IM

Installation Manual

Cardboard Packer 32 by Tetra Pak

673852-0500

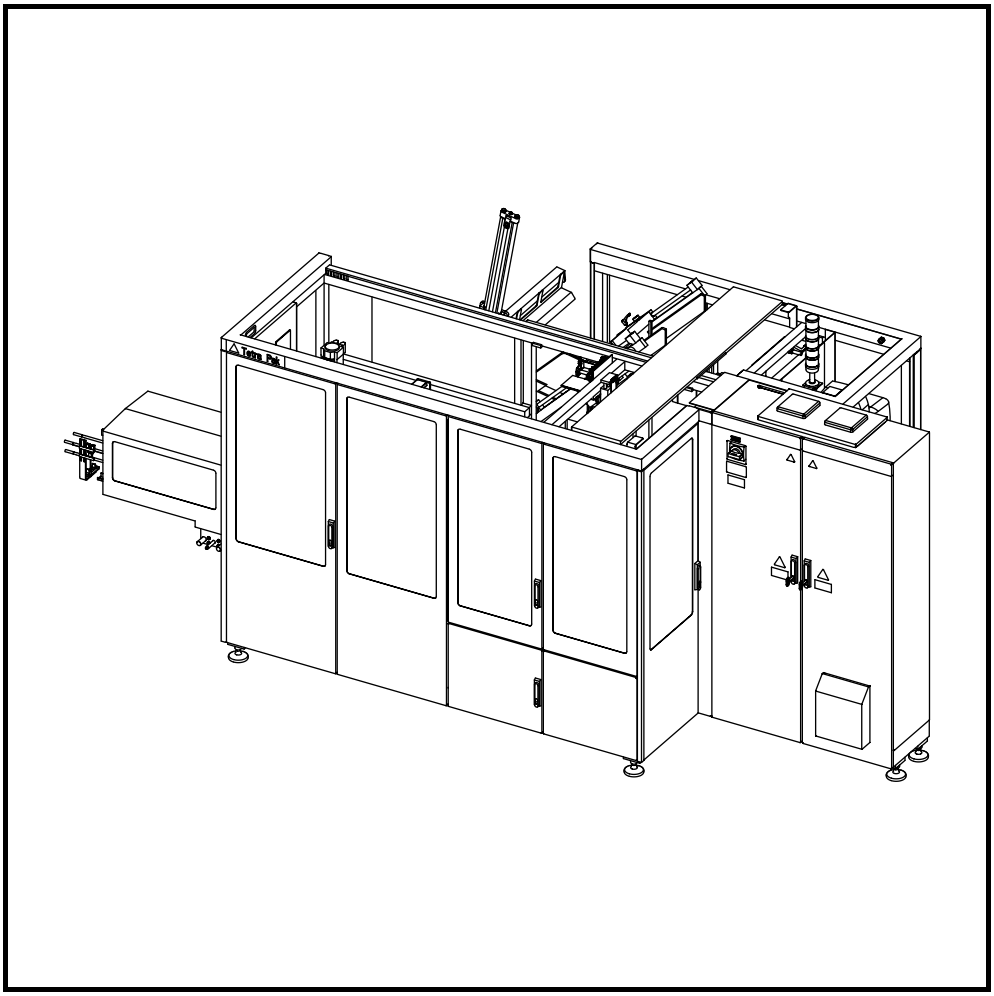

WARNING

Read and follow all safety precaution instructions throughout this manual and on safety signs attached to this equipment.

Failure to follow all safety precaution instructions could result in death or serious injury.

Tetra Pak

Doc. No. IM-3254222-0101

Copyright © 2012 Tetra Pak Group

All rights reserved. No part of this document may be reproduced or copied in any form or by any means without written permission from Tetra Pak Packaging Solutions AB.

Tetra Pak and all Tetra Pak products are trademarks belonging to the Tetra Pak Group.

The content of this manual is in accordance with the design and construction of the machine or equipment at the time of publishing. Tetra Pak reserves the right to introduce design modifications without prior notice.

The English language version of this document contains the original instructions. All other language versions are translations of the original instructions.

This document was produced by:

Tetra Pak Packaging Solutions AB
Ruben Rausings gata
SE-221 86 Lund
Sweden

Additional copies can be ordered from Tetra Pak. When ordering additional copies, always provide the document number.

Doc. No. IM-3254222-0101

Issue 2012-09

This manual is valid for:

Series No. / Machine no. Sign.

IM
Installation Manual

Cardboard Packer 32 by Tetra Pak 673852-0500

i Introduction
ii Safety Precautions
1 Technical Specification
2 Preparatory Requirements
3 Mechanical Completion
4 Commissioning
5 Performance Validation
6 Disassembly and Removal

Machine or equipment configurations that this manual is valid for are described on the next page.

Doc. No. IM-3254222-0101
Issue 2012-09

Tetra Pak
Tetra Pak Packaging Solutions AB

Valid for:

Name	Drawing Specification and Development Step	Additional Information
Cardboard Packer 32 by Tetra Pak	673852-0500	Optional Equipment: Illumination 1287186-0400 Light Barrier 2834002-0300 Air Jet Gun 2802489-0200 OK Spray Gun 1287076-0300 Discharge Unit, Roller Conveyor 2511012-0400 Discharge Conveyor 2970888-0200 Cooling unit 3263648-0100 Photocell Unit, Com. Start conv. 2802448-0300 6 Channel Hotmelt 3090149-0300 iLine-XT 3157212-0100

Update Log for Doc. No. IM-3254222-0101

This table shows all changes made to this manual, including installed rebuilding kits, added or removed pages. Page numbering on added pages begins with UP.

Date	Installed Kit	Added Pages (Doc. No.)	Removed Pages	Signature

Date	Installed Kit	Added Pages (Doc. No.)	Removed Pages	Signature

i Introduction

About the Introduction Chapter

This chapter contains basic information about this manual and the related Tetra Pak equipment.

About the Introduction Chapter i-2

Abbreviations and Terminology i-5

Reference Documents i-6

Manual Information i-7

Delivered Manuals i-7

EM i-7

IM i-7

MM i-7

OM i-7

SPC i-7

Page Layout i-8

Page Numbering i-9

Typographical Conventions i-9

Symbols i-9

Machine Introduction i-10

Intended Use of the Equipment i-10

Manufacturer i-10

Declaration of Conformity i-10

Declaration of Conformity i-11

Identification i-18

CE Classification i-18

Machine Plate i-18

Orientation i-19

Hygiene i-20

How to Use This IM i-21

Purpose of the IM i-21

Installation Workflow i-21

Support and Feedback i-22

Abbreviations and Terminology

Abbreviation/Terminology	Meaning	Translation
ANSI	American National Standards Institute	American National Standards Institute
CBP	Cardboard Packer	Cardboard Packer
CE	Communautés Européennes/European Communities	Communautés Européennes/European Communities
EEA	European Economic Area	European Economic Area
EM	Electrical Manual	Electrical Manual
FMECA	Failure Mode Effect & Criticality Analysis	Failure Mode Effect & Criticality Analysis
GMP	Good Manufacturing Practice	
HMI	Human Machine Interface	Human Machine Interface
HVAC	Heating, Ventilating, and Air Conditioning	
IM	Installation Manual	Installation Manual
ISO	International Standards Organization	International Standards Organization
LC	Line Controller	Line Controller
LH	Left Hand (side)	Left Hand (side)
MM	Maintenance Manual	Maintenance Manual
OM	Operation Manual	Operation Manual
PIM	Project and Installation Manual	
PLMS	Packaging Line Monitoring System	Packaging Line Monitoring System
RH	Right Hand (side)	Right Hand (side)
SPC	Spare Parts Catalogue	Spare Parts Catalogue
TPMS	Tetra Pak Maintenance System	Tetra Pak Maintenance System
Tray OF	Tetra Tray with Over Flaps	Tetra Tray with Over Flaps
UP	Update Pages	Update Pages
WA	Wraparound unit	Wraparound unit
WAIF	Tetra Wraparound box with Inside top Flap	Tetra Wraparound box with Inside top Flap
WAMF	Tetra Wraparound box with Meeting Flaps	Tetra Wraparound box with Meeting Flaps
WASF	Tetra Wraparound box with Side Flap	Tetra Wraparound box with Side Flap

Reference Documents

The Installation Manual references the following documents. Make sure the documents are available during the machine installation.

Document Number	Document Title	Reference in
OM-3254220-xxxx	Operation Manual	
MM-3254221-xxxx	Maintenance Manual	
EM-3254223-xxxx Valid for all countries except USA and Canada	Electrical Manual	
EM-3254224-xxxx Valid for USA and Canada		
SPC-3254225-xxxx	Spare Parts Catalogue	

Manual Information

Tetra Pak recommends reading all delivered manuals carefully. Make sure that the delivered manuals are available to personnel who operate or maintain the equipment.

It is important to keep this manual for the lifetime of the equipment and to pass the manual on to any subsequent holder or user.

Tetra Pak will not be held responsible for any damage to the equipment caused by not following the instructions given in this manual.

Delivered Manuals

Manuals delivered with this equipment:

EM

The Electrical Manual provides technicians with information about the equipment's electrical system.

IM

The Installation Manual provides technicians with information required to safely install the equipment.

MM

The Maintenance Manual provides technicians with information on maintaining the equipment.

OM

The Operation Manual provides the operator with information on handling and operating the equipment before, during, and after production.

SPC

The Spare Parts Catalogue provides the information necessary to order spare parts from Tetra Pak.

Page Layout

Every main page in a manual contains a header and a footer. The page header contains the chapter name (1) and the section name (2). The page footer contains the page number (3), and the document number (4). See also the Page Numbering section.

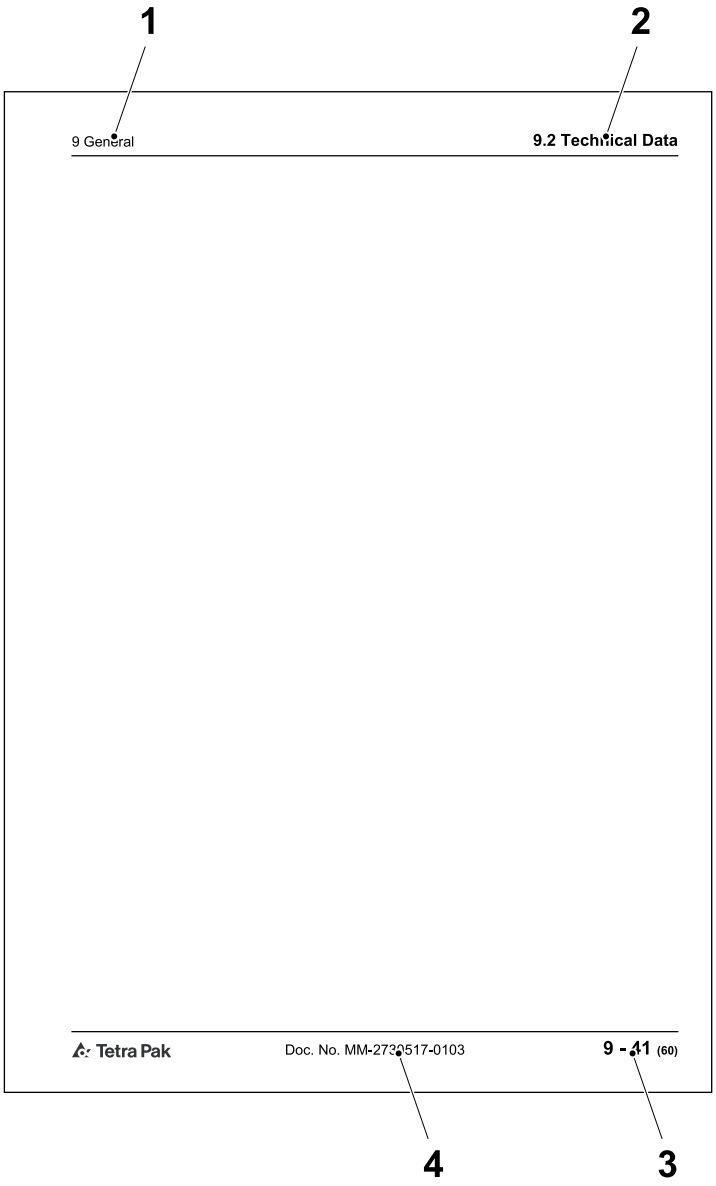

1 Chapter name
2 Section name
3 Page number
4 Document number

Page Numbering

A page number has three parts:

- chapter number (1)
- consecutive page number (2) within the chapter
- total number of pages (3) in the chapter

Note! The letters UP may replace the chapter number (1) if the manual includes update pages. The consecutive page number (2) and the total number of pages (3) of update pages do not follow the existing sequential page numbering of the chapter.

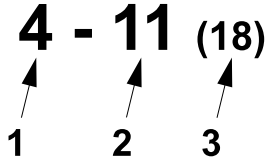

1 Chapter number
2 Consecutive page number
3 Total number of pages

Typographical Conventions

Controls on the operator panel, emergency stop devices, and program steps are printed in CAPITAL LETTERS.

Menu names, button names and other text displayed in software are printed in COURIER.

Cross-references are underlined.

Symbols

Symbols used in illustrations.

	A pointer arrow indicates the position of an object.
	A zoom arrow indicates that an object view is enlarged. The arrow points towards the enlarged view of the object.
	A rotation movement arrow indicates rotational movement of an object. The arrow points in the direction of rotation.
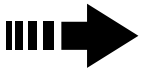	A straight movement arrow indicates movement of an object. The arrow points in the direction of movement.

Machine Introduction

Intended Use of the Equipment

The intended use of this Tetra Pak equipment is to place packages approved by Tetra Pak Packaging Solutions AB into units made of corrugated cardboard.

All other use is prohibited. Tetra Pak will not be held responsible for injury or damage if the equipment is used for any other purpose than the intended use described above.

Manufacturer

This Tetra Pak equipment has been manufactured by

Tetra Pak Packaging Solutions AB
Ruben Rausings gata
SE-221 86 Lund
Sweden

Declaration of Conformity

A copy of the Declaration of Conformity can be found below. The signed Declaration of Conformity is delivered separately with the equipment.

Declaration of Conformity

Tetra Pak

Declaration of Conformity

Tetra Pak Packaging Solutions AB
Ruben Rausings Gata
221 86 Lund
Sweden

declare that this machine/ equipment/ complex installation:

Cardboard Packer 32 (673852-0500)
75783/xxxx

is in conformity with the following harmonized standards:

EN 415-7:2006+A1:2008
EN 61000-6-2:2005
EN 61000-6-4:2007

and is in conformity with the provisions of the Directive(s) - including amendments:

[X] 2006/42/EC Machinery
[X] 2004/108/EC Electromagnetic compatibility (EMC)
[ ] 2006/95/EC Low Voltage

The following person is authorised to compile the technical file:

Mauro Ferretti
Tetra Pak Packaging Solutions S.p.A
Via Delfini 1
41123 Modena
Italy

Lund 2012-09-18

Giovan Battista Bisogni
Director, SCO - Capital Equipment - Carton Value & Distribution Equipment

English
FORM 5292 version 2011-10-27

Tetra Pak

Konformitätserklärung

Tetra Pak Packaging Solutions AB
Ruben Rausings Gata
221 86 Lund
Sweden

erklärt hiermit, dass diese Maschine / Anlage / komplexe Einrichtung:

Cardboard Packer 32 (673852-0500)
75783/xxxx

konform ist mit den folgenden harmonisierten Standards:

EN 415-7:2006+A1:2008
EN 61000-6-2:2005
EN 61000-6-4:2007

und übereinstimmt mit den Vorschriften der Richtlinien einschließlich deren Ergänzungen:

[x] 2006/42/EC Maschine
[x] 2004/108/EC Elektromagnetische Verträglichkeit (EMV)
[ ] 2006/95/EC Niederspannung

Folgender Person ist es gestattet, die technischen Unterlagen zusammenzustellen:

Mauro Ferretti
Tetra Pak Packaging Solutions S.p.A
Via Delfini 1
41123 Modena
Italy

Lund 2012-09-18

Giovan Battista Bisogni
Director, SCO - Capital Equipment - Carton Value & Distribution Equipment

Deutsch/German
FORM 5292 version 2011-10-27

Tetra Pak

Konformitetserklæring

Tetra Pak Packaging Solutions AB
Ruben Rausings Gata
221 86 Lund
Sweden

erklærer at dette maskineri/dette udstyr/ kompleks installation:

Cardboard Packer 32 (673852-0500)
75783/xxxx

holder følgende harmoniserede standarder:

EN 415-7:2006+A1:2008
EN 61000-6-2:2005
EN 61000-6-4:2007

samt bestemmelserne iht. direktivet/direktiverne, inkl. ændringer:

[x] 2006/42/EC Maskineri
[x] 2004/108/EC Elektromagnetisk kompatibilitet
[ ] 2006/95/EC Lav spænding

Følgende person er authoriseret til at udarbejde den tekniske fil:

Mauro Ferretti
Tetra Pak Packaging Solutions S.p.A
Via Delfini 1
41123 Modena
Italy

Lund 2012-09-18

Giovan Battista Bisogni
Director, SCO - Capital Equipment - Carton Value & Distribution Equipment

Dansk/Danish
FORM 5292 version 2011-10-27

Tetra Pak

Declaración de Conformidad

Tetra Pak Packaging Solutions AB
Ruben Rausings Gata
221 86 Lund
Sweden

declaramos que esta máquina/equipo/instalación compleja:

Cardboard Packer 32 (673852-0500)
75783/xxxx

es conforme a los siguientes estándares armonizados:

EN 415-7:2006+A1:2008
EN 61000-6-2:2005
EN 61000-6-4:2007

y cumple con lo que dicta(n) la(s) Directiva(s) - y sucesivas modificaciones:

[x] 2006/42/EC máquinas
[x] 2004/108/EC compatibilidad electromagnética
[ ] 2006/95/EC equipo eléctrico diseñado para el uso dentro de ciertos límites de voltaje

La persona indicada a continuación está autorizada para compilar el archivo técnico:

Mauro Ferretti
Tetra Pak Packaging Solutions S.p.A
Via Delfini 1
41123 Modena
Italy

Lund 2012-09-18

Giovan Battista Bisogni
Director, SCO - Capital Equipment - Carton Value & Distribution Equipment

Español/Spanish
FORM 5292 version 2011-10-27

Tetra Pak

Yhdenmukaistusvakuutus

Tetra Pak Packaging Solutions AB
Ruben Rausings Gata
221 86 Lund
Sweden

vakuuttaa, että allamainittu kone/koneen osa/laitteisto/kompleksi asennus:

Cardboard Packer 32 (673852-0500)
75783/xxxx

vastaa seuraavia harmonisoituja standardeja:

EN 415-7:2006+A1:2008
EN 61000-6-2:2005
EN 61000-6-4:2007

sekä seuraavia direktiivejä ja niihin liittyviä muutoksia:

[x] 2006/42/EY Kone
[x] 2004/108/EY Sähkömagneettinen yhteensopivuus
[ ] 2006/95/EY Pienjännite

Seuraava henkilö on valtuutettu täyttämään teknisen tiedoston:

Mauro Ferretti
Tetra Pak Packaging Solutions S.p.A
Via Delfini 1
41123 Modena
Italy

Lund 2012-09-18

Giovan Battista Bisogni
Director, SCO - Capital Equipment - Carton Value & Distribution Equipment

Suomi/Finnish
FORM 5292 version 2011-10-27

Tetra Pak

Déclaration de Conformité

Tetra Pak Packaging Solutions AB
Ruben Rausings Gata
221 86 Lund
Sweden

déclare que la présente machine / l'équipement / l'installation complexe :

Cardboard Packer 32 (673852-0500)
75783/xxxx

est conforme aux normes harmonisées suivantes :

EN 415-7:2006+A1:2008
EN 61000-6-2:2005
EN 61000-6-4:2007

et est conforme aux dispositions des directives suivantes (amendements compris) :

[x] 2006/42/EC Machine
[x] 2004/108/EC Compatibilité électromagnétique (EMC)
[ ] 2006/95/EC Basse tension

La personne suivante est autorisée à élaborer le dossier technique :

Mauro Ferretti
Tetra Pak Packaging Solutions S.p.A
Via Delfini 1
41123 Modena
Italy

Lund 2012-09-18

Giovan Battista Bisogni
Director, SCO - Capital Equipment - Carton Value & Distribution Equipment

Français / French
FORM 5292 version 2011-10-27

Tetra Pak

Δήλωση Συμμόρφωσης

Tetra Pak Packaging Solutions AB
Ruben Rausings Gata
221 86 Lund
Sweden

δηλώνει ότι η μηχανή / ο εξοπλισμός / σύνθετες εγκατάστασεις:

Cardboard Packer 32 (673852-0500)
75783/xxxx

είναι σε συμμόρφωση με τα ακόλουθα εναρμονισμένα πρότυπα:

EN 415-7:2006+A1:2008
EN 61000-6-2:2005
EN 61000-6-4:2007

και είναι σε συμμόρφωση με τις διατάξεις της(των) Οδηγίας(ών) - συμπεριλαμβανόμενων των τροπολογιών:

[x] 2006/42/ΕΚ Μηχανημάτων
[x] 2004/108/ΕΚ Ηλεκτρομαγνητικής Συμβατότητας (EMC)
[ ] 2006/95/ΕΚ Χαμηλής Τάσης

Το παρακάτω άτομο είναι εξουσιοδοτημένο να συντάξει τον τεχνικό φάκελο:

Mauro Ferretti
Tetra Pak Packaging Solutions S.p.A
Via Delfini 1
41123 Modena
Italy

Lund 2012-09-18

Giovan Battista Bisogni
Director, SCO - Capital Equipment - Carton Value & Distribution Equipment

Ελληνικά/Greek
FORM 5292 version 2011-10-27

Tetra Pak

Verklaring van Overeenstemming

Tetra Pak Packaging Solutions AB
Ruben Rausings Gata
221 86 Lund
Sweden

verklaart dat deze machine/uitrusting/ complexe installatie:

Cardboard Packer 32 (673852-0500)
75783/xxxx

overeenstemt met de volgende geharmoniseerde normen:

EN 415-7:2006+A1:2008
EN 61000-6-2:2005
EN 61000-6-4:2007

en overeenstemt met de bepalingen van de Richtlijn(en) - inclusief amendementen:

[x] 2006/42/EG Machine(s)
[x] 2004/108/ EG Elektromagnetische compatibiliteit (EMC)
[ ] 2006/95/EG Laagspanning

De volgende persoon heeft toestemming om het technische dossier samen te stellen:

Mauro Ferretti
Tetra Pak Packaging Solutions S.p.A
Via Delfini 1
41123 Modena
Italy

Lund 2012-09-18

Giovan Battista Bisogni
Director, SCO - Capital Equipment - Carton Value & Distribution Equipment

Nederlands/Dutch
FORM 5292 version 2011-10-27

Tetra Pak

Erklæring om samsvar

Tetra Pak Packaging Solutions AB
Ruben Rausings Gata
221 86 Lund
Sweden

erklærer at denne maskinen / dette utstyret / denne komplekse installasjonen:

Cardboard Packer 32 (673852-0500)
75783/xxxx

er i samsvar med følgende harmoniserte standarder:

EN 415-7:2006+A1:2008
EN 61000-6-2:2005
EN 61000-6-4:2007

og er i samsvar med bestemmelsene i følgende direktiver med endringer:

[x] 2006/42/EF Maskiner
[x] 2004/108/EF Elektromagnetisk kompatibilitet (EMC)
[ ] 2006/95/EF Lavspenning

Følgende person er autorisert til å kompilere den tekniske filen:

Mauro Ferretti
Tetra Pak Packaging Solutions S.p.A
Via Delfini 1
41123 Modena
Italy

Lund 2012-09-18

Giovan Battista Bisogni
Director, SCO - Capital Equipment - Carton Value & Distribution Equipment

Norsk/Norwegian
FORM 5292 version 2011-10-27

Tetra Pak

Declaração de Conformidade

Tetra Pak Packaging Solutions AB
Ruben Rausings Gata
221 86 Lund
Sweden

declaramos que a máquina/ equipamento/ instalação complexa:

Cardboard Packer 32 (673852-0500)
75783/xxxx

está em conformidade com as seguintes normas harmonizadas:

EN 415-7:2006+A1:2008
EN 61000-6-2:2005
EN 61000-6-4:2007

e está em conformidade com as disposições da(s) Directiva(s) - inclusive as sucessivas modificações:

[x] 2006/42/CE Máquinas
[x] 2004/108/CE Compatibilidade electromagnética (CEM)
[ ] 2006/95/CE Baixa Tensão

A pessoa abaixo está autorizada a compilar o ficheiro técnico:

Mauro Ferretti
Tetra Pak Packaging Solutions S.p.A
Via Delfini 1
41123 Modena
Italy

Lund 2012-09-18

Giovan Battista Bisogni
Director, SCO - Capital Equipment - Carton Value & Distribution Equipment

Português/Portuguese
FORM 5292 version 2011-10-27

Tetra Pak

Samræmisyfirlýsing

Tetra Pak Packaging Solutions AB
Ruben Rausings Gata
221 86 Lund
Sweden

lýsa hér með yfir að viðkomandi vélbúnaður/búnaður/ uppsetning samstæðu:

Cardboard Packer 32 (673852-0500)
75783/xxxx

er í samræmi við eftirfarandi samræmda staðla:

EN 415-7:2006+A1:2008
EN 61000-6-2:2005
EN 61000-6-4:2007

og í samræmi við ákvæði þessara tilskipana - að meðtöldum breytingum:

[x] 2006/42/EB Vélbúnaður
[x] 2004/108/EB Rafsegulsviðssamhæfi (EMC)
[ ] 2006/95/EB Lágspenna

Eftirfarandi einstaklingur hefur heimild til að taka saman tækniskjalið:

Mauro Ferretti
Tetra Pak Packaging Solutions S.p.A
Via Delfini 1
41123 Modena
Italy

Lund 2012-09-18

Giovan Battista Bisogni
Director, SCO - Capital Equipment - Carton Value & Distribution Equipment

Íslenska/Icelandic
FORM 5292 version 2011-10-27

Tetra Pak

Dichiarazione di Conformità

Tetra Pak Packaging Solutions AB
Ruben Rausings Gata
221 86 Lund
Sweden

dichiara che questa macchina/ apparecchiatura/ installazione complessa:

Cardboard Packer 32 (673852-0500)
75783/xxxx

è conforme alle seguenti norme armonizzate:

EN 415-7:2006+A1:2008
EN 61000-6-2:2005
EN 61000-6-4:2007

ed in conformità con quanto disposto nelle Direttive - e relativi emendamenti:

[x] 2006/42/EC Macchinari
[x] 2004/108/EC Compatibilità elettromagnetica (EMC)
[ ] 2006/95/EC Bassa tensione

La seguente persona è autorizzata a redigere il file tecnico:

Mauro Ferretti
Tetra Pak Packaging Solutions S.p.A
Via Delfini 1
41123 Modena
Italy

Lund 2012-09-18

Giovan Battista Bisogni
Director, SCO - Capital Equipment - Carton Value & Distribution Equipment

Italiano/Italian
FORM 5292 version 2011-10-27

Tetra Pak

Försäkran om överensstämmelse

Tetra Pak Packaging Solutions AB
Ruben Rausings Gata
221 86 Lund
Sweden

försäkrar att denna maskin/utrustning/komplexa anläggning:

Cardboard Packer 32 (673852-0500)
75783/xxxx

är i överensstämmelse med följande harmoniserade standarder:

EN 415-7:2006+A1:2008
EN 61000-6-2:2005
EN 61000-6-4:2007

och överensstämmer med bestämmelserna i följande direktiv inklusive tillhörande ändringar:

[x] 2006/42/EG, maskiner
[x] 2004/108/EG, elektromagnetisk kompatibilitet (EMC)
[ ] 2006/95/EG, lågspänning

Följande person är behörig att ställa samman den tekniska dokumentationen:

Mauro Ferretti
Tetra Pak Packaging Solutions S.p.A
Via Delfini 1
41123 Modena
Italy

Lund 2012-09-18

Giovan Battista Bisogni
Director, SCO - Capital Equipment - Carton Value & Distribution Equipment

Svenska/Swedish
FORM 5292 version 2011-10-27

Tetra Pak

Prohlášení o shodě

Tetra Pak Packaging Solutions AB
Ruben Rausings Gata
221 86 Lund
Sweden

prohlašuje, že tento stroj/vybavení/komplexní instalace:

Cardboard Packer 32 (673852-0500)
75783/xxxx

je v souladu s následujícími sladěnými normami:

EN 415-7:2006+A1:2008
EN 61000-6-2:2005
EN 61000-6-4:2007

a je v souladu s ustanoveními následujících směrnic
včetně jejich dodatků:

[x] 2006/42/EC Strojní zařízení
[x] 2004/108/EC Elektromagnetická kompatibilita
[ ] 2006/95/EC Nízké napětí

Ke zpracování technických souborů je oprávněna následující osoba:

Mauro Ferretti
Tetra Pak Packaging Solutions S.p.A
Via Delfini 1
41123 Modena
Italy

Lund 2012-09-18

Giovan Battista Bisogni
Director, SCO - Capital Equipment - Carton Value & Distribution Equipment

Čeština/Czech
FORM 5292 version 2011-10-27

Tetra Pak

Vastavuse Deklaratsioon

Tetra Pak Packaging Solutions AB
Ruben Rausings Gata
221 86 Lund
Sweden

deklareerib, et käesolev masin/seade/komplekspaigaldis:

Cardboard Packer 32 (673852-0500)
75783/xxxx

vastab järgmistele harmoniseeritud standardite nõuetele:

EN 415-7:2006+A1:2008
EN 61000-6-2:2005
EN 61000-6-4:2007

ja on vastavuses direktiivide sätetega
kaasa arvatud muudatused:

[x] 2006/42/EC Masinad
[x] 2004/108/EC Elektromagnetiline ühilduvus
[ ] 2006/95/EC Madalpinge

Tehnilise faili koostamiseks on luba järgmisel isikul:

Mauro Ferretti
Tetra Pak Packaging Solutions S.p.A
Via Delfini 1
41123 Modena
Italy

Lund 2012-09-18

Giovan Battista Bisogni
Director, SCO - Capital Equipment - Carton Value & Distribution Equipment

Eesti/Estonian
FORM 5292 version 2011-10-27

Tetra Pak

Megfelelőségi Nyilatkozat

Tetra Pak Packaging Solutions AB
Ruben Rausings Gata
221 86 Lund
Sweden

nyilatkozom, hogy ez a gép/berendezés/komplex összeszerelés:

Cardboard Packer 32 (673852-0500)
75783/xxxx

megfelel a következő harmonizált szabványoknak:

EN 415-7:2006+A1:2008
EN 61000-6-2:2005
EN 61000-6-4:2007

és megfelel a következő, módosításokat is magukban foglaló
Direktíváknak:

[x] 2006/42/EC Gépek
[x] 2004/108/EC Elektromágneses összeférhetőség (EMC)
[ ] 2006/95/EC Alacsony feszültségi direktíva

A műszaki dokumentum összeállítására jogosult személy:

Mauro Ferretti
Tetra Pak Packaging Solutions S.p.A
Via Delfini 1
41123 Modena
Italy

Lund 2012-09-18

Giovan Battista Bisogni
Director, SCO - Capital Equipment - Carton Value & Distribution Equipment

Magyar/Hungarian
FORM 5292 version 2011-10-27

Tetra Pak

Atbilstības deklarācija

Tetra Pak Packaging Solutions AB
Ruben Rausings Gata
221 86 Lund
Sweden

deklarējam to, ka šī mašīna/iekārta/sarežģīta instalācija:

Cardboard Packer 32 (673852-0500)
75783/xxxx

atbilst šādiem harmonizētajiem standartiem:

EN 415-7:2006+A1:2008
EN 61000-6-2:2005
EN 61000-6-4:2007

un ir saskaņā ar direktīvas(u) prasībām,
ieskaitot direktīvas(u) labojumus:

[x] 2006/42/EK Mašīnas
[x] 2004/108/EK Elektromagnētiskā savietojamība
[ ] 2006/95/EK Zemspriegums

Sastādīt tehnisko lietu ir pilnvarota šāda persona:

Mauro Ferretti
Tetra Pak Packaging Solutions S.p.A
Via Delfini 1
41123 Modena
Italy

Lund 2012-09-18

Giovan Battista Bisogni
Director, SCO - Capital Equipment - Carton Value & Distribution Equipment

Latviski/Latvian
FORM 5292 version 2011-10-27

Tetra Pak

Deklaracja Zgodności

Tetra Pak Packaging Solutions AB
Ruben Rausings Gata
221 86 Lund
Sweden

deklaruje, że niniejsza maszyna/wyposażenie/
instalacja kompleksowa:

Cardboard Packer 32 (673852-0500)
75783/xxxx

jest zgodna z następującymi normami zharmonizowanymi:

EN 415-7:2006+A1:2008
EN 61000-6-2:2005
EN 61000-6-4:2007

oraz jest zgodna z postanowieniami następujących Dyrektyw,
wraz ze zmianami:

[x] 2006/42/WE Maszyny
[x] 2004/108/WE Kompatybilność elektromagnetyczna
[ ] 2006/95/WE Niskonapięciowy sprzęt elektryczny

Następująca osoba jest upoważniona do opracowania pliku technicznego:

Mauro Ferretti
Tetra Pak Packaging Solutions S.p.A
Via Delfini 1
41123 Modena
Italy

Lund 2012-09-18

Giovan Battista Bisogni
Director, SCO - Capital Equipment - Carton Value & Distribution Equipment

Polski/Polish
FORM 5292 version 2011-10-27

Tetra Pak

Atitikties deklaracija

Tetra Pak Packaging Solutions AB
Ruben Rausings Gata
221 86 Lund
Sweden

pareiškia, kad šis mechanizmas/įrenginys/kompleksinė įranga:

Cardboard Packer 32 (673852-0500)
75783/xxxx

atitinka šiuos darniuosius standartus:

EN 415-7:2006+A1:2008
EN 61000-6-2:2005
EN 61000-6-4:2007

taip pat atitinka šių direktyvų nuostatas,
įskaitant jų pataisas:

[x] 2006/42/EB mašinų direktyva
[x] 2004/108/EB direktyva dėl elektromagnetinio suderinamumo
[ ] 2006/95/EB žemųjų įtampų direktyva

Techninį failą sudaryti įgaliotas šis asmuo:

Mauro Ferretti
Tetra Pak Packaging Solutions S.p.A
Via Delfini 1
41123 Modena
Italy

Lund 2012-09-18

Giovan Battista Bisogni
Director, SCO - Capital Equipment - Carton Value & Distribution Equipment

Lietuvių k./Lithuanian
FORM 5292 version 2011-10-27

Tetra Pak

ДЕКЛАРАЦИЯ ЗА СЪОТВЕТСТВИЕ

Tetra Pak Packaging Solutions AB
Ruben Rausings Gata
221 86 Lund
Sweden

декларира, че тази машина/ оборудване/ сложна инсталация:

Cardboard Packer 32 (673852-0500)
75783/xxxx

е в съответствие със следните хармонизационни стандарти:

EN 415-7:2006+A1:2008
EN 61000-6-2:2005
EN 61000-6-4:2007

и е в съответствие с клаузите на Директивата(ите): -
включително поправките:

[x] 2006/42/ЕС Машини
[x] 2004/108/ЕС Електромагнитна съвместимост (EMC)
[ ] 2006/95/ЕС Нисък волтаж

Следното лице е оторизирано да попълни техническия файл:

Mauro Ferretti
Tetra Pak Packaging Solutions S.p.A
Via Delfini 1
41123 Modena
Italy

Lund 2012-09-18

Giovan Battista Bisogni
Director, SCO - Capital Equipment - Carton Value & Distribution Equipment

Български/ Bulgarian
FORM 5292 version 2011-10-27

Tetra Pak

Declaraţie de conformitate

Tetra Pak Packaging Solutions AB
Ruben Rausings Gata
221 86 Lund
Sweden

declară că această maşină/ echipament/ instalaţie complexă:

Cardboard Packer 32 (673852-0500)
75783/xxxx

este în conformitate cu următoarele standarde armonizate:

EN 415-7:2006+A1:2008
EN 61000-6-2:2005
EN 61000-6-4:2007

şi este în conformitate cu prevederile Directivelor -
inclusiv cu amendamentele:

[x] 2006/42/EC Utilaje
[x] 2004/108/EC Compatibilitate electromagnetică (EMC)
[ ] 2006/95/EC Joasă tensiune

Următoarea persoană este autorizată să redacteze dosarul tehnic:

Mauro Ferretti
Tetra Pak Packaging Solutions S.p.A
Via Delfini 1
41123 Modena
Italy

Lund 2012-09-18

Giovan Battista Bisogni
Director, SCO - Capital Equipment - Carton Value & Distribution Equipment

Română/Romanian
FORM 5292 version 2011-10-27

Tetra Pak

Vyhlásenie o zhode

Tetra Pak Packaging Solutions AB
Ruben Rausings Gata
221 86 Lund
Sweden

vyhlasuje, že tento stroj/zariadenie/komplexná inštalácia:

Cardboard Packer 32 (673852-0500)
75783/xxxx

zodpovedá požiadavkám nasledujúcich harmonizovaných noriem:

EN 415-7:2006+A1:2008
EN 61000-6-2:2005
EN 61000-6-4:2007

a je v zhode s ustanoveniami Smernice (Smerníc) -
vrátane ich zmien a doplnkov:

[x] 2006/42/ES Strojárska
[x] 2004/108/ES Elektromagnetická kompatibilita (EMC)
[ ] 2006/95/ES Nízkonapäťové zariadenia

Nasledujúca osoba je oprávnená zostavovať súbor technickej dokumentácie:

Mauro Ferretti
Tetra Pak Packaging Solutions S.p.A
Via Delfini 1
41123 Modena
Italy

Lund 2012-09-18

Giovan Battista Bisogni
Director, SCO - Capital Equipment - Carton Value & Distribution Equipment

Slovensky/Slovak
FORM 5292 version 2011-10-27

Tetra Pak

Deklaracija o Skladnosti

Tetra Pak Packaging Solutions AB
Ruben Rausings Gata
221 86 Lund
Sweden

izjavljam, da je ta stroj/oprema/kompleksna namestitev:

Cardboard Packer 32 (673852-0500)
75783/xxxx

izdelan v skladu z naslednjimi standardi:

EN 415-7:2006+A1:2008
EN 61000-6-2:2005
EN 61000-6-4:2007

in v skladu z direktivo (direktivami) - vključno z dopolnili

[x] 2006/42/EC Varnost strojev
[x] 2004/108/EC Elektromagnetna združljivost (EMC)
[ ] 2006/95/EC Električna oprema, namenjena za uporabo v določenih napetostnih območjih

Oseba, ki je pooblaščena za sestavljanje tehnične datoteke:

Mauro Ferretti
Tetra Pak Packaging Solutions S.p.A
Via Delfini 1
41123 Modena
Italy

Lund 2012-09-18

Giovan Battista Bisogni
Director, SCO - Capital Equipment - Carton Value & Distribution Equipment

Slovenščina/Slovenian
FORM 5292 version 2011-10-27

Identification

CE Classification

This equipment complies with the basic health and safety regulations of the European Economic Area (EEA).

Machine Plate

The illustration below shows an example of the machine plate and its location on the equipment. The machine plate carries data needed when contacting Tetra Pak concerning this specific equipment.

Make sure that the equipment data in the front pages of this manual corresponds to the machine plate data and the machine specification.

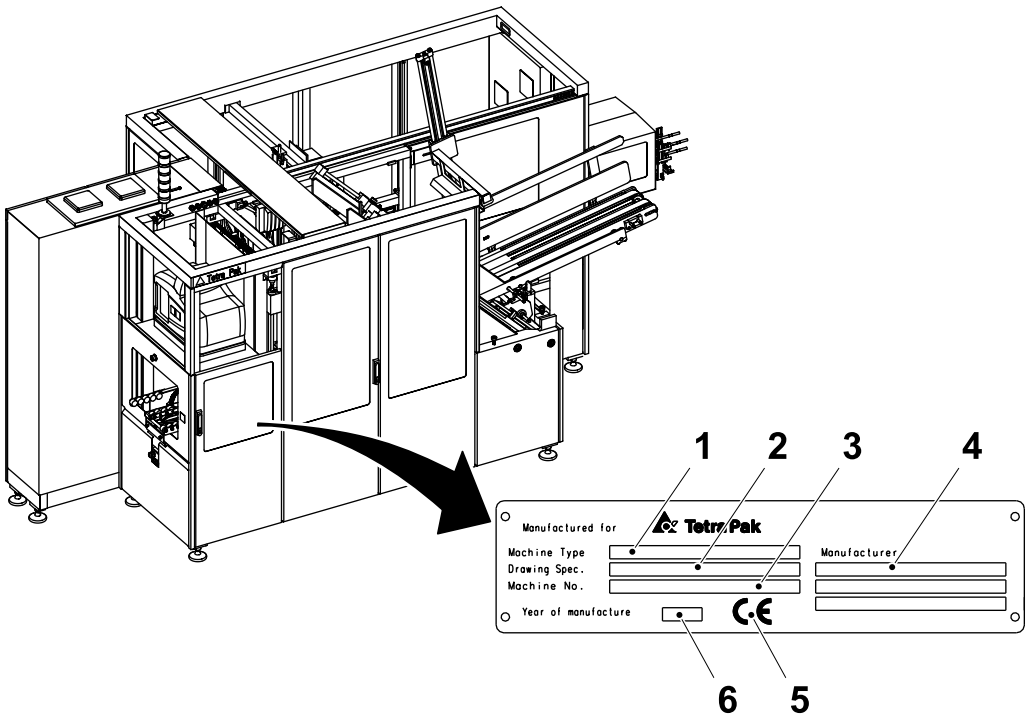

1 Machine type
2 Drawing specifications
3 Machine serial number
4 Manufacturer
5 CE mark
6 Year of manufacture

Orientation

The illustration below shows the orientation of the equipment. This orientation information will be used throughout this manual. The arrows indicate the flow of material.

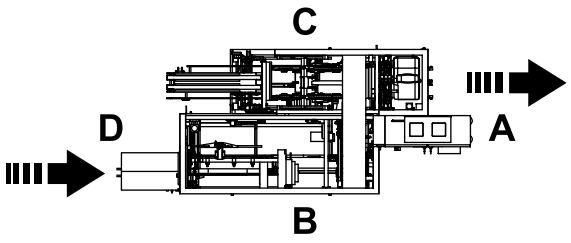

Z-infeed, RH version

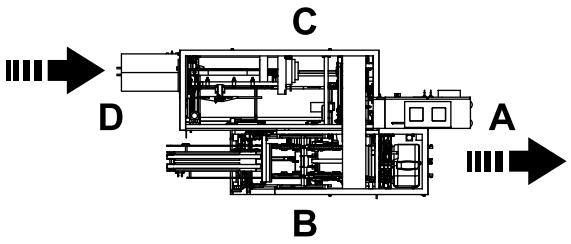

Z-infeed, LH version

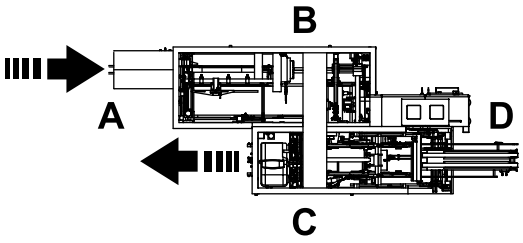

U-infeed, RH version

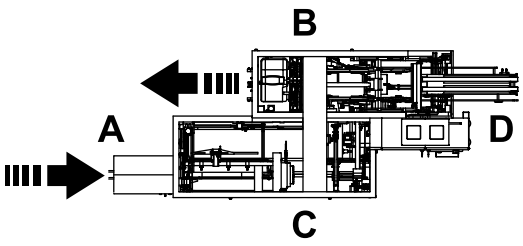

U-infeed, LH version

A Front
B Right-hand side
C Left-hand side
D Back

Hygiene

- Never clean the floors or the machine in the filling room (area) when the machine is in production.
- Keep your hands and gloves clean.
- Always wear some type of hair protection (cap or hairnet) and clean clothes (preferably white).
- Do not wear a watch, ring, necklace, earrings, or any other exposed jewellery.

How to Use This IM

Purpose of the IM

The IM provides technical specifications and preparatory information needed during the quotation of the equipment and during the entire installation process. The IM describes the equipment requirements in the packaging line. It also provides instructions on how to mechanically install, commission, and validate the performance of the equipment, and how to disassemble and remove the equipment.

The intended users of the IM are project leaders, installation planners, installation technicians, and other technicians involved in the equipment installation project.

Installation Workflow

An installation of any Tetra Pak equipment follows the Installation to Performance process. The process consists of five main activities and the IM is structured to support the process. See the illustration and the table below.

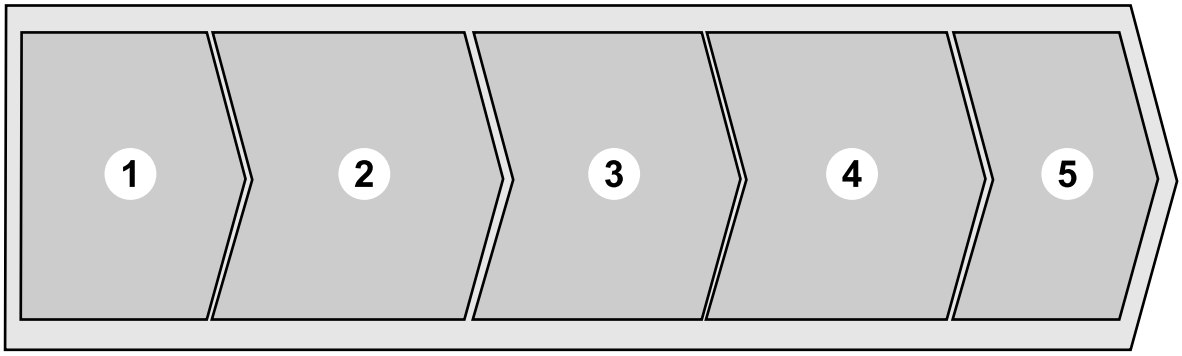

Pos.	Process Activity	End State	Related IM Chapters	Intended User
1	Preparation	Equipment at prepared site	Chapter 1 and 2	Installation planner/Project leader
2	Mechanical Completion	Equipment mechanically installed	Chapter 3	Installation technician
3	Commissioning	Equipment commissioned and functionally validated	Chapter 4	Installation technician
4	Performance Validation	Equipment performance validated	Chapter 5	Project leader
5	Hand Over	Contract fulfilled	-	-

Support and Feedback

For assistance when operating this equipment, or other inquiries, comments, or suggestions, pose the questions or give feedback on the E-Liaison home page at http://e-liaison.tetrapak.com. If access to the Tetra Pak intranet is not available, contact the nearest Tetra Pak representative.

ii Safety Precautions

Description

Safety Precaution Instructions

WARNING

Read and understand this manual before using the machine.
Failure to follow safety precautions and instructions can result in death or serious injury.

Definition of Lockout Procedure

A lockout procedure is a procedure to put each necessary energy isolating device in its safe position to prevent the energisation of the equipment, such as when a maintenance procedure should be carried out.

A lockout is the use of a device, for example, a padlock, to make sure that an energy isolating device cannot be operated.

An energy isolating device is a mechanical device that physically prevents transmission or release of energy, such as an electrical supply disconnecting device.

Description ii-2

Safety Messages Description ii-5

Personnel Requirements ii-6

Skilled Person ii-6

Instructed Person ii-6

Safety Signs ii-7

Locations of Safety Signs ii-10

Protective Devices ii-11

Emergency Stop ii-11

Emergency Stop Buttons ii-12

Safeguards ii-13

Infeed Conveyor ii-15

Indicating Tower ii-16

Audible Alarm ii-16

Safe Manual Handling ii-17

Personal Protection ii-18

Noise ii-18

Entanglement ii-18

Hazardous Substances ii-19

Disposal of Chemical Substances ii-19

Supply Systems ii-20

Electrical Supply ii-20

Residual Voltage ii-20

Electrical Cabinet ii-21

Socket Outlet ii-21

Air Supply ii-22

Water Supply ii-23

Hotmelt Equipment ii-24
Discharge Unit..... ii-26

Safety Messages Description

A safety message is always accompanied by a safety alert symbol and a signal word.

The safety alert symbol is used to alert about potential personal injury hazards. To avoid hazards, obey all safety messages that follow this symbol.

The following safety alert symbols and signal words are used in this manual to inform the user of hazards.

⚠ **DANGER**	Danger indicates an imminently hazardous situation which, if not avoided, **will** result in **death or serious injury**.
⚠ **WARNING**	Warning indicates a potentially hazardous situation which, if not avoided, **could** result in **death or serious injury**.
⚠ **CAUTION**	Caution indicates a potentially hazardous situation which, if not avoided, **may** result in **minor or moderate injury.** It may also be used to alert against unsafe practices.
CAUTION	Caution without the safety alert symbol indicates a potentially hazardous situation which, if not avoided, **may** result in **property damage**.

Personnel Requirements

Note! Personnel includes all persons working on or near this equipment.

Only skilled or instructed persons are allowed to work with this equipment.

Skilled Person

A skilled person must have relevant education and experience to enable him or her to identify hazards, analyse risks, and avoid hazards which electricity, machinery, chemicals, other energies, and supply systems on this equipment can create.

Skilled persons must meet local regulations, such as certifications and qualifications for working with these energies and systems.

Instructed Person

An instructed person must be adequately advised or supervised by a skilled person. The skilled person enables the instructed person to identify hazards, analyse risks, and avoid hazards which electricity, machinery, chemicals, other energies, and supply systems on this equipment can create.

Safety Signs

WARNING

Damaged or missing safety signs.
Safety signs are used to indicate safety hazards. If the signs are missing or damaged, they can not fulfil this function. Replace all missing or damaged safety signs immediately.

Safety signs are attached to the equipment. The table below lists all the signs that are used, and illustrations show their locations on the equipment. Each position number refers to two standards of a safety sign in the table, but only one is used on the equipment.

- Make sure that each safety sign is legible and in its correct position after installation and maintenance.
- Replace all missing or damaged safety signs immediately.

Pos	ISO Standard	ANSI Standard
1	 **Moving parts can crush and cut.** Do not operate with guard removed. Follow lockout procedure before maintenance.	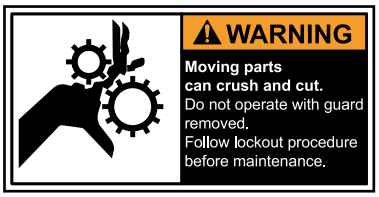
2	 **Hazardous voltage.** Will shock, burn, or cause death. Follow lockout procedure before maintenance.	
3	 **Hazardous residual voltage on capacitors.** Will shock, burn or cause death. Disconnect power and wait 5 minutes before opening. Follow instructions for safe work practices.	

(Cont'd)

(Cont'd)

Pos	ISO Standard	ANSI Standard
4		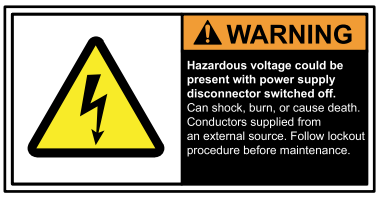
	Hazardous voltage could be present with power supply disconnector switched off. Can shock, burn or cause death. Conductors supplied from an external source. Follow lockout procedure before maintenance.	
5		
	Laser Radiation. Do not stare into beam. Class 2 laser product.	
6		
	Hazardous voltage. Can shock, burn, or cause death. Read Maintenance Manual (MM) before using this socket outlet.	
7		
	Risk of equipment damage. Do not let water into this area.	
8		
	Burn hazard. Trapped heat energy. Do not touch.	

(Cont'd)

(Cont'd)

Pos	ISO Standard	ANSI Standard
9		
	Hot surface. Do not touch. Follow lockout procedure before maintenance.	
10		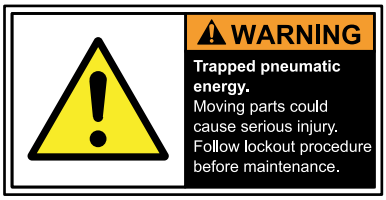
	Trapped pneumatic energy. Moving parts could cause serious injury. Follow lockout procedure before maintenance.	
11		
	Do not reach in. Moving parts may cause injury. Follow instructions for safe work practice.	
12	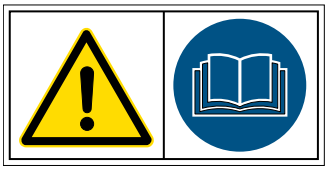	
	To prevent serious injury: • Do not operate this machine unless all doors are closed and guards are in place and operating. • Machine starts automatically. Stay clear of machine when it is operating. • Read manual before first operating machine. If manual is missing, contact Tetra Pak.	

Locations of Safety Signs

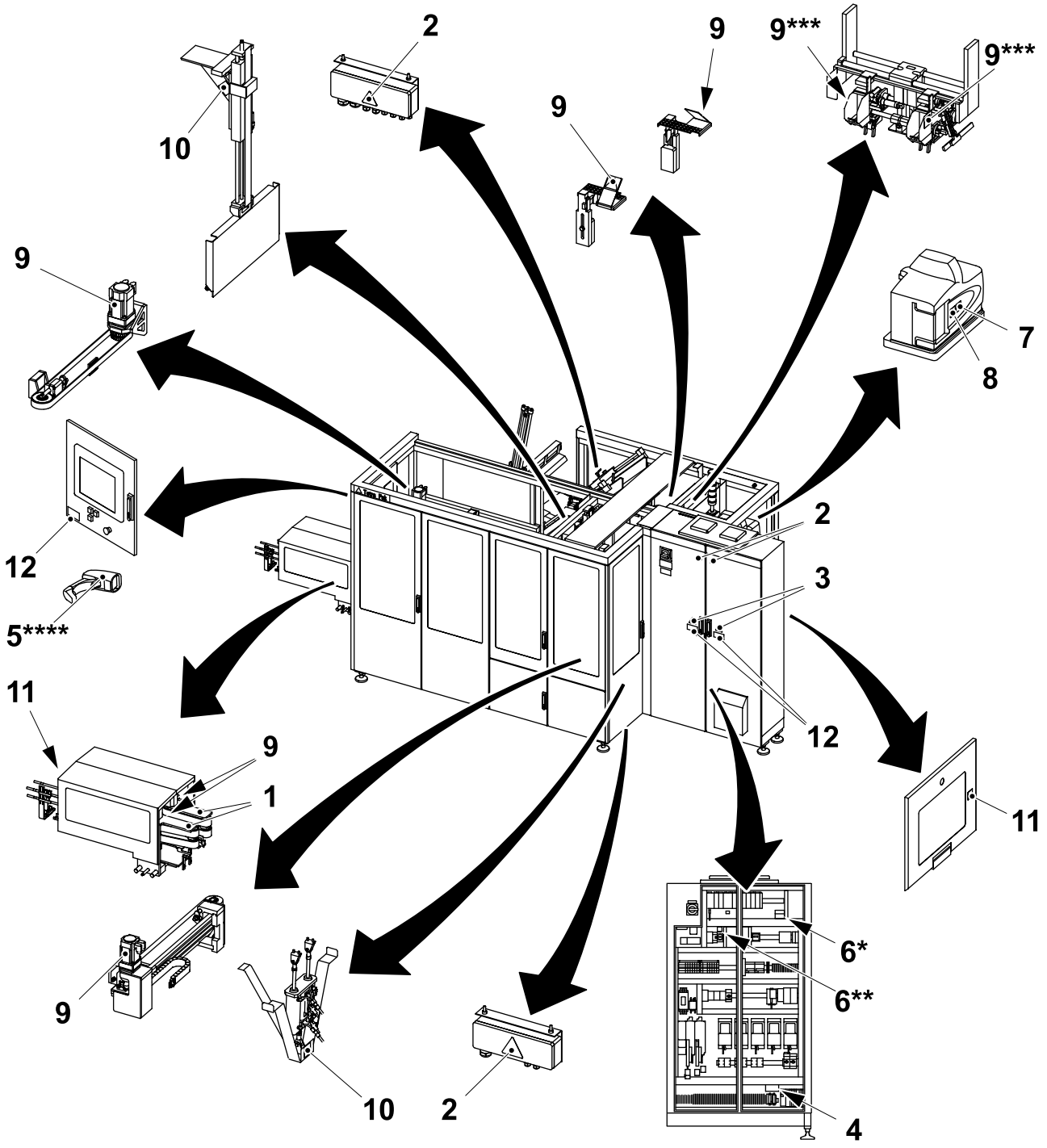

*) USA and Canada

**) All countries except USA and Canada

***) Wrap Around Unit (optional equipment)

****) iLine XT (optional equipment)

Protective Devices

There are different kinds of protective device designed to ensure safe use of the equipment. See the sections below.

WARNING
Hazardous zones.
Hazardous zones are safeguarded and provided with protective devices. Do not inch or run this equipment if any protective device is inoperative.

Change inoperative components of the safety system immediately.

For the locations of safeguards and/or other protective devices not mentioned in this section, see the Maintenance Manual.

Emergency Stop

DANGER
Hazardous voltage.
Will shock, burn, or cause death.
Hazardous voltage remains ON after activating an EMERGENCY STOP.

Emergency stop devices are used to stop this equipment immediately in a hazardous situation. Learn the positions of all emergency stop devices and how to use them.

Instructions for a normal production stop are included in the Stop chapter of the Operation Manual.

Emergency Stop Buttons

Push one of the EMERGENCY STOP buttons to stop this equipment immediately.

The location of each EMERGENCY STOP button is shown by an arrow.

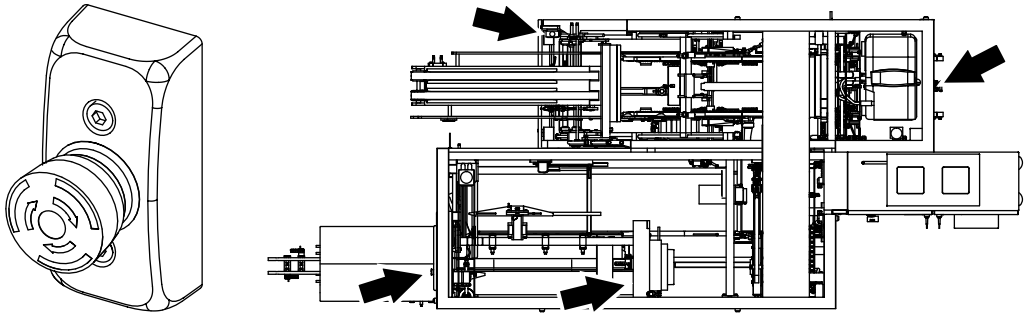

Z-infeed, RH version

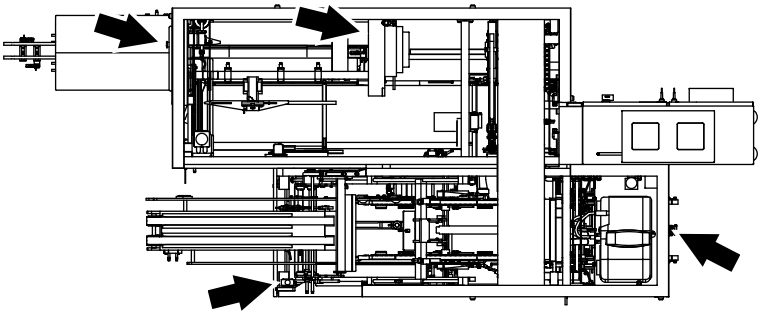

Z-infeed, LH version

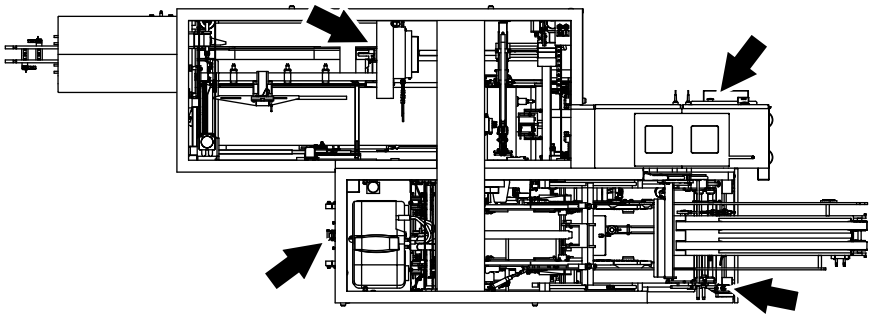

U-infeed RH version

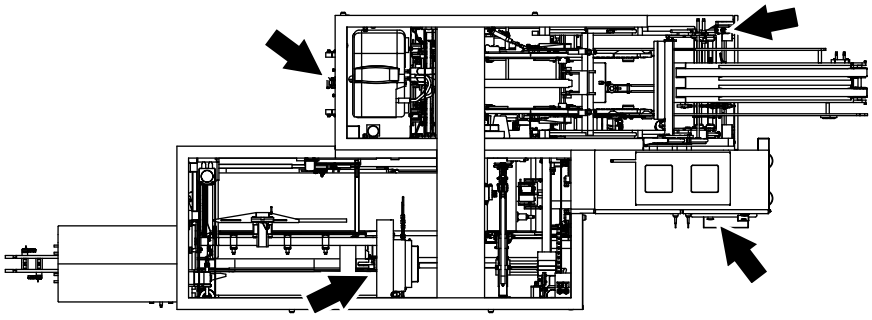

U-infeed, LH version

Safeguards

WARNING
Moving machinery parts.
Never defeat or bypass the interlocking devices.

Movable guards, for example, doors and covers leading to hazardous zones, are fitted with interlocking devices where required. These devices are usually electric safety switches that are parts of the safety system and must never be defeated, bypassed, or otherwise made inoperative.

Where movable guards (doors) are equipped with means to be locked in a nonclosed position, any person with the intention to preside, for any reason, behind such a guard must lock the guard in the nonclosed position by use of a padlock.

Note! For work on the electrical equipment, the electrical power must also be disconnected.

CAUTION
Corners and edges.
Close the doors, guards, or parts of the equipment unless they must be open during work.

CAUTION
Burn hazard.
Parts of the equipment protected by guards may be hot after operation. Allow components to cool down or use personal protective equipment.

After installation and maintenance, and before this equipment is inched or run, check that all safeguards are in place and that they operate correctly.

CAUTION
Equipment damage.
The equipment can be damaged if it is not stopped in the correct way. Never stop this equipment by opening a movable guard, for example, a door or cover, equipped with an interlocking device.

(Cont'd)

(Cont'd)

The location of each interlocking device is shown by an arrow.

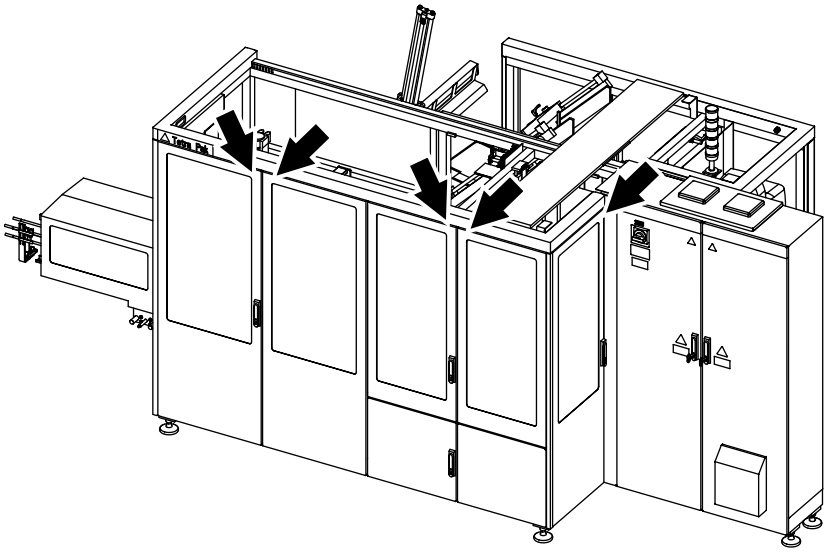

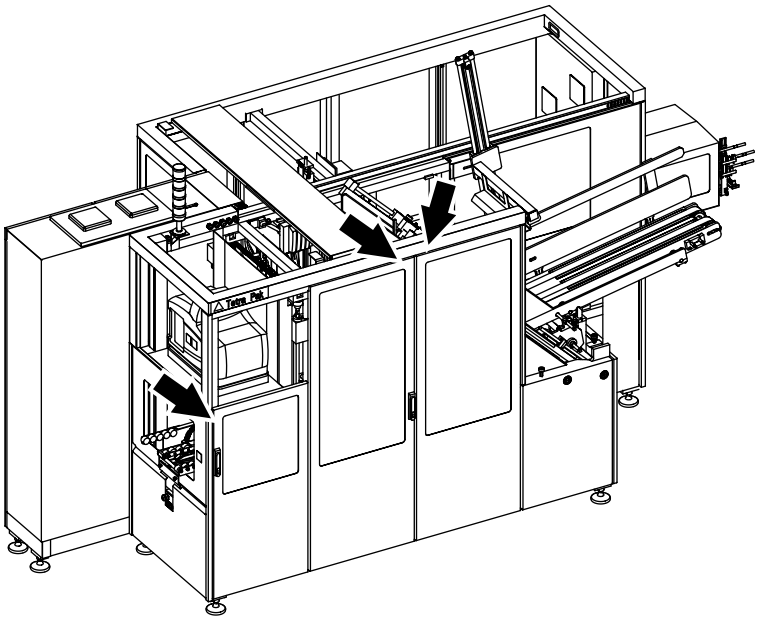

Infeed Conveyor

WARNING

Conveyor in motion.

If a door is opened, the infeed conveyor might still be in motion.
The conveyor stops when the machine is stepped down to IDLE or when an EMERGENCY STOP button is pushed or when the machine is completely turned OFF.

To stop the infeed conveyor (1), do one of the following:

- Step down to IDLE.
- Turn the machine OFF.

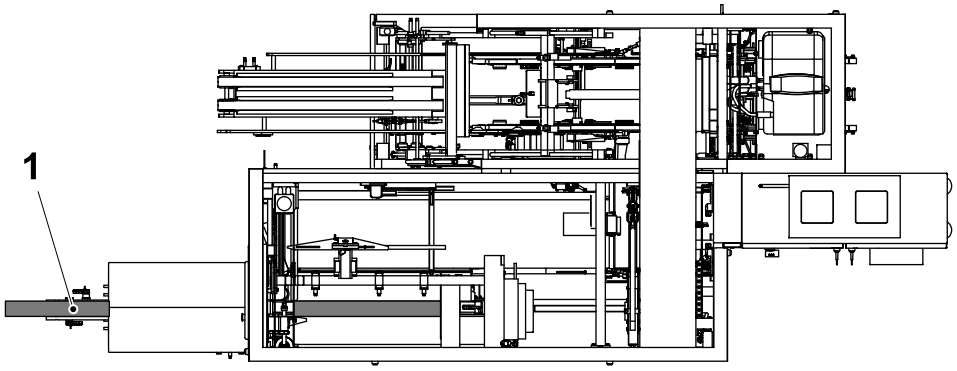

1 Infeed conveyor

Indicating Tower

An indicating tower is a column of warning lights:

- A red light (1) indicates a hazardous condition. This is a situation that requires immediate action.
- A yellow light (2) indicates an abnormal or impending critical condition. This is a condition calling for action by the operator.
- A blue light (3) indicates that operator action is required.
- A green light (4) indicates a normal condition.

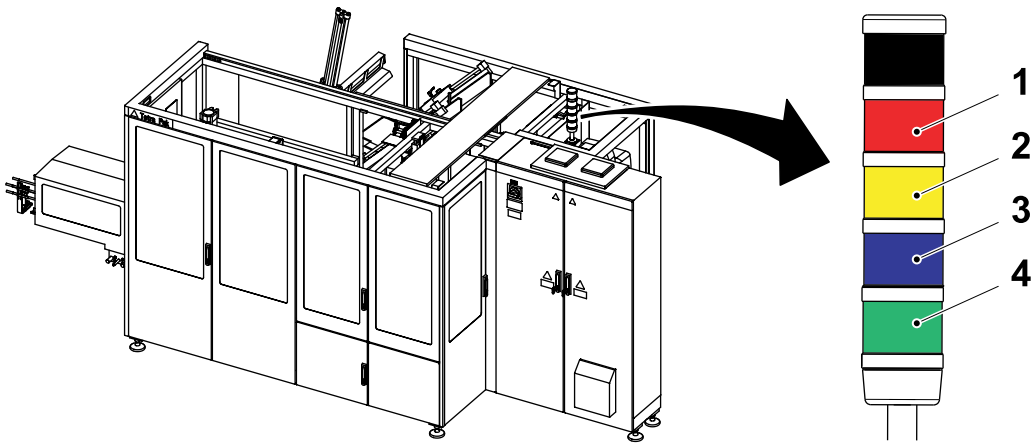

1 Red light
2 Yellow light
3 Blue light
4 Green light

Audible Alarm

The audible alarm (1) produces a warning signal every time this equipment is about to start. The warning signal sounds for approximately three seconds prior to starting to alert personnel.

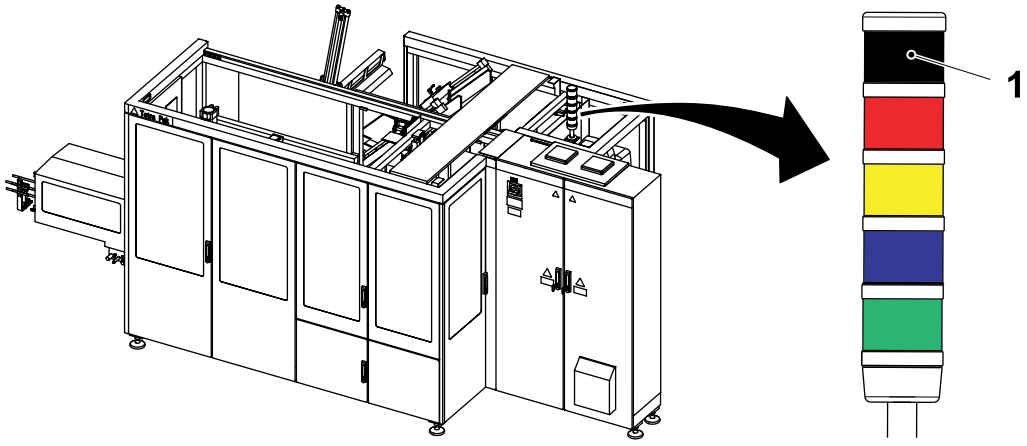

1 Audible alarm

Safe Manual Handling

Use mechanical lifting aids whenever possible. If mechanical lifting aids are not available, do not attempt to lift loads over 23 kg without the assistance of a colleague. Avoid lifting below knee height and above shoulder height. If it is necessary to lift from the floor, follow the instructions below to reduce the risk of back and disc injuries.

- Use safety shoes and be sure that the surface of the floor is not slippery.
- Get close to the load.
- Take a wide stance and find the best positions for your feet.
- Bend your hips and knees, and use your leg muscles.
- Keep the load close to your body.
- Do not twist your body while moving the load.
- Take small steps when turning.

In order to reduce the risk of injury to discs and back muscles, be careful to not bend or twist your back when lifting. Keep the load close to your body to reduce the strain on your back.

To reduce the ergonomic risks to each individual operator, job rotation is recommended, so that recovery and variety are provided.

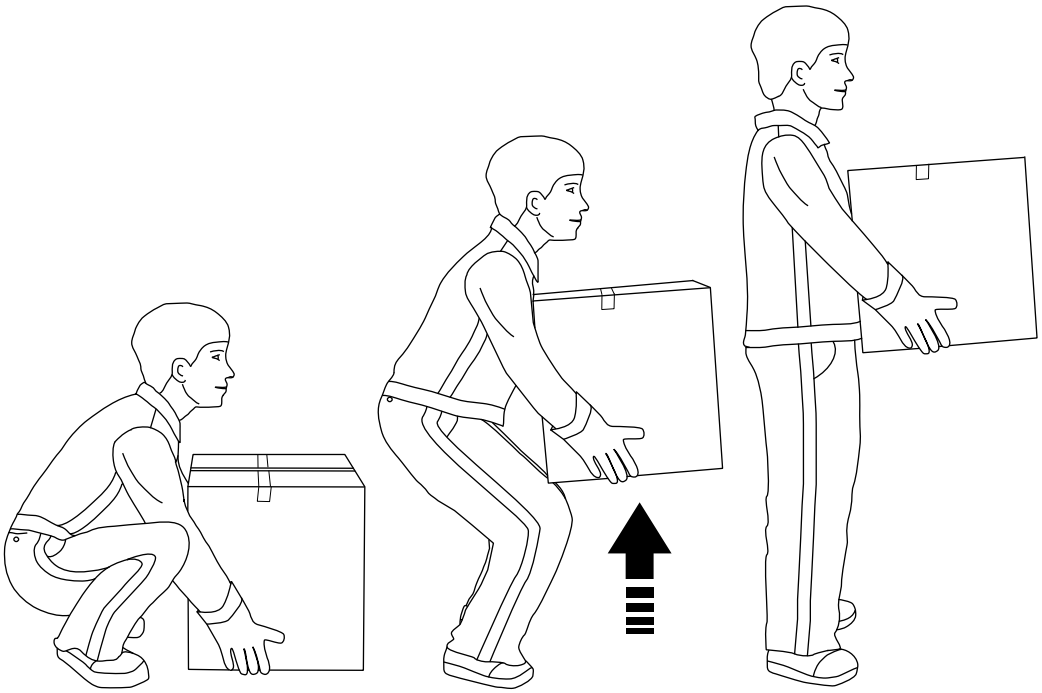

Personal Protection

This section applies to all personnel at all times when this equipment is in operation. For special personal protective equipment required when handling hazardous substances, see the Hazardous Substances section.

Noise

CAUTION

Hazardous noise.
May cause impaired hearing.
Hearing protection is recommended whenever this equipment is in operation.

Entanglement

WARNING

Risk of entanglement.
Do not wear jewellery or loose clothing when working on or near this equipment. Restrain long hair with, for example, clips or rubber bands.

Hazardous Substances

WARNING

Contact with chemicals can cause death, serious injury, or illness.
Always read and follow the instructions in the safety data sheet supplied by the manufacturer or local supplier, when handling chemicals.

Make sure that

- the safety data sheet is available
- the showers work
- an eyewash device, movable or wall-mounted, is available and operational
- additional washing facilities are nearby

Note! Learn the locations of all washing facilities in order to act immediately in case of an accident.





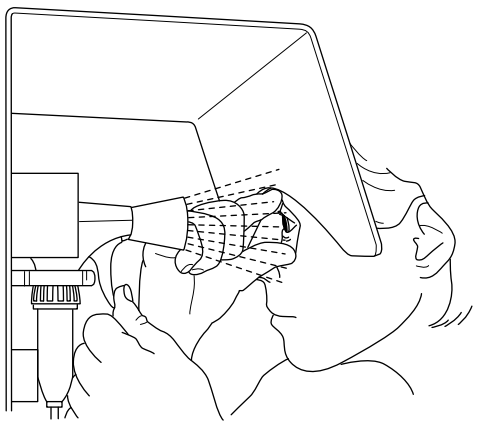

Disposal of Chemical Substances

Always read and follow the disposal instructions in the safety data sheet supplied by the manufacturer or local supplier.

It is strongly recommended that used chemical containers are

- disposed of according to the instructions immediately after use
- not used as disposal containers for other chemicals in order to avoid uncontrolled chemical reactions within the container

Supply Systems

Electrical Supply

DANGER

Hazardous voltage and moving machinery.
The electrical supply disconnecting device must be in position O (OFF) and secured with a lock before any maintenance that requires the electrical supply to be disconnected. See the Machine Status section of the MM Procedure Start Table.

Note! The key to the lock must be removed by the technician and retained in his/her possession until all work is completed.

DANGER

Hazardous voltage can be present with the power supply switched off.
Circuits identified by orange-coloured conductors are not disconnected by the main electrical supply disconnecting device. The location of the electrical supply disconnecting device of these circuits is described in the Maintenance Manual procedures that include work on these types of circuit.

Certain maintenance procedures may require power supply systems to be on. These exceptions are clearly stated in the Maintenance Manual.

The illustrations show the electrical supply disconnecting device and its location.

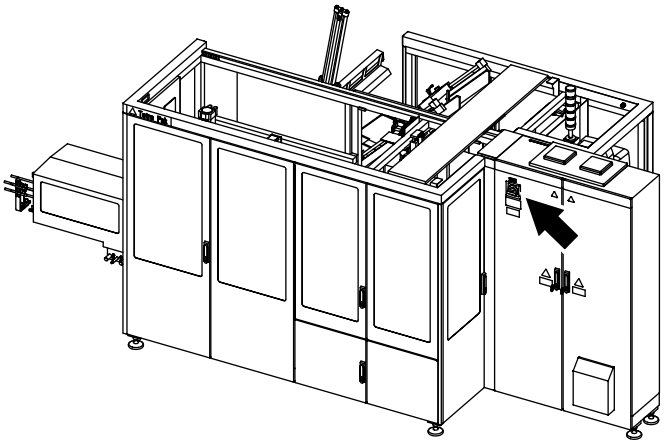

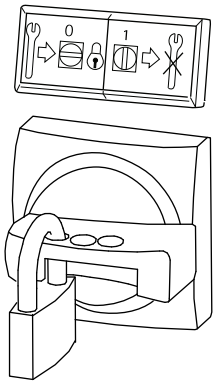

Residual Voltage

DANGER

Hazardous voltage.
Will shock, burn, or cause death.
After the electrical supply disconnecting device is turned to position O (OFF), residual voltage remains in the capacitor circuits. Wait five minutes before opening the enclosure containing these circuits. Ensure that no residual voltage remains on the capacitors before touching them.

Electrical Cabinet

DANGER

Hazardous voltage.
Will shock, burn, or cause death.
Parts behind doors to electrical enclosures may be live. The electrical supply disconnecting device must be turned to position O (OFF) and secured with a lock before performing maintenance inside the electrical cabinet.

Note! The key to the lock must be removed by the technician and retained in his/her possession until all work is completed.

The use of a key or a tool is necessary to access to the electrical cabinet.

Make sure that the electrical cabinet doors are closed after working inside the electrical cabinet. Doors with locks must be locked.

The location of each electrical cabinet is shown by an arrow.

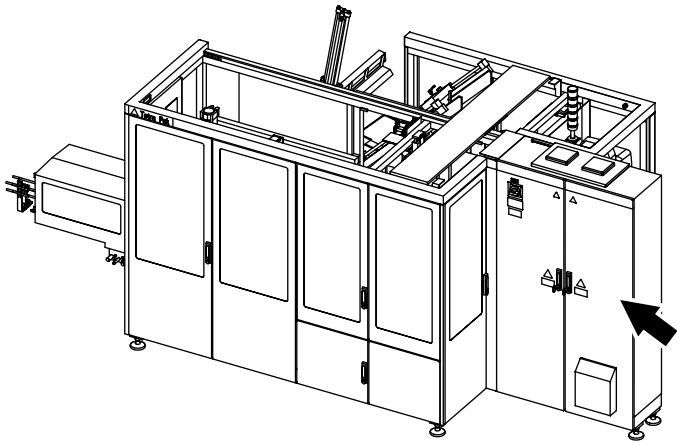

Socket Outlet

WARNING

Hazardous voltage.
Can shock, burn, or cause death.
Read the Maintenance Manual before using this socket outlet.

(Cont'd)

(Cont'd)

The socket outlet (1) is connected to a residual current device (2) to protect users against electrical shock if there is an earth fault in the connected equipment. The residual current device must be tested each time before the socket outlet is being used. See the MM for test procedure.

The illustrations show the socket outlet, the residual current device, and their locations.

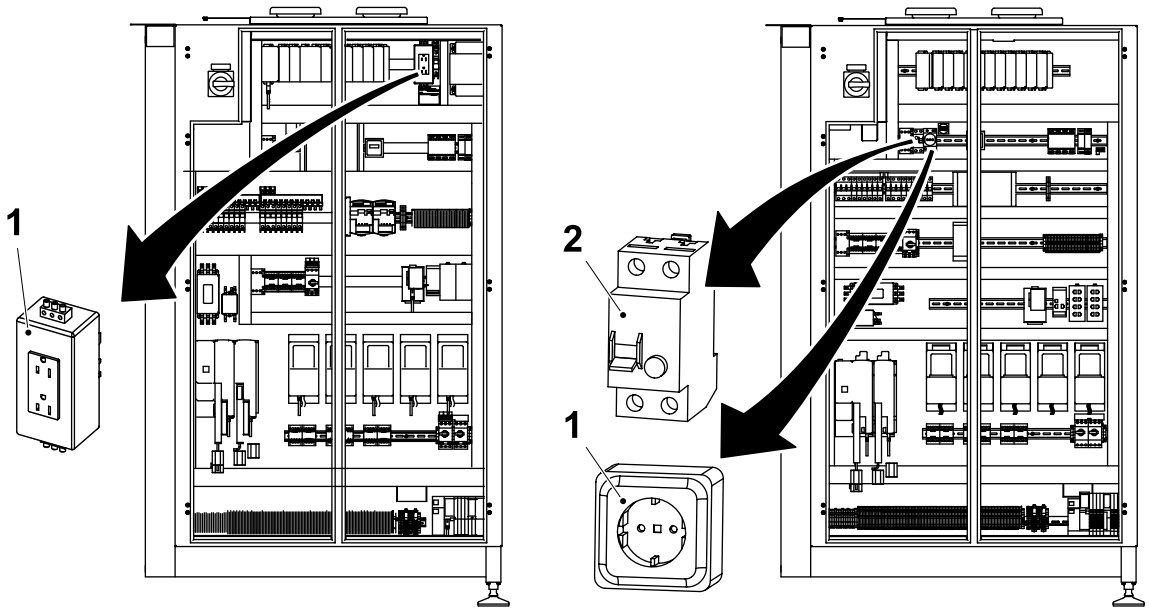

USA and Canada

All countries except USA and Canada

1 Socket outlet
2 Residual current device

Air Supply

WARNING

Compressed air and moving machinery.
Close the air supply valve and lock it, and safely release compressed air from the air system before any maintenance that requires the air supply to be closed. See the Machine Status section of the MM Procedure Start Table.

Note! The key to the lock must be removed by the technician and retained in his/her possession until all work is completed.

Certain maintenance procedures may require air supply systems to be on. These exceptions are clearly stated in the Maintenance Manual.

(Cont'd)

(Cont'd)

The illustrations show the main air valve (1) , the lock (2) , and their location.

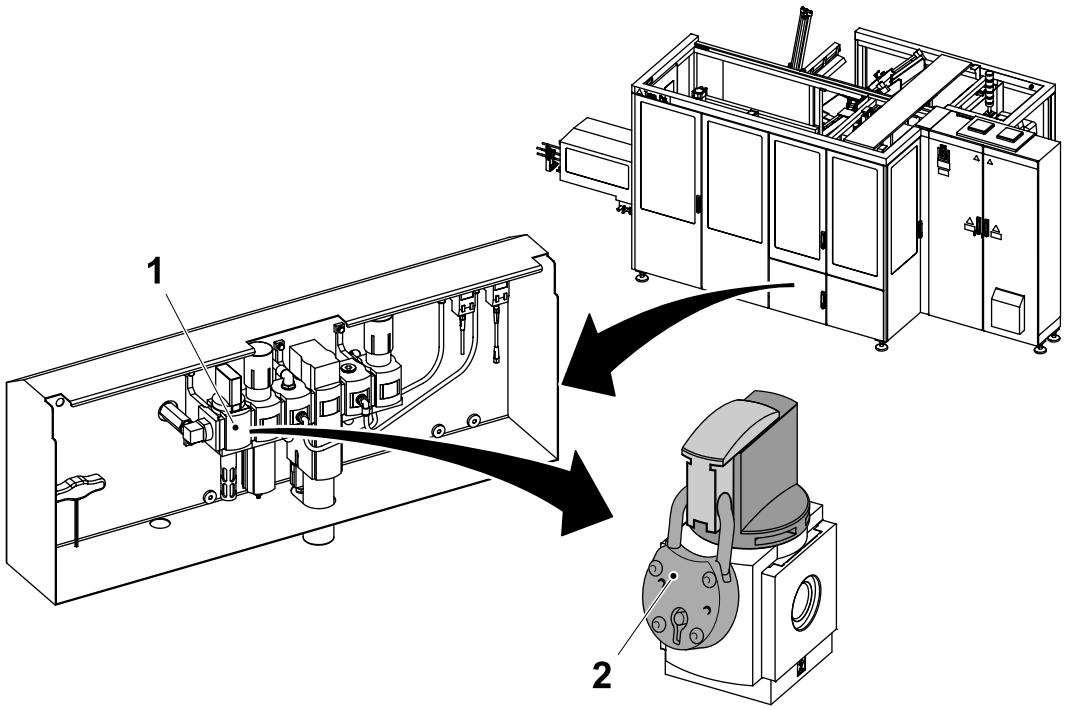

1 Main air valve
2 Lock

Water Supply

CAUTION
Water under pressure.
Close the water supply valves before any maintenance that requires the water supply to be closed. See the Machine Status section of the MM Procedure Start Table.

Certain maintenance procedures may require water supply systems to be on. These exceptions are clearly stated in the Maintenance Manual.

The illustrations show the water supply valve (1), and its location.

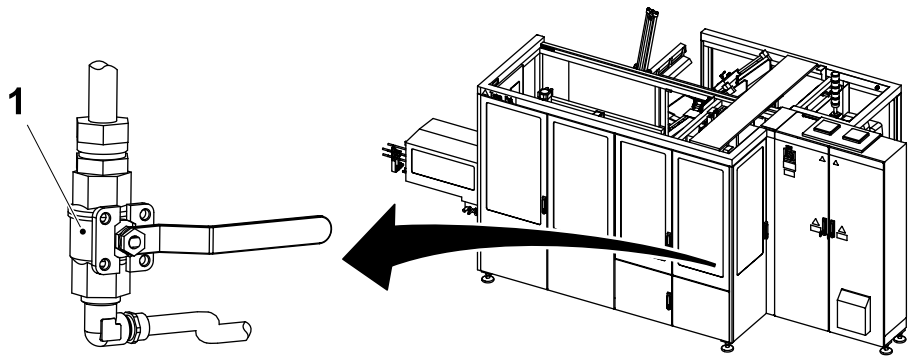

1 Valve

Hotmelt Equipment

DANGER

Hazardous voltage.
The voltage is 400V inside the hotmelt unit. Risk of immediate danger to life through electrical shock.
Never flush water or any other liquid towards the hotmelt unit when cleaning the machine. Failure to obey will result in danger to your life.

WARNING

Risk of injuries.
All service work on the hotmelt unit must be carried out by authorized personnel.
Always wear safety glasses, protective gloves, and other protective clothing to avoid injuries caused by splashing adhesive.

WARNING

Risk of injuries.
Never remove any part or component until air and the electrical supply to the machine have been disconnected and the pressure of the adhesive in the system has been relieved.

WARNING

Risk of burns.
Failure to relieve any remaining air or liquid (adhesive) pressure may cause serious injuries from burning when the hotmelt filter is detached or flushed.

WARNING

Risk of burns.
During heating and production the unit gets hot. The hotmelt tank contains heated adhesive which can cause serious injuries. Do not touch the adhesive.

CAUTION

Risk of burns.
During tank drainage never touch the drain shut.

(Cont'd)

(Cont'd)

WARNING
Burn hazard.
The hotmelt nozzles and their covers are very hot and there is risk of severe burns.
Never touch the hotmelt nozzles or their covers.

Note! The section Hotmelt Equipment in this manual only deals with what is specific for this machine.

Always refer to the documentation provided from Nordson Corporation (included in English in the delivery from Tetra Pak) before doing any kind of work on the hotmelt equipment.

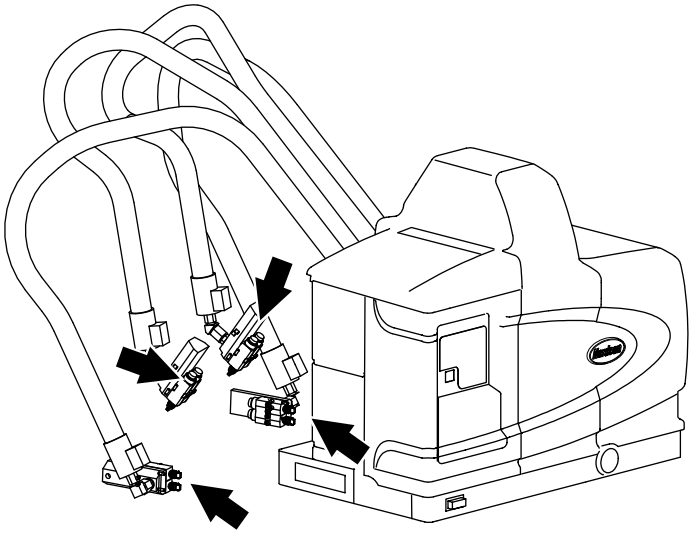

Discharge Unit

CAUTION

Machine directive.

The machine must be equipped, either with one of the optional kits described in the Installation Manual, or with a similar CE marked equipment. The incorporation is to be CE marked within the Line CE marking.

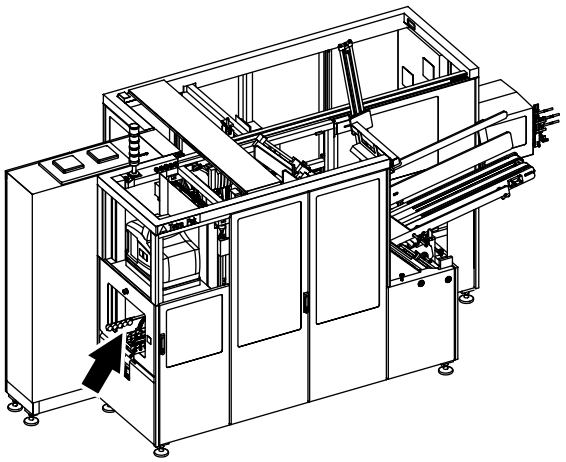

Location of the discharge unit

1 Technical Specification

About the Technical Specifications Chapter

This chapter describes the equipment's technical specification and data. The information is used during the planning and installation of the equipment.

About the Technical Specifications Chapter 1-2

1.1 Installation Data and Specifications 1-7

1.1.1 Installation Drawings 1-7

1.1.1.1 CBP 32 Z-infeed, Front View 1-7

1.1.1.2 CBP 32 Z-infeed, Side View 1-9

1.1.1.3 CBP 32 Z-infeed, Top View 1-10

1.1.1.4 CBP 32 U-infeed, Front View 1-12

1.1.1.5 CBP 32 U-infeed, Side View 1-13

1.1.1.6 CBP 32 U-infeed, Top View 1-14

1.1.1.7 Operating Area 1-16

1.1.1.8 Infeed 1-18

1.1.1.8.1 iLine or Recart (Ethernet) 1-18

1.1.1.8.2 Non iLine Configuration (No Ethernet or Recart) 1-19

1.1.1.9 Infeed with PTr 100 1-20

1.1.2 Space 1-21

1.1.2.1 Lifting and Transportation 1-21

1.1.3 Site Environment 1-22

1.1.3.1 Ambient Temperature 1-22

1.1.4 Crate 1-22

1.1.4.1 Content 1-22

1.1.4.2 Symbols and Marking on the Crate 1-22

1.2 Equipment Data 1-23

1.2.1 Configurations and Limitations 1-23

1.2.1.1 Infeed Conveyors 1-24

1.2.1.2 Discharge Conveyors 1-24

1.2.1.3 Discharge Unit (Optional) 1-24

1.2.1.3.1 Tetra Unit Conveyor 24 - Left/Right Out 1-24

1.2.1.3.2 Tetra Unit Conveyor 24 - Left/Right Out 1-27

1.2.1.3.3 Tetra Roller Conveyor 58 1-29

1.2.1.4 Conveyor Lubrication 1-30

1.2.1.5 Optional Equipment 1-30

1.2.1.6 Change-Over Time 1-31
1.2.2 Mass and Dimensions 1-31
1.2.2.1 Main Machine 1-31
1.2.2.2 Discharge, Optional Equipment 1-31
1.2.3 Capacity 1-32
1.2.4 Consumption 1-32
1.2.4.1 Electrical Power 1-32
1.2.4.2 Compressed Air 1-32
1.2.4.3 Water 1-32
1.2.5 Noise 1-32
1.2.6 Emissions 1-33
1.2.7 Hygiene Function Connection Data 1-33
1.2.7.1 Manual Cleaning 1-33
1.3 Product and Product Material Data and Specifications 1-34
1.3.1 Production Material Specification 1-34
1.3.1.1 Storage 1-34
1.3.1.2 Distribution Units 1-34
1.3.1.2.1 Wraparound Unit 1-35
1.3.1.3 Consumption 1-35
1.3.1.3.1 Blanks Consumption 1-35
1.3.1.3.2 Hotmelt Consumption 1-36
1.3.1.4 Corrugated Board 1-36
1.3.2 Start Up Material 1-37
1.3.3 Production Material 1-37
1.4 Utilities Specification 1-39
1.4.1 Water Supply Specification 1-39
1.4.1.1 Water Quality 1-39
1.4.1.2 Cleaning 1-39
1.4.2 Compressed Air Specification 1-40
1.4.3 Electrical Power Specification 1-40

1.5 Tools, Materials and Consumables Specifications 1-41
1.5.1 Lifting and Transportation Equipment 1-41
1.5.1.1 Specifications for Crated Equipment 1-41
1.5.1.2 Specifications for Uncrated Equipment. 1-41
1.5.2 Tools 1-41
1.5.3 Consumables 1-41
1.6 Mechanical Line Integration and Connection 1-42
1.7 Communication 1-43
1.7.1 Signals when Line Controller 1-43
1.7.1.1 From Line Controller to CBP 32 1-43
1.7.1.2 From CBP 32 to Line Controller 1-43

This page intentionally left blank

1.1 Installation Data and Specifications

1.1.1 Installation Drawings

1.1.1.1 CBP 32 Z-infeed, Front View

To connect extra equipment, see Section 1.2.1.5 Optional Equipment on page 1-30.

Note! The conveyor chain is driven from the machine.

(Cont'd)

(Cont'd)

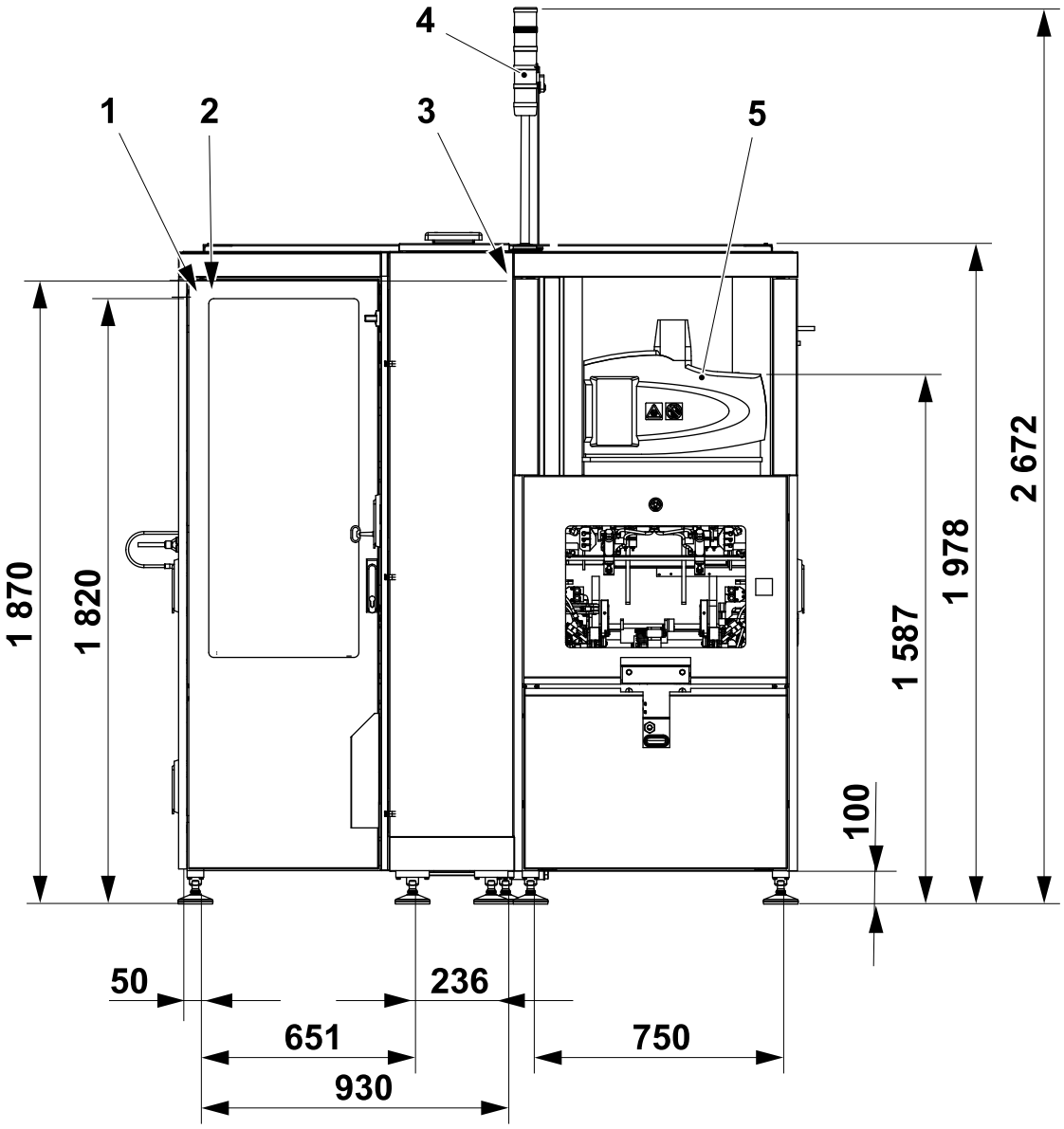

1 Water
2 Air
3 Electricity
4 Warning lamp
5 Hotmelt unit

1.1.1.2 CBP 32 Z-infeed, Side View

To connect extra equipment, see Section 1.2.1.5 Optional Equipment on page 1-30.

The conveyor chain (6) is not included. For required chain length, see the table.

Conveyor type	Required chain length (m)
Package conveyor	3.2
Unit Conveyor	3.4

Note! The conveyor chain is driven from the machine.

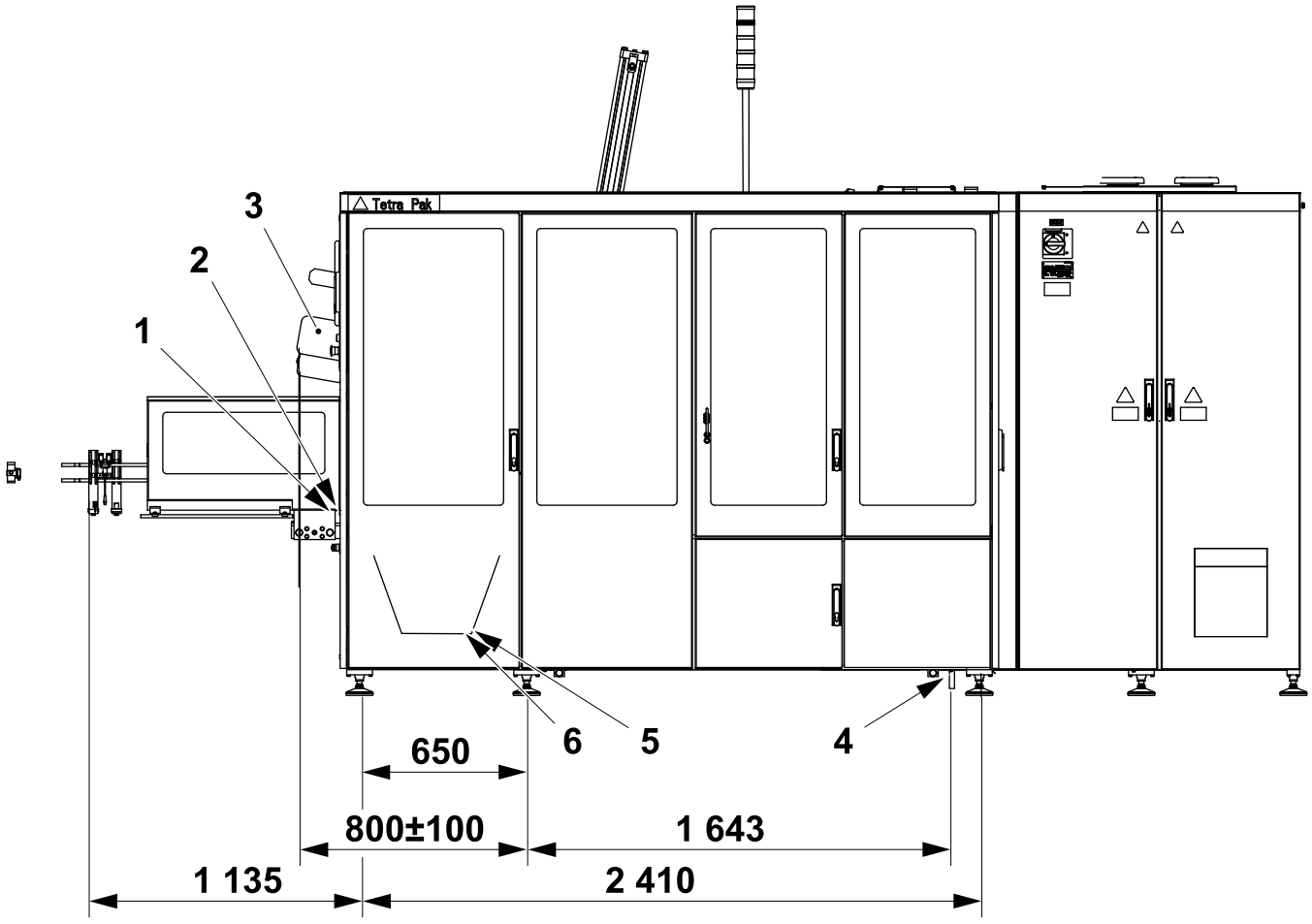

1 Connection point for infeed conveyor
2 Connection for internal conveyor lubrication 342960-133
3 Magazine
4 Drain
5 Chain tensioner (included)
6 Conveyor chain (not included)

1.1.1.3 CBP 32 Z-infeed, Top View

To connect extra equipment, see Section 1.2.1.5 Optional Equipment on page 1-30.

Note! The conveyor chain is driven from the machine.

Connection	Note
Water connection (3) (pistol)	1/2"
Air connection (4)	1/2" or "quick release coupling" Atlas Copco MT15
Electrical connection (5)	Approximately 5 m of cable needed.

(Cont'd)

(Cont'd)

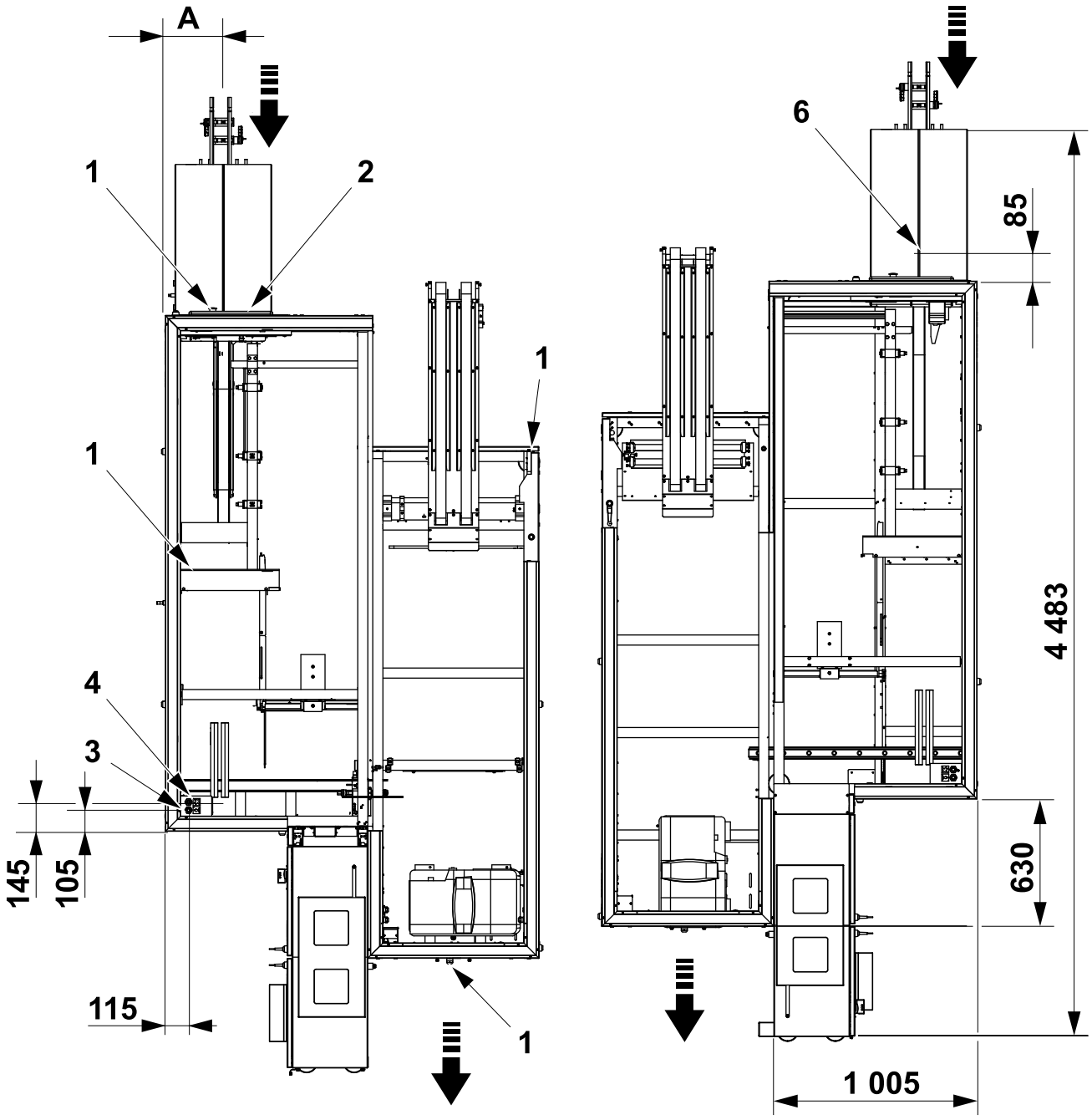

A = 308 mm for TPC 21, TPC 53, and PC 23
A = 280 mm for TUC 54 and UC 24

Z-infeed right

Z-infeed left

1 Emergency stop
2 Control panel
3 Water connection
4 Air connection
5 Electrical connection
6 Connection point for infeed conveyor

1.1.1.4 CBP 32 U-infeed, Front View

To connect extra equipment, see Section 1.2.1.5 Optional Equipment on page 1-30.

Note! The conveyor chain is driven from the machine.

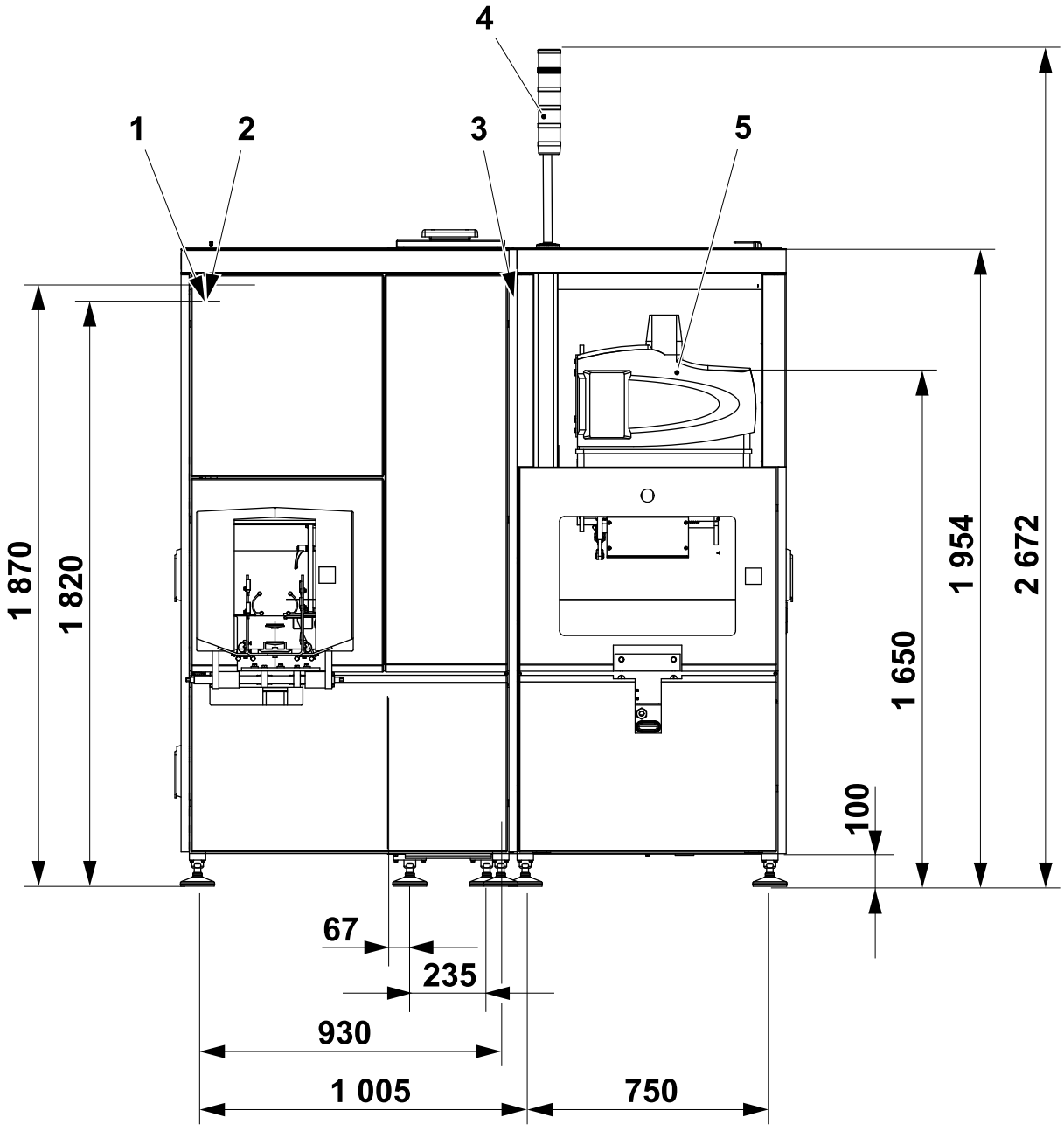

1 Water
2 Air
3 Electricity
4 Warning lamp
5 Hotmelt unit

1.1.1.5 CBP 32 U-infeed, Side View

To connect extra equipment, see Section 1.2.1.5 Optional Equipment on page 1-30.

The conveyor chain (5) is not included. For required chain length, see the table.

Conveyor type	Required chain length (m)
Package conveyor	3.2
Unit Conveyor	3.4

Note! The conveyor chain is driven from the machine.

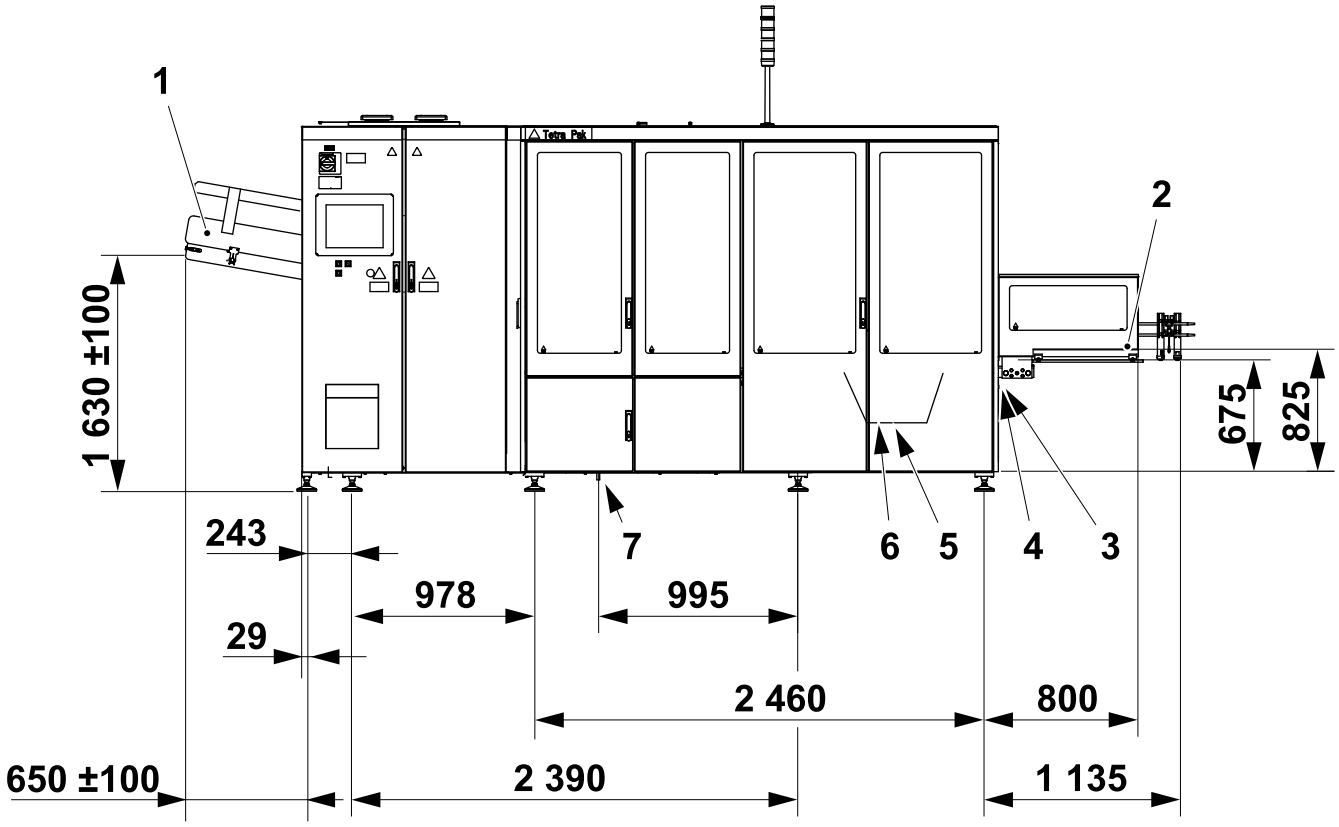

1 Magazine
2 Infeed
3 Connection for air to hose brake
4 Connection for internal conveyor lubrication 342960-133
5 Conveyor chain (not included)
6 Chain tensioner (included)
7 Drain

1.1.1.6 CBP 32 U-infeed, Top View

To connect extra equipment, see Section 1.2.1.5 Optional Equipment on page 1-30.

Note! The conveyor chain is driven from the machine.

Connection	Note
Water connection (3) (pistol)	1/2"
Air connection (2)	1/2" or "quick release coupling" Atlas Copco MT15
Electrical connection (4)	Approximately 5 m of cable needed.

(Cont'd)

(Cont'd)

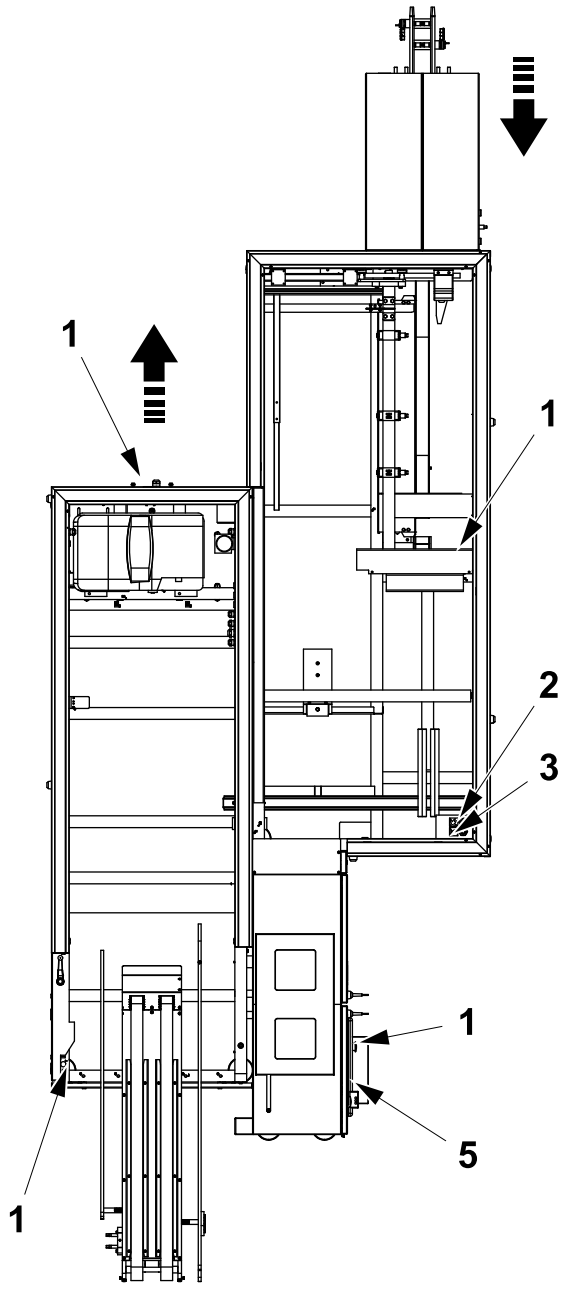

U-infeed right

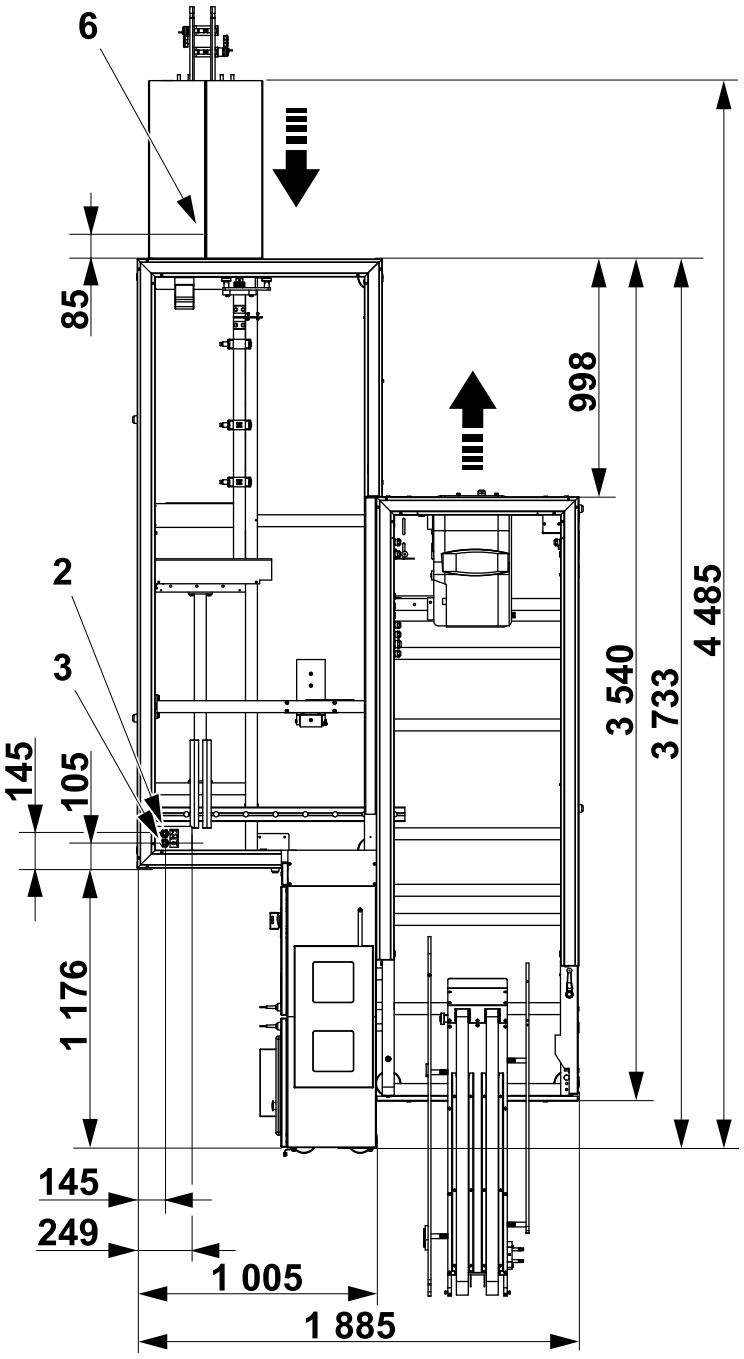

U-infeed left

1 Emergency stop
2 Air connection
3 Water connection
4 Electrical connection
5 Control panel
6 Connection point for infeed conveyor

1.1.1.7 Operating Area

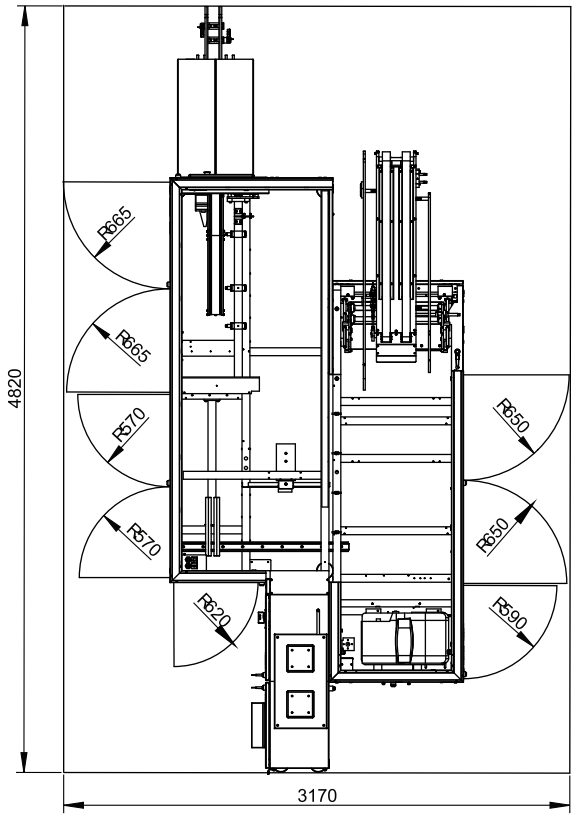

Z-infeed right

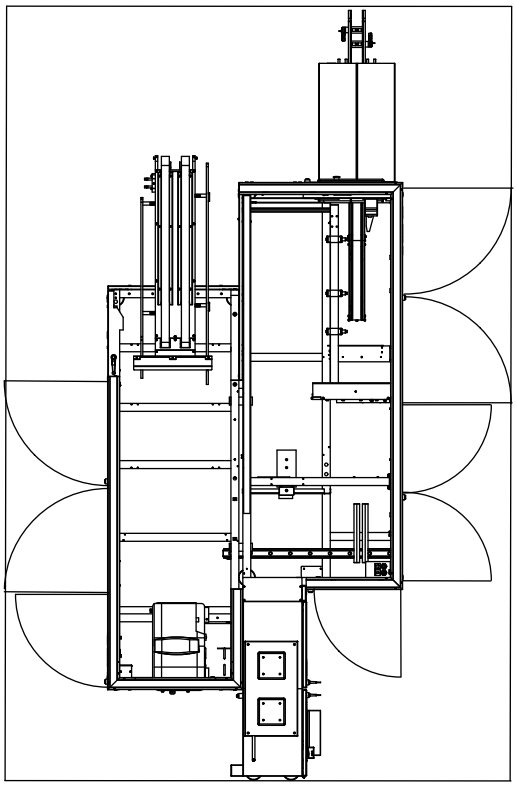

Z-infeed left

(Cont'd)

(Cont'd)

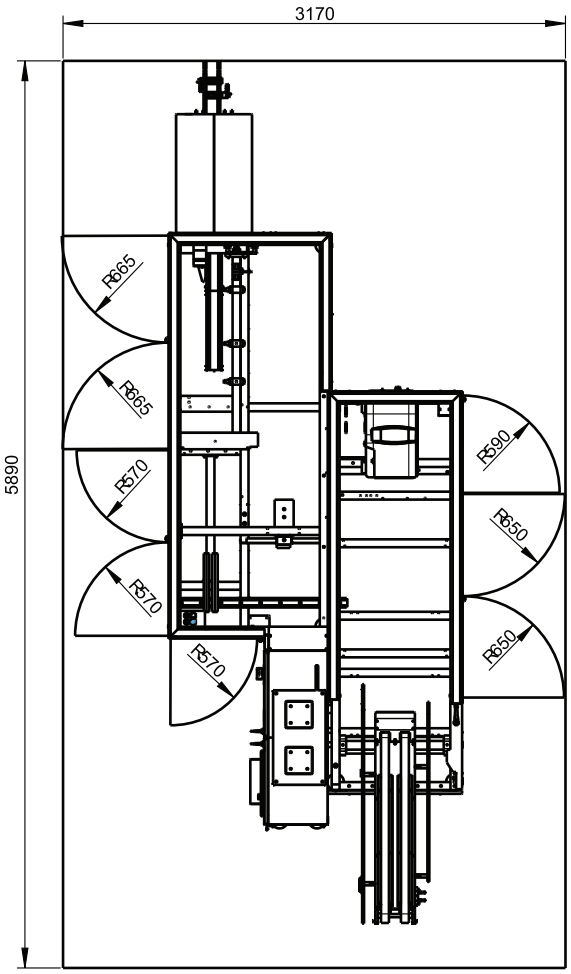

U-infeed left

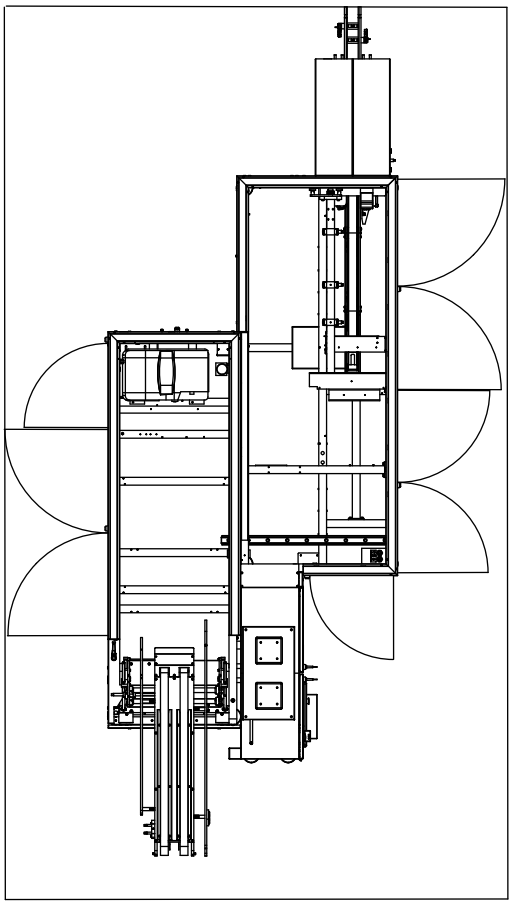

U-infeed right

1.1.1.8 Infeed

1.1.1.8.1 iLine or Recart (Ethernet)

Note! The conveyor chain is driven from the machine.

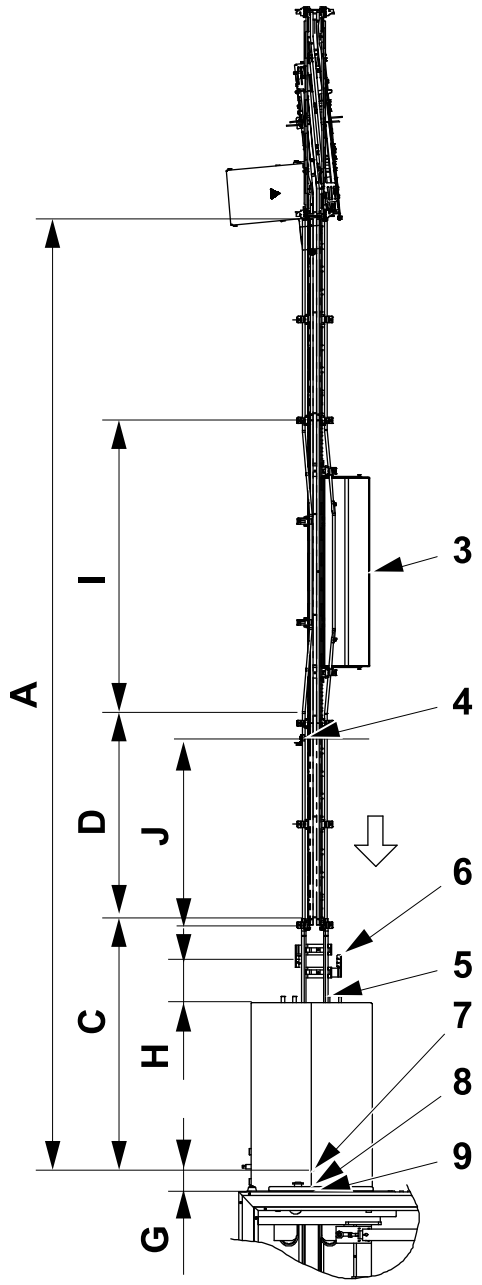

Pos.	Reference designation	Description
3		Package trap alternative conveyor (not included). Mandatory for portion packages.
4	W30B0140	Photocell unit overflow (included).
5		One meter railing (included).
6		Queue guard double (included).
7		Connection point for infeed conveyor.
8		Connection for internal conveyor lubrication 342960-133.
9		Connection for air to hose brake (not valid for this setup).

Distance (mm)	Note
A > 3 000	Max distance between drive and End Unit, see PIM Conveyor.
C = 1 000	Conveyor not included.
D = 1 000	Conveyor not included.
G = 85	
H ≈ 200	
I = 500 or 1 500	Package trap.
J = 900 to 1 100	

1.1.1.8.2 Non iLine Configuration (No Ethernet or Recart)

In absence of the Line Controller, please use this configuration.

Note! The conveyor chain is driven from the machine.

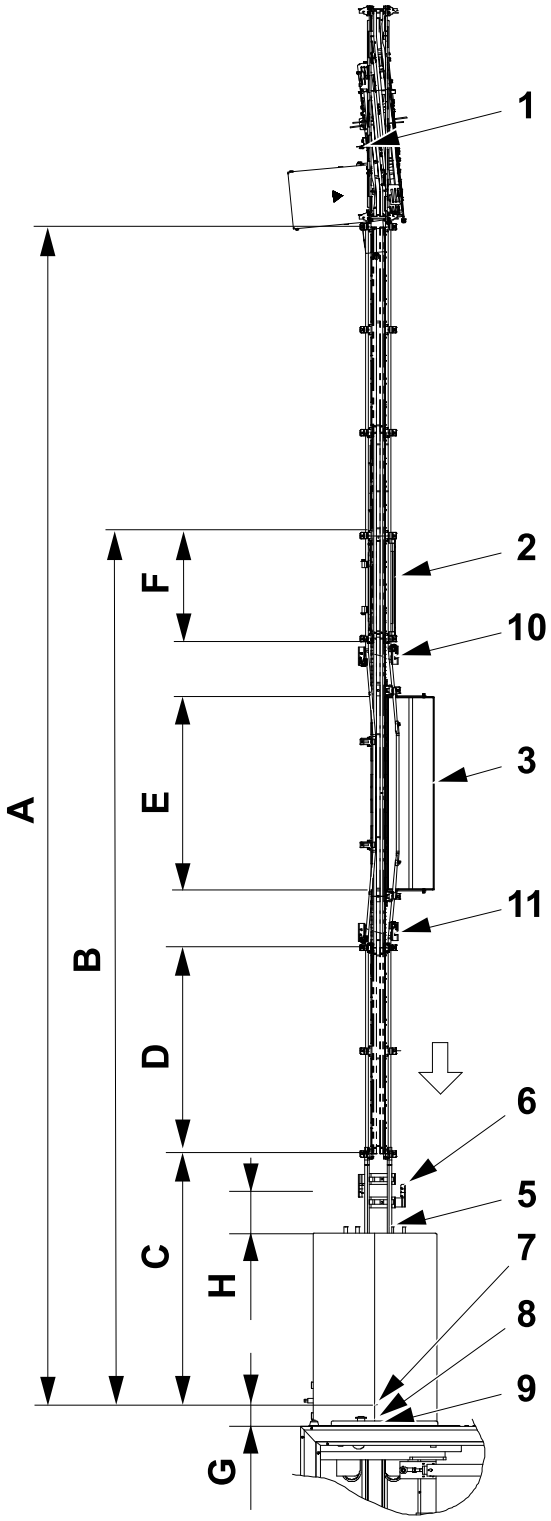

Pos.		Description
1	W10B0906	Photocell unit start conveyor 2802448 (optional equipment) for Line automation choice “Photocell control”.
2	W10K0901	Hose brake (not included). The placement of the hose brake is dependent on the packaging and the lane configuration.
3		Package trap alternative conveyor (not included). Mandatory for portion packs.
5		One meter railing (included).
6		Queue guard double (included).
7		Connection point for infeed conveyor.
8		Connection for internal conveyor lubrication 342960-133.
9		Connection for air to hose brake.
10	W10B0902 W10B0903	Photocell unit (not included): Hose brake dispense control.
11	W10B0904 W10B0905	Photocell unit (not included): Hose brake queue after brake.

Distance (mm)	Note
A ≥ 3 000	Max distance between drive and End Unit see PIM Conveyor
B B > 2 000 B > 3 500	Must be straight conveyor Straight conveyor family packages. Straight conveyor portion packages.
C = 1 000	Conveyor not included.
D = 1 000	Conveyor not included.
E = 1 000	
F = 500	
G = 85	
H ≈ 200	

1.1.1.9 Infeed with PTr 100

Note! The conveyor chain is driven from the machine.

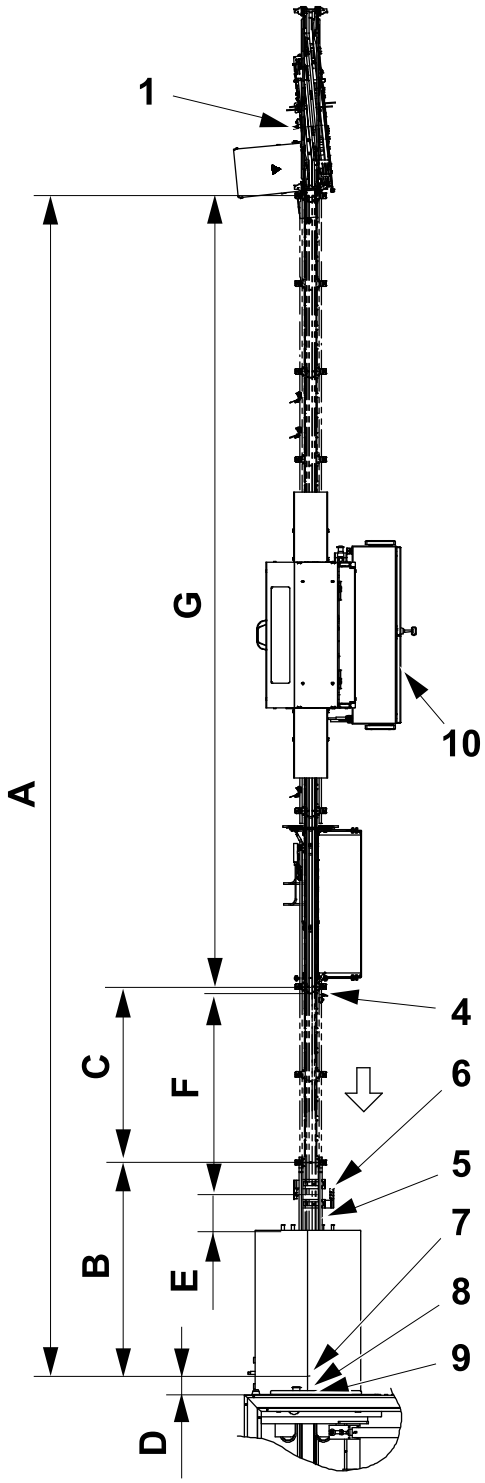

Infeed Right Z-form **Infeed Left U-form**		
Pos.		**Description**
1	W10B0906	Photocell unit start conveyor 2802448 (optional equipment) for line automation choice “Photocell control”.
4	W30B0140	Photocell unit overflow (included), for Ethernet (Line controller) or Recart.
5		One meter railing (included).
6		Queue guard double (included).
7		Connection point for infeed conveyor.
8		Connection for internal conveyor lubrication 342960-133.
9		Connection for air to PTr 100.
10		Package Turner 100 by Tetra Pak (PTr 100).

Distance (mm)	**Note**
A	Maximum distance between drive and End Unit, see PIM Conveyor.
B = 1 000	Conveyor not included.
C = 1 000	Conveyor not included.
D = 85	
E ≈ 200	
F = 900 to 1 000	
G = 4 500	See installation drawing PTr 100.

(Cont’d)

(Cont'd)

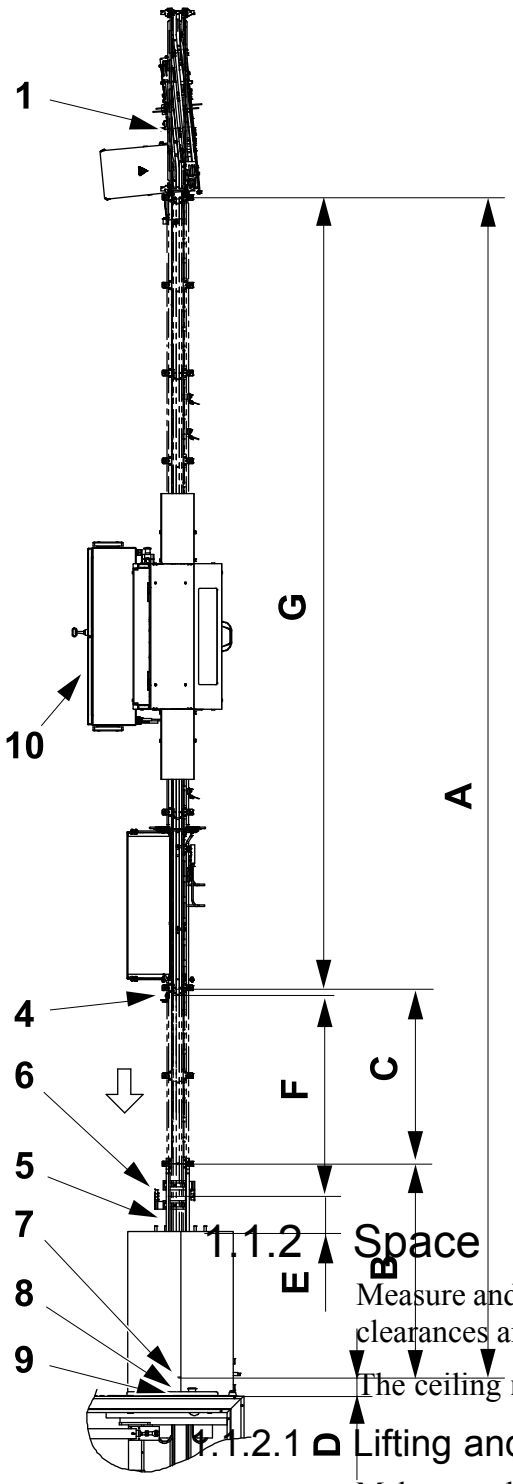

Infeed Right U-form Infeed Left Z-form		
Pos.		**Description**
1	W10B0906	Photocell unit start conveyor 2802448 (optional equipment) for line automation choice "Photocell control".
4	W30B0140	Photocell unit overflow (included) for Ethernet (Line controller) or Recart.
5		One meter railing (included).
6		Queue guard double (included).
7		Connection point for infeed conveyor.
8		Connection for internal conveyor lubrication 342960-133.
9		Connection for air to PTr 100.
10		Package Turner 100 by Tetra Pak (PTr 100).

Distance (mm)	Note
A	Maximum distance between drive and End Unit, see PIM Conveyor.
B = 1 000	Conveyor not included.
C = 1 000	Conveyor not included.
D = 85	
E ≈ 200	
F = 900 to 1 000	
G = 4 500	See installation drawing PTr 100.

1.1.2 Space

Measure and mark the designated position of the machine. For recommended clearances around the machine, see Section 1.1.1 Installation Drawings.

The ceiling **must** be at least 2700 mm.

1.1.2.1 Lifting and Transportation

Make sure that doors and passages are wide and high enough to pass with the equipment.

1.1.3 Site Environment

1.1.3.1 Ambient Temperature

The equipment is specified for an ambient temperature of maximum +40 °C (+104 °F)

The equipment shall be equipped with a cooling device for the electrical cabinet when the ambient temperature exceeds +30 ºC (+86 ºF)..

1.1.4 Crate

1.1.4.1 Content

Crate No.	Content
1	Cardboard Packer 32 Optional equipment as ordered

1.1.4.2 Symbols and Marking on the Crate

Before starting to move or unpack the machine, make sure that everybody involved understands the symbols and warnings, see Section 3.1.1.1 Lifting and Unloading the Crated Equipment.

1.2 Equipment Data

1.2.1 Configurations and Limitations

Machine Variant	Discharge Side
Z-infeed right 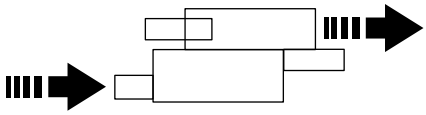	Discharge left or straight. 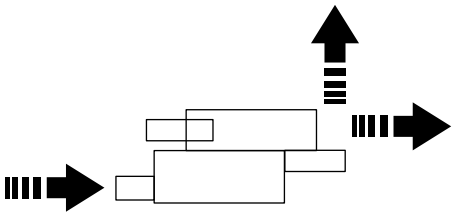
Z-infeed left 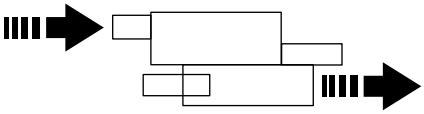	Discharge straight or right. 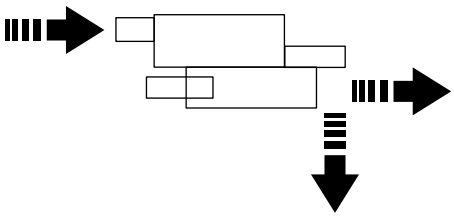
U-infeed right 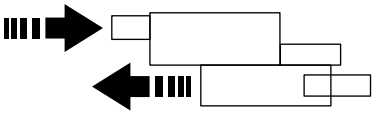	Discharge left or straight. 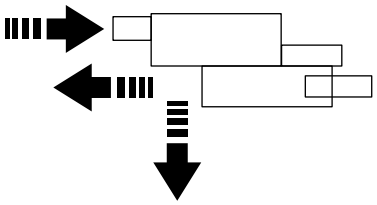
U-infeed left 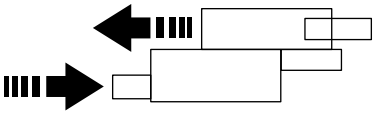	Discharge straight or right. 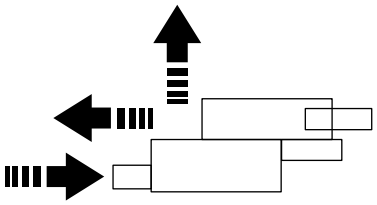

1.2.1.1 Infeed Conveyors

For single packages and multipacks [a)]

Conveyor	Height	Width	Required chain length
Tetra Unit Conveyor 24 Tetra Unit Conveyor 54	See 1.1 Installation Data and Specifications.		3.4 m (excluded)
Tetra Package Conveyor 21 Tetra Package Conveyor 23	See 1.1 Installation Data and Specifications.		3.2 m (excluded)
Chain tensioner on infeed conveyor shall be used with this equipment. Chain tensioner is included for all the conveyor types.			

a) For further information see Chapter 3 Mechanical Completion.

1.2.1.2 Discharge Conveyors

For distribution units[a)]

Conveyor	Discharge side	Height	Width	Required chain length
Tetra Unit Conveyor 24	Right, left	See 1.2.1.3.2 Tetra Unit Conveyor 24 - Left/Right Out		2 m
Tetra Roller Conveyor 58	Straight	See 1.2.1.3.3 Tetra Roller Conveyor 58		-
This machine fulfils the safety demands when light barrier 2834002, cover 2525709 or similar equipment which fulfils Machine directive 2006/42/EC and sub directives is mounted.				

a) For further information see Chapter 3 Mechanical Completion.

1.2.1.3 Discharge Unit (Optional)

WARNING

Safety demands.

Due to the various demands of discharge units, the outlet is covered by a plate that has to be removed and replaced by a safety device that fulfils the Machinery directive 2006/42/EC and sub directives. In order to fulfil the safety demands associated with the CE sign, the machine must be equipped either with one of the Discharge Units described in this manual, or with any similar equipment that also complies with Machine Directive 2006/42/EC and sub directives.

1.2.1.3.1 Tetra Unit Conveyor 24 - Left/Right Out

Note! The discharge unit is **not** included. It is available as option according to the table below.

Note! The machine must be equipped with a light barrier, available as Optional Equipment 2834002-0200.

(Cont'd)

(Cont'd)

Discharge unit	Width	Left out	Right out
Discharge conveyor 2970888-0100		-0101	-0102

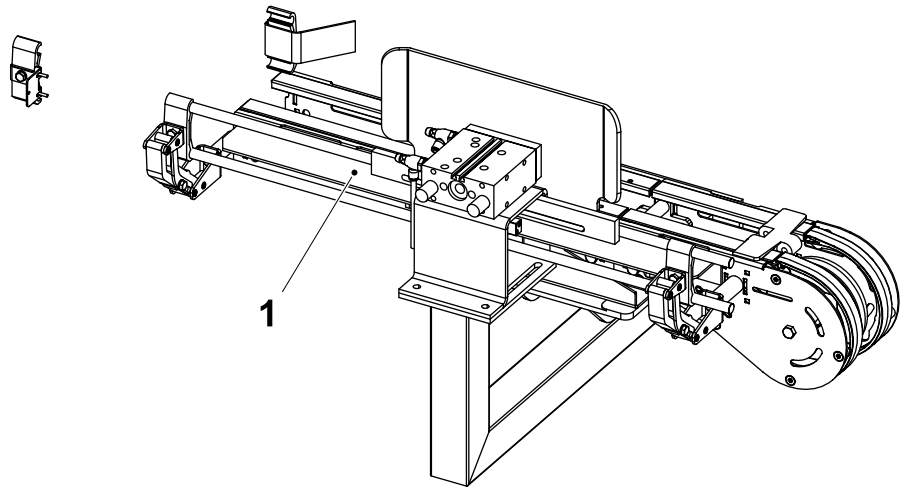

1 Discharge conveyor

(Cont'd)

(Cont'd)

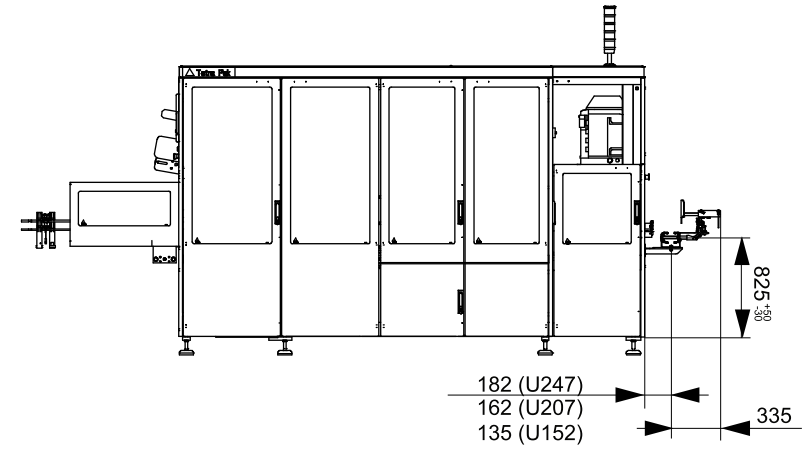

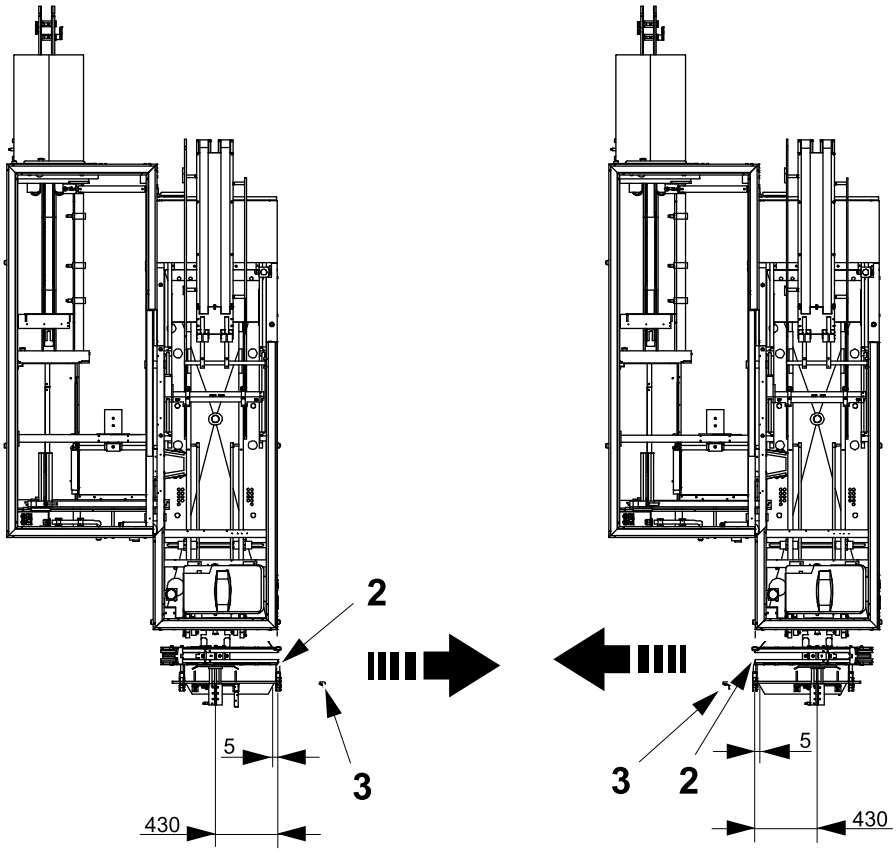

Left out Right out

2 Connection point for unit conveyor

3 Photocell 2970844 and bracket 2970893

1.2.1.3.2 Tetra Unit Conveyor 24 - Left/Right Out

Note! The discharge unit is **not** included. It is available as option according to the table below.

Note! The machine must be equipped with a light barrier, available as Optional Equipment 2834002-0200.

Discharge unit	Width	Left out	Right out
Discharge conveyor 2970888-0100		-0101	-0102

Discharge unit	Left/Right out
Shipping weight	20 kg
Shipping volume	360 dm^3
Required chain length	1.7 m

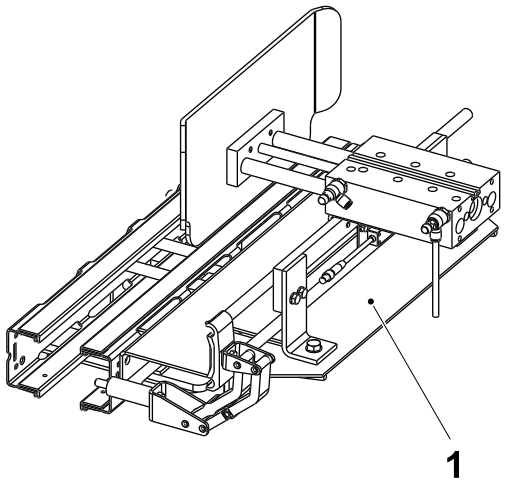

1 Discharge conveyor

(Cont'd)

(Cont'd)

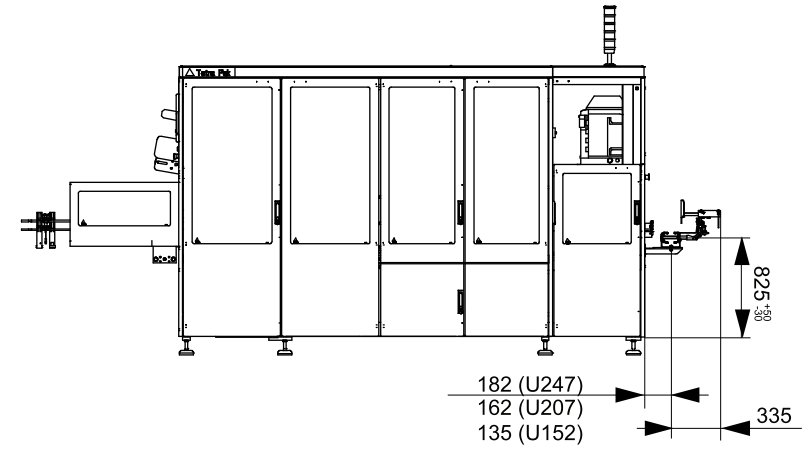

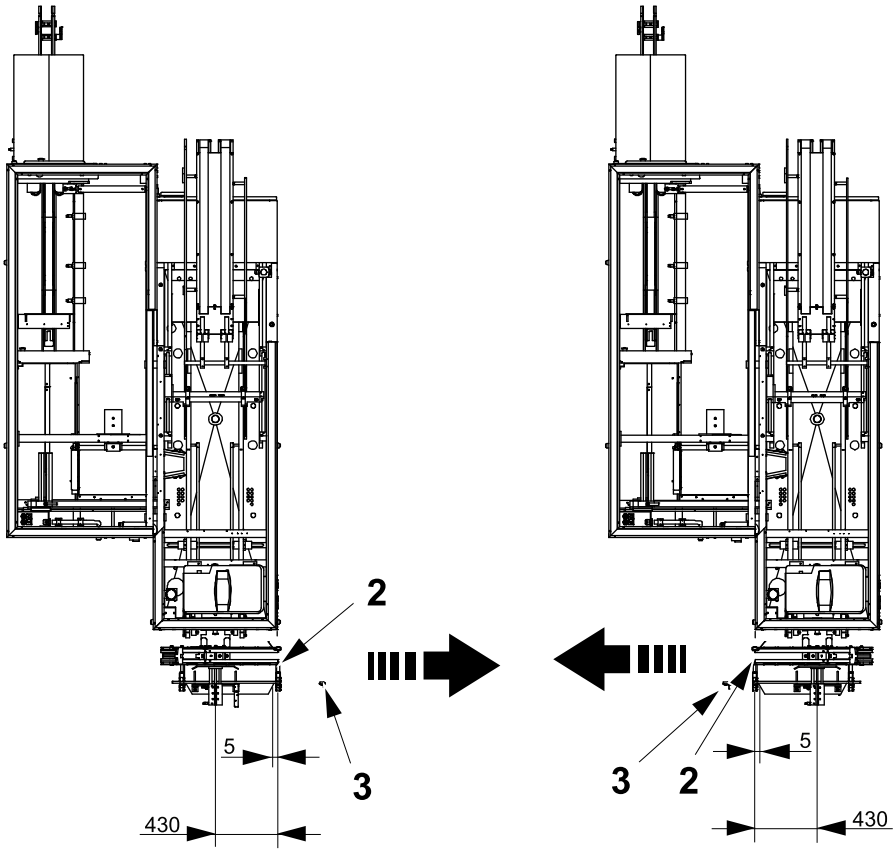

Left out Right out

2 Connection point for unit conveyor

3 Photocell 2970844 and bracket 2970893

1.2.1.3.3 Tetra Roller Conveyor 58

Note! The discharge unit is **not** included. It is available as option according to the table below.

Note! If no discharge tunnel is installed, the machine must be equipped with a light barrier, available as Optional Equipment 2834002-0200.

For discharge right out or left out, no tunnels are available and light barrier must be chosen. For discharge straight out it is possible to choose between tunnel and light barrier.

Discharge unit 2511012-0400	
Discharge tunnel 2525709-0400	
Discharge conveyor 2525710-0200	This roller conveyor is not driven. Leg is included (height 500 to 900 mm).

Discharge unit	
Shipping weight	74 kg
Shipping volume	540 dm^3

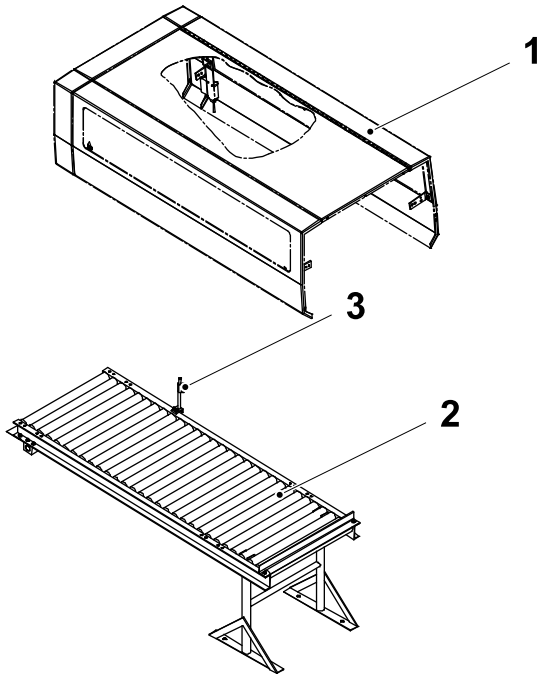

1 Discharge tunnel
2 Roller conveyor
3 Photocell Downstream Queue guard

(Cont'd)

(Cont'd)

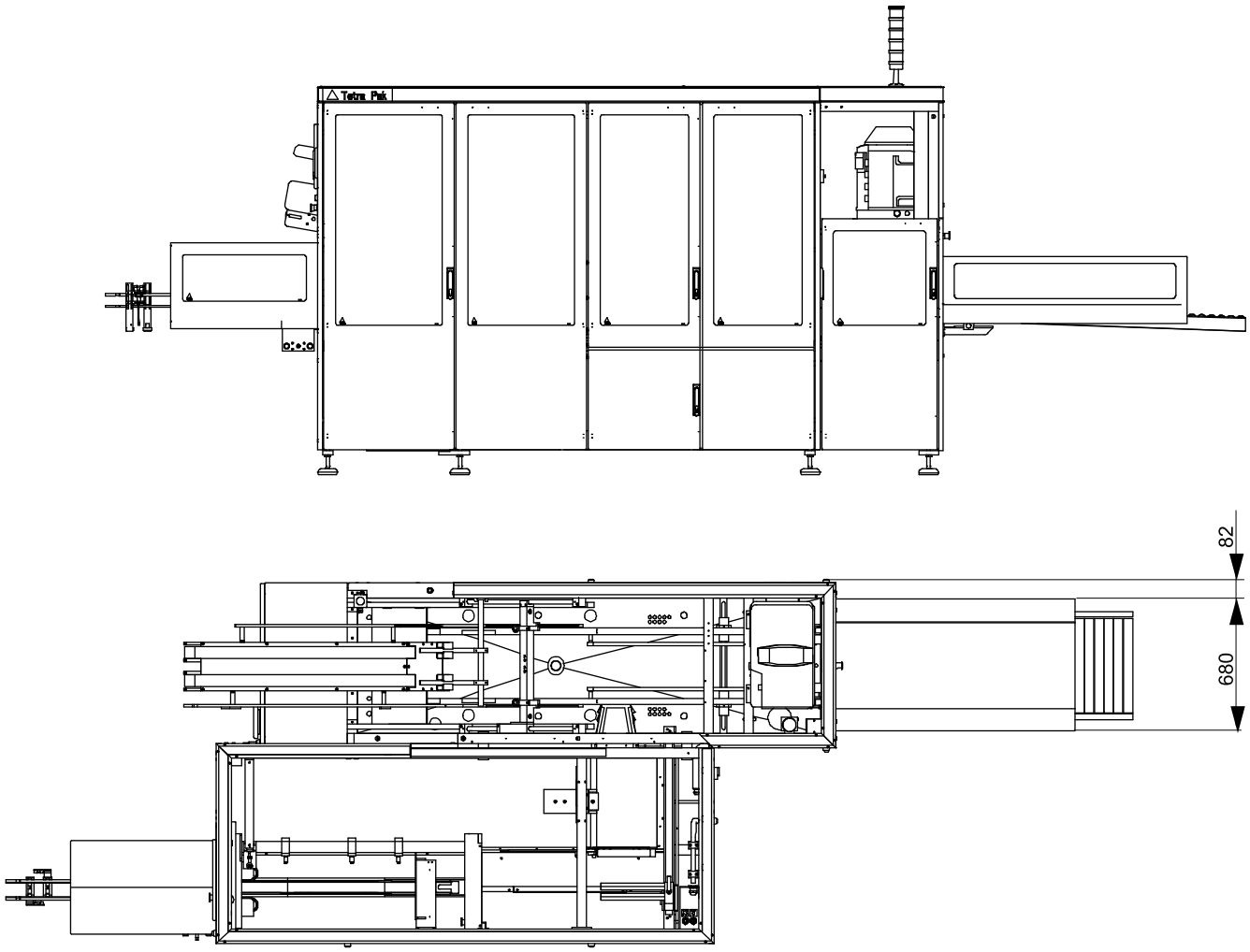

1.2.1.4 Conveyor Lubrication

This section is **only** valid for Tetra Pak conveyors in the production line, **not** for conveyors inside the machine.

Note! In order to have optimized line performance it is **very** important that the conveyor lubrication is set in accordance with the conveyor lubrication technical manual (TeM).

1.2.1.5 Optional Equipment

Type	TP No.	Note
Illumination	1287186-0400	
Light Barrier	2834002-0300	This option must be chosen if using left or right discharge.
Air jet Gun	2802489-0200	
OK Spray Gun	1287076-0300	
Discharge Unit Roller Conveyor	2511012-0400	
Discharge Conveyor	2970888-0200	

(Cont'd)

(Cont'd)

Type	TP No.	Note
Cooling Unit	3263648-0100	The equipment shall be equipped with a cooling device for the electrical cabinet when the ambient installation temperature exceeds +30 ºC (+86 ºF).
Photocell Unit Com. start conveyor	2802448-0300	
6 Channel Hotmelt	3090149-0300	
iLine-XT	3157212-0100	

1.2.1.6 Change-Over Time

Change-over times [b]	
Different package height (different unit height)	15 minutes
Different packing pattern (different unit length)	15 minutes
Different packing pattern (different unit width)	15 minutes
Different packing pattern (different unit width, length and height)	45 minutes
[b] The change-over times are valid for a trained person.	

1.2.2 Mass and Dimensions

1.2.2.1 Main Machine

Machine Variant	Weight (kg)	Length (mm)	Width (mm)	Height (mm)
Z-infeed	1 725 (with WA + 75)	3 600	2 100	2 200
U-infeed	1 725 (with WA + 75)	4 650	2 100	2 200

1.2.2.2 Discharge, Optional Equipment

Note! The discharge unit is not included. It is available as option according to the table below.

Note! The machine must be equipped with a light barrier, available as Optional Equipment 2834002-0200.

Tetra Unit Conveyor 24 - Left/Right Out				
Machine Variant		**Shipping Weight (kg)**	**Shipping volume**	**Required chain length**
Left out	-0101	20	360 dm^3	1.7 m
Right out	-0102	20	360 dm^3	1.7 m

Tetra Roller Conveyor 58				
Machine Variant		**Shipping Weight (kg)**	**Shipping volume**	
Straight		74	540 dm^3	

1.2.3 Capacity

Type	Packages per hour
Family packages (500 ml, 750 ml and 1 000 ml)	<8 000 +20%
Portion packages (200 ml, 250 ml, and 330 ml)	<9 000 +20%

1.2.4 Consumption

For information on utility specifications, see Section 1.4 Utilities Specification.

1.2.4.1 Electrical Power

If the machine is running with PTr 100 the electricity consumption should be added. See the installation manual for PTr 100.

Characteristic	Value	Notes
Consumption	Average 2.0 ± 0.7 kW	Production
	Average 3.0 ± 0.7 kW	Preheating

1.2.4.2 Compressed Air

If the machine is running with PTr 100 the air consumption should be added. See the installation manual for PTr 100.

Characteristic	Value	Notes
Consumption	Average 302 ± 22 l_n/min Peak 1 150 ± 40 l_n/min	Measured at 9 000 p/h, packing pattern 3*5 TBA200B, including WA.

1.2.4.3 Water

Characteristic	Value	Notes
Minimum flow	8 m^3/h	When cleaning.

1.2.5 Noise

CAUTION

Hazardous noise.

Risk of impaired hearing. Hearing protection is recommended whenever this equipment is in operation.

The following table give the noise level measurements for Cardboard Packer 32 machines under the following conditions:

- machine on a concrete floor supported by standard feet
- production under normal operating conditions at 7 000 p/h

Values declared in accordance with ISO 4871			
Symbol	Definition	Declared value	Notes

(Cont'd)

(Cont'd)

L_{WA}	Measured A-weighted sound power level	94.5 dB(A)	Values determined using the basic standard ISO 3744 (Engineering method)
K_{WA}	Uncertainty factor	2.5 dB(A)	
L_{pA}	Emission sound pressure level, operator position	75.5 dB(A)	Values determined using the basic standard ISO 11204 (Engineering method)
K_{pA}	Uncertainty factor	2.5 dB(A)	

1.2.6 Emissions

The Cardboard Packer 32 by Tetra Pak produces no significant emissions to air.

1.2.7 Hygiene Function Connection Data

1.2.7.1 Manual Cleaning

For information of the manual cleaning, see the Care and Cleaning chapter and the Technical Data chapter in the Operation Manual (OM).

1.3 Product and Product Material Data and Specifications

1.3.1 Production Material Specification

1.3.1.1 Storage

Make sure that the storage environment respects the following conditions:

Material	Recommended storage temperature	Recommended storage humidity	Special recommendations
Cardboard	0 to 30°C	Approximately 65%	
Hotmelt	10 to 30°C		The hotmelt can be stored for a maximum of one year. Try to avoid dust and damp in the storage facility. The first box in should be the first box out.

1.3.1.2 Distribution Units

Note! If any other unit is chosen than Tetra Tray, a Wraparound unit is needed.

	Type of distribution unit	Abbreviation
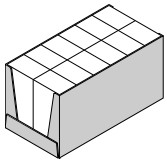	Tetra Tray	Tray
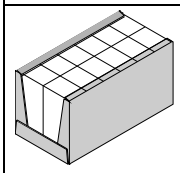	Tetra Tray with Over Flaps	Tray OF
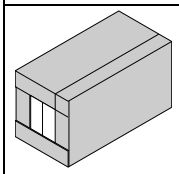	Tetra Wraparound box with Meeting Flaps	WAMF

(Cont'd)

(Cont'd)

	Type of distribution unit	Abbreviation
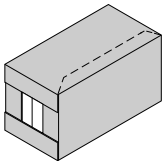	Tetra Wraparound box with Inside top Flap	WAIF
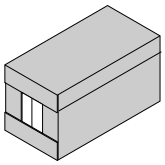	Tetra Wraparound box with Side Flap	WASF

1.3.1.2.1 Wraparound Unit

Note! These units need a Wraparound unit installed in the machine.

Wraparound boxes			
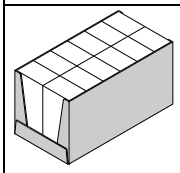 Tray OF	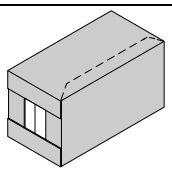 WAIF	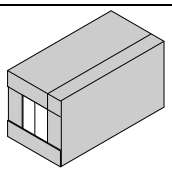 WAMF	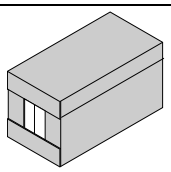 WASF
Different end flap size for the Tetra Wraparound Boxes			
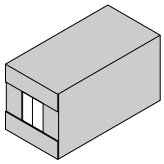 Open end	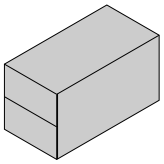 Closed end		
Maximum flap length 85 mm. The machine is set for open end as standard.			

1.3.1.3 Consumption

1.3.1.3.1 Blanks Consumption

Production material	
Consumption:	Blank consumption = A/B (blanks/hour) A: Capacity of filling machine (packages/hour) B: Number of packages/bland

1.3.1.3.2 Hotmelt Consumption

Type of distribution unit	Hotmelt consumption
Tray	0.5 kg/1 000 blanks
Tray OF	1.0 kg/1 000 blanks
WAMF	1.0 kg/1 000 blanks
WAIF	1.5 kg/1 000 blanks
WASF	1.5 kg/1 000 blanks

1.3.1.4 Corrugated Board

Recommended quality: B-Flute	
Edgewise crush:	> 4.2 kN/m
Bursting strength:	>1 000 kPa
Flat crush:	> 250 kPa
Water absorption:	< 28 g/m^2

(Cont'd)

(Cont'd)

Make sure that blanks used in a CBP 32 have:

- crease (1)
- matrix crease (2)
- cut crease (3)

in accordance with Cardboard and Straw official blank drawings. The illustration below shows the blank drawing.

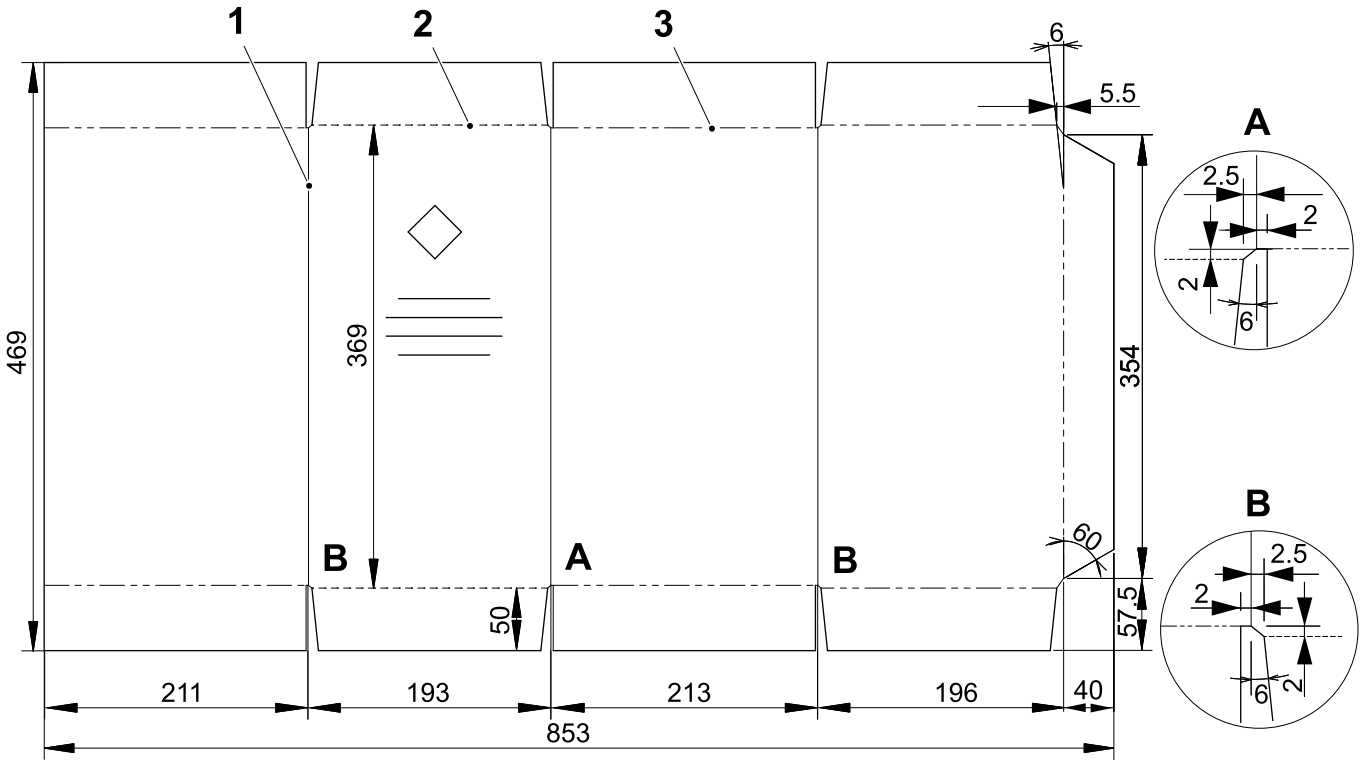

1 Crease
2 Matrix crease
3 Cut crease

1.3.2 Start Up Material

The following material is needed during start up of the equipment.

Material	TP No.	Note
Hotmelt	-	Start-up kit is included with the delivery of the equipment.

1.3.3 Production Material

The following material is needed during production.

(Cont'd)

(Cont'd)

Material	TP No.	Note
Blanks	-	See 1.3.1.2 Distribution Units
Adhesive	-	See Chapter 10 Technical Data in the Operation Manual.
Lubrication oil	-	See Chapter 10 Technical Data in the Operation Manual.

1.4 Utilities Specification

For information on utility consumption, see Section 1.2.4 Consumption.

1.4.1 Water Supply Specification

The table below shows the water pressure when cleaning the machine.

Characteristic	Value	Notes
Water quality	Drinking water	See Section 1.4.1.1 Water Quality
Min. inlet pressure	160 kPa (1.6 bar)	Water pressure when cleaning the machine
Max. inlet pressure	350 kPa (3.5 bar)	

CAUTION

Risk of damage to the equipment.

Deposits due to water of inferior quality circulating in the plant can cause malfunction of vital parts.

- The water supply pipe must be equipped with a master shut-off valve.
- The supply pressure must be constant.
- The hardness of the water used in the plant must conform to the recommended value.

1.4.1.1 Water Quality

In order to ensure good equipment operation and cleanliness, as a minimum, it is highly recommended to use a supply of water to the equipment with drinking water quality. This applies to water used for cooling, product flushing, rinsing and cleaning. A definition and description of drinking water may be found in the documents listed in the table.

Term	Definition According to Geographic Area and Document(s)
Drinking water	**EEA/EU:** COUNCIL DIRECTIVE 98/83/EC **USA:** FDA Title 40 Code of Federal Regulations - CFR Part 141, 142 and 143. **All Countries except USA and EU/EEA:** WHO Guidelines for Drinking Water Quality

1.4.1.2 Cleaning

Hot and cold water must be available for cleaning the machine. For information on the cleaning, see the Chapter Care and Cleaning in the Operation Manual.

1.4.2 Compressed Air Specification

Characteristic	Value	Notes
Air quality	Class ISO 2.4.1	According to ISO 8573-1
Maximum particles size	50 µm	
Supply pressure	700 to 1 000 kPa (7 to 10 bar)	
Connection point	Dim. 1/2” or Atlas Copco MT15	
Connection thread	G 1/2" internal	

1.4.3 Electrical Power Specification

WARNING

This product can cause a current in the protective earthing conductor. The external protective conductor associated with the power supply to this product must have a cross-sectional area of at least 10 mm^2. Where a residual current-operated protective (RCD) or monitoring (RCM) device is used for protection in case of direct or indirect contact, only an RCD or RCM of Type B is allowed on the supply side of this product.

Characteristic	Value	Notes
Supply voltage	400/230VAC ± 10%	
Phase	3/N/PE	Three-phase, five-wire system with a separate neutral and protective conductor.
Frequency	50 or 60 Hz ± 1%	To be specified on order
Full-load current value	16 A	
Short-circuit breaking capacity	5 kA	
Maximum permissible supply source impedance	500 mΩ	
Earth leakage current	10 mA	Depending on the actual site conditions, the actual earth leakage current value may differ considerably from the stated value.
Supply cables, minimum cross-sectional area	6 mm^2	If a matching transformer is used, see "Electrical Manual", chapter 9 "Mains Connection".
Cable type for supply cables	5 x 6G mm^2	If a matching transformer is used, see "Electrical Manual", chapter 9 "Mains Connection".
Control system		Control Logix
Connection		See the Electrical Manual (EM)

1.5 Tools, Materials and Consumables Specifications

See Section 2.2 Tools, Materials and Consumables for information on which phases during installation different tools, materials, and consumables are used.

1.5.1 Lifting and Transportation Equipment

1.5.1.1 Specifications for Crated Equipment

The following types of equipment can be used to lift and move the crates:

- overhead gantry
- mobile crane
- forklift.

Make sure that the lifting equipment compiles with the specifications given in the following table.

Equipment	Lifting capacity kg (lbs)	Notes
Forklift	4 000 (8 800)	3.1 Crate Handling 3.2 Positioning and Assembly

1.5.1.2 Specifications for Uncrated Equipment

Make sure that the lifting equipment compiles with the specifications given in the following table.

Equipment	Lifting capacity kg (lbs)	Notes
Forklift	4 000 (8 800)	3.2 Positioning and Assembly

1.5.2 Tools

The following tools are needed to install the equipment:

Characteristic	TP No.	Note
Spirit level	90243-0163	3.2.2 Levelling
Step ladder		2 m (7 ft.)
Wrench Key Grip 17 mm		To adjust machine feet
Wrench Key Grip 30 mm		To adjust machine feet
Pneumatic or electric powered wrench		

1.5.3 Consumables

For information on lubricants and cleaning compounds, see Chapter 10 Technical Data in the Operation Manual (OM).

1.6 Mechanical Line Integration and Connection

1.7 Communication

1.7.1 Signals when Line Controller

The tables below refers to the signal exchange between the Line Controller and the Cardboard Packer 32 when the machine is set to run towards a Line Controller.

1.7.1.1 From Line Controller to CBP 32

Signal	Machine State and Conditions
Start Production	Cardboard Packer 32 starts producing. The infeed conveyor starts running.
Stop Immediate	Line Controller detected that a machine downstream from the Cardboard Packer 32 has stopped. The Cardboard Packer 32 stops discharging trays immediately, but continues to take in packages until the machine is full.
Normal Stop	Line Controller detected that a machine has stopped upstream from the Cardboard Packer 32. The Cardboard Packer 32 remains active until it has received the fed out packages from the upstreams machine.
End Production	The Line Controller commands the Cardboard Packer 32 to perform an End of Production procedure.
Lubrication	Commands a lubrication procedure during preparation, before starting production.
Cleaning	Commands a cleaning procedure.
Reset package counters	Commands Cardboard Packer 32 to reset LC package counters
Command outfeed capacity	The nominal capacity that Cardboard Packer 32 should use if not in speed mode
Max allowed capacity	The capacity that Cardboard Packer 32 should use when in speed mode

1.7.1.2 From CBP 32 to Line Controller

Signal	Machine State and Conditions
Blocked	Cardboard Packer 32 has stopped because of a fault condition.
Blocking	Cardboard Packer 32 has a fault condition that will eventually stop the machine, but the machine is still in Receive and/or Deliver.
Preparation	Cardboard Packer 32 is powered and is running the preparation procedure but is not ready to receive a start command and can not accept incoming packages.
Ready for Production	Cardboard Packer 32 is ready to start and awaiting a start signal from the line controller. The infeed and normally also the discharge conveyor is stopped. The Cardboard Packer 32 does not accept nor deliver any packages.

(Cont'd)

(Cont'd)

Signal	Machine State and Conditions
Receive	The machine is waiting to receive or receiving packages but not delivering.
Receive and Deliver	Cardboard Packer 32 is delivering trays and can also receive or is receiving packages from an upstream machine.
Deliver	Cardboard Packer 32 is in production and is delivering packages but can not receive any packages.
Overflow	Cardboard Packer 32 is in overflow on the infeed section.
End Production Concluded	The machine has received End production command and has finished to deliver packages (i.e. less than one packing pattern of unprocessed packages are inside the machine).
Normal stop Concluded	The machine has received a NormalStop and has finished to deliver packages (i.e. emptied all sections that can be emptied without running end production).
Not Connected	The bit is on when the "Line controller" control commands are bypassed in the Equipment (by a function in the HMI).
Material request	Signal that material needs to be refilled, Hotmelt, Cardboard or Lubrication oil
Max capacity	The machines maximum capacity for the current packing pattern.
Actual Capacity Outfeed	The speed that Cardboard Packer 32 uses out of the two available from the Line Controller
Packages in	Number of packages counted in (different from PLMS counters)
Packages out	Number of packages counted out (different from PLMS counters)
Recipe list	The list of recipe names in the Cardboard Packer 32 together with the maximum capacity for each recipe
Machine number	Sends the machine number to the line controller
Machine development step	Sends the development step to the line controller

2 Preparatory Requirements

About the Preparatory Requirements Chapter

This chapter describes preparatory requirements and recommendations to ensure a good installation. Its purpose is to help the installation technicians and other involved in the installation project to quickly locate information about the site preparation, including requirements for utility, space, tools, and other required installation equipment, and specific construction details.

About the Preparatory Requirements Chapter 2-2

2.1 Organization and Training 2-5

2.1.1 Resources 2-5

2.1.2 Special Skills 2-5

2.1.3 Special Practices 2-5

2.1.4 Training 2-5

2.2 Tools, Materials and Consumables 2-6

2.2.1 During Installation 2-6

2.2.2 During Start-up 2-6

2.2.3 During Production 2-6

2.3 Maintenance Details 2-7

2.3.1 Tetra Pak Maintenance System (TPMS) 2-7

2.3.1.1 Process 2-7

2.3.1.2 Methodology 2-7

2.3.1.3 Competence 2-8

2.3.1.4 Tools 2-8

2.4 Spare Parts Supply 2-9

2.4.1 Start-Up Parts 2-9

2.4.2 Parts Inventory Management System 2-9

2.4.3 Parts Recommendation Tool 2-9

2.5 Quality Level and Procedures 2-10

2.5.1 Good Manufacturing Practices 2-10

2.5.2 Layout and Practices for a Safe and Ergonomic Workplace 2-10

2.6 Site Preparation 2-11

2.6.1 Building Requirements 2-11

2.6.2 Floor 2-11

2.6.3 Space Requirement 2-11

2.6.4 Utilities 2-12
2.6.4.1 Main Compressed Air Supply Line 2-12

2.1 Organization and Training

2.1.1 Resources

	Personnel	Time	Note
During Installation	1 technician, 1 electrician	Approximately 6 hours	
During Production	1 operator	16 to 128 minutes	Scheduled operator time during production (8 hours)
During Maintenance	Tetra Pak personnel	3.69 hours	Average preventive maintenace during 1 000 hours production
	Final user personnel	3.02 hours	

2.1.2 Special Skills

During the start-up of the equipment, a person with the ability to set up the machine configuration page in the HMI, must be available.

2.1.3 Special Practices

Tetra Pak recommends that Tetra Pak staff and the final users cooperate during installation, commissioning, and validation of the equipment. The cooperation is a part of the training on how to operate and maintain the equipment.

2.1.4 Training

All operators of the equipment must have participated at a Tetra Pak operator training.

2.2 Tools, Materials and Consumables

2.2.1 During Installation

See Section 1.5.2 Tools.

- Spirit level
- Step ladder
- Pneumatic or electric powered wrench

2.2.2 During Start-up

See Sections 1.5.2 Tools and 1.3.1 Production Material Specification.

2.2.3 During Production

Packaging material, see Section 1.3.1 Production Material Specification.

For information on lubricants and cleaning compounds, see Chapter 10 Technical Data in the OM.

2.3 Maintenance Details

Tetra Pak recommends that the Tetra Pak Maintenance System (TPMS) is used. See the TMPS section in the Maintenance Manual for more information.

2.3.1 Tetra Pak Maintenance System (TPMS)

To ensure uninterrupted production it is strongly recommended to use TPMS (Tetra Pak Maintenance System) provided by Tetra Pak. TPMS is the maintenance system for Tetra Pak packaging solutions to support system performance.

The overall scope includes:

2.3.1.1 Process

The Maintenance Process describes in six steps how Maintenance should be handled by Tetra Pak and our Customers.

1. Create Maintenance Recommendations - Documenting the individual tasks that must be performed.

2. Configure Line Maintenance - Consolidating the tasks needed for a particular packaging line configuration.

3. Generate Maintenance Event - Generating the exact tasks for a particular packaging line at a particular time.

4. Plan/Schedule Maintenance Event - Agreeing on the start date and the duration for a particular occasion.

5. Perform Maintenance Event & Feedback - Carrying out the physical maintenance and feeding back the results to the TPMS.

6. Analyse Feedback - Tetra Pak uses the feedback to correct and update global maintenance tasks.

Steps 1 to 3 are carried out by Tetra Pak. Steps 4 to 6 are carried out by both Tetra Pak and the Customer, together or separate.

Customers using the Tetra Pak planned maintenance system receive checklists from their local Tetra Pak office whenever a planned maintenance is due. These checklists are individualised for each of Tetra Pak's customer, according to the type of machine, equipment usage, and maintenance occasion. In addition, the system recommends spare parts, rotation units, tools, and templates according to the statistics collected.

2.3.1.2 Methodology

A Reliability Centred Maintenance approach built on Failure Mode Effect & Criticality Analysis (FMECA) resulting in a mix of condition based, predetermined and corrective maintenance tactics.

2.3.1.3 Competence

The skills and competencies required to set the overall strategy, establish the maintenance recommendations, administer the process, and to perform the physical work. If needed, depending on the sales agreement, make sure that customer's personnel take part in TPMS training.

2.3.1.4 Tools

TPMS On-Line - The global web based maintenance application providing seamless end to end flow of information to facilitate improvements.

- Capturing of all maintenance data performed by Tetra Pak and Customer.
- Analysis of facts consolidated in a global database for continuous improvement.
- Maintenance Recommendations - When and which activities to be performed.
- Maintenance & Operator Manual - How to perform the activities.

2.4 Spare Parts Supply

The spare parts supply must be managed to ensure the availability of needed spare parts. Tetra Pak provides services to support the spare parts supply.

2.4.1 Start-Up Parts

Start-Up Parts is a service that supports the final user of the equipment in optimizing the on-site parts inventory for selected equipment. The services is available during the first 12 months of production or 3000 hours of production. Tetra Pak and the final user regularly analyse parts consumption and optimize the inventory accordingly.

The service gives good parts management, optimized total parts cost, easy access to the right parts at the right time, improved cash flow, and reduced working capital, all of which leads to increased production availability.

2.4.2 Parts Inventory Management System

Parts Inventory Management System (PIMS) has been developed to provide an appropriate level of administration and control of the stock held on the final user's site. The main purpose of the system is to optimize the quantity of stock held, in order to ensure that the correct spare parts are available when needed.

2.4.3 Parts Recommendation Tool

The Parts Recommendation Tool identifies the type and quantity of parts the final user of the equipment should have on hand when installing new equipment. This recommendation focuses on the first 3000 production hours and is based on the final user's operation, equipment, and level of security and risk.

2.5 Quality Level and Procedures

2.5.1 Good Manufacturing Practices

Good Manufacturing Practices (GMPs) are guidelines used by food processing and packaging facilities. Important GMPs are listed below:

- Keep facilities clean and in good repair.
- Use well constructed trash receptacles and keep them clean and in good repair.
- Provide adequate ventilation to minimize odours and vapours.
- Make sure that sewage and liquid waste are drained from the product processing and packaging areas.
- Provide adequate floor drainage for water, cleaning solutions, and product that is released onto the floor.
- Sewers and drains must be accessible for cleaning. Drains should never be located directly underneath the equipment.
- Provide convenient hand washing facilities with warm running water.
- Provide properly designed heating, venting, and air condition (HVAC) systems to reduce the risk of airborne contamination.
- Provide proper personal hygiene apparel as described in your facility's GMPs and operating and safety procedures.

2.5.2 Layout and Practices for a Safe and Ergonomic Workplace

Make sure that the workplace is designed to follow local safety and ergonomics standards.

2.6 Site Preparation

Place the equipment in a working environment that is compatible with the hygienic design and function of the machine. It is recommended that Tetra Pak technical consulting services is involved during the planning stages.

For machine dimensions, space requirements, and utilities specifications, see Chapter 1 Technical Specification.

Note! Installation of the Cardboard Packer 32 machine does not require advanced site preparation.

2.6.1 Building Requirements

See QAM-588013-010X Guidelines for the Hygienic Production of Liquid Food – Site & Building Recommendations for recommendations regarding:

- Design for sanitations
- Floors
- Drains and gutters
- Walls
- Ceiling
- Pipe support system
- Doorways
- Lighting
- Associated equipment
- Water supply
- Chemical storage
- Sewage and liquid waste
- Waste
- Sanitary waste
- Hand washing facilities
- Toilets

2.6.2 Floor

It is necessary that the machine stands firmly on the floor to obtain a proper production. The floor must be in a good state.

2.6.3 Space Requirement

For space required, see Sections 1.1.1 Installation Drawings and 1.1.2 Space.

2.6.4 Utilities

2.6.4.1 Main Compressed Air Supply Line

The main air supply line should be in a form of a ring which runs through the premises; this will allow the users of air to receive it from two directions (see illustration).

There should be a drop of 5 to 10 mm per metre in the flow direction. Underneath the lowest point in the ring, a condensate drain cock (3) is to be fitted.

The output connections (2) to the users should be fitted on the topside of main line piping; this will keep condensation and dirt from following the air into the user device.

There should also be a pressure gauge (5) to make it possible to check that correct air pressure is maintained.

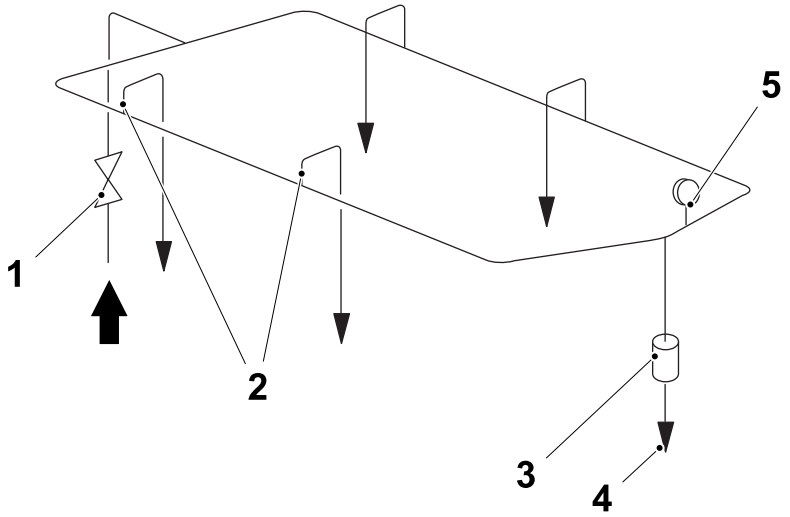

1 Shut-off valve
2 Output connection
3 Condensate drain cock
4 Condensate water
5 Pressure gauge

The diameter of the main line piping depends on its length as well as the number of pipe bends and elbows, connections and valves in the line. The higher the number of components through which the air must pass, the larger the pipe diameter must be to prevent excessive pressure drop up to the points where the air is used.

For precise calculations, always consult experts on the subject. The pipe lines should be installed so they are easily accessible to check that they are airtight.

3 Mechanical Completion

About the Mechanical Completion Chapter

This chapter describes the mechanical completion of the equipment. The mechanical completion covers all activities from receipt of the equipment until the equipment is mechanically installed. The mechanical completion activity is finalized when a mechanical completion certificate is signed.

The chapter includes procedures to receive, assemble, and install the equipment. It also includes a checklist used to verify that the equipment is mechanical correctly installed.

About the Mechanical Completion Chapter 3-2

3.1 Crate Handling 3-5

3.1.1 Goods Reception 3-5

3.1.1.1 Lifting and Unloading the Crated Equipment 3-5

3.1.1.2 Inspection 3-6

3.1.1.3 Location of Packing List 3-6

3.1.1.4 Fork Lift Points and Centre of Gravity 3-6

3.1.2 Moving the Crated Equipment 3-7

3.1.2-1 Moving the Crated Equipment 3-7

3.1.2.1 Lifting Devices 3-7

3.1.3 Delivery Checks 3-7

3.1.3.1 Inspection 3-8

3.1.4 Storing the Crated Equipment 3-8

3.1.5 Opening the Crate 3-9

3.1.5-1 Opening the Crate. 3-9

3.1.6 Unpacking the Crate 3-13

3.1.7 Disposal of Reusable Material and Waste 3-13

3.1.7.1 Reusable Packing Materials and Structures 3-13

3.1.7.2 Non Reusable Packing Materials and Structures 3-13

3.2 Positioning and Assembly 3-14

3.2.1 Moving and Positioning 3-14

3.2.1.1 Centre of Gravity Point. 3-14

3.2.1.2 Fork Lift Position 3-16

3.2.2 Levelling 3-17

3.2.3 Assembly 3-18

3.2.3.1 Warning Lamp 3-18

3.2.3.2 Infeed Conveyor 3-18

3.2.3.2.1 Railing 3-20

3.2.3.2.2 Queue Guard, Double 3-21

3.2.3.2.3 Units on the Infeed Conveyor Depending on Line Automation 3-22

3.2.3.2.4 Tunnel 3-23
3.2.3.3 Hose Brake (Not Included in the Machine) 3-25
3.2.3.4 Internal Conveyor Lubrication 3-25
3.2.3.5 Discharge Safety Device 3-26
3.2.3.6 Queue Downstream Photocell Unit 3-27
3.2.3.7 Optional Equipment 3-28
3.2.3.7.1 Discharge Unit for Tetra Unit Conveyor 24 3-28
3.2.3.7.1-1 Discharge Unit for Tetra Unit Conveyor 24 - Install 3-28
3.2.3.7.1-2 Discharge Support - Set 3-30
3.2.3.7.2 Discharge Unit for Tetra Roller Conveyor 58 3-32
3.2.3.7.2-1 Discharge Unit for Tetra Roller Conveyor 58 - Install 3-32
3.2.3.7-1 Cooling Unit - Install 3-33

3.3 Equipment Interfaces and Connections 3-38
3.3.1 Utility Connections 3-38
3.3.1.1 Inlet/Outlet Connections for Compressed Air and Water 3-39
3.3.1.1-1 Inlet/Outlet Connections for Compressed Air and Water 3-39
3.3.1.2 Electrical Power Connections 3-40
3.3.1.2-1 Main Power Supply Cable 3-41
3.3.1.3 Ethernet Cable 3-42
3.3.1.4 SNP cable 3-43
3.3.1.5 Line communication (X90 relay) cables 3-43

3.4 Restore Tools and Site 3-44

3.5 Mechanical Completion Inspection 3-45
3.5.1 Mechanical Completion Checklist CBP 32 3-47
3.5.1.1 Equipment Interfaces and Connections CBP 32 3-48
3.5.1.2 Mechanical Completion Inspection CBP 32 3-48

3.1 Crate Handling

3.1.1 Goods Reception

Inspect the crate for signs of damage. If any signs of damage are found, follow the appropriate local regulations, and contact the transportation company.

The crates are designed for transportation only. Unpack the crates as soon as possible.

3.1.1.1 Lifting and Unloading the Crated Equipment

Before starting to move or unpack the machine, make sure that everybody involved understands the symbols and warnings.

Symbol	Meaning
	Centre of gravity
	Lifting points for chains, cables, ropes or slings.
	This way up
	Fragile
	Keep dry
HANDLE WITH CARE	“Handle with care” warning
NOT TO BE DROPPED	“Not to be dropped” warning
	“Do not stack on top” warning
GROSS KG.	“Gross weight” value
NET KG.	“Net weight” value
REMOVE THIS SIDE FIRST	“Remove this side first” first side to remove from crate. **Note!** This is an additional label that does not exist on all crates.

3.1.1.2 Inspection

Visually inspect the crates for outer damage. If any damage to the crate has occurred during transportation, create a discrepancy notification in SAP/R3 using transaction code IW51 (Create Service Notification).

Take photographs of the damage and enclose the photographs with the discrepancy notification.

3.1.1.3 Location of Packing List

For the location of the packing list, see Section 3.1.3 Delivery Checks.

3.1.1.4 Fork Lift Points and Centre of Gravity

DANGER

Risk of crushing.
The crate may tilt if not observing the centre of gravity or the fork lift points. Failure to observe may result in immediate danger to life and/or major damage to equipment.

The crate is marked with centre of gravity symbol (1).

The lifting forks (2) must be positioned at equal distances from the symbol when lifting the crate. The forks should be set as wide as possible.

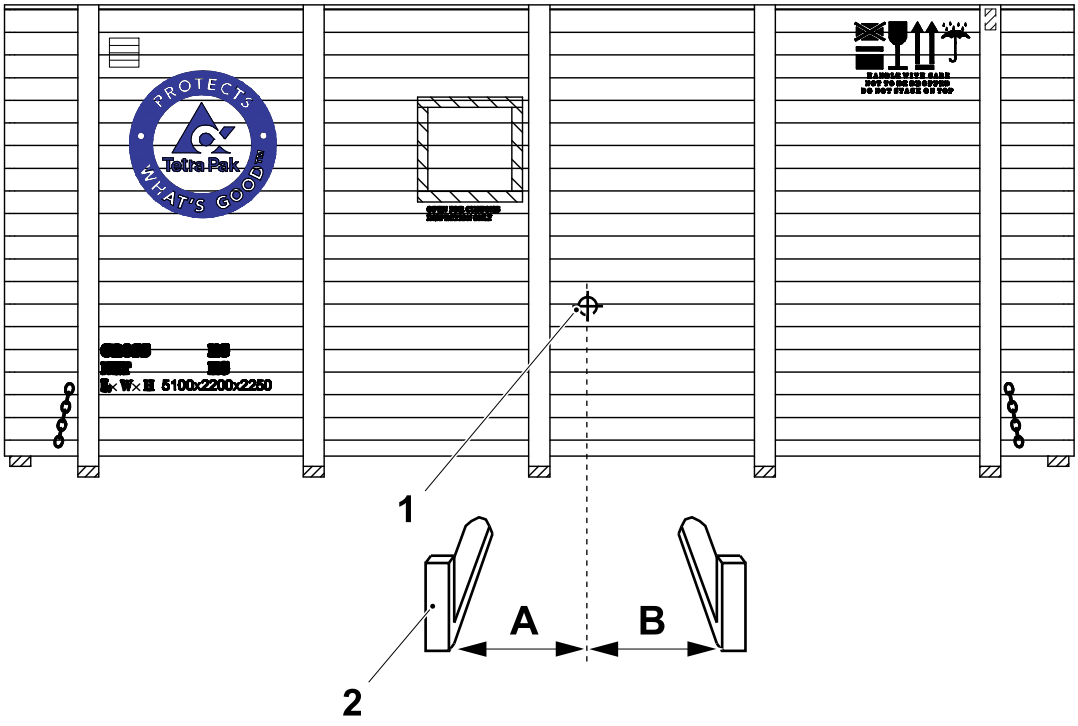

A = B

1 Centre of gravity symbol
2 Lifting fork

3.1.2 Moving the Crated Equipment

3.1.2-1 Moving the Crated Equipment

a) Lift the crate. Lift only enough to clear the floor.

b) Make sure that the crate remains stable on the lifting equipment.

c) **CAUTION**
Move the crate slowly and gently.
Move the crate to its destination.

d) Look through the customs inspection panel to see in what way the contents are facing. Position the crate to face the most convenient direction.

e) Lower the crate gently to the floor, leaving enough room around it for easy access to all sides.

f) Make sure that the crate is firmly supported. Put blocks or plates under it if necessary.

g) Remove the lifting equipment.

3.1.2.1 Lifting Devices

See Section 1.5.1.1 Specifications for Crated Equipment before lifting and unloading.

3.1.3 Delivery Checks

The packing list is located inside the inspection hatch. See the arrow in the illustration below.

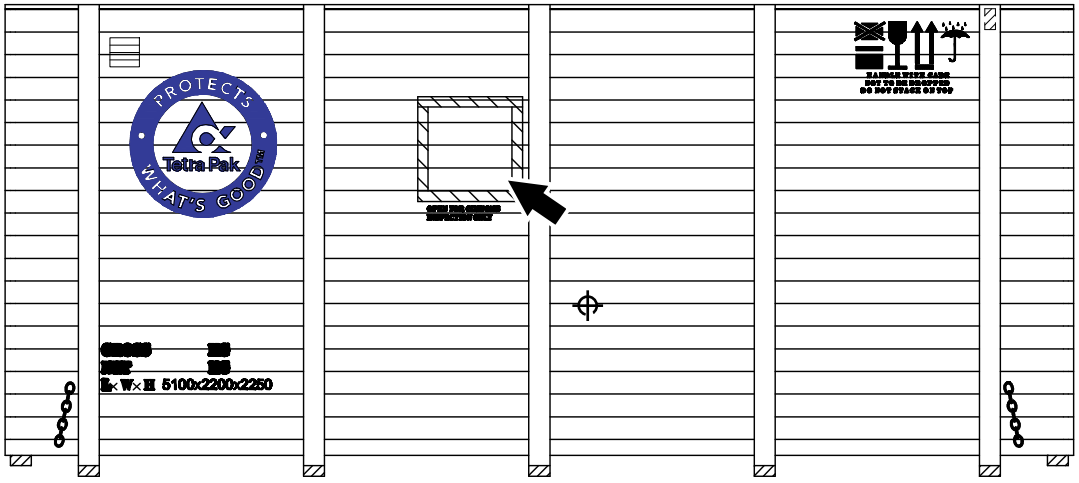

WARNING
Risk of personal injury.
Follow the recommendations below to avoid injury when unpacking the machine.

(Cont'd)

(Cont'd)

a) Examine the outside of the crates before starting to unload, and record any damage. This information must later be recorded on the Transport Damage Report.

b) Record the readings of the humidity indicators and tipping indicators attached to the outside of the crates (if present). This information must later be recorded on the Transport Damage Report.

3.1.3.1 Inspection

a) Use the packing list to check that nothing is missing.

b) Inspect the equipment for damage.

c) Open the crate, see Section 3.1.5 Opening the Crate.

d) Open the machine document box and check that the documentation corresponds with the machine and the machine number.

e) Check that the following documents are present and that they correspond to the machine in question (see the data plate):
- Machine Specification Document
- Final Inspection Report
- Declaration of Conformity
- Machine Deviation Report (if relevant)
- System drawings
- Manuals and Machine Program binder.

f) Store the documents as agreed with the customer.

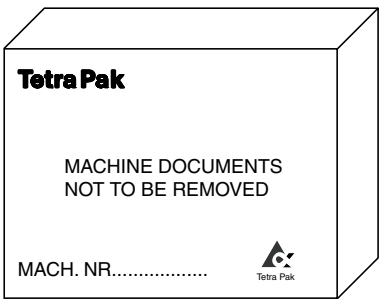

3.1.4 Storing the Crated Equipment

The crate delivered is intended to be **used for transport and short term storing**. For information about storage, see Section 6.3 Preparation for Storage.

3.1.5 Opening the Crate

3.1.5-1 Opening the Crate

WARNING
Risk of crushing.
The crate sides may tilt during removal. Failure to observe can result in serious personal injury.

a) Remove the bolts on the front edge (1) of the top lid.

b) Remove the bolts on the rear edge (2) of the top lid.

c) Remove the bolts on the side (3) and the side (4) of the top lid.

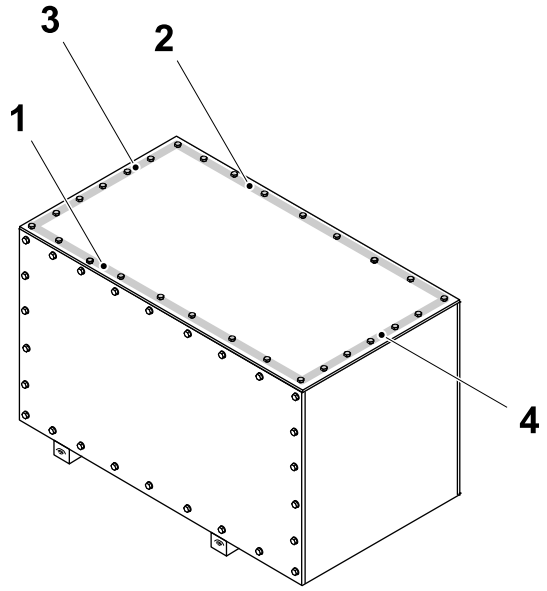

1 Front edge
2 Rear edge
3 Side
4 Side

(Cont'd)

(Cont'd)

d) Use the forklift truck to lift off the top lid.

Note! Use a crowbar or a similar tool to lift up the front edge (1) of the top lid so the forks can reach under the lid.

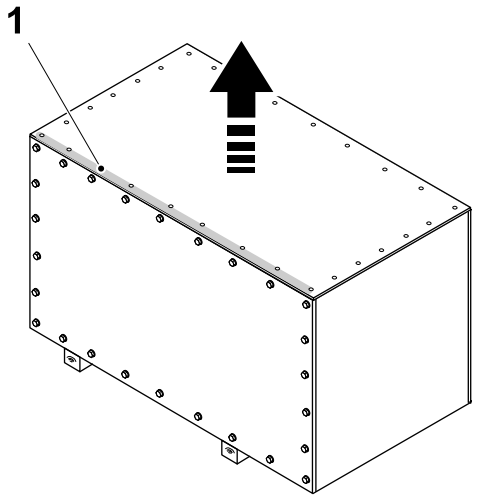

1 Front edge

e) Remove the cross beams (5). The number and location of the cross beams (5) may vary depending of machine variant.

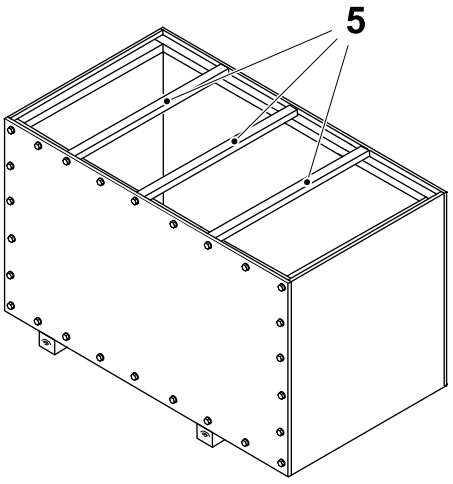

5 Cross beam

(Cont'd)

(Cont'd)

f) Before removing any bolts, position a forklift truck with its forks (6) in the direction indicated with an arrow in the illustration. This will protect the front from falling.

Note! Start with the side marked "Remove this side first" if such a marking is present on the crate.

g) Remove the bolts on the side (7) and the side (8).

h) Remove the bolts on the upper edge (9) of the crate.

i) Remote the bolts on the lower edge (10) of the crate.

Note! Do not remove the corner bolts (11) yet.

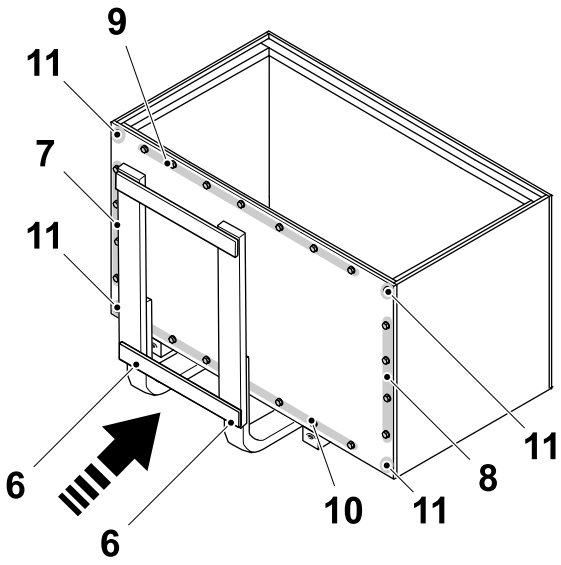

6 Forks
7 Side
8 Side
9 Upper edge
10 Lower edge
11 Bolt

(Cont'd)

(Cont'd)

j) Make sure that the forks (6) are close to the front.

k) Remove the corner bolts (11) and lower the front against the forklift truck.

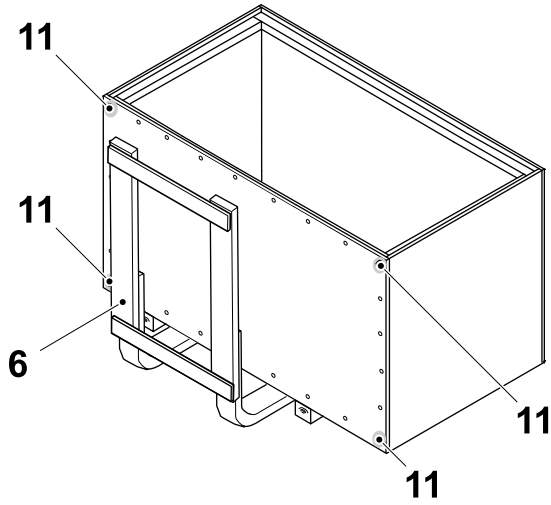

6 Forks
11 Bolt

l) Remove the beam (12).

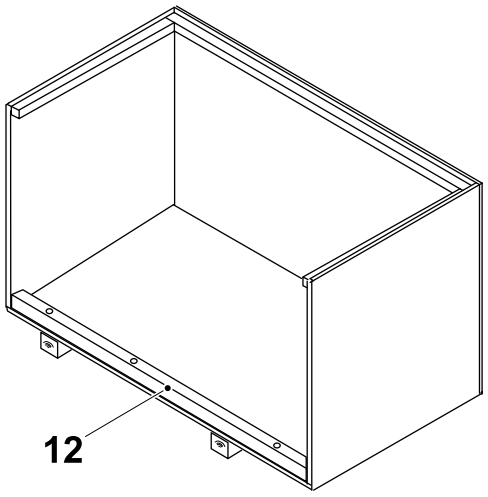

12 Beam

3.1.6 Unpacking the Crate

DANGER

Immediate danger to life.
The machine may tilt if not observing the centre of gravity or the fork lift points. Failure to observe may result in immediate danger to life and major damage to equipment.

Use the correct lifting equipment. See the Section 1.5.1.2 Specifications for Uncrated Equipment.

a) Check that the machine can be transported to the assembly site without any problems regarding ceiling height, doors, passages.

b) Remove the machine from the crate. Lift only enough to clear the crate. When lifting the machine using a fork lift truck, use the fork lift positions as shown in Section 3.2.1.2 Fork Lift Position.

c) Manoeuvre the machine out of the crate.

d) Lower the machine feet approximately 85 mm to facilitate the levelling later on.

3.1.7 Disposal of Reusable Material and Waste

3.1.7.1 Reusable Packing Materials and Structures

Reusable packing materials and structures should be collected and re-used in accordance with local regulations.

3.1.7.2 Non Reusable Packing Materials and Structures

Non reusable packing materials and structures should be collected and disposed of in accordance with local regulations.

3.2 Positioning and Assembly

3.2.1 Moving and Positioning

DANGER

Immediate danger to life.

The machine may tilt if not observing the centre of gravity or the fork lift points. Failure to observe may result in immediate danger to life

and major damage to equipment.

Use the correct lifting equipment. See the Section 1.5.1 Lifting and Transportation Equipment.

a) Unpack the machine from the crate according to Section 3.1.6 Unpacking the Crate.

b) Move the main body to its place of production and position it. See also the measurements given in the Sections 1.1 Installation Data and Specifications and 1.2.2 Mass and Dimensions.

3.2.1.1 Centre of Gravity Point

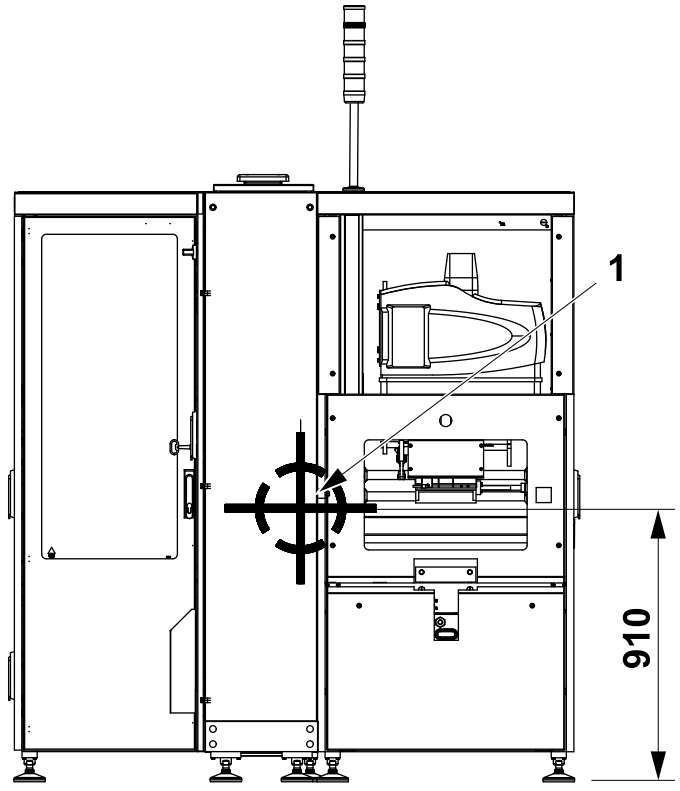

1 Centre of Gravity

(Cont'd)

(Cont'd)

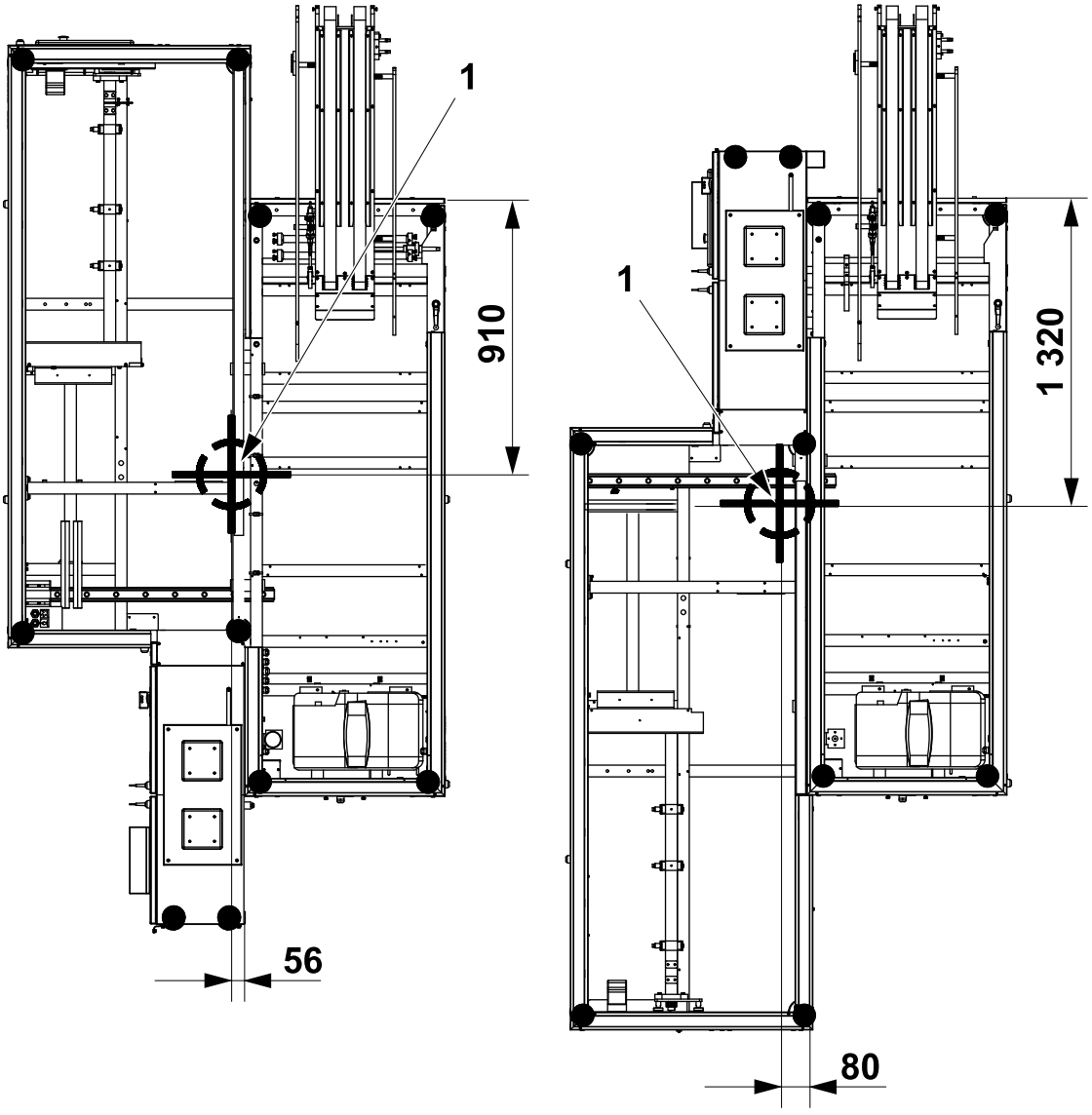

Z-infeed U-infeed

3.2.1.2 Fork Lift Position

Beware not to hit the machine feet with the fork lift. It could result in serious frame damage on the machine.

Put the forks (2) according to the drawing below. Fork length must reach across both the tray forming (3) and pattern forming (1).

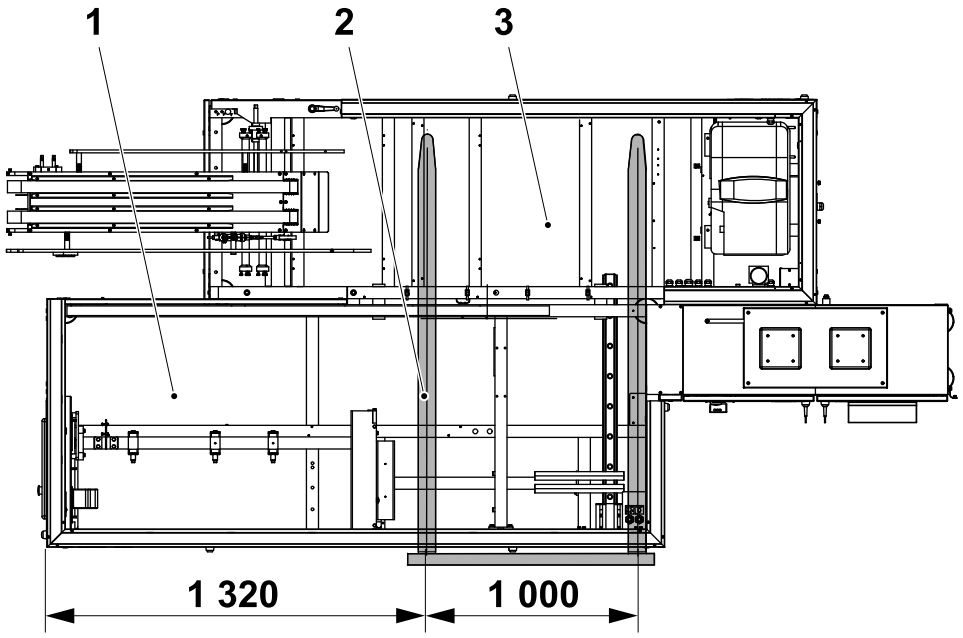

Z-infeed

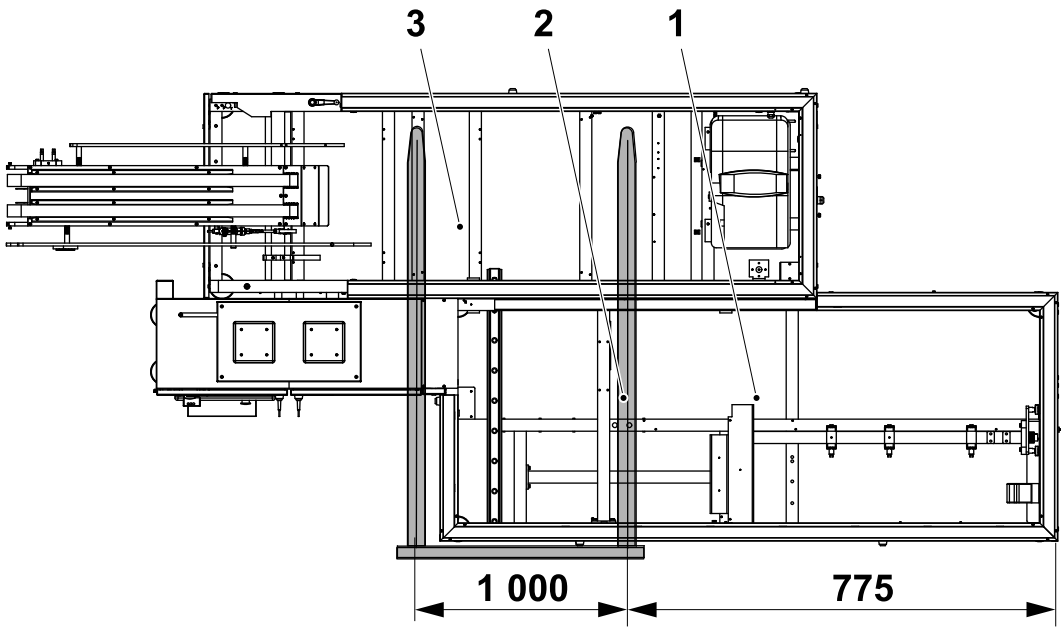

U-infeed

1 Pattern forming
2 Forks
3 Tray forming

3.2.2 Levelling

a) Check that the machine is positioned straight with for example a measuring tape. This to facilitate the connection of the infeed conveyor.

b) Check that the machine is in level with for example a spirit level. Put the spirit level in a central place in the machine, for example on the beam (1) between the tray forming and the pattern forming. If necessary, adjust by turning the machine feet (2) to a level of longitudinally ±1 mm/m. Hydraulic jacks can be used to facilitate the setting.

c) Make sure that the infeed height is correct, see 1.1 Installation Data and Specifications.

d) Check that the feet are fastened in a proper way.

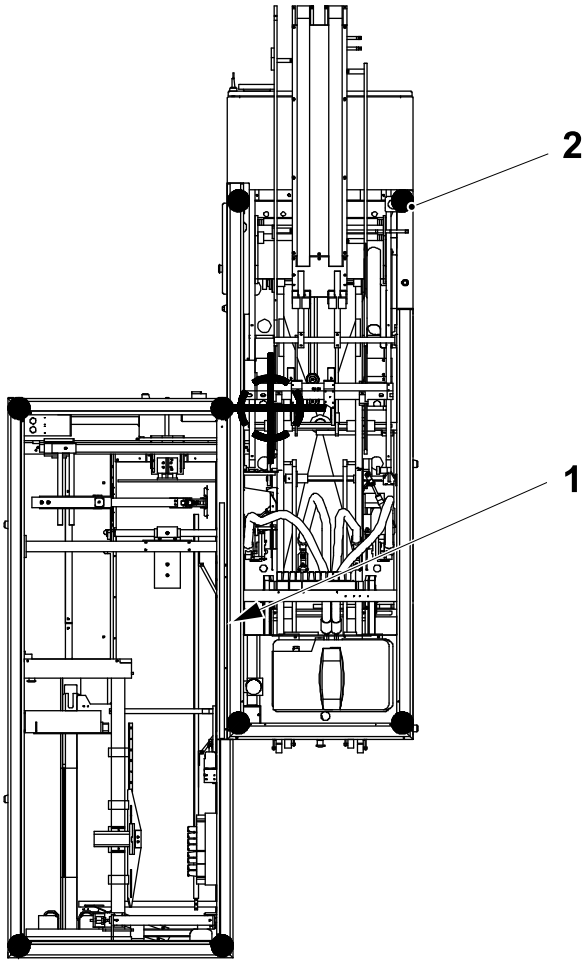

1 Beam
2 Machine foot (8 pieces)

3.2.3 Assembly

3.2.3.1 Warning Lamp

The warning lamp has been mounted upside down in order for the machine to fit in the crate.

a) Loosen the warning lamp (1).

b) Turn the warning lamp and assemble it in the same holes as it was assembled before, with the same screws on the same place. The warning lamp can be assembled under point (2), (3), (4) or (5), depending on which type of infeed the machine has.

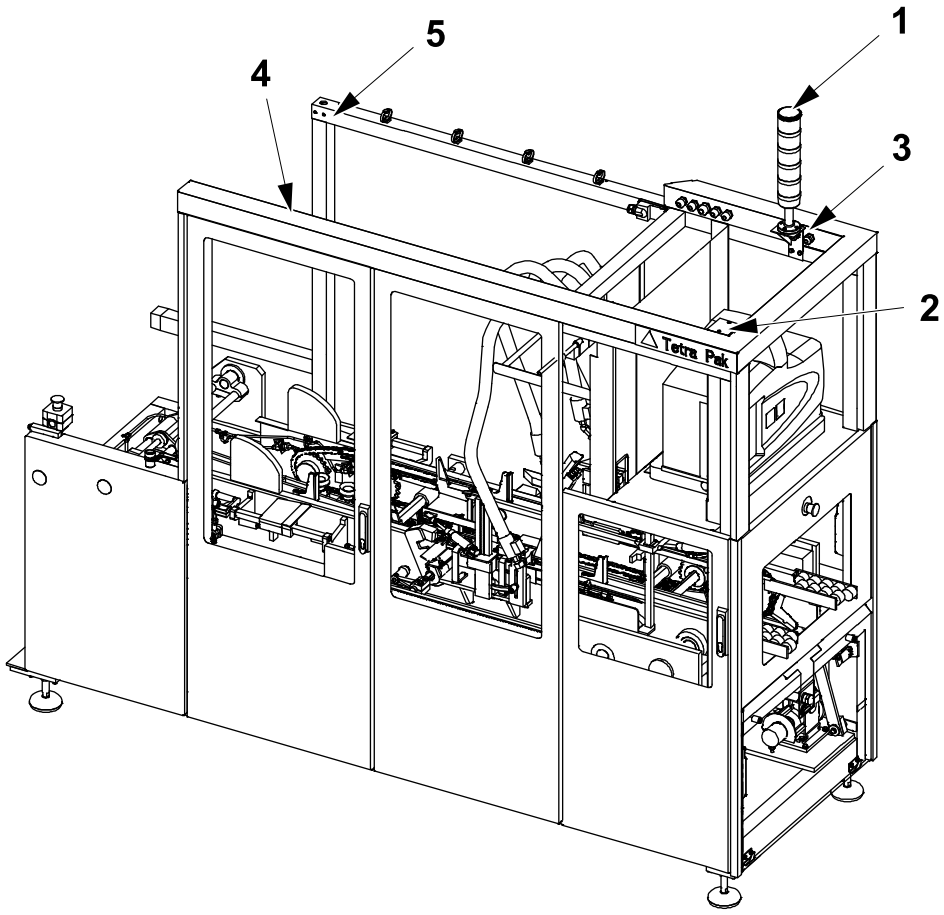

1 Warning lamp
2 Position for warning lamp (Right infeed)
3 Position for warning lamp (Left infeed)
4 Alternative place for warning lamp (Right infeed)
5 Alternative place for warning lamp (Left infeed)

3.2.3.2 Infeed Conveyor

The infeed conveyors that can be used are:

- Tetra Package Conveyor 21 (TPC 21)
- Package Conveyor 23 (PC 23)

(Cont'd)

(Cont'd)

- Unit Conveyor 24 (UC 24)
- Tetra Unit Conveyor 54 (TUC 54)

a) Assemble the conveyor body to the machine at the attachment point (1).

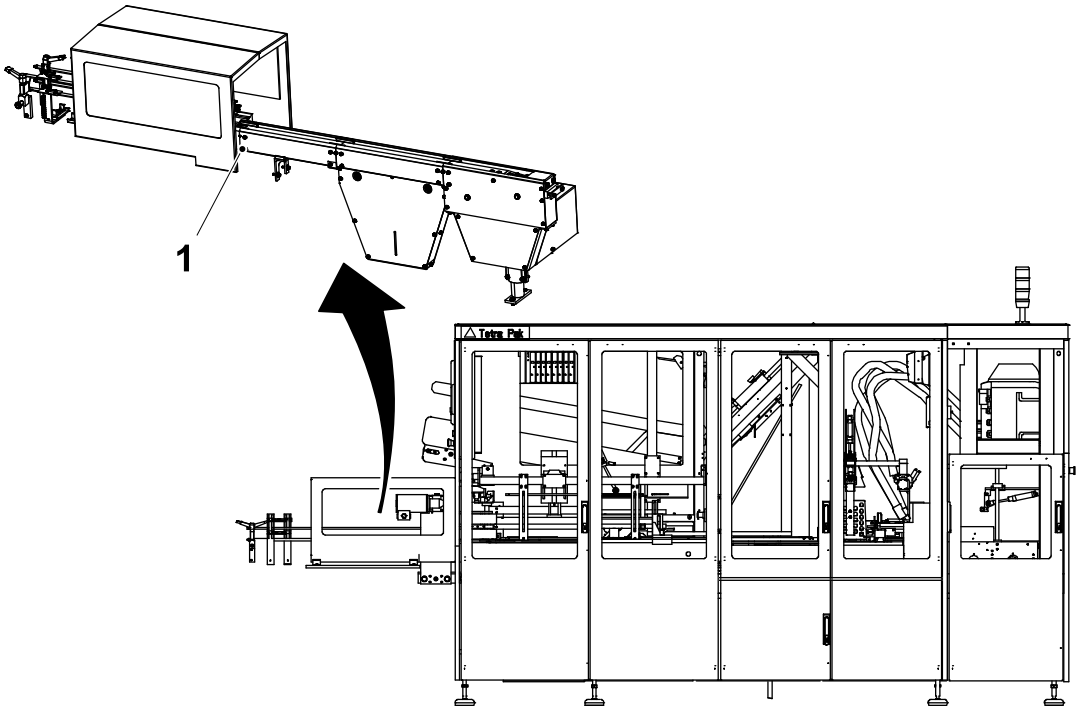

1 Attachment point

3.2.3.2.1 Railing

Depending on which infeed conveyor the machine is equipped with, it is different railings to assemble, see the illustrations below.

a) Assemble the railing (1) to the conveyor body (2).

b) Assemble the railing (1) to the brake unit (3). For more information about measurements, see Section 1.1 Installation Data and Specifications.

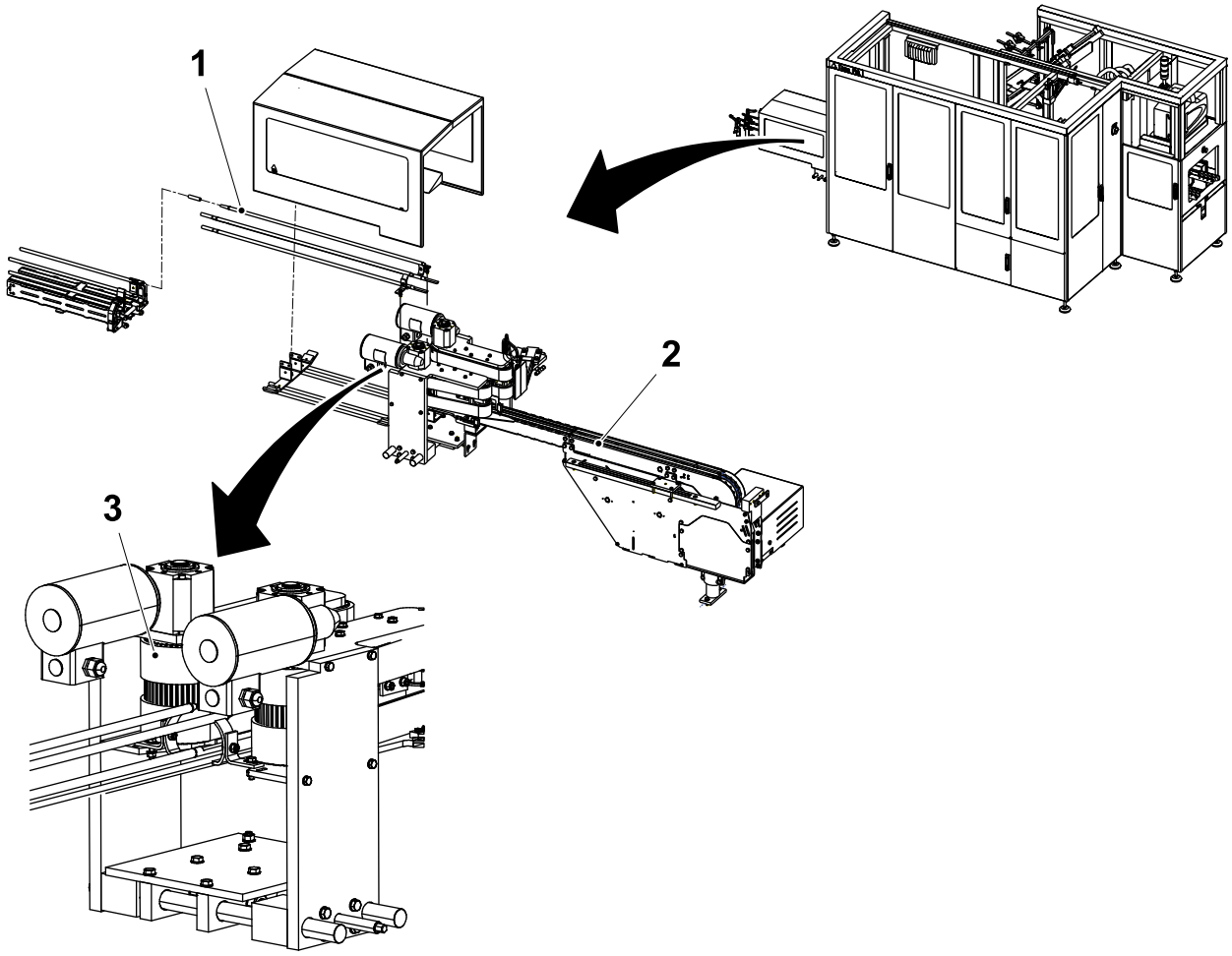

1 Railing
2 Conveyor body
3 Brake unit

3.2.3.2.2 Queue Guard, Double

Depending on which infeed conveyor the machine is equipped with there are different queue guards to assemble, see the illustrations below.

Assemble the photocell (1), the photocell (2), the photocell (3), the photocell (4), the photocell (5), and the photocell (6) to the holders (7). For more information about measurements, see Section 1.1.1 Installation Drawings.

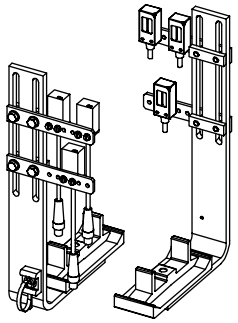

TPC 21

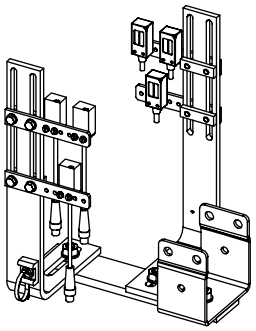

PC 23

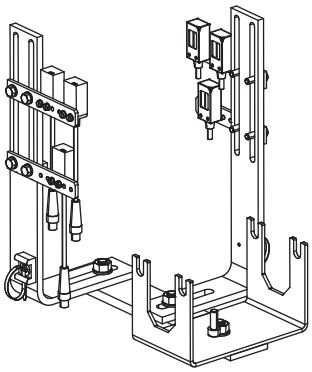

UC 24

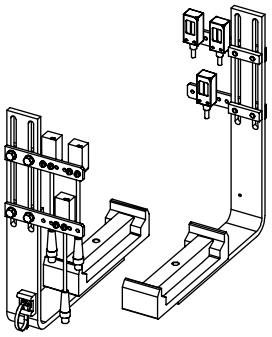

TUC 54

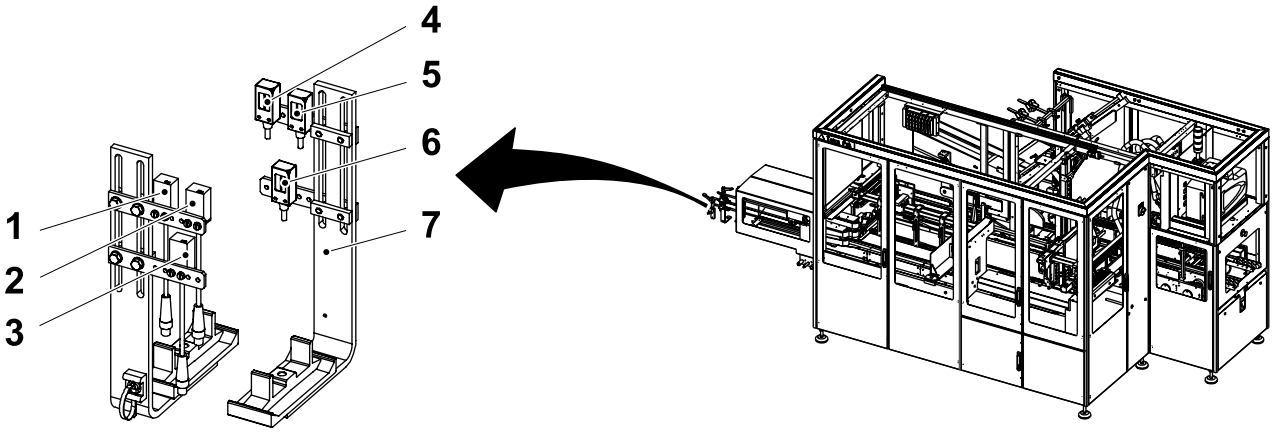

1 Photocell W30B0115
2 Photocell W30B0119
3 Photocell W30B0111
4 Photocell W30B0114
5 Photocell W30B0118
6 Photocell W30B0110
7 Holder

3.2.3.2.3 Units on the Infeed Conveyor Depending on Line Automation

Depending on Line automation choice in HMI configuration page, see 4.1.1-1 Control Panel - Set TPOP. There are different types of units that can be installed, see the configuration table below.

a) Set the start conveyor photocell unit (1) in the transfer between the Cardboard Packer 32 infeed conveyor and previous conveyor.

b) Set the infeed overflow photocell unit (2) to distance A from the queue guard double (3).

c) If external conveyor brake is installed:
- set the dispense control photocell unit (5) to distance B measured from grip area of brake.

Note! It shall read in a straight line across the conveyor (not angled).

- set the queue after brake photocell unit (6) to distance A.

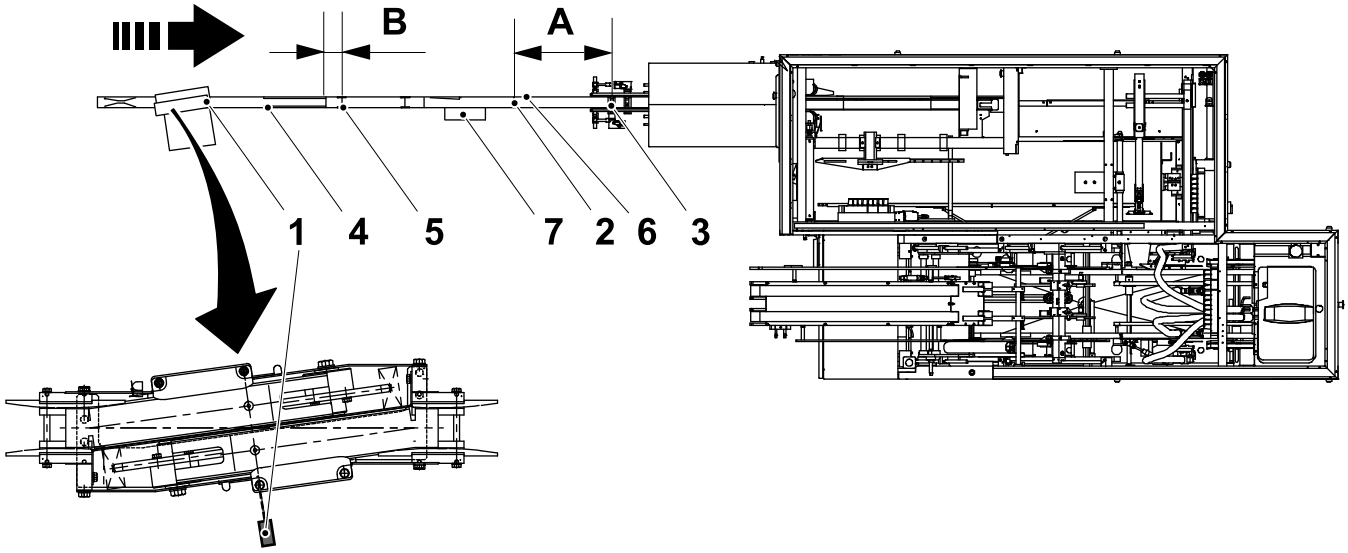

1 Photocell unit (Start conveyor) W10B0906
2 Photocell unit (Infeed overflow) W30B0140
3 Queue guard double
4 External conveyor brake W10K0901
5 Photocell unit (External conveyor brake, dispense control) W10B0902, W10B0903
6 Photocell unit (External conveyor brake, queue after brake) W10B0904, W10B0905
7 Package trap Aero

(Cont'd)

(Cont'd)

Configuration Line Automation							
Material /Equipment				**Line automation choice (HMI configuration page)**			
Pos	**Reference designation**	**Placement**	**Function**	**Line controller (Ethernet)**	**X90 relay control**	**Photocell control**	**No Line automation**
1	W10B0906	Conveyor intersection, see illustration above	Photocell, start conveyor	Not allowed	Not allowed	Install	Not allowed
2	W30B0140	A	Photocell, infeed overflow	Install	Install if Tetra Recart else Not installed	Not allowed	Not allowed
3	W30B0110, W30B0111, W30B0114, W30B0115, W30B0118, W30B0119	see 1.1.1.8 Infeed	Infeed queue/fallen pack/speed	Install	Install	Install	Install
4	W10K0901	see 1.1.1.8 Infeed	External conveyor brake:	Not allowed	Optional	Optional	Optional
5	W10B0902, W10B0903	B	Photocell, dispense control	Not allowed	Optional	Optional	Optional
6	W10B0904, W10B0905	A	Photocell, queue after brake	Not allowed	Optional	Optional	Optional
7	-	see 1.1.1.8 Infeed	Package trap	Optional	Optional	Optional	Optional

3.2.3.2.4 Tunnel

WARNING
Moving parts can cause serious injuries.
Never run the machine if the tunnel is not fitted.

(Cont'd)

(Cont'd)

a) Loosen the clamping plates (1) and remove the tunnel (2).
b) Assemble the brackets (3) to the infeed conveyor.
c) Assemble the tunnel (2) to the clamping plates (1).

For more information about the measurements, see 1.1 Installation Data and Specifications.

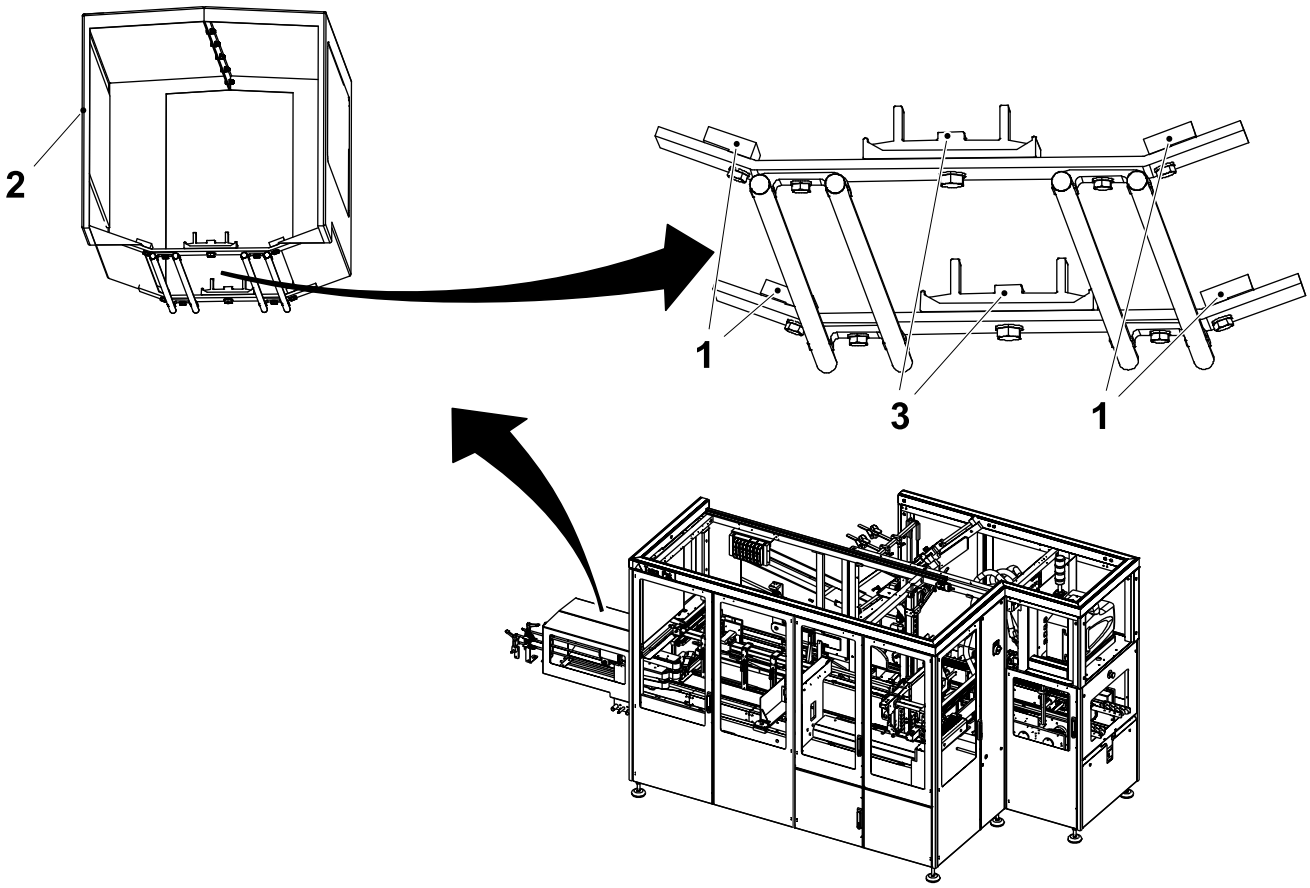

1 Clamping plate
2 Tunnel
3 Bracket

3.2.3.3 Hose Brake (Not Included in the Machine)

Assemble the hose brake (1) according to the measurements in Section 1.1 Installation Data and Specifications and the hose brake photocells (2) according to Section 3.2.3.2.3 Units on the Infeed Conveyor Depending on Line Automation.

See also 3.3 Equipment Interfaces and Connections. Perform the electrical connection according to the Electrical Manual.

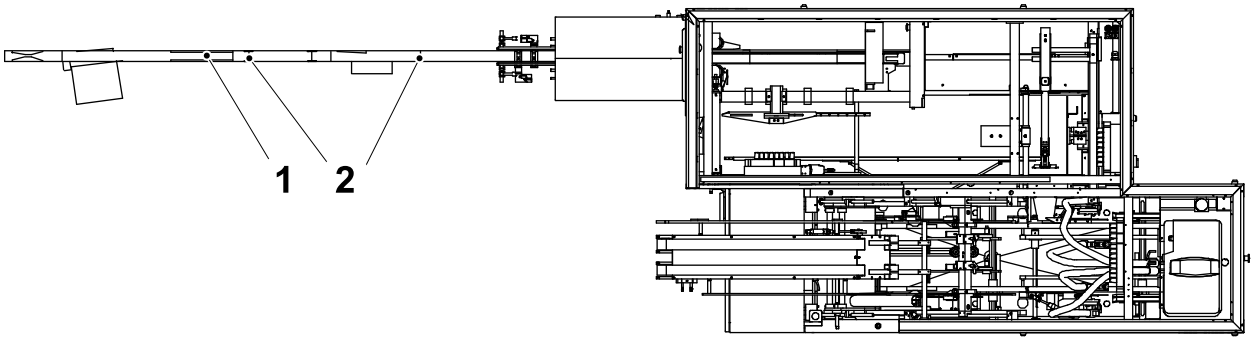

1 Hose brake
2 Hose brake photocell

3.2.3.4 Internal Conveyor Lubrication

Connect the machine for internal conveyor lubrication (1), see 1.1 Installation Data and Specifications. See also Section 3.3 Equipment Interfaces and Connections.

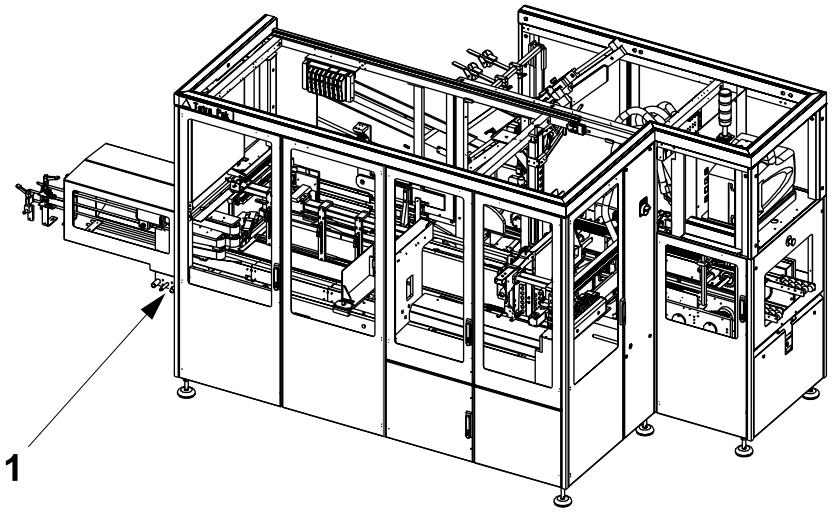

1 Internal conveyor lubrication connection

3.2.3.5 Discharge Safety Device

WARNING

Machine directive.

Due to the various demands of discharge units, the outlet is covered by a guard plate (1) that has to be removed and replaced by a safety device that fulfils the Machinery directive 2006/42/EC and sub directives.

See 1.2.1.3 Discharge Unit (Optional) for approved safety devices.

Remove the guard plate (1).

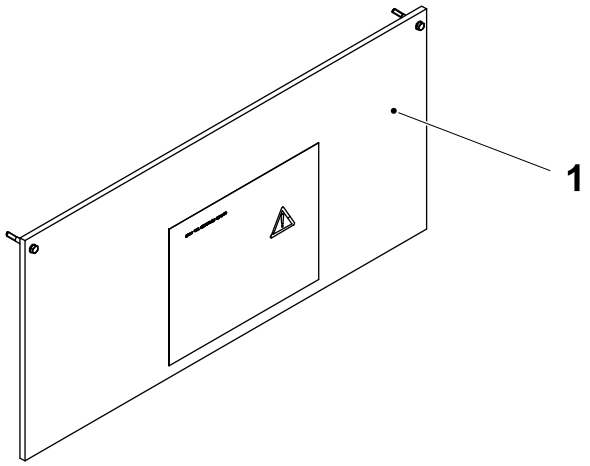

1 Guard plate

3.2.3.6 Queue Downstream Photocell Unit

A photocell unit (1) should be assembled to control the queue downstream when using conveyors at discharge side. The position of the photocell unit has to be where it can indicate if a queue is built up from the machine downstream. It should be possible for the Cardboard Packer 32 to stop if the queue is becoming to long.

The distance A must be minimum 1 meter, and the photocell must be mounted at the distance B from the conveyor connection point (2) with the next conveyor.

Note! The photocell unit (1) must NOT be mounted on the Cardboard Packer 32 driven conveyor (3), since then false alarm might occur when the Cardboard Packer 32 conveyor stops.

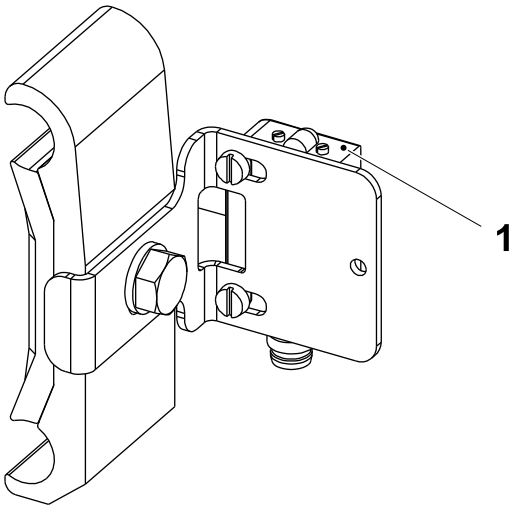

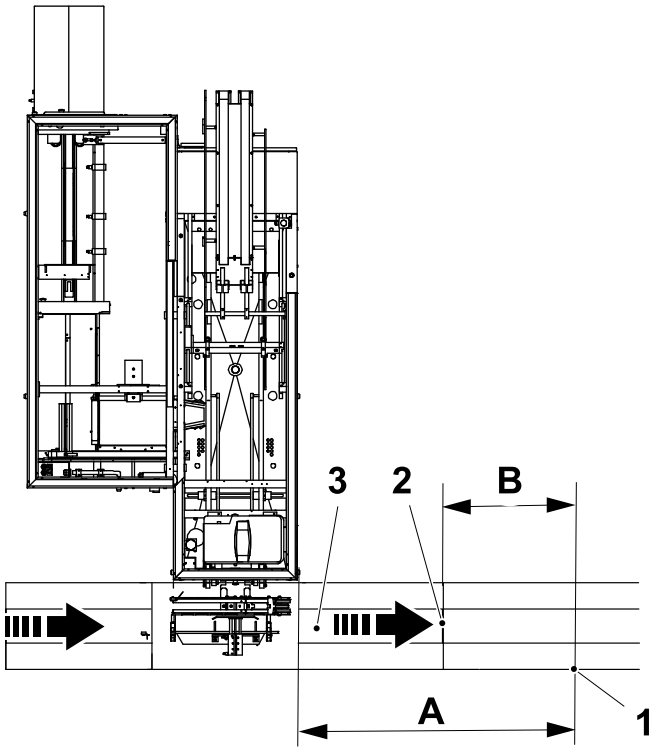

A = Minimum 1000 mm

B = About 1 tray length for the longest tray to be run

1 Photocell unit W90B0910

2 Conveyor connection point

3 Cardboard Packer 32 driven conveyor

3.2.3.7 Optional Equipment

WARNING
Machine directive.
In order to fulfil the safety demands associated with the CE sign, the machine must be equipped either with the optional components described in section 1.2.1.3 Discharge Unit (Optional), or with any similar equipment that also complies with Machine Directive 2006/42/EC and sub directives.

3.2.3.7.1 Discharge Unit for Tetra Unit Conveyor 24

A machine can be equipped with any of the following types of discharge units:

- Left Out
- Right Out

Note! For more information about the measurements, see 1.1 Installation Data and Specifications.

3.2.3.7.1-1 Discharge Unit for Tetra Unit Conveyor 24 - Install

a) Assemble the bracket (1) to the machine with the screws (2).

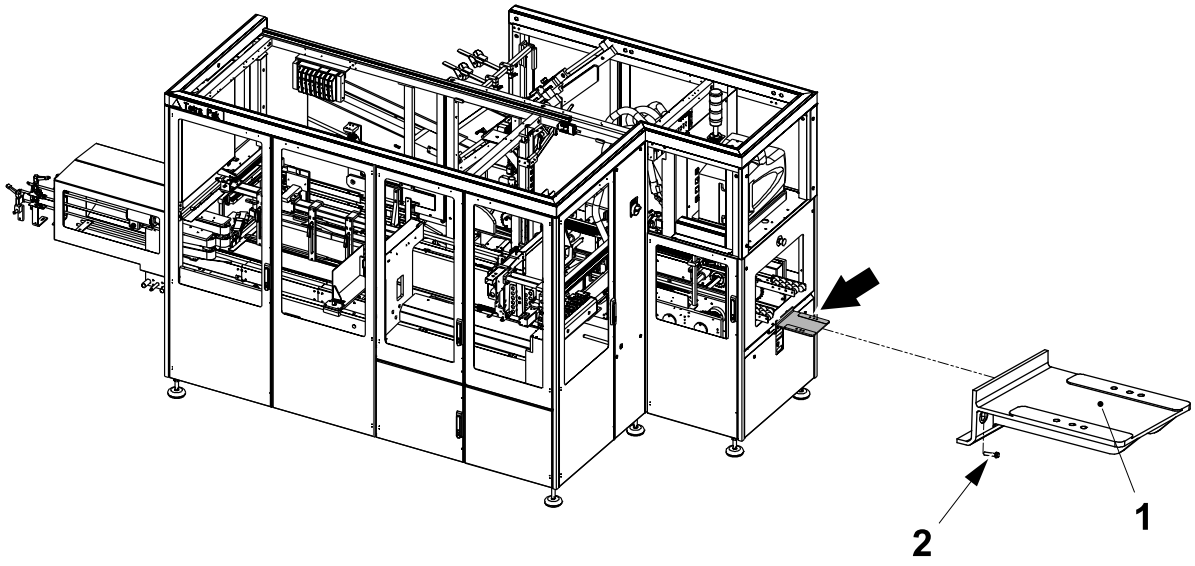

1 Bracket
2 Screw (2 pieces)

(Cont'd)

(Cont'd)

b) Fit the conveyor (3) to the bracket (1) with the clamps (4) and the screws (5). Use one of the holes (A), (B) or (C) according to the table.

Discharge unit width	Holes
U152	A
U207	B
U247	C

c) Fit the discharge support (6) to the conveyor (3).

d) Set the discharge support, see 3.2.3.7.1-2 Discharge Support - Set.

e) Fit the gable plate (7) on the conveyor railing.

Note! Switch side of the gable plate (7) depending on right or left discharge direction.

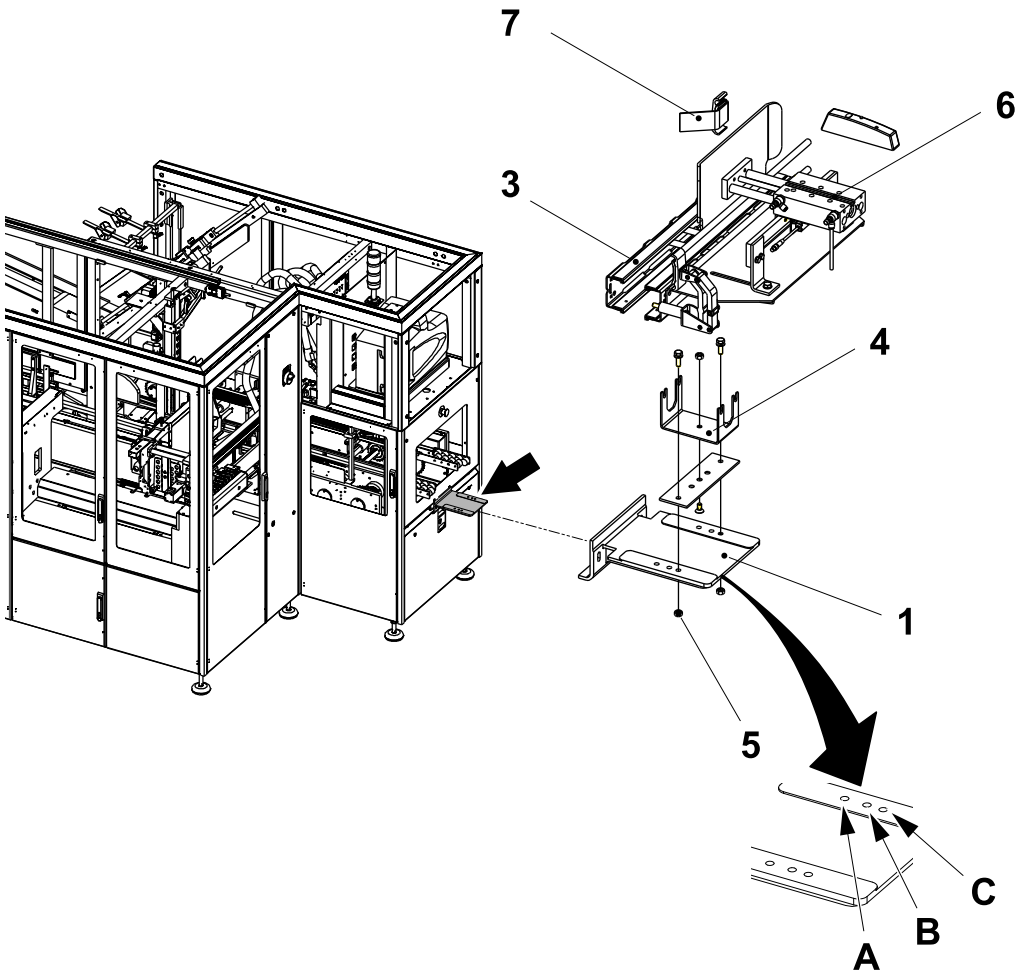

1 Bracket
3 Conveyor
4 Clamp
5 Screw (2 pieces)
6 Discharge support
7 Gable plate

3.2.3.7.1-2 Discharge Support - Set

Adjust the speed of the cylinder (3) with the throttle (2) and the throttle (4) as follows:

a) Loosen screws (5).

b) Pull in the cylinder close to the railing.

c) Tighten the screws (5).

d) Adjust the throttle (2) to set the plus movement.

e) Adjust the throttle (4) until the discharge support plate (1) damp down the tray when the tray hits the discharge support plate (1).

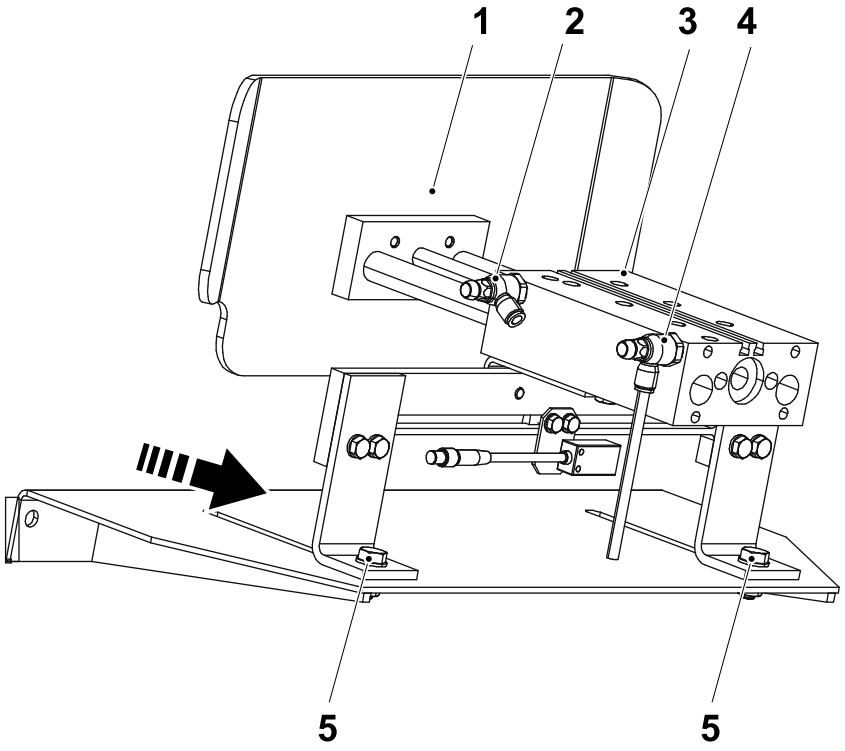

1 Discharge support plate
2 Throttle
3 Cylinder V50M0390
4 Throttle
5 Screw

(Cont'd)

(Cont'd)

f) Set the position A for photocell (6). If the distance A is more than 100 mm, it can lower the capacity but the discharge will be more safe. The purpose of the photocell (6) is to detect when it is possible for the discharge support plate (1) to receive a new tray when they come out from the machine. The photocell (6) also detects that the tray has went away on the conveyor (without a crash).

Note! If the conveyor direction is opposite from the indicated, the distance A refers to the other edge of the tray.

g) Set the reading distance for the photocell (6) to sense maximum the distance B. The photocell (6) may not detect longer than to the rail (7) closest to the discharge of the machine.

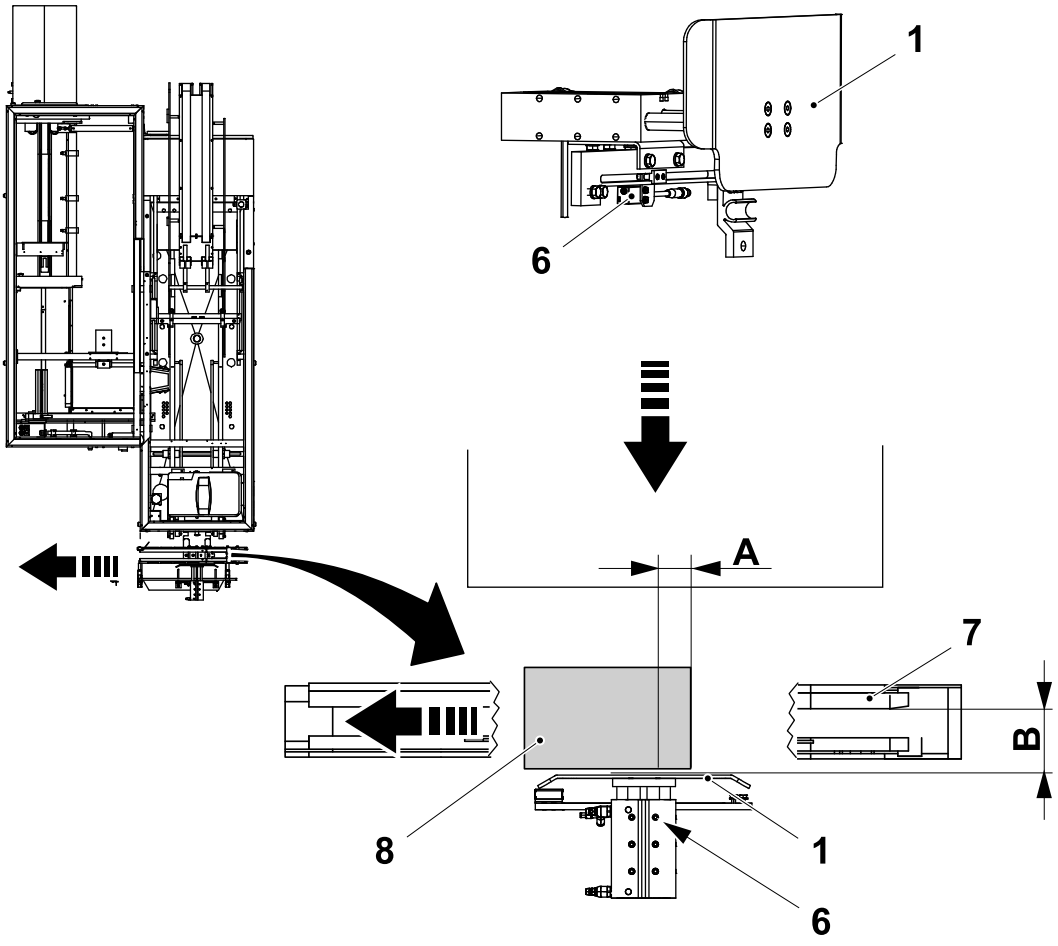

A = Minimum 100 mm

1 Discharge support plate

6 Photocell W50B0118

7 Rail

8 Discharge tray (that has not moved sideways on the conveyor)

3.2.3.7.2 Discharge Unit for Tetra Roller Conveyor 58

3.2.3.7.2-1 Discharge Unit for Tetra Roller Conveyor 58 - Install

To install the discharge unit (1), do the following:

a) Install the bracket (2) using the screws (4).

b) Assemble the discharge unit (1) to the bracket (2) using the screws (3).

c) If the discharge unit continues onto another conveyor, remove the stop (6).

Note! The tunnel (5) shall be installed horizontally (0°) and not parallel to the conveyor.

For more information about the measurements, see Section1.2.1.3.3 Tetra Roller Conveyor 58.

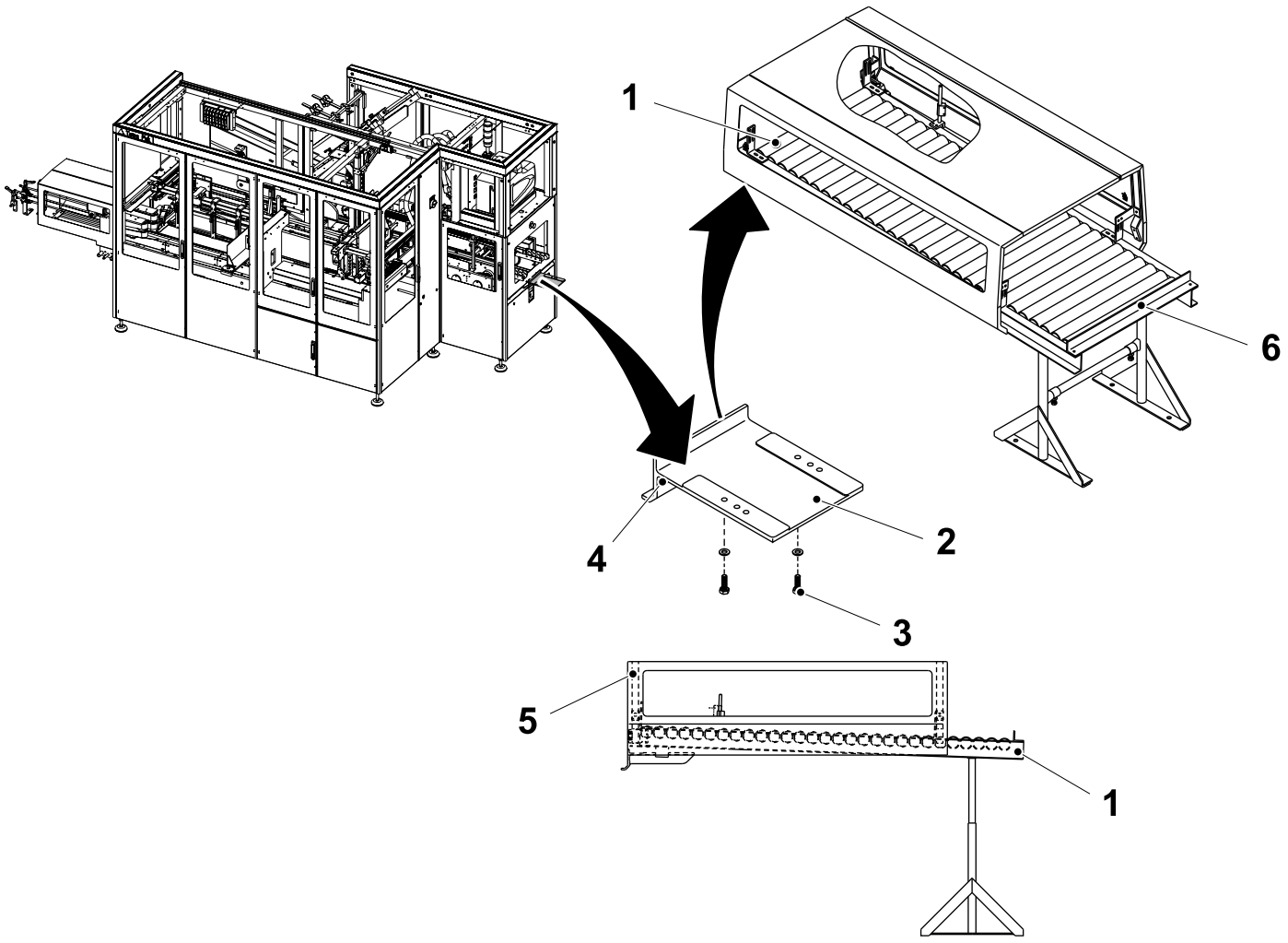

1 Discharge unit
2 Bracket
3 Screw
4 Screw (2 pieces)
5 Tunnel
6 Stop

3.2.3.7-1 Cooling Unit - Install

a) Attach the sealing frame (1) to the frame (2) with adhesive.

b) Install the frame (2) with the screws (3) on the electrical cabinet (4).

c) Attach the foam rubber strip (5), included with the cooling unit, on the frame (2).

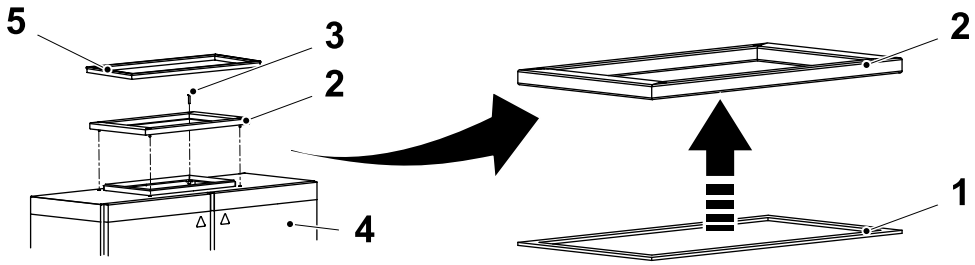

1 Sealing frame
2 Frame
3 Screw (4 pieces)
4 Electrical cabinet
5 Foam rubber strip

d) **WARNING**
Ergonomic hazard
The cooling unit is heavy. Avoid lifting the cooling unit without the use of a lifting device. When this is not possible, make sure to have two persons available for lifting the heating unit.

Lift the cooling unit with lifting straps. Use an overhead gantry, mobile crane, or fork lift. See the illustration below.

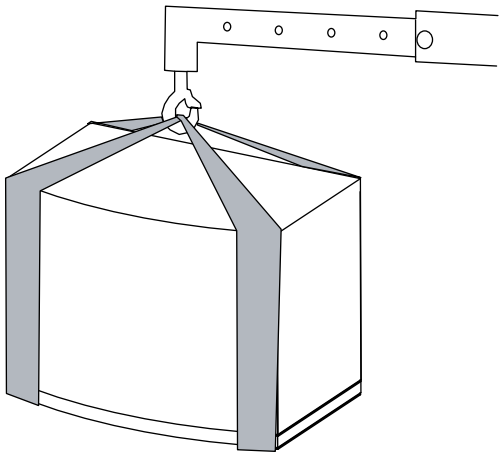

(Cont'd)

(Cont'd)

e) Put the straps around the cooling unit (6) and lift it above the electrical cabinet with a lifting device.

f) Place the cooling unit (6) on top of the frame (2).

g) Tilt the cooling unit (6) from side to side to release the straps.

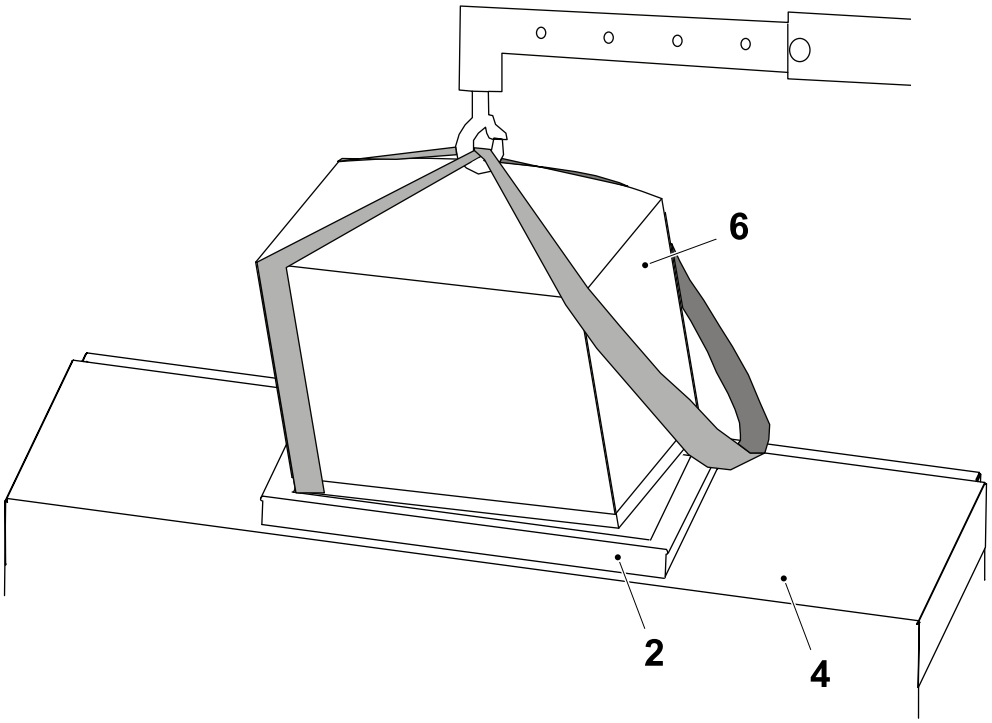

2 Frame
4 Electrical cabinet
6 Cooling unit

(Cont'd)

(Cont'd)

h) Connect the hose (7) with a hose clip (8) to the connection on the back of the cooling unit. There are two connections on the cooling unit, the one that is not used shall be plugged.

i) Connect the elbow pipe (9) with the hose (7).

j) Connect the hose (10) with the elbow pipe (9).

k) Let the hose (10) follow the back of the electrical cabinet, down to the floor.

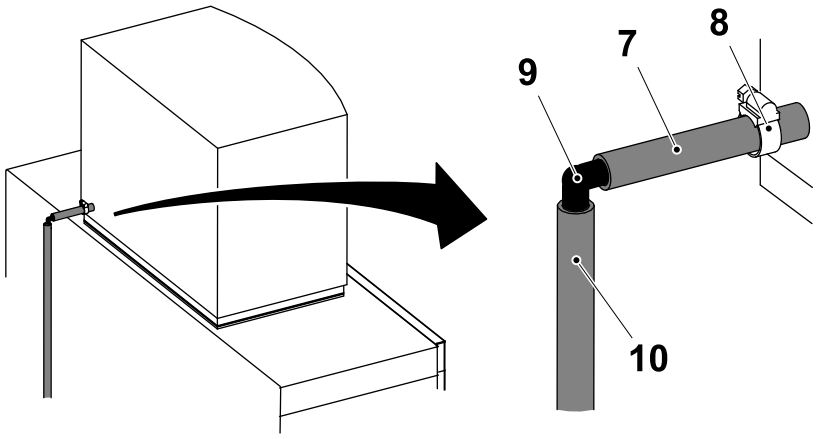

7 Hose
8 Hose clip
9 Elbow pipe
10 Hose

(Cont'd)

(Cont'd)

l) Open the doors to the electrical cabinet.

m) Secure the cooling unit to the electrical cabinet with the fastening brackets (11).

n) Assemble the limit switch (12), the limit switch (13), and the anchor plate (14) with the bracket (15).

o) Install the bracket (15) in the electrical cabinet.

p) Make the electrical connections from the cooling unit and the limit switches to the electrical cabinet according to the Electrical Manual (EM).

q) Secure the cables from the limit switches with a strip to the anchor plate (14).

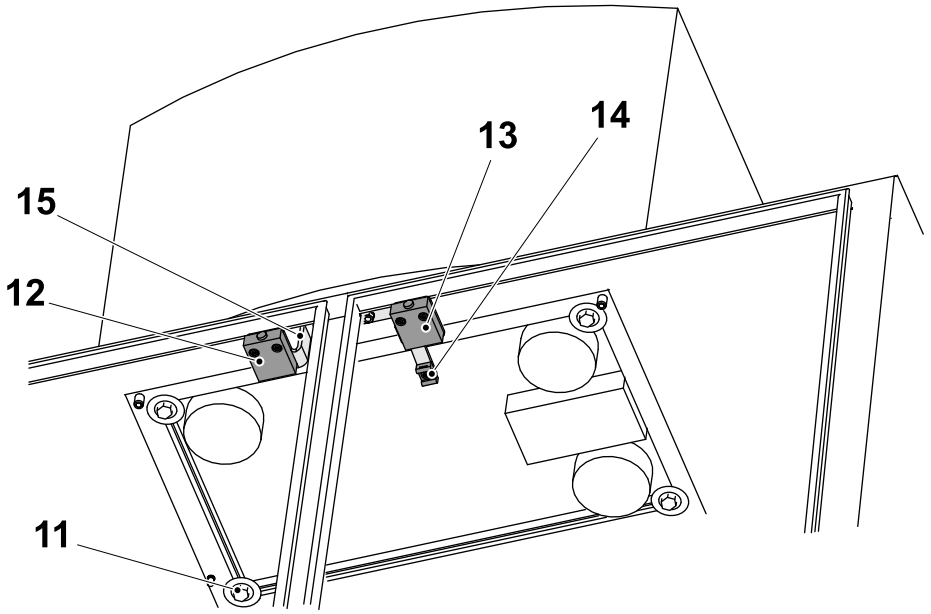

11 Fastening bracket (5 pieces)
12 Limit switch, E01W1015
13 Limit switch, E01W1017
14 Anchor plate
15 Bracket

r) If cooling unit is not selected on the HMI, the fan in the cooling unit will run without cooling the air. See Chapter Optional Equipment in the Maintenance Manual (MM) for instructions.

s) The basic controller (16) on the cooling unit supervises and regulates the cooling system. Set the temperature to 35 °C. See Chapter Optional Equipment in the MM for instructions.

(Cont'd)

(Cont'd)

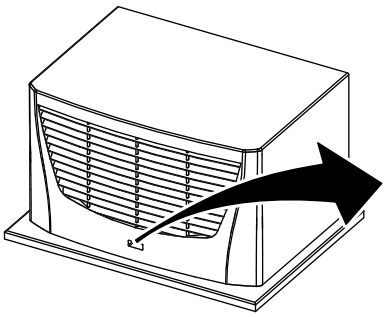

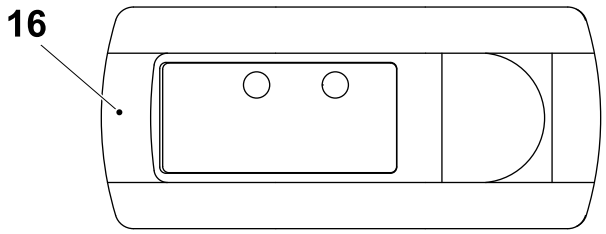

16 Basic controller

3.3 Equipment Interfaces and Connections

3.3.1 Utility Connections

WARNING
Risk of personal injury.
Make sure that air supply to the machine is switched OFF before performing any connection work.

3.3.1.1 Inlet/Outlet Connections for Compressed Air and Water

3.3.1.1-1 Inlet/Outlet Connections for Compressed Air and Water

a) Connect the water hose to the water connection (1).

b) Connect the compressed air hose to thecompressed air connection or quick release coupling (2) .

c) See Sections 1.1.1 Installation Drawings and 1.4 Utilities Specification for specifications and measurements.

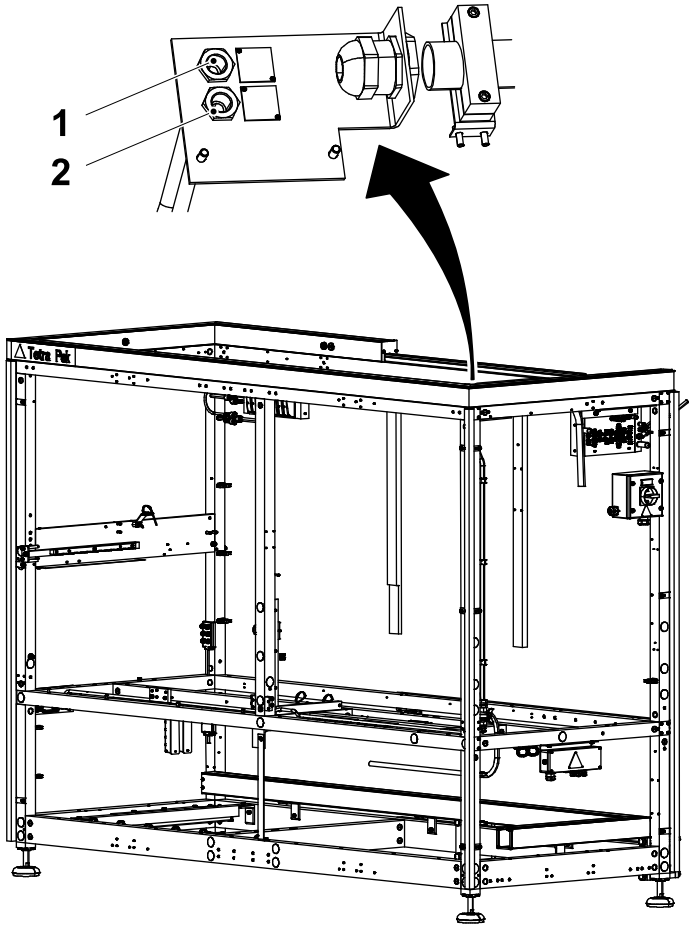

Lead In Plate for Infeed Left Z-form / Right U-form

Lead In Plate for Infeed Right Z-form / Left U-form

1 Water connection 1/2”

2 Compressed air connection 1/2” or quick release coupling

(Cont’d)

(Cont'd)

d) Connect the spray gun hose to the spray gun connection (3).

e) Connect the hose brake hose to the hose brake/ Package turner (4).

f) Connect the lubrication hose to the internal conveyor lubrication connection (5). For lubrication use in first hand liquid conveyor lubrication. If it is not available, use water.

g) Connect the air jet gun hose to the air jet gun connection (6).

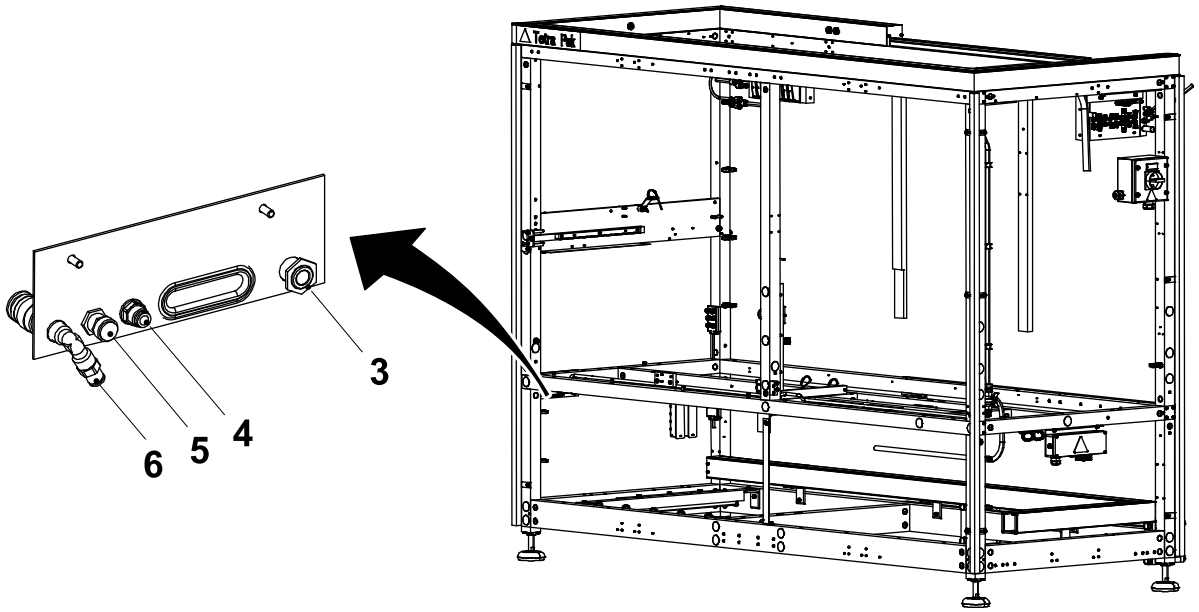

3 Spray gun connection (optional)
4 Hose brake/ Package Turner 100 (Air)
5 Internal conveyor lubrication connection
6 Air jet gun connection (optional)

3.3.1.2 Electrical Power Connections

DANGER

Risk of electrical shock and short circuits.
Make sure that power is switched OFF upstream before performing any work on cables and electrical components.

Perform the electrical connection according to the Electrical Manual. See also 1.1 Installation Data and Specifications.

3.3.1.2-1 Main Power Supply Cable

a) Install the additional protective conductor (1), the supplementary bonding (2) and the power supply cable (3) through the cable gland (4) and further through the stainless steel pipe (5).

Note! The main supply cable must be routed minimum 1 m straight up from the top of the machine before it turns away. The main supply cable must never be routed through the machine.

b) Connect the powerpower supply cable (3) to the main switch (6).

c) Connect the additional protective conductor (1) to the earth terminal marked E2 inside the main switch (6).

d) Connect the supplementary bonding (2) to the earth terminal marked E3 inside the main switch (6).

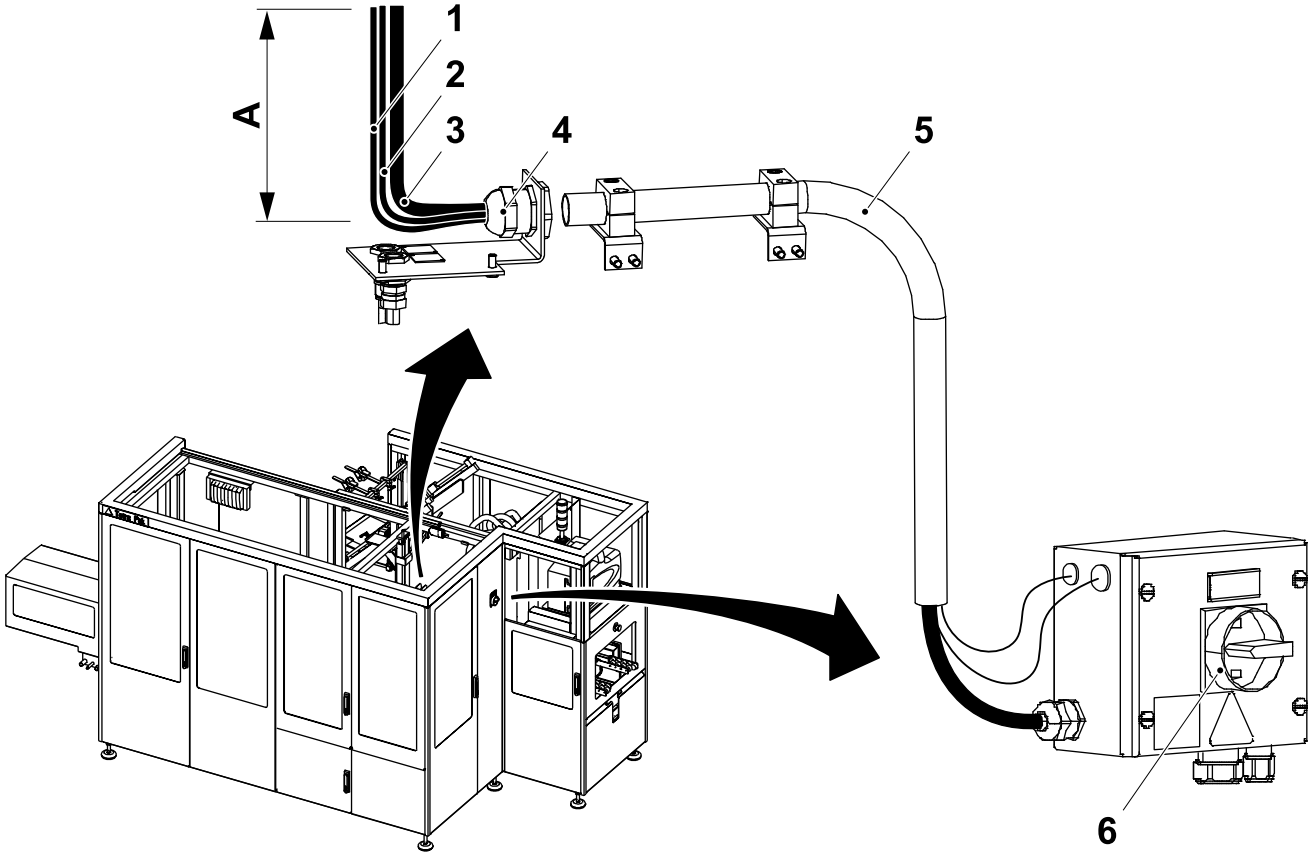

A > 1 m

1 Protective conductor
2 Supplementary bonding to the building's equipotential net
3 Power supply cable
4 Cable gland
5 Stainless steel pipe
6 Main switch

3.3.1.3 Ethernet Cable

a) If Line Controller or PPQ (Tetra Recart) Connect the incoming ethernet cable to the ethernet switch (1) in the electrical cabinet.

b) Perform the electrical connection according to the Electrical Manual.

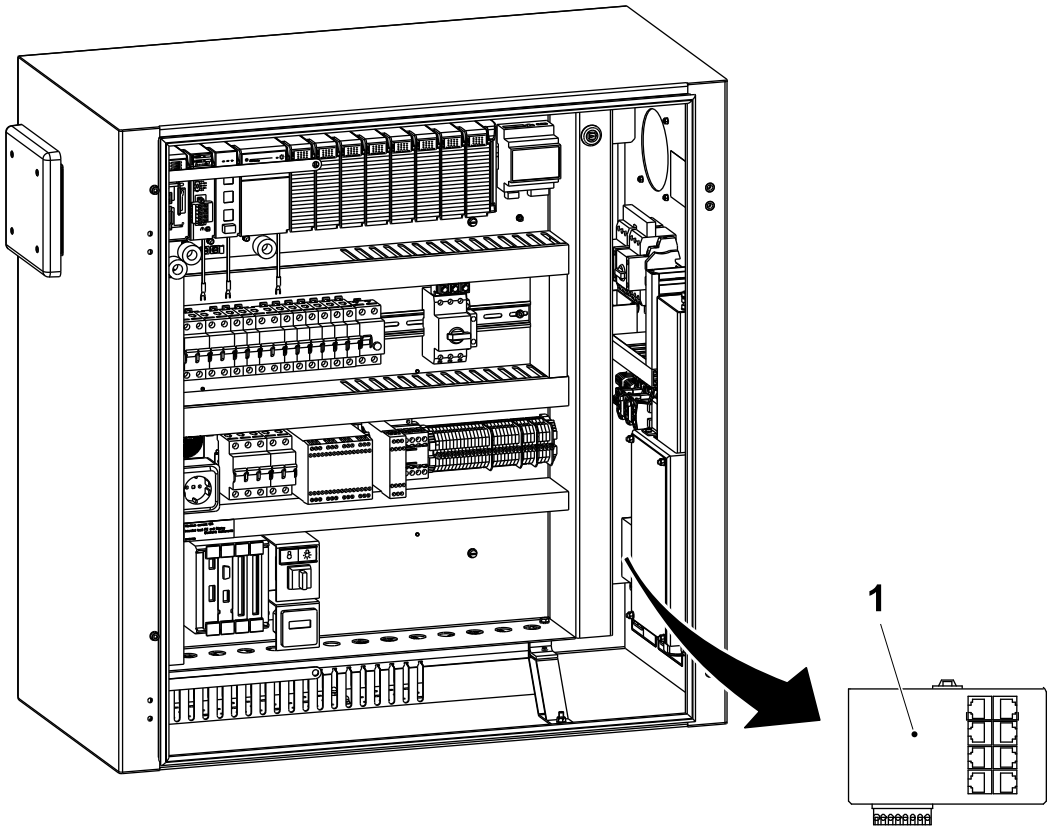

1 Ethernet switch

3.3.1.4 SNP cable

If SNP, connect the SNP cable according to the Electrical Manual at the SNP converter (1).

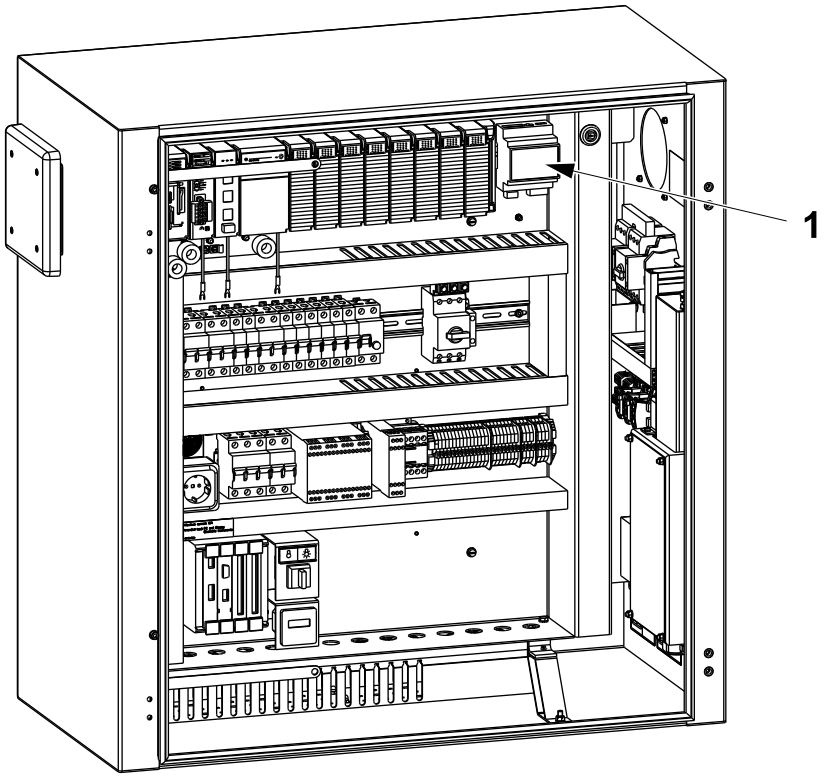

1 SNP converter

3.3.1.5 Line communication (X90 relay) cables

If Line communication (X90 relay), connect the upstream and/or downstream signals according to the Electrical Manual.

3.4 Restore Tools and Site

Make sure that

- all protective plastic is removed from the equipment
- all lifting tools and other installation tools are removed from the area around the equipment
- the area around the equipment is properly cleaned
- the equipment is properly cleaned
- the site is restored to production status

3.5 Mechanical Completion Inspection

The purpose of the mechanical completion inspection is to verify that the equipment in question has been delivered and is installed in accordance with the relevant documentation. This inspection must be carried out in conjunction with all involved parties, and prior to commissioning. All relevant installation documents are to be used for this task.

Defects or faults together with necessary actions and timing to correct the deviations must be recorded in the checklist. See Section 3.5.1 Mechanical Completion Checklist CBP 32. Commissioning must not be started until the mechanical completion inspection has been completed.

WARNING

Immediate danger to life.

During the final installation check, it is important that the procedures are followed very carefully since the safety devices may be non-functional. One of the reasons to make the final installation check is to check that the safety devices are functioning correctly.

Use the checklist as follows:

- Under Note, document any deviations, incorrect values, or comments.
- Under Signature, sign that the check is performed.

This page intentionally left blank

3.5.1 Mechanical Completion Checklist CBP 32

No.	Check	Reference Document (IM unless other document specified)	Note	Value	Signature
1	• All equipment has been delivered according to packing list. • All delivered equipment has been checked for transport damages. • All transport damages have been reported.	Packing list Crate opening/Damage report (ItP)			
2	Ensure that the documents below are available in the correct EU language, quantity (2 of each), and correspond with the specific machine. • IM • MM • OM • SPC • EM All documentation has been stored as agreed with the user.				
3	The disposal/return of crates, and so on, has been taken care of as agreed with the user.				
4	The machine is positioned according to approved layout and without interference with operating area.	Layout drawing			
5	All delivered equipment is assembled in accordance with the instructions in Chapter 3.2 Positioning and Assembly.				
6	The equipment has free mechanical movement.				
7	The machine is correctly connected to the infeed and discharge conveyors.				
8	All protective covers are in place and secure				
9	All the pipes and hoses entering through the lead-through plate under the platform are connected.				
10	All the doors open and close correctly				
11	The Start-up kit is delivered together with the machine.				

3.5.1.1 Equipment Interfaces and Connections CBP 32

No.	Check	Reference document (IM unless other document specified)	Note	Value	Signature
1	Electrical supply: • fuse rating checked • cable installation is finished • connection of phases, neutral, and earth have been checked • all protective covers are in place and secure.				
2	The main supply cable is routed 1 m straight up from the top of the machine before it turns away, not routed through the machine.				
3	There are no leakages from the utility connections: • compressed air • water				
4	Electrical site test	• KA 2727.10 • DE-P474 • DE-P475			

3.5.1.2 Mechanical Completion Inspection CBP 32

No.	Check	Reference document (IM unless other document specified)	Note	Value	Signature
1	Position and assembly of equipment verified.	IM/Layout drawing			
2	Layout drawing(s) updated to “as built” status if applicable.				
3	Connections (utilities, product lines, CIP lines, and communication) verified.				
4	Risk and safety assessment completed.	• KA 2157.12 • KA 2157.01			
5	Mechanical completion certificate issued.				

4 Commissioning

About the Commissioning Chapter

This chapter describes the commissioning of the equipment. The commissioning covers all activities from the first start up of the equipment until the equipment is validated and ready for commercial production. The commissioning activity is finalized when a commissioning certificate is signed.

About the Commissioning Chapter 4-2

4.1 Functional Validation 4-5

4.1.1 Set and Check Machine 4-5

4.1.1-1 Control Panel - Set TPOP 4-5

4.1.1-2 Machine - Check before Test Run. 4-10

4.1.1-3 Machine - Check Settings 4-10

4.1.1-4 PLMS - Install config file 4-11

4.1.2 Test Run 4-11

4.2 Commissioning Validation 4-12

4.2.1 Verify Site Conditions 4-12

4.2.2 Commissioning Review 4-12

4.2.2.1 Commissioning Review Checklist CBP 32 4-13

4.2.2.2 Commissioning Inspection CBP 32. 4-14

This page intentionally left blank

4.1 Functional Validation

Make sure any local validation requirements are observed.

4.1.1 Set and Check Machine

These procedures are performed to check for smooth mechanical movement and to verify that no components have come loose or moved out of alignment during shipping.

4.1.1-1 Control Panel - Set TPOP

Machine Status	Electrical supply disconnecting device in position I (ON) Main air valve OFF

Configure the TPOP on the machine by entering the following information. See the Operation Manual for descriptions and detailed explanations of the TPOP.

- Set user.
- Set the date and time (see the Maintenance Manual).
- Set language group (see Procedure Load Application in the Maintenance Manual).
- Set the language (see the Maintenance Manual).

(Cont'd)

(Cont'd)

- Check the machine number. Check that the `Machine number` (4) matches the machine number of the machine plate. Step down the machine to program step IDLE to change this setting.
- Set Line automation type
  a) Chose `Line automation type` (1) depending on installation
- Set PLMS type
  a) Choose `PLMS type` (2) depending on installation.
  b) If `PLMS SNP` is chosen also set correct `SNP Id` (3) (default for single Cardboard Packer 32 is 9400).
  c) If `PLMS PPQ` is chosen and dual Cardboard Packer 32 are installed, select the `Machine Position` (5).

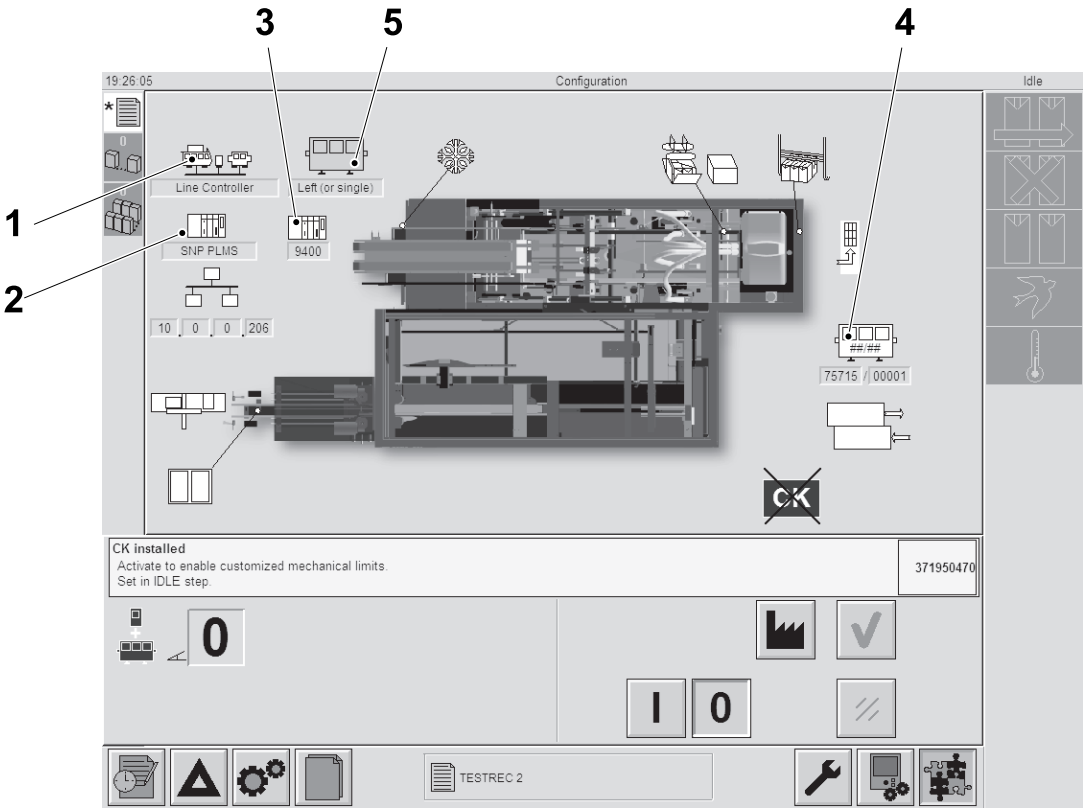

1 `Line automation type`
2 `PLMS type`
3 `SNP Id`
4 `Machine number`
5 `Machine Position`

Infeed

Log in as minimum technician and do the settings below.

(Cont'd)

(Cont'd)

a) Push the `Infeed conveyor type` button (1) to select infeed conveyor type.
   - TPC21 (single)
   - PC23 (single wide)
   - TUC54 (unit, same speed as TUC56)
   - UC24 (unit)
   - OTHER

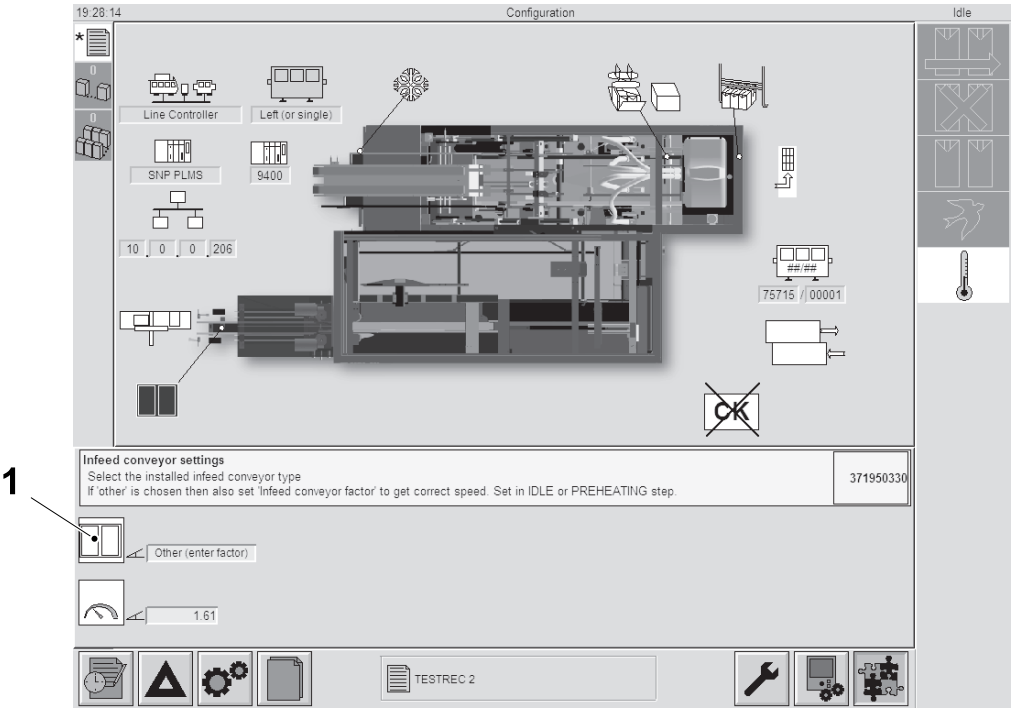

1 `Infeed conveyor type` button

(Cont'd)

(Cont'd)

b) If infeed conveyor type is set to `Other`, push the `Infeed conveyor factor` button (2)to enter correct factor for conveyor speed. To set the correct factor:

- Temporarily set `Line automation type` button (3) to `No Line Automation.`
- Step the machine to PRODUCTION and measure the infeed conveyor speed with a tachnometer in m/min.
- Tune this factor until measured speed matches the set conveyor speed (set in the in feed maintenance window).
- Change `Line automation type` button (3) back to the correct type when done.

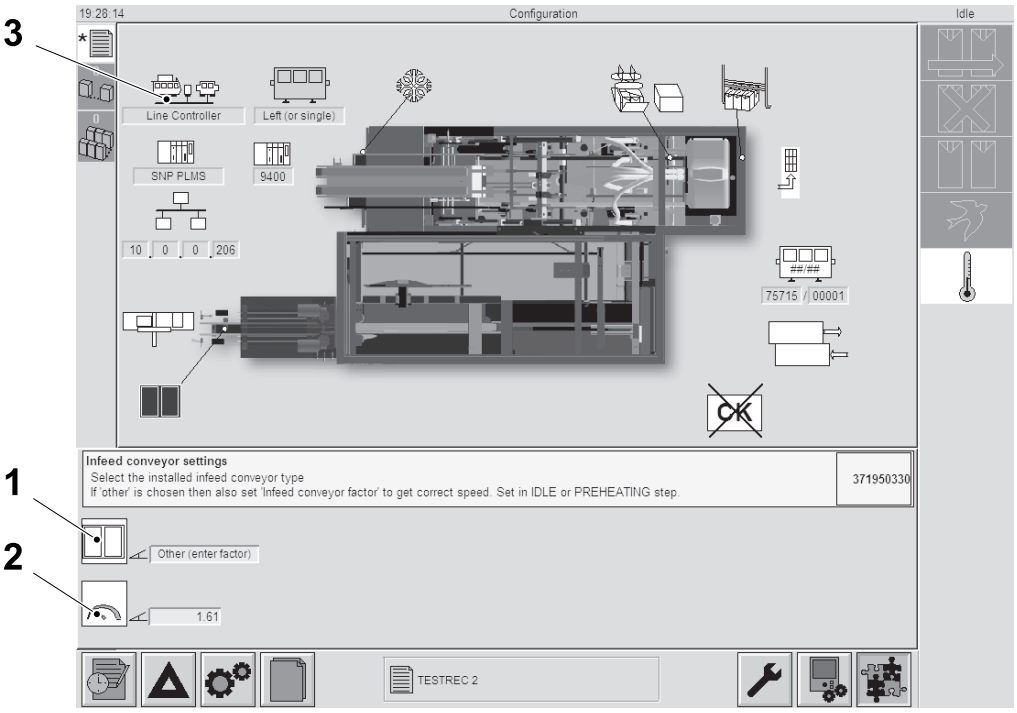

1 `Infeed conveyor type` button

2 `Infeed conveyor factor`

3 `Line automation type`

(Cont'd)

(Cont'd)

Discharge

a) Push the `Discharge type` button (1) to select the discharge type.
   - straight discharge
   - angled discharge (left or right).

b) Push the `Discharge conveyor speed` button (2) to enter discharge conveyor speed.

c) Push the `Discharge conveyor length` button (3) to enter the length of the discharge conveyor controlled by the CBP32.

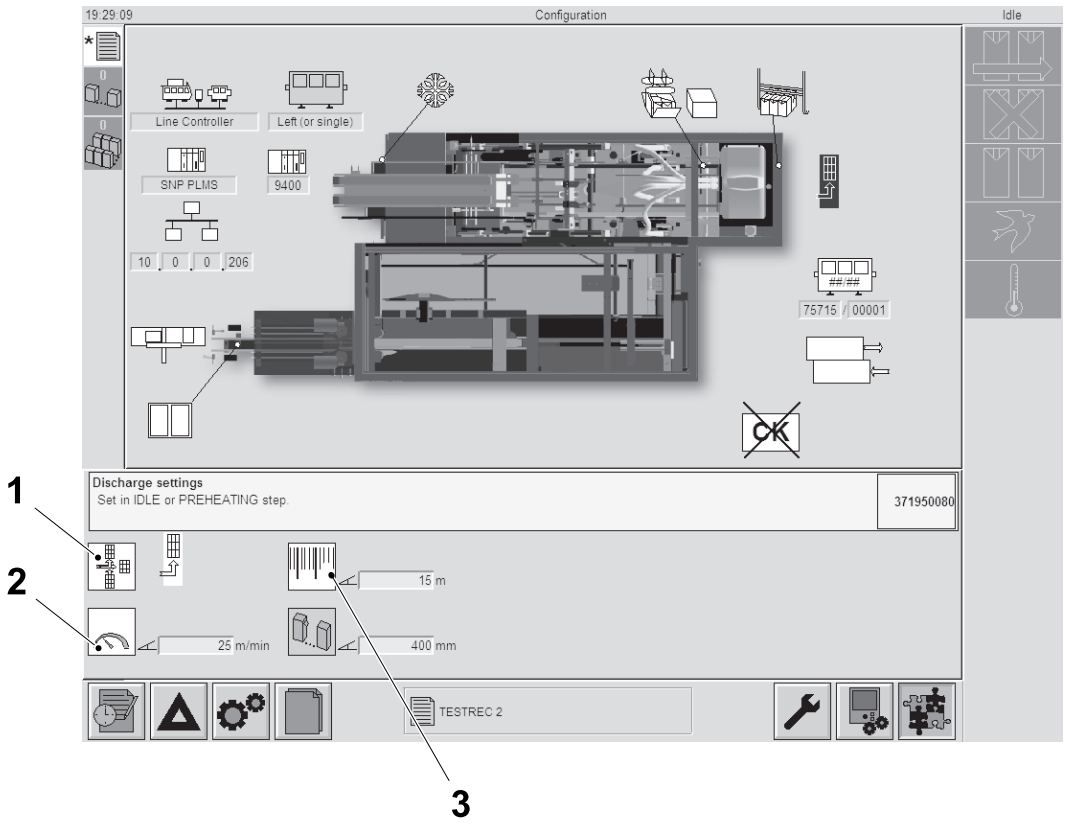

1 `Discharge type`
2 `Discharge conveyor speed`
3 `Discharge conveyor length`

4.1.1-2 Machine - Check before Test Run

Machine Status	Electrical supply disconnecting device in position O (OFF) Main air valve OFF

Before the test run of the equipment, complete the following checks. Make sure that

- all installation checks have been completed
- all required production personnel are available
- the operators have been trained and informed about
  a) machine operation
  b) use of the Operation Manual
  c) emergency stops and utility supply shut-off devices
  d) safety and hazard information
- all site preparation is finished
- the utility pipes have been pressure tested
- the welds have been treated
- the insulation work is finished
- the paint work is finished
- the floor work is finished, including gutters and drains
- the utility supplies are sufficient and stable
  a) compressed air
  b) water
  c) electrical power
- the utility supply shut-off devices are working properly
- all consumables are available in sufficient supply and properly stored
  a) blanks
  b) hotmelt

4.1.1-3 Machine - Check Settings

Note! This machine has been tested with dummies and might need a fine tuning on settings to fit packages at site. Note that filling machine packages made of fibre can differ from each other.

a) Fold a tray manually and check that the packages are fitting in the current tray. The packages shall fit exactly.

b) Check the machine programme (function, program steps, and alarms) as described in the Operation Manual (OM).

c) Check all pressure gauges settings according to the OM.

d) Check the direction of rotation for motor T40M0050; that the transfer belt moves towards the end stop.

4.1.1-4 PLMS - Install config file

Install config file into filler, see Maintenance Manual of filling machine Chapter x.x-x Install DE Config Files. PLMS config file for CBP 32 is located on the Software CD.

4.1.2 Test Run

- Run the machine, see the Operation Manual for instructions. Check that all functions, machine programs, and alarms are working.
- Make sure that the machine stops when an EMERGENCY STOP button is pushed. Test **all** EMERGENCY STOP buttons. See Emergency Stop Buttons in the Safety Precautions chapter.

WARNING
Risk of serious injuries.
Never run the machine if any of the emergency stop buttons is non-operational.

- Make sure that the machine stops when the covers fitted with safety switches are opened. This should be tested for **all** safety switches. Make sure that all covers are fitted to the machine before it is run. If the machine is equipped with tunnels, also check the safety switches on the tunnels. See section Safeguards in the Safety Precautions chapter.

WARNING
Risk of serious injuries.
Never run the machine if any safety switch is non-operational or any safety cover is not fitted.

- Check that the conveyor speed is equal to the “Tested conveyor speed” on the enclosed Final test report. If it is not, the conveyor speed must be adjusted, see the Maintenance Manual.
- Make sure that there are no abnormal noises, vibrations, etc. when the machine is running.

4.2 Commissioning Validation

The commissioning validation ensures that the packaging line is ready for commercial production. Validate the packages, equipment, and site. See the Tetra Pak Quality Assurance Management guidelines.

4.2.1 Verify Site Conditions

Practices for liquid food production and manufacturers' specifications. See also 2.6 Site Preparation.

4.2.2 Commissioning Review

The purpose of the commissioning review is to verify that the equipment in question is ready for commercial production. This inspection must be carried out in conjunction with all involved parties, and prior to the performance validation.

Defects or faults together with necessary actions and timing to correct the deviations must be recorded in the checklist. See Section 4.2.2.2 Commissioning Inspection CBP 32. Performance validation must not be started until the commissioning inspection has been completed.

Use the checklist as follows:

- Under Note, document any deviations, incorrect values, or comments.
- Under Value, document the actual value.
- Under Signature, sign that the check is performed.

4.2.2.1 Commissioning Review Checklist CBP 32

No.	Check	Reference document IM unless other document specified	Note	Value	Signature
1	Inspect the compressed air connection. Make sure that the connection is done correctly.				
2	Inspect the electrical connection. Make sure that the connection is done correctly.				
3	Make sure that all delivered equipment is assembled in accordance with the instruction in the 3 Mechanical Completion chapter.				
4	Make sure that the machine is correctly connected to the infeed and discharge conveyors. Set the infeed conveyor length via the TPOP.				
5	Check the direction of rotation for motor T40M0050; that the transfer belt moves towards the end stop.				
6	Check all pressure gauges settings according to the Operation Manual (OM).				
7	Check the machine programme (function, program steps, and alarms) as described in the Operation Manual (OM).				
8	Make sure that the Start-up kit is delivered together with the machine.				
9	Fold a tray manually and check that the packages are fitting in the current tray. The packages shall fit exactly.				

4.2.2.2 Commissioning Inspection CBP 32

No.	Check	Reference document IM unless other document specified	Note	Signature
1	Functional validation performed.			
2	Commissioning validation performed.			
3	Commissioning certificate issued.			

5 Performance Validation

About the Performance Validation Chapter

This chapter describes the performance validation of the equipment. The performance validation covers the activities from when the equipment is ready for commercial production until the equipment is handed over to the final user.

The chapter includes information on how to verify that the equipment achieves the performance targets during commercial production.

About the Performance Validation Chapter 5-2

5.1 Performance Preconditions 5-5

5.2 Commercial Production 5-6

5.3 Monitor and Improve the Performance 5-7

5.4 Performance Test 5-8

5.5 Performance Validation Inspection 5-9

5.5.1 Performance Validation Criteria CBP 32 5-11

5.5.2 Performance Validation Completed CBP 32 5-11

This page intentionally left blank

5.1 Performance Preconditions

To ensure an effective and successful performance validation, the following has to be in place prior to the execution of the performance validation:

- Commercial production: commercial production must have started.
- Attendance: both Tetra Pak and the final user must have appointed representatives to participate in the performance validation.
- Operation: the equipment must be operated according to the Operation Manual for each component in the line.
  Qualified personnel from the final user should operate the equipment during the performance validation procedures.
- Production plan: a production plan covering the duration of the performance validation must be available and agreed between Tetra Pak and the final user of the equipment before the start of performance validation.
  The production plan should reflect the normal constant running conditions, including the range of products and packaging material that the final user intends to use with the equipment, as well as any expected product changes.
  The production plan should include, in particular:
  - preparation schedule
  - production schedule and resources
  - volume to be produced
  - number of product changes and product availability
  - number of design changes and packaging/additional material availability
- Packaging material: all packaging materials be available (including film)
- Consumables: all relevant consumables (lubricants, and so on) have to be available.
- Parts: an adequate supply of spare parts must be maintained on site according to Tetra Pak recommendations.

5.2 Commercial Production

The performance validation is performed when the equipment runs in commercial production. See the sales agreement for more information.

5.3 Monitor and Improve the Performance

During the performance monitoring period the actual performance of the equipment is measured and any non-performance issues are solved. See the sales agreement for more information.

5.4 Performance Test

During the performance test the actual performance of the equipment during a pre-defined period is measured. The result of the performance test is recorded as the certified performance in the performance certificate. See the sales agreement for more information.

5.5 Performance Validation Inspection

The purpose of the performance validation inspection is to verify that the equipment in question fulfils the performance agreed upon. This inspection must be carried out in conjunction with all involved parties, prior to final hand over of the equipment.

Defects or faults together with necessary actions and time to correct the deviations must be recorded in the checklist. See Section 5.5.1 Performance Validation Criteria CBP 32.

Use the checklist as follows:

- Under Note, document any deviations, incorrect values, or comments.
- Under Signature, sign that the check is performed.

This page intentionally left blank

5.5.1 Performance Validation Criteria CBP 32

No.	Check	Reference document IM unless other document specified	Note	Signature
1	Commercial production started.			
2	The General Performance Preconditions are fulfilled.	Sales agreement with schedules		
3	The Special Performance Preconditions are fulfilled (if applicable).	Sales agreement with schedules		
4	A production plan for the performance validation period is established and communicated.	Sales agreement with schedules		
5	The Machine Mechanical Efficiency (MME) and Line Machine Mechanical Efficiency (LMME) has been monitored and optimized.			

5.5.2 Performance Validation Completed CBP 32

No.	Check	Reference document IM unless other document specified	Note	Signature
1	Performance certificate issued.			

This page intentionally left blank

6 Disassembly and Removal

About the Disassembly and Removal Chapter

This chapter contains information about how to safely disassemble and remove the equipment for reuse in another location or for final disposal.

About the Disassembly and Removal Chapter. 6-2

6.1 Disconnect Utilities 6-5

6.1.1 Compressed Air 6-5

6.1.2 Electricity 6-5

6.1.3 Water 6-5

6.2 Disassemble Machine 6-6

6.3 Preparation for Storage 6-7

6.3.1 Storing the Crated Equipment 6-7

6.3.1.1 Short Term Storing 6-7

6.4 Moving..... 6-8

6.5 Re-crating..... 6-9

6.6 Return to the manufacturer 6-10

6.7 Final Disposal 6-11

This page intentionally left blank

6.1 Disconnect Utilities

6.1.1 Compressed Air

WARNING
Risk of personal injury.
Make sure that air supply to the machine is switched off before performing any disconnection work.

Disconnect the compressed air from the pressure regulator, also see Section 3.3 Equipment Interfaces and Connections.

6.1.2 Electricity

WARNING
Risk of electrical shock and short circuits.
Make sure that power is switched OFF upstream before performing any work on cables and electrical components.

Disconnect the electricity, see the Electrical Manual, also see Section 3.3 Equipment Interfaces and Connections.

6.1.3 Water

WARNING
Risk of personal injury.
Make sure that the water supply to the machine is switched OFF before performing any disconnection work.

Disconnect the water hose from the hose brake connection, also see Section 3.3 Equipment Interfaces and Connections.

6.2 Disassemble Machine

WARNING

Risk of personal injury.

Before disassembling the machine, read the Safety Precautions.

Disassemble the machine in the reverse of the order described in Section 3.2.3 Assembly.

6.3 Preparation for Storage

6.3.1 Storing the Crated Equipment

CAUTION
Risk of equipment damage.
Store the crates indoors. Exposure to damp or too high or low temperatures may damage the equipment.

The crate delivered with the equipment is intended to be **used for transport and short term storing**. If storing the contents for a long time, the contents have to be repacked in a suitable and well ventilated (open) crate.

6.3.1.1 Short Term Storing

Make sure that the storage environment respects the following conditions:

Contents	Recommended storage temperature	Recommended storage humidity	Temperature gradient
CBP 32	-20 °C to 70 °C (-4 ºF to 158 ºF)	30 to 95%	Maximum 2 ºC/min (3.6 ºF)

6.4 Moving

DANGER

Immediate danger to life.
The machine may tilt if the centre of gravity or the forklift points is not observed. Failure to observe these may result in immediate danger to life and/or major damage to equipment.

Prior to lifting and moving the machine from its production site, do the following:

- check that the machine can be transported without any problems with ceiling height, doors, passages, and so on.
- make sure that the machine can be lifted in accordance to section 1.1.2 Space and 3.1.2 Moving the Crated Equipment3.1.2 Moving the Crated Equipment.

6.5 Re-crating

Read the instructions in 3.1.5 Opening the Crate, and re-crate the machine in the reverse order.

6.6 Return to the manufacturer

Prepare the equipment for transport. See sections 6.1 Disconnect Utilities and 6.2 Disassemble Machine.

Contact the local service organisation for further instructions and to arrange shipment.

6.7 Final Disposal

Contact your Tetra Pak market company for more information about final disposal and reuse.

If the machine is to be permanently disposed of, perform the following operations:

a) Remove all packaging material and straws, and dispose of these according to local regulations.

b) Empty the hotmelt from the hotmelt equipment according to the Nordson Manual. Dispose of the hotmelt according to local regulations.

c) Empty the oil from the central lubrication system. Dispose of the oil in compliance with local regulations.

d) Disassemble the machine as far as possible and separate the following materials:
   - stainless steel (panels and doors)
   - cast iron
   - aluminium
   - glass (windows, and so on)
   - rubber (seals, O-rings, and so on)
   - nylon and other plastics
   - electrical cables
   - hydraulic and pneumatic hoses
   - electrical components (batteries, and so on)

e) Recycle or dispose of all materials, groups, and components according to local regulations.

This page intentionally left blank

Tetra Pak

Label for 40 mm binder ***Note!*** *This page is generated* ***automatically.***

Cardboard Packer 32 by Tetra Pak
673852-0500 Issue 2012-09
Doc. No. IM-3254222-0101

Cardboard Packer 32 by Tetra Pak 1(2)
673852-0500 Issue 2012-09
Doc. No. IM-3254222-0101

Cardboard Packer 32 by Tetra Pak
673852-0500 Issue 2012-09
Doc. No. IM-3254222-0101

Cardboard Packer 32 by Tetra Pak 2(2)
673852-0500 Issue 2012-09
Doc. No. IM-3254222-0101

Cardboard Packer 32 by Tetra Pak
673852-0500 Issue 2012-09
Doc. No. IM-3254222-0101

Cardboard Packer 32 by Tetra Pak 1(2)
673852-0500 Issue 2012-09
Doc. No. IM-3254222-0101

Cardboard Packer 32 by Tetra Pak
673852-0500 Issue 2012-09
Doc. No. IM-3254222-0101

Cardboard Packer 32 by Tetra Pak 2(2)
673852-0500 Issue 2012-09
Doc. No. IM-3254222-0101

Cardboard Packer 32 by Tetra Pak
673852-0500 Issue 2012-09
Doc. No. IM-3254222-0101

Cardboard Packer 32 by Tetra Pak 1(3)
673852-0500 Issue 2012-09
Doc. No. IM-3254222-0101

Cardboard Packer 32 by Tetra Pak
673852-0500 Issue 2012-09
Doc. No. IM-3254222-0101

Cardboard Packer 32 by Tetra Pak 2(3)
673852-0500 Issue 2012-09
Doc. No. IM-3254222-0101

Cardboard Packer 32 by Tetra Pak
673852-0500 Issue 2012-09
Doc. No. IM-3254222-0101

Cardboard Packer 32 by Tetra Pak 3(3)
673852-0500 Issue 2012-09
Doc. No. IM-3254222-0101

Cardboard Packer 32 by Tetra Pak
673852-0500 Issue 2012-09
Doc. No. IM-3254222-0101

Cardboard Packer 32 by Tetra Pak 3(3)
673852-0500 Issue 2012-09
Doc. No. IM-3254222-0101

Cardboard Packer 32 by Tetra Pak
673852-0500 Issue 2012-09
Doc. No. IM-3254222-0101

Cardboard Packer 32 by Tetra Pak 1(2)
673852-0500 Issue 2012-09
Doc. No. IM-3254222-0101

Cardboard Packer 32 by Tetra Pak
673852-0500 Issue 2012-09
Doc. No. IM-3254222-0101

Cardboard Packer 32 by Tetra Pak 2(2)
673852-0500 Issue 2012-09
Doc. No. IM-3254222-0101

Cardboard Packer 32 by Tetra Pak
673852-0500 Issue 2012-09
Doc. No. IM-3254222-0101

Cardboard Packer 32 by Tetra Pak 1(3)
673852-0500 Issue 2012-09
Doc. No. IM-3254222-0101

Cardboard Packer 32 by Tetra Pak
673852-0500 Issue 2012-09
Doc. No. IM-3254222-0101

Cardboard Packer 32 by Tetra Pak 2(3)
673852-0500 Issue 2012-09
Doc. No. IM-3254222-0101

Cardboard Packer 32 by Tetra Pak
673852-0500 Issue 2012-09
Doc. No. IM-3254222-0101

Cardboard Packer 32 by Tetra Pak 3(3)
673852-0500 Issue 2012-09
Doc. No. IM-3254222-0101

Cardboard Packer 32 by Tetra Pak
673852-0500 Issue 2012-09
Doc. No. IM-3254222-0101

Cardboard Packer 32 by Tetra Pak 3(3)
673852-0500 Issue 2012-09
Doc. No. IM-3254222-0101

Cardboard Packer 32 by Tetra Pak

673852-0500 Issue 2012-09

Doc. No. IM-3254222-0101

Cardboard Packer 32 by Tetra Pak

673852-0500 Issue 2012-09

Doc. No. IM-3254222-0101

Cardboard Packer 32 by Tetra Pak

673852-0500 Issue 2012-09

Doc. No. IM-3254222-0101

Cardboard Packer 32 by Tetra Pak 1(3)

673852-0500 Issue 2012-09

Doc. No. IM-3254222-0101

Cardboard Packer 32 by Tetra Pak 1(2)

673852-0500 Issue 2012-09

Doc. No. IM-3254222-0101

Cardboard Packer 32 by Tetra Pak 2(3)

673852-0500 Issue 2012-09

Doc. No. IM-3254222-0101

Cardboard Packer 32 by Tetra Pak 2(2)

673852-0500 Issue 2012-09

Doc. No. IM-3254222-0101

Cardboard Packer 32 by Tetra Pak 3(3)

673852-0500 Issue 2012-09

Doc. No. IM-3254222-0101