*e **variable definitions** made in the **front page** file!!*

etra Cardboard Packer 70
670272-060V MULTI infeed

Issue: 9605 Doc No: SPC-585118-01

Tetra Cardboard Packer 70
670272-060V MULTI infeed

Issue: 9605 Doc No: SPC-585118-01

Tetra Cardboard Packer 70
670272-060V MULTI infeed

Issue: 9605 Doc No: SPC-585118-01

Tetra Cardboard Packer 70
670272-060V MULTI infeed

Issue: 9605 Doc No: SPC-585118-01

Tetra Cardboard Packer 70
670272-060V MULTI infeed

Issue: 9605 Doc No: SPC-585118-01

Tetra Cardboard Packer 70
670272-060V MULTI infeed

Issue: 9605 Doc No: SPC-585118-01

Tetra Cardboard Packer 70
670272-060V MULTI infeed

Issue: 9605 Doc No: SPC-585118-01

Tetra Cardboard Packer 70
670272-060V MULTI infeed

Issue: 9605 Doc No: SPC-585118-01

Tetra Cardboard Packer 70
670272-060V MULTI infeed

Issue: 9605 Doc No: SPC-585118-01

Tetra Cardboard Packer 70
670272-060V MULTI infeed

Issue: 9605 Doc No: SPC-585118-01

Tetra Cardboard Packer 70
670272-060V MULTI infeed

Issue: 9605 Doc No: SPC-585118-01

Tetra Cardboard Packer 70
670272-060V MULTI infeed

Issue: 9605 Doc No: SPC-585118-01

SPC
Spare Parts Catalogue

Tetra Cardboard Packer 70
670272-060V MULTI infeed

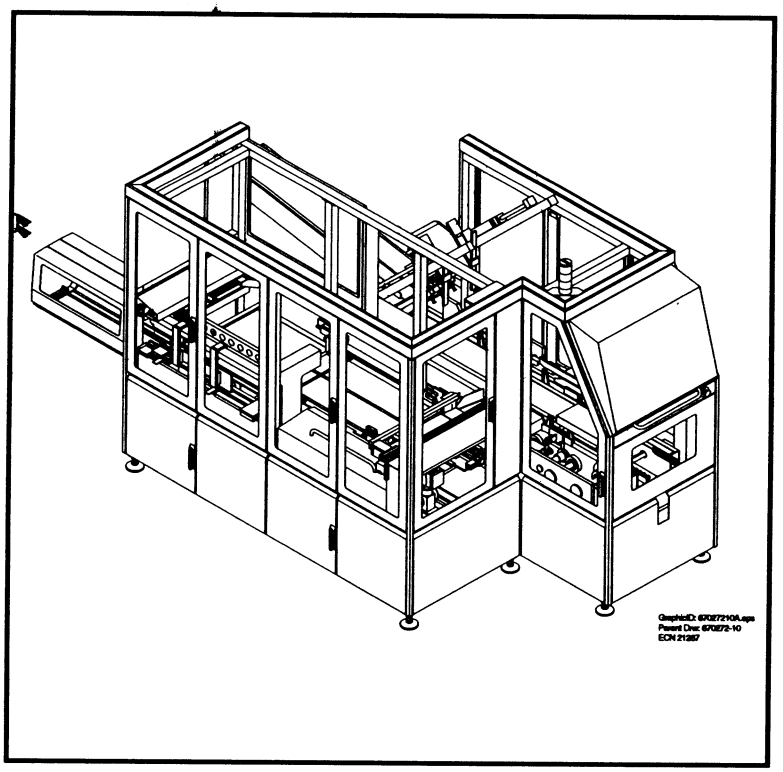

Tetra Pak

Doc No: SPC-585118-01

Main Groups of the Machine

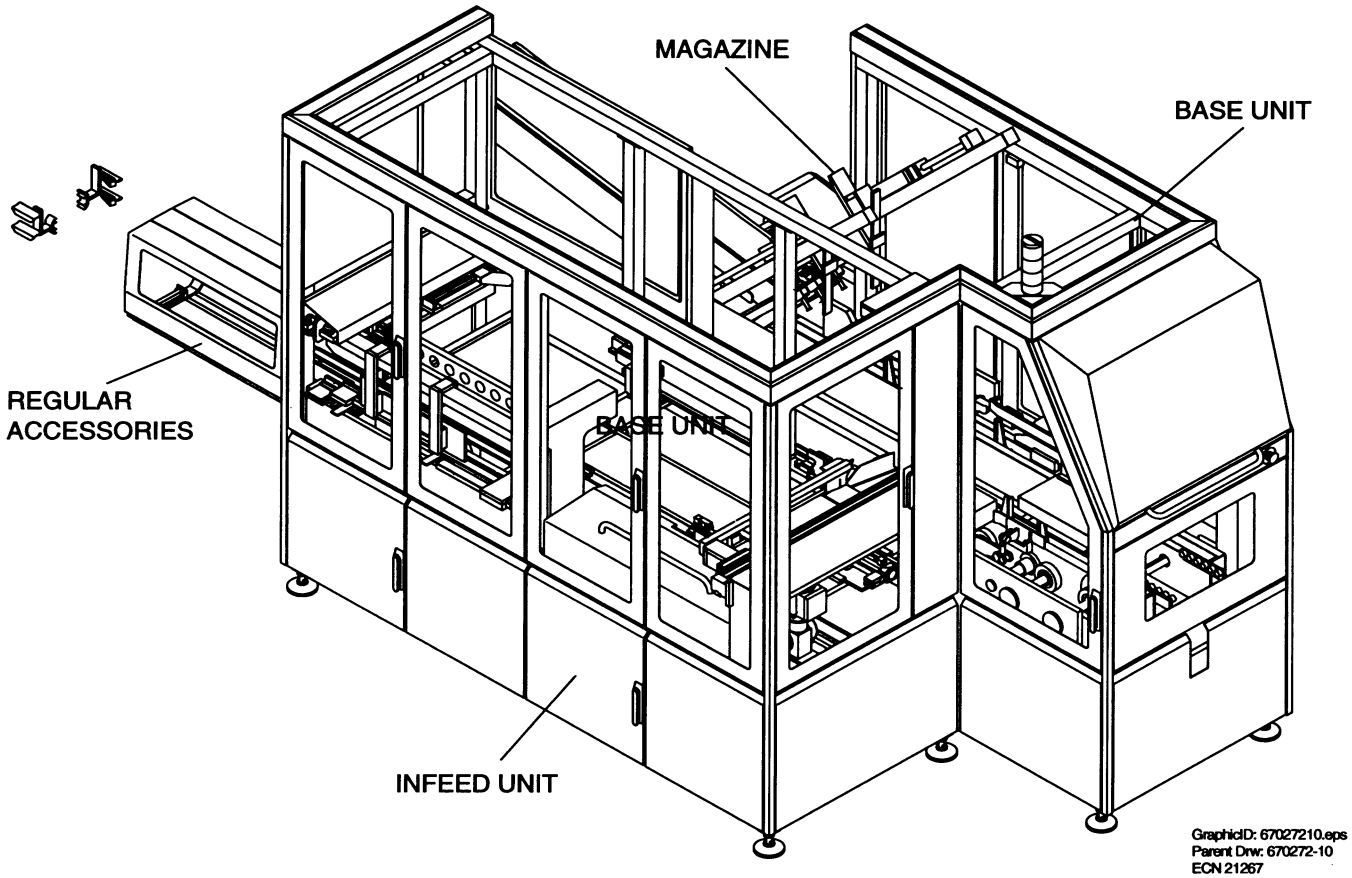

For the correct machine data, check your machine specification, supplied with the machine!

This document is valid for:

Series No/ Machine No Sign.

SPC
Spare Parts Catalogue

Tetra Cardboard Packer 70
670272-060V
with MULTI infeed

Equipment Included:

To check your actual machine data and eventual installed extra equipments, check the machine specification, supplied with the machine delivery!

Order/add necessary documents.

Table of Content:

Introduction 5

Base Unit
B- 670294-0401 17

Infeed Unit
B- 670292-0405 215

Magazine Unit
B- 670293-040V 387

For machines with Wrap Around equipment
Wrap Around Unit
B- 670375-040V 423

Regular Accessories
B- 670290-040V 461

Part number index
..... 491

Doc No: SPC-585118-01

Issue 9605

Tetra Pak

Tetra Pak Distribution AB

This page is intentionally left blank

Service

When ordering spare parts for your machine, contact the nearest Tetra Pak service station.

Manufacturer

This machine is produced by:
Tetra Pak Distribution AB
Ruben Rausings gata
221 86 Lund /Sweden

Machine identification

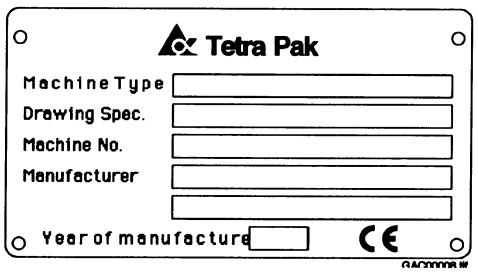

Figure 1 Example of machine plate

This machine plate is an example of the type of machine plate, attached to the machine frame. The plate carries data needed when contacting Tetra Pak concerning this particular machine.
The location of the different machine plates is shown on the page "Location of machine number plates", **see page 2**

Purpose of the Spare Parts Catalogue.

The purpose of the Spare Parts Catalogue (SPC) is to provide the technicians and contact personnel with information on how to find and order spare parts for maintenance and service of the machine. For instructions of how to replace parts and adjust machine setup, see the Maintenance Manual (MM).

Design modification

The content of this document is in accordance with the design and construction of the machine at the time it was delivered from the Tetra Pak machine production facility.

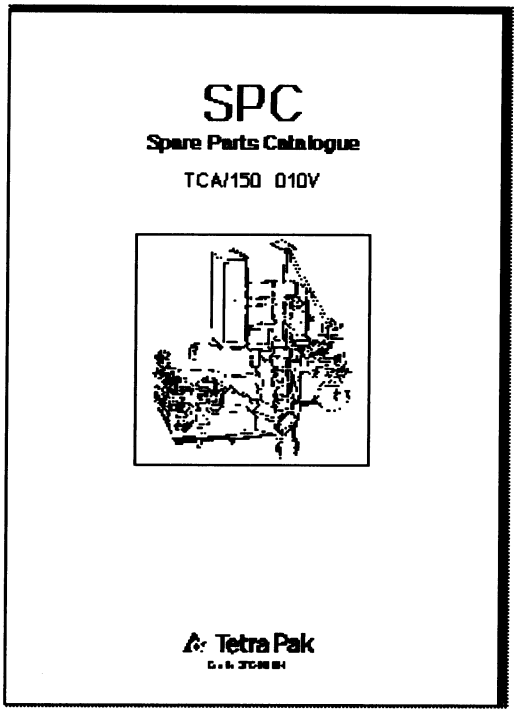

Figure 2 Example of catalogue front cover

Copyright © 1996
Tetra Pak Distribution AB

All rights reserved. No parts of this document may be reproduced or copied in any forms or by any means, without written permission from Tetra Pak Distribution AB.

Document producer

This document has been produced by:
Tetra Pak Distribution AB
Technical Publications
Ruben Rausings gata
221 86 Lund /Sweden

Further copies

Additional copies can be ordered from the nearest Tetra Pak service station. When ordering technical publications, always quote the document number printed on the front cover of the document concerned.

Number of pages

This document contains totally **534 pages,** including the first **14** introduction pages.

Tetra Pak Part numbering system

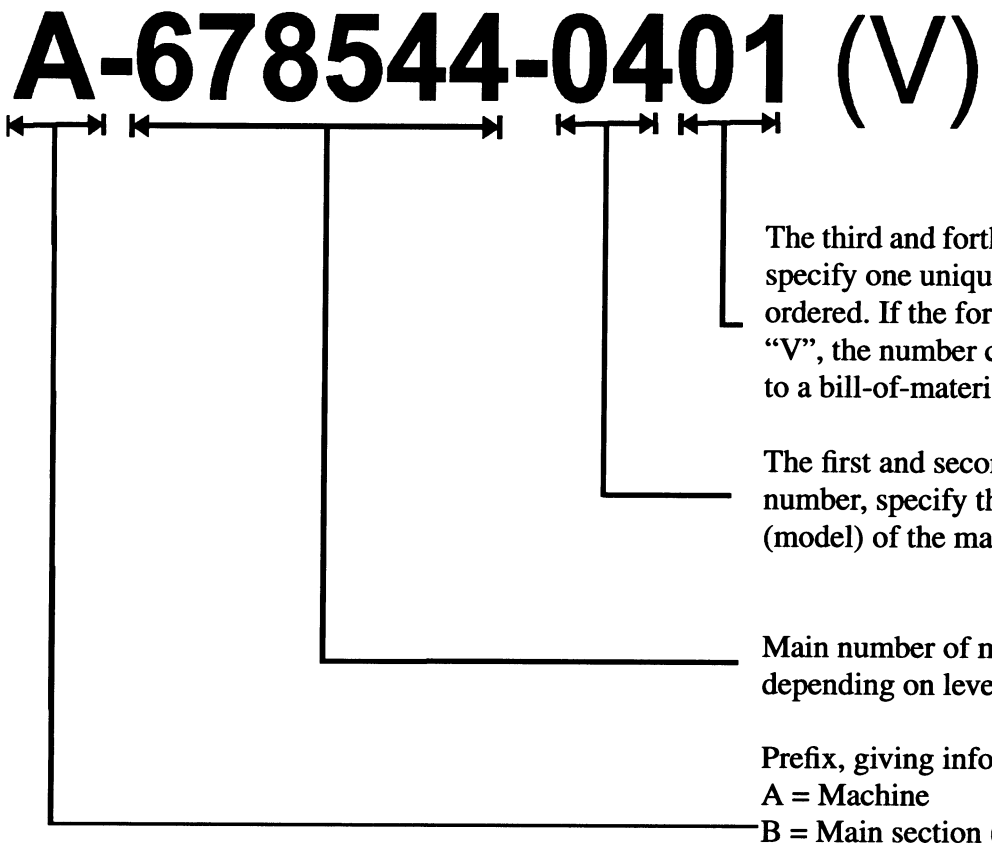

The third and forth digits in the subnumber, specify one unique group which can be ordered. If the forth digit is replaced by a "V", the number combination only points to a bill-of-material document.

The first and second digits in the sub-number, specify the development step (model) of the machine or group.

Main number of machine /group /article, depending on level.

Prefix, giving information about level, eg.
A = Machine
B = Main section (*)
C = Groups and subgroups

*) Customized distribution machines are registered as B-level as well.

Figure 3

How to find the correct Spare Part Number

A. Check that the data on your machine sign, and /or machine specification, corresponds with the catalogue.

1) Main groups of the machine

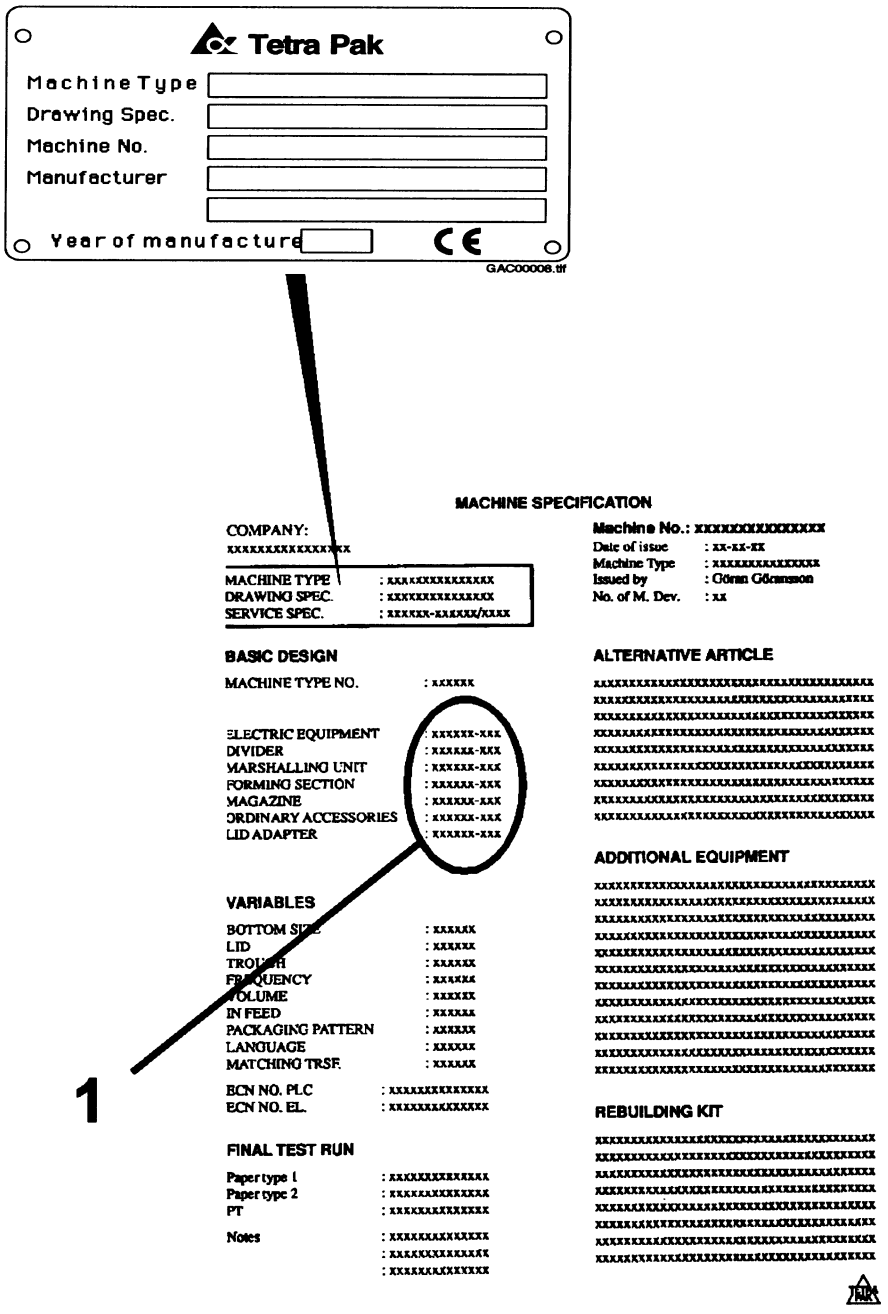

Figure 6 Example of Machine Specification

B. The second catalogue sheet contains a table of content for the main groups, included in the catalogue. The information regarding machine and main group status MUST correspond with your machine specification.
Locate and choose the main groups page number (1), in which you want to search for spare parts.

1) Main group
2) Machine type

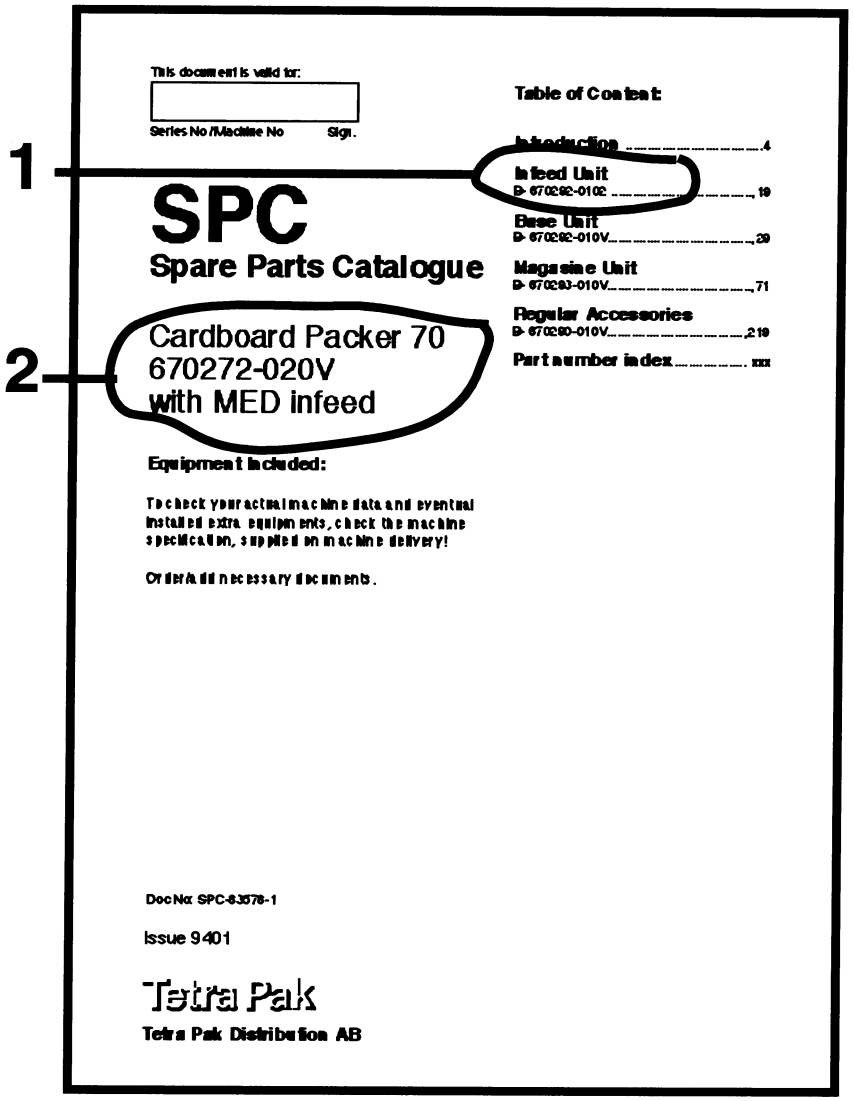

Figure 3 Example of catalogue page

C. Search in the main group illustration, the item number, which may hold your wanted spare part. Go to the text page below and find the page number for the actual group.

3) Internal information, such as latest Engineering Change, bill-of-material included in the catalogue page.
4) Used-In reference to next higher level in the machine structure
5) Pos numbering on illustration
6) Illustration number in the SPC database
7) Continuous page numbering through the document
8) Pos number corresponding to illustration
9) Group or article number.
10) Group or article description
11) Machine type including development staus
12) Group description
13) Group number (bill-of-material) including development status
14) Document number

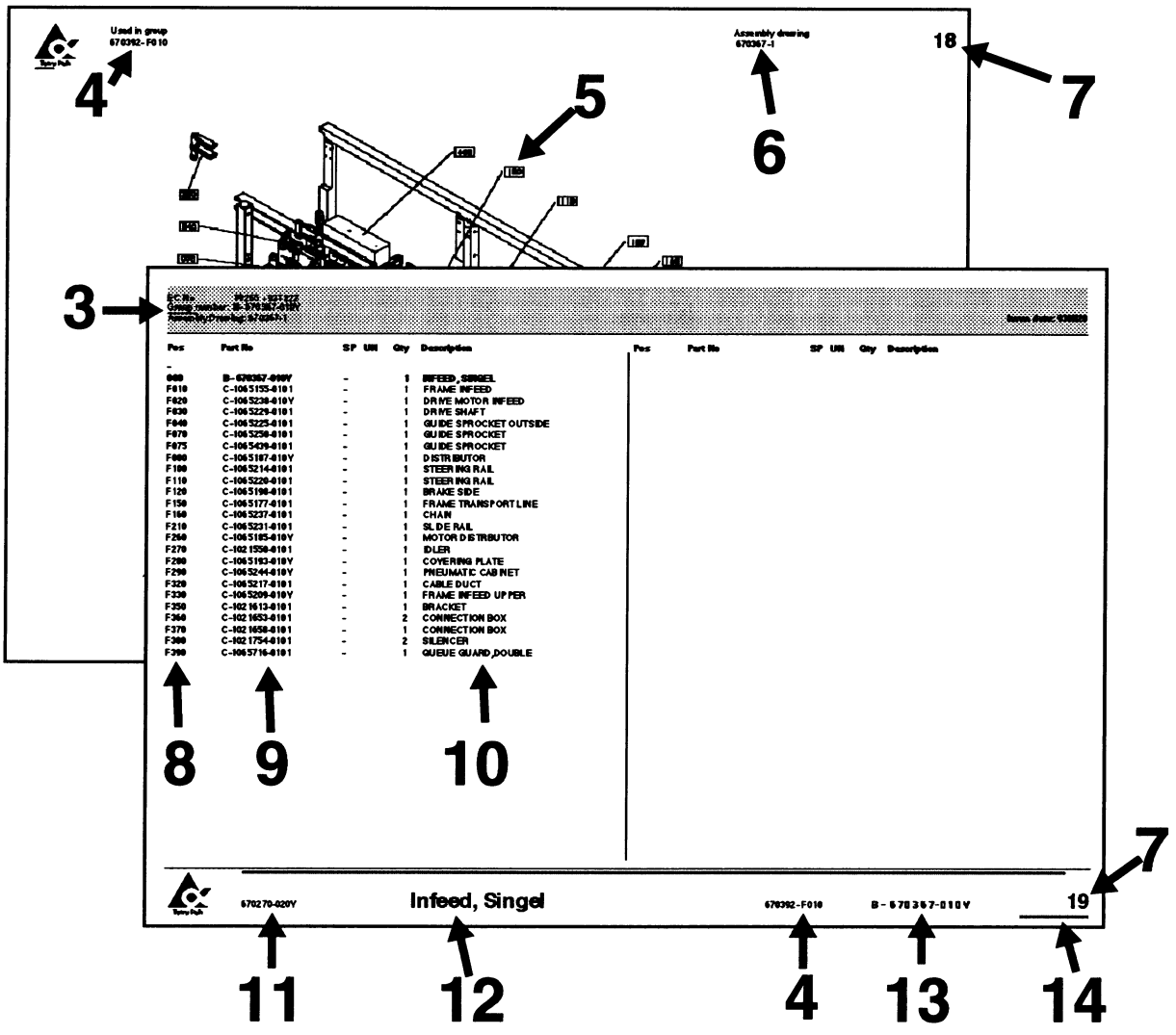

Figure 8 Example of catalogue page

D. Continue to the found page number, and search in the illustration for your spare part. Go to the text row for the found item number, and read the part number. Take eventual variant headings in consideration; if you are unsure, read your machine specification.

15) Variant heading, eg volume, left /right etc.
16) Heading for common parts
17) SP = Code for articles, which are included into various spare part kits.
    - U = starting-up kit supplied on machine delivery.
    - P = production kit to be held at production site workshop.
    - S = service kit to be held at service stations store.
    - C = central depot kit to be available at the central store.
18) UN = Short code for measure units, eg mm, kg etc.
19) Qty = Number of items needed in the complete assembly.

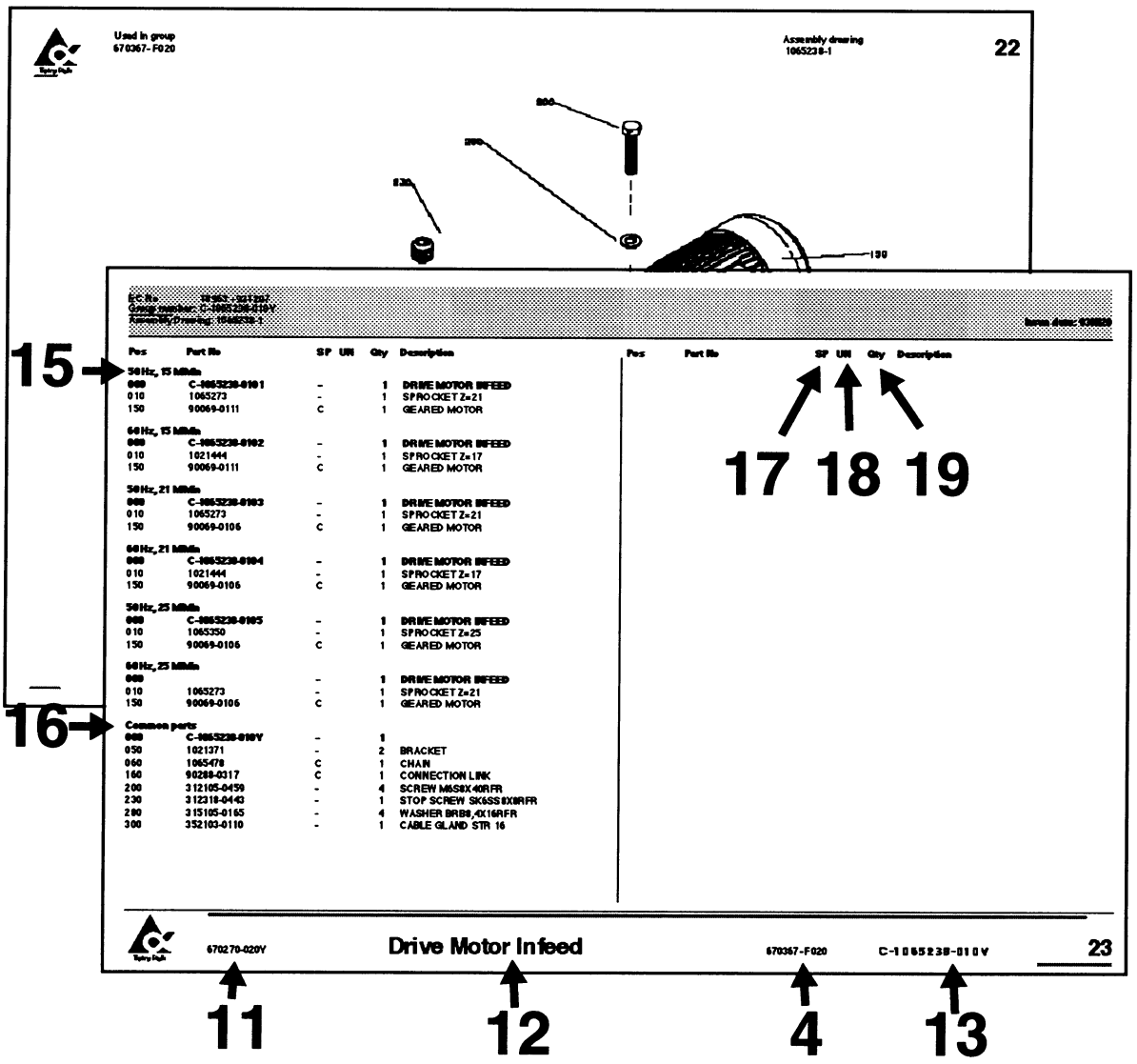

Figure 9 Example of catalogue page

This page intentionally left blank

Special terminology and abbreviations

This page intentionally left blank

SPC

Spare Parts Catalogue

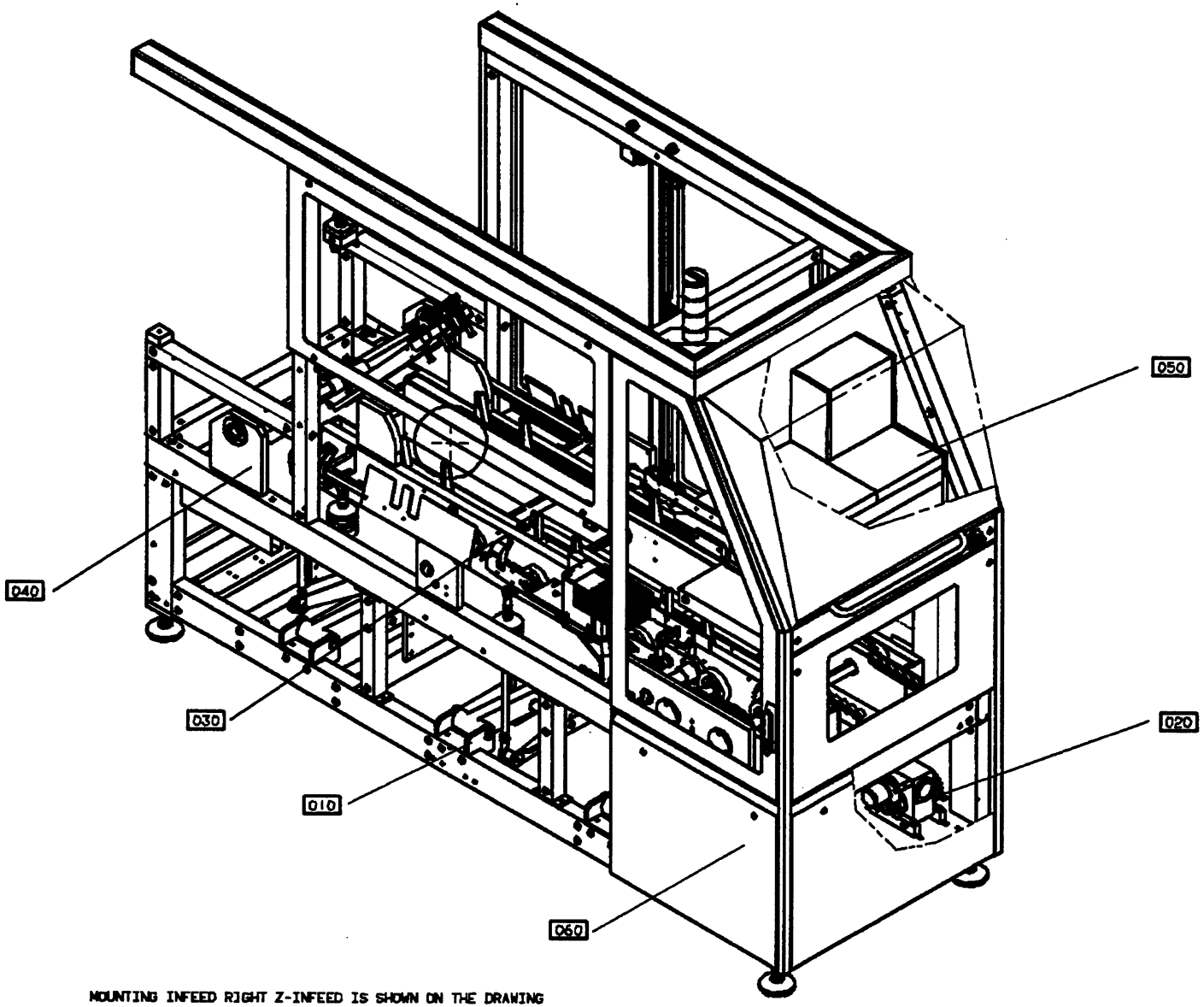

MOUNTING INFEED RIGHT Z-INFEED IS SHOWN ON THE DRAWING

GraphicID: 67029402.tif
Parent Drw:670294-2
ECN No: 22292

Pos	Part No	SP	UN	Qty	Description	Page No
-						
000	B- 670294-040V	-			BASE UNIT	
010	B- 670280-0401	-			BOTTOM SECTION	19
020	B- 670282-0301	-			DRIVE UNIT	59
030	B- 670284-0401	-			FEED UNIT	69
040	B- 670283-040V	-			SUPERSTRCTURE	115
050	B- 670281-040V	-			HOT MELT EQUIPMENT	145
060	B- 670296-020V	-			COVERING BASE UNIT	157

Pos	Part No	SP	UN	Qty	Description	Page No

Left Hand infeed

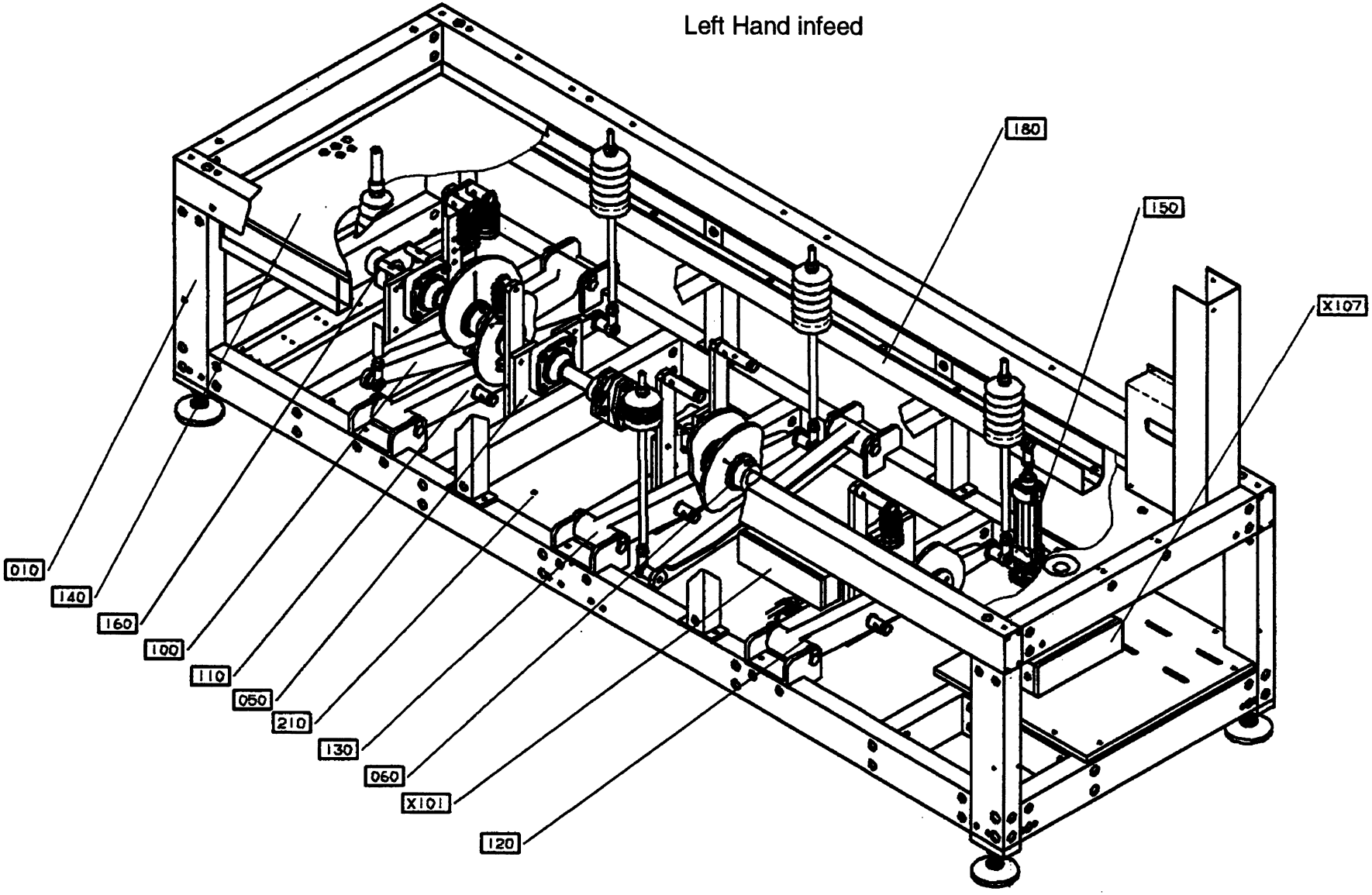

GraphicID: 67028003.tif
Parent Drw:670280-3
ECN No: 22292

Pos	Part No	SP	UN	Qty	Description	Page No
-						
000	B- 670280-0401	-		1	BOTTOM SECTION	
X101	C-1021897-0201	-		1	CONNECTION BOX	23
X107	C-1065905-0101	-		1	CONNECTION BOX	25
010	C- 556609-0301	-		1	LOWER FRAME	27
050	C- 556641-0201	-		1	MAINSHAFT REAR	29
060	C- 556654-0201	-		1	MAINSHAFT FRONT	33
100	C-1021000-0101	-		1	OPERATING ARM MAGASIN	37
110	C-1021009-0101	-		1	FOLDING FLAP	39
120	C-1021015-0101	-		1	SQUEEZER	43
130	C-1021019-0101	-		1	FLAP FOLDER	45
140	C-1021023-0301	-		1	COVERING PLATE	47
150	C-1021404-0101	-		1	PNEUMATIC CUSHIONING	49
160	C-1021982-0201	-		1	ANGLE ENCODER	53
180	C-1021730-0101	-		1	CABLE DUCT	55
210	C-1128833-0201	-		1	COVERING PLATE	57

Pos	Part No	SP	UN	Qty	Description	Page No

Right Hand infeed

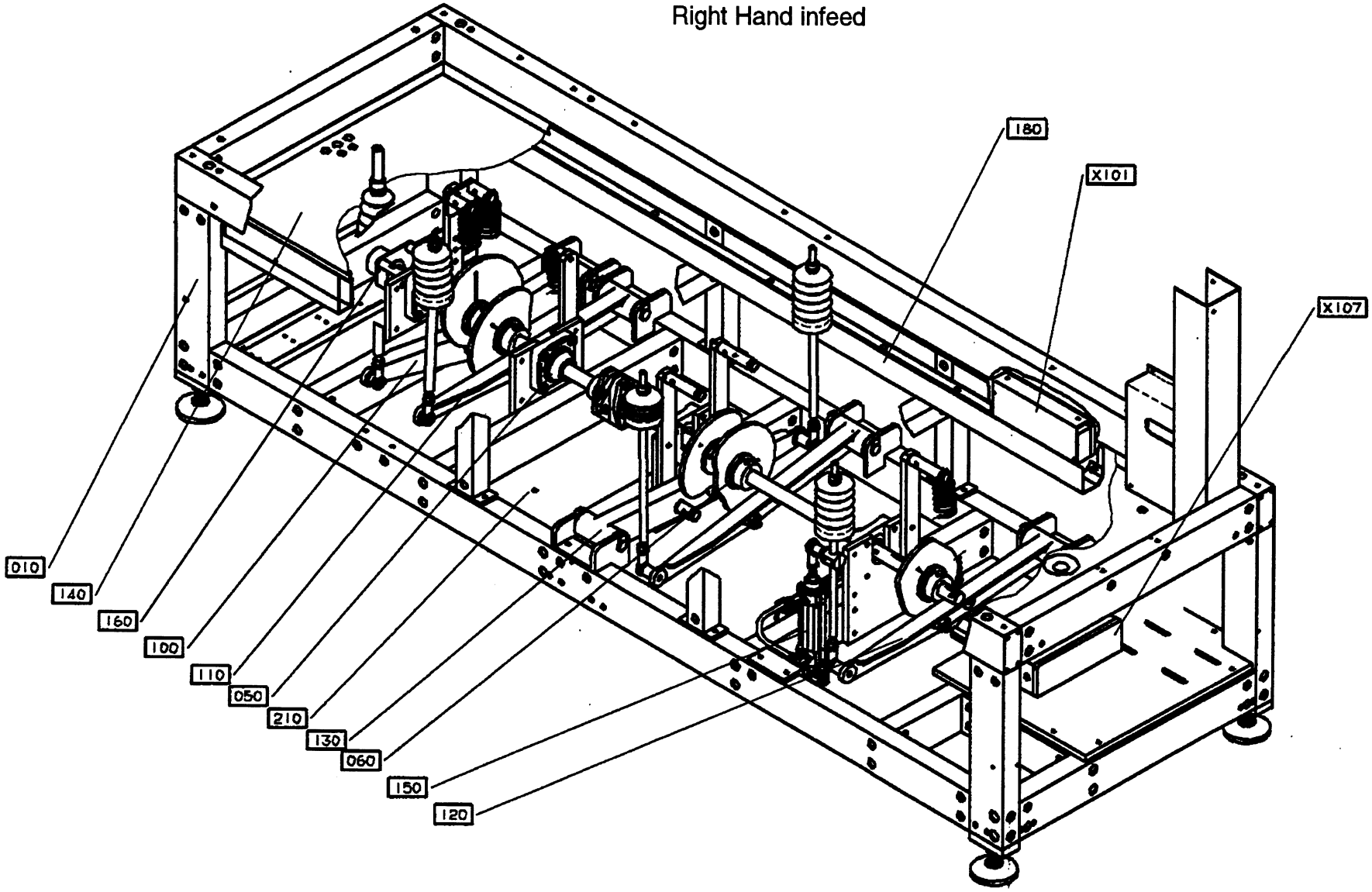

GraphicID: 67028004.tif
Parent Drw:670280-4
ECN No: 22292

Pos	Part No	SP	UN	Qty	Description	Page No
-						
000	B- 670280-0401	-		1	BOTTOM SECTION	
X101	C-1021897-0201	-		1	CONNECTION BOX	23
X107	C-1065905-0101	-		1	CONNECTION BOX	25
010	C- 556609-0301	-		1	LOWER FRAME	27
050	C- 556641-0201	-		1	MAINSHAFT REAR	29
060	C- 556654-0201	-		1	MAINSHAFT FRONT	33
100	C-1021000-0101	-		1	OPERATING ARM MAGASIN	37
110	C-1021009-0101	-		1	FOLDING FLAP	39
120	C-1021015-0101	-		1	SQUEEZER	43
130	C-1021019-0101	-		1	FLAP FOLDER	45
140	C-1021023-0301	-		1	COVERING PLATE	47
150	C-1021404-0101	-		1	PNEUMATIC CUSHIONING	49
160	C-1021982-0201	-		1	ANGLE ENCODER	53
180	C-1021730-0101	-		1	CABLE DUCT	55
210	C-1128833-0201	-		1	COVERING PLATE	57

Pos	Part No	SP	UN	Qty	Description	Page No

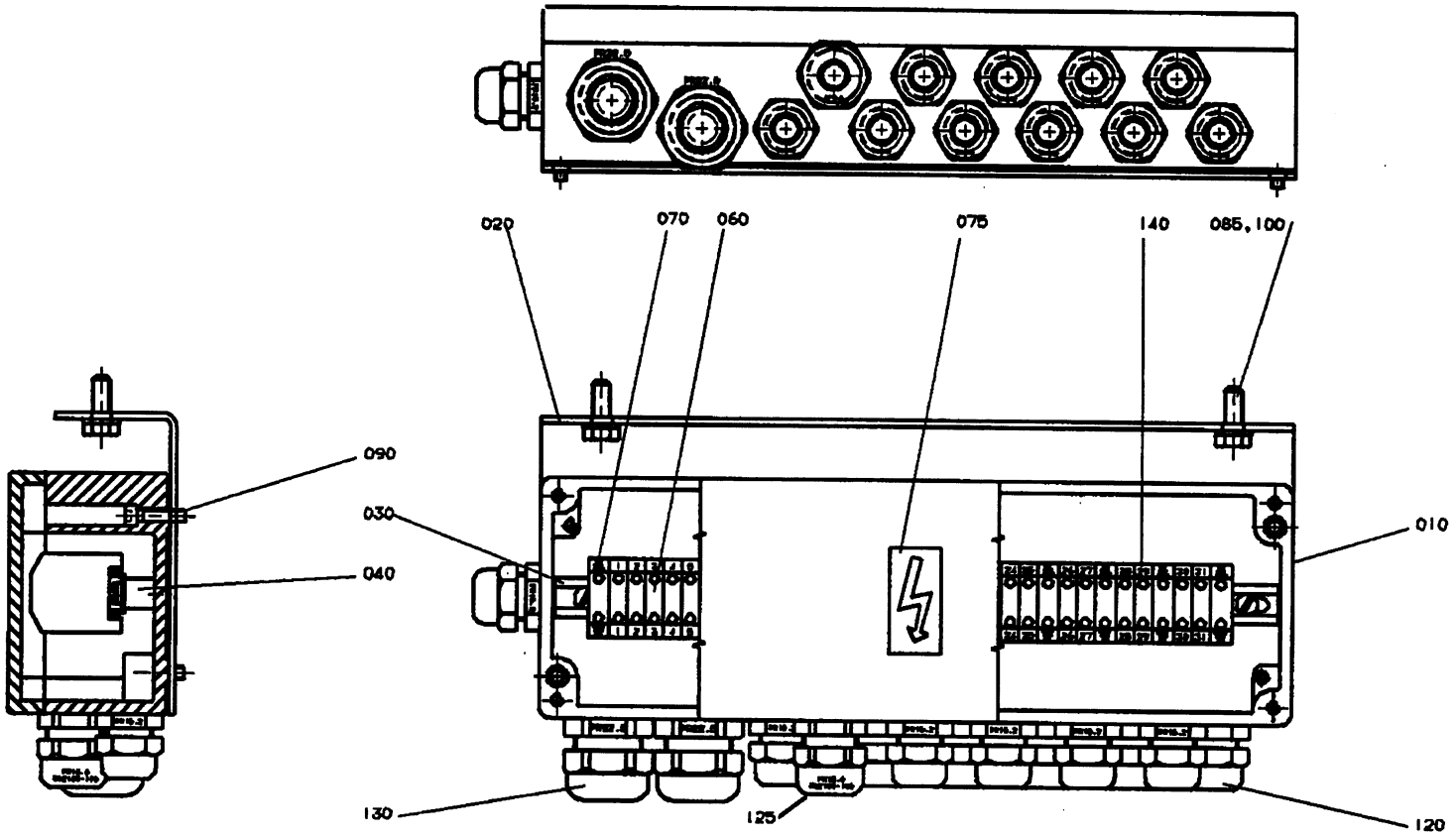

GraphicID: 102189702.tif
Parent Drw: 1021897-2
ECN No: 22292

Pos	Part No	SP	UN	Qty	Description	Page No
-						
000	**C-1021897-0201**	-		1	**CONNECTION BOX**	
010	1021898	-		1	CONNECTION BOX	
020	1021746	-		1	BRACKET	
030	8490-0010	-		1	MOUNTING RAIL	
040	479110	-		2	SPACER	
060	90077-0079	-		31	FEED THROUGH TERMINAL	
070	90135-0026	-		5	EARTHING CLAMP	
075	90194-0016	-		1	SIGN "FLASH SIGN" 50X50MM	
085	312105-0368	-		2	SCREW O4017 M6X16A280	
090	312145-0293	-		4	SLOTTED HEMFS4X16RFR	
100	315105-0153	-		2	WASHER BRB6,4X12RFR	
120	352103-0101	-		11	CABLE GLAND ST 9	
125	352103-0106	-		1	CABLE GLAND ST 11	
130	352103-0111	-		2	CABLE GLAND ST 16;10-14MM	
140	359011-0821	-		2	SET OF SIGNS 6-FW 1-50	

Pos	Part No	SP	UN	Qty	Description	Page No

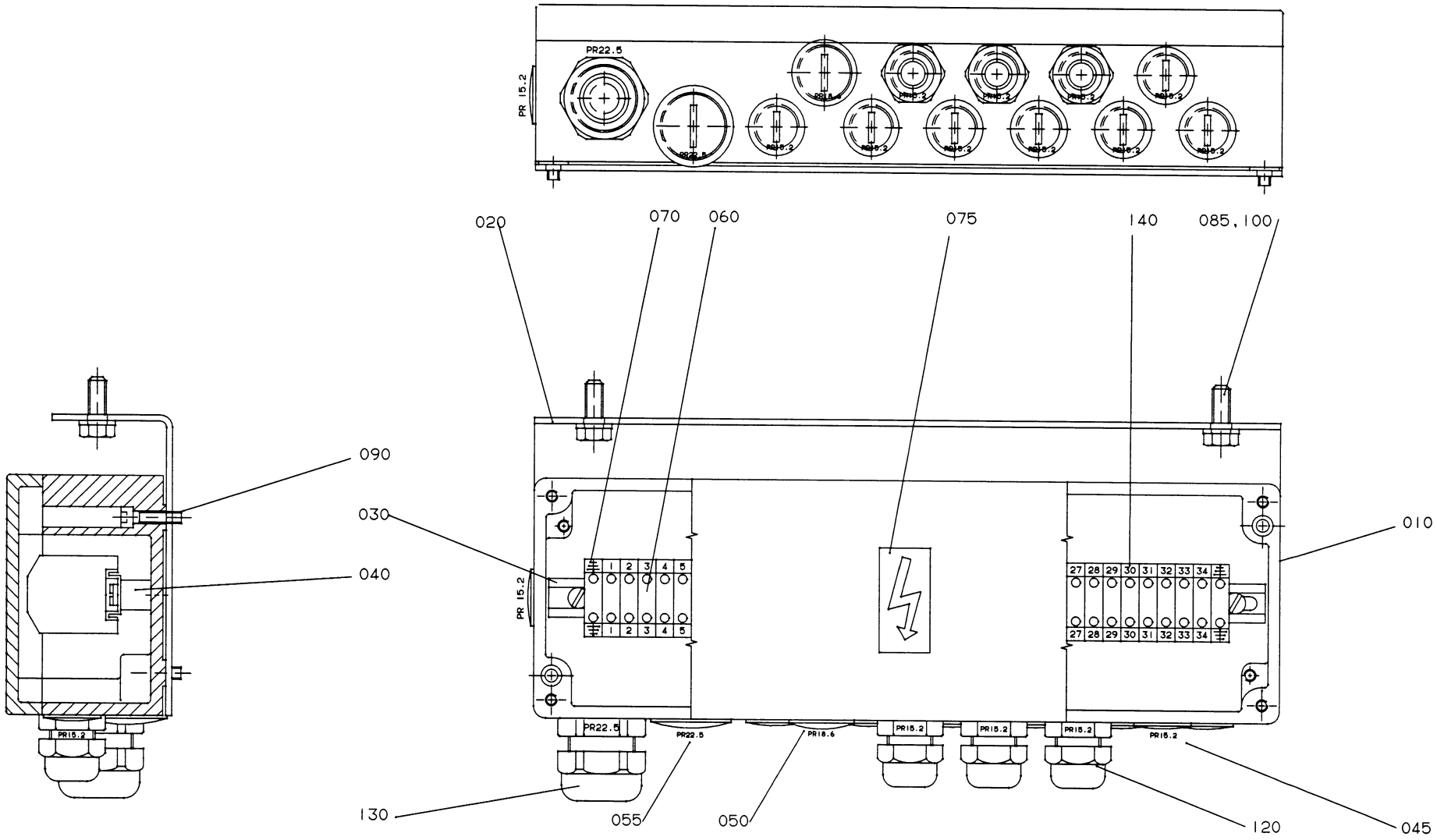

GraphicID: 106590501.eps
Parent Drw: 1065905-1
ECN 19307

Pos	Part No	SP	UN	Qty	Description	Page No
-						
000	**C-1065905-0101**	-		**1**	**CONNECTION BOX**	
010	1021898	-		1	CONNECTION BOX	
020	1021746	-		1	BRACKET	
030	8490-0010	-		1	MOUNTING RAIL	
040	479110	-		2	SPACER	
045	90002-0013	-		8	BLANK-OFF PLUG 15,2	
050	90002-0009	-		1	BLANK-OFF PLUG 18.6	
055	90002-0004	-		1	BLANK-OFF PLUG 22,5	
060	90077-0079	-		34	FEED THROUGH TERMINAL	
070	90135-0026	-		2	EARTHING CLAMP	
075	90194-0016	-		1	SIGN "FLASH SIGN" 50X50MM	
085	312105-0368	-		2	SCREW O4017 M6X16A280	
090	312145-0293	-		4	SLOTTED HEMFS4X16RFR	
100	315105-0153	-		2	WASHER BRB6,4X12RFR	
120	352103-0101	-		3	CABLE GLAND ST 9	
130	352103-0111	-		1	CABLE GLAND ST 16;10-14MM	
140	359011-0821	-		2	SET OF SIGNS 6-FW 1-50	

Pos	Part No	SP	UN	Qty	Description	Page No

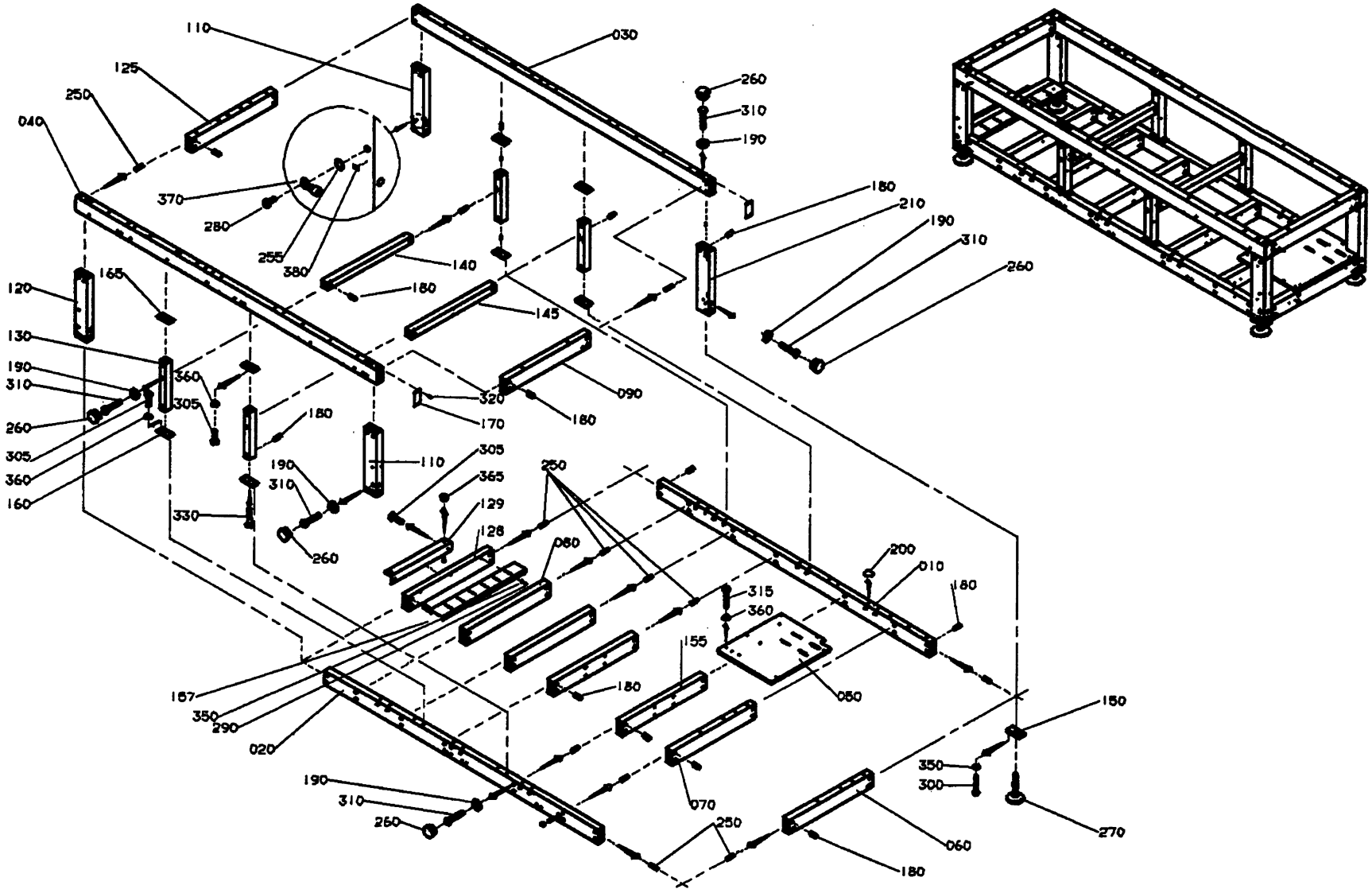

GraphicID: 55660903.tif
Parent Drw: 556609-3
ECN No: 22292

Pos	Part No	SP	UN	Qty	Description	Page No
-						
000	**C- 556609-0301**	-		**1**	**LOWER FRAME**	
010	556610	-		1	PROFILE	
020	556611	-		1	PROFILE	
030	1074714	-		1	PROFILE	
040	1074717	-		1	PROFILE	
050	556614	-		1	MOTOR PLATE	
060	1074703	-		1	PROFILE	
070	1074704	-		1	PROFILE	
080	556617	-		3	PROFILE	
090	556618	-		1	PROFILE	
110	556622	-		2	PROFILE	
120	556623	-		1	PROFILE	
125	1021323	-		1	PROFILE	
128	1021605	-		1	PROFILE	
129	1021606	-		1	BRACKET	
130	556620	-		4	PROFILE	
140	556621	-		1	PROFILE	
145	1021372	-		1	PROFILE	
150	556598	-		4	BRACKET	
155	1021728	-		1	PROFILE	
157	1021944	-		1	CABLE DUCT	
160	556624	-		4	FRAME BRACKET	
165	1021031	-		4	BRACKET	
170	556603	-		2	COVER PLATE	
180	486268	-		68	NUT	
190	548599	-		70	WASHER	
200	1021933	-		25	COVER TAPE	
210	1021997	-		1	PROFILE	
250	1065410	-		160	SLOTTED PIN	
255	90062-0060	-		1	LOCK WASHER	
260	90261-0060	-		48	PLASTIC PLUG	
270	90347-0142	-		4	FOOT	
280	312105-0327	-		1	SCREW O4017 M5X12A280	
290	312105-0366	-		3	SCREW O4017 M6X12A280	
300	312105-0376	-		16	SCREW O4017 M6X35A280	
305	312105-0453	-		20	SCREW O4017 M8X25A280	
310	312105-0459	-		60	SCREW O4017 M8X40A280	
315	312109-0457	-		8	SCREW 8X35 H A4 80	
320	312145-0325	-		8	SLOTTED HEMFS5X10RFR	
330	312155-0459	-		8	SCREW MF6S8X40RFR	
350	315105-0153	-		19	WASHER BRB6,4X12RFR	
360	315105-0165	-		28	WASHER BRB8,4X16RFR	
365	312605-0318	-		2	NUT M6M8RFR	
370	353101-0132	-		1	CABLE SHOE	
380	90194-0152	-		1	SIGN "EARTH"	

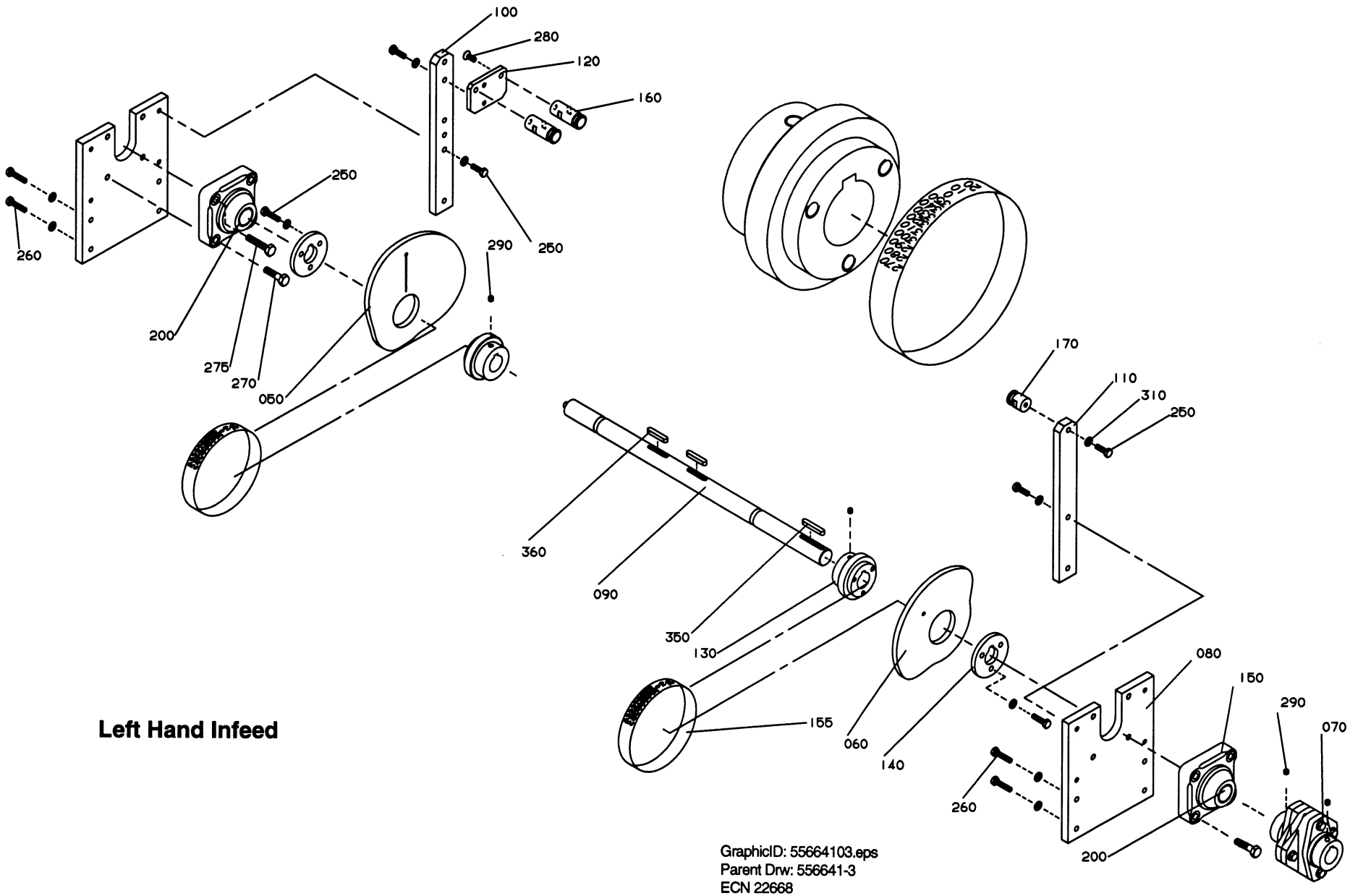

Left Hand Infeed

GraphicID: 55664103.eps
Parent Drw: 556641-3
ECN 22668

Pos	Part No	SP	UN	Qty	Description	Page No
-						
000	**C- 556641-0201**	-		**1**	**MAINSHAFT REAR**	
060	1021028	-		1	CAM DISC	
070	90355-0115	-		1	CONNECTION	
080	556642	-		2	BEARING PLATE	
090	1139135	-		1	SHAFT	
100	556645	-		1	HOLDER	
110	556646	-		1	HOLDER	
120	556647	-		1	BRACKET	
130	556648	-		2	HUB	
140	556649	-		2	WASHER	
150	90345-0075	P		2	FLANGE BEARING	
155	1021946	-		2	DIAL	
160	1021006	-		2	SPRING BRACKET	
170	556651	-		1	SPRING BRACKET	
200	90296-0068	-		X	GREASE	
250	312105-0453	-		13	SCREW O4017 M8X25A280	
260	312105-0457	-		8	SCREW O4017 M8X35A280	
270	312105-0499	-		6	SCREW 4017 M10X40A280	
275	312109-0501	-		2	SCREW 10X50 H RFR	
280	312155-0489	-		2	SCREW MF6S10X16RFR	
290	312318-0443	-		4	STOP SCREW SK6SS8X8RFR	
310	315105-0165	-		21	WASHER BRB8,4X16RFR	
350	315701-0273	-		1	FLAT WEDGE8X7X56	
360	315701-0271	-		2	FLAT WEDGE8X7X45	
O50	1065919	-		1	CAM DISC	

Pos	Part No	SP	UN	Qty	Description	Page No

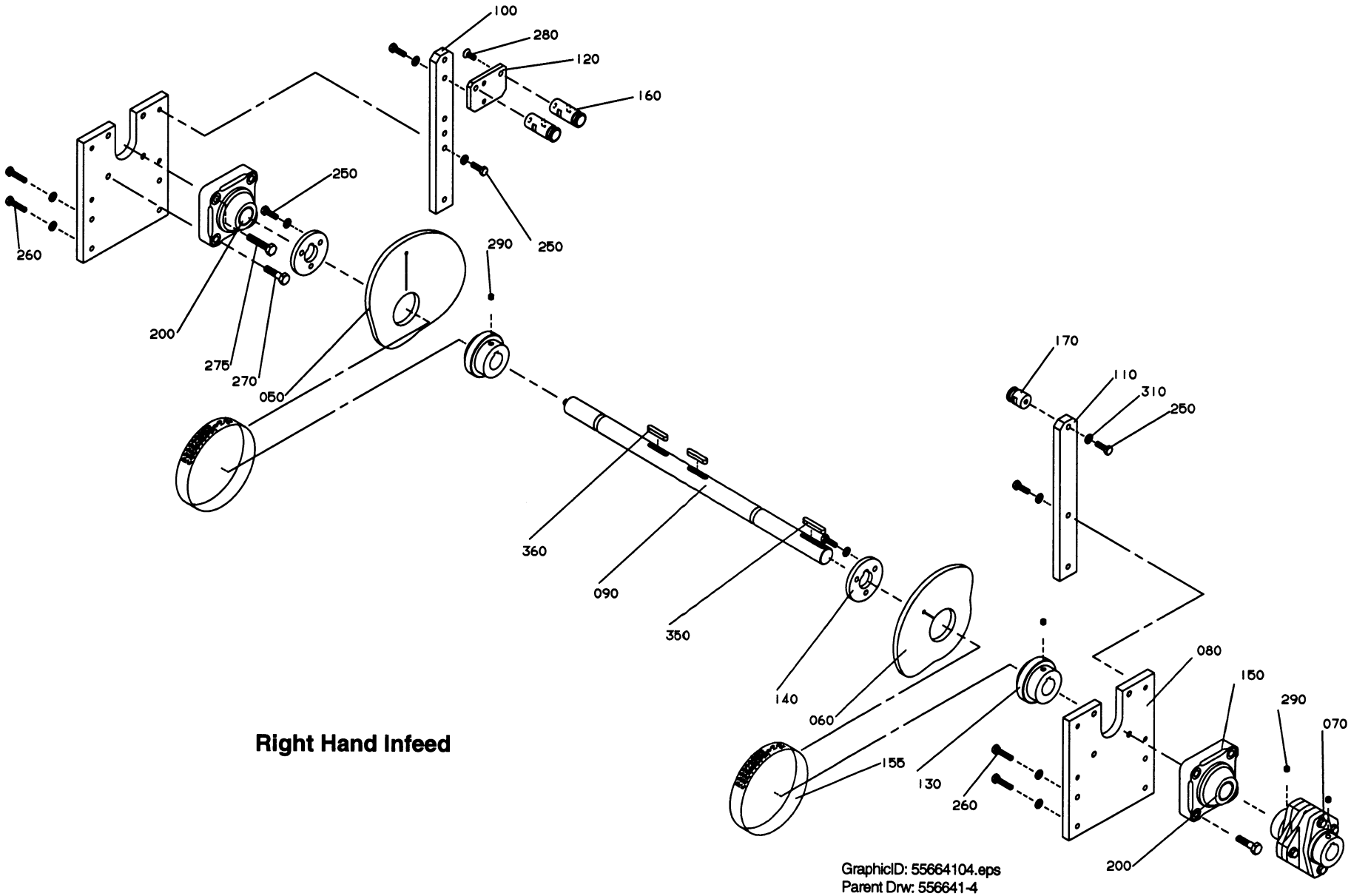

Right Hand Infeed

GraphicID: 55664104.eps
Parent Drw: 556641-4
ECN 22668

Pos	Part No	SP	UN	Qty	Description	Page No
-						
000	**C- 556641-0201**	-		1	**MAINSHAFT REAR**	
060	1021028	-		1	CAM DISC	
070	90355-0115	-		1	CONNECTION	
080	556642	-		2	BEARING PLATE	
090	1139135	-		1	SHAFT	
100	556645	-		1	HOLDER	
110	556646	-		1	HOLDER	
120	556647	-		1	BRACKET	
130	556648	-		2	HUB	
140	556649	-		2	WASHER	
150	90345-0075	P		2	FLANGE BEARING	
155	1021946	-		2	DIAL	
160	1021006	-		2	SPRING BRACKET	
170	556651	-		1	SPRING BRACKET	
200	90296-0068	-		X	GREASE	
250	312105-0453	-		13	SCREW O4017 M8X25A280	
260	312105-0457	-		8	SCREW O4017 M8X35A280	
270	312105-0499	-		6	SCREW 4017 M10X40A280	
275	312109-0501	-		2	SCREW 10X50 H RFR	
280	312155-0489	-		2	SCREW MF6S10X16RFR	
290	312318-0443	-		4	STOP SCREW SK6SS8X8RFR	
310	315105-0165	-		21	WASHER BRB8,4X16RFR	
350	315701-0273	-		1	FLAT WEDGE8X7X56	
360	315701-0271	-		2	FLAT WEDGE8X7X45	
O50	1065919	-		1	CAM DISC	

Pos	Part No	SP	UN	Qty	Description	Page No

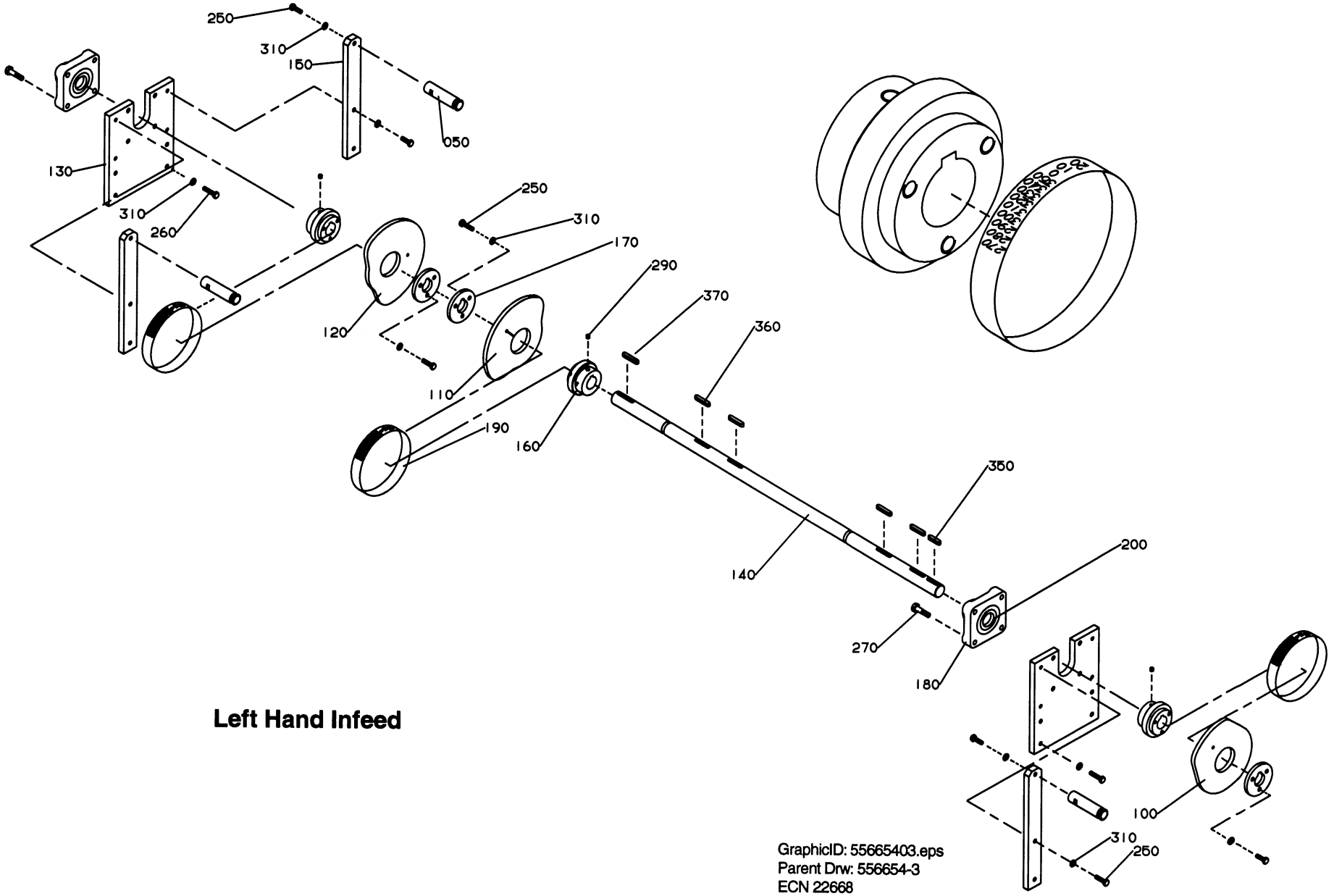

Left Hand Infeed

GraphicID: 55665403.eps
Parent Drw: 556654-3
ECN 22668

Pos	Part No	SP	UN	Qty	Description	Page No
-						
000	C- 556654-0201	-		1	**MAINSHAFT FRONT**	
050	556652	-		3	SPRING BRACKET	
100	1021027	-		1	CAM DISC	
110	1021028	-		1	CAM DISC	
120	1021029	-		1	CAM DISC	
130	556642	-		2	BEARING PLATE	
140	1139136	-		1	SHAFT	
150	556646	-		3	HOLDER	
160	556648	-		3	HUB	
170	556649	-		3	WASHER	
180	90345-0075	P		2	FLANGE BEARING	
190	1021946	-		3	DIAL	
200	90296-0068	-		X	GREASE	
250	312105-0453	-		18	SCREW O4017 M8X25A280	
260	312105-0457	-		8	SCREW O4017 M8X35A280	
270	312105-0499	-		8	SCREW 4017 M10X40A280	
290	312318-0443	-		3	STOP SCREW SK6SS8X8RFR	
310	315105-0165	-		26	WASHER BRB8,4X16RFR	
350	315701-0801	-		1	FLAT WEDGE8X7X36	
360	315701-0271	-		4	FLAT WEDGE8X7X45	
370	315701-0272	-		1	FLAT WEDGE8X7X50	

Pos	Part No	SP	UN	Qty	Description	Page No

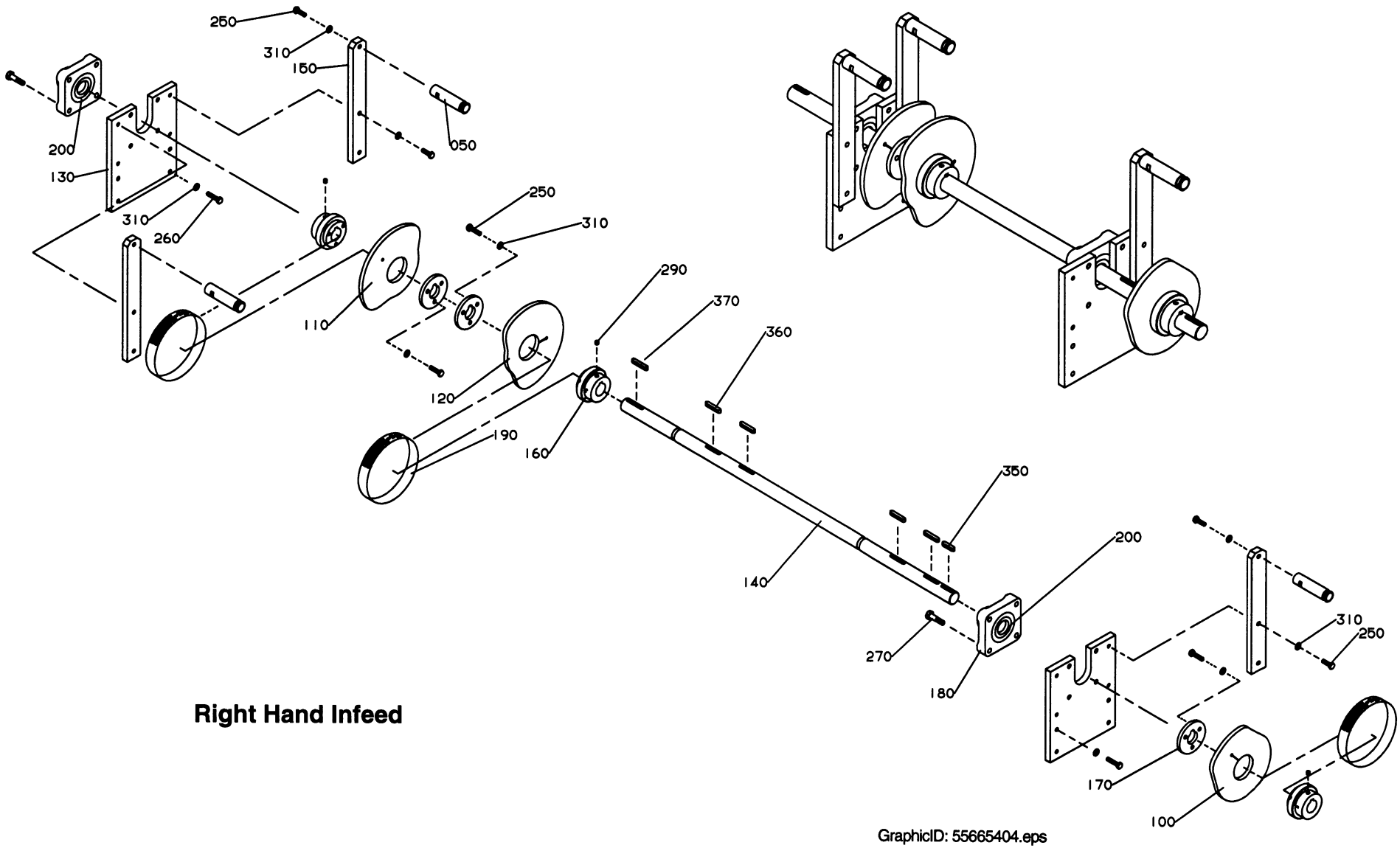

Right Hand Infeed

GraphicID: 55665404.eps
Parent Drw: 556654-4
ECN 22668

Pos	Part No	SP	UN	Qty	Description	Page No
-						
000	**C- 556654-0201**	-		**1**	**MAINSHAFT FRONT**	
050	556652	-		3	SPRING BRACKET	
100	1021027	-		1	CAM DISC	
110	1021028	-		1	CAM DISC	
120	1021029	-		1	CAM DISC	
130	556642	-		2	BEARING PLATE	
140	1139136	-		1	SHAFT	
150	556646	-		3	HOLDER	
160	556648	-		3	HUB	
170	556649	-		3	WASHER	
180	90345-0075	P		2	FLANGE BEARING	
190	1021946	-		3	DIAL	
200	90296-0068	-		X	GREASE	
250	312105-0453	-		18	SCREW O4017 M8X25A280	
260	312105-0457	-		8	SCREW O4017 M8X35A280	
270	312105-0499	-		8	SCREW 4017 M10X40A280	
290	312318-0443	-		3	STOP SCREW SK6SS8X8RFR	
310	315105-0165	-		26	WASHER BRB8,4X16RFR	
350	315701-0801	-		1	FLAT WEDGE8X7X36	
360	315701-0271	-		4	FLAT WEDGE8X7X45	
370	315701-0272	-		1	FLAT WEDGE8X7X50	

Pos	Part No	SP	UN	Qty	Description	Page No

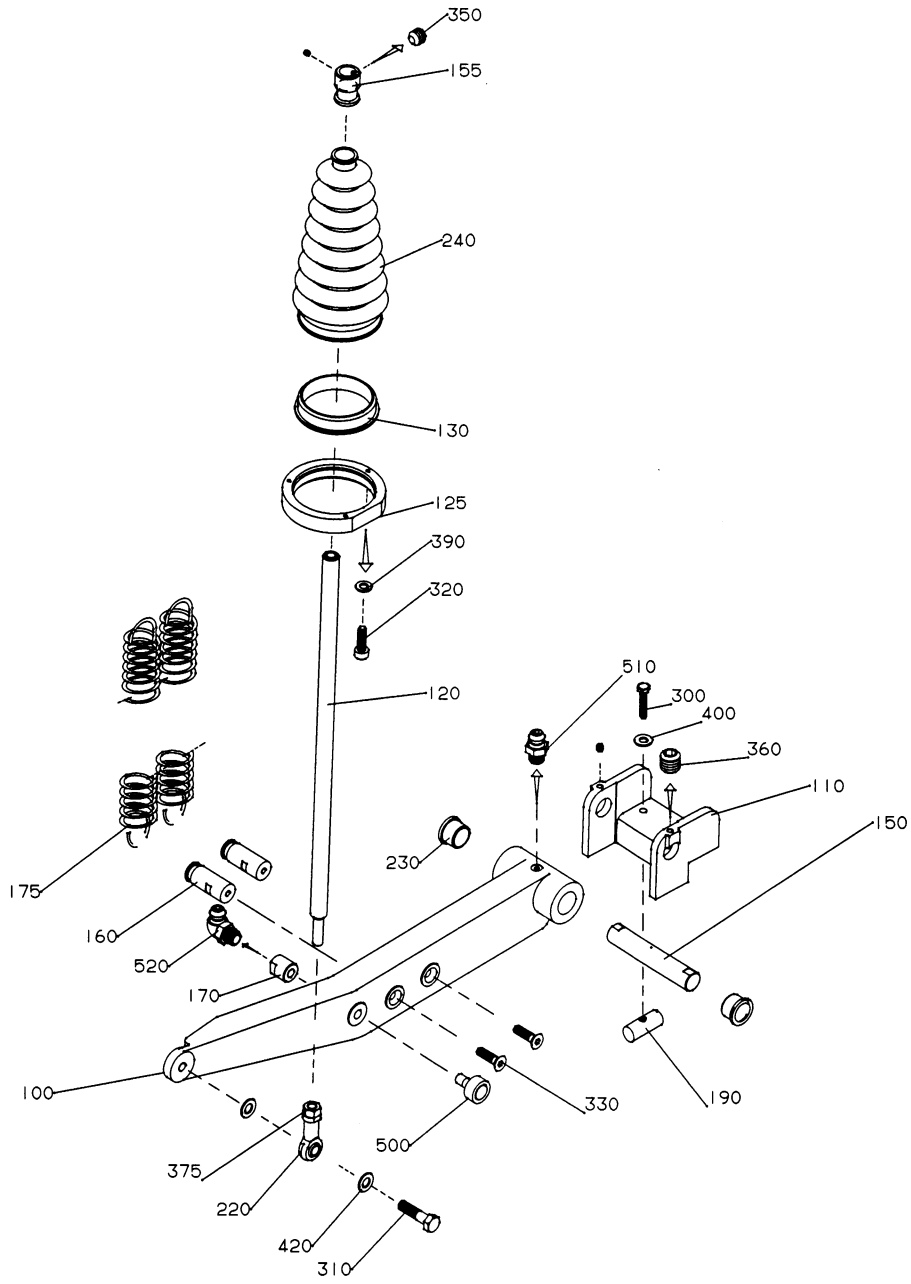

GraphicID: 102100001.eps
Parent Drw: 1021000-1
ECN 19307

Pos	Part No	SP	UN	Qty	Description	Page No
-						
000	C-1021000-0101	-		1	**OPERATING ARM MAGASIN**	
100	G- 556655	-		1	ARM	
110	G- 556657	-		1	HOLDER	
120	1021001	-		1	LINK ARM	
125	1021002	-		1	CLAMP RING	
130	1021003	-		1	RING	
150	1021004	-		1	SHAFT	
155	1021005	-		1	BUSHING	
160	1021006	-		2	SPRING BRACKET	
170	1021008	-		1	NIPPLE	
175	1021596	S		2	TENSION SPRING	
190	486268	-		2	NUT	
220	90115-0028	P		1	LINK HEAD	
230	90240-0203	P		2	PLAIN BEARING	
240	90342-0015	C		1	BELLOWS	
300	312105-0459	-		2	SCREW O4017 M8X40A280	
310	312105-0541	-		1	SCREW 4017 M12X45A280	
320	312115-0329	-		3	SCREW O4762 M5X16A280	
330	312155-0495	-		2	SCREW MF6S10X30RFR	
350	312318-0360	-		2	STOP SCREW SK6SS6X6RFR	
360	312318-0443	-		2	STOP SCREW SK6SS8X8RFR	
375	312902-0322	-		1	NUT M6M12VRFR	
390	315105-0146	-		3	WASHER BRB5,3X10RFR	
400	315105-0165	-		2	WASHER BRB8,4X16RFR	
420	315105-0178	-		2	WASHER BRB13X24RFR	
500	321582-0165	S		1	CURVE ROLLKR30PP	
510	344502-0021	-		1	NIPPLE L AHM6	
520	344502-0061	-		1	NIPPLE L M6AL.	

Pos	Part No	SP	UN	Qty	Description	Page No

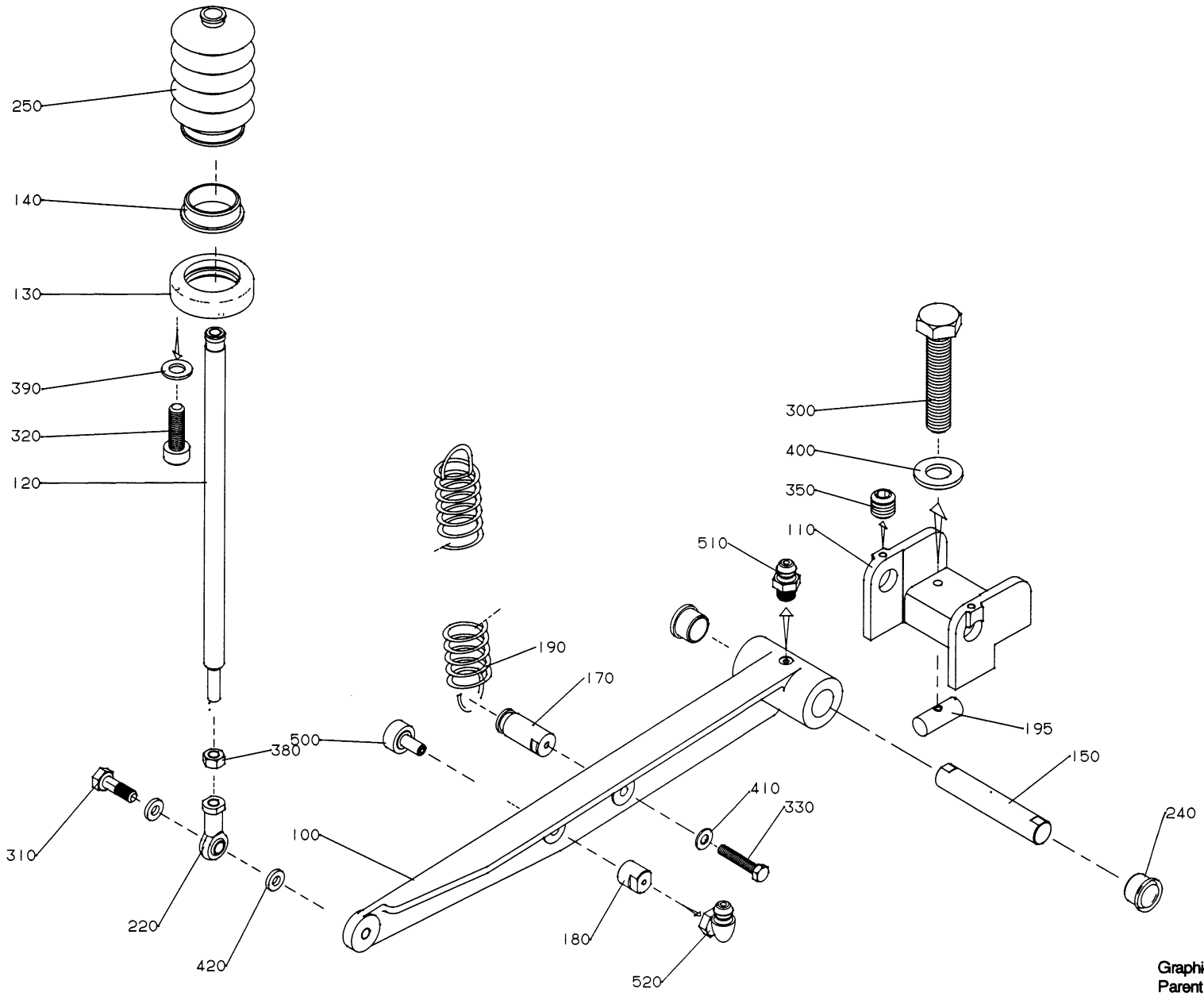

GraphicID: 102100901.eps
Parent Drw: 1021009-1
ECN 19307

Pos	Part No	SP	UN	Qty	Description	Page No
-						
000	**C-1021009-0101**	-		1	**FOLDING FLAP**	
100	G- 556656	-		1	ARM	
110	G- 556657	-		1	HOLDER	
120	1021010	-		1	LINK ARM	
130	1021011	-		1	CLAMP RING	
140	1021012	-		1	RING	
150	1021004	-		1	SHAFT	
170	1021014	-		1	SPRING BRACKET	
180	1021008	-		1	NIPPLE	
190	1021595	S		1	TENSION SPRING	
195	486268	-		2	NUT	
220	90115-0028	P		1	LINK HEAD	
240	90240-0203	P		2	PLAIN BEARING	
250	90342-0016	C		1	BELLOWS	
300	312105-0459	-		2	SCREW O4017 M8X40A280	
310	312105-0545	-		1	SCREW M6S12X65RFR	
320	312115-0329	-		3	SCREW O4762 M5X16A280	
330	312105-0495	-		1	SCREW 4017 M10X30A280	
350	312318-0443	-		2	STOP SCREW SK6SS8X8RFR	
380	312902-0322	-		1	NUT M6M12VRFR	
390	315105-0146	-		3	WASHER BRB5,3X10RFR	
400	315105-0165	-		2	WASHER BRB8,4X16RFR	
410	315105-0173	-		2	WASHER BRB10,5X22RFR	
420	315105-0178	-		2	WASHER BRB13X24RFR	
500	321582-0165	S		1	CURVE ROLLKR30PP	
510	344502-0021	-		1	NIPPLE L AHM6	
520	344502-0061	-		1	NIPPLE L M6AL.	

Pos	Part No	SP	UN	Qty	Description	Page No

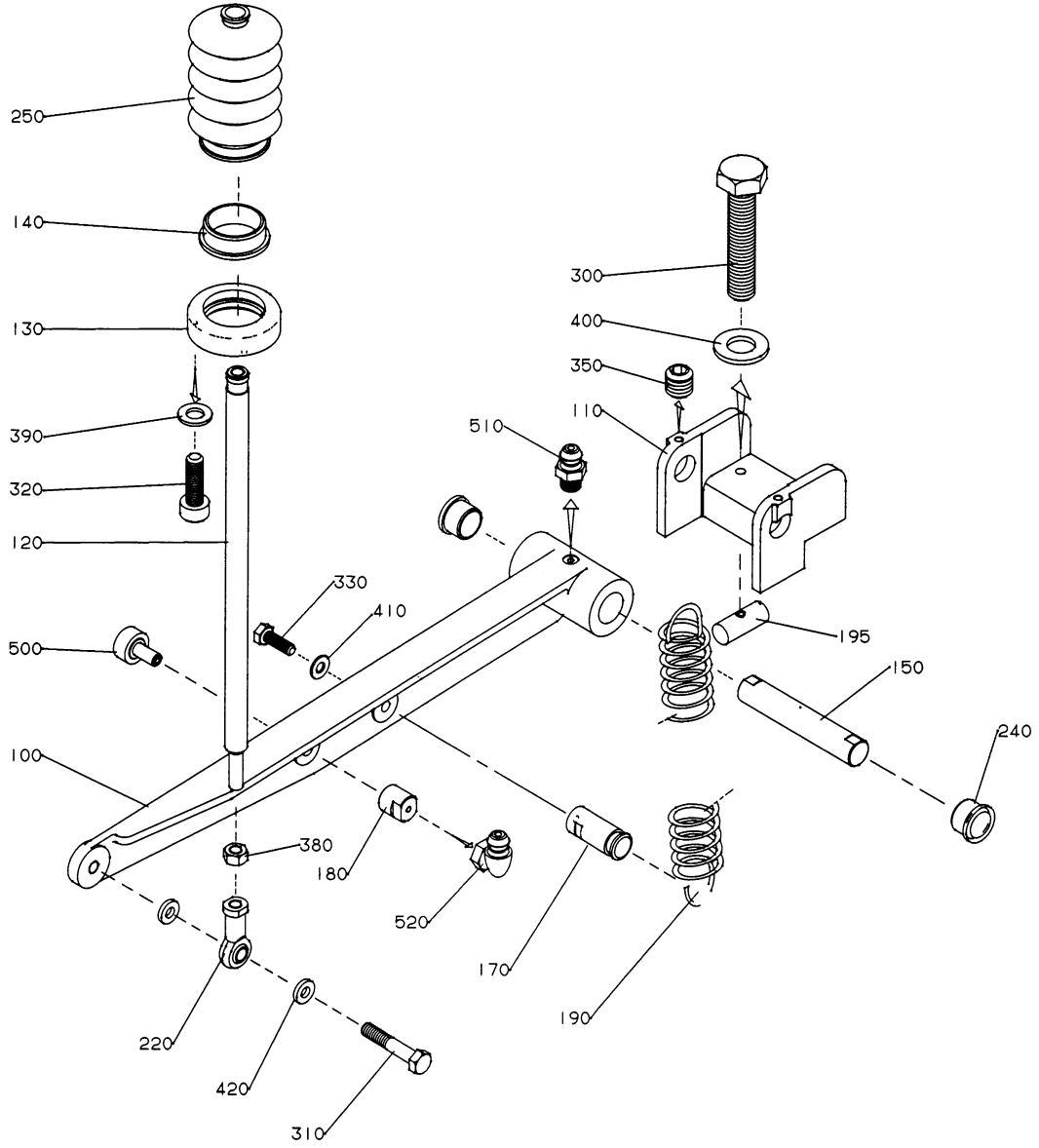

GraphicID: 102100902.eps
Parent Drw: 1021009-2
ECN 19307

Pos	Part No	SP	UN	Qty	Description	Page No
-						
000	C-1021009-0101	-		1	FOLDING FLAP	
100	G- 556656	-		1	ARM	
110	G- 556657	-		1	HOLDER	
120	1021010	-		1	LINK ARM	
130	1021011	-		1	CLAMP RING	
140	1021012	-		1	RING	
150	1021004	-		1	SHAFT	
170	1021014	-		1	SPRING BRACKET	
180	1021008	-		1	NIPPLE	
190	1021595	S		1	TENSION SPRING	
195	486268	-		2	NUT	
220	90115-0028	P		1	LINK HEAD	
240	90240-0203	P		2	PLAIN BEARING	
250	90342-0016	C		1	BELLOWS	
300	312105-0459	-		2	SCREW O4017 M8X40A280	
310	312105-0545	-		1	SCREW M6S12X65RFR	
320	312115-0329	-		3	SCREW O4762 M5X16A280	
330	312105-0495	-		1	SCREW 4017 M10X30A280	
350	312318-0443	-		2	STOP SCREW SK6SS8X8RFR	
380	312902-0322	-		1	NUT M6M12VRFR	
390	315105-0146	-		3	WASHER BRB5,3X10RFR	
400	315105-0165	-		2	WASHER BRB8,4X16RFR	
410	315105-0173	-		2	WASHER BRB10,5X22RFR	
420	315105-0178	-		2	WASHER BRB13X24RFR	
500	321582-0165	S		1	CURVE ROLLKR30PP	
510	344502-0021	-		1	NIPPLE L AHM6	
520	344502-0061	-		1	NIPPLE L M6AL.	

Pos	Part No	SP	UN	Qty	Description	Page No

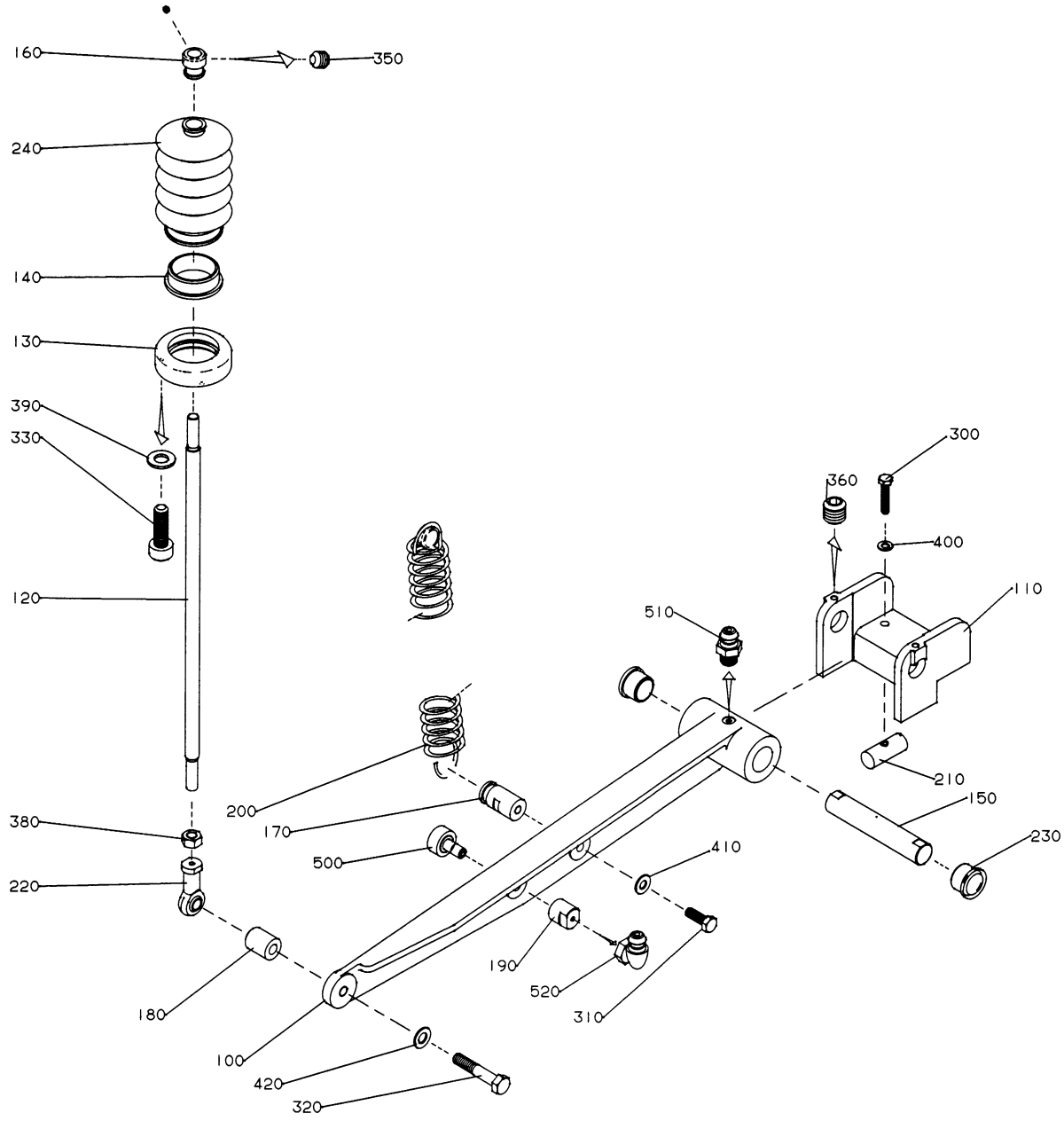

GraphicID: 102101501.eps
Parent Drw: 1021015-1
ECN 19307

Pos	Part No	SP	UN	Qty	Description	Page No
-						
000	C-1021015-0101	-		1	SQUEEZER	
100	G- 556656	-		1	ARM	
110	G- 556657	-		1	HOLDER	
120	1021020	-		1	LINK ARM	
130	1021011	-		1	CLAMP RING	
140	1021012	-		1	RING	
150	1021004	-		1	SHAFT	
160	1021021	-		1	BUSHING	
170	1021018	-		1	SPRING BRACKET	
180	1021017	-		1	WASHER	
190	1021008	-		1	NIPPLE	
200	1021595	S		1	TENSION SPRING	
210	486268	-		2	NUT	
220	90115-0028	P		1	LINK HEAD	
230	90240-0203	P		2	PLAIN BEARING	
240	90342-0016	C		1	BELLOWS	
300	312105-0459	-		2	SCREW O4017 M8X40A280	
310	312105-0495	-		1	SCREW 4017 M10X30A280	
320	312105-0545	-		1	SCREW M6S12X65RFR	
330	312105-0329	-		3	SCREW O4017 M5X16A280	
350	312318-0360	-		2	STOP SCREW SK6SS6X6RFR	
360	312318-0443	-		2	STOP SCREW SK6SS8X8RFR	
380	312902-0322	-		1	NUT M6M12VRFR	
390	315105-0146	-		3	WASHER BRB5,3X10RFR	
400	315105-0165	-		2	WASHER BRB8,4X16RFR	
410	315105-0173	-		1	WASHER BRB10,5X22RFR	
420	315105-0178	-		1	WASHER BRB13X24RFR	
500	321582-0165	S		1	CURVE ROLLKR30PP	
510	344502-0021	-		1	NIPPLE L AHM6	
520	344502-0061	-		1	NIPPLE L M6AL.	

Pos	Part No	SP	UN	Qty	Description	Page No

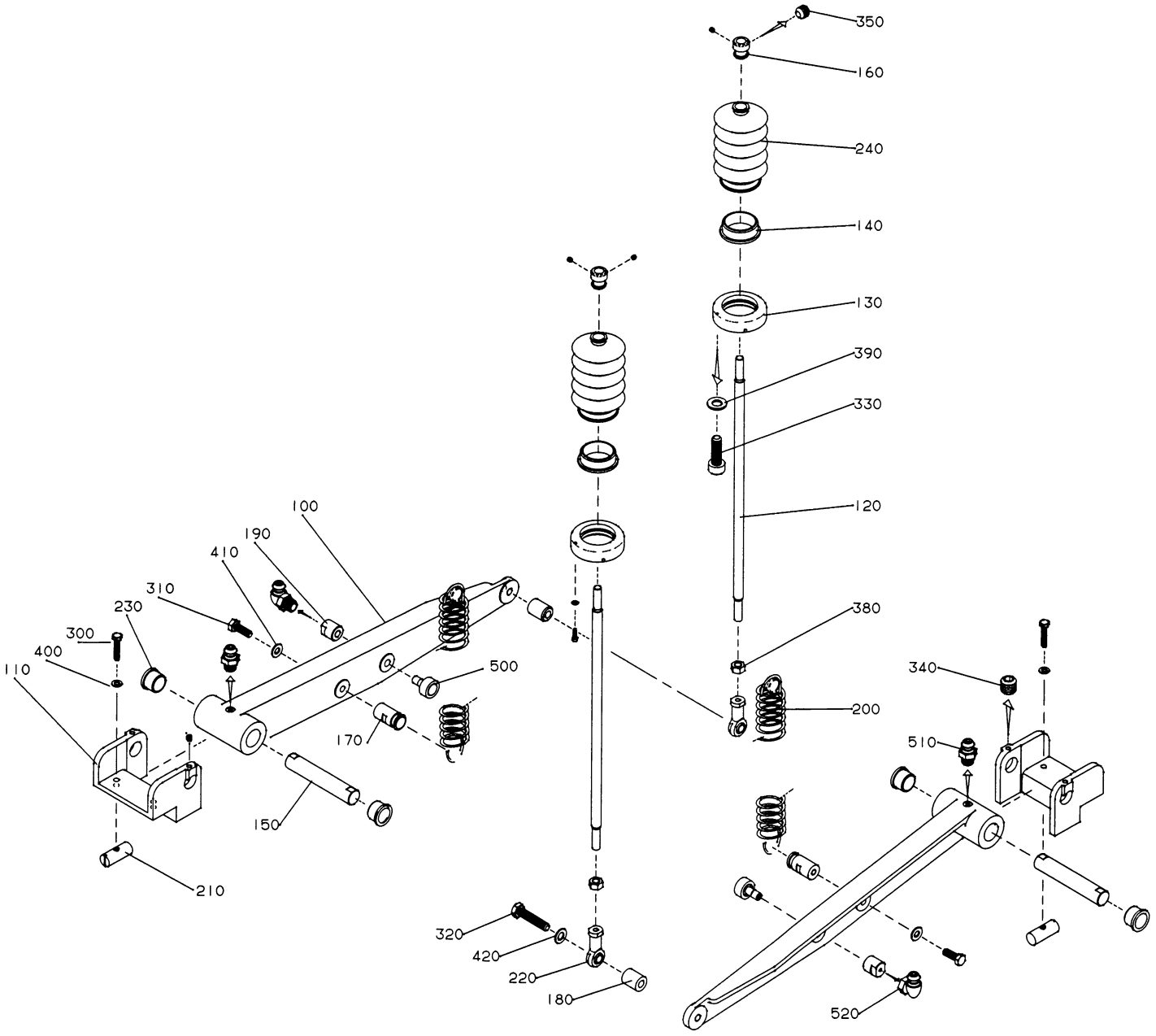

GraphicID: 102101901.eps
Parent Drw: 10211019-1
ECN 19307

Pos	Part No	SP	UN	Qty	Description	Page No
-						
000	C-1021019-0101	-		1	FLAP FOLDER	
100	G- 556656	-		2	ARM	
110	G- 556657	-		2	HOLDER	
120	1021020	-		2	LINK ARM	
130	1021011	-		2	CLAMP RING	
140	1021012	-		2	RING	
150	1021004	-		2	SHAFT	
160	1021021	-		2	BUSHING	
170	1021018	-		2	SPRING BRACKET	
180	1021017	-		2	WASHER	
190	1021008	-		2	NIPPLE	
200	1021595	S		2	TENSION SPRING	
210	486268	-		4	NUT	
220	90115-0028	P		2	LINK HEAD	
230	90240-0203	P		4	PLAIN BEARING	
240	90342-0016	C		2	BELLOWS	
300	312105-0459	-		4	SCREW O4017 M8X40A280	
310	312105-0495	-		1	SCREW 4017 M10X30A280	
320	312105-0545	-		2	SCREW M6S12X65RFR	
330	312115-0329	-		6	SCREW O4762 M5X16A280	
340	312318-0443	-		4	STOP SCREW SK6SS8X8RFR	
350	312318-0360	-		4	STOP SCREW SK6SS6X6RFR	
380	312902-0322	-		2	NUT M6M12VRFR	
390	315105-0146	-		6	WASHER BRB5,3X10RFR	
400	315105-0165	-		4	WASHER BRB8,4X16RFR	
410	315105-0173	-		2	WASHER BRB10,5X22RFR	
420	315105-0178	-		2	WASHER BRB13X24RFR	
500	321582-0165	S		2	CURVE ROLLKR30PP	
510	344502-0021	-		2	NIPPLE L AHM6	
520	344502-0061	-		2	NIPPLE L M6AL.	

Pos	Part No	SP	UN	Qty	Description	Page No

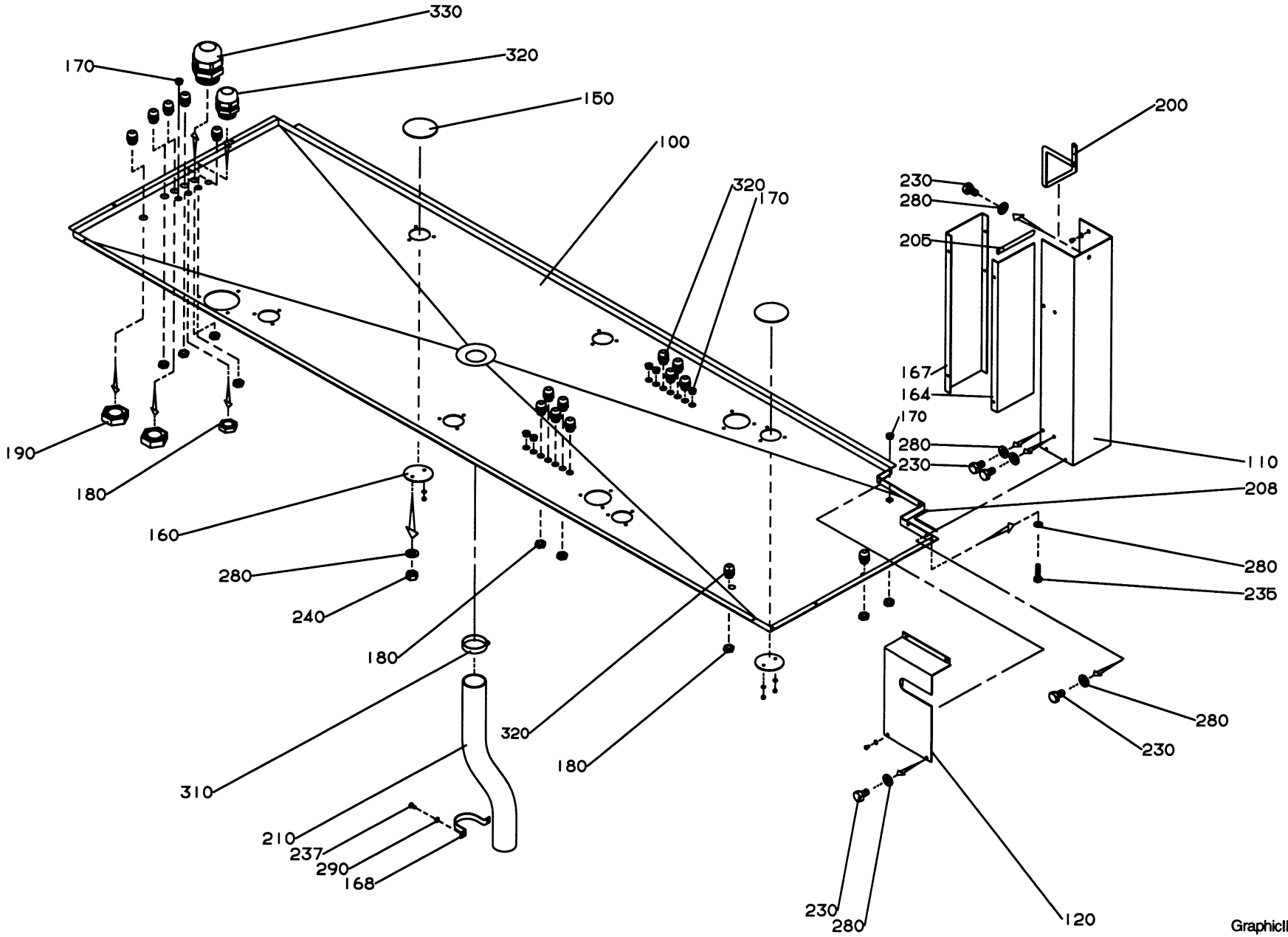

GraphicID: 102102303.eps
Parent Drw: 1021023-3
ECN 23175

Pos	Part No	SP	UN	Qty	Description	Page No
-						
000	**C-1021023-0301**	-		1	**COVERING PLATE**	
100	1139119	-		1	COVERING PLATE	
110	1139120	-		1	CABLE TRENCH	
120	1139121	-		1	CHAIN GUARD	
150	1021025	-		2	COVER DISC	
160	1021026	-		2	COVER DISC	
164	1139122	-		1	SHEET	
167	1139123	-		1	SHEET	
168	1139125	-		1	HOLDER	
170	90002-0013	-		7	BLANK-OFF PLUG 15,2	
180	90099-0104	-		21	NUT PR 15,2 (PG9)	
190	90099-0117	-		5	NUT PR18,6 (PG11)	
200	90143-0060	-	MM	535	STRIP	
205	90143-0060	-	MM	125	STRIP	
208	90157-0022	-		X	SEALING COMPOUND	
210	1139124	-		1	HOSE	
230	312105-0323	-		12	SCREW O4017 M5X8A280	
235	312105-0331	-		4	SCREW O4017 M5X20A280	
237	312105-0366	-		2	SCREW O4017 M6X12A280	
240	312605-0314	-		4	NUT M6M5RFR	
280	315105-0146	-		20	WASHER BRB5,3X10RFR	
290	315105-0153	-		2	WASHER BRB6,4X12RFR	
310	342991-0110	-		1	HOSE CLIP 50-65MMRFR	
320	352103-0101	-		14	CABLE GLAND ST 9	
330	352103-0106	-		5	CABLE GLAND ST 11	

Pos	Part No	SP	UN	Qty	Description	Page No

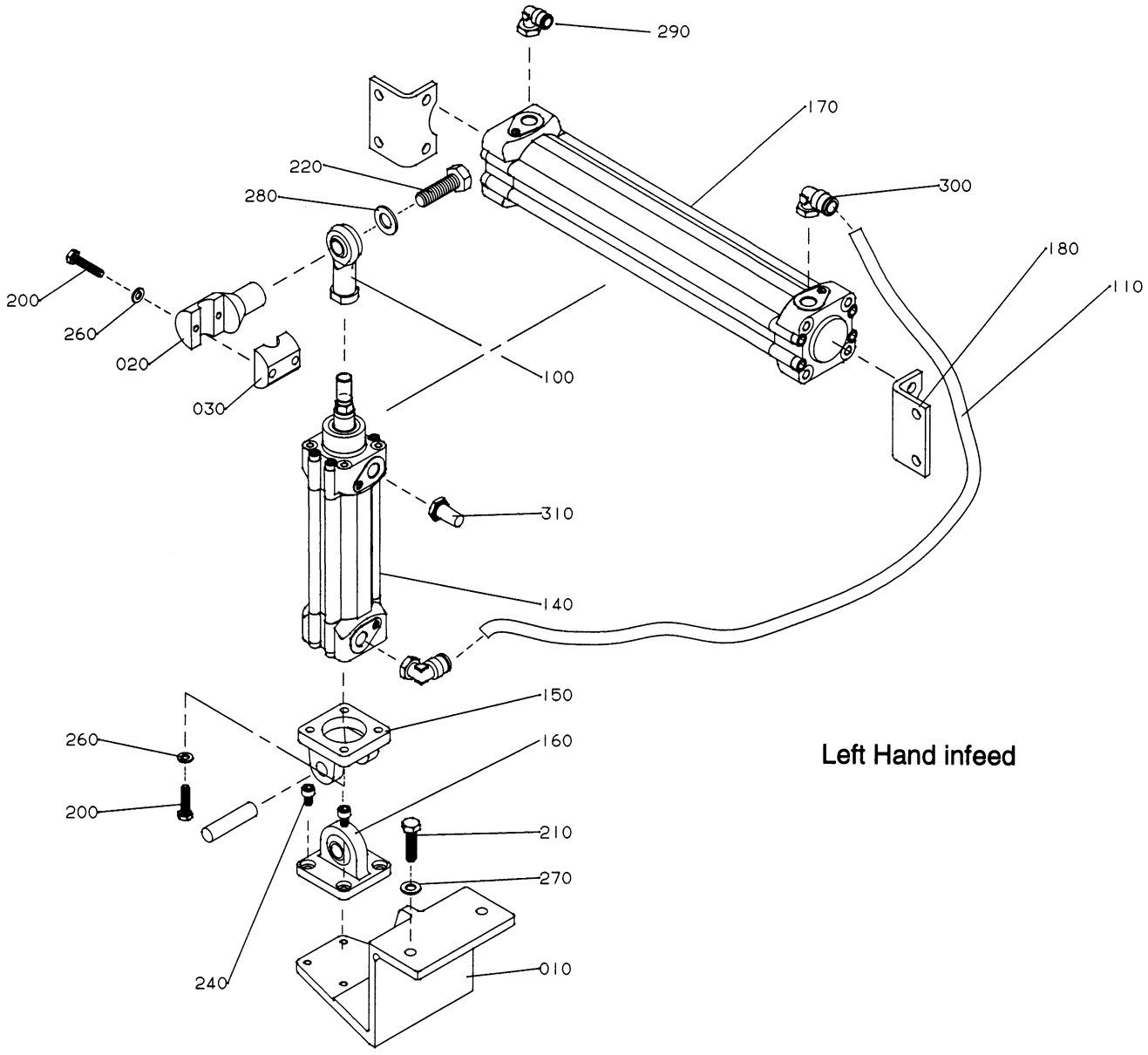

Left Hand infeed

GraphicID: 102140401.eps
Parent Drw: 1021404-1
ECN 20435

Pos	Part No	SP	UN	Qty	Description	Page No
-						
000	C-1021404-0101	-		1	PNEUMATIC CUSHIONING	
010	G-1021592	-		1	HOLDER	
020	1021593	-		1	BRACKET	
030	1021594	-		1	YOKE	
100	90450-0708	-		1	BALL JOINT COUPLING	
110	90166-0160	-	MM	250	HOSE	
140	90450-0190	-		1	CYLINDER	
150	90450-0667	-		1	BRACKET	
160	90450-0683	-		1	BRACKET	
170	90450-0201	-		1	AIR RECEIVER	
180	90450-0682	-		2	BRACKET	
200	312105-0372	-		6	SCREW O4017 M6X25A280	
210	312105-0459	-		2	SCREW O4017 M8X40A280	
220	312105-0540	-		1	SCREW 4017 M12X40A280	
240	312115-0364	-		4	SCREW 6X10 A4 80	
260	315105-0153	-		6	WASHER BRB6,4X12RFR	
270	315105-0165	-		2	WASHER BRB8,4X16RFR	
280	315105-0178	-		1	WASHER BRB13X24RFR	
290	342732-0104	-		1	ELBOW PIPE D8-R1/4"	
300	342732-0113	-		2	ELBOW PIPE 10-1/4	
310	346800-0110	-		1	SILENCER FILTER R1/4"	

Pos	Part No	SP	UN	Qty	Description	Page No

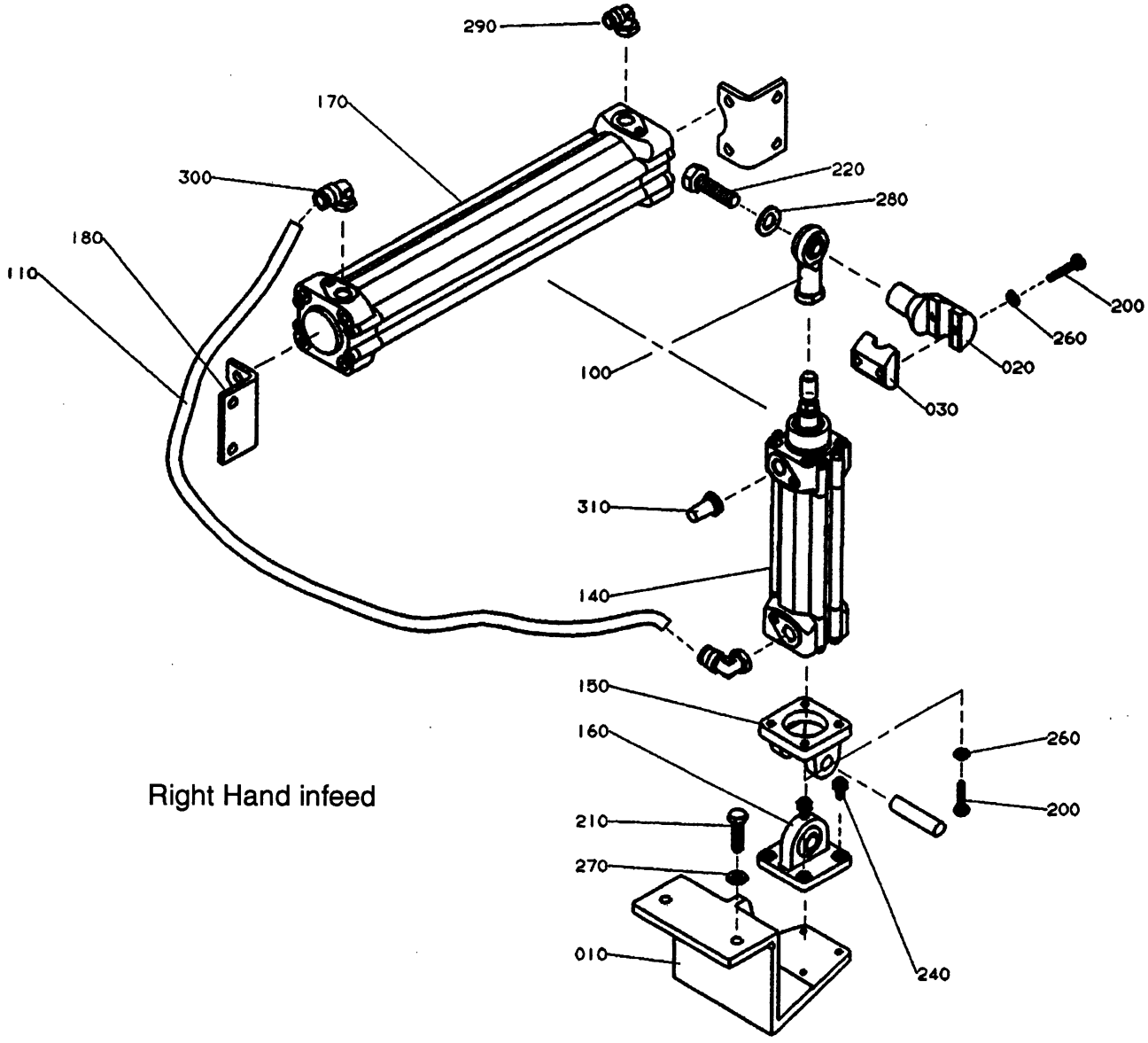

Right Hand infeed

Pos	Part No	SP	UN	Qty	Description	Page No
-						
000	C-1021404-0101	-		1	**PNEUMATIC CUSHIONING**	
010	G-1021592	-		1	HOLDER	
020	1021593	-		1	BRACKET	
030	1021594	-		1	YOKE	
100	90450-0708	-		1	BALL JOINT COUPLING	
110	90166-0160	-	MM	250	HOSE	
140	90450-0190	-		1	CYLINDER	
150	90450-0667	-		1	BRACKET	
160	90450-0683	-		1	BRACKET	
170	90450-0201	-		1	AIR RECEIVER	
180	90450-0682	-		2	BRACKET	
200	312105-0372	-		6	SCREW O4017 M6X25A280	
210	312105-0459	-		2	SCREW O4017 M8X40A280	
220	312105-0540	-		1	SCREW 4017 M12X40A280	
240	312115-0364	-		4	SCREW 6X10 A4 80	
260	315105-0153	-		6	WASHER BRB6,4X12RFR	
270	315105-0165	-		2	WASHER BRB8,4X16RFR	
280	315105-0178	-		1	WASHER BRB13X24RFR	
290	342732-0104	-		1	ELBOW PIPE D8-R1/4"	
300	342732-0113	-		2	ELBOW PIPE 10-1/4	
310	346800-0110	-		1	SILENCER FILTER R1/4"	

Pos	Part No	SP	UN	Qty	Description	Page No

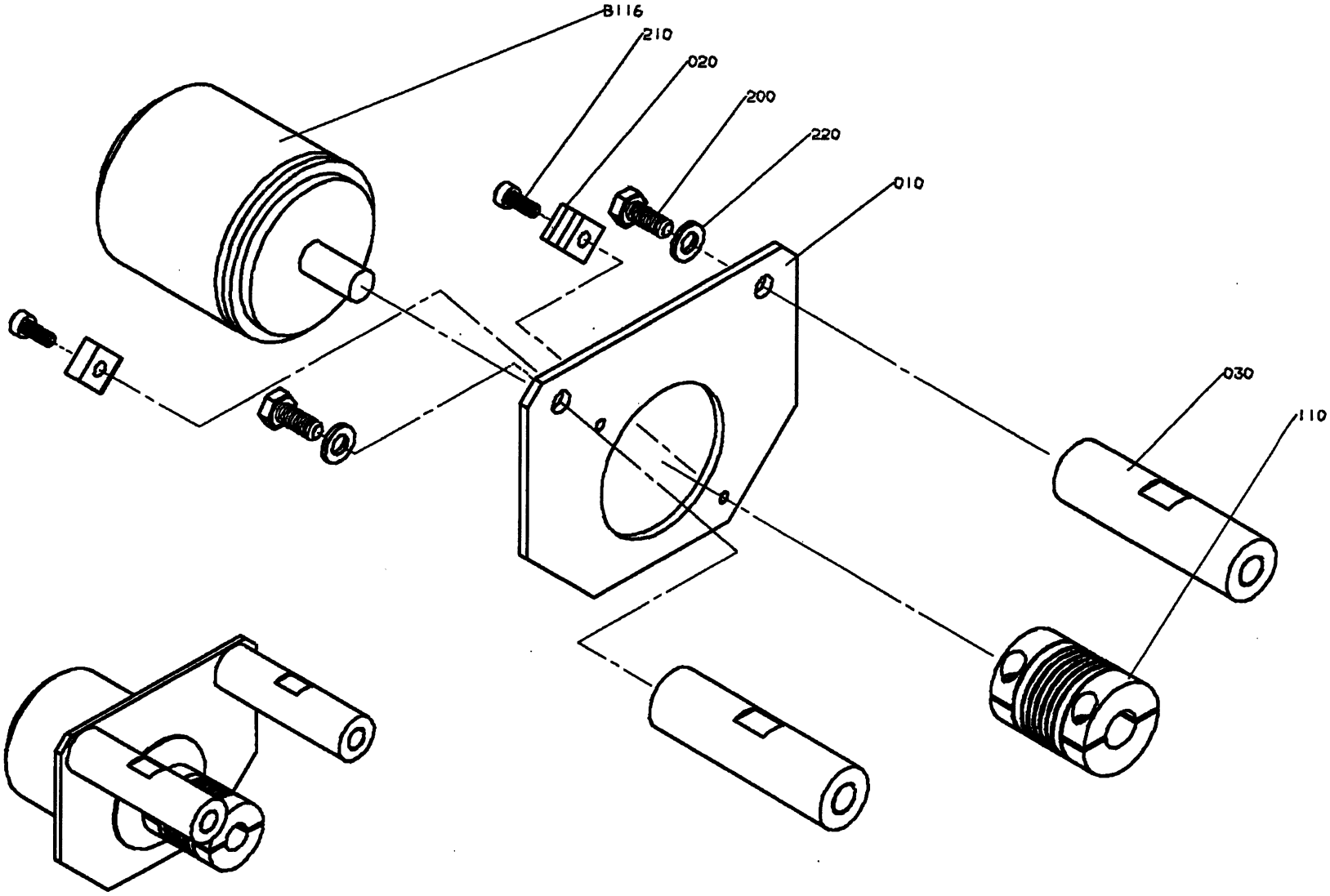

GraphicID: 102198202.tif
Parent Drw: 1021982-2
ECN No: 22292

Pos	Part No	SP	UN	Qty	Description	Page No
-						
000	**C-1021982-0201**	-		**1**	**ANGLE ENCODER**	
010	1021983	-		1	MOUNTING SHEET	
020	532889	-		2	CLAMPING PIECE	
030	1021984	-		2	SPACER	
110	90355-0031	-		1	FLEXIBLE COUPLING	
200	312105-0367	-		2	SCREW M6S6X14RFR	
210	312115-0289	-		2	SCREW S4X10 A4 80	
220	315105-0153	-		2	WASHER BRB6,4X12RFR	
B116	90061-0018	-		1	ANGLE ENCODER 8BIT GRAY	

Pos	Part No	SP	UN	Qty	Description	Page No

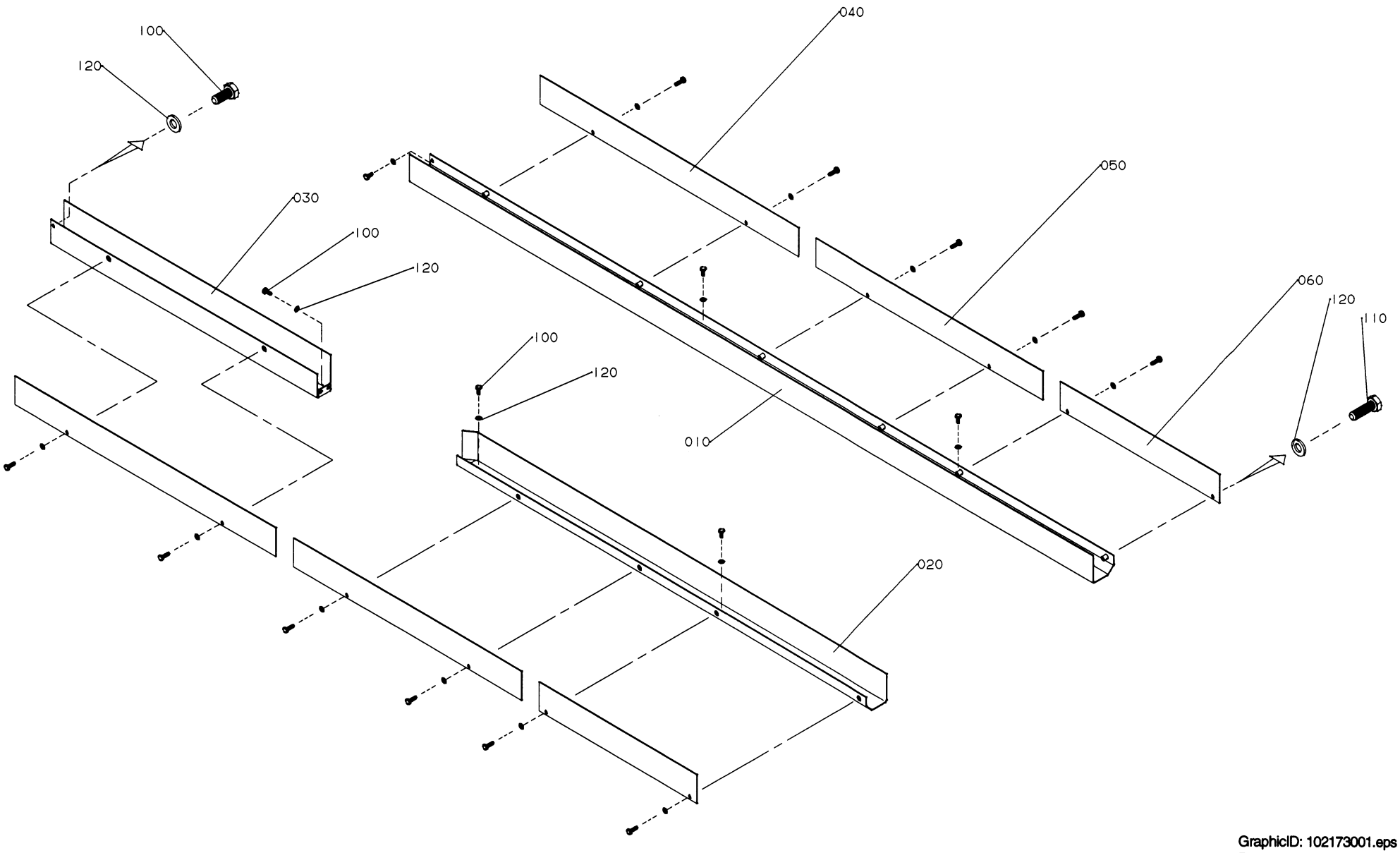

GraphicID: 102173001.eps
Parent Drw: 1021730-1
ECN 16567

Pos	Part No	SP	UN	Qty	Description	Page No
-						
000	**C-1021730-0101**	-		1	**CABLE DUCT**	
010	1021349	-		1	CABLE TRENCH	
020	1021350	-		1	CABLE TRENCH	
030	1021351	-		1	CABLE TRENCH	
040	1021390	-		2	LID	
050	1021391	-		2	LID	
060	1021392	-		2	LID	
100	312105-0367	-		12	SCREW M6S6X14RFR	
110	312105-0370	-		8	SCREW O4017 M6X20A280	
120	315105-0153	-		20	WASHER BRB6,4X12RFR	

Pos	Part No	SP	UN	Qty	Description	Page No

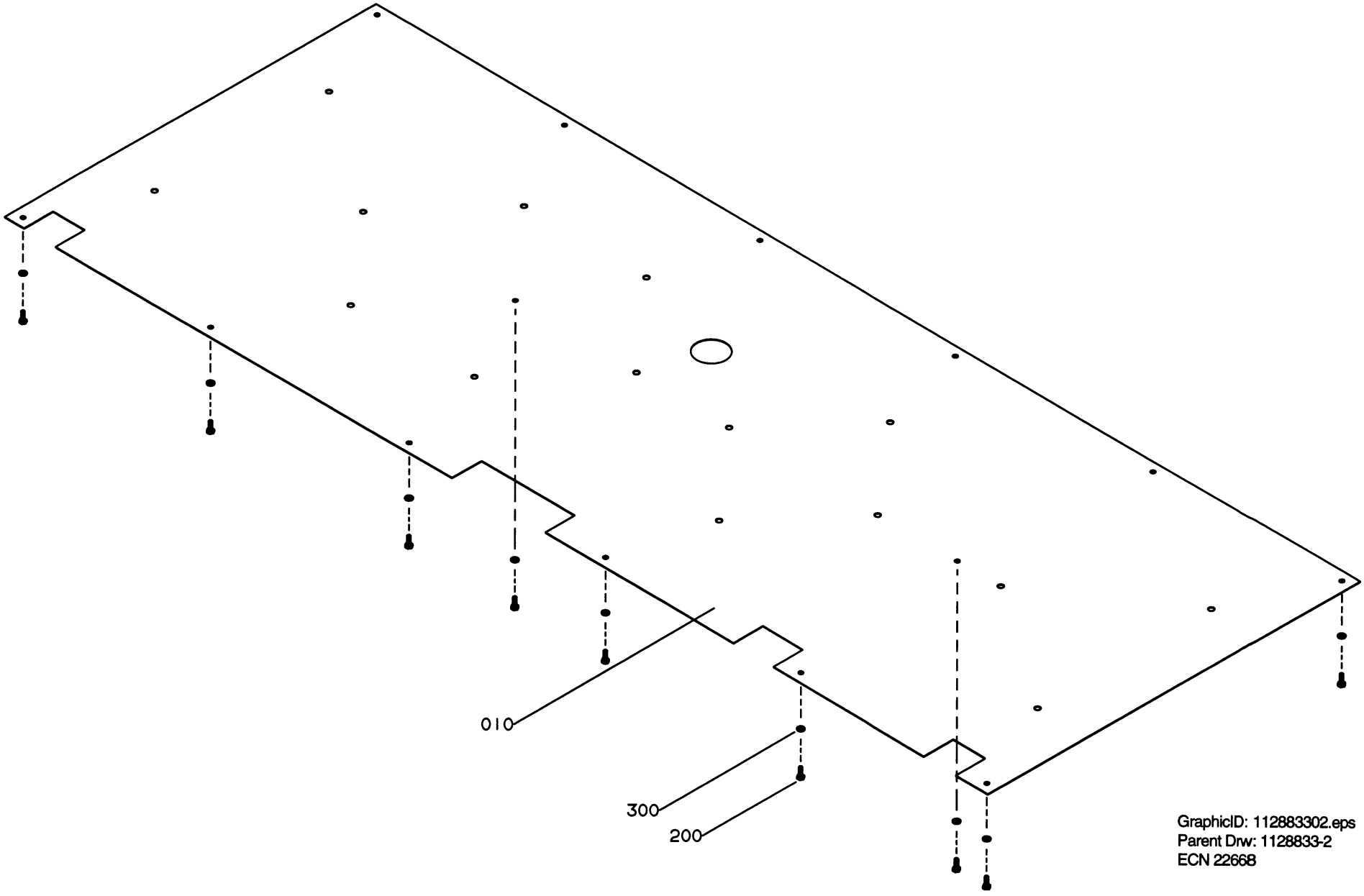

GraphicID: 112883302.eps
Parent Drw: 1128833-2
ECN 22668

Pos	Part No	SP	UN	Qty	Description	Page No
-						
000	C-1128833-0201	-		1	COVERING PLATE	
010	1139126	-		1	SHEET	
200	312105-0368	-		14	SCREW O4017 M6X16A280	
300	315105-0153	-		14	WASHER BRB6,4X12RFR	

Pos	Part No	SP	UN	Qty	Description	Page No

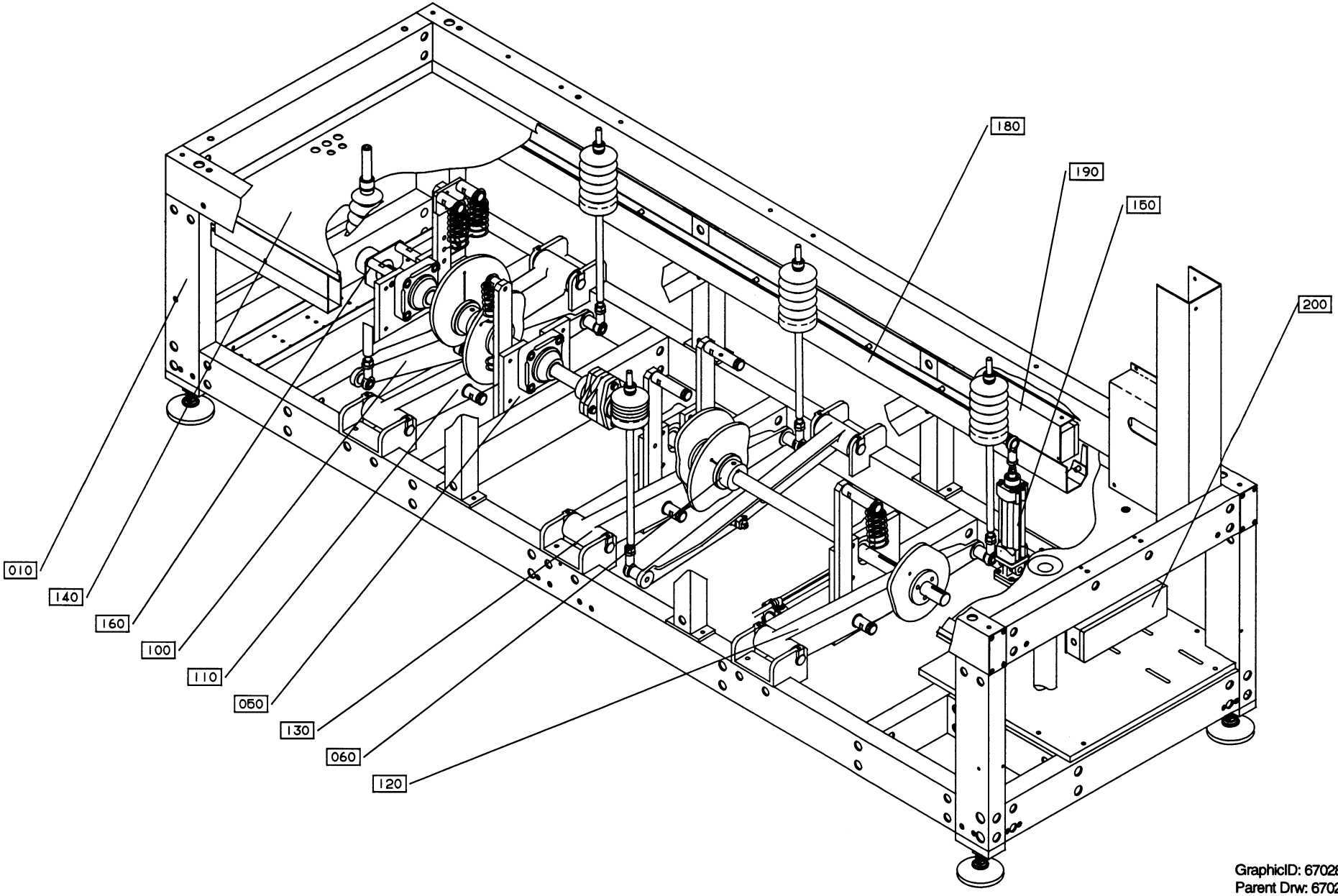

GraphicID: 6702800101.eps
Parent Drw: 670280-1
ECN 19307

Pos	Part No	SP	UN	Qty	Description	Page No
-						
000	B- 670282-0301	-		1	DRIVE UNIT	
010	C- 556625-0301	-		1	MOTOR MAINSHAFT	61
050	C- 556636-0201	-		1	ANGLE ENCODER	63
080	C- 556626-0301	-		1	MOTOR FEEDING	65
090	C-1021996-0301	-		1	SAFETY CLUTCH	67

Pos	Part No	SP	UN	Qty	Description	Page No

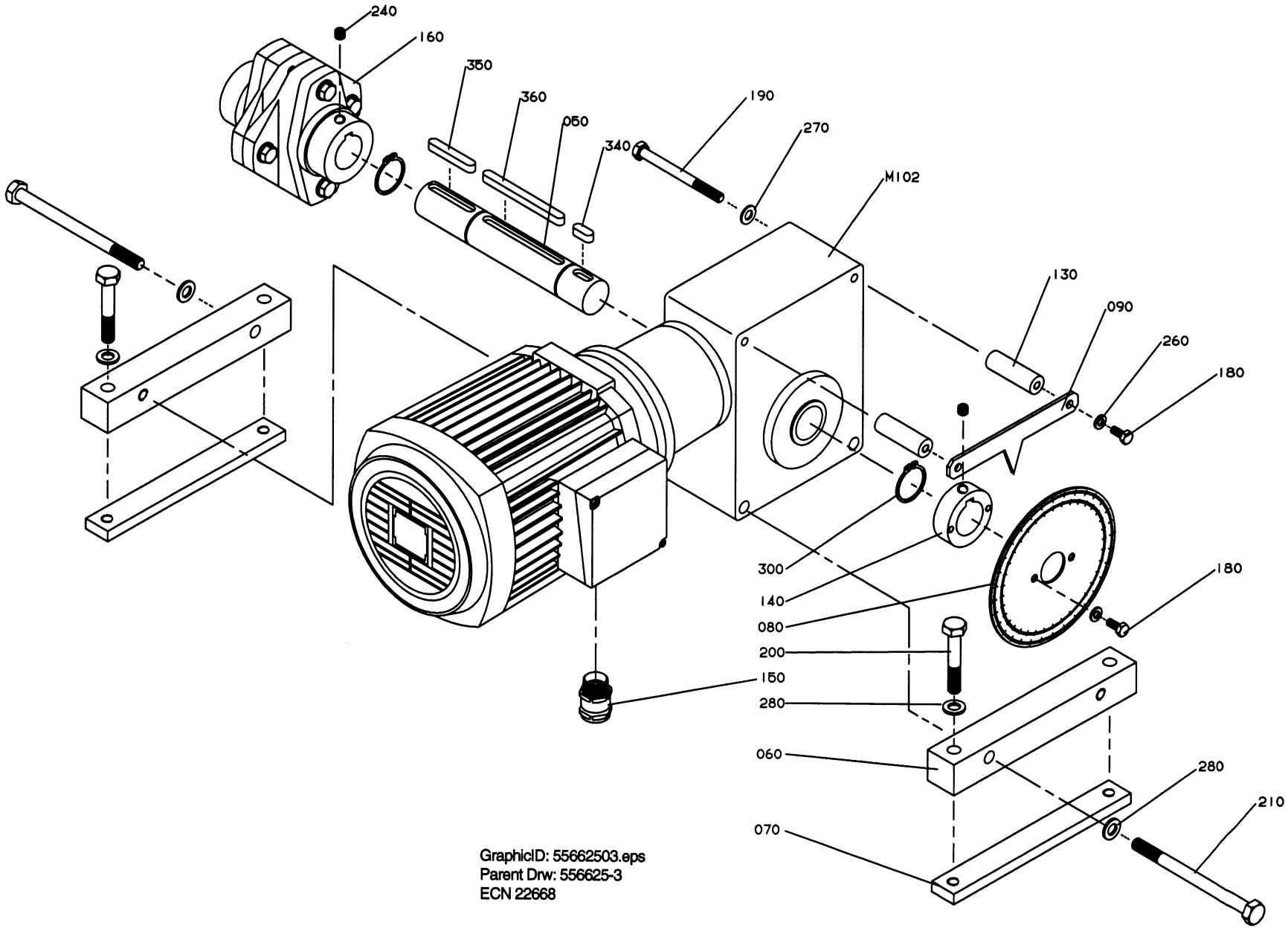

GraphicID: 55662503.eps
Parent Drw: 556625-3
ECN 22668

Pos	Part No	SP	UN	Qty	Description	Page No
-						
000	**C- 556625-0301**	-		1	**MOTOR MAINSHAFT**	
050	1128878	-		1	SHAFT	
060	556629	-		2	BRACKET	
070	556630	-		2	LOCK RAIL	
080	1021598	-		1	PROTRACTOR	
090	1021599	-		1	ARROW	
130	556638	-		2	SPACER	
140	1021597	-		1	HUB	
150	90012-0118	-		1	GLAND FITTING	
160	90355-0115	-		1	CONNECTION	
180	312105-0367	-		4	SCREW M6S6X14RFR	
190	312105-0469	-		2	SCREW O4014 M8X90A280	
200	312105-0503	-		4	SCREW 4014 M10X60A280	
210	312105-0517	-		2	SCREW 014 M10X130A280	
240	312318-0443	-		2	STOP SCREW SK6SS8X8RFR	
260	315105-0153	-		4	WASHER BRB6,4X12RFR	
270	315105-0165	-		2	WASHER BRB8,4X16RFR	
280	315105-0171	-		6	WASHER BRB10X18RFR	
300	315751-0122	-		2	CIRCLIP SGA30 RFR	
340	315701-0263	-		1	FLAT WEDGE8X7X20	
350	315701-0272	-		1	FLAT WEDGE8X7X50	
360	315701-0278	-		1	FLAT WEDGE8X7X90	
M102	90069-0266	C		1	WORM GEAR MOTOR	

Pos	Part No	SP	UN	Qty	Description	Page No

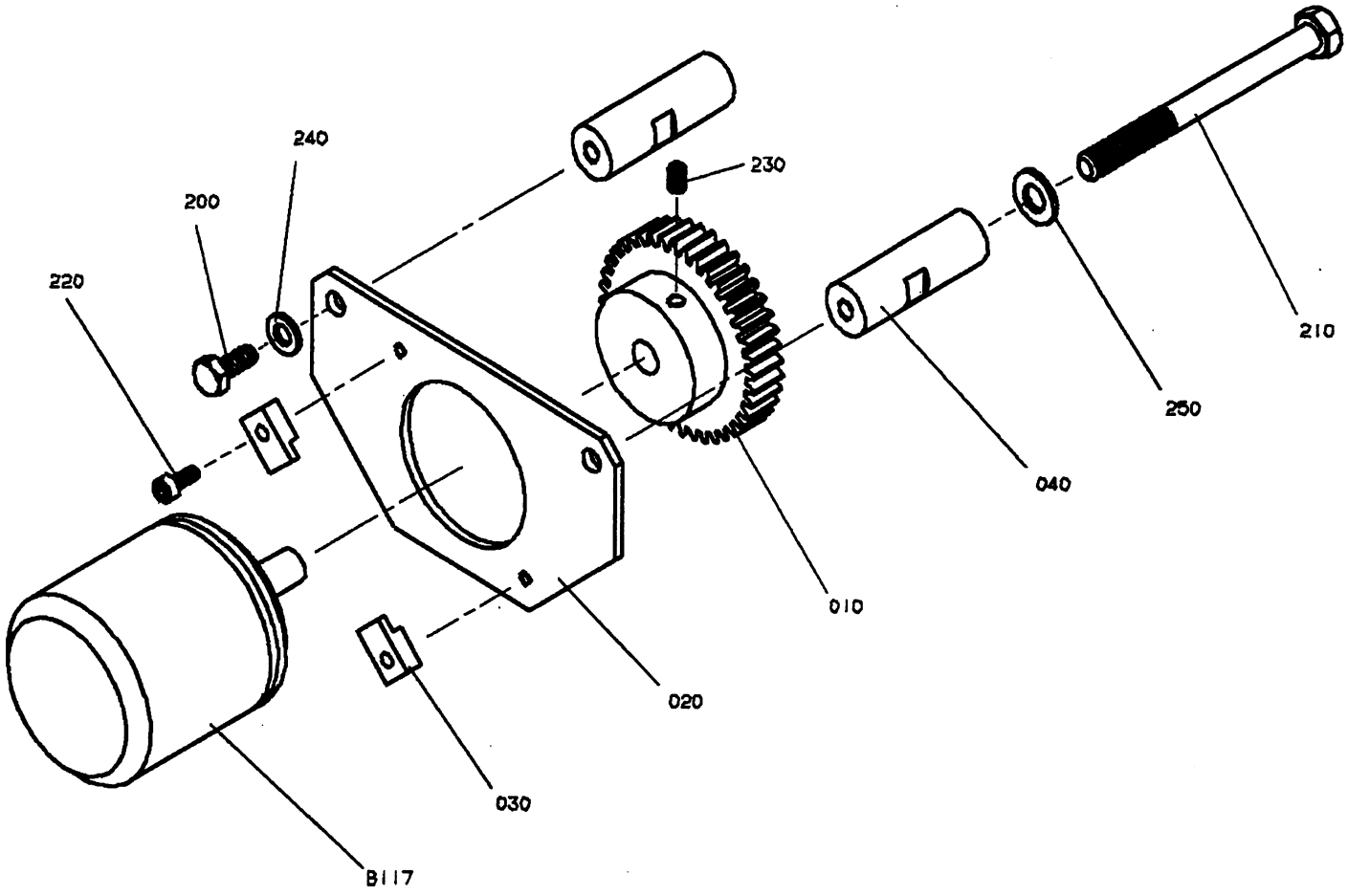
240
200
220
230
210
250
040
010
020
030
B117

Pos	Part No	SP	UN	Qty	Description	Page No
-						
000	C- 556636-0201	-		1	**ANGLE ENCODER**	
010	959179	-		1	GEAR WHEEL Z=40	
020	556637	-		1	MOUNTING SHEET	
030	532889	-		2	CLAMPING PIECE	
040	556638	-		2	SPACER	
200	312105-0367	-		2	SCREW M6S6X14RFR	
210	312105-0469	-		2	SCREW O4014 M8X90A280	
220	312115-0289	-		2	SCREW S4X10 A4 80	
230	312318-0323	-		1	STOP SCREW SK6SS5X8RFR	
240	315105-0153	-		2	WASHER BRB6,4X12RFR	
250	315105-0165	-		2	WASHER BRB8,4X16RFR	
B117	90061-0018	-		1	ANGLE ENCODER 8BIT GRAY	

Pos	Part No	SP	UN	Qty	Description	Page No

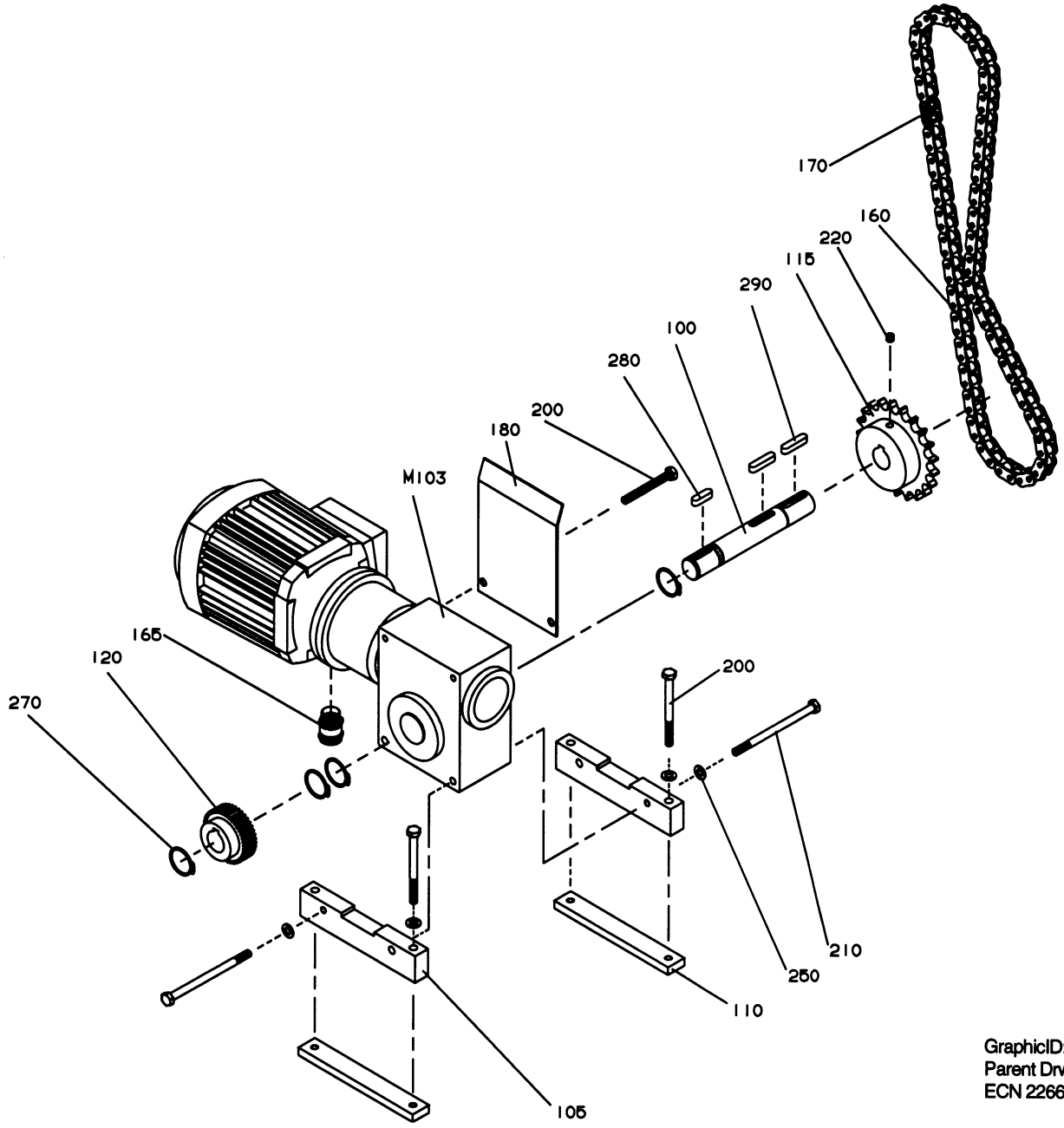

GraphicID: 55662603.eps
Parent Drw: 556626-3
ECN 22668

Pos	Part No	SP	UN	Qty	Description	Page No
-						
000	C- 556626-0301	-		1	**MOTOR FEEDING**	
100	556631	-		1	SHAFT	
105	556632	-		2	BRACKET	
110	556633	-		2	LOCK RAIL	
115	1021324	-		1	SPROCKET	
120	556635	-		1	GEAR WHEEL	
160	1021998	C		1	CHAIN	
165	90012-0118	-		1	GLAND FITTING	
170	90288-0333	C		1	CONNECTION LINK	
180	1021915	-		1	SHEET	
200	312105-0465	-		4	SCREW O4014 M8X70A280	
210	312105-0475	-		2	SCREW 4014 M8X120A280	
220	312318-0443	-		1	STOP SCREW SK6SS8X8RFR	
250	315105-0165	-		6	WASHER BRB8,4X16RFR	
270	315751-0119	-		4	CIRCLIP SGA25 RFR	
280	315701-0266	-		1	FLAT WEDGE8X7X28	
290	315701-0801	-		2	FLAT WEDGE8X7X36	
M103	90069-0267	C		1	WORM GEAR MOTOR	

Pos	Part No	SP	UN	Qty	Description	Page No

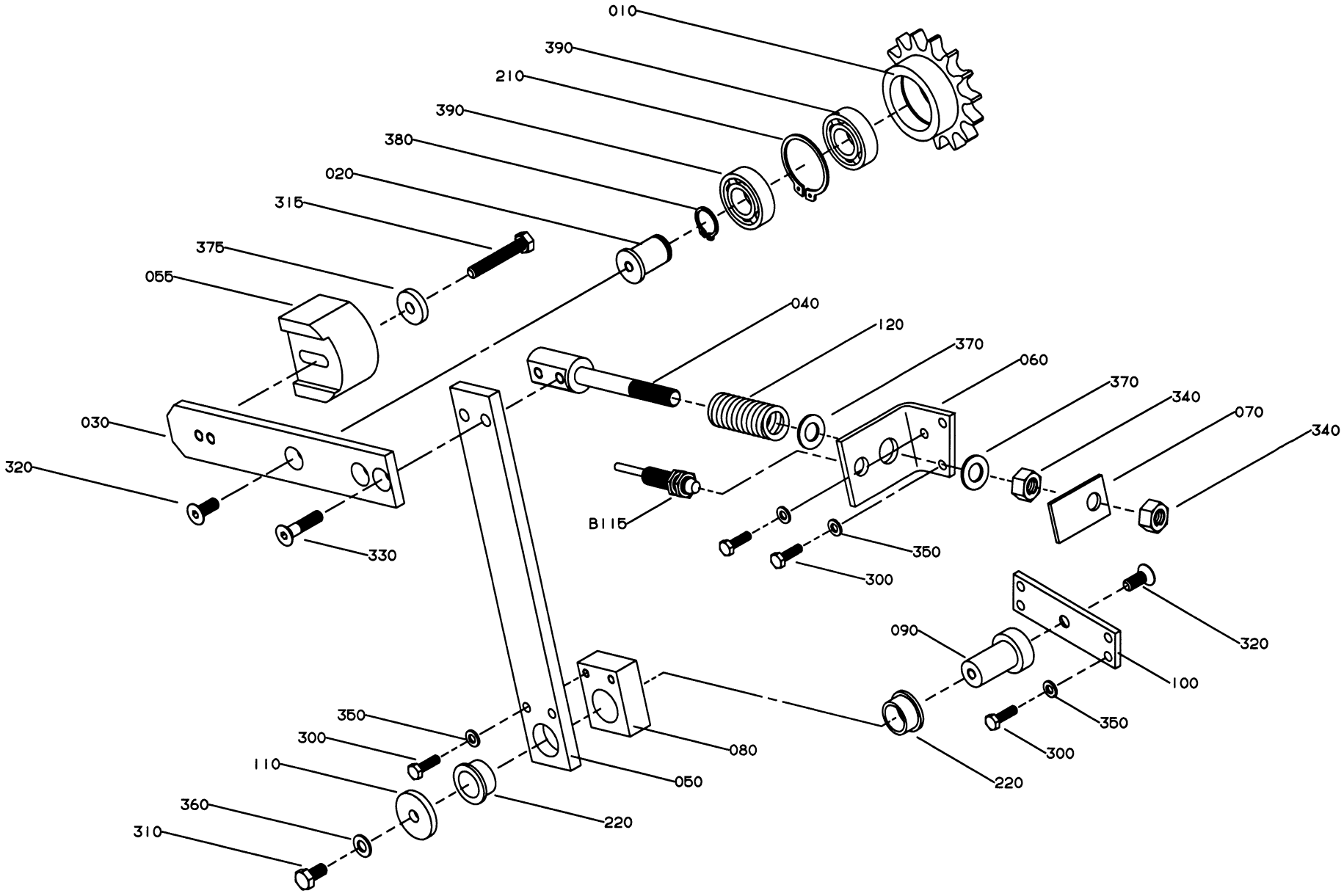

GraphicID: 102199603.eps
Parent Drw: 1021996-3
ECN 22668

Pos	Part No	SP	UN	Qty	Description	Page No
-						
000	C-1021996-0301	-		1	**SAFETY CLUTCH**	
010	1065841	-		1	SPROCKET Z=15	
020	1065842	-		1	SHAFT	
030	1139154	-		1	HOLDER	
040	1065844	-		1	SPRING GUIDE	
050	1065847	-		1	STRUT	
055	1139155	-		1	SLIDER	
060	1065845	-		1	HOLDER	
070	1065846	-		1	FLAG	
080	1065848	-		1	BEARING HOUSING	
090	1065849	-		1	SHAFT	
100	1065850	-		1	HOLDER	
110	1065851	-		1	WASHER	
120	1065852	-		1	COMPRESSION SPRING	
210	90141-0020	-		1	LOCK RING	
220	90240-0221	P		2	BEARING	
300	312105-0370	-		9	SCREW O4017 M6X20A280	
310	312105-0449	-		1	SCREW O4017 M8X16A280	
315	312105-0461	-		1	SCREW O4017 M8X50A280	
320	312155-0451	-		2	SCREW MF6S8X20RFR	
330	312155-0457	-		2	SCREW MF6S8X35RFR	
340	312605-0322	-		2	NUT M6M12RFR	
350	315105-0153	-		9	WASHER BRB6,4X12RFR	
360	315105-0165	-		1	WASHER BRB8,4X16RFR	
370	315105-0178	-		2	WASHER BRB13X24RFR	
375	315125-0165	-		1	WASHER SB 8,4X26X5 RFR	
380	315751-0116	-		1	CIRCLIP SGA20 RFR	
390	321308-0204	-		2	BALL BEARISKF6004-2RS	
B115	90044-0124	S		1	INDUCTIVE SWITCH	

Pos	Part No	SP	UN	Qty	Description	Page No

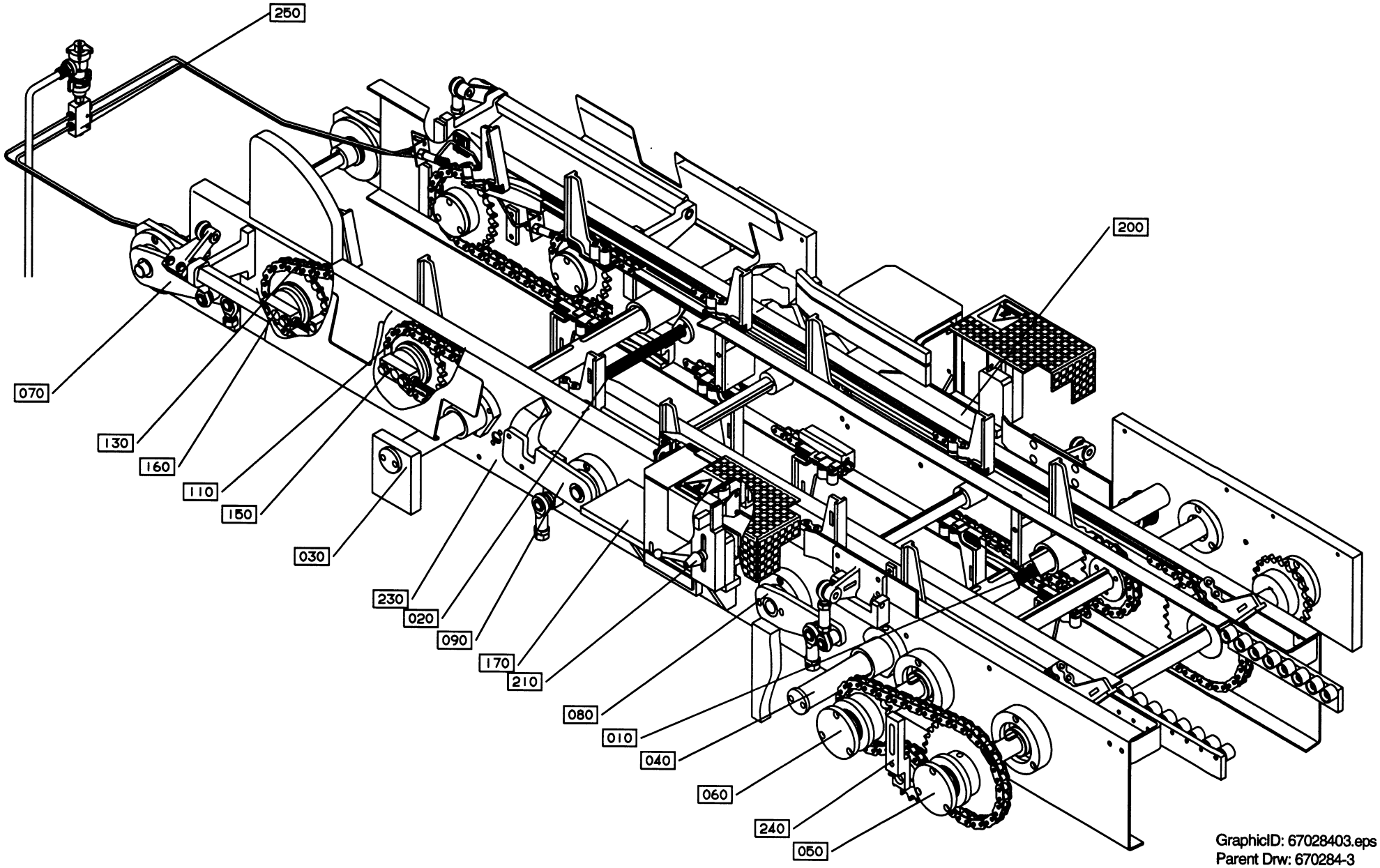

GraphicID: 67028403.eps
Parent Drw: 670284-3
ECN 22668

Pos	Part No	SP	UN	Qty	Description	Page No
-						
000	B- 670284-0401	-		1	**FEED UNIT**	
010	C-1021032-0101	-		1	SIDE ADJUSTMENT FRONT	71
020	C-1021041-0101	-		1	SIDE ADJUSTERREAR	73
030	C-1021043-0101	-		1	STEERING REAR	75
040	C-1021049-0101	-		1	STEERING FRONT	77
050	C-1021052-0101	-		1	DRIVESHAFT FRONT	79
060	C-1021060-0101	-		1	DRIVESHAFT REAR	81
070	C-1021098-0101	-		1	SHAFT FOLDINGFLAP	83
080	C-1021118-0101	-		1	SHAFT SQUEESER	87
090	C-1021119-010V	-		1	SHAFT FLAPFOLDER	91
110	C-1021093-0101	-		1	CARRIER CHAIN INSIDE	95
130	C-1021096-0101	-		1	CARRIER CHAIN OUTSIDE	97
150	C-1021072-0101	-		2	GUIDE SPROCKET INSIDE	99
160	C-1021067-0101	-		2	GUIDE SPROCKET OUTSIDE	101
170	C-1021278-040V	-		1	FOLDING BAR	103
200	C-1021290-0101	-		1	BOTTOM FOLDER	105
210	C-1021295-0201	-		1	GUN HOLDER	107
230	C-1021076-0301	-		1	MACHINE BODY	109
240	C-1021326-0101	-		1	CHAIN TIGHTENER WHEEL	111
250	C-1065896-0101	-		1	CHAIN LUBRICATION	113

Pos	Part No	SP	UN	Qty	Description	Page No

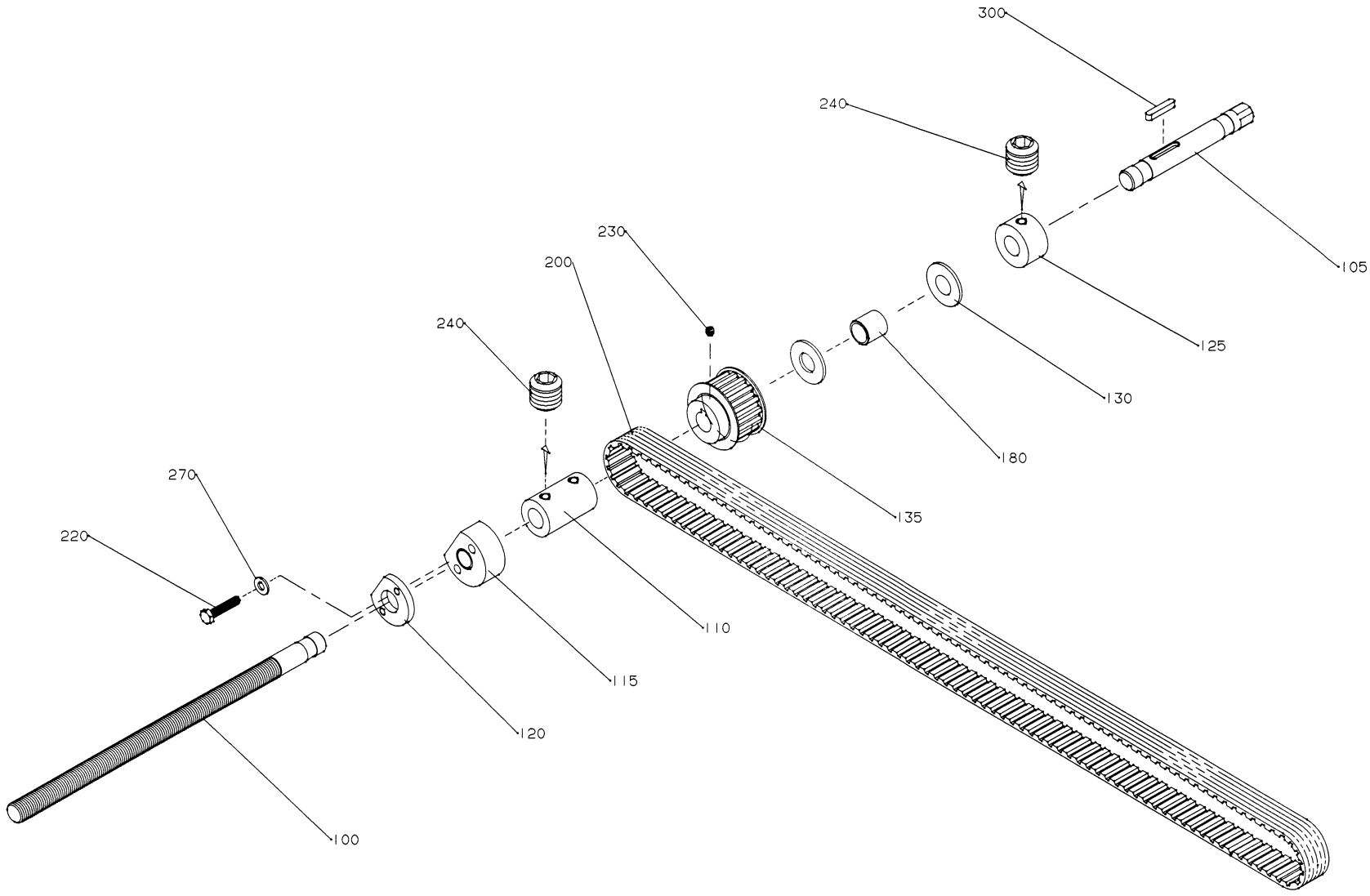

GraphicID: 102103201.eps
Parent Drw: 1021032-1
ECN 19307

Pos	Part No	SP	UN	Qty	Description	Page No
-						
000	**C-1021032-0101**	-		**1**	**SIDE ADJUSTMENT FRONT**	
100	1021033	-		1	ADJUSTING SCREW	
105	1021034	-		1	SHAFT	
110	1021035	-		1	SLEEVE	
115	1021036	-		1	NUT	
120	1021037	-		1	RING	
125	1021038	-		1	RETAINING RING	
130	1021039	-		2	WASHER	
135	1021040	-		1	TOOTHED PULLY	
180	90240-0205	-		1	PLAIN BEARING	
200	90417-0140	-		1	TOOTHED BELT	
220	312105-0374	-		2	SCREW O4017 M6X30A280	
230	312318-0360	-		1	STOP SCREW SK6SS6X6RFR	
240	312318-0443	-		4	STOP SCREW SK6SS8X8RFR	
270	315105-0156	-		2	WASHER BRB6,7X14RFR	
300	315701-0204	-		1	FLAT WEDGE5X5X28	

Pos	Part No	SP	UN	Qty	Description	Page No

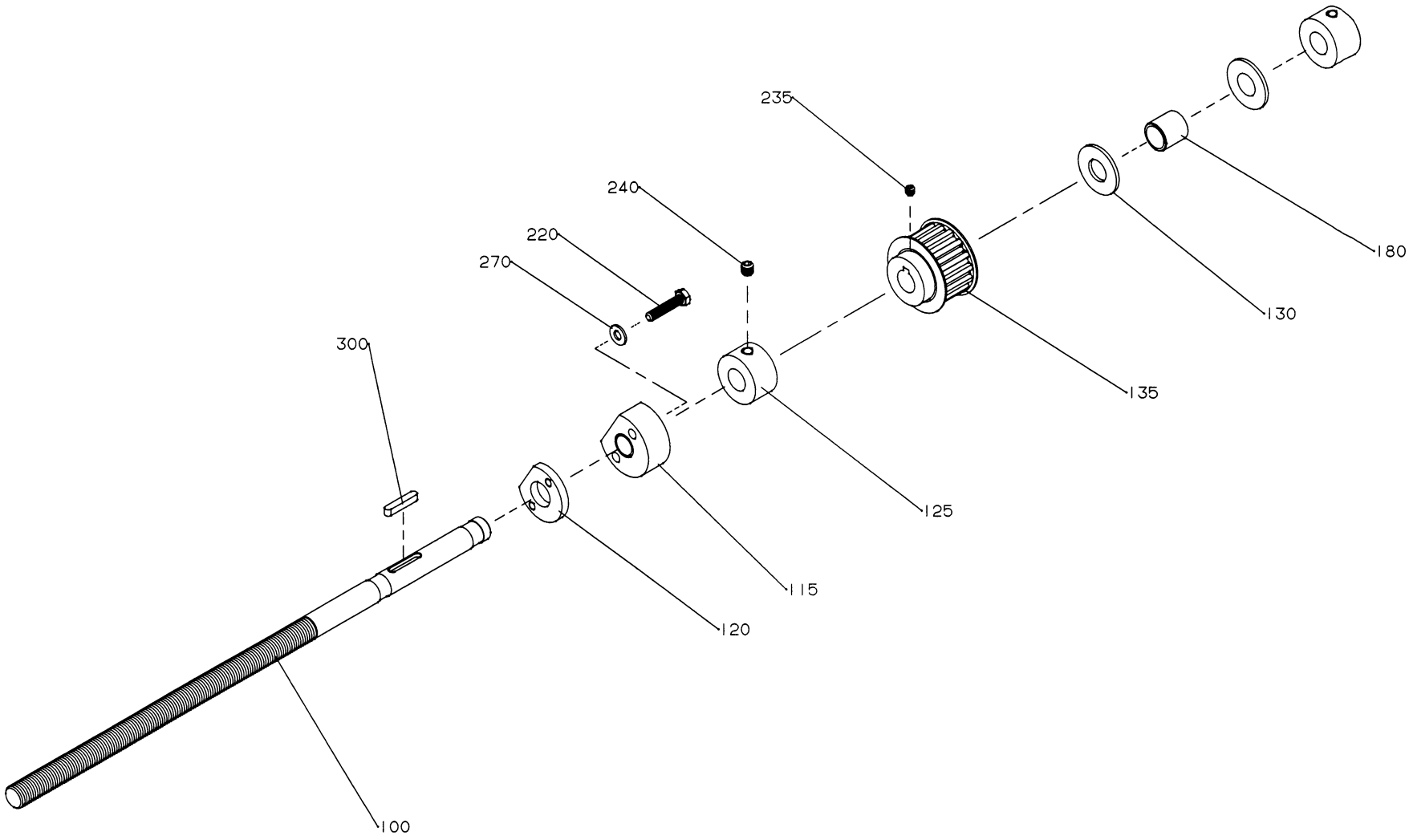

GraphicID: 102104101.eps
Parent Drw: 1021041-1
ECN 19307

Pos	Part No	SP	UN	Qty	Description	Page No
-						
000	C-1021041-0101	-		1	**SIDE ADJUSTER REAR**	
100	1021042	-		1	ADJUSTING SCREW	
115	1021036	-		1	NUT	
120	1021037	-		1	RING	
125	1021038	-		2	RETAINING RING	
130	1021039	-		2	WASHER	
135	1021040	-		1	TOOTHED PULLY	
180	90240-0205	-		1	PLAIN BEARING	
220	312105-0374	-		2	SCREW O4017 M6X30A280	
235	312318-0360	-		1	STOP SCREW SK6SS6X6RFR	
240	312318-0443	-		4	STOP SCREW SK6SS8X8RFR	
270	315105-0156	-		2	WASHER BRB6,7X14RFR	
300	315701-0204	-		1	FLAT WEDGE5X5X28	

Pos	Part No	SP	UN	Qty	Description	Page No

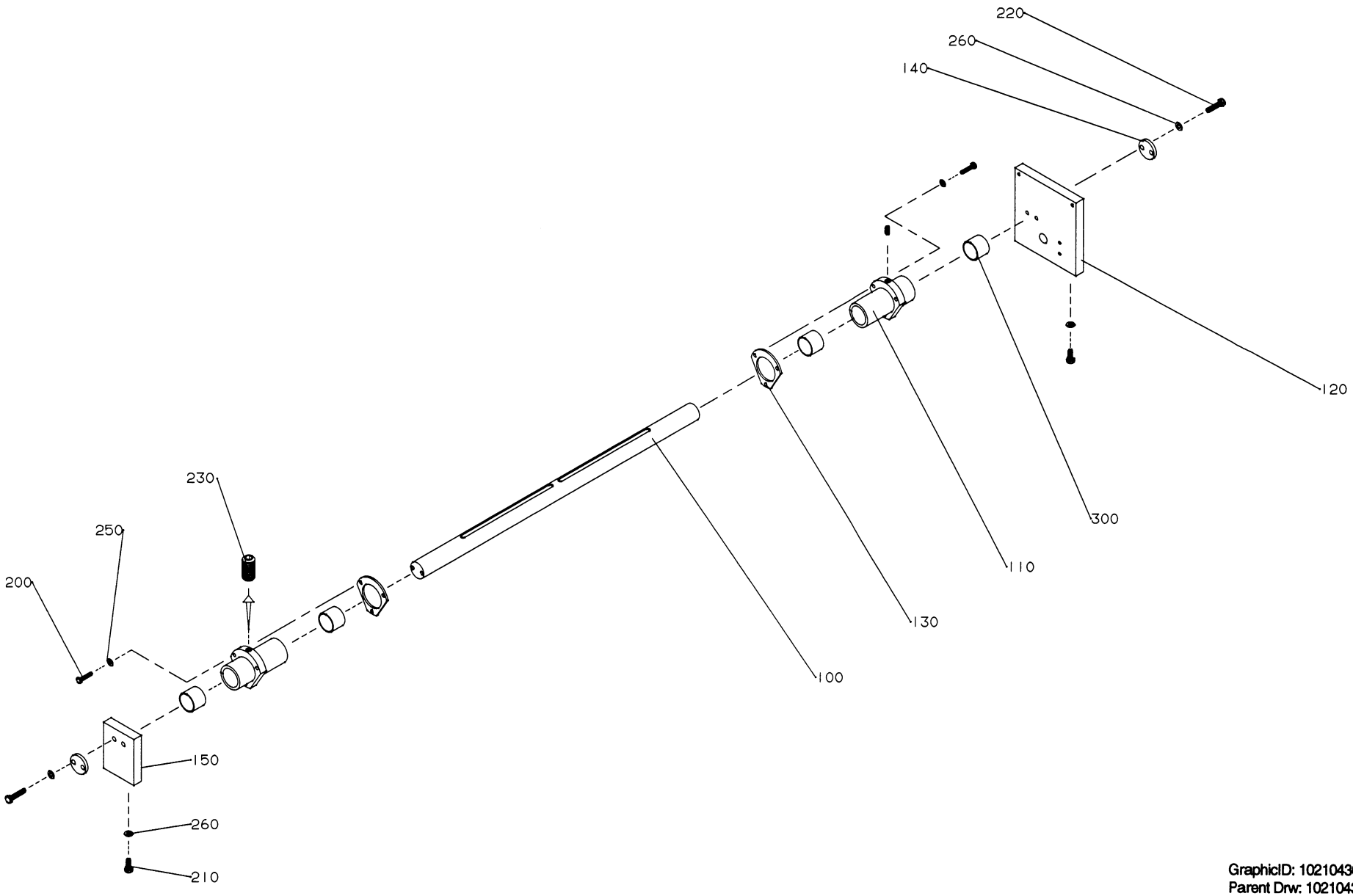

GraphicID: 102104301.eps
Parent Drw: 1021043-1
ECN 19307

Pos	Part No	SP	UN	Qty	Description	Page No
-						
000	C-1021043-0101	-		1	**STEERING REAR**	
100	1021044	-		1	PILLAR	
110	1021045	-		2	BEARING HOUSING	
120	1021046	-		1	HOLDER	
130	1021047	-		2	WASHER	
140	1021048	-		2	WASHER	
150	1080209	-		1	HOLDER	
200	312105-0372	-		6	SCREW O4017 M6X25A280	
210	312105-0453	-		4	SCREW O4017 M8X25A280	
220	312105-0459	-		4	SCREW O4017 M8X40A280	
230	312318-0449	-		2	STOP SCREW SK6SS8X16RFR	
250	315105-0156	-		6	WASHER BRB6,7X14RFR	
260	315105-0165	-		8	WASHER BRB8,4X16RFR	
300	321120-0185	-		4	BUSHING 35/39X30	

Pos	Part No	SP	UN	Qty	Description	Page No

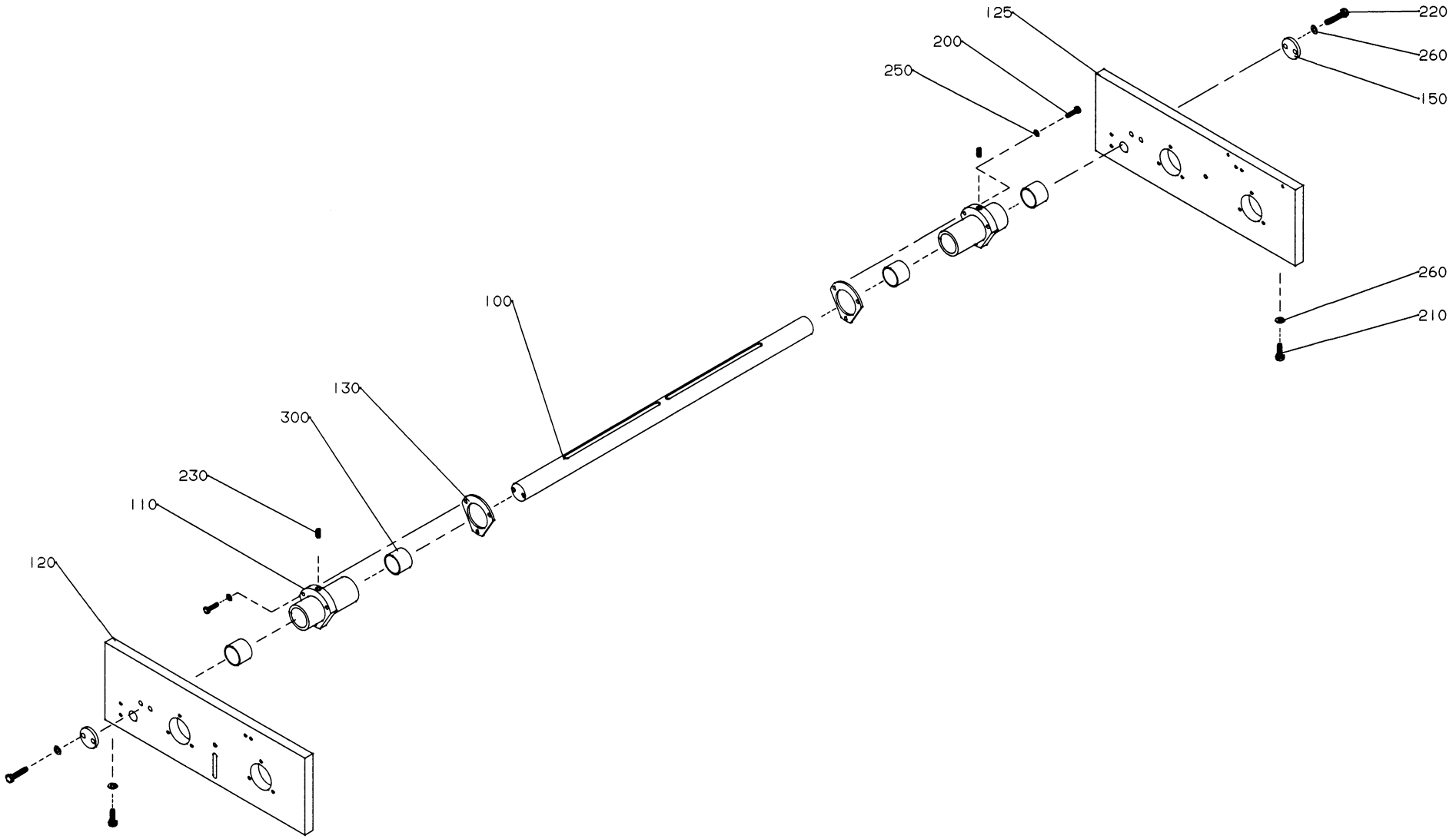

GraphicID: 102104901.eps
Parent Drw: 1021049-1
ECN 19307

Pos	Part No	SP	UN	Qty	Description	Page No
-						
000	C-1021049-0101	-		1	**STEERING FRONT**	
100	1021044	-		1	PILLAR	
110	1021045	-		2	BEARING HOUSING	
120	1021050	-		1	HOLDER	
125	1021051	-		1	HOLDER	
130	1021047	-		2	WASHER	
150	1021048	-		2	WASHER	
200	312105-0372	-		6	SCREW O4017 M6X25A280	
210	312105-0453	-		6	SCREW O4017 M8X25A280	
220	312105-0459	-		4	SCREW O4017 M8X40A280	
230	312318-0449	-		2	STOP SCREW SK6SS8X16RFR	
250	315105-0156	-		6	WASHER BRB6,7X14RFR	
260	315105-0165	-		10	WASHER BRB8,4X16RFR	
300	321120-0185	-		4	BUSHING 35/39X30	

Pos	Part No	SP	UN	Qty	Description	Page No

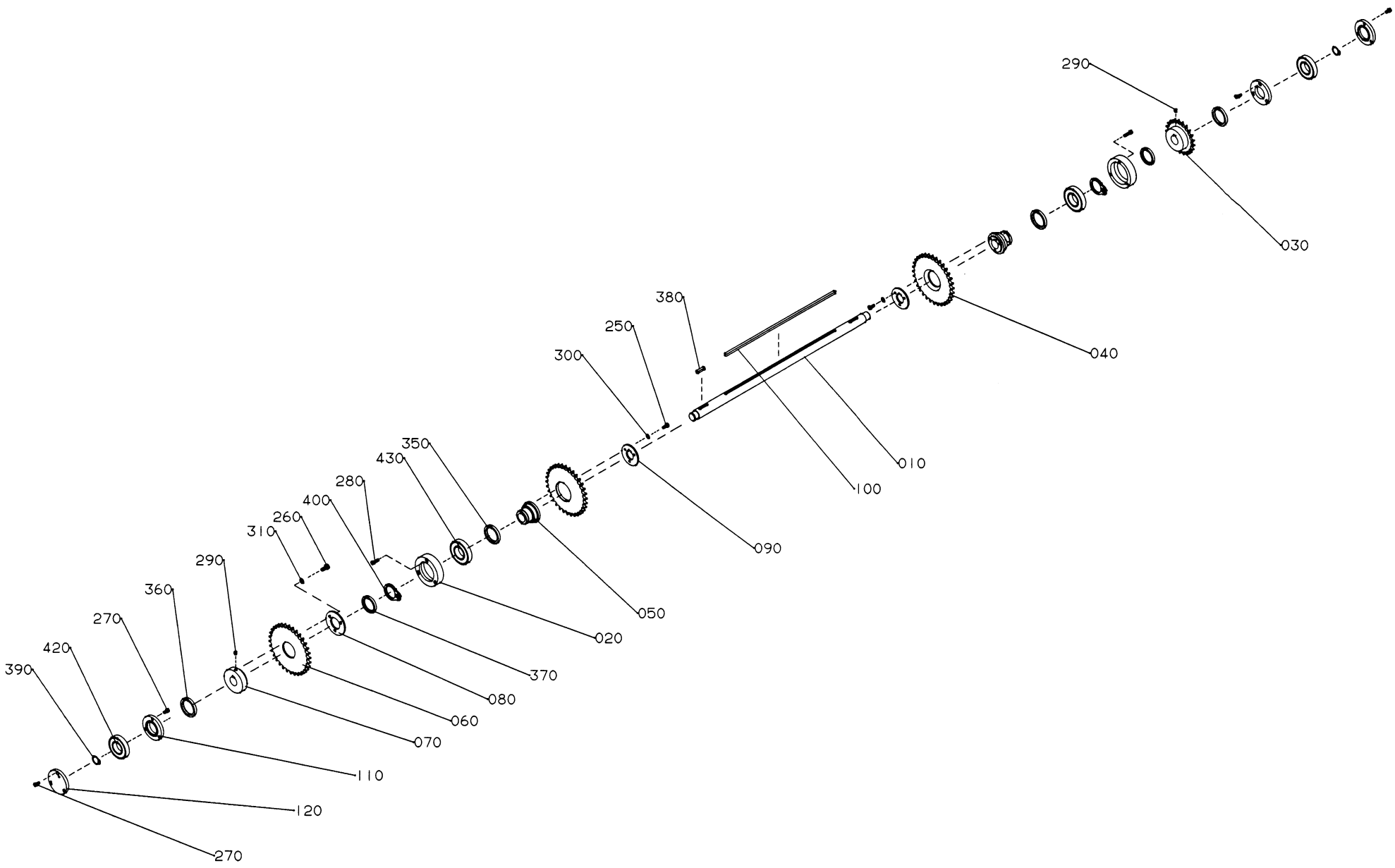

GraphicID: 102105201.eps
Parent Drw: 1021052-1
ECN 16567

Pos	Part No	SP	UN	Qty	Description	Page No
-						
000	C-1021052-0101	-		1	**DRIVESHAFT FRONT**	
010	1021053	-		1	SHAFT	
020	1021054	-		2	BEARING HOUSING	
030	1021325	-		1	SPROCKET	
040	1021056	-		2	SPROCKET	
050	1021057	-		2	HUB	
060	1021413	-		1	SPROCKET	
070	1021414	-		1	HUB	
080	1021415	-		1	WASHER	
090	1021059	-		2	WASHER	
100	1021066	-		1	FLAT WEDGE	
110	1021064	-		2	BEARING COVER	
120	1021065	-		2	BEARING COVER	
250	312105-0368	-		6	SCREW O4017 M6X16A280	
260	312105-0451	-		3	SCREW SO4017 8X20A280	
270	312115-0366	-		12	SCREW O4762 M6X12A280	
280	312115-0372	-		6	SCREW O4762 M6X25A280	
290	312318-0443	-		2	STOP SCREW SK6SS8X8RFR	
300	315105-0156	-		6	WASHER BRB6,7X14RFR	
310	315105-0165	-		3	WASHER BRB8,4X16RFR	
350	315220-0204	P		2	SEAL RING V-55S	
360	90091-0200	P		2	SEAL RING	
370	90091-0304	P		2	SEAL RING	
380	315701-0801	-		2	FLAT WEDGE8X7X36	
390	315750-0119	-		1	CIRCLIP SGA25	
400	315750-0129	-		2	CIRCLIP SGA45	
420	321313-0105	P		2	BALL BEARISKF6205-2RS	
430	321308-0209	P		2	BALL BEARISKF6009-2RS	

Pos	Part No	SP	UN	Qty	Description	Page No

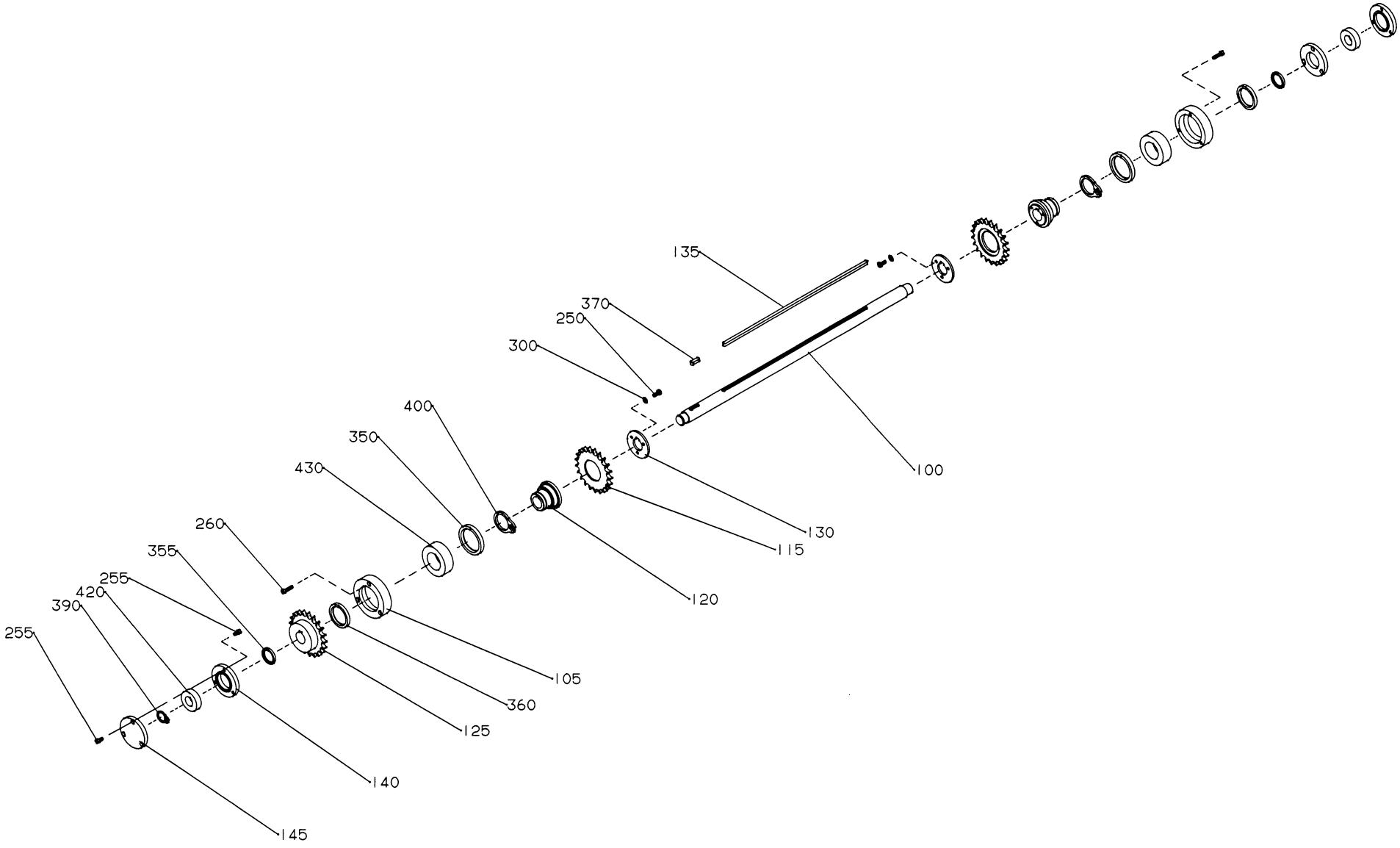

GraphicID: 102106001.eps
Parent Drw: 1021060-1
ECN 16567

Pos	Part No	SP	UN	Qty	Description	Page No
-						
000	**C-1021060-0101**	-		1	**DRIVESHAFT REAR**	
100	1021061	-		1	SHAFT	
105	1021054	-		2	BEARING HOUSING	
115	1021062	-		2	SPROCKET	
120	1021057	-		2	HUB	
125	1021063	-		1	SPROCKET	
130	1021059	-		2	WASHER	
135	1021066	-		1	FLAT WEDGE	
140	1021064	-		2	BEARING COVER	
145	1021065	-		2	BEARING COVER	
250	312105-0368	-		6	SCREW O4017 M6X16A280	
255	312115-0366	-		12	SCREW O4762 M6X12A280	
260	312115-0372	-		6	SCREW O4762 M6X25A280	
300	315105-0156	-		6	WASHER BRB6,7X14RFR	
350	315220-0204	P		2	SEAL RING V-55S	
355	90091-0200	P		2	SEAL RING	
360	90091-0304	P		2	SEAL RING	
370	315701-0266	-		1	FLAT WEDGE8X7X28	
390	315750-0119	-		1	CIRCLIP SGA25	
400	315750-0129	-		2	CIRCLIP SGA45	
420	321313-0105	P		2	BALL BEARISKF6205-2RS	
430	321308-0209	P		2	BALL BEARISKF6009-2RS	

Pos	Part No	SP	UN	Qty	Description	Page No

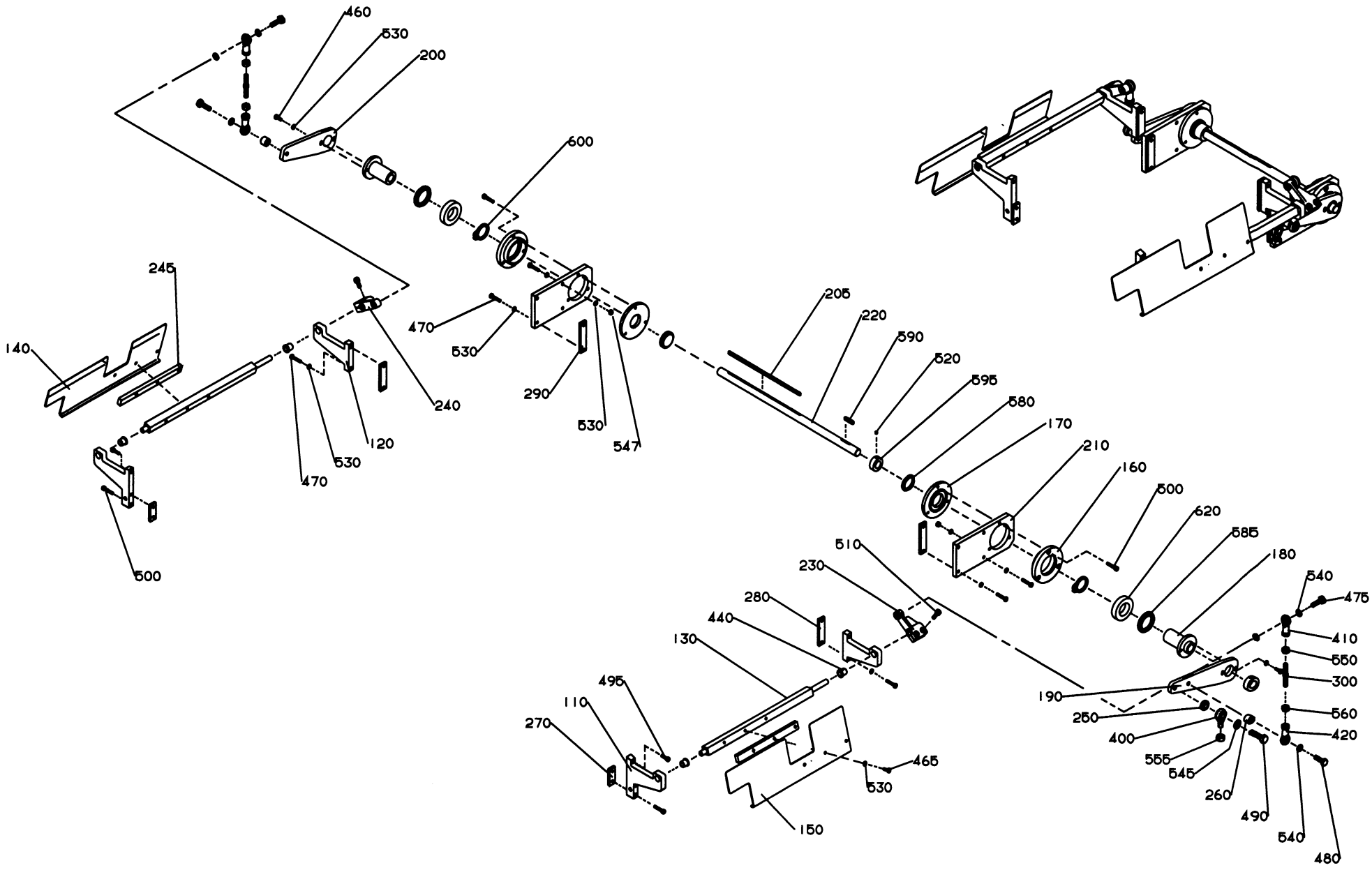

GraphicID: 102109801.eps
Parent Drw: 1021098-1
ECN 22668

Pos	Part No	SP	UN	Qty	Description	Page No
-						
000	**C-1021098-0101**	-		1	**SHAFT FOLDING FLAP**	
110	1021099	-		2	CANTILEVER	
120	1021100	-		2	CANTILEVER	
130	1021101	-		2	SHAFT	
140	1021102	-		1	FOLDING FLAP	
150	1021103	-		1	FOLDING FLAP	
160	1021104	-		2	BEARING HOUSING	
170	1021105	-		2	LID	
180	1021106	-		2	HUB	
190	1021107	-		1	ARM	
200	1021108	-		1	ARM	
205	1021579	-		1	FLAT WEDGE	
210	1021109	-		2	PLATE	
220	1021110	-		1	SHAFT	
230	G-1021111	-		1	ARM	
240	1021112	-		1	ARM	
245	1021918	-		2	SPACER	
250	1021113	-		1	WASHER	
260	1021114	-		2	WASHER	
270	1021115	-		2	LOCK PLATE	
280	1021116	-		2	LOCK PLATE	
290	1021117	-		2	LOCK PLATE	
300	1021121	-		2	LINK ARM	
400	90115-0135	P		1	LINK HEAD	
410	90115-0181	P		2	LINK HEAD	
420	90115-0182	P		2	LINK HEAD	
440	90240-0204	P		4	PLAIN BEARING	
460	312105-0368	-		4	SCREW O4017 M6X16A280	
465	312105-0371	-		6	SCREW M6S6X22RFR	
470	312105-0374	-		16	SCREW O4017 M6X30A280	
475	312105-0497	-		2	SCREW 4017 M10X35A280	
480	312105-0499	-		2	SCREW 4017 M10X40A280	
490	312105-0540	-		1	SCREW 4017 M12X40A280	
495	312115-0370	-		2	SCREW O4762 M6X20A280	
500	312115-0374	-		10	SCREW O4762 M6X30A280	
510	312115-0451	-		4	SCREW O4762 M8X20A280	
520	312318-0360	-		4	STOP SCREW SK6SS6X6RFR	
530	315105-0153	-		30	WASHER BRB6,4X12RFR	
540	315105-0171	-		6	WASHER BRB10X18RFR	
545	315105-0178	-		1	WASHER BRB13X24RFR	
547	312605-0316	-		4	NUT M6M6RFR	
550	312605-0320	-		2	NUT M6M10RFR	
555	312605-0322	-		1	NUT M6M12RFR	
560	312902-0320	-		2	NUT M6M10VRFR	
580	315220-0175	P		2	SEAL RING V-35S	
585	90091-0305	P		2	SEAL RING	
590	315701-0237	-		1	FLAT WEDGE6X6X32	
595	315742-0116	-		2	RETAINING 20SMS199RFR	
600	315750-0124	-		2	CIRCLIP SGA35	
620	321308-0207	P		2	BALL BEARISKF6007-2RS	

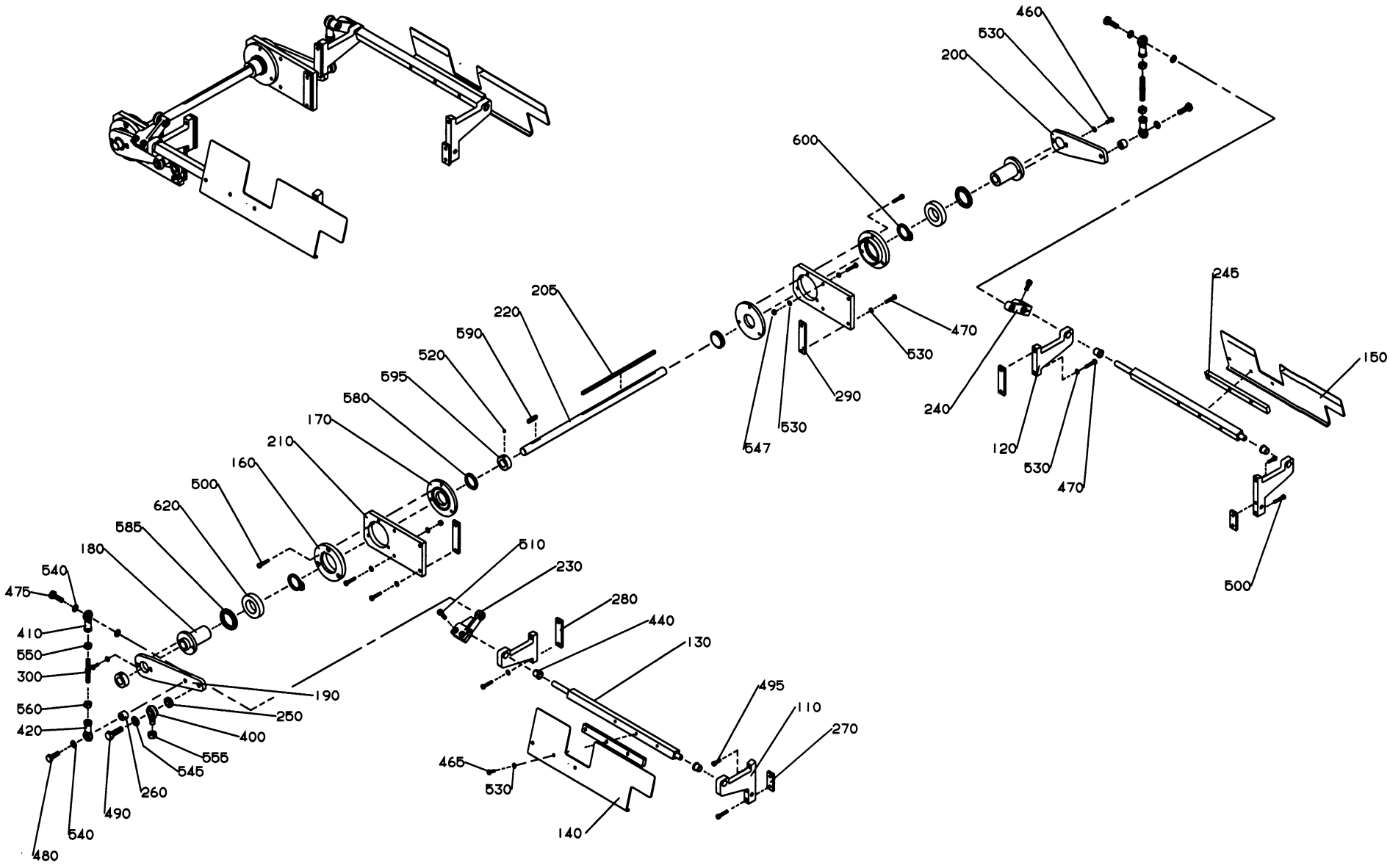

GraphicID: 102109802.eps
Parent Drw: 1021098-2
ECN 22668

Pos	Part No	SP	UN	Qty	Description	Page No
-						
000	C-1021098-0101	-		1	**SHAFT FOLDING FLAP**	
110	1021099	-		2	CANTILEVER	
120	1021100	-		2	CANTILEVER	
130	1021101	-		2	SHAFT	
140	1021102	-		1	FOLDING FLAP	
150	1021103	-		1	FOLDING FLAP	
160	1021104	-		2	BEARING HOUSING	
170	1021105	-		2	LID	
180	1021106	-		2	HUB	
190	1021107	-		1	ARM	
200	1021108	-		1	ARM	
205	1021579	-		1	FLAT WEDGE	
210	1021109	-		2	PLATE	
220	1021110	-		1	SHAFT	
230	G-1021111	-		1	ARM	
240	1021112	-		1	ARM	
245	1021918	-		2	SPACER	
250	1021113	-		1	WASHER	
260	1021114	-		2	WASHER	
270	1021115	-		2	LOCK PLATE	
280	1021116	-		2	LOCK PLATE	
290	1021117	-		2	LOCK PLATE	
300	1021121	-		2	LINK ARM	
400	90115-0135	P		1	LINK HEAD	
410	90115-0181	P		2	LINK HEAD	
420	90115-0182	P		2	LINK HEAD	
440	90240-0204	P		4	PLAIN BEARING	
460	312105-0368	-		4	SCREW O4017 M6X16A280	
465	312105-0371	-		6	SCREW M6S6X22RFR	
470	312105-0374	-		16	SCREW O4017 M6X30A280	
475	312105-0497	-		2	SCREW 4017 M10X35A280	
480	312105-0499	-		2	SCREW 4017 M10X40A280	
490	312105-0540	-		1	SCREW 4017 M12X40A280	
495	312115-0370	-		2	SCREW O4762 M6X20A280	
500	312115-0374	-		10	SCREW O4762 M6X30A280	
510	312115-0451	-		4	SCREW O4762 M8X20A280	
520	312318-0360	-		4	STOP SCREW SK6SS6X6RFR	
530	315105-0153	-		30	WASHER BRB6,4X12RFR	
540	315105-0171	-		6	WASHER BRB10X18RFR	
545	315105-0178	-		1	WASHER BRB13X24RFR	
547	312605-0316	-		4	NUT M6M6RFR	
550	312605-0320	-		2	NUT M6M10RFR	
555	312605-0322	-		1	NUT M6M12RFR	
560	312902-0320	-		2	NUT M6M10VRFR	
580	315220-0175	P		2	SEAL RING V-35S	
585	90091-0305	P		2	SEAL RING	
590	315701-0237	-		1	FLAT WEDGE6X6X32	
595	315742-0116	-		2	RETAINING 20SMS199RFR	
600	315750-0124	-		2	CIRCLIP SGA35	
620	321308-0207	P		2	BALL BEARISKF6007-2RS	

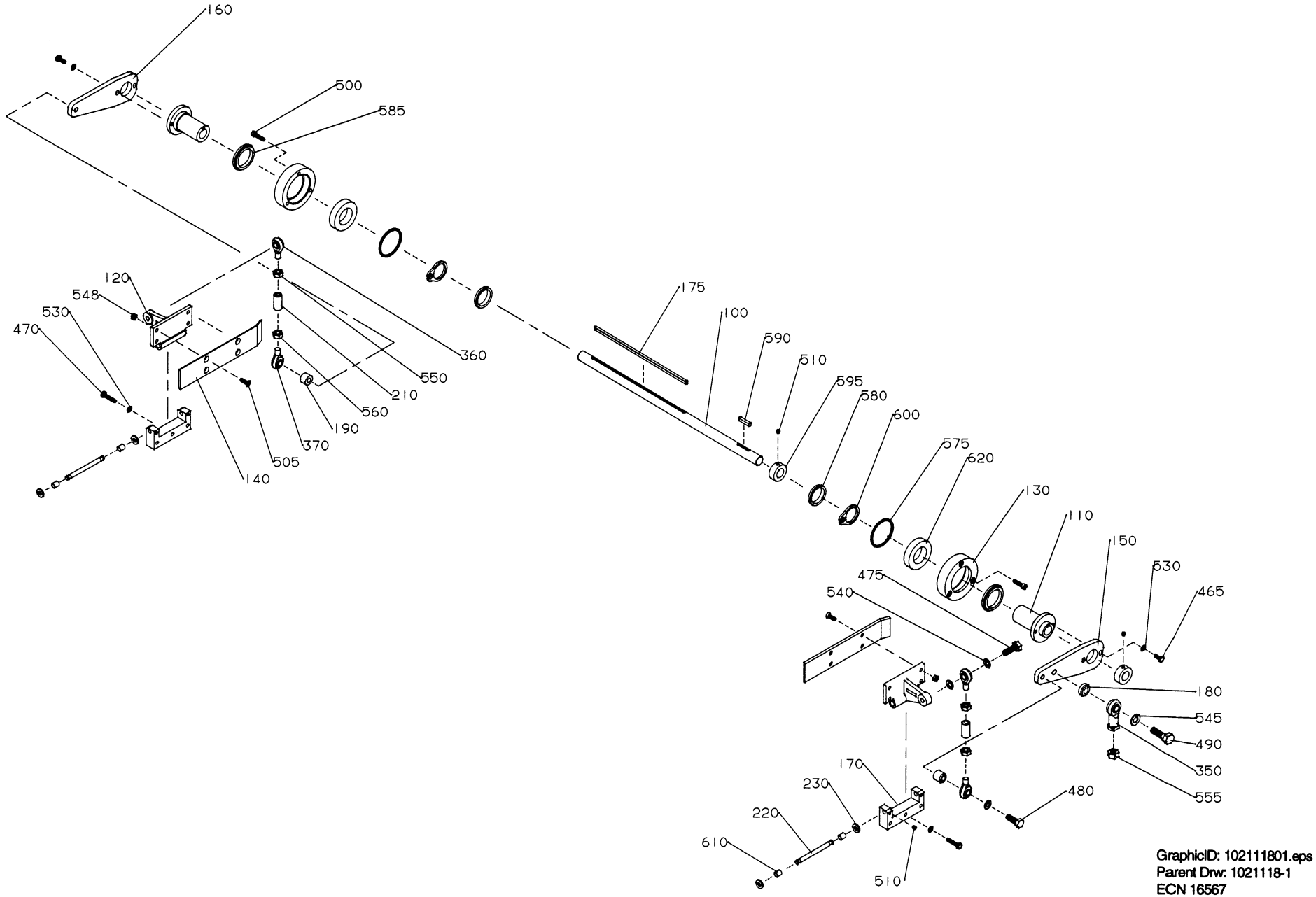

GraphicID: 102111801.eps
Parent Drw: 1021118-1
ECN 16567

Pos	Part No	SP	UN	Qty	Description	Page No
-						
000	C-1021118-0101	-		1	**SHAFT SQUEESER**	
100	1021110	-		1	SHAFT	
110	1021106	-		2	HUB	
120	G-1021122	-		2	ARM	
130	1021123	-		2	BEARING HOUSING	
140	1021124	-		2	PLATE	
150	1021125	-		1	ARM	
160	1021126	-		1	ARM	
170	1021127	-		2	HOLDER	
175	1021579	-		1	FLAT WEDGE	
180	1021113	-		1	WASHER	
190	1021114	-		2	WASHER	
210	1021128	-		2	SLEEVE	
220	1021129	-		2	SHAFT	
230	1021130	-		4	WASHER	
350	90115-0027	P		1	LINK HEAD	
360	90115-0150	P		2	LINK HEAD	
370	90115-0151	P		2	LINK HEAD	
465	312105-0368	-		4	SCREW O4017 M6X16A280	
470	312105-0374	-		6	SCREW O4017 M6X30A280	
475	312105-0497	-		2	SCREW 4017 M10X35A280	
480	312105-0499	-		2	SCREW 4017 M10X40A280	
490	312105-0540	-		1	SCREW 4017 M12X40A280	
500	312115-0372	-		6	SCREW O4762 M6X25A280	
505	312155-0370	-		8	SCREW MF6S6X20RFR	
510	312318-0360	-		4	STOP SCREW SK6SS6X6RFR	
530	315105-0153	-		18	WASHER BRB6,4X12RFR	
540	315105-0171	-		6	WASHER BRB10X18RFR	
545	315105-0178	-		1	WASHER BRB13X24RFR	
548	312605-0316	-		8	NUT M6M6RFR	
550	312605-0320	-		2	NUT M6M10RFR	
555	312605-0322	-		1	NUT M6M12RFR	
560	312902-0320	-		2	NUT M6M10VRFR	
575	315202-0303	P		2	O-RING 59,5X3	
580	315220-0175	P		2	SEAL RING V-35S	
585	90091-0305	P		2	SEAL RING	
590	315701-0237	-		1	FLAT WEDGE6X6X32	
595	315742-0116	-		2	RETAINING 20SMS199RFR	
600	315750-0124	-		2	CIRCLIP SGA35	
610	321120-0100	P		4	BUSHING 8/10X12	
620	321308-0207	P		2	BALL BEARISKF6007-2RS	

Pos	Part No	SP	UN	Qty	Description	Page No

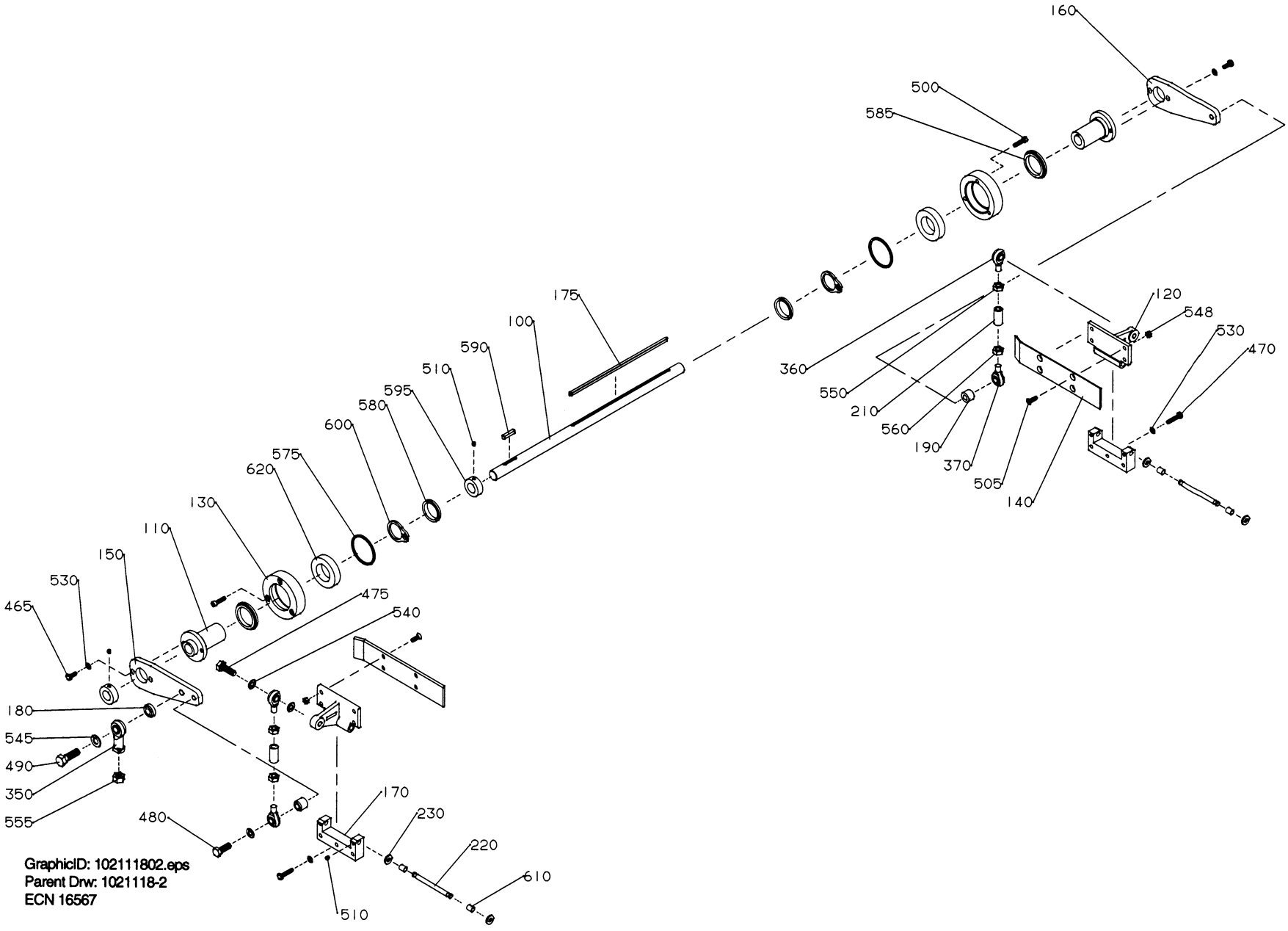
160
500
585
175
100
590
510
595
580
600
575
620
130
110
150
530
465
475
540
180
545
490
350
555
480
170
230
220
610
510
360
550
210
560
190
370
505
140
120
548
530
470
GraphicID: 102111802.eps
Parent Drw: 1021118-2
ECN 16567

Pos	Part No	SP	UN	Qty	Description	Page No
-						
000	C-1021118-0101	-		1	**SHAFT SQUEESER**	
100	1021110	-		1	SHAFT	
110	1021106	-		2	HUB	
120	G-1021122	-		2	ARM	
130	1021123	-		2	BEARING HOUSING	
140	1021124	-		2	PLATE	
150	1021125	-		1	ARM	
160	1021126	-		1	ARM	
170	1021127	-		2	HOLDER	
175	1021579	-		1	FLAT WEDGE	
180	1021113	-		1	WASHER	
190	1021114	-		2	WASHER	
210	1021128	-		2	SLEEVE	
220	1021129	-		2	SHAFT	
230	1021130	-		4	WASHER	
350	90115-0027	P		1	LINK HEAD	
360	90115-0150	P		2	LINK HEAD	
370	90115-0151	P		2	LINK HEAD	
465	312105-0368	-		4	SCREW O4017 M6X16A280	
470	312105-0374	-		6	SCREW O4017 M6X30A280	
475	312105-0497	-		2	SCREW 4017 M10X35A280	
480	312105-0499	-		2	SCREW 4017 M10X40A280	
490	312105-0540	-		1	SCREW 4017 M12X40A280	
500	312115-0372	-		6	SCREW O4762 M6X25A280	
505	312155-0370	-		8	SCREW MF6S6X20RFR	
510	312318-0360	-		4	STOP SCREW SK6SS6X6RFR	
530	315105-0153	-		18	WASHER BRB6,4X12RFR	
540	315105-0171	-		6	WASHER BRB10X18RFR	
545	315105-0178	-		1	WASHER BRB13X24RFR	
548	312605-0316	-		8	NUT M6M6RFR	
550	312605-0320	-		2	NUT M6M10RFR	
555	312605-0322	-		1	NUT M6M12RFR	
560	312902-0320	-		2	NUT M6M10VRFR	
575	315202-0303	P		2	O-RING 59,5X3	
580	315220-0175	P		2	SEAL RING V-35S	
585	90091-0305	P		2	SEAL RING	
590	315701-0237	-		1	FLAT WEDGE6X6X32	
595	315742-0116	-		2	RETAINING 20SMS199RFR	
600	315750-0124	-		2	CIRCLIP SGA35	
610	321120-0100	P		4	BUSHING 8/10X12	
620	321308-0207	P		2	BALL BEARISKF6007-2RS	

Pos	Part No	SP	UN	Qty	Description	Page No

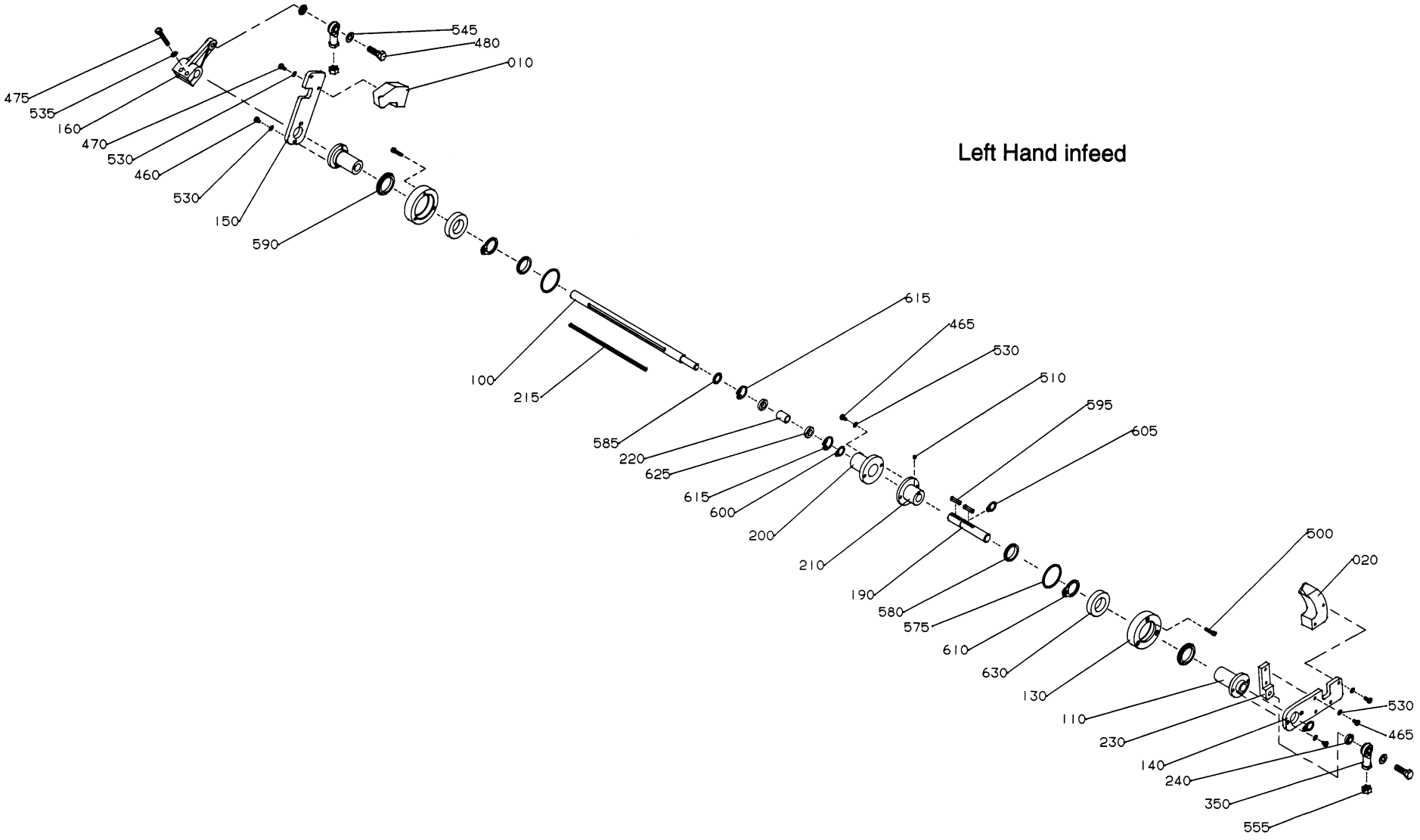

GraphicID: 102111901.eps
Parent Drw: 1021119-1
ECN 16567

Pos	Part No	SP	UN	Qty	Description	Page No
Left Hand infeed						
000	**C-1021119-0101**	-		1	**SHAFT FLAP FOLDER**	
020	1021922	-		1	LUG	
COMMON PARTS						
010	**1021135**	-		1	**LUG**	
100	1021134	-		1	SHAFT	
110	1021106	-		2	HUB	
130	1021123	-		2	BEARING HOUSING	
140	1021131	-		1	ARM	
150	1021132	-		1	ARM	
160	G-1021133	-		1	ARM	
190	1021137	-		1	SHAFT	
200	1021138	-		1	BEARING HOUSING	
210	1021139	-		1	HUB	
215	1021579	-		1	FLAT WEDGE	
220	1021140	-		1	SLEEVE	
230	1021141	-		1	BRACKET	
240	1021142	-		2	WASHER	
350	90115-0027	P		2	LINK HEAD	
460	312105-0368	-		4	SCREW O4017 M6X16A280	
465	312105-0370	-		4	SCREW O4017 M6X20A280	
470	312105-0374	-		4	SCREW O4017 M6X30A280	
475	312105-0460	-		2	SCREW O4017 M8X45A280	
480	312105-0540	-		2	SCREW 4017 M12X40A280	
500	312115-0372	-		6	SCREW O4762 M6X25A280	
510	312318-0360	-		1	STOP SCREW SK6SS6X6RFR	
530	315105-0153	-		12	WASHER BRB6,4X12RFR	
535	315105-0165	-		2	WASHER BRB8,4X16RFR	
545	315105-0178	-		2	WASHER BRB13X24RFR	
555	312605-0322	-		2	NUT M6M12RFR	
575	315202-0303	P		2	O-RING 59,5X3	
580	315220-0175	P		2	SEAL RING V-35S	
585	90091-0302	P		1	SEAL RING	
590	90091-0305	P		2	SEAL RING	
595	315701-0237	-		2	FLAT WEDGE6X6X32	
600	315750-0112	-		1	CIRCLIP SGA15	
605	315750-0116	-		2	CIRCLIP SGA20	
610	315750-0124	-		2	CIRCLIP SGA35	
615	315752-0123	-		2	CIRCLIP SGH32	
625	321308-0202	P		2	BALL BEARISKF6002-2RS	
630	321308-0207	P		2	BALL BEARISKF6007-2RS	

Pos	Part No	SP	UN	Qty	Description	Page No

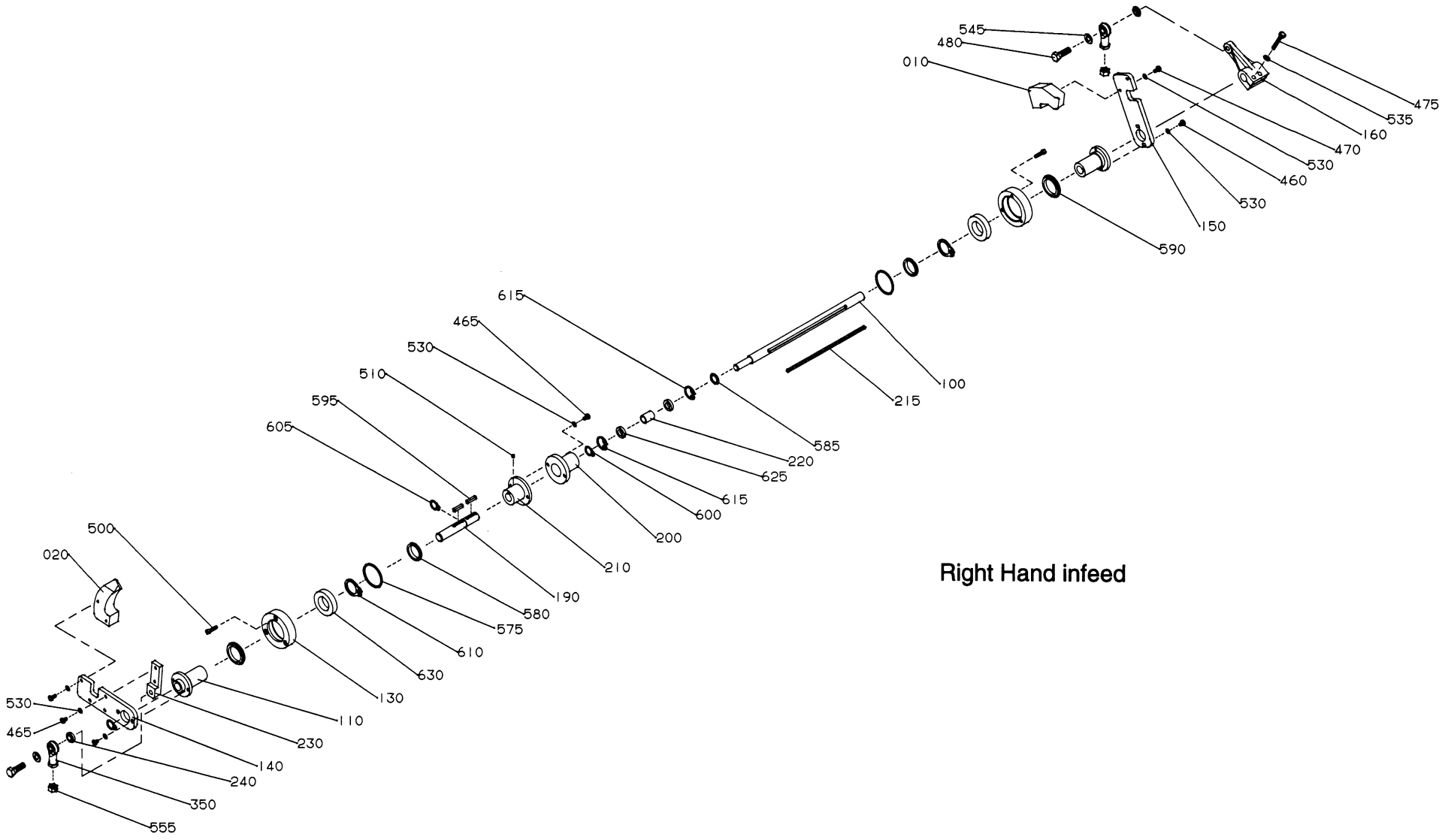

Right Hand infeed

GraphicID: 102111902.eps
Parent Drw: 1021119-2
ECN 16567

Pos	Part No	SP	UN	Qty	Description	Page No
Right Hand infeed						
000	**C-1021119-0102**	-		1	**SHAFT FLAP FOLDER**	
020	1021136	-		1	LUG	
COMMON PARTS						
010	**1021135**	-		1	**LUG**	
100	1021134	-		1	SHAFT	
110	1021106	-		2	HUB	
130	1021123	-		2	BEARING HOUSING	
140	1021131	-		1	ARM	
150	1021132	-		1	ARM	
160	G-1021133	-		1	ARM	
190	1021137	-		1	SHAFT	
200	1021138	-		1	BEARING HOUSING	
210	1021139	-		1	HUB	
215	1021579	-		1	FLAT WEDGE	
220	1021140	-		1	SLEEVE	
230	1021141	-		1	BRACKET	
240	1021142	-		2	WASHER	
350	90115-0027	P		2	LINK HEAD	
460	312105-0368	-		4	SCREW O4017 M6X16A280	
465	312105-0370	-		4	SCREW O4017 M6X20A280	
470	312105-0374	-		4	SCREW O4017 M6X30A280	
475	312105-0460	-		2	SCREW O4017 M8X45A280	
480	312105-0540	-		2	SCREW 4017 M12X40A280	
500	312115-0372	-		6	SCREW O4762 M6X25A280	
510	312318-0360	-		1	STOP SCREW SK6SS6X6RFR	
530	315105-0153	-		12	WASHER BRB6,4X12RFR	
535	315105-0165	-		2	WASHER BRB8,4X16RFR	
545	315105-0178	-		2	WASHER BRB13X24RFR	
555	312605-0322	-		2	NUT M6M12RFR	
575	315202-0303	P		2	O-RING 59,5X3	
580	315220-0175	P		2	SEAL RING V-35S	
585	90091-0302	P		1	SEAL RING	
590	90091-0305	P		2	SEAL RING	
595	315701-0237	-		2	FLAT WEDGE6X6X32	
600	315750-0112	-		1	CIRCLIP SGA15	
605	315750-0116	-		2	CIRCLIP SGA20	
610	315750-0124	-		2	CIRCLIP SGA35	
615	315752-0123	-		2	CIRCLIP SGH32	
625	321308-0202	P		2	BALL BEARISKF6002-2RS	
630	321308-0207	P		2	BALL BEARISKF6007-2RS	

Pos	Part No	SP	UN	Qty	Description	Page No

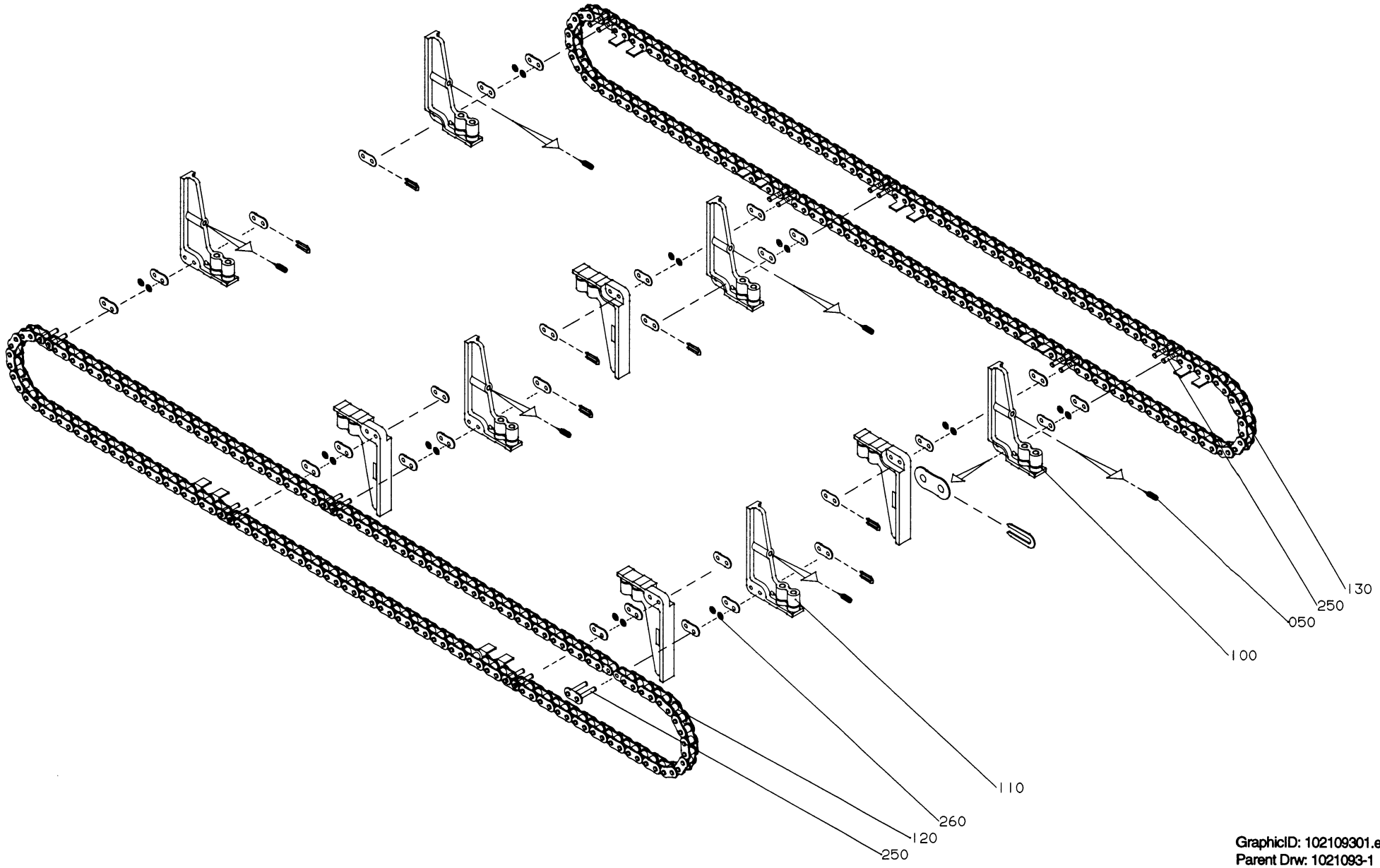

GraphicID: 102109301.eps
Parent Drw: 1021093-1
ECN 16567

Pos	Part No	SP	UN	Qty	Description	Page No
-						
000	C-1021093-0101	-		1	CARRIER CHAIN INSIDE	
100	1021092-0001	P		5	LINK	
110	1021092-0002	P		5	LINK	
120	1021090	C		5	CHAIN	
130	1021091	C		5	CHAIN	
250	318219-0389	C		10	CONNECTION	
260	315105-0153	-		20	WASHER BRB6,4X12RFR	

Pos	Part No	SP	UN	Qty	Description	Page No

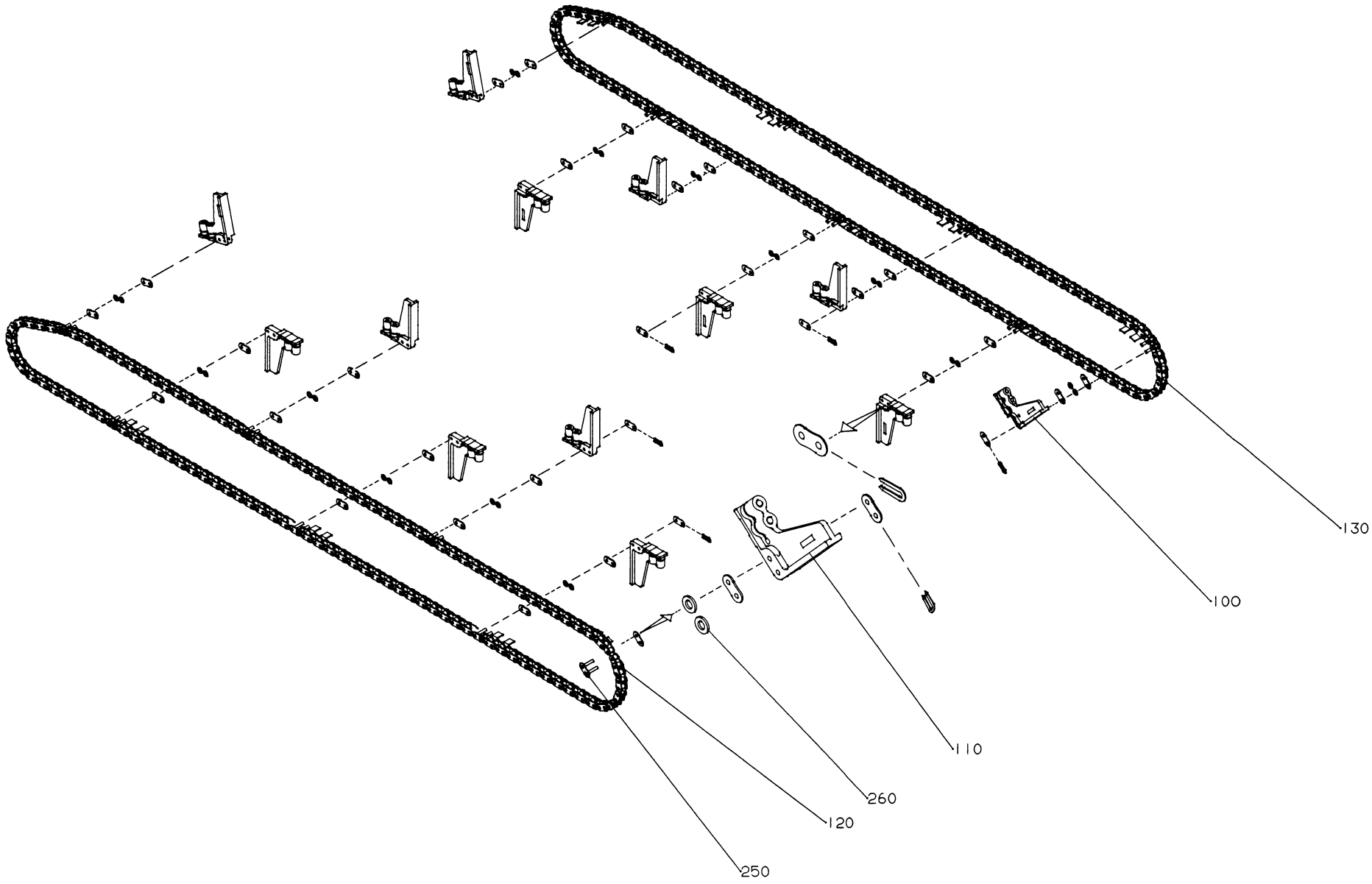

GraphicID: 102109601.eps
Parent Drw: 1021096-1
ECN 16567

Pos	Part No	SP	UN	Qty	Description	Page No
-						
000	**C-1021096-0101**	**-**		**1**	**CARRIER CHAIN OUTSIDE**	
100	1021095-0002	P		7	LINK	
110	1021095-0001	P		7	LINK	
120	1021091	C		7	CHAIN	
130	1021090	C		7	CHAIN	
250	318219-0389	C		14	CONNECTION	
260	315105-0153	-		28	WASHER BRB6,4X12RFR	

Pos	Part No	SP	UN	Qty	Description	Page No

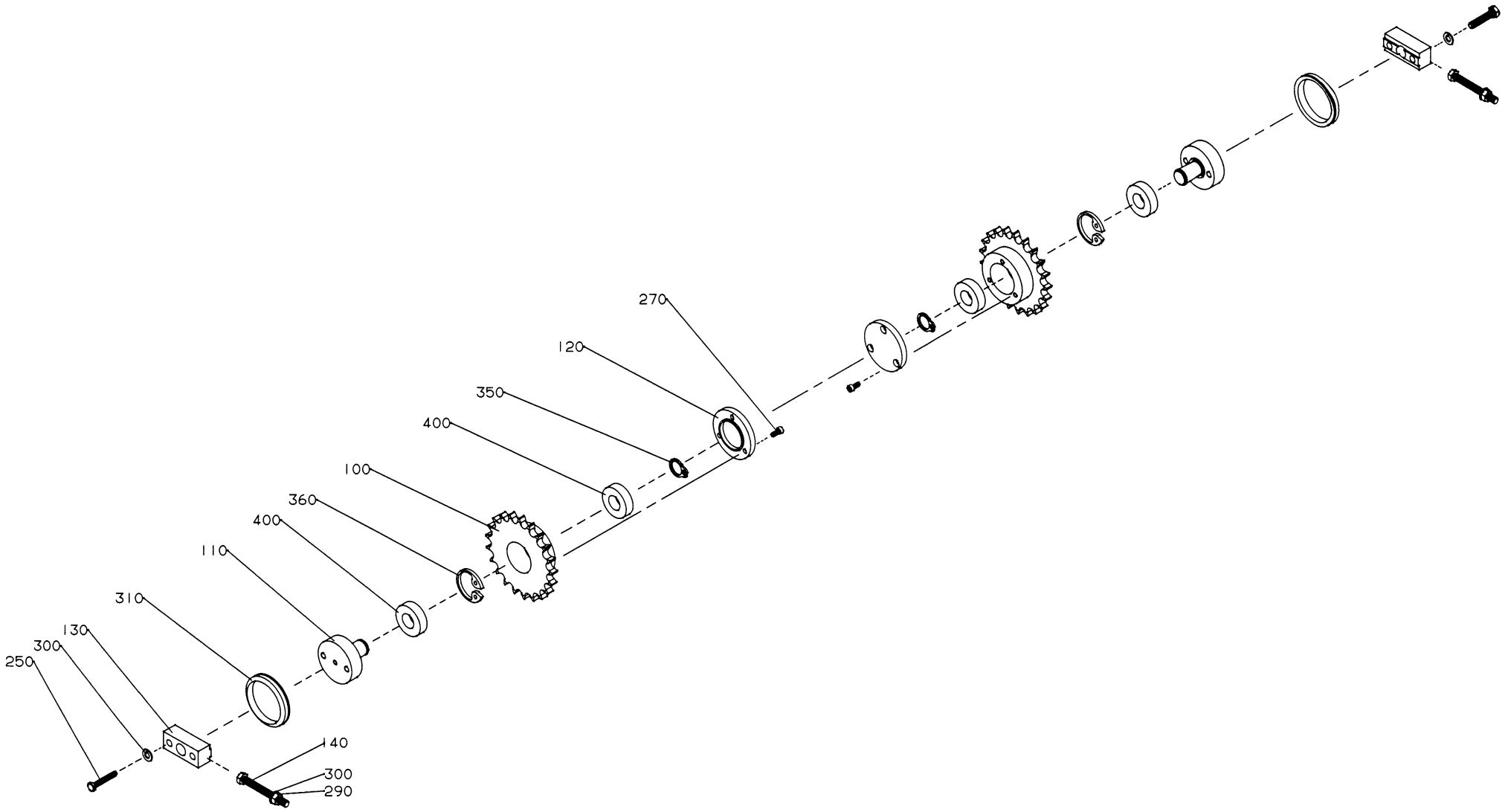

GraphicID: 102107201.eps
Parent Drw: 1021072-1
ECN 16567

Pos	Part No	SP	UN	Qty	Description	Page No
-						
000	**C-1021072-0101**	**-**		**2**	**GUIDE SPROCKET INSIDE**	
100	1021073	-		1	SPROCKET	
110	1021069	-		1	SHAFT	
120	1021070	-		1	BEARING COVER	
130	1021071	-		1	LOCKING LUG	
140	1021509	-		1	SCREW	
250	312105-0459	-		2	SCREW O4017 M8X40A280	
270	312115-0327	-		3	SCREW O4762 M5X12A280	
290	312605-0318	-		1	NUT M6M8RFR	
300	315105-0165	-		3	WASHER BRB8,4X16RFR	
310	315220-0204	P		1	SEAL RING V-55S	
350	315750-0116	-		1	CIRCLIP SGA20	
360	315752-0128	-		1	CIRCLIP SGH42	
400	321308-0204	P		2	BALL BEARISKF6004-2RS	

Pos	Part No	SP	UN	Qty	Description	Page No

Used in group
670284- 160

Assembly drawing
1021067-1

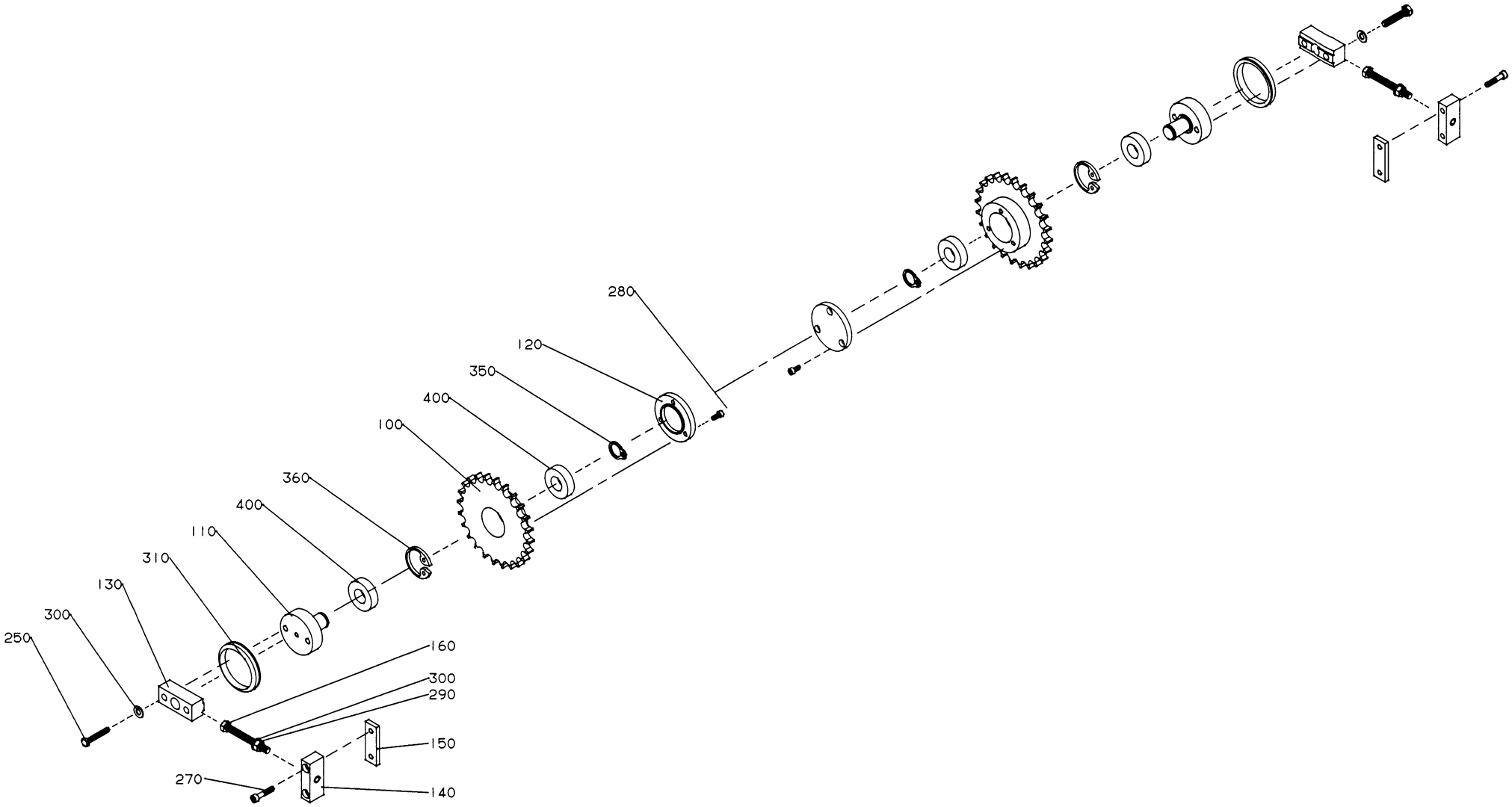

GraphicID: 102106701.eps
Parent Drw: 1021067-1
ECN 16567

Pos	Part No	SP	UN	Qty	Description	Page No
-						
000	C-1021067-0101	-		2	**GUIDE SPROCKET OUTSIDE**	
100	1021068	-		1	SPROCKET	
110	1021069	-		1	SHAFT	
120	1021070	-		1	BEARING COVER	
130	1021071	-		1	LOCKING LUG	
140	1021074	-		1	HOLDER	
150	1021075	-		1	LOCK PLATE	
160	1021509	-		1	SCREW	
250	312105-0459	-		2	SCREW O4017 M8X40A280	
270	312115-0327	-		3	SCREW O4762 M5X12A280	
280	312115-0374	-		2	SCREW O4762 M6X30A280	
290	312605-0318	-		1	NUT M6M8RFR	
300	315105-0165	-		3	WASHER BRB8,4X16RFR	
310	315220-0204	P		1	SEAL RING V-55S	
350	315750-0116	-		1	CIRCLIP SGA20	
360	315752-0128	-		1	CIRCLIP SGH42	
400	321308-0204	P		2	BALL BEARISKF6004-2RS	

Pos	Part No	SP	UN	Qty	Description	Page No

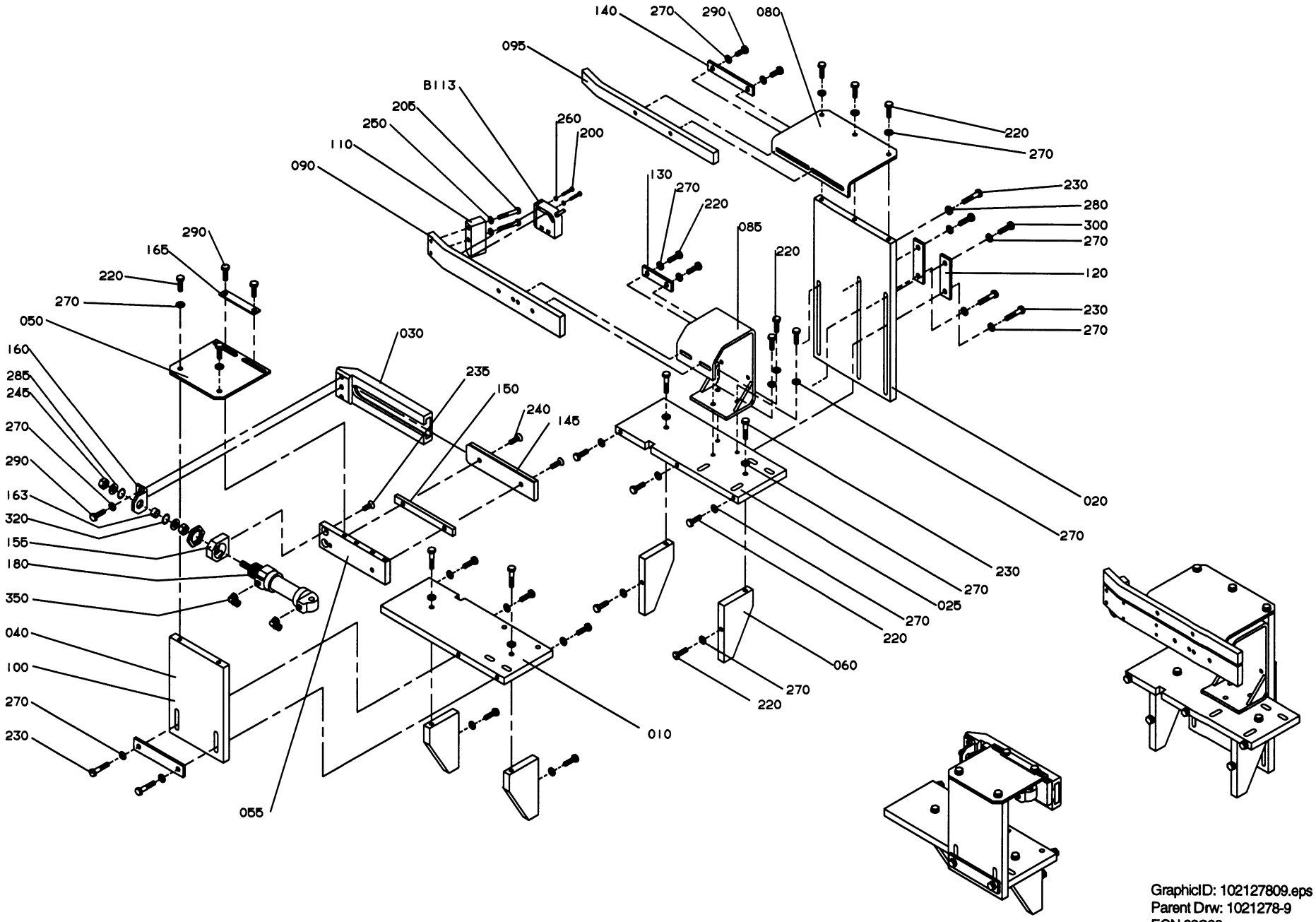

GraphicID: 102127809.eps
Parent Drw: 1021278-9
ECN 22668

Pos	Part No	SP	UN	Qty	Description	Page No
Left Hand infeed						
000	**C-1021278-0401**	-		1	**FOLDING BAR**	
Right Hand infeed						
000	**C-1021278-0402**	-		1	**FOLDING BAR**	
COMMON PARTS						
010	**1128011**	-		1	**PLATE**	
020	1139146	-		1	PLATE	
025	1065915	-		1	PLATE	
030	1128010	-		1	TUCK FOLDER	
040	1139147	-		1	PLATE	
050	1128012	-		1	BRACKET	
055	1128013	-		1	MOUNTING BAR	
060	1021284	-		4	SUPPORT	
080	1065907	-		1	BRACKET	
085	1065908	-		1	BRACKET	
090	1139101	-		1	RAIL	
095	1065910	-		1	RAIL	
100	1021289	-		1	LOCK PLATE	
110	1065911	-		1	LOCATING PIECE	
120	1065912	-		2	WASHER	
130	1065913	-		1	WASHER	
140	1065914	-		1	WASHER	
145	1128014	-		1	RAIL	
150	1128015	-		1	SPACER	
155	1128016	-		1	HOLDER	
160	1128017	-		1	BRACKET	
163	1128003	-		1	SPACER	
165	1128018	-		1	WASHER	
180	90239-0847	-		1	CYLINDER	
200	312125-0230	-		2	SLOTTED HEMCS3X20RFR	
205	312105-0337	-		2	SCREW O4014 M5X35A280	
220	312105-0370	-		20	SCREW O4017 M6X20A280	
230	312105-0374	-		9	SCREW O4017 M6X30A280	
235	312155-0368	-		2	SCREW MF6S6X16RFR	
240	312155-0370	-		2	SCREW MF6S6X20RFR	
245	312625-0318	-		2	NUT M 8	
250	315105-0146	-		2	WASHER BRB5,3X10RFR	
260	315105-0124	-		2	WASHER BRB3,2X6RFR	
270	315105-0153	-		34	WASHER BRB6,4X12RFR	
280	315115-0153	-		1	WASHER TBRB6,4X12RFR	
285	315105-0165	-		2	WASHER BRB8,4X16RFR	
290	312105-0368	-		6	SCREW O4017 M6X16A280	
300	312105-0371	-		2	SCREW M6S6X22RFR	
320	315202-0110	-		2	O-RING 12,1X1,6	
350	342732-0102	-		2	ELBOW PIPE D6-R1/8"	
B113	90232-0110	S		1	PH.CELL OMRON E3S-CL1-5M	

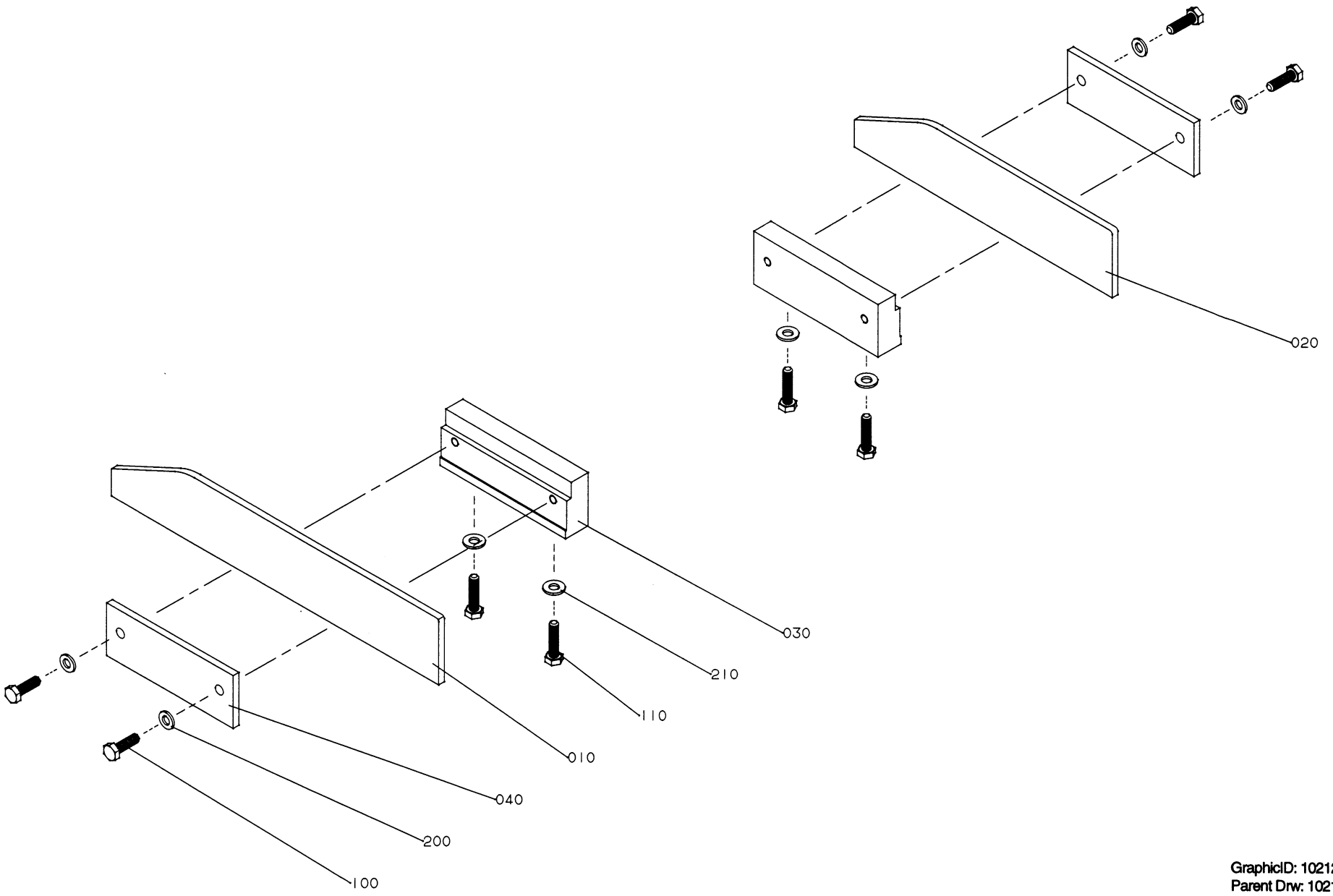

GraphicID: 102129001.eps
Parent Drw: 1021290-1
ECN 20435

Pos	Part No	SP	UN	Qty	Description	Page No
-						
000	C-1021290-0101	-		1	**BOTTOM FOLDER**	
010	1065916	-		1	RAIL	
020	1065917	-		1	RAIL	
030	1021293	-		2	CLAMPING PIECE	
040	1021294	-		2	LOCK PLATE	
100	312105-0370	-		4	SCREW O4017 M6X20A280	
110	312105-0372	-		4	SCREW O4017 M6X25A280	
200	315105-0153	-		4	WASHER BRB6,4X12RFR	
210	315105-0156	-		4	WASHER BRB6,7X14RFR	

Pos	Part No	SP	UN	Qty	Description	Page No

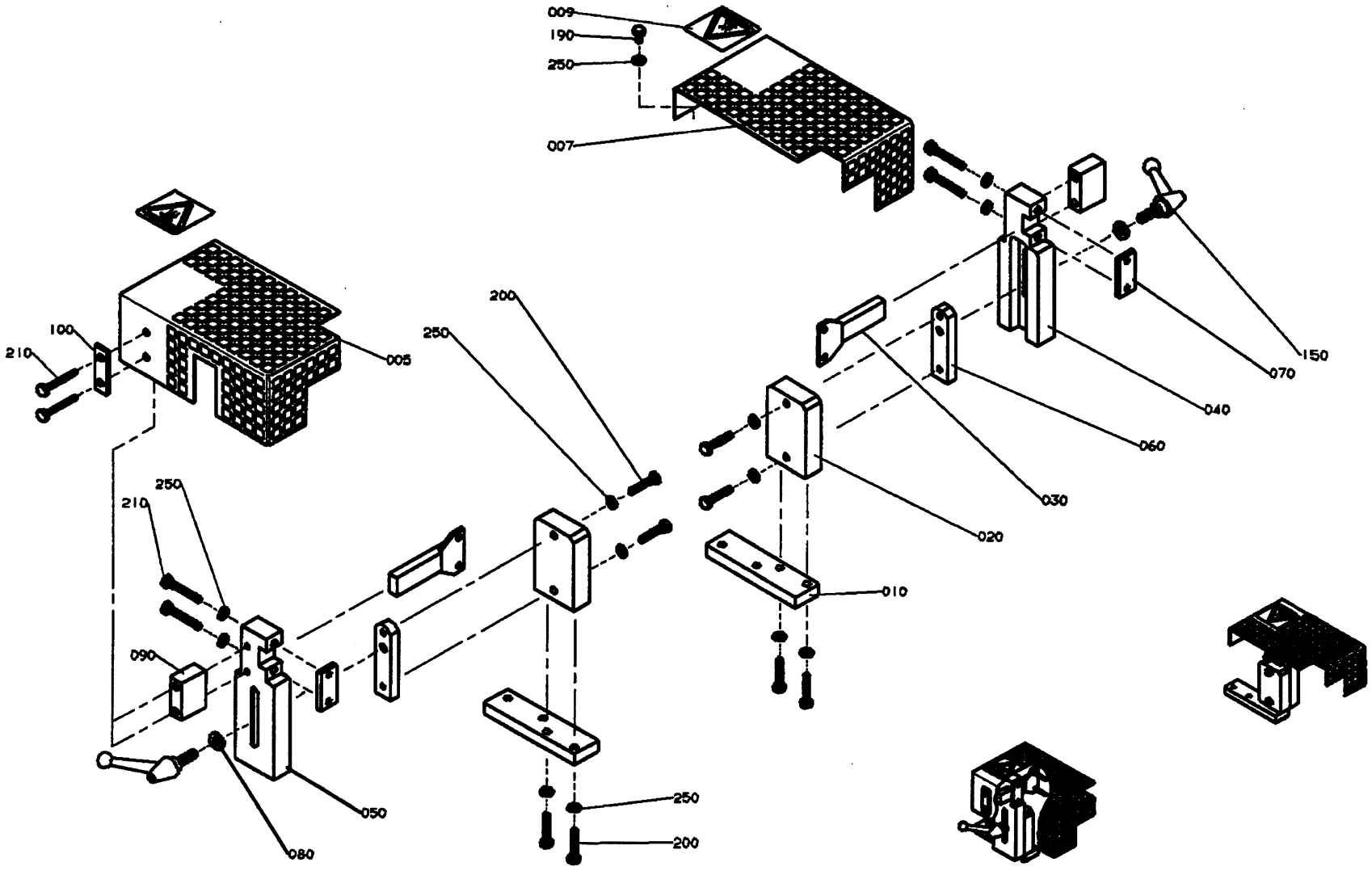

GraphicID: 102129502.tif
Parent Drw: 1021295-2
ECN No: 22292

Pos	Part No	SP	UN	Qty	Description	Page No
-						
000	**C-1021295-0201**	-		**1**	**GUN HOLDER**	
005	1074489	-		1	PROTECTION	
007	1074490	-		1	PROTECTION	
009	1128853	-		2	CAUTION SIGN	
010	1021296	-		2	BRACKET	
020	1021297	-		2	SUPPORT	
030	1021298	-		2	STEERING	
040	1021299	-		1	GUIDE	
050	1021300	-		1	GUIDE	
060	1021301	-		2	RAIL	
070	1021302	-		2	LOCK PLATE	
080	1021934	-		2	WASHER	
090	1074483	-		2	SPACER	
100	1074484	-		2	WASHER	
150	90117-0008	-		2	HANDLE	
200	312105-0374	-		8	SCREW O4017 M6X30A280	
210	312105-0378	-		8	SCREW O4017 M6X40A280	
250	315105-0153	-		12	WASHER BRB6,4X12RFR	

Pos	Part No	SP	UN	Qty	Description	Page No

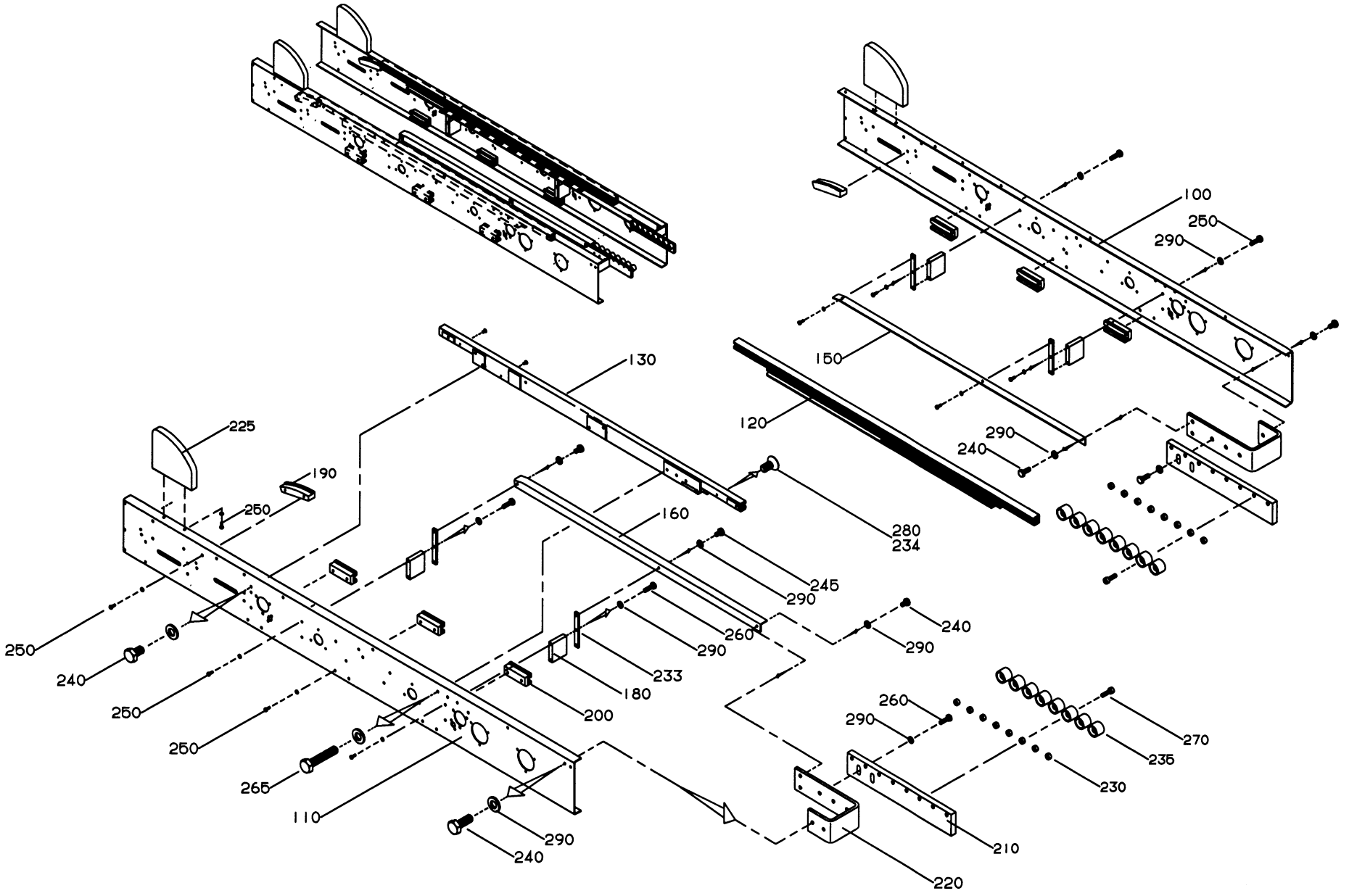

GraphicID: 102107603.eps
Parent Drw: 1021076-3
ECN 22668

Pos	Part No	SP	UN	Qty	Description	Page No
-						
000	**C-1021076-0301**	-		**1**	**MACHINE BODY**	
100	1139107	-		1	SIDE PLATE	
110	1139108	-		1	SIDE PLATE	
120	1021085	-		1	SLIDE RAIL	
130	1021086	-		1	SLIDE RAIL	
150	1139109	-		1	SLIDE RAIL	
160	1139110	-		1	SLIDE RAIL	
180	1021083	-		4	SPACER	
190	1021087	-		2	SLIDE RAIL	
200	1021088	-		6	SLIDE RAIL	
210	1139112	-		2	BRACKET	
220	1139113	-		2	FASTENING BRACKET	
225	1065918	-		2	STEERING	
230	1021901	-		16	SPACER	
233	1139114	-		4	FASTENING PLATE	
234	90157-0016	-		X	LOCKING FLUID	
235	90191-0039	P		16	WHEEL	
240	312105-0364	-		26	SCREW M6S6X10RFR	
245	312105-0366	-		4	SCREW O4017 M6X12A280	
250	312105-0368	-		28	SCREW O4017 M6X16A280	
260	312105-0370	-		12	SCREW O4017 M6X20A280	
265	312105-0374	-		2	SCREW O4017 M6X30A280	
270	312115-0370	-		16	SCREW O4762 M6X20A280	
280	312155-0291	-		6	SCREW MF6S4X12RFR	
290	315105-0153	-		72	WASHER BRB6,4X12RFR	

Pos	Part No	SP	UN	Qty	Description	Page No

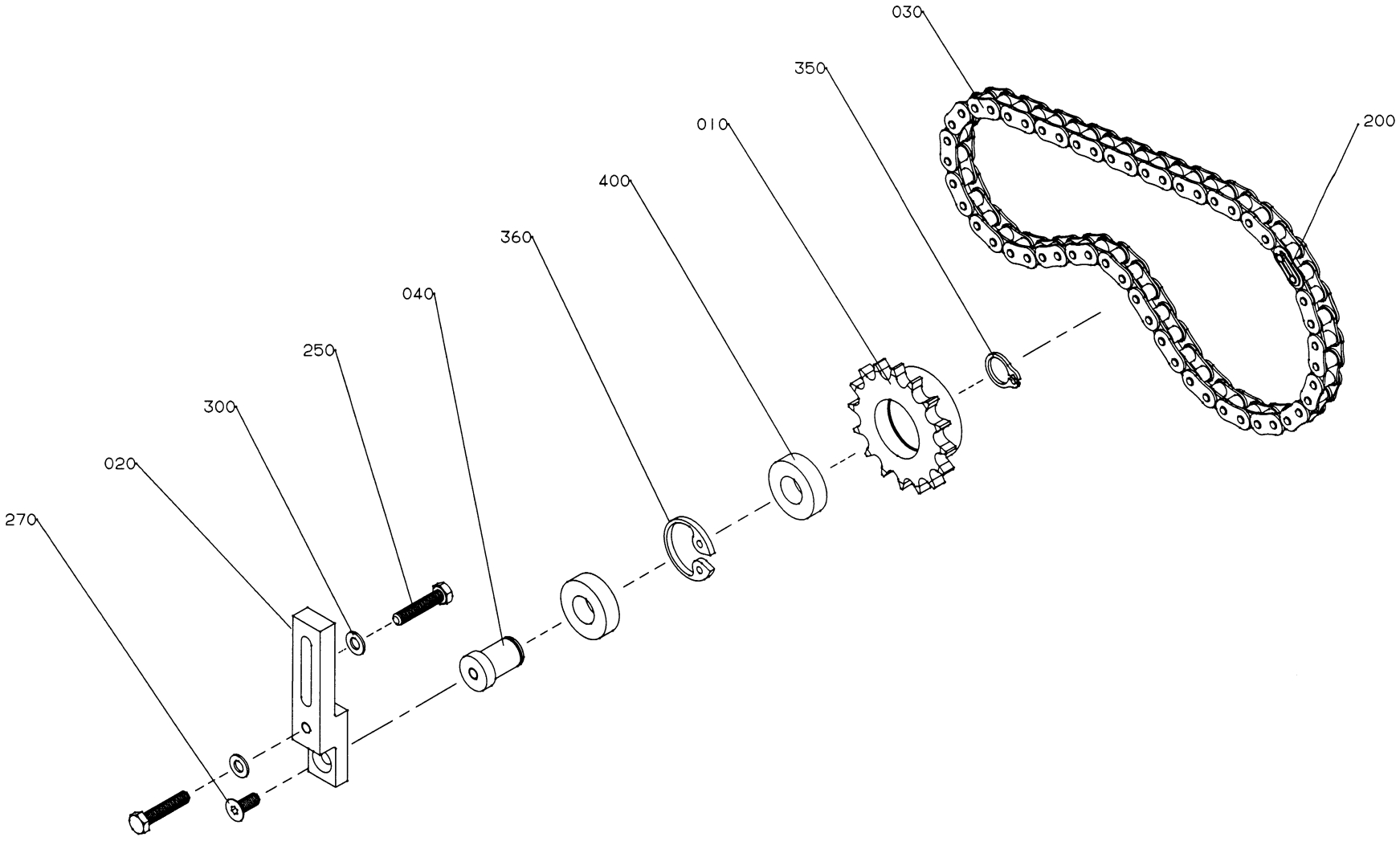

GraphicID: 102132601.eps
Parent Drw: 1021326-1
ECN 16567

Pos	Part No	SP	UN	Qty	Description	Page No
-						
000	**C-1021326-0101**	**-**		**1**	**CHAIN TIGHTENER WHEEL**	
010	1021327	-		1	SPROCKET	
020	1021328	-		1	BRACKET	
030	1021919	C		1	CHAIN	
040	1021329	-		1	SHAFT	
200	90288-0317	C		1	CONNECTION LINK	
250	312105-0459	-		2	SCREW O4017 M8X40A280	
270	312155-0451	-		1	SCREW MF6S8X20RFR	
300	315125-0165	-		2	WASHER SB 8,4X26X5 RFR	
350	315751-0116	-		1	CIRCLIP SGA20 RFR	
360	315752-0128	-		1	CIRCLIP SGH42	
400	321308-0204	P		2	BALL BEARISKF6004-2RS	

Pos	Part No	SP	UN	Qty	Description	Page No

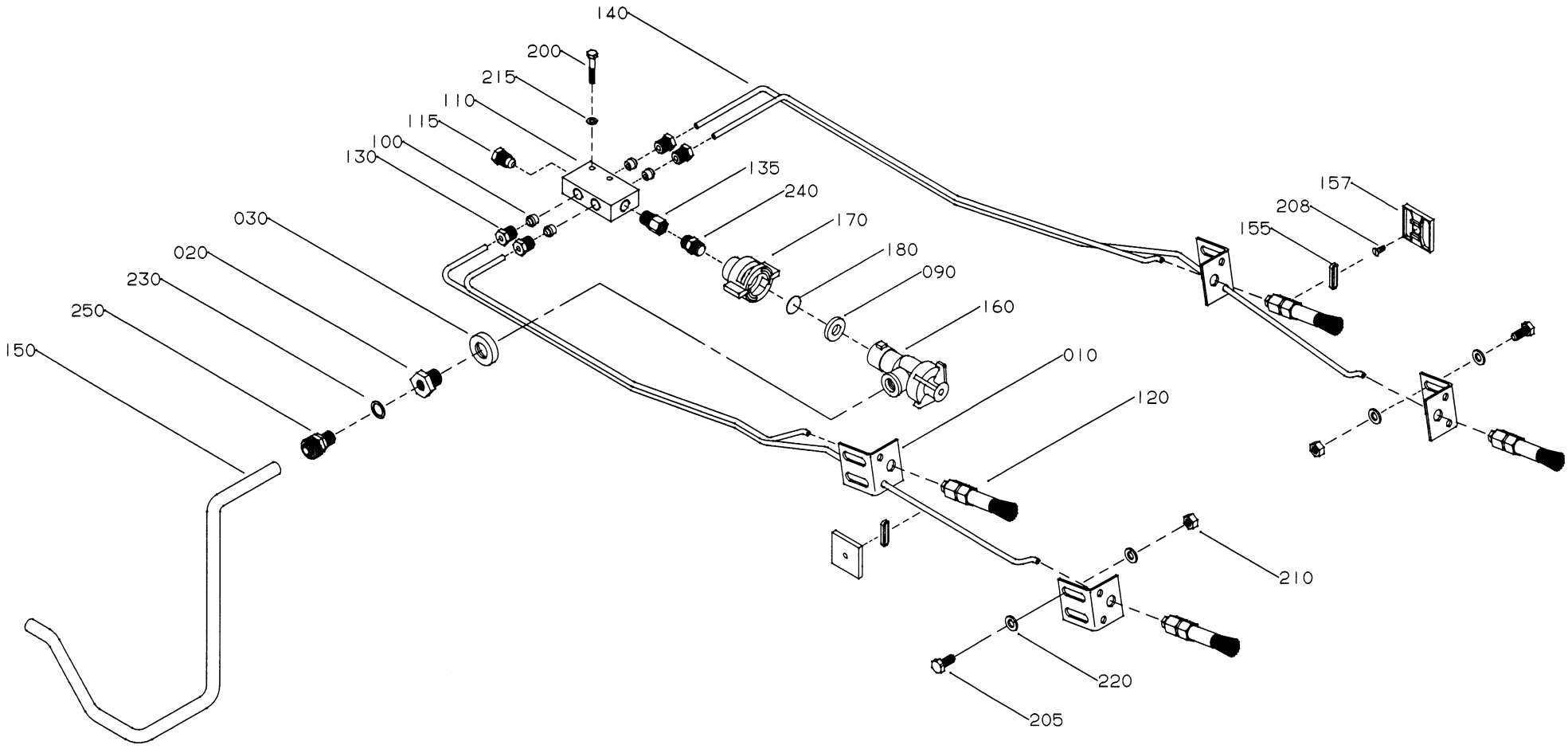

GraphicID: 106589601.eps
Parent Drw: 1065896-1
ECN 20435

Pos	Part No	SP	UN	Qty	Description	Page No
-						
000	C-1065896-0101	-		1	**CHAIN LUBRICATION**	
010	1065897	-		4	BRACKET	
020	532413	-		1	REDUCING NIPPLE	
030	532414	-		1	WASHER	
090	90005-0094	-		1	GASKET	
100	90028-0024	-		4	CONE	
110	90032-0046	-		1	JUNKTION BLOCK	
115	90087-0019	-		1	PLUG	
120	90092-0080	-		4	OIL BRUSH F.4 MM TUBE	
130	90134-0038	-		4	BUSHING	
135	90134-0081	-		1	REDUCTION SLEEVE	
140	90166-0109	-	CM	400	HOSE	
150	90166-0141	-	CM	400	HOSE	
155	90182-0005	-		2	STRAP	
157	90182-0007	-		2	PLATE	
160	90230-0027	-		1	NON-RETURN VALVE	
160	90230-0300	SP		1	* STRAINER	
160	90230-0301	SP		1	* DIAPHRAGM	
170	90230-0302	-		1	ADAPTER	
180	90230-0307	-		1	ORIFICE PLATE	
200	312105-0297	-		2	SCREW O4014 M4X25A280	
205	312105-0367	-		8	SCREW M6S6X14RFR	
208	312145-0222	-		2	SLOTTED HEMFS3X8RFR	
210	312605-0316	-		8	NUT M6M6RFR	
215	315105-0136	-		2	WASHER BRB4,3X8RFR	
220	315105-0153	-		16	WASHER BRB6,4X12RFR	
230	315233-0109	-		1	SEAL RING R1/8"	
240	342700-0109	-		1	NIPPLE RNA1/8"-1/8"	
250	342921-0131	-		1	PIPE COUPL10/8-1/8"	

Pos	Part No	SP	UN	Qty	Description	Page No

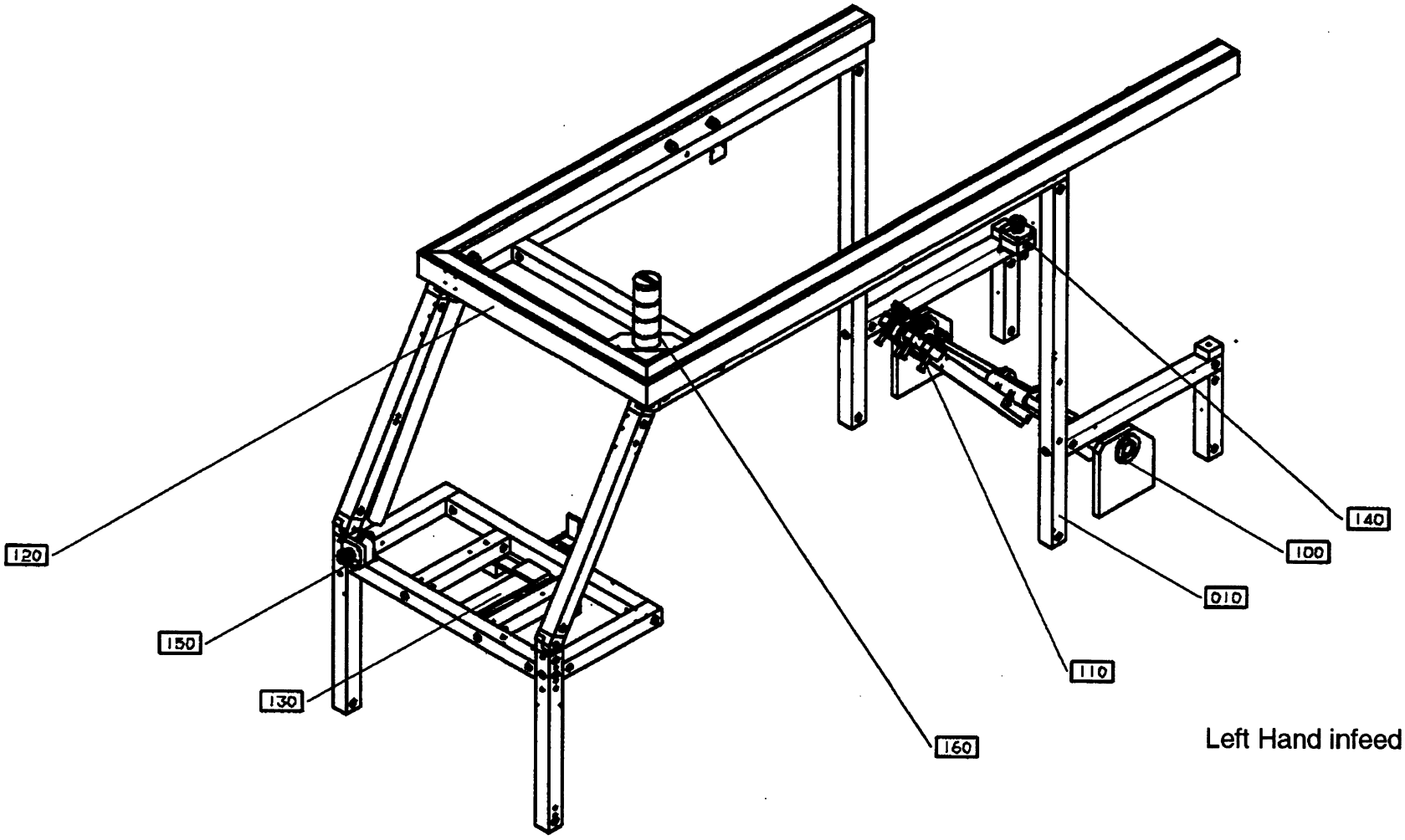

Left Hand infeed

GraphicID: 67028303.tif
Parent Drw:670283-3
ECN No: 22292

Pos	Part No	SP	UN	Qty	Description	Page No
-						
000	**B- 670283-0401**	-		1	**SUPERSTRUCTURE**	
010	C-1021303-0301	-		1	UPPERFRAME	119
100	C-1021143-0101	-		1	MAGAZINE SHAFT	121
110	C-1021160-020V	-		1	SUCTION CUP	125
120	C-1021510-010V	-		1	CABLE TRENCH	129
130	C-1065360-020V	-		1	FOLDING SUPPORT	135
130	C-1065366-020V	-			. SUPPORT	139
140	C-1021838-0202	-		1	EMERGENCY STOP	141
150	C-1021838-0203	-		1	EMERGENCY STOP	141
160	C- 581689-0101	-		1	WARNING LAMP	143

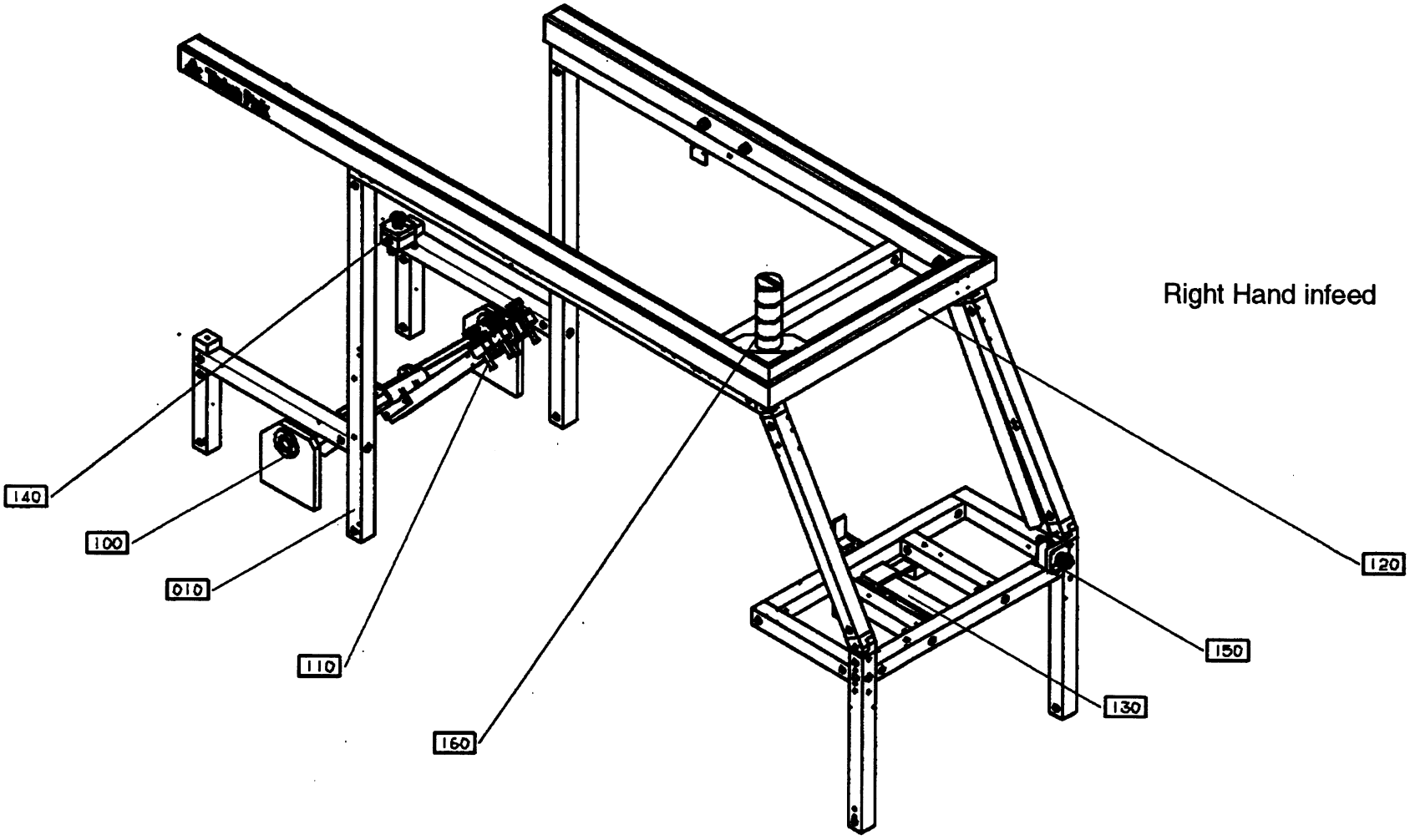

Right Hand infeed

GraphicID: 67028304.tif
Parent Drw:670283-4
ECN No: 22292

Pos	Part No	SP	UN	Qty	Description	Page No
-						
000	B- 670283-0401	-		1	SUPERSTRUCTURE	
010	C-1021303-0301	-		1	UPPERFRAME	
100	C-1021143-0101	-		1	MAGAZINE SHAFT	
110	C-1021160-020V	-		1	SUCTION CUP	
120	C-1021510-010V	-		1	CABLE TRENCH	
130	C-1065360-020V	-		1	FOLDING SUPPORT	
130	C-1065366-020V	-			. SUPPORT	
140	C-1021838-0202	-		1	EMERGENCY STOP	
150	C-1021838-0203	-		1	EMERGENCY STOP	
160	C- 581689-0101	-		1	WARNING LAMP	

Pos	Part No	SP	UN	Qty	Description	Page No

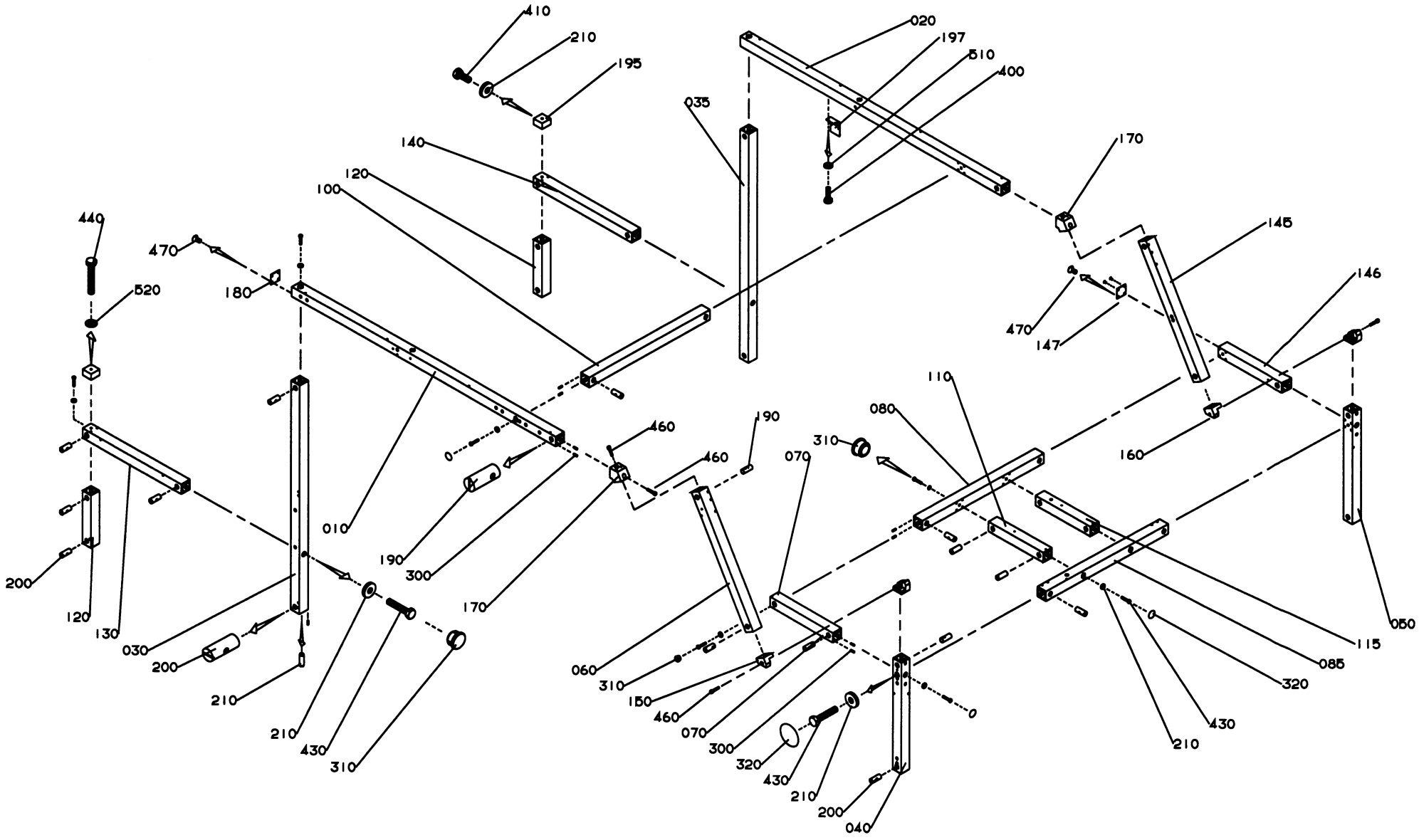
410
210
195
020
197
510
400
035
140
120
100
170
440
470
520
180
145
146
147
110
080
310
190
460
070
160
010
0
190
300
170
200
120
130
030
200
210
210
430
310
060
310
150
460
070
300
320
430
210
200
040
115
085
320
430
210
050

Pos	Part No	SP	UN	Qty	Description	Page No
-						
1-LINE Z-FORM U-FORM L-FORM, 2-LINE / 3-LINE Z-FORM U-FORM , MULTI U-FORM						
000	**C-1021303-0301**	-		1	**UPPER FRAME**	
470	312145-0325	-		4	SLOTTED HEMFS5X10RFR	
MULTI Z-FORM						
000	**C-1021303-0302**	-		1	**UPPER FRAME**	
180	1139254	-		1	COVER PLATE	
470	312145-0325	-		8	SLOTTED HEMFS5X10RFR	
Common Parts						
010	1021304	-		1	PROFILE	
020	1021305	-		1	PROFILE	
030	1021306	-		1	PROFILE	
035	1021793	-		1	PROFILE	
040	1021307	-		1	PROFILE	
050	1021308	-		1	PROFILE	
060	1021309	-		1	PROFILE	
070	1021310	-		1	PROFILE	
080	1074993	-		1	PROFILE	
085	1021412	-		1	PROFILE	
100	1021313	-		1	PROFILE	
110	1021314	-		1	PROFILE	
115	1021405	-		1	PROFILE	
120	1021315	-		2	PROFILE	
130	1021316	-		1	PROFILE	
140	1021317	-		1	PROFILE	
145	1021794	-		1	PROFILE	
146	1021989	-		1	PROFILE	
147	556604	-		1	COVER PLATE	
150	1021318	-		2	BRACKET	
160	1021319	-		2	BRACKET	
170	1139139	-		2	BRACKET	
190	1021322	-		8	NUT	
195	1021776	-		2	BRACKET	
197	1021798	-		1	BRACKET	
200	486268	-		26	NUT	
210	548599	-		26	WASHER	
300	1065410	-		132	SLOTTED PIN	
310	90261-0060	-		6	PLASTIC PLUG	
320	1021933	-		8	COVER TAPE	
400	312105-0370	-		2	SCREW O4017 M6X20A280	
410	312105-0451	-		2	SCREW SO4017 8X20A280	
430	312105-0459	-		24	SCREW O4017 M8X40A280	
440	312105-0463	-		2	SCREW O4014 M8X60A280	
460	312115-0459	-		10	SCREW O4762 M8X40A280	
510	315105-0153	-		2	WASHER BRB6,4X12RFR	
520	315105-0165	-		2	WASHER BRB8,4X16RFR	

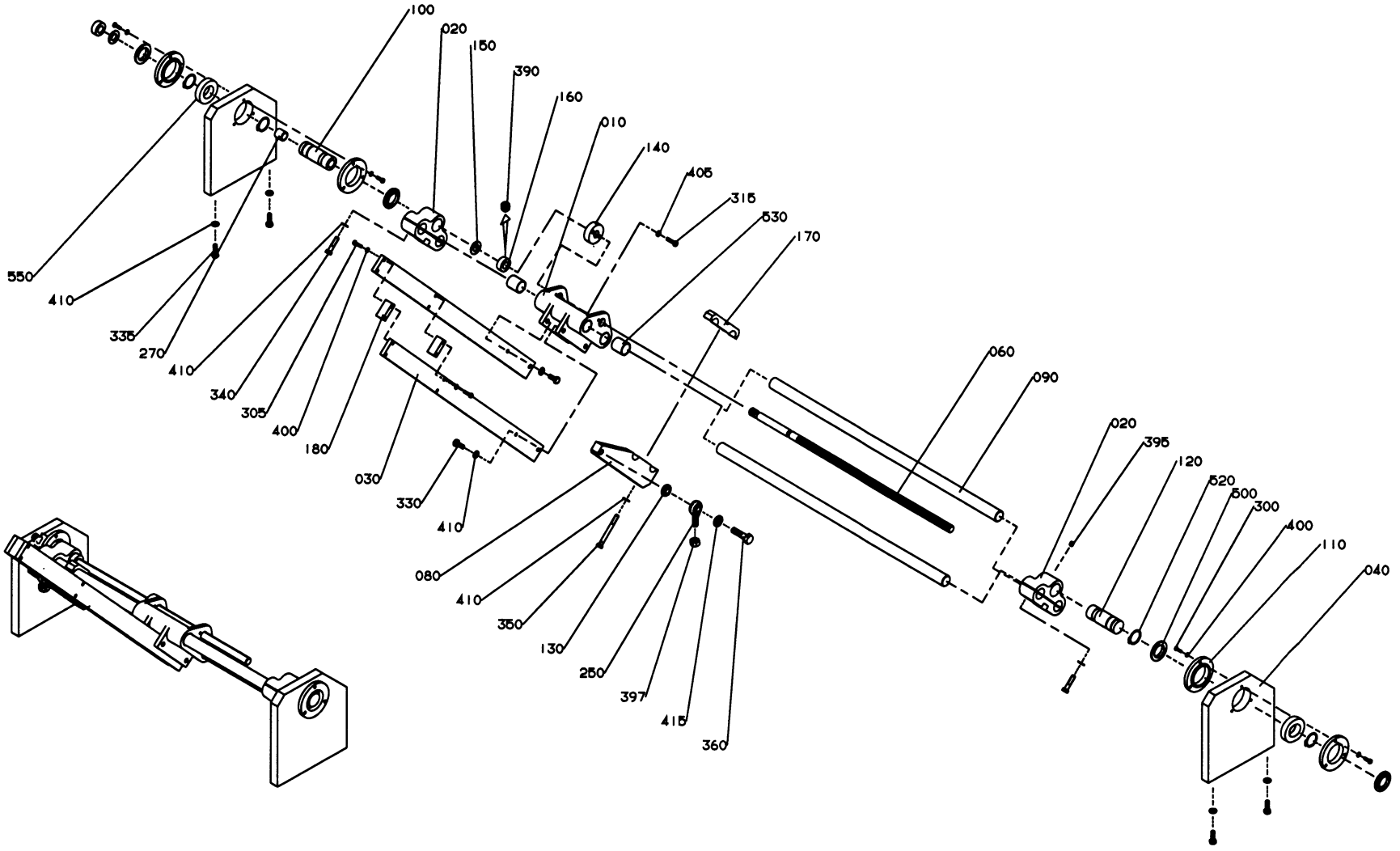

GraphicID: 102114301.eps
Parent Drw: 1021143-1
ECN 23757

Pos	Part No	SP	UN	Qty	Description	Page No
-						
000	C-1021143-0101	-		1	**MAGAZINE SHAFT**	
010	G-1021144	-		1	GUIDE	
020	1021145	-		2	CLAMPING PIECE	
030	1021146	-		2	ARM	
040	1021147	-		2	PLATE	
060	1021149	-		1	ADJUSTING SCREW	
080	1021151	-		1	ARM	
090	1021148	-		2	SHAFT	
100	1021150	-		1	SHAFT	
110	1021153	-		4	LID	
120	1021159	-		1	SHAFT	
130	1021152	-		1	WASHER	
140	1021154	-		1	NUT	
150	1021155	-		2	WASHER	
160	1021156	-		2	RETAINING RING	
170	1021157	-		1	CLAMPING PIECE	
180	1021158	-		2	SPACER	
250	90115-0135	P		1	LINK HEAD	
270	90240-0205	-		1	PLAIN BEARING	
300	312105-0329	-		12	SCREW O4017 M5X16A280	
305	312105-0331	-		8	SCREW O4017 M5X20A280	
315	312105-0372	-		2	SCREW O4017 M6X25A280	
330	312105-0451	-		4	SCREW SO4017 8X20A280	
335	312105-0453	-		4	SCREW O4017 M8X25A280	
340	312105-0457	-		8	SCREW O4017 M8X35A280	
350	312105-0465	-		2	SCREW O4014 M8X70A280	
360	312105-0541	-		1	SCREW 4017 M12X45A280	
390	312318-0360	-		4	STOP SCREW SK6SS6X6RFR	
395	312318-0443	-		2	STOP SCREW SK6SS8X8RFR	
397	312605-0322	-		1	NUT M6M12RFR	
400	315105-0146	-		20	WASHER BRB5,3X10RFR	
405	315105-0153	-		2	WASHER BRB6,4X12RFR	
410	315105-0165	-		18	WASHER BRB8,4X16RFR	
415	315105-0178	-		1	WASHER BRB13X24RFR	
500	90091-0306	-		4	SEAL RING	
520	315750-0122	-		4	CIRCLIP SGA30	
530	321120-0160	-		4	BUSHING 25/28X30	
550	321308-0206	P		2	BALL BEARISKF6006-2RS	

Pos	Part No	SP	UN	Qty	Description	Page No

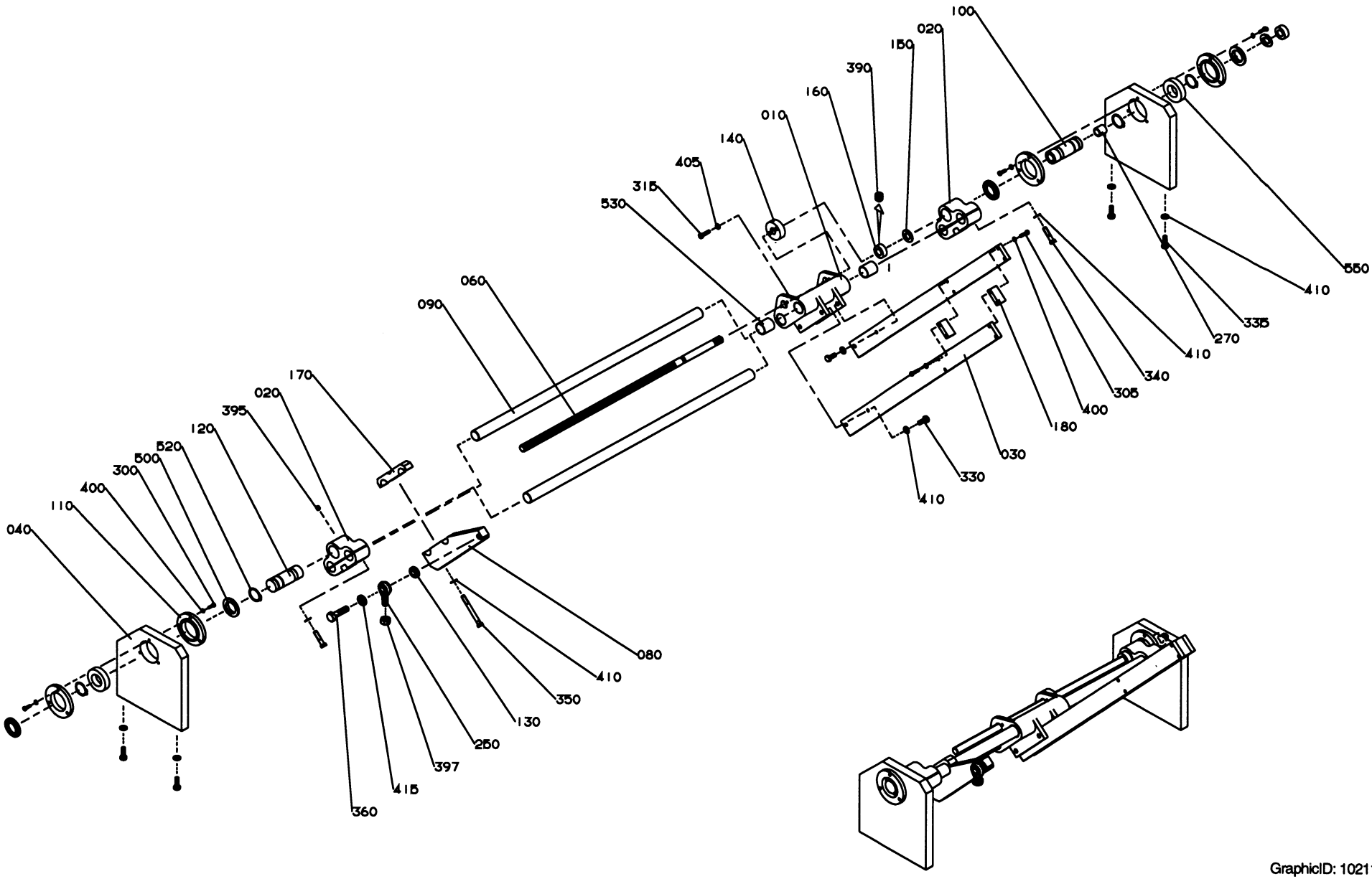

GraphicID: 102114302.eps
Parent Drw: 1021143-2
ECN 23757

Pos	Part No	SP	UN	Qty	Description	Page No
-						
000	C-1021143-0101	-		1	**MAGAZINE SHAFT**	
010	G-1021144	-		1	GUIDE	
020	1021145	-		2	CLAMPING PIECE	
030	1021146	-		2	ARM	
040	1021147	-		2	PLATE	
060	1021149	-		1	ADJUSTING SCREW	
080	1021151	-		1	ARM	
090	1021148	-		2	SHAFT	
100	1021150	-		1	SHAFT	
110	1021153	-		4	LID	
120	1021159	-		1	SHAFT	
130	1021152	-		1	WASHER	
140	1021154	-		1	NUT	
150	1021155	-		2	WASHER	
160	1021156	-		2	RETAINING RING	
170	1021157	-		1	CLAMPING PIECE	
180	1021158	-		2	SPACER	
250	90115-0135	P		1	LINK HEAD	
270	90240-0205	-		1	PLAIN BEARING	
300	312105-0329	-		12	SCREW O4017 M5X16A280	
305	312105-0331	-		8	SCREW O4017 M5X20A280	
315	312105-0372	-		2	SCREW O4017 M6X25A280	
330	312105-0451	-		4	SCREW SO4017 8X20A280	
335	312105-0453	-		4	SCREW O4017 M8X25A280	
340	312105-0457	-		8	SCREW O4017 M8X35A280	
350	312105-0465	-		2	SCREW O4014 M8X70A280	
360	312105-0541	-		1	SCREW 4017 M12X45A280	
390	312318-0360	-		4	STOP SCREW SK6SS6X6RFR	
395	312318-0443	-		2	STOP SCREW SK6SS8X8RFR	
397	312605-0322	-		1	NUT M6M12RFR	
400	315105-0146	-		20	WASHER BRB5,3X10RFR	
405	315105-0153	-		2	WASHER BRB6,4X12RFR	
410	315105-0165	-		18	WASHER BRB8,4X16RFR	
415	315105-0178	-		1	WASHER BRB13X24RFR	
500	90091-0306	-		4	SEAL RING	
520	315750-0122	-		4	CIRCLIP SGA30	
530	321120-0160	-		4	BUSHING 25/28X30	
550	321308-0206	P		2	BALL BEARISKF6006-2RS	

Pos	Part No	SP	UN	Qty	Description	Page No

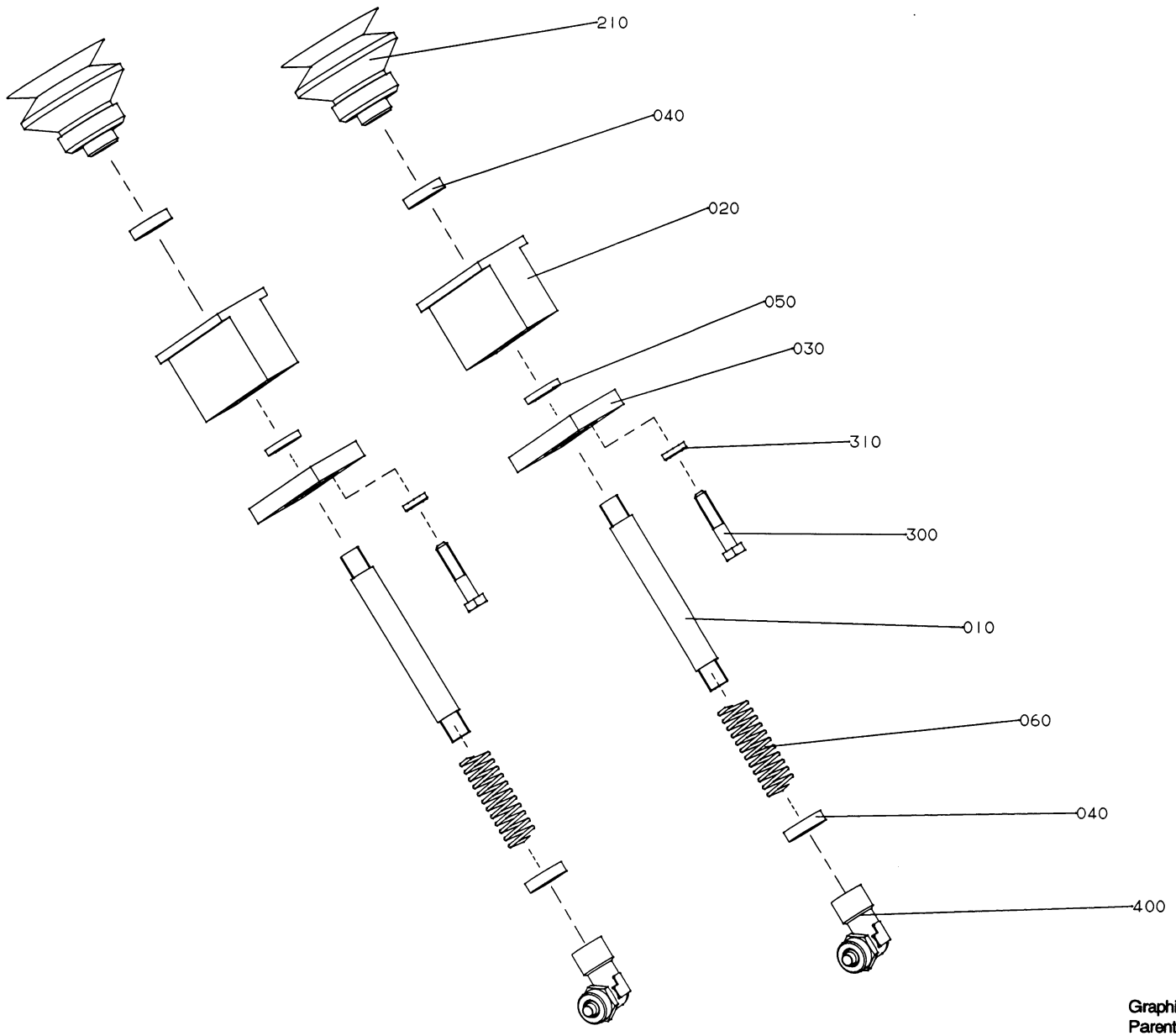

GraphicID: 102116001.eps
Parent Drw: 1021160-1
ECN 16567

Pos	Part No	SP	UN	Qty	Description	Page No
Package length 200-264						
000	**C-1021160-0201**	-		1	**SUCTION CUP**	
010	1021161	-		2	PIPE	
020	1021162	-		2	BEARING HOUSING	
030	1021163	-		2	PLATE	
040	1021164	-		4	NUT	
050	1021165	-		2	WASHER	
060	1021166	-		2	SPRING	
210	90425-0017	P		2	SUCTION CUP	
300	312105-0372	-		4	SCREW O4017 M6X25A280	
310	315105-0153	-		4	WASHER BRB6,4X12RFR	
400	342933-0121	-		2	ELBOW PIPE8/6-1/8	

Pos	Part No	SP	UN	Qty	Description	Page No

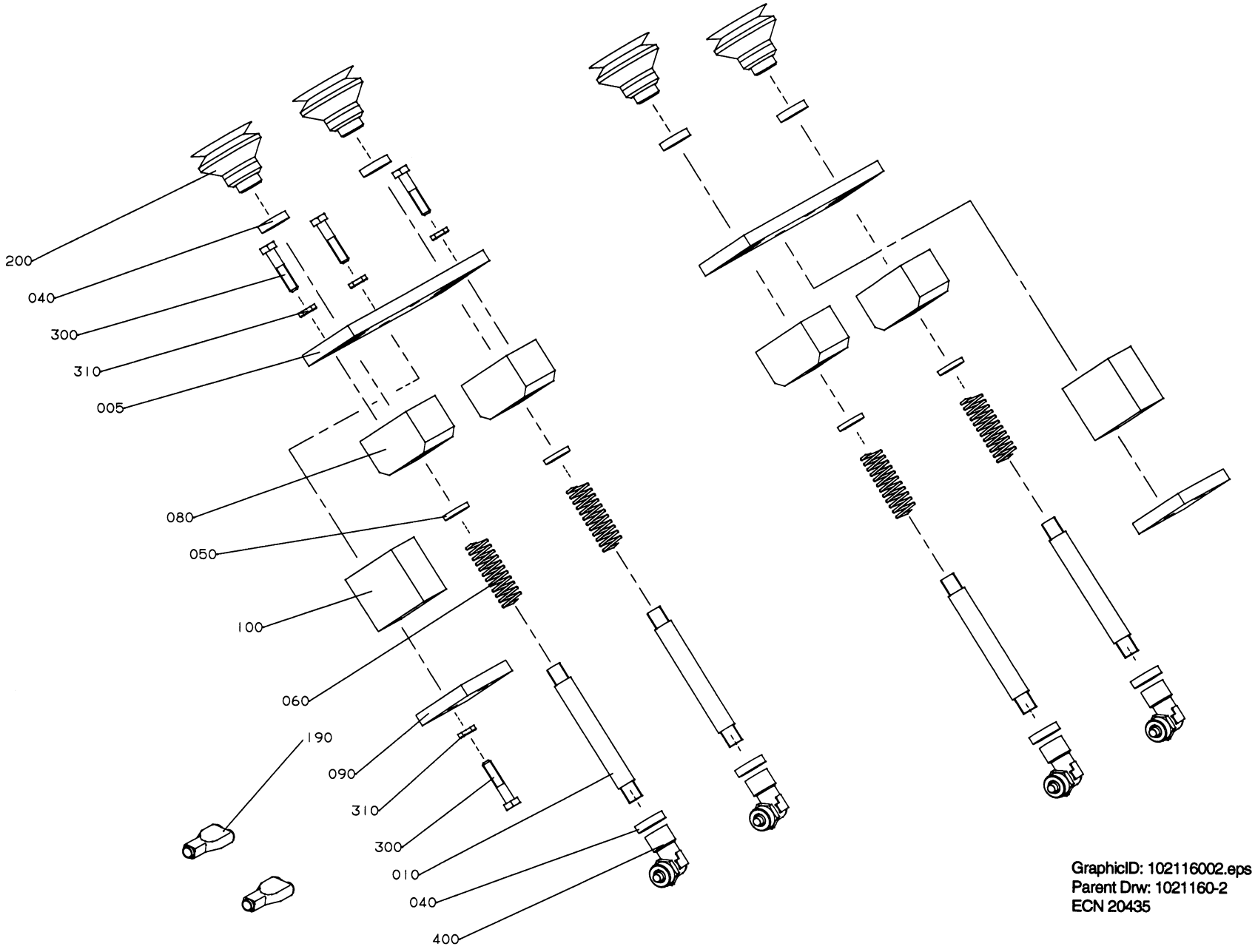

GraphicID: 102116002.eps
Parent Drw: 1021160-2
ECN 20435

Pos	Part No	SP	UN	Qty	Description	Page No
Package length 265-420						
000	**C-1021160-0202**	-		1	**SUCTION CUP**	
005	1021171	-		2	HOLDER	
010	1021161	-		4	PIPE	
040	1021164	-		8	NUT	
050	1021165	-		4	WASHER	
060	1021166	-		4	SPRING	
080	1021169	-		4	BEARING HOUSING	
090	1021170	-		2	PLATE	
100	1021172	-		2	SPACER	
190	90055-0101	-		2	JOINT CONNECTION	
200	90425-0015	P		4	SUCTION CUP	
300	312105-0372	-		16	SCREW O4017 M6X25A280	
310	315105-0153	-		16	WASHER BRB6,4X12RFR	
400	342933-0121	-		4	ELBOW PIPE8/6-1/8	

Pos	Part No	SP	UN	Qty	Description	Page No

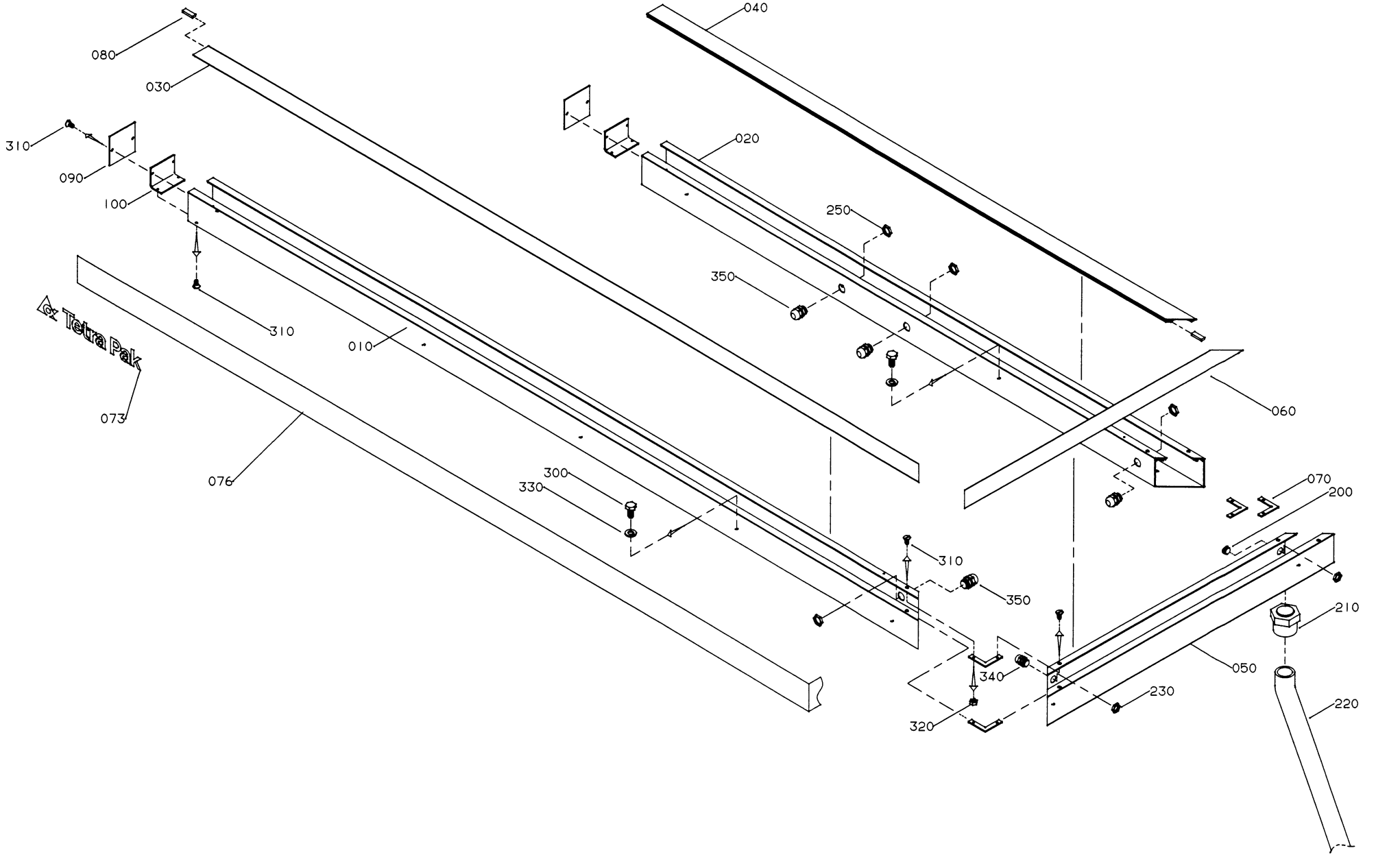

GraphicID: 102151001.eps
Parent Drw: 1021510-1
ECN 19307

Pos	Part No	SP	UN	Qty	Description	Page No
1/2/3-Line, LEFT HAND INFEED						
000	**C-1021510-0101**	-		1	**CABLE TRENCH**	
010	1021511	-		1	CABLE TRENCH	
020	1021512	-		1	CABLE TRENCH	
030	1021516	-		1	LID	
040	1021517	-		1	LID	
073	1021990	-		2	SIGN	
080	975939	-		16	SEAL	
090	1065696	-		2	COVERING PLATE	
100	1065697	-		2	BRACKET	
300	312105-0366	-		10	SCREW O4017 M6X12A280	
310	312145-0287	-		16	SLOTTED HEMFS4X8RFR	
320	312605-0312	-		16	NUT M6M4RFR	
330	315105-0153	-		10	WASHER BRB6,4X12RFR	
1/2/3-Line, RIGHT HAND INFEED						
000	**C-1021510-0102**	-		1	**CABLE TRENCH**	
010	1021514	-		1	CABLE TRENCH	
020	1021515	-		1	CABLE TRENCH	
030	1021519	-		1	LID	
040	1021520	-		1	LID	
073	1021990	-		2	SIGN	
080	975939	-		16	SEAL	
090	1065696	-		2	COVERING PLATE	
100	1065697	-		2	BRACKET	
300	312105-0366	-		10	SCREW O4017 M6X12A280	
310	312145-0287	-		16	SLOTTED HEMFS4X8RFR	
320	312605-0312	-		16	NUT M6M4RFR	
330	315105-0153	-		10	WASHER BRB6,4X12RFR	
COMMON PARTS						
050	**1021513**	-		1	**CABLE TRENCH**	
060	1021518	-		1	LID	
070	975934	-		4	GUSSET PLATE	
076	1021991	-		1	STRIP	
200	90002-0013	-		1	BLANK-OFF PLUG 15,2	
210	90012-0075	-		1	GLAND FITTING	
220	90012-0076	-		1	CABLE SHEATH	
230	90099-0104	-		2	NUT PR 15,2 (PG9)	
250	90099-0117	-		4	NUT PR18,6 (PG11)	
340	352103-0101	-		1	CABLE GLAND ST 9	
350	352103-0106	-		4	CABLE GLAND ST 11	

Pos	Part No	SP	UN	Qty	Description	Page No

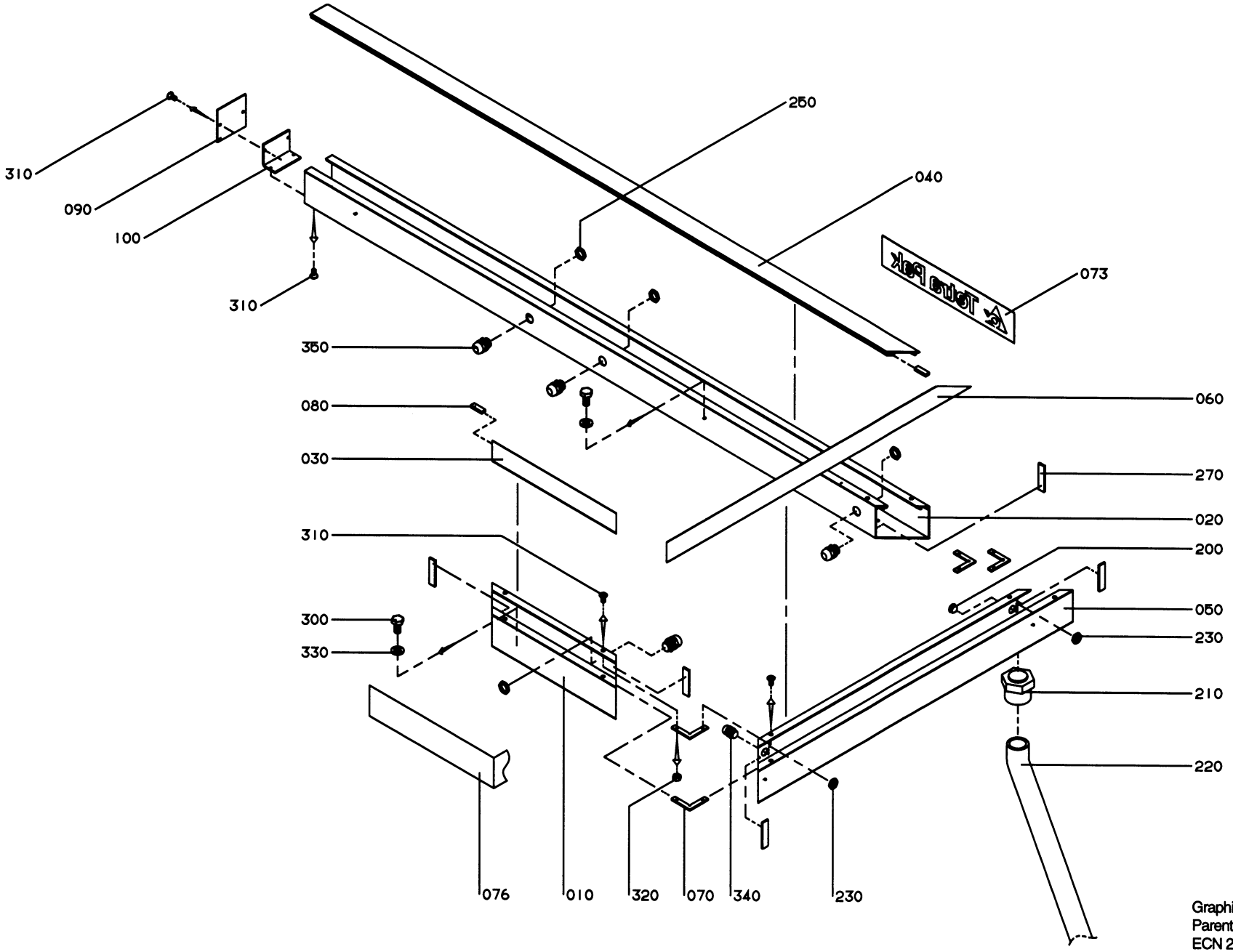

GraphicID: 102151002.eps
Parent Drw: 1021510-2
ECN 21267

Pos	Part No	SP	UN	Qty	Description	Page No
MULTI, LEFT HAND INFEED, Z-FORM						
000	**C-1021510-0103**	-		1	**CABLE TRENCH**	
010	1124632	-		1	CABLE DUCT	
020	1021512	-		1	CABLE TRENCH	
030	1124602	-		1	LID	
040	1021517	-		1	LID	
073	1021990	-		1	SIGN	
080	975939	-		10	SEAL	
090	1065696	-		1	COVERING PLATE	
100	1065697	-		1	BRACKET	
270	90143-0073	-	MM	350	RUBBER STRIP	
300	312105-0366	-		8	SCREW O4017 M6X12A280	
310	312145-0287	-		12	SLOTTED HEMFS4X8RFR	
320	312605-0312	-		12	NUT M6M4RFR	
330	315105-0153	-		8	WASHER BRB6,4X12RFR	
MULTI, RIGHT HAND INFEED, Z-FORM						
000	**C-1021510-0104**	-		1	**CABLE TRENCH**	
010	1124631	-		1	CABLE DUCT	
020	1021515	-		1	CABLE TRENCH	
030	1124601	-		1	LID	
040	1021520	-		1	LID	
073	1021990	-		1	SIGN	
080	975939	-		10	SEAL	
090	1065696	-		1	COVERING PLATE	
100	1065697	-		1	BRACKET	
270	90143-0073	-	MM	350	RUBBER STRIP	
300	312105-0366	-		8	SCREW O4017 M6X12A280	
310	312145-0287	-		12	SLOTTED HEMFS4X8RFR	
320	312605-0312	-		12	NUT M6M4RFR	
330	315105-0153	-		8	WASHER BRB6,4X12RFR	
COMMON PARTS						
050	**1021513**	-		1	**CABLE TRENCH**	
060	1021518	-		1	LID	
070	975934	-		4	GUSSET PLATE	
076	1021991	-		1	STRIP	
200	90002-0013	-		1	BLANK-OFF PLUG 15,2	
210	90012-0075	-		1	GLAND FITTING	
220	90012-0076	-		1	CABLE SHEATH	
230	90099-0104	-		2	NUT PR 15,2 (PG9)	
250	90099-0117	-		4	NUT PR18,6 (PG11)	
340	352103-0101	-		1	CABLE GLAND ST 9	
350	352103-0106	-		4	CABLE GLAND ST 11	

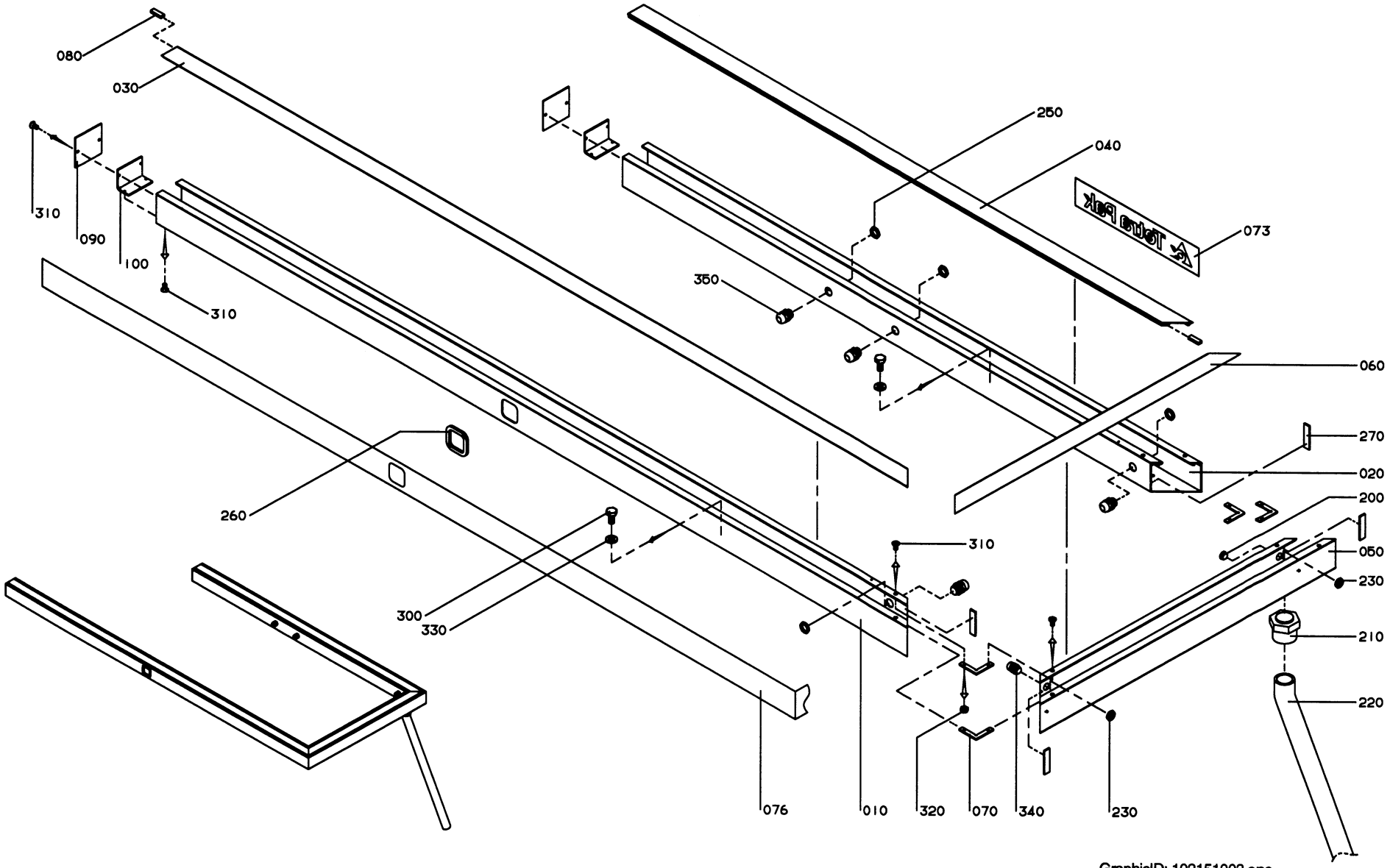

GraphicID: 102151003.eps
Parent Drw: 1021510-3
ECN 21267

Pos	Part No	SP	UN	Qty	Description	Page No
MULTI, LEFT HAND INFEED, U-FORM						
000	**C-1021510-0105**	-		1	**CABLE TRENCH**	
010	1124634	-		1	CABLE DUCT	
020	1021512	-		1	CABLE TRENCH	
030	1021516	-		1	LID	
040	1021517	-		1	LID	
073	1021990	-		1	SIGN	
080	975939	-		16	SEAL	
090	1065696	-		2	COVERING PLATE	
100	1065697	-		2	BRACKET	
260	90143-0060	-	MM	200	STRIP	
270	90143-0073	-	MM	280	RUBBER STRIP	
300	312105-0366	-		10	SCREW O4017 M6X12A280	
310	312145-0287	-		16	SLOTTED HEMFS4X8RFR	
320	312605-0312	-		16	NUT M6M4RFR	
330	315105-0153	-		10	WASHER BRB6,4X12RFR	
MULTI, RIGHT HAND INFEED, U-FORM						
000	**C-1021510-0106**	-		1	**CABLE TRENCH**	
010	1124633	-		1	CABLE DUCT	
020	1021515	-		1	CABLE TRENCH	
030	1021519	-		1	LID	
040	1021520	-		1	LID	
073	1021990	-		1	SIGN	
080	975939	-		16	SEAL	
090	1065696	-		2	COVERING PLATE	
100	1065697	-		2	BRACKET	
260	90143-0060	-	MM	200	STRIP	
270	90143-0073	-	MM	280	RUBBER STRIP	
300	312105-0366	-		10	SCREW O4017 M6X12A280	
310	312145-0287	-		16	SLOTTED HEMFS4X8RFR	
320	312605-0312	-		16	NUT M6M4RFR	
330	315105-0153	-		10	WASHER BRB6,4X12RFR	
COMMON PARTS						
050	**1021513**	-		1	**CABLE TRENCH**	
060	1021518	-		1	LID	
070	975934	-		4	GUSSET PLATE	
076	1021991	-		1	STRIP	
200	90002-0013	-		1	BLANK-OFF PLUG 15,2	
210	90012-0075	-		1	GLAND FITTING	
220	90012-0076	-		1	CABLE SHEATH	
230	90099-0104	-		2	NUT PR 15,2 (PG9)	
250	90099-0117	-		4	NUT PR18,6 (PG11)	
340	352103-0101	-		1	CABLE GLAND ST 9	
350	352103-0106	-		4	CABLE GLAND ST 11	

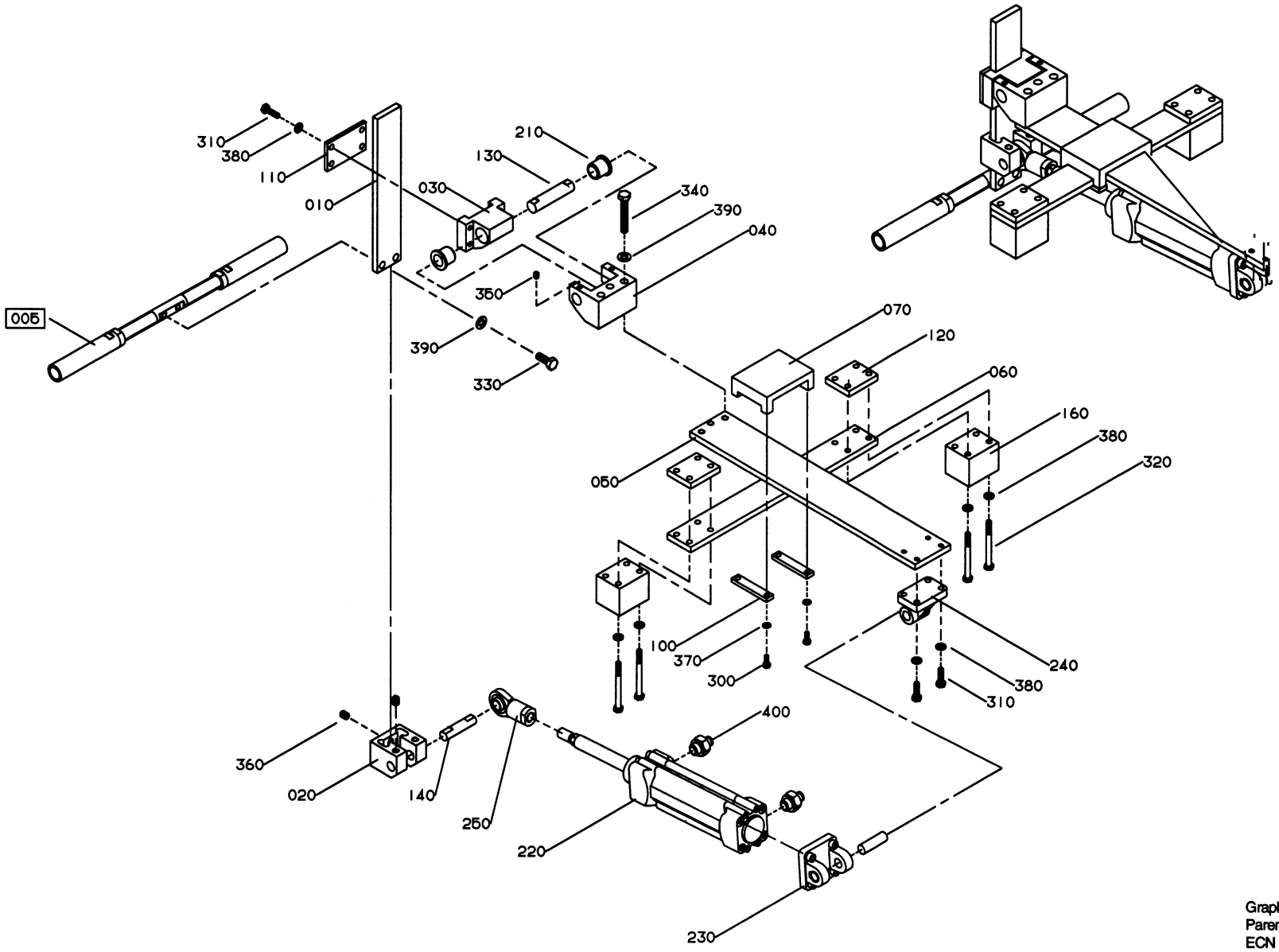

GraphicID: 106536001.eps
Parent Drw: 1065360-1
ECN 23757

Pos	Part No	SP	UN	Qty	Description	Page No
VOLUME COMBINATION; BASE 180-1136, SLIM 375-330, SLIM 375-1000, TR/M 125-300						
000	**C-1065360-0201**	-		1	**FOLDING SUPPORT**	
140	1074473	-		1	SHAFT	
310	312105-0370	-		8	SCREW O4017 M6X20A280	
380	315105-0153	-		16	WASHER BRB6,4X12RFR	
COMMON PARTS						
010	**1074462**	-		1	**RAIL**	
020	1074463	-		1	HOLDER	
030	1074464	-		1	HOLDER	
040	1074465	-		1	HOLDER	
050	1074466	-		1	RAIL	
060	1074467	-		1	RAIL	
070	1074468	-		1	CLAMPING PIECE	
100	1074486	-		2	SECURING PLATE	
110	1074470	-		1	SECURING PLATE	
120	1074471	-		2	SPACER	
130	1074472	-		1	SHAFT	
160	1074475	-		2	SPACER	
210	90240-0222	P		2	BEARING	
220	90450-0190	-		1	CYLINDER	
230	90450-0667	-		1	BRACKET	
240	90450-0707	-		1	BRACKET	
250	90450-0708	-		1	BALL JOINT COUPLING	
300	312105-0327	-		4	SCREW O4017 M5X12A280	
320	312105-0383	-		8	SCREW O4014 M6X65A280	
330	312105-0451	-		2	SCREW SO4017 8X20A280	
340	312105-0461	-		3	SCREW O4017 M8X50A280	
350	312318-0362	-		2	STOP SCREW SK6SS6X8RFR	
360	312318-0445	-		4	STOP SCREW SK6SS8X10RFR	
370	315105-0146	-		4	WASHER BRB5,3X10RFR	
390	315105-0165	-		5	WASHER BRB8,4X16RFR	
400	342722-0203	-		2	PIPE COUPLD=6-R1/4"	
F005	C-1065366-020V	-		1	SUPPORT	

Pos	Part No	SP	UN	Qty	Description	Page No

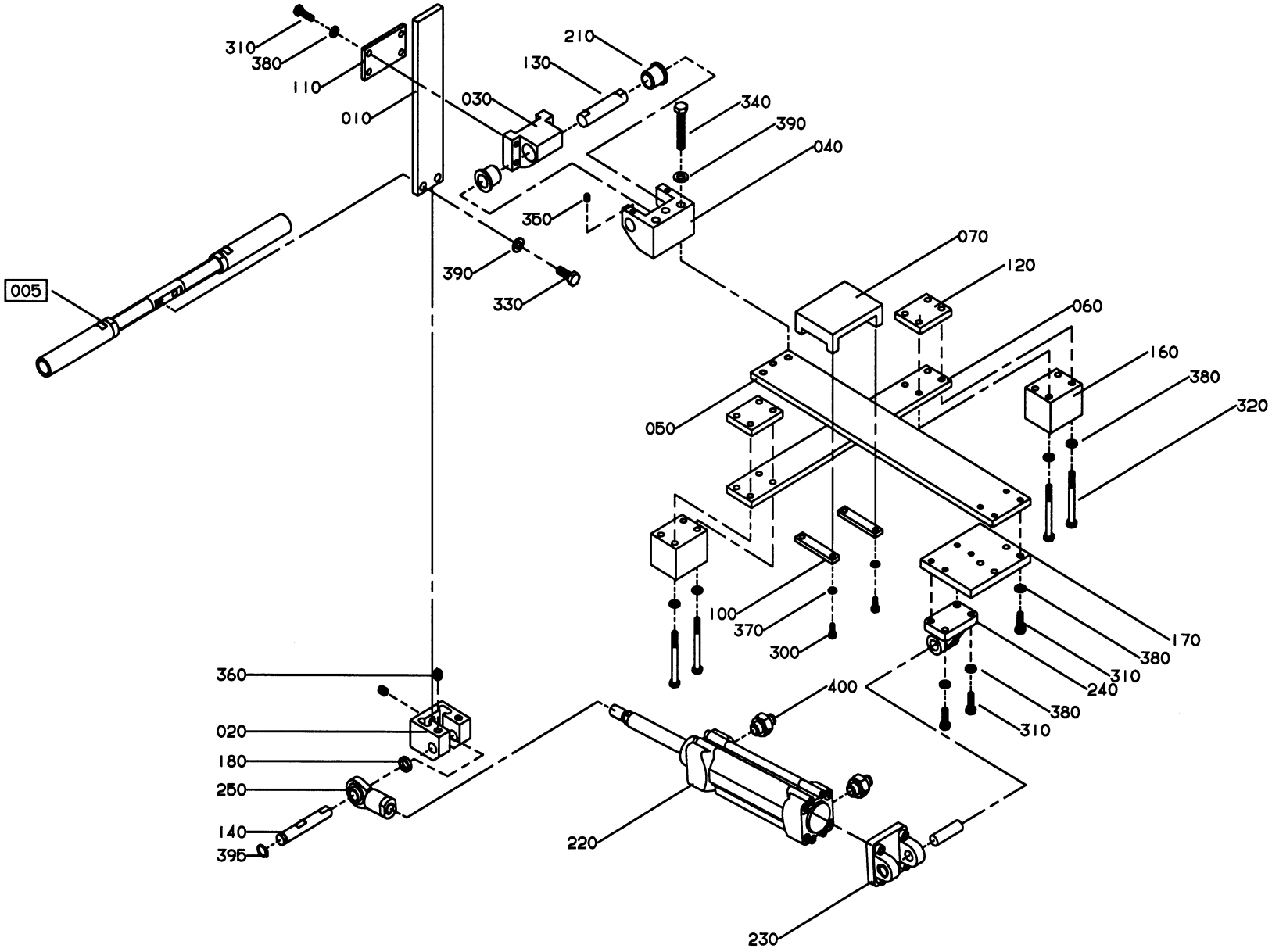

GraphicID: 106536002.eps
Parent Drw: 1065360-2
ECN 23757

Pos	Part No	SP	UN	Qty	Description	Page No
VOLUME COMBINATION; TB SQ 1000						
000	**C-1065360-0202**	-		1	**FOLDING SUPPORT**	
140	1139170	-		1	SHAFT	
170	1139171	-		1	PLATE	
180	1139172	-		1	SPACER	
310	312105-0370	-		12	SCREW O4017 M6X20A280	
380	315105-0153	-		20	WASHER BRB6,4X12RFR	
395	315751-0109	-		1	CIRCLIP SGA12 RFR	
COMMON PARTS						
010	**1074462**	-		1	**RAIL**	
020	1074463	-		1	HOLDER	
030	1074464	-		1	HOLDER	
040	1074465	-		1	HOLDER	
050	1074466	-		1	RAIL	
060	1074467	-		1	RAIL	
070	1074468	-		1	CLAMPING PIECE	
100	1074486	-		2	SECURING PLATE	
110	1074470	-		1	SECURING PLATE	
120	1074471	-		2	SPACER	
130	1074472	-		1	SHAFT	
160	1074475	-		2	SPACER	
210	90240-0222	P		2	BEARING	
220	90450-0190	-		1	CYLINDER	
230	90450-0667	-		1	BRACKET	
240	90450-0707	-		1	BRACKET	
250	90450-0708	-		1	BALL JOINT COUPLING	
300	312105-0327	-		4	SCREW O4017 M5X12A280	
320	312105-0383	-		8	SCREW O4014 M6X65A280	
330	312105-0451	-		2	SCREW SO4017 8X20A280	
340	312105-0461	-		3	SCREW O4017 M8X50A280	
350	312318-0362	-		2	STOP SCREW SK6SS6X8RFR	
360	312318-0445	-		4	STOP SCREW SK6SS8X10RFR	
370	315105-0146	-		4	WASHER BRB5,3X10RFR	
390	315105-0165	-		5	WASHER BRB8,4X16RFR	
400	342722-0203	-		2	PIPE COUPLD=6-R1/4"	
F005	C-1065366-020V	-		1	SUPPORT	

Pos	Part No	SP	UN	Qty	Description	Page No

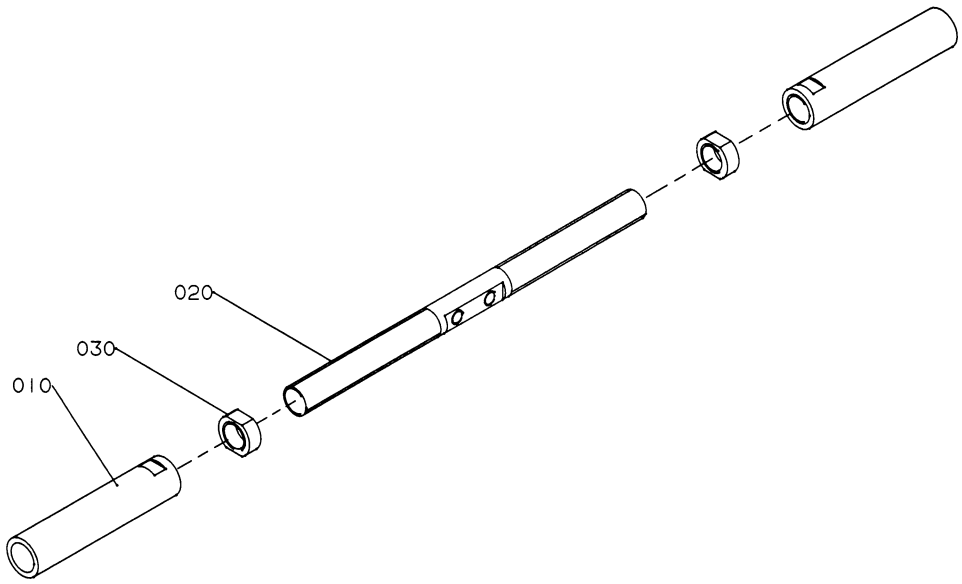

GraphicID: 106536601.eps
Parent Drw: 1065366-1
ECN 20435

Pos	Part No	SP	UN	Qty	Description	Page No
Package length 200-264						
000	**C-1065366-0201**	-		1	**SUPPORT**	
010	1074494	-		2	ROLL	
020	1074495	-		1	SHAFT	
030	1074496	-		2	NUT	
Package length 265-420						
000	**C-1065366-0202**	-		1	**SUPPORT**	
010	1074460	-		2	ROLL	
020	1074461	-		1	SHAFT	
030	1074474	-		2	NUT	

Pos	Part No	SP	UN	Qty	Description	Page No

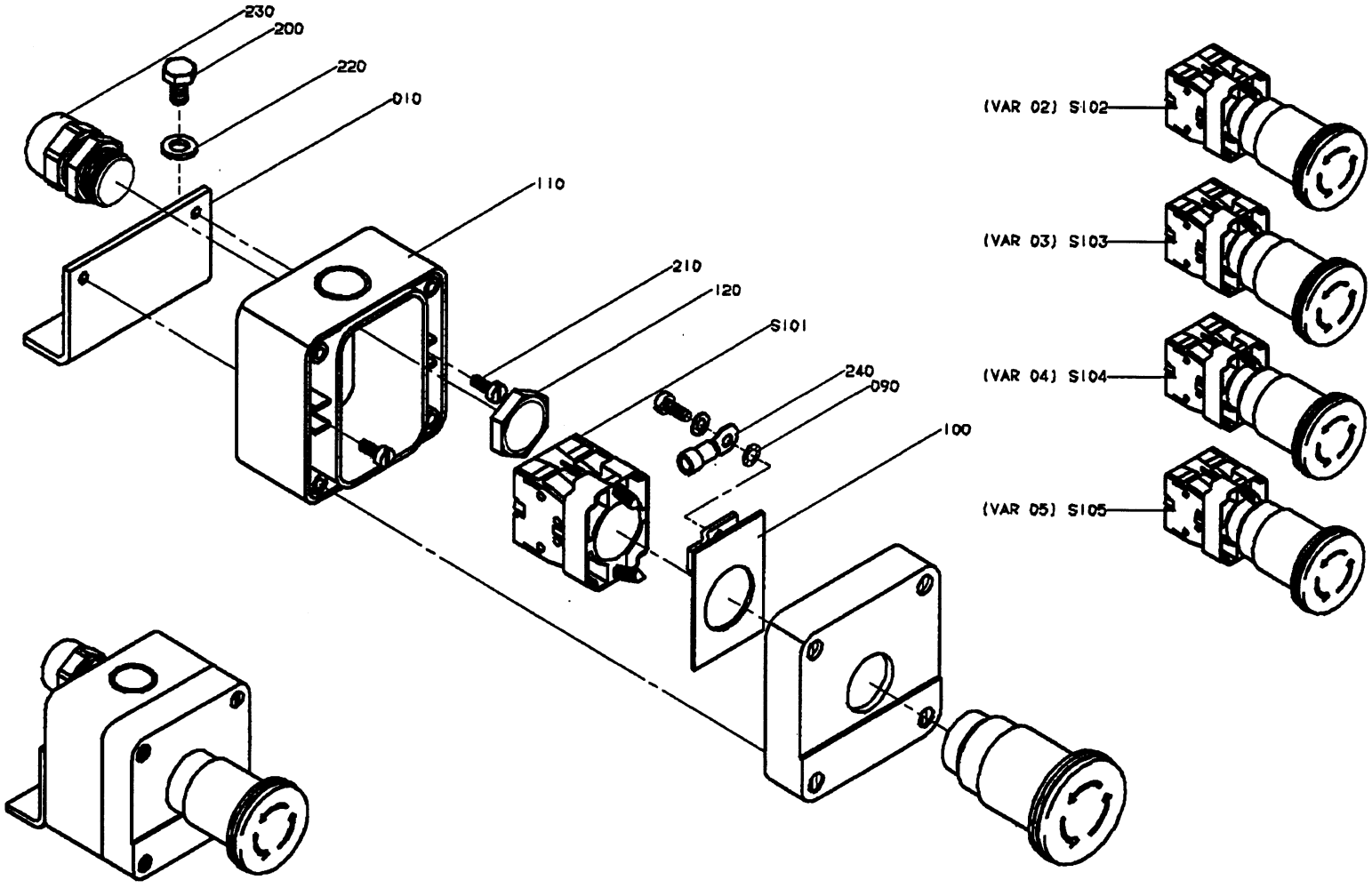

GraphicID: 102183802.tif
Parent Drw: 1021838-2
ECN No: 22292

Pos	Part No	SP	UN	Qty	Description	Page No
S101						
000	**C-1021838-0201**	**-**		**1**	**EMERGENCY STOP**	
S101	90064-0124	P		1	EMERGENCY STOP BUTTON	
S102						
000	**C-1021838-0202**	**-**		**1**	**EMERGENCY STOP**	
S102	90064-0124	P		1	EMERGENCY STOP BUTTON	
S103						
000	**C-1021838-0203**	**-**		**1**	**EMERGENCY STOP**	
S103	90064-0124	P		1	EMERGENCY STOP BUTTON	
S104						
000	**C-1021838-0204**	**-**		**1**	**EMERGENCY STOP**	
S104	90064-0124	P		1	EMERGENCY STOP BUTTON	
S105						
000	**C-1021838-0205**	**-**		**1**	**EMERGENCY STOP**	
S105	90064-0124	P		1	EMERGENCY STOP BUTTON	
COMMON PARTS						
010	**1021910**	**-**		**1**	**FASTENING BRACKET**	
090	90062-0059	-		1	LOCK WASHER	
100	90064-0336	-		1	EARTHING PLATE	
110	90066-0030	-		1	PUSH BUTTON BOX	
120	90099-0117	-		1	NUT PR18,6 (PG11)	
200	312105-0364	-		2	SCREW M6S6X10RFR	
210	312125-0289	-		2	SLOTTED HEMCS4X10RFR	
220	315105-0153	-		2	WASHER BRB6,4X12RFR	
230	352103-0106	-		1	CABLE GLAND ST 11	
240	353101-0120	-		1	CABLE SHOE	

Pos	Part No	SP	UN	Qty	Description	Page No

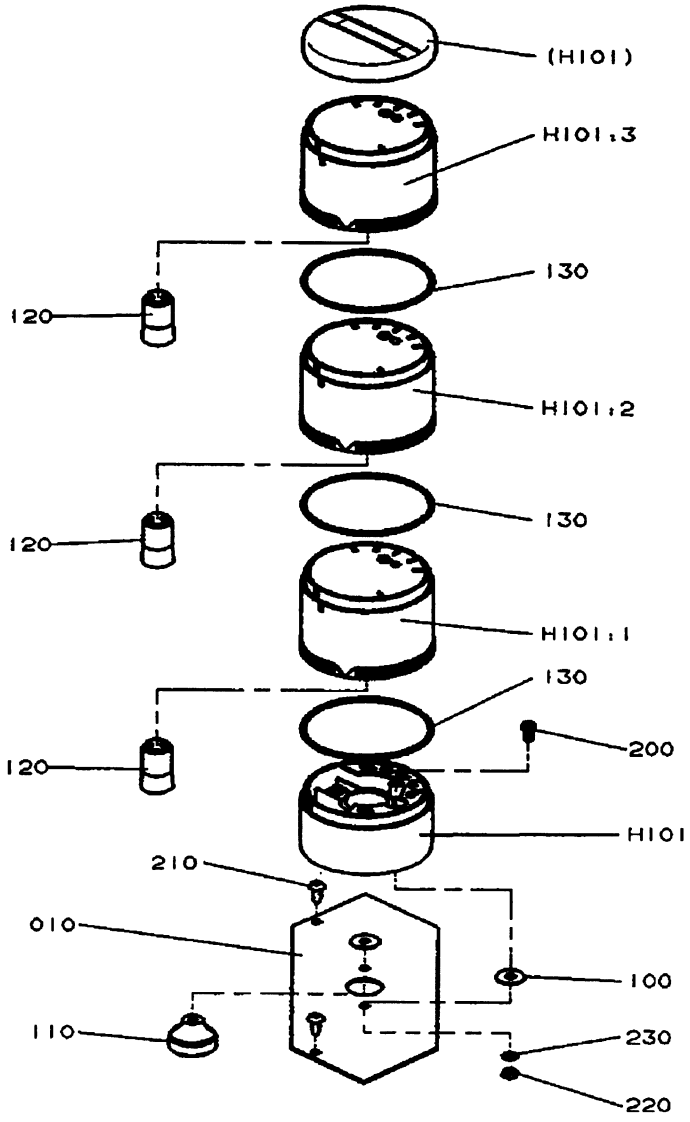

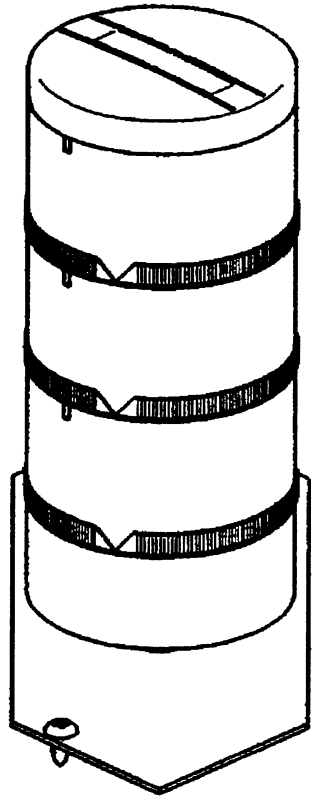

GraphicID: 58168901.tif
Parent Dr1> 581689-1
ECN No 22251

Pos	Part No	SP	UN	Qty	Description	Page No
-						
000	**C- 581689-0101**	-		**1**	**WARNING LAMP**	
010	580918	-		1	MOUNTING SHEET	
100	90005-0114	-		2	WASHER	
110	90015-0023	-		1	BUSHING	
120	90036-0068	P		3	BULB 6.5W 24V	
130	90419-0307	-		3	GASKET TO GET IP.54	
200	312125-0291	-		1	SLOTTED HEMCS4X12RFR	
210	312504-0342	-		2	DRIVE SCREA4	
220	312605-0312	-		1	NUT M6M4RFR	
230	315105-0136	-		3	WASHER BRB4,3X8RFR	
H101	1133093	-		1	BASE	
H101:1	90419-0013	-		1	LIGHT ELEMENT, BLUE	
H101:2	90419-0014	-		1	LIGHT ELEMENT, YELLOW	
H101:3	90419-0012	-		1	LIGHT ELEMENT, RED	

Pos	Part No	SP	UN	Qty	Description	Page No

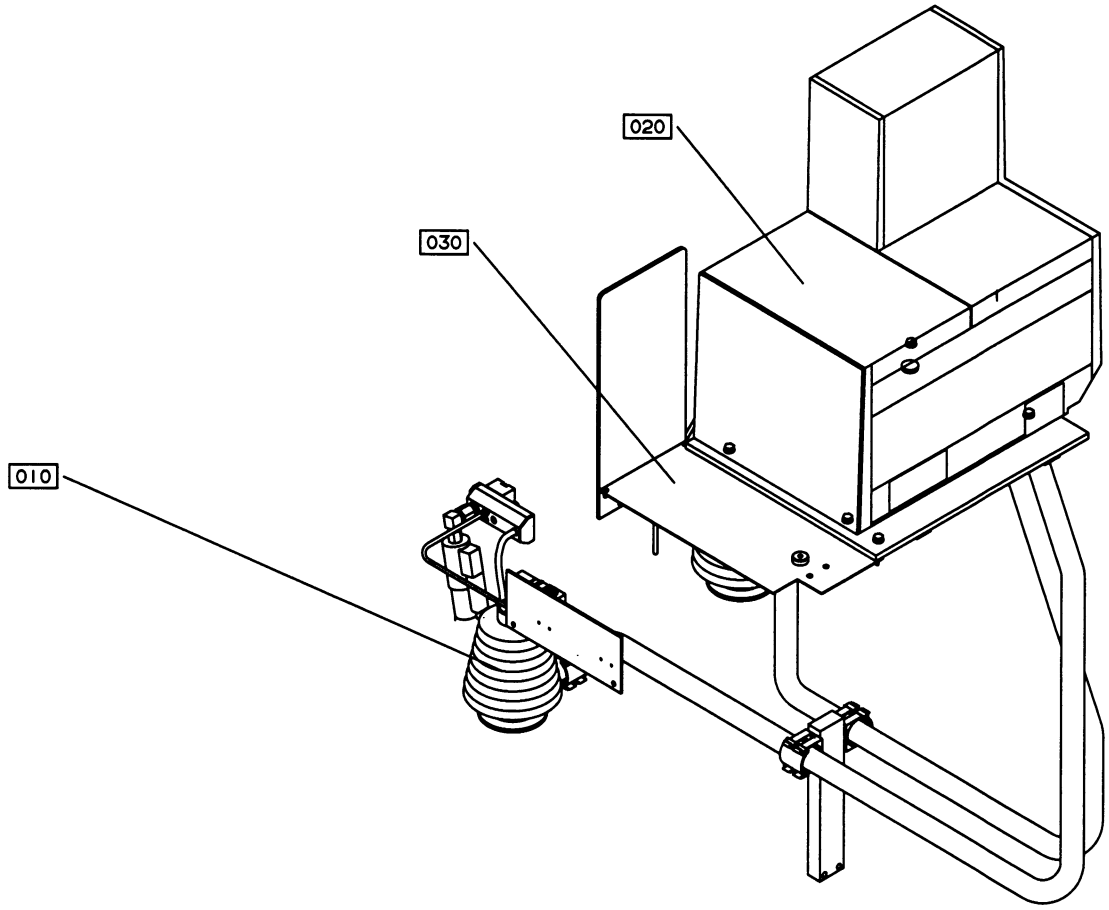

GraphicID: 67028103.eps
Parent Drw: 670281-3
ECN 23757

Pos	Part No	SP	UN	Qty	Description	Page No
-						
000	B- 670281-0401	-		1	**HOT MELT EQUIPMENT**	
010	C-1021387-0301	-		1	HOT MELT EQUIP.MISC.	147
020	C-1021395-030V	-		1	HOT MELT EQUIPMENT NORDSON	149
030	C-1021396-0301	-		1	SHELF HOT MELT	155

Pos	Part No	SP	UN	Qty	Description	Page No

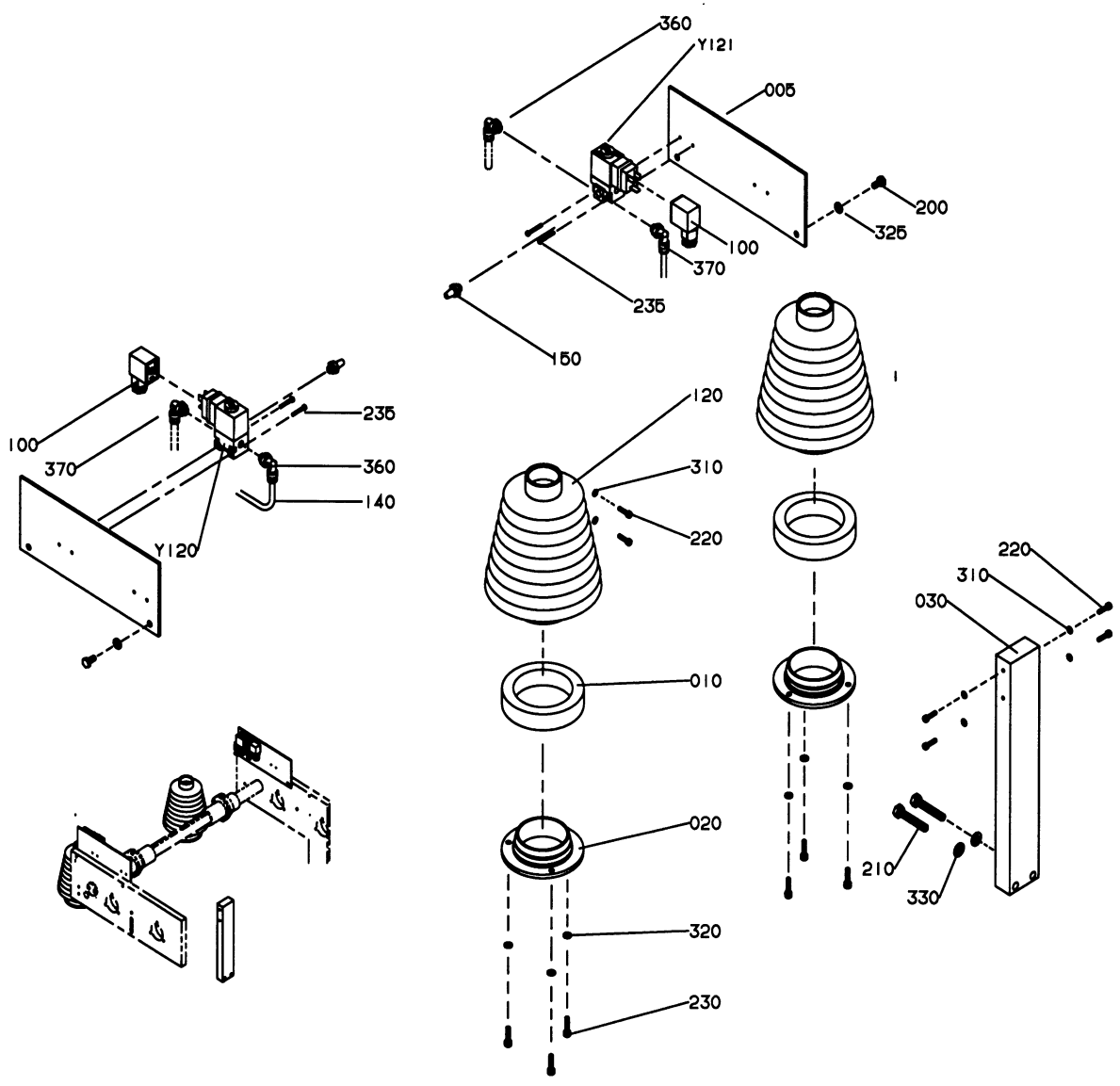

GraphicID: 102138703.eps
Parent Drw: 1021387-3
ECN 23757

Pos	Part No	SP	UN	Qty	Description	Page No
-						
000	C-1021387-0301	-		1	**HOT MELT EQUIP.MISC.**	
005	1139148	-		2	PLATE	
010	1021388	-		2	CLAMP RING	
020	1021389	-		2	RING	
030	1021554	-		1	BRACKET	
100	90042-0392	-		2	CONTACT	
120	90342-0017	-		2	BELLOWS	
140	90166-0202	-	MM	500	TEFLON PIPE	
150	90328-0003	-		2	SILENCER	
200	312105-0366	-		4	SCREW O4017 M6X12A280	
210	312105-0460	-		2	SCREW O4017 M8X45A280	
220	312115-0293	-		6	SCREW O4762 M4X16A280	
230	312115-0331	-		6	SCREW O4762 M5X20A280	
235	312125-0234	-		4	SLOTTED HEMCS3X30RFR	
310	315105-0136	-		6	WASHER BRB4,3X8RFR	
320	315105-0146	-		6	WASHER BRB5,3X10RFR	
325	315105-0153	-		4	WASHER BRB6,4X12RFR	
330	315105-0165	-		2	WASHER BRB8,4X16RFR	
360	342732-0102	-		2	ELBOW PIPE D6-R1/8"	
370	342732-0801	-		2	ELBOW PIPE D8-R1/8"	
Y120	90042-0213	P		1	SOLENOID VALVE	
Y121	90042-0213	P		1	SOLENOID VALVE	

Pos	Part No	SP	UN	Qty	Description	Page No

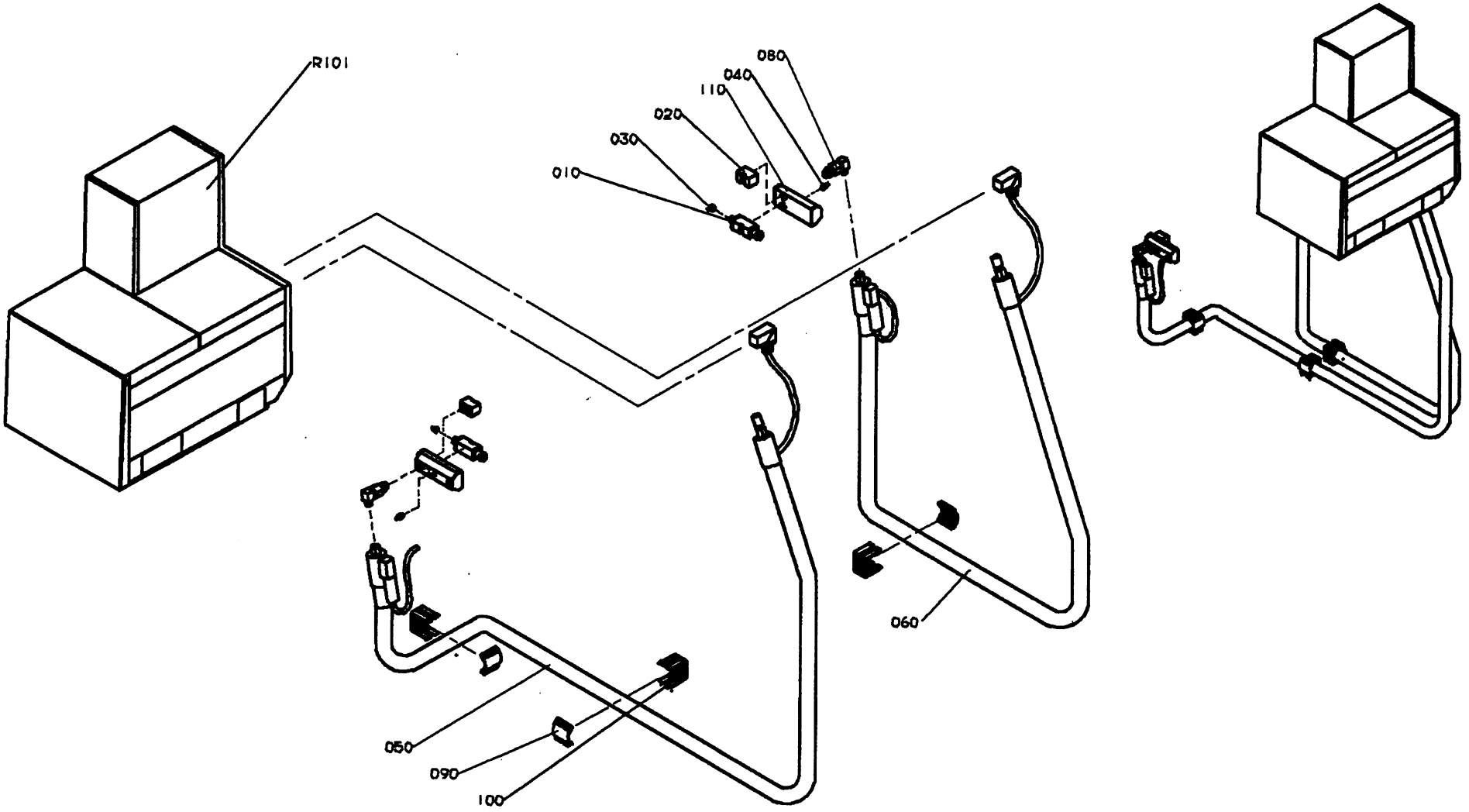

GraphicID: 102139503.tif
Parent Drw: 1021395-3
ECN No: 22292

Pos	Part No	SP	UN	Qty	Description	Page No
Tetra Tray						
000	**C-1021395-0301**	-		1	**HOT MELT EQUIPMENT NORDSON**	
010	90439-0124	P		2	MODULE	
020	90439-0232	-		2	BLID PLATE	
030	90439-0264	P		2	NOZZLE	
040	342921-0112	-		2	PIPE COUPL6/4-6M	
050	90439-0212	-		1	HOSE	
060	90439-0213	-		1	HOSE	
080	90439-0233	S		2	FILTER	
090	90439-0234	-		3	HOSE CLIP	
100	90439-0235	-		3	HOSE HOLDER	
110	90439-0237	-		2	HOT MELT GUN	
R101	90439-0266	-		1	HOT MELT UNIT	
LOW TRAY + LID						
000	**C-1021395-0305**	-		1	**HOT MELT EQUIPMENT NORDSON**	
010	90439-0124	P		2	MODULE	
020	90439-0232	-		2	BLID PLATE	
030	90439-0264	P		2	NOZZLE	
040	342921-0112	-		2	PIPE COUPL6/4-6M	
050	90439-0212	-		1	HOSE	
060	90439-0213	-		1	HOSE	
080	90439-0233	S		2	FILTER	
090	90439-0234	-		3	HOSE CLIP	
100	90439-0235	-		3	HOSE HOLDER	
110	90439-0237	-		2	HOT MELT GUN	
R101	90439-0265	-		1	HOT MELT UNIT	

Pos	Part No	SP	UN	Qty	Description	Page No

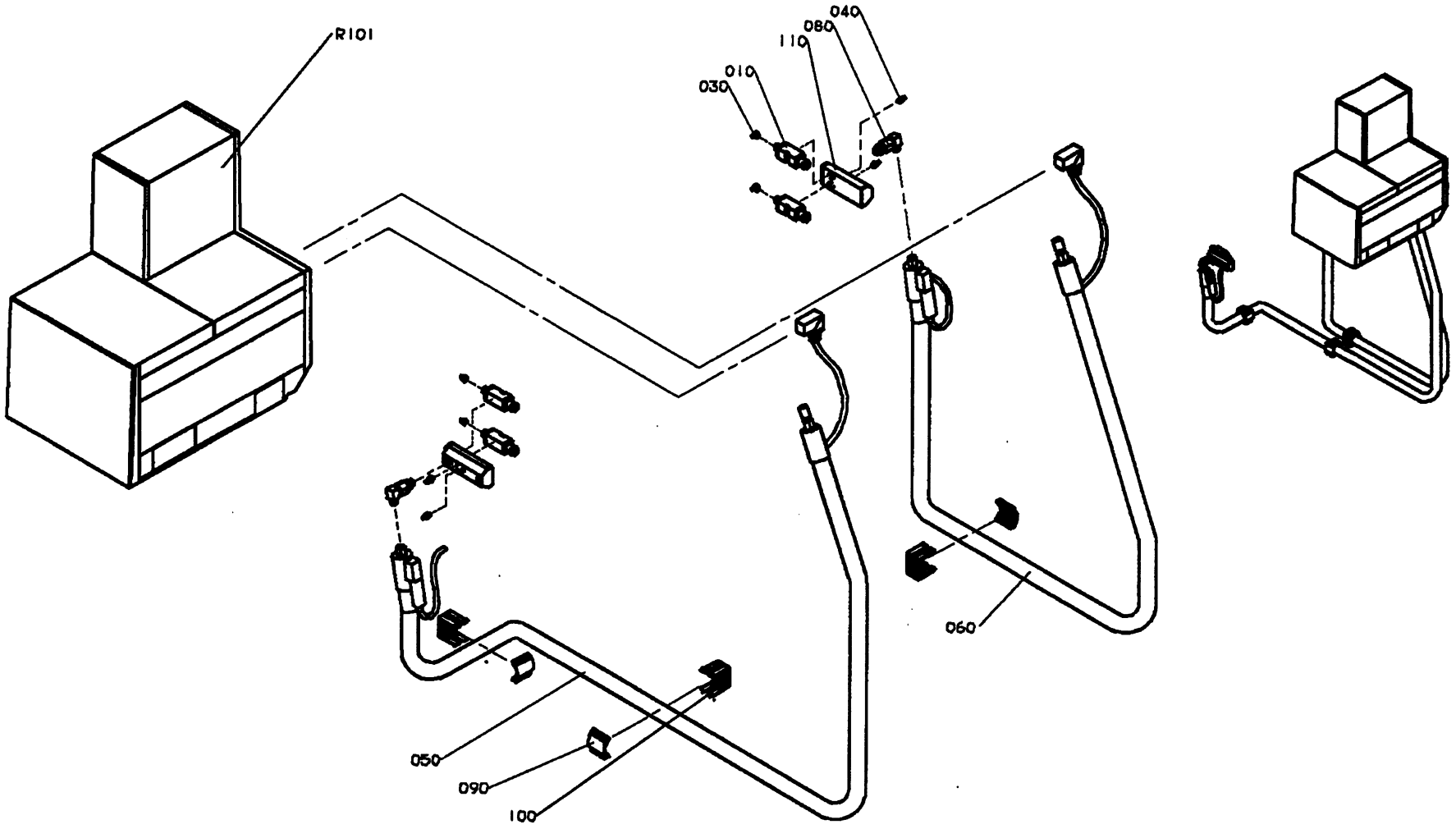

GraphicID: 102139504.tif
Parent Drw: 1021395-4
ECN No: 22292

Pos	Part No	SP	UN	Qty	Description	Page No
Tetra Wrap around Box with meeting Flaps						
Tetra Tray with over Flaps						
000	**C-1021395-0302**	**-**		**1**	**HOT MELT EQUIPMENT NORDSON**	
010	90439-0124	P		4	MODULE	
030	90439-0264	P		4	NOZZLE	
040	342921-0112	-		4	PIPE COUPL6/4-6M	
050	90439-0212	-		1	HOSE	
060	90439-0213	-		1	HOSE	
080	90439-0233	S		2	FILTER	
090	90439-0234	-		3	HOSE CLIP	
100	90439-0235	-		3	HOSE HOLDER	
110	90439-0237	-		2	HOT MELT GUN	
R101	90439-0266	-		1	HOT MELT UNIT	

Pos	Part No	SP	UN	Qty	Description	Page No

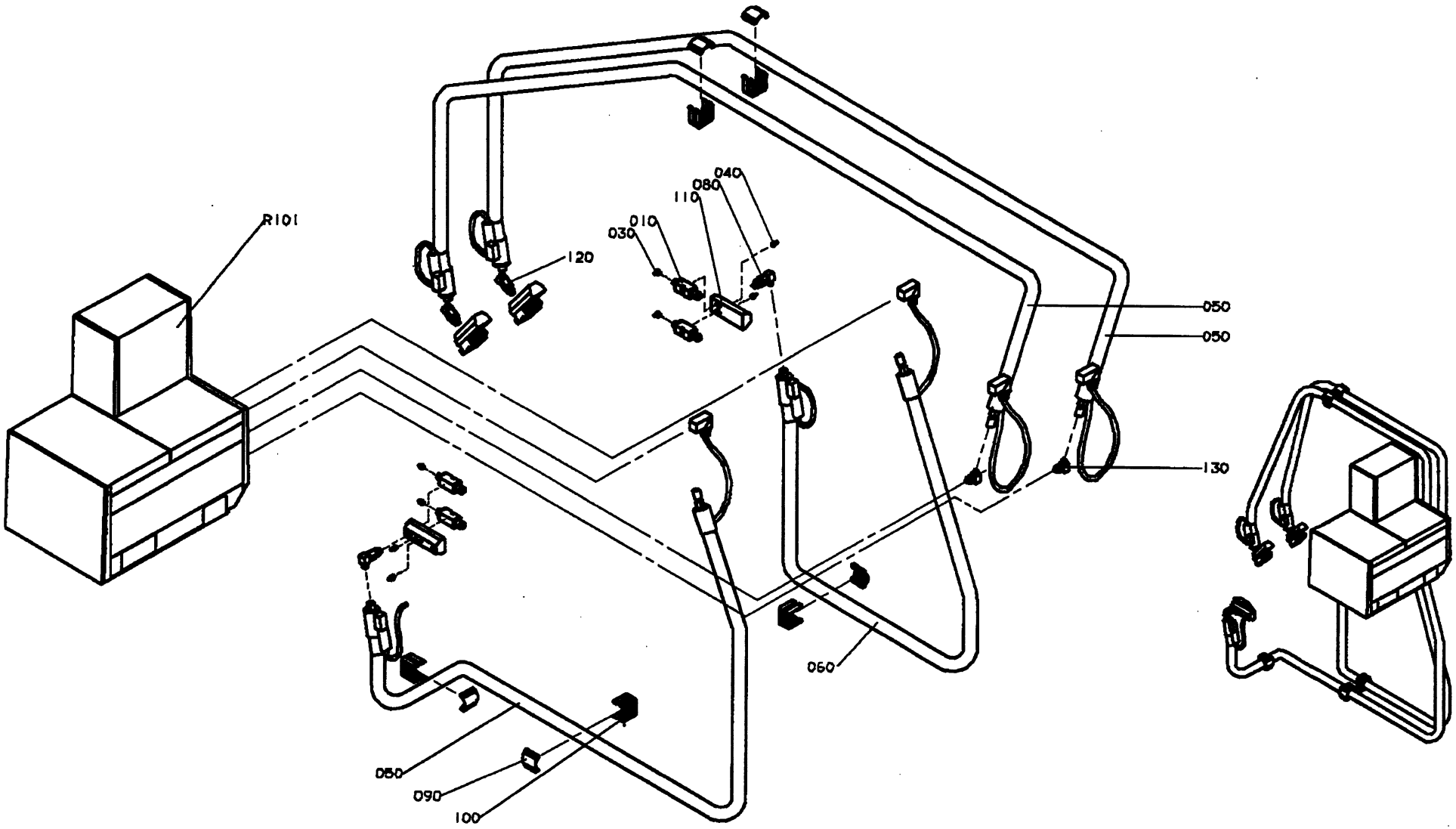

GraphicID: 102139505.tif
Parent Drw: 1021395-5
ECN No: 22292

Pos	Part No	SP	UN	Qty	Description	Page No
Tetra Wrap around Box with inside top Flap						
Tetra Wrap around Box with side Flap						
000	**C-1021395-0303**	**-**		**1**	**HOT MELT EQUIPMENT NORDSON**	
010	90439-0124	P		8	MODULE	
030	90439-0264	P		8	NOZZLE	
040	342921-0112	-		8	PIPE COUPL6/4-6M	
050	90439-0212	-		3	HOSE	
060	90439-0213	-		1	HOSE	
080	90439-0233	S		2	FILTER	
090	90439-0234	-		5	HOSE CLIP	
100	90439-0235	-		5	HOSE HOLDER	
110	90439-0237	-		4	HOT MELT GUN	
110	90439-0206	S		0	* CABLE	
110	90439-0211	P		0	* THERMOSTAT	
110	90439-0238	P		0	* HEATING ELEMENT	
120	90439-0121	-		2	FILTER	
120	90439-0214	S		1	* FILTER INSERT	
130	90439-0241	-		2	ANGLE NIPPLE	
R101	90439-0265	-		1	HOT MELT UNIT	

Pos	Part No	SP	UN	Qty	Description	Page No

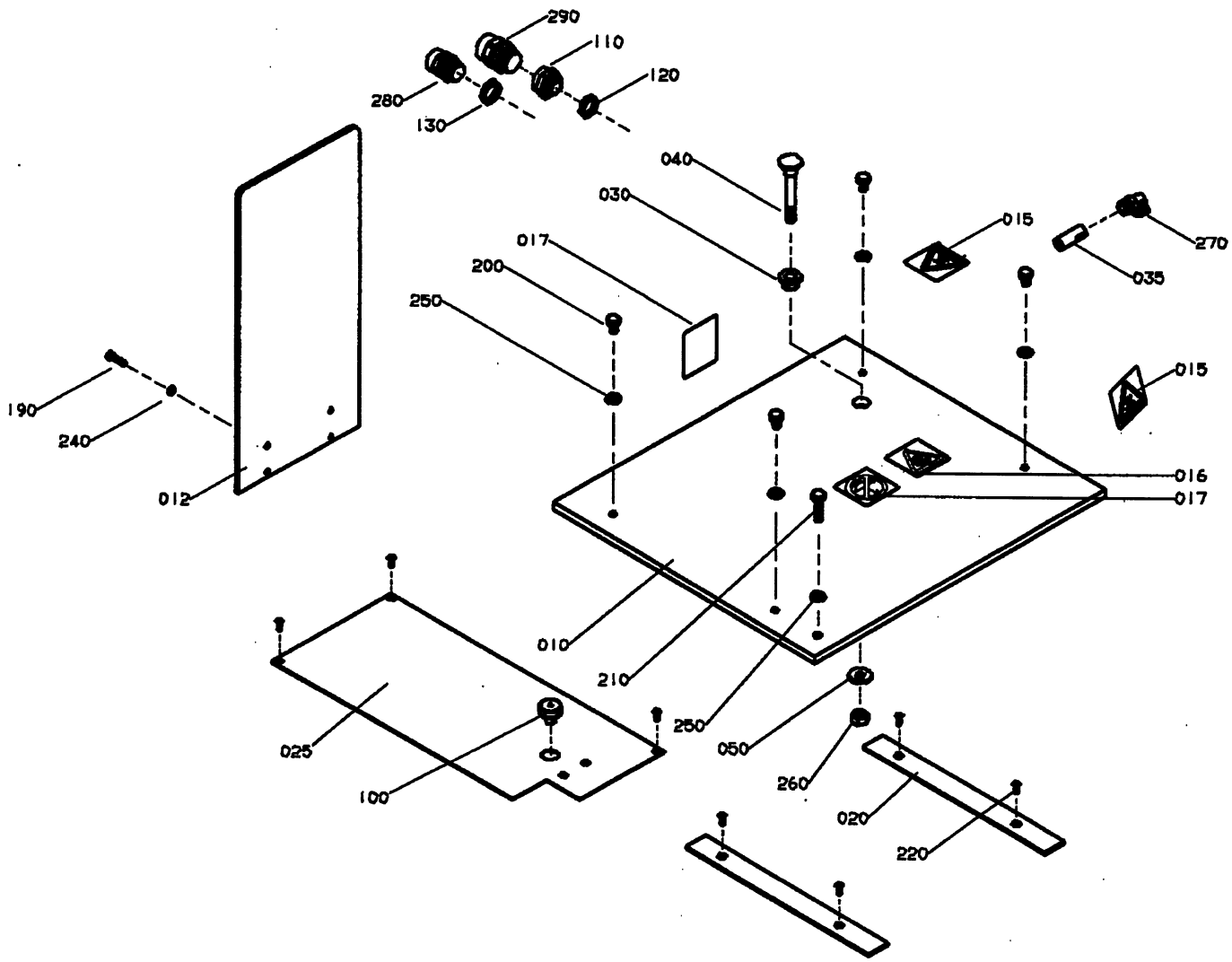

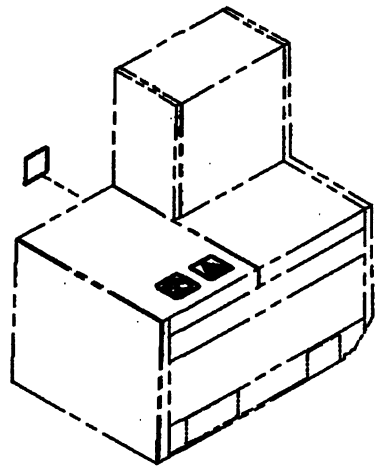

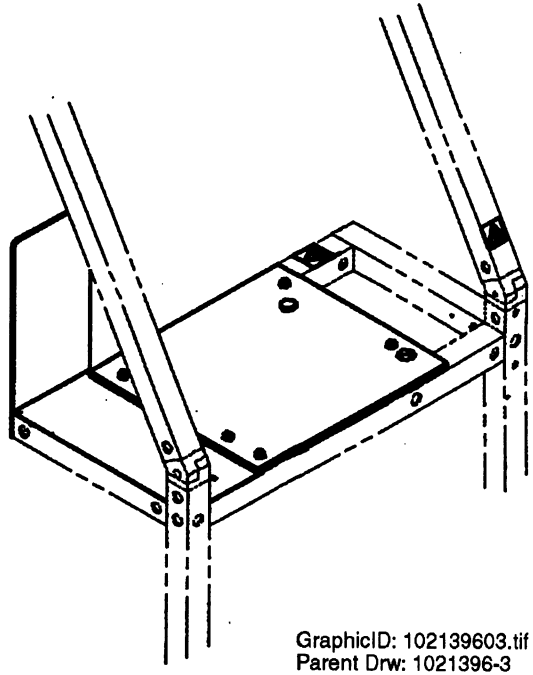

GraphicID: 102139603.tif
Parent Drw: 1021396-3
ECN No: 22292

Pos	Part No	SP	UN	Qty	Description	Page No
-						
000	**C-1021396-0301**	-		1	**SHELF HOT MELT**	
010	1021397	-		1	PLATE	
012	1074992	-		1	GUARD PLATE	
015	1128853	-		2	CAUTION SIGN	
016	1128844	-		1	CAUTION SIGN	
017	1128845	-		2	PROHIBITION SIGN	
020	1021462	-		2	SLIDING STRIP	
025	1021939	-		1	SHEET	
030	493768	-		1	BUSHING	
035	975755	-		1	ATTACHMENT	
040	1021398	-		1	BOLT	
050	1021399	-		1	WASHER	
100	90015-0023	-		1	BUSHING	
110	90089-0017	-		1	TRANSITIONAL MUFF	
120	90099-0117	-		1	NUT PR18,6 (PG11)	
130	90099-0118	-		1	NUT PR20,4 (PG13,5)	
190	312105-0331	-		4	SCREW O4017 M5X20A280	
200	312105-0447	-		4	SCREW O4017 M8X12A280	
210	312105-0455	-		1	SCREW O4017 M8X30A280	
220	312155-0291	-		7	SCREW MF6S4X12RFR	
240	315105-0146	-		4	WASHER BRB5,3X10RFR	
250	315105-0165	-		5	WASHER BRB8,4X16RFR	
260	312605-0320	-		1	NUT M6M10RFR	
270	342732-0801	-		1	ELBOW PIPE D8-R1/8"	
280	352103-0108	-		1	CABLE GLAND ST13;6-12MM	
290	352103-0111	-		1	CABLE GLAND ST 16;10-14MM	

Pos	Part No	SP	UN	Qty	Description	Page No

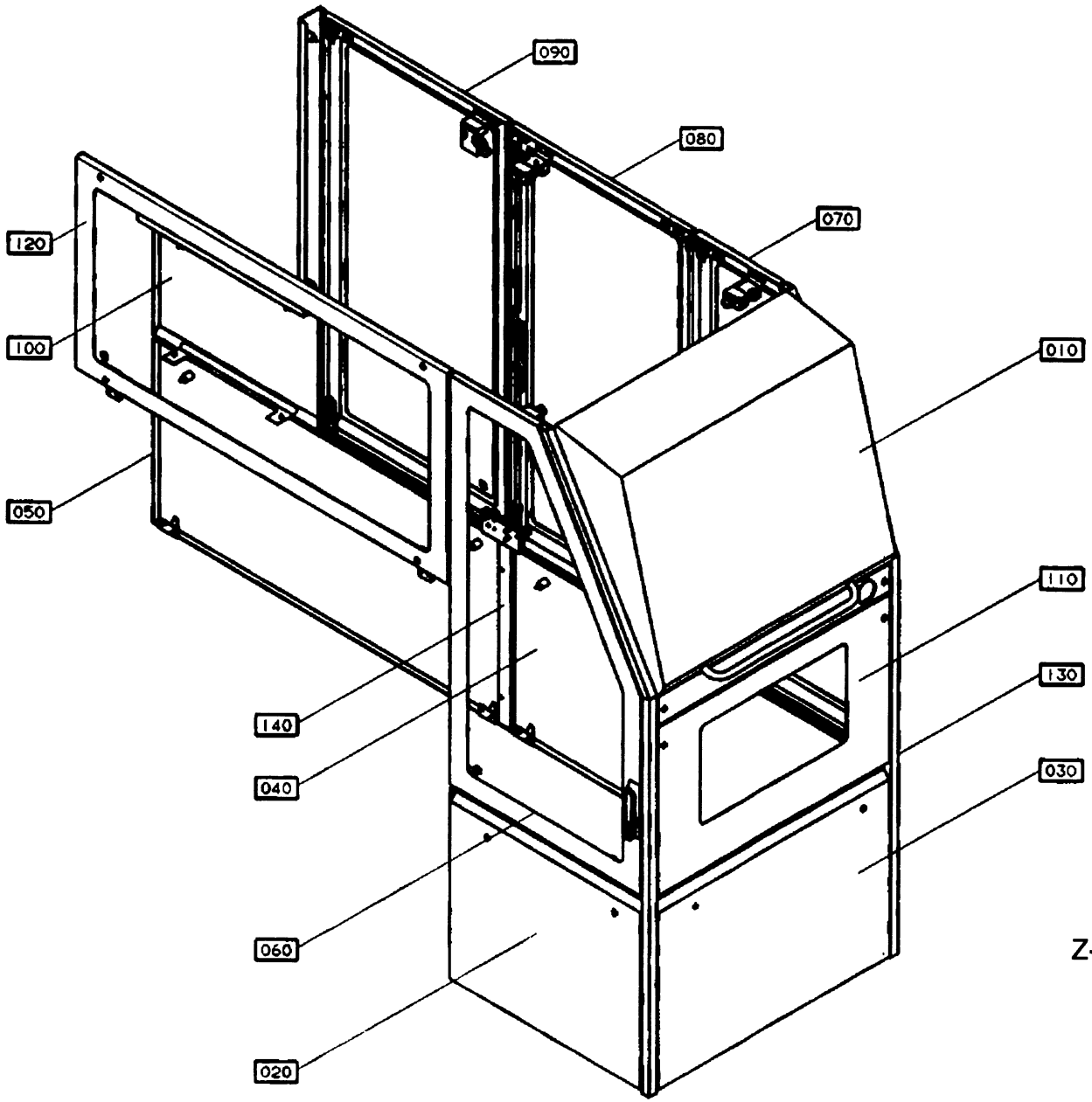

Z-form

67029601.tif
670296-1
AM 16567

Pos	Part No	SP	UN	Qty	Description	Page No
Z-FORM, 1/2/3-LINE INFEED						
000	**B- 670296-0201**	-		1	**COVERING BASE UNIT**	
020	C-1021701-0101	-		1	COVERING PLATE	169
060	C-1021712-0202	-		1	GLASS DOOR	177
070	C-1021712-0201	-		1	GLASS DOOR	177
120	C-1021782-0101	-		1	GLASS COVER	189
130	C-1021785-0101	-		1	CORNER STRIP	191
COMMON PARTS						
010	C-1021587-0101	-		1	HOOD	
030	C-1021703-0101	-		1	COVERING PLATE	171
040	C-1021705-0101	-		1	COVERING PLATE	173
050	C-1021707-0101	-		1	COVERING PLATE	175
080	C-1021714-0201	-		1	GLASS DOOR	181
090	C-1021716-0201	-		1	GLASS DOOR	183
100	C-1021718-0101	-		1	COVERING PLATE	185
110	C-1021726-0101	-		1	COVERING PLATE	187
140	C-1021854-020V	-		1	COVERS MISC.	193

Pos	Part No	SP	UN	Qty	Description	Page No

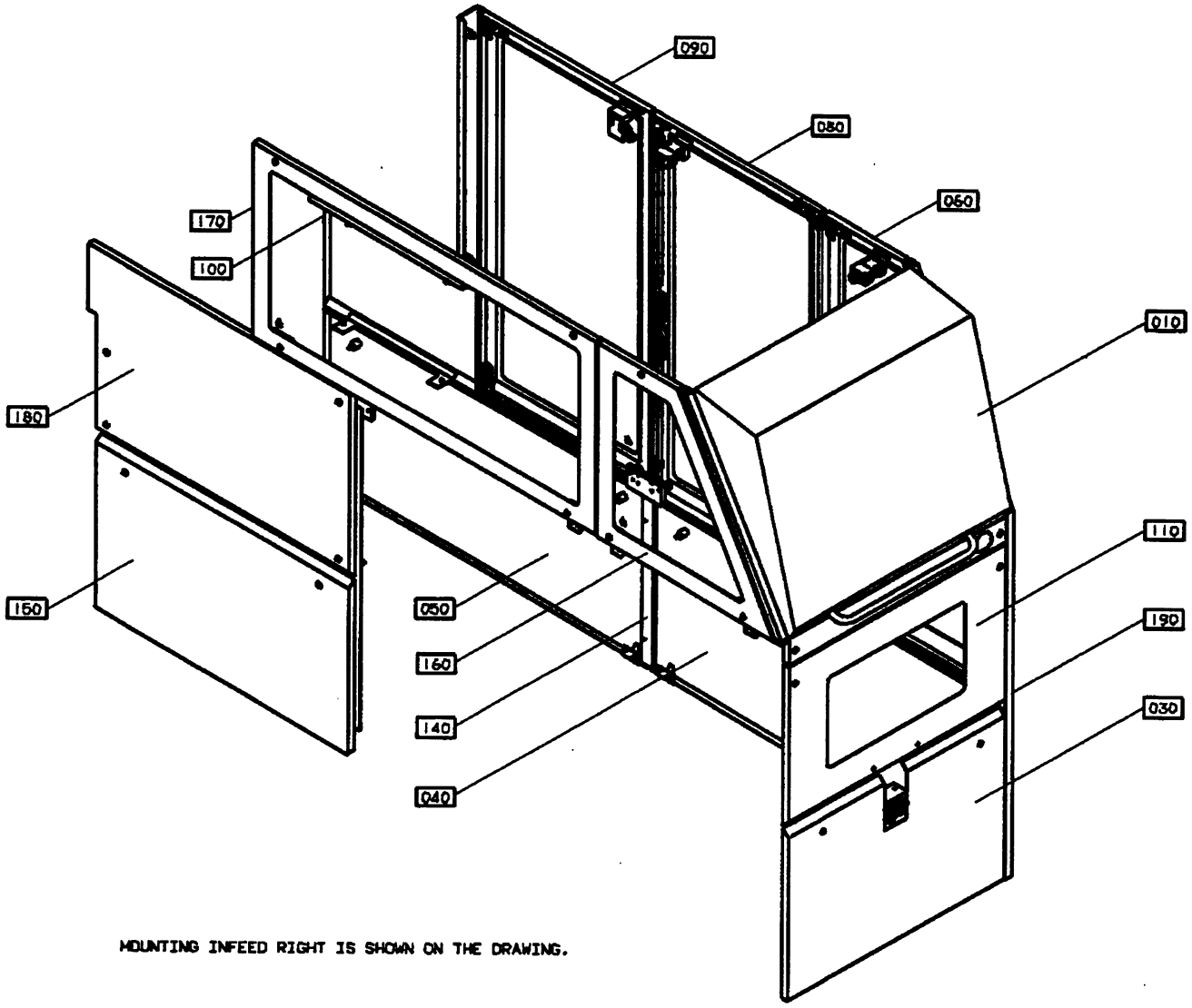

MOUNTING INFEED RIGHT IS SHOWN ON THE DRAWING.

U-form

GraphicID: 67029604.tif
Parent Drw:670296-4
ECN No: 22292

Pos	Part No	SP	UN	Qty	Description	Page No
U-FORM, 1/2/3-LINE INFEED						
000	**B- 670296-0202**	-		1	**COVERING BASE UNIT**	
060	C-1021712-020V	-		1	GLASS DOOR	
150	C-1065600-0101	-		1	COVERING PLATE	
160	C-1065614-010V	-		1	HATCH	
170	C-1065616-0101	-		1	HATCH	
180	C-1128835-010V	-		1	COVERING PLATE	
190	C-1065975-010V	-		1	CORNER STRIP	
COMMON PARTS						
010	C-1021587-0101	-		1	HOOD	
030	C-1021703-0101	-		1	COVERING PLATE	**171**
040	C-1021705-0101	-		1	COVERING PLATE	**173**
050	C-1021707-0101	-		1	COVERING PLATE	**175**
080	C-1021714-0201	-		1	GLASS DOOR	**181**
090	C-1021716-0201	-		1	GLASS DOOR	**183**
100	C-1021718-0101	-		1	COVERING PLATE	**185**
110	C-1021726-0101	-		1	COVERING PLATE	**187**
140	C-1021854-020V	-		1	COVERS MISC.	**193**

Pos	Part No	SP	UN	Qty	Description	Page No

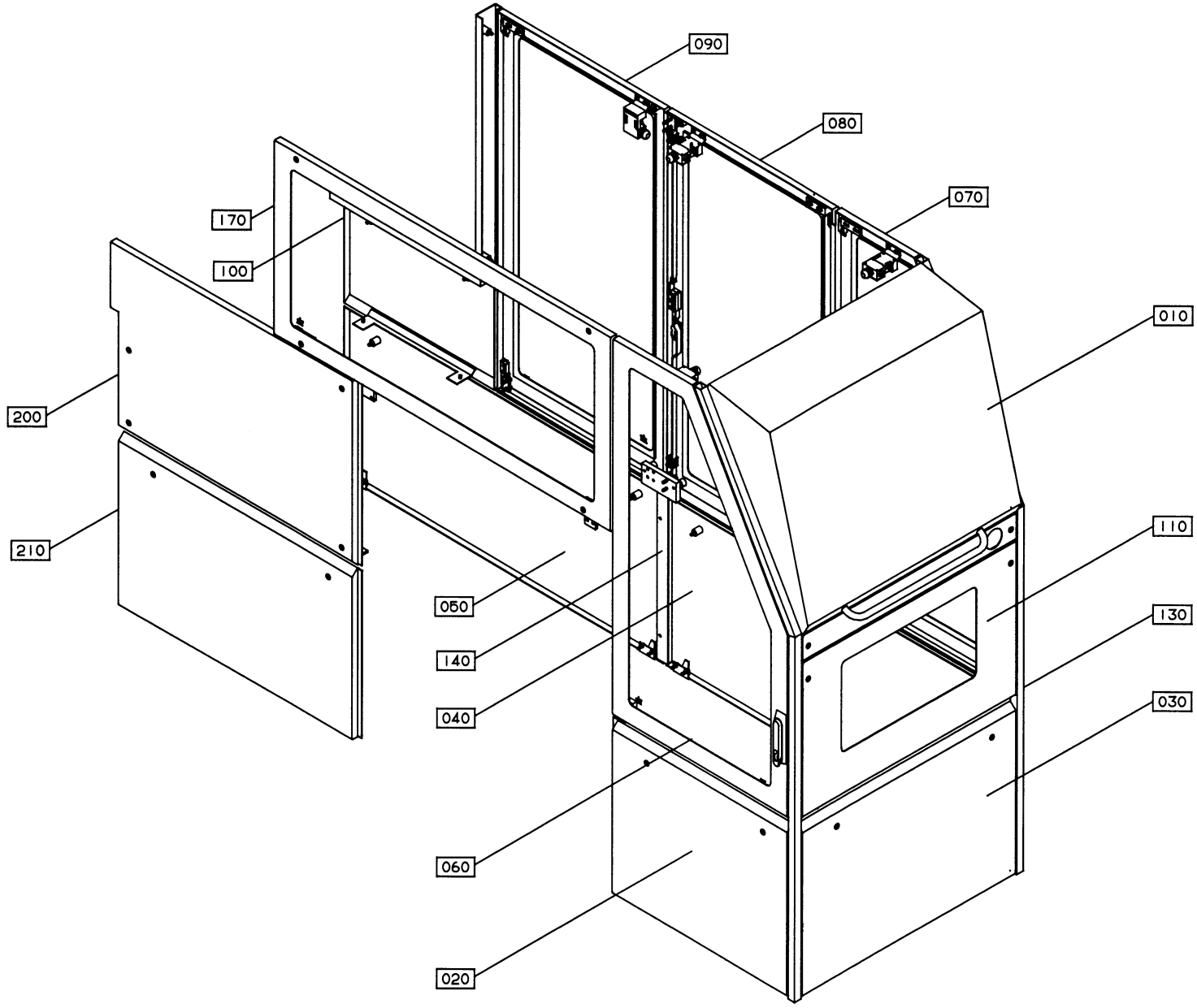

GraphicID: 67029603.eps
Parent Drw: 670296-3
ECN 20123

Pos	Part No	SP	UN	Qty	Description	Page No
L-FORM, 1-LINE INFEED						
000	**B- 670296-0203**	-		1	**COVERING BASE UNIT**	
020	C-1021701-0101	-		1	COVERING PLATE	169
060	C-1021712-0202	-		1	GLASS DOOR	177
070	C-1021712-0201	-		1	GLASS DOOR	177
130	C-1021785-0101	-		1	CORNER STRIP	191
170	C-1065616-0101	-		1	HATCH	199
200	C-1080239-020V	-		1	COVERING PLATE	205
210	C-1080240-020V	-		1	COVERING PLATE	207
COMMON PARTS						
010	C-1021587-0101	-		1	HOOD	
030	C-1021703-0101	-		1	COVERING PLATE	171
040	C-1021705-0101	-		1	COVERING PLATE	173
050	C-1021707-0101	-		1	COVERING PLATE	175
080	C-1021714-0201	-		1	GLASS DOOR	181
090	C-1021716-0201	-		1	GLASS DOOR	183
100	C-1021718-0101	-		1	COVERING PLATE	185
110	C-1021726-0101	-		1	COVERING PLATE	187
140	C-1021854-020V	-		1	COVERS MISC.	193

Pos	Part No	SP	UN	Qty	Description	Page No

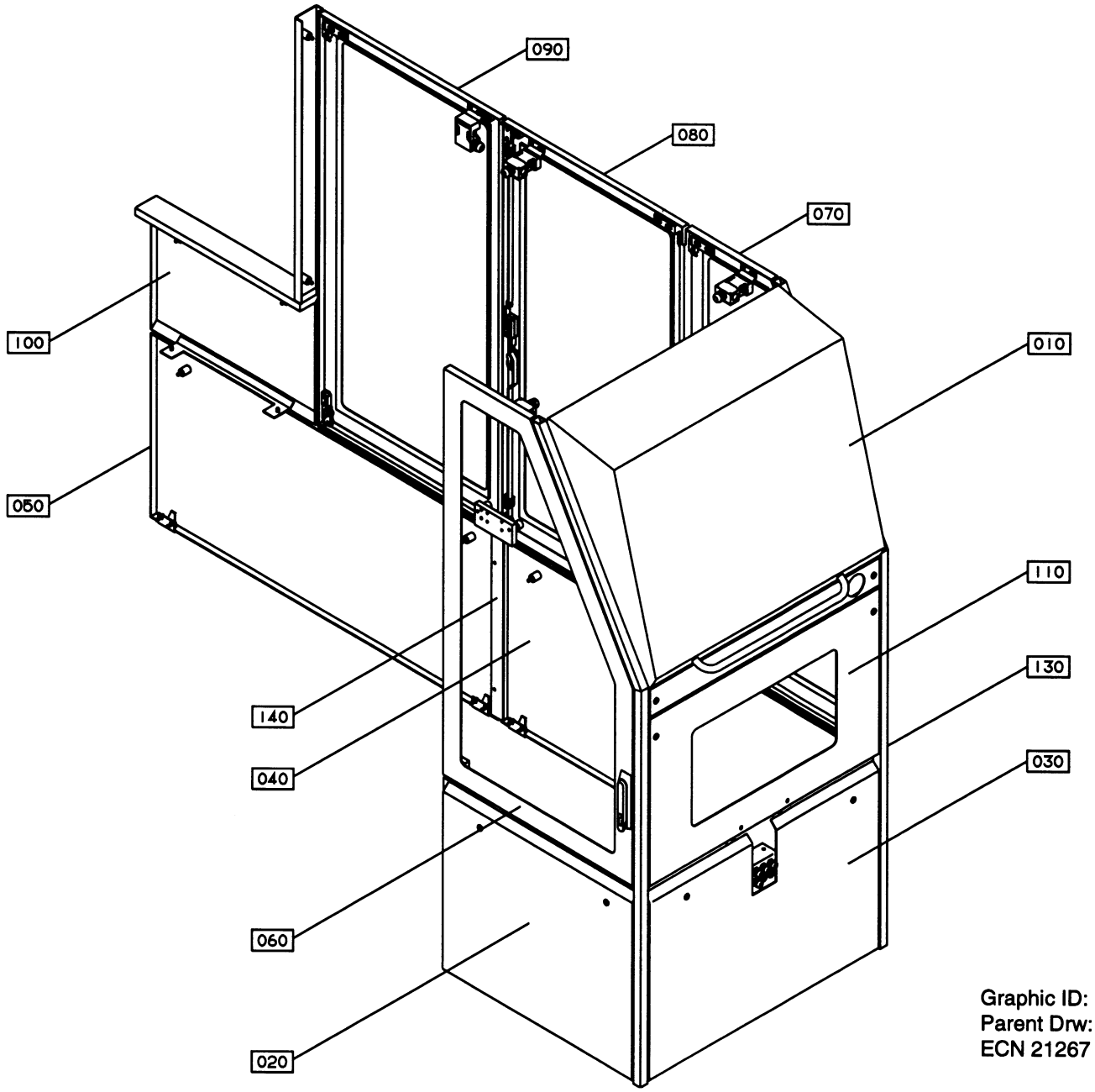

Graphic ID: 67029605.eps
Parent Drw: 670296-5
ECN 21267

Pos	Part No	SP	UN	Qty	Description	Page No
Z-FORM, MULTI INFEED						
000	**B- 670296-0204**	-		1	**COVERING BASE UNIT**	
020	C-1021701-0101	-		1	COVERING PLATE	169
060	C-1021712-0202	-		1	GLASS DOOR	177
070	C-1021712-0201	-		1	GLASS DOOR	177
130	C-1021785-0101	-		1	CORNER STRIP	191
COMMON PARTS						
010	C-1021587-0101	-		1	HOOD	
030	C-1021703-0101	-		1	COVERING PLATE	171
040	C-1021705-0101	-		1	COVERING PLATE	173
050	C-1021707-0101	-		1	COVERING PLATE	175
080	C-1021714-0201	-		1	GLASS DOOR	181
090	C-1021716-0201	-		1	GLASS DOOR	183
100	C-1021718-0101	-		1	COVERING PLATE	185
110	C-1021726-0101	-		1	COVERING PLATE	187
140	C-1021854-020V	-		1	COVERS MISC.	193

Pos	Part No	SP	UN	Qty	Description	Page No

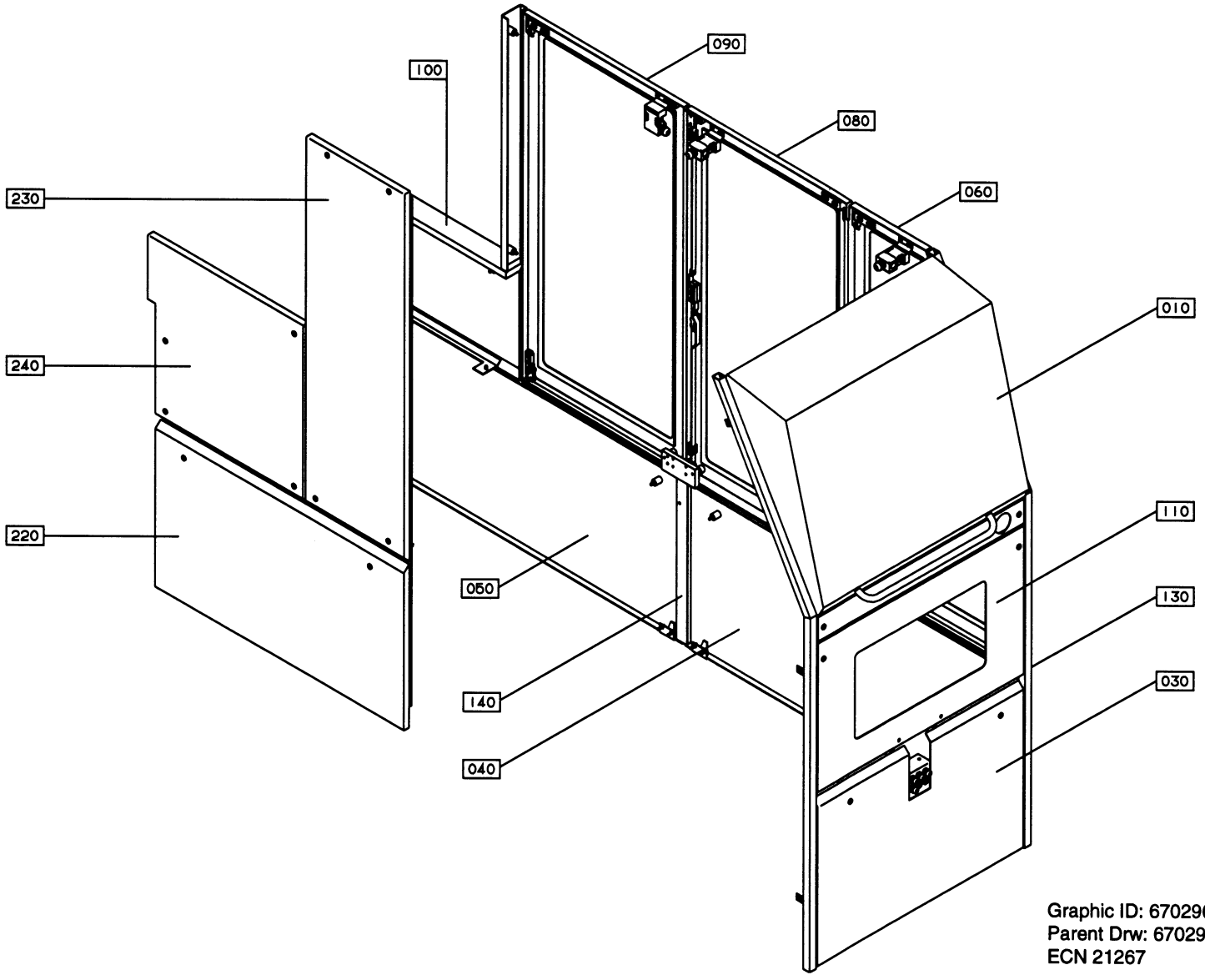

Graphic ID: 67029606.eps
Parent Drw: 670296-6
ECN 21267

Pos	Part No	SP	UN	Qty	Description	Page No
U-FORM, MULTI INFEED						
000	**B- 670296-0205**	-		1	**COVERING BASE UNIT**	
060	C-1021712-020V	-		1	GLASS DOOR	177
130	C-1021785-0101	-		1	CORNER STRIP	191
220	C-1124085-010V	-		1	COVERING PLATE	209
230	C-1124086-010V	-		1	COVERING PLATE	211
240	C-1128815-010V	-		1	COVERING PLATE	213
COMMON PARTS						
010	C-1021587-0101	-		1	HOOD	
030	C-1021703-0101	-		1	COVERING PLATE	171
040	C-1021705-0101	-		1	COVERING PLATE	173
050	C-1021707-0101	-		1	COVERING PLATE	175
080	C-1021714-0201	-		1	GLASS DOOR	181
090	C-1021716-0201	-		1	GLASS DOOR	183
100	C-1021718-0101	-		1	COVERING PLATE	185
110	C-1021726-0101	-		1	COVERING PLATE	187
140	C-1021854-020V	-		1	COVERS MISC.	193

Pos	Part No	SP	UN	Qty	Description	Page No

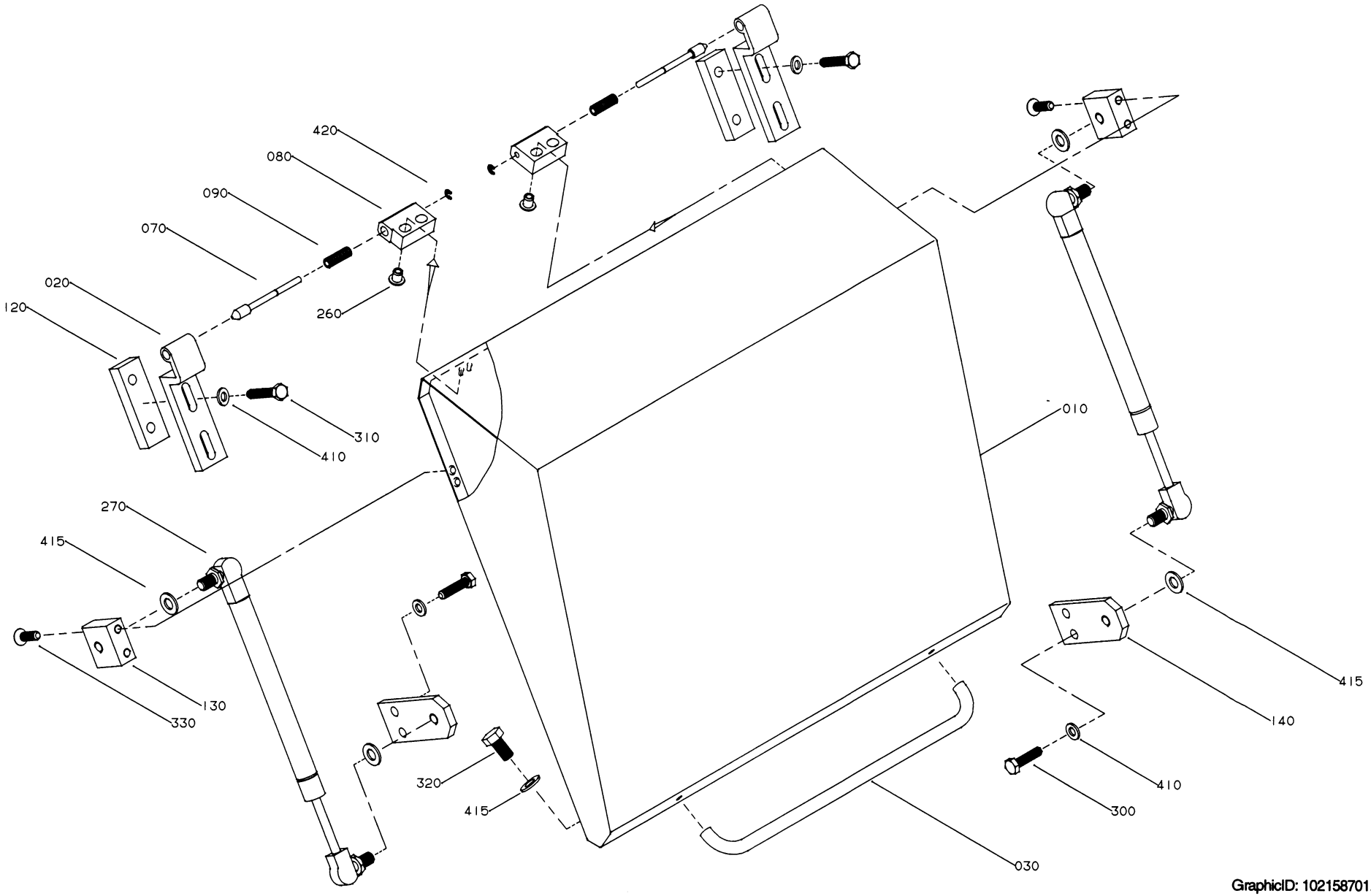

GraphicID: 102158701.eps
Parent Drw: 1021587-1
ECN 16567

Pos	Part No	SP	UN	Qty	Description	Page No
-						
000	**C-1021587-0101**	-		1	**HOOD**	
010	1021773	-		1	HOOD	
020	975927	-		2	HINGE FLANGE	
030	1021913	-		1	HANDLE	
070	959656	-		2	COTTER	
080	959657	-		2	HINGE FLANGE	
090	959658	-		2	SPRING	
120	1021775	-		2	BRACKET	
130	1128831	-		2	BRACKET	
140	1021779	-		2	BRACKET	
260	90287-0205	-		4	SCREW	
270	90347-0127	C		2	DAMPER	
300	312105-0372	-		4	SCREW O4017 M6X25A280	
310	312105-0376	-		4	SCREW O4017 M6X35A280	
320	312105-0449	-		2	SCREW O4017 M8X16A280	
330	312155-0370	-		4	SCREW MF6S6X20RFR	
410	315105-0153	-		8	WASHER BRB6,4X12RFR	
415	315105-0165	-		6	WASHER BRB8,4X16RFR	
420	315755-0105	-		2	LOCKING WAE 3,2 RFR	

Pos	Part No	SP	UN	Qty	Description	Page No

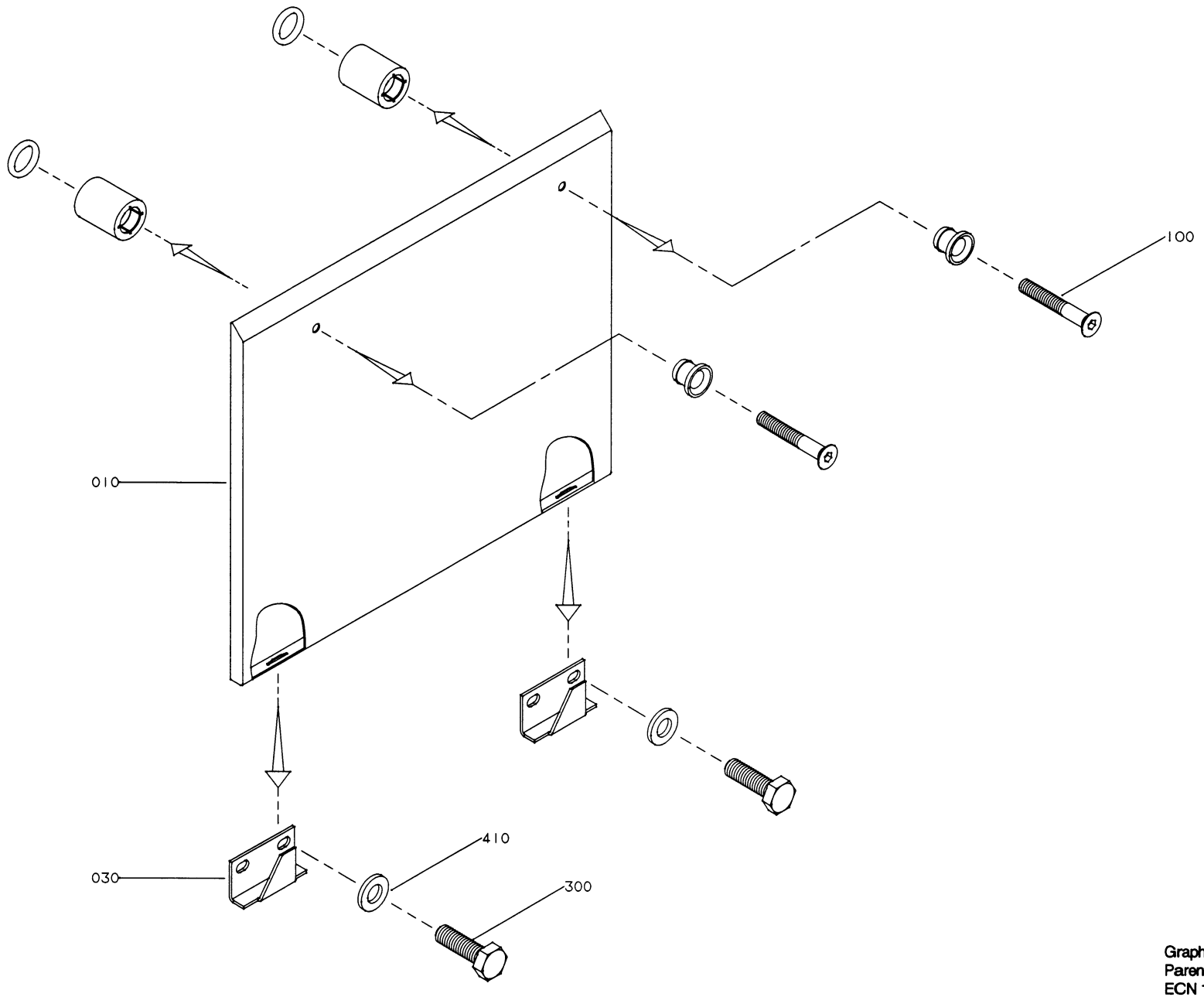

GraphicID: 102170101.eps
Parent Drw: 1021701-1
ECN 16567

Pos	Part No	SP	UN	Qty	Description	Page No
-						
000	**C-1021701-0101**	-		1	**COVERING PLATE**	
010	1021702	-		1	PROTECTION PLATE	
030	975887	-		2	CATCH	
100	90226-0458	-		2	MOUNTING SCREW	
300	312105-0368	-		4	SCREW O4017 M6X16A280	
410	315105-0153	-		4	WASHER BRB6,4X12RFR	

Pos	Part No	SP	UN	Qty	Description	Page No

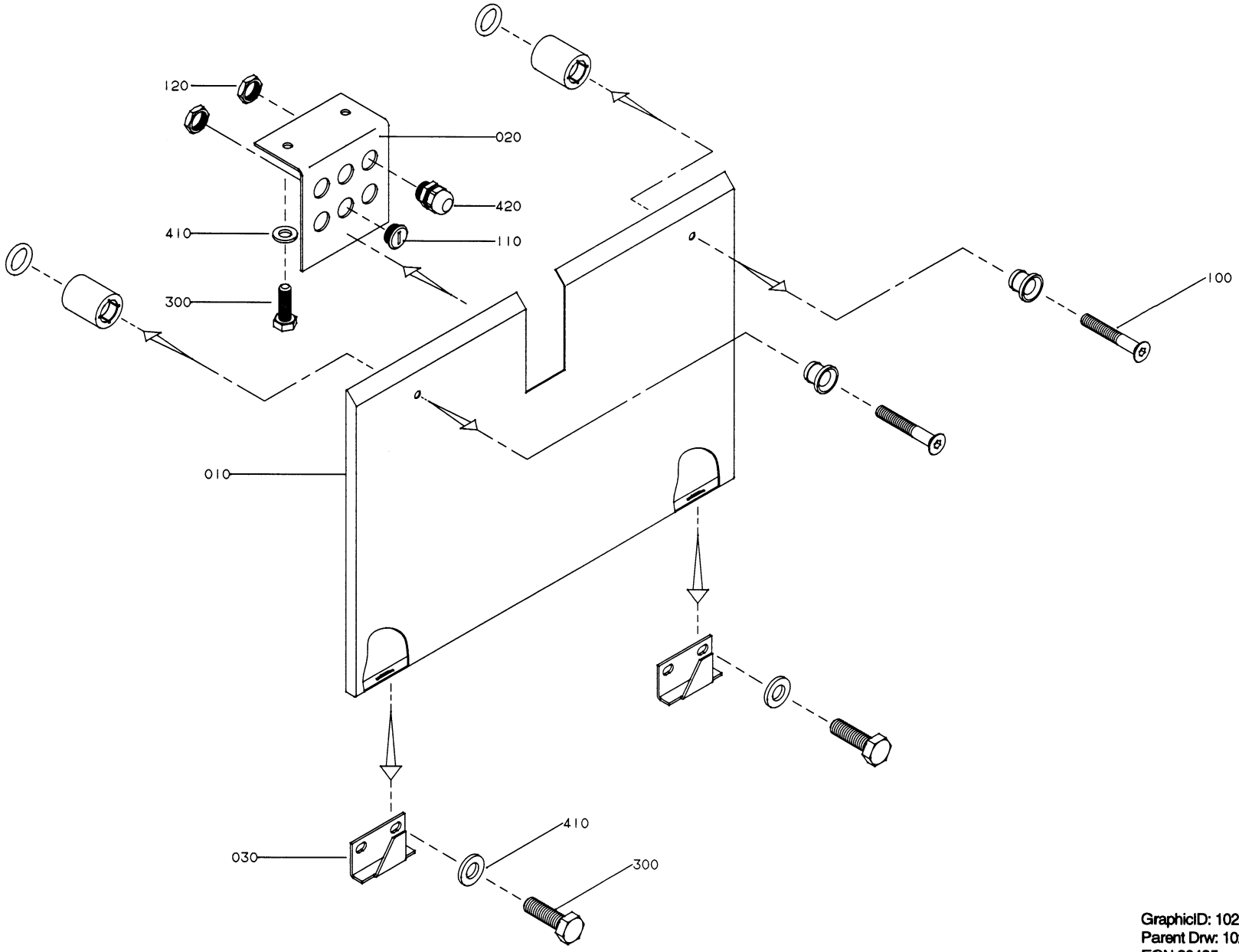

GraphicID: 102170301.eps
Parent Drw: 1021703-1
ECN 20435

Pos	Part No	SP	UN	Qty	Description	Page No
-						
000	C-1021703-0101	-		1	**COVERING PLATE**	
010	1065935	-		1	PROTECTION PLATE	
020	1065936	-		1	BRACKET	
030	975887	-		2	CATCH	
100	90226-0458	-		2	MOUNTING SCREW	
110	90002-0013	-		2	BLANK-OFF PLUG 15,2	
120	90099-0104	-		6	NUT PR 15,2 (PG9)	
300	312105-0370	-		6	SCREW O4017 M6X20A280	
410	315105-0153	-		6	WASHER BRB6,4X12RFR	
420	352103-0101	-		4	CABLE GLAND ST 9	

Pos	Part No	SP	UN	Qty	Description	Page No

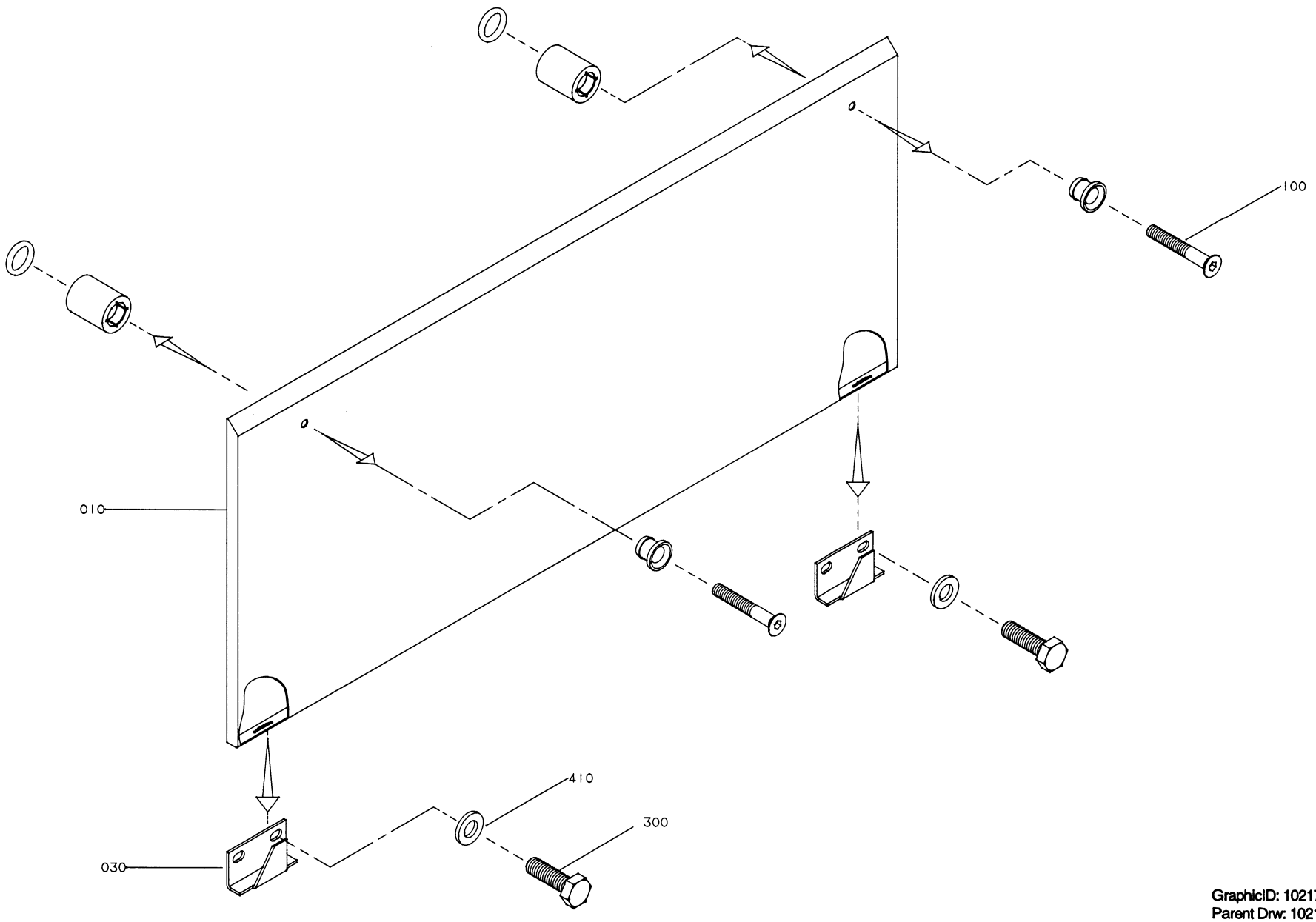

GraphicID: 102170501.eps
Parent Drw: 1021705-1
ECN 16567

Pos	Part No	SP	UN	Qty	Description	Page No
-						
000	**C-1021705-0101**	-		1	**COVERING PLATE**	
010	1021706	-		1	PROTECTION PLATE	
030	975887	-		2	CATCH	
100	90226-0458	-		2	MOUNTING SCREW	
300	312105-0368	-		4	SCREW O4017 M6X16A280	
410	315105-0153	-		4	WASHER BRB6,4X12RFR	

Pos	Part No	SP	UN	Qty	Description	Page No

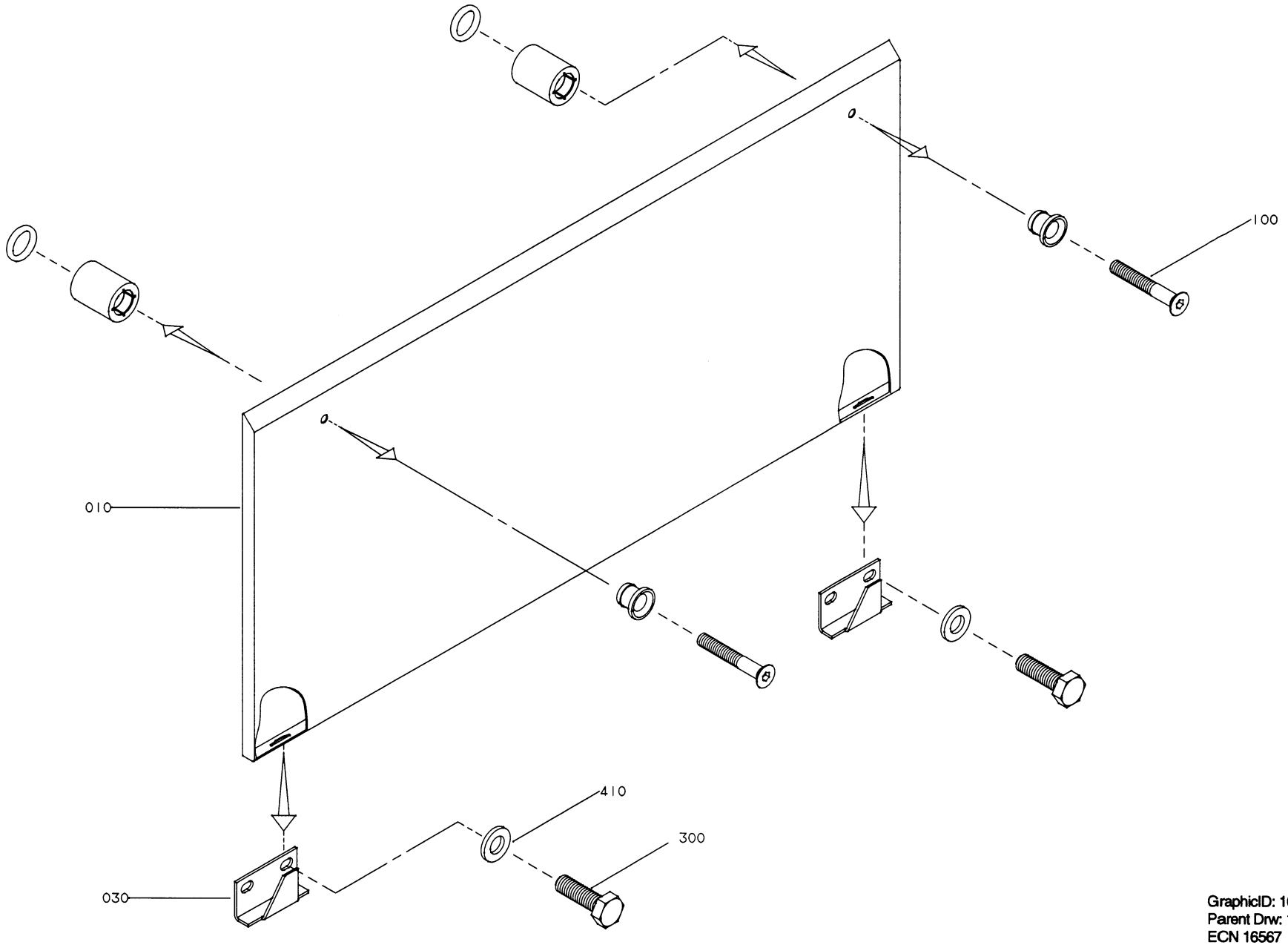

GraphicID: 102170701.eps
Parent Drw: 1021707-1
ECN 16567

Pos	Part No	SP	UN	Qty	Description	Page No
-						
000	**C-1021707-0101**	-		1	**COVERING PLATE**	
010	1021708	-		1	PROTECTION PLATE	
030	975887	-		2	CATCH	
100	90226-0458	-		2	MOUNTING SCREW	
300	312105-0368	-		4	SCREW O4017 M6X16A280	
410	315105-0153	-		4	WASHER BRB6,4X12RFR	

Pos	Part No	SP	UN	Qty	Description	Page No

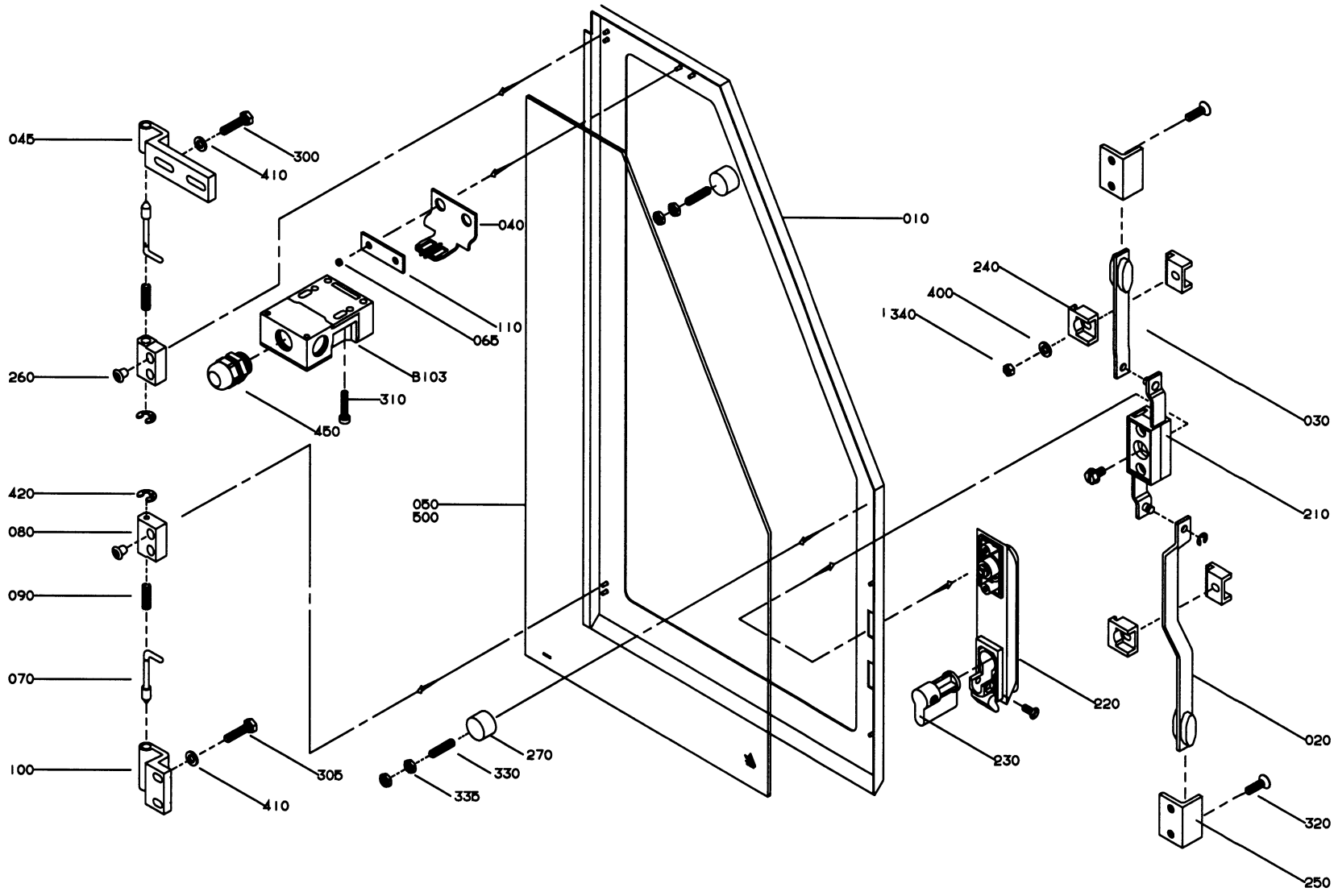

GraphicID: 102171203.eps
Parent Drw: 1021712-3
ECN 23757

Pos	Part No	SP	UN	Qty	Description	Page No
U-FORM, RIGHT HAND INFEEDZ/L-FORM, LEFT HAND INFEED, RIGHT HAND INFEED						
000	**C-1021712-0201**	-		1	**GLASS DOOR**	
010	1021713	-		1	HATCH	
050	1021724	-		1	GLASS	
B103	90044-0127	S		1	KEY SAFETY SWITCH AZ15ZVR	
COMMON PARTS						
020	**975888-0004**	-		1	**STRUT**	
030	975889-0006	-		1	STRUT	
040	975917	-		1	KEY	
045	975927	-		1	HINGE FLANGE	
065	575034	-		2	ROUND NUT	
070	959656	-		2	COTTER	
080	959657	-		2	HINGE FLANGE	
090	959658	-		2	SPRING	
100	975880	-		1	HINGE FLANGE	
110	975924	-		1	WASHER	
210	90237-0123	-		1	LOCK HOUSING	
220	90237-0126	-		1	TURNING HANDLE	
230	90237-0128	-		1	LOCK CYLINDER	
240	90237-0144	-		2	STEERING	
250	90237-0145	-		2	CATCH	
260	90287-0205	-		4	SCREW	
270	90347-0011	-		2	VIBRATION DAMPER	
300	312105-0372	-		2	SCREW O4017 M6X25A280	
305	312105-0378	-		2	SCREW O4017 M6X40A280	
310	312115-0333	-		2	SCREW O4762 M5X25A280	
320	312155-0370	-		4	SCREW MF6S6X20RFR	
330	312318-0372	-		2	STOP SCREW SK6SS6X25RFR	
335	312625-0316	-		4	NUT M 6	
340	312812-0314	-		2	LOCK NUT A2-M5RFR	
400	315105-0146	-		2	WASHER BRB5,3X10RFR	
410	315105-0153	-		4	WASHER BRB6,4X12RFR	
420	315755-0105	-		2	LOCKING WAE 3,2 RFR	
450	352103-0106	-		1	CABLE GLAND ST 11	
500	90157-0041	-		X	SEALING COMPOUND	

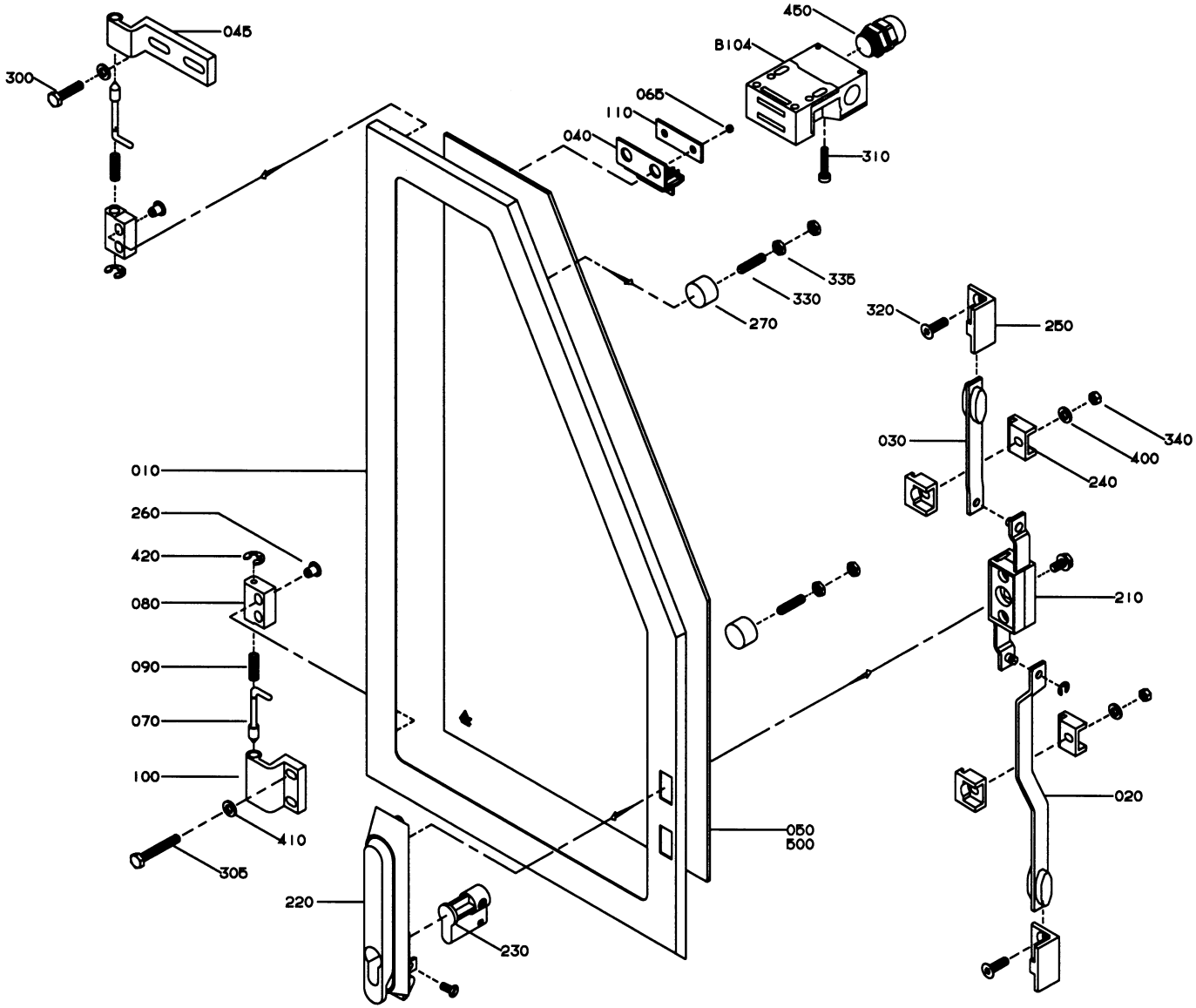

GraphicID: 102171204.eps
Parent Drw: 1021712-4
ECN 23757

Pos	Part No	SP	UN	Qty	Description	Page No
U-FORM, LEFT HAND INFEEDZ/L-FORM, LEFT HAND INFEED, RIGHT HAND INFEED						
000	**C-1021712-0202**	-		1	**GLASS DOOR**	
010	1021710	-		1	HATCH	
050	1021722	-		1	GLASS	
B104	90044-0127	S		1	KEY SAFETY SWITCH AZ15ZVR	
COMMON PARTS						
020	**975888-0004**	-		1	**STRUT**	
030	975889-0006	-		1	STRUT	
040	975917	-		1	KEY	
045	975927	-		1	HINGE FLANGE	
065	575034	-		2	ROUND NUT	
070	959656	-		2	COTTER	
080	959657	-		2	HINGE FLANGE	
090	959658	-		2	SPRING	
100	975880	-		1	HINGE FLANGE	
110	975924	-		1	WASHER	
210	90237-0123	-		1	LOCK HOUSING	
220	90237-0126	-		1	TURNING HANDLE	
230	90237-0128	-		1	LOCK CYLINDER	
240	90237-0144	-		2	STEERING	
250	90237-0145	-		2	CATCH	
260	90287-0205	-		4	SCREW	
270	90347-0011	-		2	VIBRATION DAMPER	
300	312105-0372	-		2	SCREW O4017 M6X25A280	
305	312105-0378	-		2	SCREW O4017 M6X40A280	
310	312115-0333	-		2	SCREW O4762 M5X25A280	
320	312155-0370	-		4	SCREW MF6S6X20RFR	
330	312318-0372	-		2	STOP SCREW SK6SS6X25RFR	
335	312625-0316	-		4	NUT M 6	
340	312812-0314	-		2	LOCK NUT A2-M5RFR	
400	315105-0146	-		2	WASHER BRB5,3X10RFR	
410	315105-0153	-		4	WASHER BRB6,4X12RFR	
420	315755-0105	-		2	LOCKING WAE 3,2 RFR	
450	352103-0106	-		1	CABLE GLAND ST 11	
500	90157-0041	-		X	SEALING COMPOUND	

Pos	Part No	SP	UN	Qty	Description	Page No

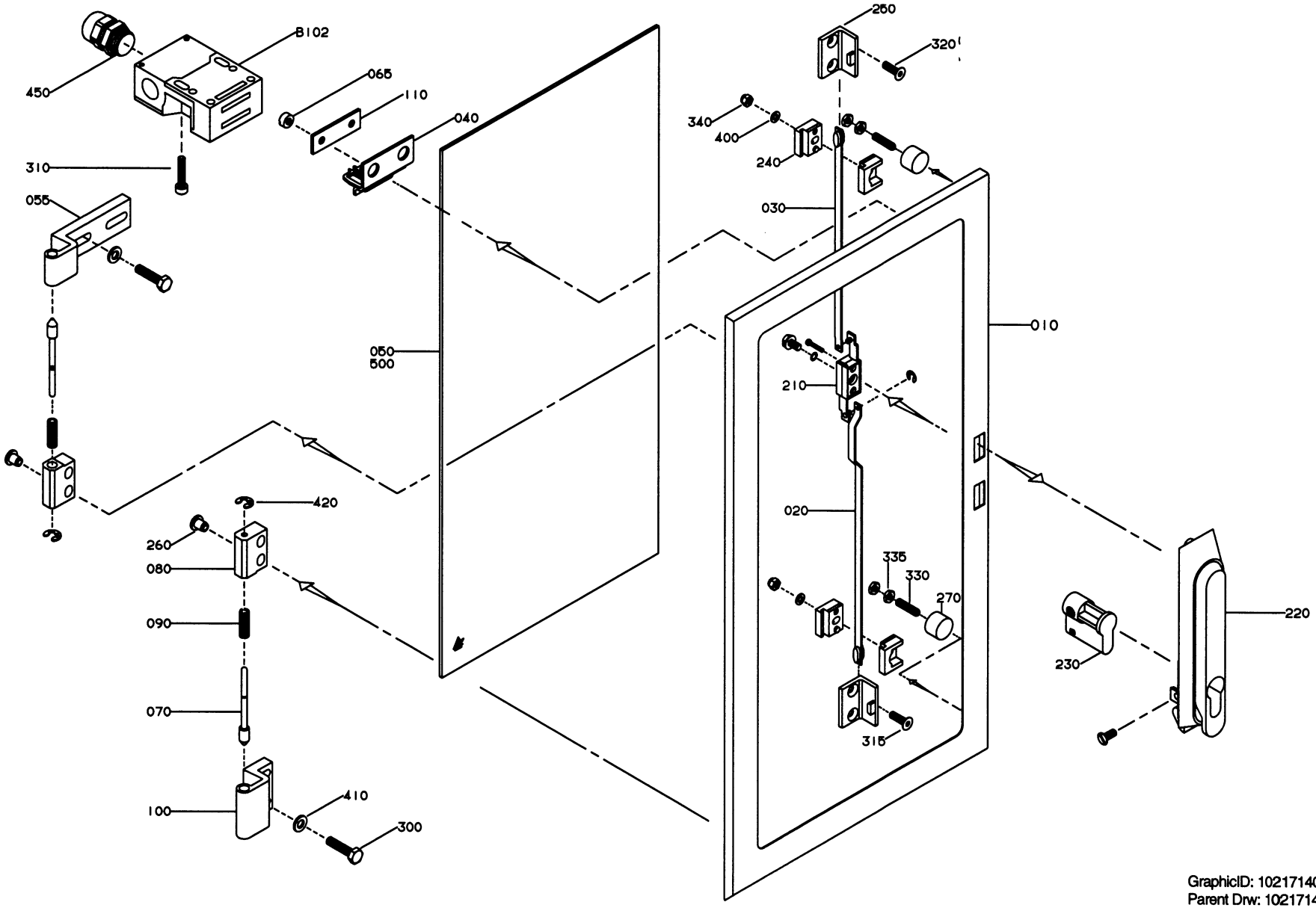

GraphicID: 102171402.eps
Parent Drw: 1021714-2
ECN 22668

Pos	Part No	SP	UN	Qty	Description	Page No
-						
000	**C-1021714-0201**	-		1	**GLASS DOOR**	
010	1021715	-		1	HATCH	
020	975888-0003	-		1	STRUT	
030	975889-0004	-		1	STRUT	
040	975917	-		1	KEY	
050	975918-0003	-		1	GLASS	
055	975927	-		1	HINGE FLANGE	
065	575034	-		2	ROUND NUT	
070	959656	-		2	COTTER	
080	959657	-		2	HINGE FLANGE	
090	959658	-		2	SPRING	
100	975880	-		1	HINGE FLANGE	
110	975924	-		1	WASHER	
210	90237-0123	-		1	LOCK HOUSING	
220	90237-0126	-		1	TURNING HANDLE	
230	90237-0128	-		1	LOCK CYLINDER	
240	90237-0144	-		2	STEERING	
250	90237-0145	-		2	CATCH	
260	90287-0205	-		4	SCREW	
270	90347-0011	-		2	VIBRATION DAMPER	
300	312105-0372	-		4	SCREW O4017 M6X25A280	
310	312115-0333	-		2	SCREW O4762 M5X25A280	
315	312155-0368	-		2	SCREW MF6S6X16RFR	
320	312155-0370	-		2	SCREW MF6S6X20RFR	
330	312318-0372	-		2	STOP SCREW SK6SS6X25RFR	
335	312625-0316	-		4	NUT M 6	
340	312812-0314	-		2	LOCK NUT A2-M5RFR	
400	315105-0146	-		2	WASHER BRB5,3X10RFR	
410	315105-0153	-		4	WASHER BRB6,4X12RFR	
420	315755-0105	-		2	LOCKING WAE 3,2 RFR	
450	352103-0106	-		1	CABLE GLAND ST 11	
500	90157-0041	-		X	SEALING COMPOUND	
B102	90044-0127	S		1	KEY SAFETY SWITCH AZ15ZVR	

Pos	Part No	SP	UN	Qty	Description	Page No

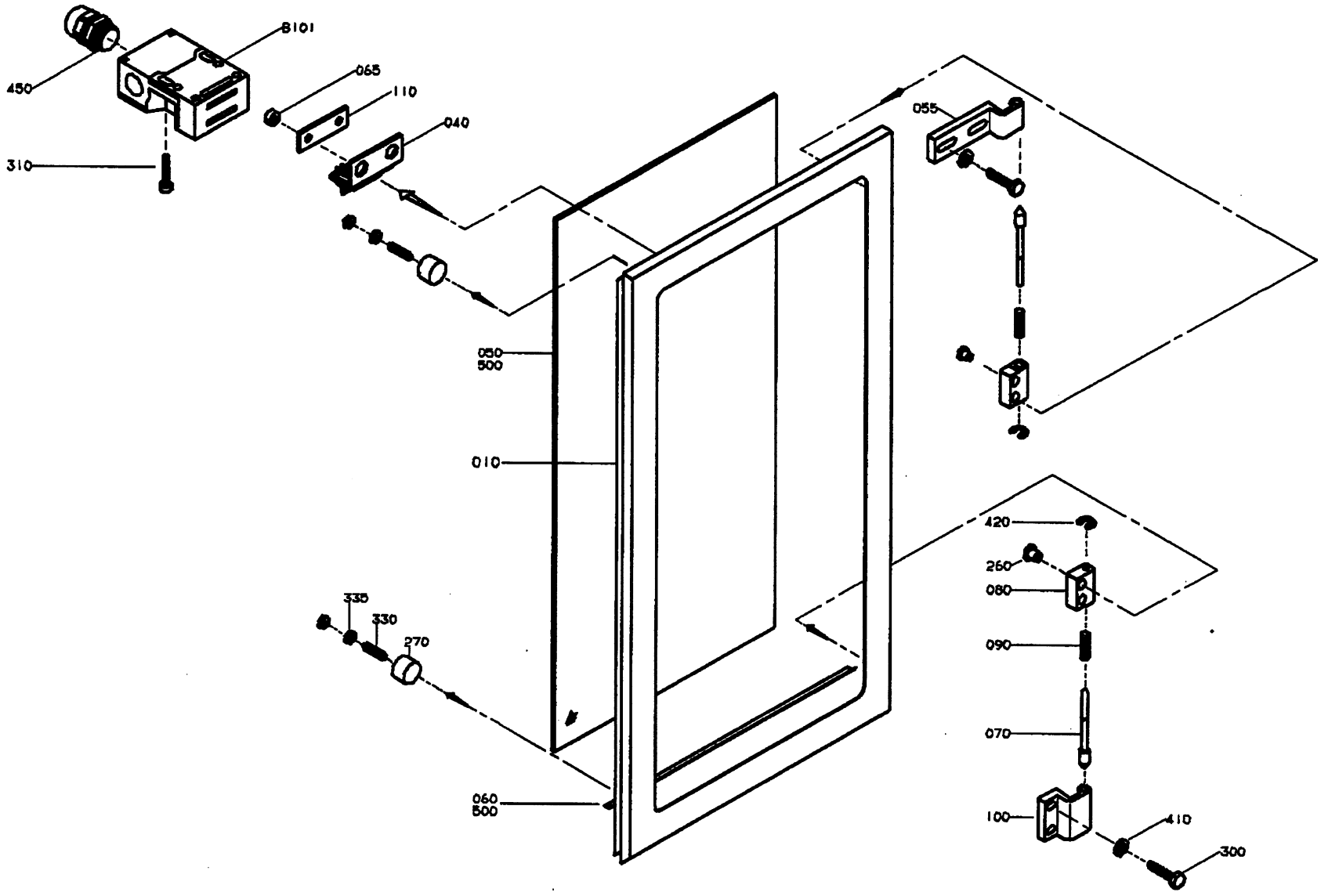

GraphicID: 102171602.tif
Parent Drw: 1021716-2
ECN No: 22292

Pos	Part No	SP	UN	Qty	Description	Page No
-						
000	C-1021716-0201	-		1	GLASS DOOR	
010	1021717	-		1	HATCH	
040	975917	-		1	KEY	
050	975918-0003	-		1	GLASS	
055	975927	-		1	HINGE FLANGE	
065	575034	-		2	ROUND NUT	
070	959656	-		2	COTTER	
080	959657	-		2	HINGE FLANGE	
090	959658	-		2	SPRING	
100	975880	-		1	HINGE FLANGE	
110	975924	-		1	WASHER	
260	90287-0205	-		4	SCREW	
270	90347-0011	-		2	VIBRATION DAMPER	
300	312105-0372	-		4	SCREW O4017 M6X25A280	
310	312115-0333	-		2	SCREW O4762 M5X25A280	
330	312318-0372	-		2	STOP SCREW SK6SS6X25RFR	
335	312625-0316	-		4	NUT M 6	
410	315105-0153	-		4	WASHER BRB6,4X12RFR	
420	315755-0105	-		2	LOCKING WAE 3,2 RFR	
450	352103-0106	-		1	CABLE GLAND ST 11	
500	90157-0041	-		X	SEALING COMPOUND	
B101	90044-0127	S		1	KEY SAFETY SWITCH AZ15ZVR	

Pos	Part No	SP	UN	Qty	Description	Page No

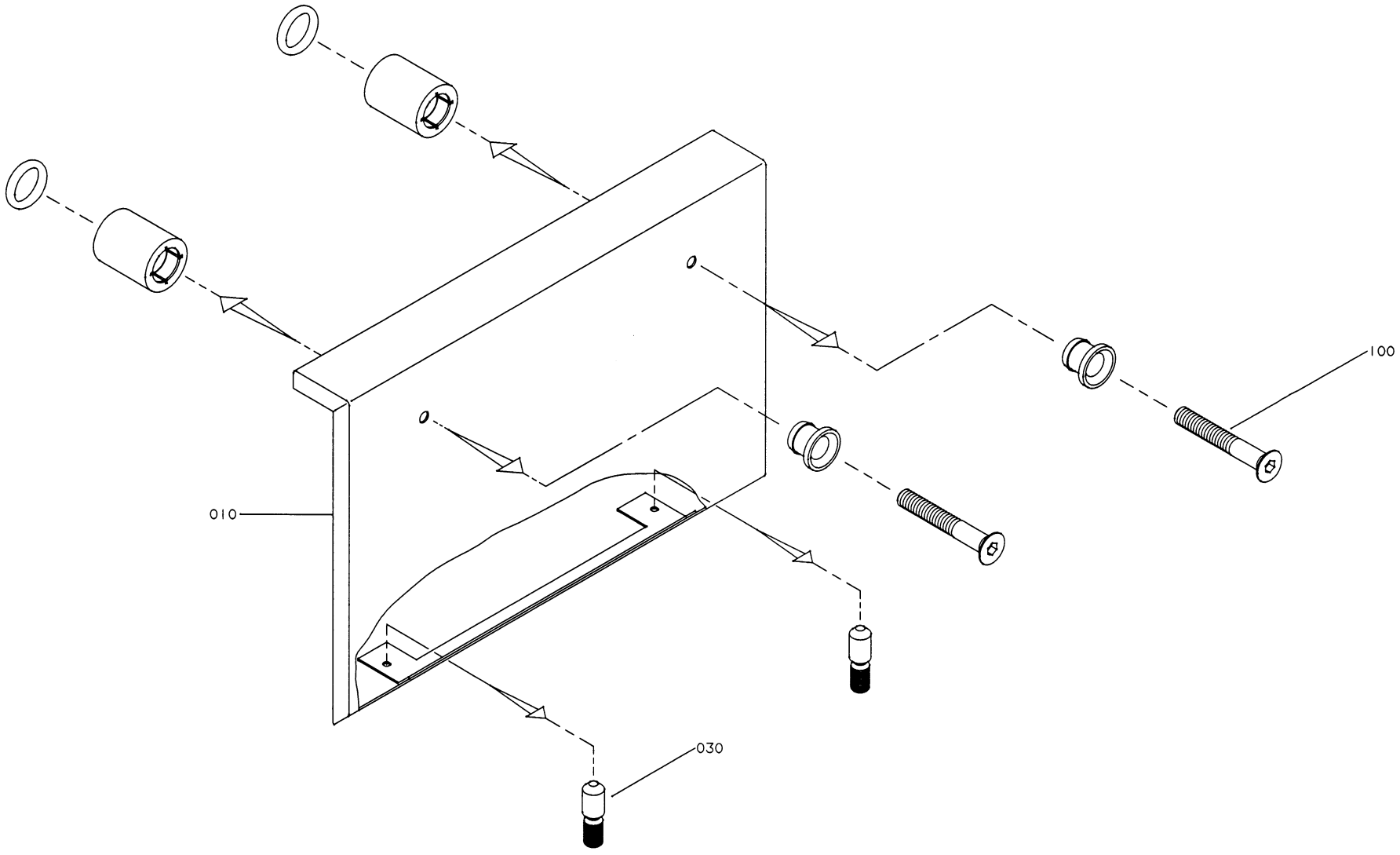

GraphicID: 102171801.eps
Parent Drw: 1021718-1
ECN 16567

Pos	Part No	SP	UN	Qty	Description	Page No
-						
000	C-1021718-0101	-		1	**COVERING PLATE**	
010	1021719	-		1	PROTECTION PLATE	
030	1021795	-		2	DOWEL	
100	90226-0458	-		2	MOUNTING SCREW	

Pos	Part No	SP	UN	Qty	Description	Page No

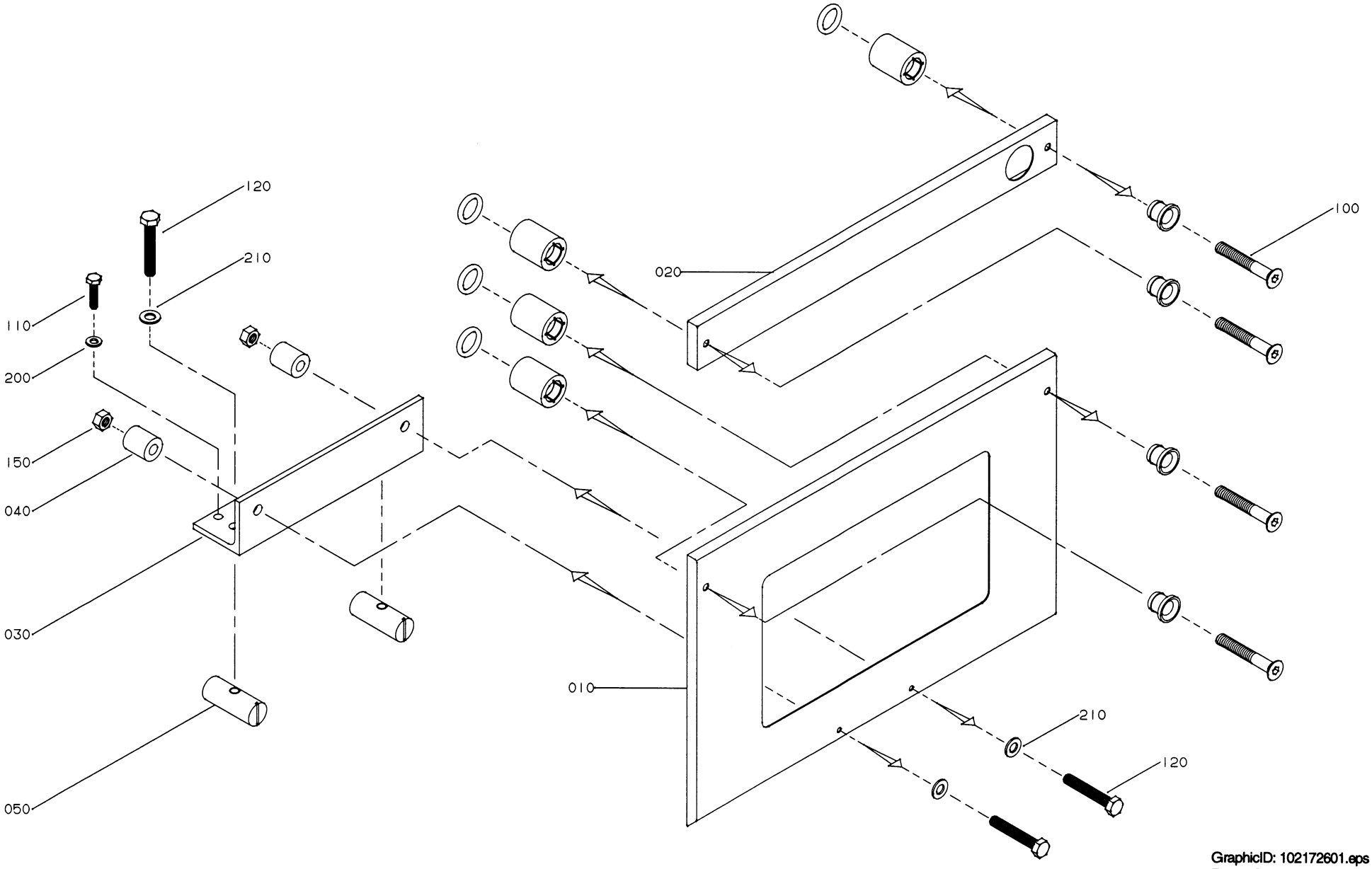

GraphicID: 102172601.eps
Parent Drw: 1021726-1
ECN 19307

Pos	Part No	SP	UN	Qty	Description	Page No
-						
000	**C-1021726-0101**	-		1	**COVERING PLATE**	
010	1021959	-		1	PROTECTION PLATE	
020	1021774	-		1	PROTECTION PLATE	
030	1021393	-		1	BRACKET	
040	1021394	-		2	SPACER	
050	486268	-		2	NUT	
100	90226-0458	-		4	MOUNTING SCREW	
110	312105-0370	-		2	SCREW O4017 M6X20A280	
120	312105-0461	-		4	SCREW O4017 M8X50A280	
150	312605-0318	-		2	NUT M6M8RFR	
200	315105-0153	-		2	WASHER BRB6,4X12RFR	
210	315105-0165	-		4	WASHER BRB8,4X16RFR	

Pos	Part No	SP	UN	Qty	Description	Page No

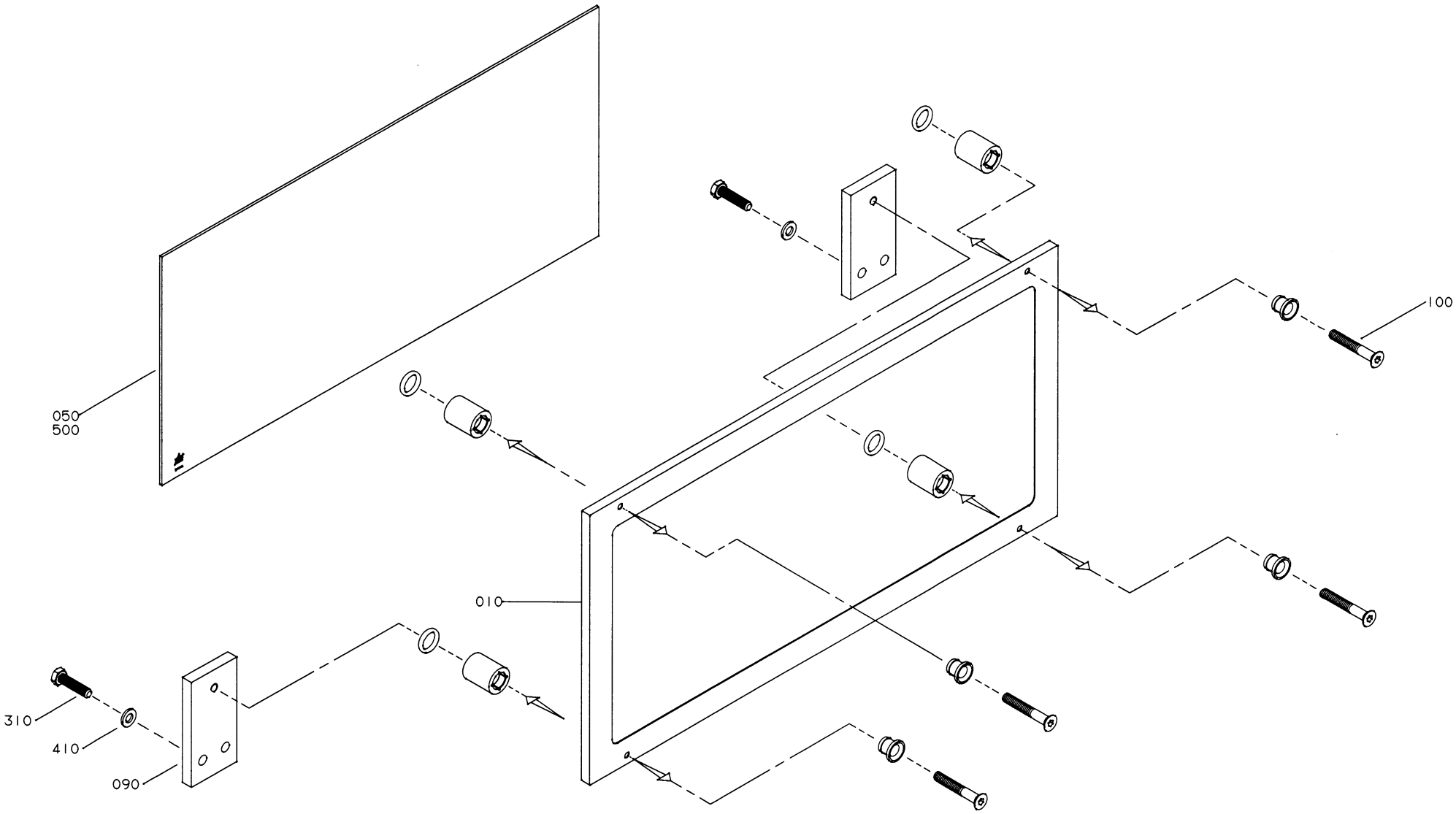

GraphicID: 102178201.eps
Parent Drw: 1021782-1
ECN 18753

Pos	Part No	SP	UN	Qty	Description	Page No
-						
000	**C-1021782-0101**	-		1	**GLASS COVER**	
010	1021783	-		1	PROTECTION PLATE	
050	1021784	-		1	GLASS	
090	1021792	-		2	BRACKET	
100	90226-0458	-		4	MOUNTING SCREW	
310	312105-0372	-		4	SCREW O4017 M6X25A280	
410	315105-0153	-		4	WASHER BRB6,4X12RFR	
500	90157-0041	-		X	SEALING COMPOUND	

Pos	Part No	SP	UN	Qty	Description	Page No

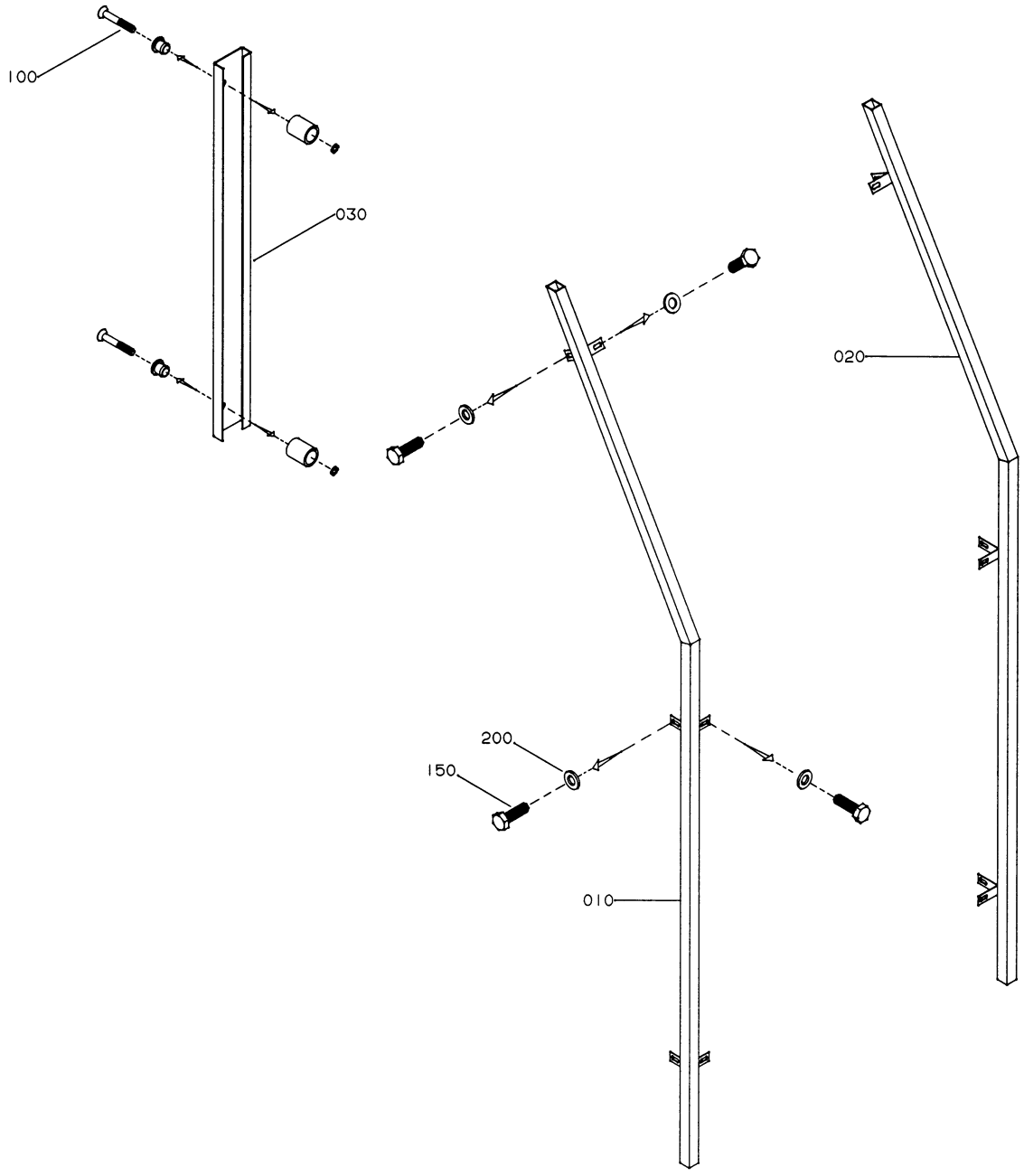

GraphicID: 102178501.eps
Parent Drw: 1021785-1
ECN 16567

Pos	Part No	SP	UN	Qty	Description	Page No
-						
000	**C-1021785-0101**	-		**1**	**CORNER STRIP**	
010	1021786	-		1	CORNER STRIP	
020	1021787	-		1	CORNER STRIP	
030	1021937	-		1	CORNER STRIP	
100	90226-0458	-		2	MOUNTING SCREW	
150	312105-0366	-		12	SCREW O4017 M6X12A280	
200	315105-0153	-		12	WASHER BRB6,4X12RFR	

Pos	Part No	SP	UN	Qty	Description	Page No

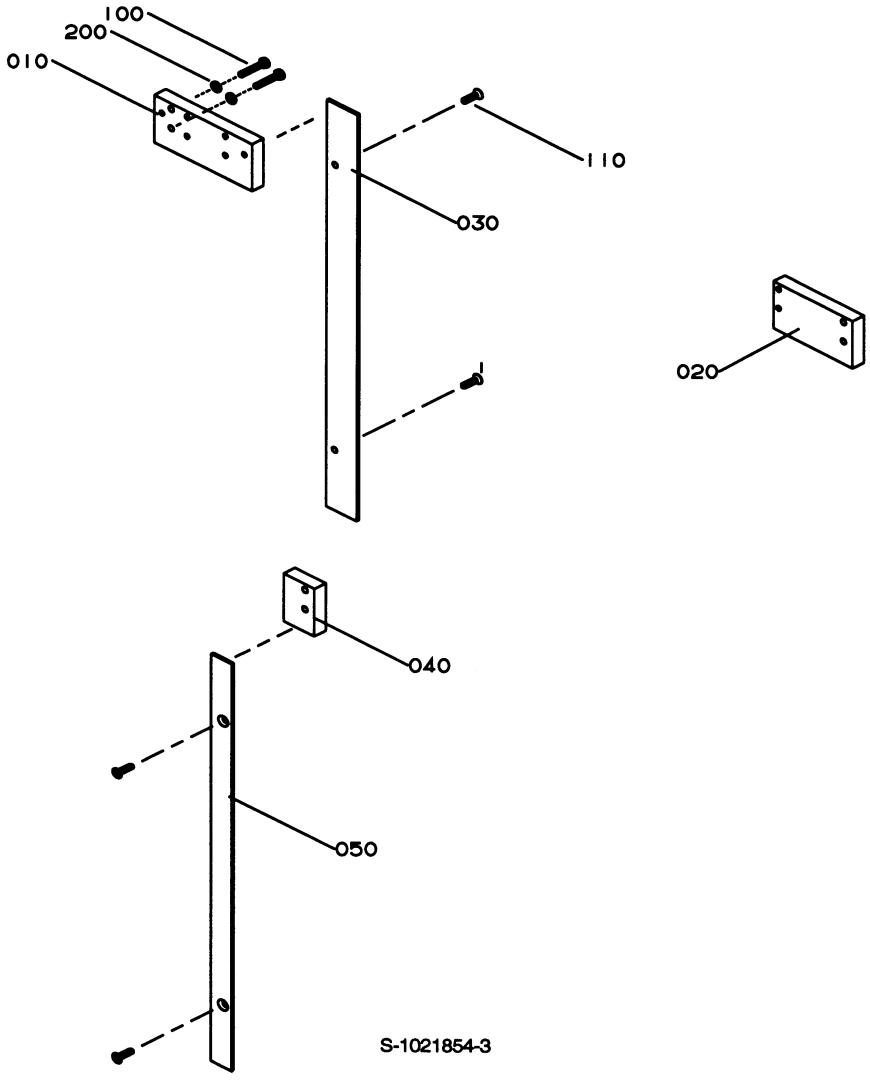
100
200
010
110
030
020
040
050
S-1021854-3

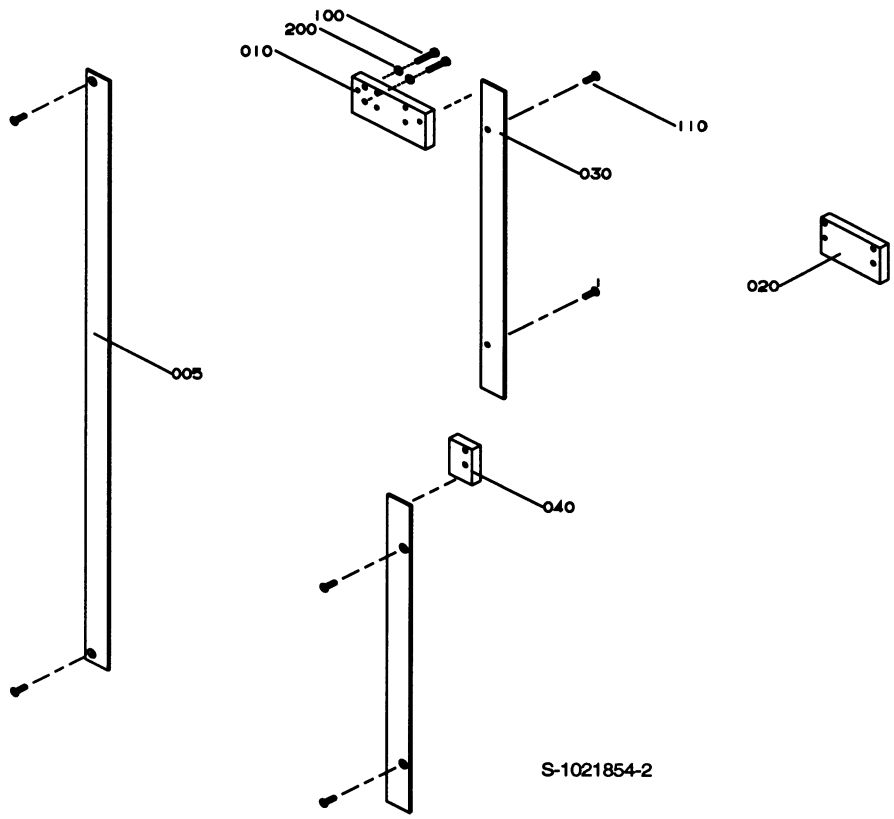
100
200
010
110
030
020
005
040
S-1021854-2

Pos	Part No	SP	UN	Qty	Description	Page No
Z-FORM, 1/2/3-LINE						
000	**C-1021854-0201**	-		1	**COVERS MISC.**	
030	1021855	-		2	RIM	
040	1021899	-		1	BRACKET	
110	312145-0370	-		4	SLOTTED HEMFS6X20RFR	
U-FORM, 1/2/3-LINE						
000	**C-1021854-0202**	-		1	**COVERS MISC.**	
005	1128830	-		1	RIM	
030	1021855	-		1	RIM	
110	312145-0370	-		4	SLOTTED HEMFS6X20RFR	
L-FORM, 1-LINE						
000	**C-1021854-0203**	-		1	**COVERS MISC.**	
005	1128830	-		1	RIM	
030	1021855	-		2	RIM	
040	1021899	-		1	BRACKET	
110	312145-0370	-		6	SLOTTED HEMFS6X20RFR	
U-FORM, MULTI						
000	**C-1021854-0204**	-		1	**COVERS MISC.**	
005	1124483	-		1	RIM	
030	1021855	-		1	RIM	
110	312145-0370	-		4	SLOTTED HEMFS6X20RFR	
Z-FORM, MULTI						
000	**C-1021854-0205**	-		1	**COVERS MISC.**	
030	1021855	-		1	RIM	
040	1021899	-		1	BRACKET	
050	1139256	-		1	STRIP	
110	312145-0370	-		4	SLOTTED HEMFS6X20RFR	
COMMON PARTS						
010	**1021721**	-		1	**BRACKET**	
020	1021799	-		1	BRACKET	
100	312105-0374	-		2	SCREW O4017 M6X30A280	
200	315105-0153	-		2	WASHER BRB6,4X12RFR	

Pos	Part No	SP	UN	Qty	Description	Page No

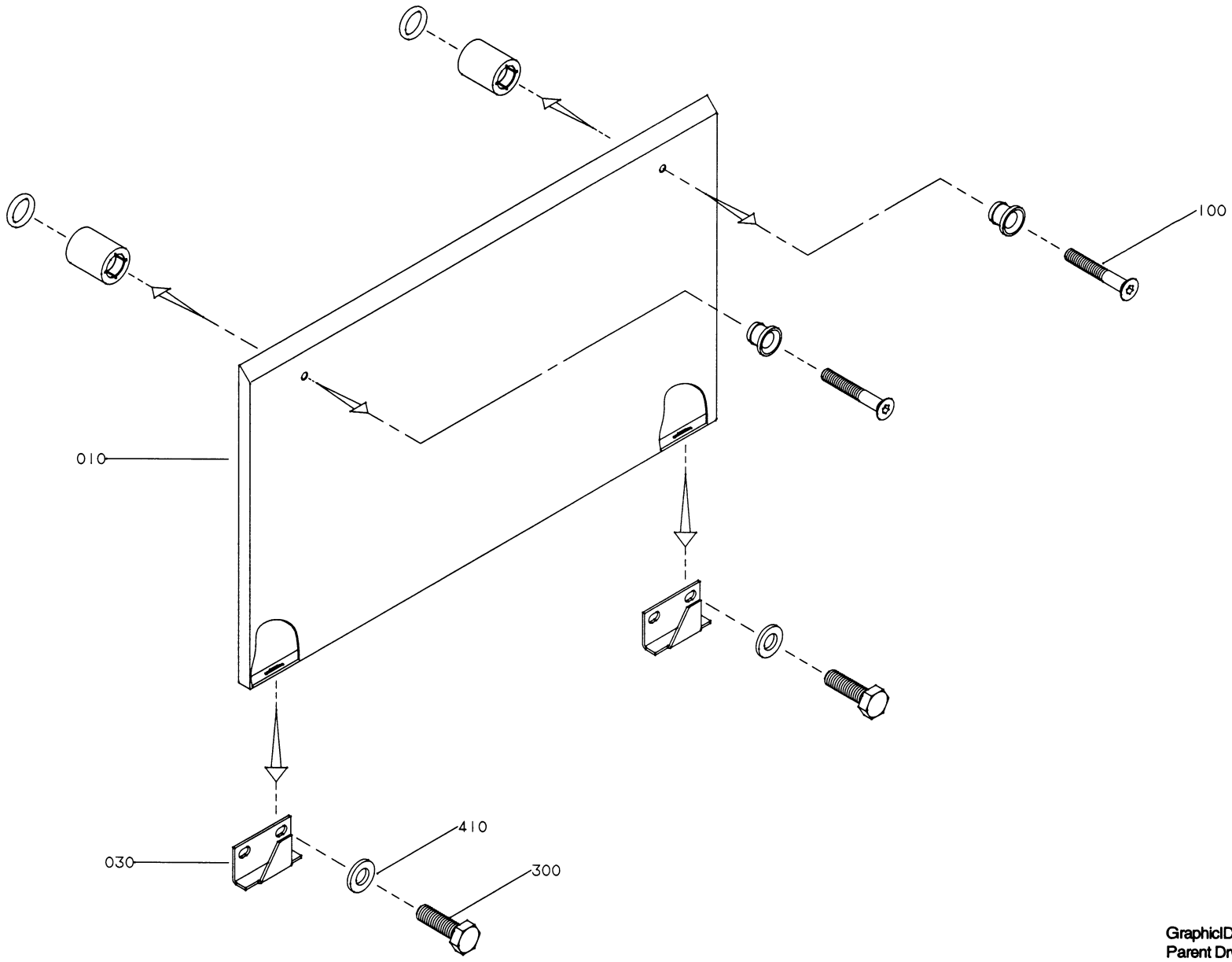

GraphicID: 106560001.eps
Parent Drw: 1065600-1
ECN 19307

Pos	Part No	SP	UN	Qty	Description	Page No
-						
000	C-1065600-0101	-		1	**COVERING PLATE**	
010	1065601	-		1	PROTECTION PLATE	
030	975887	-		2	CATCH	
100	90226-0458	-		2	MOUNTING SCREW	
300	312105-0368	-		4	SCREW O4017 M6X16A280	
410	315105-0153	-		4	WASHER BRB6,4X12RFR	

Pos	Part No	SP	UN	Qty	Description	Page No

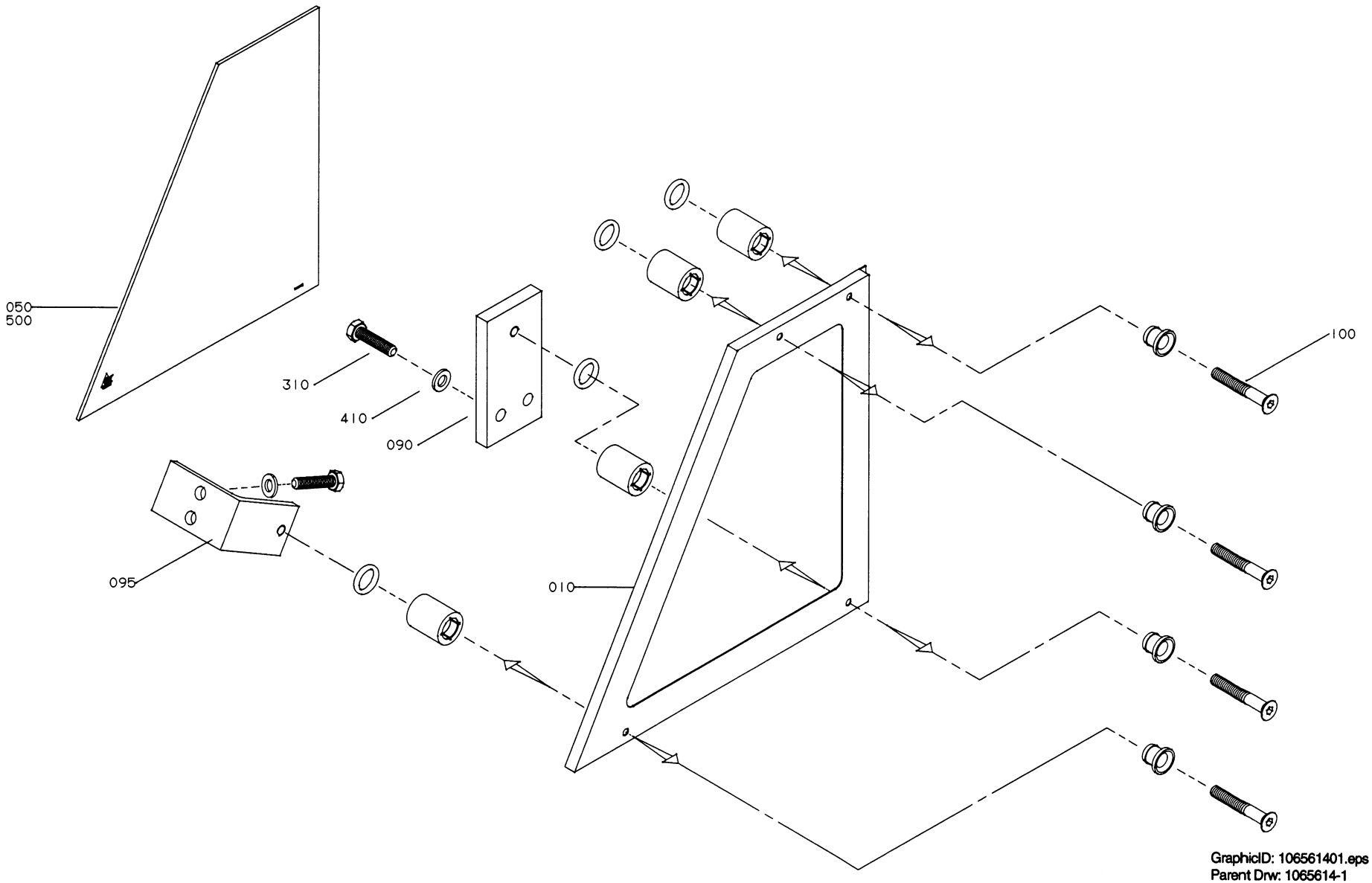

GraphicID: 106561401.eps
Parent Drw: 1065614-1
ECN 20435

Pos	Part No	SP	UN	Qty	Description	Page No
Left Hand infeed						
000	**C-1065614-0101**	-		1	**HATCH**	
010	1065615	-		1	HATCH	
050	1065618	-		1	GLASS	
Right Hand infeed						
000	**C-1065614-0102**	-		1	**HATCH**	
010	1065634	-		1	HATCH	
050	1065621	-		1	GLASS	
COMMON PARTS						
090	**1021792**	-		1	**BRACKET**	
095	1065876	-		1	BRACKET	
100	90226-0458	-		4	MOUNTING SCREW	
310	312105-0372	-		4	SCREW O4017 M6X25A280	
410	315105-0153	-		4	WASHER BRB6,4X12RFR	
500	90157-0041	-		X	SEALING COMPOUND	

Pos	Part No	SP	UN	Qty	Description	Page No

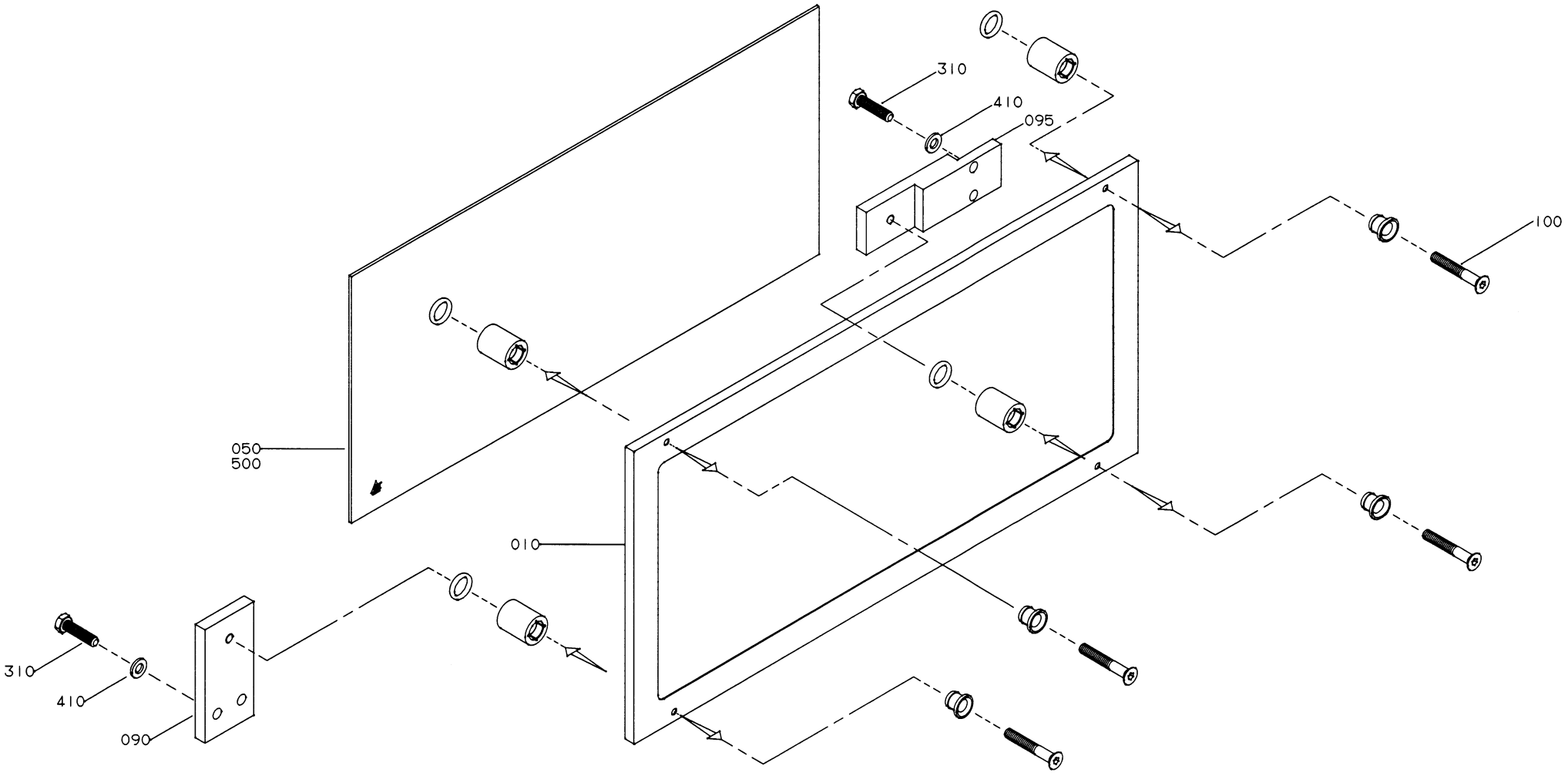

GraphicID: 106561601.eps
Parent Drw: 1065616-1
ECN 19307

Pos	Part No	SP	UN	Qty	Description	Page No
-						
000	**C-1065616-0101**	-		1	**HATCH**	
010	1021783	-		1	PROTECTION PLATE	
050	1021784	-		1	GLASS	
090	1021792	-		1	BRACKET	
095	1065617	-		1	BRACKET	
100	90226-0458	-		4	MOUNTING SCREW	
310	312105-0372	-		4	SCREW O4017 M6X25A280	
410	315105-0153	-		4	WASHER BRB6,4X12RFR	
500	90157-0041	-		X	SEALING COMPOUND	

Pos	Part No	SP	UN	Qty	Description	Page No

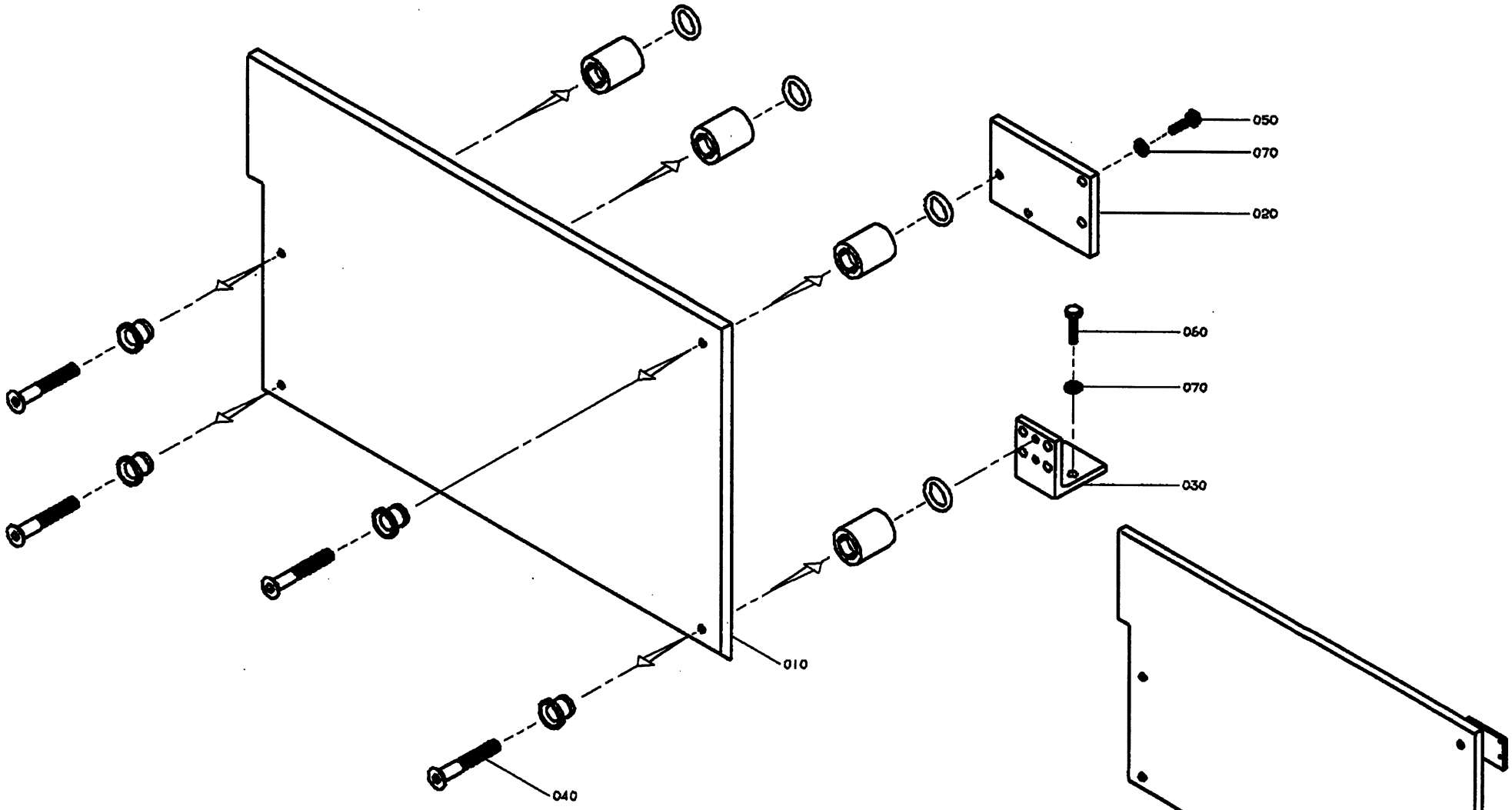

GraphicID: 112883501.tif
Parent Drw: 1128835-1
ECN No: 22292

Pos	Part No	SP	UN	Qty	Description	Page No
Left Hand infeed						
000	**C-1128835-0101**	-		1	**COVERING PLATE**	
010	1128836	-		1	PROTECTION PLATE	
Right Hand infeed						
000	**C-1128835-0102**	-		1	**COVERING PLATE**	
010	1128837	-		1	PROTECTION PLATE	
COMMON PARTS						
020	**1128829**	-		1	**BRACKET**	
030	975884	-		1	BRACKET	
040	90226-0458	-		4	MOUNTING SCREW	
050	312105-0370	-		2	SCREW O4017 M6X20A280	
060	312105-0372	-		2	SCREW O4017 M6X25A280	
070	315105-0153	-		4	WASHER BRB6,4X12RFR	

Pos	Part No	SP	UN	Qty	Description	Page No

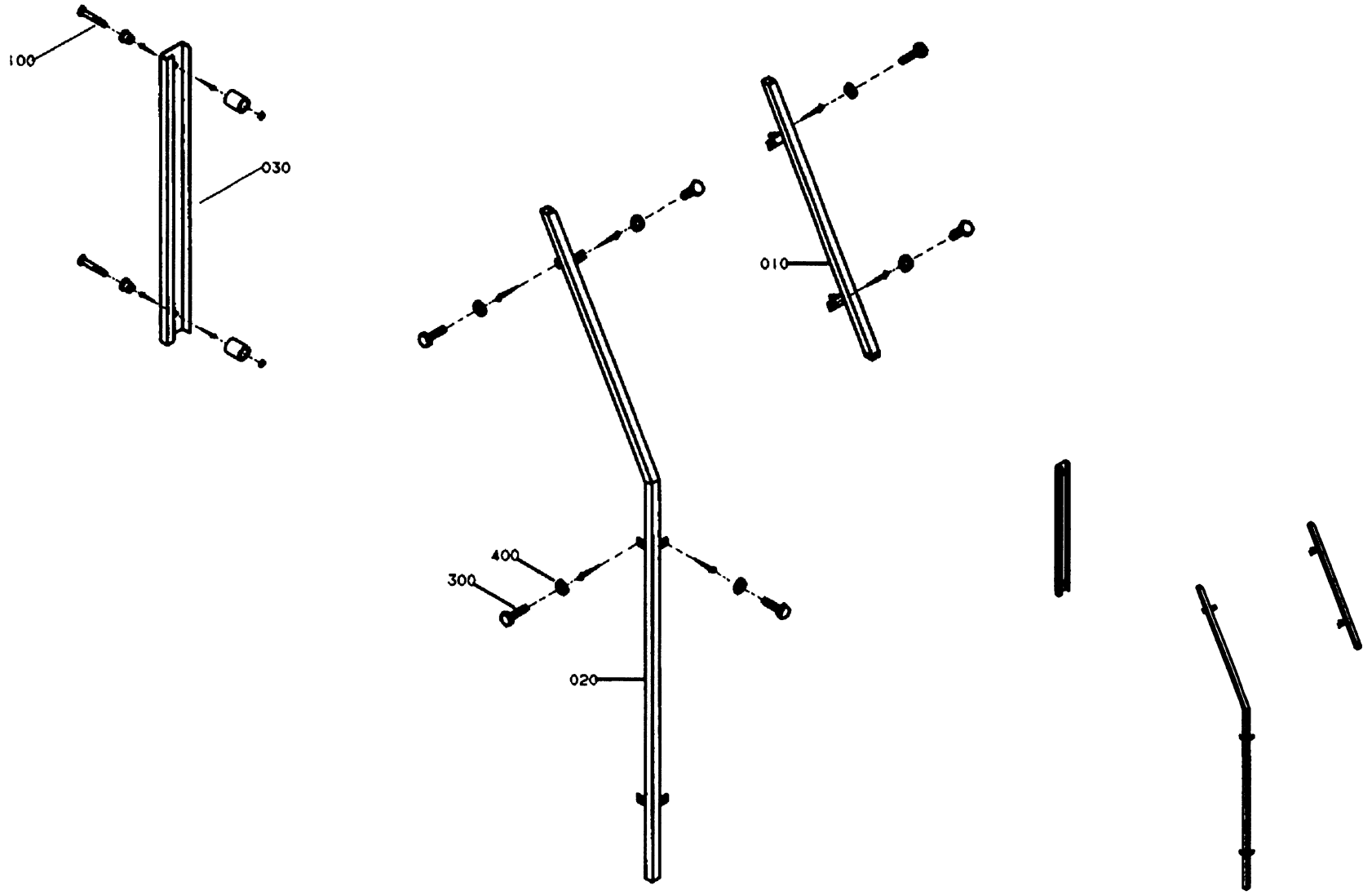

106597501.tif
1065975-1
AM 20994

Pos	Part No	SP	UN	Qty	Description	Page No
Left Hand infeed, 2/3-LINE, MULTI						
000	**C-1065975-0101**	-		**1**	**CORNER STRIP**	
010	1065629	-		1	CORNER STRIP	
020	1021786	-		1	CORNER STRIP	
300	312105-0370	-		10	SCREW O4017 M6X20A280	
400	315105-0153	-		10	WASHER BRB6,4X12RFR	
RIGHT Hand infeed, 2/3-LINE, MULTI						
000	**C-1065975-0102**	-		**1**	**CORNER STRIP**	
010	1065632	-		1	CORNER STRIP	
020	1021787	-		1	CORNER STRIP	
300	312105-0370	-		10	SCREW O4017 M6X20A280	
400	315105-0153	-		10	WASHER BRB6,4X12RFR	
LEFT HAND INFEED, RIGHT HAND INFEED, 1-LINE						
000	**C-1065975-0103**	-		**1**	**CORNER STRIP**	
010	1021786	-		1	CORNER STRIP	
020	1021787	-		1	CORNER STRIP	
300	312105-0370	-		12	SCREW O4017 M6X20A280	
400	315105-0153	-		12	WASHER BRB6,4X12RFR	
COMMON PARTS						
030	**1021937**	-		**1**	**CORNER STRIP**	
100	90226-0458	-		2	MOUNTING SCREW	

Pos	Part No	SP	UN	Qty	Description	Page No

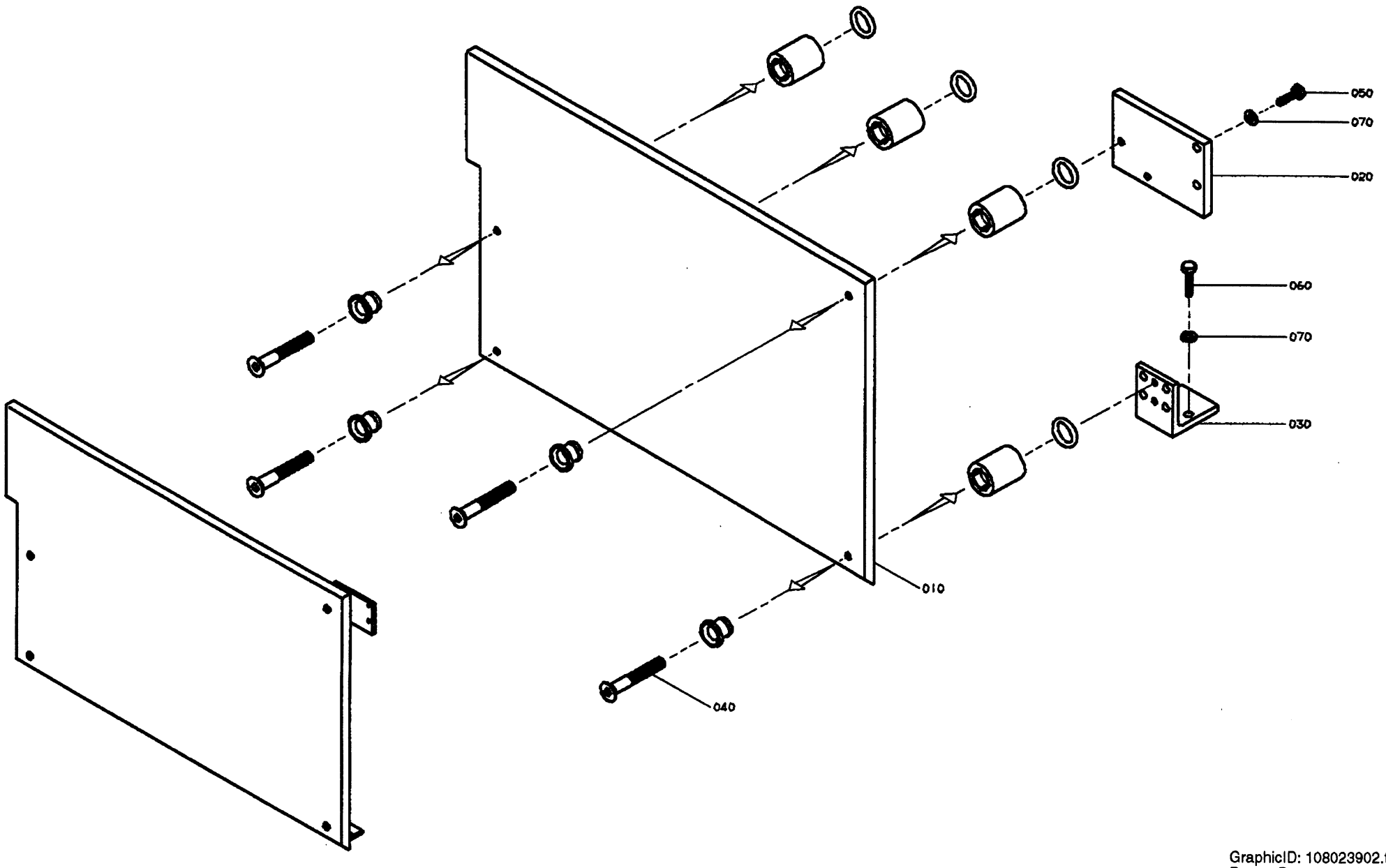

GraphicID: 108023902.tif
Parent Drw: 1080239-2
ECN No: 22292

Pos	Part No	SP	UN	Qty	Description	Page No
Left Hand infeed						
000	**C-1080239-0201**	-		1	**COVERING PLATE**	
010	1128827	-		1	PROTECTION PLATE	
Right Hand infeed						
000	**C-1080239-0202**	-		1	**COVERING PLATE**	
010	1128828	-		1	PROTECTION PLATE	
COMMON PARTS						
020	**1128829**	-		1	**BRACKET**	
030	975884	-		1	BRACKET	
040	90226-0458	-		4	MOUNTING SCREW	
050	312105-0370	-		2	SCREW O4017 M6X20A280	
060	312105-0372	-		2	SCREW O4017 M6X25A280	
070	315105-0153	-		4	WASHER BRB6,4X12RFR	

Pos	Part No	SP	UN	Qty	Description	Page No

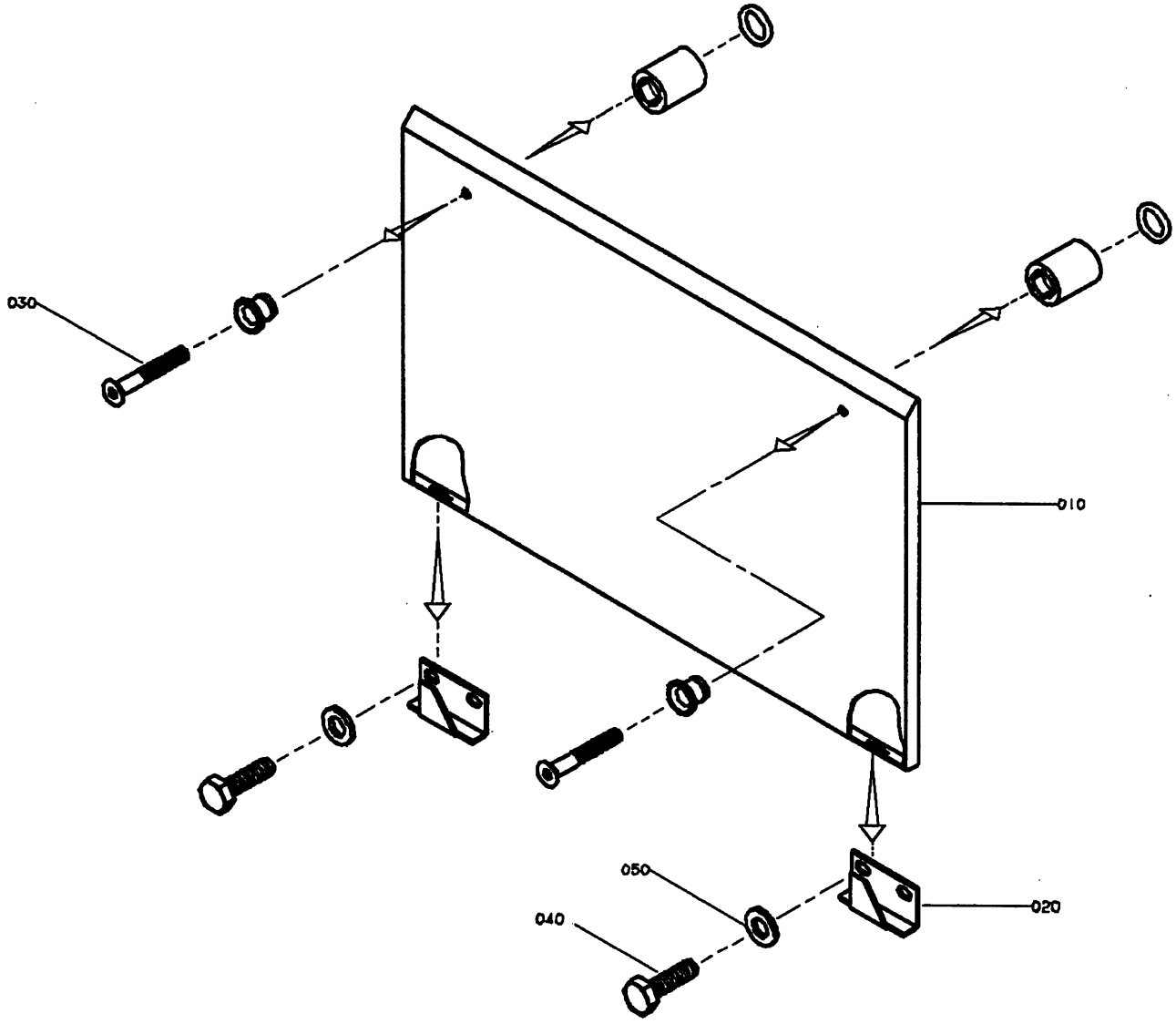

GraphicID: 108024002.tif
Parent Drw: 1080240-2
ECN No: 22292

Pos	Part No	SP	UN	Qty	Description	Page No
-						
000	C-1080240-020V	-		1	COVERING PLATE	
010	1128819	-		1	PROTECTION PLATE	
020	975887	-		2	CATCH	
030	90226-0458	-		2	MOUNTING SCREW	
040	312105-0368	-		4	SCREW O4017 M6X16A280	
050	315105-0153	-		4	WASHER BRB6,4X12RFR	

Pos	Part No	SP	UN	Qty	Description	Page No

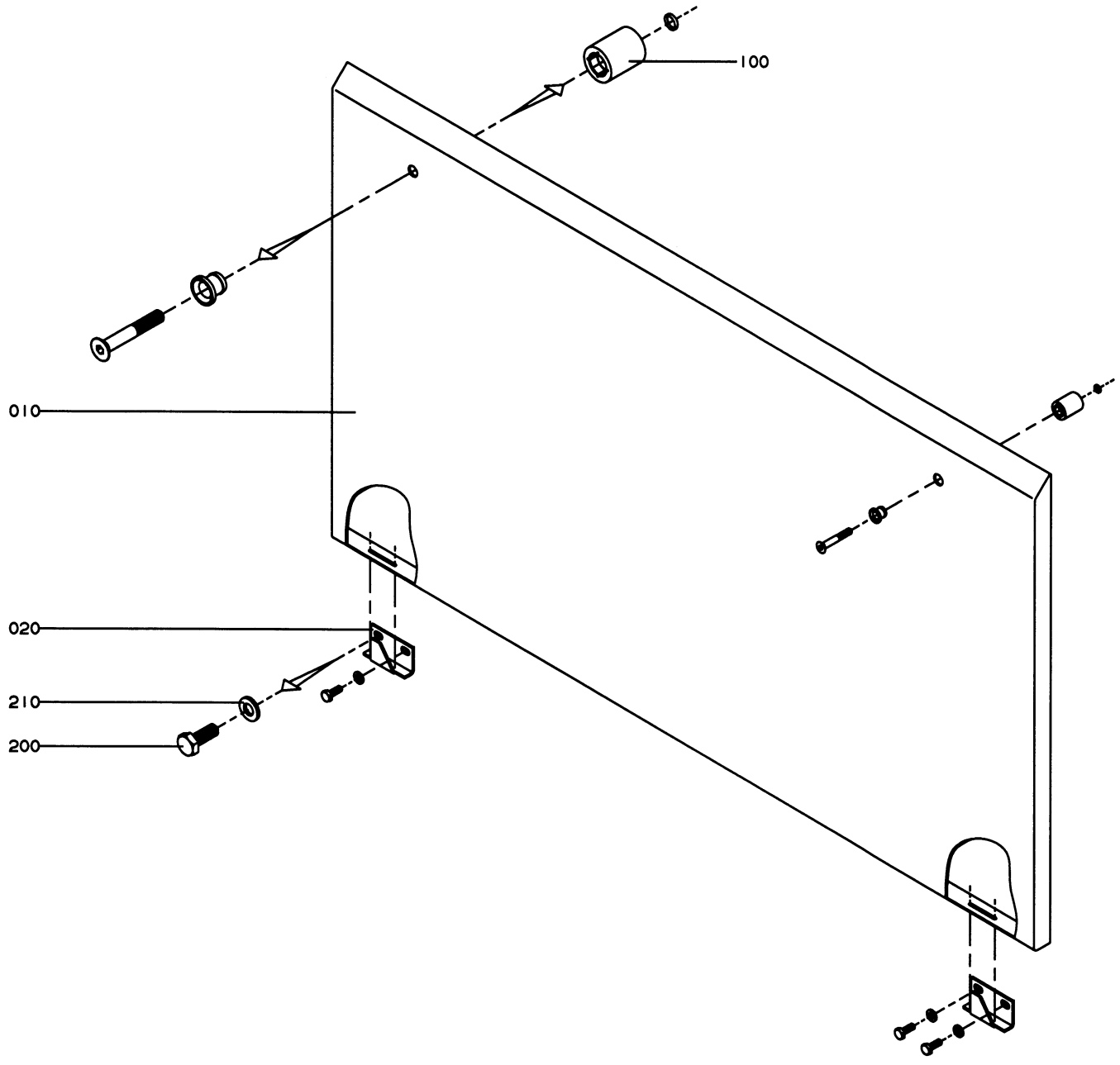

GraphicID: 112408501.eps
Parent Drw: 1124085-1
ECN 21267

Pos	Part No	SP	UN	Qty	Description	Page No
Left Hand infeed						
000	**C-1124085-0101**	-		**1**	**COVERING PLATE**	
010	1124573	-		1	COVERING PLATE	
Right Hand infeed						
000	**C-1124085-0102**	-		**1**	**COVERING PLATE**	
010	1124574	-		1	COVERING PLATE	
COMMON PARTS						
020	**975887**	-		**2**	**CATCH**	
100	90226-0458	-		2	MOUNTING SCREW	
200	312105-0368	-		4	SCREW O4017 M6X16A280	
210	315105-0153	-		4	WASHER BRB6,4X12RFR	

Pos	Part No	SP	UN	Qty	Description	Page No

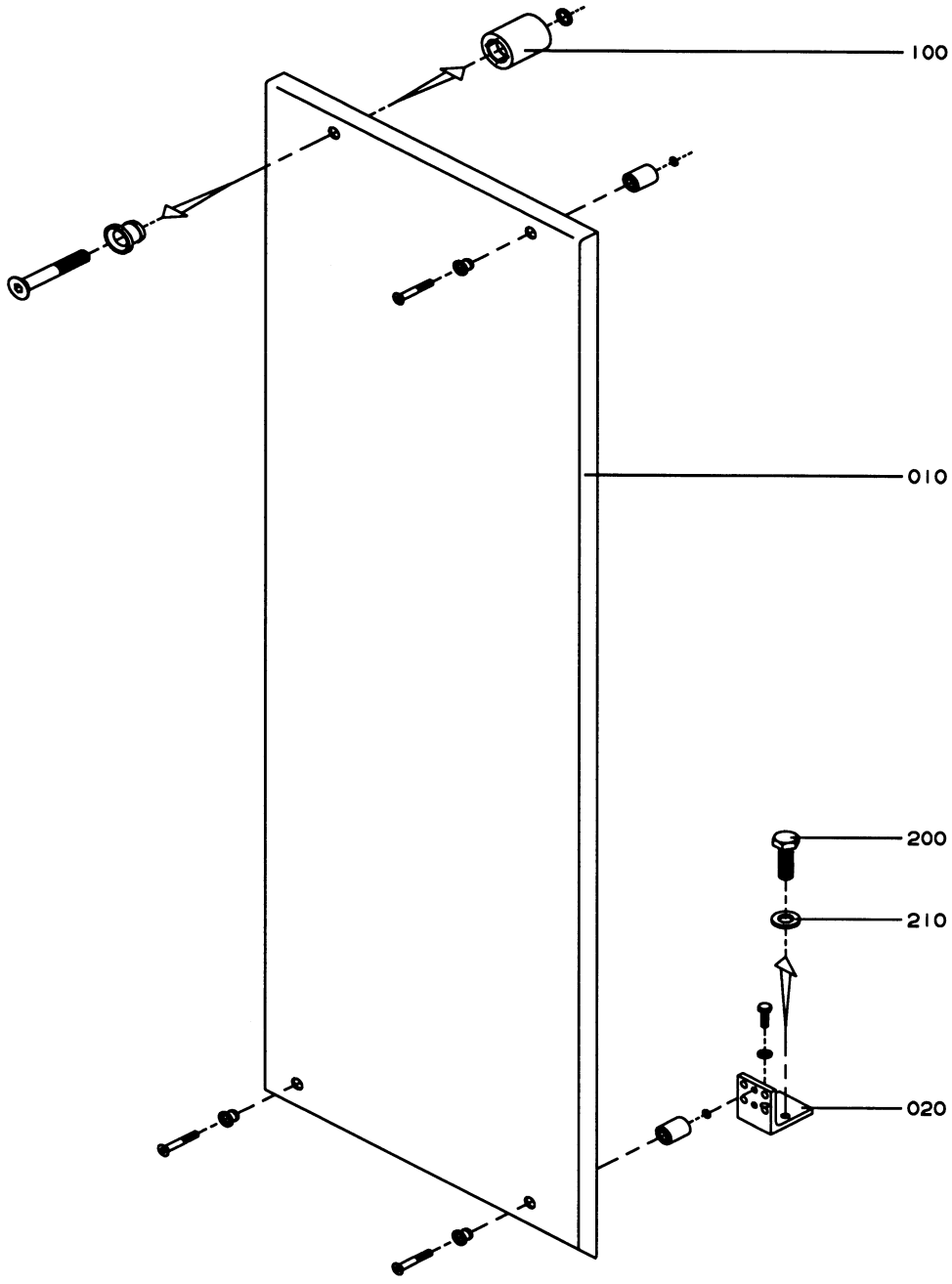

GraphicID: 112408601.eps
Parent Drw: 1124086-1
ECN 21267

Pos	Part No	SP	UN	Qty	Description	Page No
Left Hand infeed						
000	**C-1124086-0101**	-		1	**COVERING PLATE**	
010	1124500	-		1	COVERING PLATE	
Right Hand infeed						
000	**C-1124086-0102**	-		1	**COVERING PLATE**	
010	1124501	-		1	COVERING PLATE	
COMMON PARTS						
020	**975884**	-		1	**BRACKET**	
100	90226-0458	-		4	MOUNTING SCREW	
200	312105-0370	-		2	SCREW O4017 M6X20A280	
210	315105-0153	-		2	WASHER BRB6,4X12RFR	

Pos	Part No	SP	UN	Qty	Description	Page No

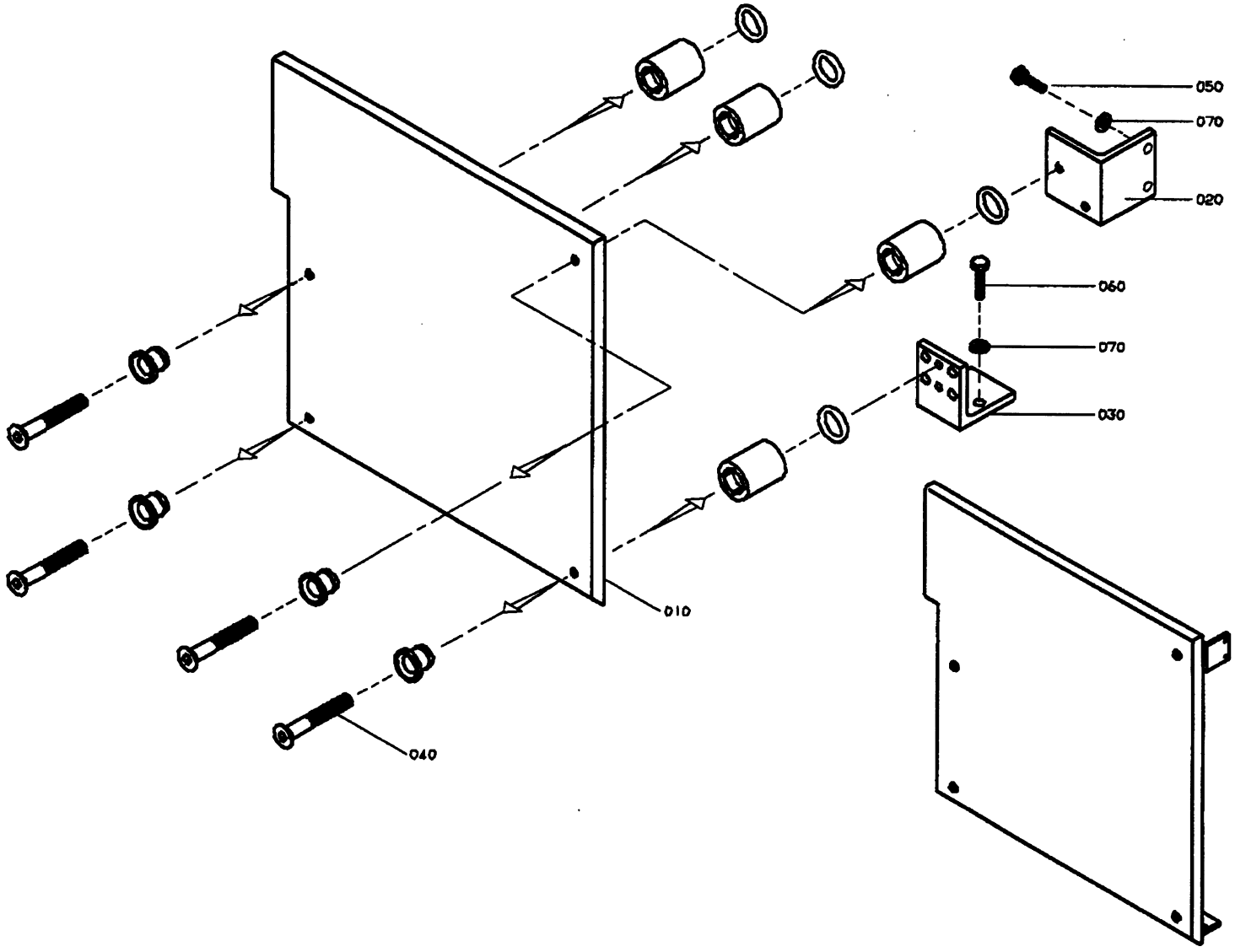

GraphicID: 112881501.tif
Parent Drw: 1128815-1
ECN No: 22292

Pos	Part No	SP	UN	Qty	Description	Page No
Left Hand infeed						
000	**C-1128815-0101**	-		1	**COVERING PLATE**	
010	1128816	-		1	PROTECTION PLATE	
Right Hand Infeed						
000	**C-1128815-0102**	-		1	**COVERING PLATE**	
010	1128817	-		1	PROTECTION PLATE	
COMMON PARTS						
020	**1128818**	-		1	**BRACKET**	
030	975884	-		1	BRACKET	
040	90226-0458	-		4	MOUNTING SCREW	
050	312105-0370	-		2	SCREW O4017 M6X20A280	
060	312105-0372	-		2	SCREW O4017 M6X25A280	
070	315105-0153	-		4	WASHER BRB6,4X12RFR	

Pos	Part No	SP	UN	Qty	Description	Page No

Tetra Pak

SPC

Spare Parts Catalogue

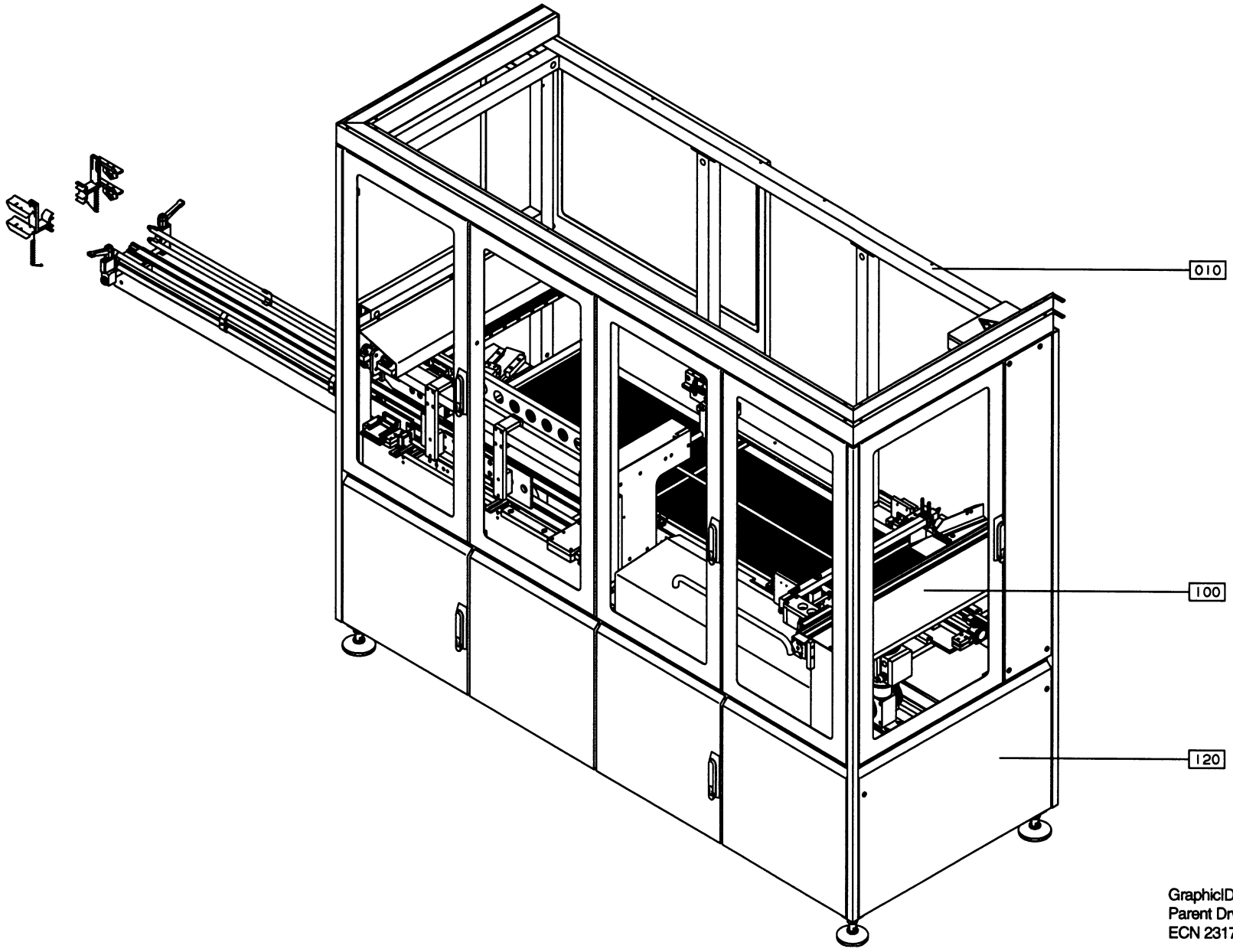

GraphicID: 67029208.eps
Parent Drw: 670292-8
ECN 23179

Pos	Part No	SP	UN	Qty	Description	Page No
-						
010	**B- 670292-0405**	-		1	**INFEED UNIT**	
010	B- 670301-020V	-		1	INFEED SINGLE/MULTI	219
100	B- 670302-0201	-		1	TRANSFER UNIT	289
120	B- 670303-010V	-		1	COVERING INFEED	353

Pos	Part No	SP	UN	Qty	Description	Page No

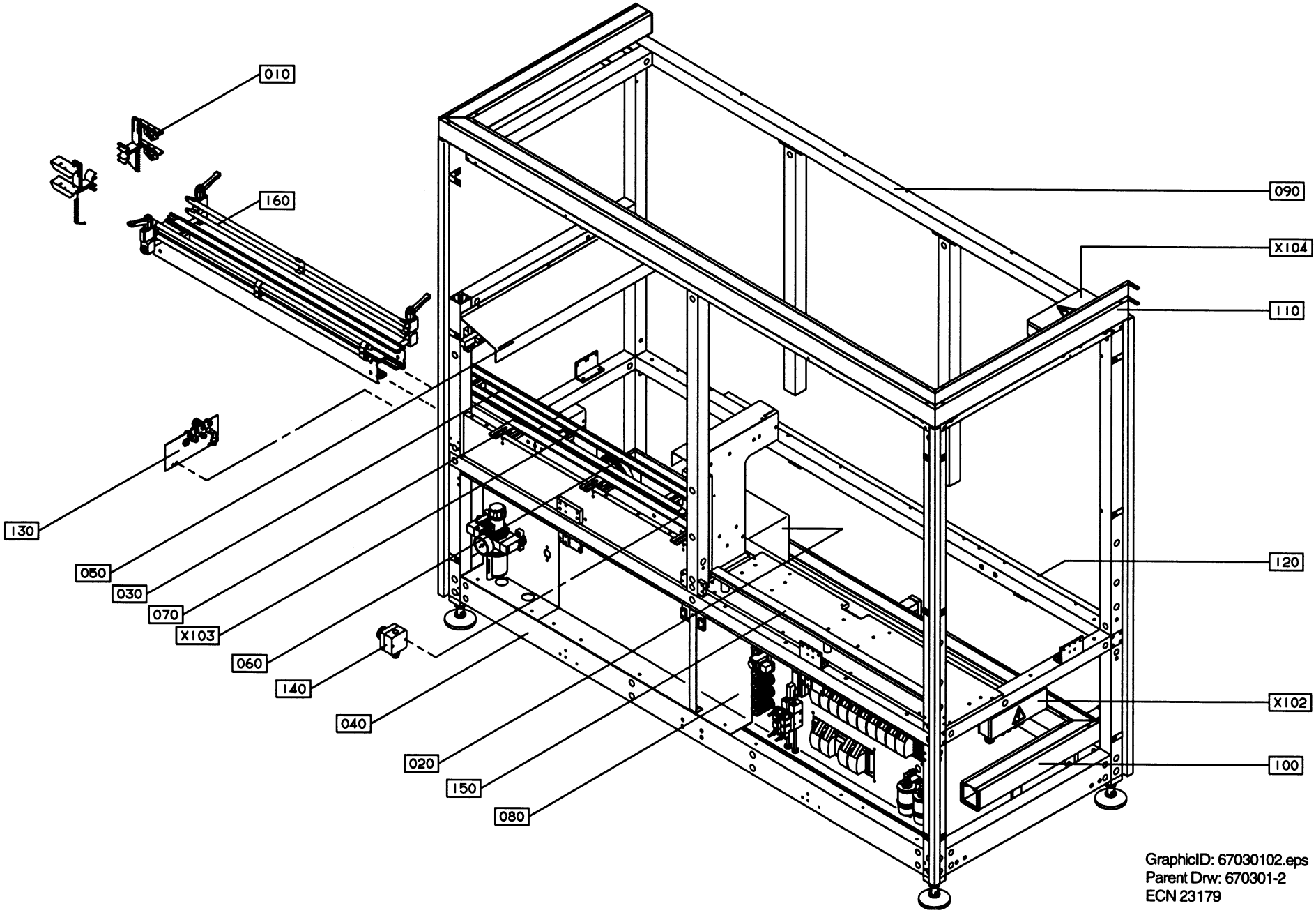

GraphicID: 67030102.eps
Parent Drw: 670301-2
ECN 23179

Pos	Part No	SP	UN	Qty	Description	Page No
Conveyor width B40, B55, B55S, B65, B68, B79						
000	**B- 670301-0201**	-		1	**INFEED SINGLE/MULTI**	
010	C- 539094-0400	-		1	QUEUE GUARD,DOUBLE	227
020	C-1124008-010V	-		1	DRIVE UNIT	231
030	C-1124009-020V	-		1	CONV.BODY, STRAIGHT	235
Conveyor width UNITADJ						
000	**B- 670301-0202**	-		1	**INFEED SINGLE/MULTI**	
010	C-1074547-0201	-		1	QUEUE GUARD,DOUBLE	229
020	C-1124028-010V	-		1	DRIVE MOTOR	233
030	C-1124030-020V	-		1	CONV.BODY, STRAIGHT	237
060	C-1124029-0201	-		1	DRIVE UNIT	245
160	C-1138016-0103	-		1	STRAIGHT CONVEYOR	287
COMMON PARTS						
X102	C-1124092-0101	-		1	CONNECTION BOX	221
X103	C-1124093-0101	-		1	CONNECTION BOX	223
X104	C-1124091-0101	-		1	CONNECTION BOX	225
040	C-1124025-0201	-		1	INFEED FRAME	239
050	C-1124026-020V	-		1	FRAME GROUPING PUSHER	243
070	C-1124031-0101	-		1	STEERING RAIL	247
080	C-1124057-0201	-		1	PNEUMATIC CABINET	249
080	C-1021618-0101	-			. FILTER-REGULATOR	257
080	C-1074127-0101	-			. SILENCER	259
080	C-1124058-020V	-			. VALVE RAMP	261
080	C-1124059-0101	-			. PRESSURE REGULATOR RAMP	265
080	C-1124062-0101	-			. EJECTOR	267
090	C-1124063-020V	-		1	INFEED FRAME UPPER	269
100	C-1124081-0101	-		1	CABLE DUCT	273
110	C-1124082-010V	-		1	CABLE DUCT	275
120	C-1124090-010V	-		1	BRACKET	279
130	C-1124096-0101	-		1	LEAD-IN PLATE	281
140	C-1111838-0201	-		1	EMERGENCY STOP	283
150	C-1124097-0101	-		1	CABLE DUCT	285

Pos	Part No	SP	UN	Qty	Description	Page No

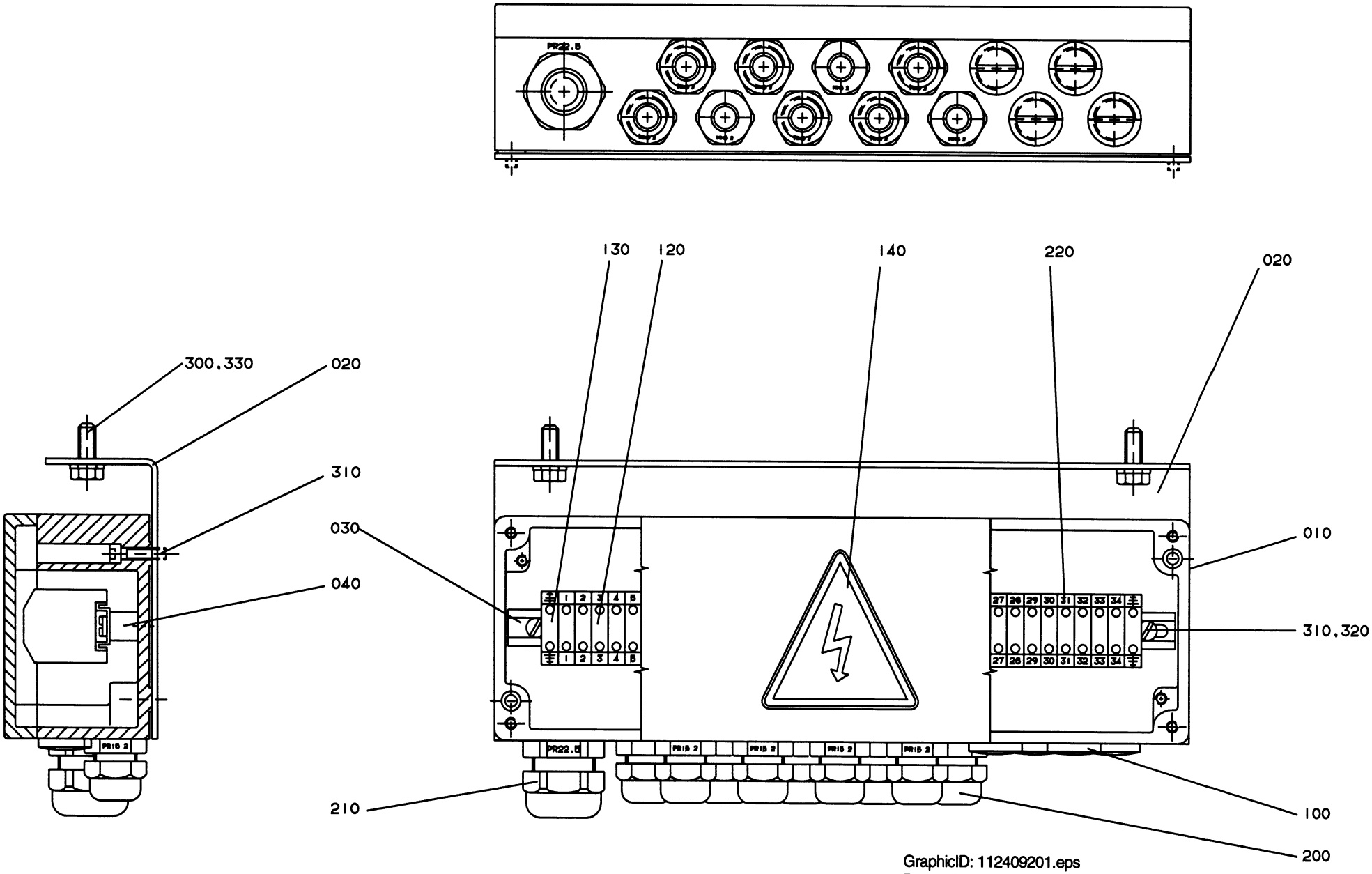

GraphicID: 112409201.eps
Parent Drw: 1124092-1
ECN 21267

Pos	Part No	SP	UN	Qty	Description	Page No
-						
000	**C-1124092-0101**	-		**1**	**CONNECTION BOX**	
010	1021742	-		1	CONNECTION BOX	
020	1124488	-		1	BRACKET	
030	8490-0010	-		1	MOUNTING RAIL	
040	479110	-		2	SPACER	
100	90002-0013	-		4	BLANK-OFF PLUG 15,2	
120	90077-0079	-		34	FEED THROUGH TERMINAL	
130	90135-0026	-		2	EARTHING CLAMP	
140	90194-0016	-		1	SIGN "FLASH SIGN" 50X50MM	
200	352103-0101	-		9	CABLE GLAND ST 9	
210	352103-0111	-		1	CABLE GLAND ST 16;10-14MM	
220	359011-0821	-		2	SET OF SIGNS 6-FW 1-50	
300	312105-0368	-		2	SCREW O4017 M6X16A280	
310	312125-0293	-		4	SLOTTED HEMCS4X16RFR	
320	315105-0136	-		2	WASHER BRB4,3X8RFR	
330	315105-0153	-		2	WASHER BRB6,4X12RFR	

Pos	Part No	SP	UN	Qty	Description	Page No

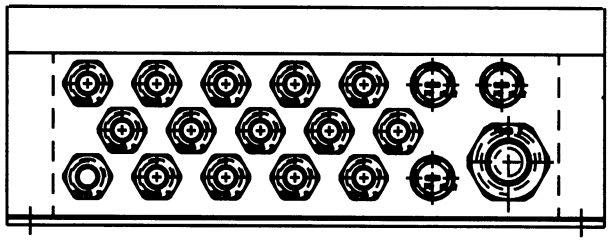

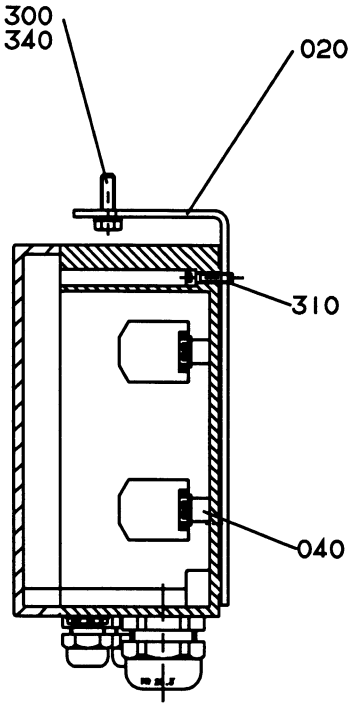

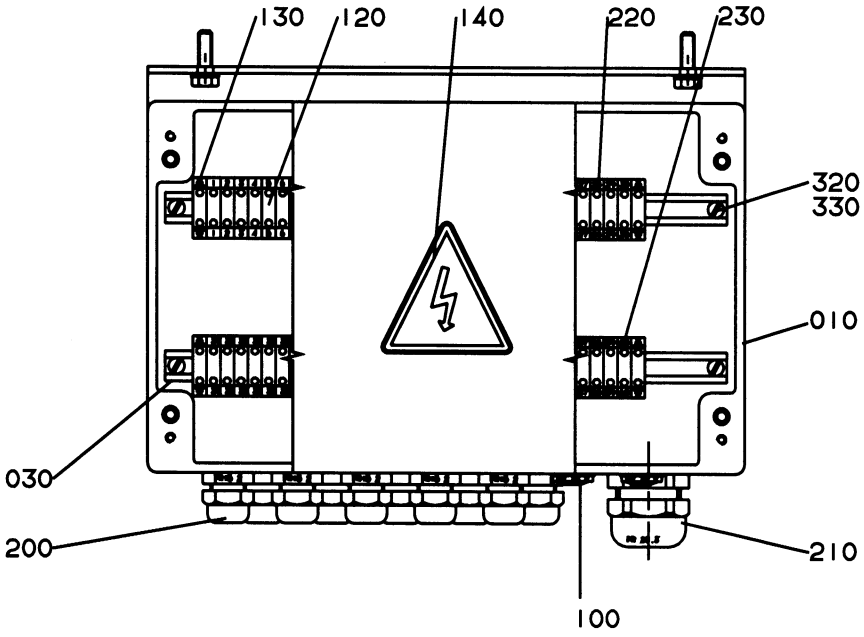

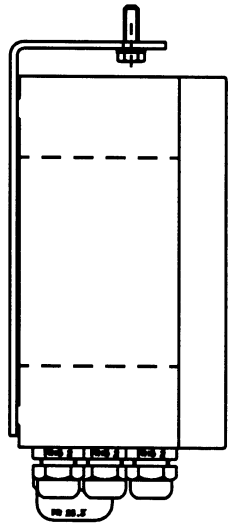

GraphicID: 112409301.eps
Parent Drw: 1124093-1
ECN 21267

Pos	Part No	SP	UN	Qty	Description	Page No
-						
000	C-1124093-0101	-		1	**CONNECTION BOX**	
010	1124521	-		1	CONNECTION BOX	
020	1124522	-		1	BRACKET	
030	8490-0010	-		2	MOUNTING RAIL	
040	479110	-		4	SPACER	
100	90002-0013	-		3	BLANK-OFF PLUG 15,2	
120	90077-0079	-		60	FEED THROUGH TERMINAL	
130	90135-0026	-		4	EARTHING CLAMP	
140	90194-0016	-		1	SIGN "FLASH SIGN" 50X50MM	
200	352103-0101	-		15	CABLE GLAND ST 9	
210	352103-0116	-		1	CABLE GLAND ST21.13-18MM	
220	359011-0821	-		2	SET OF SIGNS 6-FW 1-50	
230	359011-0822	-		2	SET OF SIG6-FW 51-100	
300	312105-0368	-		2	SCREW O4017 M6X16A280	
310	312125-0333	-		4	SLOTTED HEMCS5X25RFR	
320	312125-0293	-		4	SLOTTED HEMCS4X16RFR	
330	315105-0136	-		4	WASHER BRB4,3X8RFR	
340	315105-0153	-		2	WASHER BRB6,4X12RFR	

Pos	Part No	SP	UN	Qty	Description	Page No

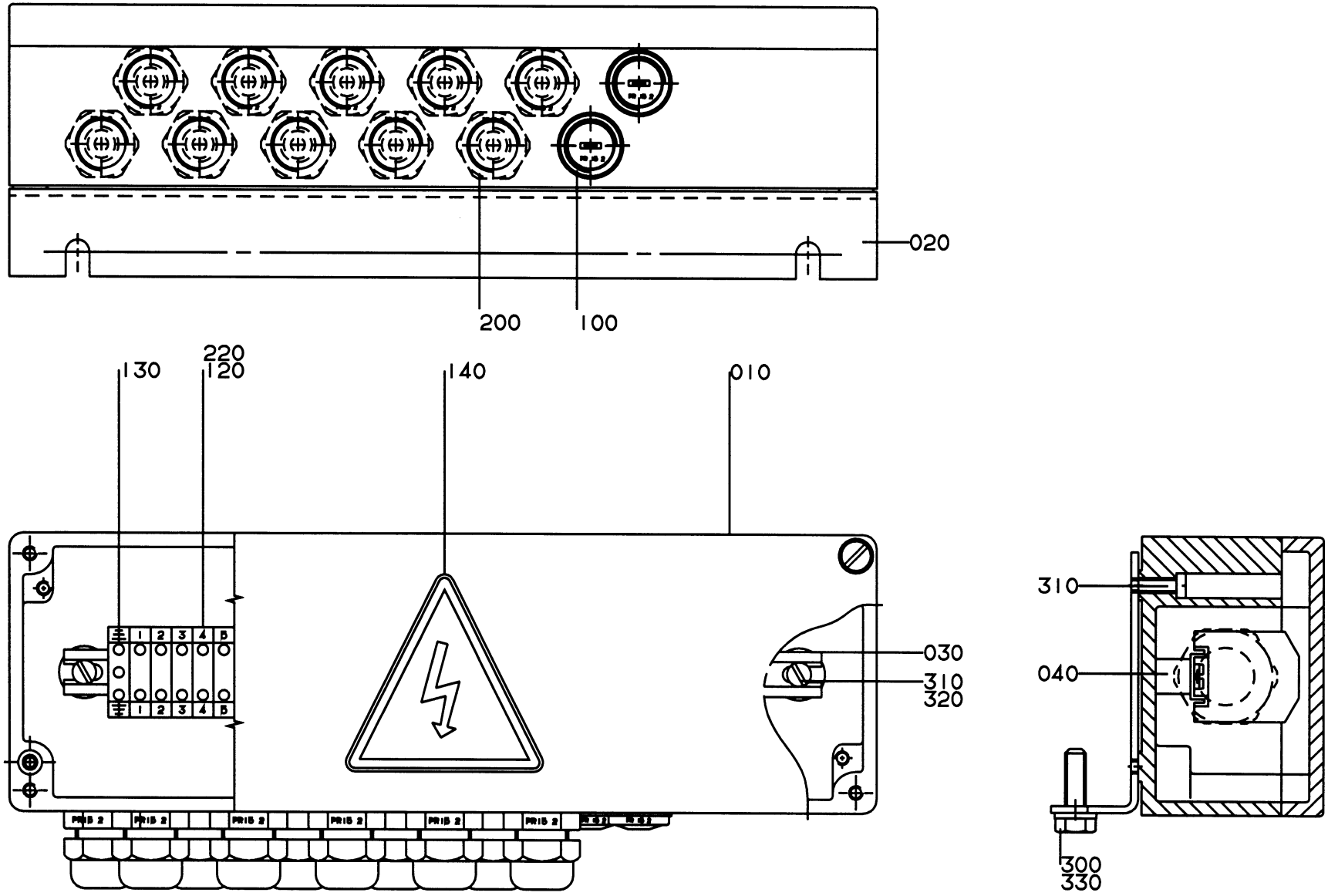

GraphicID: 112409101.eps
Parent Drw: 1124091-1
ECN 21267

Pos	Part No	SP	UN	Qty	Description	Page No
-						
000	C-1124091-0101	-		1	**CONNECTION BOX**	
010	1124519	-		1	CONNECTION BOX	
020	1124520	-		1	BRACKET	
030	8490-0010	-		1	MOUNTING RAIL	
040	479110	-		2	SPACER	
100	90002-0013	-		2	BLANK-OFF PLUG 15,2	
120	90077-0079	-		24	FEED THROUGH TERMINAL	
130	90135-0026	-		2	EARTHING CLAMP	
140	90194-0016	-		1	SIGN "FLASH SIGN" 50X50MM	
200	352103-0101	-		10	CABLE GLAND ST 9	
220	359011-0821	-		2	SET OF SIGNS 6-FW 1-50	
300	312105-0368	-		2	SCREW O4017 M6X16A280	
310	312125-0293	-		4	SLOTTED HEMCS4X16RFR	
320	315105-0136	-		2	WASHER BRB4,3X8RFR	
330	315105-0153	-		2	WASHER BRB6,4X12RFR	

Pos	Part No	SP	UN	Qty	Description	Page No

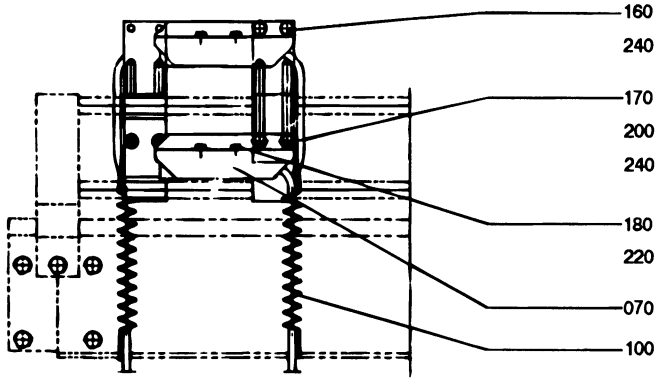
160
240
170
200
240
180
220
070
100

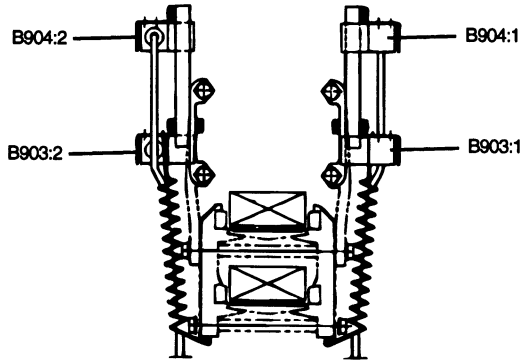
B904:2
B904:1
B903:2
B903:1

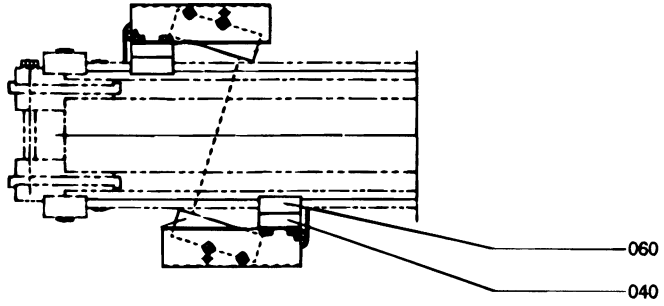
060
040

Pos	Part No	SP	UN	Qty	Description	Page No
Conveyor width B40						
000	**C- 539094-0101**		-	1	**QUEUE GUARD, DOUBLE**	
070	1086888		-	4	COVER	
040 .	552643		-	2	HOLDER	
050	540169			4	DOWEL	
060	1020638		-	2	HOLDER	
Conveyor width B55. B55S, B65, B79, R79, T79, R109, T109, B68, R68						
000	**C- 539094-0402**	-		1	**QUEUE GUARD DOUBLE**	
070	1086889		-	4	COVER	
040	539095		-	2	HOLDER	
060 .	1020637		-	2	HOLDER	
COMMON PARTS						
001	**545198**		-	1	**ASSEMBLY INSTRUCTION**	
005	C-1086721-0101		-	1	PACKING DESCRIPTION	
100	532412		-	2	SPRING	
110	1086711		-	1	SET OF SIGNS	
115	1086870			1	SIGN	
140	84632-0001			1	INSTALLATION MANUAL	
142	84633-0001			1	SPARE PART CATALOGUE	
160	312105-0325		-	4	SCREW M6S5X10 A2 80	
170	312105-0331		-	4	SCREW O4017 M5X20A280	
180	312125-0293		-	8	SLOTTED HEMCS4X16RFR	
200	312605-0314		-	4	NUT M6M5RFR	
220	315105-0136		-	8	WASHER BRB4,3X8RFR	
240	315105-0146		-	12	WASHER BRB5,3X10RFR	
B903:1	90232-0103		PU	1	PHOTOCELL	
B903:2	90232-0104		PU	1	PHOTOCELL	
B904:1	90232-0103		PU	1	PHOTOCELL	
B904:2	90232-0104		PU	1	PHOTOCELL	

Pos	Part No	SP	UN	Qty	Description	Page No

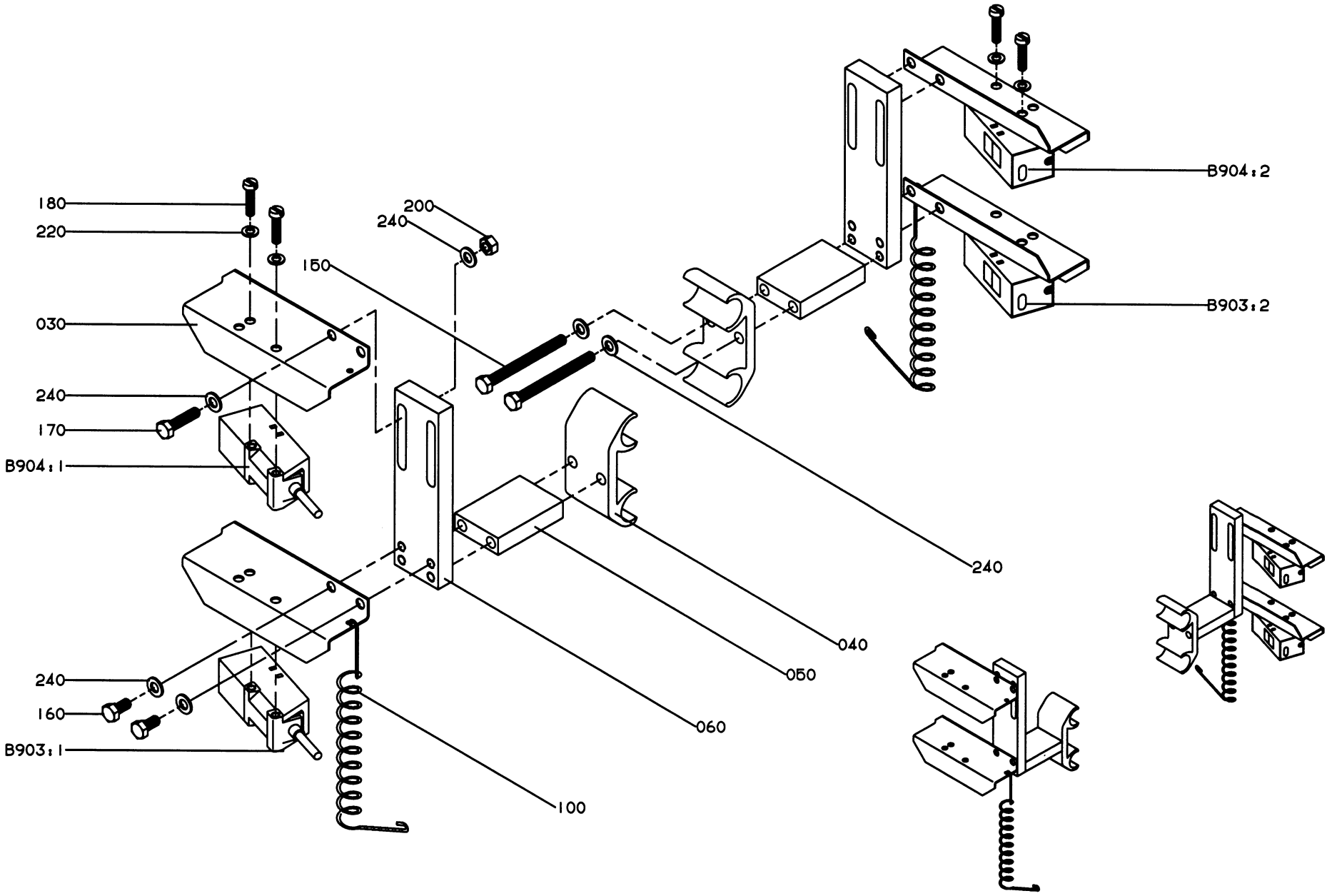

GraphicID: 107454702.eps
Parent Drw: 1074547-2
ECN 22668

Pos	Part No	SP	UN	Qty	Description	Page No
-						
000	**C-1074547-0201**	-		1	**QUEUE GUARD,DOUBLE**	
030	1086889	-		4	COVER	
040	1086175	-		2	HOLDER	
050	1021917	-		2	SPACER	
060	1074548	-		2	HOLDER	
100	532412	-		2	SPRING	
150	312101-0343	-		4	SCREW M6S5X60FZB	
160	312105-0325	-		4	SCREW M6S5X10 A2 80	
170	312105-0331	-		4	SCREW O4017 M5X20A280	
180	312125-0293	-		8	SLOTTED HEMCS4X16RFR	
200	312605-0314	-		4	NUT M6M5RFR	
220	315105-0136	-		8	WASHER BRB4,3X8RFR	
240	315105-0146	-		16	WASHER BRB5,3X10RFR	
B903:1	90232-0103	P		1	PH.CELL OMRON E3SCT61L 5M	
B903:2	90232-0104	P		1	RECEIVER OMRON E3SCT61D5M	
B904:1	90232-0103	P		1	PH.CELL OMRON E3SCT61L 5M	
B904:2	90232-0104	P		1	RECEIVER OMRON E3SCT61D5M	

Pos	Part No	SP	UN	Qty	Description	Page No

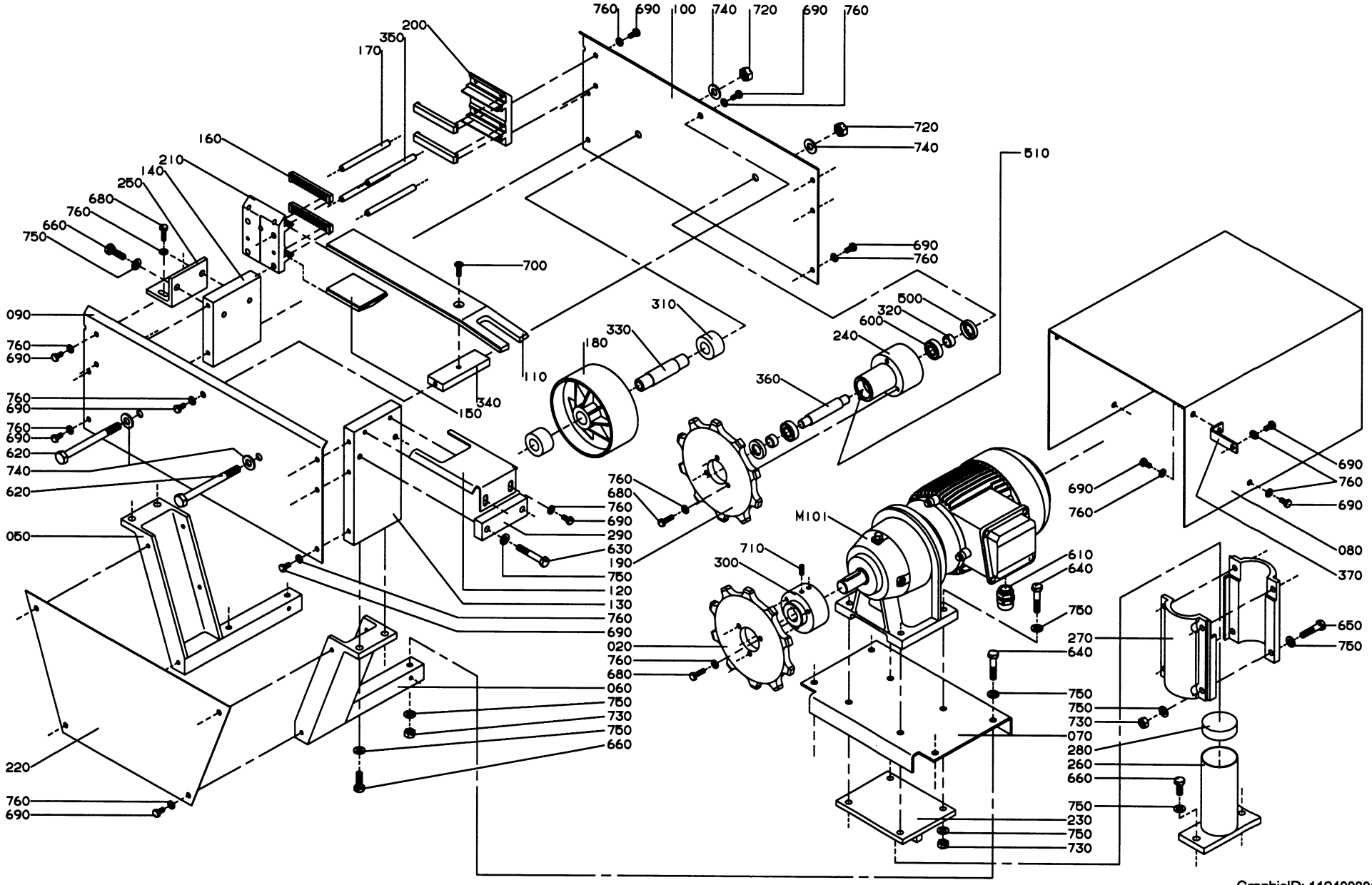

GraphicID: 112400801.eps
Parent Drw: 1124008-1
ECN 21267

Pos	Part No	SP	UN	Qty	Description	Page No
-						
000	**C-1124008-010V**	-		1	**DRIVE UNIT**	
020	486860	S		1	SPROCKET	
050	G- 486896-0001	-		1	CANTILEVER	
060	G- 486896-0002	-		1	CANTILEVER	
070	486886	-		1	MOTOR SHELF	
080	1124490	-		1	MOTOR COVER	
090	531484-0001	-		1	SIDE PLATE	
100	531484-0002	-		1	SIDE PLATE	
110	531503	-		1	SLIDE RAIL	
120	531506	-		1	PROTECTION PLATE	
130	1124874	-		1	GABLE PART	
140	1124873	-		1	GABLE PART	
150	464071-0007	-		1	SLIDE RAIL	
160	466074-0002	-		4	SLIDER	
170	476220	-		2	SPACER	
180	476975	-		1	WHEEL	
190	486858	-		1	SPROCKET	
200	486918-0001	-		1	JOINT PIECE	
210	486918-0002	-		1	JOINT PIECE	
220	497678	-		1	COVERING PLATE	
230	531487	-		1	BRACKET	
240	531953	-		1	HUB	
250	1124872	-		1	BRACKET	
260	1124869	-		1	SUPPORT LEG	
270	497680-0001	-		2	HOLDER	
280	497997	-		1	PLUG	
290	1124700	-		1	SPACER	
300	497635	-		1	HUB	
310	497637-0003	-		2	SPACER	
320	530852	-		2	RING	
330	531499	-		1	BEARING SLEEVE	
340	531502	-		1	MOUNTING BLOCK	
350	531948	-		2	SPACER	
360	531952	-		1	BEARING SLEEVE	
370	1124491	-		1	BRACKET	
500	90091-0004	S		2	SEAL RING	
510	90296-0068	-		X	GREASE	
600	321308-0201	S		2	BALL BEARISKF6001-2RS	
610	352103-0108	-		1	CABLE GLAND ST13;6-12MM	
620	312105-0513	-		2	SCREW 014 M10X110A280	
630	312105-0461	-		2	SCREW O4017 M8X50A280	
640	312105-0459	-		8	SCREW O4017 M8X40A280	
650	312105-0457	-		4	SCREW O4017 M8X35A280	
660	312105-0453	-		8	SCREW O4017 M8X25A280	
680	312105-0370	-		8	SCREW O4017 M6X20A280	
690	312105-0366	-		26	SCREW O4017 M6X12A280	
700	312155-0370	-		1	SCREW MF6S6X20RFR	
710	312318-0368	-		2	STOP SCREW SK6SS6X16RFR	
720	312605-0320	-		2	NUT M6M10RFR	
730	312605-0318	-		12	NUT M6M8RFR	
740	315105-0173	-		4	WASHER BRB10,5X22RFR	
750	315105-0165	-		34	WASHER BRB8,4X16RFR	
760	315105-0153	-		32	WASHER BRB6,4X12RFR	
M101	90069-0182	C		1	GEARED MOTOR	

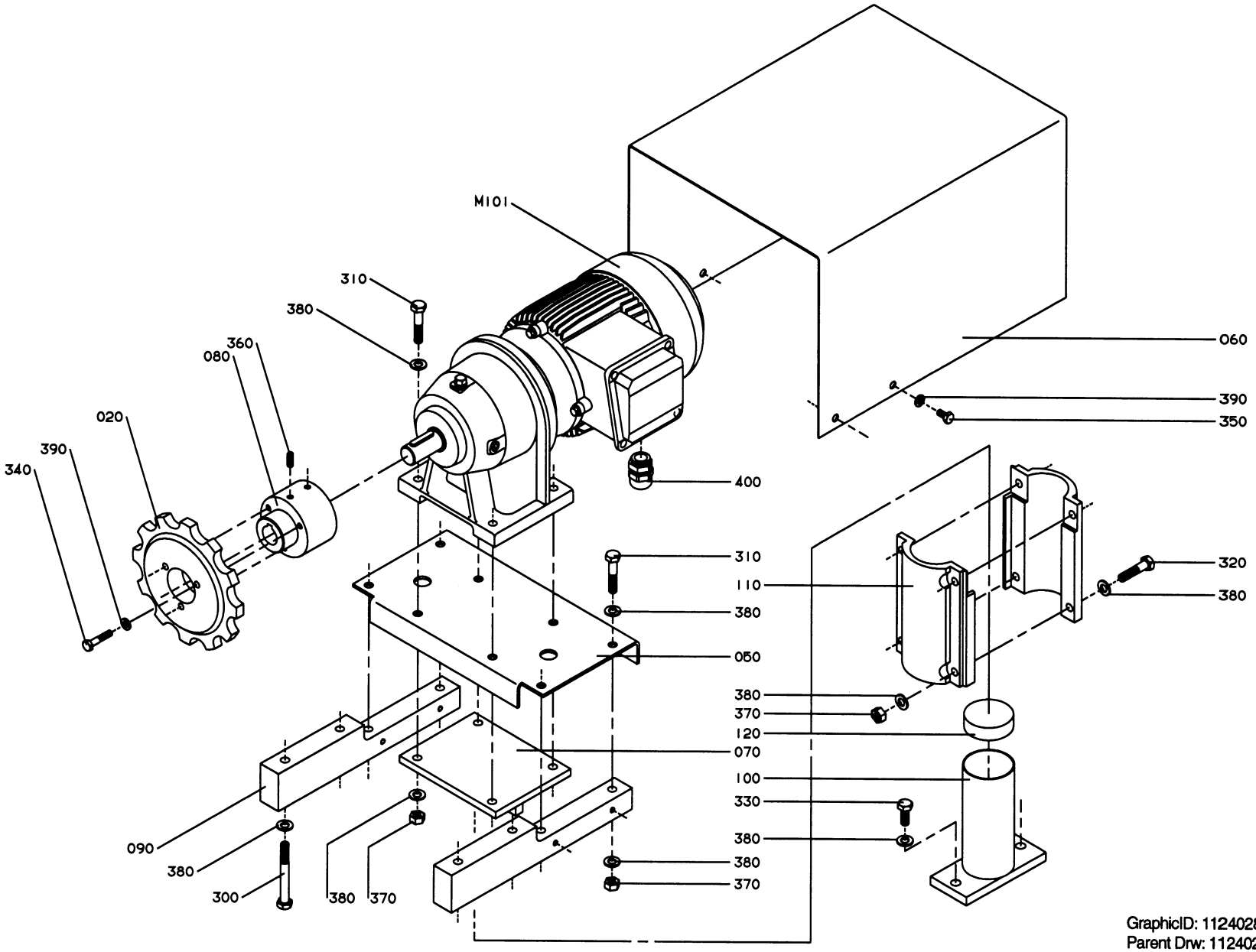

GraphicID: 112402801.eps
Parent Drw: 1124028-1
ECN 21267

Pos	Part No	SP	UN	Qty	Description	Page No
-						
000	**C-1124028-010V**	**-**		**1**	**DRIVE MOTOR**	
020	90344-0072	S		1	SPROCKET	
050	539096	-		1	MOTOR SHELF	
060	539103	-		1	MOTOR COVER	
070	531487	-		1	BRACKET	
080	539158	-		1	HUB	
090	1124868	-		2	BRACKET	
100	1124869	-		1	SUPPORT LEG	
110	497680-0001	-		2	HOLDER	
120	497997	-		1	PLUG	
300	312105-0464	-		4	SCREW O4014 M8X65A280	
310	312105-0459	-		8	SCREW O4017 M8X40A280	
320	312105-0457	-		4	SCREW O4017 M8X35A280	
330	312105-0453	-		2	SCREW O4017 M8X25A280	
340	312105-0374	-		3	SCREW O4017 M6X30A280	
350	312105-0366	-		4	SCREW O4017 M6X12A280	
360	312318-0368	-		2	STOP SCREW SK6SS6X16RFR	
370	312605-0318	-		12	NUT M6M8RFR	
380	315105-0165	-		30	WASHER BRB8,4X16RFR	
390	315105-0153	-		7	WASHER BRB6,4X12RFR	
400	90012-0118	-		1	GLAND	
M101	90069-0181	C		1	GEARED MOTOR	

Pos	Part No	SP	UN	Qty	Description	Page No

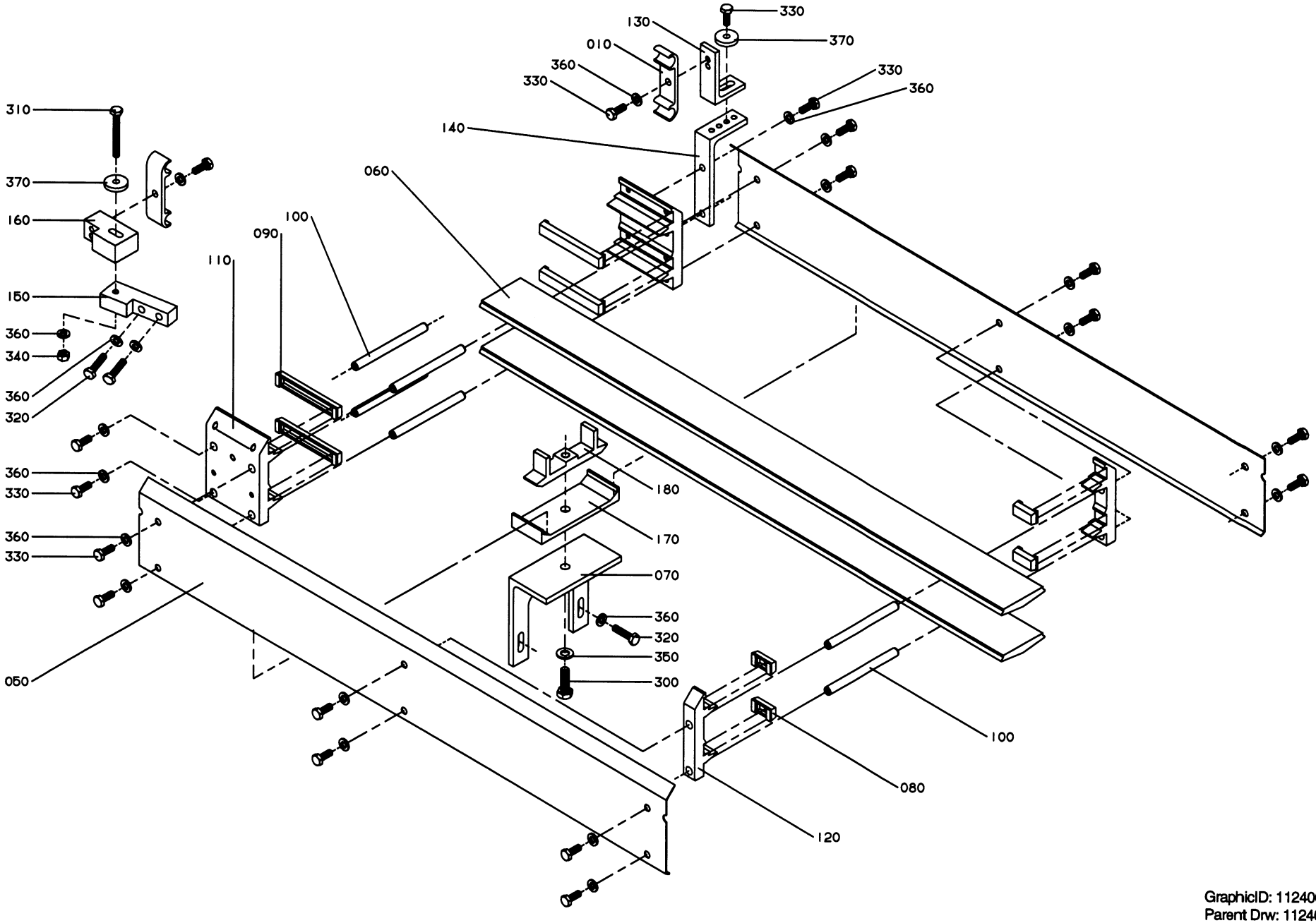

GraphicID: 112400902.eps
Parent Drw: 1124009-2
ECN 23179

Pos	Part No	SP	UN	Qty	Description	Page No
Conveyor width B40, B55, B55S, B65, B68, B79						
000	**C-1124009-0201**	-		1	**CONV.BODY,STRAIGHT**	
010	1020635-0001	-		2	HOLDER	
Conveyor width B40						
000	**C-1124009-0202**	-		1	**CONV.BODY,STRAIGHT**	
010	1020634-0001	-		2	HOLDER	
COMMON PARTS						
050	**1124711**	-		2	**COVERING PLATE**	
060	1124712	-		2	SLIDE RAIL	
070	1124713	-		1	BRACKET	
080	466074-0001	-		4	SLIDER	
090	466074-0002	-		4	SLIDER	
100	476220	-		6	SPACER	
110	457696-0001	-		2	JOINT PIECE	
120	464072	-		2	CLAMPING PART	
130	1124963	-		1	BRACKET	
140	1124964	-		1	BRACKET	
150	1124517	-		1	BRACKET	
160	1124518	-		1	BRACKET	
170	537483	-		1	BRACKET	
180	537482	-		1	BRACKET	
300	312105-0453	-		1	SCREW O4017 M8X25A280	
310	312109-0380	-		1	SCREW M6S6X50H RFR	
320	312105-0372	-		4	SCREW O4017 M6X25A280	
330	312105-0368	-		19	SCREW O4017 M6X16A280	
340	312605-0316	-		1	NUT M6M6RFR	
350	315105-0165	-		1	WASHER BRB8,4X16RFR	
360	315105-0153	-		23	WASHER BRB6,4X12RFR	
370	315125-0153	-		2	WASHER SB 6,4X22X4 RFR	

Pos	Part No	SP	UN	Qty	Description	Page No

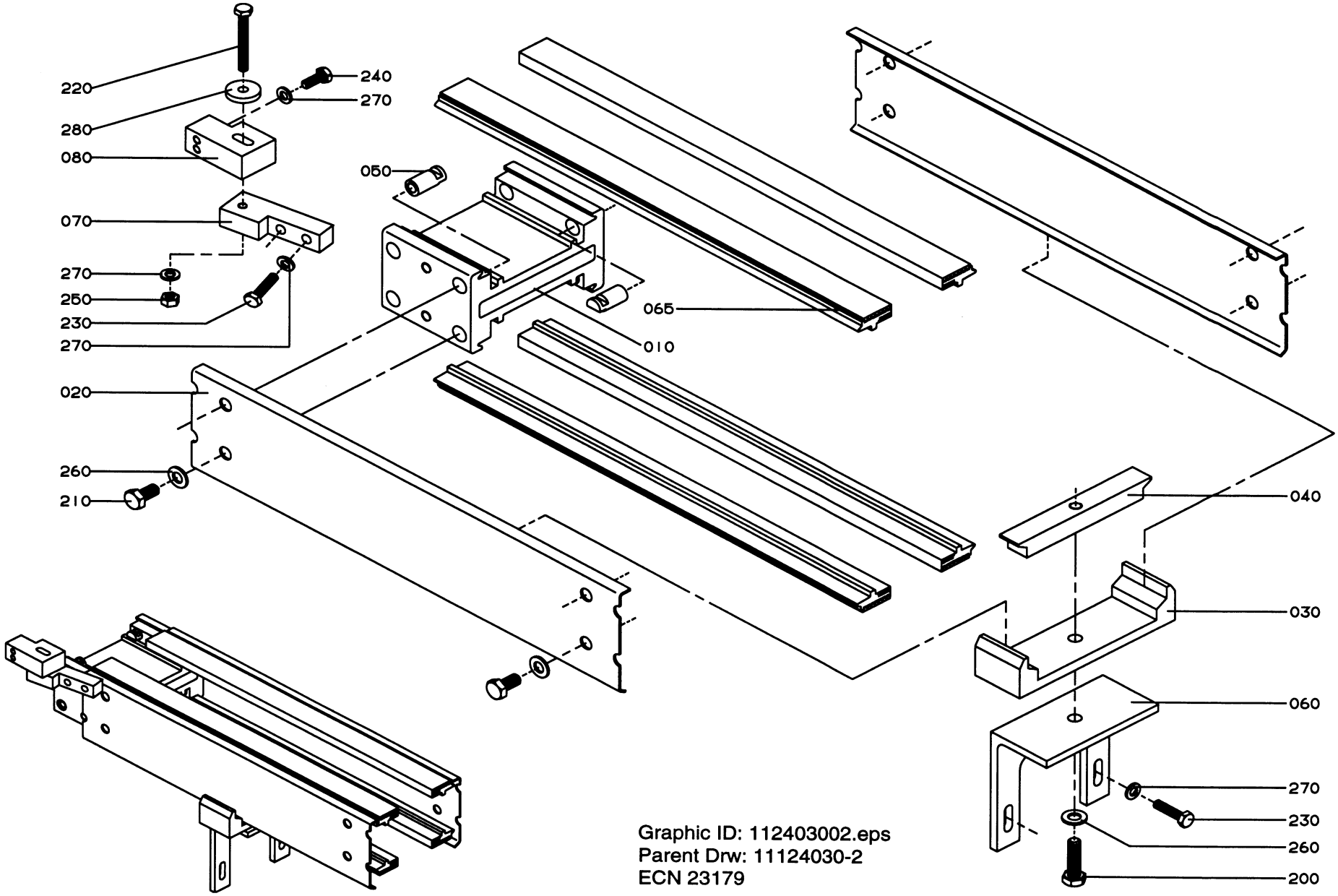

Graphic ID: 112403002.eps
Parent Drw: 11124030-2
ECN 23179

Pos	Part No	SP	UN	Qty	Description	Page No
-						
000	C-1124030-020V	-		1	CONV.BODY,STRAIGHT	
010	1086222	-		1	JOINT PIECE	
020	1139159	-		2	COVERING PLATE	
030	548246	-		1	BRACKET	
040	548247	-		1	BRACKET	
050	1086180	-		8	SLEEVE	
060	1124713	-		1	BRACKET	
065	1139160	-		4	SLIDE RAIL	
070	1124517	-		1	BRACKET	
080	1124518	-		1	BRACKET	
200	312105-0455	-		1	SCREW O4017 M8X30A280	
210	312105-0449	-		8	SCREW O4017 M8X16A280	
220	312109-0380	-		1	SCREW M6S6X50H RFR	
230	312105-0372	-		4	SCREW O4017 M6X25A280	
240	312105-0368	-		1	SCREW O4017 M6X16A280	
250	312605-0316	-		1	NUT M6M6RFR	
260	315105-0165	-		9	WASHER BRB8,4X16RFR	
270	315105-0153	-		6	WASHER BRB6,4X12RFR	
280	315125-0153	-		1	WASHER SB 6,4X22X4 RFR	

Pos	Part No	SP	UN	Qty	Description	Page No

Mounting for Unit Conveyor

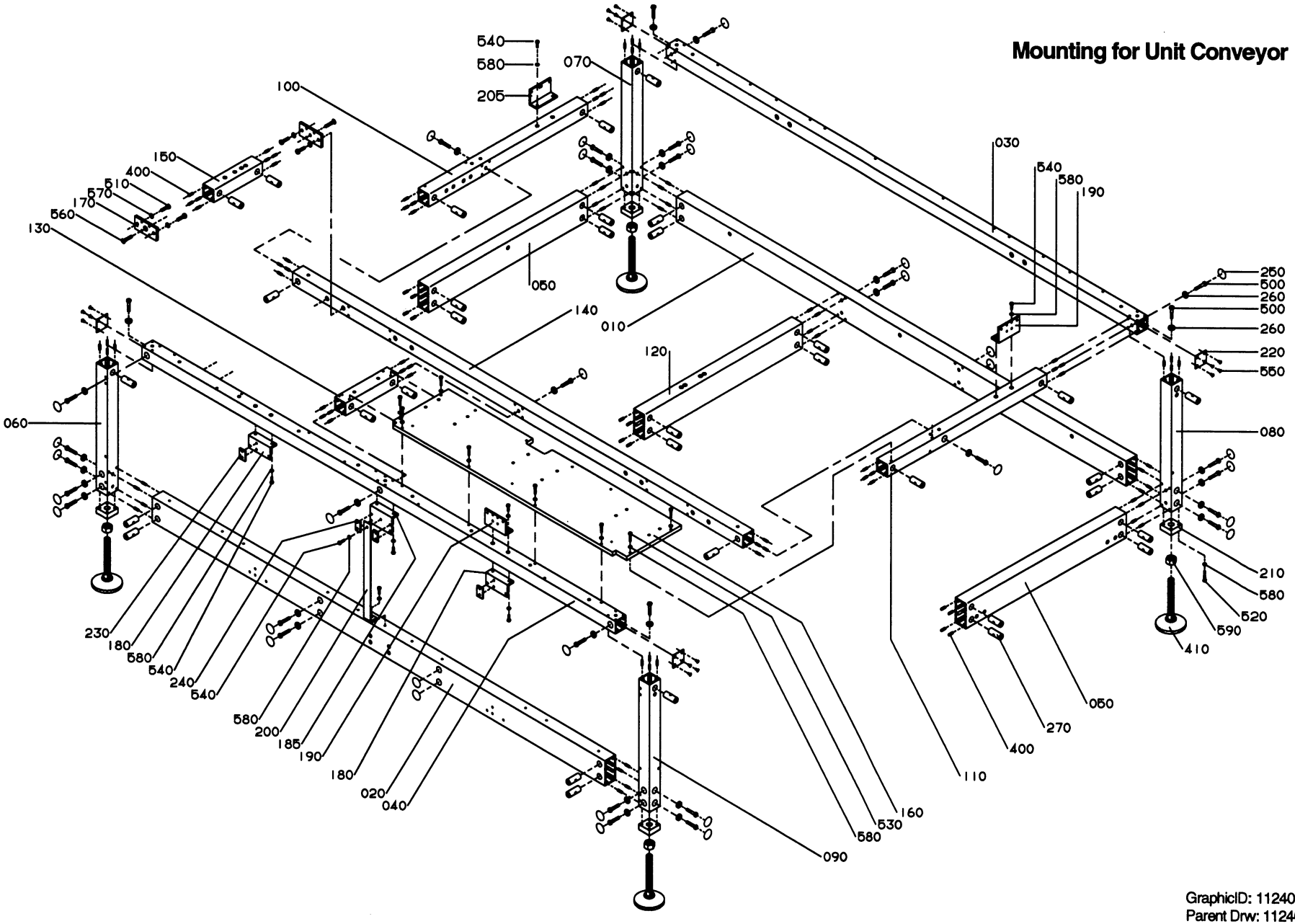

GraphicID: 112402502.eps
Parent Drw: 1124025-2
ECN 23179

Pos	Part No	SP	UN	Qty	Description	Page No
-						
000	C-1124025-0201	-		1	INFEED FRAME	
010	1124650	-		1	PROFILE	
020	1124651	-		1	PROFILE	
030	1139200	-		1	PROFILE	
040	1124653	-		1	PROFILE	
050	1124654	-		2	PROFILE	
060	1124655	-		1	PROFILE	
070	1124656	-		1	PROFILE	
080	1124657	-		1	PROFILE	
090	1124658	-		1	PROFILE	
100	1139202	-		1	PROFILE	
110	1139203	-		1	PROFILE	
120	1124661	-		1	PROFILE	
130	1124662	-		1	PROFILE	
140	1124663	-		1	PROFILE	
150	1124664	-		1	PROFILE	
160	1124783	-		1	PLATE	
170	556624	-		2	FRAME BRACKET	
180	1124718	-		2	BRACKET	
185	1124524	-		1	BRACKET	
190	1124719	-		2	BRACKET	
200	1124720	-		1	COVER SLIP	
205	1139204	-		1	BRACKET	
210	556601	-		4	BRACKET	
220	556604	-		4	COVER PLATE	
230	1124721	-		2	WASHER	
240	1124722	-		2	WASHER	
250	1021933	-		32	COVER TAPE	
260	548599	-		32	WASHER	
270	486268	-		34	NUT	
400	1065410	-		96	PIN	
410	90347-0142	-		4	FOOT	
500	312105-0459	-		32	SCREW O4017 M8X40A280	
510	312105-0455	-		4	SCREW O4017 M8X30A280	
520	312105-0376	-		16	SCREW O4017 M6X35A280	
530	312105-0374	-		8	SCREW O4017 M6X30A280	
540	312105-0370	-		14	SCREW O4017 M6X20A280	
550	312145-0325	-		16	SLOTTED HEMFS5X10RFR	
560	312155-0459	-		2	SCREW MF6S8X40RFR	
570	315105-0165	-		4	WASHER BRB8,4X16RFR	
580	315105-0153	-		38	WASHER BRB6,4X12RFR	
590	312605-0326	-		4	NUT M6M20RFR	

Pos	Part No	SP	UN	Qty	Description	Page No

Mounting for Package Conveyor

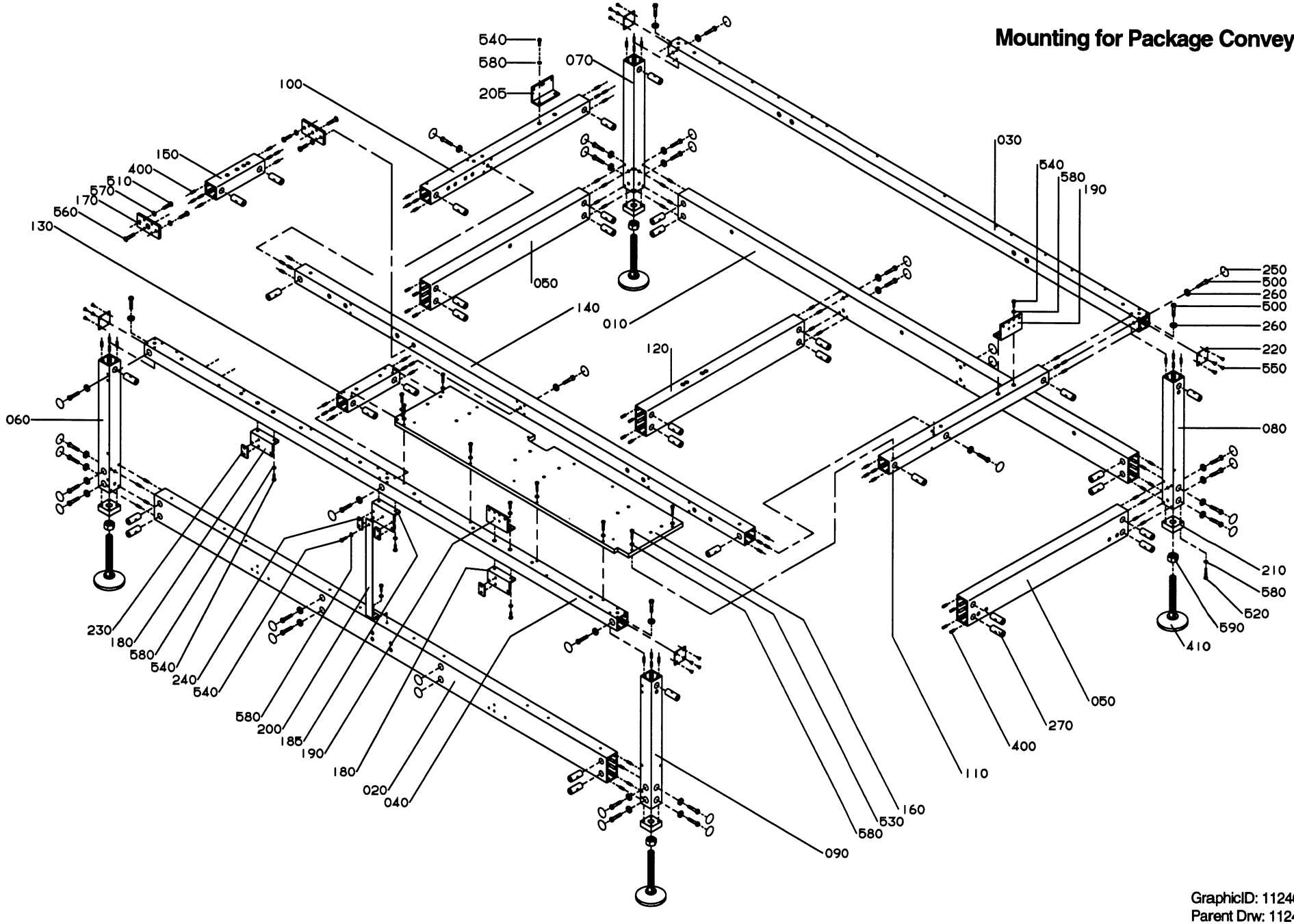

GraphicID: 112402503.eps
Parent Drw: 1124025-3
ECN 23179

Pos	Part No	SP	UN	Qty	Description	Page No
-						
000	C-1124025-0201	-		1	INFEED FRAME	
010	1124650	-		1	PROFILE	
020	1124651	-		1	PROFILE	
030	1139200	-		1	PROFILE	
040	1124653	-		1	PROFILE	
050	1124654	-		2	PROFILE	
060	1124655	-		1	PROFILE	
070	1124656	-		1	PROFILE	
080	1124657	-		1	PROFILE	
090	1124658	-		1	PROFILE	
100	1139202	-		1	PROFILE	
110	1139203	-		1	PROFILE	
120	1124661	-		1	PROFILE	
130	1124662	-		1	PROFILE	
140	1124663	-		1	PROFILE	
150	1124664	-		1	PROFILE	
160	1124783	-		1	PLATE	
170	556624	-		2	FRAME BRACKET	
180	1124718	-		2	BRACKET	
185	1124524	-		1	BRACKET	
190	1124719	-		2	BRACKET	
200	1124720	-		1	COVER SLIP	
205	1139204	-		1	BRACKET	
210	556601	-		4	BRACKET	
220	556604	-		4	COVER PLATE	
230	1124721	-		2	WASHER	
240	1124722	-		2	WASHER	
250	1021933	-		32	COVER TAPE	
260	548599	-		32	WASHER	
270	486268	-		34	NUT	
400	1065410	-		96	PIN	
410	90347-0142	-		4	FOOT	
500	312105-0459	-		32	SCREW O4017 M8X40A280	
510	312105-0455	-		4	SCREW O4017 M8X30A280	
520	312105-0376	-		16	SCREW O4017 M6X35A280	
530	312105-0374	-		8	SCREW O4017 M6X30A280	
540	312105-0370	-		14	SCREW O4017 M6X20A280	
550	312145-0325	-		16	SLOTTED HEMFS5X10RFR	
560	312155-0459	-		2	SCREW MF6S8X40RFR	
570	315105-0165	-		4	WASHER BRB8,4X16RFR	
580	315105-0153	-		38	WASHER BRB6,4X12RFR	
590	312605-0326	-		4	NUT M6M20RFR	

Pos	Part No	SP	UN	Qty	Description	Page No

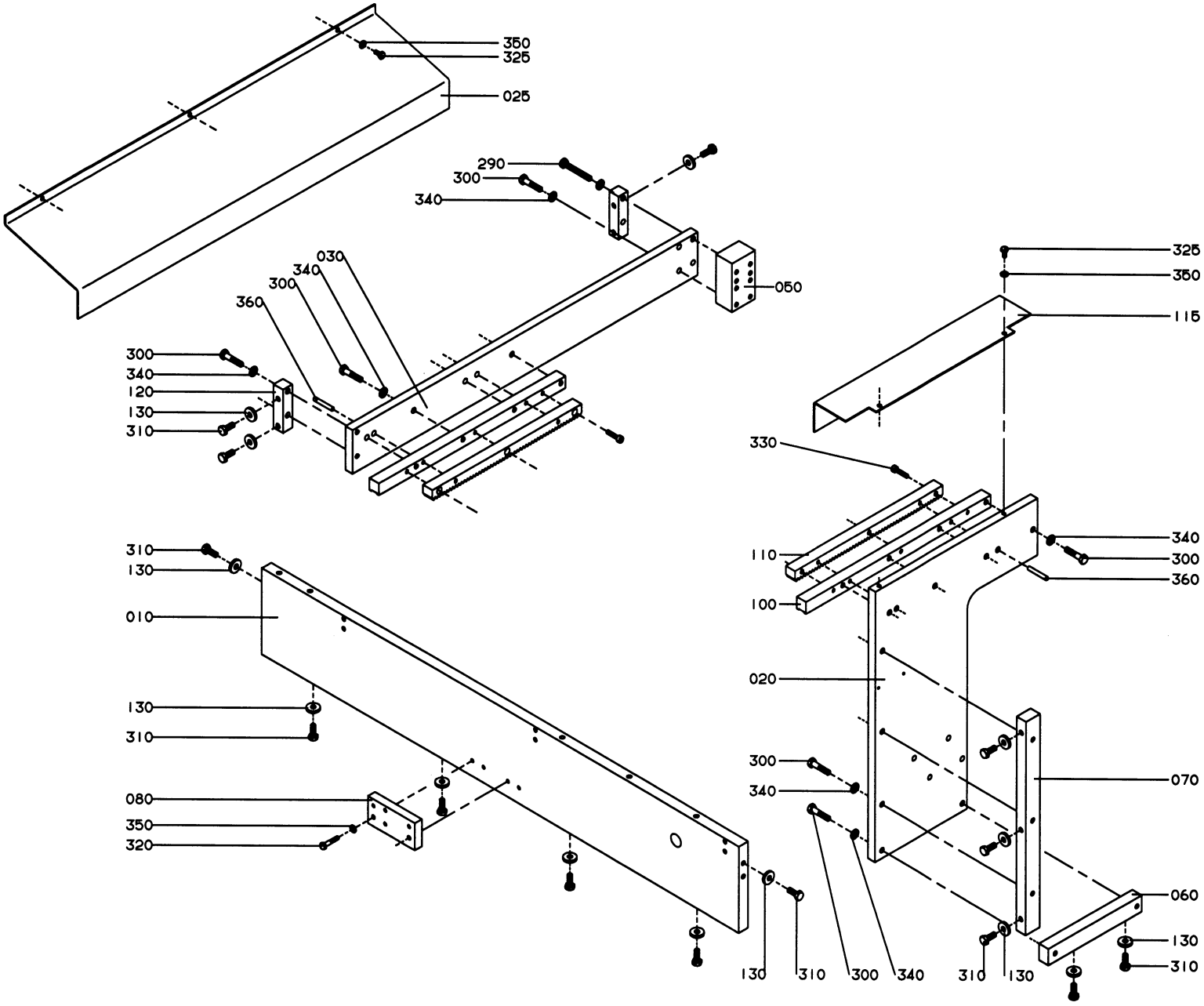

GraphicID: 112402602.eps
Parent Drw: 1124026-2
ECN 23179

Pos	Part No	SP	UN	Qty	Description	Page No
-						
000	C-1124026-020V	-		1	FRAME GROUPING PUSHER	
010	1124754	-		1	PLATE	
020	1124752	-		1	PLATE	
025	1124476	-		1	PROTECTION PLATE	
030	1139187	-		1	PLATE	
050	1139188	-		1	BRACKET	
060	1124704	-		1	BRACKET	
070	1124705	-		1	BRACKET	
080	1124716	-		1	BRACKET	
100	1124755	-		2	RAIL	
110	1124756	-		2	ROCK GEAR	
115	1124484	-		1	PROTECTION PLATE	
120	1124757	-		2	BRACKET	
130	548599	-		15	WASHER	
290	312105-0462	-		2	SCREW O4014 M8X55A280	
300	312105-0457	-		21	SCREW O4017 M8X35A280	
310	312105-0451	-		15	SCREW SO4017 8X20A280	
320	312105-0374	-		2	SCREW O4017 M6X30A280	
325	312105-0366	-		5	SCREW O4017 M6X12A280	
330	312115-0372	-		4	SCREW O4762 M6X25A280	
340	315105-0165	-		19	WASHER BRB8,4X16RFR	
350	315105-0153	-		9	WASHER BRB6,4X12RFR	
360	311103-0361	-		4	CYLINDRICACP M6 6X40 RFR	

Pos	Part No	SP	UN	Qty	Description	Page No

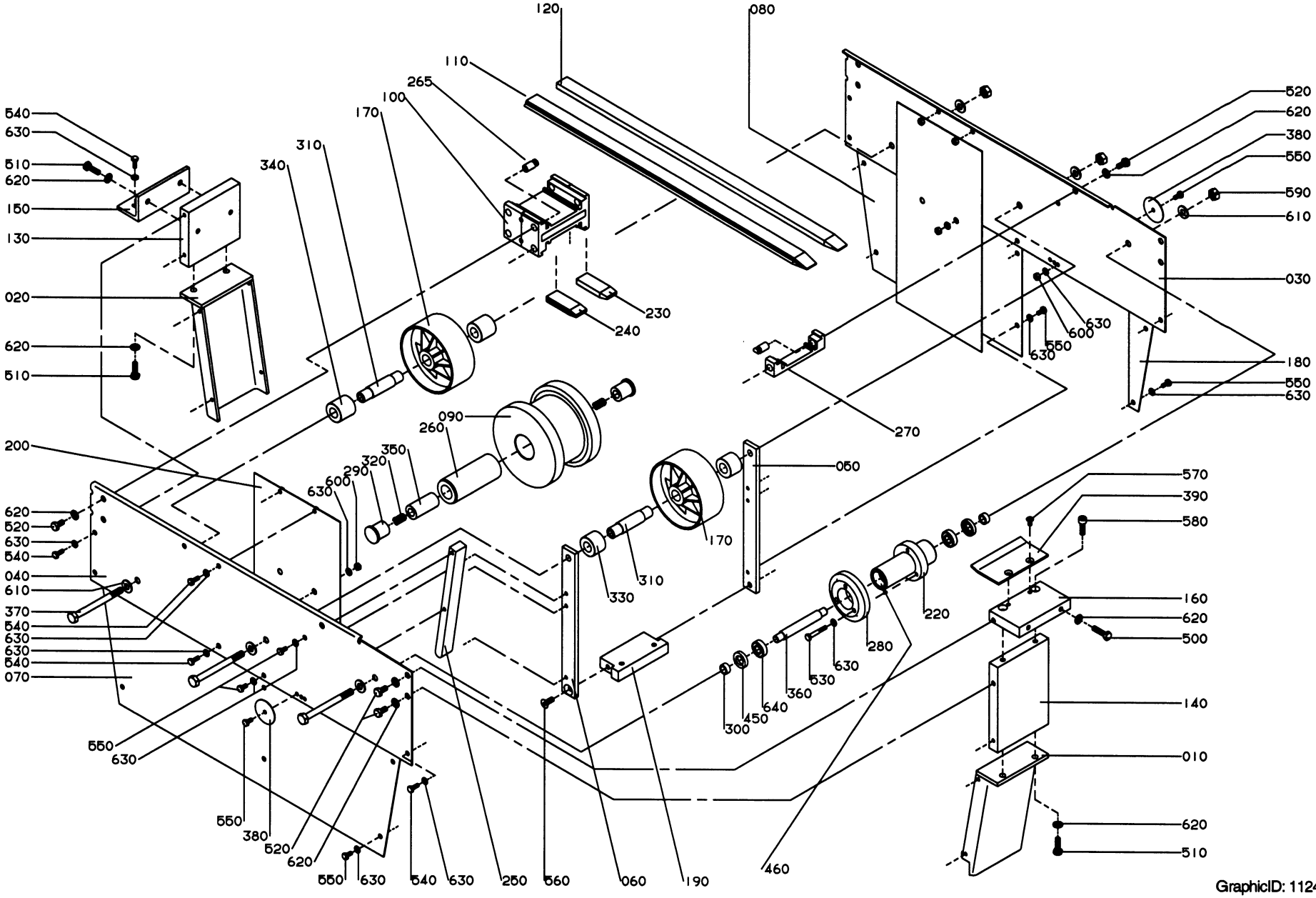
120
080
110
265
100
170
310
340
540
630
510
620
150
130
020
620
510
200
620
520
630
540
040
610
370
540
630
630
540
070
550
630
550
380
520
620
550
630
540
630
250
560
060
190
460
090
260
290
320
350
600
630
230
240
270
050
330
310
170
220
280
630
530
360
640
450
300
520
620
380
550
590
610
030
630
600
550
630
180
550
630
570
390
580
160
620
500
140
010
620
510
GraphicID: 112402902.eps
Parent Drw: 1124029-2
ECN 23179

Pos	Part No	SP	UN	Qty	Description	Page No
-						
000	**C-1124029-0201**	-		**1**	**DRIVE UNIT**	
010	547174	-		1	CANTILEVER	
020	547175	-		1	CANTILEVER	
030	1086421	-		1	SIDE PLATE	
040	1086422	-		1	SIDE PLATE	
050	538375-0001	-		1	FASTENING IRON	
060	538375-0002	-		1	FASTENING IRON	
070	538382	-		1	COVERING PLATE	
080	538384	-		1	COVERING PLATE	
090	549646	-		1	WHEEL	
100	1086383	-		1	JOINT PIECE	
110	1086423	-		1	SLIDE RAIL	
120	1086424	-		1	SLIDE RAIL	
130	1124865	-		1	GABLE PART	
140	1124866	-		1	GABLE PART	
150	1124864	-		1	BRACKET	
160	1124867	-		1	BRACKET	
170	476975	-		2	WHEEL	
180	538383	-		1	COVERING PLATE	
190	547181	-		1	BRACKET	
200	547183	-		2	SLIDE SHEET	
220	547187	-		1	HUB	
230	1086426	-		1	STEERING RAIL	
240	1086425	-		1	STEERING RAIL	
250	549644	-		1	STEERING	
260	549659	-		1	SLEEVE	
265	1086180	-		10	SLEEVE	
270	1086384	-		1	MOUNTING BLOCK	
280	1128906	-		1	WHEEL	
290	499777	-		2	PLUG	
300	530852	-		2	RING	
310	531499	-		2	BEARING SLEEVE	
320	532404	-		2	SPRING	
330	547191-0001	-		2	SPACER	
340	547191-0002	-		2	SPACER	
350	547192	-		1	PLUG	
360	547193	-		1	BEARING SLEEVE	
370	547194	-		3	SCREW	
380	549645	-		2	COVER DISC	
390	1124863	-		1	PROTECTION PLATE	
450	90091-0004	S		2	SEAL RING	
460	90296-0068	-		X	GREASE	

Pos	Part No	SP	UN	Qty	Description	Page No
500	312105-0455	-		2	SCREW O4017 M8X30A280	
510	312105-0453	-		6	SCREW O4017 M8X25A280	
520	312105-0449	-		12	SCREW O4017 M8X16A280	
530	312105-0378	-		3	SCREW O4017 M6X40A280	
540	312105-0368	-		14	SCREW O4017 M6X16A280	
550	312105-0366	-		17	SCREW O4017 M6X12A280	
560	312155-0451	-		2	SCREW MF6S8X20RFR	
570	312155-0366	-		2	SCREW MF6S6X12RFR	
580	312115-0453	-		2	SCREW O4762 M8X25A280	
590	312605-0320	-		3	NUT M6M10RFR	
600	312605-0316	-		3	NUT M6M6RFR	
610	315105-0173	-		6	WASHER BRB10,5X22RFR	
620	315105-0165	-		20	WASHER BRB8,4X16RFR	
630	315105-0153	-		35	WASHER BRB6,4X12RFR	
640	321308-0201	S		2	BALL BEARISKF6001-2RS	

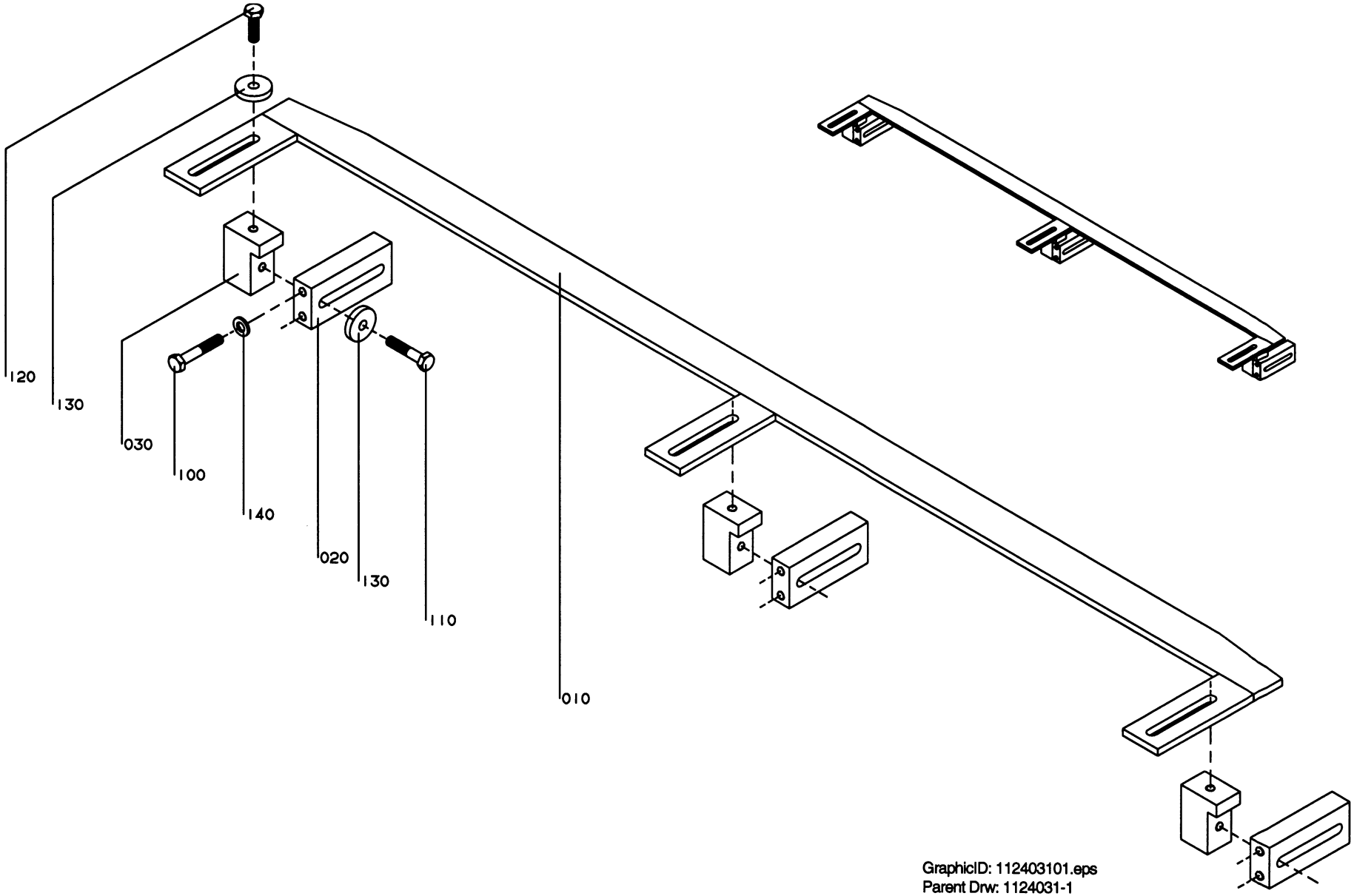

GraphicID: 112403101.eps
Parent Drw: 1124031-1
ECN 21267

Pos	Part No	SP	UN	Qty	Description	Page No
-						
000	C-1124031-0101	-		1	**STEERING RAIL**	
010	1124860	-		1	STEERING RAIL	
020	1124862	-		3	BRACKET	
030	1124861	-		3	BRACKET	
100	312105-0376	-		6	SCREW O4017 M6X35A280	
110	312105-0374	-		3	SCREW O4017 M6X30A280	
120	312105-0370	-		3	SCREW O4017 M6X20A280	
130	315125-0153	-		6	WASHER SB 6,4X22X4 RFR	
140	315105-0153	-		6	WASHER BRB6,4X12RFR	

Pos	Part No	SP	UN	Qty	Description	Page No

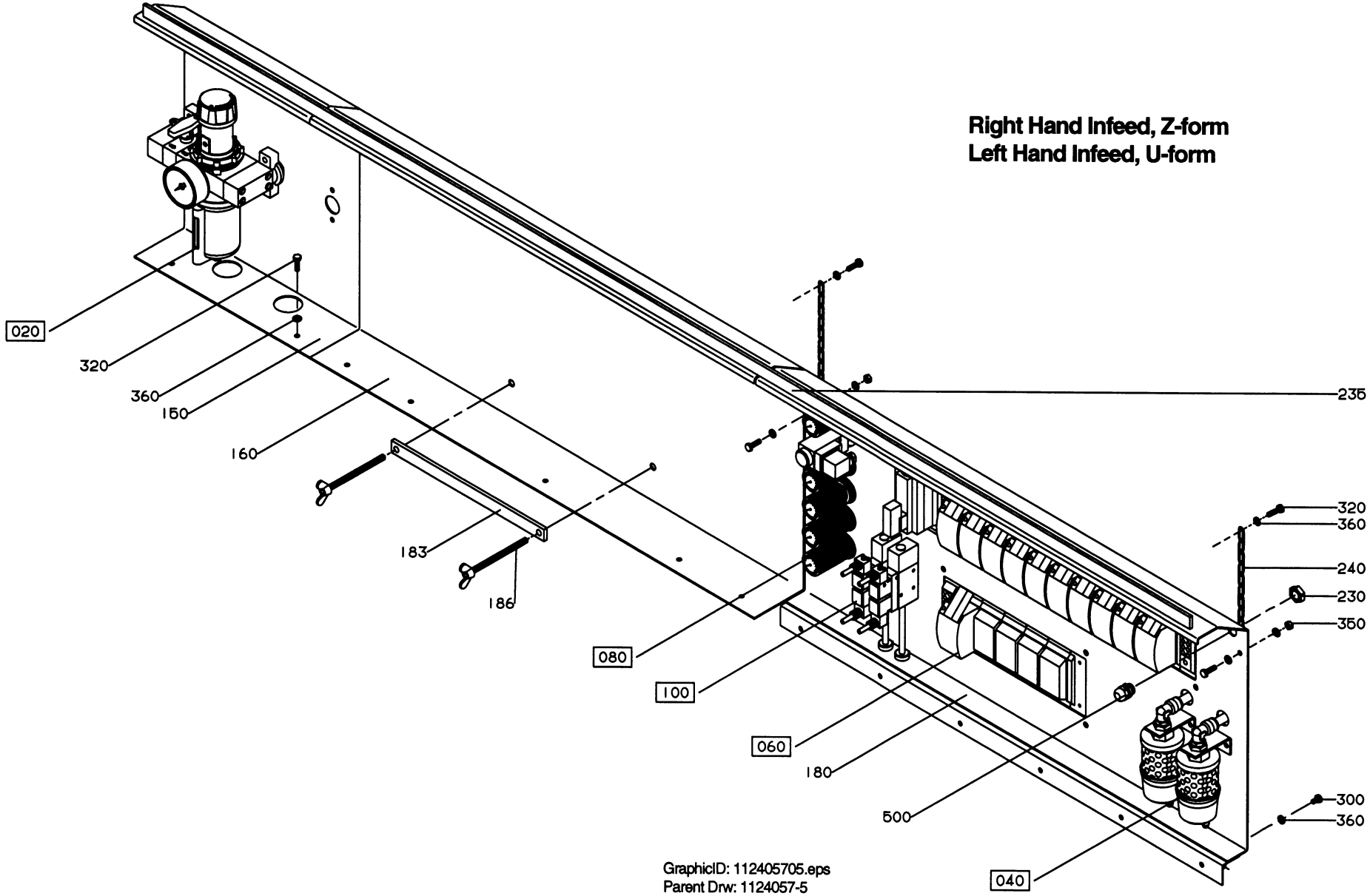
Right Hand Infeed, Z-form
Left Hand Infeed, U-form
020
320
360
150
160
183
186
080
100
060
180
500
040
235
320
360
240
230
350
300
360
GraphicID: 112405705.eps
Parent Drw: 1124057-5
ECN 23179

Pos	Part No	SP	UN	Qty	Description	Page No
-						
000	C-1124057-0201	-		1	**PNEUMATIC CABINET**	
020	C-1021618-0101	-		1	FILTER-REGULATOR	
040	C-1074127-0101	-		2	SILENCER	
060	C-1124058-020V	-		1	VALVE RAMP	
080	C-1124059-0101	-		1	PRESSURE REGULATOR RAMP	
100	C-1124062-0101	-		1	EJECTOR	
110	1139179	-		1	PNEUMATIC CHART	
150	1124825	-		1	PNEUMATIC PANEL	
160	1139210	-		1	PNEUMATIC PANEL	
180	1139211	-		1	PNEUMATIC PANEL	
183	1139212	-		1	HOLDER	
186	1139213	-		2	SCREW	
190	1139214	-		1	SET OF SIGNS	
195	90055-0100	-		2	JOINT CONNECTION	
200	90055-0101	-		2	JOINT CONNECTION	
210	90055-0147	-		1	JOINT CONNECTION	
230	90099-0104	-		5	NUT PR 15,2 (PG9)	
235	90143-0081	-	MM	2100	RUBBER SEAL	
240	90155-0016	-	MM	1000	CHAIN	
250	90163-0019	-		1	NIPPLE	
260	90166-0193	-	M	X	PLASTIC HOSE	
270	90166-0194	-	M	X	PLASTIC HOSE	
280	90166-0221	-	M	X	HOSE	
290	90166-0095	-	M	X	HOSE	
300	312105-0364	-		6	SCREW M6S6X10RFR	
320	312105-0370	-		18	SCREW O4017 M6X20A280	
350	312605-0316	-		2	NUT M6M6RFR	
360	315105-0153	-		23	WASHER BRB6,4X12RFR	
410	342716-0209	-		3	REDUCER 8-12	
420	342716-0210	-		1	REDUCER 6-12	
440	342735-0109	-		8	ELBOW PIPE D=12	
460	342742-0110	-		1	T-CONNECTI 12-3/8	
470	342748-0102	-		1	T-CONNECTI D=6	
490	342748-0109	-		6	T-CONNECTI D=12	
500	352103-0101	-		5	CABLE GLAND ST 9	
520	352113-0101	-		X	RIBBON CLA	
540	359009-0800	-		X	CABLE MARKM#RKEN PK	

Pos	Part No	SP	UN	Qty	Description	Page No

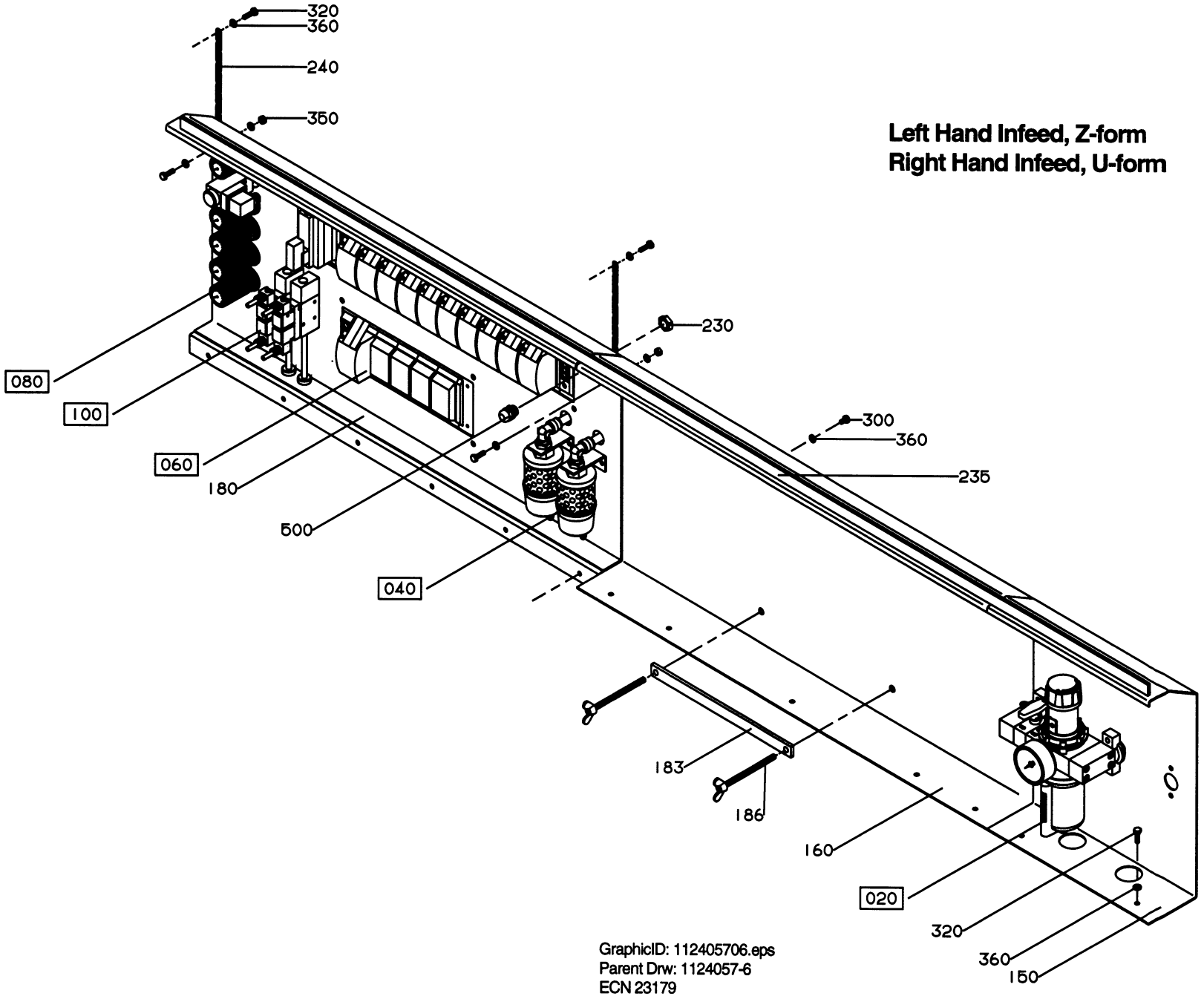

Left Hand Infeed, Z-form
Right Hand Infeed, U-form

GraphicID: 112405706.eps
Parent Drw: 1124057-6
ECN 23179

Pos	Part No	SP	UN	Qty	Description	Page No
-						
000	C-1124057-0201	-		1	**PNEUMATIC CABINET**	
020	C-1021618-0101	-		1	FILTER-REGULATOR	
040	C-1074127-0101	-		2	SILENCER	
060	C-1124058-020V	-		1	VALVE RAMP	
080	C-1124059-0101	-		1	PRESSURE REGULATOR RAMP	
100	C-1124062-0101	-		1	EJECTOR	
110	1139179	-		1	PNEUMATIC CHART	
150	1124825	-		1	PNEUMATIC PANEL	
160	1139210	-		1	PNEUMATIC PANEL	
180	1139211	-		1	PNEUMATIC PANEL	
183	1139212	-		1	HOLDER	
186	1139213	-		2	SCREW	
190	1139214	-		1	SET OF SIGNS	
195	90055-0100	-		2	JOINT CONNECTION	
200	90055-0101	-		2	JOINT CONNECTION	
210	90055-0147	-		1	JOINT CONNECTION	
230	90099-0104	-		5	NUT PR 15,2 (PG9)	
235	90143-0081	-	MM	2100	RUBBER SEAL	
240	90155-0016	-	MM	1000	CHAIN	
250	90163-0019	-		1	NIPPLE	
260	90166-0193	-	M	X	PLASTIC HOSE	
270	90166-0194	-	M	X	PLASTIC HOSE	
280	90166-0221	-	M	X	HOSE	
290	90166-0095	-	M	X	HOSE	
300	312105-0364	-		6	SCREW M6S6X10RFR	
320	312105-0370	-		18	SCREW O4017 M6X20A280	
350	312605-0316	-		2	NUT M6M6RFR	
360	315105-0153	-		23	WASHER BRB6,4X12RFR	
410	342716-0209	-		3	REDUCER 8-12	
420	342716-0210	-		1	REDUCER 6-12	
440	342735-0109	-		8	ELBOW PIPE D=12	
460	342742-0110	-		1	T-CONNECTI 12-3/8	
470	342748-0102	-		1	T-CONNECTI D=6	
490	342748-0109	-		6	T-CONNECTI D=12	
500	352103-0101	-		5	CABLE GLAND ST 9	
520	352113-0101	-		X	RIBBON CLA	
540	359009-0800	-		X	CABLE MARKM#RKEN PK	

Pos	Part No	SP	UN	Qty	Description	Page No

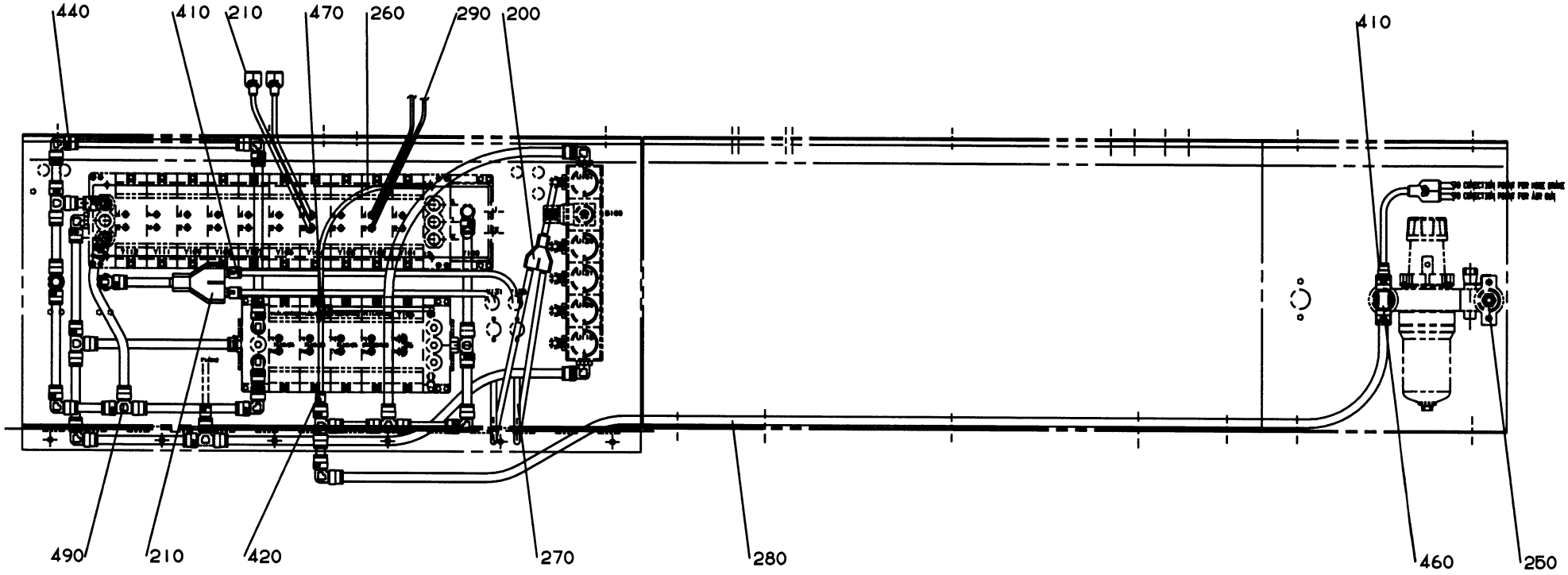

GraphicID: 112405707.eps
Parent Drw: 1124057-7
ECN 23179

Pos	Part No	SP	UN	Qty	Description	Page No
-						
000	C-1124057-0201	-		1	**PNEUMATIC CABINET**	
020	C-1021618-0101	-		1	FILTER-REGULATOR	
040	C-1074127-0101	-		2	SILENCER	
060	C-1124058-020V	-		1	VALVE RAMP	
080	C-1124059-0101	-		1	PRESSURE REGULATOR RAMP	
100	C-1124062-0101	-		1	EJECTOR	
110	1139179	-		1	PNEUMATIC CHART	
150	1124825	-		1	PNEUMATIC PANEL	
160	1139210	-		1	PNEUMATIC PANEL	
180	1139211	-		1	PNEUMATIC PANEL	
183	1139212	-		1	HOLDER	
186	1139213	-		2	SCREW	
190	1139214	-		1	SET OF SIGNS	
195	90055-0100	-		2	JOINT CONNECTION	
200	90055-0101	-		2	JOINT CONNECTION	
210	90055-0147	-		1	JOINT CONNECTION	
230	90099-0104	-		5	NUT PR 15,2 (PG9)	
235	90143-0081	-	MM	2100	RUBBER SEAL	
240	90155-0016	-	MM	1000	CHAIN	
250	90163-0019	-		1	NIPPLE	
260	90166-0193	-	M	X	PLASTIC HOSE	
270	90166-0194	-	M	X	PLASTIC HOSE	
280	90166-0221	-	M	X	HOSE	
290	90166-0095	-	M	X	HOSE	
300	312105-0364	-		6	SCREW M6S6X10RFR	
320	312105-0370	-		18	SCREW O4017 M6X20A280	
350	312605-0316	-		2	NUT M6M6RFR	
360	315105-0153	-		23	WASHER BRB6,4X12RFR	
410	342716-0209	-		3	REDUCER 8-12	
420	342716-0210	-		1	REDUCER 6-12	
440	342735-0109	-		8	ELBOW PIPE D=12	
460	342742-0110	-		1	T-CONNECTI 12-3/8	
470	342748-0102	-		1	T-CONNECTI D=6	
490	342748-0109	-		6	T-CONNECTI D=12	
500	352103-0101	-		5	CABLE GLAND ST 9	
520	352113-0101	-		X	RIBBON CLA	
540	359009-0800	-		X	CABLE MARKM#RKEN PK	

Pos	Part No	SP	UN	Qty	Description	Page No

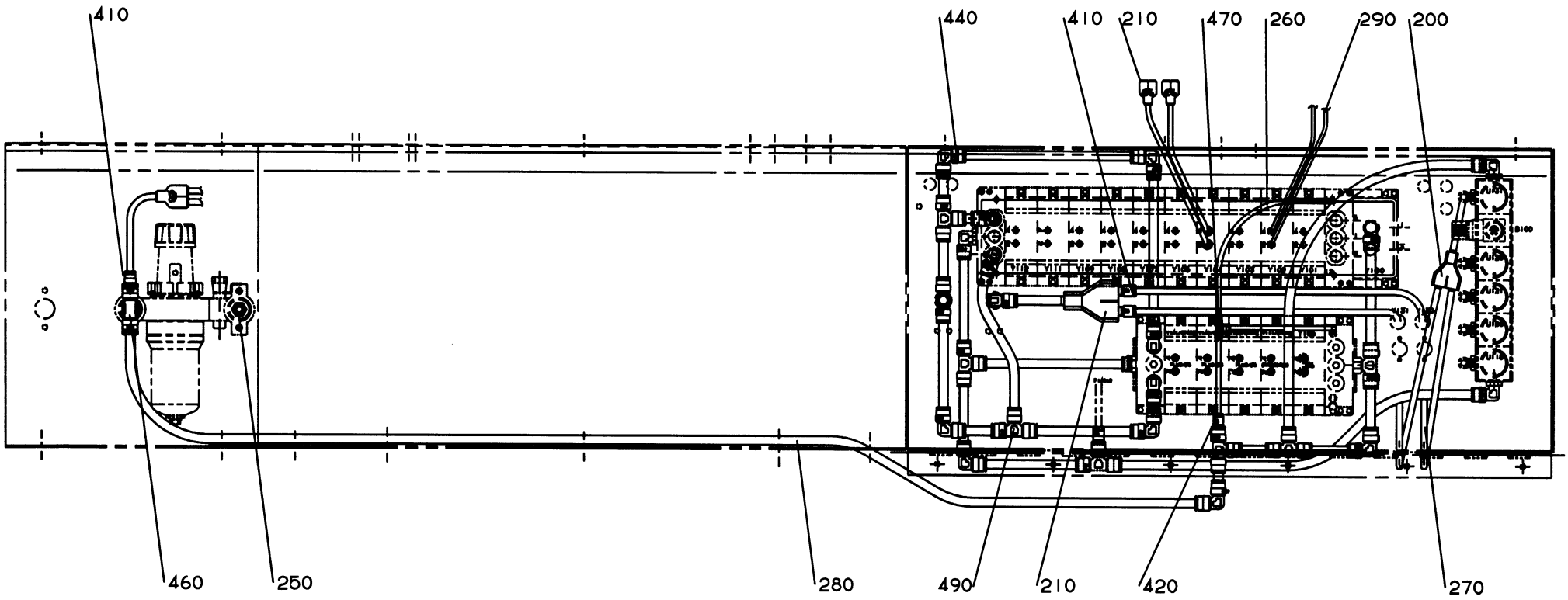

GraphicID: 112405708.eps
Parent Drw: 1124057-8
ECN 23179

Pos	Part No	SP	UN	Qty	Description	Page No
-						
000	**C-1124057-0201**	-		1	**PNEUMATIC CABINET**	
020	C-1021618-0101	-		1	FILTER-REGULATOR	
040	C-1074127-0101	-		2	SILENCER	
060	C-1124058-020V	-		1	VALVE RAMP	
080	C-1124059-0101	-		1	PRESSURE REGULATOR RAMP	
100	C-1124062-0101	-		1	EJECTOR	
110	1139179	-		1	PNEUMATIC CHART	
150	1124825	-		1	PNEUMATIC PANEL	
160	1139210	-		1	PNEUMATIC PANEL	
180	1139211	-		1	PNEUMATIC PANEL	
183	1139212	-		1	HOLDER	
186	1139213	-		2	SCREW	
190	1139214	-		1	SET OF SIGNS	
195	90055-0100	-		2	JOINT CONNECTION	
200	90055-0101	-		2	JOINT CONNECTION	
210	90055-0147	-		1	JOINT CONNECTION	
230	90099-0104	-		5	NUT PR 15,2 (PG9)	
235	90143-0081	-	MM	2100	RUBBER SEAL	
240	90155-0016	-	MM	1000	CHAIN	
250	90163-0019	-		1	NIPPLE	
260	90166-0193	-	M	X	PLASTIC HOSE	
270	90166-0194	-	M	X	PLASTIC HOSE	
280	90166-0221	-	M	X	HOSE	
290	90166-0095	-	M	X	HOSE	
300	312105-0364	-		6	SCREW M6S6X10RFR	
320	312105-0370	-		18	SCREW O4017 M6X20A280	
350	312605-0316	-		2	NUT M6M6RFR	
360	315105-0153	-		23	WASHER BRB6,4X12RFR	
410	342716-0209	-		3	REDUCER 8-12	
420	342716-0210	-		1	REDUCER 6-12	
440	342735-0109	-		8	ELBOW PIPE D=12	
460	342742-0110	-		1	T-CONNECTI 12-3/8	
470	342748-0102	-		1	T-CONNECTI D=6	
490	342748-0109	-		6	T-CONNECTI D=12	
500	352103-0101	-		5	CABLE GLAND ST 9	
520	352113-0101	-		X	RIBBON CLA	
540	359009-0800	-		X	CABLE MARKM#RKEN PK	

Pos	Part No	SP	UN	Qty	Description	Page No

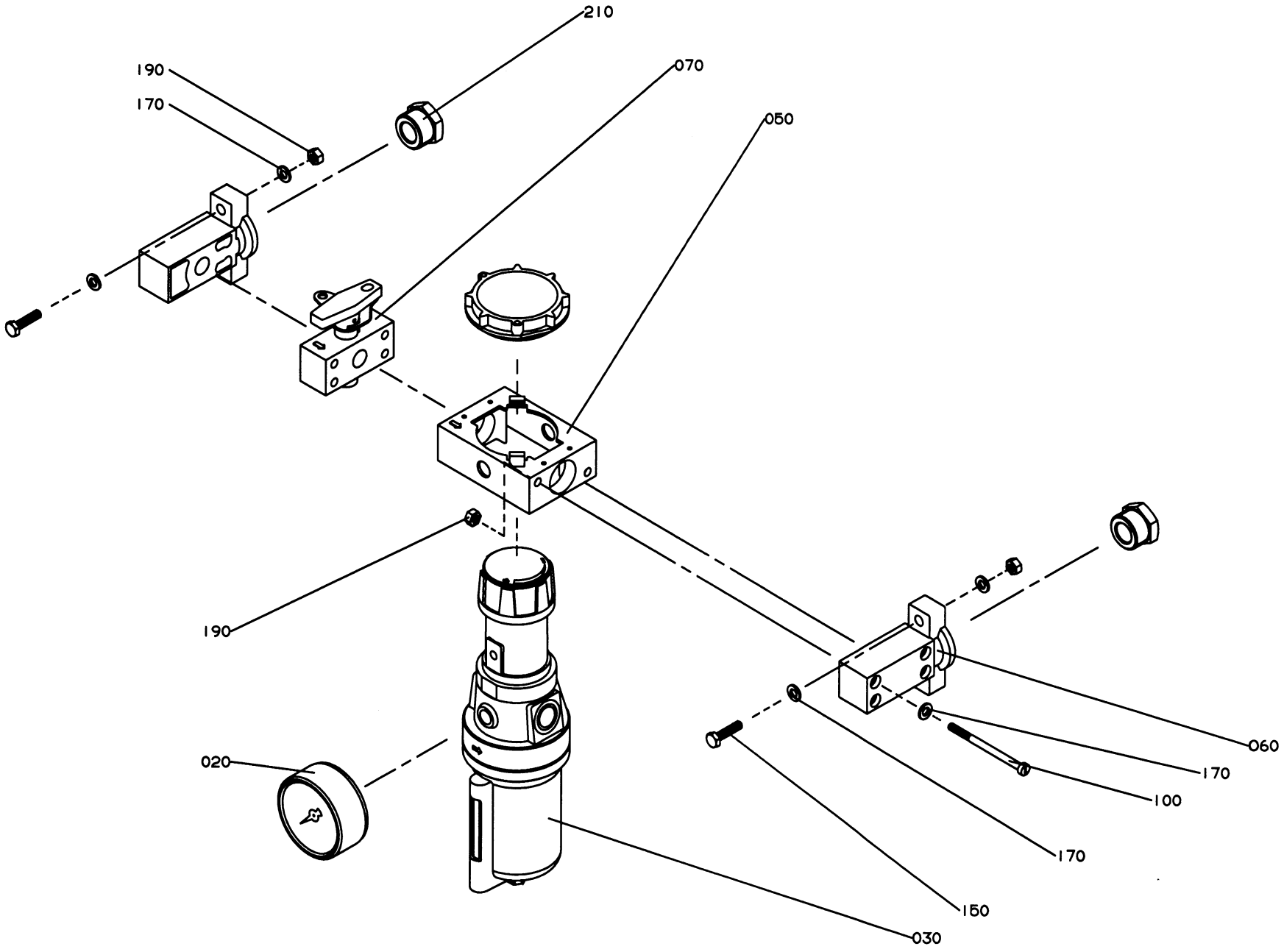

GraphicID: 102161801.eps
Parent Drw: 1021618-1
ECN 21005

Pos	Part No	SP	UN	Qty	Description	Page No
-						
000	**C-1021618-0101**	**-**		**1**	**FILTER-REGULATOR**	
210	342701-0209	-		2	BUSHING RNI3/4"-3/8"	
-						
000	**C-1021618-0102**	**-**		**1**	**FILTER-REGULATOR**	
210	342701-0210	-		2	BUSHING RNI3/4"-1/2"	
COMMON PARTS						
020	**90043-0015**	**S**		**1**	**PRESSURE GAUGE**	
030	90113-0038	S		1	REGULATOR	
030	90113-0344	S		1	* FILTER INSERT	
030	90113-0348	S		1	* SEAL KIT	
030	90113-0349	S		1	* GASKET	
050	90113-0338	-		1	YOKE	
060	90113-0356	-		1	BRACKET	
070	90187-0042	-		1	VALVE	
100	90236-0303	-		4	SCREW	
150	312105-0372	-		4	SCREW O4017 M6X25A280	
170	315105-0153	-		12	WASHER BRB6,4X12RFR	
190	312605-0316	-		8	NUT M6M6RFR	

Pos	Part No	SP	UN	Qty	Description	Page No

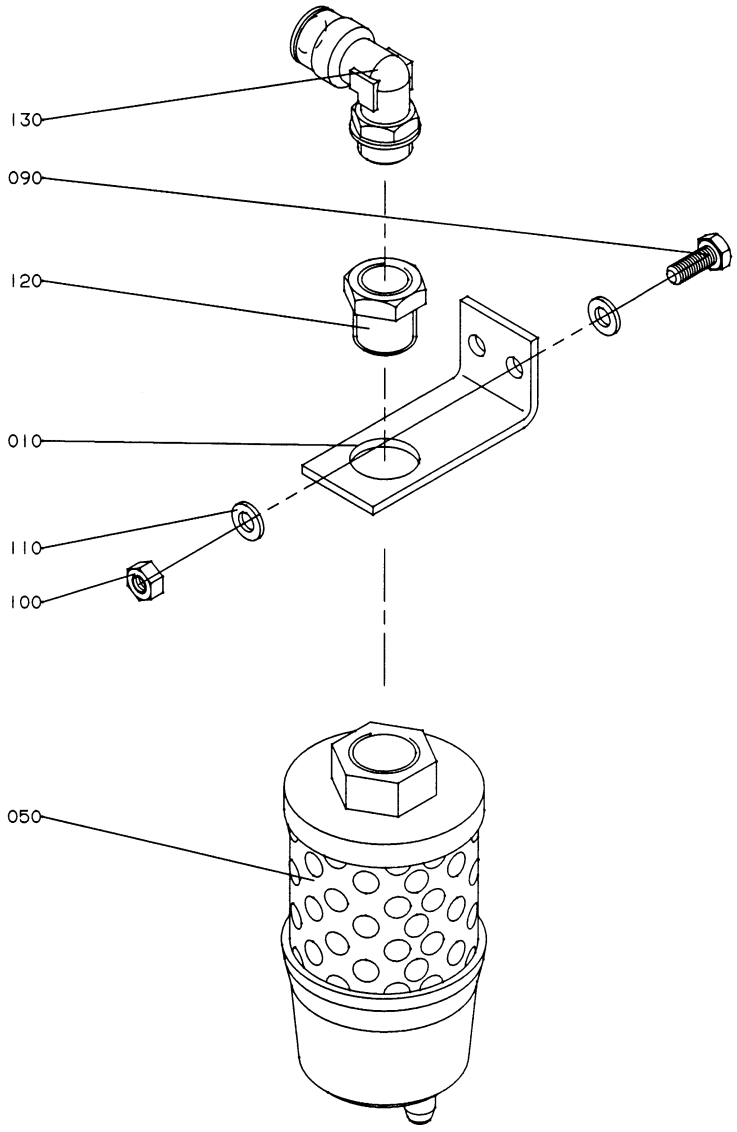

GraphicID: 107412701.eps
Parent Drw: 1074127-1
ECN 19304

Pos	Part No	SP	UN	Qty	Description	Page No
-						
000	**C-1074127-0101**	-		**2**	**SILENCER**	
010	1074209	-		1	BRACKET	
050	90328-0033	C		1	SILENCER	
090	312105-0368	-		2	SCREW O4017 M6X16A280	
100	312605-0316	-		2	NUT M6M6RFR	
110	315105-0153	-		4	WASHER BRB6,4X12RFR	
120	342701-0206	-		1	BUSHING RNI1/2"-3/8"	
130	342732-0110	-		1	ELBOW PIPE D12-R3/8"	

Pos	Part No	SP	UN	Qty	Description	Page No

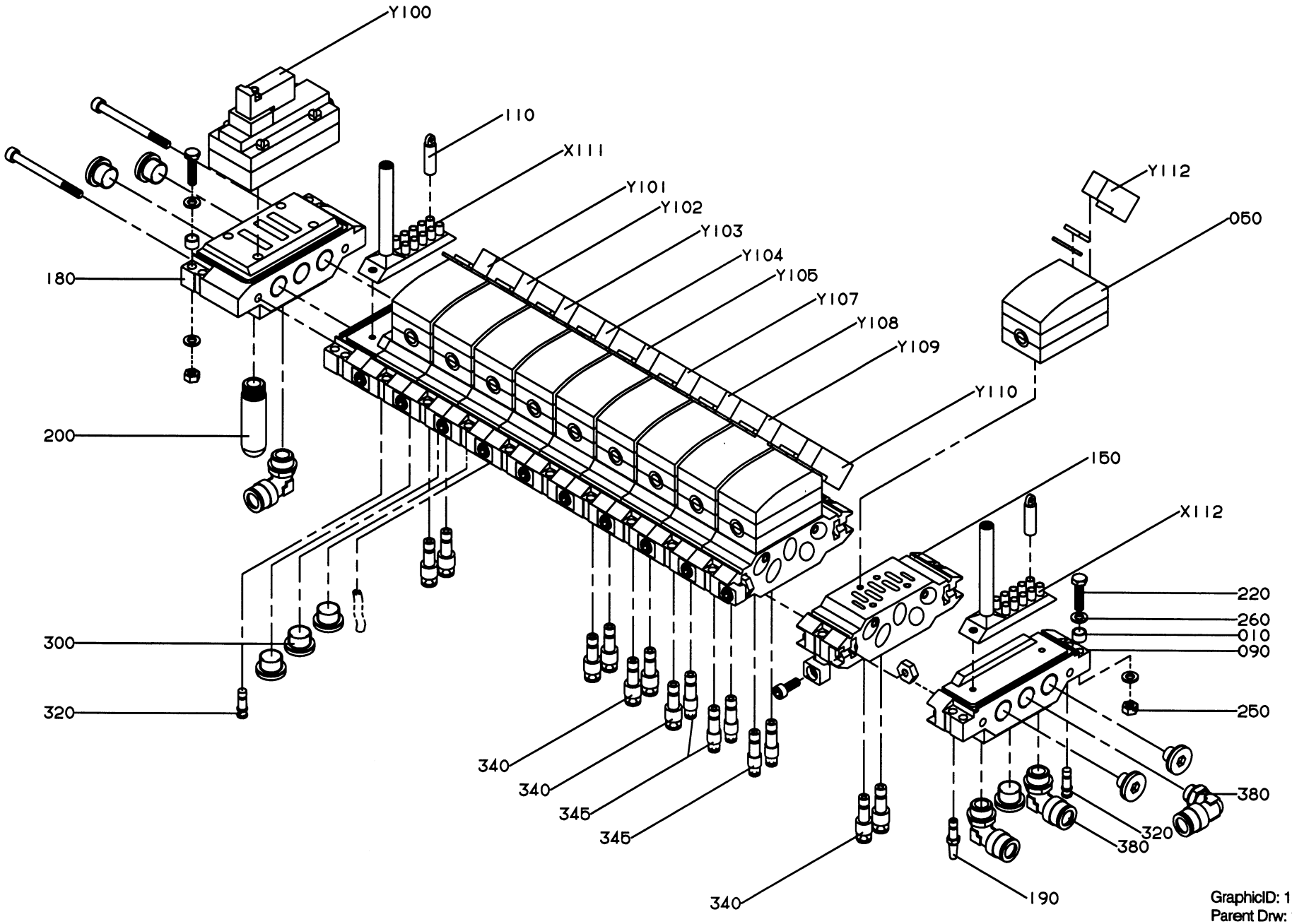

GraphicID: 112405803.eps
Parent Drw: 1124058-3
ECN 23179

Pos	Part No	SP	UN	Qty	Description	Page No
-						
000	C-1124058-020V	-		1	VALVE RAMP	
010	979219	-		8	SPACER PIPE	
050	90042-0215	-		11	SOL.VALVE PACKAGE	
070	90042-0519	-		4	COVER PLATE	
090	90042-0522	-		4	END PIECE	
110	90042-0550	-		8	PROTECTIVE COVER	
130	90042-0528	-		1	SEALING DISC	
150	90042-0532	-		15	CONNECTION TABLE	
180	90042-0545	-		1	CONNECTION TABLE	
190	90328-0017	-		2	SILENCER	
200	90328-0024	-		1	SILENCER	
220	312105-0376	-		8	SCREW O4017 M6X35A280	
250	312605-0316	-		8	NUT M6M6RFR	
260	315105-0153	-		16	WASHER BRB6,4X12RFR	
300	342713-0211	-		4	BLIND PLUG	
320	342715-0102	-		4	PLUG D=6	
330	342715-0103	-		9	PLUG D=8	
340	342716-0203	-		12	REDUCER 6-8	
345	342716-0205	-		3	REDUCER 4-8	
350	342722-0210	-		1	PIPE COUPLD=12-R3/8"	
380	342732-0110	-		6	ELBOW PIPE D12-R3/8"	
400	342742-0110	-		1	T-CONNECTI 12-3/8	
X111	90042-0535	-		1	TERMINAL FOR SOL.VALVE	
X112	90042-0535	-		1	TERMINAL FOR SOL.VALVE	
X113	90042-0535	-		1	TERMINAL FOR SOL.VALVE	
Y100	90042-0235	-		1	SOLENOID VALVE	
Y101	90042-0539	-		1	EL.COIL	
Y102	90042-0539	-		1	EL.COIL	
Y103	90042-0539	-		1	EL.COIL	
Y104	90042-0539	-		1	EL.COIL	
Y105	90042-0539	-		1	EL.COIL	
Y106	90042-0539	-		1	EL.COIL	
Y107	90042-0539	-		1	EL.COIL	
Y108	90042-0539	-		1	EL.COIL	
Y109	90042-0539	-		1	EL.COIL	
Y110	90042-0539	-		1	EL.COIL	
Y112	90042-0539	-		1	EL.COIL	

Pos	Part No	SP	UN	Qty	Description	Page No

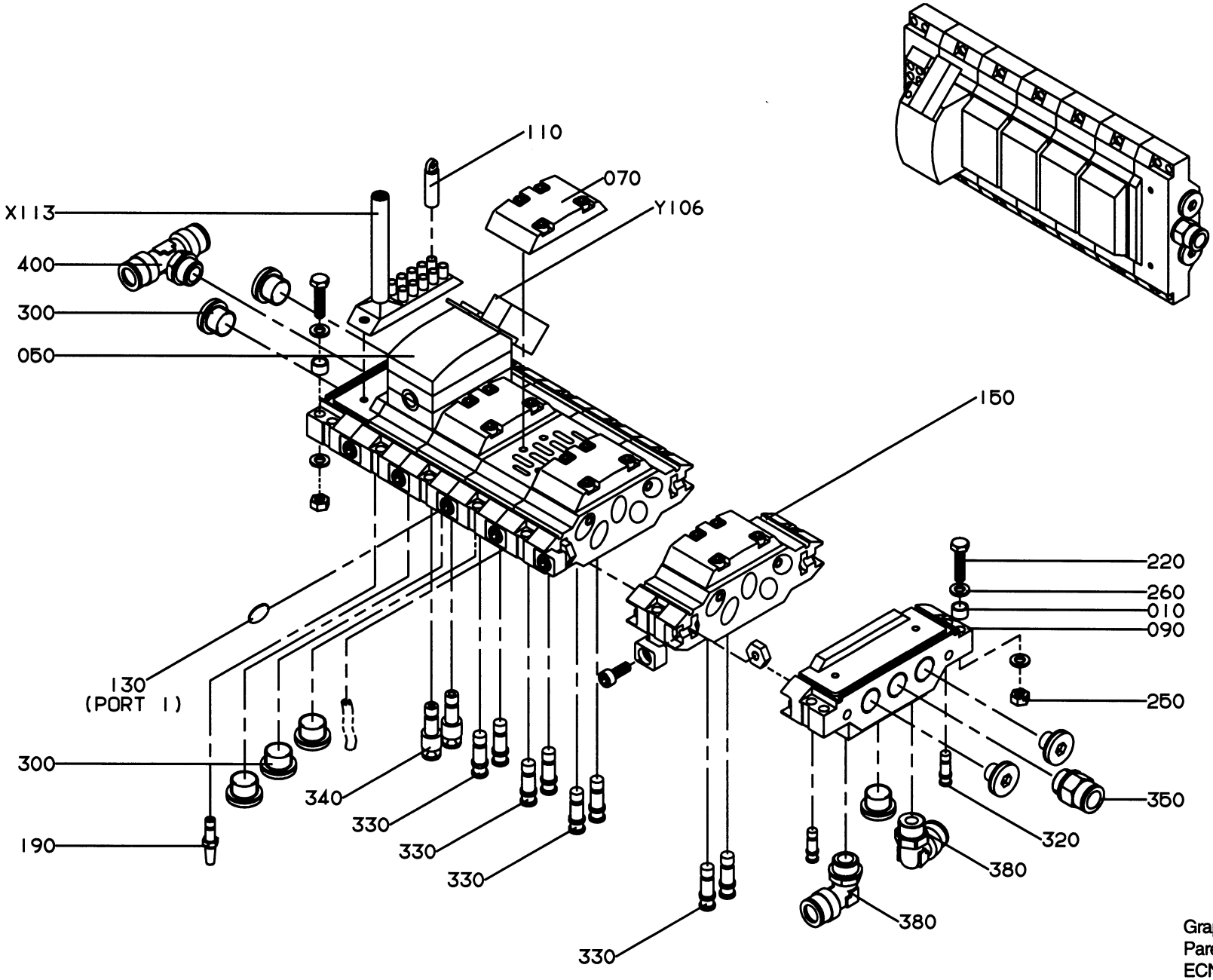

GraphicID: 112405804.eps
Parent Drw: 1124058-4
ECN 23179

Pos	Part No	SP	UN	Qty	Description	Page No
-						
000	**C-1124058-020V**	-		1	**VALVE RAMP**	
010	979219	-		8	SPACER PIPE	
050	90042-0215	-		11	SOL.VALVE PACKAGE	
070	90042-0519	-		4	COVER PLATE	
090	90042-0522	-		4	END PIECE	
110	90042-0550	-		8	PROTECTIVE COVER	
130	90042-0528	-		1	SEALING DISC	
150	90042-0532	-		15	CONNECTION TABLE	
180	90042-0545	-		1	CONNECTION TABLE	
190	90328-0017	-		2	SILENCER	
200	90328-0024	-		1	SILENCER	
220	312105-0376	-		8	SCREW O4017 M6X35A280	
250	312605-0316	-		8	NUT M6M6RFR	
260	315105-0153	-		16	WASHER BRB6,4X12RFR	
300	342713-0211	-		4	BLIND PLUG	
320	342715-0102	-		4	PLUG D=6	
330	342715-0103	-		9	PLUG D=8	
340	342716-0203	-		12	REDUCER 6-8	
345	342716-0205	-		3	REDUCER 4-8	
350	342722-0210	-		1	PIPE COUPLD=12-R3/8"	
380	342732-0110	-		6	ELBOW PIPE D12-R3/8"	
400	342742-0110	-		1	T-CONNECTI 12-3/8	
X111	90042-0535	-		1	TERMINAL FOR SOL.VALVE	
X112	90042-0535	-		1	TERMINAL FOR SOL.VALVE	
X113	90042-0535	-		1	TERMINAL FOR SOL.VALVE	
Y100	90042-0235	-		1	SOLENOID VALVE	
Y101	90042-0539	-		1	EL.COIL	
Y102	90042-0539	-		1	EL.COIL	
Y103	90042-0539	-		1	EL.COIL	
Y104	90042-0539	-		1	EL.COIL	
Y105	90042-0539	-		1	EL.COIL	
Y106	90042-0539	-		1	EL.COIL	
Y107	90042-0539	-		1	EL.COIL	
Y108	90042-0539	-		1	EL.COIL	
Y109	90042-0539	-		1	EL.COIL	
Y110	90042-0539	-		1	EL.COIL	
Y112	90042-0539	-		1	EL.COIL	

Pos	Part No	SP	UN	Qty	Description	Page No

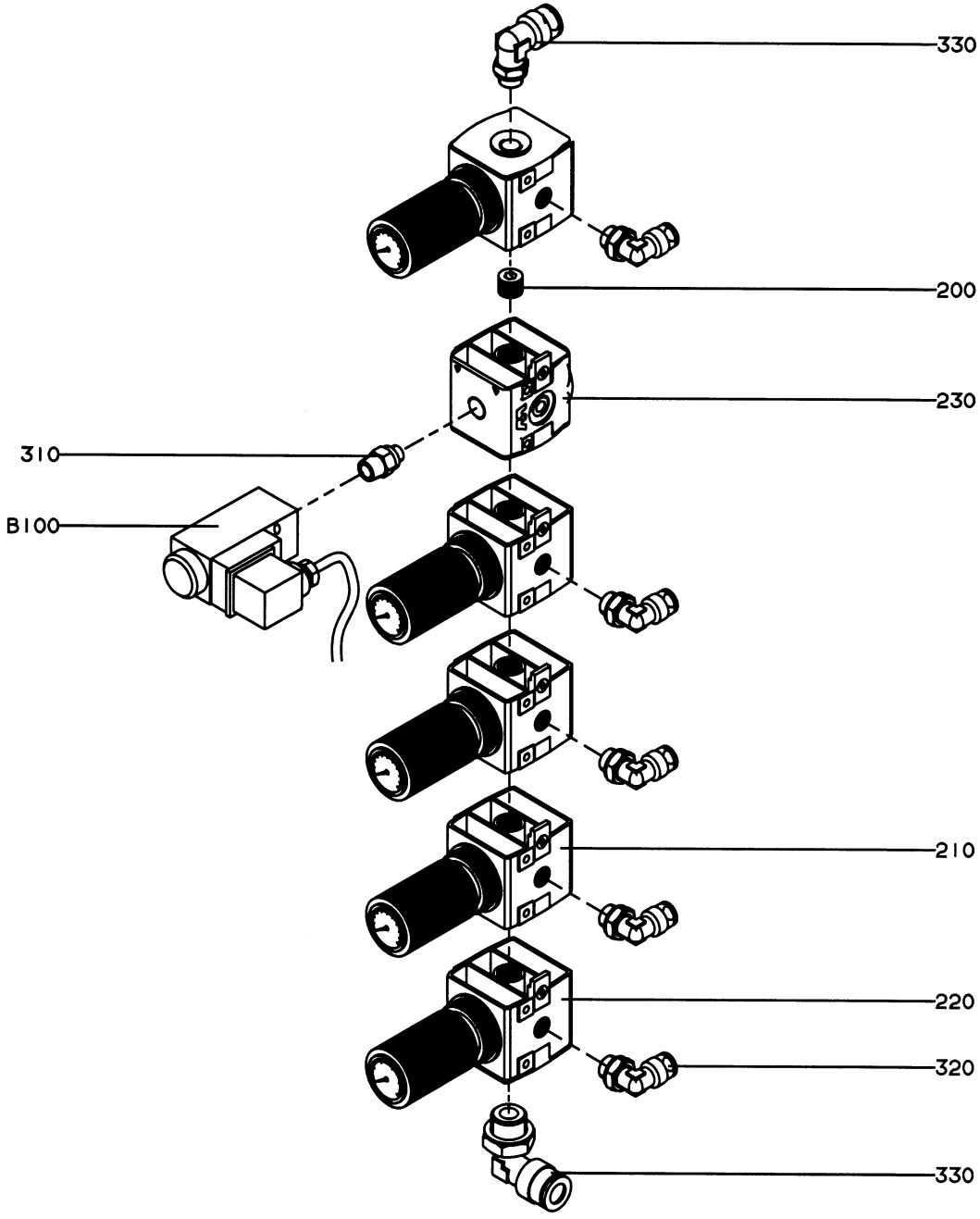

GraphicID: 112405901.eps
Parent Drw: 1124059-1
ECN 22292

Pos	Part No	SP	UN	Qty	Description	Page No
-						
000	**C-1124059-0101**	-		1	**PRESSURE REGULATOR RAMP**	
200	90087-0036	-		1	PLUG	
210	90113-0095	-		4	PRESSURE REGULATOR	
220	90113-0096	-		1	PRESSURE REGULATOR	
230	90113-0385	-		1	SEPARATION BLOCK	
310	90224-0372	-		1	CONNECTION	
320	342732-0104	-		5	ELBOW PIPE D8-R1/4"	
330	342732-0109	-		2	ELBOW PIPE D12-R1/4"	
B100	90274-0074	-		1	PRESSURE SWITCH	

Pos	Part No	SP	UN	Qty	Description	Page No

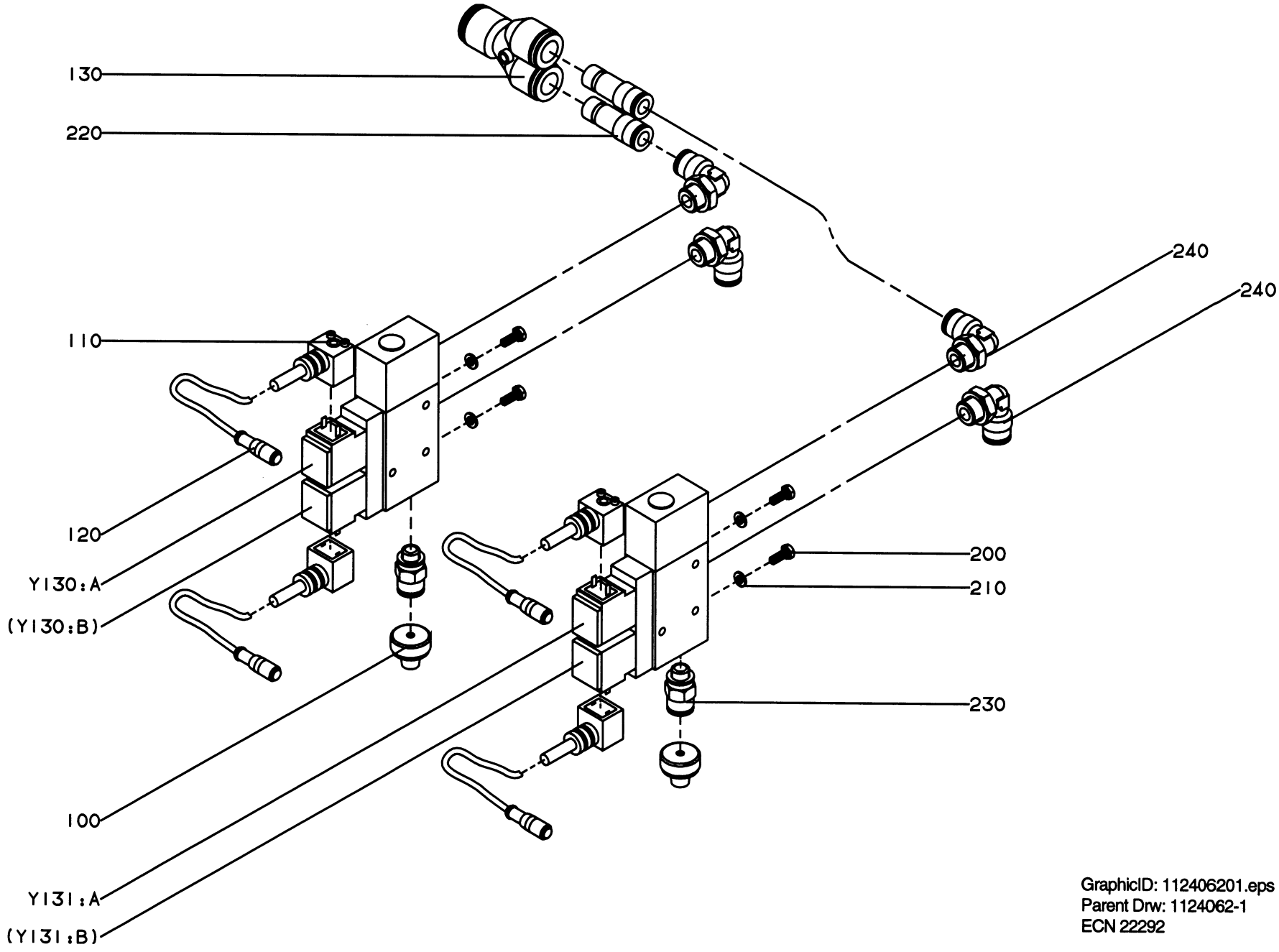

GraphicID: 112406201.eps
Parent Drw: 1124062-1
ECN 22292

Pos	Part No	SP	UN	Qty	Description	Page No
-						
000	**C-1124062-0101**	-		**1**	**EJECTOR**	
100	90015-0020	-		2	BUSHING	
110	90042-0491	-		4	CONTACT	
120	90042-0536	-		4	CONTACT FOR SOL.VALVE	
130	90055-0147	-		1	JOINT CONNECTION	
200	312105-0287	-		4	SCREW O4017 M4X8A280	
210	315105-0136	-		4	WASHER BRB4,3X8RFR	
220	342716-0209	-		2	REDUCER 8-12	
230	342722-0204	-		2	PIPE COUPLD=8-R1/8"	
240	342732-0104	-		4	ELBOW PIPE D8-R1/4"	
Y130	90425-0031	P		1	EJECTOR	
Y131	90425-0031	P		1	EJECTOR	

Pos	Part No	SP	UN	Qty	Description	Page No

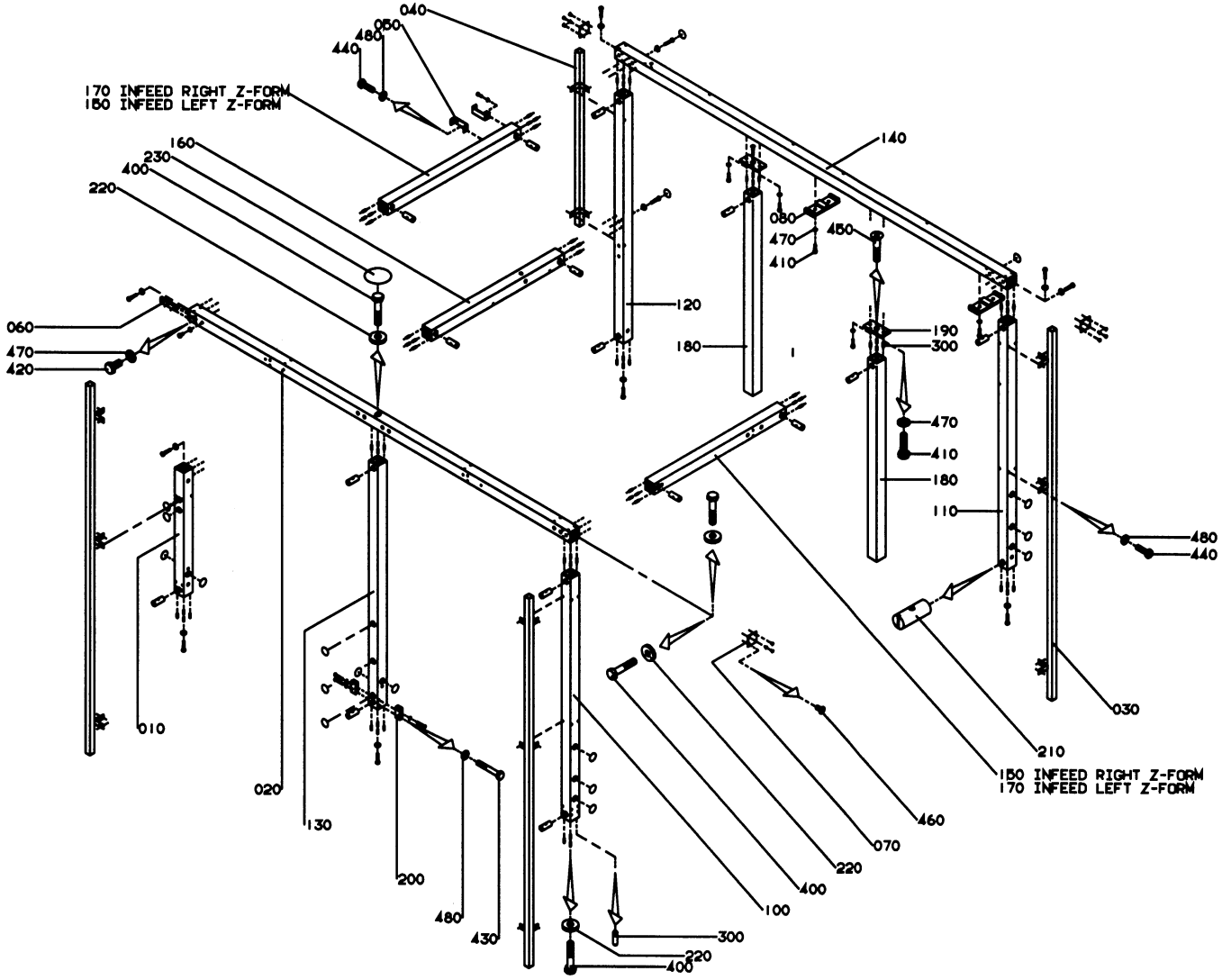
040
050
480
440
170 INFEED RIGHT Z-FORM
150 INFEED LEFT Z-FORM
160
230
400
220
140
080
470
410
450
120
180
190
300
060
470
420
470
410
180
110
480
440
030
010
020
130
200
480
430
210
150 INFEED RIGHT Z-FORM
170 INFEED LEFT Z-FORM
460
070
220
400
100
300
220
400

Pos	Part No	SP	UN	Qty	Description	Page No
Z-FORM						
000	**C-1124063-0201**	-		1	**INFEED FRAME UPPER**	
010	1139217	-		1	PROFILE	
020	1124672	-		1	PROFILE	
030	1124645	-		3	CORNER STRIP	
040	1124646	-		1	CORNER STRIP	
050	1124724	-		2	BRACKET	
060	1124644	-		1	BRACKET	
070	556604	-		3	COVER PLATE	
210	486268	-		17	NUT	
220	548599	-		15	WASHER	
230	1021933	-		18	COVER TAPE	
300	1065410	-		68	PIN	
400	312105-0459	-		15	SCREW O4017 M8X40A280	
420	312105-0449	-		2	SCREW O4017 M8X16A280	
460	312145-0325	-		12	SLOTTED HEMFS5X10RFR	
470	315105-0165	-		10	WASHER BRB8,4X16RFR	
COMMON PARTS						
080	1139255	-		2	BRACKET	
100	1124665	-		1	PROFILE	
110	1139216	-		1	PROFILE	
120	1139219	-		1	PROFILE	
130	1124670	-		1	PROFILE	
140	1124671	-		1	PROFILE	
150	1124674	-		1	PROFILE	
160	1124649	-		1	PROFILE	
170	1124648	-		1	PROFILE	
180	1124647	-		2	PROFILE	
190	556624	-		2	FRAME BRACKET	
200	1124723	-		2	BRACKET	
410	312105-0455	-		8	SCREW O4017 M8X30A280	
430	312105-0378	-		4	SCREW O4017 M6X40A280	
440	312105-0370	-		24	SCREW O4017 M6X20A280	
450	312155-0459	-		2	SCREW MF6S8X40RFR	
480	315105-0153	-		28	WASHER BRB6,4X12RFR	

Pos	Part No	SP	UN	Qty	Description	Page No

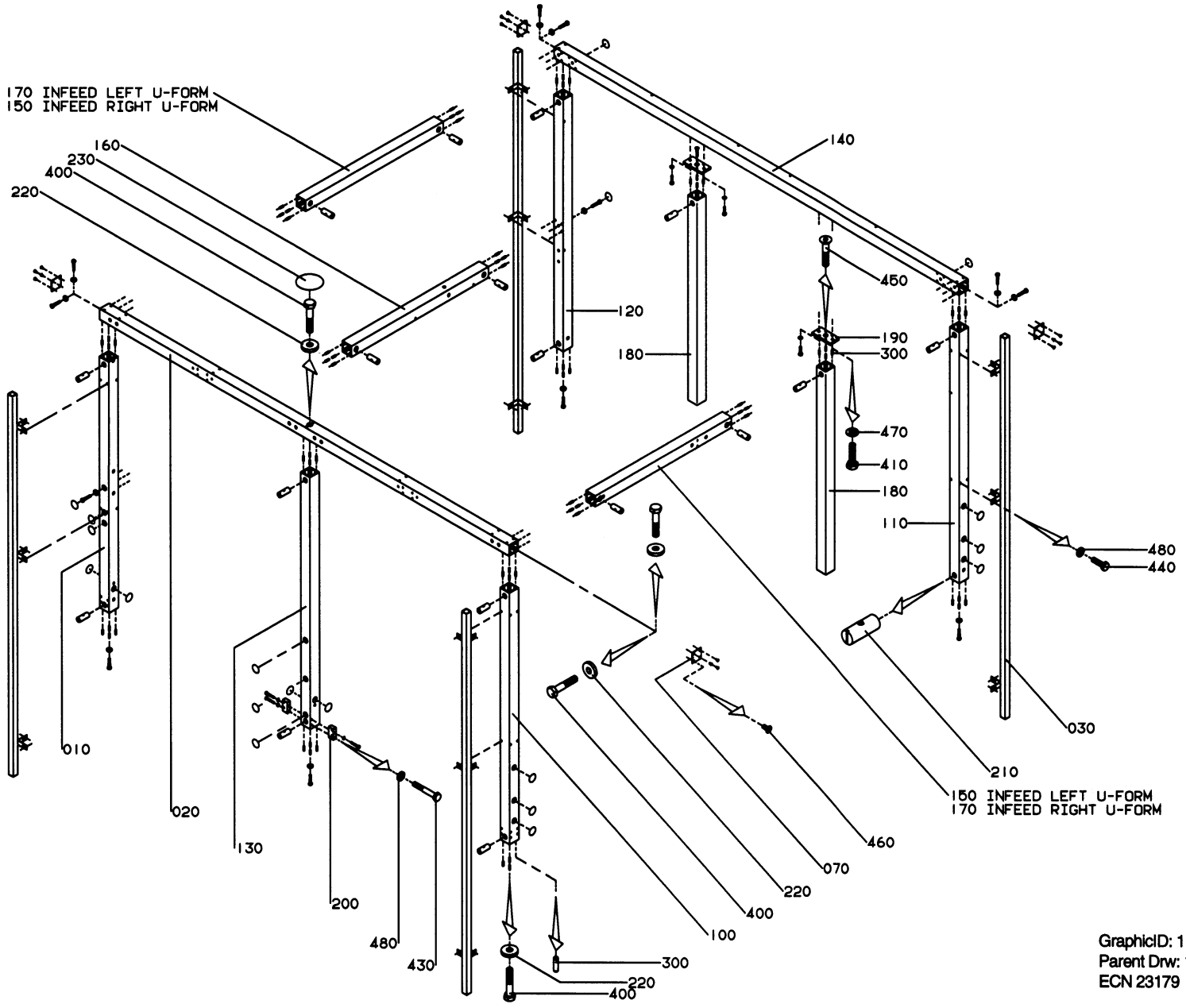

GraphicID: 112406304.eps
Parent Drw: 1124063-4
ECN 23179

Pos	Part No	SP	UN	Qty	Description	Page No
U-FORM						
000	**C-1124063-0202**	-		1	**INFEED FRAME UPPER**	
010	1139218	-		1	PROFILE	
020	1124673	-		1	PROFILE	
030	1124645	-		4	CORNER STRIP	
070	556604	-		4	COVER PLATE	
210	486268	-		18	NUT	
220	548599	-		16	WASHER	
230	1021933	-		19	COVER TAPE	
300	1065410	-		72	PIN	
400	312105-0459	-		16	SCREW O4017 M8X40A280	
460	312145-0325	-		16	SLOTTED HEMFS5X10RFR	
470	315105-0165	-		8	WASHER BRB8,4X16RFR	
COMMON PARTS						
080	1139255	-		2	BRACKET	
100	1124665	-		1	PROFILE	
110	1139216	-		1	PROFILE	
120	1139219	-		1	PROFILE	
130	1124670	-		1	PROFILE	
140	1124671	-		1	PROFILE	
150	1124674	-		1	PROFILE	
160	1124649	-		1	PROFILE	
170	1124648	-		1	PROFILE	
180	1124647	-		2	PROFILE	
190	556624	-		2	FRAME BRACKET	
200	1124723	-		2	BRACKET	
410	312105-0455	-		8	SCREW O4017 M8X30A280	
430	312105-0378	-		4	SCREW O4017 M6X40A280	
440	312105-0370	-		24	SCREW O4017 M6X20A280	
450	312155-0459	-		2	SCREW MF6S8X40RFR	
480	315105-0153	-		28	WASHER BRB6,4X12RFR	

Pos	Part No	SP	UN	Qty	Description	Page No

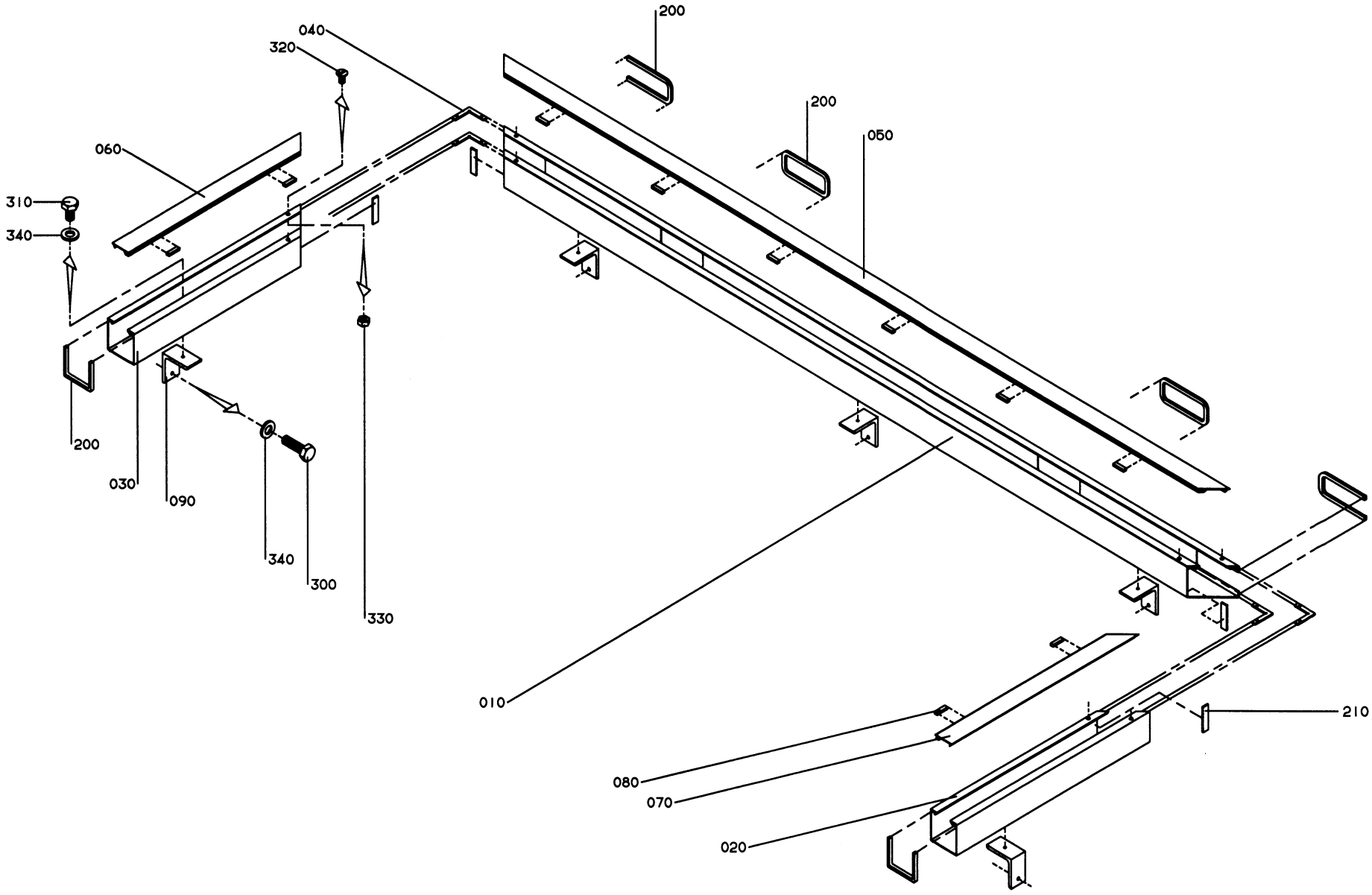

GraphicID: 112408101.eps
Parent Drw: 1124081-1
ECN 21267

Pos	Part No	SP	UN	Qty	Description	Page No
-						
000	**C-1124081-0101**	-		**1**	**CABLE DUCT**	
010	1124625	-		1	CABLE DUCT	
020	1124626	-		1	CABLE DUCT	
030	1124627	-		1	CABLE DUCT	
040	975934	-		4	GUSSET PLATE	
050	1124628	-		1	LID	
060	1124629	-		1	LID	
070	1124630	-		1	LID	
080	975939	-		10	SEAL	
090	1074738	-		5	BRACKET	
200	90143-0060	-	M	2	STRIP	
210	90143-0073	-	MM	280	RUBBER STRIP	
300	312105-0370	-		5	SCREW O4017 M6X20A280	
310	312105-0366	-		5	SCREW O4017 M6X12A280	
320	312145-0287	-		8	SLOTTED HEMFS4X8RFR	
330	312605-0312	-		8	NUT M6M4RFR	
340	315105-0153	-		10	WASHER BRB6,4X12RFR	

Pos	Part No	SP	UN	Qty	Description	Page No

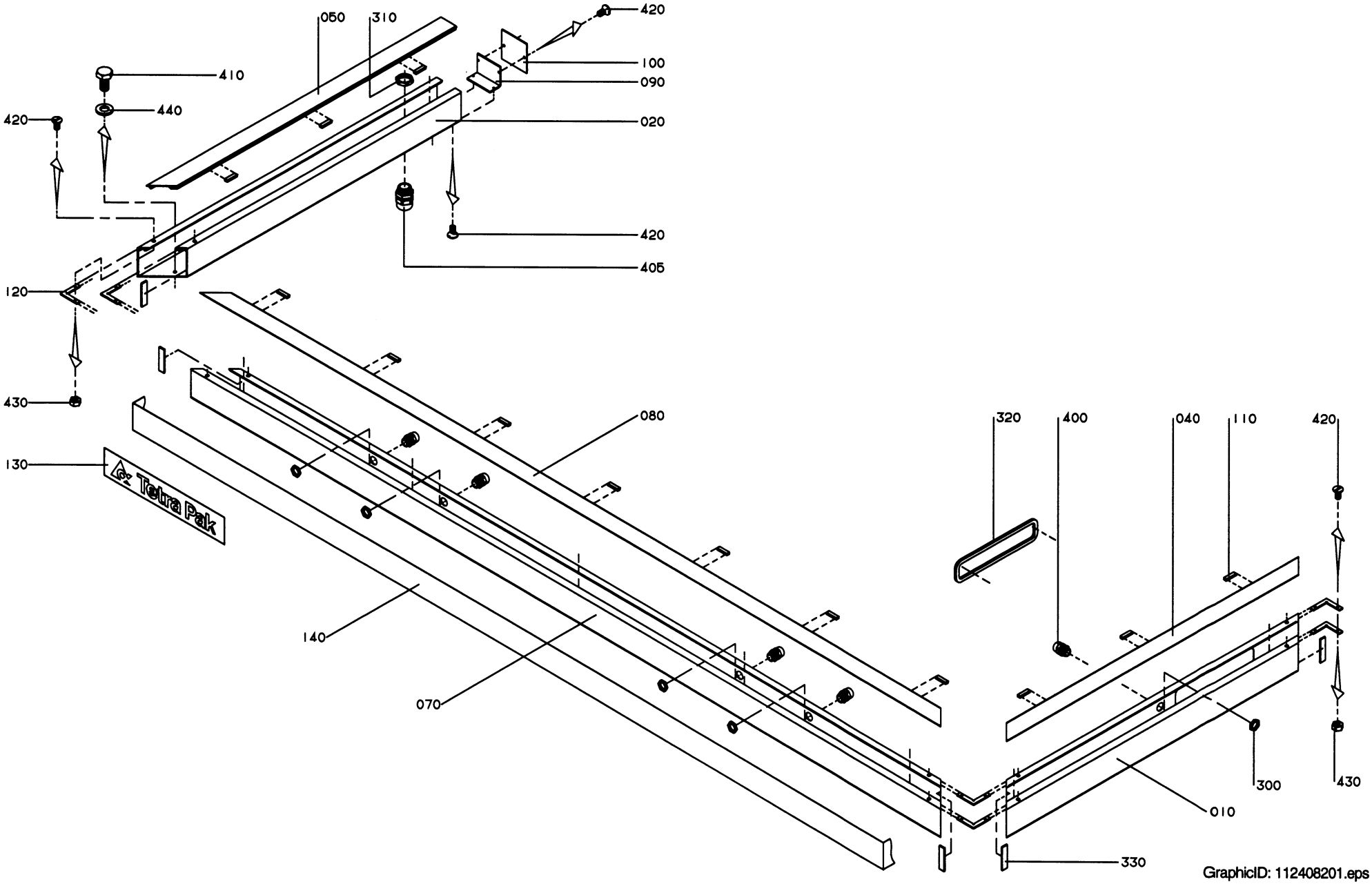

GraphicID: 112408201.eps
Parent Drw: 1124082-1
ECN 21267

Pos	Part No	SP	UN	Qty	Description	Page No
Z-Form -Left Hand infeed						
000	**C-1124082-0101**	-		1	**CABLE DUCT**	
010	1124636	-		1	CABLE DUCT	
020	1124639	-		1	CABLE DUCT	
040	1124604	-		1	LID	
050	1124607	-		1	LID	
110	975939	-		13	SEAL	
310	90099-0119	-		1	NUT PR 28,3 (PG21)	
405	352103-0116	-		1	CABLE GLAND ST21.13-18MM	
410	312105-0366	-		9	SCREW O4017 M6X12A280	
440	315105-0153	-		9	WASHER BRB6,4X12RFR	
Z-Form -Right Hand infeed						
000	**C-1124082-0102**	-		1	**CABLE DUCT**	
010	1124635	-		1	CABLE DUCT	
020	1124638	-		1	CABLE DUCT	
040	1124603	-		1	LID	
050	1124606	-		1	LID	
110	975939	-		13	SEAL	
310	90099-0119	-		1	NUT PR 28,3 (PG21)	
405	352103-0116	-		1	CABLE GLAND ST21.13-18MM	
410	312105-0366	-		9	SCREW O4017 M6X12A280	
440	315105-0153	-		9	WASHER BRB6,4X12RFR	
COMMON PARTS						
070	**1124640**	-		1	**CABLE DUCT**	
080	1124612	-		1	LID	
090	1065697	-		1	BRACKET	
100	1065696	-		1	COVERING PLATE	
120	975934	-		6	GUSSET PLATE	
130	1021990	-		1	SIGN	
140	1021991	-		1	STRIP	
300	90099-0117	-		5	NUT PR18,6 (PG11)	
320	90143-0060	-	MM	550	STRIP	
330	90143-0073	-	MM	420	RUBBER STRIP	
400	352103-0106	-		5	CABLE GLAND ST 11	
420	312145-0287	-		16	SLOTTED HEMFS4X8RFR	
430	312605-0312	-		12	NUT M6M4RFR	

Pos	Part No	SP	UN	Qty	Description	Page No

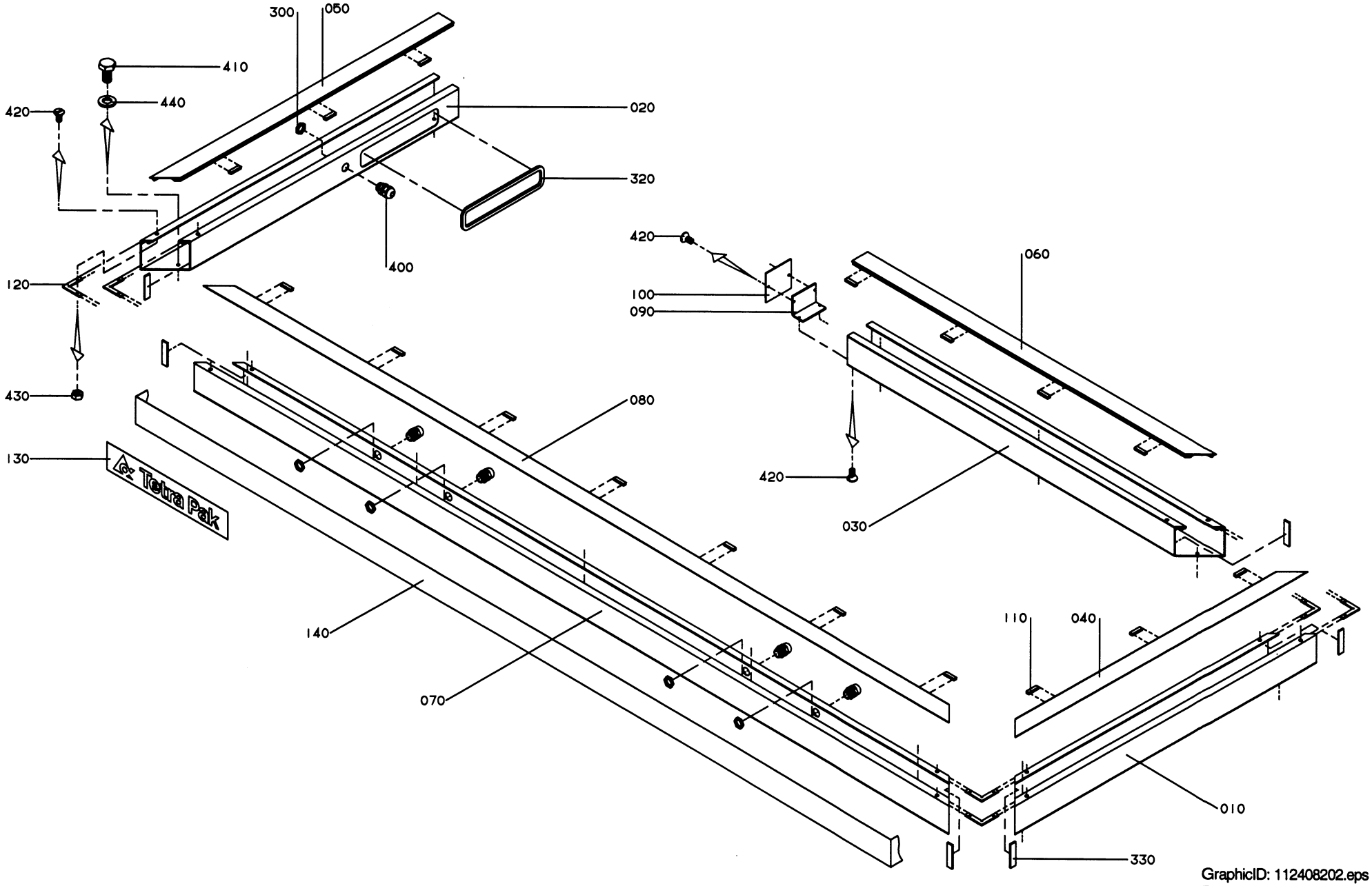

GraphicID: 112408202.eps
Parent Drw: 1124082-2
ECN 21267

Pos	Part No	SP	UN	Qty	Description	Page No
U-Form -Left Hand infeed						
000	**C-1124082-0103**	-		1	**CABLE DUCT**	
010	1124637	-		1	CABLE DUCT	
020	1124642	-		1	CABLE DUCT	
030	1124600	-		1	CABLE DUCT	
040	1124605	-		1	LID	
050	1124608	-		1	LID	
060	1124611	-		1	LID	
110	975939	-		17	SEAL	
410	312105-0366	-		12	SCREW O4017 M6X12A280	
440	315105-0153	-		12	WASHER BRB6,4X12RFR	
U-Form -Right Hand infeed						
000	**C-1124082-0104**	-		1	**CABLE DUCT**	
010	1124637	-		1	CABLE DUCT	
020	1124641	-		1	CABLE DUCT	
030	1124643	-		1	CABLE DUCT	
040	1124605	-		1	LID	
050	1124609	-		1	LID	
060	1124610	-		1	LID	
110	975939	-		17	SEAL	
410	312105-0366	-		12	SCREW O4017 M6X12A280	
440	315105-0153	-		12	WASHER BRB6,4X12RFR	
COMMON PARTS						
070	**1124640**	-		1	**CABLE DUCT**	
080	1124612	-		1	LID	
090	1065697	-		1	BRACKET	
100	1065696	-		1	COVERING PLATE	
120	975934	-		6	GUSSET PLATE	
130	1021990	-		1	SIGN	
140	1021991	-		1	STRIP	
300	90099-0117	-		5	NUT PR18,6 (PG11)	
320	90143-0060	-	MM	550	STRIP	
330	90143-0073	-	MM	420	RUBBER STRIP	
400	352103-0106	-		5	CABLE GLAND ST 11	
420	312145-0287	-		16	SLOTTED HEMFS4X8RFR	
430	312605-0312	-		12	NUT M6M4RFR	

Pos	Part No	SP	UN	Qty	Description	Page No

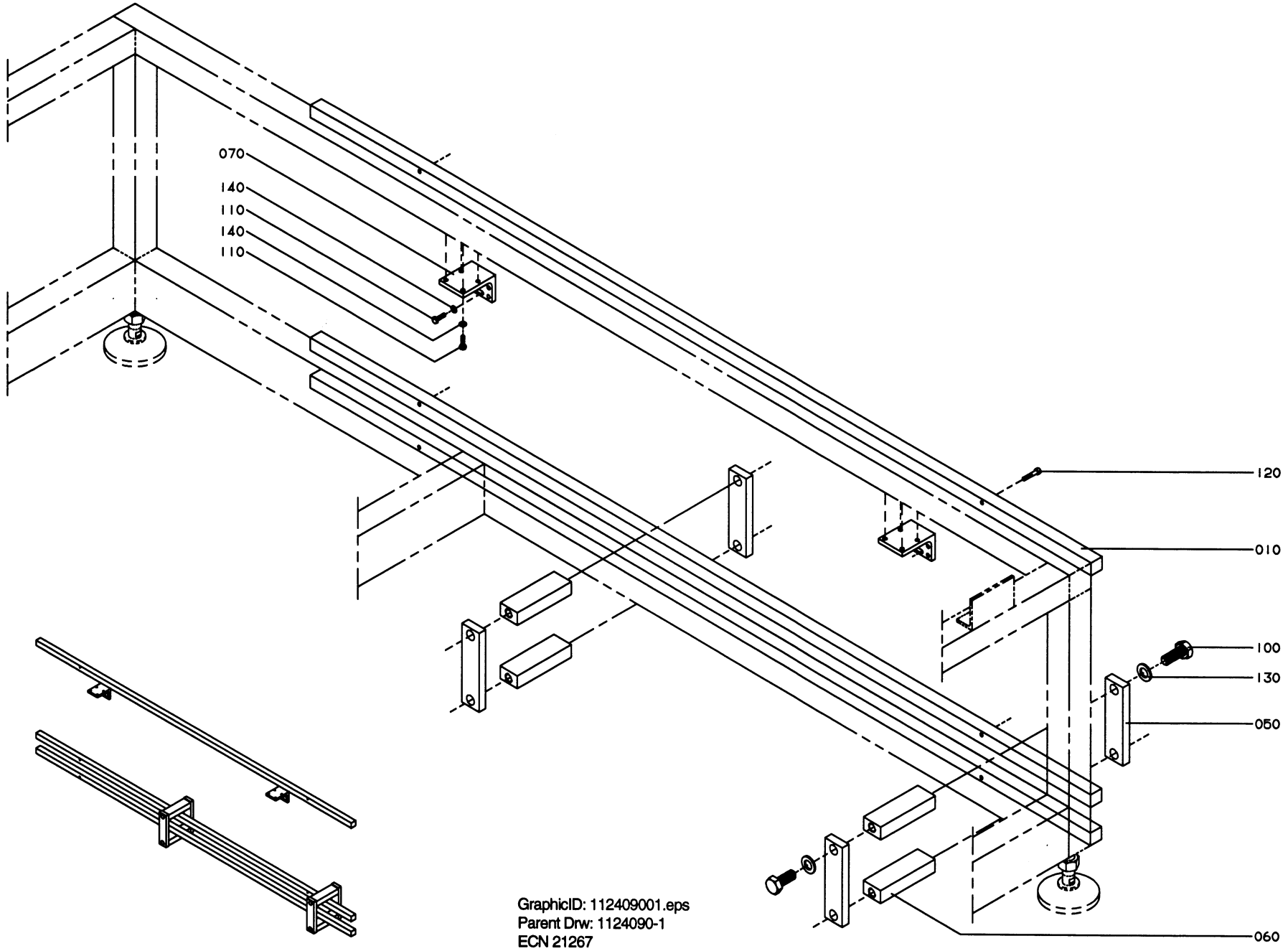

GraphicID: 112409001.eps
Parent Drw: 1124090-1
ECN 21267

Pos	Part No	SP	UN	Qty	Description	Page No
Z-FORM						
000	**C-1124090-0101**	-		1	**BRACKET**	
010	1124525	-		3	SPACER	
U-FORM						
000	**C-1124090-0102**	-		1	**BRACKET**	
010	1124526	-		3	SPACER	
COMMON PARTS						
050	**1074206**	-		4	**HOLDER**	
060	1124527	-		4	HOLDER	
070	1124503	-		2	BRACKET	
100	312105-0628	-		8	SCREW 4017 M16X40A280	
110	312105-0370	-		16	SCREW O4017 M6X20A280	
120	312115-0374	-		6	SCREW O4762 M6X30A280	
130	315105-0186	-		8	WASHER BRB17X30RFR	
140	315105-0153	-		16	WASHER BRB6,4X12RFR	

Pos	Part No	SP	UN	Qty	Description	Page No

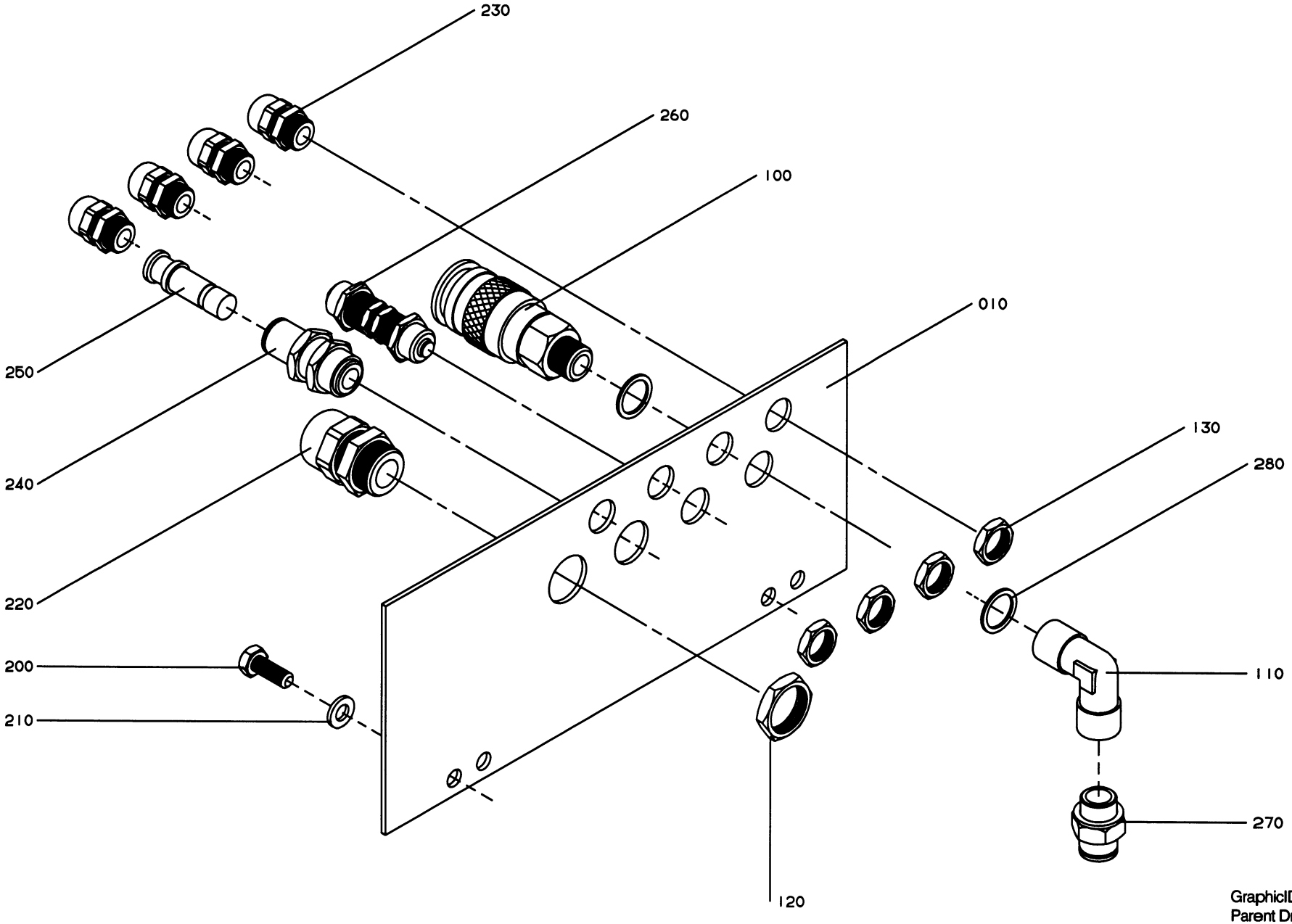

GraphicID: 112409601.eps
Parent Drw: 1124096-1
ECN 21267

Pos	Part No	SP	UN	Qty	Description	Page No
-						
000	**C-1124096-0101**	-		1	**LEAD-IN PLATE**	
010	1124485	-		1	SHEET	
100	90163-0008	-		1	CONNECTION	
110	90140-0019	-		1	BRACKET	
120	90099-0117	-		1	NUT PR18,6 (PG11)	
130	90099-0116	-		4	NUT PR 12,5 (PG7)	
200	312105-0368	-		2	SCREW O4017 M6X16A280	
210	315105-0153	-		2	WASHER BRB6,4X12RFR	
220	352103-0106	-		1	CABLE GLAND ST 11	
230	352103-0096	-		4	CABLE GLANR.ST 7	
240	342768-0103	-		1	BULKHEAD LD=8	
250	342715-0103	-		1	PLUG D=8	
260	342960-0133	-		1	BULKHEAD L10/8	
270	342722-0205	-		1	PIPE COUPLD=8-R1/4"	
280	315233-0110	-		2	SEAL RING R1/4"	

Pos	Part No	SP	UN	Qty	Description	Page No

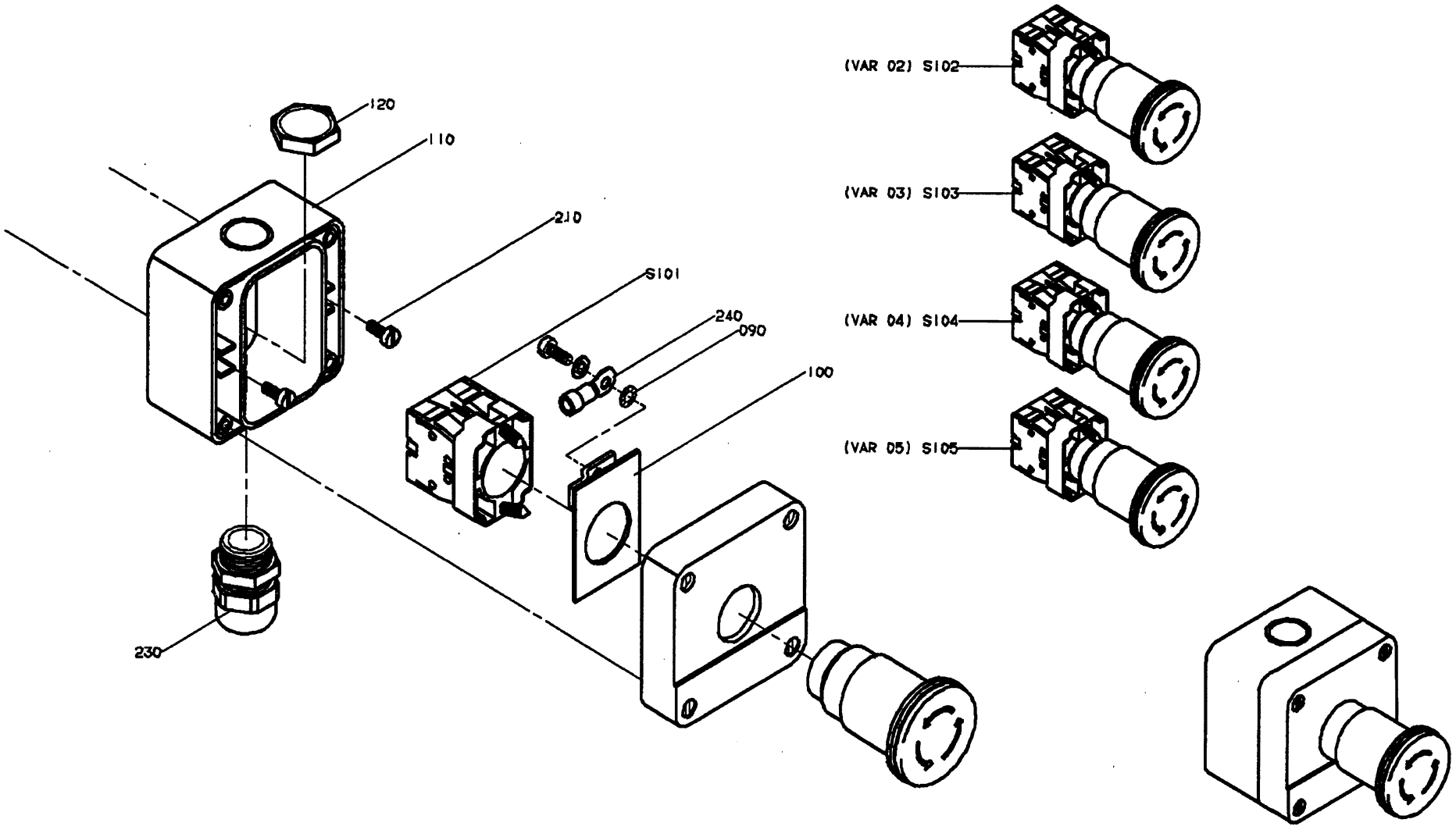

GraphicID: 111183802.tif
Parent Drw: 1111838-2
ECN No: 22292

Pos	Part No	SP	UN	Qty	Description	Page No
-						
000	**C-1111838-0201**	-		**1**	**EMERGENCY STOP**	
S101	90064-0124	P		1	EMERGENCY STOP BUTTON	
-						
000	**C-1111838-0202**	-		**1**	**EMERGENCY STOP**	
S102	90064-0124	P		1	EMERGENCY STOP BUTTON	
-						
000	**C-1111838-0203**	-		**1**	**EMERGENCY STOP**	
S103	90064-0124	P		1	EMERGENCY STOP BUTTON	
-						
000	**C-1111838-0204**	-		**1**	**EMERGENCY STOP**	
S104	90064-0124	P		1	EMERGENCY STOP BUTTON	
-						
000	**C-1111838-0205**	-		**1**	**EMERGENCY STOP**	
S105	90064-0124	P		1	EMERGENCY STOP BUTTON	
COMMON PARTS						
090	**90062-0059**	-		**1**	**LOCK WASHER**	
100	90064-0336	-		1	EARTHING PLATE	
110	90066-0030	-		1	PUSH BUTTON BOX	
120	90099-0117	-		1	NUT PR18,6 (PG11)	
210	312125-0289	-		2	SLOTTED HEMCS4X10RFR	
230	352103-0106	-		1	CABLE GLAND ST 11	
240	353101-0120	-		1	CABLE SHOE	

Pos	Part No	SP	UN	Qty	Description	Page No

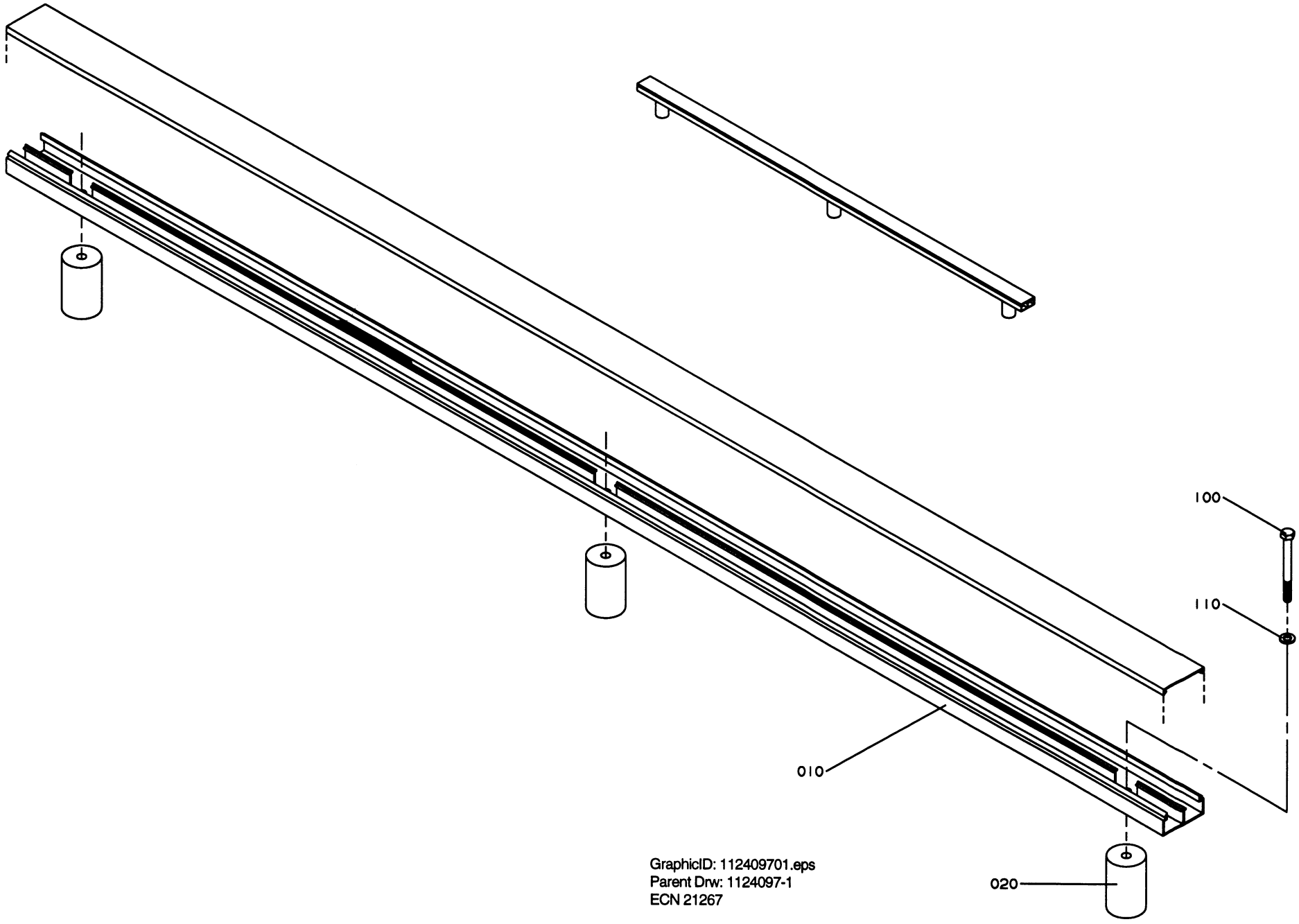

GraphicID: 112409701.eps
Parent Drw: 1124097-1
ECN 21267

Pos	Part No	SP	UN	Qty	Description	Page No
-						
000	**C-1124097-0101**	-		**1**	**CABLE DUCT**	
010	1124497	-		1	CABLE DUCT	
020	1124498	-		3	SPACER	
100	312105-0341	-		3	SCREW O4014 M5X50A280	
110	315105-0146	-		3	WASHER BRB5,3X10RFR	

Pos	Part No	SP	UN	Qty	Description	Page No

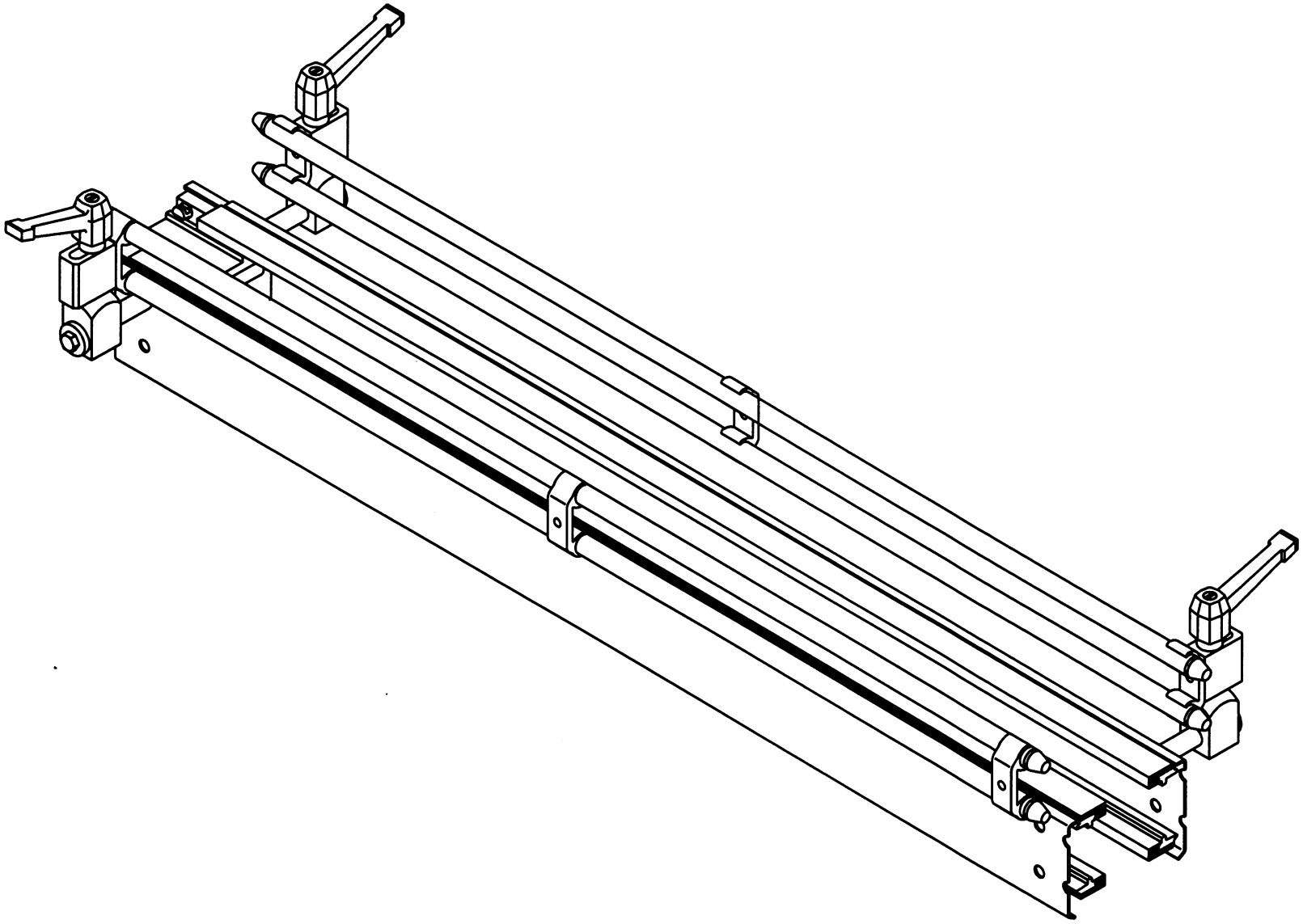

Graphic ID: 113801601.eps
Parent Drw: 1138016-1
ECN

Pos	Part No	SP	UN	Qty	Description	Page No
Conveyor LENGHT L500						
000	**C-1138016-0101**	-		1	**STRAIGHT CONVEYOR**	
010	C- 1086897-0101	-		1	CONV BODY STRAIGHT	
040	547133-0014	-		4	PIPE	
060	1086637	-		4	SLEEVE	
061	1086638	-		4	DOLLY	
062	1086639	-		4	BRACKET	
070	1086174	-		4	HOLDER	
080	1086636	-		4	SPACER	
081	1086640	-		4	STUD SCREW	
090	90117-0029	-		4	LOCKING LEVER	
100	312105-0368	-		4	SCREW 04017 M6X16A280	
120	312105-0469	-		4	SCREW 04017 M8X90A280	
140	315105-0153	-		4	WASHER BRB6,4X12RFR	
150	315105-0165	-		4	WASHER BRB6,4X16RFR	
160	315125-0165	-		4	WASHER SB 8,4X26X5 RFR	
Conveyor LENGHT L750						
000	**C-1138016-0102**	-		1	**STRAIGHT CONVEYOR**	
010	C- 1086897-0102	-		1	CONV BODY STRAIGHT	
040	547133-0015	-		4	PIPE	
060	1086637	-		4	SLEEVE	
061	1086638	-		4	DOLLY	
062	1086639	-		4	BRACKET	
070	1086174	-		6	HOLDER	
080	1086636	-		4	SPACER	
081	1086640	-		4	STUD SCREW	
090	90117-0029	-		4	LOCKING LEVER	
100	312105-0368	-		4	SCREW 04017 M6X16A280	
110	312105-0449	-		2	SCREW 04017 M8X16A280	
120	312105-0469	-		4	SCREW 04017 M8X90A280	
140	315105-0153	-		4	WASHER BRB6,4X12RFR	
150	315105-0165	-		6	WASHER BRB6,4X16RFR	
160	315125-0165	-		4	WASHER SB 8,4X26X5 RFR	
Conveyor LENGHT L1000						
000	**C-1138016-0103**	-		1	**STRAIGHT CONVEYOR**	
010	C- 1086897-0103	-		1	CONV BODY STRAIGHT	
040	547133-0010	-		4	PIPE	
060	1086637	-		4	SLEEVE	
061	1086638	-		4	DOLLY	
062	1086639	-		4	BRACKET	
070	1086174	-		6	HOLDER	
080	1086636	-		4	SPACER	
081	1086640	-		4	STUD SCREW	
090	90117-0029	-		4	LOCKING LEVER	
100	312105-0368	-		4	SCREW 04017 M6X16A280	
110	312105-0449	-		2	SCREW 04017 M8X16A280	
120	312105-0469	-		4	SCREW 04017 M8X90A280	
140	315105-0153	-		4	WASHER BRB6,4X12RFR	
150	315105-0165	-		6	WASHER BRB6,4X16RFR	
160	315125-0165	-		4	WASHER SB 8,4X26X5 RFR	
Conveyor LENGHT L2000						
000	**C-1138016-0104**	-		1	**STRAIGHT CONVEYOR**	
010	C- 1086897-0104	-		1	CONV BODY STRAIGHT	
040	547133-0016	-		4	PIPE	
060	1086637	-		8	SLEEVE	
061	1086638	-		8	DOLLY	
062	1086639	-		8	BRACKET	
070	1086174	-		14	HOLDER	
080	1086636	-		8	SPACER	
081	1086640	-		8	STUD SCREW	
090	90117-0029	-		8	LOCKING LEVER	
100	312105-0368	-		8	SCREW 04017 M6X16A280	
110	312105-0449	-		6	SCREW 04017 M8X16A280	
120	312105-0469	-		8	SCREW 04017 M8X90A280	
140	315105-0153	-		8	WASHER BRB6,4X12RFR	
150	315105-0165	-		14	WASHER BRB6,4X16RFR	
160	315125-0165	-		8	WASHER SB 8,4X26X5 RFR	
COMMON PARTS						
200	562028	-		8	DOWEL	
220	1086870	-		1	SIGN	

Pos	Part No	SP	UN	Qty	Description	Page No
-						
000	B- 670302-0201	-		1	**TRANSFER UNIT**	
010	C-1124003-020V	-		1	DOLLY	291
020	C-1124004-010V	-		1	END STOP	293
030	C-1124027-020V	-		1	GROUPING PUSHER	295
040	C-1124032-020V	-		1	GROUPING END STOP	299
050	C-1124033-0201	-		1	INFEED BRAKE	301
060	C-1124036-0201	-		1	PUSHER BELT	303
060	C-1124037-010V	-			. MOTOR	305
060	C-1124038-0101	-			. DRIVE SHAFT	307
060	C-1124040-0201	-			. MACHINE BODY	309
060	C-1124044-0101	-			. GUIDE SPROCKET	311
070	C-1124041-0201	-		1	MIDDLE BELT	313
070	C-1124042-010V	-			. MOTOR	315
070	C-1124043-010V	-			. DRIVE SHAFT	317
070	C-1124044-0101	-			. GUIDE SPROCKET	311
070	C-1124045-0201	-			. MACHINE BODY	319
070	C-1124052-0101	-			. TRANSITION SHAFT	321
070	C-1124053-0201	-			. TRANSITION SHAFT	323
080	C-1124046-0201	-		1	GROUPING BELT	325
080	C-1124039-0101	-			. GUIDE SPROCKET	327
080	C-1124047-010V	-			. MOTOR	329
080	C-1124048-0101	-			. DRIVE SHAFT	331
080	C-1124049-0201	-			. MACHINE BODY	333
080	C-1124078-0201	-			. GUIDE RAIL	335
090	C-1124054-020V	-		1	RULING GUIDE	337
100	C-1124061-010V	-		1	VOLUME PLATE	339
110	C-1124073-020V	-		1	PUSHER	341
120	C-1124077-020V	-		1	STEERING RAIL	343
130	C-1124083-020V	-		1	STEERING RAIL	345
140	C-1124084-020V	-		1	SUPPORT ARM	347
150	C-1124095-0101	-		1	PROTECTION PLATE	349
160	C-1139273-010V	-		1	SUPPORT	351

Pos	Part No	SP	UN	Qty	Description	Page No

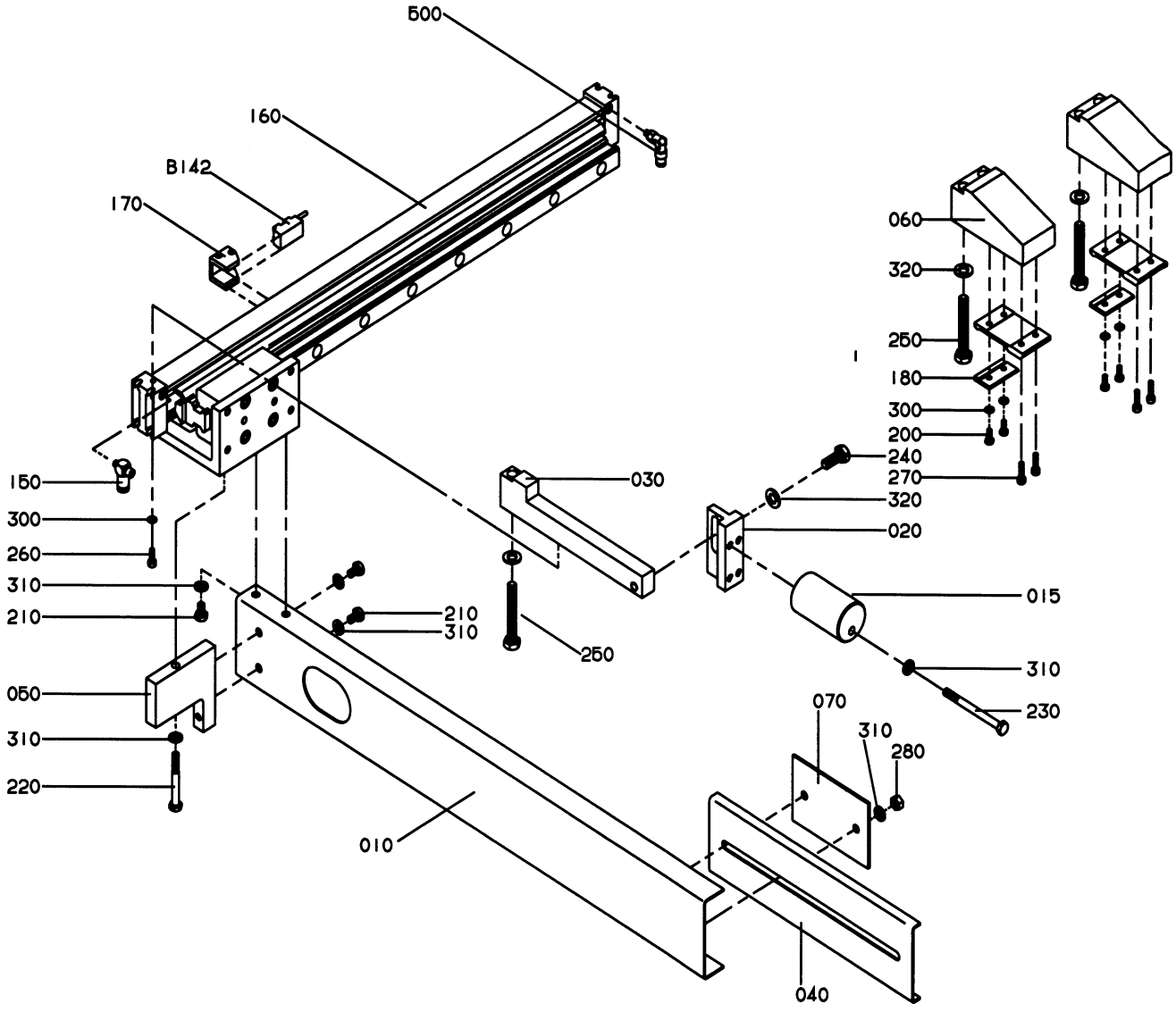

GraphicID: 112400302.eps
Parent Drw: 1124003-2
ECN 23757

Pos	Part No	SP	UN	Qty	Description	Page No
-						
000	C-1124003-020V	-		1	DOLLY	
010	1139192	-		1	SHEET	
015	1139208	-		1	ROLL	
020	1139190	-		1	BRACKET	
030	1139191	-		1	BRACKET	
040	1139193	-		1	SHEET	
050	1139194	-		1	BRACKET	
060	1139201	-		2	BRACKET	
070	1139195	-		1	SHEET	
150	90235-0779	-		1	THROTTLE CHECK VALVE	
160	90450-0369	P		1	CYLINDER	
170	90450-0669	-		1	BRACKET	
180	90450-0768	-		2	BRACKET	
200	312105-0295	-		4	SCREW O4017 M4X20A280	
210	312105-0366	-		4	SCREW O4017 M6X12A280	
220	312105-0380	-		1	SCREW O4014 M6X50A280	
230	312105-0384	-		1	SCREW O4014 M6X70A280	
240	312105-0451	-		1	SCREW SO4017 8X20A280	
250	312105-0462	-		5	SCREW O4014 M8X55A280	
260	312115-0291	-		2	SCREW O4762 M4X12A280	
270	312115-0295	-		4	SCREW O4762 M4X20A280	
280	312605-0316	-		2	NUT M6M6RFR	
300	315105-0136	-		6	WASHER BRB4,3X8RFR	
310	315105-0153	-		8	WASHER BRB6,4X12RFR	
320	315105-0165	-		6	WASHER BRB8,4X16RFR	
500	342732-0099	-		1	ELBOW PIPE D4-M5	
B142	90044-0116	P		1	PROXIMITY SWITCH	

Pos	Part No	SP	UN	Qty	Description	Page No

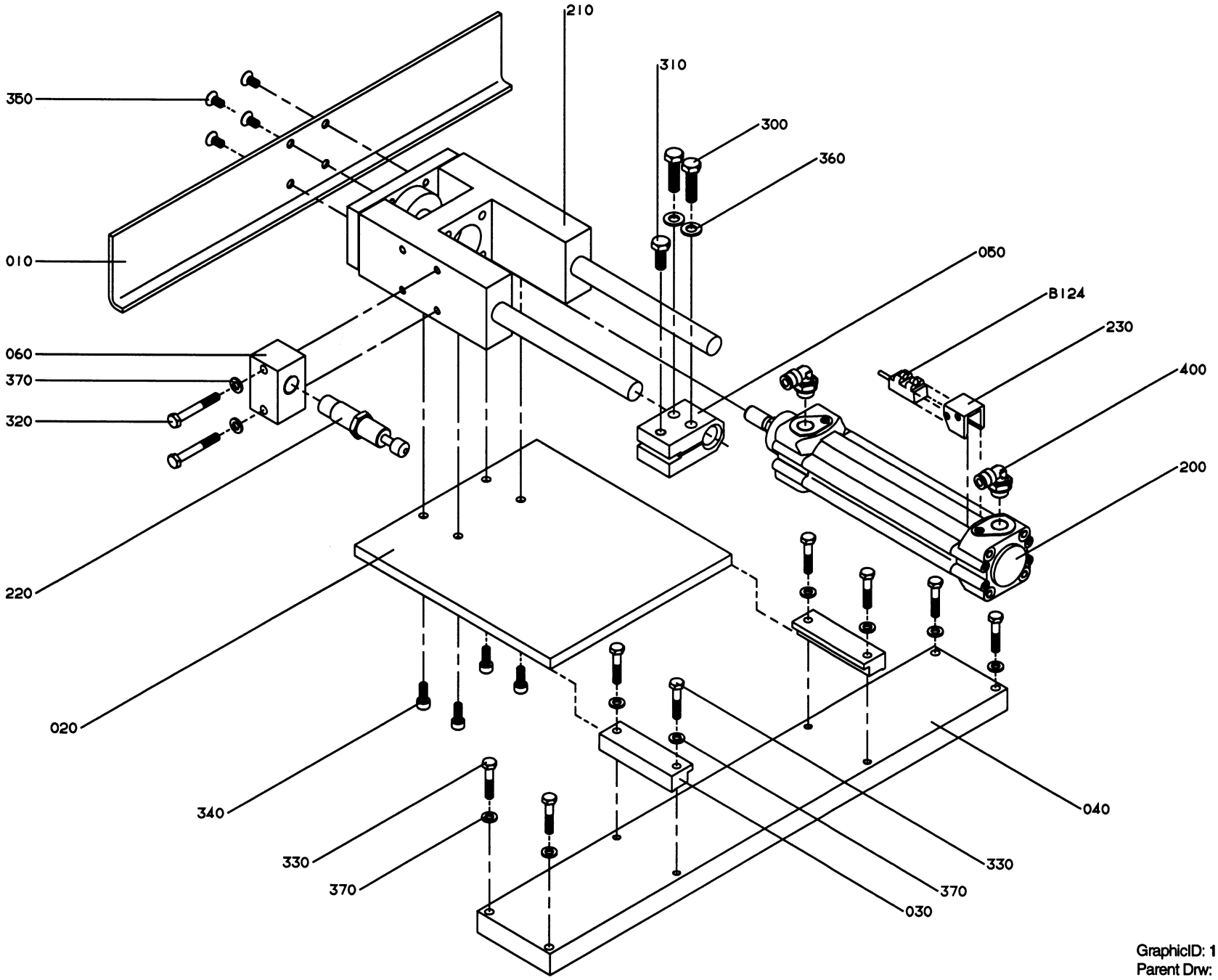

GraphicID: 112400401.eps
Parent Drw: 1124004-1
ECN 21267

Pos	Part No	SP	UN	Qty	Description	Page No
-						
000	C-1124004-010V	-		1	END STOP	
010	1124620	-		1	SHEET	
020	1124618	-		1	PLATE	
030	1124619	-		2	CLAMP RAIL	
040	1124617	-		1	PLATE	
050	1124621	-		1	STOP LUG	
060	1124622	-		1	BRACKET	
200	90450-0368	-		1	CYLINDER	
210	90450-0769	-		1	CONTROL UNIT	
220	90347-0166	-		1	DAMPER	
230	90450-0669	-		1	BRACKET	
300	312105-0455	-		2	SCREW O4017 M8X30A280	
310	312105-0451	-		1	SCREW SO4017 8X20A280	
320	312105-0378	-		2	SCREW ISO4017M6X40A280	
330	312105-0374	-		8	SCREW O4017 M6X30A280	
340	312115-0367	-		4	SCREW MC6S 6X14 A480	
350	312155-0366	-		4	SCREW MF6S6X12RFR	
360	315105-0165	-		2	WASHER BRB8,4X16RFR	
370	315105-0153	-		10	WASHER BRB6,4X12RFR	
400	342732-0103	-		2	ELBOW PIPE D6-R1/4"	
B124	90044-0116	P		1	PROXIMITY SWITCH	

Pos	Part No	SP	UN	Qty	Description	Page No

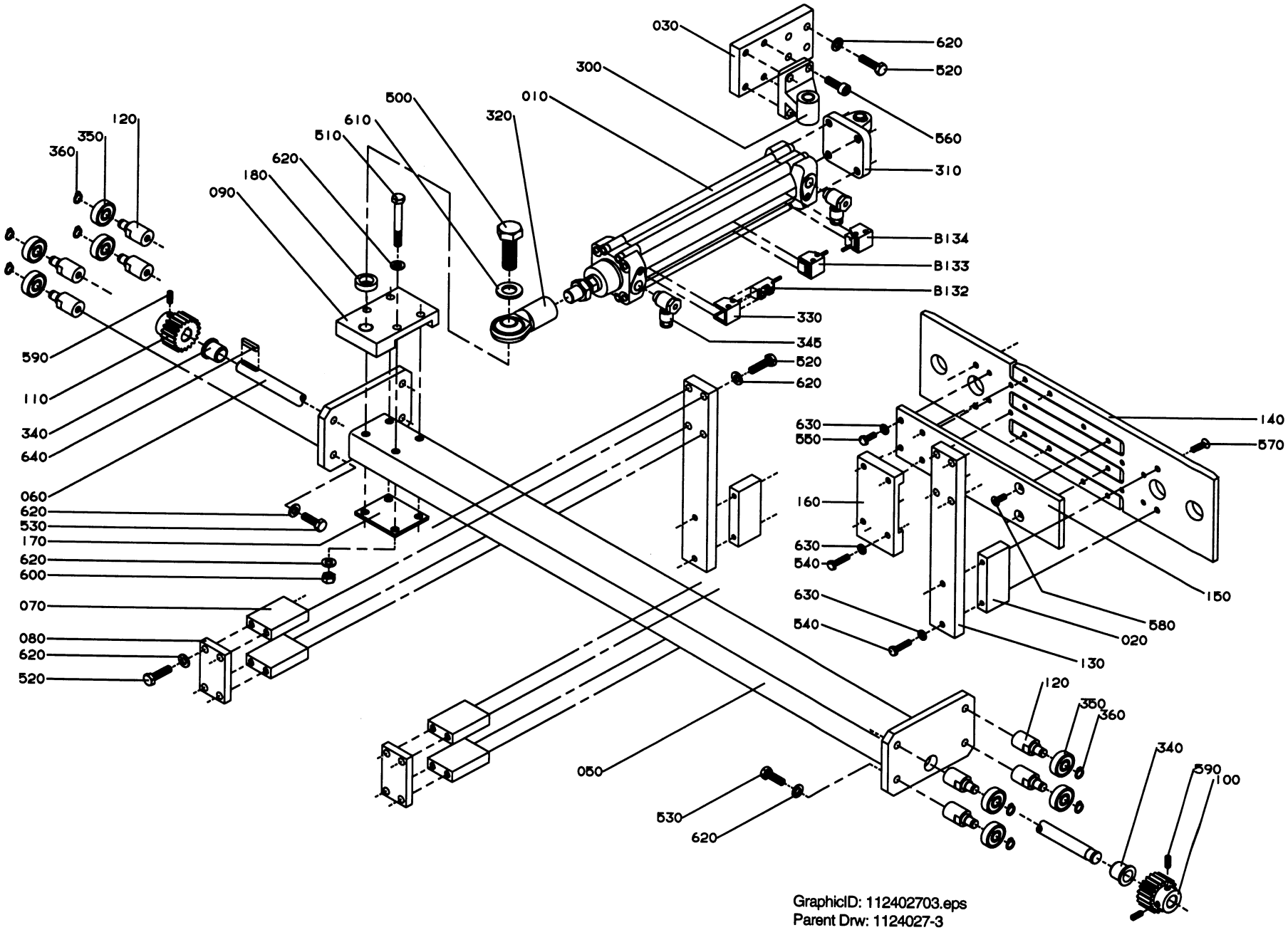

GraphicID: 112402703.eps
Parent Drw: 1124027-3
ECN 23179

Pos	Part No	SP	UN	Qty	Description	Page No
Conveyor width B40, B55, B55S						
000	**C-1124027-0201**	-		1	**GROUPING PUSHER**	
010	90450-0343	-		1	CYLINDER	
020	1124512	-		2	SPACER	
030	1124513	-		1	PLATE	
330	90450-0669	-		3	BRACKET	
Conveyor width B65, B68, B79						
000	**C-1124027-0202**	-		1	**GROUPING PUSHER**	
010	90450-0343	-		1	CYLINDER	
020	1124511	-		2	SPACER	
030	1124513	-		1	PLATE	
330	90450-0669	-		3	BRACKET	
COMMON PARTS						
050	**1124762**	-		1	**BEAM**	
060	1124761	-		1	SHAFT	
070	1124706	-		4	BRACKET	
080	1124707	-		2	PLATE	
090	1124708	-		1	BRACKET	
100	1124758	-		1	GEAR WHEEL Z=20	
110	1124759	-		1	GEAR WHEEL Z=20	
120	1124760	-		8	AXLE PIN	
130	1124763	-		2	HOLDER	
140	1124614	-		2	PUSHER PLATE	
150	1124615	-		1	PLATE	
160	1124616	-		1	BRACKET	
170	1124709	-		1	WASHER	
180	1124710	-		1	SPACER	
300	90450-0713	-		1	CYLINDER BRACKET	
310	90450-0714	-		1	CYLINDER BRACKET	
320	90450-0677	S		1	BRACKET	
340	90240-0222	P		2	BEARING	
345	90235-0707	-		2	THROTTLE CHECK VALVE	
350	90214-0123	P		8	BALL BEARING	
360	90141-0016	-		8	LOCK RING	
500	312105-0630	-		1	SCREW 4017 M16X50A280	
510	312105-0464	-		4	SCREW O4014 M8X65A280	
520	312105-0455	-		20	SCREW O4017 M8X30A280	
530	312105-0453	-		8	SCREW O4017 M8X25A280	
540	312105-0372	-		8	SCREW O4017 M6X25A280	
550	312105-0368	-		4	SCREW O4017 M6X16A280	
560	312115-0453	-		4	SCREW O4762 M8X25A280	
570	312155-0370	-		4	SCREW MF6S6X20RFR	
580	312155-0368	-		2	SCREW MF6S6X16RFR	
590	312318-0360	-		3	STOP SCREW SK6SS6X6RFR	
600	312605-0318	-		4	NUT M6M8RFR	
610	315105-0186	-		1	WASHER BRB17X30RFR	
620	315105-0165	-		36	WASHER BRB8,4X16RFR	
630	315105-0153	-		12	WASHER BRB6,4X12RFR	
640	315705-0202	-		1	FLAT WEDGE	
B132	90044-0116	S		1	PROXIMITY SWITCH	
B133	90044-0116	S		1	PROXIMITY SWITCH	
B134	90044-0116	S		1	PROXIMITY SWITCH	

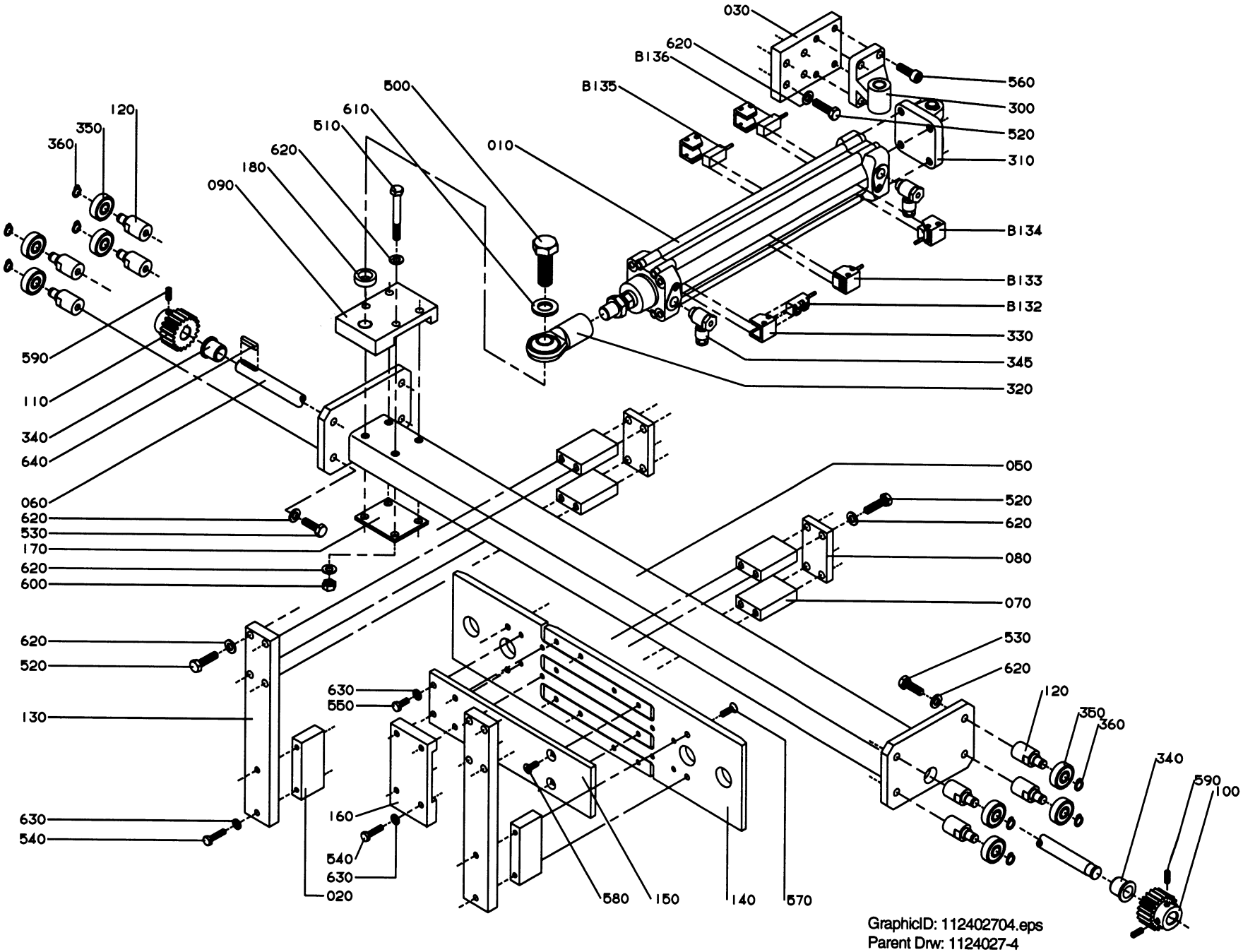

GraphicID: 112402704.eps
Parent Drw: 1124027-4
ECN 23179

Pos	Part No	SP	UN	Qty	Description	Page No
Conveyor width UNITADJ						
000	**C-1124027-0203**	-		1	**GROUPING PUSHER**	
010	90450-0367	-		1	CYLINDER	
020	1124489	-		2	SPACER	
020	1124510	-		2	SPACER	
020	1124764	-		2	SPACER	
030	1124703	-		1	PLATE	
330	90450-0669	-		5	BRACKET	
B135	90044-0116	S		1	PROXIMITY SWITCH	
B136	90044-0116	S		1	PROXIMITY SWITCH	
COMMON PARTS						
050	**1124762**	-		1	**BEAM**	
060	1124761	-		1	SHAFT	
070	1124706	-		4	BRACKET	
080	1124707	-		2	PLATE	
090	1124708	-		1	BRACKET	
100	1124758	-		1	GEAR WHEEL Z=20	
110	1124759	-		1	GEAR WHEEL Z=20	
120	1124760	-		8	AXLE PIN	
130	1124763	-		2	HOLDER	
140	1124614	-		2	PUSHER PLATE	
150	1124615	-		1	PLATE	
160	1124616	-		1	BRACKET	
170	1124709	-		1	WASHER	
180	1124710	-		1	SPACER	
300	90450-0713	-		1	CYLINDER BRACKET	
310	90450-0714	-		1	CYLINDER BRACKET	
320	90450-0677	S		1	BRACKET	
340	90240-0222	P		2	BEARING	
345	90235-0707	-		2	THROTTLE CHECK VALVE	
350	90214-0123	P		8	BALL BEARING	
360	90141-0016	-		8	LOCK RING	
500	312105-0630	-		1	SCREW 4017 M16X50A280	
510	312105-0464	-		4	SCREW O4014 M8X65A280	
520	312105-0455	-		20	SCREW O4017 M8X30A280	
530	312105-0453	-		8	SCREW O4017 M8X25A280	
540	312105-0372	-		8	SCREW O4017 M6X25A280	
550	312105-0368	-		4	SCREW O4017 M6X16A280	
560	312115-0453	-		4	SCREW O4762 M8X25A280	
570	312155-0370	-		4	SCREW MF6S6X20RFR	
580	312155-0368	-		2	SCREW MF6S6X16RFR	
590	312318-0360	-		3	STOP SCREW SK6SS6X6RFR	
600	312605-0318	-		4	NUT M6M8RFR	
610	315105-0186	-		1	WASHER BRB17X30RFR	
620	315105-0165	-		36	WASHER BRB8,4X16RFR	
630	315105-0153	-		12	WASHER BRB6,4X12RFR	
640	315705-0202	-		1	FLAT WEDGE	
B132	90044-0116	S		1	PROXIMITY SWITCH	
B133	90044-0116	S		1	PROXIMITY SWITCH	
B134	90044-0116	S		1	PROXIMITY SWITCH	

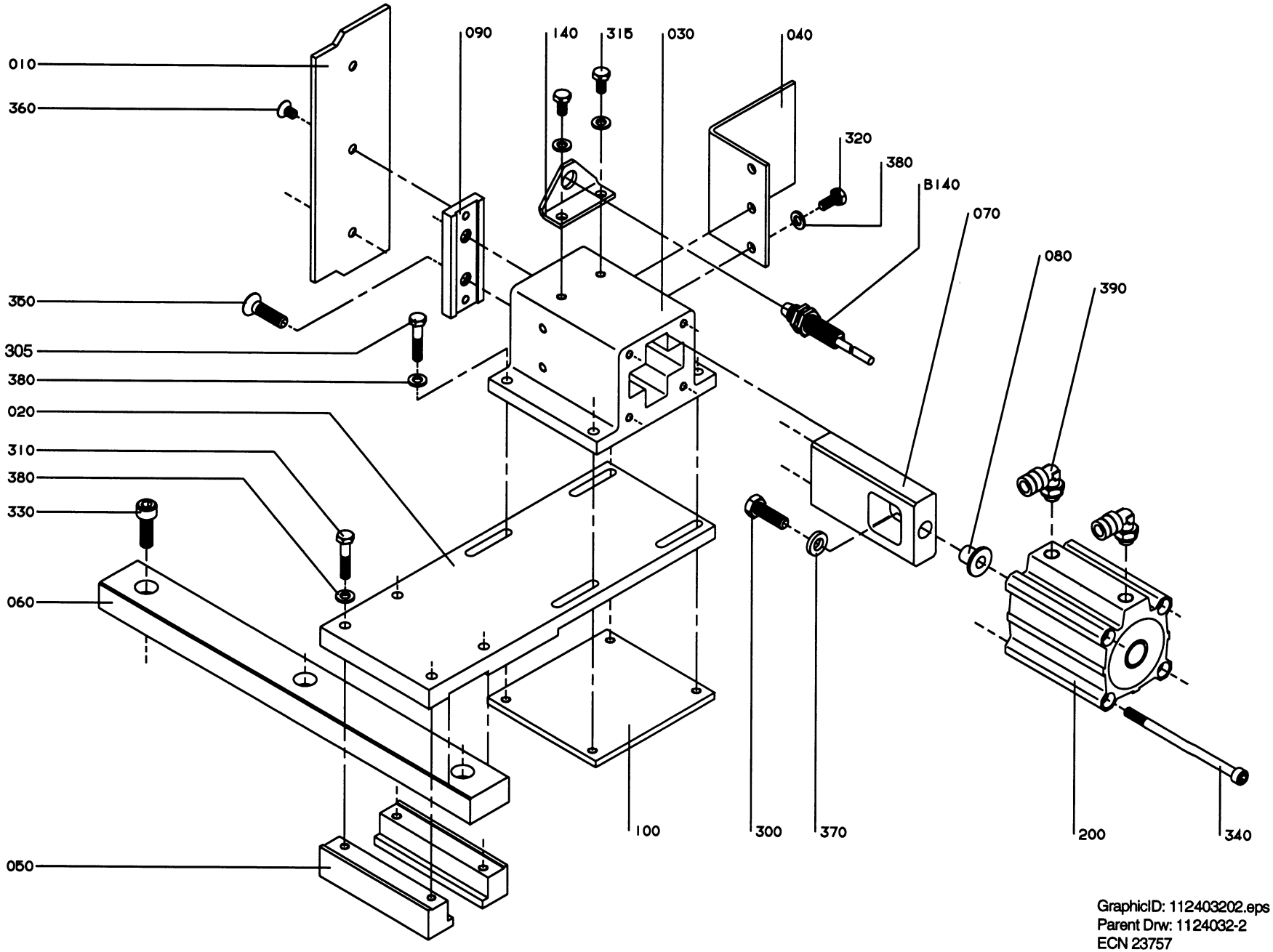

GraphicID: 112403202.eps
Parent Drw: 1124032-2
ECN 23757

Pos	Part No	SP	UN	Qty	Description	Page No
Conveyor width B40, B55, B55S						
000	**C-1124032-0201**	-		1	**GROUPING END STOP**	
010	1124506	-		1	SHEET	
Conveyor width B65, B68, B79						
000	**C-1124032-0202**	-		1	**GROUPING END STOP**	
010	1124504	-		1	SHEET	
Conveyor width UNITADJ						
000	**C-1124032-0203**	-		1	**GROUPING END STOP**	
010	1124506	-		1	SHEET	
010	1124504	-		1	SHEET	
010	1124505	-		1	SHEET	
COMMON PARTS						
020	**1124507**	-		1	**PLATE**	
030	1124859	-		1	HOUSE	
040	1124701	-		1	SLIDE SHEET	
050	1124854	-		2	CLAMP RAIL	
060	1124855	-		1	RAIL	
070	1124858	-		1	LOCATING PIECE	
080	1074234	-		1	SPACER	
090	1124508	-		1	BRACKET	
100	1124509	-		1	PLATE	
140	1124962	-		1	BRACKET	
200	90450-0365	-		1	CYLINDER	
300	312105-0453	-		1	SCREW O4017 M8X25A280	
305	312105-0372	-		4	SCREW ISO4017 M6X25A280	
310	312105-0374	-		4	SCREW O4017 M6X30A280	
315	312105-0366	-		2	SCREW O4017 M6X12A280	
320	312105-0367	-		2	SCREW M6S6X14RFR	
330	312115-0453	-		3	SCREW O4762 M8X25A280	
340	312111-0390	-		4	SCREW MC6S6X100FZB	
350	312155-0455	-		2	SCREW MF6S8X30RFR	
360	312155-0364	-		2	SCREW MF6S6X10RFR	
370	315115-0165	-		1	WASHER TBRB8,4X16RFR	
380	315105-0153	-		12	WASHER BRB6,4X12RFR	
390	342732-0102	-		2	VEE COUPLING D6-R1/8"	
B140	90044-0124	-		1	INDUCTIVE SWITCH	

Pos	Part No	SP	UN	Qty	Description	Page No

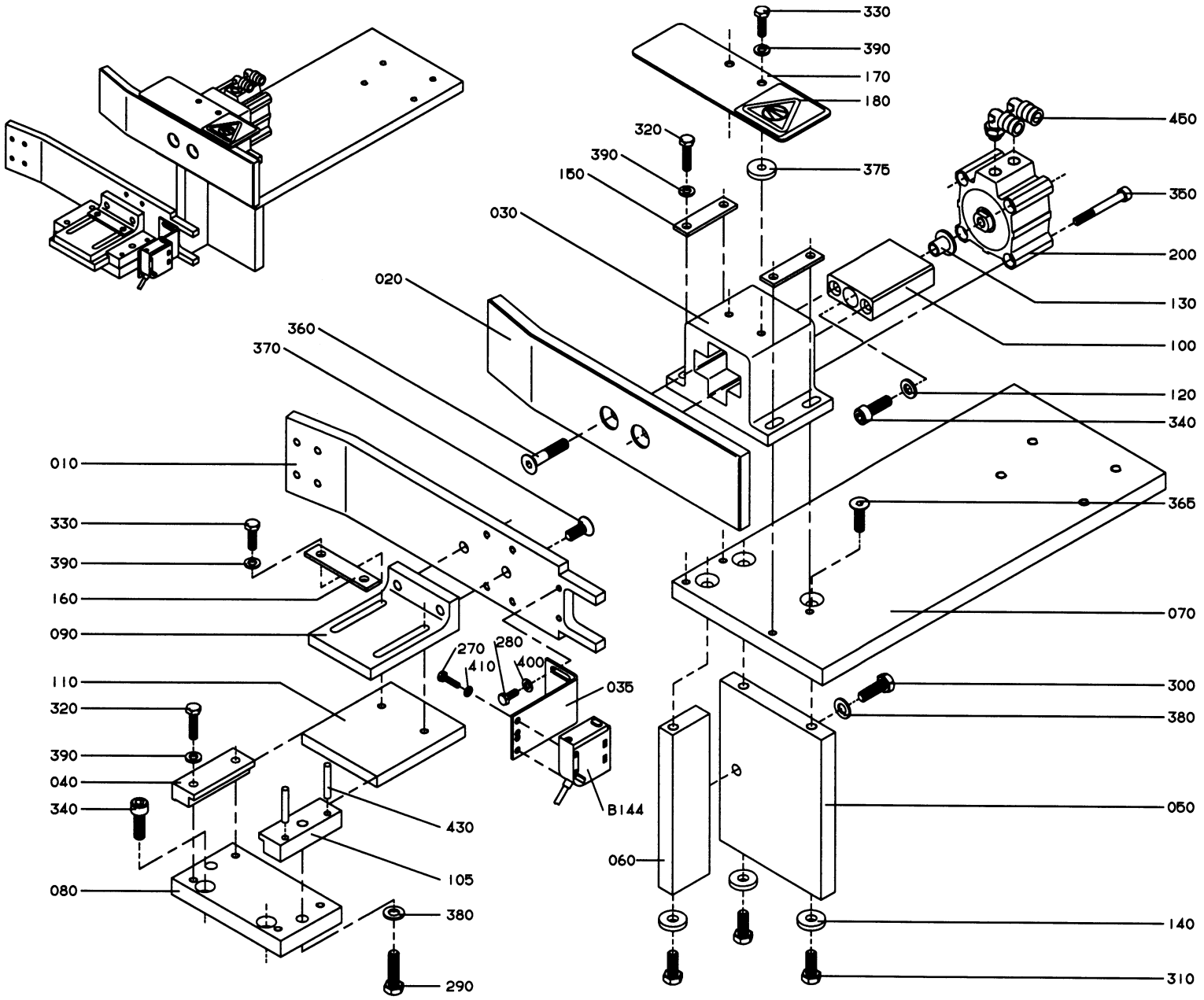

GraphicID: 112403302.eps
Parent Drw: 1124033-2
ECN 23179

Pos	Part No	SP	UN	Qty	Description	Page No
-						
000	**C-1124033-0201**	-		1	**INFEED BRAKE**	
010	1124441	-		1	RAIL	
020	1124446	-		1	RAIL	
030	1124852	-		1	HOUSE	
035	1124442	-		1	BRACKET	
040	1124750	-		1	CLAMP RAIL	
050	1124765	-		1	PLATE	
060	1124766	-		1	PLATE	
070	1139199	-		1	PLATE	
080	1124897	-		1	PLATE	
090	1124899	-		1	BRACKET	
100	1074229	-		1	LOCATING PIECE	
105	1124487	-		1	CLAMP RAIL	
110	1124898	-		1	PLATE	
120	1074233	-		1	WASHER	
130	1074234	-		1	SPACER	
140	548599	-		3	WASHER	
150	1124613	-		2	WASHER	
160	1124478	-		1	WASHER	
170	1124479	-		1	SHEET	
180	1128854	-		1	CAUTION SIGN	
200	90450-0269	P		1	CYLINDER	
270	312105-0293	-		2	SCREW O4017 M4X16A280	
280	312105-0327	-		2	SCREW O4017 M5X12A280	
290	312105-0455	-		1	SCREW O4017 M8X30A280	
300	312105-0453	-		1	SCREW O4017 M8X25A280	
310	312105-0451	-		3	SCREW SO4017 8X20A280	
320	312105-0372	-		6	SCREW O4017 M6X25A280	
330	312105-0370	-		4	SCREW O4017 M6X20A280	
340	312115-0453	-		3	SCREW O4762 M8X25A280	
350	312115-0380	-		4	SCREW O4762 M6X50A280	
360	312155-0459	-		2	SCREW MF6S8X40RFR	
365	312155-0453	-		3	SCREW MF6S8X25RFR	
370	312155-0451	-		2	SCREW MF6S8X20RFR	
375	315125-0153	-		2	WASHER SB 6,4X22X4 RFR	
380	315105-0165	-		2	WASHER BRB8,4X16RFR	
390	315105-0153	-		10	WASHER BRB6,4X12RFR	
400	315105-0146	-		2	WASHER BRB5,3X10RFR	
410	315105-0136	-		4	WASHER BRB4,3X8RFR	
420	312605-0312	-		2	NUT M6M4RFR	
430	311103-0314	-		2	CYLINDRICACP M6 5X30 RFR	
450	342732-0102	-		2	VEE COUPLING D6-R1/8"	

Pos	Part No	SP	UN	Qty	Description	Page No
B144	90232-0110	P		1	PH.CELL OMRON E3S-CL1-5M	

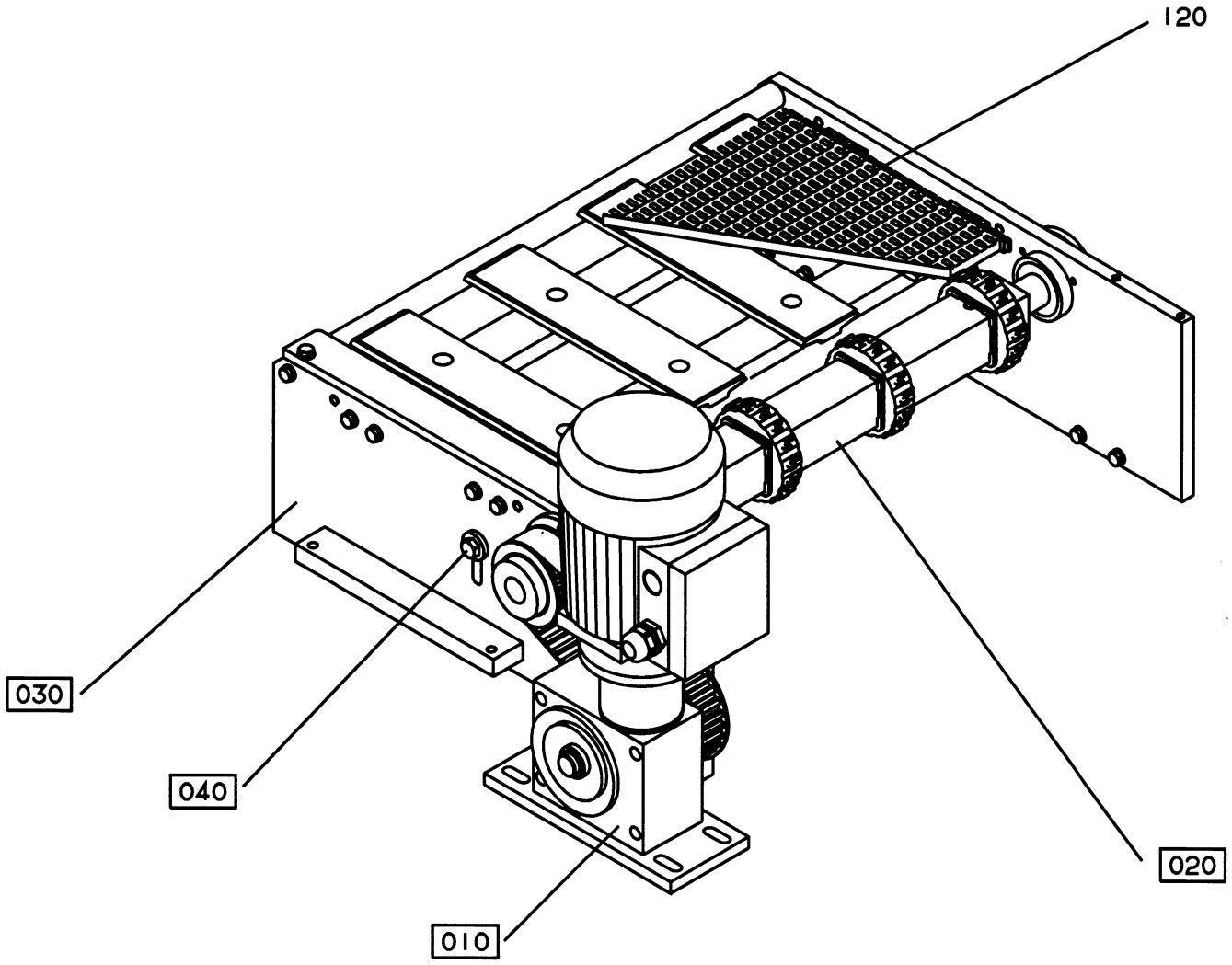

Graphic ID: 112403601.eps
Parent Drw: 1124036-1
ECN 21267

Pos	Part No	SP	UN	Qty	Description	Page No
-						
000	**C-1124036-0201**	-		**1**	**PUSHER BELT**	
010	C-1124037-010V	-		1	MOTOR	
020	C-1124038-0101	-		1	DRIVE SHAFT	
030	C-1124040-0201	-		1	MACHINE BODY	
040	C-1124044-0101	-		1	GUIDE SPROCKET	
120	1124798	-		1	CHAIN	

Pos	Part No	SP	UN	Qty	Description	Page No

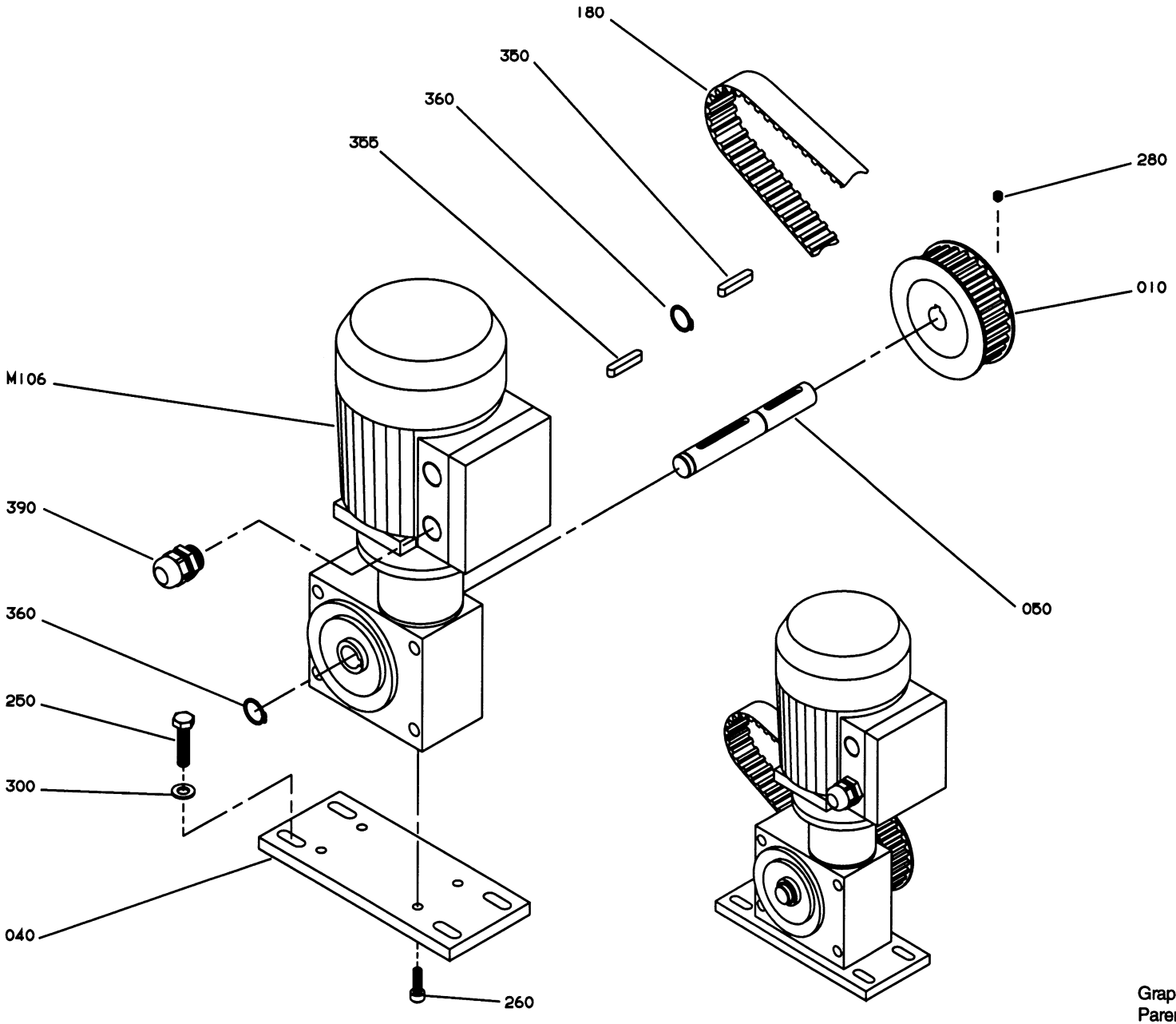

GraphicID: 112403701.eps
Parent Drw: 1124037-1
ECN 21267

Pos	Part No	SP	UN	Qty	Description	Page No
50 Hz						
000	**C-1124037-0101**	-		1	**MOTOR**	
010	1124805	-		1	TOOTHED PULLY Z=24	
60 Hz						
000	**C-1124037-0102**	-		1	**MOTOR**	
010	1124801	-		1	TOOTHED PULLY Z=20	
COMMON PARTS						
040	**1124814**	-		1	**PLATE**	
050	1124589	-		1	SHAFT	
180	90417-0071	-		1	TOOTHED BELT	
250	312105-0453	-		4	SCREW O4017 M8X25A280	
260	312115-0370	-		4	SCREW O4762 M6X20A280	
280	312318-0362	-		1	STOP SCREW SK6SS6X8RFR	
300	315105-0165	-		4	WASHER BRB8,4X16RFR	
350	315701-0207	-		1	FLAT WEDGE5X5X36	
355	315701-0210	-		1	FLAT WEDGE5X5X50	
360	315751-0113	-		2	CIRCLIP SGA16 RFR	
390	352103-0110	-		1	CABLE GLAND STR 16	
M106	90069-0237	-		1	WORM GEAR MOTOR	

Pos	Part No	SP	UN	Qty	Description	Page No

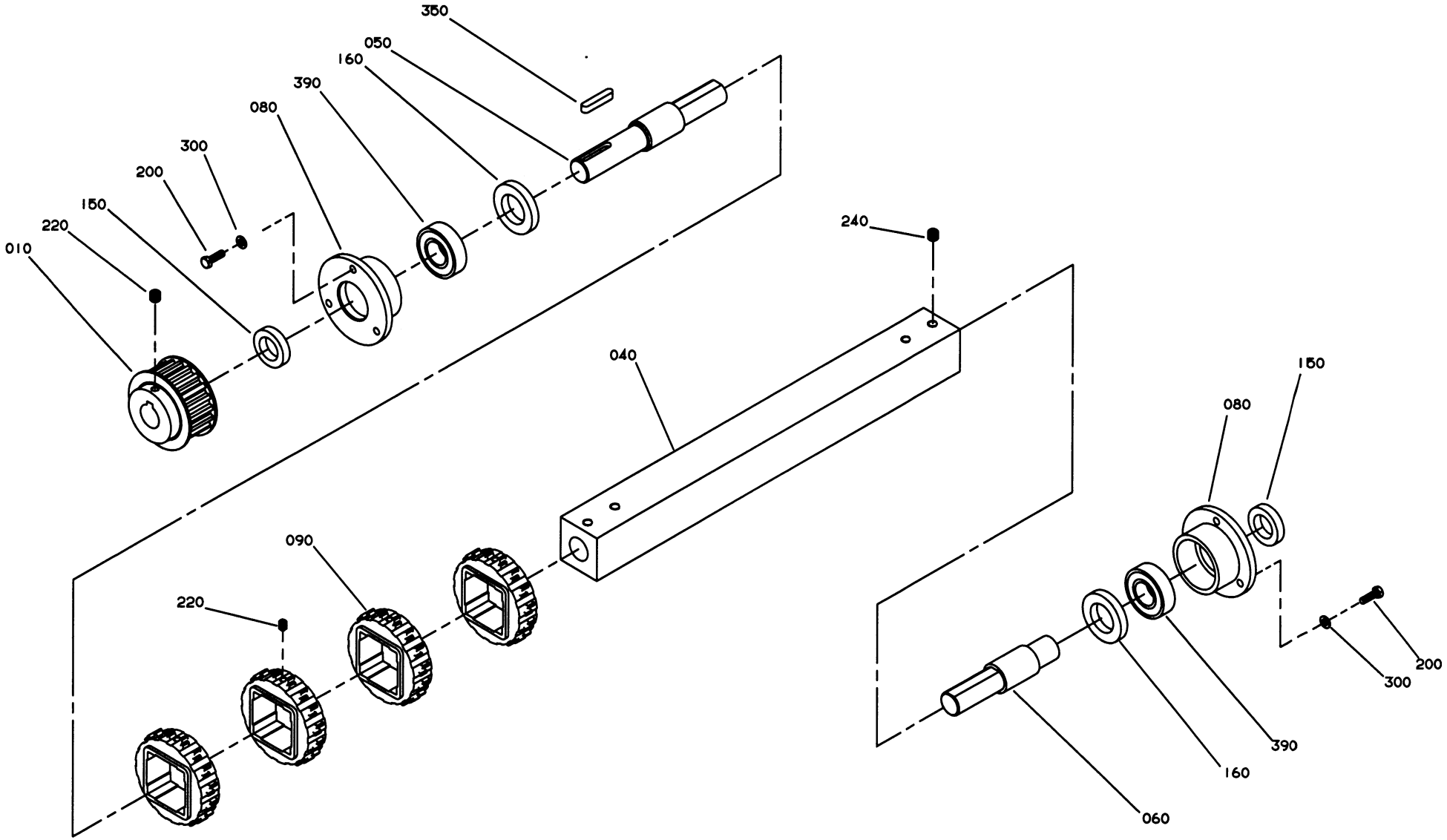

GraphicID: 112403801.eps
Parent Drw: 1124038-1
ECN 21267

Pos	Part No	SP	UN	Qty	Description	Page No
-						
000	C-1124038-0101	-		1	**DRIVE SHAFT**	
010	1124800	-		1	TOOTHED PULLY Z=20	
040	1124778	-		1	SHAFT	
050	1124781	-		1	SHAFT	
060	1124782	-		1	SHAFT	
080	1124811	-		2	BEARING HOUSING	
090	1124812	-		4	GEAR WHEEL Z=16	
150	90091-0302	-		2	SEAL RING	
160	90091-0322	-		2	SEAL RING	
200	312105-0329	-		6	SCREW O4017 M5X16A280	
220	312318-0362	-		2	STOP SCREW SK6SS6X8RFR	
240	312318-0443	-		4	STOP SCREW SK6SS8X8RFR	
300	315105-0146	-		6	WASHER BRB5,3X10RFR	
350	315701-0237	-		1	FLAT WEDGE6X6X32	
390	321308-0204	-		2	BALL BEARISKF6004-2RS	

Pos	Part No	SP	UN	Qty	Description	Page No

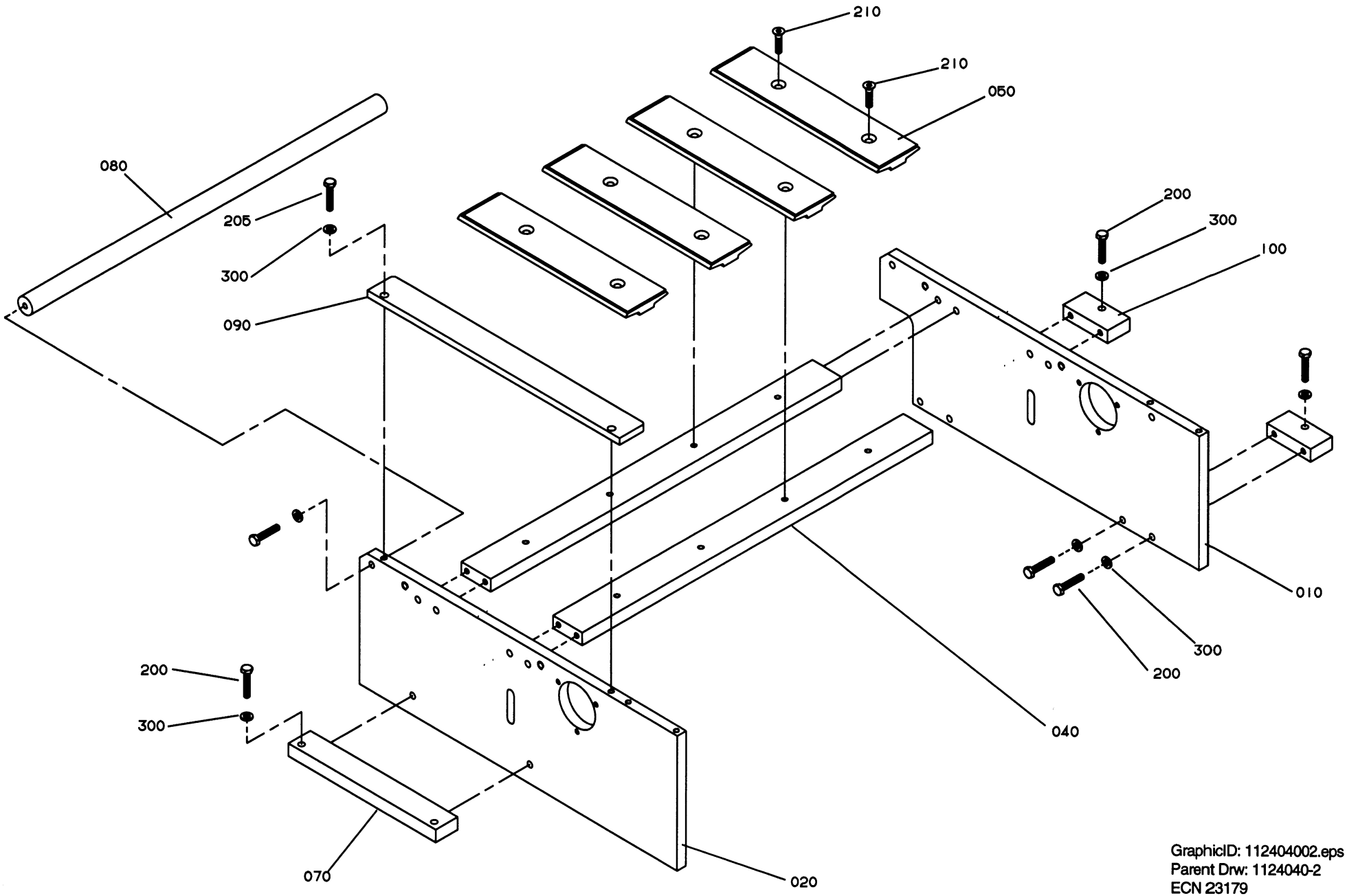

GraphicID: 112404002.eps
Parent Drw: 1124040-2
ECN 23179

Pos	Part No	SP	UN	Qty	Description	Page No
-						
000	C-1124040-0201	-		1	MACHINE BODY	
010	1139197	-		1	PLATE	
020	1124786	-		1	PLATE	
040	1124775	-		2	SUPPORT	
050	1124823	-		4	SLIDE RAIL	
070	1124776	-		1	BRACKET	
080	1124824	-		1	SHAFT	
090	1124583	-		1	RAIL	
100	1124777	-		2	BRACKET	
200	312105-0374	-		20	SCREW O4017 M6X30A280	
205	312105-0372	-		2	SCREW O4017 M6X25A280	
210	312155-0372	-		8	SCREW MF6S6X25RFR	
300	315105-0153	-		22	WASHER BRB6,4X12RFR	

Pos	Part No	SP	UN	Qty	Description	Page No

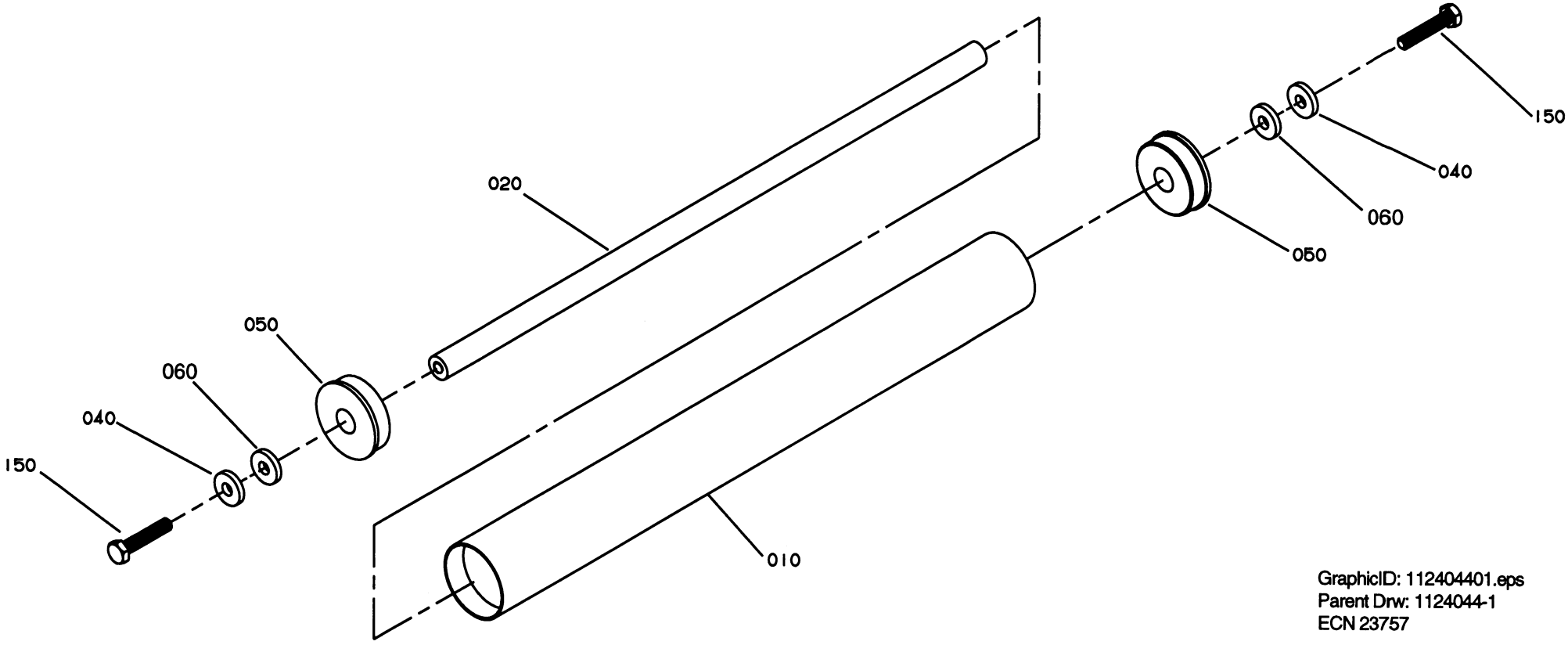

GraphicID: 112404401.eps
Parent Drw: 1124044-1
ECN 23757

Pos	Part No	SP	UN	Qty	Description	Page No
-						
000	C-1124044-0101	-		1	GUIDE SPROCKET	
010	1124787	-		1	ROLL	
020	1124789	-		1	SHAFT	
040	548599	-		2	WASHER	
050	1124790	-		2	BUSHING	
060	1139241	-		2	SPACER	
150	312105-0457	-		2	SCREW O4017 M8X35A280	

Pos	Part No	SP	UN	Qty	Description	Page No

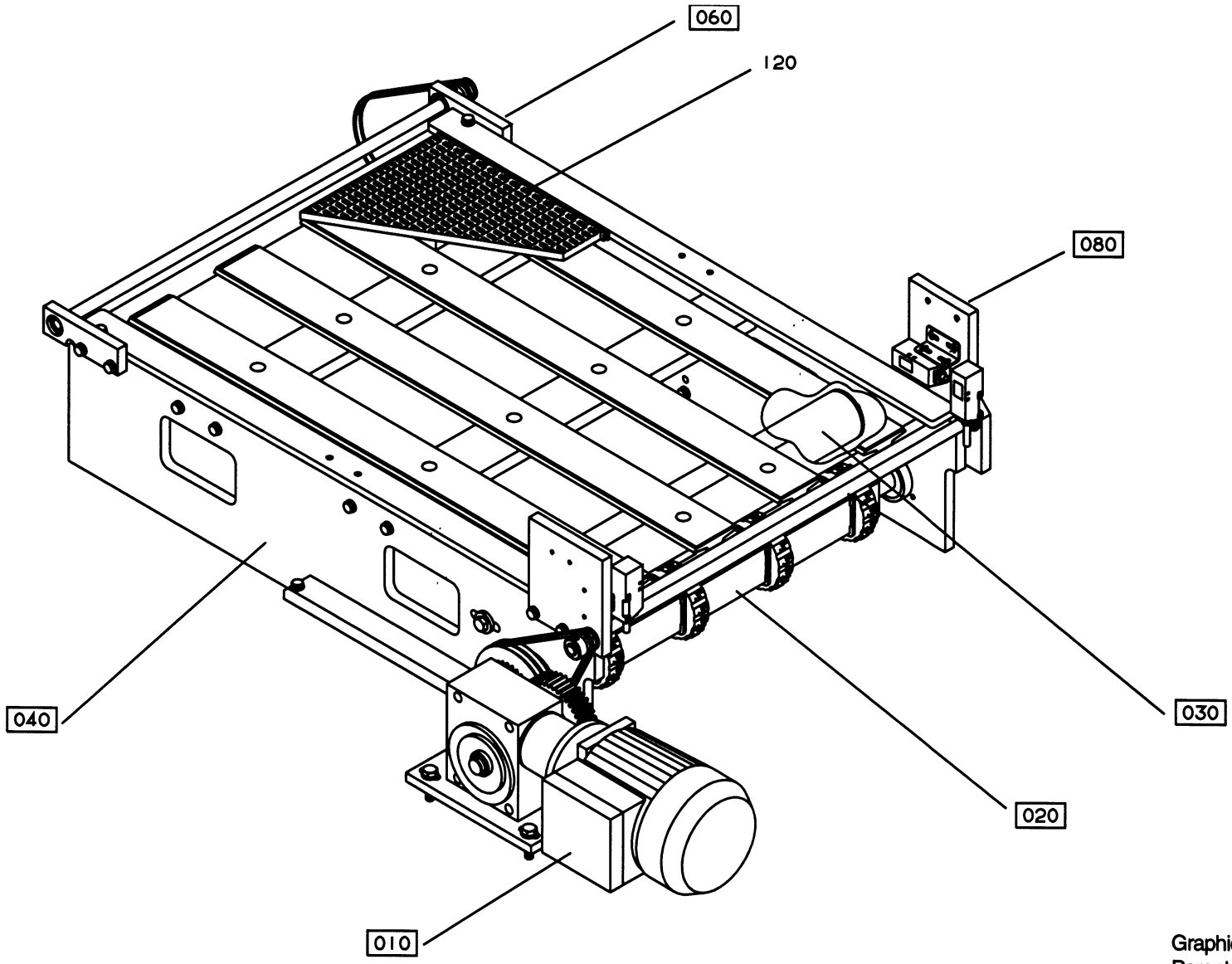

GraphicID: 112404102.eps
Parent Drw: 1124041-2
ECN 23179

Pos	Part No	SP	UN	Qty	Description	Page No
-						
000	**C-1124041-0201**	-		1	**MIDDLE BELT**	
010	C-1124042-010V	-		1	MOTOR	
020	C-1124043-010V	-		1	DRIVE SHAFT	
030	C-1124044-0101	-		1	GUIDE SPROCKET	
040	C-1124045-0201	-		1	MACHINE BODY	
060	C-1124052-0101	-		1	TRANSITION SHAFT	
080	C-1124053-0201	-		1	TRANSITION SHAFT	
120	1124799	-		1	CHAIN	

Pos	Part No	SP	UN	Qty	Description	Page No

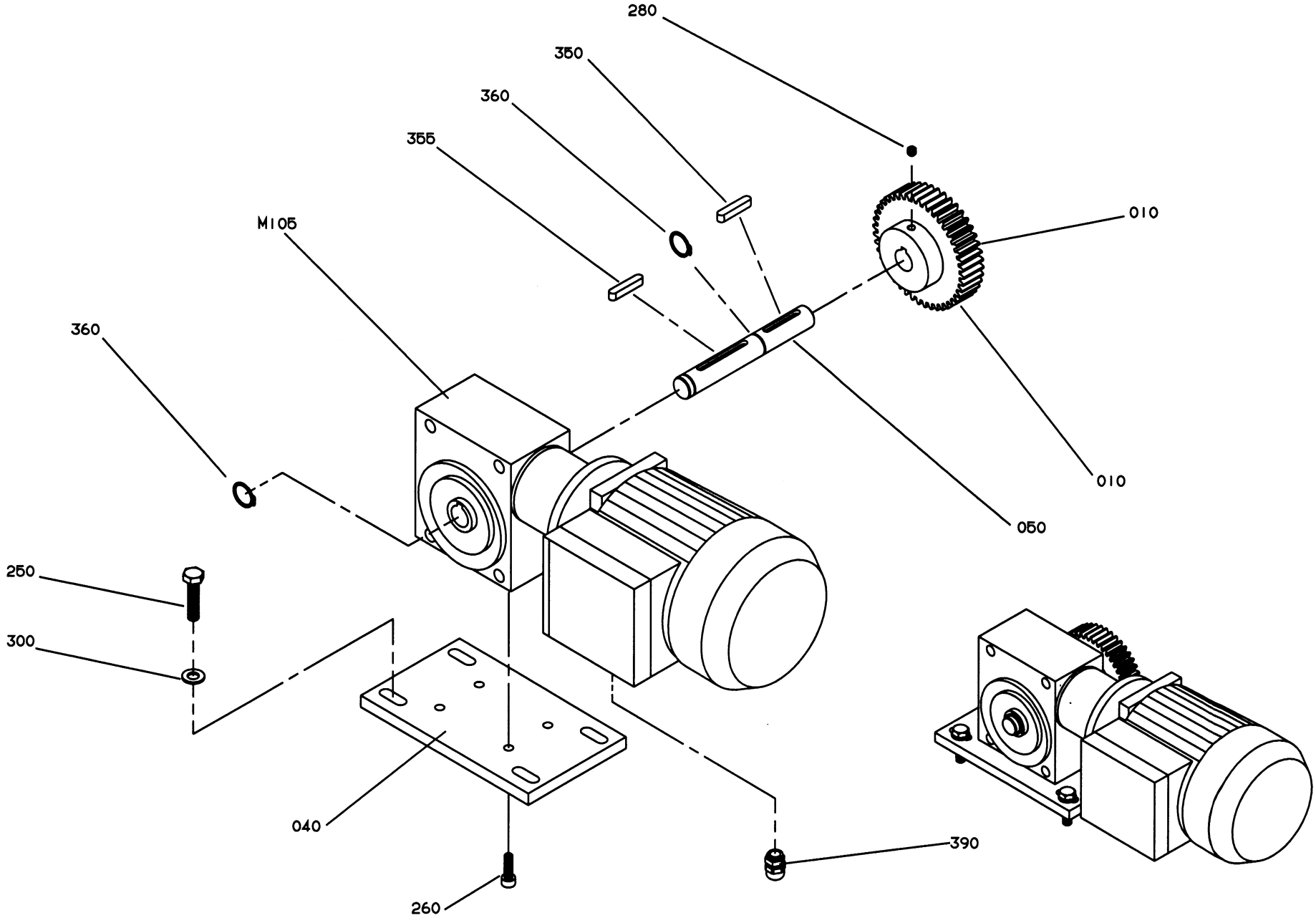

GraphicID: 112404201.eps
Parent Drw: 1124042-1
ECN 21267

Pos	Part No	SP	UN	Qty	Description	Page No
50 Hz						
000	**C-1124042-0101**	-		1	**MOTOR**	
010	1124587	-		1	GEAR WHEEL Z=44	
60 Hz						
000	**C-1124042-0102**	-		1	**MOTOR**	
010	1124810	-		1	GEAR WHEEL Z=40	
COMMON PARTS						
040	**1124813**	-		1	**PLATE**	
050	1124589	-		1	SHAFT	
250	312105-0453	-		4	SCREW O4017 M8X25A280	
260	312115-0368	-		4	SCREW O4762 M6X16A280	
280	312318-0362	-		1	STOP SCREW SK6SS6X8RFR	
300	315105-0165	-		4	WASHER BRB8,4X16RFR	
350	315701-0207	-		1	FLAT WEDGE5X5X36	
355	315701-0210	-		1	FLAT WEDGE5X5X50	
360	315751-0113	-		2	CIRCLIP SGA16 RFR	
390	352103-0110	-		1	CABLE GLAND STR 16	
M105	90069-0237	-		1	WORM GEAR MOTOR	

Pos	Part No	SP	UN	Qty	Description	Page No

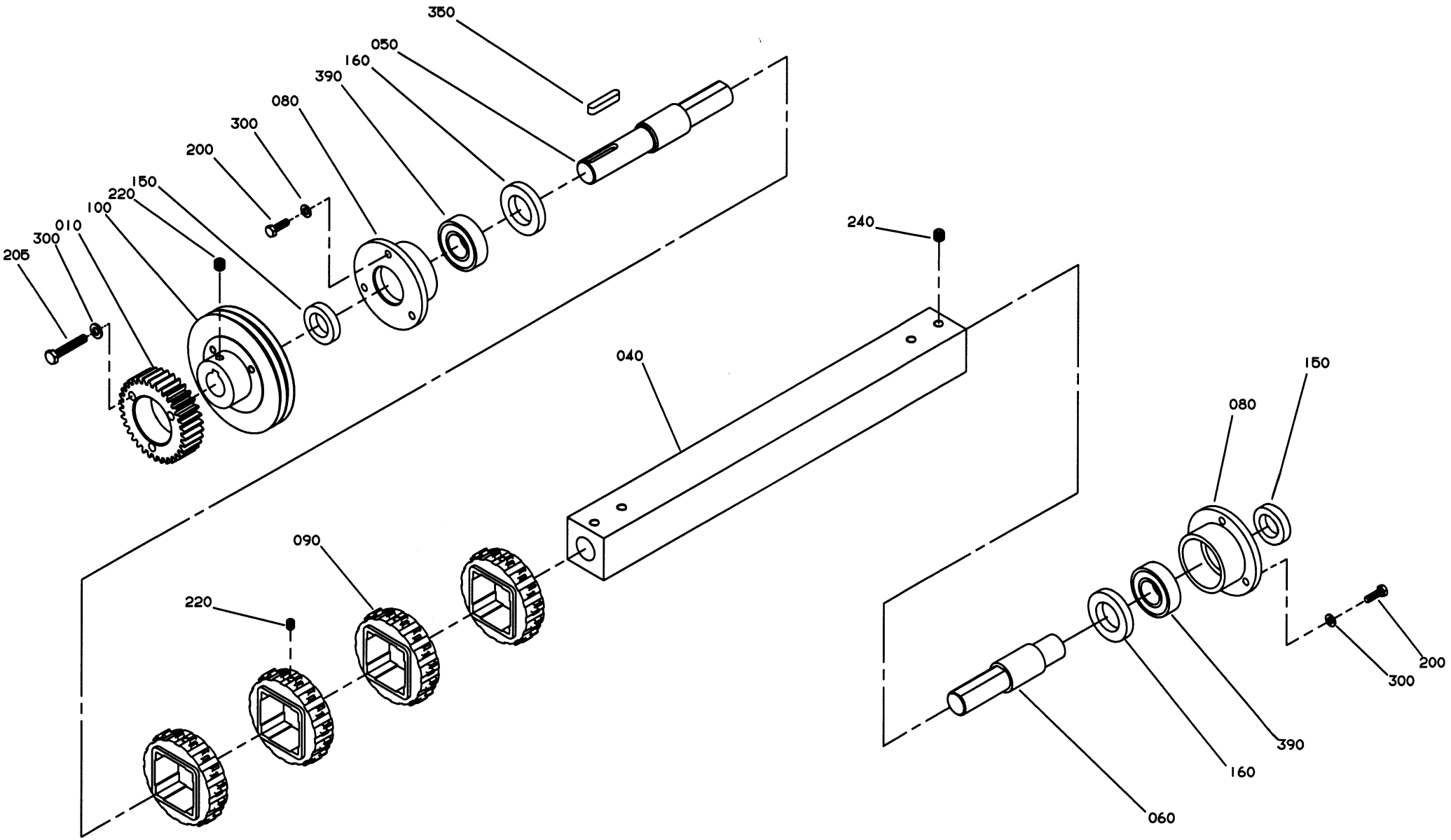

GraphicID: 112404301.eps
Parent Drw: 1124043-1
ECN 21267

Pos	Part No	SP	UN	Qty	Description	Page No
50 Hz						
000	**C-1124043-0101**	-		1	**DRIVE SHAFT**	
010	1124588	-		1	GEAR WHEEL Z=34	
60 Hz						
000	**C-1124043-0102**	-		1	**DRIVE SHAFT**	
010	1124806	-		1	GEAR WHEEL Z=36	
COMMON PARTS						
040	**1124778**	-		1	**SHAFT**	
050	1124781	-		1	SHAFT	
060	1124782	-		1	SHAFT	
080	1124811	-		2	BEARING HOUSING	
090	1124812	-		4	GEAR WHEEL Z=16	
100	1124807	-		1	PULLEY	
150	90091-0302	-		2	SEAL RING	
160	90091-0322	-		2	SEAL RING	
200	312105-0329	-		6	SCREW O4017 M5X16A280	
205	312105-0376	-		3	SCREW O4017 M6X35A280	
220	312318-0362	-		2	STOP SCREW SK6SS6X8RFR	
240	312318-0443	-		4	STOP SCREW SK6SS8X8RFR	
300	315105-0146	-		6	WASHER BRB5,3X10RFR	
305	315105-0153	-		3	WASHER BRB6,4X12RFR	
350	315701-0237	-		1	FLAT WEDGE6X6X32	
390	321308-0204	-		2	BALL BEARISKF6004-2RS	

Pos	Part No	SP	UN	Qty	Description	Page No

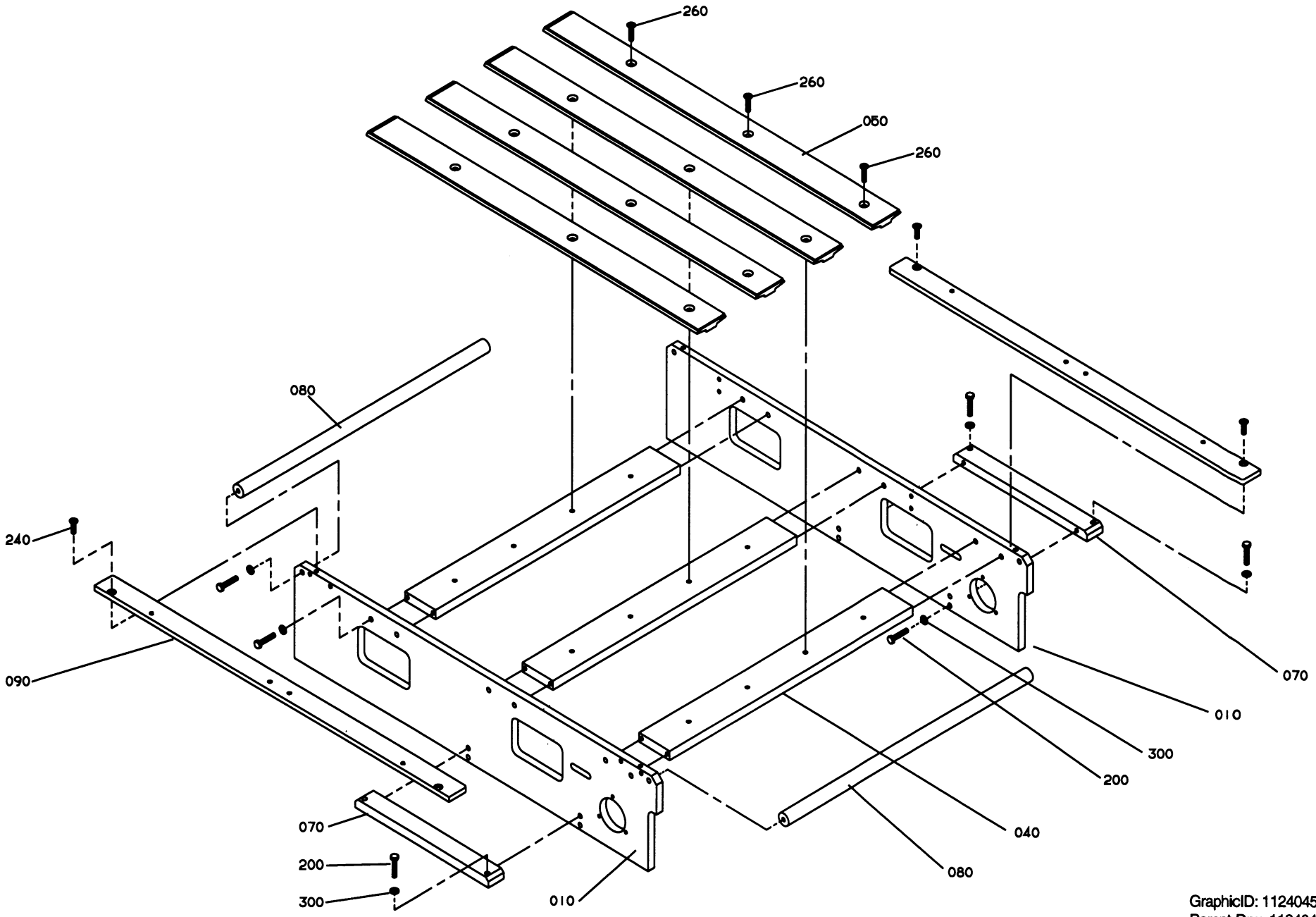

GraphicID: 112404502.eps
Parent Drw: 1124045-2
ECN 23179

Pos	Part No	SP	UN	Qty	Description	Page No
-						
000	C-1124045-0201	-		1	**MACHINE BODY**	
010	1139198	-		2	PLATE	
040	1124820	-		3	SUPPORT	
050	1124821	-		4	SLIDE RAIL	
070	1124819	-		2	BRACKET	
080	1124824	-		2	SHAFT	
090	1124584	-		2	RAIL	
200	312105-0374	-		24	SCREW O4017 M6X30A280	
240	312155-0370	-		4	SCREW MF6S6X20RFR	
260	312155-0372	-		12	SCREW MF6S6X25RFR	
300	315105-0153	-		20	WASHER BRB6,4X12RFR	

Pos	Part No	SP	UN	Qty	Description	Page No

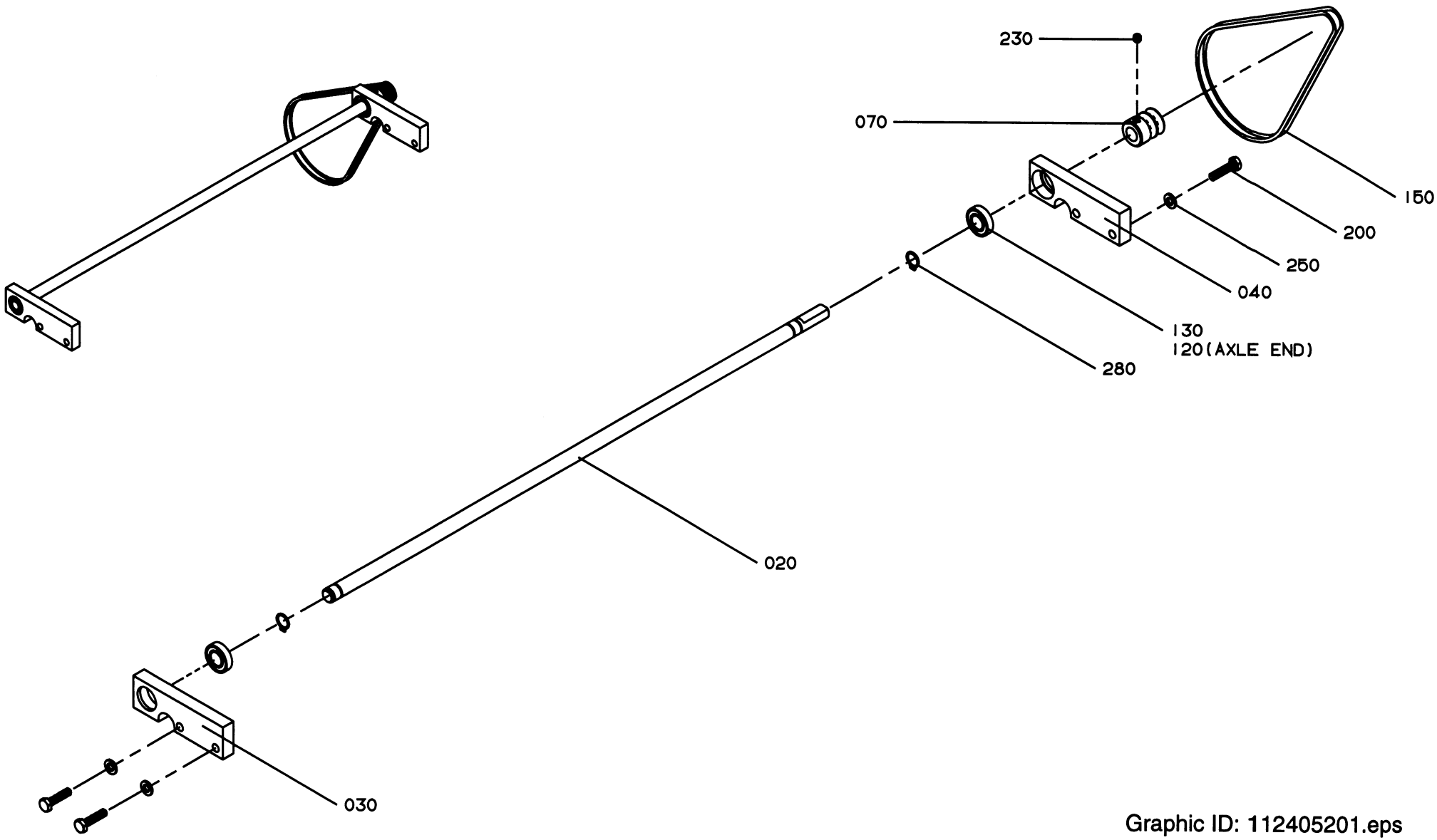

Graphic ID: 112405201.eps
Parent Drw: 1124052-1
ECN 21267

Pos	Part No	SP	UN	Qty	Description	Page No
-						
000	C-1124052-0101	-		1	**TRANSITION SHAFT**	
020	1124732	-		1	SHAFT	
030	1124734	-		1	BEARING HOUSING	
040	1124735	-		1	BEARING HOUSING	
070	1124733	-		1	PULLEY	
100	90141-0015	-		2	LOCK RING	
120	90157-0035	-		X	LOCKING FLUID	
130	90214-0112	-		2	BALL BEARING	
150	90252-0041	-		2	BELT	
200	312105-0372	-		4	SCREW O4017 M6X25A280	
230	312318-0360	-		1	STOP SCREW SK6SS6X6RFR	
250	315105-0153	-		4	WASHER BRB6,4X12RFR	

Pos	Part No	SP	UN	Qty	Description	Page No

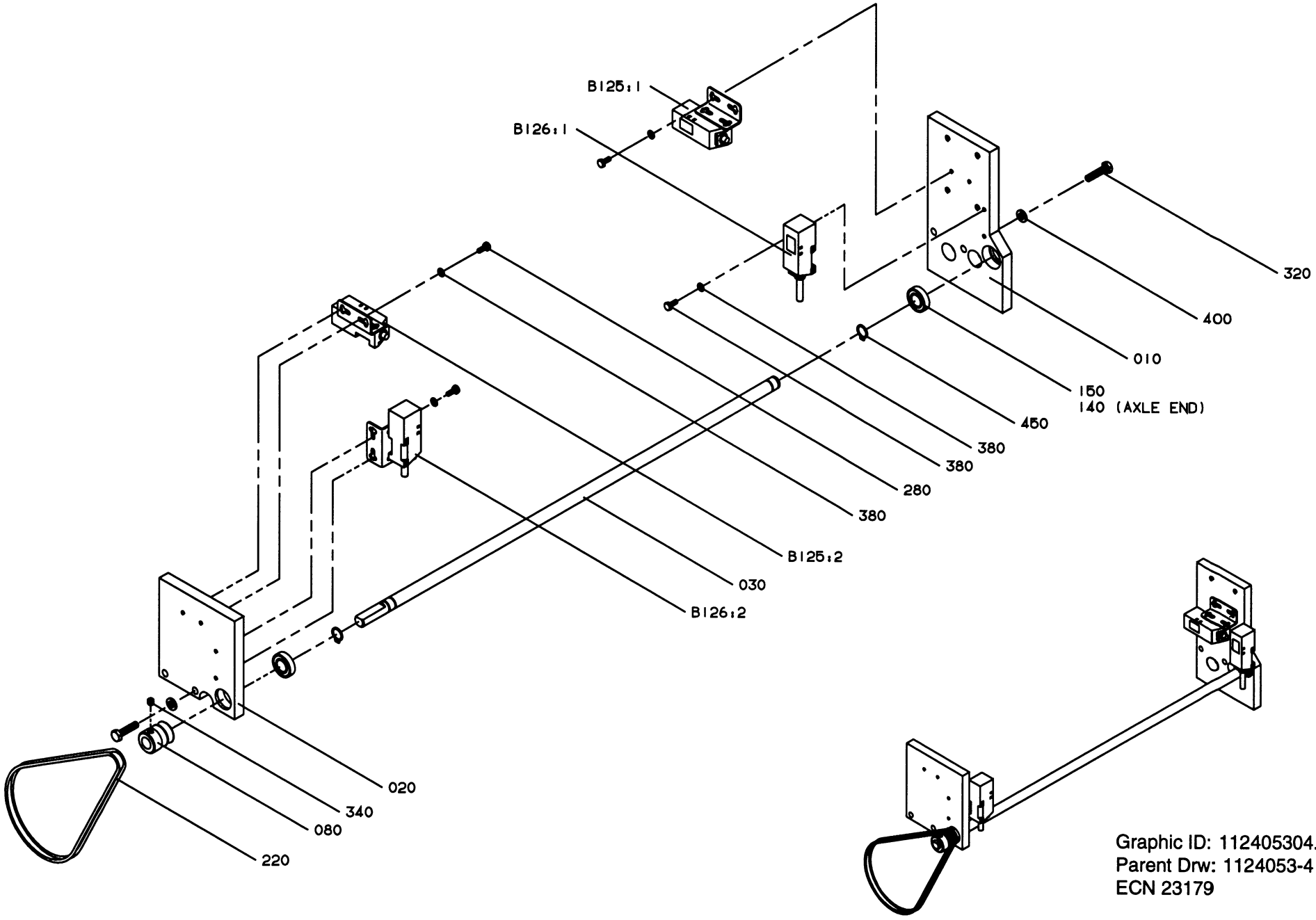

Graphic ID: 112405304.eps
Parent Drw: 1124053-4
ECN 23179

Pos	Part No	SP	UN	Qty	Description	Page No
-						
000	**C-1124053-0201**	-		1	**TRANSITION SHAFT**	
010	1124450	-		1	BEARING HOUSING	
020	1124451	-		1	BEARING HOUSING	
030	1124732	-		1	SHAFT	
080	1124733	-		1	PULLEY	
140	90157-0035	-		X	LOCKING FLUID	
150	90214-0112	S		2	BALL BEARING	
220	90252-0041	-		2	BELT	
280	312105-0291	-		8	SCREW O4017 M4X12A280	
320	312105-0372	-		4	SCREW O4017 M6X25A280	
340	312318-0360	-		1	STOP SCREW SK6SS6X6RFR	
380	315105-0136	-		8	WASHER BRB4,3X8RFR	
400	315105-0153	-		4	WASHER BRB6,4X12RFR	
450	315751-0109	-		2	CIRCLIP SGA12 RFR	
B125:1	90232-0103	P		1	PH.CELL OMRON E3SCT61L 5M	
B125:2	90232-0104	P		1	RECEIVER OMRON E3SCT61D5M	
B126:1	90232-0103	P		1	PH.CELL OMRON E3SCT61L 5M	
B126:2	90232-0104	P		1	RECEIVER OMRON E3SCT61D5M	

Pos	Part No	SP	UN	Qty	Description	Page No

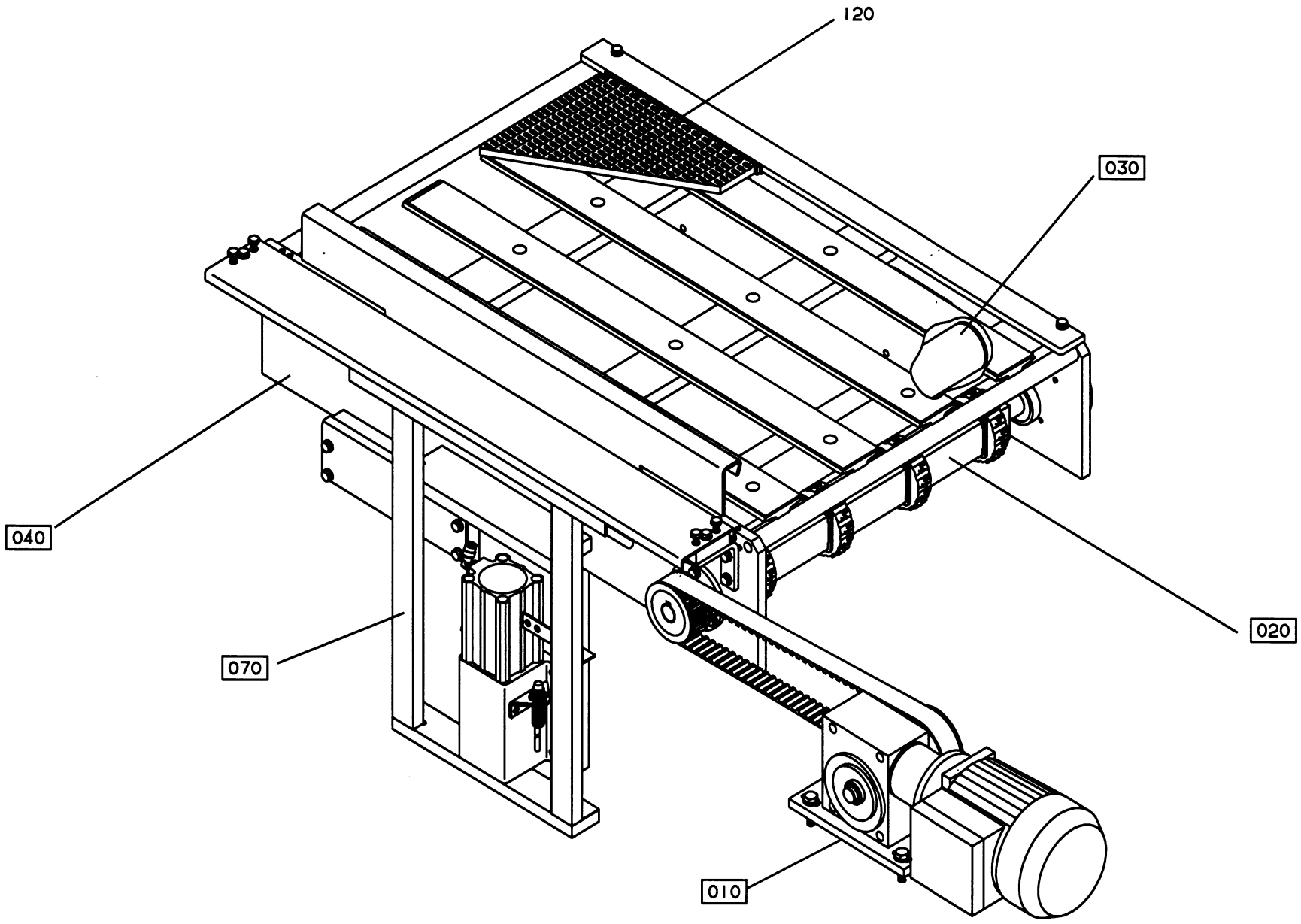

GraphicID: 112404602.eps
Parent Drw: 1124046-2
ECN 23179

Pos	Part No	SP	UN	Qty	Description	Page No
-						
000	**C-1124046-0201**	-		**1**	**GROUPING BELT**	
010	C-1124047-010V	-		1	MOTOR	
020	C-1124048-0101	-		1	DRIVE SHAFT	
030	C-1124039-0101	-		1	GUIDE SPROCKET	
040	C-1124049-0201	-		1	MACHINE BODY	
070	C-1124078-0201	-		1	GUIDE RAIL	
120	1124579	-		1	CHAIN	

Pos	Part No	SP	UN	Qty	Description	Page No

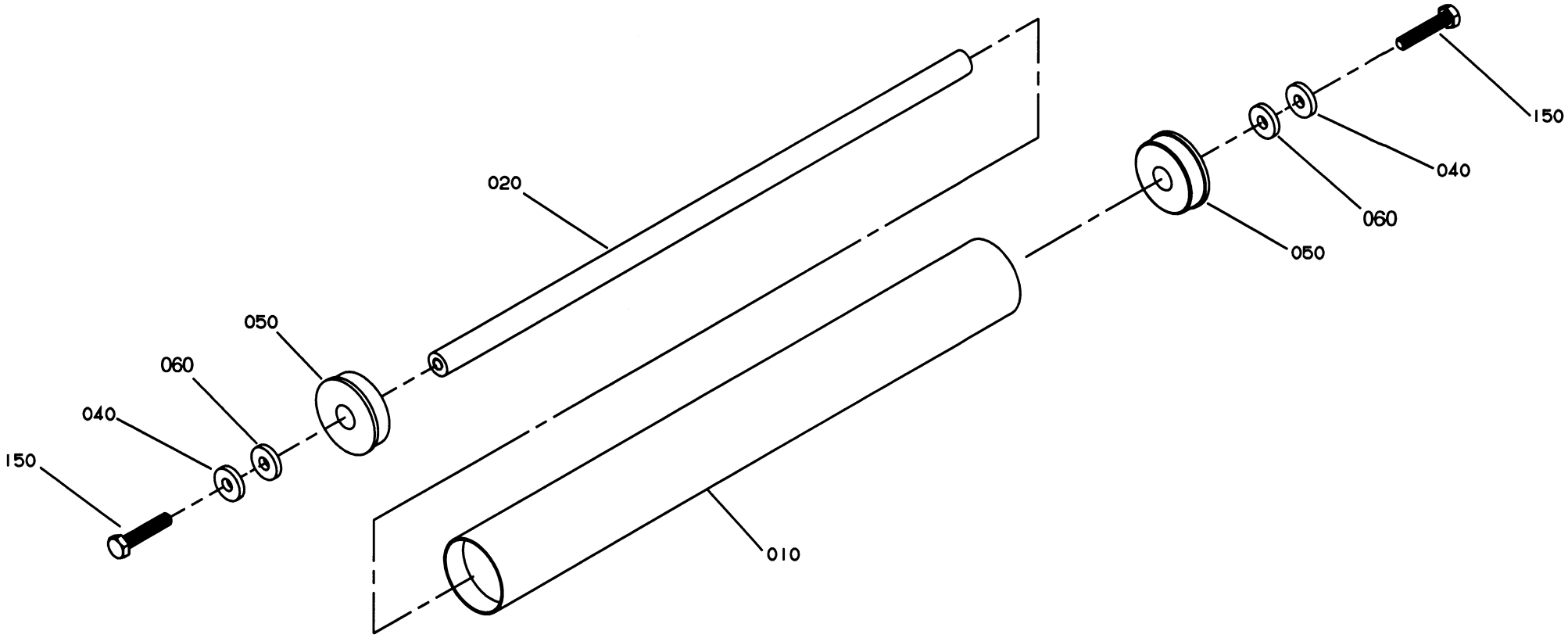

GraphicID: 112403901.eps
Parent Drw: 1124039-1
ECN 23757

Pos	Part No	SP	UN	Qty	Description	Page No
-						
000	C-1124039-0101	-		1	GUIDE SPROCKET	
010	1124596	-		1	ROLL	
020	1124597	-		1	SHAFT	
040	548599	-		2	WASHER	
050	1124790	-		2	BUSHING	
060	1139241	-		2	SPACER	
150	312105-0457	-		2	SCREW O4017 M8X35A280	

Pos	Part No	SP	UN	Qty	Description	Page No

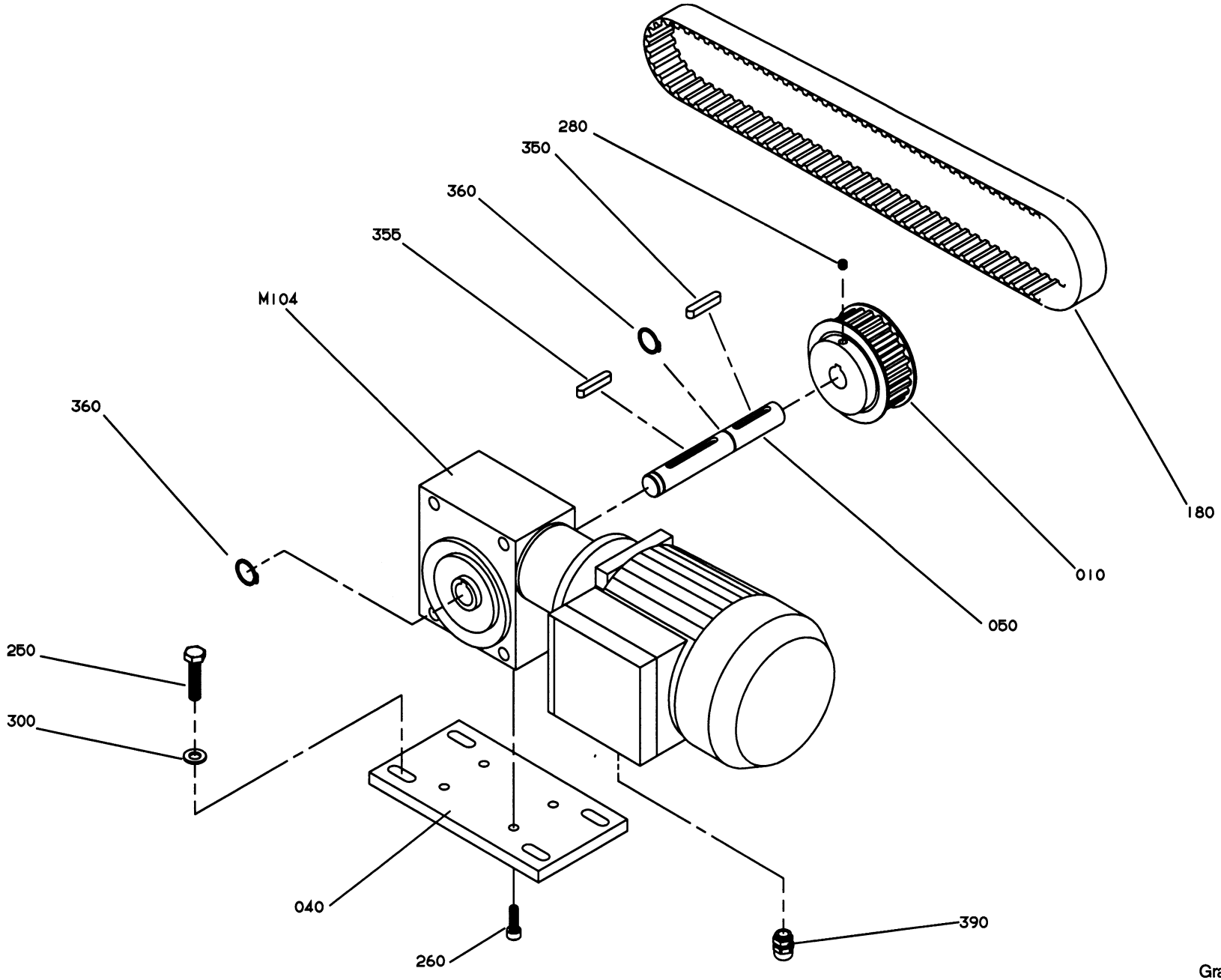

GraphicID: 112404701.eps
Parent Drw: 1124047-1
ECN 21267

Pos	Part No	SP	UN	Qty	Description	Page No
50 Hz						
000	**C-1124047-0101**	-		1	**MOTOR**	
010	1124586	-		1	TOOTHED PULLY Z=28	
180	90417-0378	-		1	TIMING BELT	
60 Hz						
000	**C-1124047-0102**	-		1	**MOTOR**	
010	1124805	-		1	TOOTHED PULLY Z=24	
180	318174-0153	-		1	TIMING BEL	
COMMON PARTS						
040	**1124815**	-		1	**PLATE**	
050	1124589	-		1	SHAFT	
250	312105-0453	-		4	SCREW O4017 M8X25A280	
260	312115-0368	-		4	SCREW O4762 M6X16A280	
280	312318-0362	-		1	STOP SCREW SK6SS6X8RFR	
300	315105-0165	-		4	WASHER BRB8,4X16RFR	
350	315701-0207	-		1	FLAT WEDGE5X5X36	
355	315701-0210	-		1	FLAT WEDGE5X5X50	
360	315751-0113	-		2	CIRCLIP SGA16 RFR	
390	352103-0110	-		1	CABLE GLAND STR 16	
M104	90069-0237	-		1	WORM GEAR MOTOR	

Pos	Part No	SP	UN	Qty	Description	Page No

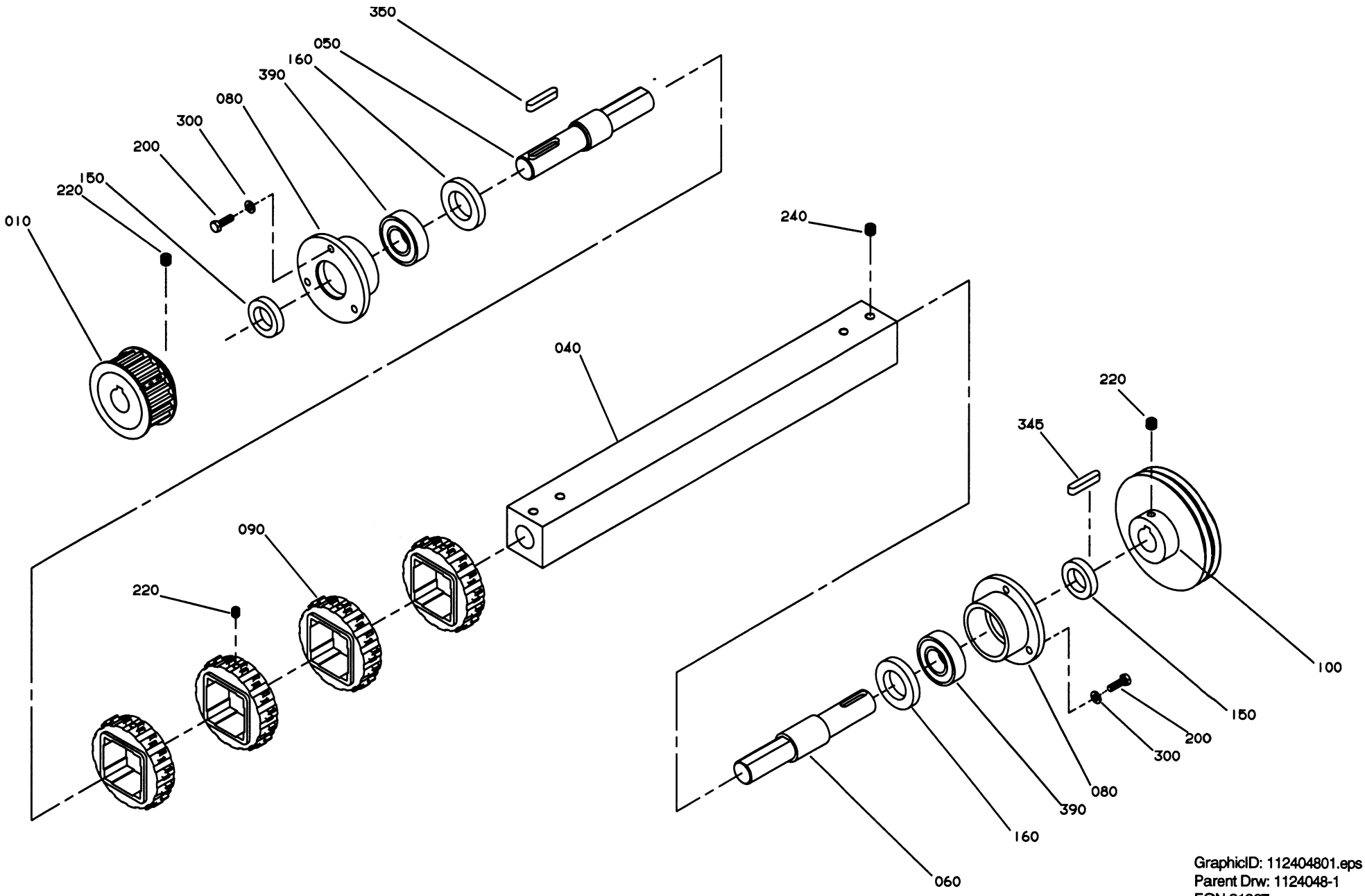

GraphicID: 112404801.eps
Parent Drw: 1124048-1
ECN 21267

Pos	Part No	SP	UN	Qty	Description	Page No
-						
000	**C-1124048-0101**	-		1	**DRIVE SHAFT**	
010	1124800	-		1	TOOTHED PULLY Z=20	
040	1124778	-		1	SHAFT	
050	1124779	-		1	SHAFT	
060	1124780	-		1	SHAFT	
080	1124811	-		2	BEARING HOUSING	
090	1124812	-		4	GEAR WHEEL Z=16	
100	1124808	-		1	PULLEY	
150	90091-0302	-		2	SEAL RING	
160	90091-0322	-		2	SEAL RING	
200	312105-0329	-		6	SCREW O4017 M5X16A280	
220	312318-0362	-		3	STOP SCREW SK6SS6X8RFR	
300	315105-0146	-		6	WASHER BRB5,3X10RFR	
350	315705-0234	-		2	FLAT WEDGE	
390	321308-0204	-		2	BALL BEARISKF6004-2RS	

Pos	Part No	SP	UN	Qty	Description	Page No

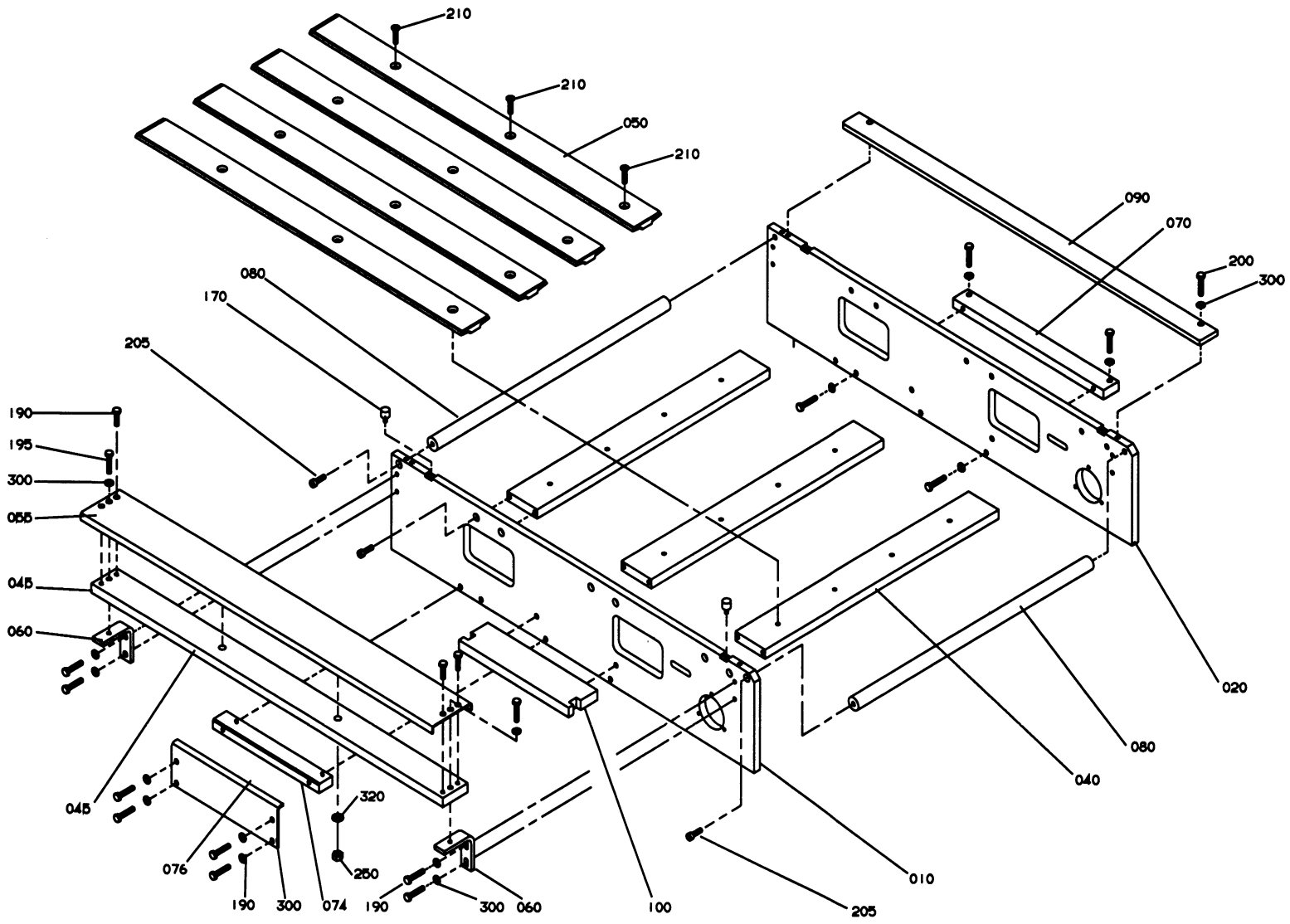

GraphicID: 112404902.eps
Parent Drw: 1124049-2
ECN 23757

Pos	Part No	SP	UN	Qty	Description	Page No
-						
000	C-1124049-0201	-		1	MACHINE BODY	
010	1124784	-		1	PLATE	
020	1124580	-		1	PLATE	
040	1124581	-		3	SUPPORT	
045	1124679	-		1	SHELF	
050	1124822	-		4	SLIDE RAIL	
055	1124681	-		1	SHEET	
060	1124680	-		2	BRACKET	
070	1124816	-		1	BRACKET	
074	1124817	-		1	RAIL	
076	1124818	-		1	SHEET	
080	1124582	-		2	SHAFT	
090	1124585	-		1	RAIL	
100	1124599	-		1	STEERING RAIL	
170	90347-0156	-		2	DAMPER	
190	312105-0370	-		12	SCREW O4017 M6X20A280	
195	312105-0372	-		2	SCREW O4017 M6X25A280	
200	312105-0374	-		9	SCREW O4017 M6X30A280	
205	312115-0370	-		16	SCREW ISO4762 M6X20A280	
210	312155-0372	-		12	SCREW MF6S6X25RFR	
250	312605-0318	-		2	NUT M6M8RFR	
300	315105-0153	-		18	WASHER BRB6,4X12RFR	
320	315105-0165	-		2	WASHER BRB8,4X16RFR	

Pos	Part No	SP	UN	Qty	Description	Page No

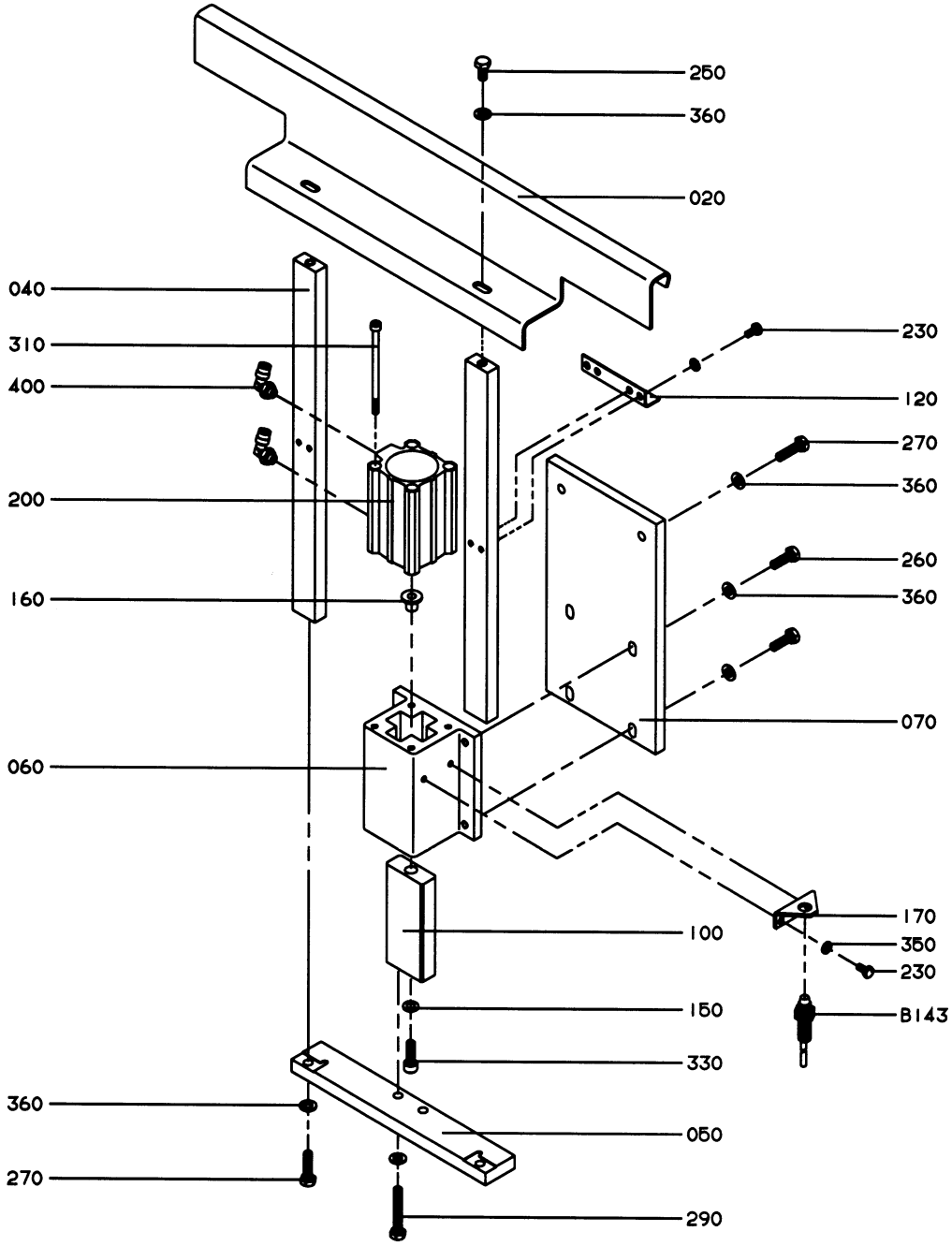

GraphicID: 112407802.eps
Parent Drw: 1124078-2
ECN 23179

Pos	Part No	SP	UN	Qty	Description	Page No
-						
000	C-1124078-0201	-		1	**GUIDE RAIL**	
020	1124745	-		1	STEERING RAIL	
040	1124675	-		2	POST	
050	1124746	-		1	SHELF	
060	1124747	-		1	HOUSE	
070	1124749	-		1	FASTENING PLATE	
100	1124676	-		1	LOCATING PIECE	
120	1139196	-		1	BRACKET	
150	1074233	-		1	WASHER	
160	1074234	-		1	SPACER	
170	1124962	-		1	BRACKET	
200	90450-0366	-		1	CYLINDER	
230	312105-0366	-		4	SCREW O4017 M6X12A280	
250	312105-0449	-		2	SCREW O4017 M8X16A280	
260	312105-0453	-		4	SCREW O4017 M8X25A280	
270	312105-0455	-		4	SCREW O4017 M8X30A280	
290	312109-0461	-		2	SCREW M6S8X50H A4 80	
310	312111-0390	-		4	SCREW MC6S6X100FZB	
330	312115-0453	-		1	SCREW O4762 M8X25A280	
350	315105-0153	-		4	WASHER BRB6,4X12RFR	
360	315105-0165	-		12	WASHER BRB8,4X16RFR	
400	342732-0102	-		2	ELBOW PIPE D6-R1/8"	
B143	90044-0124	-		1	INDUCTIVE SWITCH	

Pos	Part No	SP	UN	Qty	Description	Page No

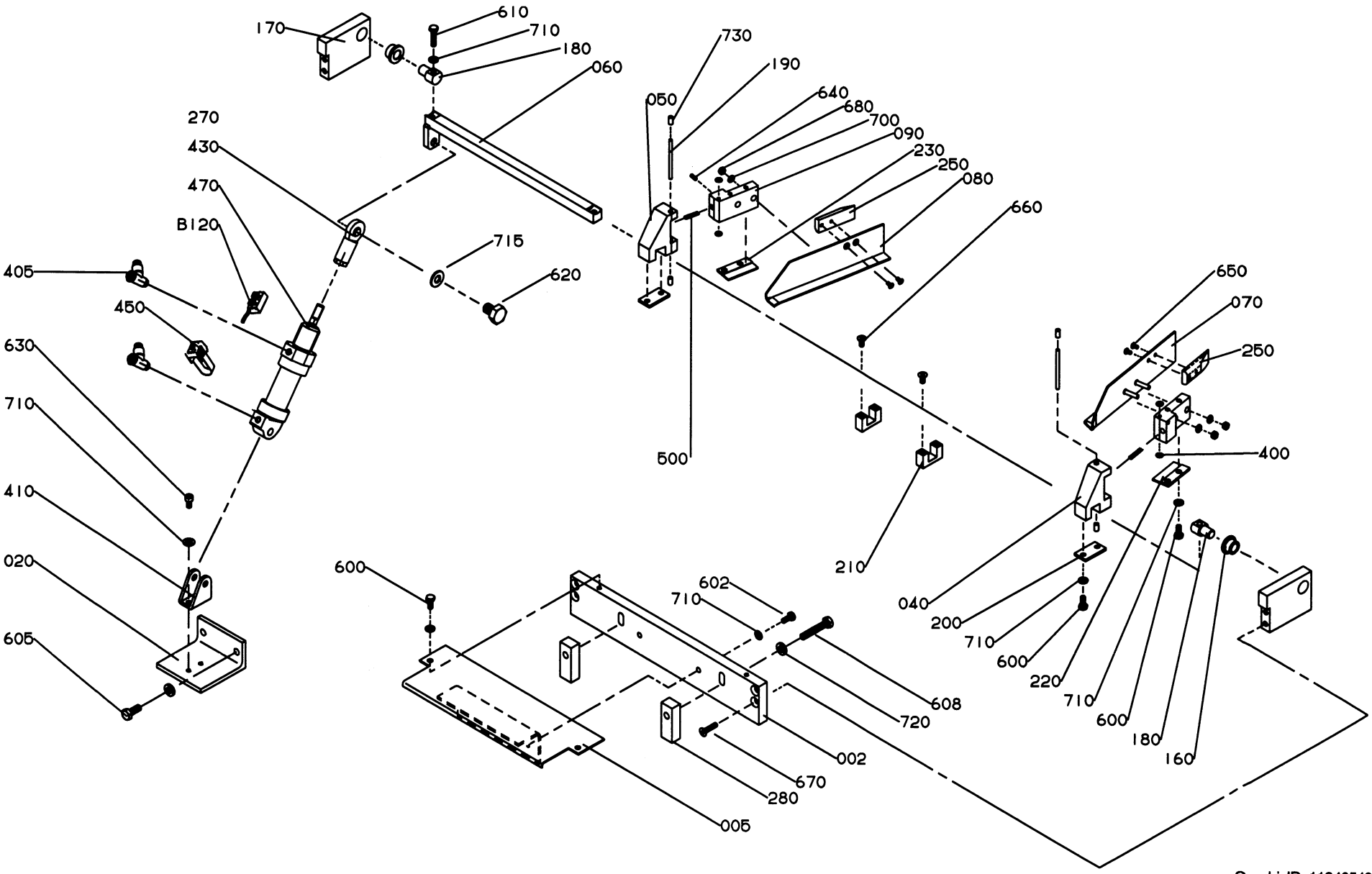

GraphicID: 112405402.eps
Parent Drw: 1124054-2
ECN 23179

Pos	Part No	SP	UN	Qty	Description	Page No
-						
000	**C-1124054-020V**	-		1	**RULING GUIDE**	
002	1124834	-		1	BRACKET	
005	1124440	-		1	SHEET	
020	1124837	-		1	BRACKET	
040	1021671	-		1	HOLDER	
050	1021672	-		1	HOLDER	
060	1124454	-		1	SHAFT	
070	1124444	-		1	HEAD PLATE	
080	1124445	-		1	HEAD PLATE	
090	1065341	-		2	HOLDER	
160	493768	P		2	BUSHING	
170	1124840	-		2	HOLDER	
180	1021669	-		2	SHAFT	
190	1021673	-		2	SHAFT	
200	1021674	-		2	SHEET	
210	1021678	-		2	HOLDER	
220	1021822	-		1	SUPPORTING SHEET	
230	1021928	-		1	SUPPORTING SHEET	
250	1124443	-		2	LUG	
280	1124839	-		2	SPACER	
400	90005-0064	-		4	WASHER	
405	90235-0288	P		2	VALVE	
410	90239-0487	P		1	BRACKET	
430	90239-0405	-		1	LINK HEAD	
450	90239-0581	-		1	HOLDER	
470	90239-0829	S		1	CYLINDER 25-50	
500	90335-0031	P		2	SPRING	
600	312105-0367	-		8	SCREW M6S6X14RFR	
602	312105-0370	-		2	SCREW O4017 M6X20A280	
605	312105-0453	-		2	SCREW O4017 M8X25A280	
608	312109-0460	-		2	SCREW	
610	312105-0372	-		2	SCREW O4017 M6X25A280	
620	312105-0491	-		1	SCREW 4017 M10X20A280	
630	312115-0366	-		2	SCREW O4762 M6X12A280	
640	312318-0289	-		2	STOP SCREW SK6SS4X10RFR	
650	312155-0289	-		4	SCREW MF6S4X10RFR	
660	312155-0368	-		4	SCREW MF6S6X16RFR	
670	312155-0372	-		4	SCREW MF6S6X25RFR	
680	312605-0314	-		4	NUT M6M5RFR	
700	315105-0146	-		5	WASHER BRB5,3X10RFR	
710	315105-0153	-		18	WASHER BRB6,4X12RFR	
715	315105-0173	-		1	WASHER BRB10,5X22RFR	
720	315115-0165	-		4	WASHER TBRB8,4X16RFR	
730	321120-0093	P		4	BUSHING 4/5,5X10	
B120	90044-0116	P		1	PROXIMITY SWITCH	

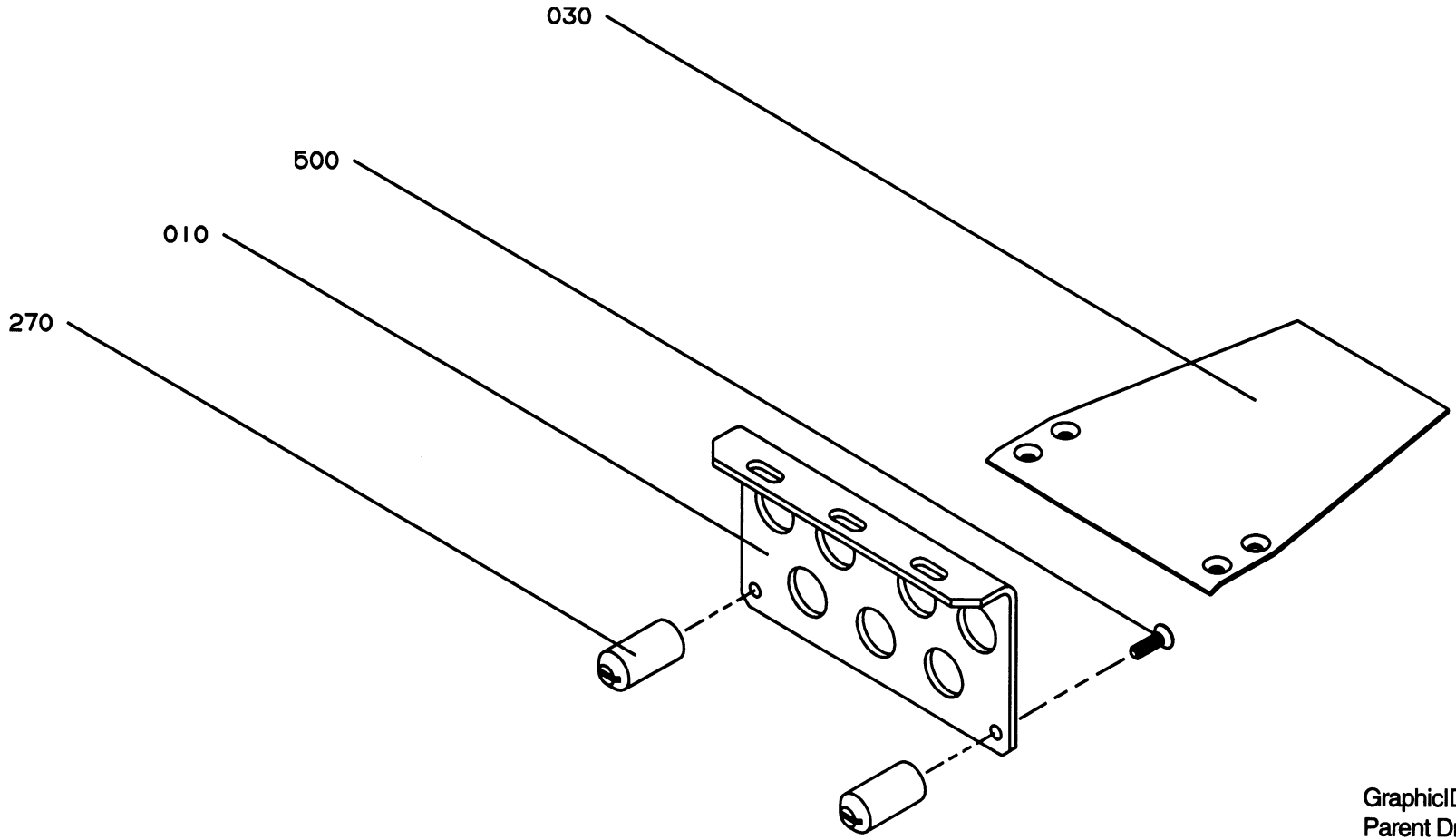

GraphicID: 112406101.eps
Parent Drw: 1124061-1
ECN 21267

Pos	Part No	SP	UN	Qty	Description	Page No
Package width 125-134						
000	**C-1124061-0101**	-		1	**VOLUME PLATE**	
010	1124531	-		1	SHEET	
030	1065461	-		1	FLAP	
Package width 135-144						
000	**C-1124061-0102**	-		1	**VOLUME PLATE**	
010	1124532	-		1	SHEET	
030	1065462	-		1	FLAP	
Package width 145-154						
000	**C-1124061-0103**	-		1	**VOLUME PLATE**	
010	1124533	-		1	SHEET	
030	1065463	-		1	FLAP	
Package width 155-164						
000	**C-1124061-0104**	-		1	**VOLUME PLATE**	
010	1124534	-		1	SHEET	
030	1065464	-		1	FLAP	
Package width 165-174						
000	**C-1124061-0105**	-		1	**VOLUME PLATE**	
010	1124535	-		1	SHEET	
030	1065465	-		1	FLAP	
Package width 175-184						
000	**C-1124061-0106**	-		1	**VOLUME PLATE**	
010	1124536	-		1	SHEET	
030	1065466	-		1	FLAP	
Package width 185-194						
000	**C-1124061-0107**	-		1	**VOLUME PLATE**	
010	1124728	-		1	SHEET	
030	1065467	-		1	FLAP	
Package width 195-204						
000	**C-1124061-0108**	-		1	**VOLUME PLATE**	
010	1124538	-		1	SHEET	
030	1065468	-		1	FLAP	
Package width 205-214						
000	**C-1124061-0109**	-		1	**VOLUME PLATE**	
010	1124539	-		1	SHEET	
030	1065469	-		1	FLAP	

Pos	Part No	SP	UN	Qty	Description	Page No
COMMON PARTS						
270	**1124848**	-		2	**GUIDE STUD**	
500	312155-0370	-		2	SCREW MF6S6X20RFR	

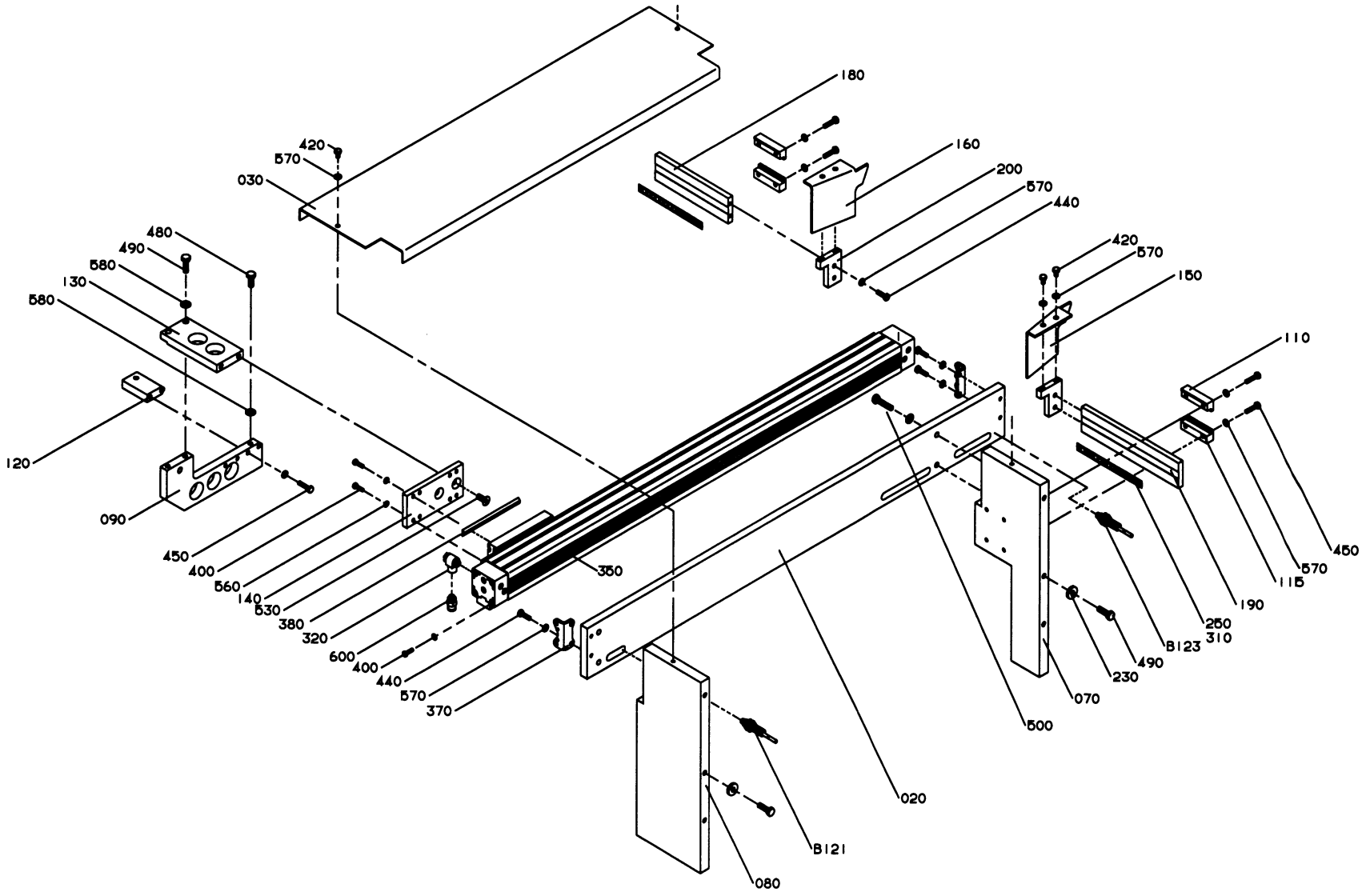

GraphicID: 112407302.eps
Parent Drw: 1124073-2
ECN 23757

Pos	Part No	SP	UN	Qty	Description	Page No
-						
000	C-1124073-020V	-		1	**PUSHER**	
020	1124431	-		1	RAIL	
030	1124477	-		1	PROTECTION PLATE	
070	1124841	-		1	FASTENING PLATE	
080	1124842	-		1	FASTENING PLATE	
090	1124849	-		1	ARM	
110	1080067	-		2	CLAMP RAIL	
115	1124541	-		2	CLAMP RAIL	
120	1124725	-		1	BRACKET	
130	1124726	-		1	ARM	
140	1124727	-		1	FASTENING PLATE	
150	1139161	-		1	STEERING RAIL	
160	1139162	-		1	STEERING RAIL	
180	1124843	-		1	RAIL	
190	1124844	-		1	RAIL	
200	1124449	-		2	BRACKET	
230	548599	-		10	WASHER	
250	1030865	-		2	DIAL	
310	90153-0015	-		X	ADHESIVE	
320	90235-241	-		2	VALVE	
350	90450-0371	-		1	CYLINDER	
370	90450-0767	-		1	BRACKET	
380	90450-0783	-		2	NUT RAIL	
400	312105-0329	-		12	SCREW O4017 M5X16A280	
420	312105-0364	-		6	SCREW M6S6X10RFR	
440	312105-0370	-		8	SCREW O4017 M6X20A280	
450	312105-0372	-		10	SCREW O4017 M6X25A280	
480	312105-0451	-		2	SCREW SO4017 8X20A280	
490	312105-0453	-		10	SCREW O4017 M8X25A280	
500	312105-0457	-		4	SCREW O4017 M8X35A280	
530	312155-0451	-		2	SCREW MF6S8X20RFR	
560	315105-0146	-		12	WASHER BRB5,3X10RFR	
570	315105-0153	-		24	WASHER BRB6,4X12RFR	
580	315105-0165	-		8	WASHER BRB8,4X16RFR	
600	342722-0204	-		2	PIPE COUPLING D=8-R1/8""	
B121	90044-0124	-		1	INDUCTIVE SWITCH	
B123	90044-0124	-		1	INDUCTIVE SWITCH	

Pos	Part No	SP	UN	Qty	Description	Page No

Note	Alt-no	Date	Sign.	Note	Alt-no	Date	Sign.	Note	Alt-no	Date	Sign.
--	INT ECN 23179	951030	JHN	1A	ECN 23757	960301	ÅSA				

INTPOS430

S-1124077-2

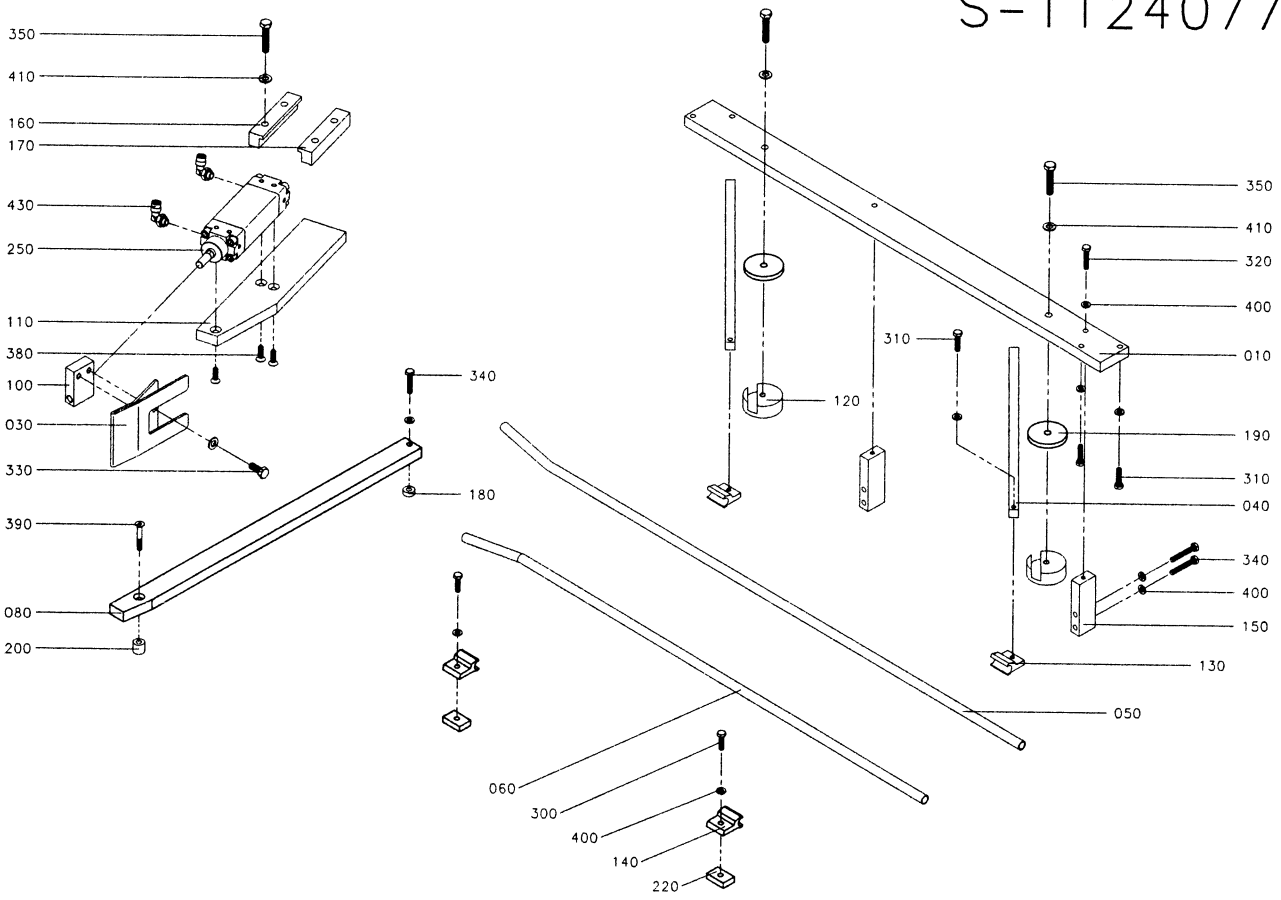

ECN 23757

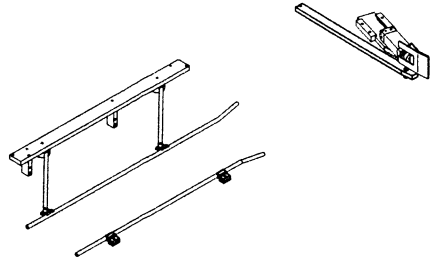

VÄNSTER INMATNING Z-FORM/HÖGER INMATNING U-FORM
LEFT HAND INFEED Z-FORM/RIGHT HAND INFEED U-FORM

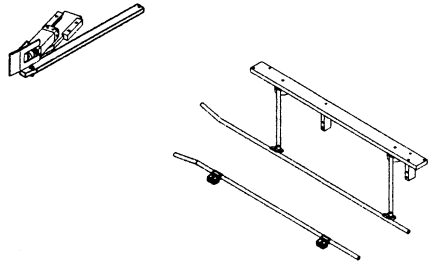

HÖGER INMATNING Z-FORM/VÄNSTER INMATNING U-FORM
RIGHT HAND INFEED Z-FORM/LEFT HAND INFEED U-FORM
SHOWN ON DRAWING BESIDE

Unless otherwise stated SHARP EDGES BROKEN	Tolerance for non-toleranced dimensions	S-670302 Assembly drawing
Marked with PART NUMBER	Designer KBS	Material
Method ... / ... RA 2103.10	Date 951024 Approved	Scale -:- Surface roughness
Tetra Pak LUND SWEDEN	STYRSKENA GUIDE RAIL	S1-1124077-2

Pos	Part No	SP	UN	Qty	Description	Page No
-						
000	C-1124077-020V	-		1	STEERING RAIL	
010	1124740	-		1	BRACKET	
030	1124452	-		1	RULE PLATE	
040	1124742	-		2	ARM	
050	1124743	-		1	STEERING RAIL	
060	1124744	-		1	STEERING RAIL	
080	1139207	-		1	STEERING RAIL	
100	1124453	-		1	BRACKET	
110	1124546	-		1	FASTENING PLATE	
120	1124736	-		2	WASHER	
130	1124737	-		2	HOLDER	
140	1124738	-		2	HOLDER	
150	1124741	-		2	BRACKET	
160	1139205	-		1	CLAMP RAIL	
170	1139206	-		1	CLAMP RAIL	
180	1124528	-		1	SPACER	
190	1124537	-		2	WASHER	
200	1124677	-		2	SPACER	
220	1124739	-		2	WASHER	
250	90450-0324	-		1	CYLINDER	
300	312105-0371	-		2	SCREW M6S6X22RFR	
310	312105-0372	-		6	SCREW O4017 M6X25A280	
320	312109-0374	-		3	SCREW M6S6X30HRFR	
330	312105-0451	-		2	SCREW SO4017 8X20A280	
340	312109-0378	-		4	SCREW M6S6X40H RFR	
350	312109-0459	-		7	SCREW M6S8X40H A4 80	
380	312155-0370	-		3	SCREW MF6S6X20RFR	
390	312155-0378	-		1	SCREW MF6S6X40RFR	
400	315105-0153	-		15	WASHER BRB6,4X12RFR	
410	315105-0165	-		8	WASHER BRB8,4X16RFR	
430	342732-0102	-		2	VEE COUPLING D6-R1/8"	

Pos	Part No	SP	UN	Qty	Description	Page No

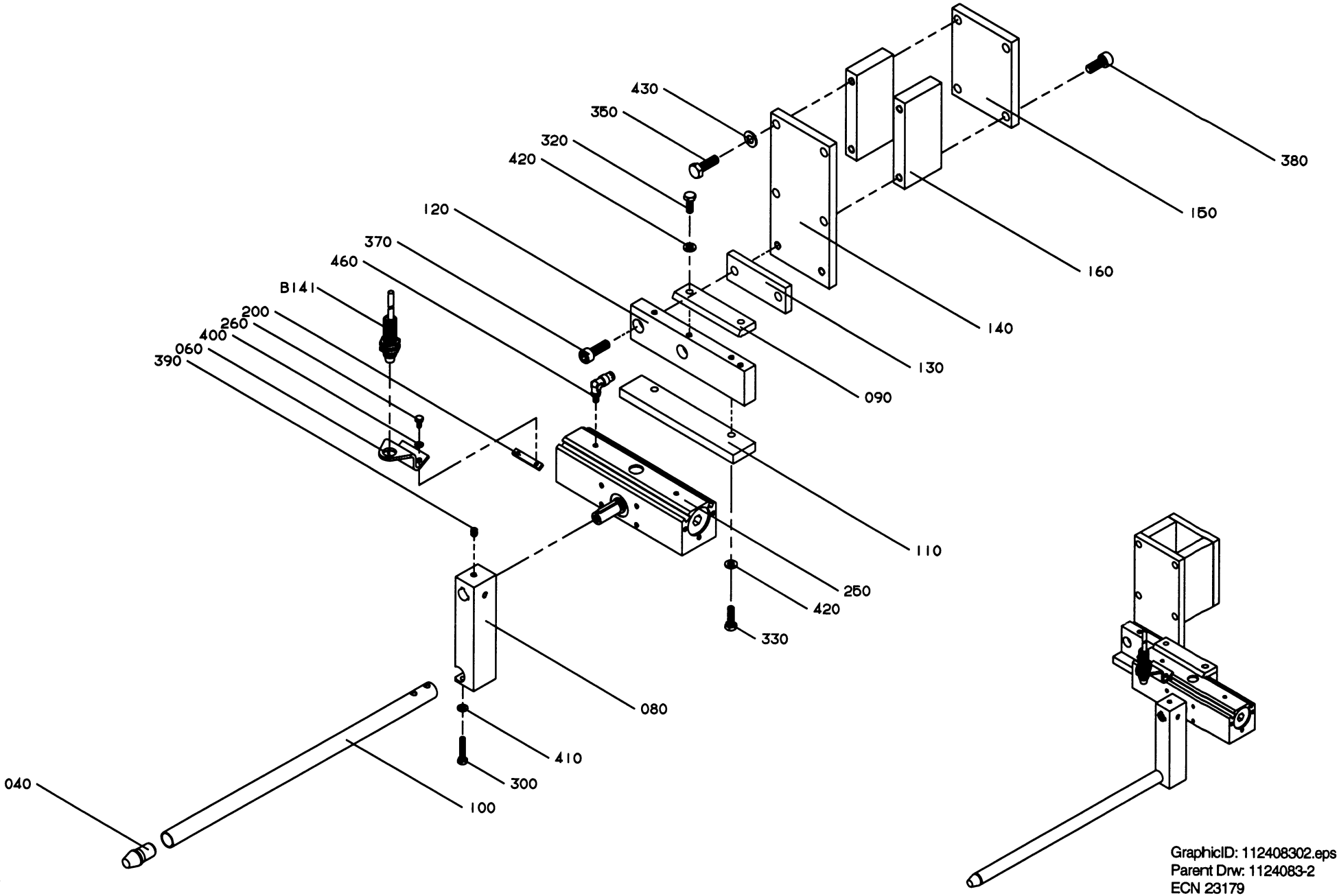

GraphicID: 112408302.eps
Parent Drw: 1124083-2
ECN 23179

Pos	Part No	SP	UN	Qty	Description	Page No
-						
000	C-1124083-020V	-		1	STEERING RAIL	
040	562028	-		1	DOWEL	
060	1124432	-		1	BRACKET	
080	1124496	-		1	ARM	
090	1124683	-		1	LOCK BAR	
100	1124684	-		1	PIPE	
110	1124685	-		1	RAIL	
120	1124686	-		1	RAIL	
130	1124687	-		1	SPACER PLATE	
140	1124688	-		1	PLATE	
150	1124689	-		1	PLATE	
160	1124690	-		2	PLATE	
200	1124433	-		1	WASHER	
250	90450-0370	-		1	CYLINDER	
260	312105-0287	-		2	SCREW O4017 M4X8A280	
300	312105-0333	-		2	SCREW O4017 M5X25A280	
320	312105-0368	-		2	SCREW O4017 M6X16A280	
330	312105-0370	-		2	SCREW O4017 M6X20A280	
350	312105-0453	-		4	SCREW O4017 M8X25A280	
370	312115-0453	-		2	SCREW O4762 M8X25A280	
380	312115-0451	-		4	SCREW O4762 M8X20A280	
390	312318-0362	-		1	STOP SCREW SK6SS6X8RFR	
400	315105-0136	-		2	WASHER BRB4,3X8RFR	
410	315105-0146	-		2	WASHER BRB5,3X10RFR	
420	315105-0153	-		4	WASHER BRB6,4X12RFR	
430	315105-0165	-		4	WASHER BRB8,4X16RFR	
460	342732-0099	-		2	ELBOW PIPE D4-M5	
B141	90044-0124	-		1	INDUCTIVE SWITCH	

Pos	Part No	SP	UN	Qty	Description	Page No

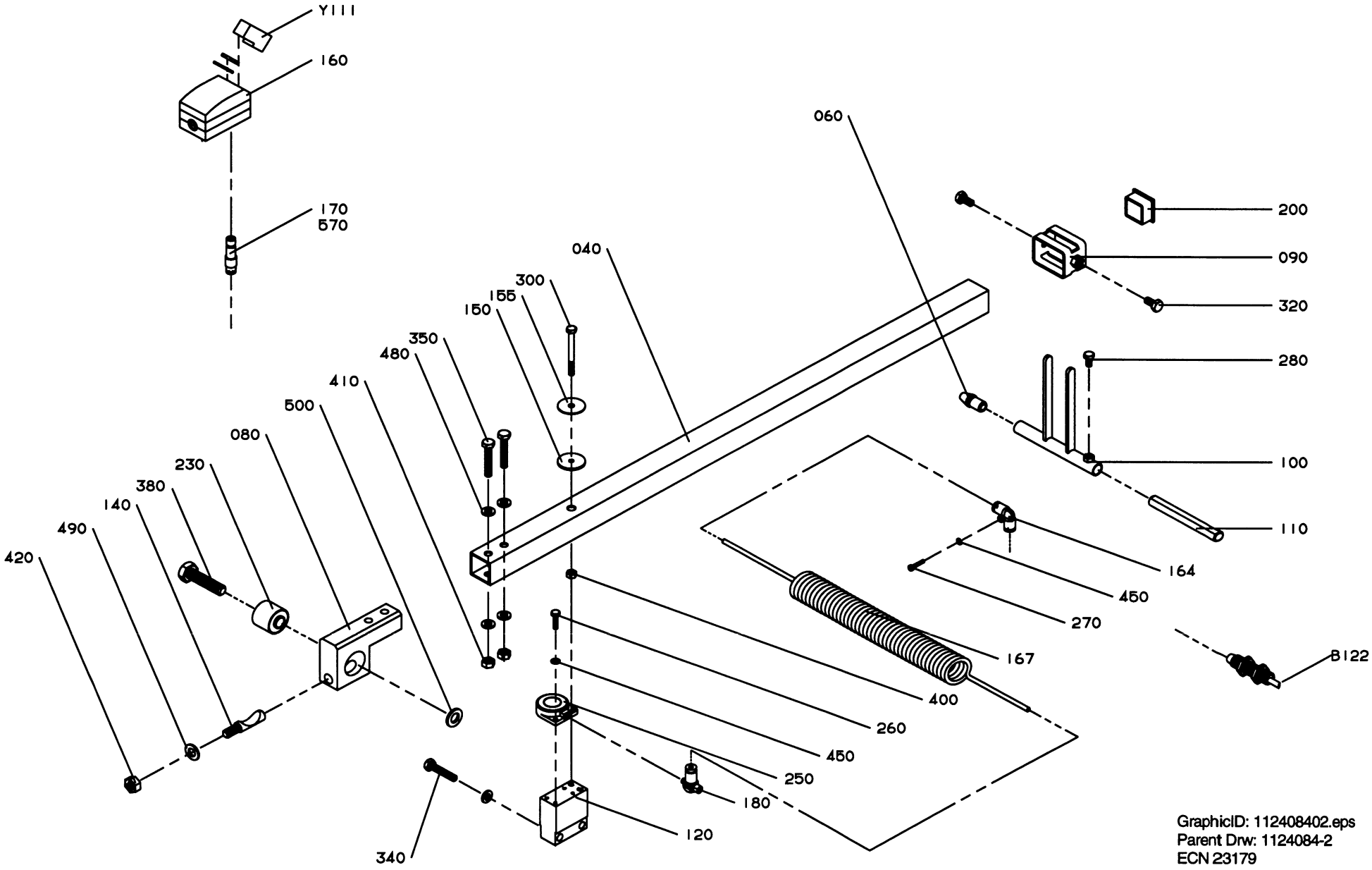

GraphicID: 112408402.eps
Parent Drw: 1124084-2
ECN 23179

Pos	Part No	SP	UN	Qty	Description	Page No
VOLUME COMBINATION; SLIM 125-330						
000	**C-1124084-020V**	-		1	**SUPPORT ARM**	
040	1124697	-		1	ARM	
060	540169	-		1	DOWEL	
080	1124693	-		1	HOUSE	
090	1124694	-		1	CLAMP	
100	1124695	-		1	GUIDE	
110	1124696	-		1	PIN	
120	1124699	-		1	BRACKET	
140	262179-0001	-		1	PIN	
150	1124447	-		1	DAMPER	
155	1124448	-		1	WASHER	
160	90042-0215	-		1	SOL.VALVE PACKAGE	
164	90055-0181	-		1	ELBOW PIPE JOINT	
167	90152-0067	-		1	FLEXIBLE CONDUIT	
170	90166-0095	-	M	X	HOSE	
180	90235-0779	-		1	THROTTLE CHECK VALVE	
200	90261-0048	-		1	PLUG	
230	90347-0012	-		1	DAMPER	
250	90450-0372	-		1	CYLINDER	
260	312125-0226	-		2	SLOTTED HEMCS3X12RFR	
270	312125-0228	-		1	SLOTTED HEMCS3X16RFR	
280	312105-0325	-		1	SCREW M6S5X10 A2 80	
300	312105-0341	-		1	SCREW O4014 M5X50A280	
320	312105-0366	-		2	SCREW O4017 M6X12A280	
340	312109-0374	-		2	SCREW M6S6X30HRFR	
350	312109-0376	-		2	SCREW 6X35 H RFR	
380	312109-0499	-		1	SCREW 10X40 H RFR	
400	312605-0314	-		1	NUT M6M5RFR	
410	312605-0316	-		2	NUT M6M6RFR	
420	312605-0318	-		1	NUT M6M8RFR	
450	315105-0124	-		3	WASHER BRB3,2X6RFR	
480	315105-0153	-		6	WASHER BRB6,4X12RFR	
490	315105-0165	-		1	WASHER BRB8,4X16RFR	
500	315105-0171	-		2	WASHER BRB10X18RFR	
570	342716-0205	-		1	REDUCER 4-8	
B122	90044-0124	-		1	INDUCTIVE SWITCH	
Y111	90042-0539	-		1	EL.COIL	

Pos	Part No	SP	UN	Qty	Description	Page No

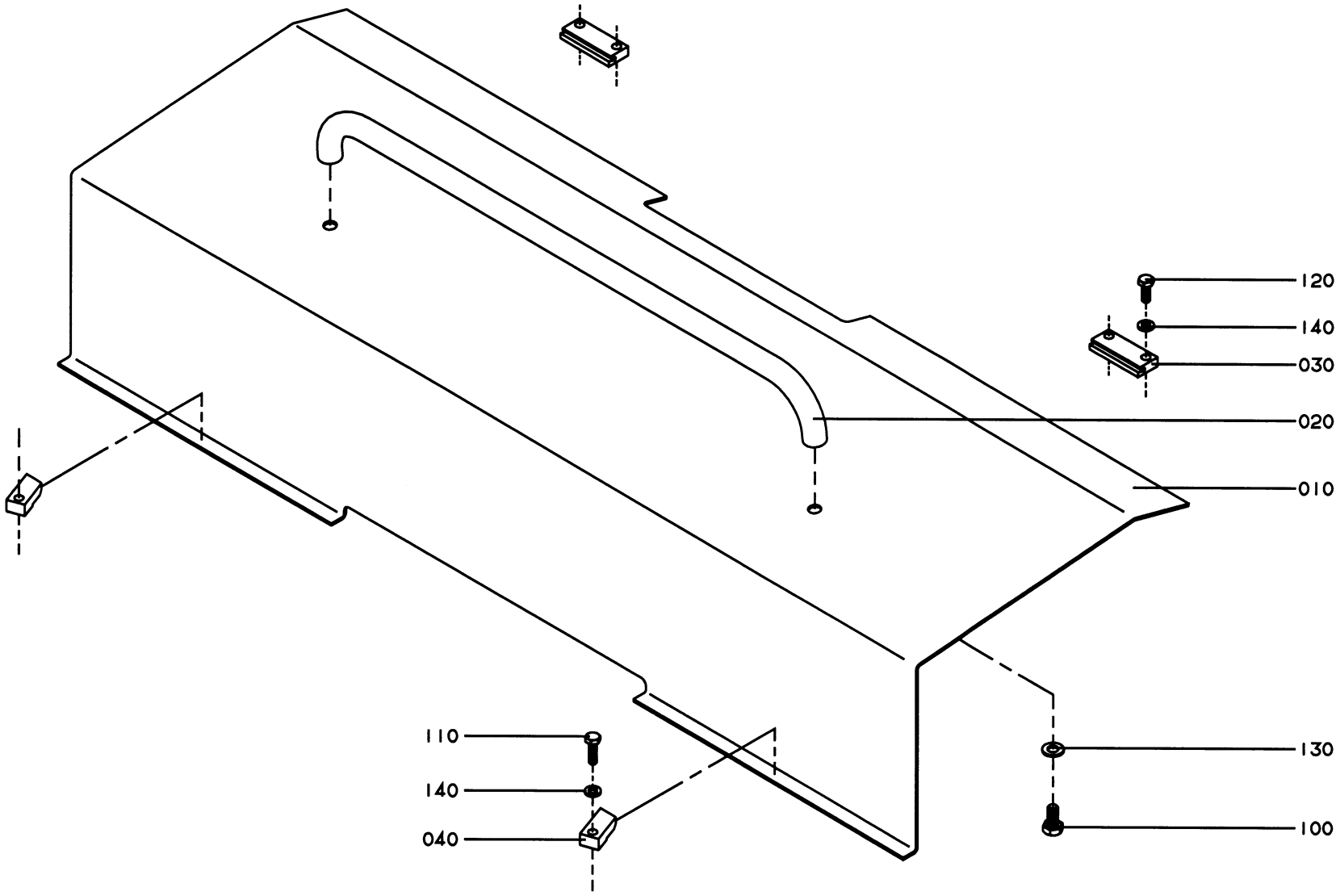

GraphicID: 112409501.eps
Parent Drw: 1124095-1
ECN 21267

Pos	Part No	SP	UN	Qty	Description	Page No
-						
000	C-1124095-0101	-		1	**PROTECTION PLATE**	
010	1124475	-		1	PROTECTION PLATE	
020	1021913	-		1	HANDLE	
030	1124480	-		2	BRACKET	
040	1124481	-		2	BRACKET	
100	312105-0449	-		2	SCREW O4017 M8X16A280	
110	312105-0370	-		2	SCREW O4017 M6X20A280	
120	312105-0368	-		4	SCREW O4017 M6X16A280	
130	315105-0165	-		2	WASHER BRB8,4X16RFR	
140	315105-0153	-		6	WASHER BRB6,4X12RFR	

Pos	Part No	SP	UN	Qty	Description	Page No

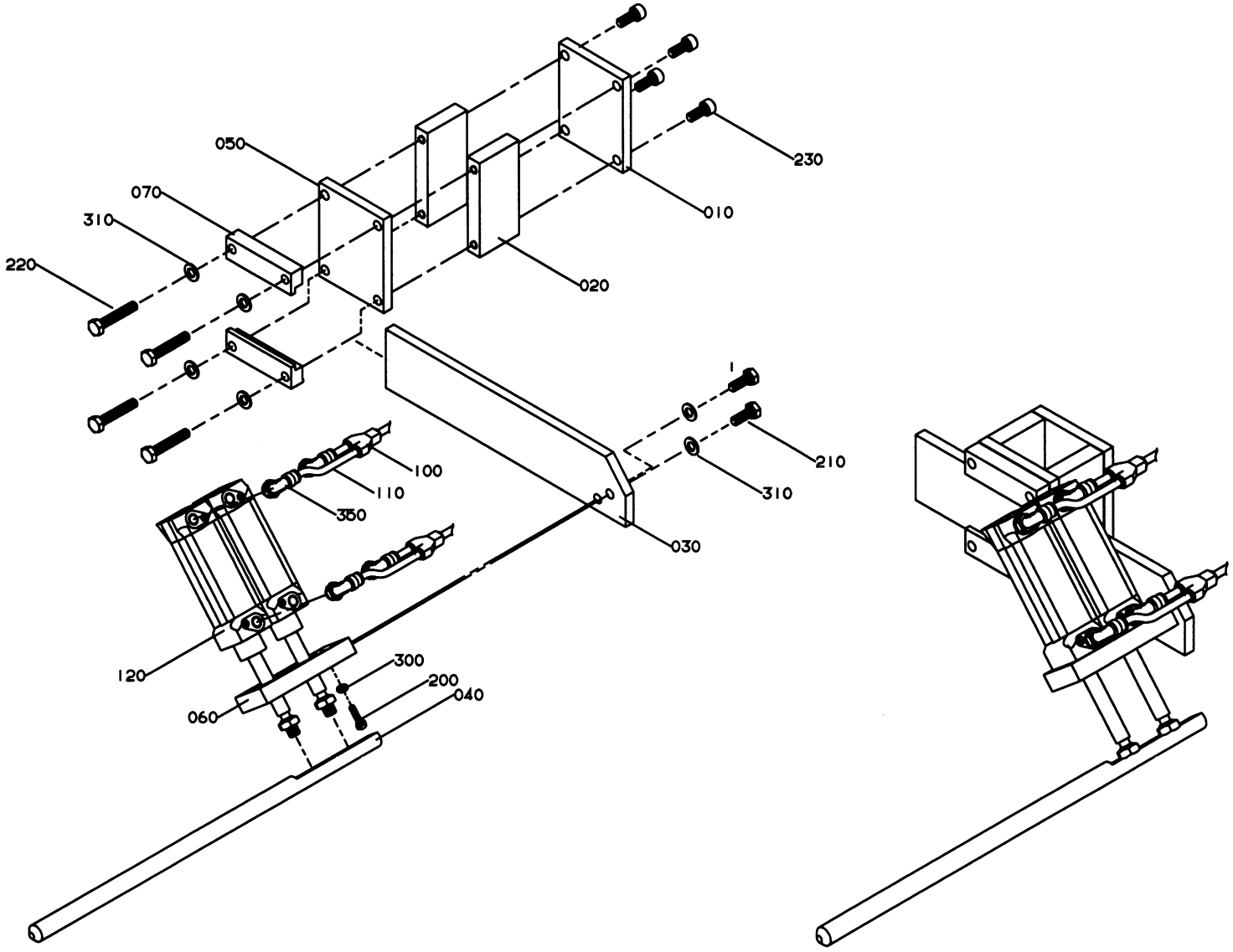

GraphicID: 113927301.eps
Parent Drw: 1139273-1
ECN 23757

Pos	Part No	SP	UN	Qty	Description	Page No
000	**C-1139273-0101**	-		1	**SUPPORT**	
010	1124689	-		1	PLATTA	
020	1124690	-		2	PLATE	
030	1139274	-		1	PLATE	
040	1139275	-		2	PIPE	
050	1139276	-		1	PLATE	
060	1139277	-		1	BRACKET	
070	1139278	-		2	CLAMP RAIL	
100	90055-0100	-		2	Y-SPLICE 6 MM	
110	90166-0193	-	M	X	POLYURETAN HOSE 6/4	
120	90450-0256	-		2	CYLINDER	
200	312105-0331	-		8	SCREW ISO4017 M5X20A280	
210	312105-0453	-		2	SCREW ISO4017 M8X25A280	
220	312109-0459	-		4	SCREW M6S8X40H A4 80	
230	312115-0451	-		4	SCREW ISO4762 M8X20A280	
300	315105-0146	-		8	WASHER BRB5,3X10RFR	
310	315105-0165	-		6	WASHER BRB8,4X16RFR	
350	342732-0102	-		4	V-COUPLING D6-R1/8"	

Pos	Part No	SP	UN	Qty	Description	Page No

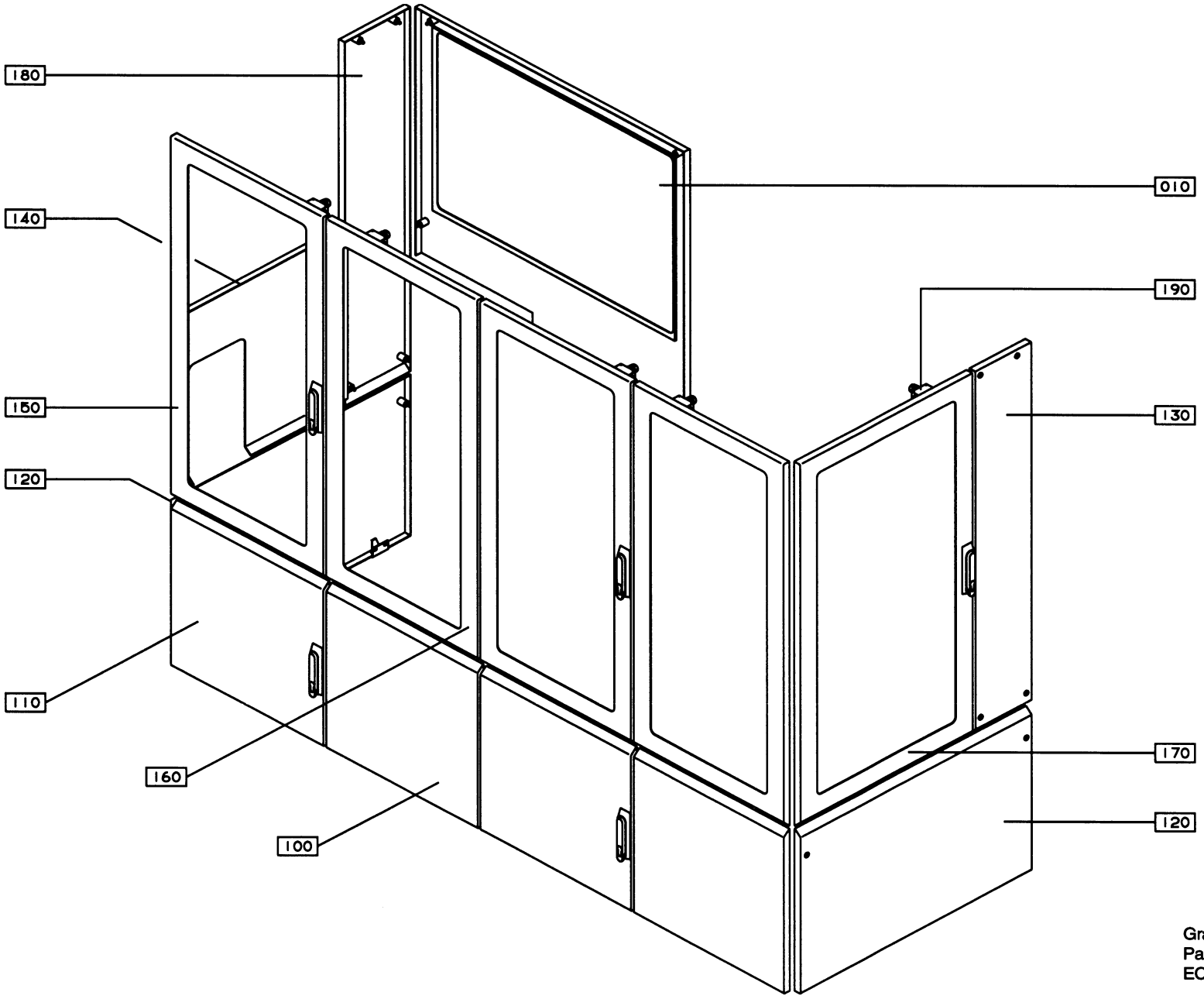

GraphicID: 67030301.eps
Parent Drw: 670303-1
ECN 21267

Pos	Part No	SP	UN	Qty	Description	Page No
Z-FORM						
000	**B- 670303-0101**	-		1	**COVERING INFEED**	
010	C-1124072-010V	-		1	COVERING PLATE	**357**
COMMON PARTS						
100	C-1124065-0101	-		2	DOOR WITHOUT HANDLE	**367**
110	C-1124066-0101	-		2	DOOR WITH HANDLE	**369**
120	C-1124068-0101	-		2	COVERING PLATE	**371**
130	C-1124069-010V	-		1	COVERING PLATE	**373**
140	C-1124071-010V	-		1	COVERING PLATE	**375**
150	C-1124075-0101	-		2	GLASS DOOR	**377**
160	C-1124076-0101	-		2	GLASS DOOR	**379**
170	C-1124079-010V	-		1	GLASS DOOR	**381**
180	C-1124080-0101	-		1	COVERING PLATE	**383**
190	C-1124094-0101	-		1	DOOR SAFETY SWITCH	**385**

Pos	Part No	SP	UN	Qty	Description	Page No

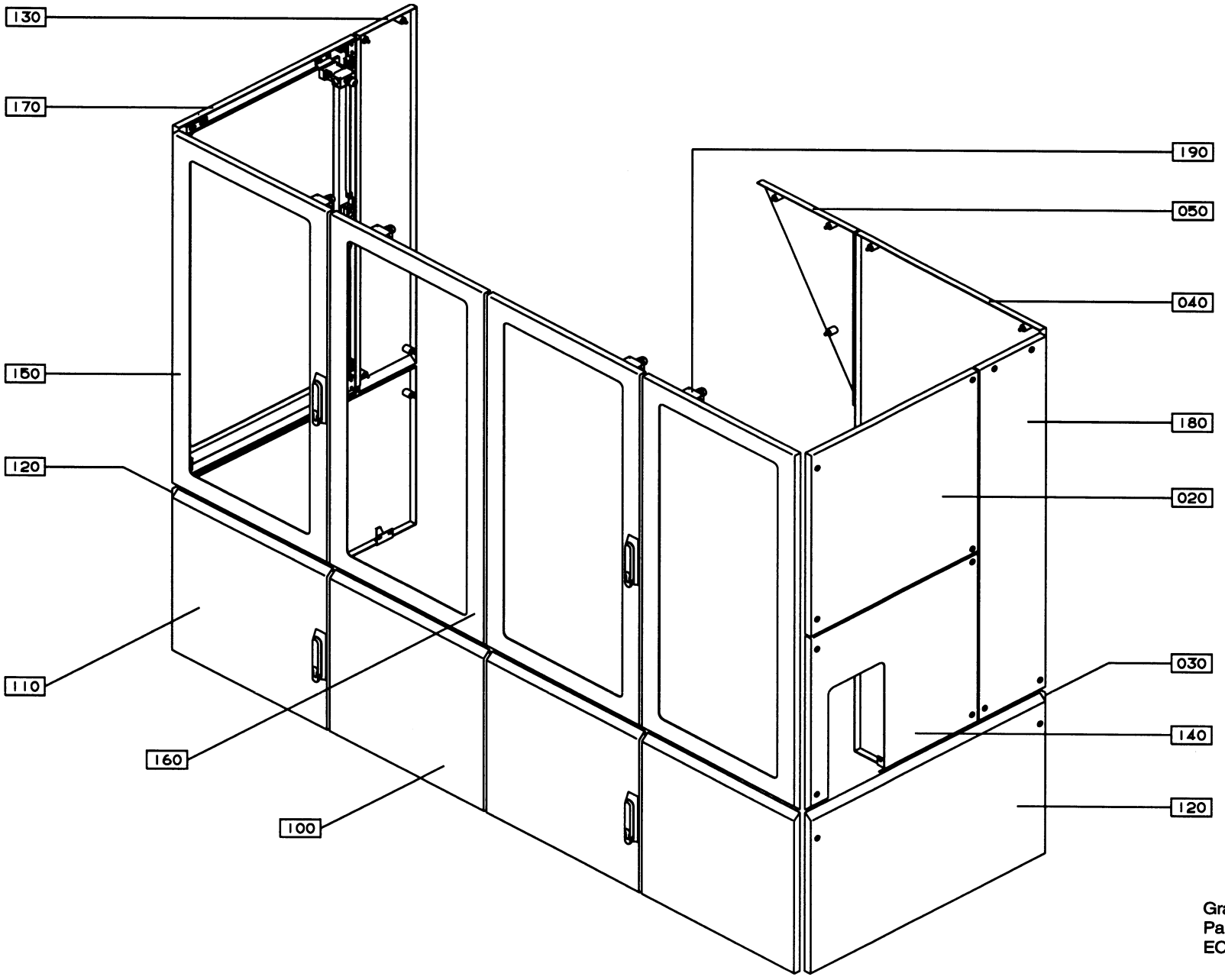

GraphicID: 67030302.eps
Parent Drw: 670303-2
ECN 21267

Pos	Part No	SP	UN	Qty	Description	Page No
U-FORM						
000	**B- 670303-0102**	-		1	**COVERING INFEED**	
020	C-1124067-0101	-		1	COVERING PLATE	**359**
030	C-1124087-0101	-		1	COVERING PLATE	**361**
040	C-1124088-0101	-		1	COVERING PLATE	**363**
050	C-1124089-010V	-		1	COVERING PLATE	**365**
COMMON PARTS						
100	C-1124065-0101	-		2	DOOR WITHOUT HANDLE	**367**
110	C-1124066-0101	-		2	DOOR WITH HANDLE	**369**
120	C-1124068-0101	-		2	COVERING PLATE	**371**
130	C-1124069-010V	-		1	COVERING PLATE	**373**
140	C-1124071-010V	-		1	COVERING PLATE	**375**
150	C-1124075-0101	-		2	GLASS DOOR	**377**
160	C-1124076-0101	-		2	GLASS DOOR	**379**
170	C-1124079-010V	-		1	GLASS DOOR	**381**
180	C-1124080-0101	-		1	COVERING PLATE	**383**
190	C-1124094-0101	-		1	DOOR SAFETY SWITCH	**385**

Pos	Part No	SP	UN	Qty	Description	Page No

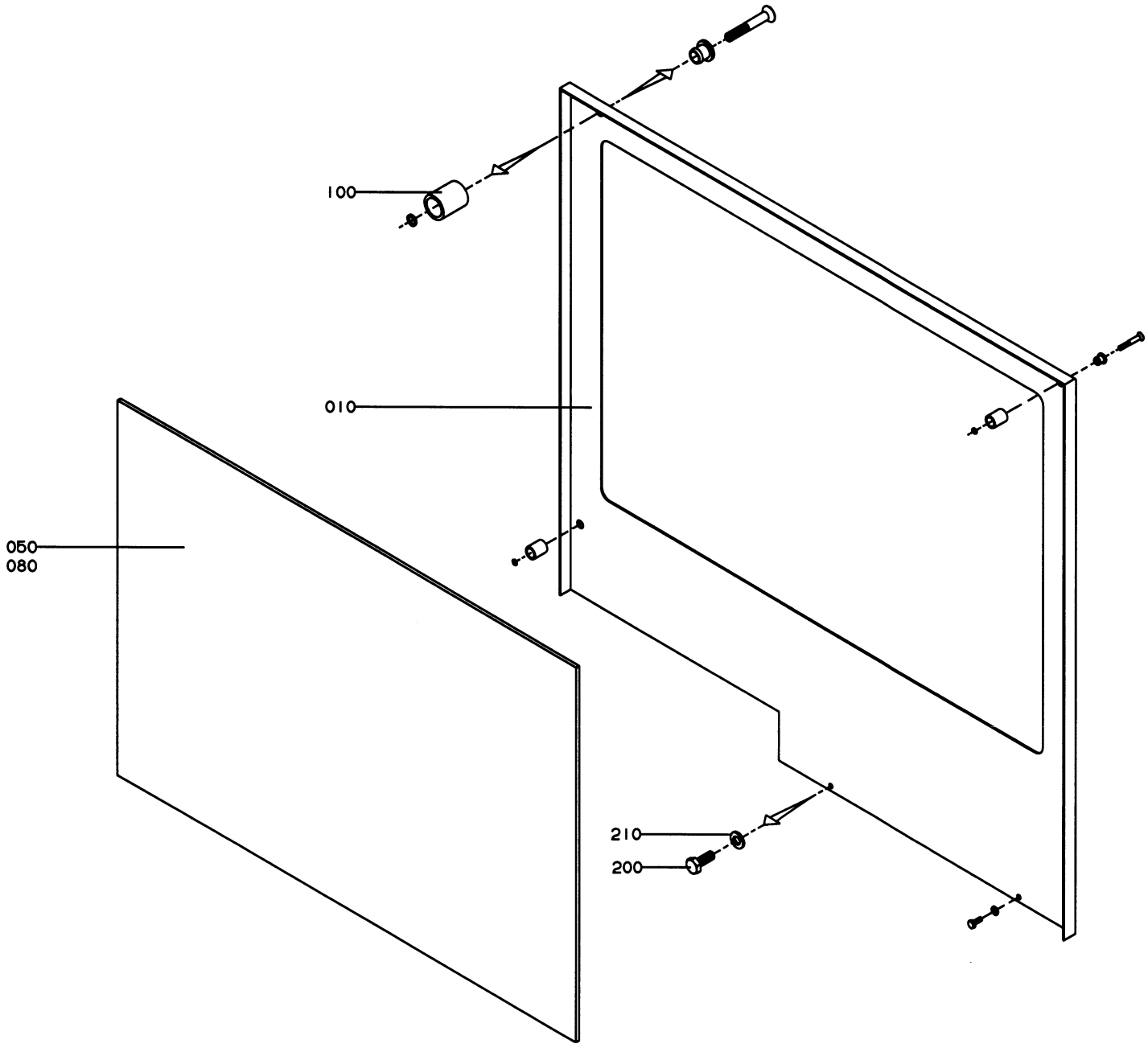

GraphicID: 112407201.eps
Parent Drw: 1124072-1
ECN 21267

Pos	Part No	SP	UN	Qty	Description	Page No
Z-Form -Left Hand infeed						
000	**C-1124072-0101**	-		1	**COVERING PLATE**	
010	1124567	-		1	COVERING PLATE	
Z-Form -Right Hand infeed						
000	**C-1124072-0102**	-		1	**COVERING PLATE**	
010	1124568	-		1	COVERING PLATE	
COMMON PARTS						
050	**1124529**	-		1	**GLASS**	
080	90157-0041	-		X	SEALING COMPOUND	
100	90226-0458	-		3	MOUNTING SCREW	
200	312105-0368	-		2	SCREW O4017 M6X16A280	
210	315105-0153	-		2	WASHER BRB6,4X12RFR	

Pos	Part No	SP	UN	Qty	Description	Page No

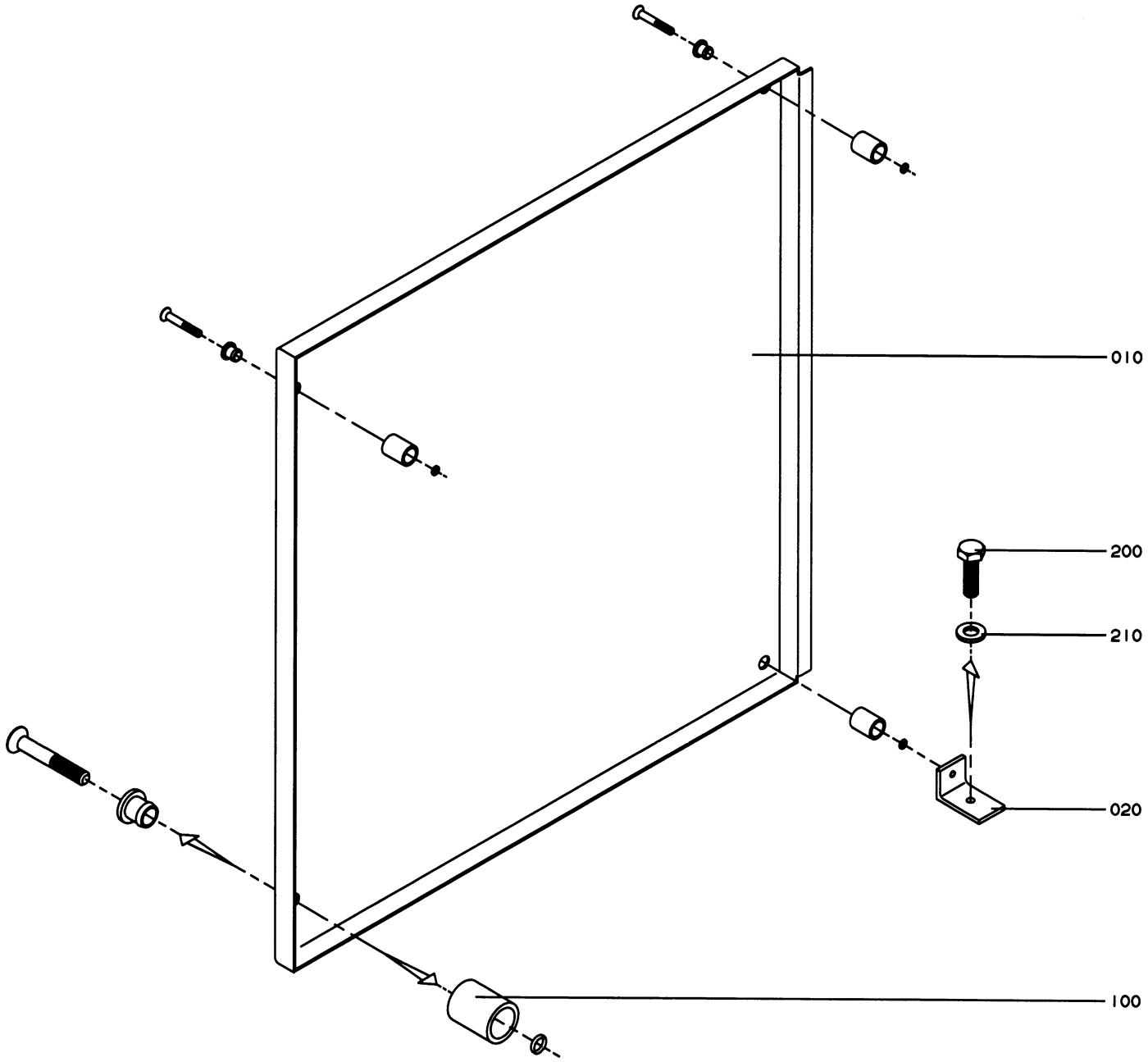

GraphicID: 112406701.eps
Parent Drw: 1124067-1
ECN 21267

Pos	Part No	SP	UN	Qty	Description	Page No
-						
000	**C-1124067-0101**	-		1	**COVERING PLATE**	
010	1124560	-		1	COVERING PLATE	
020	1124564	-		1	BRACKET	
100	90226-0458	-		4	MOUNTING SCREW	
200	312105-0368	-		1	SCREW O4017 M6X16A280	
210	315105-0153	-		1	WASHER BRB6,4X12RFR	

Pos	Part No	SP	UN	Qty	Description	Page No

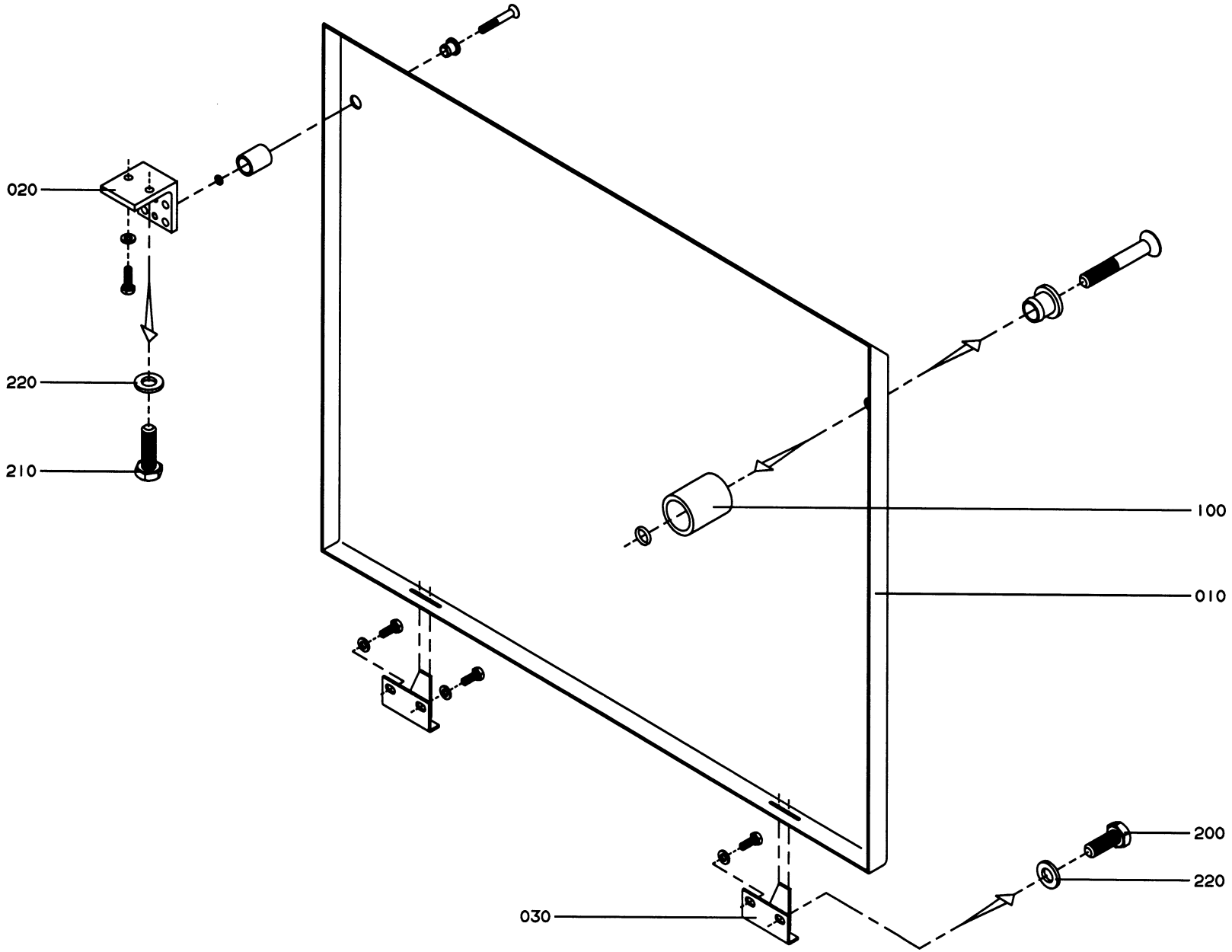

GraphicID: 112408701.eps
Parent Drw: 1124087-1
ECN 21267

Pos	Part No	SP	UN	Qty	Description	Page No
-						
000	C-1124087-0101	-		1	**COVERING PLATE**	
010	1124569	-		1	COVERING PLATE	
020	975884	-		1	BRACKET	
030	975887	-		2	CATCH	
100	90226-0458	-		2	MOUNTING SCREW	
200	312105-0368	-		4	SCREW O4017 M6X16A280	
210	312105-0370	-		2	SCREW O4017 M6X20A280	
220	315105-0153	-		6	WASHER BRB6,4X12RFR	

Pos	Part No	SP	UN	Qty	Description	Page No

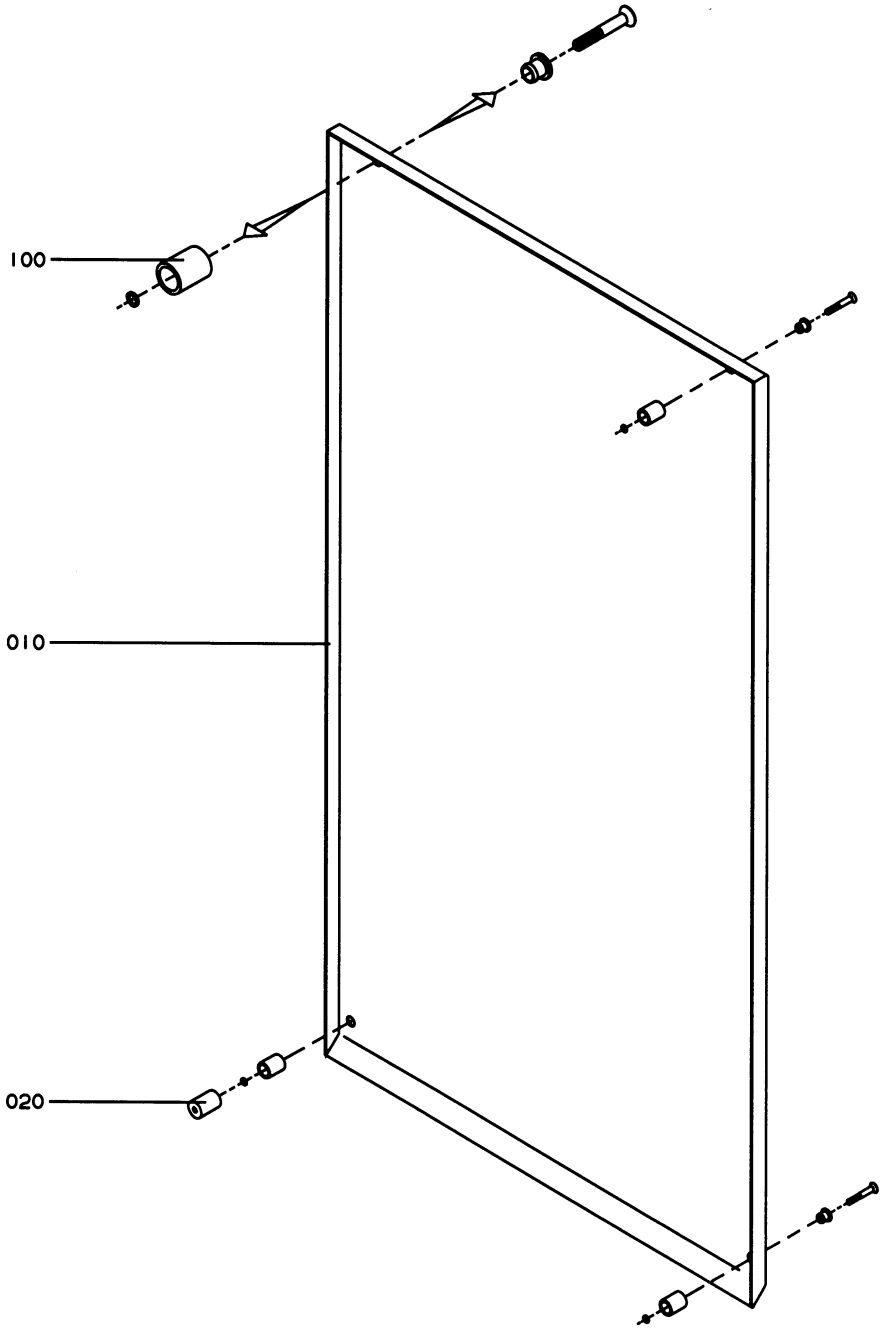

GraphicID: 112408801.eps
Parent Drw: 1124088-1
ECN 21267

Pos	Part No	SP	UN	Qty	Description	Page No
-						
000	C-1124088-0101	-		1	**COVERING PLATE**	
010	1124570	-		1	COVERING PLATE	
020	1124502	-		1	SPACER	
100	90226-0458	-		4	MOUNTING SCREW	

Pos	Part No	SP	UN	Qty	Description	Page No

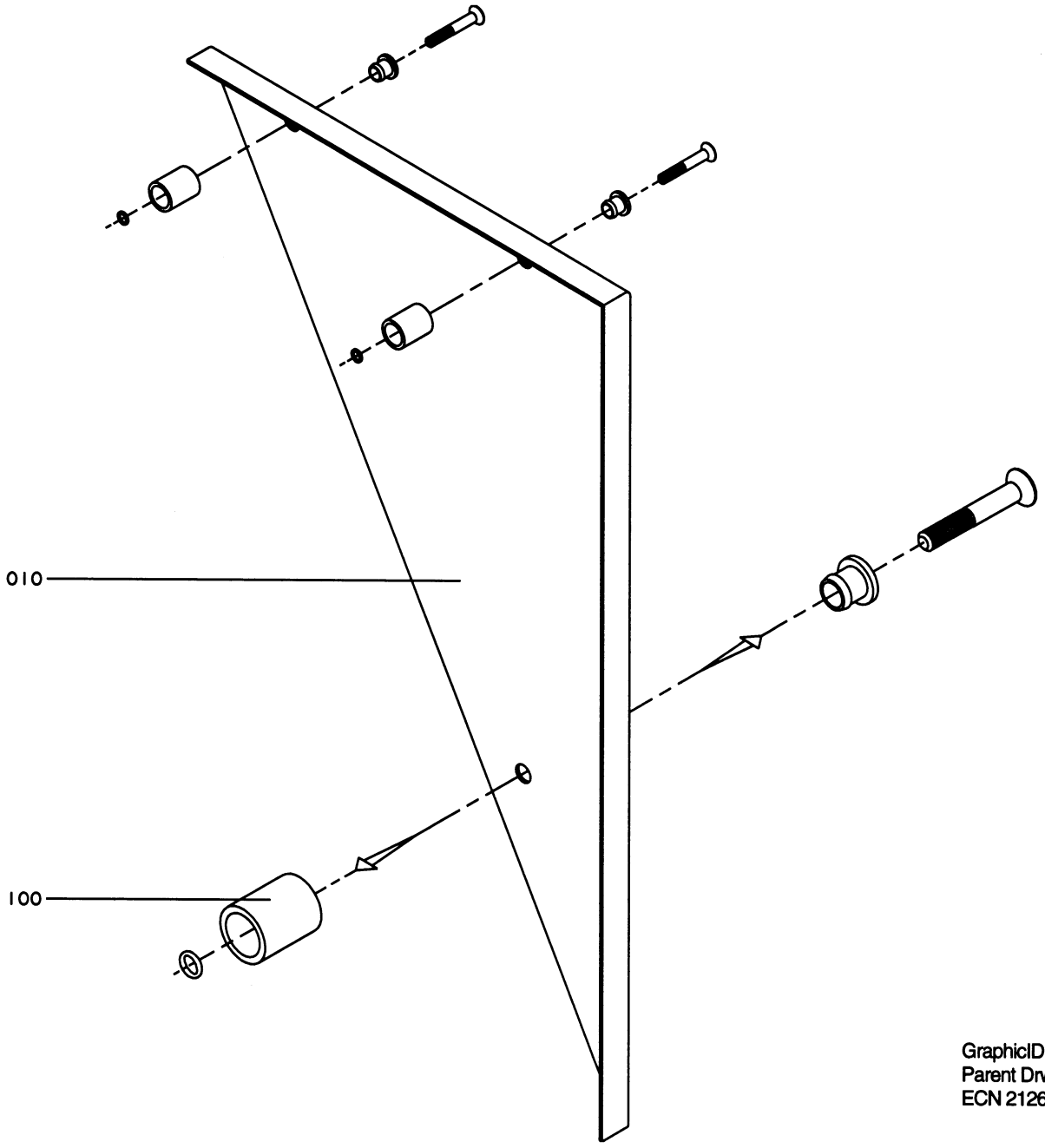

GraphicID: 112408901.eps
Parent Drw: 1124089-1
ECN 21267

Pos	Part No	SP	UN	Qty	Description	Page No
U-Form -Left Hand Infeed						
000	**C-1124089-0101**	**-**		**1**	**COVERING PLATE**	
010	1124572	-		1	COVERING PLATE	
U-Form -Right Hand Infeed						
000	**C-1124089-0102**	**-**		**1**	**COVERING PLATE**	
010	1124571	-		1	COVERING PLATE	
COMMON PARTS						
100	**90226-0458**	**-**		**3**	**MOUNTING SCREW**	

Pos	Part No	SP	UN	Qty	Description	Page No

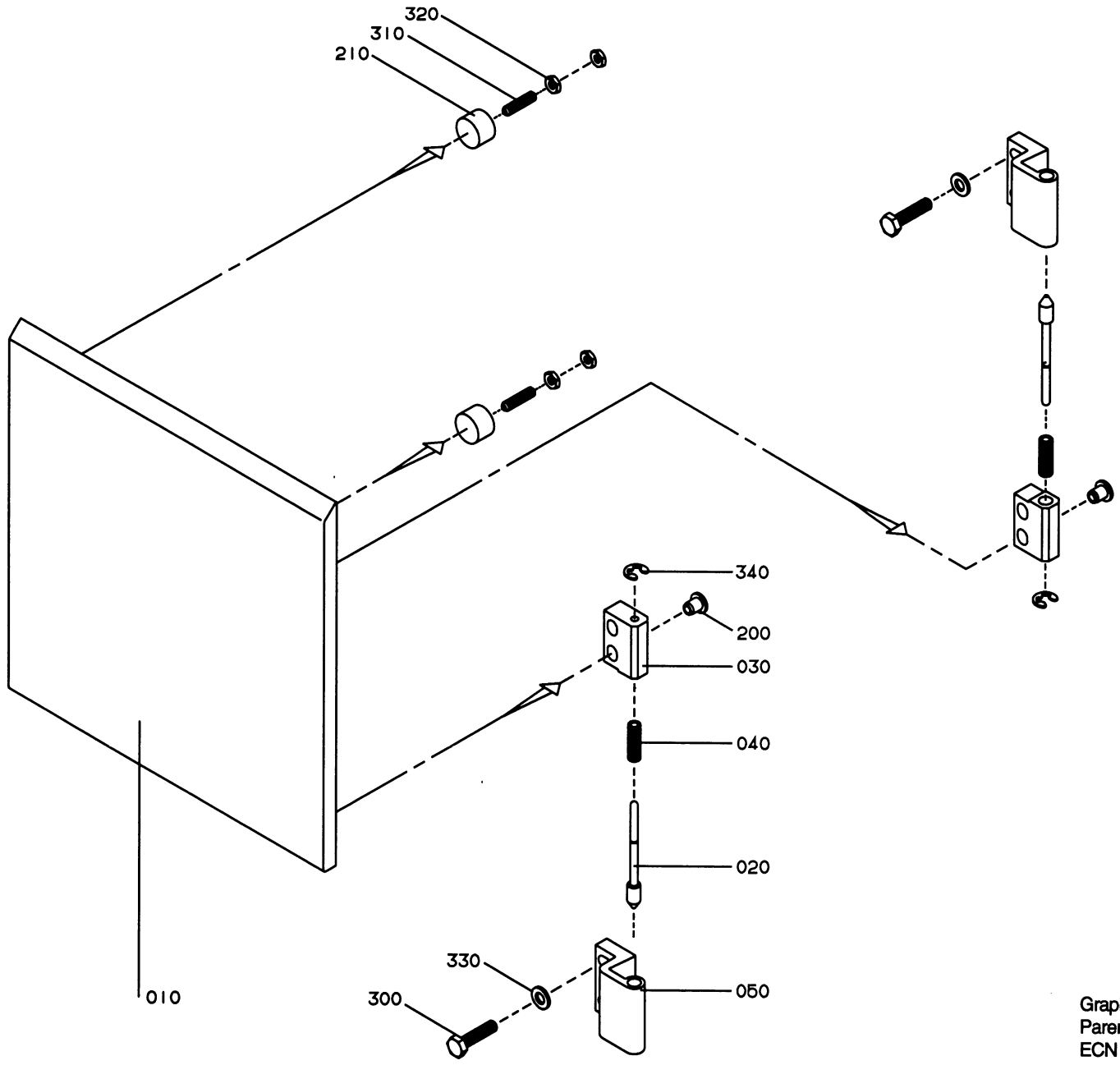

GraphicID: 112406501.eps
Parent Drw: 1124065-1
ECN 21267

Pos	Part No	SP	UN	Qty	Description	Page No
-						
000	**C-1124065-0101**	-		**2**	**DOOR WITHOUT HANDLE**	
010	1124551	-		1	HATCH	
020	959656	-		2	COTTER	
030	959657	-		2	HINGE FLANGE	
040	959658	-		2	SPRING	
050	975880	-		2	HINGE FLANGE	
200	90287-0205	-		4	SCREW	
210	90347-0011	-		2	VIBRATION DAMPER	
300	312105-0372	-		4	SCREW O4017 M6X25A280	
310	312318-0372	-		2	STOP SCREW SK6SS6X25RFR	
320	312625-0316	-		4	NUT M 6	
330	315105-0153	-		4	WASHER BRB6,4X12RFR	
340	315755-0105	-		2	LOCKING WAE 3,2 RFR	

Pos	Part No	SP	UN	Qty	Description	Page No

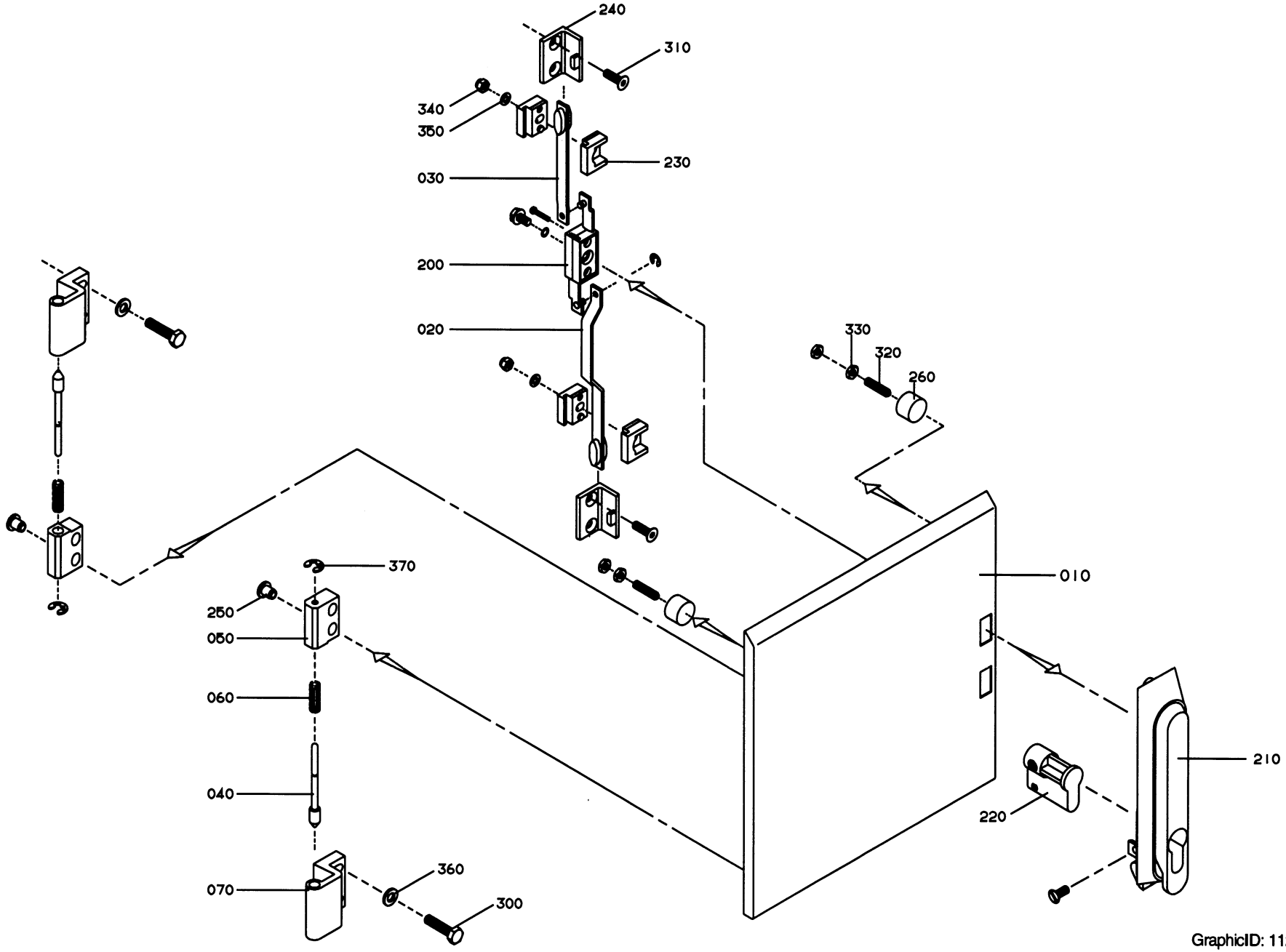

GraphicID: 112406601.eps
Parent Drw: 1124066-1
ECN 21267

Pos	Part No	SP	UN	Qty	Description	Page No
-						
000	C-1124066-0101	-		2	DOOR WITH HANDLE	
010	1124552	-		1	HATCH	
020	975888-0002	-		1	STRUT	
030	975889-0005	-		1	STRUT	
040	959656	-		2	COTTER	
050	959657	-		2	HINGE FLANGE	
060	959658	-		2	SPRING	
070	975880	-		2	HINGE FLANGE	
200	90237-0123	-		1	LOCK HOUSING	
210	90237-0126	-		1	TURNING HANDLE	
220	90237-0128	-		1	LOCK CYLINDER	
230	90237-0144	-		2	STEERING	
240	90237-0145	-		2	CATCH	
250	90287-0205	-		4	SCREW	
260	90347-0011	-		2	VIBRATION DAMPER	
300	312105-0372	-		4	SCREW O4017 M6X25A280	
310	312155-0370	-		4	SCREW MF6S6X20RFR	
320	312318-0372	-		2	STOP SCREW SK6SS6X25RFR	
330	312625-0316	-		4	NUT M 6	
340	312812-0314	-		2	LOCK NUT A2-M5RFR	
350	315105-0146	-		2	WASHER BRB5,3X10RFR	
360	315105-0153	-		4	WASHER BRB6,4X12RFR	
370	315755-0105	-		2	LOCKING WAE 3,2 RFR	

Pos	Part No	SP	UN	Qty	Description	Page No

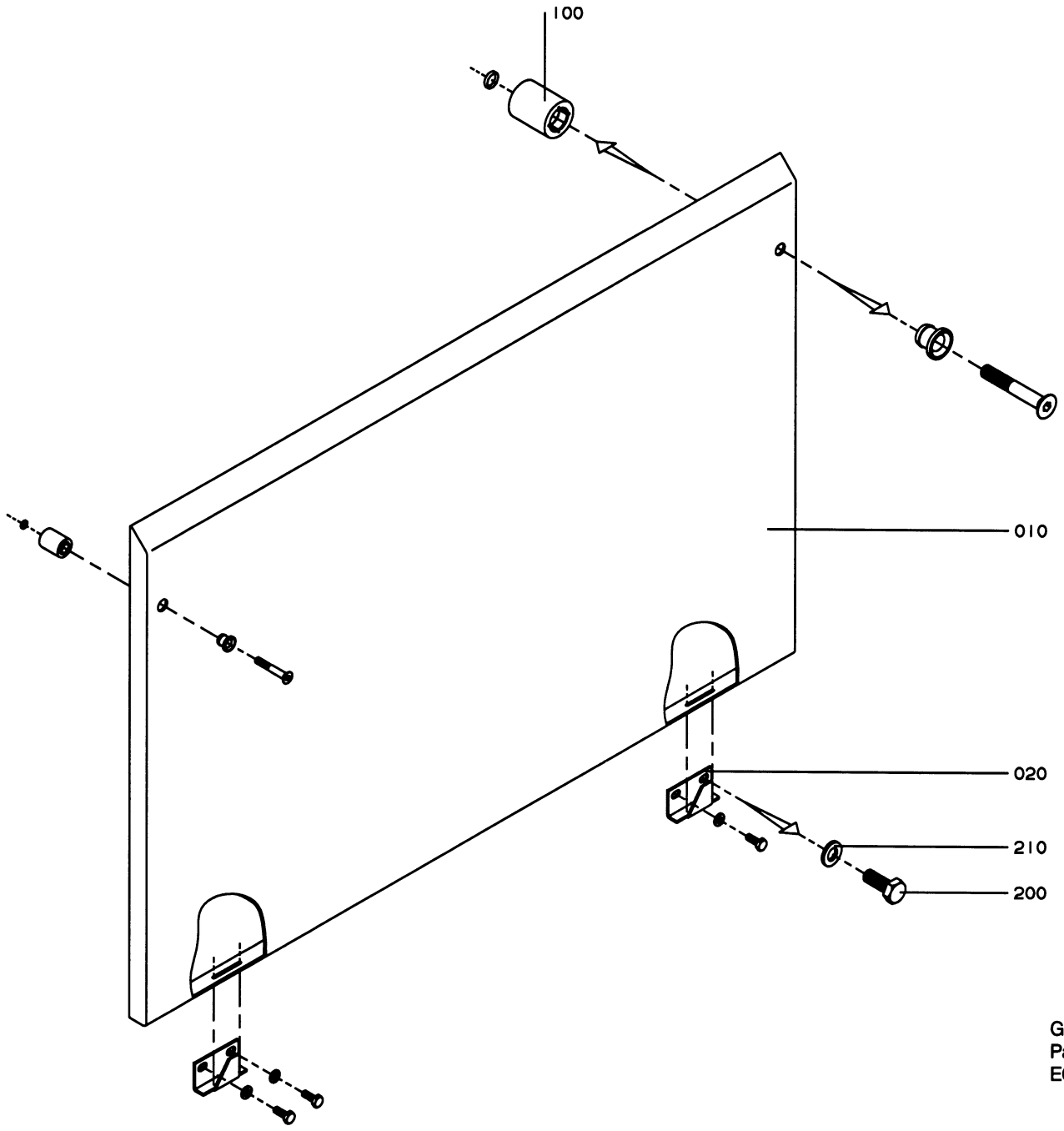

GraphicID: 112406801.eps
Parent Drw: 1124068-1
ECN 21267

Pos	Part No	SP	UN	Qty	Description	Page No
-						
000	C-1124068-0101	-		2	**COVERING PLATE**	
010	1124550	-		1	COVERING PLATE	
020	975887	-		2	CATCH	
100	90226-0458	-		2	MOUNTING SCREW	
200	312105-0368	-		4	SCREW O4017 M6X16A280	
210	315105-0153	-		4	WASHER BRB6,4X12RFR	

Pos	Part No	SP	UN	Qty	Description	Page No

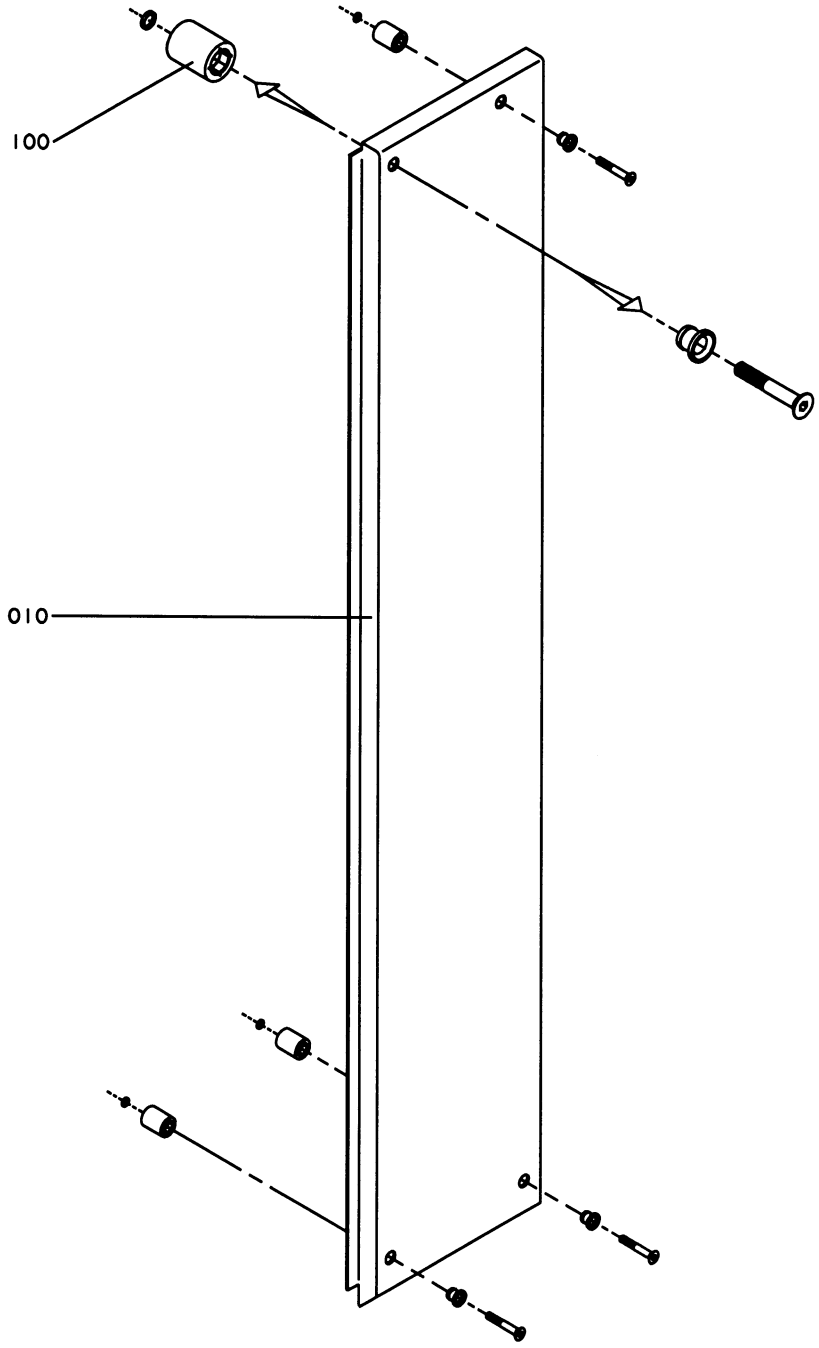

GraphicID: 112406901.eps
Parent Drw: 1124069-1
ECN 21267

Pos	Part No	SP	UN	Qty	Description	Page No
Z-Form -Left Hand infeed, U-Form -Right Hand infeed,						
000	**C-1124069-0101**	**-**		**1**	**COVERING PLATE**	
010	1124553	-		1	COVERING PLATE	
Z-Form -Right Hand infeed, U-Form -LeftHand infeed						
000	**C-1124069-0102**	**-**		**1**	**COVERING PLATE**	
010	1124554	-		1	COVERING PLATE	
COMMON PARTS						
100	**90226-0458**	**-**		**4**	**MOUNTING SCREW**	

Pos	Part No	SP	UN	Qty	Description	Page No

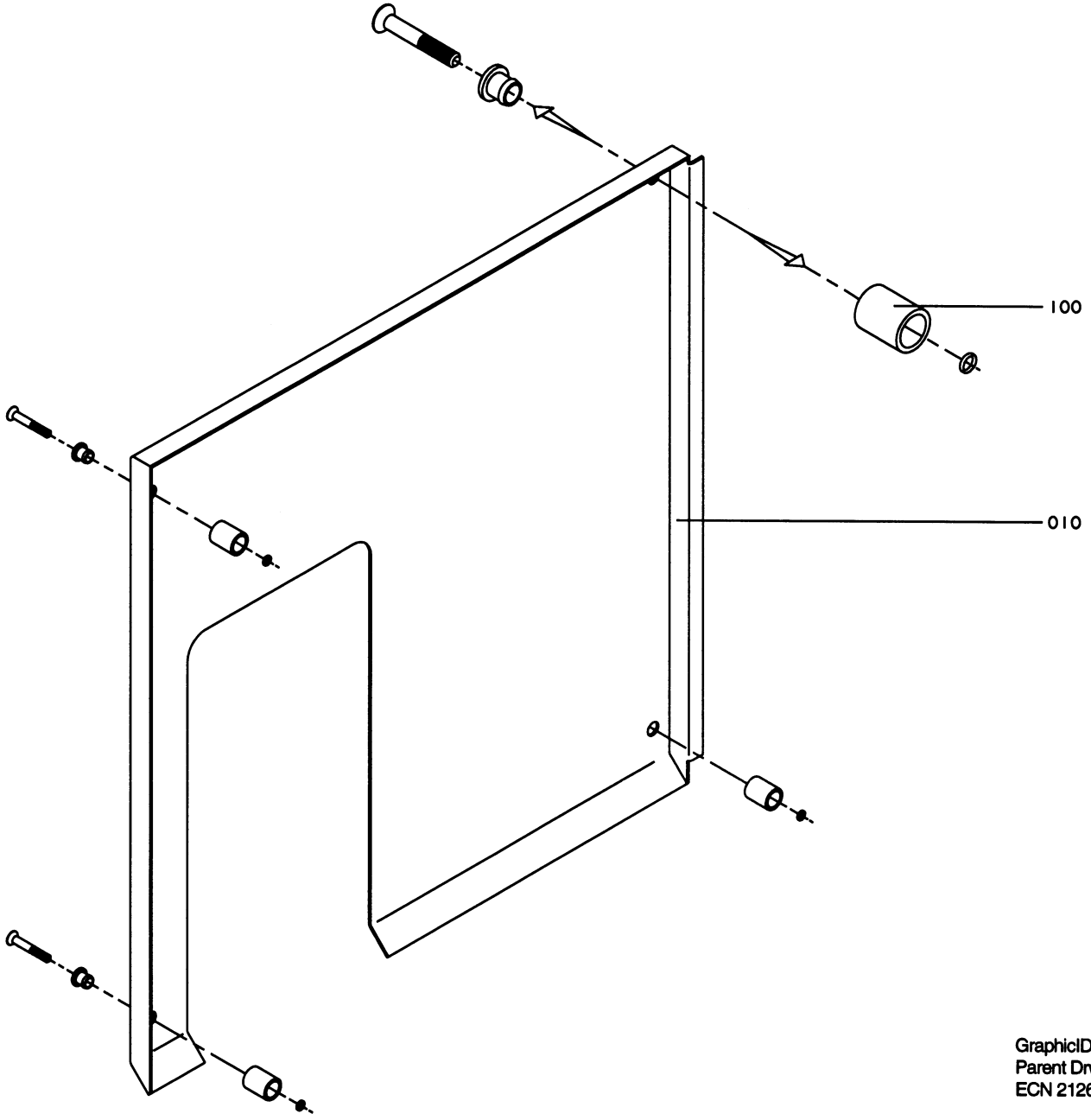

GraphicID: 112407101.eps
Parent Drw: 1124071-1
ECN 21267

Pos	Part No	SP	UN	Qty	Description	Page No
Z-Form -Left Hand infeed, U-Form -Right Hand infeed, B40, B55, B55S, B65, B68, B79						
000	**C-1124071-0101**	**-**		**1**	**COVERING PLATE**	
010	1124558	-		1	COVERING PLATE	
Z-Form -Right Hand infeed, U-Form -Left Hand infeed, B40, B 55, B55S, B65, B68, B79						
000	**C-1124071-0102**	**-**		**1**	**COVERING PLATE**	
010	1124559	-		1	COVERING PLATE	
Z-Form -Left Hand infeed, U-Form -Right Hand infeed, UNITADJ						
000	**C-1124071-0103**	**-**		**1**	**COVERING PLATE**	
010	1124556	-		1	COVERING PLATE	
Z-Form -Right Hand infeed, U-Form -Left Hand infeed, UNITADJ						
000	**C-1124071-0104**	**-**		**1**	**COVERING PLATE**	
010	1124557	-		1	COVERING PLATE	
COMMON PARTS						
100	90226-0458	-		4	MOUNTING SCREW	

Pos	Part No	SP	UN	Qty	Description	Page No

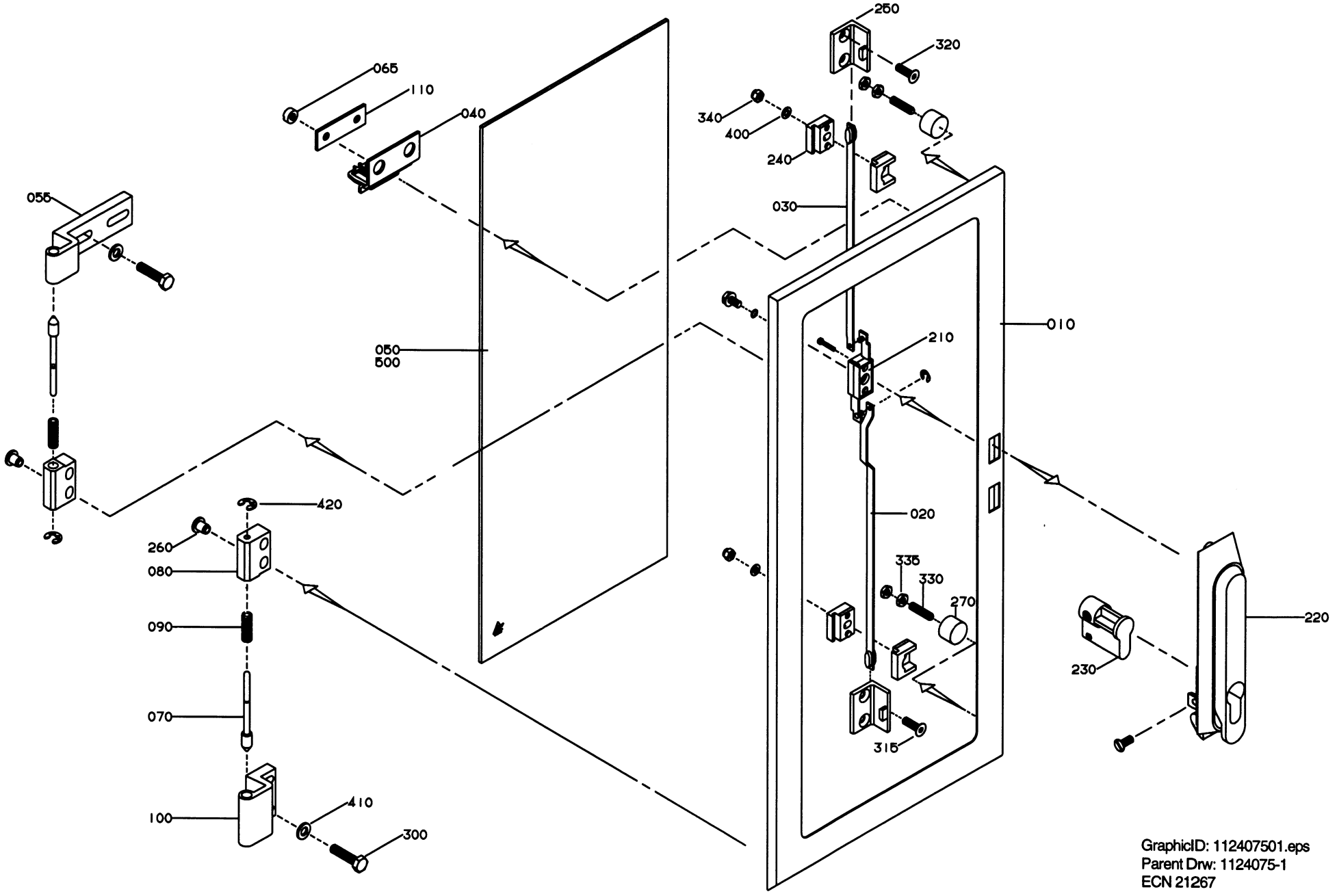

GraphicID: 112407501.eps
Parent Drw: 1124075-1
ECN 21267

Pos	Part No	SP	UN	Qty	Description	Page No
-						
000	**C-1124075-0101**	-		**2**	**GLASS DOOR**	
010	1124561	-		1	HATCH	
020	975888-0003	-		1	STRUT	
030	975889-0004	-		1	STRUT	
040	975917	-		1	KEY	
050	1124624	-		1	GLASS	
055	975927	-		1	HINGE FLANGE	
065	575034	-		2	ROUND NUT	
070	959656	-		2	COTTER	
080	959657	-		2	HINGE FLANGE	
090	959658	-		2	SPRING	
100	975880	-		1	HINGE FLANGE	
110	975924	-		1	WASHER	
210	90237-0123	-		1	LOCK HOUSING	
220	90237-0126	-		1	TURNING HANDLE	
230	90237-0128	-		1	LOCK CYLINDER	
240	90237-0144	-		2	STEERING	
250	90237-0145	-		2	CATCH	
260	90287-0205	-		4	SCREW	
270	90347-0011	-		2	VIBRATION DAMPER	
300	312105-0372	-		4	SCREW O4017 M6X25A280	
315	312155-0368	-		2	SCREW MF6S6X16RFR	
320	312155-0370	-		2	SCREW MF6S6X20RFR	
330	312318-0372	-		2	STOP SCREW SK6SS6X25RFR	
335	312625-0316	-		4	NUT M 6	
340	312812-0314	-		2	LOCK NUT A2-M5RFR	
400	315105-0146	-		2	WASHER BRB5,3X10RFR	
410	315105-0153	-		4	WASHER BRB6,4X12RFR	
420	315755-0105	-		2	LOCKING WAE 3,2 RFR	
500	90157-0041	-		X	SEALING COMPOUND	

Pos	Part No	SP	UN	Qty	Description	Page No

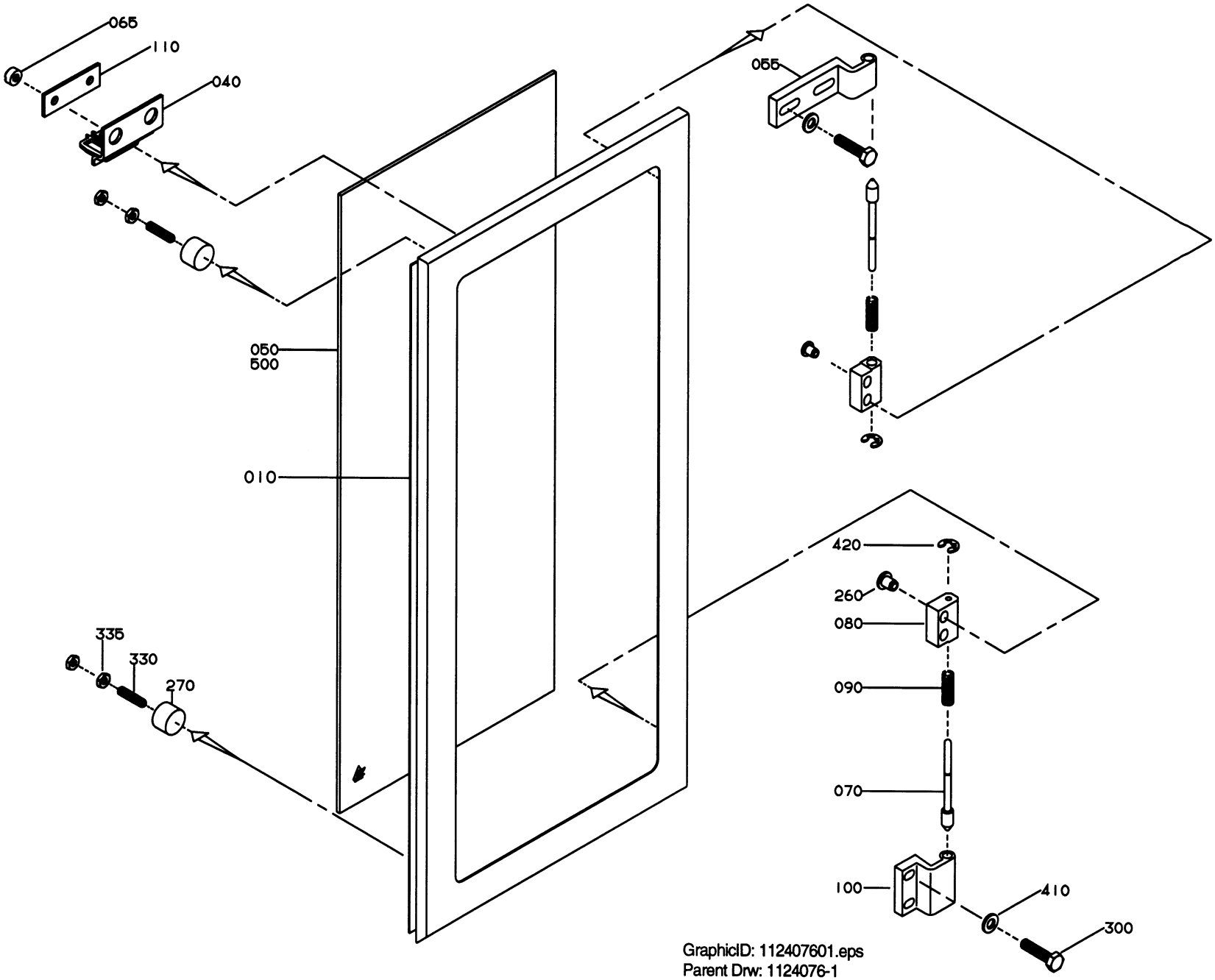

GraphicID: 112407601.eps
Parent Drw: 1124076-1
ECN 21267

Pos	Part No	SP	UN	Qty	Description	Page No
-						
000	**C-1124076-0101**	-		**2**	**GLASS DOOR**	
010	1124562	-		1	HATCH	
040	975917	-		1	KEY	
050	1124624	-		1	GLASS	
055	975927	-		1	HINGE FLANGE	
065	575034	-		2	ROUND NUT	
070	959656	-		2	COTTER	
080	959657	-		2	HINGE FLANGE	
090	959658	-		2	SPRING	
100	975880	-		1	HINGE FLANGE	
110	975924	-		1	WASHER	
260	90287-0205	-		4	SCREW	
270	90347-0011	-		2	VIBRATION DAMPER	
300	312105-0372	-		4	SCREW O4017 M6X25A280	
330	312318-0372	-		2	STOP SCREW SK6SS6X25RFR	
335	312625-0316	-		4	NUT M 6	
410	315105-0153	-		4	WASHER BRB6,4X12RFR	
420	315755-0105	-		2	LOCKING WAE 3,2 RFR	
500	90157-0041	-		X	SEALING COMPOUND	

Pos	Part No	SP	UN	Qty	Description	Page No

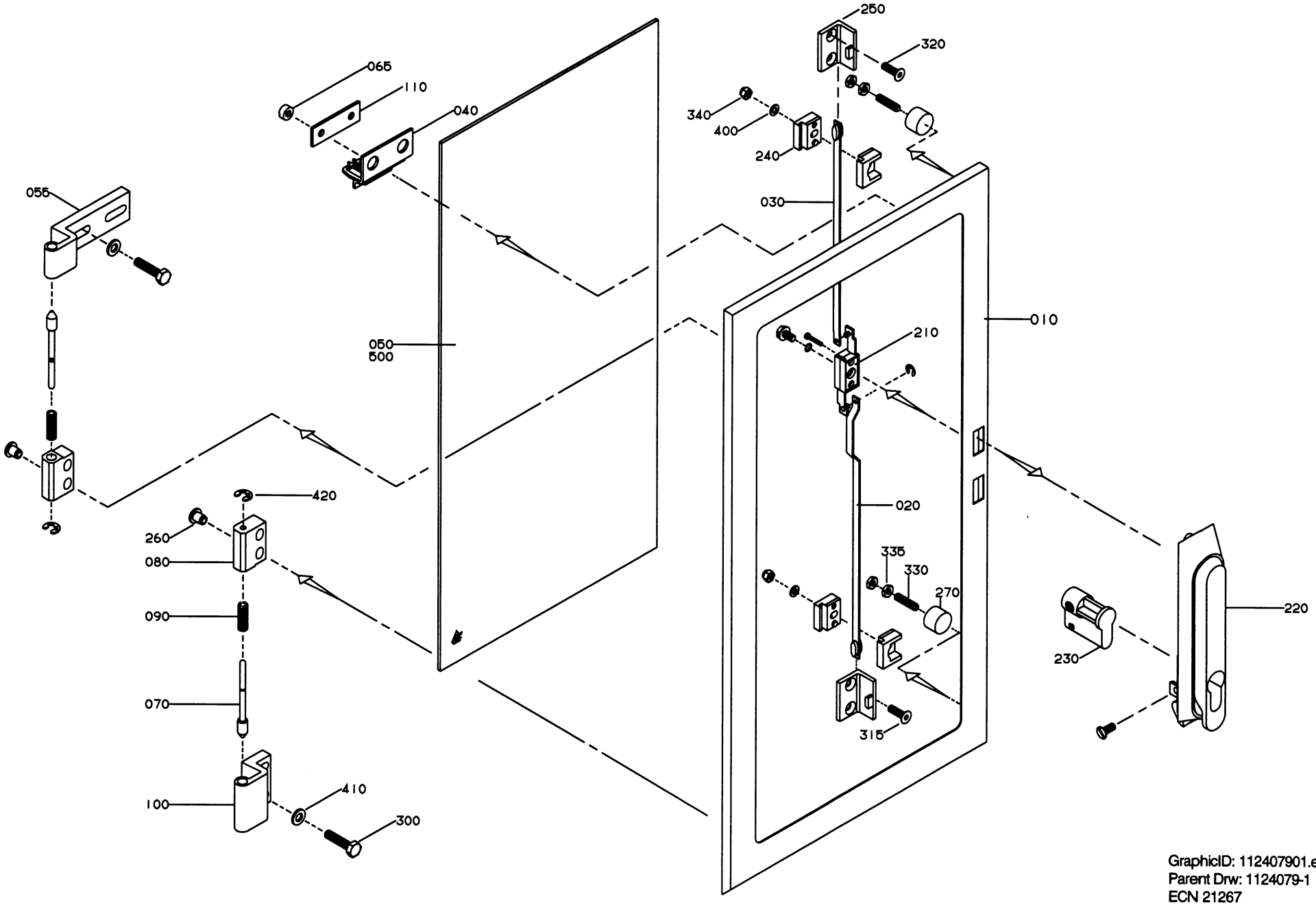

GraphicID: 112407901.eps
Parent Drw: 1124079-1
ECN 21267

Pos	Part No	SP	UN	Qty	Description	Page No
Z-Form -Left Hand infeed, U-Form -Right Hand infeed,						
000	**C-1124079-0101**	-		1	**GLASS DOOR**	
010	1124563	-		1	HATCH	
Z-Form -Right Hand infeed, U-Form -LeftHand infeed						
000	**C-1124079-0102**	-		1	**GLASS DOOR**	
010	1021715	-		1	HATCH	
COMMON PARTS						
020	**975888-0003**	-		1	**STRUT**	
030	975889-0004	-		1	STRUT	
040	975917	-		1	KEY	
050	975918-0003	-		1	GLASS	
055	975927	-		1	HINGE FLANGE	
065	575034	-		2	ROUND NUT	
070	959656	-		2	COTTER	
080	959657	-		2	HINGE FLANGE	
090	959658	-		2	SPRING	
100	975880	-		1	HINGE FLANGE	
110	975924	-		1	WASHER	
210	90237-0123	-		1	LOCK HOUSING	
220	90237-0126	-		1	TURNING HANDLE	
230	90237-0128	-		1	LOCK CYLINDER	
240	90237-0144	-		2	STEERING	
250	90237-0145	-		2	CATCH	
260	90287-0205	-		4	SCREW	
270	90347-0011	-		2	VIBRATION DAMPER	
300	312105-0372	-		4	SCREW O4017 M6X25A280	
315	312155-0368	-		2	SCREW MF6S6X16RFR	
320	312155-0370	-		2	SCREW MF6S6X20RFR	
330	312318-0372	-		2	STOP SCREW SK6SS6X25RFR	
335	312625-0316	-		4	NUT M 6	
340	312812-0314	-		2	LOCK NUT A2-M5RFR	
400	315105-0146	-		2	WASHER BRB5,3X10RFR	
410	315105-0153	-		4	WASHER BRB6,4X12RFR	
420	315755-0105	-		2	LOCKING WAE 3,2 RFR	
500	90157-0041	-		X	SEALING COMPOUND	

Pos	Part No	SP	UN	Qty	Description	Page No

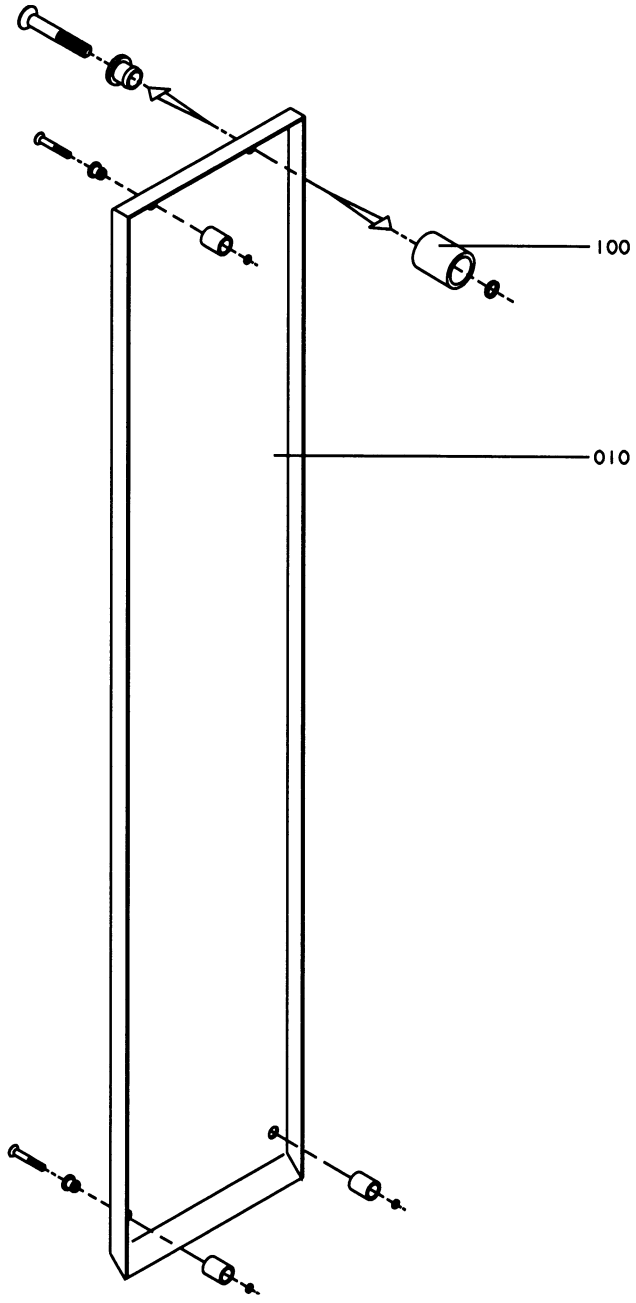

GraphicID: 112408001.eps
Parent Drw: 1124080-1
ECN 21267

Pos	Part No	SP	UN	Qty	Description	Page No
-						
000	**C-1124080-0101**	-		1	**COVERING PLATE**	
010	1124555	-		1	COVERING PLATE	
100	90226-0458	-		4	MOUNTING SCREW	

Pos	Part No	SP	UN	Qty	Description	Page No

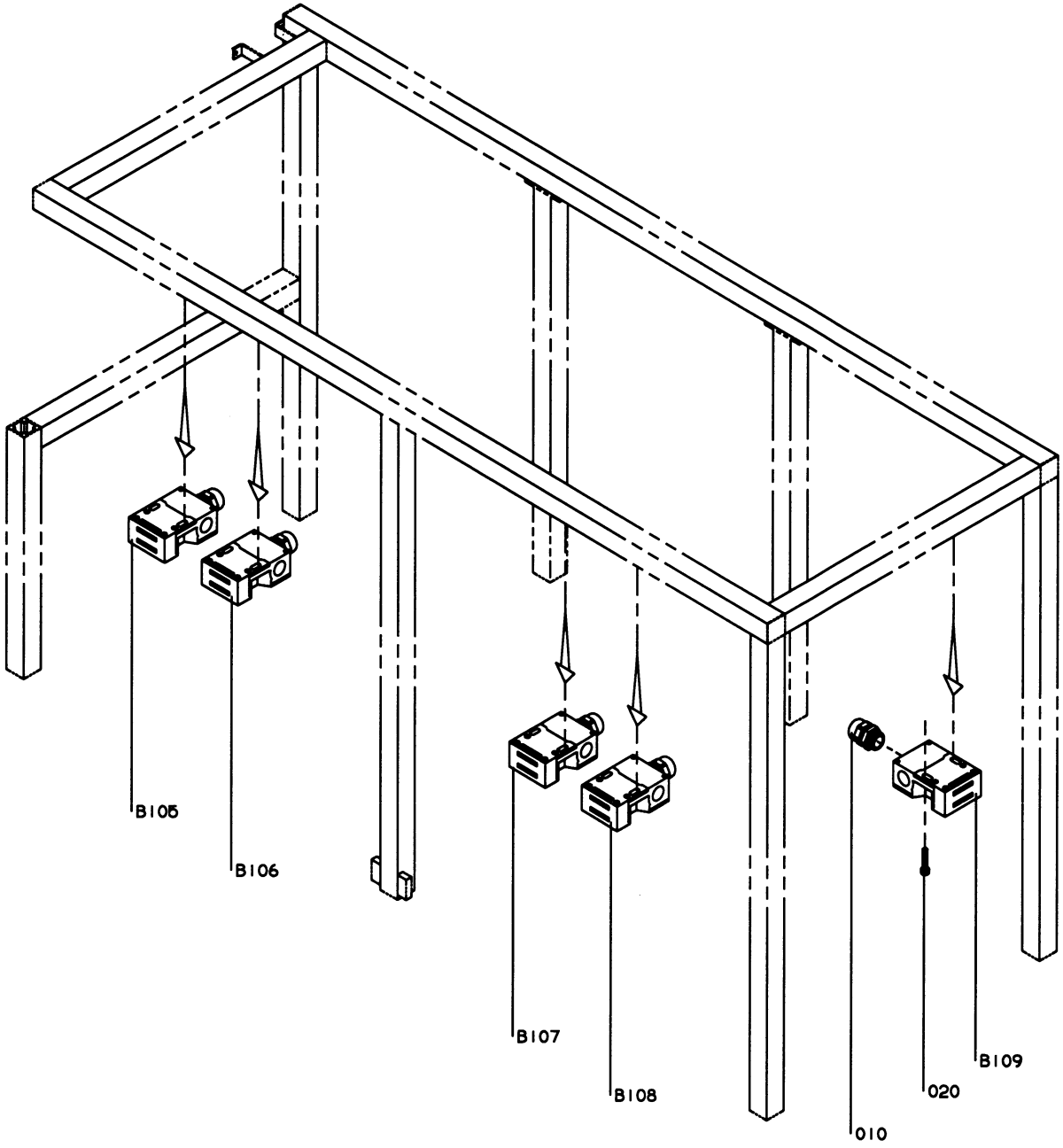

GraphicID: 112409401.eps
Parent Drw: 1124094-1
ECN 23179

Pos	Part No	SP	UN	Qty	Description	Page No
-						
000	**C-1124094-0101**	-		1	**DOOR SAFETY SWITCH**	
010	352103-0106	-		5	CABLE GLAND ST 11	
020	312115-0333	-		10	SCREW O4762 M5X25A280	
B105	90044-0127	S		1	KEY SAFETY SWITCH AZ15ZVR	
B106	90044-0127	S		1	KEY SAFETY SWITCH AZ15ZVR	
B107	90044-0127	S		1	KEY SAFETY SWITCH AZ15ZVR	
B108	90044-0127	S		1	KEY SAFETY SWITCH AZ15ZVR	
B109	90044-0127	S		1	KEY SAFETY SWITCH AZ15ZVR	

Pos	Part No	SP	UN	Qty	Description	Page No

Tetra Pak

SPC

Spare Parts Catalogue

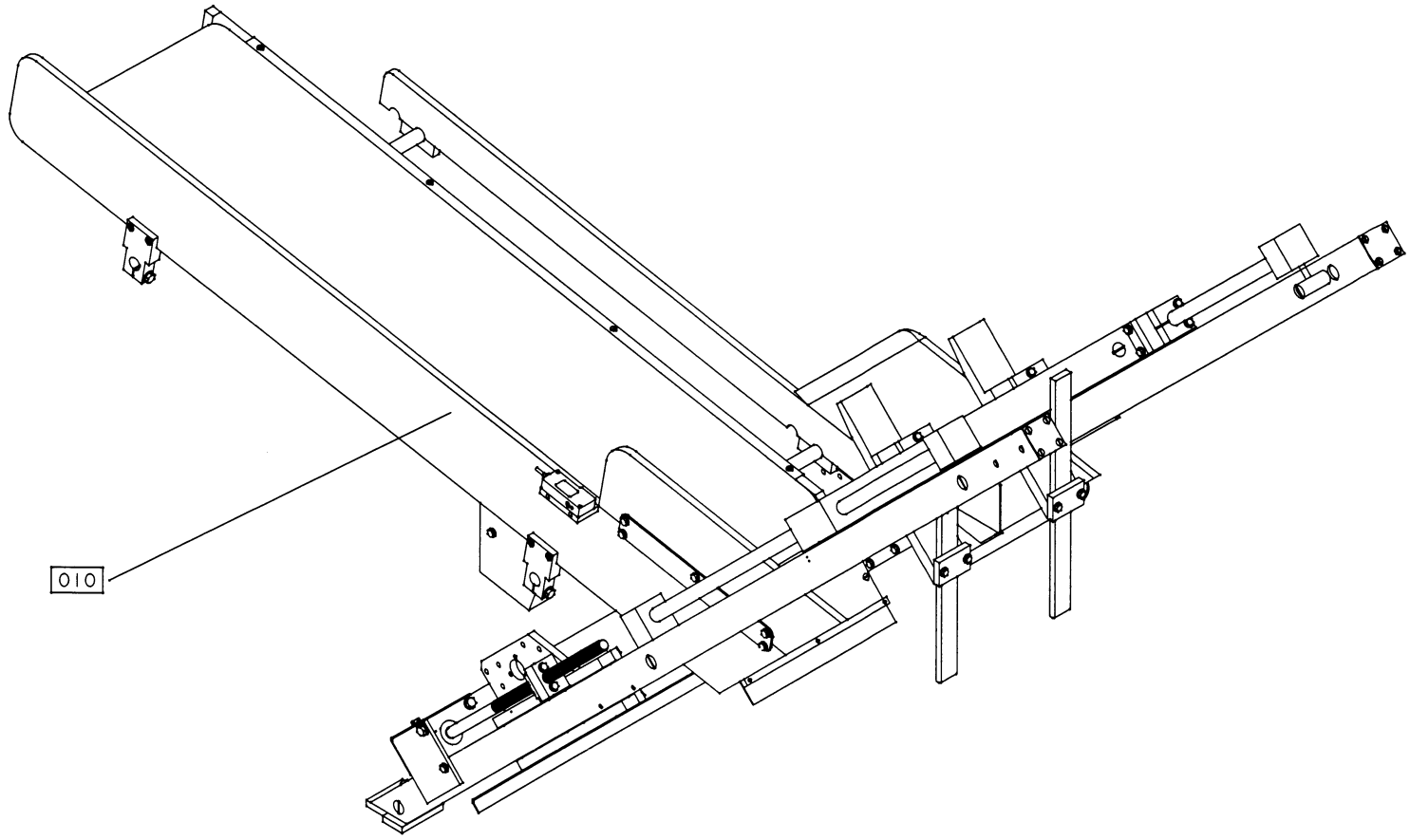

67029301.eps
670293-1
ECN 16567

Pos	Part No	SP	UN	Qty	Description	Page No
-						
010	B- 670293-0401	-		1	**MAGAZINE**	
010	B- 670285-0401	-		1	MAGAZINE	391

Pos	Part No	SP	UN	Qty	Description	Page No

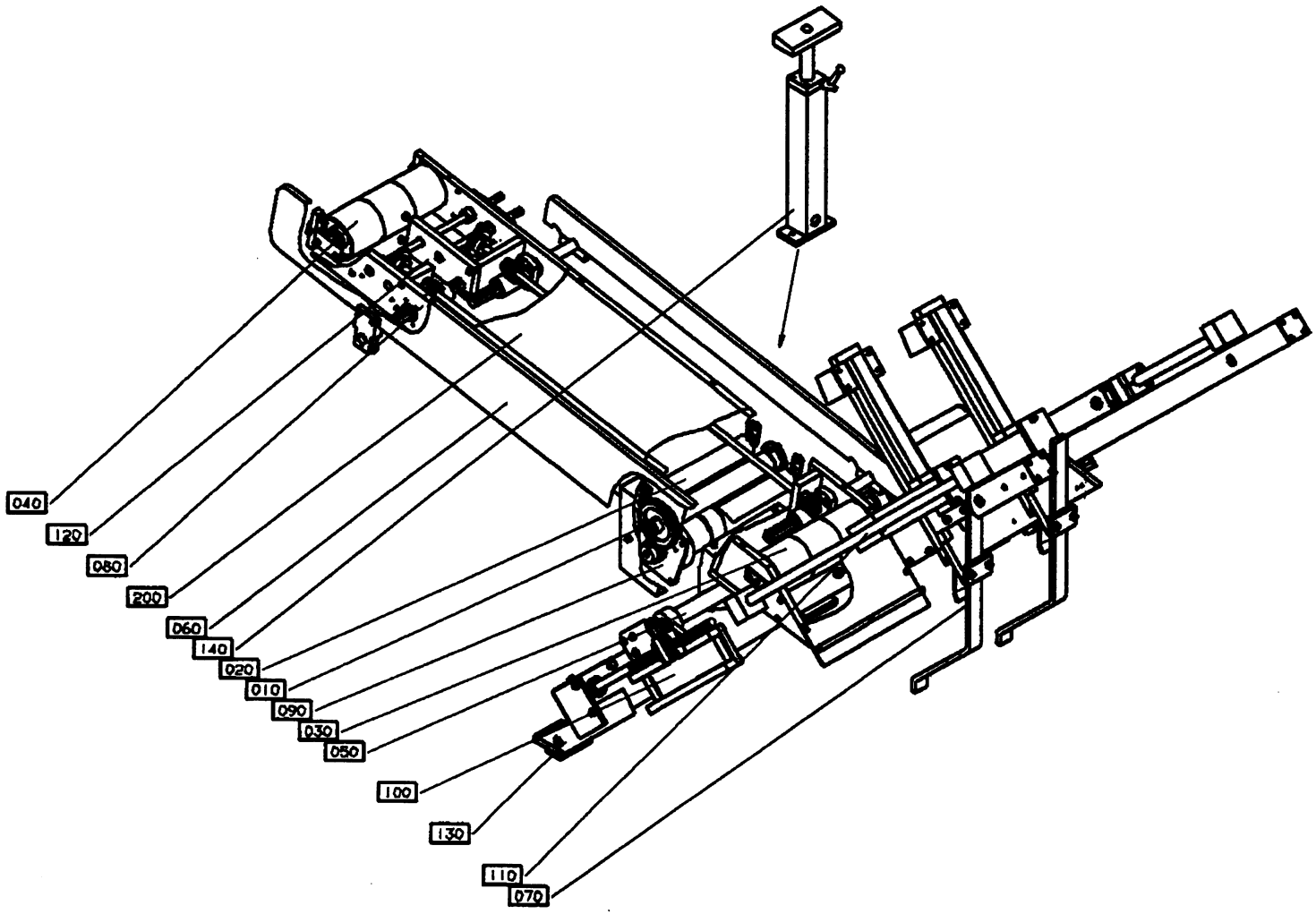

GraphicID: 67028502.tif
Parent Drw:670285-2
ECN No: 22292

Pos	Part No	SP	UN	Qty	Description	Page No
SEMI AUTOMATIC						
000	**B- 670285-0401**	-		1	**MAGAZINE**	
010	C-1021173-0101	-		1	DRIVE ROLLER	393
020	C-1021174-0101	-		2	BENDING ROLLER	395
030	C-1021175-0101	-		1	BENDING ROLLER FRONT	397
040	C-1021176-0101	-		1	BENDING ROLLER REAR	399
050	C-1021177-0101	-		1	WAY BOTTOMPART	401
060	C-1021178-0401	-		1	SIDE STEERING	405
070	C-1021179-0201	-		1	TOP STEERING	407
080	C-1021180-0101	-		1	MAGASINEFRAME	409
090	C-1021181-0201	-		1	DRIVE MOTOR	411
100	C-1021203-0201	-		1	BOTTOMFLAP ADJUSTABLE	413
110	C-1021222-0401	-		1	TOPFLAP ADJUSTABLE	415
120	C-1021243-0101	-		1	SIDESTEERING ADJUSTABLE	417
130	C-1021273-0201	-		1	FRAME	419
140	C-1128047-010V	-		1	SUPPORT	421
200	90252-0038	-		1	DRIVE BELT	

Pos	Part No	SP	UN	Qty	Description	Page No

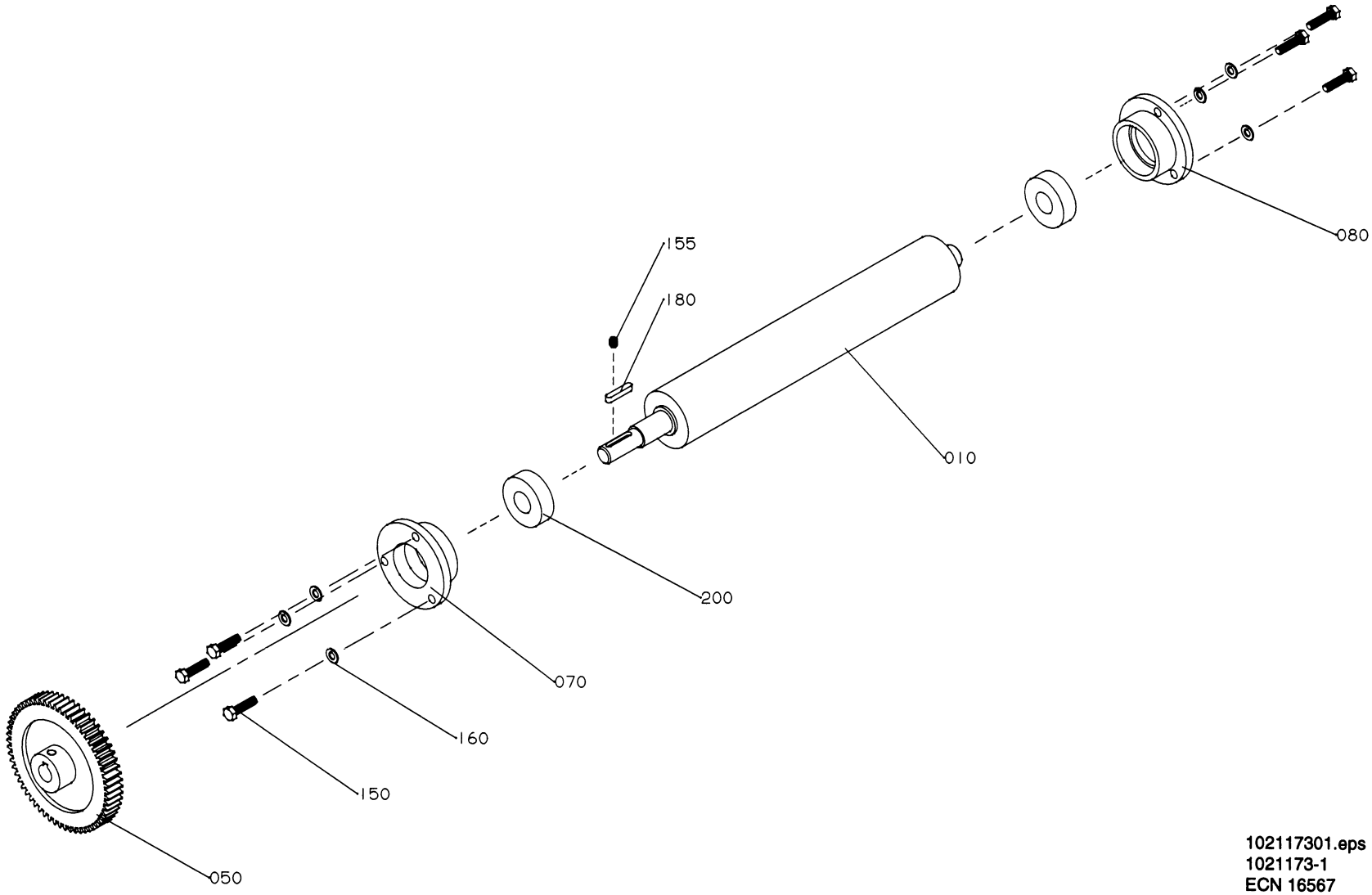

102117301.eps
1021173-1
ECN 16567

Pos	Part No	SP	UN	Qty	Description	Page No
-						
000	**C-1021173-0101**	-		**1**	**DRIVE ROLLER**	
010	1021182	-		1	SHAFT	
050	1021183	-		1	GEAR WHEEL	
070	1021184	-		1	BEARING HOUSING	
080	1021185	-		1	BEARING HOUSING	
150	312105-0331	-		6	SCREW O4017 M5X20A280	
155	312318-0360	-		1	STOP SCREW SK6SS6X6RFR	
160	315105-0146	-		6	WASHER BRB5,3X10RFR	
180	315701-0171	-		1	FLAT WEDGE4X4X22	
200	321313-0102	C		2	BALL BEARISKF6202-2RS	

Pos	Part No	SP	UN	Qty	Description	Page No

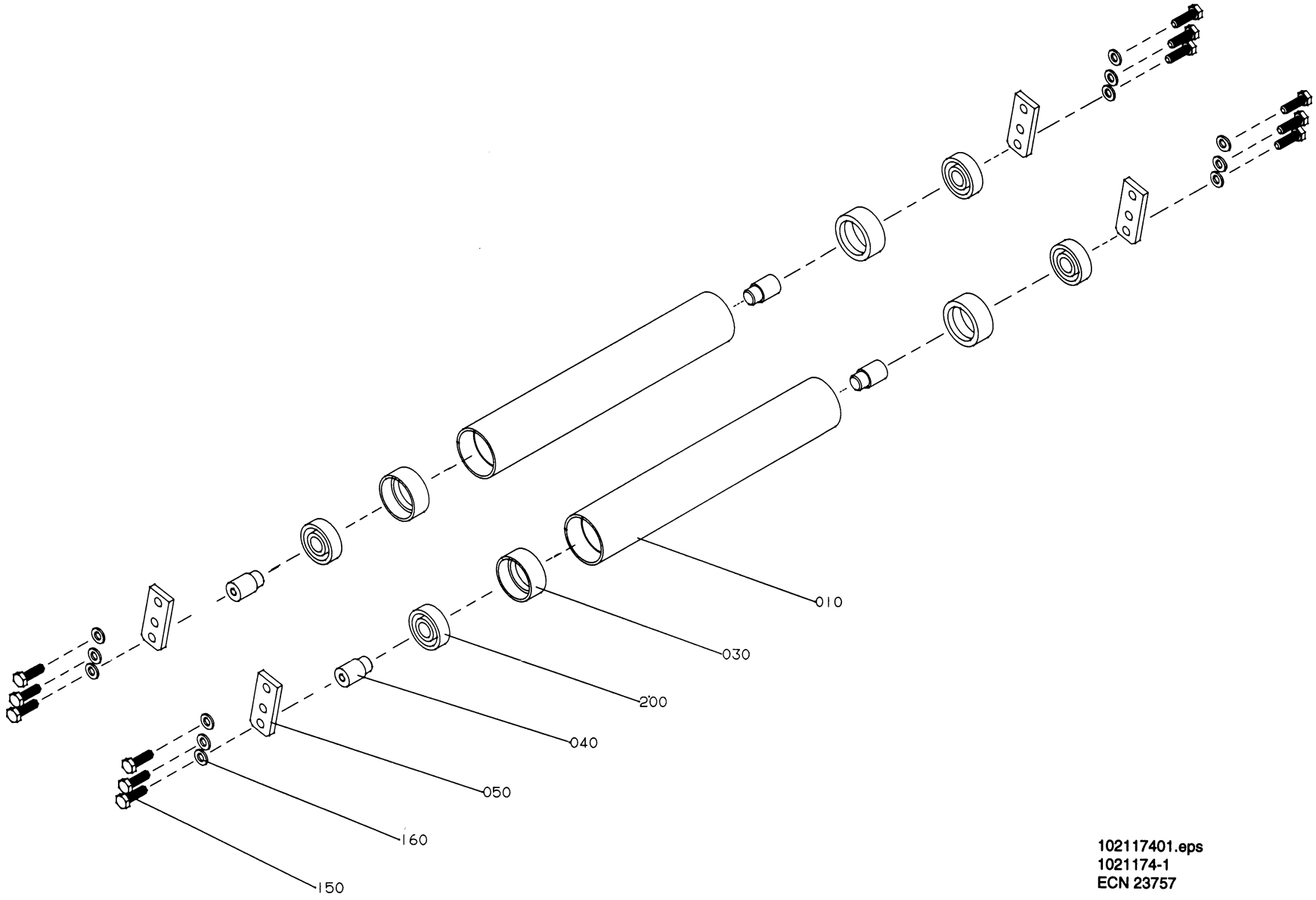

102117401.eps
1021174-1
ECN 23757

Pos	Part No	SP	UN	Qty	Description	Page No
-						
000	C-1021174-0101	-		2	BENDING ROLLER	
010	1021186	-		1	ROLL	
030	1021187	-		2	SLEEVE	
040	1021188	-		2	AXLE PIN	
050	1021189	-		2	HOLDER	
150	312105-0370	-		6	SCREW O4017 M6X20A280	
160	315105-0153	-		6	WASHER BRB6,4X12RFR	
200	321313-0101	C		2	BALL BEARISKF6201-2RS	

Pos	Part No	SP	UN	Qty	Description	Page No

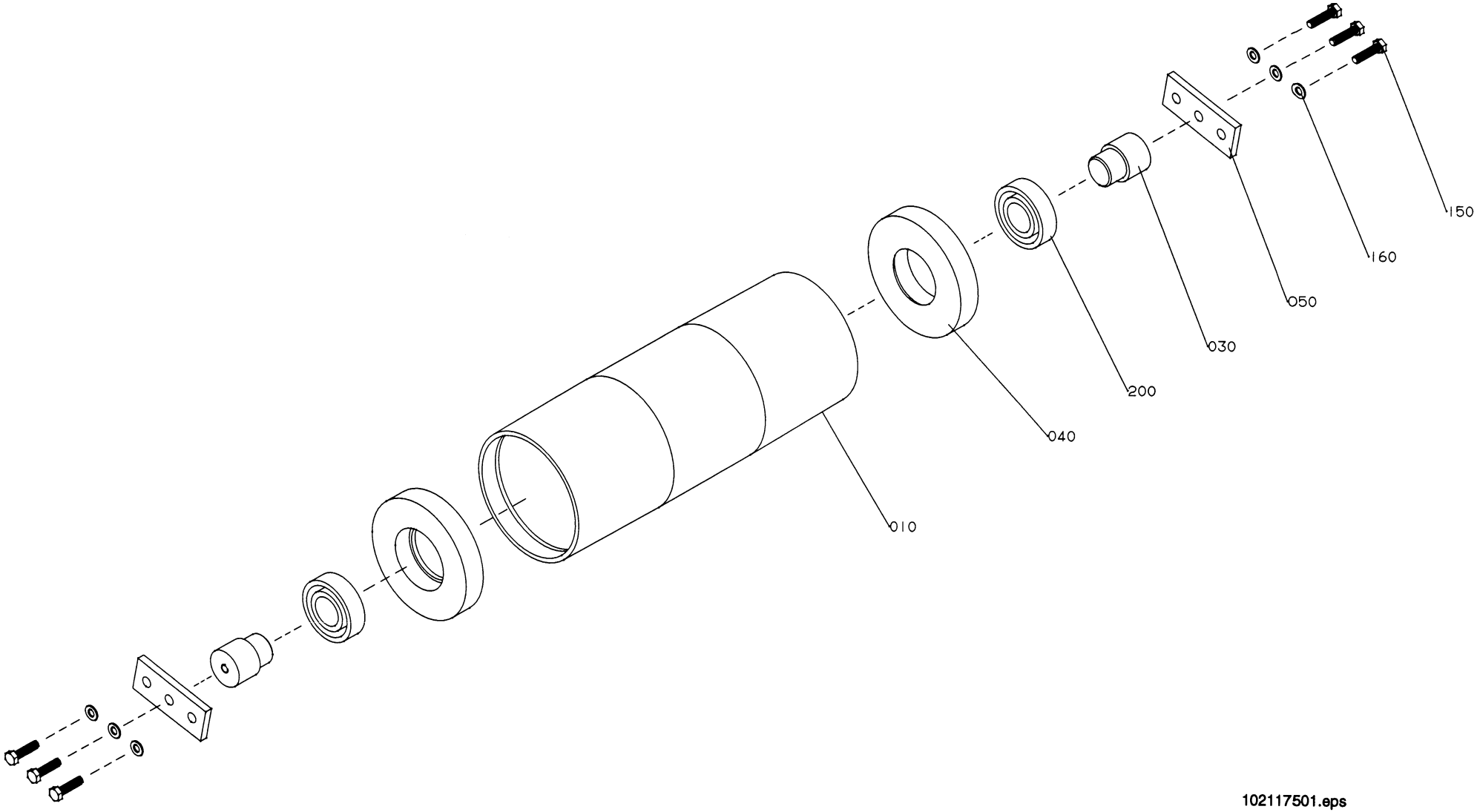

102117501.eps
1021175-1
ECN16567

Pos	Part No	SP	UN	Qty	Description	Page No
-						
000	C-1021175-0101	-		1	BENDING ROLLER FRONT	
010	1021190	-		1	ROLL	
030	1021191	-		2	SLEEVE	
040	1021192	-		2	AXLE PIN	
050	1021193	-		2	HOLDER	
150	312105-0370	-		6	SCREW O4017 M6X20A280	
160	315105-0153	-		6	WASHER BRB6,4X12RFR	
200	321308-0204	C		2	BALL BEARISKF6004-2RS	

Pos	Part No	SP	UN	Qty	Description	Page No

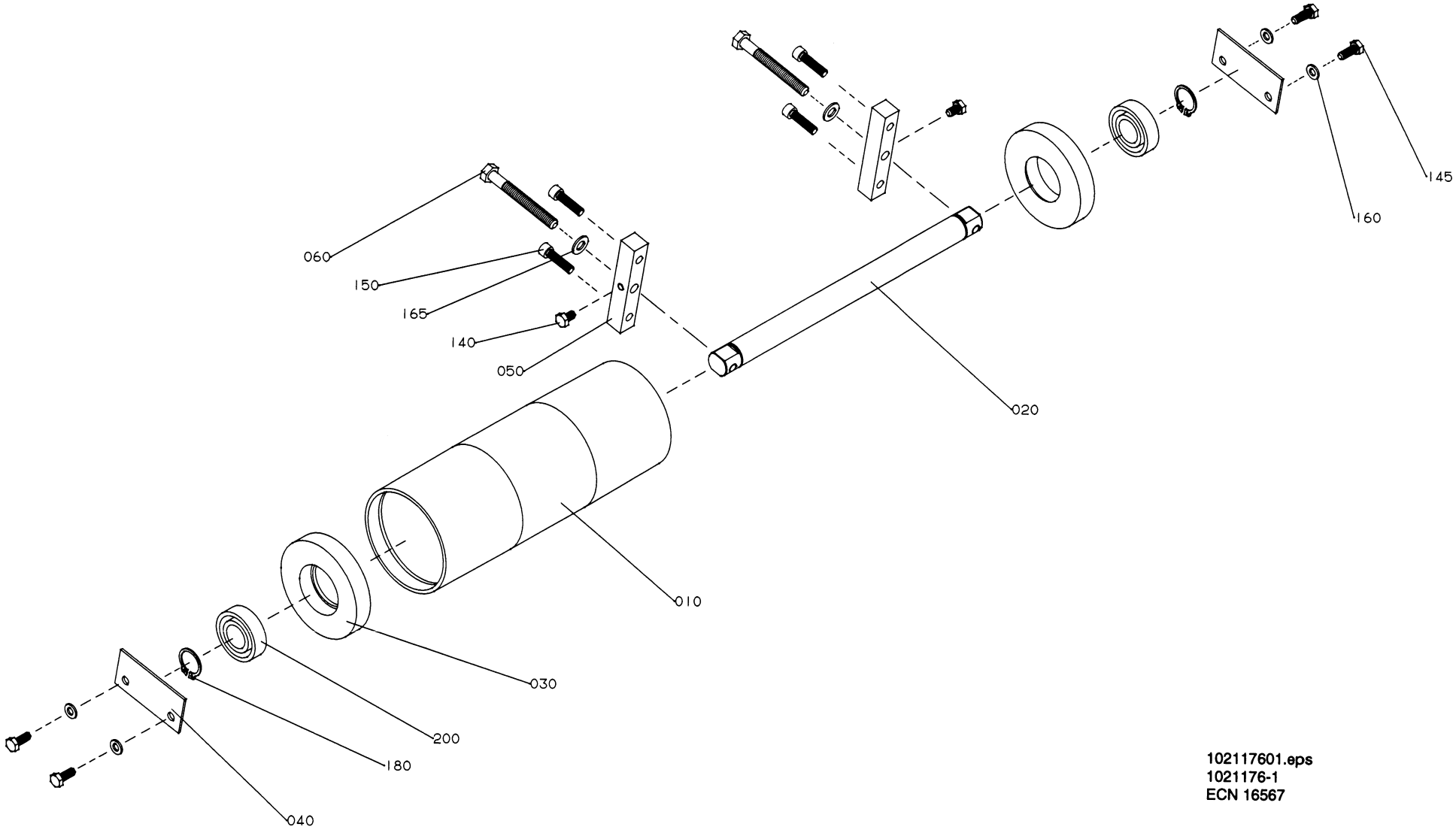

102117601.eps
1021176-1
ECN 16567

Pos	Part No	SP	UN	Qty	Description	Page No
-						
000	C-1021176-0101	-		1	**BENDING ROLLER REAR**	
010	1021190	-		1	ROLL	
020	1021194	-		1	SHAFT	
030	1021191	-		2	SLEEVE	
040	1021195	-		2	PLATE	
050	1021196	-		2	BRACKET	
060	1021197	-		2	SCREW	
140	312105-0364	-		2	SCREW M6S6X10RFR	
145	312105-0368	-		4	SCREW O4017 M6X16A280	
150	312115-0372	-		4	SCREW O4762 M6X25A280	
160	315105-0153	-		4	WASHER BRB6,4X12RFR	
165	315105-0165	-		2	WASHER BRB8,4X16RFR	
180	315751-0116	-		2	CIRCLIP SGA20 RFR	
200	321308-0204	C		2	BALL BEARISKF6004-2RS	

Pos	Part No	SP	UN	Qty	Description	Page No

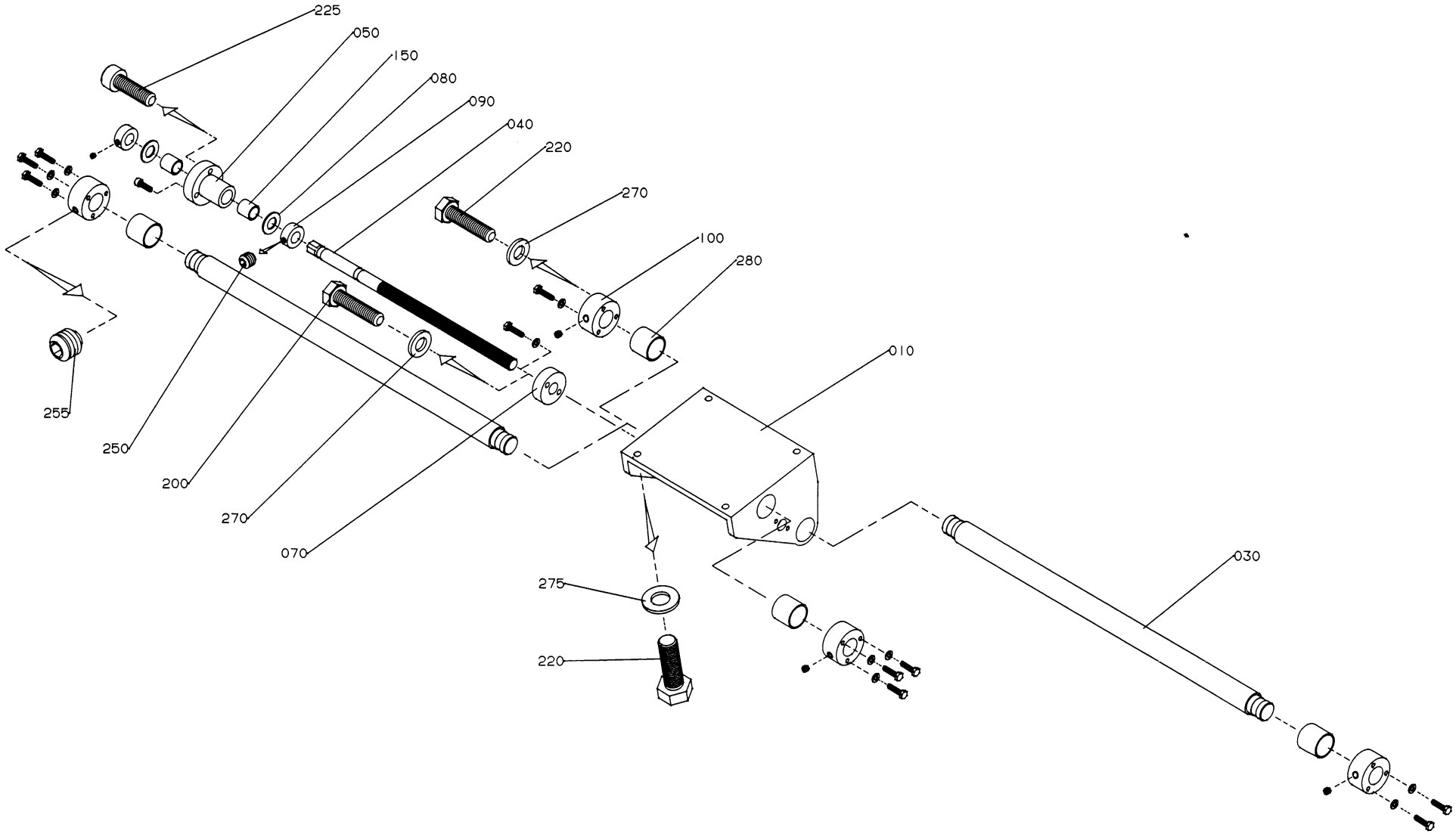

102117701.eps
1021177-1
ECN 16567

Pos	Part No	SP	UN	Qty	Description	Page No
-						
000	**C-1021177-0101**	-		1	**WAY BOTTOMPART**	
010	G-1021198	-		1	GUIDE	
030	1021199	-		2	SHAFT	
040	1021200	-		1	ADJUSTING SCREW	
050	1021201	-		1	BEARING HOUSING	
070	1021154	-		1	NUT	
080	1021155	-		2	WASHER	
090	1021156	-		2	RETAINING RING	
100	1021202	-		4	HUB	
150	90240-0205	-		2	PLAIN BEARING	
200	312105-0372	-		14	SCREW O4017 M6X25A280	
220	312105-0453	-		4	SCREW O4017 M8X25A280	
225	312115-0370	-		3	SCREW O4762 M6X20A280	
250	312318-0360	-		4	STOP SCREW SK6SS6X6RFR	
255	312318-0443	-		4	STOP SCREW SK6SS8X8RFR	
270	315105-0153	-		14	WASHER BRB6,4X12RFR	
275	315105-0165	-		4	WASHER BRB8,4X16RFR	
280	321120-0171	-		4	BUSHING 30/34X30	

Pos	Part No	SP	UN	Qty	Description	Page No

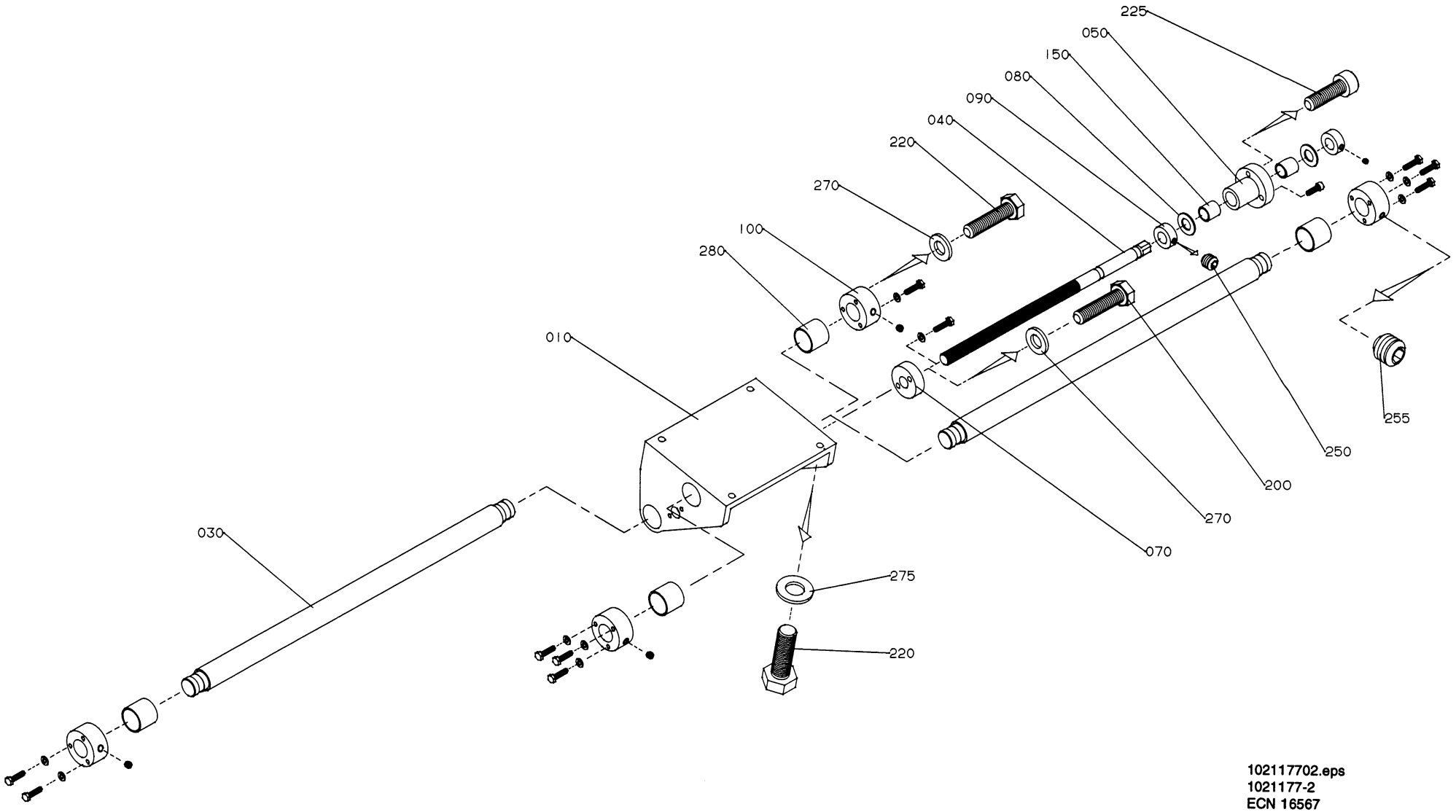

102117702.eps
1021177-2
ECN 16567

Pos	Part No	SP	UN	Qty	Description	Page No
-						
000	C-1021177-0101	-		1	**WAY BOTTOM PART**	
010	G-1021198	-		1	GUIDE	
030	1021199	-		2	SHAFT	
040	1021200	-		1	ADJUSTING SCREW	
050	1021201	-		1	BEARING HOUSING	
070	1021154	-		1	NUT	
080	1021155	-		2	WASHER	
090	1021156	-		2	RETAINING RING	
100	1021202	-		4	HUB	
150	90240-0205	-		2	PLAIN BEARING	
200	312105-0372	-		14	SCREW O4017 M6X25A280	
220	312105-0453	-		4	SCREW O4017 M8X25A280	
225	312115-0370	-		3	SCREW O4762 M6X20A280	
250	312318-0360	-		4	STOP SCREW SK6SS6X6RFR	
255	312318-0443	-		4	STOP SCREW SK6SS8X8RFR	
270	315105-0153	-		14	WASHER BRB6,4X12RFR	
275	315105-0165	-		4	WASHER BRB8,4X16RFR	
280	321120-0171	-		4	BUSHING 30/34X30	

Pos	Part No	SP	UN	Qty	Description	Page No

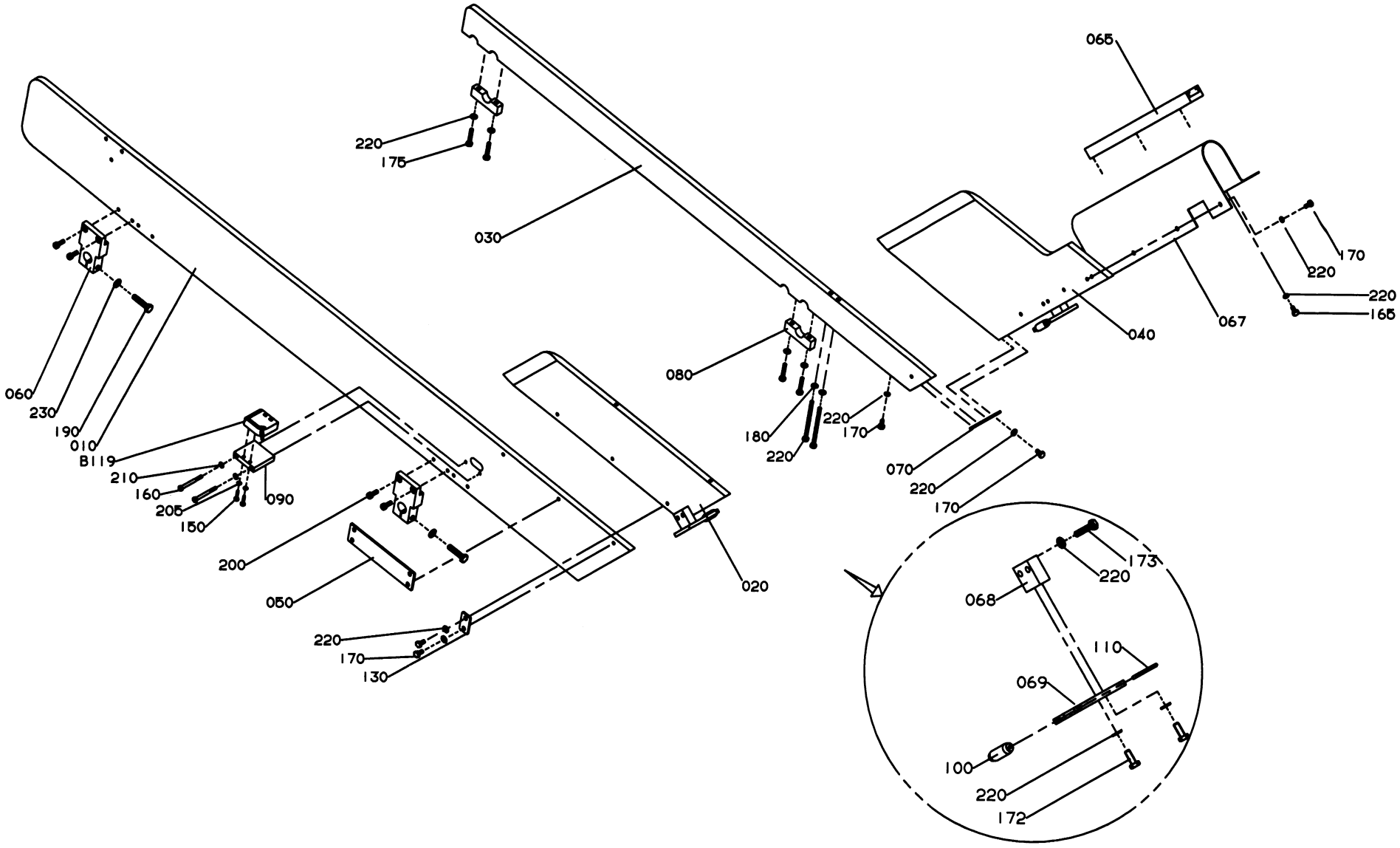

GraphicID: 102117807.eps
Parent Drw: 1021178-7
ECN 22668

Pos	Part No	SP	UN	Qty	Description	Page No
-						
000	C-1021178-0401	-		1	**SIDE STEERING**	
010	1139102	-		1	SIDE PLATE	
020	1128048	-		1	STEERING	
030	1128888	-		1	SIDE PLATE	
040	1128889	-		1	STEERING	
050	1128883	-		1	BRACKET	
060	1021242	-		2	CLAMPING PIECE	
065	1021950	-		1	SLIDE RAIL	
067	1128882	-		1	PROTECTION	
068	1128885	-		2	HOLDER	
069	1074314	-		2	HOLDER	
070	1021892	-		1	MOUNTING SHEET	
080	1021893	-		2	HOLDER	
090	1139103	-		1	PHOTOCELL BRACKET	
100	1074315	-		2	ROLL	
110	1074316	-		2	SHAFT	
130	1128884	-		1	BRACKET	
150	312105-0293	-		2	SCREW O4017 M4X16A280	
160	312105-0343	-		2	SCREW M6S5X60 A2 80	
165	312105-0364	-		3	SCREW M6S6X10RFR	
170	312105-0366	-		14	SCREW O4017 M6X12A280	
172	312105-0368	-		4	SCREW O4017 M6X16A280	
173	312105-0372	-		4	SCREW O4017 M6X25A280	
175	312105-0374	-		4	SCREW O4017 M6X30A280	
180	312105-0386	-		2	SCREW O4014 M6X80A280	
190	312105-0457	-		2	SCREW O4017 M8X35A280	
200	312115-0368	-		4	SCREW O4762 M6X16A280	
205	315105-0136	-		2	WASHER BRB4,3X8RFR	
210	315105-0146	-		2	WASHER BRB5,3X10RFR	
220	315105-0153	-		31	WASHER BRB6,4X12RFR	
230	315105-0165	-		2	WASHER BRB8,4X16RFR	
B119	90232-0110	S		1	PH.CELL OMRON E3S-CL1-5M	

Pos	Part No	SP	UN	Qty	Description	Page No

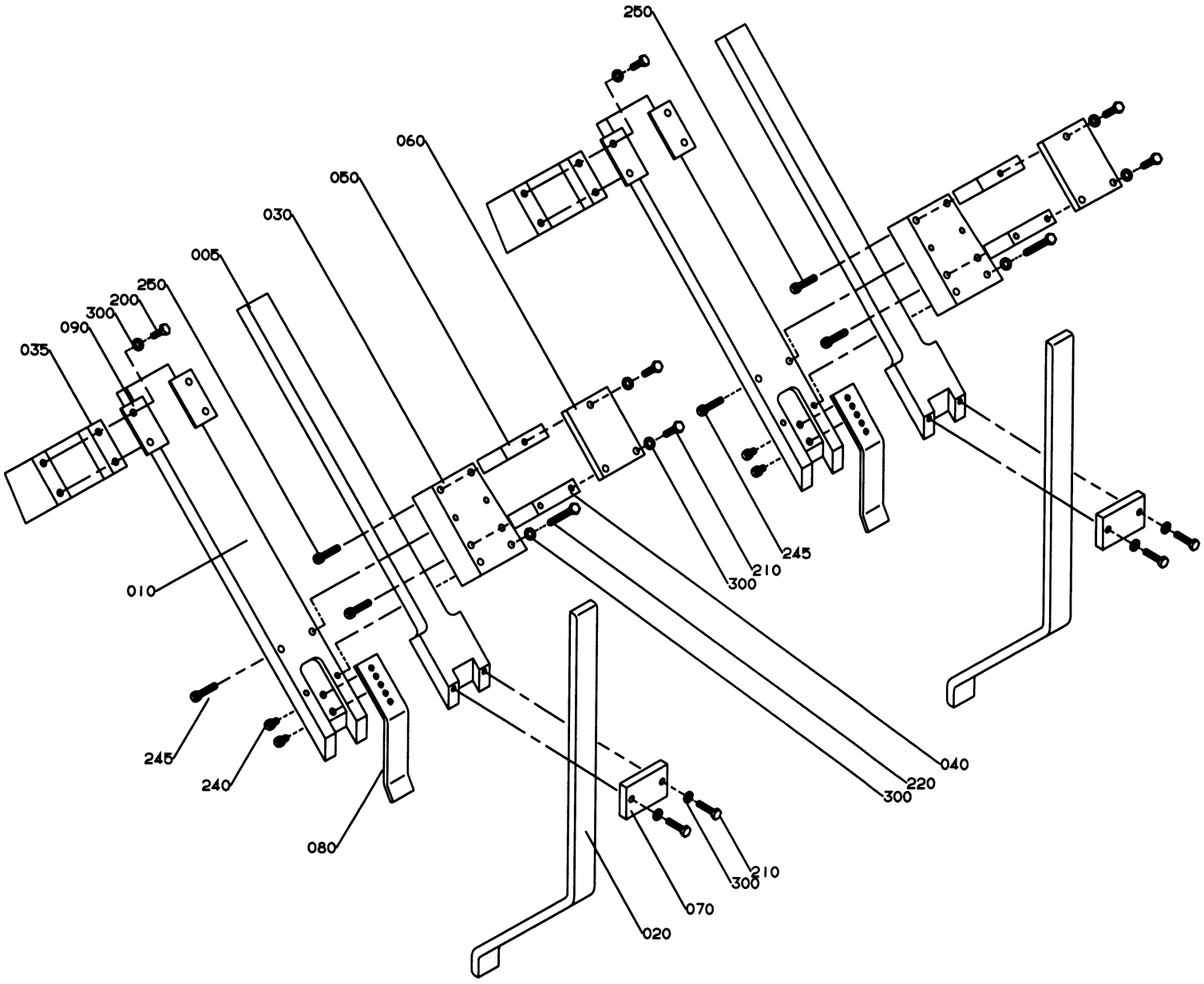

GraphicID: 102117903.eps
Parent Drw: 1021179-3
ECN 22668

Pos	Part No	SP	UN	Qty	Description	Page No
-						
000	C-1021179-0201	-		1	TOP STEERING	
005	1021992	-		2	RAIL	
010	1128029	-		2	RAIL	
020	1065902	-		2	FOLDING BAR	
030	1021994	-		2	PLATE	
035	1128030	-		2	LUG	
040	1021233	-		2	SPACER	
050	1021234	-		2	SPACER	
060	1021235	-		2	PLATE	
070	1021236	-		2	LOCK PLATE	
080	1021995	-		2	STEERING RAIL	
090	1128049	-		4	LOCK SHEET	
200	312105-0368	-		8	SCREW O4017 M6X16A280	
210	312105-0372	-		10	SCREW O4017 M6X25A280	
220	312105-0381	-		4	SCREW O4014 M6X55A280	
240	312115-0366	-		4	SCREW O4762 M6X12A280	
245	312115-0374	-		4	SCREW O4762 M6X30A280	
250	312115-0379	-		8	SCREW O4762 M6X45A280	
300	315105-0153	-		18	WASHER BRB6,4X12RFR	

Pos	Part No	SP	UN	Qty	Description	Page No

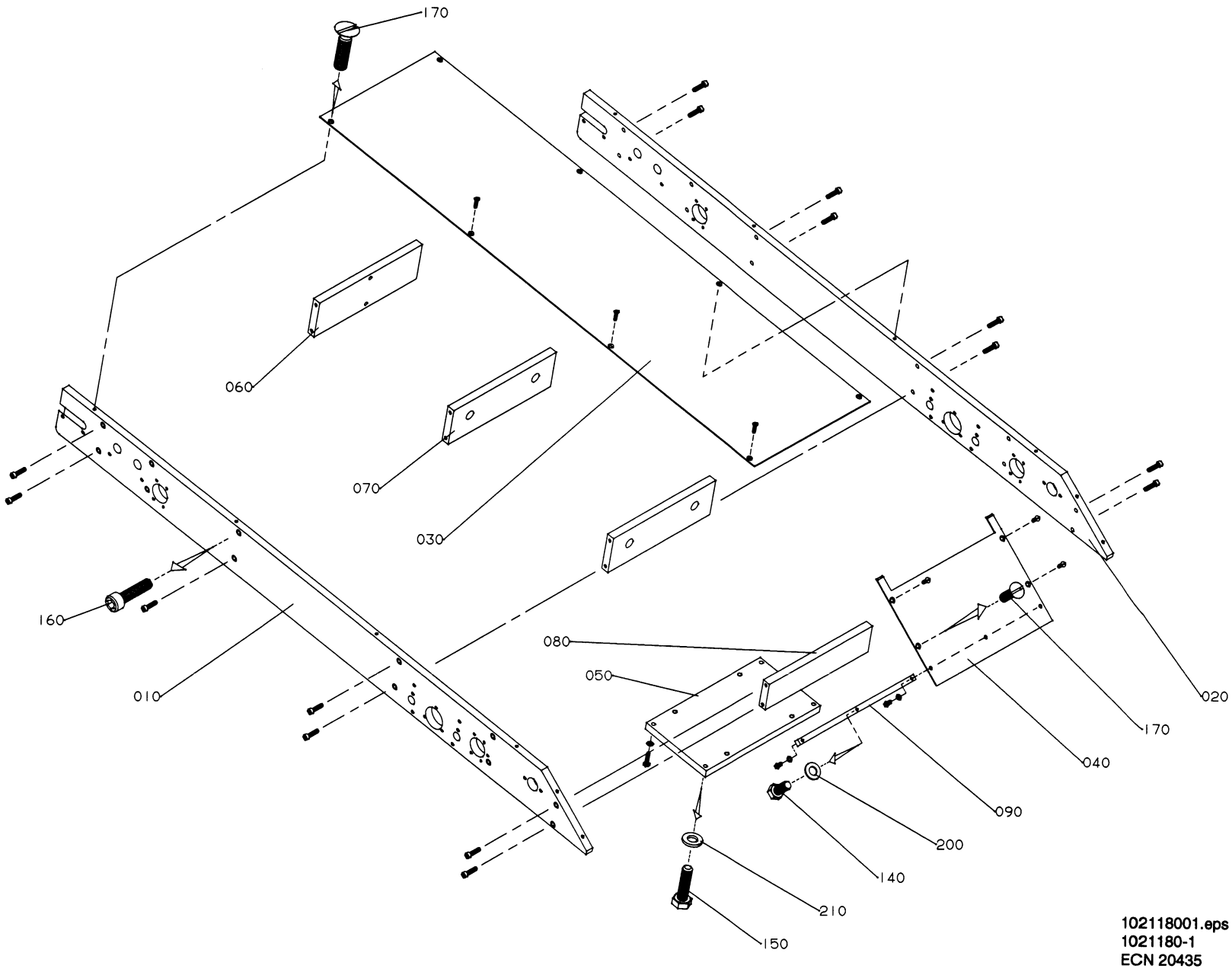

102118001.eps
1021180-1
ECN 20435

Pos	Part No	SP	UN	Qty	Description	Page No
-						
000	C-1021180-0101	-		1	**MAGAZINE FRAME**	
010	1021264	-		1	SIDE PLATE	
020	1021265	-		1	SIDE PLATE	
030	1021338	-		1	COVERING PLATE	
040	1021339	-		1	COVERING PLATE	
050	1021266	-		1	PLATE	
060	1021259	-		1	PLATE	
070	1021267	-		2	PLATE	
080	1021268	-		1	PLATE	
090	1021506	-		1	SUPPORT	
140	312105-0327	-		3	SCREW O4017 M5X12A280	
150	312105-0374	-		4	SCREW O4017 M6X30A280	
160	312115-0372	-		16	SCREW O4762 M6X25A280	
170	312155-0325	-		12	SCREW MF6S5X10RFR	
200	315105-0146	-		3	WASHER BRB5,3X10RFR	
210	315105-0153	-		4	WASHER BRB6,4X12RFR	

Pos	Part No	SP	UN	Qty	Description	Page No

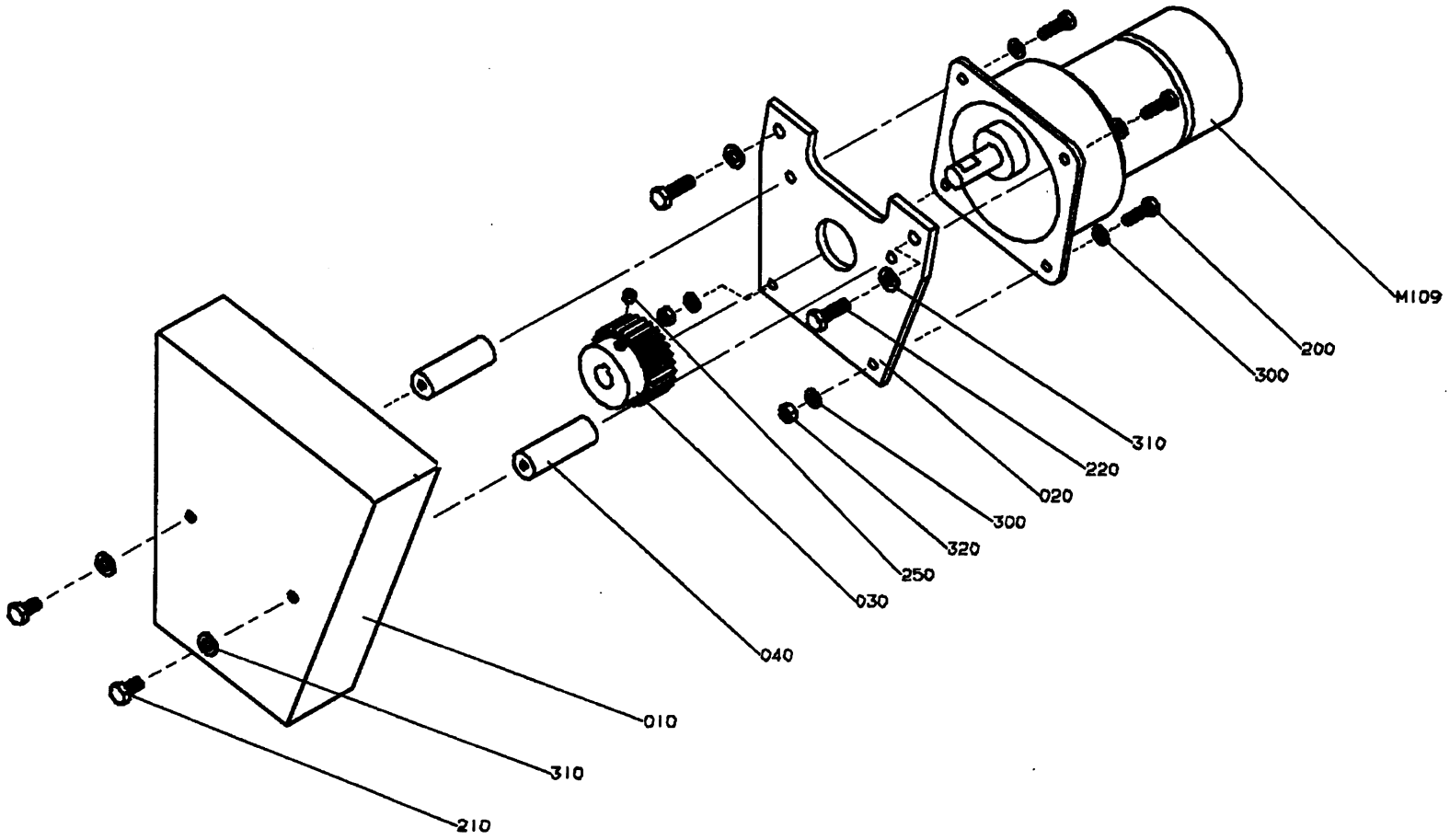

GraphicID: 102118102.tif
Parent Drw: 1021181-2
ECN No: 22292

Pos	Part No	SP	UN	Qty	Description	Page No
-						
000	**C-1021181-0201**	-		1	**DRIVE MOTOR**	
010	1021269	-		1	COVER	
020	1021270	-		1	HOLDER	
030	1021271	-		1	GEAR WHEEL	
040	1021272	-		2	SPACER	
200	312105-0329	-		4	SCREW O4017 M5X16A280	
210	312105-0366	-		2	SCREW O4017 M6X12A280	
220	312105-0370	-		2	SCREW O4017 M6X20A280	
250	312318-0360	-		1	STOP SCREW SK6SS6X6RFR	
300	315105-0146	-		6	WASHER BRB5,3X10RFR	
310	315105-0153	-		4	WASHER BRB6,4X12RFR	
320	312605-0314	-		2	NUT M6M5RFR	
M109	90069-0222	C		1	GEARED MOTOR	

Pos	Part No	SP	UN	Qty	Description	Page No

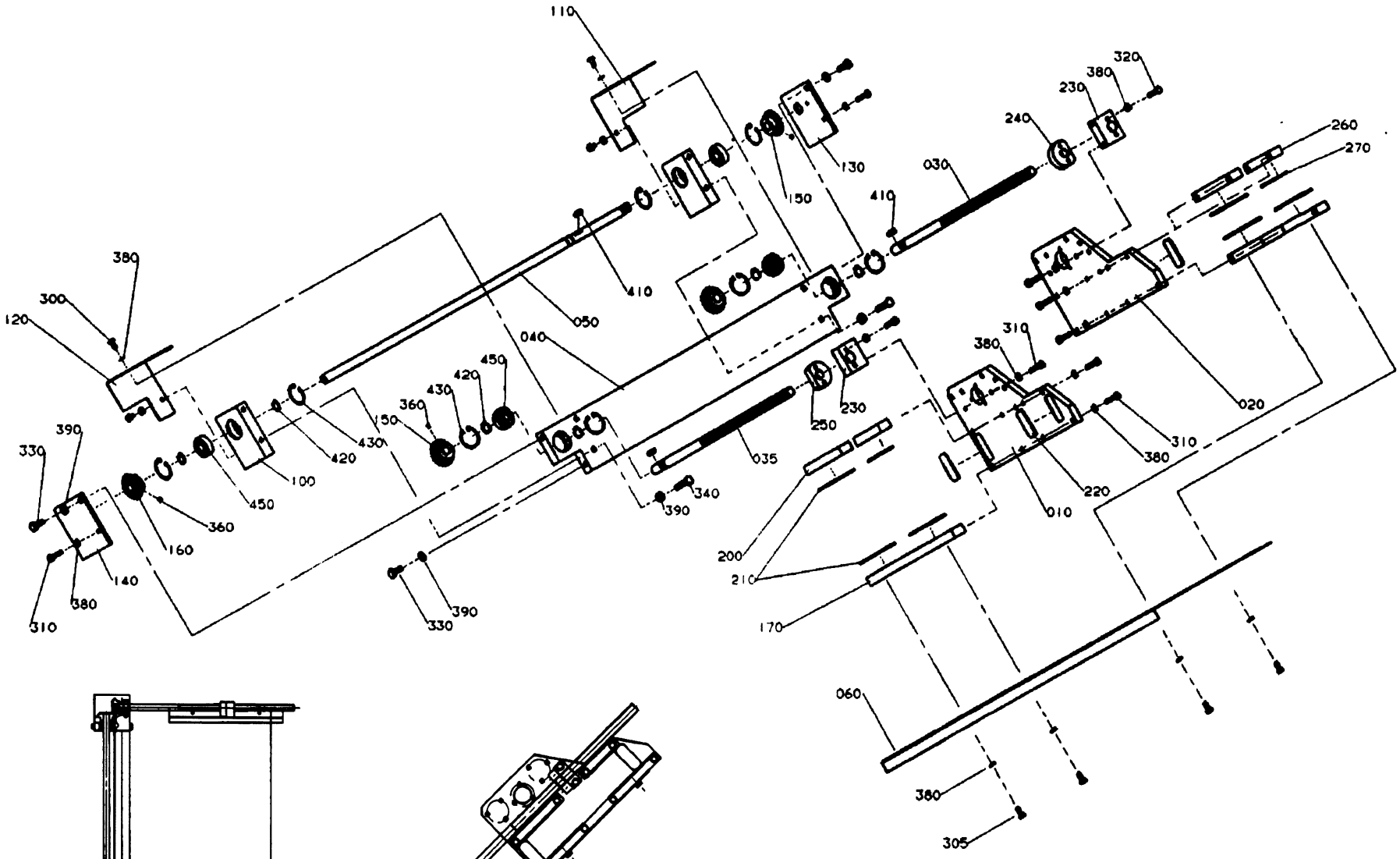

MOUNTING INFEED RIGHT IS SHOWN ON THE DRAWING
INFEED LEFT MIRROR REVERSED.

Pos	Part No	SP	UN	Qty	Description	Page No
-						
000	C-1021203-0201	-		1	**BOTTOM FLAP ADJUSTABLE**	
010	1065368	-		1	END SECTION	
020	1065369	-		1	END SECTION	
030	1021212	-		1	ADJUSTING SCREW	
035	1021508	-		1	ADJUSTING SCREW	
040	1021213	-		1	PLATE	
050	1021215	-		1	SHAFT	
060	1021953	-		1	PROTECTION PLATE	
100	1021214	-		2	BEARING HOUSING	
110	1021216	-		1	COVER	
120	1021217	-		1	COVER	
130	1021218	-		1	SUPPORT	
140	1021219	-		1	SUPPORT	
150	1021220	-		3	GEAR WHEEL	
160	1021221	-		1	GEAR WHEEL	
170	1021949	-		2	RAIL	
200	1021207	-		2	RAIL	
210	1021208	-		6	SLIDING STRIP	
220	1021209	-		4	SLIDING STRIP	
230	1021210	-		2	HOLDER	
240	1021211	-		1	NUT	
250	1021507	-		1	NUT	
260	1065370	-		2	RAIL	
270	1065371	-		2	SLIDING STRIP	
300	312105-0366	-		4	SCREW O4017 M6X12A280	
305	312105-0367	-		4	SCREW M6S6X14RFR	
310	312105-0372	-		22	SCREW O4017 M6X25A280	
320	312105-0374	-		4	SCREW O4017 M6X30A280	
330	312105-0451	-		4	SCREW SO4017 8X20A280	
340	312105-0457	-		4	SCREW O4017 M8X35A280	
360	312318-0360	-		5	STOP SCREW SK6SS6X6RFR	
380	315105-0153	-		34	WASHER BRB6,4X12RFR	
390	315105-0165	-		8	WASHER BRB8,4X16RFR	
410	315701-0200	-		3	FLAT WEDGE5X5X18	
420	315751-0112	-		6	CIRCLIP SGA15 RFR	
430	315753-0124	-		8	CIRCLIP GH 35 RFR	
450	321313-0102	-		4	BALL BEARISKF6202-2RS	

Pos	Part No	SP	UN	Qty	Description	Page No

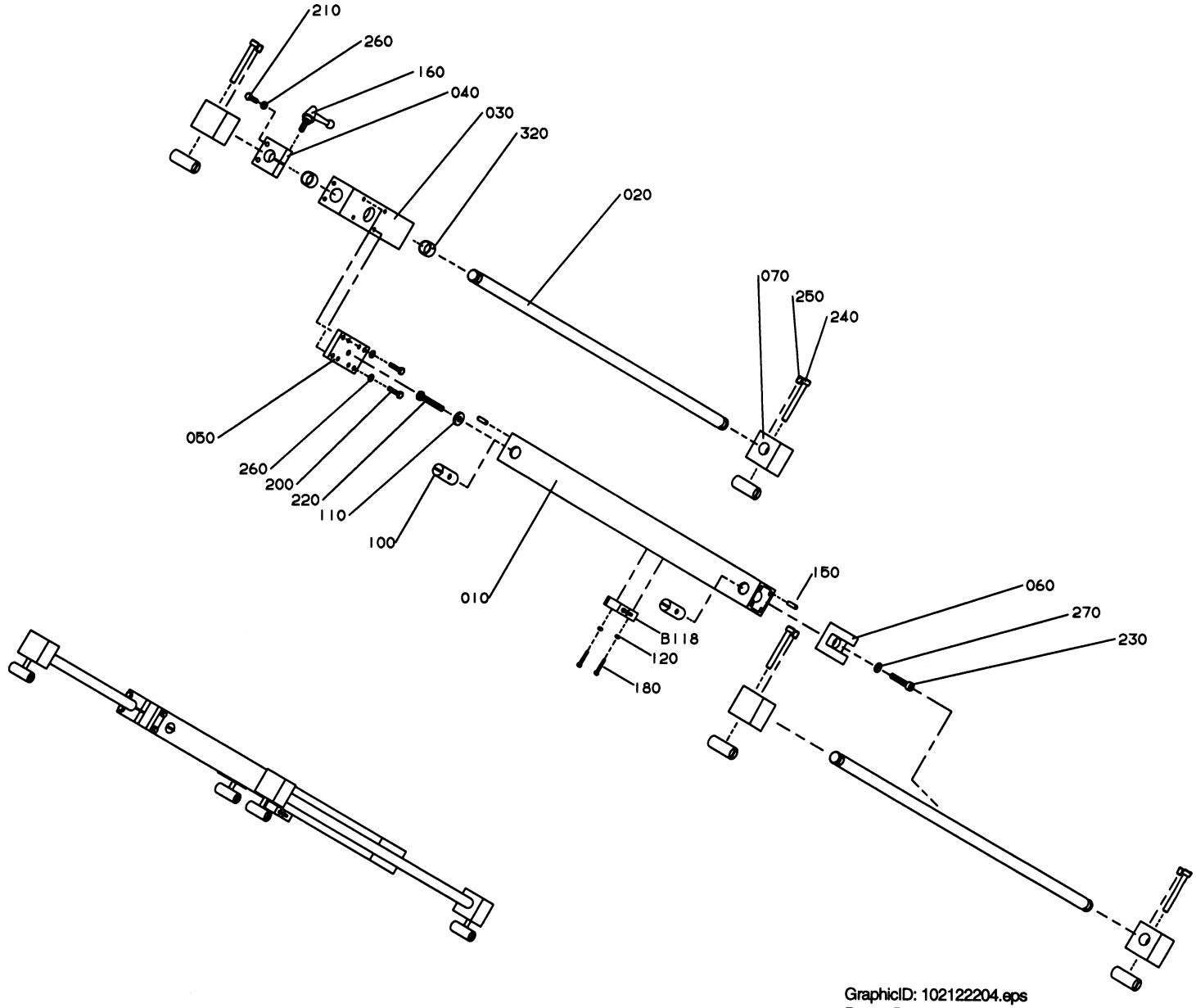

GraphicID: 102122204.eps
Parent Drw: 1021222-4
ECN 22668

Pos	Part No	SP	UN	Qty	Description	Page No
-						
000	**C-1021222-0401**	-		1	**TOP FLAP ADJUSTABLE**	
010	1139104	-		1	PROFILE	
020	1111866	-		2	PILLAR	
030	1021225	-		1	BEARING HOUSING	
040	1021226	-		1	CLAMPING PIECE	
050	1021227	-		1	FASTENING PLATE	
060	1021228	-		1	STEERING	
070	1021229	-		4	BRACKET	
100	486268	-		6	NUT	
110	548599	-		1	WASHER	
120	315105-0124	-		2	WASHER BRB3,2X6RFR	
150	1065410	-		8	PIN	
160	90117-0026	-		1	LOCKING LEVER	
180	312125-0230	-		2	SLOTTED HEMCS3X20RFR	
200	312105-0372	-		4	SCREW O4017 M6X25A280	
210	312105-0374	-		2	SCREW O4017 M6X30A280	
220	312105-0461	-		1	SCREW O4017 M8X50A280	
230	312115-0459	-		1	SCREW O4762 M8X40A280	
240	312115-0465	-		4	SCREW O4762 M8X70A280	
250	312318-0447	-		4	STOP SCREW SK6SS8X12RFR	
260	315105-0153	-		6	WASHER BRB6,4X12RFR	
270	315105-0165	-		1	WASHER BRB8,4X16RFR	
320	321120-0137	-		2	BUSHING 20/23X15	
B118	90232-0110	-		1	PH.CELL OMRON E3S-CL1-5M	

Pos	Part No	SP	UN	Qty	Description	Page No

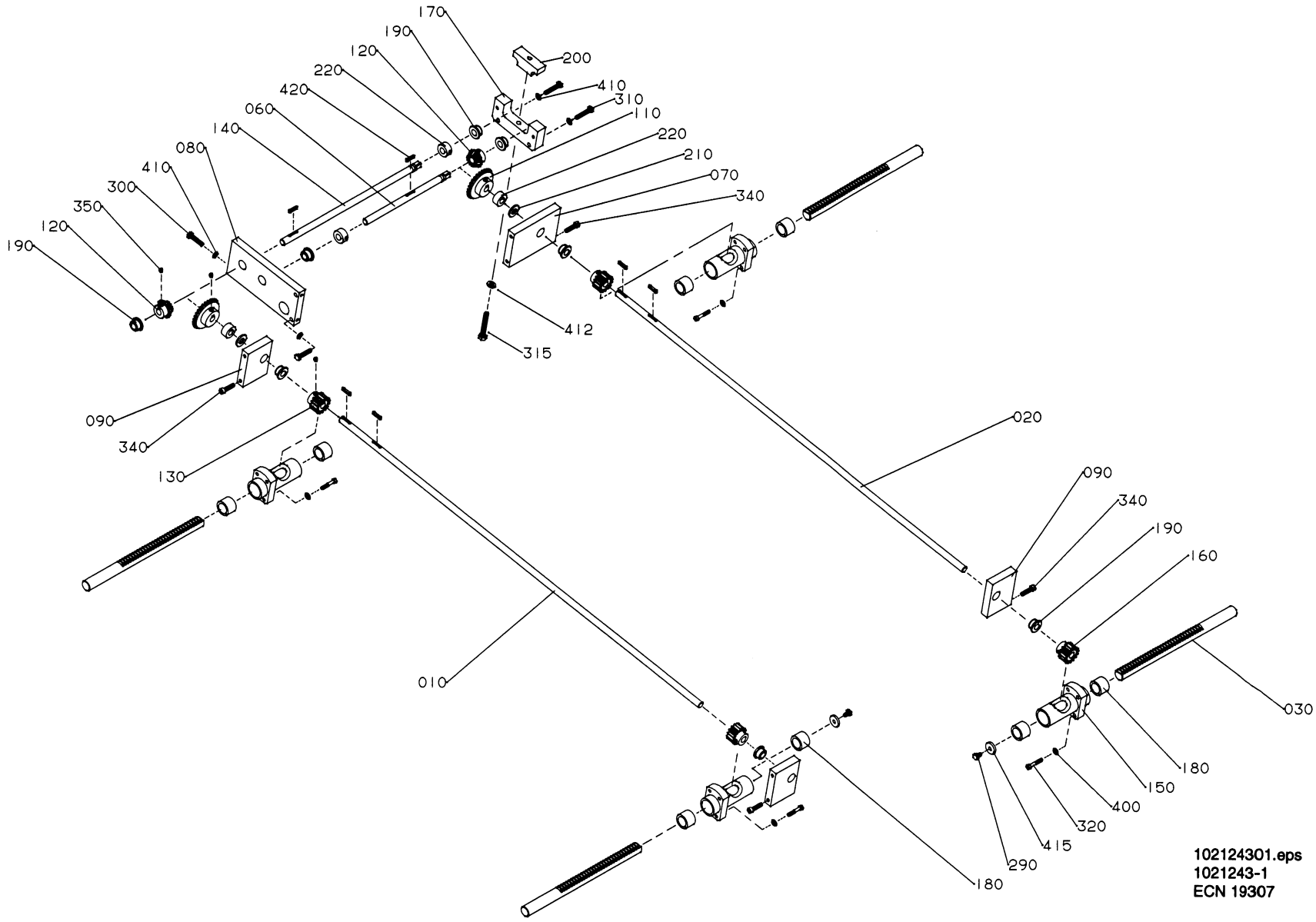
170
190
120
220
420
060
140
080
410
300
350
120
190
200
410
310
110
220
210
070
340
412
315
090
340
130
010
020
090
340
190
160
030
180
150
400
320
415
290
180
102124301.eps
1021243-1
ECN 19307

Pos	Part No	SP	UN	Qty	Description	Page No
000	C-1021243-0101	-		1	**SIDE STEERING ADJUSTABLE**	
010	1021244	-		1	SHAFT	
020	1021245	-		1	SHAFT	
030	1021246	-		4	PILLAR	
060	1021249	-		1	SHAFT	
070	1021250	-		1	BEARING HOLDER	
080	1021251	-		1	BEARING HOLDER	
090	1021252	-		3	BEARING HOLDER	
110	1021253	-		2	CONICAL GEAR	
120	1021254	-		2	CONICAL GEAR	
130	1021255	-		2	GEAR WHEEL	
140	1021256	-		1	SHAFT	
150	1021257	-		4	BEARING HOUSING	
160	1021258	-		2	GEAR WHEEL	
170	1021260	-		1	HOLDER	
180	230462	-		8	BUSHING	
190	493768	-		8	BUSHING	
200	1021261	-		1	CLAMPING PIECE	
210	1021262	-		2	WASHER	
220	1021263	-		4	RETAINING RING	
290	312105-0364	-		2	SCREW M6S6X10RFR	
300	312105-0374	-		4	SCREW O4017 M6X30A280	
310	312105-0376	-		2	SCREW O4017 M6X35A280	
315	312105-0460	-		1	SCREW O4017 M8X45A280	
320	312115-0335	-		16	SCREW O4762 M5X30A280	
340	312115-0372	-		8	SCREW O4762 M6X25A280	
350	312318-0360	-		18	STOP SCREW SK6SS6X6RFR	
400	315105-0146	-		16	WASHER BRB5,3X10RFR	
410	315105-0153	-		6	WASHER BRB6,4X12RFR	
412	315105-0165	-		1	WASHER BRB8,4X16RFR	
415	315125-0153	-		2	WASHER SB 6,4X22X4 RFR	
420	315701-0170	-		6	FLAT WEDGE4X4X20	

Pos	Part No	SP	UN	Qty	Description	Page No

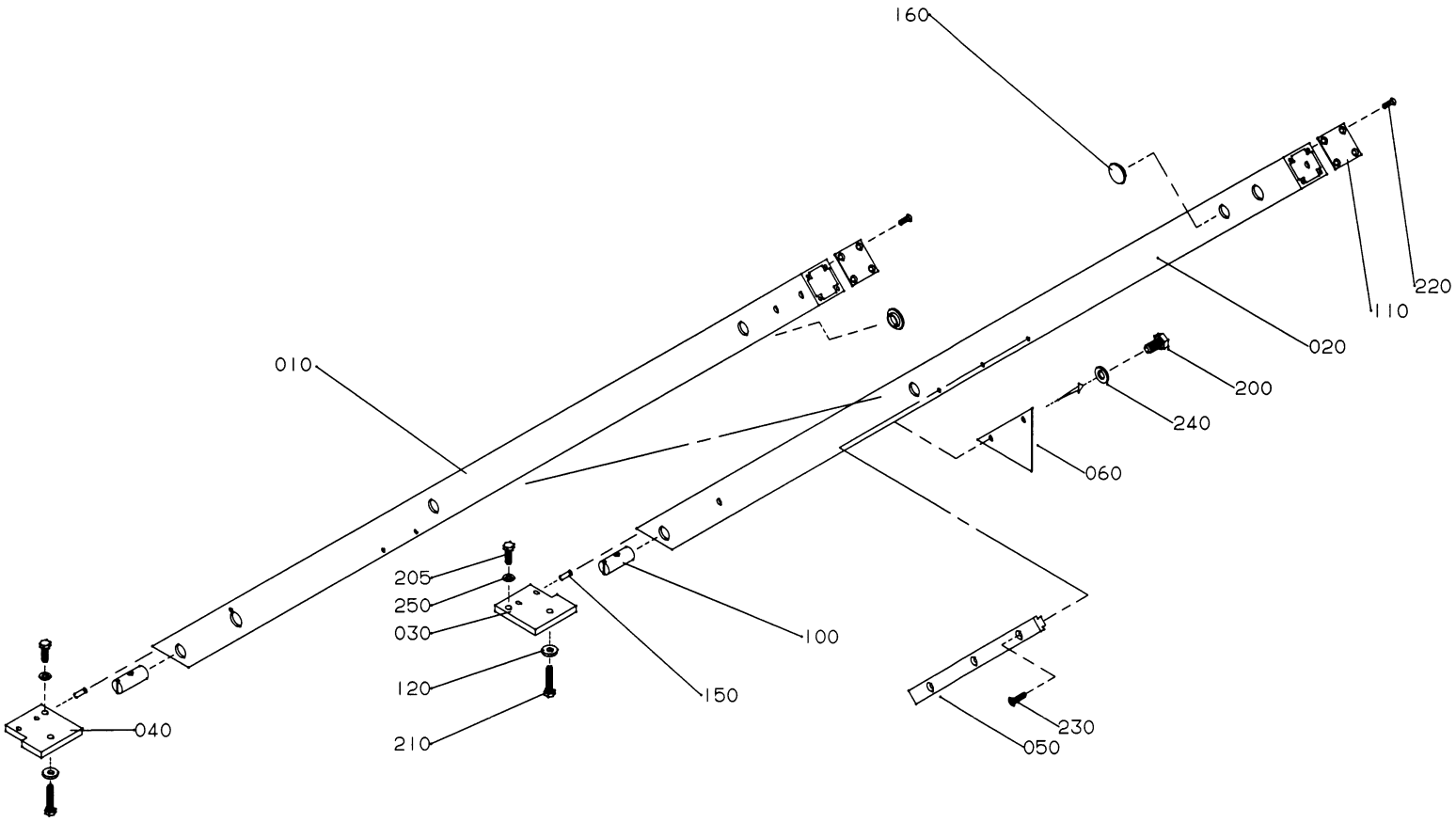

102127301.eps
1021273-1
ECN 16567

Pos	Part No	SP	UN	Qty	Description	Page No
-						
000	C-1021273-0201	-		1	**FRAME**	
010	1111864	-		1	PROFILE	
020	1111865	-		1	PROFILE	
030	1021276	-		1	PLATE	
040	1021277	-		1	PLATE	
050	1021951	-		1	SLIDER	
060	1021955	-		1	PROTECTION	
100	486268	-		2	NUT	
110	556604	-		2	COVER PLATE	
120	548599	-		4	WASHER	
150	1065410	-		4	PIN	
160	90261-0060	-		2	PLASTIC PLUG	
200	312105-0366	-		2	SCREW O4017 M6X12A280	
205	312105-0453	-		2	SCREW O4017 M8X25A280	
210	312105-0459	-		2	SCREW O4017 M8X40A280	
220	312145-0325	-		8	SLOTTED HEMFS5X10RFR	
230	312155-0372	-		3	SCREW MF6S6X25RFR	
240	315105-0153	-		2	WASHER BRB6,4X12RFR	
250	315105-0165	-		2	WASHER BRB8,4X16RFR	

Pos	Part No	SP	UN	Qty	Description	Page No

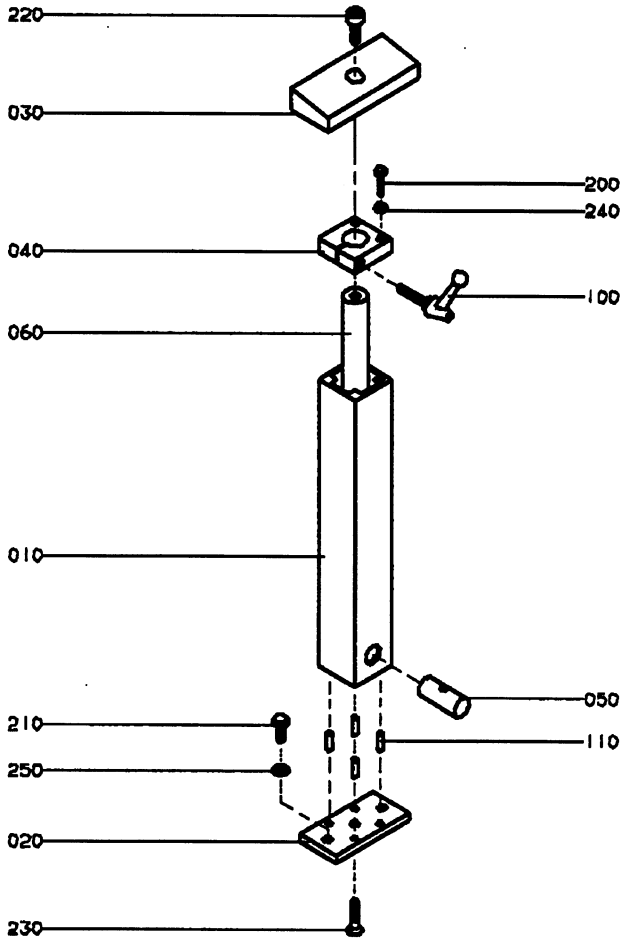

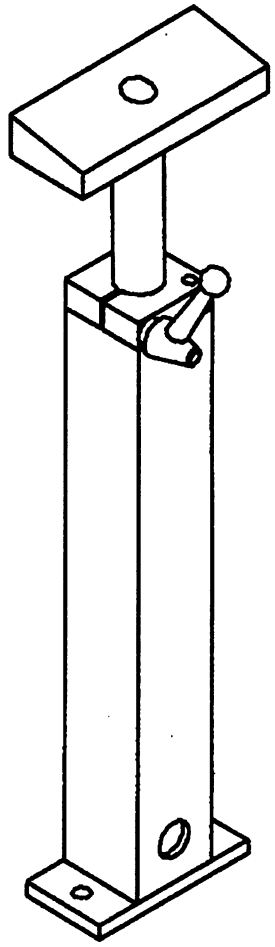

GraphicID: 112804701.tif
Parent Drw: 1128047-1
ECN No: 22292

Pos	Part No	SP	UN	Qty	Description	Page No
-						
000	C-1128047-010V	-		1	**SUPPORT**	
010	1128879	-		1	PROFILE	
020	556624	-		1	FRAME BRACKET	
030	1128881	-		1	SUPPORT PLATE	
040	1128880	-		1	CLAMPING PIECE	
050	486268	-		1	NUT	
060	1128886	-		1	SHAFT	
100	90117-0026	-		1	LOCKING LEVER	
110	1065410	-		4	PIN	
200	312105-0372	-		2	SCREW O4017 M6X25A280	
210	312105-0451	-		2	SCREW SO4017 8X20A280	
220	312115-0491	-		1	SCREW 4762 M10X20A280	
230	312155-0457	-		1	SCREW MF6S8X35RFR	
240	315105-0153	-		2	WASHER BRB6,4X12RFR	
250	315105-0165	-		2	WASHER BRB8,4X16RFR	

Pos	Part No	SP	UN	Qty	Description	Page No

Tetra Pak

SPC

Spare Parts Catalogue

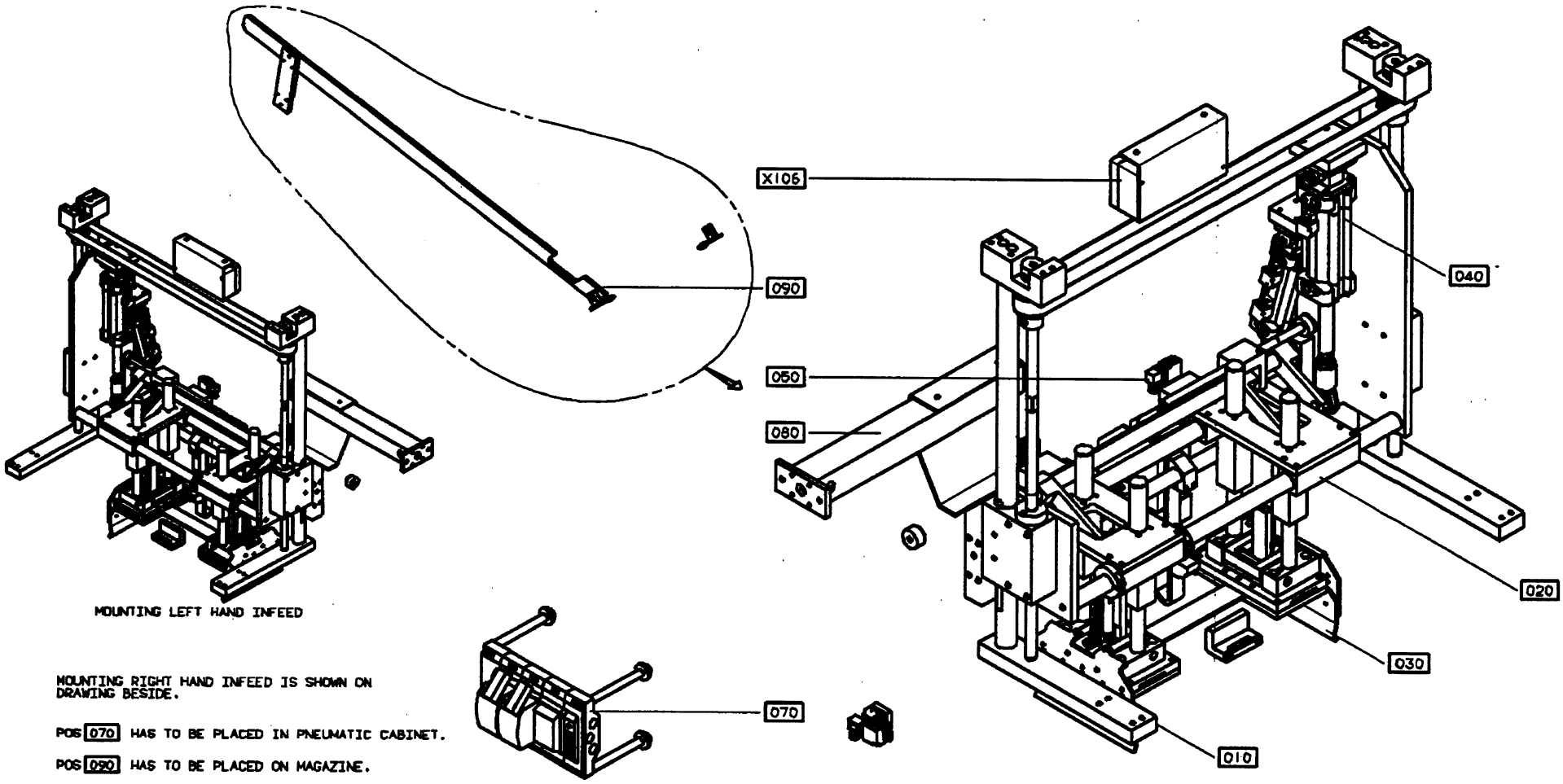

MOUNTING LEFT HAND INFEED

MOUNTING RIGHT HAND INFEED IS SHOWN ON DRAWING BESIDE.

POS 070 HAS TO BE PLACED IN PNEUMATIC CABINET.

POS 090 HAS TO BE PLACED ON MAGAZINE.

GraphicID: 67037503.tif
Parent Drw:670375-3
ECN No: 22292

Pos	Part No	SP	UN	Qty	Description	Page No
Tetra Wrap around Box with inside top Flap						
000	**B- 670375-0401**	-		1	**WRAP AROUND UNIT**	
010	C-1074251-0101	-		1	FRAME	431
020	C-1074252-030V	-		1	ADJUSTMENT PLATE	433
030	C-1074253-030V	-		1	SQUEEZER	437
040	C-1074254-030V	-		1	CYLINDERS	443
050	C-1074255-030V	-		1	HOTMELT EQUIPEMENT MISC.	453
070	C-1074257-030V	-		1	VALVE RAMP	453
080	C-1074258-010V	-		1	STEERING	457
090	C-1074259-0201	-		1	MAGAZINE SUPPORT	459
X106	C-1074256-0201	-		1	CONNECTION BOX	429
Tetra Wrap around Box with meeting Flaps						
Tetra Tray with over Flaps						
000	**B- 670375-0402**	-		1	**WRAP AROUND UNIT**	
010	C-1074251-0101	-		1	FRAME	431
020	C-1074252-030V	-		1	ADJUSTMENT PLATE	433
030	C-1074253-030V	-		1	SQUEEZER	437
040	C-1074254-030V	-		1	CYLINDERS	443
050	C-1074255-030V	-		1	HOTMELT EQUIPEMENT MISC.	453
070	C-1074257-030V	-		1	VALVE RAMP	457
080	C-1074258-010V	-		1	STEERING	457
090	C-1074259-0201	-		1	MAGAZINE SUPPORT	459
X106	C-1074256-0201	-		1	CONNECTION BOX	429

Pos	Part No	SP	UN	Qty	Description	Page No

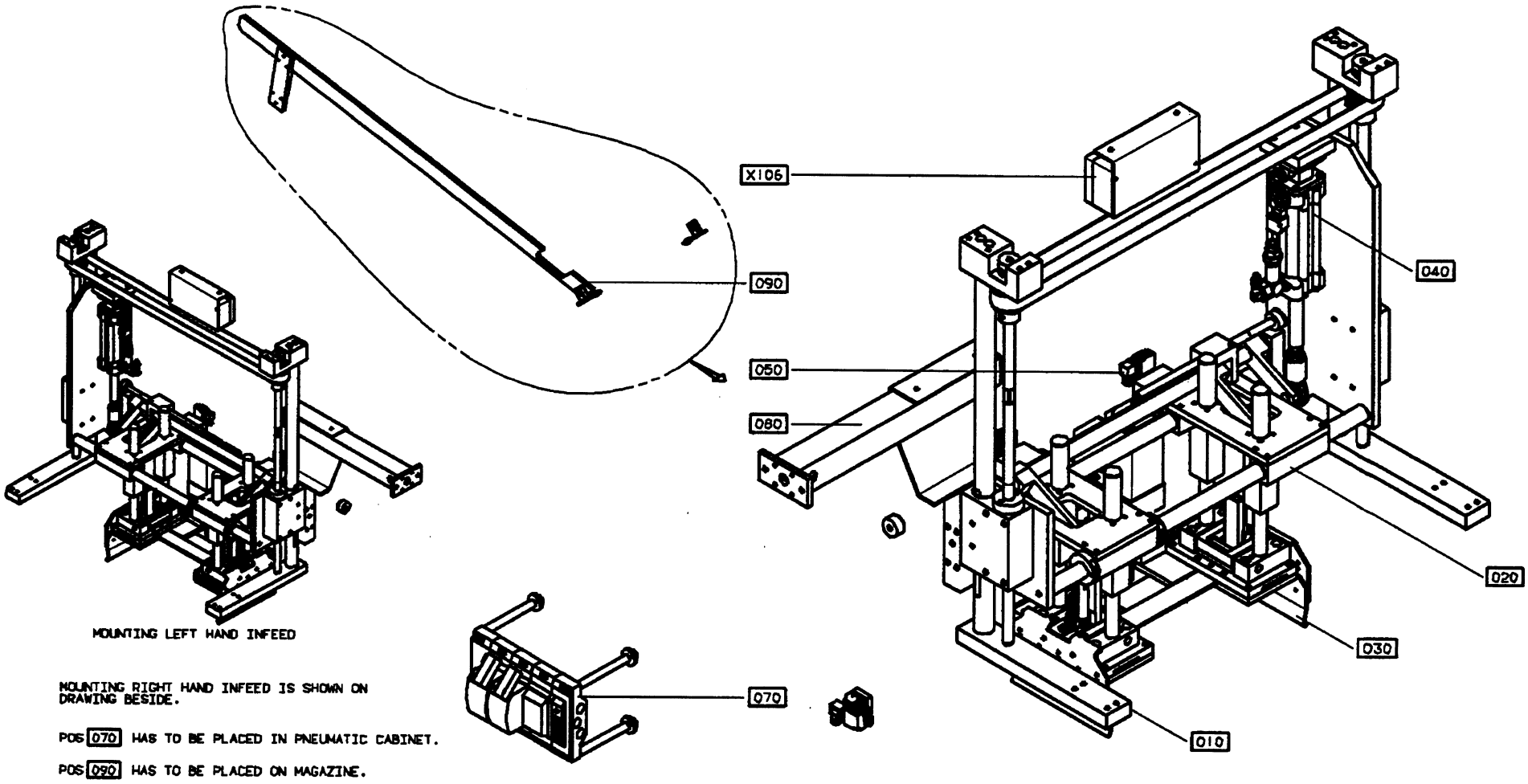

MOUNTING LEFT HAND INFEED

MOUNTING RIGHT HAND INFEED IS SHOWN ON DRAWING BESIDE.

POS 070 HAS TO BE PLACED IN PNEUMATIC CABINET.

POS 090 HAS TO BE PLACED ON MAGAZINE.

GraphicID: 67037504.tif
Parent Drw:670375-4
ECN No: 22292

Pos	Part No	SP	UN	Qty	Description	Page No
Tetra Wrap around Box with side Flap						
000	**B- 670375-0404**	-		1	**WRAP AROUND UNIT**	
010	C-1074251-0101	-		1	FRAME	431
020	C-1074252-030V	-		1	ADJUSTMENT PLATE	433
030	C-1074253-030V	-		1	SQUEEZER	437
040	C-1074254-030V	-		1	CYLINDERS	443
050	C-1074255-030V	-		1	HOTMELT EQUIPEMENT MISC.	453
070	C-1074257-030V	-		1	VALVE RAMP	457
080	C-1074258-010V	-		1	STEERING	457
090	C-1074259-0201	-		1	MAGAZINE SUPPORT	459
X106	C-1074256-0201	-		1	CONNECTION BOX	429
010	C-1074251-0101	-		1	FRAME	431
020	C-1074252-030V	-		1	ADJUSTMENT PLATE	433
030	C-1074253-030V	-		1	SQUEEZER	437
040	C-1074254-030V	-		1	CYLINDERS	443
050	C-1074255-030V	-		1	HOTMELT EQUIPEMENT MISC.	453
070	C-1074257-030V	-		1	VALVE RAMP	457
080	C-1074258-010V	-		1	STEERING	457
090	C-1074259-0201	-		1	MAGAZINE SUPPORT	459
X106	C-1074256-0201	-		1	CONNECTION BOX	429

Pos	Part No	SP	UN	Qty	Description	Page No

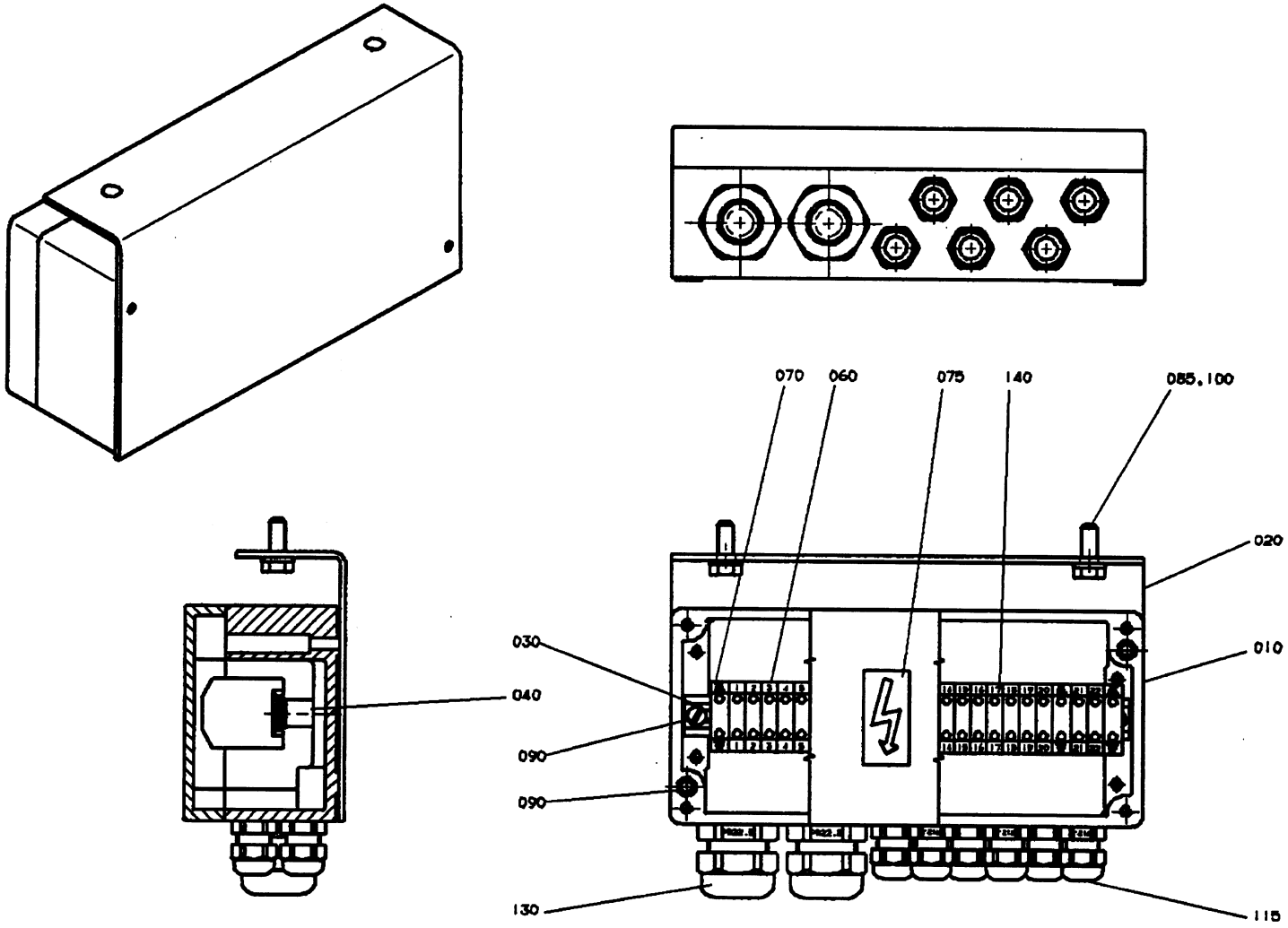

GraphicID: 107425602.tif
Parent Drw: 1074256-2
ECN No: 22292

Pos	Part No	SP	UN	Qty	Description	Page No
-						
000	C-1074256-0201	-		1	**CONNECTION BOX**	
010	1074309	-		1	CONNECTION BOX	
020	1074310	-		1	BRACKET	
030	8490-0003	-		1	RAIL	
040	479110	-		2	SPACER	
060	90077-0079	-		22	FEED THROUGH TERMINAL	
070	90135-0026	-		3	EARTHING CLAMP	
075	90194-0016	-		1	SIGN "FLASH SIGN" 50X50MM	
085	312105-0368	-		2	SCREW O4017 M6X16A280	
090	312145-0293	-		4	SLOTTED HEMFS4X16RFR	
100	315105-0153	-		2	WASHER BRB6,4X12RFR	
115	352103-0096	-		6	CABLE GLANR.ST 7	
130	352103-0111	-		2	CABLE GLAND ST 16;10-14MM	
140	359011-0821	-		2	SET OF SIGNS 6-FW 1-50	

Pos	Part No	SP	UN	Qty	Description	Page No

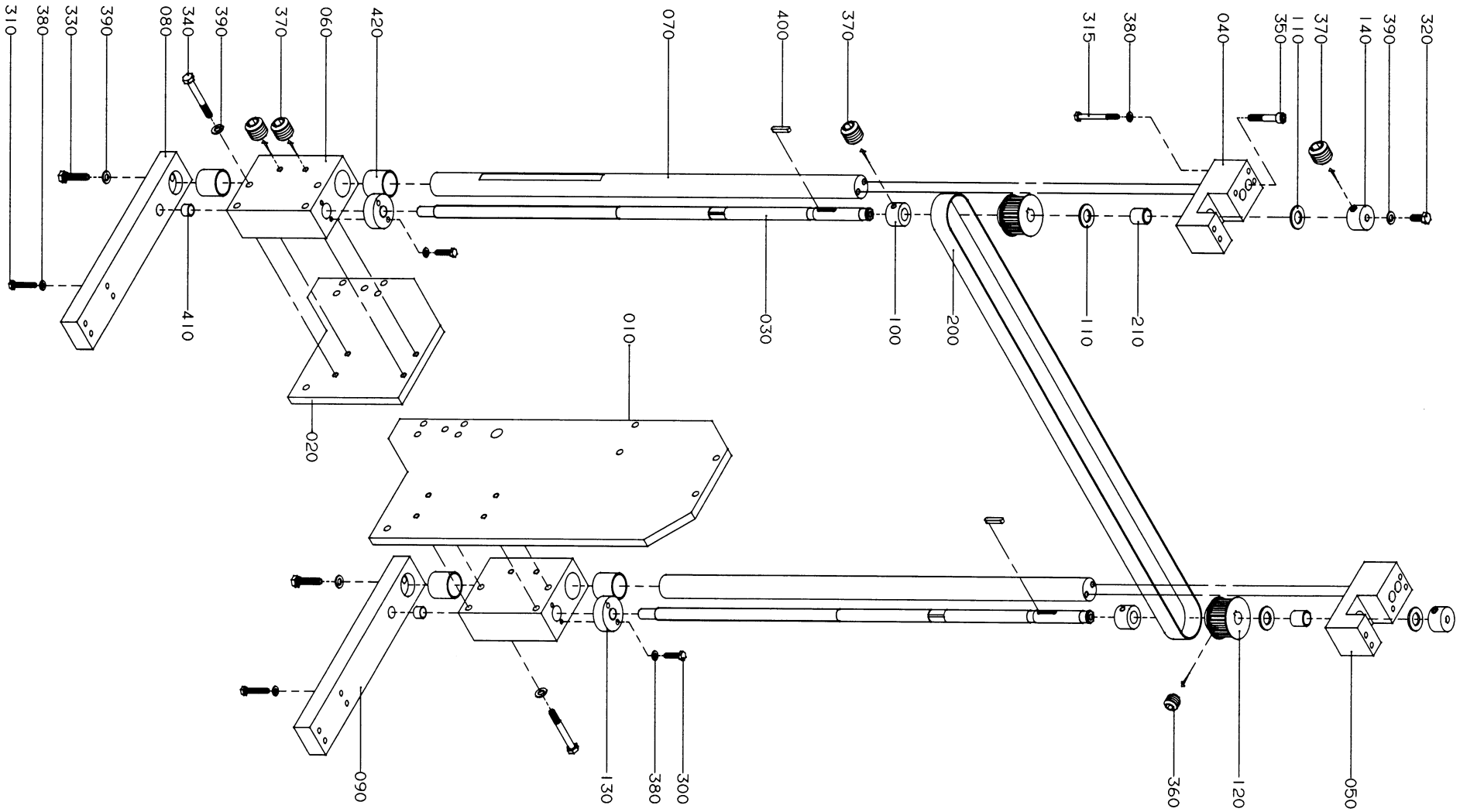

GraphicID: 107425101.eps
Parent Drw: 1074251-1
ECN 19306

Pos	Part No	SP	UN	Qty	Description	Page No
-						
000	C-1074251-0101	-		1	**FRAME**	
010	1074263	-		1	SIDE PLATE	
020	1074264	-		1	SIDE PLATE	
030	1074265	-		2	ADJUSTING SCREW	
040	1074261	-		1	HOLDER	
050	1074262	-		1	HOLDER	
060	1074266	-		2	HOLDER	
070	1074267	-		2	SHAFT	
080	1074268	-		1	CANTILEVER	
090	1074269	-		1	CANTILEVER	
100	1021038	-		2	RETAINING RING	
110	1021039	-		4	WASHER	
120	1021040	-		2	TOOTHED PULLY	
130	1021154	-		2	NUT	
140	1074270	-		2	HOLDER	
200	90417-0069	-		1	TOOTHED BELT	
210	90240-0205	-		2	PLAIN BEARING	
300	312105-0372	-		4	SCREW O4017 M6X25A280	
310	312105-0376	-		8	SCREW O4017 M6X35A280	
315	312105-0382	-		10	SCREW O4014 M6X60A280	
320	312105-0451	-		2	SCREW SO4017 8X20A280	
330	312105-0455	-		4	SCREW O4017 M8X30A280	
340	312105-0464	-		8	SCREW O4014 M8X65A280	
350	312115-0460	-		4	SCREW O4762 M8X45A280	
360	312318-0360	-		2	STOP SCREW SK6SS6X6RFR	
370	312318-0443	-		12	STOP SCREW SK6SS8X8RFR	
380	315105-0153	-		22	WASHER BRB6,4X12RFR	
390	315105-0165	-		14	WASHER BRB8,4X16RFR	
400	315701-0204	-		2	FLAT WEDGE5X5X28	
410	321120-0114	-		2	BUSHING 13/15X10	
420	321120-0171	-		4	BUSHING 30/34X30	

Pos	Part No	SP	UN	Qty	Description	Page No

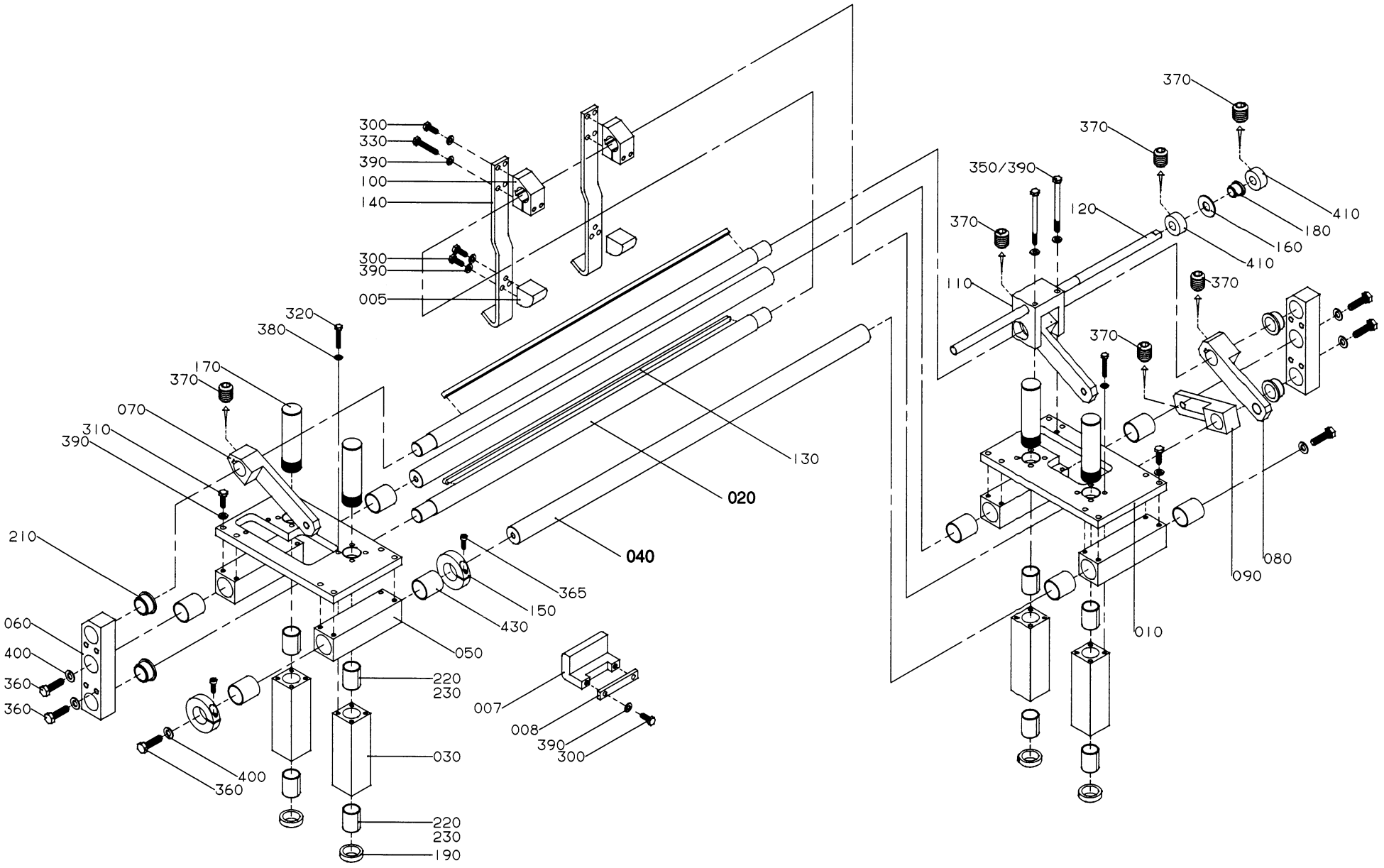

GraphicID: 107425201.eps
Parent Drw: 1074252-1
ECN 19306

Pos	Part No	SP	UN	Qty	Description	Page No
Tetra Wrap around Box with inside top Flap						
000	**C-1074252-030V**	-		1	**ADJUSTMENT PLATE**	
005	1074308	-		2	LOCATING PIECE	
020	1074273	-		2	SHAFT	
090	1074279	-		1	ARM	
100	1074280	-		2	HOLDER	
130	1074285	-		2	FLAT WEDGE	
140	1074307	-		2	ARM	
210	90240-0221	P		4	BEARING	
300	312105-0368	-		8	SCREW O4017 M6X16A280	
330	312105-0376	-		4	SCREW O4017 M6X35A280	
370	312318-0362	-		8	STOP SCREW SK6SS6X8RFR	
390	315105-0153	-		28	WASHER BRB6,4X12RFR	
Tetra Wrap around Box with meeting Flaps						
Tetra Tray with over Flaps						
000	**C-1074252-0302**	-		1	**ADJUSTMENT PLATE**	
005	1074319	-		2	LOCATING PIECE	
007	1074480	-		1	STEERING	
008	1074481	-		1	RAIL	
020	1074273	-		2	SHAFT	
090	1074279	-		1	ARM	
100	1074280	-		2	HOLDER	
130	1074285	-		2	FLAT WEDGE	
140	1074307	-		2	ARM	
210	90240-0221	P		4	BEARING	
300	312105-0368	-		12	SCREW O4017 M6X16A280	
330	312105-0376	-		4	SCREW O4017 M6X35A280	
370	312318-0362	-		8	STOP SCREW SK6SS6X8RFR	
390	315105-0153	-		30	WASHER BRB6,4X12RFR	
COMMON PARTS						
010	**1074272**	-		**2**	**SHEET**	
030	1074271	-		4	GUIDE STEERING	
040	1074274	-		2	SHAFT	
050	1074275	-		4	GUIDE STEERING	
060	1074276	-		2	HOLDER	
070	1074277	-		2	ARM	
080	1074278	-		1	ARM	
110	1074281	-		1	LOCATING PIECE	
120	1074282	-		1	ADJUSTING SCREW	
150	1074260	-		2	CLAMPING RING	
160	1074284	-		1	WASHER	
170	1139156	-		4	PROTECTION	
180	1074482	-		1	PLAIN BEARING	
190	90091-0038	-		4	SEAL RING	
220	90240-0279	-		8	BEARING	
230	90296-0068	-		X	GREASE	
310	312105-0370	-		16	SCREW O4017 M6X20A280	
320	312105-0333	-		16	SCREW O4017 M5X25A280	
350	312105-0386	-		2	SCREW O4014 M6X80A280	
360	312105-0453	-		12	SCREW O4017 M8X25A280	
365	312115-0329	-		2	SCREW O4762 M5X16A280	
380	315105-0146	-		16	WASHER BRB5,3X10RFR	
400	315105-0165	-		12	WASHER BRB8,4X16RFR	
410	315742-0108	-		2	RETAINING 12SMS199RFR	
430	321120-0160	-		8	BUSHING 25/28X30	

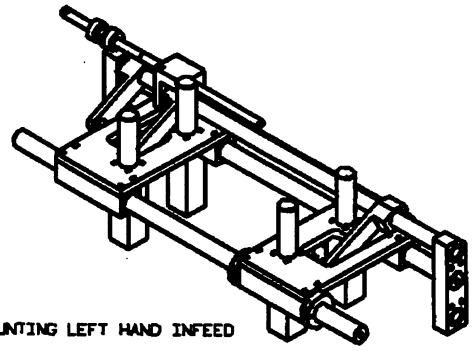

MOUNTING LEFT HAND INFEED

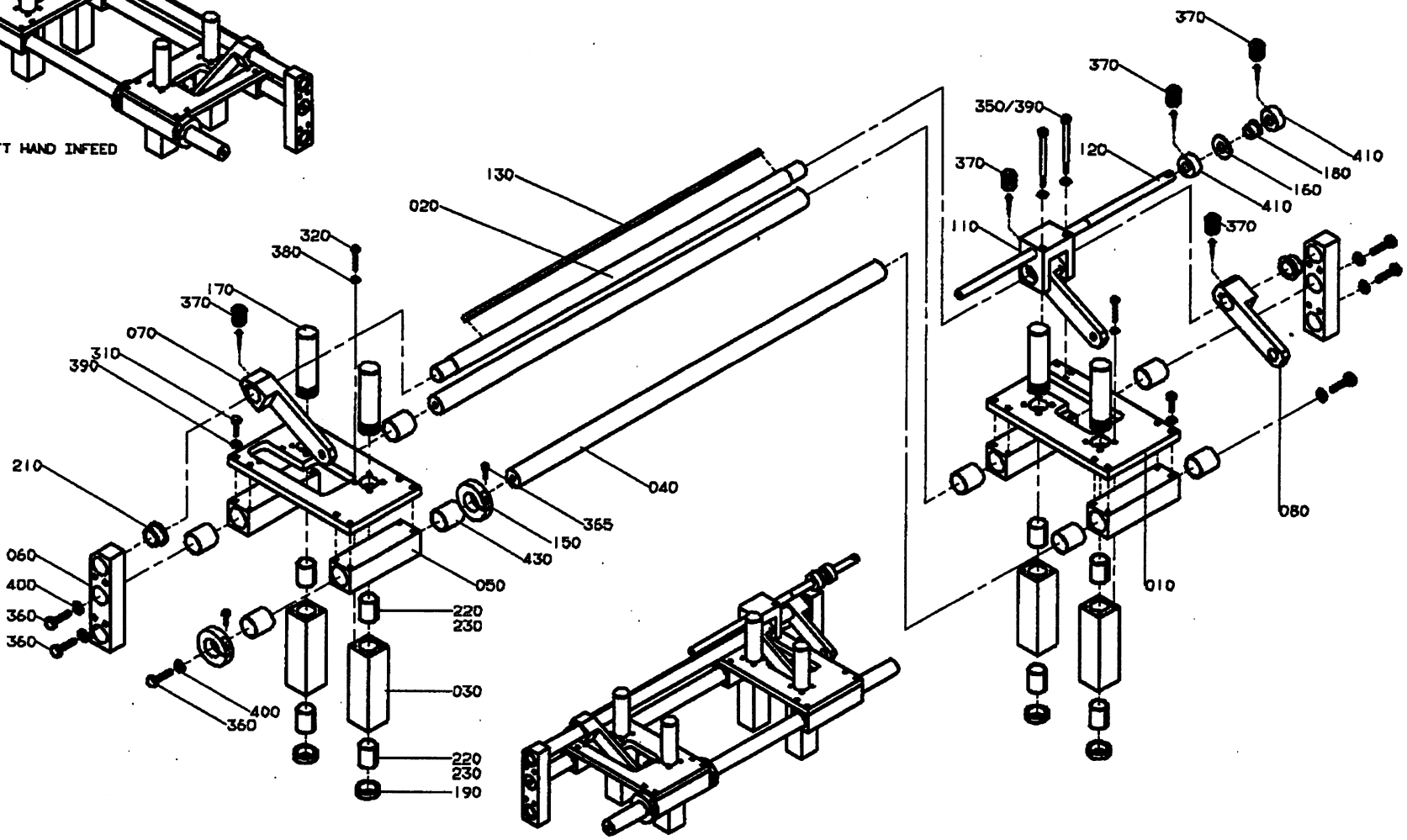

MOUNTING RIGHT HAND INFEED

POS 007 AND 008 HAS TO BE MOUNTED ON FOLDING SUPPORT.

GraphicID: 107425202.tif
Parent Drw: 1074252-2
ECN No: 21127

Pos	Part No	SP	UN	Qty	Description	Page No
TTetra Wrap around Box with side Flaps						
000	**C-1074252-0303**	-		1	**ADJUSTMENT PLATE**	
020	1074273	-		1	SHAFT	
130	1074285	-		1	FLAT WEDGE	
210	90240-0221	P		2	BEARING	
370	312318-0362	-		7	STOP SCREW SK6SS6X8RFR	
390	315105-0153	-		16	WASHER BRB6,4X12RFR	
COMMON PARTS						
010	**1074272**	-		2	**SHEET**	
030	1074271	-		4	GUIDE STEERING	
040	1074274	-		2	SHAFT	
050	1074275	-		4	GUIDE STEERING	
060	1074276	-		2	HOLDER	
070	1074277	-		2	ARM	
080	1074278	-		1	ARM	
110	1074281	-		1	LOCATING PIECE	
120	1074282	-		1	ADJUSTING SCREW	
150	1074260	-		2	CLAMPING RING	
160	1074284	-		1	WASHER	
170	1139156	-		4	PROTECTION	
180	1074482	-		1	PLAIN BEARING	
190	90091-0038	-		4	SEAL RING	
220	90240-0279	-		8	BEARING	
230	90296-0068	-		X	GREASE	
310	312105-0370	-		16	SCREW O4017 M6X20A280	
320	312105-0333	-		16	SCREW O4017 M5X25A280	
350	312105-0386	-		2	SCREW O4014 M6X80A280	
360	312105-0453	-		12	SCREW O4017 M8X25A280	
365	312115-0329	-		2	SCREW O4762 M5X16A280	
380	315105-0146	-		16	WASHER BRB5,3X10RFR	
400	315105-0165	-		12	WASHER BRB8,4X16RFR	
410	315742-0108	-		2	RETAINING 12SMS199RFR	
430	321120-0160	-		8	BUSHING 25/28X30	

Pos	Part No	SP	UN	Qty	Description	Page No

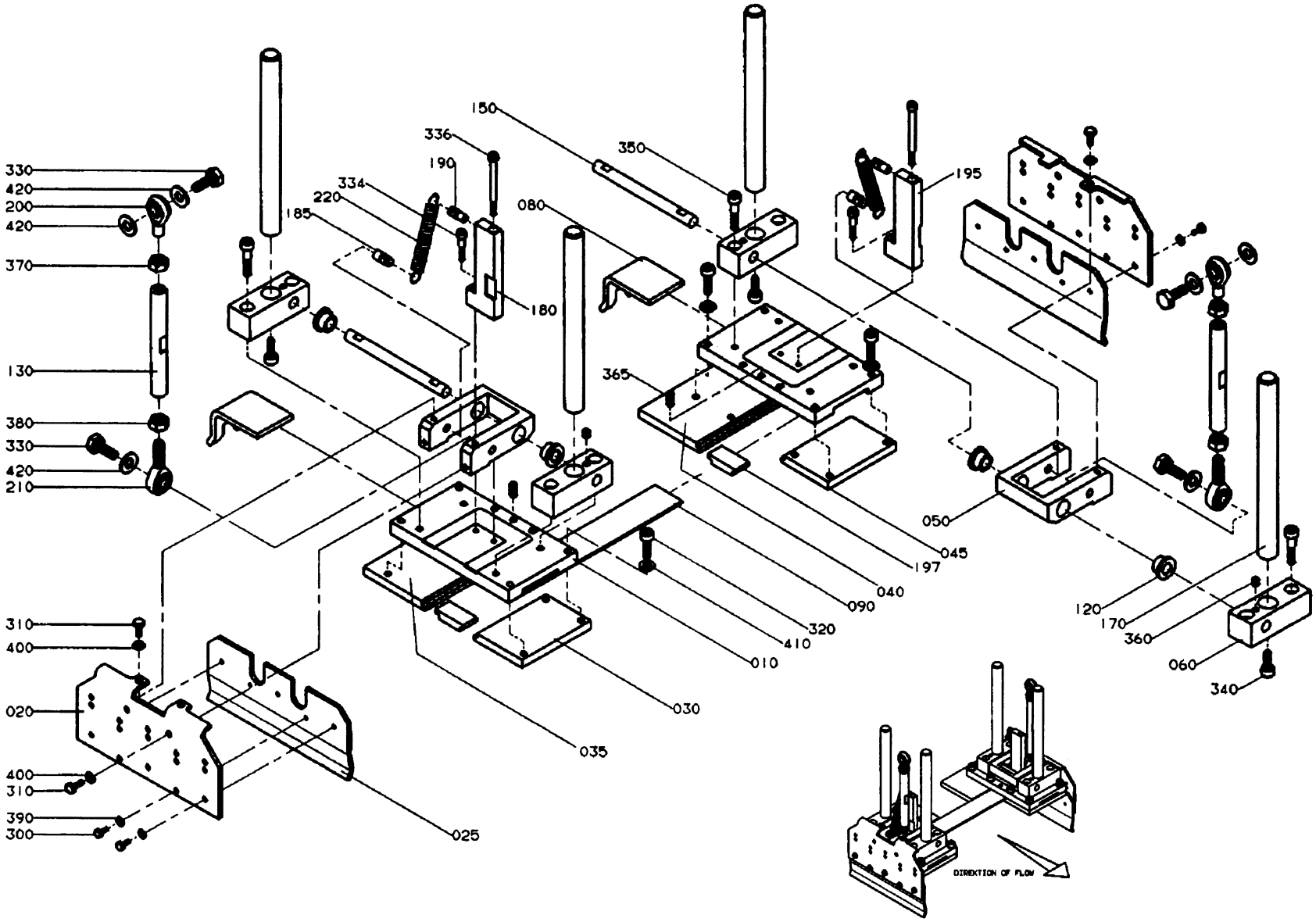
330
420
200
420
370
130
380
330
420
210
310
400
020
400
310
390
300
025
035
030
010
410
320
090
040
197
045
050
365
180
185
220
334
336
190
150
350
080
195
120
170
360
060
340
DIREKTION OF FLOW

Pos	Part No	SP	UN	Qty	Description	Page No
Tetra Wrap around Box with inside top Flap						
000	**C-1074253-0301**	-		**1**	**SQUEEZER**	
030	1074288	-		1	PLATE	
035	1128001	-		1	PLATE	
040	1128002	-		1	PLATE	
045	1074289	-		1	PLATE	
080	1074293	-		2	SUPPORTING SHEET	
310	312105-0367	-		8	SCREW M6S6X14RFR	
400	315105-0153	-		8	WASHER BRB6,4X12RFR	
COMMON PARTS						
010	**1074286**	-		**2**	**SHEET**	
020	1074287	-		2	FOLDING FLAP	
025	1074318	-		2	FOLDING FLAP	
050	1074290	-		2	HOLDER	
060	1074291	-		4	BRACKET	
090	1074294	-		1	RAIL	
120	493768	P		4	BUSHING	
130	1074295	-		2	STRUT	
150	1074297	-		2	SHAFT	
170	1074299	-		4	SHAFT	
180	1139127	-		1	HOLDER	
185	1074477	-		2	SPRING BRACKET	
190	1074478	-		2	SPRING BRACKET	
195	1139128	-		1	HOLDER	
197	1074485	-		2	RAIL	
200	90115-0150	P		2	LINK HEAD	
210	90115-0151	P		2	LINK HEAD	
220	1139129	P		2	TENSION SPRING	
300	312105-0323	-		10	SCREW ISO4017 M5X8A2 80	
320	312115-0453	-		12	SCREW O4762 M8X25A280	
330	312105-0495	-		4	SCREW ISO4017 M10X30A280	
334	312115-0374	-		2	SCREW O4762 M6X30A280	
336	312115-0384	-		2	SCREW O4762 M6X70A280	
340	312115-0451	-		4	SCREW O4762 M8X20A280	
350	312115-0457	-		8	SCREW O4762 M8X35A280	
360	312318-0443	-		4	STOP SCREW SK6SS8X8RFR	
365	312318-0449	-		2	STOP SCREW SK6SS8X16RFR	
370	312605-0320	-		2	NUT M6M10RFR	
380	312902-0320	-		2	NUT M6M10VRFR	
390	315105-0146	-		10	WASHER BRB5,3X10RFR	
410	315105-0165	-		12	WASHER BRB8,4X16RFR	
420	315105-0173	-		6	WASHER BRB10,5X22RFR	

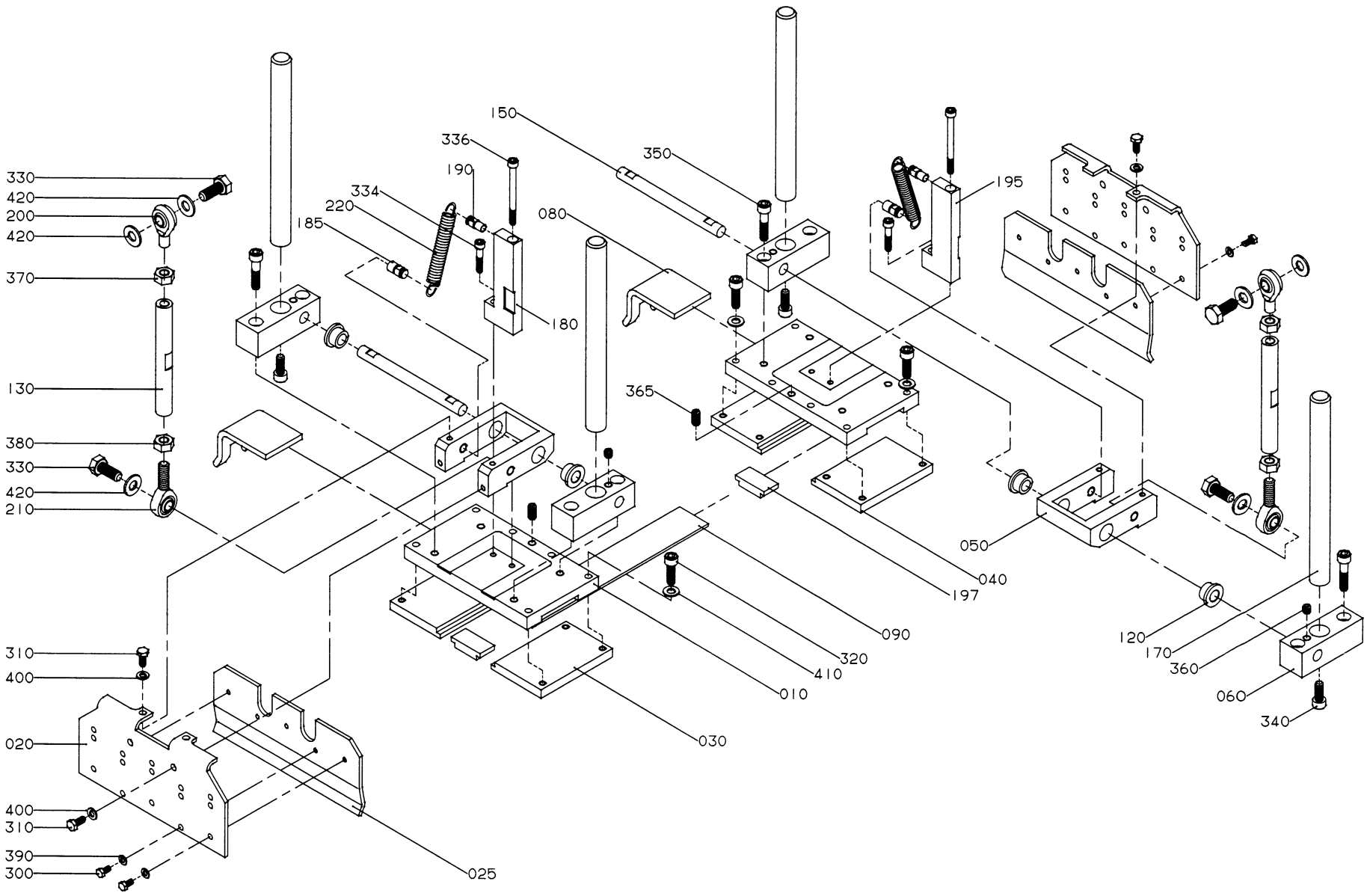

GraphicID: 107425301.eps
Parent Drw: 1074253-1
ECN 19305

Pos	Part No	SP	UN	Qty	Description	Page No
Tetra Wrap around Box with meeting Flaps						
Tetra Tray with over Flaps						
000	**C-1074253-0302**	-		1	**SQUEEZER**	
030	1074288	-		2	PLATE	
045	1074289	-		2	PLATE	
080	1074293	-		2	SUPPORTING SHEET	
310	312105-0367	-		8	SCREW M6S6X14RFR	
400	315105-0153	-		8	WASHER BRB6,4X12RFR	
COMMON PARTS						
010	**1074286**	-		**2**	**SHEET**	
020	1074287	-		2	FOLDING FLAP	
025	1074318	-		2	FOLDING FLAP	
050	1074290	-		2	HOLDER	
060	1074291	-		4	BRACKET	
090	1074294	-		1	RAIL	
120	493768	P		4	BUSHING	
130	1074295	-		2	STRUT	
150	1074297	-		2	SHAFT	
170	1074299	-		4	SHAFT	
180	1139127	-		1	HOLDER	
185	1074477	-		2	SPRING BRACKET	
190	1074478	-		2	SPRING BRACKET	
195	1139128	-		1	HOLDER	
197	1074485	-		2	RAIL	
200	90115-0150	P		2	LINK HEAD	
210	90115-0151	P		2	LINK HEAD	
220	1139129	P		2	TENSION SPRING	
300	312105-0325	-		10	SCREW M6S5X10 A2 80	
320	312115-0453	-		12	SCREW O4762 M8X25A280	
330	312105-0493	-		4	SCREW 4017 M10X25A280	
334	312115-0374	-		2	SCREW O4762 M6X30A280	
336	312115-0384	-		2	SCREW O4762 M6X70A280	
340	312115-0451	-		4	SCREW O4762 M8X20A280	
350	312115-0457	-		8	SCREW O4762 M8X35A280	
360	312318-0443	-		4	STOP SCREW SK6SS8X8RFR	
365	312318-0449	-		2	STOP SCREW SK6SS8X16RFR	
370	312605-0320	-		2	NUT M6M10RFR	
380	312902-0320	-		2	NUT M6M10VRFR	
390	315105-0146	-		10	WASHER BRB5,3X10RFR	
410	315105-0165	-		12	WASHER BRB8,4X16RFR	
420	315105-0173	-		6	WASHER BRB10,5X22RFR	

Pos	Part No	SP	UN	Qty	Description	Page No

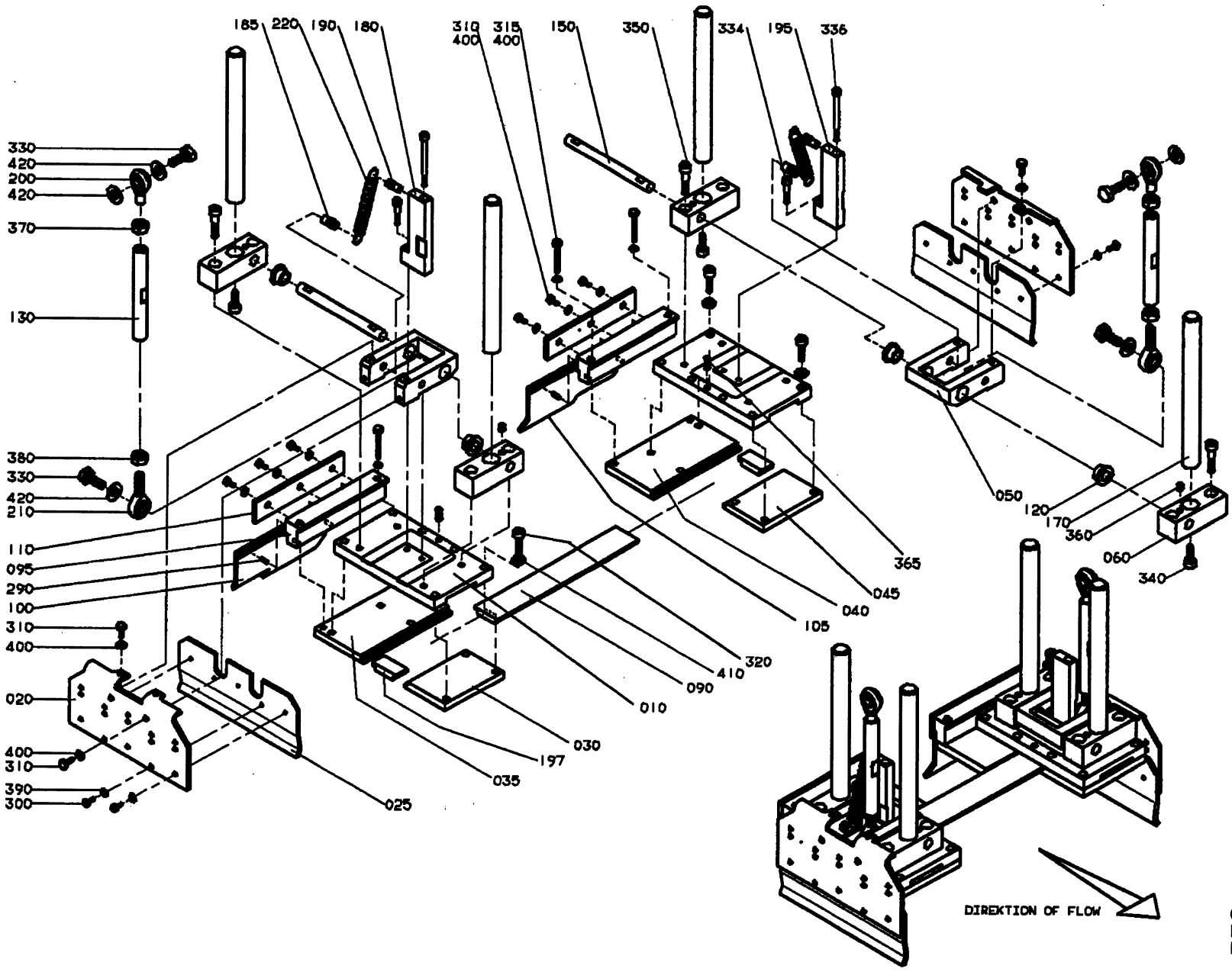

GraphicID: 107425303.tif
Parent Drw: 1074253-3
ECN No: 21127

Pos	Part No	SP	UN	Qty	Description	Page No
Tetra Wrap around Box with side Flaps						
000	**C-1074253-0303**	-		1	**SQUEEZER**	
030	1074288	-		1	PLATE	
035	1128001	-		1	PLATE	
040	1128002	-		1	PLATE	
045	1074289	-		1	PLATE	
095	1128406	-		2	HOLDER	
100	1128407	-		1	HEAD PLATE	
105	1128408	-		1	HEAD PLATE	
110	1128409	-		2	SECURING PLATE	
290	311112-0251	-		6	SLOTTED TURP 4X10 RFR	
310	312105-0367	-		14	SCREW M6S6X14RFR	
315	312105-0378	-		4	SCREW O4017 M6X40A280	
400	315105-0153	-		18	WASHER BRB6,4X12RFR	
COMMON PARTS						
010	**1074286**	-		2	**SHEET**	
020	1074287	-		2	FOLDING FLAP	
025	1074318	-		2	FOLDING FLAP	
050	1074290	-		2	HOLDER	
060	1074291	-		4	BRACKET	
090	1074294	-		1	RAIL	
120	493768	P		4	BUSHING	
130	1074295	-		2	STRUT	
150	1074297	-		2	SHAFT	
170	1074299	-		4	SHAFT	
180	1139127	-		1	HOLDER	
185	1074477	-		2	SPRING BRACKET	
190	1074478	-		2	SPRING BRACKET	
195	1139128	-		1	HOLDER	
197	1074485	-		2	RAIL	
200	90115-0150	P		2	LINK HEAD	
210	90115-0151	P		2	LINK HEAD	
220	1139129	P		2	TENSION SPRING	
300	312105-0325	-		10	SCREW M6S5X10 A2 80	
320	312115-0453	-		12	SCREW O4762 M8X25A280	
330	312105-0493	-		4	SCREW 4017 M10X25A280	
334	312115-0374	-		2	SCREW O4762 M6X30A280	
336	312115-0384	-		2	SCREW O4762 M6X70A280	
340	312115-0451	-		4	SCREW O4762 M8X20A280	
350	312115-0457	-		8	SCREW O4762 M8X35A280	
360	312318-0443	-		4	STOP SCREW SK6SS8X8RFR	
365	312318-0449	-		2	STOP SCREW SK6SS8X16RFR	

Pos	Part No	SP	UN	Qty	Description	Page No
370	312605-0320	-		2	NUT M6M10RFR	
380	312902-0320	-		2	NUT M6M10VRFR	
390	315105-0146	-		10	WASHER BRB5,3X10RFR	
410	315105-0165	-		12	WASHER BRB8,4X16RFR	
420	315105-0173	-		6	WASHER BRB10,5X22RFR	

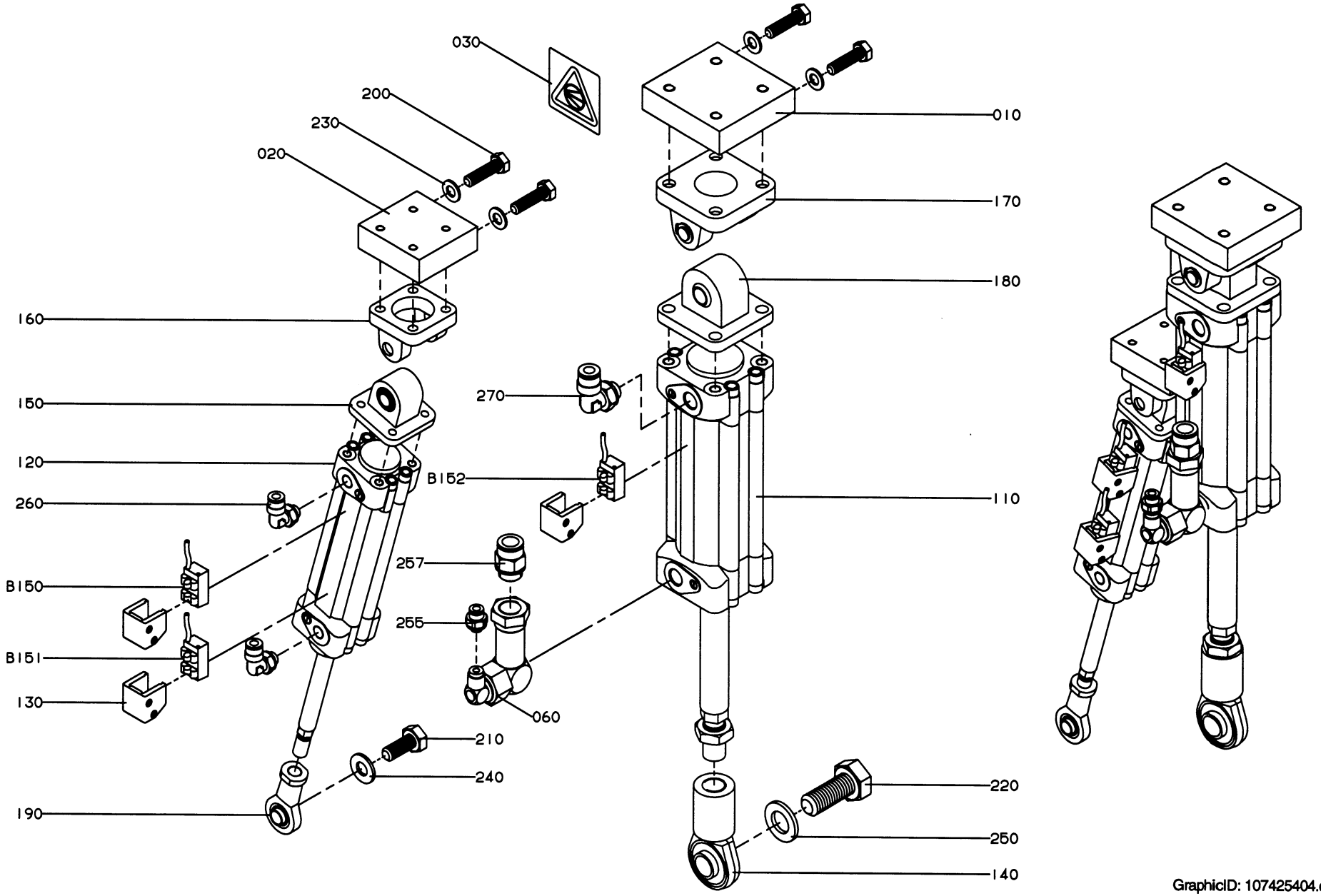

GraphicID: 107425404.eps
Parent Drw: 1074254-4
ECN 22668

Pos	Part No	SP	UN	Qty	Description	Page No
TTetra Wrap around Box with inside top Flap						
Tetra Wrap around Box with meeting Flaps						
Tetra Tray with over Flaps						
000	**C-1074254-0301**	-		**1**	**CYLINDERS**	
020	1074304	-		1	BRACKET	
120	90450-0281	-		1	CYLINDER	
130	90450-0669	-		3	BRACKET	
150	90450-0678	-		1	BRACKET	
160	90450-0654	-		1	CYLINDER BRACKET	
190	90450-0723	-		1	BALL JOINT COUPLING	
200	312105-0453	-		4	SCREW O4017 M8X25A280	
210	312105-0493	-		1	SCREW 4017 M10X25A280	
230	315105-0165	-		4	WASHER BRB8,4X16RFR	
240	315105-0173	-		1	WASHER BRB10,5X22RFR	
260	342732-0102	-		2	ELBOW PIPE D6-R1/8"	
B150	90044-0116	-		1	PROXIMITY SWITCH	
B151	90044-0116	-		1	PROXIMITY SWITCH	
COMMON PARTS						
010	**1074303**	-		**1**	**BRACKET**	
030	1128854	-		1	CAUTION SIGN	
060	90235-0768	-		1	VALVE	
110	90450-0280	-		1	CYLINDER	
140	90450-0677	-		1	BRACKET	
170	90450-0714	-		1	CYLINDER BRACKET	
180	90450-0722	-		1	PENDULUM SUSPENSION	
220	312105-0626	-		1	SCREW M6S16X35RFR	
250	315105-0186	-		1	WASHER BRB17X30RFR	
255	342722-0197	-		1	PIPE COUPLD=6-M5	
257	342722-0205	-		1	PIPE COUPLD=8-R1/4"	
270	342732-0104	-		1	ELBOW PIPE D8-R1/4"	
B152	90044-0116	-		1	PROXIMITY SWITCH	

Pos	Part No	SP	UN	Qty	Description	Page No

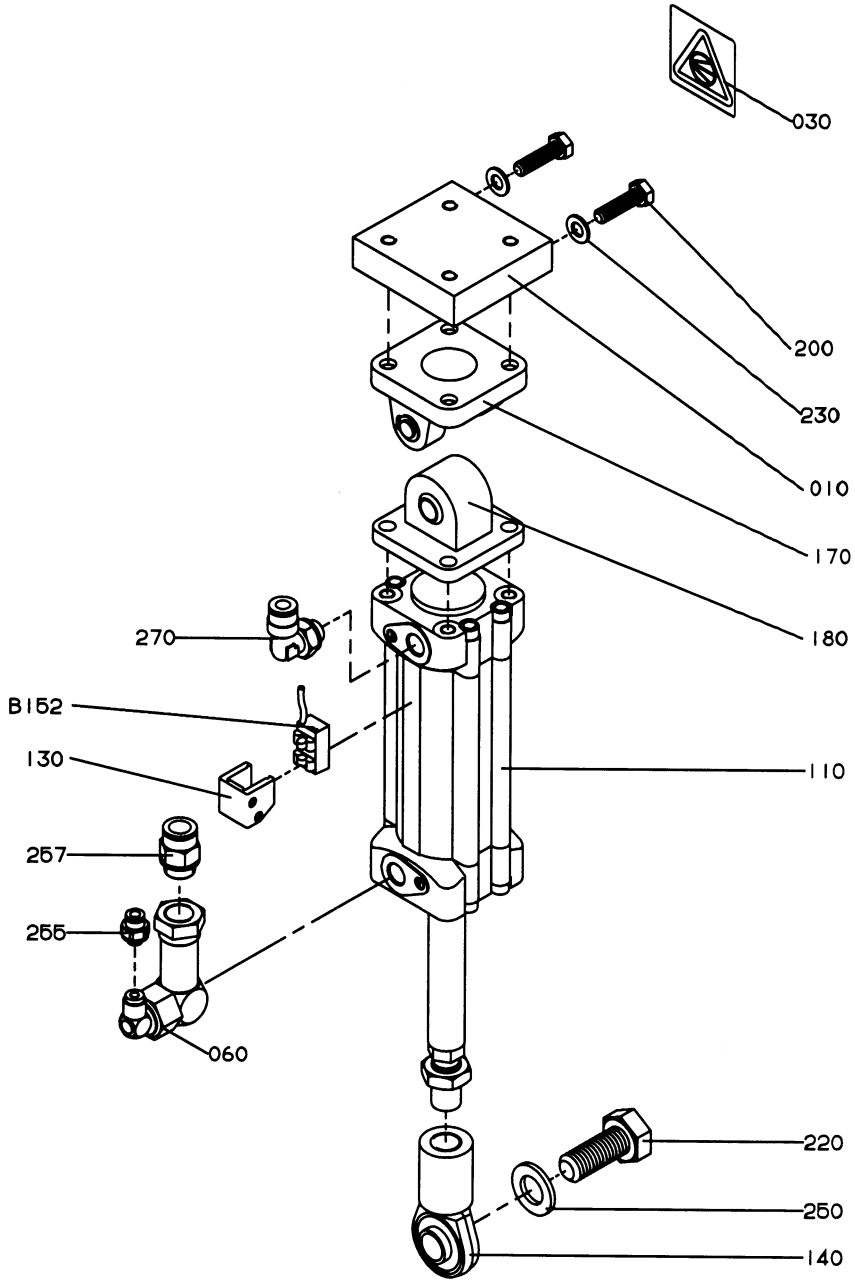

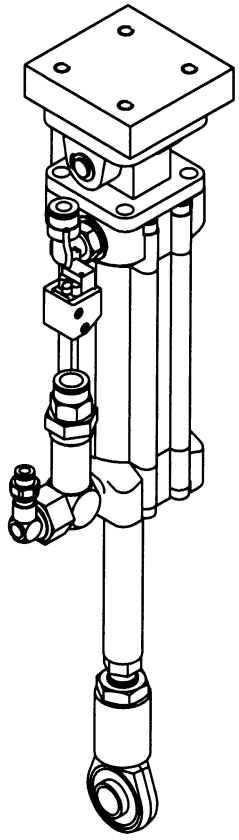

GraphicID: 107425405.eps
Parent Drw: 1074254-5
ECN 22668

Pos	Part No	SP	UN	Qty	Description	Page No
Tetra Wrap around Box with side Flaps						
000	**C-1074254-0302**	-		1	**CYLINDERS**	
130	90450-0669	-		1	BRACKET	
200	312105-0453	-		2	SCREW O4017 M8X25A280	
230	315105-0165	-		2	WASHER BRB8,4X16RFR	
COMMON PARTS						
010	**1074303**	-		1	**BRACKET**	
030	1128854	-		1	CAUTION SIGN	
060	90235-0768	-		1	VALVE	
110	90450-0280	-		1	CYLINDER	
140	90450-0677	-		1	BRACKET	
170	90450-0714	-		1	CYLINDER BRACKET	
180	90450-0722	-		1	PENDULUM SUSPENSION	
220	312105-0626	-		1	SCREW M6S16X35RFR	
250	315105-0186	-		1	WASHER BRB17X30RFR	
255	342722-0197	-		1	PIPE COUPLD=6-M5	
257	342722-0205	-		1	PIPE COUPLD=8-R1/4"	
270	342732-0104	-		1	ELBOW PIPE D8-R1/4"	
B152	90044-0116	-		1	PROXIMITY SWITCH	

Pos	Part No	SP	UN	Qty	Description	Page No

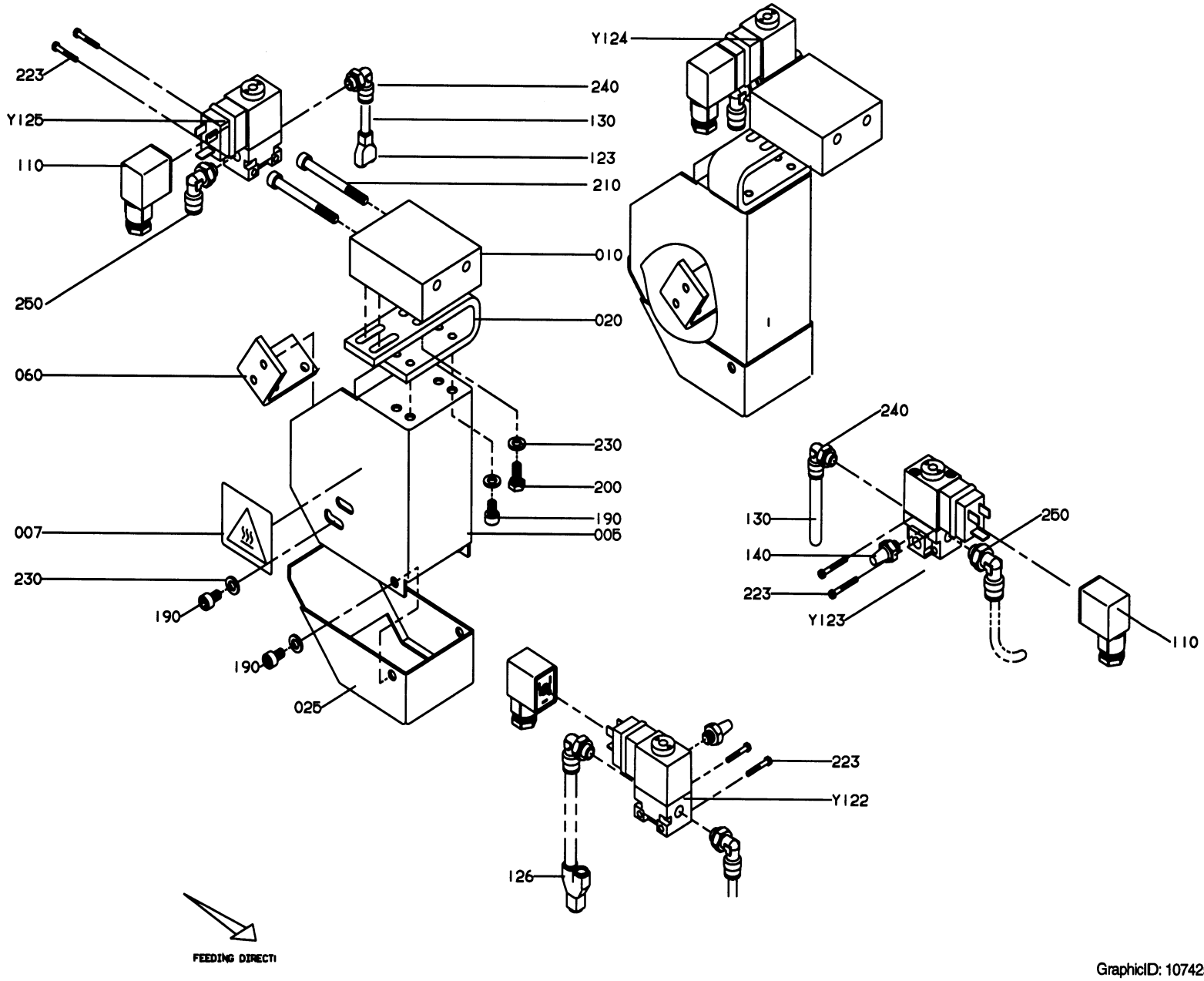
223
Y125
110
250
240
130
123
210
010
020
060
230
200
190
005
007
230
190
190
025
Y124
240
130
140
223
Y123
250
110
223
Y122
126
FEEDING DIRECTI

Pos	Part No	SP	UN	Qty	Description	Page No
Tetra Wrap around Box with inside top Flap, Z-form, U-form						
Tetra Wrap around Box with side Flap, Z-form, U-form						
000	**C-1074255-0301**	-		1	**HOT MELT EQUIPEMENT MISC.**	
005	1074322	-		2	PROTECTION	
007	1128853	-		2	CAUTION SIGN	
010	1139152	-		2	HOLDER	
020	1074306	-		2	HOLDER	
025	1074323	-		2	PROTECTION	
060	1074325	-		2	BRACKET	
110	90042-0392	-		4	CONTACT	
123	90055-0100	-		2	JOINT CONNECTION	
126	90055-0101	-		4	JOINT CONNECTION	
130	90166-0202	-	MM	1000	TEFLON PIPE	
140	90328-0003	-		4	SILENCER	
190	312115-0364	-		16	SCREW 6X10 A4 80	
200	312105-0367	-		8	SCREW M6S6X14RFR	
210	312115-0385	-		4	SCREW MC6S 6X75 A280	
223	312125-0234	-		8	SLOTTED HEMCS3X30RFR	
230	315105-0153	-		32	WASHER BRB6,4X12RFR	
240	342732-0102	-		4	ELBOW PIPE D6-R1/8"	
250	342732-0801	-		4	ELBOW PIPE D8-R1/8"	
Y124	90042-0213	-		1	SOLENOID VALVE	
Y125	90042-0213	-		1	SOLENOID VALVE	
COMMON PARTS						
Y122	**90042-0213**	-		1	**SOLENOID VALVE**	
Y123	90042-0213	-		1	SOLENOID VALVE	

Pos	Part No	SP	UN	Qty	Description	Page No

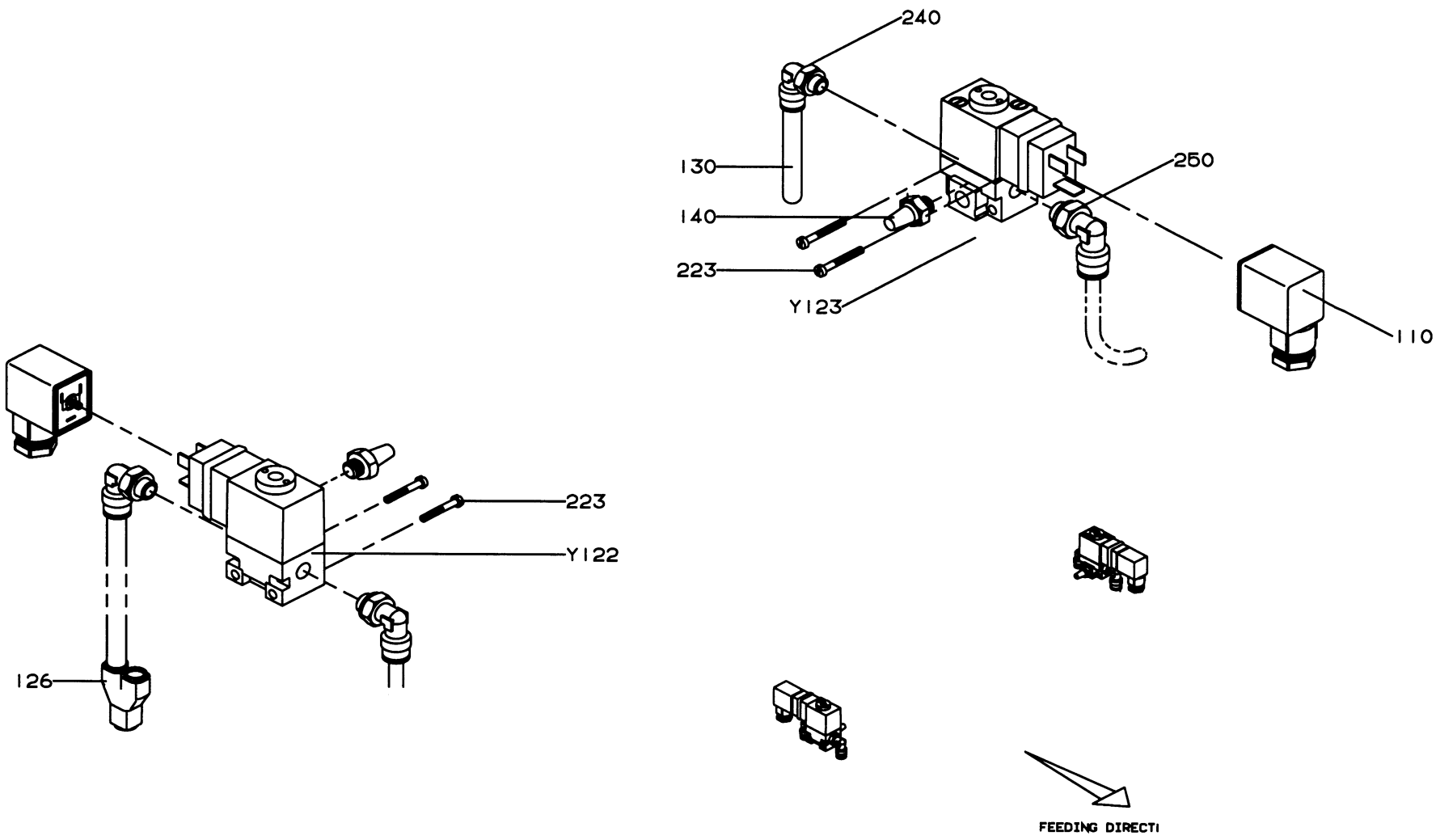

GraphicID: 107425508.eps
Parent Drw: 1074255-8
ECN 23757

Pos	Part No	SP	UN	Qty	Description	Page No
Tetra Wrap around Box with meeting Flaps, Z-form, U-form, L-form						
Tetra Tray with over Flaps, Z-form, U-form, L-form						
000	**C-1074255-0302**	-		1	**HOT MELT EQUIPEMENT MISC.**	
110	90042-0392	-		2	CONTACT	
126	90055-0101	-		2	JOINT CONNECTION	
130	90166-0202	-	MM	500	TEFLON PIPE	
140	90328-0003	-		2	SILENCER	
223	312125-0234	-		4	SLOTTED HEMCS3X30RFR	
240	342732-0102	-		2	ELBOW PIPE D6-R1/8"	
250	342732-0801	-		2	ELBOW PIPE D8-R1/8"	
COMMON PARTS						
Y122	**90042-0213**	-		1	**SOLENOID VALVE**	
Y123	90042-0213	-		1	SOLENOID VALVE	

Pos	Part No	SP	UN	Qty	Description	Page No

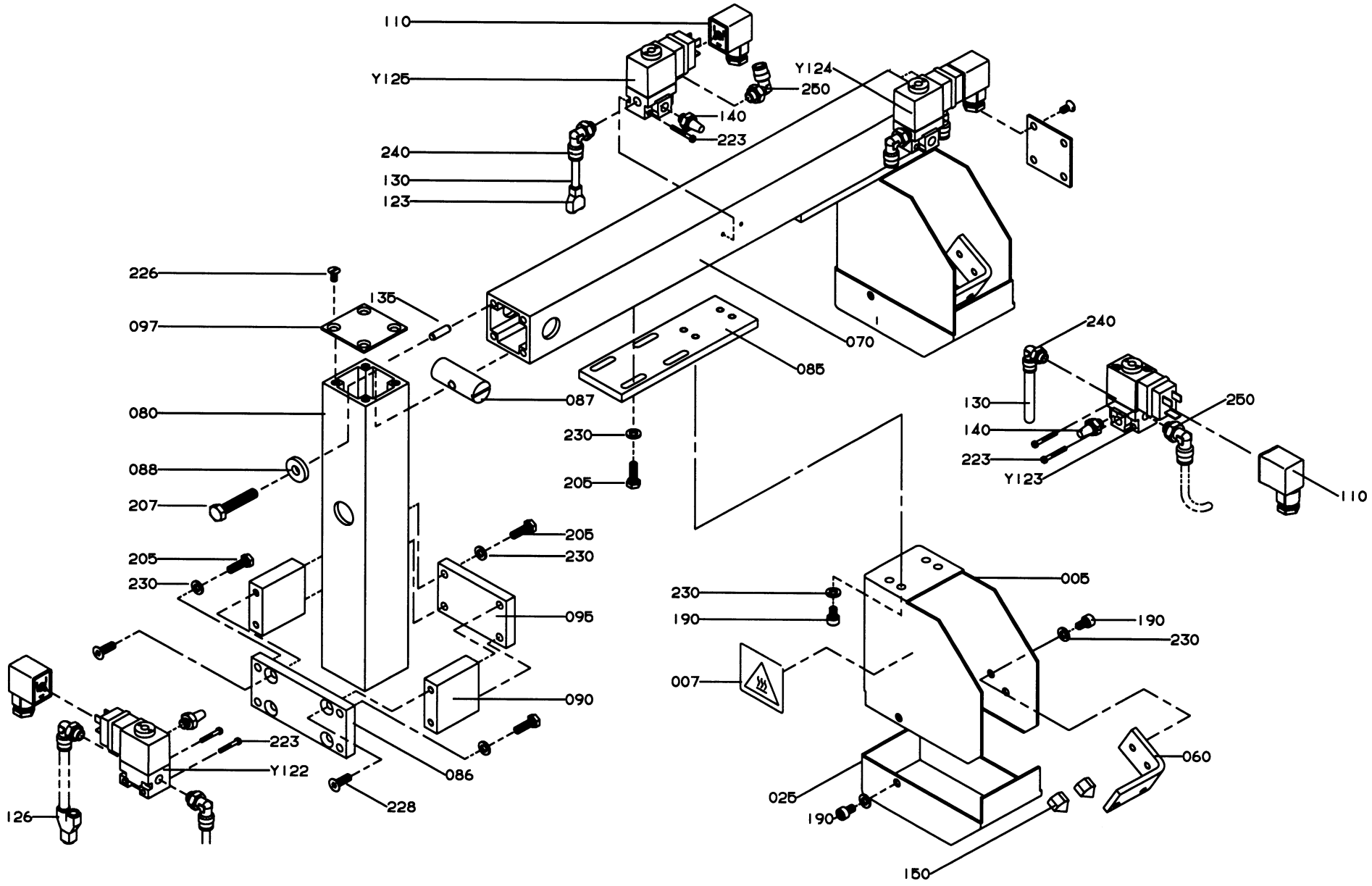

107425509.eps
1074255-9
ECN: 23757

Pos	Part No	SP	UN	Qty	Description	Page No
Tetra Wrap around Box with inside Flap, L-form						
Tetra Wrap around Box with side Flap, L-form						
000	**C-1074255-0303**	-		1	**HOT MELT EQUIPEMENT MISC.**	
005	1111892	-		2	PROTECTION	
007	1128853	-		2	CAUTION SIGN	
025	1111893	-		2	PROTECTION	
060	1074325	-		2	BRACKET	
070	1139151	-		1	PROFILE	
080	1128402	-		1	PROFILE	
085	1128403	-		2	BRACKET	
086	1128410	-		1	LOCK PLATE	
087	486268	-		1	NUT	
088	548599	-		1	WASHER	
090	1128404	-		2	SPACER	
095	1128405	-		1	LOCK PLATE	
097	556604	-		2	COVER PLATE	
110	90042-0392	-		4	CONTACT	
123	90055-0100	-		2	JOINT CONNECTION	
126	90055-0101	-		4	JOINT CONNECTION	
130	90166-0202	-	MM	1000	TEFLON PIPE	
135	1065410	-		4	PIN	
140	90328-0003	-		4	SILENCER	
150	90439-0120	-		4	NOZZLE 237012	
190	312115-0364	-		16	SCREW 6X10 A4 80	
205	312105-0370	-		16	SCREW O4017 M6X20A280	
207	312105-0457	-		1	SCREW O4017 M8X35A280	
223	312125-0234	-		8	SLOTTED HEMCS3X30RFR	
226	312145-0325	-		8	SLOTTED HEMFS5X10RFR	
228	312155-0368	-		4	SCREW MF6S6X16RFR	
230	315105-0153	-		40	WASHER BRB6,4X12RFR	
240	342732-0102	-		4	ELBOW PIPE D6-R1/8"	
250	342732-0801	-		4	ELBOW PIPE D8-R1/8"	
Y124	90042-0213	-		1	SOLENOID VALVE	
Y125	90042-0213	-		1	SOLENOID VALVE	
COMMON PARTS						
Y122	**90042-0213**	-		1	**SOLENOID VALVE**	
Y123	90042-0213	-		1	SOLENOID VALVE	

Pos	Part No	SP	UN	Qty	Description	Page No

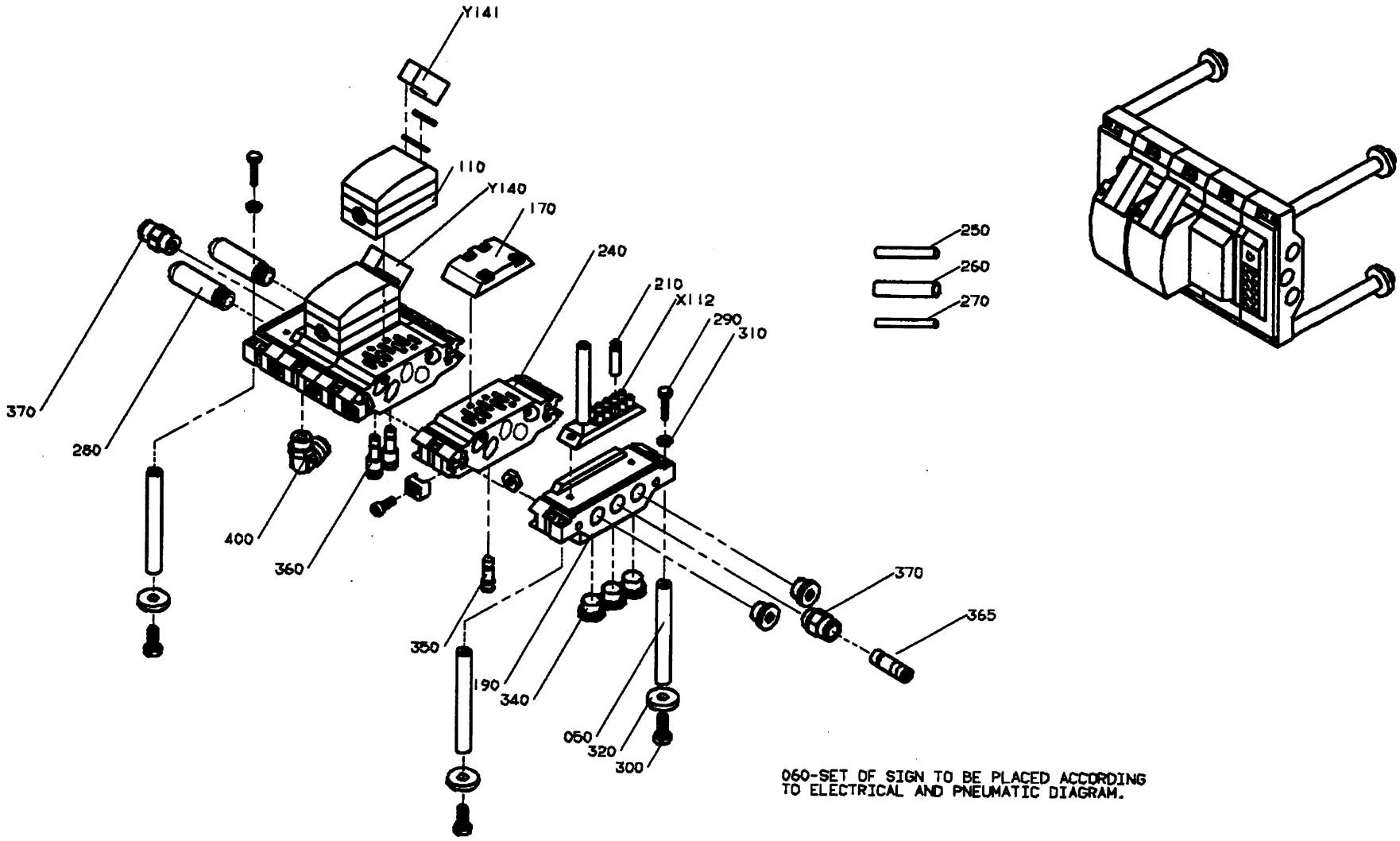
Y141
110
Y140
170
240
210
X112
290
310
250
260
270
370
280
400
360
350
190
340
370
365
050
320
300
060-SET OF SIGN TO BE PLACED ACCORDING
TO ELECTRICAL AND PNEUMATIC DIAGRAM.

Pos	Part No	SP	UN	Qty	Description	Page No
1-Line- Z-Form, U-Form						
Tetra Wrap around Box with inside top Flap						
Tetra Wrap around Box with meeting Flaps						
Tetra Tray with over Flaps						
000	**C-1074257-0301**	-		1	**VALVE RAMP**	
050	1074169	-		4	SPACER	
110	90042-0215	P		2	SOL.VALVE PACKAGE	
170	90042-0519	-		1	COVER PLATE	
190	90042-0522	-		2	END PIECE	
210	90042-0550	-		8	PROTECTIVE COVER	
240	90042-0532	-		3	CONNECTION TABLE	
260	90166-0221	-	MM	500	HOSE	
270	90166-0193	-	M	21	PLASTIC HOSE	
280	90328-0024	P		2	SILENCER	
290	312105-0372	-		4	SCREW O4017 M6X25A280	
300	312105-0451	-		4	SCREW SO4017 8X20A280	
310	315105-0153	-		4	WASHER BRB6,4X12RFR	
320	315125-0165	-		4	WASHER SB 8,4X26X5 RFR	
340	342713-0211	-		1	BLIND PLUG	
350	342715-0103	-		2	PLUG D=8	
360	342716-0203	-		2	REDUCER 6-8	
370	342722-0210	-		2	PIPE COUPLD=12-R3/8"	
400	342732-0110	-		1	ELBOW PIPE D12-R3/8"	
X112	90042-0535	-		1	TERMINAL FOR SOL.VALVE	
Y141	90042-0539	P		1	EL.COIL	
1-Line- Z-Form, U-Form						
Tetra Wrap around Box with side Flap						
000	**C-1074257-0305**	-		1	**VALVE RAMP**	
050	1074169	-		4	SPACER	
110	90042-0215	P		1	SOL.VALVE PACKAGE	
170	90042-0519	-		2	COVER PLATE	
190	90042-0522	-		2	END PIECE	
210	90042-0550	-		9	PROTECTIVE COVER	
240	90042-0532	-		3	CONNECTION TABLE	
260	90166-0221	-	MM	500	HOSE	
270	90166-0193	-	M	7	PLASTIC HOSE	
280	90328-0024	P		2	SILENCER	
290	312105-0372	-		4	SCREW O4017 M6X25A280	
300	312105-0451	-		4	SCREW SO4017 8X20A280	
310	315105-0153	-		4	WASHER BRB6,4X12RFR	
320	315125-0165	-		4	WASHER SB 8,4X26X5 RFR	
340	342713-0211	-		1	BLIND PLUG	
350	342715-0103	-		4	PLUG D=8	
370	342722-0210	-		2	PIPE COUPLD=12-R3/8"	
400	342732-0110	-		1	ELBOW PIPE D12-R3/8"	
X112	90042-0535	-		1	TERMINAL FOR SOL.VALVE	
COMMON PARTS						
060	**1128044**	-		1	**SET OF SIGNS**	
250	90166-0194	-	M	14	PLASTIC HOSE	
365	342716-0210	-		1	REDUCER 6-12	
Y140	90042-0539	P		1	EL.COIL	

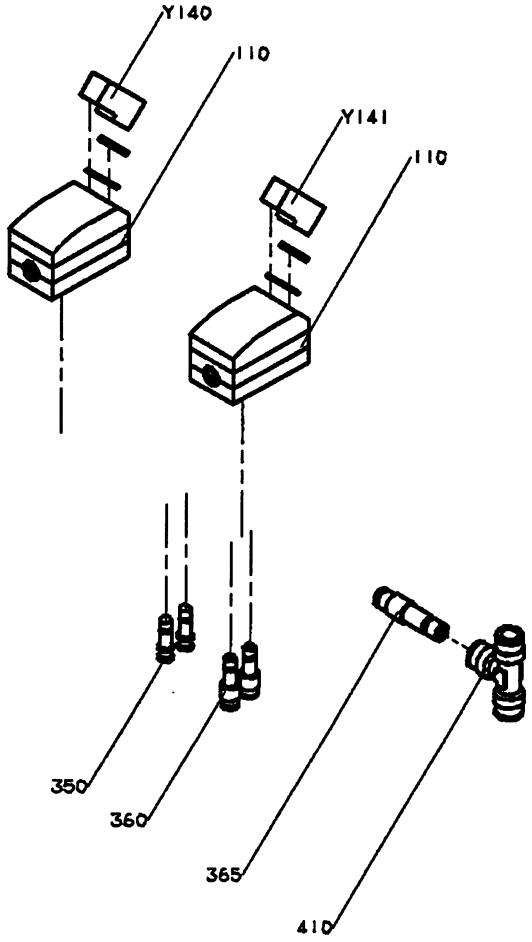

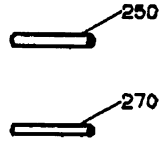

060-SET OF SIGN TO BE PLACED ACCORDING
TO ELECTRICAL AND PNEUMATIC DIAGRAM.

PILOT LUFT PÅ ALLA VENTILER.
PILOT AIR ON ALL VALVES.

OBS! VÄND PACKNINGEN UNDER LOCKET
I VENTILEN 180°
NOTE! TURN THE GASKET BELOW THE LID
IN THE VALVE 180°

VALVES TO BE PLACED IN PNEUMATIC CABINET
ACCORDING TO PNEUMATIC CHART.

GraphicID: 107425710.tif
Parent Drw: 1074257-10
ECN No: 22292

Pos	Part No	SP	UN	Qty	Description	Page No
2-Line- Z-Form, U-Form, 3-Line- Z-Form, U-Form						
1-Line- L-Form						
MULTI INFEED						
Tetra Wrap around Box with inside top Flap						
Tetra Wrap around Box with meeting Flaps						
Tetra Tray with over Flaps						
000	**C-1074257-0302**	**-**		**1**	**VALVE RAMP**	
110	90042-0215	P		2	SOL.VALVE PACKAGE	
270	90166-0193	-	M	21	PLASTIC HOSE	
360	342716-0203	-		2	REDUCER 6-8	
410	342748-0109	-		1	T-CONNECTI D=12	
Y141	90042-0539	P		1	EL.COIL	
2-Line- Z-Form, U-Form, 3-Line- Z-Form, U-Form						
MULTI INFEED						
Tetra Wrap around Box with side Flap						
000	**C-1074257-0306**	**-**		**1**	**VALVE RAMP**	
110	90042-0215	P		1	SOL.VALVE PACKAGE	
270	90166-0193	-	M	7	PLASTIC HOSE	
350	342715-0103	-		2	PLUG D=8	
410	342748-0109	-		1	T-CONNECTI D=12	
COMMON PARTS						
060	**1128044**	**-**		**1**	**SET OF SIGNS**	
250	90166-0194	-	M	14	PLASTIC HOSE	
365	342716-0210	-		1	REDUCER 6-12	
Y140	90042-0539	P		1	EL.COIL	

Pos	Part No	SP	UN	Qty	Description	Page No

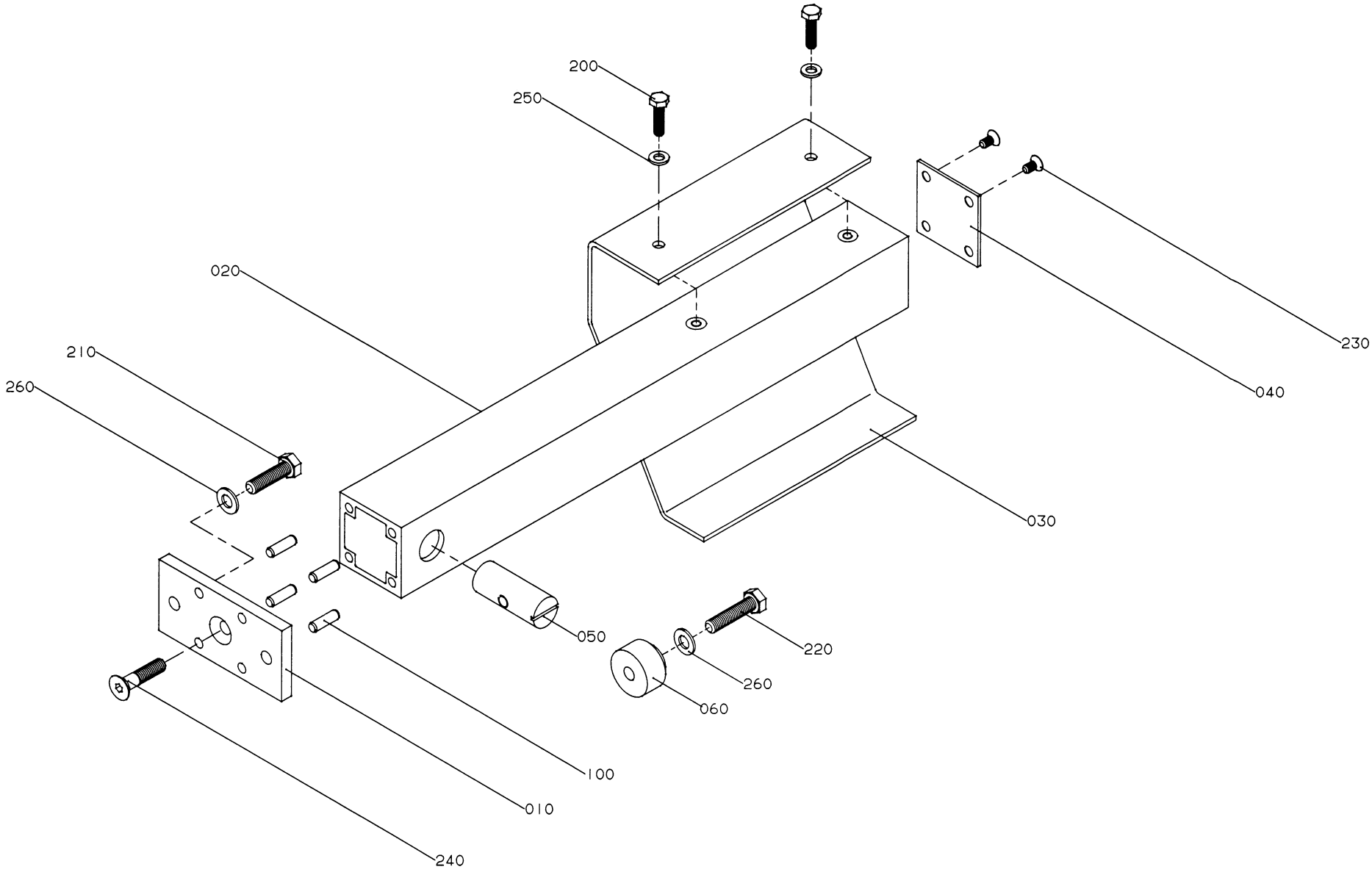

GraphicID: 107425801.eps
Parent Drw: 1074258-1
ECN 19306

Pos	Part No	SP	UN	Qty	Description	Page No
2-Line- Z-Form						
000	**C-1074258-0102**	-		1	**STEERING**	
010	556624	-		1	FRAME BRACKET	
020	1074331	-		1	PROFILE	
030	1074332	-		1	HEAD PLATE	
040	556604	-		1	COVER PLATE	
050	486268	-		1	NUT	
060	1074333	-		1	ROLL	
100	1065410	-		4	PIN	
200	312105-0371	-		2	SCREW M6S6X22RFR	
210	312105-0453	-		2	SCREW O4017 M8X25A280	
220	312105-0455	-		1	SCREW O4017 M8X30A280	
230	312145-0325	-		4	SLOTTED HEMFS5X10RFR	
240	312155-0457	-		1	SCREW MF6S8X35RFR	
250	315105-0153	-		2	WASHER BRB6,4X12RFR	
260	315105-0165	-		3	WASHER BRB8,4X16RFR	

Pos	Part No	SP	UN	Qty	Description	Page No

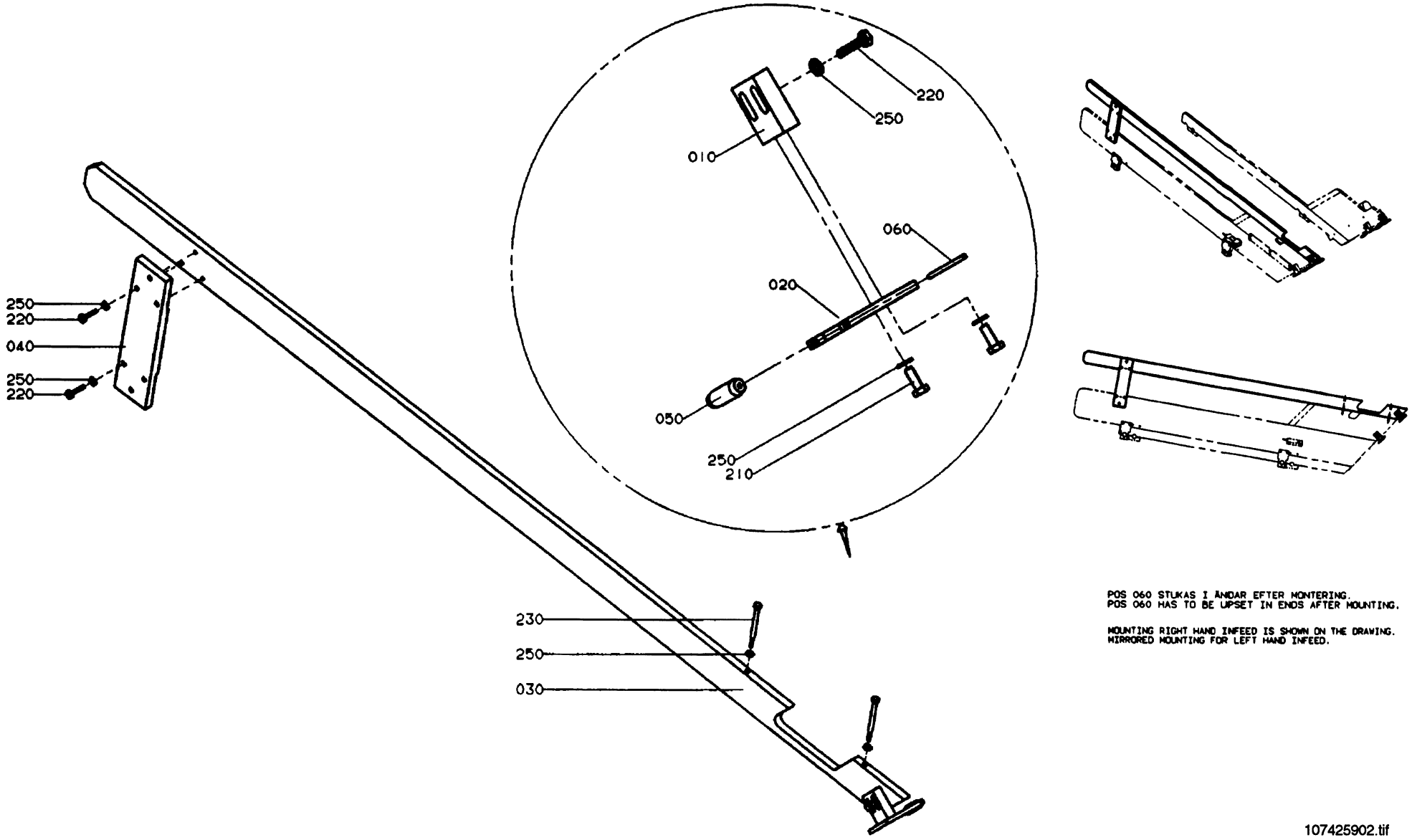

POS 060 STUKAS I ÄNDAR EFTER MONTERING.
POS 060 HAS TO BE UPSET IN ENDS AFTER MOUNTING.

MOUNTING RIGHT HAND INFEED IS SHOWN ON THE DRAWING.
MIRRORED MOUNTING FOR LEFT HAND INFEED.

Pos	Part No	SP	UN	Qty	Description	Page No
-						
000	C-1074259-0201	-		1	**MAGAZINE SUPPORT**	
010	1074313	-		2	HOLDER	
020	1074314	-		2	HOLDER	
030	1074328	-		1	SIDE PLATE	
040	1074329	-		1	HOLDER	
050	1074315	-		2	ROLL	
060	1074316	-		2	SHAFT	
210	312105-0368	-		4	SCREW O4017 M6X16A280	
220	312105-0372	-		10	SCREW O4017 M6X25A280	
230	312105-0384	-		2	SCREW O4014 M6X70A280	
250	315105-0153	-		16	WASHER BRB6,4X12RFR	

Pos	Part No	SP	UN	Qty	Description	Page No

Tetra Pak

SPC

Spare Parts Catalogue

This page is intentionally left blank

Pos	Part No	SP	UN	Qty	Description	Page No
3-Line- Z-Form, U-Form						
000	**B- 670290-0401**	-		1	**REGULAR ACCESSORIES**	
040	C-1111820-020V	-		1	TUNNEL	**467**
050	C-1065361-040V	-		1	DOCUMENT 670270 MAX INF.	**477**
100	1128031	-		1	PNEUMATIC CHART	
2-Line- Z-Form, U-Form						
000	**B- 670290-0402**	-		1	**REGULAR ACCESSORIES**	
040	C-1065359-010V	-		1	TUNNEL	**469**
050	C-1065920-040V	-		1	DOCUMENT 670270 MED INF.	**479**
100	1139177	-		1	PNEUMATIC CHART	
1-Line- Z-Form, U-Form						
000	**B- 670290-0403**	-		1	**REGULAR ACCESSORIES**	
040	C-1074239-010V	-		1	TUNNEL	**471**
050	C-1065921-040V	-		1	DOCUMENT 670270 MIN INF.	**481**
100	1139178	-		1	PNEUMATIC CHART	
1-Line- L-Form						
000	**B- 670290-0404**	-		1	**REGULAR ACCESSORIES**	
040	C-1080030-0201	-		1	TUNNEL	**473**
050	C-1065922-040V	-		1	DOCUMENT 670270 L INF.	**483**
100	1128034	-		1	PNEUMATIC CHART	
MULTI- Z-Form, U-Form						
000	**B- 670290-0405**	-		1	**REGULAR ACCESSORIES**	
040	C-1124035-010V	-		1	TUNNEL	**475**
050	C-1074545-020V	-		1	DOCUMENT 670270 MULTI INF	**485**
100	1139179	-		1	PNEUMATIC CHART	
COMMON PARTS						
030	**C-1021942-010V**	-		1	**START-UP KIT**	
060	C-1074394-0301	-		1	QUEUE GUARD,SINGLE	**487**
070	C-1074441-0201	-		1	GUARD PLATE	**489**
200	90243-0209	-		1	BAILER	
210	1119739	-		1	MACHINE SIGN CE	

Pos	Part No	SP	UN	Qty	Description	Page No

This page is intentionally left blank

Pos	Part No	SP	UN	Qty	Description	Page No
-						
000	**C-1021942-010V**	**-**		**1**	**START-UP KIT**	
010	90153-0036	-		1	ADHESIVE	

Pos	Part No	SP	UN	Qty	Description	Page No

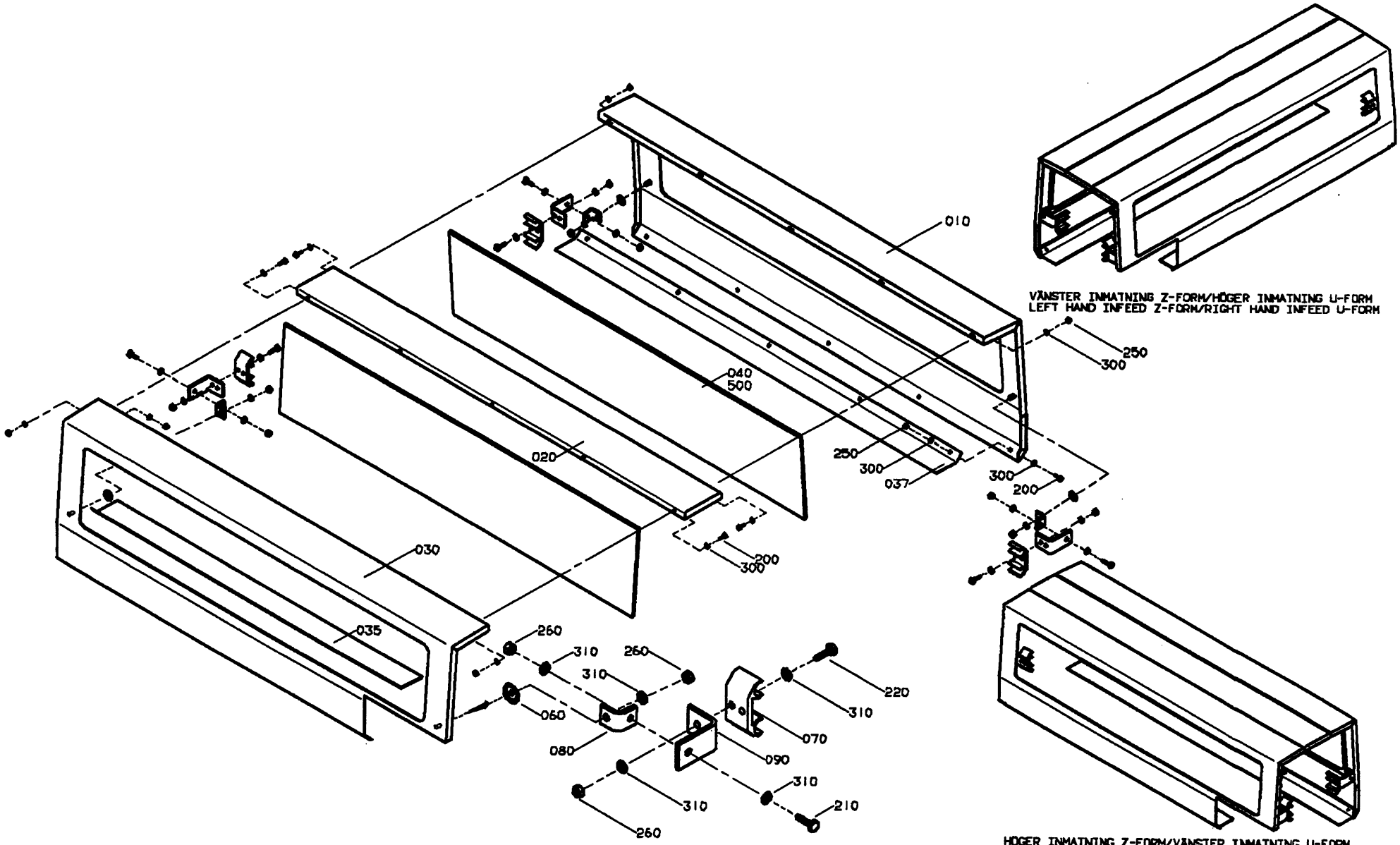

GraphicID: 111182002.tif
Parent Drw: 1111820-2
ECN No: 22292

Pos	Part No	SP	UN	Qty	Description	Page No
Conveyor width B40, Z-FORM, LEFT HAND INFEED, U-FORM, RIGHT HAND INFEED						
000	**C-1111820-0201**	-		1	**TUNNEL**	
030	1128848	-		1	TUNNEL	
090	1111818	-		4	BRACKET	
Conveyor width B40, Z-FORM, RIGHT HAND INFEED, U-FORM, LEFT HAND INFEED						
000	**C-1111820-0202**	-		1	**TUNNEL**	
030	1128849	-		1	TUNNEL	
090	1111818	-		4	BRACKET	
Conveyor width B55. B55S, B65, Z-FORM, LEFT HAND INFEED, U-FORM, RIGHT HAND INFEED						
000	**C-1111820-0203**	-		1	**TUNNEL**	
030	1128848	-		1	TUNNEL	
090	1111817	-		4	BRACKET	
Conveyor width B55. B55S, B65, Z-FORM, RIGHT HAND INFEED, U-FORM, LEFT HAND INFEED						
000	**C-1111820-0204**	-		1	**TUNNEL**	
030	1128849	-		1	TUNNEL	
090	1111817	-		4	BRACKET	
COMMON PARTS						
010	**1128846**	-		1	**TUNNEL**	
020	1128847	-		1	COVERING PLATE	
035	1128850	-		1	COVERING PLATE	
037	1128851	-		1	COVERING PLATE	
040	1128852	-		2	GLASS	
060	575418	-		4	WASHER	
070	575435	-		4	HOLDER	
080	1074344	-		4	BRACKET	
200	312105-0328	-		19	SCREW M6S5X14 A2 80	
210	312105-0368	-		4	SCREW O4017 M6X16A280	
220	312105-0370	-		8	SCREW O4017 M6X20A280	
250	312605-0314	-		19	NUT M6M5RFR	
260	312605-0316	-		16	NUT M6M6RFR	
300	315105-0146	-		38	WASHER BRB5,3X10RFR	
310	315105-0153	-		28	WASHER BRB6,4X12RFR	
500	90157-0041	-		X	SEALING COMPOUND	

Pos	Part No	SP	UN	Qty	Description	Page No

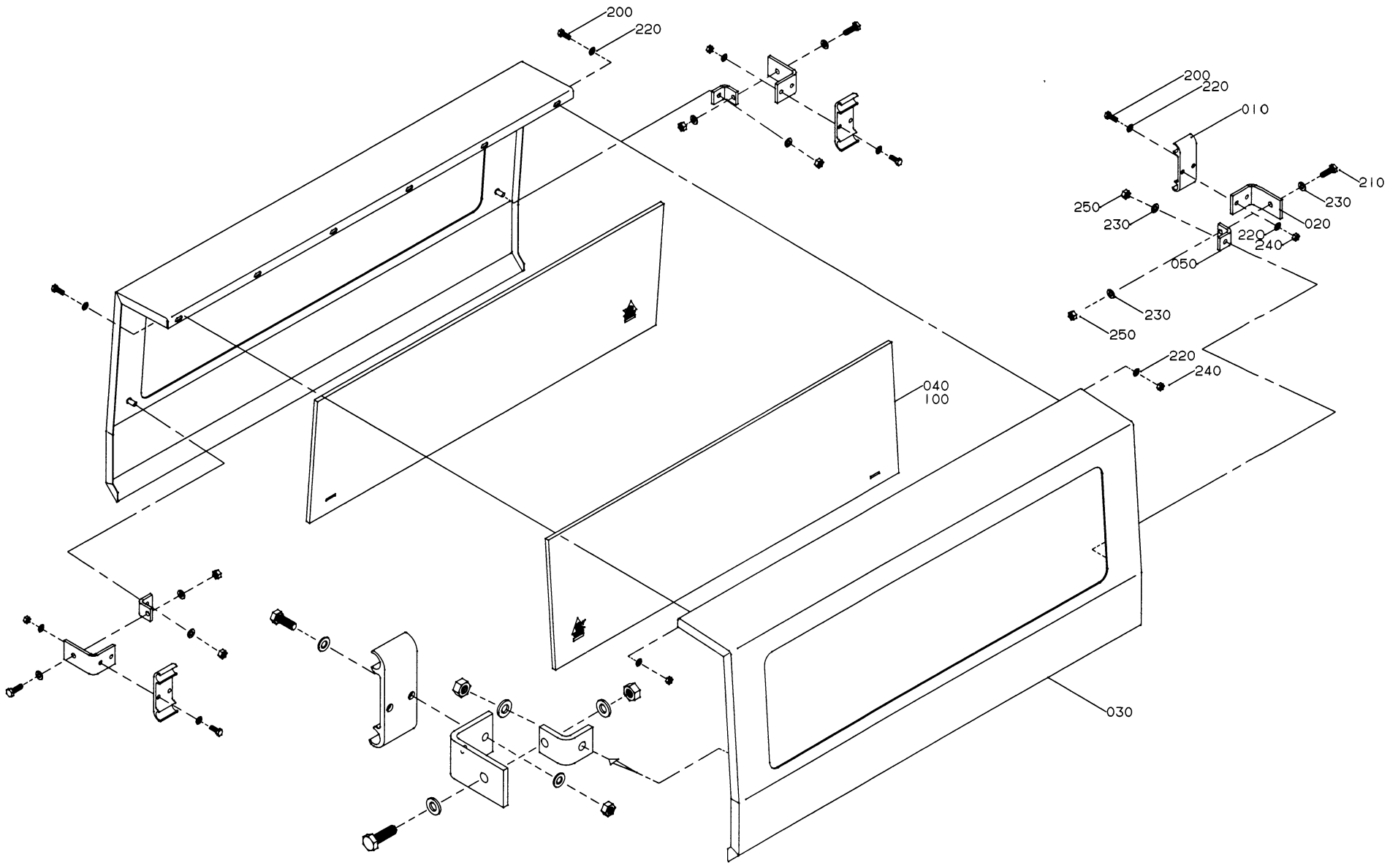

GraphicID: 106535901.eps
Parent Drw: 1065359-1
ECN 19307

Pos	Part No	SP	UN	Qty	Description	Page No
Conveyor width B40						
000	**C-1065359-0101**	-		1	**TUNNEL**	
010	1020638	-		4	HOLDER	
020	577854	-		4	BRACKET	
Conveyor width B55. B55S						
000	**C-1065359-0102**	-		1	**TUNNEL**	
010	1020637	-		4	HOLDER	
020	577855	-		4	BRACKET	
Conveyor width B65						
000	**C-1065359-0103**	-		1	**TUNNEL**	
010	1020637	-		4	HOLDER	
020	577856	-		4	BRACKET	
Conveyor width B79						
000	**C-1065359-0104**	-		1	**TUNNEL**	
010	1020637	-		4	HOLDER	
020	577857	-		4	BRACKET	
Conveyor width B68						
000	**C-1065359-0105**	-		1	**TUNNEL**	
020	1139138	-		4	BRACKET	
COMMON PARTS						
030	**577862**	-		2	**TUNNEL HALF**	
040	1074379	-		2	GLASS	
050	577859	-		4	BRACKET	
100	90157-0041	-		X	SEALING COMPOUND	
200	312105-0329	-		14	SCREW O4017 M5X16A280	
210	312105-0370	-		4	SCREW O4017 M6X20A280	
220	315105-0146	-		28	WASHER BRB5,3X10RFR	
230	315105-0153	-		12	WASHER BRB6,4X12RFR	
240	312605-0314	-		12	NUT M6M5RFR	
250	312605-0316	-		8	NUT M6M6RFR	

Pos	Part No	SP	UN	Qty	Description	Page No

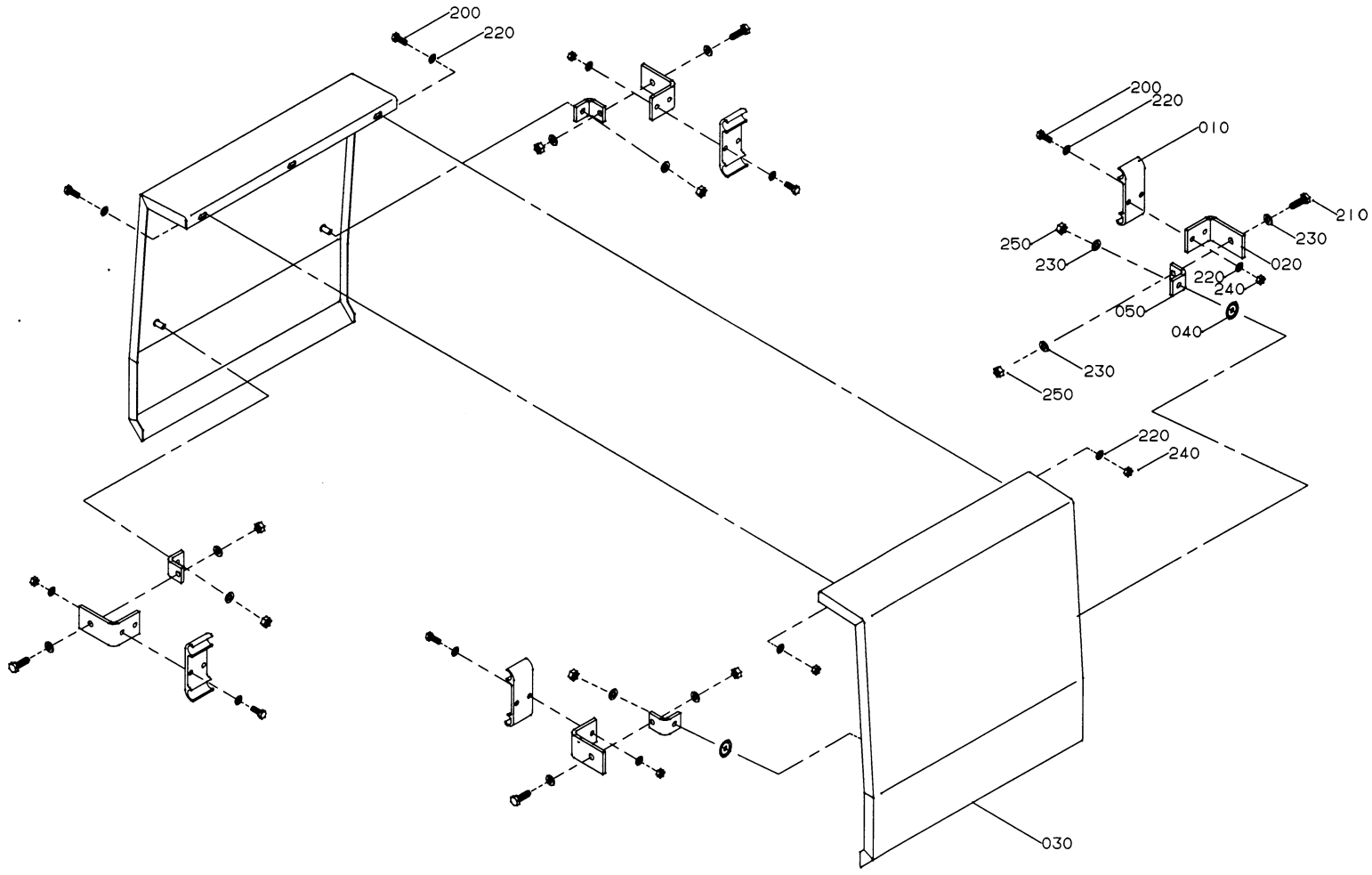

GraphicID: 107423901.eps
Parent Drw: 1074239-1
ECN 19304

Pos	Part No	SP	UN	Qty	Description	Page No
Conveyor width B40						
000	**C-1074239-0101**	-		1	**TUNNEL**	
010	1020638	-		4	HOLDER	
020	1074242	-		4	BRACKET	
Conveyor width B55. B55S						
000	**C-1074239-0102**	-		1	**TUNNEL**	
010	1020637	-		4	HOLDER	
020	1074243	-		4	BRACKET	
Conveyor width B65						
000	**C-1074239-0103**	-		1	**TUNNEL**	
010	1020637	-		4	HOLDER	
020	1074244	-		4	BRACKET	
COMMON PARTS						
030	**1074237**	-		2	**TUNNEL**	
040	575417	-		4	WASHER	
050	577859	-		4	BRACKET	
200	312105-0329	-		11	SCREW O4017 M5X16A280	
210	312105-0370	-		4	SCREW O4017 M6X20A280	
220	315105-0146	-		22	WASHER BRB5,3X10RFR	
230	315105-0153	-		12	WASHER BRB6,4X12RFR	
240	312605-0314	-		8	NUT M6M5RFR	
250	312605-0316	-		8	NUT M6M6RFR	

Pos	Part No	SP	UN	Qty	Description	Page No

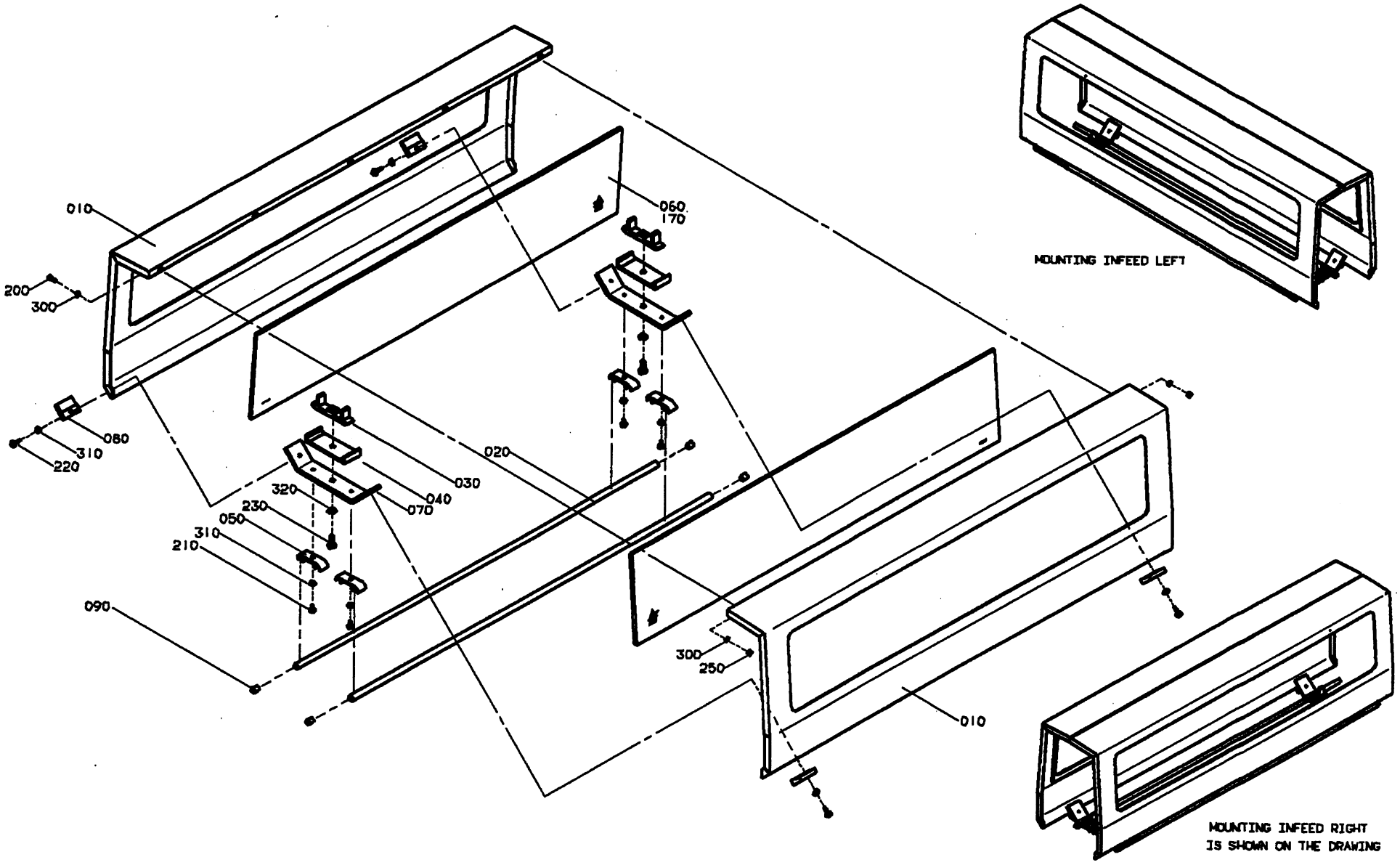

GraphicID: 108003002.tif
Parent Drw: 1080030-2
ECN No: 22292

Pos	Part No	SP	UN	Qty	Description	Page No
-						
000	**C-1080030-0201**	-		1	**TUNNEL**	
010	1128868	-		2	TUNNEL	
020	1128869	-		2	PIPE	
030	537482	-		2	BRACKET	
040	537483	-		2	BRACKET	
050	1020634-0001	-		4	HOLDER	
060	1128852	-		2	GLASS	
070	1128870	-		2	BRACKET	
080	1128871	-		4	CLAMPING PLATE	
090	484701	-		4	SHUTTER	
170	90157-0041	-		X	SEALING COMPOUND	
200	312105-0328	-		5	SCREW M6S5X14 A2 80	
210	312105-0364	-		4	SCREW M6S6X10RFR	
220	312105-0368	-		4	SCREW O4017 M6X16A280	
230	312105-0451	-		2	SCREW SO4017 8X20A280	
250	312605-0314	-		5	NUT M6M5RFR	
300	315105-0146	-		10	WASHER BRB5,3X10RFR	
310	315105-0153	-		8	WASHER BRB6,4X12RFR	
320	315105-0165	-		2	WASHER BRB8,4X16RFR	

Pos	Part No	SP	UN	Qty	Description	Page No

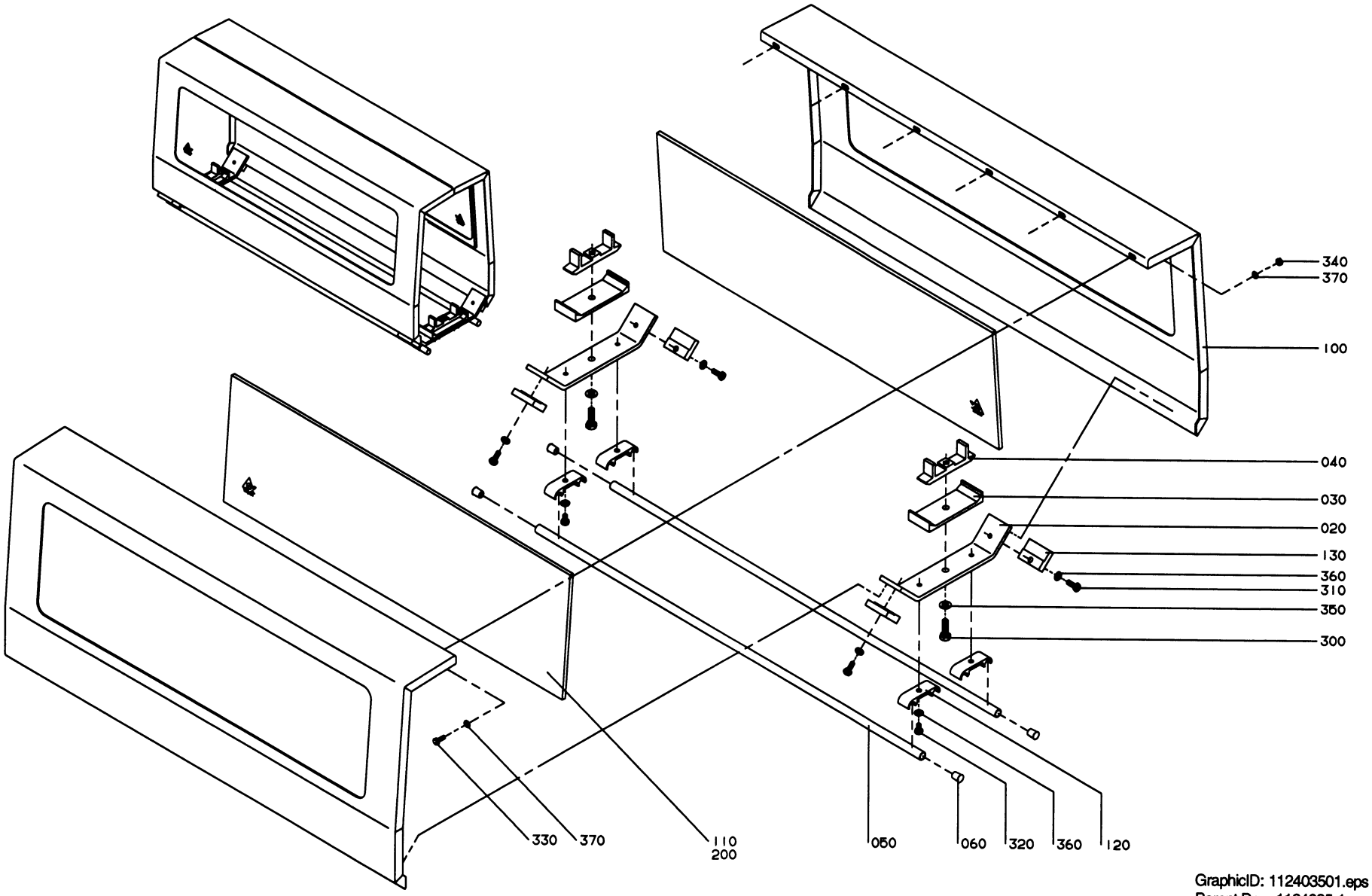

GraphicID: 112403501.eps
Parent Drw: 1124035-1
ECN 21267

Pos	Part No	SP	UN	Qty	Description	Page No
Conveyor width B40, B55, B55S, B65, B68, B79						
000	**C-1124035-0101**	-		1	**TUNNEL**	
020	1128870	-		2	BRACKET	
030	537483	-		2	BRACKET	
040	537482	-		2	BRACKET	
050	476221-0008	-		2	PIPE	
060	484701	-		4	SHUTTER	
330	312105-0328	-		6	SCREW M6S5X14 A2 80	
340	312605-0314	-		6	NUT M6M5RFR	
370	315105-0146	-		12	WASHER BRB5,3X10RFR	
Conveyor width UNITADJ						
000	**C-1124035-0102**	-		1	**TUNNEL**	
010	1111067	-		1	COVERING PLATE	
020	1124482	-		2	BRACKET	
030	548246	-		2	BRACKET	
040	548247	-		2	BRACKET	
050	476221-0008	-		4	PIPE	
060	484701	-		8	SHUTTER	
330	312105-0328	-		12	SCREW M6S5X14 A2 80	
340	312605-0314	-		12	NUT M6M5RFR	
370	315105-0146	-		24	WASHER BRB5,3X10RFR	
COMMON PARTS						
100	**577862**	-		2	**TUNNEL HALF**	
110	1074379	-		2	GLASS	
120	1020634-0001	-		4	HOLDER	
130	1128871	-		4	CLAMPING PLATE	
200	90157-0041	-		X	SEALING COMPOUND	
300	312105-0453	-		2	SCREW O4017 M8X25A280	
310	312105-0368	-		4	SCREW O4017 M6X16A280	
320	312105-0364	-		4	SCREW M6S6X10RFR	
350	315105-0165	-		2	WASHER BRB8,4X16RFR	
360	315105-0153	-		8	WASHER BRB6,4X12RFR	

Pos	Part No	SP	UN	Qty	Description	Page No

This page is intentionally left blank

Pos	Part No	SP	UN	Qty	Description	Page No
-						
000	**C-1065361-040V**	-		1	**DOCUMENT 670270 MAX INF.**	
010	OM-84836-01	-		1	OPERATORS MANUAL, ENGLISH	
020	MM-84841-01	-		1	MAINTENANCE MANUAL, ENGLISH	
030	IM-84846-01	-		1	INSTALLATION MANUAL, ENGLISH	
040	SPC-84851-01	-		1	SPARE PARTS CATALOGUE	
050	EM-84856-01	-		1	ELECTRICAL MANUAL	
060	EM-84864-01	-		1	ELECTRICAL MANUAL (VOLUME 160S, 200S)	
070	EM-8465-01	-		1	ELECTRICAL MANUAL (VOLUME 100S, 125S)	

Pos	Part No	SP	UN	Qty	Description	Page No

This page is intentionally left blank

Pos	Part No	SP	UN	Qty	Description	Page No
-						
000	**C-1065920-040V**	-		1	**DOCUMENT 670270 MED INF.**	
010	OM-84837-01	-		1	OPERATORS MANUAL	
020	MM-84842-01	-		1	MAINTENANCE MANUAL	
030	IM-84847-01	-		1	INSTALLATION MANUAL	
040	SPC-84866-01	-		1	SPARE PARTS CATALOGUE	
050	EM-84857-01	-		1	ELECTRICAL MANUAL	

Pos	Part No	SP	UN	Qty	Description	Page No

This page is intentionally left blank

Pos	Part No	SP	UN	Qty	Description	Page No
-						
000	C-1065921-040V	-		1	DOCUMENT 670270 MIN INF.	
010	OM-84838-01	-		1	OPERATORS MANUAL	
020	MM-84843-01	-		1	MAINTENANCE MANUAL	
030	IM-84848-01	-		1	INSTALLATION MANUAL	
040	SPC-84867-01	-		1	SPARE PARTS CATALOGUE	
050	EM-84858-01	-		1	ELECTRICAL MANUAL	

Pos	Part No	SP	UN	Qty	Description	Page No

This page is intentionally left blank

Pos	Part No	SP	UN	Qty	Description	Page No
-						
000	**C-1065922-040V**	-		1	**DOCUMENT 670270 L INF.**	
010	OM-84839-01	-		1	OPERATORS MANUAL	
020	MM-84844-01	-		1	MAINTENANCE MANUAL	
030	IM-84849-01	-		1	INSTALLATION MANUAL	
040	SPC-84971-01	-		1	SPARE PARTS CATALOGUE	
050	EM-84859-01	-		1	ELECTRICAL MANUAL	

Pos	Part No	SP	UN	Qty	Description	Page No

This page is intentionally left blank

Pos	Part No	SP	UN	Qty	Description	Page No
-						
000	**C-1074545-020V**	-		1	**DOCUMENT 670270 MULTI INF**	
010	OM-84840-01	-		1	OPERATORS MANUAL	
020	MM-585317-01	-		1	MAINTENANCE MANUAL	
030	IM-84850-01	-		1	INSTALLATION MANUAL	
040	SPC-585118-01	-		1	SPARE PARTS CATALOGUE	
050	EM-84860-01	-		1	ELECTRICAL MANUAL	
	* for variants without bottom size selector					
050	EM-585325-01	-		1	ELECTRICAL MANUAL	
	* for variants with bottom size selector					

Pos	Part No	SP	UN	Qty	Description	Page No

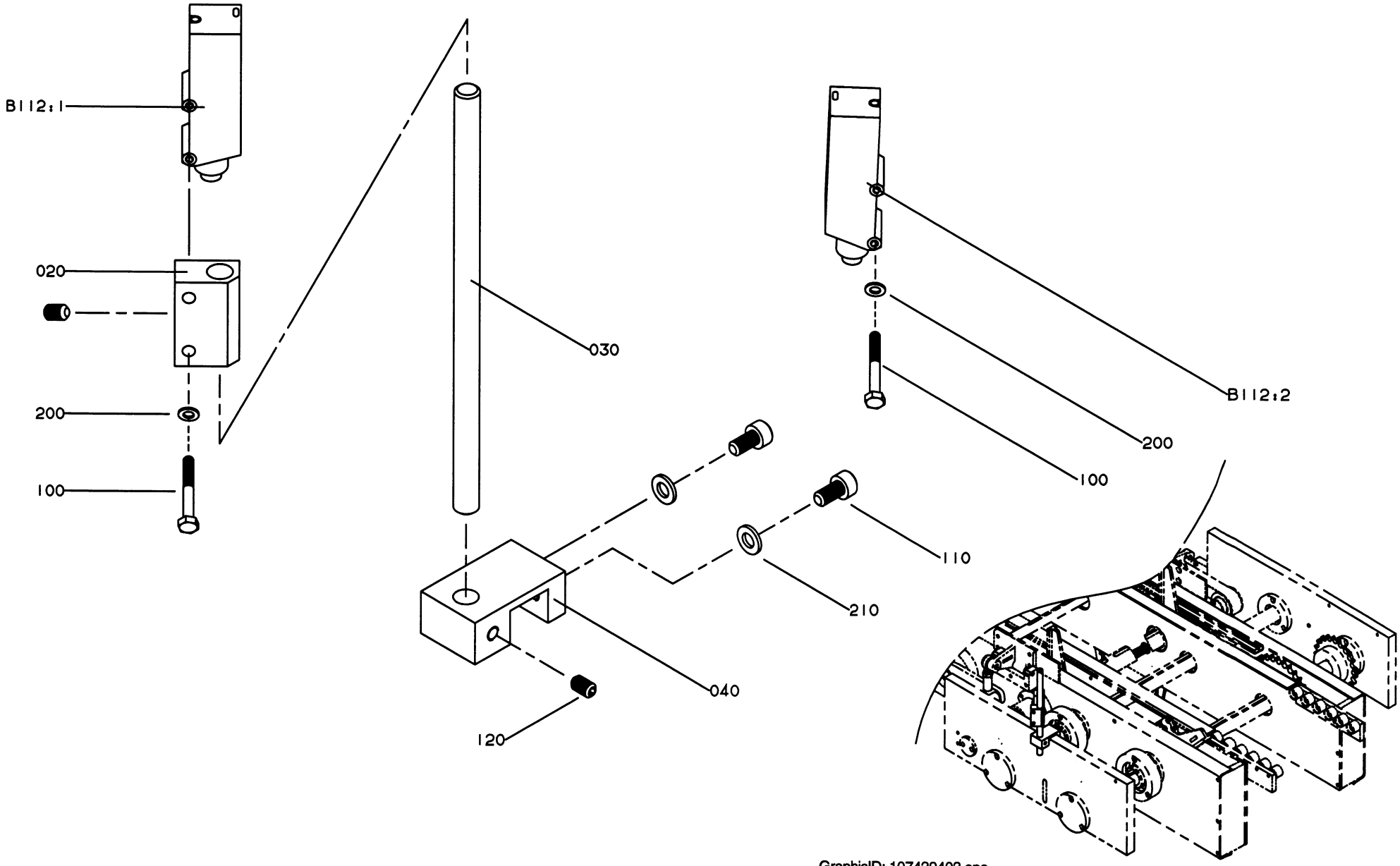

GraphicID: 107439403.eps
Parent Drw: 1074394-3
ECN 22668

Pos	Part No	SP	UN	Qty	Description	Page No
-						
000	**C-1074394-0301**	-		1	**QUEUE GUARD,SINGLE**	
020	1020829	-		1	MOUNTING BLOCK	
030	1074429	-		1	ROD	
040	1074428	-		1	BRACKET	
100	312105-0297	-		4	SCREW O4014 M4X25A280	
110	312115-0366	-		2	SCREW O4762 M6X12A280	
120	312318-0364	-		2	STOP SCREW SK6SS6X10RFR	
200	315105-0136	-		4	WASHER BRB4,3X8RFR	
210	315105-0153	-		2	WASHER BRB6,4X12RFR	
B112:1	90232-0103	-		1	PH.CELL OMRON E3SCT61L 5M	
B112:2	90232-0104	-		1	RECEIVER OMRON E3SCT61D5M	

Pos	Part No	SP	UN	Qty	Description	Page No

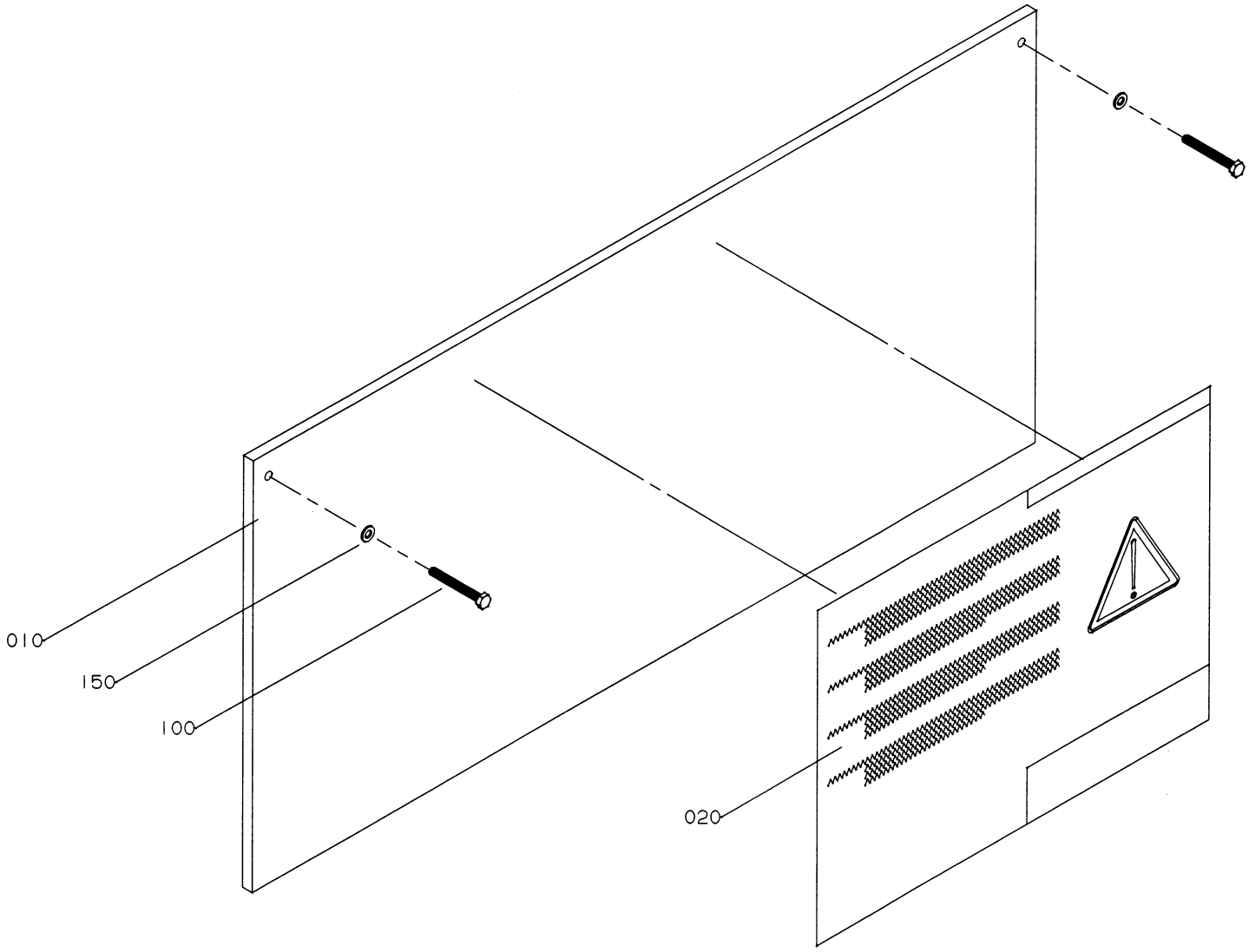

GraphicID: 107444101.eps
Parent Drw: 1074441-1
ECN 19307

Pos	Part No	SP	UN	Qty	Description	Page No
-						
000	C-1074441-0201	-		1	**GUARD PLATE**	
010	1074442	-		1	PLATE	
020	1128859	-		1	SIGN	
100	312105-0380	-		2	SCREW O4014 M6X50A280	
150	315105-0153	-		2	WASHER BRB6,4X12RFR	

Pos	Part No	SP	UN	Qty	Description	Page No

Tetra Pak

SPC

Spare Parts Catalogue

Part No	MMref	Description	Page No
10-14MM			23, 25, 153, 219, 425
1020634-0001	01.08	HOLDER	233
1020634-0001	05.05	HOLDER	469
1020634-0001	05.06	HOLDER	471
1020635-0001	01.08	HOLDER	233
1020637	05.03	HOLDER	465
1020637	05.04	HOLDER	467
1020638	05.03	HOLDER	465
1020638	05.04	HOLDER	467
1020829	05.12	MOUNTING BLOCK	483
1021001	01.06	LINK ARM	37
1021002	01.06	CLAMP RING	37
1021003	01.06	RING	37
1021004	01.06	SHAFT	37
1021004	01.07	SHAFT	39, 41
1021004	01.08	SHAFT	43
1021004	01.09	SHAFT	45
1021005	01.06	BUSHING	37
1021006	01.04	SPRING BRACKET	29, 31
1021006	01.06	SPRING BRACKET	37
1021008	01.06	NIPPLE	37
1021008	01.07	NIPPLE	39, 41
1021008	01.08	NIPPLE	43
1021008	01.09	NIPPLE	45
1021010	01.07	LINK ARM	39, 41
1021011	01.07	CLAMP RING	39, 41
1021011	01.08	CLAMP RING	43
1021011	01.09	CLAMP RING	45
1021012	01.07	RING	39, 41
1021012	01.08	RING	43
1021012	01.09	RING	45
1021014	01.07	SPRING BRACKET	39, 41
1021017	01.08	WASHER	43
1021017	01.09	WASHER	45
1021018	01.08	SPRING BRACKET	43
1021018	01.09	SPRING BRACKET	45
1021020	01.08	LINK ARM	43
1021020	01.09	LINK ARM	45
1021021	01.08	BUSHING	43
1021021	01.09	BUSHING	45
1021025	01.10	COVER DISC	47
1021026	01.10	COVER DISC	47
1021027	01.05	CAM DISC	33, 35
1021028	01.04	CAM DISC	29, 31
1021028	01.05	CAM DISC	33, 35
1021029	01.05	CAM DISC	33, 35
1021031	01.03	BRACKET	27
1021033	01.03.01	ADJUSTING SCREW	71
1021034	01.03.01	SHAFT	71
1021035	01.03.01	SLEEVE	71
1021036	01.03.01	NUT	71
1021036	01.03.02	NUT	73
1021037	01.03.01	RING	71
1021037	01.03.02	RING	73
1021038	01.03.01	RETAINING RING	71
1021038	01.03.02	RETAINING RING	73
1021038	04.02	RETAINING RING	427
1021039	01.03.01	WASHER	71
1021039	01.03.02	WASHER	73
1021039	04.02	WASHER	427
1021040	01.03.01	TOOTHED PULLY	71
1021040	01.03.02	TOOTHED PULLY	73
1021040	04.02	TOOTHED PULLY	427
1021042	01.03.02	ADJUSTING SCREW	73
1021044	01.03.03	PILLAR	75
1021044	01.03.04	PILLAR	77
1021045	01.03.03	BEARING HOUSING	75
1021045	01.03.04	BEARING HOUSING	77
1021046	01.03.03	HOLDER	75
1021047	01.03.03	WASHER	75
1021047	01.03.04	WASHER	77
1021048	01.03.03	WASHER	75
1021048	01.03.04	WASHER	77
1021050	01.03.04	HOLDER	77
1021051	01.03.04	HOLDER	77
1021053	01.03.05	SHAFT	79
1021054	01.03.05	BEARING HOUSING	79
1021054	01.03.06	BEARING HOUSING	81
1021056	01.03.05	SPROCKET	79
1021057	01.03.05	HUB	79
1021057	01.03.06	HUB	81
1021059	01.03.05	WASHER	79
1021059	01.03.06	WASHER	81
1021061	01.03.06	SHAFT	81
1021062	01.03.06	SPROCKET	81
1021063	01.03.06	SPROCKET	81

Part No	MMref	Description	Page No
1021064	01.03.05	BEARING COVER	79
1021064	01.03.06	BEARING COVER	81
1021065	01.03.05	BEARING COVER	79
1021065	01.03.06	BEARING COVER	81
1021066	01.03.05	FLAT WEDGE	79
1021066	01.03.06	FLAT WEDGE	81
1021068	01.03.13	SPROCKET	101
1021069	01.03.12	SHAFT	99
1021069	01.03.13	SHAFT	101
1021070	01.03.12	BEARING COVER	99
1021070	01.03.13	BEARING COVER	101
1021071	01.03.12	LOCKING LUG	99
1021071	01.03.13	LOCKING LUG	101
1021073	01.03.12	SPROCKET	99
1021074	01.03.13	HOLDER	101
1021075	01.03.13	LOCK PLATE	101
1021083	01.03.17	SPACER	109
1021085	01.03.17	SLIDE RAIL	109
1021086	01.03.17	SLIDE RAIL	109
1021087	01.03.17	SLIDE RAIL	109
1021088	01.03.17	SLIDE RAIL	109
1021090	01.03.10	CHAIN	95
1021090	01.03.11	CHAIN	97
1021091	01.03.10	CHAIN	95
1021091	01.03.11	CHAIN	97
1021092-0001	01.03.10	LINK	95
1021092-0002	01.03.10	LINK	95
1021095-0001	01.03.11	LINK	97
1021095-0002	01.03.11	LINK	97
1021099	01.03.07	CANTILEVER	83, 85
1021100	01.03.07	CANTILEVER	83, 85
1021101	01.03.07	SHAFT	83, 85
1021102	01.03.07	FOLDING FLAP	83, 85
1021103	01.03.07	FOLDING FLAP	83, 85
1021104	01.03.07	BEARING HOUSING	83, 85
1021105	01.03.07	LID	83, 85
1021106	01.03.07	HUB	83, 85
1021106	01.03.08	HUB	87, 89
1021106	01.03.09	HUB	91, 93
1021107	01.03.07	ARM	83, 85
1021108	01.03.07	ARM	83, 85
1021109	01.03.07	PLATE	83, 85
1021110	01.03.07	SHAFT	83, 85
1021110	01.03.08	SHAFT	87, 89
1021112	01.03.07	ARM	83, 85
1021113	01.03.07	WASHER	83, 85
1021113	01.03.08	WASHER	87, 89
1021114	01.03.07	WASHER	83, 85
1021114	01.03.08	WASHER	87, 89
1021115	01.03.07	LOCK PLATE	83, 85
1021116	01.03.07	LOCK PLATE	83, 85
1021117	01.03.07	LOCK PLATE	83, 85
1021121	01.03.07	LINK ARM	83, 85
1021123	01.03.08	BEARING HOUSING	87, 89
1021123	01.03.09	BEARING HOUSING	91, 93
1021124	01.03.08	PLATE	87, 89
1021125	01.03.08	ARM	87, 89
1021126	01.03.08	ARM	87, 89
1021127	01.03.08	HOLDER	87, 89
1021128	01.03.08	SLEEVE	87, 89
1021129	01.03.08	SHAFT	87, 89
1021130	01.03.08	WASHER	87, 89
1021131	01.03.09	ARM	91, 93
1021132	01.03.09	ARM	91, 93
1021134	01.03.09	SHAFT	91, 93
1021135	01.03.09	LUG	91, 93
1021136	01.03.09	LUG	93
1021137	01.03.09	SHAFT	91, 93
1021138	01.03.09	BEARING HOUSING	91, 93
1021139	01.03.09	HUB	91, 93
1021140	01.03.09	SLEEVE	91, 93
1021141	01.03.09	BRACKET	91, 93
1021142	01.03.09	WASHER	91, 93
1021145	01.04.02	CLAMPING PIECE	121, 123
1021146	01.04.02	ARM	121, 123
1021147	01.04.02	PLATE	121, 123
1021148	01.04.02	SHAFT	121, 123
1021149	01.04.02	ADJUSTING SCREW	121, 123
1021150	01.04.02	SHAFT	121, 123
1021151	01.04.02	ARM	121, 123
1021152	01.04.02	WASHER	121, 123
1021153	01.04.02	LID	121, 123
1021154	01.04.02	NUT	121, 123
1021154	03.05	NUT	397, 399
1021154	04.02	NUT	427
1021155	01.04.02	WASHER	121, 123

Part No	MMref	Description	Page No
1021155	03.05	WASHER	397, 399
1021156	01.04.02	RETAINING RING	121, 123
1021156	03.05	RETAINING RING	397, 399
1021157	01.04.02	CLAMPING PIECE	121, 123
1021158	01.04.02	SPACER	121, 123
1021159	01.04.02	SHAFT	121, 123
1021161	01.04.03	PIPE	125, 127
1021162	01.04.03	BEARING HOUSING	125
1021163	01.04.03	PLATE	125
1021164	01.04.03	NUT	125, 127
1021165	01.04.03	WASHER	125, 127
1021166	01.04.03	SPRING	125, 127
1021169	01.04.03	BEARING HOUSING	127
1021170	01.04.03	PLATE	127
1021171	01.04.03	HOLDER	127
1021172	01.04.03	SPACER	127
1021182	03.01	SHAFT	389
1021183	03.01	GEAR WHEEL	389
1021184	03.01	BEARING HOUSING	389
1021185	03.01	BEARING HOUSING	389
1021186	03.02	ROLL	391
1021187	03.02	SLEEVE	391
1021188	03.02	AXLE PIN	391
1021189	03.02	HOLDER	391
1021190	03.03	ROLL	393
1021190	03.04	ROLL	395
1021191	03.03	SLEEVE	393
1021191	03.04	SLEEVE	395
1021192	03.03	AXLE PIN	393
1021193	03.03	HOLDER	393
1021194	03.04	SHAFT	395
1021195	03.04	PLATE	395
1021196	03.04	BRACKET	395
1021197	03.04	SCREW	395
1021199	03.05	SHAFT	397, 399
1021200	03.05	ADJUSTING SCREW	397, 399
1021201	03.05	BEARING HOUSING	397, 399
1021202	03.05	HUB	397, 399
1021207	03.10	RAIL	409
1021208	03.10	SLIDING STRIP	409
1021209	03.10	SLIDING STRIP	409
1021210	03.10	HOLDER	409
1021211	03.10	NUT	409
1021212	03.10	ADJUSTING SCREW	409
1021213	03.10	PLATE	409
1021214	03.10	BEARING HOUSING	409
1021215	03.10	SHAFT	409
1021216	03.10	COVER	409
1021217	03.10	COVER	409
1021218	03.10	SUPPORT	409
1021219	03.10	SUPPORT	409
1021220	03.10	GEAR WHEEL	409
1021221	03.10	GEAR WHEEL	409
1021225	03.11	BEARING HOUSING	411
1021226	03.11	CLAMPING PIECE	411
1021227	03.11	FASTENING PLATE	411
1021228	03.11	STEERING	411
1021229	03.11	BRACKET	411
1021233	03.07	SPACER	403
1021234	03.07	SPACER	403
1021235	03.07	PLATE	403
1021236	03.07	LOCK PLATE	403
1021242	03.06	CLAMPING PIECE	401
1021244	03.12	SHAFT	413
1021245	03.12	SHAFT	413
1021246	03.12	PILLAR	413
1021249	03.12	SHAFT	413
1021250	03.12	BEARING HOLDER	413
1021251	03.12	BEARING HOLDER	413
1021252	03.12	BEARING HOLDER	413
1021253	03.12	CONICAL GEAR	413
1021254	03.12	CONICAL GEAR	413
1021255	03.12	GEAR WHEEL	413
1021256	03.12	SHAFT	413
1021257	03.12	BEARING HOUSING	413
1021258	03.12	GEAR WHEEL	413
1021259	03.08	PLATE	405
1021260	03.12	HOLDER	413
1021261	03.12	CLAMPING PIECE	413
1021262	03.12	WASHER	413
1021263	03.12	RETAINING RING	413
1021264	03.08	SIDE PLATE	405
1021265	03.08	SIDE PLATE	405
1021266	03.08	PLATE	405
1021267	03.08	PLATE	405
1021268	03.08	PLATE	405

Part No	MMref	Description	Page No
1021269	03.09	COVER	407
1021270	03.09	HOLDER	407
1021271	03.09	GEAR WHEEL	407
1021272	03.09	SPACER	407
1021276	03.13	PLATE	415
1021277	03.13	PLATE	415
1021284	01.03.14	SUPPORT	103
1021289	01.03.14	LOCK PLATE	103
1021293	01.03.15	CLAMPING PIECE	105
1021294	01.03.15	LOCK PLATE	105
1021296	01.03.16	BRACKET	107
1021297	01.03.16	SUPPORT	107
1021298	01.03.16	STEERING	107
1021299	01.03.16	GUIDE	107
1021300	01.03.16	GUIDE	107
1021301	01.03.16	RAIL	107
1021302	01.03.16	LOCK PLATE	107
1021304	01.04.01	PROFILE	119
1021305	01.04.01	PROFILE	119
1021306	01.04.01	PROFILE	119
1021307	01.04.01	PROFILE	119
1021308	01.04.01	PROFILE	119
1021309	01.04.01	PROFILE	119
1021310	01.04.01	PROFILE	119
1021313	01.04.01	PROFILE	119
1021314	01.04.01	PROFILE	119
1021315	01.04.01	PROFILE	119
1021316	01.04.01	PROFILE	119
1021317	01.04.01	PROFILE	119
1021318	01.04.01	BRACKET	119
1021319	01.04.01	BRACKET	119
1021322	01.04.01	NUT	119
1021323	01.03	PROFILE	27
1021324	02.03	SPROCKET	65
1021325	01.03.05	SPROCKET	79
1021327	01.03.18	SPROCKET	111
1021328	01.03.18	BRACKET	111
1021329	01.03.18	SHAFT	111
1021338	03.08	COVERING PLATE	405
1021339	03.08	COVERING PLATE	405
1021349	01.13	CABLE TRENCH	55
1021350	01.13	CABLE TRENCH	55
1021351	01.13	CABLE TRENCH	55
1021372	01.03	PROFILE	27
1021388	02.01	CLAMP RING	145
1021389	02.01	RING	145
1021390	01.13	LID	55
1021391	01.13	LID	55
1021392	01.13	LID	55
1021393	01.06.10	BRACKET	185
1021394	01.06.10	SPACER	185
1021397	02.03	PLATE	153
1021398	02.03	BOLT	153
1021399	02.03	WASHER	153
1021405	01.04.01	PROFILE	119
1021412	01.04.01	PROFILE	119
1021413	01.03.05	SPROCKET	79
1021414	01.03.05	HUB	79
1021415	01.03.05	WASHER	79
1021462	02.03	SLIDING STRIP	153
1021506	03.08	SUPPORT	405
1021507	03.10	NUT	409
1021508	03.10	ADJUSTING SCREW	409
1021509	01.03.12	SCREW	99
1021509	01.03.13	SCREW	101
1021511	01.04.04	CABLE TRENCH	129
1021512	01.04.04	CABLE TRENCH	129, 131, 133
1021513	01.04.04	CABLE TRENCH	129, 131, 133
1021514	01.04.04	CABLE TRENCH	129
1021515	01.04.04	CABLE TRENCH	129, 131, 133
1021516	01.04.04	LID	129, 133
1021517	01.04.04	LID	129, 131, 133
1021518	01.04.04	LID	129, 131, 133
1021519	01.04.04	LID	129, 133
1021520	01.04.04	LID	129, 131, 133
1021554	02.01	BRACKET	145
1021579	01.03.07	FLAT WEDGE	83, 85
1021579	01.03.08	FLAT WEDGE	87, 89
1021579	01.03.09	FLAT WEDGE	91, 93
1021593	01.11	BRACKET	49, 51
1021594	01.11	YOKE	49, 51
1021595	01.07	TENSION SPRING	39, 41
1021595	01.08	TENSION SPRING	43
1021595	01.09	TENSION SPRING	45
1021596	01.06	TENSION SPRING	37
1021597	02.01	HUB	61

Part No	MMref	Description	Page No
1021598	02.01	PROTRACTOR	61
1021599	02.01	ARROW	61
1021605	01.03	PROFILE	27
1021606	01.03	BRACKET	27
1021669	2.09	SHAFT	335
1021671	2.09	HOLDER	335
1021672	2.09	HOLDER	335
1021673	2.09	SHAFT	335
1021674	2.09	SHEET	335
1021678	2.09	HOLDER	335
1021702	01.06.02	PROTECTION PLATE	167
1021706	01.06.04	PROTECTION PLATE	171
1021708	01.06.05	PROTECTION PLATE	173
1021710	01.06.06	HATCH	177
1021713	01.06.06	HATCH	175
1021715	01.06.07	HATCH	179
1021715	03.13	HATCH	377
1021717	01.06.08	HATCH	181
1021719	01.06.09	PROTECTION PLATE	183
1021721	01.06.13	BRACKET	191
1021722	01.06.06	GLASS	177
1021723	01.06.06	DRIP PLATE	175, 177
1021724	01.06.06	GLASS	175
1021728	01.03	PROFILE	27
1021742	01.01	CONNECTION BOX	219
1021746	01.01	BRACKET	23
1021746	01.02	BRACKET	25
1021773	01.06.01	HOOD	165
1021774	01.06.10	PROTECTION PLATE	185
1021775	01.06.01	BRACKET	165
1021776	01.04.01	BRACKET	119
1021779	01.06.01	BRACKET	165
1021783	01.06.11	PROTECTION PLATE	187
1021783	01.06.16	PROTECTION PLATE	197
1021784	01.06.11	GLASS	187
1021784	01.06.16	GLASS	197
1021786	01.06.12	CORNER STRIP	189
1021786	01.06.18	CORNER STRIP	201
1021787	01.06.12	CORNER STRIP	189
1021787	01.06.18	CORNER STRIP	201
1021792	01.06.11	BRACKET	187
1021792	01.06.15	BRACKET	195
1021792	01.06.16	BRACKET	197
1021793	01.04.01	PROFILE	119
1021794	01.04.01	PROFILE	119
1021795	01.06.09	DOWEL	183
1021798	01.04.01	BRACKET	119
1021799	01.06.13	BRACKET	191
1021822	2.09	SUPPORTING SHEET	335
1021855	01.06.13	RIM	191
1021892	03.06	MOUNTING SHEET	401
1021893	03.06	HOLDER	401
1021898	01.01	CONNECTION BOX	23
1021898	01.02	CONNECTION BOX	25
1021899	01.06.13	BRACKET	191
1021901	01.03.17	SPACER	109
1021910	01.04.06	FASTENING BRACKET	139
1021913	01.06.01	HANDLE	165
1021913	2.15	HANDLE	347
1021915	02.03	SHEET	65
1021917	01.05	SPACER	227
1021918	01.03.07	SPACER	83, 85
1021919	01.03.18	CHAIN	111
1021922	01.03.09	LUG	91
1021928	2.09	SUPPORTING SHEET	335
1021933	01.03	COVER TAPE	27
1021933	01.04.01	COVER TAPE	119
1021933	01.10	COVER TAPE	237, 239
1021933	01.17	COVER TAPE	267, 269
1021934	01.03.16	WASHER	107
1021937	01.06.12	CORNER STRIP	189
1021937	01.06.18	CORNER STRIP	201
1021939	02.03	SHEET	153
1021944	01.03	CABLE DUCT	27
1021946	01.04	DIAL	29, 31
1021946	01.05	DIAL	33, 35
1021949	03.10	RAIL	409
1021950	03.06	SLIDE RAIL	401
1021951	03.13	SLIDER	415
1021953	03.10	PROTECTION PLATE	409
1021955	03.13	PROTECTION	415
1021959	01.06.10	PROTECTION PLATE	185
1021983	01.12	MOUNTING SHEET	53
1021984	01.12	SPACER	53
1021989	01.04.01	PROFILE	119
1021990	01.04.04	SIGN	129, 131, 133

Part No	MMref	Description	Page No
1021990	01.19	SIGN	273, 275
1021991	01.04.04	STRIP	129, 131, 133
1021991	01.19	STRIP	273, 275
1021992	03.07	RAIL	403
1021994	03.07	PLATE	403
1021995	03.07	STEERING RAIL	403
1021997	01.03	PROFILE	27
1021998	02.03	CHAIN	65
1030865	2.11	DIAL	339
1065341	2.09	HOLDER	335
1065368	03.10	END SECTION	409
1065369	03.10	END SECTION	409
1065370	03.10	RAIL	409
1065371	03.10	SLIDING STRIP	409
1065410	01.03	SLOTTED PIN	27
1065410	01.04.01	SLOTTED PIN	119
1065461	2.10	FLAP	337
1065462	2.10	FLAP	337
1065463	2.10	FLAP	337
1065464	2.10	FLAP	337
1065465	2.10	FLAP	337
1065466	2.10	FLAP	337
1065467	2.10	FLAP	337
1065468	2.10	FLAP	337
1065469	2.10	FLAP	337
1065601	01.06.14	PROTECTION PLATE	193
1065615	01.06.15	HATCH	195
1065617	01.06.16	BRACKET	197
1065618	01.06.15	GLASS	195
1065621	01.06.15	GLASS	195
1065629	01.06.18	CORNER STRIP	201
1065632	01.06.18	CORNER STRIP	201
1065634	01.06.15	HATCH	195
1065696	01.04.04	COVERING PLATE	129, 131, 133
1065696	01.19	COVERING PLATE	273, 275
1065697	01.04.04	BRACKET	129, 131, 133
1065697	01.19	BRACKET	273, 275
1065841	02.04	SPROCKET Z=15	67
1065842	02.04	SHAFT	67
1065844	02.04	SPRING GUIDE	67
1065845	02.04	HOLDER	67
1065846	02.04	FLAG	67
1065847	02.04	STRUT	67
1065848	02.04	BEARING HOUSING	67
1065849	02.04	SHAFT	67
1065850	02.04	HOLDER	67
1065851	02.04	WASHER	67
1065852	02.04	COMPRESSION SPRING	67
1065876	01.06.15	BRACKET	195
1065897	01.03.19	BRACKET	113
1065902	03.07	FOLDING BAR	403
1065907	01.03.14	BRACKET	103
1065908	01.03.14	BRACKET	103
1065910	01.03.14	RAIL	103
1065911	01.03.14	LOCATING PIECE	103
1065912	01.03.14	WASHER	103
1065913	01.03.14	WASHER	103
1065914	01.03.14	WASHER	103
1065915	01.03.14	PLATE	103
1065916	01.03.15	RAIL	105
1065917	01.03.15	RAIL	105
1065918	01.03.17	STEERING	109
1065919	01.04	CAM DISC	29, 31
1065935	01.06.03	PROTECTION PLATE	169
1065936	01.06.03	BRACKET	169
1074169	04.07	SPACER	449
1074206	01.20	HOLDER	277
1074209	01.14.2	BRACKET	257
1074229	2.05	LOCATING PIECE	299
1074233	2.05	WASHER	299
1074233	2.08.5	WASHER	333
1074234	2.04	SPACER	297
1074234	2.05	SPACER	299
1074234	2.08.5	SPACER	333
1074237	05.04	TUNNEL	467
1074242	05.04	BRACKET	467
1074243	05.04	BRACKET	467
1074244	05.04	BRACKET	467
1074260	04.03	CLAMPING RING	427, 429, 431
1074261	04.02	HOLDER	427
1074262	04.02	HOLDER	427
1074263	04.02	SIDE PLATE	427
1074264	04.02	SIDE PLATE	427
1074265	04.02	ADJUSTING SCREW	427
1074266	04.02	HOLDER	427
1074267	04.02	SHAFT	427

Part No	MMref	Description	Page No
1074268	04.02	CANTILEVER	427
1074269	04.02	CANTILEVER	427
1074270	04.02	HOLDER	427
1074271	04.03	GUIDE STEERING	427, 429, 431
1074272	04.03	SHEET	427, 429, 431
1074273	04.03	SHAFT	429, 431
1074274	04.03	SHAFT	427, 429, 431
1074275	04.03	GUIDE STEERING	427, 429, 431
1074276	04.03	HOLDER	427, 429, 431
1074277	04.03	ARM	427, 429, 431
1074278	04.03	ARM	427, 429, 431
1074279	04.03	ARM	429
1074280	04.03	HOLDER	429
1074281	04.03	LOCATING PIECE	427, 429, 431
1074282	04.03	ADJUSTING SCREW	427, 429, 431
1074284	04.03	WASHER	427, 429, 431
1074285	04.03	FLAT WEDGE	429, 431
1074286	04.04	SHEET	433, 435, 437
1074287	04.04	FOLDING FLAP	433, 435, 437
1074288	04.04	PLATE	433, 435, 437
1074289	04.04	PLATE	433, 435, 437
1074290	04.04	HOLDER	433, 435, 437
1074291	04.04	BRACKET	433, 435, 437
1074293	04.04	SUPPORTING SHEET	433, 435
1074294	04.04	RAIL	433, 435, 437
1074295	04.04	STRUT	433, 435, 437
1074297	04.04	SHAFT	433, 435, 437
1074299	04.04	SHAFT	433, 435, 437
1074303	04.05	BRACKET	439, 441
1074304	04.05	BRACKET	439
1074306	04.06	HOLDER	443
1074307	04.03	ARM	429
1074308	04.03	LOCATING PIECE	429
1074309	04.01	CONNECTION BOX	425
1074310	04.01	BRACKET	425
1074313	04.09	HOLDER	455
1074314	03.06	HOLDER	401
1074314	04.09	HOLDER	455
1074315	03.06	ROLL	401
1074315	04.09	ROLL	455
1074316	03.06	SHAFT	401
1074316	04.09	SHAFT	455
1074318	04.04	FOLDING FLAP	433, 435, 437
1074319	04.03	LOCATING PIECE	429
1074322	04.06	PROTECTION	443
1074323	04.06	PROTECTION	443
1074325	04.06	BRACKET	443, 447
1074328	04.09	SIDE PLATE	455
1074329	04.09	HOLDER	455
1074331	04.08	PROFILE	453
1074332	04.08	HEAD PLATE	453
1074333	04.08	ROLL	453
1074344	05.02	BRACKET	463
1074379	05.03	GLASS	465
1074379	05.06	GLASS	471
1074428	05.12	BRACKET	483
1074429	05.12	ROD	483
1074442	05.13	PLATE	485
1074460	01.04.05.1	ROLL	137
1074461	01.04.05.1	SHAFT	137
1074462	01.04.05	RAIL	135
1074463	01.04.05	HOLDER	135
1074464	01.04.05	HOLDER	135
1074465	01.04.05	HOLDER	135
1074466	01.04.05	RAIL	135
1074467	01.04.05	RAIL	135
1074468	01.04.05	CLAMPING PIECE	135
1074470	01.04.05	SECURING PLATE	135
1074471	01.04.05	SPACER	135
1074472	01.04.05	SHAFT	135
1074473	01.04.05	SHAFT	135
1074474	01.04.05.1	NUT	137
1074475	01.04.05	SPACER	135
1074477	04.04	SPRING BRACKET	433, 435, 437
1074478	04.04	SPRING BRACKET	433, 435, 437
1074480	04.03	STEERING	429
1074481	04.03	RAIL	429
1074482	04.03	PLAIN BEARING	427, 429, 431
1074483	01.03.16	SPACER	107
1074484	01.03.16	WASHER	107
1074485	04.04	RAIL	433, 435, 437
1074486	01.04.05	SECURING PLATE	135
1074489	01.03.16	PROTECTION	107
1074490	01.03.16	PROTECTION	107
1074494	01.04.05.1	ROLL	137
1074495	01.04.05.1	SHAFT	137

Part No	MMref	Description	Page No
1074496	01.04.05.1	NUT	137
1074548	01.05	HOLDER	227
1074703	01.03	PROFILE	27
1074704	01.03	PROFILE	27
1074714	01.03	PROFILE	27
1074717	01.03	PROFILE	27
1074738	01.18	BRACKET	271
1074992	02.03	GUARD PLATE	153
1074993	01.04.01	PROFILE	119
1080067	2.11	CLAMP RAIL	339
1080209	01.03.03	HOLDER	75
1086180	01.09	SLEEVE	235
1086180	01.12	SLEEVE	243
1086222	01.09	JOINT PIECE	235
1086383	01.12	JOINT PIECE	243
1086384	01.12	MOUNTING BLOCK	243
1086421	01.12	SIDE PLATE	243
1086422	01.12	SIDE PLATE	243
1086423	01.12	SLIDE RAIL	243
1086424	01.12	SLIDE RAIL	243
1086425	01.12	STEERING RAIL	243
1086426	01.12	STEERING RAIL	243
1086889	01.05	COVER	227
1111067	05.06	COVERING PLATE	471
1111817	05.02	BRACKET	463
1111818	05.02	BRACKET	463
1111864	03.13	PROFILE	415
1111865	03.13	PROFILE	415
1111866	03.11	PILLAR	411
1111892	04.06	PROTECTION	447
1111893	04.06	PROTECTION	447
1119739	05	MACHINE SIGN CE	459
1124431	2.11	RAIL	339
1124432	2.13	BRACKET	343
1124433	2.13	WASHER	343
1124440	2.09	SHEET	335
1124441	2.05	RAIL	299
1124442	2.05	BRACKET	299
1124443	2.09	LUG	335
1124444	2.09	HEAD PLATE	335
1124445	2.09	HEAD PLATE	335
1124446	2.05	RAIL	299
1124447	2.14	DAMPER	345
1124448	2.14	WASHER	345
1124449	2.11	BRACKET	339
1124450	2.07.6	BEARING HOUSING	321
1124451	2.07.6	BEARING HOUSING	321
1124452	2.12	RULE PLATE	341
1124453	2.12	BRACKET	341
1124454	2.09	SHAFT	335
1124475	2.15	PROTECTION PLATE	347
1124476	01.11	PROTECTION PLATE	241
1124477	2.11	PROTECTION PLATE	339
1124478	2.05	WASHER	299
1124479	2.05	SHEET	299
1124480	2.15	BRACKET	347
1124481	2.15	BRACKET	347
1124482	05.06	BRACKET	471
1124483	01.06.13	RIM	191
1124484	01.11	PROTECTION PLATE	241
1124485	01.21	SHEET	279
1124487	2.05	CLAMP RAIL	299
1124488	01.01	BRACKET	219
1124489	2.03	SPACER	295
1124490	01.06	MOTOR COVER	229
1124491	01.06	BRACKET	229
1124496	2.13	ARM	343
1124497	01.23	CABLE DUCT	283
1124498	01.23	SPACER	283
1124500	01.06.22	COVERING PLATE	209
1124501	01.06.22	COVERING PLATE	209
1124502	03.04	SPACER	359
1124503	01.20	BRACKET	277
1124504	2.04	SHEET	297
1124505	2.04	SHEET	297
1124506	2.04	SHEET	297
1124507	2.04	PLATE	297
1124508	2.04	BRACKET	297
1124509	2.04	PLATE	297
1124510	2.03	SPACER	295
1124511	2.03	SPACER	293
1124512	2.03	SPACER	293
1124513	2.03	PLATE	293
1124517	01.08	BRACKET	233
1124517	01.09	BRACKET	235
1124518	01.08	BRACKET	233

Part No	MMref	Description	Page No
1124518	01.09	BRACKET	235
1124519	01.03	CONNECTION BOX	223
1124520	01.03	BRACKET	223
1124521	01.02	CONNECTION BOX	221
1124522	01.02	BRACKET	221
1124524	01.10	BRACKET	237, 239
1124525	01.20	SPACER	277
1124526	01.20	SPACER	277
1124527	01.20	HOLDER	277
1124528	2.12	SPACER	341
1124529	03.01	GLASS	353
1124531	2.10	SHEET	337
1124532	2.10	SHEET	337
1124533	2.10	SHEET	337
1124534	2.10	SHEET	337
1124535	2.10	SHEET	337
1124536	2.10	SHEET	337
1124537	2.12	WASHER	341
1124538	2.10	SHEET	337
1124539	2.10	SHEET	337
1124541	2.11	CLAMP RAIL	339
1124546	2.12	FASTENING PLATE	341
1124550	03.08	COVERING PLATE	367
1124551	03.06	HATCH	363
1124552	03.07	HATCH	365
1124553	03.09	COVERING PLATE	369
1124554	03.09	COVERING PLATE	369
1124555	03.14	COVERING PLATE	379
1124556	03.10	COVERING PLATE	371
1124557	03.10	COVERING PLATE	371
1124558	03.10	COVERING PLATE	371
1124559	03.10	COVERING PLATE	371
1124560	03.02	COVERING PLATE	355
1124561	03.11	HATCH	373
1124562	03.12	HATCH	375
1124563	03.13	HATCH	377
1124564	03.02	BRACKET	355
1124567	03.01	COVERING PLATE	353
1124568	03.01	COVERING PLATE	353
1124569	03.03	COVERING PLATE	357
1124570	03.04	COVERING PLATE	359
1124571	03.05	COVERING PLATE	361
1124572	03.05	COVERING PLATE	361

Part No	MMref	Description	Page No
1124573	01.06.21	COVERING PLATE	207
1124574	01.06.21	COVERING PLATE	207
1124579	2.08	CHAIN	323
1124580	2.08.4	PLATE	331
1124581	2.08.4	SUPPORT	331
1124582	2.08.4	SHAFT	331
1124583	2.06.2	RAIL	307
1124584	2.07.4	RAIL	317
1124585	2.08.4	RAIL	331
1124586	2.08.2	TOOTHED PULLY Z=28	327
1124587	2.07.1	GEAR WHEEL Z=44	313
1124588	2.07.2	GEAR WHEEL Z=34	315
1124589	2.06.0	SHAFT	303
1124589	2.07.1	SHAFT	313
1124589	2.08.2	SHAFT	327
1124596	2.08.1	ROLL	325
1124597	2.08.1	SHAFT	325
1124599	2.08.4	STEERING RAIL	331
1124600	01.19	CABLE DUCT	275
1124601	01.04.04	LID	131
1124602	01.04.04	LID	131
1124603	01.19	LID	273
1124604	01.19	LID	273
1124605	01.19	LID	275
1124606	01.19	LID	273
1124607	01.19	LID	273
1124608	01.19	LID	275
1124609	01.19	LID	275
1124610	01.19	LID	275
1124611	01.19	LID	275
1124612	01.19	LID	273, 275
1124613	2.05	WASHER	299
1124614	2.03	PUSHER PLATE	293, 295
1124615	2.03	PLATE	293, 295
1124616	2.03	BRACKET	293, 295
1124617	2.02	PLATE	291
1124618	2.02	PLATE	291
1124619	2.02	CLAMP RAIL	291
1124620	2.02	SHEET	291
1124621	2.02	STOP LUG	291
1124622	2.02	BRACKET	291
1124624	03.11	GLASS	373
1124624	03.12	GLASS	375

Part No	MMref	Description	Page No
1124625	01.18	CABLE DUCT	271
1124626	01.18	CABLE DUCT	271
1124627	01.18	CABLE DUCT	271
1124628	01.18	LID	271
1124629	01.18	LID	271
1124630	01.18	LID	271
1124631	01.04.04	CABLE DUCT	131
1124632	01.04.04	CABLE DUCT	131
1124633	01.04.04	CABLE DUCT	133
1124634	01.04.04	CABLE DUCT	133
1124635	01.19	CABLE DUCT	273
1124636	01.19	CABLE DUCT	273
1124637	01.19	CABLE DUCT	275
1124638	01.19	CABLE DUCT	273
1124639	01.19	CABLE DUCT	273
1124640	01.19	CABLE DUCT	273, 275
1124641	01.19	CABLE DUCT	275
1124642	01.19	CABLE DUCT	275
1124643	01.19	CABLE DUCT	275
1124644	01.17	BRACKET	267
1124645	01.17	CORNER STRIP	267, 269
1124646	01.17	CORNER STRIP	267
1124647	01.17	PROFILE	267, 269
1124648	01.17	PROFILE	267, 269
1124649	01.17	PROFILE	267, 269
1124650	01.10	PROFILE	237, 239
1124651	01.10	PROFILE	237, 239
1124653	01.10	PROFILE	237, 239
1124654	01.10	PROFILE	237, 239
1124655	01.10	PROFILE	237, 239
1124656	01.10	PROFILE	237, 239
1124657	01.10	PROFILE	237, 239
1124658	01.10	PROFILE	237, 239
1124661	01.10	PROFILE	237, 239
1124662	01.10	PROFILE	237, 239
1124663	01.10	PROFILE	237, 239
1124664	01.10	PROFILE	237, 239
1124665	01.17	PROFILE	267, 269
1124670	01.17	PROFILE	267, 269
1124671	01.17	PROFILE	267, 269
1124672	01.17	PROFILE	267
1124673	01.17	PROFILE	269
1124674	01.17	PROFILE	267, 269
1124675	2.08.5	POST	333
1124676	2.08.5	LOCATING PIECE	333
1124677	2.12	SPACER	341
1124679	2.08.4	SHELF	331
1124680	2.08.4	BRACKET	331
1124681	2.08.4	SHEET	331
1124683	2.13	LOCK BAR	343
1124684	2.13	PIPE	343
1124685	2.13	RAIL	343
1124686	2.13	RAIL	343
1124687	2.13	SPACER PLATE	343
1124688	2.13	PLATE	343
1124689	2.13	PLATE	343
1124690	2.13	PLATE	343
1124693	2.14	HOUSE	345
1124694	2.14	CLAMP	345
1124695	2.14	GUIDE	345
1124696	2.14	PIN	345
1124697	2.14	ARM	345
1124699	2.14	BRACKET	345
1124700	01.06	SPACER	229
1124701	2.04	SLIDE SHEET	297
1124703	2.03	PLATE	295
1124704	01.11	BRACKET	241
1124705	01.11	BRACKET	241
1124706	2.03	BRACKET	293, 295
1124707	2.03	PLATE	293, 295
1124708	2.03	BRACKET	293, 295
1124709	2.03	WASHER	293, 295
1124710	2.03	SPACER	293, 295
1124711	01.08	COVERING PLATE	233
1124712	01.08	SLIDE RAIL	233
1124713	01.08	BRACKET	233
1124713	01.09	BRACKET	235
1124716	01.11	BRACKET	241
1124718	01.10	BRACKET	237, 239
1124719	01.10	BRACKET	237, 239
1124720	01.10	COVER SLIP	237, 239
1124721	01.10	WASHER	237, 239
1124722	01.10	WASHER	237, 239
1124723	01.17	BRACKET	267, 269
1124724	01.17	BRACKET	267
1124725	2.11	BRACKET	339

Part No	MMref	Description	Page No
1124726	2.11	ARM	339
1124727	2.11	FASTENING PLATE	339
1124728	2.10	SHEET	337
1124732	2.07.5	SHAFT	319
1124732	2.07.6	SHAFT	321
1124733	2.07.5	PULLEY	319
1124733	2.07.6	PULLEY	321
1124734	2.07.5	BEARING HOUSING	319
1124735	2.07.5	BEARING HOUSING	319
1124736	2.12	WASHER	341
1124737	2.12	HOLDER	341
1124738	2.12	HOLDER	341
1124739	2.12	WASHER	341
1124740	2.12	BRACKET	341
1124741	2.12	BRACKET	341
1124742	2.12	ARM	341
1124743	2.12	STEERING RAIL	341
1124744	2.12	STEERING RAIL	341
1124745	2.08.5	STEERING RAIL	333
1124746	2.08.5	SHELF	333
1124747	2.08.5	HOUSE	333
1124749	2.08.5	FASTENING PLATE	333
1124750	2.05	CLAMP RAIL	299
1124752	01.11	PLATE	241
1124754	01.11	PLATE	241
1124755	01.11	RAIL	241
1124756	01.11	ROCK GEAR	241
1124757	01.11	BRACKET	241
1124758	2.03	GEAR WHEEL Z=20	293, 295
1124759	2.03	GEAR WHEEL Z=20	293, 295
1124760	2.03	AXLE PIN	293, 295
1124761	2.03	SHAFT	293, 295
1124762	2.03	BEAM	293, 295
1124763	2.03	HOLDER	293, 295
1124764	2.03	SPACER	295
1124765	2.05	PLATE	299
1124766	2.05	PLATE	299
1124775	2.06.2	SUPPORT	307
1124776	2.06.2	BRACKET	307
1124777	2.06.2	BRACKET	307
1124778	2.06.1	SHAFT	305
1124778	2.07.2	SHAFT	315
1124778	2.08.3	SHAFT	329
1124779	2.08.3	SHAFT	329
1124780	2.08.3	SHAFT	329
1124781	2.06.1	SHAFT	305
1124781	2.07.2	SHAFT	315
1124782	2.06.1	SHAFT	305
1124782	2.07.2	SHAFT	315
1124783	01.10	PLATE	237, 239
1124784	2.08.4	PLATE	331
1124786	2.06.2	PLATE	307
1124787	2.06.3	ROLL	309
1124789	2.06.3	SHAFT	309
1124790	2.06.3	BUSHING	309
1124790	2.08.1	BUSHING	325
1124798	2.06	CHAIN	301
1124799	2.07	CHAIN	311
1124800	2.06.1	TOOTHED PULLY Z=20	305
1124800	2.08.3	TOOTHED PULLY Z=20	329
1124801	2.06.0	TOOTHED PULLY Z=20	303
1124805	2.06.0	TOOTHED PULLY Z=24	303
1124805	2.08.2	TOOTHED PULLY Z=24	327
1124806	2.07.2	GEAR WHEEL Z=36	315
1124807	2.07.2	PULLEY	315
1124808	2.08.3	PULLEY	329
1124810	2.07.1	GEAR WHEEL Z=40	313
1124811	2.06.1	BEARING HOUSING	305
1124811	2.07.2	BEARING HOUSING	315
1124811	2.08.3	BEARING HOUSING	329
1124812	2.06.1	GEAR WHEEL Z=16	305
1124812	2.07.2	GEAR WHEEL Z=16	315
1124812	2.08.3	GEAR WHEEL Z=16	329
1124813	2.07.1	PLATE	313
1124814	2.06.0	PLATE	303
1124815	2.08.2	PLATE	327
1124816	2.08.4	BRACKET	331
1124817	2.08.4	RAIL	331
1124818	2.08.4	SHEET	331
1124819	2.07.4	BRACKET	317
1124820	2.07.4	SUPPORT	317
1124821	2.07.4	SLIDE RAIL	317
1124822	2.08.4	SLIDE RAIL	331
1124823	2.06.2	SLIDE RAIL	307
1124824	2.06.2	SHAFT	307
1124824	2.07.4	SHAFT	317

Part No	MMref	Description	Page No
1124825	01.14	PNEUMATIC PANEL	247, 249, 251, 253
1124834	2.09	BRACKET	335
1124837	2.09	BRACKET	335
1124839	2.09	SPACER	335
1124840	2.09	HOLDER	335
1124841	2.11	FASTENING PLATE	339
1124842	2.11	FASTENING PLATE	339
1124843	2.11	RAIL	339
1124844	2.11	RAIL	339
1124848	2.10	GUIDE STUD	337
1124849	2.11	ARM	339
1124852	2.05	HOUSE	299
1124854	2.04	CLAMP RAIL	297
1124855	2.04	RAIL	297
1124858	2.04	LOCATING PIECE	297
1124859	2.04	HOUSE	297
1124860	01.13	STEERING RAIL	245
1124861	01.13	BRACKET	245
1124862	01.13	BRACKET	245
1124863	01.12	PROTECTION PLATE	243
1124864	01.12	BRACKET	243
1124865	01.12	GABLE PART	243
1124866	01.12	GABLE PART	243
1124867	01.12	BRACKET	243
1124868	01.07	BRACKET	231
1124869	01.06	SUPPORT LEG	229
1124869	01.07	SUPPORT LEG	231
1124872	01.06	BRACKET	229
1124873	01.06	GABLE PART	229
1124874	01.06	GABLE PART	229
1124897	2.05	PLATE	299
1124898	2.05	PLATE	299
1124899	2.05	BRACKET	299
1124962	2.04	BRACKET	297
1124962	2.08.5	BRACKET	333
1124963	01.08	BRACKET	233
1124964	01.08	BRACKET	233
1128001	04.04	PLATE	433, 437
1128002	04.04	PLATE	433, 437
1128003	01.03.14	SPACER	103
1128010	01.03.14	TUCK FOLDER	103
1128011	01.03.14	PLATE	103
1128012	01.03.14	BRACKET	103
1128013	01.03.14	MOUNTING BAR	103
1128014	01.03.14	RAIL	103
1128015	01.03.14	SPACER	103
1128016	01.03.14	HOLDER	103
1128017	01.03.14	BRACKET	103
1128018	01.03.14	WASHER	103
1128029	03.07	RAIL	403
1128030	03.07	LUG	403
1128031	05	PNEUMATIC CHART	459
1128034	05	PNEUMATIC CHART	459
1128044	04.07	SET OF SIGNS	449, 451
1128048	03.06	STEERING	401
1128049	03.07	LOCK SHEET	403
1128402	04.06	PROFILE	447
1128403	04.06	BRACKET	447
1128404	04.06	SPACER	447
1128405	04.06	LOCK PLATE	447
1128406	04.04	HOLDER	437
1128407	04.04	HEAD PLATE	437
1128408	04.04	HEAD PLATE	437
1128409	04.04	SECURING PLATE	437
1128410	04.06	LOCK PLATE	447
1128816	01.06.23	PROTECTION PLATE	211
1128817	01.06.23	PROTECTION PLATE	211
1128818	01.06.23	BRACKET	211
1128819	01.06.20	PROTECTION PLATE	205
1128827	01.06.19	PROTECTION PLATE	203
1128828	01.06.19	PROTECTION PLATE	203
1128829	01.06.17	BRACKET	199
1128829	01.06.19	BRACKET	203
1128830	01.06.13	RIM	191
1128831	01.06.01	BRACKET	165
1128836	01.06.17	PROTECTION PLATE	199
1128837	01.06.17	PROTECTION PLATE	199
1128844	02.03	CAUTION SIGN	153
1128845	02.03	PROHIBITION SIGN	153
1128846	05.02	TUNNEL	463
1128847	05.02	COVERING PLATE	463
1128848	05.02	TUNNEL	463
1128849	05.02	TUNNEL	463
1128850	05.02	COVERING PLATE	463
1128851	05.02	COVERING PLATE	463
1128852	05.02	GLASS	463

Part No	MMref	Description	Page No
1128852	05.05	GLASS	469
1128853	01.03.16	CAUTION SIGN	107
1128853	02.03	CAUTION SIGN	153
1128853	04.06	CAUTION SIGN	443, 447
1128854	04.05	CAUTION SIGN	439, 441
1128854	2.05	CAUTION SIGN	299
1128859	05.13	SIGN	485
1128868	05.05	TUNNEL	469
1128869	05.05	PIPE	469
1128870	05.05	BRACKET	469
1128870	05.06	BRACKET	471
1128871	05.05	CLAMPING PLATE	469
1128871	05.06	CLAMPING PLATE	471
1128878	02.01	SHAFT	61
1128879	03.14	PROFILE	417
1128880	03.14	CLAMPING PIECE	417
1128881	03.14	SUPPORT PLATE	417
1128882	03.06	PROTECTION	401
1128883	03.06	BRACKET	401
1128884	03.06	BRACKET	401
1128885	03.06	HOLDER	401
1128886	03.14	SHAFT	417
1128888	03.06	SIDE PLATE	401
1128889	03.06	STEERING	401
1128906	01.12	WHEEL	243
1133093	01.04.07	BASE	141
1139101	01.03.14	RAIL	103
1139102	03.06	SIDE PLATE	401
1139103	03.06	PHOTOCELL BRACKET	401
1139104	03.11	PROFILE	411
1139107	01.03.17	SIDE PLATE	109
1139108	01.03.17	SIDE PLATE	109
1139109	01.03.17	SLIDE RAIL	109
1139110	01.03.17	SLIDE RAIL	109
1139112	01.03.17	BRACKET	109
1139113	01.03.17	FASTENING BRACKET	109
1139114	01.03.17	FASTENING PLATE	109
1139119	01.10	COVERING PLATE	47
1139120	01.10	CABLE TRENCH	47
1139121	01.10	CHAIN GUARD	47
1139122	01.10	SHEET	47
1139123	01.10	SHEET	47
1139124	01.10	HOSE	47
1139125	01.10	HOLDER	47
1139126	01.14	SHEET	57
1139127	04.04	HOLDER	433, 435, 437
1139128	04.04	HOLDER	433, 435, 437
1139129	04.04	TENSION SPRING	433, 435, 437
1139135	01.04	SHAFT	29, 31
1139136	01.05	SHAFT	33, 35
1139138	05.03	BRACKET	465
1139139	01.04.01	BRACKET	119
1139146	01.03.14	PLATE	103
1139147	01.03.14	PLATE	103
1139148	02.01	PLATE	145
1139151	04.06	PROFILE	447
1139152	04.06	HOLDER	443
1139154	02.04	HOLDER	67
1139155	02.04	SLIDER	67
1139156	04.03	PROTECTION	427, 429, 431
1139159	01.09	COVERING PLATE	235
1139160	01.09	SLIDE RAIL	235
1139161	2.11	STEERING RAIL	339
1139162	2.11	STEERING RAIL	339
1139170	01.04.05	SHAFT	135
1139171	01.04.05	PLATE	135
1139172	01.04.05	SPACER	135
1139177	05	PNEUMATIC CHART	459
1139178	05	PNEUMATIC CHART	459
1139179	01.14	PNEUMATIC CHART	247, 249, 251, 253
1139179	05	PNEUMATIC CHART	459
1139187	01.11	PLATE	241
1139188	01.11	BRACKET	241
1139190	2.01	BRACKET	289
1139191	2.01	BRACKET	289
1139192	2.01	SHEET	289
1139193	2.01	SHEET	289
1139194	2.01	BRACKET	289
1139195	2.01	SHEET	289
1139196	2.08.5	BRACKET	333
1139197	2.06.2	PLATE	307
1139198	2.07.4	PLATE	317
1139199	2.05	PLATE	299
1139200	01.10	PROFILE	237, 239
1139201	2.01	BRACKET	289
1139202	01.10	PROFILE	237, 239

Part No	MMref	Description	Page No
1139203	01.10	PROFILE	237, 239
1139204	01.10	BRACKET	237, 239
1139205	2.12	CLAMP RAIL	341
1139206	2.12	CLAMP RAIL	341
1139207	2.12	STEERING RAIL	341
1139208	2.01	ROLL	289
1139210	01.14	PNEUMATIC PANEL	247, 249, 251, 253
1139211	01.14	PNEUMATIC PANEL	247, 249, 251, 253
1139212	01.14	HOLDER	247, 249, 251, 253
1139213	01.14	SCREW	247, 249, 251, 253
1139214	01.14	SET OF SIGNS	247, 249, 251, 253
1139216	01.17	PROFILE	267, 269
1139217	01.17	PROFILE	267
1139218	01.17	PROFILE	269
1139219	01.17	PROFILE	267, 269
230462	03.12	BUSHING	413
262179	2.14	PIN	345
311103-0314	2.05	CYLINDRICACP M6 5X30 RFR	299
311103-0361	01.11	CYLINDRICACP M6 6X40 RFR	241
311112-0251	04.04	SLOTTED TURP 4X10 RFR	437
312101-0343	01.05	SCREW M6S5X60FZB	227
312105-0287	01.15	SCREW O4017 M4X8A280	265
312105-0287	2.13	SCREW O4017 M4X8A280	343
312105-0291	2.07.6	SCREW O4017 M4X12A280	321
312105-0293	03.06	SCREW O4017 M4X16A280	401
312105-0293	2.05	SCREW O4017 M4X16A280	299
312105-0295	2.01	SCREW O4017 M4X20A280	289
312105-0297	01.03.19	SCREW O4014 M4X25A280	113
312105-0297	05.12	SCREW O4014 M4X25A280	483
312105-0323	01.10	SCREW O4017 M5X8A280	47
312105-0325	01.05	SCREW M6S5X10 A2 80	227
312105-0325	04.04	SCREW M6S5X10 A2 80	433, 435, 437
312105-0325	2.14	SCREW M6S5X10 A2 80	345
312105-0327	01.03	SCREW O4017 M5X12A280	27
312105-0327	01.04.05	SCREW O4017 M5X12A280	135
312105-0327	03.08	SCREW O4017 M5X12A280	405
312105-0327	2.05	SCREW O4017 M5X12A280	299
312105-0328	05.02	SCREW M6S5X14 A2 80	463
312105-0328	05.05	SCREW M6S5X14 A2 80	469
312105-0328	05.06	SCREW M6S5X14 A2 80	471
312105-0329	01.04.02	SCREW O4017 M5X16A280	121, 123
312105-0329	01.08	SCREW O4017 M5X16A280	43
312105-0329	03.09	SCREW O4017 M5X16A280	407
312105-0329	05.03	SCREW O4017 M5X16A280	465
312105-0329	05.04	SCREW O4017 M5X16A280	467
312105-0329	2.06.1	SCREW O4017 M5X16A280	305
312105-0329	2.07.2	SCREW O4017 M5X16A280	315
312105-0329	2.08.3	SCREW O4017 M5X16A280	329
312105-0329	2.11	SCREW O4017 M5X16A280	339
312105-0331	01.04.02	SCREW O4017 M5X20A280	121, 123
312105-0331	01.05	SCREW O4017 M5X20A280	227
312105-0331	01.10	SCREW O4017 M5X20A280	47
312105-0331	02.03	SCREW O4017 M5X20A280	153
312105-0331	03.01	SCREW O4017 M5X20A280	389
312105-0333	04.03	SCREW O4017 M5X25A280	427, 429, 431
312105-0333	2.13	SCREW O4017 M5X25A280	343
312105-0337	01.03.14	SCREW O4014 M5X35A280	103
312105-0341	01.23	SCREW O4014 M5X50A280	283
312105-0341	2.14	SCREW O4014 M5X50A280	345
312105-0343	03.06	SCREW M6S5X60 A2 80	401
312105-0364	01.03.17	SCREW M6S6X10RFR	109
312105-0364	01.04.06	SCREW M6S6X10RFR	139
312105-0364	01.14	SCREW M6S6X10RFR	247, 249, 251, 253
312105-0364	03.04	SCREW M6S6X10RFR	395
312105-0364	03.06	SCREW M6S6X10RFR	401
312105-0364	03.12	SCREW M6S6X10RFR	413
312105-0364	05.05	SCREW M6S6X10RFR	469
312105-0364	05.06	SCREW M6S6X10RFR	471
312105-0364	2.11	SCREW M6S6X10RFR	339
312105-0366	01.03	SCREW O4017 M6X12A280	27
312105-0366	01.03.17	SCREW O4017 M6X12A280	109
312105-0366	01.04.04	SCREW O4017 M6X12A280	129, 131, 133
312105-0366	01.06	SCREW O4017 M6X12A280	229
312105-0366	01.06.12	SCREW O4017 M6X12A280	189
312105-0366	01.07	SCREW O4017 M6X12A280	231
312105-0366	01.10	SCREW O4017 M6X12A280	47
312105-0366	01.11	SCREW O4017 M6X12A280	241
312105-0366	01.12	SCREW O4017 M6X12A280	243
312105-0366	01.18	SCREW O4017 M6X12A280	271
312105-0366	01.19	SCREW O4017 M6X12A280	273, 275
312105-0366	02.01	SCREW O4017 M6X12A280	145
312105-0366	03.06	SCREW O4017 M6X12A280	401
312105-0366	03.09	SCREW O4017 M6X12A280	407
312105-0366	03.10	SCREW O4017 M6X12A280	409
312105-0366	03.13	SCREW O4017 M6X12A280	415
312105-0366	2.01	SCREW O4017 M6X12A280	289

Part No	MMref	Description	Page No
312105-0366	2.04	SCREW O4017 M6X12A280	297
312105-0366	2.08.5	SCREW O4017 M6X12A280	333
312105-0366	2.14	SCREW O4017 M6X12A280	345
312105-0367	01.03.19	SCREW M6S6X14RFR	113
312105-0367	01.12	SCREW M6S6X14RFR	53
312105-0367	01.13	SCREW M6S6X14RFR	55
312105-0367	02.01	SCREW M6S6X14RFR	61
312105-0367	02.02	SCREW M6S6X14RFR	63
312105-0367	03.10	SCREW M6S6X14RFR	409
312105-0367	04.04	SCREW M6S6X14RFR	433, 435, 437
312105-0367	04.06	SCREW M6S6X14RFR	443
312105-0367	2.04	SCREW M6S6X14RFR	297
312105-0367	2.09	SCREW M6S6X14RFR	335
312105-0368	01.01	SCREW O4017 M6X16A280	23, 219
312105-0368	01.02	SCREW O4017 M6X16A280	25, 221
312105-0368	01.03	SCREW O4017 M6X16A280	223
312105-0368	01.03.05	SCREW O4017 M6X16A280	79
312105-0368	01.03.06	SCREW O4017 M6X16A280	81
312105-0368	01.03.07	SCREW O4017 M6X16A280	83, 85
312105-0368	01.03.08	SCREW O4017 M6X16A280	87, 89
312105-0368	01.03.09	SCREW O4017 M6X16A280	91, 93
312105-0368	01.03.14	SCREW O4017 M6X16A280	103
312105-0368	01.03.17	SCREW O4017 M6X16A280	109
312105-0368	01.06.02	SCREW O4017 M6X16A280	167
312105-0368	01.06.04	SCREW O4017 M6X16A280	171
312105-0368	01.06.05	SCREW O4017 M6X16A280	173
312105-0368	01.06.14	SCREW O4017 M6X16A280	193
312105-0368	01.06.20	SCREW O4017 M6X16A280	205
312105-0368	01.06.21	SCREW O4017 M6X16A280	207
312105-0368	01.08	SCREW O4017 M6X16A280	233
312105-0368	01.09	SCREW O4017 M6X16A280	235
312105-0368	01.12	SCREW O4017 M6X16A280	243
312105-0368	01.14	SCREW O4017 M6X16A280	57
312105-0368	01.14.2	SCREW O4017 M6X16A280	257
312105-0368	01.21	SCREW O4017 M6X16A280	279
312105-0368	03.01	SCREW O4017 M6X16A280	353
312105-0368	03.02	SCREW O4017 M6X16A280	355
312105-0368	03.03	SCREW O4017 M6X16A280	357
312105-0368	03.04	SCREW O4017 M6X16A280	395
312105-0368	03.06	SCREW O4017 M6X16A280	401
312105-0368	03.07	SCREW O4017 M6X16A280	403
312105-0368	03.08	SCREW O4017 M6X16A280	367
312105-0368	04.01	SCREW O4017 M6X16A280	425
312105-0368	04.03	SCREW O4017 M6X16A280	429
312105-0368	04.09	SCREW O4017 M6X16A280	455
312105-0368	05.02	SCREW O4017 M6X16A280	463
312105-0368	05.05	SCREW O4017 M6X16A280	469
312105-0368	05.06	SCREW O4017 M6X16A280	471
312105-0368	2.03	SCREW O4017 M6X16A280	293, 295
312105-0368	2.13	SCREW O4017 M6X16A280	343
312105-0368	2.15	SCREW O4017 M6X16A280	347
312105-0370	01.03.09	SCREW O4017 M6X20A280	91, 93
312105-0370	01.03.14	SCREW O4017 M6X20A280	103
312105-0370	01.03.15	SCREW O4017 M6X20A280	105
312105-0370	01.03.17	SCREW O4017 M6X20A280	109
312105-0370	01.04.01	SCREW O4017 M6X20A280	119
312105-0370	01.04.05	SCREW O4017 M6X20A280	135
312105-0370	01.06	SCREW O4017 M6X20A280	229
312105-0370	01.06.03	SCREW O4017 M6X20A280	169
312105-0370	01.06.10	SCREW O4017 M6X20A280	185
312105-0370	01.06.17	SCREW O4017 M6X20A280	199
312105-0370	01.06.18	SCREW O4017 M6X20A280	201
312105-0370	01.06.19	SCREW O4017 M6X20A280	203
312105-0370	01.06.22	SCREW O4017 M6X20A280	209
312105-0370	01.06.23	SCREW O4017 M6X20A280	211
312105-0370	01.10	SCREW O4017 M6X20A280	237, 239
312105-0370	01.13	SCREW O4017 M6X20A280	55, 245
312105-0370	01.14	SCREW O4017 M6X20A280	247, 249, 251, 253
312105-0370	01.17	SCREW O4017 M6X20A280	267, 269
312105-0370	01.18	SCREW O4017 M6X20A280	271
312105-0370	01.20	SCREW O4017 M6X20A280	277
312105-0370	02.04	SCREW O4017 M6X20A280	67
312105-0370	03.02	SCREW O4017 M6X20A280	391
312105-0370	03.03	SCREW O4017 M6X20A280	357, 393
312105-0370	03.09	SCREW O4017 M6X20A280	407
312105-0370	04.03	SCREW O4017 M6X20A280	427, 429, 431
312105-0370	04.06	SCREW O4017 M6X20A280	447
312105-0370	05.02	SCREW O4017 M6X20A280	463
312105-0370	05.03	SCREW O4017 M6X20A280	465
312105-0370	05.04	SCREW O4017 M6X20A280	467
312105-0370	2.05	SCREW O4017 M6X20A280	299
312105-0370	2.08.4	SCREW O4017 M6X20A280	331
312105-0370	2.09	SCREW O4017 M6X20A280	335
312105-0370	2.11	SCREW O4017 M6X20A280	339
312105-0370	2.13	SCREW O4017 M6X20A280	343
312105-0370	2.15	SCREW O4017 M6X20A280	347

Part No	MMref	Description	Page No
312105-0371	01.03.07	SCREW M6S6X22RFR	83, 85
312105-0371	01.03.14	SCREW M6S6X22RFR	103
312105-0371	04.08	SCREW M6S6X22RFR	453
312105-0371	2.12	SCREW M6S6X22RFR	341
312105-0372	01.03.03	SCREW O4017 M6X25A280	75
312105-0372	01.03.04	SCREW O4017 M6X25A280	77
312105-0372	01.03.15	SCREW O4017 M6X25A280	105
312105-0372	01.04.02	SCREW O4017 M6X25A280	121, 123
312105-0372	01.04.03	SCREW O4017 M6X25A280	125, 127
312105-0372	01.06.01	SCREW O4017 M6X25A280	165
312105-0372	01.06.06	SCREW O4017 M6X25A280	175, 177
312105-0372	01.06.07	SCREW O4017 M6X25A280	179
312105-0372	01.06.08	SCREW O4017 M6X25A280	181
312105-0372	01.06.11	SCREW O4017 M6X25A280	187
312105-0372	01.06.15	SCREW O4017 M6X25A280	195
312105-0372	01.06.16	SCREW O4017 M6X25A280	197
312105-0372	01.06.17	SCREW O4017 M6X25A280	199
312105-0372	01.06.19	SCREW O4017 M6X25A280	203
312105-0372	01.06.23	SCREW O4017 M6X25A280	211
312105-0372	01.08	SCREW O4017 M6X25A280	233
312105-0372	01.09	SCREW O4017 M6X25A280	235
312105-0372	01.11	SCREW O4017 M6X25A280	49, 51
312105-0372	01.14.1	SCREW O4017 M6X25A280	255
312105-0372	03.05	SCREW O4017 M6X25A280	397, 399
312105-0372	03.06	SCREW O4017 M6X25A280	363, 401
312105-0372	03.07	SCREW O4017 M6X25A280	365, 403
312105-0372	03.10	SCREW O4017 M6X25A280	409
312105-0372	03.11	SCREW O4017 M6X25A280	373, 411
312105-0372	03.12	SCREW O4017 M6X25A280	375
312105-0372	03.13	SCREW O4017 M6X25A280	377
312105-0372	03.14	SCREW O4017 M6X25A280	417
312105-0372	04.02	SCREW O4017 M6X25A280	427
312105-0372	04.07	SCREW O4017 M6X25A280	449
312105-0372	04.09	SCREW O4017 M6X25A280	455
312105-0372	2.03	SCREW O4017 M6X25A280	293, 295
312105-0372	2.05	SCREW O4017 M6X25A280	299
312105-0372	2.06.2	SCREW O4017 M6X25A280	307
312105-0372	2.07.5	SCREW O4017 M6X25A280	319
312105-0372	2.07.6	SCREW O4017 M6X25A280	321
312105-0372	2.08.4	SCREW O4017 M6X25A280	331
312105-0372	2.09	SCREW O4017 M6X25A280	335
312105-0372	2.11	SCREW O4017 M6X25A280	339
312105-0372	2.12	SCREW O4017 M6X25A280	341
312105-0374	01.03.01	SCREW O4017 M6X30A280	71
312105-0374	01.03.02	SCREW O4017 M6X30A280	73
312105-0374	01.03.07	SCREW O4017 M6X30A280	83, 85
312105-0374	01.03.08	SCREW O4017 M6X30A280	87, 89
312105-0374	01.03.09	SCREW O4017 M6X30A280	91, 93
312105-0374	01.03.14	SCREW O4017 M6X30A280	103
312105-0374	01.03.16	SCREW O4017 M6X30A280	107
312105-0374	01.03.17	SCREW O4017 M6X30A280	109
312105-0374	01.06.13	SCREW O4017 M6X30A280	191
312105-0374	01.07	SCREW O4017 M6X30A280	231
312105-0374	01.10	SCREW O4017 M6X30A280	237, 239
312105-0374	01.11	SCREW O4017 M6X30A280	241
312105-0374	01.13	SCREW O4017 M6X30A280	245
312105-0374	03.06	SCREW O4017 M6X30A280	401
312105-0374	03.08	SCREW O4017 M6X30A280	405
312105-0374	03.10	SCREW O4017 M6X30A280	409
312105-0374	03.11	SCREW O4017 M6X30A280	411
312105-0374	03.12	SCREW O4017 M6X30A280	413
312105-0374	2.02	SCREW O4017 M6X30A280	291
312105-0374	2.04	SCREW O4017 M6X30A280	297
312105-0374	2.06.2	SCREW O4017 M6X30A280	307
312105-0374	2.07.4	SCREW O4017 M6X30A280	317
312105-0374	2.08.4	SCREW O4017 M6X30A280	331
312105-0376	01.03	SCREW O4017 M6X35A280	27
312105-0376	01.06.01	SCREW O4017 M6X35A280	165
312105-0376	01.10	SCREW O4017 M6X35A280	237, 239
312105-0376	01.13	SCREW O4017 M6X35A280	245
312105-0376	01.14.3	SCREW O4017 M6X35A280	259, 261
312105-0376	03.12	SCREW O4017 M6X35A280	413
312105-0376	04.02	SCREW O4017 M6X35A280	427
312105-0376	04.03	SCREW O4017 M6X35A280	429
312105-0376	2.07.2	SCREW O4017 M6X35A280	315
312105-0378	01.03.16	SCREW O4017 M6X40A280	107
312105-0378	01.06.06	SCREW O4017 M6X40A280	175, 177
312105-0378	01.12	SCREW O4017 M6X40A280	243
312105-0378	01.17	SCREW O4017 M6X40A280	267, 269
312105-0378	04.04	SCREW O4017 M6X40A280	437
312105-0379	2.02	SCREW O4014 M6X45A280	291
312105-0380	05.13	SCREW O4014 M6X50A280	485
312105-0380	2.01	SCREW O4014 M6X50A280	289
312105-0381	03.07	SCREW O4014 M6X55A280	403
312105-0382	04.02	SCREW O4014 M6X60A280	427
312105-0383	01.04.05	SCREW O4014 M6X65A280	135

Part No	MMref	Description	Page No
312105-0384	04.09	SCREW O4014 M6X70A280	455
312105-0384	2.01	SCREW O4014 M6X70A280	289
312105-0386	03.06	SCREW O4014 M6X80A280	401
312105-0386	04.03	SCREW O4014 M6X80A280	427, 429, 431
312105-0447	02.03	SCREW O4017 M8X12A280	153
312105-0449	01.06.01	SCREW O4017 M8X16A280	165
312105-0449	01.09	SCREW O4017 M8X16A280	235
312105-0449	01.12	SCREW O4017 M8X16A280	243
312105-0449	01.17	SCREW O4017 M8X16A280	267
312105-0449	02.04	SCREW O4017 M8X16A280	67
312105-0449	2.08.5	SCREW O4017 M8X16A280	333
312105-0449	2.15	SCREW O4017 M8X16A280	347
312105-0451	01.03.05	SCREW SO4017 8X20A280	79
312105-0451	01.04.01	SCREW SO4017 8X20A280	119
312105-0451	01.04.02	SCREW SO4017 8X20A280	121, 123
312105-0451	01.04.05	SCREW SO4017 8X20A280	135
312105-0451	01.11	SCREW SO4017 8X20A280	241
312105-0451	03.10	SCREW SO4017 8X20A280	409
312105-0451	03.14	SCREW SO4017 8X20A280	417
312105-0451	04.02	SCREW SO4017 8X20A280	427
312105-0451	04.07	SCREW SO4017 8X20A280	449
312105-0451	05.05	SCREW SO4017 8X20A280	469
312105-0451	2.01	SCREW SO4017 8X20A280	289
312105-0451	2.02	SCREW SO4017 8X20A280	291
312105-0451	2.05	SCREW SO4017 8X20A280	299
312105-0451	2.11	SCREW SO4017 8X20A280	339
312105-0451	2.12	SCREW SO4017 8X20A280	341
312105-0453	01.03	SCREW O4017 M8X25A280	27
312105-0453	01.03.03	SCREW O4017 M8X25A280	75
312105-0453	01.03.04	SCREW O4017 M8X25A280	77
312105-0453	01.04	SCREW O4017 M8X25A280	29, 31
312105-0453	01.04.02	SCREW O4017 M8X25A280	121, 123
312105-0453	01.05	SCREW O4017 M8X25A280	33, 35
312105-0453	01.06	SCREW O4017 M8X25A280	229
312105-0453	01.07	SCREW O4017 M8X25A280	231
312105-0453	01.08	SCREW O4017 M8X25A280	233
312105-0453	01.12	SCREW O4017 M8X25A280	243
312105-0453	03.05	SCREW O4017 M8X25A280	397, 399
312105-0453	03.13	SCREW O4017 M8X25A280	415
312105-0453	04.03	SCREW O4017 M8X25A280	427, 429, 431
312105-0453	04.05	SCREW O4017 M8X25A280	439, 441
312105-0453	04.08	SCREW O4017 M8X25A280	453
312105-0453	05.06	SCREW O4017 M8X25A280	471
312105-0453	2.03	SCREW O4017 M8X25A280	293, 295
312105-0453	2.04	SCREW O4017 M8X25A280	297
312105-0453	2.05	SCREW O4017 M8X25A280	299
312105-0453	2.06.0	SCREW O4017 M8X25A280	303
312105-0453	2.07.1	SCREW O4017 M8X25A280	313
312105-0453	2.08.2	SCREW O4017 M8X25A280	327
312105-0453	2.08.5	SCREW O4017 M8X25A280	333
312105-0453	2.09	SCREW O4017 M8X25A280	335
312105-0453	2.11	SCREW O4017 M8X25A280	339
312105-0453	2.13	SCREW O4017 M8X25A280	343
312105-0455	01.09	SCREW O4017 M8X30A280	235
312105-0455	01.10	SCREW O4017 M8X30A280	237, 239
312105-0455	01.12	SCREW O4017 M8X30A280	243
312105-0455	01.17	SCREW O4017 M8X30A280	267, 269
312105-0455	02.03	SCREW O4017 M8X30A280	153
312105-0455	04.02	SCREW O4017 M8X30A280	427
312105-0455	04.08	SCREW O4017 M8X30A280	453
312105-0455	2.02	SCREW O4017 M8X30A280	291
312105-0455	2.03	SCREW O4017 M8X30A280	293, 295
312105-0455	2.05	SCREW O4017 M8X30A280	299
312105-0455	2.08.5	SCREW O4017 M8X30A280	333
312105-0457	01.04	SCREW O4017 M8X35A280	29, 31
312105-0457	01.04.02	SCREW O4017 M8X35A280	121, 123
312105-0457	01.05	SCREW O4017 M8X35A280	33, 35
312105-0457	01.06	SCREW O4017 M8X35A280	229
312105-0457	01.07	SCREW O4017 M8X35A280	231
312105-0457	01.11	SCREW O4017 M8X35A280	241
312105-0457	03.06	SCREW O4017 M8X35A280	401
312105-0457	03.10	SCREW O4017 M8X35A280	409
312105-0457	04.06	SCREW O4017 M8X35A280	447
312105-0457	2.06.3	SCREW O4017 M8X35A280	309
312105-0457	2.08.1	SCREW O4017 M8X35A280	325
312105-0457	2.11	SCREW O4017 M8X35A280	339
312105-0459	01.03	SCREW O4017 M8X40A280	27
312105-0459	01.03.03	SCREW O4017 M8X40A280	75
312105-0459	01.03.04	SCREW O4017 M8X40A280	77
312105-0459	01.03.12	SCREW O4017 M8X40A280	99
312105-0459	01.03.13	SCREW O4017 M8X40A280	101
312105-0459	01.03.18	SCREW O4017 M8X40A280	111
312105-0459	01.04.01	SCREW O4017 M8X40A280	119
312105-0459	01.06	SCREW O4017 M8X40A280	37, 229
312105-0459	01.07	SCREW O4017 M8X40A280	39, 41, 231
312105-0459	01.08	SCREW O4017 M8X40A280	43

Part No	MMref	Description	Page No
312105-0459	01.09	SCREW O4017 M8X40A280	45
312105-0459	01.10	SCREW O4017 M8X40A280	237, 239
312105-0459	01.11	SCREW O4017 M8X40A280	49, 51
312105-0459	01.17	SCREW O4017 M8X40A280	267, 269
312105-0459	03.13	SCREW O4017 M8X40A280	415
312105-0460	01.03.09	SCREW O4017 M8X45A280	91, 93
312105-0460	02.01	SCREW O4017 M8X45A280	145
312105-0460	03.12	SCREW O4017 M8X45A280	413
312105-0461	01.04.05	SCREW O4017 M8X50A280	135
312105-0461	01.06	SCREW O4017 M8X50A280	229
312105-0461	01.06.10	SCREW O4017 M8X50A280	185
312105-0461	02.04	SCREW O4017 M8X50A280	67
312105-0461	03.11	SCREW O4017 M8X50A280	411
312105-0462	01.11	SCREW O4014 M8X55A280	241
312105-0462	2.01	SCREW O4014 M8X55A280	289
312105-0463	01.04.01	SCREW O4014 M8X60A280	119
312105-0464	01.07	SCREW O4014 M8X65A280	231
312105-0464	04.02	SCREW O4014 M8X65A280	427
312105-0464	2.03	SCREW O4014 M8X65A280	293, 295
312105-0465	01.04.02	SCREW O4014 M8X70A280	121, 123
312105-0465	02.03	SCREW O4014 M8X70A280	65
312105-0469	02.01	SCREW O4014 M8X90A280	61
312105-0469	02.02	SCREW O4014 M8X90A280	63
312105-0475	02.03	SCREW 4014 M8X120A280	65
312105-0491	2.09	SCREW 4017 M10X20A280	335
312105-0493	04.04	SCREW 4017 M10X25A280	433, 435, 437
312105-0493	04.05	SCREW 4017 M10X25A280	439
312105-0495	01.07	SCREW 4017 M10X30A280	39, 41
312105-0495	01.08	SCREW 4017 M10X30A280	43
312105-0495	01.09	SCREW 4017 M10X30A280	45
312105-0497	01.03.07	SCREW 4017 M10X35A280	83, 85
312105-0497	01.03.08	SCREW 4017 M10X35A280	87, 89
312105-0499	01.03.07	SCREW 4017 M10X40A280	83, 85
312105-0499	01.03.08	SCREW 4017 M10X40A280	87, 89
312105-0499	01.04	SCREW 4017 M10X40A280	29, 31
312105-0499	01.05	SCREW 4017 M10X40A280	33, 35
312105-0503	02.01	SCREW 4014 M10X60A280	61
312105-0513	01.06	SCREW 014 M10X110A280	229
312105-0517	02.01	SCREW 014 M10X130A280	61
312105-0540	01.03.07	SCREW 4017 M12X40A280	83, 85
312105-0540	01.03.08	SCREW 4017 M12X40A280	87, 89
312105-0540	01.03.09	SCREW 4017 M12X40A280	91, 93
312105-0540	01.11	SCREW 4017 M12X40A280	49, 51
312105-0541	01.04.02	SCREW 4017 M12X45A280	121, 123
312105-0541	01.06	SCREW 4017 M12X45A280	37
312105-0545	01.07	SCREW M6S12X65RFR	39, 41
312105-0545	01.08	SCREW M6S12X65RFR	43
312105-0545	01.09	SCREW M6S12X65RFR	45
312105-0626	04.05	SCREW M6S16X35RFR	439, 441
312105-0628	01.20	SCREW 4017 M16X40A280	277
312105-0630	2.03	SCREW 4017 M16X50A280	293, 295
312109-0374	2.12	SCREW M6S6X30HRFR	341
312109-0374	2.14	SCREW M6S6X30HRFR	345
312109-0376	2.14	SCREW 6X35 H RFR	345
312109-0378	2.12	SCREW M6S6X40H RFR	341
312109-0380	01.08	SCREW M6S6X50H RFR	233
312109-0380	01.09	SCREW M6S6X50H RFR	235
312109-0457	01.03	SCREW 8X35 H A4 80	27
312109-0459	2.12	SCREW M6S8X40H A4 80	341
312109-0460	2.09	SCREW	335
312109-0461	2.08.5	SCREW M6S8X50H A4 80	333
312109-0499	2.14	SCREW 10X40 H RFR	345
312109-0501	01.04	SCREW 10X50 H RFR	29, 31
312111-0390	2.04	SCREW MC6S6X100FZB	297
312111-0390	2.08.5	SCREW MC6S6X100FZB	333
312115-0289	01.12	SCREW S4X10 A4 80	53
312115-0289	02.02	SCREW S4X10 A4 80	63
312115-0291	2.01	SCREW O4762 M4X12A280	289
312115-0293	02.01	SCREW O4762 M4X16A280	145
312115-0295	2.01	SCREW O4762 M4X20A280	289
312115-0327	01.03.12	SCREW O4762 M5X12A280	99
312115-0327	01.03.13	SCREW O4762 M5X12A280	101
312115-0329	01.06	SCREW O4762 M5X16A280	37
312115-0329	01.07	SCREW O4762 M5X16A280	39, 41
312115-0329	01.09	SCREW O4762 M5X16A280	45
312115-0329	04.03	SCREW O4762 M5X16A280	427, 429, 431
312115-0331	02.01	SCREW O4762 M5X20A280	145
312115-0333	01.06.06	SCREW O4762 M5X25A280	175, 177
312115-0333	01.06.07	SCREW O4762 M5X25A280	179
312115-0333	01.06.08	SCREW O4762 M5X25A280	181
312115-0333	03.15	SCREW O4762 M5X25A280	381
312115-0335	03.12	SCREW O4762 M5X30A280	413
312115-0364	01.11	SCREW 6X10 A4 80	49, 51
312115-0364	04.06	SCREW 6X10 A4 80	443, 447
312115-0366	01.03.05	SCREW O4762 M6X12A280	79
312115-0366	01.03.06	SCREW O4762 M6X12A280	81

Part No	MMref	Description	Page No
312115-0366	03.07	SCREW O4762 M6X12A280	403
312115-0366	05.12	SCREW O4762 M6X12A280	483
312115-0366	2.09	SCREW O4762 M6X12A280	335
312115-0368	03.06	SCREW O4762 M6X16A280	401
312115-0368	2.02	SCREW O4762 M6X16A280	291
312115-0368	2.06.0	SCREW O4762 M6X16A280	303
312115-0368	2.07.1	SCREW O4762 M6X16A280	313
312115-0368	2.08.2	SCREW O4762 M6X16A280	327
312115-0370	01.03.07	SCREW O4762 M6X20A280	83, 85
312115-0370	01.03.17	SCREW O4762 M6X20A280	109
312115-0370	03.05	SCREW O4762 M6X20A280	397, 399
312115-0372	01.03.05	SCREW O4762 M6X25A280	79
312115-0372	01.03.06	SCREW O4762 M6X25A280	81
312115-0372	01.03.08	SCREW O4762 M6X25A280	87, 89
312115-0372	01.03.09	SCREW O4762 M6X25A280	91, 93
312115-0372	01.11	SCREW O4762 M6X25A280	241
312115-0372	03.04	SCREW O4762 M6X25A280	395
312115-0372	03.08	SCREW O4762 M6X25A280	405
312115-0372	03.12	SCREW O4762 M6X25A280	413
312115-0374	01.03.07	SCREW O4762 M6X30A280	83, 85
312115-0374	01.03.13	SCREW O4762 M6X30A280	101
312115-0374	01.20	SCREW O4762 M6X30A280	277
312115-0374	03.07	SCREW O4762 M6X30A280	403
312115-0374	04.04	SCREW O4762 M6X30A280	433, 435, 437
312115-0379	03.07	SCREW O4762 M6X45A280	403
312115-0380	2.05	SCREW O4762 M6X50A280	299
312115-0382	04.06	SCREW O4762 M6X60A280	443
312115-0384	04.04	SCREW O4762 M6X70A280	433, 435, 437
312115-0451	01.03.07	SCREW O4762 M8X20A280	83, 85
312115-0451	04.04	SCREW O4762 M8X20A280	433, 435, 437
312115-0451	2.13	SCREW O4762 M8X20A280	343
312115-0453	01.12	SCREW O4762 M8X25A280	243
312115-0453	04.04	SCREW O4762 M8X25A280	433, 435, 437
312115-0453	2.03	SCREW O4762 M8X25A280	293, 295
312115-0453	2.04	SCREW O4762 M8X25A280	297
312115-0453	2.05	SCREW O4762 M8X25A280	299
312115-0453	2.08.5	SCREW O4762 M8X25A280	333
312115-0453	2.13	SCREW O4762 M8X25A280	343
312115-0457	04.04	SCREW O4762 M8X35A280	433, 435, 437
312115-0459	01.04.01	SCREW O4762 M8X40A280	119
312115-0459	03.11	SCREW O4762 M8X40A280	411
312115-0460	04.02	SCREW O4762 M8X45A280	427
312115-0465	03.11	SCREW O4762 M8X70A280	411
312115-0491	03.14	SCREW 4762 M10X20A280	417
312125-0226	2.14	SLOTTED HEMCS3X12RFR	345
312125-0228	2.14	SLOTTED HEMCS3X16RFR	345
312125-0230	01.03.14	SLOTTED HEMCS3X20RFR	103
312125-0230	03.11	SLOTTED HEMCS3X20RFR	411
312125-0234	02.01	SLOTTED HEMCS3X30RFR	145
312125-0234	04.06	SLOTTED HEMCS3X30RFR	443, 445, 447
312125-0289	01.04.06	SLOTTED HEMCS4X10RFR	139
312125-0289	01.22	SLOTTED HEMCS4X10RFR	281
312125-0291	01.04.07	SLOTTED HEMCS4X12RFR	141
312125-0293	01.01	SLOTTED HEMCS4X16RFR	219
312125-0293	01.02	SLOTTED HEMCS4X16RFR	221
312125-0293	01.03	SLOTTED HEMCS4X16RFR	223
312125-0293	01.05	SLOTTED HEMCS4X16RFR	227
312125-0333	01.02	SLOTTED HEMCS5X25RFR	221
312145-0222	01.03.19	SLOTTED HEMFS3X8RFR	113
312145-0287	01.04.04	SLOTTED HEMFS4X8RFR	129, 131, 133
312145-0287	01.18	SLOTTED HEMFS4X8RFR	271
312145-0287	01.19	SLOTTED HEMFS4X8RFR	273, 275
312145-0293	01.01	SLOTTED HEMFS4X16RFR	23
312145-0293	01.02	SLOTTED HEMFS4X16RFR	25
312145-0293	04.01	SLOTTED HEMFS4X16RFR	425
312145-0325	01.03	SLOTTED HEMFS5X10RFR	27
312145-0325	01.04.01	SLOTTED HEMFS5X10RFR	119
312145-0325	01.10	SLOTTED HEMFS5X10RFR	237, 239
312145-0325	01.17	SLOTTED HEMFS5X10RFR	267, 269
312145-0325	03.13	SLOTTED HEMFS5X10RFR	415
312145-0325	04.06	SLOTTED HEMFS5X10RFR	447
312145-0325	04.08	SLOTTED HEMFS5X10RFR	453
312145-0370	01.06.13	SLOTTED HEMFS6X20RFR	191
312155-0289	2.09	SCREW MF6S4X10RFR	335
312155-0291	01.03.17	SCREW MF6S4X12RFR	109
312155-0291	02.03	SCREW MF6S4X12RFR	153
312155-0325	03.08	SCREW MF6S5X10RFR	405
312155-0364	2.04	SCREW MF6S6X10RFR	297
312155-0366	01.12	SCREW MF6S6X12RFR	243
312155-0366	2.02	SCREW MF6S6X12RFR	291
312155-0368	01.03.14	SCREW MF6S6X16RFR	103
312155-0368	01.06.07	SCREW MF6S6X16RFR	179
312155-0368	03.11	SCREW MF6S6X16RFR	373
312155-0368	03.13	SCREW MF6S6X16RFR	377
312155-0368	04.06	SCREW MF6S6X16RFR	447
312155-0368	2.03	SCREW MF6S6X16RFR	293, 295

Part No	MMref	Description	Page No
312155-0368	2.09	SCREW MF6S6X16RFR	335
312155-0370	01.03.08	SCREW MF6S6X20RFR	87, 89
312155-0370	01.03.14	SCREW MF6S6X20RFR	103
312155-0370	01.06	SCREW MF6S6X20RFR	229
312155-0370	01.06.01	SCREW MF6S6X20RFR	165
312155-0370	01.06.06	SCREW MF6S6X20RFR	175, 177
312155-0370	01.06.07	SCREW MF6S6X20RFR	179
312155-0370	03.07	SCREW MF6S6X20RFR	365
312155-0370	03.11	SCREW MF6S6X20RFR	373
312155-0370	03.13	SCREW MF6S6X20RFR	377
312155-0370	2.03	SCREW MF6S6X20RFR	293, 295
312155-0370	2.07.4	SCREW MF6S6X20RFR	317
312155-0370	2.10	SCREW MF6S6X20RFR	337
312155-0370	2.12	SCREW MF6S6X20RFR	341
312155-0372	03.13	SCREW MF6S6X25RFR	415
312155-0372	2.06.2	SCREW MF6S6X25RFR	307
312155-0372	2.07.4	SCREW MF6S6X25RFR	317
312155-0372	2.08.4	SCREW MF6S6X25RFR	331
312155-0372	2.09	SCREW MF6S6X25RFR	335
312155-0374	2.12	SCREW MF6S6X30RFR	341
312155-0451	01.03.18	SCREW MF6S8X20RFR	111
312155-0451	01.12	SCREW MF6S8X20RFR	243
312155-0451	02.04	SCREW MF6S8X20RFR	67
312155-0451	2.05	SCREW MF6S8X20RFR	299
312155-0451	2.11	SCREW MF6S8X20RFR	339
312155-0453	2.05	SCREW MF6S8X25RFR	299
312155-0455	2.04	SCREW MF6S8X30RFR	297
312155-0457	02.04	SCREW MF6S8X35RFR	67
312155-0457	03.14	SCREW MF6S8X35RFR	417
312155-0457	04.08	SCREW MF6S8X35RFR	453
312155-0459	01.03	SCREW MF6S8X40RFR	27
312155-0459	01.10	SCREW MF6S8X40RFR	237, 239
312155-0459	01.17	SCREW MF6S8X40RFR	267, 269
312155-0459	2.05	SCREW MF6S8X40RFR	299
312155-0489	01.04	SCREW MF6S10X16RFR	29, 31
312155-0495	01.06	SCREW MF6S10X30RFR	37
312318-0289	2.09	STOP SCREW SK6SS4X10RFR	335
312318-0323	02.02	STOP SCREW SK6SS5X8RFR	63
312318-0360	01.03.01	STOP SCREW SK6SS6X6RFR	71
312318-0360	01.03.02	STOP SCREW SK6SS6X6RFR	73
312318-0360	01.03.07	STOP SCREW SK6SS6X6RFR	83, 85
312318-0360	01.03.08	STOP SCREW SK6SS6X6RFR	87, 89
312318-0360	01.03.09	STOP SCREW SK6SS6X6RFR	91, 93
312318-0360	01.04.02	STOP SCREW SK6SS6X6RFR	121, 123
312318-0360	01.06	STOP SCREW SK6SS6X6RFR	37
312318-0360	01.08	STOP SCREW SK6SS6X6RFR	43
312318-0360	01.09	STOP SCREW SK6SS6X6RFR	45
312318-0360	03.01	STOP SCREW SK6SS6X6RFR	389
312318-0360	03.05	STOP SCREW SK6SS6X6RFR	397, 399
312318-0360	03.09	STOP SCREW SK6SS6X6RFR	407
312318-0360	03.10	STOP SCREW SK6SS6X6RFR	409
312318-0360	03.12	STOP SCREW SK6SS6X6RFR	413
312318-0360	04.02	STOP SCREW SK6SS6X6RFR	427
312318-0360	2.03	STOP SCREW SK6SS6X6RFR	293, 295
312318-0360	2.07.2	STOP SCREW SK6SS6X6RFR	315
312318-0360	2.07.5	STOP SCREW SK6SS6X6RFR	319
312318-0360	2.07.6	STOP SCREW SK6SS6X6RFR	321
312318-0362	01.04.05	STOP SCREW SK6SS6X8RFR	135
312318-0362	04.03	STOP SCREW SK6SS6X8RFR	429, 431
312318-0362	2.06.0	STOP SCREW SK6SS6X8RFR	303
312318-0362	2.06.1	STOP SCREW SK6SS6X8RFR	305
312318-0362	2.07.1	STOP SCREW SK6SS6X8RFR	313
312318-0362	2.08.2	STOP SCREW SK6SS6X8RFR	327
312318-0362	2.08.3	STOP SCREW SK6SS6X8RFR	329
312318-0362	2.13	STOP SCREW SK6SS6X8RFR	343
312318-0364	05.12	STOP SCREW SK6SS6X10RFR	483
312318-0368	01.06	STOP SCREW SK6SS6X16RFR	229
312318-0368	01.07	STOP SCREW SK6SS6X16RFR	231
312318-0372	01.06.06	STOP SCREW SK6SS6X25RFR	175, 177
312318-0372	01.06.07	STOP SCREW SK6SS6X25RFR	179
312318-0372	01.06.08	STOP SCREW SK6SS6X25RFR	181
312318-0372	03.06	STOP SCREW SK6SS6X25RFR	363
312318-0372	03.07	STOP SCREW SK6SS6X25RFR	365
312318-0372	03.11	STOP SCREW SK6SS6X25RFR	373
312318-0372	03.12	STOP SCREW SK6SS6X25RFR	375
312318-0372	03.13	STOP SCREW SK6SS6X25RFR	377
312318-0443	01.03.01	STOP SCREW SK6SS8X8RFR	71
312318-0443	01.03.02	STOP SCREW SK6SS8X8RFR	73
312318-0443	01.03.05	STOP SCREW SK6SS8X8RFR	79
312318-0443	01.04	STOP SCREW SK6SS8X8RFR	29, 31
312318-0443	01.04.02	STOP SCREW SK6SS8X8RFR	121, 123
312318-0443	01.05	STOP SCREW SK6SS8X8RFR	33, 35
312318-0443	01.06	STOP SCREW SK6SS8X8RFR	37
312318-0443	01.07	STOP SCREW SK6SS8X8RFR	39, 41
312318-0443	01.08	STOP SCREW SK6SS8X8RFR	43
312318-0443	01.09	STOP SCREW SK6SS8X8RFR	45

Part No	MMref	Description	Page No
312318-0443	02.01	STOP SCREW SK6SS8X8RFR	61
312318-0443	02.03	STOP SCREW SK6SS8X8RFR	65
312318-0443	03.05	STOP SCREW SK6SS8X8RFR	397, 399
312318-0443	04.02	STOP SCREW SK6SS8X8RFR	427
312318-0443	04.04	STOP SCREW SK6SS8X8RFR	433, 435, 437
312318-0443	2.06.1	STOP SCREW SK6SS8X8RFR	305
312318-0443	2.07.2	STOP SCREW SK6SS8X8RFR	315
312318-0445	01.04.05	STOP SCREW SK6SS8X10RFR	135
312318-0447	03.11	STOP SCREW SK6SS8X12RFR	411
312318-0449	01.03.03	STOP SCREW SK6SS8X16RFR	75
312318-0449	01.03.04	STOP SCREW SK6SS8X16RFR	77
312318-0449	04.04	STOP SCREW SK6SS8X16RFR	433, 435, 437
312504-0342	01.04.07	DRIVE SCREA4	141
312605-0312	01.04.04	NUT M6M4RFR	129, 131, 133
312605-0312	01.04.07	NUT M6M4RFR	141
312605-0312	01.18	NUT M6M4RFR	271
312605-0312	01.19	NUT M6M4RFR	273, 275
312605-0312	2.05	NUT M6M4RFR	299
312605-0314	01.05	NUT M6M5RFR	227
312605-0314	01.10	NUT M6M5RFR	47
312605-0314	03.09	NUT M6M5RFR	407
312605-0314	05.02	NUT M6M5RFR	463
312605-0314	05.03	NUT M6M5RFR	465
312605-0314	05.04	NUT M6M5RFR	467
312605-0314	05.05	NUT M6M5RFR	469
312605-0314	05.06	NUT M6M5RFR	471
312605-0314	2.09	NUT M6M5RFR	335
312605-0314	2.14	NUT M6M5RFR	345
312605-0316	01.03.07	NUT M6M6RFR	83, 85
312605-0316	01.03.08	NUT M6M6RFR	87, 89
312605-0316	01.03.19	NUT M6M6RFR	113
312605-0316	01.08	NUT M6M6RFR	233
312605-0316	01.09	NUT M6M6RFR	235
312605-0316	01.12	NUT M6M6RFR	243
312605-0316	01.14	NUT M6M6RFR	247, 249, 251, 253
312605-0316	01.14.1	NUT M6M6RFR	255
312605-0316	01.14.2	NUT M6M6RFR	257
312605-0316	01.14.3	NUT M6M6RFR	259, 261
312605-0316	05.02	NUT M6M6RFR	463
312605-0316	05.03	NUT M6M6RFR	465
312605-0316	05.04	NUT M6M6RFR	467
312605-0316	2.01	NUT M6M6RFR	289
312605-0316	2.14	NUT M6M6RFR	345
312605-0318	01.03	NUT M6M8RFR	27
312605-0318	01.03.12	NUT M6M8RFR	99
312605-0318	01.03.13	NUT M6M8RFR	101
312605-0318	01.06	NUT M6M8RFR	229
312605-0318	01.06.10	NUT M6M8RFR	185
312605-0318	01.07	NUT M6M8RFR	231
312605-0318	2.03	NUT M6M8RFR	293, 295
312605-0318	2.08.4	NUT M6M8RFR	331
312605-0318	2.14	NUT M6M8RFR	345
312605-0320	01.03.07	NUT M6M10RFR	83, 85
312605-0320	01.03.08	NUT M6M10RFR	87, 89
312605-0320	01.06	NUT M6M10RFR	229
312605-0320	01.12	NUT M6M10RFR	243
312605-0320	02.03	NUT M6M10RFR	153
312605-0320	04.04	NUT M6M10RFR	433, 435, 437
312605-0322	01.03.07	NUT M6M12RFR	83, 85
312605-0322	01.03.08	NUT M6M12RFR	87, 89
312605-0322	01.03.09	NUT M6M12RFR	91, 93
312605-0322	01.04.02	NUT M6M12RFR	121, 123
312605-0322	02.04	NUT M6M12RFR	67
312605-0326	01.10	NUT M6M20RFR	237, 239
312625-0316	01.06.06	NUT M 6	175, 177
312625-0316	01.06.07	NUT M 6	179
312625-0316	01.06.08	NUT M 6	181
312625-0316	03.06	NUT M 6	363
312625-0316	03.07	NUT M 6	365
312625-0316	03.11	NUT M 6	373
312625-0316	03.12	NUT M 6	375
312625-0316	03.13	NUT M 6	377
312625-0318	01.03.14	NUT M 8	103
312812-0314	01.06.06	LOCK NUT A2-M5RFR	175, 177
312812-0314	01.06.07	LOCK NUT A2-M5RFR	179
312812-0314	03.07	LOCK NUT A2-M5RFR	365
312812-0314	03.11	LOCK NUT A2-M5RFR	373
312812-0314	03.13	LOCK NUT A2-M5RFR	377
312902-0320	01.03.07	NUT M6M10VRFR	83, 85
312902-0320	01.03.08	NUT M6M10VRFR	87, 89
312902-0320	04.04	NUT M6M10VRFR	433, 435, 437
312902-0322	01.06	NUT M6M12VRFR	37
312902-0322	01.07	NUT M6M12VRFR	39, 41
312902-0322	01.08	NUT M6M12VRFR	43
312902-0322	01.09	NUT M6M12VRFR	45
315105-0124	01.03.14	WASHER BRB3,2X6RFR	103

Part No	MMref	Description	Page No
315105-0124	03.11	WASHER BRB3,2X6RFR	411
315105-0124	2.14	WASHER BRB3,2X6RFR	345
315105-0136	01.01	WASHER BRB4,3X8RFR	219
315105-0136	01.02	WASHER BRB4,3X8RFR	221
315105-0136	01.03	WASHER BRB4,3X8RFR	223
315105-0136	01.03.19	WASHER BRB4,3X8RFR	113
315105-0136	01.04.07	WASHER BRB4,3X8RFR	141
315105-0136	01.05	WASHER BRB4,3X8RFR	227
315105-0136	01.15	WASHER BRB4,3X8RFR	265
315105-0136	02.01	WASHER BRB4,3X8RFR	145
315105-0136	03.06	WASHER BRB4,3X8RFR	401
315105-0136	05.12	WASHER BRB4,3X8RFR	483
315105-0136	2.01	WASHER BRB4,3X8RFR	289
315105-0136	2.05	WASHER BRB4,3X8RFR	299
315105-0136	2.07.6	WASHER BRB4,3X8RFR	321
315105-0136	2.13	WASHER BRB4,3X8RFR	343
315105-0146	01.03.14	WASHER BRB5,3X10RFR	103
315105-0146	01.04.02	WASHER BRB5,3X10RFR	121, 123
315105-0146	01.04.05	WASHER BRB5,3X10RFR	135
315105-0146	01.05	WASHER BRB5,3X10RFR	227
315105-0146	01.06	WASHER BRB5,3X10RFR	37
315105-0146	01.06.06	WASHER BRB5,3X10RFR	175, 177
315105-0146	01.06.07	WASHER BRB5,3X10RFR	179
315105-0146	01.07	WASHER BRB5,3X10RFR	39, 41
315105-0146	01.08	WASHER BRB5,3X10RFR	43
315105-0146	01.09	WASHER BRB5,3X10RFR	45
315105-0146	01.10	WASHER BRB5,3X10RFR	47
315105-0146	01.23	WASHER BRB5,3X10RFR	283
315105-0146	02.01	WASHER BRB5,3X10RFR	145
315105-0146	02.03	WASHER BRB5,3X10RFR	153
315105-0146	03.01	WASHER BRB5,3X10RFR	389
315105-0146	03.06	WASHER BRB5,3X10RFR	401
315105-0146	03.07	WASHER BRB5,3X10RFR	365
315105-0146	03.08	WASHER BRB5,3X10RFR	405
315105-0146	03.09	WASHER BRB5,3X10RFR	407
315105-0146	03.11	WASHER BRB5,3X10RFR	373
315105-0146	03.12	WASHER BRB5,3X10RFR	413
315105-0146	03.13	WASHER BRB5,3X10RFR	377
315105-0146	04.03	WASHER BRB5,3X10RFR	427, 429, 431
315105-0146	04.04	WASHER BRB5,3X10RFR	433, 435, 437
315105-0146	05.02	WASHER BRB5,3X10RFR	463
315105-0146	05.03	WASHER BRB5,3X10RFR	465
315105-0146	05.04	WASHER BRB5,3X10RFR	467
315105-0146	05.05	WASHER BRB5,3X10RFR	469
315105-0146	05.06	WASHER BRB5,3X10RFR	471
315105-0146	2.05	WASHER BRB5,3X10RFR	299
315105-0146	2.06.1	WASHER BRB5,3X10RFR	305
315105-0146	2.07.2	WASHER BRB5,3X10RFR	315
315105-0146	2.08.3	WASHER BRB5,3X10RFR	329
315105-0146	2.09	WASHER BRB5,3X10RFR	335
315105-0146	2.11	WASHER BRB5,3X10RFR	339
315105-0146	2.13	WASHER BRB5,3X10RFR	343
315105-0153	01.01	WASHER BRB6,4X12RFR	23, 219
315105-0153	01.02	WASHER BRB6,4X12RFR	25, 221
315105-0153	01.03	WASHER BRB6,4X12RFR	27, 223
315105-0153	01.03.07	WASHER BRB6,4X12RFR	83, 85
315105-0153	01.03.08	WASHER BRB6,4X12RFR	87, 89
315105-0153	01.03.09	WASHER BRB6,4X12RFR	91, 93
315105-0153	01.03.10	WASHER BRB6,4X12RFR	95
315105-0153	01.03.11	WASHER BRB6,4X12RFR	97
315105-0153	01.03.14	WASHER BRB6,4X12RFR	103
315105-0153	01.03.15	WASHER BRB6,4X12RFR	105
315105-0153	01.03.16	WASHER BRB6,4X12RFR	107
315105-0153	01.03.17	WASHER BRB6,4X12RFR	109
315105-0153	01.03.19	WASHER BRB6,4X12RFR	113
315105-0153	01.04.01	WASHER BRB6,4X12RFR	119
315105-0153	01.04.02	WASHER BRB6,4X12RFR	121, 123
315105-0153	01.04.03	WASHER BRB6,4X12RFR	125, 127
315105-0153	01.04.04	WASHER BRB6,4X12RFR	129, 131, 133
315105-0153	01.04.05	WASHER BRB6,4X12RFR	135
315105-0153	01.04.06	WASHER BRB6,4X12RFR	139
315105-0153	01.06	WASHER BRB6,4X12RFR	229
315105-0153	01.06.01	WASHER BRB6,4X12RFR	165
315105-0153	01.06.02	WASHER BRB6,4X12RFR	167
315105-0153	01.06.03	WASHER BRB6,4X12RFR	169
315105-0153	01.06.04	WASHER BRB6,4X12RFR	171
315105-0153	01.06.05	WASHER BRB6,4X12RFR	173
315105-0153	01.06.06	WASHER BRB6,4X12RFR	175, 177
315105-0153	01.06.07	WASHER BRB6,4X12RFR	179
315105-0153	01.06.08	WASHER BRB6,4X12RFR	181
315105-0153	01.06.10	WASHER BRB6,4X12RFR	185
315105-0153	01.06.11	WASHER BRB6,4X12RFR	187
315105-0153	01.06.12	WASHER BRB6,4X12RFR	189
315105-0153	01.06.13	WASHER BRB6,4X12RFR	191
315105-0153	01.06.14	WASHER BRB6,4X12RFR	193
315105-0153	01.06.15	WASHER BRB6,4X12RFR	195

Part No	MMref	Description	Page No
315105-0153	01.06.16	WASHER BRB6,4X12RFR	197
315105-0153	01.06.17	WASHER BRB6,4X12RFR	199
315105-0153	01.06.18	WASHER BRB6,4X12RFR	201
315105-0153	01.06.19	WASHER BRB6,4X12RFR	203
315105-0153	01.06.20	WASHER BRB6,4X12RFR	205
315105-0153	01.06.21	WASHER BRB6,4X12RFR	207
315105-0153	01.06.22	WASHER BRB6,4X12RFR	209
315105-0153	01.06.23	WASHER BRB6,4X12RFR	211
315105-0153	01.07	WASHER BRB6,4X12RFR	231
315105-0153	01.08	WASHER BRB6,4X12RFR	233
315105-0153	01.09	WASHER BRB6,4X12RFR	235
315105-0153	01.10	WASHER BRB6,4X12RFR	47, 237, 239
315105-0153	01.11	WASHER BRB6,4X12RFR	49, 51, 241
315105-0153	01.12	WASHER BRB6,4X12RFR	53, 243
315105-0153	01.13	WASHER BRB6,4X12RFR	55, 245
315105-0153	01.14	WASHER BRB6,4X12RFR	57, 247, 249, 251, 253
315105-0153	01.14.1	WASHER BRB6,4X12RFR	255
315105-0153	01.14.2	WASHER BRB6,4X12RFR	257
315105-0153	01.14.3	WASHER BRB6,4X12RFR	259, 261
315105-0153	01.17	WASHER BRB6,4X12RFR	267, 269
315105-0153	01.18	WASHER BRB6,4X12RFR	271
315105-0153	01.19	WASHER BRB6,4X12RFR	273, 275
315105-0153	01.20	WASHER BRB6,4X12RFR	277
315105-0153	01.21	WASHER BRB6,4X12RFR	279
315105-0153	02.01	WASHER BRB6,4X12RFR	61, 145
315105-0153	02.02	WASHER BRB6,4X12RFR	63
315105-0153	02.04	WASHER BRB6,4X12RFR	67
315105-0153	03.01	WASHER BRB6,4X12RFR	353
315105-0153	03.02	WASHER BRB6,4X12RFR	355, 391
315105-0153	03.03	WASHER BRB6,4X12RFR	357, 393
315105-0153	03.04	WASHER BRB6,4X12RFR	395
315105-0153	03.05	WASHER BRB6,4X12RFR	397, 399
315105-0153	03.06	WASHER BRB6,4X12RFR	363, 401
315105-0153	03.07	WASHER BRB6,4X12RFR	365, 403
315105-0153	03.08	WASHER BRB6,4X12RFR	367, 405
315105-0153	03.09	WASHER BRB6,4X12RFR	407
315105-0153	03.10	WASHER BRB6,4X12RFR	409
315105-0153	03.11	WASHER BRB6,4X12RFR	373, 411
315105-0153	03.12	WASHER BRB6,4X12RFR	375, 413
315105-0153	03.13	WASHER BRB6,4X12RFR	377, 415
315105-0153	03.14	WASHER BRB6,4X12RFR	417
315105-0153	04.01	WASHER BRB6,4X12RFR	425
315105-0153	04.02	WASHER BRB6,4X12RFR	427
315105-0153	04.03	WASHER BRB6,4X12RFR	429, 431
315105-0153	04.04	WASHER BRB6,4X12RFR	433, 435, 437
315105-0153	04.06	WASHER BRB6,4X12RFR	443, 447
315105-0153	04.07	WASHER BRB6,4X12RFR	449
315105-0153	04.08	WASHER BRB6,4X12RFR	453
315105-0153	04.09	WASHER BRB6,4X12RFR	455
315105-0153	05.02	WASHER BRB6,4X12RFR	463
315105-0153	05.03	WASHER BRB6,4X12RFR	465
315105-0153	05.04	WASHER BRB6,4X12RFR	467
315105-0153	05.05	WASHER BRB6,4X12RFR	469
315105-0153	05.06	WASHER BRB6,4X12RFR	471
315105-0153	05.12	WASHER BRB6,4X12RFR	483
315105-0153	05.13	WASHER BRB6,4X12RFR	485
315105-0153	2.01	WASHER BRB6,4X12RFR	289
315105-0153	2.02	WASHER BRB6,4X12RFR	291
315105-0153	2.03	WASHER BRB6,4X12RFR	293, 295
315105-0153	2.04	WASHER BRB6,4X12RFR	297
315105-0153	2.05	WASHER BRB6,4X12RFR	299
315105-0153	2.06.2	WASHER BRB6,4X12RFR	307
315105-0153	2.07.2	WASHER BRB6,4X12RFR	315
315105-0153	2.07.4	WASHER BRB6,4X12RFR	317
315105-0153	2.07.5	WASHER BRB6,4X12RFR	319
315105-0153	2.07.6	WASHER BRB6,4X12RFR	321
315105-0153	2.08.4	WASHER BRB6,4X12RFR	331
315105-0153	2.08.5	WASHER BRB6,4X12RFR	333
315105-0153	2.09	WASHER BRB6,4X12RFR	335
315105-0153	2.11	WASHER BRB6,4X12RFR	339
315105-0153	2.12	WASHER BRB6,4X12RFR	341
315105-0153	2.13	WASHER BRB6,4X12RFR	343
315105-0153	2.14	WASHER BRB6,4X12RFR	345
315105-0153	2.15	WASHER BRB6,4X12RFR	347
315105-0156	01.03.01	WASHER BRB6,7X14RFR	71
315105-0156	01.03.02	WASHER BRB6,7X14RFR	73
315105-0156	01.03.03	WASHER BRB6,7X14RFR	75
315105-0156	01.03.04	WASHER BRB6,7X14RFR	77
315105-0156	01.03.05	WASHER BRB6,7X14RFR	79
315105-0156	01.03.06	WASHER BRB6,7X14RFR	81
315105-0156	01.03.15	WASHER BRB6,7X14RFR	105
315105-0165	01.03	WASHER BRB8,4X16RFR	27
315105-0165	01.03.03	WASHER BRB8,4X16RFR	75
315105-0165	01.03.04	WASHER BRB8,4X16RFR	77
315105-0165	01.03.05	WASHER BRB8,4X16RFR	79
315105-0165	01.03.09	WASHER BRB8,4X16RFR	91, 93

Part No	MMref	Description	Page No
315105-0165	01.03.12	WASHER BRB8,4X16RFR	99
315105-0165	01.03.13	WASHER BRB8,4X16RFR	101
315105-0165	01.03.14	WASHER BRB8,4X16RFR	103
315105-0165	01.04	WASHER BRB8,4X16RFR	29, 31
315105-0165	01.04.01	WASHER BRB8,4X16RFR	119
315105-0165	01.04.02	WASHER BRB8,4X16RFR	121, 123
315105-0165	01.04.05	WASHER BRB8,4X16RFR	135
315105-0165	01.05	WASHER BRB8,4X16RFR	33, 35
315105-0165	01.06	WASHER BRB8,4X16RFR	37, 229
315105-0165	01.06.01	WASHER BRB8,4X16RFR	165
315105-0165	01.06.10	WASHER BRB8,4X16RFR	185
315105-0165	01.07	WASHER BRB8,4X16RFR	39, 41, 231
315105-0165	01.08	WASHER BRB8,4X16RFR	43, 233
315105-0165	01.09	WASHER BRB8,4X16RFR	45, 235
315105-0165	01.10	WASHER BRB8,4X16RFR	237, 239
315105-0165	01.11	WASHER BRB8,4X16RFR	49, 51, 241
315105-0165	01.12	WASHER BRB8,4X16RFR	243
315105-0165	01.17	WASHER BRB8,4X16RFR	267, 269
315105-0165	02.01	WASHER BRB8,4X16RFR	61, 145
315105-0165	02.02	WASHER BRB8,4X16RFR	63
315105-0165	02.03	WASHER BRB8,4X16RFR	65, 153
315105-0165	02.04	WASHER BRB8,4X16RFR	67
315105-0165	03.04	WASHER BRB8,4X16RFR	395
315105-0165	03.05	WASHER BRB8,4X16RFR	397, 399
315105-0165	03.06	WASHER BRB8,4X16RFR	401
315105-0165	03.10	WASHER BRB8,4X16RFR	409
315105-0165	03.11	WASHER BRB8,4X16RFR	411
315105-0165	03.12	WASHER BRB8,4X16RFR	413
315105-0165	03.13	WASHER BRB8,4X16RFR	415
315105-0165	03.14	WASHER BRB8,4X16RFR	417
315105-0165	04.02	WASHER BRB8,4X16RFR	427
315105-0165	04.03	WASHER BRB8,4X16RFR	427, 429, 431
315105-0165	04.04	WASHER BRB8,4X16RFR	433, 435, 437
315105-0165	04.05	WASHER BRB8,4X16RFR	439, 441
315105-0165	04.08	WASHER BRB8,4X16RFR	453
315105-0165	05.05	WASHER BRB8,4X16RFR	469
315105-0165	05.06	WASHER BRB8,4X16RFR	471
315105-0165	2.01	WASHER BRB8,4X16RFR	289
315105-0165	2.02	WASHER BRB8,4X16RFR	291
315105-0165	2.03	WASHER BRB8,4X16RFR	293, 295
315105-0165	2.05	WASHER BRB8,4X16RFR	299
315105-0165	2.06.0	WASHER BRB8,4X16RFR	303
315105-0165	2.07.1	WASHER BRB8,4X16RFR	313
315105-0165	2.08.2	WASHER BRB8,4X16RFR	327
315105-0165	2.08.4	WASHER BRB8,4X16RFR	331
315105-0165	2.08.5	WASHER BRB8,4X16RFR	333
315105-0165	2.11	WASHER BRB8,4X16RFR	339
315105-0165	2.12	WASHER BRB8,4X16RFR	341
315105-0165	2.13	WASHER BRB8,4X16RFR	343
315105-0165	2.14	WASHER BRB8,4X16RFR	345
315105-0165	2.15	WASHER BRB8,4X16RFR	347
315105-0171	01.03.07	WASHER BRB10X18RFR	83, 85
315105-0171	01.03.08	WASHER BRB10X18RFR	87, 89
315105-0171	02.01	WASHER BRB10X18RFR	61
315105-0171	2.14	WASHER BRB10X18RFR	345
315105-0173	01.06	WASHER BRB10,5X22RFR	229
315105-0173	01.07	WASHER BRB10,5X22RFR	39, 41
315105-0173	01.08	WASHER BRB10,5X22RFR	43
315105-0173	01.09	WASHER BRB10,5X22RFR	45
315105-0173	01.12	WASHER BRB10,5X22RFR	243
315105-0173	04.04	WASHER BRB10,5X22RFR	433, 435, 437
315105-0173	04.05	WASHER BRB10,5X22RFR	439
315105-0173	2.09	WASHER BRB10,5X22RFR	335
315105-0178	01.03.07	WASHER BRB13X24RFR	83, 85
315105-0178	01.03.08	WASHER BRB13X24RFR	87, 89
315105-0178	01.03.09	WASHER BRB13X24RFR	91, 93
315105-0178	01.04.02	WASHER BRB13X24RFR	121, 123
315105-0178	01.06	WASHER BRB13X24RFR	37
315105-0178	01.07	WASHER BRB13X24RFR	39, 41
315105-0178	01.08	WASHER BRB13X24RFR	43
315105-0178	01.09	WASHER BRB13X24RFR	45
315105-0178	01.11	WASHER BRB13X24RFR	49, 51
315105-0178	02.04	WASHER BRB13X24RFR	67
315105-0186	01.20	WASHER BRB17X30RFR	277
315105-0186	04.05	WASHER BRB17X30RFR	439, 441
315105-0186	2.03	WASHER BRB17X30RFR	293, 295
315115-0153	01.03.14	WASHER TBRB6,4X12RFR	103
315115-0165	2.04	WASHER TBRB8,4X16RFR	297
315115-0165	2.09	WASHER TBRB8,4X16RFR	335
315125-0153	01.08	WASHER SB 6,4X22X4 RFR	233
315125-0153	01.09	WASHER SB 6,4X22X4 RFR	235
315125-0153	01.13	WASHER SB 6,4X22X4 RFR	245
315125-0153	03.12	WASHER SB 6,4X22X4 RFR	413
315125-0153	2.05	WASHER SB 6,4X22X4 RFR	299
315125-0165	01.03.18	WASHER SB 8,4X26X5 RFR	111
315125-0165	02.04	WASHER SB 8,4X26X5 RFR	67

Part No	MMref	Description	Page No
315125-0165	04.07	WASHER SB 8,4X26X5 RFR	449
315202-0110	01.03.14	O-RING 12,1X1,6	103
315202-0303	01.03.08	O-RING 59,5X3	87, 89
315202-0303	01.03.09	O-RING 59,5X3	91, 93
315220-0175	01.03.07	SEAL RING V-35S	83, 85
315220-0175	01.03.08	SEAL RING V-35S	87, 89
315220-0175	01.03.09	SEAL RING V-35S	91, 93
315220-0204	01.03.05	SEAL RING V-55S	79
315220-0204	01.03.06	SEAL RING V-55S	81
315220-0204	01.03.12	SEAL RING V-55S	99
315220-0204	01.03.13	SEAL RING V-55S	101
315233-0109	01.03.19	SEAL RING R1/8"	113
315233-0110	01.21	SEAL RING R1/4"	279
315701-0170	03.12	FLAT WEDGE4X4X20	413
315701-0171	03.01	FLAT WEDGE4X4X22	389
315701-0200	03.10	FLAT WEDGE5X5X18	409
315701-0204	01.03.01	FLAT WEDGE5X5X28	71
315701-0204	01.03.02	FLAT WEDGE5X5X28	73
315701-0204	04.02	FLAT WEDGE5X5X28	427
315701-0207	2.06.0	FLAT WEDGE5X5X36	303
315701-0207	2.07.1	FLAT WEDGE5X5X36	313
315701-0207	2.08.2	FLAT WEDGE5X5X36	327
315701-0210	2.06.0	FLAT WEDGE5X5X50	303
315701-0210	2.07.1	FLAT WEDGE5X5X50	313
315701-0210	2.08.2	FLAT WEDGE5X5X50	327
315701-0237	01.03.07	FLAT WEDGE6X6X32	83, 85
315701-0237	01.03.08	FLAT WEDGE6X6X32	87, 89
315701-0237	01.03.09	FLAT WEDGE6X6X32	91, 93
315701-0237	2.06.1	FLAT WEDGE6X6X32	305
315701-0237	2.07.2	FLAT WEDGE6X6X32	315
315701-0263	02.01	FLAT WEDGE8X7X20	61
315701-0266	01.03.06	FLAT WEDGE8X7X28	81
315701-0266	02.03	FLAT WEDGE8X7X28	65
315701-0271	01.04	FLAT WEDGE8X7X45	29, 31
315701-0271	01.05	FLAT WEDGE8X7X45	33, 35
315701-0272	01.05	FLAT WEDGE8X7X50	33, 35
315701-0272	02.01	FLAT WEDGE8X7X50	61
315701-0273	01.04	FLAT WEDGE8X7X56	29, 31
315701-0278	02.01	FLAT WEDGE8X7X90	61
315701-0801	01.03.05	FLAT WEDGE8X7X36	79
315701-0801	01.05	FLAT WEDGE8X7X36	33, 35
315701-0801	02.03	FLAT WEDGE8X7X36	65
315705-0202	2.03	FLAT WEDGE	293, 295
315705-0234	2.08.3	FLAT WEDGE	329
315742-0108	04.03	RETAINING 12SMS199RFR	427, 429, 431
315742-0116	01.03.07	RETAINING 20SMS199RFR	83, 85
315742-0116	01.03.08	RETAINING 20SMS199RFR	87, 89
315750-0112	01.03.09	CIRCLIP SGA15	91, 93
315750-0116	01.03.09	CIRCLIP SGA20	91, 93
315750-0116	01.03.12	CIRCLIP SGA20	99
315750-0116	01.03.13	CIRCLIP SGA20	101
315750-0119	01.03.05	CIRCLIP SGA25	79
315750-0119	01.03.06	CIRCLIP SGA25	81
315750-0122	01.04.02	CIRCLIP SGA30	121, 123
315750-0124	01.03.07	CIRCLIP SGA35	83, 85
315750-0124	01.03.08	CIRCLIP SGA35	87, 89
315750-0124	01.03.09	CIRCLIP SGA35	91, 93
315750-0129	01.03.05	CIRCLIP SGA45	79
315750-0129	01.03.06	CIRCLIP SGA45	81
315751-0109	01.04.05	CIRCLIP SGA12 RFR	135
315751-0109	2.07.6	CIRCLIP SGA12 RFR	321
315751-0112	03.10	CIRCLIP SGA15 RFR	409
315751-0113	2.06.0	CIRCLIP SGA16 RFR	303
315751-0113	2.07.1	CIRCLIP SGA16 RFR	313
315751-0113	2.08.2	CIRCLIP SGA16 RFR	327
315751-0116	01.03.18	CIRCLIP SGA20 RFR	111
315751-0116	02.04	CIRCLIP SGA20 RFR	67
315751-0116	03.04	CIRCLIP SGA20 RFR	395
315751-0119	02.03	CIRCLIP SGA25 RFR	65
315751-0122	02.01	CIRCLIP SGA30 RFR	61
315752-0123	01.03.09	CIRCLIP SGH32	91, 93
315752-0128	01.03.12	CIRCLIP SGH42	99
315752-0128	01.03.13	CIRCLIP SGH42	101
315752-0128	01.03.18	CIRCLIP SGH42	111
315753-0124	03.10	CIRCLIP GH 35 RFR	409
315755-0105	01.06.01	LOCKING WAE 3,2 RFR	165
315755-0105	01.06.06	LOCKING WAE 3,2 RFR	175, 177
315755-0105	01.06.07	LOCKING WAE 3,2 RFR	179
315755-0105	01.06.08	LOCKING WAE 3,2 RFR	181
315755-0105	03.06	LOCKING WAE 3,2 RFR	363
315755-0105	03.07	LOCKING WAE 3,2 RFR	365
315755-0105	03.11	LOCKING WAE 3,2 RFR	373
315755-0105	03.12	LOCKING WAE 3,2 RFR	375
315755-0105	03.13	LOCKING WAE 3,2 RFR	377
318174-0153	2.08.2	TIMING BEL	327
318219-0389	01.03.10	CONNECTION	95

Part No	MMref	Description	Page No
318219-0389	01.03.11	CONNECTION	97
321120-0093	2.09	BUSHING 4/5,5X10	335
321120-0100	01.03.08	BUSHING 8/10X12	87, 89
321120-0114	04.02	BUSHING 13/15X10	427
321120-0137	03.11	BUSHING 20/23X15	411
321120-0160	01.04.02	BUSHING 25/28X30	121, 123
321120-0160	04.03	BUSHING 25/28X30	427, 429, 431
321120-0171	03.05	BUSHING 30/34X30	397, 399
321120-0171	04.02	BUSHING 30/34X30	427
321120-0185	01.03.03	BUSHING 35/39X30	75
321120-0185	01.03.04	BUSHING 35/39X30	77
321308-0201	01.06	BALL BEARISKF6001-2RS	229
321308-0201	01.12	BALL BEARISKF6001-2RS	243
321308-0202	01.03.09	BALL BEARISKF6002-2RS	91, 93
321308-0204	01.03.12	BALL BEARISKF6004-2RS	99
321308-0204	01.03.13	BALL BEARISKF6004-2RS	101
321308-0204	01.03.18	BALL BEARISKF6004-2RS	111
321308-0204	02.04	BALL BEARISKF6004-2RS	67
321308-0204	03.03	BALL BEARISKF6004-2RS	393
321308-0204	03.04	BALL BEARISKF6004-2RS	395
321308-0204	2.06.1	BALL BEARISKF6004-2RS	305
321308-0204	2.07.2	BALL BEARISKF6004-2RS	315
321308-0204	2.08.3	BALL BEARISKF6004-2RS	329
321308-0206	01.04.02	BALL BEARISKF6006-2RS	121, 123
321308-0207	01.03.07	BALL BEARISKF6007-2RS	83, 85
321308-0207	01.03.08	BALL BEARISKF6007-2RS	87, 89
321308-0207	01.03.09	BALL BEARISKF6007-2RS	91, 93
321308-0209	01.03.05	BALL BEARISKF6009-2RS	79
321308-0209	01.03.06	BALL BEARISKF6009-2RS	81
321313-0101	03.02	BALL BEARISKF6201-2RS	391
321313-0102	03.01	BALL BEARISKF6202-2RS	389
321313-0102	03.10	BALL BEARISKF6202-2RS	409
321313-0105	01.03.05	BALL BEARISKF6205-2RS	79
321313-0105	01.03.06	BALL BEARISKF6205-2RS	81
321582-0165	01.06	CURVE ROLLKR30PP	37
321582-0165	01.07	CURVE ROLLKR30PP	39, 41
321582-0165	01.08	CURVE ROLLKR30PP	43
321582-0165	01.09	CURVE ROLLKR30PP	45
342700-0109	01.03.19	NIPPLE RNA1/8"-1/8"	113
342701-0206	01.14.2	BUSHING RNI1/2"-3/8"	257
342701-0209	01.14.1	BUSHING RNI3/4"-3/8"	255
342701-0210	01.14.1	BUSHING RNI3/4"-1/2"	255
342713-0211	01.14.3	BLIND PLUG	259, 261
342713-0211	04.07	BLIND PLUG	449
342715-0102	01.14.3	PLUG D=6	259, 261
342715-0103	01.14.3	PLUG D=8	259, 261
342715-0103	01.21	PLUG D=8	279
342715-0103	04.07	PLUG D=8	449, 451
342716-0203	01.14.3	REDUCER 6-8	259, 261
342716-0203	04.07	REDUCER 6-8	449, 451
342716-0205	01.14.3	REDUCER 4-8	259, 261
342716-0205	2.14	REDUCER 4-8	345
342716-0209	01.14	REDUCER 8-12	247, 249, 251, 253
342716-0209	01.15	REDUCER 8-12	265
342716-0210	01.14	REDUCER 6-12	247, 249, 251, 253
342716-0210	04.07	REDUCER 6-12	449, 451
342722-0197	04.05	PIPE COUPLD=6-M5	439, 441
342722-0203	01.04.05	PIPE COUPLD=6-R1/4"	135
342722-0204	01.15	PIPE COUPLD=8-R1/8"	265
342722-0205	01.21	PIPE COUPLD=8-R1/4"	279
342722-0205	04.05	PIPE COUPLD=8-R1/4"	439, 441
342722-0210	01.14.3	PIPE COUPLD=12-R3/8"	259, 261
342722-0210	04.07	PIPE COUPLD=12-R3/8"	449
342732-0099	2.01	ELBOW PIPE D4-M5	289
342732-0099	2.13	ELBOW PIPE D4-M5	343
342732-0102	01.03.14	ELBOW PIPE D6-R1/8"	103
342732-0102	02.01	ELBOW PIPE D6-R1/8"	145
342732-0102	04.05	ELBOW PIPE D6-R1/8"	439
342732-0102	04.06	ELBOW PIPE D6-R1/8"	443, 445, 447
342732-0102	2.08.5	ELBOW PIPE D6-R1/8"	333
342732-0103	2.02	ELBOW PIPE D6-R1/4"	291
342732-0104	01.11	ELBOW PIPE D8-R1/4"	49, 51
342732-0104	01.14.4	ELBOW PIPE D8-R1/4"	263
342732-0104	01.15	ELBOW PIPE D8-R1/4"	265
342732-0104	04.05	ELBOW PIPE D8-R1/4"	439, 441
342732-0109	01.14.4	ELBOW PIPE D12-R1/4"	263
342732-0110	01.14.2	ELBOW PIPE D12-R3/8"	257
342732-0110	01.14.3	ELBOW PIPE D12-R3/8"	259, 261
342732-0110	04.07	ELBOW PIPE D12-R3/8"	449
342732-0113	01.11	ELBOW PIPE 10-1/4	49, 51
342732-0801	02.01	ELBOW PIPE D8-R1/8"	145
342732-0801	02.03	ELBOW PIPE D8-R1/8"	153
342732-0801	04.06	ELBOW PIPE D8-R1/8"	443, 445, 447
342732-0801	2.04	ELBOW PIPE D8-R1/8"	297
342732-0801	2.05	ELBOW PIPE D8-R1/8"	299
342732-0801	2.11	ELBOW PIPE D8-R1/8"	339

Part No	MMref	Description	Page No
342735-0109	01.14	ELBOW PIPE D=12	247, 249, 251, 253
342742-0110	01.14	T-CONNECTI 12-3/8	247, 249, 251, 253
342742-0110	01.14.3	T-CONNECTI 12-3/8	259, 261
342748-0102	01.14	T-CONNECTI D=6	247, 249, 251, 253
342748-0109	01.14	T-CONNECTI D=12	247, 249, 251, 253
342748-0109	04.07	T-CONNECTI D=12	451
342768-0103	01.21	BULKHEAD LD=8	279
342921-0112	02.02	PIPE COUPL6/4-6M	147, 149, 151
342921-0131	01.03.19	PIPE COUPL10/8-1/8"	113
342933-0121	01.04.03	ELBOW PIPE8/6-1/8	125, 127
342960-0133	01.21	BULKHEAD L10/8	279
342991-0110	01.10	HOSE CLIP 50-65MMRFR	47
344502-0021	01.06	NIPPLE L AHM6	37
344502-0021	01.07	NIPPLE L AHM6	39, 41
344502-0021	01.08	NIPPLE L AHM6	43
344502-0021	01.09	NIPPLE L AHM6	45
344502-0061	01.06	NIPPLE L M6AL.	37
344502-0061	01.07	NIPPLE L M6AL.	39, 41
344502-0061	01.08	NIPPLE L M6AL.	43
344502-0061	01.09	NIPPLE L M6AL.	45
346800-0110	01.11	SILENCER FILTER R1/4"	49, 51
352103-0096	01.21	CABLE GLANR.ST 7	279
352103-0096	04.01	CABLE GLANR.ST 7	425
352103-0101	01.01	CABLE GLAND ST 9	23, 219
352103-0101	01.02	CABLE GLAND ST 9	25, 221
352103-0101	01.03	CABLE GLAND ST 9	223
352103-0101	01.04.04	CABLE GLAND ST 9	129, 131, 133
352103-0101	01.06.03	CABLE GLAND ST 9	169
352103-0101	01.10	CABLE GLAND ST 9	47
352103-0101	01.14	CABLE GLAND ST 9	247, 249, 251, 253
352103-0106	01.01	CABLE GLAND ST 11	23
352103-0106	01.04.04	CABLE GLAND ST 11	129, 131, 133
352103-0106	01.04.06	CABLE GLAND ST 11	139
352103-0106	01.06.06	CABLE GLAND ST 11	175, 177
352103-0106	01.06.07	CABLE GLAND ST 11	179
352103-0106	01.06.08	CABLE GLAND ST 11	181
352103-0106	01.10	CABLE GLAND ST 11	47
352103-0106	01.19	CABLE GLAND ST 11	273, 275
352103-0106	01.21	CABLE GLAND ST 11	279
352103-0106	01.22	CABLE GLAND ST 11	281
352103-0106	03.15	CABLE GLAND ST 11	381
352103-0108	01.06	CABLE GLAND ST13	229
352103-0108	01.07	CABLE GLAND ST13	231
352103-0108	02.03	CABLE GLAND ST13	153
352103-0110	2.06.0	CABLE GLAND STR 16	303
352103-0110	2.07.1	CABLE GLAND STR 16	313
352103-0110	2.08.2	CABLE GLAND STR 16	327
352103-0111	01.01	CABLE GLAND ST 16	23, 219
352103-0111	01.02	CABLE GLAND ST 16	25
352103-0111	02.03	CABLE GLAND ST 16	153
352103-0111	04.01	CABLE GLAND ST 16	425
352103-0116	01.02	CABLE GLAND ST21.13-18MM	221
352103-0116	01.19	CABLE GLAND ST21.13-18MM	273
352113-0101	01.14	RIBBON CLA	247, 249, 251, 253
353101-0120	01.04.06	CABLE SHOE	139
353101-0120	01.22	CABLE SHOE	281
353101-0132	01.03	CABLE SHOE	27
359009-0800	01.14	CABLE MARKM#RKEN PK	247, 249, 251, 253
359011-0821	01.01	SET OF SIGNS 6-FW 1-50	23, 219
359011-0821	01.02	SET OF SIGNS 6-FW 1-50	25, 221
359011-0821	01.03	SET OF SIGNS 6-FW 1-50	223
359011-0821	04.01	SET OF SIGNS 6-FW 1-50	425
359011-0822	01.02	SET OF SIG6-FW 51-100	221
457696-0001	01.08	JOINT PIECE	233
464071-0007	01.06	SLIDE RAIL	229
464072	01.08	CLAMPING PART	233
466074-0001	01.08	SLIDER	233
466074-0002	01.06	SLIDER	229
466074-0002	01.08	SLIDER	233
476220	01.06	SPACER	229
476220	01.08	SPACER	233
476221-0008	05.06	PIPE	471
476975	01.06	WHEEL	229
476975	01.12	WHEEL	243
479110	01.01	SPACER	23, 219
479110	01.02	SPACER	25, 221
479110	01.03	SPACER	223
479110	04.01	SPACER	425
484701	05.05	SHUTTER	469
484701	05.06	SHUTTER	471
486268	01.03	NUT	27
486268	01.04.01	NUT	119
486268	01.06	NUT	37
486268	01.06.10	NUT	185
486268	01.07	NUT	39, 41
486268	01.08	NUT	43

Part No	MMref	Description	Page No
486268	01.09	NUT	45
486268	01.10	NUT	237, 239
486268	01.17	NUT	267, 269
486268	03.11	NUT	411
486268	03.13	NUT	415
486268	03.14	NUT	417
486268	04.06	NUT	447
486268	04.08	NUT	453
486858	01.06	SPROCKET	229
486860	01.06	SPROCKET	229
486886	01.06	MOTOR SHELF	229
486918-0001	01.06	JOINT PIECE	229
486918-0002	01.06	JOINT PIECE	229
493768	02.03	BUSHING	153
493768	03.12	BUSHING	413
493768	04.04	BUSHING	433, 435, 437
493768	2.09	BUSHING	335
497635	01.06	HUB	229
497637-0003	01.06	SPACER	229
497678	01.06	COVERING PLATE	229
497680-0001	01.06	HOLDER	229
497680-0001	01.07	HOLDER	231
497997	01.06	PLUG	229
497997	01.07	PLUG	231
499777	01.12	PLUG	243
530852	01.06	RING	229
530852	01.12	RING	243
531484-0001	01.06	SIDE PLATE	229
531484-0002	01.06	SIDE PLATE	229
531487	01.06	BRACKET	229
531487	01.07	BRACKET	231
531499	01.06	BEARING SLEEVE	229
531499	01.12	BEARING SLEEVE	243
531502	01.06	MOUNTING BLOCK	229
531503	01.06	SLIDE RAIL	229
531506	01.06	PROTECTION PLATE	229
531948	01.06	SPACER	229
531952	01.06	BEARING SLEEVE	229
531953	01.06	HUB	229
532404	01.12	SPRING	243
532412	01.05	SPRING	227
532413	01.03.19	REDUCING NIPPLE	113
532414	01.03.19	WASHER	113
532889	01.12	CLAMPING PIECE	53
532889	02.02	CLAMPING PIECE	63
537482	01.08	BRACKET	233
537482	05.05	BRACKET	469
537482	05.06	BRACKET	471
537483	01.08	BRACKET	233
537483	05.05	BRACKET	469
537483	05.06	BRACKET	471
538375-0001	01.12	FASTENING IRON	243
538375-0002	01.12	FASTENING IRON	243
538382	01.12	COVERING PLATE	243
538383	01.12	COVERING PLATE	243
538384	01.12	COVERING PLATE	243
539096	01.07	MOTOR SHELF	231
539103	01.07	MOTOR COVER	231
539158	01.07	HUB	231
540169	2.14	DOWEL	345
547174	01.12	CANTILEVER	243
547175	01.12	CANTILEVER	243
547181	01.12	BRACKET	243
547183	01.12	SLIDE SHEET	243
547187	01.12	HUB	243
547191-0001	01.12	SPACER	243
547191-0002	01.12	SPACER	243
547192	01.12	PLUG	243
547193	01.12	BEARING SLEEVE	243
547194	01.12	SCREW	243
548246	01.09	BRACKET	235
548246	05.06	BRACKET	471
548247	01.09	BRACKET	235
548247	05.06	BRACKET	471
548599	01.03	WASHER	27
548599	01.04.01	WASHER	119
548599	01.10	WASHER	237, 239
548599	01.11	WASHER	241
548599	01.17	WASHER	267, 269
548599	03.11	WASHER	411
548599	03.13	WASHER	415
548599	04.06	WASHER	447
548599	2.05	WASHER	299
548599	2.06.3	WASHER	309
548599	2.08.1	WASHER	325
548599	2.11	WASHER	339

Part No	MMref	Description	Page No
548927	01.05	HOLDER	227
549644	01.12	STEERING	243
549645	01.12	COVER DISC	243
549646	01.12	WHEEL	243
549659	01.12	SLEEVE	243
556598	01.03	BRACKET	27
556601	01.10	BRACKET	237, 239
556603	01.03	COVER PLATE	27
556604	01.04.01	COVER PLATE	119
556604	01.10	COVER PLATE	237, 239
556604	01.17	COVER PLATE	267, 269
556604	03.13	COVER PLATE	415
556604	04.06	COVER PLATE	447
556604	04.08	COVER PLATE	453
556610	01.03	PROFILE	27
556611	01.03	PROFILE	27
556614	01.03	MOTOR PLATE	27
556617	01.03	PROFILE	27
556618	01.03	PROFILE	27
556620	01.03	PROFILE	27
556621	01.03	PROFILE	27
556622	01.03	PROFILE	27
556623	01.03	PROFILE	27
556624	01.03	FRAME BRACKET	27
556624	01.10	FRAME BRACKET	237, 239
556624	01.17	FRAME BRACKET	267, 269
556624	03.14	FRAME BRACKET	417
556624	04.08	FRAME BRACKET	453
556629	02.01	BRACKET	61
556630	02.01	LOCK RAIL	61
556631	02.03	SHAFT	65
556632	02.03	BRACKET	65
556633	02.03	LOCK RAIL	65
556635	02.03	GEAR WHEEL	65
556637	02.02	MOUNTING SHEET	63
556638	02.01	SPACER	61
556638	02.02	SPACER	63
556642	01.04	BEARING PLATE	29, 31
556642	01.05	BEARING PLATE	33, 35
556645	01.04	HOLDER	29, 31
556646	01.04	HOLDER	29, 31
556646	01.05	HOLDER	33, 35
556647	01.04	BRACKET	29, 31

Part No	MMref	Description	Page No
556648	01.04	HUB	29, 31
556648	01.05	HUB	33, 35
556649	01.04	WASHER	29, 31
556649	01.05	WASHER	33, 35
556651	01.04	SPRING BRACKET	29, 31
556652	01.05	SPRING BRACKET	33, 35
562028	2.13	DOWEL	343
575034	01.06.06	ROUND NUT	175, 177
575034	01.06.07	ROUND NUT	179
575034	01.06.08	ROUND NUT	181
575034	03.11	ROUND NUT	373
575034	03.12	ROUND NUT	375
575034	03.13	ROUND NUT	377
575417	05.04	WASHER	467
575418	05.02	WASHER	463
575435	05.02	HOLDER	463
577854	05.03	BRACKET	465
577855	05.03	BRACKET	465
577856	05.03	BRACKET	465
577857	05.03	BRACKET	465
577859	05.03	BRACKET	465
577859	05.04	BRACKET	467
577862	05.03	TUNNEL HALF	465
577862	05.06	TUNNEL HALF	471
580918	01.04.07	MOUNTING SHEET	141
6-12MM			153, 229, 231
8490-0003	04.01	RAIL	425
8490-0010	01.01	MOUNTING RAIL	23, 219
8490-0010	01.02	MOUNTING RAIL	25, 221
8490-0010	01.03	MOUNTING RAIL	223
90002-0004	01.02	BLANK-OFF PLUG 22,5	25
90002-0009	01.02	BLANK-OFF PLUG 18.6	25
90002-0013	01.01	BLANK-OFF PLUG 15,2	219
90002-0013	01.02	BLANK-OFF PLUG 15,2	25, 221
90002-0013	01.03	BLANK-OFF PLUG 15,2	223
90002-0013	01.04.04	BLANK-OFF PLUG 15,2	129, 131, 133
90002-0013	01.06.03	BLANK-OFF PLUG 15,2	169
90002-0013	01.10	BLANK-OFF PLUG 15,2	47
90005-0064	2.09	WASHER	335
90005-0094	01.03.19	GASKET	113
90005-0114	01.04.07	WASHER	141
90012-0075	01.04.04	GLAND FITTING	129, 131, 133
90012-0076	01.04.04	CABLE SHEATH	129, 131, 133

Part No	MMref	Description	Page No
90012-0118	02.01	GLAND FITTING	61
90012-0118	02.03	GLAND FITTING	65
90015-0020	01.15	BUSHING	265
90015-0023	01.04.07	BUSHING	141
90015-0023	02.03	BUSHING	153
90028-0024	01.03.19	CONE	113
90032-0046	01.03.19	JUNKTION BLOCK	113
90036-0068	01.04.07	BULB 6.5W 24V	141
90042-0213	02.01	SOLENOID VALVE	145
90042-0213	04.06	SOLENOID VALVE	443, 445, 447
90042-0215	01.14.3	SOL.VALVE PACKAGE	259, 261
90042-0215	04.07	SOL.VALVE PACKAGE	449, 451
90042-0215	2.14	SOL.VALVE PACKAGE	345
90042-0235	01.14.3	SOLENOID VALVE	259, 261
90042-0392	02.01	CONTACT	145
90042-0491	01.15	CONTACT	265
90042-0491	04.06	CONTACT	443, 445, 447
90042-0519	01.14.3	COVER PLATE	259, 261
90042-0519	04.07	COVER PLATE	449
90042-0522	01.14.3	END PIECE	259, 261
90042-0522	04.07	END PIECE	449
90042-0528	01.14.3	SEALING DISC	259, 261
90042-0532	01.14.3	CONNECTION TABLE	259, 261
90042-0532	04.07	CONNECTION TABLE	449
90042-0535	01.14.3	TERMINAL FOR SOL.VALVE	259, 261
90042-0535	04.07	TERMINAL FOR SOL.VALVE	449
90042-0536	01.15	CONTACT FOR SOL.VALVE	265
90042-0539	01.14.3	EL.COIL	259, 261
90042-0539	04.07	EL.COIL	449, 451
90042-0539	2.14	EL.COIL	345
90042-0545	01.14.3	CONNECTION TABLE	259, 261
90042-0550	01.14.3	PROTECTIVE COVER	259, 261
90042-0550	04.07	PROTECTIVE COVER	449
90043-0015	01.14.1	PRESSURE GAUGE	255
90044-0116	04.05	PROXIMITY SWITCH	439, 441
90044-0116	2.01	PROXIMITY SWITCH	289
90044-0116	2.02	PROXIMITY SWITCH	291
90044-0116	2.03	PROXIMITY SWITCH	293, 295
90044-0116	2.09	PROXIMITY SWITCH	335
90044-0124	02.04	INDUCTIVE SWITCH	67
90044-0124	2.04	INDUCTIVE SWITCH	297
90044-0124	2.08.5	INDUCTIVE SWITCH	333
90044-0124	2.11	INDUCTIVE SWITCH	339
90044-0124	2.13	INDUCTIVE SWITCH	343
90044-0124	2.14	INDUCTIVE SWITCH	345
90044-0127	01.06.06	KEY SAFETY SWITCH AZ15ZVR	175, 177
90044-0127	01.06.07	KEY SAFETY SWITCH AZ15ZVR	179
90044-0127	01.06.08	KEY SAFETY SWITCH AZ15ZVR	181
90044-0127	03.15	KEY SAFETY SWITCH AZ15ZVR	381
90055-0100	01.14	JOINT CONNECTION	247, 249, 251, 253
90055-0100	04.06	JOINT CONNECTION	443, 447
90055-0101	01.04.03	JOINT CONNECTION	127
90055-0101	01.14	JOINT CONNECTION	247, 249, 251, 253
90055-0101	04.06	JOINT CONNECTION	443, 445, 447
90055-0147	01.14	JOINT CONNECTION	247, 249, 251, 253
90055-0147	01.15	JOINT CONNECTION	265
90055-0181	2.14	ELBOW PIPE JOINT	345
90061-0018	01.12	ANGLE ENCODER 8BIT GRAY	53
90061-0018	02.02	ANGLE ENCODER 8BIT GRAY	63
90062-0059	01.04.06	LOCK WASHER	139
90062-0059	01.22	LOCK WASHER	281
90062-0060	01.03	LOCK WASHER	27
90064-0124	01.04.06	EMERGENCY STOP BUTTON	139
90064-0124	01.22	EMERGENCY STOP BUTTON	281
90064-0336	01.04.06	EARTHING PLATE	139
90064-0336	01.22	EARTHING PLATE	281
90066-0030	01.04.06	PUSH BUTTON BOX	139
90066-0030	01.22	PUSH BUTTON BOX	281
90069-0181	01.07	GEARED MOTOR	231
90069-0182	01.06	GEARED MOTOR	229
90069-0222	03.09	GEARED MOTOR	407
90069-0237	2.06.0	WORM GEAR MOTOR	303
90069-0237	2.07.1	WORM GEAR MOTOR	313
90069-0237	2.08.2	WORM GEAR MOTOR	327
90069-0266	02.01	WORM GEAR MOTOR	61
90069-0267	02.03	WORM GEAR MOTOR	65
90077-0079	01.01	FEED THROUGH TERMINAL	23, 219
90077-0079	01.02	FEED THROUGH TERMINAL	25, 221
90077-0079	01.03	FEED THROUGH TERMINAL	223
90077-0079	04.01	FEED THROUGH TERMINAL	425
90087-0019	01.03.19	PLUG	113
90087-0036	01.14.4	PLUG	263
90089-0017	02.03	TRANSITIONAL MUFF	153
90091-0004	01.06	SEAL RING	229
90091-0004	01.12	SEAL RING	243
90091-0038	04.03	SEAL RING	427, 429, 431

Part No	MMref	Description	Page No
90091-0200	01.03.05	SEAL RING	79
90091-0200	01.03.06	SEAL RING	81
90091-0302	01.03.09	SEAL RING	91, 93
90091-0302	2.06.1	SEAL RING	305
90091-0302	2.07.2	SEAL RING	315
90091-0302	2.08.3	SEAL RING	329
90091-0304	01.03.05	SEAL RING	79
90091-0304	01.03.06	SEAL RING	81
90091-0305	01.03.07	SEAL RING	83, 85
90091-0305	01.03.08	SEAL RING	87, 89
90091-0305	01.03.09	SEAL RING	91, 93
90091-0306	01.04.02	SEAL RING	121, 123
90091-0322	2.06.1	SEAL RING	305
90091-0322	2.07.2	SEAL RING	315
90091-0322	2.08.3	SEAL RING	329
90092-0080	01.03.19	OIL BRUSH F.4 MM TUBE	113
90099-0104	01.04.04	NUT PR 15,2 (PG9)	129, 131, 133
90099-0104	01.06.03	NUT PR 15,2 (PG9)	169
90099-0104	01.10	NUT PR 15,2 (PG9)	47
90099-0104	01.14	NUT PR 15,2 (PG9)	247, 249, 251, 253
90099-0116	01.21	NUT PR 12,5 (PG7)	279
90099-0117	01.04.04	NUT PR18,6 (PG11)	129, 131, 133
90099-0117	01.04.06	NUT PR18,6 (PG11)	139
90099-0117	01.10	NUT PR18,6 (PG11)	47
90099-0117	01.19	NUT PR18,6 (PG11)	273, 275
90099-0117	01.21	NUT PR18,6 (PG11)	279
90099-0117	01.22	NUT PR18,6 (PG11)	281
90099-0117	02.03	NUT PR18,6 (PG11)	153
90099-0118	02.03	NUT PR20,4 (PG13,5)	153
90099-0119	01.19	NUT PR 28,3 (PG21)	273
90113-0038	01.14.1	REGULATOR	255
90113-0095	01.14.4	PRESSURE REGULATOR	263
90113-0096	01.14.4	PRESSURE REGULATOR	263
90113-0338	01.14.1	YOKE	255
90113-0344	01.14.1	* FILTER INSERT	255
90113-0348	01.14.1	* SEAL KIT	255
90113-0349	01.14.1	* GASKET	255
90113-0356	01.14.1	BRACKET	255
90113-0385	01.14.4	SEPARATION BLOCK	263
90115-0027	01.03.08	LINK HEAD	87, 89
90115-0027	01.03.09	LINK HEAD	91, 93
90115-0028	01.06	LINK HEAD	37
90115-0028	01.07	LINK HEAD	39, 41
90115-0028	01.08	LINK HEAD	43
90115-0028	01.09	LINK HEAD	45
90115-0135	01.03.07	LINK HEAD	83, 85
90115-0135	01.04.02	LINK HEAD	121, 123
90115-0150	01.03.08	LINK HEAD	87, 89
90115-0150	04.04	LINK HEAD	433, 435, 437
90115-0151	01.03.08	LINK HEAD	87, 89
90115-0151	04.04	LINK HEAD	433, 435, 437
90115-0181	01.03.07	LINK HEAD	83, 85
90115-0182	01.03.07	LINK HEAD	83, 85
90117-0008	01.03.16	HANDLE	107
90117-0026	03.11	LOCKING LEVER	411
90117-0026	03.14	LOCKING LEVER	417
90134-0038	01.03.19	BUSHING	113
90134-0081	01.03.19	REDUCTION SLEEVE	113
90135-0026	01.01	EARTHING CLAMP	23, 219
90135-0026	01.02	EARTHING CLAMP	25, 221
90135-0026	01.03	EARTHING CLAMP	223
90135-0026	04.01	EARTHING CLAMP	425
90140-0019	01.21	BRACKET	279
90141-0015	2.07.5	LOCK RING	319
90141-0016	2.03	LOCK RING	293, 295
90141-0020	02.04	LOCK RING	67
90143-0060	01.04.04	STRIP	133
90143-0060	01.10	STRIP	47
90143-0060	01.18	STRIP	271
90143-0060	01.19	STRIP	273, 275
90143-0073	01.04.04	RUBBER STRIP	131, 133
90143-0073	01.18	RUBBER STRIP	271
90143-0073	01.19	RUBBER STRIP	273, 275
90143-0081	01.14	RUBBER SEAL	247, 249, 251, 253
90152-0067	2.14	FLEXIBLE CONDUIT	345
90153-0015	2.11	ADHESIVE	339
90153-0036	05.01	ADHESIVE	461
90155-0016	01.14	CHAIN	247, 249, 251, 253
90157-0016	01.03.17	LOCKING FLUID	109
90157-0022	01.10	SEALING COMPOUND	47
90157-0035	2.07.5	LOCKING FLUID	319
90157-0035	2.07.6	LOCKING FLUID	321
90157-0041	01.06.06	SEALING COMPOUND	175, 177
90157-0041	01.06.07	SEALING COMPOUND	179
90157-0041	01.06.08	SEALING COMPOUND	181
90157-0041	01.06.11	SEALING COMPOUND	187

Part No	MMref	Description	Page No
90157-0041	01.06.15	SEALING COMPOUND	195
90157-0041	01.06.16	SEALING COMPOUND	197
90157-0041	03.01	SEALING COMPOUND	353
90157-0041	03.11	SEALING COMPOUND	373
90157-0041	03.12	SEALING COMPOUND	375
90157-0041	03.13	SEALING COMPOUND	377
90157-0041	05.02	SEALING COMPOUND	463
90157-0041	05.03	SEALING COMPOUND	465
90157-0041	05.05	SEALING COMPOUND	469
90157-0041	05.06	SEALING COMPOUND	471
90163-0008	01.21	CONNECTION	279
90163-0019	01.14	NIPPLE	247, 249, 251, 253
90166-0109	01.03.19	HOSE	113
90166-0141	01.03.19	HOSE	113
90166-0160	01.11	HOSE	49, 51
90166-0193	01.14	PLASTIC HOSE	247, 249, 251, 253
90166-0193	04.07	PLASTIC HOSE	449, 451
90166-0194	01.14	PLASTIC HOSE	247, 249, 251, 253
90166-0194	04.07	PLASTIC HOSE	449, 451
90166-0202	02.01	TEFLON PIPE	145
90166-0202	04.06	TEFLON PIPE	443, 445, 447
90166-0221	01.14	HOSE	247, 249, 251, 253
90166-0221	04.07	HOSE	449
90166-0222	01.14	HOSE	247, 249, 251, 253
90166-0222	2.14	HOSE	345
90182-0005	01.03.19	STRAP	113
90182-0007	01.03.19	PLATE	113
90187-0042	01.14.1	VALVE	255
90191-0039	01.03.17	WHEEL	109
90194-0016	01.01	SIGN "FLASH SIGN" 50X50MM	23, 219
90194-0016	01.02	SIGN "FLASH SIGN" 50X50MM	25, 221
90194-0016	01.03	SIGN "FLASH SIGN" 50X50MM	223
90194-0016	04.01	SIGN "FLASH SIGN" 50X50MM	425
90194-0152	01.03	SIGN "EARTH"	27
90214-0112	2.07.5	BALL BEARING	319
90214-0112	2.07.6	BALL BEARING	321
90214-0123	2.03	BALL BEARING	293, 295
90224-0372	01.14.4	CONNECTION	263
90226-0458	01.06.02	MOUNTING SCREW	167
90226-0458	01.06.03	MOUNTING SCREW	169
90226-0458	01.06.04	MOUNTING SCREW	171
90226-0458	01.06.05	MOUNTING SCREW	173
90226-0458	01.06.09	MOUNTING SCREW	183
90226-0458	01.06.10	MOUNTING SCREW	185
90226-0458	01.06.11	MOUNTING SCREW	187
90226-0458	01.06.12	MOUNTING SCREW	189
90226-0458	01.06.14	MOUNTING SCREW	193
90226-0458	01.06.15	MOUNTING SCREW	195
90226-0458	01.06.16	MOUNTING SCREW	197
90226-0458	01.06.17	MOUNTING SCREW	199
90226-0458	01.06.18	MOUNTING SCREW	201
90226-0458	01.06.19	MOUNTING SCREW	203
90226-0458	01.06.20	MOUNTING SCREW	205
90226-0458	01.06.21	MOUNTING SCREW	207
90226-0458	01.06.22	MOUNTING SCREW	209
90226-0458	01.06.23	MOUNTING SCREW	211
90226-0458	03.01	MOUNTING SCREW	353
90226-0458	03.02	MOUNTING SCREW	355
90226-0458	03.03	MOUNTING SCREW	357
90226-0458	03.04	MOUNTING SCREW	359
90226-0458	03.05	MOUNTING SCREW	361
90226-0458	03.08	MOUNTING SCREW	367
90226-0458	03.09	MOUNTING SCREW	369
90226-0458	03.10	MOUNTING SCREW	371
90226-0458	03.14	MOUNTING SCREW	379
90230-0027	01.03.19	NON-RETURN VALVE	113
90230-0300	01.03.19	* STRAINER	113
90230-0301	01.03.19	* DIAPHRAGM	113
90230-0302	01.03.19	ADAPTER	113
90230-0307	01.03.19	ORIFICE PLATE	113
90232-0103	01.05	PH.CELL OMRON E3SCT61L 5M	227
90232-0103	05.12	PH.CELL OMRON E3SCT61L 5M	483
90232-0103	2.07.6	PH.CELL OMRON E3SCT61L 5M	321
90232-0104	01.05	RECEIVER OMRON E3SCT61D5M	227
90232-0104	05.12	RECEIVER OMRON E3SCT61D5M	483
90232-0104	2.07.6	RECEIVER OMRON E3SCT61D5M	321
90232-0110	01.03.14	PH.CELL OMRON E3S-CL1-5M	103
90232-0110	03.06	PH.CELL OMRON E3S-CL1-5M	401
90232-0110	03.11	PH.CELL OMRON E3S-CL1-5M	411
90232-0110	2.05	PH.CELL OMRON E3S-CL1-5M	299
90235-0288	2.09	VALVE	335
90235-0707	2.03	THROTTLE CHECK VALVE	293, 295
90235-0768	04.05	VALVE	439, 441
90235-0779	2.01	THROTTLE CHECK VALVE	289
90235-0779	2.14	THROTTLE CHECK VALVE	345
90236-0303	01.14.1	SCREW	255

Part No	MMref	Description	Page No
90237-0123	01.06.06	LOCK HOUSING	175, 177
90237-0123	01.06.07	LOCK HOUSING	179
90237-0123	03.07	LOCK HOUSING	365
90237-0123	03.11	LOCK HOUSING	373
90237-0123	03.13	LOCK HOUSING	377
90237-0126	01.06.06	TURNING HANDLE	175, 177
90237-0126	01.06.07	TURNING HANDLE	179
90237-0126	03.07	TURNING HANDLE	365
90237-0126	03.11	TURNING HANDLE	373
90237-0126	03.13	TURNING HANDLE	377
90237-0128	01.06.06	LOCK CYLINDER	175, 177
90237-0128	01.06.07	LOCK CYLINDER	179
90237-0128	03.07	LOCK CYLINDER	365
90237-0128	03.11	LOCK CYLINDER	373
90237-0128	03.13	LOCK CYLINDER	377
90237-0144	01.06.06	STEERING	175, 177
90237-0144	01.06.07	STEERING	179
90237-0144	03.07	STEERING	365
90237-0144	03.11	STEERING	373
90237-0144	03.13	STEERING	377
90237-0145	01.06.06	CATCH	175, 177
90237-0145	01.06.07	CATCH	179
90237-0145	03.07	CATCH	365
90237-0145	03.11	CATCH	373
90237-0145	03.13	CATCH	377
90239-0405	2.09	LINK HEAD	335
90239-0487	2.09	BRACKET	335
90239-0581	2.09	HOLDER	335
90239-0829	2.09	CYLINDER 25-50	335
90239-0847	01.03.14	CYLINDER	103
90240-0203	01.06	PLAIN BEARING	37
90240-0203	01.07	PLAIN BEARING	39, 41
90240-0203	01.08	PLAIN BEARING	43
90240-0203	01.09	PLAIN BEARING	45
90240-0204	01.03.07	PLAIN BEARING	83, 85
90240-0205	01.03.01	PLAIN BEARING	71
90240-0205	01.03.02	PLAIN BEARING	73
90240-0205	01.04.02	PLAIN BEARING	121, 123
90240-0205	03.05	PLAIN BEARING	397, 399
90240-0205	04.02	PLAIN BEARING	427
90240-0221	02.04	BEARING	67
90240-0221	04.03	BEARING	429, 431
90240-0222	01.04.05	BEARING	135
90240-0222	2.03	BEARING	293, 295
90240-0279	04.03	BEARING	427, 429, 431
90243-0209	05	BAILER	459
90252-0038	03	DRIVE BELT	387
90252-0041	2.07.5	BELT	319
90252-0041	2.07.6	BELT	321
90258-0046	01.10	PIN	237, 239
90258-0046	01.17	PIN	267, 269
90258-0046	03.11	PIN	411
90258-0046	03.13	PIN	415
90258-0046	03.14	PIN	417
90258-0046	04.06	PIN	447
90258-0046	04.08	PIN	453
90261-0048	2.14	PLUG	345
90261-0060	01.03	PLASTIC PLUG	27
90261-0060	01.04.01	PLASTIC PLUG	119
90261-0060	03.13	PLASTIC PLUG	415
90274-0074	01.14.4	PRESSURE SWITCH	263
90287-0205	01.06.01	SCREW	165
90287-0205	01.06.06	SCREW	175, 177
90287-0205	01.06.07	SCREW	179
90287-0205	01.06.08	SCREW	181
90287-0205	03.06	SCREW	363
90287-0205	03.07	SCREW	365
90287-0205	03.11	SCREW	373
90287-0205	03.12	SCREW	375
90287-0205	03.13	SCREW	377
90288-0317	01.03.18	CONNECTION LINK	111
90288-0333	02.03	CONNECTION LINK	65
90296-0068	01.04	GREASE	29, 31
90296-0068	01.05	GREASE	33, 35
90296-0068	01.06	GREASE	229
90296-0068	01.12	GREASE	243
90296-0068	04.03	GREASE	427, 429, 431
90328-0003	02.01	SILENCER	145
90328-0003	04.06	SILENCER	443, 445, 447
90328-0017	01.14.3	SILENCER	259, 261
90328-0024	01.14.3	SILENCER	259, 261
90328-0024	04.07	SILENCER	449
90328-0033	01.14.2	SILENCER	257
90335-0031	2.09	SPRING	335
90342-0015	01.06	BELLOWS	37
90342-0016	01.07	BELLOWS	39, 41

Part No	MMref	Description	Page No
90342-0016	01.08	BELLOWS	43
90342-0016	01.09	BELLOWS	45
90342-0017	02.01	BELLOWS	145
90344-0072	01.07	SPROCKET	231
90345-0075	01.04	FLANGE BEARING	29, 31
90345-0075	01.05	FLANGE BEARING	33, 35
90347-0011	01.06.06	VIBRATION DAMPER	175, 177
90347-0011	01.06.07	VIBRATION DAMPER	179
90347-0011	01.06.08	VIBRATION DAMPER	181
90347-0011	03.06	VIBRATION DAMPER	363
90347-0011	03.07	VIBRATION DAMPER	365
90347-0011	03.11	VIBRATION DAMPER	373
90347-0011	03.12	VIBRATION DAMPER	375
90347-0011	03.13	VIBRATION DAMPER	377
90347-0012	2.14	DAMPER	345
90347-0127	01.06.01	DAMPER	165
90347-0142	01.03	FOOT	27
90347-0142	01.10	FOOT	237, 239
90347-0156	2.08.4	DAMPER	331
90347-0166	2.02	DAMPER	291
90355-0031	01.12	FLEXIBLE COUPLING	53
90355-0115	01.04	CONNECTION	29, 31
90355-0115	02.01	CONNECTION	61
90417-0069	04.02	TOOTHED BELT	427
90417-0071	2.06.0	TOOTHED BELT	303
90417-0140	01.03.01	TOOTHED BELT	71
90417-0378	2.08.2	TIMING BELT	327
90419-0012	01.04.07	LIGHT ELEMENT, RED	141
90419-0013	01.04.07	LIGHT ELEMENT, BLUE	141
90419-0014	01.04.07	LIGHT ELEMENT, YELLOW	141
90419-0307	01.04.07	GASKET TO GET IP.54	141
90425-0015	01.04.03	SUCTION CUP	127
90425-0017	01.04.03	SUCTION CUP	125
90425-0031	01.15	EJECTOR	265
90439-0120	04.06	NOZZLE 237012	447
90439-0121	02.02	FILTER	151
90439-0124	02.02	MODULE	147, 149, 151
90439-0206	02.02	* CABLE	151
90439-0211	02.02	* THERMOSTAT	151
90439-0212	02.02	HOSE	147, 149, 151
90439-0213	02.02	HOSE	147, 149, 151
90439-0214	02.02	* FILTER INSERT	151
90439-0232	02.02	BLID PLATE	147, 151
90439-0233	02.02	FILTER	147, 149, 151
90439-0234	02.02	HOSE CLIP	147, 149, 151
90439-0235	02.02	HOSE HOLDER	147, 149, 151
90439-0237	02.02	HOT MELT GUN	147, 149, 151
90439-0238	02.02	* HEATING ELEMENT	151
90439-0241	02.02	ANGLE NIPPLE	151
90439-0257	02.02	HOT MELT UNIT	147, 149
90439-0258	02.02	HOT MELT UNIT	151
90439-0264	02.02	NOZZLE	147, 149, 151
90450-0190	01.04.05	CYLINDER	135
90450-0190	01.11	CYLINDER	49, 51
90450-0201	01.11	AIR RECEIVER	49, 51
90450-0269	2.05	CYLINDER	299
90450-0280	04.05	CYLINDER	439, 441
90450-0281	04.05	CYLINDER	439
90450-0324	2.12	CYLINDER	341
90450-0343	2.03	CYLINDER	293
90450-0365	2.04	CYLINDER	297
90450-0366	2.08.5	CYLINDER	333
90450-0367	2.03	CYLINDER	295
90450-0368	2.02	CYLINDER	291
90450-0369	2.01	CYLINDER	289
90450-0370	2.13	CYLINDER	343
90450-0371	2.11	CYLINDER	339
90450-0372	2.14	CYLINDER	345
90450-0654	04.05	CYLINDER BRACKET	439
90450-0667	01.04.05	BRACKET	135
90450-0667	01.11	BRACKET	49, 51
90450-0669	04.05	BRACKET	439, 441
90450-0669	2.01	BRACKET	289
90450-0669	2.02	BRACKET	291
90450-0669	2.03	BRACKET	293, 295
90450-0677	04.05	BRACKET	439, 441
90450-0677	2.03	BRACKET	293, 295
90450-0678	04.05	BRACKET	439
90450-0682	01.11	BRACKET	49, 51
90450-0683	01.11	BRACKET	49, 51
90450-0707	01.04.05	BRACKET	135
90450-0708	01.04.05	BALL JOINT COUPLING	135
90450-0708	01.11	BALL JOINT COUPLING	49, 51
90450-0713	2.03	CYLINDER BRACKET	293, 295
90450-0714	04.05	CYLINDER BRACKET	439, 441
90450-0714	2.03	CYLINDER BRACKET	293, 295

Part No	MMref	Description	Page No
90450-0722	04.05	PENDULUM SUSPENSION	439, 441
90450-0723	04.05	BALL JOINT COUPLING	439
90450-0767	2.11	BRACKET	339
90450-0768	2.01	BRACKET	289
90450-0769	2.02	CONTROL UNIT	291
959179	02.02	GEAR WHEEL Z=40	63
959656	01.06.01	COTTER	165
959656	01.06.06	COTTER	175, 177
959656	01.06.07	COTTER	179
959656	01.06.08	COTTER	181
959656	03.06	COTTER	363
959656	03.07	COTTER	365
959656	03.11	COTTER	373
959656	03.12	COTTER	375
959656	03.13	COTTER	377
959657	01.06.01	HINGE FLANGE	165
959657	01.06.06	HINGE FLANGE	175, 177
959657	01.06.07	HINGE FLANGE	179
959657	01.06.08	HINGE FLANGE	181
959657	03.06	HINGE FLANGE	363
959657	03.07	HINGE FLANGE	365
959657	03.11	HINGE FLANGE	373
959657	03.12	HINGE FLANGE	375
959657	03.13	HINGE FLANGE	377
959658	01.06.01	SPRING	165
959658	01.06.06	SPRING	175, 177
959658	01.06.07	SPRING	179
959658	01.06.08	SPRING	181
959658	03.06	SPRING	363
959658	03.07	SPRING	365
959658	03.11	SPRING	373
959658	03.12	SPRING	375
959658	03.13	SPRING	377
975755	02.03	ATTACHMENT	153
975880	01.06.06	HINGE FLANGE	175, 177
975880	01.06.07	HINGE FLANGE	179
975880	01.06.08	HINGE FLANGE	181
975880	03.06	HINGE FLANGE	363
975880	03.07	HINGE FLANGE	365
975880	03.11	HINGE FLANGE	373
975880	03.12	HINGE FLANGE	375
975880	03.13	HINGE FLANGE	377
975884	01.06.17	BRACKET	199
975884	01.06.19	BRACKET	203
975884	01.06.22	BRACKET	209
975884	01.06.23	BRACKET	211
975884	03.03	BRACKET	357
975887	01.06.02	CATCH	167
975887	01.06.03	CATCH	169
975887	01.06.04	CATCH	171
975887	01.06.05	CATCH	173
975887	01.06.14	CATCH	193
975887	01.06.20	CATCH	205
975887	01.06.21	CATCH	207
975887	03.03	CATCH	357
975887	03.08	CATCH	367
975888-0002	03.07	STRUT	365
975888-0003	01.06.07	STRUT	179
975888-0003	03.11	STRUT	373
975888-0003	03.13	STRUT	377
975888-0004	01.06.06	STRUT	175, 177
975889-0004	01.06.07	STRUT	179
975889-0004	03.11	STRUT	373
975889-0004	03.13	STRUT	377
975889-0005	03.07	STRUT	365
975889-0006	01.06.06	STRUT	175, 177
975917	01.06.06	KEY	175, 177
975917	01.06.07	KEY	179
975917	01.06.08	KEY	181
975917	03.11	KEY	373
975917	03.12	KEY	375
975917	03.13	KEY	377
975918-0003	01.06.07	GLASS	179
975918-0003	01.06.08	GLASS	181
975918-0003	03.13	GLASS	377
975924	01.06.06	WASHER	175, 177
975924	01.06.07	WASHER	179
975924	01.06.08	WASHER	181
975924	03.11	WASHER	373
975924	03.12	WASHER	375
975924	03.13	WASHER	377
975927	01.06.01	HINGE FLANGE	165
975927	01.06.06	HINGE FLANGE	175, 177
975927	01.06.07	HINGE FLANGE	179
975927	01.06.08	HINGE FLANGE	181
975927	03.11	HINGE FLANGE	373

Part No	MMref	Description	Page No
975927	03.12	HINGE FLANGE	375
975927	03.13	HINGE FLANGE	377
975934	01.04.04	GUSSET PLATE	129, 131, 133
975934	01.18	GUSSET PLATE	271
975934	01.19	GUSSET PLATE	273, 275
975939	01.04.04	SEAL	129, 131, 133
975939	01.18	SEAL	271
975939	01.19	SEAL	273, 275
979219	01.14.3	SPACER PIPE	259, 261
B			
B- 670280-0401	01	BOTTOM SECTION	19, 21
B- 670280-0401	01.01	BOTTOM SECTION	17
B- 670281-0401	02	HOTMELT EQUIPMENT	143
B- 670281-040V	01.05	HOT MELT EQUIPMENT	17
B- 670282-0301	01.02	DRIVE UNIT	17
B- 670282-0301	02	DRIVE UNIT	59
B- 670283-0401	01.04	SUPERSTRUCTURE	115, 117
B- 670283-040V	01.04	SUPERSTRCTURE	17
B- 670284-0401	01.03	FEED UNIT	17, 69
B- 670285-0401	03	MAGAZINE	385, 387
B- 670290-0401	05	REGULAR ACCESSORIES	459
B- 670290-0402	05	REGULAR ACCESSORIES	459
B- 670290-0403	05	REGULAR ACCESSORIES	459
B- 670290-0404	05	REGULAR ACCESSORIES	459
B- 670290-0405	05	REGULAR ACCESSORIES	459
B- 670292-0405	02	INFEED UNIT	215
B- 670293-0401	03	MAGAZINE	385
B- 670294-040V	01.01	BASE UNIT	17
B- 670296-0201	01.06	COVERING BASE UNIT	155
B- 670296-0202	01.06	COVERING BASE UNIT	157
B- 670296-0203	01.06	COVERING BASE UNIT	159
B- 670296-0204	01.06	COVERING BASE UNIT	161
B- 670296-0205	01.06	COVERING BASE UNIT	163
B- 670296-020V	01.06	COVERING BASE UNIT	17
B- 670301-0201	01	INFEED SINGLE/MULTI	217
B- 670301-0202	01	INFEED SINGLE/MULTI	217
B- 670301-020V	02	INFEED SINGLE/MULTI	215
B- 670302-0201	02	TRANSFER UNIT	215
B- 670302-0201	2	TRANSFER UNIT	287
B- 670303-0101	03	COVERING INFEED	349
B- 670303-0102	03	COVERING INFEED	351
B- 670303-010V	02	COVERING INFEED	215
B- 670375-0401	04	WRAP AROUND UNIT	421
B- 670375-0402	04	WRAP AROUND UNIT	421
B- 670375-0404	04	WRAP AROUND UNIT	423
C			
C- 539094-0400	01	CONNECTION BOX	217
C- 539094-0401	01.04	CONNECTION BOX	225
C- 556609-0301	01	LOWER FRAME	19, 21
C- 556609-0301	01.03	LOWER FRAME	27
C- 556625-0301	02	MOTOR MAINSHAFT	59
C- 556625-0301	02.01	MOTOR MAINSHAFT	61
C- 556626-0301	02	MOTOR FEEDING	59
C- 556626-0301	02.03	MOTOR FEEDING	65
C- 556636-0201	02	ANGLE ENCODER	59
C- 556636-0201	02.02	ANGLE ENCODER	63
C- 556641-0201	01	MAINSHAFT REAR	19, 21
C- 556641-0201	01.04	MAINSHAFT REAR	29, 31
C- 556654-0201	01	MAINSHAFT FRONT	19, 21
C- 556654-0201	01.05	MAINSHAFT FRONT	33, 35
C- 581689-0101	01.04	WARNING LAMP	115, 117
C- 581689-0101	01.04.07	WARNING LAMP	141
C-1021000-0101	01	OPERATING ARM MAGASIN	19, 21
C-1021000-0101	01.06	OPERATING ARM MAGASIN	37
C-1021009-0101	01	FOLDING FLAP	19, 21
C-1021009-0101	01.07	FOLDING FLAP	39, 41
C-1021015-0101	01	SQUEEZER	19, 21
C-1021015-0101	01.08	SQUEEZER	43
C-1021019-0101	01	FLAP FOLDER	19, 21
C-1021019-0101	01.09	FLAP FOLDER	45
C-1021023-0301	01	COVERING PLATE	19, 21
C-1021023-0301	01.10	COVERING PLATE	47
C-1021032-0101	01.03	SIDE ADJUSTMENT FRONT	69
C-1021032-0101	01.03.01	SIDE ADJUSTMENT FRONT	71
C-1021041-0101	01.03	SIDE ADJUSTERREAR	69
C-1021041-0101	01.03.02	SIDE ADJUSTERREAR	73
C-1021043-0101	01.03	STEERING REAR	69
C-1021043-0101	01.03.03	STEERING REAR	75
C-1021049-0101	01.03	STEERING FRONT	69
C-1021049-0101	01.03.04	STEERING FRONT	77
C-1021052-0101	01.03	DRIVESHAFT FRONT	69
C-1021052-0101	01.03.05	DRIVESHAFT FRONT	79
C-1021060-0101	01.03	DRIVESHAFT REAR	69
C-1021060-0101	01.03.06	DRIVESHAFT REAR	81
C-1021067-0101	01.03	GUIDE SPROCKET OUTSIDE	69

Part No	MMref	Description	Page No
C-1021067-0101	.01.03.13	GUIDE SPROCKET OUTSIDE	101
C-1021072-0101	.01.03	GUIDE SPROCKET INSIDE	69
C-1021072-0101	.01.03.12	GUIDE SPROCKET INSIDE	99
C-1021076-0301	.01.03	MACHINE BODY	69
C-1021076-0301	.01.03.17	MACHINE BODY	109
C-1021093-0101	.01.03	CARRIER CHAIN INSIDE	69
C-1021093-0101	.01.03.10	CARRIER CHAIN INSIDE	95
C-1021096-0101	.01.03	CARRIER CHAIN OUTSIDE	69
C-1021096-0101	.01.03.11	CARRIER CHAIN OUTSIDE	97
C-1021098-0101	.01.03	SHAFT FOLDINGFLAP	69
C-1021098-0101	.01.03.07	SHAFT FOLDINGFLAP	83, 85
C-1021118-0101	.01.03	SHAFT SQUEESER	69
C-1021118-0101	.01.03.08	SHAFT SQUEESER	87, 89
C-1021119-0101	.01.03.09	SHAFT FLAPFOLDER	91
C-1021119-0102	.01.03.09	SHAFT FLAPFOLDER	93
C-1021119-010V	.01.03	SHAFT FLAPFOLDER	69
C-1021143-0101	.01.04	MAGAZINE SHAFT	115, 117
C-1021143-0101	.01.04.02	MAGAZINE SHAFT	121, 123
C-1021160-0201	.01.04.03	SUCTION CUP	125
C-1021160-0202	.01.04.03	SUCTION CUP	127
C-1021160-020V	.01.04	SUCTION CUP	115, 117
C-1021173-0101	.03	DRIVE ROLLER	387
C-1021173-0101	.03.01	DRIVE ROLLER	389
C-1021174-0101	.03	BENDING ROLLER	387
C-1021174-0101	.03.02	BENDING ROLLER	391
C-1021175-0101	.03	BENDING ROLLER FRONT	387
C-1021175-0101	.03.03	BENDING ROLLER FRONT	393
C-1021176-0101	.03	BENDING ROLLER REAR	387
C-1021176-0101	.03.04	BENDING ROLLER REAR	395
C-1021177-0101	.03	WAY BOTTOMPART	387
C-1021177-0101	.03.05	WAY BOTTOMPART	397, 399
C-1021178-0401	.03	SIDE STEERING	387
C-1021178-0401	.03.06	SIDE STEERING	401
C-1021179-0201	.03	TOP STEERING	387
C-1021179-0201	.03.07	TOP STEERING	403
C-1021180-0101	.03	MAGASINEFRAME	387
C-1021180-0101	.03.08	MAGASINEFRAME	405
C-1021181-0201	.03	DRIVE MOTOR	387
C-1021181-0201	.03.09	DRIVE MOTOR	407
C-1021203-0201	.03	BOTTOMFLAP ADJUSTABLE	387
C-1021203-0201	.03.10	BOTTOMFLAP ADJUSTABLE	409
C-1021222-0401	.03	TOPFLAP ADJUSTABLE	387
C-1021222-0401	.03.11	TOPFLAP ADJUSTABLE	411
C-1021243-0101	.03	SIDESTEERING ADJUSTABLE	387
C-1021243-0101	.03.12	SIDESTEERING ADJUSTABLE	413
C-1021273-0201	.03	FRAME	387
C-1021273-0201	.03.13	FRAME	415
C-1021278-0401	.01.03.14	FOLDING BAR	103
C-1021278-0402	.01.03.14	FOLDING BAR	103
C-1021278-040V	.01.03	FOLDING BAR	69
C-1021290-0101	.01.03	BOTTOM FOLDER	69
C-1021290-0101	.01.03.15	BOTTOM FOLDER	105
C-1021295-0201	.01.03	GUN HOLDER	69
C-1021295-0201	.01.03.16	GUN HOLDER	107
C-1021303-0301	.01.04	UPPERFRAME	115, 117
C-1021303-0301	.01.04.01	UPPERFRAME	119
C-1021326-0101	.01.03	CHAIN TIGHTENER WHEEL	69
C-1021326-0101	.01.03.18	CHAIN TIGHTENER WHEEL	111
C-1021387-0301	.02	HOTMELT EQUIP.MISC.	143
C-1021387-0301	.02.01	HOTMELT EQUIP.MISC.	145
C-1021395-0301	.02.02	HOTMELT EQUIPMENT NORDSON	147
C-1021395-0302	.02.02	HOTMELT EQUIPMENT NORDSON	149
C-1021395-0303	.02.02	HOTMELT EQUIPMENT NORDSON	151
C-1021395-0305	.02.02	HOTMELT EQUIPMENT NORDSON	151
C-1021395-030V	.02	HOTMELT EQUIPMENT NORDSON	143
C-1021396-0301	.02	SHELF HOTMELT	143
C-1021396-0301	.02.03	SHELF HOTMELT	153
C-1021404-0101	.01	PNEUMATIC CUSHIONING	19, 21
C-1021404-0101	.01.11	PNEUMATIC CUSHIONING	49, 51
C-1021510-0101	.01.04.04	CABLE TRENCH	129
C-1021510-0102	.01.04.04	CABLE TRENCH	129
C-1021510-0103	.01.04.04	CABLE TRENCH	131
C-1021510-0104	.01.04.04	CABLE TRENCH	131
C-1021510-0105	.01.04.04	CABLE TRENCH	133
C-1021510-0106	.01.04.04	CABLE TRENCH	133
C-1021510-010V	.01.04	CABLE TRENCH	115, 117
C-1021587-0101	.01.06	HOOD	155, 157, 159, 161, 163
C-1021587-0101	.01.06.01	HOOD	165
C-1021618-0101	.01	. FILTER-REGULATOR	217
C-1021618-0101	.01.14	FILTER-REGULATOR	247, 249, 251, 253
C-1021618-0101	.01.14.1	FILTER-REGULATOR	255
C-1021618-0102	.01.14.1	FILTER-REGULATOR	255
C-1021701-0101	.01.06	COVERING PLATE	155, 159, 161
C-1021701-0101	.01.06.02	COVERING PLATE	167
C-1021703-0101	.01.06	COVERING PLATE	155, 157, 159, 161, 163
C-1021703-0101	.01.06.03	COVERING PLATE	169

Part No	MMref	Description	Page No
C-1074251-0101	.04	FRAME	421, 423
C-1074251-0101	.04.02	FRAME	427
C-1074252-0302	.04.03	ADJUSTMENT PLATE	429
C-1074252-0303	.04.03	ADJUSTMENT PLATE	431
C-1074252-030V	.04	ADJUSTMENT PLATE	421, 423
C-1074252-030V	.04.03	ADJUSTMENT PLATE	429
C-1074253-0301	.04.04	SQUEEZER	433
C-1074253-0302	.04.04	SQUEEZER	435
C-1074253-0303	.04.04	SQUEEZER	437
C-1074253-030V	.04	SQUEEZER	421, 423
C-1074254-0301	.04.05	CYLINDERS	439
C-1074254-0302	.04.05	CYLINDERS	441
C-1074254-030V	.04	CYLINDERS	421, 423
C-1074255-0301	.04.06	HOTMELT EQUIPEMENT MISC.	443
C-1074255-0302	.04.06	HOTMELT EQUIPEMENT MISC.	445
C-1074255-0303	.04.06	HOTMELT EQUIPEMENT MISC.	447
C-1074255-030V	.04	HOTMELT EQUIPEMENT MISC.	421, 423
C-1074256-0201	.04	CONNECTION BOX	421, 423
C-1074256-0201	.04.01	CONNECTION BOX	425
C-1074257-0301	.04.07	VALVE RAMP	449
C-1074257-0302	.04.07	VALVE RAMP	451
C-1074257-0305	.04.07	VALVE RAMP	449
C-1074257-0306	.04.07	VALVE RAMP	451
C-1074257-030V	.04	VALVE RAMP	421, 423
C-1074258-0102	.04.08	STEERING	453
C-1074258-010V	.04	STEERING	421, 423
C-1074259-0201	.04	MAGAZINE SUPPORT	421, 423
C-1074259-0201	.04.09	MAGAZINE SUPPORT	455
C-1074394-0301	.05	QUEUE GUARD,SINGLE	459
C-1074394-0301	.05.12	QUEUE GUARD,SINGLE	483
C-1074441-0201	.05	GUARD PLATE	459
C-1074441-0201	.05.13	GUARD PLATE	485
C-1074545-020V	.05	DOCUMENT 670270 MULTI INF	459
C-1074545-020V	.05.11	DOCUMENT 670270 MULTI INF	481
C-1074547-0201	.01	QUEUE GUARD,DOUBLE	217
C-1074547-0201	.01.05	QUEUE GUARD,DOUBLE	227
C-1080030-0201	.05	TUNNEL	459
C-1080030-0201	.05.05	TUNNEL	469
C-1080239-0201	.01.06.19	COVERING PLATE	203
C-1080239-0202	.01.06.19	COVERING PLATE	203
C-1080239-020V	.01.06	COVERING PLATE	159
C-1080240-020V	.01.06	COVERING PLATE	159
C-1080240-020V	.01.06.20	COVERING PLATE	205

Part No	MMref	Description	Page No
C-1111820-0201	.05.02	TUNNEL	463
C-1111820-0202	.05.02	TUNNEL	463
C-1111820-0203	.05.02	TUNNEL	463
C-1111820-0204	.05.02	TUNNEL	463
C-1111820-020V	.05	TUNNEL	459
C-1111838-0201	.01	EMERGENCY STOP	217
C-1111838-0201	.01.22	EMERGENCY STOP	281
C-1111838-0202	.01.22	EMERGENCY STOP	281
C-1111838-0203	.01.22	EMERGENCY STOP	281
C-1111838-0204	.01.22	EMERGENCY STOP	281
C-1111838-0205	.01.22	EMERGENCY STOP	281
C-1124003-020V	.2	DOLLY	287
C-1124003-020V	.2.01	DOLLY	289
C-1124004-010V	.2	END STOP	287
C-1124004-010V	.2.02	END STOP	291
C-1124008-010V	.01	DRIVE UNIT	217
C-1124008-010V	.01.06	DRIVE UNIT	229
C-1124009-0201	.01.08	CONV.BODY,STRAIGHT	233
C-1124009-0202	.01.08	CONV.BODY,STRAIGHT	233
C-1124009-020V	.01	CONV.BODY,STRAIGHT	217
C-1124025-0201	.01	INFEED FRAME	217
C-1124025-0201	.01.10	INFEED FRAME	237, 239
C-1124026-020V	.01	FRAME GROUPING PUSHER	217
C-1124026-020V	.01.11	FRAME GROUPING PUSHER	241
C-1124027-0201	.2.03	GROUPING PUSHER	293
C-1124027-0202	.2.03	GROUPING PUSHER	293
C-1124027-0203	.2.03	GROUPING PUSHER	295
C-1124027-020V	.2	GROUPING PUSHER	287
C-1124028-010V	.01	DRIVE MOTOR	217
C-1124028-010V	.01.07	DRIVE MOTOR	231
C-1124029-0201	.01	DRIVE UNIT	217
C-1124029-0201	.01.12	DRIVE UNIT	243
C-1124030-020V	.01	CONV.BODY,STRAIGHT	217
C-1124030-020V	.01.09	CONV.BODY,STRAIGHT	235
C-1124031-0101	.01	STEERING RAIL	217
C-1124031-0101	.01.13	STEERING RAIL	245
C-1124032-0201	.2.04	GROUPING END STOP	297
C-1124032-0202	.2.04	GROUPING END STOP	297
C-1124032-0203	.2.04	GROUPING END STOP	297
C-1124032-020V	.2	GROUPING END STOP	287
C-1124033-0201	.2	INFEED BRAKE	287
C-1124033-0201	.2.05	INFEED BRAKE	299
C-1124035-0101	.05.06	TUNNEL	471

Part No	MMref	Description	Page No
C-1124035-0102	.05.06	TUNNEL	471
C-1124035-010V	.05	TUNNEL	459
C-1124036-0201	.2	PUSHER BELT	287
C-1124036-0201	.2.06	PUSHER BELT	301
C-1124037-0101	.2.06.0	MOTOR	303
C-1124037-0102	.2.06.0	MOTOR	303
C-1124037-010V	.2	. MOTOR	287
C-1124037-010V	.2.06	MOTOR	301
C-1124038-0101	.2	. DRIVE SHAFT	287
C-1124038-0101	.2.06	DRIVE SHAFT	301
C-1124038-0101	.2.06.1	DRIVE SHAFT	305
C-1124039-0101	.2	. GUIDE SPROCKET	287
C-1124039-0101	.2.08	GUIDE SPROCKET	323
C-1124039-0101	.2.08.1	GUIDE SPROCKET	325
C-1124040-0201	.2	. MACHINE BODY	287
C-1124040-0201	.2.06	MACHINE BODY	301
C-1124040-0201	.2.06.2	MACHINE BODY	307
C-1124041-0201	.2	MIDDLE BELT	287
C-1124041-0201	.2.07	MIDDLE BELT	311
C-1124042-0101	.2.07.1	MOTOR	313
C-1124042-0102	.2.07.1	MOTOR	313
C-1124042-010V	.2	. MOTOR	287
C-1124042-010V	.2.07	MOTOR	311
C-1124043-0101	.2.07.2	DRIVE SHAFT	315
C-1124043-0102	.2.07.2	DRIVE SHAFT	315
C-1124043-010V	.2	. DRIVE SHAFT	287
C-1124043-010V	.2.07	DRIVE SHAFT	311
C-1124044-0101	.2	. GUIDE SPROCKET	287
C-1124044-0101	.2.06	GUIDE SPROCKET	301
C-1124044-0101	.2.06.3	GUIDE SPROCKET	309
C-1124044-0101	.2.07	GUIDE SPROCKET	311
C-1124045-0201	.2	. MACHINE BODY	287
C-1124045-0201	.2.07	MACHINE BODY	311
C-1124045-0201	.2.07.4	MACHINE BODY	317
C-1124046-0201	.2	GROUPING BELT	287
C-1124046-0201	.2.08	GROUPING BELT	323
C-1124047-0101	.2.08.2	MOTOR	327
C-1124047-0102	.2.08.2	MOTOR	327
C-1124047-010V	.2	. MOTOR	287
C-1124047-010V	.2.08	MOTOR	323
C-1124048-0101	.2	. DRIVE SHAFT	287
C-1124048-0101	.2.08	DRIVE SHAFT	323
C-1124048-0101	.2.08.3	DRIVE SHAFT	329
C-1124049-0201	.2	. MACHINE BODY	287
C-1124049-0201	.2.08	MACHINE BODY	323
C-1124049-0201	.2.08.4	MACHINE BODY	331
C-1124052-0101	.2	. TRANSITION SHAFT	287
C-1124052-0101	.2.07	TRANSITION SHAFT	311
C-1124052-0101	.2.07.5	TRANSITION SHAFT	319
C-1124053-0201	.2	. TRANSITION SHAFT	287
C-1124053-0201	.2.07	TRANSITION SHAFT	311
C-1124053-0201	.2.07.6	TRANSITION SHAFT	321
C-1124054-020V	.2	RULING GUIDE	287
C-1124054-020V	.2.09	RULING GUIDE	335
C-1124057-0201	.01	PNEUMATIC CABINET	217
C-1124057-0201	.01.14	PNEUMATIC CABINET	247, 249, 251, 253
C-1124058-020V	.01	. VALVE RAMP	217
C-1124058-020V	.01.14	VALVE RAMP	247, 249, 251, 253
C-1124058-020V	.01.14.3	VALVE RAMP	259, 261
C-1124059-0101	.01	. PRESSURE REGULATOR RAMP	217
C-1124059-0101	.01.14	PRESSURE REGULATOR RAMP	247, 249, 251, 253
C-1124059-0101	.01.14.4	PRESSURE REGULATOR RAMP	263
C-1124061-0101	.2.10	VOLUME PLATE	337
C-1124061-0102	.2.10	VOLUME PLATE	337
C-1124061-0103	.2.10	VOLUME PLATE	337
C-1124061-0104	.2.10	VOLUME PLATE	337
C-1124061-0105	.2.10	VOLUME PLATE	337
C-1124061-0106	.2.10	VOLUME PLATE	337
C-1124061-0107	.2.10	VOLUME PLATE	337
C-1124061-0108	.2.10	VOLUME PLATE	337
C-1124061-0109	.2.10	VOLUME PLATE	337
C-1124061-010V	.2	VOLUME PLATE	287
C-1124062-0101	.01	. EJECTOR	217
C-1124062-0101	.01.14	EJECTOR	247, 249, 251, 253
C-1124062-0101	.01.15	EJECTOR	265
C-1124063-0201	.01.17	INFEED FRAME UPPER	267
C-1124063-0202	.01.17	INFEED FRAME UPPER	269
C-1124063-020V	.01	INFEED FRAME UPPER	217
C-1124065-0101	.03	DOOR WITHOUT HANDLE	349, 351
C-1124065-0101	.03.06	DOOR WITHOUT HANDLE	363
C-1124066-0101	.03	DOOR WITH HANDLE	349, 351
C-1124066-0101	.03.07	DOOR WITH HANDLE	365
C-1124067-0101	.03	COVERING PLATE	351
C-1124067-0101	.03.02	COVERING PLATE	355
C-1124068-0101	.03	COVERING PLATE	349, 351
C-1124068-0101	.03.08	COVERING PLATE	367

Part No	MMref	Description	Page No
C-1124069-0101	.03.09	COVERING PLATE	369
C-1124069-0102	.03.09	COVERING PLATE	369
C-1124069-010V	.03	COVERING PLATE	349, 351
C-1124071-0101	.03.10	COVERING PLATE	371
C-1124071-0102	.03.10	COVERING PLATE	371
C-1124071-0103	.03.10	COVERING PLATE	371
C-1124071-0104	.03.10	COVERING PLATE	371
C-1124071-010V	.03	COVERING PLATE	349, 351
C-1124072-0101	.03.01	COVERING PLATE	353
C-1124072-0102	.03.01	COVERING PLATE	353
C-1124072-010V	.03	COVERING PLATE	349
C-1124073-020V	.2	PUSHER	287
C-1124073-020V	.2.11	PUSHER	339
C-1124075-0101	.03	GLASS DOOR	349, 351
C-1124075-0101	.03.11	GLASS DOOR	373
C-1124076-0101	.03	GLASS DOOR	349, 351
C-1124076-0101	.03.12	GLASS DOOR	375
C-1124077-020V	.2	STEERING RAIL	287
C-1124077-020V	.2.12	STEERING RAIL	341
C-1124078-0201	.2	. GUIDE RAIL	287
C-1124078-0201	.2.08	GUIDE RAIL	323
C-1124078-0201	.2.08.5	GUIDE RAIL	333
C-1124079-0101	.03.13	GLASS DOOR	377
C-1124079-0102	.03.13	GLASS DOOR	377
C-1124079-010V	.03	GLASS DOOR	349, 351
C-1124080-0101	.03	COVERING PLATE	349, 351
C-1124080-0101	.03.14	COVERING PLATE	379
C-1124081-0101	.01	CABLE DUCT	217
C-1124081-0101	.01.18	CABLE DUCT	271
C-1124082-0101	.01.19	CABLE DUCT	273
C-1124082-0102	.01.19	CABLE DUCT	273
C-1124082-0103	.01.19	CABLE DUCT	275
C-1124082-0104	.01.19	CABLE DUCT	275
C-1124082-010V	.01	CABLE DUCT	217
C-1124083-020V	.2	STEERING RAIL	287
C-1124083-020V	.2.13	STEERING RAIL	343
C-1124084-020V	.2	SUPPORT ARM	287
C-1124084-020V	.2.14	SUPPORT ARM	345
C-1124085-0101	.01.06.21	COVERING PLATE	207
C-1124085-0102	.01.06.21	COVERING PLATE	207
C-1124085-010V	.01.06	COVERING PLATE	163
C-1124086-0101	.01.06.22	COVERING PLATE	209
C-1124086-0102	.01.06.22	COVERING PLATE	209
C-1124086-010V	.01.06	COVERING PLATE	163
C-1124087-0101	.03	COVERING PLATE	351
C-1124087-0101	.03.03	COVERING PLATE	357
C-1124088-0101	.03	COVERING PLATE	351
C-1124088-0101	.03.04	COVERING PLATE	359
C-1124089-0101	.03.05	COVERING PLATE	361
C-1124089-0102	.03.05	COVERING PLATE	361
C-1124089-010V	.03	COVERING PLATE	351
C-1124090-0101	.01.20	BRACKET	277
C-1124090-0102	.01.20	BRACKET	277
C-1124090-010V	.01	BRACKET	217
C-1124091-0101	.01	CONNECTION BOX	217
C-1124091-0101	.01.03	CONNECTION BOX	223
C-1124092-0101	.01	CONNECTION BOX	217
C-1124092-0101	.01.01	CONNECTION BOX	219
C-1124093-0101	.01	CONNECTION BOX	217
C-1124093-0101	.01.02	CONNECTION BOX	221
C-1124094-0101	.03	DOOR SAFETY SWITCH	349, 351
C-1124094-0101	.03.15	DOOR SAFETY SWITCH	381
C-1124095-0101	.2	PROTECTION PLATE	287
C-1124095-0101	.2.15	PROTECTION PLATE	347
C-1124096-0101	.01	LEAD-IN PLATE	217
C-1124096-0101	.01.21	LEAD-IN PLATE	279
C-1124097-0101	.01	CABLE DUCT	217
C-1124097-0101	.01.23	CABLE DUCT	283
C-1128047-010V	.03	SUPPORT	387
C-1128047-010V	.03.14	SUPPORT	417
C-1128815-0101	.01.06.23	COVERING PLATE	211
C-1128815-0102	.01.06.23	COVERING PLATE	211
C-1128815-010V	.01.06	COVERING PLATE	163
C-1128833-0201	.01	COVERING PLATE	19, 21
C-1128833-0201	.01.14	COVERING PLATE	57
C-1128835-0101	.01.06.17	COVERING PLATE	199
C-1128835-0102	.01.06.17	COVERING PLATE	199
C-1128835-010V	.01.06	COVERING PLATE	157
C-1138016-0103	.01	CABLE DUCT	217
C-1138016-0103	.01.24	CABLE DUCT	285

G

G- 486896-0001	.01.06	CANTILEVER	229
G- 486896-0002	.01.06	CANTILEVER	229
G- 556655	.01.06	ARM	37
G- 556656	.01.07	ARM	39, 41
G- 556656	.01.08	ARM	43

Part No	MMref	Description	Page No
G- 556656	01.09	ARM	45
G- 556657	01.06	HOLDER	37
G- 556657	01.07	HOLDER	39, 41
G- 556657	01.08	HOLDER	43
G- 556657	01.09	HOLDER	45
G-1021111	01.03.07	ARM	83, 85
G-1021122	01.03.08	ARM	87, 89
G-1021133	01.03.09	ARM	91, 93
G-1021144	01.04.02	GUIDE	121, 123
G-1021198	03.05	GUIDE	397, 399
G-1021592	01.11	HOLDER	49, 51

Part No	MMref	Description	Page No

This page intentionally left blank

Tetra Pak