SPC
Spare Parts Catalogue

Tetra Cardboard Packer 70
670272-060V MED-infeed

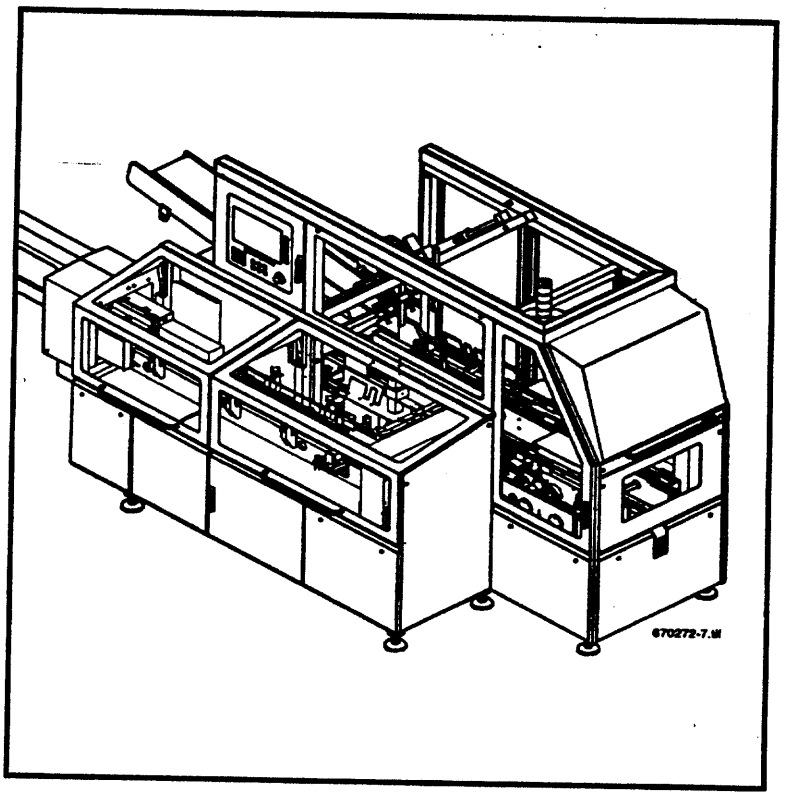

Tetra Pak

Doc No: SPC-84866-01

This document is valid for:

Series No/ Machine No Sign.

SPC
Spare Parts Catalogue

Tetra Cardboard Packer 70
670272-060V
with MED-infeed

Equipment Included:

To check your actual machine data and eventual installed extra equipments, check the machine specification, supplied with the machine delivery!

Order/add necessary documents.

Table of Content:

Introduction 5

Base Unit
B- 670294-0401 17

Infeed Unit
B- 670292-0402 215

Magazine Unit
B- 670293-040V 339

For machines with Wrap Around equipment
Wrap Around Unit
B- 670375-040V 375

Regular Accessories
B- 670290-040V 413

Part number index
..... 443

Doc No: SPC-84866-01

Issue 9605

Tetra Pak

Tetra Pak Distribution AB

Main Groups of the Machine

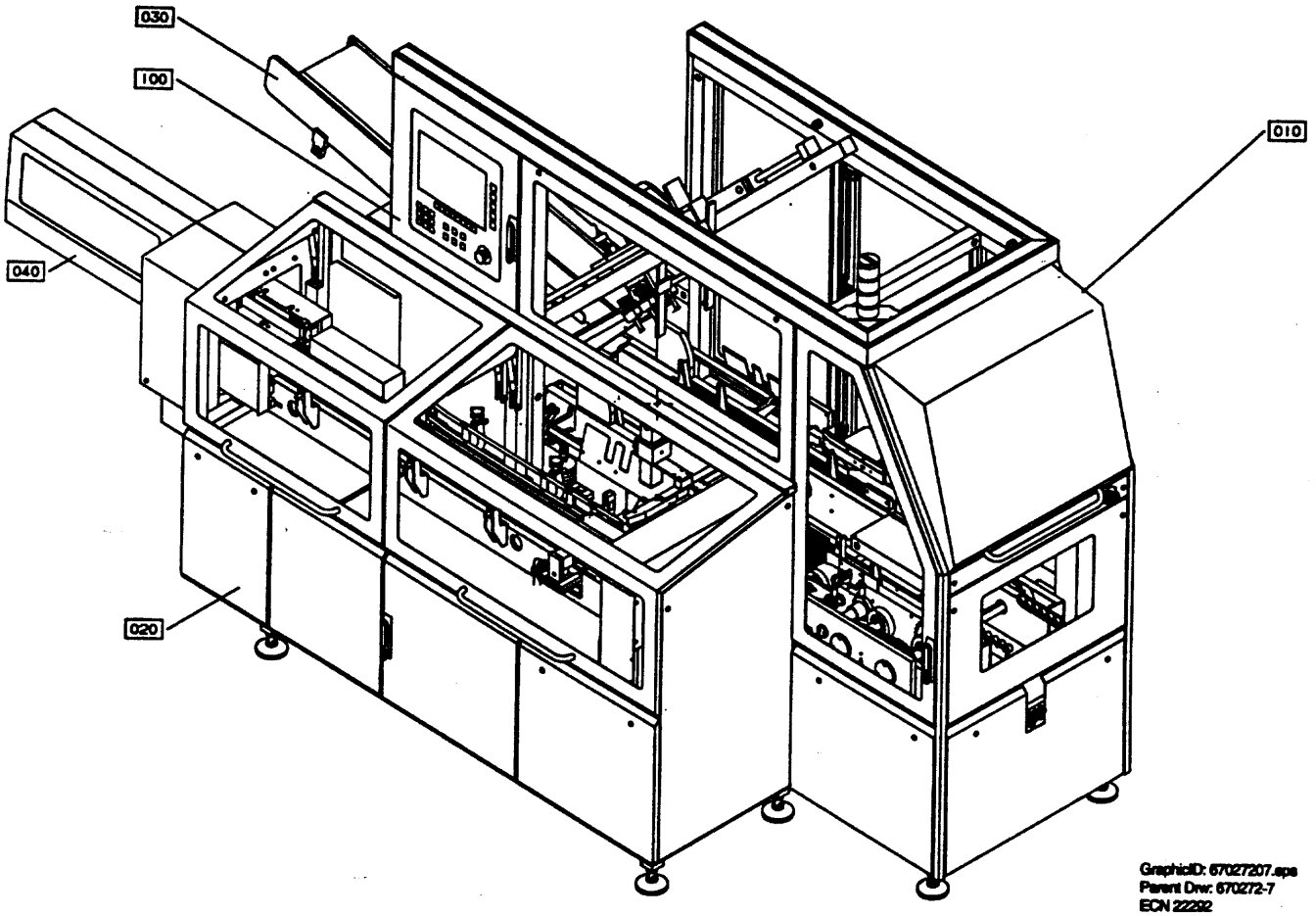

GraphicID: 67027207.eps
Parent Drw: 670272-7
ECN 22292

For the correct machine data, check your machine specification, supplied with the machine!

This page is intentionally left blank

Service

When ordering spare parts for your machine, contact the nearest Tetra Pak service station.

Manufacturer

This machine is produced by:
Tetra Pak Distribution AB
Ruben Rausings gata
221 86 Lund /Sweden

Machine identification

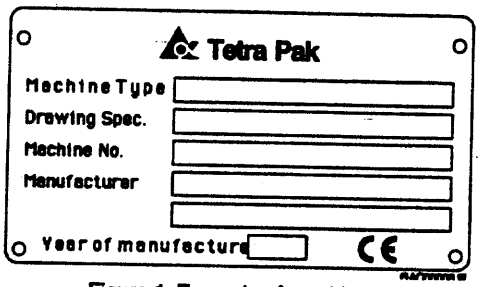

Figure 1 Example of machine plate

This machine plate is an example of the type of machine plate, attached to the machine frame. The plate carries data needed when contacting Tetra Pak concerning this particular machine.
The location of the different machine plates is shown on the page "Location of machine number plates", see page 2

Purpose of the Spare Parts Catalogue.

The purpose of the Spare Parts Catalogue (SPC) is to provide the technicians and contact personnel with information on how to find and order spare parts for maintenance and service of the machine. For instructions of how to replace parts and adjust machine setup, see the Maintenance Manual (MM).

Design modification

The content of this document is in accordance with the design and construction of the machine at the time it was delivered from the Tetra Pak machine production facility.

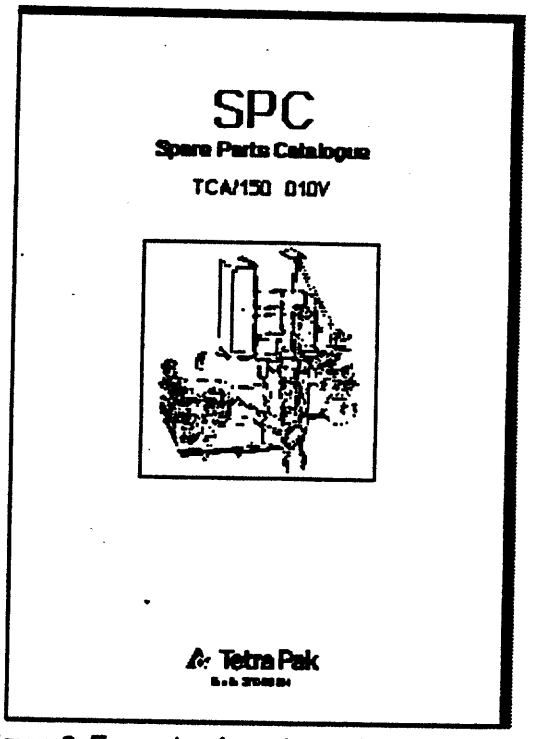

Figure 2 Example of catalogue front cover

Copyright © 1996
Tetra Pak Distribution AB

All rights reserved. No parts of this document may be reproduced or copied in any forms or by any means, without written permission from Tetra Pak Distribution AB.

Document producer

This document has been produced by:
Tetra Pak Distribution AB
Technical Publications
Ruben Rausings gata
221 86 Lund /Sweden

Further copies

Additional copies can be ordered from the nearest Tetra Pak service station. When ordering technical publications, always quote the document number printed on the front cover of the document concerned.

Number of pages

This document contains totally **484 pages,** including the first **14** introduction pages.

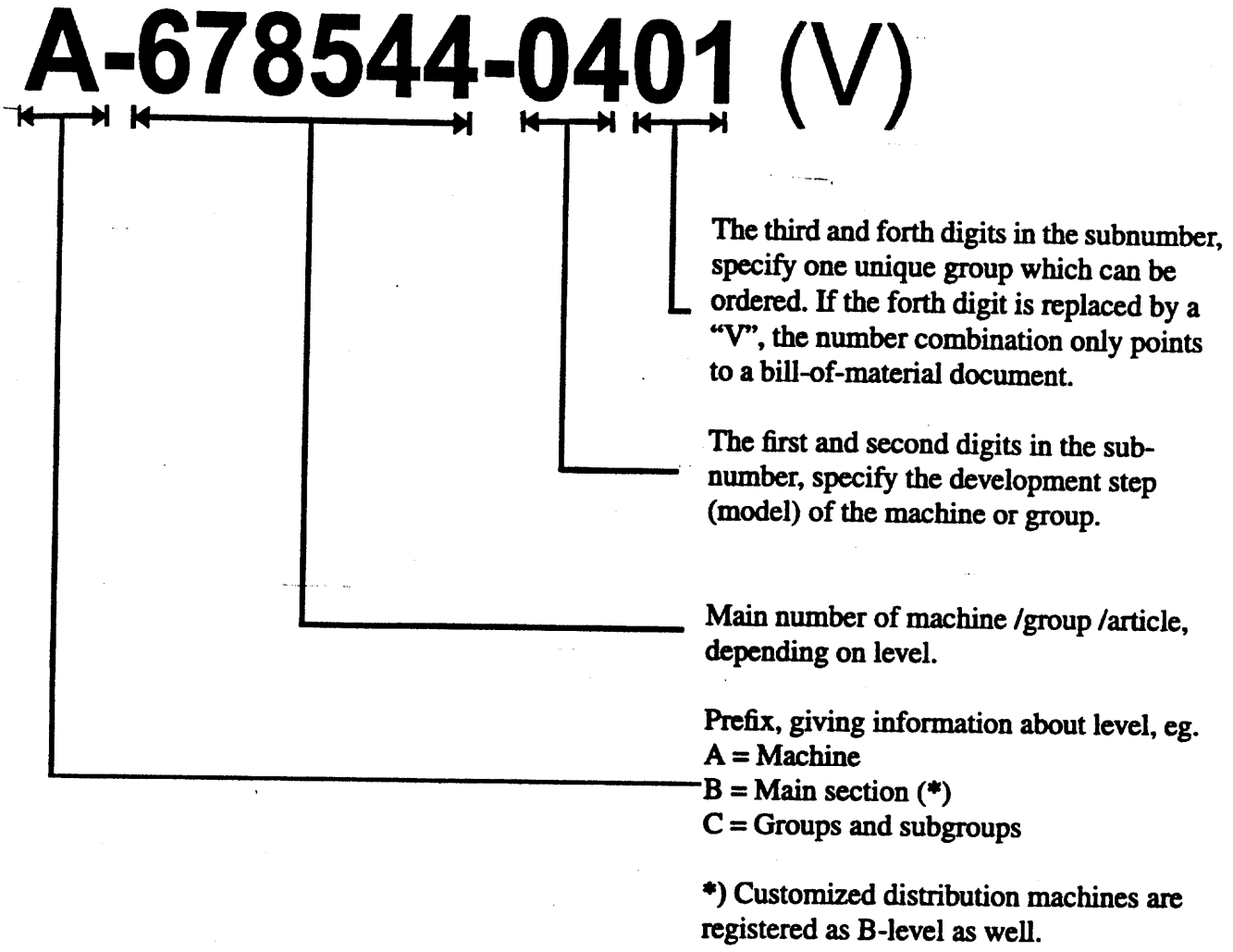
A-678544-0401 (V)
The third and forth digits in the subnumber, specify one unique group which can be ordered. If the forth digit is replaced by a "V", the number combination only points to a bill-of-material document.
The first and second digits in the sub-number, specify the development step (model) of the machine or group.
Main number of machine /group /article, depending on level.
Prefix, giving information about level, eg.
A = Machine
B = Main section (*)
C = Groups and subgroups
*) Customized distribution machines are registered as B-level as well.

Figure 3

How to find the correct Spare Part Number

A. Check that the data on your machine sign, and /or machine specification, corresponds with the catalogue.

1) Main groups of the machine

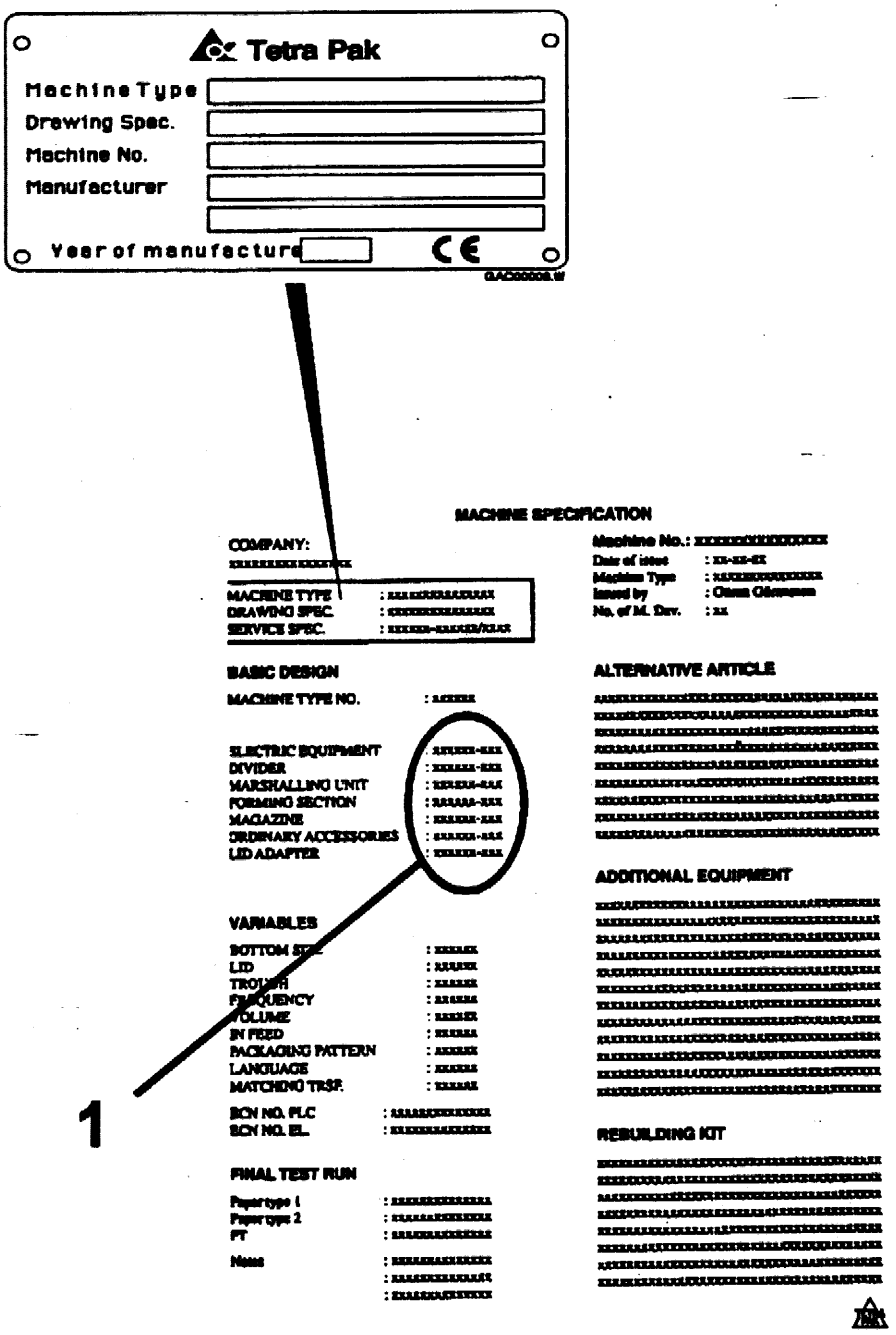

Figure 6 Example of Machine Specification

B. The second catalogue sheet contains a table of content for the main groups, included in the catalogue. The information regarding machine and main group status MUST correspond with your machine specification.
Locate and choose the main groups page number (1), in which you want to search for spare parts.

1) Main group
2) Machine type

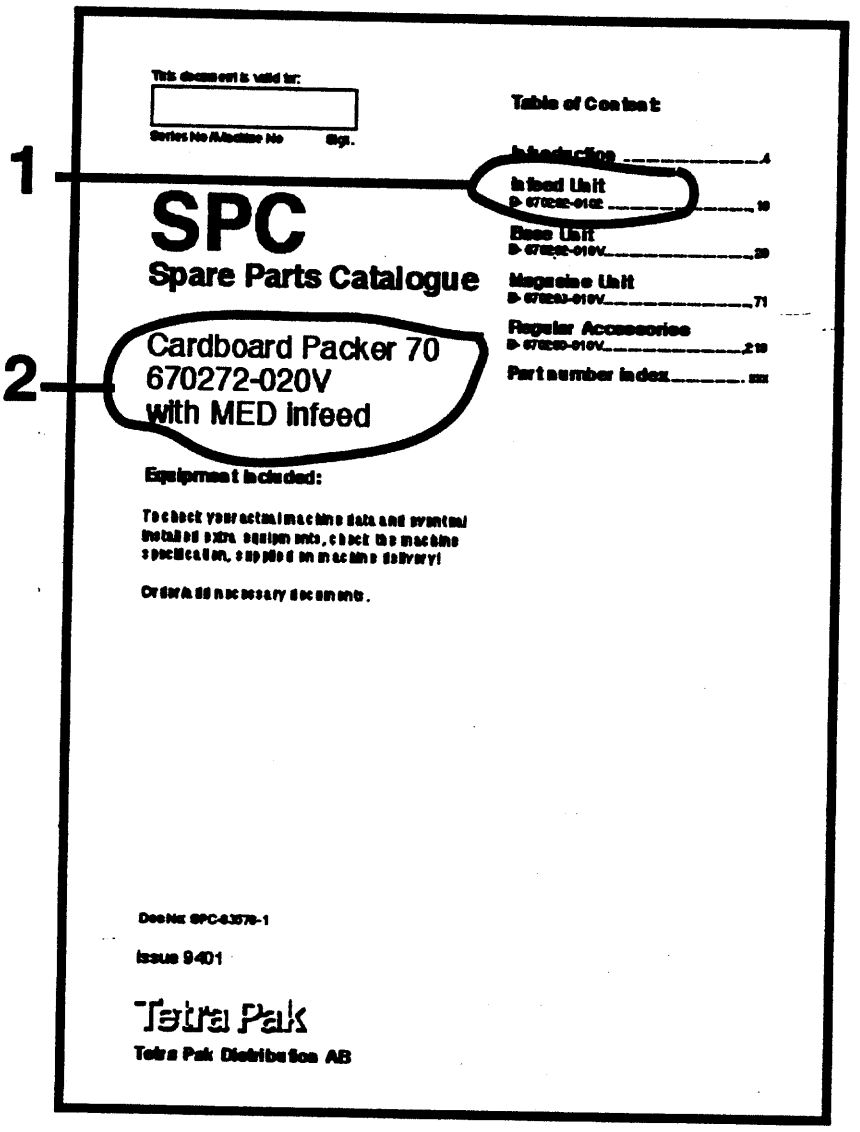

Figure 3 Example of catalogue page

C. Search in the main group illustration, the item number, which may hold your wanted spare part. Go to the text page below and find the page number for the actual group.

3) Internal information, such as latest Engineering Change, bill-of-material included in the catalogue page.
4) Used-In reference to next higher level in the machine structure
5) Pos numbering on illustration
6) Illustration number in the SPC database
7) Continuous page numbering through the document
8) Pos number corresponding to illustration
9) Group or article number.
10) Group or article description
11) Machine type including development staus
12) Group description
13) Group number (bill-of-material) including development status
14) Document number

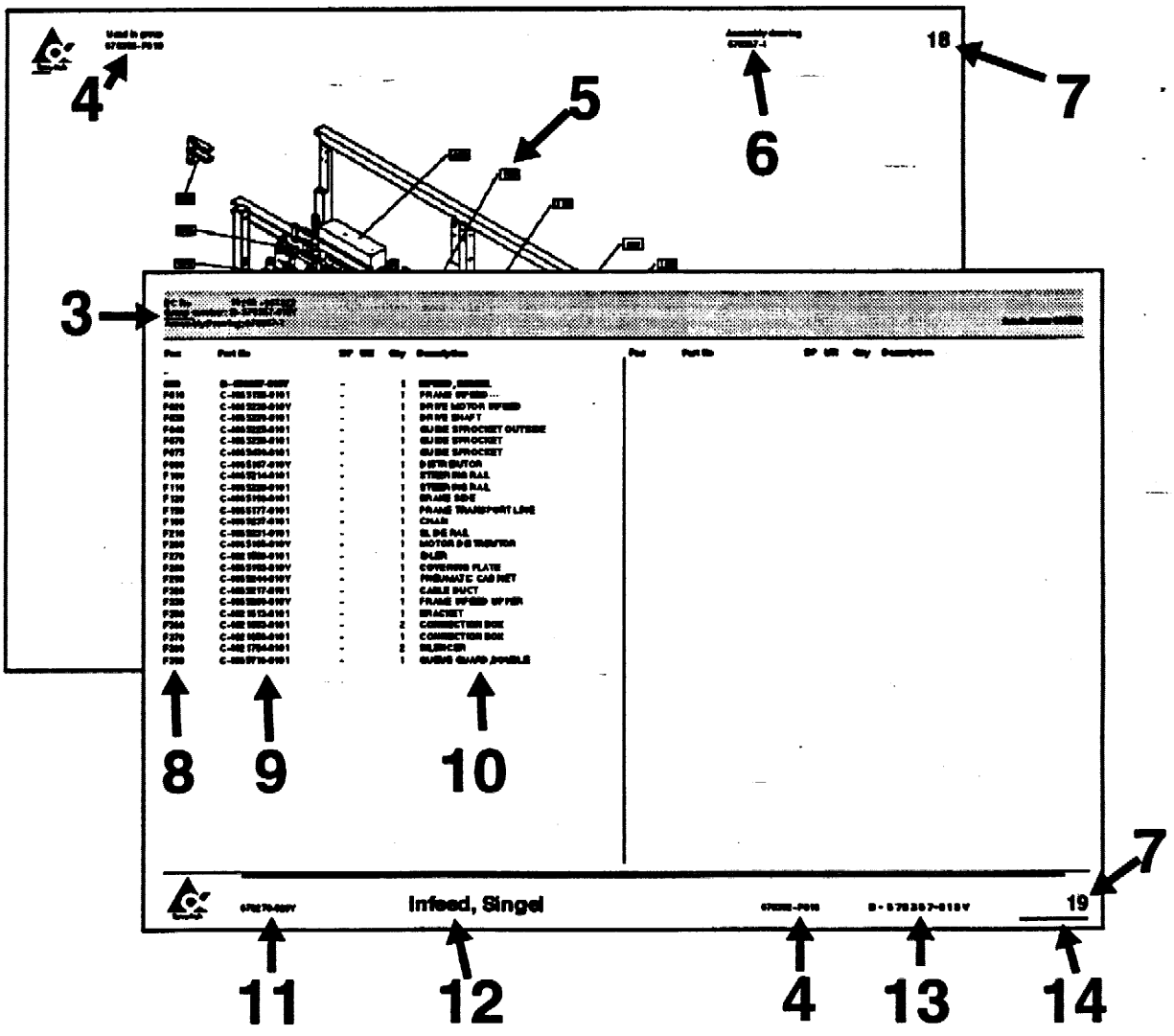

Figure 8 Example of catalogue page

D. Continue to the found page number, and search in the illustration for your spare part. Go to the text row for the found item number, and read the part number. Take eventual variant headings in consideration; if you are unsure, read your machine specification.

15) Variant heading, eg volume, left /right etc.
16) Heading for common parts
17) SP = Code for articles, which are included into various spare part kits.
    - U = starting-up kit supplied on machine delivery.
    - P = production kit to be held at production site workshop.
    - S = service kit to be held at service stations store.
    - C = central depot kit to be available at the central store.
18) UN = Short code for measure units, eg mm, kg etc.
19) Qty = Number of items needed in the complete assembly.

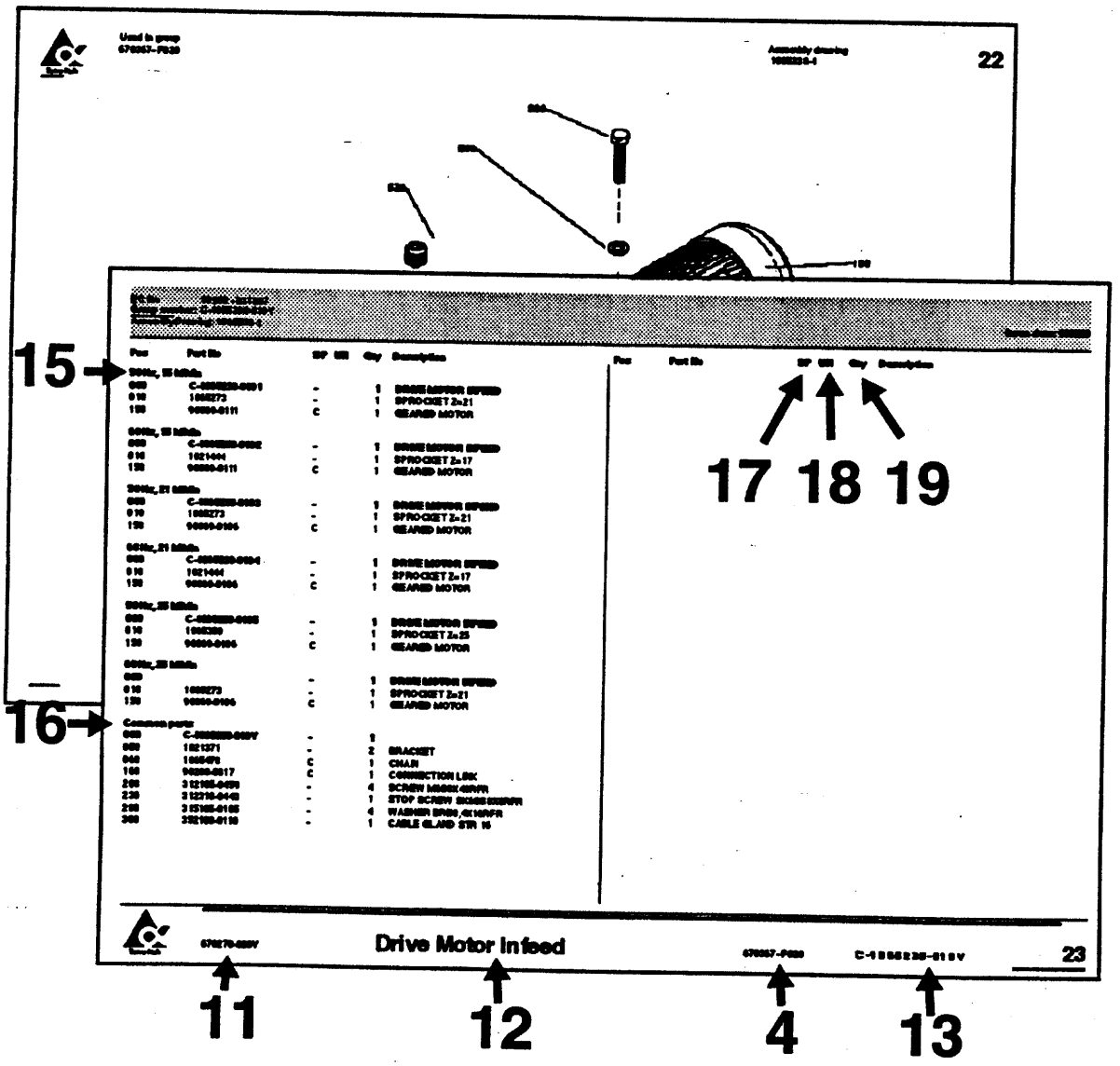

Figure 9 Example of catalogue page

This page intentionally left blank

This page intentionally left blank

SPC

Spare Parts Catalogue

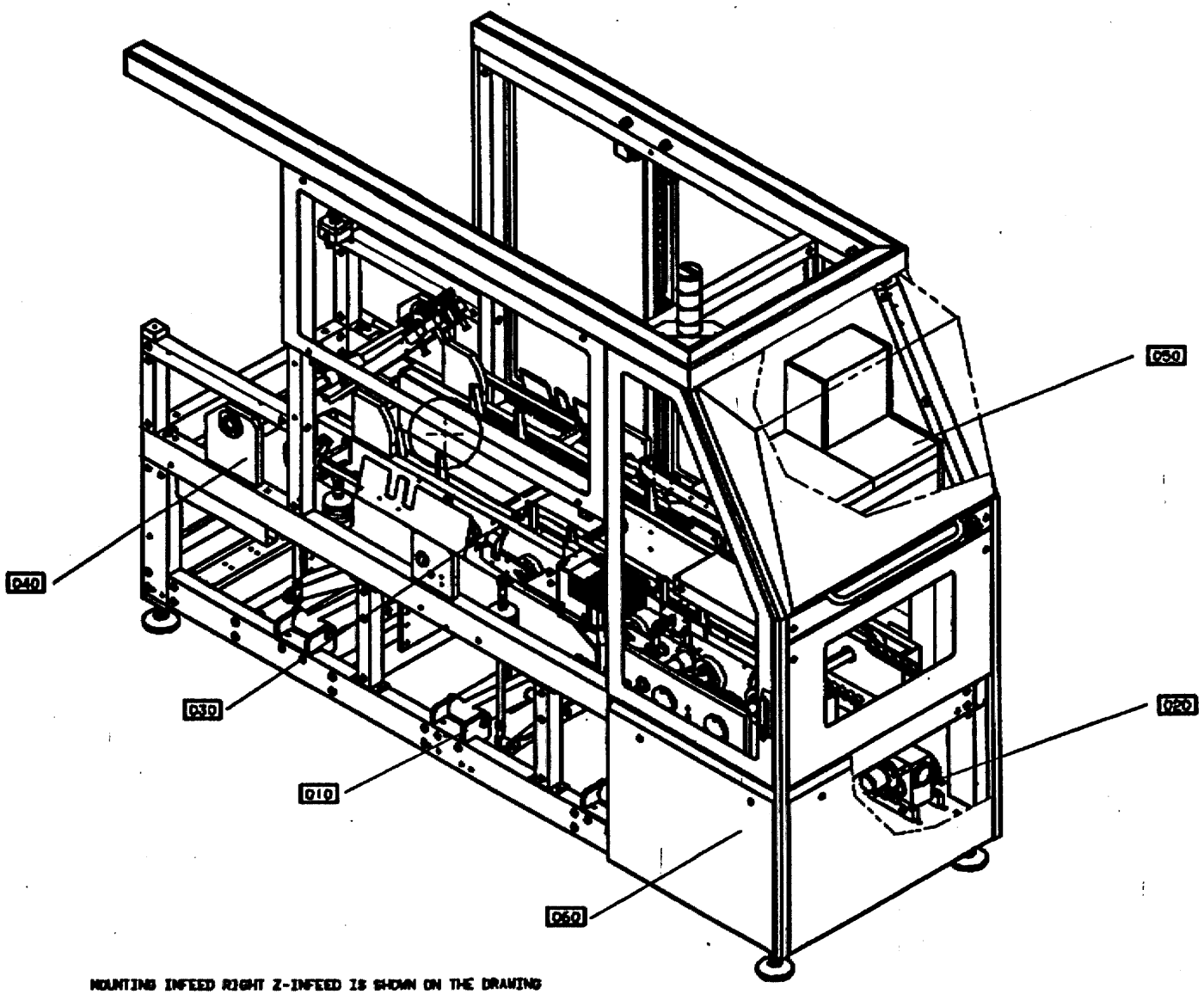

MOUNTING INFEED RIGHT Z-INFEED IS SHOWN ON THE DRAWING

GraphicID: 67029402.tif
Parent Drw:670294-2
ECN No: 22292

Pos	Part No	SP	UN	Qty	Description	Page No
000	B- 670294-040V	-			BASE UNIT	
010	B- 670280-0401	-			BOTTOM SECTION	19
020	B- 670282-0301	-			DRIVE UNIT	59
030	B- 670284-0401	-			FEED UNIT	69
040	B- 670283-040V	-			SUPERSTRCTURE	115
050	B- 670281-040V	-			HOT MELT EQUIPMENT	145
060	B- 670296-020V	-			COVERING BASE UNIT	157

Pos	Part No	SP	UN	Qty	Description	Page No

Left Hand infeed

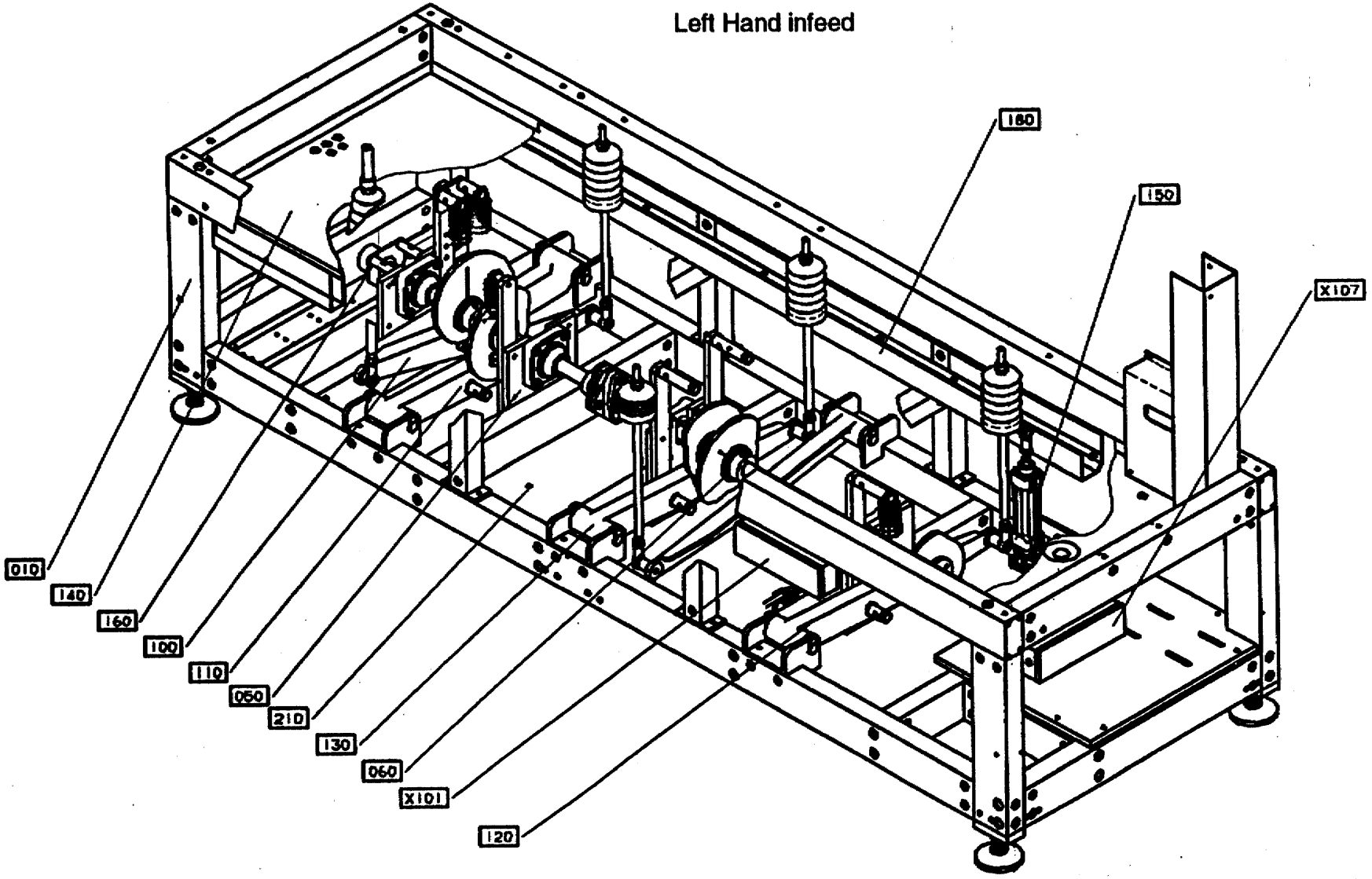

GraphicID: 67028003.tif
Parent Drw:670280-3
ECN No: 22292

Pos	Part No	SP	UN	Qty	Description	Page No
000	B- 670280-0401	-		1	BOTTOM SECTION	
X101	C-1021897-0201	-		1	CONNECTION BOX	23
X107	C-1065905-0101	-		1	CONNECTION BOX	25
010	C- 556609-0301	-		1	LOWER FRAME	27
050	C- 556641-0201	-		1	MAINSHAFT REAR	29
060	C- 556654-0201	-		1	MAINSHAFT FRONT	33
100	C-1021000-0101	-		1	OPERATING ARM MAGASIN	37
110	C-1021009-0101	-		1	FOLDING FLAP	39
120	C-1021015-0101	-		1	SQUEEZER	43
130	C-1021019-0101	-		1	FLAP FOLDER	45
140	C-1021023-0301	-		1	COVERING PLATE	47
150	C-1021404-0101	-		1	PNEUMATIC CUSHIONING	49
160	C-1021982-0201	-		1	ANGLE ENCODER	53
180	C-1021730-0101	-		1	CABLE DUCT	55
210	C-1128833-0201	-		1	COVERING PLATE	57

Right Hand infeed

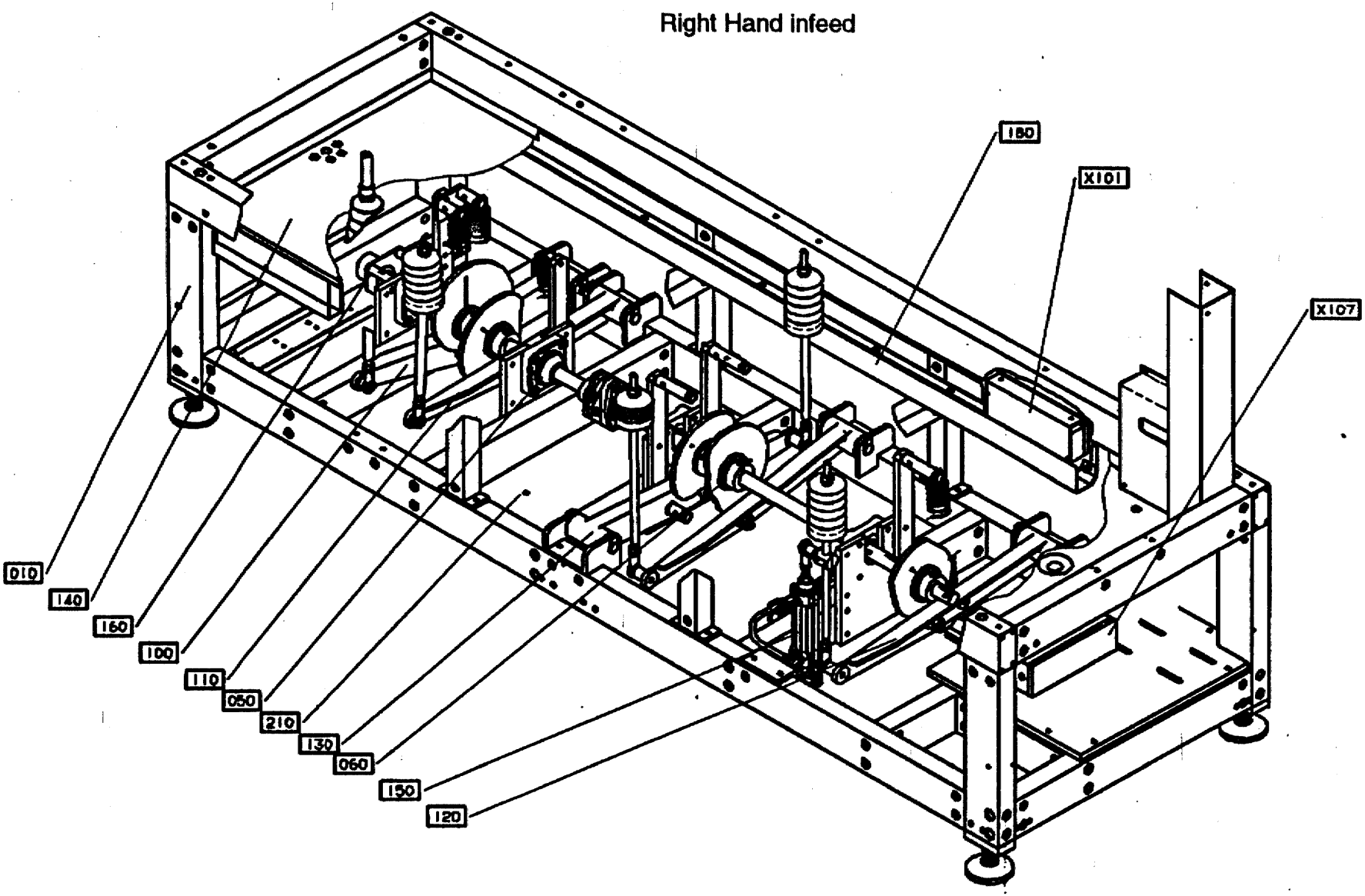

GraphicID: 67028004.tif
Parent Drw:670280-4
ECN No: 22292

Pos	Part No	SP	UN	Qty	Description	Page No
000	B- 670280-0401	-		1	BOTTOM SECTION	
X101	C-1021897-0201	-		1	CONNECTION BOX	23
X107	C-1065905-0101	-		1	CONNECTION BOX	25
010	C- 556609-0301	-		1	LOWER FRAME	27
050	C- 556641-0201	-		1	MAINSHAFT REAR	29
060	C- 556654-0201	-		1	MAINSHAFT FRONT	33
100	C-1021000-0101	-		1	OPERATING ARM MAGASIN	37
110	C-1021009-0101	-		1	FOLDING FLAP	39
120	C-1021015-0101	-		1	SQUEEZER	43
130	C-1021019-0101	-		1	FLAP FOLDER	45
140	C-1021023-0301	-		1	COVERING PLATE	47
150	C-1021404-0101	-		1	PNEUMATIC CUSHIONING	49
160	C-1021982-0201	-		1	ANGLE ENCODER	53
180	C-1021730-0101	-		1	CABLE DUCT	55
210	C-1128833-0201	-		1	COVERING PLATE	57

Pos	Part No	SP	UN	Qty	Description	Page No

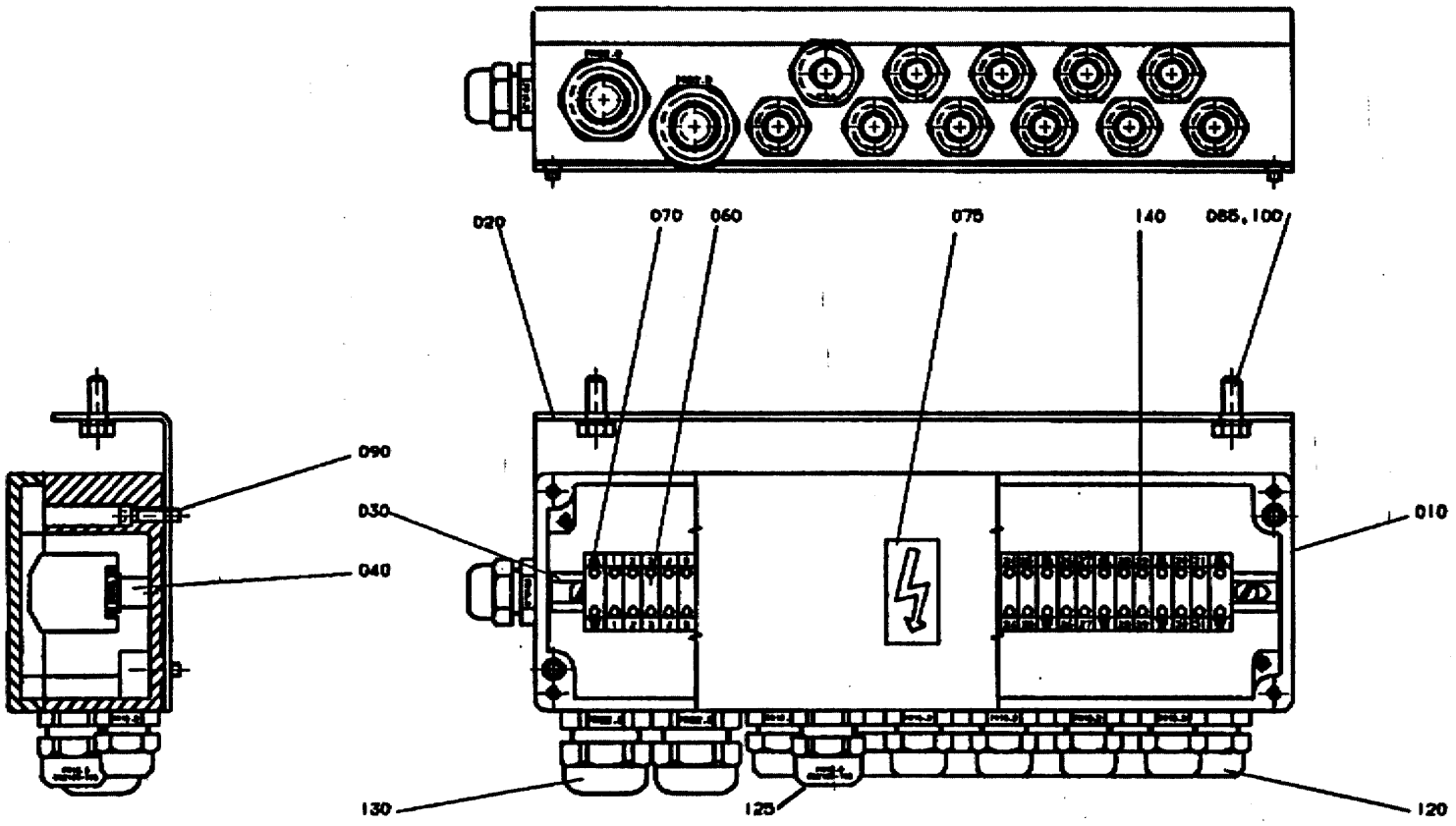

GraphicID: 102189702.tif
Parent Drw: 1021897-2
ECN No: 22292

Pos	Part No	SP	UN	Qty	Description	Page No
-						
000	C-1021897-0201	-		1	CONNECTION BOX	
010	1021898	-		1	CONNECTION BOX	
020	1021746	-		1	BRACKET	
030	8490-0010	-		1	MOUNTING RAIL	
040	479110	-		2	SPACER	
060	90077-0079	-		31	FEED THROUGH TERMINAL	
070	90135-0026	-		5	EARTHING CLAMP	
075	90194-0016	-		1	SIGN "FLASH SIGN" 50X50MM	
085	312105-0368	-		2	SCREW O4017 M6X16A280	
090	312145-0293	-		4	SLOTTED HEMFS4X16RFR	
100	315105-0153	-		2	WASHER BRB6,4X12RFR	
120	352103-0101	-		11	CABLE GLAND ST 9	
125	352103-0106	-		1	CABLE GLAND ST 11	
130	352103-0111	-		2	CABLE GLAND ST 16;10-14MM	
140	359011-0821	-		2	SET OF SIGNS 6-FW 1-50	

Pos	Part No	SP	UN	Qty	Description	Page No

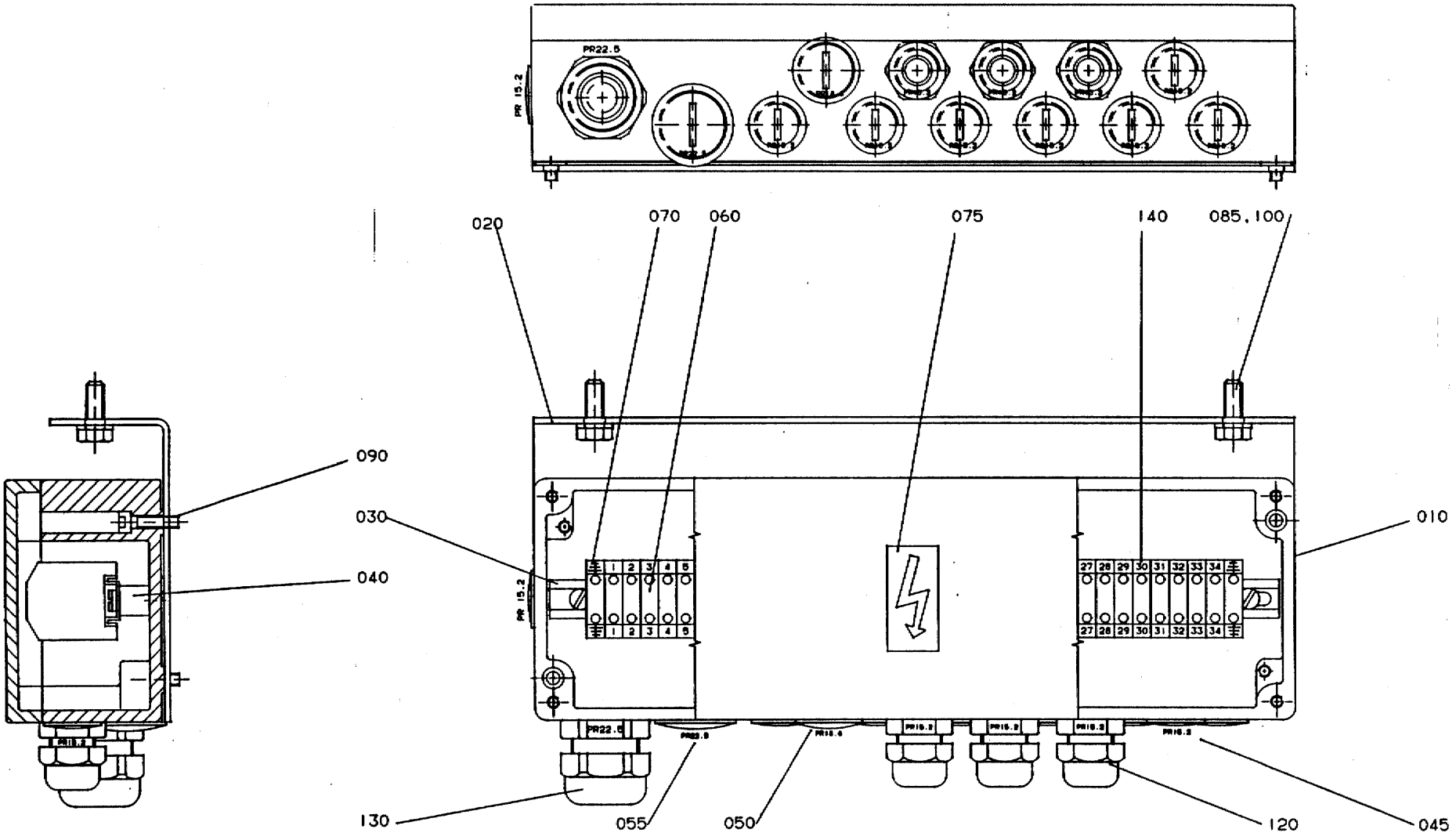

GraphicID: 106590501.eps
Parent Drw: 1065905-1
ECN 19307

Pos	Part No	SP	UN	Qty	Description	Page No
000	C-1065905-0101	-		1	CONNECTION BOX	
010	1021898	-		1	CONNECTION BOX	
020	1021746	-		1	BRACKET	
030	8490-0010	-		1	MOUNTING RAIL	
040	479110	-		2	SPACER	
045	90002-0013	-		8	BLANK-OFF PLUG 15,2	
050	90002-0009	-		1	BLANK-OFF PLUG 18.6	
055	90002-0004	-		1	BLANK-OFF PLUG 22,5	
060	90077-0079	-		34	FEED THROUGH TERMINAL	
070	90135-0026	-		2	EARTHING CLAMP	
075	90194-0016	-		1	SIGN "FLASH SIGN" 50X50MM	
085	312105-0368	-		2	SCREW O4017 M6X16A280	
090	312145-0293	-		4	SLOTTED HEMFS4X16RFR	
100	315105-0153	-		2	WASHER BRB6,4X12RFR	
120	352103-0101	-		3	CABLE GLAND ST 9	
130	352103-0111	-		1	CABLE GLAND ST 16;10-14MM	
140	359011-0821	-		2	SET OF SIGNS 6-FW 1-50	

Pos	Part No	SP	UN	Qty	Description	Page No

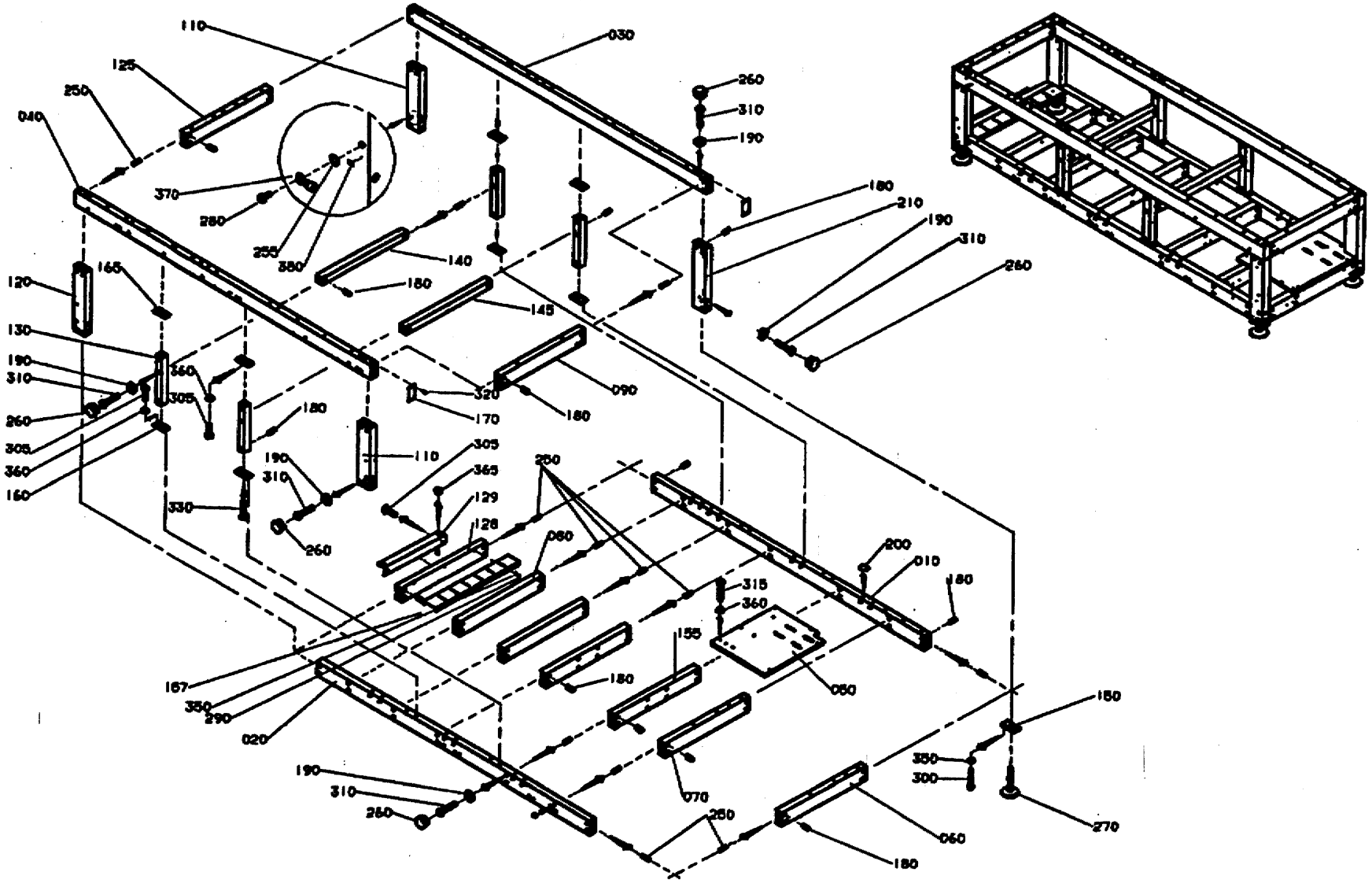

GraphicID: 55660903.tif
Parent Drw: 556609-3
ECN No: 22292

Pos	Part No	SP	UN	Qty	Description	Page No
-						
000	C- 556609-0301	-		1	LOWER FRAME	
010	556610	-		1	PROFILE	
020	556611	-		1	PROFILE	
030	1074714	-		1	PROFILE	
040	1074717	-		1	PROFILE	
050	556614	-		1	MOTOR PLATE	
060	1074703	-		1	PROFILE	
070	1074704	-		1	PROFILE	
080	556617	-		3	PROFILE	
090	556618	-		1	PROFILE	
110	556622	-		2	PROFILE	
120	556623	-		1	PROFILE	
125	1021323	-		1	PROFILE	
128	1021605	-		1	PROFILE	
129	1021606	-		1	BRACKET	
130	556620	-		4	PROFILE	
140	556621	-		1	PROFILE	
145	1021372	-		1	PROFILE	
150	556598	-		4	BRACKET	
155	1021728	-		1	PROFILE	
157	1021944	-		1	CABLE DUCT	
160	556624	-		4	FRAME BRACKET	
165	1021031	-		4	BRACKET	
170	556603	-		2	COVER PLATE	
180	486268	-		68	NUT	
190	548599	-		70	WASHER	
200	1021933	-		25	COVER TAPE	
210	1021997	-		1	PROFILE	
250	1065410	-		160	SLOTTED PIN	
255	90062-0060	-		1	LOCK WASHER	
260	90261-0060	-		48	PLASTIC PLUG	
270	90347-0142	-		4	FOOT	
280	312105-0327	-		1	SCREW O4017 M5X12A280	
290	312105-0366	-		3	SCREW O4017 M6X12A280	
300	312105-0376	-		16	SCREW O4017 M6X35A280	
305	312105-0453	-		20	SCREW O4017 M8X25A280	
310	312105-0459	-		60	SCREW O4017 M8X40A280	
315	312109-0457	-		8	SCREW 8X35 H A4 80	
320	312145-0325	-		8	SLOTTED HEMFS5X10RFR	
330	312155-0459	-		8	SCREW MF6S8X40RFR	
350	315105-0153	-		19	WASHER BRB6,4X12RFR	
360	315105-0165	-		28	WASHER BRB8,4X16RFR	
365	312605-0318	-		2	NUT M6M8RFR	
370	353101-0132	-		1	CABLE SHOE	
380	90194-0152	-		1	SIGN "EARTH"	

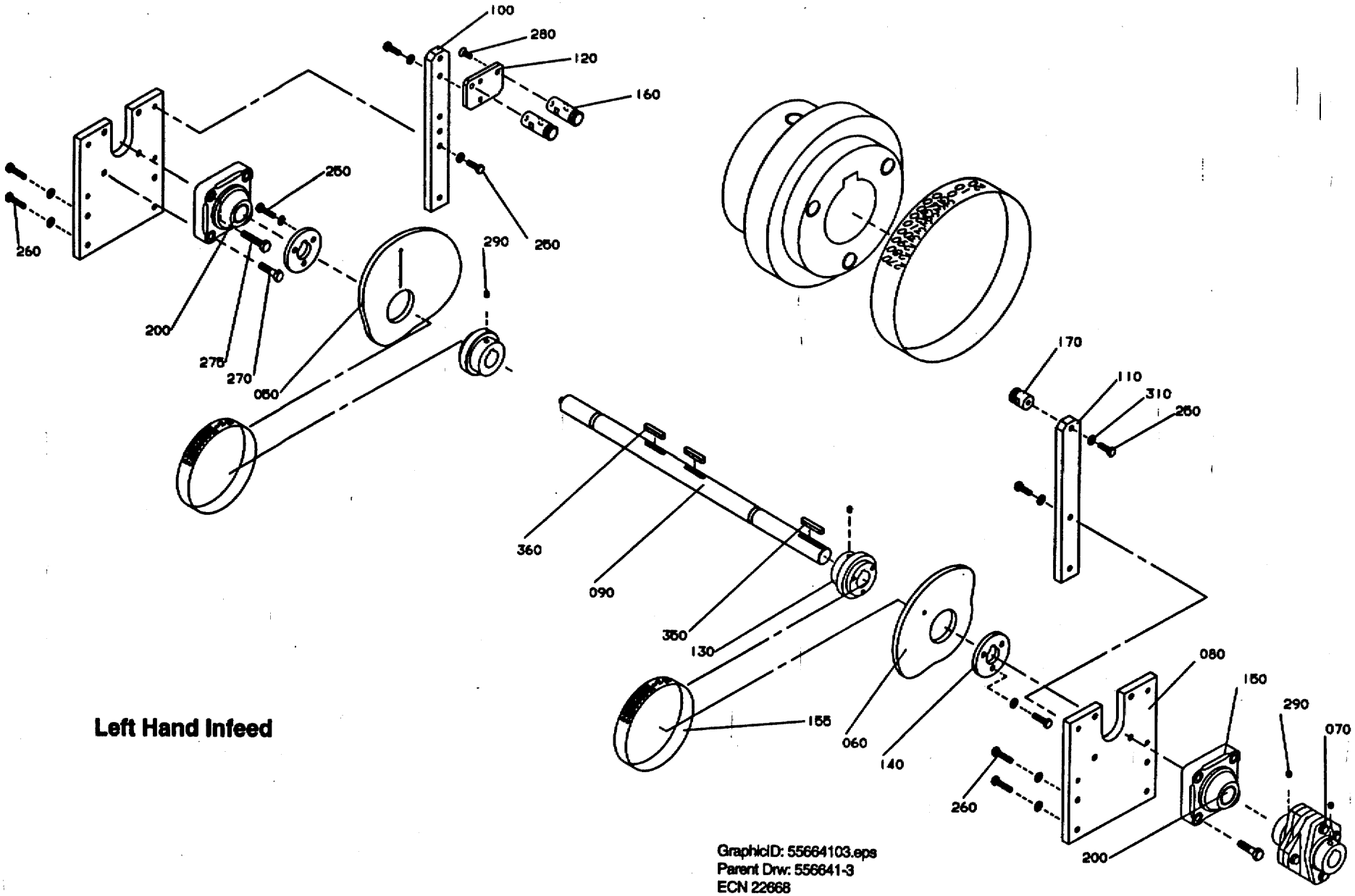

Left Hand Infeed

GraphicID: 55664103.eps
Parent Drw: 556641-3
ECN 22668

Pos	Part No	SP	UN	Qty	Description	Page No
-						
000	C- 556641-0201	-		1	MAIN SHAFT REAR	
060	1021028	-		1	CAM DISC	
070	90355-0115	-		1	CONNECTION	
080	556642	-		2	BEARING PLATE	
090	1139135	-		1	SHAFT	
100	556645	-		1	HOLDER	
110	556646	-		1	HOLDER	
120	556647	-		1	BRACKET	
130	556648	-		2	HUB	
140	556649	-		2	WASHER	
150	90345-0075	P		2	FLANGE BEARING	
155	1021946	-		2	DIAL	
160	1021006	-		2	SPRING BRACKET	
170	556651	-		1	SPRING BRACKET	
200	90296-0068	-		X	GREASE	
250	312105-0453	-		13	SCREW O4017 M8X25A280	
260	312105-0457	-		8	SCREW O4017 M8X35A280	
270	312105-0499	-		6	SCREW 4017 M10X40A280	
275	312109-0501	-		2	SCREW 10X50 H RFR	
280	312155-0489	-		2	SCREW MF6S10X16RFR	
290	312318-0443	-		4	STOP SCREW SK6SS8X8RFR	
310	315105-0165	-		21	WASHER BRB8,4X16RFR	
350	315701-0273	-		1	FLAT WEDGE8X7X56	
360	315701-0271	-		2	FLAT WEDGE8X7X45	
O50	1065919	-		1	CAM DISC	

Pos	Part No	SP	UN	Qty	Description	Page No

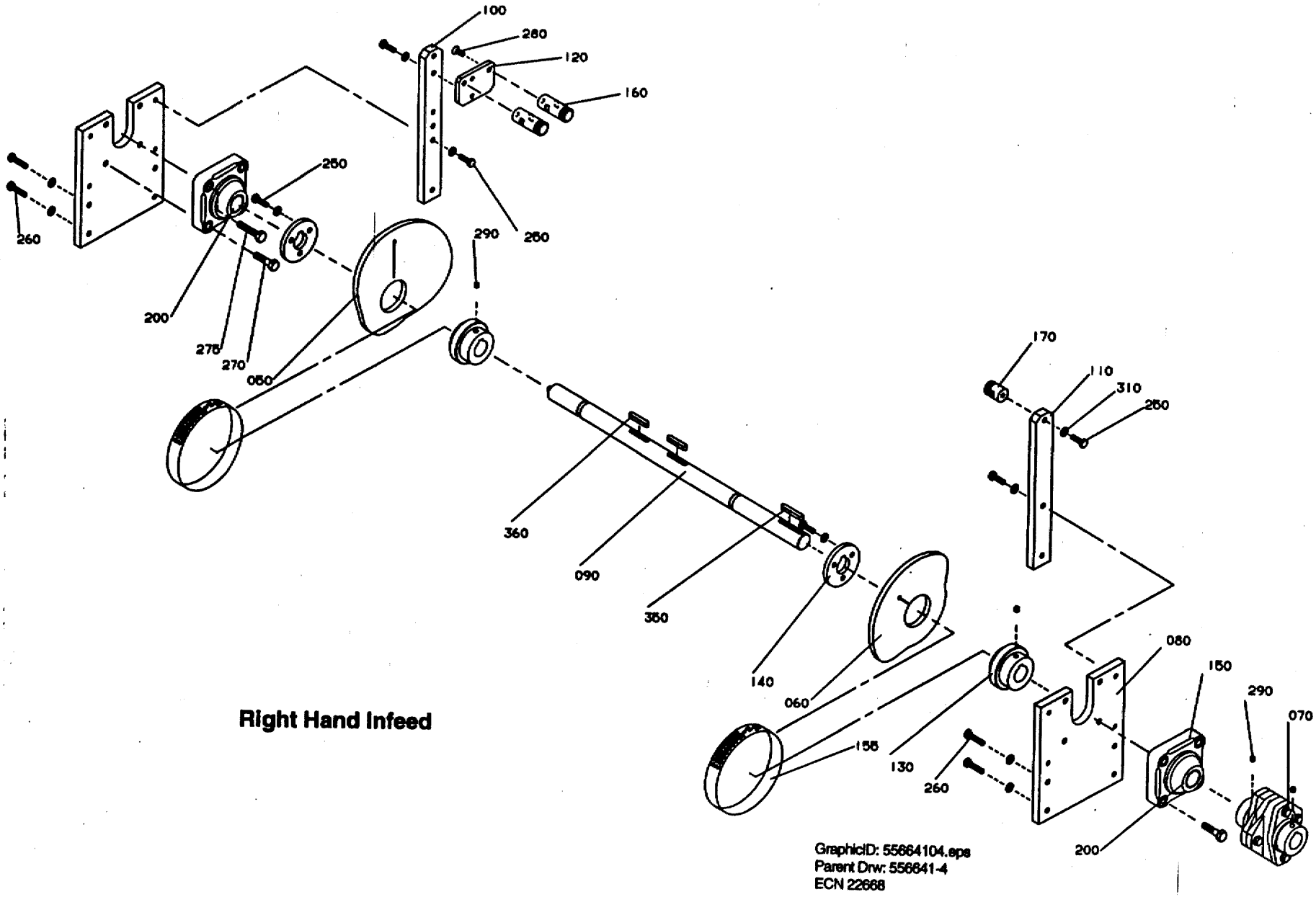

Right Hand Infeed

GraphicID: 55664104.eps
Parent Drw: 556641-4
ECN 22668

Pos	Part No	SP	UN	Qty	Description	Page No
000	C- 556641-0201	-		1	MAIN SHAFT REAR	
060	1021028	-		1	CAM DISC	
070	90355-0115	-		1	CONNECTION	
080	556642	-		2	BEARING PLATE	
090	1139135	-		1	SHAFT	
100	556645	-		1	HOLDER	
110	556646	-		1	HOLDER	
120	556647	-		1	BRACKET	
130	556648	-		2	HUB	
140	556649	-		2	WASHER	
150	90345-0075	P		2	FLANGE BEARING	
155	1021946	-		2	DIAL	
160	1021006	-		2	SPRING BRACKET	
170	556651	-		1	SPRING BRACKET	
200	90296-0068	-		X	GREASE	
250	312105-0453	-		13	SCREW O4017 M8X25A280	
260	312105-0457	-		8	SCREW O4017 M8X35A280	
270	312105-0499	-		6	SCREW 4017 M10X40A280	
275	312109-0501	-		2	SCREW 10X50 H RFR	
280	312155-0489	-		2	SCREW MF6S10X16RFR	
290	312318-0443	-		4	STOP SCREW SK6SS8X8RFR	
310	315105-0165	-		21	WASHER BRB8,4X16RFR	
350	315701-0273	-		1	FLAT WEDGE8X7X56	
360	315701-0271	-		2	FLAT WEDGE8X7X45	
O50	1065919	-		1	CAM DISC	

Pos	Part No	SP	UN	Qty	Description	Page No

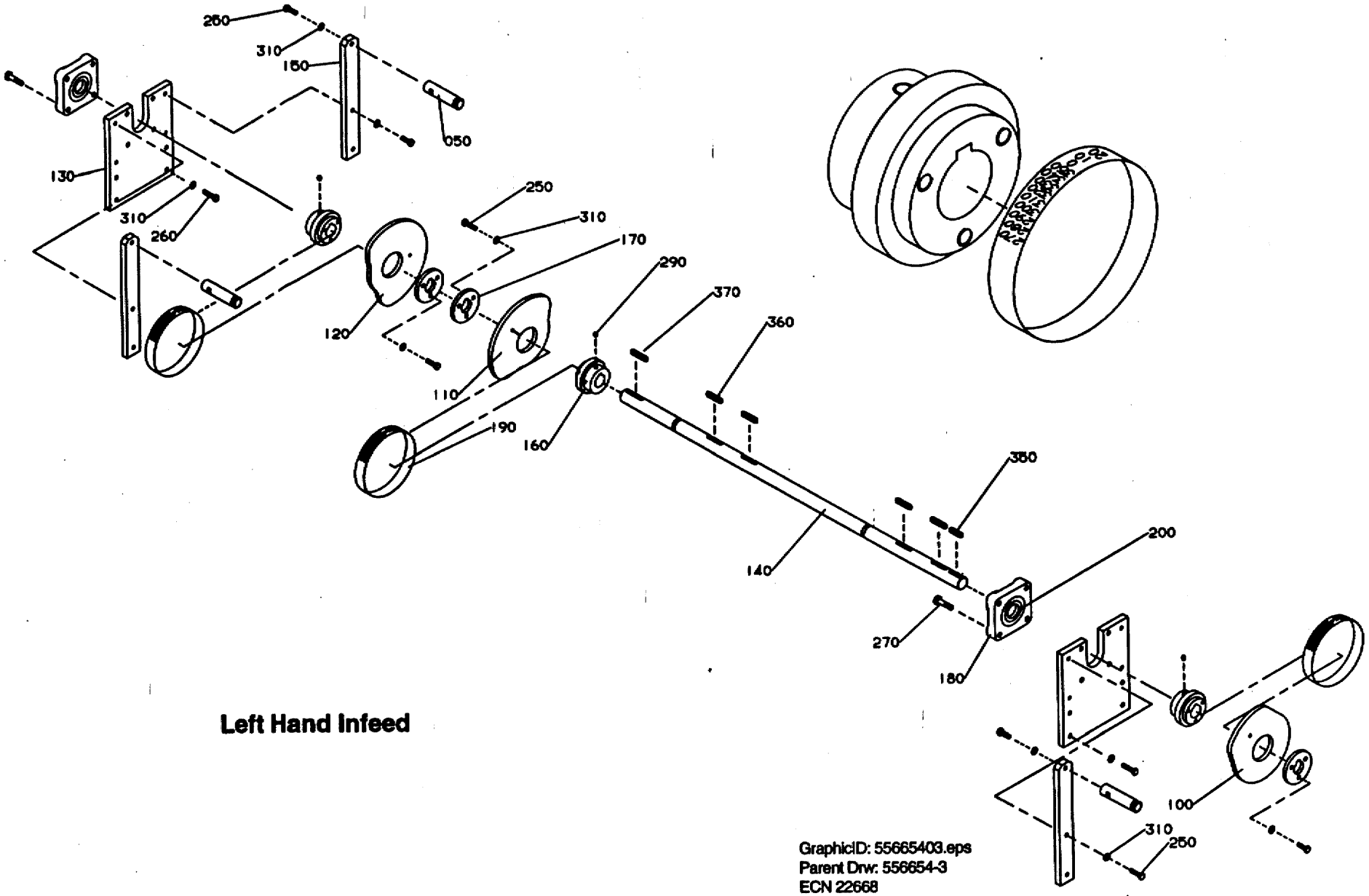

Left Hand Infeed

GraphicID: 55665403.eps
Parent Drw: 556654-3
ECN 22668

Pos	Part No	SP	UN	Qty	Description	Page No
-						
000	C- 556654-0201	-		1	MAIN SHAFT FRONT	
050	556652	-		3	SPRING BRACKET	
100	1021027	-		1	CAM DISC	
110	1021028	-		1	CAM DISC	
120	1021029	-		1	CAM DISC	
130	556642	-		2	BEARING PLATE	
140	1139136	-		1	SHAFT	
150	556646	-		3	HOLDER	
160	556648	-		3	HUB	
170	556649	-		3	WASHER	
180	90345-0075	P		2	FLANGE BEARING	
190	1021946	-		3	DIAL	
200	90296-0068	-		X	GREASE	
250	312105-0453	-		18	SCREW O4017 M8X25A280	
260	312105-0457	-		8	SCREW O4017 M8X35A280	
270	312105-0499	-		8	SCREW 4017 M10X40A280	
290	312318-0443	-		3	STOP SCREW SK6SS8X8RFR	
310	315105-0165	-		26	WASHER BRB8,4X16RFR	
350	315701-0801	-		1	FLAT WEDGE8X7X36	
360	315701-0271	-		4	FLAT WEDGE8X7X45	
370	315701-0272	-		1	FLAT WEDGE8X7X50	

Pos	Part No	SP	UN	Qty	Description	Page No

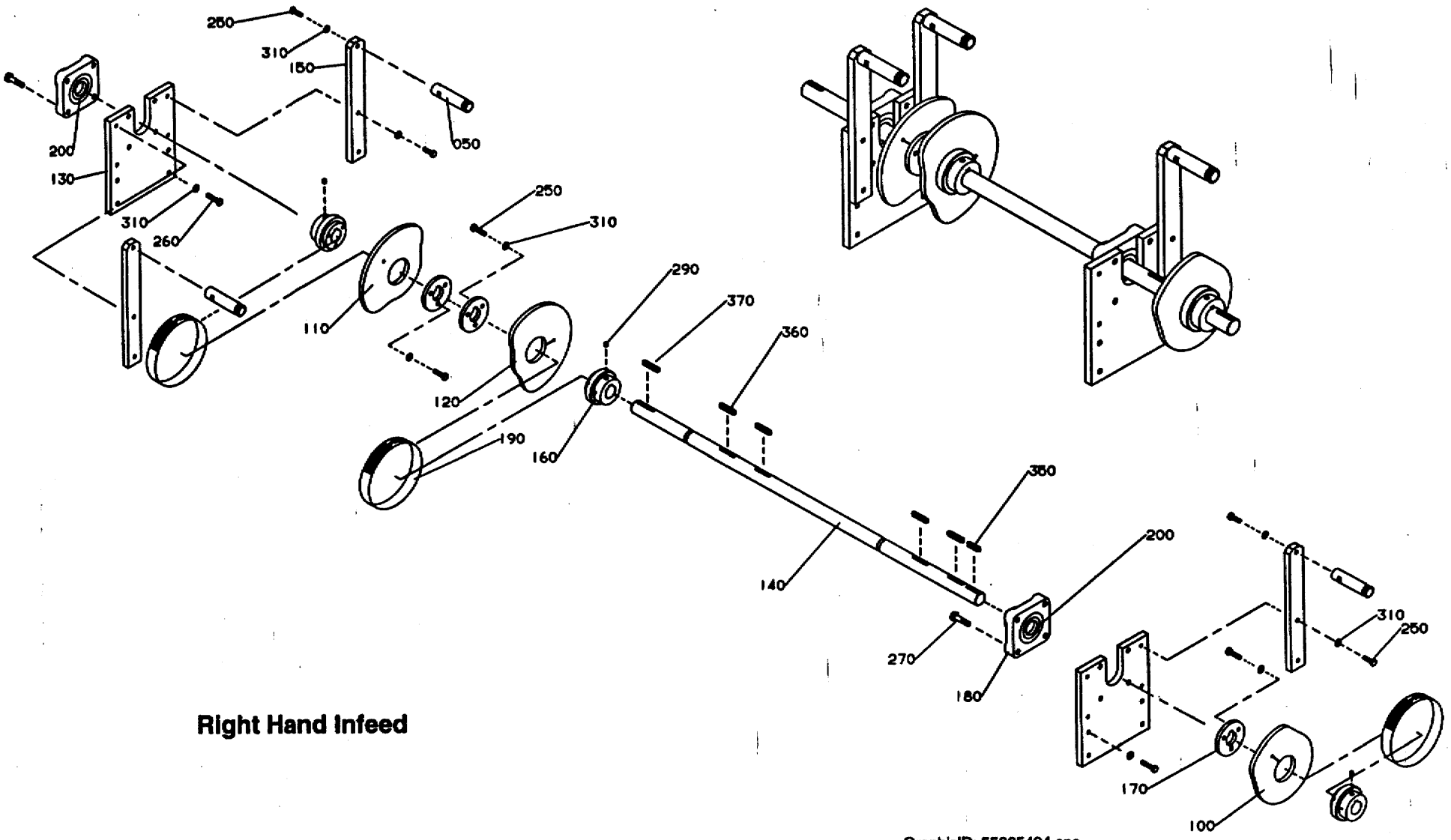

Right Hand Infeed

GraphicID: 55665404.eps
Parent Drw: 556654-4
ECN 22668

Pos	Part No	SP	UN	Qty	Description	Page No
-						
000	C- 556654-0201	-		1	MAIN SHAFT FRONT	
050	556652	-		3	SPRING BRACKET	
100	1021027	-		1	CAM DISC	
110	1021028	-		1	CAM DISC	
120	1021029	-		1	CAM DISC	
130	556642	-		2	BEARING PLATE	
140	1139136	-		1	SHAFT	
150	556646	-		3	HOLDER	
160	556648	-		3	HUB	
170	556649	-		3	WASHER	
180	90345-0075	P		2	FLANGE BEARING	
190	1021946	-		3	DIAL	
200	90296-0068	-		X	GREASE	
250	312105-0453	-		18	SCREW O4017 M8X25A280	
260	312105-0457	-		8	SCREW O4017 M8X35A280	
270	312105-0499	-		8	SCREW 4017 M10X40A280	
290	312318-0443	-		3	STOP SCREW SK6SS8X8RFR	
310	315105-0165	-		26	WASHER BRB8,4X16RFR	
350	315701-0801	-		1	FLAT WEDGE8X7X36	
360	315701-0271	-		4	FLAT WEDGE8X7X45	
370	315701-0272	-		1	FLAT WEDGE8X7X50	

Pos	Part No	SP	UN	Qty	Description	Page No

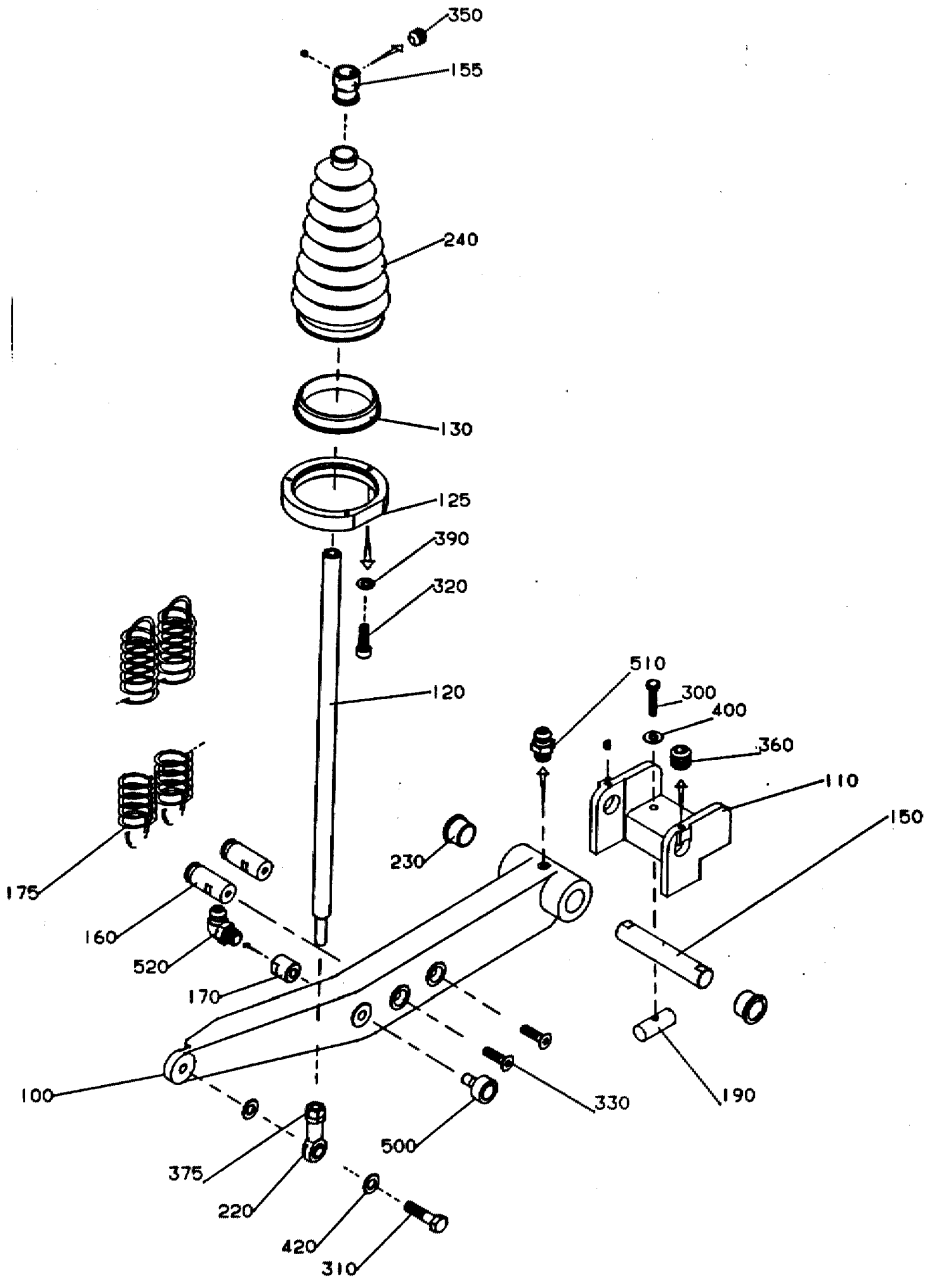

GraphicID: 102100001.eps
Parent Drw: 1021000-1
ECN 19307

Pos	Part No	SP	UN	Qty	Description	Page No
-						
000	C-1021000-0101	-		1	OPERATING ARM MAGAZIN	
100	G- 556655	-		1	ARM	
110	G- 556657	-		1	HOLDER	
120	1021001	-		1	LINK ARM	
125	1021002	-		1	CLAMP RING	
130	1021003	-		1	RING	
150	1021004	-		1	SHAFT	
155	1021005	-		1	BUSHING	
160	1021006	-		2	SPRING BRACKET	
170	1021008	-		1	NIPPLE	
175	1021596	S		2	TENSION SPRING	
190	486268	-		2	NUT	
220	90115-0028	P		1	LINK HEAD	
230	90240-0203	P		2	PLAIN BEARING	
240	90342-0015	C		1	BELLOWS	
300	312105-0459	-		2	SCREW O4017 M8X40A280	
310	312105-0541	-		1	SCREW 4017 M12X45A280	
320	312115-0329	-		3	SCREW O4762 M5X16A280	
330	312155-0495	-		2	SCREW MF6S10X30RFR	
350	312318-0360	-		2	STOP SCREW SK6SS6X6RFR	
360	312318-0443	-		2	STOP SCREW SK6SS8X8RFR	
375	312902-0322	-		1	NUT M6M12VRFR	
390	315105-0146	-		3	WASHER BRB5,3X10RFR	
400	315105-0165	-		2	WASHER BRB8,4X16RFR	
420	315105-0178	-		2	WASHER BRB13X24RFR	
500	321582-0165	S		1	CURVE ROLLKR30PP	
510	344502-0021	-		1	NIPPLE L AHM6	
520	344502-0061	-		1	NIPPLE L M6AL.	

Pos	Part No	SP	UN	Qty	Description	Page No

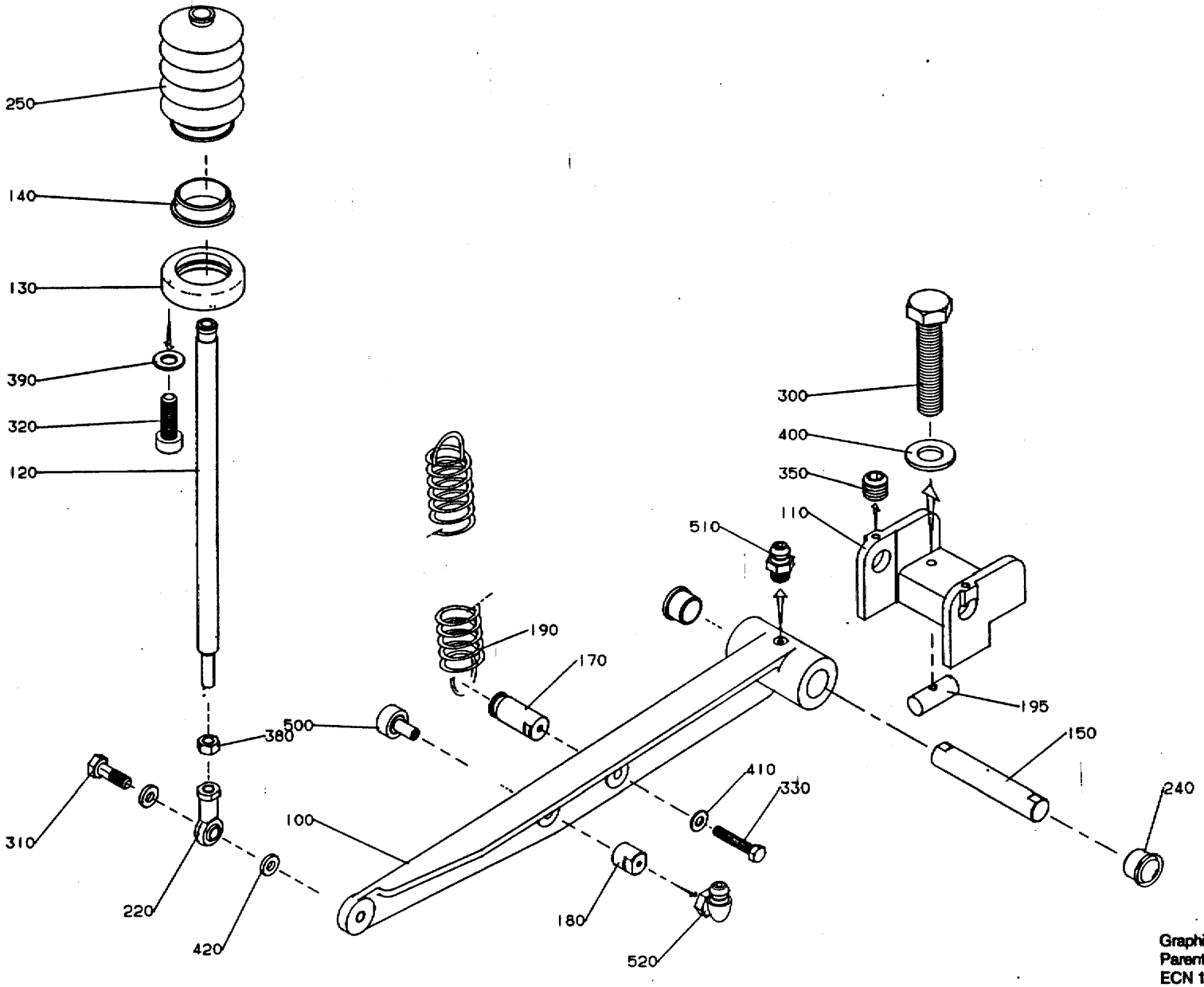

GraphicID: 102100901.eps
Parent Drw: 1021009-1
ECN 19307

Pos	Part No	SP	UN	Qty	Description	Page No
000	C-1021009-0101	-		1	FOLDING FLAP	
100	G- 556656	-		1	ARM	
110	G- 556657	-		1	HOLDER	
120	1021010	-		1	LINK ARM	
130	1021011	-		1	CLAMP RING	
140	1021012	-		1	RING	
150	1021004	-		1	SHAFT	
170	1021014	-		1	SPRING BRACKET	
180	1021008	-		1	NIPPLE	
190	1021595	S		1	TENSION SPRING	
195	486268	-		2	NUT	
220	90115-0028	P		1	LINK HEAD	
240	90240-0203	P		2	PLAIN BEARING	
250	90342-0016	C		1	BELLOWS	
300	312105-0459	-		2	SCREW O4017 M8X40A280	
310	312105-0545	-		1	SCREW M6S12X65RFR	
320	312115-0329	-		3	SCREW O4762 M5X16A280	
330	312105-0495	-		1	SCREW 4017 M10X30A280	
350	312318-0443	-		2	STOP SCREW SK6SS8X8RFR	
380	312902-0322	-		1	NUT M6M12VRFR	
390	315105-0146	-		3	WASHER BRB5,3X10RFR	
400	315105-0165	-		2	WASHER BRB8,4X16RFR	
410	315105-0173	-		2	WASHER BRB10,5X22RFR	
420	315105-0178	-		2	WASHER BRB13X24RFR	
500	321582-0165	S		1	CURVE ROLLKR30PP	
510	344502-0021	-		1	NIPPLE L AHM6	
520	344502-0061	-		1	NIPPLE L M6AL.	

Pos	Part No	SP	UN	Qty	Description	Page No

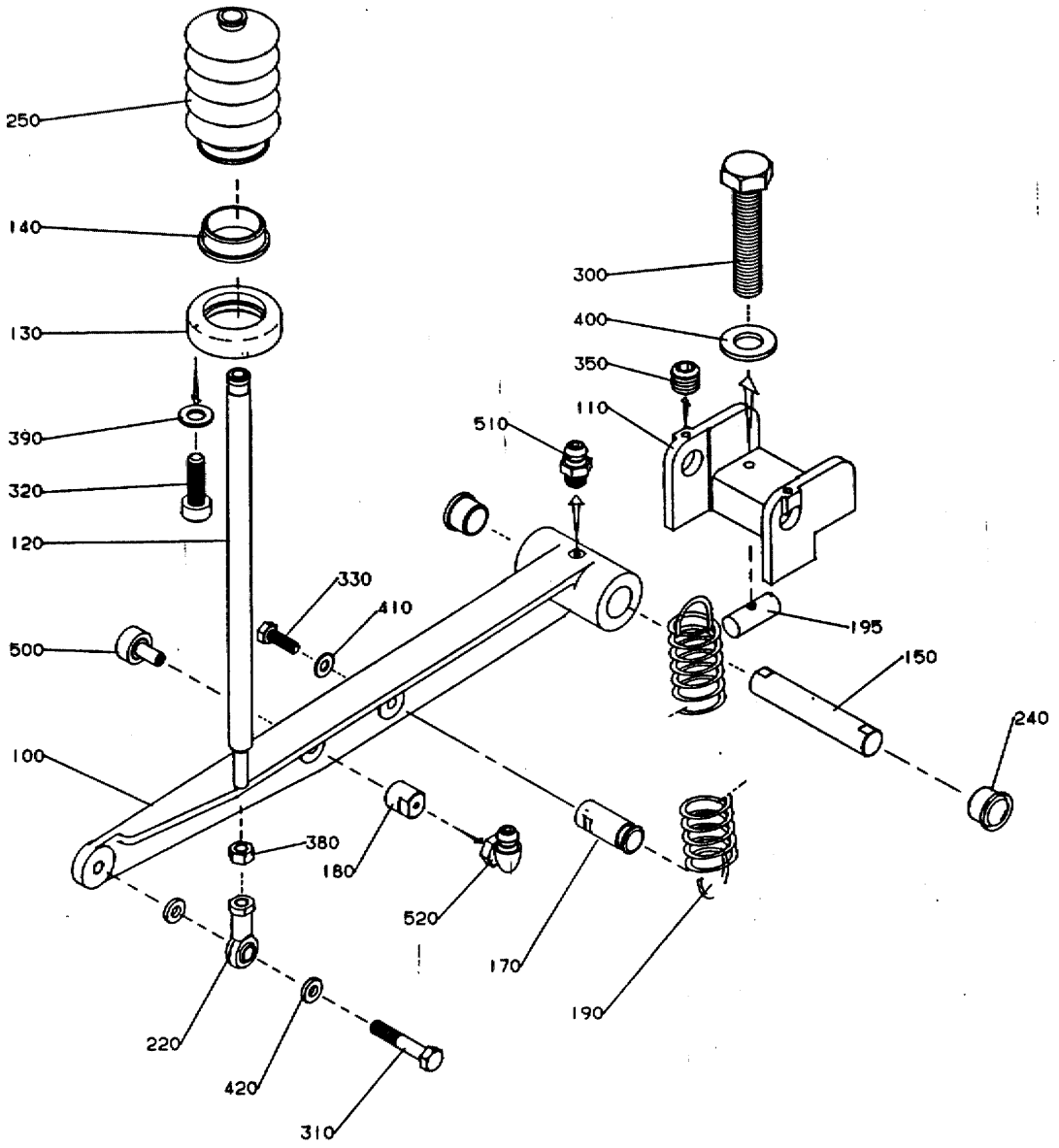

GraphicID: 102100902.eps
Parent Drw: 1021009-2
ECN 19307

Pos	Part No	SP	UN	Qty	Description	Page No
-						
000	C-1021009-0101	-		1	FOLDING FLAP	
100	G- 556656	-		1	ARM	
110	G- 556657	-		1	HOLDER	
120	1021010	-		1	LINK ARM	
130	1021011	-		1	CLAMP RING	
140	1021012	-		1	RING	
150	1021004	-		1	SHAFT	
170	1021014	-		1	SPRING BRACKET	
180	1021008	-		1	NIPPLE	
190	1021595	S		1	TENSION SPRING	
195	486268	-		2	NUT	
220	90115-0028	P		1	LINK HEAD	
240	90240-0203	P		2	PLAIN BEARING	
250	90342-0016	C		1	BELLOWS	
300	312105-0459	-		2	SCREW O4017 M8X40A280	
310	312105-0545	-		1	SCREW M6S12X65RFR	
320	312115-0329	-		3	SCREW O4762 M5X16A280	
330	312105-0495	-		1	SCREW 4017 M10X30A280	
350	312318-0443	-		2	STOP SCREW SK6SS8X8RFR	
380	312902-0322	-		1	NUT M6M12VRFR	
390	315105-0146	-		3	WASHER BRB5,3X10RFR	
400	315105-0165	-		2	WASHER BRB8,4X16RFR	
410	315105-0173	-		2	WASHER BRB10,5X22RFR	
420	315105-0178	-		2	WASHER BRB13X24RFR	
500	321582-0165	S		1	CURVE ROLLKR30PP	
510	344502-0021	-		1	NIPPLE L AHM6	
520	344502-0061	-		1	NIPPLE L M6AL.	

Pos	Part No	SP	UN	Qty	Description	Page No

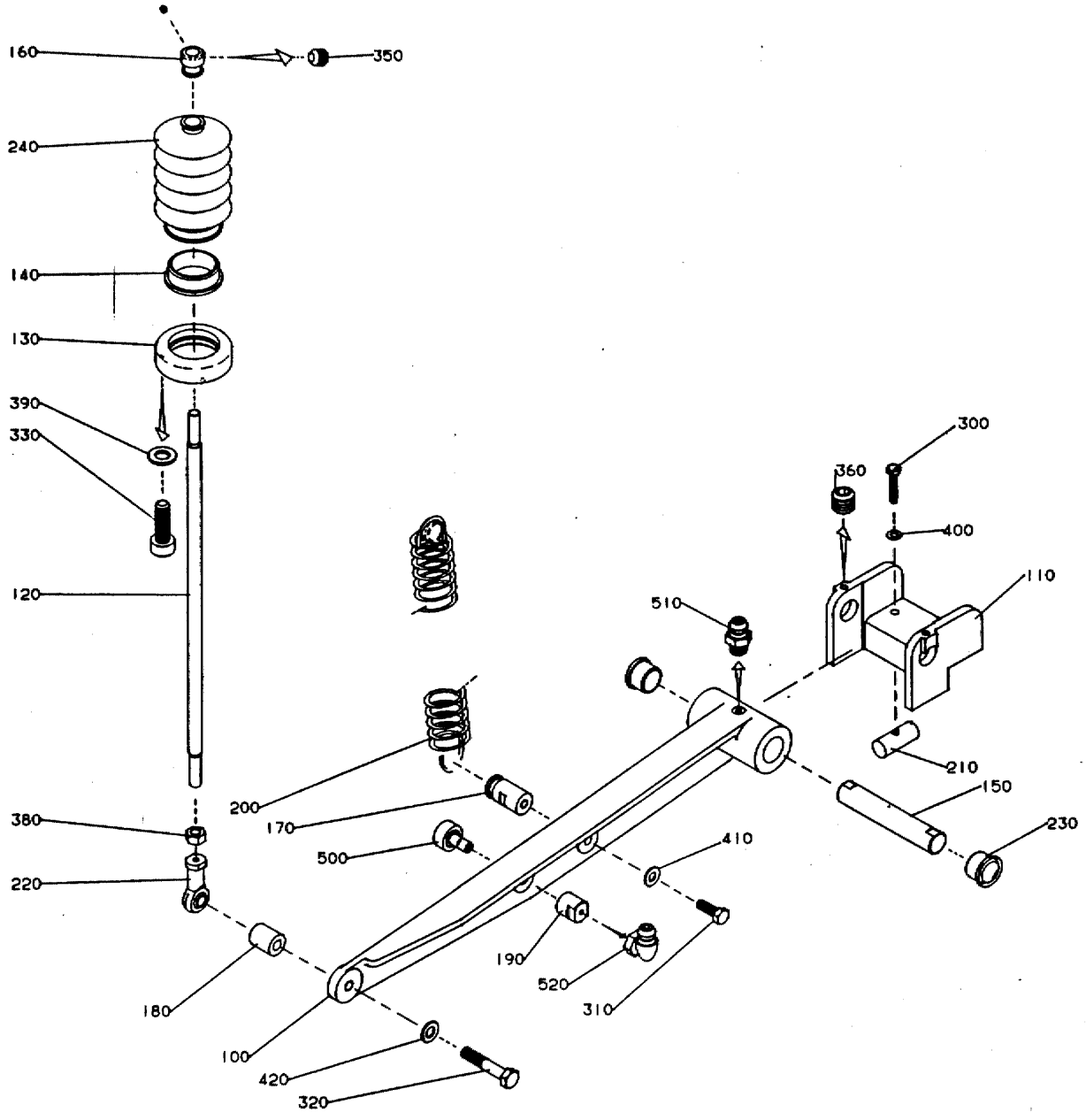

GraphicID: 102101501.eps
Parent Drw: 1021015-1
ECN 19307

Pos	Part No	SP	UN	Qty	Description	Page No
-						
000	C-1021015-0101	-		1	SQUEEZER	
100	G- 556656	-		1	ARM	
110	G- 556657	-		1	HOLDER	
120	1021020	-		1	LINK ARM	
130	1021011	-		1	CLAMP RING	
140	1021012	-		1	RING	
150	1021004	-		1	SHAFT	
160	1021021	-		1	BUSHING	
170	1021018	-		1	SPRING BRACKET	
180	1021017	-		1	WASHER	
190	1021008	-		1	NIPPLE	
200	1021595	S		1	TENSION SPRING	
210	486268	-		2	NUT	
220	90115-0028	P		1	LINK HEAD	
230	90240-0203	P		2	PLAIN BEARING	
240	90342-0016	C		1	BELLOWS	
300	312105-0459	-		2	SCREW O4017 M8X40A280	
310	312105-0495	-		1	SCREW 4017 M10X30A280	
320	312105-0545	-		1	SCREW M6S12X65RFR	
330	312105-0329	-		3	SCREW O4017 M5X16A280	
350	312318-0360	-		2	STOP SCREW SK6SS6X6RFR	
360	312318-0443	-		2	STOP SCREW SK6SS8X8RFR	
380	312902-0322	-		1	NUT M6M12VRFR	
390	315105-0146	-		3	WASHER BRB5,3X10RFR	
400	315105-0165	-		2	WASHER BRB8,4X16RFR	
410	315105-0173	-		1	WASHER BRB10,5X22RFR	
420	315105-0178	-		1	WASHER BRB13X24RFR	
500	321582-0165	S		1	CURVE ROLLKR30PP	
510	344502-0021	-		1	NIPPLE L AHM6	
520	344502-0061	-		1	NIPPLE L M6AL.	

Pos	Part No	SP	UN	Qty	Description	Page No

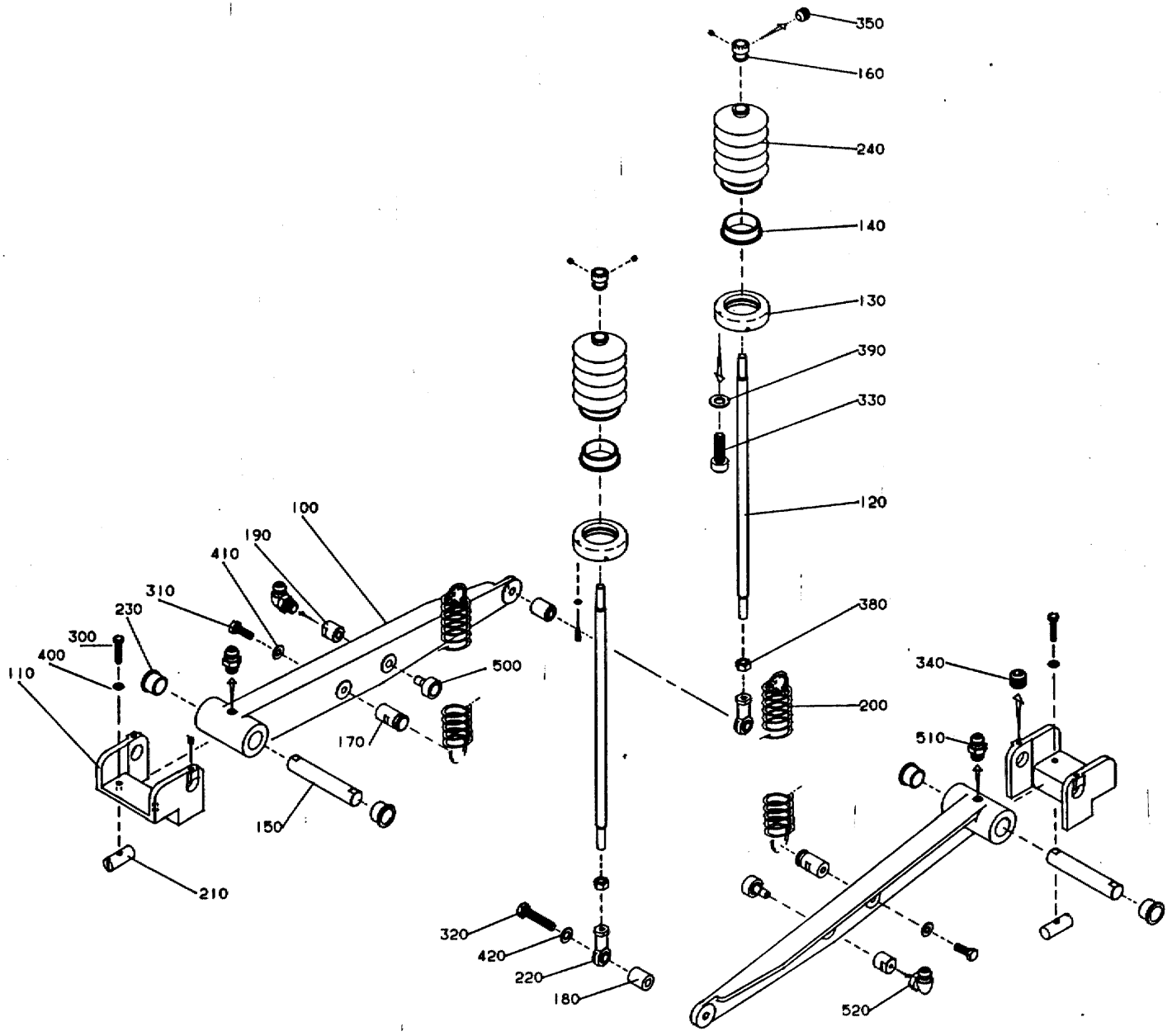

GraphicID: 102101901.eps
Parent Drw: 10211019-1
ECN 19307

Pos	Part No	SP	UN	Qty	Description	Page No
000	C-1021019-0101	-		1	FLAP FOLDER	
100	G- 556656	-		2	ARM	
110	G- 556657	-		2	HOLDER	
120	1021020	-		2	LINK ARM	
130	1021011	-		2	CLAMP RING	
140	1021012	-		2	RING	
150	1021004	-		2	SHAFT	
160	1021021	-		2	BUSHING	
170	1021018	-		2	SPRING BRACKET	
180	1021017	-		2	WASHER	
190	1021008	-		2	NIPPLE	
200	1021595	S		2	TENSION SPRING	
210	486268	-		4	NUT	
220	90115-0028	P		2	LINK HEAD	
230	90240-0203	P		4	PLAIN BEARING	
240	90342-0016	C		2	BELLOWS	
300	312105-0459	-		4	SCREW O4017 M8X40A280	
310	312105-0495	-		1	SCREW 4017 M10X30A280	
320	312105-0545	-		2	SCREW M6S12X65RFR	
330	312115-0329	-		6	SCREW O4762 M5X16A280	
340	312318-0443	-		4	STOP SCREW SK6SS8X8RFR	
350	312318-0360	-		4	STOP SCREW SK6SS6X6RFR	
380	312902-0322	-		2	NUT M6M12VRFR	
390	315105-0146	-		6	WASHER BRB5,3X10RFR	
400	315105-0165	-		4	WASHER BRB8,4X16RFR	
410	315105-0173	-		2	WASHER BRB10,5X22RFR	
420	315105-0178	-		2	WASHER BRB13X24RFR	
500	321582-0165	S		2	CURVE ROLLKR30PP	
510	344502-0021	-		2	NIPPLE L AHM6	
520	344502-0061	-		2	NIPPLE L M6AL.	

Pos	Part No	SP	UN	Qty	Description	Page No

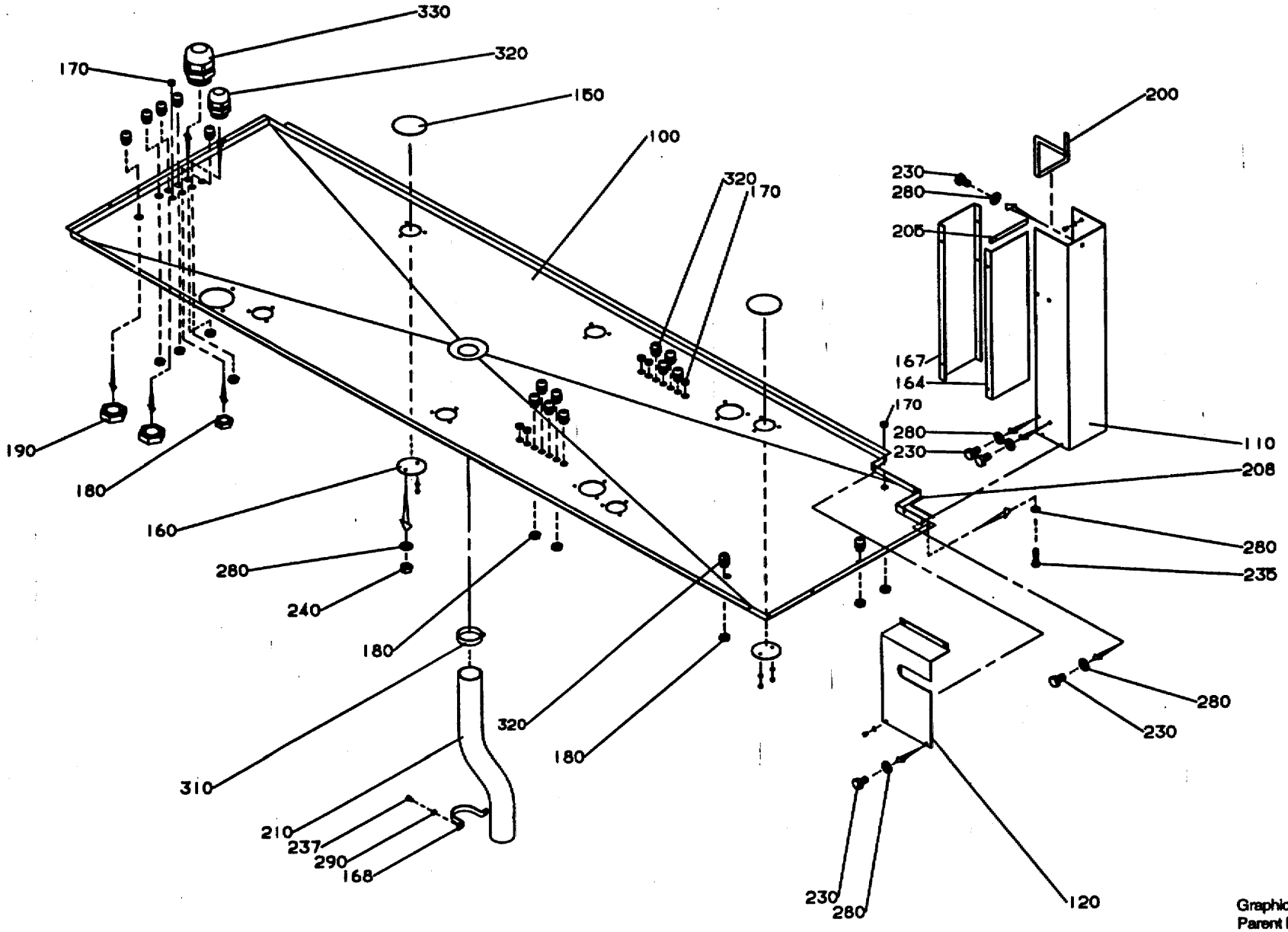

GraphicID: 102102303.eps
Parent Drw: 1021023-3
ECN 23175

Pos	Part No	SP	UN	Qty	Description	Page No
-						
000	C-1021023-0301	-		1	COVERING PLATE	
100	1139119	-		1	COVERING PLATE	
110	1139120	-		1	CABLE TRENCH	
120	1139121	-		1	CHAIN GUARD	
150	1021025	-		2	COVER DISC	
160	1021026	-		2	COVER DISC	
164	1139122	-		1	SHEET	
167	1139123	-		1	SHEET	
168	1139125	-		1	HOLDER	
170	90002-0013	-		7	BLANK-OFF PLUG 15,2	
180	90099-0104	-		21	NUT PR 15,2 (PG9)	
190	90099-0117	-		5	NUT PR18,6 (PG11)	
200	90143-0060	-	MM	535	STRIP	
205	90143-0060	-	MM	125	STRIP	
208	90157-0022	-		X	SEALING COMPOUND	
210	1139124	-		1	HOSE	
230	312105-0323	-		12	SCREW O4017 M5X8A280	
235	312105-0331	-		4	SCREW O4017 M5X20A280	
237	312105-0366	-		2	SCREW O4017 M6X12A280	
240	312605-0314	-		4	NUT M6M5RFR	
280	315105-0146	-		20	WASHER BRB5,3X10RFR	
290	315105-0153	-		2	WASHER BRB6,4X12RFR	
310	342991-0110	-		1	HOSE CLIP 50-65MMRFR	
320	352103-0101	-		14	CABLE GLAND ST 9	
330	352103-0106	-		5	CABLE GLAND ST 11	

Pos	Part No	SP	UN	Qty	Description	Page No

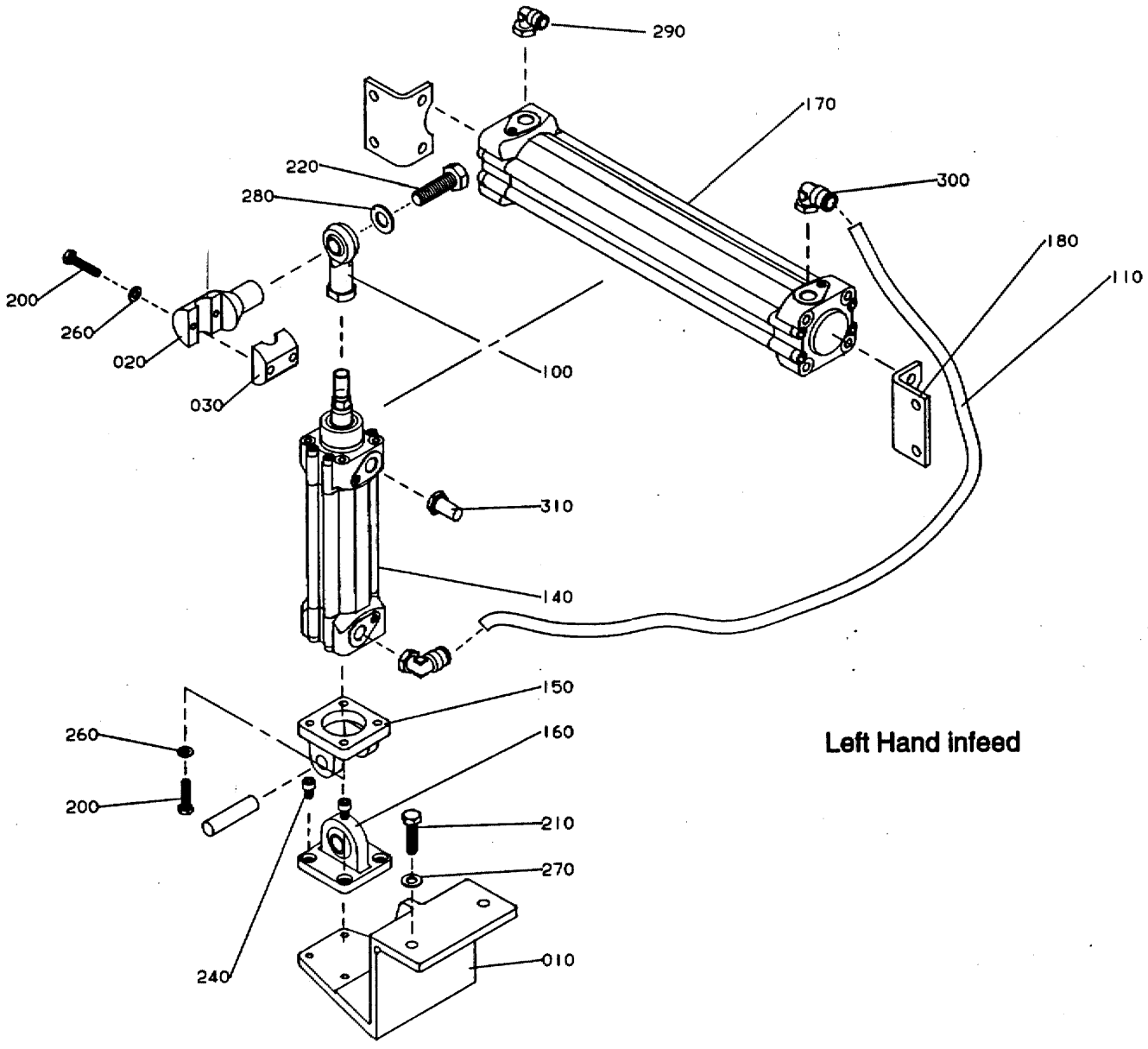

Left Hand infeed

GraphicID: 102140401.eps
Parent Drw: 1021404-1
ECN 20435

Pos	Part No	SP	UN	Qty	Description	Page No
000	C-1021404-0101	-		1	PNEUMATIC CUSHIONING	
010	G-1021592	-		1	HOLDER	
020	1021593	-		1	BRACKET	
030	1021594	-		1	YOKE	
100	90450-0708	-		1	BALL JOINT COUPLING	
110	90166-0160	-	MM	250	HOSE	
140	90450-0190	-		1	CYLINDER	
150	90450-0667	-		1	BRACKET	
160	90450-0683	-		1	BRACKET	
170	90450-0201	-		1	AIR RECEIVER	
180	90450-0682	-		2	BRACKET	
200	312105-0372	-		6	SCREW O4017 M6X25A280	
210	312105-0459	-		2	SCREW O4017 M8X40A280	
220	312105-0540	-		1	SCREW 4017 M12X40A280	
240	312115-0364	-		4	SCREW 6X10 A4 80	
260	315105-0153	-		6	WASHER BRB6,4X12RFR	
270	315105-0165	-		2	WASHER BRB8,4X16RFR	
280	315105-0178	-		1	WASHER BRB13X24RFR	
290	342732-0104	-		1	ELBOW PIPE D8-R1/4"	
300	342732-0113	-		2	ELBOW PIPE 10-1/4	
310	346800-0110	-		1	SILENCER FILTER R1/4"	

Pos	Part No	SP	UN	Qty	Description	Page No

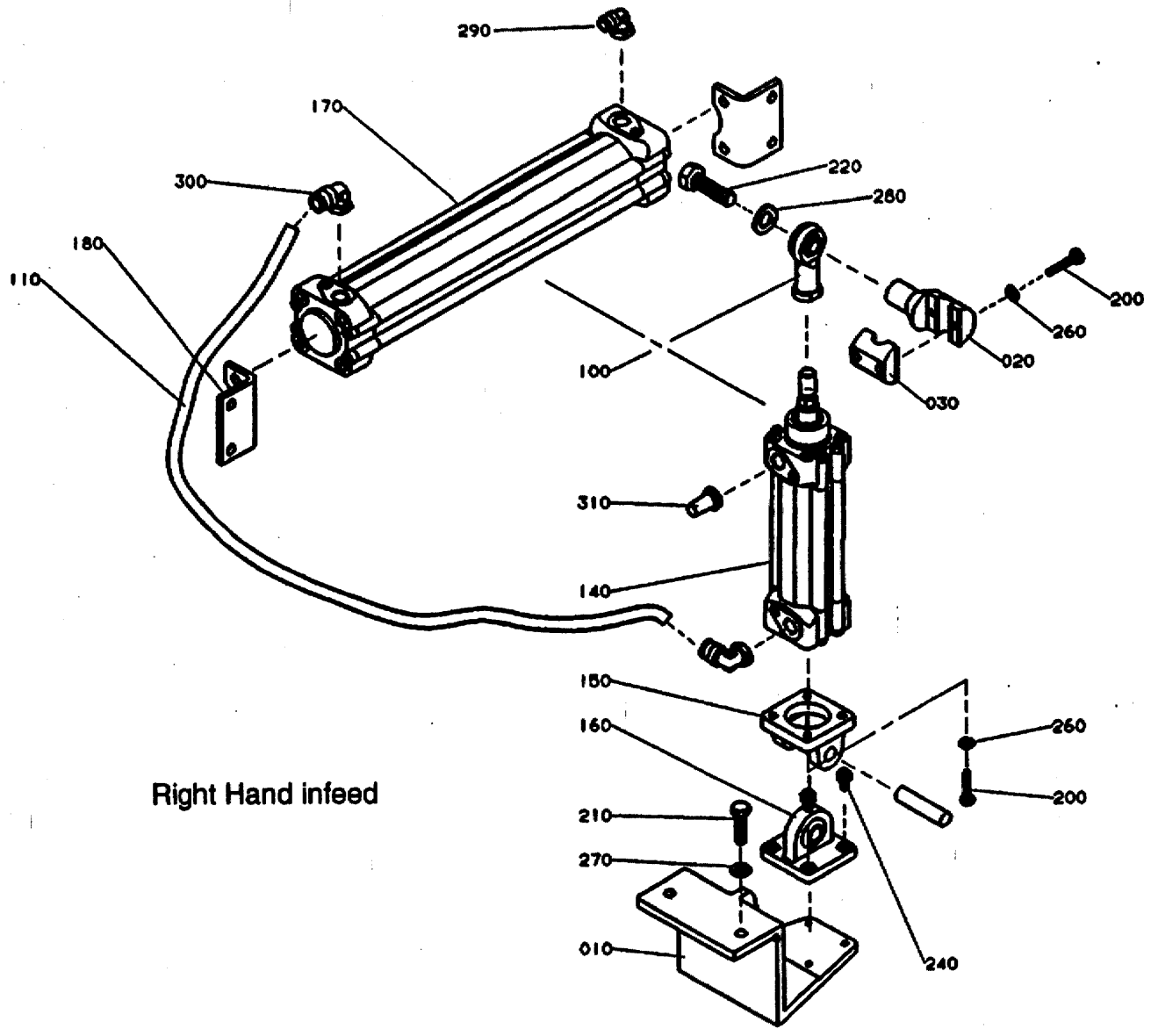

Right Hand infeed

GraphicID: 102140402.tif
Parent Drw: 1021404-2
ECN No: 20435

Pos	Part No	SP	UN	Qty	Description	Page No
-						
000	C-1021404-0101	-		1	PNEUMATIC CUSHIONING	
010	G-1021592	-		1	HOLDER	
020	1021593	-		1	BRACKET	
030	1021594	-		1	YOKE	
100	90450-0708	-		1	BALL JOINT COUPLING	
110	90166-0160	-	MM	250	HOSE	
140	90450-0190	-		1	CYLINDER	
150	90450-0667	-		1	BRACKET	
160	90450-0683	-		1	BRACKET	
170	90450-0201	-		1	AIR RECEIVER	
180	90450-0682	-		2	BRACKET	
200	312105-0372	-		6	SCREW O4017 M6X25A280	
210	312105-0459	-		2	SCREW O4017 M8X40A280	
220	312105-0540	-		1	SCREW 4017 M12X40A280	
240	312115-0364	-		4	SCREW 6X10 A4 80	
260	315105-0153	-		6	WASHER BRB6,4X12RFR	
270	315105-0165	-		2	WASHER BRB8,4X16RFR	
280	315105-0178	-		1	WASHER BRB13X24RFR	
290	342732-0104	-		1	ELBOW PIPE D8-R1/4"	
300	342732-0113	-		2	ELBOW PIPE 10-1/4	
310	346800-0110	-		1	SILENCER FILTER R1/4"	

Pos	Part No	SP	UN	Qty	Description	Page No

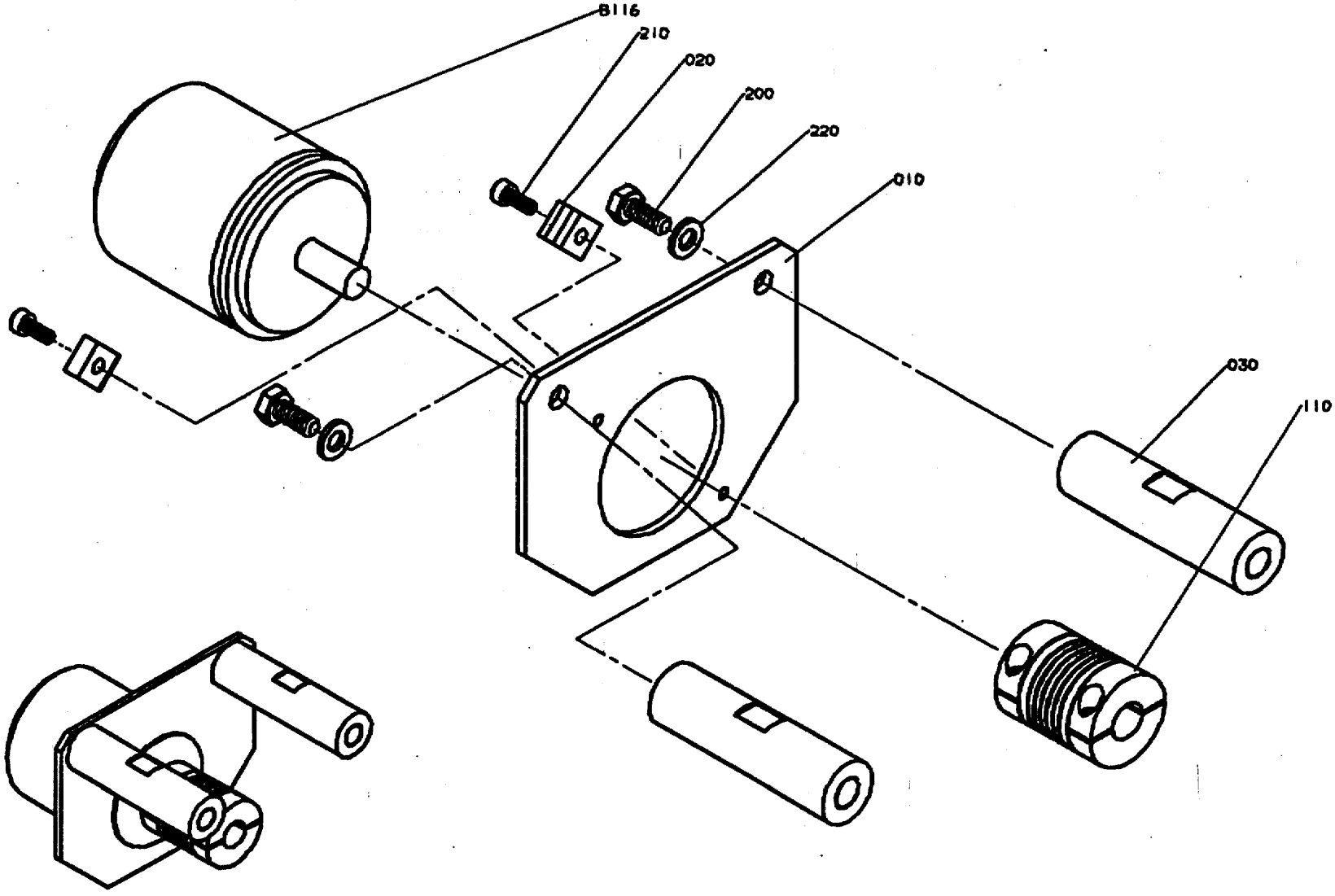

GraphicID: 102198202.tif
Parent Drw: 1021982-2
ECN No: 22292

Pos	Part No	SP	UN	Qty	Description	Page No
000	C-1021982-0201	-		1	ANGLE ENCODER	
010	1021983	-		1	MOUNTING SHEET	
020	532889	-		2	CLAMPING PIECE	
030	1021984	-		2	SPACER	
110	90355-0031	-		1	FLEXIBLE COUPLING	
200	312105-0367	-		2	SCREW M6S6X14RFR	
210	312115-0289	-		2	SCREW S4X10 A4 80	
220	315105-0153	-		2	WASHER BRB6,4X12RFR	
B116	90061-0018	-		1	ANGLE ENCODER 8BIT GRAY	

Pos	Part No	SP	UN	Qty	Description	Page No

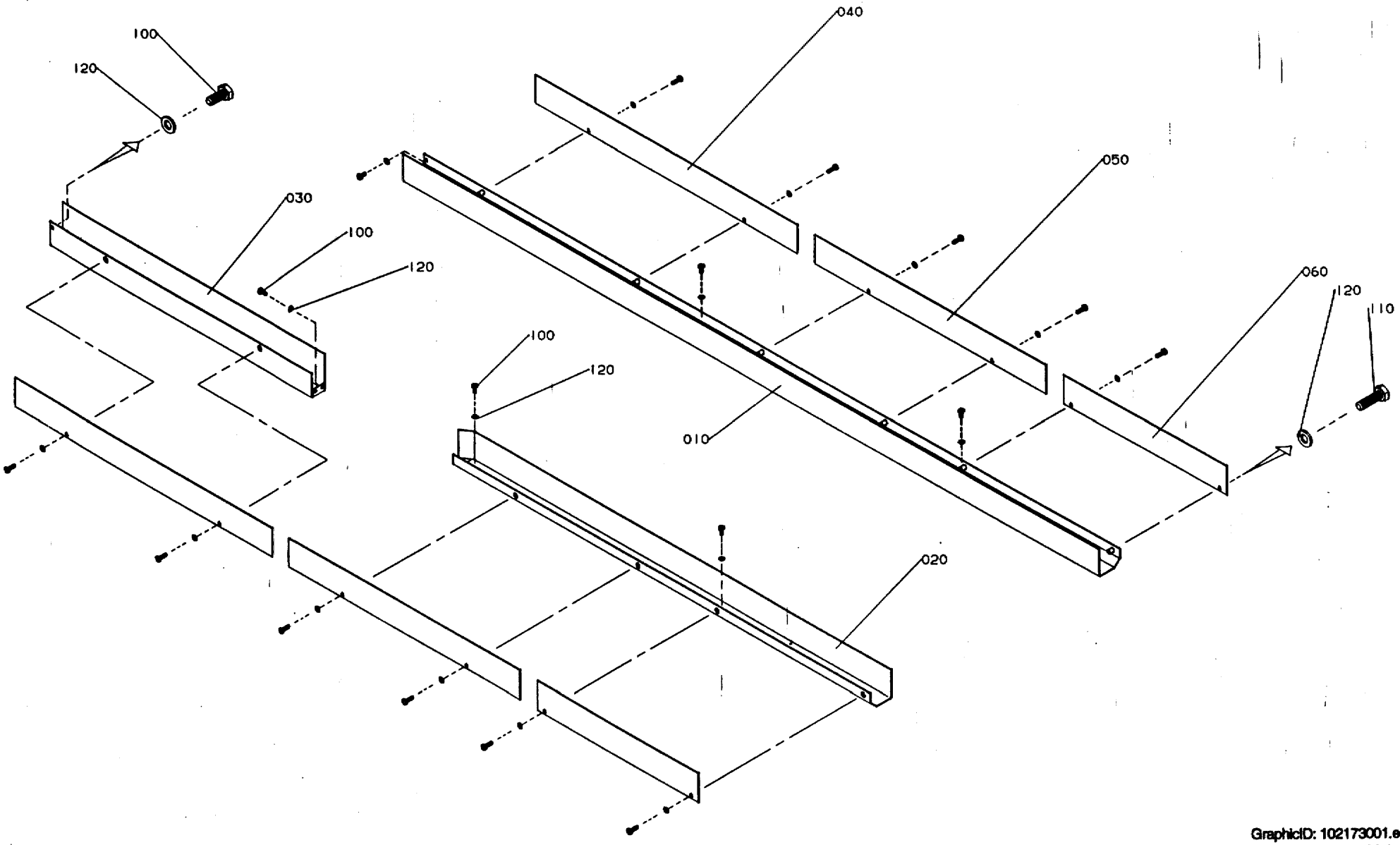

GraphicID: 102173001.eps
Parent Drw: 1021730-1
ECN 16567

Pos	Part No	SP	UN	Qty	Description	Page No
-						
000	C-1021730-0101	-		1	CABLE DUCT	
010	1021349	-		1	CABLE TRENCH	
020	1021350	-		1	CABLE TRENCH	
030	1021351	-		1	CABLE TRENCH	
040	1021390	-		2	LID	
050	1021391	-		2	LID	
060	1021392	-		2	LID	
100	312105-0367	-		12	SCREW M6S6X14RFR	
110	312105-0370	-		8	SCREW O4017 M6X20A280	
120	315105-0153	-		20	WASHER BRB6,4X12RFR	

Pos	Part No	SP	UN	Qty	Description	Page No

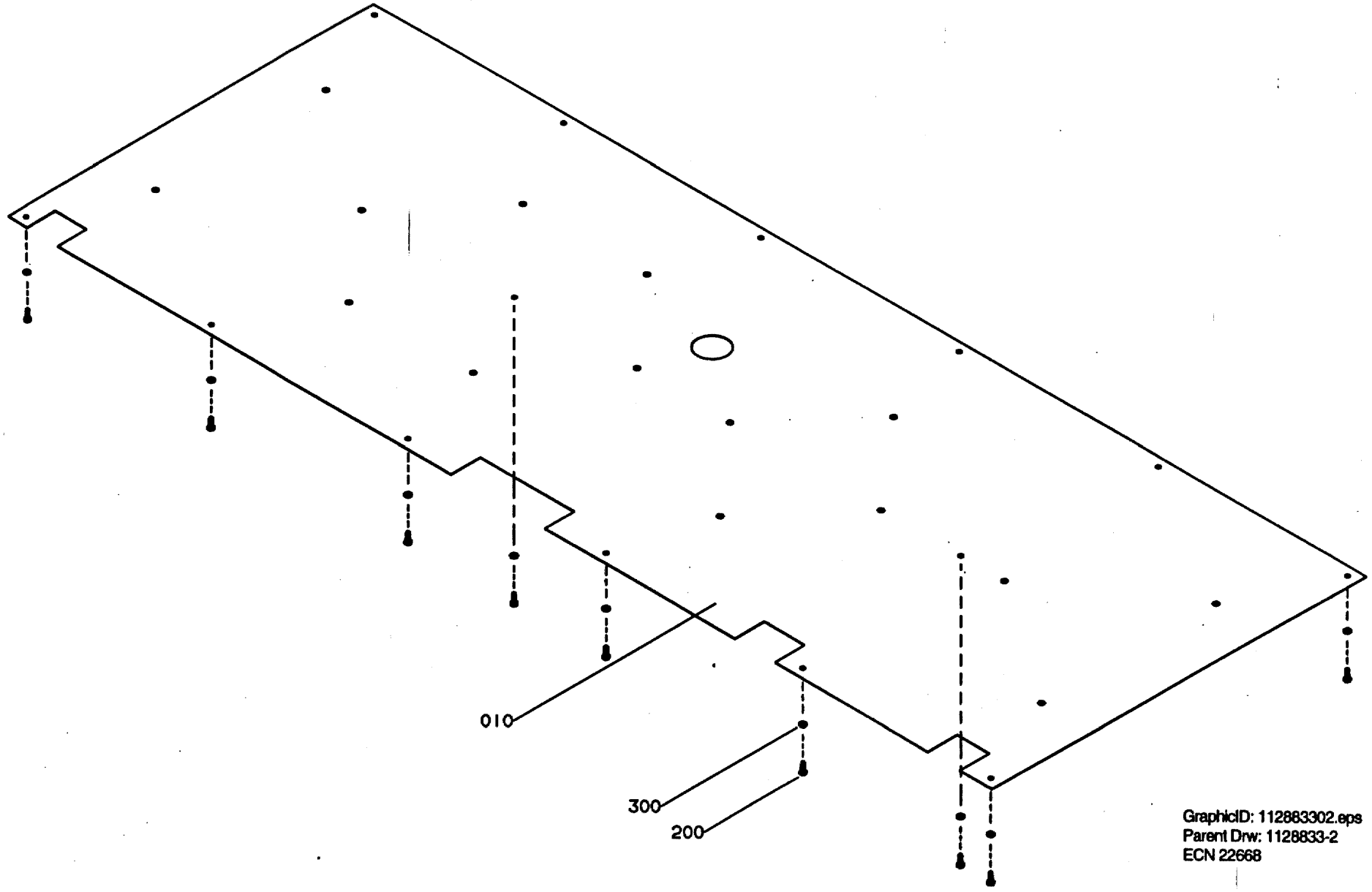

GraphicID: 112883302.eps
Parent Drw: 1128833-2
ECN 22668

Pos	Part No	SP	UN	Qty	Description	Page No
-						
000	C-1128833-0201	-		1	COVERING PLATE	
010	1139126	-		1	SHEET	
200	312105-0368	-		14	SCREW O4017 M6X16A280	
300	315105-0153	-		14	WASHER BRB6,4X12RFR	

Pos	Part No	SP	UN	Qty	Description	Page No

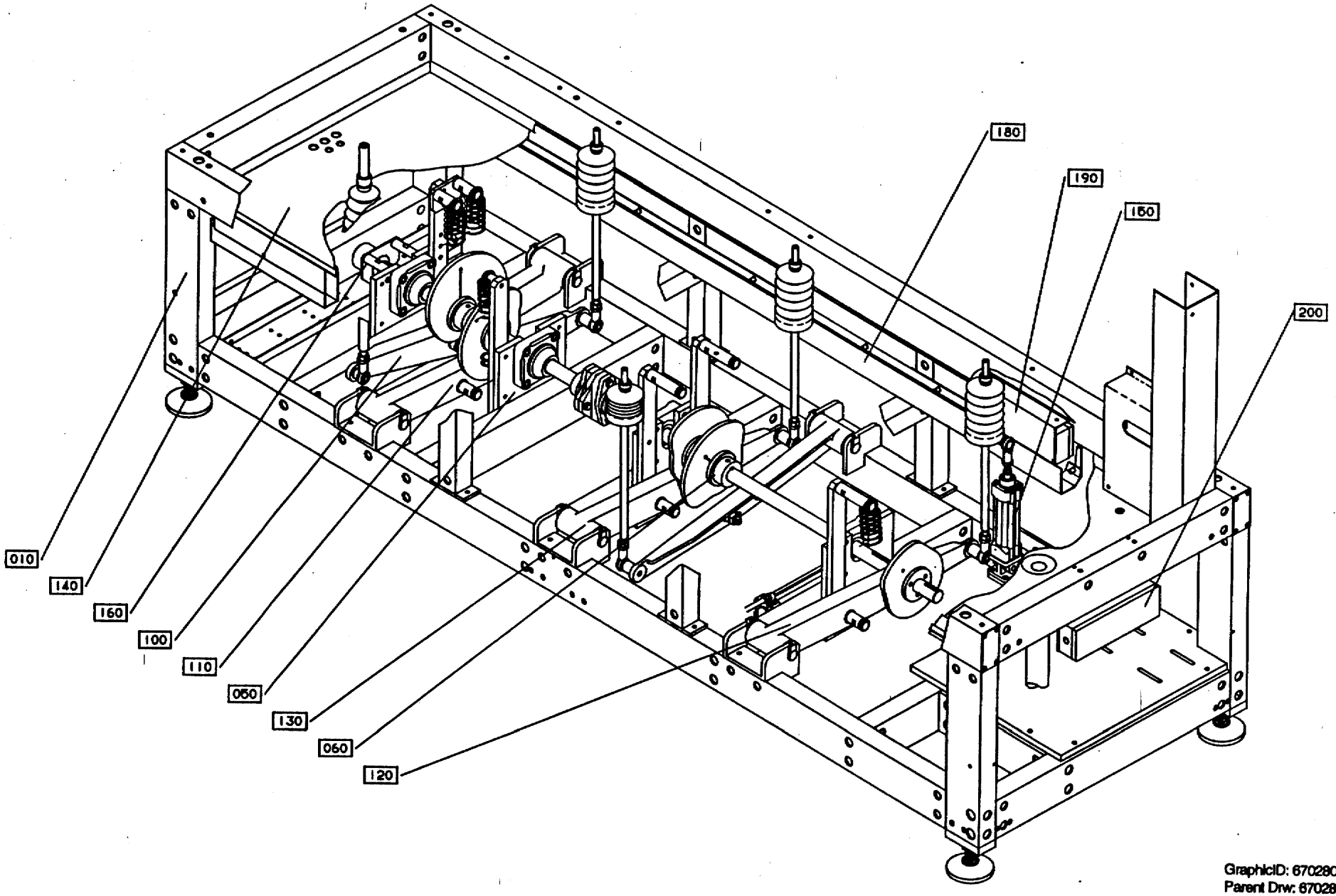

GraphicID: 6702800101.eps
Parent Drw: 670280-1
ECN 19307

Pos	Part No	SP	UN	Qty	Description	Page No
000	B- 670282-0301	-		1	DRIVE UNIT	
010	C- 556625-0301	-		1	MOTOR MAINSHAFT	61
050	C- 556636-0201	-		1	ANGLE ENCODER	63
080	C- 556626-0301	-		1	MOTOR FEEDING	65
090	C-1021996-0301	-		1	SAFETY CLUTCH	67

Pos	Part No	SP	UN	Qty	Description	Page No

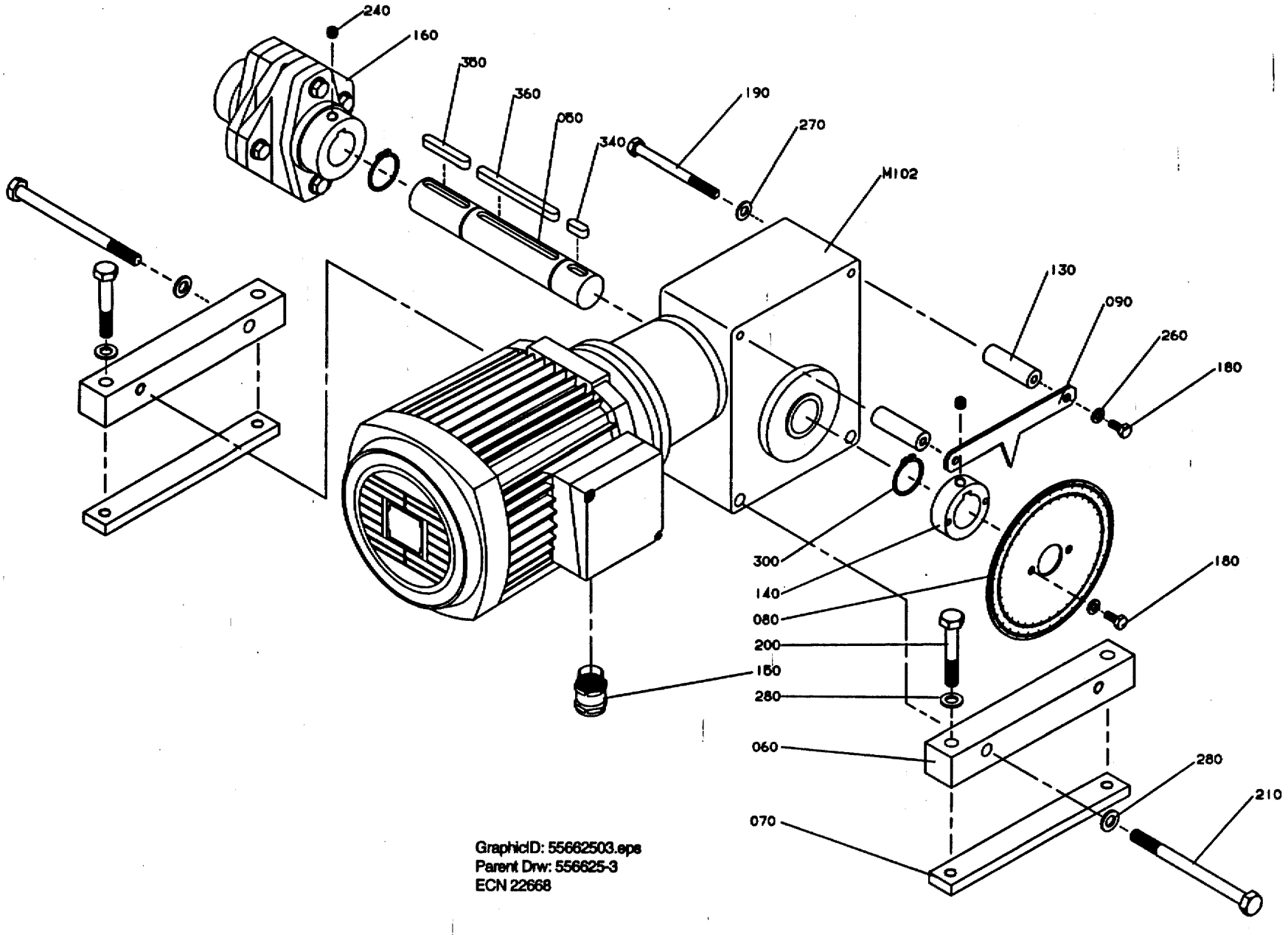

GraphicID: 55662503.eps
Parent Drw: 556625-3
ECN 22668

Pos	Part No	SP	UN	Qty	Description	Page No
000	C- 556625-0301	-		1	MOTOR MAINSHAFT	
050	1128878	-		1	SHAFT	
060	556629	-		2	BRACKET	
070	556630	-		2	LOCK RAIL	
080	1021598	-		1	PROTRACTOR	
090	1021599	-		1	ARROW	
130	556638	-		2	SPACER	
140	1021597	-		1	HUB	
150	90012-0118	-		1	GLAND FITTING	
160	90355-0115	-		1	CONNECTION	
180	312105-0367	-		4	SCREW M6S6X14RFR	
190	312105-0469	-		2	SCREW O4014 M8X90A280	
200	312105-0503	-		4	SCREW 4014 M10X60A280	
210	312105-0517	-		2	SCREW 014 M10X130A280	
240	312318-0443	-		2	STOP SCREW SK6SS8X8RFR	
260	315105-0153	-		4	WASHER BRB6,4X12RFR	
270	315105-0165	-		2	WASHER BRB8,4X16RFR	
280	315105-0171	-		6	WASHER BRB10X18RFR	
300	315751-0122	-		2	CIRCLIP SGA30 RFR	
340	315701-0263	-		1	FLAT WEDGE8X7X20	
350	315701-0272	-		1	FLAT WEDGE8X7X50	
360	315701-0278	-		1	FLAT WEDGE8X7X90	
M102	90069-0266	C		1	WORM GEAR MOTOR	

Pos	Part No	SP	UN	Qty	Description	Page No

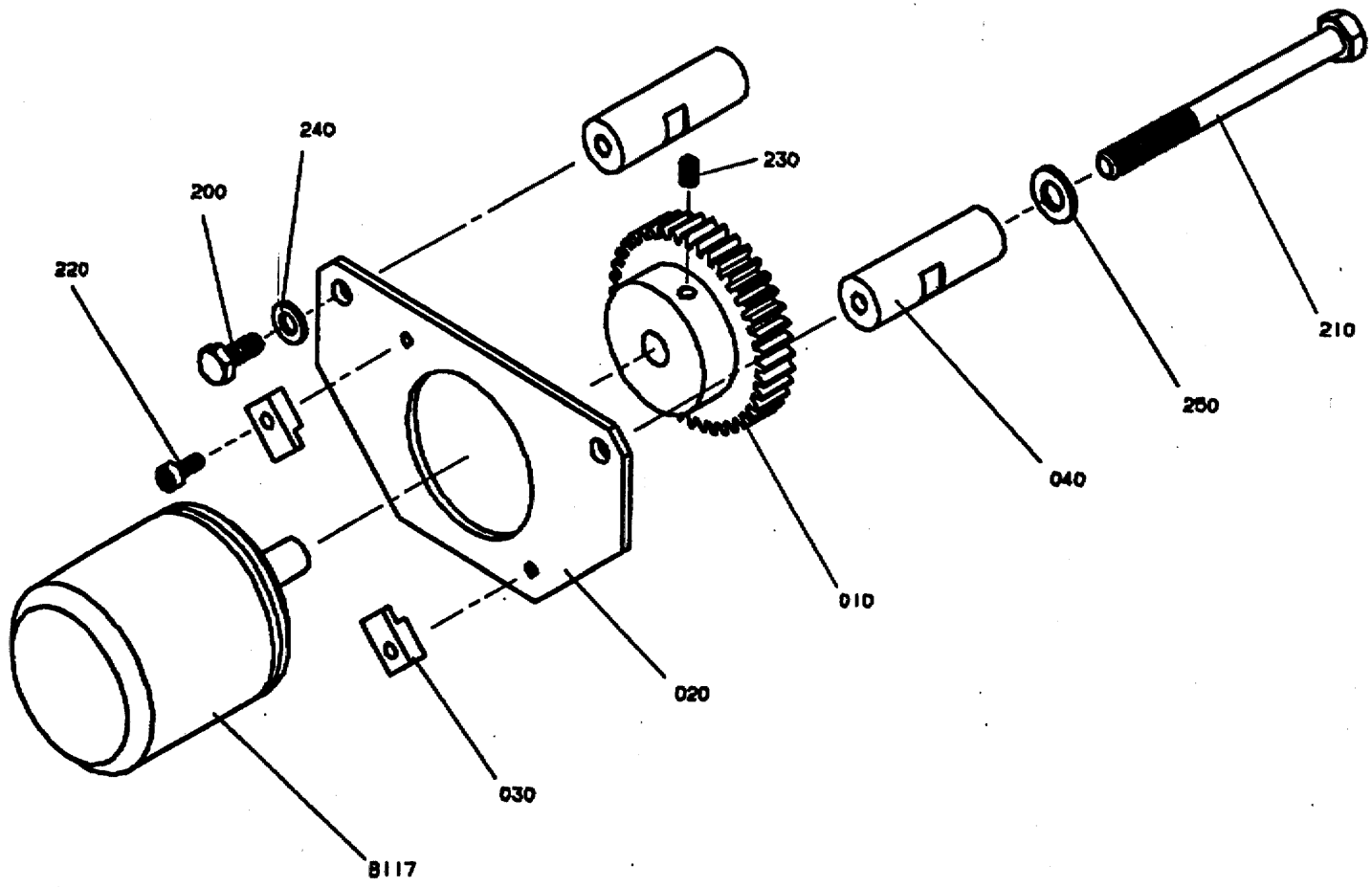

GraphicID: 55663602.tif
Parent Drw: 556636-2
ECN No: 22292

Pos	Part No	SP	UN	Qty	Description	Page No
-						
000	C- 556636-0201	-		1	ANGLE ENCODER	
010	959179	-		1	GEAR WHEEL Z=40	
020	556637	-		1	MOUNTING SHEET	
030	532889	-		2	CLAMPING PIECE	
040	556638	-		2	SPACER	
200	312105-0367	-		2	SCREW M6S6X14RFR	
210	312105-0469	-		2	SCREW O4014 M8X90A280	
220	312115-0289	-		2	SCREW S4X10 A4 80	
230	312318-0323	-		1	STOP SCREW SK6SS5X8RFR	
240	315105-0153	-		2	WASHER BRB6,4X12RFR	
250	315105-0165	-		2	WASHER BRB8,4X16RFR	
B117	90061-0018	-		1	ANGLE ENCODER 8BIT GRAY	

Pos	Part No	SP	UN	Qty	Description	Page No

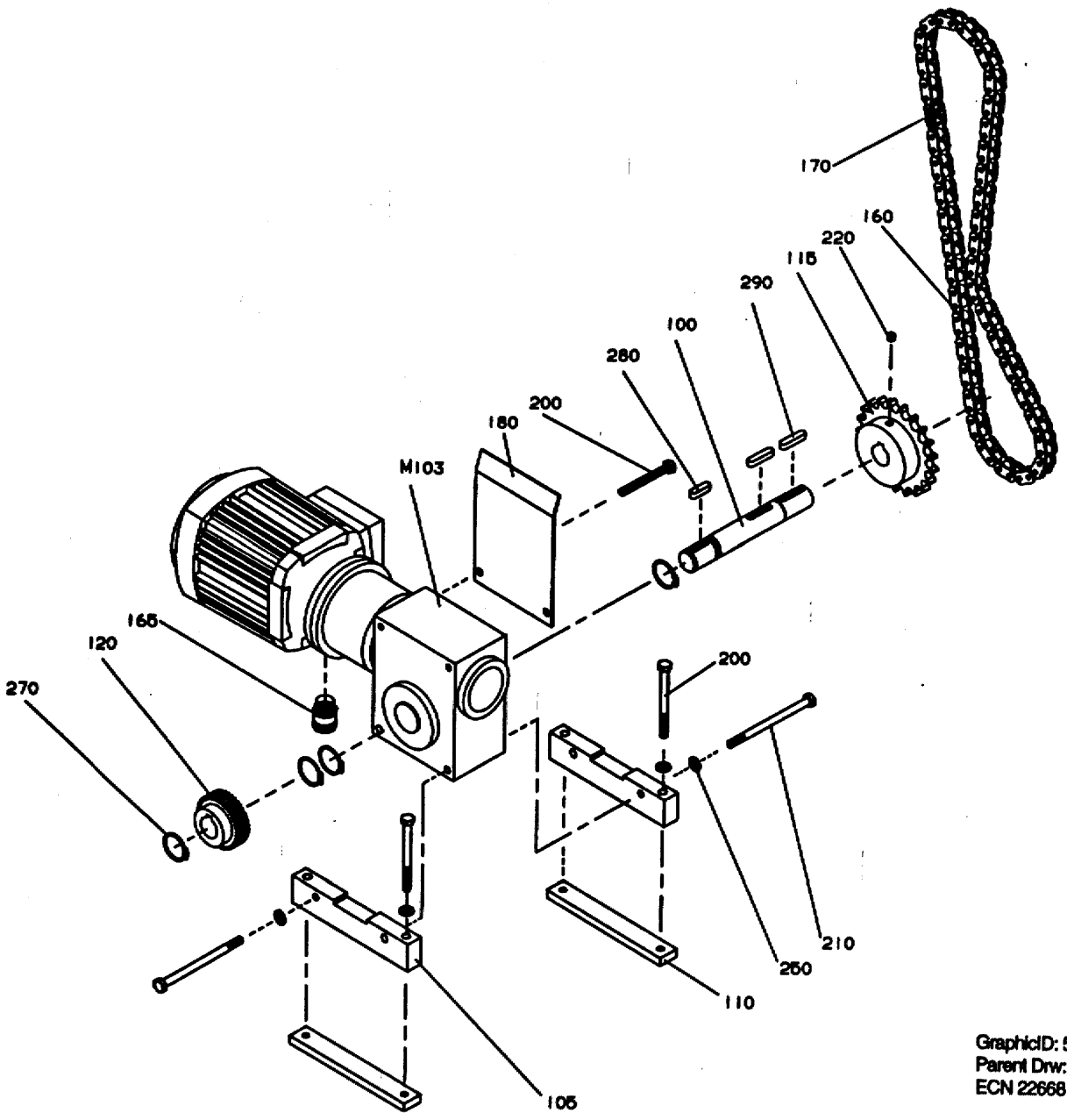

GraphicID: 55662603.eps
Parent Drw: 556626-3
ECN 22668

Pos	Part No	SP	UN	Qty	Description	Page No
-						
000	C- 556626-0301	-		1	MOTOR FEEDING	
100	556631	-		1	SHAFT	
105	556632	-		2	BRACKET	
110	556633	-		2	LOCK RAIL	
115	1021324	-		1	SPROCKET	
120	556635	-		1	GEAR WHEEL	
160	1021998	C		1	CHAIN	
165	90012-0118	-		1	GLAND FITTING	
170	90288-0333	C		1	CONNECTION LINK	
180	1021915	-		1	SHEET	
200	312105-0465	-		4	SCREW O4014 M8X70A280	
210	312105-0475	-		2	SCREW 4014 M8X120A280	
220	312318-0443	-		1	STOP SCREW SK6SS8X8RFR	
250	315105-0165	-		6	WASHER BRB8,4X16RFR	
270	315751-0119	-		4	CIRCLIP SGA25 RFR	
280	315701-0266	-		1	FLAT WEDGE8X7X28	
290	315701-0801	-		2	FLAT WEDGE8X7X36	
M103	90069-0267	C		1	WORM GEAR MOTOR	

Pos	Part No	SP	UN	Qty	Description	Page No

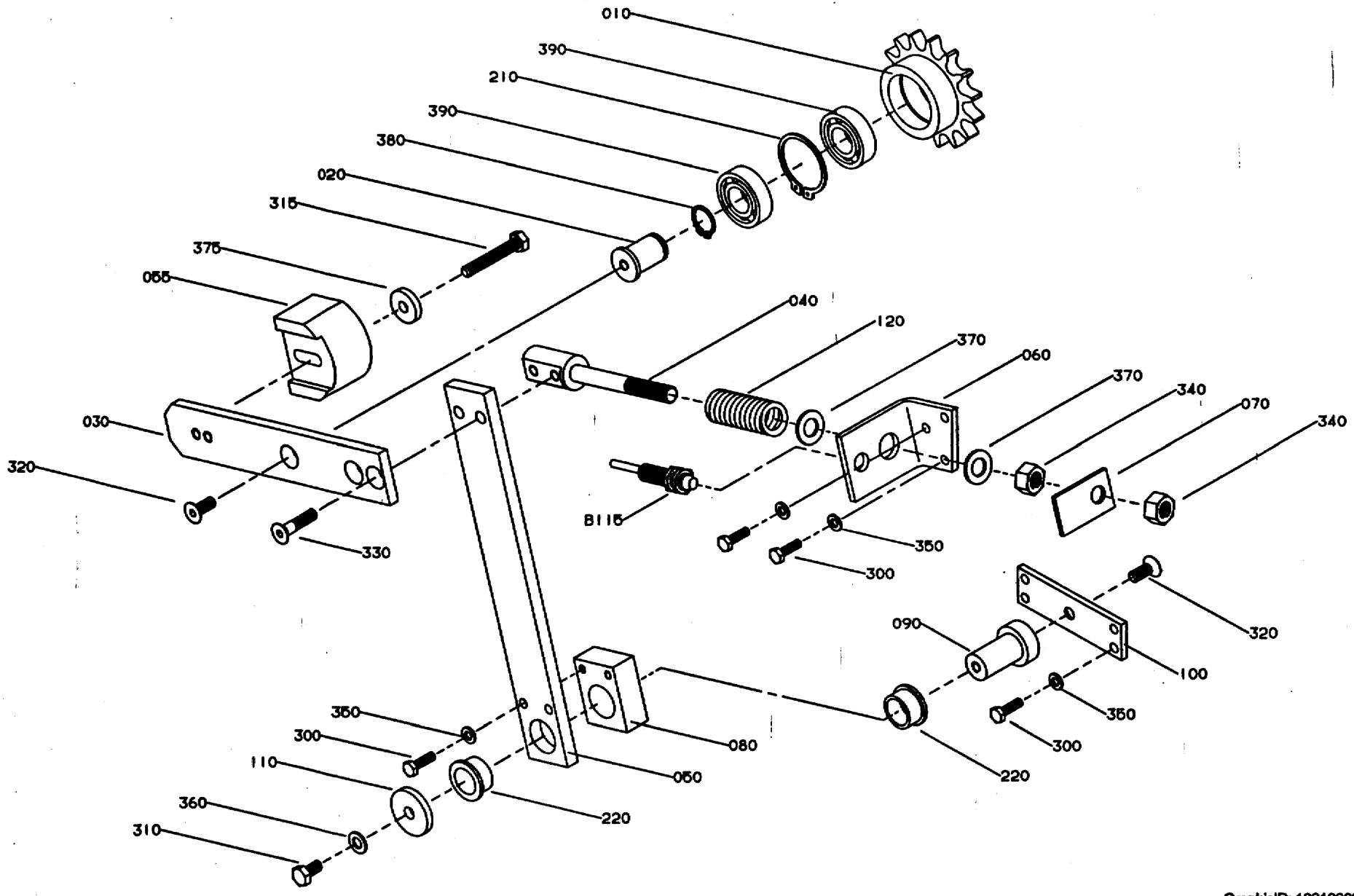

GraphicID: 102199603.eps
Parent Drw: 1021996-3
ECN 22668

Pos	Part No	SP	UN	Qty	Description	Page No
-						
000	C-1021996-0301	-		1	SAFETY CLUTCH	
010	1065841	-		1	SPROCKET Z=15	
020	1065842	-		1	SHAFT	
030	1139154	-		1	HOLDER	
040	1065844	-		1	SPRING GUIDE	
050	1065847	-		1	STRUT	
055	1139155	-		1	SLIDER	
060	1065845	-		1	HOLDER	
070	1065846	-		1	FLAG	
080	1065848	-		1	BEARING HOUSING	
090	1065849	-		1	SHAFT	
100	1065850	-		1	HOLDER	
110	1065851	-		1	WASHER	
120	1065852	-		1	COMPRESSION SPRING	
210	90141-0020	-		1	LOCK RING	
220	90240-0221	P		2	BEARING	
300	312105-0370	-		9	SCREW O4017 M6X20A280	
310	312105-0449	-		1	SCREW O4017 M8X16A280	
315	312105-0461	-		1	SCREW O4017 M8X50A280	
320	312155-0451	-		2	SCREW MF6S8X20RFR	
330	312155-0457	-		2	SCREW MF6S8X35RFR	
340	312605-0322	-		2	NUT M6M12RFR	
350	315105-0153	-		9	WASHER BRB6,4X12RFR	
360	315105-0165	-		1	WASHER BRB8,4X16RFR	
370	315105-0178	-		2	WASHER BRB13X24RFR	
375	315125-0165	-		1	WASHER SB 8,4X26X5 RFR	
380	315751-0116	-		1	CIRCLIP SGA20 RFR	
390	321308-0204	-		2	BALL BEARISKF6004-2RS	
B115	90044-0124	S		1	INDUCTIVE SWITCH	

Pos	Part No	SP	UN	Qty	Description	Page No

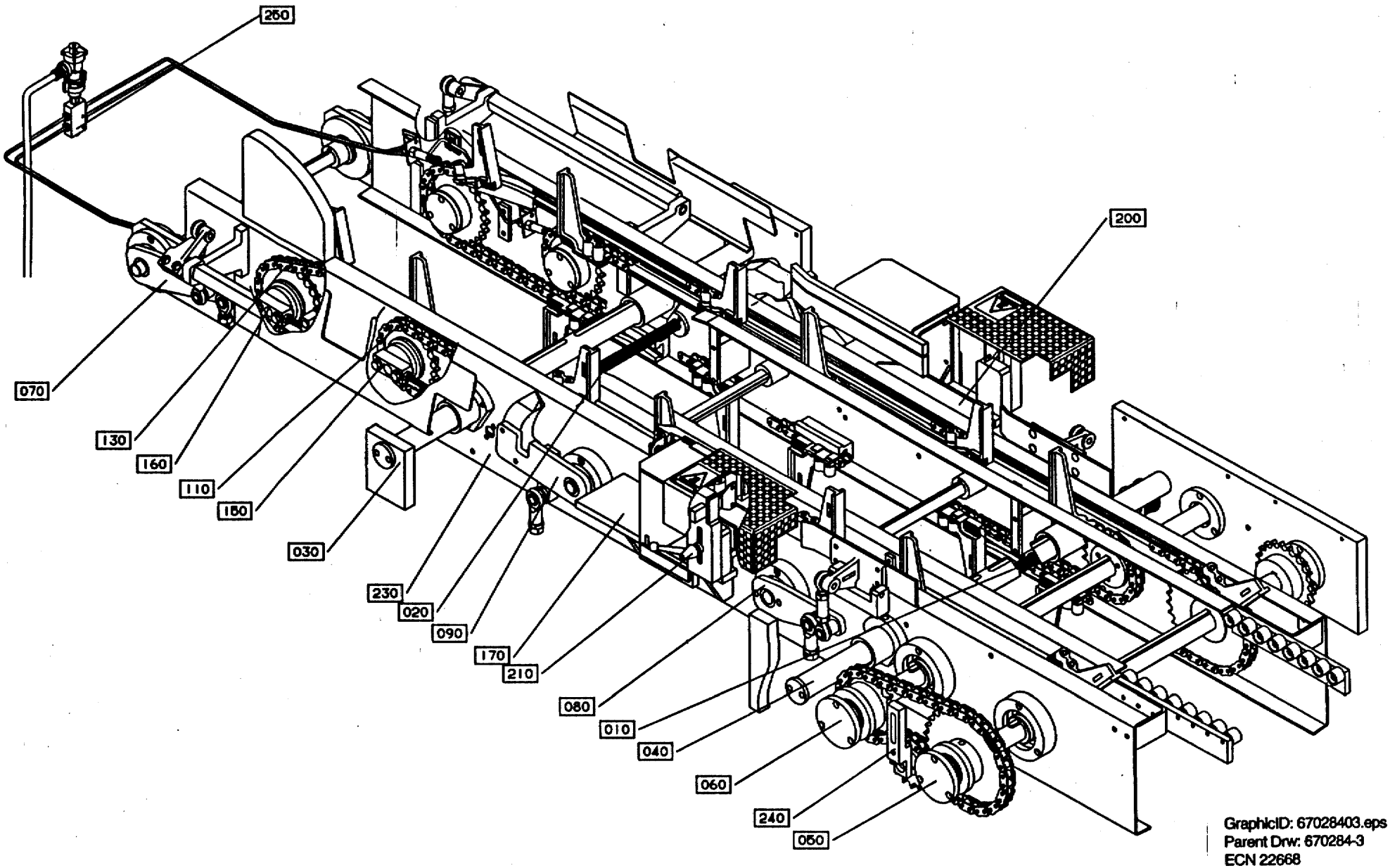

GraphicID: 67028403.eps
Parent Drw: 670284-3
ECN 22668

Pos	Part No	SP	UN	Qty	Description	Page No
-						
000	B- 670284-0401	-		1	FEED UNIT	
010	C-1021032-0101	-		1	SIDE ADJUSTMENT FRONT	71
020	C-1021041-0101	-		1	SIDE ADJUSTERREAR	73
030	C-1021043-0101	-		1	STEERING REAR	75
040	C-1021049-0101	-		1	STEERING FRONT	77
050	C-1021052-0101	-		1	DRIVESHAFT FRONT	79
060	C-1021060-0101	-		1	DRIVESHAFT REAR	81
070	C-1021098-0101	-		1	SHAFT FOLDINGFLAP	83
080	C-1021118-0101	-		1	SHAFT SQUEESER	87
090	C-1021119-010V	-		1	SHAFT FLAPFOLDER	91
110	C-1021093-0101	-		1	CARRIER CHAIN INSIDE	95
130	C-1021096-0101	-		1	CARRIER CHAIN OUTSIDE	97
150	C-1021072-0101	-		2	GUIDE SPROCKET INSIDE	99
160	C-1021067-0101	-		2	GUIDE SPROCKET OUTSIDE	101
170	C-1021278-040V	-		1	FOLDING BAR	103
200	C-1021290-0101	-		1	BOTTOM FOLDER	105
210	C-1021295-0201	-		1	GUN HOLDER	107
230	C-1021076-0301	-		1	MACHINE BODY	109
240	C-1021326-0101	-		1	CHAIN TIGHTENER WHEEL	111
250	C-1065896-0101	-		1	CHAIN LUBRICATION	113

Pos	Part No	SP	UN	Qty	Description	Page No

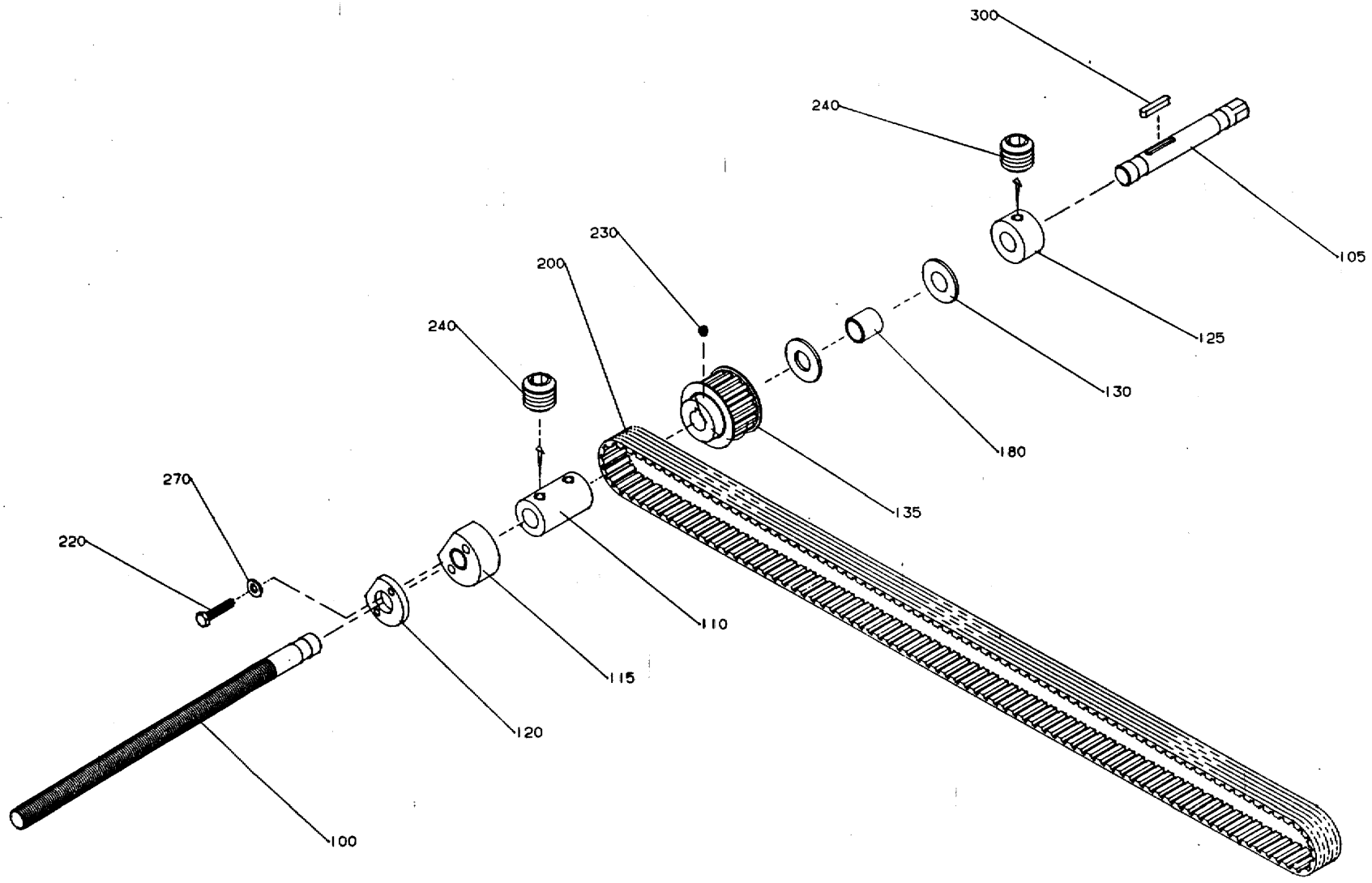

GraphicID: 102103201.eps
Parent Drw: 1021032-1
ECN 19307

Pos	Part No	SP	UN	Qty	Description	Page No
-						
000	C-1021032-0101	-		1	SIDE ADJUSTMENT FRONT	
100	1021033	-		1	ADJUSTING SCREW	
105	1021034	-		1	SHAFT	
110	1021035	-		1	SLEEVE	
115	1021036	-		1	NUT	
120	1021037	-		1	RING	
125	1021038	-		1	RETAINING RING	
130	1021039	-		2	WASHER	
135	1021040	-		1	TOOTHED PULLY	
180	90240-0205	-		1	PLAIN BEARING	
200	90417-0140	-		1	TOOTHED BELT	
220	312105-0374	-		2	SCREW O4017 M6X30A280	
230	312318-0360	-		1	STOP SCREW SK6SS6X6RFR	
240	312318-0443	-		4	STOP SCREW SK6SS8X8RFR	
270	315105-0156	-		2	WASHER BRB6,7X14RFR	
300	315701-0204	-		1	FLAT WEDGE5X5X28	

Pos	Part No	SP	UN	Qty	Description	Page No

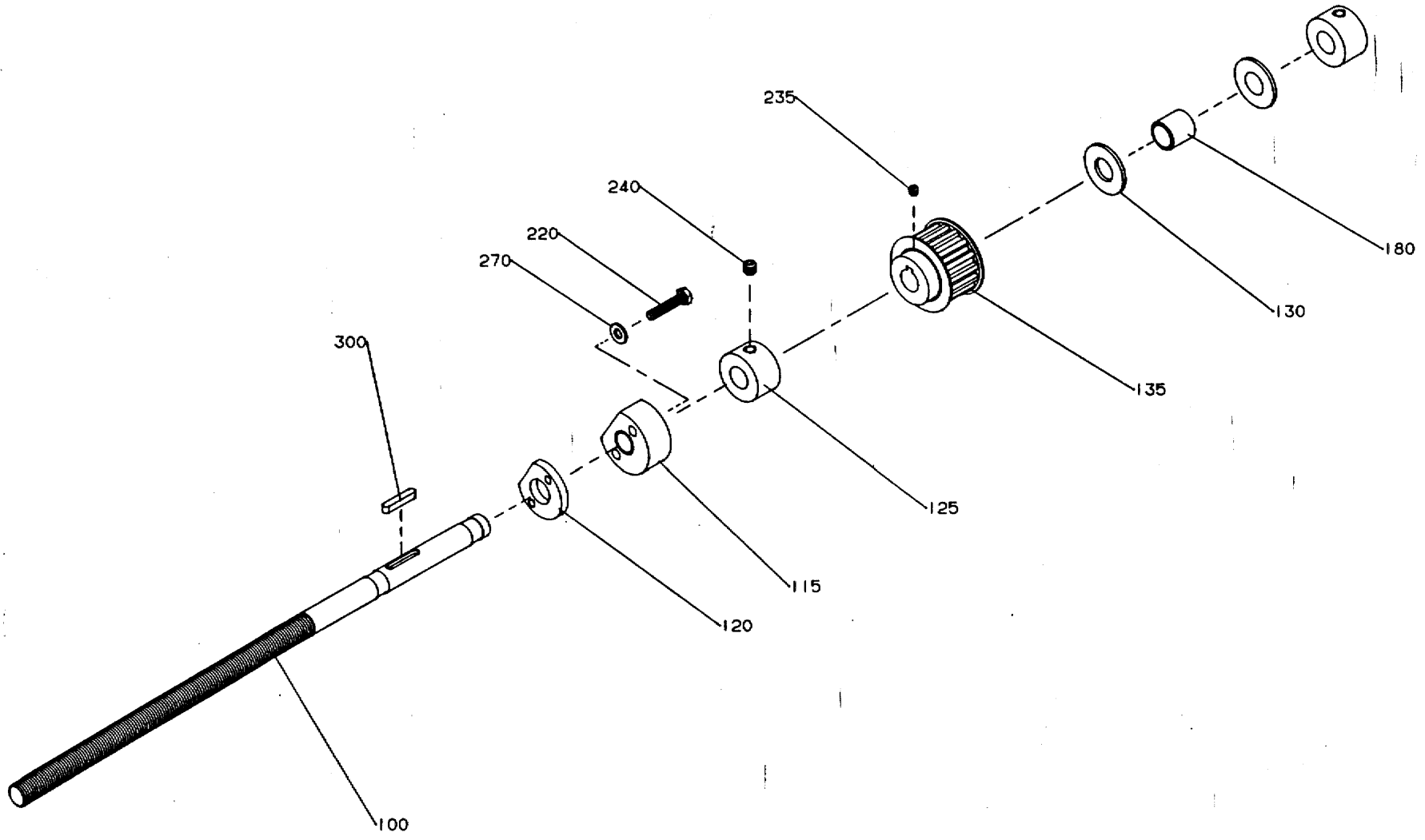

GraphicID: 102104101.eps
Parent Drw: 1021041-1
ECN 19307

Pos	Part No	SP	UN	Qty	Description	Page No
-						
000	C-1021041-0101	-		1	SIDE ADJUSTER REAR	
100	1021042	-		1	ADJUSTING SCREW	
115	1021036	-		1	NUT	
120	1021037	-		1	RING	
125	1021038	-		2	RETAINING RING	
130	1021039	-		2	WASHER	
135	1021040	-		1	TOOTHED PULLY	
180	90240-0205	-		1	PLAIN BEARING	
220	312105-0374	-		2	SCREW O4017 M6X30A280	
235	312318-0360	-		1	STOP SCREW SK6SS6X6RFR	
240	312318-0443	-		4	STOP SCREW SK6SS8X8RFR	
270	315105-0156	-		2	WASHER BRB6,7X14RFR	
300	315701-0204	-		1	FLAT WEDGE5X5X28	

Pos	Part No	SP	UN	Qty	Description	Page No

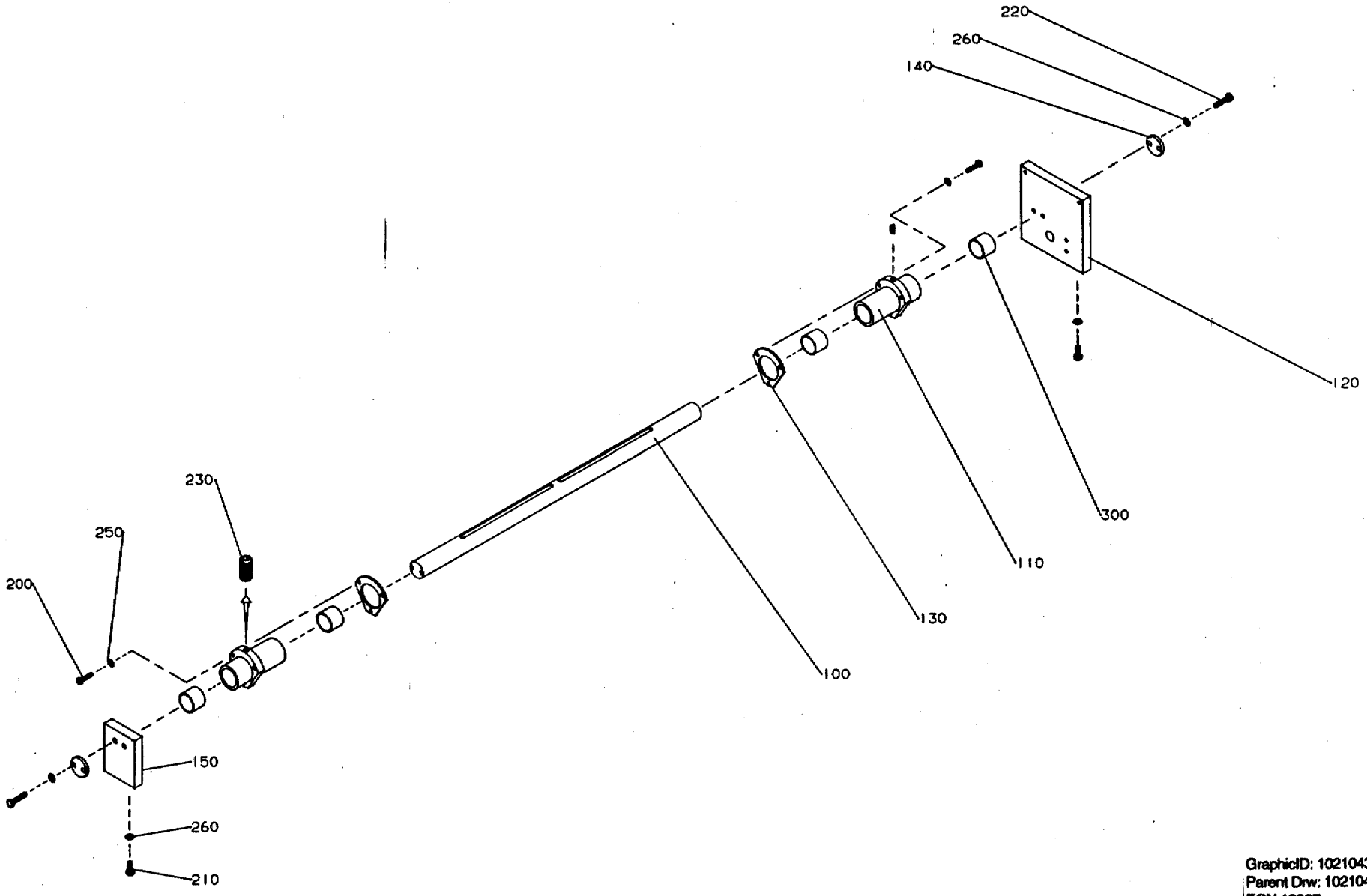

GraphicID: 102104301.eps
Parent Drw: 1021043-1
ECN 19307

Pos	Part No	SP	UN	Qty	Description	Page No
-						
000	C-1021043-0101	-		1	STEERING REAR	
100	1021044	-		1	PILLAR	
110	1021045	-		2	BEARING HOUSING	
120	1021046	-		1	HOLDER	
130	1021047	-		2	WASHER	
140	1021048	-		2	WASHER	
150	1080209	-		1	HOLDER	
200	312105-0372	-		6	SCREW O4017 M6X25A280	
210	312105-0453	-		4	SCREW O4017 M8X25A280	
220	312105-0459	-		4	SCREW O4017 M8X40A280	
230	312318-0449	-		2	STOP SCREW SK6SS8X16RFR	
250	315105-0156	-		6	WASHER BRB6,7X14RFR	
260	315105-0165	-		8	WASHER BRB8,4X16RFR	
300	321120-0185	-		4	BUSHING 35/39X30	

Pos	Part No	SP	UN	Qty	Description	Page No

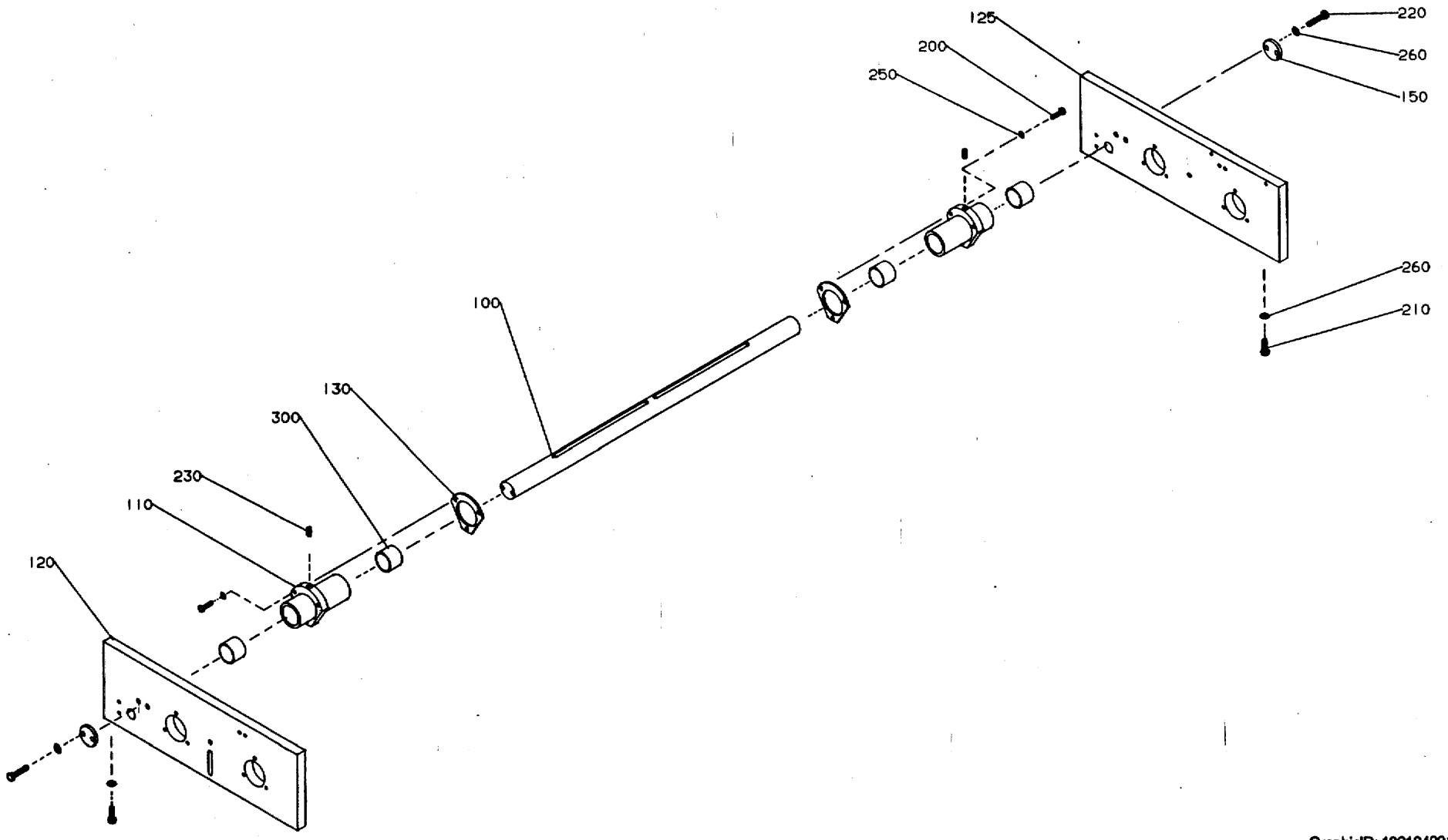

GraphicID: 102104901.eps
Parent Drw: 1021049-1
ECN 19307

Pos	Part No	SP	UN	Qty	Description	Page No
-						
000	C-1021049-0101	-		1	STEERING FRONT	
100	1021044	-		1	PILLAR	
110	1021045	-		2	BEARING HOUSING	
120	1021050	-		1	HOLDER	
125	1021051	-		1	HOLDER	
130	1021047	-		2	WASHER	
150	1021048	-		2	WASHER	
200	312105-0372	-		6	SCREW O4017 M6X25A280	
210	312105-0453	-		6	SCREW O4017 M8X25A280	
220	312105-0459	-		4	SCREW O4017 M8X40A280	
230	312318-0449	-		2	STOP SCREW SK6SS8X16RFR	
250	315105-0156	-		6	WASHER BRB6,7X14RFR	
260	315105-0165	-		10	WASHER BRB8,4X16RFR	
300	321120-0185	-		4	BUSHING 35/39X30	

Pos	Part No	SP	UN	Qty	Description	Page No

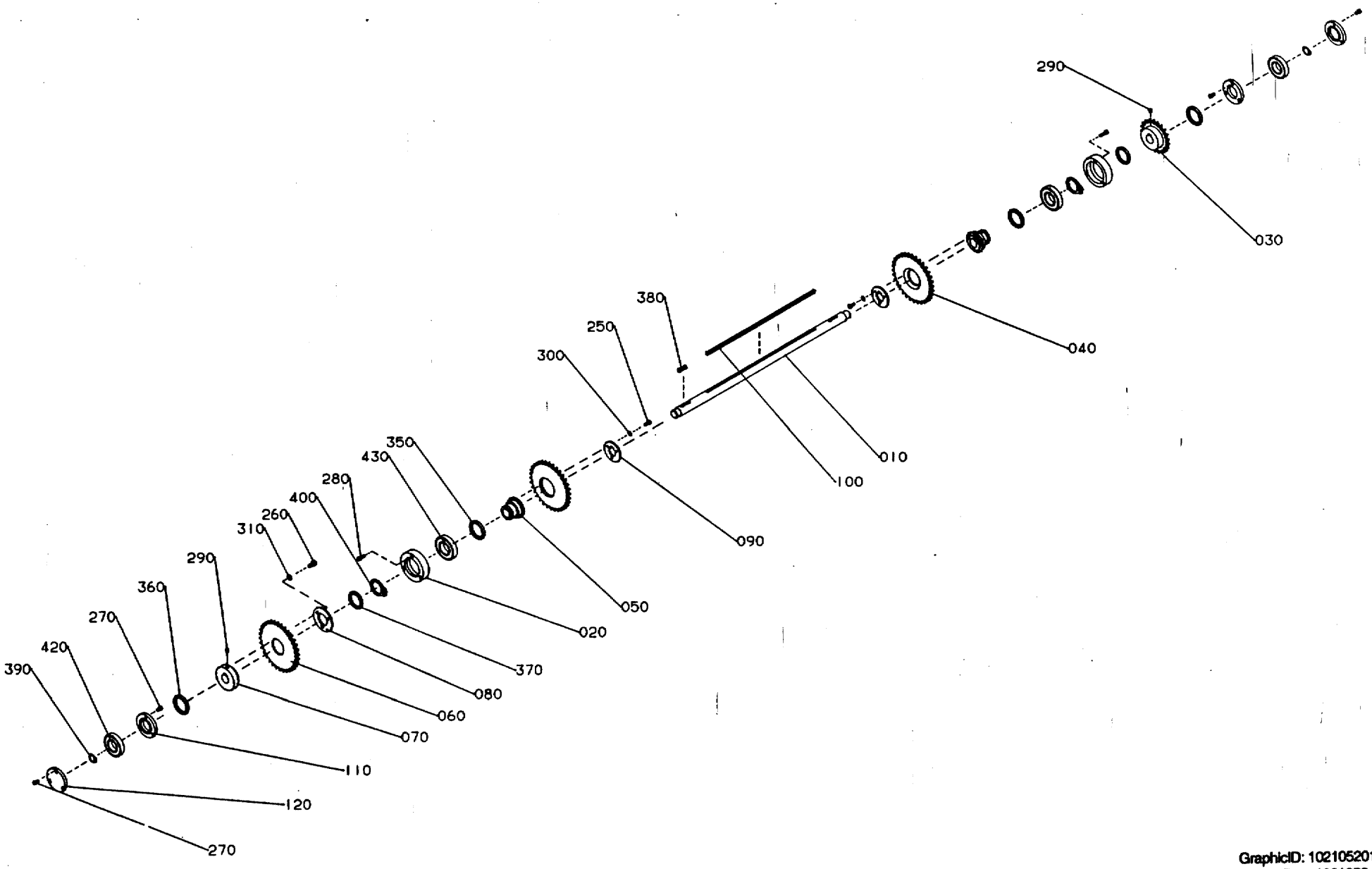

GraphicID: 102105201.eps
Parent Drw: 1021052-1
ECN 16567

Pos	Part No	SP	UN	Qty	Description	Page No
000	C-1021052-0101	-		1	DRIVE SHAFT FRONT	
010	1021053	-		1	SHAFT	
020	1021054	-		2	BEARING HOUSING	
030	1021325	-		1	SPROCKET	
040	1021056	-		2	SPROCKET	
050	1021057	-		2	HUB	
060	1021413	-		1	SPROCKET	
070	1021414	-		1	HUB	
080	1021415	-		1	WASHER	
090	1021059	-		2	WASHER	
100	1021066	-		1	FLAT WEDGE	
110	1021064	-		2	BEARING COVER	
120	1021065	-		2	BEARING COVER	
250	312105-0368	-		6	SCREW O4017 M6X16A280	
260	312105-0451	-		3	SCREW SO4017 8X20A280	
270	312115-0366	-		12	SCREW O4762 M6X12A280	
280	312115-0372	-		6	SCREW O4762 M6X25A280	
290	312318-0443	-		2	STOP SCREW SK6SS8X8RFR	
300	315105-0156	-		6	WASHER BRB6,7X14RFR	
310	315105-0165	-		3	WASHER BRB8,4X16RFR	
350	315220-0204	P		2	SEAL RING V-55S	
360	90091-0200	P		2	SEAL RING	
370	90091-0304	P		2	SEAL RING	
380	315701-0801	-		2	FLAT WEDGE8X7X36	
390	315750-0119	-		1	CIRCLIP SGA25	
400	315750-0129	-		2	CIRCLIP SGA45	
420	321313-0105	P		2	BALL BEARISKF6205-2RS	
430	321308-0209	P		2	BALL BEARISKF6009-2RS	

Pos	Part No	SP	UN	Qty	Description	Page No

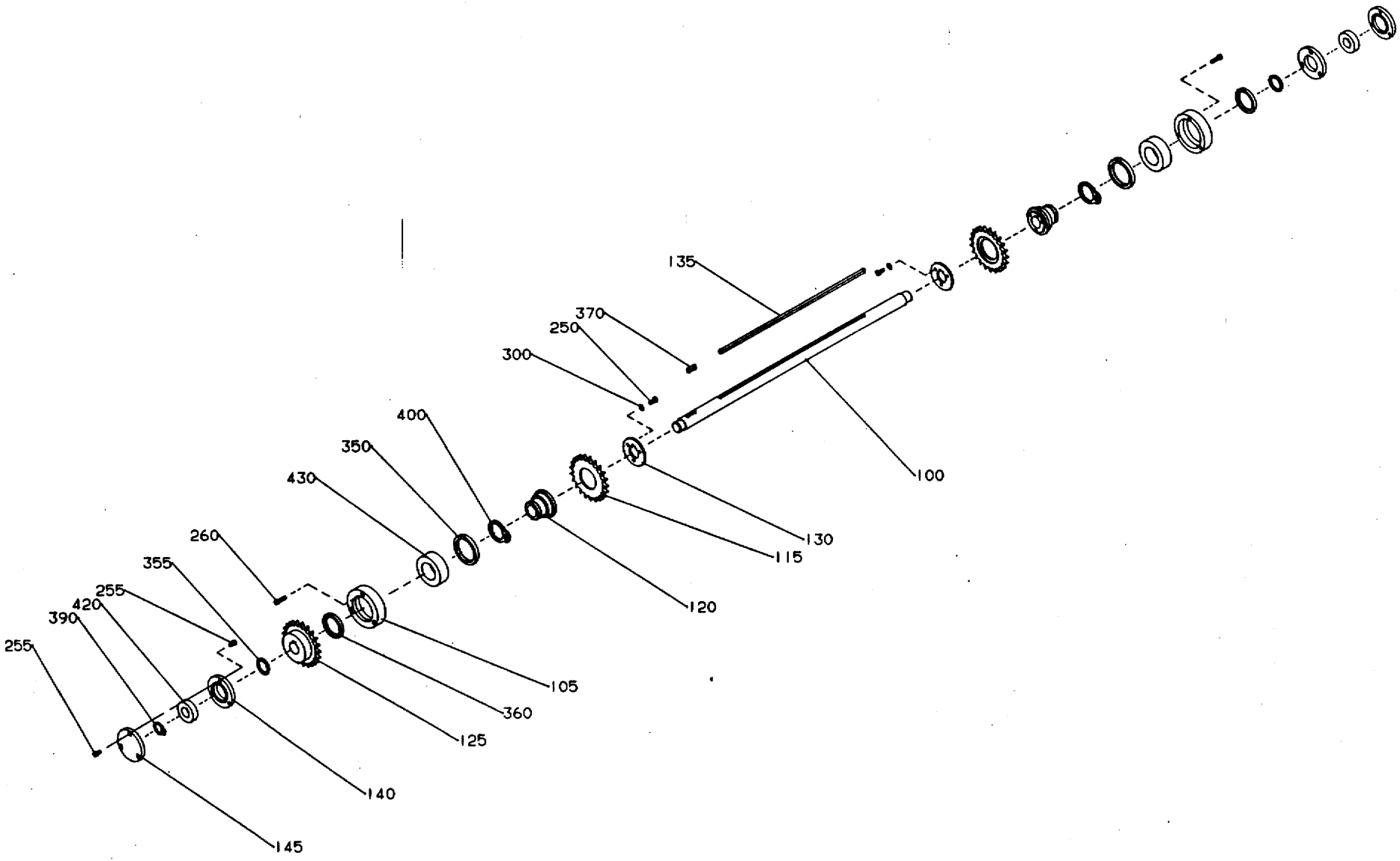

GraphicID: 102106001.eps
Parent Drw: 1021060-1
ECN 16567

Pos	Part No	SP	UN	Qty	Description	Page No
-						
000	C-1021060-0101	-		1	DRIVE SHAFT REAR	
100	1021061	-		1	SHAFT	
105	1021054	-		2	BEARING HOUSING	
115	1021062	-		2	SPROCKET	
120	1021057	-		2	HUB	
125	1021063	-		1	SPROCKET	
130	1021059	-		2	WASHER	
135	1021066	-		1	FLAT WEDGE	
140	1021064	-		2	BEARING COVER	
145	1021065	-		2	BEARING COVER	
250	312105-0368	-		6	SCREW O4017 M6X16A280	
255	312115-0366	-		12	SCREW O4762 M6X12A280	
260	312115-0372	-		6	SCREW O4762 M6X25A280	
300	315105-0156	-		6	WASHER BRB6,7X14RFR	
350	315220-0204	P		2	SEAL RING V-55S	
355	90091-0200	P		2	SEAL RING	
360	90091-0304	P		2	SEAL RING	
370	315701-0266	-		1	FLAT WEDGE8X7X28	
390	315750-0119	-		1	CIRCLIP SGA25	
400	315750-0129	-		2	CIRCLIP SGA45	
420	321313-0105	P		2	BALL BEARISKF6205-2RS	
430	321308-0209	P		2	BALL BEARISKF6009-2RS	

Pos	Part No	SP	UN	Qty	Description	Page No

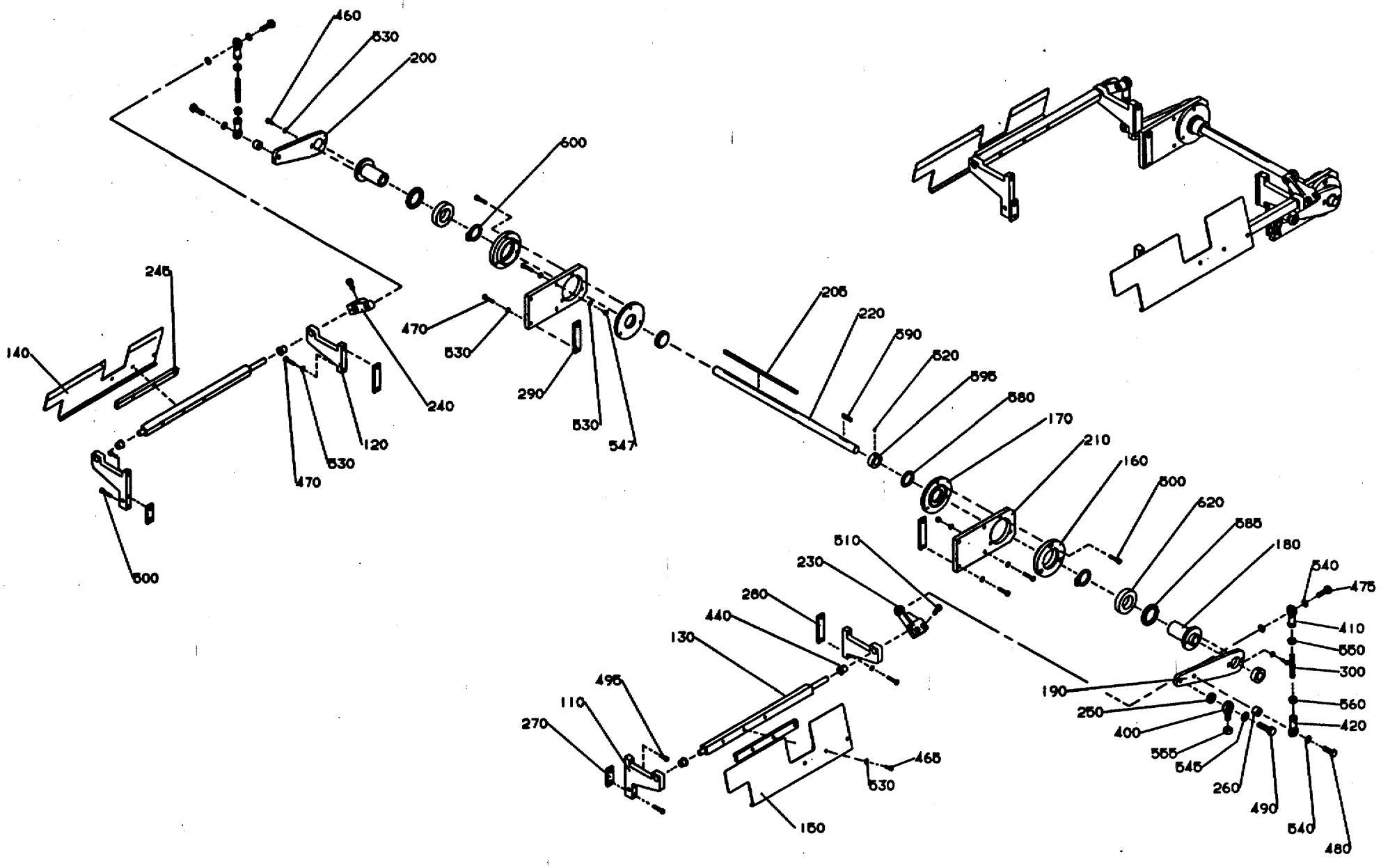

GraphicID: 102109801.eps
Parent Drw: 1021098-1
ECN 22668

Pos	Part No	SP	UN	Qty	Description	Page No
000	C-1021098-0101	-		1	SHAFT FOLDING FLAP	
110	1021099	-		2	CANTILEVER	
120	1021100	-		2	CANTILEVER	
130	1021101	-		2	SHAFT	
140	1021102	-		1	FOLDING FLAP	
150	1021103	-		1	FOLDING FLAP	
160	1021104	-		2	BEARING HOUSING	
170	1021105	-		2	LID	
180	1021106	-		2	HUB	
190	1021107	-		1	ARM	
200	1021108	-		1	ARM	
205	1021579	-		1	FLAT WEDGE	
210	1021109	-		2	PLATE	
220	1021110	-		1	SHAFT	
230	G-1021111	-		1	ARM	
240	1021112	-		1	ARM	
245	1021918	-		2	SPACER	
250	1021113	-		1	WASHER	
260	1021114	-		2	WASHER	
270	1021115	-		2	LOCK PLATE	
280	1021116	-		2	LOCK PLATE	
290	1021117	-		2	LOCK PLATE	
300	1021121	-		2	LINK ARM	
400	90115-0135	P		1	LINK HEAD	
410	90115-0181	P		2	LINK HEAD	
420	90115-0182	P		2	LINK HEAD	
440	90240-0204	P		4	PLAIN BEARING	
460	312105-0368	-		4	SCREW O4017 M6X16A280	
465	312105-0371	-		6	SCREW M6S6X22RFR	
470	312105-0374	-		16	SCREW O4017 M6X30A280	
475	312105-0497	-		2	SCREW 4017 M10X35A280	
480	312105-0499	-		2	SCREW 4017 M10X40A280	
490	312105-0540	-		1	SCREW 4017 M12X40A280	
495	312115-0370	-		2	SCREW O4762 M6X20A280	
500	312115-0374	-		10	SCREW O4762 M6X30A280	
510	312115-0451	-		4	SCREW O4762 M8X20A280	
520	312318-0360	-		4	STOP SCREW SK6SS6X6RFR	
530	315105-0153	-		30	WASHER BRB6,4X12RFR	
540	315105-0171	-		6	WASHER BRB10X18RFR	
545	315105-0178	-		1	WASHER BRB13X24RFR	
547	312605-0316	-		4	NUT M6M6RFR	
550	312605-0320	-		2	NUT M6M10RFR	
555	312605-0322	-		1	NUT M6M12RFR	
560	312902-0320	-		2	NUT M6M10VRFR	
580	315220-0175	P		2	SEAL RING V-35S	
585	90091-0305	P		2	SEAL RING	
590	315701-0237	-		1	FLAT WEDGE6X6X32	
595	315742-0116	-		2	RETAINING 20SMS199RFR	
600	315750-0124	-		2	CIRCLIP SGA35	
620	321308-0207	P		2	BALL BEARISKF6007-2RS	

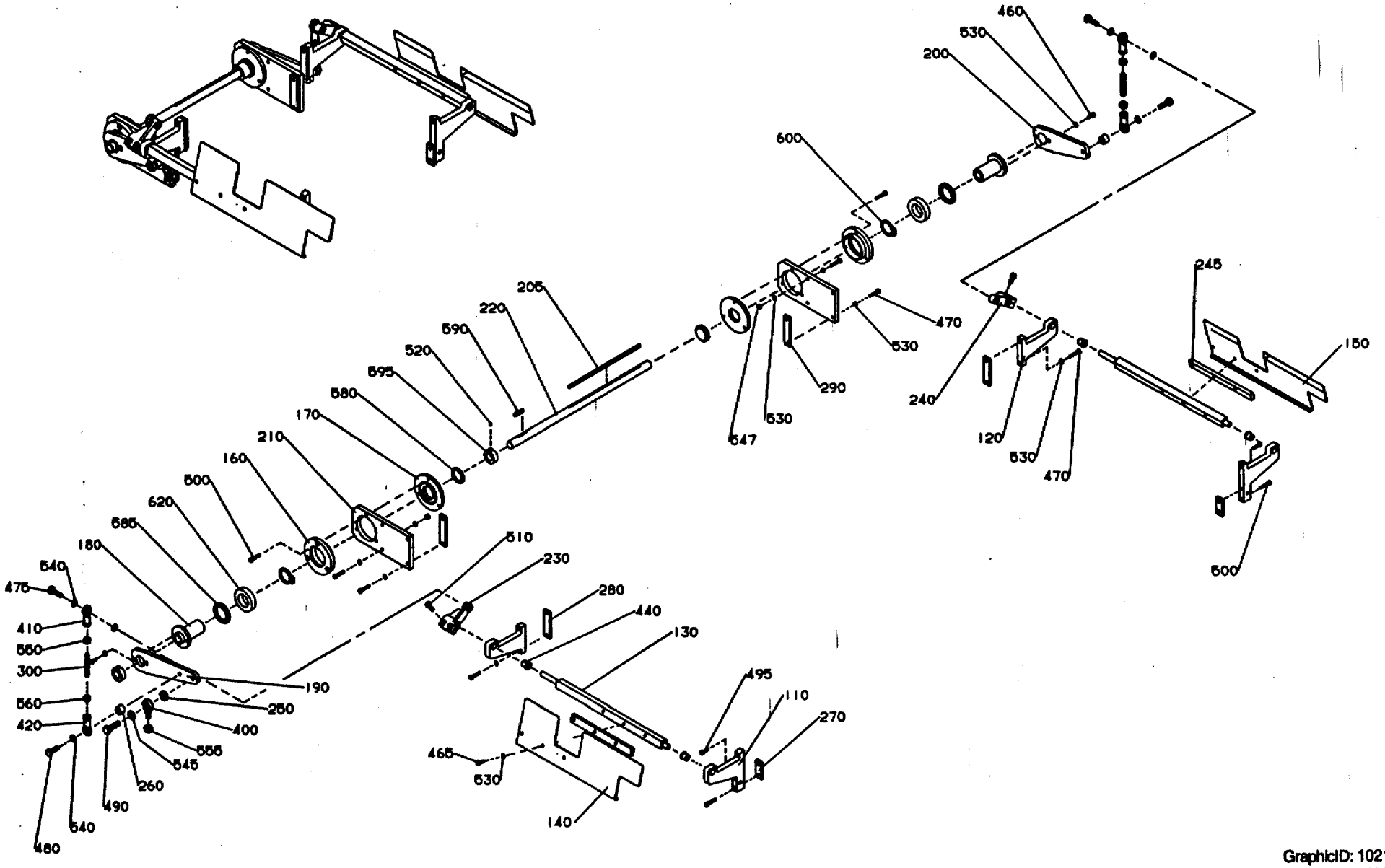

GraphicID: 102109802.eps
Parent Drw: 1021098-2
ECN 22668

Pos	Part No	SP	UN	Qty	Description	Page No
-						
000	C-1021098-0101	-		1	SHAFT FOLDING FLAP	
110	1021099	-		2	CANTILEVER	
120	1021100	-		2	CANTILEVER	
130	1021101	-		2	SHAFT	
140	1021102	-		1	FOLDING FLAP	
150	1021103	-		1	FOLDING FLAP	
160	1021104	-		2	BEARING HOUSING	
170	1021105	-		2	LID	
180	1021106	-		2	HUB	
190	1021107	-		1	ARM	
200	1021108	-		1	ARM	
205	1021579	-		1	FLAT WEDGE	
210	1021109	-		2	PLATE	
220	1021110	-		1	SHAFT	
230	G-1021111	-		1	ARM	
240	1021112	-		1	ARM	
245	1021918	-		2	SPACER	
250	1021113	-		1	WASHER	
260	1021114	-		2	WASHER	
270	1021115	-		2	LOCK PLATE	
280	1021116	-		2	LOCK PLATE	
290	1021117	-		2	LOCK PLATE	
300	1021121	-		2	LINK ARM	
400	90115-0135	P		1	LINK HEAD	
410	90115-0181	P		2	LINK HEAD	
420	90115-0182	P		2	LINK HEAD	
440	90240-0204	P		4	PLAIN BEARING	
460	312105-0368	-		4	SCREW O4017 M6X16A280	
465	312105-0371	-		6	SCREW M6S6X22RFR	
470	312105-0374	-		16	SCREW O4017 M6X30A280	
475	312105-0497	-		2	SCREW 4017 M10X35A280	
480	312105-0499	-		2	SCREW 4017 M10X40A280	
490	312105-0540	-		1	SCREW 4017 M12X40A280	
495	312115-0370	-		2	SCREW O4762 M6X20A280	
500	312115-0374	-		10	SCREW O4762 M6X30A280	
510	312115-0451	-		4	SCREW O4762 M8X20A280	
520	312318-0360	-		4	STOP SCREW SK6SS6X6RFR	
530	315105-0153	-		30	WASHER BRB6,4X12RFR	
540	315105-0171	-		6	WASHER BRB10X18RFR	
545	315105-0178	-		1	WASHER BRB13X24RFR	
547	312605-0316	-		4	NUT M6M6RFR	
550	312605-0320	-		2	NUT M6M10RFR	
555	312605-0322	-		1	NUT M6M12RFR	
560	312902-0320	-		2	NUT M6M10VRFR	
580	315220-0175	P		2	SEAL RING V-35S	
585	90091-0305	P		2	SEAL RING	
590	315701-0237	-		1	FLAT WEDGE6X6X32	
595	315742-0116	-		2	RETAINING 20SMS199RFR	
600	315750-0124	-		2	CIRCLIP SGA35	
620	321308-0207	P		2	BALL BEARISKF6007-2RS	

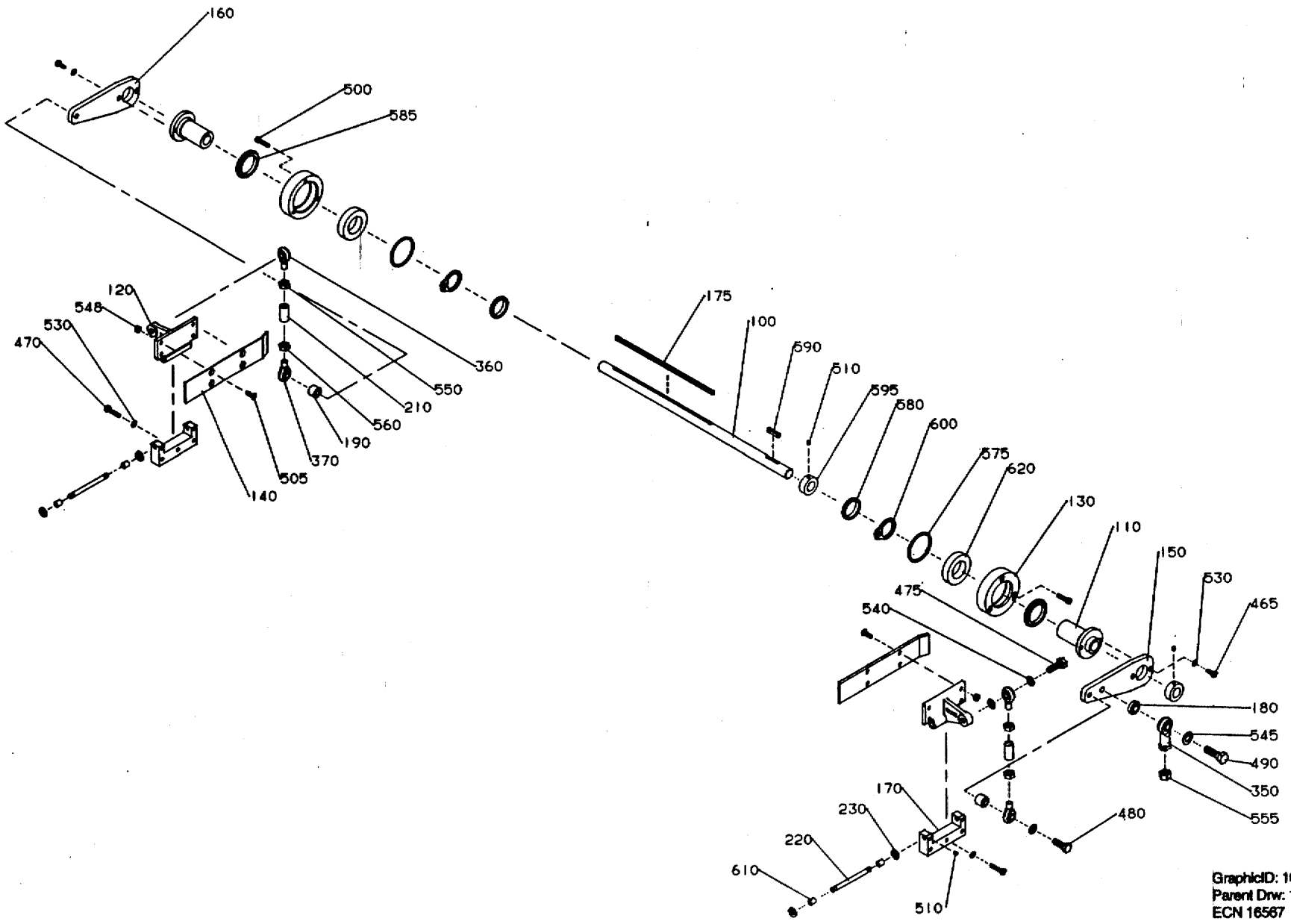

GraphicID: 102111801.eps
Parent Drw: 1021118-1
ECN 16567

Pos	Part No	SP	UN	Qty	Description	Page No
-						
000	C-1021118-0101	-		1	SHAFT SQUEESER	
100	1021110	-		1	SHAFT	
110	1021106	-		2	HUB	
120	G-1021122	-		2	ARM	
130	1021123	-		2	BEARING HOUSING	
140	1021124	-		2	PLATE	
150	1021125	-		1	ARM	
160	1021126	-		1	ARM	
170	1021127	-		2	HOLDER	
175	1021579	-		1	FLAT WEDGE	
180	1021113	-		1	WASHER	
190	1021114	-		2	WASHER	
210	1021128	-		2	SLEEVE	
220	1021129	-		2	SHAFT	
230	1021130	-		4	WASHER	
350	90115-0027	P		1	LINK HEAD	
360	90115-0150	P		2	LINK HEAD	
370	90115-0151	P		2	LINK HEAD	
465	312105-0368	-		4	SCREW O4017 M6X16A280	
470	312105-0374	-		6	SCREW O4017 M6X30A280	
475	312105-0497	-		2	SCREW 4017 M10X35A280	
480	312105-0499	-		2	SCREW 4017 M10X40A280	
490	312105-0540	-		1	SCREW 4017 M12X40A280	
500	312115-0372	-		6	SCREW O4762 M6X25A280	
505	312155-0370	-		8	SCREW MF6S6X20RFR	
510	312318-0360	-		4	STOP SCREW SK6SS6X6RFR	
530	315105-0153	-		18	WASHER BRB6,4X12RFR	
540	315105-0171	-		6	WASHER BRB10X18RFR	
545	315105-0178	-		1	WASHER BRB13X24RFR	
548	312605-0316	-		8	NUT M6M6RFR	
550	312605-0320	-		2	NUT M6M10RFR	
555	312605-0322	-		1	NUT M6M12RFR	
560	312902-0320	-		2	NUT M6M10VRFR	
575	315202-0303	P		2	O-RING 59,5X3	
580	315220-0175	P		2	SEAL RING V-35S	
585	90091-0305	P		2	SEAL RING	
590	315701-0237	-		1	FLAT WEDGE6X6X32	
595	315742-0116	-		2	RETAINING 20SMS199RFR	
600	315750-0124	-		2	CIRCLIP SGA35	
610	321120-0100	P		4	BUSHING 8/10X12	
620	321308-0207	P		2	BALL BEARISKF6007-2RS	

Pos	Part No	SP	UN	Qty	Description	Page No

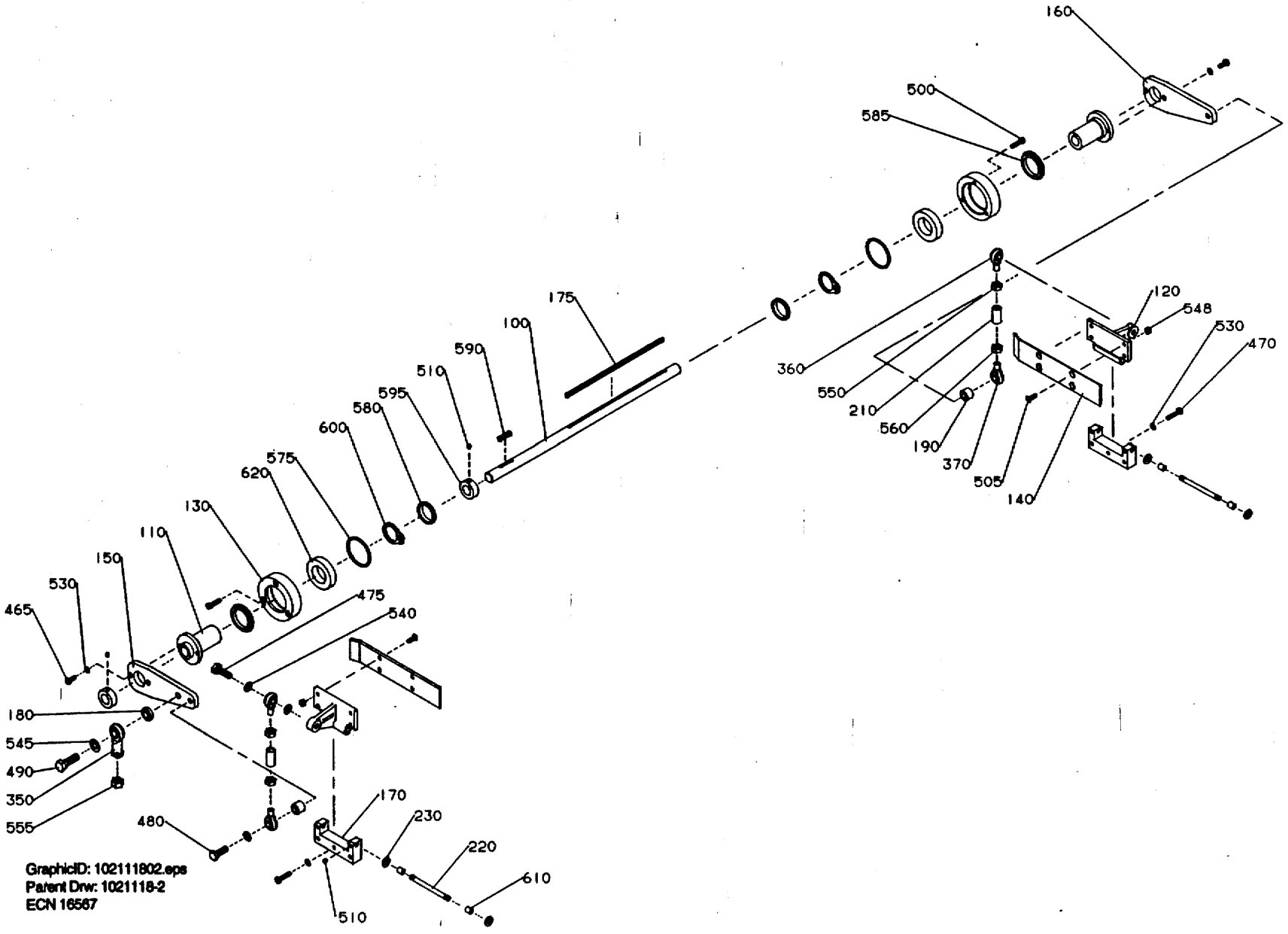
160
500
585
175
100
590
510
595
580
600
620
575
130
110
150
530
465
475
540
180
545
490
350
555
480
170
230
220
610
510
360
550
210
560
190
370
505
140
120
548
530
470
GraphicID: 102111802.eps
Parent Drw: 1021118-2
ECN 16567

Pos	Part No	SP	UN	Qty	Description	Page No
-						
000	C-1021118-0101	-		1	SHAFT SQUEESER	
100	1021110	-		1	SHAFT	
110	1021106	-		2	HUB	
120	G-1021122	-		2	ARM	
130	1021123	-		2	BEARING HOUSING	
140	1021124	-		2	PLATE	
150	1021125	-		1	ARM	
160	1021126	-		1	ARM	
170	1021127	-		2	HOLDER	
175	1021579	-		1	FLAT WEDGE	
180	1021113	-		1	WASHER	
190	1021114	-		2	WASHER	
210	1021128	-		2	SLEEVE	
220	1021129	-		2	SHAFT	
230	1021130	-		4	WASHER	
350	90115-0027	P		1	LINK HEAD	
360	90115-0150	P		2	LINK HEAD	
370	90115-0151	P		2	LINK HEAD	
465	312105-0368	-		4	SCREW O4017 M6X16A280	
470	312105-0374	-		6	SCREW O4017 M6X30A280	
475	312105-0497	-		2	SCREW 4017 M10X35A280	
480	312105-0499	-		2	SCREW 4017 M10X40A280	
490	312105-0540	-		1	SCREW 4017 M12X40A280	
500	312115-0372	-		6	SCREW O4762 M6X25A280	
505	312155-0370	-		8	SCREW MF6S6X20RFR	
510	312318-0360	-		4	STOP SCREW SK6SS6X6RFR	
530	315105-0153	-		18	WASHER BRB6,4X12RFR	
540	315105-0171	-		6	WASHER BRB10X18RFR	
545	315105-0178	-		1	WASHER BRB13X24RFR	
548	312605-0316	-		8	NUT M6M6RFR	
550	312605-0320	-		2	NUT M6M10RFR	
555	312605-0322	-		1	NUT M6M12RFR	
560	312902-0320	-		2	NUT M6M10VRFR	
575	315202-0303	P		2	O-RING 59,5X3	
580	315220-0175	P		2	SEAL RING V-35S	
585	90091-0305	P		2	SEAL RING	
590	315701-0237	-		1	FLAT WEDGE6X6X32	
595	315742-0116	-		2	RETAINING 20SMS199RFR	
600	315750-0124	-		2	CIRCLIP SGA35	
610	321120-0100	P		4	BUSHING 8/10X12	
620	321308-0207	P		2	BALL BEARISKF6007-2RS	

Pos	Part No	SP	UN	Qty	Description	Page No

Left Hand infeed

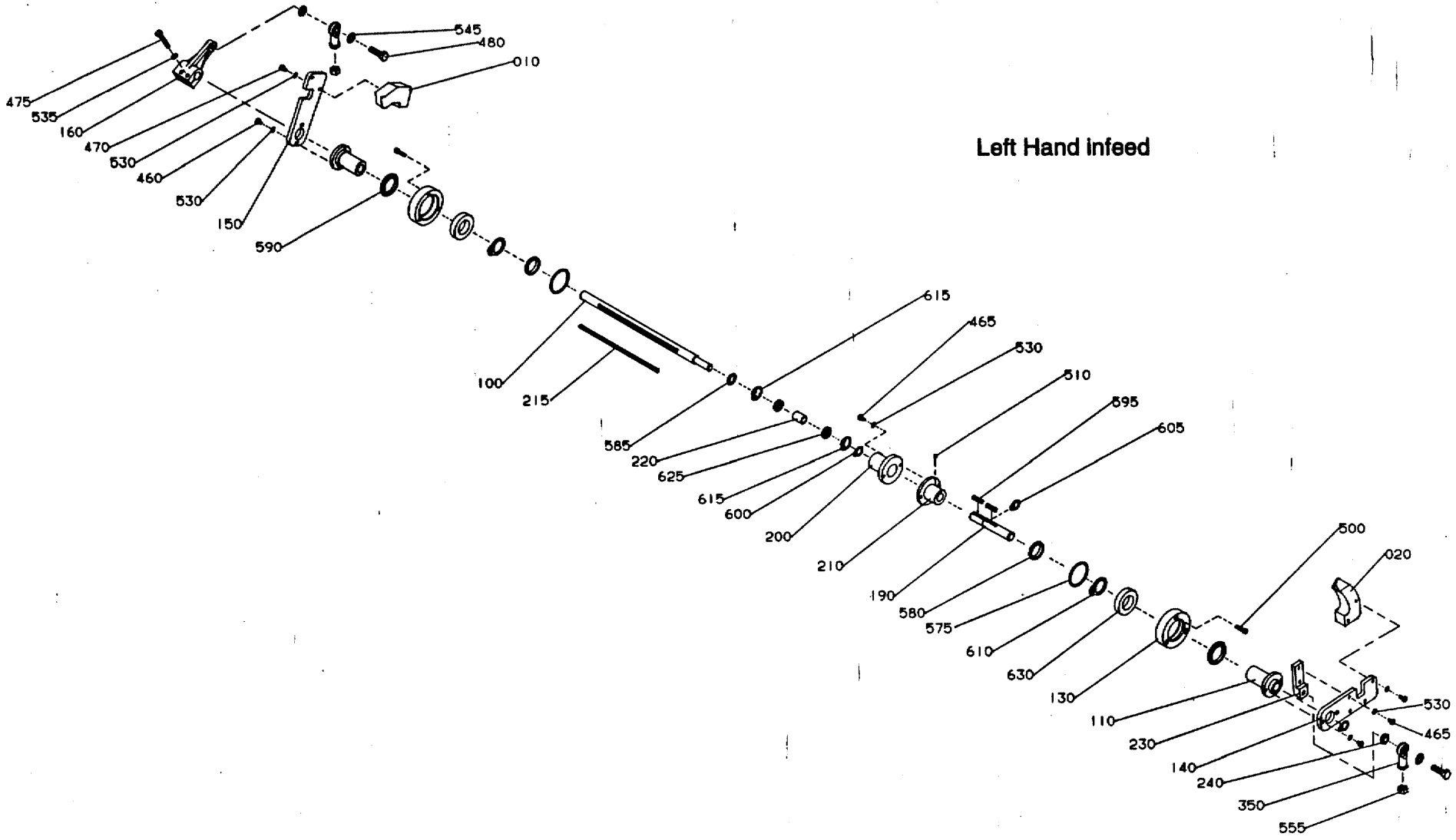

GraphicID: 102111901.eps
Parent Drw: 1021119-1
ECN 16567

Pos	Part No	SP	UN	Qty	Description	Page No
Left Hand Infeed						
000	C-1021119-0101	-		1	SHAFT FLAP FOLDER	
020	1021922	-		1	LUG	
COMMON PARTS						
010	1021135	-		1	LUG	
100	1021134	-		1	SHAFT	
110	1021106	-		2	HUB	
130	1021123	-		2	BEARING HOUSING	
140	1021131	-		1	ARM	
150	1021132	-		1	ARM	
160	G-1021133	-		1	ARM	
190	1021137	-		1	SHAFT	
200	1021138	-		1	BEARING HOUSING	
210	1021139	-		1	HUB	
215	1021579	-		1	FLAT WEDGE	
220	1021140	-		1	SLEEVE	
230	1021141	-		1	BRACKET	
240	1021142	-		2	WASHER	
350	90115-0027	P		2	LINK HEAD	
460	312105-0368	-		4	SCREW O4017 M6X16A280	
465	312105-0370	-		4	SCREW O4017 M6X20A280	
470	312105-0374	-		4	SCREW O4017 M6X30A280	
475	312105-0460	-		2	SCREW O4017 M8X45A280	
480	312105-0540	-		2	SCREW 4017 M12X40A280	
500	312115-0372	-		6	SCREW O4762 M6X25A280	
510	312318-0360	-		1	STOP SCREW SK6SS6X6RFR	
530	315105-0153	-		12	WASHER BRB6,4X12RFR	
535	315105-0165	-		2	WASHER BRB8,4X16RFR	
545	315105-0178	-		2	WASHER BRB13X24RFR	
555	312605-0322	-		2	NUT M6M12RFR	
575	315202-0303	P		2	O-RING 59,5X3	
580	315220-0175	P		2	SEAL RING V-35S	
585	90091-0302	P		1	SEAL RING	
590	90091-0305	P		2	SEAL RING	
595	315701-0237	-		2	FLAT WEDGE6X6X32	
600	315750-0112	-		1	CIRCLIP SGA15	
605	315750-0116	-		2	CIRCLIP SGA20	
610	315750-0124	-		2	CIRCLIP SGA35	
615	315752-0123	-		2	CIRCLIP SGH32	
625	321308-0202	P		2	BALL BEARISKF6002-2RS	
630	321308-0207	P		2	BALL BEARISKF6007-2RS	

Pos	Part No	SP	UN	Qty	Description	Page No

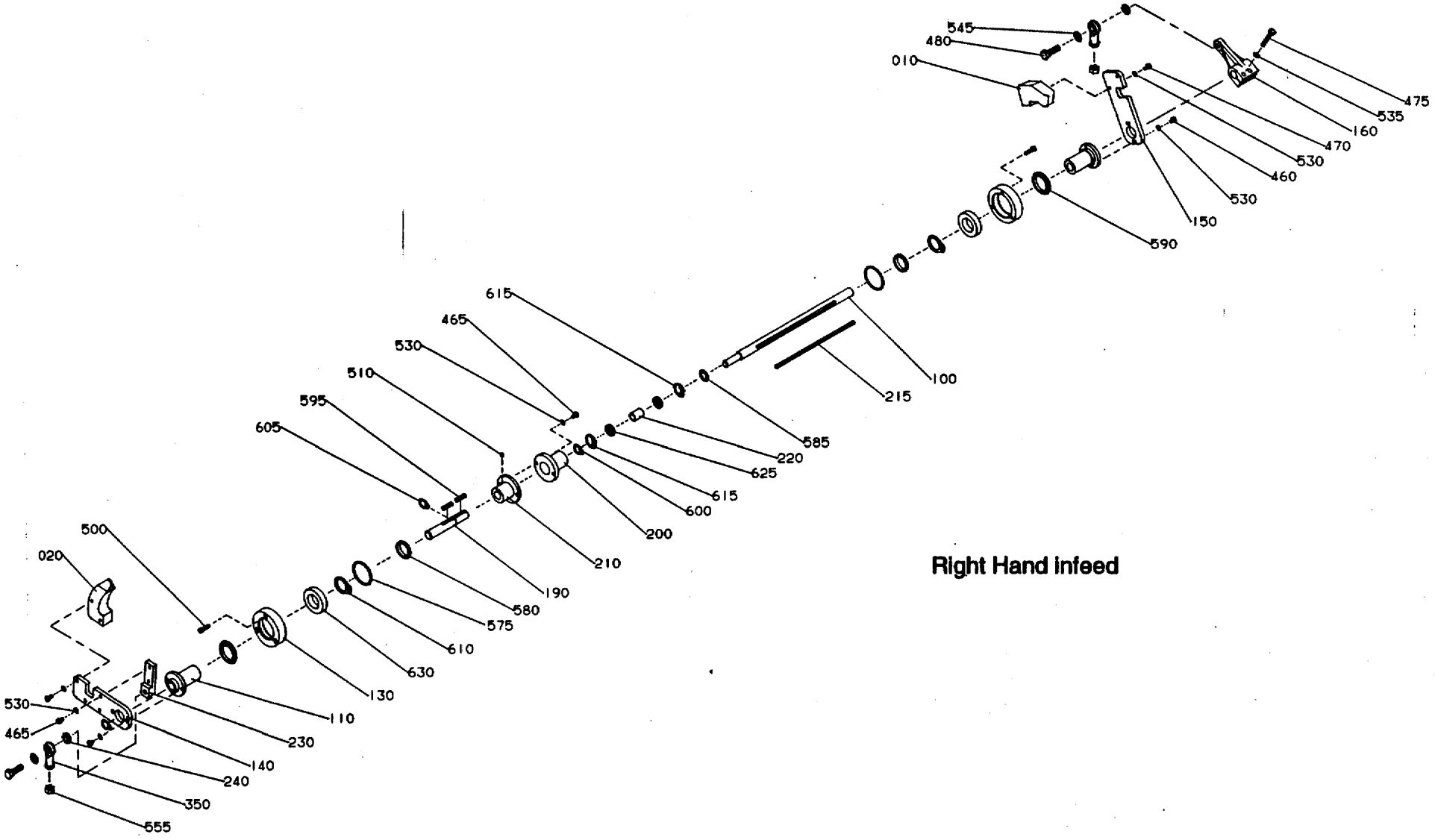

Right Hand Infeed

GraphicID: 102111902.eps
Parent Drw: 1021119-2
ECN 16567

Pos	Part No	SP	UN	Qty	Description	Page No
Right Hand Infeed						
000	C-1021119-0102	-		1	SHAFT FLAP FOLDER	
020	1021136	-		1	LUG	
COMMON PARTS						
010	1021135	-		1	LUG	
100	1021134	-		1	SHAFT	
110	1021106	-		2	HUB	
130	1021123	-		2	BEARING HOUSING	
140	1021131	-		1	ARM	
150	1021132	-		1	ARM	
160	G-1021133	-		1	ARM	
190	1021137	-		1	SHAFT	
200	1021138	-		1	BEARING HOUSING	
210	1021139	-		1	HUB	
215	1021579	-		1	FLAT WEDGE	
220	1021140	-		1	SLEEVE	
230	1021141	-		1	BRACKET	
240	1021142	-		2	WASHER	
350	90115-0027	P		2	LINK HEAD	
460	312105-0368	-		4	SCREW O4017 M6X16A280	
465	312105-0370	-		4	SCREW O4017 M6X20A280	
470	312105-0374	-		4	SCREW O4017 M6X30A280	
475	312105-0460	-		2	SCREW O4017 M8X45A280	
480	312105-0540	-		2	SCREW 4017 M12X40A280	
500	312115-0372	-		6	SCREW O4762 M6X25A280	
510	312318-0360	-		1	STOP SCREW SK6SS6X6RFR	
530	315105-0153	-		12	WASHER BRB6,4X12RFR	
535	315105-0165	-		2	WASHER BRB8,4X16RFR	
545	315105-0178	-		2	WASHER BRB13X24RFR	
555	312605-0322	-		2	NUT M6M12RFR	
575	315202-0303	P		2	O-RING 59,5X3	
580	315220-0175	P		2	SEAL RING V-35S	
585	90091-0302	P		1	SEAL RING	
590	90091-0305	P		2	SEAL RING	
595	315701-0237	-		2	FLAT WEDGE6X6X32	
600	315750-0112	-		1	CIRCLIP SGA15	
605	315750-0116	-		2	CIRCLIP SGA20	
610	315750-0124	-		2	CIRCLIP SGA35	
615	315752-0123	-		2	CIRCLIP SGH32	
625	321308-0202	P		2	BALL BEARISKF6002-2RS	
630	321308-0207	P		2	BALL BEARISKF6007-2RS	

Pos	Part No	SP	UN	Qty	Description	Page No

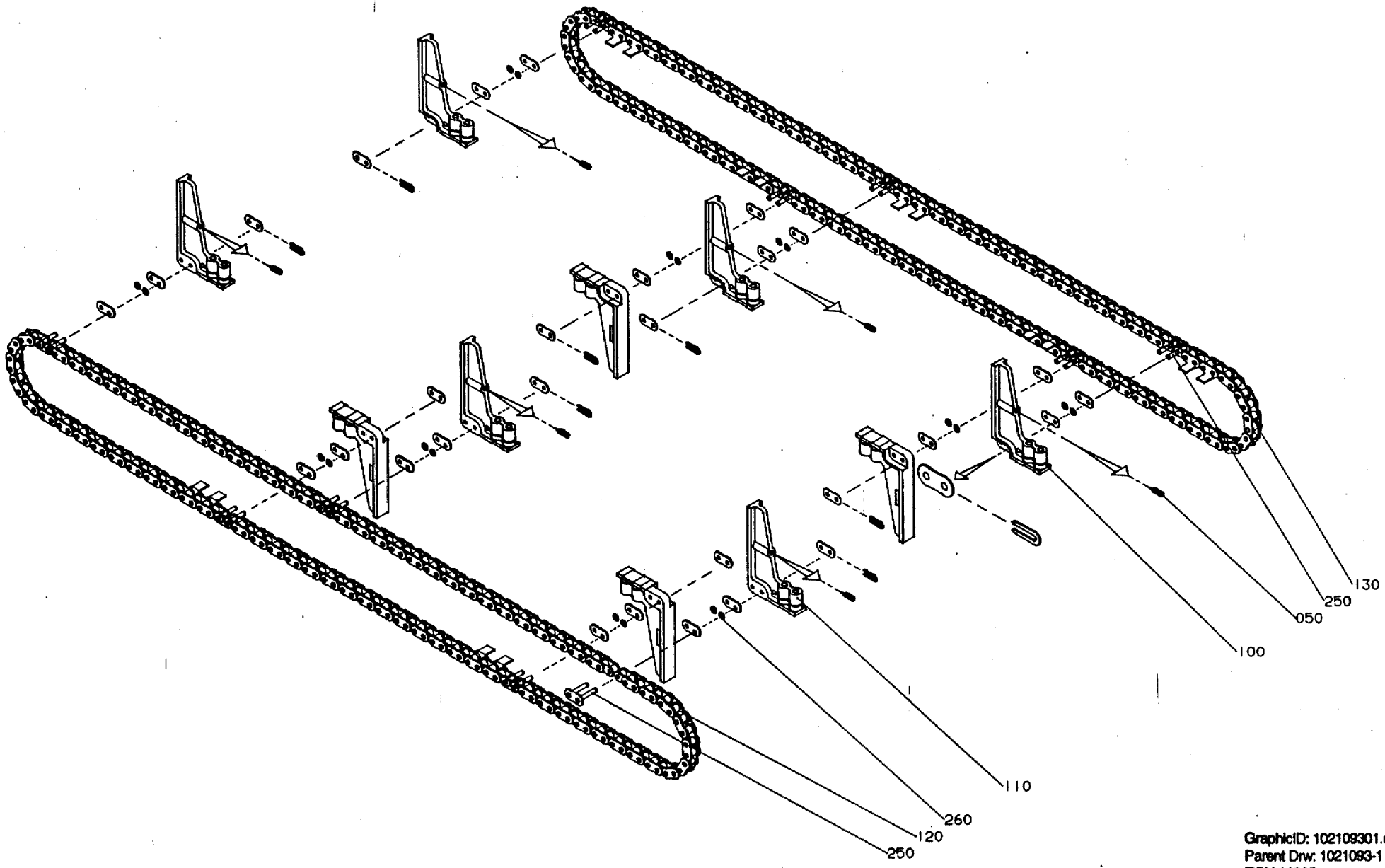

GraphicID: 102109301.eps
Parent Drw: 1021093-1
ECN 16567

Pos	Part No	SP	UN	Qty	Description	Page No
-						
000	C-1021093-0101	-		1	CARRIER CHAIN INSIDE	
100	1021092-0001	P		5	LINK	
110	1021092-0002	P		5	LINK	
120	1021090	C		5	CHAIN	
130	1021091	C		5	CHAIN	
250	318219-0389	C		10	CONNECTION	
260	315105-0153	-		20	WASHER BRB6,4X12RFR	

Pos	Part No	SP	UN	Qty	Description	Page No

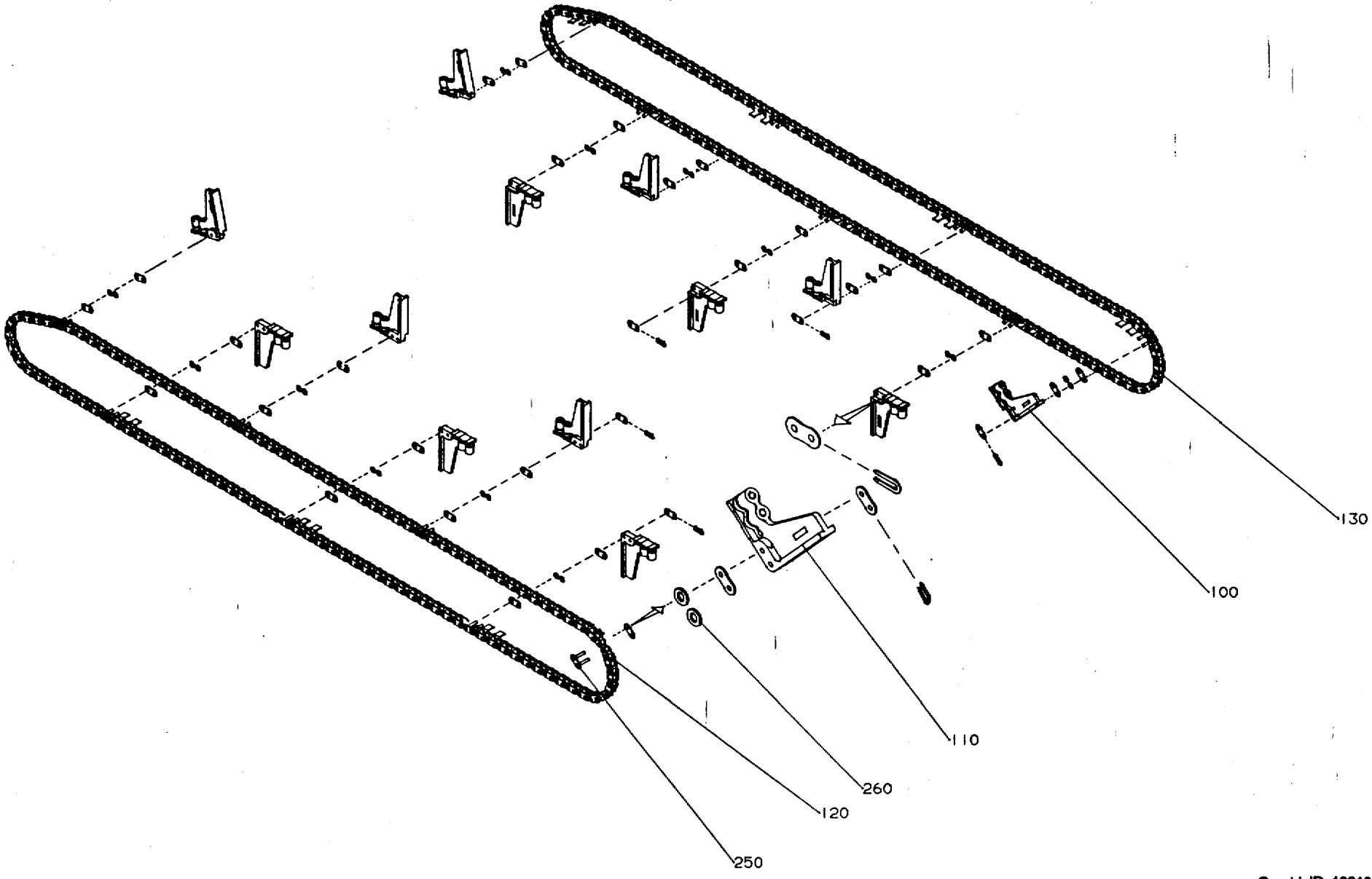

GraphicID: 102109601.eps
Parent Drw: 1021096-1
ECN 16567

Pos	Part No	SP	UN	Qty	Description	Page No
-						
000	C-1021096-0101	-		1	CARRIER CHAIN OUTSIDE	
100	1021095-0002	P		7	LINK	
110	1021095-0001	P		7	LINK	
120	1021091	C		7	CHAIN	
130	1021090	C		7	CHAIN	
250	316219-0389	C		14	CONNECTION	
260	315105-0153	-		28	WASHER BRB6,4X12RFR	

Pos	Part No	SP	UN	Qty	Description	Page No

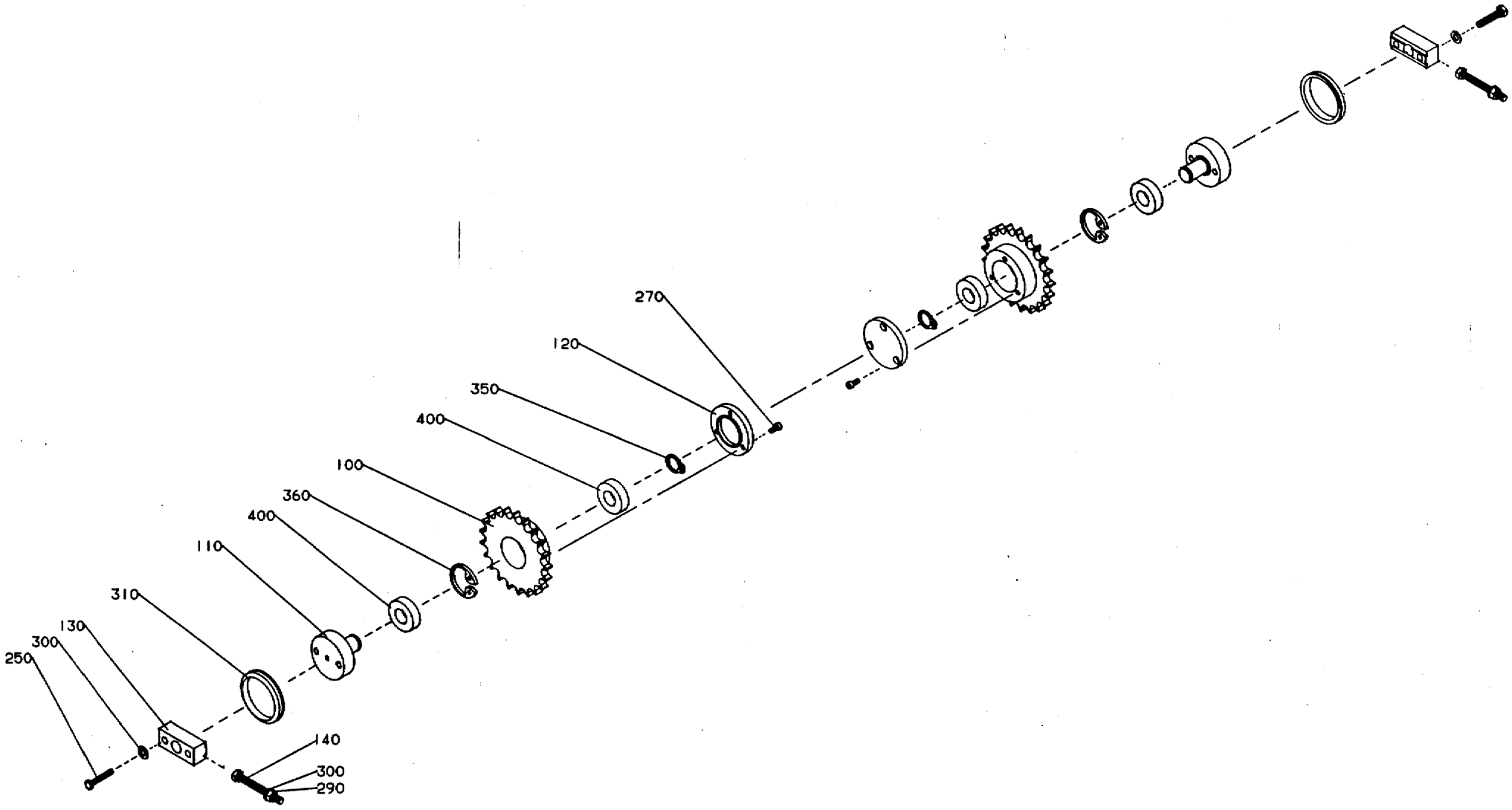

GraphicID: 102107201.eps
Parent Drw: 1021072-1
ECN 16567

Pos	Part No	SP	UN	Qty	Description	Page No
000	C-1021072-0101	-		2	GUIDE SPROCKET INSIDE	
100	1021073	-		1	SPROCKET	
110	1021069	-		1	SHAFT	
120	1021070	-		1	BEARING COVER	
130	1021071	-		1	LOCKING LUG	
140	1021509	-		1	SCREW	
250	312105-0459	-		2	SCREW O4017 M8X40A280	
270	312115-0327	-		3	SCREW O4762 M5X12A280	
290	312605-0318	-		1	NUT M6M8RFR	
300	315105-0165	-		3	WASHER BRB8,4X16RFR	
310	315220-0204	P		1	SEAL RING V-55S	
350	315750-0116	-		1	CIRCLIP SGA20	
360	315752-0128	-		1	CIRCLIP SGH42	
400	321308-0204	P		2	BALL BEARISKF6004-2RS	

Pos	Part No	SP	UN	Qty	Description	Page No

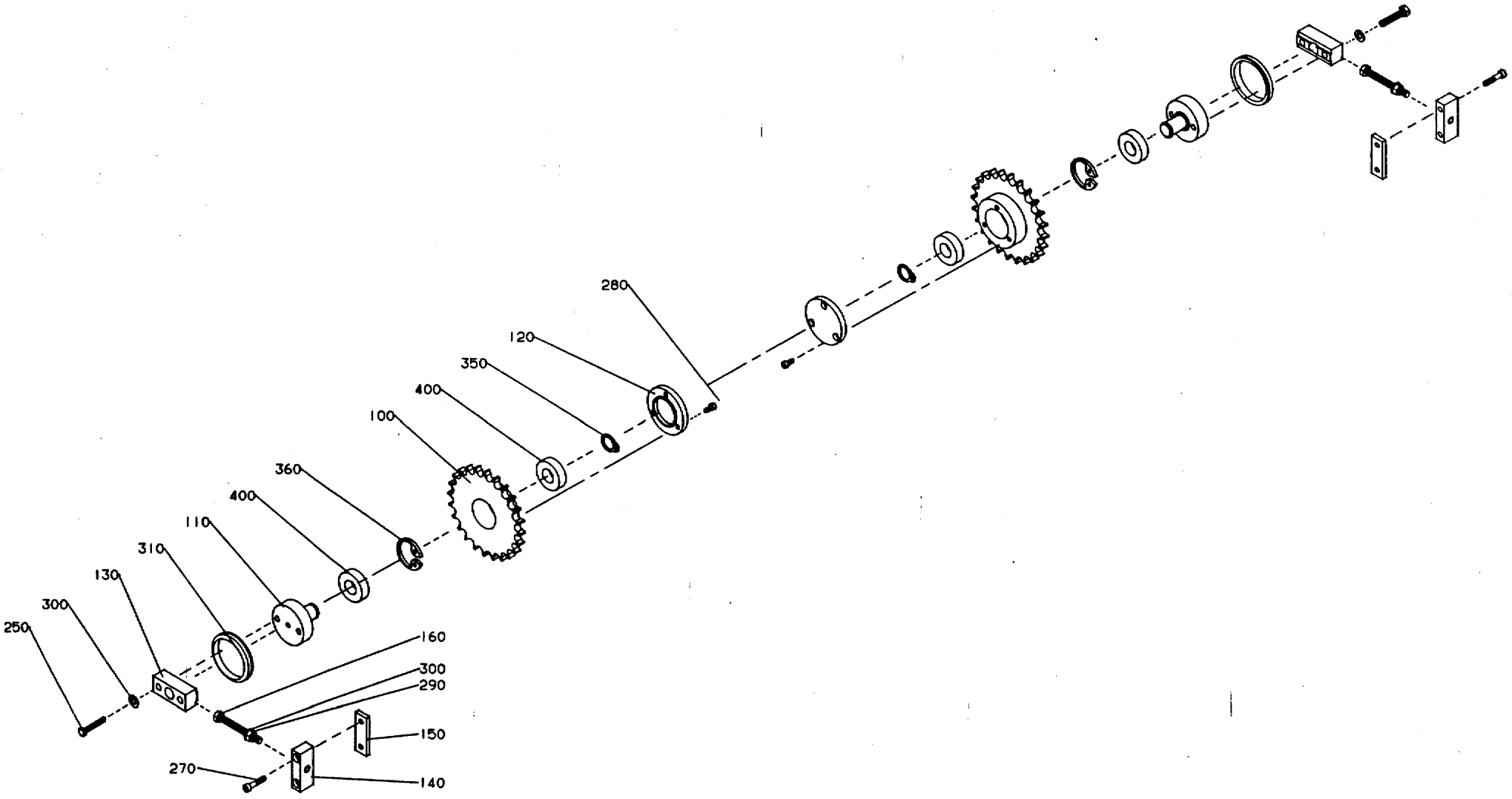

GraphicID: 102106701.eps
Parent Drw: 1021067-1
ECN 16567

Pos	Part No	SP	UN	Qty	Description	Page No
-						
000	C-1021067-0101	-		2	GUIDE SPROCKET OUTSIDE	
100	1021068	-		1	SPROCKET	
110	1021069	-		1	SHAFT	
120	1021070	-		1	BEARING COVER	
130	1021071	-		1	LOCKING LUG	
140	1021074	-		1	HOLDER	
150	1021075	-		1	LOCK PLATE	
160	1021509	-		1	SCREW	
250	312105-0459	-		2	SCREW O4017 M8X40A280	
270	312115-0327	-		3	SCREW O4762 M5X12A280	
280	312115-0374	-		2	SCREW O4762 M6X30A280	
290	312605-0318	-		1	NUT M6M8RFR	
300	315105-0165	-		3	WASHER BRB8,4X16RFR	
310	315220-0204	P		1	SEAL RING V-55S	
350	315750-0116	-		1	CIRCLIP SGA20	
360	315752-0128	-		1	CIRCLIP SGH42	
400	321308-0204	P		2	BALL BEARISKF6004-2RS	

Pos	Part No	SP	UN	Qty	Description	Page No

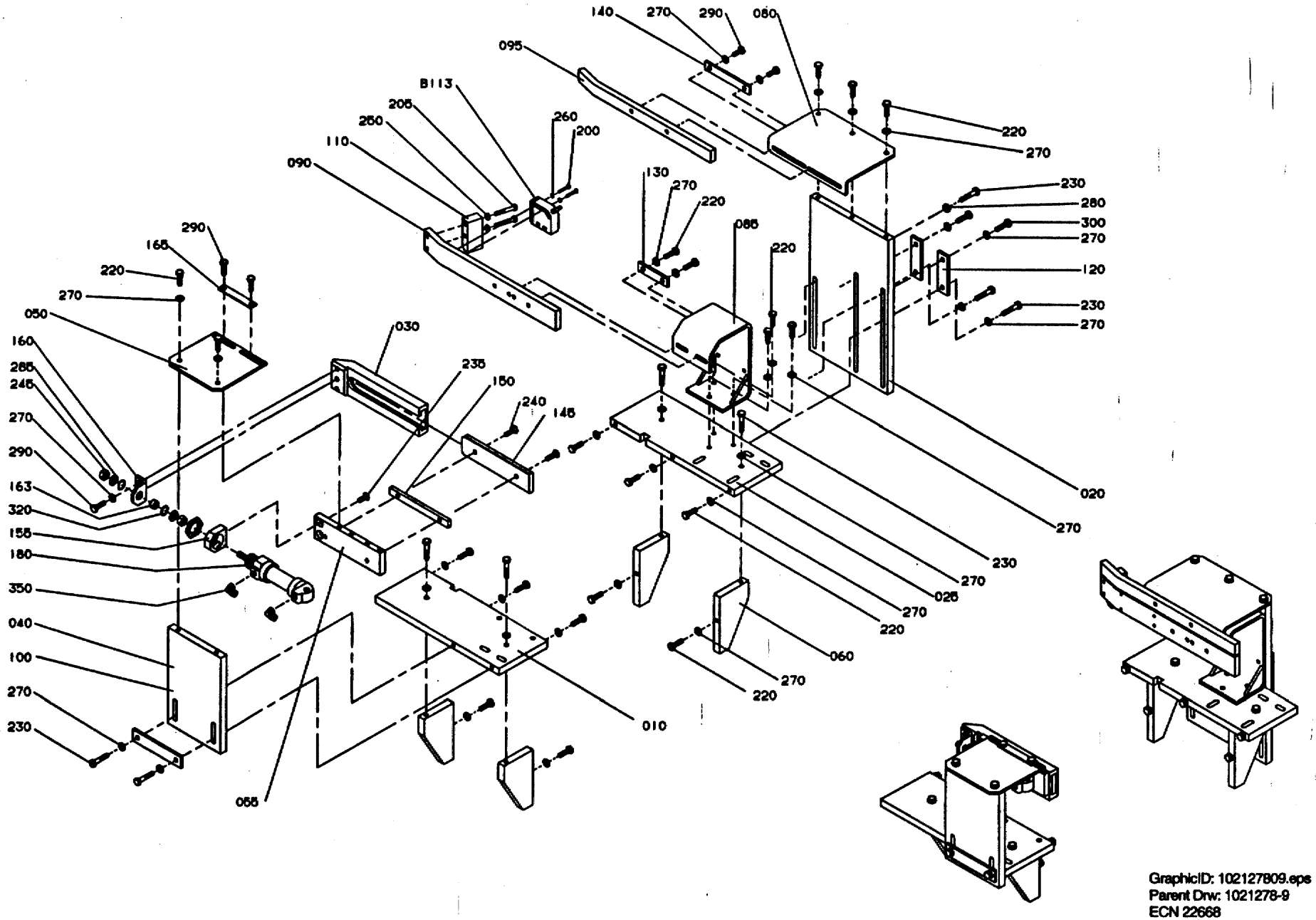

GraphicID: 102127809.eps
Parent Drw: 1021278-9
ECN 22668

Pos	Part No	SP	UN	Qty	Description	Page No
Left Hand Infeed						
000	C-1021278-0401	-		1	FOLDING BAR	
Right Hand Infeed						
000	C-1021278-0402	-		1	FOLDING BAR	
COMMON PARTS						
010	1128011	-		1	PLATE	
020	1139146	-		1	PLATE	
025	1065915	-		1	PLATE	
030	1128010	-		1	TUCK FOLDER	
040	1139147	-		1	PLATE	
050	1128012	-		1	BRACKET	
055	1128013	-		1	MOUNTING BAR	
060	1021284	-		4	SUPPORT	
080	1065907	-		1	BRACKET	
085	1065908	-		1	BRACKET	
090	1139101	-		1	RAIL	
095	1065910	-		1	RAIL	
100	1021289	-		1	LOCK PLATE	
110	1065911	-		1	LOCATING PIECE	
120	1065912	-		2	WASHER	
130	1065913	-		1	WASHER	
140	1065914	-		1	WASHER	
145	1128014	-		1	RAIL	
150	1128015	-		1	SPACER	
155	1128016	-		1	HOLDER	
160	1128017	-		1	BRACKET	
163	1128003	-		1	SPACER	
165	1128018	-		1	WASHER	
180	90239-0847	-		1	CYLINDER	
200	312125-0230	-		2	SLOTTED HEMCS3X20RFR	
205	312105-0337	-		2	SCREW O4014 M5X35A280	
220	312105-0370	-		20	SCREW O4017 M6X20A280	
230	312105-0374	-		9	SCREW O4017 M6X30A280	
235	312155-0368	-		2	SCREW MF6S6X16RFR	
240	312155-0370	-		2	SCREW MF6S6X20RFR	
245	312625-0318	-		2	NUT M 8	
250	315105-0146	-		2	WASHER BRB5,3X10RFR	
260	315105-0124	-		2	WASHER BRB3,2X6RFR	
270	315105-0153	-		34	WASHER BRB6,4X12RFR	
280	315115-0153	-		1	WASHER TBRB6,4X12RFR	
285	315105-0165	-		2	WASHER BRB8,4X16RFR	
290	312105-0368	-		6	SCREW O4017 M6X16A280	
300	312105-0371	-		2	SCREW M6S6X22RFR	
320	315202-0110	-		2	O-RING 12,1X1,6	
350	342732-0102	-		2	ELBOW PIPE D6-R1/8"	
B113	90232-0110	S		1	PH.CELL OMRON E3S-CL1-5M	

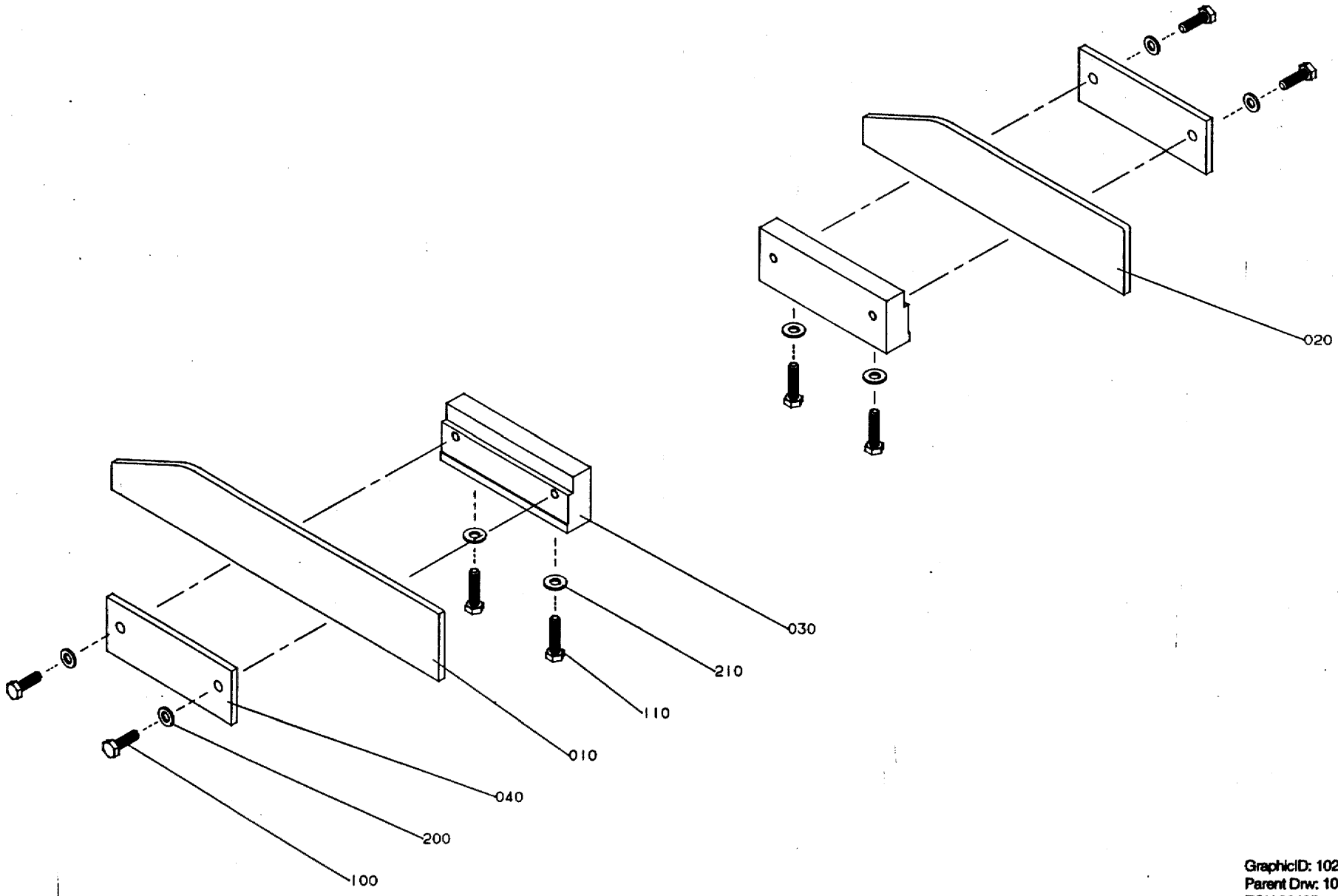

GraphicID: 102129001.eps
Parent Drw: 1021290-1
ECN 20435

Pos	Part No	SP	UN	Qty	Description	Page No
-						
000	C-1021290-0101	-		1	BOTTOM FOLDER	
010	1065916	-		1	RAIL	
020	1065917	-		1	RAIL	
030	1021293	-		2	CLAMPING PIECE	
040	1021294	-		2	LOCK PLATE	
100	312105-0370	-		4	SCREW O4017 M6X20A280	
110	312105-0372	-		4	SCREW O4017 M6X25A280	
200	315105-0153	-		4	WASHER BRB6,4X12RFR	
210	315105-0156	-		4	WASHER BRB6,7X14RFR	

Pos	Part No	SP	UN	Qty	Description	Page No

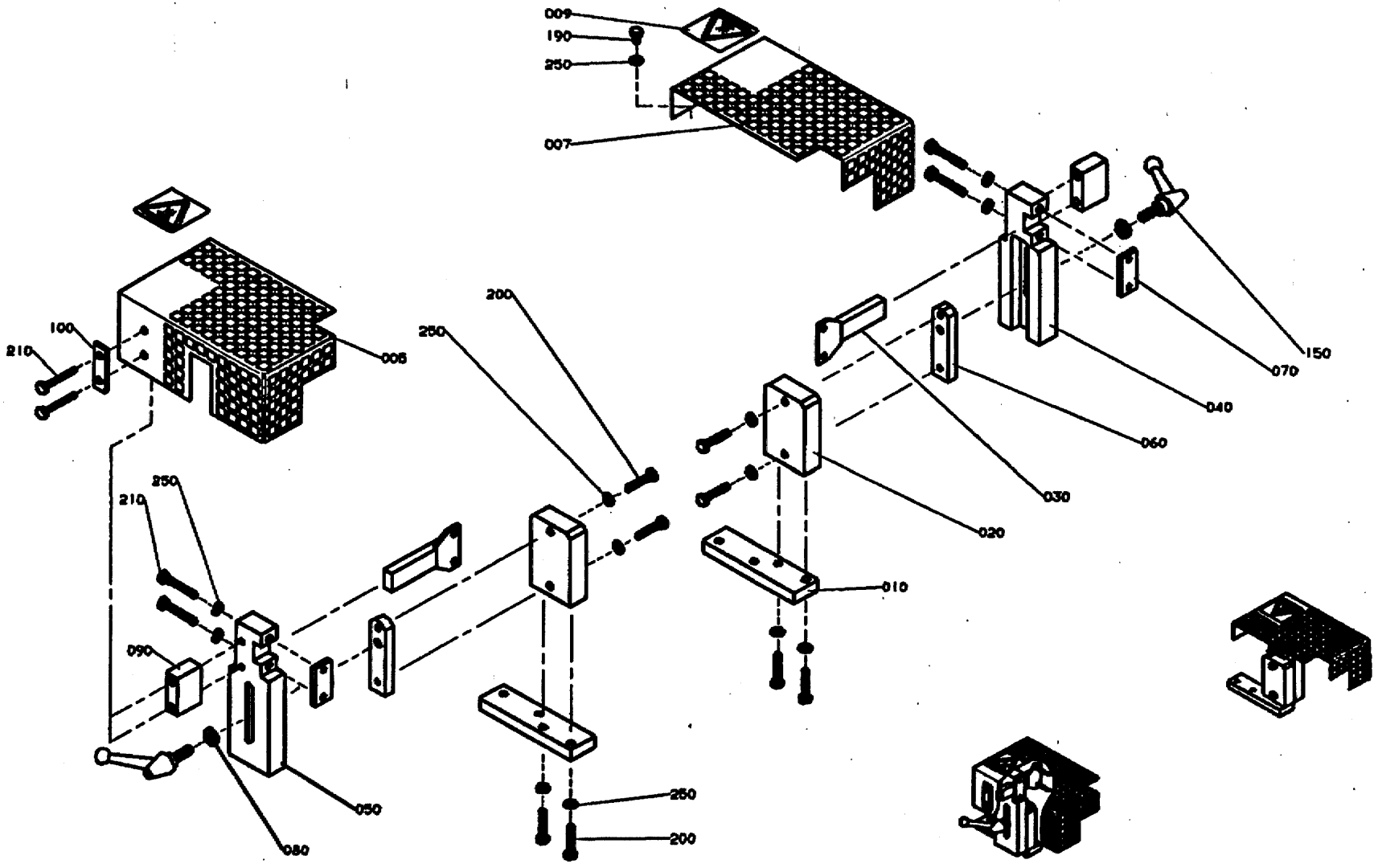

GraphicID: 102129502.tif
Parent Drw: 1021295-2
ECN No: 22292

Pos	Part No	SP	UN	Qty	Description	Page No
-						
000	C-1021295-0201	-		1	GUN HOLDER	
005	1074489	-		1	PROTECTION	
007	1074490	-		1	PROTECTION	
009	1128853	-		2	CAUTION SIGN	
010	1021296	-		2	BRACKET	
020	1021297	-		2	SUPPORT	
030	1021298	-		2	STEERING	
040	1021299	-		1	GUIDE	
050	1021300	-		1	GUIDE	
060	1021301	-		2	RAIL	
070	1021302	-		2	LOCK PLATE	
080	1021934	-		2	WASHER	
090	1074483	-		2	SPACER	
100	1074484	-		2	WASHER	
150	90117-0008	-		2	HANDLE	
200	312105-0374	-		8	SCREW O4017 M6X30A280	
210	312105-0378	-		8	SCREW O4017 M6X40A280	
250	315105-0153	-		12	WASHER BRB6,4X12RFR	

Pos	Part No	SP	UN	Qty	Description	Page No

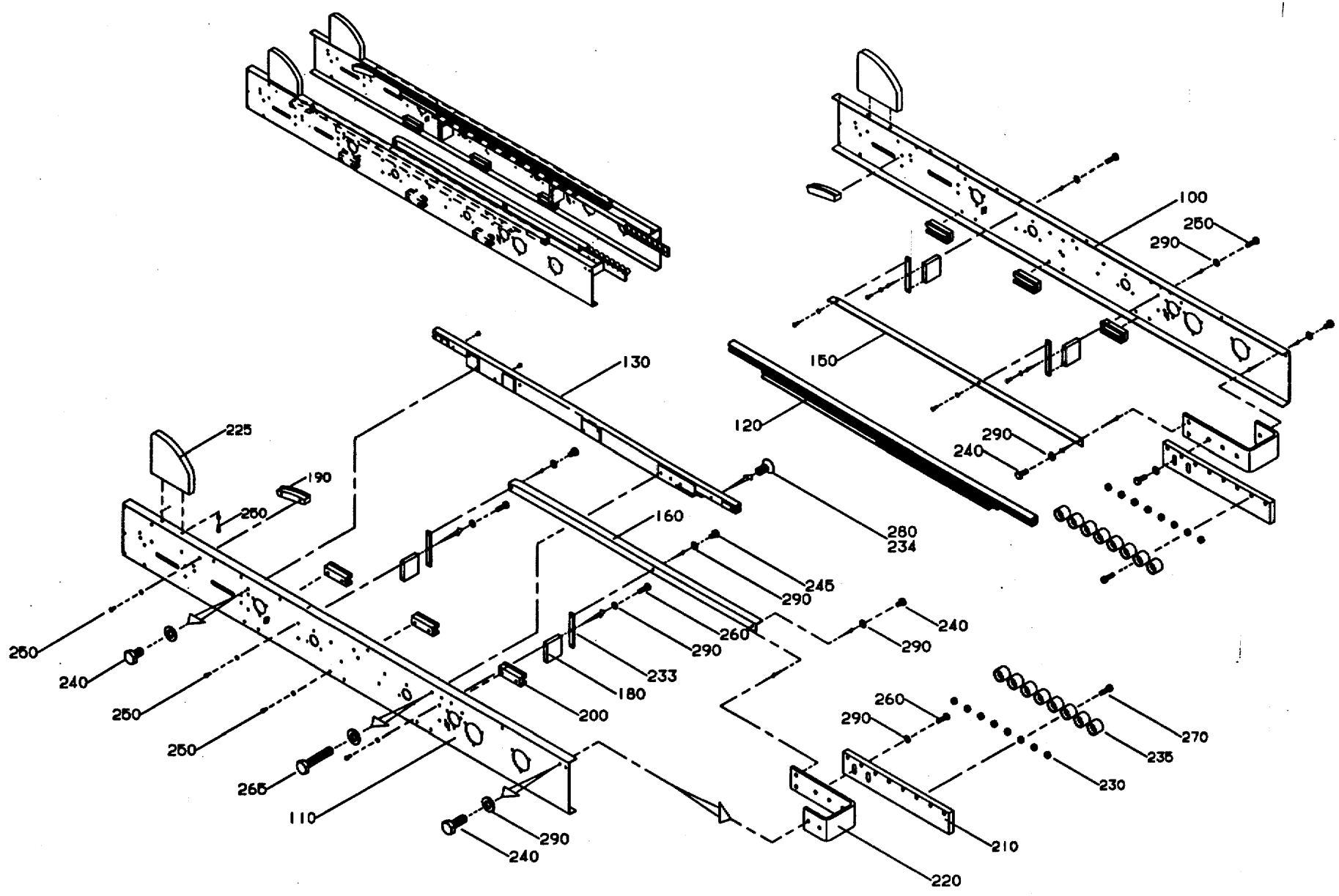

GraphicID: 102107603.eps
Parent Drw: 1021076-3
ECN 22668

Pos	Part No	SP	UN	Qty	Description	Page No
000	C-1021076-0301	-		1	MACHINE BODY	
100	1139107	-		1	SIDE PLATE	
110	1139108	-		1	SIDE PLATE	
120	1021085	-		1	SLIDE RAIL	
130	1021086	-		1	SLIDE RAIL	
150	1139109	-		1	SLIDE RAIL	
160	1139110	-		1	SLIDE RAIL	
180	1021083	-		4	SPACER	
190	1021087	-		2	SLIDE RAIL	
200	1021088	-		6	SLIDE RAIL	
210	1139112	-		2	BRACKET	
220	1139113	-		2	FASTENING BRACKET	
225	1065918	-		2	STEERING	
230	1021901	-		16	SPACER	
233	1139114	-		4	FASTENING PLATE	
234	90157-0016	-		X	LOCKING FLUID	
235	90191-0039	P		16	WHEEL	
240	312105-0364	-		26	SCREW M6S6X10RFR	
245	312105-0366	-		4	SCREW O4017 M6X12A280	
250	312105-0368	-		28	SCREW O4017 M6X16A280	
260	312105-0370	-		12	SCREW O4017 M6X20A280	
265	312105-0374	-		2	SCREW O4017 M6X30A280	
270	312115-0370	-		16	SCREW O4762 M6X20A280	
280	312155-0291	-		6	SCREW MF6S4X12RFR	
290	315105-0153	-		72	WASHER BRB6,4X12RFR	

Pos	Part No	SP	UN	Qty	Description	Page No

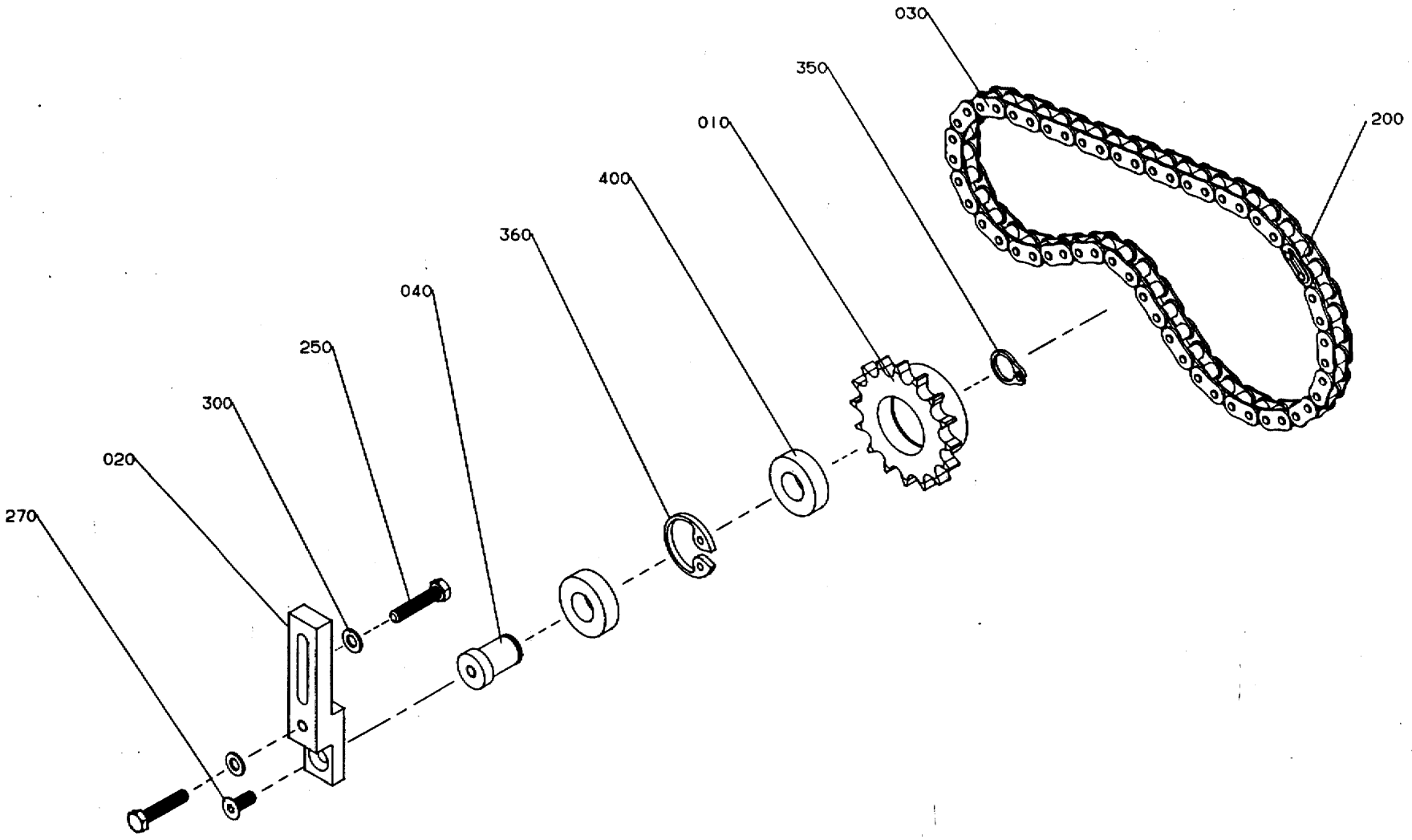

GraphicID: 102132601.eps
Parent Drw: 1021326-1
ECN 16567

Pos	Part No	SP	UN	Qty	Description	Page No
000	C-1021326-0101	-		1	CHAIN TIGHTENER WHEEL	
010	1021327	-		1	SPROCKET	
020	1021328	-		1	BRACKET	
030	1021919	C		1	CHAIN	
040	1021329	-		1	SHAFT	
200	90288-0317	C		1	CONNECTION LINK	
250	312105-0459	-		2	SCREW O4017 M8X40A280	
270	312155-0451	-		1	SCREW MF6S8X20RFR	
300	315125-0165	-		2	WASHER SB 8,4X26X5 RFR	
350	315751-0116	-		1	CIRCLIP SGA20 RFR	
360	315752-0128	-		1	CIRCLIP SGH42	
400	321308-0204	P		2	BALL BEARISKF6004-2RS	

Pos	Part No	SP	UN	Qty	Description	Page No

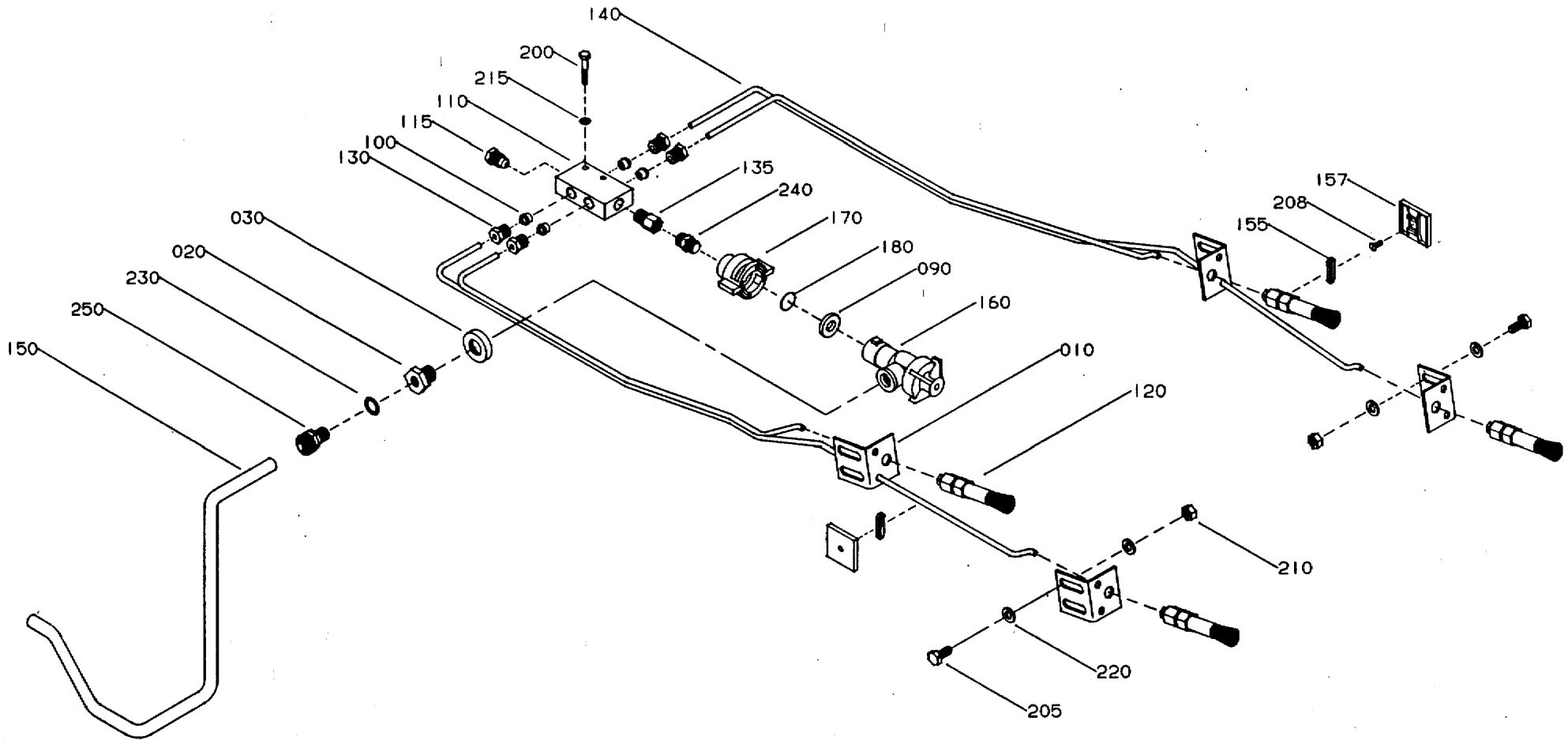

GraphicID: 106589601.eps
Parent Drw: 1065896-1
ECN 20435

Pos	Part No	SP	UN	Qty	Description	Page No
000	C-1065896-0101	-		1	CHAIN LUBRICATION	
010	1065897	-		4	BRACKET	
020	532413	-		1	REDUCING NIPPLE	
030	532414	-		1	WASHER	
090	90005-0094	-		1	GASKET	
100	90028-0024	-		4	CONE	
110	90032-0046	-		1	JUNKTION BLOCK	
115	90087-0019	-		1	PLUG	
120	90092-0080	-		4	OIL BRUSH F.4 MM TUBE	
130	90134-0038	-		4	BUSHING	
135	90134-0081	-		1	REDUCTION SLEEVE	
140	90166-0109	-	CM	400	HOSE	
150	90166-0141	-	CM	400	HOSE	
155	90182-0005	-		2	STRAP	
157	90182-0007	-		2	PLATE	
160	90230-0027	-		1	NON-RETURN VALVE	
160	90230-0300	SP		1	* STRAINER	
160	90230-0301	SP		1	* DIAPHRAGM	
170	90230-0302	-		1	ADAPTER	
180	90230-0307	-		1	ORIFICE PLATE	
200	312105-0297	-		2	SCREW O4014 M4X25A280	
205	312105-0367	-		8	SCREW M6S6X14RFR	
208	312145-0222	-		2	SLOTTED HEMFS3X8RFR	
210	312605-0316	-		8	NUT M6M6RFR	
215	315105-0136	-		2	WASHER BRB4,3X8RFR	
220	315105-0153	-		16	WASHER BRB6,4X12RFR	
230	315233-0109	-		1	SEAL RING R1/8"	
240	342700-0109	-		1	NIPPLE RNA1/8"-1/8"	
250	342921-0131	-		1	PIPE COUPL10/8-1/8"	

Pos	Part No	SP	UN	Qty	Description	Page No

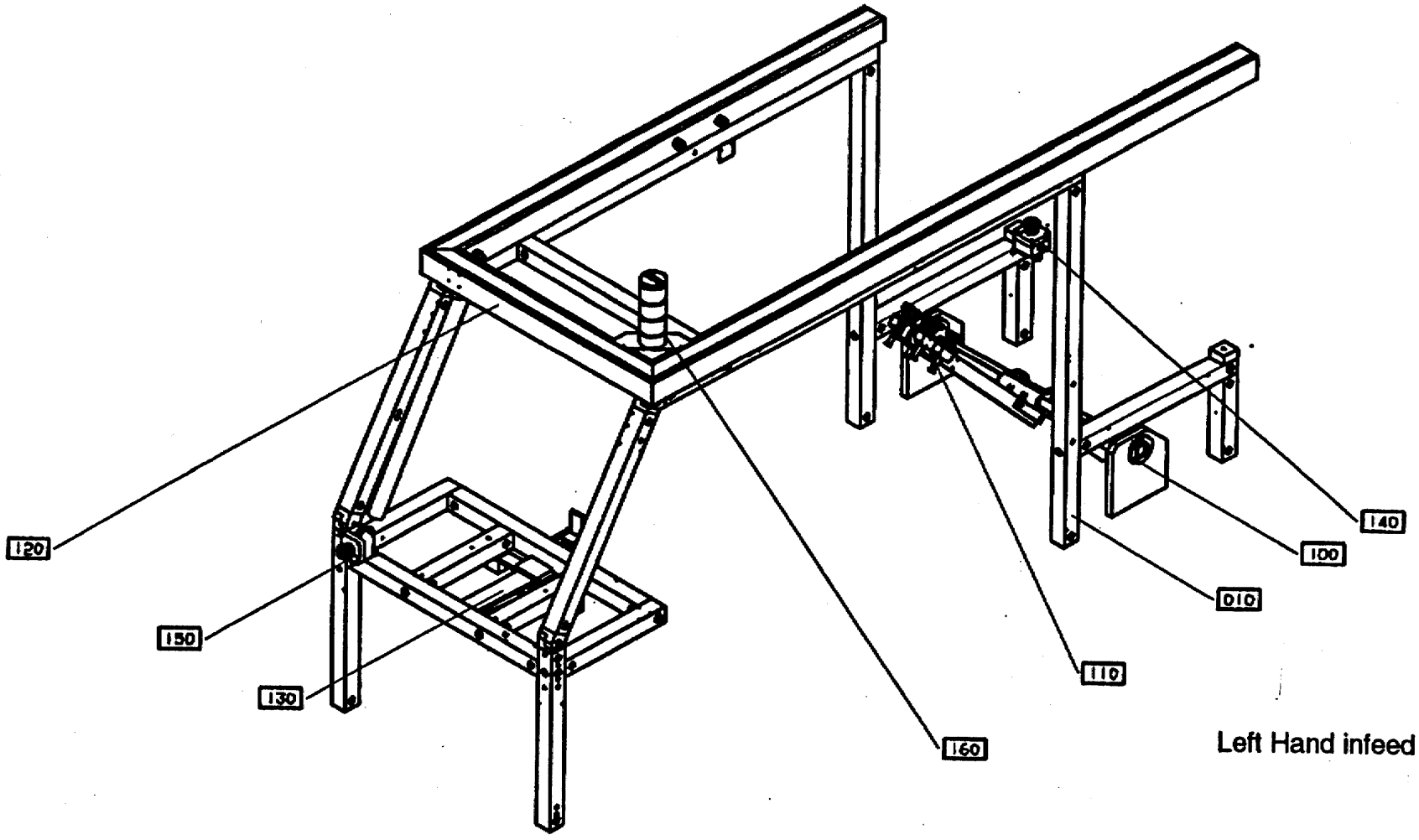

Left Hand infeed

GraphicID: 67028303.tif
Parent Drw:670283-3
ECN No: 22292

Pos	Part No	SP	UN	Qty	Description	Page No
-						
000	B- 670283-0401	-		1	SUPERSTRUCTURE	
010	C-1021303-0301	-		1	UPPERFRAME	119
100	C-1021143-0101	-		1	MAGAZINE SHAFT	121
110	C-1021160-020V	-		1	SUCTION CUP	125
120	C-1021510-010V	-		1	CABLE TRENCH	129
130	C-1065360-020V	-		1	FOLDING SUPPORT	135
130	C-1065366-020V	-			. SUPPORT	139
140	C-1021838-0202	-		1	EMERGENCY STOP	141
150	C-1021838-0203	-		1	EMERGENCY STOP	141
160	C- 581689-0101	-		1	WARNING LAMP	143

Pos	Part No	SP	UN	Qty	Description	Page No

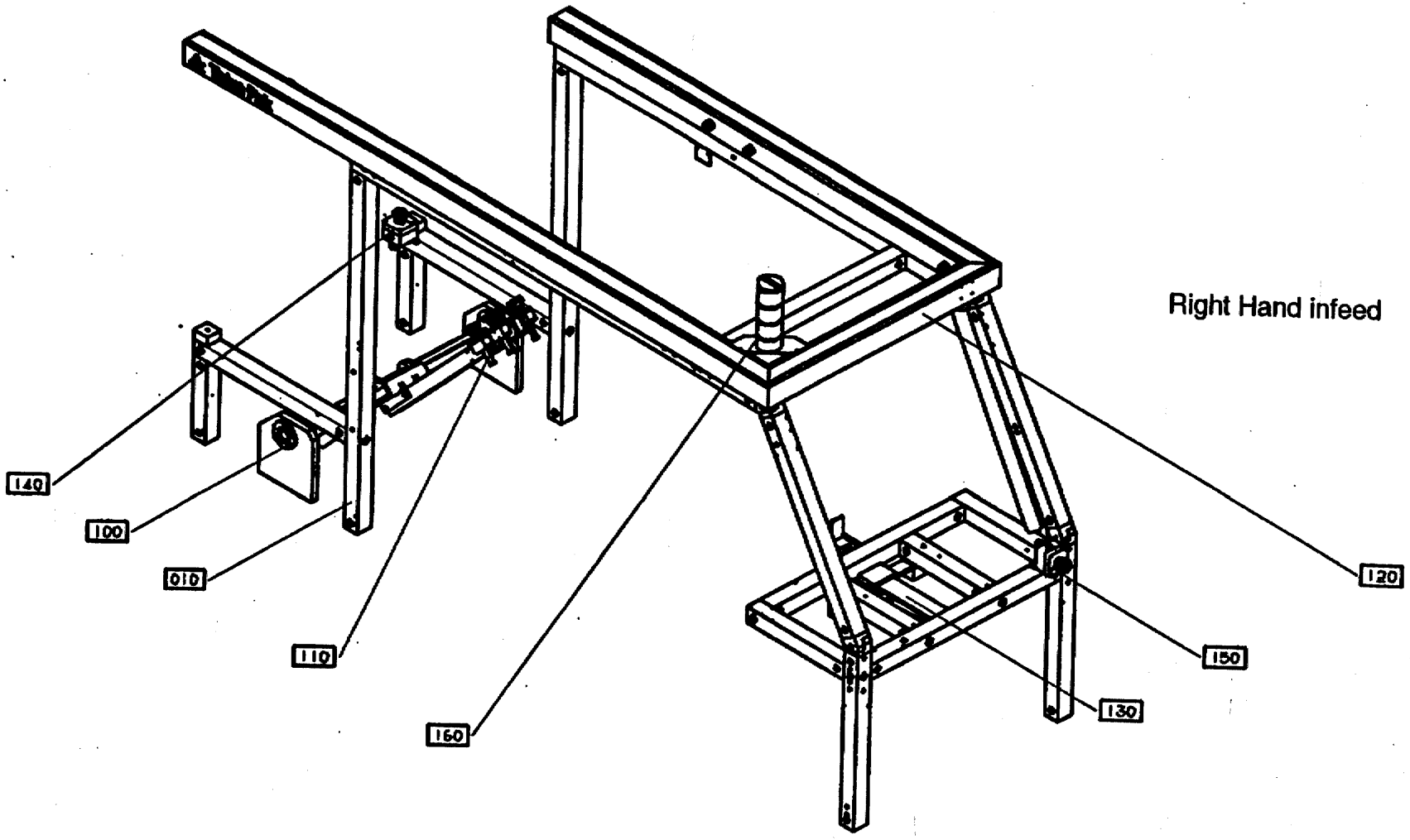

Right Hand infeed

GraphicID: 67028304.tif
Parent Drw:670283-4
ECN No: 22292

Pos	Part No	SP	UN	Qty	Description	Page No
000	B- 670283-0401	-		1	SUPERSTRUCTURE	
010	C-1021303-0301	-		1	UPPERFRAME	
100	C-1021143-0101	-		1	MAGAZINE SHAFT	
110	C-1021160-020V	-		1	SUCTION CUP	
120	C-1021510-010V	-		1	CABLE TRENCH	
130	C-1065360-020V	-		1	FOLDING SUPPORT	
130	C-1065366-020V	-			. SUPPORT	
140	C-1021838-0202	-		1	EMERGENCY STOP	
150	C-1021838-0203	-		1	EMERGENCY STOP	
160	C- 581689-0101	-		1	WARNING LAMP	

Pos	Part No	SP	UN	Qty	Description	Page No

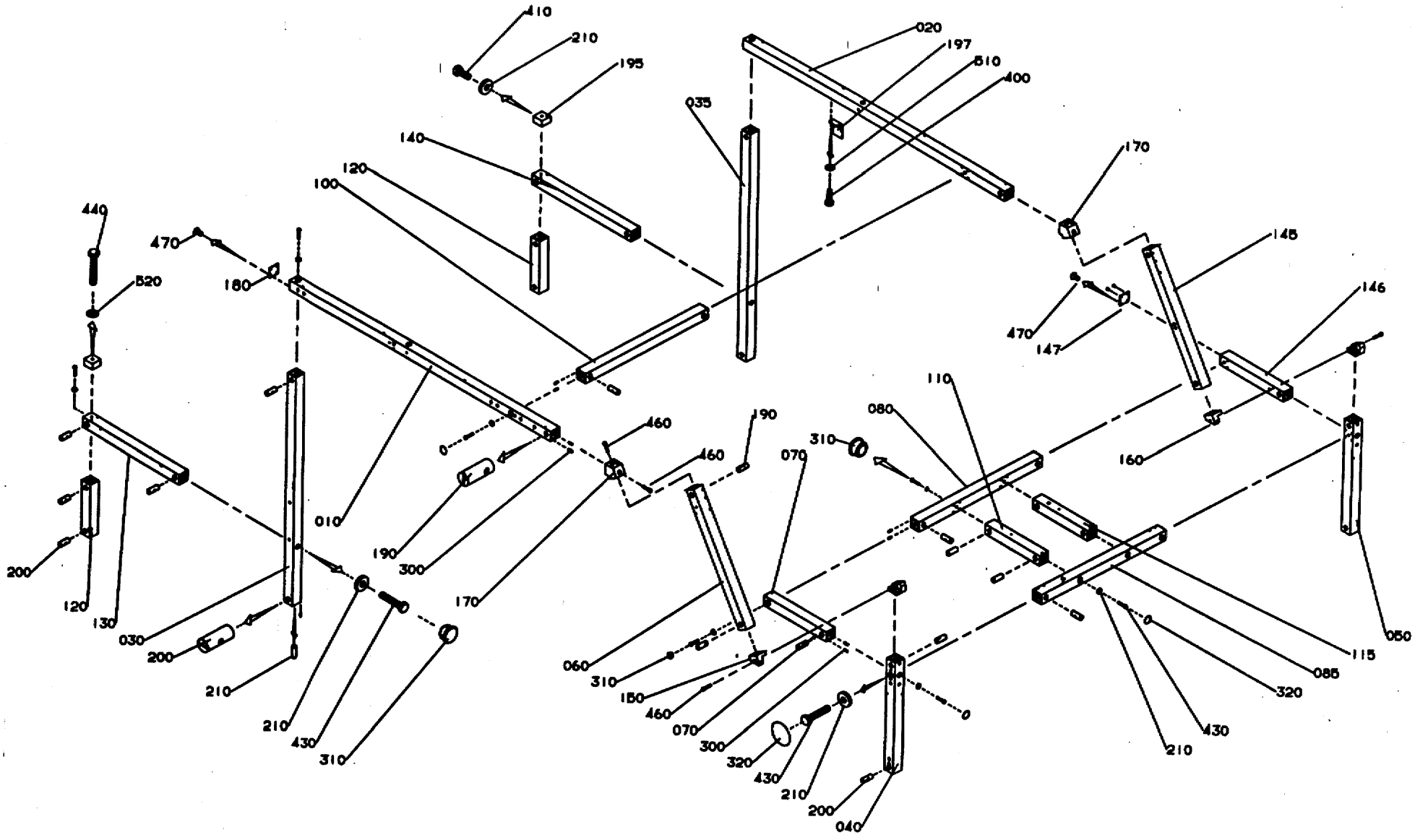

GraphicID: 102130303.eps
Parent Drw: 1021303-3
ECN 23757

Pos	Part No	SP	UN	Qty	Description	Page No
-						
1-LINE Z-FORM U-FORM L-FORM, 2-LINE / 3-LINE Z-FORM U-FORM , MULTI U-FORM						
000	C-1021303-0301	-		1	UPPER FRAME	
470	312145-0325	-		4	SLOTTED HEMFS5X10RFR	
MULTI Z-FORM						
000	C-1021303-0302	-		1	UPPER FRAME	
180	1139254	-		1	COVER PLATE	
470	312145-0325	-		8	SLOTTED HEMFS5X10RFR	
Common Parts						
010	1021304	-		1	PROFILE	
020	1021305	-		1	PROFILE	
030	1021306	-		1	PROFILE	
035	1021793	-		1	PROFILE	
040	1021307	-		1	PROFILE	
050	1021308	-		1	PROFILE	
060	1021309	-		1	PROFILE	
070	1021310	-		1	PROFILE	
080	1074993	-		1	PROFILE	
085	1021412	-		1	PROFILE	
100	1021313	-		1	PROFILE	
110	1021314	-		1	PROFILE	
115	1021405	-		1	PROFILE	
120	1021315	-		2	PROFILE	
130	1021316	-		1	PROFILE	
140	1021317	-		1	PROFILE	
145	1021794	-		1	PROFILE	
146	1021989	-		1	PROFILE	
147	556604	-		1	COVER PLATE	
150	1021318	-		2	BRACKET	
160	1021319	-		2	BRACKET	
170	1139139	-		2	BRACKET	
190	1021322	-		8	NUT	
195	1021776	-		2	BRACKET	
197	1021798	-		1	BRACKET	
200	486268	-		26	NUT	
210	548599	-		26	WASHER	
300	1065410	-		132	SLOTTED PIN	
310	90261-0060	-		6	PLASTIC PLUG	
320	1021933	-		8	COVER TAPE	
400	312105-0370	-		2	SCREW O4017 M6X20A280	
410	312105-0451	-		2	SCREW SO4017 8X20A280	
430	312105-0459	-		24	SCREW O4017 M8X40A280	
440	312105-0463	-		2	SCREW O4014 M8X60A280	
460	312115-0459	-		10	SCREW O4762 M8X40A280	
510	315105-0153	-		2	WASHER BRB6,4X12RFR	
520	315105-0165	-		2	WASHER BRB8,4X16RFR	

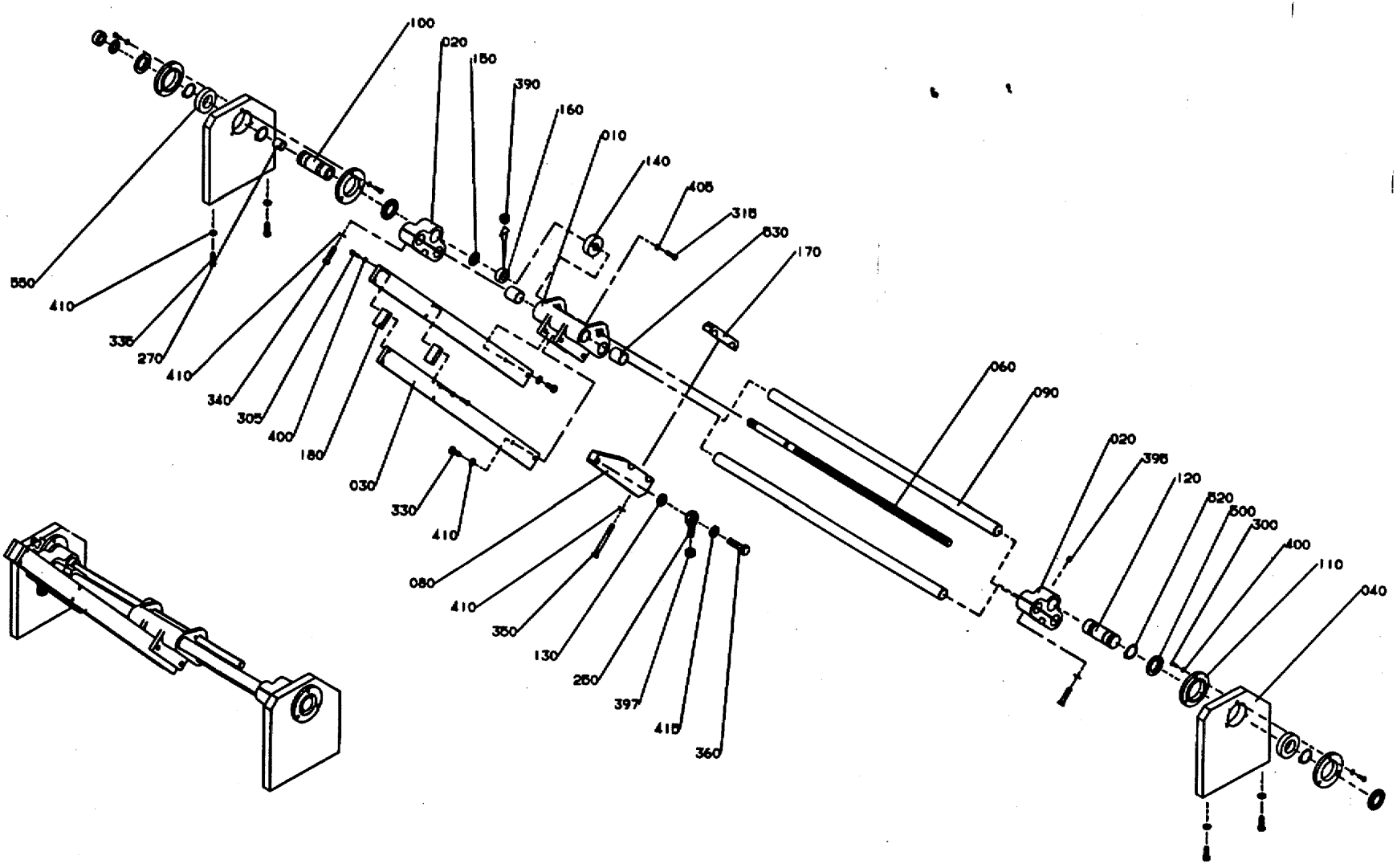

GraphicID: 102114301.eps
Parent Drw: 1021143-1
ECN 23757

Pos	Part No	SP	UN	Qty	Description	Page No
-						
000	C-1021143-0101	-		1	MAGAZINE SHAFT	
010	G-1021144	-		1	GUIDE	
020	1021145	-		2	CLAMPING PIECE	
030	1021146	-		2	ARM	
040	1021147	-		2	PLATE	
060	1021149	-		1	ADJUSTING SCREW	
080	1021151	-		1	ARM	
090	1021148	-		2	SHAFT	
100	1021150	-		1	SHAFT	
110	1021153	-		4	LID	
120	1021159	-		1	SHAFT	
130	1021152	-		1	WASHER	
140	1021154	-		1	NUT	
150	1021155	-		2	WASHER	
160	1021156	-		2	RETAINING RING	
170	1021157	-		1	CLAMPING PIECE	
180	1021158	-		2	SPACER	
250	90115-0135	P		1	LINK HEAD	
270	90240-0205	-		1	PLAIN BEARING	
300	312105-0329	-		12	SCREW O4017 M5X16A280	
305	312105-0331	-		8	SCREW O4017 M5X20A280	
315	312105-0372	-		2	SCREW O4017 M6X25A280	
330	312105-0451	-		4	SCREW SO4017 8X20A280	
335	312105-0453	-		4	SCREW O4017 M8X25A280	
340	312105-0457	-		8	SCREW O4017 M8X35A280	
350	312105-0465	-		2	SCREW O4014 M8X70A280	
360	312105-0541	-		1	SCREW 4017 M12X45A280	
390	312318-0360	-		4	STOP SCREW SK6SS6X6RFR	
395	312318-0443	-		2	STOP SCREW SK6SS8X8RFR	
397	312605-0322	-		1	NUT M6M12RFR	
400	315105-0146	-		20	WASHER BRB5,3X10RFR	
405	315105-0153	-		2	WASHER BRB6,4X12RFR	
410	315105-0165	-		18	WASHER BRB8,4X16RFR	
415	315105-0178	-		1	WASHER BRB13X24RFR	
500	90091-0306	-		4	SEAL RING	
520	315750-0122	-		4	CIRCLIP SGA30	
530	321120-0160	-		4	BUSHING 25/28X30	
550	321308-0206	P		2	BALL BEARISKF6006-2RS	

Pos	Part No	SP	UN	Qty	Description	Page No

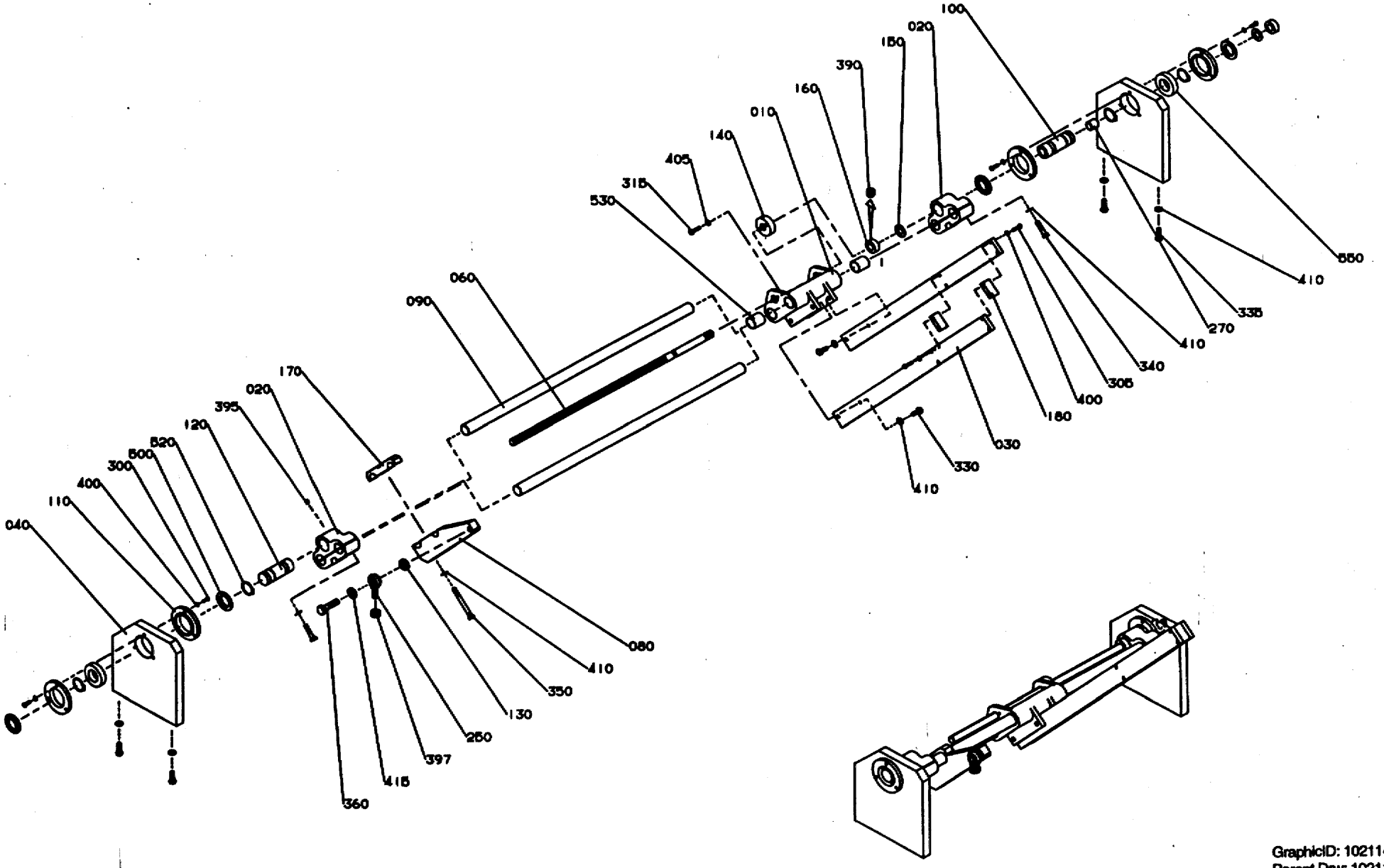

GraphicID: 102114302.eps
Parent Drw: 1021143-2
ECN 23757

Pos	Part No	SP	UN	Qty	Description	Page No
000	C-1021143-0101	-		1	MAGAZINE SHAFT	
010	G-1021144	-		1	GUIDE	
020	1021145	-		2	CLAMPING PIECE	
030	1021146	-		2	ARM	
040	1021147	-		2	PLATE	
060	1021149	-		1	ADJUSTING SCREW	
080	1021151	-		1	ARM	
090	1021148	-		2	SHAFT	
100	1021150	-		1	SHAFT	
110	1021153	-		4	LID	
120	1021159	-		1	SHAFT	
130	1021152	-		1	WASHER	
140	1021154	-		1	NUT	
150	1021155	-		2	WASHER	
160	1021156	-		2	RETAINING RING	
170	1021157	-		1	CLAMPING PIECE	
180	1021158	-		2	SPACER	
250	90115-0135	P		1	LINK HEAD	
270	90240-0205	-		1	PLAIN BEARING	
300	312105-0329	-		12	SCREW O4017 M5X16A280	
305	312105-0331	-		8	SCREW O4017 M5X20A280	
315	312105-0372	-		2	SCREW O4017 M6X25A280	
330	312105-0451	-		4	SCREW SO4017 8X20A280	
335	312105-0453	-		4	SCREW O4017 M8X25A280	
340	312105-0457	-		8	SCREW O4017 M8X35A280	
350	312105-0465	-		2	SCREW O4014 M8X70A280	
360	312105-0541	-		1	SCREW 4017 M12X45A280	
390	312318-0360	-		4	STOP SCREW SK6SS6X6RFR	
395	312318-0443	-		2	STOP SCREW SK6SS8X8RFR	
397	312605-0322	-		1	NUT M6M12RFR	
400	315105-0146	-		20	WASHER BRB5,3X10RFR	
405	315105-0153	-		2	WASHER BRB6,4X12RFR	
410	315105-0165	-		18	WASHER BRB8,4X16RFR	
415	315105-0178	-		1	WASHER BRB13X24RFR	
500	90091-0306	-		4	SEAL RING	
520	315750-0122	-		4	CIRCLIP SGA30	
530	321120-0160	-		4	BUSHING 25/28X30	
550	321308-0206	P		2	BALL BEARISKF6006-2RS	

Pos	Part No	SP	UN	Qty	Description	Page No

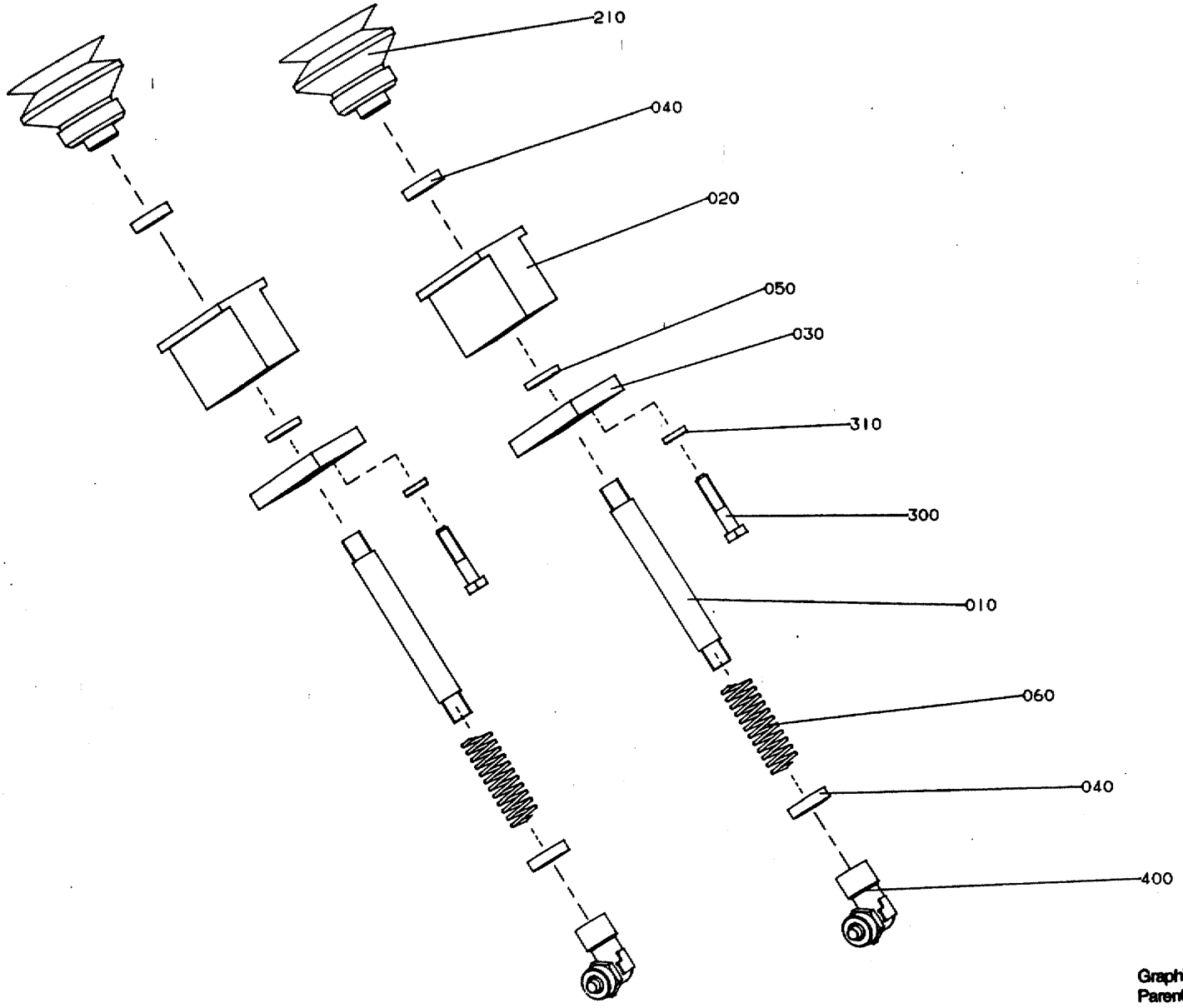

GraphicID: 102116001.eps
Parent Drw: 1021160-1
ECN 16567

Pos	Part No	SP	UN	Qty	Description	Page No
Package length 200-264						
000	C-1021160-0201	-		1	SUCTION CUP	
010	1021161	-		2	PIPE	
020	1021162	-		2	BEARING HOUSING	
030	1021163	-		2	PLATE	
040	1021164	-		4	NUT	
050	1021165	-		2	WASHER	
060	1021166	-		2	SPRING	
210	90425-0017	P		2	SUCTION CUP	
300	312105-0372	-		4	SCREW O4017 M6X25A280	
310	315105-0153	-		4	WASHER BRB6,4X12RFR	
400	342933-0121	-		2	ELBOW PIPE8/6-1/8	

Pos	Part No	SP	UN	Qty	Description	Page No

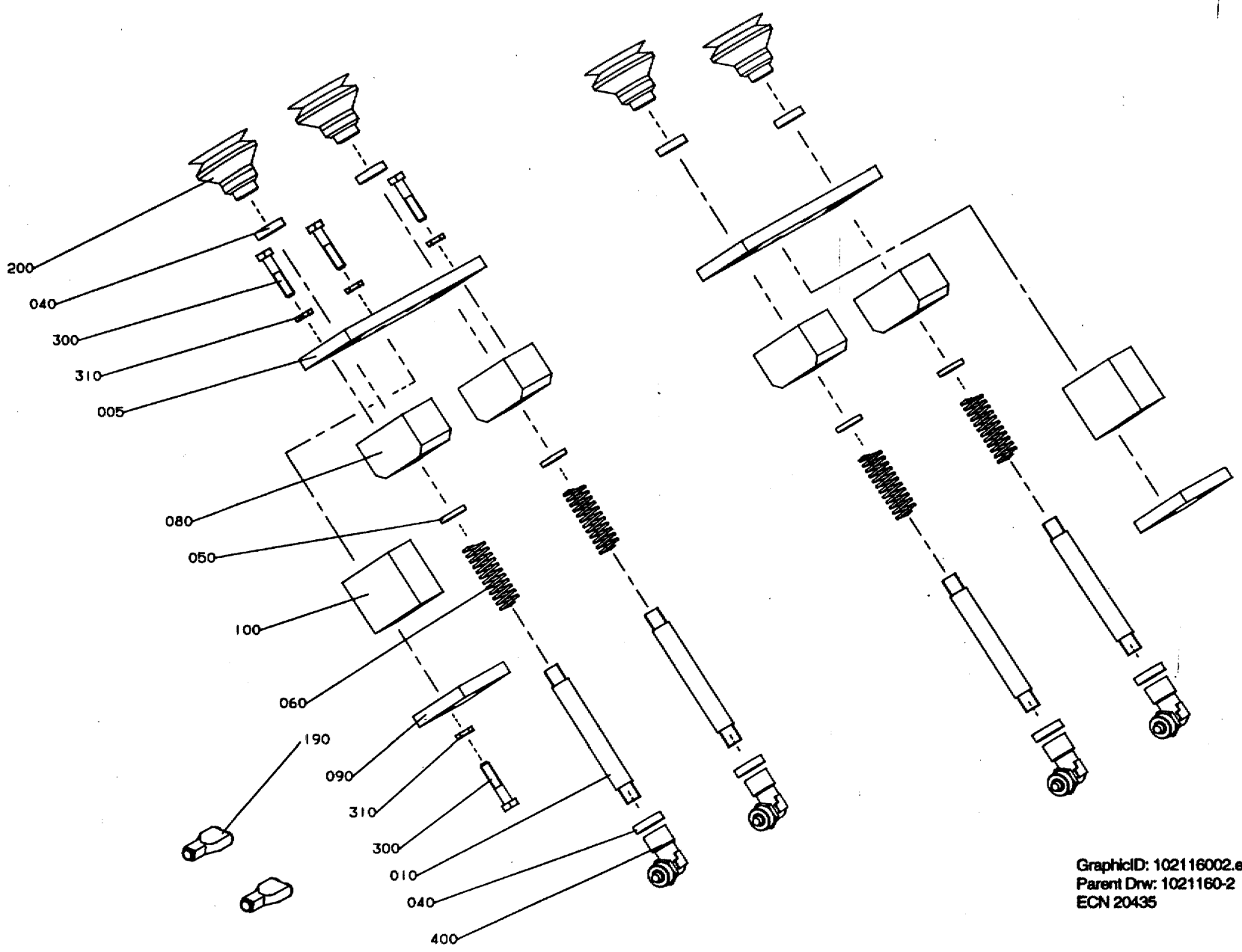

GraphicID: 102116002.eps
Parent Drw: 1021160-2
ECN 20435

Pos	Part No	SP	UN	Qty	Description	Page No
Package length 265-420						
000	C-1021160-0202	-		1	SUCTION CUP	
005	1021171	-		2	HOLDER	
010	1021161	-		4	PIPE	
040	1021164	-		8	NUT	
050	1021165	-		4	WASHER	
060	1021166	-		4	SPRING	
080	1021169	-		4	BEARING HOUSING	
090	1021170	-		2	PLATE	
100	1021172	-		2	SPACER	
190	90055-0101	-		2	JOINT CONNECTION	
200	90425-0015	P		4	SUCTION CUP	
300	312105-0372	-		16	SCREW O4017 M6X25A280	
310	315105-0153	-		16	WASHER BRB6,4X12RFR	
400	342933-0121	-		4	ELBOW PIPE8/6-1/8	

Pos	Part No	SP	UN	Qty	Description	Page No

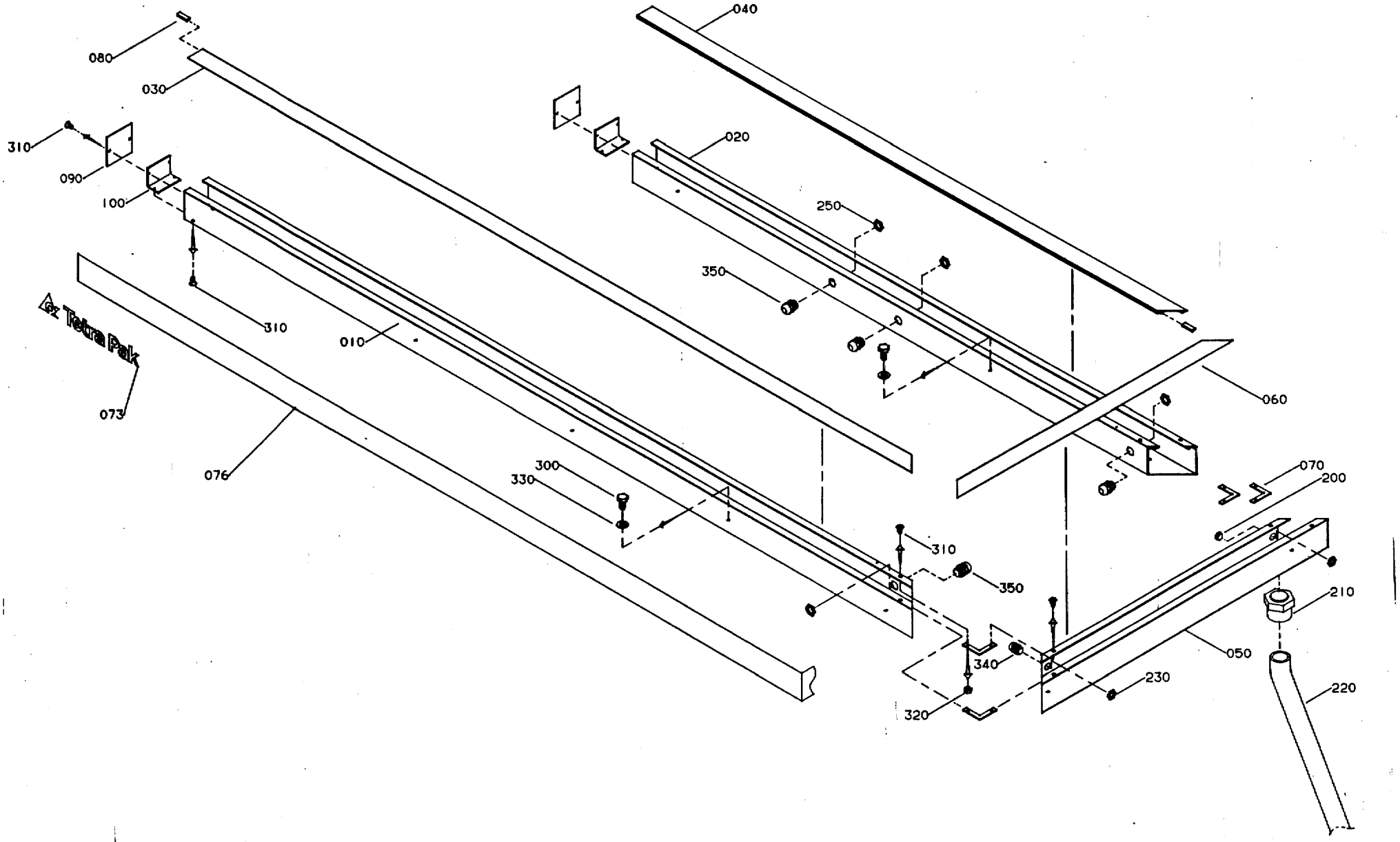

GraphicID: 102151001.eps
Parent Drw: 1021510-1
ECN 19307

Pos	Part No	SP	UN	Qty	Description	Page No
1/2/3-Line, LEFT HAND INFEED						
000	C-1021510-0101	-		1	CABLE TRENCH	
010	1021511	-		1	CABLE TRENCH	
020	1021512	-		1	CABLE TRENCH	
030	1021516	-		1	LID	
040	1021517	-		1	LID	
073	1021990	-		2	SIGN	
080	975939	-		16	SEAL	
090	1065696	-		2	COVERING PLATE	
100	1065697	-		2	BRACKET	
300	312105-0366	-		10	SCREW O4017 M6X12A280	
310	312145-0287	-		16	SLOTTED HEMFS4X8RFR	
320	312605-0312	-		16	NUT M6M4RFR	
330	315105-0153	-		10	WASHER BRB6,4X12RFR	
1/2/3-Line, RIGHT HAND INFEED						
000	C-1021510-0102	-		1	CABLE TRENCH	
010	1021514	-		1	CABLE TRENCH	
020	1021515	-		1	CABLE TRENCH	
030	1021519	-		1	LID	
040	1021520	-		1	LID	
073	1021990	-		2	SIGN	
080	975939	-		16	SEAL	
090	1065696	-		2	COVERING PLATE	
100	1065697	-		2	BRACKET	
300	312105-0366	-		10	SCREW O4017 M6X12A280	
310	312145-0287	-		16	SLOTTED HEMFS4X8RFR	
320	312605-0312	-		16	NUT M6M4RFR	
330	315105-0153	-		10	WASHER BRB6,4X12RFR	
COMMON PARTS						
050	1021513	-		1	CABLE TRENCH	
060	1021518	-		1	LID	
070	975934	-		4	GUSSET PLATE	
076	1021991	-		1	STRIP	
200	90002-0013	-		1	BLANK-OFF PLUG 15,2	
210	90012-0075	-		1	GLAND FITTING	
220	90012-0076	-		1	CABLE SHEATH	
230	90099-0104	-		2	NUT PR 15,2 (PG9)	
250	90099-0117	-		4	NUT PR18,6 (PG11)	
340	352103-0101	-		1	CABLE GLAND ST 9	
350	352103-0106	-		4	CABLE GLAND ST 11	

Pos	Part No	SP	UN	Qty	Description	Page No

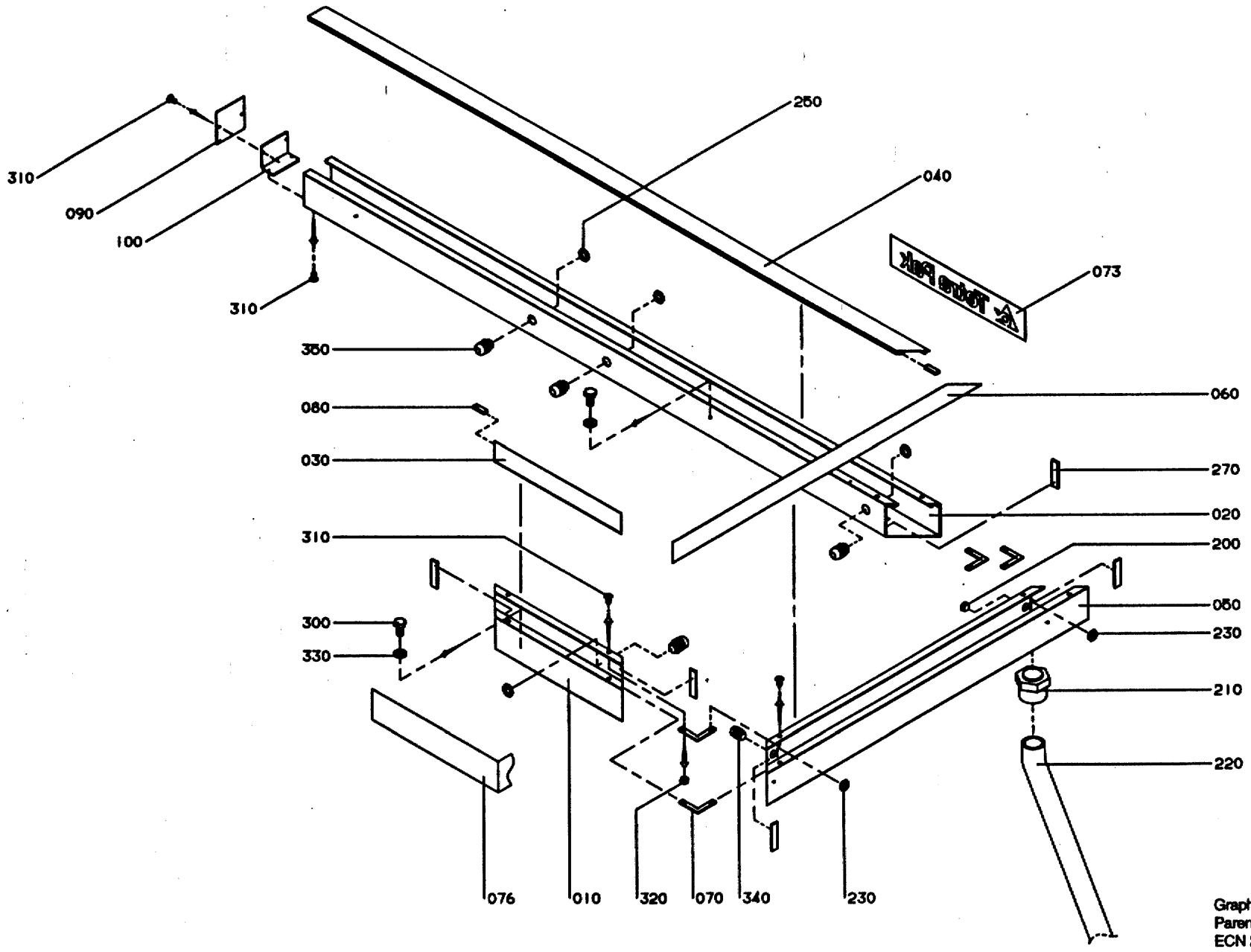

GraphicID: 102151002.eps
Parent Drw: 1021510-2
ECN 21267

Pos	Part No	SP	UN	Qty	Description	Page No
MULTI, LEFT HAND INFEED, Z-FORM						
000	**C-1021510-0103**	-		1	**CABLE TRENCH**	
010	1124632	-		1	CABLE DUCT	
020	1021512	-		1	CABLE TRENCH	
030	1124602	-		1	LID	
040	1021517	-		1	LID	
073	1021990	-		1	SIGN	
080	975939	-		10	SEAL	
090	1065696	-		1	COVERING PLATE	
100	1065697	-		1	BRACKET	
270	90143-0073	-	MM	350	RUBBER STRIP	
300	312105-0366	-		8	SCREW O4017 M6X12A280	
310	312145-0287	-		12	SLOTTED HEMFS4X8RFR	
320	312605-0312	-		12	NUT M6M4RFR	
330	315105-0153	-		8	WASHER BRB6,4X12RFR	
MULTI, RIGHT HAND INFEED, Z-FORM						
000	**C-1021510-0104**	-		1	**CABLE TRENCH**	
010	1124631	-		1	CABLE DUCT	
020	1021515	-		1	CABLE TRENCH	
030	1124601	-		1	LID	
040	1021520	-		1	LID	
073	1021990	-		1	SIGN	
080	975939	-		10	SEAL	
090	1065696	-		1	COVERING PLATE	
100	1065697	-		1	BRACKET	
270	90143-0073	-	MM	350	RUBBER STRIP	
300	312105-0366	-		8	SCREW O4017 M6X12A280	
310	312145-0287	-		12	SLOTTED HEMFS4X8RFR	
320	312605-0312	-		12	NUT M6M4RFR	
330	315105-0153	-		8	WASHER BRB6,4X12RFR	
COMMON PARTS						
050	**1021513**	-		1	**CABLE TRENCH**	
060	1021518	-		1	LID	
070	975934	-		4	GUSSET PLATE	
076	1021991	-		1	STRIP	
200	90002-0013	-		1	BLANK-OFF PLUG 15,2	
210	90012-0075	-		1	GLAND FITTING	
220	90012-0076	-		1	CABLE SHEATH	
230	90099-0104	-		2	NUT PR 15,2 (PG9)	
250	90099-0117	-		4	NUT PR18,6 (PG11)	
340	352103-0101	-		1	CABLE GLAND ST 9	
350	352103-0106	-		4	CABLE GLAND ST 11	

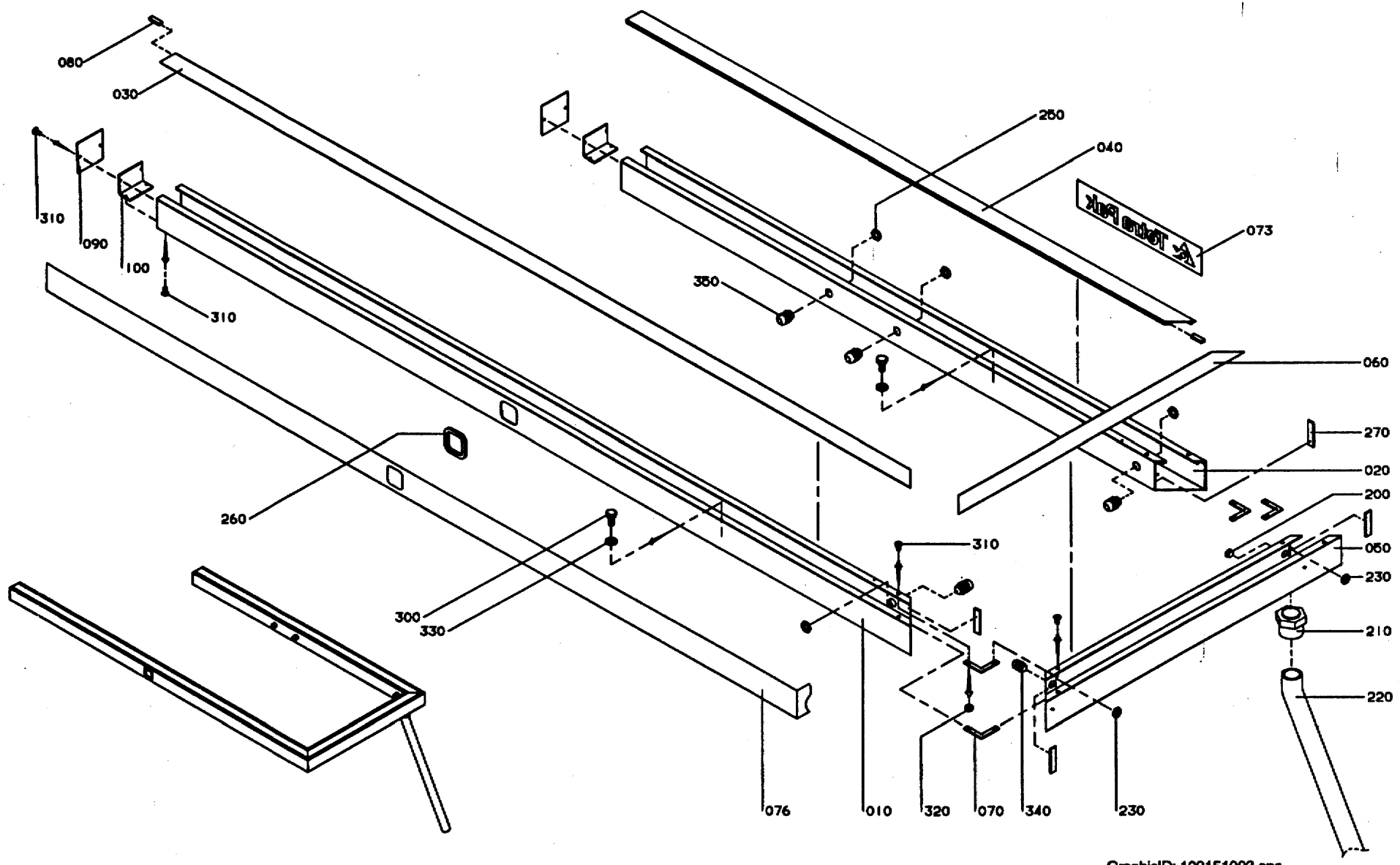

GraphicID: 102151003.eps
Parent Drw: 1021510-3
ECN 21267

Pos	Part No	SP	UN	Qty	Description	Page No
MULTI, LEFT HAND INFEED, U-FORM						
000	**C-1021510-0105**	-		1	**CABLE TRENCH**	
010	1124634	-		1	CABLE DUCT	
020	1021512	-		1	CABLE TRENCH	
030	1021516	-		1	LID	
040	1021517	-		1	LID	
073	1021990	-		1	SIGN	
080	975939	-		16	SEAL	
090	1065696	-		2	COVERING PLATE	
100	1065697	-		2	BRACKET	
260	90143-0060	-	MM	200	STRIP	
270	90143-0073	-	MM	280	RUBBER STRIP	
300	312105-0366	-		10	SCREW O4017 M6X12A280	
310	312145-0287	-		16	SLOTTED HEMFS4X8RFR	
320	312605-0312	-		16	NUT M6M4RFR	
330	315105-0153	-		10	WASHER BRB6,4X12RFR	
MULTI, RIGHT HAND INFEED, U-FORM						
000	**C-1021510-0106**	-		1	**CABLE TRENCH**	
010	1124633	-		1	CABLE DUCT	
020	1021515	-		1	CABLE TRENCH	
030	1021519	-		1	LID	
040	1021520	-		1	LID	
073	1021990	-		1	SIGN	
080	975939	-		16	SEAL	
090	1065696	-		2	COVERING PLATE	
100	1065697	-		2	BRACKET	
260	90143-0060	-	MM	200	STRIP	
270	90143-0073	-	MM	280	RUBBER STRIP	
300	312105-0366	-		10	SCREW O4017 M6X12A280	
310	312145-0287	-		16	SLOTTED HEMFS4X8RFR	
320	312605-0312	-		16	NUT M6M4RFR	
330	315105-0153	-		10	WASHER BRB6,4X12RFR	
COMMON PARTS						
050	**1021513**	-		1	**CABLE TRENCH**	
060	1021518	-		1	LID	
070	975934	-		4	GUSSET PLATE	
076	1021991	-		1	STRIP	
200	90002-0013	-		1	BLANK-OFF PLUG 15,2	
210	90012-0075	-		1	GLAND FITTING	
220	90012-0076	-		1	CABLE SHEATH	
230	90099-0104	-		2	NUT PR 15,2 (PG9)	
250	90099-0117	-		4	NUT PR18,6 (PG11)	
340	352103-0101	-		1	CABLE GLAND ST 9	
350	352103-0106	-		4	CABLE GLAND ST 11	

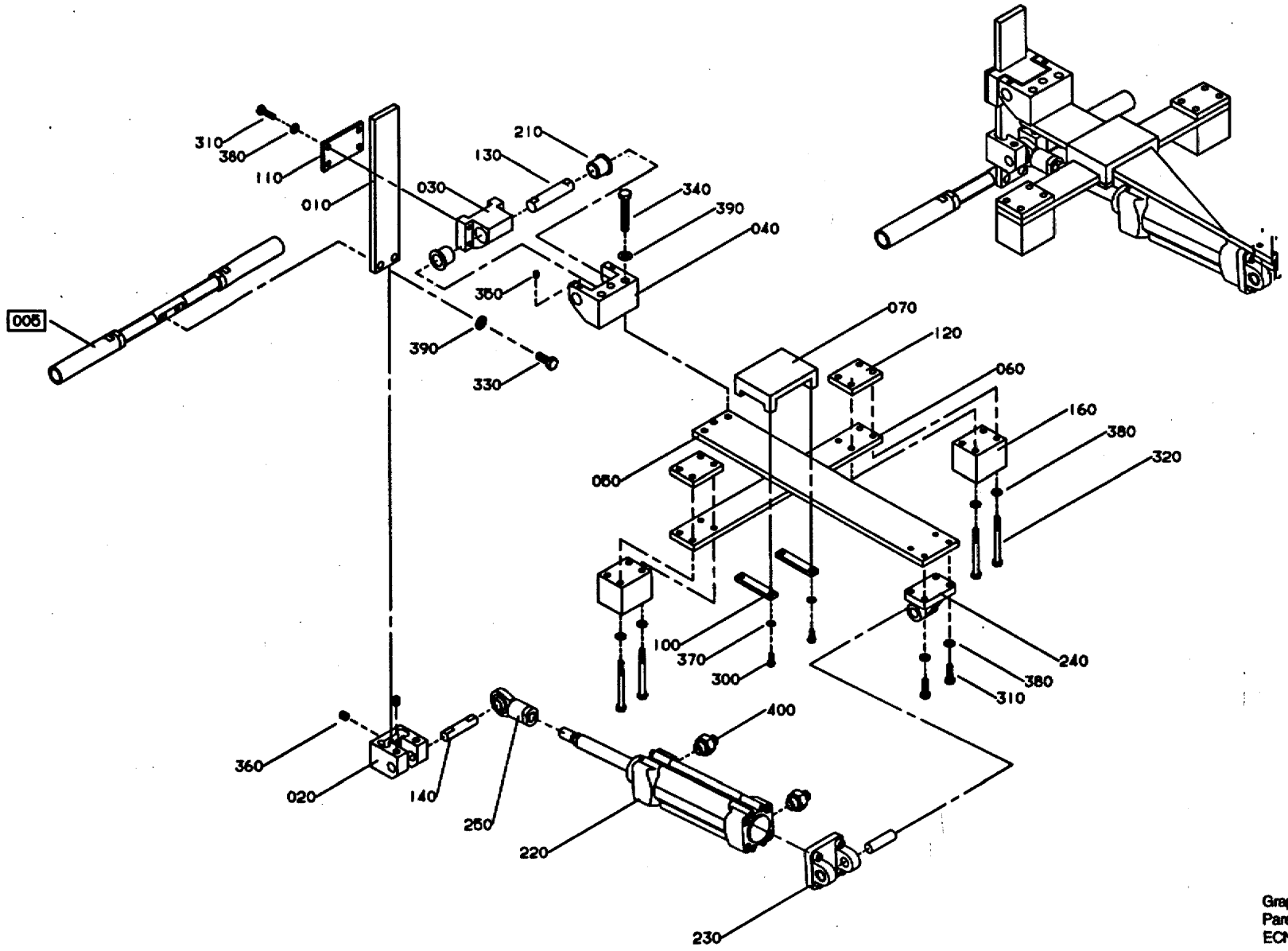

GraphicID: 106536001.eps
Parent Drw: 1065360-1
ECN 23757

Pos	Part No	SP	UN	Qty	Description	Page No
VOLUME COMBINATION; BASE 180-1136, SLIM 375-330, SLIM 375-1000, TR/M 125-300						
000	C-1065360-0201	-		1	FOLDING SUPPORT	
140	1074473	-		1	SHAFT	
310	312105-0370	-		8	SCREW O4017 M6X20A280	
380	315105-0153	-		16	WASHER BRB6,4X12RFR	
COMMON PARTS						
010	1074462	-		1	RAIL	
020	1074463	-		1	HOLDER	
030	1074464	-		1	HOLDER	
040	1074465	-		1	HOLDER	
050	1074466	-		1	RAIL	
060	1074467	-		1	RAIL	
070	1074468	-		1	CLAMPING PIECE	
100	1074486	-		2	SECURING PLATE	
110	1074470	-		1	SECURING PLATE	
120	1074471	-		2	SPACER	
130	1074472	-		1	SHAFT	
160	1074475	-		2	SPACER	
210	90240-0222	P		2	BEARING	
220	90450-0190	-		1	CYLINDER	
230	90450-0667	-		1	BRACKET	
240	90450-0707	-		1	BRACKET	
250	90450-0708	-		1	BALL JOINT COUPLING	
300	312105-0327	-		4	SCREW O4017 M5X12A280	
320	312105-0383	-		8	SCREW O4014 M6X65A280	
330	312105-0451	-		2	SCREW SO4017 8X20A280	
340	312105-0461	-		3	SCREW O4017 M8X50A280	
350	312318-0362	-		2	STOP SCREW SK6SS6X8RFR	
360	312318-0445	-		4	STOP SCREW SK6SS8X10RFR	
370	315105-0146	-		4	WASHER BRB5,3X10RFR	
390	315105-0165	-		5	WASHER BRB8,4X16RFR	
400	342722-0203	-		2	PIPE COUPLD=6-R1/4"	
F005	C-1065366-020V	-		1	SUPPORT	

Pos	Part No	SP	UN	Qty	Description	Page No

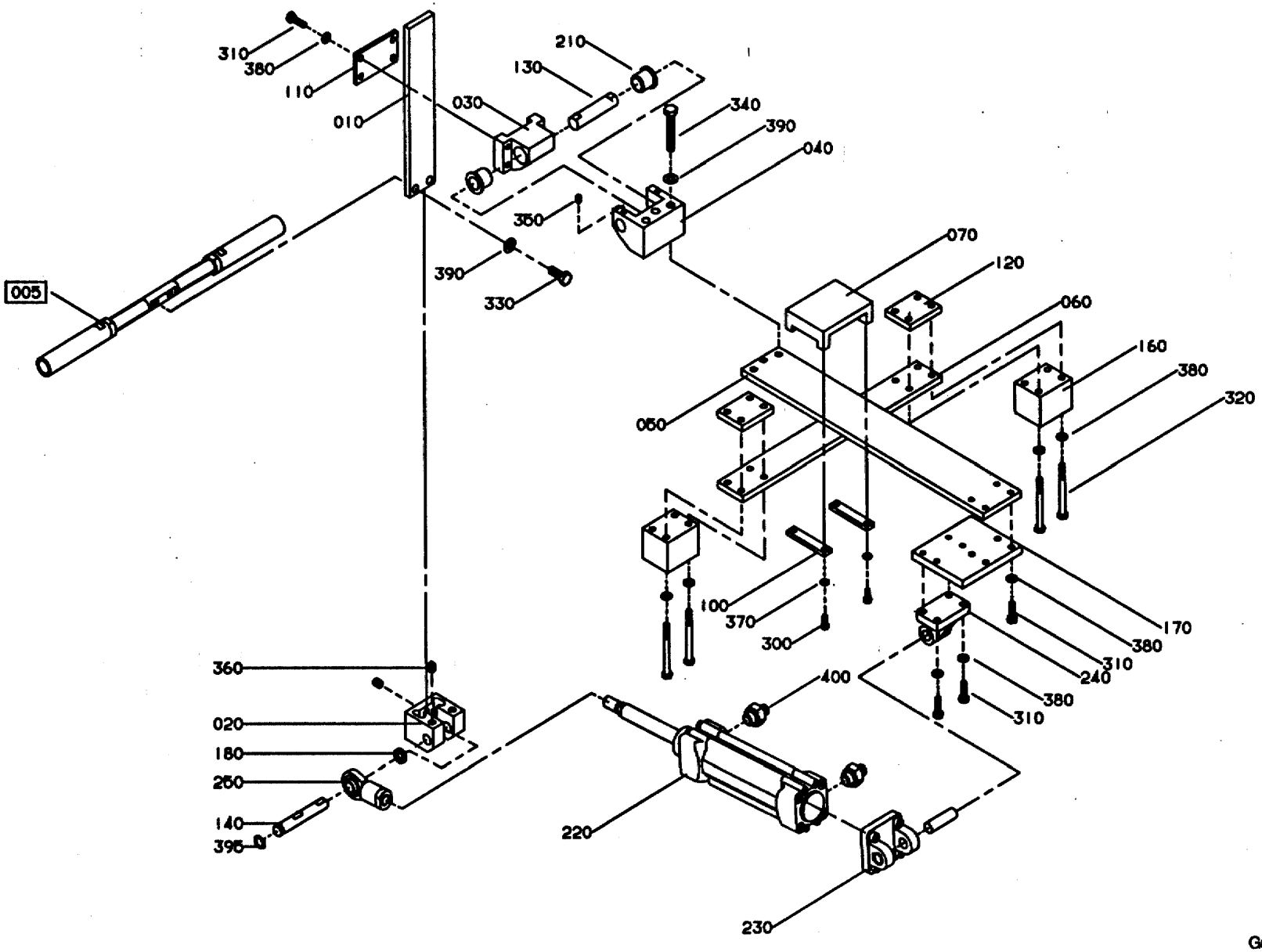

GraphicID: 106536002.eps
Parent Drw: 1065360-2
ECN 23757

Pos	Part No	SP	UN	Qty	Description	Page No
VOLUME COMBINATION; TB SQ 1000						
000	C-1065360-0202	-		1	FOLDING SUPPORT	
140	1139170	-		1	SHAFT	
170	1139171	-		1	PLATE	
180	1139172	-		1	SPACER	
310	312105-0370	-		12	SCREW O4017 M6X20A280	
380	315105-0153	-		20	WASHER BRB6,4X12RFR	
395	315751-0109	-		1	CIRCLIP SGA12 RFR	
COMMON PARTS						
010	1074462	-		1	RAIL	
020	1074463	-		1	HOLDER	
030	1074464	-		1	HOLDER	
040	1074465	-		1	HOLDER	
050	1074466	-		1	RAIL	
060	1074467	-		1	RAIL	
070	1074468	-		1	CLAMPING PIECE	
100	1074486	-		2	SECURING PLATE	
110	1074470	-		1	SECURING PLATE	
120	1074471	-		2	SPACER	
130	1074472	-		1	SHAFT	
160	1074475	-		2	SPACER	
210	90240-0222	P		2	BEARING	
220	90450-0190	-		1	CYLINDER	
230	90450-0667	-		1	BRACKET	
240	90450-0707	-		1	BRACKET	
250	90450-0708	-		1	BALL JOINT COUPLING	
300	312105-0327	-		4	SCREW O4017 M5X12A280	
320	312105-0383	-		8	SCREW O4014 M6X65A280	
330	312105-0451	-		2	SCREW SO4017 8X20A280	
340	312105-0461	-		3	SCREW O4017 M8X50A280	
350	312318-0362	-		2	STOP SCREW SK6SS6X8RFR	
360	312318-0445	-		4	STOP SCREW SK6SS8X10RFR	
370	315105-0146	-		4	WASHER BRB5,3X10RFR	
390	315105-0165	-		5	WASHER BRB8,4X16RFR	
400	342722-0203	-		2	PIPE COUPLD=6-R1/4"	
F005	C-1065366-020V	-		1	SUPPORT	

Pos	Part No	SP	UN	Qty	Description	Page No

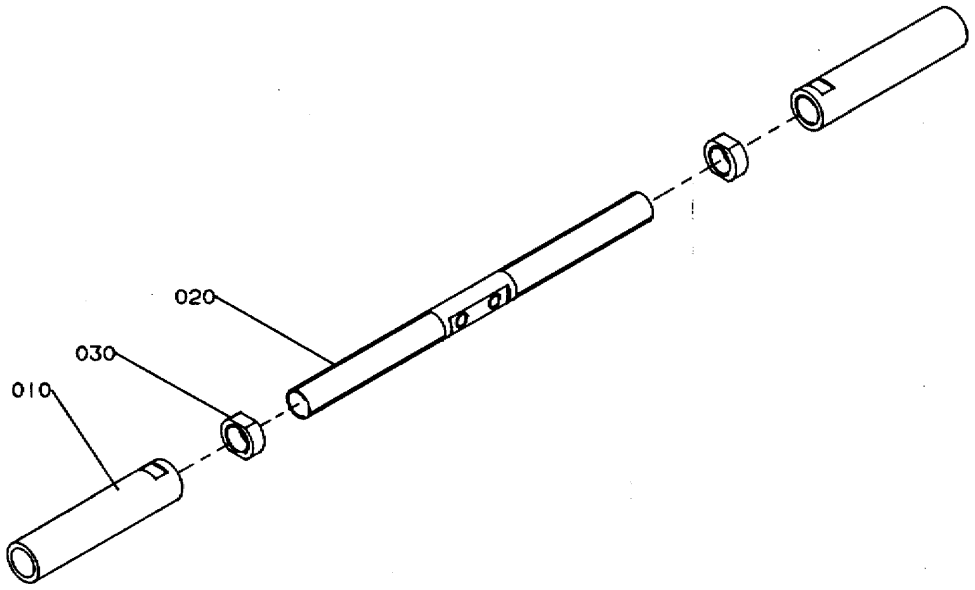

GraphicID: 106536601.eps
Parent Drw: 1065366-1
ECN 20435

Pos	Part No	SP	UN	Qty	Description	Page No
Package length 200-264						
000	C-1065366-0201	-		1	SUPPORT	
010	1074494	-		2	ROLL	
020	1074495	-		1	SHAFT	
030	1074496	-		2	NUT	
Package length 265-420						
000	C-1065366-0202	-		1	SUPPORT	
010	1074460	-		2	ROLL	
020	1074461	-		1	SHAFT	
030	1074474	-		2	NUT	

Pos	Part No	SP	UN	Qty	Description	Page No

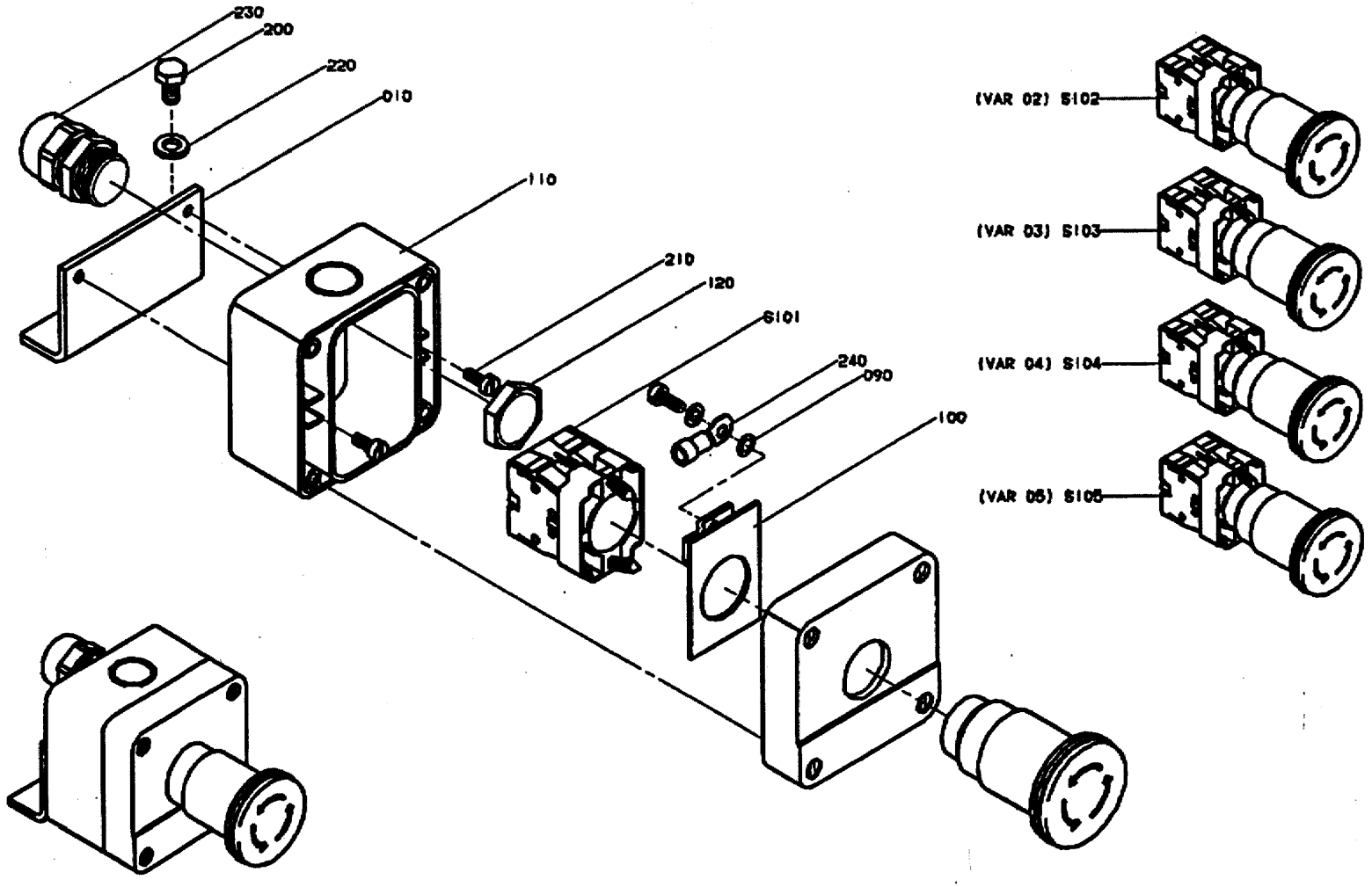

GraphicID: 102183802.tif
Parent Drw: 1021838-2
ECN No: 22292

Pos	Part No	SP	UN	Qty	Description
S101					
000	C-1021838-0201	-		1	**EMERGENCY STOP**
S101	90064-0124	P		1	EMERGENCY STOP BUTTON
S102					
000	C-1021838-0202	-		1	**EMERGENCY STOP**
S102	90064-0124	P		1	EMERGENCY STOP BUTTON
S103					
000	C-1021838-0203	-		1	**EMERGENCY STOP**
S103	90064-0124	P		1	EMERGENCY STOP BUTTON
S104					
000	C-1021838-0204	-		1	**EMERGENCY STOP**
S104	90064-0124	P		1	EMERGENCY STOP BUTTON
S105					
000	C-1021838-0205	-		1	**EMERGENCY STOP**
S105	90064-0124	P		1	EMERGENCY STOP BUTTON
COMMON PARTS					
010	1021910	-		1	**FASTENING BRACKET**
090	90062-0059	-		1	LOCK WASHER
100	90064-0336	-		1	EARTHING PLATE
110	90066-0030	-		1	PUSH BUTTON BOX
120	90099-0117	-		1	NUT PR18,6 (PG11)
200	312105-0364	-		2	SCREW M6S6X10RFR
210	312125-0289	-		2	SLOTTED HEMCS4X10RFR
220	315105-0153	-		2	WASHER BRB6,4X12RFR
230	352103-0106	-		1	CABLE GLAND ST 11
240	353101-0120	-		1	CABLE SHOE

Pos	Part No	SP	UN	Qty	Description	Page No

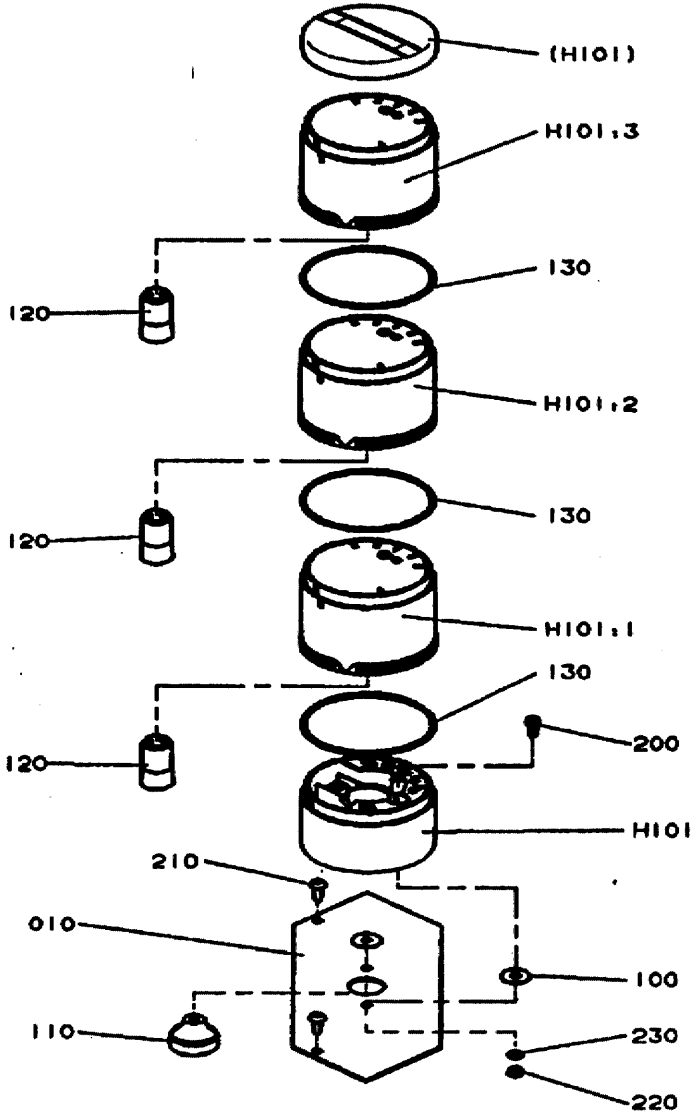

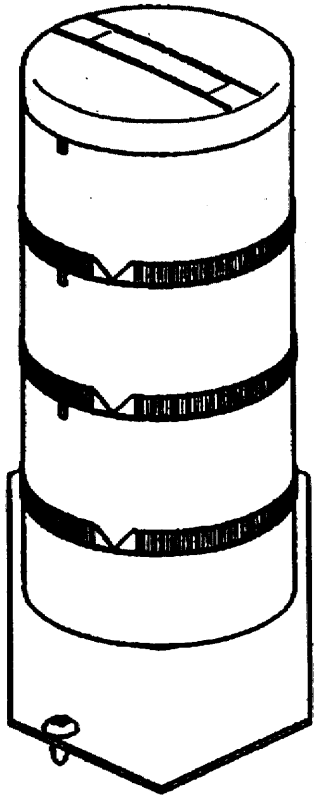

GraphicID: 58168901.tif
Parent Dr1> 581689-1
ECN No 22251

Pos	Part No	SP	UN	Qty	Description	Page No
-						
000	C- 581689-0101	-		1	WARNING LAMP	
010	580918	-		1	MOUNTING SHEET	
100	90005-0114	-		2	WASHER	
110	90015-0023	-		1	BUSHING	
120	90036-0068	P		3	BULB 6.5W 24V	
130	90419-0307	-		3	GASKET TO GET IP.54	
200	312125-0291	-		1	SLOTTED HEMCS4X12RFR	
210	312504-0342	-		2	DRIVE SCREA4	
220	312605-0312	-		1	NUT M6M4RFR	
230	315105-0136	-		3	WASHER BRB4,3X8RFR	
H101	1133093	-		1	BASE	
H101:1	90419-0013	-		1	LIGHT ELEMENT, BLUE	
H101:2	90419-0014	-		1	LIGHT ELEMENT, YELLOW	
H101:3	90419-0012	-		1	LIGHT ELEMENT, RED	

Pos	Part No	SP	UN	Qty	Description	Page No

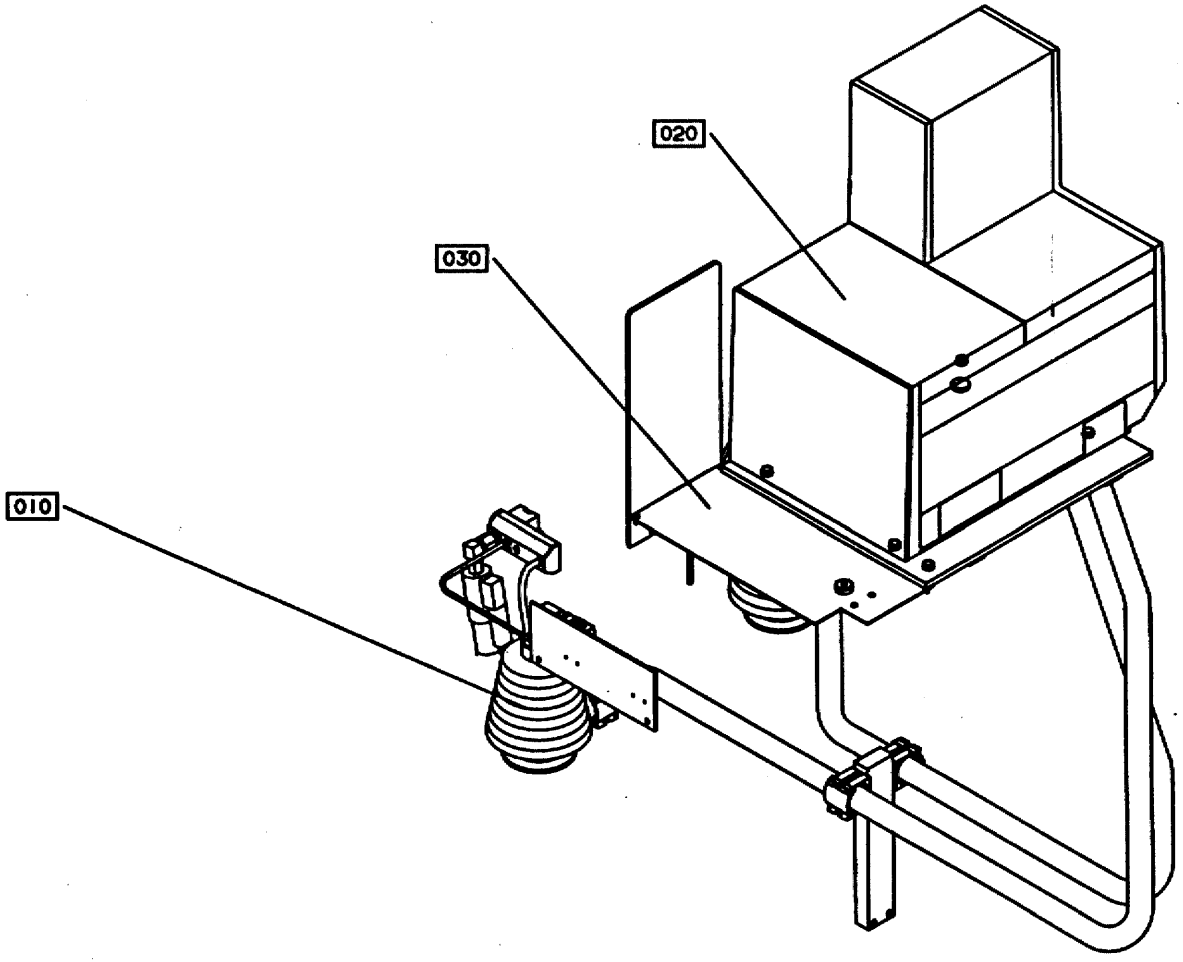

GraphicID: 67028103.eps
Parent Drw: 670281-3
ECN 23757

Pos	Part No	SP	UN	Qty	Description	Page No
-						
000	B- 670281-0401	-		1	HOT MELT EQUIPMENT	
010	C-1021387-0301	-		1	HOT MELT EQUIP.MISC.	147
020	C-1021395-030V	-		1	HOT MELT EQUIPMENT NORDSON	149
030	C-1021396-0301	-		1	SHELF HOT MELT	155

Pos	Part No	SP	UN	Qty	Description	Page No

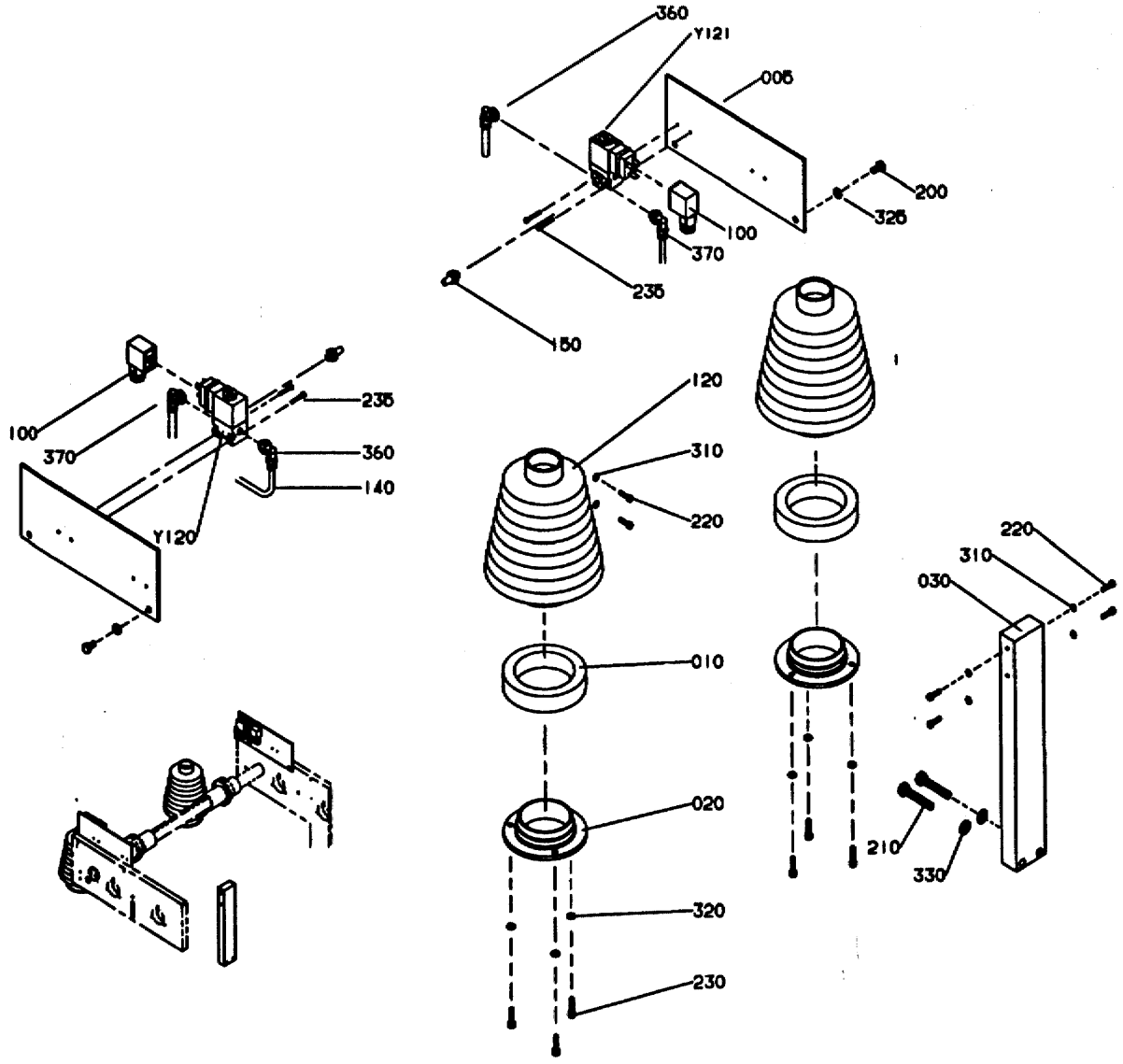

GraphicID: 102138703.eps
Parent Drw: 1021387-3
ECN 23757

Pos	Part No	SP	UN	Qty	Description	Page No
-						
000	C-1021387-0301	-		1	HOT MELT EQUIP.MISC.	
005	1139148	-		2	PLATE	
010	1021388	-		2	CLAMP RING	
020	1021389	-		2	RING	
030	1021554	-		1	BRACKET	
100	90042-0392	-		2	CONTACT	
120	90342-0017	-		2	BELLOWS	
140	90166-0202	-	MM	500	TEFLON PIPE	
150	90328-0003	-		2	SILENCER	
200	312105-0366	-		4	SCREW O4017 M6X12A280	
210	312105-0460	-		2	SCREW O4017 M8X45A280	
220	312115-0293	-		6	SCREW O4762 M4X16A280	
230	312115-0331	-		6	SCREW O4762 M5X20A280	
235	312125-0234	-		4	SLOTTED HEMCS3X30RFR	
310	315105-0136	-		6	WASHER BRB4,3X8RFR	
320	315105-0146	-		6	WASHER BRB5,3X10RFR	
325	315105-0153	-		4	WASHER BRB6,4X12RFR	
330	315105-0165	-		2	WASHER BRB8,4X16RFR	
360	342732-0102	-		2	ELBOW PIPE D6-R1/8"	
370	342732-0801	-		2	ELBOW PIPE D8-R1/8"	
Y120	90042-0213	P		1	SOLENOID VALVE	
Y121	90042-0213	P		1	SOLENOID VALVE	

Pos	Part No	SP	UN	Qty	Description	Page No

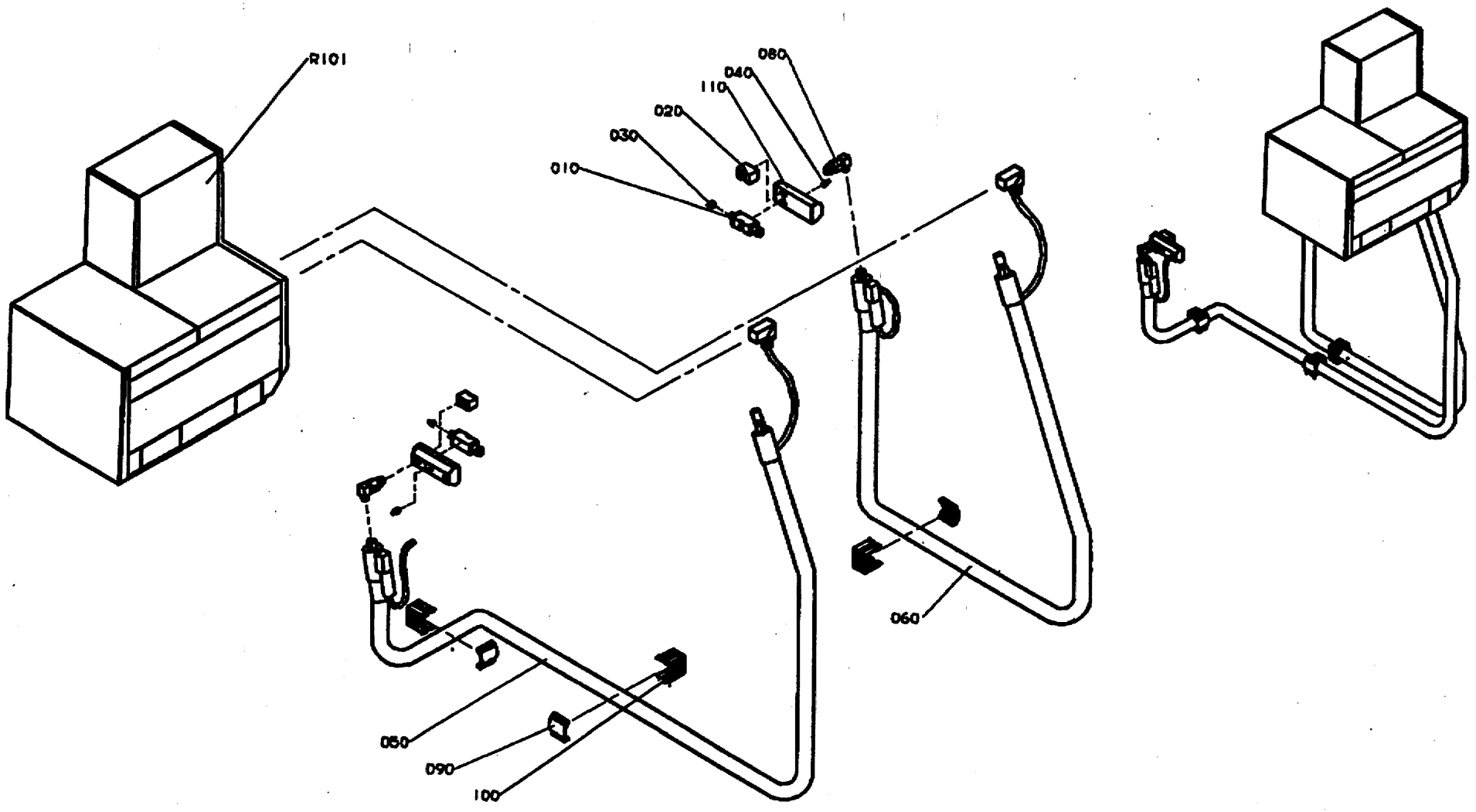

GraphicID: 102139503.tif
Parent Drw: 1021395-3
ECN No: 22292

Pos	Part No	SP	UN	Qty	Description	Page No
Tetra Tray						
000	C-1021395-0301	-		1	HOT MELT EQUIPMENT NORDSON	
010	90439-0124	P		2	MODULE	
020	90439-0232	-		2	BLID PLATE	
030	90439-0264	P		2	NOZZLE	
040	342921-0112	-		2	PIPE COUPL6/4-6M	
050	90439-0212	-		1	HOSE	
060	90439-0213	-		1	HOSE	
080	90439-0233	S		2	FILTER	
090	90439-0234	-		3	HOSE CLIP	
100	90439-0235	-		3	HOSE HOLDER	
110	90439-0237	-		2	HOT MELT GUN	
R101	90439-0266	-		1	HOT MELT UNIT	
LOW TRAY + LID						
000	C-1021395-0305	-		1	HOT MELT EQUIPMENT NORDSON	
010	90439-0124	P		2	MODULE	
020	90439-0232	-		2	BLID PLATE	
030	90439-0264	P		2	NOZZLE	
040	342921-0112	-		2	PIPE COUPL6/4-6M	
050	90439-0212	-		1	HOSE	
060	90439-0213	-		1	HOSE	
080	90439-0233	S		2	FILTER	
090	90439-0234	-		3	HOSE CLIP	
100	90439-0235	-		3	HOSE HOLDER	
110	90439-0237	-		2	HOT MELT GUN	
R101	90439-0265	-		1	HOT MELT UNIT	

Pos	Part No	SP	UN	Qty	Description	Page No

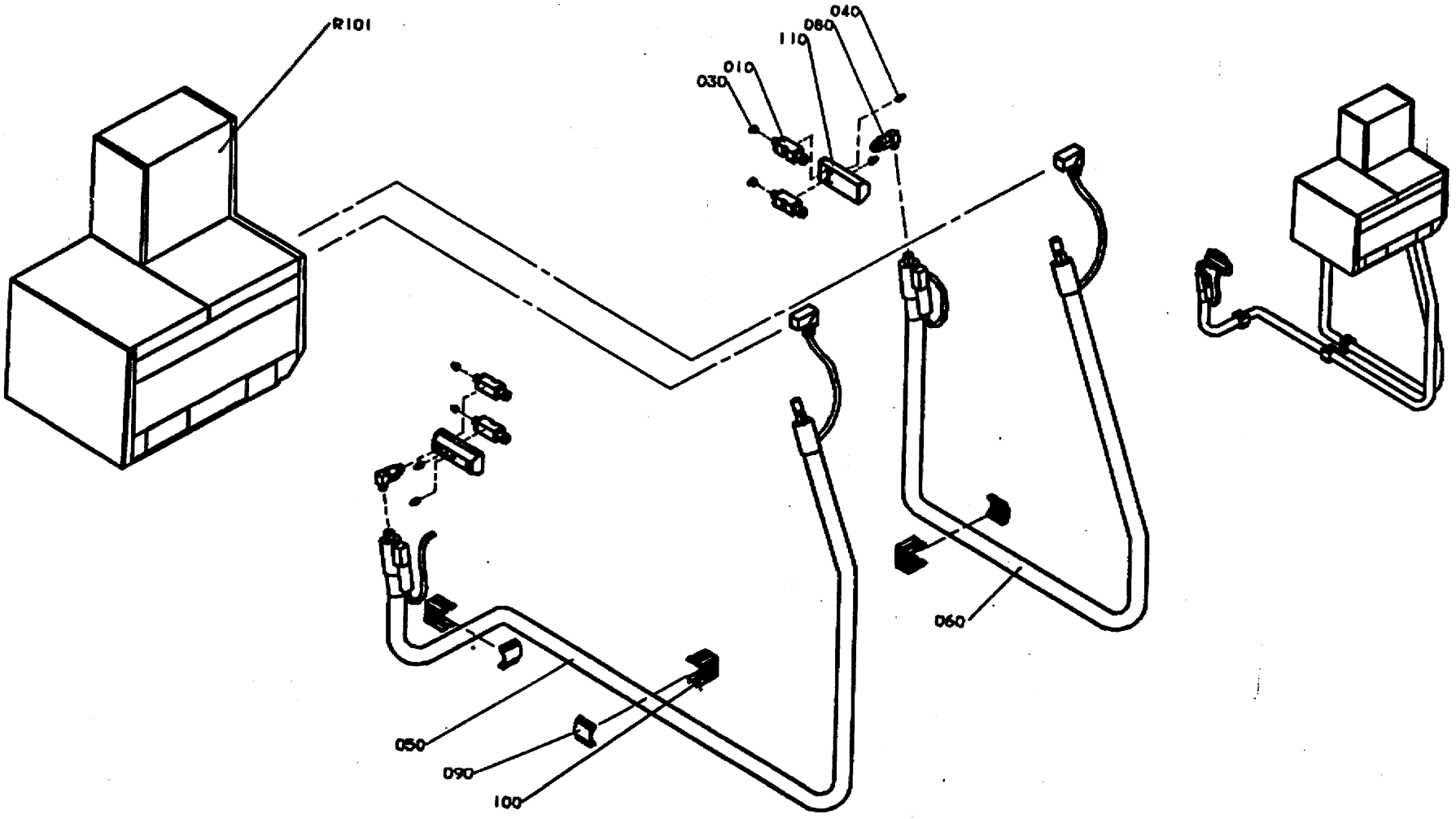

GraphicID: 102139504.tif
Parent Drw: 1021395-4
ECN No: 22292

Pos	Part No	SP	UN	Qty	Description	Page No
Tetra Wrap around Box with meeting Flaps						
Tetra Tray with over Flaps						
000	C-1021395-0302	-		1	HOT MELT EQUIPMENT NORDSON	
010	90439-0124	P		4	MODULE	
030	90439-0264	P		4	NOZZLE	
040	342921-0112	-		4	PIPE COUPL6/4-6M	
050	90439-0212	-		1	HOSE	
060	90439-0213	-		1	HOSE	
080	90439-0233	S		2	FILTER	
090	90439-0234	-		3	HOSE CLIP	
100	90439-0235	-		3	HOSE HOLDER	
110	90439-0237	-		2	HOT MELT GUN	
R101	90439-0266	-		1	HOT MELT UNIT	

Pos	Part No	SP	UN	Qty	Description	Page No

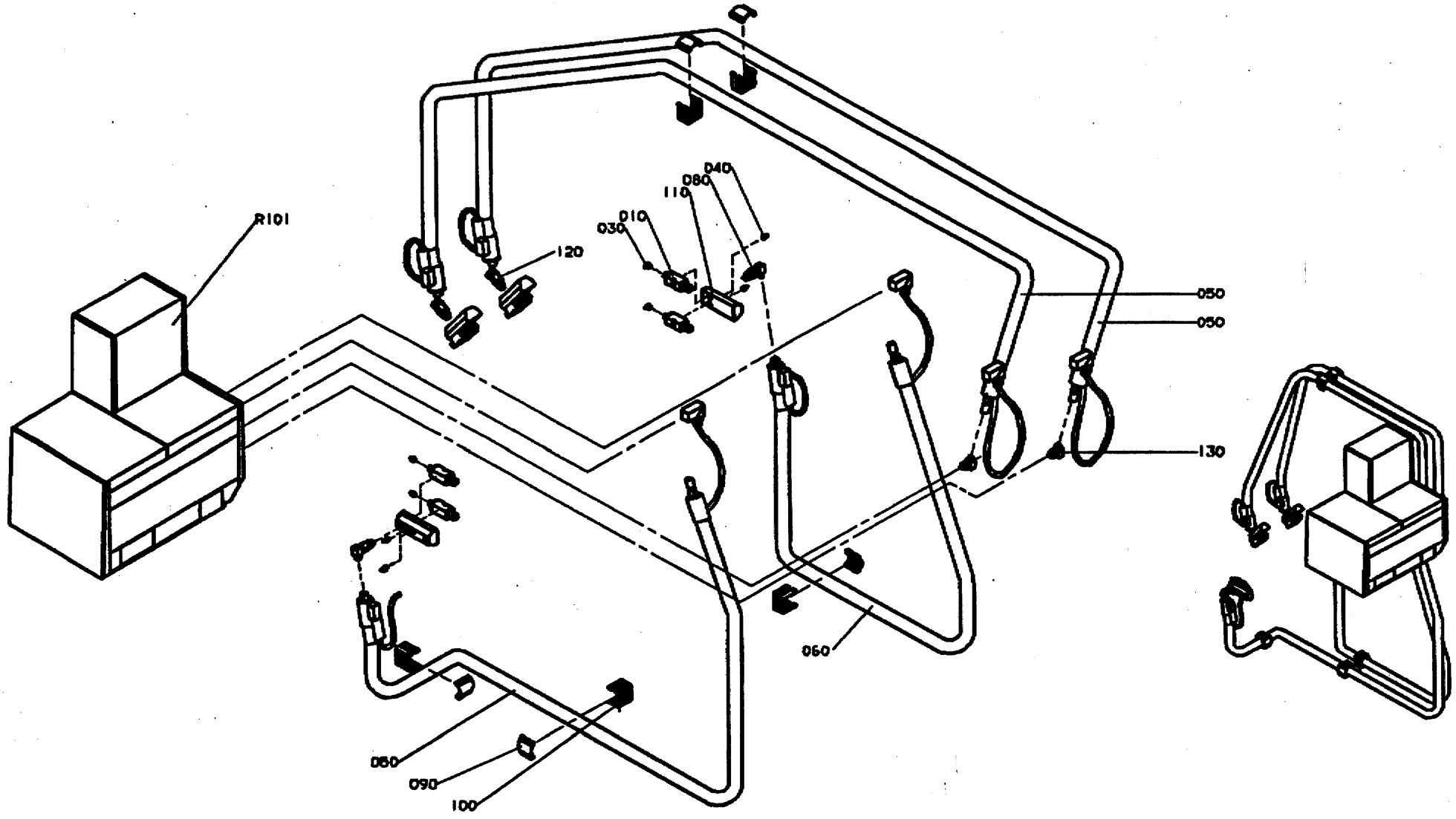

GraphicID: 102139505.tif
Parent Drw: 1021395-5
ECN No: 22292

Pos	Part No	SP	UN	Qty	Description	Page No
Tetra Wrap around Box with inside top Flap						
Tetra Wrap around Box with side Flap						
000	C-1021395-0303	-		1	HOT MELT EQUIPMENT NORDSON	
010	90439-0124	P		8	MODULE	
030	90439-0264	P		8	NOZZLE	
040	342921-0112	-		8	PIPE COUPL6/4-6M	
050	90439-0212	-		3	HOSE	
060	90439-0213	-		1	HOSE	
080	90439-0233	S		2	FILTER	
090	90439-0234	-		5	HOSE CLIP	
100	90439-0235	-		5	HOSE HOLDER	
110	90439-0237	-		4	HOT MELT GUN	
110	90439-0206	S		0	* CABLE	
110	90439-0211	P		0	* THERMOSTAT	
110	90439-0238	P		0	* HEATING ELEMENT	
120	90439-0121	-		2	FILTER	
120	90439-0214	S		1	* FILTER INSERT	
130	90439-0241	-		2	ANGLE NIPPLE	
R101	90439-0265	-		1	HOT MELT UNIT	

Pos	Part No	SP	UN	Qty	Description	Page No

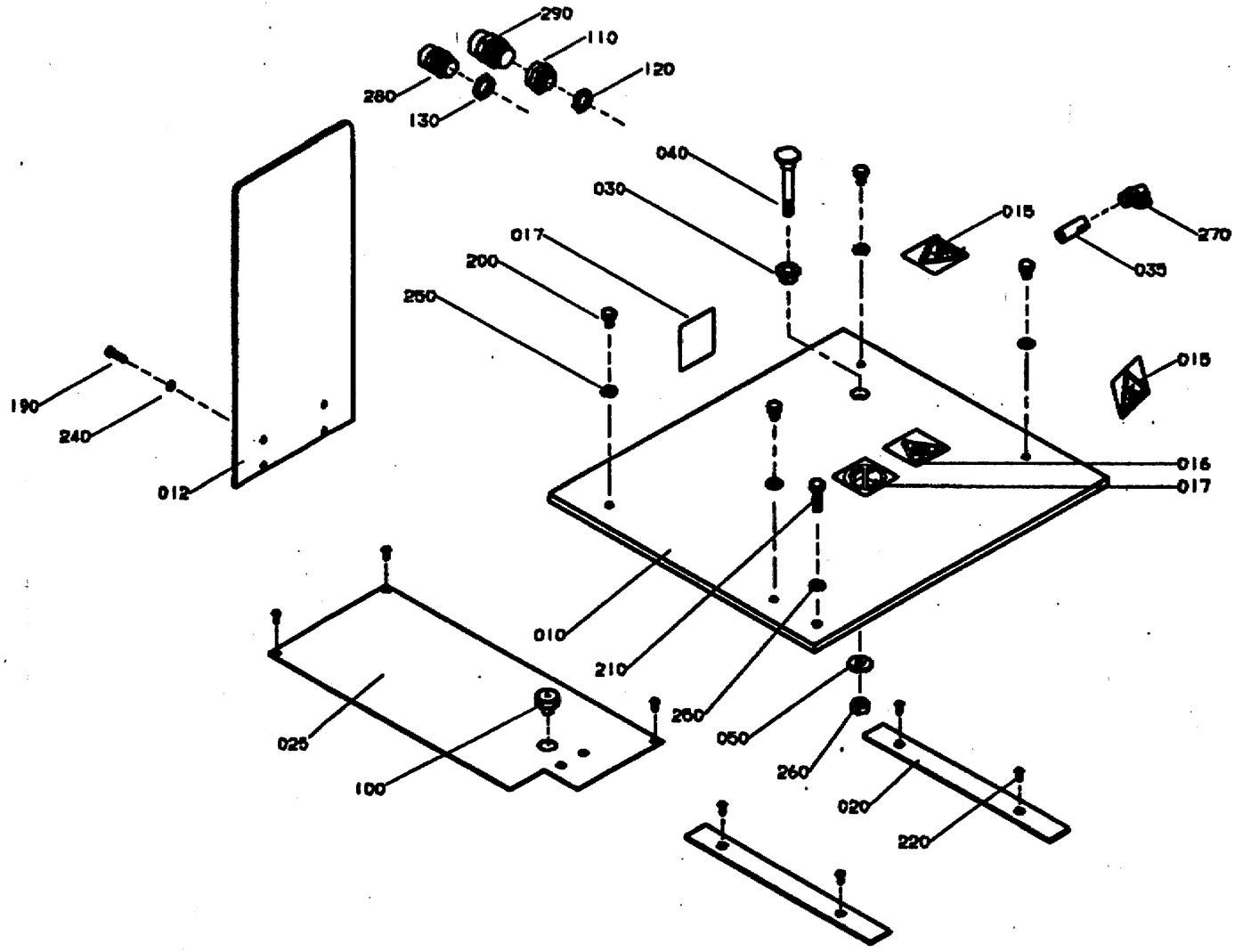

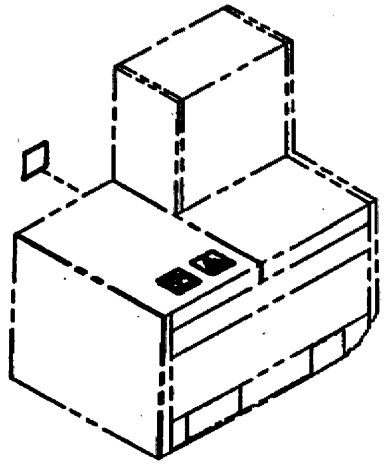

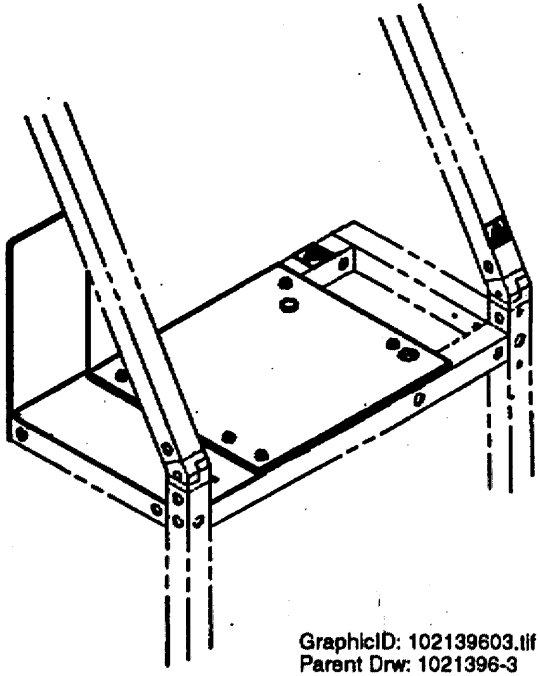

GraphicID: 102139603.tif
Parent Drw: 1021396-3
ECN No: 22292

Pos	Part No	SP	UN	Qty	Description	Page No
-						
000	C-1021396-0301	-		1	SHELF HOT MELT	
010	1021397	-		1	PLATE	
012	1074992	-		1	GUARD PLATE	
015	1128853	-		2	CAUTION SIGN	
016	1128844	-		1	CAUTION SIGN	
017	1128845	-		2	PROHIBITION SIGN	
020	1021462	-		2	SLIDING STRIP	
025	1021939	-		1	SHEET	
030	493768	-		1	BUSHING	
035	975755	-		1	ATTACHMENT	
040	1021398	-		1	BOLT	
050	1021399	-		1	WASHER	
100	90015-0023	-		1	BUSHING	
110	90089-0017	-		1	TRANSITIONAL MUFF	
120	90099-0117	-		1	NUT PR18,6 (PG11)	
130	90099-0118	-		1	NUT PR20,4 (PG13,5)	
190	312105-0331	-		4	SCREW O4017 M5X20A280	
200	312105-0447	-		4	SCREW O4017 M8X12A280	
210	312105-0455	-		1	SCREW O4017 M8X30A280	
220	312155-0291	-		7	SCREW MF6S4X12RFR	
240	315105-0146	-		4	WASHER BRB5,3X10RFR	
250	315105-0165	-		5	WASHER BRB8,4X16RFR	
260	312605-0320	-		1	NUT M6M10RFR	
270	342732-0801	-		1	ELBOW PIPE D8-R1/8"	
280	352103-0108	-		1	CABLE GLAND ST13;6-12MM	
290	352103-0111	-		1	CABLE GLAND ST 16;10-14MM	

Pos	Part No	SP	UN	Qty	Description	Page No

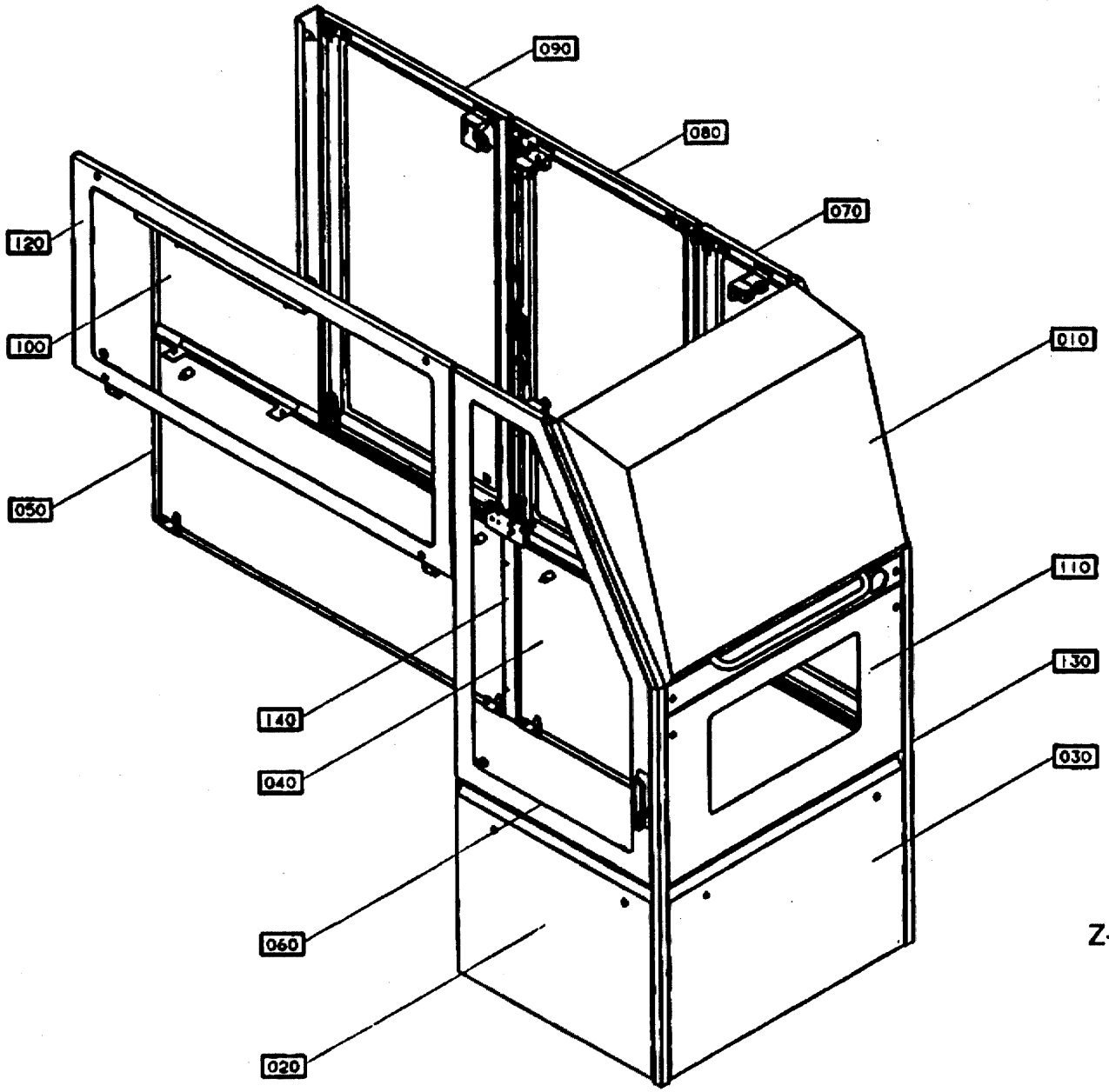

Z-form

67029601.tif
670296-1
AM 16567

Pos	Part No	SP	UN	Qty	Description	Page No
Z-FORM, 1/2/3-LINE INFEED						
000	B- 670296-0201	-		1	COVERING BASE UNIT	
020	C-1021701-0101	-		1	COVERING PLATE	169
060	C-1021712-0202	-		1	GLASS DOOR	177
070	C-1021712-0201	-		1	GLASS DOOR	177
120	C-1021782-0101	-		1	GLASS COVER	189
130	C-1021785-0101	-		1	CORNER STRIP	191
COMMON PARTS						
010	C-1021587-0101	-		1	HOOD	
030	C-1021703-0101	-		1	COVERING PLATE	171
040	C-1021705-0101	-		1	COVERING PLATE	173
050	C-1021707-0101	-		1	COVERING PLATE	175
080	C-1021714-0201	-		1	GLASS DOOR	181
090	C-1021716-0201	-		1	GLASS DOOR	183
100	C-1021718-0101	-		1	COVERING PLATE	185
110	C-1021726-0101	-		1	COVERING PLATE	187
140	C-1021854-020V	-		1	COVERS MISC.	193

Pos	Part No	SP	UN	Qty	Description	Page No

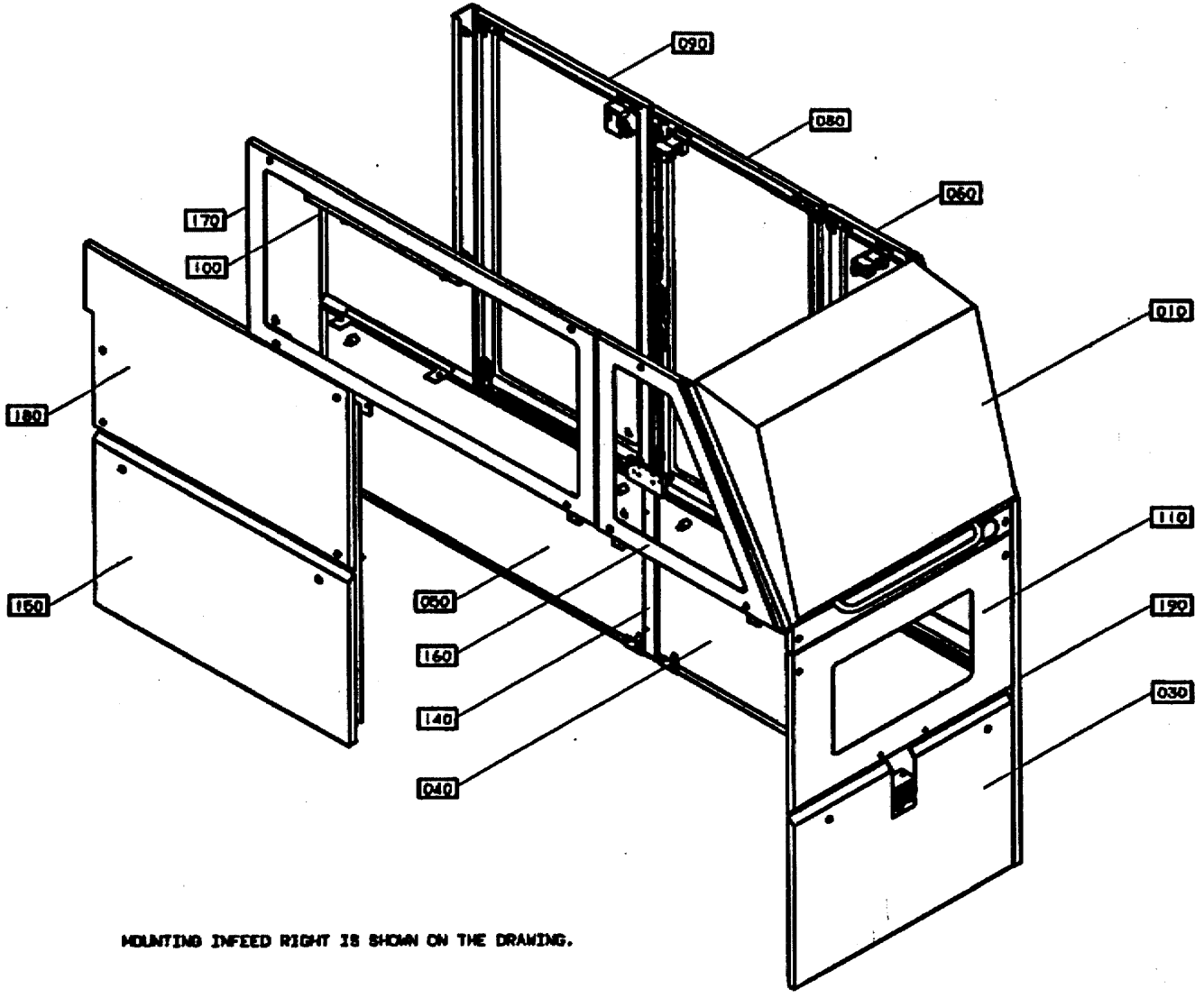

U-form

MOUNTING INFEED RIGHT IS SHOWN ON THE DRAWING.

GraphicID: 67029604.tif
Parent Drw:670296-4
ECN No: 22292

Pos	Part No	SP	UN	Qty	Description	Page No
U-FORM, 1/2/3-LINE INFEED						
000	B- 670296-0202	-		1	COVERING BASE UNIT	
060	C-1021712-020V	-		1	GLASS DOOR	
150	C-1065600-0101	-		1	COVERING PLATE	
160	C-1065614-010V	-		1	HATCH	
170	C-1065616-0101	-		1	HATCH	
180	C-1128835-010V	-		1	COVERING PLATE	
190	C-1065975-010V	-		1	CORNER STRIP	
COMMON PARTS						
010	C-1021587-0101	-		1	HOOD	
030	C-1021703-0101	-		1	COVERING PLATE	171
040	C-1021705-0101	-		1	COVERING PLATE	173
050	C-1021707-0101	-		1	COVERING PLATE	175
080	C-1021714-0201	-		1	GLASS DOOR	181
090	C-1021716-0201	-		1	GLASS DOOR	183
100	C-1021718-0101	-		1	COVERING PLATE	185
110	C-1021726-0101	-		1	COVERING PLATE	187
140	C-1021854-020V	-		1	COVERS MISC.	193

Pos	Part No	SP	UN	Qty	Description	Page No

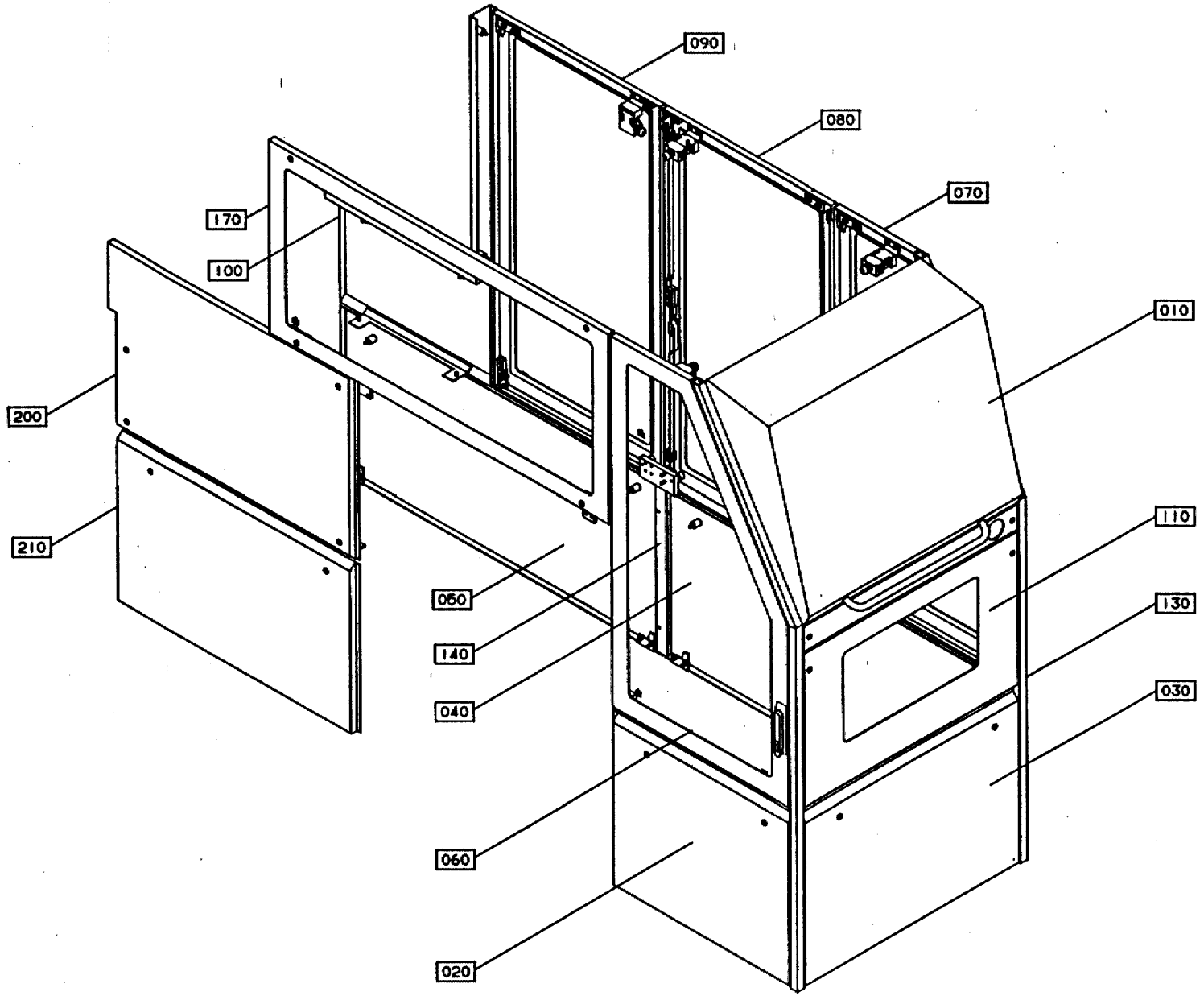

GraphicID: 67029603.eps
Parent Drw: 670296-3
ECN 20123

Pos	Part No	SP	UN	Qty	Description	Page No
L-FORM, 1-LINE INFEED						
000	B- 670296-0203	-		1	COVERING BASE UNIT	
020	C-1021701-0101	-		1	COVERING PLATE	169
060	C-1021712-0202	-		1	GLASS DOOR	177
070	C-1021712-0201	-		1	GLASS DOOR	177
130	C-1021785-0101	-		1	CORNER STRIP	191
170	C-1065616-0101	-		1	HATCH	199
200	C-1080239-020V	-		1	COVERING PLATE	205
210	C-1080240-020V	-		1	COVERING PLATE	207
COMMON PARTS						
010	C-1021587-0101	-		1	HOOD	
030	C-1021703-0101	-		1	COVERING PLATE	171
040	C-1021705-0101	-		1	COVERING PLATE	173
050	C-1021707-0101	-		1	COVERING PLATE	175
080	C-1021714-0201	-		1	GLASS DOOR	181
090	C-1021716-0201	-		1	GLASS DOOR	183
100	C-1021718-0101	-		1	COVERING PLATE	185
110	C-1021726-0101	-		1	COVERING PLATE	187
140	C-1021854-020V	-		1	COVERS MISC.	193

Pos	Part No	SP	UN	Qty	Description	Page No

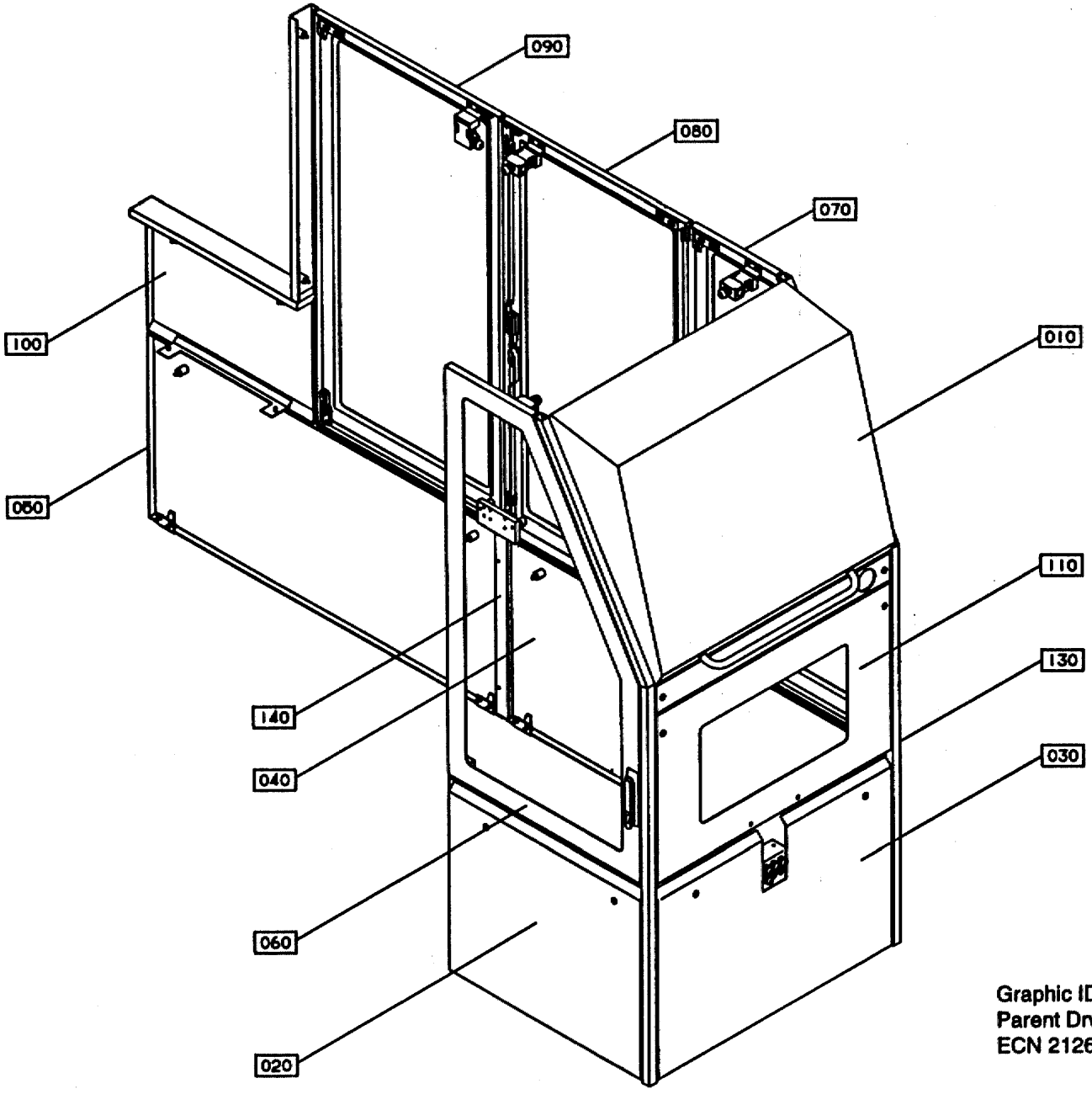

Graphic ID: 67029605.eps
Parent Drw: 670296-5
ECN 21267

Pos	Part No	SP	UN	Qty	Description	Page No
Z-FORM, MULTI INFEED						
000	B- 670296-0204	-		1	COVERING BASE UNIT	
020	C-1021701-0101	-		1	COVERING PLATE	169
060	C-1021712-0202	-		1	GLASS DOOR	177
070	C-1021712-0201	-		1	GLASS DOOR	177
130	C-1021785-0101	-		1	CORNER STRIP	191
COMMON PARTS						
010	C-1021587-0101	-		1	HOOD	
030	C-1021703-0101	-		1	COVERING PLATE	171
040	C-1021705-0101	-		1	COVERING PLATE	173
050	C-1021707-0101	-		1	COVERING PLATE	175
080	C-1021714-0201	-		1	GLASS DOOR	181
090	C-1021716-0201	-		1	GLASS DOOR	183
100	C-1021718-0101	-		1	COVERING PLATE	185
110	C-1021726-0101	-		1	COVERING PLATE	187
140	C-1021854-020V	-		1	COVERS MISC.	193

Pos	Part No	SP	UN	Qty	Description	Page No

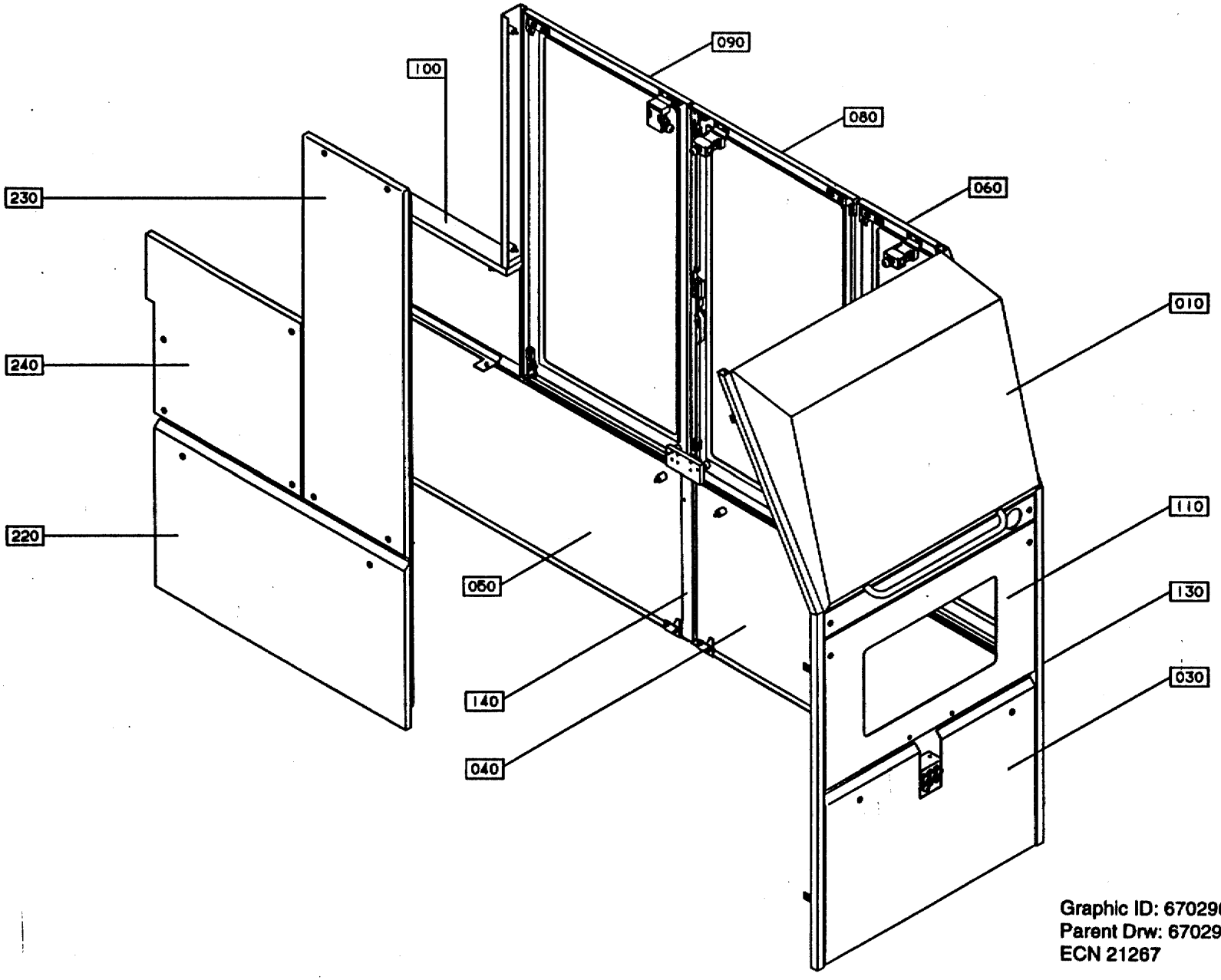

Graphic ID: 67029606.eps
Parent Drw: 670296-6
ECN 21267

Pos	Part No	SP	UN	Qty	Description	Page No
U-FORM, MULTI INFEED						
000	B- 670296-0205	-		1	COVERING BASE UNIT	
060	C-1021712-020V	-		1	GLASS DOOR	177
130	C-1021785-0101	-		1	CORNER STRIP	191
220	C-1124085-010V	-		1	COVERING PLATE	209
230	C-1124086-010V	-		1	COVERING PLATE	211
240	C-1128815-010V	-		1	COVERING PLATE	213
COMMON PARTS						
010	C-1021587-0101	-		1	HOOD	
030	C-1021703-0101	-		1	COVERING PLATE	171
040	C-1021705-0101	-		1	COVERING PLATE	173
050	C-1021707-0101	-		1	COVERING PLATE	175
080	C-1021714-0201	-		1	GLASS DOOR	181
090	C-1021716-0201	-		1	GLASS DOOR	183
100	C-1021718-0101	-		1	COVERING PLATE	185
110	C-1021726-0101	-		1	COVERING PLATE	187
140	C-1021854-020V	-		1	COVERS MISC.	193

Pos	Part No	SP	UN	Qty	Description	Page No

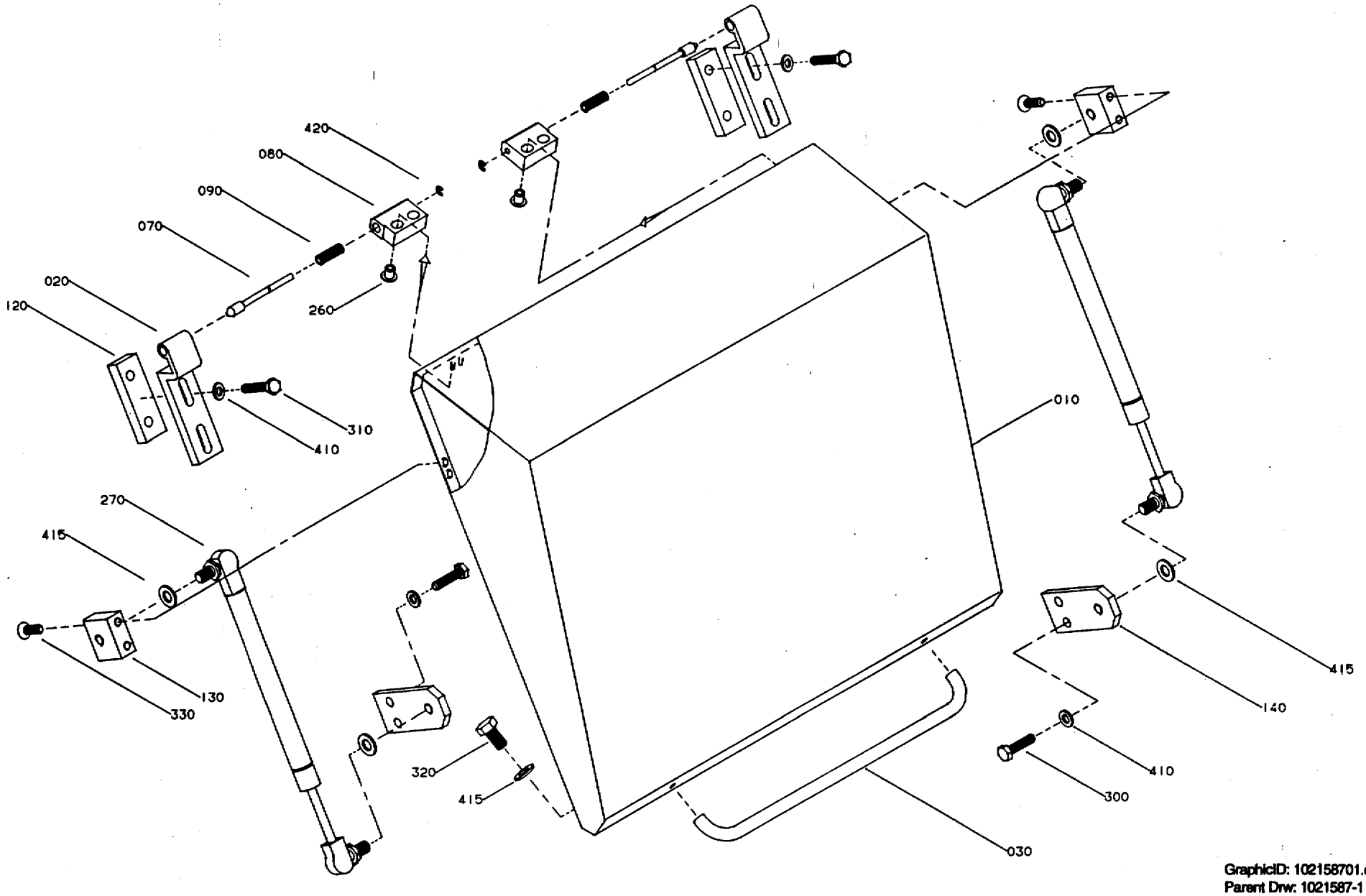

GraphicID: 102158701.eps
Parent Drw: 1021587-1
ECN 16567

Pos	Part No	SP	UN	Qty	Description	Page No
-						
000	C-1021587-0101	-		1	HOOD	
010	1021773	-		1	HOOD	
020	975927	-		2	HINGE FLANGE	
030	1021913	-		1	HANDLE	
070	959656	-		2	COTTER	
080	959657	-		2	HINGE FLANGE	
090	959658	-		2	SPRING	
120	1021775	-		2	BRACKET	
130	1128831	-		2	BRACKET	
140	1021779	-		2	BRACKET	
260	90287-0205	-		4	SCREW	
270	90347-0127	C		2	DAMPER	
300	312105-0372	-		4	SCREW O4017 M6X25A280	
310	312105-0376	-		4	SCREW O4017 M6X35A280	
320	312105-0449	-		2	SCREW O4017 M8X16A280	
330	312155-0370	-		4	SCREW MF6S6X20RFR	
410	315105-0153	-		8	WASHER BRB6,4X12RFR	
415	315105-0165	-		6	WASHER BRB8,4X16RFR	
420	315755-0105	-		2	LOCKING WAE 3,2 RFR	

Pos	Part No	SP	UN	Qty	Description	Page No

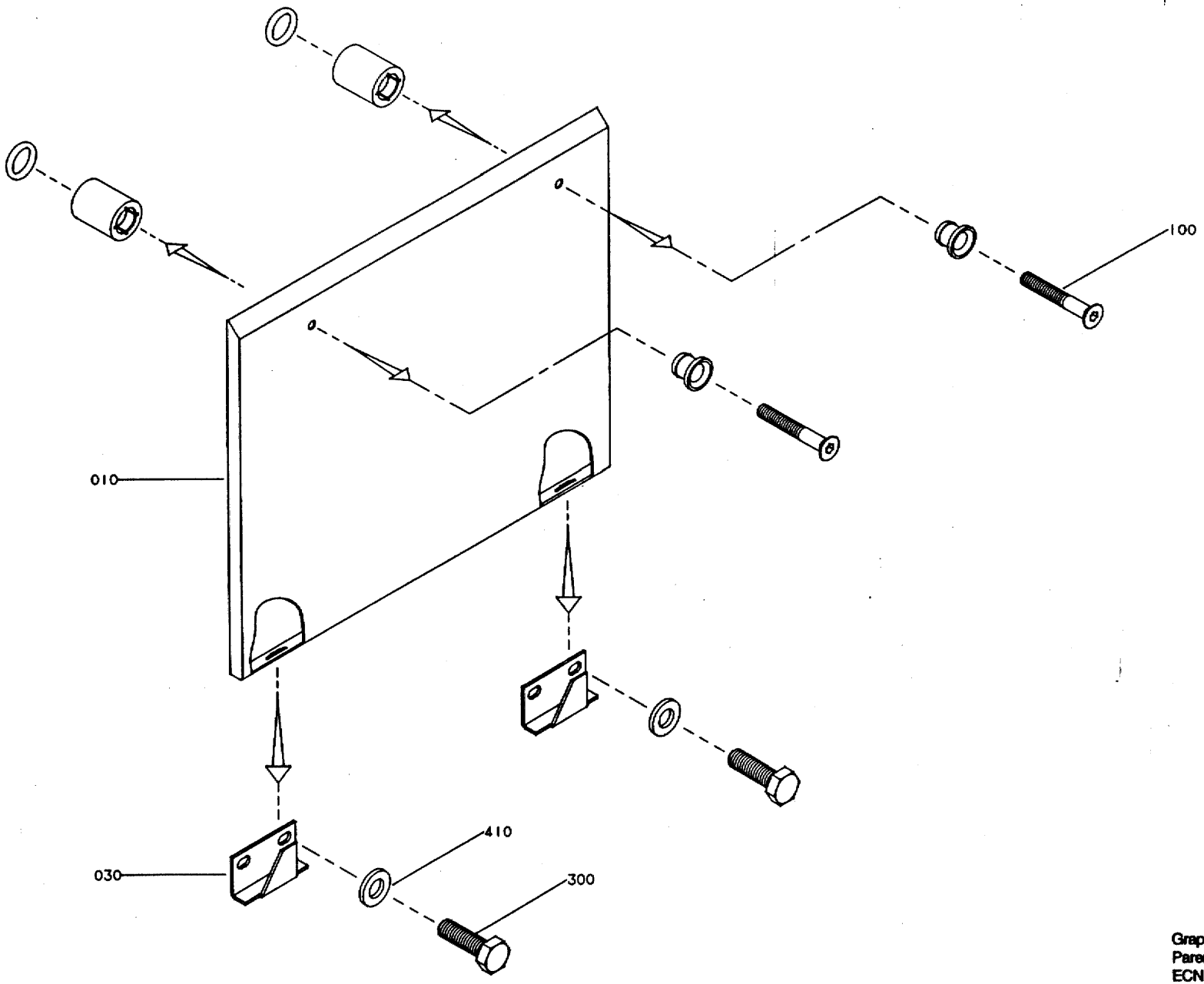

GraphicID: 102170101.eps
Parent Drw: 1021701-1
ECN 16567

Pos	Part No	SP	UN	Qty	Description	Page No
-						
000	C-1021701-0101	-		1	COVERING PLATE	
010	1021702	-		1	PROTECTION PLATE	
030	975887	-		2	CATCH	
100	90226-0458	-		2	MOUNTING SCREW	
300	312105-0368	-		4	SCREW O4017 M6X16A280	
410	315105-0153	-		4	WASHER BRB6,4X12RFR	

Pos	Part No	SP	UN	Qty	Description	Page No

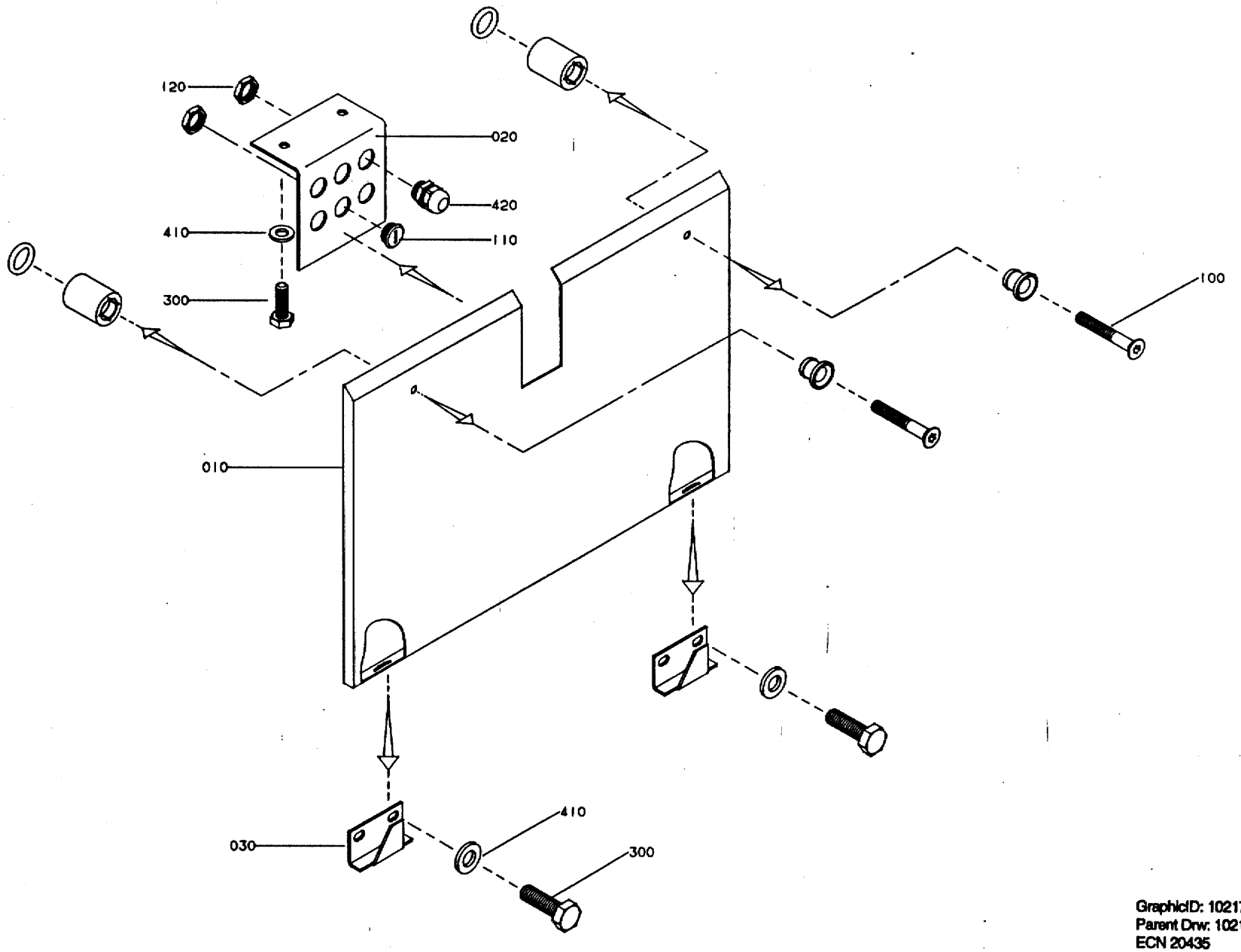

GraphicID: 102170301.eps
Parent Drw: 1021703-1
ECN 20435

Pos	Part No	SP	UN	Qty	Description	Page No
-						
000	C-1021703-0101	-		1	COVERING PLATE	
010	1065935	-		1	PROTECTION PLATE	
020	1065936	-		1	BRACKET	
030	975887	-		2	CATCH	
100	90226-0458	-		2	MOUNTING SCREW	
110	90002-0013	-		2	BLANK-OFF PLUG 15,2	
120	90099-0104	-		6	NUT PR 15,2 (PG9)	
300	312105-0370	-		6	SCREW O4017 M6X20A280	
410	315105-0153	-		6	WASHER BRB6,4X12RFR	
420	352103-0101	-		4	CABLE GLAND ST 9	

Pos	Part No	SP	UN	Qty	Description	Page No

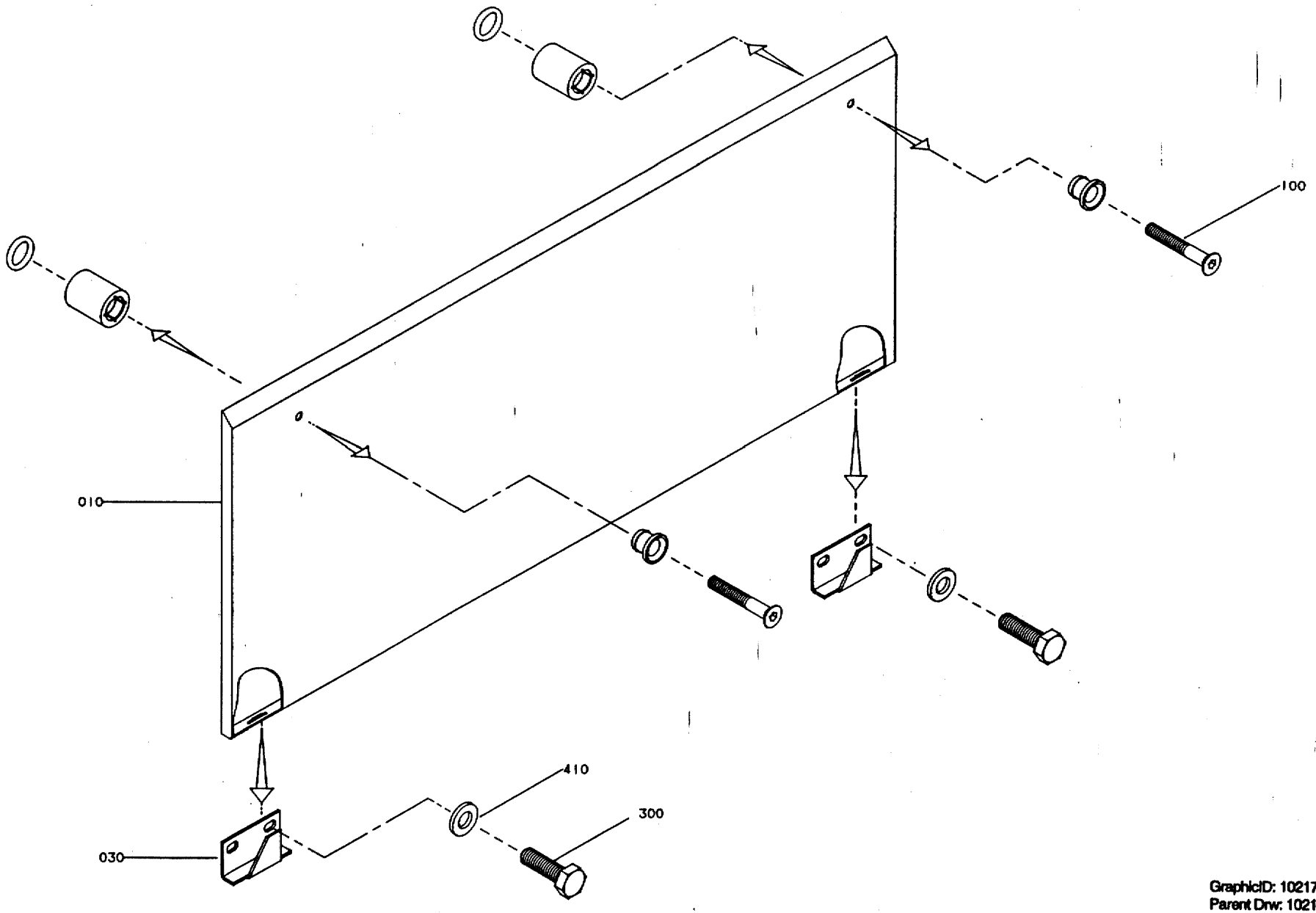

GraphicID: 102170501.eps
Parent Drw: 1021705-1
ECN 16567

Pos	Part No	SP	UN	Qty	Description	Page No
-						
000	C-1021705-0101	-		1	COVERING PLATE	
010	1021706	-		1	PROTECTION PLATE	
030	975887	-		2	CATCH	
100	90226-0458	-		2	MOUNTING SCREW	
300	312105-0368	-		4	SCREW O4017 M6X16A280	
410	315105-0153	-		4	WASHER BRB6,4X12RFR	

Pos	Part No	SP	UN	Qty	Description	Page No

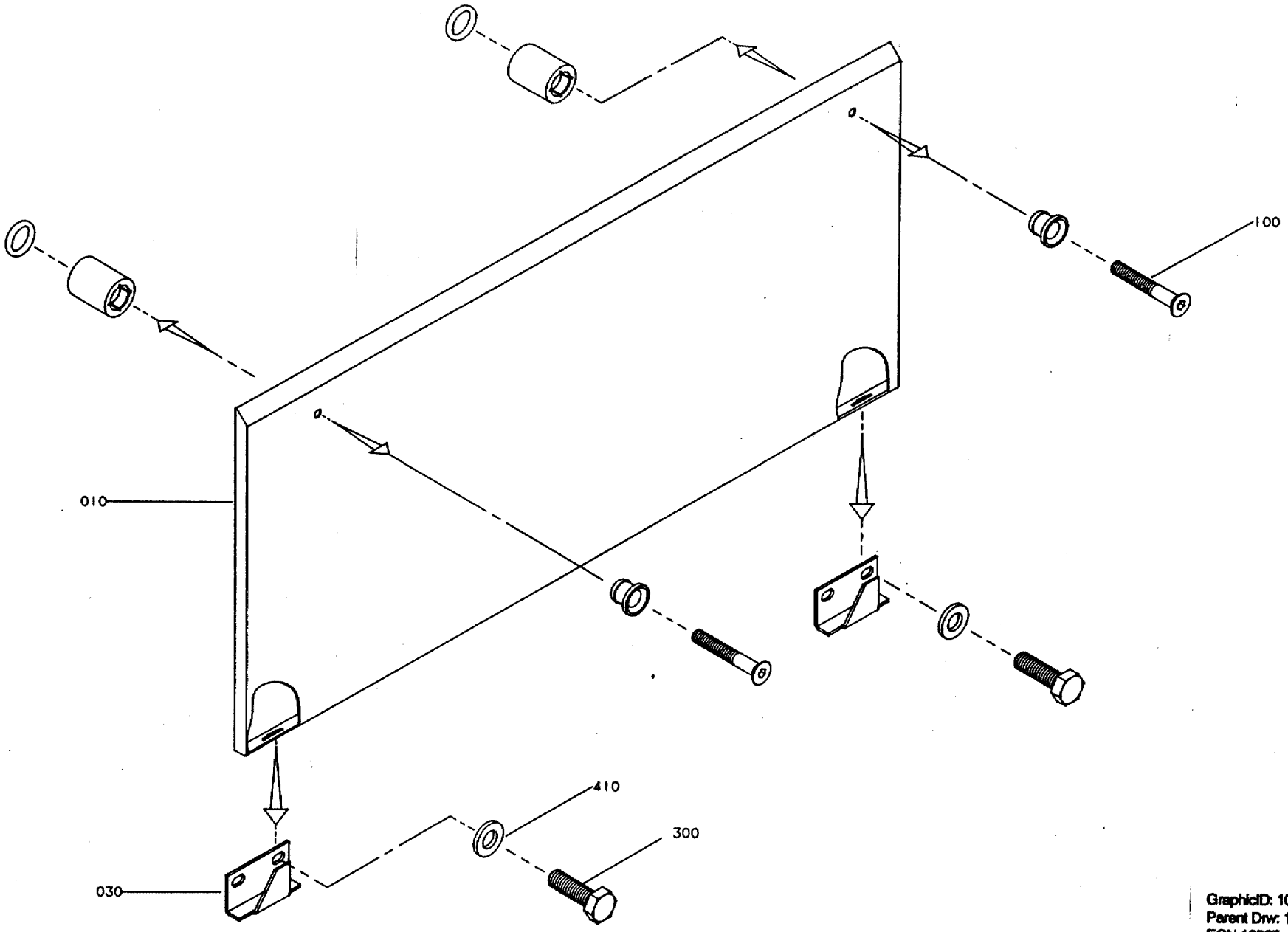

GraphicID: 102170701.eps
Parent Drw: 1021707-1
ECN 16567

Pos	Part No	SP	UN	Qty	Description	Page No
-						
000	C-1021707-0101	-		1	COVERING PLATE	
010	1021708	-		1	PROTECTION PLATE	
030	975887	-		2	CATCH	
100	90226-0458	-		2	MOUNTING SCREW	
300	312105-0368	-		4	SCREW O4017 M6X16A280	
410	315105-0153	-		4	WASHER BRB6,4X12RFR	

Pos	Part No	SP	UN	Qty	Description	Page No

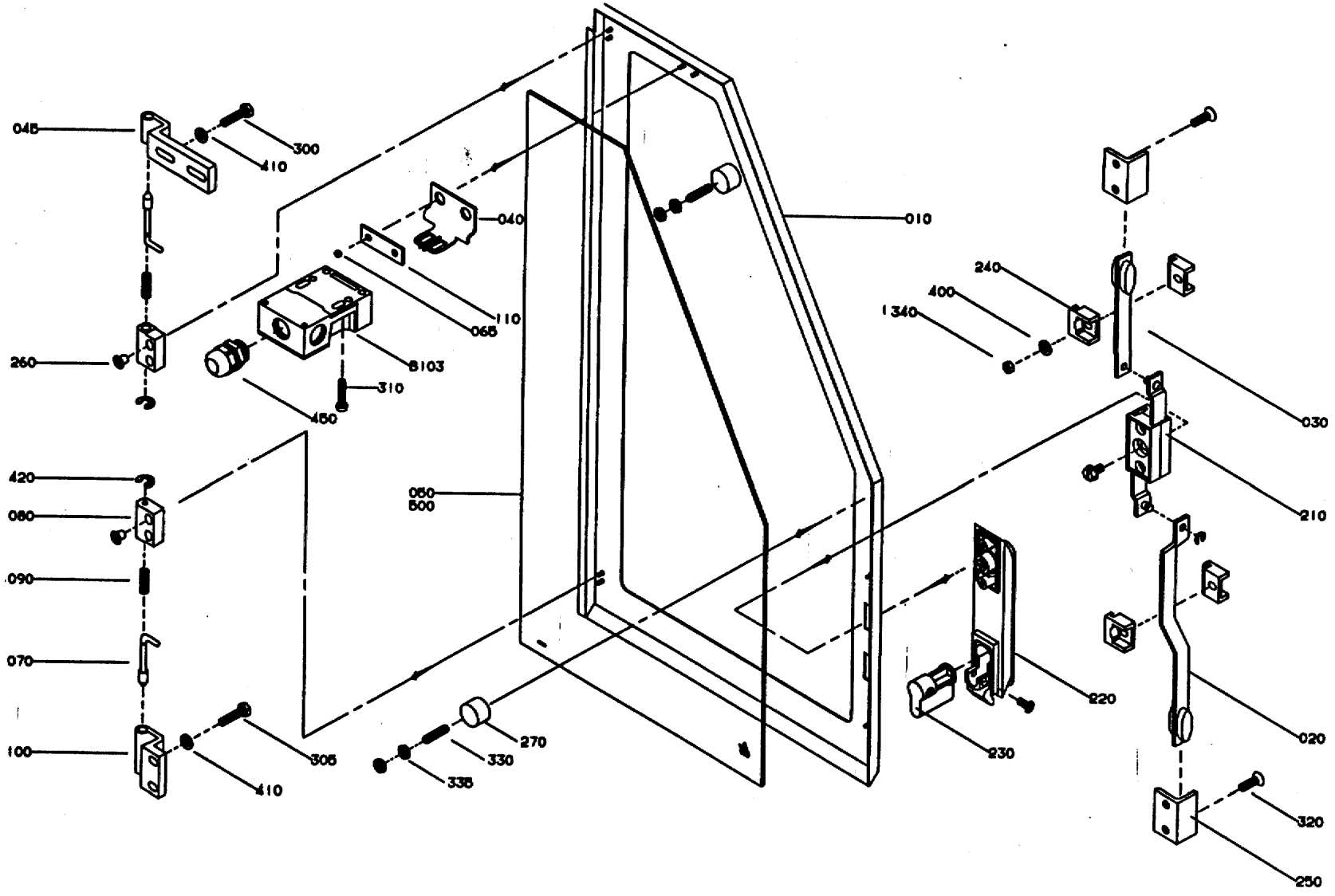

GraphicID: 102171203.eps
Parent Drw: 1021712-3
ECN 23757

Pos	Part No	SP	UN	Qty	Description	Page No
U-FORM, RIGHT HAND INFEEDZ/L-FORM, LEFT HAND INFEED, RIGHT HAND INFEED						
000	C-1021712-0201	-		1	GLASS DOOR	
010	1021713	-		1	HATCH	
050	1021724	-		1	GLASS	
B103	90044-0127	S		1	KEY SAFETY SWITCH AZ15ZVR	
COMMON PARTS						
020	975888-0004	-		1	STRUT	
030	975889-0006	-		1	STRUT	
040	975917	-		1	KEY	
045	975927	-		1	HINGE FLANGE	
065	575034	-		2	ROUND NUT	
070	959656	-		2	COTTER	
080	959657	-		2	HINGE FLANGE	
090	959658	-		2	SPRING	
100	975880	-		1	HINGE FLANGE	
110	975924	-		1	WASHER	
210	90237-0123	-		1	LOCK HOUSING	
220	90237-0126	-		1	TURNING HANDLE	
230	90237-0128	-		1	LOCK CYLINDER	
240	90237-0144	-		2	STEERING	
250	90237-0145	-		2	CATCH	
260	90287-0205	-		4	SCREW	
270	90347-0011	-		2	VIBRATION DAMPER	
300	312105-0372	-		2	SCREW O4017 M6X25A280	
305	312105-0378	-		2	SCREW O4017 M6X40A280	
310	312115-0333	-		2	SCREW O4762 M5X25A280	
320	312155-0370	-		4	SCREW MF6S6X20RFR	
330	312318-0372	-		2	STOP SCREW SK6SS6X25RFR	
335	312625-0316	-		4	NUT M 6	
340	312812-0314	-		2	LOCK NUT A2-M5RFR	
400	315105-0146	-		2	WASHER BRB5,3X10RFR	
410	315105-0153	-		4	WASHER BRB6,4X12RFR	
420	315755-0105	-		2	LOCKING WAE 3,2 RFR	
450	352103-0106	-		1	CABLE GLAND ST 11	
500	90157-0041	-		X	SEALING COMPOUND	

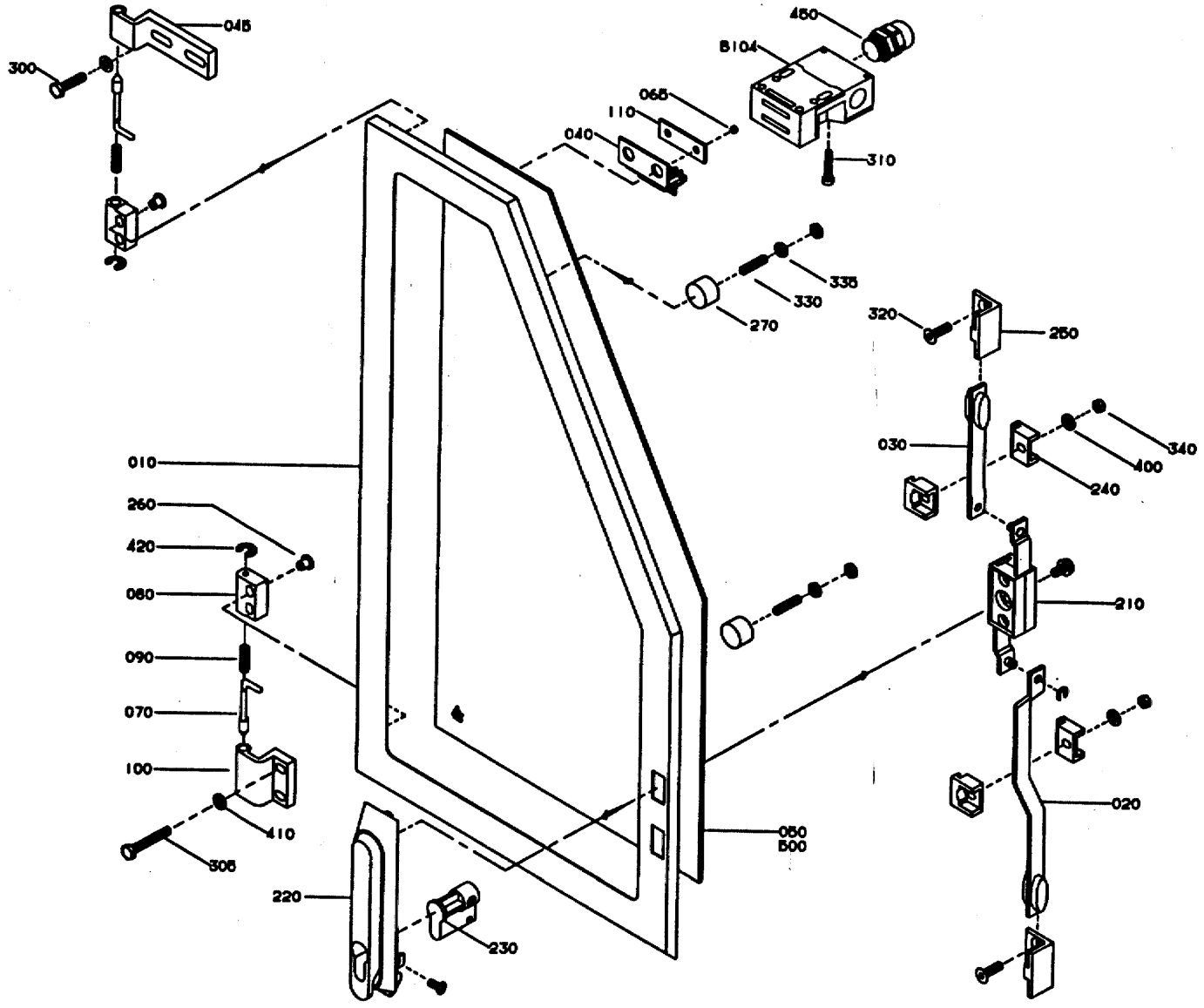

GraphicID: 102171204.eps
Parent Drw: 1021712-4
ECN 23757

Pos	Part No	SP	UN	Qty	Description	Page No
U-FORM, LEFT HAND INFEEDZ/L-FORM, LEFT HAND INFEED, RIGHT HAND INFEED						
000	C-1021712-0202	-		1	GLASS DOOR	
010	1021710	-		1	HATCH	
050	1021722	-		1	GLASS	
B104	90044-0127	S		1	KEY SAFETY SWITCH AZ15ZVR	
COMMON PARTS						
020	975888-0004	-		1	STRUT	
030	975889-0006	-		1	STRUT	
040	975917	-		1	KEY	
045	975927	-		1	HINGE FLANGE	
065	575034	-		2	ROUND NUT	
070	959656	-		2	COTTER	
080	959657	-		2	HINGE FLANGE	
090	959658	-		2	SPRING	
100	975880	-		1	HINGE FLANGE	
110	975924	-		1	WASHER	
210	90237-0123	-		1	LOCK HOUSING	
220	90237-0126	-		1	TURNING HANDLE	
230	90237-0128	-		1	LOCK CYLINDER	
240	90237-0144	-		2	STEERING	
250	90237-0145	-		2	CATCH	
260	90287-0205	-		4	SCREW	
270	90347-0011	-		2	VIBRATION DAMPER	
300	312105-0372	-		2	SCREW O4017 M6X25A280	
305	312105-0378	-		2	SCREW O4017 M6X40A280	
310	312115-0333	-		2	SCREW O4762 M5X25A280	
320	312155-0370	-		4	SCREW MF6S6X20RFR	
330	312318-0372	-		2	STOP SCREW SK6SS6X25RFR	
335	312625-0316	-		4	NUT M 6	
340	312812-0314	-		2	LOCK NUT A2-M5RFR	
400	315105-0146	-		2	WASHER BRB5,3X10RFR	
410	315105-0153	-		4	WASHER BRB6,4X12RFR	
420	315755-0105	-		2	LOCKING WAE 3,2 RFR	
450	352103-0106	-		1	CABLE GLAND ST 11	
500	90157-0041	-		X	SEALING COMPOUND	

Pos	Part No	SP	UN	Qty	Description	Page No

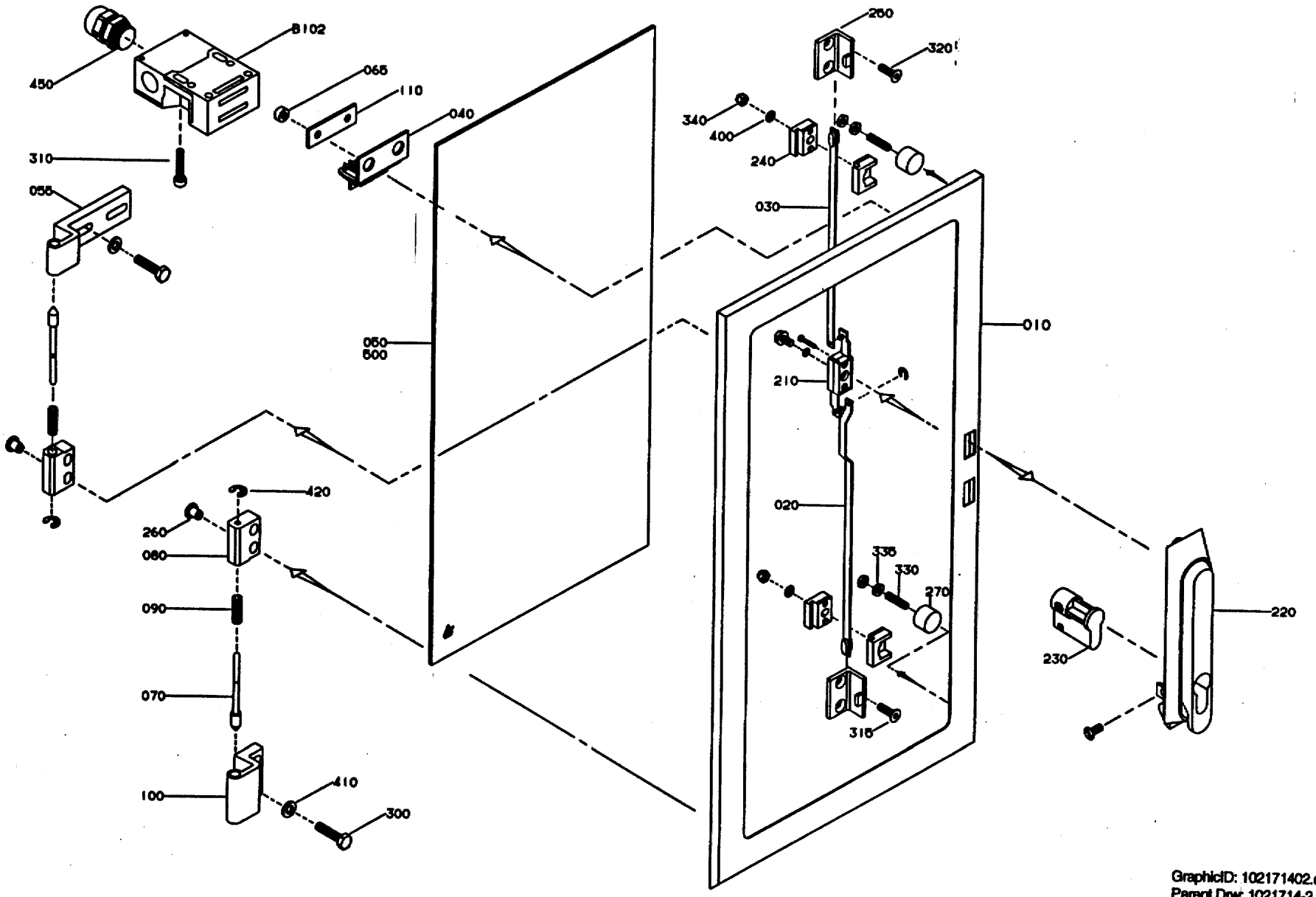

GraphicID: 102171402.eps
Parent Drw: 1021714-2
ECN 22668

Pos	Part No	SP	UN	Qty	Description	Page No
-						
000	C-1021714-0201	-		1	GLASS DOOR	
010	1021715	-		1	HATCH	
020	975888-0003	-		1	STRUT	
030	975889-0004	-		1	STRUT	
040	975917	-		1	KEY	
050	975918-0003	-		1	GLASS	
055	975927	-		1	HINGE FLANGE	
065	575034	-		2	ROUND NUT	
070	959656	-		2	COTTER	
080	959657	-		2	HINGE FLANGE	
090	959658	-		2	SPRING	
100	975880	-		1	HINGE FLANGE	
110	975924	-		1	WASHER	
210	90237-0123	-		1	LOCK HOUSING	
220	90237-0126	-		1	TURNING HANDLE	
230	90237-0128	-		1	LOCK CYLINDER	
240	90237-0144	-		2	STEERING	
250	90237-0145	-		2	CATCH	
260	90287-0205	-		4	SCREW	
270	90347-0011	-		2	VIBRATION DAMPER	
300	312105-0372	-		4	SCREW O4017 M6X25A280	
310	312115-0333	-		2	SCREW O4762 M5X25A280	
315	312155-0368	-		2	SCREW MF6S6X16RFR	
320	312155-0370	-		2	SCREW MF6S6X20RFR	
330	312318-0372	-		2	STOP SCREW SK6SS6X25RFR	
335	312625-0316	-		4	NUT M 6	
340	312812-0314	-		2	LOCK NUT A2-M5RFR	
400	315105-0146	-		2	WASHER BRB5,3X10RFR	
410	315105-0153	-		4	WASHER BRB6,4X12RFR	
420	315755-0105	-		2	LOCKING WAE 3,2 RFR	
450	352103-0106	-		1	CABLE GLAND ST 11	
500	90157-0041	-		X	SEALING COMPOUND	
B102	90044-0127	S		1	KEY SAFETY SWITCH AZ15ZVR	

Pos	Part No	SP	UN	Qty	Description	Page No

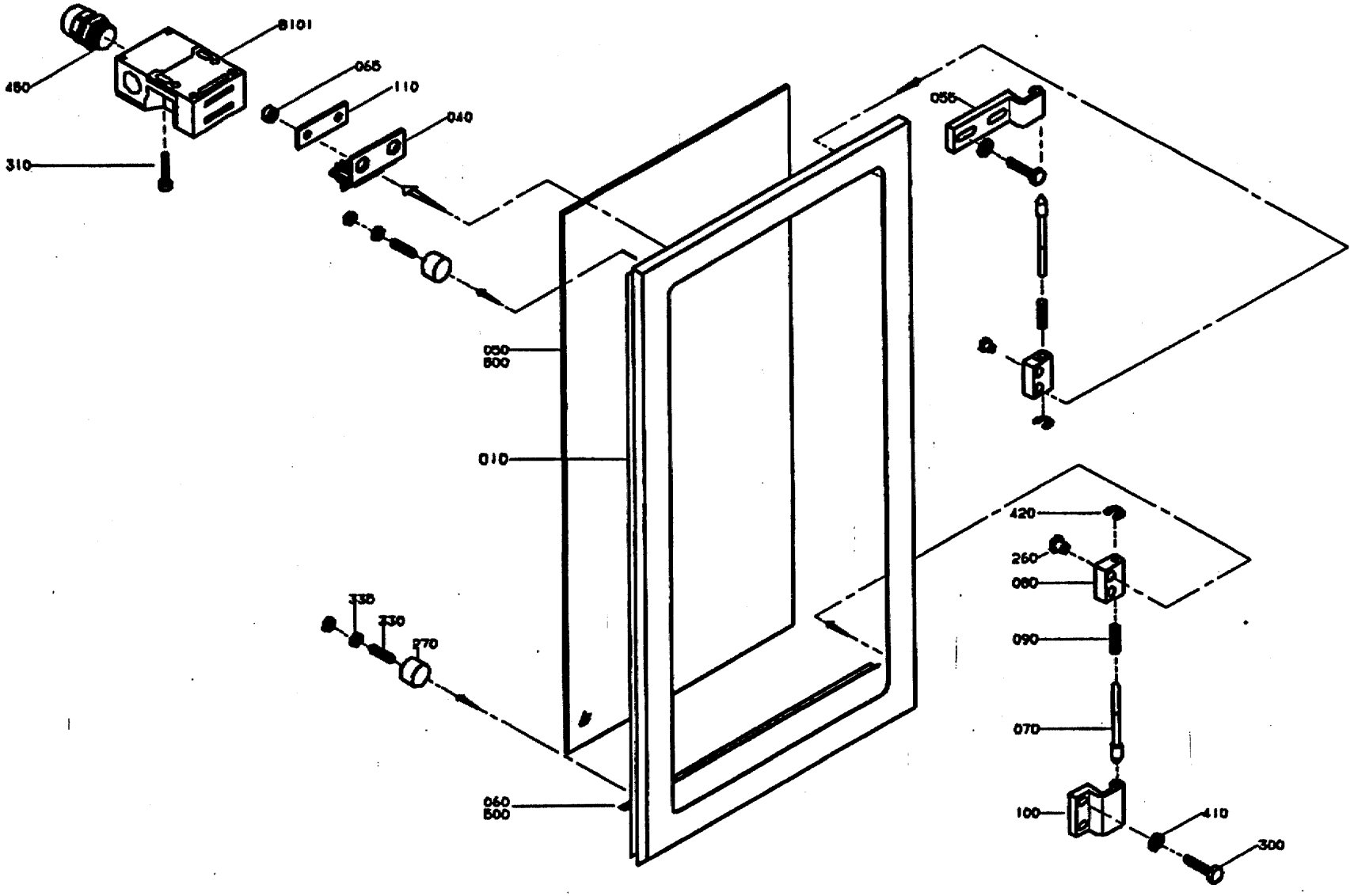

GraphicID: 102171602.til
Parent Drw: 1021716-2
ECN No: 22292

Pos	Part No	SP	UN	Qty	Description	Page No
000	C-1021716-0201	-		1	GLASS DOOR	
010	1021717	-		1	HATCH	
040	975917	-		1	KEY	
050	975918-0003	-		1	GLASS	
055	975927	-		1	HINGE FLANGE	
065	575034	-		2	ROUND NUT	
070	959656	-		2	COTTER	
080	959657	-		2	HINGE FLANGE	
090	959658	-		2	SPRING	
100	975880	-		1	HINGE FLANGE	
110	975924	-		1	WASHER	
260	90287-0205	-		4	SCREW	
270	90347-0011	-		2	VIBRATION DAMPER	
300	312105-0372	-		4	SCREW O4017 M6X25A280	
310	312115-0333	-		2	SCREW O4762 M5X25A280	
330	312318-0372	-		2	STOP SCREW SK6SS6X25RFR	
335	312625-0316	-		4	NUT M 6	
410	315105-0153	-		4	WASHER BRB6,4X12RFR	
420	315755-0105	-		2	LOCKING WAE 3,2 RFR	
450	352103-0106	-		1	CABLE GLAND ST 11	
500	90157-0041	-		X	SEALING COMPOUND	
B101	90044-0127	S		1	KEY SAFETY SWITCH AZ15ZVR	

Pos	Part No	SP	UN	Qty	Description	Page No

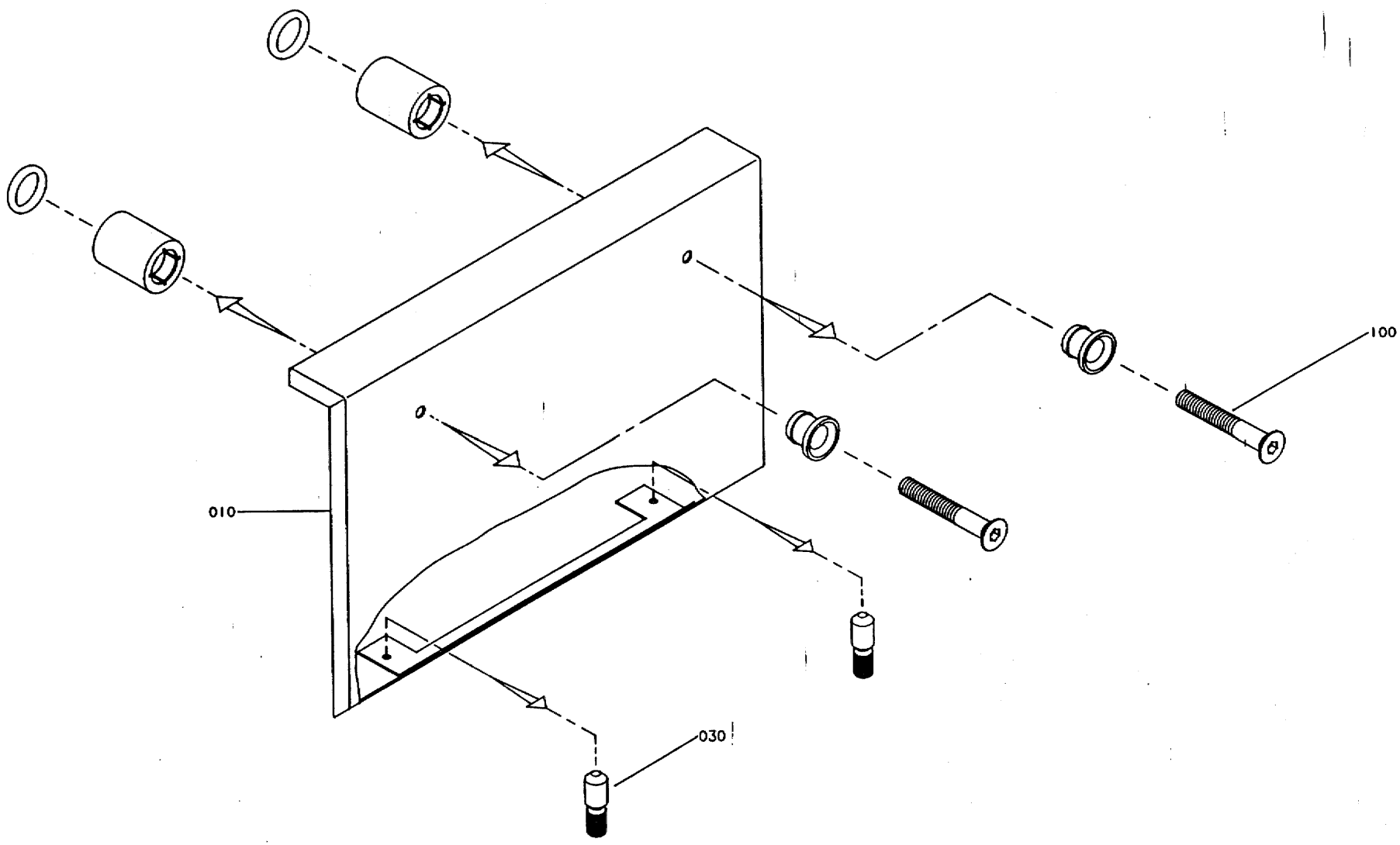

GraphicID: 102171801.eps
Parent Drw: 1021718-1
ECN 16567

Pos	Part No	SP	UN	Qty	Description	Page No
000	C-1021718-0101	-		1	COVERING PLATE	
010	1021719	-		1	PROTECTION PLATE	
030	1021795	-		2	DOWEL	
100	90226-0458	-		2	MOUNTING SCREW	

Pos	Part No	SP	UN	Qty	Description	Page No

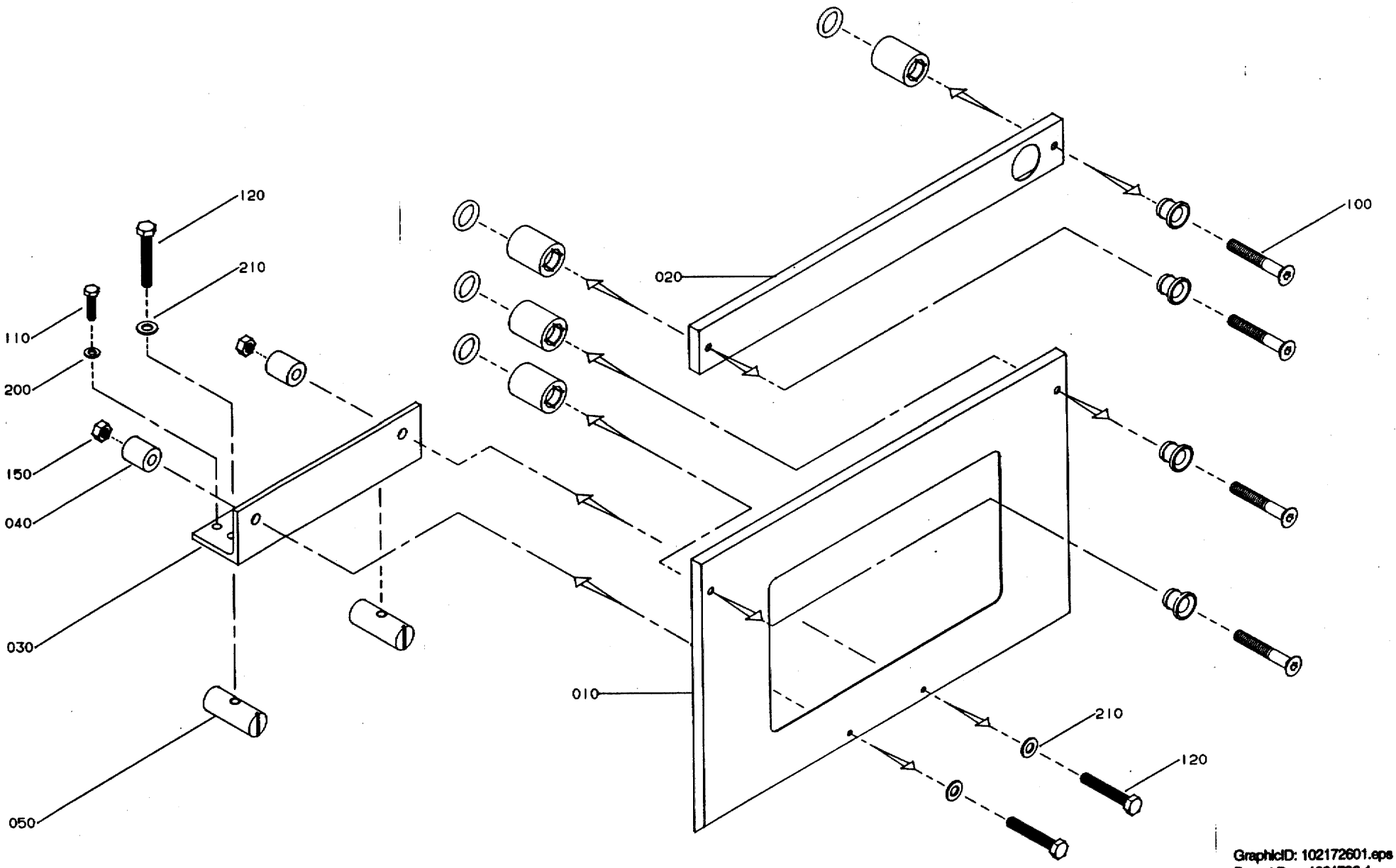

GraphicID: 102172601.eps
Parent Drw: 1021726-1
ECN 19307

Pos	Part No	SP	UN	Qty	Description	Page No
-						
000	C-1021726-0101	-		1	COVERING PLATE	
010	1021959	-		1	PROTECTION PLATE	
020	1021774	-		1	PROTECTION PLATE	
030	1021393	-		1	BRACKET	
040	1021394	-		2	SPACER	
050	486268	-		2	NUT	
100	90226-0458	-		4	MOUNTING SCREW	
110	312105-0370	-		2	SCREW O4017 M6X20A280	
120	312105-0461	-		4	SCREW O4017 M8X50A280	
150	312605-0318	-		2	NUT M6M8RFR	
200	315105-0153	-		2	WASHER BRB6,4X12RFR	
210	315105-0165	-		4	WASHER BRB8,4X16RFR	

Pos	Part No	SP	UN	Qty	Description	Page No

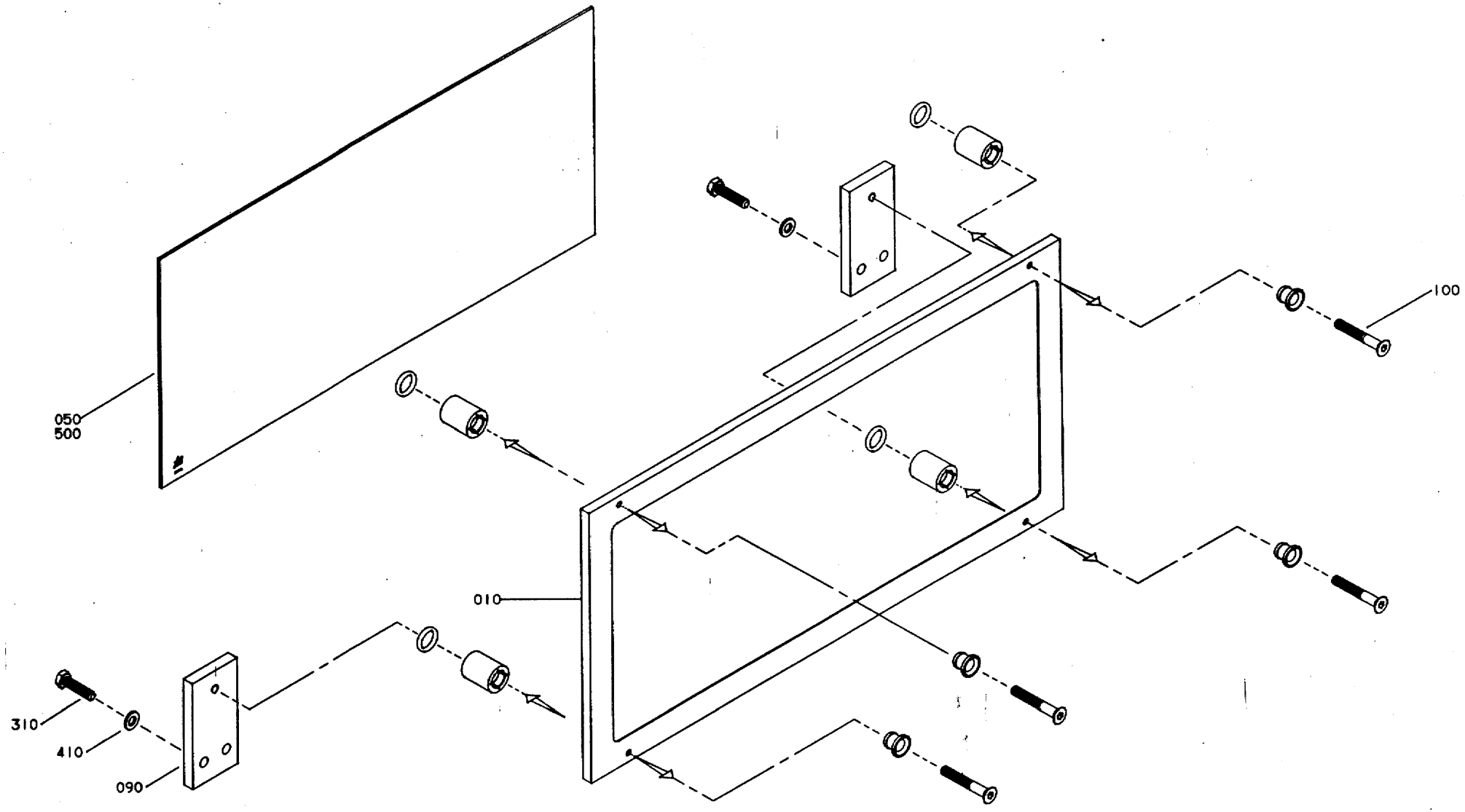

GraphicID: 102178201.eps
Parent Drw: 1021782-1
ECN 18753

Pos	Part No	SP	UN	Qty	Description	Page No
000	C-1021782-0101	-		1	GLASS COVER	
010	1021783	-		1	PROTECTION PLATE	
050	1021784	-		1	GLASS	
090	1021792	-		2	BRACKET	
100	90226-0458	-		4	MOUNTING SCREW	
310	312105-0372	-		4	SCREW O4017 M6X25A280	
410	315105-0153	-		4	WASHER BRB6,4X12RFR	
500	90157-0041	-		X	SEALING COMPOUND	

Pos	Part No	SP	UN	Qty	Description	Page No

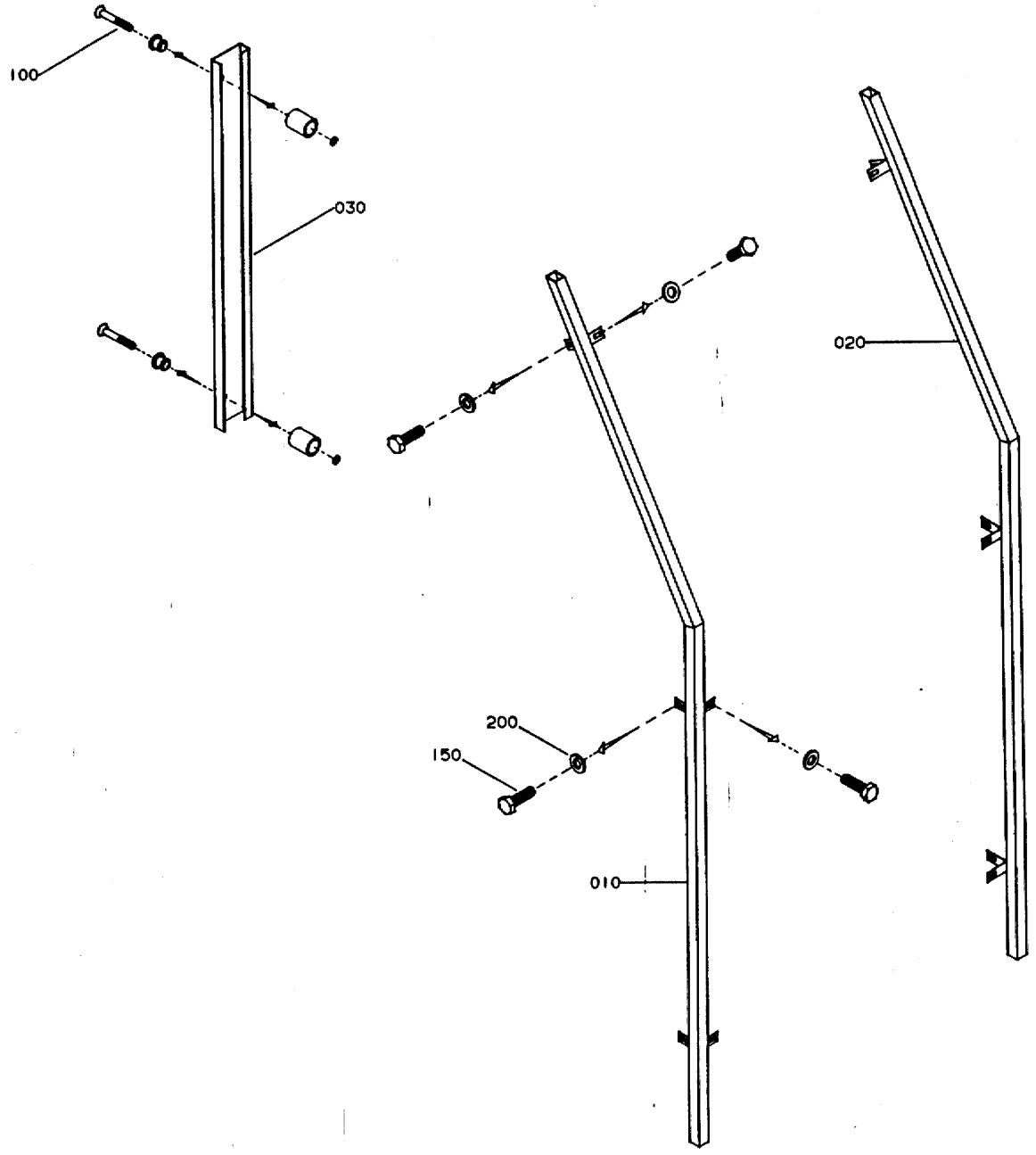

GraphicID: 102178501.eps
Parent Drw: 1021785-1
ECN 16567

Pos	Part No	SP	UN	Qty	Description	Page No
000	C-1021785-0101	-		1	CORNER STRIP	
010	1021786	-		1	CORNER STRIP	
020	1021787	-		1	CORNER STRIP	
030	1021937	-		1	CORNER STRIP	
100	90226-0458	-		2	MOUNTING SCREW	
150	312105-0366	-		12	SCREW O4017 M6X12A280	
200	315105-0153	-		12	WASHER BRB6,4X12RFR	

Pos	Part No	SP	UN	Qty	Description	Page No

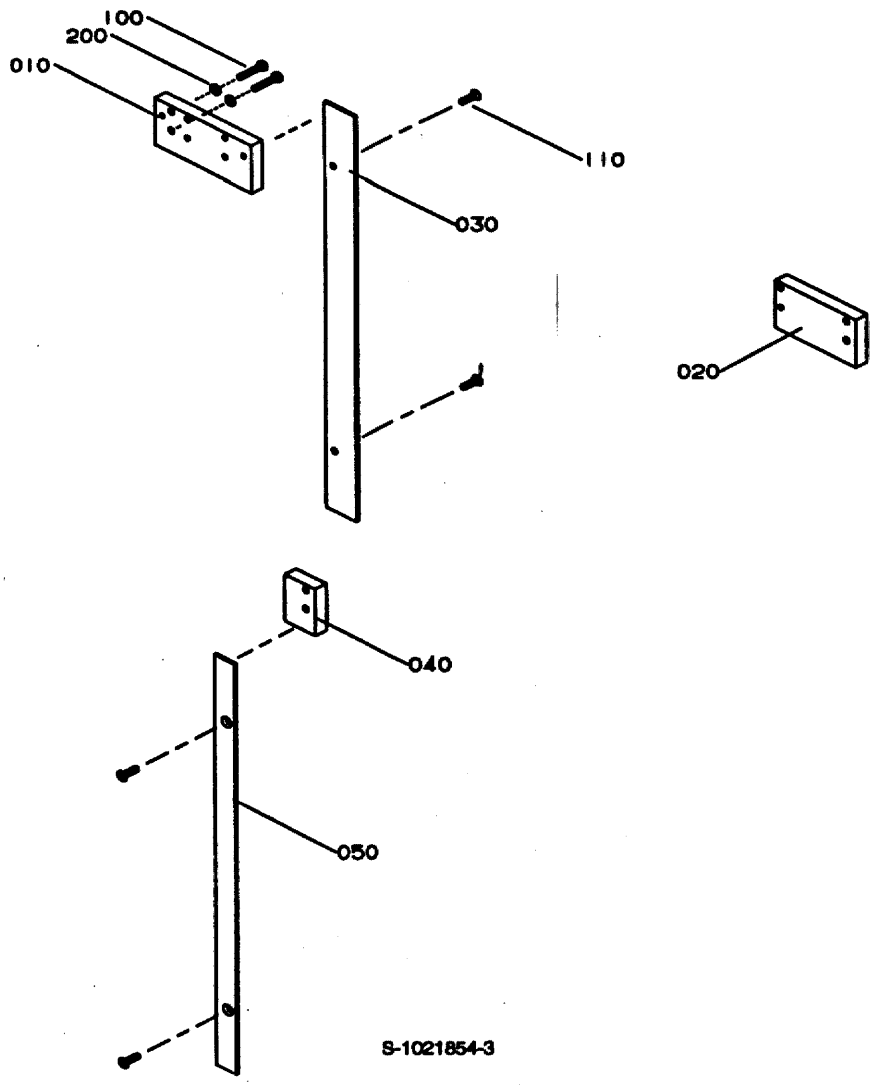
100
200
010
110
030
020
040
050
S-1021854-3

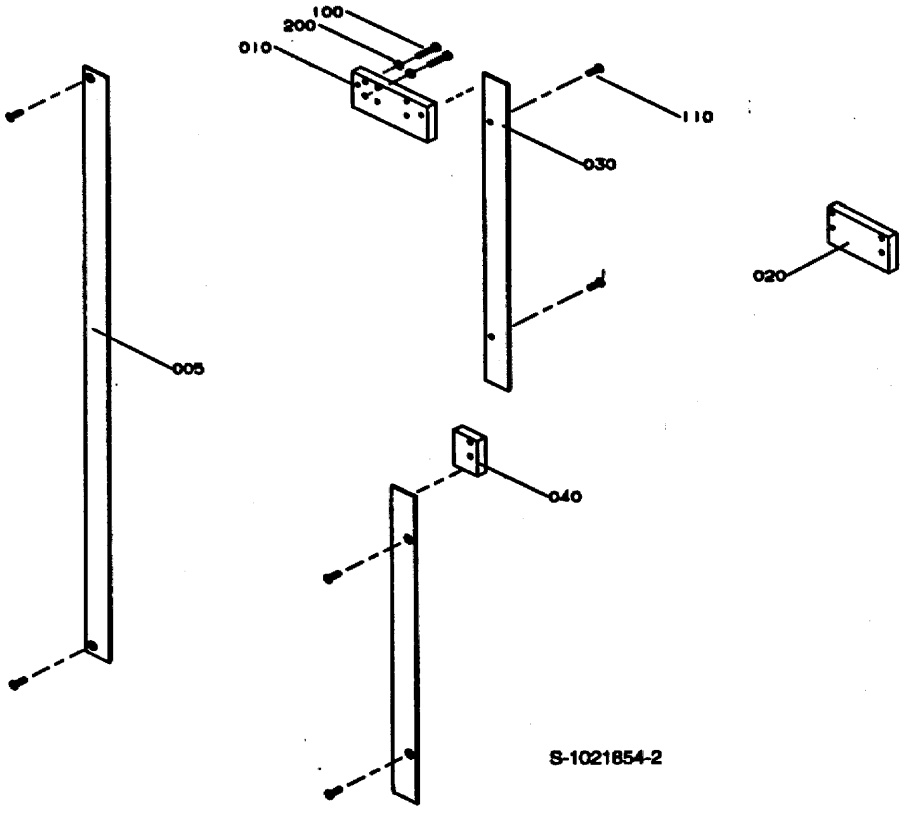
100
200
010
110
030
020
005
040
S-1021854-2

Pos	Part No	SP	UN	Qty	Description	Page No
Z-FORM, 1/2/3-LINE						
000	C-1021854-0201	-		1	COVERS MISC.	
030	1021855	-		2	RIM	
040	1021899	-		1	BRACKET	
110	312145-0370	-		4	SLOTTED HEMFS6X20RFR	
U-FORM, 1/2/3-LINE						
000	C-1021854-0202	-		1	COVERS MISC.	
005	1128830	-		1	RIM	
030	1021855	-		1	RIM	
110	312145-0370	-		4	SLOTTED HEMFS6X20RFR	
L-FORM, 1-LINE						
000	C-1021854-0203	-		1	COVERS MISC.	
005	1128830	-		1	RIM	
030	1021855	-		2	RIM	
040	1021899	-		1	BRACKET	
110	312145-0370	-		6	SLOTTED HEMFS6X20RFR	
U-FORM, MULTI						
000	C-1021854-0204	-		1	COVERS MISC.	
005	1124483	-		1	RIM	
030	1021855	-		1	RIM	
110	312145-0370	-		4	SLOTTED HEMFS6X20RFR	
Z-FORM, MULTI						
000	C-1021854-0205	-		1	COVERS MISC.	
030	1021855	-		1	RIM	
040	1021899	-		1	BRACKET	
050	1139256	-		1	STRIP	
110	312145-0370	-		4	SLOTTED HEMFS6X20RFR	
COMMON PARTS						
010	1021721	-		1	BRACKET	
020	1021799	-		1	BRACKET	
100	312105-0374	-		2	SCREW O4017 M6X30A280	
200	315105-0153	-		2	WASHER BRB6,4X12RFR	

Pos	Part No	SP	UN	Qty	Description	Page No

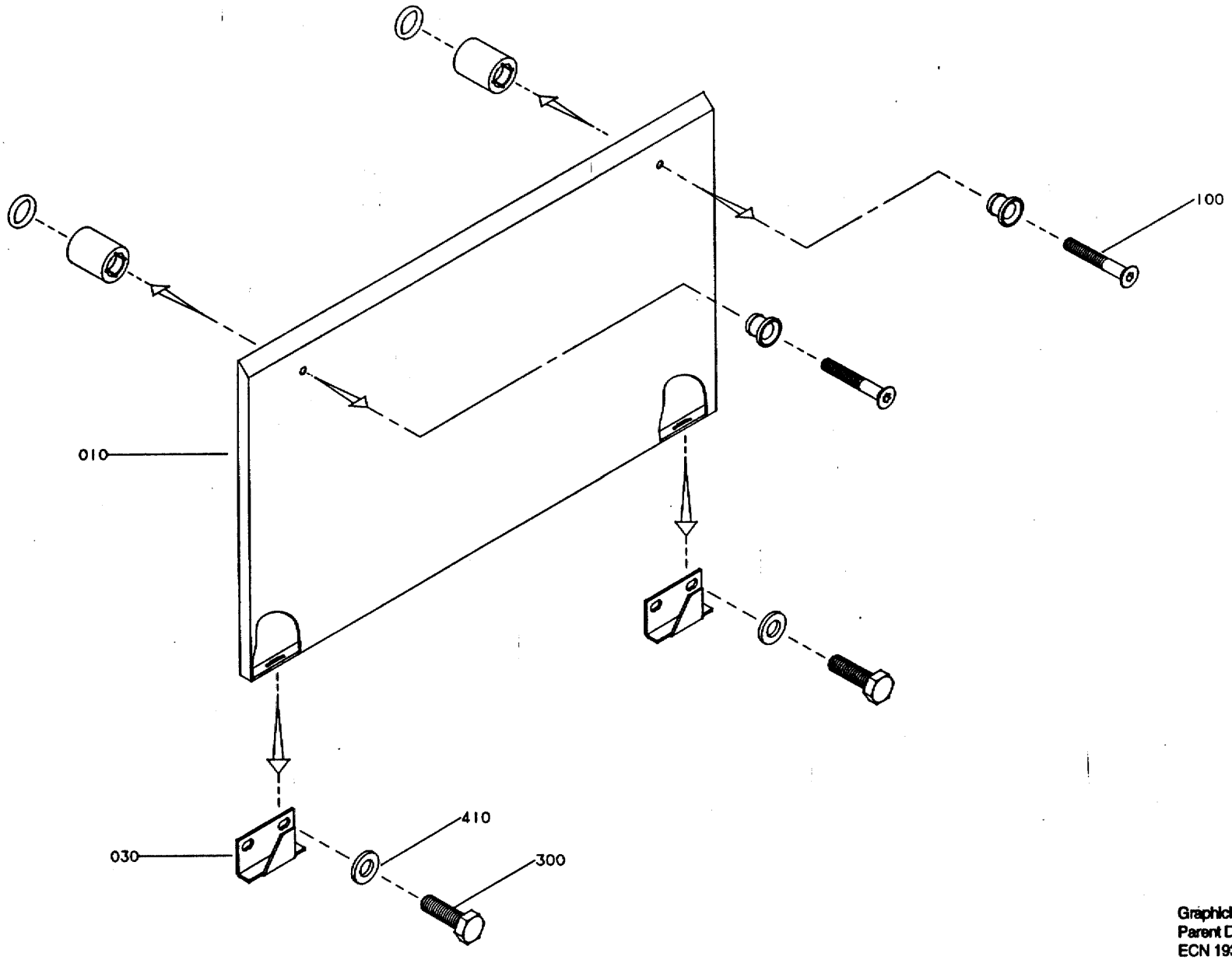

GraphicID: 106560001.eps
Parent Drw: 1065600-1
ECN 19307

Pos	Part No	SP	UN	Qty	Description	Page No
-						
000	C-1065600-0101	-		1	COVERING PLATE	
010	1065601	-		1	PROTECTION PLATE	
030	975887	-		2	CATCH	
100	90226-0458	-		2	MOUNTING SCREW	
300	312105-0368	-		4	SCREW O4017 M6X16A280	
410	315105-0153	-		4	WASHER BRB6,4X12RFR	

Pos	Part No	SP	UN	Qty	Description	Page No

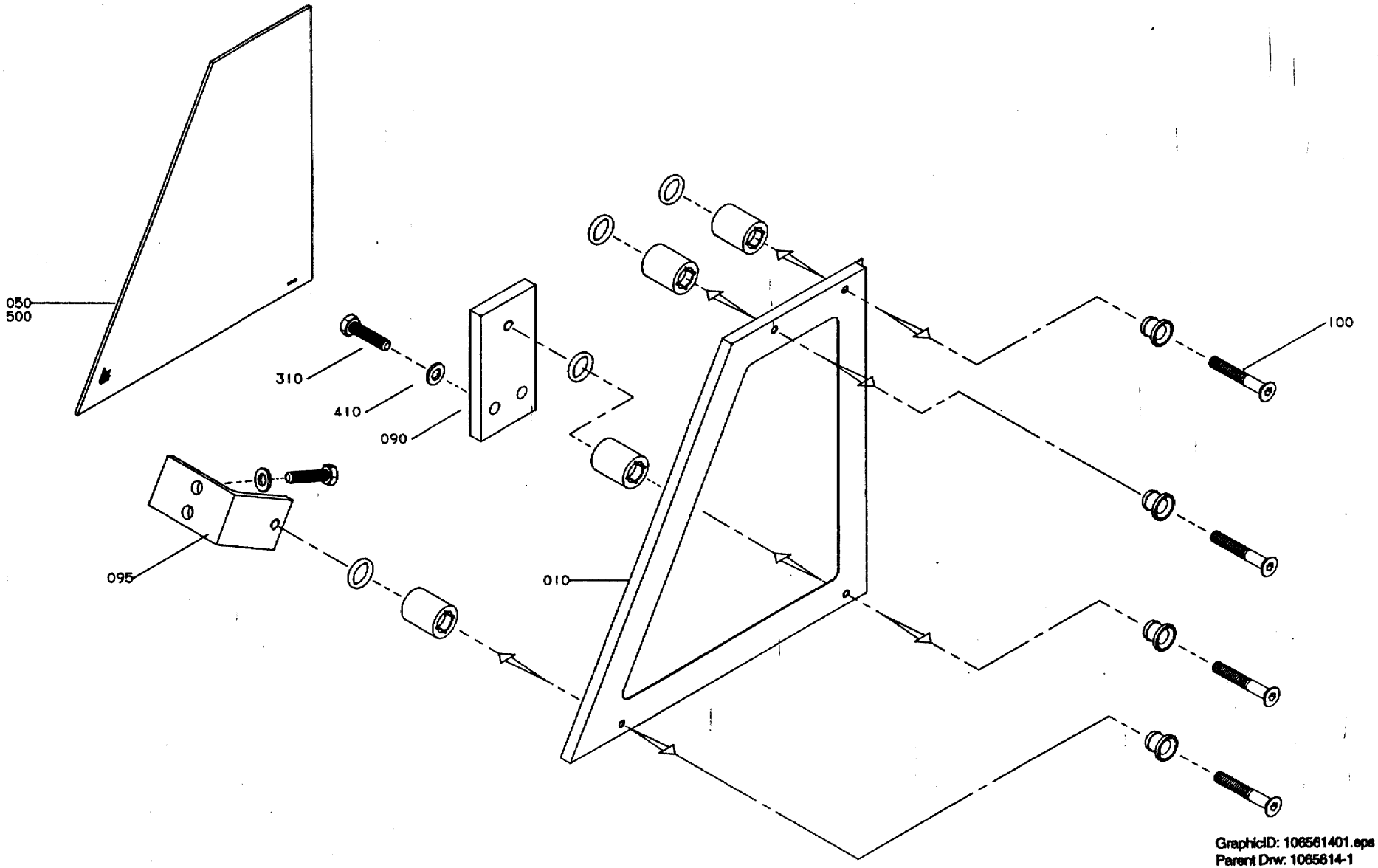

GraphicID: 106561401.eps
Parent Drw: 1065614-1
ECN 20435

Pos	Part No	SP	UN	Qty	Description
Left Hand Infeed					
000	C-1065614-0101	-		1	HATCH
010	1065615	-		1	HATCH
050	1065618	-		1	GLASS
Right Hand Infeed					
000	C-1065614-0102	-		1	HATCH
010	1065634	-		1	HATCH
050	1065621	-		1	GLASS
COMMON PARTS					
090	1021792	-		1	BRACKET
095	1065876	-		1	BRACKET
100	90226-0458	-		4	MOUNTING SCREW
310	312105-0372	-		4	SCREW O4017 M6X25A280
410	315105-0153	-		4	WASHER BRB6,4X12RFR
500	90157-0041	-		X	SEALING COMPOUND

Page No

Pos	Part No	SP	UN	Qty	Description

Page No

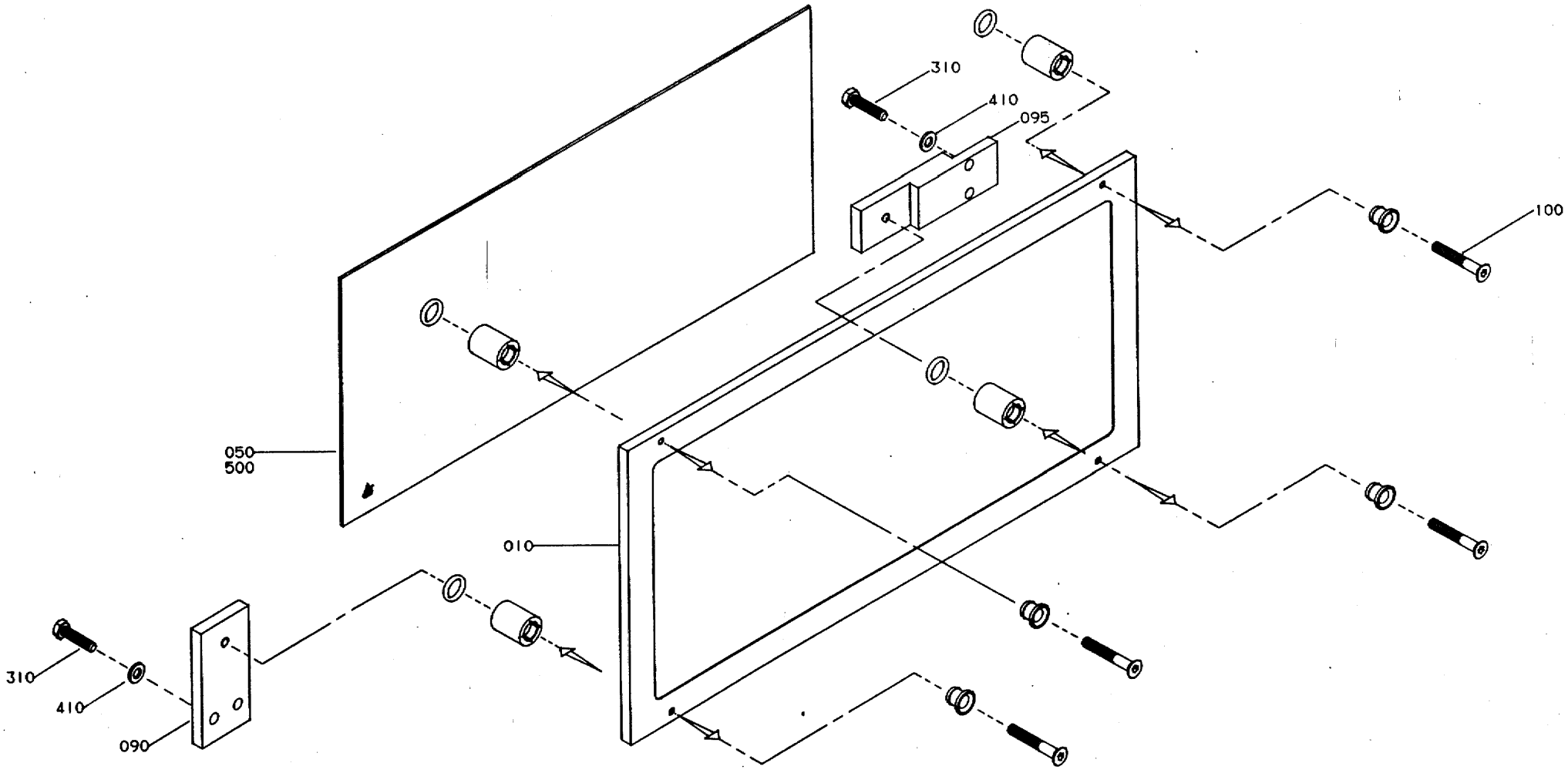

GraphicID: 106561601.eps
Parent Drw: 1065616-1
ECN 19307

Pos	Part No	SP	UN	Qty	Description	Page No
-						
000	C-1065616-0101	-		1	HATCH	
010	1021783	-		1	PROTECTION PLATE	
050	1021784	-		1	GLASS	
090	1021792	-		1	BRACKET	
095	1065617	-		1	BRACKET	
100	90226-0458	-		4	MOUNTING SCREW	
310	312105-0372	-		4	SCREW O4017 M6X25A280	
410	315105-0153	-		4	WASHER BRB6,4X12RFR	
500	90157-0041	-		X	SEALING COMPOUND	

Pos	Part No	SP	UN	Qty	Description	Page No

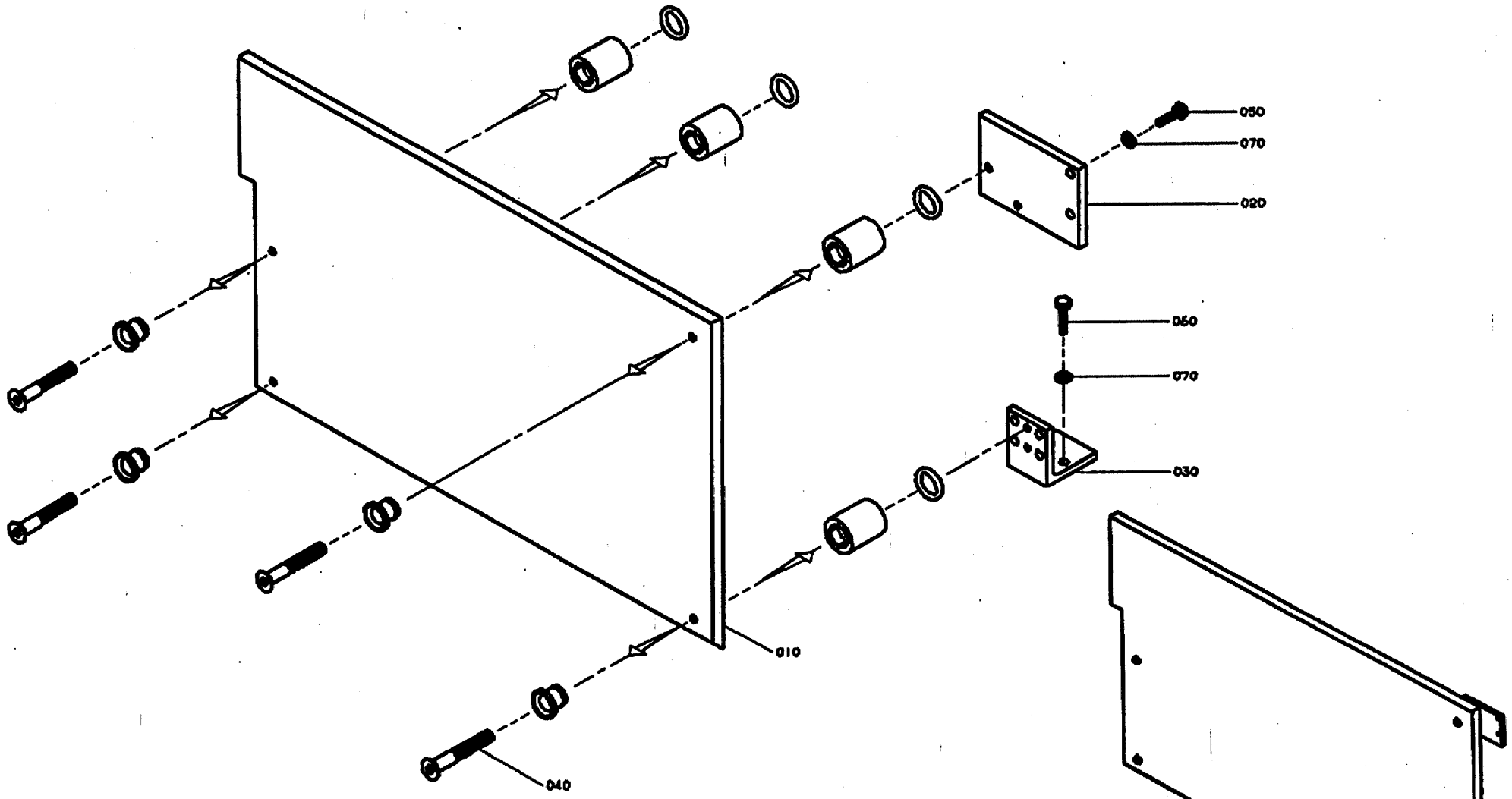

GraphicID: 112883501.tif
Parent Drw: 1128835-1
ECN No: 22292

Pos	Part No	SP	UN	Qty	Description	Page No
Left Hand infeed						
000	C-1128835-0101	-		1	COVERING PLATE	
010	1128836	-		1	PROTECTION PLATE	
Right Hand infeed						
000	C-1128835-0102	-		1	COVERING PLATE	
010	1128837	-		1	PROTECTION PLATE	
COMMON PARTS						
020	1128829	-		1	BRACKET	
030	975884	-		1	BRACKET	
040	90226-0458	-		4	MOUNTING SCREW	
050	312105-0370	-		2	SCREW O4017 M6X20A280	
060	312105-0372	-		2	SCREW O4017 M6X25A280	
070	315105-0153	-		4	WASHER BRB6,4X12RFR	

Pos	Part No	SP	UN	Qty	Description	Page No

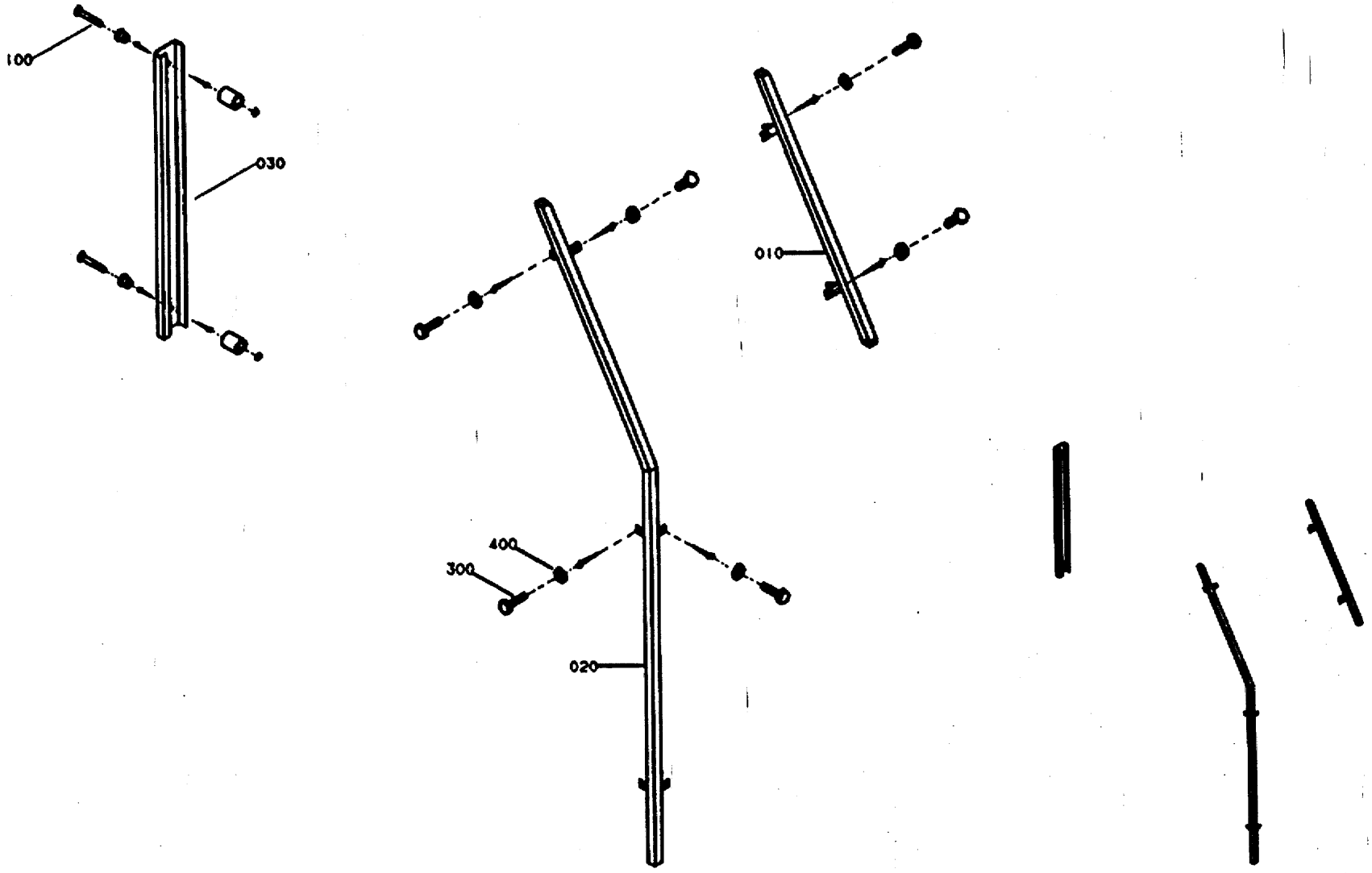

106597501.tif
1065975-1
AM 20994

Pos	Part No	SP	UN	Qty	Description	Page No
Left Hand Infeed, 2/3-LINE, MULTI						
000	C-1065975-0101	-		1	CORNER STRIP	
010	1065629	-		1	CORNER STRIP	
020	1021786	-		1	CORNER STRIP	
300	312105-0370	-		10	SCREW O4017 M6X20A280	
400	315105-0153	-		10	WASHER BRB6,4X12RFR	
RIGHT Hand Infeed, 2/3-LINE, MULTI						
000	C-1065975-0102	-		1	CORNER STRIP	
010	1065632	-		1	CORNER STRIP	
020	1021787	-		1	CORNER STRIP	
300	312105-0370	-		10	SCREW O4017 M6X20A280	
400	315105-0153	-		10	WASHER BRB6,4X12RFR	
LEFT HAND INFEED, RIGHT HAND INFEED, 1-LINE						
000	C-1065975-0103	-		1	CORNER STRIP	
010	1021786	-		1	CORNER STRIP	
020	1021787	-		1	CORNER STRIP	
300	312105-0370	-		12	SCREW O4017 M6X20A280	
400	315105-0153	-		12	WASHER BRB6,4X12RFR	
COMMON PARTS						
030	1021937	-		1	CORNER STRIP	
100	90226-0458	-		2	MOUNTING SCREW	

Pos	Part No	SP	UN	Qty	Description	Page No

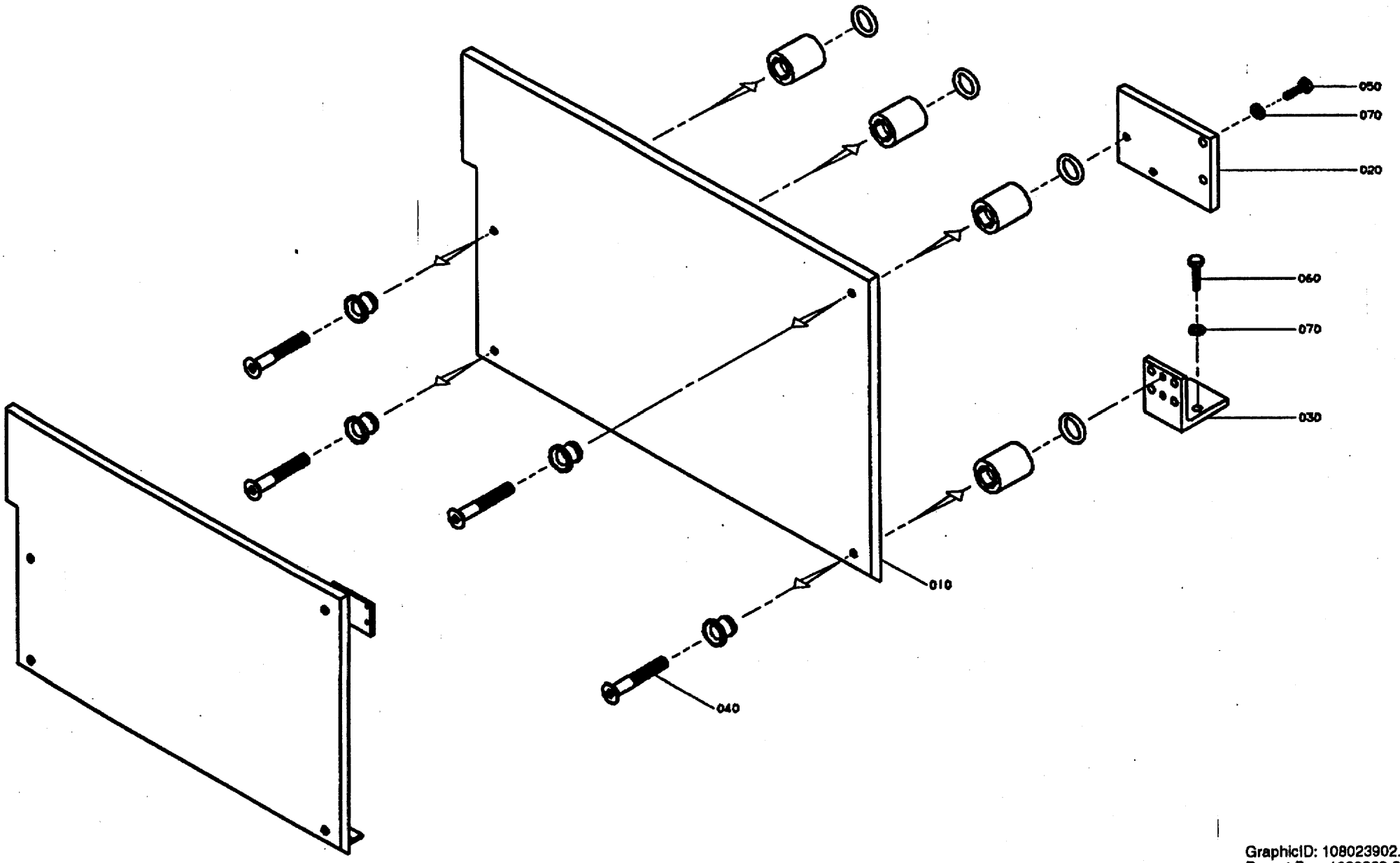

GraphicID: 108023902.tif
Parent Drw: 1080239-2
ECN No: 22292

Pos	Part No	SP	UN	Qty	Description	Page No
Left Hand Infeed						
000	C-1080239-0201	-		1	COVERING PLATE	
010	1128827	-		1	PROTECTION PLATE	
Right Hand Infeed						
000	C-1080239-0202	-		1	COVERING PLATE	
010	1128828	-		1	PROTECTION PLATE	
COMMON PARTS						
020	1128829	-		1	BRACKET	
030	975884	-		1	BRACKET	
040	90226-0458	-		4	MOUNTING SCREW	
050	312105-0370	-		2	SCREW O4017 M6X20A280	
060	312105-0372	-		2	SCREW O4017 M6X25A280	
070	315105-0153	-		4	WASHER BRB6,4X12RFR	

Pos	Part No	SP	UN	Qty	Description	Page No

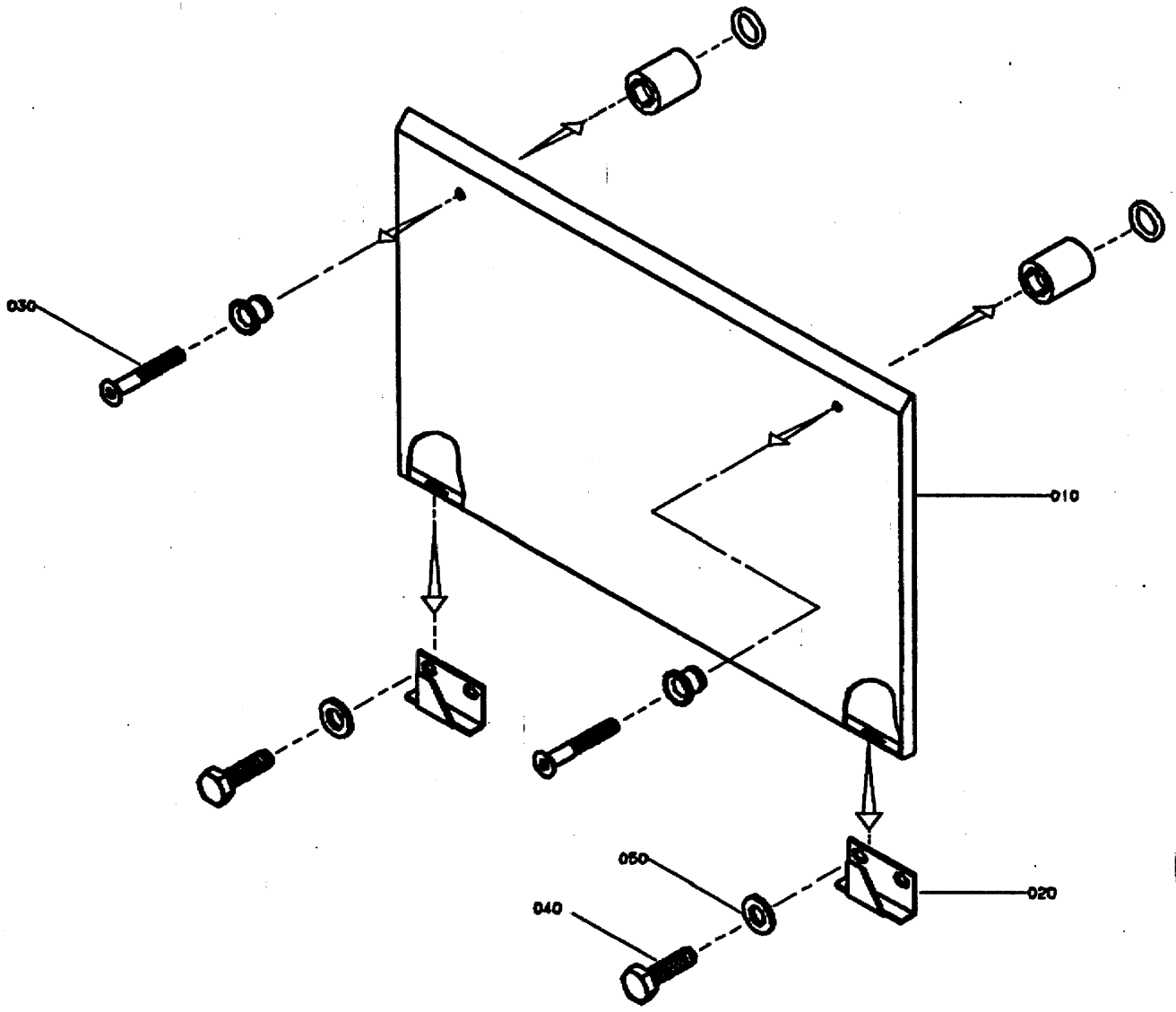

GraphicID: 108024002.tif
Parent Drw: 1080240-2
ECN No: 22292

Pos	Part No	SP	UN	Qty	Description	Page No
000	C-1080240-020V	-		1	COVERING PLATE	
010	1128819	-		1	PROTECTION PLATE	
020	975887	-		2	CATCH	
030	90226-0458	-		2	MOUNTING SCREW	
040	312105-0368	-		4	SCREW O4017 M6X16A280	
050	315105-0153	-		4	WASHER BRB6,4X12RFR	

Pos	Part No	SP	UN	Qty	Description	Page No

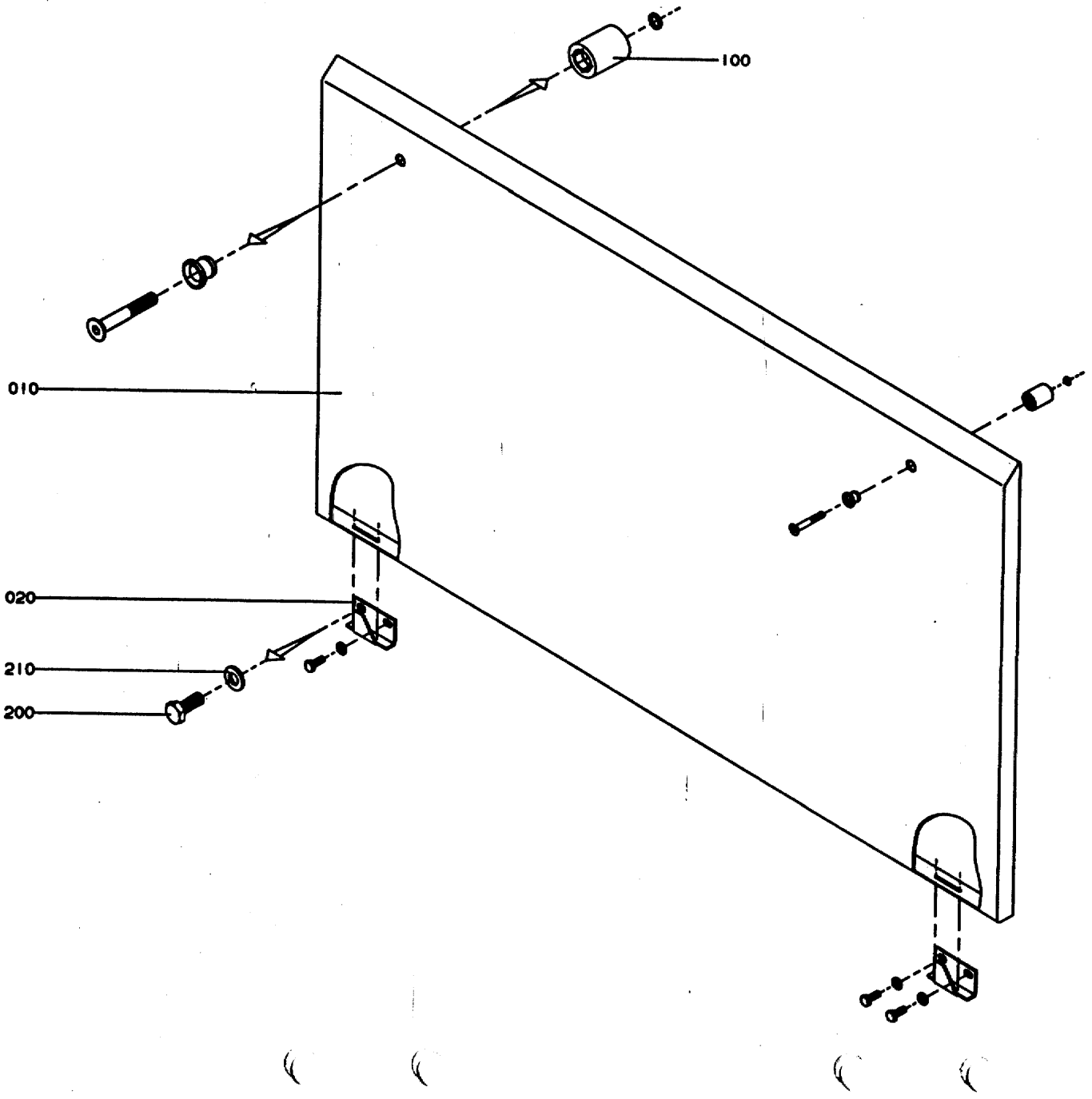

GraphicID: 112408501.eps
Parent Drw: 1124085-1
ECN 21267

Pos	Part No	SP	UN	Qty	Description	Page No
Left Hand Infeed						
000	C-1124085-0101	-		1	COVERING PLATE	
010	1124573	-		1	COVERING PLATE	
Right Hand Infeed						
000	C-1124085-0102	-		1	COVERING PLATE	
010	1124574	-		1	COVERING PLATE	
COMMON PARTS						
020	975887	-		2	CATCH	
100	90226-0458	-		2	MOUNTING SCREW	
200	312105-0368	-		4	SCREW O4017 M6X16A280	
210	315105-0153	-		4	WASHER BRB6,4X12RFR	

Pos	Part No	SP	UN	Qty	Description	Page No

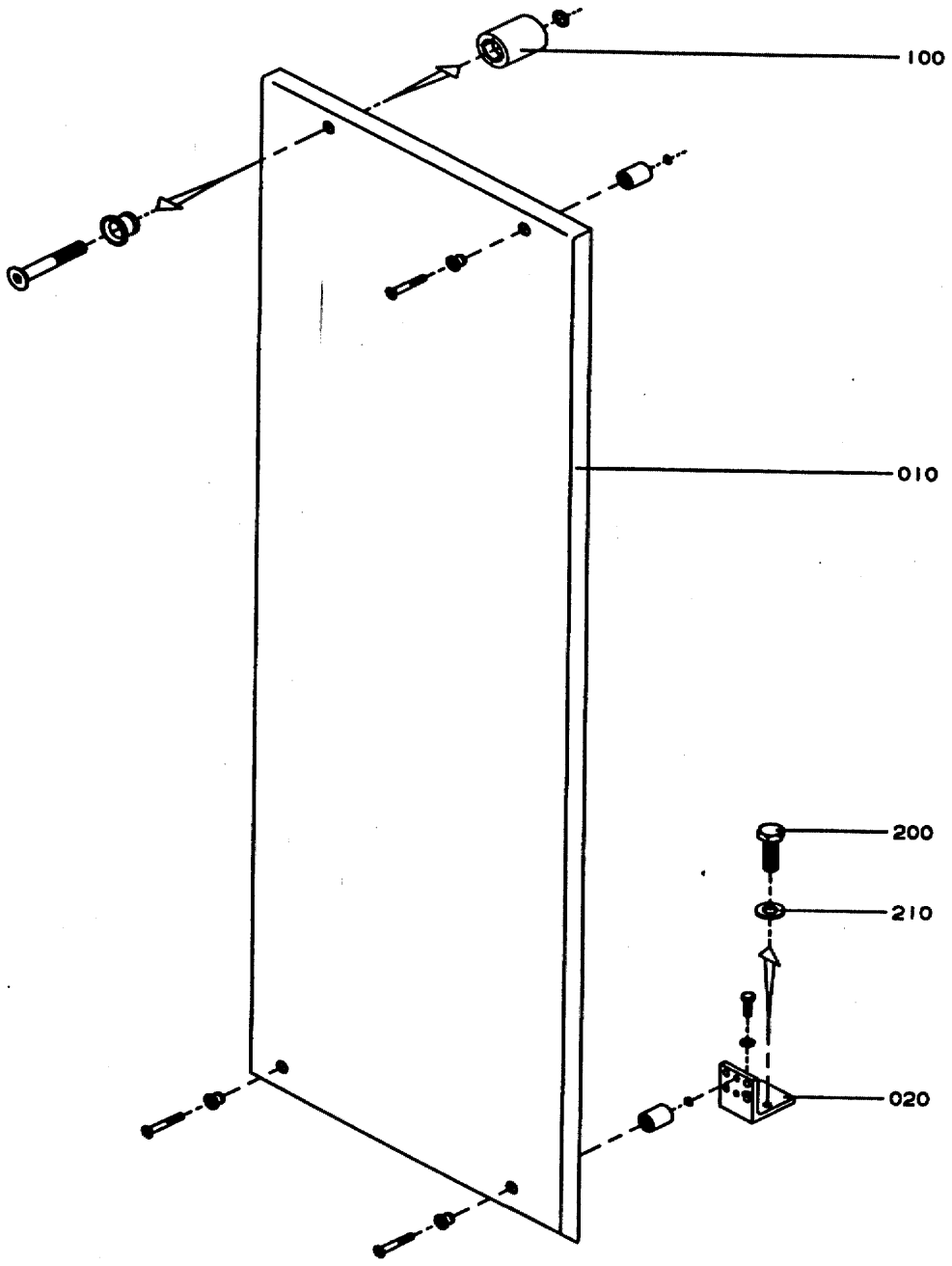

GraphicID: 112408601.eps
Parent Drw: 1124086-1
ECN 21267

Pos	Part No	SP	UN	Qty	Description	Page No
Left Hand Infeed						
000	C-1124086-0101	-		1	COVERING PLATE	
010	1124500	-		1	COVERING PLATE	
Right Hand Infeed						
000	C-1124086-0102	-		1	COVERING PLATE	
010	1124501	-		1	COVERING PLATE	
COMMON PARTS						
020	975884	-		1	BRACKET	
100	90226-0458	-		4	MOUNTING SCREW	
200	312105-0370	-		2	SCREW O4017 M6X20A280	
210	315105-0153	-		2	WASHER BRB6,4X12RFR	

Pos	Part No	SP	UN	Qty	Description	Page No

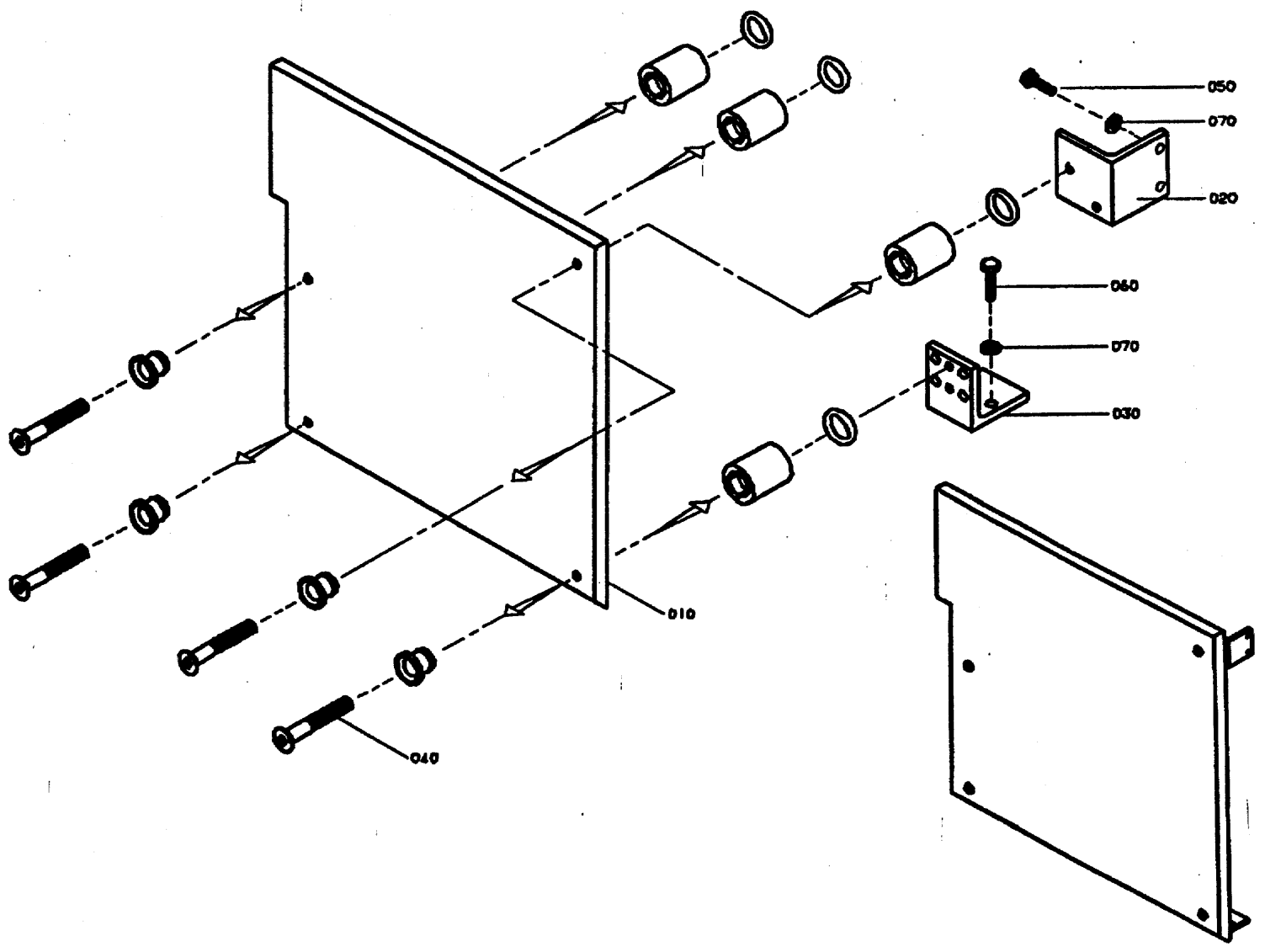

GraphicID: 112881501.tif
Parent Drw: 1128815-1
ECN No: 22292

Pos	Part No	SP	UN	Qty	Description	Page No
Left Hand Infeed						
000	C-1128815-0101	-		1	COVERING PLATE	
010	1128816	-		1	PROTECTION PLATE	
Right Hand Infeed						
000	C-1128815-0102	-		1	COVERING PLATE	
010	1128817	-		1	PROTECTION PLATE	
COMMON PARTS						
020	1128818	-		1	BRACKET	
030	975884	-		1	BRACKET	
040	90226-0458	-		4	MOUNTING SCREW	
050	312105-0370	-		2	SCREW O4017 M6X20A280	
060	312105-0372	-		2	SCREW O4017 M6X25A280	
070	315105-0153	-		4	WASHER BRB6,4X12RFR	

Pos	Part No	SP	UN	Qty	Description	Page No

Tetra Pak

SPC

Spare Parts Catalogue

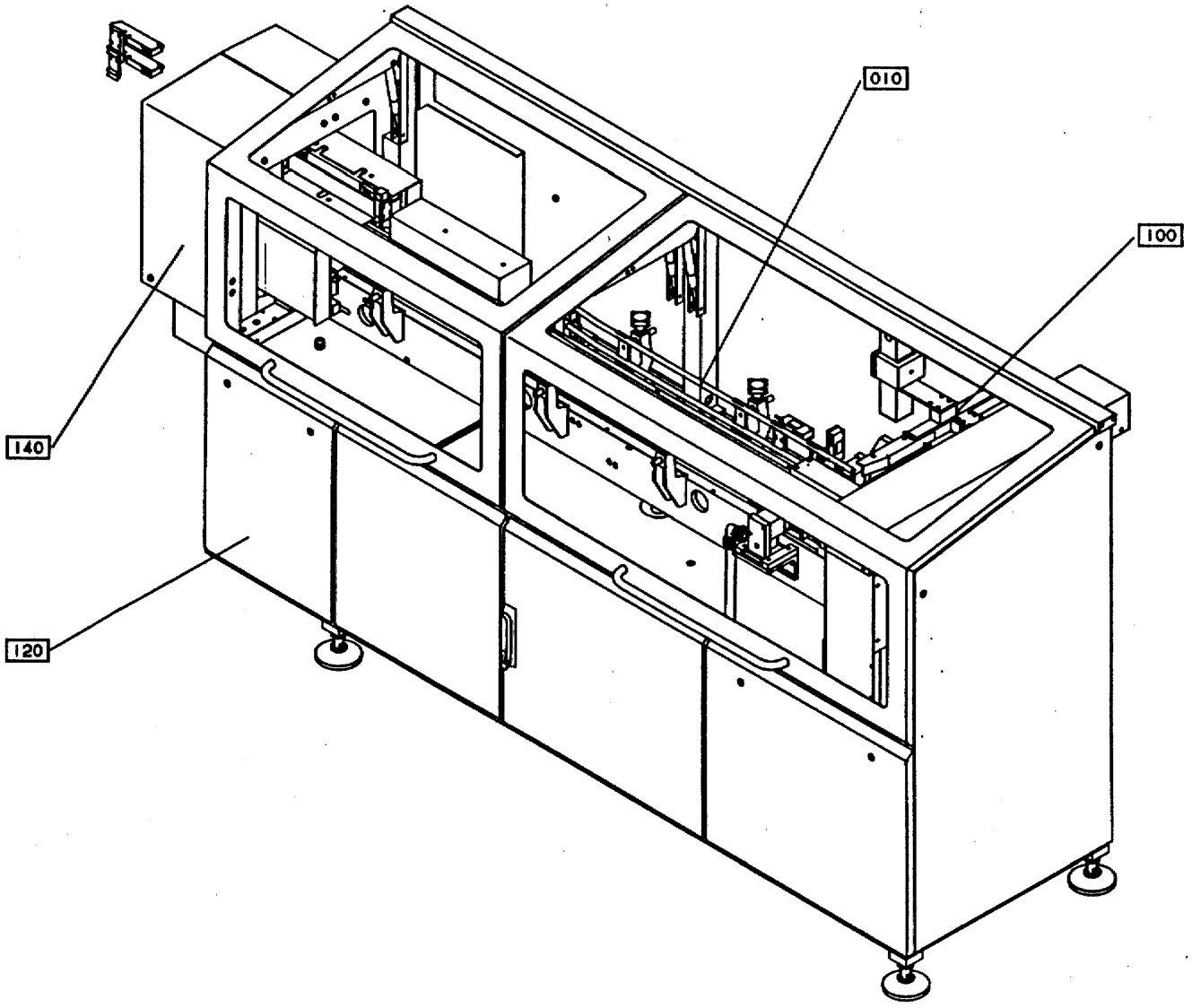

GraphicID: 67029202.eps
Parent Drw: 670292-2
ECN 18963

Pos	Part No	SP	UN	Qty	Description	Page No
-						
000	B- 670292-0402	-		1	INFEED UNIT	
010	B- 670367-0401	-		1	INFEED Section	219
100	B- 670368-0301	-		1	TRANSFER UNIT	283
120	B- 670369-0401	-		1	COVERING INFEED UNIT	297
140	C-1065140-030V	-		1	BELT BRAKE	325

Pos	Part No	SP	UN	Qty	Description	Page No

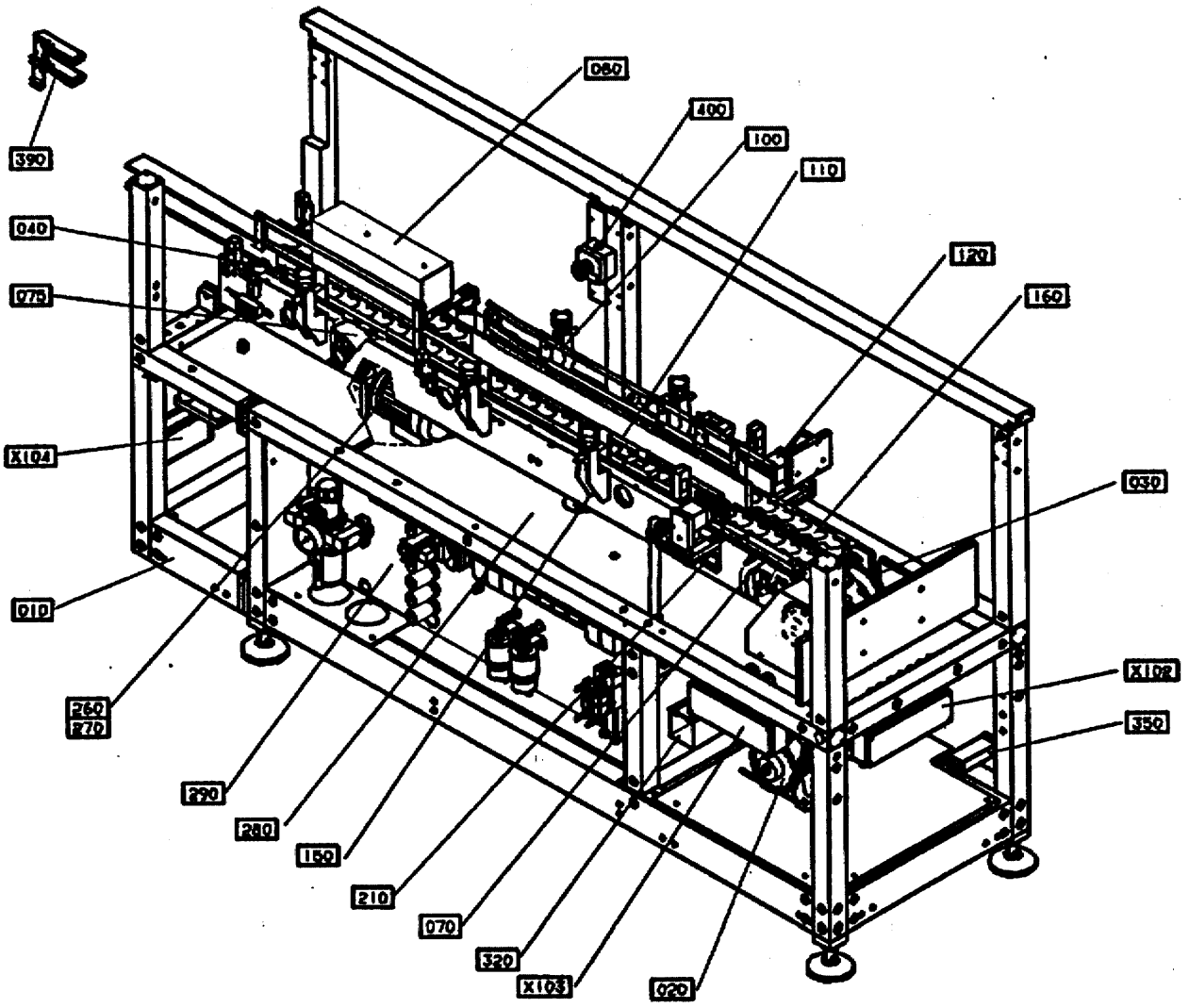

GraphicID: 67036703.tif
Parent Drw:670367-3
ECN No: 22292

Pos	Part No	SP	UN	Qty	Description	Page No
000	B- 670367-0401	-		1	INFEED SECTION	
X102	C-1021653-0101	-		1	CONNECTION BOX	221
X103	C-1021653-0101	-		1	CONNECTION BOX	223
X104	C-1139149-0101	-		1	CONNECTION BOX	223
010	C-1065155-0201	-		1	FRAME INFEED	225
020	C-1065238-030V	-		1	DRIVE MOTOR INFEED	231
030	C-1065229-0101	-		1	DRIVE SHAFT	233
040	C-1065225-0101	-		1	GUIDE SPROCKET OUTSIDE	235
070	C-1065250-0101	-		1	GUIDE SPROCKET	237
075	C-1065439-0101	-		1	GUIDE SPROCKET	239
080	C-1065187-030V	-		1	DISTRIBUTOR	239
100	C-1065214-0101	-		1	STEERING RAIL	241
110	C-1065220-020V	-		1	STEERING RAIL	243
120	C-1065198-0301	-		1	BRAKE SIDE	245
150	C-1065177-0201	-		1	FRAME TRANSPORT LINE	247
160	C-1065237-0101	-		1	CHAIN	249
210	C-1065231-0201	-		1	SLIDE RAIL	251
260	C-1065185-020V	-		1	MOTOR DISTRBUTOR	253
270	C-1021550-0101	-		1	IDLER	255
280	C-1065193-020V	-		1	COVERING PLATE	257
290	C-1128005-020V	-		1	PNEUMATIC CABINET	259
290	C-1021618-0101	-			. FILTER-REGULATOR	263
290	C-1074127-0101	-			. SILENCER	265
290	C-1124059-0101	-			. PRESSURE REGULATOR RAMP	267
290	C-1124062-0101	-			. EJECTOR	269
290	C-1128041-0101	-			. VALVE RAMP	271
320	C-1065217-0301	-		1	CABLE DUCT	273
330	C-1065209-020V	-		1	FRAME INFEED UPPER	275
350	C-1074730-0101	-		1	BRACKET	277
390	C- 539094-0400	-		1	BRACKET	279
400	C-1111838-0201	-		1	EMERGENCY STOP	281

Pos	Part No	SP	UN	Qty	Description	Page No

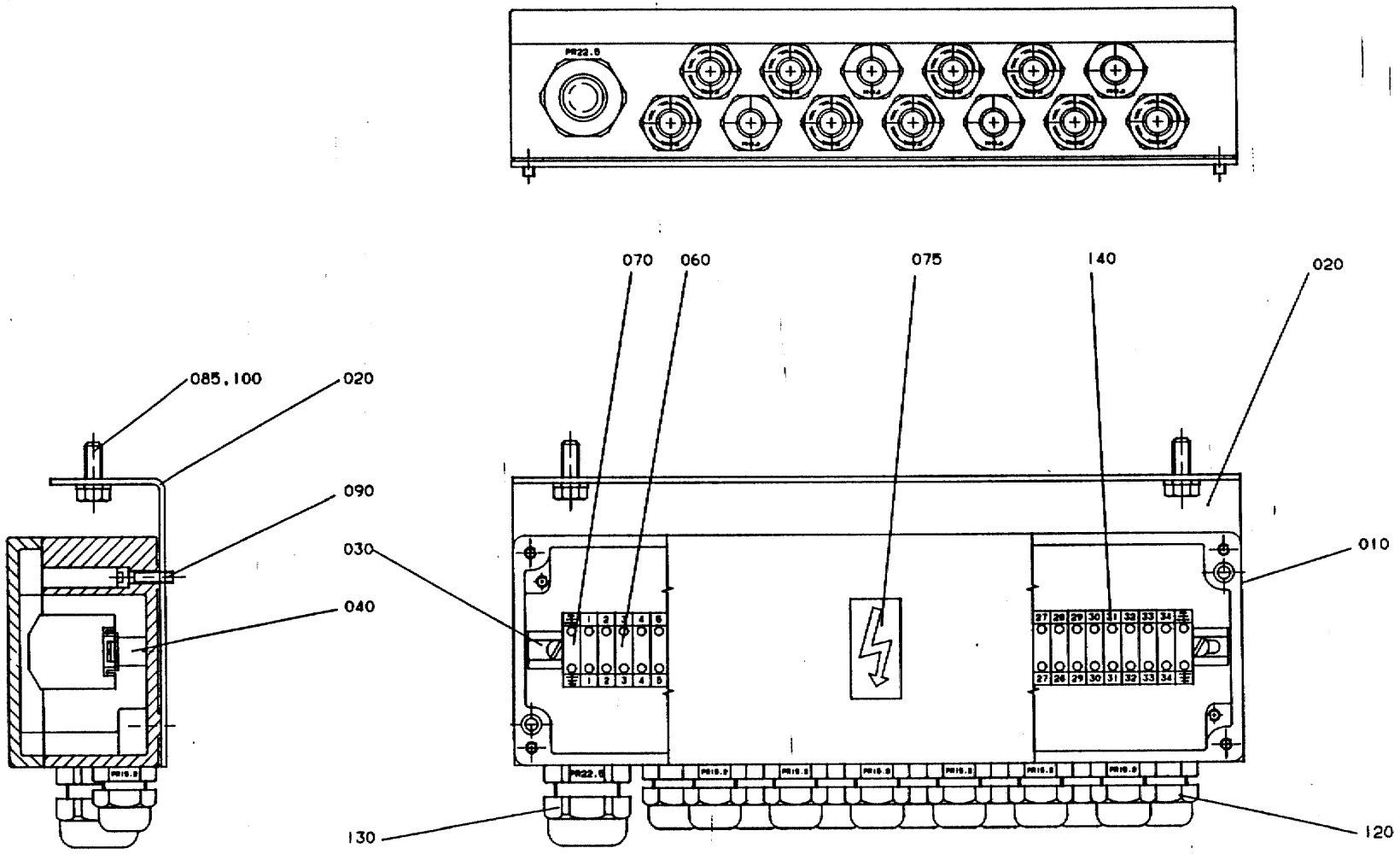

GraphicID: 102165301.eps
Parent Drw: 1021653-1
ECN 16567

Pos	Part No	SP	UN	Qty	Description	Page No
000	C-1021653-0101	-		1	CONNECTION BOX	
010	1021742	-		1	CONNECTION BOX	
020	1021746	-		1	BRACKET	
030	8490-0010	-		1	MOUNTING RAIL	
040	479110	-		2	SPACER	
060	90077-0079	-		34	FEED THROUGH TERMINAL	
070	90135-0026	-		2	EARTHING CLAMP	
075	90194-0016	-		1	SIGN "FLASH SIGN" 50X50MM	
085	312105-0368	-		4	SCREW O4017 M6X16A280	
090	312145-0293	-		2	SLOTTED HEMFS4X16RFR	
100	315105-0153	-		2	WASHER BRB6,4X12RFR	
120	352103-0101	-		13	CABLE GLAND ST 9	
130	352103-0111	-		1	CABLE GLAND ST 16;10-14MM	
140	359011-0821	-		2	SET OF SIGNS 6-FW 1-50	

Pos	Part No	SP	UN	Qty	Description	Page No

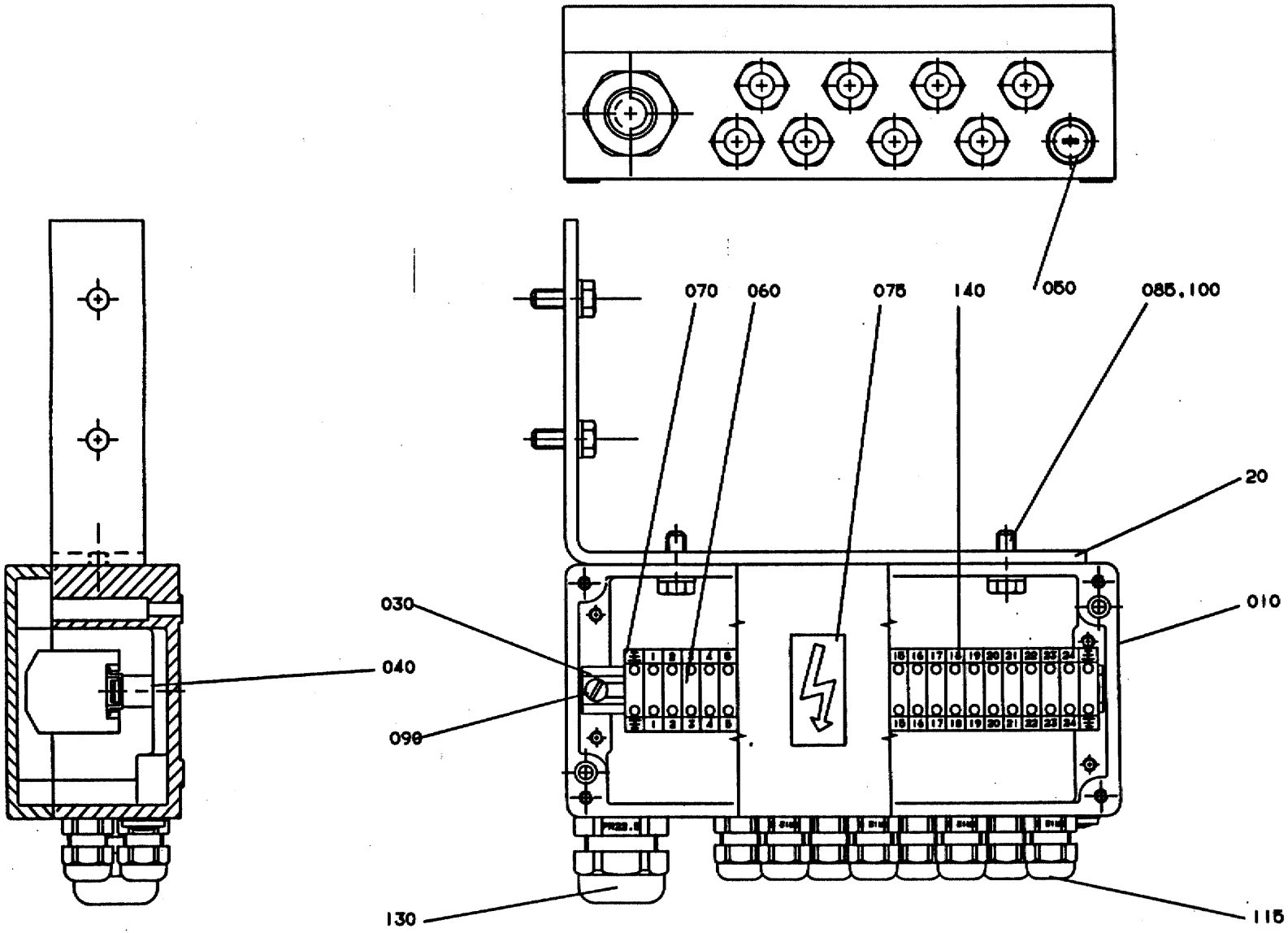

GraphicID: 113914901.eps
Parent Drw: 113914901-2
ECN 22668

Pos	Part No	SP	UN	Qty	Description	Page No
-						
000	C-1139149-0101	-		1	CONNECTION BOX	
010	1139150	-		1	CONNECTION BOX	
020	1021857	-		1	BRACKET	
030	8490-0003	-		1	RAIL	
040	479110	-		2	SPACER	
050	90002-0018	-		1	BLIND PLUG	
060	90077-0079	-		24	FEED THROUGH TERMINAL	
070	90135-0026	-		2	EARTHING CLAMP	
075	90194-0016	-		1	SIGN "FLASH SIGN" 50X50MM	
085	312105-0368	-		2	SCREW O4017 M6X16A280	
090	312145-0293	-		4	SLOTTED HEMFS4X16RFR	
100	315105-0153	-		2	WASHER BRB6,4X12RFR	
115	352103-0096	-		8	CABLE GLANR.ST 7	
130	352103-0111	-		1	CABLE GLAND ST 16;10-14MM	
140	359011-0821	-		2	SET OF SIGNS 6-FW 1-50	

Pos	Part No	SP	UN	Qty	Description	Page No

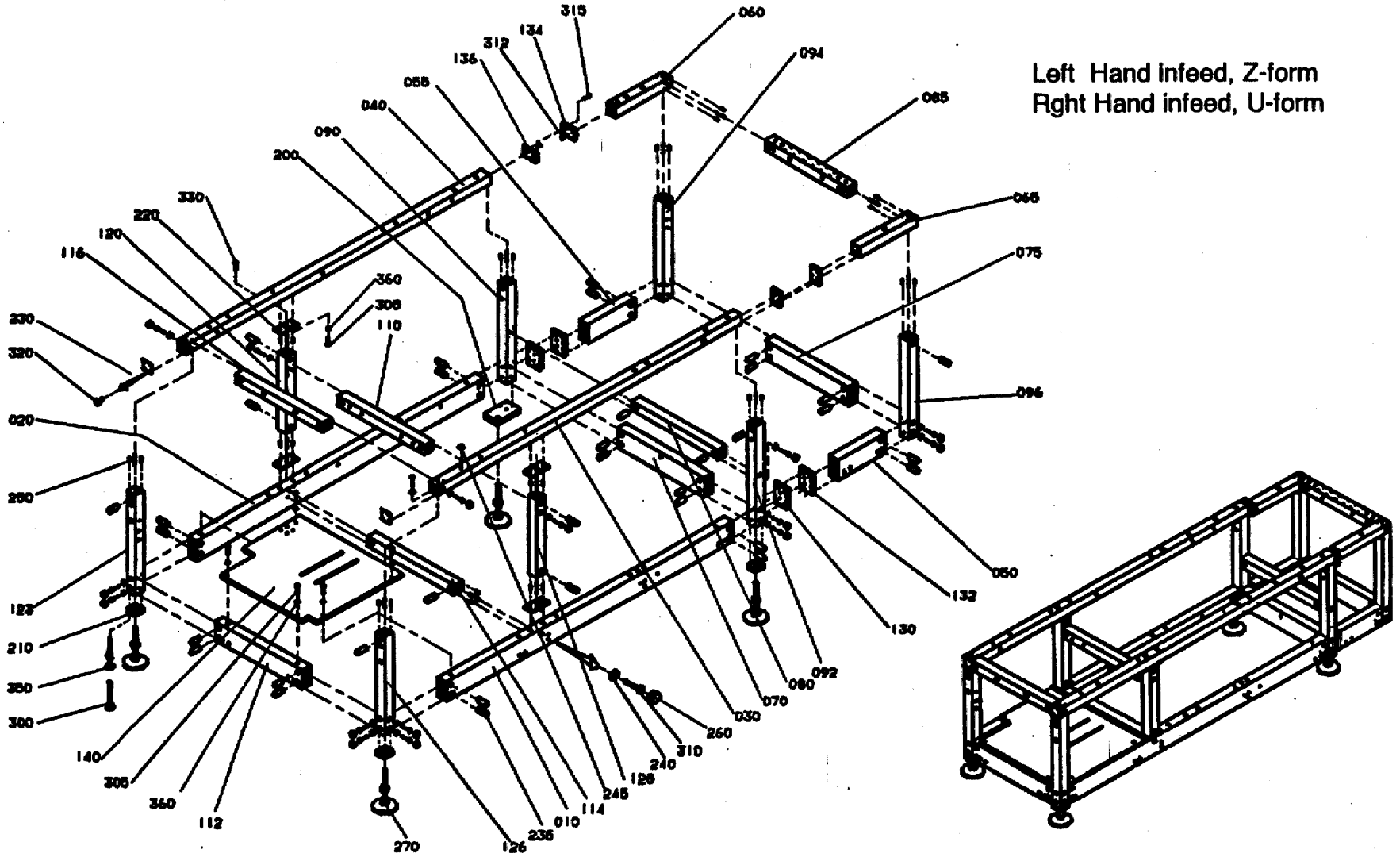

Left Hand infeed, Z-form
Rght Hand infeed, U-form

GraphicID: 106515503.tif
Parent Drw: 1065155-3
ECN No: 22218

Pos	Part No	SP	UN	Qty	Description	Page No
000	C-1065155-0201	-		1	FRAME INFEED	
010	1074691	-		1	PROFILE	
020	1074692	-		1	PROFILE	
030	1074741	-		1	PROFILE	
040	1074742	-		1	PROFILE	
050	1065160	-		1	PROFILE	
055	1065161	-		1	PROFILE	
060	1065162	-		1	PROFILE	
065	1065163	-		1	PROFILE	
070	1065164	-		1	PROFILE	
075	1065165	-		1	PROFILE	
080	1065166	-		1	PROFILE	
085	1065167	-		1	PROFILE	
090	1065168	-		1	PROFILE	
092	1065169	-		1	PROFILE	
094	1065170	-		1	PROFILE	
096	1065171	-		1	PROFILE	
110	1021364	-		1	PROFILE	
112	1021358	-		1	PROFILE	
114	1021749	-		1	PROFILE	
116	1021362	-		1	PROFILE	
120	1021365	-		1	PROFILE	
123	1021608	-		1	PROFILE	
126	1021609	-		1	PROFILE	
128	1021853	-		1	PROFILE	
130	1065172	-		2	BRACKET	
132	1065173	-		2	BRACKET	
134	1065174	-		2	BRACKET	
136	1065175	-		2	BRACKET	
140	1074705	-		1	MOTOR PLATE	
200	1021366	-		1	BRACKET	
210	556601	-		3	BRACKET	
220	556624	-		4	FRAME BRACKET	
230	556604	-		4	COVER PLATE	
235	486268	-		42	NUT	
240	548599	-		38	WASHER	
245	1021933	-		25	COVER TAPE	
250	1065410	-		152	SLOTTED PIN	
260	90261-0060	-		38	PLASTIC PLUG	
270	90347-0142	-		4	FOOT	
300	312105-0376	-		16	SCREW O4017 M6X35A280	
305	312105-0455	-		14	SCREW O4017 M8X30A280	
310	312105-0459	-		38	SCREW O4017 M8X40A280	
312	312115-0368	-		16	SCREW O4762 M6X16A280	
315	312115-0451	-		8	SCREW O4762 M8X20A280	
320	312145-0325	-		16	SLOTTED HEMFS5X10RFR	
330	312155-0459	-		4	SCREW MF6S8X40RFR	
350	315105-0153	-		16	WASHER BRB6,4X12RFR	
360	315105-0165	-		14	WASHER BRB8,4X16RFR	

Right Hand infeed, Z-form
Left Hand infeed, U-form

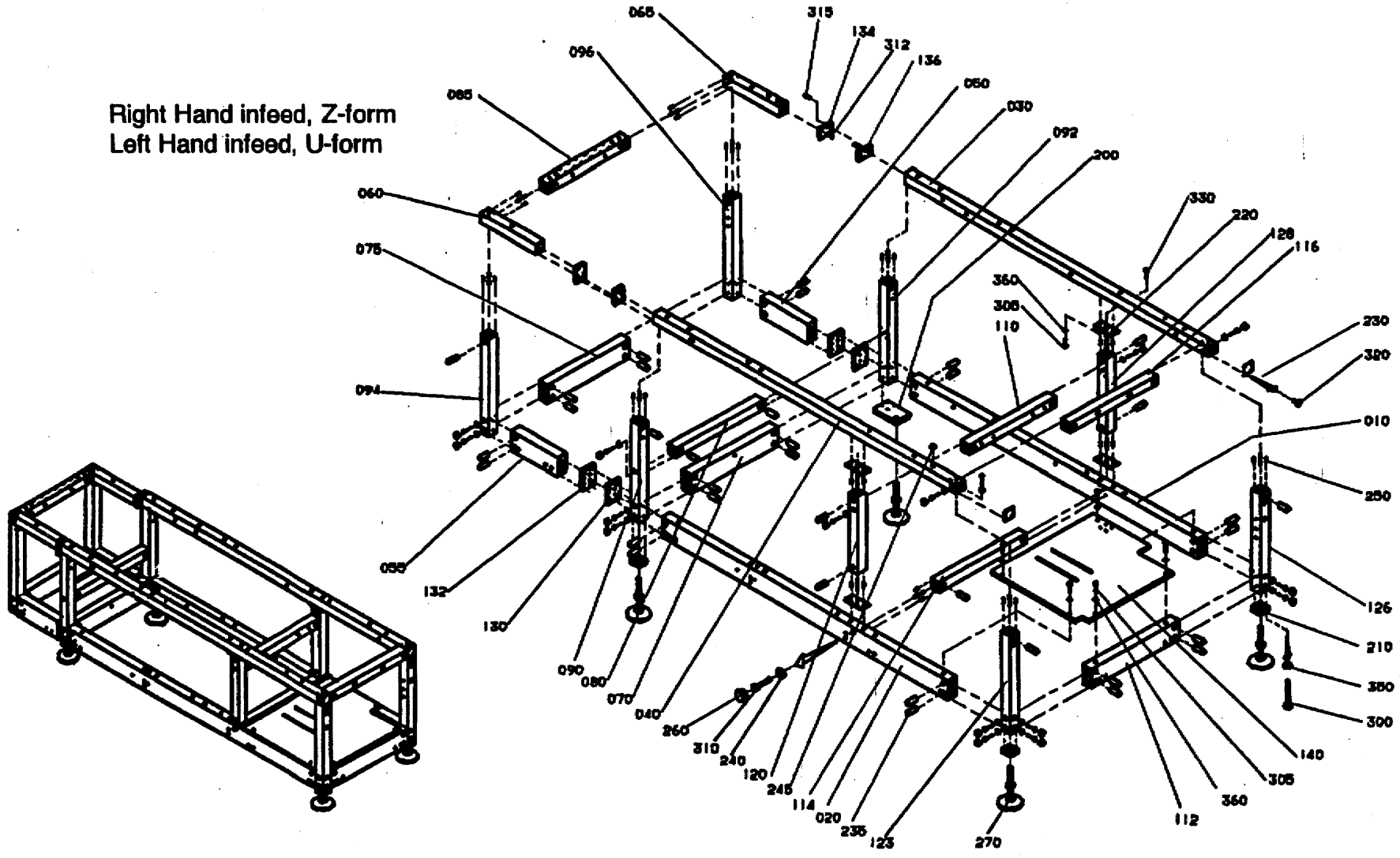

GraphicID: 106515504.tif
Parent Drw: 1065155-4
ECN No: 22218

Pos	Part No	SP	UN	Qty	Description	Page No
-						
000	C-1065155-0201	-		1	FRAME INFEED	
010	1074691	-		1	PROFILE	
020	1074692	-		1	PROFILE	
030	1074741	-		1	PROFILE	
040	1074742	-		1	PROFILE	
050	1065160	-		1	PROFILE	
055	1065161	-		1	PROFILE	
060	1065162	-		1	PROFILE	
065	1065163	-		1	PROFILE	
070	1065164	-		1	PROFILE	
075	1065165	-		1	PROFILE	
080	1065166	-		1	PROFILE	
085	1065167	-		1	PROFILE	
090	1065168	-		1	PROFILE	
092	1065169	-		1	PROFILE	
094	1065170	-		1	PROFILE	
096	1065171	-		1	PROFILE	
110	1021364	-		1	PROFILE	
112	1021358	-		1	PROFILE	
114	1021749	-		1	PROFILE	
116	1021362	-		1	PROFILE	
120	1021365	-		1	PROFILE	
123	1021608	-		1	PROFILE	
126	1021609	-		1	PROFILE	
128	1021853	-		1	PROFILE	
130	1065172	-		2	BRACKET	
132	1065173	-		2	BRACKET	
134	1065174	-		2	BRACKET	
136	1065175	-		2	BRACKET	
140	1074705	-		1	MOTOR PLATE	
200	1021366	-		1	BRACKET	
210	556601	-		3	BRACKET	
220	556624	-		4	FRAME BRACKET	
230	556604	-		4	COVER PLATE	
235	486268	-		42	NUT	
240	548599	-		38	WASHER	
245	1021933	-		25	COVER TAPE	
250	1065410	-		152	SLOTTED PIN	
260	90261-0060	-		38	PLASTIC PLUG	
270	90347-0142	-		4	FOOT	
300	312105-0376	-		16	SCREW O4017 M6X35A280	
305	312105-0455	-		14	SCREW O4017 M8X30A280	
310	312105-0459	-		38	SCREW O4017 M8X40A280	
312	312115-0368	-		16	SCREW O4762 M6X16A280	
315	312115-0451	-		8	SCREW O4762 M8X20A280	
320	312145-0325	-		16	SLOTTED HEMFS5X10RFR	
330	312155-0459	-		4	SCREW MF6S8X40RFR	
350	315105-0153	-		16	WASHER BRB6,4X12RFR	
360	315105-0165	-		14	WASHER BRB8,4X16RFR	

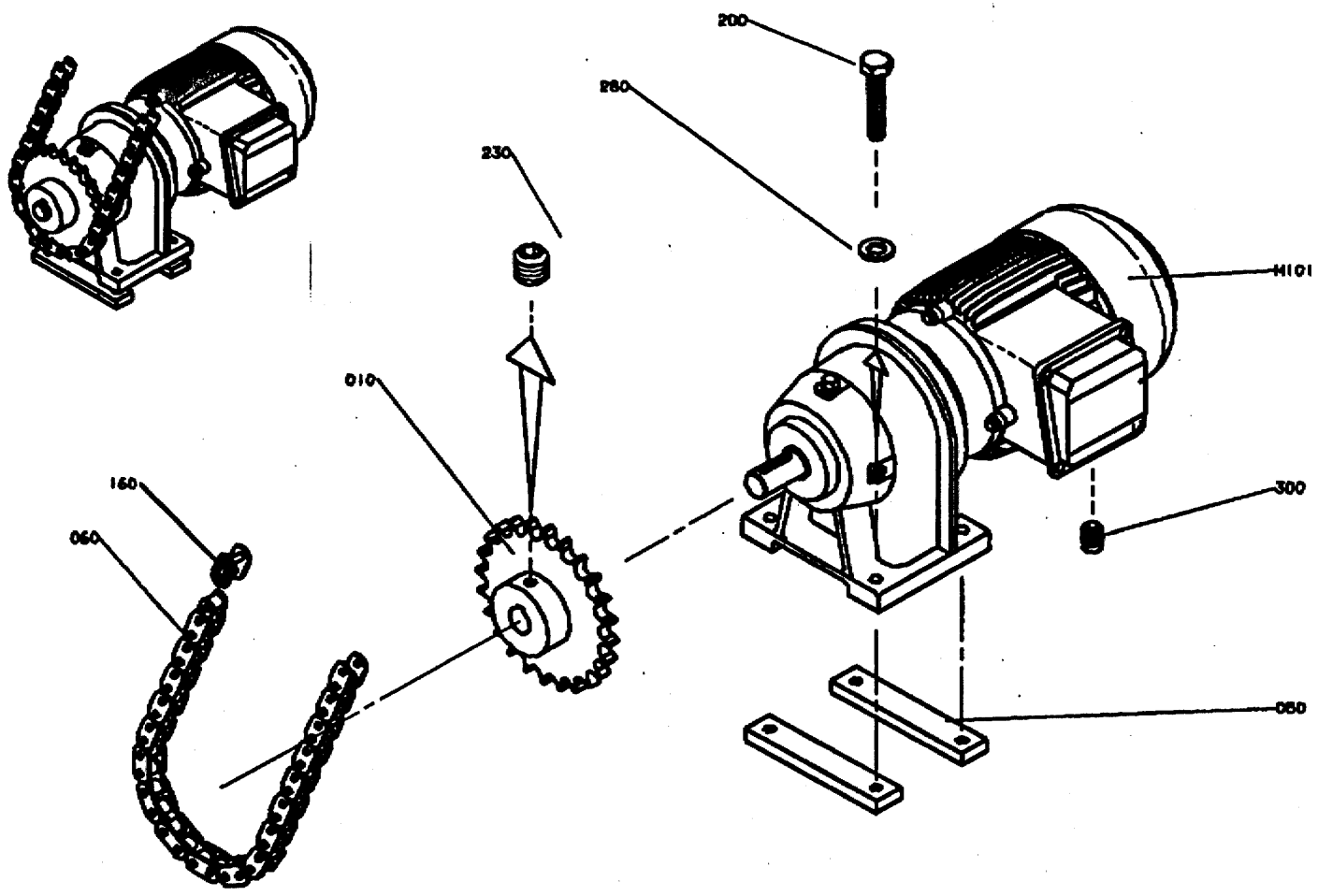

GraphicID: 106523802.tif
Parent Drw: 1065238-2
ECN No: 22292

Pos	Part No	SP	UN	Qty	Description	Page No
Conveyor speed 15 m/min, 50 Hz						
000	C-1065238-0301	-		1	DRIVE MOTOR INFEED	
010	1065273	-		1	SPROCKET Z=21	
060	1065478	C		1	CHAIN	
M101	90069-0111	C		1	GEARED MOTOR	
Conveyor speed 15 m/min, 60 Hz						
000	C-1065238-0302	-		1	DRIVE MOTOR INFEED	
010	1021444	-		1	SPROCKET Z=17	
060	1065478	C		1	CHAIN	
M101	90069-0111	C		1	GEARED MOTOR	
Conveyor speed 21 m/min, 50 Hz						
000	C-1065238-0303	-		1	DRIVE MOTOR INFEED	
010	1065273	-		1	SPROCKET Z=21	
060	1065478	C		1	CHAIN	
M101	90069-0106	C		1	GEARED MOTOR	
Conveyor speed 21 m/min, 60 Hz						
000	C-1065238-0304	-		1	DRIVE MOTOR INFEED	
010	1021444	-		1	SPROCKET Z=17	
060	1065478	C		1	CHAIN	
M101	90069-0106	C		1	GEARED MOTOR	
Conveyor speed 30 m/min, 50 Hz						
000	C-1065238-0305	-		1	DRIVE MOTOR INFEED	
010	1021865	-		1	SPROCKET Z=28	
060	1021998	C		1	CHAIN	
M101	90069-0106	C		1	GEARED MOTOR	
Conveyor speed 30 m/min, 60 Hz						
000	C-1065238-0306	-		1	DRIVE MOTOR INFEED	
010	1021866	-		1	SPROCKET Z=23	
060	1065478	C		1	CHAIN	
M101	90069-0106	C		1	GEARED MOTOR	
COMMON PARTS						
050	1021371	-		2	BRACKET	
160	90288-0333	C		1	CONNECTION LINK	
200	312105-0459	-		4	SCREW O4017 M8X40A280	
230	312318-0443	-		1	STOP SCREW SK6SS8X8RFR	
280	315105-0165	-		4	WASHER BRB8,4X16RFR	
300	352103-0110	-		1	CABLE GLAND STR 16	

Pos	Part No	SP	UN	Qty	Description	Page No

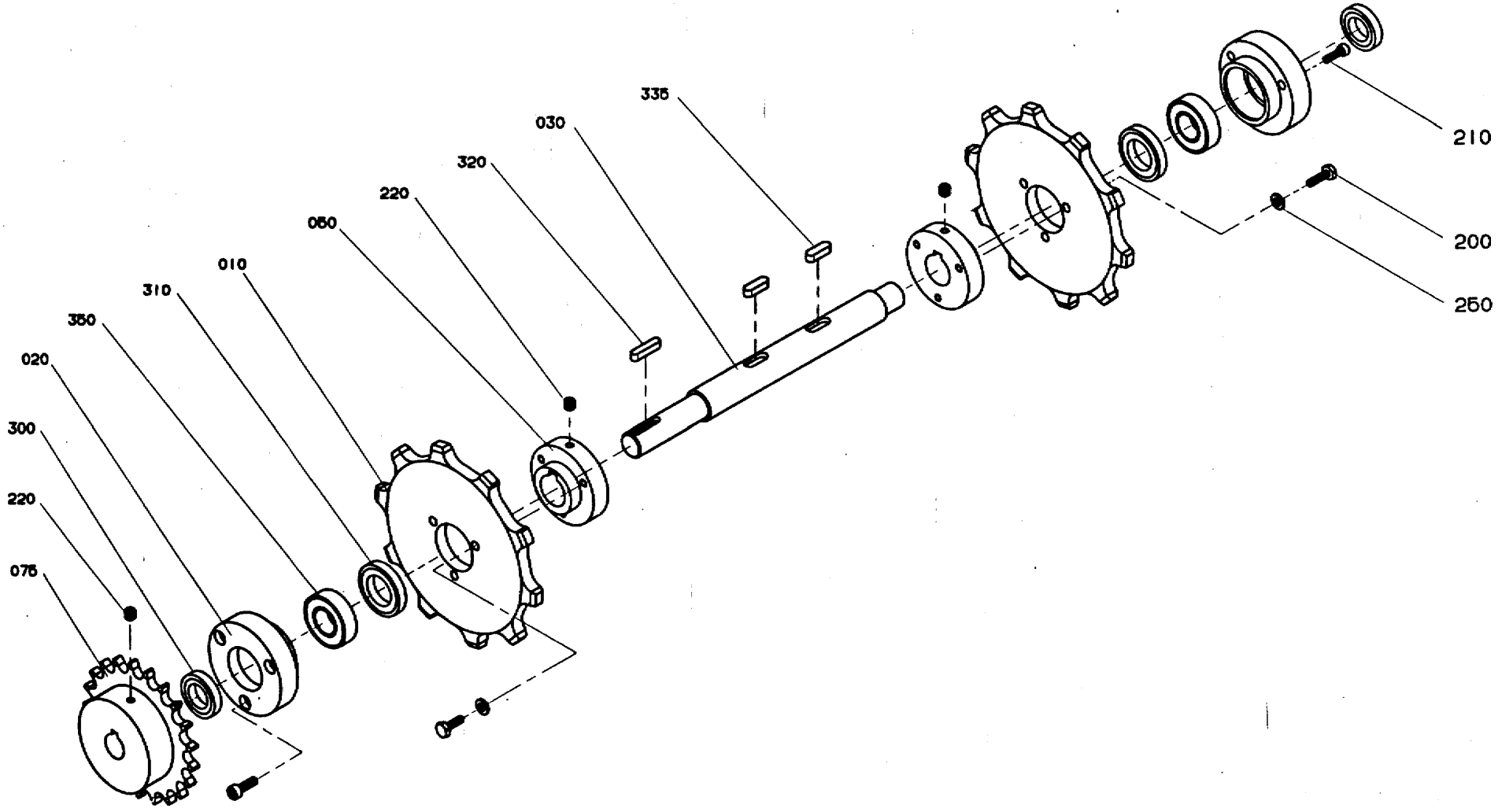

106522901.EPS
1065229-1
ECN 18963

Pos	Part No	SP	UN	Qty	Description	Page No
000	C-1065229-0101	-		1	DRIVE SHAFT	
010	486858	-		2	SPROCKET	
020	1021426	-		2	BEARING HOUSING	
030	1065230	-		1	SHAFT	
050	1065249	-		2	HUB	
075	1065273	-		1	SPROCKET Z=21	
200	312105-0370	-		6	SCREW O4017 M6X20A280	
210	312115-0372	-		6	SCREW O4762 M6X25A280	
220	312318-0443	-		3	STOP SCREW SK6SS8X8RFR	
250	315105-0153	-		6	WASHER BRB6,4X12RFR	
300	90091-0303	P		2	SEAL RING	
310	315221-0158	P		2	SEAL RING CB25X42X7	
320	315701-0235	-		1	FLAT WEDGE6X6X28	
335	315701-0265	-		2	FLAT WEDGE8X7X25	
350	321308-0204	P		2	BALL BEARISKF6004-2RS	

Pos	Part No	SP	UN	Qty	Description	Page No

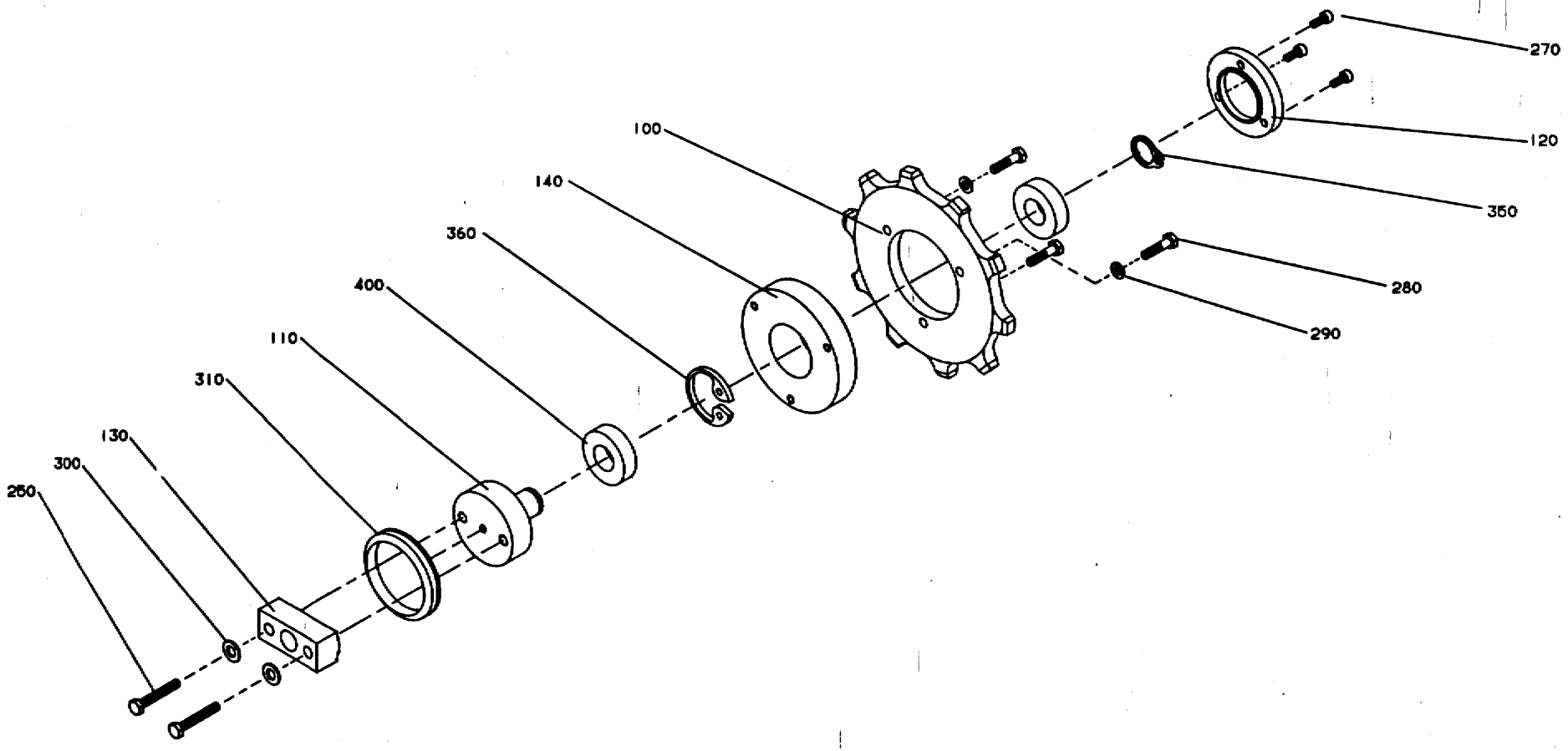

GraphicID: 16522501.eps
Parent Drw: 1065225-1
ECN 18963

Pos	Part No	SP	UN	Qty	Description	Page No
-						
000	C-1065225-0101	-		1	GUIDE SPROCKET OUTSIDE	
100	1065228	-		1	SPROCKET Z=10	
110	1065227	-		1	SHAFT	
120	1021070	-		1	BEARING COVER	
130	1021071	-		1	LOCKING LUG	
140	1065226	-		1	BEARING PLATE	
250	312109-0461	-		2	SCREW M6S8X50H A4 80	
270	312115-0327	-		3	SCREW O4762 M5X12A280	
280	312105-0371	-		3	SCREW M6S6X22RFR	
290	315105-0153	-		3	WASHER BRB6,4X12RFR	
300	315105-0165	-		2	WASHER BRB8,4X16RFR	
310	315220-0204	P		1	SEAL RING V-55S	
350	315750-0116	-		1	CIRCLIP SGA20	
360	315752-0128	-		1	CIRCLIP SGH42	
400	321308-0204	P		2	BALL BEARISKF6004-2RS	

Pos	Part No	SP	UN	Qty	Description	Page No

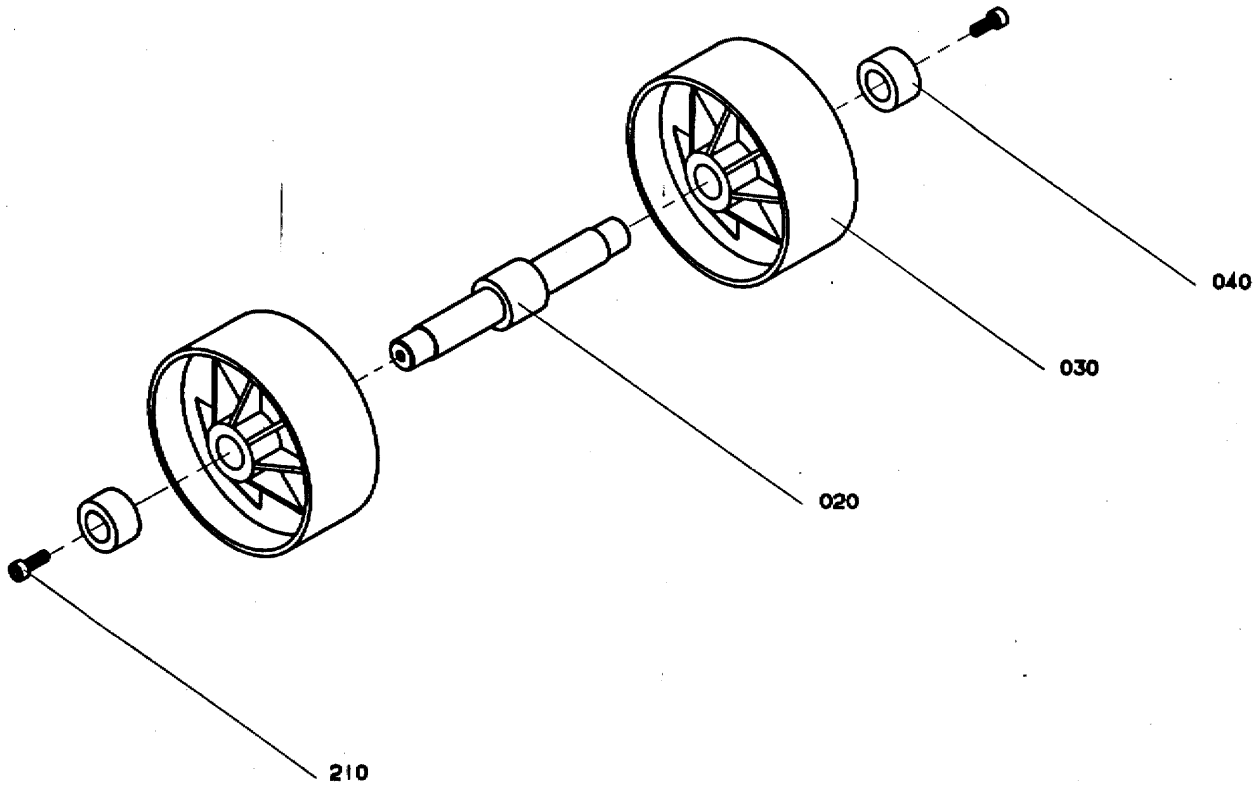

106525001.EPS
1065250-1
ECN 18963

Pos	Part No	SP	UN	Qty	Description	Page No
-						
000	C-1065250-0101	-		1	GUIDE SPROCKET	
020	1065251	-		1	SHAFT	
030	476975	-		2	WHEEL	
040	1065252	-		2	SPACER	
210	312105-0370	-		2	SCREW O4017 M6X20A280	

Pos	Part No	SP	UN	Qty	Description	Page No

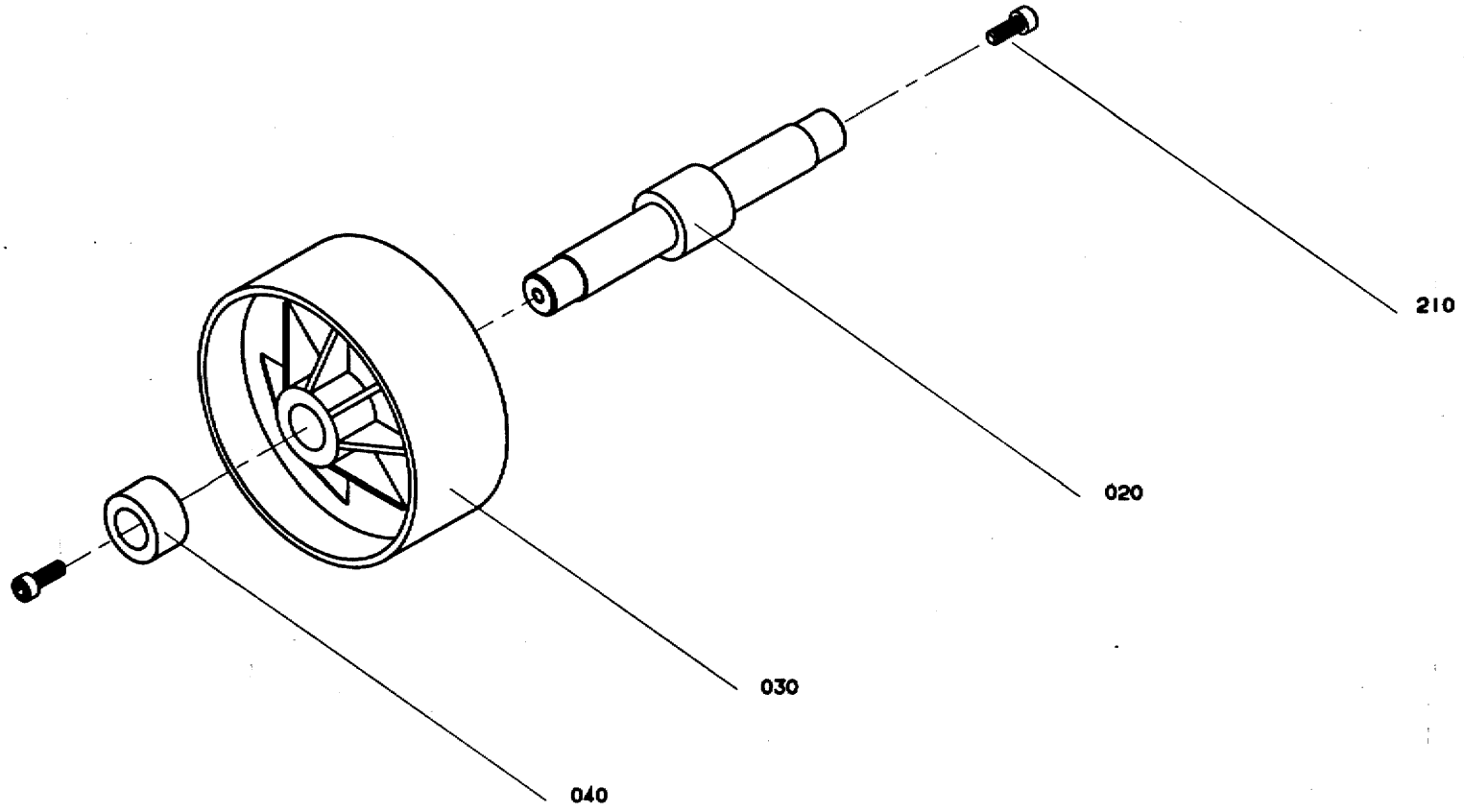

106543901.EPS
1065439-1
ECN 18963

Pos	Part No	SP	UN	Qty	Description	Page No
-						
000	C-1065439-0101	-		1	GUIDE SPROCKET	
020	1065251	-		1	SHAFT	
030	476975	-		1	WHEEL	
040	1065252	-		1	SPACER	
210	312105-0370	-		2	SCREW O4017 M6X20A280	

Pos	Part No	SP	UN	Qty	Description	Page No

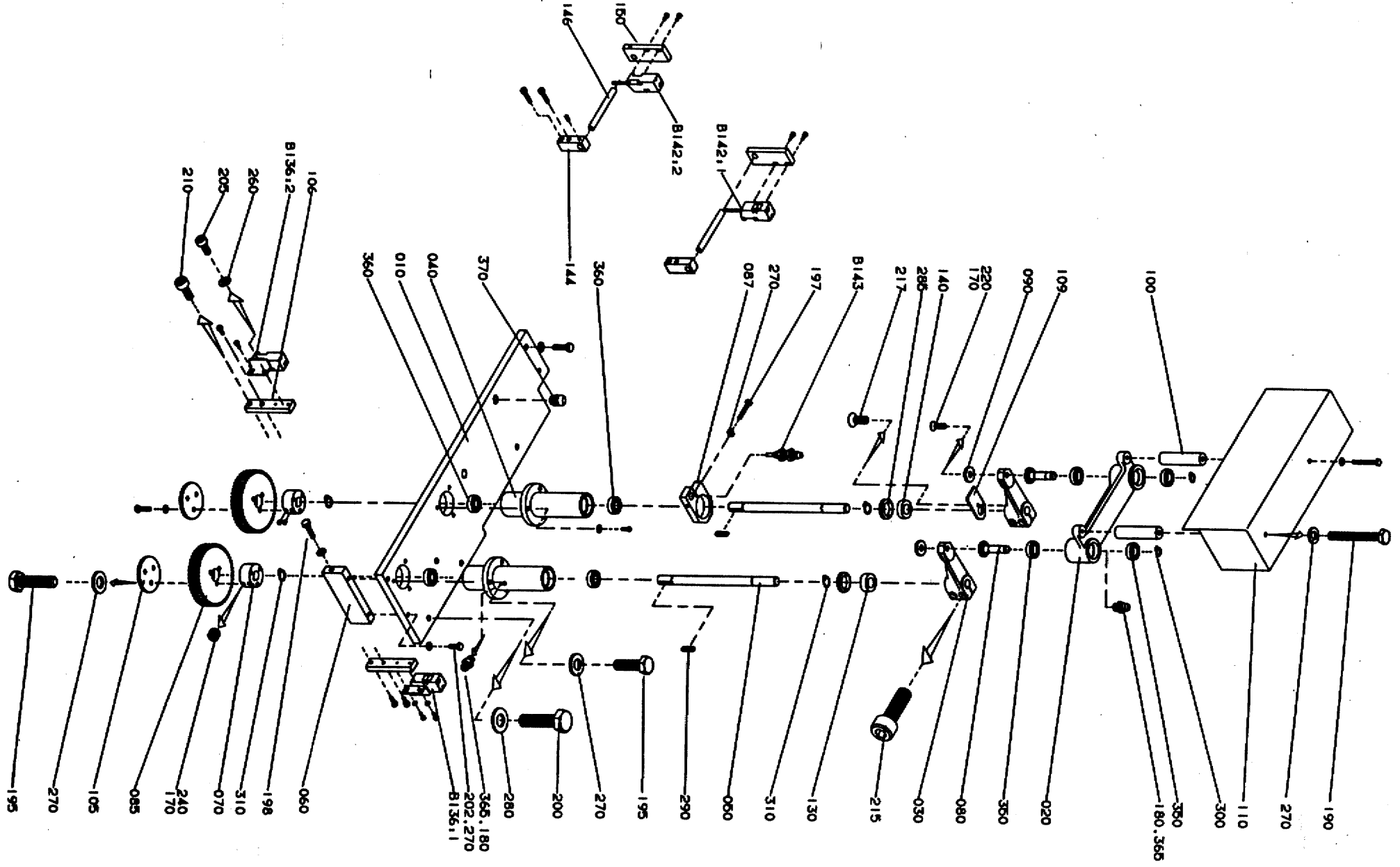

GraphicID: 106518703.eps
Parent Drw: 1065187-3
ECN 22668

Pos	Part No	SP	UN	Qty	Description	Page No
Z-Form -Left Hand Infeed, U-Form -Right Hand Infeed,						
000	C-1065187-0301	-		1	DISTRIBUTOR	
110	1065192	-		1	COVER	
Z-Form -Right Hand Infeed, U-Form -LeftHand Infeed						
000	C-1065187-0302	-		1	DISTRIBUTOR	
110 .	1065191	-		1	COVER	
COMMON PARTS						
010	1065188	-		1	PLATE	
020	G-1021493	-		1	FRAME	
030	G-1065189	-		2	ARM	
040	1065434	-		2	BEARING HOUSING	
050	1065435	-		2	SHAFT	
060	1065190	-		1	PLATE	
070	1021498	-		2	HUB	
080	1021499	-		2	SHAFT	
085	1021549	-		2	GEAR WHEEL Z=50	
087	1065591	-		1	HOLDER	
090	1065436	-		2	WASHER	
100	1065479	-		2	SPACER	
105	1021553	-		2	WASHER	
106	1139137	-		2	SPACER	
109	1021833	-		1	CURVE	
130	1065598	-		1	SPACER	
140	1065599	-		1	SPACER	
144	1065240	-		2	PLATE	
146	1065241	-		2	SHAFT	
150	1128887	-		2	PHOTOCELL BRACKET	
170	90157-0016	-		X	LOCKING FLUID	
180	90296-0068	-		X	GREASE	
190	312105-0390	-		2	SCREW 6X100 A4 80	
193	312105-0370	-		3	SCREW O4017 M6X20A280	
195	312105-0372	-		12	SCREW O4017 M6X25A280	
197	312105-0376	-		1	SCREW O4017 M6X35A280	
198	312105-0451	-		1	SCREW SO4017 8X20A280	
200	312105-0455	-		4	SCREW O4017 M8X30A280	
202	312109-0374	-		2	SCREW M6S6X30HRFR	
205	312115-0289	-		3	SCREW S4X10 A4 80	
210	312115-0372	-		6	SCREW O4762 M6X25A280	
215.	312115-0453	-		4	SCREW O4762 M8X25A280	
217	312155-0289	-		1	SCREW MF6S4X10RFR	
220	312155-0453	-		2	SCREW MF6S8X25RFR	
240	312318-0360	-		4	STOP SCREW SK6SS6X6RFR	
260	315105-0136	-		2	WASHER BRB4,3X8RFR	
270	315105-0153	-		17	WASHER BRB6,4X12RFR	
280	315105-0165	-		6	WASHER BRB8,4X16RFR	
285	315220-0156	P		2	SEAL RING V-25S	
290	315701-0203	-		2	FLAT WEDGE5X5X25	
300	315751-0109	-		2	CIRCLIP SGA12 RFR	
310	315751-0112	-		4	CIRCLIP SGA15 RFR	
350	321308-0101	P		4	BALL BEARISKF6001RS	
360	321308-0102	P		4	BALL BEARISKF6002RS	
365	344502-0021	-		4	NIPPLE L AHM6	
370	352103-0101	-		2	CABLE GLAND ST 9	
B136:1	90232-0103	S		1	PH.CELL OMRON E3SCT61L 5M	
B136:2	90232-0104	S		1	RECEIVER OMRON E3SCT61D5M	
B142:1	90232-0103	S		1	PH.CELL OMRON E3SCT61L 5M	
B142:2	90232-0104	S		1	RECEIVER OMRON E3SCT61D5M	
B143	90044-0124	S		1	INDUCTIVE SWITCH	

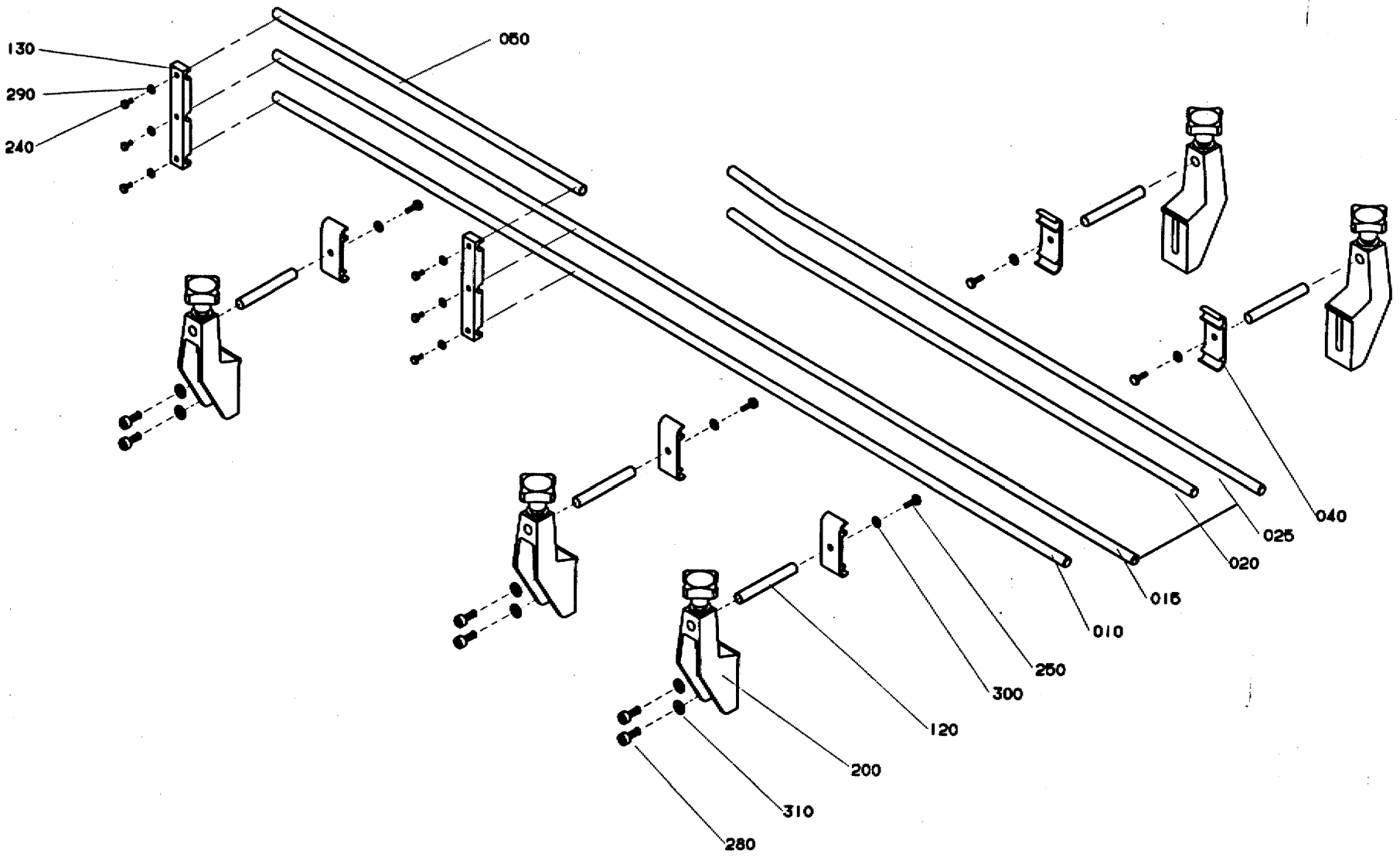

106521401.EPS
10652214-1
ECN 16567

Pos	Part No	SP	UN	Qty	Description	Page No
-						
000	C-1065214-0101	-		1	STEERING RAIL	
010	1065215	-		1	STEERING RAIL	
015	1065337	-		1	STEERING RAIL	
020	1065216	-		1	STEERING RAIL	
025	1065338	-		1	STEERING RAIL	
040	1020635-0002	-		5	HOLDER	
050	1065344	-		1	STEERING RAIL	
120	1021539	-		5	SHAFT	
130	1065345	-		2	HOLDER	
200	90243-0232	-		5	GUIDE BRACKET	
240	312105-0325	-		6	SCREW M6S5X10 A2 80	
250	312105-0368	-		5	SCREW O4017 M6X16A280	
280	312115-0451	-		10	SCREW O4762 M8X20A280	
290	315105-0146	-		6	WASHER BRB5,3X10RFR	
300	315105-0153	-		5	WASHER BRB6,4X12RFR	
310	315105-0165	-		10	WASHER BRB8,4X16RFR	

Pos	Part No	SP	UN	Qty	Description	Page No

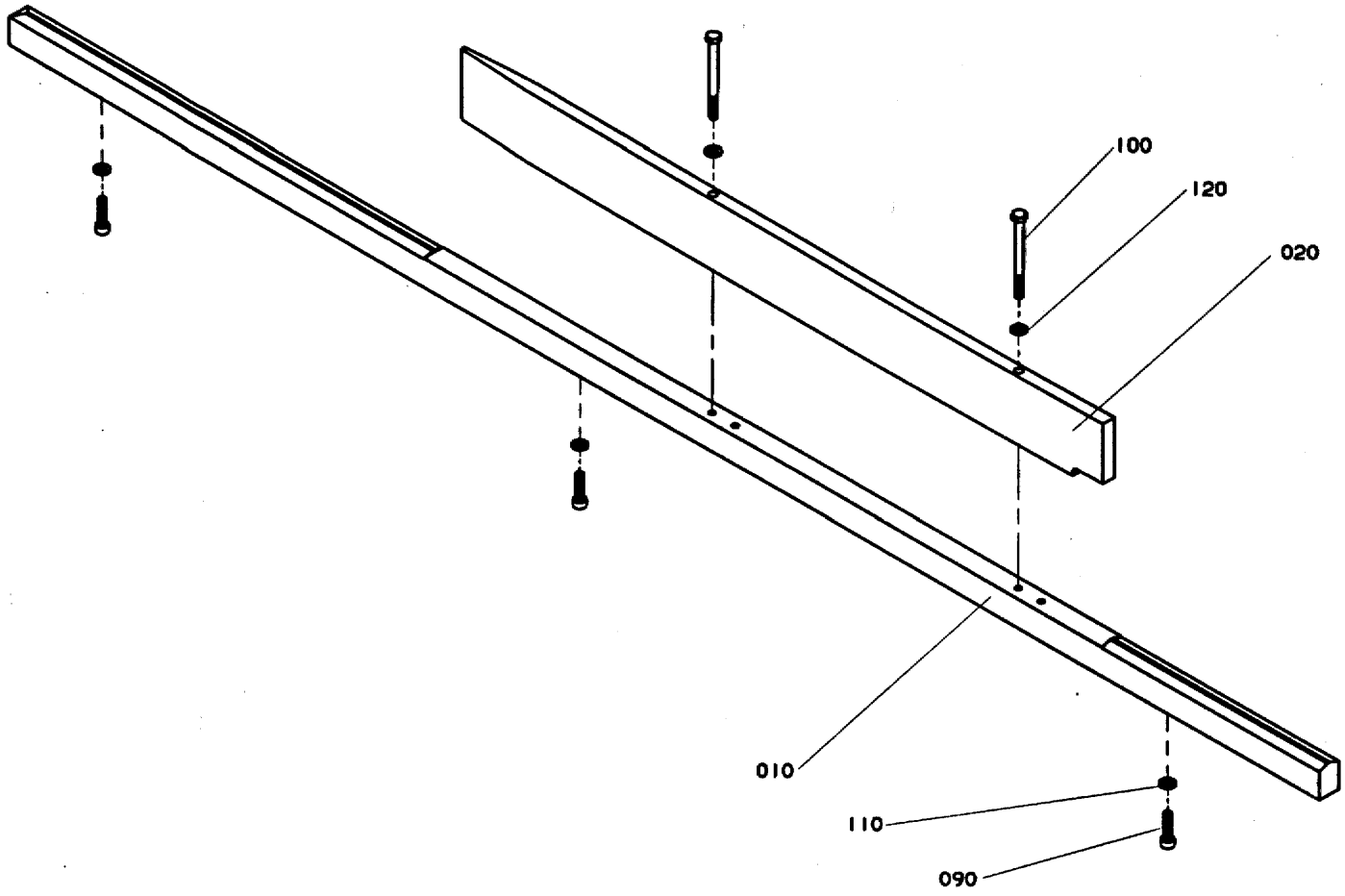

106522001.EPS
1065220-1
ECN 16567

Pos	Part No	SP	UN	Qty	Description	Page No
Conveyor width B40, B55, B55S. Z-FORM, LEFT HAND INFEED, U-FORM, RIGHT HAND INFEED						
000	C-1065220-0201	-		1	**STEERING RAIL**	
010	1074975	-		1	STEERING RAIL	
020	1074977	-		1	STEERING RAIL	
200	312105-0467	-		2	SCREW O4014 M8X80A280	
Conveyor width B40, B55, B55S, Z-FORM, RIGHT HAND INFEED, U-FORM, LEFT HAND INFEED						
000	C-1065220-0202	-		1	**STEERING RAIL**	
010	1074976	-		1	STEERING RAIL	
020	1074977	-		1	STEERING RAIL	
200	312105-0467	-		2	SCREW O4014 M8X80A280	
Conveyor width B79, B68, LEFT HAND INFEED, RIGHT HAND INFEED						
000	C-1065220-0203	-		1	**STEERING RAIL**	
010	1111826	-		1	STEERING RAIL	
020	1065221	-		1	STEERING RAIL	
200	312105-0471	-		2	SCREW 4014 M8X100A280	
COMMON PARTS						
210	312115-0370	-		3	**SCREW O4762 M6X20A280**	
220	315105-0153	-		3	WASHER BRB6,4X12RFR	
230	315105-0165	-		2	WASHER BRB8,4X16RFR	

Pos	Part No	SP	UN	Qty	Description	Page No

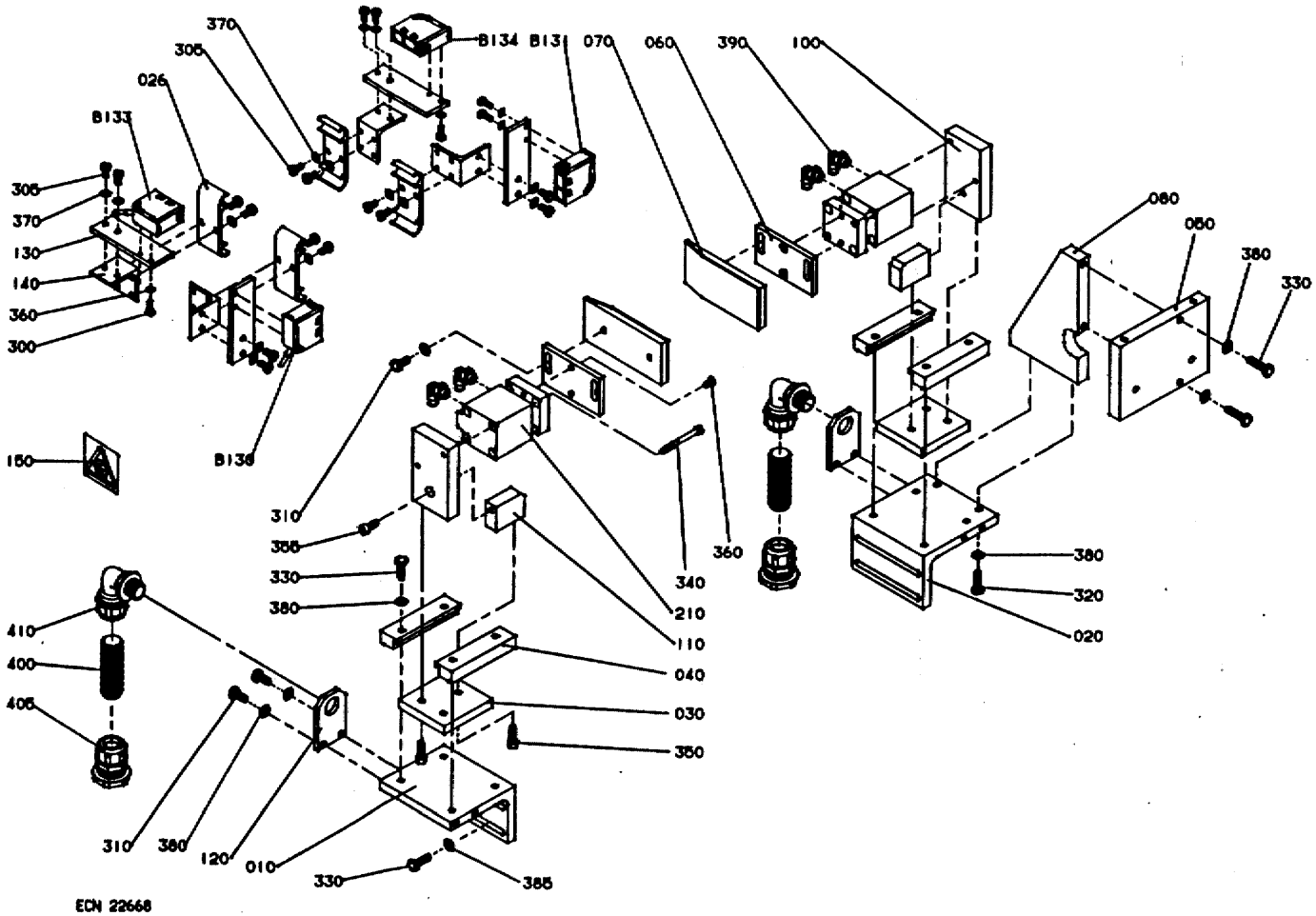

ECN 22668

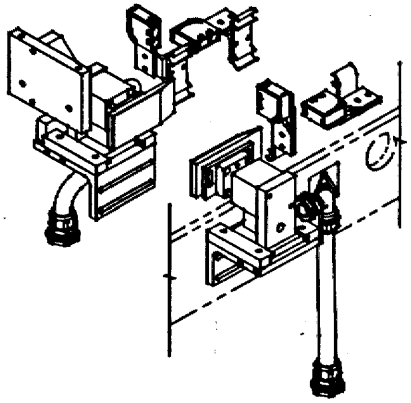

VÄNSTER INMATNING Z-FORM/HÖGER INMATNING U-FORM
LEFT HAND INFEED Z-FORM/RIGHT HAND INFEED U-FORM

POS 150 VARNINGSSKYLT SKA PLACERAS
PÅ STATIV TRANSPORTBAND (C-1065177)
POS 150 CAUTION SIGN SHALL BE PLACED
ON FRAME TRANSPORT LINE (C-1065177)

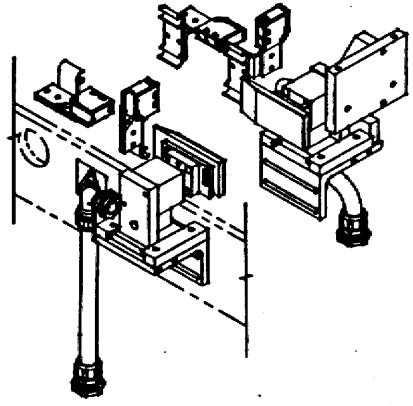

HÖGER INMATNING Z-FORM/VÄNSTER INMATNING U-FORM
RIGHT HAND INFEED Z-FORM/LEFT HAND INFEED U-FORM
SHOWN ON DRAWING BESIDE

GraphicID: 106519803.eps
Parent Drw: 1065198-3
ECN 22668

Pos	Part No	SP	UN	Qty	Description	Page No
-						
000	C-1065198-0301	-		1	BRAKE SIDE	
010	1065199	-		1	ANGLE BRACKET	
020	1065200	-		1	ANGLE BRACKET	
026	1020637	-		4	HOLDER	
030	1065201	-		2	PLATE	
040	1065204	-		4	STEERING RAIL	
050	1065205	-		1	PLATE	
060	1065207	-		2	BRACKET	
070	1065208	-		2	RAIL	
080	1139145	-		1	PLATE	
100	1065202	-		2	PLATE	
110	1065203	-		2	SPRING	
120	1065343	-		2	HOLDER	
130	1139100	-		4	PHOTOCELL BRACKET	
140	1065433	-		4	FASTENING BRACKET	
150	1128854	-		1	CAUTION SIGN	
210	90450-0261	S		2	CYLINDER	
300	312105-0291	-		8	SCREW O4017 M4X12A280	
305	312105-0325	-		16	SCREW M6S5X10 A2 80	
310	312105-0367	-		8	SCREW M6S6X14RFR	
320	312105-0370	-		2	SCREW O4017 M6X20A280	
330	312105-0372	-		18	SCREW O4017 M6X25A280	
340	312115-0341	-		4	SCREW MC6S 5X50 A4 80	
350	312115-0366	-		6	SCREW O4762 M6X12A280	
355	312115-0368	-		2	SCREW O4762 M6X16A280	
360	315105-0136	-		8	WASHER BRB4,3X8RFR	
370	315105-0146	-		16	WASHER BRB5,3X10RFR	
380	315105-0153	-		12	WASHER BRB6,4X12RFR	
385	315105-0156	-		8	WASHER BRB6,7X14RFR	
390	342732-0100	-		4	ELBOW PIPE D4-R1/8"	
400	352135-0106	-	MM	400	HOSE .016	
405	352136-0127	-		2	GLAND FITT	
410	352137-0127	-		2	GLAND FITT	
B130	90232-0110	S		1	PH.CELL OMRON E3S-CL1-5M	
B131	90232-0110	S		1	PH.CELL OMRON E3S-CL1-5M	
B133	90232-0110	S		1	PH.CELL OMRON E3S-CL1-5M	
B134	90232-0110	S		1	PH.CELL OMRON E3S-CL1-5M	

Pos	Part No	SP	UN	Qty	Description	Page No

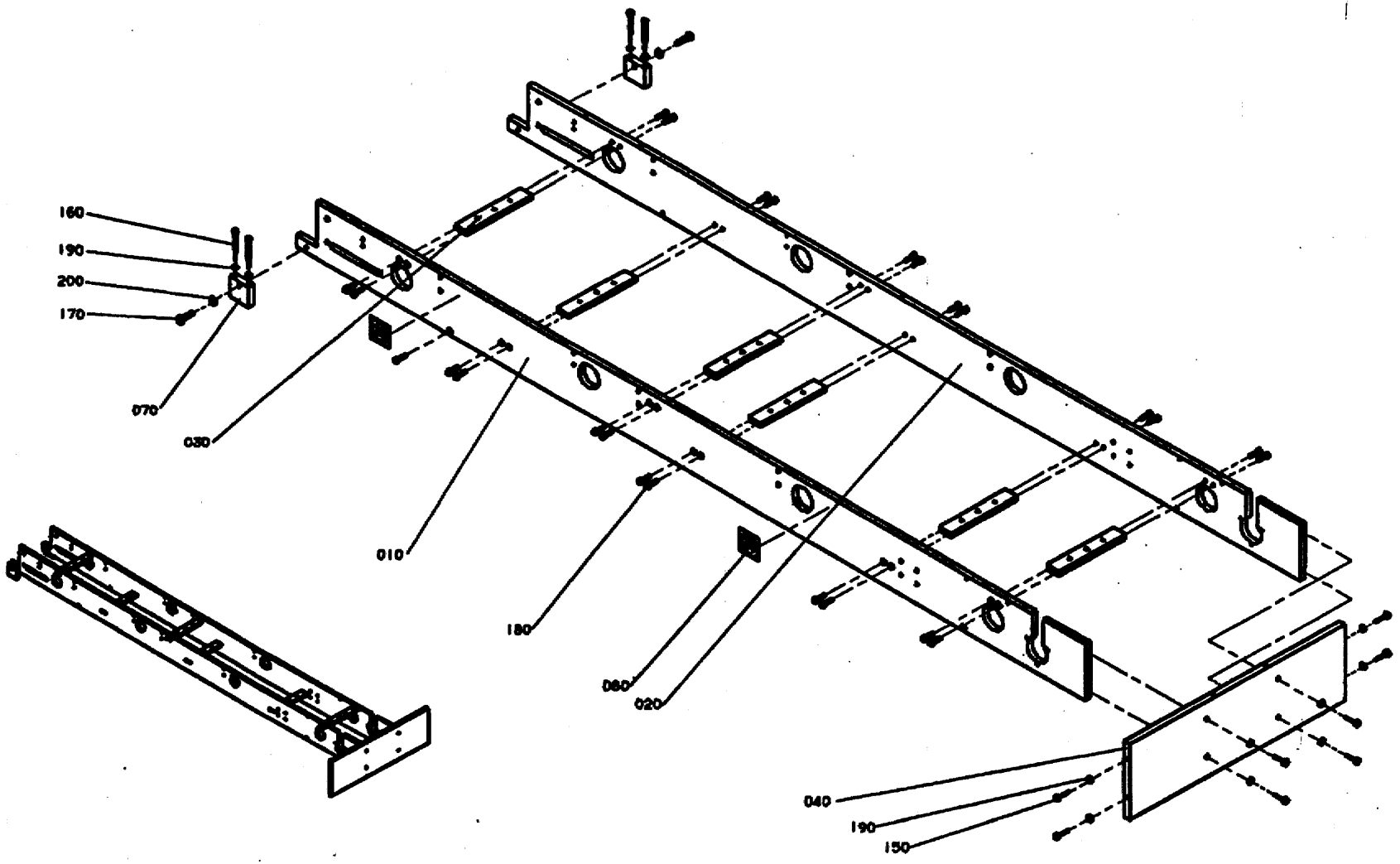

GraphicID: 106517702.tif
Parent Drw: 1065177-2
ECN No: 22292

Pos	Part No	SP	UN	Qty	Description	Page No
-						
000	C-1065177-0201	-		1	FRAME TRANSPORT LINE	
010	1065178	-		1	SIDE PLATE	
020	1065179	-		1	SIDE PLATE	
030	1065180	-		6	HOLDER	
040	1065181	-		1	PLATE	
070	1065184	-		2	BRACKET	
080	1128856	-		2	PROHIBITION SIGN	
150	312105-0374	-		8	SCREW O4017 M6X30A280	
160	312105-0382	-		4	SCREW O4014 M6X60A280	
170	312105-0455	-		2	SCREW O4017 M8X30A280	
180	312115-0370	-		24	SCREW O4762 M6X20A280	
190	315105-0153	-		12	WASHER BRB6,4X12RFR	
200	315105-0165	-		2	WASHER BRB8,4X16RFR	

Pos	Part No	SP	UN	Qty	Description	Page No

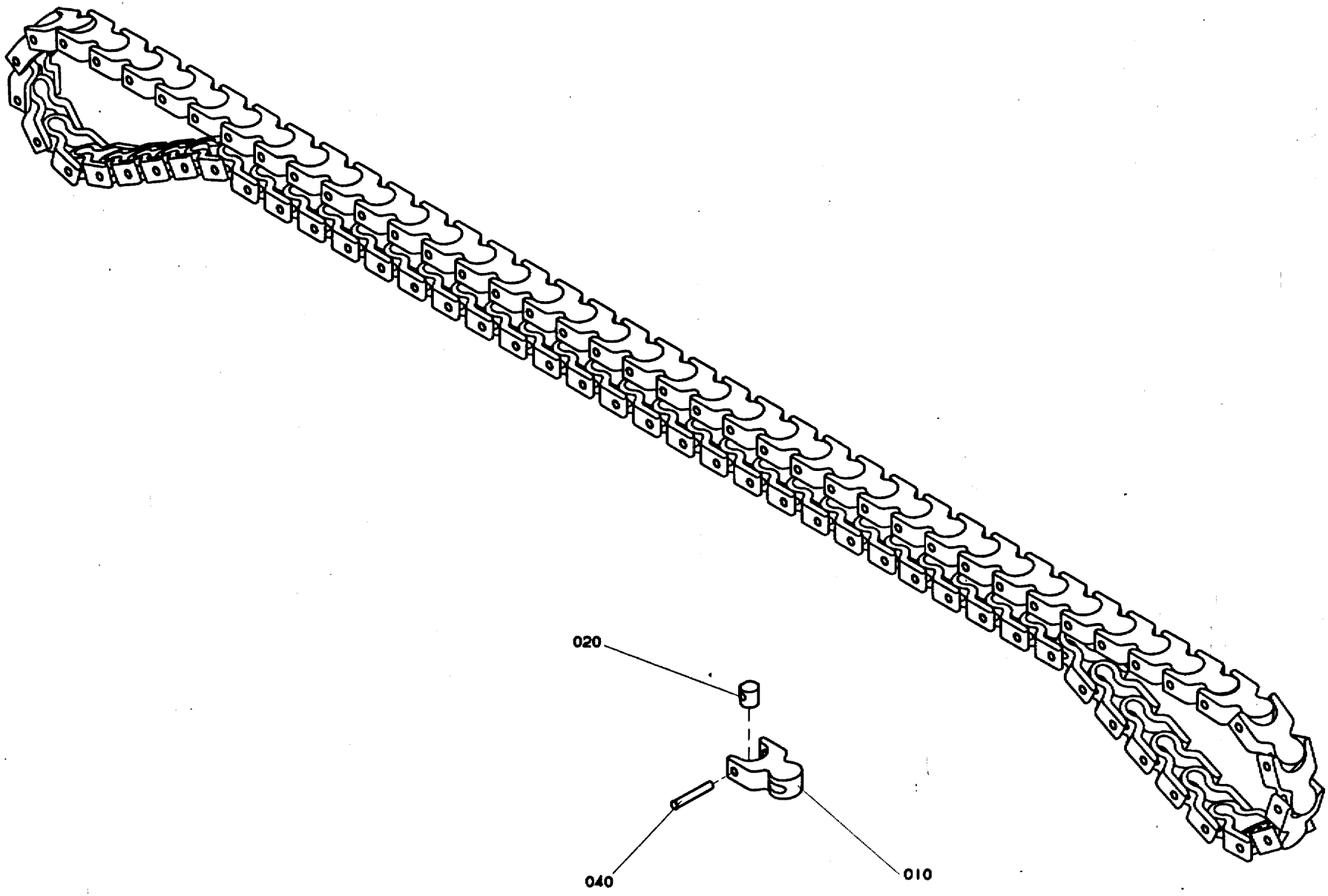

106523701.EPS
1065237-1
ECN 18963

Pos	Part No	SP	UN	Qty	Description	Page No
000	C-1065237-0101	-		1	CHAIN	
010	484846	-		80	LINK	
020	484847	-		80	PLUNGER	
040	545890	-		81	RIVET	

Pos	Part No	SP	UN	Qty	Description	Page No

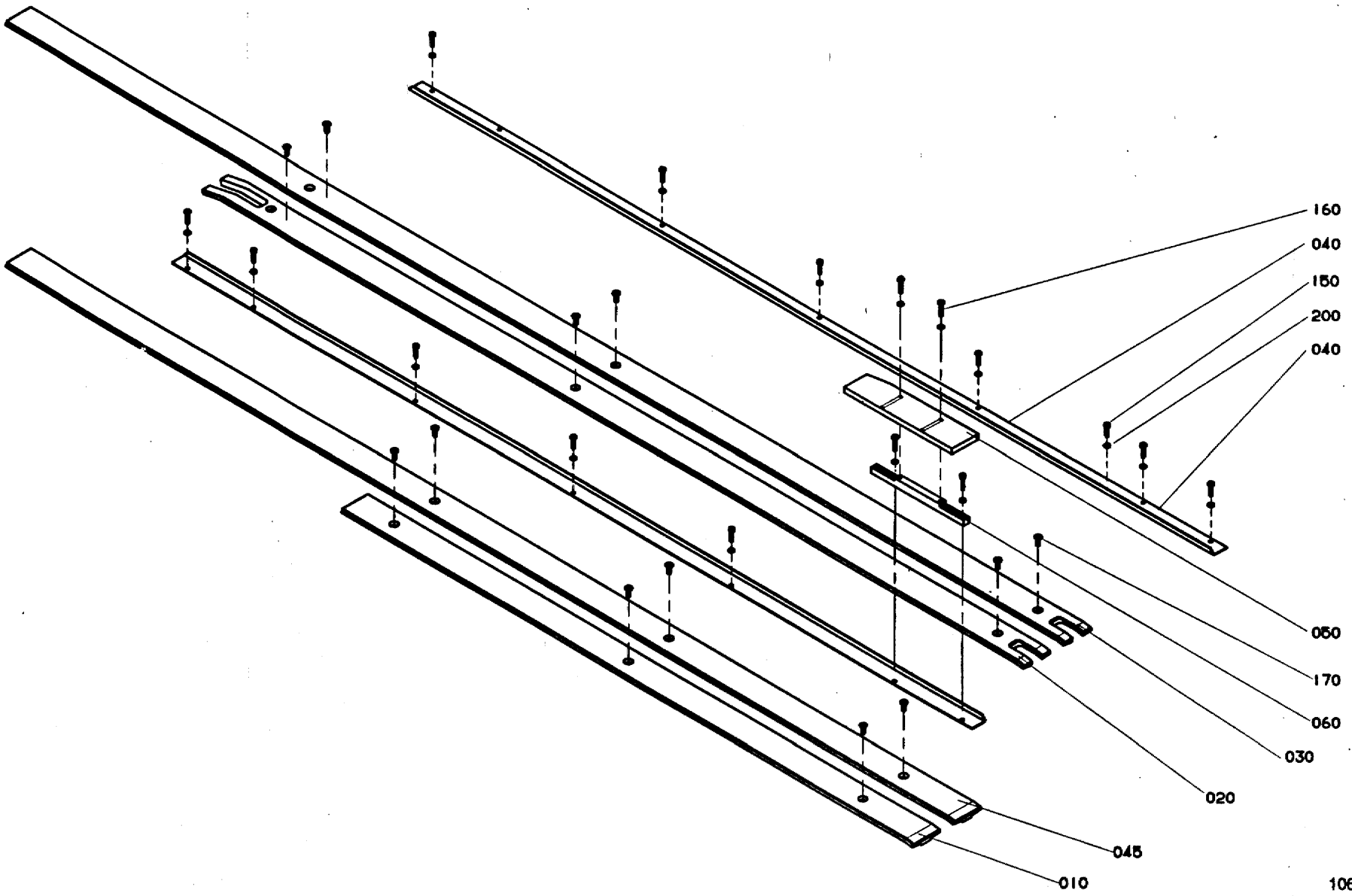

106523101.EPS
1065231-1
ECN 18963

Pos	Part No	SP	UN	Qty	Description	Page No
-						
000	C-1065231-0201	-		1	SLIDE RAIL	
010	1065232	-		1	SLIDE RAIL	
020	1065233	-		1	SLIDE RAIL	
030	1065234	-		1	SLIDE RAIL	
040	1111834	-		2	STEERING RAIL	
045	1065438	-		1	SLIDE RAIL	
050	1128028	-		1	STEERING RAIL	
060	1065904	-		1	SPACER	
150	312105-0329	-		14	SCREW O4017 M5X16A280	
160	312105-0331	-		4	SCREW O4017 M5X20A280	
170	312155-0370	-		12	SCREW MF6S6X20RFR	
200	315105-0146	-		18	WASHER BRB5,3X10RFR	

Pos	Part No	SP	UN	Qty	Description	Page No

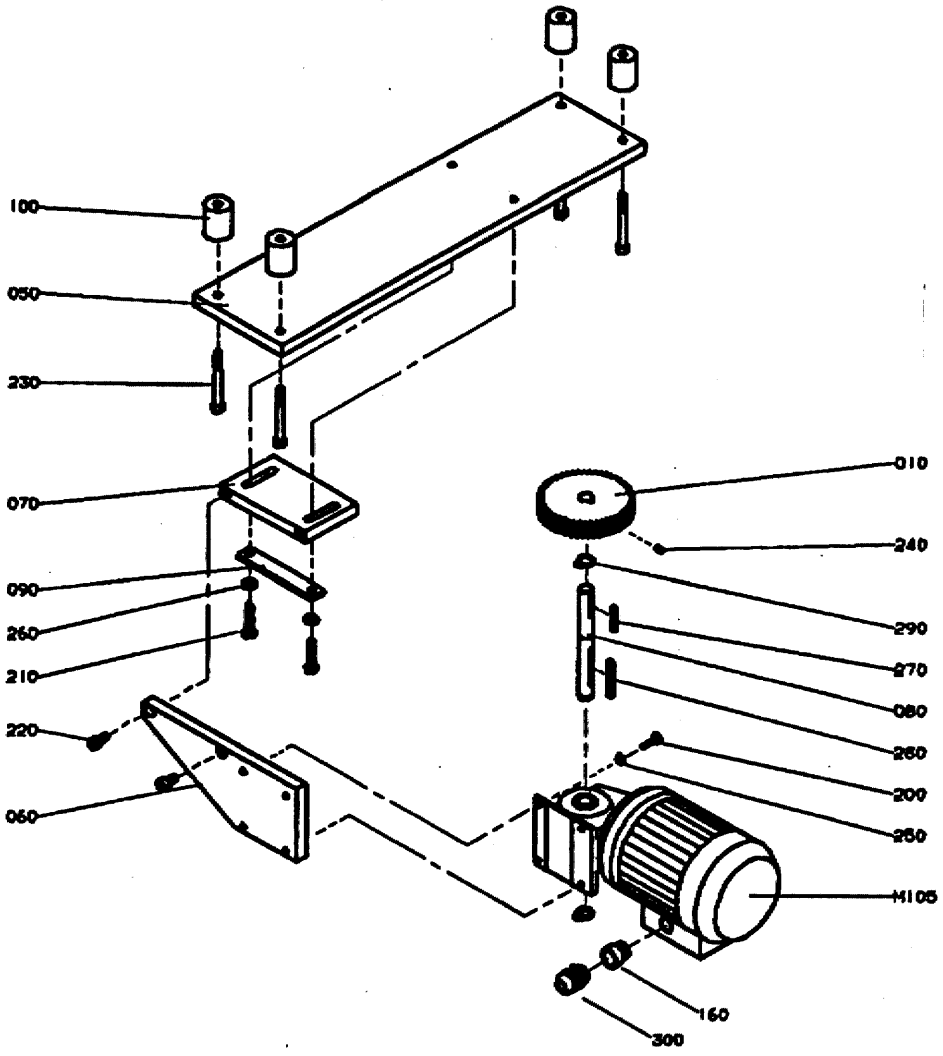

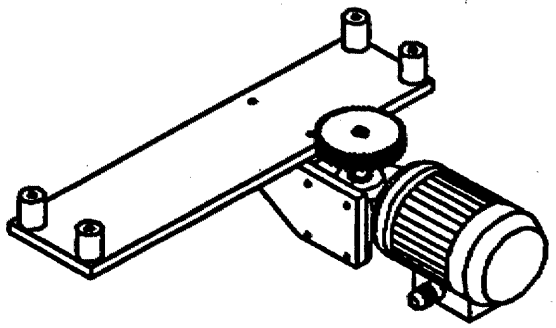

MOUNTING INFEED RIGHT Z-FORM IS SHOWN ON THE DRAWING, INFEED LEFT MIRROR REVERSED.

GraphicID: 106518502.tif
Parent Drw: 1065185-2
ECN No: 22292

Pos	Part No	SP	UN	Qty	Description	Page No
Conveyor speed 15 m/min, 50 Hz						
000	C-1065185-0201	-		1	MOTOR DISTRBUTOR	
010	1021864	-		1	GEAR WHEEL Z=40	
Conveyor speed 15 m/min, 60 Hz						
000	C-1065185-0202	-		1	MOTOR DISTRBUTOR	
010	1065349	-		1	GEAR WHEEL Z=32	
Conveyor speed 21/25/30 m/min, 50 Hz						
000	C-1065185-0203	-		1	MOTOR DISTRBUTOR	
010	1021547	-		1	GEAR WHEEL Z=50	
Conveyor speed 21/25/30 m/min, 60 Hz						
000	C-1065185-0204	-		1	MOTOR DISTRBUTOR	
010	1021864	-		1	GEAR WHEEL Z=40	
COMMON PARTS						
050	1065186	-		1	PLATE	
060	1021640	-		1	HOLDER	
070	1021638	-		1	BRACKET	
080	1021642	-		1	SHAFT	
090	1021639	-		1	RAIL	
100	1021641	-		4	SPACER	
160	90089-0017	-		1	TRANSITIONAL MUFF	
200	312105-0370	-		4	SCREW O4017 M6X20A280	
210	312105-0457	-		2	SCREW O4017 M8X35A280	
220	312115-0449	-		2	SCREW O4762 M8X16A280	
230	312115-0465	-		2	SCREW O4762 M8X70A280	
240	312318-0364	-		1	STOP SCREW SK6SS6X10RFR	
250	315105-0153	-		4	WASHER BRB6,4X12RFR	
260	315105-0165	-		4	WASHER BRB8,4X16RFR	
270	315701-0206	-		1	FLAT WEDGE5X5X32	
280	315701-0210	-		1	FLAT WEDGE5X5X50	
290	315751-0113	-		2	CIRCLIP SGA16 RFR	
300	352103-0111	-		1	CABLE GLAND ST 16;10-14MM	
M105	90069-0221	C		1	WORM GEAR MOTOR	

Pos	Part No	SP	UN	Qty	Description	Page No

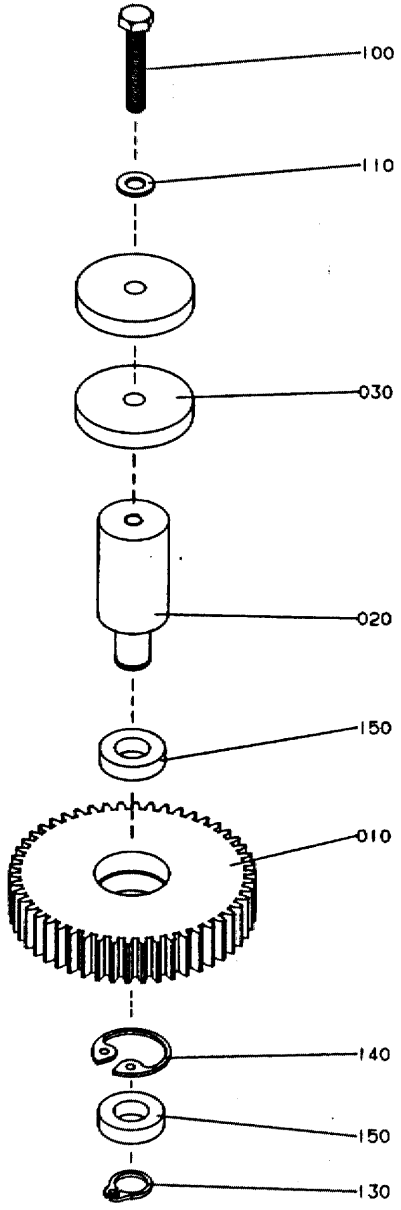

GraphicID: 102155001.eps
Parent Drw: 1021550-1
ECN 16567

Pos	Part No	SP	UN	Qty	Description	Page No
-						
000	C-1021550-0101	-		1	IDLER	
010	1021548	-		1	GEAR WHEEL Z=50	
020	1021551	-		1	SHAFT	
030	1021552	-		2	WASHER	
100	312105-0460	-		1	SCREW O4017 M8X45A280	
110	315105-0165	-		1	WASHER BRB8,4X16RFR	
130	315751-0112	-		1	CIRCLIP SGA15 RFR	
140	315752-0123	-		1	CIRCLIP SGH32	
150	321308-0202	P		2	BALL BEARISKF6002-2RS	

Pos	Part No	SP	UN	Qty	Description	Page No

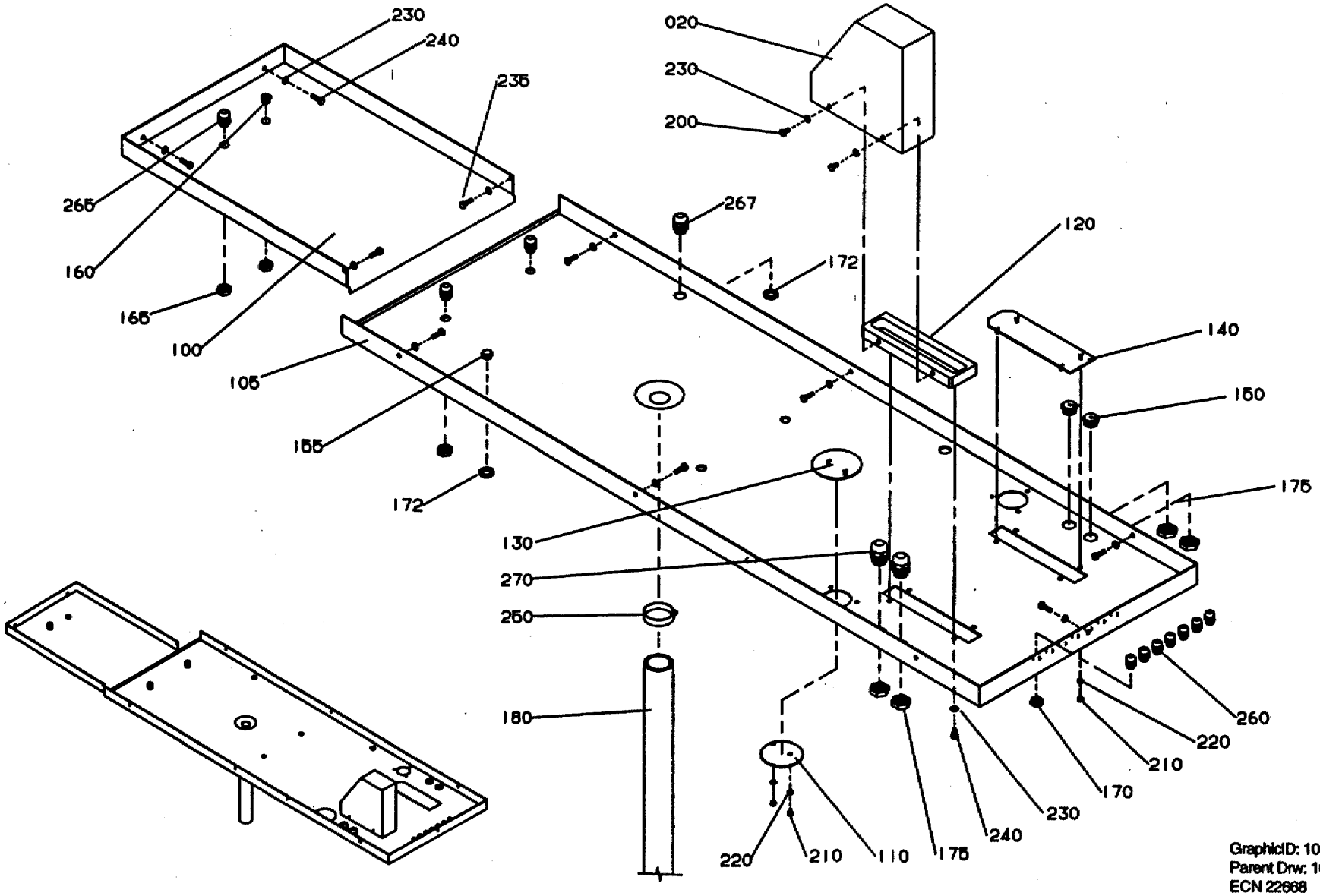

GraphicID: 106519302.eps
Parent Drw: 1065193-2
ECN 22668

Pos	Part No	SP	UN	Qty	Description	Page No
Z-Form -Left Hand Infeed, U-Form -Right Hand Infeed,						
000	C-1065193-0201	-		1	COVERING PLATE	
020	1021954	-		1	CHAIN GUARD	
Z-Form -Right Hand Infeed, U-Form -LeftHand Infeed						
000	C-1065193-0202	-		1	COVERING PLATE	
020	1021826	-		1	CHAIN GUARD	
COMMON PARTS						
100	1065195	-		1	COVERING PLATE	
105	1111841	-		1	COVERING PLATE	
110	1021026	-		1	COVER DISC	
120	1021825	-		1	SEALING FRAME	
130	1021025	-		1	COVER DISC	
140	1021828	-		1	COVER DISC	
145	90002-0018	-		1	BLIND PLUG	
150	90002-0004	-		2	BLANK-OFF PLUG 22,5	
155	90002-0009	-		1	BLANK-OFF PLUG 18.6	
160	90002-0013	-		1	BLANK-OFF PLUG 15,2	
165	90099-0104	-		6	NUT PR 15,2 (PG9)	
170	90099-0116	-		8	NUT PR 12,5 (PG7)	
172	90099-0117	-		2	NUT PR18,6 (PG11)	
175	90099-0110	-		4	NUT PR 22,5 (PG16)	
180	90166-0107	-	MM	550	HOSE	
200	312105-0366	-		6	SCREW O4017 M6X12A280	
210	312605-0314	-		6	NUT M6M5RFR	
220	315105-0146	-		6	WASHER BRB5,3X10RFR	
230	315105-0156	-		19	WASHER BRB6,7X14RFR	
235	312105-0367	-		1	SCREW M6S6X14RFR	
240	312105-0368	-		10	SCREW O4017 M6X16A280	
250	342991-0109	-		1	HOSE CLIP 44-56MMRFR	
260	352103-0096	-		7	CABLE GLANR.ST 7	
265	352103-0101	-		5	CABLE GLAND ST 9	
267	352103-0106	-		1	CABLE GLAND ST 11	
270	352103-0110	-		2	CABLE GLAND STR 16	

Pos	Part No	SP	UN	Qty	Description	Page No

VÄNSER INMATNING Z-FORM/HÖGER INMATNING U-FORM
LEFT HAND INFEED Z-FORM/RIGHT HAND INFEED U-FORM
SHOWN ON DRAWING BESIDE

HÖGER INMATNING Z-FORM/VÄNSTER INMATNING U-FORM
RIGHT HAND INFEED Z-FORM/LEFT HAND INFEED U-FORM
SHOWN ON DRAWING BESIDE

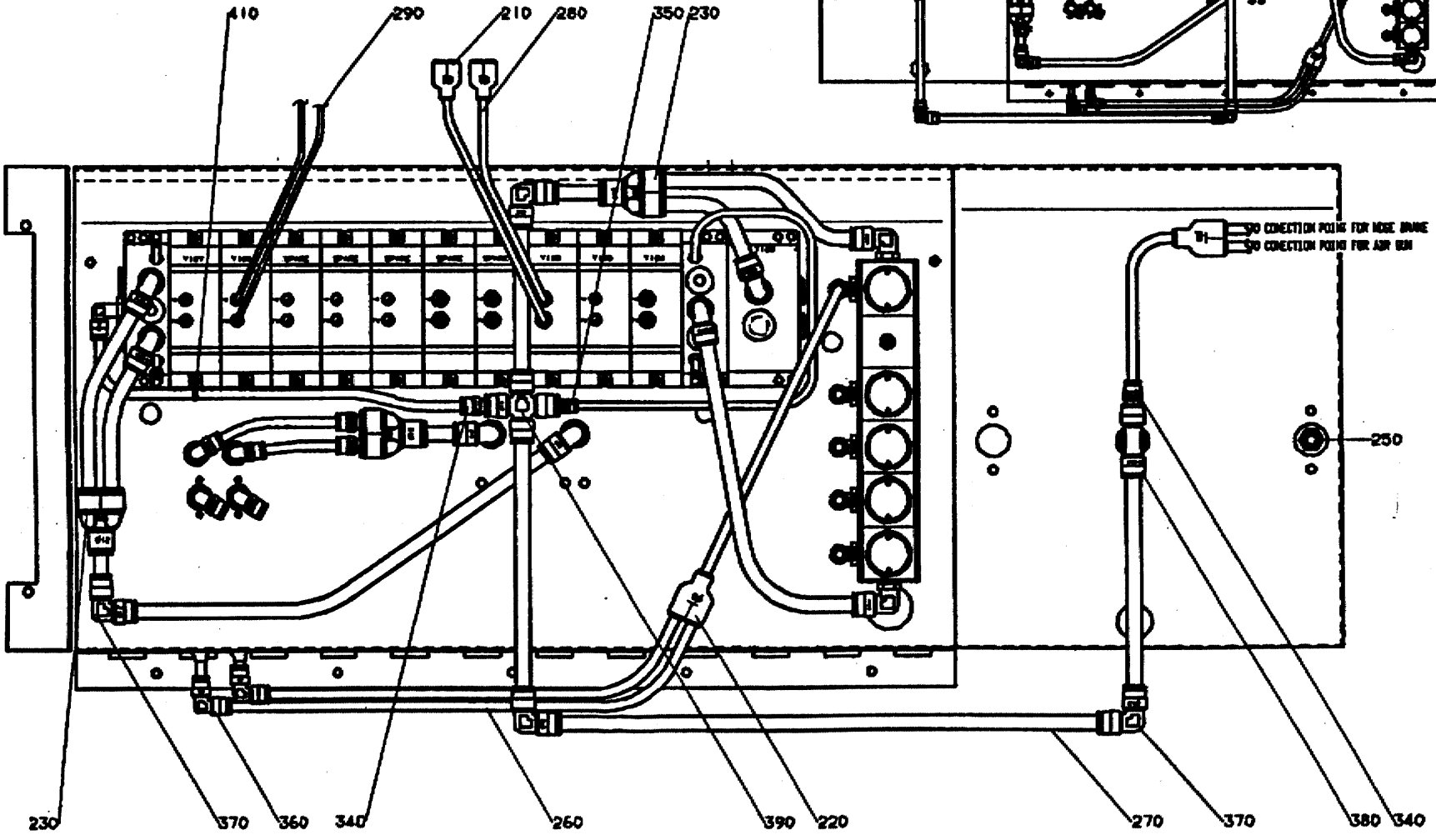

GraphicID: 112800502.tif
Parent Drw: 1128005-2
ECN No: 22292

Pos	Part No	SP	UN	Qty	Description	Page No
Z-Form -Left Hand Infeed, U-Form -Right Hand Infeed,						
000	C-1128005-0201	-		1	PNEUMATIC CABINET	
100	1128042	-		1	CABINET	
Z-Form -Right Hand Infeed, U-Form -LeftHand Infeed						
000	C-1128005-0202	-		1	PNEUMATIC CABINET	
100	1128043	-		1	CABINET	
COMMON PARTS						
010	C-1021618-0101	-		1	FILTER-REGULATOR	
020	C-1074127-0101	-		2	SILENCER	
030	C-1124059-0101	-		1	PRESSURE REGULATOR RAMP	
040	C-1124062-0101	-		1	EJECTOR	
050	C-1128041-0101	-		1	VALVE RAMP	
110	1139177	-		1	PNEUMATIC CHART	
120	1128035	-		1	PNEUMATIC CABINET	
130	90155-0016	-	MM	1000	CHAIN	
140	1128038	-		1	COVERING PLATE	
150	1139214	-		1	SET OF SIGNS	
200	90002-0010	-		1	PLUG	
210	90055-0100	-		2	JOINT CONNECTION	
220	90055-0101	-		2	JOINT CONNECTION	
230	90055-0147	-		2	JOINT CONNECTION	
235	90099-0104	-		3	NUT PR 15,2 (PG9)	
240	90099-0120	-		1	NUT PR 37 (PG29)	
245	90143-0081	-	MM	1220	RUBBER SEAL	
250	90163-0019	-		1	NIPPLE	
260	90166-0194	-	M	7	PLASTIC HOSE	
270	90166-0221	-	M	4	HOSE	
280	90166-0193	-	M	7	PLASTIC HOSE	
290	90166-0095	-	M	7	HOSE	
300	312105-0370	-		15	SCREW O4017 M6X20A280	
320	315105-0153	-		21	WASHER BRB6,4X12RFR	
330	312605-0316	-		4	NUT M6M6RFR	
340	342716-0209	-		2	REDUCER 8-12	
350	342716-0210	-		1	REDUCER 6-12	
360	342735-0103	-		2	ELBOW PIPE D=8	
370	342735-0109	-		6	ELBOW PIPE D=12	
380	342742-0110	-		1	T-CONNECTI 12-3/8	
390	342771-0105	-		1	HOSE COUPL	
400	352103-0101	-		3	CABLE GLAND ST 9	
410	352113-0101	-		X	RIBBON CLA	
420	359009-0800	-		X	CABLE MARKM#RKEN PK	

Pos	Part No	SP	UN	Qty	Description	Page No

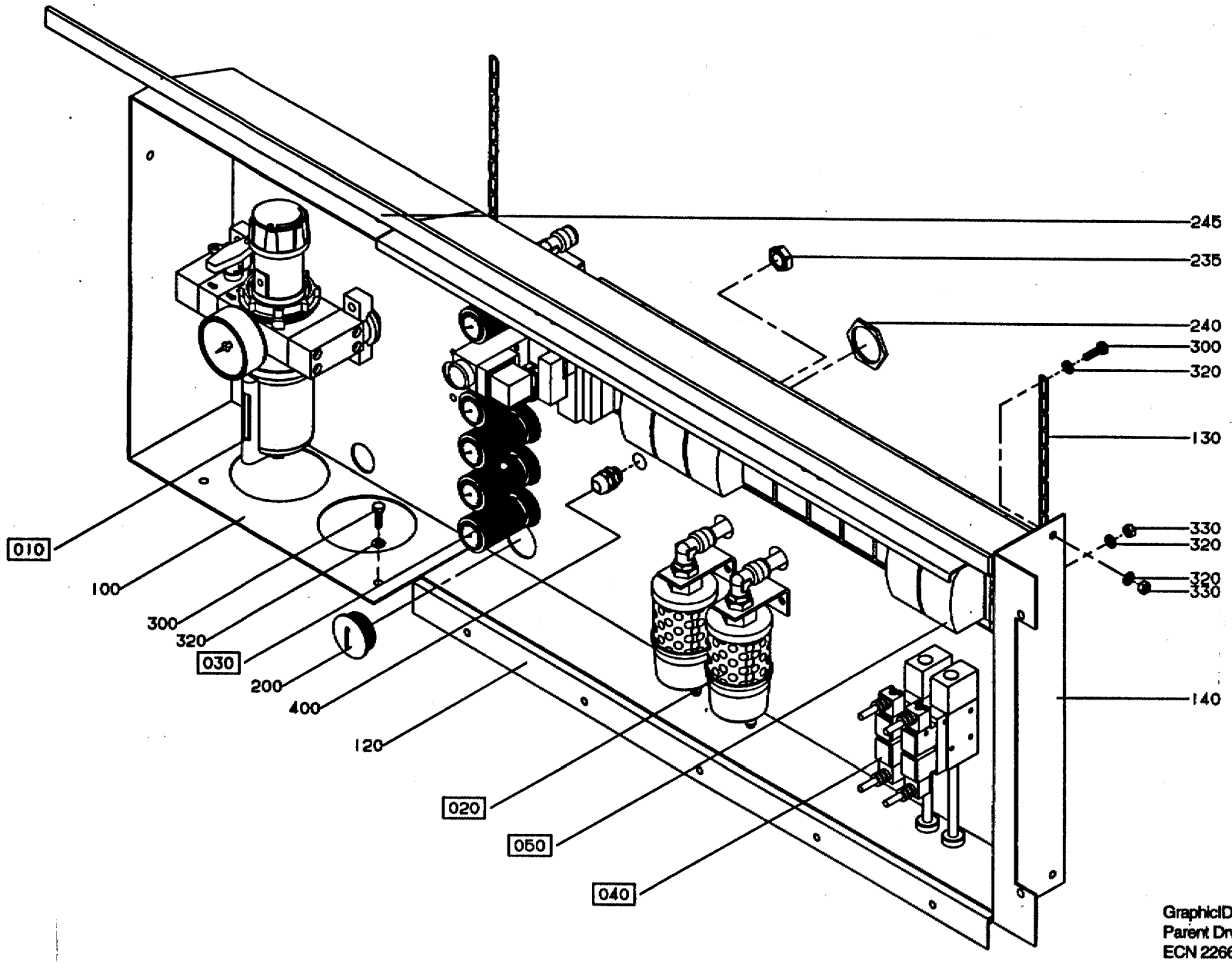

GraphicID: 112800503.eps
Parent Drw: 1128005-3
ECN 22668

Pos	Part No	SP	UN	Qty	Description	Page No
Z-Form -Left Hand Infeed, U-Form -Right Hand Infeed,						
000	C-1128005-0201	-		1	PNEUMATIC CABINET	
100	1128042	-		1	CABINET	
Z-Form -Right Hand Infeed, U-Form -LeftHand Infeed						
000	C-1128005-0202	-		1	PNEUMATIC CABINET	
100	1128043	-		1	CABINET	
COMMON PARTS						
010	C-1021618-0101	-		1	FILTER-REGULATOR	
020	C-1074127-0101	-		2	SILENCER	
030	C-1124059-0101	-		1	PRESSURE REGULATOR RAMP	
040	C-1124062-0101	-		1	EJECTOR	
050	C-1128041-0101	-		1	VALVE RAMP	
110	1139177	-		1	PNEUMATIC CHART	
120	1128035	-		1	PNEUMATIC CABINET	
130	90155-0016	-	MM	1000	CHAIN	
140	1128038	-		1	COVERING PLATE	
150	1139214	-		1	SET OF SIGNS	
200	90002-0010	-		1	PLUG	
210	90055-0100	-		2	JOINT CONNECTION	
220	90055-0101	-		2	JOINT CONNECTION	
230	90055-0147	-		2	JOINT CONNECTION	
235	90099-0104	-		3	NUT PR 15,2 (PG9)	
240	90099-0120	-		1	NUT PR 37 (PG29)	
245	90143-0081	-	MM	1220	RUBBER SEAL	
250	90163-0019	-		1	NIPPLE	
260	90166-0194	-	M	7	PLASTIC HOSE	
270	90166-0221	-	M	4	HOSE	
280	90166-0193	-	M	7	PLASTIC HOSE	
290	90166-0222	-	M	7	HOSE	
300	312105-0370	-		15	SCREW O4017 M6X20A280	
320	315105-0153	-		21	WASHER BRB6,4X12RFR	
330	312605-0316	-		4	NUT M6M6RFR	
340	342716-0209	-		2	REDUCER 8-12	
350	342716-0210	-		1	REDUCER 6-12	
360	342735-0103	-		2	ELBOW PIPE D=8	
370	342735-0109	-		6	ELBOW PIPE D=12	
380	342742-0110	-		1	T-CONNECTI 12-3/8	
390	342771-0105	-		1	HOSE COUPL	
400	352103-0101	-		3	CABLE GLAND ST 9	
410	352113-0101	-		X	RIBBON CLA	
420	359009-0800	-		X	CABLE MARKM#RKEN PK	

Pos	Part No	SP	UN	Qty	Description	Page No

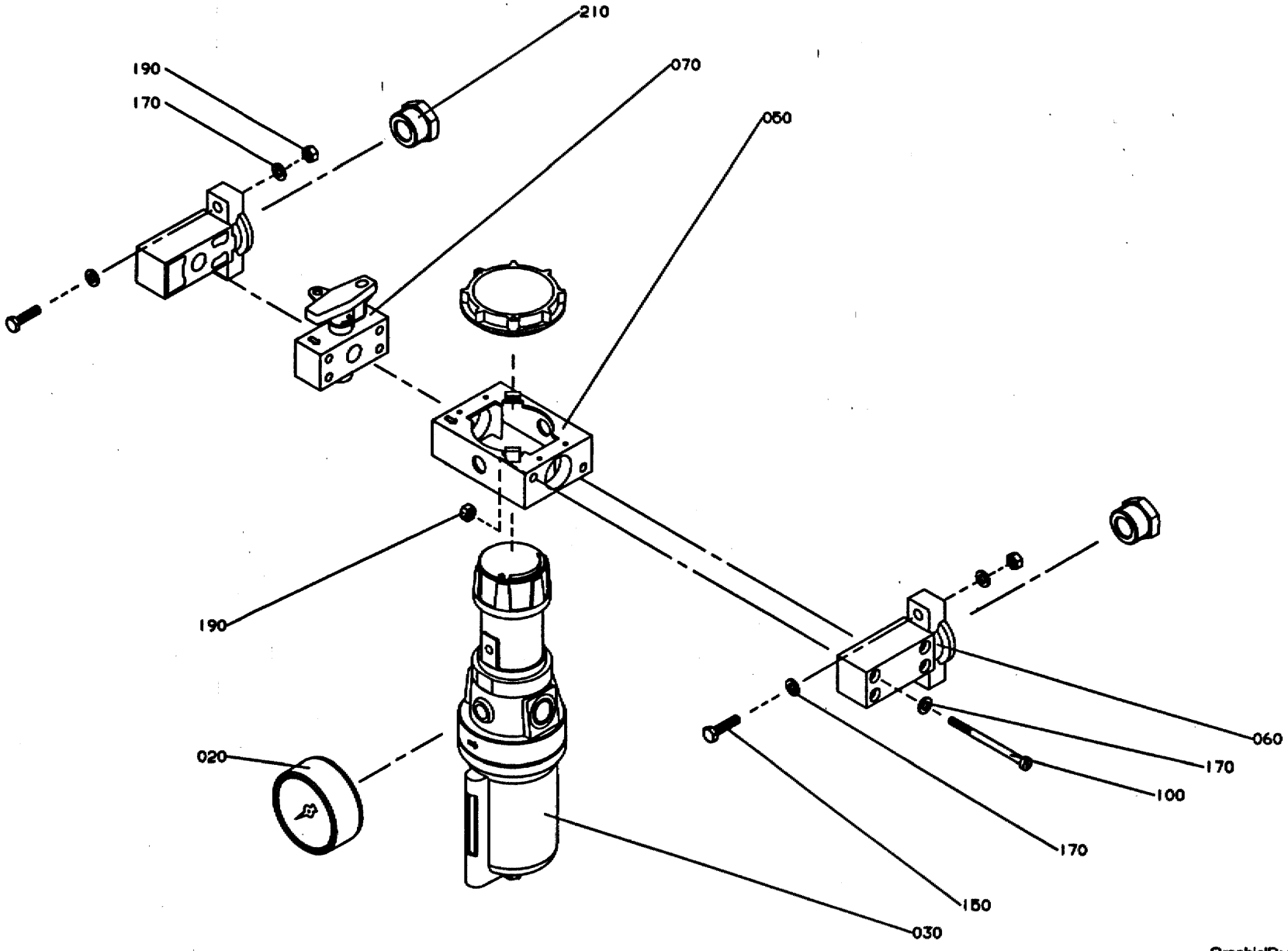

GraphicID: 102161801.eps
Parent Drw: 1021618-1
ECN 21005

Pos	Part No	SP	UN	Qty	Description	Page No
-						
000	C-1021618-0101	-		1	FILTER-REGULATOR	
210	342701-0209	-		2	BUSHING RNI3/4"-3/8"	
-						
000	C-1021618-0102	-		1	FILTER-REGULATOR	
210	342701-0210	-		2	BUSHING RNI3/4"-1/2"	
COMMON PARTS						
020	90043-0015	S		1	PRESSURE GAUGE	
030	90113-0038	S		1	REGULATOR	
030	90113-0344	S		1	* FILTER INSERT	
030	90113-0348	S		1	* SEAL KIT	
030	90113-0349	S		1	* GASKET	
050	90113-0338	-		1	YOKE	
060	90113-0356	-		1	BRACKET	
070	90187-0042	-		1	VALVE	
100	90236-0303	-		4	SCREW	
150	312105-0372	-		4	SCREW O4017 M6X25A280	
170	315105-0153	-		12	WASHER BRB6,4X12RFR	
190	312605-0316	-		8	NUT M6M6RFR	

Pos	Part No	SP	UN	Qty	Description	Page No

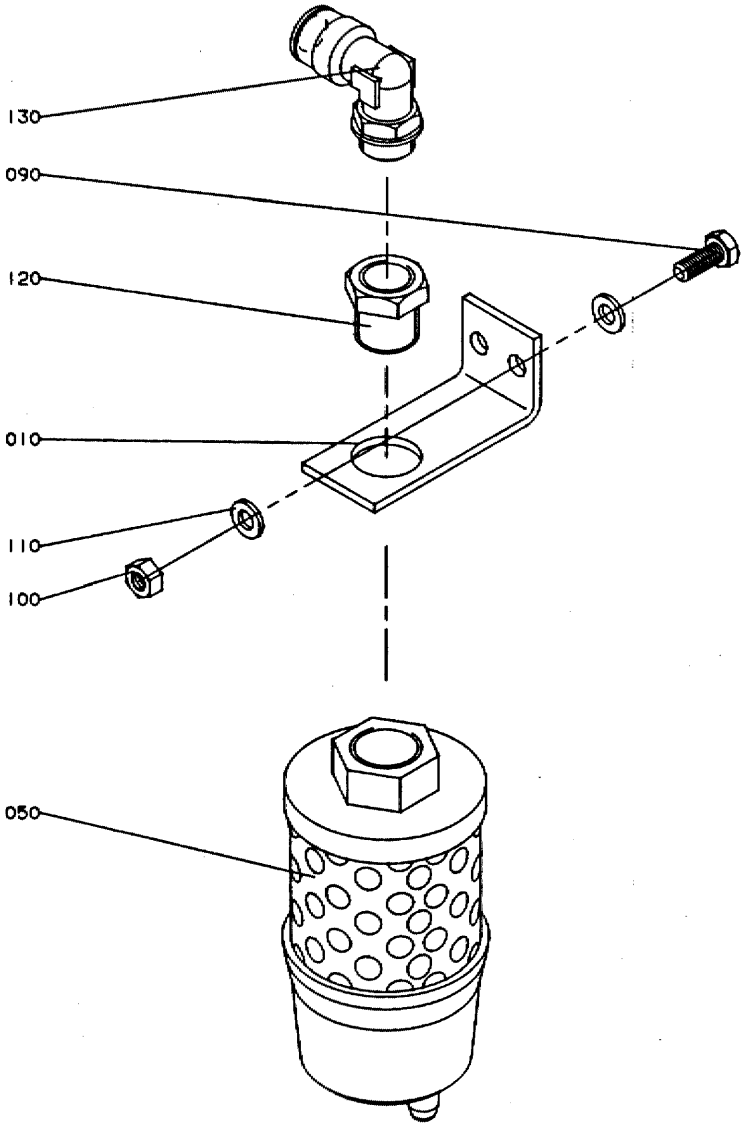

GraphicID: 107412701.eps
Parent Drw: 1074127-1
ECN 19304

Pos	Part No	SP	UN	Qty	Description	Page No
000	C-1074127-0101	-		2	SILENCER	
010	1074209	-		1	BRACKET	
050	90328-0033	C		1	SILENCER	
090	312105-0368	-		2	SCREW O4017 M6X16A280	
100	312605-0316	-		2	NUT M6M6RFR	
110	315105-0153	-		4	WASHER BRB6,4X12RFR	
120	342701-0206	-		1	BUSHING RNI1/2"-3/8"	
130	342732-0110	-		1	ELBOW PIPE D12-R3/8"	

Pos	Part No	SP	UN	Qty	Description	Page No

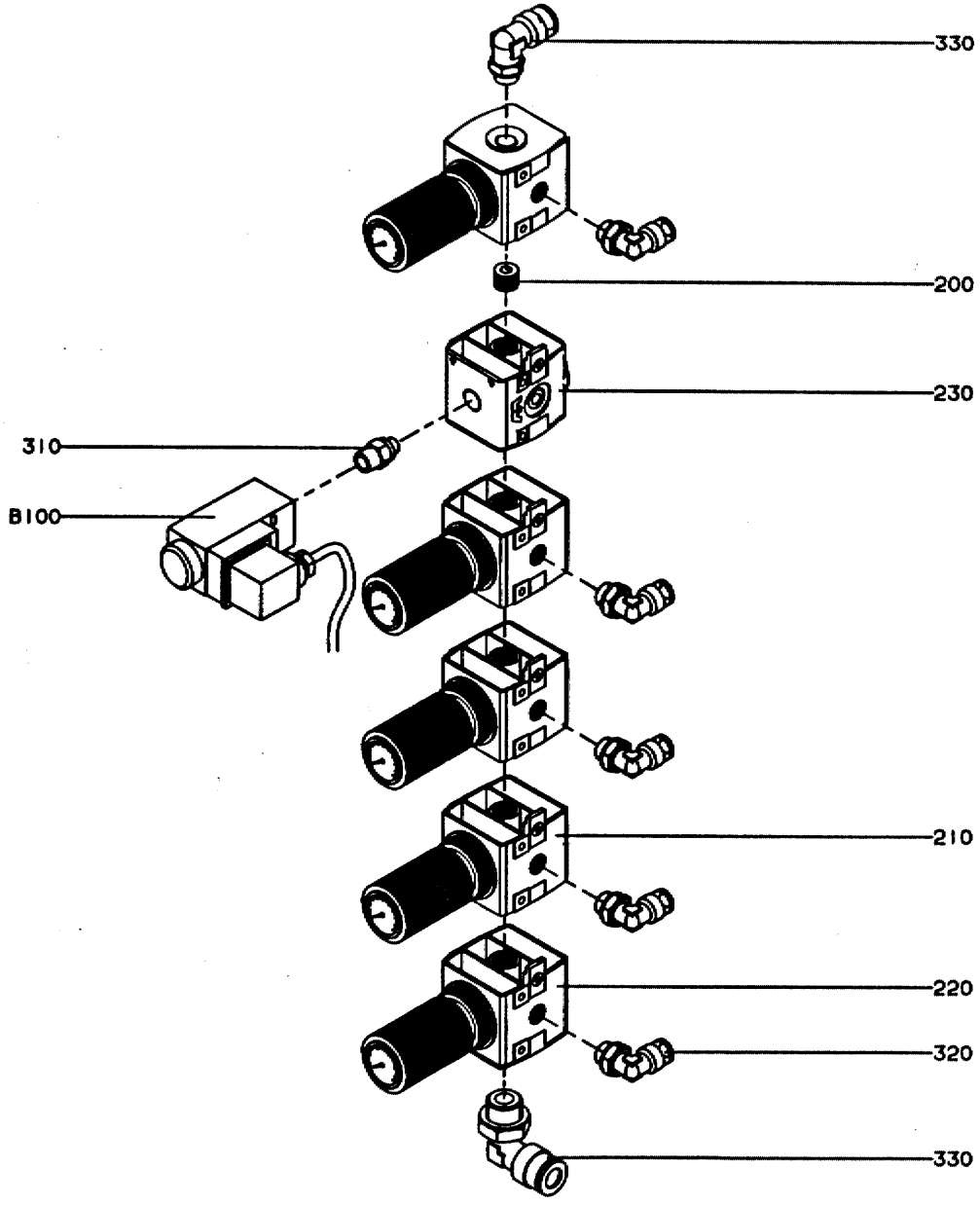

GraphicID: 112405901.eps
Parent Drw: 1124059-1
ECN 22292

Pos	Part No	SP	UN	Qty	Description	Page No
-						
000	C-1124059-0101	-		1	PRESSURE REGULATOR RAMP	
200	90087-0036	-		1	PLUG	
210	90113-0095	-		4	PRESSURE REGULATOR	
220	90113-0096	-		1	PRESSURE REGULATOR	
230	90113-0385	-		1	SEPARATION BLOCK	
310	90224-0372	-		1	CONNECTION	
320	342732-0104	-		5	ELBOW PIPE D8-R1/4"	
330	342732-0109	-		2	ELBOW PIPE D12-R1/4"	
B100	90274-0074	-		1	PRESSURE SWITCH	

Pos	Part No	SP	UN	Qty	Description	Page No

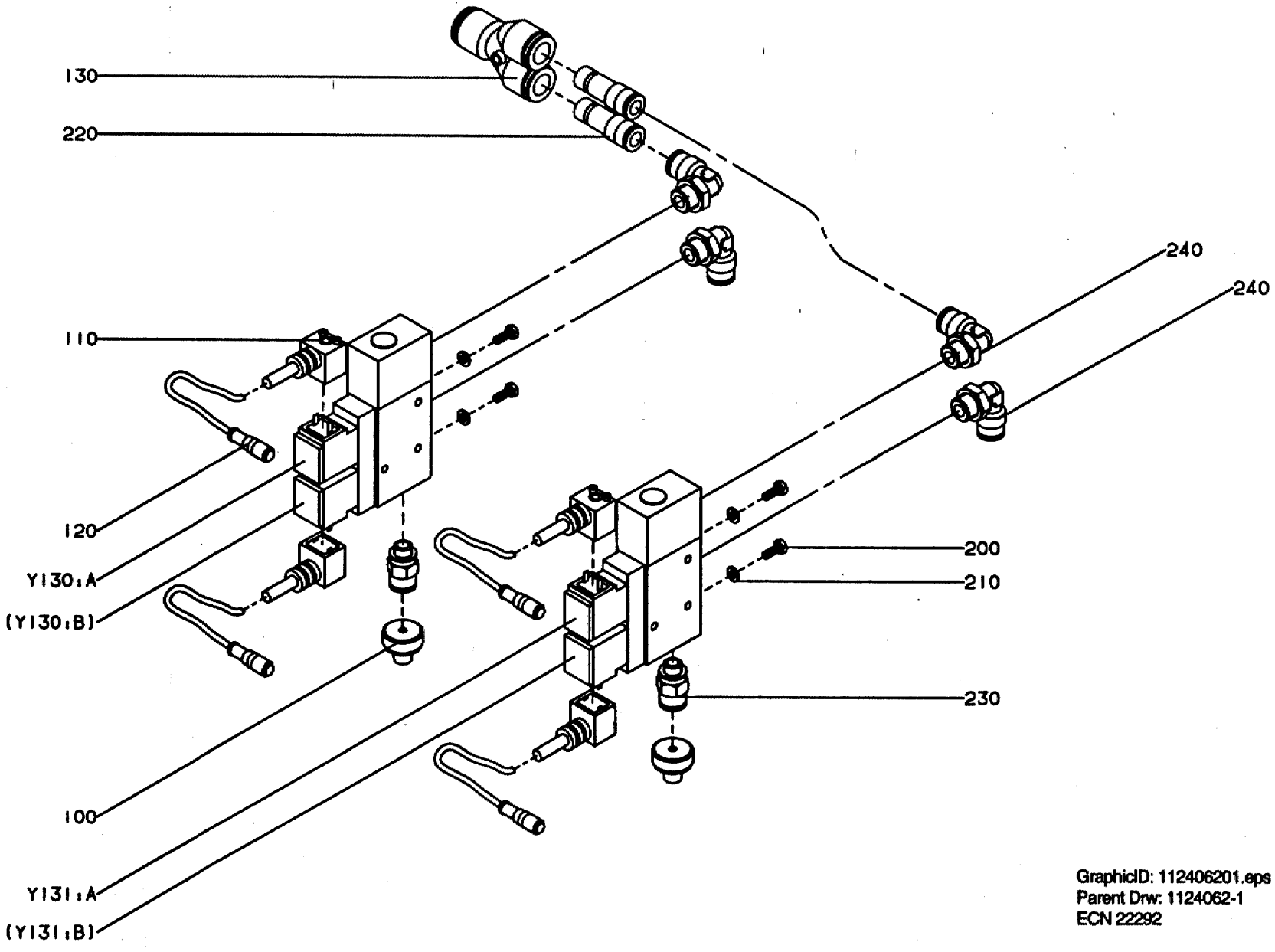

GraphicID: 112406201.eps
Parent Drw: 1124062-1
ECN 22292

Pos	Part No	SP	UN	Qty	Description	Page No
-						
000	C-1124062-0101	-		1	EJECTOR	
100	90015-0020	-		2	BUSHING	
110	90042-0491	-		4	CONTACT	
120	90042-0536	-		4	CONTACT FOR SOL.VALVE	
130	90055-0147	-		1	JOINT CONNECTION	
200	312105-0287	-		4	SCREW O4017 M4X8A280	
210	315105-0136	-		4	WASHER BRB4,3X8RFR	
220	342716-0209	-		2	REDUCER 8-12	
230	342722-0204	-		2	PIPE COUPLD=8-R1/8"	
240	342732-0104	-		4	ELBOW PIPE D8-R1/4"	
Y130	90425-0031	P		1	EJECTOR	
Y131	90425-0031	P		1	EJECTOR	

Pos	Part No	SP	UN	Qty	Description	Page No

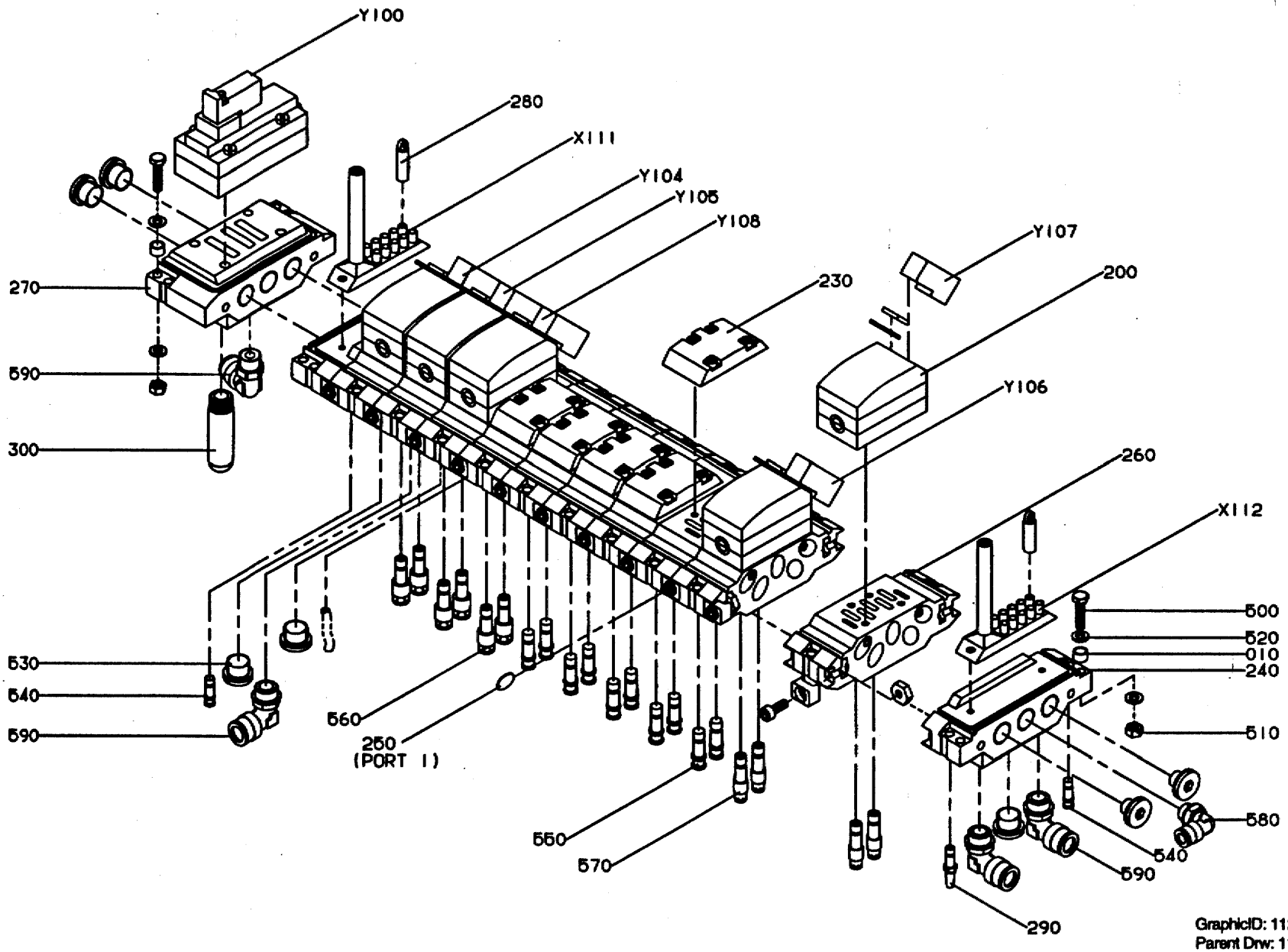

GraphicID: 112804101.eps
Parent Drw: 1128041-1
ECN 22668

Pos	Part No	SP	UN	Qty	Description	Page No
-						
000	C-1128041-0101	-		1	VALVE RAMP	
010	979219	-		4	SPACER PIPE	
200	90042-0215	P		5	SOL.VALVE PACKAGE	
230	90042-0519	-		5	COVER PLATE	
240	90042-0522	-		2	END PIECE	
250	90042-0528	-		1	SEALING DISC	
260	90042-0532	P		10	CONNECTION TABLE	
270	90042-0545	-		1	CONNECTION TABLE	
280	90042-0550	-		10	PROTECTIVE COVER	
290	90328-0017	-		1	SILENCER	
300	90328-0024	-		1	SILENCER	
500	312109-0376	-		4	SCREW 6X35 H RFR	
510	312605-0316	-		4	NUT M6M6RFR	
520	315103-0153	-		8	WASHER BRB6,4X12MSGFN	
530	342713-0211	-		1	BLIND PLUG	
540	342715-0102	-		2	PLUG D=6	
550	342715-0103	-		10	PLUG D=8	
560	342716-0203	-		6	REDUCER 6-8	
570	342716-0205	-		4	REDUCER 4-8	
580	342732-0105	-		1	ELBOW PIPE D8-R3/8"	
590	342732-0110	-		4	ELBOW PIPE D12-R3/8"	
X111	90042-0535	-		1	TERMINAL FOR SOL.VALVE	
X112	90042-0535	-		1	TERMINAL FOR SOL.VALVE	
Y100	90042-0235	P		1	SOLENOID VALVE	
Y104	90042-0539	P		1	EL.COIL	
Y105	90042-0539	P		1	EL.COIL	
Y106	90042-0539	P		1	EL.COIL	
Y107	90042-0539	P		1	EL.COIL	
Y108	90042-0539	P		1	EL.COIL	

Pos	Part No	SP	UN	Qty	Description	Page No

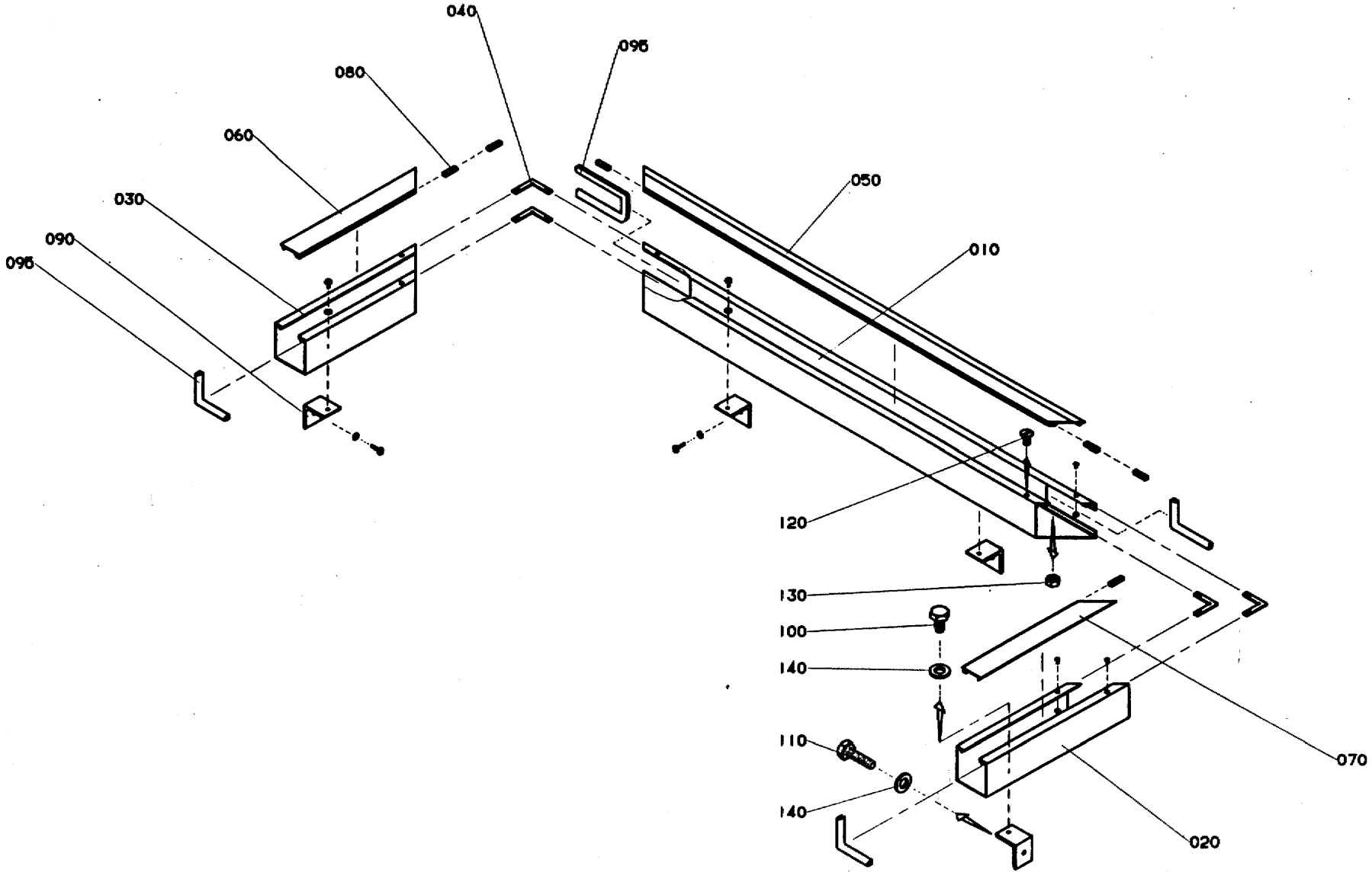

106521701.EPS
1065217-1
ECN 18963

Pos	Part No	SP	UN	Qty	Description	Page No
-						
000	C-1065217-0301	-		1	CABLE DUCT	
010	1065218	-		1	CABLE DUCT	
020	1128894	-		1	CABLE DUCT	
030	1128895	-		1	CABLE DUCT	
040	975934	-		4	GUSSET PLATE	
050	1065219	-		1	LID	
060	1128896	-		1	LID	
070	1128897	-		1	LID	
080	975939	-		8	SEAL	
090	1128838	-		4	FASTENING BRACKET	
095	90143-0060	-	M	1	STRIP	
100	312105-0364	-		4	SCREW M6S6X10RFR	
110	312105-0370	-		4	SCREW O4017 M6X20A280	
120	312145-0287	-		8	SLOTTED HEMFS4X8RFR	
130	312605-0312	-		8	NUT M6M4RFR	
140	315105-0153	-		8	WASHER BRB6,4X12RFR	

Pos	Part No	SP	UN	Qty	Description	Page No

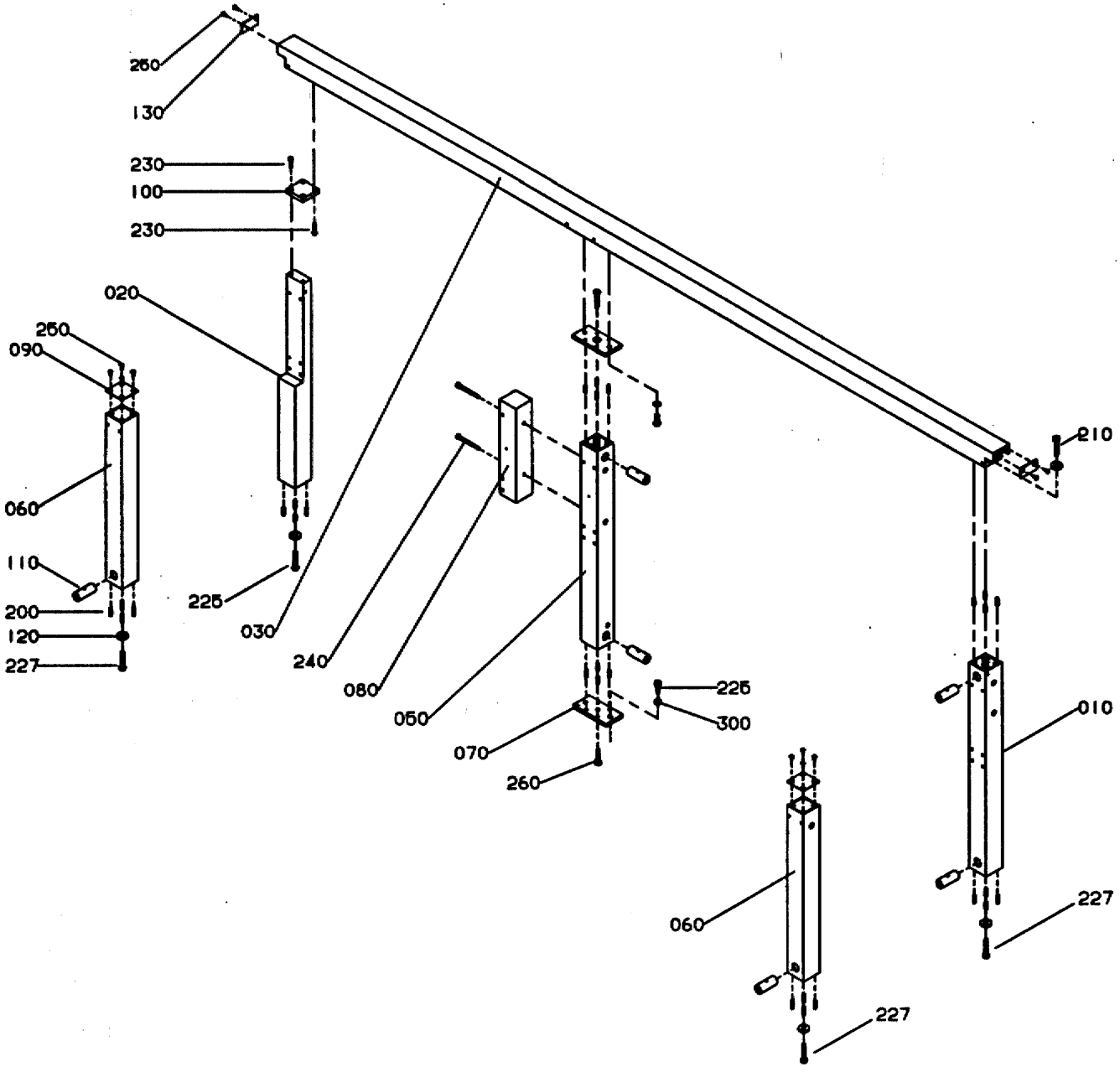

GraphicID: 106520902.eps
Parent Drw: 1065209-2
ECN 23179

Pos	Part No	SP	UN	Qty	Description	Page No
Z-Form -Left Hand Infeed, U-Form -Right Hand Infeed,						
000	C-1065209-020V	-		1	FRAME INFEED UPPER	
030	1111056	-		1	PROFILE	
Z-Form -Right Hand Infeed, U-Form -LeftHand Infeed						
000	C-1065209-0202	-		1	FRAME INFEED UPPER	
030	1111057	-		1	PROFILE	
COMMON PARTS						
010	1111054	-		1	PROFILE	
020	1111055	-		1	PROFILE	
050	1111058	-		1	PROFILE	
060	1111059	-		2	PROFILE	
070	556624	-		2	FRAME BRACKET	
080	1111064	-		1	SUPPORT	
090	556604	-		2	COVER PLATE	
100	1065484	-		1	BRACKET	
110	486268	-		6	NUT	
120	548599	-		5	WASHER	
130	1065092	-		2	COVER PLATE	
200	1065410	-		28	SLOTTED PIN	
210	312105-0459	-		1	SCREW O4017 M8X40A280	
225	312105-0453	-		5	SCREW O4017 M8X25A280	
227	312109-0457	-		3	SCREW 8X35 H A4 80	
230	312115-0370	-		4	SCREW O4762 M6X20A280	
240	312115-0382	-		2	SCREW O4762 M6X60A280	
250	312145-0325	-		12	SLOTTED HEMFS5X10RFR	
260	312155-0459	-		2	SCREW MF6S8X40RFR	
300	315105-0165	-		6	WASHER BRB8,4X16RFR	

Pos	Part No	SP	UN	Qty	Description	Page No



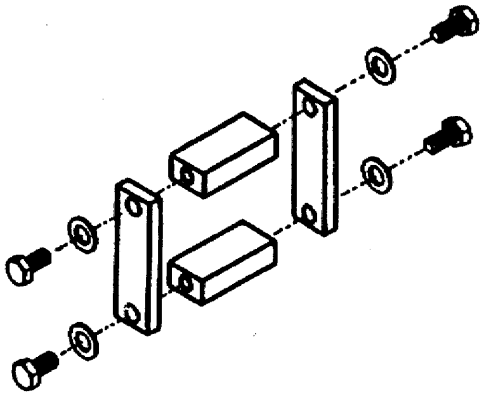

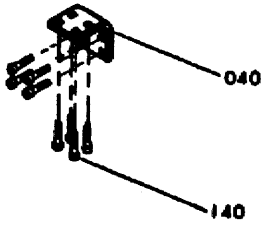

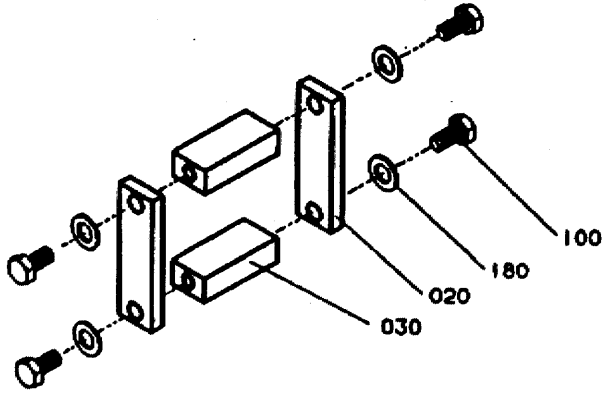

1074730-1

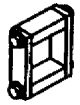





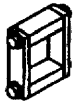



1074730-2

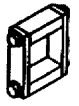

Pos	Part No	SP	UN	Qty	Description	Page No
1/2/3-LIBE, Z-FORM, U-FORM						
000	C-1074730-0101	-		1	BRACKET	
040	1074727	-		2	BRACKET	
140	312115-0372	-		16	SCREW O4762 M6X25A280	
1-LINE, L-FORM						
000	C-1074730-0102	-		1	BRACKET	
040	1074727	-		1	BRACKET	
140	312115-0372	-		12	SCREW O4762 M6X25A280	
COMMON PARTS						
020	1074206	-		4	HOLDER	
030	1074207	-		4	HOLDER	
100	312105-0626	-		8	SCREW M6S16X35RFR	
180	315105-0186	-		8	WASHER BRB17X30RFR	

Pos	Part No	SP	UN	Qty	Description	Page No

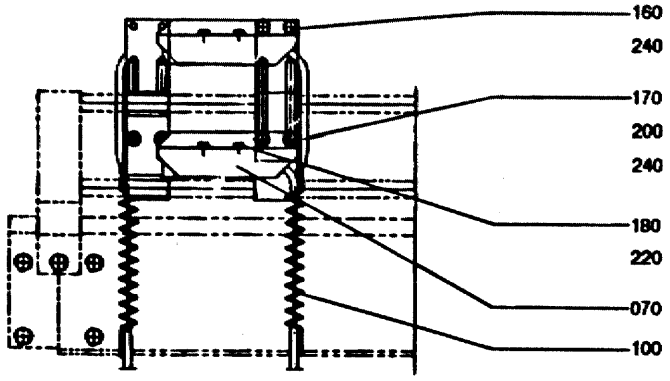

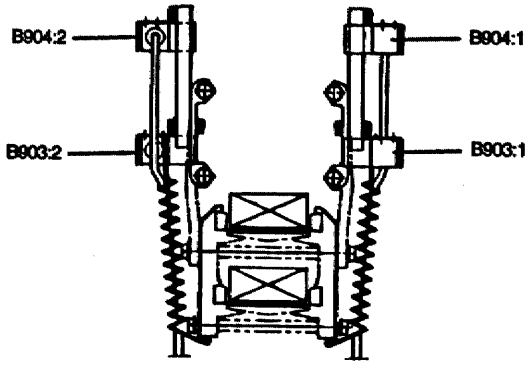

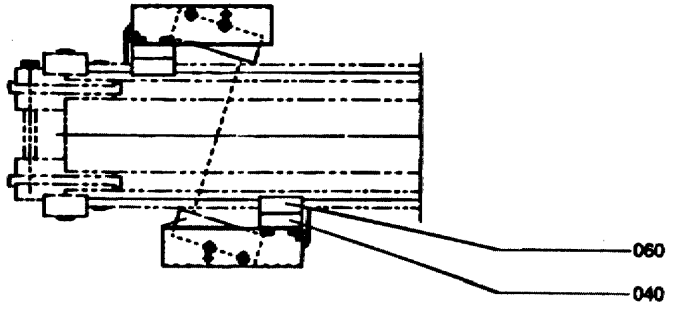

GraphicID: 53909401.eps
Parent Drw: 539094-1
ECN 11043

Pos	Part No	SP	UN	Qty	Description	Page No
Conveyor width B40						
000	C- 539094-0401	-		1	BRACKET	
070	1086888		-	4	COVER	
040 .	552643		-	2	HOLDER	
050	540169			4	DOWEL	
060	1020638		-	2	HOLDER	
Conveyor width B55. B55S, B65, B79, R79, T79, R109, T109, B68, R68						
000	C- 539094-0402	-		1	QUEUE GUARD DOUBLE	
070	1086889		-	4	COVER	
040	539095		-	2	HOLDER	
060 .	1020637		-	2	HOLDER	
COMMON PARTS						
001	545198		-	1	ASSEMBLY INSTRUCTION	
005	C-1086721-0101		-	1	PACKING DESCRIPTION	
100	532412		-	2	SPRING	
110	1086711		-	1	SET OF SIGNS	
115	1086870			1	SIGN	
140	84632-0001			1	INSTALLATION MANUAL	
142	84633-0001			1	SPARE PART CATALOGUE	
160	312105-0325		-	4	SCREW M6S5X10 A2 80	
170	312105-0331		-	4	SCREW O4017 M5X20A280	
180	312125-0293		-	8	SLOTTED HEMCS4X16RFR	
200	312605-0314		-	4	NUT M6M5RFR	
220	315105-0136		-	8	WASHER BRB4,3X8RFR	
240	315105-0146		-	12	WASHER BRB5,3X10RFR	
B903:1	90232-0103		PU	1	PHOTOCELL	
B903:2	90232-0104		PU	1	PHOTOCELL	
B904:1	90232-0103		PU	1	PHOTOCELL	
B904:2	90232-0104		PU	1	PHOTOCELL	

Pos	Part No	SP	UN	Qty	Description	Page No

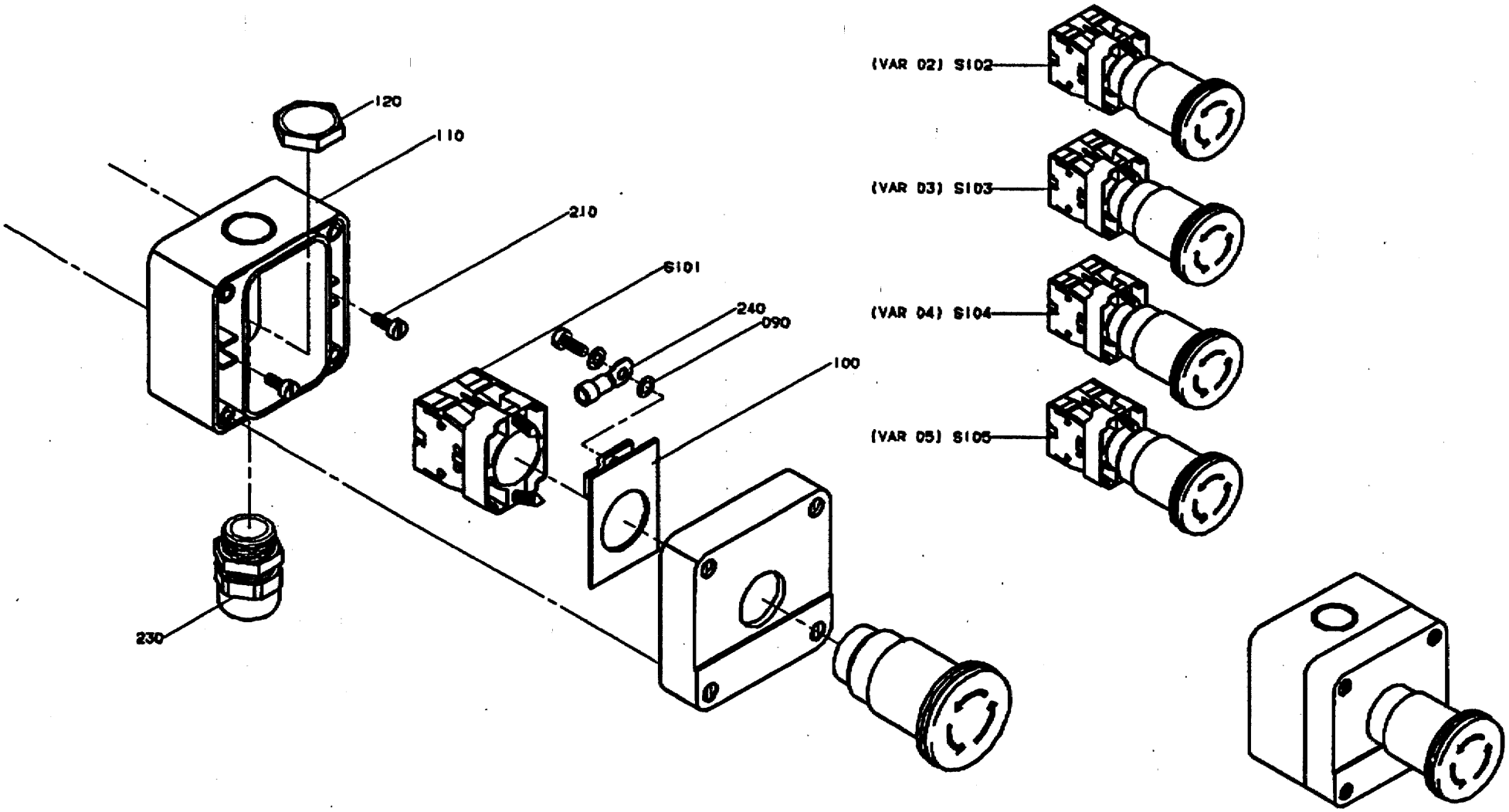

GraphicID: 111183802.tif
Parent Drw: 1111838-2
ECN No: 22292

Pos	Part No	SP	UN	Qty	Description	Page No
S101						
000	C-1111838-0201	-		1	EMERGENCY STOP	
S101	90064-0124	P		1	EMERGENCY STOP BUTTON	
S102						
000	C-1111838-0202	-		1	EMERGENCY STOP	
S102	90064-0124	P		1	EMERGENCY STOP BUTTON	
S103						
000	C-1111838-0203	-		1	EMERGENCY STOP	
S103	90064-0124	P		1	EMERGENCY STOP BUTTON	
S104						
000	C-1111838-0204	-		1	EMERGENCY STOP	
S104	90064-0124	P		1	EMERGENCY STOP BUTTON	
S105						
000	C-1111838-0205	-		1	EMERGENCY STOP	
S105	90064-0124	P		1	EMERGENCY STOP BUTTON	
COMMON PARTS						
090	90062-0059	-		1	LOCK WASHER	
100	90064-0336	-		1	EARTHING PLATE	
110	90066-0030	-		1	PUSH BUTTON BOX	
120	90099-0117	-		1	NUT PR18,6 (PG11)	
210	312125-0289	-		2	SLOTTED HEMCS4X10RFR	
230	352103-0106	-		1	CABLE GLAND ST 11	
240	353101-0120	-		1	CABLE SHOE	

Pos	Part No	SP	UN	Qty	Description	Page No

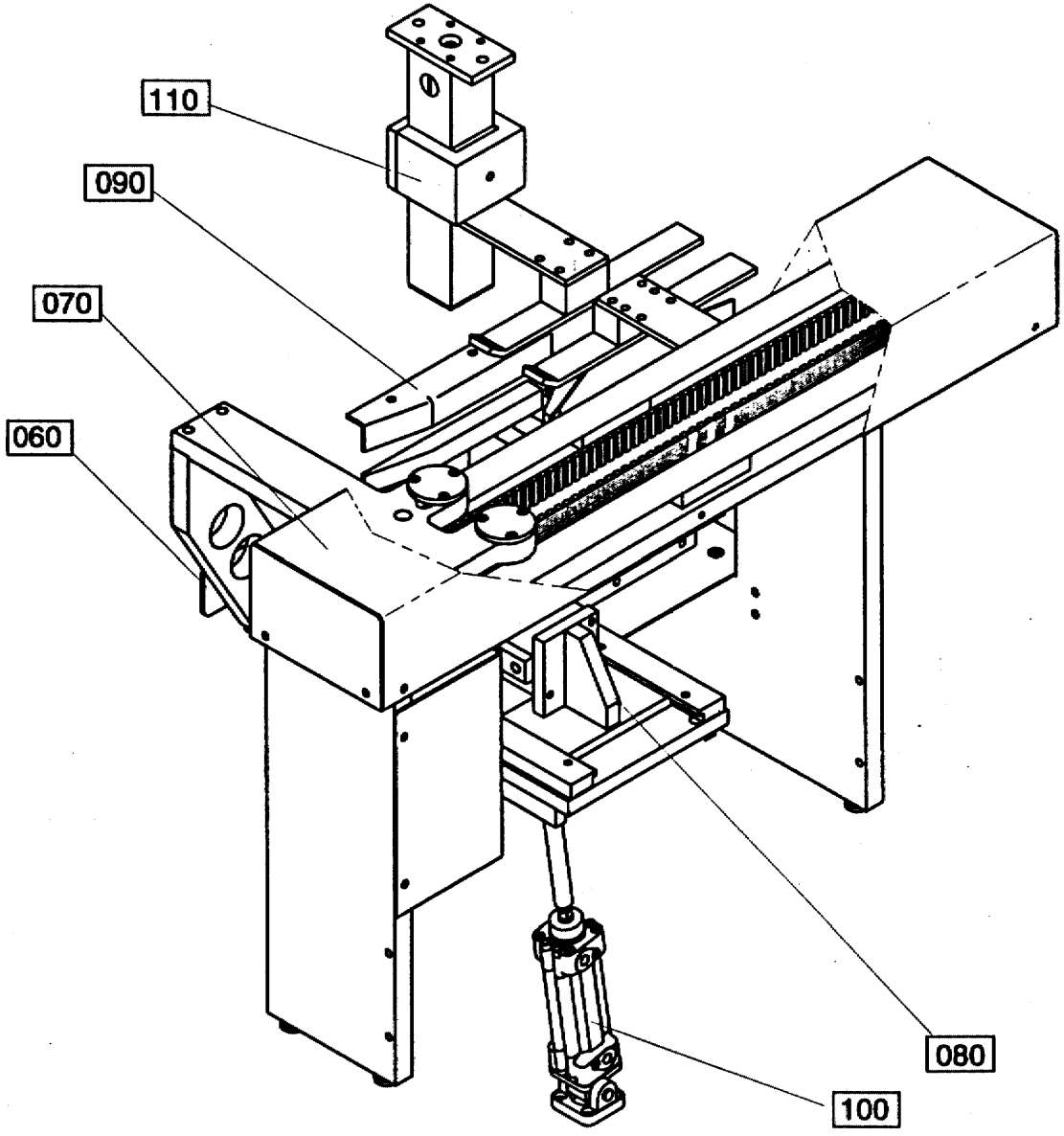

670368101.EPS
6703681-1
ECN 18963

Pos	Part No	SP	UN	Qty	Description	Page No
-						
000	B- 670368-0401	-		1	TRANSFER UNIT	
060	C-1065321-010V	-		1	VOLUME PLATE	285
070	C-1065294-0301	-		1	PUSHER	287
080	C-1065196-0201	-		1	END STOP	289
090	C-1065242-0201	-		1	GROUPING UNIT	291
100	C-1065291-0201	-		1	RULING GUIDE	293
110	C-1065412-0101	-		1	TOP STEERING	295

Pos	Part No	SP	UN	Qty	Description	Page No

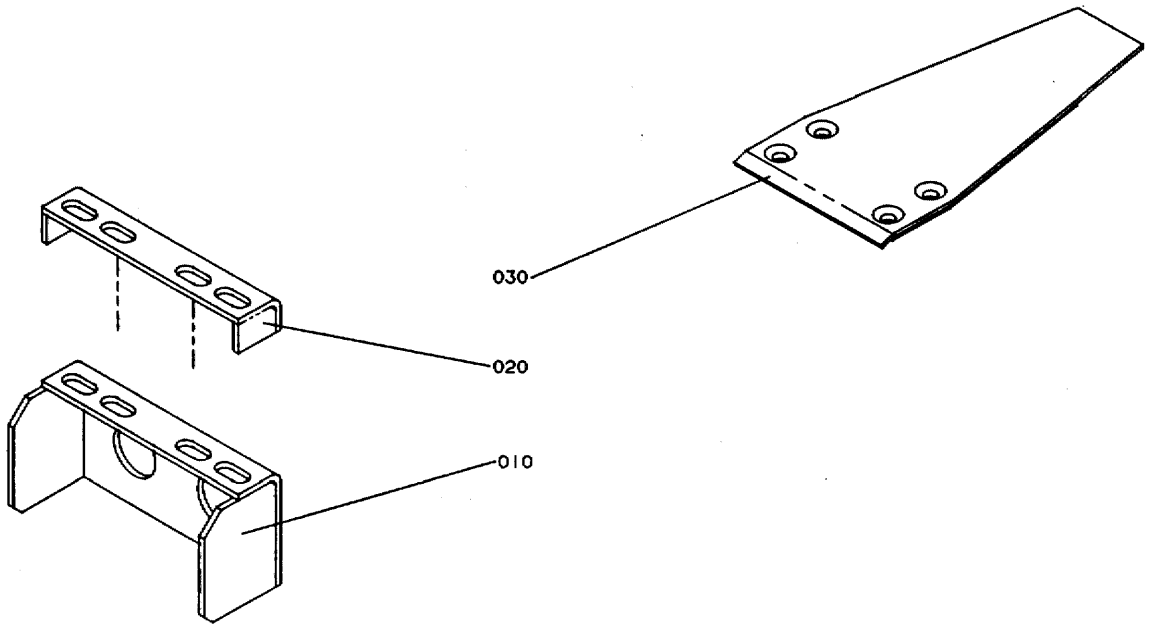

GraphicID: 106532101.eps
Parent Drw: 1065321-1
ECN 18752

Pos	Part No	SP	UN	Qty	Description	Page No
Package width 125-134						
000	C-1065321-0101	-		1	VOLUME PLATE	
010	1065441	-		1	SHEET	
020	1065451	-		1	SHEET	
030	1065461	-		1	FLAP	
Package width 135-144						
000	C-1065321-0102	-		1	VOLUME PLATE	
010	1065442	-		1	SHEET	
020	1065452	-		1	SHEET	
030	1065462	-		1	FLAP	
Package width 145-154						
000	C-1065321-0103	-		1	VOLUME PLATE	
010	1065443	-		1	SHEET	
020	1065453	-		1	SHEET	
030	1065463	-		1	FLAP	
Package width 155-164						
000	C-1065321-0104	-		1	VOLUME PLATE	
010	1065444	-		1	SHEET	
020	1065454	-		1	SHEET	
030	1065464	-		1	FLAP	
Package width 165-174						
000	C-1065321-0105	-		1	VOLUME PLATE	
010	1065445	-		1	SHEET	
020	1065455	-		1	SHEET	
030	1065465	-		1	FLAP	
Package width 175-184						
000	C-1065321-0106	-		1	VOLUME PLATE	
010	1065446	-		1	SHEET	
020	1065456	-		1	SHEET	
030	1065466	-		1	FLAP	
Package width 185-194						
000	C-1065321-0107	-		1	VOLUME PLATE	
010	1065447	-		1	SHEET	
020	1065457	-		1	SHEET	
030	1065467	-		1	FLAP	
Package width 195-204						
000	C-1065321-0108	-		1	VOLUME PLATE	
010	1065448	-		1	SHEET	
020	1065458	-		1	SHEET	
030	1065468	-		1	FLAP	
Package width 205-214						
000	C-1065321-0109	-		1	VOLUME PLATE	
010	1065449	-		1	SHEET	
020	1065459	-		1	SHEET	
030	1065469	-		1	FLAP	

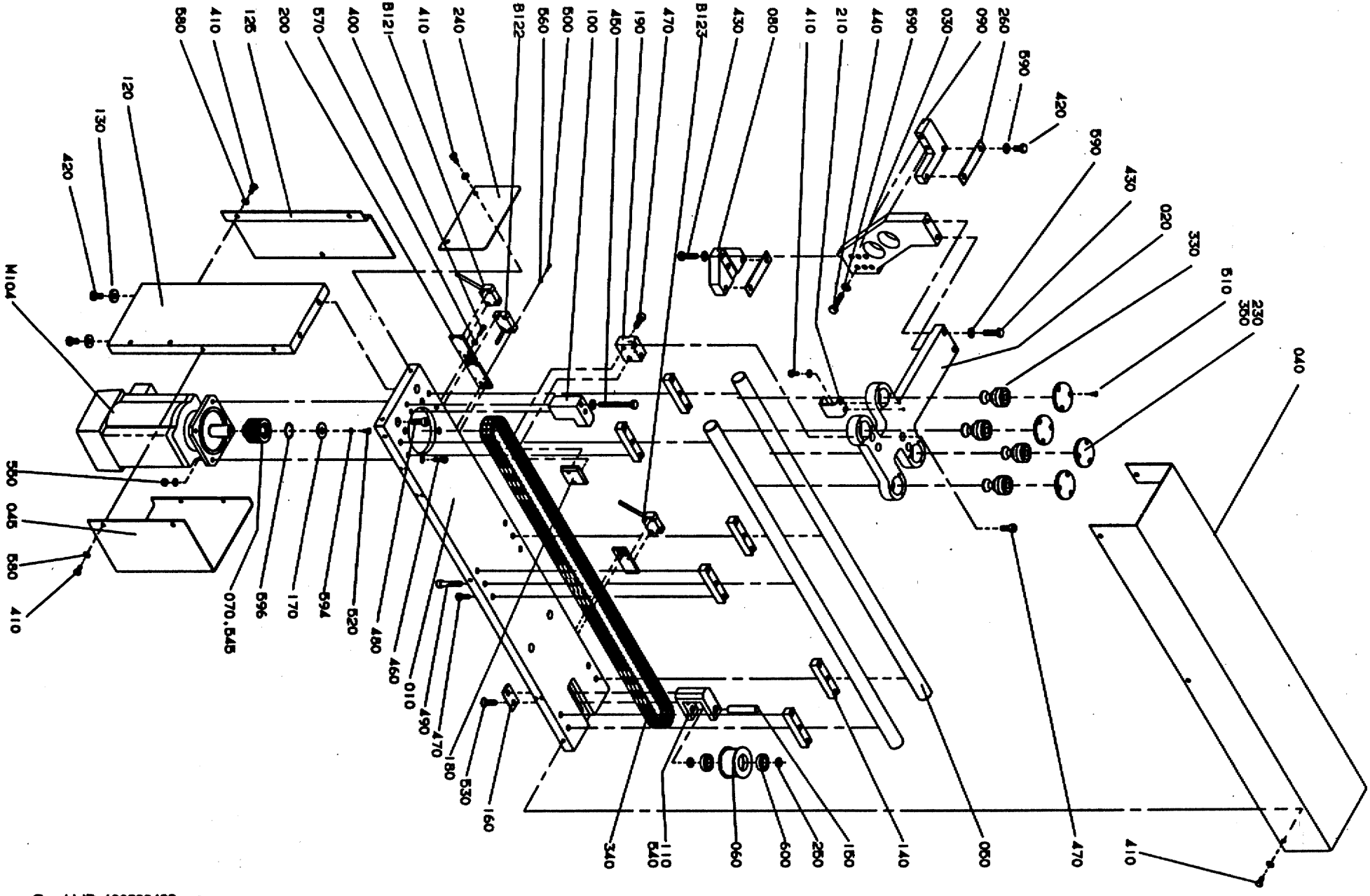

GraphicID: 106529403.eps
Parent Drw: 1065294-3
ECN 22668

Pos	Part No	SP	UN	Qty	Description	Page No
000	C-1065294-0301	-		1	PUSHER	
010	1065394	-		1	PLATE	
020	1065395	-		1	CARRIAGE	
030	1065396	-		1	ARM	
040	1065407	-		1	COVER	
045	1065480	-		1	PROTECTION	
050	1065299	-		2	SHAFT	
060	1111835	-		1	GUIDE SPROCKET	
070	1128023	-		1	TOOTHED PULLY Z=30	
080	1065397	-		1	HOLDER	
090	1065398	-		1	HOLDER	
100	1065399	-		1	STOP	
110	1065406	-		1	HOLDER	
120	1065409	-		1	PLATE	
125	1065481	-		1	PROTECTION	
130	548599	-		2	WASHER	
140	1065296	-		6	SUPPORT	
150	1065298	-		1	SHAFT	
160	1065303	-		1	PLATE	
170	1128024	-		1	WASHER	
180	1065400	-		1	BELT HOLDER	
190	1065401	-		1	BELT HOLDER	
200	1065402	-		3	HOLDER	
210	1065403	-		1	FLAG	
230	1065405	-		4	LID	
240	1065408	-		1	SHEET	
250	1065411	-		2	SPACER	
260	1065450	-		2	WASHER	
330	90191-0070	S		4	ROLL	
340	90417-0338	S		1	TIMING BELT	
350	90296-0068	-		X	GREASE	
400	312105-0329	-		6	SCREW O4017 M5X16A280	
410	312105-0366	-		1	SCREW O4017 M6X12A280	
420	312105-0451	-		6	SCREW SO4017 8X20A280	
430	312105-0455	-		4	SCREW O4017 M8X30A280	
440	312105-0457	-		2	SCREW O4017 M8X35A280	
450	312105-0465	-		2	SCREW O4014 M8X70A280	
460	312115-0372	-		4	SCREW O4762 M6X25A280	
470	312115-0451	-		10	SCREW O4762 M8X20A280	
480	312115-0453	-		4	SCREW O4762 M8X25A280	
490	312115-0457	-		6	SCREW O4762 M8X35A280	
500	312125-0228	-		6	SLOTTED HEMCS3X16RFR	
510	312155-0289	-		12	SCREW MF6S4X10RFR	
520	312155-0366	-		1	SCREW MF6S6X12RFR	
530	312155-0453	-		2	SCREW MF6S8X25RFR	
540	312318-0321	-		2	STOP SCREW SK6SS5X6RFR	
545	312318-0443	-		2	STOP SCREW SK6SS8X8RFR	
550	312605-0316	-		4	NUT M6M6RFR	
560	315105-0124	-		6	WASHER BRB3,2X6RFR	
570	315105-0146	-		6	WASHER BRB5,3X10RFR	
580	315105-0153	-		19	WASHER BRB6,4X12RFR	
590	315105-0165	-		12	WASHER BRB8,4X16RFR	
594	315202-0104	-		1	O-RING 6,1X1,6	
596	315202-0217	-		1	O-RING 24,2X3	
600	321308-0201	P		2	BALL BEARISKF6001-2RS	
B121	90044-0104	S		1	PROX.SWITCHIFM IN 3002	
B122	90044-0104	S		1	PROX.SWITCHIFM IN 3002	
B123	90044-0104	S		1	PROX.SWITCHIFM IN 3002	
M104	90045-0167	S		1	MOTOR	

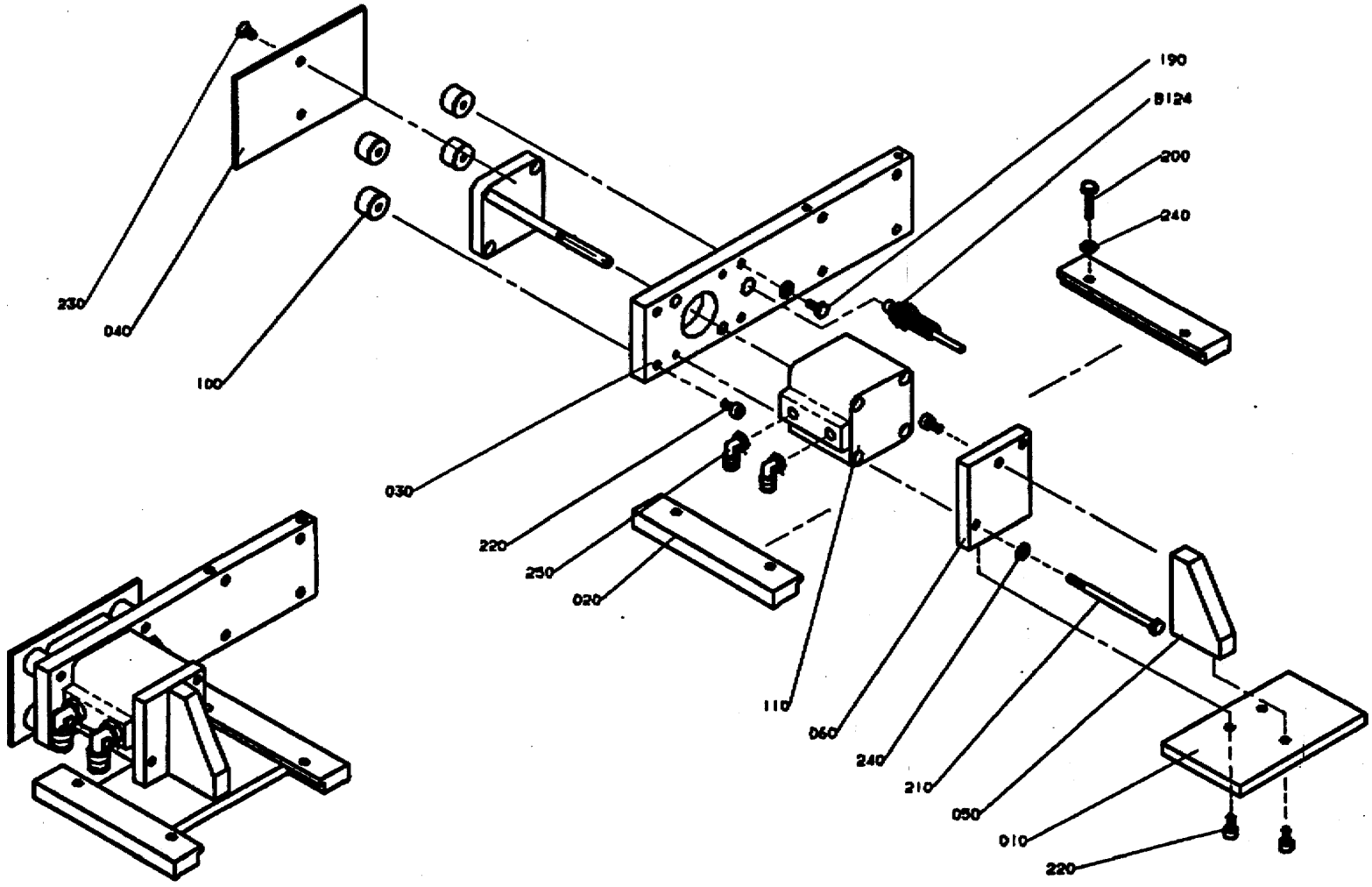

GraphicID: 106519602.tif
Parent Drw: 1065196-2
ECN No: 22292

Pos	Part No	SP	UN	Qty	Description	Page No
000	C-1065196-0201	-		1	END STOP	
010	1021622	-		1	PLATE	
020	1021623	-		2	STEERING RAIL	
030	1065393	-		1	BRACKET	
040	1065197	-		1	PLATE	
050	1021620	-		1	SPRING	
060	1021621	-		1	PLATE	
100	90347-0011	-		4	VIBRATION DAMPER	
110	90450-0116	-		1	CYLINDER	
190	312105-0371	-		4	SCREW M6S6X22RFR	
200	312105-0372	-		4	SCREW O4017 M6X25A280	
210	312105-0388	-		2	SCREW O4014 M6X90A280	
220	312115-0366	-		4	SCREW O4762 M6X12A280	
230	312155-0366	-		2	SCREW MF6S6X12RFR	
240	315105-0153	-		10	WASHER BRB6,4X12RFR	
250	342732-0102	-		2	ELBOW PIPE D6-R1/8"	
B124	90044-0124	S		1	INDUCTIVE SWITCH	

Pos	Part No	SP	UN	Qty	Description	Page No

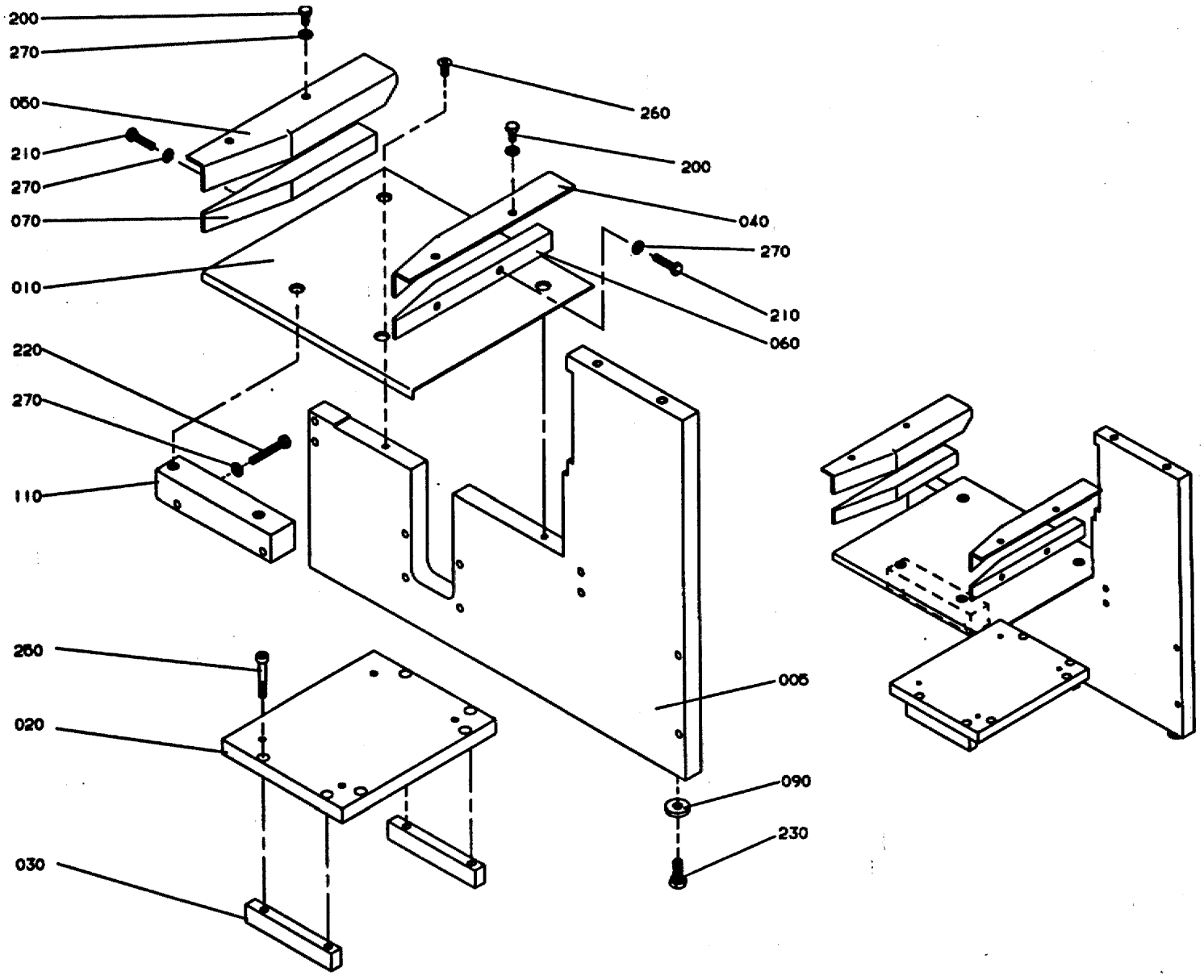

GraphicID: 106524202.eps
Parent Drw: 1065242-2
ECN 22668

Pos	Part No	SP	UN	Qty	Description	Page No
Z-Form -Left Hand Infeed, U-Form -Right Hand Infeed,						
000	C-1065242-0201	-		1	GROUPING UNIT	
040	1065390	-		1	STEERING RAIL	
050	1139142	-		1	STEERING RAIL	
Z-Form -Right Hand Infeed, U-Form -LeftHand Infeed						
000	C-1065242-0202	-		1	GROUPING UNIT	
040	1065391	-		1	STEERING RAIL	
050	1139143	-		1	STEERING RAIL	
COMMON PARTS						
005	1065322	-		1	SHEET	
010	1065243	-		1	SHEET	
020	1065182	-		1	BRACKET	
030	1065183	-		2	BRACKET	
060	1065392	-		1	STEERING RAIL	
070	1139144	-		1	STEERING RAIL	
090	548599	-		3	WASHER	
110	1021634	-		1	HOLDER	
200	312105-0366	-		4	SCREW O4017 M6X12A280	
210	312105-0372	-		4	SCREW O4017 M6X25A280	
220	312109-0378	-		2	SCREW M6S6X40H RFR	
230	312105-0451	-		3	SCREW SO4017 8X20A280	
240	312115-0372	-		2	SCREW O4762 M6X25A280	
250	312115-0378	-		4	SCREW O4762 M6X40A280	
260	312155-0366	-		4	SCREW MF6S6X12RFR	
270	315105-0153	-		10	WASHER BRB6,4X12RFR	

Pos	Part No	SP	UN	Qty	Description	Page No

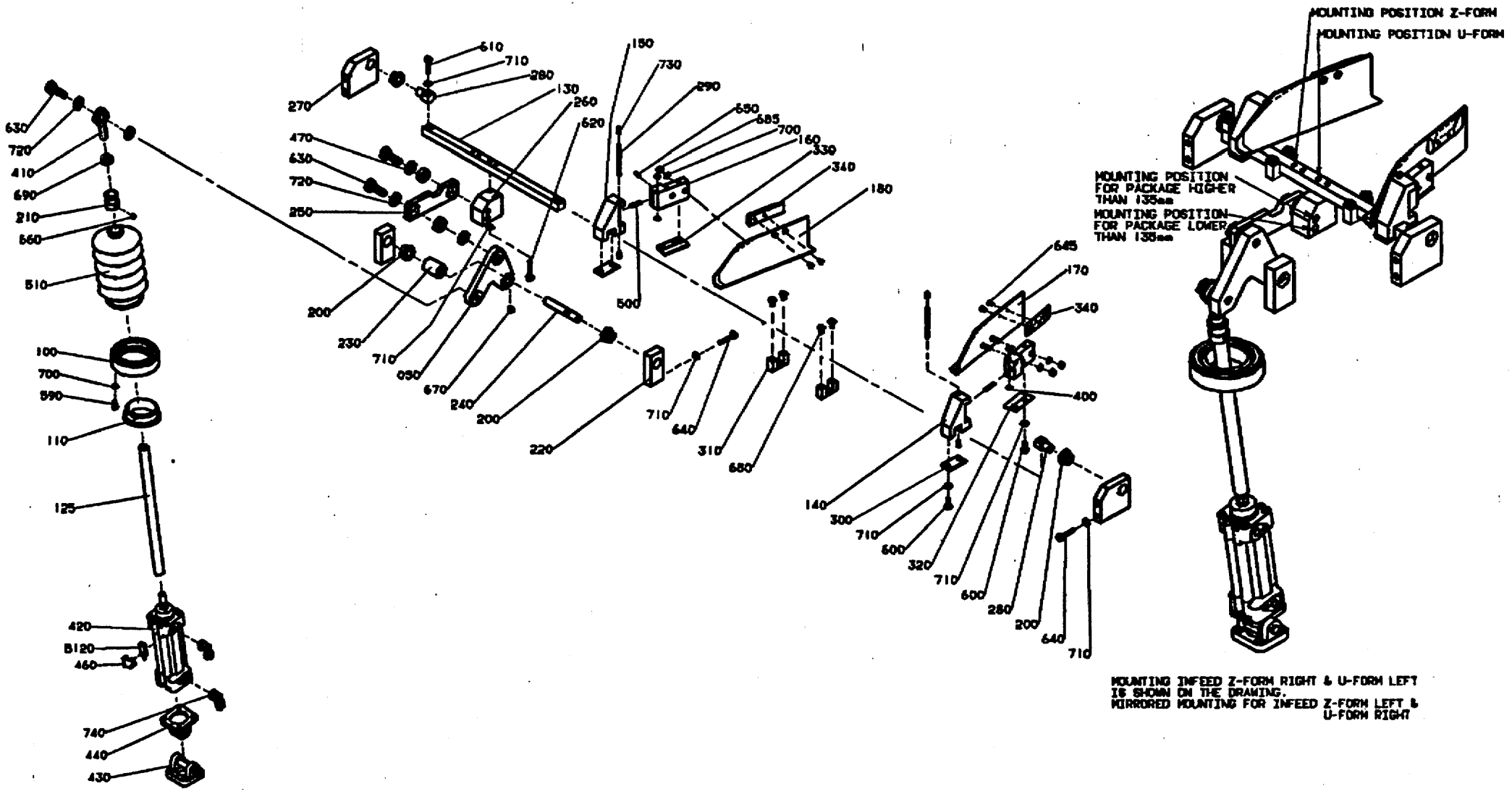

GraphicID: 106529102.tif
Parent Drw: 1065291-2
ECN No: 22292

Pos	Part No	SP	UN	Qty	Description	Page No
-						
000	C-1065291-0201	-		1	RULING GUIDE	
050	G-1021662	-		1	LINK ARM	
100	1021011	-		1	CLAMP RING	
110	1021012	-		1	RING	
125	1021661	-		1	STRUT	
130	1065056	-		1	SHAFT	
140	1021671	-		1	HOLDER	
150	1021672	-		1	HOLDER	
160	1065341	-		2	HOLDER	
170	1065339	-		1	HEAD PLATE	
180	1065340	-		1	HEAD PLATE	
200	493768	P		4	BUSHING	
210	1021021	-		1	BUSHING	
220	1021663	-		2	HOLDER	
230	1021664	-		1	SPACER	
240	1021665	-		1	SHAFT	
250	1021666	-		1	LINK	
260	1021976	-		1	HOLDER	
270	1021668	-		2	HOLDER	
280	1021669	-		2	SHAFT	
290	1021673	-		2	SHAFT	
300	1021674	-		2	SHEET	
310	1021678	-		2	HOLDER	
320	1021822	-		1	SUPPORTING SHEET	
330	1021928	-		1	SUPPORTING SHEET	
340	1065342	-		2	LUG	
400	90005-0064	-		4	WASHER	
410	90115-0151	-		1	LINK HEAD	
420	90450-0200	-		1	CYLINDER	
430	90450-0654	-		1	CYLINDER BRACKET	
440	90450-0678	-		1	BRACKET	
460	90450-0669	-		1	BRACKET	
470	90240-0093	P		2	PLAIN BEARING	
500	90335-0031	P		2	SPRING	
510	90342-0016	-		1	BELLOWS	
590	312105-0325	-		3	SCREW M6S5X10 A2 80	
600	312105-0367	-		8	SCREW M6S6X14RFR	
610	312105-0372	-		2	SCREW O4017 M6X25A280	
620	312105-0380	-		2	SCREW O4014 M6X50A280	
630	312105-0495	-		3	SCREW 4017 M10X30A280	
640	312109-0374	-		8	SCREW M6S6X30HRFR	
650	312318-0289	-		2	STOP SCREW SK6SS4X10RFR	
660	312318-0360	-		1	STOP SCREW SK6SS6X6RFR	
670	312318-0443	-		1	STOP SCREW SK6SS8X8RFR	
680	312155-0368	-		4	SCREW MF6S6X16RFR	
685	312605-0314	-		4	NUT M6M5RFR	
690	312902-0320	-		1	NUT M6M10VRFR	
700	315105-0146	-		7	WASHER BRB5,3X10RFR	
710	315105-0153	-		20	WASHER BRB6,4X12RFR	
720	315105-0173	-		5	WASHER BRB10,5X22RFR	
730	321120-0093	P		4	BUSHING 4/5,5X10	
740	342732-0102	-		2	ELBOW PIPE D6-R1/8"	
B120	90044-0116	S		1	PROXIMITY SWITCH	

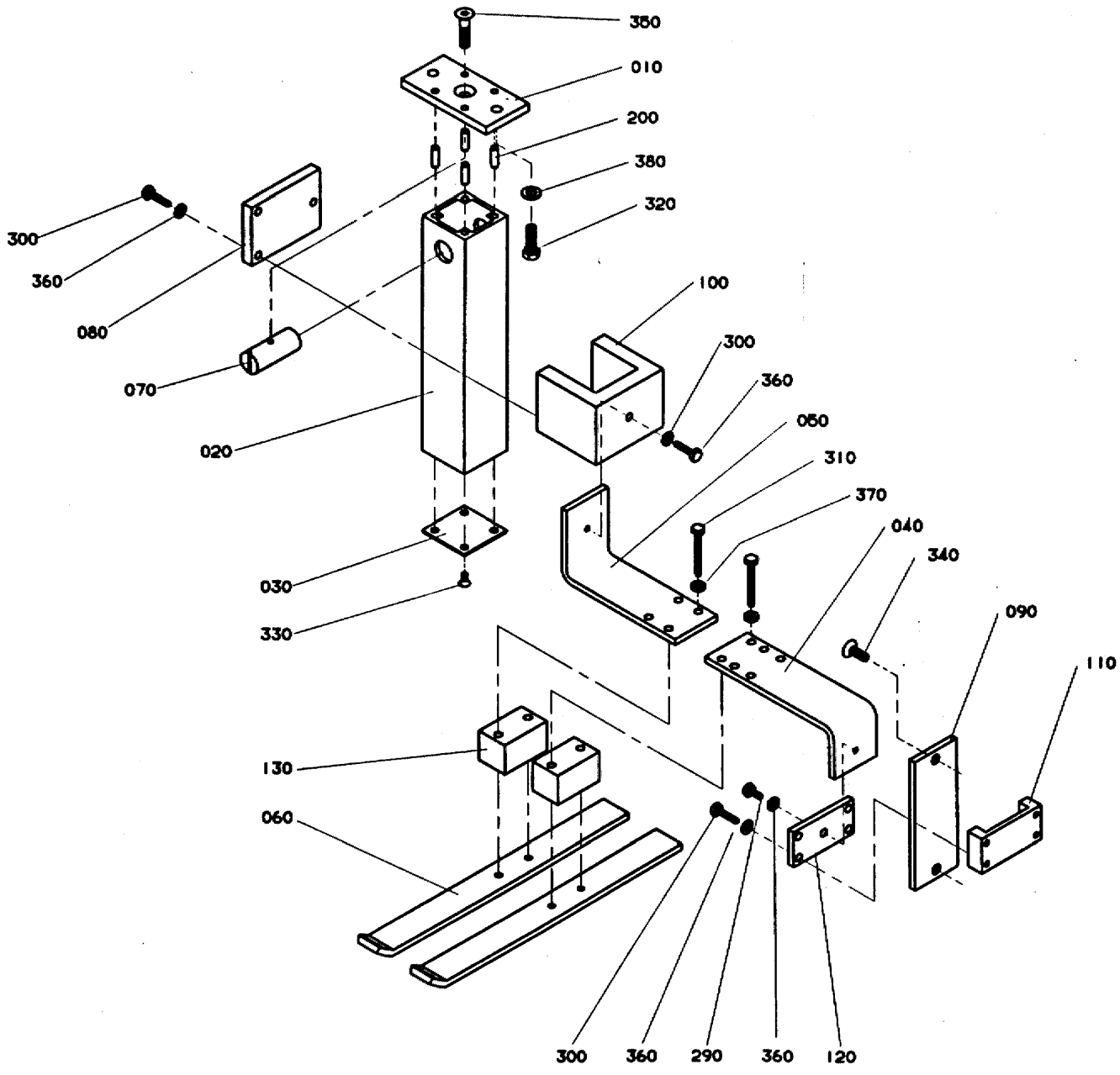

106541201.EPS
1065412-1
ECN 18752

Pos	Part No	SP	UN	Qty	Description	Page No
000	C-1065412-0101	-		1	TOP STEERING	
010	556624	-		1	FRAME BRACKET	
020	1065413	-		1	PROFILE	
030	556604	-		1	COVER PLATE	
040	1065414	-		1	ROD	
050	1065415	-		1	ROD	
060	1065416	-		2	RAIL	
070	486268	-		1	NUT	
080	1021235	-		1	PLATE	
090	1065417	-		1	RAIL	
100	1065418	-		1	CLAMPING PIECE	
110	1065419	-		1	CLAMPING PIECE	
120	1065420	-		1	SECURING PLATE	
130	1065421	-		2	SPACER	
200	1065410	-		4	PIN	
290	312105-0366	-		1	SCREW O4017 M6X12A280	
300	312105-0371	-		8	SCREW M6S6X22RFR	
310	312105-0379	-		4	SCREW O4014 M6X45A280	
320	312105-0453	-		2	SCREW O4017 M8X25A280	
330	312145-0325	-		4	SLOTTED HEMFS5X10RFR	
340	312155-0451	-		2	SCREW MF6S8X20RFR	
350	312155-0457	-		1	SCREW MF6S8X35RFR	
360	315105-0153	-		9	WASHER BRB6,4X12RFR	
370	315115-0153	-		4	WASHER TBRB6,4X12RFR	
380	315105-0165	-		2	WASHER BRB8,4X16RFR	

Pos	Part No	SP	UN	Qty	Description	Page No

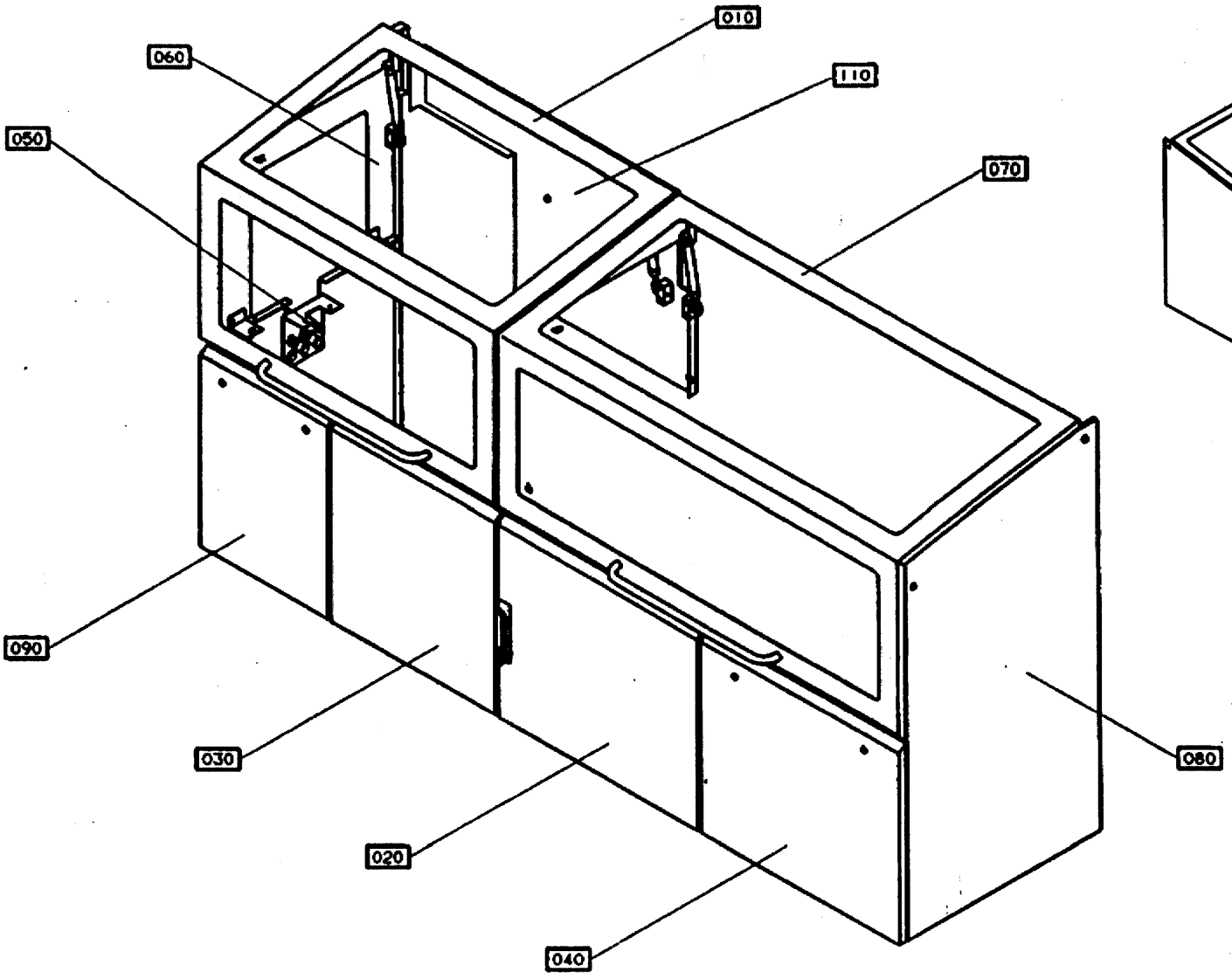

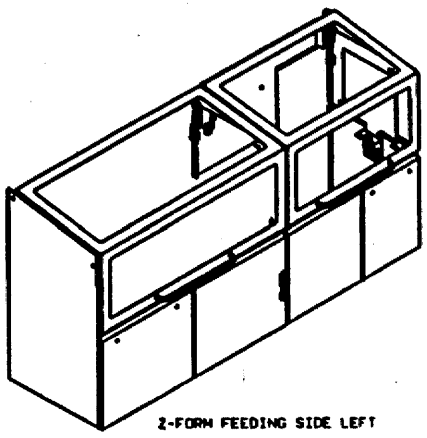

2-FORM FEEDING SIDE LEFT

67036903.tif
670369-3
AM 20762

Pos	Part No	SP	UN	Qty	Description	Page No
Z-FORM						
000	B- 670369-0401	-		1	COVERING, INFEED UNIT	
110	C-1065346-010V	-		1	COVERING PLATE	323
COMMON PARTS						
010	C-1065262-0201	-		1	HOOD INFEED	301
020	C-1021681-030V	-		1	DOOR	303
030	C-1065266-010V	-		1	DOOR WITHOUT HANDLE	305
040	C-1021685-0101	-		1	COVERING PLATE	307
050	C-1065258-020V	-		1	COVERING PLATE	309
060	C-1065253-010V	-		1	COVERING PLATE	311
070	C-1021691-0302	-		1	HOOD INFEED	315
080	C-1021689-010V	-		1	COVERING PLATE	317
090	C-1065269-0101	-		1	COVERING PLATE	319

Pos	Part No	SP	UN	Qty	Description	Page No

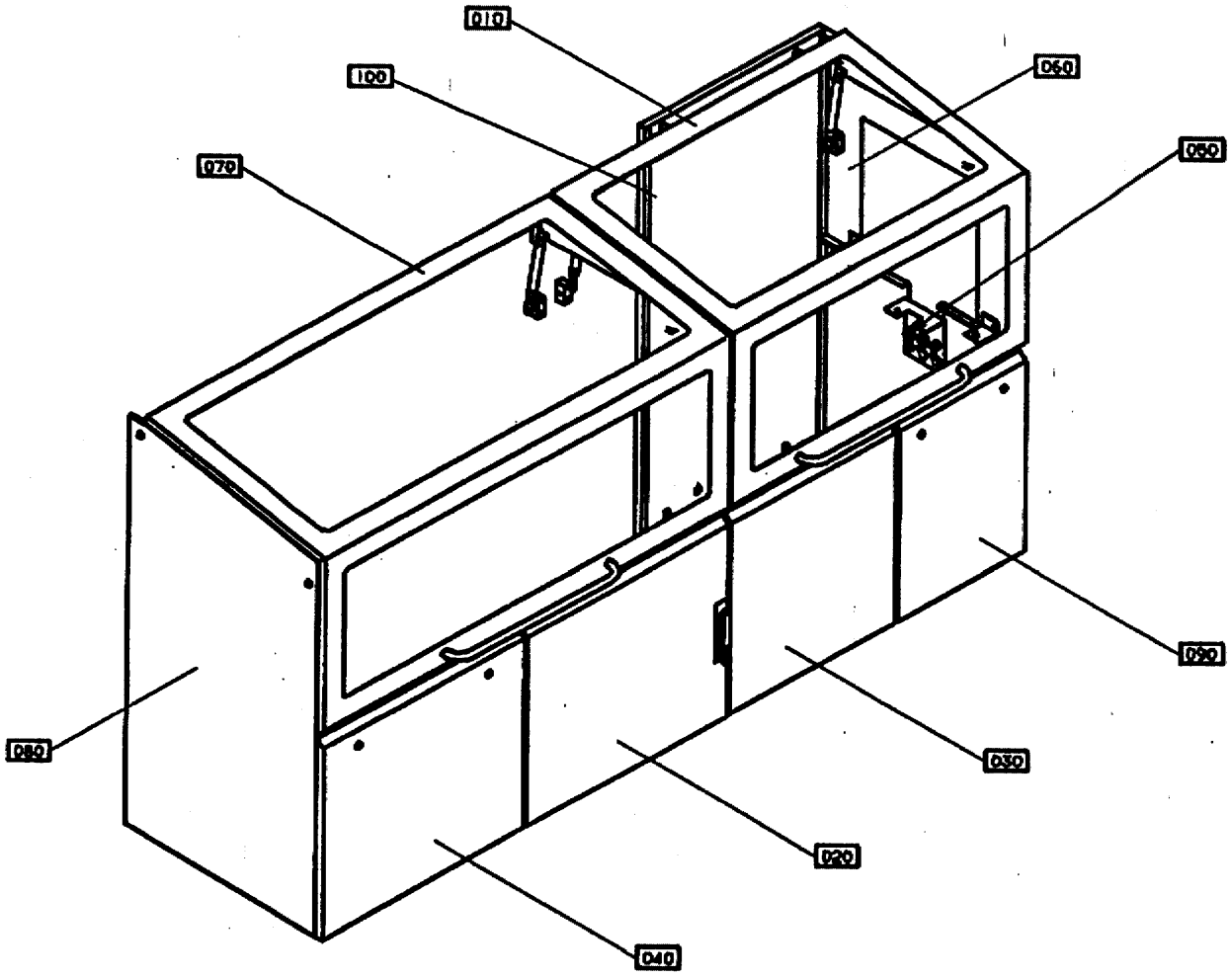

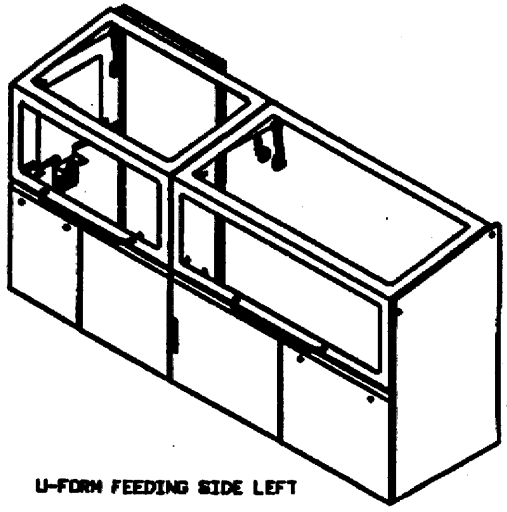

U-FORM FEEDING SIDE LEFT

U-FORM FEEDING SIDE RIGHT IS SHOWN ON DRAWING BESIDE.

GraphicID: 67036904.tif
Parent Drw: 670369-4
ECN No: 22218

Pos	Part No	SP	UN	Qty	Description	Page No
U-FORM						
000	B- 670369-0402	-		1	**COVERING, INFEED UNIT**	
100	C-1065271-0101	-		1	COVERING PLATE	321
COMMON PARTS						
010	C-1065262-0201	-		1	HOOD INFEED	301
020	C-1021681-030V	-		1	DOOR	303
030	C-1065266-010V	-		1	DOOR WITHOUT HANDLE	305
040	C-1021685-0101	-		1	COVERING PLATE	305
050	C-1065258-020V	-		1	COVERING PLATE	307
060	C-1065253-010V	-		1	COVERING PLATE	309
070	C-1021691-0302	-		1	HOOD INFEED	315
080	C-1021689-010V	-		1	COVERING PLATE	317
090	C-1065269-0101	-		1	COVERING PLATE	319

Pos	Part No	SP	UN	Qty	Description	Page No

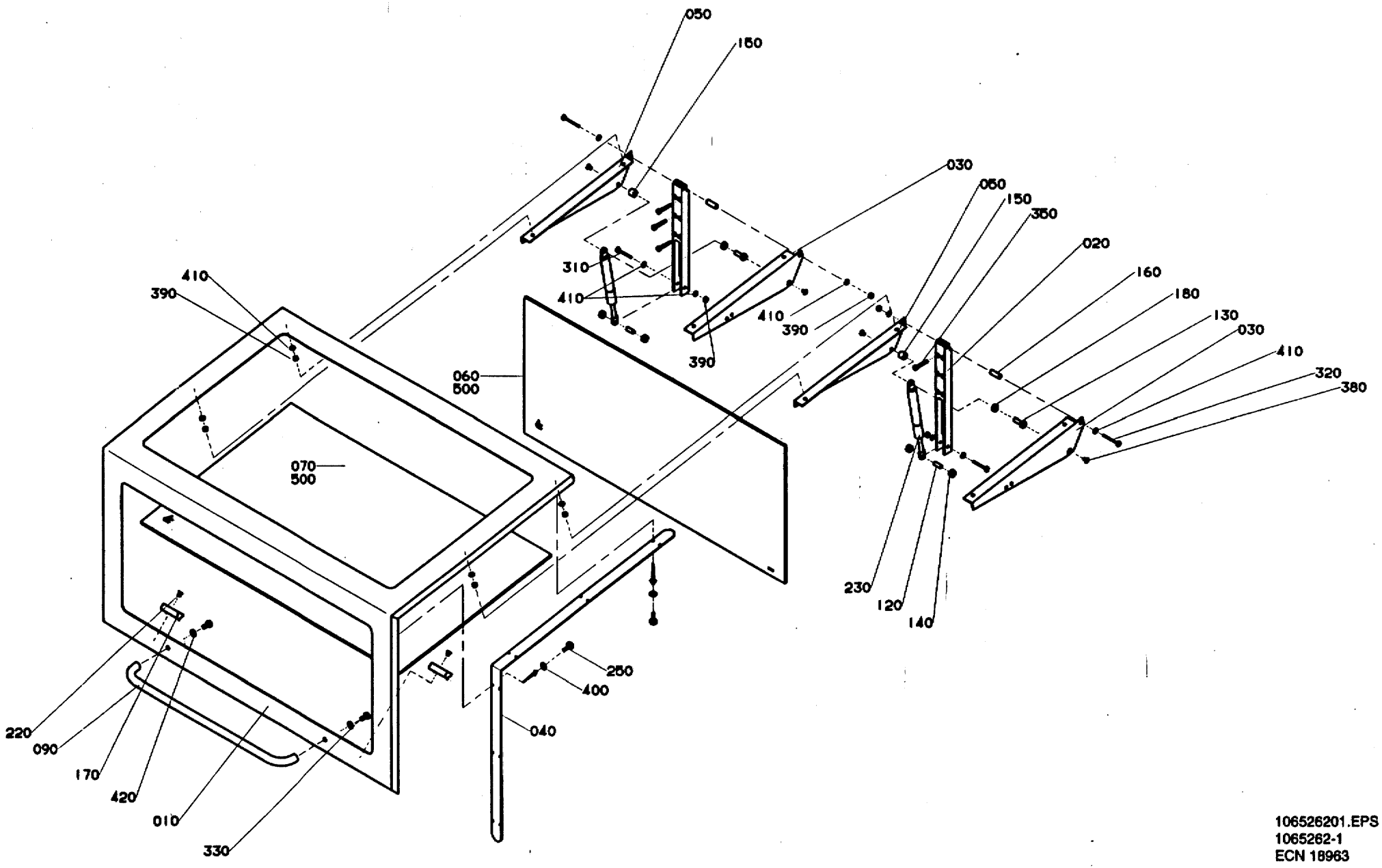

106526201.EPS
1065262-1
ECN 18963

Pos	Part No	SP	UN	Qty	Description	Page No
-						
000	C-1065262-0201	-		1	HOOD INFEED	
010	1111044	-		1	HOOD	
020	1080104	-		2	BRACKET	
030	1080105	-		2	BRACKET	
040	1111080	-		1	RIM	
050	1080087	-		2	BRACKET	
060	1065264	-		1	GLASS	
070	1065265	-		1	GLASS	
090	1021913	-		1	HANDLE	
095	1111068	-		2	BRACKET	
100	1080157	-		2	SPACER	
110	1080158	-		2	PIPE	
137	575418	-		4	WASHER	
170	1065924	-		2	DAMPER	
220	90287-0205	-		2	SCREW	
230	90347-0148	C		2	DAMPER	
250	311521-0152	-		6	BLANK RIVE0X8,0 RFR	
310	312105-0376	-		10	SCREW O4017 M6X35A280	
320	312105-0447	-		2	SCREW O4017 M8X12A280	
330	312105-0449	-		2	SCREW O4017 M8X16A280	
380	312605-0316	-		6	NUT M6M6RFR	
410	315105-0153	-		16	WASHER BRB6,4X12RFR	
420	315115-0165	-		4	WASHER TBRB8,4X16RFR	
500	90157-0041	-		X	SEALING COMPOUND	

Pos	Part No	SP	UN	Qty	Description	Page No

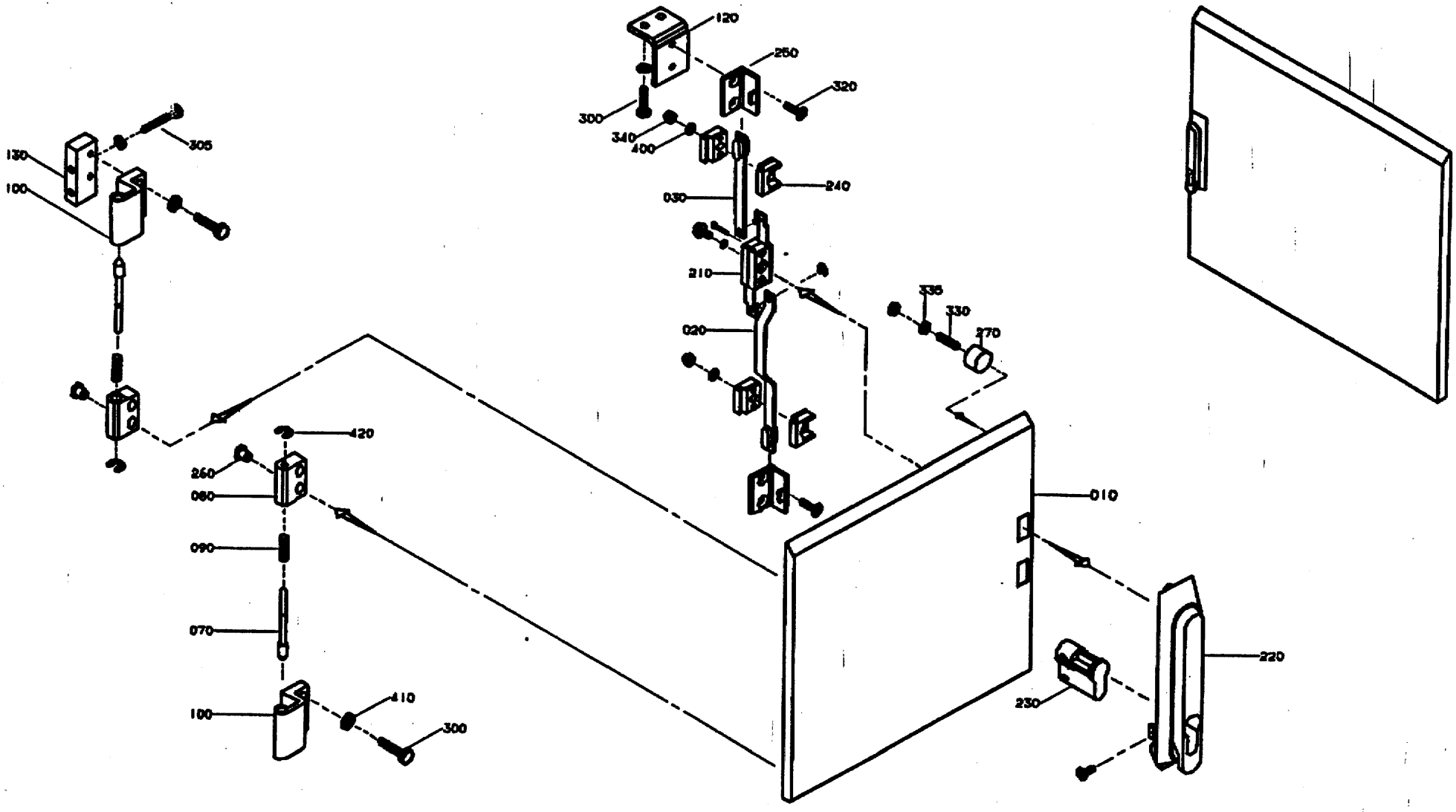

GraphicID: 102168102.tif
Parent Drw: 1021681-2
ECN No: 22292

Pos	Part No	SP	UN	Qty	Description	Page No
Z-FORM -LEFT HAND INFEEDI , U-FORM- RIGHT HAND INFEED						
000	C-1021681-0301	-		1	DOOR	
010	1021874	-		1	HATCH	
Z-FORM -RIGHT HAND INFEEDI , U-FORM- LEFTHAND INFEED						
000	C-1021681-0302	-		1	DOOR	
010	1021682	-		1	HATCH	
COMMON PARTS						
020	975888-0002	-		1	STRUT	
030	975889-0005	-		1	STRUT	
070	959656	-		2	COTTER	
080	959657	-		2	HINGE FLANGE	
090	959658	-		2	SPRING	
100	975880	-		2	HINGE FLANGE	
120	1128832	-		1	BRACKET	
130	1021720	-		1	BRACKET	
200	90194-0016	-		1	SIGN "FLASH SIGN" 50X50MM	
210	90237-0123	-		1	LOCK HOUSING	
220	90237-0126	-		1	TURNING HANDLE	
230	90237-0128	-		1	LOCK CYLINDER	
240	90237-0144	-		2	STEERING	
250	90237-0145	-		2	CATCH	
260	90287-0205	-		4	SCREW	
270	90347-0011	-		2	VIBRATION DAMPER	
300	312105-0372	-		6	SCREW O4017 M6X25A280	
305	312105-0378	-		2	SCREW O4017 M6X40A280	
320	312155-0370	-		4	SCREW MF6S6X20RFR	
330	312318-0372	-		2	STOP SCREW SK6SS6X25RFR	
335	312625-0316	-		4	NUT M 6	
340	312812-0314	-		2	LOCK NUT A2-M5RFR	
400	315105-0146	-		2	WASHER BRB5,3X10RFR	
410	315105-0153	-		8	WASHER BRB6,4X12RFR	
420	315755-0105	-		2	LOCKING WAE 3,2 RFR	

Pos	Part No	SP	UN	Qty	Description	Page No

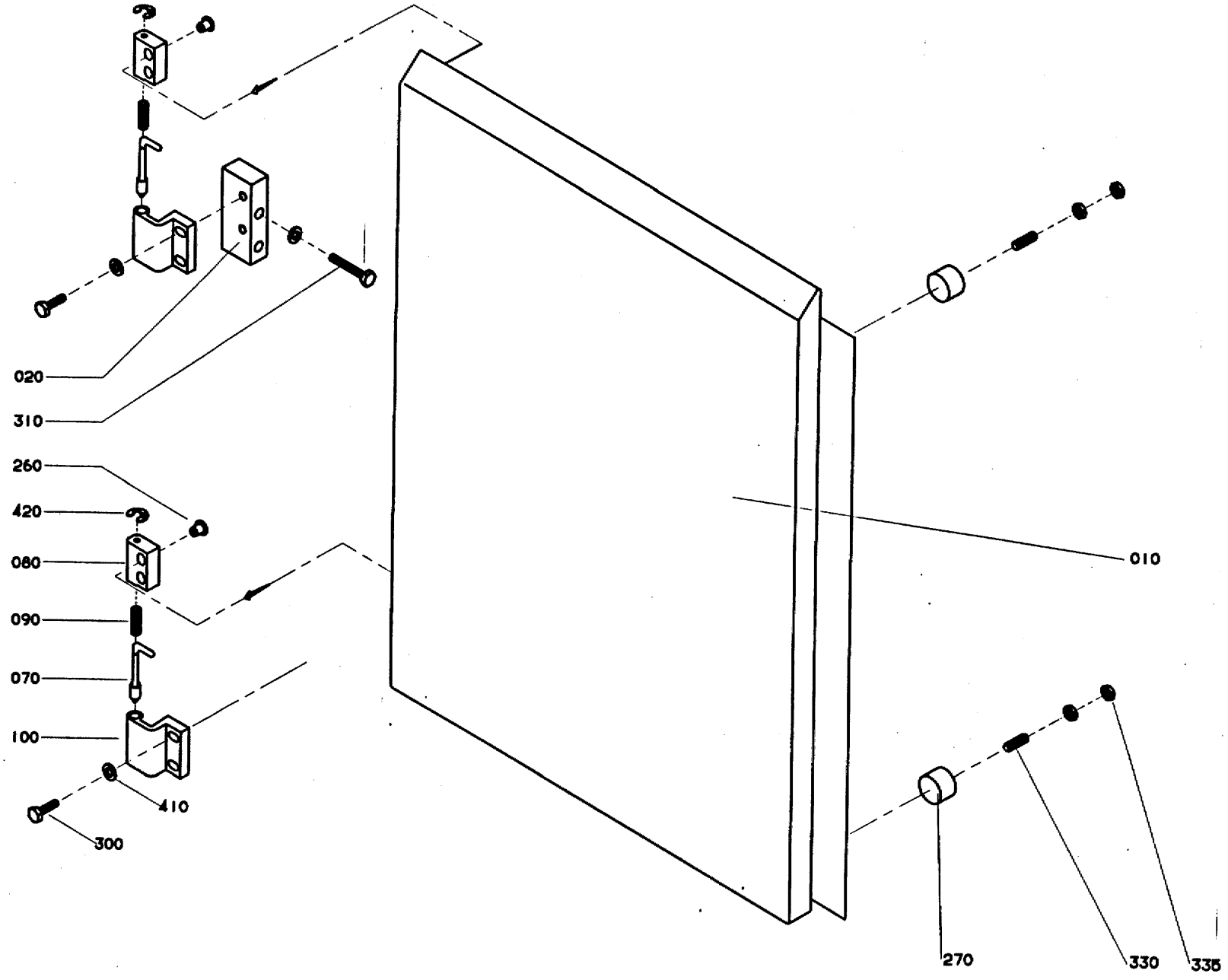

106526601.EPS
1065266-1
ECN 18963

Pos	Part No	SP	UN	Qty	Description	Page No
Z-Form -Left Hand Infeed, U-Form -Right Hand Infeed,						
000	C-1065266-0101	-		1	DOOR WITHOUT HANDLE	
010	1065268	-		1	HATCH	
Z-Form -Right Hand Infeed, U-Form -LeftHand Infeed						
000	C-1065266-0102	-		1	DOOR WITHOUT HANDLE	
010	1065267	-		1	HATCH	
COMMON PARTS						
020	1065274	-		1	BRACKET	
070	959656	-		2	COTTER	
080	959657	-		2	HINGE FLANGE	
090	959658	-		2	SPRING	
100	975880	-		2	HINGE FLANGE	
260	90287-0205	-		4	SCREW	
270	90347-0011	-		2	VIBRATION DAMPER	
300	312105-0372	-		4	SCREW O4017 M6X25A280	
310	312105-0376	-		2	SCREW O4017 M6X35A280	
330	312318-0372	-		2	STOP SCREW SK6SS6X25RFR	
335	312625-0316	-		4	NUT M 6	
410	315105-0153	-		4	WASHER BRB6,4X12RFR	
420	315755-0105	-		2	LOCKING WAE 3,2 RFR	

Pos	Part No	SP	UN	Qty	Description	Page No

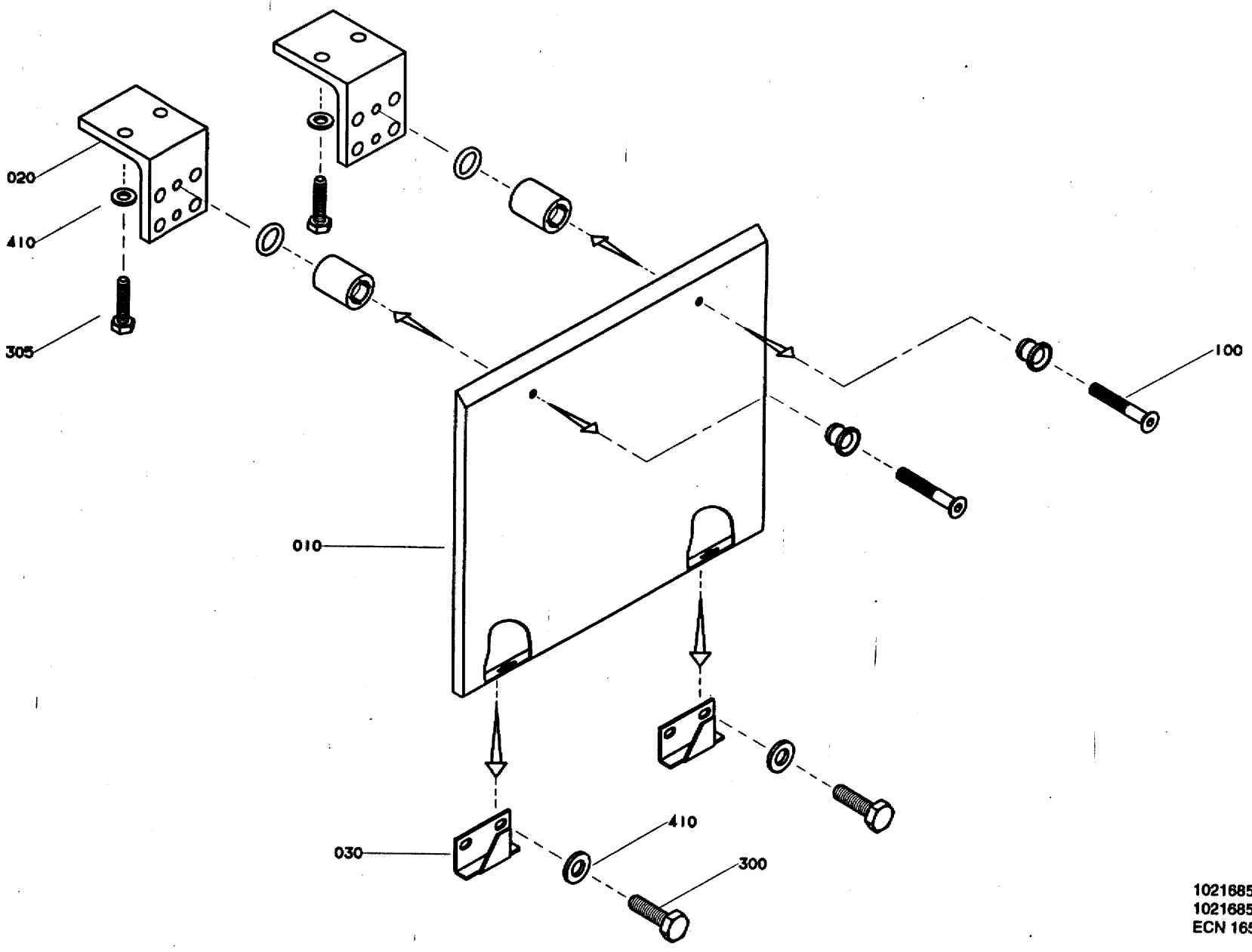

102168501.EPS
1021685-1
ECN 16567

Pos	Part No	SP	UN	Qty	Description	Page No
-						
000	C-1021685-0101	-		1	COVERING PLATE	
010	1021686	-		1	PROTECTION PLATE	
020	975884	-		2	BRACKET	
030	975887	-		2	CATCH	
100	90226-0458	-		2	MOUNTING SCREW	
300	312105-0370	-		4	SCREW O4017 M6X20A280	
305	312105-0372	-		4	SCREW O4017 M6X25A280	
410	315105-0153	-		8	WASHER BRB6,4X12RFR	

Pos	Part No	SP	UN	Qty	Description	Page No

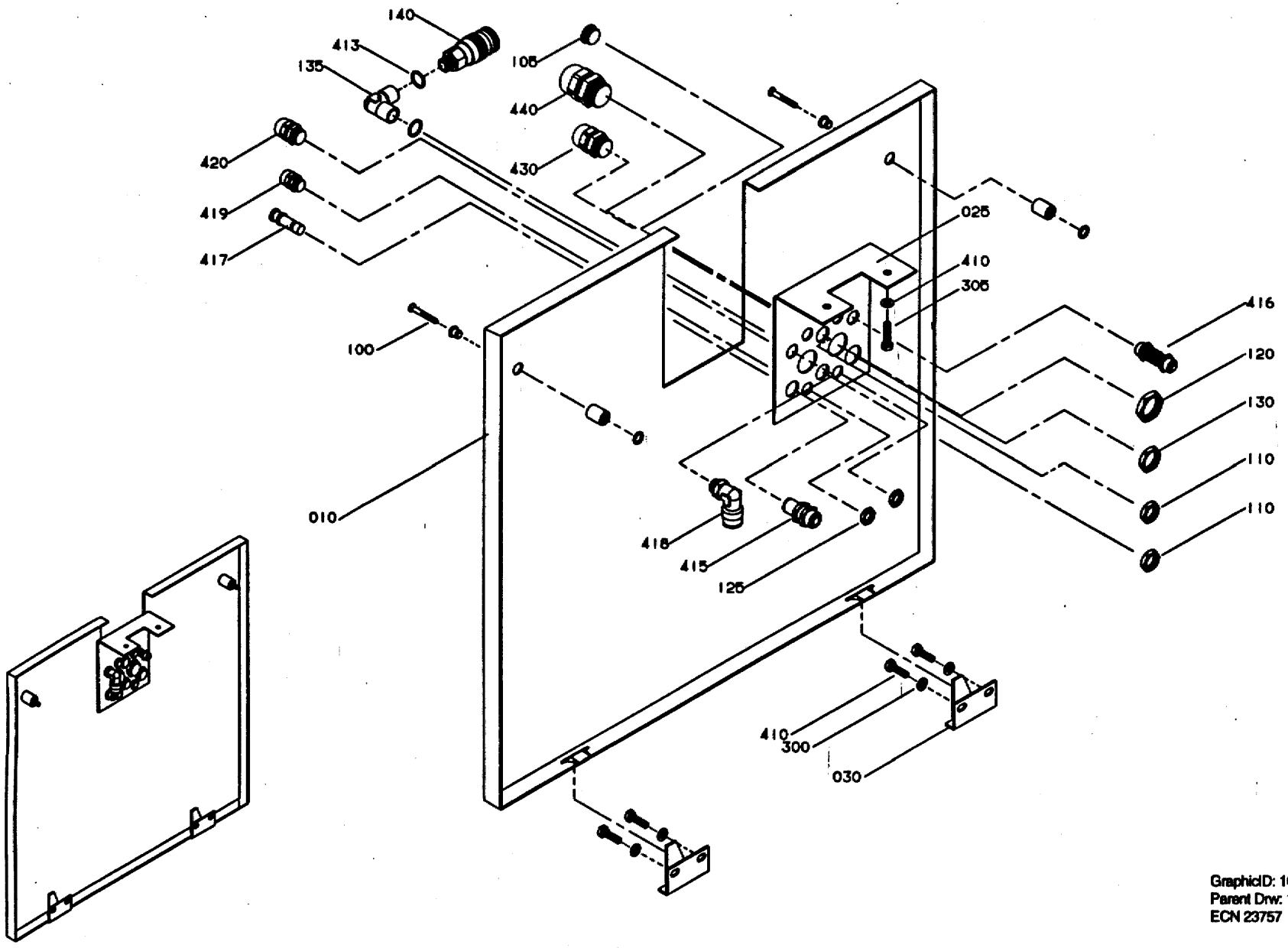

GraphicID: 106525802.eps
Parent Drw: 1065258-2
ECN 23757

Pos	Part No	SP	UN	Qty	Description	Page No
Z-FORM						
000	C-1065258-0201	-		1	COVERING PLATE	
010	1065259	-		1	PROTECTION PLATE	
U-Form -Left Hand Infeed						
000	C-1065258-0202	-		1	COVERING PLATE	
010	1065260	-		1	PROTECTION PLATE	
U-Form -Right Hand Infeed						
000	C-1065258-0203	-		1	COVERING PLATE	
010	1065261	-		1	PROTECTION PLATE	
COMMON PARTS						
025	1128898	-		1	BRACKET	
030	975887	-		2	CATCH	
100	90226-0458	-		2	MOUNTING SCREW	
105	90002-0013	-		1	BLANK-OFF PLUG 15,2	
110	90099-0104	-		2	NUT PR 15,2 (PG9)	
120	90099-0110	-		2	NUT PR 22,5 (PG16)	
125	90099-0116	-		4	NUT PR 12,5 (PG7)	
130	90099-0117	-		1	NUT PR18,6 (PG11)	
135	90140-0019	-		1	BRACKET	
140	90163-0008	-		1	CONNECTION	
300	312105-0370	-		4	SCREW O4017 M6X20A280	
305	312105-0372	-		2	SCREW O4017 M6X25A280	
410	315105-0153	-		6	WASHER BRB6,4X12RFR	
413	315233-0110	-		2	SEAL RING R1/4"	
415	342768-0103	-		1	BULKHEAD LD=8	
416	342960-0133	-		1	BULKHEAD L10/8	
417	342715-0103	-		1	PLUG D=8	
418	342732-0104	-		1	ELBOW PIPE D12-R1/4"	
419	352103-0096	-		4	CABLE GLANR.ST 7	
420	352103-0101	-		1	CABLE GLAND ST 9	
430	352103-0106	-		1	CABLE GLAND ST 11	
440	352103-0111	-		2	CABLE GLAND ST 16;10-14MM	

Pos	Part No	SP	UN	Qty	Description	Page No

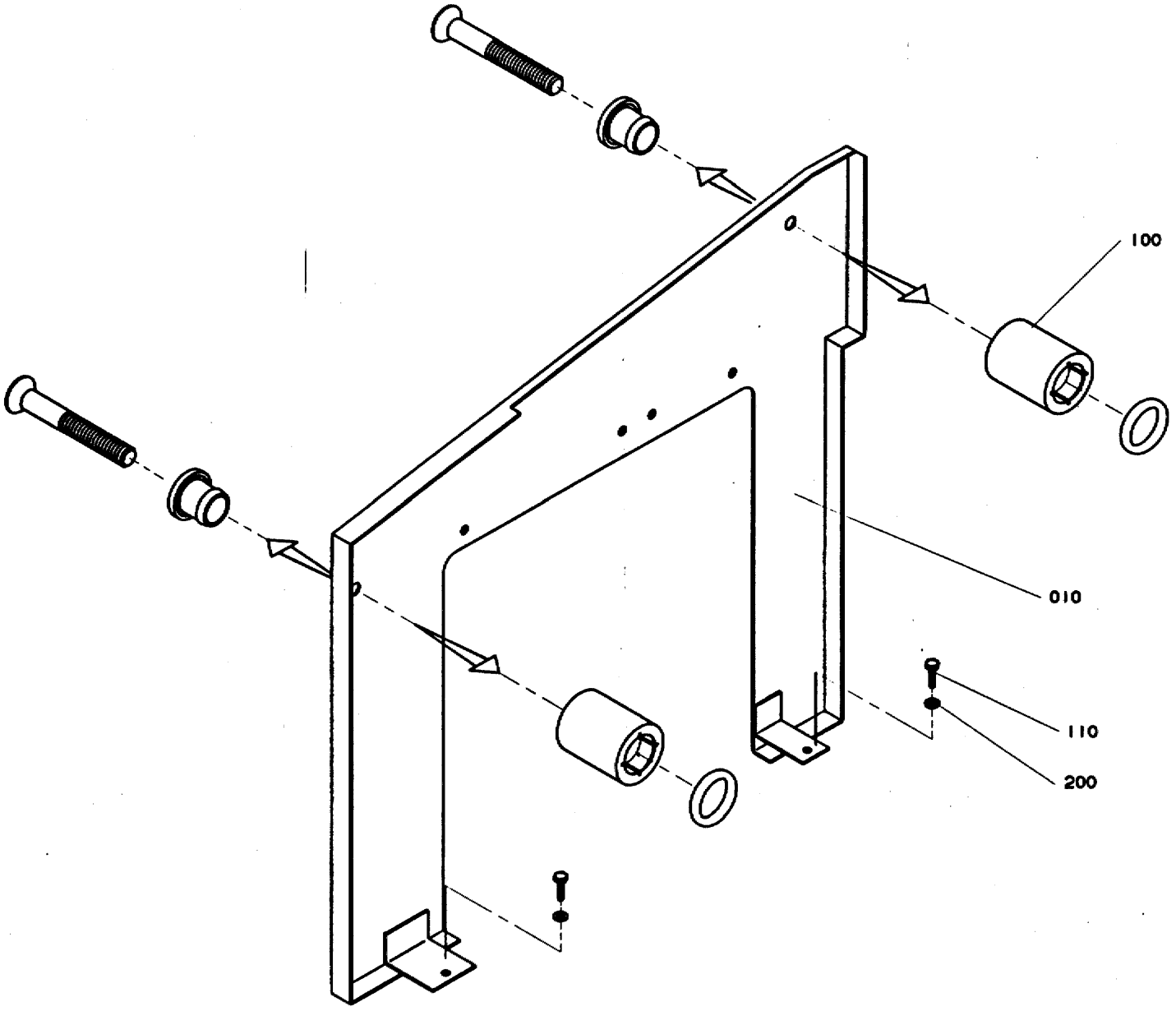

106525301.EPS
1065253-1
ECN 18963

Pos	Part No	SP	UN	Qty	Description	Page No
Z-Form -Left Hand Infeed						
000	C-1065253-0101	-		1	COVERING PLATE	
010	1065256	-		1	PROTECTION PLATE	
Z-Form -Right Hand Infeed						
000	C-1065253-0102	-		1	COVERING PLATE	
010	1065254	-		1	PROTECTION PLATE	
COMMON PARTS						
100	90226-0458	-		2	MOUNTING SCREW	
110	312105-0368	-		2	SCREW O4017 M6X16A280	
200	315105-0153	-		2	WASHER BRB6,4X12RFR	

Pos	Part No	SP	UN	Qty	Description	Page No

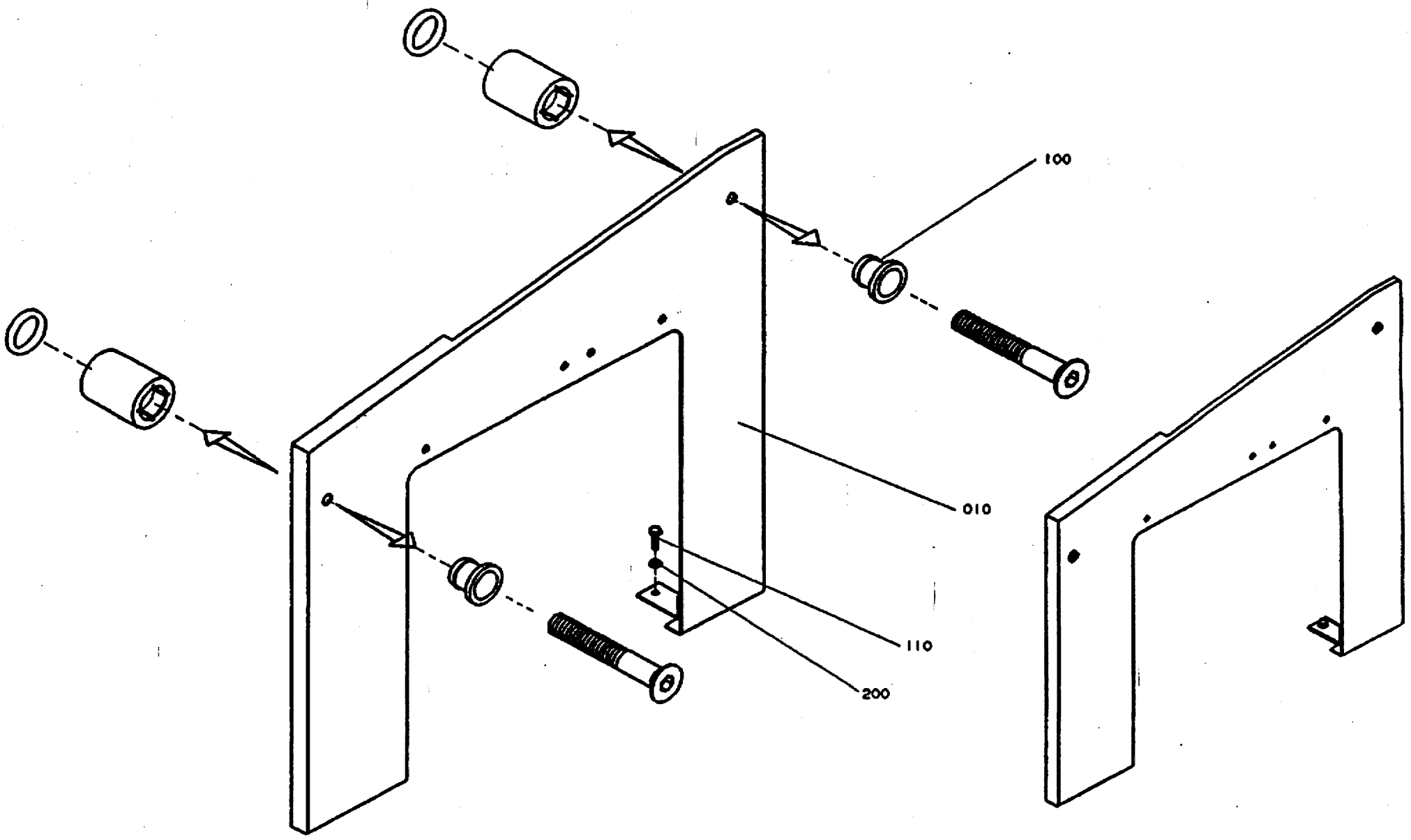

GraphicID: 106525302.tif
Parent Dr1> 1065253-2
ECN No 28963

Pos	Part No	SP	UN	Qty	Description	Page No
U-Form -Left Hand Infeed						
000	C-1065253-0103	-		1	COVERING PLATE	
010	1065255	-		1	PROTECTION PLATE	
U-Form -Right Hand Infeed						
000	C-1065253-0104	-		1	COVERING PLATE	
010	1065257	-		1	PROTECTION PLATE	
COMMON PARTS						
100	90226-0458	-		2	MOUNTING SCREW	
110	312105-0368	-		2	SCREW O4017 M6X16A280	
200	315105-0153	-		2	WASHER BRB6,4X12RFR	

Pos	Part No	SP	UN	Qty	Description	Page No

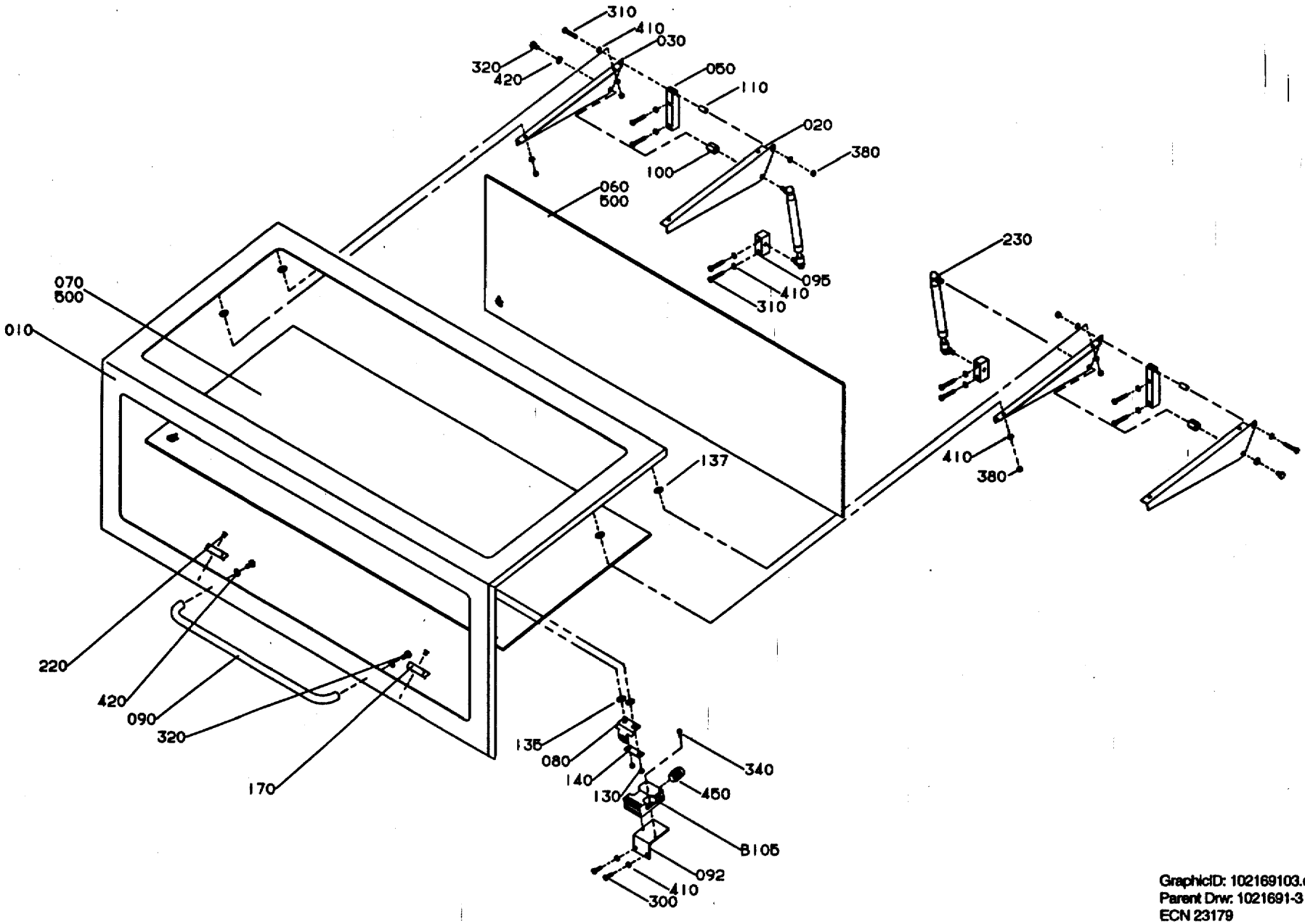

GraphicID: 102169103.eps
Parent Drw: 1021691-3
ECN 23179

Pos	Part No	SP	UN	Qty	Description	Page No
-						
000	C-1021691-0301	-		1	HOOD INFEED	
170	1021907	-		2	DAMPER	
-						
000	C-1021691-0302	-		1	HOOD INFEED	
170	1065924	-		2	DAMPER	
COMMON PARTS						
010	1111043	-		1	HOOD	
020	1080104	-		2	BRACKET	
030	1080105	-		2	BRACKET	
050	1080087	-		2	BRACKET	
060	1021694	-		1	GLASS	
070	1021695	-		1	GLASS	
080	975917	-		1	KEY	
090	1021913	-		1	HANDLE	
092	1074989	-		1	SHEET	
095	1111068	-		2	BRACKET	
100	1080157	-		2	SPACER	
110	1080158	-		2	PIPE	
130	575034	-		2	ROUND NUT	
135	575417	-		2	WASHER	
137	575418	-		4	WASHER	
140	975924	-		1	WASHER	
220	90287-0205	-		2	SCREW	
230	90347-0060	C		2	DAMPER	
300	312105-0370	-		2	SCREW O4017 M6X20A280	
310	312105-0376	-		10	SCREW O4017 M6X35A280	
320	312105-0447	-		4	SCREW O4017 M8X12A280	
340	312115-0327	-		2	SCREW O4762 M5X12A280	
380	312605-0316	-		6	NUT M6M6RFR	
410	315105-0153	-		18	WASHER BRB6,4X12RFR	
420	315115-0165	-		4	WASHER TBRB8,4X16RFR	
450	352103-0106	-		1	CABLE GLAND ST 11	
500	90157-0041	-		X	SEALING COMPOUND	
B105	90044-0127	S		1	KEY SAFETY SWITCH AZ15ZVR	

Pos	Part No	SP	UN	Qty	Description	Page No

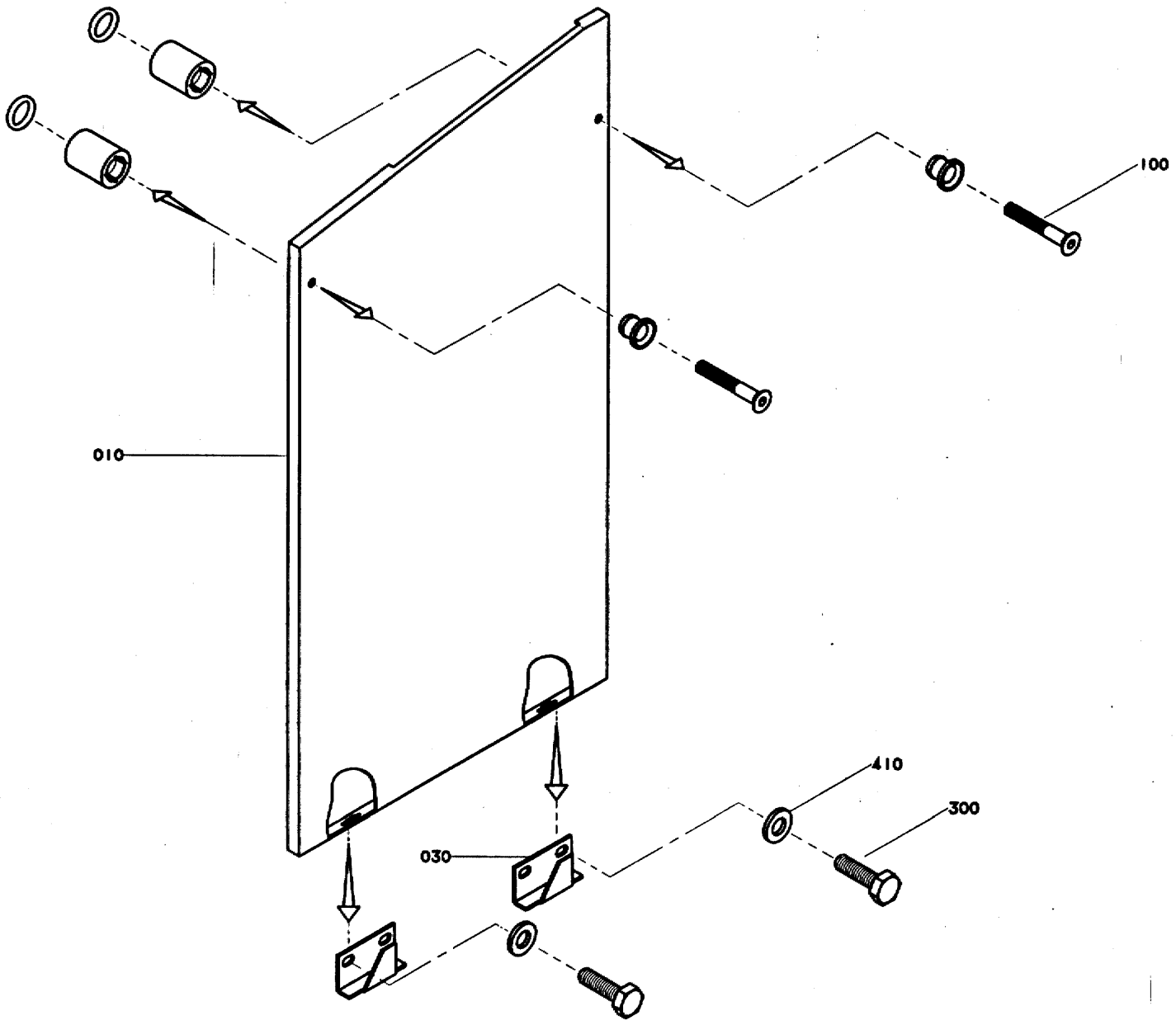

102168901.EPS
1021689-1
ECN 16567

Pos	Part No	SP	UN	Qty	Description	Page No
Z-FORM - LEFT HAND INFEED , U-FORM- RIGHT HAND INFEED						
000	C-1021689-0101	-		1	COVERING PLATE	
010	1021876	-		1	PROTECTION PLATE	
Z-FORM - RIGHT HAND INFEED , U-FORM- LEFT HAND INFEED						
000	C-1021689-0102	-		1	COVERING PLATE	
010	1021690	-		1	PROTECTION PLATE	
COMMON PARTS						
030	975887	-		2	CATCH	
100	90226-0458	-		2	MOUNTING SCREW	
300	312105-0370	-		4	SCREW O4017 M6X20A280	
410	315105-0153	-		4	WASHER BRB6,4X12RFR	

Pos	Part No	SP	UN	Qty	Description	Page No

Doc No: SPC-84866-01

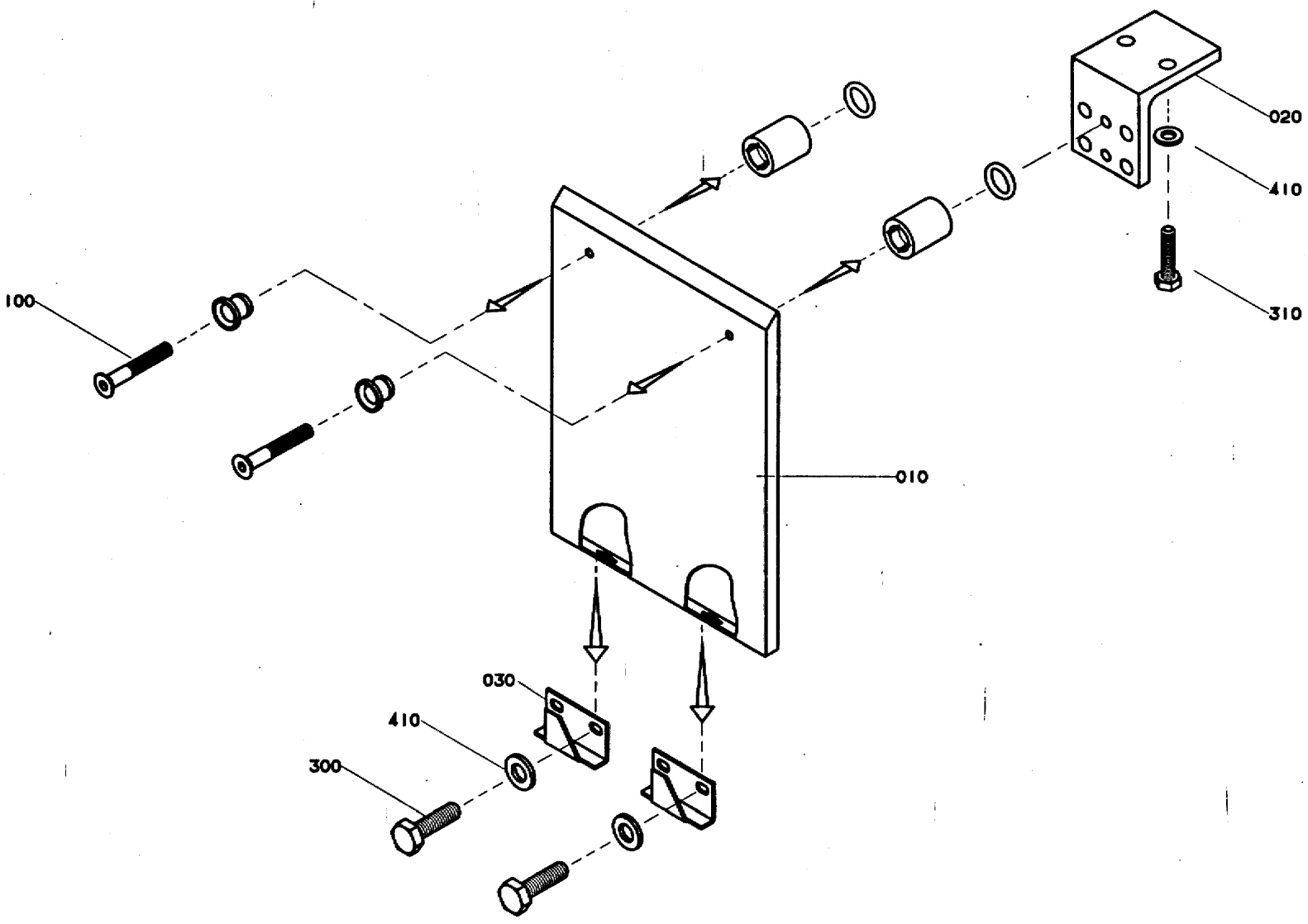

106526901.EPS
1065269-1
ECN 18963

Pos	Part No	SP	UN	Qty	Description	Page No
-						
000	C-1065269-0101	-		1	COVERING PLATE	
010	1065270	-		1	PROTECTION PLATE	
020	975884	-		1	BRACKET	
030	975887	-		2	CATCH	
100	90226-0458	-		2	MOUNTING SCREW	
300	312105-0370	-		4	SCREW O4017 M6X20A280	
310	312105-0372	-		2	SCREW O4017 M6X25A280	
410	315105-0153	-		4	WASHER BRB6,4X12RFR	

Pos	Part No	SP	UN	Qty	Description	Page No

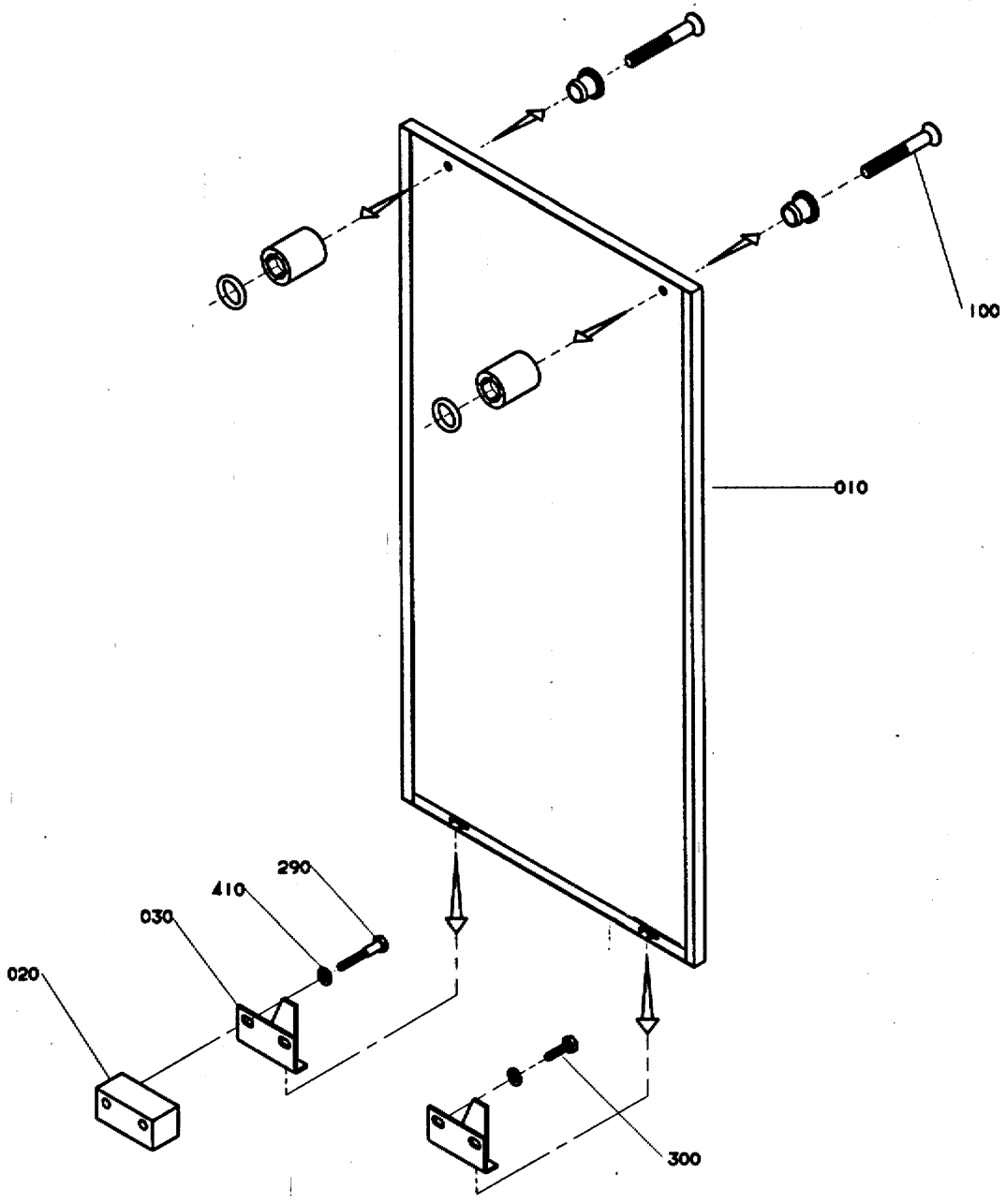

106527101.EPS
1065271-1
ECN 18963

Pos	Part No	SP	UN	Qty	Description	Page No
000	C-1065271-0101	-		1	COVERING PLATE	
010	1065272	-		1	PROTECTION PLATE	
020	1065276	-		1	BRACKET	
030	975887	-		2	CATCH	
100	90226-0458	-		2	MOUNTING SCREW	
290	312105-0379	-		2	SCREW O4014 M6X45A280	
300	312105-0370	-		2	SCREW O4017 M6X20A280	
410	315105-0153	-		4	WASHER BRB6,4X12RFR	

Pos	Part No	SP	UN	Qty	Description	Page No

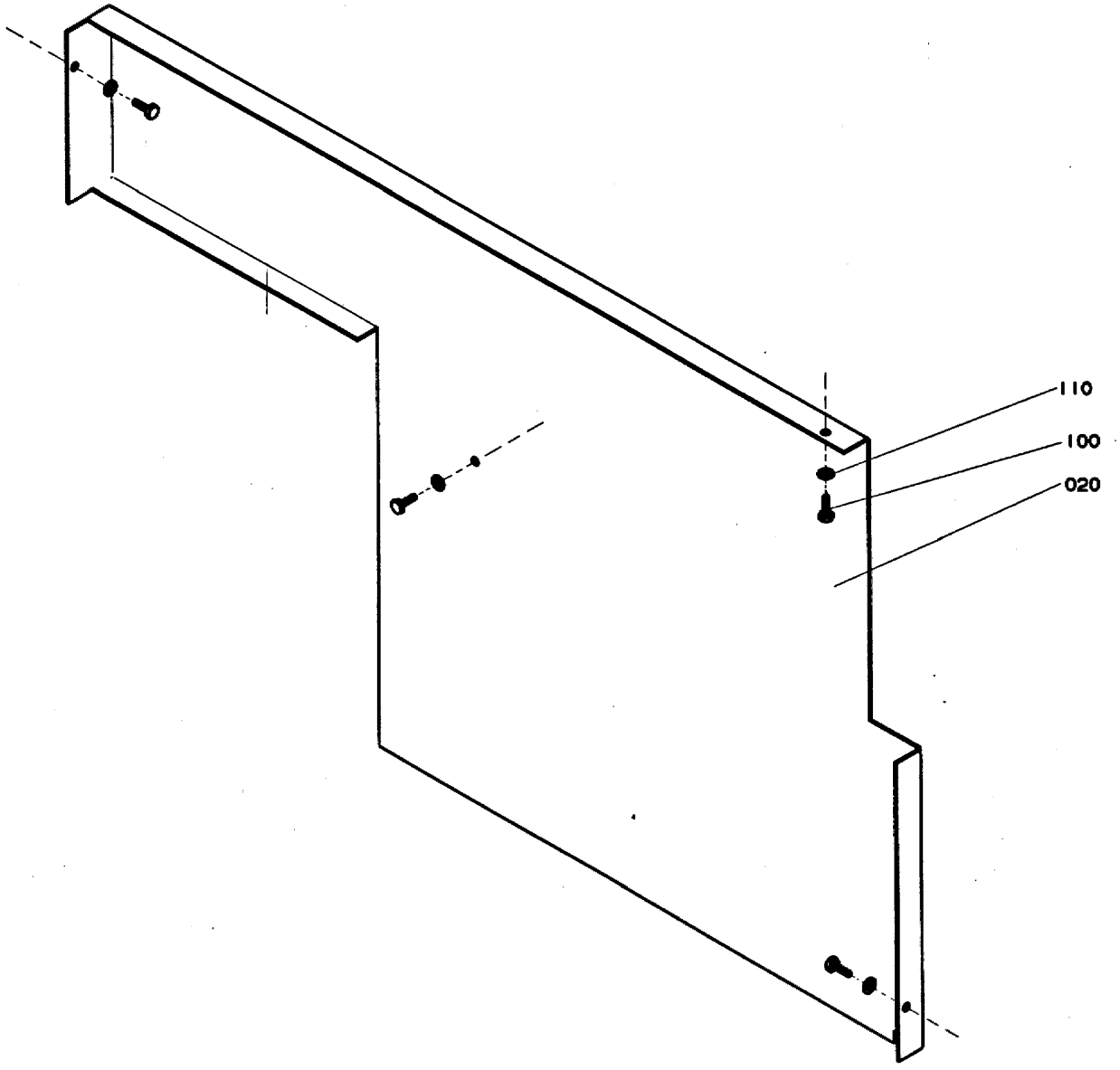

106534601.EPS
1065346-1
ECN 18963

Pos	Part No	SP	UN	Qty	Description	Page No
Left Hand Infeed						
000	C-1065346-0101	-		1	COVERING PLATE	
010	1065347	-		1	PROTECTION PLATE	
Right Hand Infeed						
000	C-1065346-0102	-		1	COVERING PLATE	
020	1065348	-		1	PROTECTION PLATE	
COMMON PARTS						
100	312105-0368	-		4	SCREW O4017 M6X16A280	
110	315105-0153	-		4	WASHER BRB6,4X12RFR	

Pos	Part No	SP	UN	Qty	Description	Page No

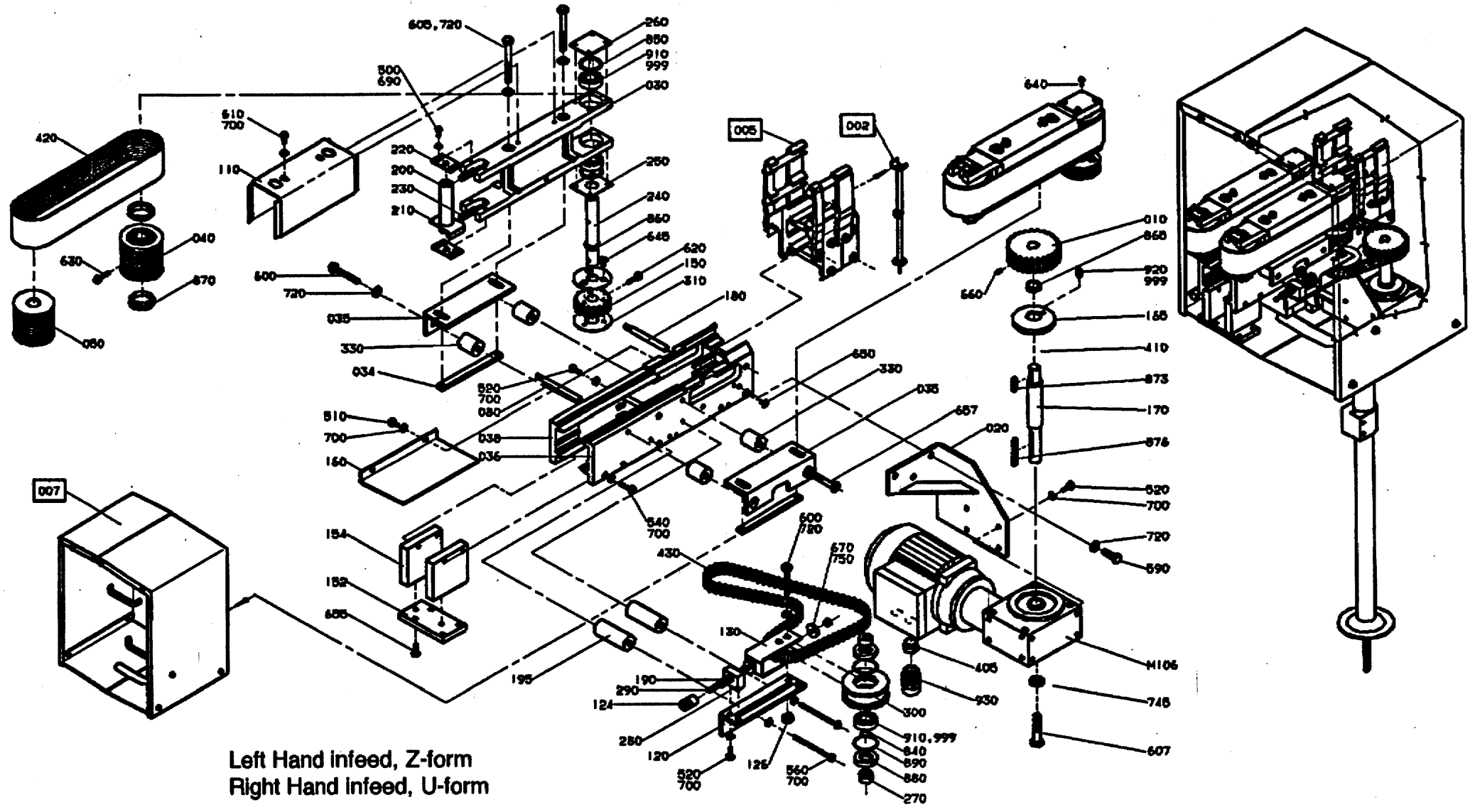

Left Hand infeed, Z-form
Right Hand infeed, U-form

GraphicID: 106514005.tif
Parent Drw: 1065140-5
ECN No: 22292

Pos	Part No	SP	UN	Qty	Description	Page No
Z-Form -Left Hand Infeed, U-Form -Right Hand Infeed, 50 Hz, 15 M/MIN						
000	C-1065140-0301	-		1	BELT BRAKE	
007	C-1065490-0102	-		1	PROTECTION	
010	1065356	-		1	TOOTHED PULLY Z=27	
M106	90069-0237	-		1	WORM GEAR MOTOR	
Z-Form -Left Hand Infeed, U-Form -Right Hand Infeed, 60 Hz, 15 M/MIN						
007	C-1065140-0303	-		1	BELT BRAKE	
010	1065355	-		1	TOOTHED PULLY Z=22	
M106	90069-0237	-		1	WORM GEAR MOTOR	
Z-Form -Left Hand Infeed, U-Form -Right Hand Infeed, 50 Hz, 21 M/MIN						
007	C-1065140-0305	-		1	BELT BRAKE	
010	1065355	-		1	TOOTHED PULLY Z=22	
M106	90069-0236	-		1	WORM GEAR MOTOR	
Z-Form -Left Hand Infeed, U-Form -Right Hand Infeed, 60 Hz, 21 M/MIN						
007	C-1065140-0307	-		1	BELT BRAKE	
010	1065357	-		1	TOOTHED PULLY Z=32	
M106	90069-0237	-		1	WORM GEAR MOTOR	
Z-Form -Left Hand Infeed, U-Form -Right Hand Infeed, 50 Hz, 30 M/MIN						
007	C-1065140-0309	-		1	BELT BRAKE	
010	1139173	-		1	TOOTHED PULLY Z=31	
M106	90069-0236	-		1	WORM GEAR MOTOR	
Z-Form -Left Hand Infeed, U-Form -Right Hand Infeed, 60 Hz, 30 M/MIN						
007	C-1065140-0311	-		1	BELT BRAKE	
010	533211	-		1	TOOTHED PULLY Z=25	
M106	90069-0236	-		1	WORM GEAR MOTOR	
COMMON PARTS						
002	C- 499085-0102	-		1	LEG	333
005	C-1065142-010V	-		1	ATTACHMENT	335
030	1074695	-		2	HOLDER	
034	1074698	-		2	NUT RAIL	
035	1074697	-		2	CANTILEVER	
036	1065150	-		1	SIDE PIECE	
038	1065151	-		1	SIDE PIECE	
040	561652	-		2	WHEEL	
050	561653	-		2	ROLL	
080	476220	-		3	SPACER	
110	1074745	-		2	BELT SUPORT	
120	1065387	-		1	CANTILEVER	
124	1074696	-		1	NUT	
126	1074699	-		1	NUT	
130	533217	-		1	BOW CLAMP	
150	1020646	-		2	TOOTHED PULLY	
152	1065143	-		1	BRACKET	
154	1065144	-		2	BRACKET	
160	1065353	-		1	DRIP PLATE	
165	1111827	-		1	LID	
170	1111828	-		1	SHAFT	
180	531948	-		1	SPACER	
190	533134	-		1	COMPRESSION SPRING	
195	1065147	-		2	SPACER	
200	533228	-		2	SHAFT	
210	533230	-		4	SHEET	
220	533231	-		4	SECURING PLATE	
230	90335-0067	-		4	SPRING	
240	533233	-		2	SHAFT	
250	533234	-		2	LID	
260	533235	-		2	LID	
270	533237	-		2	AXLE PIN	
280	533238	-		1	BLOCKING PIECE	
290	1065386	-		1	STUD SCREW	
300	533240	-		1	WHEEL	
310	533241	-		4	FLANGE	
330	1065289	-		4	SPACER	
405	90089-0017	-		1	TRANSITIONAL MUFF	
420	90252-0036	-		2	DRIVE BELT	
430	90417-0188	-		1	TIMING BELT	
500	312105-0327	-		8	SCREW O4017 M5X12A280	
510	312105-0364	-		2	SCREW M6S6X10RFR	
520	312105-0368	-		10	SCREW O4017 M6X16A280	
540	312105-0372	-		4	SCREW O4017 M6X25A280	
560	312105-0386	-		2	SCREW O4014 M6X80A280	
590	312105-0449	-		3	SCREW O4017 M8X16A280	
600	312105-0461	-		3	SCREW O4017 M8X50A280	
605	312105-0471	-		4	SCREW 4014 M8X100A280	
607	312105-0491	-		1	SCREW 4017 M10X20A280	
610	312115-0366	-		4	SCREW O4762 M6X12A280	
620	312115-0370	-		2	SCREW O4762 M6X20A280	
630	312115-0372	-		2	SCREW O4762 M6X25A280	
640	312125-0287	-		16	SLOTTED HEMCS4X8RFR	
645	312145-0287	-		12	SLOTTED HEMFS4X8RFR	

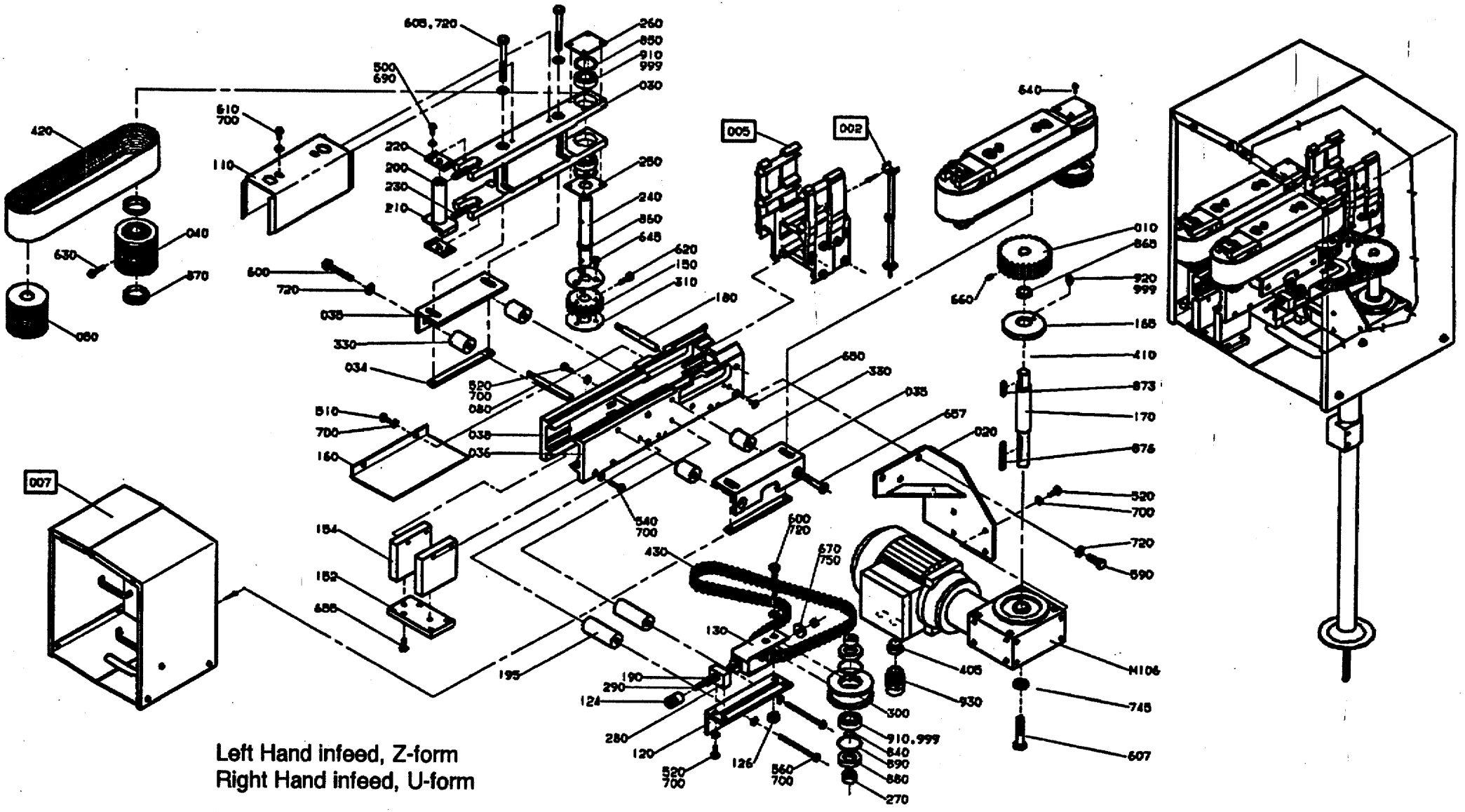

Left Hand infeed, Z-form
Right Hand infeed, U-form

GraphicID: 106514005.tif
Parent Drw: 1065140-5
ECN No: 22292

Pos	Part No	SP	UN	Qty	Description	Page No
650	312155-0366	-		1	SCREW MF6S6X12RFR	
655	312155-0370	-		2	SCREW MF6S6X20RFR	
657	312155-0461	-		2	SCREW MF6S8X50RFR	
660	312318-0364	-		1	STOP SCREW SK6SS6X10RFR	
670	312605-0316	-		3	NUT M6M6RFR	
680	312605-0318	-		2	NUT M6M8RFR	
690	315105-0146	-		8	WASHER BRB5,3X10RFR	
700	315105-0153	-		26	WASHER BRB6,4X12RFR	
720	315105-0165	-		7	WASHER BRB8,4X16RFR	
730	315115-0153	-		1	WASHER TBRB6,4X12RFR	
740	315115-0165	-		5	WASHER TBRB8,4X16RFR	
745	315115-0173	-		1	WASHER B 10,5X22 RFR	
750	315125-0153	-		2	WASHER SB 6,4X22X4 RFR	
840	315202-0111	-		1	O-RING 13,1X1,6	
850	315202-0219	-		4	O-RING 29,2X3	
860	315220-0130	-		2	SEAL RING V-16S	
865	315220-0148	-		1	SEAL RING V-22S	
870	315220-0172	-		4	SEAL RING V-32S	
873	315701-0203	-		1	FLAT WEDGE5X5X25	
876	315701-0210	-		1	FLAT WEDGE5X5X50	
880	315221-0145	-		2	SEAL RING CB20X35X7	
890	315753-0124	-		2	CIRCLIP GH 35 RFR	
910	321308-0203	-		5	BALL BEARISKF6003-2RS	
920	344502-0021	-		1	NIPPLE L AHM6	
930	352103-0111	-		1	CABLE GLAND ST 16;10-14MM	
999	90296-0068	-		X	GREASE	

Pos	Part No	SP	UN	Qty	Description	Page No

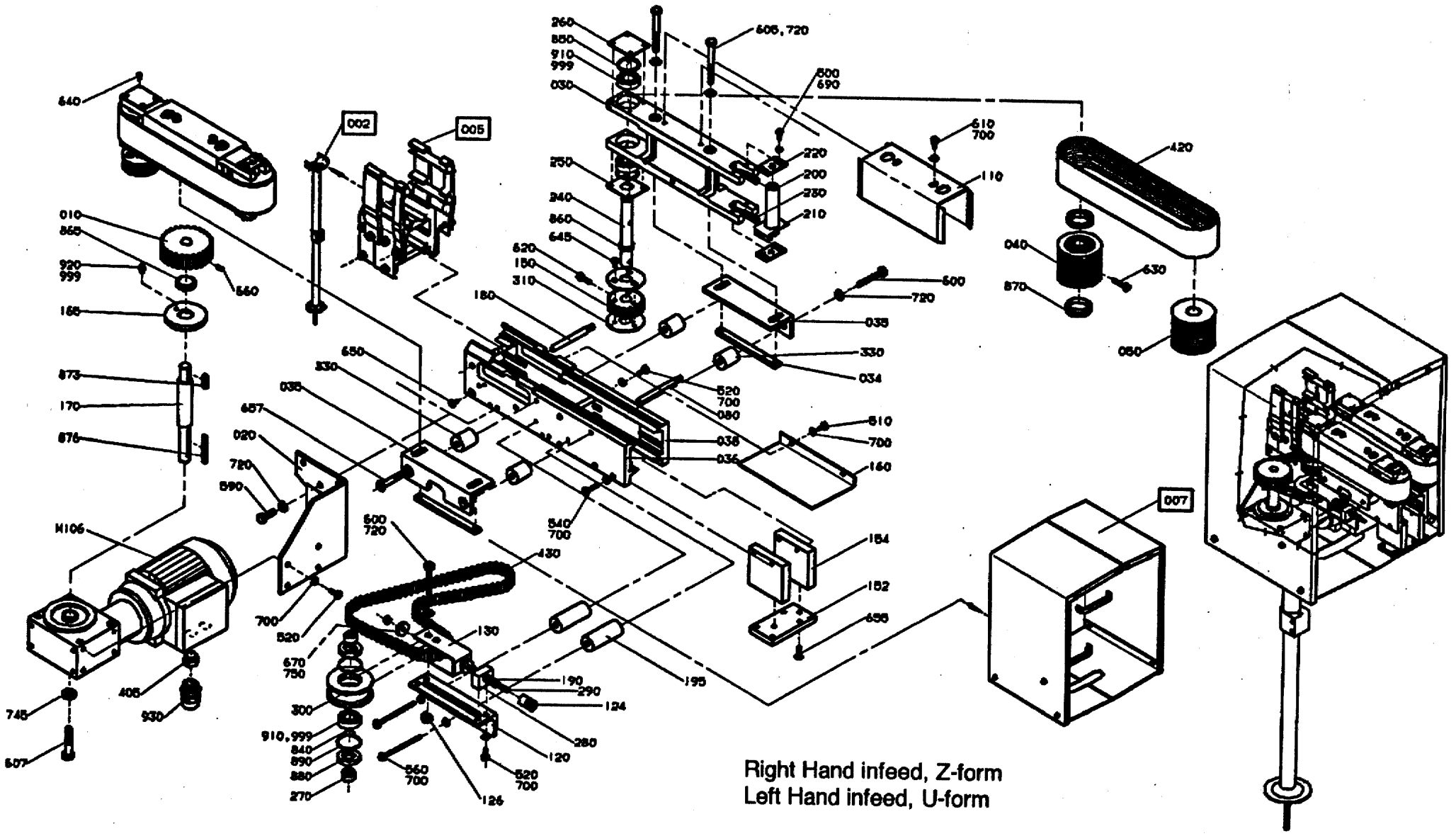

Right Hand infeed, Z-form
Left Hand infeed, U-form

GraphicID: 106514006.tif
Parent Drw: 1065140-6
ECN No: 22292

Pos	Part No	SP	UN	Qty	Description	Page No
Z-Form -Right Hand Infeed, U-Form -Left Hand Infeed, 50 Hz, 15 m/min						
007	C-1065140-0302	-		1	BELT BRAKE	
010	1065356	-		1	TOOTHED PULLY Z=27	
M106	90069-0237	-		1	WORM GEAR MOTOR	
Z-Form -Right Hand Infeed, U-Form -Left Hand Infeed, 60 Hz, 15 m/min						
007	C-1065140-0304	-		1	BELT BRAKE	
010	1065355	-		1	TOOTHED PULLY Z=22	
M106	90069-0237	-		1	WORM GEAR MOTOR	
Z-Form -Right Hand Infeed, U-Form -Left Hand Infeed, 50 Hz, 21 m/min						
007	C-1065140-0306	-		1	BELT BRAKE	
010	1065355	-		1	TOOTHED PULLY Z=22	
M106	90069-0236	-		1	WORM GEAR MOTOR	
Z-Form -Right Hand Infeed, U-Form -Left Hand Infeed, 60 Hz, 21 m/min						
007	C-1065140-0308	-		1	BELT BRAKE	
010	1065357	-		1	TOOTHED PULLY Z=32	
M106	90069-0237	-		1	WORM GEAR MOTOR	
Z-Form -Right Hand Infeed, U-Form -Left Hand Infeed, 50 Hz, 30 m/min						
007	C-1065140-0310	-		1	BELT BRAKE	
010	1139173	-		1	TOOTHED PULLY Z=31	
M106	90069-0236	-		1	WORM GEAR MOTOR	
Z-Form -Right Hand Infeed, U-Form -Left Hand Infeed, 60 Hz, 30 m/min						
007	C-1065140-0312	-		1	BELT BRAKE	
010	533211	-		1	TOOTHED PULLY Z=25	
M106	90069-0236	-		1	WORM GEAR MOTOR	
COMMON PARTS						
002	C- 499085-0102	-		1	LEG	333
005	C-1065142-010V	-		1	ATTACHMENT	335
020	1065351	-		1	FASTENING BRACKET	
030	1074695	-		2	HOLDER	
034	1074698	-		2	NUT RAIL	
035	1074697	-		2	CANTILEVER	
036	1065150	-		1	SIDE PIECE	
038	1065151	-		1	SIDE PIECE	
040	561652	-		2	WHEEL	
050	561653	-		2	ROLL	
080	476220	-		3	SPACER	
110	1074745	-		2	BELT SUPORT	
120	1065387	-		1	CANTILEVER	
124	1074696	-		1	NUT	
126	1074699	-		1	NUT	
130	533217	-		1	BOW CLAMP	
150	1020646	-		2	TOOTHED PULLY	
152	1065143	-		1	BRACKET	
154	1065144	-		2	BRACKET	
160	1065353	-		1	DRIP PLATE	
165	1111827	-		1	LID	
170	1111828	-		1	SHAFT	
180	531948	-		1	SPACER	
190	533134	-		1	COMPRESSION SPRING	
195	1065147	-		2	SPACER	
200	533228	-		2	SHAFT	
210	533230	-		4	SHEET	
220	533231	-		4	SECURING PLATE	
230	90335-0067	-		4	SPRING	
240	533233	-		2	SHAFT	
250	533234	-		2	LID	
260	533235	-		2	LID	
270	533237	-		2	AXLE PIN	
280	533238	-		1	BLOCKING PIECE	
290	1065386	-		1	STUD SCREW	
300	533240	-		1	WHEEL	
310	533241	-		4	FLANGE	
330	1065289	-		4	SPACER	
405	90089-0017	-		1	TRANSITIONAL MUFF	
420	90252-0036	-		2	DRIVE BELT	
430	90417-0188	-		1	TIMING BELT	
500	312105-0327	-		8	SCREW O4017 M5X12A280	
510	312105-0364	-		2	SCREW M6S6X10RFR	
520	312105-0368	-		10	SCREW O4017 M6X16A280	
540	312105-0372	-		4	SCREW O4017 M6X25A280	
560	312105-0386	-		2	SCREW O4014 M6X80A280	
590	312105-0449	-		3	SCREW O4017 M8X16A280	
600	312105-0461	-		3	SCREW O4017 M8X50A280	
605	312105-0471	-		4	SCREW 4014 M8X100A280	
607	312105-0491	-		1	SCREW 4017 M10X20A280	
610	312115-0366	-		4	SCREW O4762 M6X12A280	
620	312115-0370	-		2	SCREW O4762 M6X20A280	
630	312115-0372	-		2	SCREW O4762 M6X25A280	
640	312125-0287	-		16	SLOTTED HEMCS4X8RFR	
645	312145-0287	-		12	SLOTTED HEMFS4X8RFR	
650	312155-0366	-		1	SCREW MF6S6X12RFR	

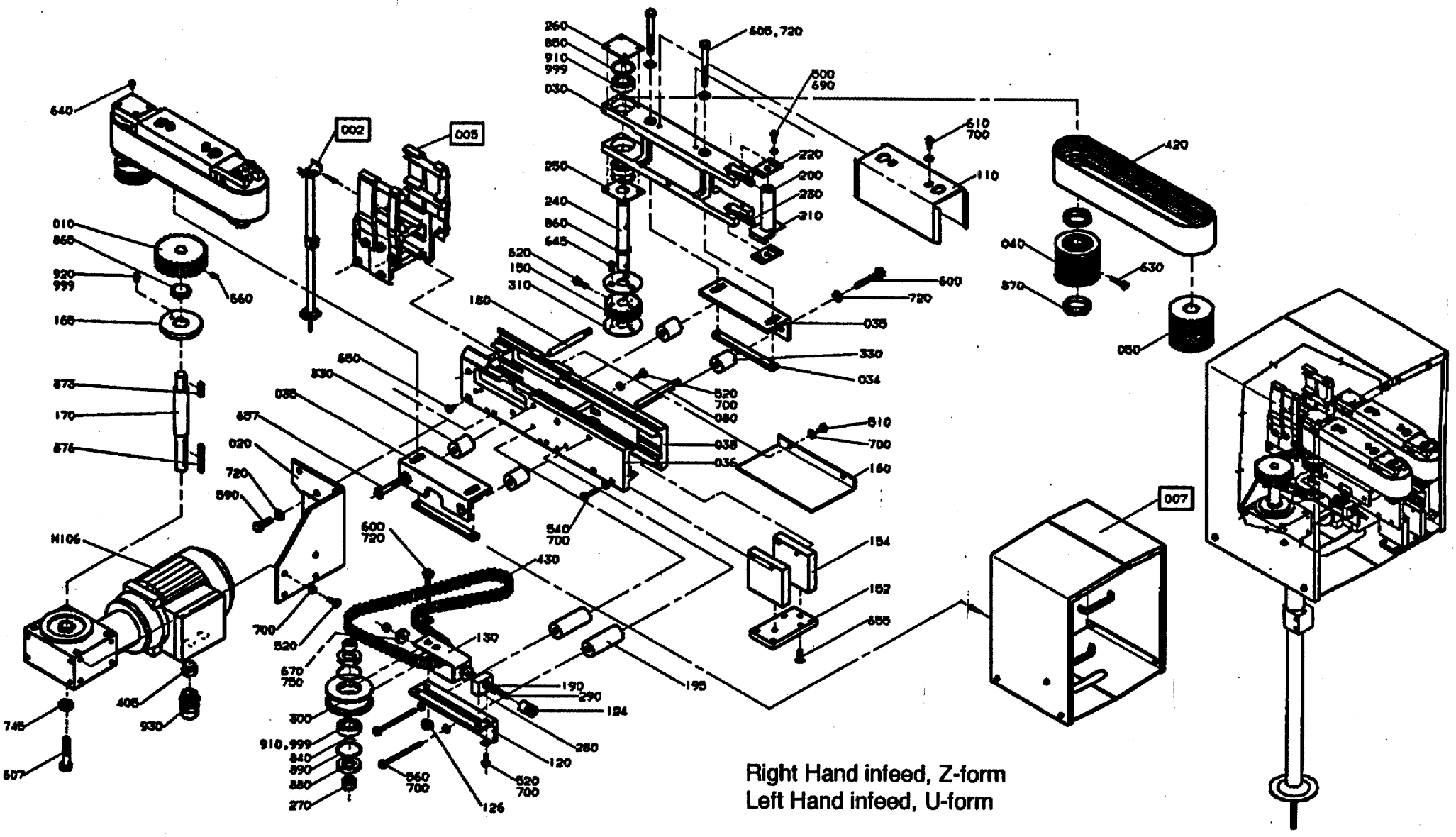

Right Hand infeed, Z-form
Left Hand infeed, U-form

GraphicID: 106514006.tif
Parent Drw: 1065140-6
ECN No: 22292

Pos	Part No	SP	UN	Qty	Description	Page No
655	312155-0370	-		2	SCREW MF6S6X20RFR	
657	312155-0461	-		2	SCREW MF6S8X50RFR	
660	312318-0364	-		1	STOP SCREW SK6SS6X10RFR	
670	312605-0316	-		3	NUT M6M6RFR	
680	312605-0318	-		2	NUT M6M8RFR	
690	315105-0146	-		8	WASHER BRB5,3X10RFR	
700	315105-0153	-		26	WASHER BRB6,4X12RFR	
720	315105-0165	-		7	WASHER BRB8,4X16RFR	
730	315115-0153	-		1	WASHER TBRB6,4X12RFR	
740	315115-0165	-		5	WASHER TBRB8,4X16RFR	
745	315115-0173	-		1	WASHER B 10,5X22 RFR	
750	315125-0153	-		2	WASHER SB 6,4X22X4 RFR	
840	315202-0111	-		1	O-RING 13,1X1,6	
850	315202-0219	-		4	O-RING 29,2X3	
860	315220-0130	-		2	SEAL RING V-16S	
865	315220-0148	-		1	SEAL RING V-22S	
870	315220-0172	-		4	SEAL RING V-32S	
873	315701-0203	-		1	FLAT WEDGE5X5X25	
876	315701-0210	-		1	FLAT WEDGE5X5X50	
880	315221-0145	-		2	SEAL RING CB20X35X7	
890	315753-0124	-		2	CIRCLIP GH 35 RFR	
910	321308-0203	-		5	BALL BEARISKF6003-2RS	
920	344502-0021	-		1	NIPPLE L AHM6	
930	352103-0111	-		1	CABLE GLAND ST 16;10-14MM	
999	90296-0068	-		X	GREASE	

Pos	Part No	SP	UN	Qty	Description	Page No

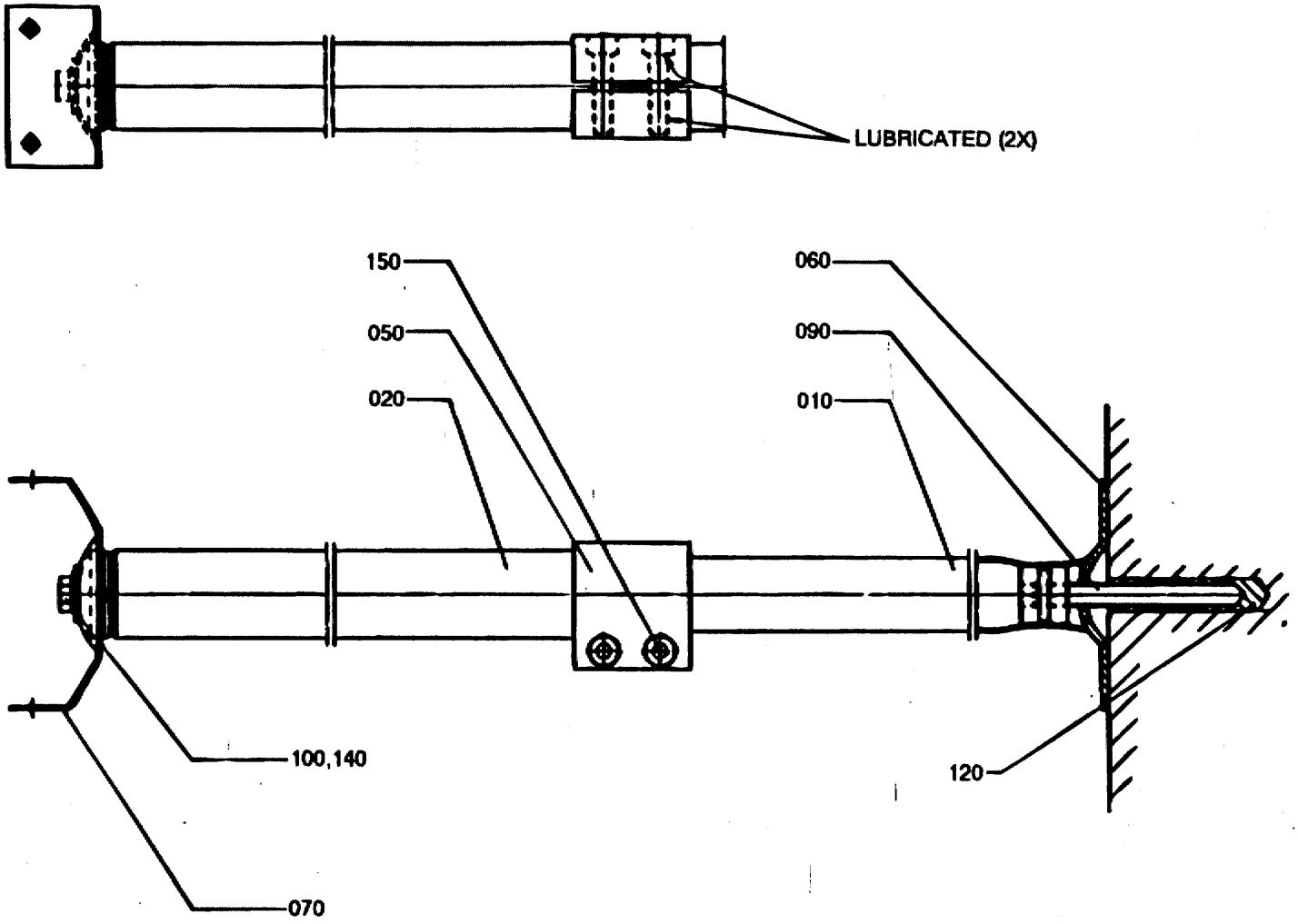

49908501.TIF
499085-1
AM 11040

Pos	Part No	SP	UN	Qty	Description	Page No
Conveyor height 400-600						
000	C- 499085-0101	-		1	LEG	
010	484170-0001	-		1	PIPE	
020	484171-0001	-		1	LEG	
Conveyor height 600-1000						
000	C- 499085-0102	-		1	LEG	
010	484170-0002	-		1	PIPE	
020	484171-0002	-		1	LEG	
Conveyor height 1000-1400						
000	C- 499085-0103	-		1	LEG	
010	484170-0003	-		1	PIPE	
020	484171-0002	-		1	LEG	
COMMON PARTS						
001	542564	-		1	ASSEMBLY INSTRUCTION	
050	484148	-		1	CLAMPING PART	
060	484165	-		1	FOOT	
070	486884	-		1	BRACKET	
090	497995	-		1	STUD SCREW	
100	529076	-		1	WASHER	
120	90049-0010	-		1	EXPANDING PLUG	
140	312105-0453	-		1	SCREW O4017 M8X25A280	
150	312115-0457	-		2	SCREW O4762 M8X35A280	

Pos	Part No	SP	UN	Qty	Description	Page No

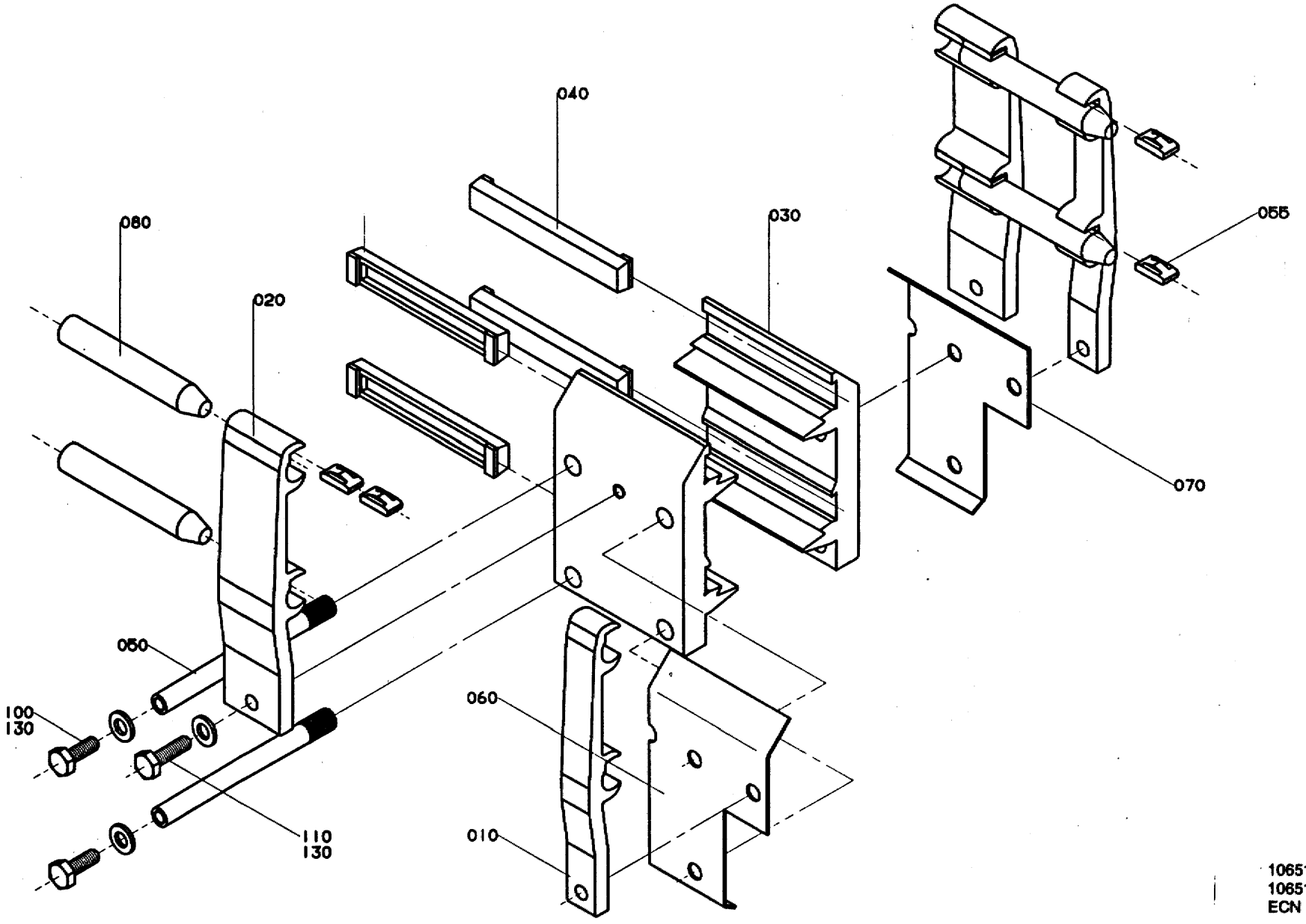

106514201.EPS
1065142-1
ECN 19265

Pos	Part No	SP	UN	Qty	Description	Page No
Conveyor width B40						
000	C-1065142-0101	-		1	ATTACHMENT	
010	1020141-0001	-		2	HOLDER	
020	1020141-0002	-		2	HOLDER	
Conveyor width B55, B55S						
000	C-1065142-0102	-		1	ATTACHMENT	
010	1020142-0001	-		2	HOLDER	
020	1020142-0002	-		2	HOLDER	
Conveyor width B65						
000	C-1065142-0103	-		1	ATTACHMENT	
010	1020143-0001	-		2	HOLDER	
020	1020143-0002	-		2	HOLDER	
Conveyor width B79						
000	C-1065142-0104	-		1	ATTACHMENT	
010	1020144-0001	-		2	HOLDER	
020	1020144-0002	-		2	HOLDER	
Conveyor width B68						
000	C-1065142-0105	-		1	ATTACHMENT	
010	1020816-0001	-		2	HOLDER	
020	1020816-0002	-		2	HOLDER	
COMMON PARTS						
030	457696-0001	-		2	JOINT PIECE	
040	466074-0002	-		4	SLIDER	
050	476220	-		4	SPACER	
055	1020146	-		12	LOCKING BLOCK	
060	1065460	-		1	COVERING PLATE	
070	533227	-		1	COVERING PLATE	
080	533236-0002	-		4	SUPPORT BAR	
100	312105-0368	-		8	SCREW O4017 M6X16A280	
110	312105-0370	-		4	SCREW O4017 M6X20A280	
130	315105-0153	-		12	WASHER BRB6,4X12RFR	

Pos	Part No	SP	UN	Qty	Description	Page No

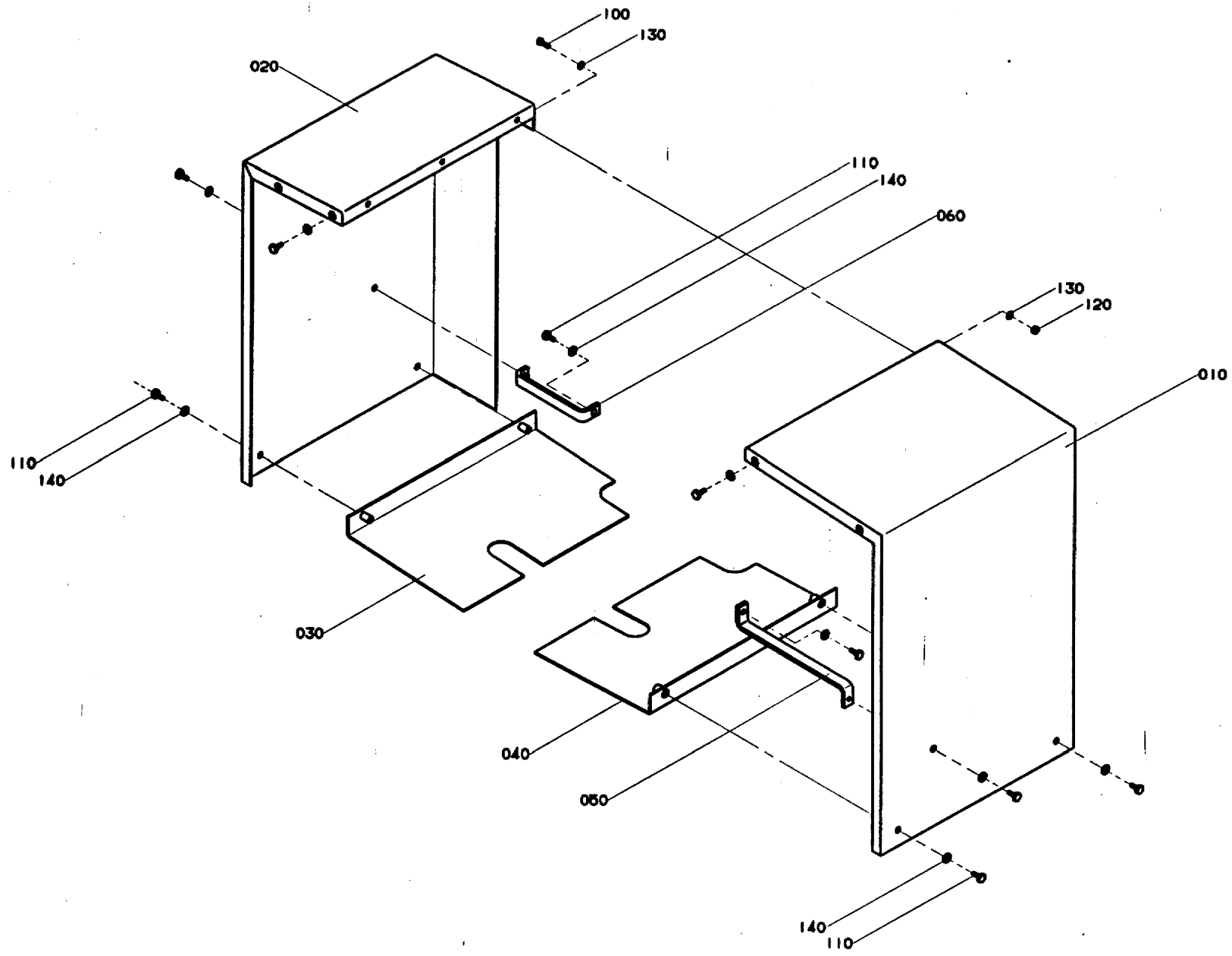

106549001.EPS
1065490-1
ECN 19265

Pos	Part No	SP	UN	Qty	Description	Page No
Z-Form -Left Hand Infeed, U-Form -Right Hand Infeed,						
000	C-1065490-0101	-		1	PROTECTION	
010	1065491	-		1	PROTECTION	
020	1065492	-		1	PROTECTION	
Z-Form -Right Hand Infeed, U-Form -LeftHand Infeed						
000	C-1065490-0102	-		1	PROTECTION	
010	1065497	-		1	PROTECTION	
020	1065498	-		1	PROTECTION	
COMMON PARTS						
030	1065493	-		1	SHEET	
040	1065494	-		1	SHEET	
050	1065496	-		1	FASTENING IRON	
060	1065495	-		1	FASTENING IRON	
100	312105-0328	-		3	SCREW M6S5X14 A2 80	
110	312105-0366	-		12	SCREW O4017 M6X12A280	
120	312605-0314	-		3	NUT M6M5RFR	
130	315105-0146	-		6	WASHER BRB5,3X10RFR	
140	315105-0153	-		12	WASHER BRB6,4X12RFR	

Pos	Part No	SP	UN	Qty	Description	Page No

Tetra Pak

SPC

Spare Parts Catalogue

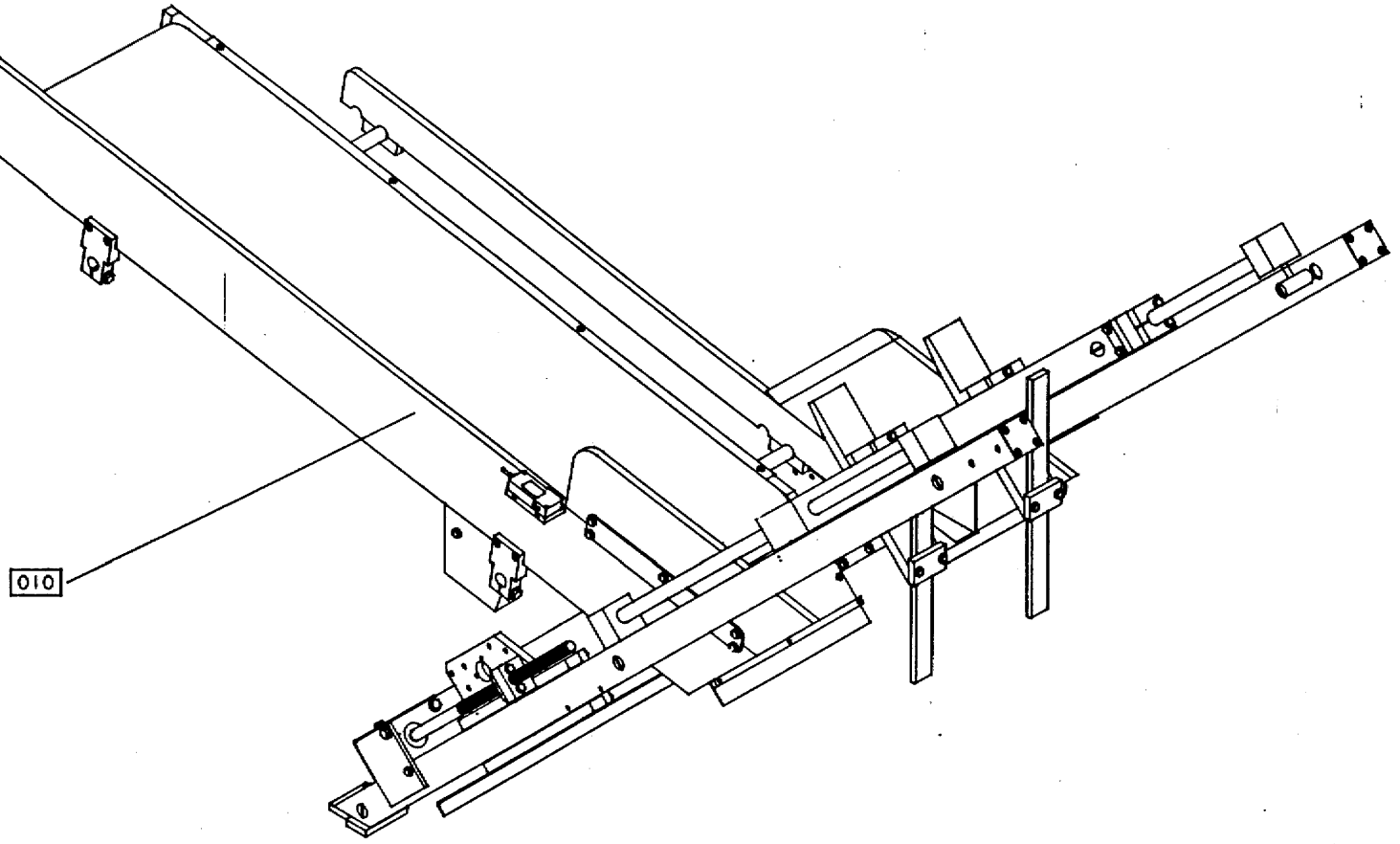

67029301.eps
670293-1
ECN 16567

Pos	Part No	SP	UN	Qty	Description	Page No
-						
010	B- 670293-0401	-		1	MAGAZINE	
010	B- 670285-0401	-		1	MAGAZINE	343

Pos	Part No	SP	UN	Qty	Description	Page No

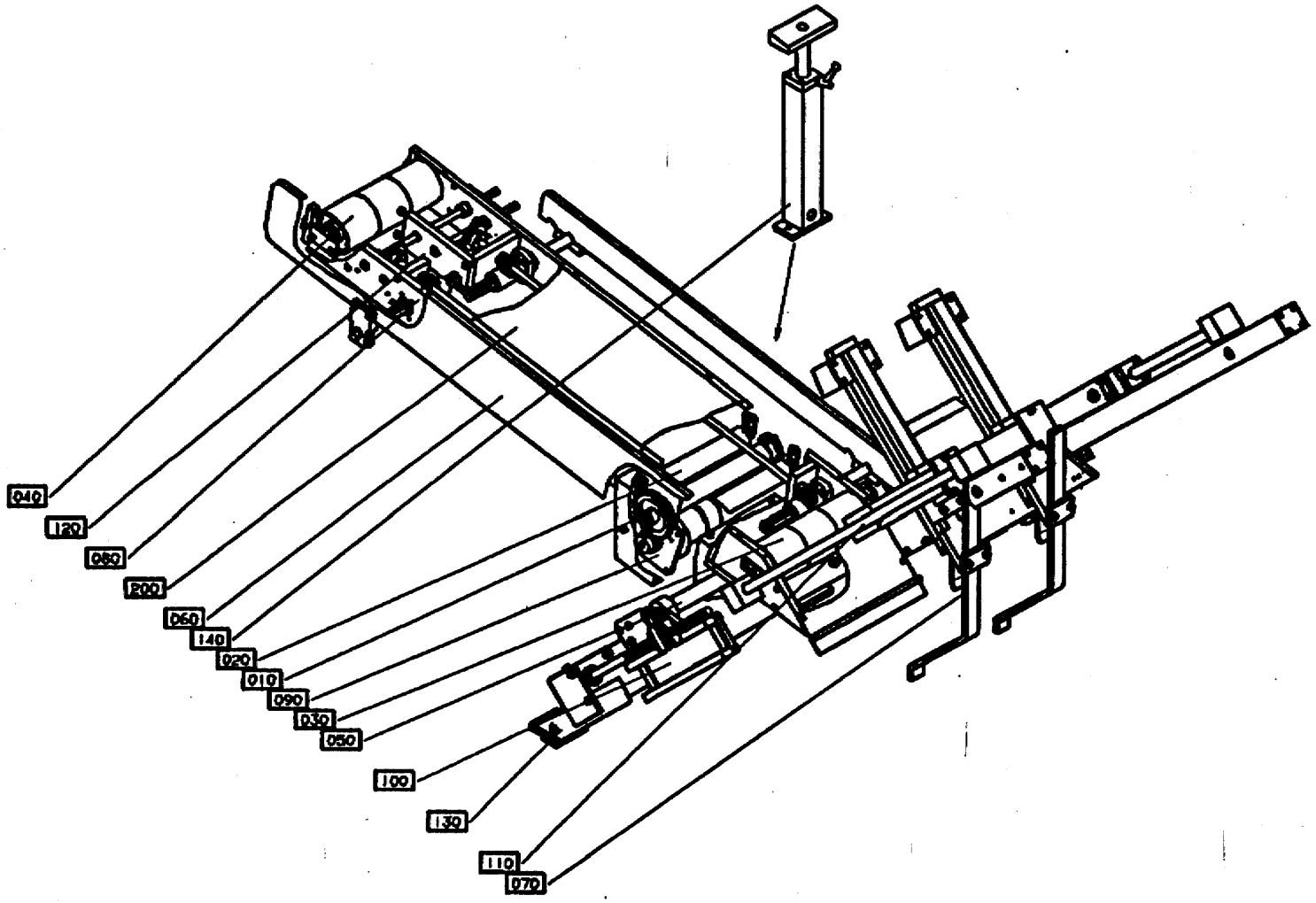

GraphicID: 67028502.tif
Parent Drw:670285-2
ECN No: 22292

Pos	Part No	SP	UN	Qty	Description	Page No
SEMI AUTOMATIC						
000	B- 670285-0401	-		1	MAGAZINE	
010	C-1021173-0101	-		1	DRIVE ROLLER	345
020	C-1021174-0101	-		2	BENDING ROLLER	347
030	C-1021175-0101	-		1	BENDING ROLLER FRONT	349
040	C-1021176-0101	-		1	BENDING ROLLER REAR	351
050	C-1021177-0101	-		1	WAY BOTTOMPART	353
060	C-1021178-0401	-		1	SIDE STEERING	357
070	C-1021179-0201	-		1	TOP STEERING	359
080	C-1021180-0101	-		1	MAGASINEFRAME	361
090	C-1021181-0201	-		1	DRIVE MOTOR	363
100	C-1021203-0201	-		1	BOTTOMFLAP ADJUSTABLE	365
110	C-1021222-0401	-		1	TOPFLAP ADJUSTABLE	367
120	C-1021243-0101	-		1	SIDESTEERING ADJUSTABLE	369
130	C-1021273-0201	-		1	FRAME	371
140	C-1128047-010V	-		1	SUPPORT	373
200	90252-0038	-		1	DRIVE BELT	

Pos	Part No	SP	UN	Qty	Description	Page No

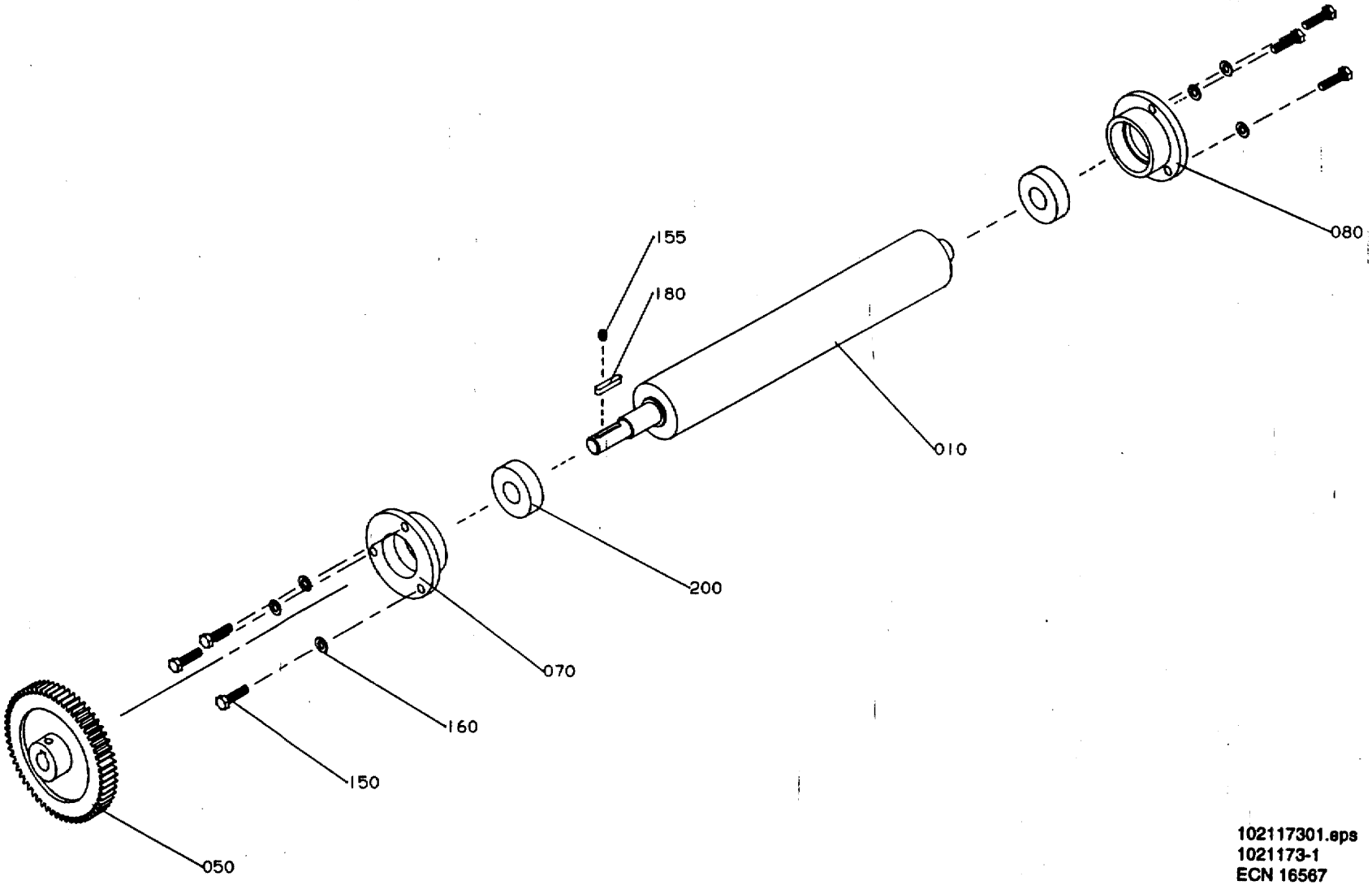

102117301.eps
1021173-1
ECN 16567

Pos	Part No	SP	UN	Qty	Description	Page No
-						
000	C-1021173-0101	-		1	DRIVE ROLLER	
010	1021182	-		1	SHAFT	
050	1021183	-		1	GEAR WHEEL	
070	1021184	-		1	BEARING HOUSING	
080	1021185	-		1	BEARING HOUSING	
150	312105-0331	-		6	SCREW O4017 M5X20A280	
155	312318-0360	-		1	STOP SCREW SK6SS6X6RFR	
160	315105-0146	-		6	WASHER BRB5,3X10RFR	
180	315701-0171	-		1	FLAT WEDGE4X4X22	
200	321313-0102	C		2	BALL BEARISKF6202-2RS	

Pos	Part No	SP	UN	Qty	Description	Page No

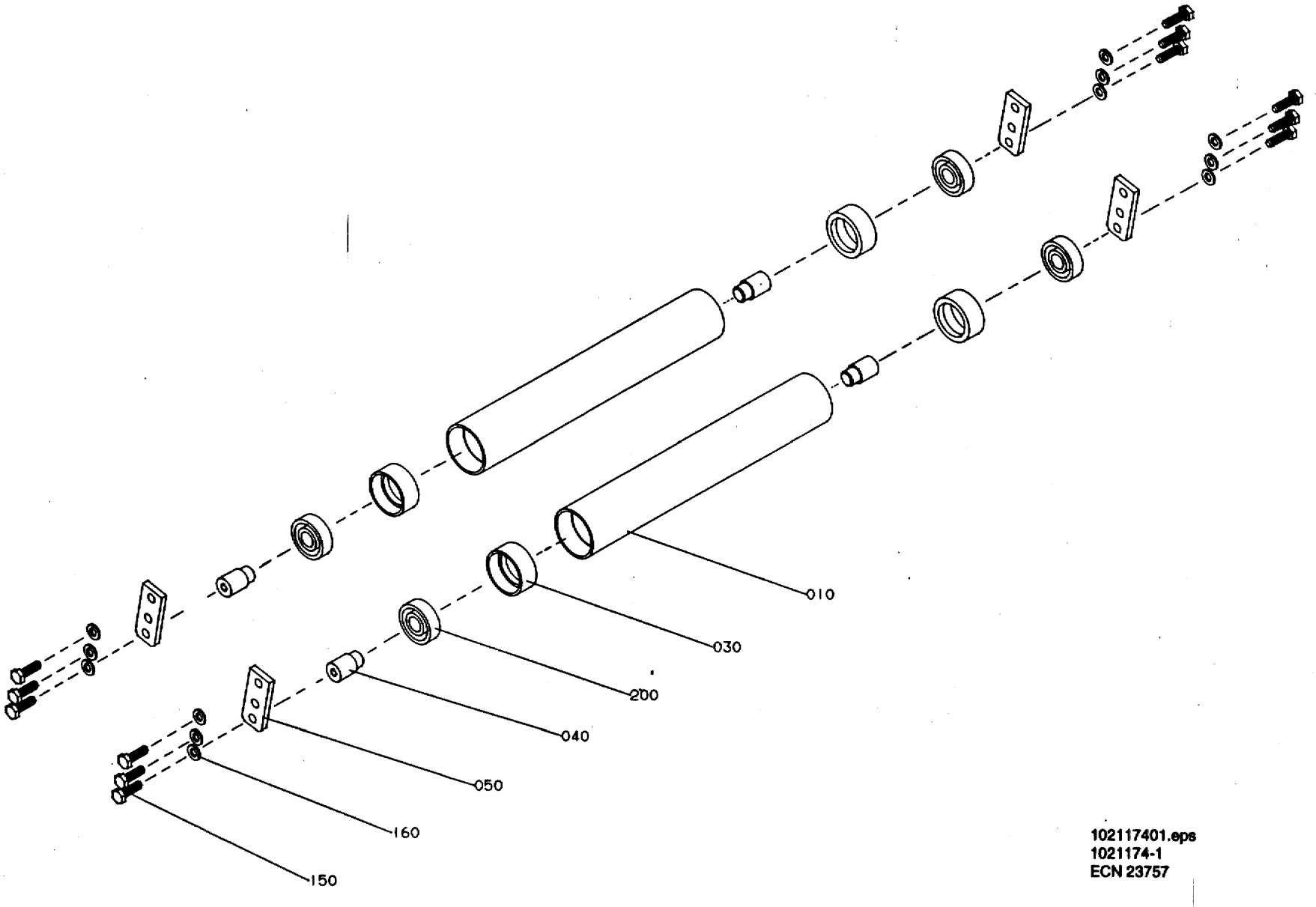

102117401.eps
1021174-1
ECN 23757

Pos	Part No	SP	UN	Qty	Description	Page No
-						
000	C-1021174-0101	-		2	BENDING ROLLER	
010	1021186	-		1	ROLL	
030	1021187	-		2	SLEEVE	
040	1021188	-		2	AXLE PIN	
050	1021189	-		2	HOLDER	
150	312105-0370	-		6	SCREW O4017 M6X20A280	
160	315105-0153	-		6	WASHER BRB6,4X12RFR	
200	321313-0101	C		2	BALL BEARISKF6201-2RS	

Pos	Part No	SP	UN	Qty	Description	Page No

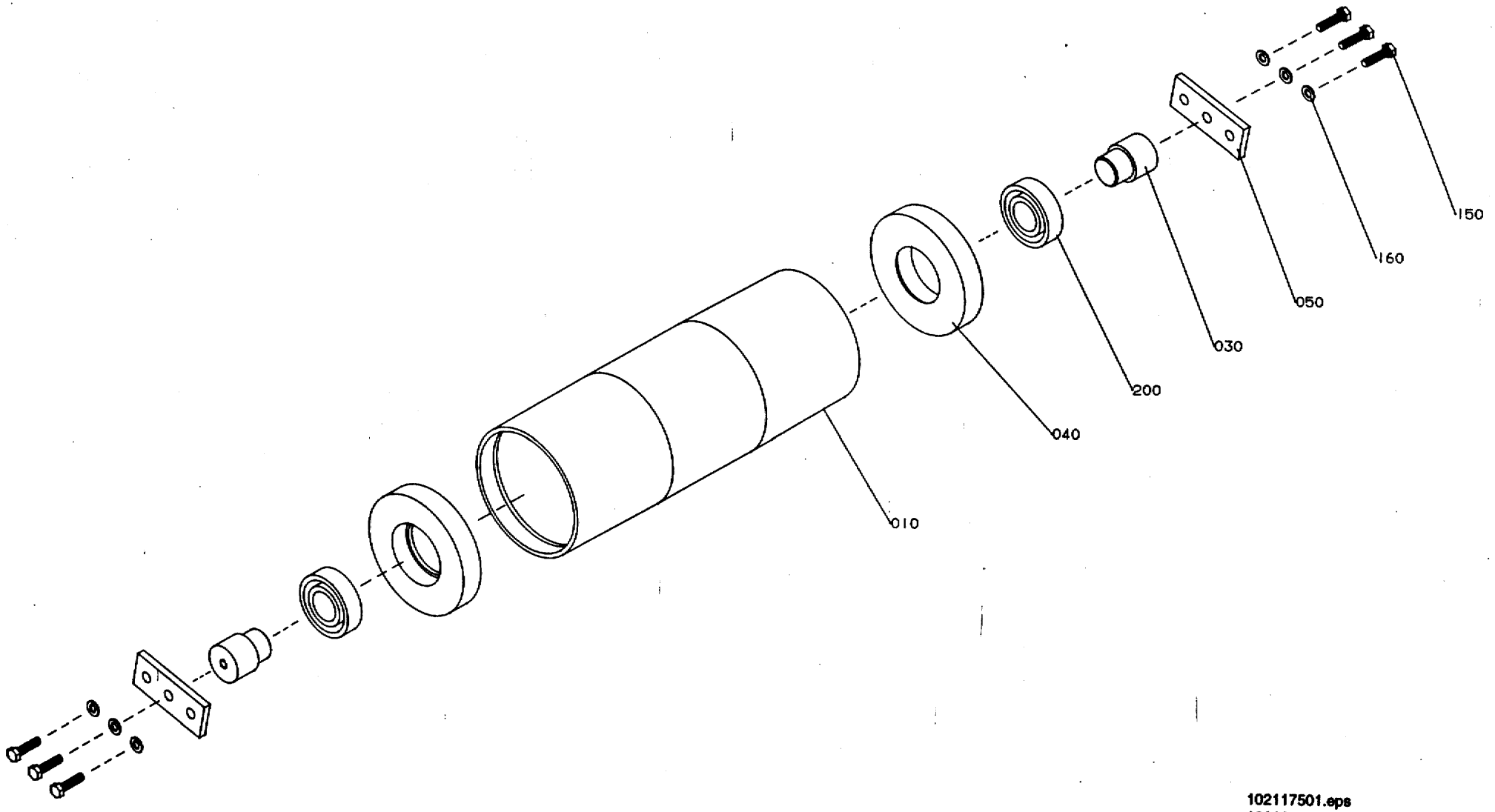

102117501.eps
1021175-1
ECN16567

Pos	Part No	SP	UN	Qty	Description	Page No
-						
000	C-1021175-0101	-		1	BENDING ROLLER FRONT	
010	1021190	-		1	ROLL	
030	1021191	-		2	SLEEVE	
040	1021192	-		2	AXLE PIN	
050	1021193	-		2	HOLDER	
150	312105-0370	-		6	SCREW O4017 M6X20A280	
160	315105-0153	-		6	WASHER BRB6,4X12RFR	
200	321308-0204	C		2	BALL BEARISKF6004-2RS	

Pos	Part No	SP	UN	Qty	Description	Page No

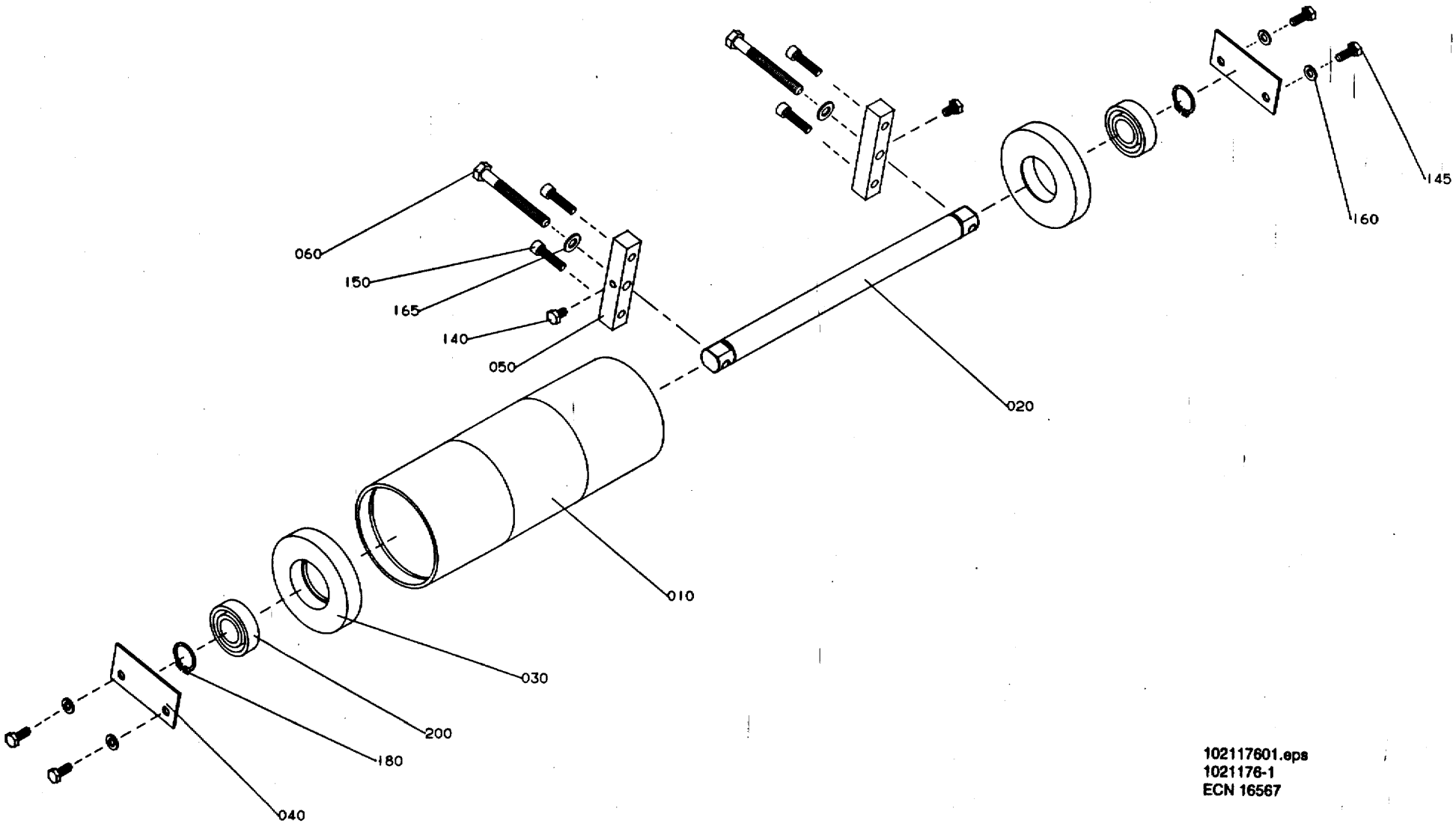

102117601.eps
1021176-1
ECN 16567

Pos	Part No	SP	UN	Qty	Description	Page No
-						
000	C-1021176-0101	-		1	BENDING ROLLER REAR	
010	1021190	-		1	ROLL	
020	1021194	-		1	SHAFT	
030	1021191	-		2	SLEEVE	
040	1021195	-		2	PLATE	
050	1021196	-		2	BRACKET	
060	1021197	-		2	SCREW	
140	312105-0364	-		2	SCREW M6S6X10RFR	
145	312105-0368	-		4	SCREW O4017 M6X16A280	
150	312115-0372	-		4	SCREW O4762 M6X25A280	
160	315105-0153	-		4	WASHER BRB6,4X12RFR	
165	315105-0165	-		2	WASHER BRB8,4X16RFR	
180	315751-0116	-		2	CIRCLIP SGA20 RFR	
200	321308-0204	C		2	BALL BEARISKF6004-2RS	

Pos	Part No	SP	UN	Qty	Description	Page No

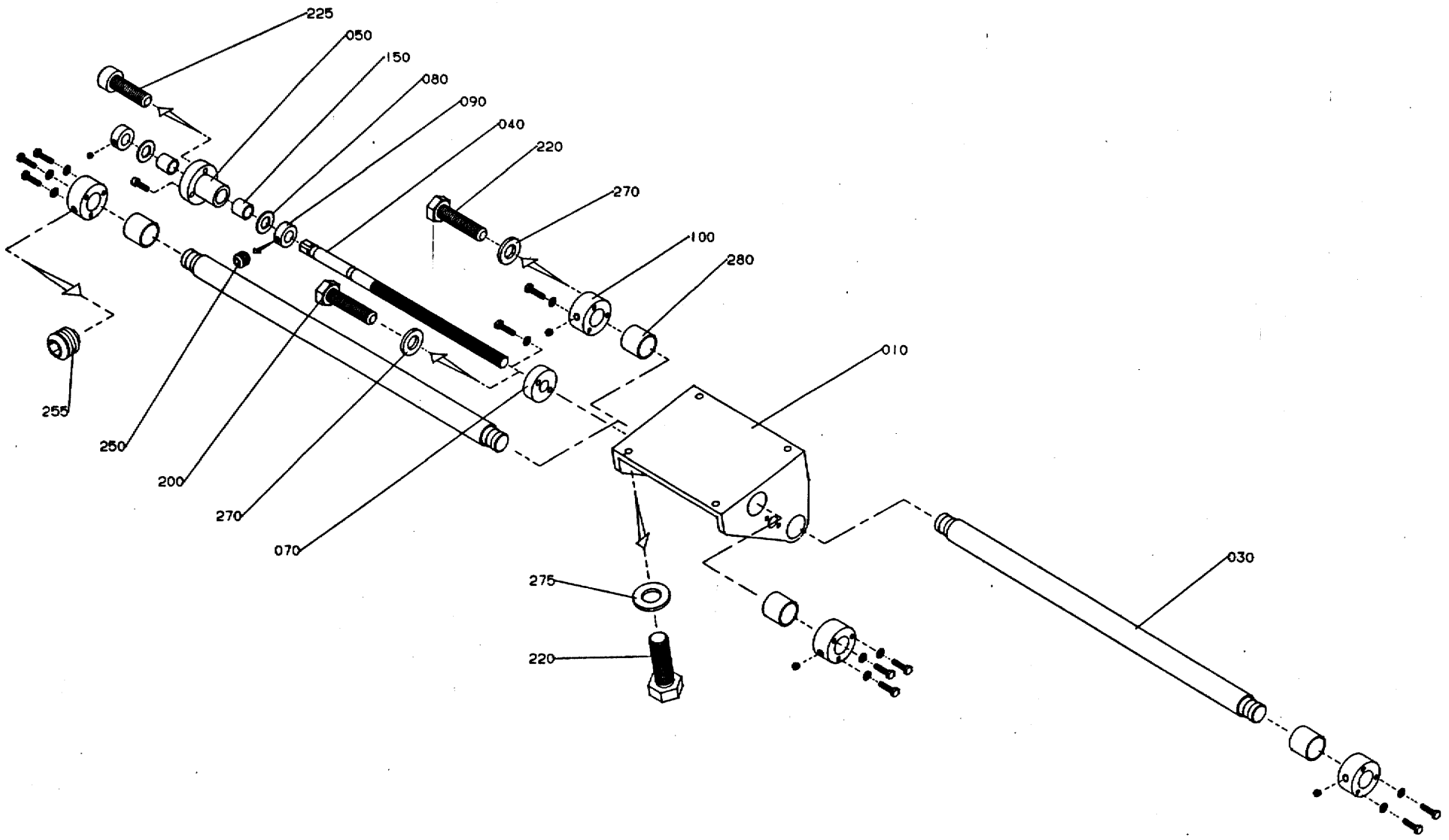

102117701.eps
1021177-1
ECN 16567

Pos	Part No	SP	UN	Qty	Description	Page No
-						
000	C-1021177-0101	-		1	WAY BOTTOM PART	
010	G-1021198	-		1	GUIDE	
030	1021199	-		2	SHAFT	
040	1021200	-		1	ADJUSTING SCREW	
050	1021201	-		1	BEARING HOUSING	
070	1021154	-		1	NUT	
080	1021155	-		2	WASHER	
090	1021156	-		2	RETAINING RING	
100	1021202	-		4	HUB	
150	90240-0205	-		2	PLAIN BEARING	
200	312105-0372	-		14	SCREW O4017 M6X25A280	
220	312105-0453	-		4	SCREW O4017 M8X25A280	
225	312115-0370	-		3	SCREW O4762 M6X20A280	
250	312318-0360	-		4	STOP SCREW SK6SS6X6RFR	
255	312318-0443	-		4	STOP SCREW SK6SS8X8RFR	
270	315105-0153	-		14	WASHER BRB6,4X12RFR	
275	315105-0165	-		4	WASHER BRB8,4X16RFR	
280	321120-0171	-		4	BUSHING 30/34X30	

Pos	Part No	SP	UN	Qty	Description	Page No

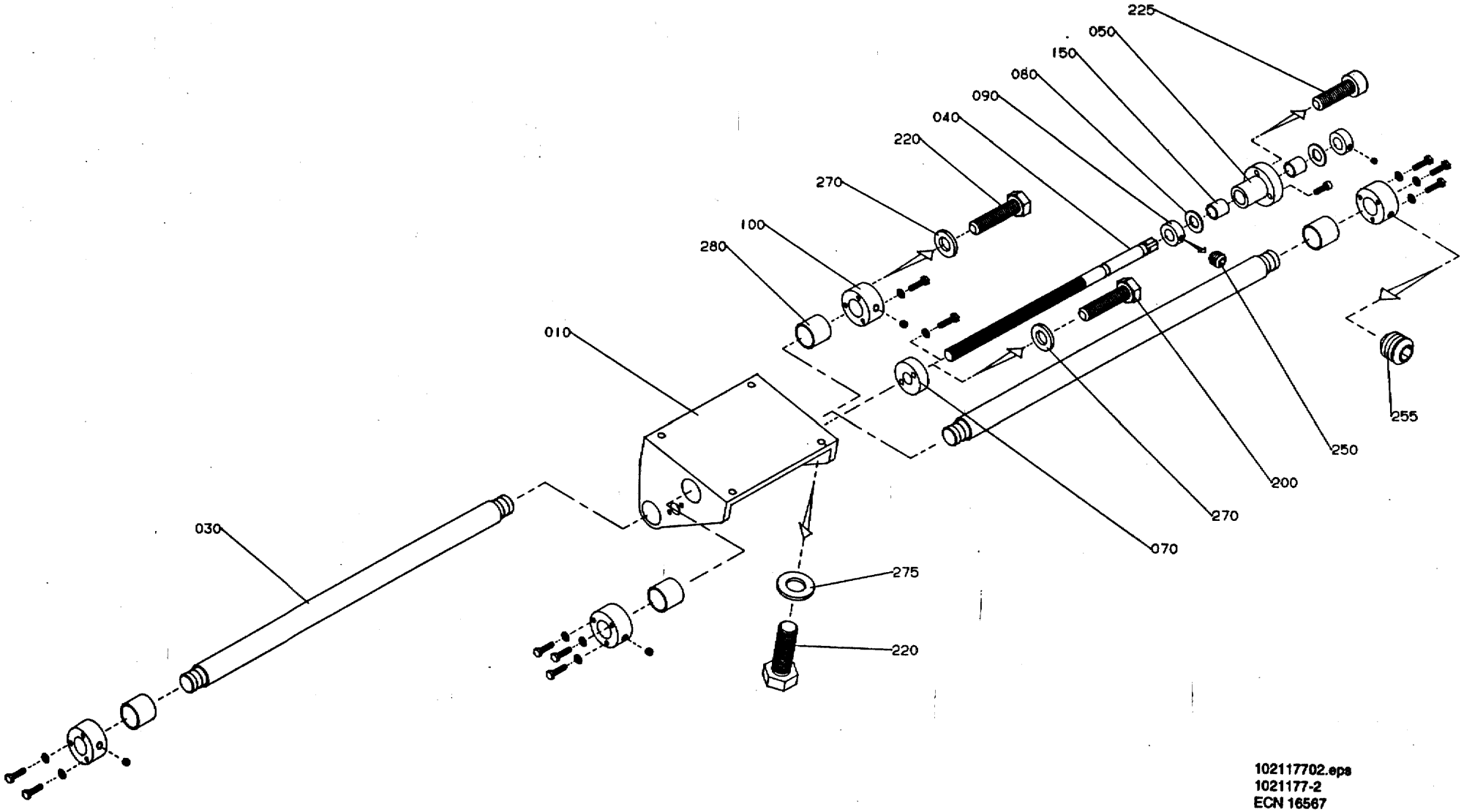

102117702.eps
1021177-2
ECN 16567

Pos	Part No	SP	UN	Qty	Description	Page No
000	C-1021177-0101	-		1	WAY BOTTOM PART	
010	G-1021198	-		1	GUIDE	
030	1021199	-		2	SHAFT	
040	1021200	-		1	ADJUSTING SCREW	
050	1021201	-		1	BEARING HOUSING	
070	1021154	-		1	NUT	
080	1021155	-		2	WASHER	
090	1021156	-		2	RETAINING RING	
100	1021202	-		4	HUB	
150	90240-0205	-		2	PLAIN BEARING	
200	312105-0372	-		14	SCREW O4017 M6X25A280	
220	312105-0453	-		4	SCREW O4017 M8X25A280	
225	312115-0370	-		3	SCREW O4762 M6X20A280	
250	312318-0360	-		4	STOP SCREW SK6SS6X6RFR	
255	312318-0443	-		4	STOP SCREW SK6SS8X8RFR	
270	315105-0153	-		14	WASHER BRB6,4X12RFR	
275	315105-0165	-		4	WASHER BRB8,4X16RFR	
280	321120-0171	-		4	BUSHING 30/34X30	

Pos	Part No	SP	UN	Qty	Description	Page No

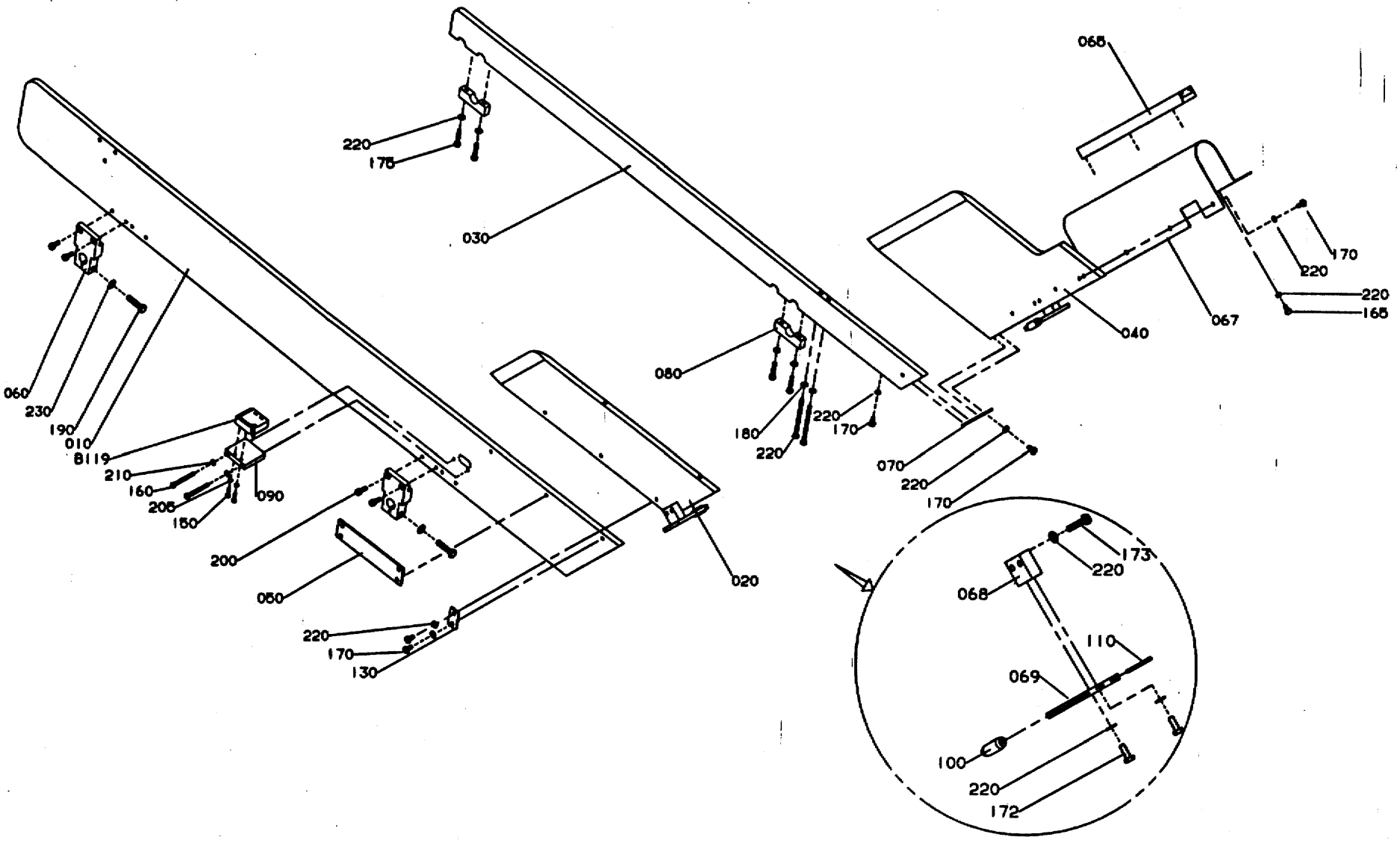

GraphicID: 102117807.eps
Parent Drw: 1021178-7
ECN 22668

Pos	Part No	SP	UN	Qty	Description	Page No
-						
000	C-1021178-0401	-		1	SIDE STEERING	
010	1139102	-		1	SIDE PLATE	
020	1128048	-		1	STEERING	
030	1128888	-		1	SIDE PLATE	
040	1128889	-		1	STEERING	
050	1128883	-		1	BRACKET	
060	1021242	-		2	CLAMPING PIECE	
065	1021950	-		1	SLIDE RAIL	
067	1128882	-		1	PROTECTION	
068	1128885	-		2	HOLDER	
069	1074314	-		2	HOLDER	
070	1021892	-		1	MOUNTING SHEET	
080	1021893	-		2	HOLDER	
090	1139103	-		1	PHOTOCELL BRACKET	
100	1074315	-		2	ROLL	
110	1074316	-		2	SHAFT	
130	1128884	-		1	BRACKET	
150	312105-0293	-		2	SCREW O4017 M4X16A280	
160	312105-0343	-		2	SCREW M6S5X60 A2 80	
165	312105-0364	-		3	SCREW M6S6X10RFR	
170	312105-0366	-		14	SCREW O4017 M6X12A280	
172	312105-0368	-		4	SCREW O4017 M6X16A280	
173	312105-0372	-		4	SCREW O4017 M6X25A280	
175	312105-0374	-		4	SCREW O4017 M6X30A280	
180	312105-0386	-		2	SCREW O4014 M6X80A280	
190	312105-0457	-		2	SCREW O4017 M8X35A280	
200	312115-0368	-		4	SCREW O4762 M6X16A280	
205	315105-0136	-		2	WASHER BRB4,3X8RFR	
210	315105-0146	-		2	WASHER BRB5,3X10RFR	
220	315105-0153	-		31	WASHER BRB6,4X12RFR	
230	315105-0165	-		2	WASHER BRB8,4X16RFR	
B119	90232-0110	S		1	PH.CELL OMRON E3S-CL1-5M	

Pos	Part No	SP	UN	Qty	Description	Page No

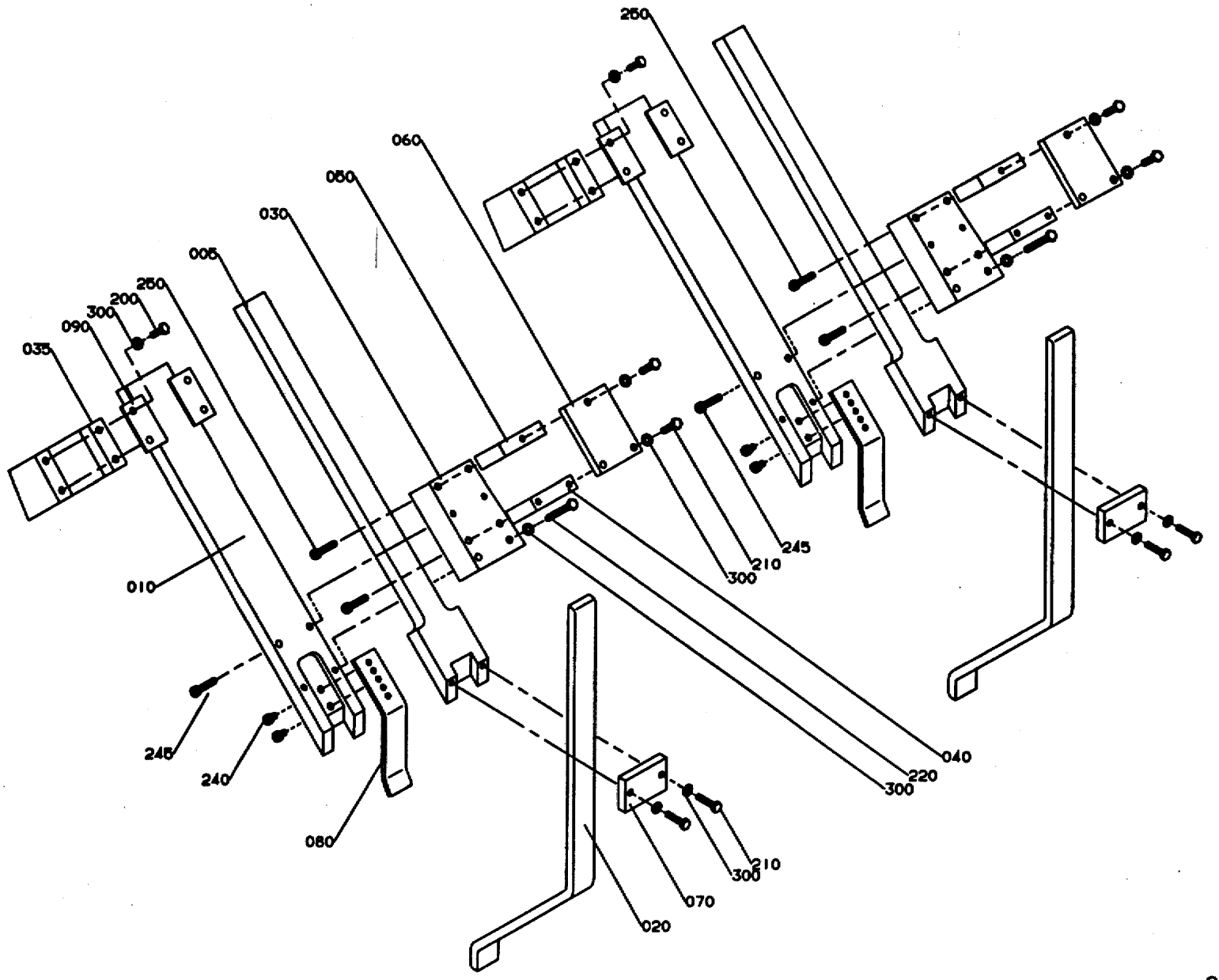

GraphicID: 102117903.eps
Parent Drw: 1021179-3
ECN 22668

Pos	Part No	SP	UN	Qty	Description	Page No
000	C-1021179-0201	-		1	TOP STEERING	
005	1021992	-		2	RAIL	
010	1128029	-		2	RAIL	
020	1065902	-		2	FOLDING BAR	
030	1021994	-		2	PLATE	
035	1128030	-		2	LUG	
040	1021233	-		2	SPACER	
050	1021234	-		2	SPACER	
060	1021235	-		2	PLATE	
070	1021236	-		2	LOCK PLATE	
080	1021995	-		2	STEERING RAIL	
090	1128049	-		4	LOCK SHEET	
200	312105-0368	-		8	SCREW O4017 M6X16A280	
210	312105-0372	-		10	SCREW O4017 M6X25A280	
220	312105-0381	-		4	SCREW O4014 M6X55A280	
240	312115-0366	-		4	SCREW O4762 M6X12A280	
245	312115-0374	-		4	SCREW O4762 M6X30A280	
250	312115-0379	-		8	SCREW O4762 M6X45A280	
300	315105-0153	-		18	WASHER BRB6,4X12RFR	

Pos	Part No	SP	UN	Qty	Description	Page No

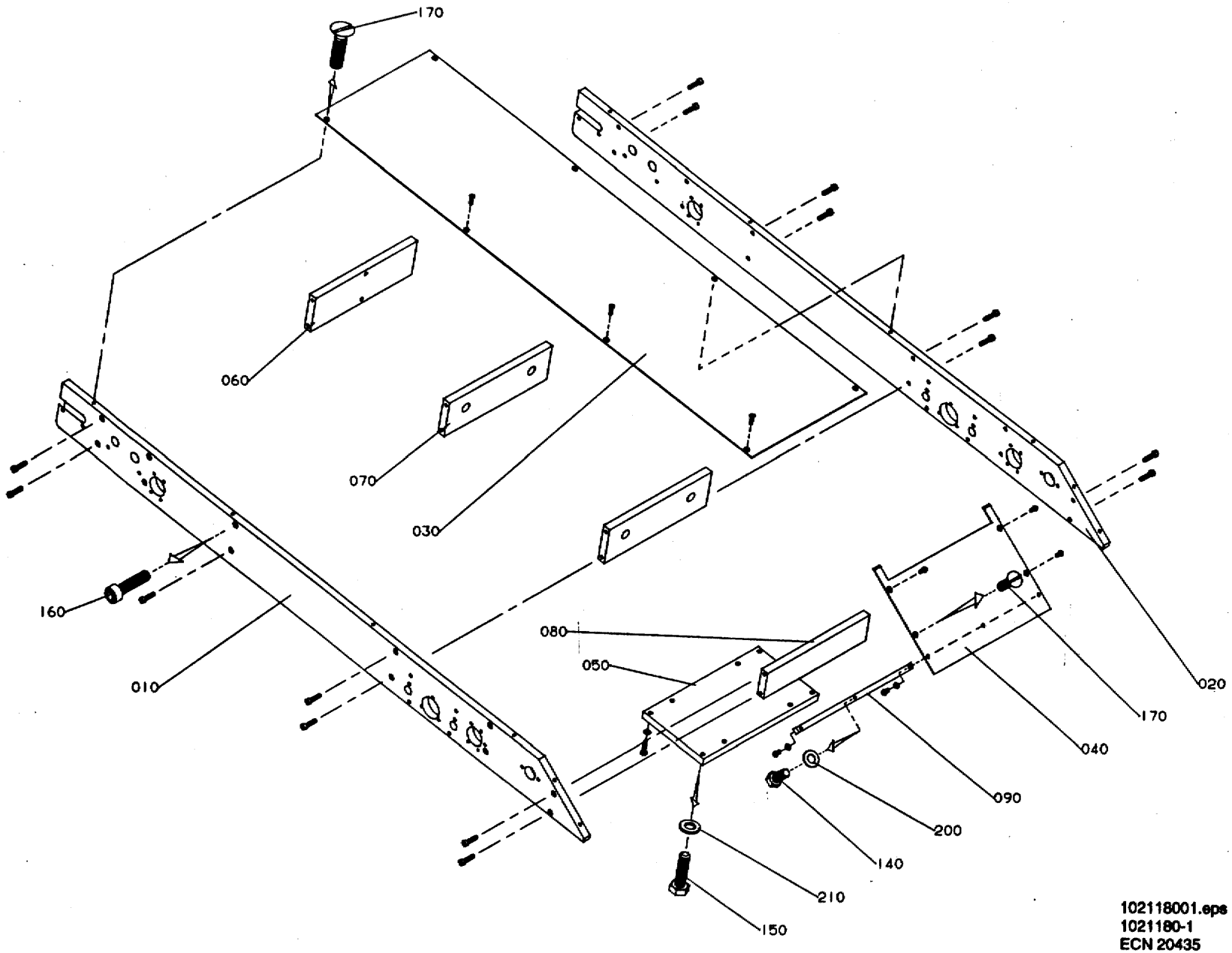

102118001.eps
1021180-1
ECN 20435

Pos	Part No	SP	UN	Qty	Description	Page No
000	C-1021180-0101	-		1	**MAGAZINE FRAME**	
010	1021264	-		1	SIDE PLATE	
020	1021265	-		1	SIDE PLATE	
030	1021338	-		1	COVERING PLATE	
040	1021339	-		1	COVERING PLATE	
050	1021266	-		1	PLATE	
060	1021259	-		1	PLATE	
070	1021267	-		2	PLATE	
080	1021268	-		1	PLATE	
090	1021506	-		1	SUPPORT	
140	312105-0327	-		3	SCREW O4017 M5X12A280	
150	312105-0374	-		4	SCREW O4017 M6X30A280	
160	312115-0372	-		16	SCREW O4762 M6X25A280	
170	312155-0325	-		12	SCREW MF6S5X10RFR	
200	315105-0146	-		3	WASHER BRB5,3X10RFR	
210	315105-0153	-		4	WASHER BRB6,4X12RFR	

Pos	Part No	SP	UN	Qty	Description	Page No

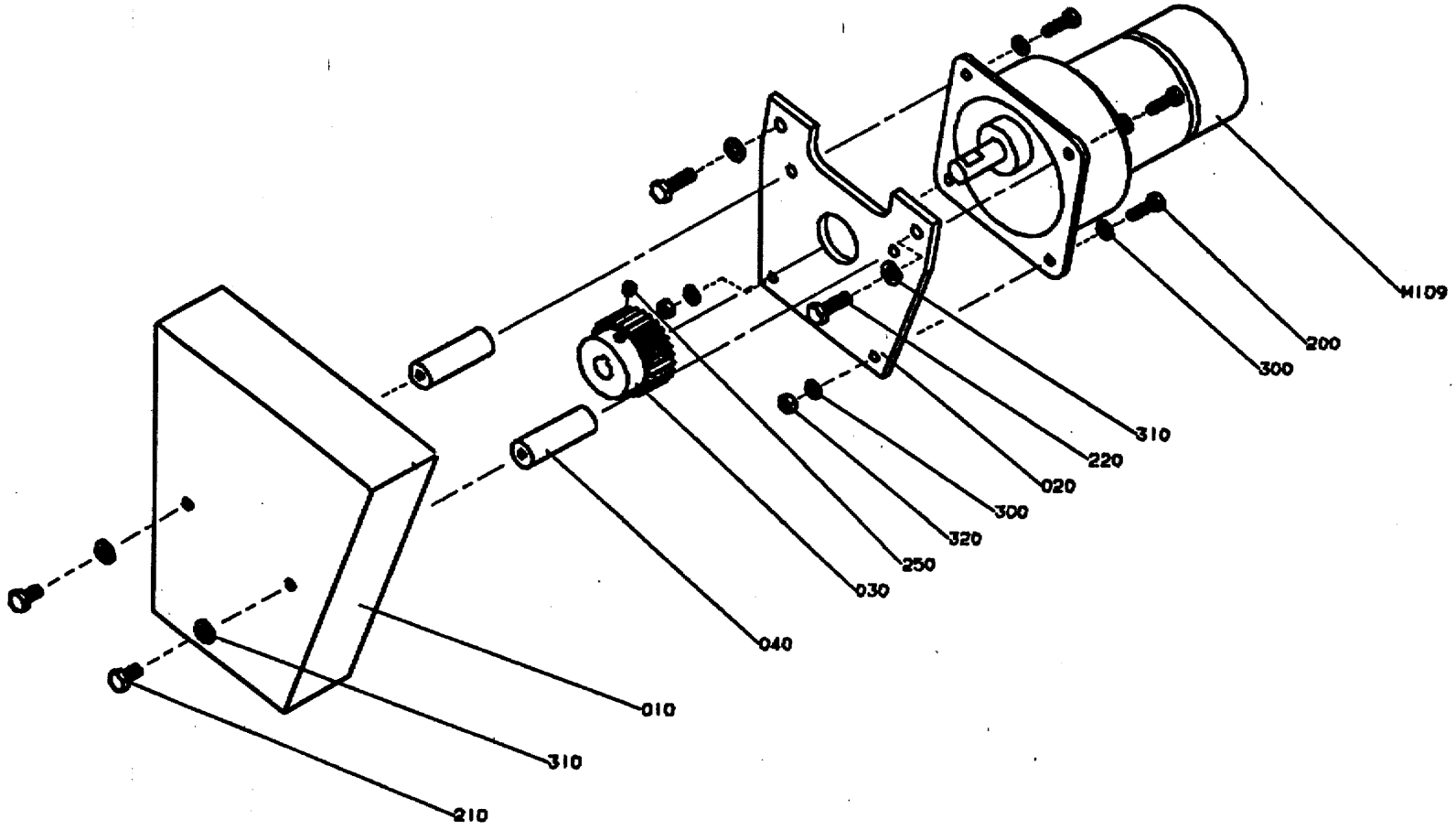

GraphicID: 102118102.tif
Parent Drw: 1021181-2
ECN No: 22292

Pos	Part No	SP	UN	Qty	Description	Page No
-						
000	C-1021181-0201	-		1	DRIVE MOTOR	
010	1021269	-		1	COVER	
020	1021270	-		1	HOLDER	
030	1021271	-		1	GEAR WHEEL	
040	1021272	-		2	SPACER	
200	312105-0329	-		4	SCREW O4017 M5X16A280	
210	312105-0366	-		2	SCREW O4017 M6X12A280	
220	312105-0370	-		2	SCREW O4017 M6X20A280	
250	312318-0360	-		1	STOP SCREW SK6SS6X6RFR	
300	315105-0146	-		6	WASHER BRB5,3X10RFR	
310	315105-0153	-		4	WASHER BRB6,4X12RFR	
320	312605-0314	-		2	NUT M6M5RFR	
M109	90069-0222	C		1	GEARED MOTOR	

Pos	Part No	SP	UN	Qty	Description	Page No

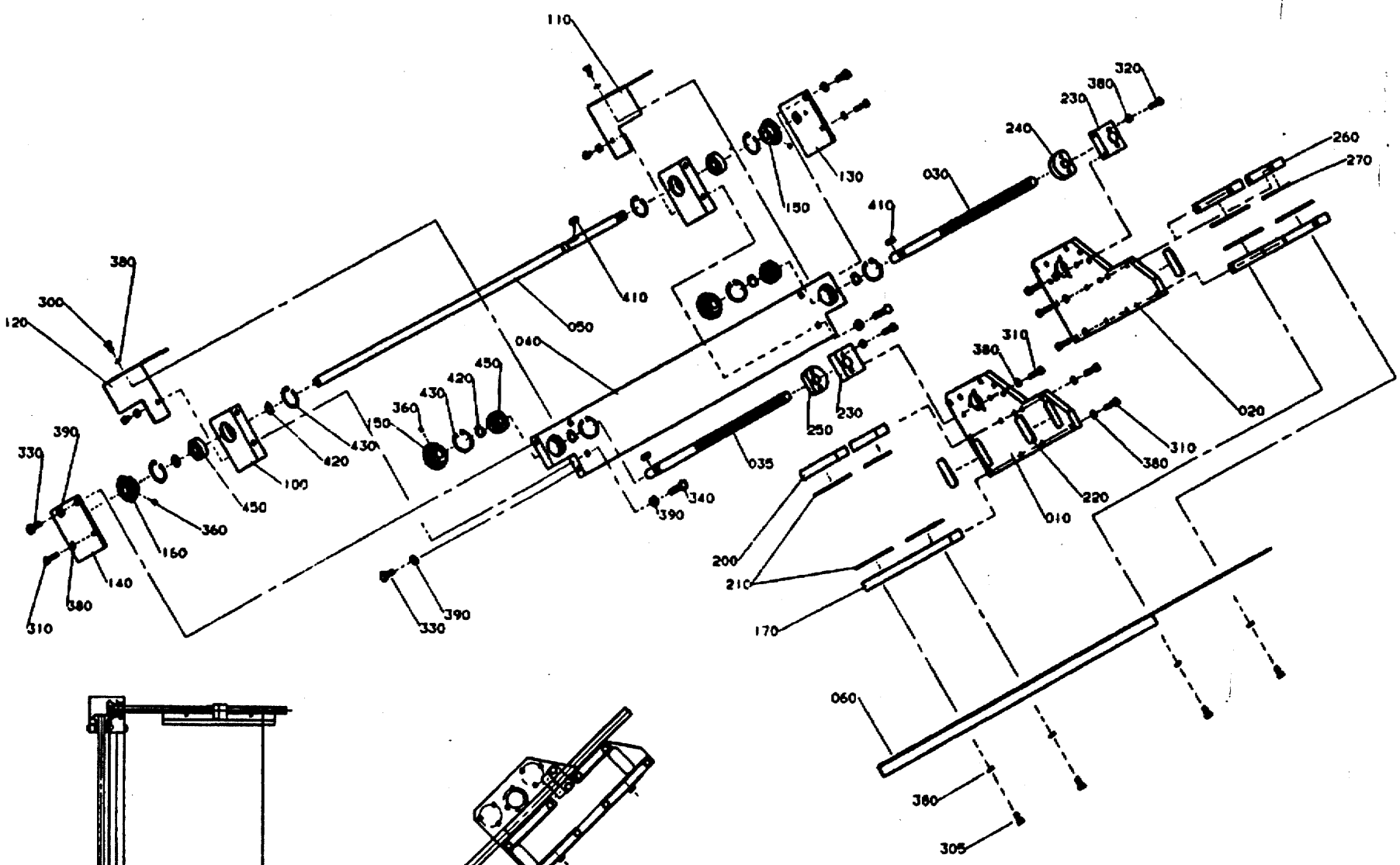

MOUNTING INFEED RIGHT IS SHOWN ON THE DRAWING
INFEED LEFT MIRROR REVERSED.

Pos	Part No	SP	UN	Qty	Description	Page No
-						
000	C-1021203-0201	-		1	BOTTOM FLAP ADJUSTABLE	
010	1065368	-		1	END SECTION	
020	1065369	-		1	END SECTION	
030	1021212	-		1	ADJUSTING SCREW	
035	1021508	-		1	ADJUSTING SCREW	
040	1021213	-		1	PLATE	
050	1021215	-		1	SHAFT	
060	1021953	-		1	PROTECTION PLATE	
100	1021214	-		2	BEARING HOUSING	
110	1021216	-		1	COVER	
120	1021217	-		1	COVER	
130	1021218	-		1	SUPPORT	
140	1021219	-		1	SUPPORT	
150	1021220	-		3	GEAR WHEEL	
160	1021221	-		1	GEAR WHEEL	
170	1021949	-		2	RAIL	
200	1021207	-		2	RAIL	
210	1021208	-		6	SLIDING STRIP	
220	1021209	-		4	SLIDING STRIP	
230	1021210	-		2	HOLDER	
240	1021211	-		1	NUT	
250	1021507	-		1	NUT	
260	1065370	-		2	RAIL	
270	1065371	-		2	SLIDING STRIP	
300	312105-0366	-		4	SCREW O4017 M6X12A280	
305	312105-0367	-		4	SCREW M6S6X14RFR	
310	312105-0372	-		22	SCREW O4017 M6X25A280	
320	312105-0374	-		4	SCREW O4017 M6X30A280	
330	312105-0451	-		4	SCREW SO4017 8X20A280	
340	312105-0457	-		4	SCREW O4017 M8X35A280	
360	312318-0360	-		5	STOP SCREW SK6SS6X6RFR	
380	315105-0153	-		34	WASHER BRB6,4X12RFR	
390	315105-0165	-		8	WASHER BRB8,4X16RFR	
410	315701-0200	-		3	FLAT WEDGE5X5X18	
420	315751-0112	-		6	CIRCLIP SGA15 RFR	
430	315753-0124	-		8	CIRCLIP GH 35 RFR	
450	321313-0102	-		4	BALL BEARISKF6202-2RS	

Pos	Part No	SP	UN	Qty	Description	Page No

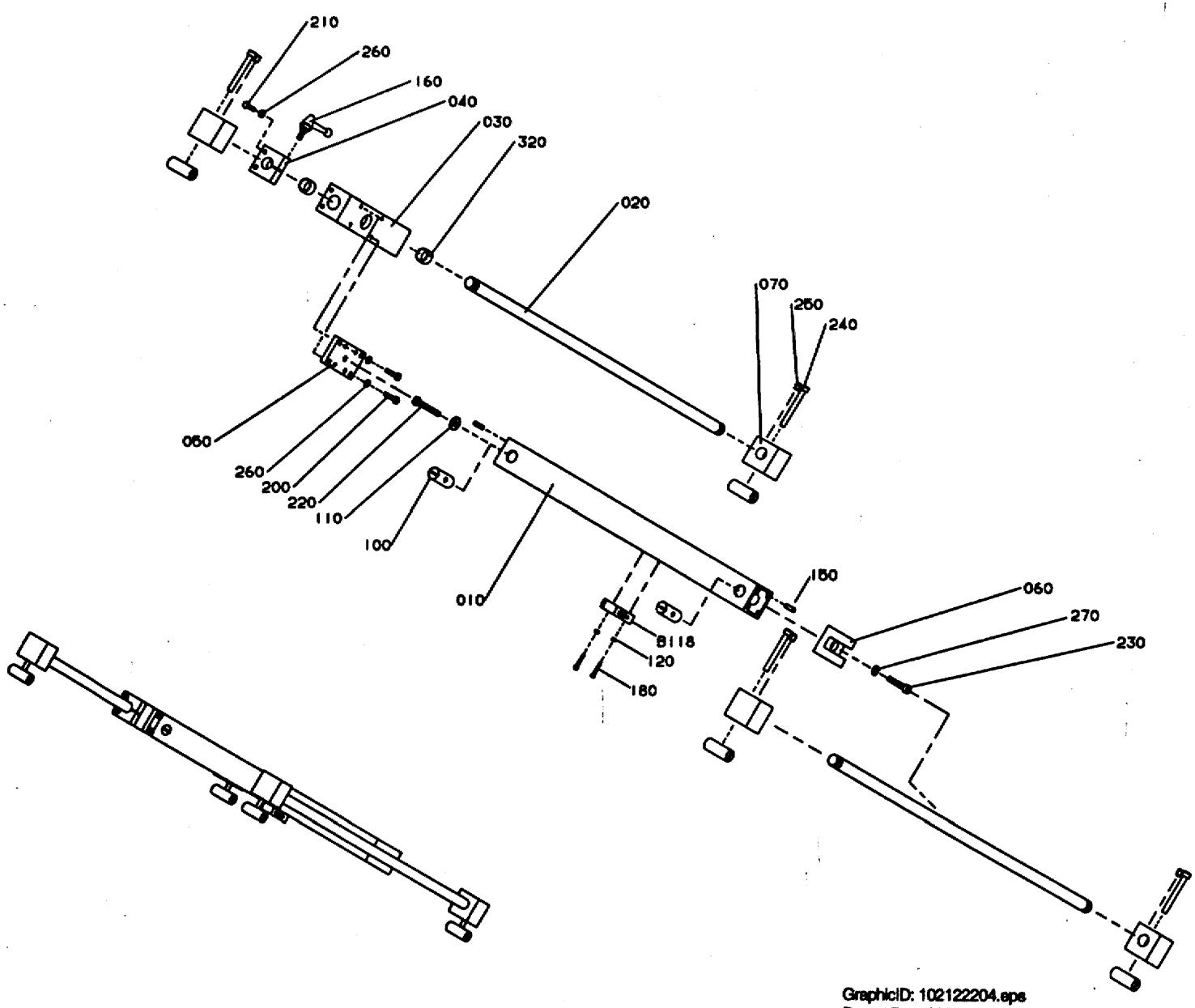

GraphicID: 102122204.eps
Parent Drw: 1021222-4
ECN 22668

Pos	Part No	SP	UN	Qty	Description	Page No
-						
000	C-1021222-0401	-		1	TOP FLAP ADJUSTABLE	
010	1139104	-		1	PROFILE	
020	1111866	-		2	PILLAR	
030	1021225	-		1	BEARING HOUSING	
040	1021226	-		1	CLAMPING PIECE	
050	1021227	-		1	FASTENING PLATE	
060	1021228	-		1	STEERING	
070	1021229	-		4	BRACKET	
100	486268	-		6	NUT	
110	548599	-		1	WASHER	
120	315105-0124	-		2	WASHER BRB3,2X6RFR	
150	1065410	-		8	PIN	
160	90117-0026	-		1	LOCKING LEVER	
180	312125-0230	-		2	SLOTTED HEMCS3X20RFR	
200	312105-0372	-		4	SCREW O4017 M6X25A280	
210	312105-0374	-		2	SCREW O4017 M6X30A280	
220	312105-0461	-		1	SCREW O4017 M8X50A280	
230	312115-0459	-		1	SCREW O4762 M8X40A280	
240	312115-0465	-		4	SCREW O4762 M8X70A280	
250	312318-0447	-		4	STOP SCREW SK6SS8X12RFR	
260	315105-0153	-		6	WASHER BRB6,4X12RFR	
270	315105-0165	-		1	WASHER BRB8,4X16RFR	
320	321120-0137	-		2	BUSHING 20/23X15	
B118	90232-0110	-		1	PH.CELL OMRON E3S-CL1-5M	

Pos	Part No	SP	UN	Qty	Description	Page No

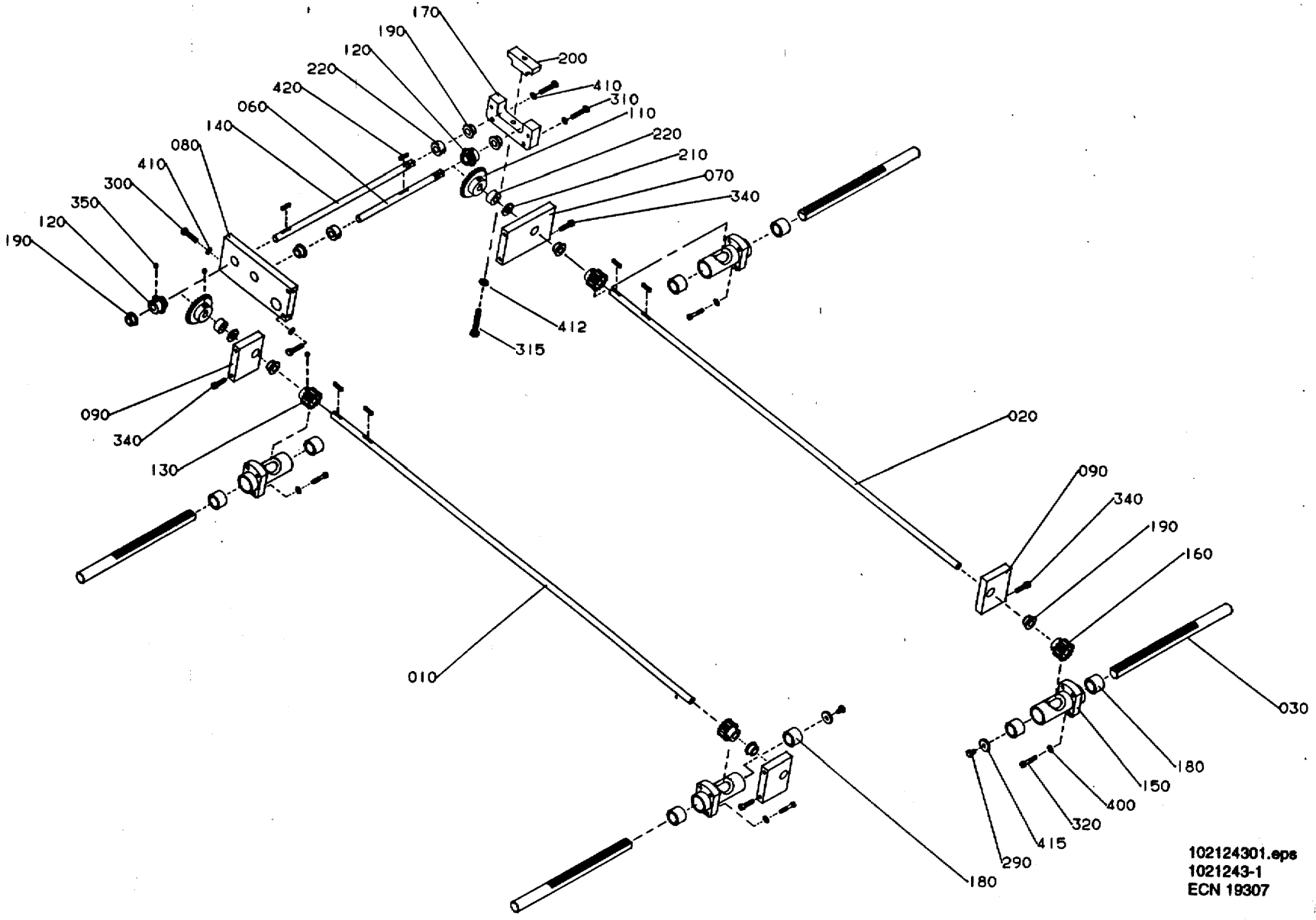
170
190
120
220
420
060
140
080
410
300
350
120
190
200
410
310
110
220
210
070
340
412
315
090
340
130
020
090
340
190
160
010
030
180
150
400
320
415
290
180
102124301.eps
1021243-1
ECN 19307

Pos	Part No	SP	UN	Qty	Description	Page No
000	C-1021243-0101	-		1	SIDE STEERING ADJUSTABLE	
010	1021244	-		1	SHAFT	
020	1021245	-		1	SHAFT	
030	1021246	-		4	PILLAR	
060	1021249	-		1	SHAFT	
070	1021250	-		1	BEARING HOLDER	
080	1021251	-		1	BEARING HOLDER	
090	1021252	-		3	BEARING HOLDER	
110	1021253	-		2	CONICAL GEAR	
120	1021254	-		2	CONICAL GEAR	
130	1021255	-		2	GEAR WHEEL	
140	1021256	-		1	SHAFT	
150	1021257	-		4	BEARING HOUSING	
160	1021258	-		2	GEAR WHEEL	
170	1021260	-		1	HOLDER	
180	230462	-		8	BUSHING	
190	493768	-		8	BUSHING	
200	1021261	-		1	CLAMPING PIECE	
210	1021262	-		2	WASHER	
220	1021263	-		4	RETAINING RING	
290	312105-0364	-		2	SCREW M6S6X10RFR	
300	312105-0374	-		4	SCREW O4017 M6X30A280	
310	312105-0376	-		2	SCREW O4017 M6X35A280	
315	312105-0460	-		1	SCREW O4017 M8X45A280	
320	312115-0335	-		16	SCREW O4762 M5X30A280	
340	312115-0372	-		8	SCREW O4762 M6X25A280	
350	312318-0360	-		18	STOP SCREW SK6SS6X6RFR	
400	315105-0146	-		16	WASHER BRB5,3X10RFR	
410	315105-0153	-		6	WASHER BRB6,4X12RFR	
412	315105-0165	-		1	WASHER BRB8,4X16RFR	
415	315125-0153	-		2	WASHER SB 6,4X22X4 RFR	
420	315701-0170	-		6	FLAT WEDGE4X4X20	

Pos	Part No	SP	UN	Qty	Description	Page No

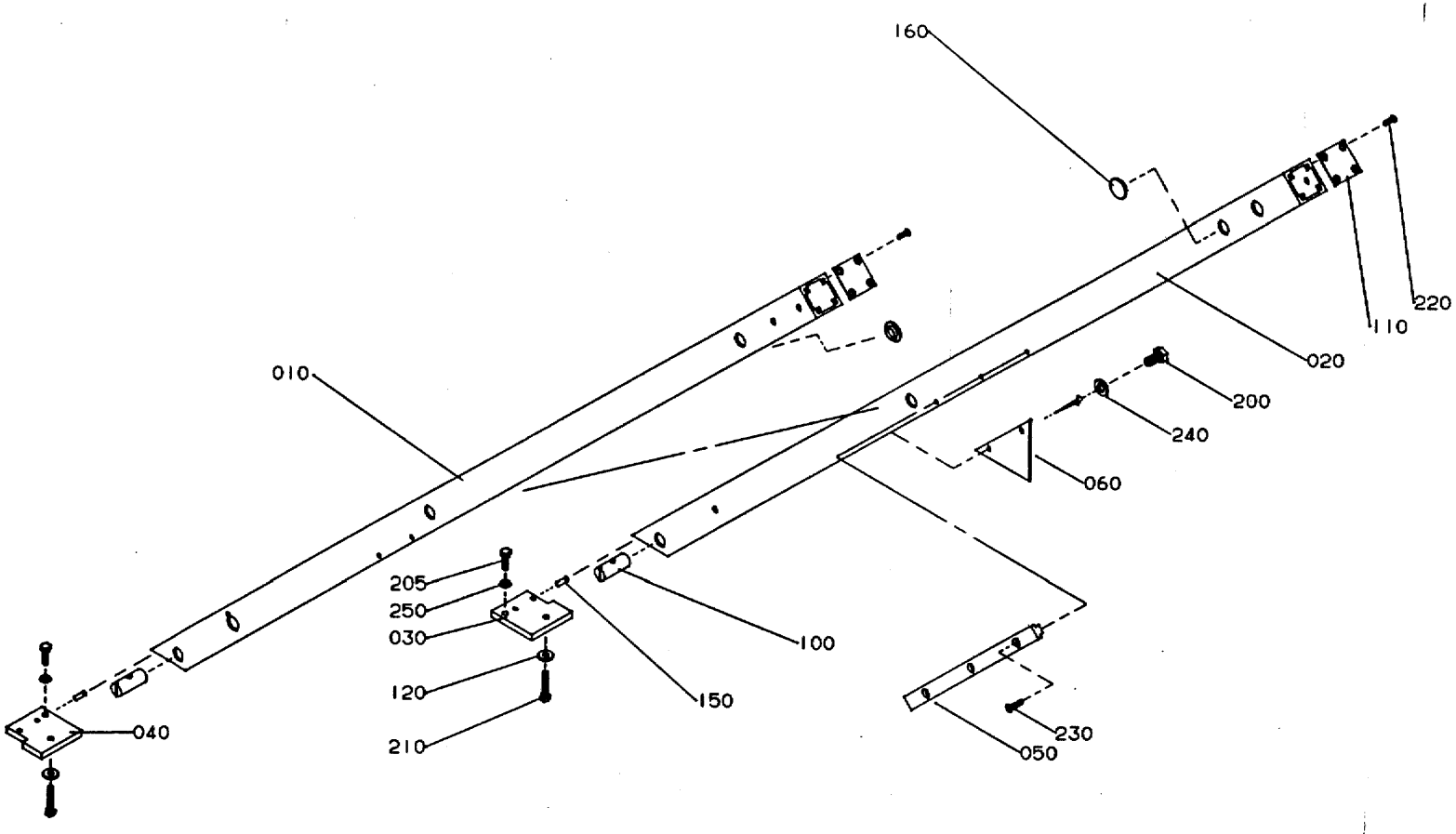

102127301.eps
1021273-1
ECN 16567

Pos	Part No	SP	UN	Qty	Description	Page No
-						
000	C-1021273-0201	-		1	FRAME	
010	1111864	-		1	PROFILE	
020	1111865	-		1	PROFILE	
030	1021276	-		1	PLATE	
040	1021277	-		1	PLATE	
050	1021951	-		1	SLIDER	
060	1021955	-		1	PROTECTION	
100	486268	-		2	NUT	
110	556604	-		2	COVER PLATE	
120	548599	-		4	WASHER	
150	1065410	-		4	PIN	
160	90261-0060	-		2	PLASTIC PLUG	
200	312105-0366	-		2	SCREW O4017 M6X12A280	
205	312105-0453	-		2	SCREW O4017 M8X25A280	
210	312105-0459	-		2	SCREW O4017 M8X40A280	
220	312145-0325	-		8	SLOTTED HEMFS5X10RFR	
230	312155-0372	-		3	SCREW MF6S6X25RFR	
240	315105-0153	-		2	WASHER BRB6,4X12RFR	
250	315105-0165	-		2	WASHER BRB8,4X16RFR	

Pos	Part No	SP	UN	Qty	Description	Page No

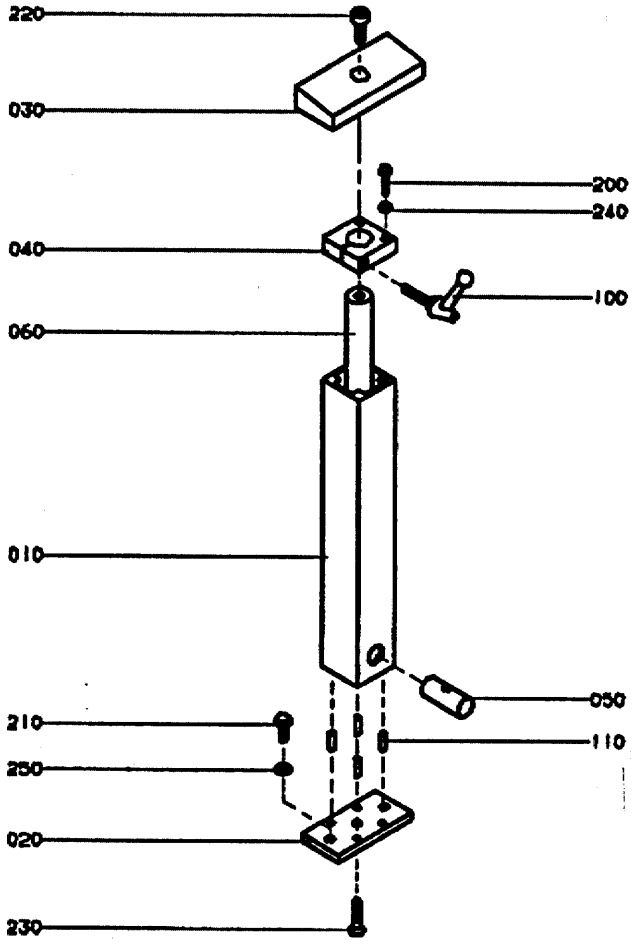

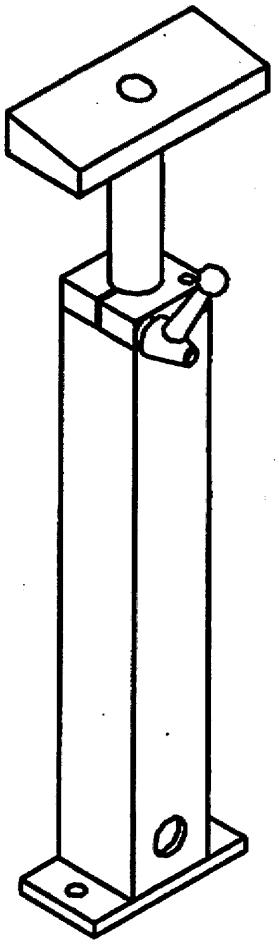

GraphicID: 112804701.tif
Parent Drw: 1128047-1
ECN No: 22292

Pos	Part No	SP	UN	Qty	Description	Page No
-						
000	C-1128047-010V	-		1	SUPPORT	
010	1128879	-		1	PROFILE	
020	556624	-		1	FRAME BRACKET	
030	1128881	-		1	SUPPORT PLATE	
040	1128880	-		1	CLAMPING PIECE	
050	486268	-		1	NUT	
060	1128886	-		1	SHAFT	
100	90117-0026	-		1	LOCKING LEVER	
110	1065410	-		4	PIN	
200	312105-0372	-		2	SCREW O4017 M6X25A280	
210	312105-0451	-		2	SCREW SO4017 8X20A280	
220	312115-0491	-		1	SCREW 4762 M10X20A280	
230	312155-0457	-		1	SCREW MF6S8X35RFR	
240	315105-0153	-		2	WASHER BRB6,4X12RFR	
250	315105-0165	-		2	WASHER BRB8,4X16RFR	

Pos	Part No	SP	UN	Qty	Description	Page No

Tetra Pak

SPC

Spare Parts Catalogue

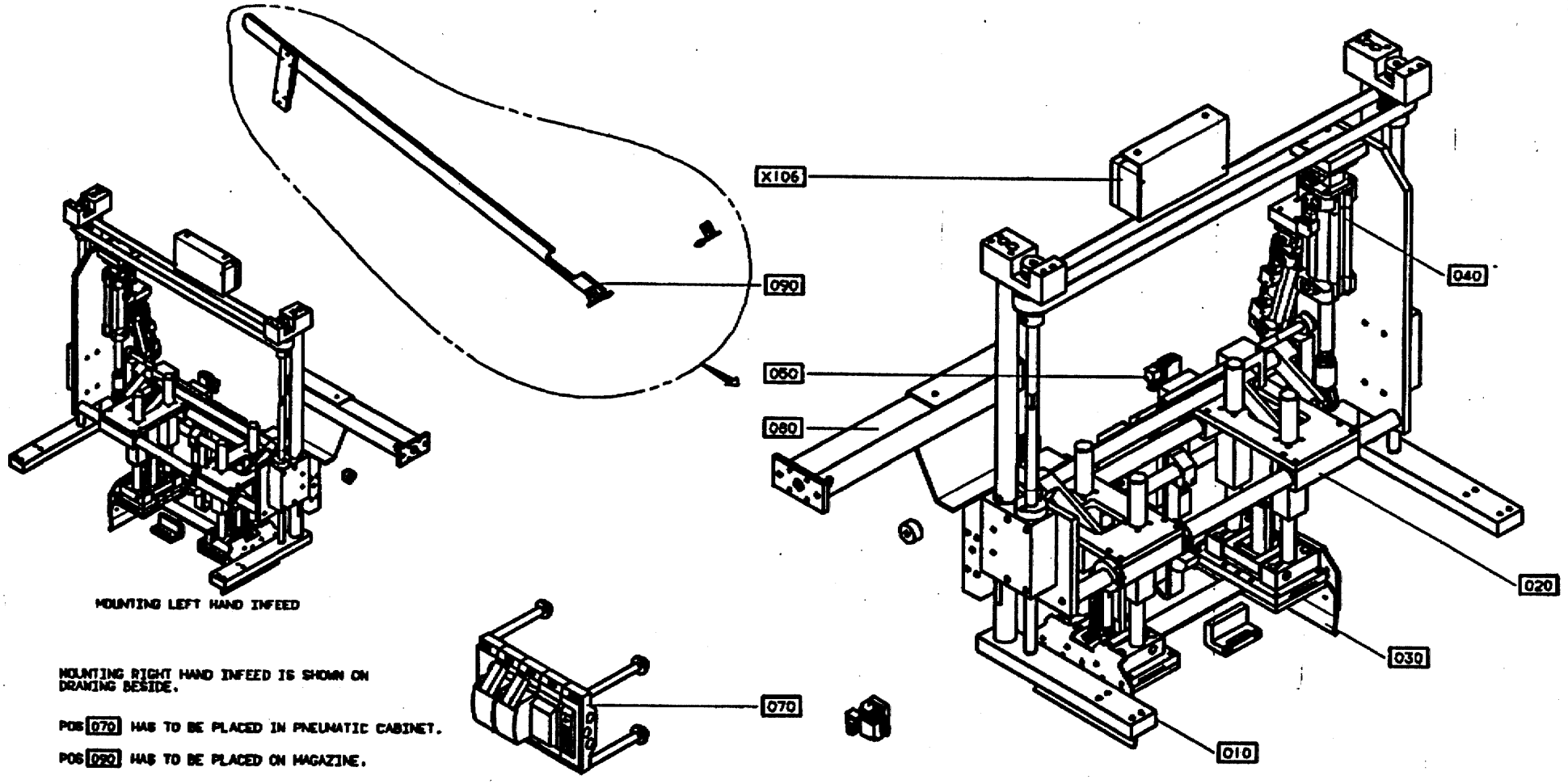

MOUNTING LEFT HAND INFEED

MOUNTING RIGHT HAND INFEED IS SHOWN ON DRAWING BESIDE.

POS 070 HAS TO BE PLACED IN PNEUMATIC CABINET.

POS 090 HAS TO BE PLACED ON MAGAZINE.

GraphicID: 67037503.III
Parent Drw:670375-3
ECN No: 22292

Pos	Part No	SP	UN	Qty	Description	Page No
Tetra Wrap around Box with inside top Flap						
000	B- 670375-0401	-		1	WRAP AROUND UNIT	
010	C-1074251-0101	-		1	FRAME	383
020	C-1074252-030V	-		1	ADJUSTMENT PLATE	385
030	C-1074253-030V	-		1	SQUEEZER	389
040	C-1074254-030V	-		1	CYLINDERS	395
050	C-1074255-030V	-		1	HOTMELT EQUIPEMENT MISC.	405
070	C-1074257-030V	-		1	VALVE RAMP	405
080	C-1074258-010V	-		1	STEERING	409
090	C-1074259-0201	-		1	MAGAZINE SUPPORT	411
X106	C-1074256-0201	-		1	CONNECTION BOX	381
Tetra Wrap around Box with meeting Flaps						
Tetra Tray with over Flaps						
000	B- 670375-0402	-		1	WRAP AROUND UNIT	
010	C-1074251-0101	-		1	FRAME	383
020	C-1074252-030V	-		1	ADJUSTMENT PLATE	385
030	C-1074253-030V	-		1	SQUEEZER	389
040	C-1074254-030V	-		1	CYLINDERS	395
050	C-1074255-030V	-		1	HOTMELT EQUIPEMENT MISC.	405
070	C-1074257-030V	-		1	VALVE RAMP	409
080	C-1074258-010V	-		1	STEERING	409
090	C-1074259-0201	-		1	MAGAZINE SUPPORT	411
X106	C-1074256-0201	-		1	CONNECTION BOX	381

Pos	Part No	SP	UN	Qty	Description	Page No

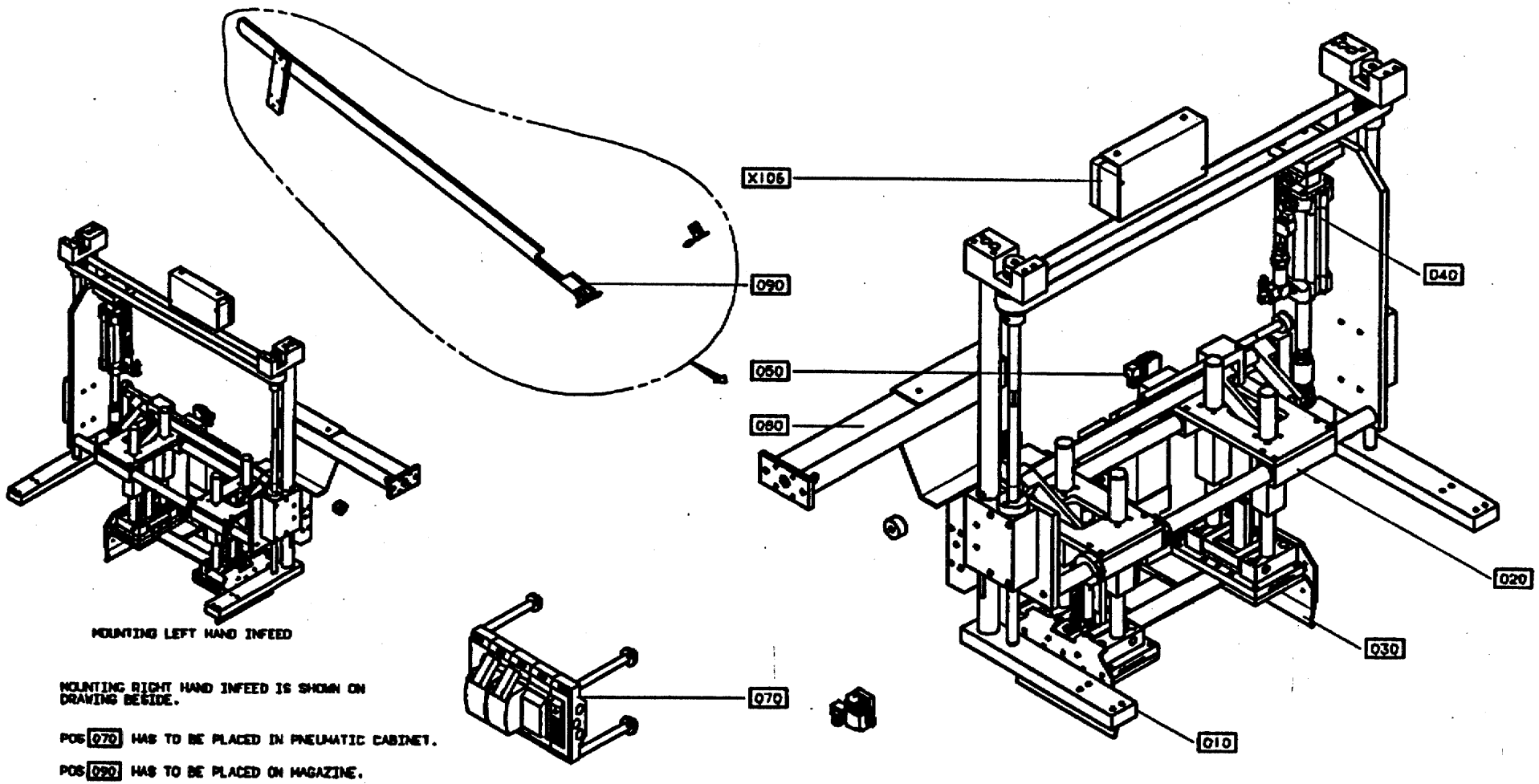

MOUNTING LEFT HAND INFEED

MOUNTING RIGHT HAND INFEED IS SHOWN ON DRAWING BESIDE.

POS 070 HAS TO BE PLACED IN PNEUMATIC CABINET.

POS 090 HAS TO BE PLACED ON MAGAZINE.

GraphicID: 67037504.III
Parent Drw:670375-4
ECN No: 22292

Pos	Part No	SP	UN	Qty	Description	Page No
Tetra Wrap around Box with side Flap						
000	B- 670375-0404	-		1	**WRAP AROUND UNIT**	
010	C-1074251-0101	-		1	FRAME	383
020	C-1074252-030V	-		1	ADJUSTMENT PLATE	385
030	C-1074253-030V	-		1	SQUEEZER	389
040	C-1074254-030V	-		1	CYLINDERS	395
050	C-1074255-030V	-		1	HOTMELT EQUIPEMENT MISC.	405
070	C-1074257-030V	-		1	VALVE RAMP	409
080	C-1074258-010V	-		1	STEERING	409
090	C-1074259-0201	-		1	MAGAZINE SUPPORT	411
X106	C-1074256-0201	-		1	CONNECTION BOX	381
010	C-1074251-0101	-		1	FRAME	383
020	C-1074252-030V	-		1	ADJUSTMENT PLATE	385
030	C-1074253-030V	-		1	SQUEEZER	389
040	C-1074254-030V	-		1	CYLINDERS	395
050	C-1074255-030V	-		1	HOTMELT EQUIPEMENT MISC.	405
070	C-1074257-030V	-		1	VALVE RAMP	409
080	C-1074258-010V	-		1	STEERING	409
090	C-1074259-0201	-		1	MAGAZINE SUPPORT	411
X106	C-1074256-0201	-		1	CONNECTION BOX	381

Pos	Part No	SP	UN	Qty	Description	Page No

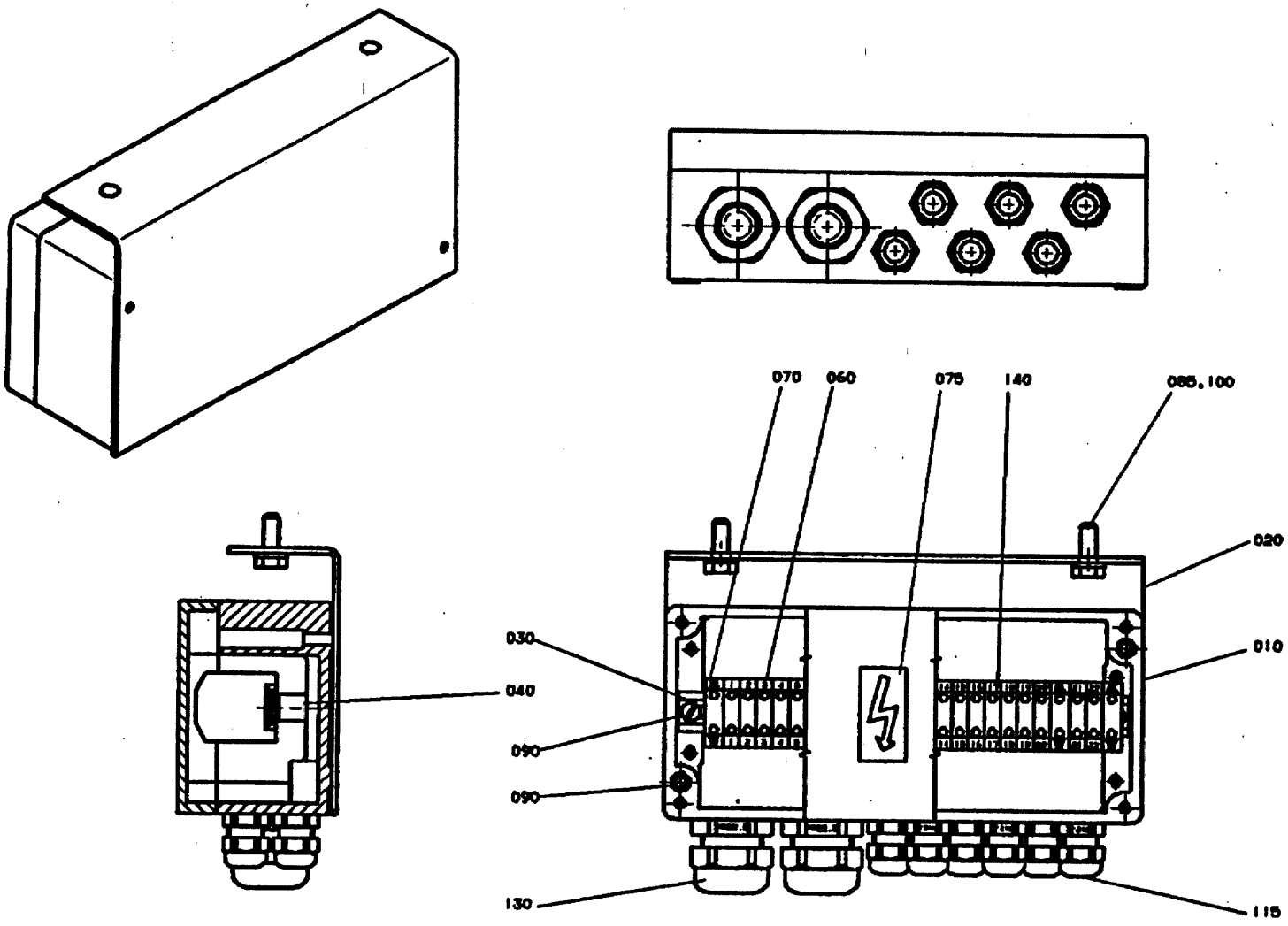

GraphicID: 107425602.tif
Parent Drw: 1074256-2
ECN No: 22292

Pos	Part No	SP	UN	Qty	Description	Page No
-						
000	C-1074256-0201	-		1	CONNECTION BOX	
010	1074309	-		1	CONNECTION BOX	
020	1074310	-		1	BRACKET	
030	8490-0003	-		1	RAIL	
040	479110	-		2	SPACER	
060	90077-0079	-		22	FEED THROUGH TERMINAL	
070	90135-0026	-		3	EARTHING CLAMP	
075	90194-0016	-		1	SIGN "FLASH SIGN" 50X50MM	
085	312105-0368	-		2	SCREW O4017 M6X16A280	
090	312145-0293	-		4	SLOTTED HEMFS4X16RFR	
100	315105-0153	-		2	WASHER BRB6,4X12RFR	
115	352103-0096	-		6	CABLE GLANR.ST 7	
130	352103-0111	-		2	CABLE GLAND ST 16;10-14MM	
140	359011-0821	-		2	SET OF SIGNS 6-FW 1-50	

Pos	Part No	SP	UN	Qty	Description	Page No

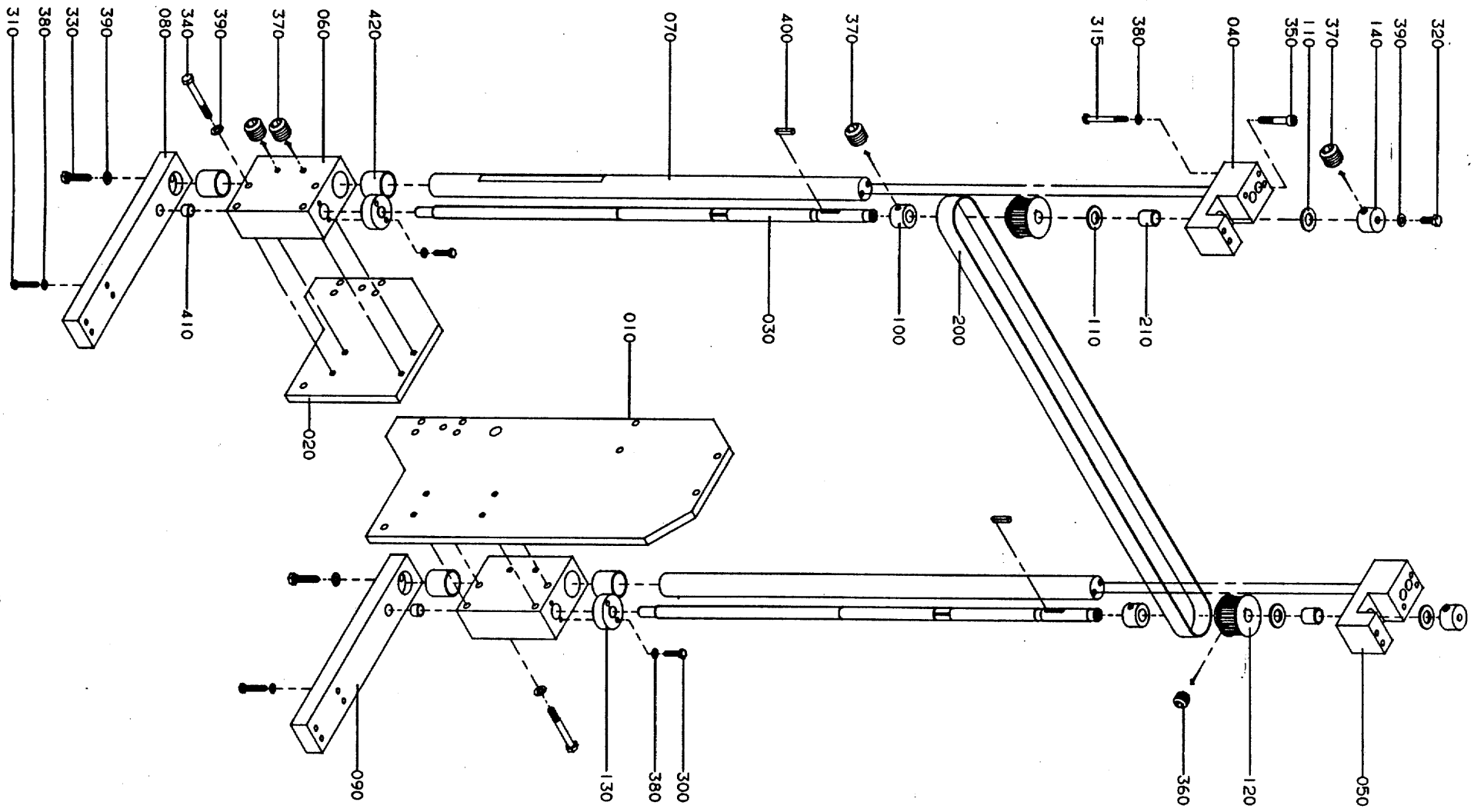

GraphicID: 107425101.eps
Parent Drw: 1074251-1
ECN 19306

Pos	Part No	SP	UN	Qty	Description	Page No
000	C-1074251-0101	-		1	FRAME	
010	1074263	-		1	SIDE PLATE	
020	1074264	-		1	SIDE PLATE	
030	1074265	-		2	ADJUSTING SCREW	
040	1074261	-		1	HOLDER	
050	1074262	-		1	HOLDER	
060	1074266	-		2	HOLDER	
070	1074267	-		2	SHAFT	
080	1074268	-		1	CANTILEVER	
090	1074269	-		1	CANTILEVER	
100	1021038	-		2	RETAINING RING	
110	1021039	-		4	WASHER	
120	1021040	-		2	TOOTHED PULLY	
130	1021154	-		2	NUT	
140	1074270	-		2	HOLDER	
200	90417-0069	-		1	TOOTHED BELT	
210	90240-0205	-		2	PLAIN BEARING	
300	312105-0372	-		4	SCREW O4017 M6X25A280	
310	312105-0376	-		8	SCREW O4017 M6X35A280	
315	312105-0382	-		10	SCREW O4014 M6X60A280	
320	312105-0451	-		2	SCREW SO4017 8X20A280	
330	312105-0455	-		4	SCREW O4017 M8X30A280	
340	312105-0464	-		8	SCREW O4014 M8X65A280	
350	312115-0460	-		4	SCREW O4762 M8X45A280	
360	312318-0360	-		2	STOP SCREW SK6SS6X6RFR	
370	312318-0443	-		12	STOP SCREW SK6SS8X8RFR	
380	315105-0153	-		22	WASHER BRB6,4X12RFR	
390	315105-0165	-		14	WASHER BRB8,4X16RFR	
400	315701-0204	-		2	FLAT WEDGE5X5X28	
410	321120-0114	-		2	BUSHING 13/15X10	
420	321120-0171	-		4	BUSHING 30/34X30	

Pos	Part No	SP	UN	Qty	Description	Page No

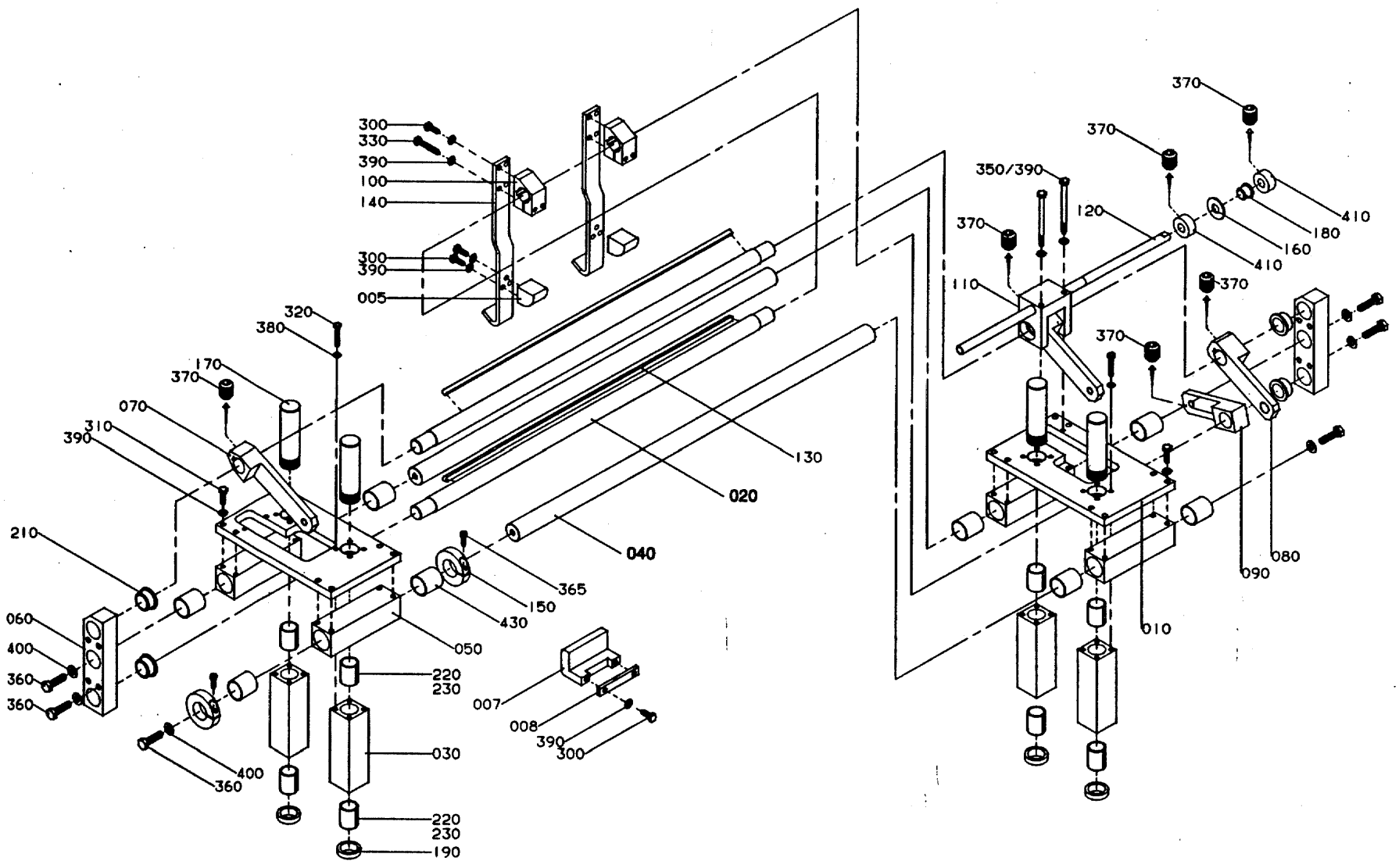

GraphicID: 107425201.eps
Parent Drw: 1074252-1
ECN 19306

Pos	Part No	SP	UN	Qty	Description	Page No
Tetra Wrap around Box with inside top Flap						
000	C-1074252-030V	-		1	**ADJUSTMENT PLATE**	
005	1074308	-		2	LOCATING PIECE	
020	1074273	-		2	SHAFT	
090	1074279	-		1	ARM	
100	1074280	-		2	HOLDER	
130	1074285	-		2	FLAT WEDGE	
140	1074307	-		2	ARM	
210	90240-0221	P		4	BEARING	
300	312105-0368	-		8	SCREW O4017 M6X16A280	
330	312105-0376	-		4	SCREW O4017 M6X35A280	
370	312318-0362	-		8	STOP SCREW SK6SS6X8RFR	
390	315105-0153	-		28	WASHER BRB6,4X12RFR	
Tetra Wrap around Box with meeting Flaps						
Tetra Tray with over Flaps						
000	C-1074252-0302	-		1	**ADJUSTMENT PLATE**	
005	1074319	-		2	LOCATING PIECE	
007	1074480	-		1	STEERING	
008	1074481	-		1	RAIL	
020	1074273	-		2	SHAFT	
090	1074279	-		1	ARM	
100	1074280	-		2	HOLDER	
130	1074285	-		2	FLAT WEDGE	
140	1074307	-		2	ARM	
210	90240-0221	P		4	BEARING	
300	312105-0368	-		12	SCREW O4017 M6X16A280	
330	312105-0376	-		4	SCREW O4017 M6X35A280	
370	312318-0362	-		8	STOP SCREW SK6SS6X8RFR	
390	315105-0153	-		30	WASHER BRB6,4X12RFR	
COMMON PARTS						
010	1074272	-		2	**SHEET**	
030	1074271	-		4	GUIDE STEERING	
040	1074274	-		2	SHAFT	
050	1074275	-		4	GUIDE STEERING	
060	1074276	-		2	HOLDER	
070	1074277	-		2	ARM	
080	1074278	-		1	ARM	
110	1074281	-		1	LOCATING PIECE	
120	1074282	-		1	ADJUSTING SCREW	
150	1074260	-		2	CLAMPING RING	
160	1074284	-		1	WASHER	
170	1139156	-		4	PROTECTION	
180	1074482	-		1	PLAIN BEARING	
190	90091-0038	-		4	SEAL RING	
220	90240-0279	-		8	BEARING	
230	90296-0068	-		X	GREASE	
310	312105-0370	-		16	SCREW O4017 M6X20A280	
320	312105-0333	-		16	SCREW O4017 M5X25A280	
350	312105-0386	-		2	SCREW O4014 M6X80A280	
360	312105-0453	-		12	SCREW O4017 M8X25A280	
365	312115-0329	-		2	SCREW O4762 M5X16A280	
380	315105-0146	-		16	WASHER BRB5,3X10RFR	
400	315105-0165	-		12	WASHER BRB8,4X16RFR	
410	315742-0108	-		2	RETAINING 12SMS199RFR	
430	321120-0160	-		8	BUSHING 25/28X30	

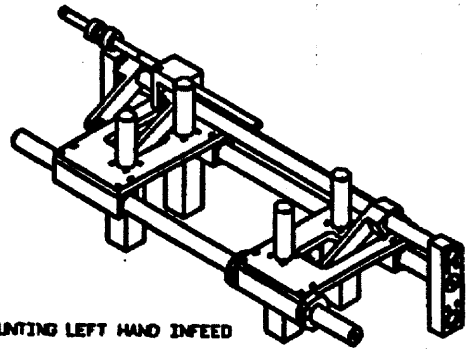

MOUNTING LEFT HAND INFEED

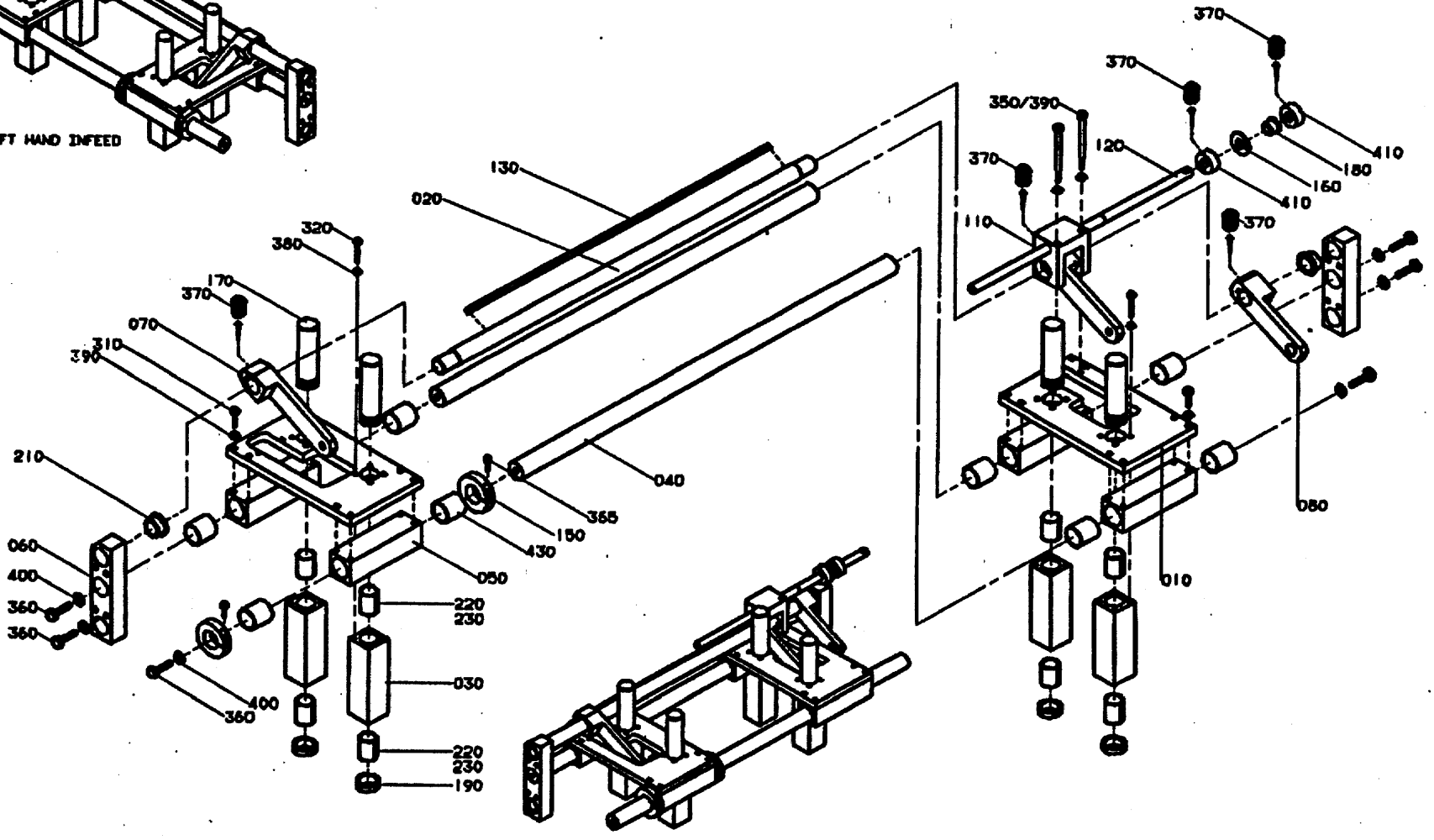

MOUNTING RIGHT HAND INFEED

POS 007 AND 008 HAS TO BE MOUNTED ON FOLDING SUPPORT.

GraphicID: 107425202.tif
Parent Drw: 1074252-2
ECN No: 21127

Pos	Part No	SP	UN	Qty	Description	Page No
TTetra Wrap around Box with side Flaps						
000	C-1074252-0303	-		1	ADJUSTMENT PLATE	
020	1074273	-		1	SHAFT	
130	1074285	-		1	FLAT WEDGE	
210	90240-0221	P		2	BEARING	
370	312318-0362	-		7	STOP SCREW SK6SS6X8RFR	
390	315105-0153	-		16	WASHER BRB6,4X12RFR	
COMMON PARTS						
010	1074272	-		2	SHEET	
030	1074271	-		4	GUIDE STEERING	
040	1074274	-		2	SHAFT	
050	1074275	-		4	GUIDE STEERING	
060	1074276	-		2	HOLDER	
070	1074277	-		2	ARM	
080	1074278	-		1	ARM	
110	1074281	-		1	LOCATING PIECE	
120	1074282	-		1	ADJUSTING SCREW	
150	1074260	-		2	CLAMPING RING	
160	1074284	-		1	WASHER	
170	1139156	-		4	PROTECTION	
180	1074482	-		1	PLAIN BEARING	
190	90091-0038	-		4	SEAL RING	
220	90240-0279	-		8	BEARING	
230	90296-0068	-		X	GREASE	
310	312105-0370	-		16	SCREW O4017 M6X20A280	
320	312105-0333	-		16	SCREW O4017 M5X25A280	
350	312105-0386	-		2	SCREW O4014 M6X80A280	
360	312105-0453	-		12	SCREW O4017 M8X25A280	
365	312115-0329	-		2	SCREW O4762 M5X16A280	
380	315105-0146	-		16	WASHER BRB5,3X10RFR	
400	315105-0165	-		12	WASHER BRB8,4X16RFR	
410	315742-0108	-		2	RETAINING 12SMS199RFR	
430	321120-0160	-		8	BUSHING 25/28X30	

Pos	Part No	SP	UN	Qty	Description	Page No

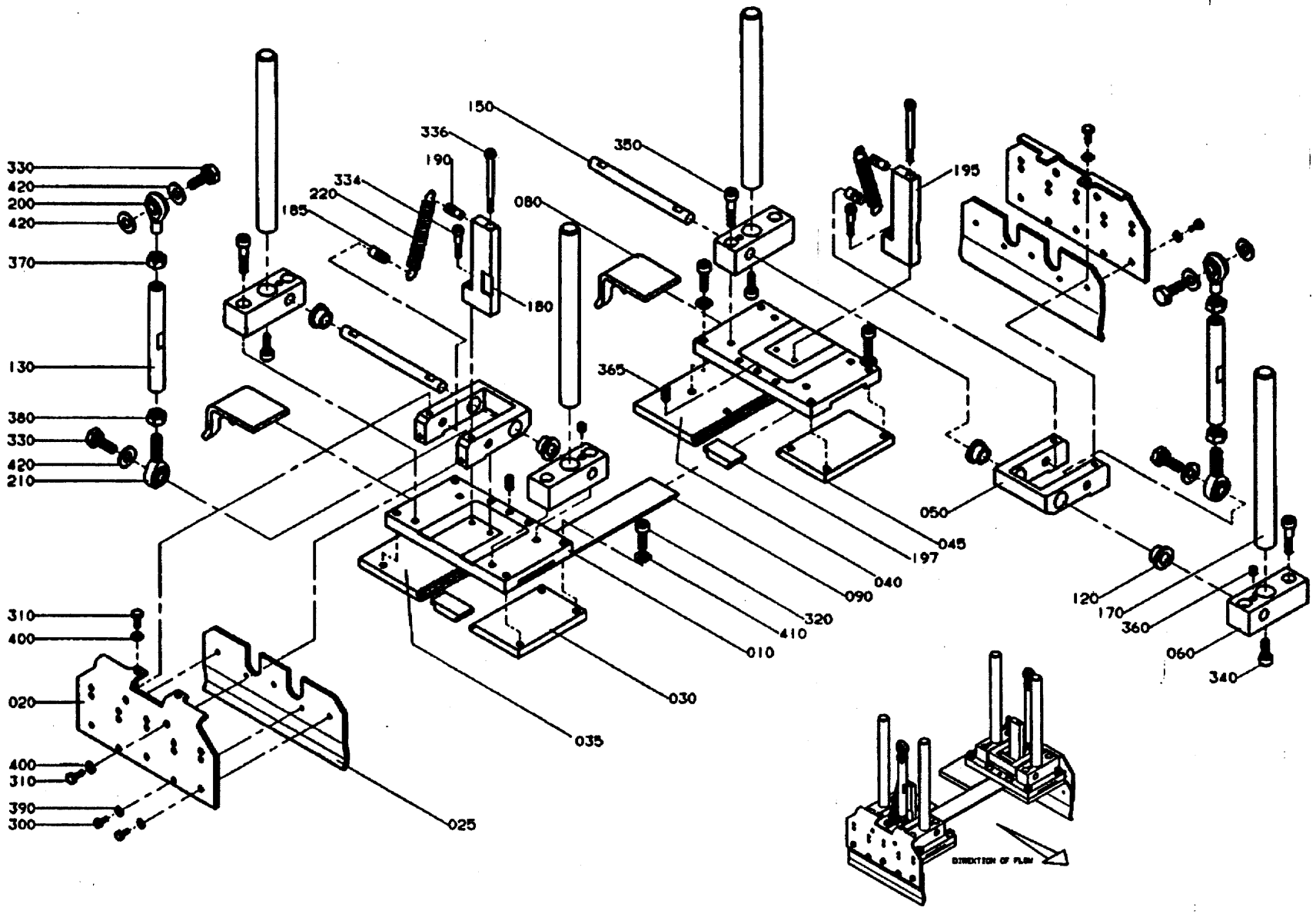
330
420
200
420
370
130
380
330
420
210
310
400
020
400
310
390
300
025
035
030
010
410
320
090
040
197
045
050
365
080
180
185
220
334
190
336
150
350
195
120
170
360
060
340
DIRECTION OF FLOW

Pos	Part No	SP	UN	Qty	Description	Page No
Tetra Wrap around Box with inside top Flap						
000	C-1074253-0301	-		1	SQUEEZER	
030	1074288	-		1	PLATE	
035	1128001	-		1	PLATE	
040	1128002	-		1	PLATE	
045	1074289	-		1	PLATE	
080	1074293	-		2	SUPPORTING SHEET	
310	312105-0367	-		8	SCREW M6S6X14RFR	
400	315105-0153	-		8	WASHER BRB6,4X12RFR	
COMMON PARTS						
010	1074286	-		2	SHEET	
020	1074287	-		2	FOLDING FLAP	
025	1074318	-		2	FOLDING FLAP	
050	1074290	-		2	HOLDER	
060	1074291	-		4	BRACKET	
090	1074294	-		1	RAIL	
120	493768	P		4	BUSHING	
130	1074295	-		2	STRUT	
150	1074297	-		2	SHAFT	
170	1074299	-		4	SHAFT	
180	1139127	-		1	HOLDER	
185	1074477	-		2	SPRING BRACKET	
190	1074478	-		2	SPRING BRACKET	
195	1139128	-		1	HOLDER	
197	1074485	-		2	RAIL	
200	90115-0150	P		2	LINK HEAD	
210	90115-0151	P		2	LINK HEAD	
220	1139129	P		2	TENSION SPRING	
300	312105-0323	-		10	SCREW ISO4017 M5X8A280	
320	312115-0453	-		12	SCREW O4762 M8X25A280	
330	312105-0495	-		4	SCREW 4017 M10X30A280	
334	312115-0374	-		2	SCREW O4762 M6X30A280	
336	312115-0384	-		2	SCREW O4762 M6X70A280	
340	312115-0451	-		4	SCREW O4762 M8X20A280	
350	312115-0457	-		8	SCREW O4762 M8X35A280	
360	312318-0443	-		4	STOP SCREW SK6SS8X8RFR	
365	312318-0449	-		2	STOP SCREW SK6SS8X16RFR	
370	312605-0320	-		2	NUT M6M10RFR	
380	312902-0320	-		2	NUT M6M10VRFR	
390	315105-0146	-		10	WASHER BRB5,3X10RFR	
410	315105-0165	-		12	WASHER BRB8,4X16RFR	
420	315105-0173	-		6	WASHER BRB10,5X22RFR	

Pos	Part No	SP	UN	Qty	Description	Page No

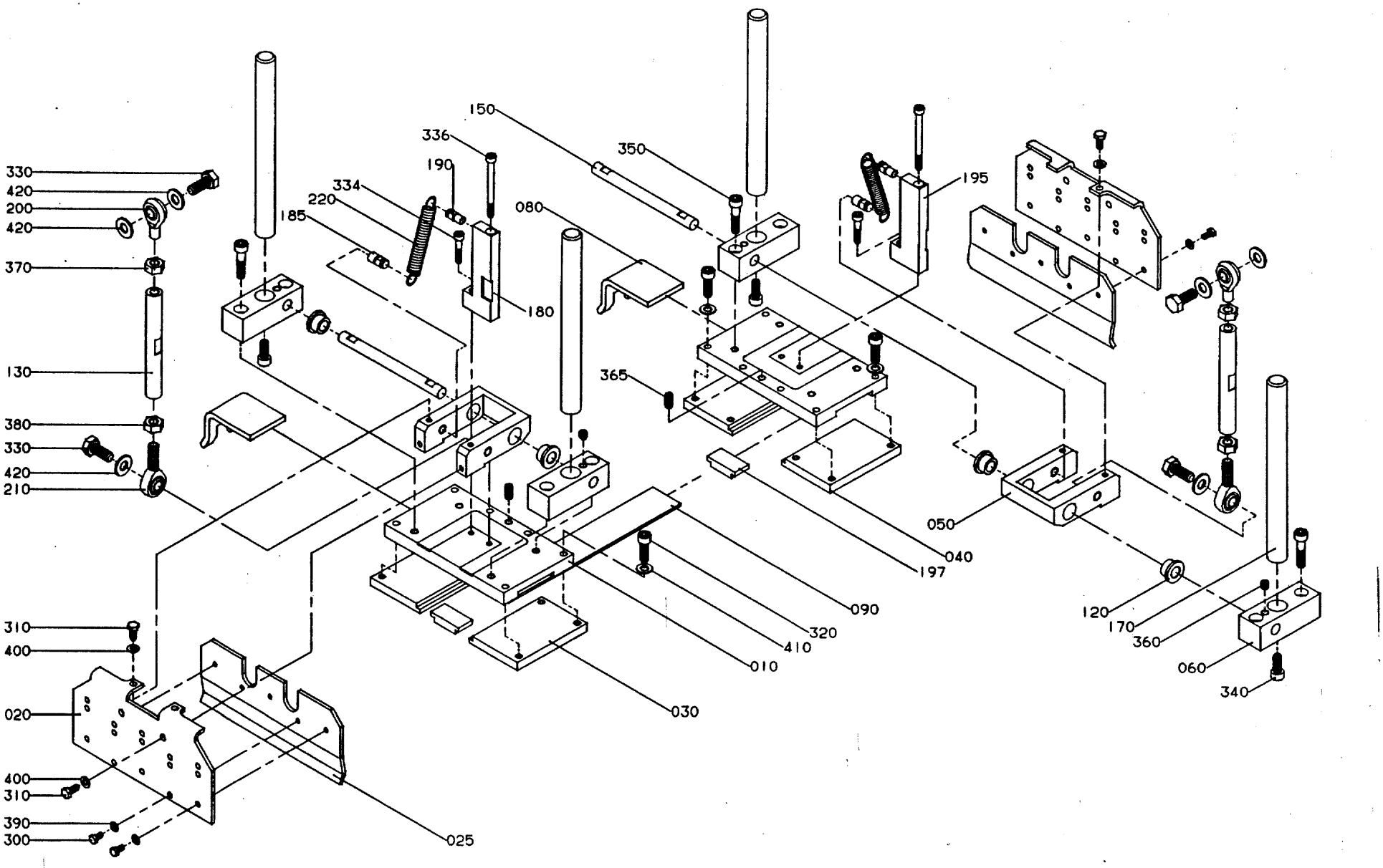

GraphicID: 107425301.eps
Parent Drw: 1074253-1
ECN 19305

Pos	Part No	SP	UN	Qty	Description	Page No
Tetra Wrap around Box with meeting Flaps						
Tetra Tray with over Flaps						
000	C-1074253-0302	-		1	SQUEEZER	
030	1074288	-		2	PLATE	
045	1074289	-		2	PLATE	
080	1074293	-		2	SUPPORTING SHEET	
310	312105-0367	-		8	SCREW M6S6X14RFR	
400	315105-0153	-		8	WASHER BRB6,4X12RFR	
COMMON PARTS						
010	1074286	-		2	SHEET	
020	1074287	-		2	FOLDING FLAP	
025	1074318	-		2	FOLDING FLAP	
050	1074290	-		2	HOLDER	
060	1074291	-		4	BRACKET	
090	1074294	-		1	RAIL	
120	493768	P		4	BUSHING	
130	1074295	-		2	STRUT	
150	1074297	-		2	SHAFT	
170	1074299	-		4	SHAFT	
180	1139127	-		1	HOLDER	
185	1074477	-		2	SPRING BRACKET	
190	1074478	-		2	SPRING BRACKET	
195	1139128	-		1	HOLDER	
197	1074485	-		2	RAIL	
200	90115-0150	P		2	LINK HEAD	
210	90115-0151	P		2	LINK HEAD	
220	1139129	P		2	TENSION SPRING	
300	312105-0325	-		10	SCREW M6S5X10 A2 80	
320	312115-0453	-		12	SCREW O4762 M8X25A280	
330	312105-0493	-		4	SCREW 4017 M10X25A280	
334	312115-0374	-		2	SCREW O4762 M6X30A280	
336	312115-0384	-		2	SCREW O4762 M6X70A280	
340	312115-0451	-		4	SCREW O4762 M8X20A280	
350	312115-0457	-		8	SCREW O4762 M8X35A280	
360	312318-0443	-		4	STOP SCREW SK6SS8X8RFR	
365	312318-0449	-		2	STOP SCREW SK6SS8X16RFR	
370	312605-0320	-		2	NUT M6M10RFR	
380	312902-0320	-		2	NUT M6M10VRFR	
390	315105-0146	-		10	WASHER BRB5,3X10RFR	
410	315105-0165	-		12	WASHER BRB8,4X16RFR	
420	315105-0173	-		6	WASHER BRB10,5X22RFR	

Pos	Part No	SP	UN	Qty	Description	Page No

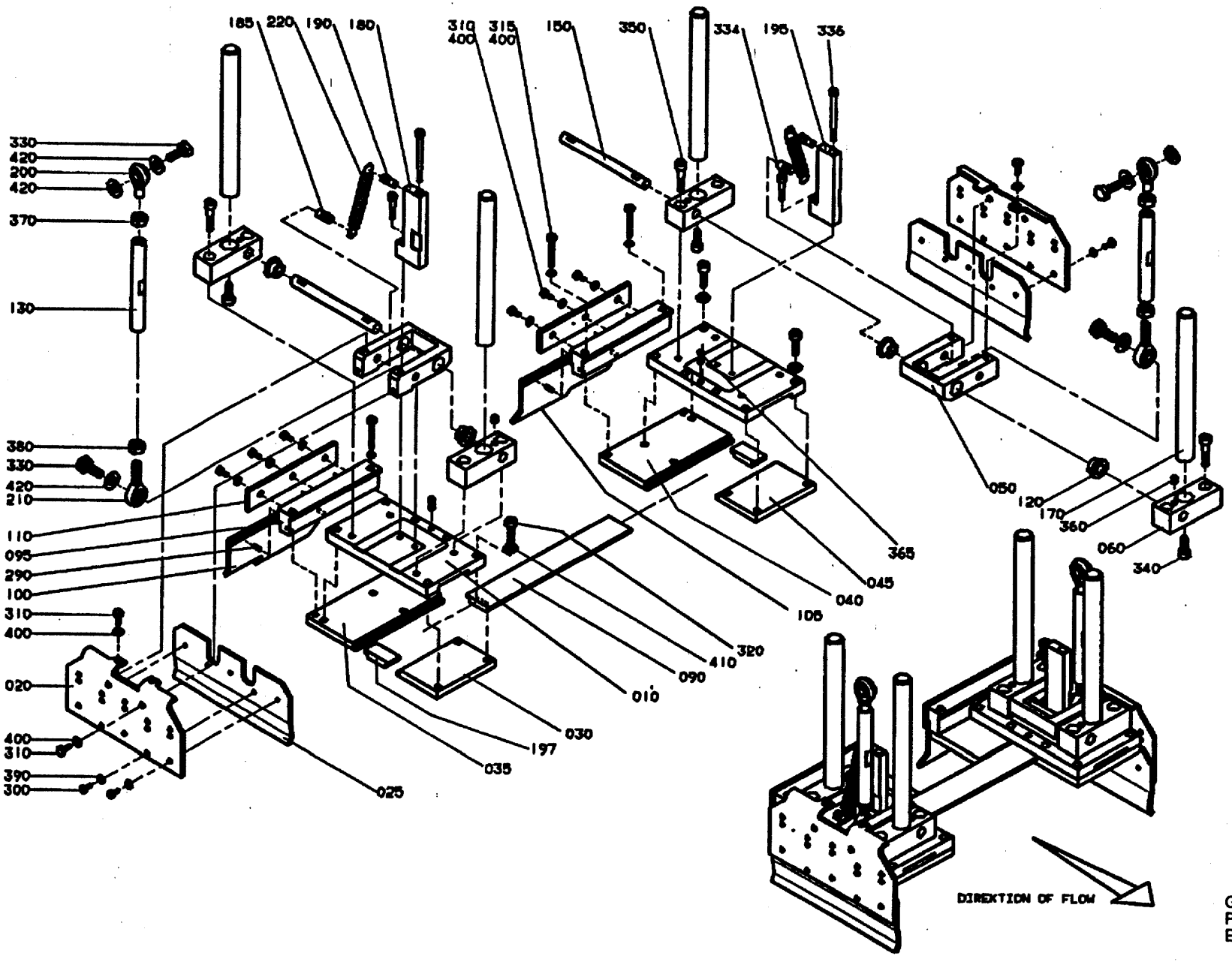

GraphicID: 107425303.tif
Parent Drw: 1074253-3
ECN No: 21127

Pos	Part No	SP	UN	Qty	Description	Page No
Tetra Wrap around Box with side Flaps						
000	C-1074253-0303	-		1	SQUEEZER	
030	1074288	-		1	PLATE	
035	1128001	-		1	PLATE	
040	1128002	-		1	PLATE	
045	1074289	-		1	PLATE	
095	1128406	-		2	HOLDER	
100	1128407	-		1	HEAD PLATE	
105	1128408	-		1	HEAD PLATE	
110	1128409	-		2	SECURING PLATE	
290	311112-0251	-		6	SLOTTED TURP 4X10 RFR	
310	312105-0367	-		14	SCREW M6S6X14RFR	
315	312105-0378	-		4	SCREW O4017 M6X40A280	
400	315105-0153	-		18	WASHER BRB6,4X12RFR	
COMMON PARTS						
010	1074286	-		2	SHEET	
020	1074287	-		2	FOLDING FLAP	
025	1074318	-		2	FOLDING FLAP	
050	1074290	-		2	HOLDER	
060	1074291	-		4	BRACKET	
090	1074294	-		1	RAIL	
120	493768	P		4	BUSHING	
130	1074295	-		2	STRUT	
150	1074297	-		2	SHAFT	
170	1074299	-		4	SHAFT	
180	1139127	-		1	HOLDER	
185	1074477	-		2	SPRING BRACKET	
190	1074478	-		2	SPRING BRACKET	
195	1139128	-		1	HOLDER	
197	1074485	-		2	RAIL	
200	90115-0150	P		2	LINK HEAD	
210	90115-0151	P		2	LINK HEAD	
220	1139129	P		2	TENSION SPRING	
300	312105-0325	-		10	SCREW M6S5X10 A2 80	
320	312115-0453	-		12	SCREW O4762 M8X25A280	
330	312105-0493	-		4	SCREW 4017 M10X25A280	
334	312115-0374	-		2	SCREW O4762 M6X30A280	
336	312115-0384	-		2	SCREW O4762 M6X70A280	
340	312115-0451	-		4	SCREW O4762 M8X20A280	
350	312115-0457	-		8	SCREW O4762 M8X35A280	
360	312318-0443	-		4	STOP SCREW SK6SS8X8RFR	
365	312318-0449	-		2	STOP SCREW SK6SS8X16RFR	

Pos	Part No	SP	UN	Qty	Description	Page No
370	312605-0320	-		2	NUT M6M10RFR	
380	312902-0320	-		2	NUT M6M10VRFR	
390	315105-0146	-		10	WASHER BRB5,3X10RFR	
410	315105-0165	-		12	WASHER BRB8,4X16RFR	
420	315105-0173	-		6	WASHER BRB10,5X22RFR	

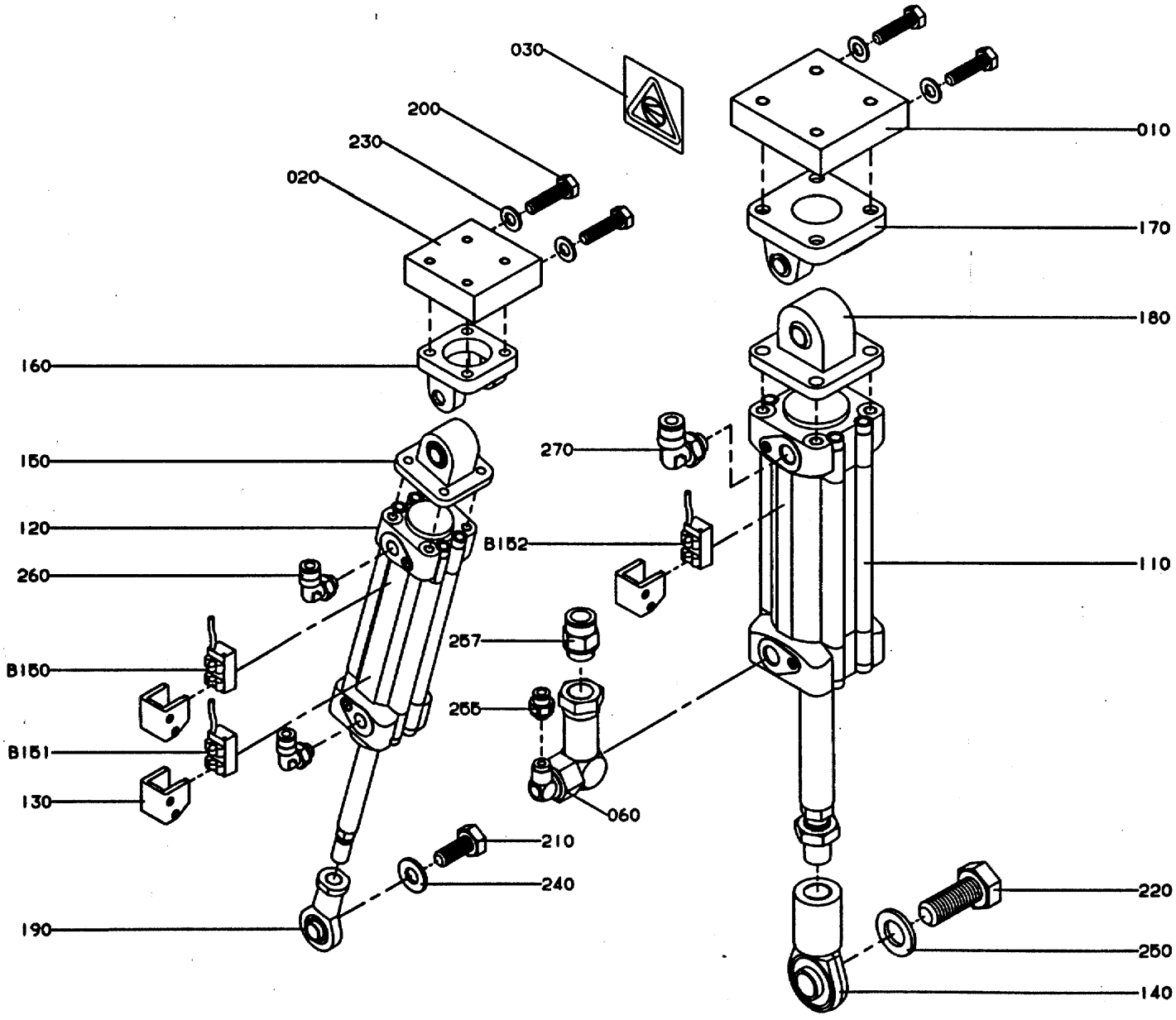

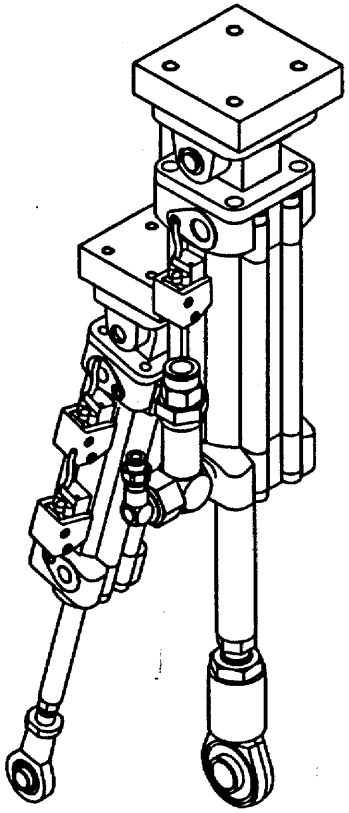

GraphicID: 107425404.eps
Parent Drw: 1074254-4
ECN 22668

Pos	Part No	SP	UN	Qty	Description	Page No
TTetra Wrap around Box with inside top Flap						
Tetra Wrap around Box with meeting Flaps						
Tetra Tray with over Flaps						
000	C-1074254-0301	-		1	CYLINDERS	
020	1074304	-		1	BRACKET	
120	90450-0281	-		1	CYLINDER	
130	90450-0669	-		3	BRACKET	
150	90450-0678	-		1	BRACKET	
160	90450-0654	-		1	CYLINDER BRACKET	
190	90450-0723	-		1	BALL JOINT COUPLING	
200	312105-0453	-		4	SCREW O4017 M8X25A280	
210	312105-0493	-		1	SCREW 4017 M10X25A280	
230	315105-0165	-		4	WASHER BRB8,4X16RFR	
240	315105-0173	-		1	WASHER BRB10,5X22RFR	
260	342732-0102	-		2	ELBOW PIPE D6-R1/8"	
B150	90044-0116	-		1	PROXIMITY SWITCH	
B151	90044-0116	-		1	PROXIMITY SWITCH	
COMMON PARTS						
010	1074303	-		1	BRACKET	
030	1128854	-		1	CAUTION SIGN	
060	90235-0768	-		1	VALVE	
110	90450-0280	-		1	CYLINDER	
140	90450-0677	-		1	BRACKET	
170	90450-0714	-		1	CYLINDER BRACKET	
180	90450-0722	-		1	PENDULUM SUSPENSION	
220	312105-0626	-		1	SCREW M6S16X35RFR	
250	315105-0186	-		1	WASHER BRB17X30RFR	
255	342722-0197	-		1	PIPE COUPLD=6-M5	
257	342722-0205	-		1	PIPE COUPLD=8-R1/4"	
270	342732-0104	-		1	ELBOW PIPE D8-R1/4"	
B152	90044-0116	-		1	PROXIMITY SWITCH	

Pos	Part No	SP	UN	Qty	Description	Page No

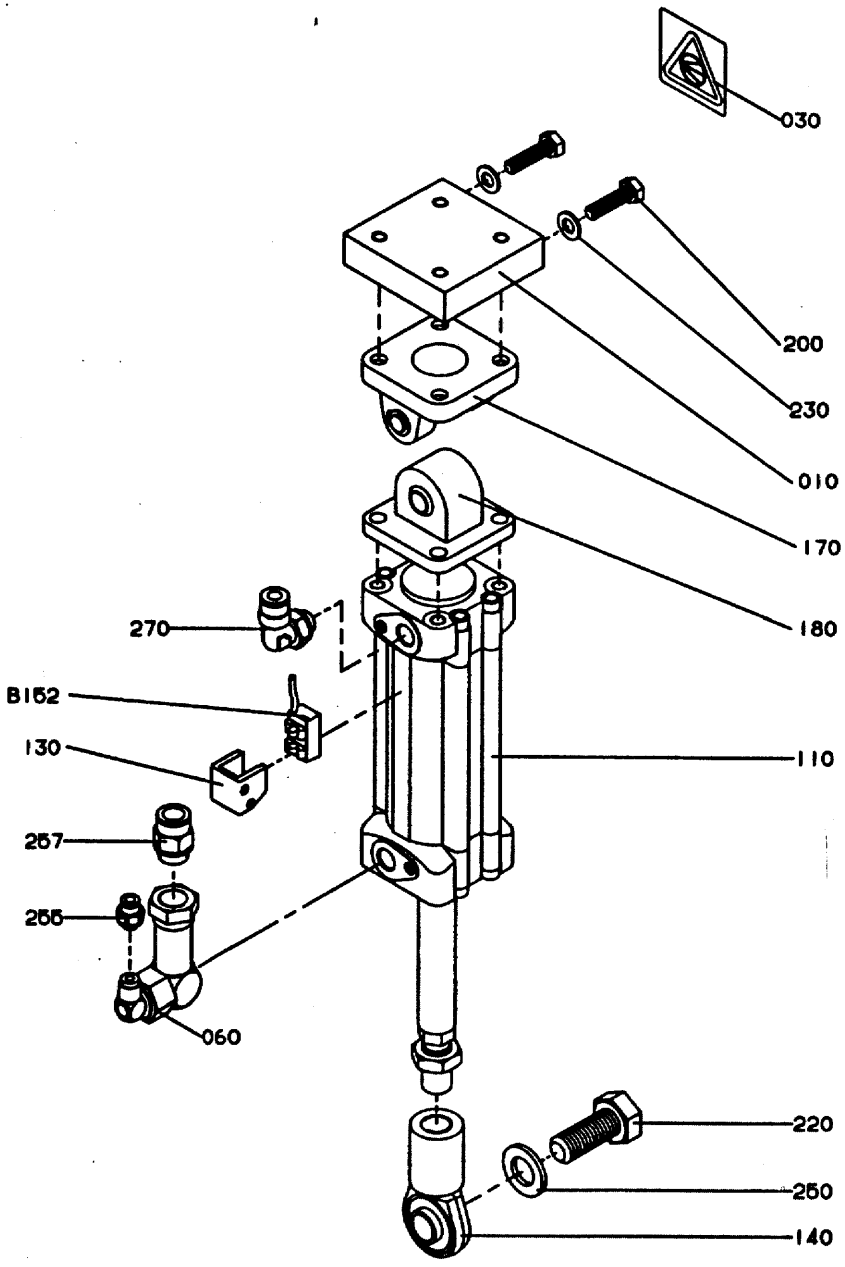

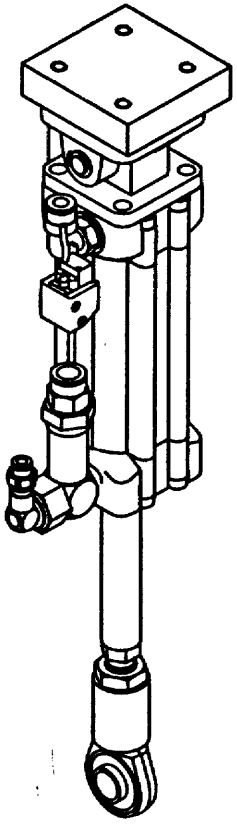

GraphicID: 107425405.eps
Parent Drw: 1074254-5
ECN 22668

Pos	Part No	SP	UN	Qty	Description	Page No
Tetra Wrap around Box with side Flaps						
000	C-1074254-0302	-		1	CYLINDERS	
130	90450-0669	-		1	BRACKET	
200	312105-0453	-		2	SCREW O4017 M8X25A280	
230	315105-0165	-		2	WASHER BRB8,4X16RFR	
COMMON PARTS						
010	1074303	-		1	BRACKET	
030	1128854	-		1	CAUTION SIGN	
060	90235-0768	-		1	VALVE	
110	90450-0280	-		1	CYLINDER	
140	90450-0677	-		1	BRACKET	
170	90450-0714	-		1	CYLINDER BRACKET	
180	90450-0722	-		1	PENDULUM SUSPENSION	
220	312105-0626	-		1	SCREW M6S16X35RFR	
250	315105-0186	-		1	WASHER BRB17X30RFR	
255	342722-0197	-		1	PIPE COUPLD=6-M5	
257	342722-0205	-		1	PIPE COUPLD=8-R1/4"	
270	342732-0104	-		1	ELBOW PIPE D8-R1/4"	
B152	90044-0116	-		1	PROXIMITY SWITCH	

Pos	Part No	SP	UN	Qty	Description	Page No

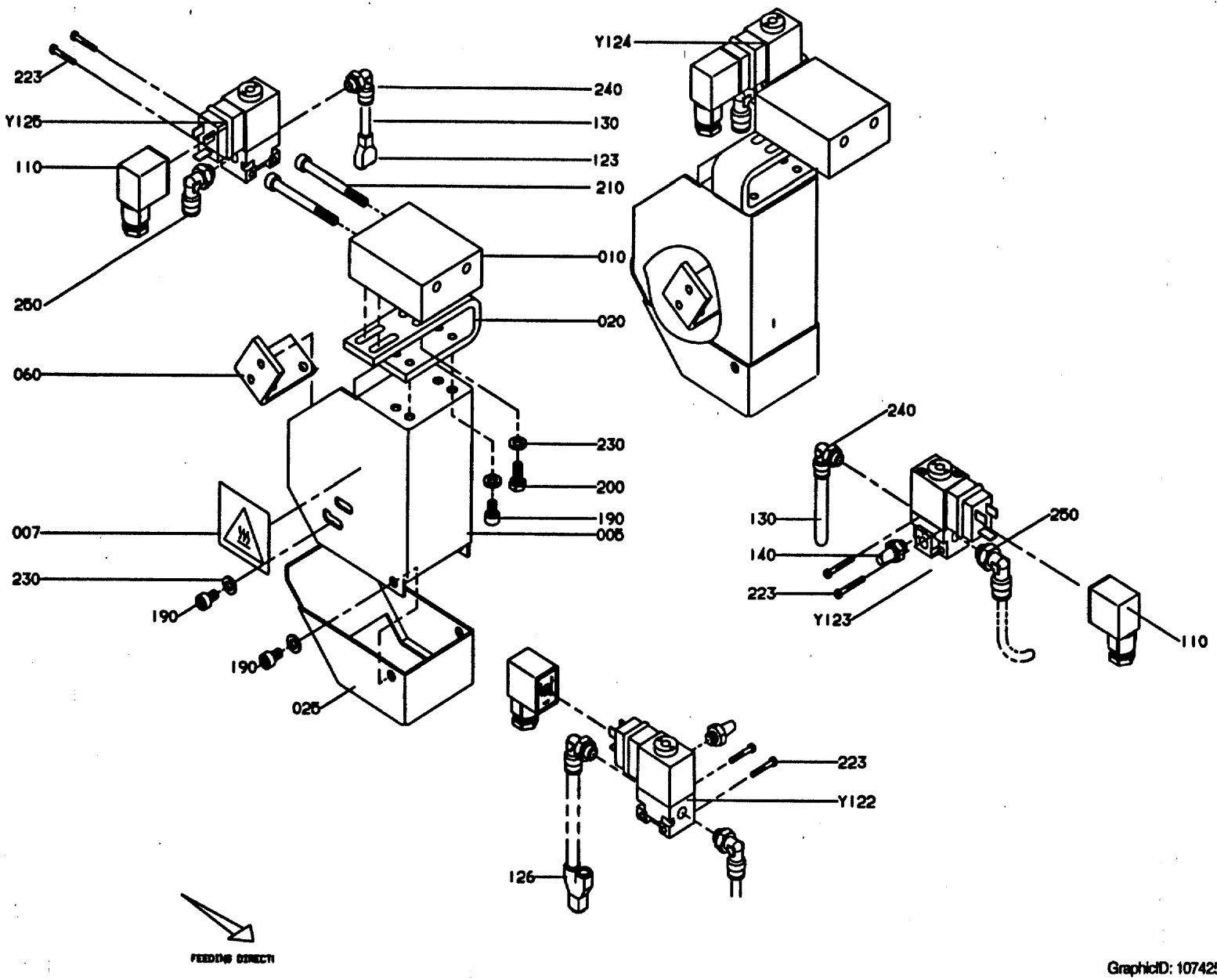

GraphicID: 107425507.eps
Parent Drw: 1074255-7
ECN 23757

Pos	Part No	SP	UN	Qty	Description	Page No
Tetra Wrap around Box with inside top Flap, Z-form, U-form						
Tetra Wrap around Box with side Flap, Z-form, U-form						
000	C-1074255-0301	-		1	HOT MELT EQUIPMENT MISC.	
005	1074322	-		2	PROTECTION	
007	1128853	-		2	CAUTION SIGN	
010	1139152	-		2	HOLDER	
020	1074306	-		2	HOLDER	
025	1074323	-		2	PROTECTION	
060	1074325	-		2	BRACKET	
110	90042-0392	-		4	CONTACT	
123	90055-0100	-		2	JOINT CONNECTION	
126	90055-0101	-		4	JOINT CONNECTION	
130	90166-0202	-	MM	1000	TEFLON PIPE	
140	90328-0003	-		4	SILENCER	
190	312115-0364	-		16	SCREW 6X10 A4 80	
200	312105-0367	-		8	SCREW M6S6X14RFR	
210	312115-0385	-		4	SCREW MC6S 6X75 A280	
223	312125-0234	-		8	SLOTTED HEMCS3X30RFR	
230	315105-0153	-		32	WASHER BRB6,4X12RFR	
240	342732-0102	-		4	ELBOW PIPE D6-R1/8"	
250	342732-0801	-		4	ELBOW PIPE D8-R1/8"	
Y124	90042-0213	-		1	SOLENOID VALVE	
Y125	90042-0213	-		1	SOLENOID VALVE	
COMMON PARTS						
Y122	**90042-0213**	-		1	**SOLENOID VALVE**	
Y123	90042-0213	-		1	SOLENOID VALVE	

Pos	Part No	SP	UN	Qty	Description	Page No

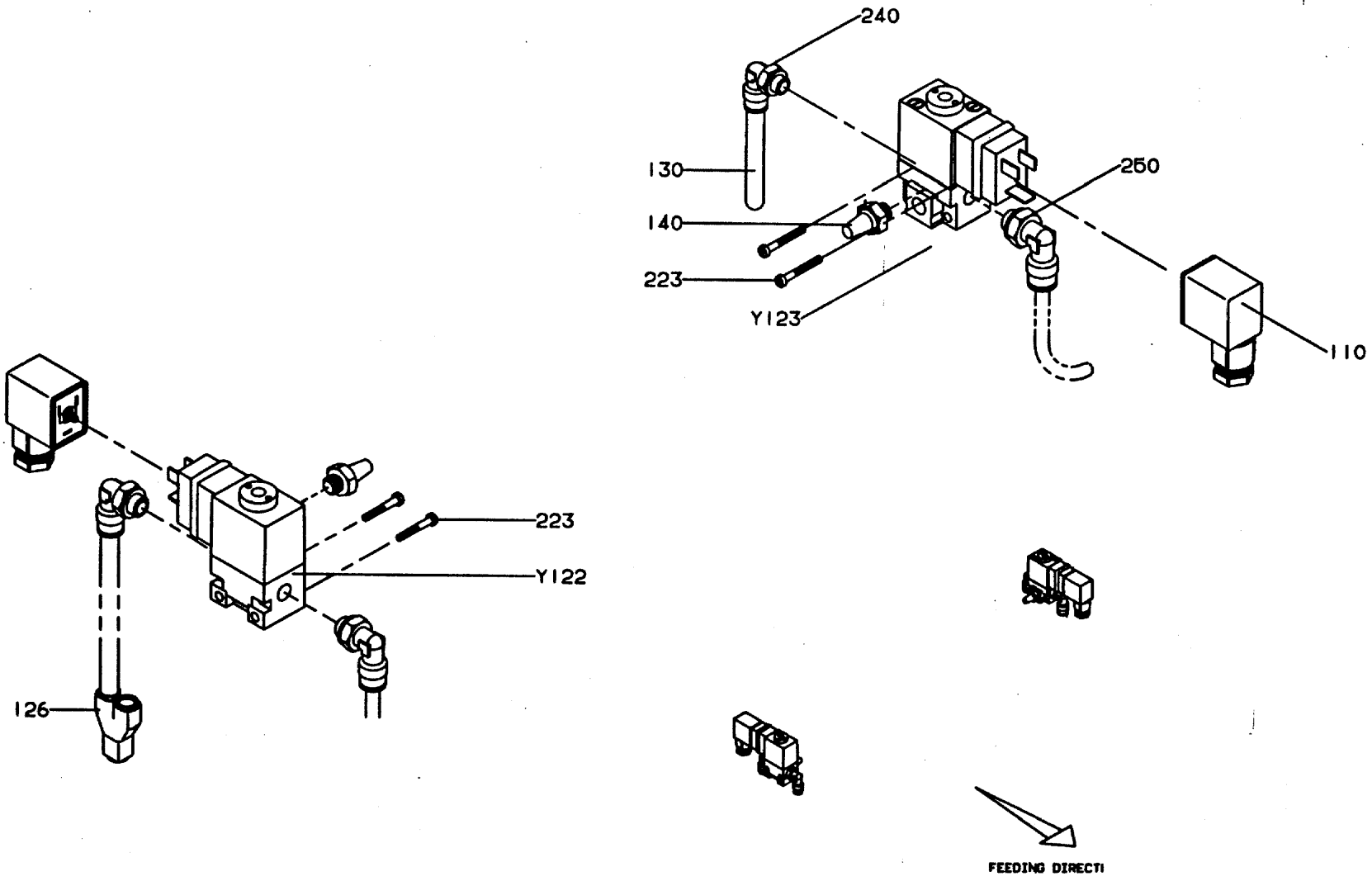

GraphicID: 107425508.eps
Parent Drw: 1074255-8
ECN 23757

Pos	Part No	SP	UN	Qty	Description	Page No
Tetra Wrap around Box with meeting Flaps, Z-form, U-form, L-form						
Tetra Tray with over Flaps, Z-form, U-form, L-form						
000	C-1074255-0302	-		1	HOT MELT EQUIPEMENT MISC.	
110	90042-0392	-		2	CONTACT	
126	90055-0101	-		2	JOINT CONNECTION	
130	90166-0202	-	MM	500	TEFLON PIPE	
140	90328-0003	-		2	SILENCER	
223	312125-0234	-		4	SLOTTED HEMCS3X30RFR	
240	342732-0102	-		2	ELBOW PIPE D6-R1/8"	
250	342732-0801	-		2	ELBOW PIPE D8-R1/8"	
COMMON PARTS						
Y122	90042-0213	-		1	SOLENOID VALVE	
Y123	90042-0213	-		1	SOLENOID VALVE	

Pos	Part No	SP	UN	Qty	Description	Page No

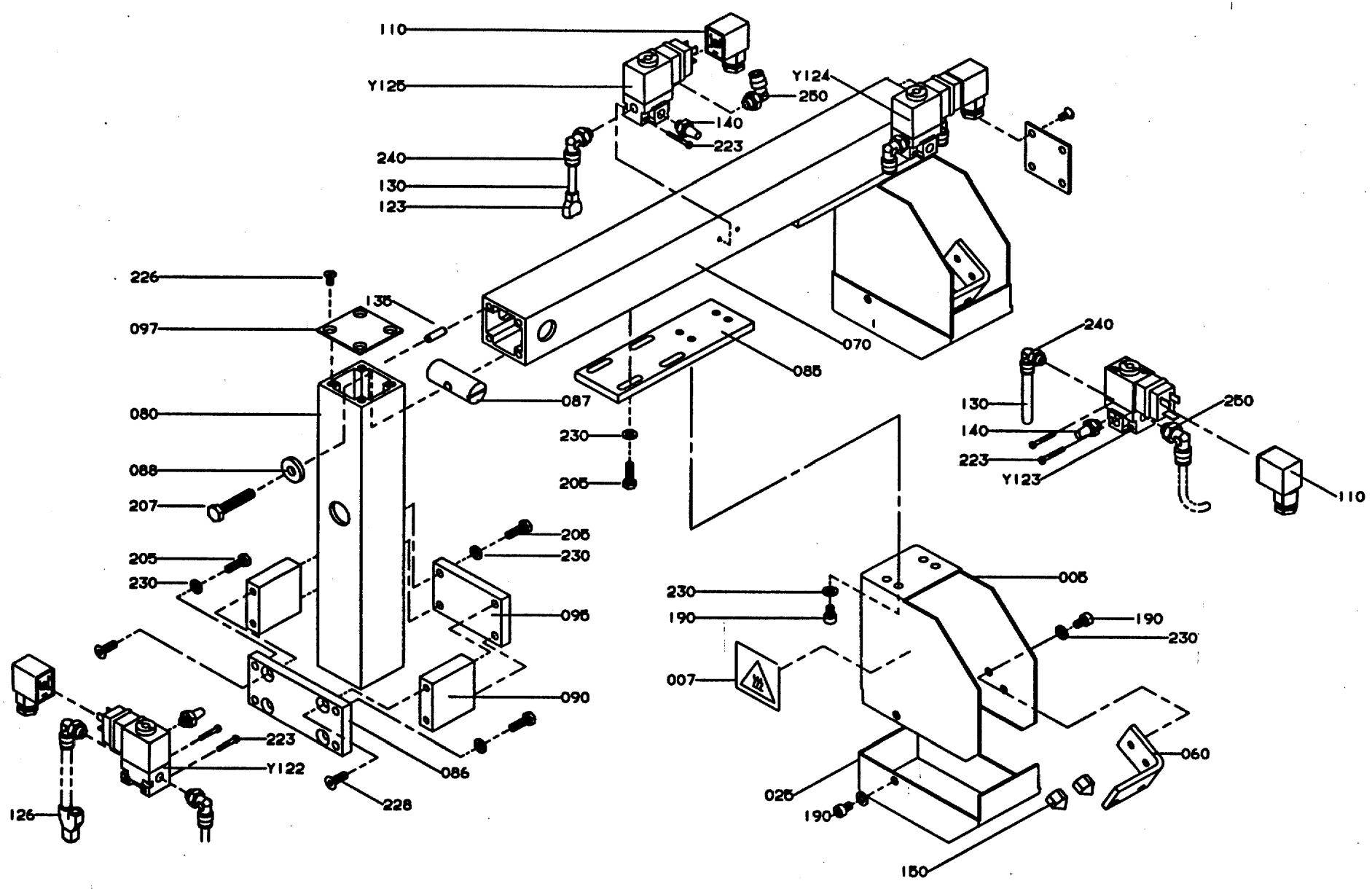

107425509.eps
1074255-9
ECN: 23757

Pos	Part No	SP	UN	Qty	Description	Page No
Tetra Wrap around Box with inside Flap, L-form						
Tetra Wrap around Box with side Flap, L-form						
000	C-1074255-0303	-		1	HOT MELT EQUIPMENT MISC.	
005	1111892	-		2	PROTECTION	
007	1128853	-		2	CAUTION SIGN	
025	1111893	-		2	PROTECTION	
060	1074325	-		2	BRACKET	
070	1139151	-		1	PROFILE	
080	1128402	-		1	PROFILE	
085	1128403	-		2	BRACKET	
086	1128410	-		1	LOCK PLATE	
087	486268	-		1	NUT	
088	548599	-		1	WASHER	
090	1128404	-		2	SPACER	
095	1128405	-		1	LOCK PLATE	
097	556604	-		2	COVER PLATE	
110	90042-0392	-		4	CONTACT	
123	90055-0100	-		2	JOINT CONNECTION	
126	90055-0101	-		4	JOINT CONNECTION	
130	90166-0202	-	MM	1000	TEFLON PIPE	
135	1065410	-		4	PIN	
140	90328-0003	-		4	SILENCER	
150	90439-0120	-		4	NOZZLE 237012	
190	312115-0364	-		16	SCREW 6X10 A4 80	
205	312105-0370	-		16	SCREW O4017 M6X20A280	
207	312105-0457	-		1	SCREW O4017 M8X35A280	
223	312125-0234	-		8	SLOTTED HEMCS3X30RFR	
226	312145-0325	-		8	SLOTTED HEMFS5X10RFR	
228	312155-0368	-		4	SCREW MF6S6X16RFR	
230	315105-0153	-		40	WASHER BRB6,4X12RFR	
240	342732-0102	-		4	ELBOW PIPE D6-R1/8"	
250	342732-0801	-		4	ELBOW PIPE D8-R1/8"	
Y124	90042-0213	-		1	SOLENOID VALVE	
Y125	90042-0213	-		1	SOLENOID VALVE	
COMMON PARTS						
Y122	**90042-0213**	-		1	**SOLENOID VALVE**	
Y123	90042-0213	-		1	SOLENOID VALVE	

Pos	Part No	SP	UN	Qty	Description	Page No

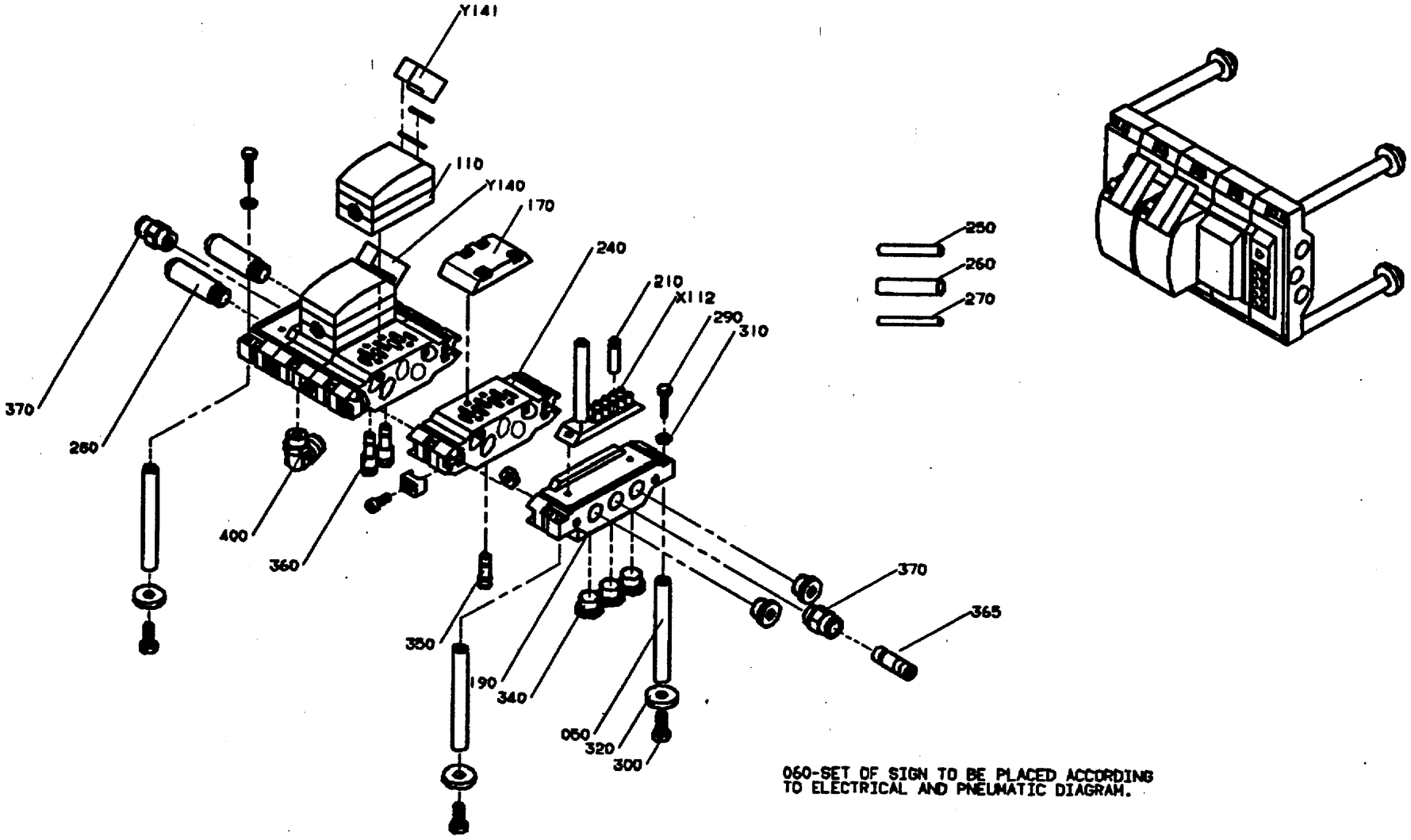

060-SET OF SIGN TO BE PLACED ACCORDING TO ELECTRICAL AND PNEUMATIC DIAGRAM.

GraphicID: 107425709.tif
Parent Drw: 1074257-9
ECN No: 22292

Pos	Part No	SP	UN	Qty	Description	Page No
1-Line- Z-Form, U-Form						
Tetra Wrap around Box with inside top Flap						
Tetra Wrap around Box with meeting Flaps						
Tetra Tray with over Flaps						
000	C-1074257-0301	-		1	**VALVE RAMP**	
050	1074169	-		4	SPACER	
110	90042-0215	P		2	SOL.VALVE PACKAGE	
170	90042-0519	-		1	COVER PLATE	
190	90042-0522	-		2	END PIECE	
210	90042-0550	-		8	PROTECTIVE COVER	
240	90042-0532	-		3	CONNECTION TABLE	
260	90166-0221	-	MM	500	HOSE	
270	90166-0193	-	M	21	PLASTIC HOSE	
280	90328-0024	P		2	SILENCER	
290	312105-0372	-		4	SCREW O4017 M6X25A280	
300	312105-0451	-		4	SCREW SO4017 8X20A280	
310	315105-0153	-		4	WASHER BRB6,4X12RFR	
320	315125-0165	-		4	WASHER SB 8,4X26X5 RFR	
340	342713-0211	-		1	BLIND PLUG	
350	342715-0103	-		2	PLUG D=8	
360	342716-0203	-		2	REDUCER 6-8	
370	342722-0210	-		2	PIPE COUPLD=12-R3/8"	
400	342732-0110	-		1	ELBOW PIPE D12-R3/8"	
X112	90042-0535	-		1	TERMINAL FOR SOL.VALVE	
Y141	90042-0539	P		1	EL.COIL	
1-Line- Z-Form, U-Form						
Tetra Wrap around Box with side Flap						
000	C-1074257-0305	-		1	**VALVE RAMP**	
050	1074169	-		4	SPACER	
110	90042-0215	P		1	SOL.VALVE PACKAGE	
170	90042-0519	-		2	COVER PLATE	
190	90042-0522	-		2	END PIECE	
210	90042-0550	-		9	PROTECTIVE COVER	
240	90042-0532	-		3	CONNECTION TABLE	
260	90166-0221	-	MM	500	HOSE	
270	90166-0193	-	M	7	PLASTIC HOSE	
280	90328-0024	P		2	SILENCER	
290	312105-0372	-		4	SCREW O4017 M6X25A280	
300	312105-0451	-		4	SCREW SO4017 8X20A280	
310	315105-0153	-		4	WASHER BRB6,4X12RFR	
320	315125-0165	-		4	WASHER SB 8,4X26X5 RFR	
340	342713-0211	-		1	BLIND PLUG	
350	342715-0103	-		4	PLUG D=8	
370	342722-0210	-		2	PIPE COUPLD=12-R3/8"	
400	342732-0110	-		1	ELBOW PIPE D12-R3/8"	
X112	90042-0535	-		1	TERMINAL FOR SOL.VALVE	
COMMON PARTS						
060	1128044	-		1	**SET OF SIGNS**	
250	90166-0194	-	M	14	PLASTIC HOSE	
365	342716-0210	-		1	REDUCER 6-12	
Y140	90042-0539	P		1	EL.COIL	

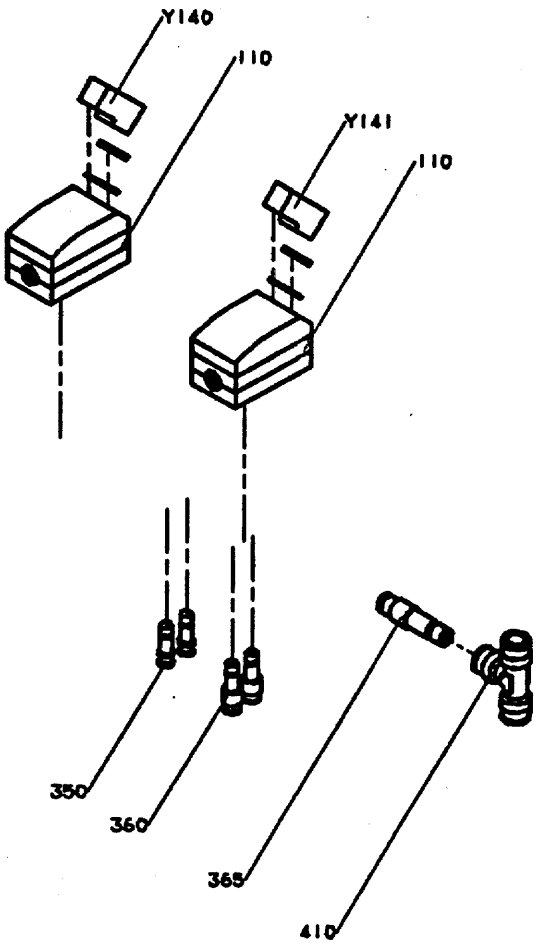

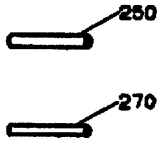

060-SET OF SIGN TO BE PLACED ACCORDING TO ELECTRICAL AND PNEUMATIC DIAGRAM.

PILOT LUFT PÅ ALLA VENTILER.
PILOT AIR ON ALL VALVES.

OBS! VÄND PACKNINGEN UNDER LOCKET I VENTILEN 180°
NOTE! TURN THE GASKET BELOW THE LID IN THE VALVE 180°

VALVES TO BE PLACED IN PNEUMATIC CABINET ACCORDING TO PNEUMATIC CHART.

GraphicID: 107425710.tif
Parent Drw: 1074257-10
ECN No: 22292

Pos	Part No	SP	UN	Qty	Description	Page No
2-Line- Z-Form, U-Form, 3-Line- Z-Form, U-Form						
1-Line- L-Form						
MULTI INFEED						
Tetra Wrap around Box with inside top Flap						
Tetra Wrap around Box with meeting Flaps						
Tetra Tray with over Flaps						
000	C-1074257-0302	-		1	**VALVE RAMP**	
110	90042-0215	P		2	SOL.VALVE PACKAGE	
270	90166-0193	-	M	21	PLASTIC HOSE	
360	342716-0203	-		2	REDUCER 6-8	
410	342748-0109	-		1	T-CONNECTI D=12	
Y141	90042-0539	P		1	EL.COIL	
2-Line- Z-Form, U-Form, 3-Line- Z-Form, U-Form						
MULTI INFEED						
Tetra Wrap around Box with side Flap						
000	C-1074257-0306	-		1	**VALVE RAMP**	
110	90042-0215	P		1	SOL.VALVE PACKAGE	
270	90166-0193	-	M	7	PLASTIC HOSE	
350	342715-0103	-		2	PLUG D=8	
410	342748-0109	-		1	T-CONNECTI D=12	
COMMON PARTS						
060	1128044	-		1	**SET OF SIGNS**	
250	90166-0194	-	M	14	PLASTIC HOSE	
365	342716-0210	-		1	REDUCER 6-12	
Y140	90042-0539	P		1	EL.COIL	

Pos	Part No	SP	UN	Qty	Description	Page No

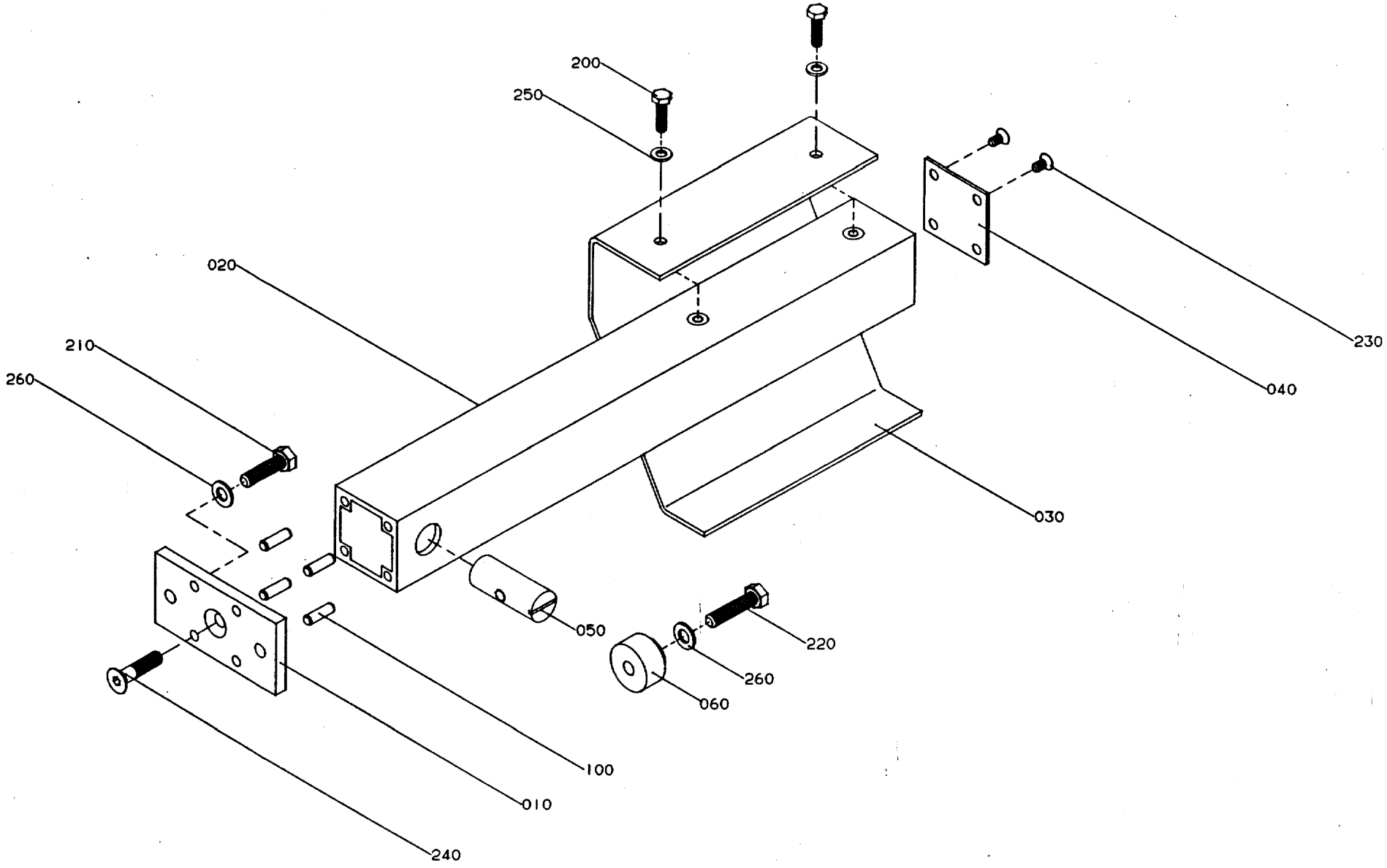

GraphicID: 107425801.eps
Parent Drw: 1074258-1
ECN 19306

Pos	Part No	SP	UN	Qty	Description	Page No
2-Line- Z-Form						
000	C-1074258-0102	-		1	STEERING	
010	556624	-		1	FRAME BRACKET	
020	1074331	-		1	PROFILE	
030	1074332	-		1	HEAD PLATE	
040	556604	-		1	COVER PLATE	
050	486268	-		1	NUT	
060	1074333	-		1	ROLL	
100	1065410	-		4	PIN	
200	312105-0371	-		2	SCREW M6S6X22RFR	
210	312105-0453	-		2	SCREW O4017 M8X25A280	
220	312105-0455	-		1	SCREW O4017 M8X30A280	
230	312145-0325	-		4	SLOTTED HEMFS5X10RFR	
240	312155-0457	-		1	SCREW MF6S8X35RFR	
250	315105-0153	-		2	WASHER BRB6,4X12RFR	
260	315105-0165	-		3	WASHER BRB8,4X16RFR	

Pos	Part No	SP	UN	Qty	Description	Page No

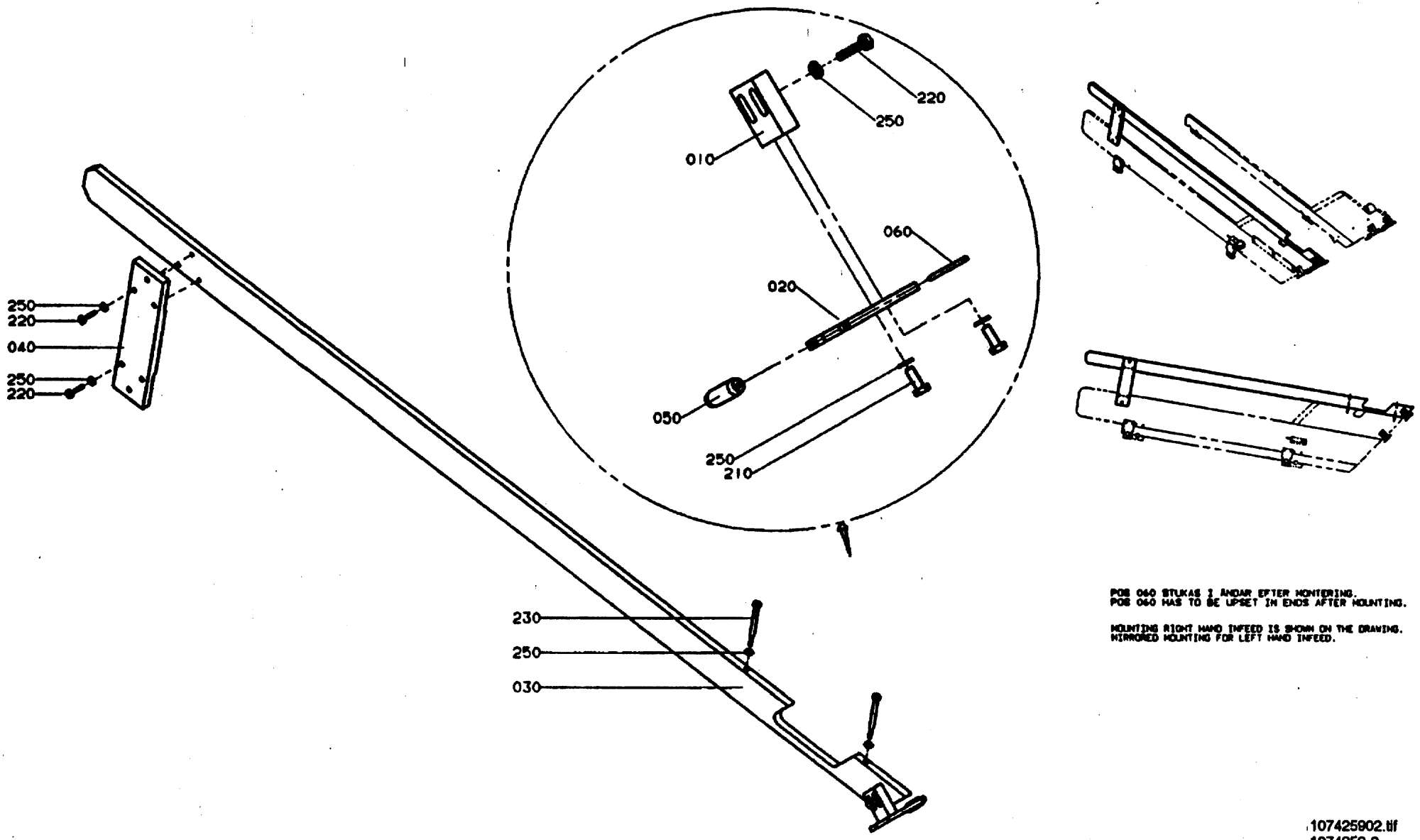

POS 040 STUKAS I ÄNDAR EFTER MONTERING.
POS 040 HAS TO BE UPSET IN ENDS AFTER MOUNTING.

MOUNTING RIGHT HAND INFEED IS SHOWN ON THE DRAWING.
MIRRORED MOUNTING FOR LEFT HAND INFEED.

107425902.tif
1074259-2
AM 20762

Pos	Part No	SP	UN	Qty	Description	Page No
-						
000	C-1074259-0201	-		1	MAGAZINE SUPPORT	
010	1074313	-		2	HOLDER	
020	1074314	-		2	HOLDER	
030	1074328	-		1	SIDE PLATE	
040	1074329	-		1	HOLDER	
050	1074315	-		2	ROLL	
060	1074316	-		2	SHAFT	
210	312105-0368	-		4	SCREW O4017 M6X16A280	
220	312105-0372	-		10	SCREW O4017 M6X25A280	
230	312105-0384	-		2	SCREW O4014 M6X70A280	
250	315105-0153	-		16	WASHER BRB6,4X12RFR	

Pos	Part No	SP	UN	Qty	Description	Page No

Tetra Pak

SPC

Spare Parts Catalogue

This page is intentionally left blank

Pos	Part No	SP	UN	Qty	Description	Page No
3-Line- Z-Form, U-Form						
000	B- 670290-0401	-		1	REGULAR ACCESSORIES	
040	C-1111820-020V	-		1	TUNNEL	419
050	C-1065361-040V	-		1	DOCUMENT 670270 MAX INF.	429
100	1128031	-		1	PNEUMATIC CHART	
2-Line- Z-Form, U-Form						
000	B- 670290-0402	-		1	REGULAR ACCESSORIES	
040	C-1065359-010V	-		1	TUNNEL	421
050	C-1065920-040V	-		1	DOCUMENT 670270 MED INF.	431
100	1139177	-		1	PNEUMATIC CHART	
1-Line- Z-Form, U-Form						
000	B- 670290-0403	-		1	REGULAR ACCESSORIES	
040	C-1074239-010V	-		1	TUNNEL	423
050	C-1065921-040V	-		1	DOCUMENT 670270 MIN INF.	433
100	1139178	-		1	PNEUMATIC CHART	
1-Line- L-Form						
000	B- 670290-0404	-		1	REGULAR ACCESSORIES	
040	C-1080030-0201	-		1	TUNNEL	425
050	C-1065922-040V	-		1	DOCUMENT 670270 L INF.	435
100	1128034	-		1	PNEUMATIC CHART	
MULTI- Z-Form, U-Form						
000	B- 670290-0405	-		1	REGULAR ACCESSORIES	
040	C-1124035-010V	-		1	TUNNEL	427
050	C-1074545-020V	-		1	DOCUMENT 670270 MULTI INF	437
100	1139179	-		1	PNEUMATIC CHART	
COMMON PARTS						
030	C-1021942-010V	-		1	START-UP KIT	
060	C-1074394-0301	-		1	QUEUE GUARD,SINGLE	439
070	C-1074441-0201	-		1	GUARD PLATE	441
200	90243-0209	-		1	BAILER	
210	1119739	-		1	MACHINE SIGN CE	

Pos	Part No	SP	UN	Qty	Description	Page No

This page is intentionally left blank

Pos	Part No	SP	UN	Qty	Description	Page No
-						
000	C-1021942-010V	-		1	START-UP KIT	
010	90153-0036	-		1	ADHESIVE	

Pos	Part No	SP	UN	Qty	Description	Page No

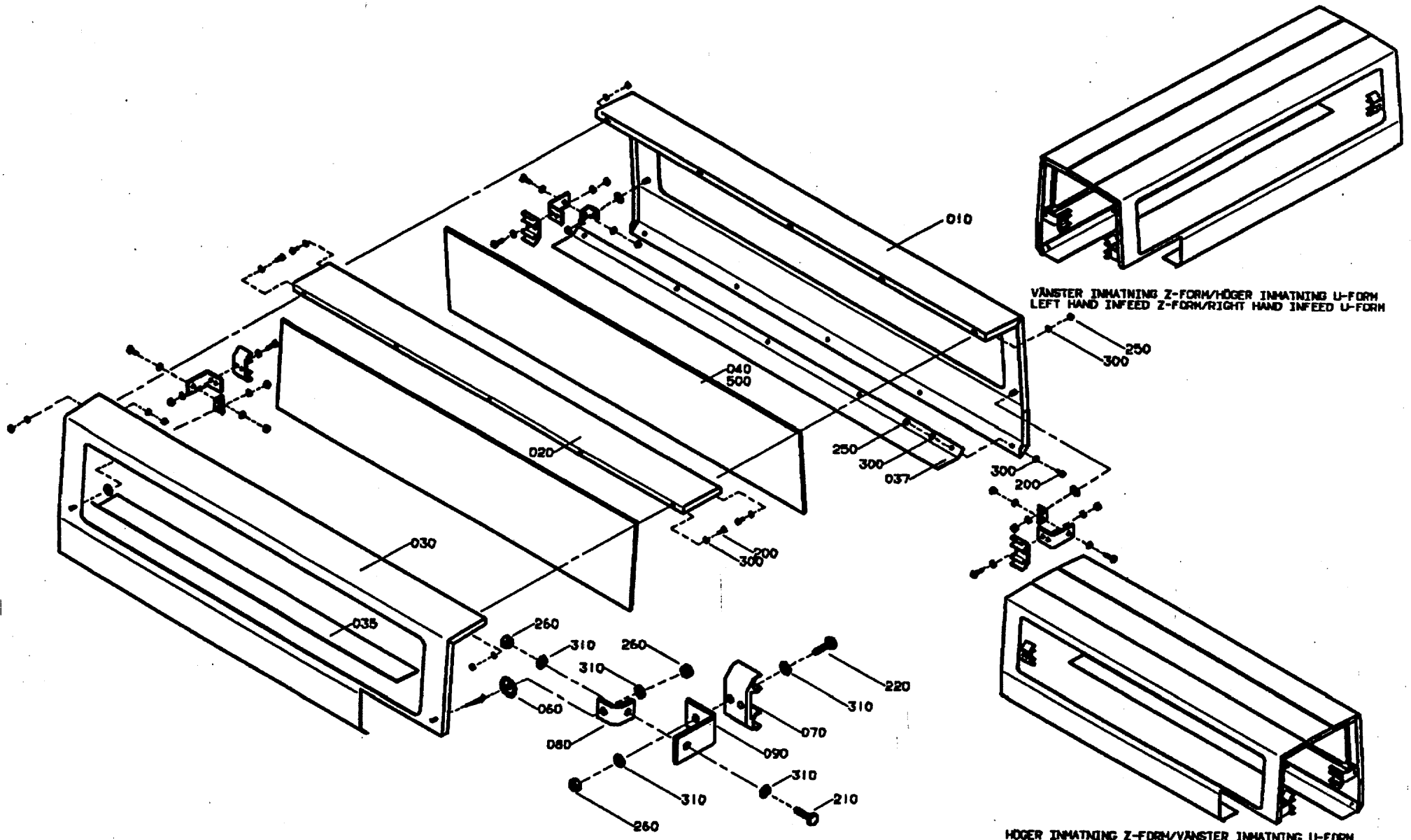

GraphicID: 111182002.tif
Parent Drw: 1111820-2
ECN No: 22292

Pos	Part No	SP	UN	Qty	Description	Page No
Conveyor width B40, Z-FORM, LEFT HAND INFEED, U-FORM, RIGHT HAND INFEED						
000	C-1111820-0201	-		1	TUNNEL	
030	1128848	-		1	TUNNEL	
090	1111818	-		4	BRACKET	
Conveyor width B40, Z-FORM, RIGHT HAND INFEED, U-FORM, LEFT HAND INFEED						
000	C-1111820-0202	-		1	TUNNEL	
030	1128849	-		1	TUNNEL	
090	1111818	-		4	BRACKET	
Conveyor width B55. B55S, B65, Z-FORM, LEFT HAND INFEED, U-FORM, RIGHT HAND INFEED						
000	C-1111820-0203	-		1	TUNNEL	
030	1128848	-		1	TUNNEL	
090	1111817	-		4	BRACKET	
Conveyor width B55. B55S, B65, Z-FORM, RIGHT HAND INFEED, U-FORM, LEFT HAND INFEED						
000	C-1111820-0204	-		1	TUNNEL	
030	1128849	-		1	TUNNEL	
090	1111817	-		4	BRACKET	
COMMON PARTS						
010	1128846	-		1	TUNNEL	
020	1128847	-		1	COVERING PLATE	
035	1128850	-		1	COVERING PLATE	
037	1128851	-		1	COVERING PLATE	
040	1128852	-		2	GLASS	
060	575418	-		4	WASHER	
070	575435	-		4	HOLDER	
080	1074344	-		4	BRACKET	
200	312105-0328	-		19	SCREW M6S5X14 A2 80	
210	312105-0368	-		4	SCREW O4017 M6X16A280	
220	312105-0370	-		8	SCREW O4017 M6X20A280	
250	312605-0314	-		19	NUT M6M5RFR	
260	312605-0316	-		16	NUT M6M6RFR	
300	315105-0146	-		38	WASHER BRB5,3X10RFR	
310	315105-0153	-		28	WASHER BRB6,4X12RFR	
500	90157-0041	-		X	SEALING COMPOUND	

Pos	Part No	SP	UN	Qty	Description	Page No

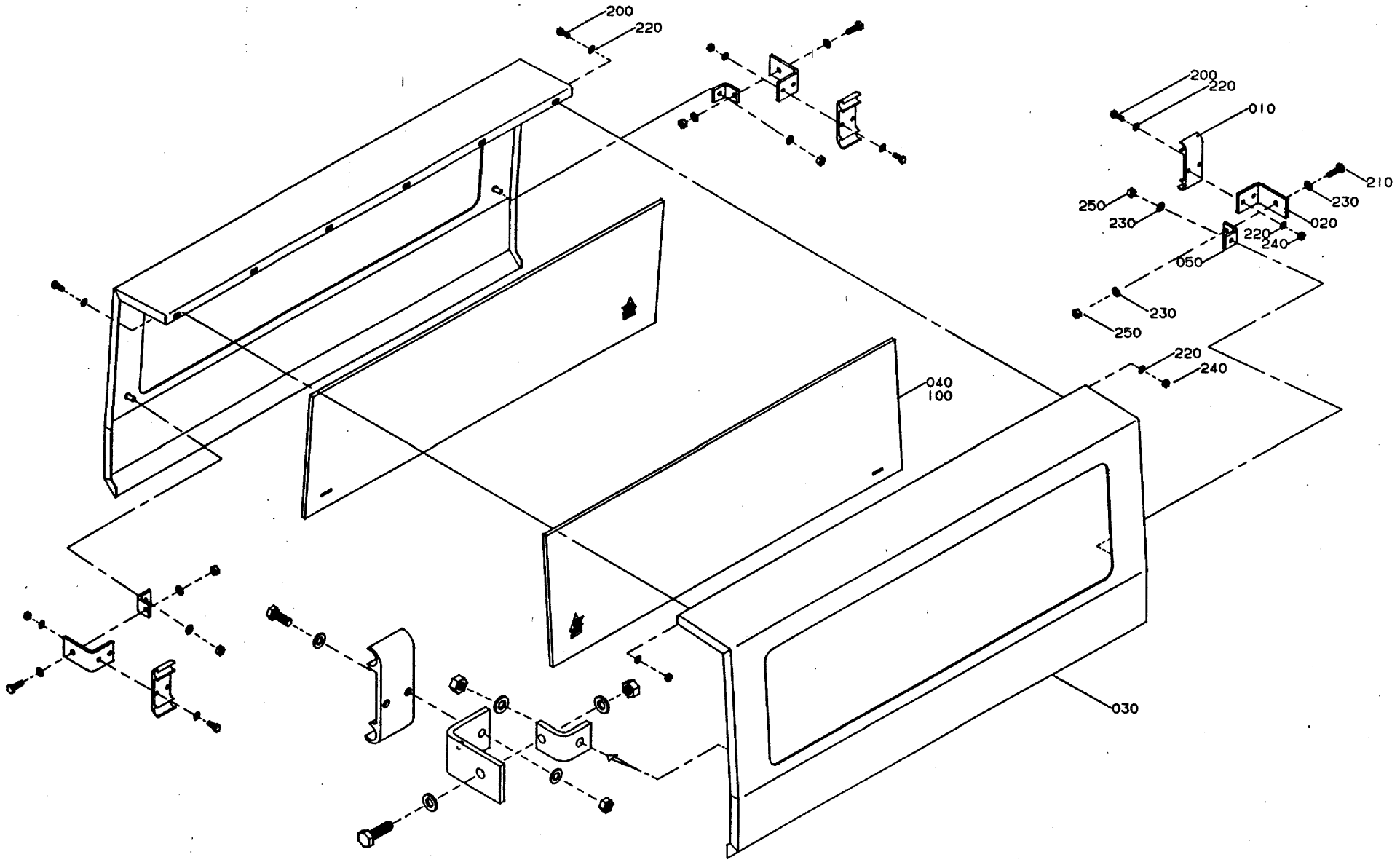

GraphicID: 106535901.eps
Parent Drw: 1065359-1
ECN 19307

Pos	Part No	SP	UN	Qty	Description	Page No
Conveyor width B40						
000	C-1065359-0101	-		1	TUNNEL	
010	1020638	-		4	HOLDER	
020	577854	-		4	BRACKET	
Conveyor width B55. B55S						
000	C-1065359-0102	-		1	TUNNEL	
010	1020637	-		4	HOLDER	
020	577855	-		4	BRACKET	
Conveyor width B65						
000	C-1065359-0103	-		1	TUNNEL	
010	1020637	-		4	HOLDER	
020	577856	-		4	BRACKET	
Conveyor width B79						
000	C-1065359-0104	-		1	TUNNEL	
010	1020637	-		4	HOLDER	
020	577857	-		4	BRACKET	
Conveyor width B68						
000	C-1065359-0105	-		1	TUNNEL	
020	1139138	-		4	BRACKET	
COMMON PARTS						
030	577862	-		2	TUNNEL HALF	
040	1074379	-		2	GLASS	
050	577859	-		4	BRACKET	
100	90157-0041	-		X	SEALING COMPOUND	
200	312105-0329	-		14	SCREW O4017 M5X16A280	
210	312105-0370	-		4	SCREW O4017 M6X20A280	
220	315105-0146	-		28	WASHER BRB5,3X10RFR	
230	315105-0153	-		12	WASHER BRB6,4X12RFR	
240	312605-0314	-		12	NUT M6M5RFR	
250	312605-0316	-		8	NUT M6M6RFR	

Pos	Part No	SP	UN	Qty	Description	Page No

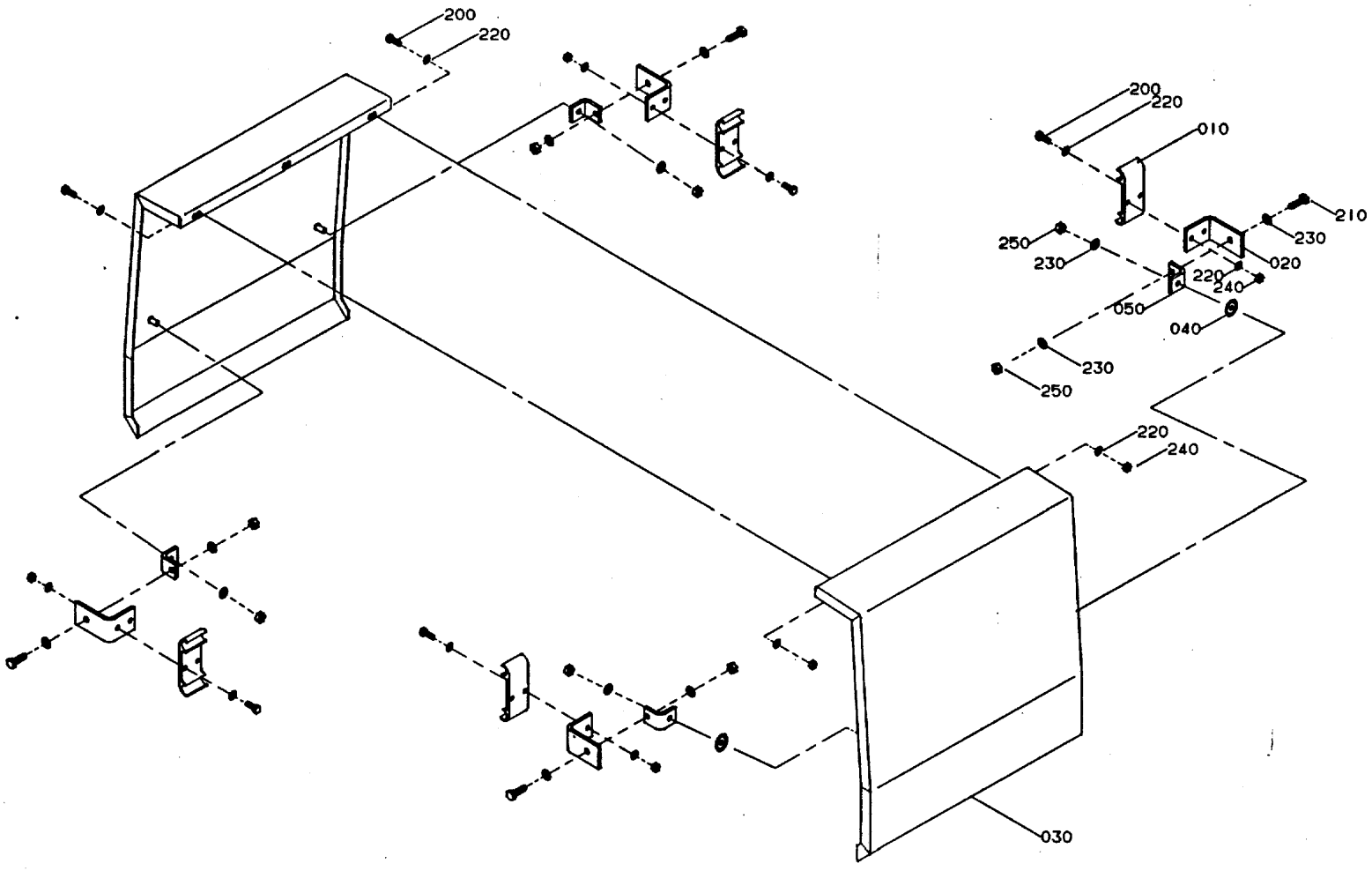

GraphicID: 107423901.eps
Parent Drw: 1074239-1
ECN 19304

Pos	Part No	SP	UN	Qty	Description	Page No
Conveyor width B40						
000	C-1074239-0101	-		1	TUNNEL	
010	1020638	-		4	HOLDER	
020	1074242	-		4	BRACKET	
Conveyor width B55. B55S						
000	C-1074239-0102	-		1	TUNNEL	
010	1020637	-		4	HOLDER	
020	1074243	-		4	BRACKET	
Conveyor width B65						
000	C-1074239-0103	-		1	TUNNEL	
010	1020637	-		4	HOLDER	
020	1074244	-		4	BRACKET	
COMMON PARTS						
030	1074237	-		2	TUNNEL	
040	575417	-		4	WASHER	
050	577859	-		4	BRACKET	
200	312105-0329	-		11	SCREW O4017 M5X16A280	
210	312105-0370	-		4	SCREW O4017 M6X20A280	
220	315105-0146	-		22	WASHER BRB5,3X10RFR	
230	315105-0153	-		12	WASHER BRB6,4X12RFR	
240	312605-0314	-		8	NUT M6M5RFR	
250	312605-0316	-		8	NUT M6M6RFR	

Pos	Part No	SP	UN	Qty	Description	Page No

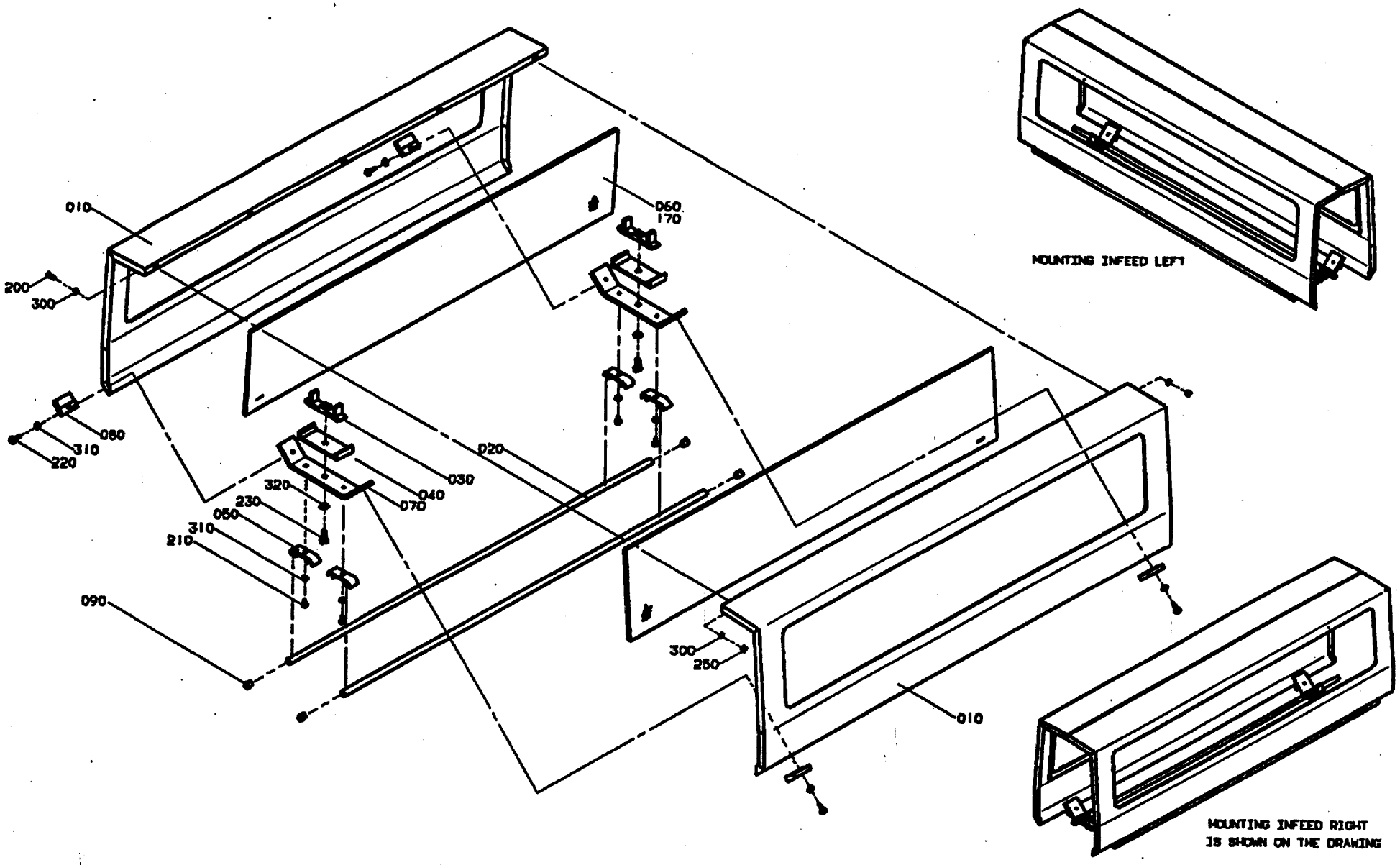

GraphicID: 108003002.tif
Parent Drw: 1080030-2
ECN No: 22292

Pos	Part No	SP	UN	Qty	Description	Page No
-						
000	C-1080030-0201	-		1	TUNNEL	
010	1128868	-		2	TUNNEL	
020	1128869	-		2	PIPE	
030	537482	-		2	BRACKET	
040	537483	-		2	BRACKET	
050	1020634-0001	-		4	HOLDER	
060	1128852	-		2	GLASS	
070	1128870	-		2	BRACKET	
080	1128871	-		4	CLAMPING PLATE	
090	484701	-		4	SHUTTER	
170	90157-0041	-		X	SEALING COMPOUND	
200	312105-0328	-		5	SCREW M6S5X14 A2 80	
210	312105-0364	-		4	SCREW M6S6X10RFR	
220	312105-0368	-		4	SCREW O4017 M6X16A280	
230	312105-0451	-		2	SCREW SO4017 8X20A280	
250	312605-0314	-		5	NUT M6M5RFR	
300	315105-0146	-		10	WASHER BRB5,3X10RFR	
310	315105-0153	-		8	WASHER BRB6,4X12RFR	
320	315105-0165	-		2	WASHER BRB8,4X16RFR	

Pos	Part No	SP	UN	Qty	Description	Page No

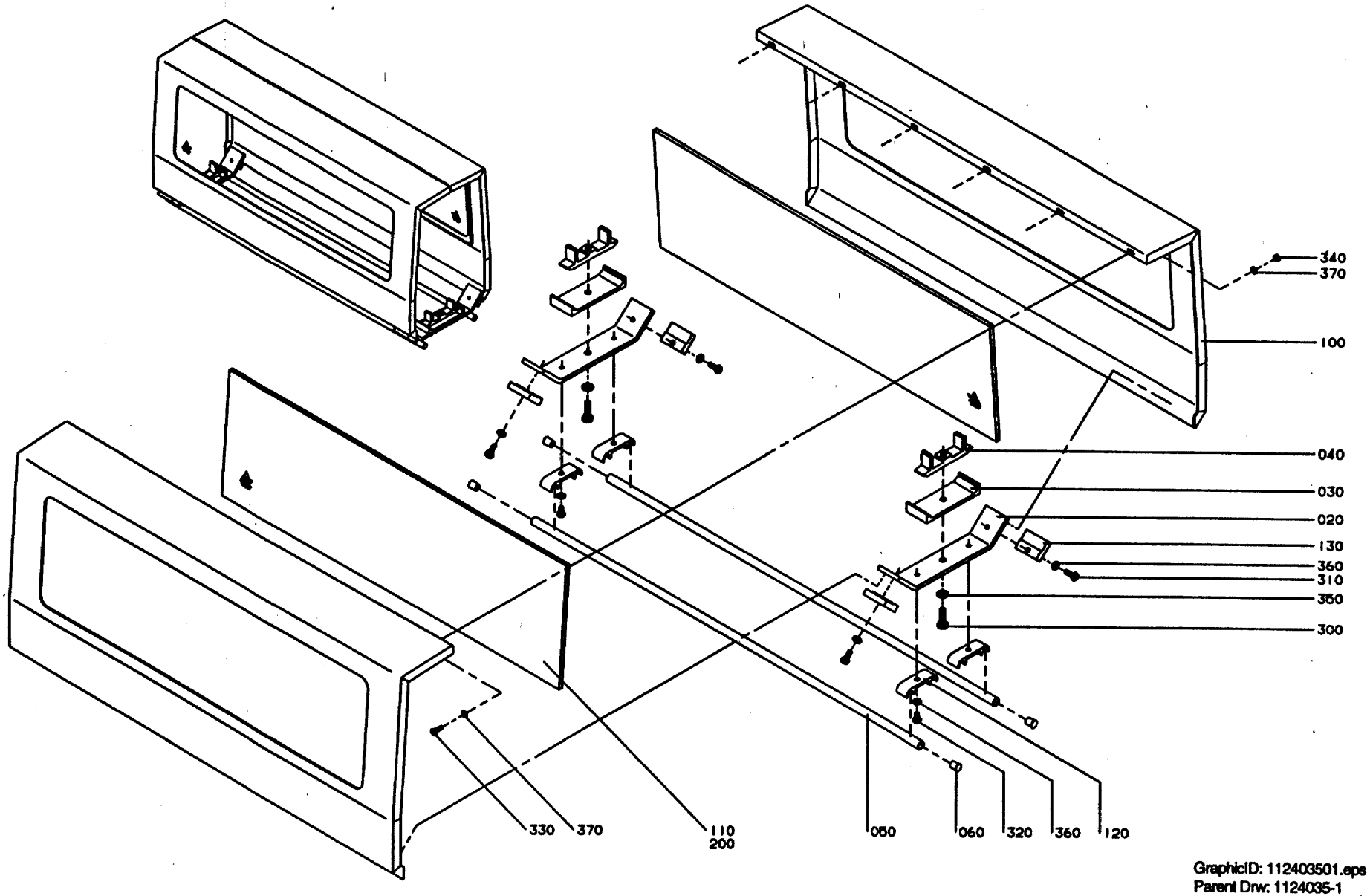

GraphicID: 112403501.eps
Parent Drw: 1124035-1
ECN 21267

Pos	Part No	SP	UN	Qty	Description	Page No
Conveyor width B40, B55, B55S, B65, B68, B79						
000	C-1124035-0101	-		1	TUNNEL	
020	1128870	-		2	BRACKET	
030	537483	-		2	BRACKET	
040	537482	-		2	BRACKET	
050	476221-0008	-		2	PIPE	
060	484701	-		4	SHUTTER	
330	312105-0328	-		6	SCREW M6S5X14 A2 80	
340	312605-0314	-		6	NUT M6M5RFR	
370	315105-0146	-		12	WASHER BRB5,3X10RFR	
Conveyor width UNITADJ						
000	C-1124035-0102	-		1	TUNNEL	
010	1111067	-		1	COVERING PLATE	
020	1124482	-		2	BRACKET	
030	548246	-		2	BRACKET	
040	548247	-		2	BRACKET	
050	476221-0008	-		4	PIPE	
060	484701	-		8	SHUTTER	
330	312105-0328	-		12	SCREW M6S5X14 A2 80	
340	312605-0314	-		12	NUT M6M5RFR	
370	315105-0146	-		24	WASHER BRB5,3X10RFR	
COMMON PARTS						
100	577862	-		2	TUNNEL HALF	
110	1074379	-		2	GLASS	
120	1020634-0001	-		4	HOLDER	
130	1128871	-		4	CLAMPING PLATE	
200	90157-0041	-		X	SEALING COMPOUND	
300	312105-0453	-		2	SCREW O4017 M8X25A280	
310	312105-0368	-		4	SCREW O4017 M6X16A280	
320	312105-0364	-		4	SCREW M6S6X10RFR	
350	315105-0165	-		2	WASHER BRB8,4X16RFR	
360	315105-0153	-		8	WASHER BRB6,4X12RFR	

Pos	Part No	SP	UN	Qty	Description	Page No

This page is intentionally left blank

Pos	Part No	SP	UN	Qty	Description	Page No
-						
000	C-1065361-040V	-		1	DOCUMENT 670270 MAX INF.	
010	OM-84836-01	-		1	OPERATORS MANUAL, ENGLISH	
020	MM-84841-01	-		1	MAINTENANCE MANUAL, ENGLISH	
030	IM-84846-01	-		1	INSTALLATION MANUAL, ENGLISH	
040	SPC-84851-01	-		1	SPARE PARTS CATALOGUE	
050	EM-84856-01	-		1	ELECTRICAL MANUAL	
060	EM-84864-01	-		1	ELECTRICAL MANUAL (VOLUME 160S, 200S)	
070	EM-8465-01	-		1	ELECTRICAL MANUAL (VOLUME 100S, 125S)	

Pos	Part No	SP	UN	Qty	Description	Page No

This page is intentionally left blank

Pos	Part No	SP	UN	Qty	Description	Page No
-						
000	C-1065920-040V	-		1	DOCUMENT 670270 MED INF.	
010	OM-84837-01	-		1	OPERATORS MANUAL	
020	MM-84842-01	-		1	MAINTENANCE MANUAL	
030	IM-84847-01	-		1	INSTALLATION MANUAL	
040	SPC-84866-01	-		1	SPARE PARTS CATALOGUE	
050	EM-84857-01	-		1	ELECTRICAL MANUAL	

Pos	Part No	SP	UN	Qty	Description	Page No

This page is intentionally left blank

Pos	Part No	SP	UN	Qty	Description	Page No
-						
000	C-1065921-040V	-		1	DOCUMENT 670270 MIN INF.	
010	OM-84838-01	-		1	OPERATORS MANUAL	
020	MM-84843-01	-		1	MAINTENANCE MANUAL	
030	IM-84848-01	-		1	INSTALLATION MANUAL	
040	SPC-84867-01	-		1	SPARE PARTS CATALOGUE	
050	EM-84858-01	-		1	ELECTRICAL MANUAL	

Pos	Part No	SP	UN	Qty	Description	Page No

This page is intentionally left blank

Pos	Part No	SP	UN	Qty	Description	Page No
-						
000	C-1065922-040V	-		1	DOCUMENT 670270 L INF.	
010	OM-84839-01	-		1	OPERATORS MANUAL	
020	MM-84844-01	-		1	MAINTENANCE MANUAL	
030	IM-84849-01	-		1	INSTALLATION MANUAL	
040	SPC-84971-01	-		1	SPARE PARTS CATALOGUE	
050	EM-84859-01	-		1	ELECTRICAL MANUAL	

Pos	Part No	SP	UN	Qty	Description	Page No

This page is intentionally left blank

Pos	Part No	SP	UN	Qty	Description	Page No
-						
000	C-1074545-020V	-		1	DOCUMENT 670270 MULTI INF	
010	OM-84840-01	-		1	OPERATORS MANUAL	
020	MM-585317-01	-		1	MAINTENANCE MANUAL	
030	IM-84850-01	-		1	INSTALLATION MANUAL	
040	SPC-585118-01	-		1	SPARE PARTS CATALOGUE	
050	EM-84860-01	-		1	ELECTRICAL MANUAL	
	* for variants without bottom size selector					
050	EM-585325-01	-		1	ELECTRICAL MANUAL	
	* for variants with bottom size selector					

Pos	Part No	SP	UN	Qty	Description	Page No

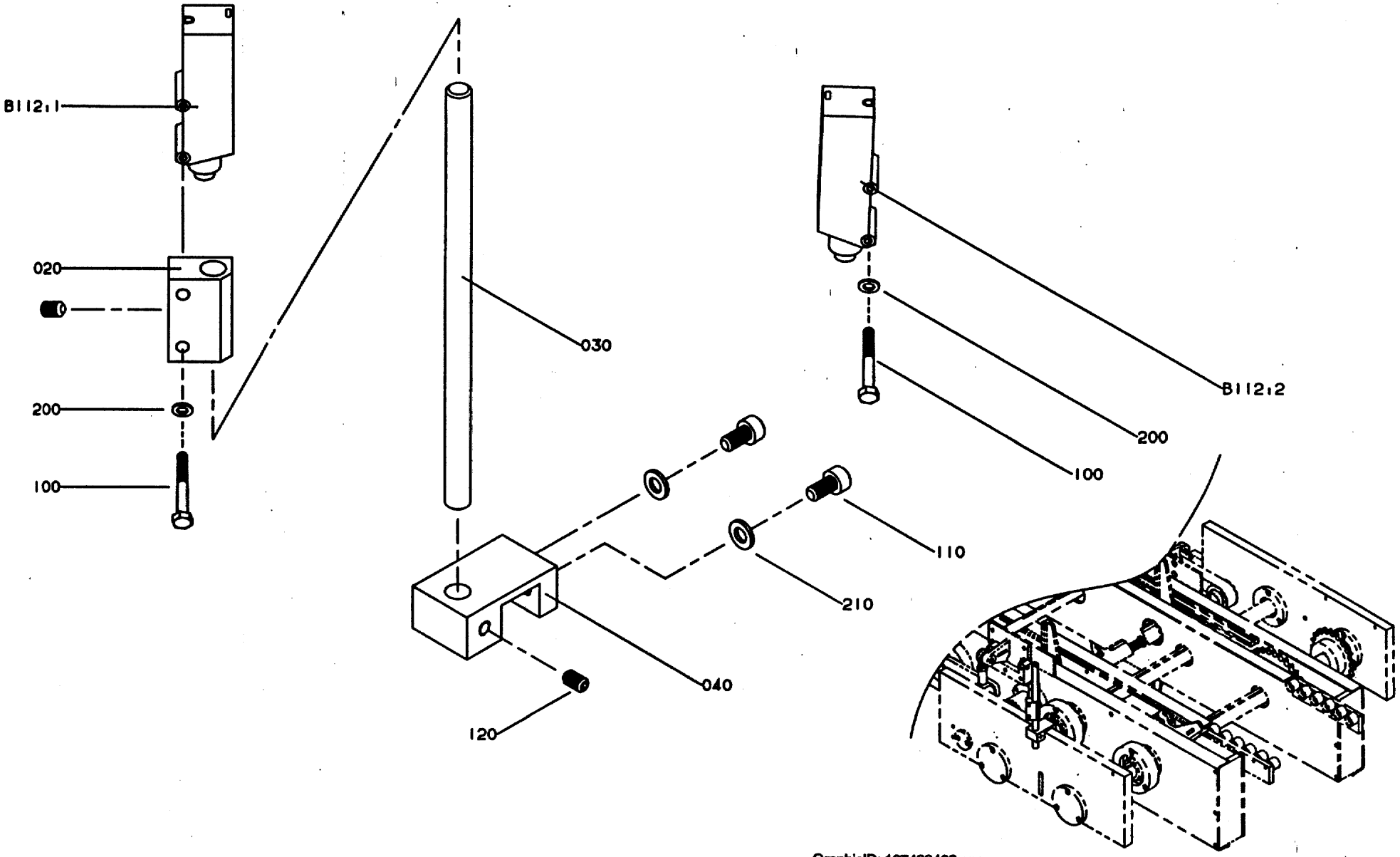

GraphicID: 107439403.eps
Parent Drw: 1074394-3
ECN 22668

Pos	Part No	SP	UN	Qty	Description	Page No
-						
000	C-1074394-0301	-		1	QUEUE GUARD,SINGLE	
020	1020829	-		1	MOUNTING BLOCK	
030	1074429	-		1	ROD	
040	1074428	-		1	BRACKET	
100	312105-0297	-		4	SCREW O4014 M4X25A280	
110	312115-0366	-		2	SCREW O4762 M6X12A280	
120	312318-0364	-		2	STOP SCREW SK6SS6X10RFR	
200	315105-0136	-		4	WASHER BRB4,3X8RFR	
210	315105-0153	-		2	WASHER BRB6,4X12RFR	
B112:1	90232-0103	-		1	PH.CELL OMRON E3SCT61L 5M	
B112:2	90232-0104	-		1	RECEIVER OMRON E3SCT61D5M	

Pos	Part No	SP	UN	Qty	Description	Page No

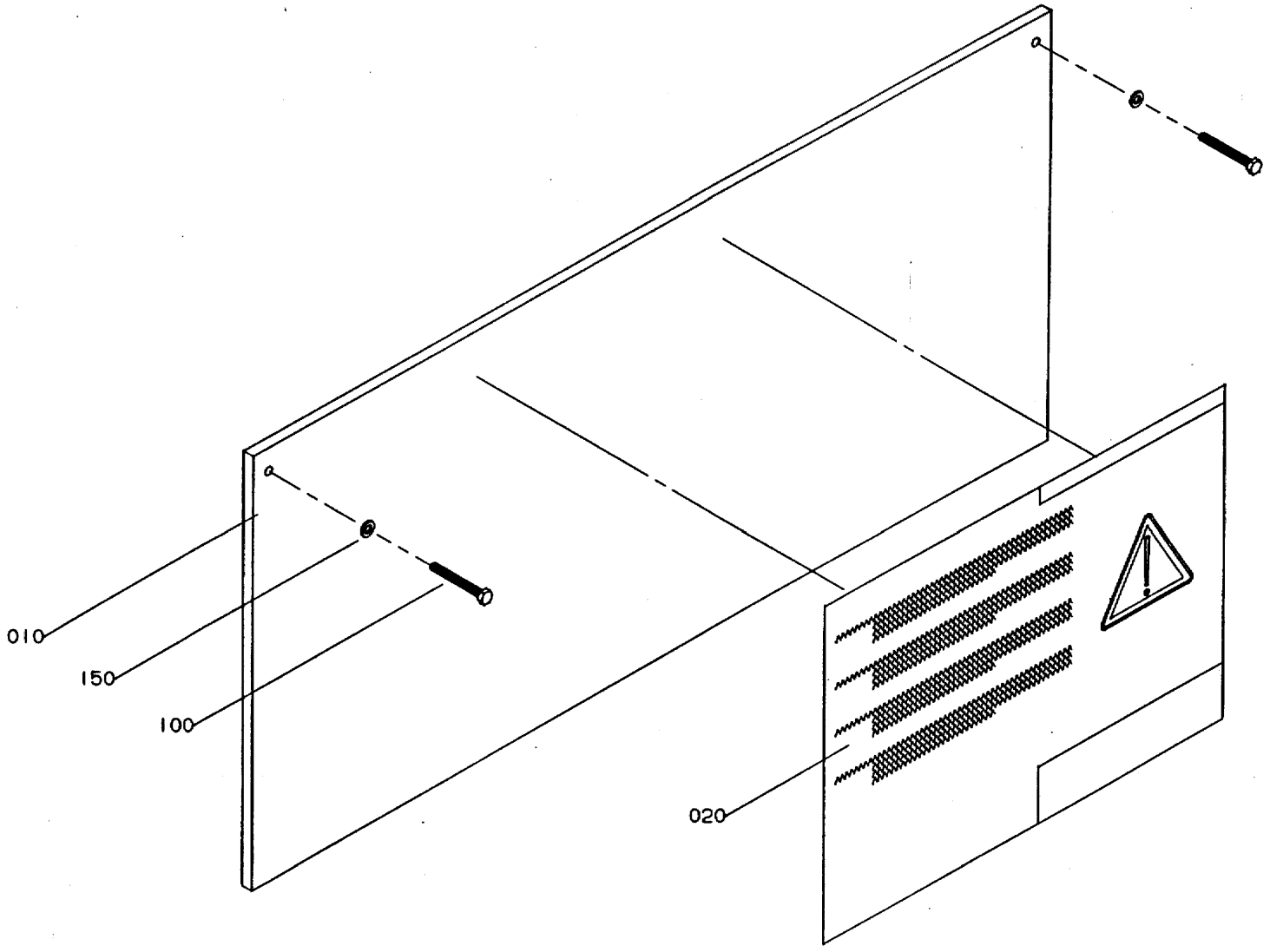

GraphicID: 107444101.eps
Parent Drw: 1074441-1
ECN 19307

Pos	Part No	SP	UN	Qty	Description	Page No
-						
000	C-1074441-0201	-		1	GUARD PLATE	
010	1074442	-		1	PLATE	
020	1128859	-		1	SIGN	
100	312105-0380	-		2	SCREW O4014 M6X50A280	
150	315105-0153	-		2	WASHER BRB6,4X12RFR	

Pos	Part No	SP	UN	Qty	Description	Page No

Tetra Pak

SPC

Spare Parts Catalogue

Part No	MMref	Description	Page No
10-14MM			23, 25, 155, 221, 223, 253, 309, 327, 331, 381
1020141-0001	2.04.2	HOLDER	335
1020141-0002	2.04.2	HOLDER	335
1020142-0001	2.04.2	HOLDER	335
1020142-0002	2.04.2	HOLDER	335
1020143-0001	2.04.2	HOLDER	335
1020143-0002	2.04.2	HOLDER	335
1020144-0001	2.04.2	HOLDER	335
1020144-0002	2.04.2	HOLDER	335
1020146	2.04.2	LOCKING BLOCK	335
1020634-0001	05.05	HOLDER	425
1020634-0001	05.06	HOLDER	427
1020635-0002	02.11	HOLDER	241
1020637		HOLDER	279
1020637	02.13	HOLDER	245
1020637	05.03	HOLDER	421
1020637	05.04	HOLDER	423
1020638		HOLDER	279
1020638	05.03	HOLDER	421
1020638	05.04	HOLDER	423
1020646	2.04	TOOTHED PULLY	325, 329
1020816-0001	2.04.2	HOLDER	335
1020816-0002	2.04.2	HOLDER	335
1020829	05.12	MOUNTING BLOCK	439
1021001	01.06	LINK ARM	37
1021002	01.06	CLAMP RING	37
1021003	01.06	RING	37
1021004	01.06	SHAFT	37
1021004	01.07	SHAFT	39, 41
1021004	01.08	SHAFT	43
1021004	01.09	SHAFT	45
1021005	01.06	BUSHING	37
1021006	01.04	SPRING BRACKET	29, 31
1021006	01.06	SPRING BRACKET	37
1021008	01.06	NIPPLE	37
1021008	01.07	NIPPLE	39, 41
1021008	01.08	NIPPLE	43
1021008	01.09	NIPPLE	45
1021010	01.07	LINK ARM	39, 41
1021011	01.07	CLAMP RING	39, 41
1021011	01.08	CLAMP RING	43
1021011	01.09	CLAMP RING	45
1021011	2.02.05	CLAMP RING	293

Part No	MMref	Description	Page No
1021012	01.07	RING	39, 41
1021012	01.08	RING	43
1021012	01.09	RING	45
1021012	2.02.05	RING	293
1021014	01.07	SPRING BRACKET	39, 41
1021017	01.08	WASHER	43
1021017	01.09	WASHER	45
1021018	01.08	SPRING BRACKET	43
1021018	01.09	SPRING BRACKET	45
1021020	01.08	LINK ARM	43
1021020	01.09	LINK ARM	45
1021021	01.08	BUSHING	43
1021021	01.09	BUSHING	45
1021021	2.02.05	BUSHING	293
1021025	01.10	COVER DISC	47
1021025	02.19	COVER DISC	257
1021026	01.10	COVER DISC	47
1021026	02.19	COVER DISC	257
1021027	01.05	CAM DISC	33, 35
1021028	01.04	CAM DISC	29, 31
1021028	01.05	CAM DISC	33, 35
1021029	01.05	CAM DISC	33, 35
1021031	01.03	BRACKET	27
1021033	01.03.01	ADJUSTING SCREW	71
1021034	01.03.01	SHAFT	71
1021035	01.03.01	SLEEVE	71
1021036	01.03.01	NUT	71
1021036	01.03.02	NUT	73
1021037	01.03.01	RING	71
1021037	01.03.02	RING	73
1021038	01.03.01	RETAINING RING	71
1021038	01.03.02	RETAINING RING	73
1021038	04.02	RETAINING RING	383
1021039	01.03.01	WASHER	71
1021039	01.03.02	WASHER	73
1021039	04.02	WASHER	383
1021040	01.03.01	TOOTHED PULLY	71
1021040	01.03.02	TOOTHED PULLY	73
1021040	04.02	TOOTHED PULLY	383
1021042	01.03.02	ADJUSTING SCREW	73
1021044	01.03.03	PILLAR	75
1021044	01.03.04	PILLAR	77
1021045	01.03.03	BEARING HOUSING	75

Part No	MMref	Description	Page No
1021045	01.03.04	BEARING HOUSING	77
1021046	01.03.03	HOLDER	75
1021047	01.03.03	WASHER	75
1021047	01.03.04	WASHER	77
1021048	01.03.03	WASHER	75
1021048	01.03.04	WASHER	77
1021050	01.03.04	HOLDER	77
1021051	01.03.04	HOLDER	77
1021053	01.03.05	SHAFT	79
1021054	01.03.05	BEARING HOUSING	79
1021054	01.03.06	BEARING HOUSING	81
1021056	01.03.05	SPROCKET	79
1021057	01.03.05	HUB	79
1021057	01.03.06	HUB	81
1021059	01.03.05	WASHER	79
1021059	01.03.06	WASHER	81
1021061	01.03.06	SHAFT	81
1021062	01.03.06	SPROCKET	81
1021063	01.03.06	SPROCKET	81
1021064	01.03.05	BEARING COVER	79
1021064	01.03.06	BEARING COVER	81
1021065	01.03.05	BEARING COVER	79
1021065	01.03.06	BEARING COVER	81
1021066	01.03.05	FLAT WEDGE	79
1021066	01.03.06	FLAT WEDGE	81
1021068	01.03.13	SPROCKET	101
1021069	01.03.12	SHAFT	99
1021069	01.03.13	SHAFT	101
1021070	01.03.12	BEARING COVER	99
1021070	01.03.13	BEARING COVER	101
1021070	02.07	BEARING COVER	233
1021071	01.03.12	LOCKING LUG	99
1021071	01.03.13	LOCKING LUG	101
1021071	02.07	LOCKING LUG	233
1021073	01.03.12	SPROCKET	99
1021074	01.03.13	HOLDER	101
1021075	01.03.13	LOCK PLATE	101
1021083	01.03.17	SPACER	109
1021085	01.03.17	SLIDE RAIL	109
1021086	01.03.17	SLIDE RAIL	109
1021087	01.03.17	SLIDE RAIL	109
1021088	01.03.17	SLIDE RAIL	109
1021090	01.03.10	CHAIN	95
1021090	01.03.11	CHAIN	97
1021091	01.03.10	CHAIN	95
1021091	01.03.11	CHAIN	97
1021092-0001	01.03.10	LINK	95
1021092-0002	01.03.10	LINK	95
1021095-0001	01.03.11	LINK	97
1021095-0002	01.03.11	LINK	97
1021099	01.03.07	CANTILEVER	83, 85
1021100	01.03.07	CANTILEVER	83, 85
1021101	01.03.07	SHAFT	83, 85
1021102	01.03.07	FOLDING FLAP	83, 85
1021103	01.03.07	FOLDING FLAP	83, 85
1021104	01.03.07	BEARING HOUSING	83, 85
1021105	01.03.07	LID	83, 85
1021106	01.03.07	HUB	83, 85
1021106	01.03.08	HUB	87, 89
1021106	01.03.09	HUB	91, 93
1021107	01.03.07	ARM	83, 85
1021108	01.03.07	ARM	83, 85
1021109	01.03.07	PLATE	83, 85
1021110	01.03.07	SHAFT	83, 85
1021110	01.03.08	SHAFT	87, 89
1021112	01.03.07	ARM	83, 85
1021113	01.03.07	WASHER	83, 85
1021113	01.03.08	WASHER	87, 89
1021114	01.03.07	WASHER	83, 85
1021114	01.03.08	WASHER	87, 89
1021115	01.03.07	LOCK PLATE	83, 85
1021116	01.03.07	LOCK PLATE	83, 85
1021117	01.03.07	LOCK PLATE	83, 85
1021121	01.03.07	LINK ARM	83, 85
1021123	01.03.08	BEARING HOUSING	87, 89
1021123	01.03.09	BEARING HOUSING	91, 93
1021124	01.03.08	PLATE	87, 89
1021125	01.03.08	ARM	87, 89
1021126	01.03.08	ARM	87, 89
1021127	01.03.08	HOLDER	87, 89
1021128	01.03.08	SLEEVE	87, 89
1021129	01.03.08	SHAFT	87, 89
1021130	01.03.08	WASHER	87, 89
1021131	01.03.09	ARM	91, 93
1021132	01.03.09	ARM	91, 93
1021134	01.03.09	SHAFT	91, 93

Part No	MMref	Description	Page No
1021135	01.03.09	LUG	91, 93
1021136	01.03.09	LUG	93
1021137	01.03.09	SHAFT	91, 93
1021138	01.03.09	BEARING HOUSING	91, 93
1021139	01.03.09	HUB	91, 93
1021140	01.03.09	SLEEVE	91, 93
1021141	01.03.09	BRACKET	91, 93
1021142	01.03.09	WASHER	91, 93
1021145	01.04.02	CLAMPING PIECE	121, 123
1021146	01.04.02	ARM	121, 123
1021147	01.04.02	PLATE	121, 123
1021148	01.04.02	SHAFT	121, 123
1021149	01.04.02	ADJUSTING SCREW	121, 123
1021150	01.04.02	SHAFT	121, 123
1021151	01.04.02	ARM	121, 123
1021152	01.04.02	WASHER	121, 123
1021153	01.04.02	LID	121, 123
1021154	01.04.02	NUT	121, 123
1021154	03.05	NUT	353, 355
1021154	04.02	NUT	383
1021155	01.04.02	WASHER	121, 123
1021155	03.05	WASHER	353, 355
1021156	01.04.02	RETAINING RING	121, 123
1021156	03.05	RETAINING RING	353, 355
1021157	01.04.02	CLAMPING PIECE	121, 123
1021158	01.04.02	SPACER	121, 123
1021159	01.04.02	SHAFT	121, 123
1021161	01.04.03	PIPE	125, 127
1021162	01.04.03	BEARING HOUSING	125
1021163	01.04.03	PLATE	125
1021164	01.04.03	NUT	125, 127
1021165	01.04.03	WASHER	125, 127
1021166	01.04.03	SPRING	125, 127
1021169	01.04.03	BEARING HOUSING	127
1021170	01.04.03	PLATE	127
1021171	01.04.03	HOLDER	127
1021172	01.04.03	SPACER	127
1021182	03.01	SHAFT	345
1021183	03.01	GEAR WHEEL	345
1021184	03.01	BEARING HOUSING	345
1021185	03.01	BEARING HOUSING	345
1021186	03.02	ROLL	347
1021187	03.02	SLEEVE	347
1021188	03.02	AXLE PIN	347
1021189	03.02	HOLDER	347
1021190	03.03	ROLL	349
1021190	03.04	ROLL	351
1021191	03.03	SLEEVE	349
1021191	03.04	SLEEVE	351
1021192	03.03	AXLE PIN	349
1021193	03.03	HOLDER	349
1021194	03.04	SHAFT	351
1021195	03.04	PLATE	351
1021196	03.04	BRACKET	351
1021197	03.04	SCREW	351
1021199	03.05	SHAFT	353, 355
1021200	03.05	ADJUSTING SCREW	353, 355
1021201	03.05	BEARING HOUSING	353, 355
1021202	03.05	HUB	353, 355
1021207	03.10	RAIL	365
1021208	03.10	SLIDING STRIP	365
1021209	03.10	SLIDING STRIP	365
1021210	03.10	HOLDER	365
1021211	03.10	NUT	365
1021212	03.10	ADJUSTING SCREW	365
1021213	03.10	PLATE	365
1021214	03.10	BEARING HOUSING	365
1021215	03.10	SHAFT	365
1021216	03.10	COVER	365
1021217	03.10	COVER	365
1021218	03.10	SUPPORT	365
1021219	03.10	SUPPORT	365
1021220	03.10	GEAR WHEEL	365
1021221	03.10	GEAR WHEEL	365
1021225	03.11	BEARING HOUSING	367
1021226	03.11	CLAMPING PIECE	367
1021227	03.11	FASTENING PLATE	367
1021228	03.11	STEERING	367
1021229	03.11	BRACKET	367
1021233	03.07	SPACER	359
1021234	03.07	SPACER	359
1021235	03.07	PLATE	359
1021235	2.02.06	PLATE	295
1021236	03.07	LOCK PLATE	359
1021242	03.06	CLAMPING PIECE	357
1021244	03.12	SHAFT	369

Part No	MMref	Description	Page No
1021245	03.12	SHAFT	369
1021246	03.12	PILLAR	369
1021249	03.12	SHAFT	369
1021250	03.12	BEARING HOLDER	369
1021251	03.12	BEARING HOLDER	369
1021252	03.12	BEARING HOLDER	369
1021253	03.12	CONICAL GEAR	369
1021254	03.12	CONICAL GEAR	369
1021255	03.12	GEAR WHEEL	369
1021256	03.12	SHAFT	369
1021257	03.12	BEARING HOUSING	369
1021258	03.12	GEAR WHEEL	369
1021259	03.08	PLATE	361
1021260	03.12	HOLDER	369
1021261	03.12	CLAMPING PIECE	369
1021262	03.12	WASHER	369
1021263	03.12	RETAINING RING	369
1021264	03.08	SIDE PLATE	361
1021265	03.08	SIDE PLATE	361
1021266	03.08	PLATE	361
1021267	03.08	PLATE	361
1021268	03.08	PLATE	361
1021269	03.09	COVER	363
1021270	03.09	HOLDER	363
1021271	03.09	GEAR WHEEL	363
1021272	03.09	SPACER	363
1021276	03.13	PLATE	371
1021277	03.13	PLATE	371
1021284	01.03.14	SUPPORT	103
1021289	01.03.14	LOCK PLATE	103
1021293	01.03.15	CLAMPING PIECE	105
1021294	01.03.15	LOCK PLATE	105
1021296	01.03.16	BRACKET	107
1021297	01.03.16	SUPPORT	107
1021298	01.03.16	STEERING	107
1021299	01.03.16	GUIDE	107
1021300	01.03.16	GUIDE	107
1021301	01.03.16	RAIL	107
1021302	01.03.16	LOCK PLATE	107
1021304	01.04.01	PROFILE	119
1021305	01.04.01	PROFILE	119
1021306	01.04.01	PROFILE	119
1021307	01.04.01	PROFILE	119
1021308	01.04.01	PROFILE	119
1021309	01.04.01	PROFILE	119
1021310	01.04.01	PROFILE	119
1021313	01.04.01	PROFILE	119
1021314	01.04.01	PROFILE	119
1021315	01.04.01	PROFILE	119
1021316	01.04.01	PROFILE	119
1021317	01.04.01	PROFILE	119
1021318	01.04.01	BRACKET	119
1021319	01.04.01	BRACKET	119
1021322	01.04.01	NUT	119
1021323	01.03	PROFILE	119
1021324	02.03	SPROCKET	27
1021325	01.03.05	SPROCKET	65
1021327	01.03.18	SPROCKET	79
1021328	01.03.18	BRACKET	111
1021329	01.03.18	SHAFT	111
1021338	03.08	COVERING PLATE	111
1021339	03.08	COVERING PLATE	361
1021349	01.13	CABLE TRENCH	361
1021350	01.13	CABLE TRENCH	55
1021351	01.13	CABLE TRENCH	55
1021358	02.04	PROFILE	55
1021362	02.04	PROFILE	225, 227
1021364	02.04	PROFILE	225, 227
1021365	02.04	PROFILE	225, 227
1021366	02.04	BRACKET	225, 227
1021371	02.05	BRACKET	225, 227
1021372	01.03	PROFILE	229
1021388	02.01	CLAMP RING	27
1021389	02.01	RING	147
1021390	01.13	LID	147
1021391	01.13	LID	55
1021392	01.13	LID	55
1021393	01.06.10	BRACKET	55
1021394	01.06.10	SPACER	187
1021397	02.03	PLATE	187
1021398	02.03	BOLT	155
1021399	02.03	WASHER	155
1021405	01.04.01	PROFILE	155
1021412	01.04.01	PROFILE	119
1021413	01.03.05	SPROCKET	119
1021414	01.03.05	HUB	79
			79

Part No	MMref	Description	Page No
1021415	01.03.05	WASHER	79
1021426	02.06	BEARING HOUSING	231
1021444	02.05	SPROCKET Z=17	229
1021462	02.03	SLIDING STRIP	155
1021498	02.10	HUB	239
1021499	02.10	SHAFT	239
1021506	03.08	SUPPORT	361
1021507	03.10	NUT	365
1021508	03.10	ADJUSTING SCREW	365
1021509	01.03.12	SCREW	99
1021509	01.03.13	SCREW	101
1021511	01.04.04	CABLE TRENCH	129
1021512	01.04.04	CABLE TRENCH	129, 131, 133
1021513	01.04.04	CABLE TRENCH	129, 131, 133
1021514	01.04.04	CABLE TRENCH	129
1021515	01.04.04	CABLE TRENCH	129, 131, 133
1021516	01.04.04	LID	129, 133
1021517	01.04.04	LID	129, 131, 133
1021518	01.04.04	LID	129, 131, 133
1021519	01.04.04	LID	129, 133
1021520	01.04.04	LID	129, 131, 133
1021539	02.11	SHAFT	241
1021547	02.17	GEAR WHEEL Z=50	253
1021548	02.18	GEAR WHEEL Z=50	255
1021549	02.10	GEAR WHEEL Z=50	239
1021551	02.18	SHAFT	255
1021552	02.18	WASHER	255
1021553	02.10	WASHER	239
1021554	02.01	BRACKET	147
1021579	01.03.07	FLAT WEDGE	83, 85
1021579	01.03.08	FLAT WEDGE	87, 89
1021579	01.03.09	FLAT WEDGE	91, 93
1021593	01.11	BRACKET	49, 51
1021594	01.11	YOKE	49, 51
1021595	01.07	TENSION SPRING	39, 41
1021595	01.08	TENSION SPRING	43
1021595	01.09	TENSION SPRING	45
1021596	01.06	TENSION SPRING	37
1021597	02.01	HUB	61
1021598	02.01	PROTRACTOR	61
1021599	02.01	ARROW	61
1021605	01.03	PROFILE	27
1021606	01.03	BRACKET	27
1021608	02.04	PROFILE	225, 227
1021609	02.04	PROFILE	225, 227
1021620	2.02.03	SPRING	289
1021621	2.02.03	PLATE	289
1021622	2.02.03	PLATE	289
1021623	2.02.03	STEERING RAIL	289
1021634	2.02.04	HOLDER	291
1021638	02.17	BRACKET	253
1021639	02.17	RAIL	253
1021640	02.17	HOLDER	253
1021641	02.17	SPACER	253
1021642	02.17	SHAFT	253
1021661	2.02.05	STRUT	293
1021663	2.02.05	HOLDER	293
1021664	2.02.05	SPACER	293
1021665	2.02.05	SHAFT	293
1021666	2.02.05	LINK	293
1021668	2.02.05	HOLDER	293
1021669	2.02.05	SHAFT	293
1021671	2.02.05	HOLDER	293
1021672	2.02.05	HOLDER	293
1021673	2.02.05	SHAFT	293
1021674	2.02.05	SHEET	293
1021678	2.02.05	HOLDER	293
1021682	2.03.02	HATCH	303
1021686	2.03.04	PROTECTION PLATE	307
1021690	2.03.08	PROTECTION PLATE	317
1021694	2.03.07	GLASS	315
1021695	2.03.07	GLASS	315
1021702	01.06.02	PROTECTION PLATE	169
1021706	01.06.04	PROTECTION PLATE	173
1021708	01.06.05	PROTECTION PLATE	175
1021710	01.06.06	HATCH	179
1021713	01.06.06	HATCH	177
1021715	01.06.07	HATCH	181
1021717	01.06.08	HATCH	183
1021719	01.06.09	PROTECTION PLATE	185
1021720	2.03.02	BRACKET	303
1021721	01.06.13	BRACKET	193
1021722	01.06.06	GLASS	179
1021723	01.06.06	DRIP PLATE	177, 179
1021724	01.06.06	GLASS	177
1021728	01.03	PROFILE	27

Part No	MMref	Description	Page No
1021742	02.01	CONNECTION BOX	221
1021746	01.01	BRACKET	23
1021746	01.02	BRACKET	25
1021746	02.01	BRACKET	221
1021749	02.04	PROFILE	225, 227
1021773	01.06.01	HOOD	167
1021774	01.06.10	PROTECTION PLATE	187
1021775	01.06.01	BRACKET	167
1021776	01.04.01	BRACKET	119
1021779	01.06.01	BRACKET	167
1021783	01.06.11	PROTECTION PLATE	189
1021783	01.06.16	PROTECTION PLATE	199
1021784	01.06.11	GLASS	189
1021784	01.06.16	GLASS	199
1021786	01.06.12	CORNER STRIP	191
1021786	01.06.18	CORNER STRIP	203
1021787	01.06.12	CORNER STRIP	191
1021787	01.06.18	CORNER STRIP	203
1021792	01.06.11	BRACKET	189
1021792	01.06.15	BRACKET	197
1021792	01.06.16	BRACKET	199
1021793	01.04.01	PROFILE	119
1021794	01.04.01	PROFILE	119
1021795	01.06.09	DOWEL	185
1021798	01.04.01	BRACKET	119
1021799	01.06.13	BRACKET	193
1021822	2.02.05	SUPPORTING SHEET	293
1021825	02.19	SEALING FRAME	257
1021826	02.19	CHAIN GUARD	257
1021828	02.19	COVER DISC	257
1021833	02.10	CURVE	239
1021853	02.04	PROFILE	225, 227
1021855	01.06.13	RIM	193
1021857	02.03	BRACKET	223
1021864	02.17	GEAR WHEEL Z=40	253
1021865	02.05	SPROCKET Z=28	229
1021866	02.05	SPROCKET Z=23	229
1021874	2.03.02	HATCH	303
1021876	2.03.08	PROTECTION PLATE	317
1021892	03.06	MOUNTING SHEET	357
1021893	03.06	HOLDER	357
1021898	01.01	CONNECTION BOX	23
1021898	01.02	CONNECTION BOX	25
1021899	01.06.13	BRACKET	193
1021901	01.03.17	SPACER	109
1021907	2.03.07	DAMPER	315
1021910	01.04.06	FASTENING BRACKET	141
1021913	01.06.01	HANDLE	167
1021913	2.03.01	HANDLE	301
1021913	2.03.07	HANDLE	315
1021915	02.03	SHEET	65
1021918	01.03.07	SPACER	83, 85
1021919	01.03.18	CHAIN	111
1021922	01.03.09	LUG	91
1021928	2.02.05	SUPPORTING SHEET	293
1021933	01.03	COVER TAPE	27
1021933	01.04.01	COVER TAPE	119
1021933	02.04	COVER TAPE	225, 227
1021934	01.03.16	WASHER	107
1021937	01.06.12	CORNER STRIP	191
1021937	01.06.18	CORNER STRIP	203
1021939	02.03	SHEET	155
1021944	01.03	CABLE DUCT	27
1021946	01.04	DIAL	29, 31
1021946	01.05	DIAL	33, 35
1021949	03.10	RAIL	365
1021950	03.06	SLIDE RAIL	357
1021951	03.13	SLIDER	371
1021953	03.10	PROTECTION PLATE	365
1021954	02.19	CHAIN GUARD	257
1021955	03.13	PROTECTION	371
1021959	01.06.10	PROTECTION PLATE	187
1021976	2.02.05	HOLDER	293
1021983	01.12	MOUNTING SHEET	53
1021984	01.12	SPACER	53
1021989	01.04.01	PROFILE	119
1021990	01.04.04	SIGN	129, 131, 133
1021991	01.04.04	STRIP	129, 131, 133
1021992	03.07	RAIL	359
1021994	03.07	PLATE	359
1021995	03.07	STEERING RAIL	359
1021997	01.03	PROFILE	27
1021998	02.03	CHAIN	65
1021998	02.05	CHAIN	229
1065056	2.02.05	SHAFT	293
1065092	02.22	COVER PLATE	275

Part No	MMref	Description	Page No
1065143	2.04	BRACKET	325, 329
1065144	2.04	BRACKET	325, 329
1065147	2.04	SPACER	325, 329
1065150	2.04	SIDE PIECE	325, 329
1065151	2.04	SIDE PIECE	325, 329
1065160	02.04	PROFILE	225, 227
1065161	02.04	PROFILE	225, 227
1065162	02.04	PROFILE	225, 227
1065163	02.04	PROFILE	225, 227
1065164	02.04	PROFILE	225, 227
1065165	02.04	PROFILE	225, 227
1065166	02.04	PROFILE	225, 227
1065167	02.04	PROFILE	225, 227
1065168	02.04	PROFILE	225, 227
1065169	02.04	PROFILE	225, 227
1065170	02.04	PROFILE	225, 227
1065171	02.04	PROFILE	225, 227
1065172	02.04	BRACKET	225, 227
1065173	02.04	BRACKET	225, 227
1065174	02.04	BRACKET	225, 227
1065175	02.04	BRACKET	225, 227
1065178	02.14	SIDE PLATE	247
1065179	02.14	SIDE PLATE	247
1065180	02.14	HOLDER	247
1065181	02.14	PLATE	247
1065182	2.02.04	BRACKET	291
1065183	2.02.04	BRACKET	291
1065184	02.14	BRACKET	247
1065186	02.17	PLATE	253
1065188	02.10	PLATE	239
1065190	02.10	PLATE	239
1065191	02.10	COVER	239
1065192	02.10	COVER	239
1065195	02.19	COVERING PLATE	257
1065197	2.02.03	PLATE	289
1065199	02.13	ANGLE BRACKET	245
1065200	02.13	ANGLE BRACKET	245
1065201	02.13	PLATE	245
1065202	02.13	PLATE	245
1065203	02.13	SPRING	245
1065204	02.13	STEERING RAIL	245
1065205	02.13	PLATE	245
1065207	02.13	BRACKET	245
1065208	02.13	RAIL	245
1065215	02.11	STEERING RAIL	241
1065216	02.11	STEERING RAIL	241
1065218	02.21	CABLE DUCT	273
1065219	02.21	LID	273
1065221	02.12	STEERING RAIL	243
1065226	02.07	BEARING PLATE	233
1065227	02.07	SHAFT	233
1065228	02.07	SPROCKET Z=10	233
1065230	02.06	SHAFT	231
1065232	02.16	SLIDE RAIL	251
1065233	02.16	SLIDE RAIL	251
1065234	02.16	SLIDE RAIL	251
1065240	02.10	PLATE	239
1065241	02.10	SHAFT	239
1065243	2.02.04	SHEET	291
1065249	02.06	HUB	231
1065251	02.08	SHAFT	235
1065251	02.09	SHAFT	237
1065252	02.08	SPACER	235
1065252	02.09	SPACER	237
1065254	2.03.06	PROTECTION PLATE	311
1065255	2.03.06	PROTECTION PLATE	313
1065256	2.03.06	PROTECTION PLATE	311
1065257	2.03.06	PROTECTION PLATE	313
1065259	2.03.05	PROTECTION PLATE	309
1065260	2.03.05	PROTECTION PLATE	309
1065261	2.03.05	PROTECTION PLATE	309
1065264	2.03.01	GLASS	301
1065265	2.03.01	GLASS	301
1065267	2.03.03	HATCH	305
1065268	2.03.03	HATCH	305
1065270	2.03.09	PROTECTION PLATE	319
1065272	2.03.10	PROTECTION PLATE	321
1065273	02.05	SPROCKET Z=21	229
1065273	02.06	SPROCKET Z=21	231
1065274	2.03.03	BRACKET	305
1065276	2.03.10	BRACKET	321
1065289	2.04	SPACER	325, 329
1065296	2.02.02	SUPPORT	287
1065298	2.02.02	SHAFT	287
1065299	2.02.02	SHAFT	287
1065303	2.02.02	PLATE	287

Part No	MMref	Description	Page No
1065322	2.02.04	SHEET	291
1065337	02.11	STEERING RAIL	241
1065338	02.11	STEERING RAIL	241
1065339	2.02.05	HEAD PLATE	293
1065340	2.02.05	HEAD PLATE	293
1065341	2.02.05	HOLDER	293
1065342	2.02.05	LUG	293
1065343	02.13	HOLDER	245
1065344	02.11	STEERING RAIL	241
1065345	02.11	HOLDER	241
1065347	2.03.11	PROTECTION PLATE	323
1065348	2.03.11	PROTECTION PLATE	323
1065349	02.17	GEAR WHEEL Z=32	253
1065351	2.04	FASTENING BRACKET	329
1065353	2.04	DRIP PLATE	325, 329
1065355	2.04	TOOTHED PULLY Z=22	325, 329
1065356	2.04	TOOTHED PULLY Z=27	325, 329
1065357	2.04	TOOTHED PULLY Z=32	325, 329
1065368	03.10	END SECTION	365
1065369	03.10	END SECTION	365
1065370	03.10	RAIL	365
1065371	03.10	SLIDING STRIP	365
1065386	2.04	STUD SCREW	325, 329
1065387	2.04	CANTILEVER	325, 329
1065390	2.02.04	STEERING RAIL	291
1065391	2.02.04	STEERING RAIL	291
1065392	2.02.04	STEERING RAIL	291
1065393	2.02.03	BRACKET	289
1065394	2.02.02	PLATE	287
1065395	2.02.02	CARRIAGE	287
1065396	2.02.02	ARM	287
1065397	2.02.02	HOLDER	287
1065398	2.02.02	HOLDER	287
1065399	2.02.02	STOP	287
1065400	2.02.02	BELT HOLDER	287
1065401	2.02.02	BELT HOLDER	287
1065402	2.02.02	HOLDER	287
1065403	2.02.02	FLAG	287
1065405	2.02.02	LID	287
1065406	2.02.02	HOLDER	287
1065407	2.02.02	COVER	287
1065408	2.02.02	SHEET	287
1065409	2.02.02	PLATE	287

Part No	MMref	Description	Page No
1065410	01.03	SLOTTED PIN	27
1065410	01.04.01	SLOTTED PIN	119
1065410	02.04	SLOTTED PIN	225, 227
1065410	02.22	SLOTTED PIN	275
1065411	2.02.02	SPACER	287
1065413	2.02.06	PROFILE	295
1065414	2.02.06	ROD	295
1065415	2.02.06	ROD	295
1065416	2.02.06	RAIL	295
1065417	2.02.06	RAIL	295
1065418	2.02.06	CLAMPING PIECE	295
1065419	2.02.06	CLAMPING PIECE	295
1065420	2.02.06	SECURING PLATE	295
1065421	2.02.06	SPACER	295
1065433	02.13	FASTENING BRACKET	245
1065434	02.10	BEARING HOUSING	239
1065435	02.10	SHAFT	239
1065436	02.10	WASHER	239
1065438	02.16	SLIDE RAIL	251
1065441	2.02.01	SHEET	285
1065442	2.02.01	SHEET	285
1065443	2.02.01	SHEET	285
1065444	2.02.01	SHEET	285
1065445	2.02.01	SHEET	285
1065446	2.02.01	SHEET	285
1065447	2.02.01	SHEET	285
1065448	2.02.01	SHEET	285
1065449	2.02.01	SHEET	285
1065450	2.02.02	WASHER	287
1065451	2.02.01	SHEET	285
1065452	2.02.01	SHEET	285
1065453	2.02.01	SHEET	285
1065454	2.02.01	SHEET	285
1065455	2.02.01	SHEET	285
1065456	2.02.01	SHEET	285
1065457	2.02.01	SHEET	285
1065458	2.02.01	SHEET	285
1065459	2.02.01	SHEET	285
1065460	2.04.2	COVERING PLATE	335
1065461	2.02.01	FLAP	285
1065462	2.02.01	FLAP	285
1065463	2.02.01	FLAP	285
1065464	2.02.01	FLAP	285

Part No	MMref	Description	Page No
1065465	2.02.01	FLAP	285
1065466	2.02.01	FLAP	285
1065467	2.02.01	FLAP	285
1065468	2.02.01	FLAP	285
1065469	2.02.01	FLAP	285
1065478	02.05	CHAIN	229
1065479	02.10	SPACER	239
1065480	2.02.02	PROTECTION	287
1065481	2.02.02	PROTECTION	287
1065484	02.22	BRACKET	275
1065491	2.04.3	PROTECTION	337
1065492	2.04.3	PROTECTION	337
1065493	2.04.3	SHEET	337
1065494	2.04.3	SHEET	337
1065495	2.04.3	FASTENING IRON	337
1065496	2.04.3	FASTENING IRON	337
1065497	2.04.3	PROTECTION	337
1065498	2.04.3	PROTECTION	337
1065591	02.10	HOLDER	239
1065598	02.10	SPACER	239
1065599	02.10	SPACER	239
1065601	01.06.14	PROTECTION PLATE	195
1065615	01.06.15	HATCH	197
1065617	01.06.16	BRACKET	199
1065618	01.06.15	GLASS	197
1065621	01.06.15	GLASS	197
1065629	01.06.18	CORNER STRIP	203
1065632	01.06.18	CORNER STRIP	203
1065634	01.06.15	HATCH	197
1065696	01.04.04	COVERING PLATE	129, 131, 133
1065697	01.04.04	BRACKET	129, 131, 133
1065841	02.04	SPROCKET Z=15	67
1065842	02.04	SHAFT	67
1065844	02.04	SPRING GUIDE	67
1065845	02.04	HOLDER	67
1065846	02.04	FLAG	67
1065847	02.04	STRUT	67
1065848	02.04	BEARING HOUSING	67
1065849	02.04	SHAFT	67
1065850	02.04	HOLDER	67
1065851	02.04	WASHER	67
1065852	02.04	COMPRESSION SPRING	67
1065876	01.06.15	BRACKET	197
1065897	01.03.19	BRACKET	113
1065902	03.07	FOLDING BAR	359
1065904	02.16	SPACER	251
1065907	01.03.14	BRACKET	103
1065908	01.03.14	BRACKET	103
1065910	01.03.14	RAIL	103
1065911	01.03.14	LOCATING PIECE	103
1065912	01.03.14	WASHER	103
1065913	01.03.14	WASHER	103
1065914	01.03.14	WASHER	103
1065915	01.03.14	PLATE	103
1065916	01.03.15	RAIL	105
1065917	01.03.15	RAIL	105
1065918	01.03.17	STEERING	109
1065919	01.04	CAM DISC	29, 31
1065924	2.03.01	DAMPER	301
1065924	2.03.07	DAMPER	315
1065935	01.06.03	PROTECTION PLATE	171
1065936	01.06.03	BRACKET	171
1074169	04.07	SPACER	405
1074206	02.23	HOLDER	277
1074207	02.23	HOLDER	277
1074209	02.20.2	BRACKET	265
1074237	05.04	TUNNEL	423
1074242	05.04	BRACKET	423
1074243	05.04	BRACKET	423
1074244	05.04	BRACKET	423
1074260	04.03	CLAMPING RING	385, 387
1074261	04.02	HOLDER	383
1074262	04.02	HOLDER	383
1074263	04.02	SIDE PLATE	383
1074264	04.02	SIDE PLATE	383
1074265	04.02	ADJUSTING SCREW	383
1074266	04.02	HOLDER	383
1074267	04.02	SHAFT	383
1074268	04.02	CANTILEVER	383
1074269	04.02	CANTILEVER	383
1074270	04.02	HOLDER	383
1074271	04.03	GUIDE STEERING	385, 387
1074272	04.03	SHEET	385, 387
1074273	04.03	SHAFT	385, 387
1074274	04.03	SHAFT	385, 387
1074275	04.03	GUIDE STEERING	385, 387

Part No	MMref	Description	Page No
1074276	04.03	HOLDER	385, 387
1074277	04.03	ARM	385, 387
1074278	04.03	ARM	385, 387
1074279	04.03	ARM	385
1074280	04.03	HOLDER	385
1074281	04.03	LOCATING PIECE	385, 387
1074282	04.03	ADJUSTING SCREW	385, 387
1074284	04.03	WASHER	385, 387
1074285	04.03	FLAT WEDGE	385, 387
1074286	04.04	SHEET	389, 391, 393
1074287	04.04	FOLDING FLAP	389, 391, 393
1074288	04.04	PLATE	389, 391, 393
1074289	04.04	PLATE	389, 391, 393
1074290	04.04	HOLDER	389, 391, 393
1074291	04.04	BRACKET	389, 391, 393
1074293	04.04	SUPPORTING SHEET	389, 391
1074294	04.04	RAIL	389, 391, 393
1074295	04.04	STRUT	389, 391, 393
1074297	04.04	SHAFT	389, 391, 393
1074299	04.04	SHAFT	389, 391, 393
1074303	04.05	BRACKET	395, 397
1074304	04.05	BRACKET	395
1074306	04.06	HOLDER	399
1074307	04.03	ARM	385
1074308	04.03	LOCATING PIECE	385
1074309	04.01	CONNECTION BOX	381
1074310	04.01	BRACKET	381
1074313	04.09	HOLDER	411
1074314	03.06	HOLDER	357
1074314	04.09	HOLDER	411
1074315	03.06	ROLL	357
1074315	04.09	ROLL	411
1074316	03.06	SHAFT	357
1074316	04.09	SHAFT	411
1074318	04.04	FOLDING FLAP	389, 391, 393
1074319	04.03	LOCATING PIECE	385
1074322	04.06	PROTECTION	399
1074323	04.06	PROTECTION	399
1074325	04.06	BRACKET	399, 403
1074328	04.09	SIDE PLATE	411
1074329	04.09	HOLDER	411
1074331	04.08	PROFILE	409
1074332	04.08	HEAD PLATE	409

Part No	MMref	Description	Page No
1074333	04.08	ROLL	409
1074344	05.02	BRACKET	419
1074379	05.03	GLASS	421
1074379	05.06	GLASS	427
1074428	05.12	BRACKET	439
1074429	05.12	ROD	439
1074442	05.13	PLATE	441
1074460	01.04.05.1	ROLL	139
1074461	01.04.05.1	SHAFT	139
1074462	01.04.05	RAIL	135, 137
1074463	01.04.05	HOLDER	135, 137
1074464	01.04.05	HOLDER	135, 137
1074465	01.04.05	HOLDER	135, 137
1074466	01.04.05	RAIL	135, 137
1074467	01.04.05	RAIL	135, 137
1074468	01.04.05	CLAMPING PIECE	135, 137
1074470	01.04.05	SECURING PLATE	135, 137
1074471	01.04.05	SPACER	135, 137
1074472	01.04.05	SHAFT	135, 137
1074473	01.04.05	SHAFT	135
1074474	01.04.05.1	NUT	139
1074475	01.04.05	SPACER	135, 137
1074477	04.04	SPRING BRACKET	389, 391, 393
1074478	04.04	SPRING BRACKET	389, 391, 393
1074480	04.03	STEERING	385
1074481	04.03	RAIL	385
1074482	04.03	PLAIN BEARING	385, 387
1074483	01.03.16	SPACER	107
1074484	01.03.16	WASHER	107
1074485	04.04	RAIL	389, 391, 393
1074486	01.04.05	SECURING PLATE	135, 137
1074489	01.03.16	PROTECTION	107
1074490	01.03.16	PROTECTION	107
1074494	01.04.05.1	ROLL	139
1074495	01.04.05.1	SHAFT	139
1074496	01.04.05.1	NUT	139
1074691	02.04	PROFILE	225, 227
1074692	02.04	PROFILE	225, 227
1074695	2.04	HOLDER	325, 329
1074696	2.04	NUT	325, 329
1074697	2.04	CANTILEVER	325, 329
1074698	2.04	NUT RAIL	325, 329
1074699	2.04	NUT	325, 329

Part No	MMref	Description	Page No
1074703	01.03	PROFILE	27
1074704	01.03	PROFILE	27
1074705	02.04	MOTOR PLATE	225, 227
1074714	01.03	PROFILE	27
1074717	01.03	PROFILE	27
1074727	02.23	BRACKET	277
1074741	02.04	PROFILE	225, 227
1074742	02.04	PROFILE	225, 227
1074745	2.04	BELT SUPORT	325, 329
1074975	02.12	STEERING RAIL	243
1074976	02.12	STEERING RAIL	243
1074977	02.12	STEERING RAIL	243
1074989	2.03.07	SHEET	315
1074992	02.03	GUARD PLATE	155
1074993	01.04.01	PROFILE	119
1080087	2.03.01	BRACKET	301
1080087	2.03.07	BRACKET	315
1080104	2.03.01	BRACKET	301
1080104	2.03.07	BRACKET	315
1080105	2.03.01	BRACKET	301
1080105	2.03.07	BRACKET	315
1080157	2.03.01	SPACER	301
1080157	2.03.07	SPACER	315
1080158	2.03.01	PIPE	301
1080158	2.03.07	PIPE	315
1080209	01.03.03	HOLDER	75
1086711		SET OF SIGNS	279
1111043	2.03.07	HOOD	315
1111044	2.03.01	HOOD	301
1111054	02.22	PROFILE	275
1111055	02.22	PROFILE	275
1111056	02.22	PROFILE	275
1111057	02.22	PROFILE	275
1111058	02.22	PROFILE	275
1111059	02.22	PROFILE	275
1111064	02.22	SUPPORT	275
1111067	05.06	COVERING PLATE	427
1111068	2.03.01	BRACKET	301
1111068	2.03.07	BRACKET	315
1111080	2.03.01	RIM	301
1111817	05.02	BRACKET	419
1111818	05.02	BRACKET	419
1111826	02.12	STEERING RAIL	243

Part No	MMref	Description	Page No
1111827	2.04	LID	325, 329
1111828	2.04	SHAFT	325, 329
1111834	02.16	STEERING RAIL	251
1111835	2.02.02	GUIDE SPROCKET	287
1111841	02.19	COVERING PLATE	257
1111864	03.13	PROFILE	371
1111865	03.13	PROFILE	371
1111866	03.11	PILLAR	367
1111892	04.06	PROTECTION	403
1111893	04.06	PROTECTION	403
1119739	05	MACHINE SIGN CE	415
1124482	05.06	BRACKET	427
1124483	01.06.13	RIM	193
1124500	01.06.22	COVERING PLATE	211
1124501	01.06.22	COVERING PLATE	211
1124573	01.06.21	COVERING PLATE	209
1124574	01.06.21	COVERING PLATE	209
1124601	01.04.04	LID	131
1124602	01.04.04	LID	131
1124631	01.04.04	CABLE DUCT	131
1124632	01.04.04	CABLE DUCT	131
1124633	01.04.04	CABLE DUCT	133
1124634	01.04.04	CABLE DUCT	133
1128001	04.04	PLATE	389, 393
1128002	04.04	PLATE	389, 393
1128003	01.03.14	SPACER	103
1128010	01.03.14	TUCK FOLDER	103
1128011	01.03.14	PLATE	103
1128012	01.03.14	BRACKET	103
1128013	01.03.14	MOUNTING BAR	103
1128014	01.03.14	RAIL	103
1128015	01.03.14	SPACER	103
1128016	01.03.14	HOLDER	103
1128017	01.03.14	BRACKET	103
1128018	01.03.14	WASHER	103
1128023	2.02.02	TOOTHED PULLY Z=30	287
1128024	2.02.02	WASHER	287
1128028	02.16	STEERING RAIL	251
1128029	03.07	RAIL	359
1128030	03.07	LUG	359
1128031	05	PNEUMATIC CHART	415
1128034	05	PNEUMATIC CHART	415
1128035	02.20	PNEUMATIC CABINET	259, 261

Part No	MMref	Description	Page No
1128038	02.20	COVERING PLATE	259, 261
1128042	02.20	CABINET	259, 261
1128043	02.20	CABINET	259, 261
1128044	04.07	SET OF SIGNS	405, 407
1128048	03.06	STEERING	357
1128049	03.07	LOCK SHEET	359
1128402	04.06	PROFILE	403
1128403	04.06	BRACKET	403
1128404	04.06	SPACER	403
1128405	04.06	LOCK PLATE	403
1128406	04.04	HOLDER	393
1128407	04.04	HEAD PLATE	393
1128408	04.04	HEAD PLATE	393
1128409	04.04	SECURING PLATE	393
1128410	04.06	LOCK PLATE	403
1128816	01.06.23	PROTECTION PLATE	213
1128817	01.06.23	PROTECTION PLATE	213
1128818	01.06.23	BRACKET	213
1128819	01.06.20	PROTECTION PLATE	207
1128827	01.06.19	PROTECTION PLATE	205
1128828	01.06.19	PROTECTION PLATE	205
1128829	01.06.17	BRACKET	201
1128829	01.06.19	BRACKET	205
1128830	01.06.13	RIM	193
1128831	01.06.01	BRACKET	167
1128832	2.03.02	BRACKET	303
1128836	01.06.17	PROTECTION PLATE	201
1128837	01.06.17	PROTECTION PLATE	201
1128838	02.21	FASTENING BRACKET	273
1128844	02.03	CAUTION SIGN	155
1128845	02.03	PROHIBITION SIGN	155
1128846	05.02	TUNNEL	419
1128847	05.02	COVERING PLATE	419
1128848	05.02	TUNNEL	419
1128849	05.02	TUNNEL	419
1128850	05.02	COVERING PLATE	419
1128851	05.02	COVERING PLATE	419
1128852	05.02	GLASS	419
1128852	05.05	GLASS	425
1128853	01.03.16	CAUTION SIGN	107
1128853	02.03	CAUTION SIGN	155
1128853	04.06	CAUTION SIGN	399, 403
1128854	02.13	CAUTION SIGN	245
1128854	04.05	CAUTION SIGN	395, 397
1128856	02.14	PROHIBITION SIGN	247
1128859	05.13	SIGN	441
1128868	05.05	TUNNEL	425
1128869	05.05	PIPE	425
1128870	05.05	BRACKET	425
1128870	05.06	BRACKET	427
1128871	05.05	CLAMPING PLATE	425
1128871	05.06	CLAMPING PLATE	427
1128878	02.01	SHAFT	61
1128879	03.14	PROFILE	373
1128880	03.14	CLAMPING PIECE	373
1128881	03.14	SUPPORT PLATE	373
1128882	03.06	PROTECTION	357
1128883	03.06	BRACKET	357
1128884	03.06	BRACKET	357
1128885	03.06	HOLDER	357
1128886	03.14	SHAFT	373
1128887	02.10	PHOTOCELL BRACKET	239
1128888	03.06	SIDE PLATE	357
1128889	03.06	STEERING	357
1128894	02.21	CABLE DUCT	273
1128895	02.21	CABLE DUCT	273
1128896	02.21	LID	273
1128897	02.21	LID	273
1128898	2.03.05	BRACKET	309
1133093	01.04.07	BASE	143
1139100	02.13	PHOTOCELL BRACKET	245
1139101	01.03.14	RAIL	103
1139102	03.06	SIDE PLATE	357
1139103	03.06	PHOTOCELL BRACKET	357
1139104	03.11	PROFILE	367
1139107	01.03.17	SIDE PLATE	109
1139108	01.03.17	SIDE PLATE	109
1139109	01.03.17	SLIDE RAIL	109
1139110	01.03.17	SLIDE RAIL	109
1139112	01.03.17	BRACKET	109
1139113	01.03.17	FASTENING BRACKET	109
1139114	01.03.17	FASTENING PLATE	109
1139119	01.10	COVERING PLATE	47
1139120	01.10	CABLE TRENCH	47
1139121	01.10	CHAIN GUARD	47
1139122	01.10	SHEET	47

Part No	MMref	Description	Page No
1139123	01.10	SHEET	47
1139124	01.10	HOSE	47
1139125	01.10	HOLDER	47
1139126	01.14	SHEET	57
1139127	04.04	HOLDER	389, 391, 393
1139128	04.04	HOLDER	389, 391, 393
1139129	04.04	TENSION SPRING	389, 391, 393
1139135	01.04	SHAFT	29, 31
1139136	01.05	SHAFT	33, 35
1139137	02.10	SPACER	239
1139138	05.03	BRACKET	421
1139139	01.04.01	BRACKET	119
1139142	2.02.04	STEERING RAIL	291
1139143	2.02.04	STEERING RAIL	291
1139144	2.02.04	STEERING RAIL	291
1139145	02.13	PLATE	245
1139146	01.03.14	PLATE	103
1139147	01.03.14	PLATE	103
1139148	02.01	PLATE	147
1139150	02.03	CONNECTION BOX	223
1139151	04.06	PROFILE	403
1139152	04.06	HOLDER	399
1139154	02.04	HOLDER	67
1139155	02.04	SLIDER	67
1139156	04.03	PROTECTION	385, 387
1139170	01.04.05	SHAFT	137
1139171	01.04.05	PLATE	137
1139172	01.04.05	SPACER	137
1139173	2.04	TOOTHED PULLY Z=31	325, 329
1139174	2.04	TOOTHED PULLY Z=25	325, 329
1139177	02.20	PNEUMATIC CHART	259, 261
1139177	05	PNEUMATIC CHART	415
1139178	05	PNEUMATIC CHART	415
1139179	05	PNEUMATIC CHART	415
1139214	02.20	SET OF SIGNS	259, 261
230462	03.12	BUSHING	369
311112-0251	04.04	SLOTTED TURP 4X10 RFR	393
311521-0152	2.03.01	BLANK RIVE0X8,0 RFR	301
312105-0287	02.20.4	SCREW O4017 M4X8A280	269
312105-0291	02.13	SCREW O4017 M4X12A280	245
312105-0293	03.06	SCREW O4017 M4X16A280	357
312105-0297	01.03.19	SCREW O4014 M4X25A280	113
312105-0297	05.12	SCREW O4014 M4X25A280	439

Part No	MMref	Description	Page No
312105-0323	01.10	SCREW O4017 M5X8A280	47
312105-0325		SCREW M6S5X10 A2 80	279
312105-0325	02.11	SCREW M6S5X10 A2 80	241
312105-0325	02.13	SCREW M6S5X10 A2 80	245
312105-0325	04.04	SCREW M6S5X10 A2 80	389, 391, 393
312105-0325	2.02.05	SCREW M6S5X10 A2 80	293
312105-0327	01.03	SCREW O4017 M5X12A280	27
312105-0327	01.04.05	SCREW O4017 M5X12A280	135, 137
312105-0327	03.08	SCREW O4017 M5X12A280	361
312105-0327	2.04	SCREW O4017 M5X12A280	325, 329
312105-0328	05.02	SCREW M6S5X14 A2 80	419
312105-0328	05.05	SCREW M6S5X14 A2 80	425
312105-0328	05.06	SCREW M6S5X14 A2 80	427
312105-0328	2.04.3	SCREW M6S5X14 A2 80	337
312105-0329	01.04.02	SCREW O4017 M5X16A280	121, 123
312105-0329	01.08	SCREW O4017 M5X16A280	43
312105-0329	02.16	SCREW O4017 M5X16A280	251
312105-0329	03.09	SCREW O4017 M5X16A280	363
312105-0329	05.03	SCREW O4017 M5X16A280	421
312105-0329	05.04	SCREW O4017 M5X16A280	423
312105-0329	2.02.02	SCREW O4017 M5X16A280	287
312105-0331		SCREW O4017 M5X20A280	279
312105-0331	01.04.02	SCREW O4017 M5X20A280	121, 123
312105-0331	01.10	SCREW O4017 M5X20A280	47
312105-0331	02.03	SCREW O4017 M5X20A280	155
312105-0331	02.16	SCREW O4017 M5X20A280	251
312105-0331	03.01	SCREW O4017 M5X20A280	345
312105-0333	04.03	SCREW O4017 M5X25A280	385, 387
312105-0337	01.03.14	SCREW O4014 M5X35A280	103
312105-0343	03.06	SCREW M6S5X60 A2 80	357
312105-0364	01.03.17	SCREW M6S6X10RFR	109
312105-0364	01.04.06	SCREW M6S6X10RFR	141
312105-0364	02.21	SCREW M6S6X10RFR	273
312105-0364	03.04	SCREW M6S6X10RFR	351
312105-0364	03.06	SCREW M6S6X10RFR	357
312105-0364	03.12	SCREW M6S6X10RFR	369
312105-0364	05.05	SCREW M6S6X10RFR	425
312105-0364	05.06	SCREW M6S6X10RFR	427
312105-0364	2.04	SCREW M6S6X10RFR	325, 329
312105-0366	01.03	SCREW O4017 M6X12A280	27
312105-0366	01.03.17	SCREW O4017 M6X12A280	109
312105-0366	01.04.04	SCREW O4017 M6X12A280	129, 131, 133
312105-0366	01.06.12	SCREW O4017 M6X12A280	191

Part No	MMref	Description	Page No
312105-0366	01.10	SCREW O4017 M6X12A280	47
312105-0366	02.01	SCREW O4017 M6X12A280	147
312105-0366	02.19	SCREW O4017 M6X12A280	257
312105-0366	03.06	SCREW O4017 M6X12A280	357
312105-0366	03.09	SCREW O4017 M6X12A280	363
312105-0366	03.10	SCREW O4017 M6X12A280	365
312105-0366	03.13	SCREW O4017 M6X12A280	371
312105-0366	2.02.02	SCREW O4017 M6X12A280	287
312105-0366	2.02.04	SCREW O4017 M6X12A280	291
312105-0366	2.02.06	SCREW O4017 M6X12A280	295
312105-0366	2.04.3	SCREW O4017 M6X12A280	337
312105-0367	01.03.19	SCREW M6S6X14RFR	113
312105-0367	01.12	SCREW M6S6X14RFR	53
312105-0367	01.13	SCREW M6S6X14RFR	55
312105-0367	02.01	SCREW M6S6X14RFR	61
312105-0367	02.02	SCREW M6S6X14RFR	63
312105-0367	02.13	SCREW M6S6X14RFR	245
312105-0367	02.19	SCREW M6S6X14RFR	257
312105-0367	03.10	SCREW M6S6X14RFR	365
312105-0367	04.04	SCREW M6S6X14RFR	389, 391, 393
312105-0367	04.06	SCREW M6S6X14RFR	399
312105-0367	2.02.05	SCREW M6S6X14RFR	293
312105-0368	01.01	SCREW O4017 M6X16A280	23
312105-0368	01.02	SCREW O4017 M6X16A280	25
312105-0368	01.03.05	SCREW O4017 M6X16A280	79
312105-0368	01.03.06	SCREW O4017 M6X16A280	81
312105-0368	01.03.07	SCREW O4017 M6X16A280	83, 85
312105-0368	01.03.08	SCREW O4017 M6X16A280	87, 89
312105-0368	01.03.09	SCREW O4017 M6X16A280	91, 93
312105-0368	01.03.14	SCREW O4017 M6X16A280	103
312105-0368	01.03.17	SCREW O4017 M6X16A280	109
312105-0368	01.06.02	SCREW O4017 M6X16A280	169
312105-0368	01.06.04	SCREW O4017 M6X16A280	173
312105-0368	01.06.05	SCREW O4017 M6X16A280	175
312105-0368	01.06.14	SCREW O4017 M6X16A280	195
312105-0368	01.06.20	SCREW O4017 M6X16A280	207
312105-0368	01.06.21	SCREW O4017 M6X16A280	209
312105-0368	01.14	SCREW O4017 M6X16A280	57
312105-0368	02.01	SCREW O4017 M6X16A280	221
312105-0368	02.03	SCREW O4017 M6X16A280	223
312105-0368	02.11	SCREW O4017 M6X16A280	241
312105-0368	02.19	SCREW O4017 M6X16A280	257
312105-0368	02.20.2	SCREW O4017 M6X16A280	265

Part No	MMref	Description	Page No
312105-0368	03.04	SCREW O4017 M6X16A280	351
312105-0368	03.06	SCREW O4017 M6X16A280	357
312105-0368	03.07	SCREW O4017 M6X16A280	359
312105-0368	04.01	SCREW O4017 M6X16A280	381
312105-0368	04.03	SCREW O4017 M6X16A280	385
312105-0368	04.09	SCREW O4017 M6X16A280	411
312105-0368	05.02	SCREW O4017 M6X16A280	419
312105-0368	05.05	SCREW O4017 M6X16A280	425
312105-0368	05.06	SCREW O4017 M6X16A280	427
312105-0368	2.03.06	SCREW O4017 M6X16A280	311, 313
312105-0368	2.03.11	SCREW O4017 M6X16A280	323
312105-0368	2.04	SCREW O4017 M6X16A280	325, 329
312105-0368	2.04.2	SCREW O4017 M6X16A280	335
312105-0370	01.03.09	SCREW O4017 M6X20A280	91, 93
312105-0370	01.03.14	SCREW O4017 M6X20A280	103
312105-0370	01.03.15	SCREW O4017 M6X20A280	105
312105-0370	01.03.17	SCREW O4017 M6X20A280	109
312105-0370	01.04.01	SCREW O4017 M6X20A280	119
312105-0370	01.04.05	SCREW O4017 M6X20A280	135, 137
312105-0370	01.06.03	SCREW O4017 M6X20A280	171
312105-0370	01.06.10	SCREW O4017 M6X20A280	187
312105-0370	01.06.17	SCREW O4017 M6X20A280	201
312105-0370	01.06.18	SCREW O4017 M6X20A280	203
312105-0370	01.06.19	SCREW O4017 M6X20A280	205
312105-0370	01.06.22	SCREW O4017 M6X20A280	211
312105-0370	01.06.23	SCREW O4017 M6X20A280	213
312105-0370	01.13	SCREW O4017 M6X20A280	55
312105-0370	02.04	SCREW O4017 M6X20A280	67
312105-0370	02.06	SCREW O4017 M6X20A280	231
312105-0370	02.08	SCREW O4017 M6X20A280	235
312105-0370	02.09	SCREW O4017 M6X20A280	237
312105-0370	02.10	SCREW O4017 M6X20A280	239
312105-0370	02.13	SCREW O4017 M6X20A280	245
312105-0370	02.17	SCREW O4017 M6X20A280	253
312105-0370	02.20	SCREW O4017 M6X20A280	259, 261
312105-0370	02.21	SCREW O4017 M6X20A280	273
312105-0370	03.02	SCREW O4017 M6X20A280	347
312105-0370	03.03	SCREW O4017 M6X20A280	349
312105-0370	03.09	SCREW O4017 M6X20A280	363
312105-0370	04.03	SCREW O4017 M6X20A280	385, 387
312105-0370	04.06	SCREW O4017 M6X20A280	403
312105-0370	05.02	SCREW O4017 M6X20A280	419
312105-0370	05.03	SCREW O4017 M6X20A280	421

Part No	MMref	Description	Page No
312105-0370	05.04	SCREW O4017 M6X20A280	423
312105-0370	2.03.04	SCREW O4017 M6X20A280	307
312105-0370	2.03.05	SCREW O4017 M6X20A280	309
312105-0370	2.03.07	SCREW O4017 M6X20A280	315
312105-0370	2.03.08	SCREW O4017 M6X20A280	317
312105-0370	2.03.09	SCREW O4017 M6X20A280	319
312105-0370	2.03.10	SCREW O4017 M6X20A280	321
312105-0370	2.04.2	SCREW O4017 M6X20A280	335
312105-0371	01.03.07	SCREW M6S6X22RFR	83, 85
312105-0371	01.03.14	SCREW M6S6X22RFR	103
312105-0371	02.07	SCREW M6S6X22RFR	233
312105-0371	04.08	SCREW M6S6X22RFR	409
312105-0371	2.02.03	SCREW M6S6X22RFR	289
312105-0371	2.02.06	SCREW M6S6X22RFR	295
312105-0372	01.03.03	SCREW O4017 M6X25A280	75
312105-0372	01.03.04	SCREW O4017 M6X25A280	77
312105-0372	01.03.15	SCREW O4017 M6X25A280	105
312105-0372	01.04.02	SCREW O4017 M6X25A280	121, 123
312105-0372	01.04.03	SCREW O4017 M6X25A280	125, 127
312105-0372	01.06.01	SCREW O4017 M6X25A280	167
312105-0372	01.06.06	SCREW O4017 M6X25A280	177, 179
312105-0372	01.06.07	SCREW O4017 M6X25A280	181
312105-0372	01.06.08	SCREW O4017 M6X25A280	183
312105-0372	01.06.11	SCREW O4017 M6X25A280	189
312105-0372	01.06.15	SCREW O4017 M6X25A280	197
312105-0372	01.06.16	SCREW O4017 M6X25A280	199
312105-0372	01.06.17	SCREW O4017 M6X25A280	201
312105-0372	01.06.19	SCREW O4017 M6X25A280	205
312105-0372	01.06.23	SCREW O4017 M6X25A280	213
312105-0372	01.11	SCREW O4017 M6X25A280	49, 51
312105-0372	02.10	SCREW O4017 M6X25A280	239
312105-0372	02.13	SCREW O4017 M6X25A280	245
312105-0372	02.20.1	SCREW O4017 M6X25A280	263
312105-0372	03.05	SCREW O4017 M6X25A280	353, 355
312105-0372	03.06	SCREW O4017 M6X25A280	357
312105-0372	03.07	SCREW O4017 M6X25A280	359
312105-0372	03.10	SCREW O4017 M6X25A280	365
312105-0372	03.11	SCREW O4017 M6X25A280	367
312105-0372	03.14	SCREW O4017 M6X25A280	373
312105-0372	04.02	SCREW O4017 M6X25A280	383
312105-0372	04.07	SCREW O4017 M6X25A280	405
312105-0372	04.09	SCREW O4017 M6X25A280	411
312105-0372	2.02.03	SCREW O4017 M6X25A280	289

Part No	MMref	Description	Page No
312105-0372	2.02.04	SCREW O4017 M6X25A280	291
312105-0372	2.02.05	SCREW O4017 M6X25A280	293
312105-0372	2.03.02	SCREW O4017 M6X25A280	303
312105-0372	2.03.03	SCREW O4017 M6X25A280	305
312105-0372	2.03.04	SCREW O4017 M6X25A280	307
312105-0372	2.03.05	SCREW O4017 M6X25A280	309
312105-0372	2.03.09	SCREW O4017 M6X25A280	319
312105-0372	2.04	SCREW O4017 M6X25A280	325, 329
312105-0374	01.03.01	SCREW O4017 M6X30A280	71
312105-0374	01.03.02	SCREW O4017 M6X30A280	73
312105-0374	01.03.07	SCREW O4017 M6X30A280	83, 85
312105-0374	01.03.08	SCREW O4017 M6X30A280	87, 89
312105-0374	01.03.09	SCREW O4017 M6X30A280	91, 93
312105-0374	01.03.14	SCREW O4017 M6X30A280	103
312105-0374	01.03.16	SCREW O4017 M6X30A280	107
312105-0374	01.03.17	SCREW O4017 M6X30A280	109
312105-0374	01.06.13	SCREW O4017 M6X30A280	193
312105-0374	02.14	SCREW O4017 M6X30A280	247
312105-0374	03.06	SCREW O4017 M6X30A280	357
312105-0374	03.08	SCREW O4017 M6X30A280	361
312105-0374	03.10	SCREW O4017 M6X30A280	365
312105-0374	03.11	SCREW O4017 M6X30A280	367
312105-0374	03.12	SCREW O4017 M6X30A280	369
312105-0376	01.03	SCREW O4017 M6X35A280	27
312105-0376	01.06.01	SCREW O4017 M6X35A280	167
312105-0376	02.04	SCREW O4017 M6X35A280	225, 227
312105-0376	02.10	SCREW O4017 M6X35A280	239
312105-0376	03.12	SCREW O4017 M6X35A280	369
312105-0376	04.02	SCREW O4017 M6X35A280	383
312105-0376	04.03	SCREW O4017 M6X35A280	385
312105-0376	2.03.01	SCREW O4017 M6X35A280	301
312105-0376	2.03.03	SCREW O4017 M6X35A280	305
312105-0376	2.03.07	SCREW O4017 M6X35A280	315
312105-0378	01.03.16	SCREW O4017 M6X40A280	107
312105-0378	01.06.06	SCREW O4017 M6X40A280	177, 179
312105-0378	04.04	SCREW O4017 M6X40A280	393
312105-0378	2.03.02	SCREW O4017 M6X40A280	303
312105-0379	2.02.06	SCREW O4014 M6X45A280	295
312105-0379	2.03.10	SCREW O4014 M6X45A280	321
312105-0380	05.13	SCREW O4014 M6X50A280	441
312105-0380	2.02.05	SCREW O4014 M6X50A280	293
312105-0381	03.07	SCREW O4014 M6X55A280	359
312105-0382	02.14	SCREW O4014 M6X60A280	247

Part No	MMref	Description	Page No
312105-0382	04.02	SCREW O4014 M6X60A280	383
312105-0383	01.04.05	SCREW O4014 M6X65A280	135, 137
312105-0384	04.09	SCREW O4014 M6X70A280	411
312105-0386	03.06	SCREW O4014 M6X80A280	357
312105-0386	04.03	SCREW O4014 M6X80A280	385, 387
312105-0386	2.04	SCREW O4014 M6X80A280	325, 329
312105-0388	2.02.03	SCREW O4014 M6X90A280	289
312105-0390	02.10	SCREW 6X100 A4 80	239
312105-0447	02.03	SCREW O4017 M8X12A280	155
312105-0447	2.03.01	SCREW O4017 M8X12A280	301
312105-0447	2.03.07	SCREW O4017 M8X12A280	315
312105-0449	01.06.01	SCREW O4017 M8X16A280	167
312105-0449	02.04	SCREW O4017 M8X16A280	67
312105-0449	2.03.01	SCREW O4017 M8X16A280	301
312105-0449	2.04	SCREW O4017 M8X16A280	325, 329
312105-0451	01.03.05	SCREW SO4017 8X20A280	79
312105-0451	01.04.01	SCREW SO4017 8X20A280	119
312105-0451	01.04.02	SCREW SO4017 8X20A280	121, 123
312105-0451	01.04.05	SCREW SO4017 8X20A280	135, 137
312105-0451	02.10	SCREW SO4017 8X20A280	239
312105-0451	03.10	SCREW SO4017 8X20A280	365
312105-0451	03.14	SCREW SO4017 8X20A280	373
312105-0451	04.02	SCREW SO4017 8X20A280	383
312105-0451	04.07	SCREW SO4017 8X20A280	405
312105-0451	05.05	SCREW SO4017 8X20A280	425
312105-0451	2.02.02	SCREW SO4017 8X20A280	287
312105-0451	2.02.04	SCREW SO4017 8X20A280	291
312105-0453	01.03	SCREW O4017 M8X25A280	27
312105-0453	01.03.03	SCREW O4017 M8X25A280	75
312105-0453	01.03.04	SCREW O4017 M8X25A280	77
312105-0453	01.04	SCREW O4017 M8X25A280	29, 31
312105-0453	01.04.02	SCREW O4017 M8X25A280	121, 123
312105-0453	01.05	SCREW O4017 M8X25A280	33, 35
312105-0453	02.22	SCREW O4017 M8X25A280	275
312105-0453	03.05	SCREW O4017 M8X25A280	353, 355
312105-0453	03.13	SCREW O4017 M8X25A280	371
312105-0453	04.03	SCREW O4017 M8X25A280	385, 387
312105-0453	04.05	SCREW O4017 M8X25A280	395, 397
312105-0453	04.08	SCREW O4017 M8X25A280	409
312105-0453	05.06	SCREW O4017 M8X25A280	427
312105-0453	2.02.06	SCREW O4017 M8X25A280	295
312105-0453	2.04.1	SCREW O4017 M8X25A280	333
312105-0455	02.03	SCREW O4017 M8X30A280	155

Part No	MMref	Description	Page No
312105-0455	02.04	SCREW O4017 M8X30A280	225, 227
312105-0455	02.10	SCREW O4017 M8X30A280	239
312105-0455	02.14	SCREW O4017 M8X30A280	247
312105-0455	04.02	SCREW O4017 M8X30A280	383
312105-0455	04.08	SCREW O4017 M8X30A280	409
312105-0455	2.02.02	SCREW O4017 M8X30A280	287
312105-0457	01.04	SCREW O4017 M8X35A280	29, 31
312105-0457	01.04.02	SCREW O4017 M8X35A280	121, 123
312105-0457	01.05	SCREW O4017 M8X35A280	33, 35
312105-0457	02.17	SCREW O4017 M8X35A280	253
312105-0457	03.06	SCREW O4017 M8X35A280	357
312105-0457	03.10	SCREW O4017 M8X35A280	365
312105-0457	04.06	SCREW O4017 M8X35A280	403
312105-0457	2.02.02	SCREW O4017 M8X35A280	287
312105-0459	01.03	SCREW O4017 M8X40A280	27
312105-0459	01.03.03	SCREW O4017 M8X40A280	75
312105-0459	01.03.04	SCREW O4017 M8X40A280	77
312105-0459	01.03.12	SCREW O4017 M8X40A280	99
312105-0459	01.03.13	SCREW O4017 M8X40A280	101
312105-0459	01.03.18	SCREW O4017 M8X40A280	111
312105-0459	01.04.01	SCREW O4017 M8X40A280	119
312105-0459	01.06	SCREW O4017 M8X40A280	37
312105-0459	01.07	SCREW O4017 M8X40A280	39, 41
312105-0459	01.08	SCREW O4017 M8X40A280	43
312105-0459	01.09	SCREW O4017 M8X40A280	45
312105-0459	01.11	SCREW O4017 M8X40A280	49, 51
312105-0459	02.04	SCREW O4017 M8X40A280	225, 227
312105-0459	02.05	SCREW O4017 M8X40A280	229
312105-0459	02.22	SCREW O4017 M8X40A280	275
312105-0459	03.13	SCREW O4017 M8X40A280	371
312105-0460	01.03.09	SCREW O4017 M8X45A280	91, 93
312105-0460	02.01	SCREW O4017 M8X45A280	147
312105-0460	02.18	SCREW O4017 M8X45A280	255
312105-0460	03.12	SCREW O4017 M8X45A280	369
312105-0461	01.04.05	SCREW O4017 M8X50A280	135, 137
312105-0461	01.06.10	SCREW O4017 M8X50A280	187
312105-0461	02.04	SCREW O4017 M8X50A280	67
312105-0461	03.11	SCREW O4017 M8X50A280	367
312105-0461	2.04	SCREW O4017 M8X50A280	325, 329
312105-0463	01.04.01	SCREW O4014 M8X60A280	119
312105-0464	04.02	SCREW O4014 M8X65A280	383
312105-0465	01.04.02	SCREW O4014 M8X70A280	121, 123
312105-0465	02.03	SCREW O4014 M8X70A280	65

Part No	MMref	Description	Page No
312105-0465	2.02.02	SCREW O4014 M8X70A280	287
312105-0467	02.12	SCREW O4014 M8X80A280	243
312105-0469	02.01	SCREW O4014 M8X90A280	61
312105-0469	02.02	SCREW O4014 M8X90A280	63
312105-0471	02.12	SCREW 4014 M8X100A280	243
312105-0471	2.04	SCREW 4014 M8X100A280	325, 329
312105-0475	02.03	SCREW 4014 M8X120A280	65
312105-0491	2.04	SCREW 4017 M10X20A280	325, 329
312105-0493	04.04	SCREW 4017 M10X25A280	389, 391, 393
312105-0493	04.05	SCREW 4017 M10X25A280	395
312105-0495	01.07	SCREW 4017 M10X30A280	39, 41
312105-0495	01.08	SCREW 4017 M10X30A280	43
312105-0495	01.09	SCREW 4017 M10X30A280	45
312105-0495	2.02.05	SCREW 4017 M10X30A280	293
312105-0497	01.03.07	SCREW 4017 M10X35A280	83, 85
312105-0497	01.03.08	SCREW 4017 M10X35A280	87, 89
312105-0499	01.03.07	SCREW 4017 M10X40A280	83, 85
312105-0499	01.03.08	SCREW 4017 M10X40A280	87, 89
312105-0499	01.04	SCREW 4017 M10X40A280	29, 31
312105-0499	01.05	SCREW 4017 M10X40A280	33, 35
312105-0503	02.01	SCREW 4014 M10X60A280	61
312105-0517	02.01	SCREW 014 M10X130A280	61
312105-0540	01.03.07	SCREW 4017 M12X40A280	83, 85
312105-0540	01.03.08	SCREW 4017 M12X40A280	87, 89
312105-0540	01.03.09	SCREW 4017 M12X40A280	91, 93
312105-0540	01.11	SCREW 4017 M12X40A280	49, 51
312105-0541	01.04.02	SCREW 4017 M12X45A280	121, 123
312105-0541	01.06	SCREW 4017 M12X45A280	37
312105-0545	01.07	SCREW M6S12X65RFR	39, 41
312105-0545	01.08	SCREW M6S12X65RFR	43
312105-0545	01.09	SCREW M6S12X65RFR	45
312105-0626	02.23	SCREW M6S16X35RFR	277
312105-0626	04.05	SCREW M6S16X35RFR	395, 397
312109-0374	02.10	SCREW M6S6X30HRFR	239
312109-0374	2.02.05	SCREW M6S6X30HRFR	293
312109-0376	02.20.5	SCREW 6X35 H RFR	271
312109-0378	2.02.04	SCREW M6S6X40H RFR	291
312109-0457	01.03	SCREW 8X35 H A4 80	27
312109-0457	02.22	SCREW 8X35 H A4 80	275
312109-0461	02.07	SCREW M6S8X50H A4 80	233
312109-0501	01.04	SCREW 10X50 H RFR	29, 31
312115-0289	01.12	SCREW S4X10 A4 80	53
312115-0289	02.02	SCREW S4X10 A4 80	63
312115-0289	02.10	SCREW S4X10 A4 80	239
312115-0293	02.01	SCREW O4762 M4X16A280	147
312115-0327	01.03.12	SCREW O4762 M5X12A280	99
312115-0327	01.03.13	SCREW O4762 M5X12A280	101
312115-0327	02.07	SCREW O4762 M5X12A280	233
312115-0327	2.03.07	SCREW O4762 M5X12A280	315
312115-0329	01.06	SCREW O4762 M5X16A280	37
312115-0329	01.07	SCREW O4762 M5X16A280	39, 41
312115-0329	01.09	SCREW O4762 M5X16A280	45
312115-0329	04.03	SCREW O4762 M5X16A280	385, 387
312115-0331	02.01	SCREW O4762 M5X20A280	147
312115-0333	01.06.06	SCREW O4762 M5X25A280	177, 179
312115-0333	01.06.07	SCREW O4762 M5X25A280	181
312115-0333	01.06.08	SCREW O4762 M5X25A280	183
312115-0335	03.12	SCREW O4762 M5X30A280	369
312115-0341	02.13	SCREW MC6S 5X50 A4 80	245
312115-0364	01.11	SCREW 6X10 A4 80	49, 51
312115-0364	04.06	SCREW 6X10 A4 80	399, 403
312115-0366	01.03.05	SCREW O4762 M6X12A280	79
312115-0366	01.03.06	SCREW O4762 M6X12A280	81
312115-0366	02.13	SCREW O4762 M6X12A280	245
312115-0366	03.07	SCREW O4762 M6X12A280	359
312115-0366	05.12	SCREW O4762 M6X12A280	439
312115-0366	2.02.03	SCREW O4762 M6X12A280	289
312115-0366	2.04	SCREW O4762 M6X12A280	325, 329
312115-0368	02.04	SCREW O4762 M6X16A280	225, 227
312115-0368	02.13	SCREW O4762 M6X16A280	245
312115-0368	03.06	SCREW O4762 M6X16A280	357
312115-0370	01.03.07	SCREW O4762 M6X20A280	83, 85
312115-0370	01.03.17	SCREW O4762 M6X20A280	109
312115-0370	02.12	SCREW O4762 M6X20A280	243
312115-0370	02.14	SCREW O4762 M6X20A280	247
312115-0370	02.22	SCREW O4762 M6X20A280	275
312115-0370	03.05	SCREW O4762 M6X20A280	353, 355
312115-0370	2.04	SCREW O4762 M6X20A280	325, 329
312115-0372	01.03.05	SCREW O4762 M6X25A280	79
312115-0372	01.03.06	SCREW O4762 M6X25A280	81
312115-0372	01.03.08	SCREW O4762 M6X25A280	87, 89
312115-0372	01.03.09	SCREW O4762 M6X25A280	91, 93
312115-0372	02.06	SCREW O4762 M6X25A280	231
312115-0372	02.10	SCREW O4762 M6X25A280	239
312115-0372	02.23	SCREW O4762 M6X25A280	277
312115-0372	03.04	SCREW O4762 M6X25A280	351

Part No	MMref	Description	Page No
312115-0372	03.08	SCREW O4762 M6X25A280	361
312115-0372	03.12	SCREW O4762 M6X25A280	369
312115-0372	2.02.02	SCREW O4762 M6X25A280	287
312115-0372	2.02.04	SCREW O4762 M6X25A280	291
312115-0372	2.04	SCREW O4762 M6X25A280	325, 329
312115-0374	01.03.07	SCREW O4762 M6X30A280	83, 85
312115-0374	01.03.13	SCREW O4762 M6X30A280	101
312115-0374	03.07	SCREW O4762 M6X30A280	359
312115-0374	04.04	SCREW O4762 M6X30A280	389, 391, 393
312115-0378	2.02.04	SCREW O4762 M6X40A280	291
312115-0379	03.07	SCREW O4762 M6X45A280	359
312115-0382	02.22	SCREW O4762 M6X60A280	275
312115-0382	04.06	SCREW O4762 M6X60A280	399
312115-0384	04.04	SCREW O4762 M6X70A280	389, 391, 393
312115-0449	02.17	SCREW O4762 M8X16A280	253
312115-0451	01.03.07	SCREW O4762 M8X20A280	83, 85
312115-0451	02.04	SCREW O4762 M8X20A280	225, 227
312115-0451	02.11	SCREW O4762 M8X20A280	241
312115-0451	04.04	SCREW O4762 M8X20A280	389, 391, 393
312115-0451	2.02.02	SCREW O4762 M8X20A280	287
312115-0453	02.10	SCREW O4762 M8X25A280	239
312115-0453	04.04	SCREW O4762 M8X25A280	389, 391, 393
312115-0453	2.02.02	SCREW O4762 M8X25A280	287
312115-0457	04.04	SCREW O4762 M8X35A280	389, 391, 393
312115-0457	2.02.02	SCREW O4762 M8X35A280	287
312115-0457	2.04.1	SCREW O4762 M8X35A280	333
312115-0459	01.04.01	SCREW O4762 M8X40A280	119
312115-0459	03.11	SCREW O4762 M8X40A280	367
312115-0460	04.02	SCREW O4762 M8X45A280	383
312115-0465	02.17	SCREW O4762 M8X70A280	253
312115-0465	03.11	SCREW O4762 M8X70A280	367
312115-0491	03.14	SCREW 4762 M10X20A280	373
312125-0228	2.02.02	SLOTTED HEMCS3X16RFR	287
312125-0230	01.03.14	SLOTTED HEMCS3X20RFR	103
312125-0230	03.11	SLOTTED HEMCS3X20RFR	367
312125-0234	02.01	SLOTTED HEMCS3X30RFR	147
312125-0234	04.06	SLOTTED HEMCS3X30RFR	399, 401, 403
312125-0287	2.04	SLOTTED HEMCS4X8RFR	325, 329
312125-0289	01.04.06	SLOTTED HEMCS4X10RFR	141
312125-0289	02.25	SLOTTED HEMCS4X10RFR	281
312125-0291	01.04.07	SLOTTED HEMCS4X12RFR	143
312125-0293		SLOTTED HEMCS4X16RFR	279
312145-0222	01.03.19	SLOTTED HEMFS3X8RFR	113
312145-0287	01.04.04	SLOTTED HEMFS4X8RFR	129, 131, 133
312145-0287	02.21	SLOTTED HEMFS4X8RFR	273
312145-0287	2.04	SLOTTED HEMFS4X8RFR	325, 329
312145-0293	01.01	SLOTTED HEMFS4X16RFR	23
312145-0293	01.02	SLOTTED HEMFS4X16RFR	25
312145-0293	02.01	SLOTTED HEMFS4X16RFR	221
312145-0293	02.03	SLOTTED HEMFS4X16RFR	223
312145-0293	04.01	SLOTTED HEMFS4X16RFR	381
312145-0325	01.03	SLOTTED HEMFS5X10RFR	27
312145-0325	01.04.01	SLOTTED HEMFS5X10RFR	119
312145-0325	02.04	SLOTTED HEMFS5X10RFR	225, 227
312145-0325	02.22	SLOTTED HEMFS5X10RFR	275
312145-0325	03.13	SLOTTED HEMFS5X10RFR	371
312145-0325	04.06	SLOTTED HEMFS5X10RFR	403
312145-0325	04.08	SLOTTED HEMFS5X10RFR	409
312145-0325	2.02.06	SLOTTED HEMFS5X10RFR	295
312145-0370	01.06.13	SLOTTED HEMFS6X20RFR	193
312155-0289	02.10	SCREW MF6S4X10RFR	239
312155-0289	2.02.02	SCREW MF6S4X10RFR	287
312155-0291	01.03.17	SCREW MF6S4X12RFR	109
312155-0291	02.03	SCREW MF6S4X12RFR	155
312155-0325	03.08	SCREW MF6S5X10RFR	361
312155-0366	2.02.02	SCREW MF6S6X12RFR	287
312155-0366	2.02.03	SCREW MF6S6X12RFR	289
312155-0366	2.02.04	SCREW MF6S6X12RFR	291
312155-0366	2.04	SCREW MF6S6X12RFR	327, 329
312155-0368	01.03.14	SCREW MF6S6X16RFR	103
312155-0368	01.06.07	SCREW MF6S6X16RFR	181
312155-0368	04.06	SCREW MF6S6X16RFR	403
312155-0368	2.02.05	SCREW MF6S6X16RFR	293
312155-0370	01.03.08	SCREW MF6S6X20RFR	87, 89
312155-0370	01.03.14	SCREW MF6S6X20RFR	103
312155-0370	01.06.01	SCREW MF6S6X20RFR	167
312155-0370	01.06.06	SCREW MF6S6X20RFR	177, 179
312155-0370	01.06.07	SCREW MF6S6X20RFR	181
312155-0370	02.16	SCREW MF6S6X20RFR	251
312155-0370	2.03.02	SCREW MF6S6X20RFR	303
312155-0370	2.04	SCREW MF6S6X20RFR	327, 331
312155-0372	03.13	SCREW MF6S6X25RFR	371
312155-0451	01.03.18	SCREW MF6S8X20RFR	111
312155-0451	02.04	SCREW MF6S8X20RFR	67
312155-0451	2.02.06	SCREW MF6S8X20RFR	295
312155-0453	02.10	SCREW MF6S8X25RFR	239

Part No	MMref	Description	Page No
312155-0453	2.02.02	SCREW MF6S8X25RFR	287
312155-0457	02.04	SCREW MF6S8X35RFR	67
312155-0457	03.14	SCREW MF6S8X35RFR	373
312155-0457	04.08	SCREW MF6S8X35RFR	409
312155-0457	2.02.06	SCREW MF6S8X35RFR	295
312155-0459	01.03	SCREW MF6S8X40RFR	27
312155-0459	02.04	SCREW MF6S8X40RFR	225, 227
312155-0459	02.22	SCREW MF6S8X40RFR	275
312155-0461	2.04	SCREW MF6S8X50RFR	327, 331
312155-0489	01.04	SCREW MF6S10X16RFR	29, 31
312155-0495	01.06	SCREW MF6S10X30RFR	37
312318-0289	2.02.05	STOP SCREW SK6SS4X10RFR	293
312318-0321	2.02.02	STOP SCREW SK6SS5X6RFR	287
312318-0323	02.02	STOP SCREW SK6SS5X8RFR	63
312318-0360	01.03.01	STOP SCREW SK6SS6X6RFR	71
312318-0360	01.03.02	STOP SCREW SK6SS6X6RFR	73
312318-0360	01.03.07	STOP SCREW SK6SS6X6RFR	83, 85
312318-0360	01.03.08	STOP SCREW SK6SS6X6RFR	87, 89
312318-0360	01.03.09	STOP SCREW SK6SS6X6RFR	91, 93
312318-0360	01.04.02	STOP SCREW SK6SS6X6RFR	121, 123
312318-0360	01.06	STOP SCREW SK6SS6X6RFR	37
312318-0360	01.08	STOP SCREW SK6SS6X6RFR	43
312318-0360	01.09	STOP SCREW SK6SS6X6RFR	45
312318-0360	02.10	STOP SCREW SK6SS6X6RFR	239
312318-0360	03.01	STOP SCREW SK6SS6X6RFR	345
312318-0360	03.05	STOP SCREW SK6SS6X6RFR	353, 355
312318-0360	03.09	STOP SCREW SK6SS6X6RFR	363
312318-0360	03.10	STOP SCREW SK6SS6X6RFR	365
312318-0360	03.12	STOP SCREW SK6SS6X6RFR	369
312318-0360	04.02	STOP SCREW SK6SS6X6RFR	383
312318-0360	2.02.05	STOP SCREW SK6SS6X6RFR	293
312318-0362	01.04.05	STOP SCREW SK6SS6X8RFR	135, 137
312318-0362	04.03	STOP SCREW SK6SS6X8RFR	385, 387
312318-0364	02.17	STOP SCREW SK6SS6X10RFR	253
312318-0364	05.12	STOP SCREW SK6SS6X10RFR	439
312318-0364	2.04	STOP SCREW SK6SS6X10RFR	327, 331
312318-0372	01.06.06	STOP SCREW SK6SS6X25RFR	177, 179
312318-0372	01.06.07	STOP SCREW SK6SS6X25RFR	181
312318-0372	01.06.08	STOP SCREW SK6SS6X25RFR	183
312318-0372	2.03.02	STOP SCREW SK6SS6X25RFR	303
312318-0372	2.03.03	STOP SCREW SK6SS6X25RFR	305
312318-0443	01.03.01	STOP SCREW SK6SS8X8RFR	71
312318-0443	01.03.02	STOP SCREW SK6SS8X8RFR	73

Part No	MMref	Description	Page No
312318-0443	01.03.05	STOP SCREW SK6SS8X8RFR	79
312318-0443	01.04	STOP SCREW SK6SS8X8RFR	29, 31
312318-0443	01.04.02	STOP SCREW SK6SS8X8RFR	121, 123
312318-0443	01.05	STOP SCREW SK6SS8X8RFR	33, 35
312318-0443	01.06	STOP SCREW SK6SS8X8RFR	37
312318-0443	01.07	STOP SCREW SK6SS8X8RFR	39, 41
312318-0443	01.08	STOP SCREW SK6SS8X8RFR	43
312318-0443	01.09	STOP SCREW SK6SS8X8RFR	45
312318-0443	02.01	STOP SCREW SK6SS8X8RFR	61
312318-0443	02.03	STOP SCREW SK6SS8X8RFR	65
312318-0443	02.05	STOP SCREW SK6SS8X8RFR	229
312318-0443	02.06	STOP SCREW SK6SS8X8RFR	231
312318-0443	03.05	STOP SCREW SK6SS8X8RFR	353, 355
312318-0443	04.02	STOP SCREW SK6SS8X8RFR	383
312318-0443	04.04	STOP SCREW SK6SS8X8RFR	389, 391, 393
312318-0443	2.02.02	STOP SCREW SK6SS8X8RFR	287
312318-0443	2.02.05	STOP SCREW SK6SS8X8RFR	293
312318-0445	01.04.05	STOP SCREW SK6SS8X10RFR	135, 137
312318-0447	03.11	STOP SCREW SK6SS8X12RFR	367
312318-0449	01.03.03	STOP SCREW SK6SS8X16RFR	75
312318-0449	01.03.04	STOP SCREW SK6SS8X16RFR	77
312318-0449	04.04	STOP SCREW SK6SS8X16RFR	389, 391, 393
312504-0342	01.04.07	DRIVE SCREA4	143
312605-0312	01.04.04	NUT M6M4RFR	129, 131, 133
312605-0312	01.04.07	NUT M6M4RFR	143
312605-0312	02.21	NUT M6M4RFR	273
312605-0314		NUT M6M5RFR	279
312605-0314	01.10	NUT M6M5RFR	47
312605-0314	02.19	NUT M6M5RFR	257
312605-0314	03.09	NUT M6M5RFR	363
312605-0314	05.02	NUT M6M5RFR	419
312605-0314	05.03	NUT M6M5RFR	421
312605-0314	05.04	NUT M6M5RFR	423
312605-0314	05.05	NUT M6M5RFR	425
312605-0314	05.06	NUT M6M5RFR	427
312605-0314	2.02.05	NUT M6M5RFR	293
312605-0314	2.04.3	NUT M6M5RFR	337
312605-0316	01.03.07	NUT M6M6RFR	83, 85
312605-0316	01.03.08	NUT M6M6RFR	87, 89
312605-0316	01.03.19	NUT M6M6RFR	113
312605-0316	02.20	NUT M6M6RFR	259, 261
312605-0316	02.20.1	NUT M6M6RFR	263
312605-0316	02.20.2	NUT M6M6RFR	265

Part No	MMref	Description	Page No
312605-0316	02.20.5	NUT M6M6RFR	271
312605-0316	05.02	NUT M6M6RFR	419
312605-0316	05.03	NUT M6M6RFR	421
312605-0316	05.04	NUT M6M6RFR	423
312605-0316	2.02.02	NUT M6M6RFR	287
312605-0316	2.03.01	NUT M6M6RFR	301
312605-0316	2.03.07	NUT M6M6RFR	315
312605-0316	2.04	NUT M6M6RFR	327, 331
312605-0318	01.03	NUT M6M8RFR	27
312605-0318	01.03.12	NUT M6M8RFR	99
312605-0318	01.03.13	NUT M6M8RFR	101
312605-0318	01.06.10	NUT M6M8RFR	187
312605-0318	2.04	NUT M6M8RFR	327, 331
312605-0320	01.03.07	NUT M6M10RFR	83, 85
312605-0320	01.03.08	NUT M6M10RFR	87, 89
312605-0320	02.03	NUT M6M10RFR	155
312605-0320	04.04	NUT M6M10RFR	389, 391, 393
312605-0322	01.03.07	NUT M6M12RFR	83, 85
312605-0322	01.03.08	NUT M6M12RFR	87, 89
312605-0322	01.03.09	NUT M6M12RFR	91, 93
312605-0322	01.04.02	NUT M6M12RFR	121, 123
312605-0322	02.04	NUT M6M12RFR	67
312625-0316	01.06.06	NUT M 6	177, 179
312625-0316	01.06.07	NUT M 6	181
312625-0316	01.06.08	NUT M 6	183
312625-0316	2.03.02	NUT M 6	303
312625-0316	2.03.03	NUT M 6	305
312625-0318	01.03.14	NUT M 8	103
312812-0314	01.06.06	LOCK NUT A2-M5RFR	177, 179
312812-0314	01.06.07	LOCK NUT A2-M5RFR	181
312812-0314	2.03.02	LOCK NUT A2-M5RFR	303
312902-0320	01.03.07	NUT M6M10VRFR	83, 85
312902-0320	01.03.08	NUT M6M10VRFR	87, 89
312902-0320	04.04	NUT M6M10VRFR	389, 391, 393
312902-0320	2.02.05	NUT M6M10VRFR	293
312902-0322	01.06	NUT M6M12VRFR	37
312902-0322	01.07	NUT M6M12VRFR	39, 41
312902-0322	01.08	NUT M6M12VRFR	43
312902-0322	01.09	NUT M6M12VRFR	45
315103-0153	02.20.5	WASHER BRB6,4X12MSGFN	271
315105-0124	01.03.14	WASHER BRB3,2X6RFR	103
315105-0124	03.11	WASHER BRB3,2X6RFR	367
315105-0124	2.02.02	WASHER BRB3,2X6RFR	287
315105-0136		WASHER BRB4,3X8RFR	279
315105-0136	01.03.19	WASHER BRB4,3X8RFR	113
315105-0136	01.04.07	WASHER BRB4,3X8RFR	143
315105-0136	02.01	WASHER BRB4,3X8RFR	147
315105-0136	02.10	WASHER BRB4,3X8RFR	239
315105-0136	02.13	WASHER BRB4,3X8RFR	245
315105-0136	02.20.4	WASHER BRB4,3X8RFR	269
315105-0136	03.06	WASHER BRB4,3X8RFR	357
315105-0136	05.12	WASHER BRB4,3X8RFR	439
315105-0146		WASHER BRB5,3X10RFR	279
315105-0146	01.03.14	WASHER BRB5,3X10RFR	103
315105-0146	01.04.02	WASHER BRB5,3X10RFR	121, 123
315105-0146	01.04.05	WASHER BRB5,3X10RFR	135, 137
315105-0146	01.06	WASHER BRB5,3X10RFR	37
315105-0146	01.06.06	WASHER BRB5,3X10RFR	177, 179
315105-0146	01.06.07	WASHER BRB5,3X10RFR	181
315105-0146	01.07	WASHER BRB5,3X10RFR	39, 41
315105-0146	01.08	WASHER BRB5,3X10RFR	43
315105-0146	01.09	WASHER BRB5,3X10RFR	45
315105-0146	01.10	WASHER BRB5,3X10RFR	47
315105-0146	02.01	WASHER BRB5,3X10RFR	147
315105-0146	02.03	WASHER BRB5,3X10RFR	155
315105-0146	02.11	WASHER BRB5,3X10RFR	241
315105-0146	02.13	WASHER BRB5,3X10RFR	245
315105-0146	02.16	WASHER BRB5,3X10RFR	251
315105-0146	02.19	WASHER BRB5,3X10RFR	257
315105-0146	03.01	WASHER BRB5,3X10RFR	345
315105-0146	03.06	WASHER BRB5,3X10RFR	357
315105-0146	03.08	WASHER BRB5,3X10RFR	361
315105-0146	03.09	WASHER BRB5,3X10RFR	363
315105-0146	03.12	WASHER BRB5,3X10RFR	369
315105-0146	04.03	WASHER BRB5,3X10RFR	385, 387
315105-0146	04.04	WASHER BRB5,3X10RFR	389, 391, 393
315105-0146	05.02	WASHER BRB5,3X10RFR	419
315105-0146	05.03	WASHER BRB5,3X10RFR	421
315105-0146	05.04	WASHER BRB5,3X10RFR	423
315105-0146	05.05	WASHER BRB5,3X10RFR	425
315105-0146	05.06	WASHER BRB5,3X10RFR	427
315105-0146	2.02.02	WASHER BRB5,3X10RFR	287
315105-0146	2.02.05	WASHER BRB5,3X10RFR	293
315105-0146	2.03.02	WASHER BRB5,3X10RFR	303
315105-0146	2.04	WASHER BRB5,3X10RFR	327, 331
315105-0146	2.04.3	WASHER BRB5,3X10RFR	337

Part No	MMref	Description	Page No
315105-0153	01.01	WASHER BRB6,4X12RFR	23
315105-0153	01.02	WASHER BRB6,4X12RFR	25
315105-0153	01.03	WASHER BRB6,4X12RFR	27
315105-0153	01.03.07	WASHER BRB6,4X12RFR	83, 85
315105-0153	01.03.08	WASHER BRB6,4X12RFR	87, 89
315105-0153	01.03.09	WASHER BRB6,4X12RFR	91, 93
315105-0153	01.03.10	WASHER BRB6,4X12RFR	95
315105-0153	01.03.11	WASHER BRB6,4X12RFR	97
315105-0153	01.03.14	WASHER BRB6,4X12RFR	103
315105-0153	01.03.15	WASHER BRB6,4X12RFR	105
315105-0153	01.03.16	WASHER BRB6,4X12RFR	107
315105-0153	01.03.17	WASHER BRB6,4X12RFR	109
315105-0153	01.03.19	WASHER BRB6,4X12RFR	113
315105-0153	01.04.01	WASHER BRB6,4X12RFR	119
315105-0153	01.04.02	WASHER BRB6,4X12RFR	121, 123
315105-0153	01.04.03	WASHER BRB6,4X12RFR	125, 127
315105-0153	01.04.04	WASHER BRB6,4X12RFR	129, 131, 133
315105-0153	01.04.05	WASHER BRB6,4X12RFR	135, 137
315105-0153	01.04.06	WASHER BRB6,4X12RFR	141
315105-0153	01.06.01	WASHER BRB6,4X12RFR	167
315105-0153	01.06.02	WASHER BRB6,4X12RFR	169
315105-0153	01.06.03	WASHER BRB6,4X12RFR	171
315105-0153	01.06.04	WASHER BRB6,4X12RFR	173
315105-0153	01.06.05	WASHER BRB6,4X12RFR	175
315105-0153	01.06.06	WASHER BRB6,4X12RFR	177, 179
315105-0153	01.06.07	WASHER BRB6,4X12RFR	181
315105-0153	01.06.08	WASHER BRB6,4X12RFR	183
315105-0153	01.06.10	WASHER BRB6,4X12RFR	187
315105-0153	01.06.11	WASHER BRB6,4X12RFR	189
315105-0153	01.06.12	WASHER BRB6,4X12RFR	191
315105-0153	01.06.13	WASHER BRB6,4X12RFR	193
315105-0153	01.06.14	WASHER BRB6,4X12RFR	195
315105-0153	01.06.15	WASHER BRB6,4X12RFR	197
315105-0153	01.06.16	WASHER BRB6,4X12RFR	199
315105-0153	01.06.17	WASHER BRB6,4X12RFR	201
315105-0153	01.06.18	WASHER BRB6,4X12RFR	203
315105-0153	01.06.19	WASHER BRB6,4X12RFR	205
315105-0153	01.06.20	WASHER BRB6,4X12RFR	207
315105-0153	01.06.21	WASHER BRB6,4X12RFR	209
315105-0153	01.06.22	WASHER BRB6,4X12RFR	211
315105-0153	01.06.23	WASHER BRB6,4X12RFR	213
315105-0153	01.10	WASHER BRB6,4X12RFR	47
315105-0153	01.11	WASHER BRB6,4X12RFR	49, 51
315105-0153	01.12	WASHER BRB6,4X12RFR	53
315105-0153	01.13	WASHER BRB6,4X12RFR	55
315105-0153	01.14	WASHER BRB6,4X12RFR	57
315105-0153	02.01	WASHER BRB6,4X12RFR	61, 147, 221
315105-0153	02.02	WASHER BRB6,4X12RFR	63
315105-0153	02.03	WASHER BRB6,4X12RFR	223
315105-0153	02.04	WASHER BRB6,4X12RFR	67, 225, 227
315105-0153	02.06	WASHER BRB6,4X12RFR	231
315105-0153	02.07	WASHER BRB6,4X12RFR	233
315105-0153	02.10	WASHER BRB6,4X12RFR	239
315105-0153	02.11	WASHER BRB6,4X12RFR	241
315105-0153	02.12	WASHER BRB6,4X12RFR	243
315105-0153	02.13	WASHER BRB6,4X12RFR	245
315105-0153	02.14	WASHER BRB6,4X12RFR	247
315105-0153	02.17	WASHER BRB6,4X12RFR	253
315105-0153	02.20	WASHER BRB6,4X12RFR	259, 261
315105-0153	02.20.1	WASHER BRB6,4X12RFR	263
315105-0153	02.20.2	WASHER BRB6,4X12RFR	265
315105-0153	02.21	WASHER BRB6,4X12RFR	273
315105-0153	03.02	WASHER BRB6,4X12RFR	347
315105-0153	03.03	WASHER BRB6,4X12RFR	349
315105-0153	03.04	WASHER BRB6,4X12RFR	351
315105-0153	03.05	WASHER BRB6,4X12RFR	353, 355
315105-0153	03.06	WASHER BRB6,4X12RFR	357
315105-0153	03.07	WASHER BRB6,4X12RFR	359
315105-0153	03.08	WASHER BRB6,4X12RFR	361
315105-0153	03.09	WASHER BRB6,4X12RFR	363
315105-0153	03.10	WASHER BRB6,4X12RFR	365
315105-0153	03.11	WASHER BRB6,4X12RFR	367
315105-0153	03.12	WASHER BRB6,4X12RFR	369
315105-0153	03.13	WASHER BRB6,4X12RFR	371
315105-0153	03.14	WASHER BRB6,4X12RFR	373
315105-0153	04.01	WASHER BRB6,4X12RFR	381
315105-0153	04.02	WASHER BRB6,4X12RFR	383
315105-0153	04.03	WASHER BRB6,4X12RFR	385, 387
315105-0153	04.04	WASHER BRB6,4X12RFR	389, 391, 393
315105-0153	04.06	WASHER BRB6,4X12RFR	399, 403
315105-0153	04.07	WASHER BRB6,4X12RFR	405
315105-0153	04.08	WASHER BRB6,4X12RFR	409
315105-0153	04.09	WASHER BRB6,4X12RFR	411
315105-0153	05.02	WASHER BRB6,4X12RFR	419
315105-0153	05.03	WASHER BRB6,4X12RFR	421
315105-0153	05.04	WASHER BRB6,4X12RFR	423

Part No	MMref	Description	Page No
315105-0153	05.05	WASHER BRB6,4X12RFR	425
315105-0153	05.06	WASHER BRB6,4X12RFR	427
315105-0153	05.12	WASHER BRB6,4X12RFR	439
315105-0153	05.13	WASHER BRB6,4X12RFR	441
315105-0153	2.02.02	WASHER BRB6,4X12RFR	287
315105-0153	2.02.03	WASHER BRB6,4X12RFR	289
315105-0153	2.02.04	WASHER BRB6,4X12RFR	291
315105-0153	2.02.05	WASHER BRB6,4X12RFR	293
315105-0153	2.02.06	WASHER BRB6,4X12RFR	295
315105-0153	2.03.01	WASHER BRB6,4X12RFR	301
315105-0153	2.03.02	WASHER BRB6,4X12RFR	303
315105-0153	2.03.03	WASHER BRB6,4X12RFR	305
315105-0153	2.03.04	WASHER BRB6,4X12RFR	307
315105-0153	2.03.05	WASHER BRB6,4X12RFR	309
315105-0153	2.03.06	WASHER BRB6,4X12RFR	311, 313
315105-0153	2.03.07	WASHER BRB6,4X12RFR	315
315105-0153	2.03.08	WASHER BRB6,4X12RFR	317
315105-0153	2.03.09	WASHER BRB6,4X12RFR	319
315105-0153	2.03.10	WASHER BRB6,4X12RFR	321
315105-0153	2.03.11	WASHER BRB6,4X12RFR	323
315105-0153	2.04	WASHER BRB6,4X12RFR	327, 331
315105-0153	2.04.2	WASHER BRB6,4X12RFR	335
315105-0153	2.04.3	WASHER BRB6,4X12RFR	337
315105-0156	01.03.01	WASHER BRB6,7X14RFR	71
315105-0156	01.03.02	WASHER BRB6,7X14RFR	73
315105-0156	01.03.03	WASHER BRB6,7X14RFR	75
315105-0156	01.03.04	WASHER BRB6,7X14RFR	77
315105-0156	01.03.05	WASHER BRB6,7X14RFR	79
315105-0156	01.03.06	WASHER BRB6,7X14RFR	81
315105-0156	01.03.15	WASHER BRB6,7X14RFR	105
315105-0156	02.13	WASHER BRB6,7X14RFR	245
315105-0156	02.19	WASHER BRB6,7X14RFR	257
315105-0165	01.03	WASHER BRB8,4X16RFR	27
315105-0165	01.03.03	WASHER BRB8,4X16RFR	75
315105-0165	01.03.04	WASHER BRB8,4X16RFR	77
315105-0165	01.03.05	WASHER BRB8,4X16RFR	79
315105-0165	01.03.09	WASHER BRB8,4X16RFR	91, 93
315105-0165	01.03.12	WASHER BRB8,4X16RFR	99
315105-0165	01.03.13	WASHER BRB8,4X16RFR	101
315105-0165	01.03.14	WASHER BRB8,4X16RFR	103
315105-0165	01.04	WASHER BRB8,4X16RFR	29, 31
315105-0165	01.04.01	WASHER BRB8,4X16RFR	119
315105-0165	01.04.02	WASHER BRB8,4X16RFR	121, 123
315105-0165	01.04.05	WASHER BRB8,4X16RFR	135, 137
315105-0165	01.05	WASHER BRB8,4X16RFR	33, 35
315105-0165	01.06	WASHER BRB8,4X16RFR	37
315105-0165	01.06.01	WASHER BRB8,4X16RFR	167
315105-0165	01.06.10	WASHER BRB8,4X16RFR	187
315105-0165	01.07	WASHER BRB8,4X16RFR	39, 41
315105-0165	01.08	WASHER BRB8,4X16RFR	43
315105-0165	01.09	WASHER BRB8,4X16RFR	45
315105-0165	01.11	WASHER BRB8,4X16RFR	49, 51
315105-0165	02.01	WASHER BRB8,4X16RFR	61, 147
315105-0165	02.02	WASHER BRB8,4X16RFR	63
315105-0165	02.03	WASHER BRB8,4X16RFR	65, 155
315105-0165	02.04	WASHER BRB8,4X16RFR	67, 225, 227
315105-0165	02.05	WASHER BRB8,4X16RFR	229
315105-0165	02.07	WASHER BRB8,4X16RFR	233
315105-0165	02.10	WASHER BRB8,4X16RFR	239
315105-0165	02.11	WASHER BRB8,4X16RFR	241
315105-0165	02.12	WASHER BRB8,4X16RFR	243
315105-0165	02.14	WASHER BRB8,4X16RFR	247
315105-0165	02.17	WASHER BRB8,4X16RFR	253
315105-0165	02.18	WASHER BRB8,4X16RFR	255
315105-0165	02.22	WASHER BRB8,4X16RFR	275
315105-0165	03.04	WASHER BRB8,4X16RFR	351
315105-0165	03.05	WASHER BRB8,4X16RFR	353, 355
315105-0165	03.06	WASHER BRB8,4X16RFR	357
315105-0165	03.10	WASHER BRB8,4X16RFR	365
315105-0165	03.11	WASHER BRB8,4X16RFR	367
315105-0165	03.12	WASHER BRB8,4X16RFR	369
315105-0165	03.13	WASHER BRB8,4X16RFR	371
315105-0165	03.14	WASHER BRB8,4X16RFR	373
315105-0165	04.02	WASHER BRB8,4X16RFR	383
315105-0165	04.03	WASHER BRB8,4X16RFR	385, 387
315105-0165	04.04	WASHER BRB8,4X16RFR	389, 391, 393
315105-0165	04.05	WASHER BRB8,4X16RFR	395, 397
315105-0165	04.08	WASHER BRB8,4X16RFR	409
315105-0165	05.05	WASHER BRB8,4X16RFR	425
315105-0165	05.06	WASHER BRB8,4X16RFR	427
315105-0165	2.02.02	WASHER BRB8,4X16RFR	287
315105-0165	2.02.06	WASHER BRB8,4X16RFR	295
315105-0165	2.04	WASHER BRB8,4X16RFR	327, 331
315105-0171	01.03.07	WASHER BRB10X18RFR	83, 85
315105-0171	01.03.08	WASHER BRB10X18RFR	87, 89
315105-0171	02.01	WASHER BRB10X18RFR	61

Part No	MMref	Description	Page No
315105-0173	01.07	WASHER BRB10,5X22RFR	39, 41
315105-0173	01.08	WASHER BRB10,5X22RFR	43
315105-0173	01.09	WASHER BRB10,5X22RFR	45
315105-0173	04.04	WASHER BRB10,5X22RFR	389, 391, 393
315105-0173	04.05	WASHER BRB10,5X22RFR	395
315105-0173	2.02.05	WASHER BRB10,5X22RFR	293
315105-0178	01.03.07	WASHER BRB13X24RFR	83, 85
315105-0178	01.03.08	WASHER BRB13X24RFR	87, 89
315105-0178	01.03.09	WASHER BRB13X24RFR	91, 93
315105-0178	01.04.02	WASHER BRB13X24RFR	121, 123
315105-0178	01.06	WASHER BRB13X24RFR	37
315105-0178	01.07	WASHER BRB13X24RFR	39, 41
315105-0178	01.08	WASHER BRB13X24RFR	43
315105-0178	01.09	WASHER BRB13X24RFR	45
315105-0178	01.11	WASHER BRB13X24RFR	49, 51
315105-0178	02.04	WASHER BRB13X24RFR	67
315105-0186	02.23	WASHER BRB17X30RFR	277
315105-0186	04.05	WASHER BRB17X30RFR	395, 397
315115-0153	01.03.14	WASHER TBRB6,4X12RFR	103
315115-0153	2.02.06	WASHER TBRB6,4X12RFR	295
315115-0153	2.04	WASHER TBRB6,4X12RFR	327, 331
315115-0165	2.03.01	WASHER TBRB8,4X16RFR	301
315115-0165	2.03.07	WASHER TBRB8,4X16RFR	315
315115-0165	2.04	WASHER TBRB8,4X16RFR	327, 331
315115-0173	2.04	WASHER B 10,5X22 RFR	327, 331
315125-0153	03.12	WASHER SB 6,4X22X4 RFR	369
315125-0153	2.04	WASHER SB 6,4X22X4 RFR	327, 331
315125-0165	01.03.18	WASHER SB 8,4X26X5 RFR	111
315125-0165	02.04	WASHER SB 8,4X26X5 RFR	67
315125-0165	04.07	WASHER SB 8,4X26X5 RFR	405
315202-0104	2.02.02	O-RING 6,1X1,6	287
315202-0110	01.03.14	O-RING 12,1X1,6	103
315202-0111	2.04	O-RING 13,1X1,6	327, 331
315202-0217	2.02.02	O-RING 24,2X3	287
315202-0219	2.04	O-RING 29,2X3	327, 331
315202-0303	01.03.08	O-RING 59,5X3	87, 89
315202-0303	01.03.09	O-RING 59,5X3	91, 93
315220-0130	2.04	SEAL RING V-16S	327, 331
315220-0148	2.04	SEAL RING V-22S	327, 331
315220-0156	02.10	SEAL RING V-25S	239
315220-0172	2.04	SEAL RING V-32S	327, 331
315220-0175	01.03.07	SEAL RING V-35S	83, 85
315220-0175	01.03.08	SEAL RING V-35S	87, 89
315220-0175	01.03.09	SEAL RING V-35S	91, 93
315220-0204	01.03.05	SEAL RING V-55S	79
315220-0204	01.03.06	SEAL RING V-55S	81
315220-0204	01.03.12	SEAL RING V-55S	99
315220-0204	01.03.13	SEAL RING V-55S	101
315220-0204	02.07	SEAL RING V-55S	233
315221-0145	2.04	SEAL RING CB20X35X7	327, 331
315221-0158	02.06	SEAL RING CB25X42X7	231
315233-0109	01.03.19	SEAL RING R1/8"	113
315233-0110	2.03.05	SEAL RING R1/4"	309
315701-0170	03.12	FLAT WEDGE4X4X20	369
315701-0171	03.01	FLAT WEDGE4X4X22	345
315701-0200	03.10	FLAT WEDGE5X5X18	365
315701-0203	02.10	FLAT WEDGE5X5X25	239
315701-0203	2.04	FLAT WEDGE5X5X25	327, 331
315701-0204	01.03.01	FLAT WEDGE5X5X28	71
315701-0204	01.03.02	FLAT WEDGE5X5X28	73
315701-0204	04.02	FLAT WEDGE5X5X28	383
315701-0206	02.17	FLAT WEDGE5X5X32	253
315701-0210	02.17	FLAT WEDGE5X5X50	253
315701-0210	2.04	FLAT WEDGE5X5X50	327, 331
315701-0235	02.06	FLAT WEDGE6X6X28	231
315701-0237	01.03.07	FLAT WEDGE6X6X32	83, 85
315701-0237	01.03.08	FLAT WEDGE6X6X32	87, 89
315701-0237	01.03.09	FLAT WEDGE6X6X32	91, 93
315701-0263	02.01	FLAT WEDGE8X7X20	61
315701-0265	02.06	FLAT WEDGE8X7X25	231
315701-0266	01.03.06	FLAT WEDGE8X7X28	81
315701-0266	02.03	FLAT WEDGE8X7X28	65
315701-0271	01.04	FLAT WEDGE8X7X45	29, 31
315701-0271	01.05	FLAT WEDGE8X7X45	33, 35
315701-0272	01.05	FLAT WEDGE8X7X50	33, 35
315701-0272	02.01	FLAT WEDGE8X7X50	61
315701-0273	01.04	FLAT WEDGE8X7X56	29, 31
315701-0278	02.01	FLAT WEDGE8X7X90	61
315701-0801	01.03.05	FLAT WEDGE8X7X36	79
315701-0801	01.05	FLAT WEDGE8X7X36	33, 35
315701-0801	02.03	FLAT WEDGE8X7X36	65
315742-0108	04.03	RETAINING 12SMS199RFR	385, 387
315742-0116	01.03.07	RETAINING 20SMS199RFR	83, 85
315742-0116	01.03.08	RETAINING 20SMS199RFR	87, 89
315750-0112	01.03.09	CIRCLIP SGA15	91, 93
315750-0116	01.03.09	CIRCLIP SGA20	91, 93

Part No	MMref	Description	Page No
315750-0116	01.03.12	CIRCLIP SGA20	99
315750-0116	01.03.13	CIRCLIP SGA20	101
315750-0116	02.07	CIRCLIP SGA20	233
315750-0119	01.03.05	CIRCLIP SGA25	79
315750-0119	01.03.06	CIRCLIP SGA25	81
315750-0122	01.04.02	CIRCLIP SGA30	121, 123
315750-0124	01.03.07	CIRCLIP SGA35	83, 85
315750-0124	01.03.08	CIRCLIP SGA35	87, 89
315750-0124	01.03.09	CIRCLIP SGA35	91, 93
315750-0129	01.03.05	CIRCLIP SGA45	79
315750-0129	01.03.06	CIRCLIP SGA45	81
315751-0109	01.04.05	CIRCLIP SGA12 RFR	137
315751-0109	02.10	CIRCLIP SGA12 RFR	239
315751-0112	02.10	CIRCLIP SGA15 RFR	239
315751-0112	02.18	CIRCLIP SGA15 RFR	255
315751-0112	03.10	CIRCLIP SGA15 RFR	365
315751-0113	02.17	CIRCLIP SGA16 RFR	253
315751-0116	01.03.18	CIRCLIP SGA20 RFR	111
315751-0116	02.04	CIRCLIP SGA20 RFR	67
315751-0116	03.04	CIRCLIP SGA20 RFR	351
315751-0119	02.03	CIRCLIP SGA25 RFR	65
315751-0122	02.01	CIRCLIP SGA30 RFR	61
315752-0123	01.03.09	CIRCLIP SGH32	91, 93
315752-0123	02.18	CIRCLIP SGH32	255
315752-0128	01.03.12	CIRCLIP SGH42	99
315752-0128	01.03.13	CIRCLIP SGH42	101
315752-0128	01.03.18	CIRCLIP SGH42	111
315752-0128	02.07	CIRCLIP SGH42	233
315753-0124	03.10	CIRCLIP GH 35 RFR	365
315753-0124	2.04	CIRCLIP GH 35 RFR	327, 331
315755-0105	01.06.01	LOCKING WAE 3,2 RFR	167
315755-0105	01.06.06	LOCKING WAE 3,2 RFR	177, 179
315755-0105	01.06.07	LOCKING WAE 3,2 RFR	181
315755-0105	01.06.08	LOCKING WAE 3,2 RFR	183
315755-0105	2.03.02	LOCKING WAE 3,2 RFR	303
315755-0105	2.03.03	LOCKING WAE 3,2 RFR	305
318219-0389	01.03.10	CONNECTION	95
318219-0389	01.03.11	CONNECTION	97
321120-0093	2.02.05	BUSHING 4/5,5X10	293
321120-0100	01.03.08	BUSHING 8/10X12	87, 89
321120-0114	04.02	BUSHING 13/15X10	383
321120-0137	03.11	BUSHING 20/23X15	367
321120-0160	01.04.02	BUSHING 25/28X30	121, 123
321120-0160	04.03	BUSHING 25/28X30	385, 387
321120-0171	03.05	BUSHING 30/34X30	353, 355
321120-0171	04.02	BUSHING 30/34X30	383
321120-0185	01.03.03	BUSHING 35/39X30	75
321120-0185	01.03.04	BUSHING 35/39X30	77
321308-0101	02.10	BALL BEARISKF6001RS	239
321308-0102	02.10	BALL BEARISKF6002RS	239
321308-0201	2.02.02	BALL BEARISKF6001-2RS	287
321308-0202	01.03.09	BALL BEARISKF6002-2RS	91, 93
321308-0202	02.18	BALL BEARISKF6002-2RS	255
321308-0203	2.04	BALL BEARISKF6003-2RS	327, 331
321308-0204	01.03.12	BALL BEARISKF6004-2RS	99
321308-0204	01.03.13	BALL BEARISKF6004-2RS	101
321308-0204	01.03.18	BALL BEARISKF6004-2RS	111
321308-0204	02.04	BALL BEARISKF6004-2RS	67
321308-0204	02.06	BALL BEARISKF6004-2RS	231
321308-0204	02.07	BALL BEARISKF6004-2RS	233
321308-0204	03.03	BALL BEARISKF6004-2RS	349
321308-0204	03.04	BALL BEARISKF6004-2RS	351
321308-0206	01.04.02	BALL BEARISKF6006-2RS	121, 123
321308-0207	01.03.07	BALL BEARISKF6007-2RS	83, 85
321308-0207	01.03.08	BALL BEARISKF6007-2RS	87, 89
321308-0207	01.03.09	BALL BEARISKF6007-2RS	91, 93
321308-0209	01.03.05	BALL BEARISKF6009-2RS	79
321308-0209	01.03.06	BALL BEARISKF6009-2RS	81
321313-0101	03.02	BALL BEARISKF6201-2RS	347
321313-0102	03.01	BALL BEARISKF6202-2RS	345
321313-0102	03.10	BALL BEARISKF6202-2RS	365
321313-0105	01.03.05	BALL BEARISKF6205-2RS	79
321313-0105	01.03.06	BALL BEARISKF6205-2RS	81
321582-0165	01.06	CURVE ROLLKR30PP	37
321582-0165	01.07	CURVE ROLLKR30PP	39, 41
321582-0165	01.08	CURVE ROLLKR30PP	43
321582-0165	01.09	CURVE ROLLKR30PP	45
342700-0109	01.03.19	NIPPLE RNA1/8"-1/8"	113
342701-0206	02.20.2	BUSHING RNI1/2"-3/8"	265
342701-0209	02.20.1	BUSHING RNI3/4"-3/8"	263
342701-0210	02.20.1	BUSHING RNI3/4"-1/2"	263
342713-0211	02.20.5	BLIND PLUG	271
342713-0211	04.07	BLIND PLUG	405
342715-0102	02.20.5	PLUG D=6	271
342715-0103	02.20.5	PLUG D=8	271
342715-0103	04.07	PLUG D=8	405, 407

Part No	MMref	Description	Page No
342715-0103	2.03.05	PLUG D=8	309
342716-0203	02.20.5	REDUCER 6-8	271
342716-0203	04.07	REDUCER 6-8	405, 407
342716-0205	02.20.5	REDUCER 4-8	271
342716-0209	02.20	REDUCER 8-12	259, 261
342716-0209	02.20.4	REDUCER 8-12	269
342716-0210	02.20	REDUCER 6-12	259, 261
342716-0210	04.07	REDUCER 6-12	405, 407
342722-0197	04.05	PIPE COUPLD=6-M5	395, 397
342722-0203	01.04.05	PIPE COUPLD=6-R1/4"	135, 137
342722-0204	02.20.4	PIPE COUPLD=8-R1/8"	269
342722-0205	04.05	PIPE COUPLD=8-R1/4"	395, 397
342722-0210	04.07	PIPE COUPLD=12-R3/8"	405
342732-0100	02.13	ELBOW PIPE D4-R1/8"	245
342732-0102	01.03.14	ELBOW PIPE D6-R1/8"	103
342732-0102	02.01	ELBOW PIPE D6-R1/8"	147
342732-0102	04.05	ELBOW PIPE D6-R1/8"	395
342732-0102	04.06	ELBOW PIPE D6-R1/8"	399, 401, 403
342732-0102	2.02.03	ELBOW PIPE D6-R1/8"	289
342732-0102	2.02.05	ELBOW PIPE D6-R1/8"	293
342732-0104	01.11	ELBOW PIPE D8-R1/4"	49, 51
342732-0104	02.20.3	ELBOW PIPE D8-R1/4"	267
342732-0104	02.20.4	ELBOW PIPE D8-R1/4"	269
342732-0104	04.05	ELBOW PIPE D8-R1/4"	395, 397
342732-0105	02.20.5	ELBOW PIPE D8-R3/8"	271
342732-0109	02.20.3	ELBOW PIPE D12-R1/4"	267
342732-0109	2.03.05	ELBOW PIPE D12-R1/4"	309
342732-0110	02.20.2	ELBOW PIPE D12-R3/8"	265
342732-0110	02.20.5	ELBOW PIPE D12-R3/8"	271
342732-0110	04.07	ELBOW PIPE D12-R3/8"	405
342732-0113	01.11	ELBOW PIPE 10-1/4	49, 51
342732-0801	02.01	ELBOW PIPE D8-R1/8"	147
342732-0801	02.03	ELBOW PIPE D8-R1/8"	155
342732-0801	04.06	ELBOW PIPE D8-R1/8"	399, 401, 403
342735-0103	02.20	ELBOW PIPE D=8	259, 261
342735-0109	02.20	ELBOW PIPE D=12	259, 261
342742-0110	02.20	T-CONNECTI 12-3/8	259, 261
342748-0109	04.07	T-CONNECTI D=12	407
342768-0103	2.03.05	BULKHEAD LD=8	309
342771-0105	02.20	HOSE COUPL	259, 261
342921-0112	02.02	PIPE COUPL6/4-6M	149, 151, 153
342921-0131	01.03.19	PIPE COUPL10/8-1/8"	113
342933-0121	01.04.03	ELBOW PIPE8/6-1/8	125, 127

Part No	MMref	Description	Page No
342960-0133	2.03.05	BULKHEAD L10/8	309
342991-0109	02.19	HOSE CLIP 44-56MMRFR	257
342991-0110	01.10	HOSE CLIP 50-65MMRFR	47
344502-0021	01.06	NIPPLE L AHM6	37
344502-0021	01.07	NIPPLE L AHM6	39, 41
344502-0021	01.08	NIPPLE L AHM6	43
344502-0021	01.09	NIPPLE L AHM6	45
344502-0021	02.10	NIPPLE L AHM6	239
344502-0021	2.04	NIPPLE L AHM6	327, 331
344502-0061	01.06	NIPPLE L M6AL.	37
344502-0061	01.07	NIPPLE L M6AL.	39, 41
344502-0061	01.08	NIPPLE L M6AL.	43
344502-0061	01.09	NIPPLE L M6AL.	45
346800-0110	01.11	SILENCER FILTER R1/4"	49, 51
352103-0096	02.03	CABLE GLANR.ST 7	223
352103-0096	02.19	CABLE GLANR.ST 7	257
352103-0096	04.01	CABLE GLANR.ST 7	381
352103-0096	2.03.05	CABLE GLANR.ST 7	309
352103-0101	01.01	CABLE GLAND ST 9	23
352103-0101	01.02	CABLE GLAND ST 9	25
352103-0101	01.04.04	CABLE GLAND ST 9	129, 131, 133
352103-0101	01.06.03	CABLE GLAND ST 9	171
352103-0101	01.10	CABLE GLAND ST 9	47
352103-0101	02.01	CABLE GLAND ST 9	221
352103-0101	02.10	CABLE GLAND ST 9	239
352103-0101	02.19	CABLE GLAND ST 9	257
352103-0101	02.20	CABLE GLAND ST 9	259, 261
352103-0101	2.03.05	CABLE GLAND ST 9	309
352103-0106	01.01	CABLE GLAND ST 11	23
352103-0106	01.04.04	CABLE GLAND ST 11	129, 131, 133
352103-0106	01.04.06	CABLE GLAND ST 11	141
352103-0106	01.06.06	CABLE GLAND ST 11	177, 179
352103-0106	01.06.07	CABLE GLAND ST 11	181
352103-0106	01.06.08	CABLE GLAND ST 11	183
352103-0106	01.10	CABLE GLAND ST 11	47
352103-0106	02.19	CABLE GLAND ST 11	257
352103-0106	02.25	CABLE GLAND ST 11	281
352103-0106	2.03.05	CABLE GLAND ST 11	309
352103-0106	2.03.07	CABLE GLAND ST 11	315
352103-0108	02.03	CABLE GLAND ST13	155
352103-0110	02.05	CABLE GLAND STR 16	229
352103-0110	02.19	CABLE GLAND STR 16	257
352103-0111	01.01	CABLE GLAND ST 16	23

Part No	MMref	Description	Page No
352103-0111	01.02	CABLE GLAND ST 16	25
352103-0111	02.01	CABLE GLAND ST 16	221
352103-0111	02.03	CABLE GLAND ST 16	155, 223
352103-0111	02.17	CABLE GLAND ST 16	253
352103-0111	04.01	CABLE GLAND ST 16	381
352103-0111	2.03.05	CABLE GLAND ST 16	309
352103-0111	2.04	CABLE GLAND ST 16	327, 331
352113-0101	02.20	RIBBON CLA	259, 261
352135-0106	02.13	HOSE .016	245
352136-0127	02.13	GLAND FITT	245
352137-0127	02.13	GLAND FITT	245
353101-0120	01.04.06	CABLE SHOE	141
353101-0120	02.25	CABLE SHOE	281
353101-0132	01.03	CABLE SHOE	27
359009-0800	02.20	CABLE MARKM#RKEN PK	259, 261
359011-0821	01.01	SET OF SIGNS 6-FW 1-50	23
359011-0821	01.02	SET OF SIGNS 6-FW 1-50	25
359011-0821	02.01	SET OF SIGNS 6-FW 1-50	221
359011-0821	02.03	SET OF SIGNS 6-FW 1-50	223
359011-0821	04.01	SET OF SIGNS 6-FW 1-50	381
457696-0001	2.04.2	JOINT PIECE	335
466074-0002	2.04.2	SLIDER	335
476220	2.04	SPACER	325, 329
476220	2.04.2	SPACER	335
476221-0008	05.06	PIPE	427
476975	02.08	WHEEL	235
476975	02.09	WHEEL	237
479110	01.01	SPACER	23
479110	01.02	SPACER	25
479110	02.01	SPACER	221
479110	02.03	SPACER	223
479110	04.01	SPACER	381
484148	2.04.1	CLAMPING PART	333
484165	2.04.1	FOOT	333
484170-0001	2.04.1	PIPE	333
484170-0002	2.04.1	PIPE	333
484170-0003	2.04.1	PIPE	333
484171-0001	2.04.1	LEG	333
484171-0002	2.04.1	LEG	333
484701	05.05	SHUTTER	425
484701	05.06	SHUTTER	427
484846	02.15	LINK	249
484847	02.15	PLUNGER	249

Part No	MMref	Description	Page No
486268	01.03	NUT	27
486268	01.04.01	NUT	119
486268	01.06	NUT	37
486268	01.06.10	NUT	187
486268	01.07	NUT	39, 41
486268	01.08	NUT	43
486268	01.09	NUT	45
486268	02.04	NUT	225, 227
486268	02.22	NUT	275
486268	03.11	NUT	367
486268	03.13	NUT	371
486268	03.14	NUT	373
486268	04.06	NUT	403
486268	04.08	NUT	409
486268	2.02.06	NUT	295
486858	02.06	SPROCKET	231
486884	2.04.1	BRACKET	333
493768	02.03	BUSHING	155
493768	03.12	BUSHING	369
493768	04.04	BUSHING	389, 391, 393
493768	2.02.05	BUSHING	293
497995	2.04.1	STUD SCREW	333
529076	2.04.1	WASHER	333
531948	2.04	SPACER	325, 329
532403		COVER	279
532412		SPRING	279
532413	01.03.19	REDUCING NIPPLE	113
532414	01.03.19	WASHER	113
532889	01.12	CLAMPING PIECE	53
532889	02.02	CLAMPING PIECE	63
533134	2.04	COMPRESSION SPRING	325, 329
533217	2.04	BOW CLAMP	325, 329
533227	2.04.2	COVERING PLATE	335
533228	2.04	SHAFT	325, 329
533230	2.04	SHEET	325, 329
533231	2.04	SECURING PLATE	325, 329
533233	2.04	SHAFT	325, 329
533234	2.04	LID	325, 329
533235	2.04	LID	325, 329
533236-0002	2.04.2	SUPPORT BAR	335
533237	2.04	AXLE PIN	325, 329
533238	2.04	BLOCKING PIECE	325, 329
533240	2.04	WHEEL	325, 329

Part No	MMref	Description	Page No
533241	2.04	FLANGE	325, 329
537482	05.05	BRACKET	425
537482	05.06	BRACKET	427
537483	05.05	BRACKET	425
537483	05.06	BRACKET	427
539095		HOLDER	279
541328		COVER	279
542564	2.04.1	ASSEMBLY INSTRUCTION	333
545198		ASSEMBLY INSTRUCTION	279
545890	02.15	RIVET	249
548246	05.06	BRACKET	427
548247	05.06	BRACKET	427
548599	01.03	WASHER	27
548599	01.04.01	WASHER	119
548599	02.04	WASHER	225, 227
548599	02.22	WASHER	275
548599	03.11	WASHER	367
548599	03.13	WASHER	371
548599	04.06	WASHER	403
548599	2.02.02	WASHER	287
548599	2.02.04	WASHER	291
552643		HOLDER	279
556598	01.03	BRACKET	27
556601	02.04	BRACKET	225, 227
556603	01.03	COVER PLATE	27
556604	01.04.01	COVER PLATE	119
556604	02.04	COVER PLATE	225, 227
556604	02.22	COVER PLATE	275
556604	03.13	COVER PLATE	371
556604	04.06	COVER PLATE	403
556604	04.08	COVER PLATE	409
556604	2.02.06	COVER PLATE	295
556610	01.03	PROFILE	27
556611	01.03	PROFILE	27
556614	01.03	MOTOR PLATE	27
556617	01.03	PROFILE	27
556618	01.03	PROFILE	27
556620	01.03	PROFILE	27
556621	01.03	PROFILE	27
556622	01.03	PROFILE	27
556623	01.03	PROFILE	27
556624	01.03	FRAME BRACKET	27
556624	02.04	FRAME BRACKET	225, 227

Part No	MMref	Description	Page No
556624	02.22	FRAME BRACKET	275
556624	03.14	FRAME BRACKET	373
556624	04.08	FRAME BRACKET	409
556624	2.02.06	FRAME BRACKET	295
556629	02.01	BRACKET	61
556630	02.01	LOCK RAIL	61
556631	02.03	SHAFT	65
556632	02.03	BRACKET	65
556633	02.03	LOCK RAIL	65
556635	02.03	GEAR WHEEL	65
556637	02.02	MOUNTING SHEET	63
556638	02.01	SPACER	61
556638	02.02	SPACER	63
556642	01.04	BEARING PLATE	29, 31
556642	01.05	BEARING PLATE	33, 35
556645	01.04	HOLDER	29, 31
556646	01.04	HOLDER	29, 31
556646	01.05	HOLDER	33, 35
556647	01.04	BRACKET	29, 31
556648	01.04	HUB	29, 31
556648	01.05	HUB	33, 35
556649	01.04	WASHER	29, 31
556649	01.05	WASHER	33, 35
556651	01.04	SPRING BRACKET	29, 31
556652	01.05	SPRING BRACKET	33, 35
561652	2.04	WHEEL	325, 329
561653	2.04	ROLL	325, 329
575034	01.06.06	ROUND NUT	177, 179
575034	01.06.07	ROUND NUT	181
575034	01.06.08	ROUND NUT	183
575034	2.03.07	ROUND NUT	315
575417	05.04	WASHER	423
575417	2.03.07	WASHER	315
575418	05.02	WASHER	419
575418	2.03.01	WASHER	301
575418	2.03.07	WASHER	315
575435	05.02	HOLDER	419
577854	05.03	BRACKET	421
577855	05.03	BRACKET	421
577856	05.03	BRACKET	421
577857	05.03	BRACKET	421
577859	05.03	BRACKET	421
577859	05.04	BRACKET	423

Part No	MMref	Description	Page No
577862	05.03	TUNNEL HALF	421
577862	05.06	TUNNEL HALF	427
580918	01.04.07	MOUNTING SHEET	143
6-12MM			155
8490-0003	02.03	RAIL	223
8490-0003	04.01	RAIL	381
8490-0010	01.01	MOUNTING RAIL	23
8490-0010	01.02	MOUNTING RAIL	25
8490-0010	02.01	MOUNTING RAIL	221
90002-0004	01.02	BLANK-OFF PLUG 22,5	25
90002-0004	02.19	BLANK-OFF PLUG 22,5	257
90002-0009	01.02	BLANK-OFF PLUG 18.6	25
90002-0009	02.19	BLANK-OFF PLUG 18.6	257
90002-0010	02.20	PLUG	259, 261
90002-0013	01.02	BLANK-OFF PLUG 15,2	25
90002-0013	01.04.04	BLANK-OFF PLUG 15,2	129, 131, 133
90002-0013	01.06.03	BLANK-OFF PLUG 15,2	171
90002-0013	01.10	BLANK-OFF PLUG 15,2	47
90002-0013	02.19	BLANK-OFF PLUG 15,2	257
90002-0013	2.03.05	BLANK-OFF PLUG 15,2	309
90002-0018	02.03	BLIND PLUG	223
90002-0018	02.19	BLIND PLUG	257
90005-0064	2.02.05	WASHER	293
90005-0094	01.03.19	GASKET	113
90005-0114	01.04.07	WASHER	143
90012-0075	01.04.04	GLAND FITTING	129, 131, 133
90012-0076	01.04.04	CABLE SHEATH	129, 131, 133
90012-0118	02.01	GLAND FITTING	61
90012-0118	02.03	GLAND FITTING	65
90015-0020	02.20.4	BUSHING	269
90015-0023	01.04.07	BUSHING	143
90015-0023	02.03	BUSHING	155
90028-0024	01.03.19	CONE	113
90032-0046	01.03.19	JUNKTION BLOCK	113
90036-0068	01.04.07	BULB 6.5W 24V	143
90042-0213	02.01	SOLENOID VALVE	147
90042-0213	04.06	SOLENOID VALVE	399, 401, 403
90042-0215	02.20.5	SOL.VALVE PACKAGE	271
90042-0215	04.07	SOL.VALVE PACKAGE	405, 407
90042-0235	02.20.5	SOLENOID VALVE	271
90042-0392	02.01	CONTACT	147
90042-0491	02.20.4	CONTACT	269
90042-0491	04.06	CONTACT	399, 401, 403
90042-0519	02.20.5	COVER PLATE	271
90042-0519	04.07	COVER PLATE	405
90042-0522	02.20.5	END PIECE	271
90042-0522	04.07	END PIECE	405
90042-0528	02.20.5	SEALING DISC	271
90042-0532	02.20.5	CONNECTION TABLE	271
90042-0532	04.07	CONNECTION TABLE	405
90042-0535	02.20.5	TERMINAL FOR SOL.VALVE	271
90042-0535	04.07	TERMINAL FOR SOL.VALVE	405
90042-0536	02.20.4	CONTACT FOR SOL.VALVE	269
90042-0539	02.20.5	EL.COIL	271
90042-0539	04.07	EL.COIL	405, 407
90042-0545	02.20.5	CONNECTION TABLE	271
90042-0550	02.20.5	PROTECTIVE COVER	271
90042-0550	04.07	PROTECTIVE COVER	405
90043-0015	02.20.1	PRESSURE GAUGE	263
90044-0104	2.02.02	PROX.SWITCHIFM IN 3002	287
90044-0116	04.05	PROXIMITY SWITCH	395, 397
90044-0116	2.02.05	PROXIMITY SWITCH	293
90044-0124	02.04	INDUCTIVE SWITCH	67
90044-0124	02.10	INDUCTIVE SWITCH	239
90044-0124	2.02.03	INDUCTIVE SWITCH	289
90044-0127	01.06.06	KEY SAFETY SWITCH AZ15ZVR	177, 179
90044-0127	01.06.07	KEY SAFETY SWITCH AZ15ZVR	181
90044-0127	01.06.08	KEY SAFETY SWITCH AZ15ZVR	183
90044-0127	2.03.07	KEY SAFETY SWITCH AZ15ZVR	315
90045-0167	2.02.02	MOTOR	287
90049-0010	2.04.1	EXPANDING PLUG	333
90055-0100	02.20	JOINT CONNECTION	259, 261
90055-0100	04.06	JOINT CONNECTION	399, 403
90055-0101	01.04.03	JOINT CONNECTION	127
90055-0101	02.20	JOINT CONNECTION	259, 261
90055-0101	04.06	JOINT CONNECTION	399, 401, 403
90055-0147	02.20	JOINT CONNECTION	259, 261
90055-0147	02.20.4	JOINT CONNECTION	269
90061-0018	01.12	ANGLE ENCODER 8BIT GRAY	53
90061-0018	02.02	ANGLE ENCODER 8BIT GRAY	63
90062-0059	01.04.06	LOCK WASHER	141
90062-0059	02.25	LOCK WASHER	281
90062-0060	01.03	LOCK WASHER	27
90064-0124	01.04.06	EMERGENCY STOP BUTTON	141
90064-0124	02.25	EMERGENCY STOP BUTTON	281
90064-0336	01.04.06	EARTHING PLATE	141

Part No	MMref	Description	Page No
90064-0336	02.25	EARTHING PLATE	281
90066-0030	01.04.06	PUSH BUTTON BOX	141
90066-0030	02.25	PUSH BUTTON BOX	281
90069-0106	02.05	GEARED MOTOR	229
90069-0111	02.05	GEARED MOTOR	229
90069-0221	02.17	WORM GEAR MOTOR	253
90069-0222	03.09	GEARED MOTOR	363
90069-0236	2.04	WORM GEAR MOTOR	325, 329
90069-0237	2.04	WORM GEAR MOTOR	325, 329
90069-0266	02.01	WORM GEAR MOTOR	61
90069-0267	02.03	WORM GEAR MOTOR	65
90077-0079	01.01	FEED THROUGH TERMINAL	23
90077-0079	01.02	FEED THROUGH TERMINAL	25
90077-0079	02.01	FEED THROUGH TERMINAL	221
90077-0079	02.03	FEED THROUGH TERMINAL	223
90077-0079	04.01	FEED THROUGH TERMINAL	381
90087-0019	01.03.19	PLUG	113
90087-0036	02.20.3	PLUG	267
90089-0017	02.03	TRANSITIONAL MUFF	155
90089-0017	02.17	TRANSITIONAL MUFF	253
90089-0017	2.04	TRANSITIONAL MUFF	325, 329
90091-0038	04.03	SEAL RING	385, 387
90091-0200	01.03.05	SEAL RING	79
90091-0200	01.03.06	SEAL RING	81
90091-0302	01.03.09	SEAL RING	91, 93
90091-0303	02.06	SEAL RING	231
90091-0304	01.03.05	SEAL RING	79
90091-0304	01.03.06	SEAL RING	81
90091-0305	01.03.07	SEAL RING	83, 85
90091-0305	01.03.08	SEAL RING	87, 89
90091-0305	01.03.09	SEAL RING	91, 93
90091-0306	01.04.02	SEAL RING	121, 123
90092-0080	01.03.19	OIL BRUSH F.4 MM TUBE	113
90099-0104	01.04.04	NUT PR 15,2 (PG9)	129, 131, 133
90099-0104	01.06.03	NUT PR 15,2 (PG9)	171
90099-0104	01.10	NUT PR 15,2 (PG9)	47
90099-0104	02.19	NUT PR 15,2 (PG9)	257
90099-0104	02.20	NUT PR 15,2 (PG9)	259, 261
90099-0104	2.03.05	NUT PR 15,2 (PG9)	309
90099-0110	02.19	NUT PR 22,5 (PG16)	257
90099-0110	2.03.05	NUT PR 22,5 (PG16)	309
90099-0116	02.19	NUT PR 12,5 (PG7)	257
90099-0116	2.03.05	NUT PR 12,5 (PG7)	309

Part No	MMref	Description	Page No
90099-0117	01.04.04	NUT PR18,6 (PG11)	129, 131, 133
90099-0117	01.04.06	NUT PR18,6 (PG11)	141
90099-0117	01.10	NUT PR18,6 (PG11)	47
90099-0117	02.03	NUT PR18,6 (PG11)	155
90099-0117	02.19	NUT PR18,6 (PG11)	257
90099-0117	02.25	NUT PR18,6 (PG11)	281
90099-0117	2.03.05	NUT PR18,6 (PG11)	309
90099-0118	02.03	NUT PR20,4 (PG13,5)	155
90099-0120	02.20	NUT PR 37 (PG29)	259, 261
90113-0038	02.20.1	REGULATOR	263
90113-0095	02.20.3	PRESSURE REGULATOR	267
90113-0096	02.20.3	PRESSURE REGULATOR	267
90113-0338	02.20.1	YOKE	263
90113-0344	02.20.1	* FILTER INSERT	263
90113-0348	02.20.1	* SEAL KIT	263
90113-0349	02.20.1	* GASKET	263
90113-0356	02.20.1	BRACKET	263
90113-0385	02.20.3	SEPARATION BLOCK	267
90115-0027	01.03.08	LINK HEAD	87, 89
90115-0027	01.03.09	LINK HEAD	91, 93
90115-0028	01.06	LINK HEAD	37
90115-0028	01.07	LINK HEAD	39, 41
90115-0028	01.08	LINK HEAD	43
90115-0028	01.09	LINK HEAD	45
90115-0135	01.03.07	LINK HEAD	83, 85
90115-0135	01.04.02	LINK HEAD	121, 123
90115-0150	01.03.08	LINK HEAD	87, 89
90115-0150	04.04	LINK HEAD	389, 391, 393
90115-0151	01.03.08	LINK HEAD	87, 89
90115-0151	04.04	LINK HEAD	389, 391, 393
90115-0151	2.02.05	LINK HEAD	293
90115-0181	01.03.07	LINK HEAD	83, 85
90115-0182	01.03.07	LINK HEAD	83, 85
90117-0008	01.03.16	HANDLE	107
90117-0026	03.11	LOCKING LEVER	367
90117-0026	03.14	LOCKING LEVER	373
90134-0038	01.03.19	BUSHING	113
90134-0081	01.03.19	REDUCTION SLEEVE	113
90135-0026	01.01	EARTHING CLAMP	23
90135-0026	01.02	EARTHING CLAMP	25
90135-0026	02.01	EARTHING CLAMP	221
90135-0026	02.03	EARTHING CLAMP	223
90135-0026	04.01	EARTHING CLAMP	381

Part No	MMref	Description	Page No
90140-0019	2.03.05	BRACKET	309
90141-0020	02.04	LOCK RING	67
90143-0060	01.04.04	STRIP	133
90143-0060	01.10	STRIP	47
90143-0060	02.21	STRIP	273
90143-0073	01.04.04	RUBBER STRIP	131, 133
90143-0081	02.20	RUBBER SEAL	259, 261
90153-0036	05.01	ADHESIVE	417
90157-0016	01.03.17	LOCKING FLUID	109
90157-0016	02.10	LOCKING FLUID	239
90157-0022	01.10	SEALING COMPOUND	47
90157-0041	01.06.06	SEALING COMPOUND	177, 179
90157-0041	01.06.07	SEALING COMPOUND	181
90157-0041	01.06.08	SEALING COMPOUND	183
90157-0041	01.06.11	SEALING COMPOUND	189
90157-0041	01.06.15	SEALING COMPOUND	197
90157-0041	01.06.16	SEALING COMPOUND	199
90157-0041	05.02	SEALING COMPOUND	419
90157-0041	05.03	SEALING COMPOUND	421
90157-0041	05.05	SEALING COMPOUND	425
90157-0041	05.06	SEALING COMPOUND	427
90157-0041	2.03.01	SEALING COMPOUND	301
90157-0041	2.03.07	SEALING COMPOUND	315
90163-0008	2.03.05	CONNECTION	309
90163-0019	02.20	NIPPLE	259, 261
90166-0107	02.19	HOSE	257
90166-0109	01.03.19	HOSE	113
90166-0141	01.03.19	HOSE	113
90166-0160	01.11	HOSE	49, 51
90166-0193	02.20	PLASTIC HOSE	259, 261
90166-0193	04.07	PLASTIC HOSE	405, 407
90166-0194	02.20	PLASTIC HOSE	259, 261
90166-0194	04.07	PLASTIC HOSE	405, 407
90166-0202	02.01	TEFLON PIPE	147
90166-0202	04.06	TEFLON PIPE	399, 401, 403
90166-0221	02.20	HOSE	259, 261
90166-0221	04.07	HOSE	405
90166-0222	02.20	HOSE	259, 261
90182-0005	01.03.19	STRAP	113
90182-0007	01.03.19	PLATE	113
90187-0042	02.20.1	VALVE	263
90191-0039	01.03.17	WHEEL	109
90191-0070	2.02.02	ROLL	287
90194-0016	01.01	SIGN "FLASH SIGN" 50X50MM	23
90194-0016	01.02	SIGN "FLASH SIGN" 50X50MM	25
90194-0016	02.01	SIGN "FLASH SIGN" 50X50MM	221
90194-0016	02.03	SIGN "FLASH SIGN" 50X50MM	223
90194-0016	04.01	SIGN "FLASH SIGN" 50X50MM	381
90194-0016	2.03.02	SIGN "FLASH SIGN" 50X50MM	303
90194-0152	01.03	SIGN "EARTH"	27
90224-0372	02.20.3	CONNECTION	267
90226-0458	01.06.02	MOUNTING SCREW	169
90226-0458	01.06.03	MOUNTING SCREW	171
90226-0458	01.06.04	MOUNTING SCREW	173
90226-0458	01.06.05	MOUNTING SCREW	175
90226-0458	01.06.09	MOUNTING SCREW	185
90226-0458	01.06.10	MOUNTING SCREW	187
90226-0458	01.06.11	MOUNTING SCREW	189
90226-0458	01.06.12	MOUNTING SCREW	191
90226-0458	01.06.14	MOUNTING SCREW	195
90226-0458	01.06.15	MOUNTING SCREW	197
90226-0458	01.06.16	MOUNTING SCREW	199
90226-0458	01.06.17	MOUNTING SCREW	201
90226-0458	01.06.18	MOUNTING SCREW	203
90226-0458	01.06.19	MOUNTING SCREW	205
90226-0458	01.06.20	MOUNTING SCREW	207
90226-0458	01.06.21	MOUNTING SCREW	209
90226-0458	01.06.22	MOUNTING SCREW	211
90226-0458	01.06.23	MOUNTING SCREW	213
90226-0458	2.03.04	MOUNTING SCREW	307
90226-0458	2.03.05	MOUNTING SCREW	309
90226-0458	2.03.06	MOUNTING SCREW	311, 313
90226-0458	2.03.08	MOUNTING SCREW	317
90226-0458	2.03.09	MOUNTING SCREW	319
90226-0458	2.03.10	MOUNTING SCREW	321
90230-0027	01.03.19	NON-RETURN VALVE	113
90230-0300	01.03.19	* STRAINER	113
90230-0301	01.03.19	* DIAPHRAGM	113
90230-0302	01.03.19	ADAPTER	113
90230-0307	01.03.19	ORIFICE PLATE	113
90232-0059		PHOTOCELL	279
90232-0060		PHOTOCELL	279
90232-0103	02.10	PH.CELL OMRON E3SCT61L 5M	239
90232-0103	05.12	PH.CELL OMRON E3SCT61L 5M	439
90232-0104	02.10	RECEIVER OMRON E3SCT61D5M	239
90232-0104	05.12	RECEIVER OMRON E3SCT61D5M	439

Part No	MMref	Description	Page No
90232-0110	01.03.14	PH.CELL OMRON E3S-CL1-5M	103
90232-0110	02.13	PH.CELL OMRON E3S-CL1-5M	245
90232-0110	03.06	PH.CELL OMRON E3S-CL1-5M	357
90232-0110	03.11	PH.CELL OMRON E3S-CL1-5M	367
90235-0768	04.05	VALVE	395, 397
90236-0303	02.20.1	SCREW	263
90237-0123	01.06.06	LOCK HOUSING	177, 179
90237-0123	01.06.07	LOCK HOUSING	181
90237-0123	2.03.02	LOCK HOUSING	303
90237-0126	01.06.06	TURNING HANDLE	177, 179
90237-0126	01.06.07	TURNING HANDLE	181
90237-0126	2.03.02	TURNING HANDLE	303
90237-0128	01.06.06	LOCK CYLINDER	177, 179
90237-0128	01.06.07	LOCK CYLINDER	181
90237-0128	2.03.02	LOCK CYLINDER	303
90237-0144	01.06.06	STEERING	177, 179
90237-0144	01.06.07	STEERING	181
90237-0144	2.03.02	STEERING	303
90237-0145	01.06.06	CATCH	177, 179
90237-0145	01.06.07	CATCH	181
90237-0145	2.03.02	CATCH	303
90239-0847	01.03.14	CYLINDER	103
90240-0093	2.02.05	PLAIN BEARING	293
90240-0203	01.06	PLAIN BEARING	37
90240-0203	01.07	PLAIN BEARING	39, 41
90240-0203	01.08	PLAIN BEARING	43
90240-0203	01.09	PLAIN BEARING	45
90240-0204	01.03.07	PLAIN BEARING	83, 85
90240-0205	01.03.01	PLAIN BEARING	71
90240-0205	01.03.02	PLAIN BEARING	73
90240-0205	01.04.02	PLAIN BEARING	121, 123
90240-0205	03.05	PLAIN BEARING	353, 355
90240-0205	04.02	PLAIN BEARING	383
90240-0221	02.04	BEARING	67
90240-0221	04.03	BEARING	385, 387
90240-0222	01.04.05	BEARING	135, 137
90240-0279	04.03	BEARING	385, 387
90243-0209	05	BAILER	415
90243-0232	02.11	GUIDE BRACKET	241
90252-0036	2.04	DRIVE BELT	325, 329
90252-0038	03	DRIVE BELT	343
90258-0046	03.11	PIN	367
90258-0046	03.13	PIN	371
90258-0046	03.14	PIN	373
90258-0046	04.06	PIN	403
90258-0046	04.08	PIN	409
90258-0046	2.02.06	PIN	295
90261-0060	01.03	PLASTIC PLUG	27
90261-0060	01.04.01	PLASTIC PLUG	119
90261-0060	02.04	PLASTIC PLUG	225, 227
90261-0060	03.13	PLASTIC PLUG	371
90274-0074	02.20.3	PRESSURE SWITCH	267
90287-0205	01.06.01	SCREW	167
90287-0205	01.06.06	SCREW	177, 179
90287-0205	01.06.07	SCREW	181
90287-0205	01.06.08	SCREW	183
90287-0205	2.03.01	SCREW	301
90287-0205	2.03.02	SCREW	303
90287-0205	2.03.03	SCREW	305
90287-0205	2.03.07	SCREW	315
90288-0317	01.03.18	CONNECTION LINK	111
90288-0333	02.03	CONNECTION LINK	65
90288-0333	02.05	CONNECTION LINK	229
90296-0068	01.04	GREASE	29, 31
90296-0068	01.05	GREASE	33, 35
90296-0068	02.10	GREASE	239
90296-0068	04.03	GREASE	385, 387
90296-0068	2.02.02	GREASE	287
90296-0068	2.04	GREASE	327, 331
90328-0003	02.01	SILENCER	147
90328-0003	04.06	SILENCER	399, 401, 403
90328-0017	02.20.5	SILENCER	271
90328-0024	02.20.5	SILENCER	271
90328-0024	04.07	SILENCER	405
90328-0033	02.20.2	SILENCER	265
90335-0031	2.02.05	SPRING	293
90335-0067	2.04	SPRING	325, 329
90342-0015	01.06	BELLOWS	37
90342-0016	01.07	BELLOWS	39, 41
90342-0016	01.08	BELLOWS	43
90342-0016	01.09	BELLOWS	45
90342-0016	2.02.05	BELLOWS	293
90342-0017	02.01	BELLOWS	147
90345-0075	01.04	FLANGE BEARING	29, 31
90345-0075	01.05	FLANGE BEARING	33, 35
90347-0011	01.06.06	VIBRATION DAMPER	177, 179

Part No	MMref	Description	Page No
90347-0011	01.06.07	VIBRATION DAMPER	181
90347-0011	01.06.08	VIBRATION DAMPER	183
90347-0011	2.02.03	VIBRATION DAMPER	289
90347-0011	2.03.02	VIBRATION DAMPER	303
90347-0011	2.03.03	VIBRATION DAMPER	305
90347-0060	2.03.07	DAMPER	315
90347-0127	01.06.01	DAMPER	167
90347-0142	01.03	FOOT	27
90347-0142	02.04	FOOT	225, 227
90347-0148	2.03.01	DAMPER	301
90355-0031	01.12	FLEXIBLE COUPLING	53
90355-0115	01.04	CONNECTION	29, 31
90355-0115	02.01	CONNECTION	61
90417-0069	04.02	TOOTHED BELT	383
90417-0140	01.03.01	TOOTHED BELT	71
90417-0188	2.04	TIMING BELT	325, 329
90417-0338	2.02.02	TIMING BELT	287
90419-0012	01.04.07	LIGHT ELEMENT, RED	143
90419-0013	01.04.07	LIGHT ELEMENT, BLUE	143
90419-0014	01.04.07	LIGHT ELEMENT, YELLOW	143
90419-0307	01.04.07	GASKET TO GET IP.54	143
90425-0015	01.04.03	SUCTION CUP	127
90425-0017	01.04.03	SUCTION CUP	125
90425-0031	02.20.4	EJECTOR	269
90439-0120	04.06	NOZZLE 237012	403
90439-0121	02.02	FILTER	153
90439-0124	02.02	MODULE	149, 151, 153
90439-0206	02.02	* CABLE	153
90439-0211	02.02	* THERMOSTAT	153
90439-0212	02.02	HOSE	149, 151, 153
90439-0213	02.02	HOSE	149, 151, 153
90439-0214	02.02	* FILTER INSERT	153
90439-0232	02.02	BLID PLATE	149
90439-0233	02.02	FILTER	149, 151, 153
90439-0234	02.02	HOSE CLIP	149, 151, 153
90439-0235	02.02	HOSE HOLDER	149, 151, 153
90439-0237	02.02	HOT MELT GUN	149, 151, 153
90439-0238	02.02	* HEATING ELEMENT	153
90439-0241	02.02	ANGLE NIPPLE	153
90439-0257	02.02	HOT MELT UNIT	149, 151
90439-0258	02.02	HOT MELT UNIT	153
90439-0264	02.02	NOZZLE	149, 151, 153
90450-0116	2.02.03	CYLINDER	289
90450-0190	01.04.05	CYLINDER	135, 137
90450-0190	01.11	CYLINDER	49, 51
90450-0200	2.02.05	CYLINDER	293
90450-0201	01.11	AIR RECEIVER	49, 51
90450-0261	02.13	CYLINDER	245
90450-0280	04.05	CYLINDER	395, 397
90450-0281	04.05	CYLINDER	395
90450-0654	04.05	CYLINDER BRACKET	395
90450-0654	2.02.05	CYLINDER BRACKET	293
90450-0667	01.04.05	BRACKET	135, 137
90450-0667	01.11	BRACKET	49, 51
90450-0669	04.05	BRACKET	395, 397
90450-0669	2.02.05	BRACKET	293
90450-0677	04.05	BRACKET	395, 397
90450-0678	04.05	BRACKET	395
90450-0678	2.02.05	BRACKET	293
90450-0682	01.11	BRACKET	49, 51
90450-0683	01.11	BRACKET	49, 51
90450-0707	01.04.05	BRACKET	135, 137
90450-0708	01.04.05	BALL JOINT COUPLING	135, 137
90450-0708	01.11	BALL JOINT COUPLING	49, 51
90450-0714	04.05	CYLINDER BRACKET	395, 397
90450-0722	04.05	PENDULUM SUSPENSION	395, 397
90450-0723	04.05	BALL JOINT COUPLING	395
959179	02.02	GEAR WHEEL Z=40	63
959656	01.06.01	COTTER	167
959656	01.06.06	COTTER	177, 179
959656	01.06.07	COTTER	181
959656	01.06.08	COTTER	183
959656	2.03.02	COTTER	303
959656	2.03.03	COTTER	305
959657	01.06.01	HINGE FLANGE	167
959657	01.06.06	HINGE FLANGE	177, 179
959657	01.06.07	HINGE FLANGE	181
959657	01.06.08	HINGE FLANGE	183
959657	2.03.02	HINGE FLANGE	303
959657	2.03.03	HINGE FLANGE	305
959658	01.06.01	SPRING	167
959658	01.06.06	SPRING	177, 179
959658	01.06.07	SPRING	181
959658	01.06.08	SPRING	183
959658	2.03.02	SPRING	303
959658	2.03.03	SPRING	305

Part No	MMref	Description	Page No
975755	02.03	ATTACHMENT	155
975761	02.20	CHAIN	259, 261
975880	01.06.06	HINGE FLANGE	177, 179
975880	01.06.07	HINGE FLANGE	181
975880	01.06.08	HINGE FLANGE	183
975880	2.03.02	HINGE FLANGE	303
975880	2.03.03	HINGE FLANGE	305
975884	01.06.17	BRACKET	201
975884	01.06.19	BRACKET	205
975884	01.06.22	BRACKET	211
975884	01.06.23	BRACKET	213
975884	2.03.04	BRACKET	307
975884	2.03.09	BRACKET	319
975887	01.06.02	CATCH	169
975887	01.06.03	CATCH	171
975887	01.06.04	CATCH	173
975887	01.06.05	CATCH	175
975887	01.06.14	CATCH	195
975887	01.06.20	CATCH	207
975887	01.06.21	CATCH	209
975887	2.03.04	CATCH	307
975887	2.03.05	CATCH	309
975887	2.03.08	CATCH	317
975887	2.03.09	CATCH	319
975887	2.03.10	CATCH	321
975888-0002	2.03.02	STRUT	303
975888-0003	01.06.07	STRUT	181
975888-0004	01.06.06	STRUT	177, 179
975889-0004	01.06.07	STRUT	181
975889-0005	2.03.02	STRUT	303
975889-0006	01.06.06	STRUT	177, 179
975917	01.06.06	KEY	177, 179
975917	01.06.07	KEY	181
975917	01.06.08	KEY	183
975917	2.03.07	KEY	315
975918-0003	01.06.07	GLASS	181
975918-0003	01.06.08	GLASS	183
975924	01.06.06	WASHER	177, 179
975924	01.06.07	WASHER	181
975924	01.06.08	WASHER	183
975924	2.03.07	WASHER	315
975927	01.06.01	HINGE FLANGE	167
975927	01.06.06	HINGE FLANGE	177, 179
975927	01.06.07	HINGE FLANGE	181
975927	01.06.08	HINGE FLANGE	183
975934	01.04.04	GUSSET PLATE	129, 131, 133
975934	02.21	GUSSET PLATE	273
975939	01.04.04	SEAL	129, 131, 133
975939	02.21	SEAL	273
979219	02.20.5	SPACER PIPE	271

B

B- 670280-0401	01	BOTTOM SECTION	19, 21
B- 670280-0401	01.01	BOTTOM SECTION	17
B- 670281-0401	02	HOTMELT EQUIPMENT	145
B- 670281-040V	01.05	HOT MELT EQUIPMENT	17
B- 670282-0301	01.02	DRIVE UNIT	17
B- 670282-0301	02	DRIVE UNIT	59
B- 670283-0401	01.04	SUPERSTRUCTURE	115, 117
B- 670283-040V	01.04	SUPERSTRCTURE	17
B- 670284-0401	01.03	FEED UNIT	17, 69
B- 670285-0401	03	MAGAZINE	341, 343
B- 670290-0401	05	REGULAR ACCESSORIES	415
B- 670290-0402	05	REGULAR ACCESSORIES	415
B- 670290-0403	05	REGULAR ACCESSORIES	415
B- 670290-0404	05	REGULAR ACCESSORIES	415
B- 670290-0405	05	REGULAR ACCESSORIES	415
B- 670292-0402	02	INFEED UNIT	217
B- 670293-0401	03	MAGAZINE	341
B- 670294-040V	01.01	BASE UNIT	17
B- 670296-0201	01.06	COVERING BASE UNIT	157
B- 670296-0202	01.06	COVERING BASE UNIT	159
B- 670296-0203	01.06	COVERING BASE UNIT	161
B- 670296-0204	01.06	COVERING BASE UNIT	163
B- 670296-0205	01.06	COVERING BASE UNIT	165
B- 670296-020V	01.06	COVERING BASE UNIT	17
B- 670367-0401	02	INFEED SECTION	219
B- 670367-0401	02	INFEED Section	217
B- 670368-0301	02	TRANSFER UNIT	217
B- 670368-0401	2.02	TRANSFER UNIT	283
B- 670369-0401	02	COVERING INFEED unit	217
B- 670369-0401	2.03	COVERING, INFEED UNIT	297
B- 670369-0402	2.03	COVERING, INFEED UNIT	299
B- 670375-0401	04	WRAP AROUND UNIT	377
B- 670375-0402	04	WRAP AROUND UNIT	377
B- 670375-0404	04	WRAP AROUND UNIT	379

Part No	MMref	Description	Page No
C			
C- 499085-0101	..2.04.1	LEG	333
C- 499085-0102	..2.04	LEG	325, 329
C- 499085-0102	..2.04.1	LEG	333
C- 499085-0103	..2.04.1	LEG	333
C- 539094-0400	..02	BRACKET	219
C- 539094-0400	..02.24	BRACKET	279
C- 539094-0402	..2.1.03	QUEUE GUARD DOUBLE	279
C- 556609-0301	..01	LOWER FRAME	19, 21
C- 556609-0301	..01.03	LOWER FRAME	27
C- 556625-0301	..02	MOTOR MAINSHAFT	59
C- 556625-0301	..02.01	MOTOR MAINSHAFT	61
C- 556626-0301	..02	MOTOR FEEDING	59
C- 556626-0301	..02.03	MOTOR FEEDING	65
C- 556636-0201	..02	ANGLE ENCODER	59
C- 556636-0201	..02.02	ANGLE ENCODER	63
C- 556641-0201	..01	MAINSHAFT REAR	19, 21
C- 556641-0201	..01.04	MAINSHAFT REAR	29, 31
C- 556654-0201	..01	MAINSHAFT FRONT	19, 21
C- 556654-0201	..01.05	MAINSHAFT FRONT	33, 35
C- 581689-0101	..01.04	WARNING LAMP	115, 117
C- 581689-0101	..01.04.07	WARNING LAMP	143
C-1021000-0101	.01	OPERATING ARM MAGASIN	19, 21
C-1021000-0101	.01.06	OPERATING ARM MAGASIN	37
C-1021009-0101	.01	FOLDING FLAP	19, 21
C-1021009-0101	.01.07	FOLDING FLAP	39, 41
C-1021015-0101	.01	SQUEEZER	19, 21
C-1021015-0101	.01.08	SQUEEZER	43
C-1021019-0101	.01	FLAP FOLDER	19, 21
C-1021019-0101	.01.09	FLAP FOLDER	45
C-1021023-0301	.01	COVERING PLATE	19, 21
C-1021023-0301	.01.10	COVERING PLATE	47
C-1021032-0101	.01.03	SIDE ADJUSTMENT FRONT	69
C-1021032-0101	.01.03.01	SIDE ADJUSTMENT FRONT	71
C-1021041-0101	.01.03	SIDE ADJUSTERREAR	69
C-1021041-0101	.01.03.02	SIDE ADJUSTERREAR	73
C-1021043-0101	.01.03	STEERING REAR	69
C-1021043-0101	.01.03.03	STEERING REAR	75
C-1021049-0101	.01.03	STEERING FRONT	69
C-1021049-0101	.01.03.04	STEERING FRONT	77
C-1021052-0101	.01.03	DRIVESHAFT FRONT	69
C-1021052-0101	.01.03.05	DRIVESHAFT FRONT	79
C-1021060-0101	.01.03	DRIVESHAFT REAR	69
C-1021060-0101	.01.03.06	DRIVESHAFT REAR	81
C-1021067-0101	.01.03	GUIDE SPROCKET OUTSIDE	69
C-1021067-0101	.01.03.13	GUIDE SPROCKET OUTSIDE	101
C-1021072-0101	.01.03	GUIDE SPROCKET INSIDE	69
C-1021072-0101	.01.03.12	GUIDE SPROCKET INSIDE	99
C-1021076-0301	.01.03	MACHINE BODY	69
C-1021076-0301	.01.03.17	MACHINE BODY	109
C-1021093-0101	.01.03	CARRIER CHAIN INSIDE	69
C-1021093-0101	.01.03.10	CARRIER CHAIN INSIDE	95
C-1021096-0101	.01.03	CARRIER CHAIN OUTSIDE	69
C-1021096-0101	.01.03.11	CARRIER CHAIN OUTSIDE	97
C-1021098-0101	.01.03	SHAFT FOLDINGFLAP	69
C-1021098-0101	.01.03.07	SHAFT FOLDINGFLAP	83, 85
C-1021118-0101	.01.03	SHAFT SQUEESER	69
C-1021118-0101	.01.03.08	SHAFT SQUEESER	87, 89
C-1021119-0101	.01.03.09	SHAFT FLAPFOLDER	91
C-1021119-0102	.01.03.09	SHAFT FLAPFOLDER	93
C-1021119-010V	.01.03	SHAFT FLAPFOLDER	69
C-1021143-0101	.01.04	MAGAZINE SHAFT	115, 117
C-1021143-0101	.01.04.02	MAGAZINE SHAFT	121, 123
C-1021160-0201	.01.04.03	SUCTION CUP	125
C-1021160-0202	.01.04.03	SUCTION CUP	127
C-1021160-020V	.01.04	SUCTION CUP	115, 117
C-1021173-0101	.03	DRIVE ROLLER	343
C-1021173-0101	.03.01	DRIVE ROLLER	345
C-1021174-0101	.03	BENDING ROLLER	343
C-1021174-0101	.03.02	BENDING ROLLER	347
C-1021175-0101	.03	BENDING ROLLER FRONT	343
C-1021175-0101	.03.03	BENDING ROLLER FRONT	349
C-1021176-0101	.03	BENDING ROLLER REAR	343
C-1021176-0101	.03.04	BENDING ROLLER REAR	351
C-1021177-0101	.03	WAY BOTTOMPART	343
C-1021177-0101	.03.05	WAY BOTTOMPART	353, 355
C-1021178-0401	.03	SIDE STEERING	343
C-1021178-0401	.03.06	SIDE STEERING	357
C-1021179-0201	.03	TOP STEERING	343
C-1021179-0201	.03.07	TOP STEERING	359
C-1021180-0101	.03	MAGASINEFRAME	343
C-1021180-0101	.03.08	MAGASINEFRAME	361
C-1021181-0201	.03	DRIVE MOTOR	343
C-1021181-0201	.03.09	DRIVE MOTOR	363
C-1021203-0201	.03	BOTTOMFLAP ADJUSTABLE	343

Part No	MMref	Description	Page No
C-1021203-0201	.03.10	BOTTOMFLAP ADJUSTABLE	365
C-1021222-0401	.03	TOPFLAP ADJUSTABLE	343
C-1021222-0401	.03.11	TOPFLAP ADJUSTABLE	367
C-1021243-0101	.03	SIDESTEERING ADJUSTABLE	343
C-1021243-0101	.03.12	SIDESTEERING ADJUSTABLE	369
C-1021273-0201	.03	FRAME	343
C-1021273-0201	.03.13	FRAME	371
C-1021278-0401	.01.03.14	FOLDING BAR	103
C-1021278-0402	.01.03.14	FOLDING BAR	103
C-1021278-040V	.01.03	FOLDING BAR	69
C-1021290-0101	.01.03	BOTTOM FOLDER	69
C-1021290-0101	.01.03.15	BOTTOM FOLDER	105
C-1021295-0201	.01.03	GUN HOLDER	69
C-1021295-0201	.01.03.16	GUN HOLDER	107
C-1021303-0301	.01.04	UPPERFRAME	115, 117
C-1021303-0301	.01.04.01	UPPERFRAME	119
C-1021326-0101	.01.03	CHAIN TIGHTENER WHEEL	69
C-1021326-0101	.01.03.16	CHAIN TIGHTENER WHEEL	111
C-1021387-0301	.02	HOTMELT EQUIP.MISC.	145
C-1021387-0301	.02.01	HOTMELT EQUIP.MISC.	147
C-1021395-0301	.02.02	HOTMELT EQUIPMENT NORDSON	149
C-1021395-0302	.02.02	HOTMELT EQUIPMENT NORDSON	151
C-1021395-0303	.02.02	HOTMELT EQUIPMENT NORDSON	153
C-1021395-030V	.02	HOTMELT EQUIPMENT NORDSON	145
C-1021396-0301	.02	SHELF HOTMELT	145
C-1021396-0301	.02.03	SHELF HOTMELT	155
C-1021404-0101	.01	PNEUMATIC CUSHIONING	19, 21
C-1021404-0101	.01.11	PNEUMATIC CUSHIONING	49, 51
C-1021510-0101	.01.04.04	CABLE TRENCH	129
C-1021510-0102	.01.04.04	CABLE TRENCH	129
C-1021510-0103	.01.04.04	CABLE TRENCH	131
C-1021510-0104	.01.04.04	CABLE TRENCH	131
C-1021510-0105	.01.04.04	CABLE TRENCH	133
C-1021510-0106	.01.04.04	CABLE TRENCH	133
C-1021510-010V	.01.04	CABLE TRENCH	115, 117
C-1021550-0101	.02	IDLER	219
C-1021550-0101	.02.18	IDLER	255
C-1021587-0101	.01.06	HOOD	157, 159, 161, 163, 165
C-1021587-0101	.01.06.01	HOOD	167
C-1021618-0101	.02	. FILTER-REGULATOR	219
C-1021618-0101	.02.20	FILTER-REGULATOR	259, 261
C-1021618-0101	.02.20.1	FILTER-REGULATOR	263
C-1021618-0102	.02.20.1	FILTER-REGULATOR	263

Part No	MMref	Description	Page No
C-1021653-0101	.02	CONNECTION BOX	219
C-1021653-0101	.02.01	CONNECTION BOX	221
C-1021681-0301	.2.03.02	DOOR	303
C-1021681-0302	.2.03.02	DOOR	303
C-1021681-030V	.2.03	DOOR	297, 299
C-1021685-0101	.2.03	COVERING PLATE	297, 299
C-1021685-0101	.2.03.04	COVERING PLATE	307
C-1021689-0101	.2.03.08	COVERING PLATE	317
C-1021689-0102	.2.03.08	COVERING PLATE	317
C-1021689-010V	.2.03	COVERING PLATE	297, 299
C-1021691-0301	.2.03.07	HOOD INFEED	315
C-1021691-0302	.2.03	HOOD INFEED	297, 299
C-1021691-0302	.2.03.07	HOOD INFEED	315
C-1021701-0101	.01.06	COVERING PLATE	157, 161, 163
C-1021701-0101	.01.06.02	COVERING PLATE	169
C-1021703-0101	.01.06	COVERING PLATE	157, 159, 161, 163, 165
C-1021703-0101	.01.06.03	COVERING PLATE	171
C-1021705-0101	.01.06	COVERING PLATE	157, 159, 161, 163, 165
C-1021705-0101	.01.06.04	COVERING PLATE	173
C-1021707-0101	.01.06	COVERING PLATE	157, 159, 161, 163, 165
C-1021707-0101	.01.06.05	COVERING PLATE	175
C-1021712-0201	.01.06	GLASS DOOR	157, 161, 163
C-1021712-0201	.01.06.06	GLASS DOOR	177
C-1021712-0202	.01.06	GLASS DOOR	157, 161, 163
C-1021712-0202	.01.06.06	GLASS DOOR	179
C-1021712-020V	.01.06	GLASS DOOR	159, 165
C-1021714-0201	.01.06	GLASS DOOR	157, 159, 161, 163, 165
C-1021714-0201	.01.06.07	GLASS DOOR	181
C-1021716-0201	.01.06	GLASS DOOR	157, 159, 161, 163, 165
C-1021716-0201	.01.06.08	GLASS DOOR	183
C-1021718-0101	.01.06	COVERING PLATE	157, 159, 161, 163, 165
C-1021718-0101	.01.06.09	COVERING PLATE	185
C-1021726-0101	.01.06	COVERING PLATE	157, 159, 161, 163, 165
C-1021726-0101	.01.06.10	COVERING PLATE	187
C-1021730-0101	.01	CABLE DUCT	19, 21
C-1021730-0101	.01.13	CABLE DUCT	55
C-1021782-0101	.01.06	GLASS COVER	157
C-1021782-0101	.01.06.11	GLASS COVER	189
C-1021785-0101	.01.06	CORNER STRIP	157, 161, 163, 165
C-1021785-0101	.01.06.12	CORNER STRIP	191
C-1021838-0201	.01.04.06	EMERGENCY STOP	141
C-1021838-0202	.01.04	EMERGENCY STOP	115, 117
C-1021838-0202	.01.04.06	EMERGENCY STOP	141

Part No	MMref	Description	Page No
C-1021838-0203	.01.04	EMERGENCY STOP	115, 117
C-1021838-0203	.01.04.06	EMERGENCY STOP	141
C-1021838-0204	.01.04.06	EMERGENCY STOP	141
C-1021838-0205	.01.04.06	EMERGENCY STOP	141
C-1021854-0201	.01.06.13	COVERS MISC.	193
C-1021854-0202	.01.06.13	COVERS MISC.	193
C-1021854-0203	.01.06.13	COVERS MISC.	193
C-1021854-0204	.01.06.13	COVERS MISC.	193
C-1021854-020V	.01.06	COVERS MISC.	157, 159, 161, 163, 165
C-1021897-0201	.01	CONNECTION BOX	19, 21
C-1021897-0201	.01.01	CONNECTION BOX	23
C-1021942-010V	.05	START-UP KIT	415
C-1021942-010V	.05.01	START-UP KIT	417
C-1021982-0201	.01	ANGLE ENCODER	19, 21
C-1021982-0201	.01.12	ANGLE ENCODER	53
C-1021996-0301	.02	SAFETY CLUTCH	59
C-1021996-0301	.02.04	SAFETY CLUTCH	67
C-1065140-0301	.2.04	BELT BRAKE	325
C-1065140-0302	.2.04	BELT BRAKE	329
C-1065140-0303	.2.04	BELT BRAKE	325
C-1065140-0304	.2.04	BELT BRAKE	329
C-1065140-0305	.2.04	BELT BRAKE	325
C-1065140-0306	.2.04	BELT BRAKE	329
C-1065140-0307	.2.04	BELT BRAKE	325
C-1065140-0308	.2.04	BELT BRAKE	329
C-1065140-0309	.2.04	BELT BRAKE	325
C-1065140-030V	.02	BELT BRAKE	217
C-1065140-0310	.2.04	BELT BRAKE	329
C-1065140-0311	.2.04	BELT BRAKE	325
C-1065140-0312	.2.04	BELT BRAKE	329
C-1065142-0101	.2.04.2	ATTACHMENT	335
C-1065142-0102	.2.04.2	ATTACHMENT	335
C-1065142-0103	.2.04.2	ATTACHMENT	335
C-1065142-0104	.2.04.2	ATTACHMENT	335
C-1065142-0105	.2.04.2	ATTACHMENT	335
C-1065142-010V	.2.04	ATTACHMENT	325, 329
C-1065155-0201	.02	FRAME INFEED	219
C-1065155-0201	.02.04	FRAME INFEED	225, 227
C-1065177-0201	.02	FRAME TRANSPORT LINE	219
C-1065177-0201	.02.14	FRAME TRANSPORT LINE	247
C-1065185-0201	.02.17	MOTOR DISTRBUTOR	253
C-1065185-0202	.02.17	MOTOR DISTRBUTOR	253
C-1065185-0203	.02.17	MOTOR DISTRBUTOR	253
C-1065185-0204	.02.17	MOTOR DISTRBUTOR	253
C-1065185-020V	.02	MOTOR DISTRBUTOR	219
C-1065187-0301	.02.10	DISTRIBUTOR	239
C-1065187-0302	.02.10	DISTRIBUTOR	239
C-1065187-030V	.02	DISTRIBUTOR	219
C-1065193-0201	.02.19	COVERING PLATE	257
C-1065193-0202	.02.19	COVERING PLATE	257
C-1065193-020V	.02	COVERING PLATE	219
C-1065196-0201	.2.02	END STOP	283
C-1065196-0201	.2.02.03	END STOP	289
C-1065198-0301	.02	BRAKE SIDE	219
C-1065198-0301	.02.13	BRAKE SIDE	245
C-1065209-0202	.02.22	FRAME INFEED UPPER	275
C-1065209-020V	.02	FRAME INFEED UPPER	219
C-1065209-020V	.02.22	FRAME INFEED UPPER	275
C-1065214-0101	.02	STEERING RAIL	219
C-1065214-0101	.02.11	STEERING RAIL	241
C-1065217-0301	.02	CABLE DUCT	219
C-1065217-0301	.02.21	CABLE DUCT	273
C-1065220-0201	.02.12	STEERING RAIL	243
C-1065220-0202	.02.12	STEERING RAIL	243
C-1065220-0203	.02.12	STEERING RAIL	243
C-1065220-020V	.02	STEERING RAIL	219
C-1065225-0101	.02	GUIDE SPROCKET OUTSIDE	219
C-1065225-0101	.02.07	GUIDE SPROCKET OUTSIDE	233
C-1065229-0101	.02	DRIVE SHAFT	219
C-1065229-0101	.02.06	DRIVE SHAFT	231
C-1065231-0201	.02	SLIDE RAIL	219
C-1065231-0201	.02.16	SLIDE RAIL	251
C-1065237-0101	.02	CHAIN	219
C-1065237-0101	.02.15	CHAIN	249
C-1065238-0301	.02.05	DRIVE MOTOR INFEED	229
C-1065238-0302	.02.05	DRIVE MOTOR INFEED	229
C-1065238-0303	.02.05	DRIVE MOTOR INFEED	229
C-1065238-0304	.02.05	DRIVE MOTOR INFEED	229
C-1065238-0305	.02.05	DRIVE MOTOR INFEED	229
C-1065238-0306	.02.05	DRIVE MOTOR INFEED	229
C-1065238-030V	.02	DRIVE MOTOR INFEED	219
C-1065242-0201	.2.02	GROUPING UNIT	283
C-1065242-0201	.2.02.04	GROUPING UNIT	291
C-1065242-0202	.2.02.04	GROUPING UNIT	291
C-1065250-0101	.02	GUIDE SPROCKET	219
C-1065250-0101	.02.08	GUIDE SPROCKET	235

Part No	MMref	Description	Page No
C-1065253-0101	.2.03.06	COVERING PLATE	311
C-1065253-0102	.2.03.06	COVERING PLATE	311
C-1065253-0103	.2.03.06	COVERING PLATE	313
C-1065253-0104	.2.03.06	COVERING PLATE	313
C-1065253-010V	.2.03	COVERING PLATE	297, 299
C-1065258-0201	.2.03.05	COVERING PLATE	309
C-1065258-0202	.2.03.05	COVERING PLATE	309
C-1065258-0203	.2.03.05	COVERING PLATE	309
C-1065258-020V	.2.03	COVERING PLATE	297, 299
C-1065262-0201	.2.03	HOOD INFEED	297, 299
C-1065262-0201	.2.03.01	HOOD INFEED	301
C-1065266-0101	.2.03.03	DOOR WITHOUT HANDLE	305
C-1065266-0102	.2.03.03	DOOR WITHOUT HANDLE	305
C-1065266-010V	.2.03	DOOR WITHOUT HANDLE	297, 299
C-1065269-0101	.2.03	COVERING PLATE	297, 299
C-1065269-0101	.2.03.09	COVERING PLATE	319
C-1065271-0101	.2.03	COVERING PLATE	299
C-1065271-0101	.2.03.10	COVERING PLATE	321
C-1065291-0201	.2.02	RULING GUIDE	283
C-1065291-0201	.2.02.05	RULING GUIDE	293
C-1065294-0301	.2.02	PUSHER	283
C-1065294-0301	.2.02.02	PUSHER	287
C-1065321-0101	.2.02.01	VOLUME PLATE	285
C-1065321-0102	.2.02.01	VOLUME PLATE	285
C-1065321-0103	.2.02.01	VOLUME PLATE	285
C-1065321-0104	.2.02.01	VOLUME PLATE	285
C-1065321-0105	.2.02.01	VOLUME PLATE	285
C-1065321-0106	.2.02.01	VOLUME PLATE	285
C-1065321-0107	.2.02.01	VOLUME PLATE	285
C-1065321-0108	.2.02.01	VOLUME PLATE	285
C-1065321-0109	.2.02.01	VOLUME PLATE	285
C-1065321-010V	.2.02	VOLUME PLATE	283
C-1065346-0101	.2.03.11	COVERING PLATE	323
C-1065346-0102	.2.03.11	COVERING PLATE	323
C-1065346-010V	.2.03	COVERING PLATE	297
C-1065359-0101	.05.03	TUNNEL	421
C-1065359-0102	.05.03	TUNNEL	421
C-1065359-0103	.05.03	TUNNEL	421
C-1065359-0104	.05.03	TUNNEL	421
C-1065359-0105	.05.03	TUNNEL	421
C-1065359-010V	.05	TUNNEL	415
C-1065360-0201	.01.04.05	FOLDING SUPPORT	135
C-1065360-0202	.01.04.05	FOLDING SUPPORT	137
C-1065360-020V	.01.04	FOLDING SUPPORT	115, 117
C-1065361-040V	.05	DOCUMENT 670270 MAX INF.	415
C-1065361-040V	.05.07	DOCUMENT 670270 MAX INF.	429
C-1065366-0201	.01.04.05.1	SUPPORT	139
C-1065366-0202	.01.04.05.1	SUPPORT	139
C-1065366-020V	.01.04	. SUPPORT	115, 117
C-1065366-020V	.01.04.05	SUPPORT	135, 137
C-1065412-0101	.2.02	TOP STEERING	283
C-1065412-0101	.2.02.06	TOP STEERING	295
C-1065439-0101	.02	GUIDE SPROCKET	219
C-1065439-0101	.02.09	GUIDE SPROCKET	237
C-1065490-0101	.2.04.3	PROTECTION	337
C-1065490-0102	.2.04	PROTECTION	325
C-1065490-0102	.2.04.3	PROTECTION	337
C-1065600-0101	.01.06	COVERING PLATE	159
C-1065600-0101	.01.06.14	COVERING PLATE	195
C-1065614-0101	.01.06.15	HATCH	197
C-1065614-0102	.01.06.15	HATCH	197
C-1065614-010V	.01.06	HATCH	159
C-1065616-0101	.01.06	HATCH	159, 161
C-1065616-0101	.01.06.16	HATCH	199
C-1065896-0101	.01.03	CHAIN LUBRICATION	69
C-1065896-0101	.01.03.19	CHAIN LUBRICATION	113
C-1065905-0101	.01	CONNECTION BOX	19, 21
C-1065905-0101	.01.02	CONNECTION BOX	25
C-1065920-040V	.05	DOCUMENT 670270 MED INF.	415
C-1065920-040V	.05.08	DOCUMENT 670270 MED INF.	431
C-1065921-040V	.05	DOCUMENT 670270 MIN INF.	415
C-1065921-040V	.05.09	DOCUMENT 670270 MIN INF.	433
C-1065922-040V	.05	DOCUMENT 670270 L INF.	415
C-1065922-040V	.05.10	DOCUMENT 670270 L INF.	435
C-1065975-0101	.01.06.18	CORNER STRIP	203
C-1065975-0102	.01.06.18	CORNER STRIP	203
C-1065975-0103	.01.06.18	CORNER STRIP	203
C-1065975-010V	.01.06	CORNER STRIP	159
C-1074127-0101	.02	. SILENCER	219
C-1074127-0101	.02.20	SILENCER	259, 261
C-1074127-0101	.02.20.2	SILENCER	265
C-1074239-0101	.05.04	TUNNEL	423
C-1074239-0102	.05.04	TUNNEL	423
C-1074239-0103	.05.04	TUNNEL	423
C-1074239-010V	.05	TUNNEL	415
C-1074251-0101	.04	FRAME	377, 379

Part No	MMref	Description	Page No
C-1074251-0101	.04.02	FRAME	383
C-1074252-0302	.04.03	ADJUSTMENT PLATE	385
C-1074252-0303	.04.03	ADJUSTMENT PLATE	387
C-1074252-030V	.04	ADJUSTMENT PLATE	377, 379
C-1074252-030V	.04.03	ADJUSTMENT PLATE	385
C-1074253-0301	.04.04	SQUEEZER	389
C-1074253-0302	.04.04	SQUEEZER	391
C-1074253-0303	.04.04	SQUEEZER	393
C-1074253-030V	.04	SQUEEZER	377, 379
C-1074254-0301	.04.05	CYLINDERS	395
C-1074254-0302	.04.05	CYLINDERS	397
C-1074254-030V	.04	CYLINDERS	377, 379
C-1074255-0301	.04.06	HOTMELT EQUIPEMENT MISC.	399
C-1074255-0302	.04.06	HOTMELT EQUIPEMENT MISC.	401
C-1074255-0303	.04.06	HOTMELT EQUIPEMENT MISC.	403
C-1074255-030V	.04	HOTMELT EQUIPEMENT MISC.	377, 379
C-1074256-0201	.04	CONNECTION BOX	377, 379
C-1074256-0201	.04.01	CONNECTION BOX	381
C-1074257-0301	.04.07	VALVE RAMP	405
C-1074257-0302	.04.07	VALVE RAMP	407
C-1074257-0305	.04.07	VALVE RAMP	405
C-1074257-0306	.04.07	VALVE RAMP	407
C-1074257-030V	.04	VALVE RAMP	377, 379
C-1074258-0102	.04.08	STEERING	409
C-1074258-010V	.04	STEERING	377, 379
C-1074259-0201	.04	MAGAZINE SUPPORT	377, 379
C-1074259-0201	.04.09	MAGAZINE SUPPORT	411
C-1074394-0301	.05	QUEUE GUARD,SINGLE	415
C-1074394-0301	.05.12	QUEUE GUARD,SINGLE	439
C-1074441-0201	.05	GUARD PLATE	415
C-1074441-0201	.05.13	GUARD PLATE	441
C-1074545-020V	.05	DOCUMENT 670270 MULTI INF	415
C-1074545-020V	.05.11	DOCUMENT 670270 MULTI INF	437
C-1074730-0101	.02	BRACKET	219
C-1074730-0101	.02.23	BRACKET	277
C-1074730-0102	.02.23	BRACKET	277
C-1080030-0201	.05	TUNNEL	415
C-1080030-0201	.05.05	TUNNEL	425
C-1080239-0201	.01.06.19	COVERING PLATE	205
C-1080239-0202	.01.06.19	COVERING PLATE	205
C-1080239-020V	.01.06	COVERING PLATE	161
C-1080240-020V	.01.06	COVERING PLATE	161
C-1080240-020V	.01.06.20	COVERING PLATE	207
C-1086721-0101		PACKING DESCRIPTION	279
C-1111820-0201	.05.02	TUNNEL	419
C-1111820-0202	.05.02	TUNNEL	419
C-1111820-0203	.05.02	TUNNEL	419
C-1111820-0204	.05.02	TUNNEL	419
C-1111820-020V	.05	TUNNEL	415
C-1111838-0201	.02	EMERGENCY STOP	219
C-1111838-0201	.02.25	EMERGENCY STOP	281
C-1111838-0202	.02.25	EMERGENCY STOP	281
C-1111838-0203	.02.25	EMERGENCY STOP	281
C-1111838-0204	.02.25	EMERGENCY STOP	281
C-1111838-0205	.02.25	EMERGENCY STOP	281
C-1124035-0101	.05.06	TUNNEL	427
C-1124035-0102	.05.06	TUNNEL	427
C-1124035-010V	.05	TUNNEL	415
C-1124059-0101	.02	. PRESSURE REGULATOR RAMP	219
C-1124059-0101	.02.20	PRESSURE REGULATOR RAMP	259, 261
C-1124059-0101	.02.20.3	PRESSURE REGULATOR RAMP	267
C-1124062-0101	.02	. EJECTOR	219
C-1124062-0101	.02.20	EJECTOR	259, 261
C-1124062-0101	.02.20.4	EJECTOR	269
C-1124085-0101	.01.06.21	COVERING PLATE	209
C-1124085-0102	.01.06.21	COVERING PLATE	209
C-1124085-010V	.01.06	COVERING PLATE	165
C-1124086-0101	.01.06.22	COVERING PLATE	211
C-1124086-0102	.01.06.22	COVERING PLATE	211
C-1124086-010V	.01.06	COVERING PLATE	165
C-1128005-0201	.02.20	PNEUMATIC CABINET	259, 261
C-1128005-0202	.02.20	PNEUMATIC CABINET	259, 261
C-1128005-020V			261
C-1128005-020V	.02	PNEUMATIC CABINET	219
C-1128041-0101	.02	. VALVE RAMP	219
C-1128041-0101	.02.20	VALVE RAMP	259, 261
C-1128041-0101	.02.20.5	VALVE RAMP	271
C-1128047-010V	.03	SUPPORT	343
C-1128047-010V	.03.14	SUPPORT	373
C-1128815-0101	.01.06.23	COVERING PLATE	213
C-1128815-0102	.01.06.23	COVERING PLATE	213
C-1128815-010V	.01.06	COVERING PLATE	165
C-1128833-0201	.01	COVERING PLATE	19, 21
C-1128833-0201	.01.14	COVERING PLATE	57
C-1128835-0101	.01.06.17	COVERING PLATE	201
C-1128835-0102	.01.06.17	COVERING PLATE	201

Part No	MMref	Description	Page No
C-1128835-010V	01.06	COVERING PLATE	159
C-1139149-0101	02	CONNECTION BOX	219
C-1139149-0101	02.03	CONNECTION BOX	223
G			
G- 556655	01.06	ARM	37
G- 556656	01.07	ARM	39, 41
G- 556656	01.08	ARM	43
G- 556656	01.09	ARM	45
G- 556657	01.06	HOLDER	37
G- 556657	01.07	HOLDER	39, 41
G- 556657	01.08	HOLDER	43
G- 556657	01.09	HOLDER	45
G-1021111	01.03.07	ARM	83, 85
G-1021122	01.03.08	ARM	87, 89
G-1021133	01.03.09	ARM	91, 93
G-1021144	01.04.02	GUIDE	121, 123
G-1021198	03.05	GUIDE	353, 355
G-1021493	02.10	FRAME	239
G-1021592	01.11	HOLDER	49, 51
G-1021662	2.02.05	LINK ARM	293
G-1065189	02.10	ARM	239

Part No	MMref	Description	Page No

Part No	MMref	Description	Page No

Part No	MMref	Description	Page No

Tetra Pak