IM

Installation Manual

Film Wrapper 68 by Tetra Pak

674968-0400

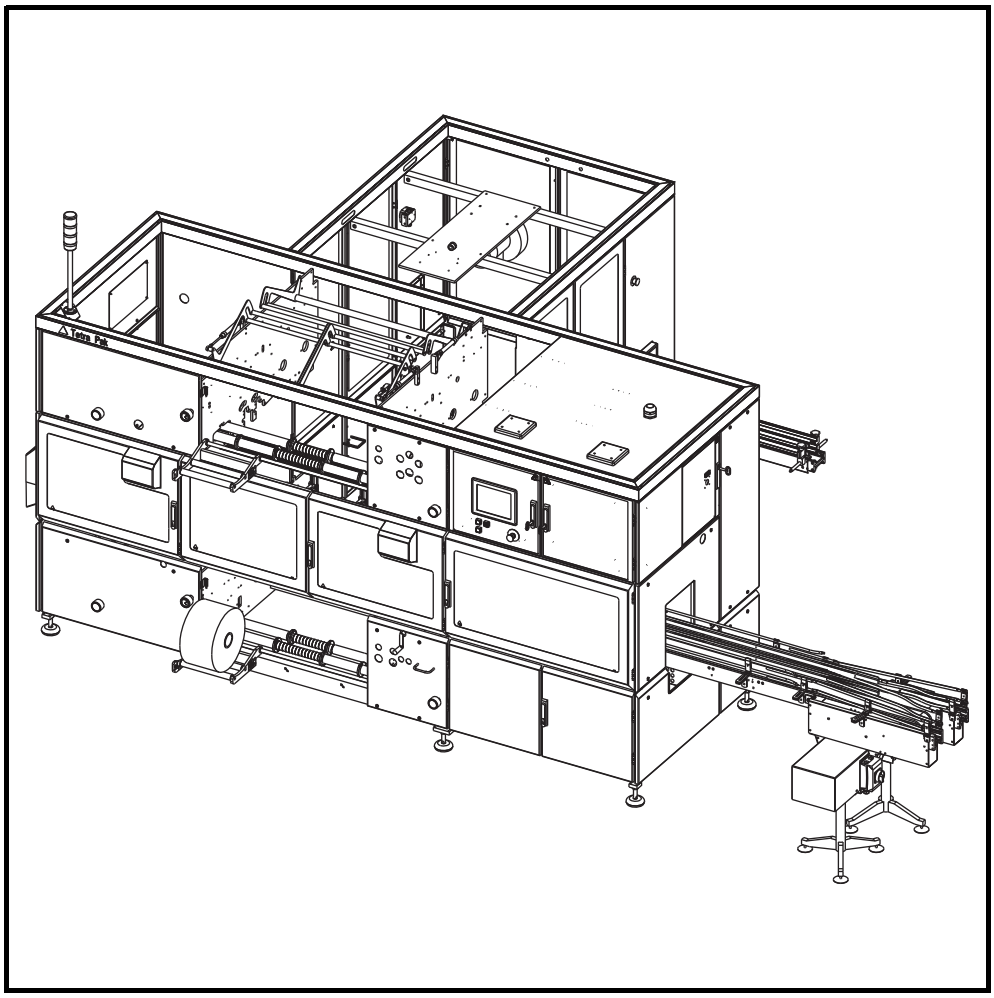

WARNING

Read and follow all safety precaution instructions throughout this manual and on safety signs attached to this equipment.

Failure to follow all safety precaution instructions could result in death or serious injury.

Tetra Pak

Doc. No. IM-2879848-0103

Copyright © 2008 Tetra Pak Group

All rights reserved. No part of this document may be reproduced or copied in any form or by any means without written permission from Tetra Pak Packaging Solutions AB.

Tetra Pak and all Tetra Pak products are trademarks belonging to the Tetra Pak Group.

The content of this manual is in accordance with the design and construction of the machine or equipment at the time of publishing. Tetra Pak reserves the right to introduce design modifications without prior notice.

The English version of this document is the original language version.

This document was produced by:

Tetra Pak Packaging Solutions AB
Ruben Rausings gata
SE-221 86 Lund
Sweden

Additional copies can be ordered from Tetra Pak. When ordering additional copies, always provide the document number.

Doc. No. IM-2879848-0103

Issue 2008-12

This manual is valid for:

Series No./ Machine No. Sign.

IM

Installation Manual

Film Wrapper 68 by Tetra Pak
674968-0400

i Introduction

ii Safety Precautions

1 Technical Data and Drawings

2 Preparation

3 Moving and Unpacking the Equipment

4 Positioning, Assembly and Connections

5 Final Installation Check

6 Preparation for Comissioning

7 Disassembly and Removal

Machine or equipment configurations that this manual is valid for are described on the next page.

Doc. No. IM-2879848-0103

Issue 2008-12

Tetra Pak

Tetra Pak Packaging Solutions AB

Valid for:

Name	Drawing Specification and Development Step	Additional Information
Film Wrapper 68	674968-0400	Optional Equipment: - 2812690-0100 Start Infeed Conveyor - 1569125-0400 Design Correction - 2646380-0100 Cooling System AC Electrical Cabinet - 2651870-0100 Extra Infeed Conveyor Control - 2651872-0100 Extra Discharge Conveyor Control - 2650988-0200 Vertical Perforating - 90456-2135 Mist Lubrication -2976190-0100 Lifting Trolley

Update Log for Doc. No. IM-2879848-0103

This table shows all changes made to this manual, including installed rebuilding kits, added or removed pages. Page numbering on added pages begins with UP.

Date	Installed Kit	Added Pages (Doc. No.)	Removed Pages	Signature

Date	Installed Kit	Added Pages (Doc. No.)	Removed Pages	Signature

i Introduction

About the Introduction Chapter

This chapter contains basic information about this manual and the related Tetra Pak equipment.

Abbreviations and Terminology . . . . . i - 5
Manual Information . . . . . i - 6
Delivered Manuals . . . . . i - 6
Page Layout . . . . . i - 7
Page Numbering. . . . . i - 8
Typographical Conventions . . . . . i - 8
Symbols . . . . . i - 8
Machine Introduction . . . . . i - 9
Intended Use of the Equipment . . . . . i - 9
Manufacturer . . . . . i - 9
Support and Feedback . . . . . i - 9
Identification . . . . . i - 10
CE Classification . . . . . i - 10
Machine Plate . . . . . i - 10
Orientation . . . . . i - 11
Hygiene. . . . . i - 12
Packaging Material. . . . . i - 12

This page intentionally left blank

Abbreviations and Terminology

Abbreviation/ Terminology	Meaning	Translation
CE	Communautés Européennes / European Communities	
EEA	European Economic Area	
EM	Electrical Manual	
FW 68	Film Wrapper 68	
IM	Installation Manual	
I/O	Input/Output	
LED	Light Emitting Diode	
LH	Left Hand side	
MM	Maintenance Manual	
OE	Optional Equipment	
OM	Operation Manual	
PD	Package Divider	
PLC	Programmable Logic Controller	
PLMS	Packaging Line Monitoring System	
RH	Right Hand side	
SNP	Series Ninety Protocol	
SPC	Spare Parts Catalogue	
TPMS	Tetra Pak Maintenance System	
TPOP	Tetra Pak Operator Panel	

Manual Information

Tetra Pak recommends reading all delivered manuals carefully. Make sure that the delivered manuals are available to personnel who operate or maintain the equipment.

It is important to keep this manual for the lifetime of the equipment and to pass the manual on to any subsequent holder or user.

Tetra Pak will not be held responsible for any damage to the equipment caused by not following the instructions given in this manual.

Delivered Manuals

Manuals delivered with this equipment:

- EM

  The Electrical Manual provides technicians with information about the equipment's electrical system.
- IM

  The Installation Manual provides technicians with information required to safely install the equipment.
- MM

  The Maintenance Manual provides technicians with information on maintaining the equipment.
- OM

  The Operation Manual manual provides the operator with information on handling and operating the equipment before, during, and after production.
- SPC

  The Spare Parts Catalogue provides the information necessary to order spare parts from Tetra Pak

Page Layout

Every main page in a manual contains a header and a footer. The page header contains the chapter name (1) and the section name (2). The page footer contains the page number (3), and the document number (4). See also the Page Numbering section.

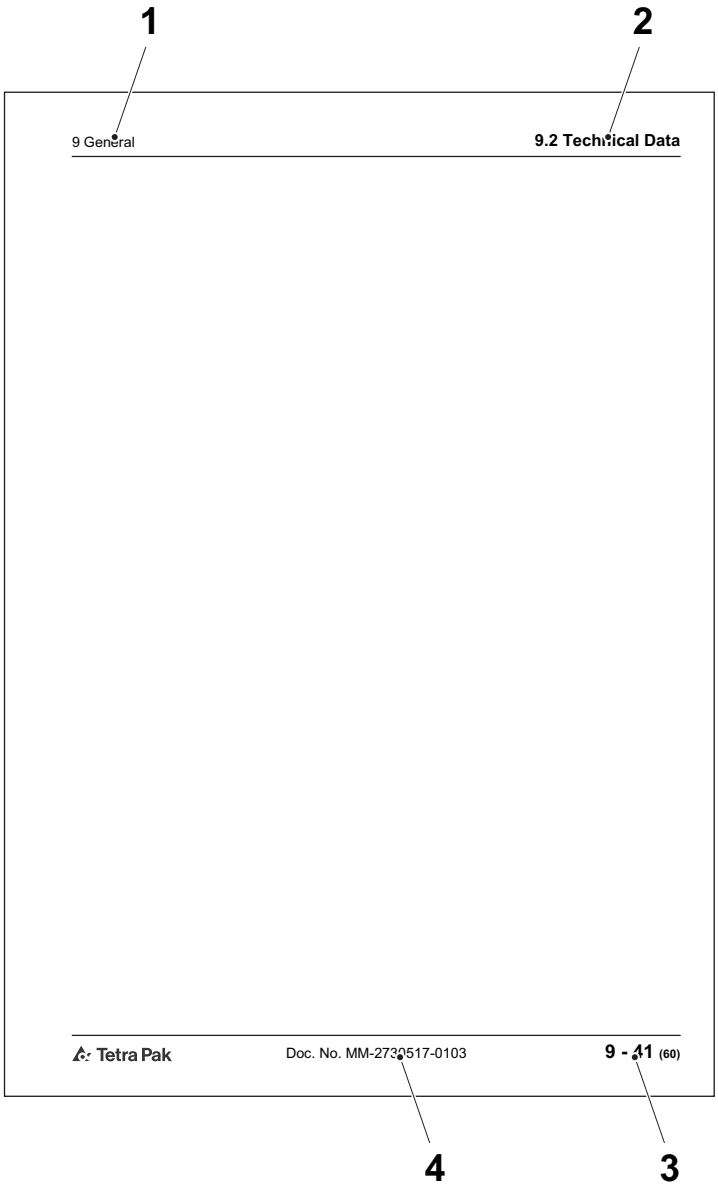

1 Chapter name
2 Section name
3 Page number
4 Document number

Page Numbering

A page number has three parts:

- chapter number (1)
- consecutive page number (2) within the chapter
- total number of pages (3) in the chapter.

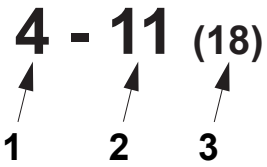

1 Chapter number
2 Consecutive page number
3 Total number of pages

Typographical Conventions

Controls on the operator panel, emergency stop devices, and program steps are printed in CAPITAL LETTERS.

Menu names, button names and other text displayed in software are printed in `Courier`.

Cross-references are underlined.

Symbols

Symbols used in illustrations.

	A pointer arrow indicates the position of an object.
	A zoom arrow indicates that an object view is enlarged. The arrow points towards the enlarged view of the object.
	A rotation movement arrow indicates rotational movement of an object. The arrow points in the direction of rotation.
	A straight movement arrow indicates movement of an object. The arrow points in the direction of movement.

Machine Introduction

Intended Use of the Equipment

The intended use of this Tetra Pak machine is to create a multipack unit, by wrapping and shrinking plastic film around packages.

All other use is prohibited. Tetra Pak will not be held responsible for injury or damage if the equipment is used for any other purpose.

Manufacturer

This Tetra Pak equipment has been manufactured by

Tetra Pak Packaging Solutions AB
Ruben Rausings gata
SE-221 86 Lund
Sweden

Support and Feedback

If you encounter problems when operating this equipment or have other inquiries, comments, or suggestions for improvement, contact Tetra Pak.

Identification

CE Classification

This equipment complies with the basic health and safety regulations of the European Economic Area (EEA).

Machine Plate

The illustration below shows the machine plate and its location on the equipment. The machine plate carries data needed when contacting Tetra Pak concerning this specific equipment.

Make sure that the equipment data in the front pages of this manual corresponds to the machine plate data and the machine specification.

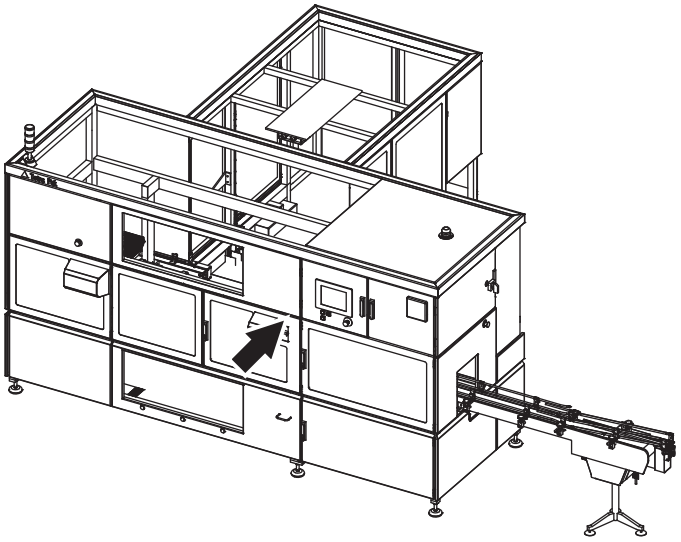

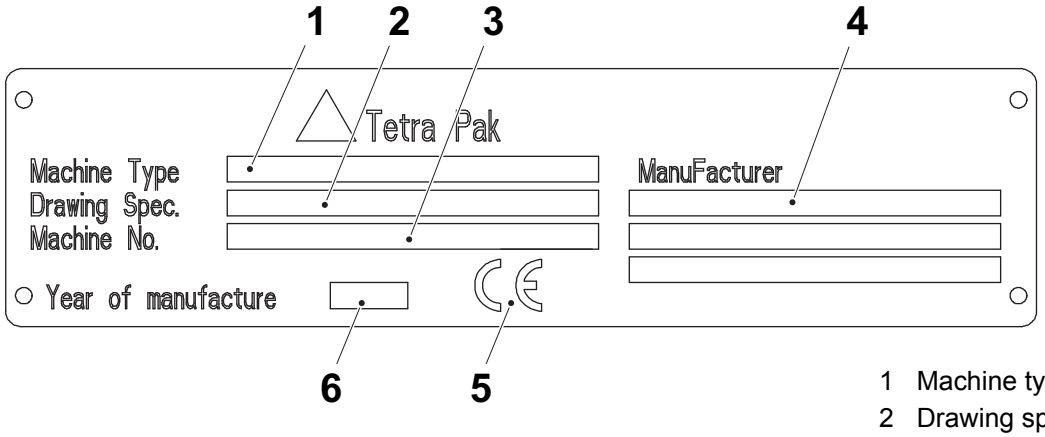

1 Machine type
2 Drawing specifications
3 Machine number
4 Designed by
5 Manufactured by
6 Year of manufacture

Orientation

The illustration below shows the orientation of the equipment. This orientation information will be used throughout this manual. The arrows indicate the flow of material.

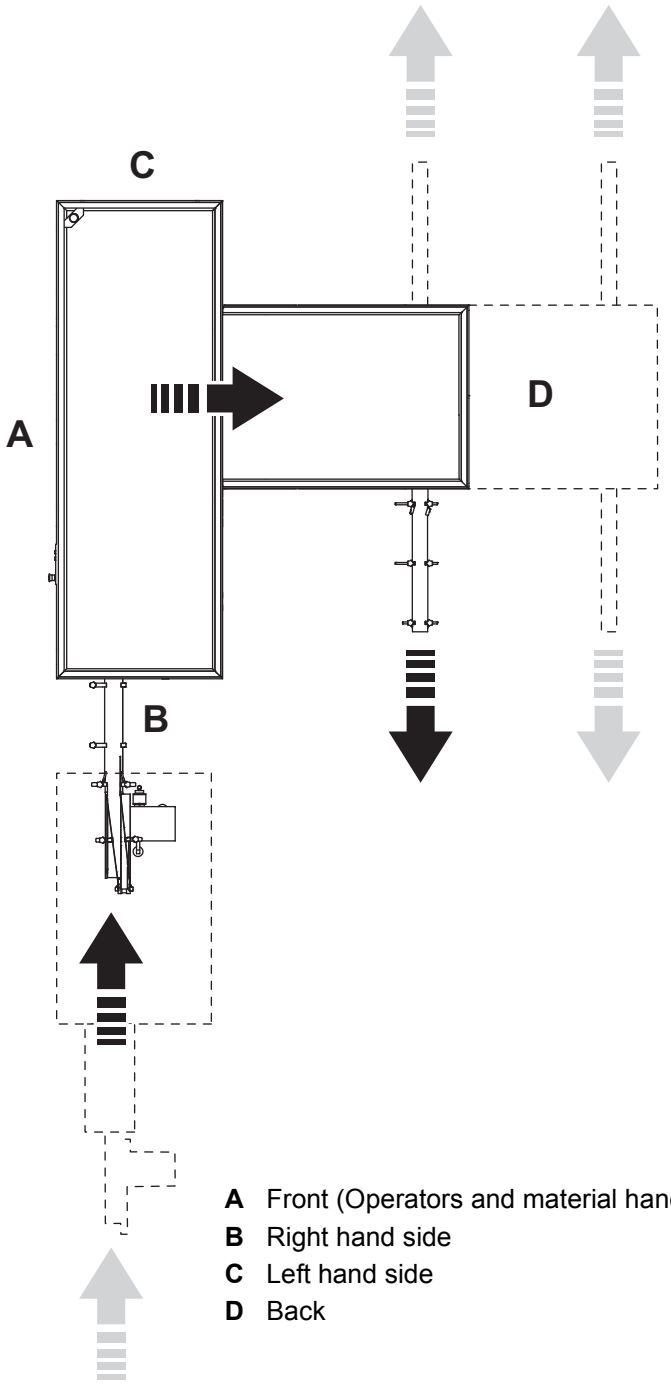

A Front (Operators and material handling side)
B Right hand side
C Left hand side
D Back

Hygiene

Film Material

Avoid microbiological contamination of the packaging material:

- Always protect your packaging material against contamination.
- Always keep the doors to the filling room (area) closed. To prevent contamination via air streams, never open a window when the machine is in production.
- Never clean the floors or the machine in the filling room (area) when the machine is in production.
- Compressed air used for cleaning purposes is to be used only for cleaning filters and should only be used outside of the filling room (area) or in the final folder compartment of the filling machine.
- Prepare the splicing of the packaging material as late as possible.
- Disinfect your hands before touching anything that may come into contact with the product. Use code H disinfectant. See the Technical Data chapter of the Maintenance Manual.
- Keep your hands clean.
- Always wear some type of hair protection (cap or hairnet) and clean clothes (preferably white).
- Do not wear a watch, ring, necklace, earrings, or any other exposed jewellery.

How to Use This IM

Purpose of the IM

The IM provides technical specifications and preparatory information needed during the quotation of the equipment and during the entire installation process. The IM describes the equipment requirements in the packaging line. It also provides instructions on how to mechanically install, commission, and validate the performance of the equipment, and how to disassemble and remove the equipment.

The intended users of the IM are project leaders, installation planners, installation technicians, and other technicians involved in the equipment installation project.

This page intentionally left blank

ii Safety Precautions

Safety Precaution Instructions

WARNING

Read all safety precaution instructions throughout this manual and on safety signs attached to this equipment.
Failure to follow all safety precaution instructions could result in death or serious injury.

Definition of Lockout Procedure

A lockout procedure is a procedure to put each necessary energy isolating device in its safe position to prevent the energisation of the equipment, such as when a maintenance procedure should be carried out.

A lockout is the use of a device, for example, a padlock, to make sure that an energy isolating device cannot be operated.

An energy isolating device is a mechanical device that physically prevents transmission or release of energy, such as a power supply disconnector.

Safety Messages Description . . . . . ii - 5
Personnel Requirements . . . . . ii - 6
Skilled Person . . . . . ii - 6
Instructed Person. . . . . ii - 6
Safety Signs . . . . . ii - 7
Locations of Safety Signs . . . . . ii - 9
Protective Devices. . . . . ii - 12
Emergency Stop. . . . . ii - 12
Emergency Stop Push-Buttons . . . . . ii - 13
Safeguards . . . . . ii - 16
Warning Lamp . . . . . ii - 20
Audible Alarm. . . . . ii - 20
Personal Protection. . . . . ii - 21
Noise Hazard . . . . . ii - 21
Entanglement Hazard . . . . . ii - 21
Hot Areas . . . . . ii - 21
Ergonomic Hazard . . . . . ii - 21
Hazardous Substances . . . . . ii - 22
Disposal of Chemical Substances . . . . . ii - 23
Laser Sensors . . . . . ii - 24
Base Module. . . . . ii - 24
Base Module with Card Inserter . . . . . ii - 25
Supply Systems. . . . . ii - 26
Power Supply . . . . . ii - 26
Base Module with Card Inserter . . . . . ii - 27
Residual Voltage . . . . . ii - 27
Electrical Cabinet. . . . . ii - 28
Socket Outlet . . . . . ii - 30

Air Supply . . . . . ii - 31

Safety Messages Description

A safety message is always accompanied by a safety alert symbol and a signal word.

The safety alert symbol is used to alert about potential personal injury hazards. To avoid hazards, obey all safety messages that follow this symbol.

The following safety alert symbols and signal words are used in this manual to inform the user of hazards.

DANGER	Danger indicates an imminently hazardous situation which, if not avoided, will result in death or serious injury.
WARNING	Warning indicates a potentially hazardous situation which, if not avoided, **could** result in **death or serious injury**.
CAUTION	Caution indicates a potentially hazardous situation which, if not avoided, **may** result in **minor or moderate injury.** It may also be used to alert against unsafe practices.
CAUTION	Caution without the safety alert symbol indicates a potentially hazardous situation which, if not avoided, **may** result in **property damage**.

Personnel Requirements

Note! Personnel includes all persons working on or near this equipment.

Only skilled or instructed persons are allowed to work with this equipment.

Skilled Person

A skilled person must have relevant education and experience to enable him or her to identify hazards, analyse risks, and avoid hazards which electricity, machinery, chemicals, other energies, and supply systems on this equipment can create.

Skilled persons must meet local regulations, such as certifications and qualifications for working with these energies and systems.

Instructed Person

An instructed person must be adequately advised or supervised by a skilled person. The skilled person enables the instructed person to identify hazards, analyse risks, and avoid hazards which electricity, machinery, chemicals, other energies, and supply systems on this equipment can create.

Safety Signs

WARNING

Damaged or missing safety signs increase the risk of death or serious injury.

Replace all missing or damaged safety signs immediately.

Safety signs are attached to the equipment. The table below lists all the signs that are used, and illustrations show their locations on the equipment. Each position number refers to two variants of a safety sign in the table, but only one is used on the equipment.

- Make sure that each safety sign is legible and in its correct position after installation and maintenance.
- Replace all missing or damaged safety signs immediately.

Pos.	ISO sign	ANSI sign
1		
	Hazardous voltage. Will shock, burn, or cause death. Follow lockout procedure before maintenance.	
2		
	Hot surface. Do not touch. Follow lockout procedure before maintenance.	
3		
	Do NOT step or stand on the splicing table. The splicing table may break.	
4		
	Laser radiation. Caution. Laser radiation, do not stare into beam. Class 2 laser product.	

Pos.	ISO sign	ANSI sign
5		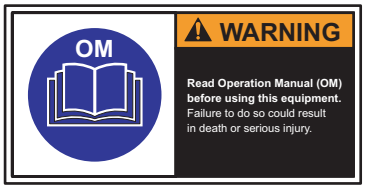
	Read Operation Manual (OM) before using this equipment. Failure to do so could result in death or serious injury.	
6		
	Hazardous rotating shafts and belts. Can crush and cut. Keep hands clear while the machine is operating.	
7		
	Hazardous voltage. Can shock, burn, or cause death. Read Maintenance Manual before using this socket outlet.	
8		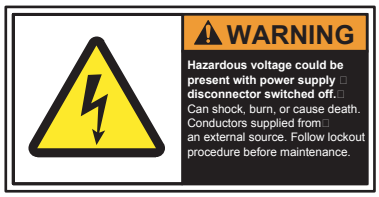
	Hazardous voltage could be present with power supply disconnector switched off. Can shock, burn or cause death. Conductors supplied from an external source. Follow lockout procedure before maintenance.	

Locations of Safety Signs

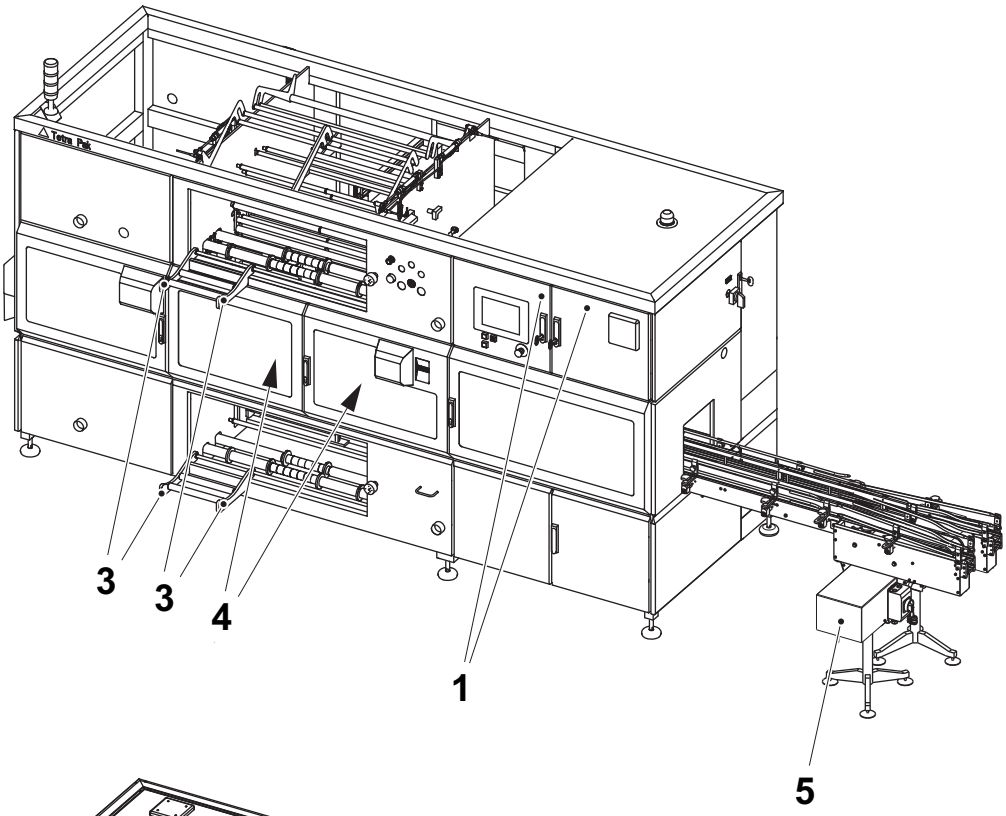

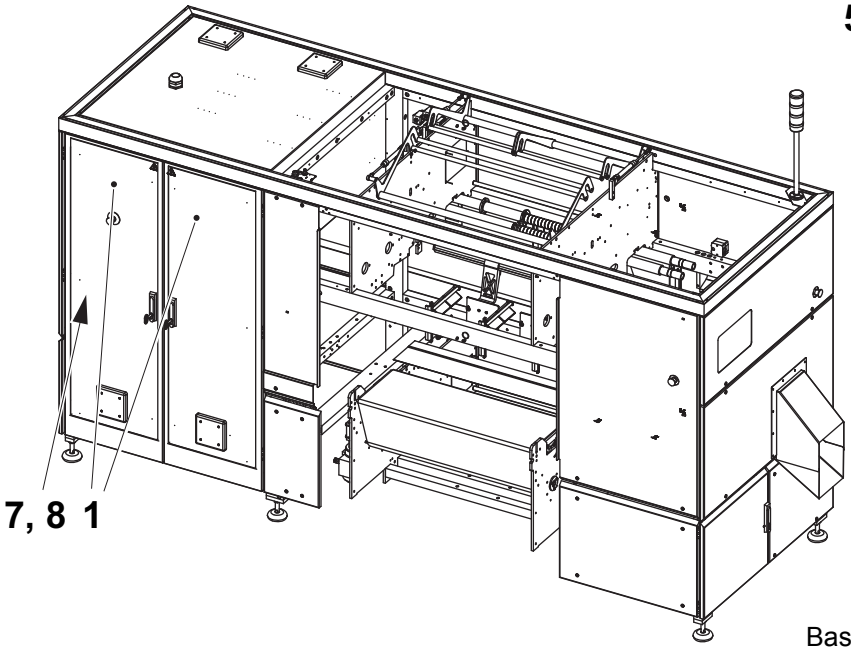

Base module

(Cont'd)

(Cont'd)

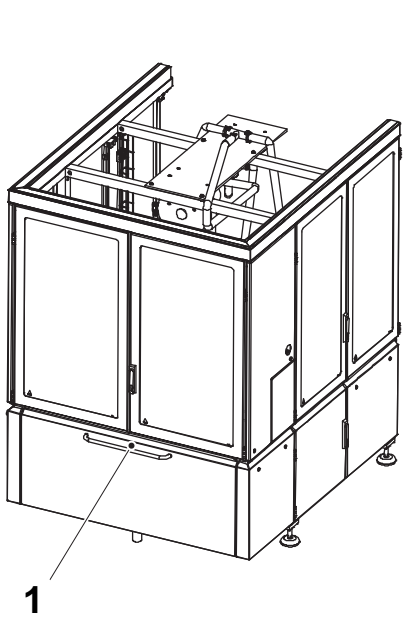

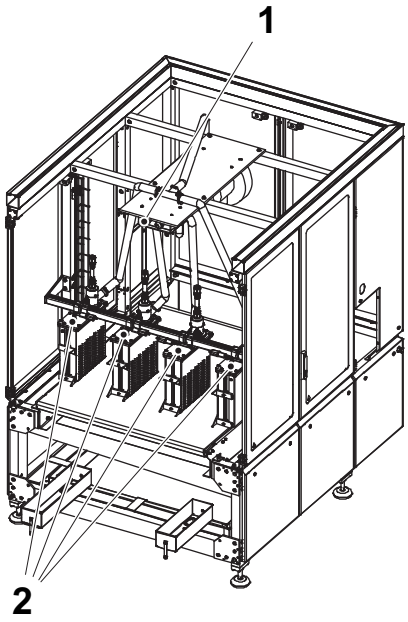

Stretch unit

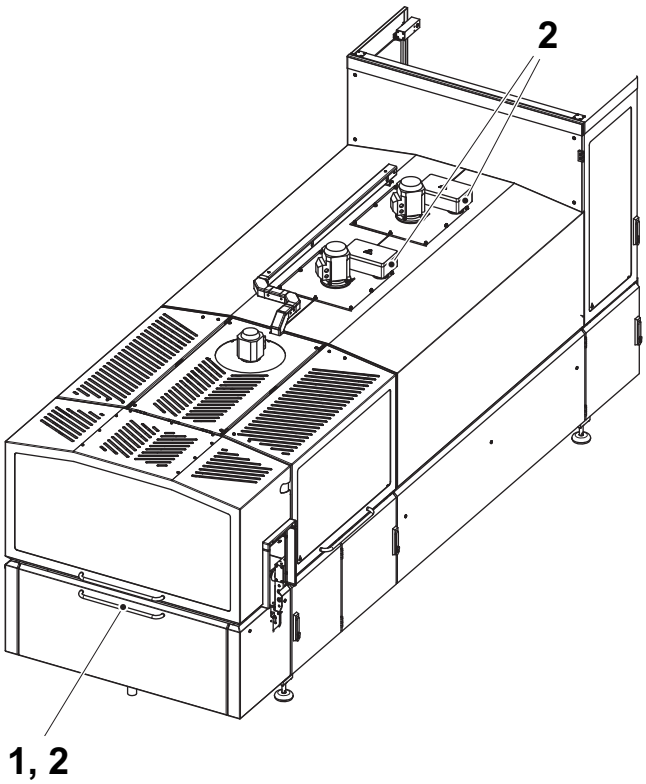

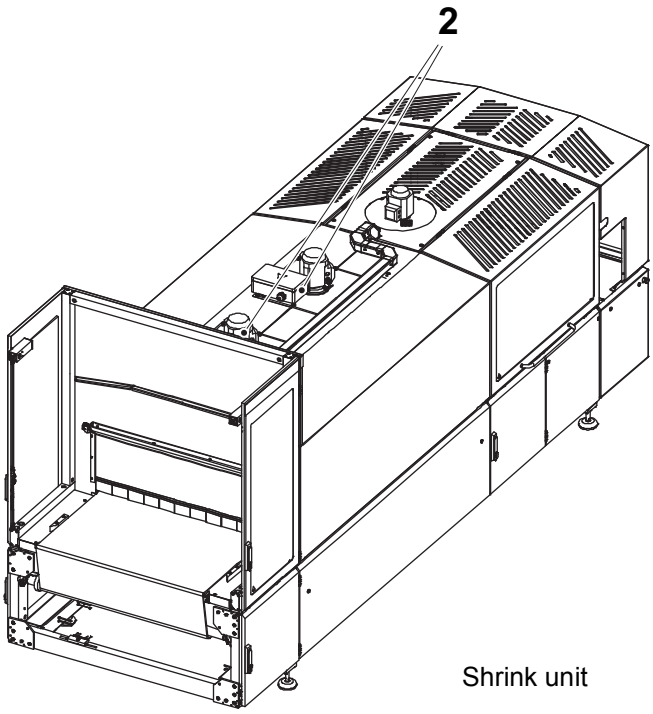

Shrink unit

(Cont'd)

(Cont'd)

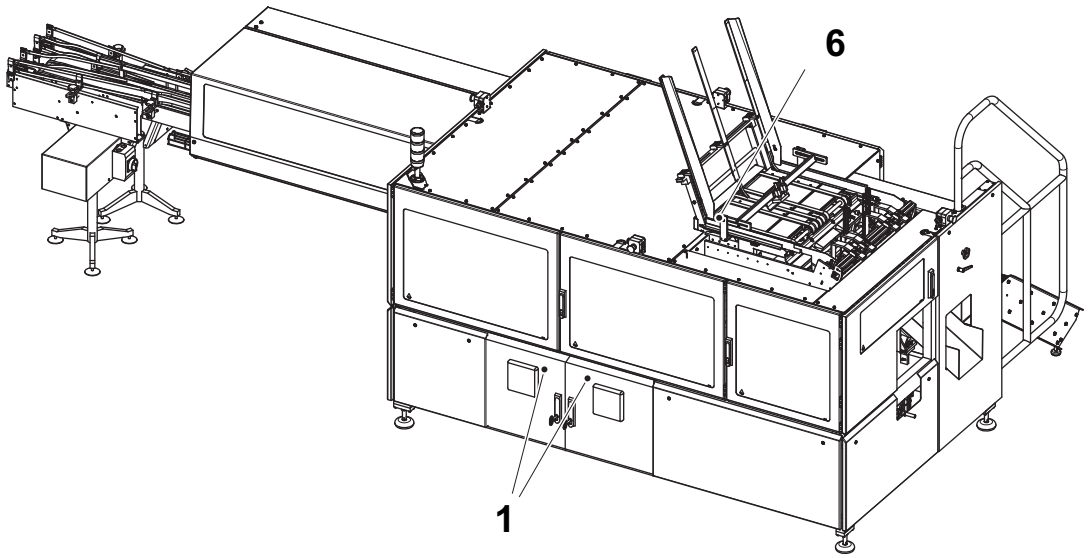

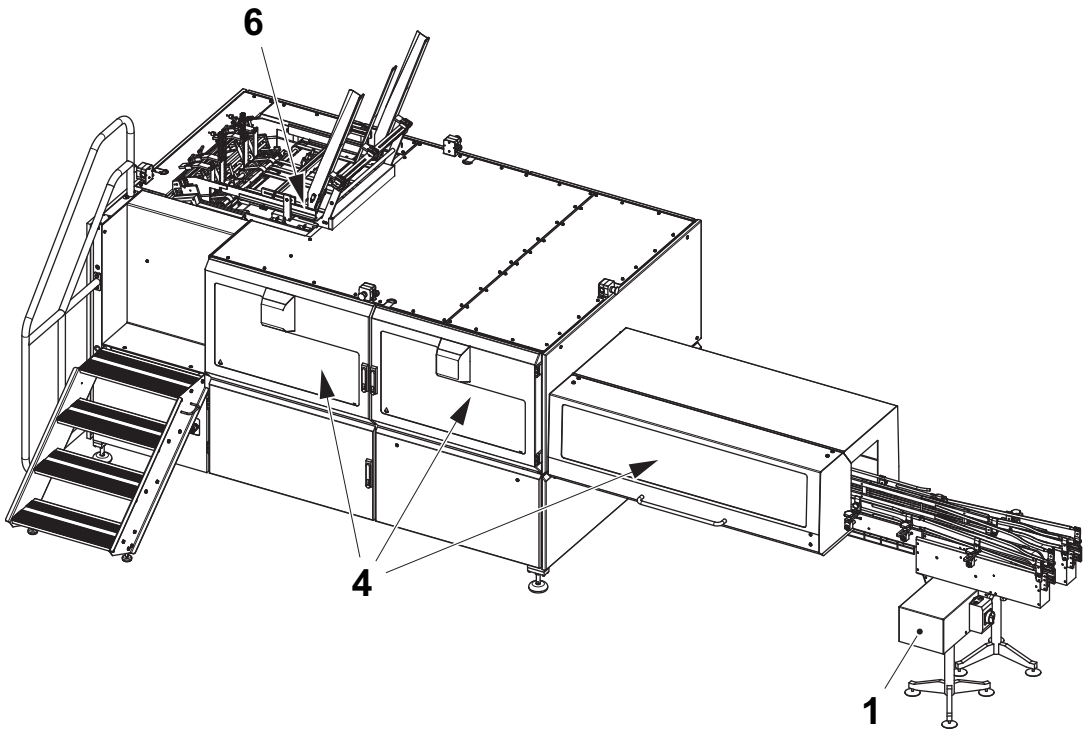

Card inserter

Protective Devices

WARNING

Hazardous zones.

Hazardous zones are safeguarded and provided with protective devices. Do not inch or run this equipment if any protective device is inoperative.

Change inoperative components of the safety system immediately.

WARNING

Hazardous voltage.

Hazardous voltage remains on this equipment after activating an EMERGENCY STOP or an interlocking device.

Emergency Stop

Emergency stop devices are used to stop this equipment immediately in an hazardous situation. Learn the positions of all emergency stop devices and how to use them.

Instructions for a normal production stop are included in the Stop chapter of the Operation Manual.

Emergency Stop Push-Buttons

Push one of the EMERGENCY STOP push-buttons to stop this equipment immediately.

The location of each EMERGENCY STOP push-button is shown by an arrow.

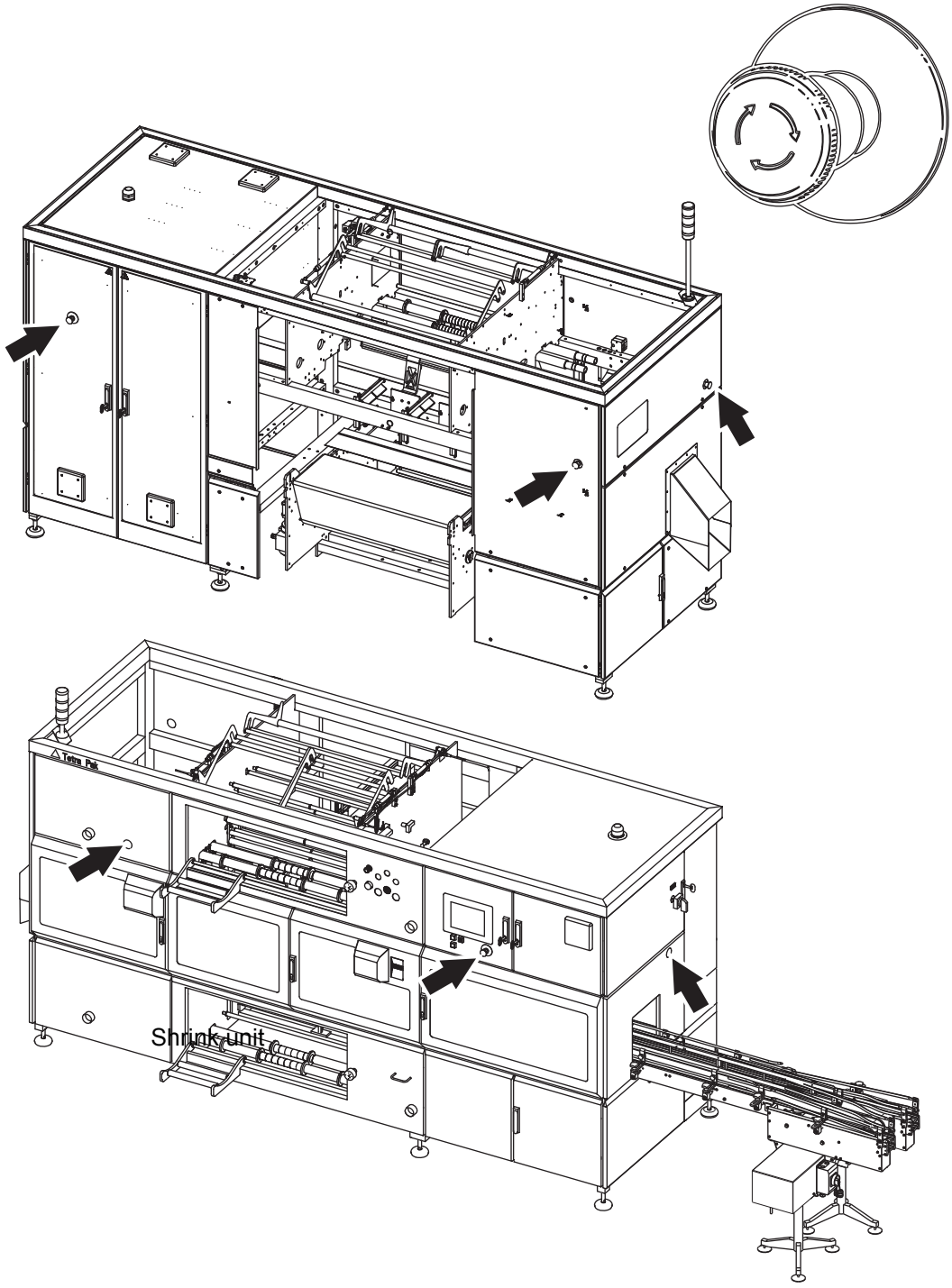

Base module

(Cont'd)

(Cont'd)

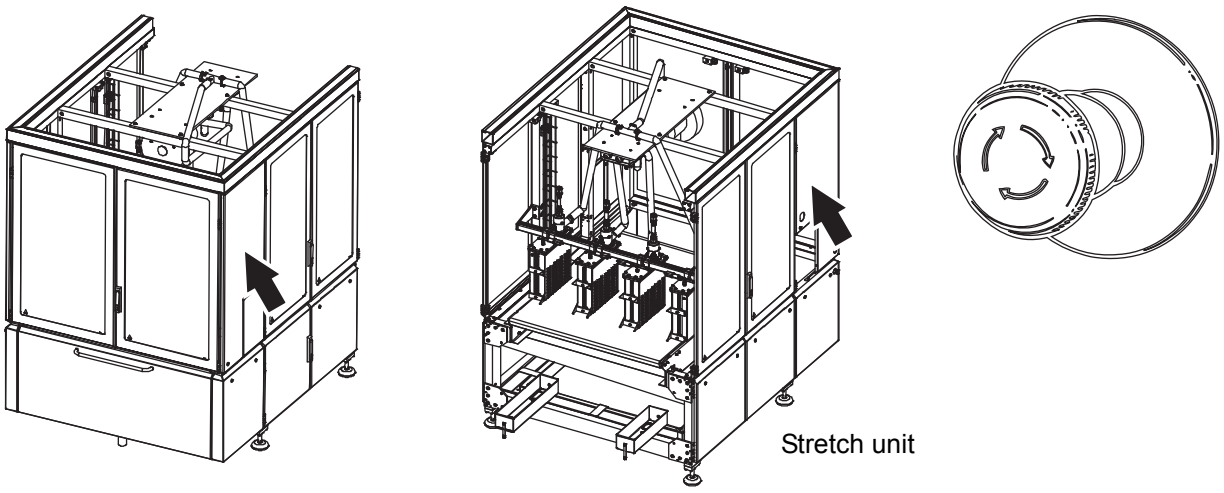

Stretch unit

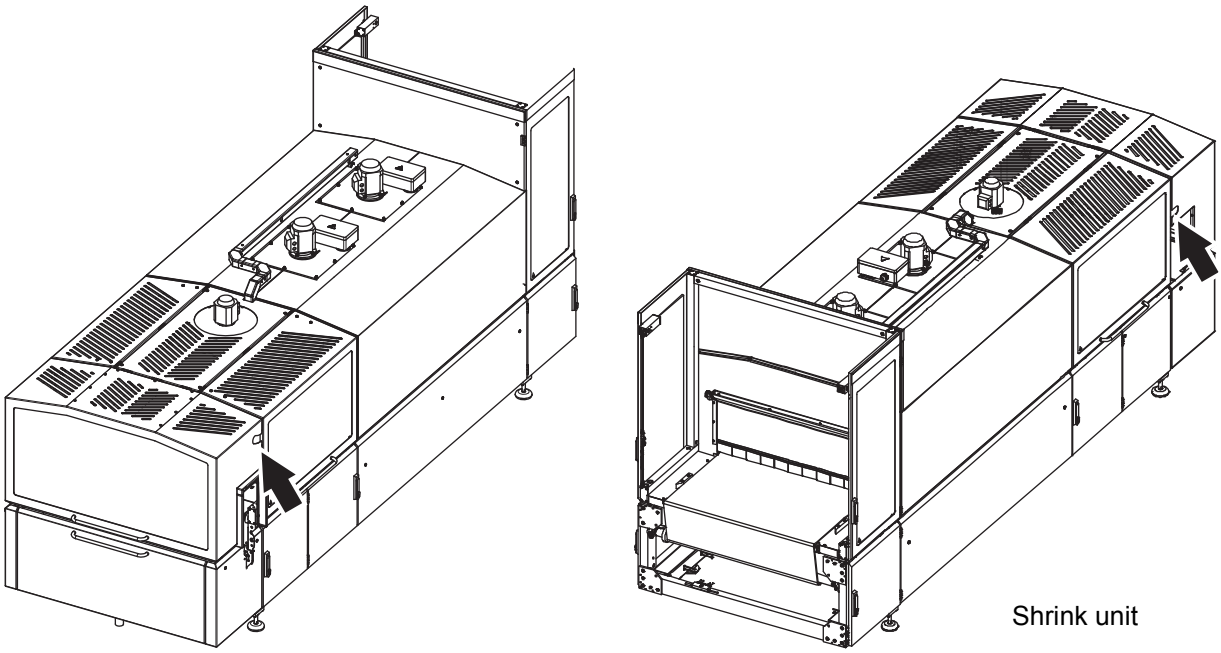

Shrink unit

(Cont'd)

(Cont'd)

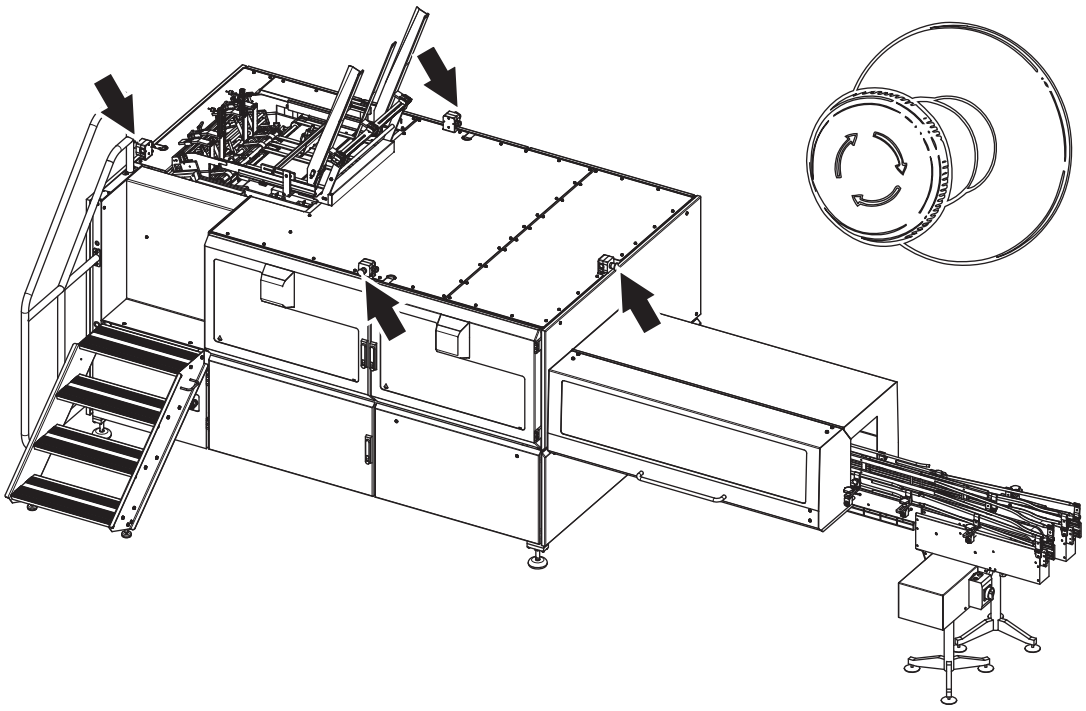

Card Inserter

Safeguards

WARNING
Moving machinery.
Never defeat or bypass the interlocking devices.

Movable guards, for example, doors and covers leading to hazardous zones, are fitted with interlocking devices where required. These devices are usually electric safety switches that are parts of the safety system and must never be defeated, bypassed, or otherwise made inoperative.

WARNING
Corners and edges.
To prevent injury from corners and edges of open doors and covers, close them unless they must be open during such work. Be careful when working under an open door, cover or elsewhere below parts of the equipment with corners and edges.

CAUTION
Burn hazard.
Parts of this equipment may be hot after operation.

After installation and maintenance, and before this equipment is inched or run, check that all safeguards are in place and that they operate correctly.

CAUTION
Risk of damage to equipment.
Never stop this equipment by opening an interlocking guard.

The location of each interlocking guard is shown by an arrow.

(Cont'd)

(Cont'd)

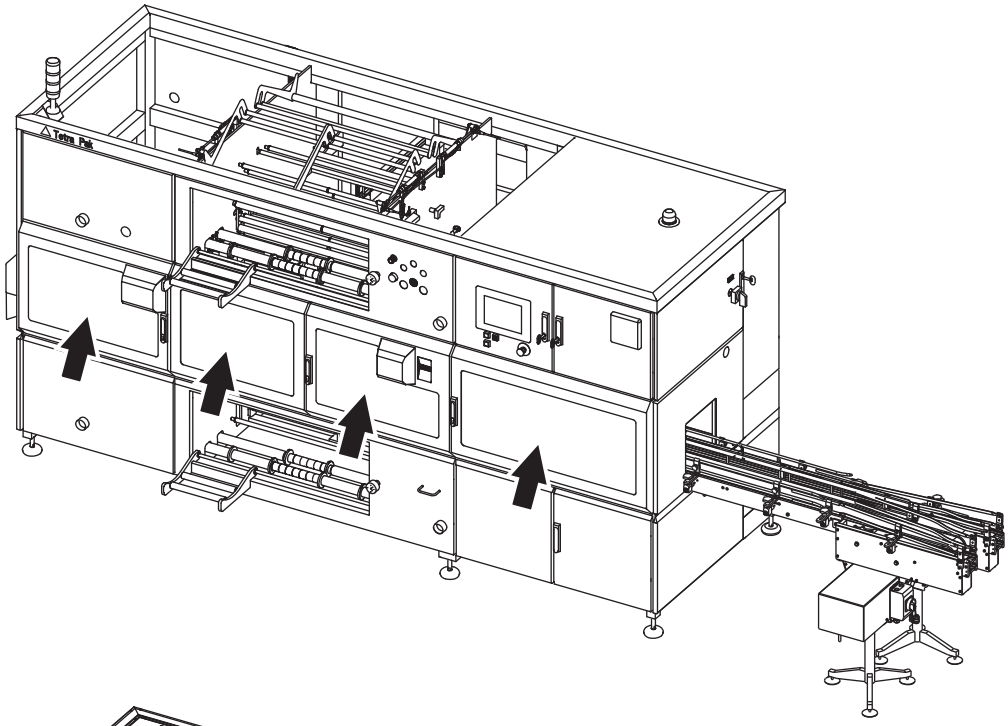

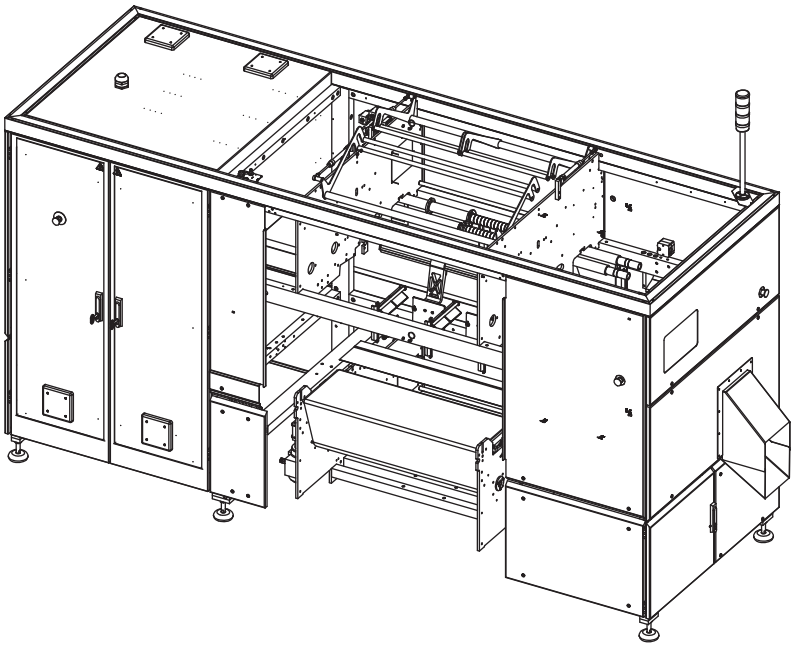

Base module

(Cont'd)

(Cont'd)

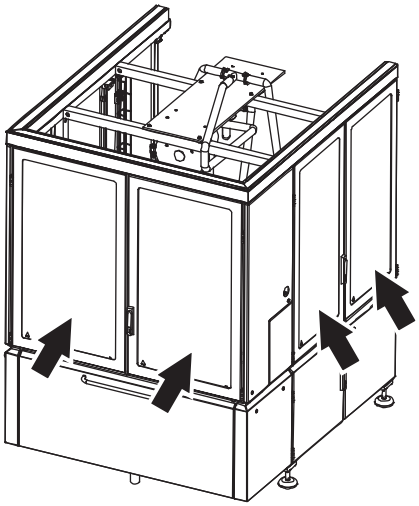

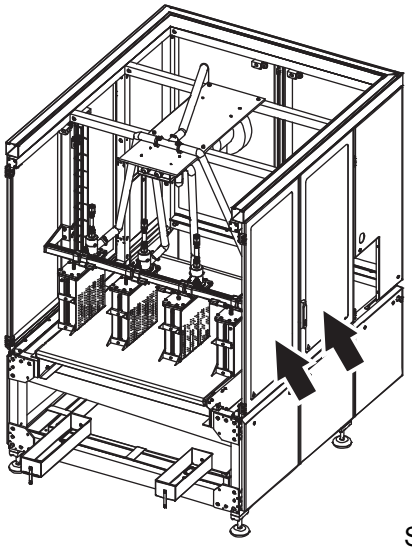

Stretch unit

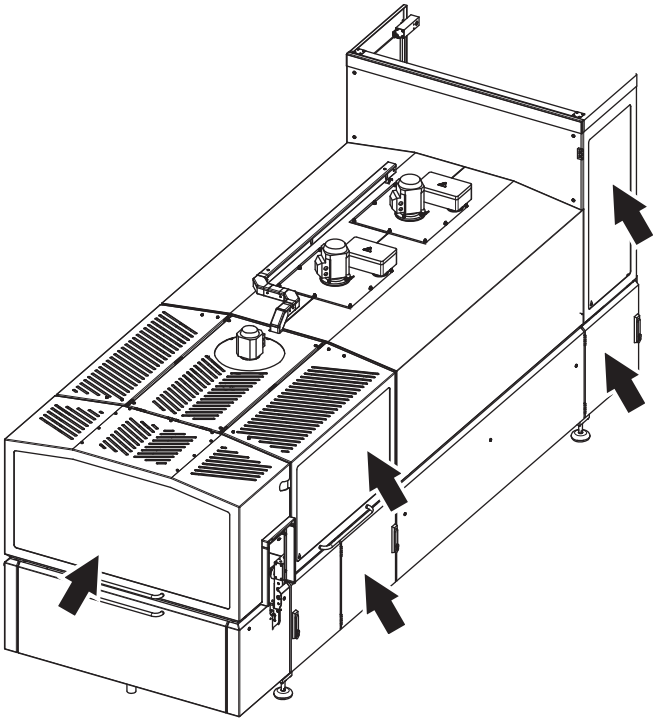

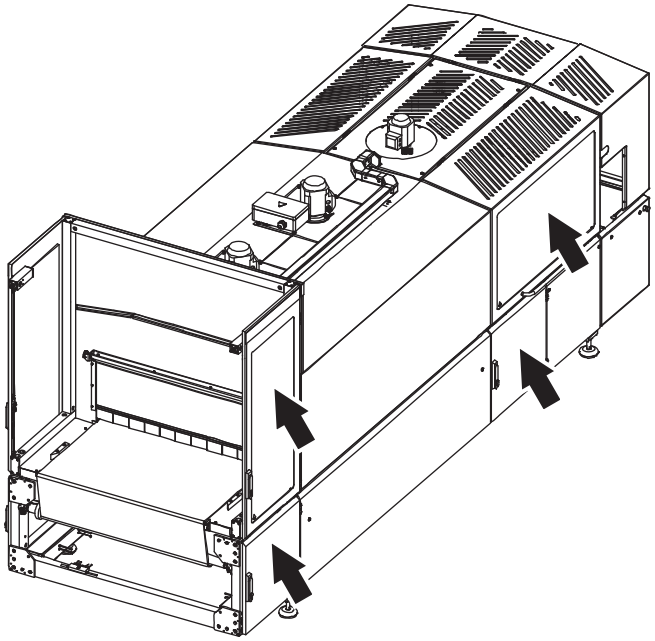

Shrink unit

(Cont'd)

(Cont'd)

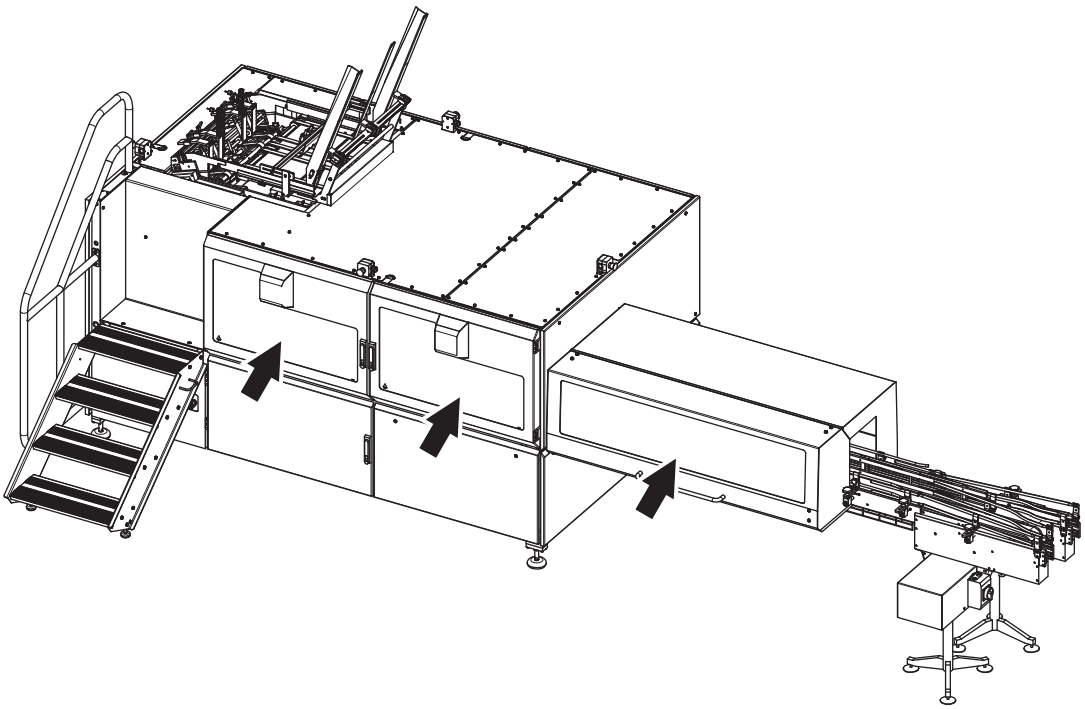

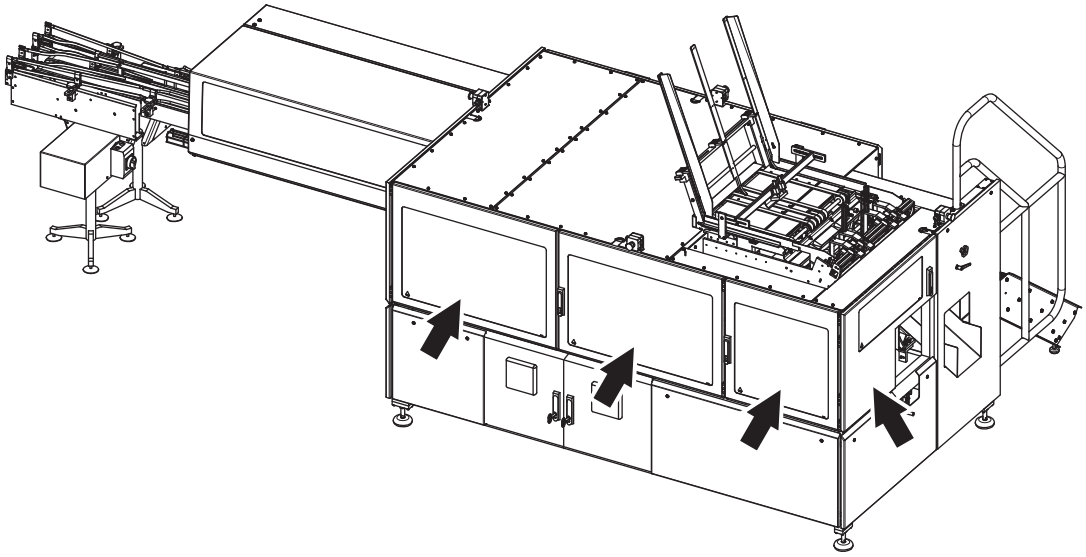

Card Inserter

Warning Lamp

A warning lamp is a column of warning lights:

- A red light (2) indicates a hazardous condition. This is a situation that requires immediate action.
- A yellow light (3) indicates an abnormal or impending critical condition. This is a condition calling for action by the operator.
- A blue light (4) indicates that operator action is required.

Audible Alarm

The audible alarm (1) produces a warning signal every time this equipment is about to start. The warning signal sounds for approximately three seconds prior to starting to alert personnel.

Note! The warning signal sounds when the machine is stepping up from step one to step two, and from step two to production.

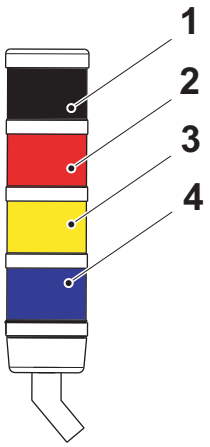

1 Audible alarm
2 Red light
3 Yellow light
4 Blue light

Personal Protection

This section applies to all personnel at all times when this equipment is in operation. For special personal protection required when handling hazardous substances, see the Hazardous Substances section.

Noise Hazard

CAUTION

Hazardous noise.

Risk of impaired hearing. Hearing protection is recommended whenever this equipment is in operation.

Entanglement Hazard

WARNING

Risk of entanglement.

Do not wear jewellery or loose clothing when working on or near this equipment. Long hair may not be loose.

Hot Areas

WARNING

Risk of burns.

The sealing jaws or the hot air nozzle areas are very hot when the machine is heated. There is risk of severe injuries. Never touch the hot areas when the machine is heated.

Ergonomic Hazard

WARNING

Ergonomic hazard.

Handling materials and supplies, for the machine, can be repetitive manual work and involve ergonomic hazards with risk for personal injury.
Materials and supplies should be located. e.g. layout design, to avoid twisting the body or bending the back when placing them into the machine. It is recommended to use aids such as a lifting table or lifting device for these tasks.
Follow instructions for safe work practices.

Hazardous Substances

WARNING

Contact with chemicals can cause death, serious injury, or illness.
Always read and follow the instructions in the safety data sheet supplied by the manufacturer or local supplier, when handling chemicals.

Make sure that

- the safety data sheet is available
- the showers work
- an eyewash device, movable or wall-mounted, is available and operational
- additional washing facilities are nearby

Note! Learn the locations of all washing facilities in order to act immediately in case of an accident





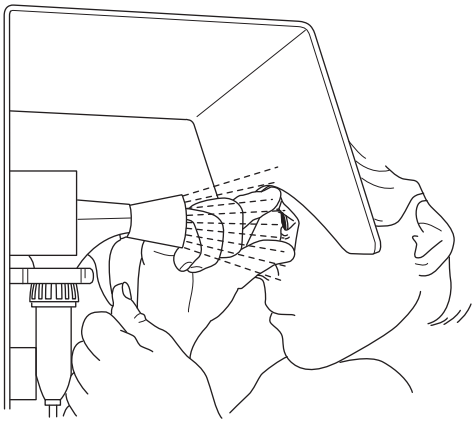

Disposal of Chemical Substances

Always read and follow the disposal instructions in the safety data sheet supplied by the manufacturer or local supplier.

It is strongly recommended that used chemical containers are

- disposed of according to the instructions immediately after use
- not used as disposal containers for other chemicals in order to avoid uncontrolled chemical reactions within the container

Laser Sensors

CAUTION

Laser radiation.
Do not stare into the beam. Class 2 Laser product.

Shut OFF the main power supply before working with any maintenance in the machine. The laser beams can effect eyes when staring into the beam.

Certain maintenance procedures may require that the main power is ON, these exceptions are clearly stated in the MM.

The illustration below show where in the machine the laser sensors are placed.

Base Module

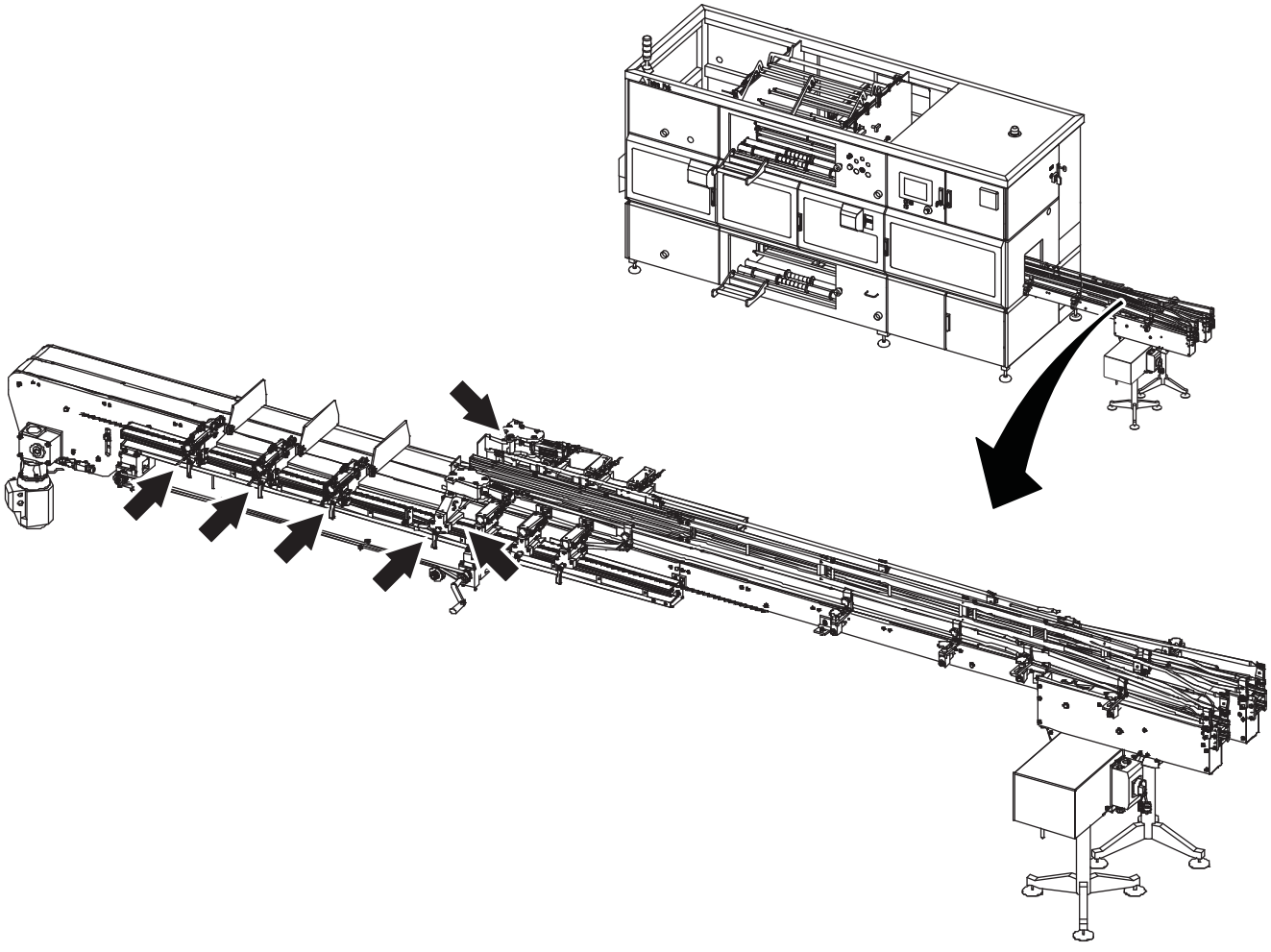

(Cont'd)

(Cont'd)

Base Module with Card Inserter

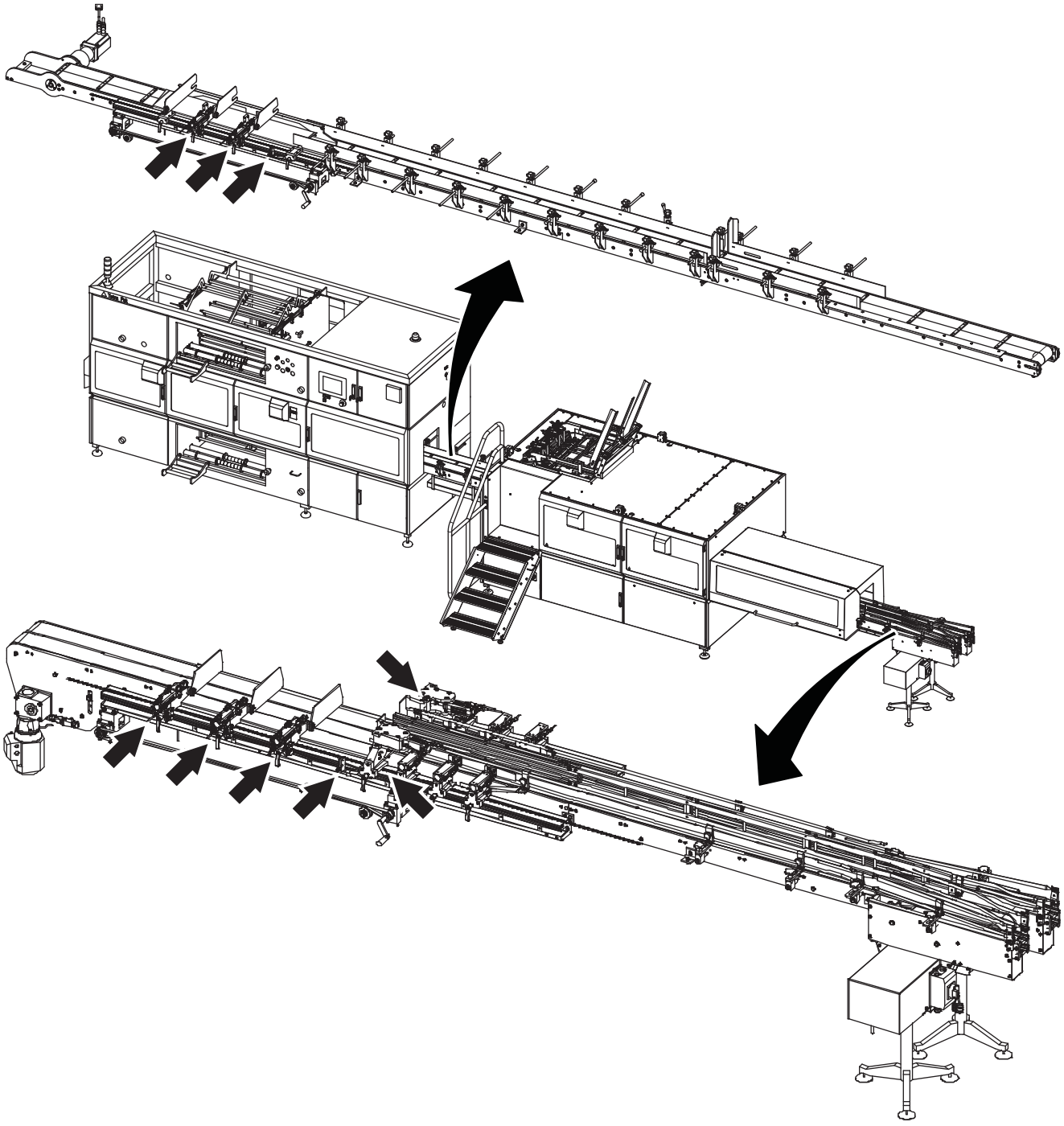

Supply Systems

Power Supply

DANGER

Hazardous voltage and moving machinery.
The power supply disconnector must be turned off and secured with a lock before any maintenance.

Note! The key to the lock must be removed by the technician and retained in his/her possession until all work is completed.

Certain maintenance procedures may require power supply systems to be on. These exceptions are clearly stated in the Maintenance Manual.

The illustrations show the power supply disconnector and its location.

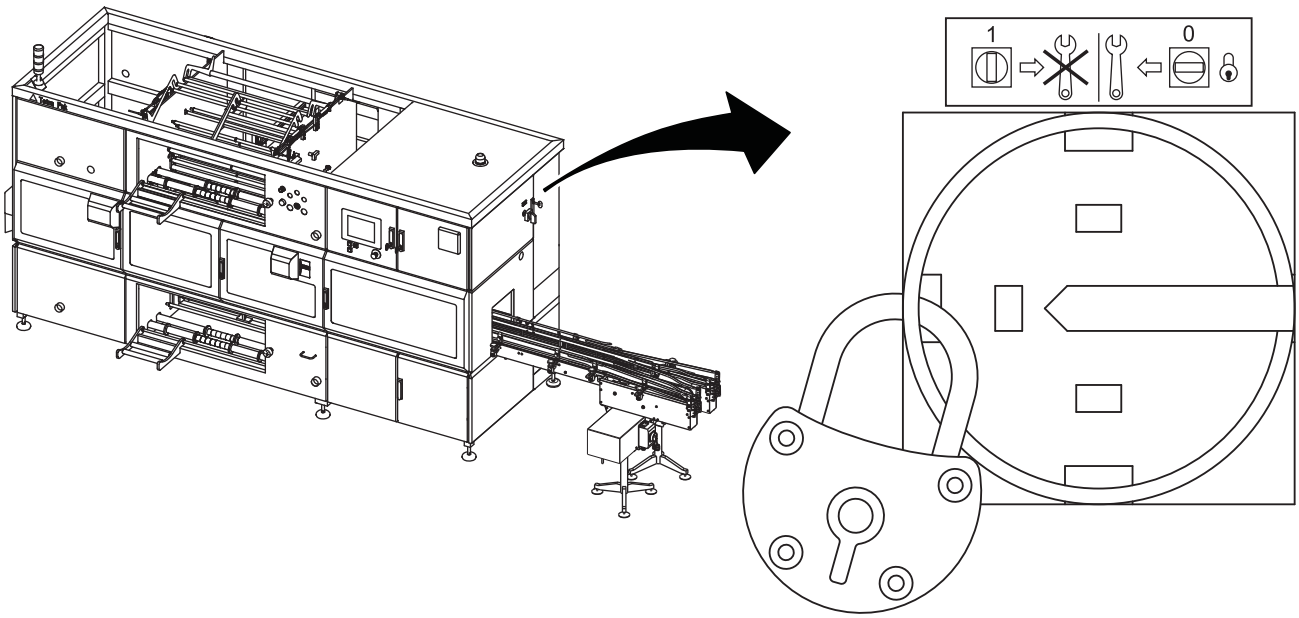

(Cont'd)

(Cont'd)

Base Module with Card Inserter

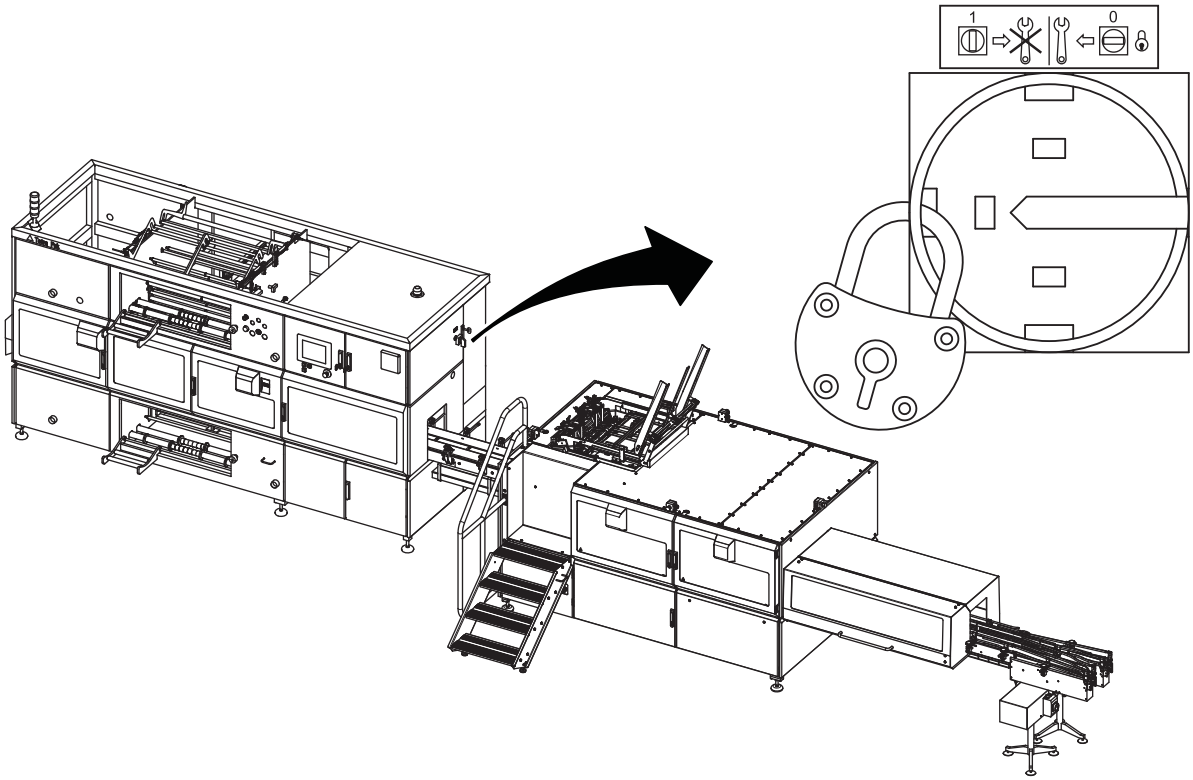

Residual Voltage

DANGER

Hazardous voltage.

Do not touch any terminals immediately after the power supply disconnector is turned off. Ensure that no residual voltage remains on the capacitors before touching. Wait five minutes. Failure to observe this information will cause death or serious injury.

After the power supply disconnector is turned off, residual voltage remains in the capacitor circuits.

Electrical Cabinet

DANGER

Hazardous voltage.
Will shock, burn, or cause death.
The power supply disconnector must be turned off and secured with a lock before maintenance inside the electrical cabinet.

Note! The key to the lock must be removed by the technician and retained in his/her possession until all work is completed.

Make sure that the electrical cabinet doors are closed after working inside the electrical cabinet. Doors with lock must be locked.

The location of each electrical cabinet is shown by an arrow.

Base module

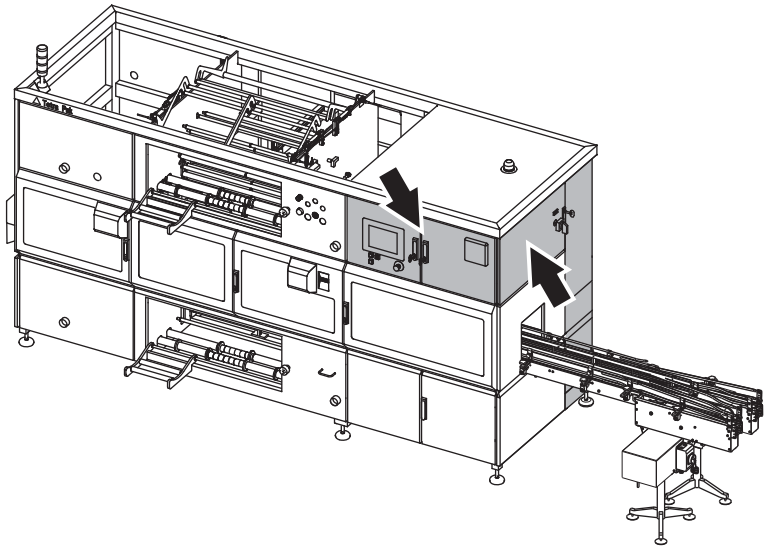

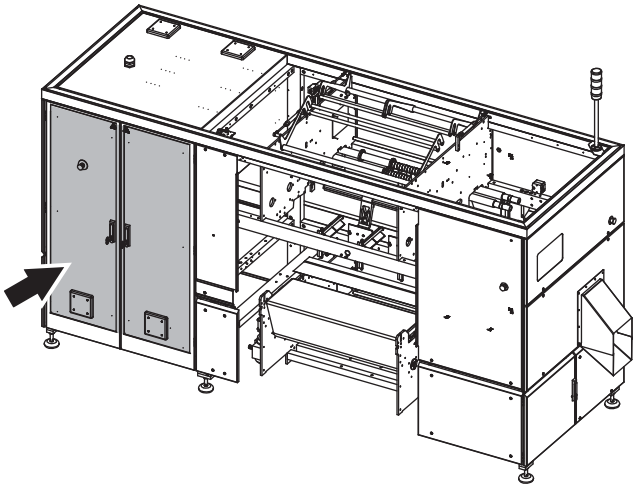

(Cont'd)

(Cont'd)

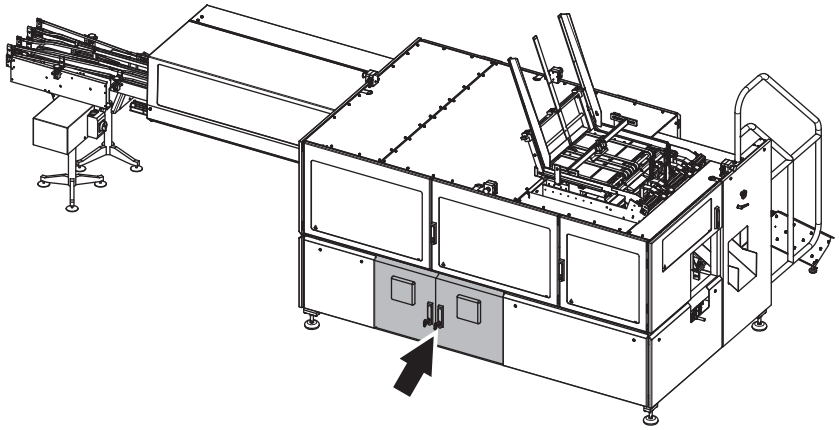

Card Inserter

Socket Outlet

WARNING

Hazardous voltage.

Can shock, burn, or cause death. Read the Maintenance Manual before using this socket outlet.

The socket outlet (1) is connected to a residual current device (2) to protect users against electrical shock if there is an earth fault in the connected equipment. The residual current device shall be tested each time before the socket outlet is being used. See the MM for test procedure.

The illustrations show the socket outlet, the residual current device, and their location.

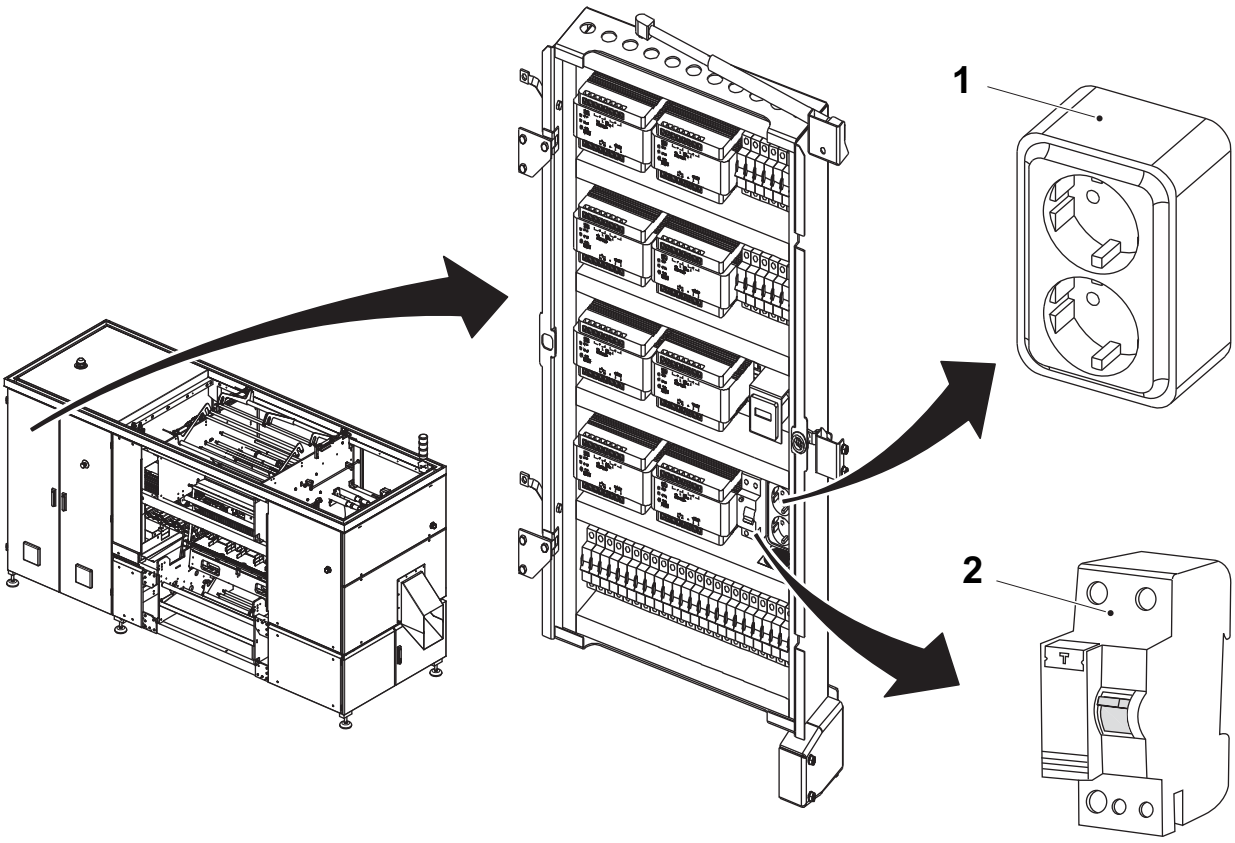

1 Socket outlet
2 Residual current device

Air Supply

WARNING

Compressed air and moving machinery.
Close the main air valve and lock it before any maintenance.

Note! The key to the lock must be removed by the technician and retained in his/her possession until all work is completed.

Certain maintenance procedures may require air supply systems to be on. These exceptions are clearly stated in the Maintenance Manual.

The illustrations show the main air valve (1), the lock (2), and their location.

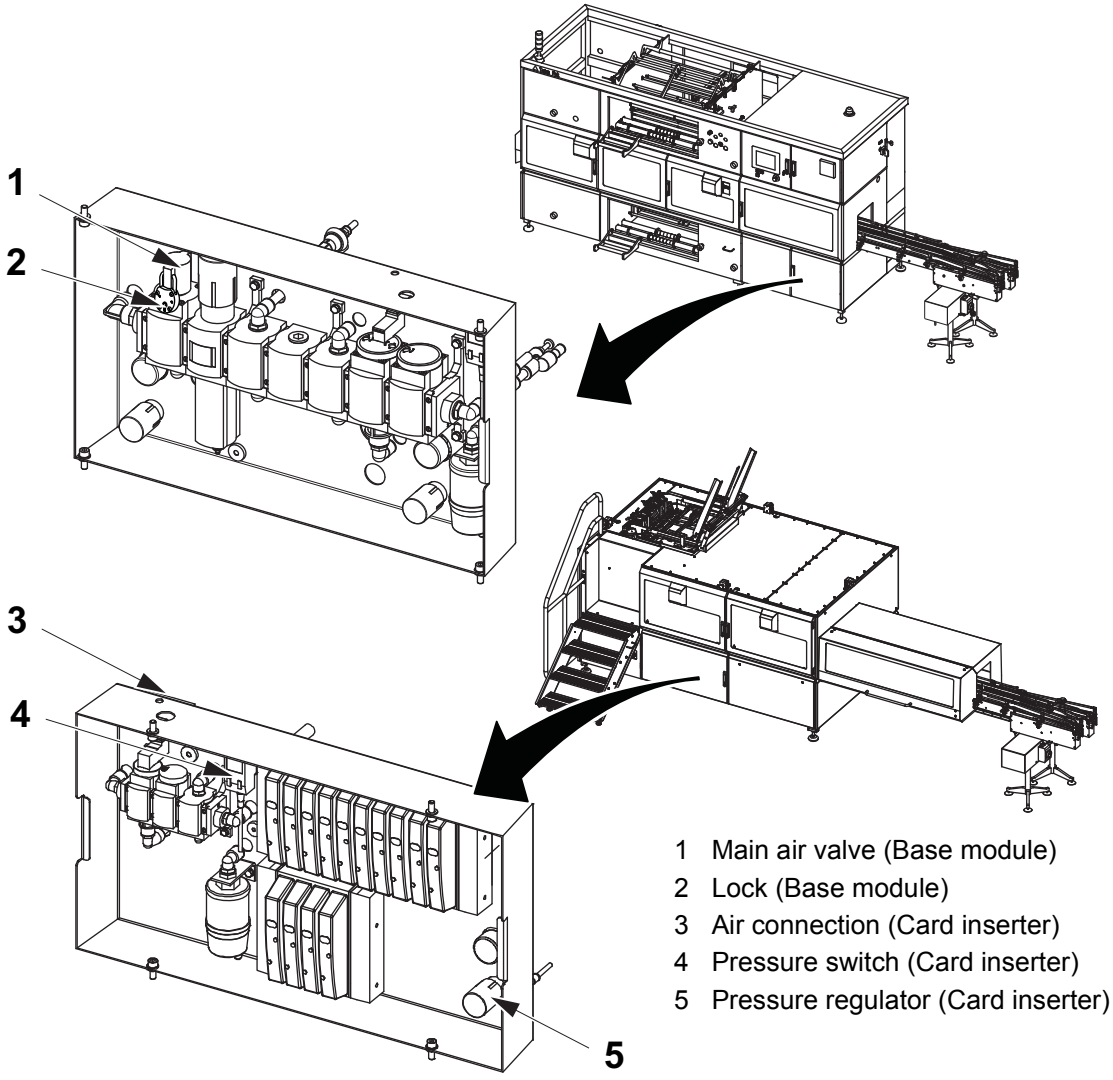

1 Main air valve (Base module)
2 Lock (Base module)
3 Air connection (Card inserter)
4 Pressure switch (Card inserter)
5 Pressure regulator (Card inserter)

This page intentionally left blank

1 Technical Data and Drawings

Description

This chapter includes essential reference data and drawings used prior to and during the equipment installation.

1.1 Installation Drawings. . . . . 1 - 5

1.1.1 Machine Dimensions . . . . . 1 - 5

1.1.1.1 FW 68 - Stretch Unit - Single Infeed . . . . . 1 - 5

1.1.1.2 FW 68 - Shrink Unit - Single Infeed . . . . . 1 - 7

1.1.1.3 FW 68 - Stretch Unit - Double Infeed . . . . . 1 - 9

1.1.1.4 FW 68 - Shrink Unit - Double Infeed. . . . . 1 - 11

1.1.1.5 FW 68 - Stretch Unit - Single Infeed - Card Inserter . . . . . 1 - 13

1.1.1.6 FW 68 - Shrink Unit - Single Infeed - Card Inserter . . . . . 1 - 15

1.1.1.7 FW 68 - Stretch Unit - Double Infeed - Card Inserter . . . . . 1 - 17

1.1.1.8 FW 68 - Shrink Unit - Double Infeed - Card Inserter . . . . . 1 - 19

1.1.2 Description of Control Function . . . . . 1 - 21

1.1.2.1 FW 68 without Card Inserter . . . . . 1 - 22

1.1.2.2 FW 68 with Card Inserter. . . . . 1 - 23

1.1.2. Calculate Queue Photocell Distance . . . . . 1 - 24

1.2.1.1 Package Width in Transport Direction . . . . . 1 - 25

1.2.1.2 Package Unit Depth . . . . . 1 - 26

1.2.1.3 Stretch Unit . . . . . 1 - 27

1.2.1.4 Shrink Unit . . . . . 1 - 27

1.1.3 Required Clearances around the Machine . . . . 1 - 28

1.1.3.1 FW 68 without Card Inserter . . . . . 1 - 28

1.1.3.2 FW 68 with Card Inserter. . . . . 1 - 30

1.1.4 Connections . . . . . 1 - 32

1.2 Mass (Weight) . . . . . 1 - 33

1.2.1 Centre of Gravity . . . . . 1 - 33

1.2.1.1 FW 68 Base Module . . . . . 1 - 33

1.2.1.2 Stretch Unit . . . . . 1 - 33

1.2.1.3 Shrink Unit . . . . . 1 - 34

1.2.1.4 Card Inserter . . . . . 1 - 34

1.2.2 Static Load . . . . . 1 - 35

1.2.2.1 FW 68 - Base Module . . . . . 1 - 35
1.2.2.2 FW 68 - Stretch Unit . . . . . 1 - 36
1.2.2.3 FW 68 - Shrink Unit . . . . . 1 - 37
1.2.2.4 FW 68 - Card Inserter . . . . . 1 - 38

1.3 Utility Connection Data . . . . . 1 - 39

1.4 Noise . . . . . 1 - 40

1.4.1 FW 68 without Card Inserter. . . . . 1 - 40

1.4.2 FW 68 with Card Inserter . . . . . 1 - 41

1.5 Technical Data . . . . . 1 - 42

1.6 Conveyor Lubrication . . . . . 1 - 46

1.1 Installation Drawings

If nothing else is stated, all installation drawings show a right infeed and right discharge machine. For different infeed and discharge alternatives see Section Orientation in Chapter i Introduction.

1.1.1 Machine Dimensions

1.1.1.1 FW 68 - Stretch Unit - Single Infeed

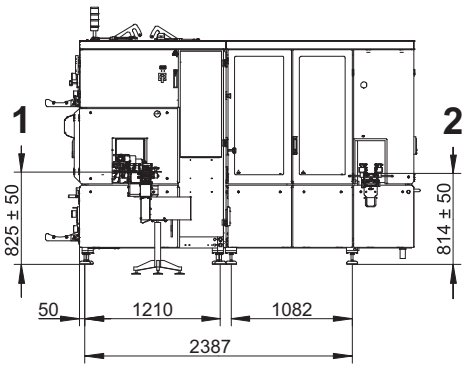

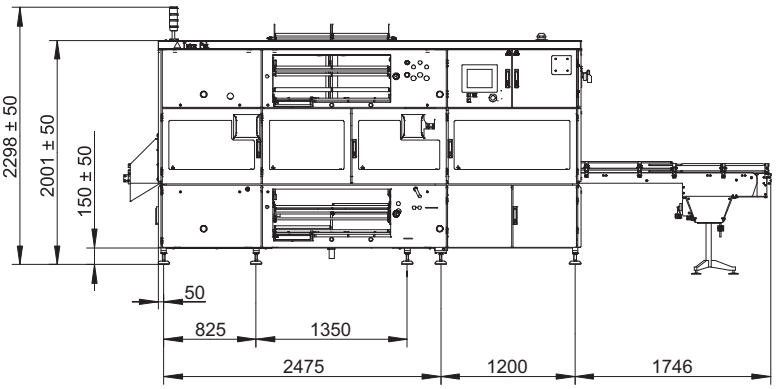

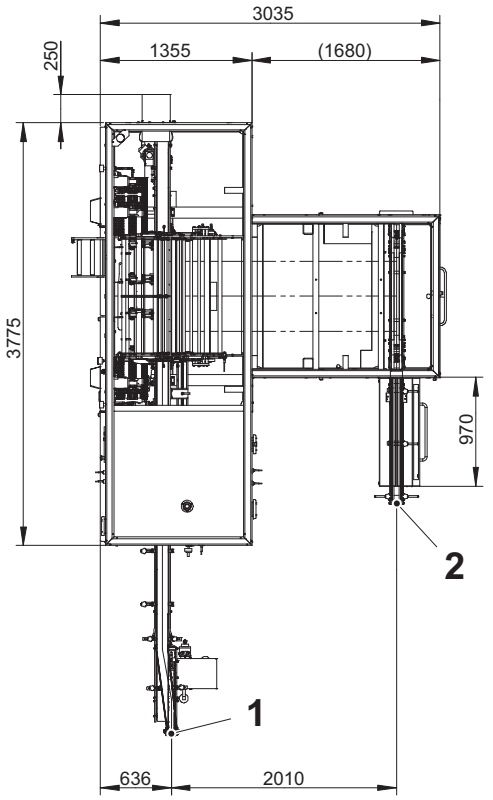

Note! The infeed drive unit for PC 23 is not included in the machine delivery, and has to be ordered separately.

1 Infeed
2 Discharge

(Cont'd)

(Cont'd)

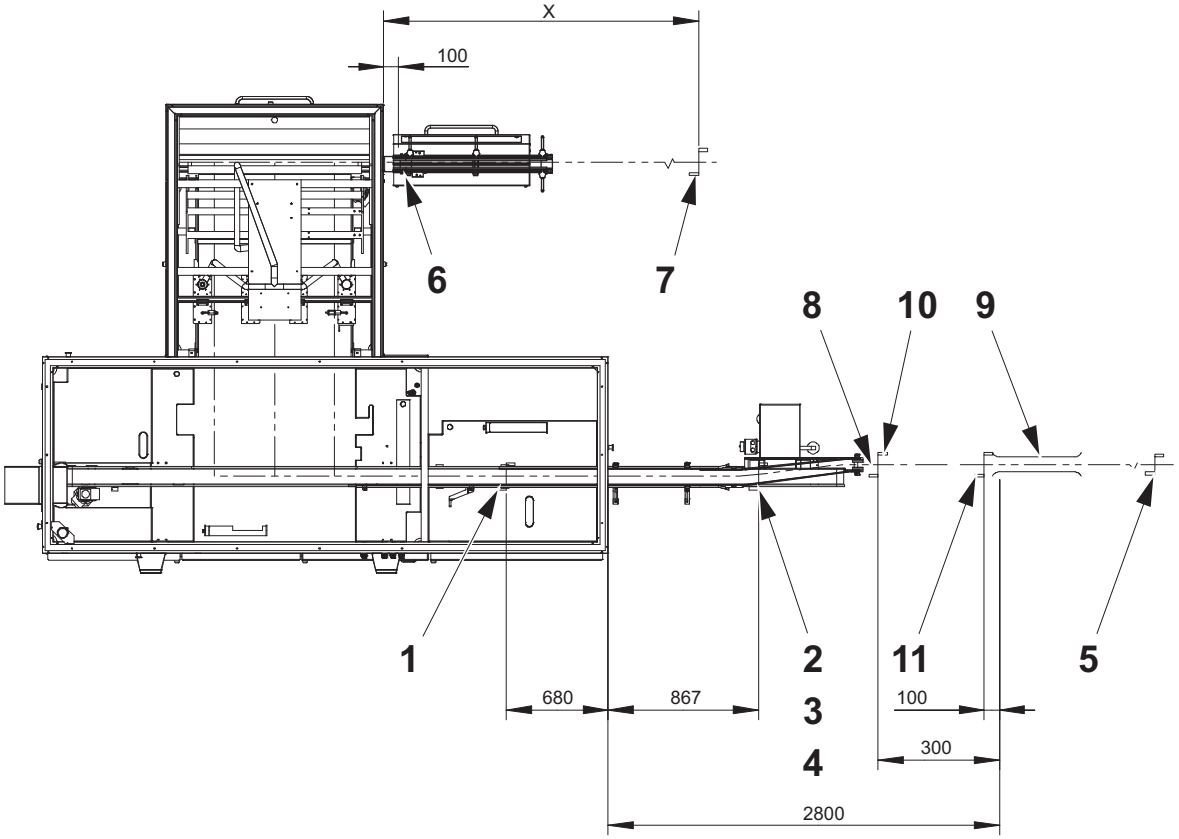

Pos	Denomination	EM reference
1	Infeed photocell (min. queue infeed 1) (included)	B213
2	Infeed photocell (infeed upper 1) (included)	B271
3	Infeed photocell (infeed lower 1) (included)	B214
4	Infeed photocell (infeed upper 1) (included)	B215
5 *	Photocell (start infeed conveyor) (**not** included - OE)	B905.1 B905.2
6	Photocell (queue discharge 1) (included)	B358.1 B358.2
7	Photocell (queue discharge 2) (included) For distance X see Section 1.1.2. Calculate Queue Photocell Distance	B359.1 B359.2
8	Chain tensioner (**not** included)	–
9	Hose brake (**not** included)	–
10	Photocell (max. queue) (included in hose brake)	B212.1 B212.2
11	Photocell (queue separation) (included in hose brake)	B211.1 B211.2

*) Applicable only for lines without line communication.

1.1.1.2 FW 68 - Shrink Unit - Single Infeed

Note! The infeed drive unit for PC 23 is not included in the machine delivery, and has to be ordered separately.

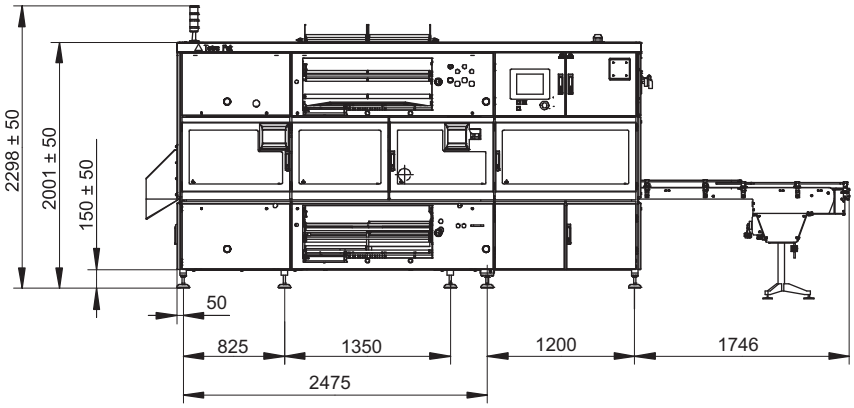

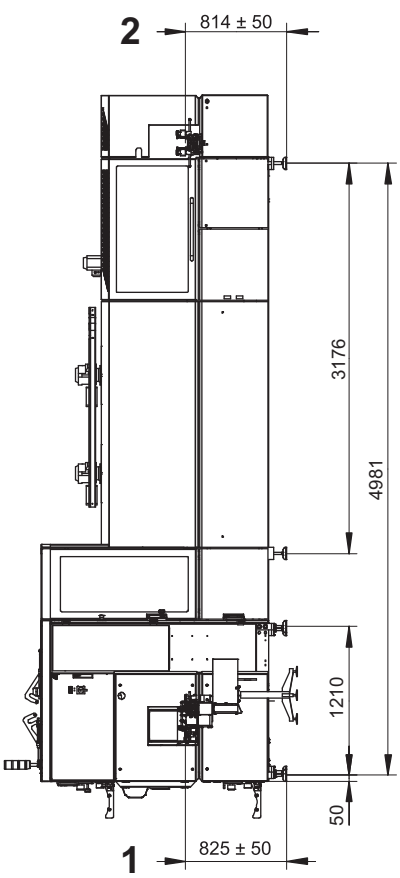

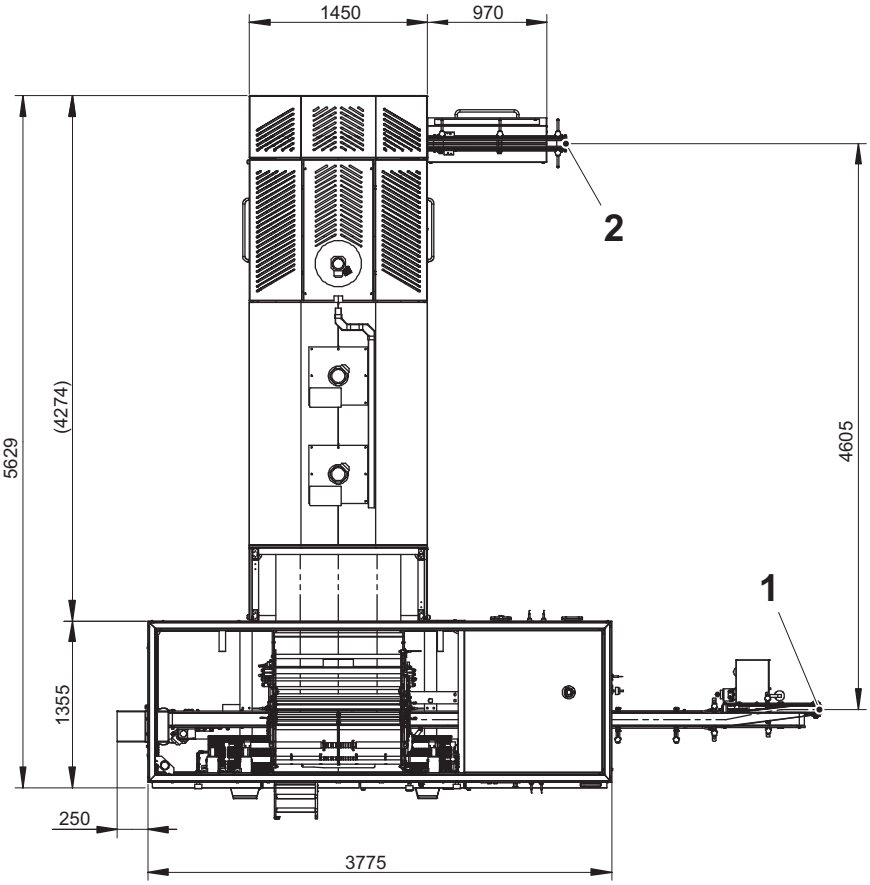

1 Infeed
2 Discharge

(Cont'd)

(Cont'd)

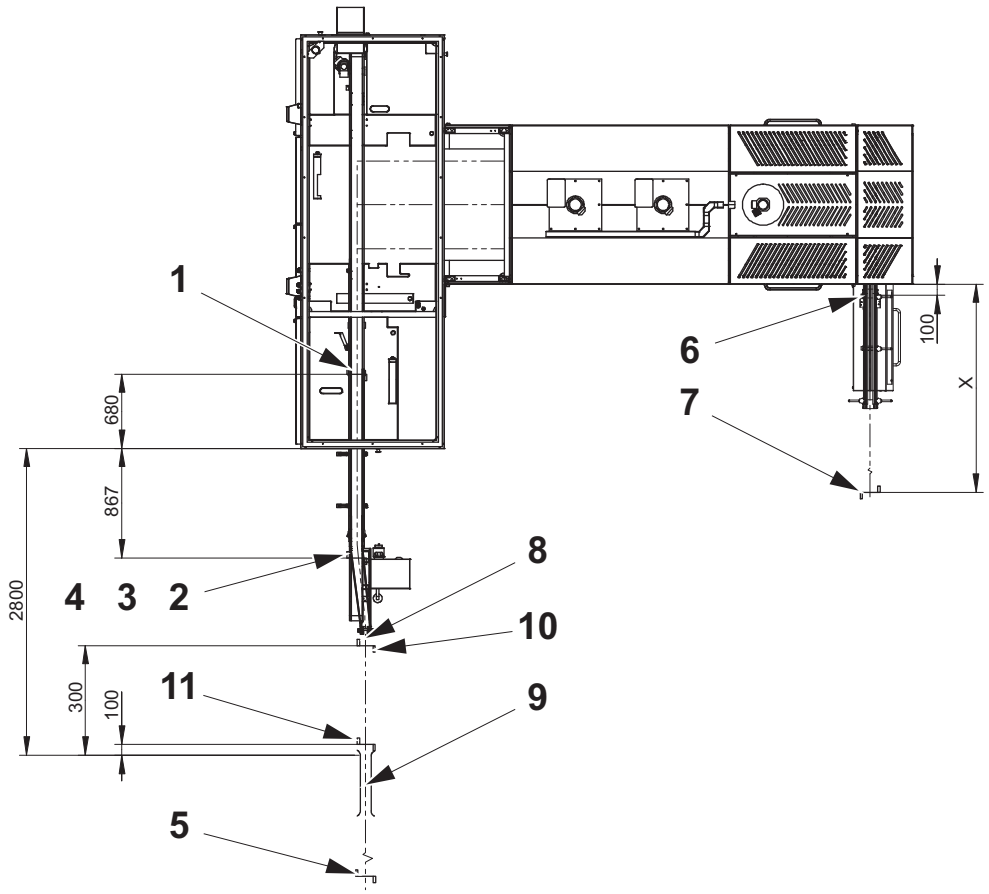

Pos	Denomination	EM reference
1	Infeed photocell (min. queue infeed 1) (included)	B213
2	Infeed photocell (infeed upper 1) (included)	B271
3	Infeed photocell (infeed lower 1) (included)	B214
4	Infeed photocell (infeed upper 1) (included)	B215
5 *	Photocell (start infeed conveyor) (**not** included - OE)	B905.1 B905.2
6	Photocell (queue discharge 1) (included)	B358.1 B358.2
7	Photocell (queue discharge 2) (included) For distance X see Section 1.1.2. Calculate Queue Photocell Distance	B359.1 B359.2
8	Chain tensioner (**not** included)	–
9	Hose brake (**not** included)	–
10	Photocell (max. queue) (included in hose brake)	B212.1 B212.2
11	Photocell (queue separation) (included in hose brake)	B211.1 B211.2

*) Applicable only for lines without line communication.

1.1.1.3 FW 68 - Stretch Unit - Double Infeed

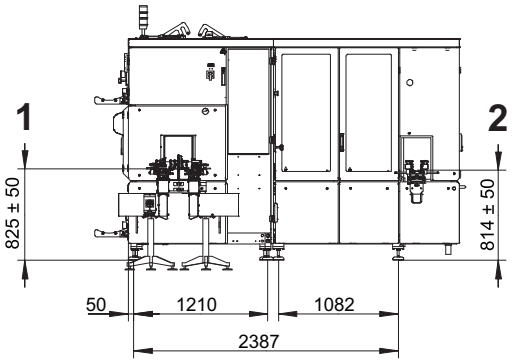

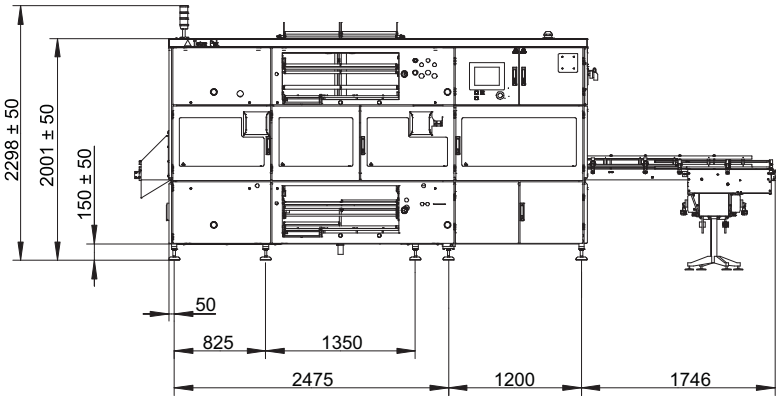

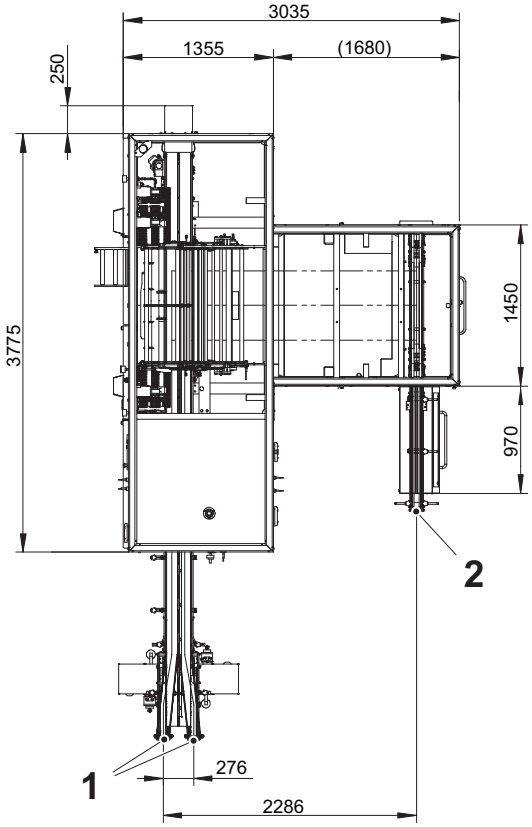

Note! The infeed drive unit for PC 23 is not included in the machine delivery, and has to be ordered separately.

1 Infeed
2 Discharge

(Cont'd)

(Cont'd)

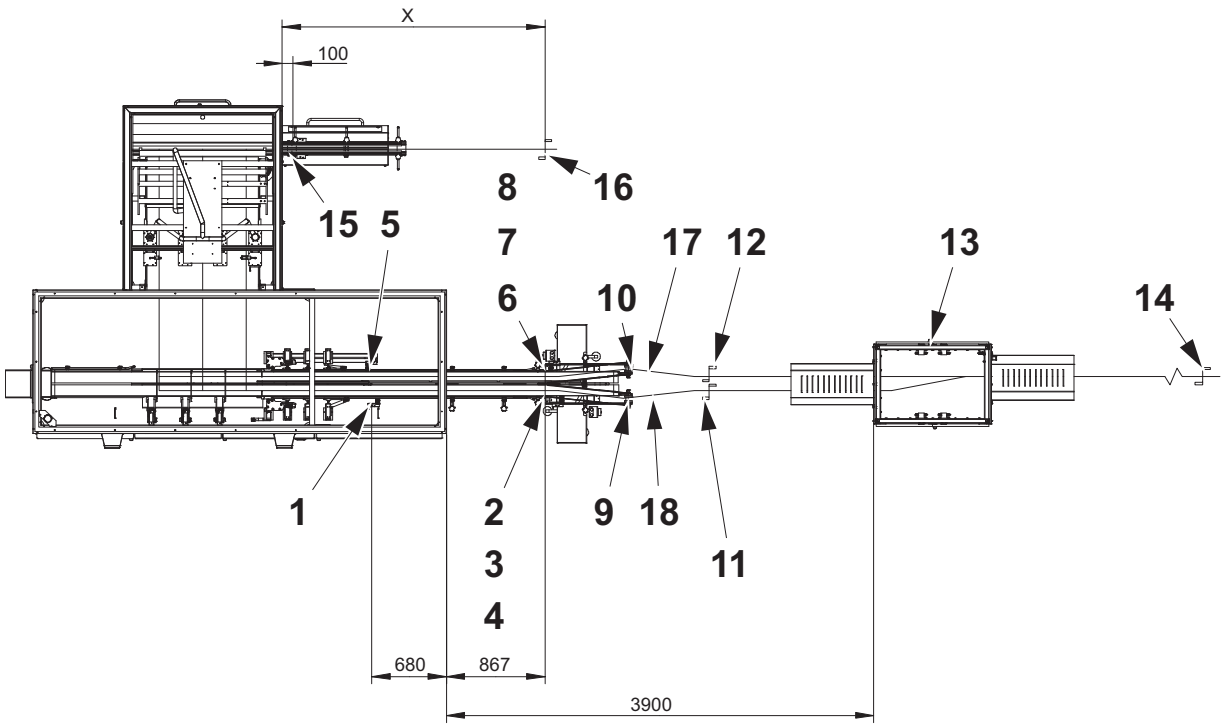

Pos	Denomination	EM reference
1	Infeed photocell (min. queue infeed 1) (included)	B213
2	Infeed photocell (infeed upper 1) (included)	B271
3	Infeed photocell (infeed lower 1) (included)	B214
4	Infeed photocell (infeed upper 1) (included)	B215
5	Infeed photocell (min. queue infeed 2) (included)	B224
6	Infeed photocell (infeed upper 2) (included)	B272
7	Infeed photocell (infeed lower 2) (included)	B225
8	Infeed photocell (infeed upper 2) (included)	B226
9	Photocell (queue left) (included in divider) (see TeM PD 122)	B109
10	Photocell (queue right) (included in divider) (see TeM PD 122)	B111
11	Photocell (queue at left outfeed) (included in divider) (see TeM PD 122)	B104
12	Photocell (queue at right outfeed) (included in divider) (see TeM PD 122)	B105
13	Divider PD 122 (**not** included)	–
14 *	Photocell (start infeed conveyor) (**not** included; OE)	B905.1 B905.2
15	Photocell (queue discharge 1) (included)	B358.1 B358.2
16	Photocell (queue discharge 2) (included) For distance X see Section 1.1.2. Calculate Queue Photocell Distance	B359.1 B359.2
17	Chain tensioner (**not** included)	–
18	Adjustable conveyor link (**not** included)	–

*) Applicable only for lines without line communication.

1.1.1.4 FW 68 - Shrink Unit - Double Infeed

Note! The infeed drive unit for PC 23 is not included in the machine delivery, and has to be ordered separately.

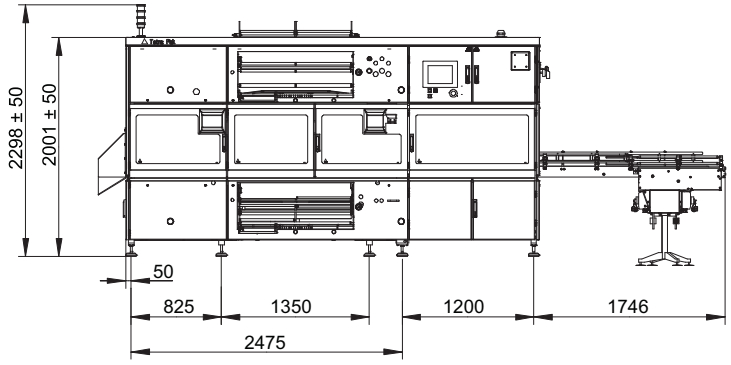

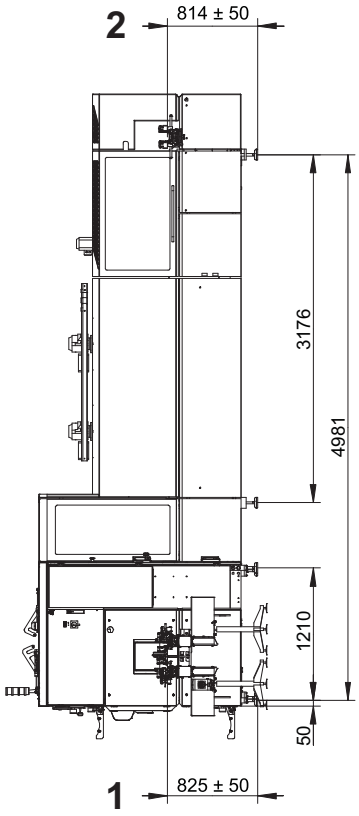

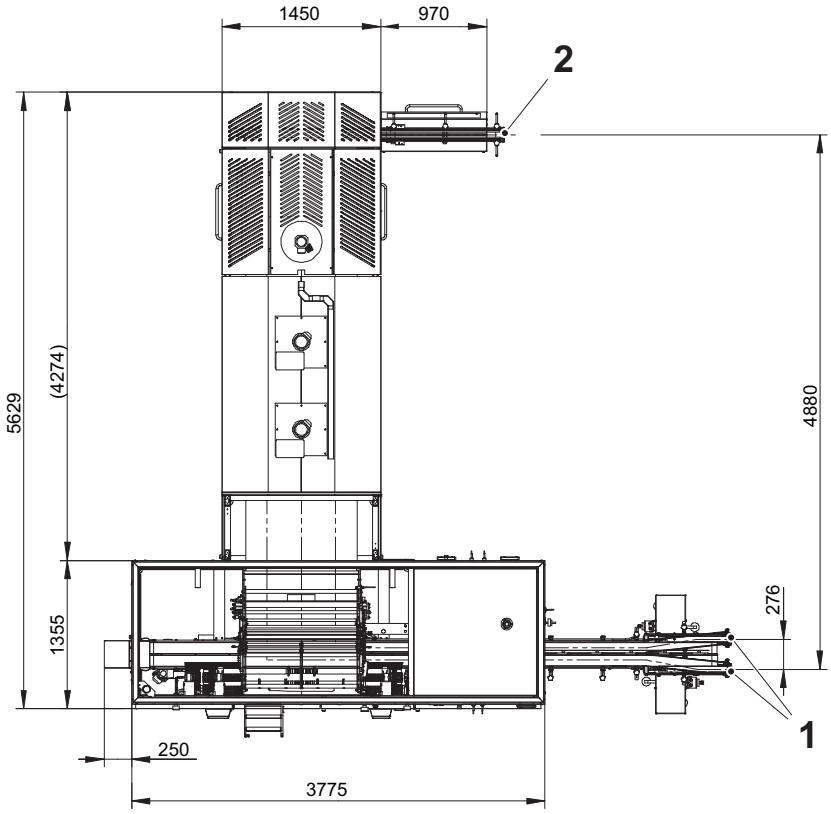

1 Infeed
2 Discharge

(Cont'd)

(Cont'd)

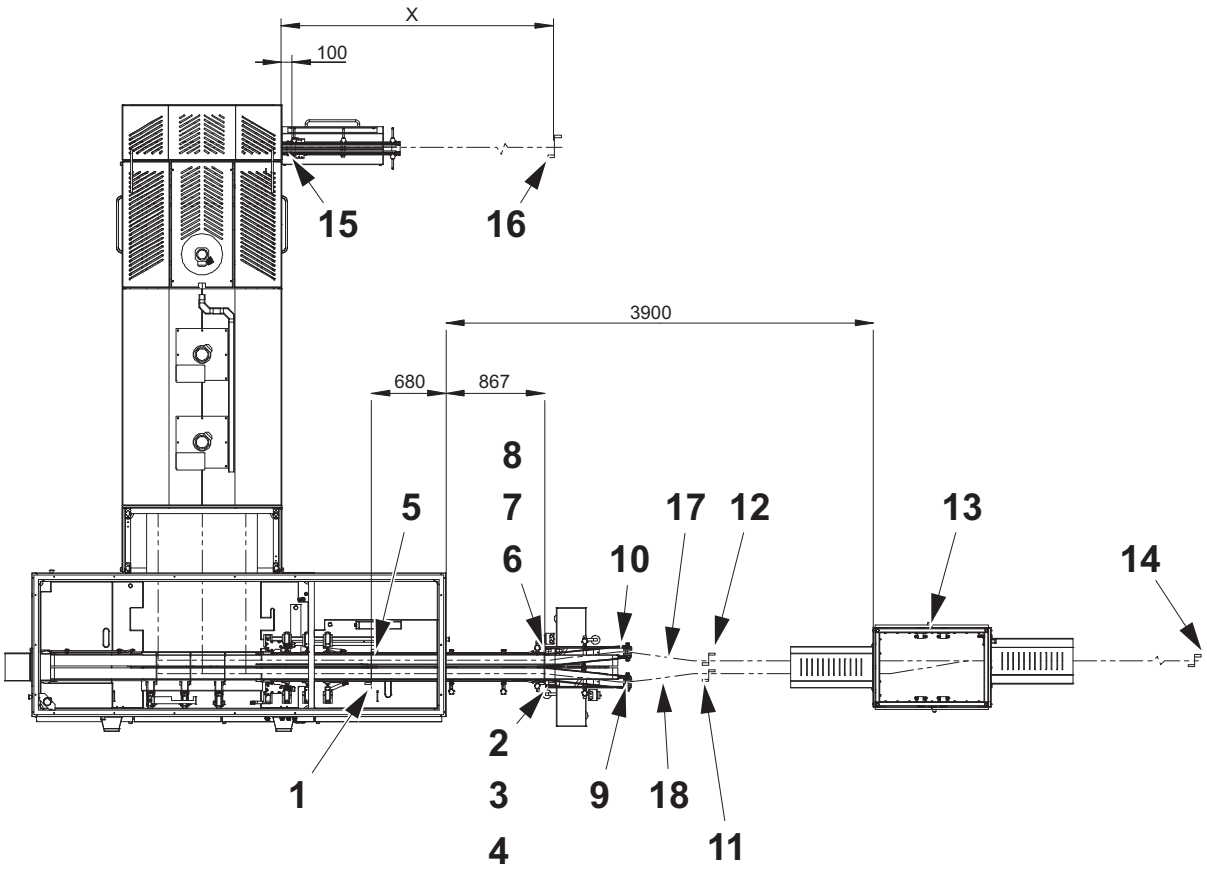

Pos	Denomination	EM reference
1	Infeed photocell (min. queue infeed 1) (included)	B213
2	Infeed photocell (infeed upper 1) (included)	B271
3	Infeed photocell (infeed lower 1) (included)	B214
4	Infeed photocell (infeed upper 1) (included)	B215
5	Infeed photocell (min. queue infeed 2) (included)	B224
6	Infeed photocell (infeed upper 2) (included)	B272
7	Infeed photocell (infeed lower 2) (included)	B225
8	Infeed photocell (infeed upper 2) (included)	B226
9	Photocell (queue left) (included in divider) (see TeM PD 122)	B109
10	Photocell (queue right) (included in divider) (see TeM PD 122)	B111
11	Photocell (queue at left outfeed) (included in divider) (see TeM PD 122)	B104
12	Photocell (queue at right outfeed) (included in divider) (see TeM PD 122)	B105
13	Divider PD 122 (**not** included)	–
14 *	Photocell (start infeed conveyor) (**not** included; OE)	B905.1 B905.2
15	Photocell (queue discharge 1) (included)	B358.1 B358.2
16	Photocell (queue discharge 2) (included) For distance X see Section 1.1.2. Calculate Queue Photocell Distance	B359.1 B359.2
17	Chain tensioner (**not** included)	–
18	Adjustable conveyor link (**not** included)	–

*) Applicable only for lines without line communication.

1.1.1.5 FW 68 - Stretch Unit - Single Infeed - Card Inserter

Note! Only measures regarding Card Inserter or measures that differ from corresponding measures in installation drawing 1.1.1.1 FW 68 - Stretch Unit - Single Infeed are displayed.

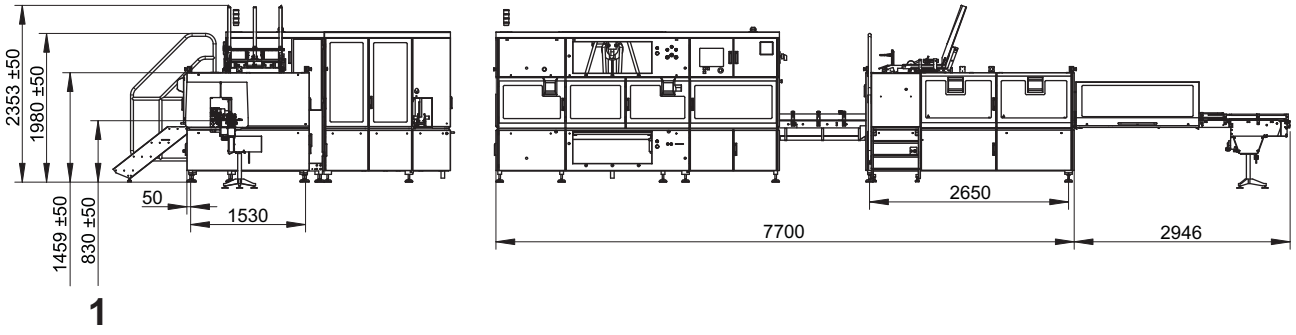

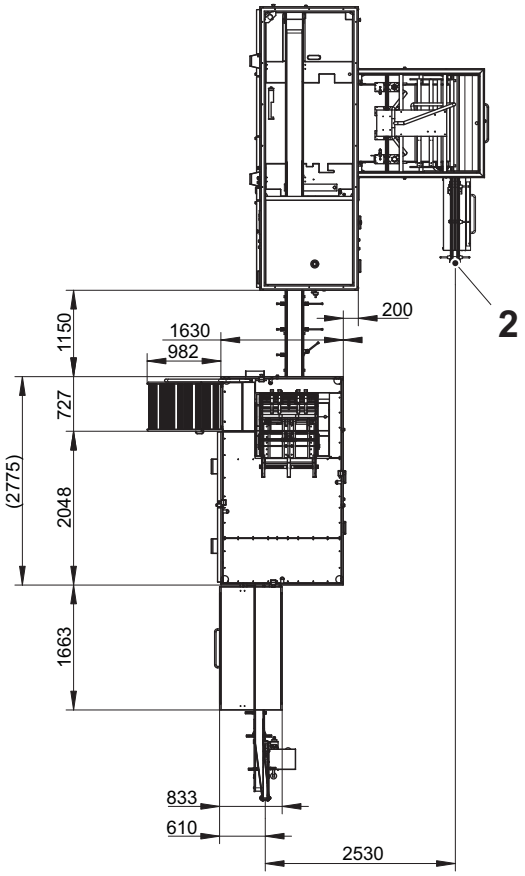

Note! The infeed drive unit for PC 23 is not included in the machine delivery, and has to be ordered separately.

1 Infeed
2 Discharge

(Cont'd)

(Cont'd)

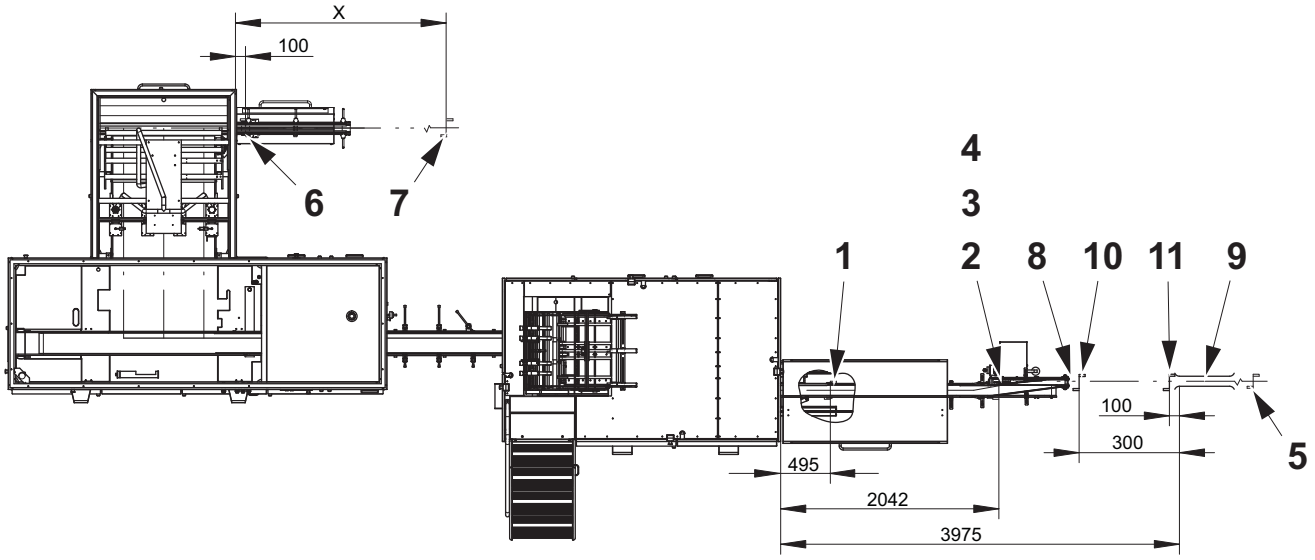

Pos	Denomination	EM reference
1	Infeed photocell (min. queue infeed 1) (included)	B213
2	Infeed photocell (infeed upper 1) (included)	B271
3	Infeed photocell (infeed lower 1) (included)	B214
4	Infeed photocell (infeed upper 1) (included)	B215
5 *	Photocell (start infeed conveyor) (**not** included - OE)	B905.1 B905.2
6	Photocell (queue discharge 1) (included)	B358.1 B358.2
7	Photocell (queue discharge 2) (included) For distance X see Section 1.1.2. Calculate Queue Photocell Distance	B359.1 B359.2
8	Chain tensioner (**not** included)	–
9	Hose brake (**not** included)	–
10	Photocell (max. queue) (included in hose brake)	B212.1 B212.2
11	Photocell (queue separation) (included in hose brake)	B211.1 B211.2

1.1.1.6 FW 68 - Shrink Unit - Single Infeed - Card Inserter

Note! Only measures regarding Card Inserter or measures that differ from corresponding measures in installation drawing 1.1.1.2 FW 68 - Shrink Unit - Single Infeed are displayed.

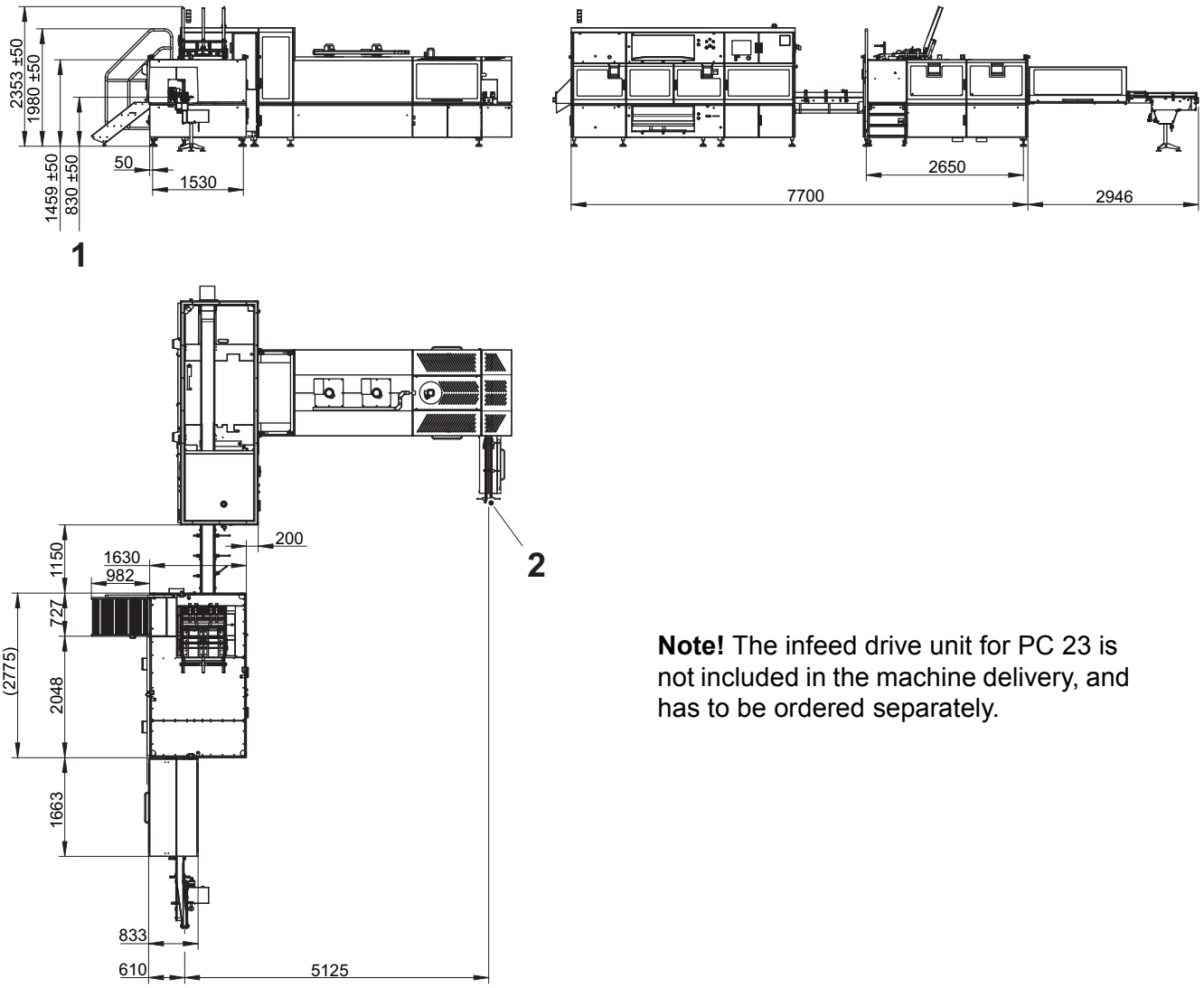

Note! The infeed drive unit for PC 23 is not included in the machine delivery, and has to be ordered separately.

1 Infeed
2 Discharge

(Cont'd)

(Cont'd)

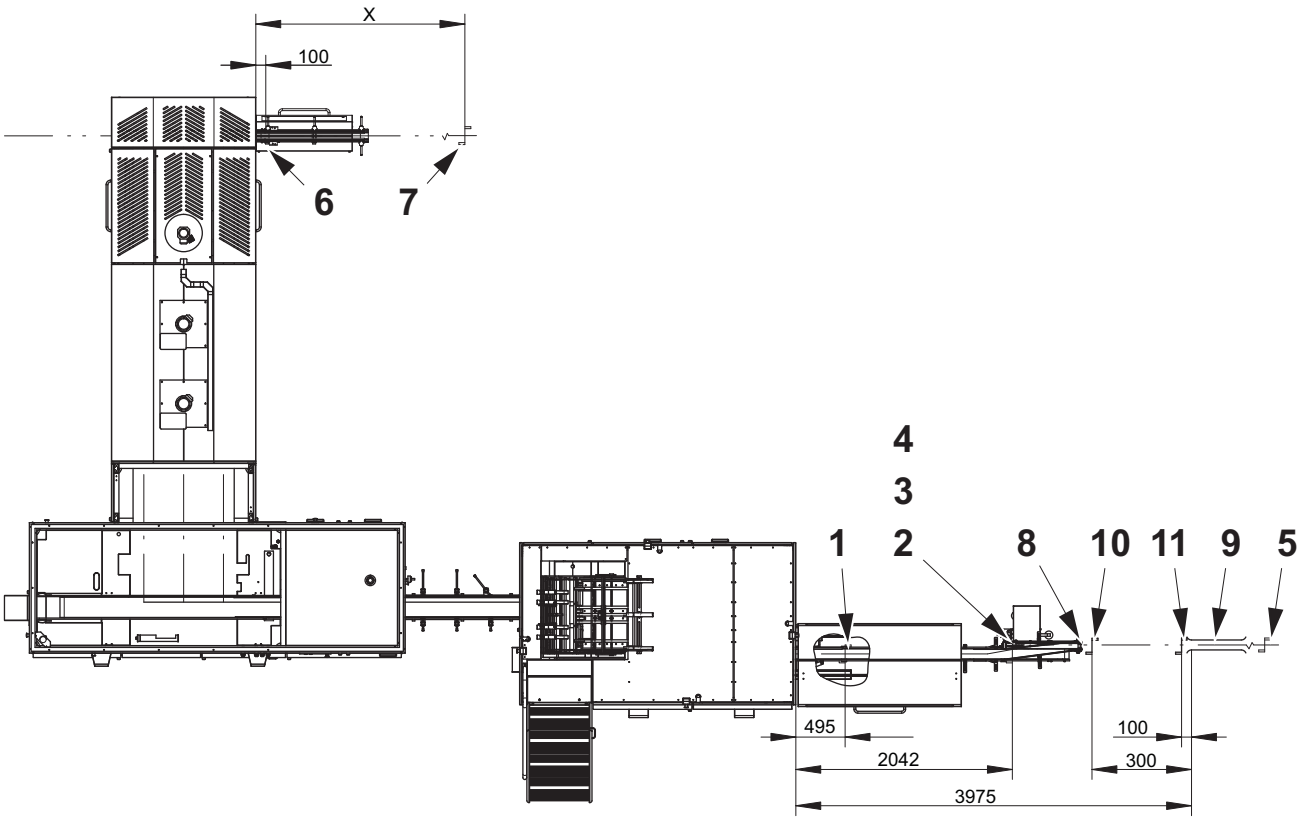

Pos	Denomination	EM reference
1	Infeed photocell (min. queue infeed 1) (included)	B213
2	Infeed photocell (infeed upper 1) (included)	B271
3	Infeed photocell (infeed lower 1) (included)	B214
4	Infeed photocell (infeed upper 1) (included)	B215
5 *	Photocell (start infeed conveyor) (**not** included - OE)	B905.1 B905.2
6	Photocell (queue discharge 1) (included)	B358.1 B358.2
7	Photocell (queue discharge 2) (included) For distance X see Section 1.1.2. Calculate Queue Photocell Distance	B359.1 B359.2
8	Chain tensioner (**not** included)	–
9	Hose brake (**not** included)	–
10	Photocell (max. queue) (included in hose brake)	B212.1 B212.2
11	Photocell (queue separation) (included in hose brake)	B211.1 B211.2

*) Applicable only for lines without line communication.

1.1.1.7 FW 68 - Stretch Unit - Double Infeed - Card Inserter

Note! Only measures regarding Card Inserter or measures that differ from corresponding measures in installation drawing 1.1.1.1 FW 68 - Stretch Unit - Single Infeed are displayed.

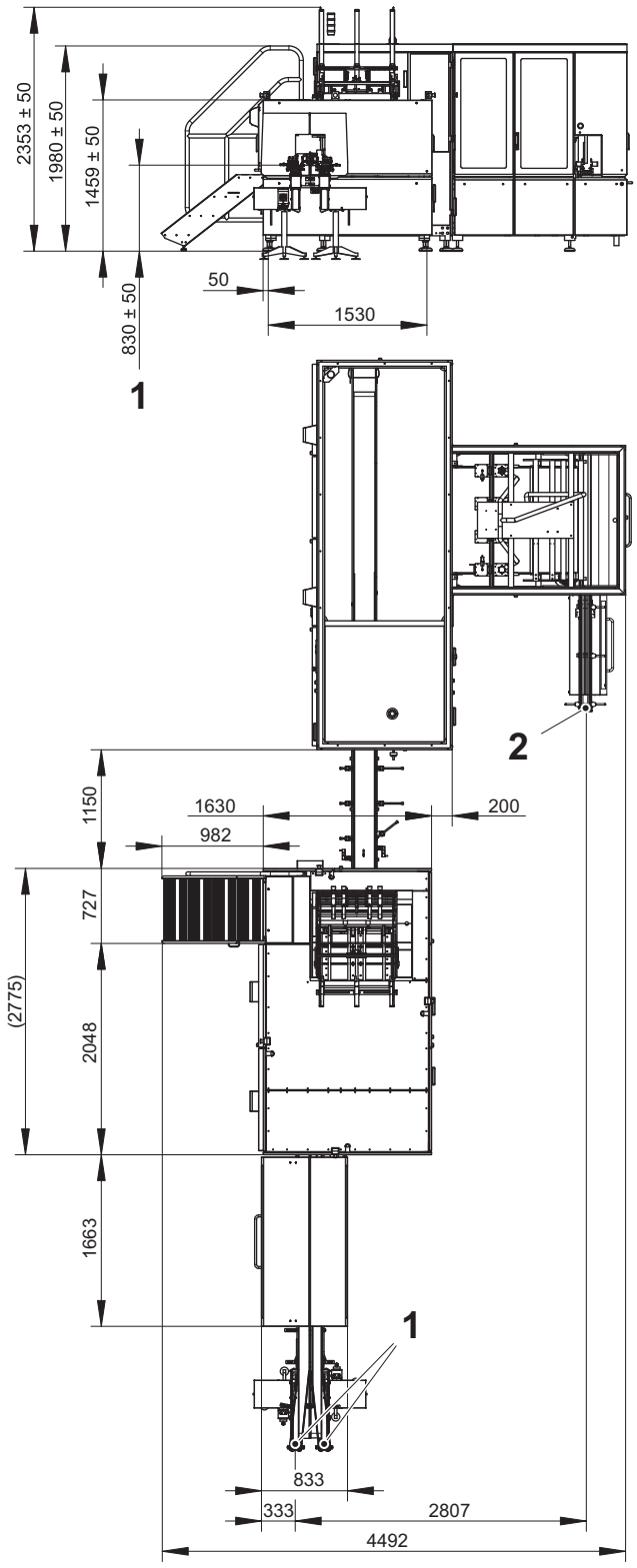

Note! The infeed drive unit for PC 23 is not included in the machine delivery, and has to be ordered separately.

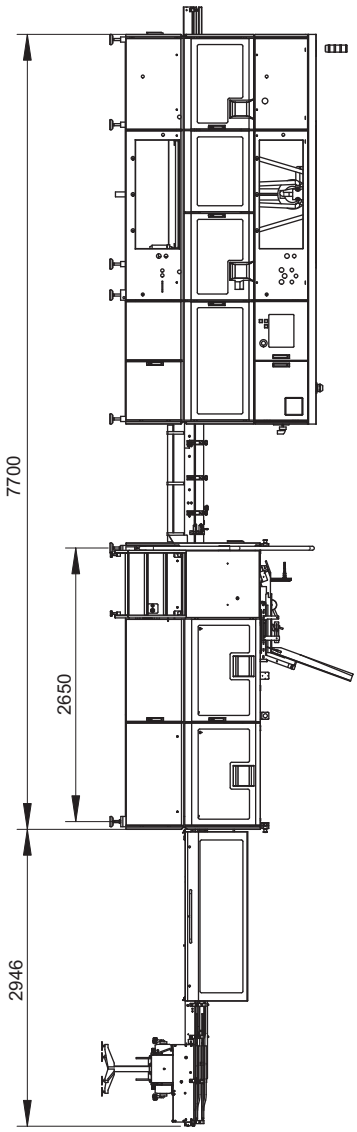

1 Infeed
2 Discharge

(Cont'd)

(Cont'd)

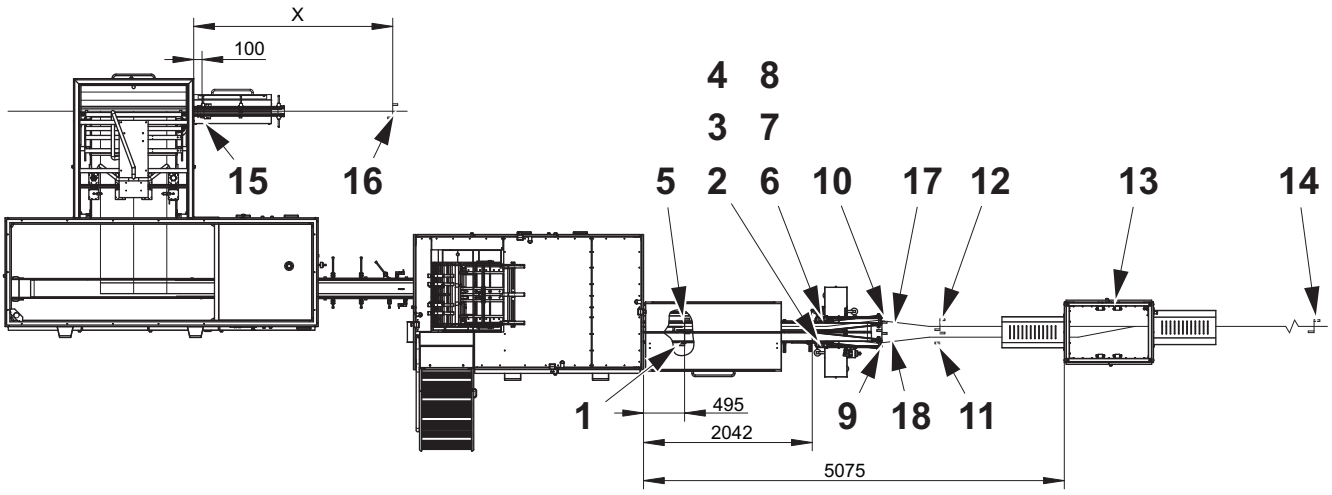

Pos	Denomination	EM reference
1	Infeed photocell (min. queue infeed 1) (included)	B213
2	Infeed photocell (infeed upper 1) (included)	B271
3	Infeed photocell (infeed lower 1) (included)	B214
4	Infeed photocell (infeed upper 1) (included)	B215
5	Infeed photocell (min. queue infeed 2) (included)	B224
6	Infeed photocell (infeed upper 2) (included)	B272
7	Infeed photocell (infeed lower 2) (included)	B225
8	Infeed photocell (infeed upper 2) (included)	B226
9	Photocell (queue left) (included in divider) (see TeM PD 122)	B109
10	Photocell (queue right) (included in divider) (see TeM PD 122)	B111
11	Photocell (queue at left outfeed) (included in divider) (see TeM PD 122)	B104
12	Photocell (queue at right outfeed) (included in divider) (see TeM PD 122)	B105
13	Divider PD 122 (**not** included)	–
14 *	Photocell (start infeed conveyor) (**not** included; OE)	B905.1 B905.2
15	Photocell (queue discharge 1) (included)	B358.1 B358.2
16	Photocell (queue discharge 2) (included) For distance X see Section 1.1.2. Calculate Queue Photocell Distance	B359.1 B359.2
17	Chain tensioner (**not** included)	–
18	Adjustable conveyor link (**not** included)	–

*) Applicable only for lines without line communication.

1.1.1.8 FW 68 - Shrink Unit - Double Infeed - Card Inserter

Note! Only measures regarding Card Inserter or measures that differ from corresponding measures in installation drawing 1.1.1.4 FW 68 - Shrink Unit - Double Infeed are displayed.

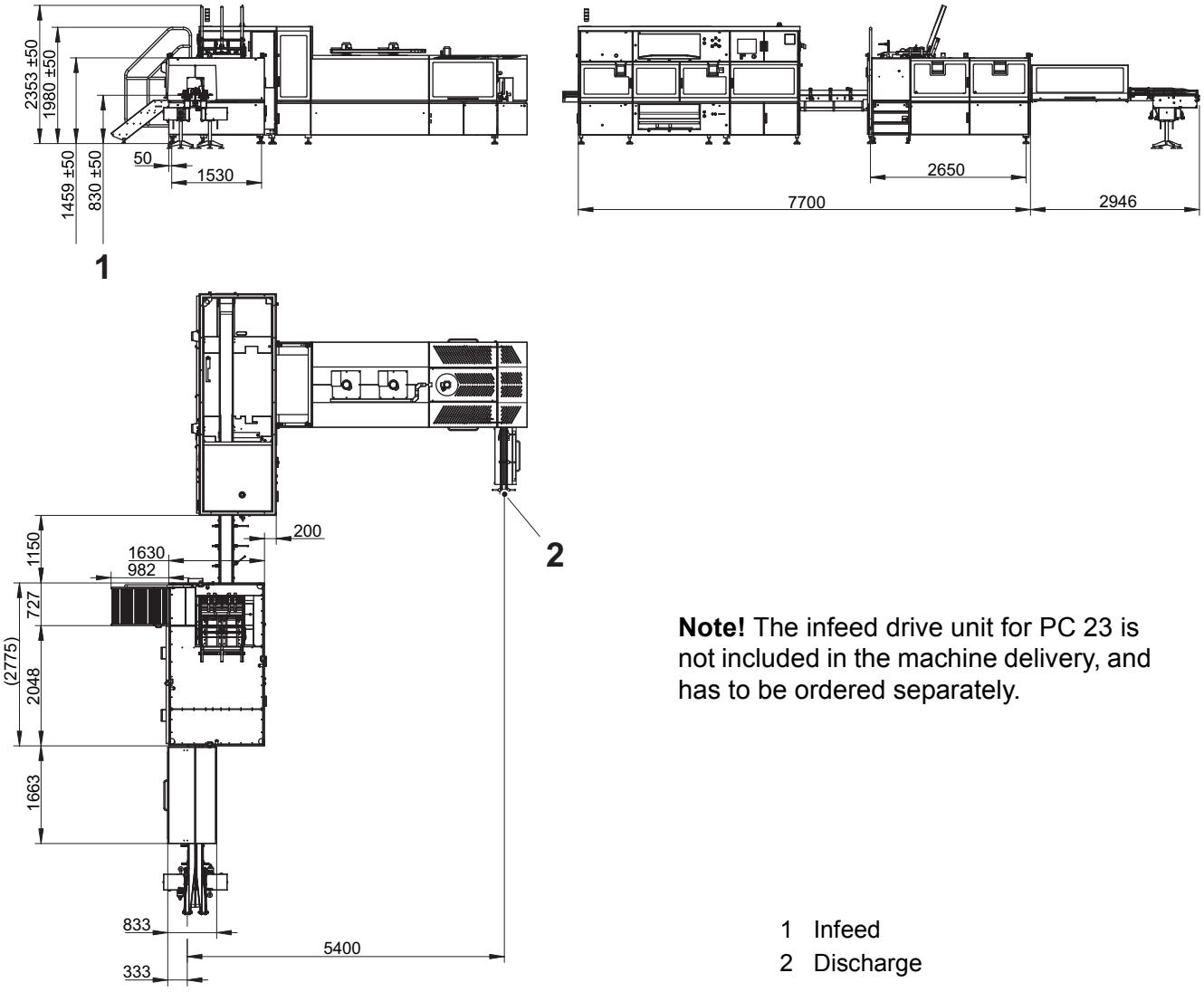

Note! The infeed drive unit for PC 23 is not included in the machine delivery, and has to be ordered separately.

1 Infeed
2 Discharge

(Cont'd)

(Cont'd)

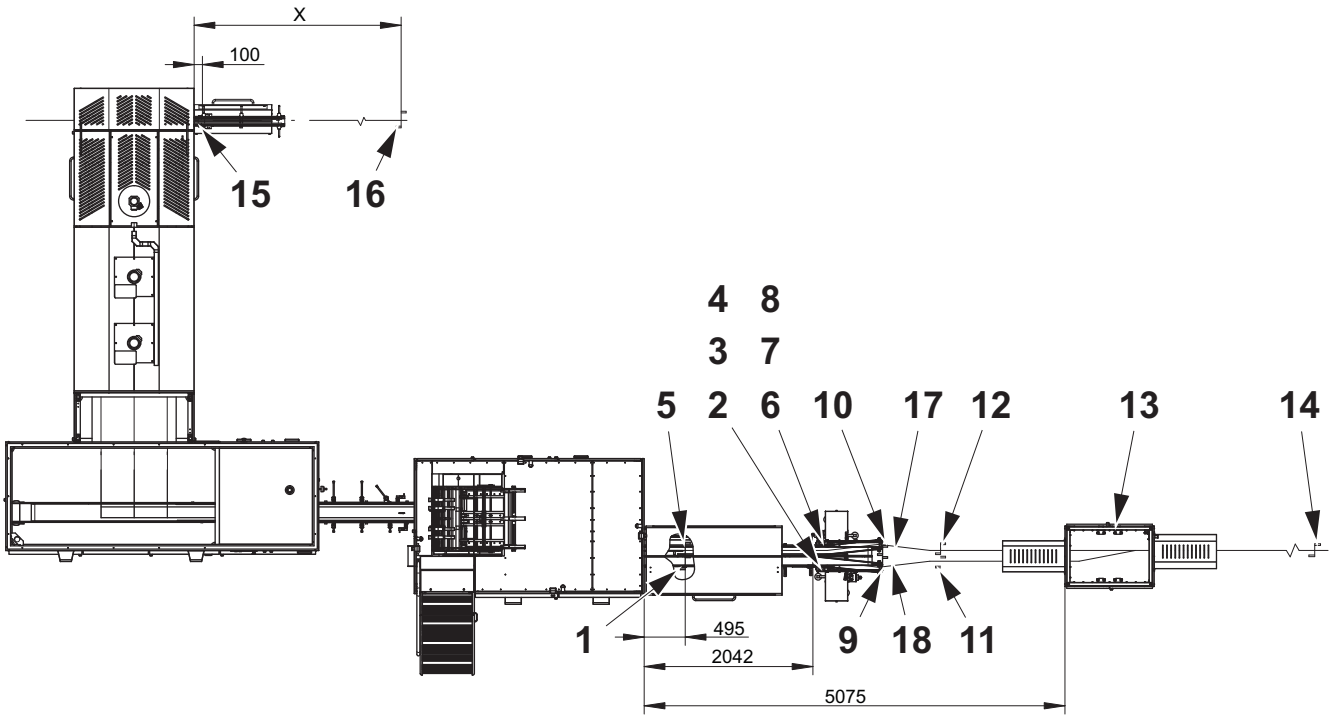

Pos	Denomination	EM reference
1	Infeed photocell (min. queue infeed 1) (included)	B213
2	Infeed photocell (infeed upper 1) (included)	B271
3	Infeed photocell (infeed lower 1) (included)	B214
4	Infeed photocell (infeed upper 1) (included)	B215
5	Infeed photocell (min. queue infeed 2) (included)	B224
6	Infeed photocell (infeed upper 2) (included)	B272
7	Infeed photocell (infeed lower 2) (included)	B225
8	Infeed photocell (infeed upper 2) (included)	B226
9	Photocell (queue left) (included in divider) (see TeM PD 122)	B109
10	Photocell (queue right) (included in divider) (see TeM PD 122)	B111
11	Photocell (queue at left outfeed) (included in divider) (see TeM PD 122)	B104
12	Photocell (queue at right outfeed) (included in divider) (see TeM PD 122)	B105
13	Divider PD 122 (**not** included)	–
14 *	Photocell (start infeed conveyor) (**not** included; OE)	B905.1 B905.2
15	Photocell (queue discharge 1) (included)	B358.1 B358.2
16	Photocell (queue discharge 2) (included) For distance X see Section 1.1.2. Calculate Queue Photocell Distance	B359.1 B359.2
17	Chain tensioner (**not** included)	–
18	Adjustable conveyor link (**not** included)	–

*) Applicable only for lines without line communication.

1.1.2 Description of Control Function

The table below show which drive motors that can be controlled by the FW 68 in the different possible configurations of infeed section, discharge section, and OE.

The drive motors can be found in the illustrations on pages 1-22 and 1-23.

Pos	Infeed and Discharge Configuration	Drive Motor					Note
		M131	M155	M132	M133	M156	
A	Single Infeed	YES	YES	NO	NO	NO	
B	Single Infeed External Infeed Conveyor Control	YES	YES	YES	YES	NO	
C	Single Infeed External Discharge Conveyor Control	YES	YES	NO	NO	YES	
D	Single Infeed External Infeed Conveyor Control External Discharge Conveyor Control	YES	YES	YES	YES	YES	
E	Double Infeed	YES	YES	NO*	NO*	NO	For line with PD 122 positioned at min. distance (3.9 m) from FW 68
F	Double Infeed External Infeed Conveyor Control	YES	YES	YES	YES	NO	For line with an extra pair of drive motors fitted between PD 122 and FW 68
G	Double Infeed External Discharge Conveyor Control	YES	YES	NO*	NO*	YES	For line with PD 122 positioned at min. distance (3.9 m) from FW 68
H	Double Infeed External Infeed Conveyor Control External Discharge Conveyor Control	YES	YES	YES	YES	YES	For line with PD 122 positioned at a distance that require extra drive motors

*) Controlled by PD 122

(Cont'd)

(Cont'd)

1.1.2.1 FW 68 without Card Inserter

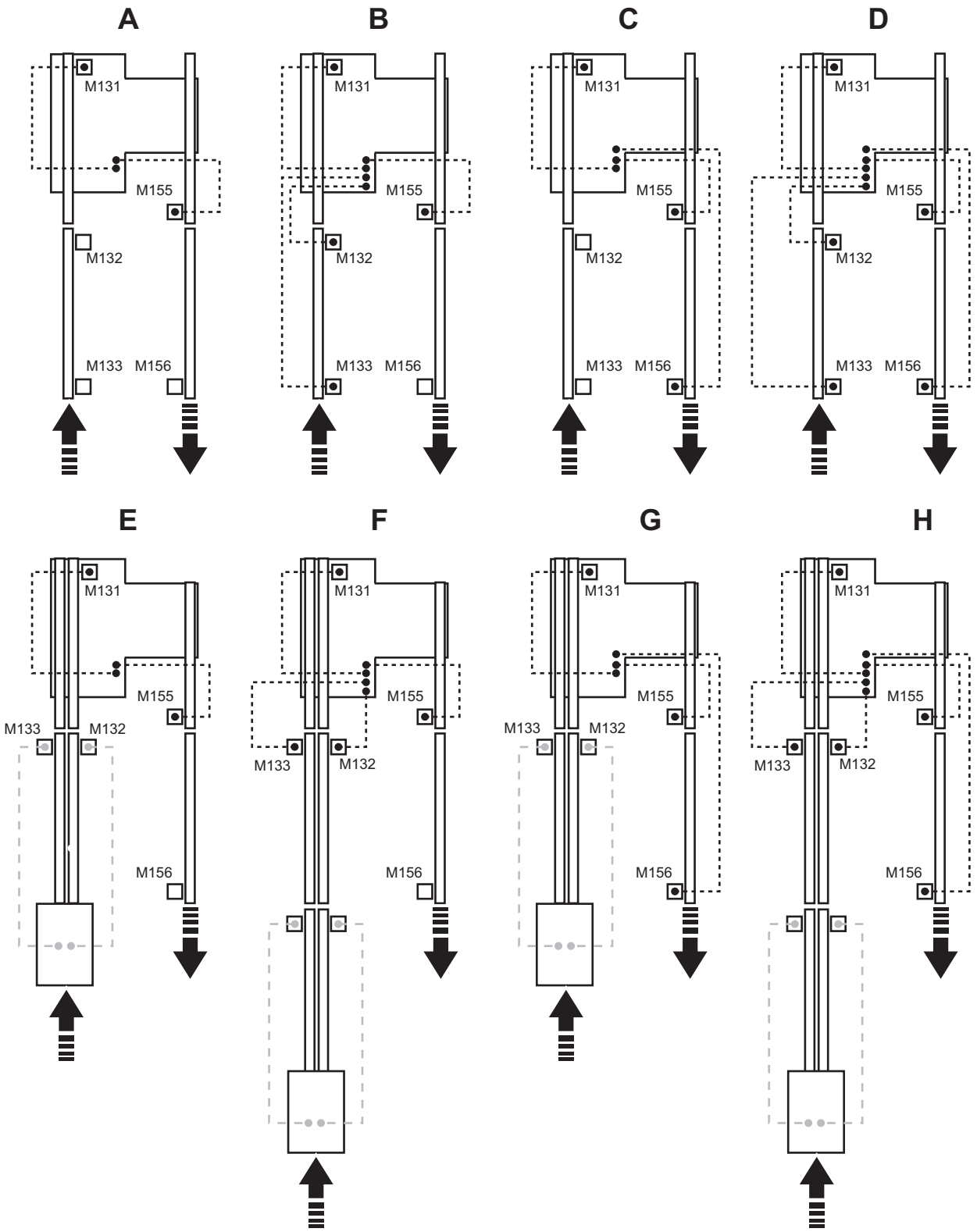

(Cont'd)

(Cont'd)

1.1.2.2 FW 68 with Card Inserter

The different drive motors are controlled in the same way as described in the table on page 1-21 and in Section 1.1.2.1 FW 68 without Card Inserter.

In the illustration below only the three main configurations are shown.

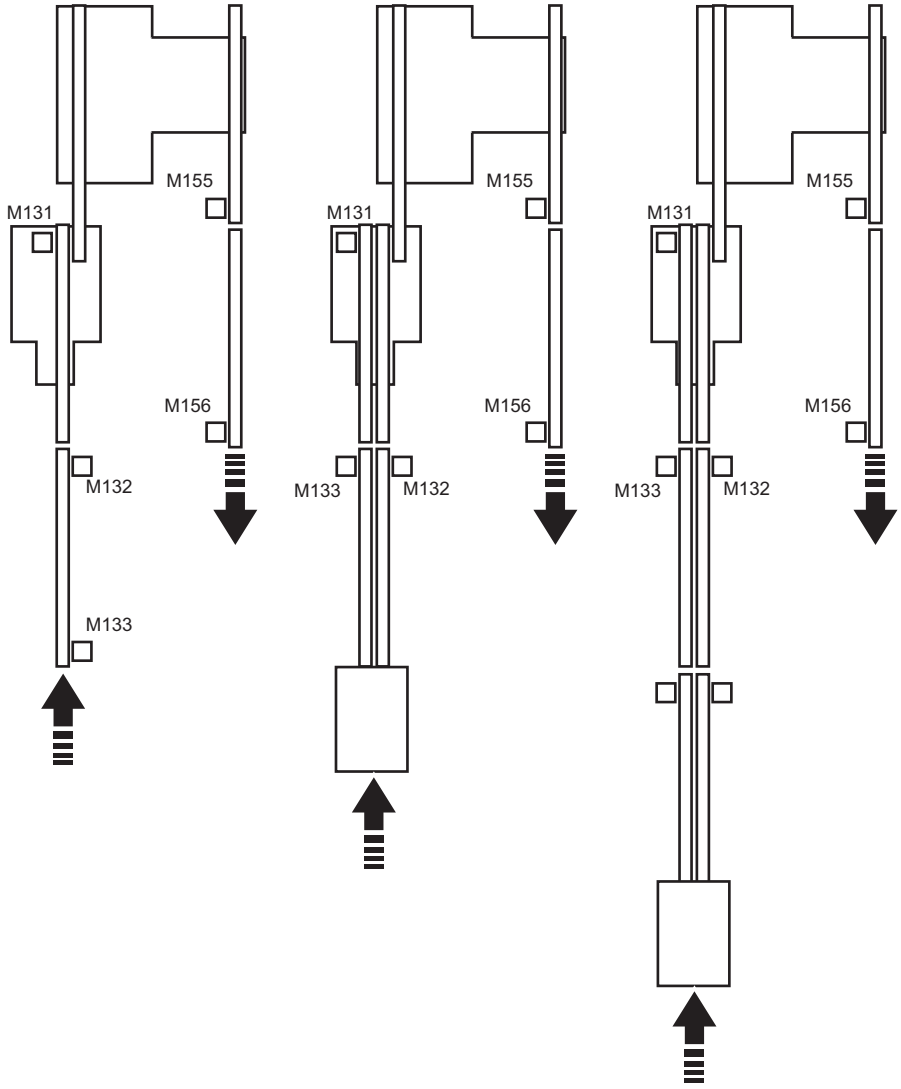

1.1.2. Calculate Queue Photocell Distance

To calculate the minimum distance to discharge queue photocell use the equation, on page 1-27, corresponding to the equipment set-up. The distance is marked X in the installation drawings previously in this section. Put in the actual constant figures from the equipment set-up to be calculated.

The meaning of the constants used in every equation is described in the table below.

Constant	Meaning	Unit
X	Distance to discharge queue photocell	m
A	Filler production speed	p/h
B	Over capacity in FW 68 (in decimal number): • 1,20 for 20% overcapacity (recommended for normal speed lines) • 1,26 for 26% overcapacity (recommended for high speed lines)	—
C	Package width in transport direction See Section 1.2.1.1 Package Width in Transport Direction	mm
D	Discharge conveyor speed (38 m/min recommended)	m/min
E	Number of packages (unit depth) See Section 1.2.1.2 Package Unit Depth	—

1.2.1.1 Package Width in Transport Direction

The packages can be transported in two ways - with the depth side (1) or with the width side (2) facing forward. Measure the width (3) or the depth (4) in the transport direction (arrow) corresponding to the package pattern to be produced.

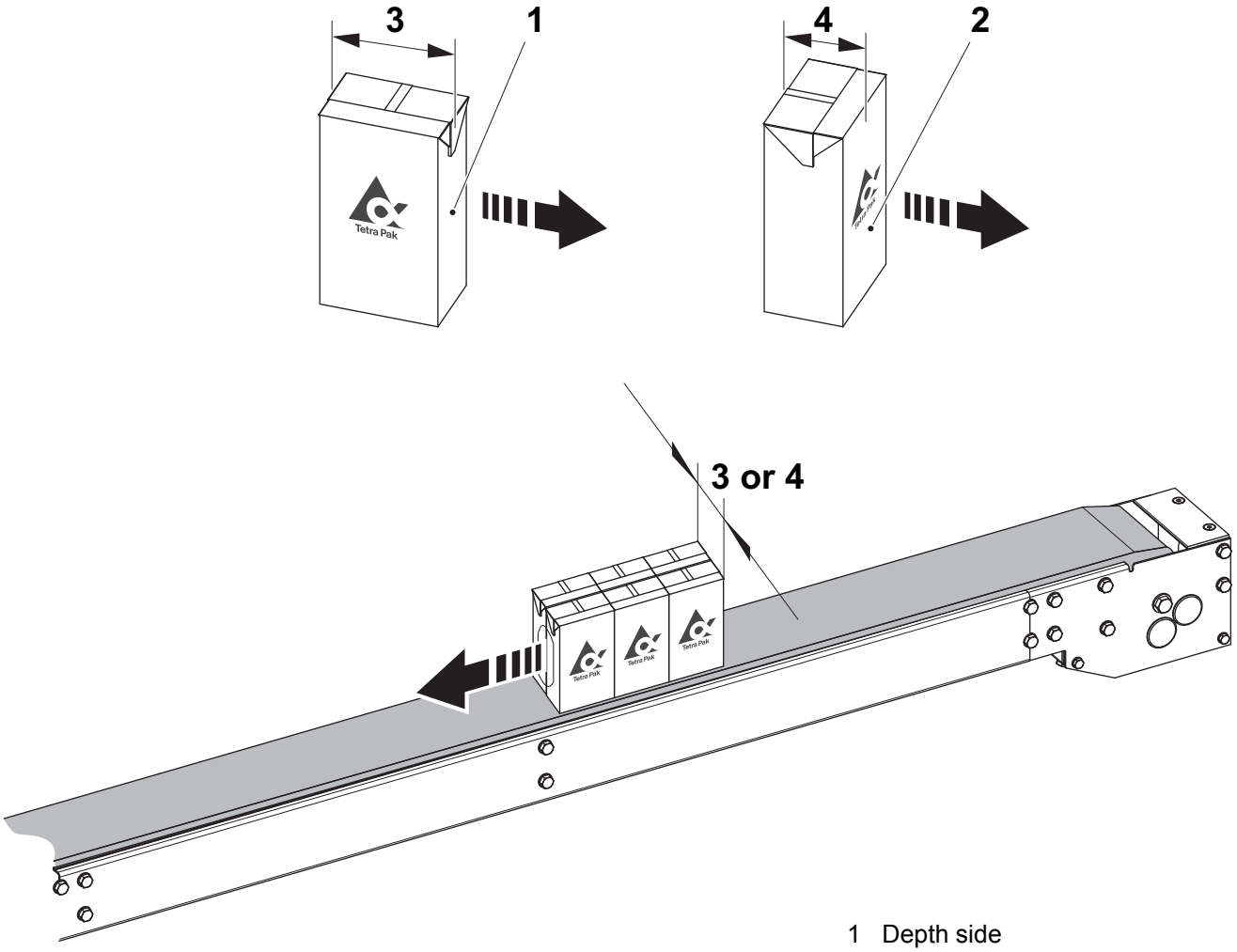

1 Depth side
2 Width side
3 Width
4 Depth

1.2.1.2 Package Unit Depth

Package unit depth refers to the number of packages standing beside each other, in one film wrapped unit like package (2) and (3), on the discharge unit conveyor (1).

In the illustration below the constant for the number of packages (unit depth) is 2.

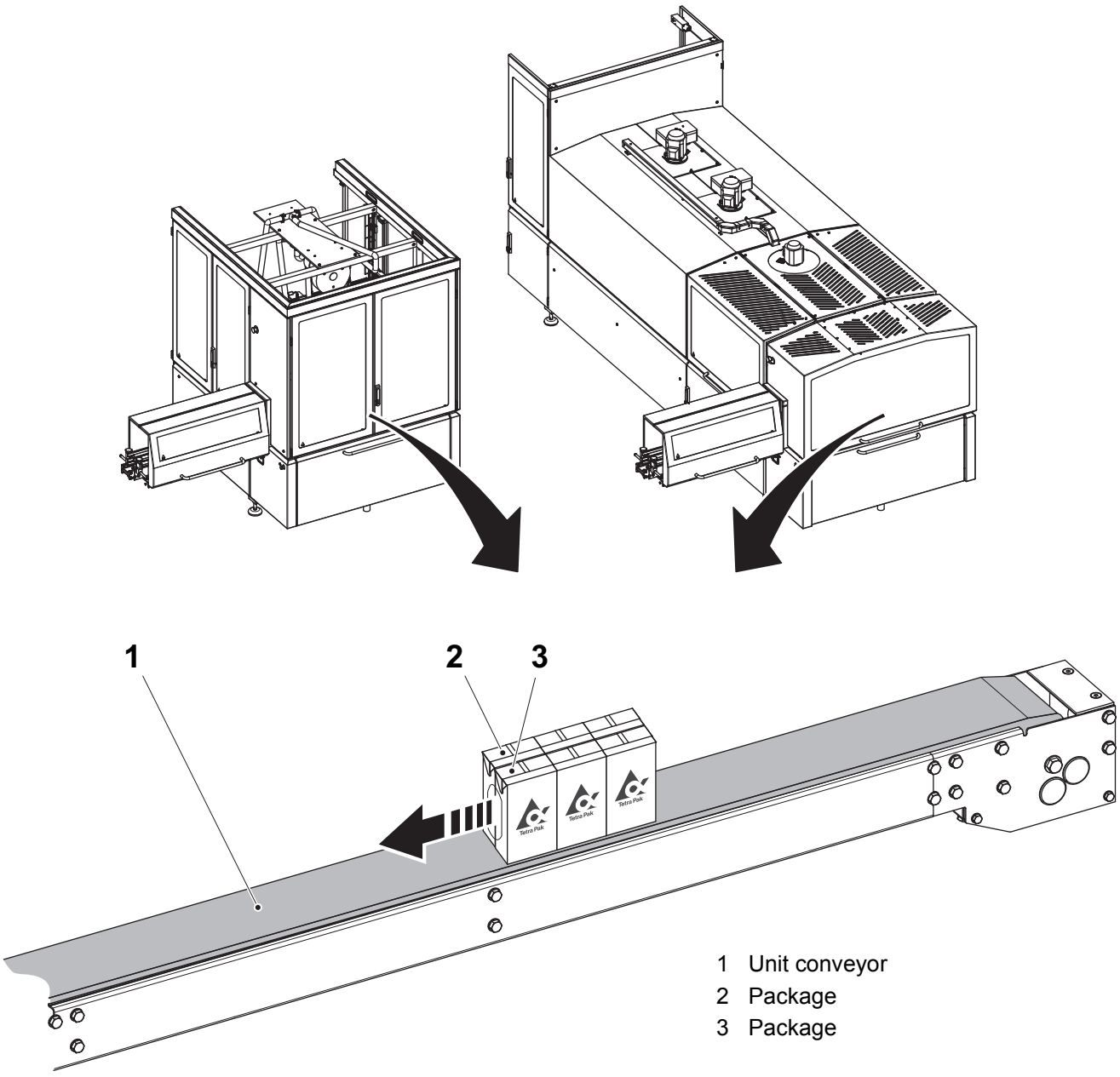

1.2.1.3 Stretch Unit

$$X = \frac{A \times B / 60 \times (1.7 / 7.5) / E \times C / 1000}{1 - [A \times B / 60 \times (C / 1000) / E / D]} + 1$$

1.7 is the length of the Stretch Unit conveyor (unit: m)
7.5 is the speed of the Stretch Unit conveyor (unit: m/min)

1.2.1.4 Shrink Unit

$$X = \frac{A \times B / 60 \times (4.3 / 10) / E \times C / 1000}{1 - [A \times B / 60 \times (C / 1000) / E / D]} + 1$$

4.3 is the length of the Shrink Unit conveyor (unit: m)
10 is the speed of the Shrink Unit conveyor (unit: m/min)

Example

Note! This example is valid for both Shrink unit and Stretch unit (except for the conveyor length and speed data).

Production of package TBA 200 S in package pattern 3x2 and with the following specifications:

- Filler production speed: 20 000 p/h
- Over capacity: 26%
- Package width in transport direction: 47 mm
- Conveyor speed: 38 m/min
- Number of packages (unit depth): 2

$$X = \frac{20\,000 \times 1.26 / 60 \times (4.3 / 10) / 2 \times 47 / 1000}{1 - [20\,000 \times 1.26 / 60 \times (47 / 1000) / 2 / 38]} + 1 = 6.73$$

Accordingly the minimum distance to the discharge queue photocell is 6.73 m.

1.1.3 Required Clearances around the Machine

1.1.3.1 FW 68 without Card Inserter

The drawings show the required space around the machine.

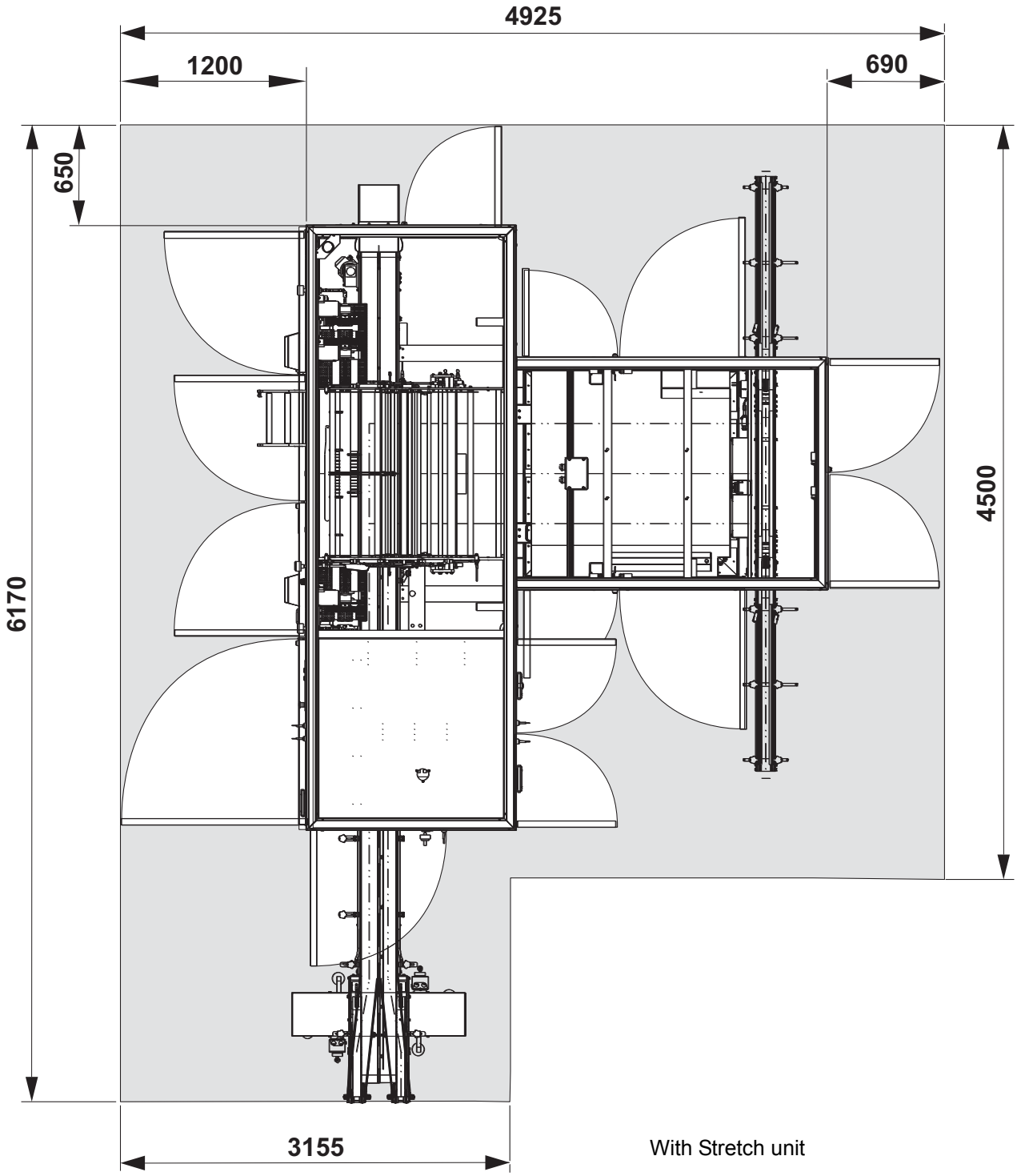

With Stretch unit

(Cont'd)

(Cont'd)

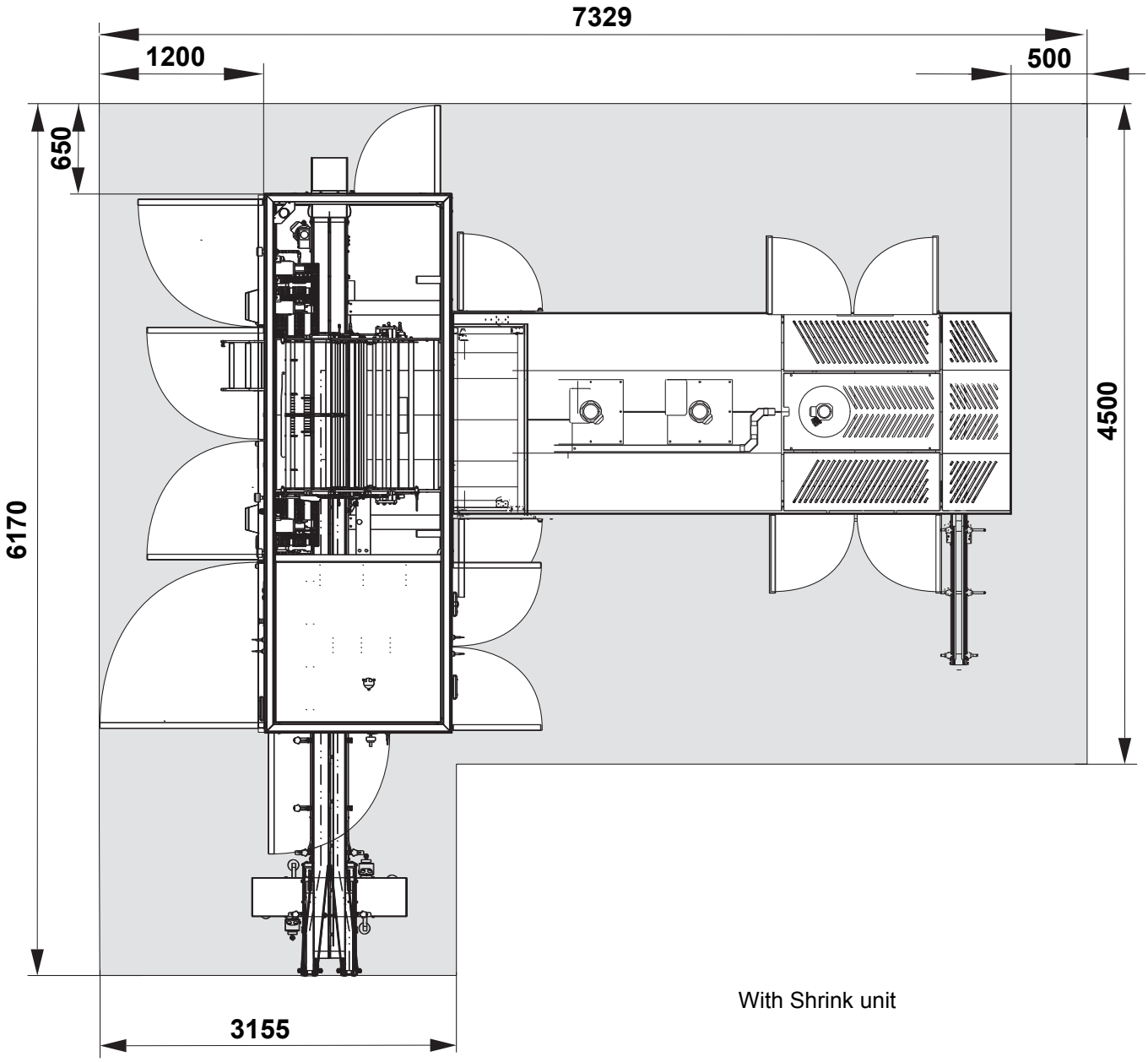

With Shrink unit

1.1.3.2 FW 68 with Card Inserter

The drawings show the required space around the machine.

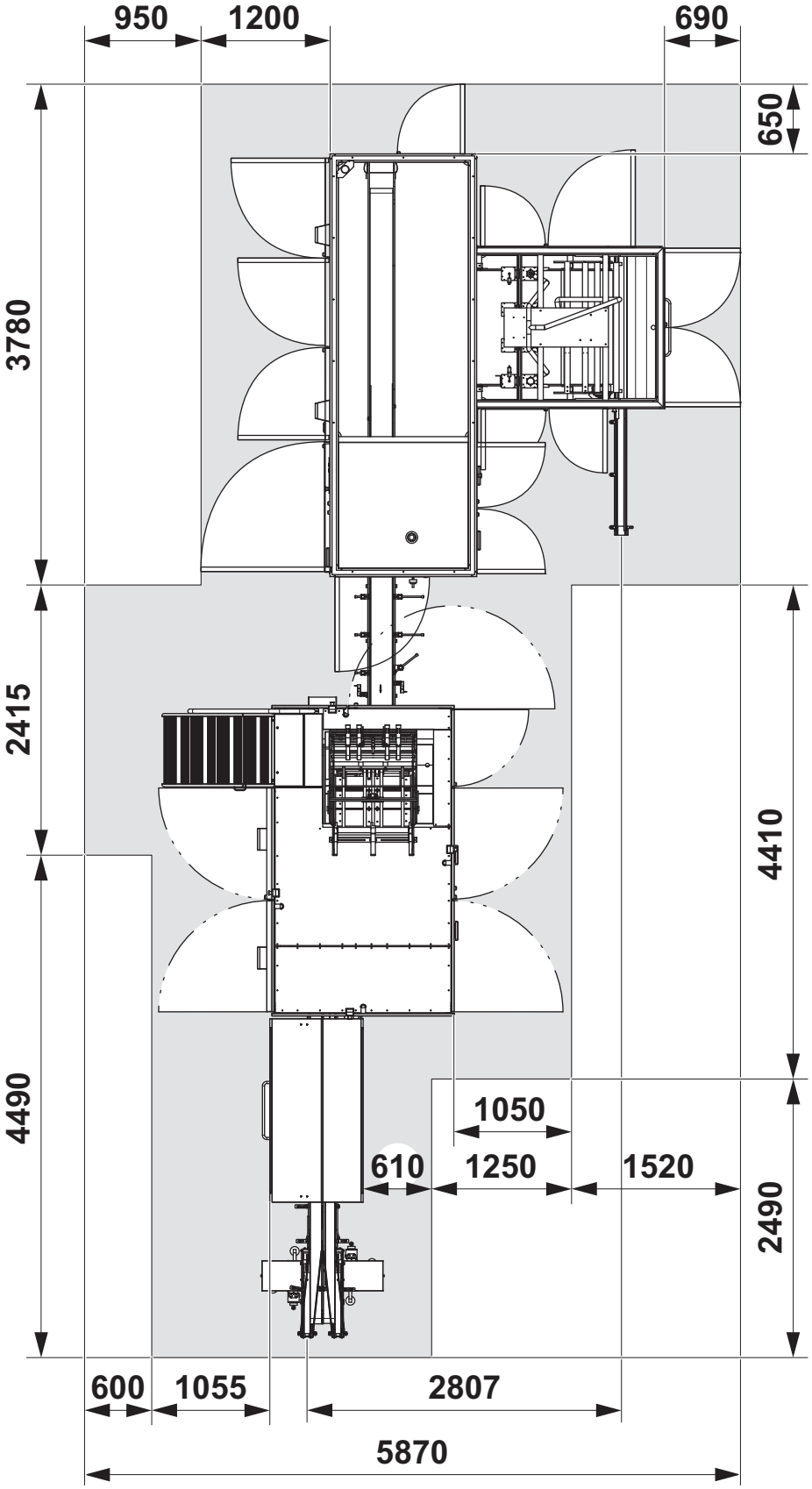

With Stretch unit

(Cont'd)

(Cont'd)

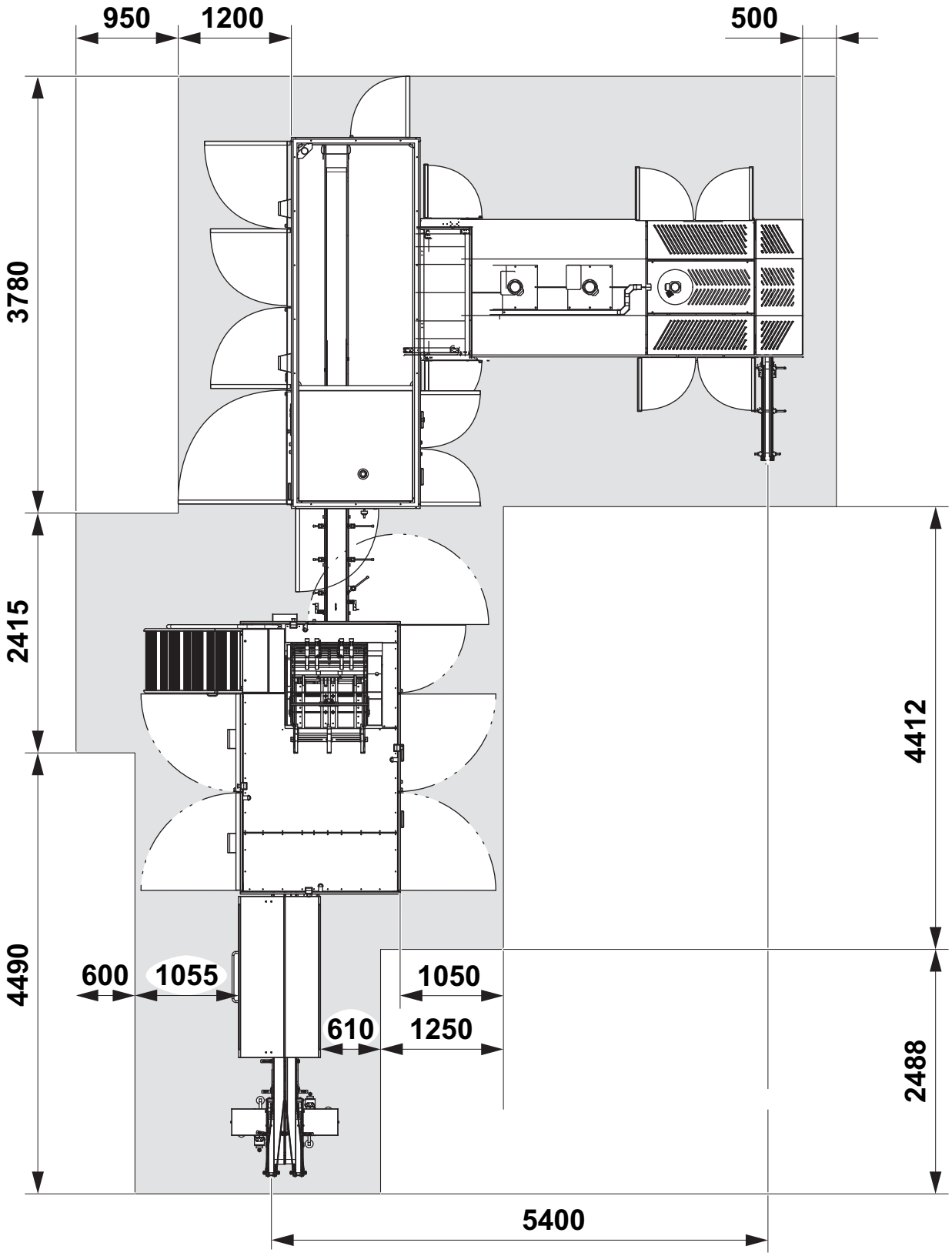

With Shrink unit

1.1.4 Connections

The below drawing shows the location of the connections for compressed air (1), water (2) and electricity (3). See 1.5 Technical Data.

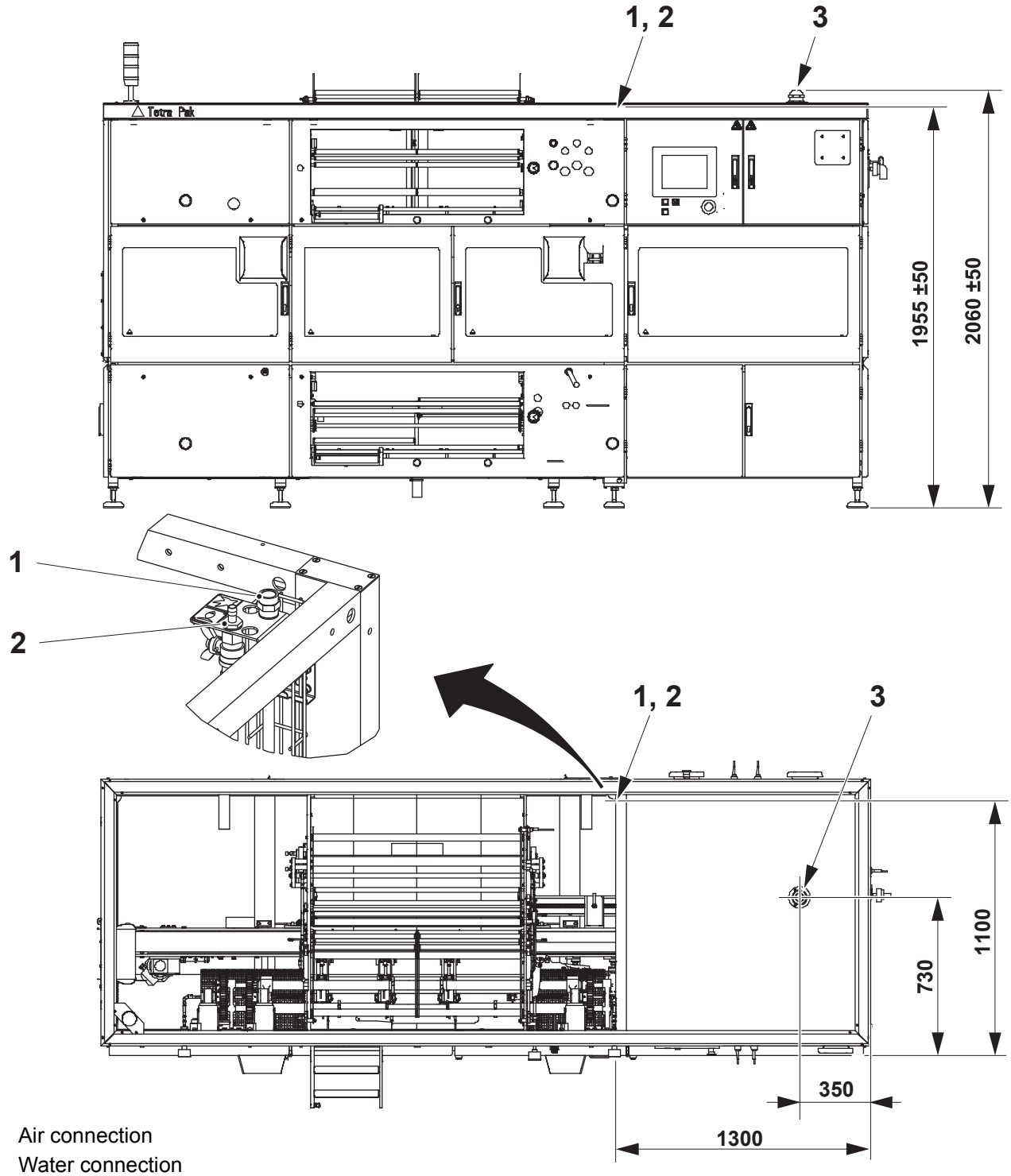

1 Air connection
2 Water connection
3 Electrical connection

1.2 Mass (Weight)

Contents	Weight kg (Gross)	Length mm	Width mm	Height mm
Base Module	2400	3775	1310	2001
Stretch unit	700	1347	1380	2001
Shrink unit	1500	4274	1450	2001
Card Inserter	1420	2775	1790	2330

Note! For more accurate dimensions, see the installation drawings.

1.2.1 Centre of Gravity

1.2.1.1 FW 68 Base Module

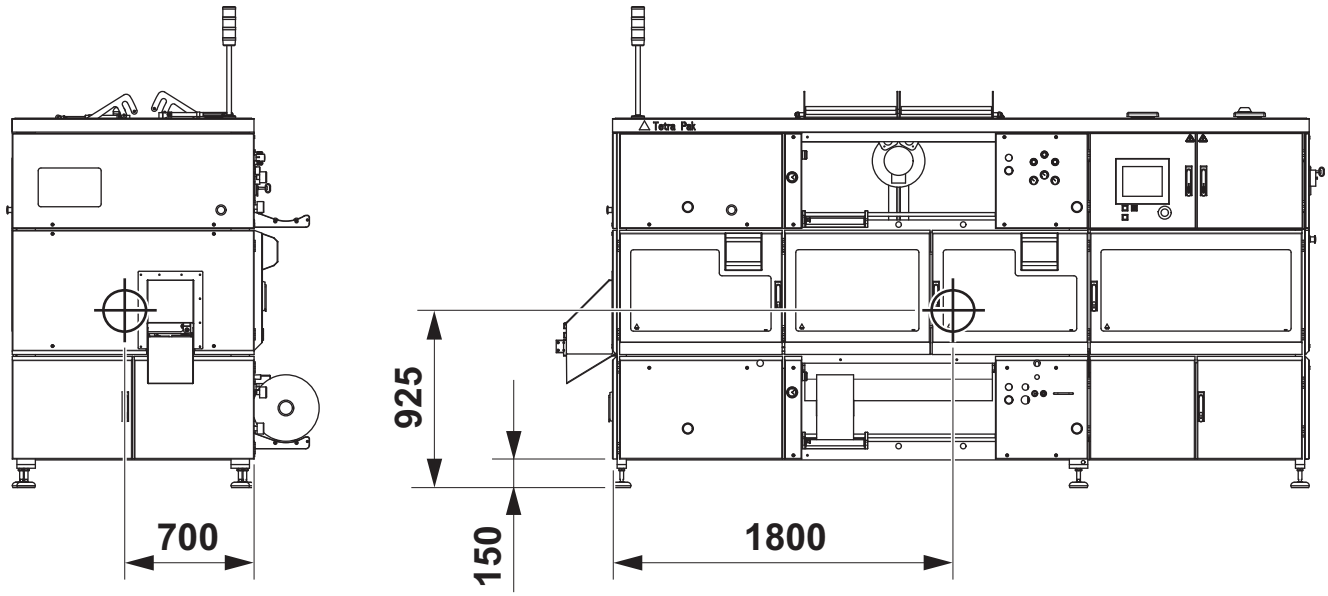

1.2.1.2 Stretch Unit

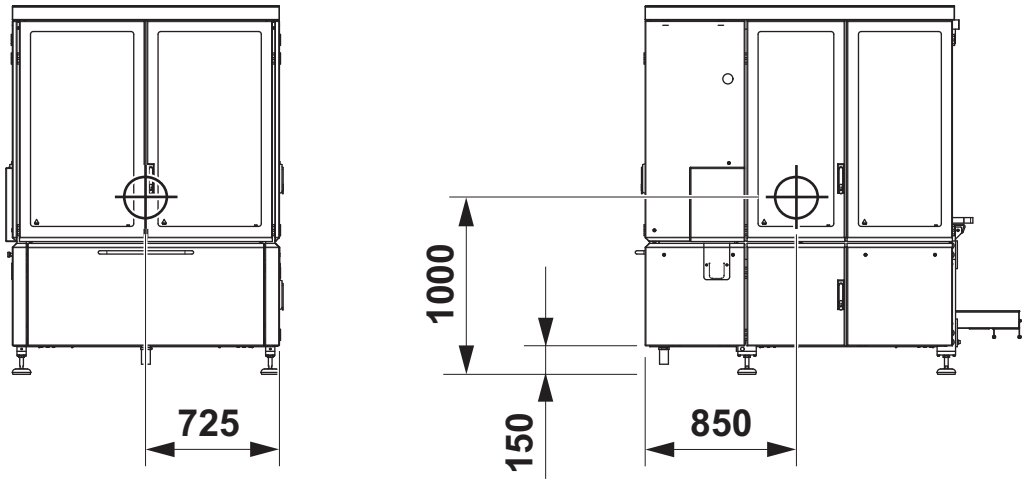

1.2.1.3 Shrink Unit

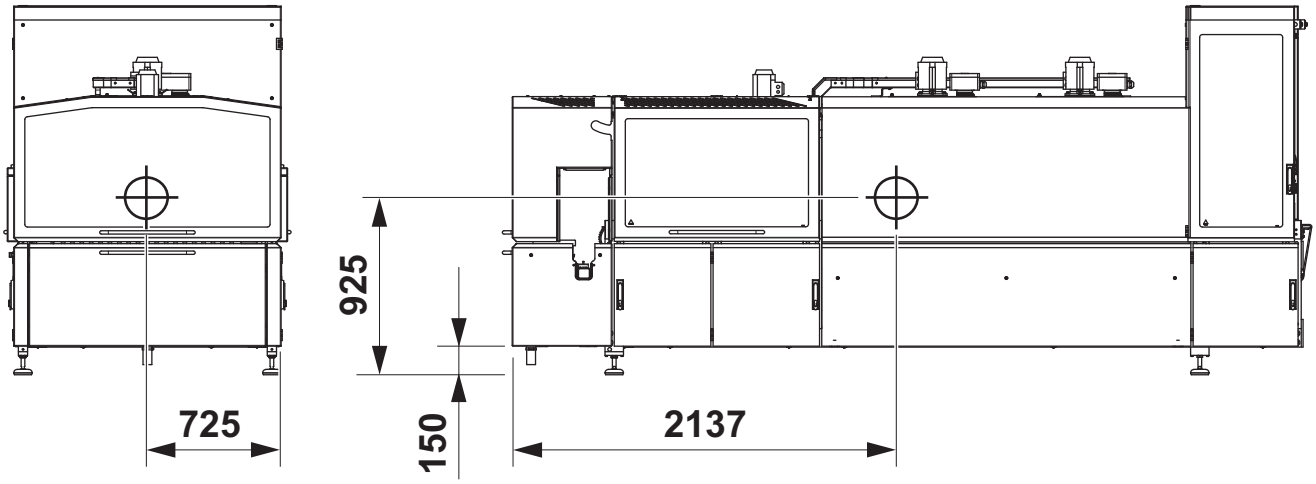

1.2.1.4 Card Inserter

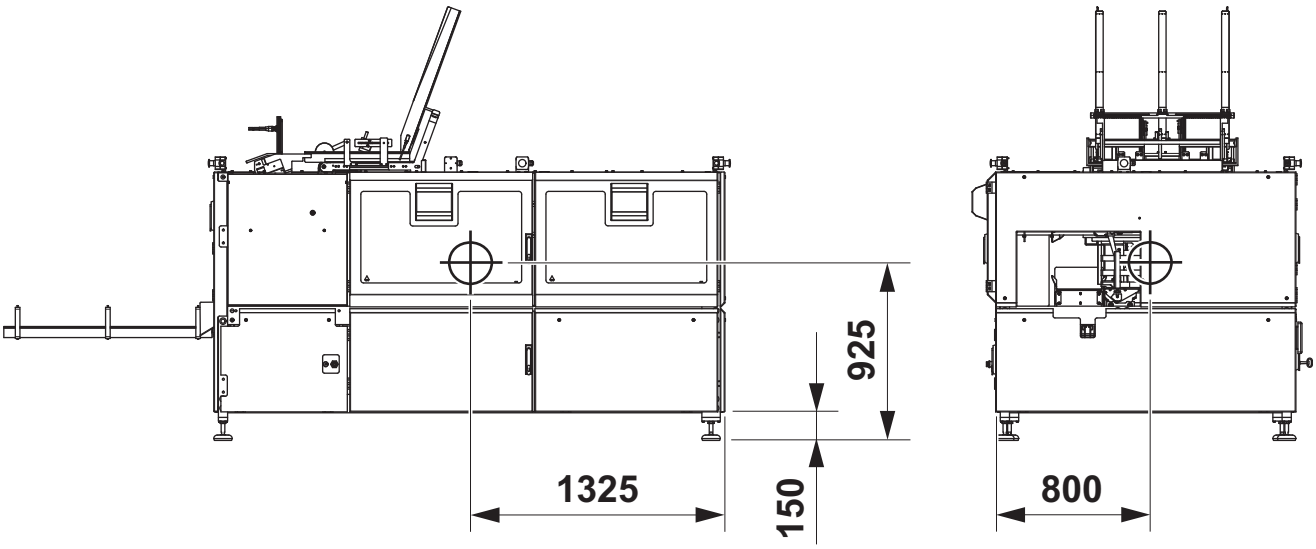

1.2.2 Static Load

1.2.2.1 FW 68 - Base Module

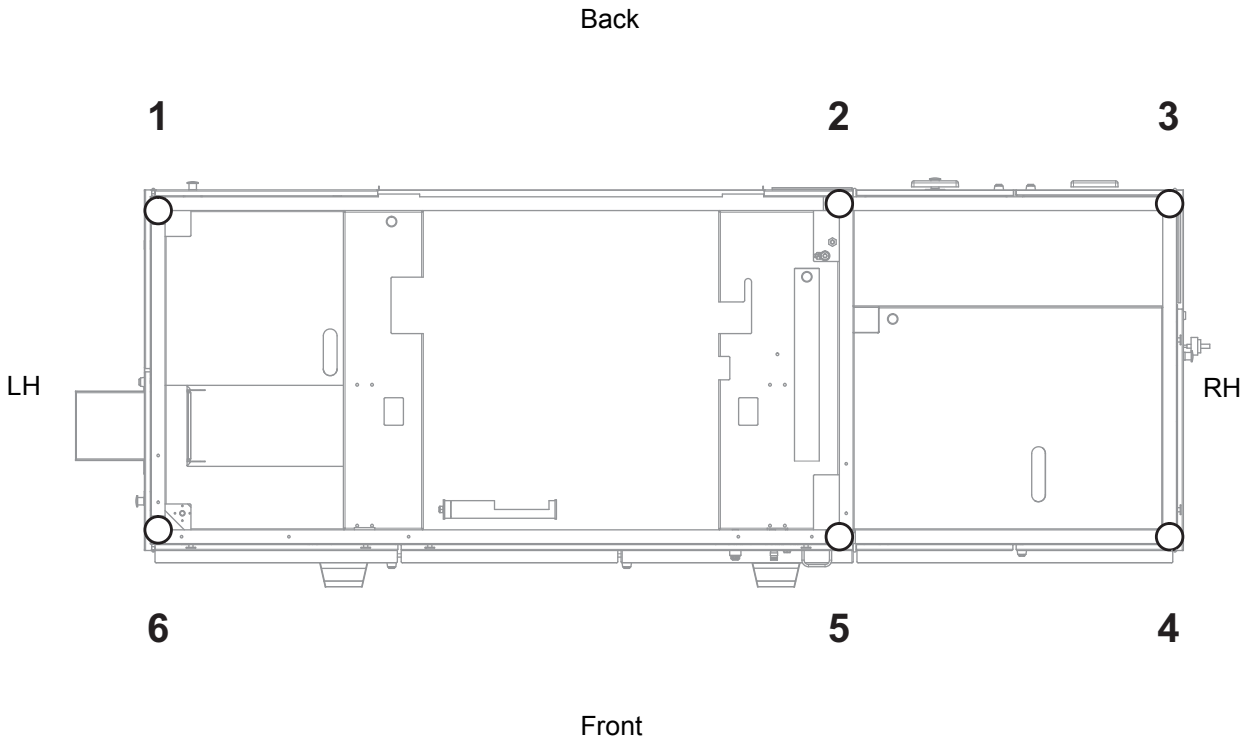

Foot	Load kg (lbs)
1	155 (340)
2	920 (2030)
3	40 (90)
4	255 (560)
5	600 (1325)
6	405 (890)

1.2.2.2 FW 68 - Stretch Unit

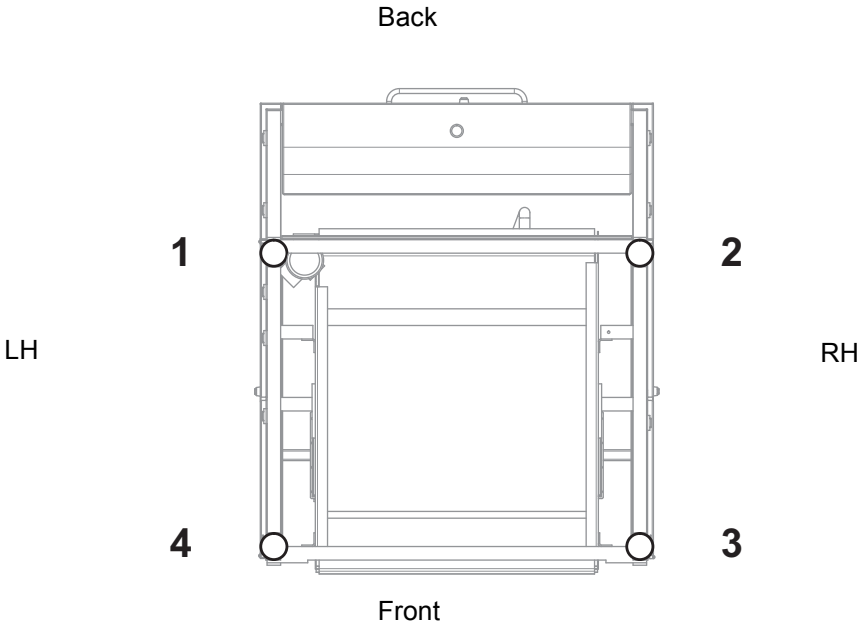

Foot	Load kg (lbs)
1	260 (575)
2	245 (538)
3	90 (192)
4	30 (70)

1.2.2.3 FW 68 - Shrink Unit

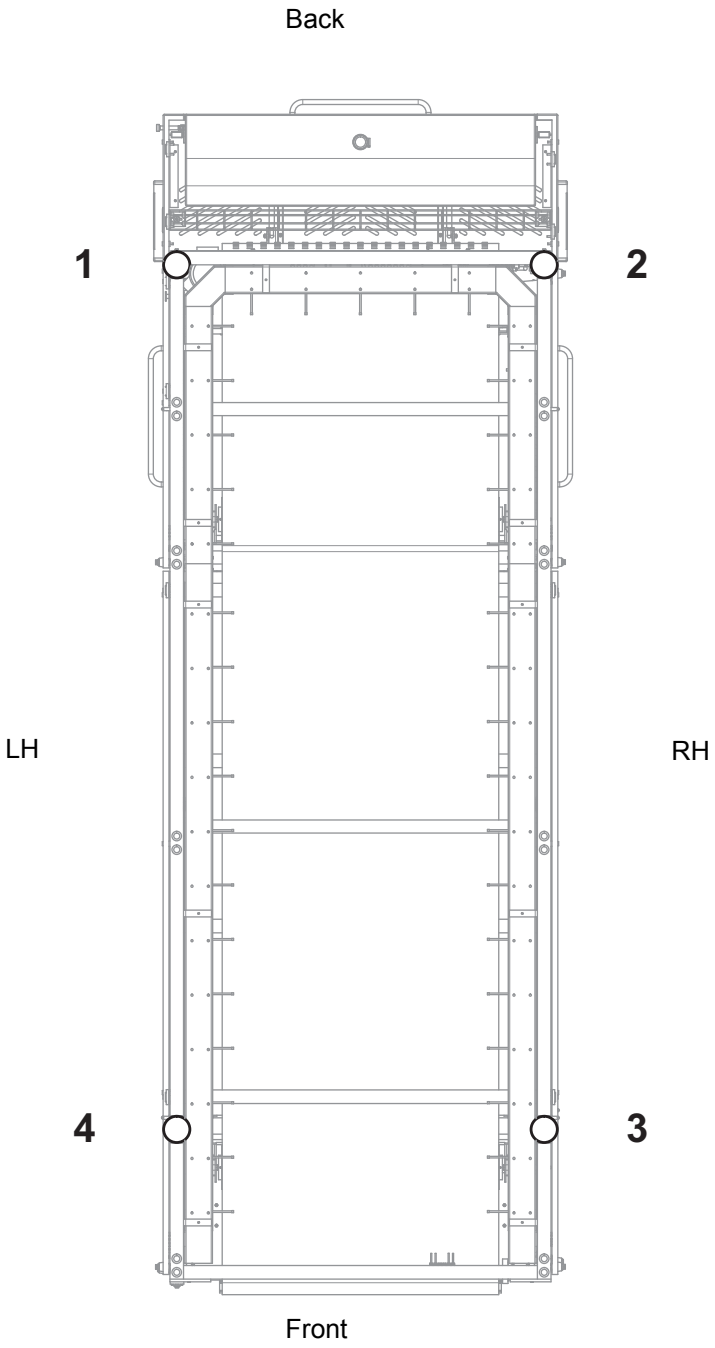

Foot	Load kg (lbs)
1	360 (792)
2	370
3	350 (767)
4	365 (807)

1.2.2.4 FW 68 - Card Inserter

Back

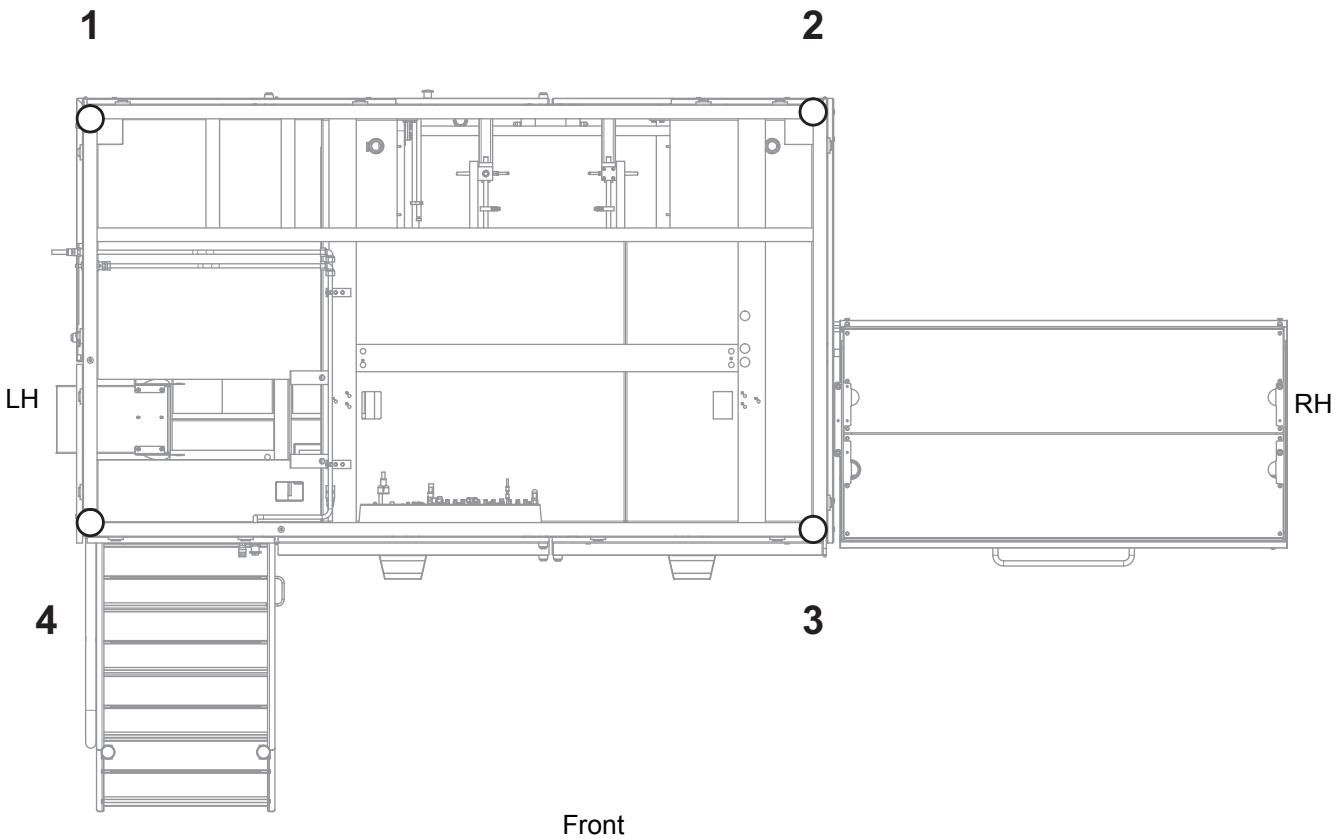

Front

Foot	Load kg (lbs)
1	390 (860)
2	270 (595)
3	320 (705)
4	440 (970)

1.3 Utility Connection Data

Compressed Air Connection

The compressed air should be connected at the point shown in Section 1.1.4 Connections.

Water connection

The water should be connected at the point shown in Section 1.1.4 Connections.

Electrical Connection

To connect the electricity, see EM, chapter 7, Mains connections diagram. Point of connection is shown in Section 1.1.4 Connections.

1.4 Noise

1.4.1 FW 68 without Card Inserter

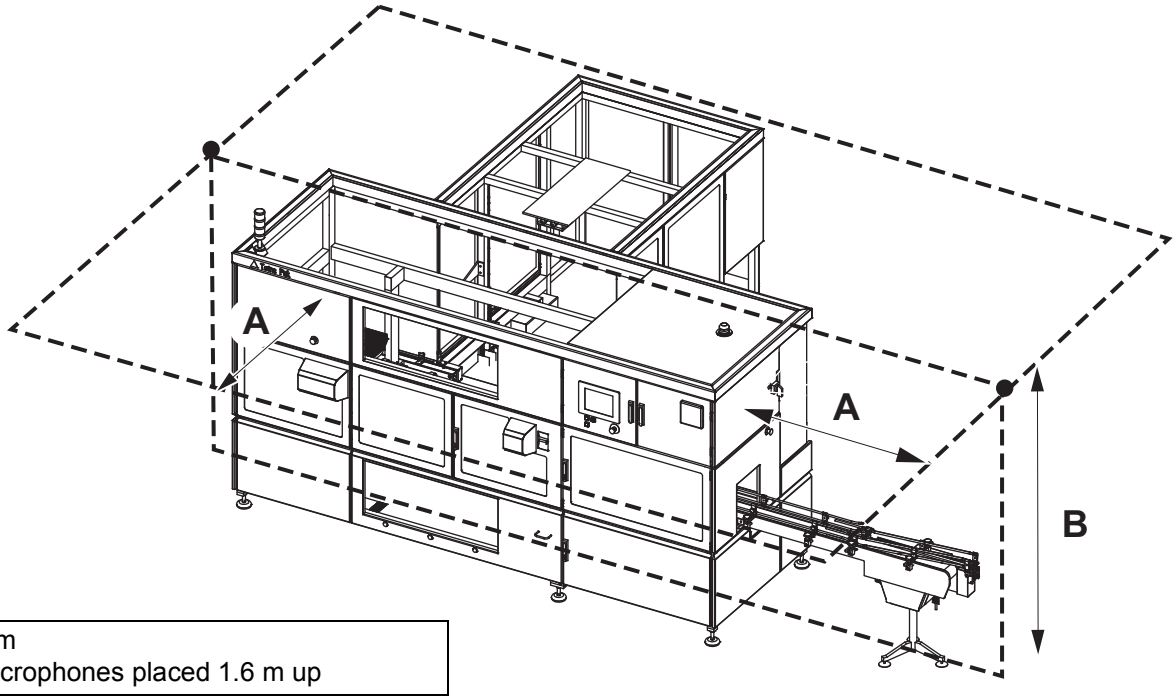

A = 1 m
B = Microphones placed 1.6 m up

DECLARED DUAL-NUMBER NOISE EMISSION VALUES in accordance with ISO 4871 **Machine**: Film Wrapper 68 Machine running in normal production with 20000 p/h	
Measured A-weighted Emission Sound Pressure Level, L_{pA}: (ref. 20 µPa) at the operator´s position B	**76.5** dB(A)
Uncertainty factor, K_{pA}:	5 dB(A)
Values determined using the basic standard ISO 11204 (Survey method)	
Measured A-weighted Sound Power Level, L_{WA}: (ref. 1 pW)	**94** dB(A)
Uncertainty factor, K_{WA}:	4 dB(A)
Values determined using the basic standard ISO 3746 (Survey method)	

1.4.2 FW 68 with Card Inserter

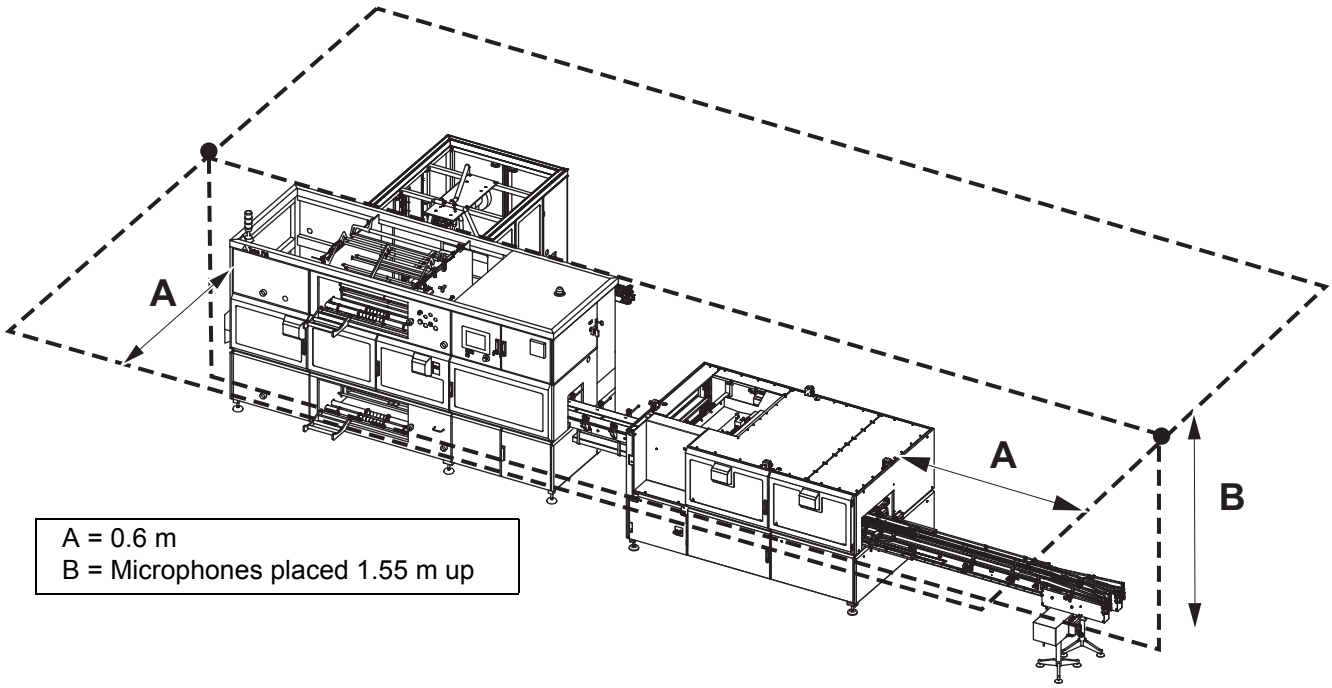

DECLARED DUAL-NUMBER NOISE EMISSION VALUES in accordance with ISO 4871 **Machine**: Film Wrapper 68 - 0300 with Card Inserter Machine running in normal production	
Measured A-weighted Emission Sound Pressure Level, L_{pA}: (ref. 20 µPa) at the operator´s position B	**75** dB(A)
Uncertainty factor, K_{pA}:	5 dB(A)
Values determined using the basic standard ISO 11204 (Survey method)	

1.5 Technical Data

Documentation	
Installation drawing	2701219, 2701220, 2701221, 2701222
Pneumatic diagram	See SPC 2601358-0200
Lubrication system	2740703
Selections	
Volume	See Business Configurator
Volume/PP	
Infeed	Feedside left; Feedside right
Discharge	End unit (left or right); Through going
Card Inserter	Feedside left; Feedside right
Compressed air	
Max particles size	40 µm
Dew point	+3°C
Oil content	Only when using Mist lubrication (OE), 0,01 mg/m^3
Momentary peak consumption	1025 Nl/min 1190 Nl/min (with Card Inserter)
Average consumption during an 8 hour shift	360 Nl/min (single infeed, Stretch unit) 490 Nl/min (double infeed, Stretch unit) 490 Nl/min (single infeed, Stretch unit and Card Inserter) 465 Nl/min (double infeed, Stretch unit and Card Inserter) 590 Nl/min (single infeed, Shrink unit) 680 Nl/min (double infeed, Shrink unit) 590 Nl/min (single infeed, Shrink unit and Card Inserter) 680 Nl/min (double infeed, Shrink unit and Card Inserter)
Connection thread	G 3/8” internal
Required pressure	6.3-10 Bar
Electricity	
Control system	GE Fanuc PLC System
Power consumption	
Pre-heating/Production	18,1/12,1 kW (single infeed Stretch unit) 18,5/13,5 kW (double infeed Stretch unit) 18,5/13,5 kW (single infeed Stretch unit and Card Inserter) 19,8/12,0 kW (double infeed Stretch unit and Card Inserter) 30/25 kW (single infeed Shrink unit) 29,8/28 kW (double infeed Shrink unit) 30/25 kW (single infeed Shrink unit and Card Inserter) 29,8/29 kW (double infeed Shrink unit and Card Inserter)
Phase	3N~
Frequency	60/50 Hz ± 2%
Voltage	400/230 V +10/-15%
Fuse dimension	100 A
Cable area (copper min.)	70 mm^2
Cable type	4x70/50 or follow local regulations

(Cont'd)

(Cont'd)

<table>
<tr><td colspan="5">Conveyors</td></tr>
<tr><td colspan="5">Infeed</td></tr>
<tr><td>Type (standard)</td><td colspan="4">Tetra Package Conveyor 21 (TPC21)
Package Conveyor 23 (PC23)</td></tr>
<tr><td>Type of chain</td><td colspan="4">TPC21: MOD02 1550500-0101, MOD86 542586-0201
PC23: MOD04 1550700-0201</td></tr>
<tr><td>Width</td><td colspan="4">TOPC21: 54 mm
PC23: 70 mm</td></tr>
<tr><td>Infeed height (Top of Chain)</td><td colspan="4">FW 68 base module: 825 mm
Card Inserter: 830 mm</td></tr>
<tr><td>Speed</td><td colspan="4">20 or 38 m/min</td></tr>
<tr><td>Infeed side</td><td colspan="4">Left or right</td></tr>
<tr><td>Required chain length</td><td colspan="4">1 m</td></tr>
<tr><td>Maximum chain length that can be pulled (equivalent to straight conveyor)</td><td colspan="4">See PIM Conveyor</td></tr>
<tr><td>Drive unit driven from the machine</td><td colspan="4">Yes (OE)
See Section 1.1.2 Description of Control Function</td></tr>
<tr><td>External drive unit controlled from the machine</td><td colspan="4">Yes (OE)
See Section 1.1.2 Description of Control Function</td></tr>
<tr><td>Chain tensioner required</td><td colspan="4">Yes</td></tr>
<tr><td>Conveyor chain lubricant</td><td colspan="4">Yes</td></tr>
<tr><td rowspan="4">Frequency, drive unit
Package Conveyor 23
(Drive unit 2590240-0207, not included in machine delivery)</td><td>Infeed type</td><td>Speed</td><td>Frequency</td><td rowspan="4">Note!
The specified drive unit is the only one that can be used with PC23 for this machine.</td></tr>
<tr><td>Single</td><td>Flex</td><td>25 Hz</td></tr>
<tr><td>Double</td><td>Speed</td><td>50 Hz</td></tr>
<tr><td>Double</td><td>Speed</td><td>50 Hz</td></tr>
<tr><td colspan="5">Discharge</td></tr>
<tr><td>Type (standard)</td><td colspan="4">Tetra Unit Conveyor 54 (TUC 54)
Tetra Conveyor Flexi 56 (TCF 56)</td></tr>
<tr><td>Type of chain</td><td colspan="4">90155-27</td></tr>
<tr><td>Width</td><td colspan="4">TUC 54: U 120 - 247
TCF 56: U 40 - 250</td></tr>
<tr><td>Discharge height (Top of Chain)</td><td colspan="4">814 mm</td></tr>
<tr><td>Speed</td><td colspan="4">20 or 38 m/min</td></tr>
<tr><td>Maximum chain length that can be pulled (equivalent to straight conveyor)</td><td colspan="4">See PIM Conveyor</td></tr>
<tr><td>Time to complete a sequential stop</td><td colspan="4">3 s</td></tr>
<tr><td>Drive unit driven from the machine</td><td colspan="4">Yes (OE)
See Section 1.1.2 Description of Control Function</td></tr>
<tr><td>External drive unit controlled from the machine</td><td colspan="4">Yes (OE)
See Section 1.1.2 Description of Control Function</td></tr>
<tr><td>Conveyor chain lubricant</td><td colspan="4">Yes</td></tr>
<tr><td>Chain tensioner required</td><td colspan="4">Yes</td></tr>
</table>

(Cont'd)

(Cont'd)

Production material		
One-way material		
Film specification	Film	Stretch unit 1569818 Shrink unit 2672780
	Printed film	Stretch unit 2740690 Shrink unit 2740691
Returnable material		
Crate	Yes	
Miscellaneous		
Maximum nominal capacity	Double infeed portion package: 20 000 p/h Double infeed family package: 12 000 p/h Single infeed portion package: 10 000 p/h Note! Also depending on package pattern.	
PLMS-version, SNP	5.0	
PLMS-version, Genius	3.0	
PLMS cable	TP No. 90220-0091	
Line control Genius	Downstream: package coming Downstream: run and able Upstream: start conveyor Upstream: ready signal	
Line control I/O	Downstream: package coming Downstream: run and able Upstream: start conveyor Upstream: ready signal	
Line control cable	TP No. 351150-0405	
Machine has power supply for package trap Aero	Yes	
Machine has control function for conveyor lubrication solenoid valve	No	
Noise emission	<76.5 dB	
Attachment of the machine to the floor	No	
Thermal load (heat emission)		
During production	10 kW (Stretch unit) 12 kW (Stretch unit and Card Inserter) 25 kW (Shrink unit) 27 kW (Shrink unit and Card Inserter)	

(Cont'd)

(Cont'd)

Scope of delivery		
Optional equipment		
Start Infeed Conveyor Photocells: Design Correction: Cooling System AC in Electrical Cabinet: Extra Discharge Conveyor Control: Extra Infeed Conveyor Control: Mist Lubrication: Vertical Perforating: Card Inserter: Lifting Trolley:	2812690-0100 1569125-0400 2646380-0100 2651872-0100 2651870-0100 90456-2135 2650988-0100 674965-0100 2976190-0100	
Not included in delivery, according to the Installation drawing (Parts are sold by TP GTS AB)		
Parts and cables	PLMS cable	
Templates and tools for normal operation	—	
Shipping data		
Machine weight:	Base module: Stretch unit: Shrink unit: Card Inserter:	2400 kg 700 kg 1500 kg 1420 kg
Number of boxes	2 3 (with Card Inserter)	
Shipping weight	Base module: Stretch unit: Shrink unit: Card Inserter:	3000 kg 1000 kg 2000 kg 2300 kg
Shipping volume	Base module: Stretch unit: Shrink unit: Card Inserter:	20 m^3 10 m^3 21 m^3 25 m^3

1.6 Conveyor Lubrication

This section is only valid for Tetra Pak conveyors in the production line, not for conveyors inside the machine.

Note! In order to have optimized line performance it is very important that the conveyor lubrication is set in accordance with the conveyor lubrication technical manual (TeM).

2 Preparation

Description

This chapter contains the site preparation requirements for the installation described in this Installation Manual.

2.1 Requirements . . . . . 2 - 5

2.1.1 Floor . . . . . 2 - 5

2.2 Auxiliary Equipment . . . . . 2 - 6

This page intentionally left blank

2.1 Requirements

In order to obtain the best possible working condition for the machine, it is necessary to follow our recommendation of data according to Chapter 1 Technical Data and Drawings.

2.1.1 Floor

To obtain a proper production it is necessary that the machine is standing stable on the floor. It is important that the floor is in good condition.

See Section 1.2.2 Static Load in Chapter 1 Technical Data and Drawings for static load of each module of the FW 68.

2.2 Auxiliary Equipment

WARNING
Risk of personal injury.
Follow the recommendations below to avoid injury.

CAUTION
Risk of damage to equipment.
Fork extensions must be used if the fork lift does not have forks long enough to lift the crates or the machine in a secure manner.

The following equipment is recommended to ensure smooth and safe handling:

Equipment	Capacity (kg)	Quantity
Fork lift	3000	1
Fork extensions (optional)	3000	1

3 Moving and Unpacking the Equipment

Description

This chapter contains information about how to transport, store, and unpack the machine prior to installation.

3.1 Crate Handling . . . . . 3 - 5

3.1.1 Crate Data . . . . . 3 - 5

3.2 Lifting and Unloading . . . . . 3 - 6

3.2.1 Centre of Gravity . . . . . 3 - 6

3.2.2 Correct Fork Lift Points . . . . . 3 - 7

3.3 Storage . . . . . 3 - 8

3.4 Unpacking and Inspection . . . . . 3 - 9

3.5 Uncrating Sequence . . . . . 3 - 10

3.6 Inspection Documentation . . . . . 3 - 15

3.7 Disposing of Reusable Materials and Waste . 3 - 16

3.7.1 Re-usable Packing Materials and Structures . . 3 - 16

3.7.2 Non Re-usable Packing Materials and Structures . . . . . 3 - 16

3.8 Machine Transport. . . . . 3 - 17

3.8.1 General . . . . . 3 - 17

This page intentionally left blank

3.1 Crate Handling

3.1.1 Crate Data

The following table contains data needed for handling the crate:

Contents	Weight kg (Gross)	Length mm	Width mm	Height mm
Crate incl. base module	3000	5100	1750	2250
Crate incl. Stretch unit	1000	2200	2100	2250
Crate incl. Shrink unit	2100	4500	2100	2250
Crate incl. Card Inserter	2300	5600	2100	2100

3.2 Lifting and Unloading

DANGER

Immediate danger to life.

To ensure safe and efficient handling of the crate, study the following instructions carefully.

3.2.1 Centre of Gravity

The illustration below shows how the centre of gravity is indicated on a Tetra Pak crate.

WARNING

Example only.

The purpose of the illustration below is to give an example of how the centre of gravity is indicated on a crate. For information on the location of the centre of gravity for a specific crate, see the actual marks on the crate.

WARNING

Immediate danger to life

The machine may tilt if not observing the centre of gravity. Failure to observe may result in immediate danger to life and/or major damage to equipment.

Centre of gravity

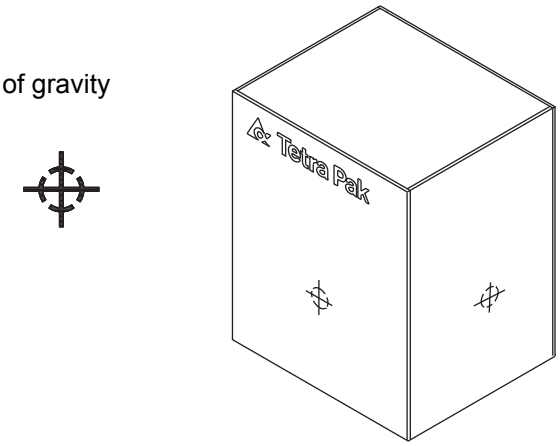

(Cont'd)

(Cont'd)

3.2.2 Correct Fork Lift Points

DANGER

Immediate danger to life.
Always use long forks or fork extensions. The crate may tilt if not observing the centre of gravity (1) or the fork lift points. Failure to observe may result in immediate danger to life and/or major damage to equipment.

Insert the forks so that the centre of gravity (1) is placed between the forks. The forks should be set as wide as possible.The fork length must reach across the whole machine.

Note! After any moving of the machine, it should be put down gently.

Also see section 3.8 Machine Transport.

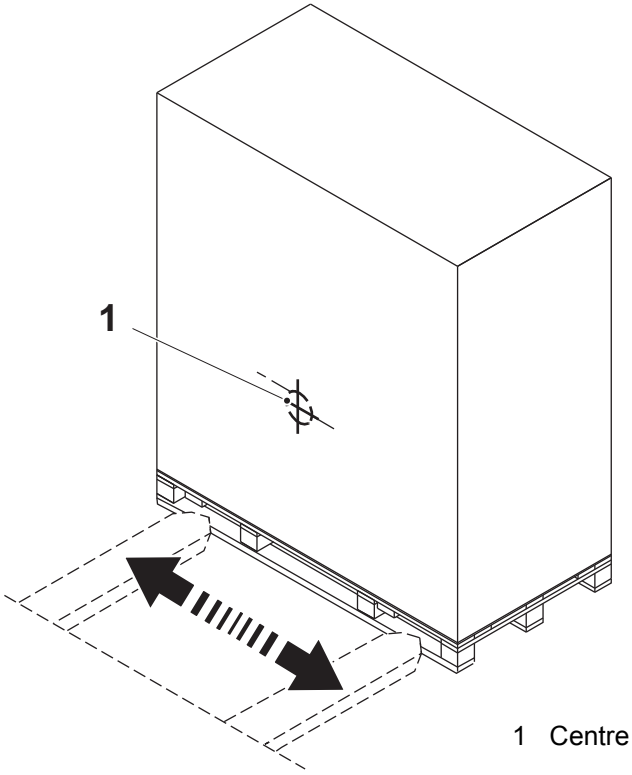

1 Centre of gravity

3.3 Storage

Contents	Recommended Storage Temperature	Recommended Storage Humidity
Film Wrapper 68	- 20 °C to+ 70 °C	
Film	10-35° C	appr. 65%
Card Inserter	- 20 °C to+ 70 °C	

3.4 Unpacking and Inspection

This section contains information needed for safe and efficient unpacking of the machine. The following information is supplied:

- Required tools and equipment
- Uncrating sequence
- Inspection documentationDisposal / re-use of used material

WARNING

Risk of personal injury.

Follow the recommendations in the following sections to avoid injury when unpacking the machine.

3.5 Uncrating Sequence

Look through the customs inspection panels to see in which direction the contents are facing. Position the crate to face the most convenient direction.

Do not open the crates until all is prepared for the installation.

Note! The following instructions apply for all crates.

WARNING

Risk of serious personal injury.
Be aware of the risk of crushing injuries when handling the loose parts of the crate.

a) Before removing any bolts, position a fork lift truck (1) to protect the front from falling.

b) Remove the bolts for the front in the sequence (2) to (5).

Note! Do not remove the corner bolts (6) yet.

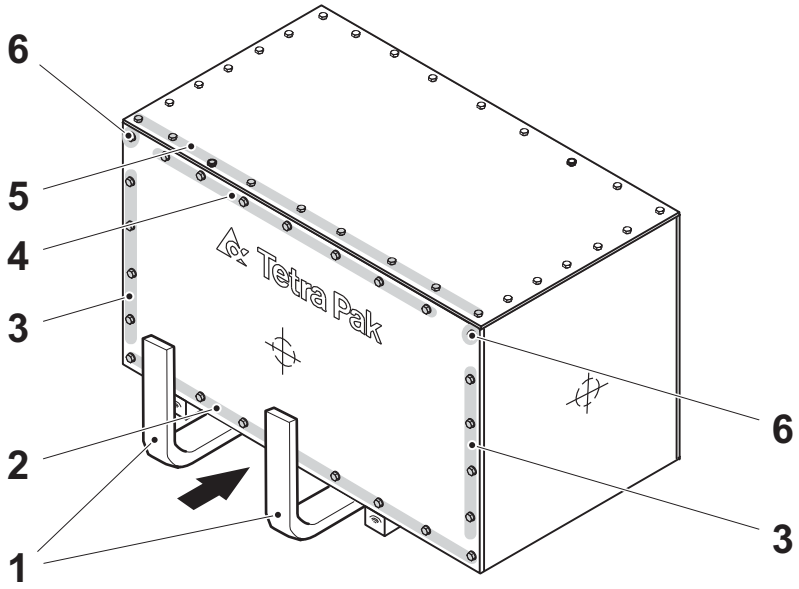

1 Fork lift truck
2 Bolt
3 Bolt
4 Bolt
5 Bolt
6 Corner bolt

(Cont'd)

(Cont'd)

WARNING

Risk of personal injury.

When loosening the left and right top corner bolts (6), the front as well as loose equipment parts may fall out.

c) Make sure that the fork lift truck (1) is close to the front of the crate.

d) Remove the corner bolts (6) and lower the front against the fork lift truck.

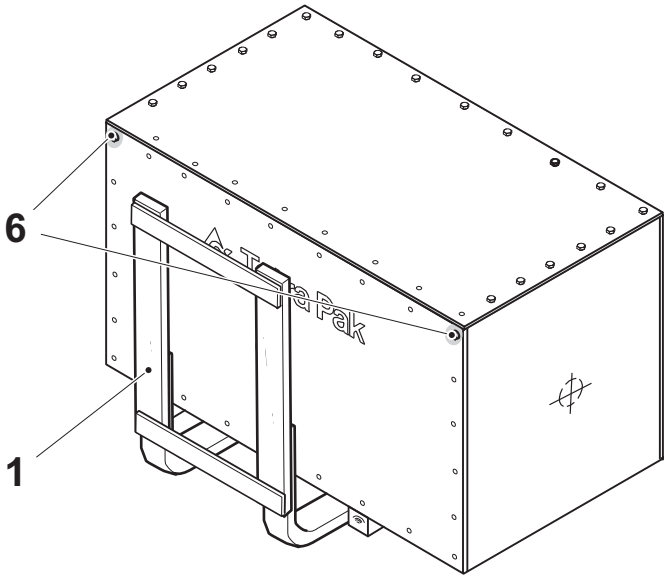

1 Fork lift truck
6 Corner bolt

(Cont'd)

(Cont'd)

e) Remove the remaining bolts (7) and use the fork lift truck to lift off the top lid.

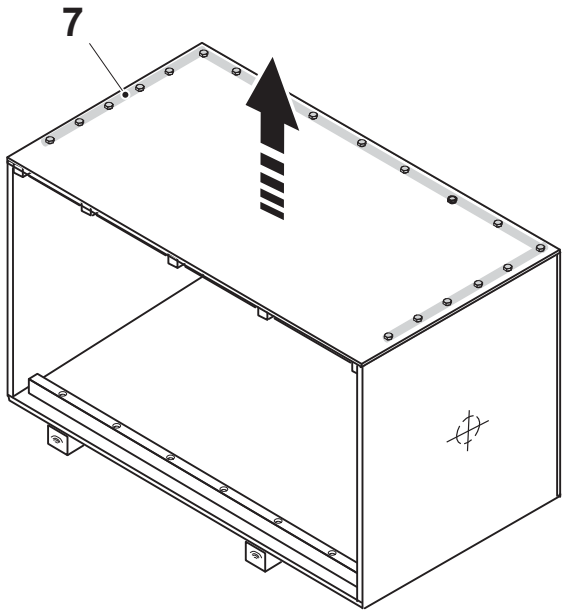

7 Bolt

(Cont'd)

(Cont'd)

f) Remove the cross beams (8).

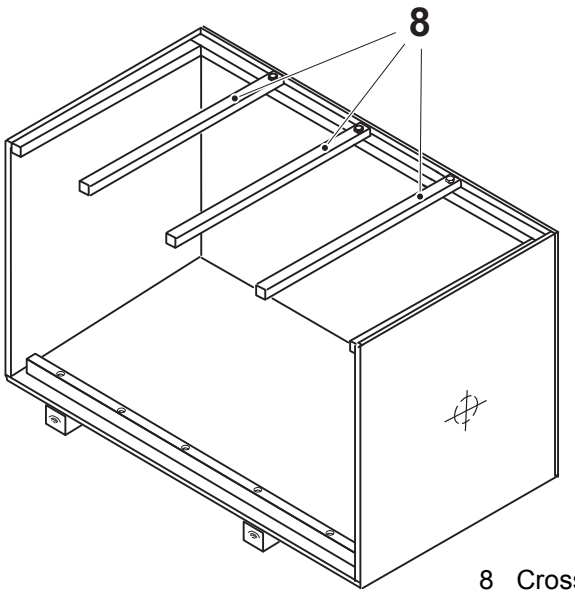

8 Cross beam

g) Remove the bolts (9) and the bottom beam (10).

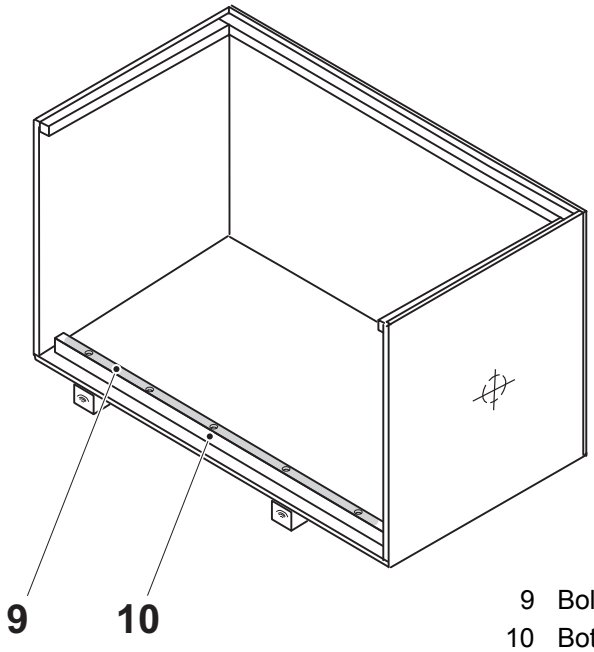

9 Bolt
10 Bottom beam

(Cont'd)

(Cont'd)

DANGER

Immediate danger to life.

The equipment may tilt if not observing the centre of gravity or the fork lift points. Failure to obey may result in immediate danger to life and/or major damage to equipment.

h) Gently remove the equipment from the crate. When lifting the equipment using a fork lift truck, use the fork lift positions as shown in Section 3.2.1 Centre of Gravity.

i) Check that the equipment is complete and not damaged. Also see instructions in 3.8 Machine Transport.

3.6 Inspection Documentation

Enclosed you will find a Transport Damage Report. Fill in the report as soon as the machine is uncrated and send it to the below address. If any Tetra Pak equipment is damaged when opening the crate, take pictures to illustrate the damage and enclose the photographs.

The report and the pictures (if any) should be sent to:

Tetra Pak Packaging Solutions AB
Quality Assurance
Ruben Rausings gata
S-221 86 Lund
Sweden

Note! The Transport Damage Report must be filled in and returned even if there is no damage to report.

TRANSPORT DAMAGE REPORT

IMPORTANT
PLEASE RETURN THIS FORM EVEN IF NO DAMAGE CAN BE FOUND.

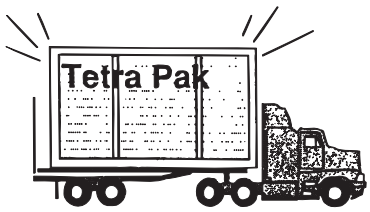

WE NEED YOUR HELP TO IMPROVE OUR PACKING!

DO YOU HAVE ANY COMMENTS ON THE MODE OF PACKING THIS MACHINE OR ON THE EXPORT PACKING ITSELF? IF SO, PLEASE HELP US BY FILLING OUT THIS FORM. IF POSSIBLE ALSO TAKE PICTURES OF THE DAMAGED CASE OR MACHINE AND ENCLOSE THOSE PICTURES WITH THIS FORM WHICH SHOULD BE SENT TO:

Tetra Pak Carton Ambient AB
QUALITY ASSURANCE
RUBEN RAUSINGS GATA
S-221 86 LUND
SWEDEN

PLEASE ACT ON THIS AS SOON AS YOU HAVE INSTALLED THE MACHINE.
THANK YOU FOR YOUR COOPERATION.

TYPE OF MACHINE _____ MACHINE NO _____

DELIVERED EX COUNTRY _____ CUSTOMER _____

NO DAMAGE ☐

DAMAGE TO: CASE YES ☐ NO ☐ MACHINE YES ☐ NO ☐ OTHER PARTS YES ☐ NO ☐

VISABLE ART OF DAMAGE _____

OTHER DAMAGE SUCH AS: DUST ☐ LEAKAGE ☐ CORROSION ☐

DAMAGE PROBABLY CAUSED BY: _____

YOUR SUGGESTION TO PREVENT FURTHER DAMAGE _____

ISSUED BY (NAME IN BLOCK LETTERS) _____

STATION/TP COMPANY _____

DATE _____ PLACE _____

3.7 Disposing of Reusable Materials and Waste

3.7.1 Re-usable Packing Materials and Structures

Re-usable packaging materials and structures should be collected and re-used in accordance with local regulations.

3.7.2 Non Re-usable Packing Materials and Structures

Non re-usable packaging materials and structures should be collected and disposed of in accordance with local regulations.

3.8 Machine Transport

3.8.1 General

Prior to moving the machine into position for assembling, do the following:

- check that the machine can be transported to the assembly site without any problems regarding ceiling height, doors, passages, etc.

DANGER

Immediate danger to life.

The machine may tilt if not observing the centre of gravity or the fork lift points. Failure to observe may result in immediate danger to life and/or major damage to equipment.

- make sure that the equipment can be lifted in accordance with the instructions in Section 3.1 Crate Handling.

This page intentionally left blank

4 Positioning, Assembly and Connections

Description

This chapter contains instructions for positioning and assembling the machine. Instructions for equipment connections, such as how to connect the equipment to supply systems, are also included.

4.1 Positioning . . . . . 4 - 5
4.2 Levelling . . . . . 4 - 6
4.3 Assembly . . . . . 4 - 7
4.3.1 Assembly Procedures . . . . . 4 - 7
4.3.1.1 Warning Lamp . . . . . 4 - 9
4.3.1.2 Infeed Section . . . . . 4 - 10
4.3.1.3 Card Inserter . . . . . 4 - 14
4.3.1.4 Stretch Unit . . . . . 4 - 36
4.3.1.5 Shrink unit . . . . . 4 - 43
4.3.1.6 Discharge Unit . . . . . 4 - 50
4.3.1.7 Discharge Tunnel . . . . . 4 - 51
4.4 Connections . . . . . 4 - 52
4.4.1 Compressed Air Connection . . . . . 4 - 52
4.4.2 Water Connection . . . . . 4 - 52
4.4.3 Electrical Connection . . . . . 4 - 52
4.4.2.1 Main power supply cable . . . . . 4 - 53
4.4.2.2 Earth Cable . . . . . 4 - 54
4.4.2.3 PLMS and Line Communication . . . . . 4 - 56
4.4.2.4 External Conveyor . . . . . 4 - 57
4.4.2.5 External Infeed Conveyor Control . . . . . 4 - 58

This page intentionally left blank

4.1 Positioning

DANGER

Immediate danger to life.
The equipment may tilt if not observing the centre of gravity or the fork lift points. Failure to observe may result in immediate danger to life and/or major damage to equipment.

Check that the equipment can be transported to the assembly site without any problems regarding the ceiling height, doors, passages, etc.

Make sure that the equipment can be lifted and moved in accordance with Section 3.1 Crate Handling and Section 3.8 Machine Transport.

Place the equipment according to the installation drawing and the site layout drawing.

4.2 Levelling

Make sure that the base module is level by means of for example a spirit level. Place the spirit level on the cross beams as well as on the longitudinal beams. If necessary, adjust by turning the adjustable feet (1).

Note! There might be variations in the floor height that could complicate the levelling process.

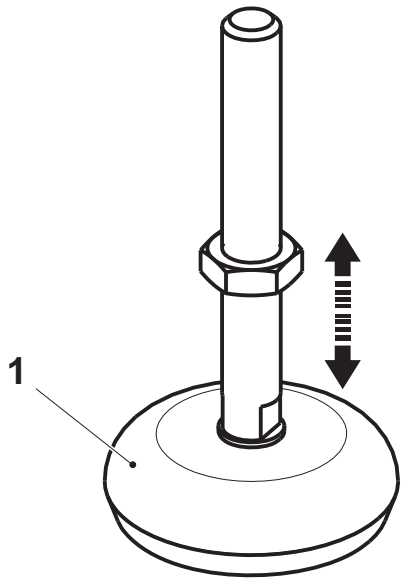

1 Adjustable foot

4.3 Assembly

The FW 68 is assembled at delivery, except for the following equipment:

- Warning lamp, see Section 4.3.1.1 Warning Lamp
- Infeed section, see Section 4.3.1.2 Infeed Section
- Card Inserter, see Section 4.3.1.3 Card Inserter
- Stretch unit, see Section 4.3.1.4 Stretch Unit
- Shrink unit, see Section 4.3.1.5 Shrink unit
- Discharge tunnel (can be 2 pcs), see Section 4.3.1.7 Discharge Tunnel

4.3.1 Assembly Procedures

Note! If a Card Inserter is to be installed, begin with Section 4.3.1.3 Card Inserter. If not, proceed.

a) Make sure that the FW 68 base module (see the illustration below) is correct positioned and levelled according to Sections 4.1 Positioning and 4.2 Levelling.

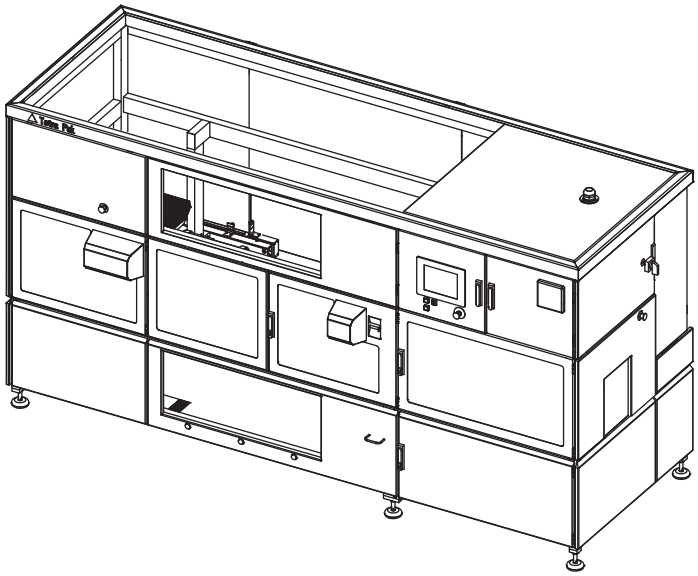

(Cont'd)

(Cont'd)

b) Remove all transport security devices.

c) Connect the water gun (1) and the air jet gun (2).

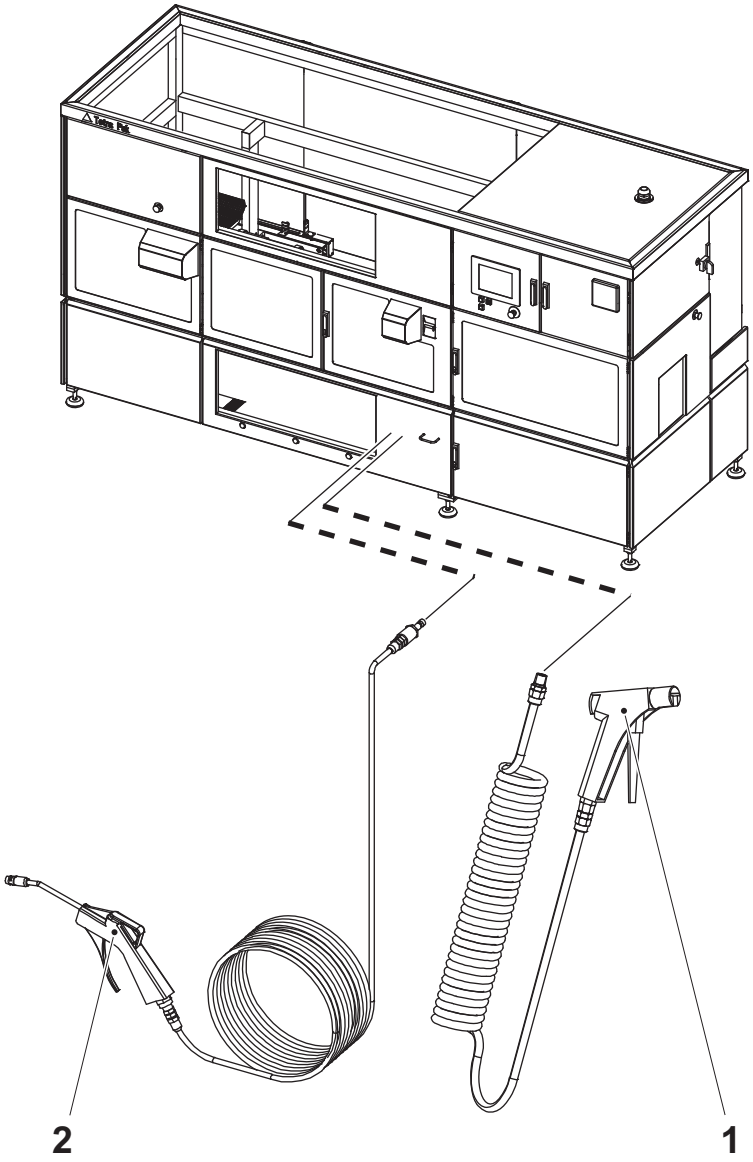

1 Water gun
2 Air jet gun

4.3.1.1 Warning Lamp

The warning lamp has been fitted upside down in order for the machine to fit in the crate.

a) Remove the warning lamp from its transport position.

b) Place the warning lamp in its intended position on the top beam LH and fit the screws (1).

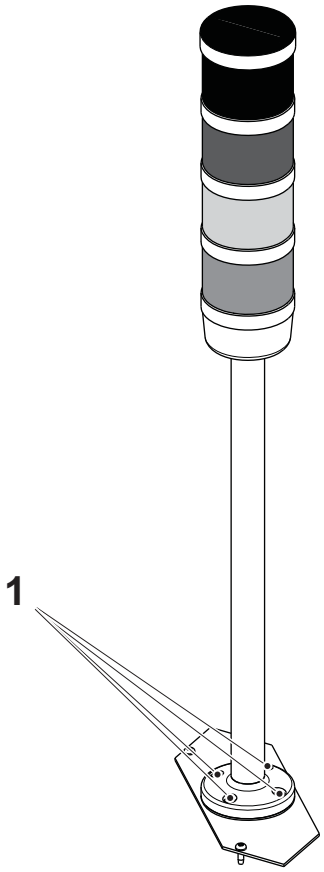

1 Screw

4.3.1.2 Infeed Section

Note! This section is valid only if a Card Inserter is not to be installed. If a Card Inserter is to be installed, go to Section 4.3.1.3 Card Inserter. All illustrations in this section shows double infeed. The procedure is the same as described with the single infeed. The difference is that the single infeed has only one conveyor and one drive motor. The greyed section is already fitted in the base module.

Note! The drive unit is not included in the delivery when Package Conveyor 23 is used. This unit (2590240-0207) must be ordered separately.

a) Carefully insert the infeed section in the FW 68 base module by manually lifting it in place. Stop when the infeed section has reached the break point (see item c).

b) On each side of the infeed section, fit the screws (1).

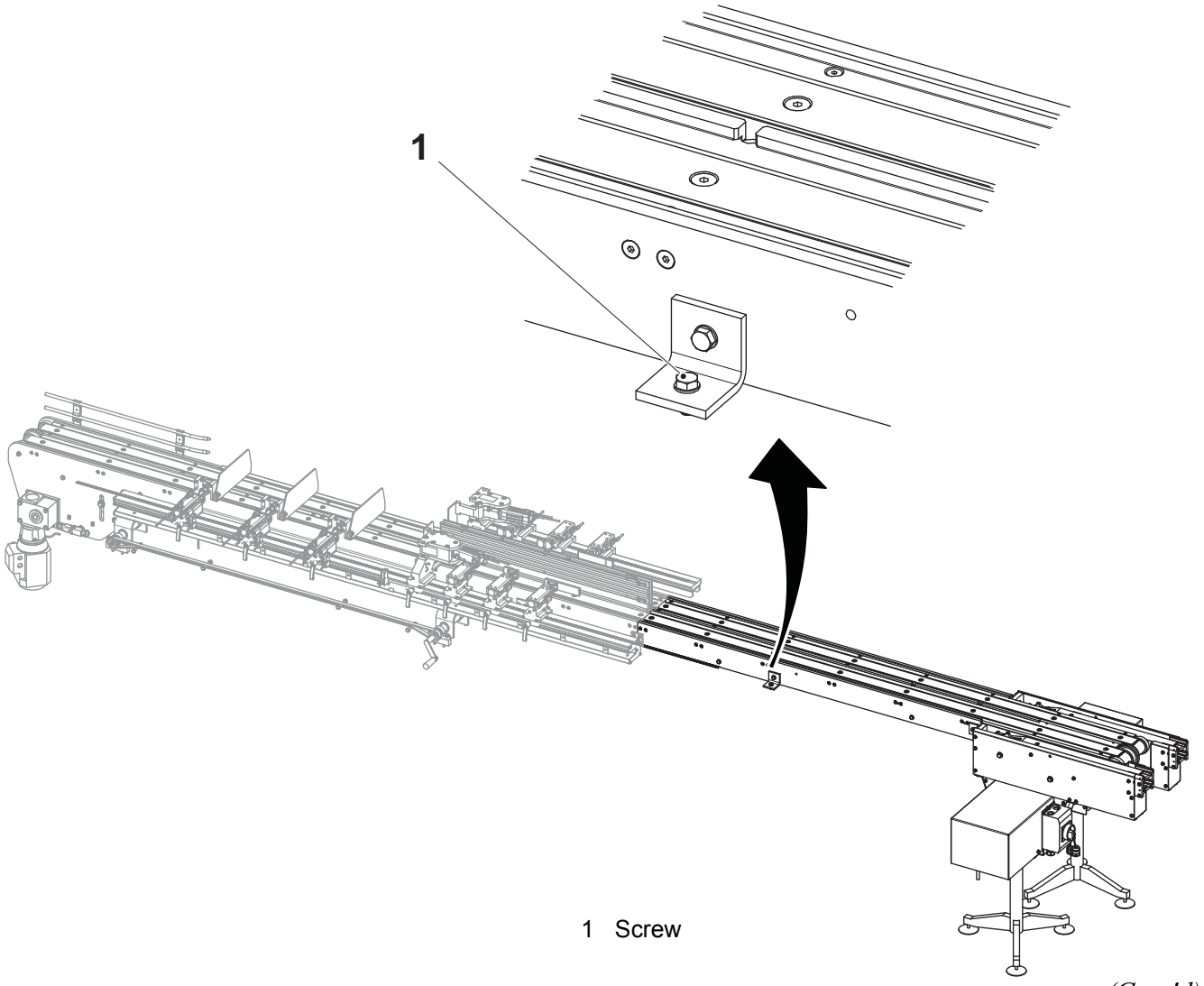

1 Screw

(Cont'd)

(Cont'd)

c) Fit all screws at the break point (2).

d) Level the infeed section by means of the drive motor adjustable feet.

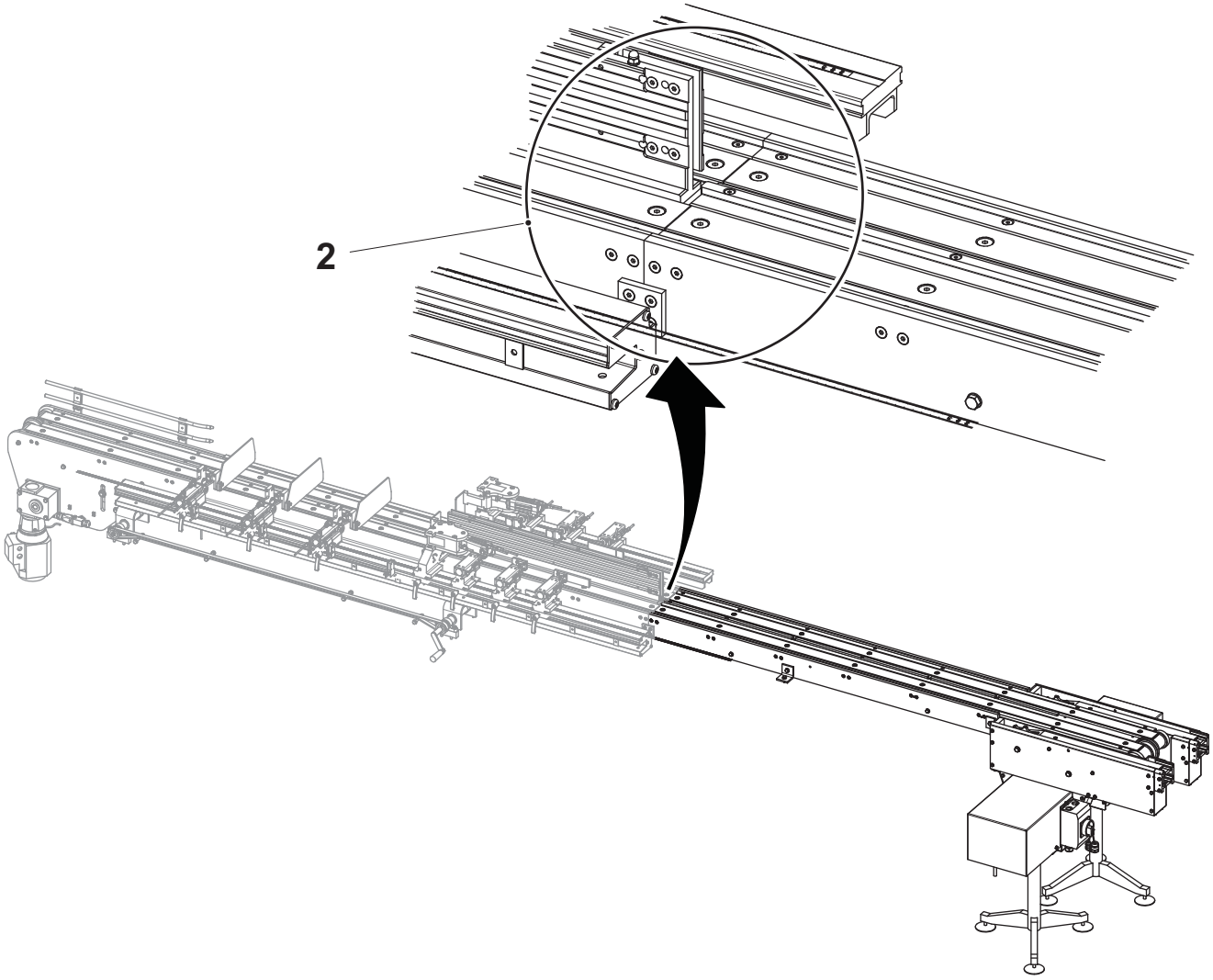

2 Break point

(Cont'd)

(Cont'd)

e) Thread a conveyor belt and put it together. Thread the other conveyor belt too (if double infeed is to be installed).

f) Tighten the conveyor belt (belts).

Note! Make sure the conveyor belt (belts) and the drive wheel are aligned sideways.

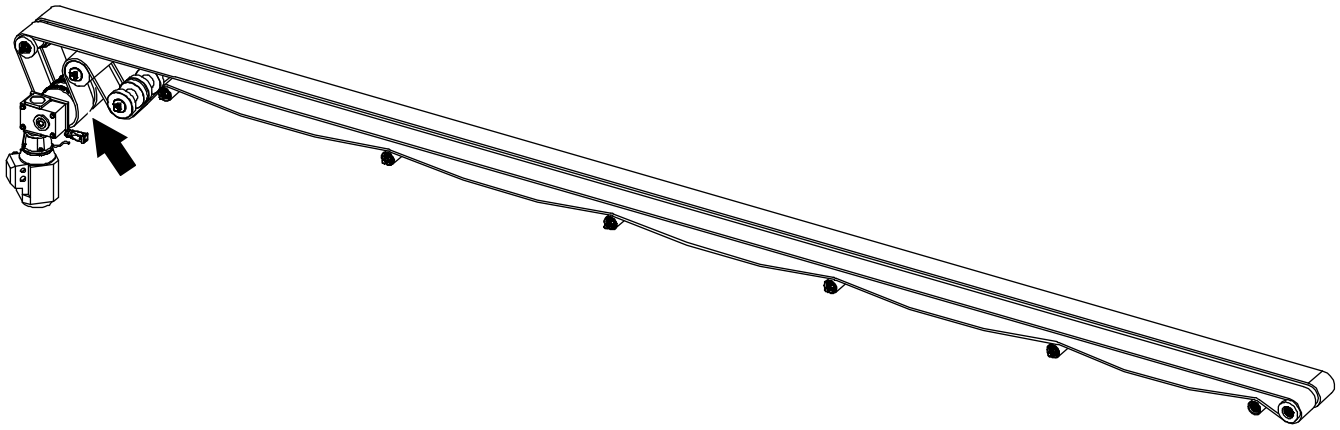

g) Fit all railings, photocells, and other conveyor parts (such as spacers for example).

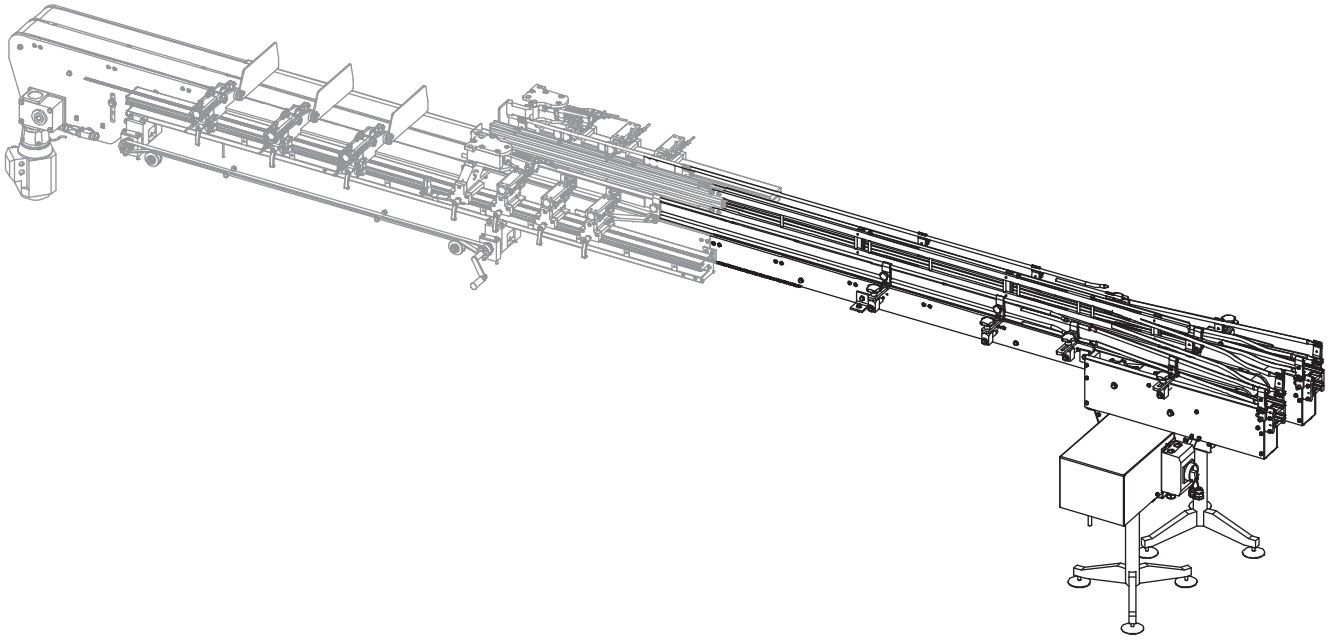

(Cont'd)

(Cont'd)

h) Pull and connect all photocell cables from inside the FW 68 base module to the end of the infeed section.

i) If the drive motor is to be controlled by the FW 68, follow the instructions in Section 4.4.2.5 External Infeed Conveyor Control.

4.3.1.3 Card Inserter

Note! This section is valid only if a Card Inserter is to be installed. If a Card Inserter is not to be installed, go to Section 4.3.1.2 Infeed Section. All illustrations in this section shows double infeed. The procedure is the same as described with the single infeed. The difference is that the single infeed has only one conveyor and one drive motor. The greyed section is already fitted in the Card Inserter.

Note! The drive unit is not included in the delivery when Package Conveyor 23 is used. This must be ordered separately.

a) Position the Card Inserter according to Section 4.1 Positioning.

b) Level the Card Inserter to Section 4.2 Levelling.

c) Remove all transport security devices.

d) Carefully insert the infeed section in the Card Inserter by manually lifting it in place. Stop when the infeed section has reached the break point (see item f).

(Cont'd)

(Cont'd)

e) On each side of the infeed section, fit the screws (1).

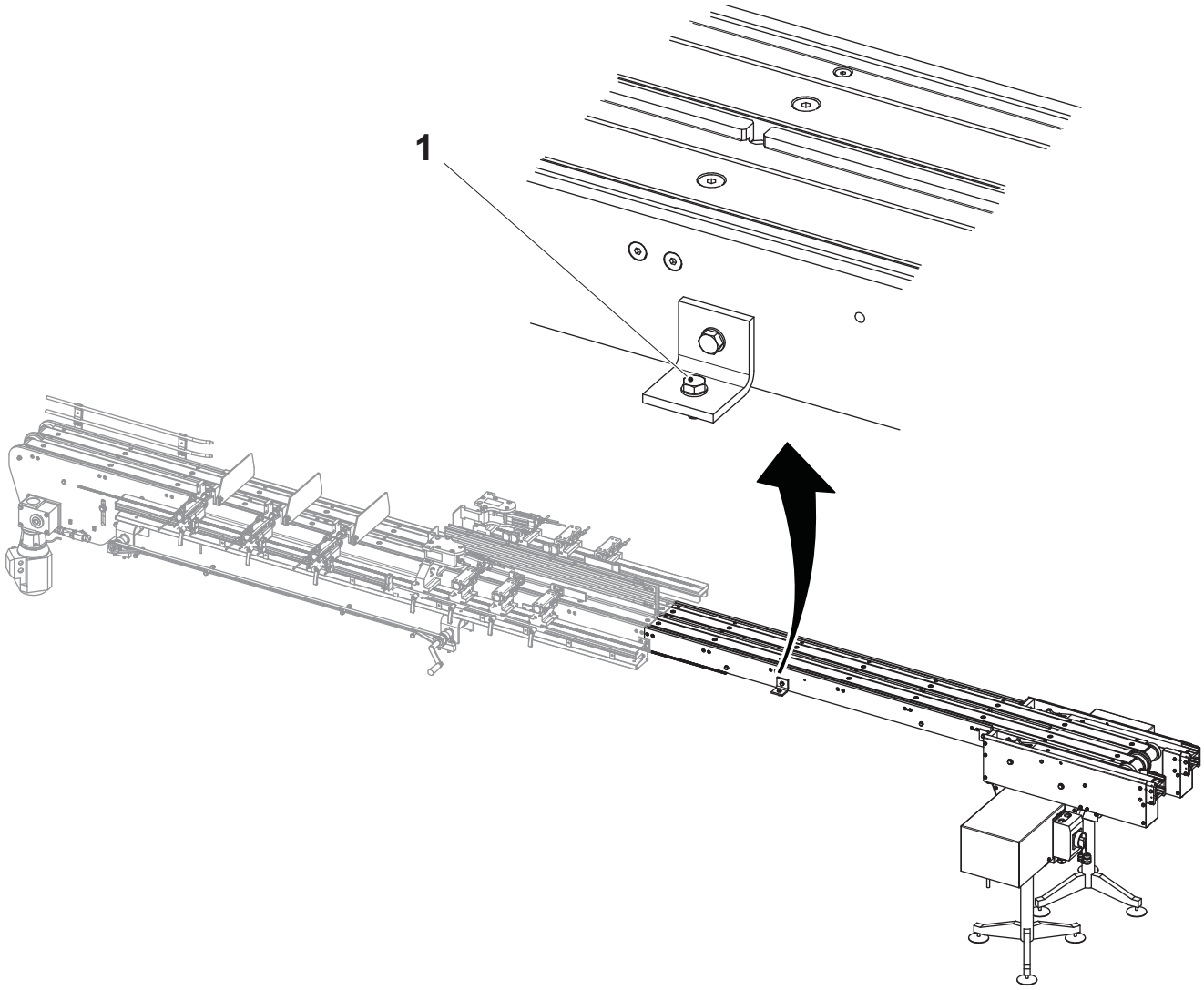

1 Screw

(Cont'd)

(Cont'd)

f) Fit all screws at the break point (2).

g) Level the infeed section by means of the drive motor adjustable feet.

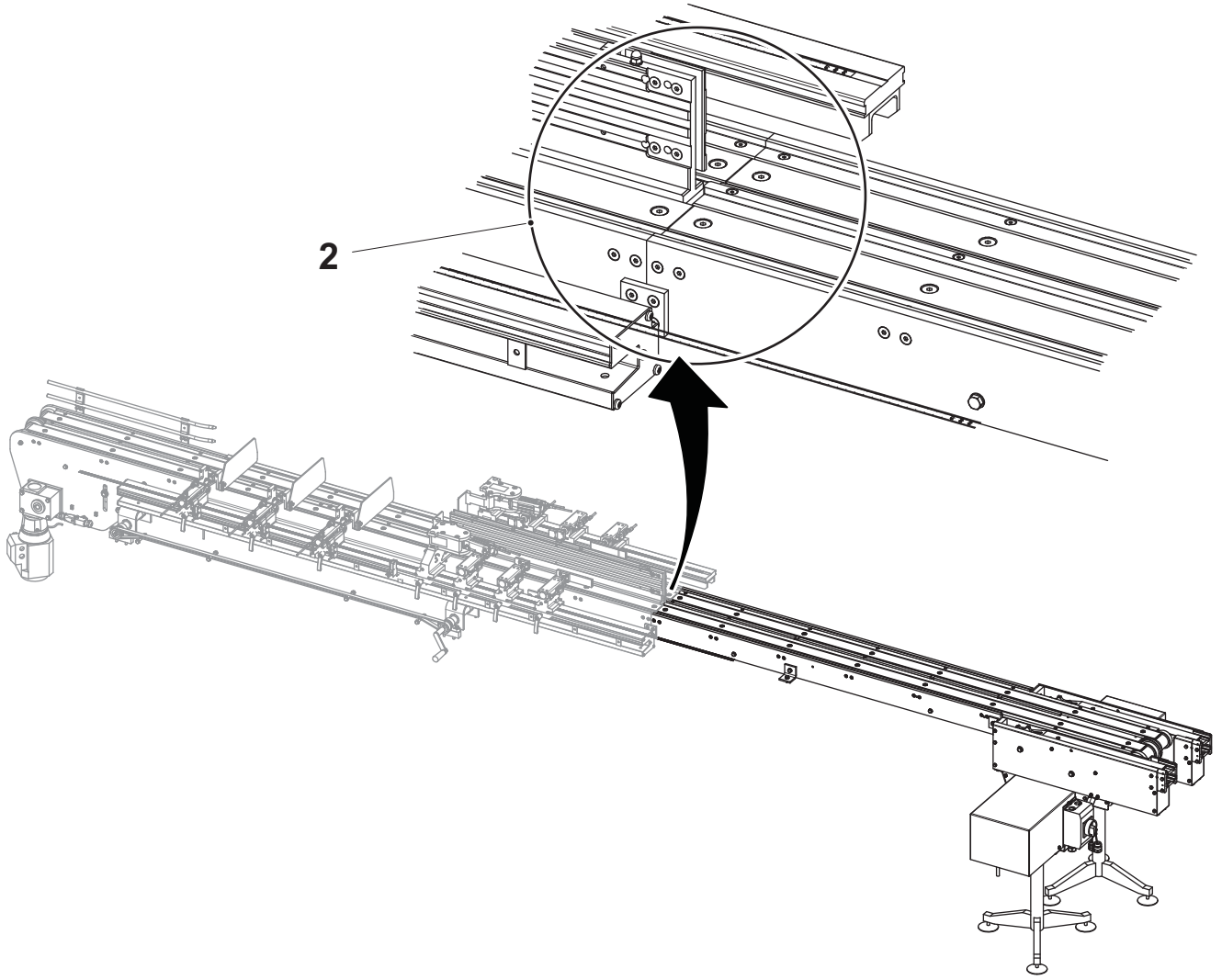

2 Break point

(Cont'd)

(Cont'd)

h) Thread a conveyor belt and put it together. Thread the other conveyor belt too (if double infeed is to be installed).

i) Tighten the conveyor belt (belts).

Note! Make sure the conveyor belt (belts) and the drive wheel are aligned sideways.

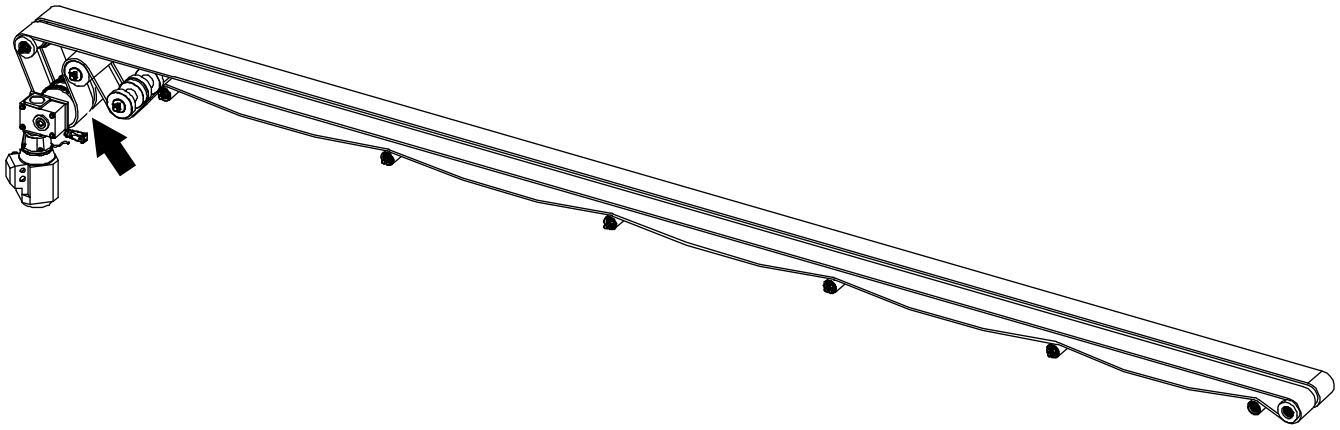

j) Fit all railings, photocells, and other conveyor parts (such as distances for example).

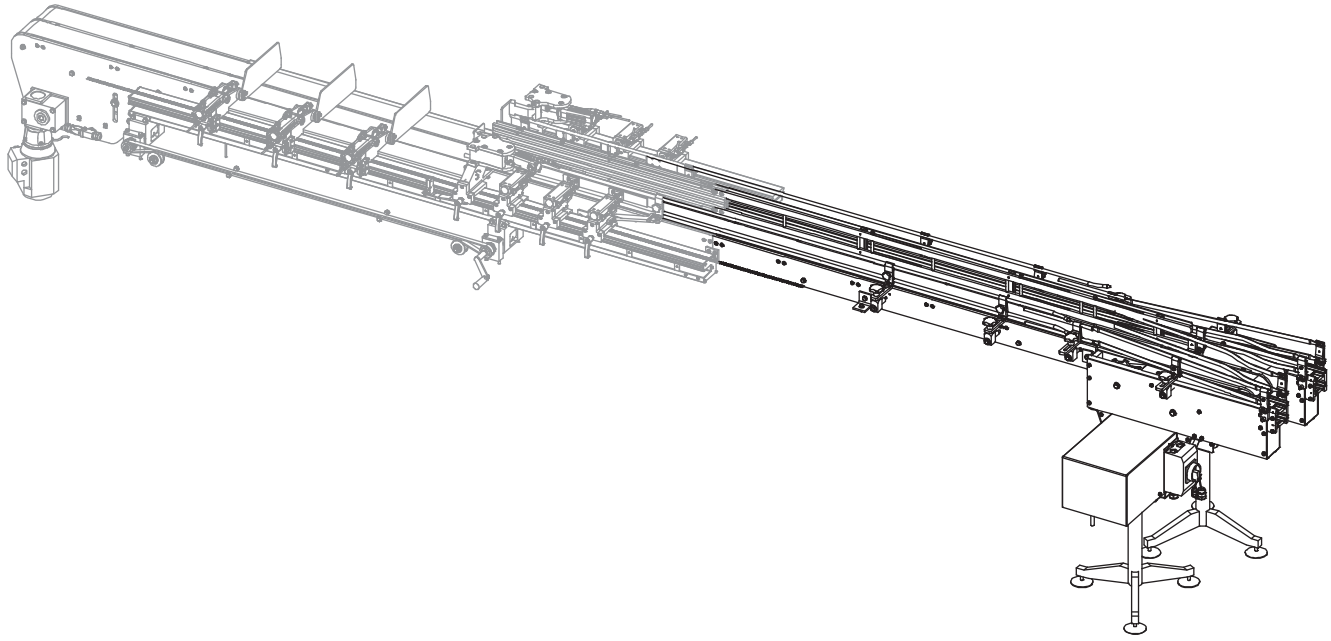

k) Pull and connect all photocell cables from inside the Card Inserter to the end of the infeed section.

l) If the drive motor is to be controlled by the FW 68, follow the instructions in Section 4.4.2.5 External Infeed Conveyor Control.

(Cont'd)

(Cont'd)

CAUTION
Risk of damage to equipment.
Fork extensions must be used if the forks are not long enough to lift the equipment in a secure manner.

m) With the aid of a hand pallet truck, gently lift up the FW 68 base module and place it approximately 30 cm (distance A) before the Card Inserter by means of the indexing conveyor (3) break point. See the illustration below.

n) Connect the lower splice of the conveyor belt (4).

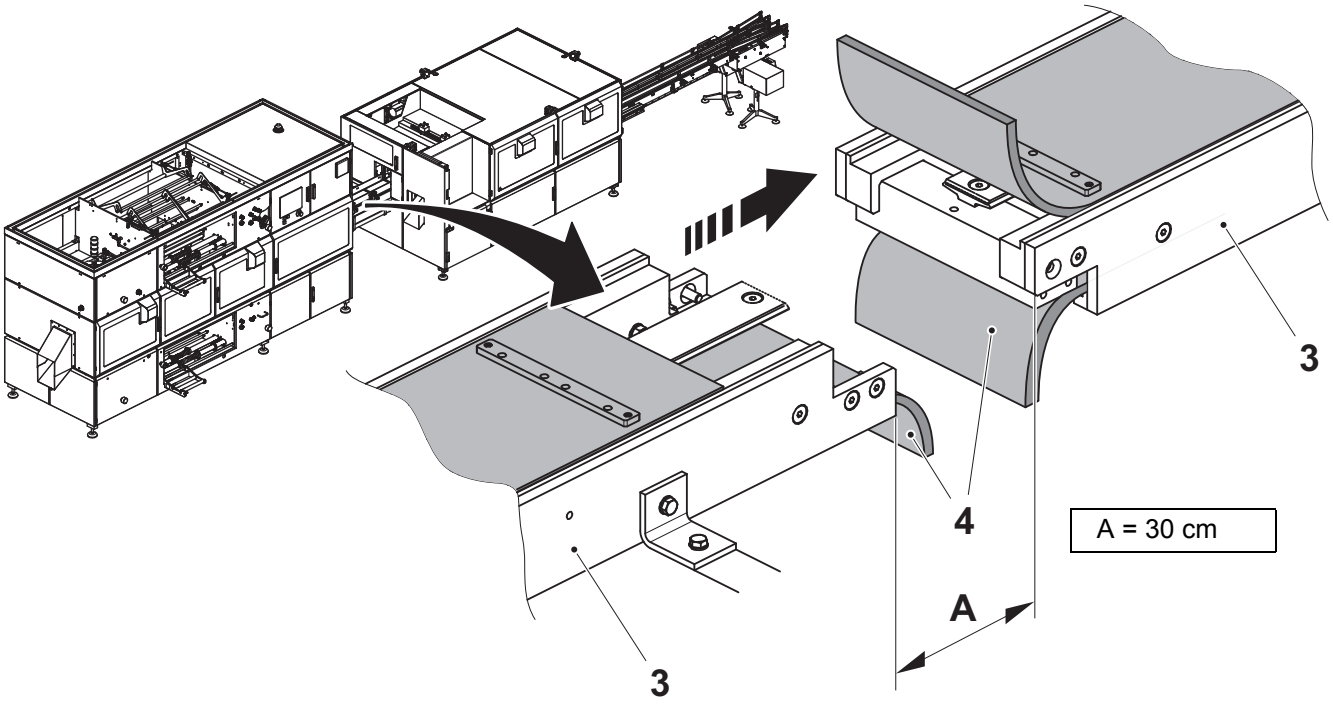

3 Indexing conveyor
4 Conveyor belt

(Cont'd)

(Cont'd)

CAUTION
Risk of damage to equipment.
Make sure that no cables will become damaged or got jammed when the FW 68 base module is fitted to the Card Inserter by means of the indexing conveyor.

o) Draw and put all loose cables from the Card Inserter inside the FW 68 base module.

p) Lower the FW 68 base module and level it according to Section 4.2 Levelling.

q) Gently push the FW 68 base module so that the both ends of the indexing conveyor is fitted together in the break point (5).

r) Fit and tighten the screws (6) on both sides of the indexing conveyor.

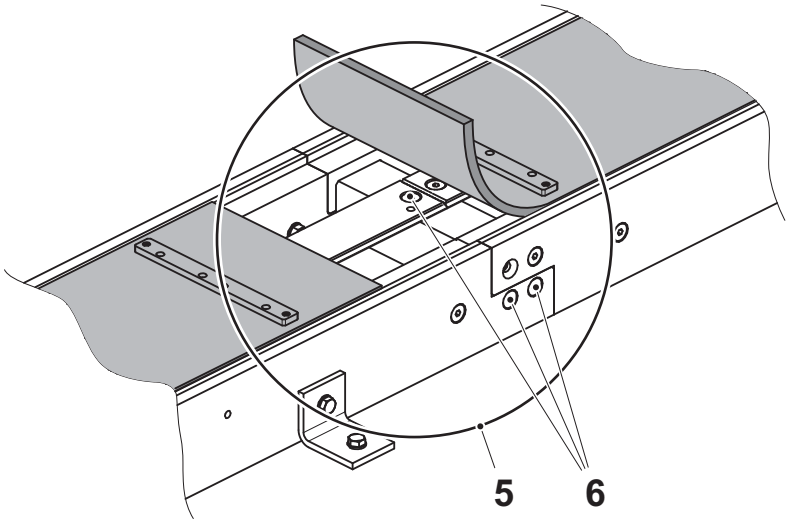

5 Break point
6 Screw

(Cont'd)

(Cont'd)

s) Connect the upper splice of the conveyor belt (7).

t) Tighten the conveyor belt.

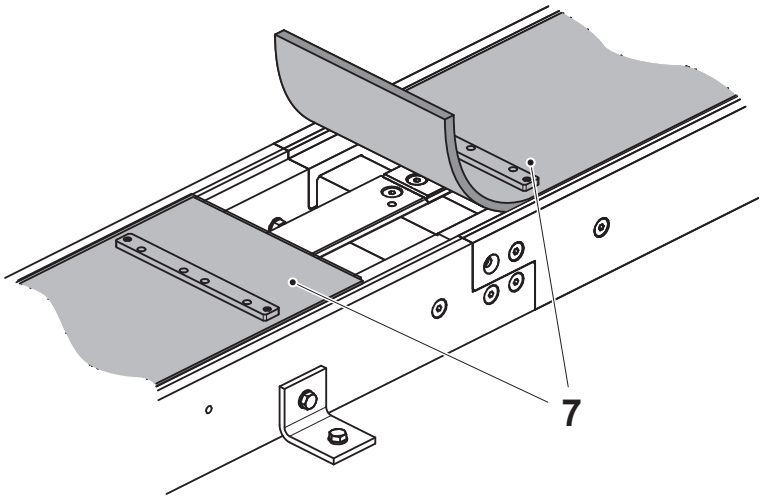

7 Conveyor belt

(Cont'd)

(Cont'd)

Note! It is not necessary that all mentioned components to be fitted in items u) and v) are loose.

u) Fit all rail holders (10) by means of washers (9) and the screws (8), the rails (12) and (18), and the counter wheel (14).

v) The support rods are to be fitted according to the following:
- Short support rod without knob (11)
- Long support rod without knob (13)
- Long support rod with knob (15)
- Angled support rod with knob (16)
- Angled support rod without knob (17)
- Short support rod with knob (19)

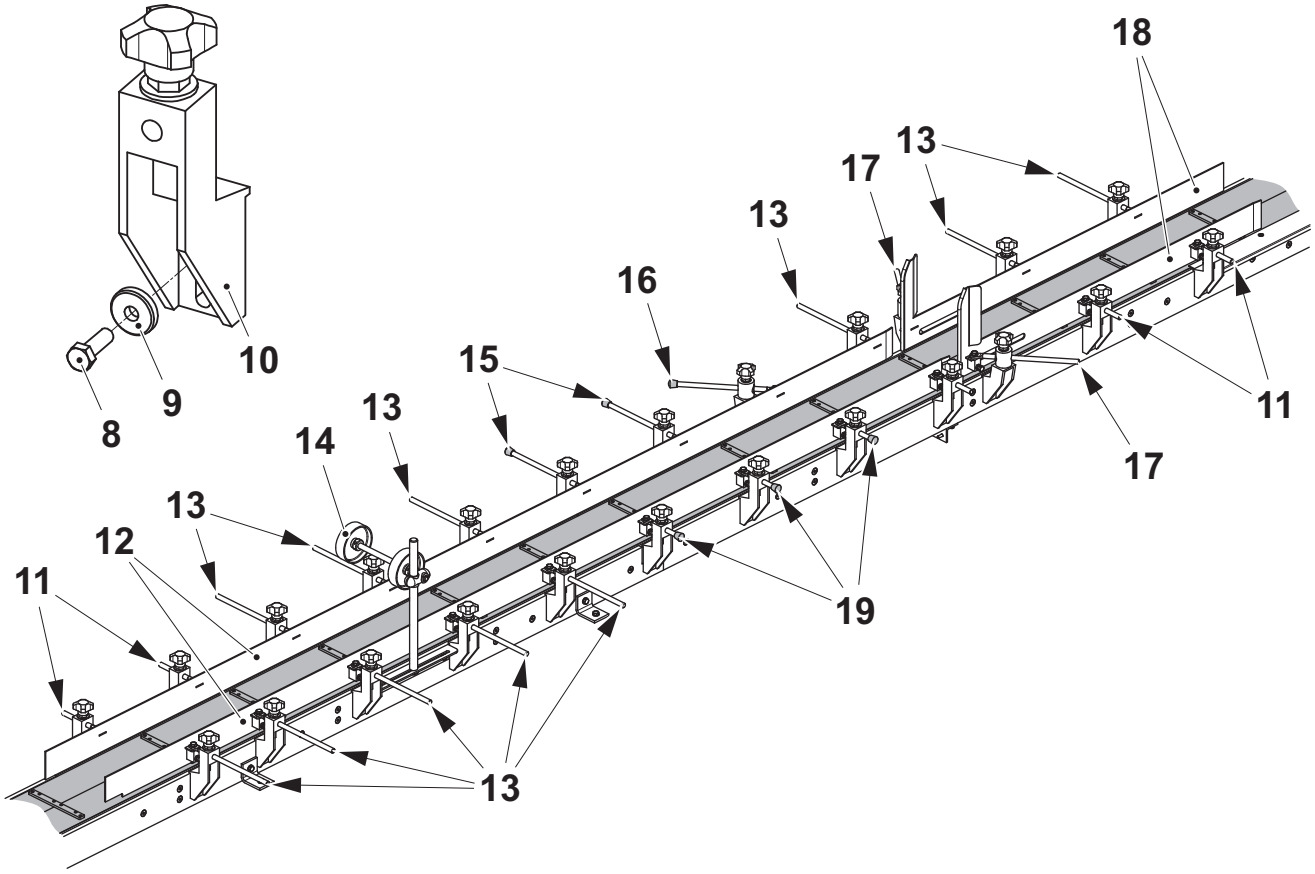

8 Screw
9 Washer
10 Rail holder
11 Short support rod without knob
12 Rail
13 Long support rod without knob
14 Counter wheel
15 Long support rod with knob
16 Angled support rod with knob
17 Angled support rod without knob
18 Rail
19 Short support rod with knob

(Cont'd)

(Cont'd)

w) Fit the two loose fastening brackets (20) by means of the washers (21) and the screws (22).

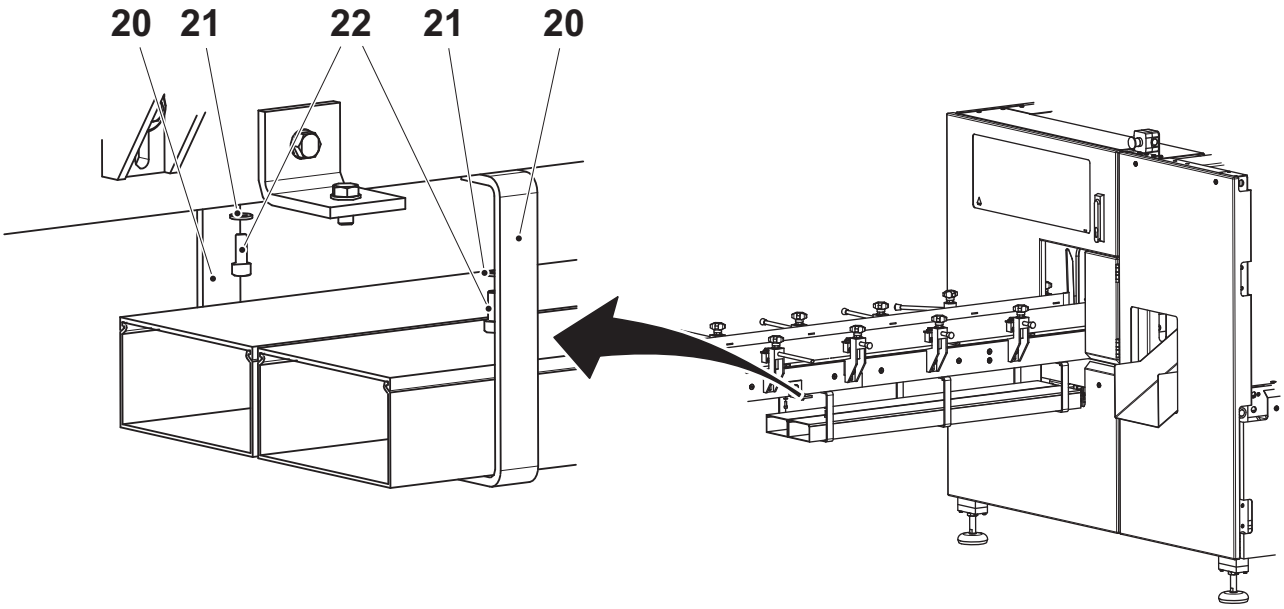

20 Fastening brackets
21 Washer
22 Screw

(Cont'd)

(Cont'd)

x) The cables, nuts, and cable glands in item y) must be handled as follows:
   a) Remove the nut (23) from the cable gland (24).
   b) Pull the cable through the corresponding hole, see item y) in the electrical cabinet (25).
   c) Fit the nut from inside of the electrical cabinet.
   d) Tighten the nut.
   e) Connect all cables inside the electrical cabinet according to the EM.

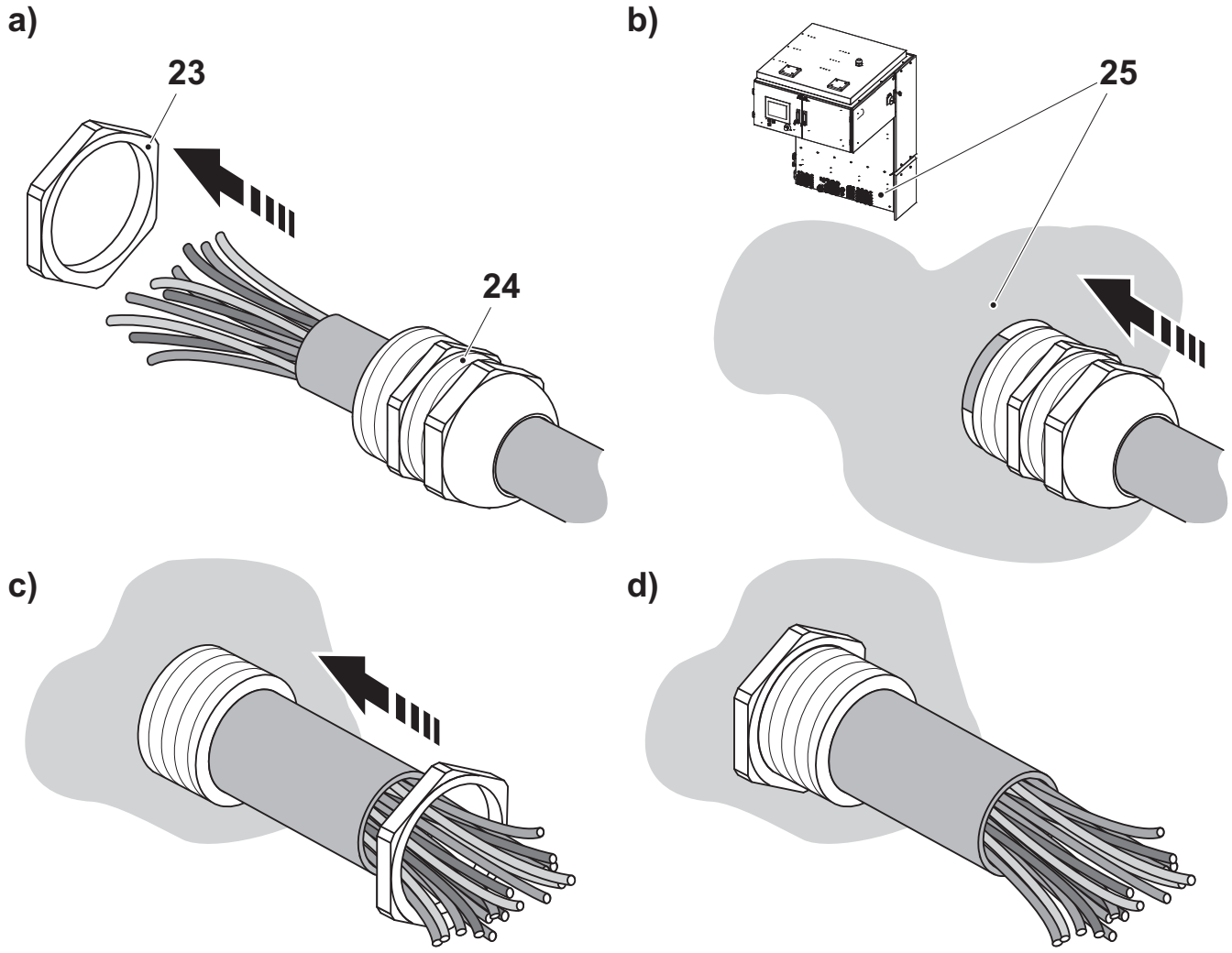

23 Nut
24 Cable gland
25 Electrical cabinet

(Cont'd)

(Cont'd)

y) Pull and connect the cables from the Card Inserter to the FW 68 base module electrical cabinet according to the table and illustration below. See also the EM.

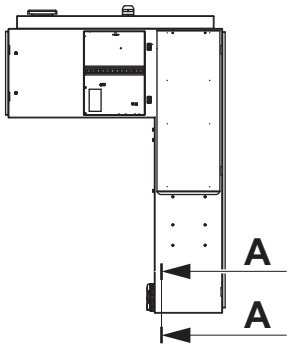

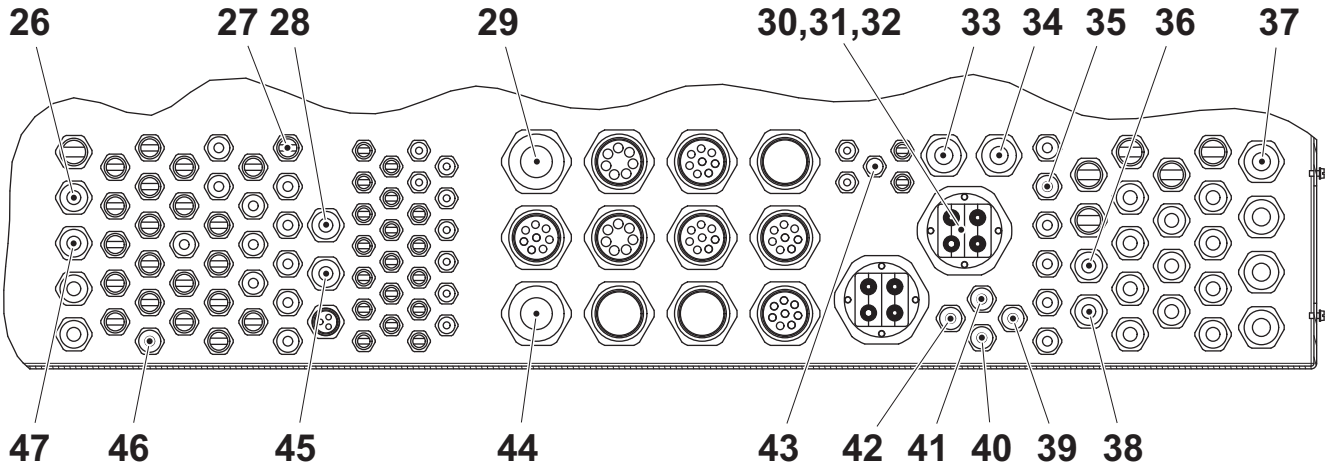

Position	Cable No.
26	W419
27	W710
28	W166
29	W163
30	W157.2
31	W158.2
32	W159.2
33	W158.1
34	W159.1
35	W997
36	W415

Position	Cable No.
37	W157.1
38	W174
39	W172
40	W171
41	W162
42	W173
43	W107
44	W164
45	W165
46	W167
47	W418

(Cont'd)

(Cont'd)

z) From the FW 68 base module to the Card Inserter draw and connect the drive motor cable (48) and the encoder cable (49). See also the EM.

Note! The drive motor cable should be found inside of the cover (50).

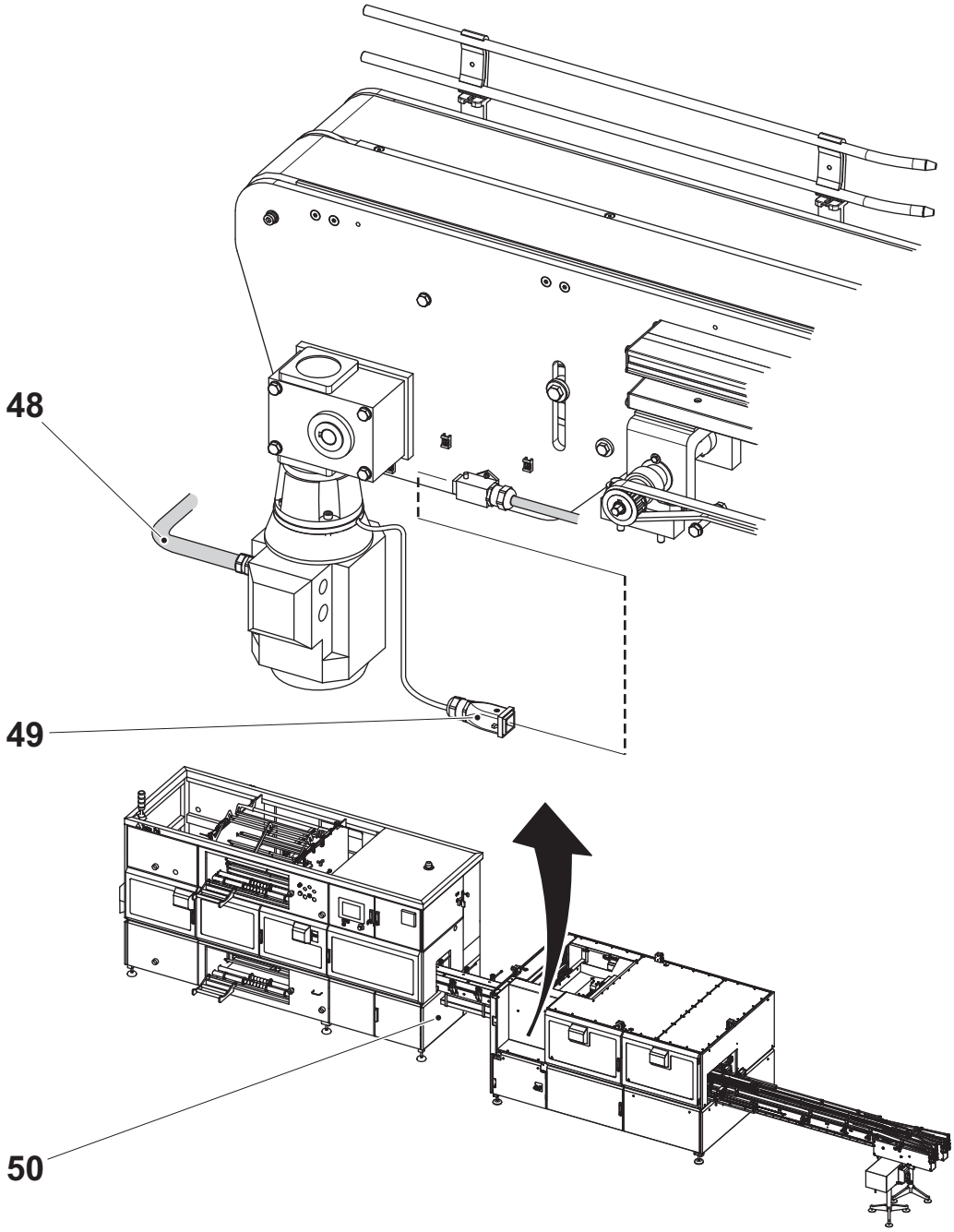

48 Drive motor cable
49 Encoder cable
50 Cover

(Cont'd)

(Cont'd)

aa) From the Card Inserter (the cable duct below the indexing conveyor) draw and connect the following cable and hoses to their corresponding connection in FW 68:

- water hose (51)
- main air hose (52) - marked 1003
- air jet gun hose (53) - marked 1002
- pilot air hose (54) - marked 1001

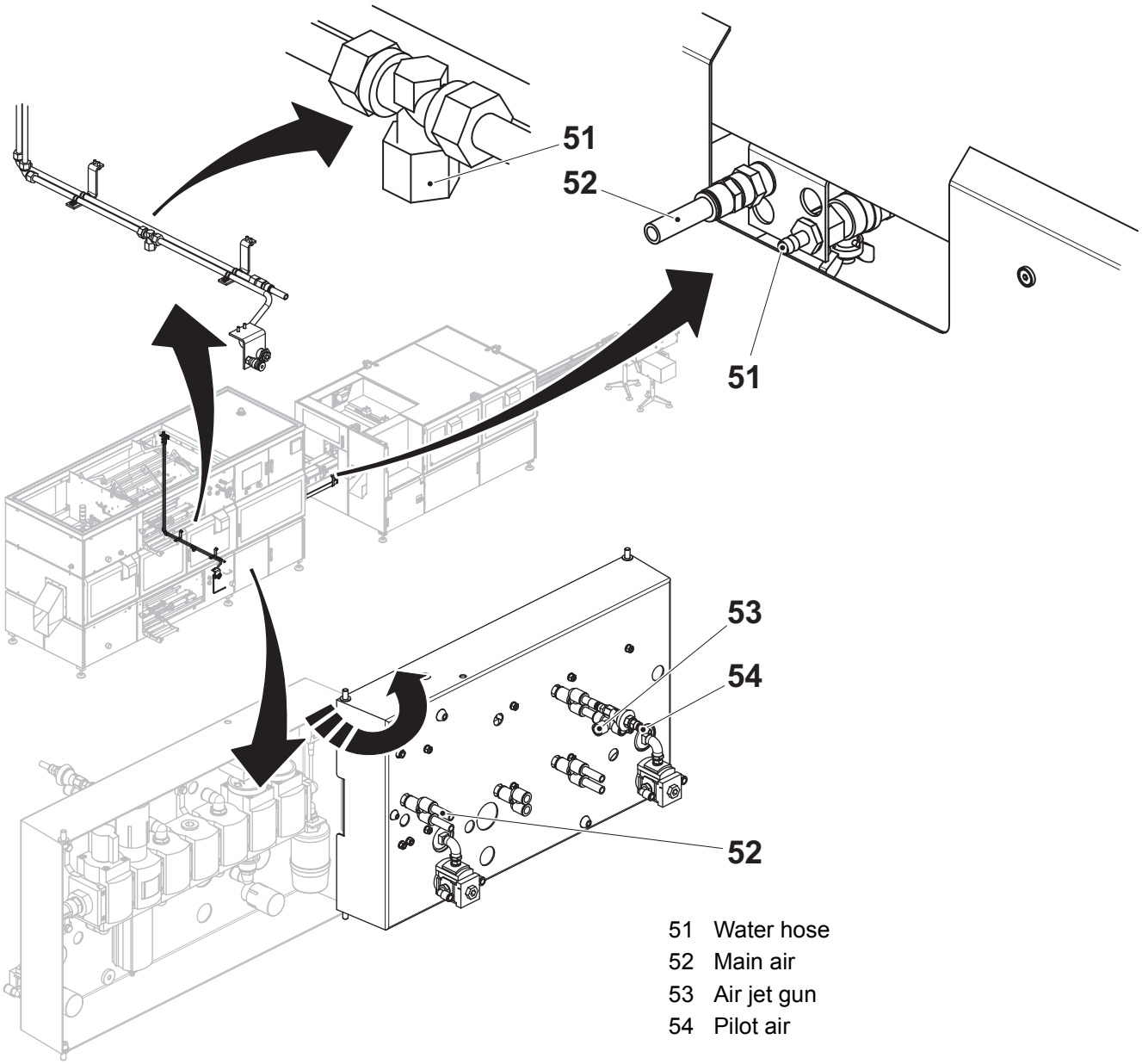

51 Water hose
52 Main air
53 Air jet gun
54 Pilot air

(Cont'd)

(Cont'd)

ab) Fit the stair (56) and the railing (55) by means of the washers (57) and screws (58).

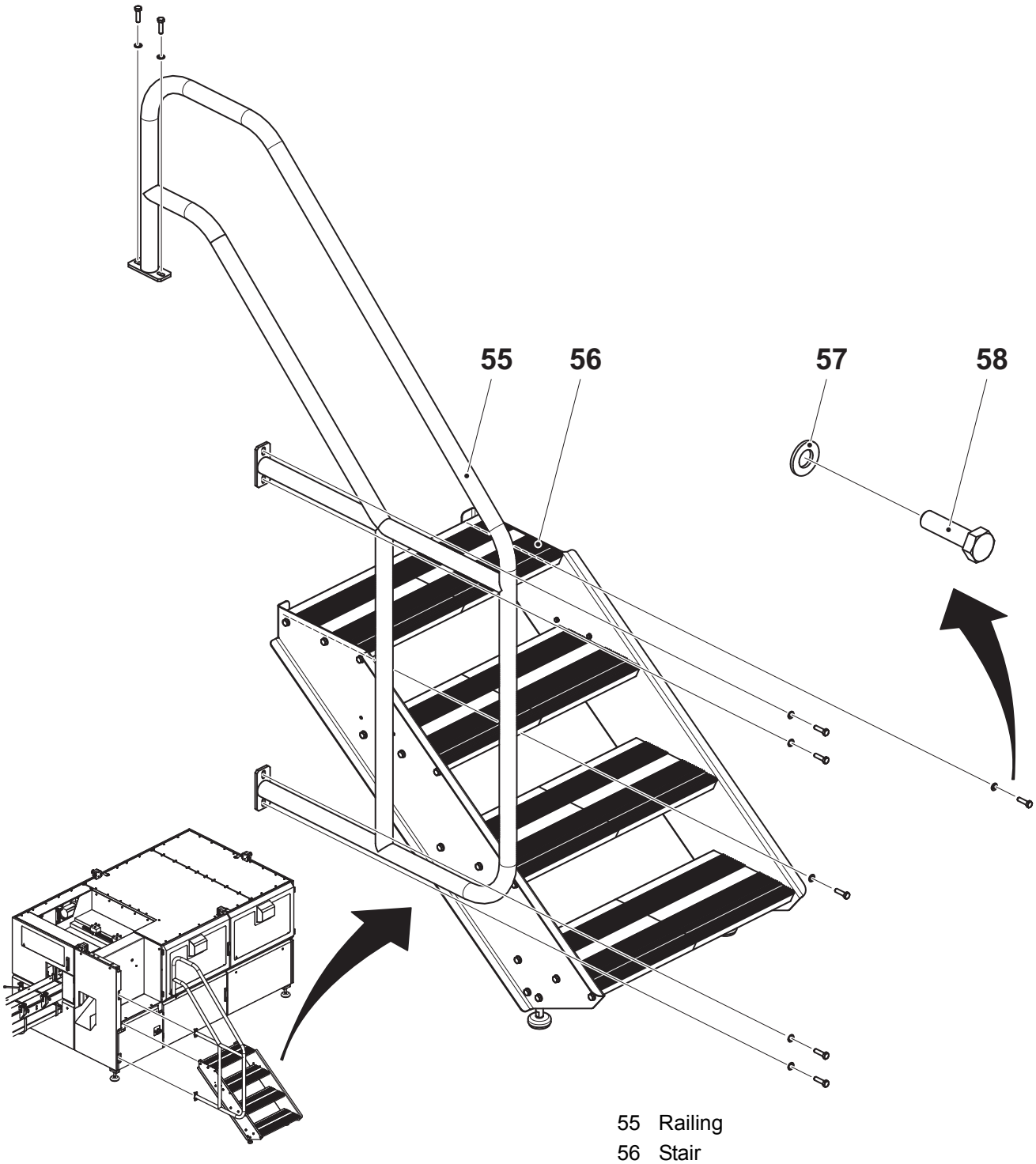

55 Railing
56 Stair
57 Washer (8 pcs)
58 Screw (8 pcs)

(Cont'd)

(Cont'd)

ac) Remove the nuts (62), the washers (61), and the handles (60).

ad) Fit the guide rails (59) to the vertical magazine in the card feeder.

ae) Fit and tighten the washers, the nuts, and the handles (60).

af) Draw and connect the cable (63) to the proximity switch (64).

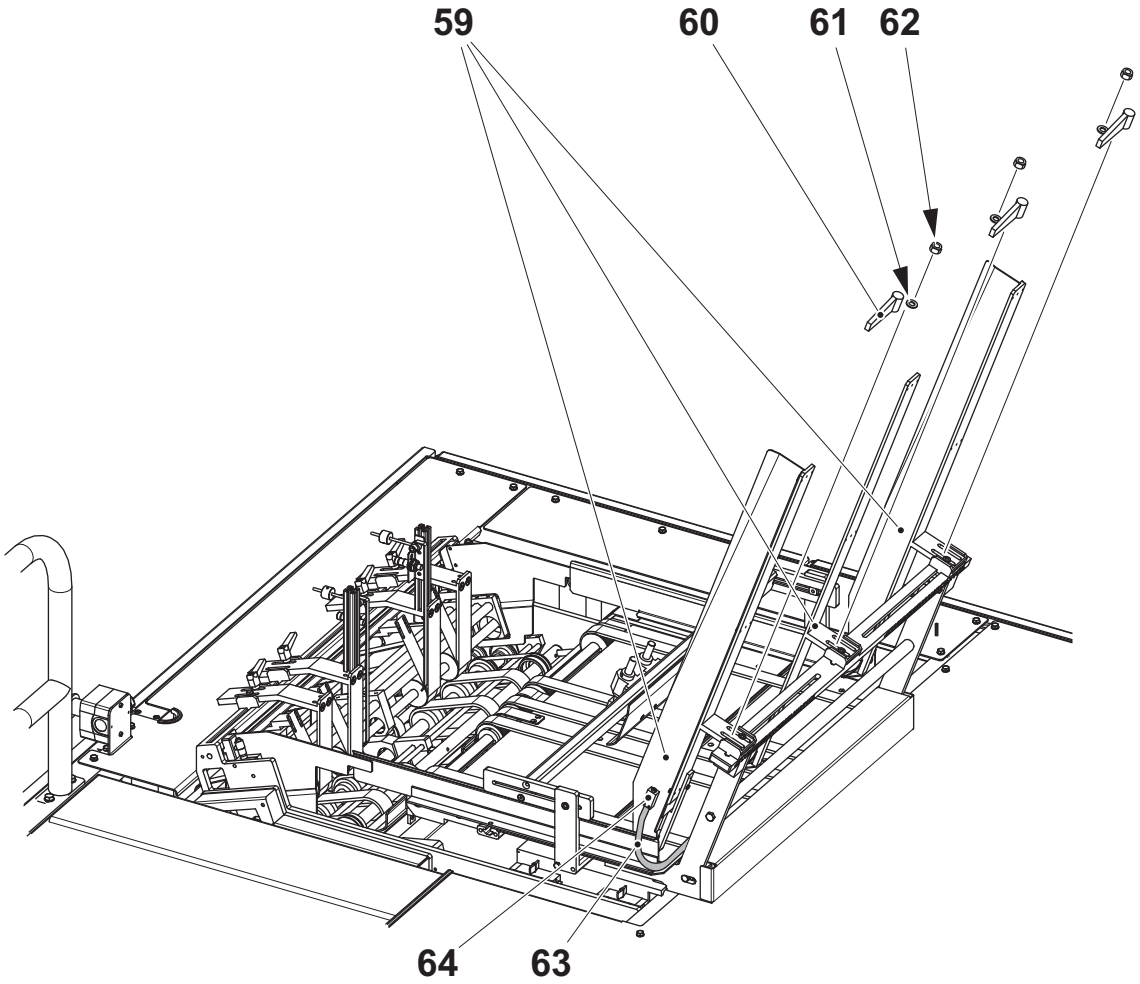

59 Guide rail
60 Handle (3 pcs)
61 Washer (3 pcs)
62 Nut (3 pcs)
63 Cable
64 Proximity switch

(Cont'd)

(Cont'd)

ag) Fit the frames (65) by means of the screws (67) and the washers (66).

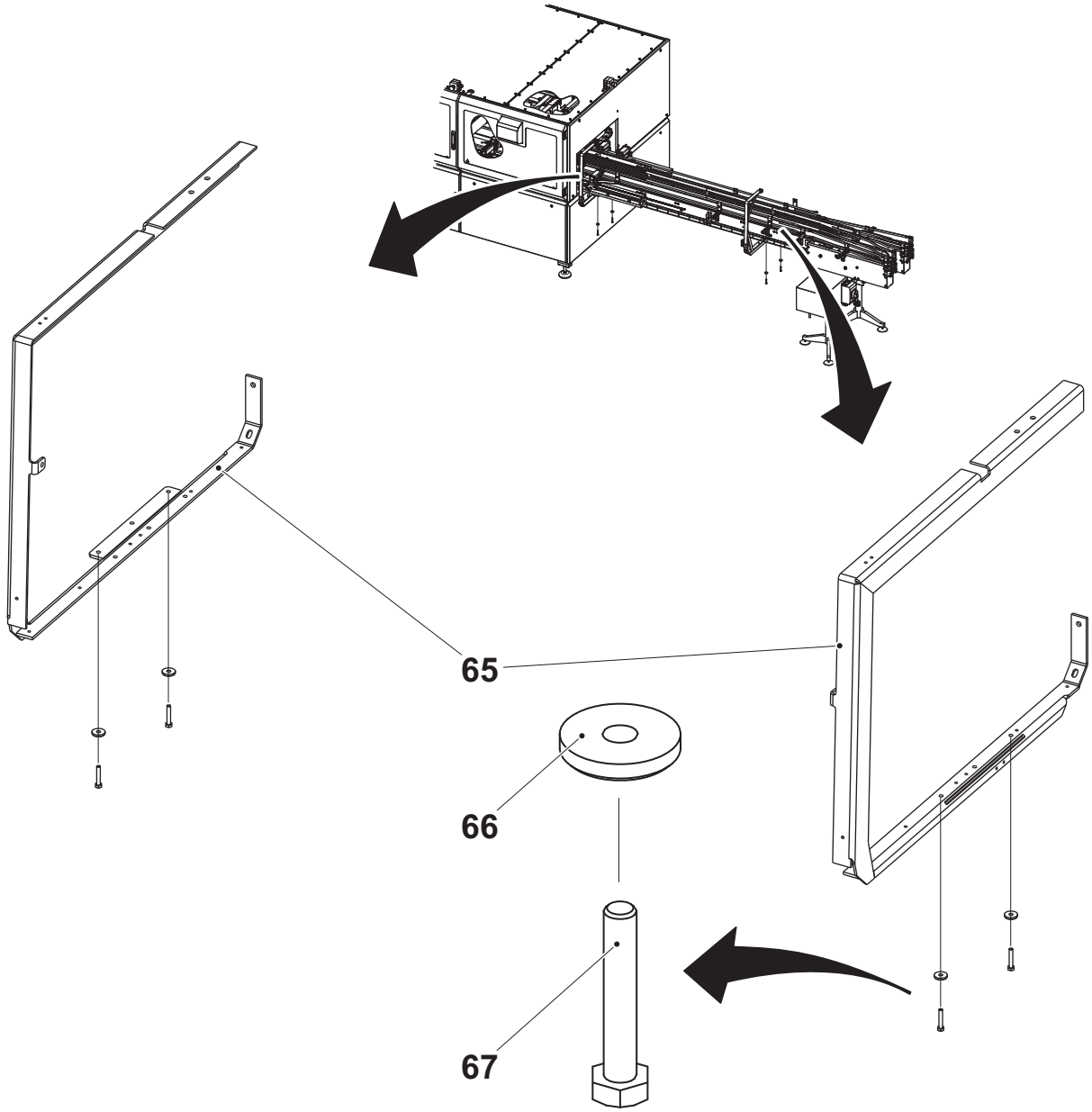

65 Frame (2 pcs)
66 Washer (4 pcs)
67 Screw (4 pcs)

(Cont'd)

(Cont'd)

ah) Fit the bottom plates (68) by means of the washers (69) and the screws (70).

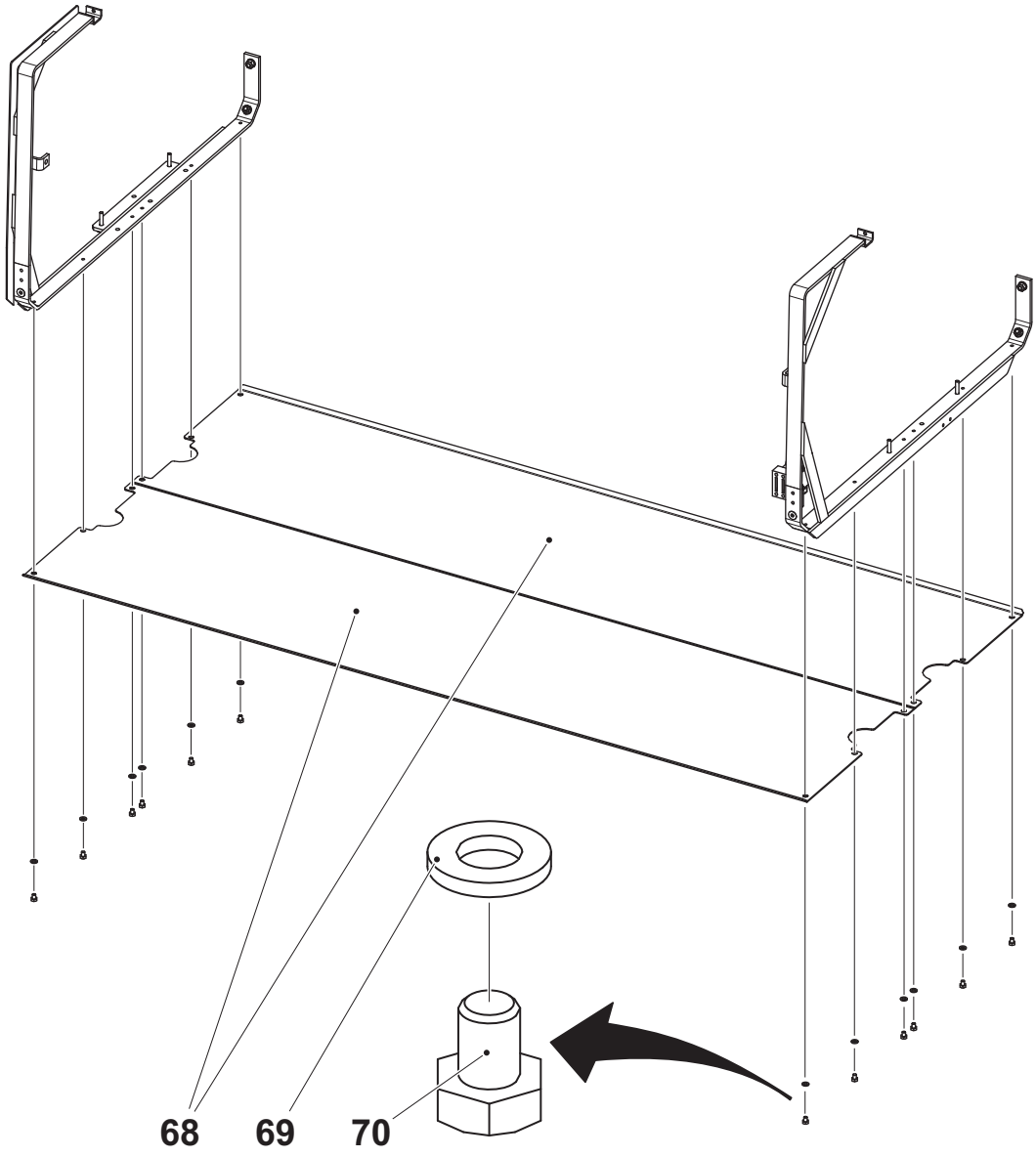

68 Bottom plate (2 pcs)
69 Washer (12 pcs)
70 Screw (12 pcs)

(Cont'd)

(Cont'd)

ai) In the row of screws and nuts that the hinge on the cover (72) is fitted with, remove the outermost ones (71).

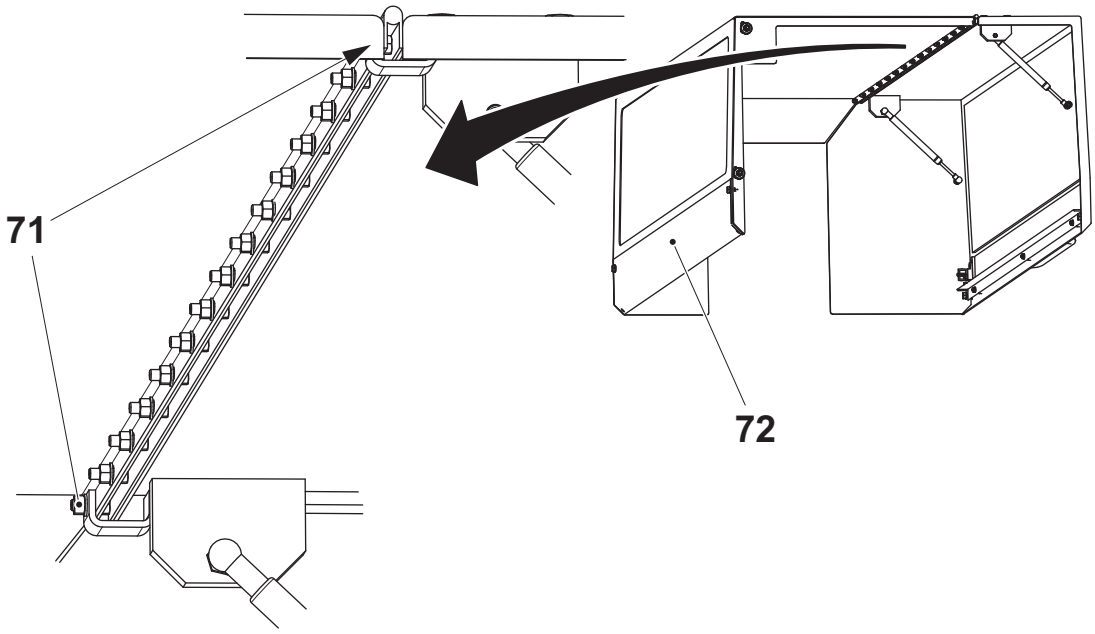

71 Screw and nut (2x2 pcs)
72 Cover

(Cont'd)

(Cont'd)

aj) Fit the cover to the frame by means of the screws (73), the washers (74), the washers (75), and the nuts (76).

Note! The washers (75) and the nuts (76) shall be fitted from inside the adjacent Card Inserter plate.

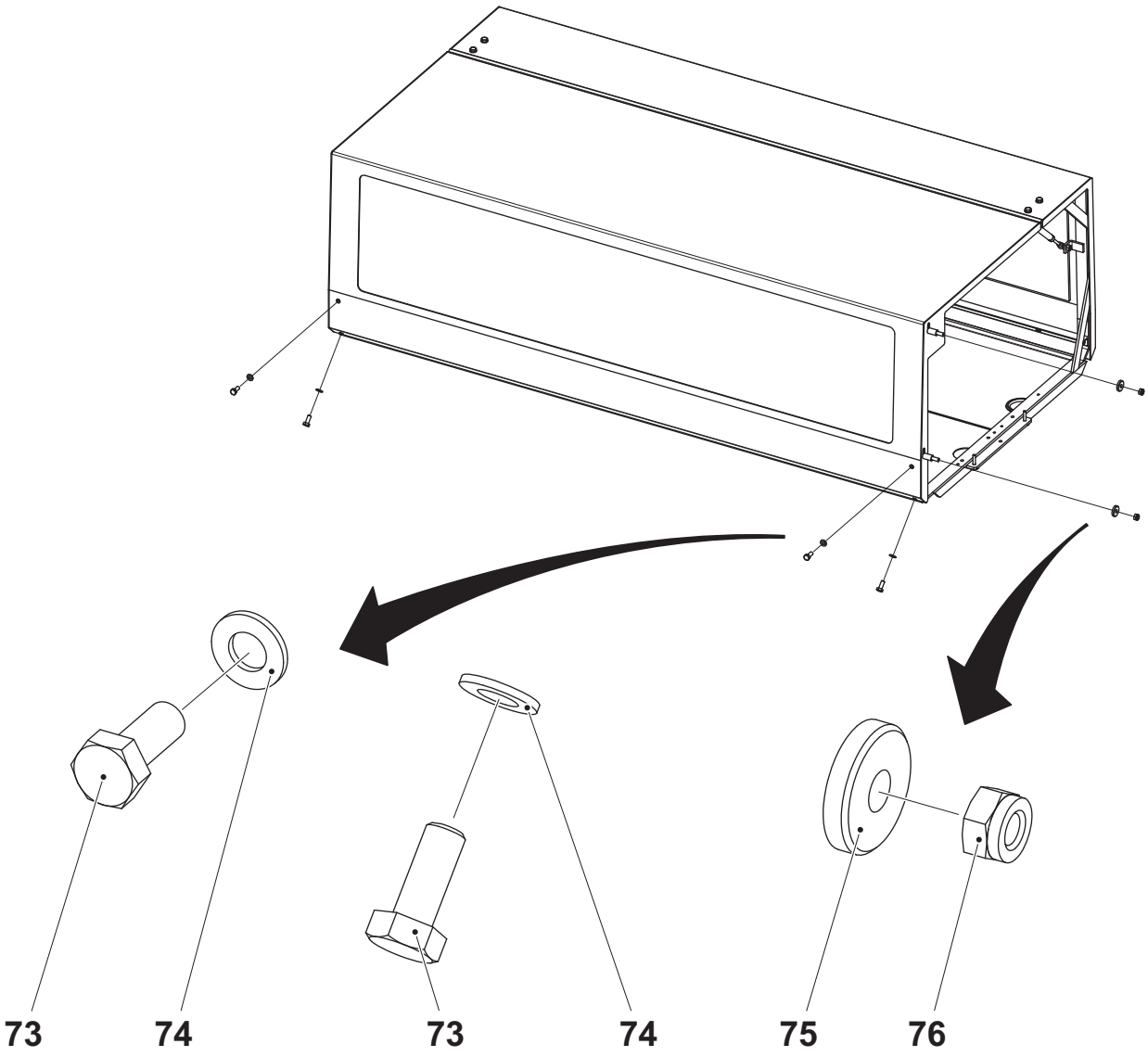

73 Screw (4 pcs)
74 Washer (4 pcs)
75 Washer (2 pcs)
76 Nut (2 pcs)

(Cont'd)

(Cont'd)

ak) Fit back the screws and nuts (71) inside the cover (72).

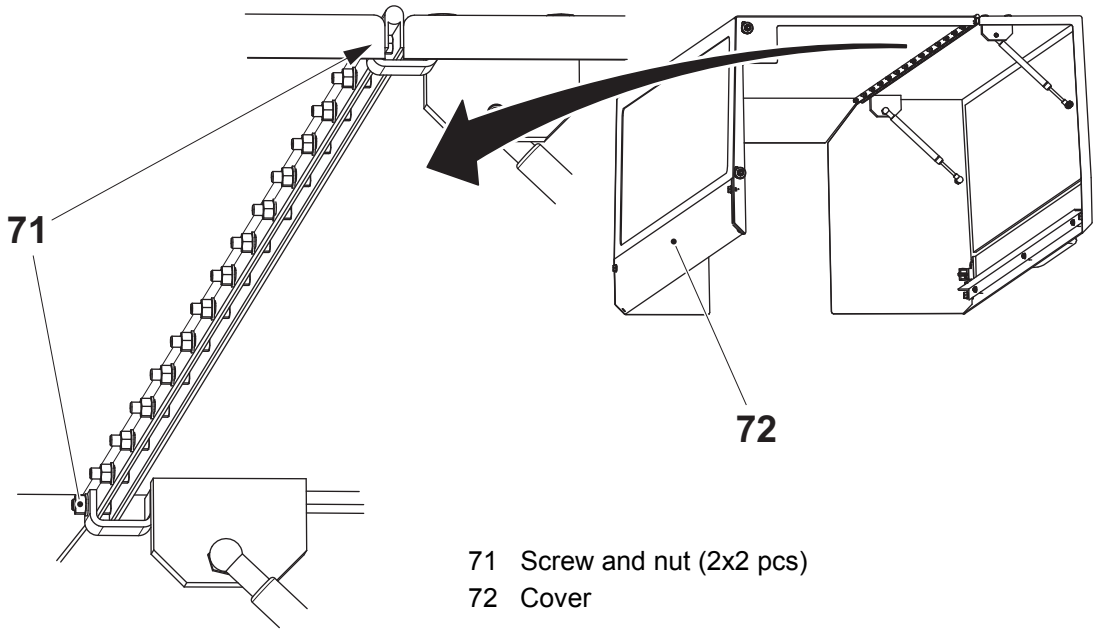

71 Screw and nut (2x2 pcs)
72 Cover

al) On both sides of the openable part of the cover, fit the gas springs to the frame by means of the nuts (77).

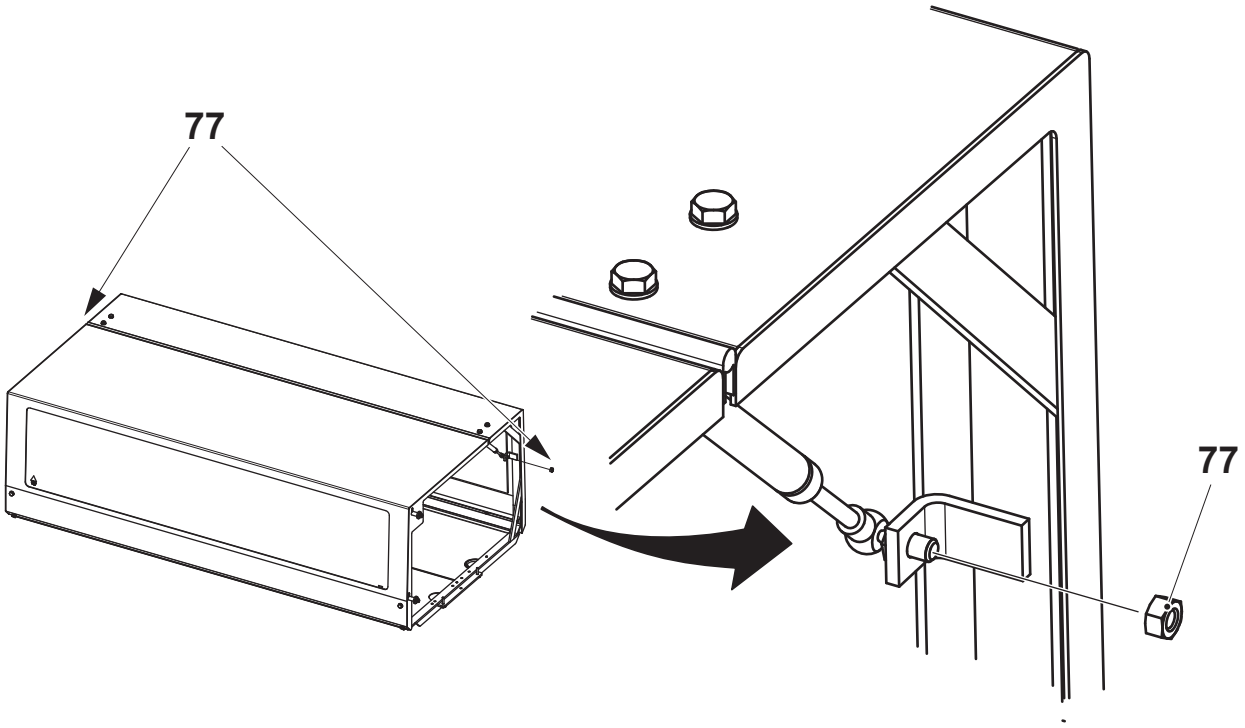

77 Nut (2 pcs)

(Cont'd)

(Cont'd)

am) On the cover RH, draw and connect the safety switch cable (78).

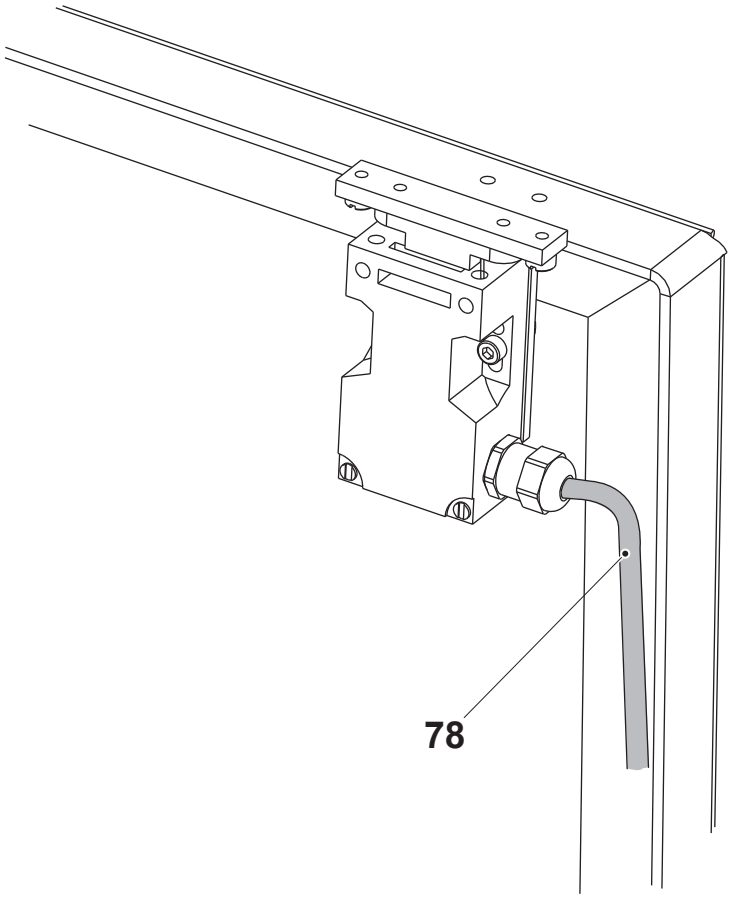

78 Cable

(Cont'd)

(Cont'd)

an) Connect the water gun (80) and the air jet gun (79).

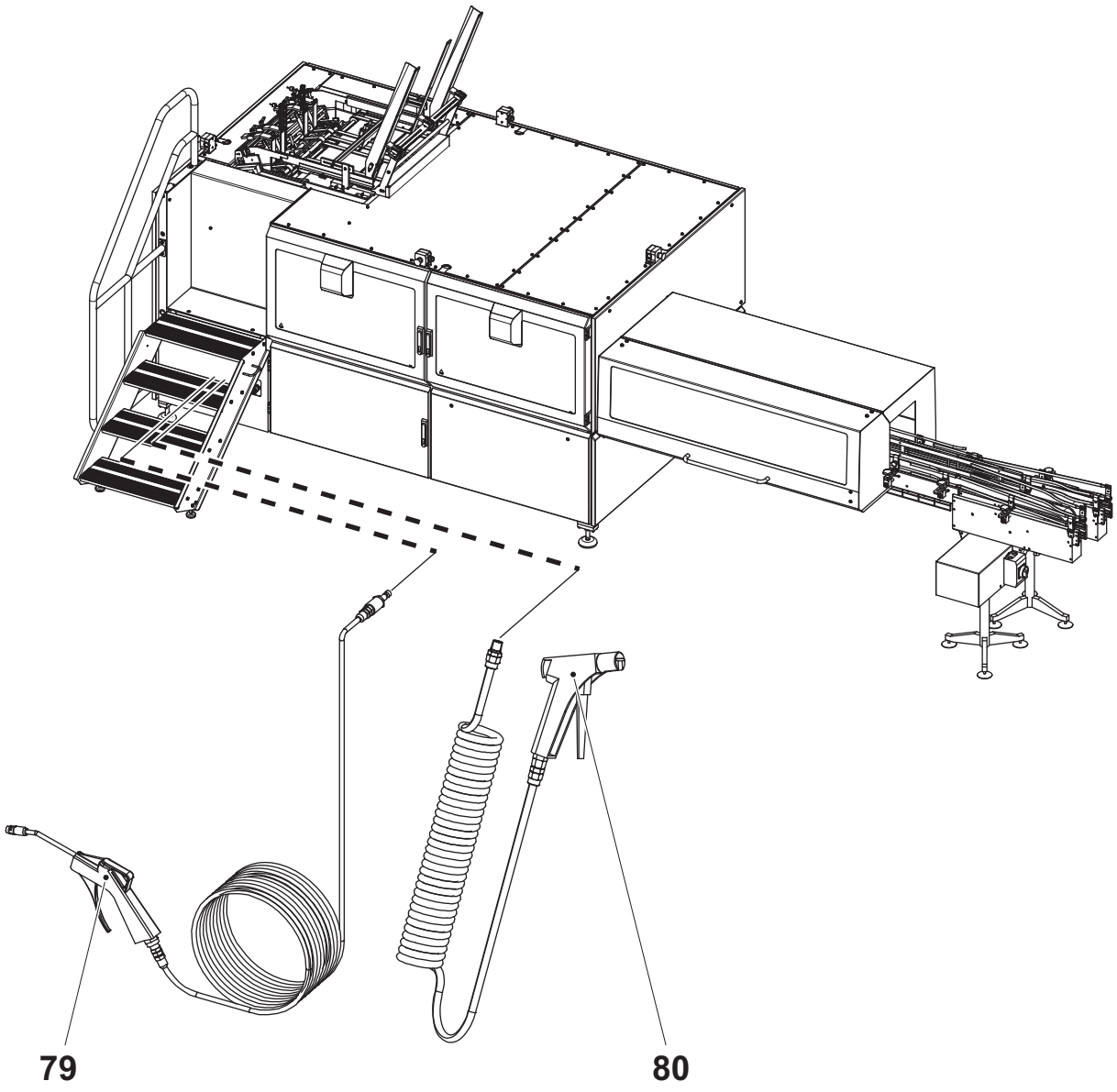

79 Air jet gun
80 Water gun

4.3.1.4 Stretch Unit

Note! This section is valid only if a Stretch unit is to be installed. If a Shrink unit is to be installed, go to Section 4.3.1.5 Shrink unit.

CAUTION
Risk of damage to equipment.
Make sure that the docking plate guides on the base module are properly fitted into the corresponding holes on the Stretch unit docking plates.Fork extensions must be used if the fork lift does not have forks long enough to lift the equipment in a secure manner.

Note! Before fitting the Stretch unit, make sure that the adjustable feet are set low enough for the docking plates holes to fit the base module guides.

a) Remove all transport security devices.

b) Place a hand pallet truck according to the illustration below and gently lift up the Stretch unit.

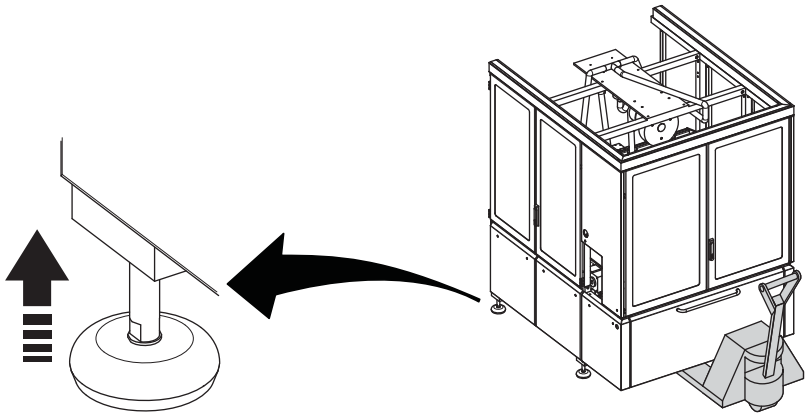

(Cont'd)

(Cont'd)

c) Fit the Stretch unit to the machine by means of fitting the base module docking plate (1) guides (2) in the corresponding holes (3) on the Stretch unit docking plates (4).

Note! Make sure that the beams (5) are fitted into the correct position.

d) Fit the screw in the through both base module and Stretch unit docking plates throughgoing hole (one screw at each docking plates pair).

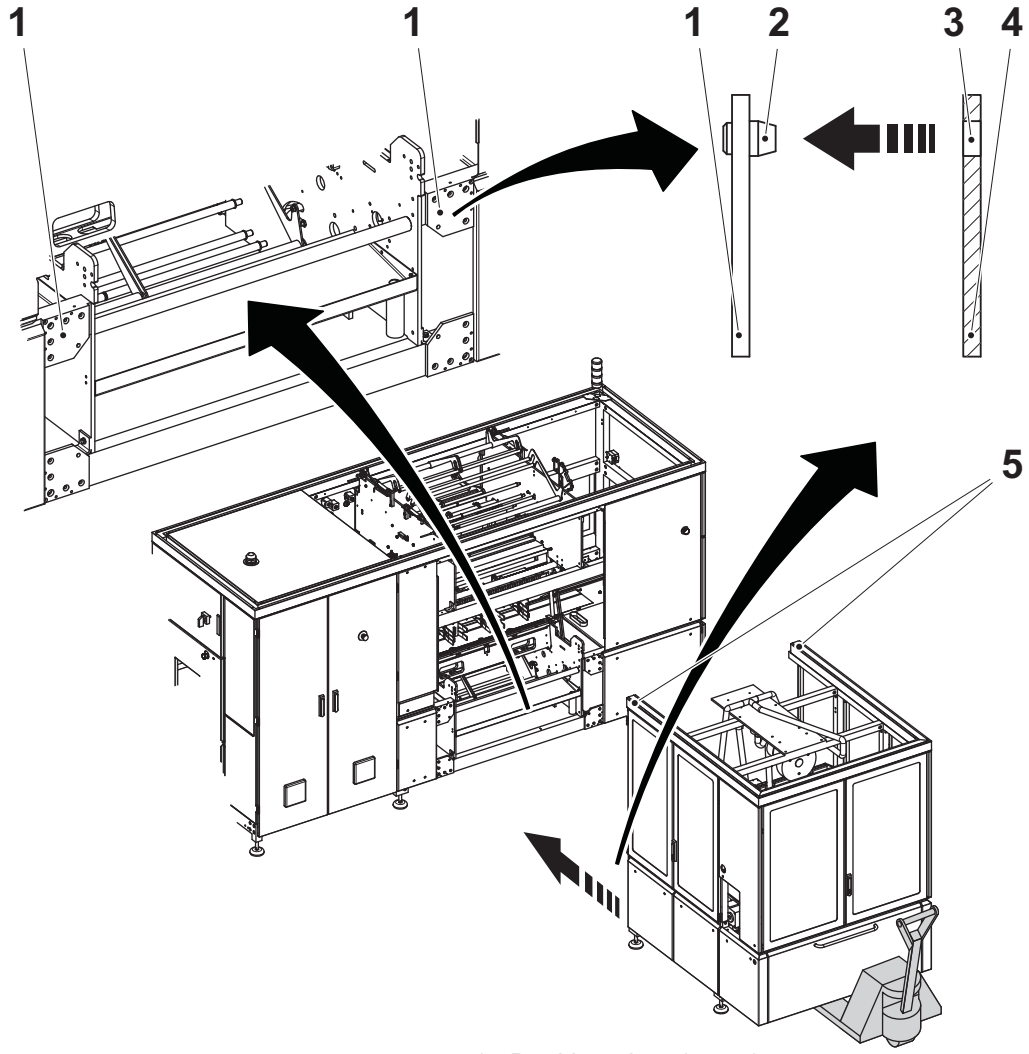

1 Docking plate (4 pcs)
2 Guide (2 pcs)
3 Hole (2 pcs)
4 Docking plate (4 pcs)
5 Beam (2 pcs)

(Cont'd)

(Cont'd)

e) Adjust the Stretch unit adjustable feet so that the equipment rests on the floor instead of on the hand pallet truck forks.

f) Gently lower the forks of the hand pallet truck and remove it.

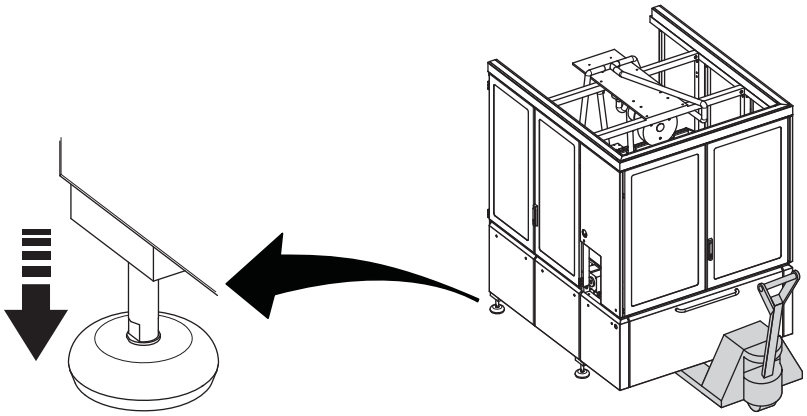

g) Level the Stretch unit with the aid of for example a spirit level. Place the spirit level on the cross beams as well as on the longitudinal beams. If necessary, adjust by turning the adjustable feet.

h) Draw and connect the electricity cable from the Stretch unit to the base module electrical cabinet. See the EM.

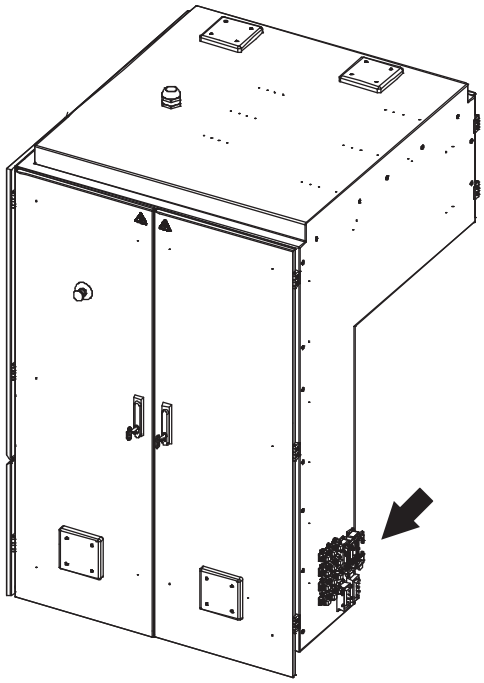

(Cont'd)

(Cont'd)

i) Open the door (6) and remove the covers (7).

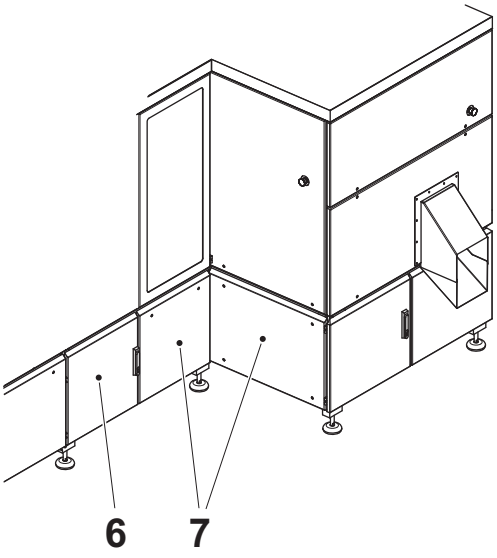

6 Door
7 Cover

j) Remove the screws (8) and swing out the valve panel (9).

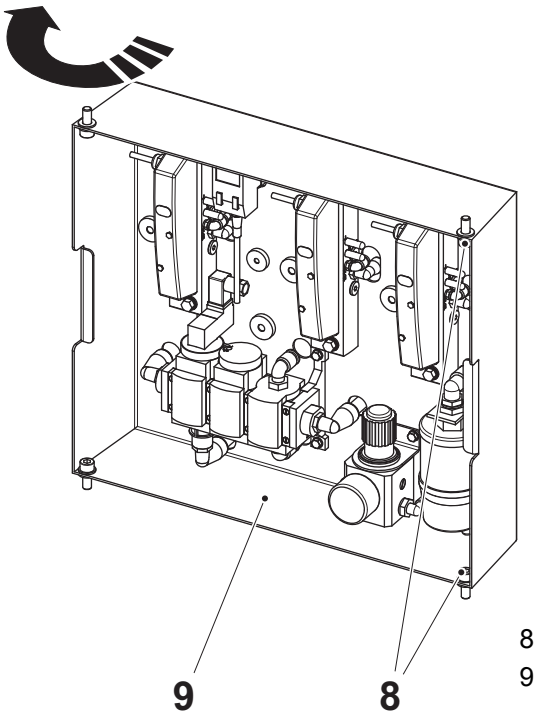

8 Screw
9 Valve panel

(Cont'd)

(Cont'd)

k) Pull and connect the compressed air hoses (10) and (11) from the base module to the Stretch unit.

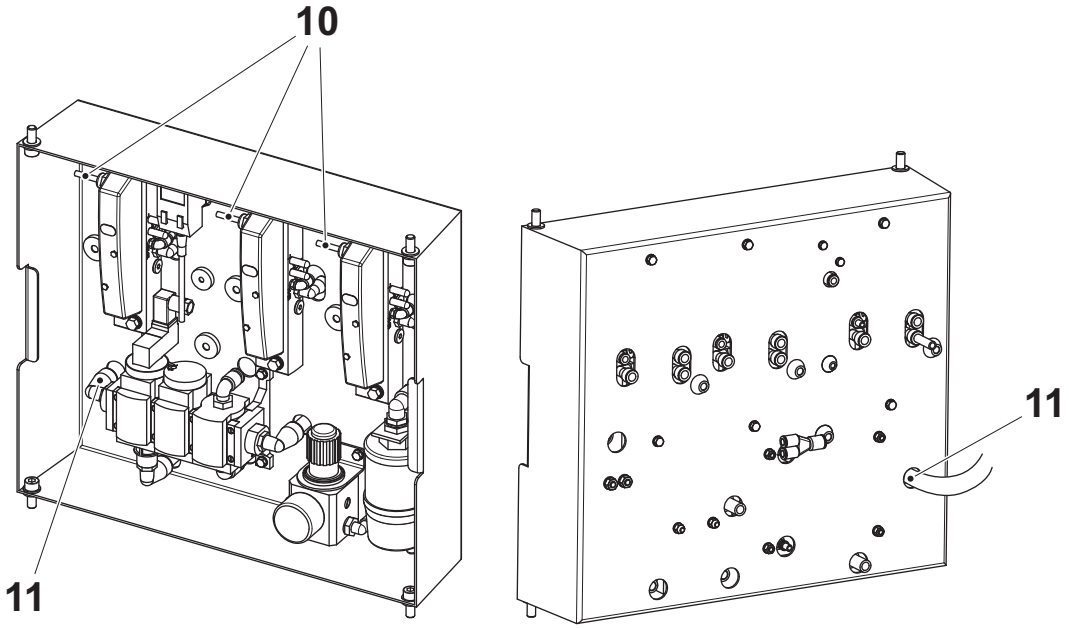

10 Compressed air hose - pilot
11 Compressed air hose - supply

l) Draw and connect the central lubrication hose (13) from the Stretch unit block (12) to the base module block (14).

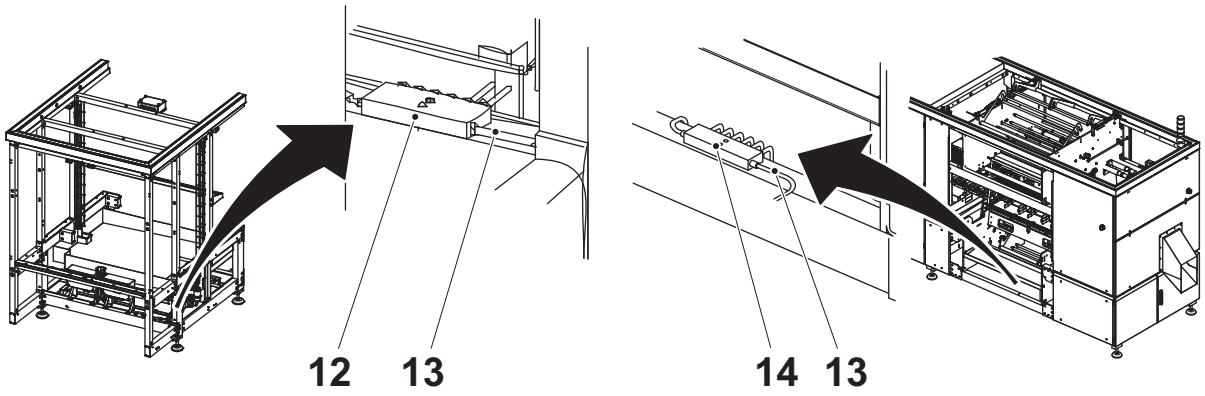

12 Block (Shrink unit)
13 Central lubrication hose
14 Block (base module)

(Cont'd)

(Cont'd)

m) Swing back the valve panel (15) and fit the two screws (16).

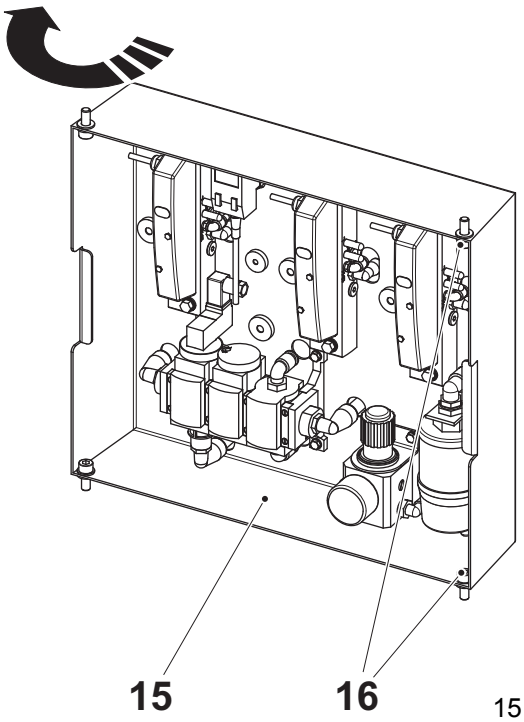

15 Valve panel
16 Screw

(Cont'd)

(Cont'd)

n) Check that the Stretch unit is level with the base module by means of the Stretch unit conveyor belt (17) and the base module conveyor belt (20). If these parts are not level, adjust them according to the MM.

o) Check that the distance A between the bars (18) and (19) is 13 mm according to the illustration below.

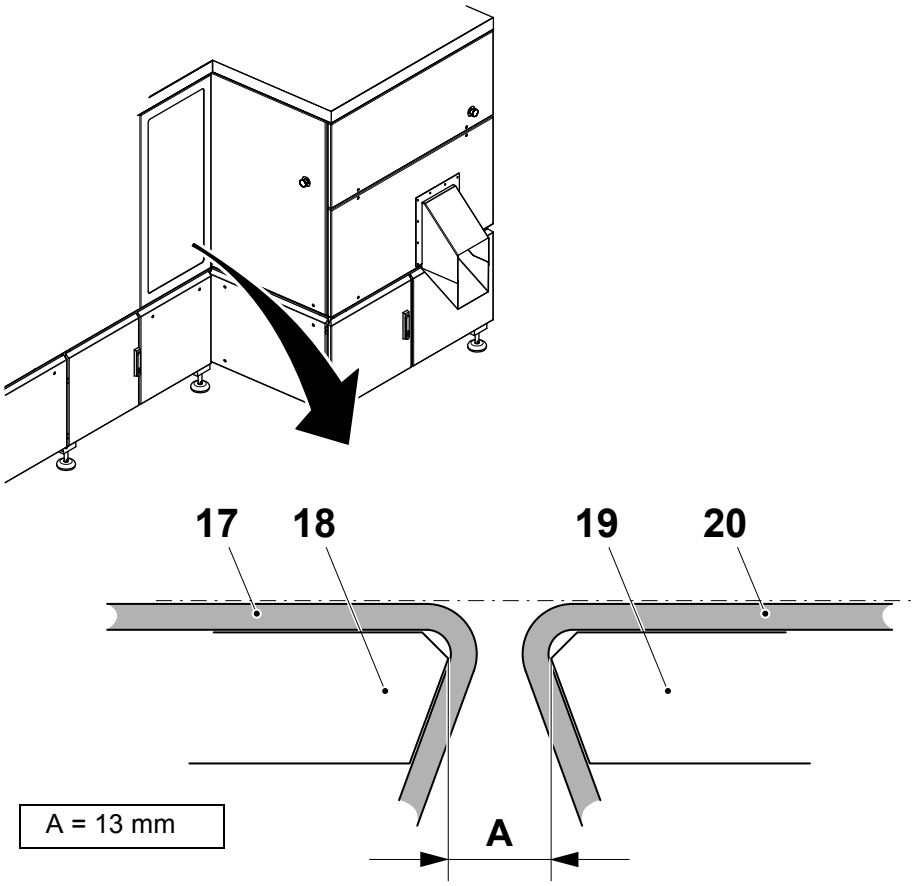

17 Conveyor belt (Stretch unit)
18 Bar (Stretch unit)
19 Bar (Base module)
20 Conveyor belt (Base module)

p) Close all doors and fit all covers.

4.3.1.5 Shrink unit

Note! This section is valid only if a Shrink unit is to be installed. If a Stretch unit is to be installed, go to Section 4.3.1.4 Stretch Unit.

CAUTION
Risk of damage to equipment.
Make sure that the docking plate guides on the base module are properly fitted into the corresponding holes on the Shrink unit docking plates. Fork extensions must be used if the fork lift does not have forks long enough to lift the equipment in a secure manner.

Note! Before fitting the Shrink unit, make sure that the adjustable feet are set low enough for the docking plates holes to fit the base module guides.

a) Remove all transport security devices.

b) Place a hand pallet truck according to the illustration below and gently lift up the Shrink unit.

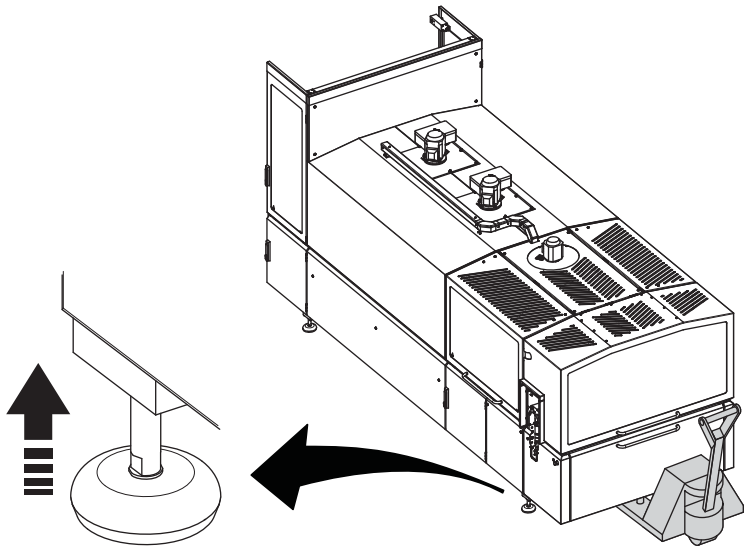

(Cont'd)

(Cont'd)

c) Fit the Shrink unit to the base module by means of fitting the holes (3) on the Shrink unit docking plates (4) onto the corresponding base module docking plate (1) guides (2).

Note! Make sure that the beams (5) are fitted into the correct position.

d) Fit the screw in the through both base module and Shrink unit docking plates throughgoing hole (one screw at each docking plates pair).

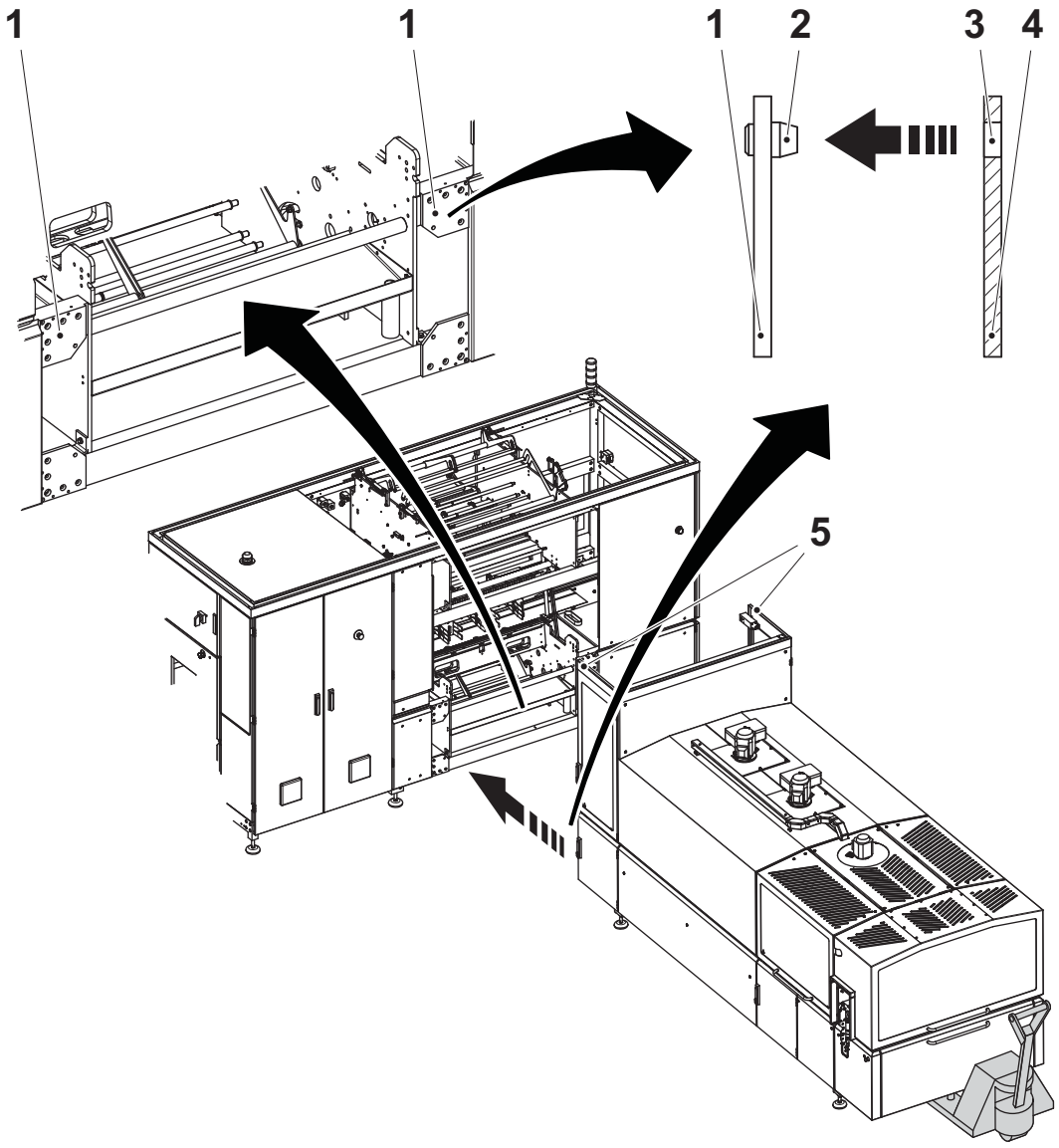

1 Docking plate (4 pcs)
2 Guide (2 pcs)
3 Hole (2 pcs)
4 Docking plate (4 pcs)
5 Beam (2 pcs)

(Cont'd)

(Cont'd)

e) Adjust the Shrink unit adjustable feet so that the equipment rests on the floor instead of on the hand pallet truck forks.

f) Gently lower the forks of the hand pallet truck and remove it.

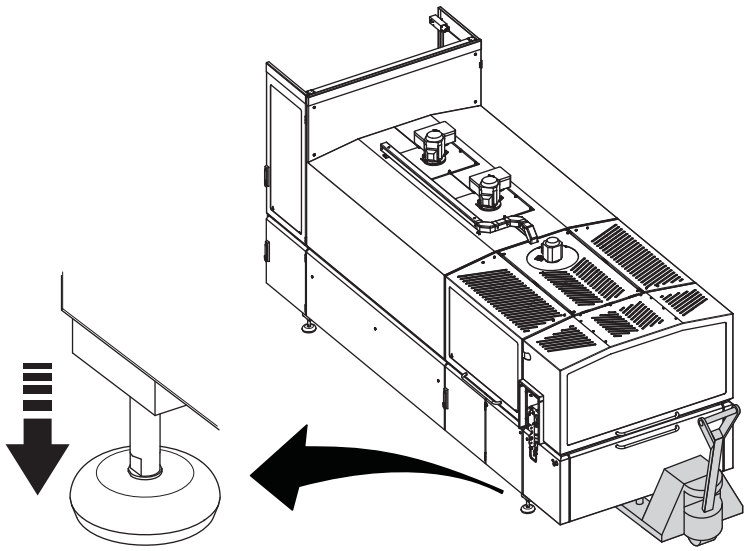

g) Level the Shrink unit with the aid of for example a spirit level. Place the spirit level on the cross beams as well as on the longitudinal beams. If necessary, adjust by turning the adjustable feet.

(Cont'd)

(Cont'd)

h) Pull and connect the electricity cable from the Shrink unit to the base module electrical cabinet. See the EM.

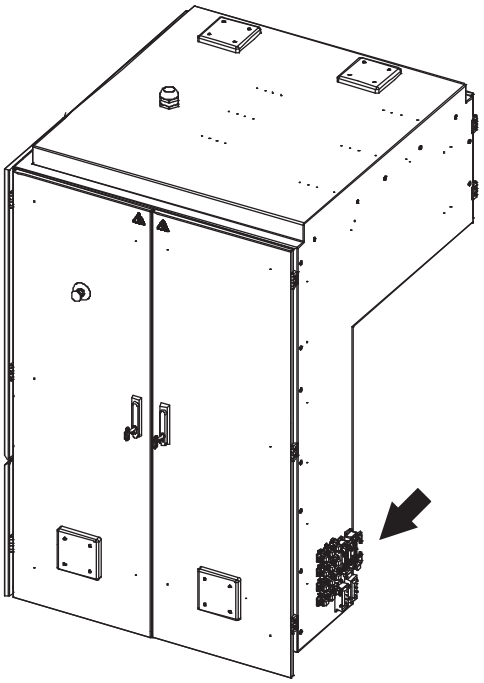

i) Open the doors (6) and remove the cover (7)

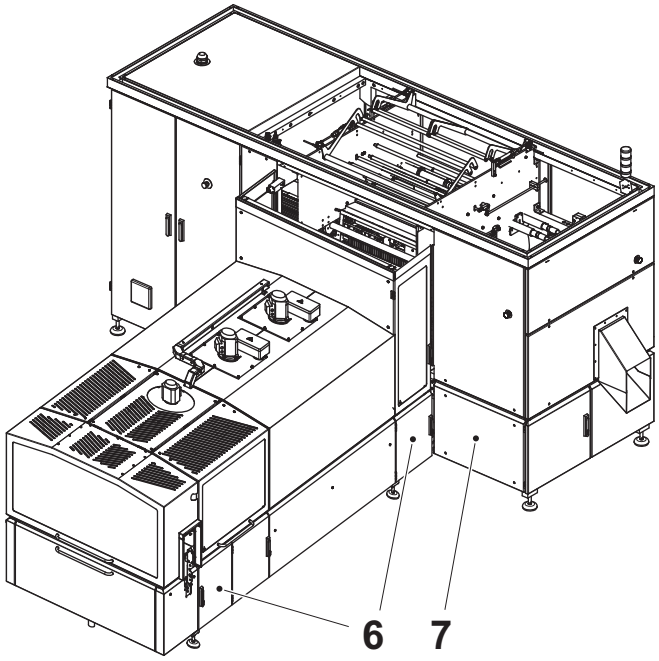

6 Door
7 Cover

(Cont'd)

(Cont'd)

j) Remove the screws (8) and swing out the valve panel (9).

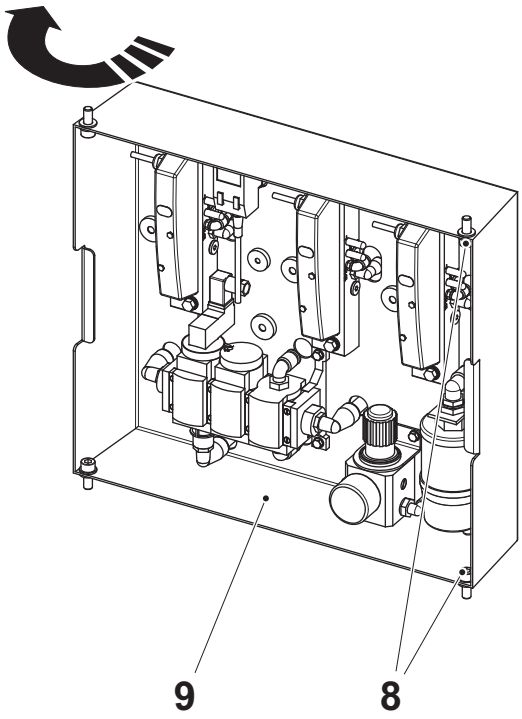

8 Screw
9 Valve panel

(Cont'd)

(Cont'd)

k) Pull and connect the compressed air hoses (10) and (11) from the base module to the Shrink unit.

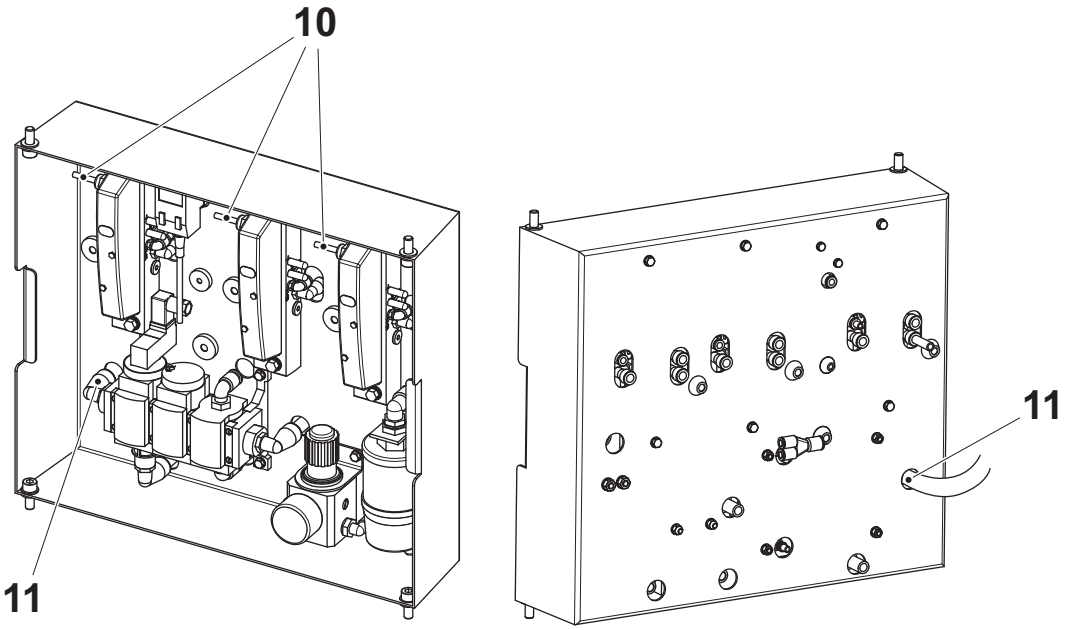

10 Compressed air hose - pilot
11 Compressed air hose - supply

l) Draw and connect the central lubrication hose (12) from the Shrink unit block (13) to the base module block (14).

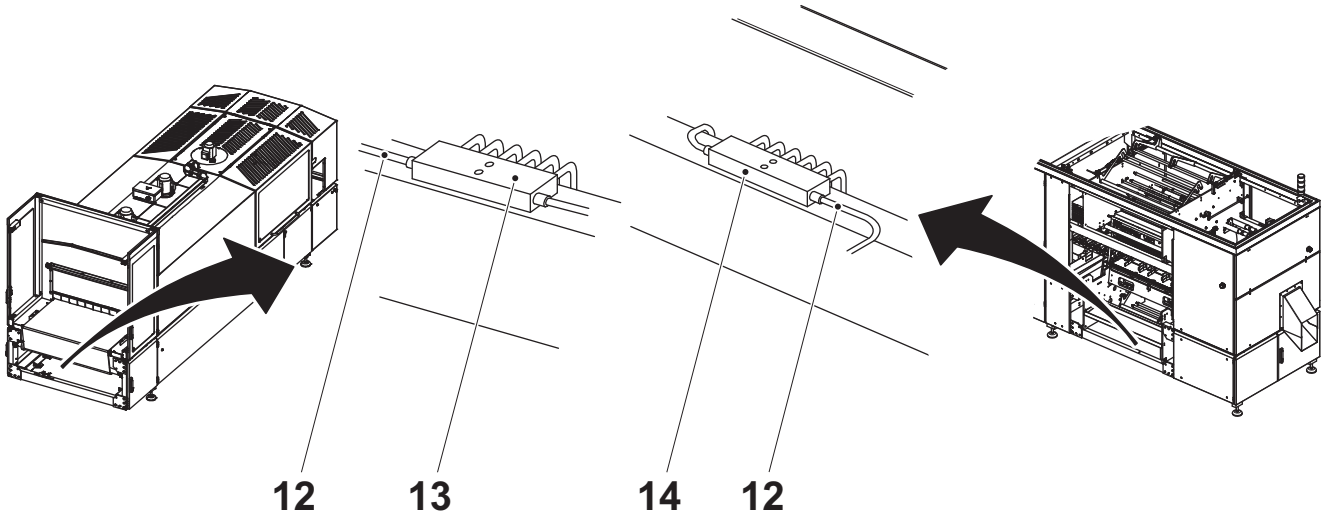

12 Central lubrication hose
13 Block (Shrink unit)
14 Block (base module)

(Cont'd)

(Cont'd)

m) Check that the Shrink unit is level with the base module by means of the Shrink unit conveyor belt (15) and the base module conveyor belt (18). If these parts are not level, adjust them according to the MM.

n) Check that the distance A between the bars (16) and (17) is 13 mm according to the illustration below.

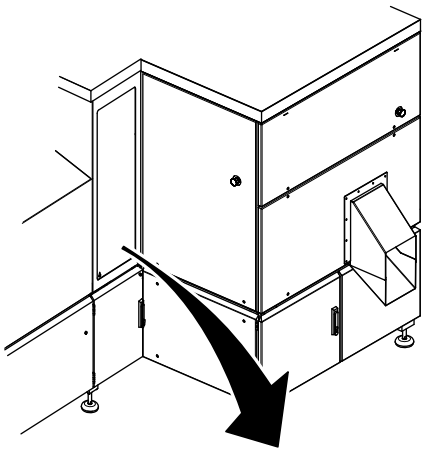

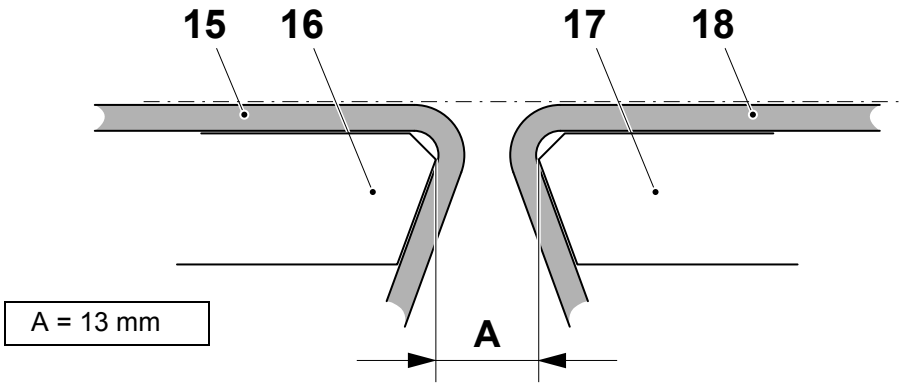

15 Conveyor belt (Shrink unit)
16 Bar (Shrink unit)
17 Bar (Base module)
18 Conveyor belt (Base module)

o) Close all doors and fit all covers.

4.3.1.6 Discharge Unit

The rails on the conveyor from the discharge unit must be adjusted to the correct position. This can be done by moving the rail, or cutting to the correct length.

Note! Cut or move the rails to eliminate the shaded parts of the rails shown in the illustration below.

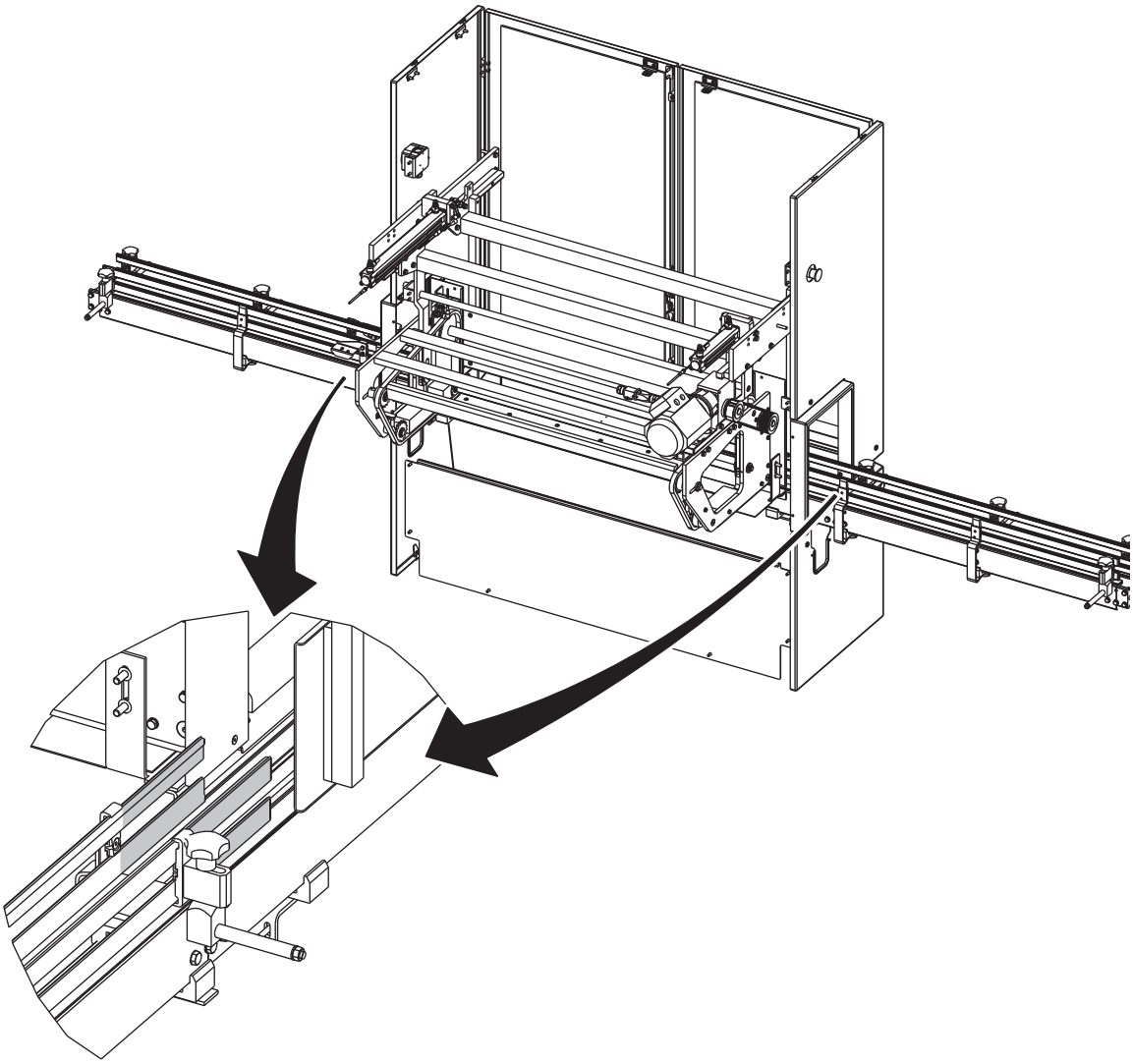

4.3.1.7 Discharge Tunnel

The discharge tunnel (1) is to be fitted with four bolts on the machine discharge.

Note! Only the first section of the discharge conveyor can be fitted to the machine before fitting the discharge tunnel (1). This because that the discharge tunnel must be thread onto the discharge conveyor and then attached to this.

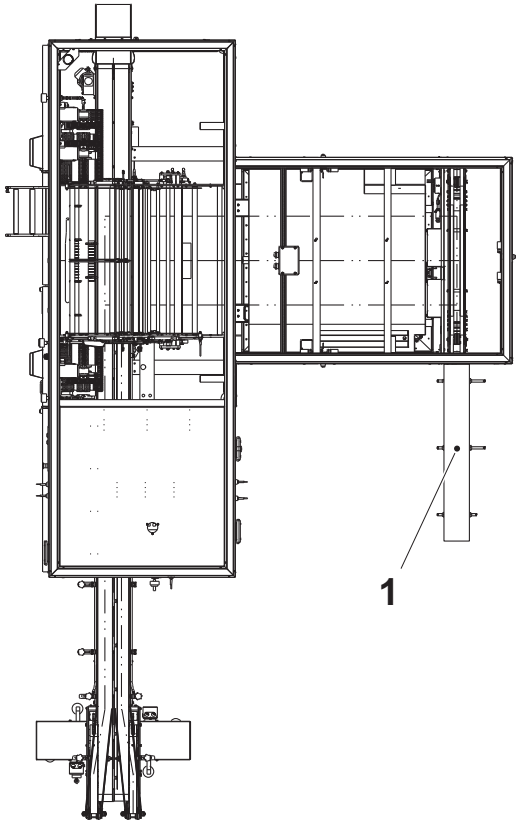

1 Discharge tunnel

4.4 Connections

4.4.1 Compressed Air Connection

Compressed air should be connected at the point shown in Section 1.1.4 Connections, chapter 1 Technical Data and Drawings.

4.4.2 Water Connection

Water should be connected at the point shown in Section 1.1.4 Connections, chapter 1 Technical Data and Drawings.

4.4.3 Electrical Connection

DANGER

Risk of electrical shock and short circuits.
Make sure that power supply disconnecting device is OFF upstream before performing any work on cables and electrical components.

The electricity should be connected at the point shown in Section 1.1.4 Connections, chapter 1 Technical Data and Drawings.

To connect the electricity, see the EM.

4.4.2.1 Main power supply cable

Install the power supply cable (1) through the cable gland (2) and further through the stainless steel pipe. Use anchors and bundle strips to attach the cable at the frame.

Note! Depending on machine set-up, the main switch (3) is mounted either at the left or at the right side of the electrical cabinet (4). For both cases, use the cable gland (2) when installing the power supply cable.

Install the power supply cable to the main switch as illustrated.

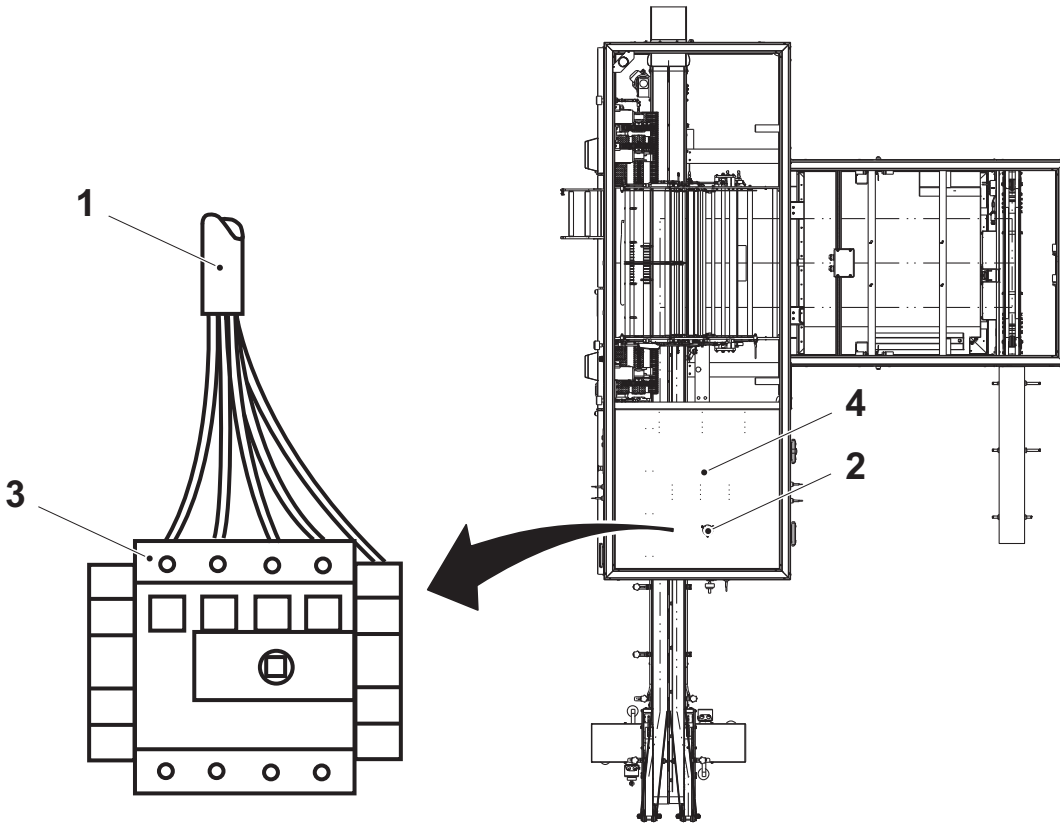

1 Power supply cable
2 Cable gland
3 Main switch
4 Electrical cabinet

(Cont'd)

(Cont'd)

4.4.2.2 Earth Cable

Stretch

Connect the earth cables in the locations shown in the illustration below.

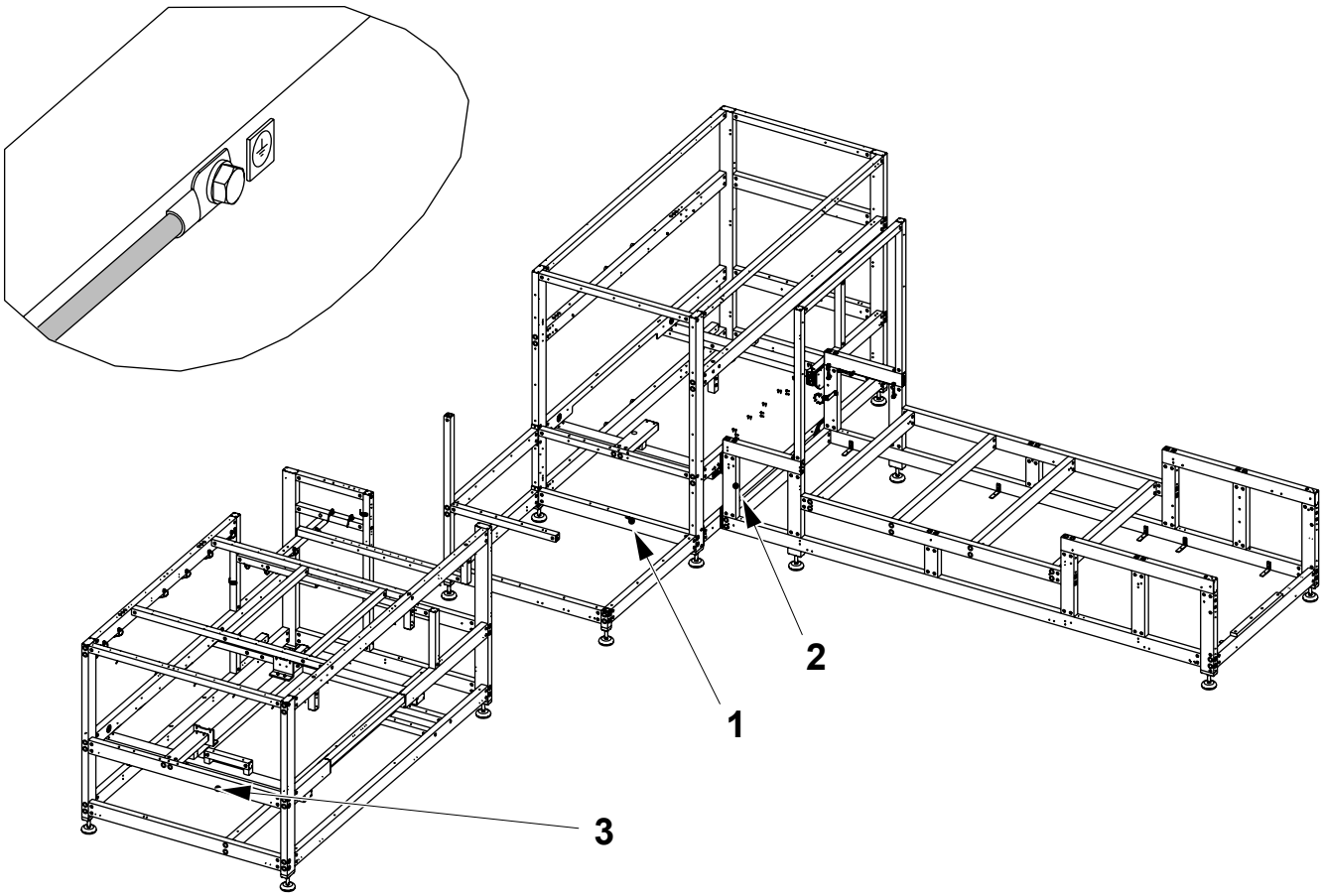

1 Earth cable connection, Base Machine
2 Earth cable connection, Stretch Module
3 Earth cable connection, Card Inserter (OE)

(Cont'd)

(Cont'd)

Shrink

Connect the earth cables in the locations shown in the illustration below.

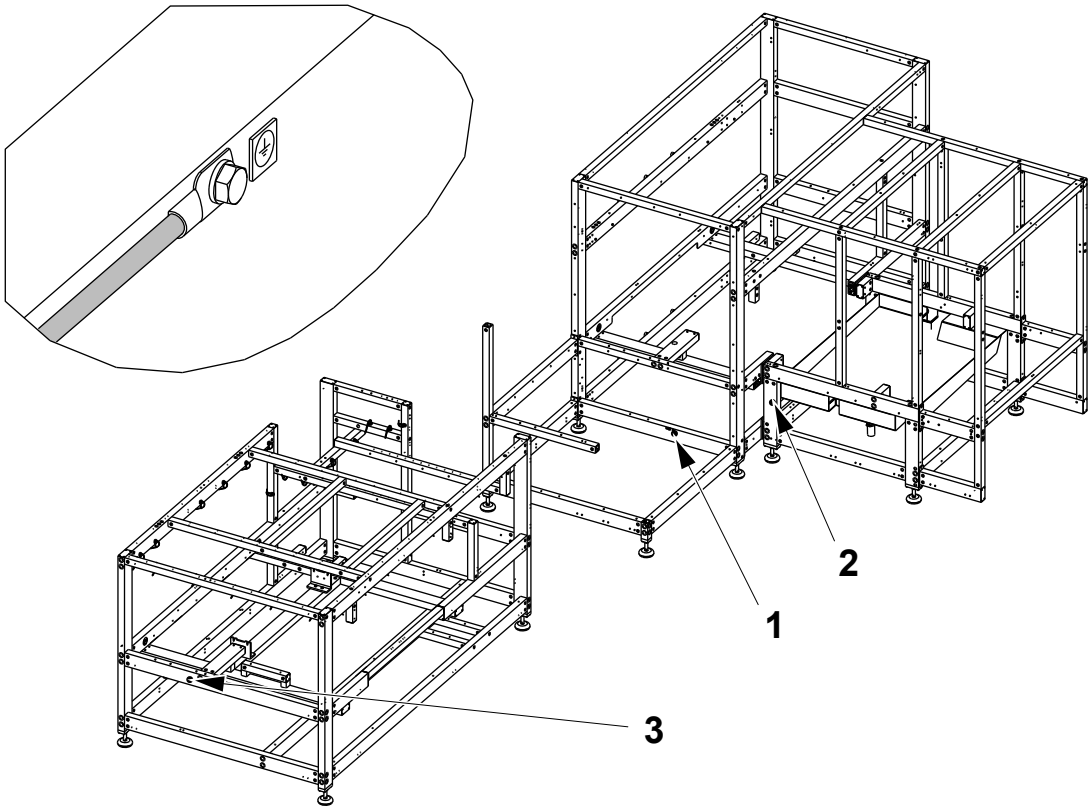

1 Earth cable connection, Base Machine
2 Earth cable connection, Shrink Module
3 Earth cable connection, Card Inserter

(Cont'd)

(Cont'd)

4.4.2.3 PLMS and Line Communication

Fit the cable glands as illustrated when installing the cables for PLMS and for Line Communication.

Perform the electrical connection according to the EM.

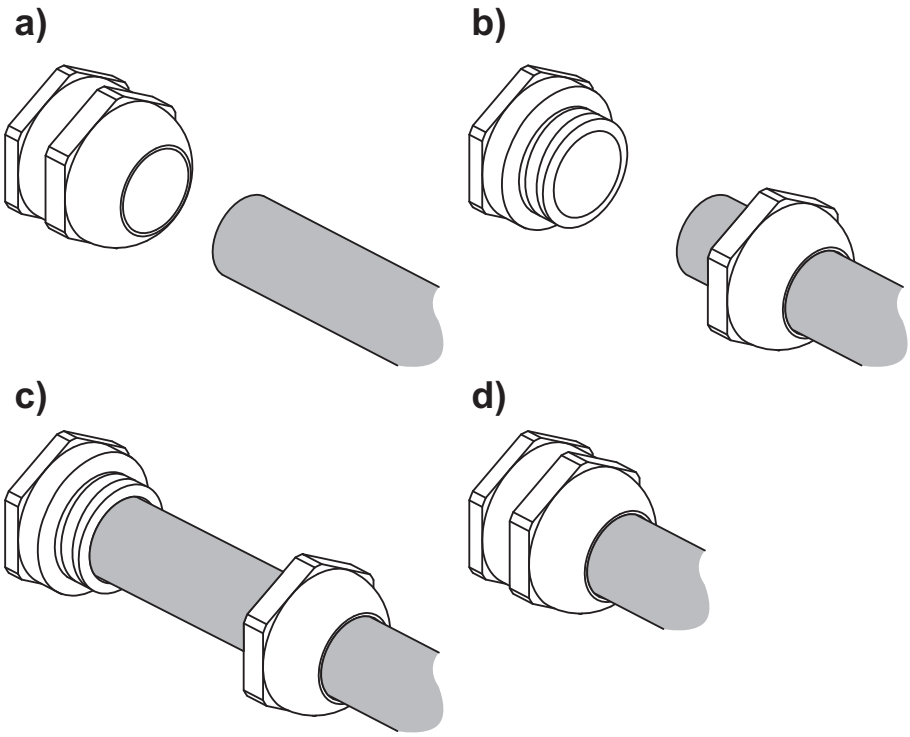

4.4.2.4 External Conveyor

Fit the cable glands as illustrated when installing the cable for the conveyor.

The motor overload protection for the external conveyor is designed for the range of 0,37 - 0,75 kW. Adjust the motor overload protection to the value stated on the motor data sign.

Perform the electrical connection according to the EM.

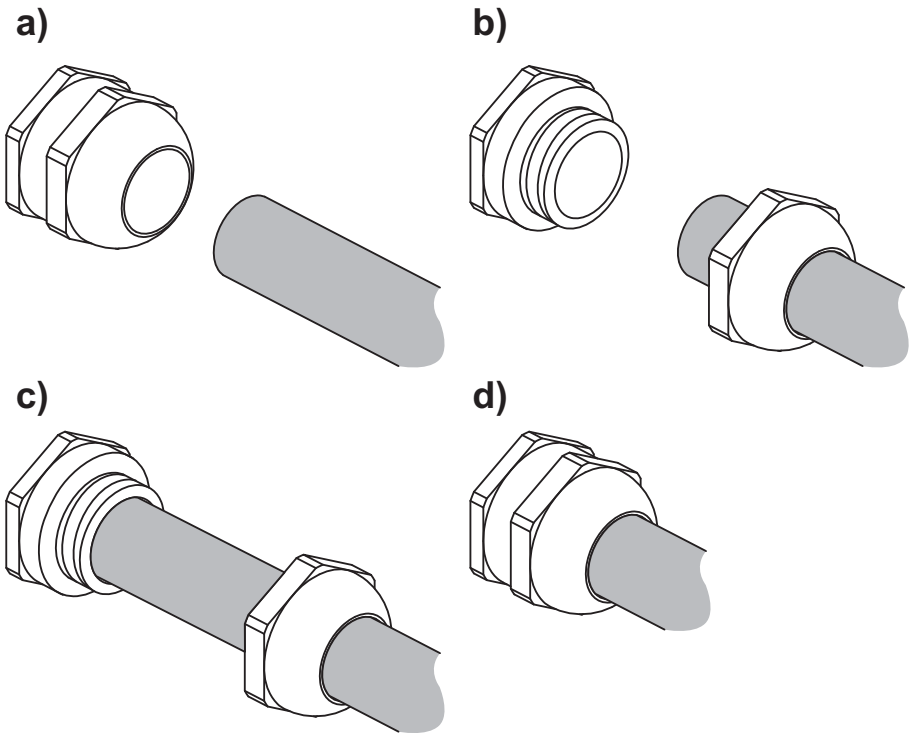

4.4.2.5 External Infeed Conveyor Control

Pull and connect the cable (1) to the electrical cabinet through a suitable cable gland. Perform the electrical connection according to the EM.

Fit the cable gland according to the illustration below.

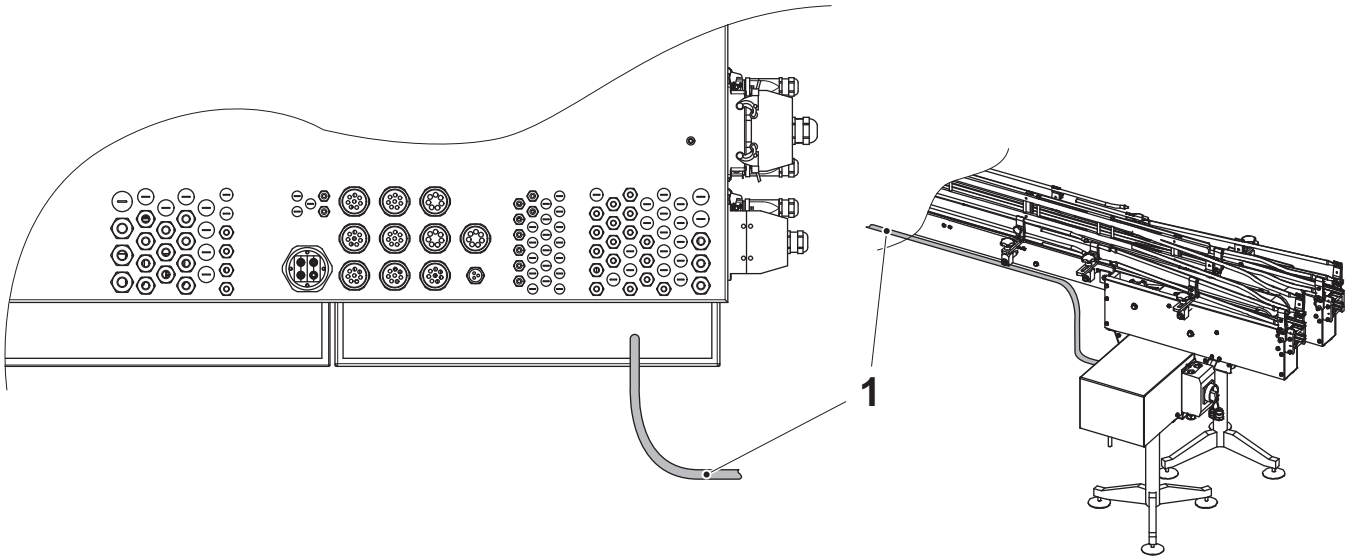

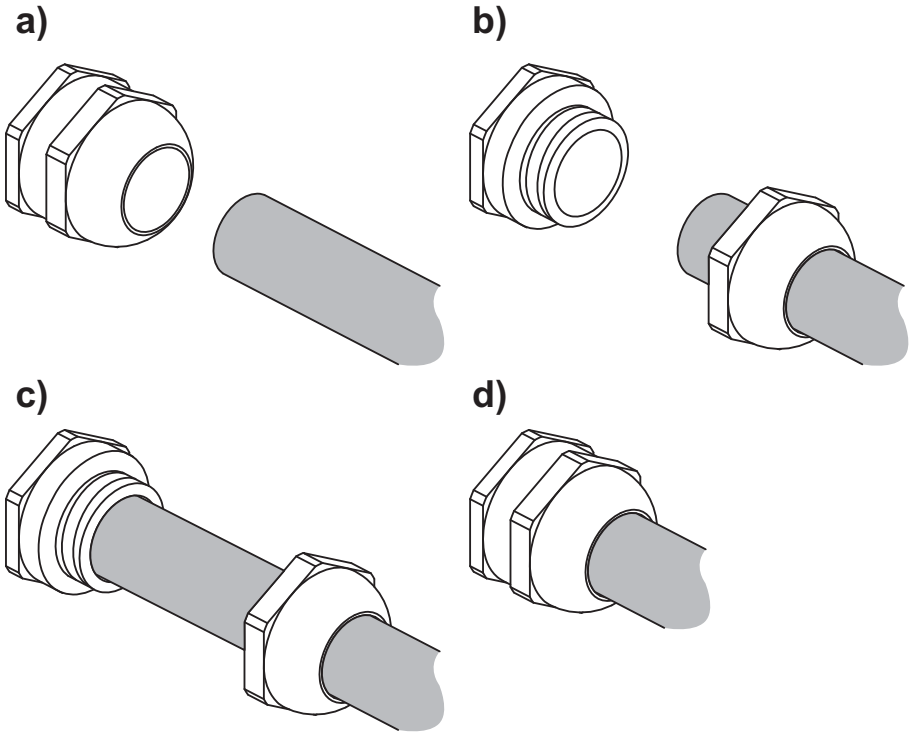

5 Final Installation Check

Description

This chapter describes all checks that must be performed after the machine installation has been completed.

5.1 Final Installation Check. . . . . 5 - 5

This page intentionally left blank

5.1 Final Installation Check

Note! This machine has been tested with dummy packages and might need fine tuning of the settings to fit the packages at site. See the MM for settings.

Note! Some steps will require only mechanical checks, others will require running tests. Follow these steps to complete the installation check.

Step	Text	Done
1	Inspect the compressed air connection. Make sure that the connection is done correctly.	
2	Inspect the electrical connection. Make sure that the connection is done correctly. **DANGER** **Risk of electrical shock.** The voltage is 400 V inside the electrical cabinet. Contact with a 400 V voltage may cause electrical shock or serious injury. In case of an accident, immediately call for medical attention.	
3	Make sure that the machine stops when an **Emergency stop** button is pushed. Test **all Emergency stop** buttons. See Chapter ii Safety Precautions, Section Emergency Stop. **WARNING** **Risk of serious injury.** Never run the machine if any of the emergency stop buttons are non-operational.	

(Cont'd)

(Cont'd)

Step	Text	Done
4	Make sure that the machine stops when doors fitted with safety switches are opened. This should be tested for **all** safety switches. Make sure all covers are fitted to the machine before it is run. See Chapter ii Safety Precautions, Section Safeguards. **WARNING** **Risk of serious injury.** Never run the machine if any safety switch is non-operational or any cover is not fitted.	
5	Make sure that all delivered equipment is assembled in accordance with the instructions in Chapter 4 Positioning, Assembly and Connections, Section 4.3 Assembly.	
6	Make sure that the machine is correctly connected to the infeed and discharge conveyors.	
7	Check the direction of all machine movements.	
8	Check all pressure gauge settings as described in the OM.	
9	Check the machine program (function, program steps and alarms) as described in the OM.	
10	Make sure there are no abnormal noises, vibrations, etc. when the machine is running.	
11	Make sure that the Start-up kit is delivered together with the machine. **Note!** If a Card Inserter is installed there will be two Start-up kits.	

6 Preparation for Commissioning

Note! The machine does not require preparations for commissioning.

This page intentionally left blank

7 Disassembly and Removal

Description

The chapter contains information about how to safely disassemble and remove the machine for reuse in another location or for final disposal.

7.1 Preparation . . . . . 7 - 5
7.1.1 Personnel Requirements . . . . . 7 - 5
7.1.2 Transport and Auxiliary Equipment . . . . . 7 - 5
7.1.3 Utility Connections . . . . . 7 - 5
7.2 Disconnect Utilities . . . . . 7 - 6
7.2.1 Compressed Air . . . . . 7 - 6
7.2.2 Water . . . . . 7 - 6
7.2.3 Electricity . . . . . 7 - 6
7.3 Drainage . . . . . 7 - 7
7.4 Disassemble the Machine . . . . . 7 - 10
7.4.1 Single or Double Infeed . . . . . 7 - 16
7.4.2 Card Inserter . . . . . 7 - 21
7.5 Storage Preparation . . . . . 7 - 43
7.6 Moving . . . . . 7 - 44
7.7 Re-crating . . . . . 7 - 45
7.8 Final Disposal . . . . . 7 - 46

This page intentionally left blank

7.1 Preparation

7.1.1 Personnel Requirements

For personnel requirements needed to disassemble and handle the machine, see Section Personnel Requirements in Chapter ii Safety Precautions.

7.1.2 Transport and Auxiliary Equipment

For required tools and auxiliary equipment needed for the job, see Section 3.8 Machine Transport.

7.1.3 Utility Connections

De-energise the machine, that is, shut off supplies of electricity and compressed air.

7.2 Disconnect Utilities

7.2.1 Compressed Air

WARNING

Risk of personal injury.

Make sure that air supply to the machine is switched OFF before performing any disconnection work.

Note! If the machine is to be drained, do not disconnect the compressed air before Section 7.3 Drainage is performed.

Disconnect the compressed air. For more information, see Section 4.4.1 Compressed Air Connection.

Disconnect the compressed air gun with its hose.

7.2.2 Water

WARNING

Risk of personal injury.

Make sure that water supply to the machine is switched OFF before performing any disconnection work.

Disconnect the water. For more information, see Section 4.4.2 Water Connection.

7.2.3 Electricity

DANGER

Risk of electrical shock and short circuits.

Make sure that power supply disconnecting device is switched OFF upstream before performing any work on cables and electrical components.

Disconnect the electricity, see the EM.

7.3 Drainage

WARNING

Make sure that water supply is disconnected before proceeding.

CAUTION

Risk of damage to equipment.

If the machine is to be transported in weather conditions where it is risk of low temperatures, it must be drained.

a) Disconnect the spray gun (1) with its hose (2).

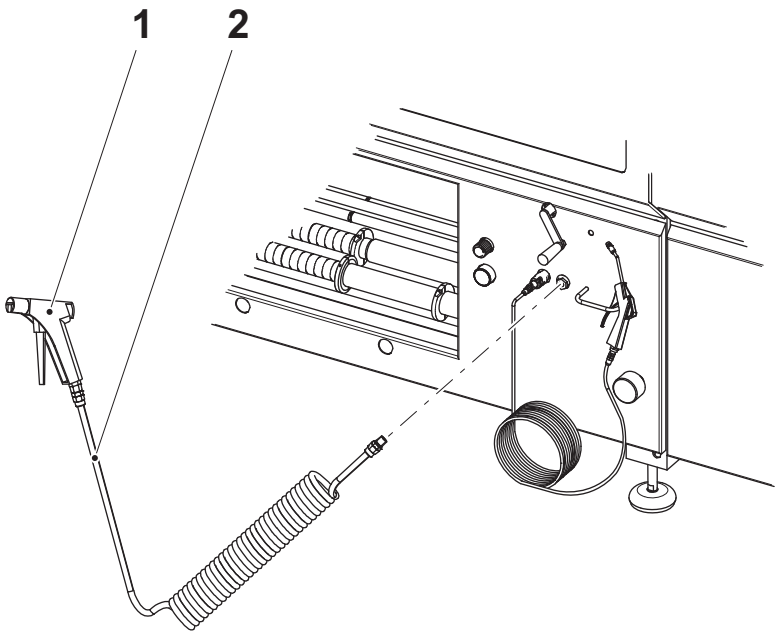

1 Spray gun
2 Hose

(Cont'd)

(Cont'd)

Note! If there is a Card Inserter installed proceed. If not, go to item c).

b) Disconnect the spray gun (3) with its hose (4) from the spray gun connection (5).

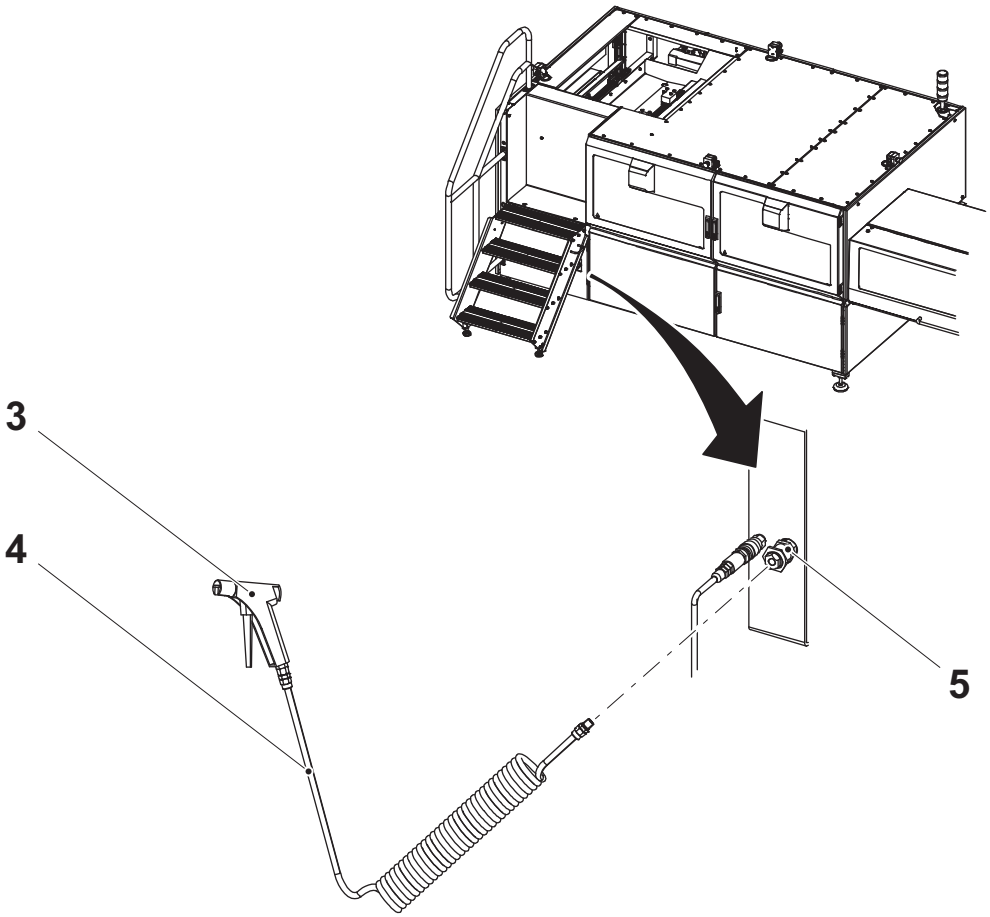

3 Spray gun
4 Hose
5 Spray gun connection

(Cont'd)

(Cont'd)

c) Make sure that the ball valve (7) is opened.

d) Put the air jet gun (6) to the water supply connection (8) and gently blow out remaining water from the water pipe.

Note! The water will come out through the spray gun connection (9).

Note! If there is a Card Inserter installed, water will also come out through the spray gun connection on this unit. See item b).

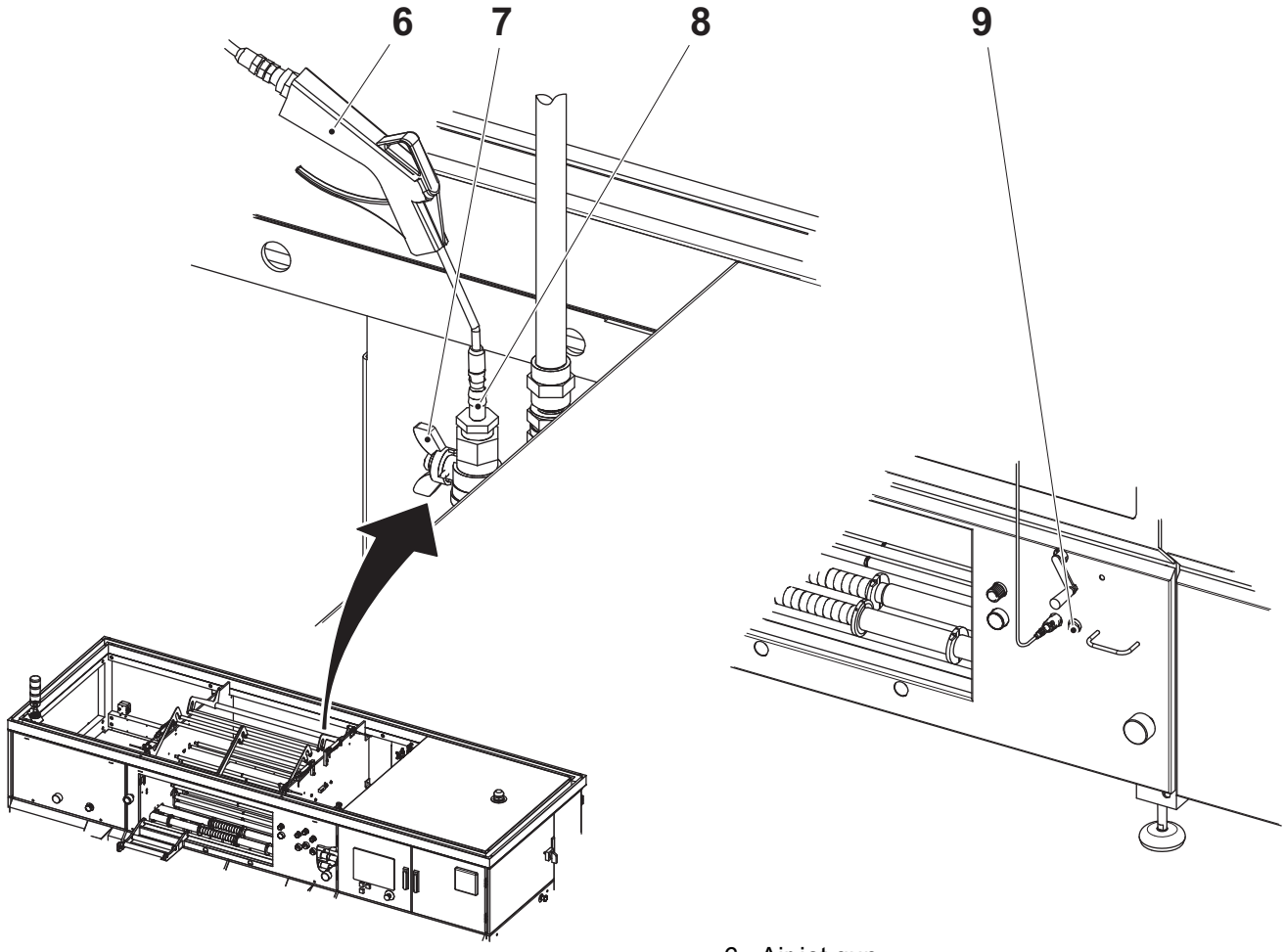

6 Air jet gun
7 Ball valve
8 Water supply connection
9 Spray gun connection

e) Perform Section 7.2.1 Compressed Air.

7.4 Disassemble the Machine

WARNING
Risk of personal injury.
Before disassembling the machine, read Chapter.

CAUTION
Risk of damage to equipment.
Make sure that Sections 7.2 Disconnect Utilities and, if necessary, 7.3 Drainage are performed.

Note! In order to simplify re-assembly of the machine, put all loosened screws, nuts, washers, etc. in plastic bags and mark them.

a) Clean the machine according to Section 9 Care and Cleaning in the OM.

b) Remove the cover (1) and disconnect all cables on the right hand outside of the electrical cabinet (2).

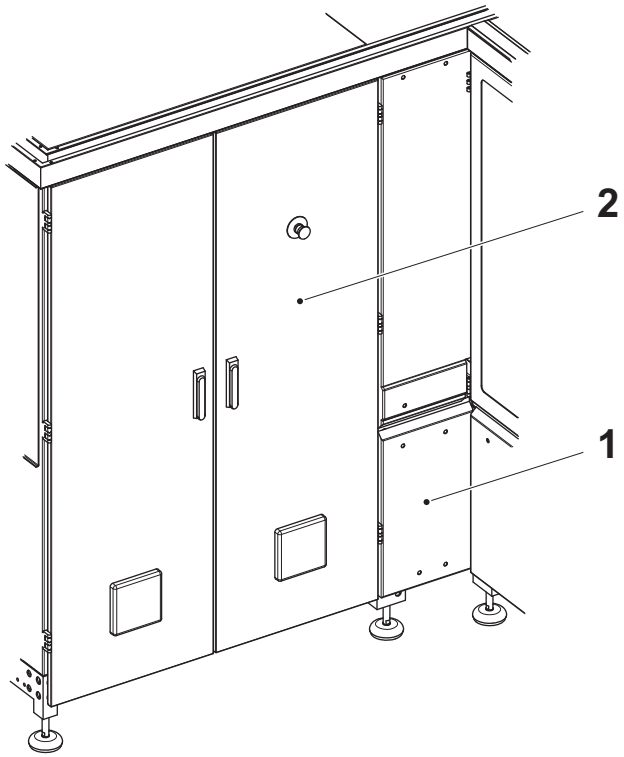

1 Cover
2 Electrical cabinet

(Cont'd)

(Cont'd)

c) Pull back each cable to the equipment belonging to it.

d) Secure all cables with the aid of straps.

e) Remove the cover (3) and disconnect the central lubrication hose (4) from the block (5).

f) Plug the open end of the central lubrication hose and the open connection in the block, with the aid of adhesive tape or a hose plug.

g) Draw the central lubrication hose into the Stretch unit or the Shrink unit and secure it with the aid of straps.

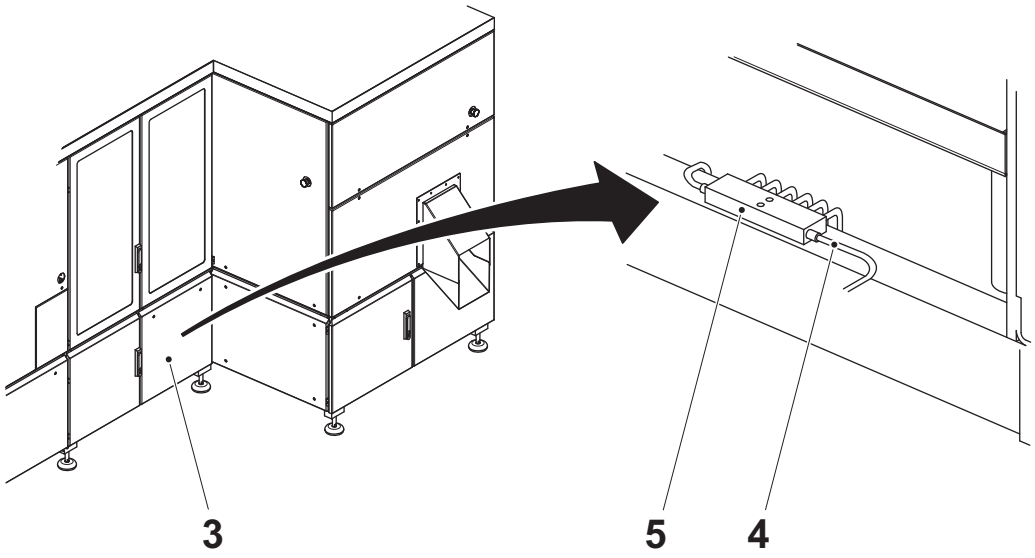

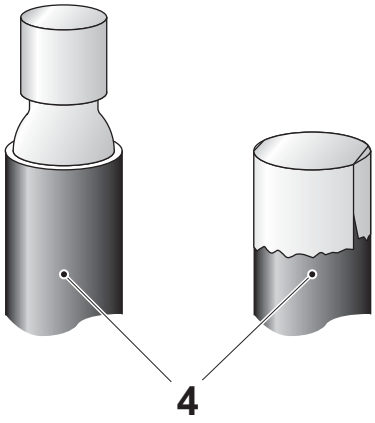

3 Cover
4 Central lubrication hose
5 Block

(Cont'd)

(Cont'd)

h) Open the door (6) and swing out the valve panel (7).

i) Disconnect the compressed air hoses (8) and (9).

j) Draw back the compressed air hoses to the FW 68 and secure them with the aid of straps.

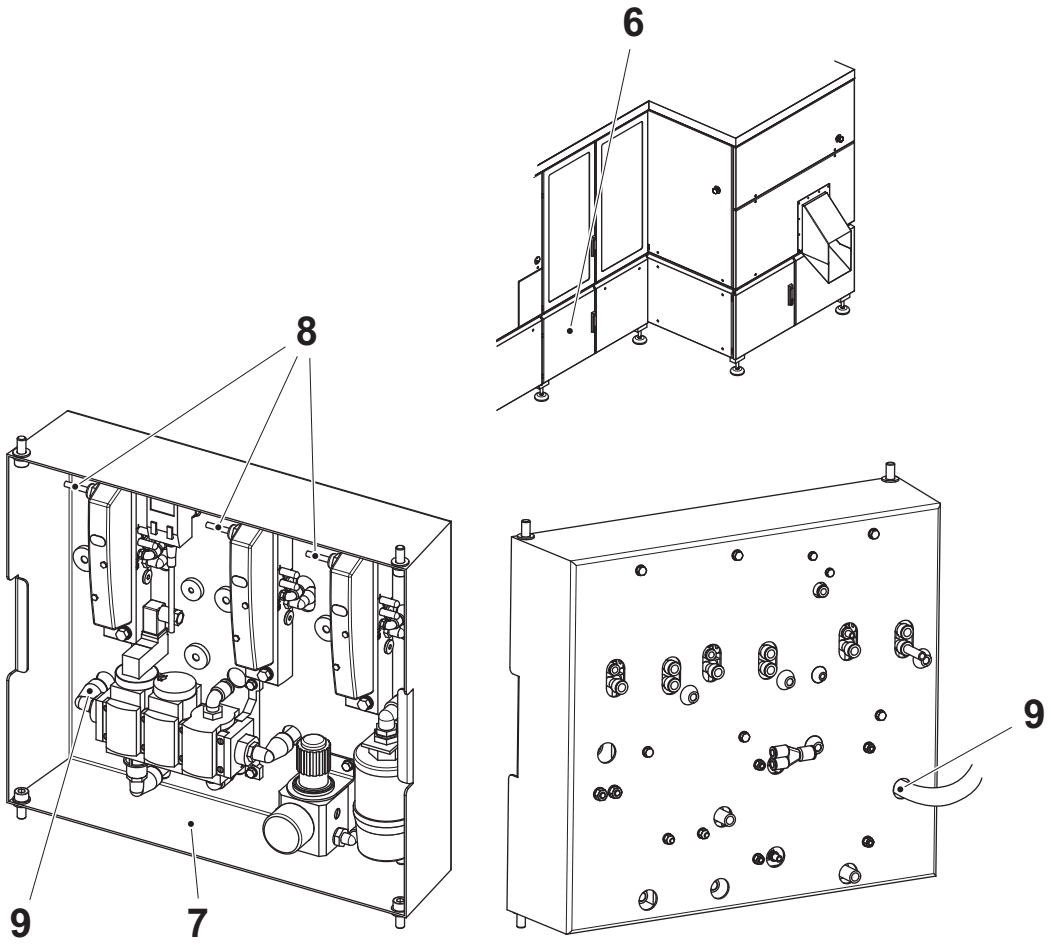

6 Door
7 Valve panel
8 Compressed air hose - pilot
9 Compressed air hose - supply

(Cont'd)

(Cont'd)

k) Remove the tunnel (10) and the outfeed conveyor (11) from the Stretch unit or the Shrink unit by:
   - Releasing the outfeed conveyor from the continuation of the conveyor.
   - Removing all screws holding the tunnel to the outfeed conveyor.
   - Removing the screws holding the outfeed conveyor to the Stretch unit or the Shrink unit.
   - Gently removing the tunnel and the outfeed conveyor as one part.

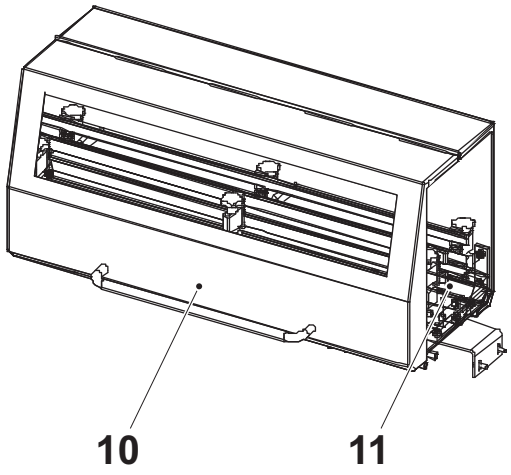

10 Tunnel
11 Outfeed conveyor

(Cont'd)

(Cont'd)

l) Remove the screws from the four docking plates (12) between the FW 68 and the Stretch unit or the Shrink unit.

CAUTION
Risk of damage to equipment.
Fork extensions must be used if the fork lift does not have forks long enough to lift the equipment in a secure manner.

m) Place a hand pallet truck under the Stretch unit or the Shrink unit and gently lift the forks so that they just bear against the bottom frame.

n) Lower all adjustable feet so that the equipment rests on the hand pallet forks.

o) Gently remove the equipment.

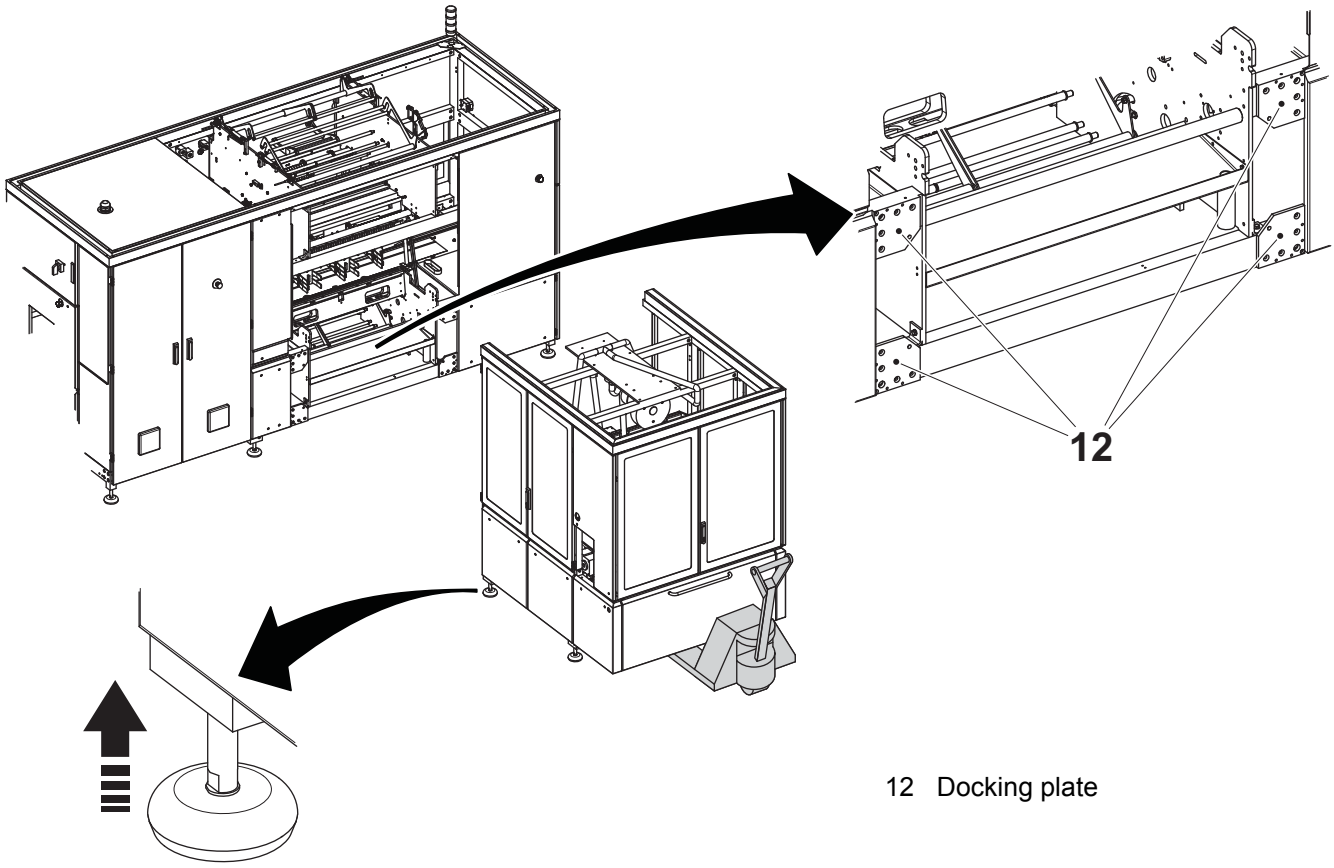

12 Docking plate

(Cont'd)

(Cont'd)

p) With the aid of straps, secure the Stretch unit or the Shrink unit for transport by means of securing:
   - loose cables
   - loose photocells
   - the discharger

q) Fit back all covers and close all doors on the Stretch unit or the Shrink unit.

CAUTION
Risk of damage to equipment.
Make sure that the lower film tensioners does not hang down below the machine bottom frame.

r) With the aid of straps, secure the FW 68 for transport by means of securing:
   - the upper film tensioners
   - the lower film tensioners
   - the pusher

s) Fit back all covers and close all doors on the FW 68.

7.4.1 Single or Double Infeed

Note! This section is only valid if a Card Inserter is not installed. If a Card Inserter is installed follow the procedures in Section 7.4.2 Card Inserter. All illustrations in this section shows double infeed. The procedure is the same as described with the single infeed. The difference is that the single infeed has only one conveyor and one drive motor.

a) On the infeed section, remove all railings, photocells and other fitted conveyor parts from the drive motor section and to the break point (see item d).

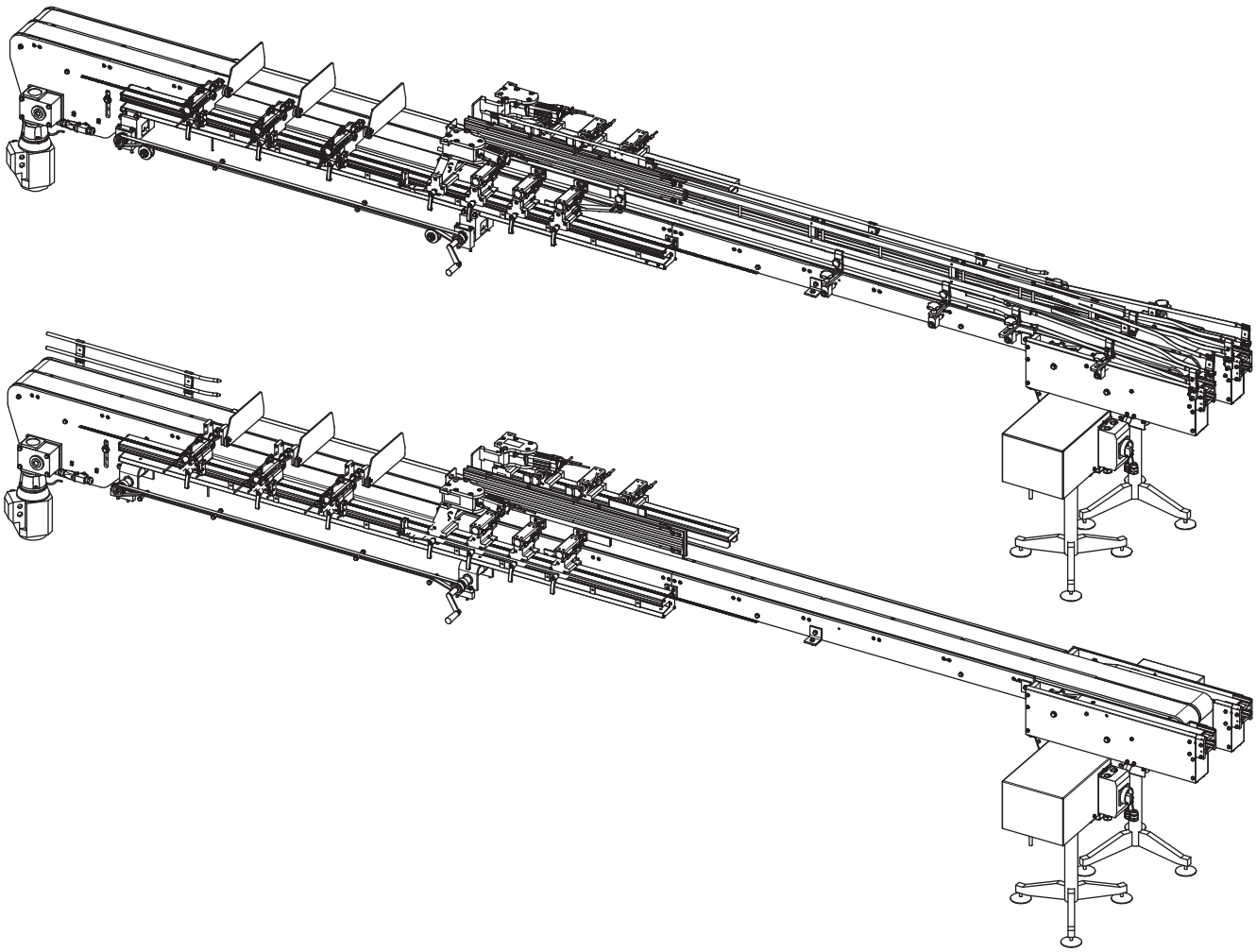

(Cont'd)

(Cont'd)

b) Split the conveyor belts (1).

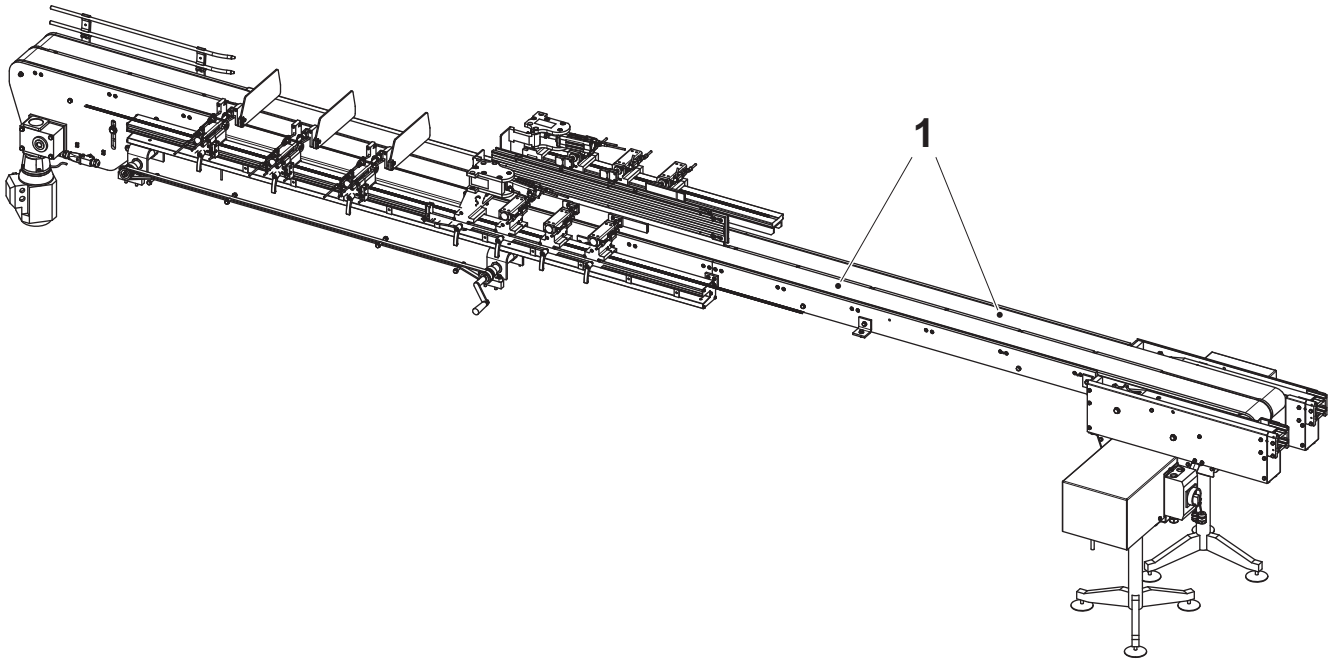

1 Conveyor belt

c) Roll up and place the conveyor belts inside the FW 68.

(Cont'd)

(Cont'd)

d) Loosen the infeed section by means of removing all screws from the break point (2).

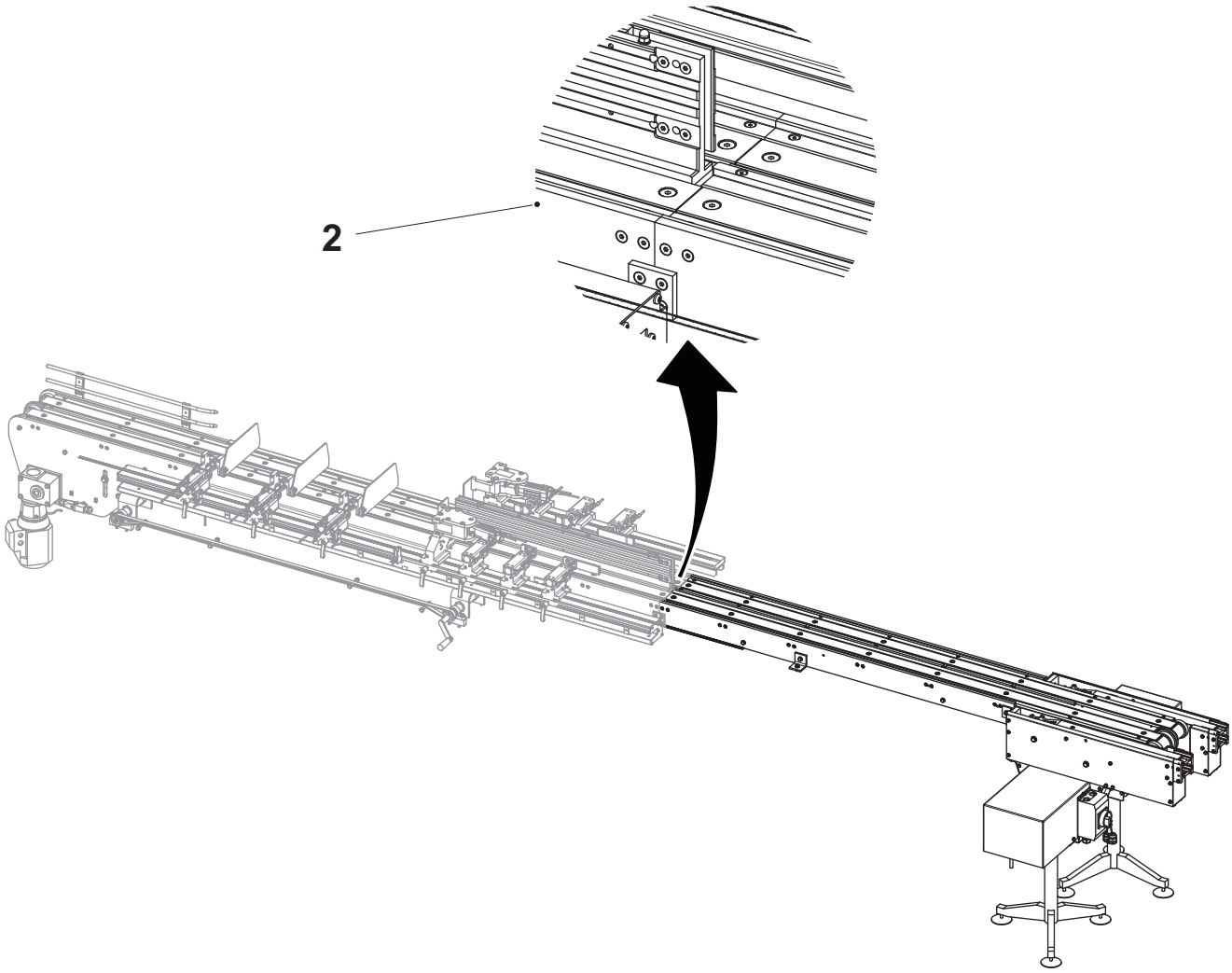

2 Break point

(Cont'd)

(Cont'd)

e) On each side of the infeed section, remove the two screws (3).

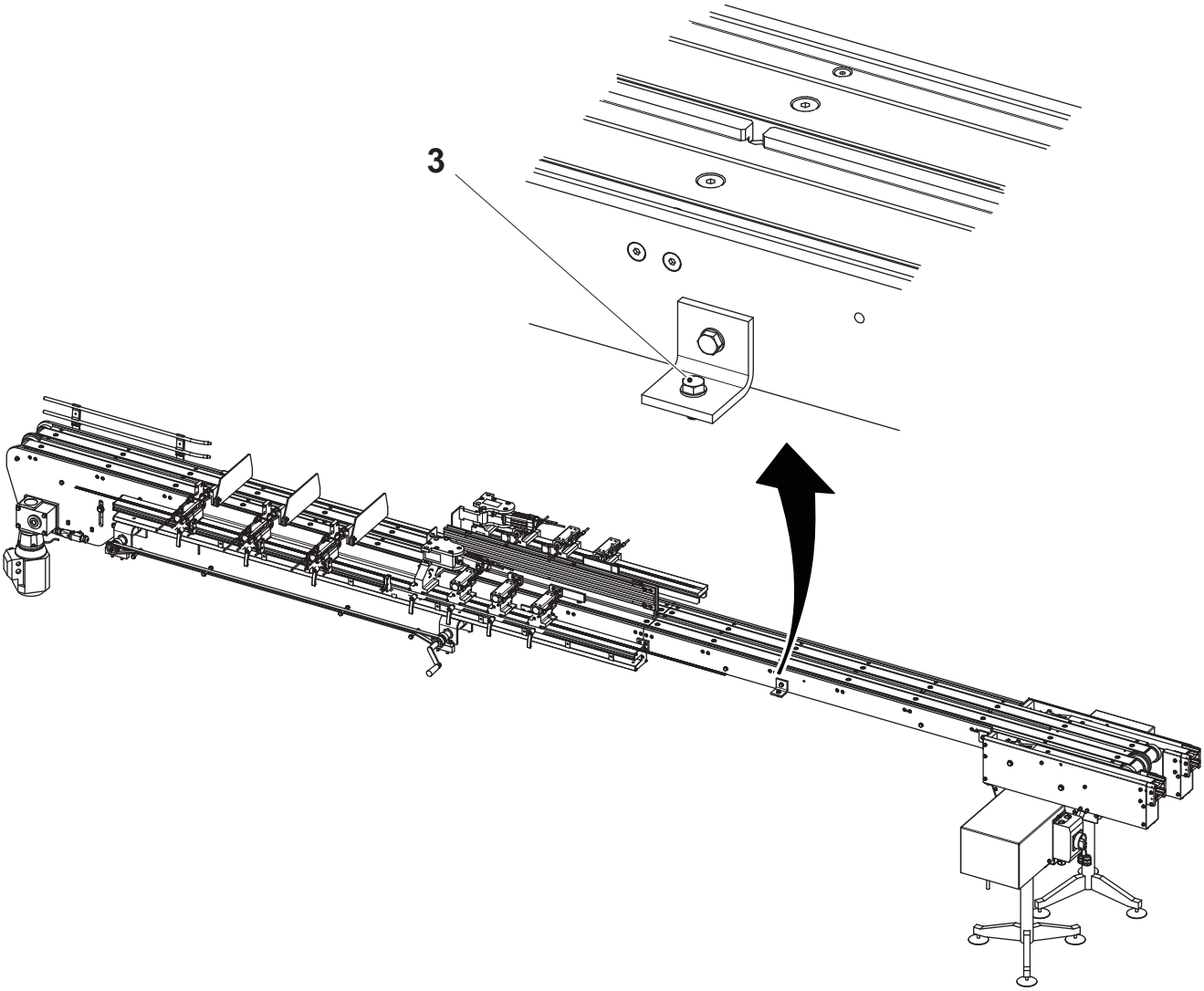

3 Screw

(Cont'd)

(Cont'd)

CAUTION
Risk of damage to equipment.
The drive motors (4) must stand on its feet. Do not place the removed infeed section so that the drive motor lies down.

f) Gently remove the infeed section. Place the infeed section supported in a way so it can remain standing with the drive motors standing on their feet.

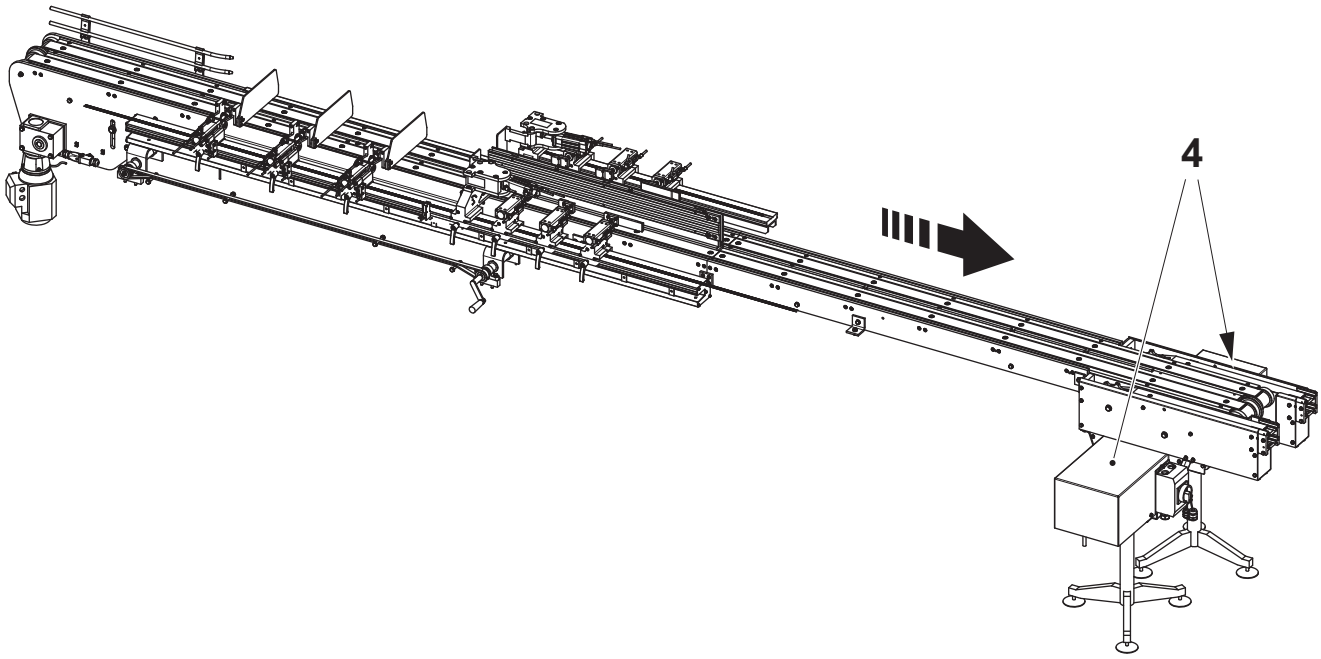

4 Drive motor

7.4.2 Card Inserter

Note! This section is only valid if a Card Inserter is installed. If a Card Inserter is not installed follow the procedures in Section 7.4.1 Single or Double Infeed.

a) Disconnect the water gun (1) and the air jet gun (2).

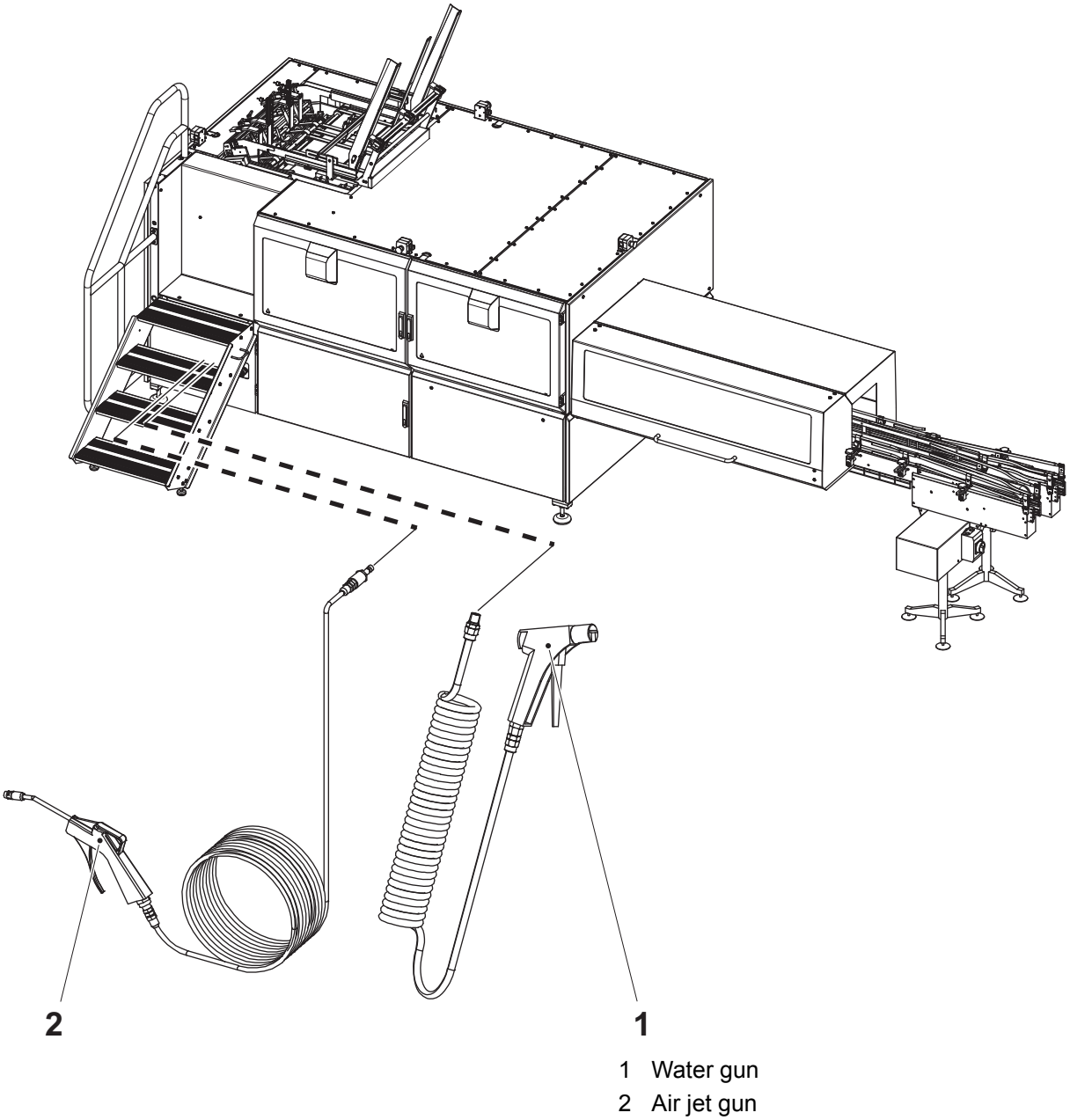

1 Water gun
2 Air jet gun

(Cont'd)

(Cont'd)

b) On the inside of the cover (3) RH, disconnect the safety switch cable (4).

c) Draw the cable back into the Card Inserter.

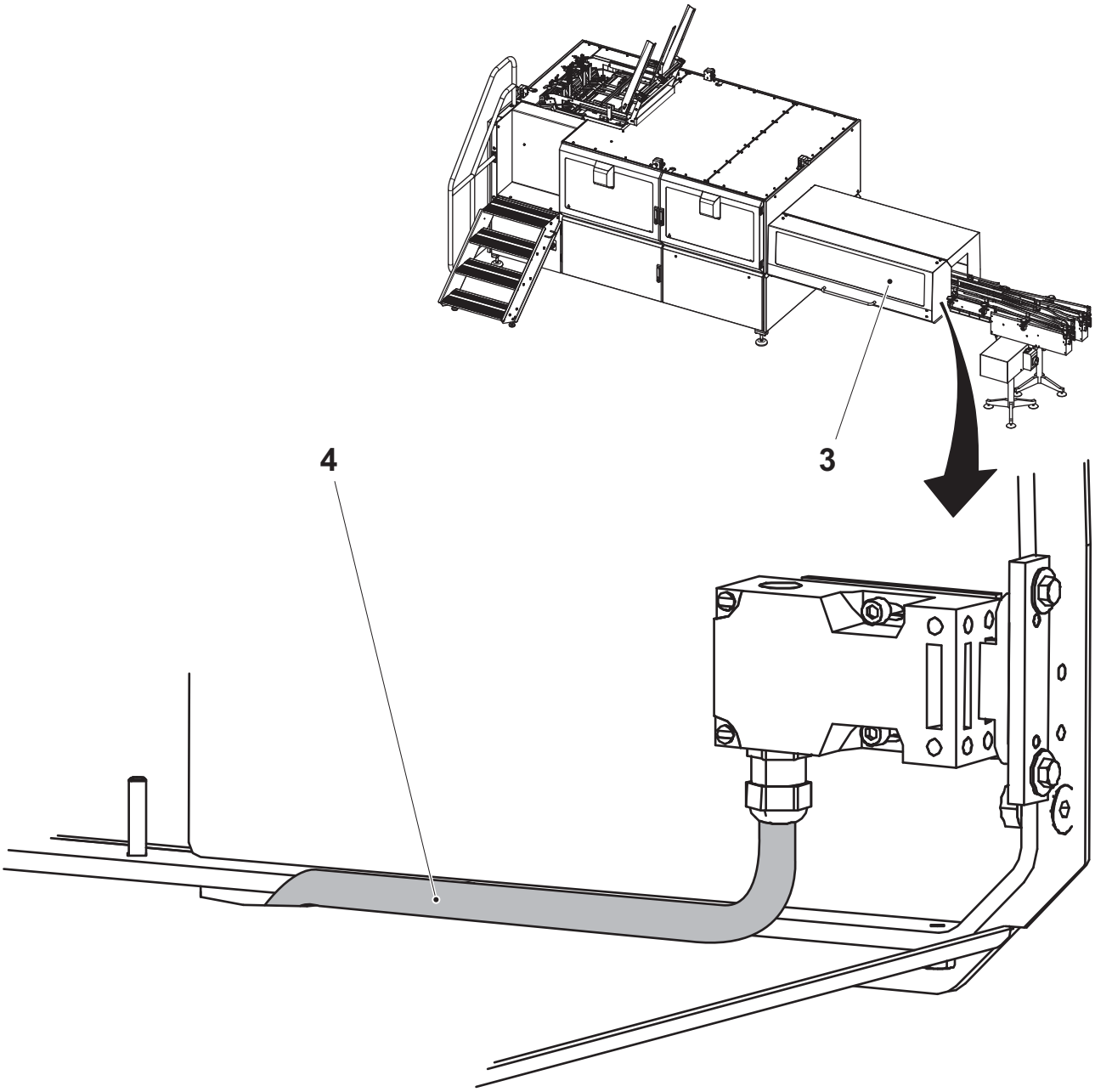

3 Cover
4 Cable

(Cont'd)

(Cont'd)

d) On both sides of the cover, loosen the gas springs (5) from the frames (6) by means of the nuts (7).

e) Remove the screws and nuts (8).

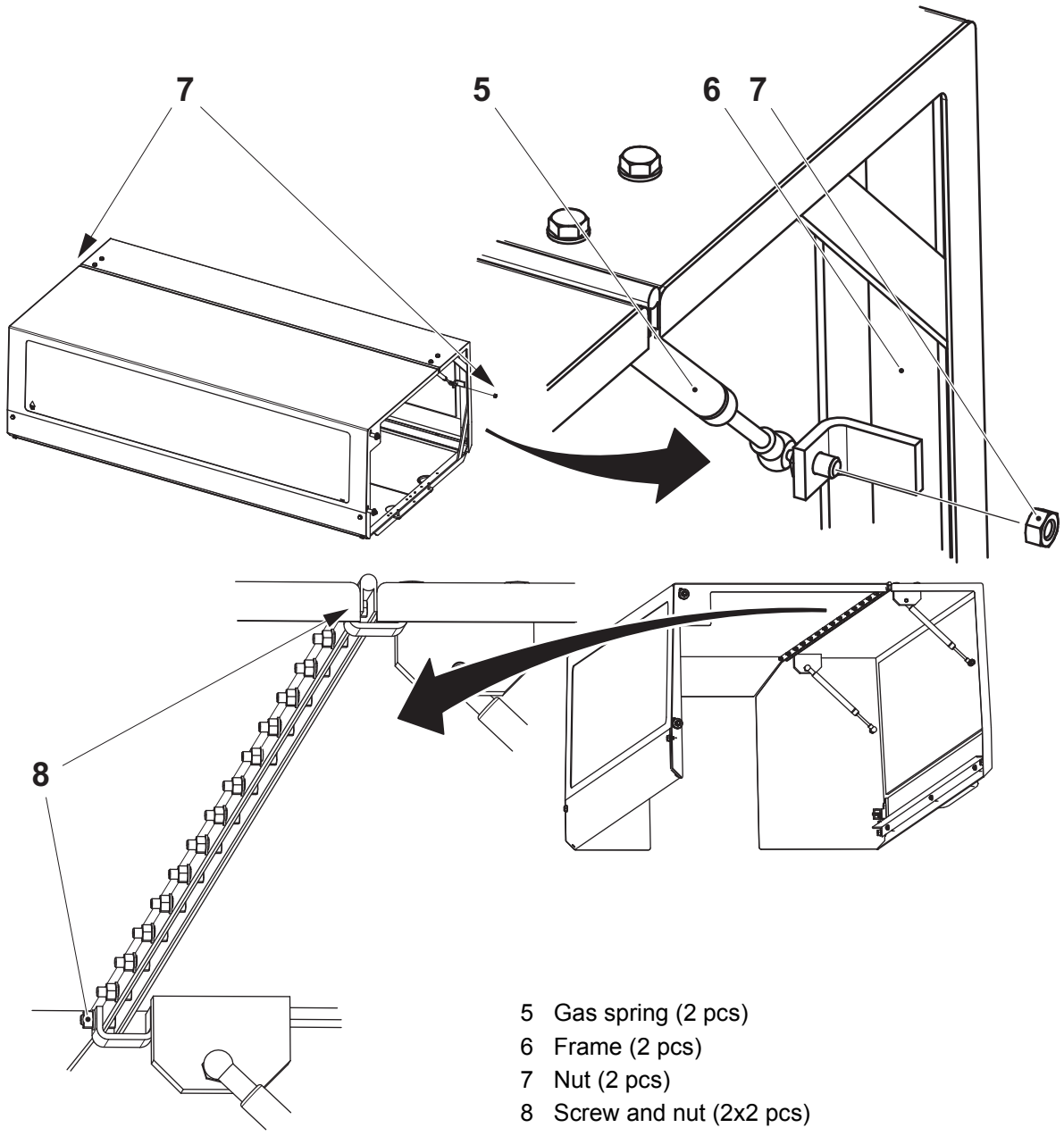

5 Gas spring (2 pcs)
6 Frame (2 pcs)
7 Nut (2 pcs)
8 Screw and nut (2x2 pcs)

(Cont'd)

(Cont'd)

f) Remove the screws (9), the washers (10), the washers (11), and the nuts (12).

g) Manually remove the cover from the frames.

Note! The washers (11) and the nuts (12) shall be removed from inside the adjacent Card Inserter plate.

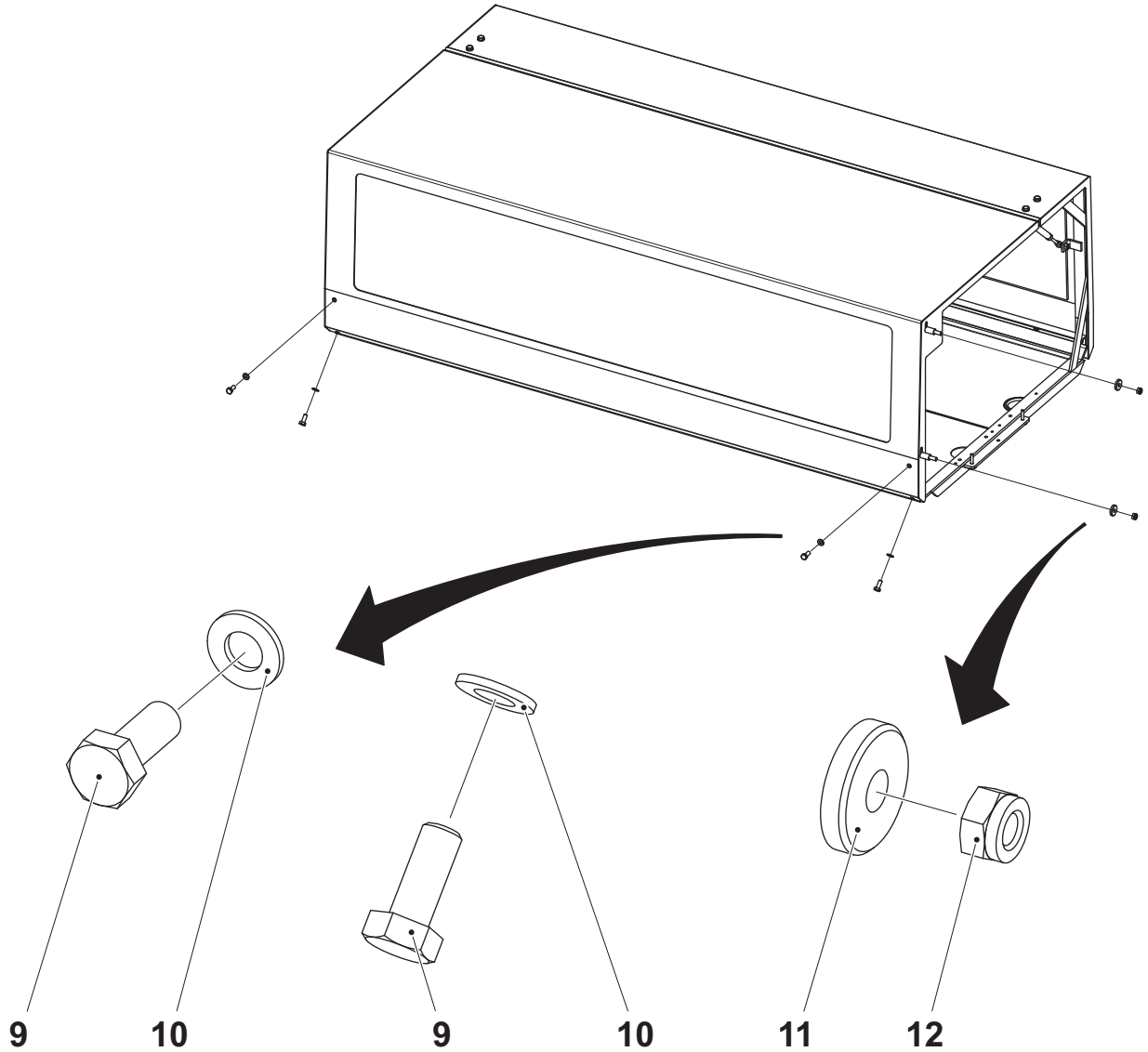

9 Screw (4 pcs)
10 Washer (4 pcs)
11 Washer (2 pcs)
12 Nut (2 pcs)

(Cont'd)

(Cont'd)

h) Fit back and tighten the screws and nuts (8).

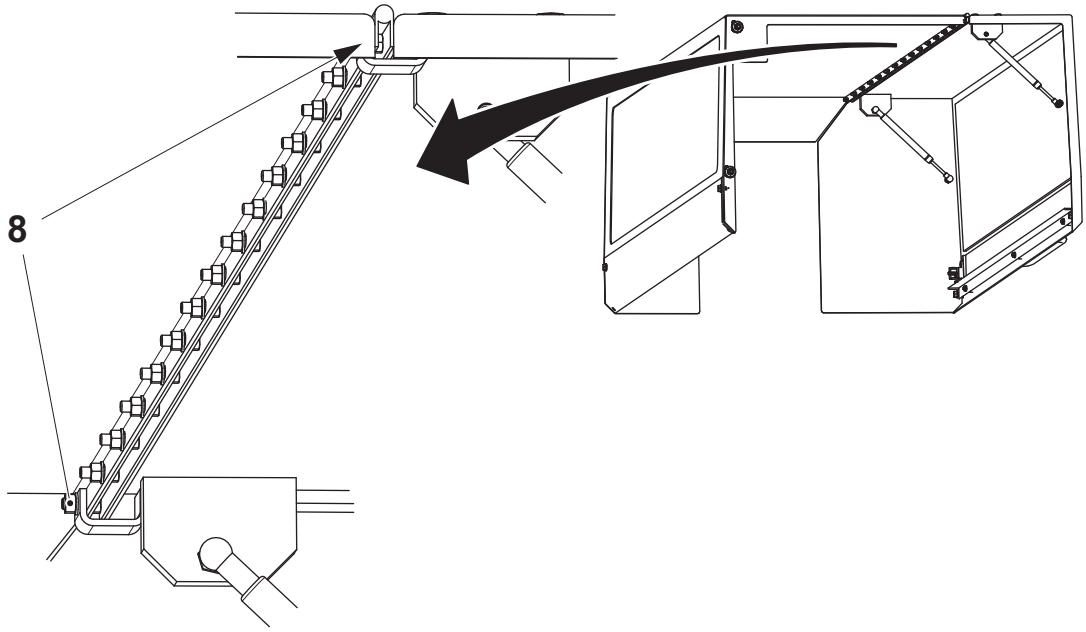

8 Screw and nut (2x2 pcs)

(Cont'd)

(Cont'd)

i) Remove the bottom plates (13) by means of the washers (14) and the screws (15).

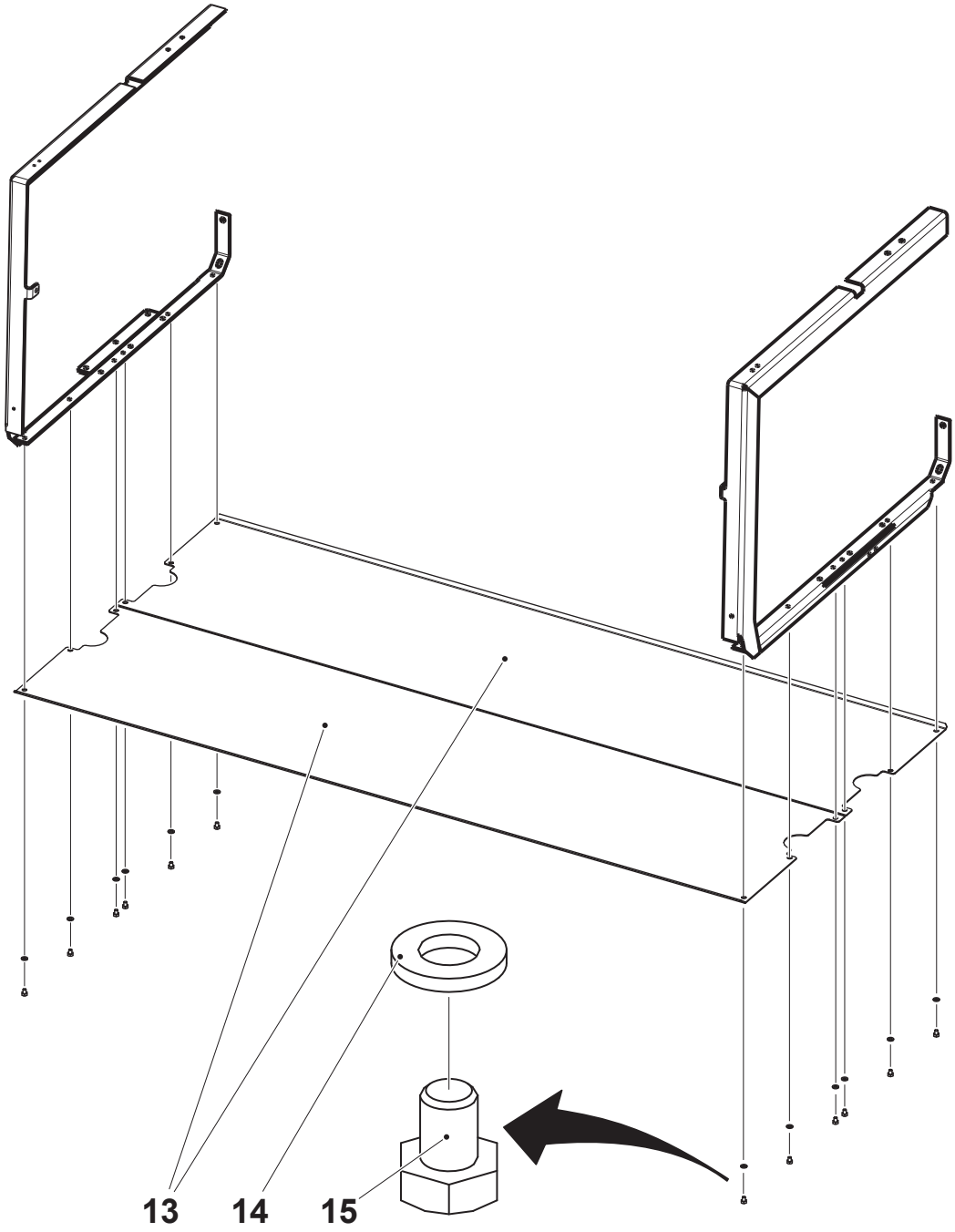

13 Bottom plate (2 pcs)
14 Washer (12 pcs)
15 Screw (12 pcs)

(Cont'd)

(Cont'd)

j) Remove the frames (16) by means of the screws (18) and the washers (17).

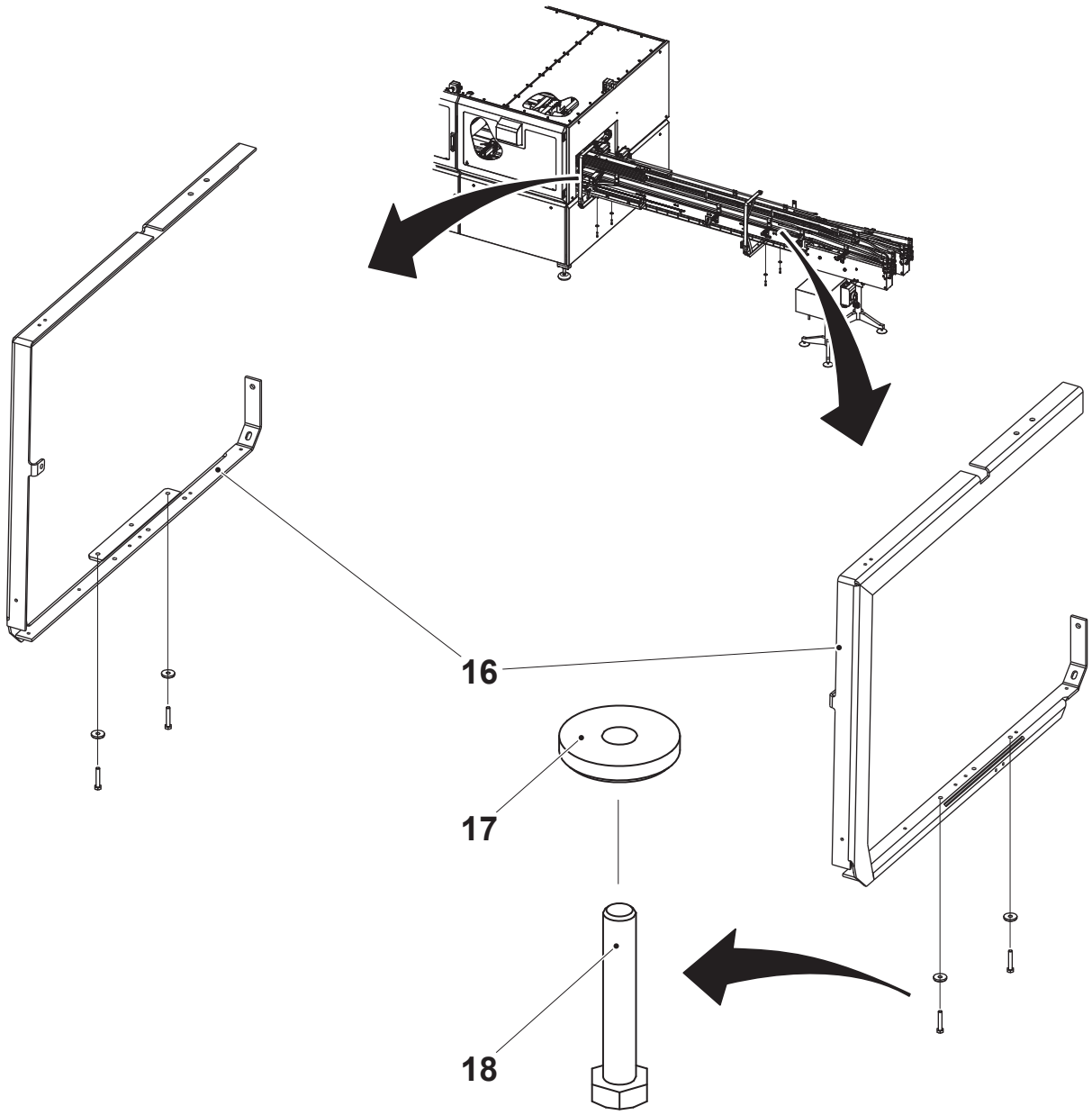

16 Frame (2 pcs)
17 Washer (4 pcs)
18 Screw (4 pcs)

(Cont'd)

(Cont'd)

k) Disconnect the cable (19) to the proximity switch (20).
l) Draw the cable back into the Card Inserter.
m) Remove the nuts (21), the washers (22), and the handles (23).
n) Remove the guide rails (24) to the vertical magazine in the card feeder.
o) Fit back and tighten the washers, the nuts, and the handles.

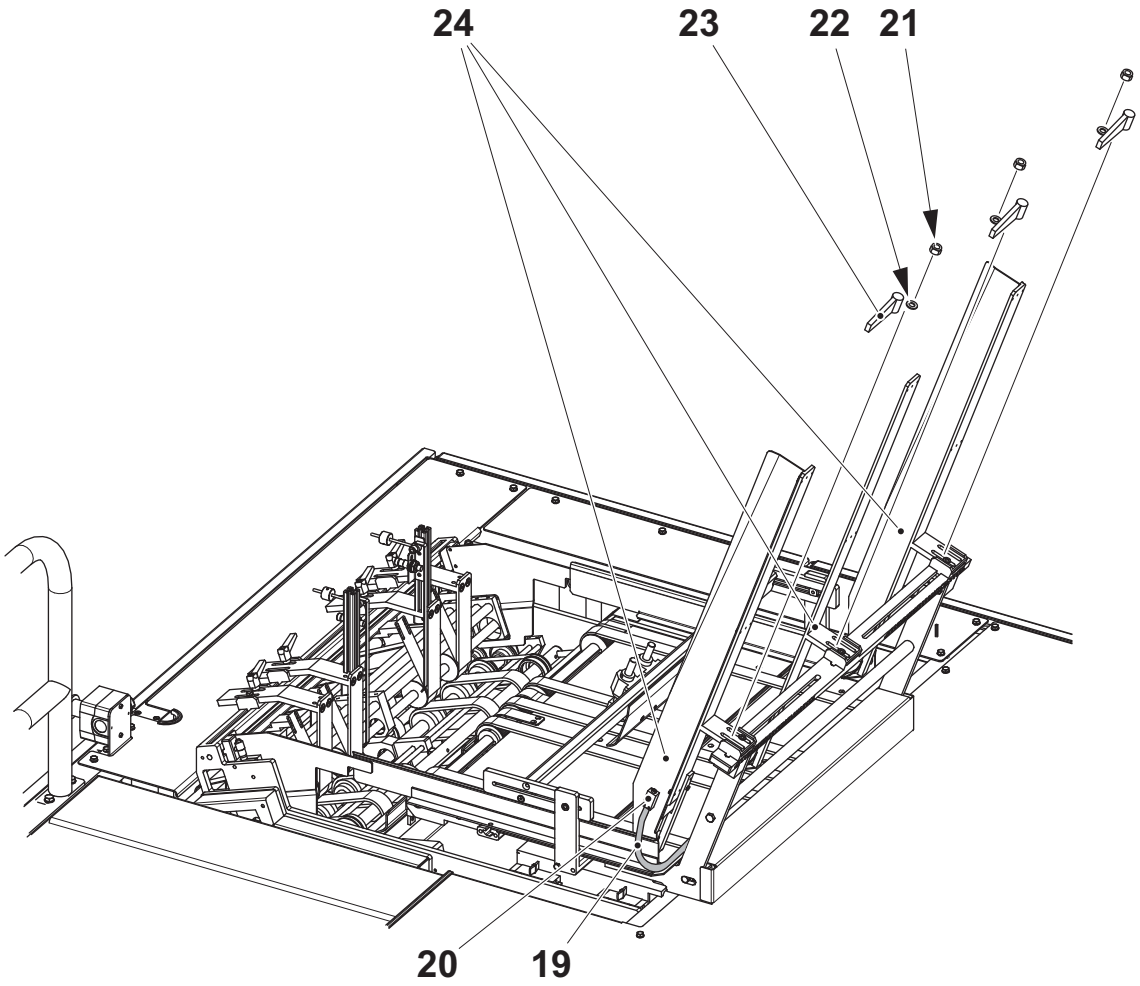

19 Cable
20 Proximity switch
21 Nut (3 pcs)
22 Washer (3 pcs)
23 Handle (3 pcs)
24 Guide rail

(Cont'd)

(Cont'd)

p) Remove the stair (25) and the railing (26) by means of the washers (27) and screws (28).

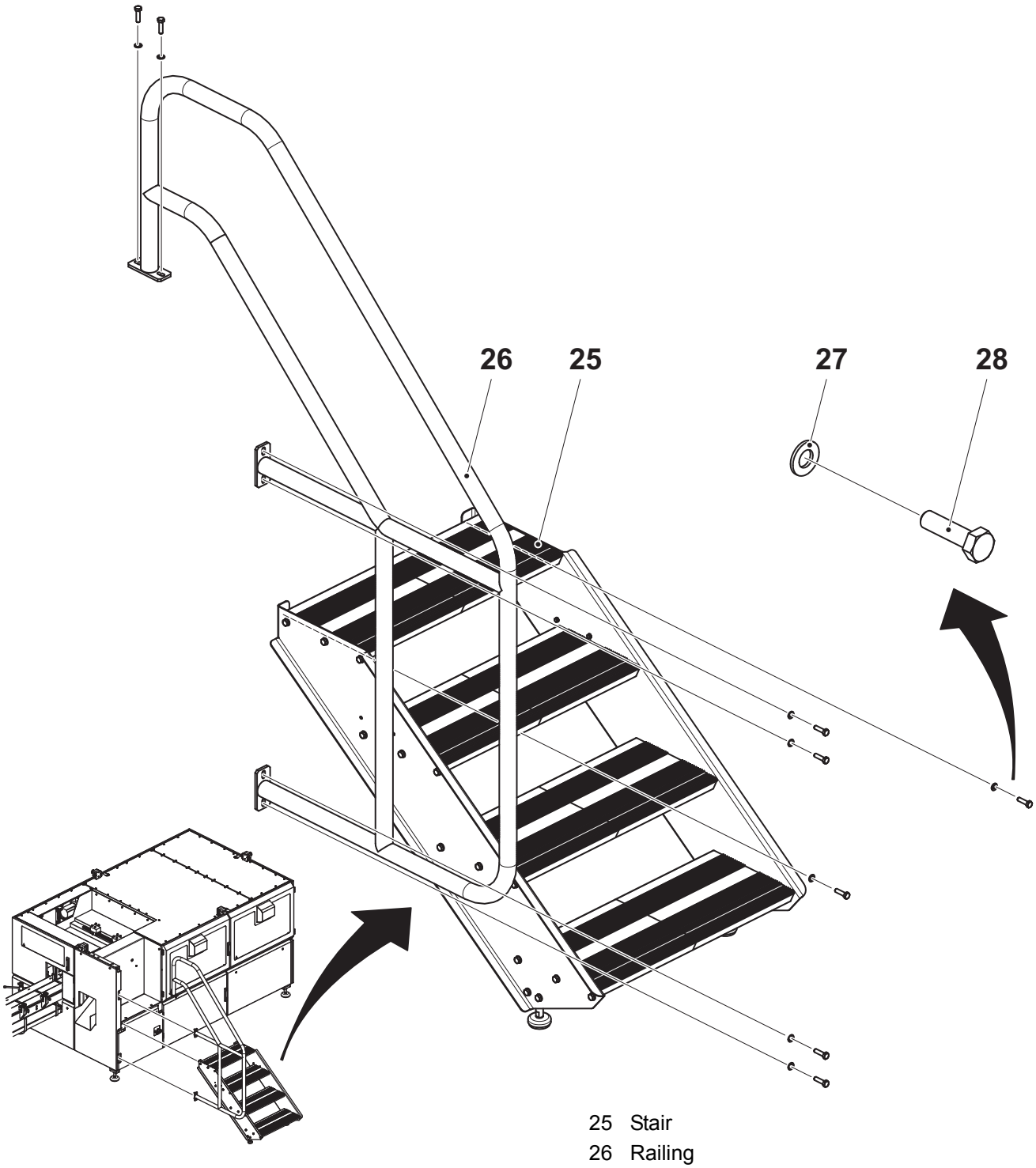

25 Stair
26 Railing
27 Washer (8 pcs)
28 Screw (8 pcs)

(Cont'd)

(Cont'd)

q) Disconnect the drive motor cable (29) and the encoder cable (30).

r) Draw back the drive motor cable from the Card Inserter to the FW 68 base module.

Note! Place the drive motor cable inside of the cover (31).

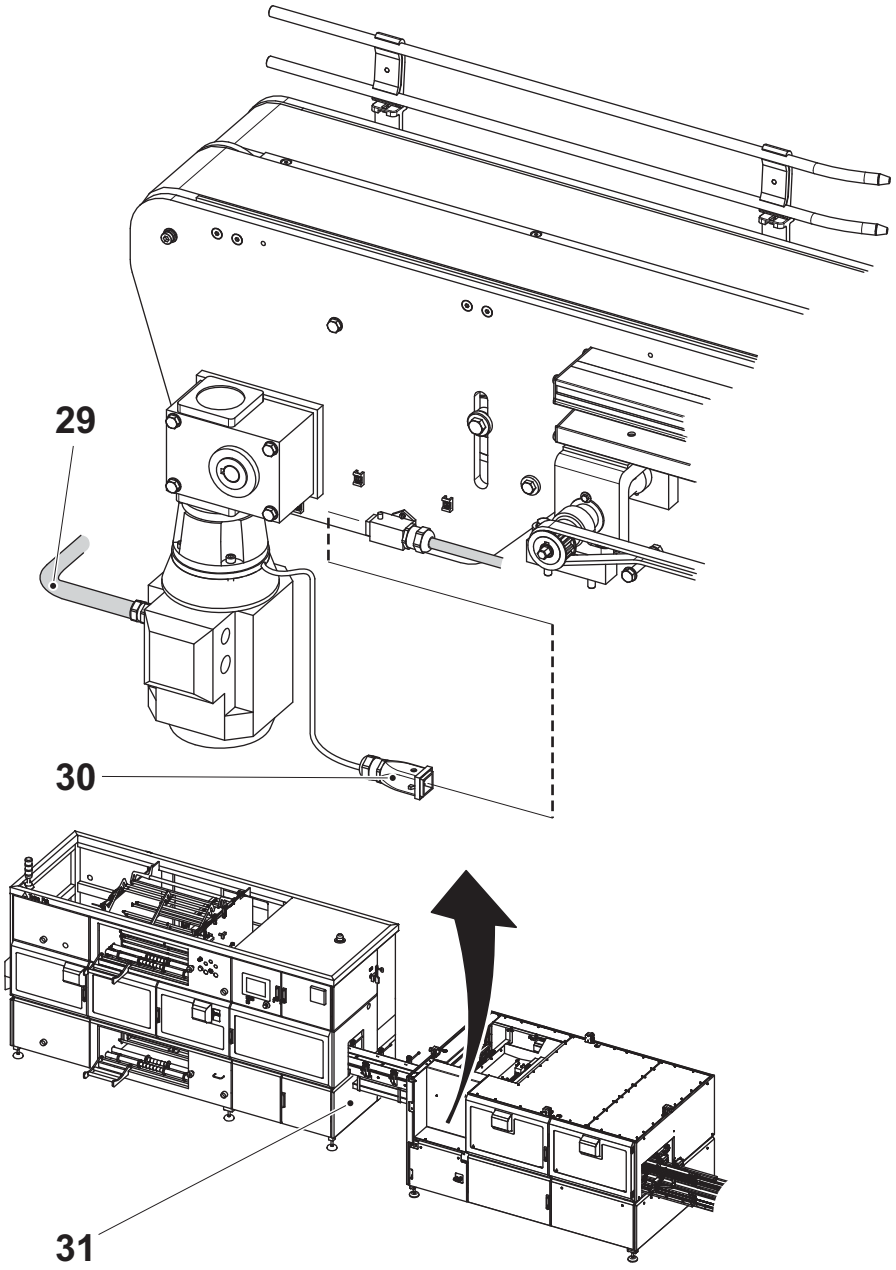

29 Drive motor cable
30 Encoder cable
31 Cover

(Cont'd)

(Cont'd)

s) Disconnect the following cable and hoses from their corresponding connection in FW 68:
   - water hose (32)
   - main air hose (33) - marked 1003
   - air jet gun hose (34) - marked 1002
   - pilot air hose (35) - marked 1001

t) Draw back all hoses to the Card Inserter (the cable duct below the indexing conveyor).

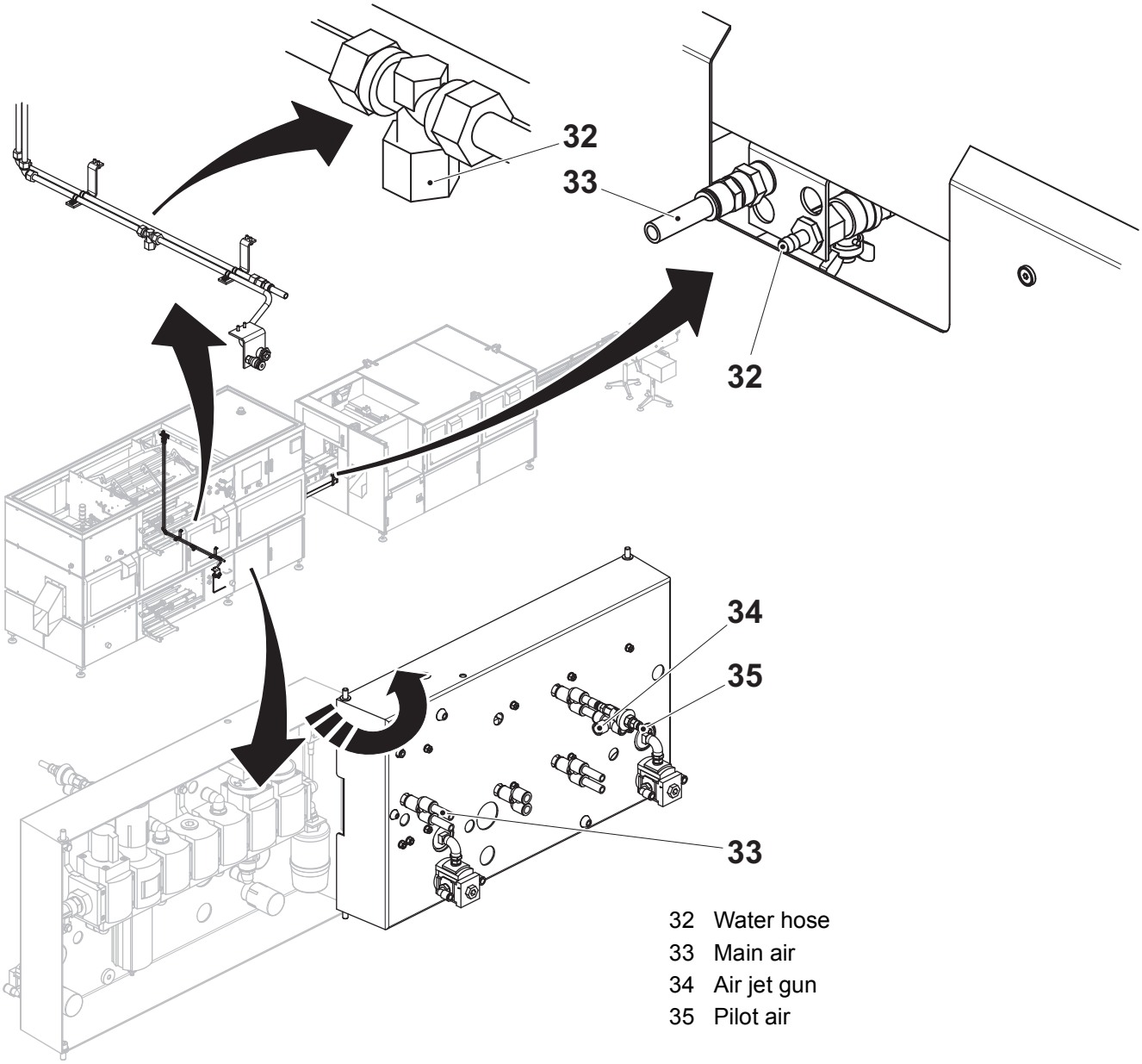

32 Water hose
33 Main air
34 Air jet gun
35 Pilot air

(Cont'd)

(Cont'd)

u) The cables, nuts, and cable glands in item v) must be handled as follows:
   a) Remove the nut (36) from the cable gland (37).
   b) Draw the cable through the corresponding hole, see item v) in the electrical cabinet (38).
   c) Fit the nut from inside of the electrical cabinet.
   d) Tighten the nut.
   e) Remove all cables inside the electrical cabinet according to the EM.

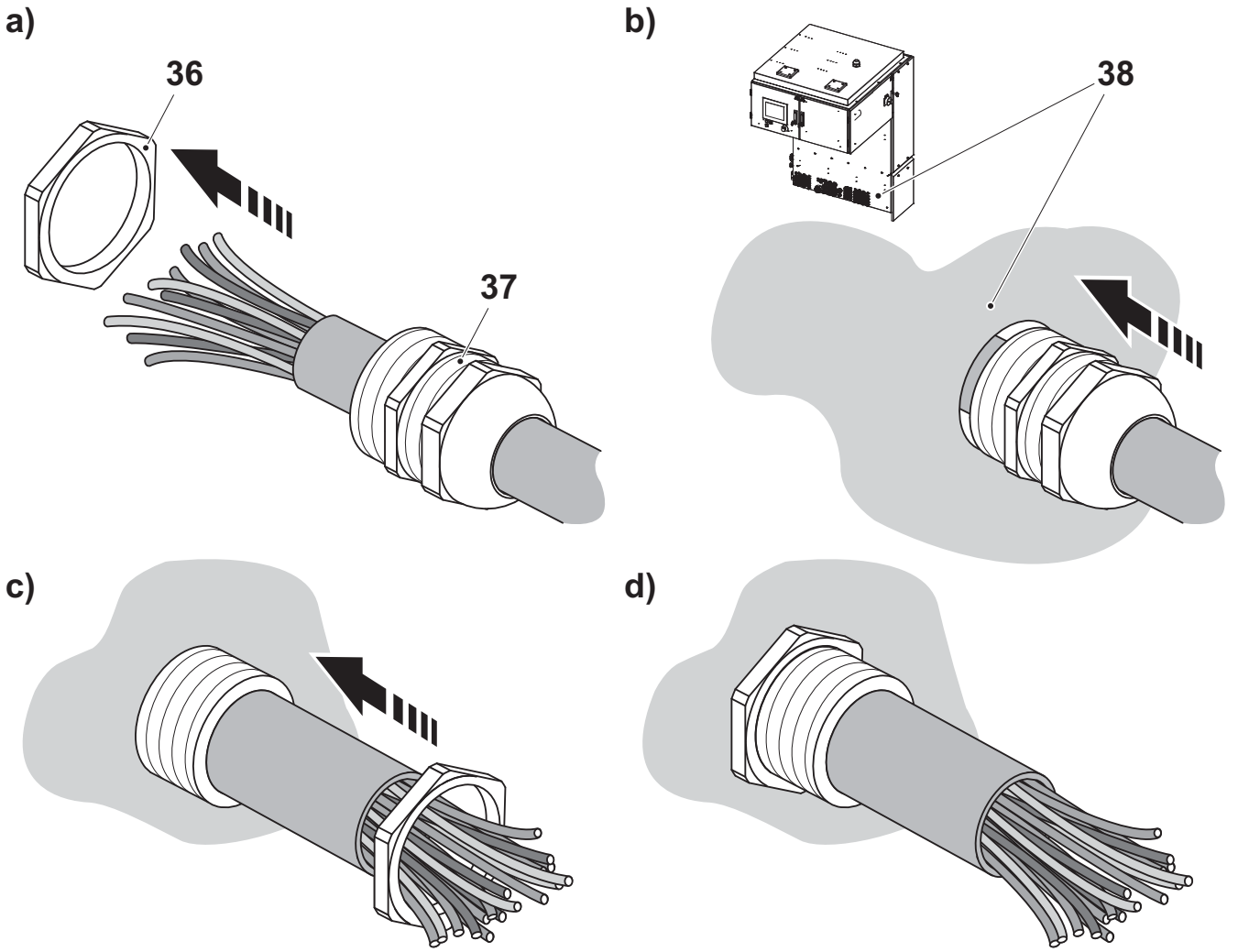

36 Nut
37 Cable gland
38 Electrical cabinet

(Cont'd)

(Cont'd)

v) Disconnect the cables from the FW 68 base module electrical cabinet to the Card Inserter according to the table and the illustration below. See also the EM.

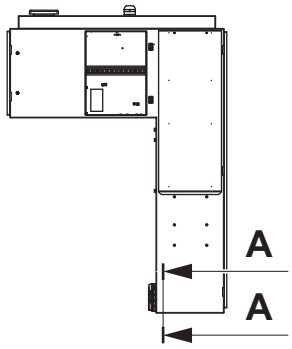

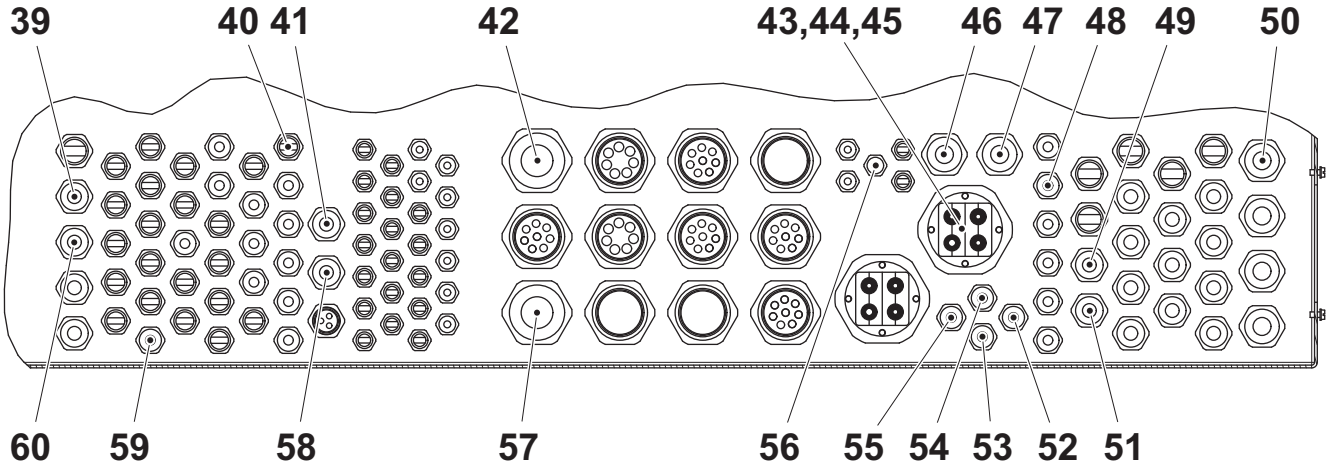

Position	Cable No.
39	W419
40	W710
41	W166
42	W163
43	W157.2
44	W158.2
45	W159.2
46	W158.1
47	W159.1
48	W997
49	W415

Position	Cable No.
50	W157.1
51	W174
52	W172
53	W171
54	W162
55	W173
56	W107
57	W164
58	W165
59	W167
60	W418

(Cont'd)

(Cont'd)

w) If the infeed section drive motor is controlled by the FW 68, see Section 4.4.2.5 External Infeed Conveyor Control in Chapter 4 Positioning, Assembly and Connections, disconnect the cable and draw it from the FW 68 electrical cabinet to the drive motor.

x) Loosen the two fastening brackets (61) by means of the washers (62) and the screws (63).

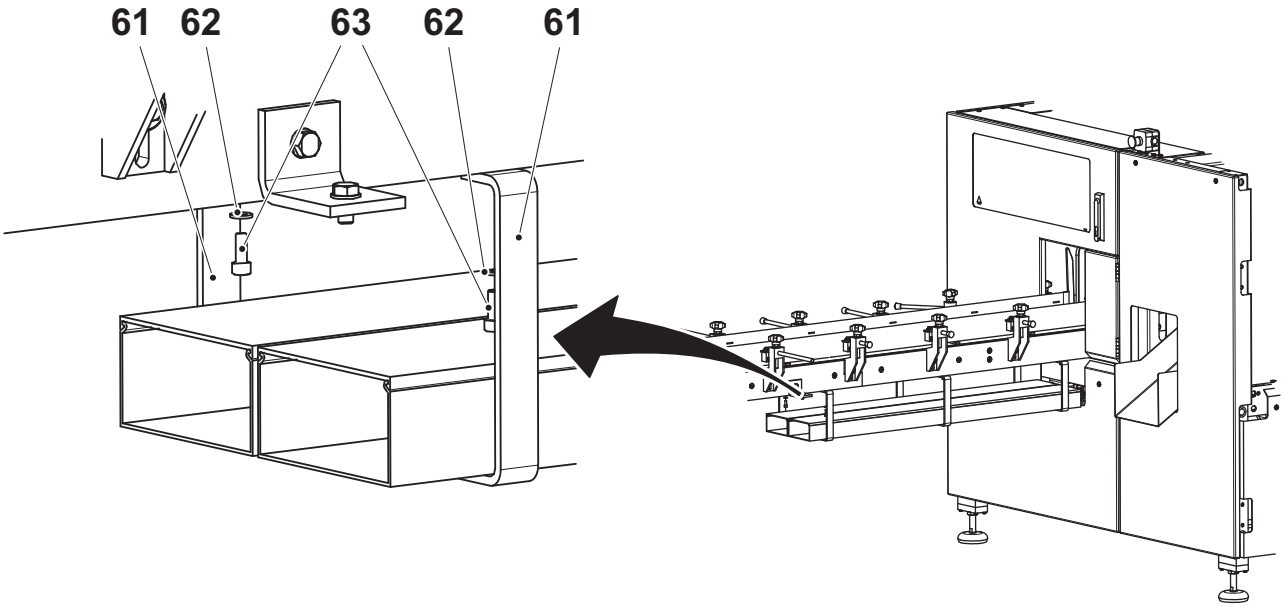

61 Fastening brackets
62 Washer
63 Screw

(Cont'd)

(Cont'd)

y) Remove all rail holders and rails on the indexing conveyor that needs to be removed in order to separate the FW 68 base module from the Card Inserter.

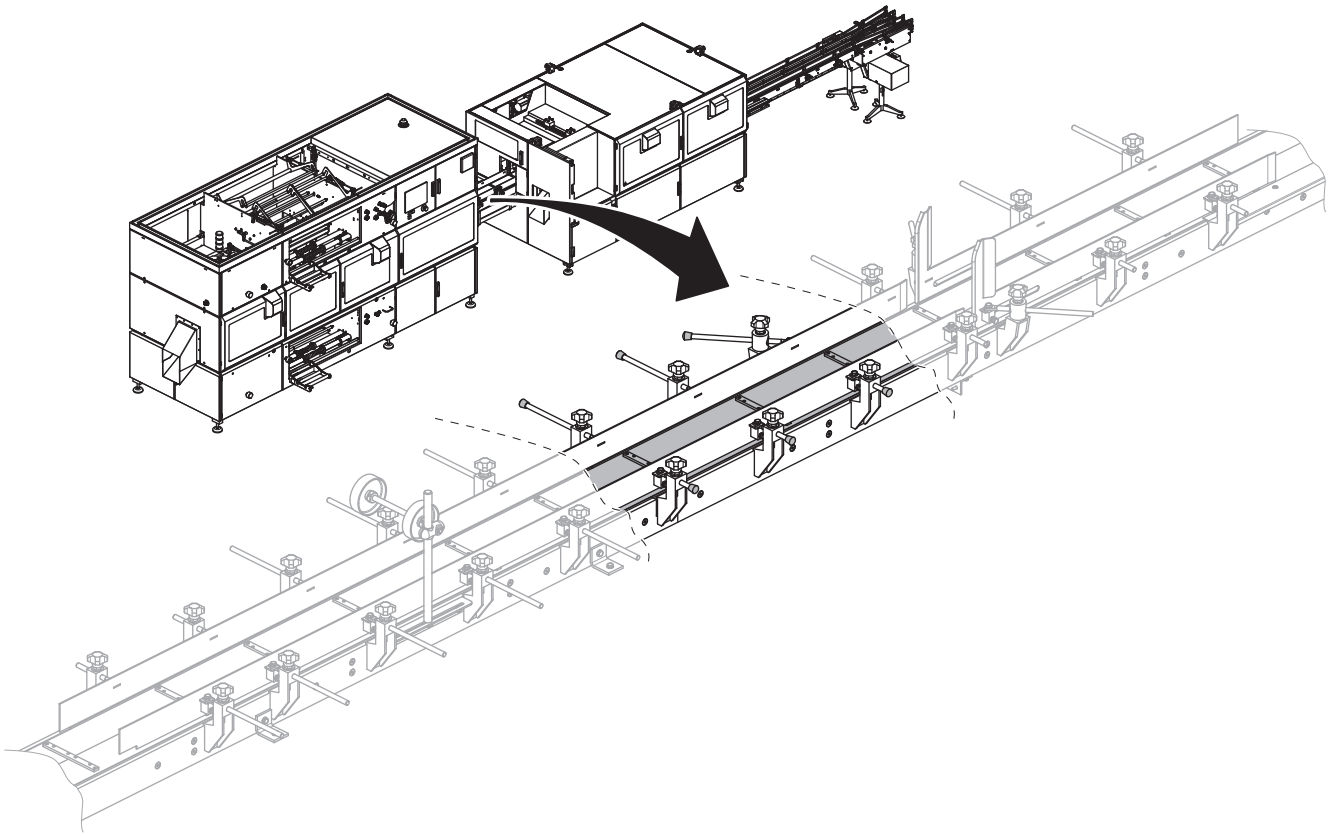

z) Split the upper part of the conveyor belt (64).

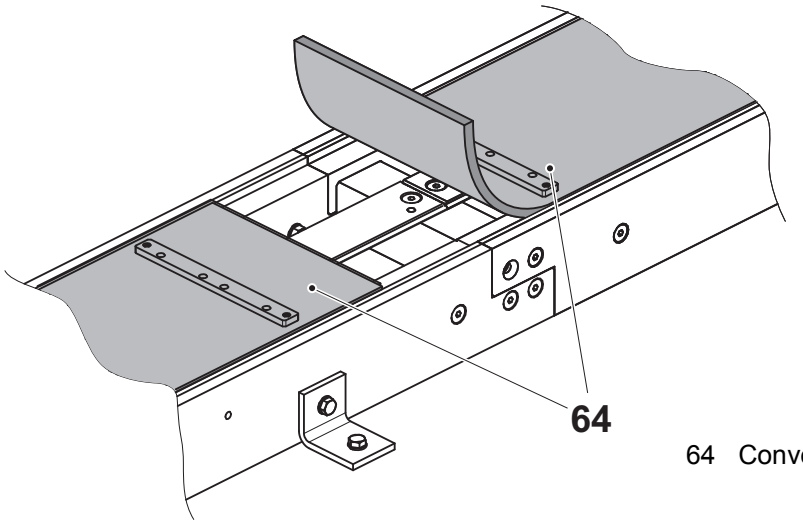

64 Conveyor belt

(Cont'd)

(Cont'd)

aa) Remove all the screws (65) on both sides of the indexing conveyor. break point (66).

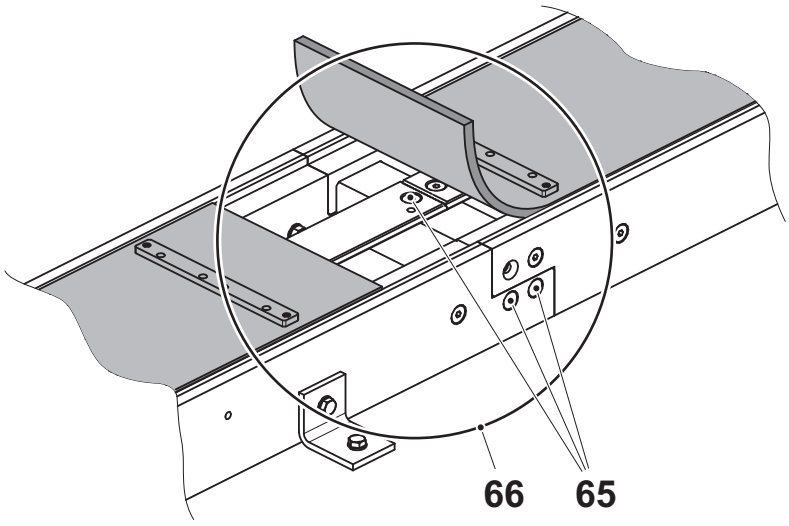

65 Break point
66 Screw

(Cont'd)

(Cont'd)

CAUTION
Risk of damage to equipment.
Fork extensions must be used if the forks are not long enough to lift the equipment in a secure manner. Make sure that no cables will become damaged or got jammed when the FW 68 base module is separated from the Card Inserter.

ab) With the aid of a hand pallet truck, gently lift up the FW 68 base module and pull it approximately 30 cm (distance A) from the Card Inserter by means of the indexing conveyor (67) break point. See the illustration below.

ac) Split the lower part of the conveyor belt (68).

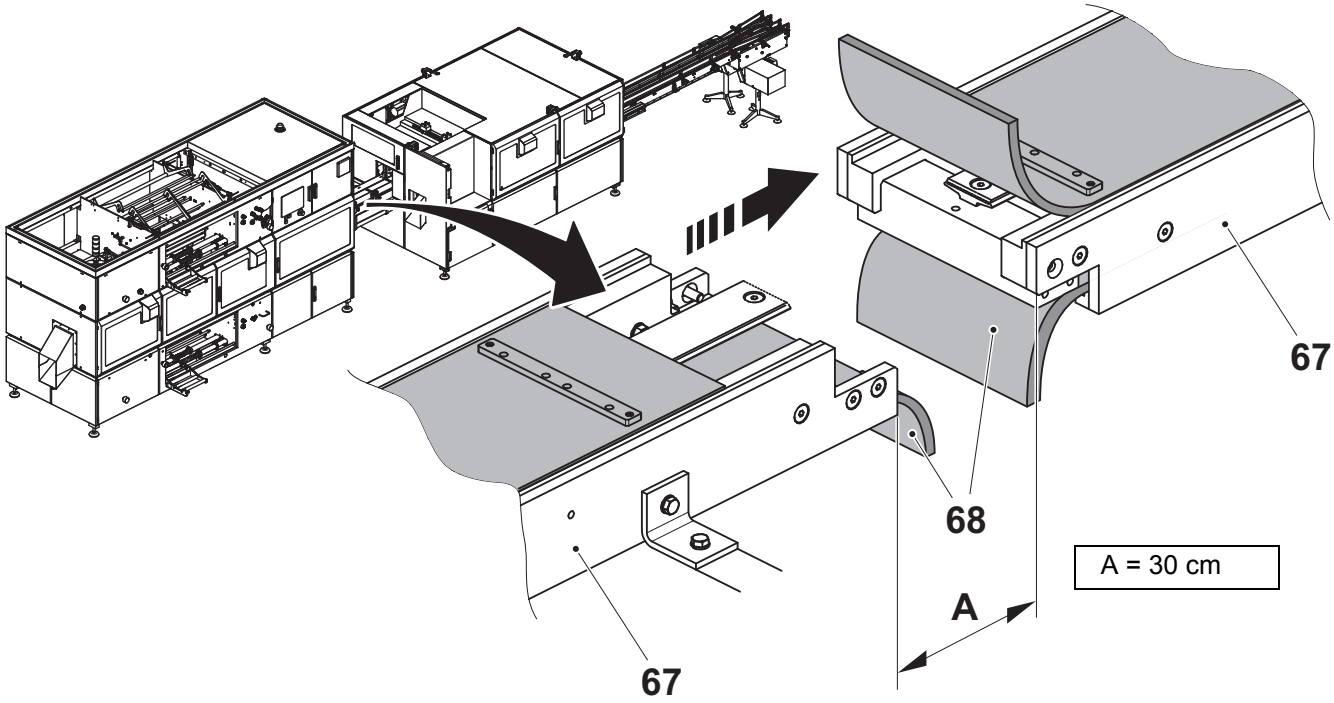

67 Indexing conveyor
68 Conveyor belt

ad) If not already done, draw back and secure all loose cables and hoses from the FW 68 base module to the Card Inserter indexing conveyor.

ae) Gently remove the FW 68 base module.

(Cont'd)

(Cont'd)

af) On the infeed section, disconnect all photocell cables and draw them back to the Card Inserter.

ag) Remove all railings, photocells, and other conveyor parts that are outside of the Card Inserter (the part inside of the Card Inserter is greyed in the illustration below).

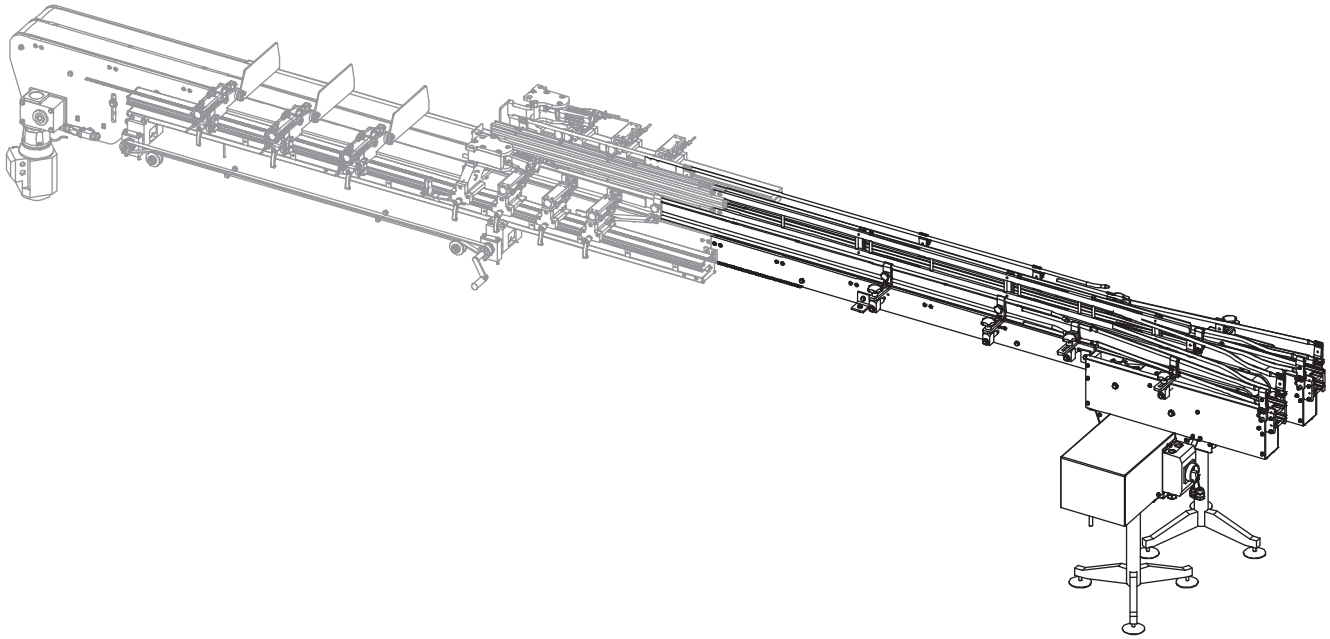

ah) Split the conveyor belt and remove it from the infeed section.



(Cont'd)

(Cont'd)

ai) Remove all screws at the break point (69).

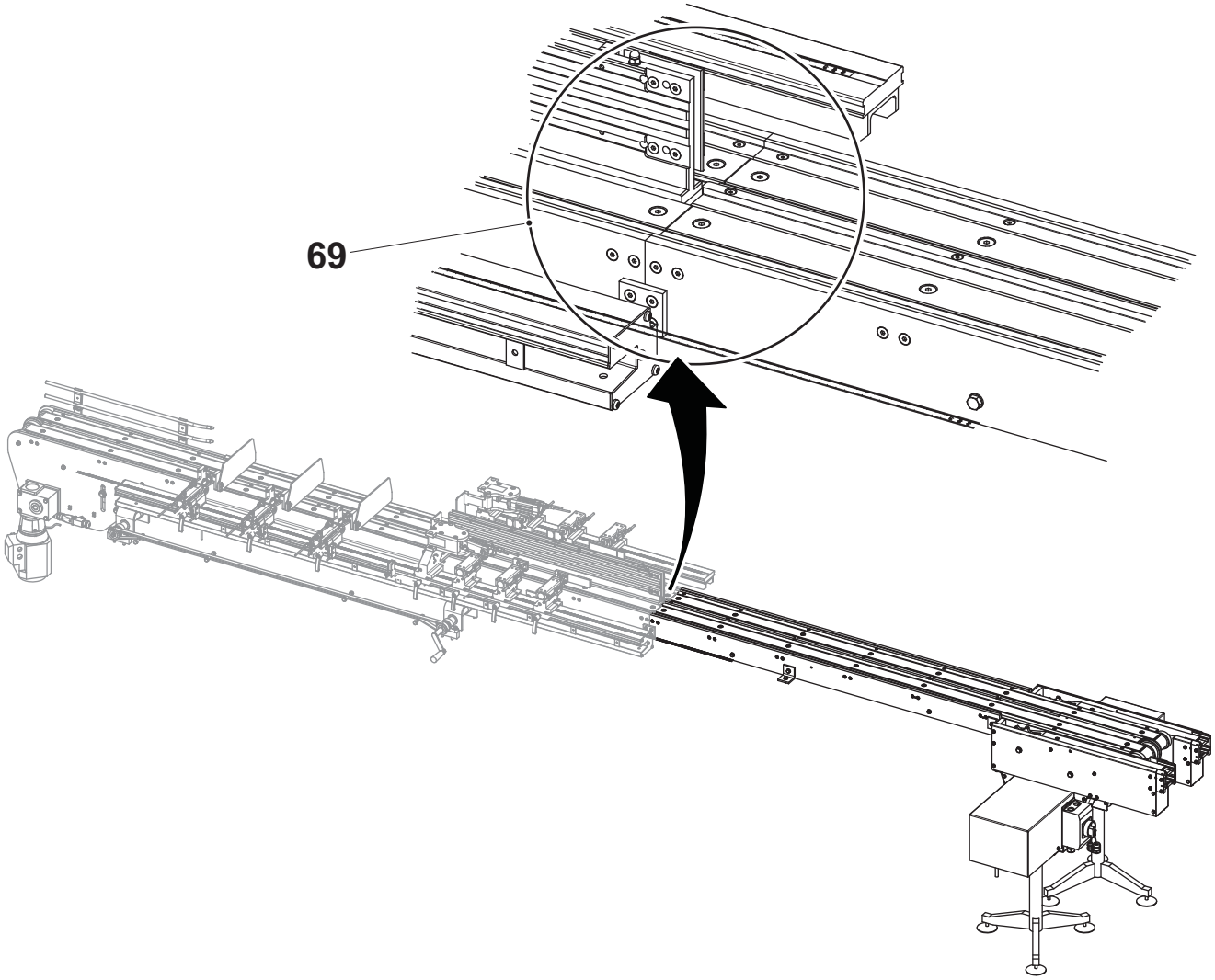

69 Break point

(Cont'd)

(Cont'd)

aj) On each side of the infeed section, remove the screws (70).

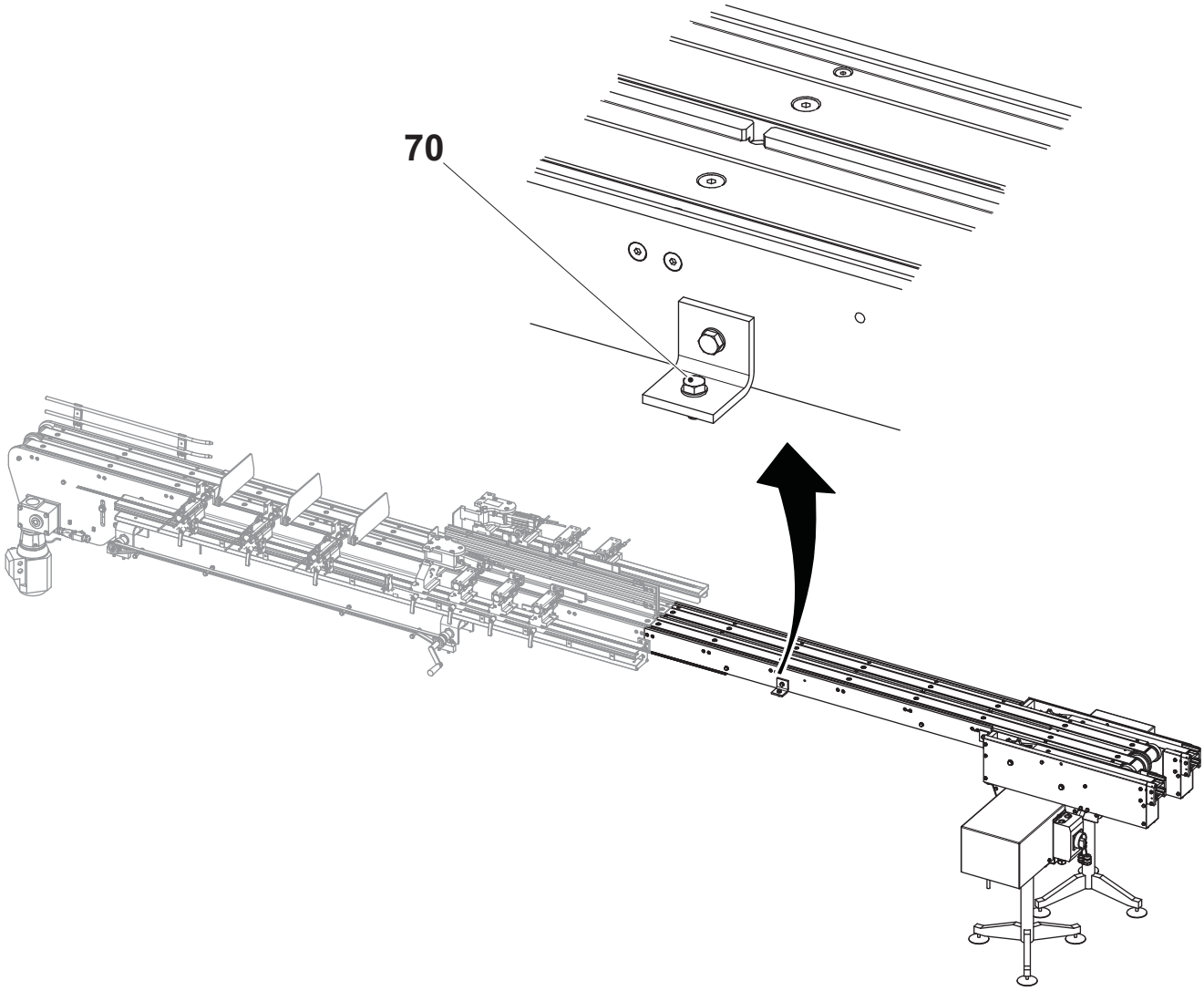

70 Screw

(Cont'd)

(Cont'd)

CAUTION
Risk of damage to equipment.
The drive motors (71) - only one drive motor if the machine is equipped with single infeed instead of double infeed as shown in the illustration below - must stand on its feet. Do not place the removed infeed section so that the drive motor lies down.

ak) Gently remove the infeed section. Place the infeed section supported in a way so it can remain standing with the drive motors standing on their feet.

Note! The conveyor fitted to the infeed section has not been taken in consideration.

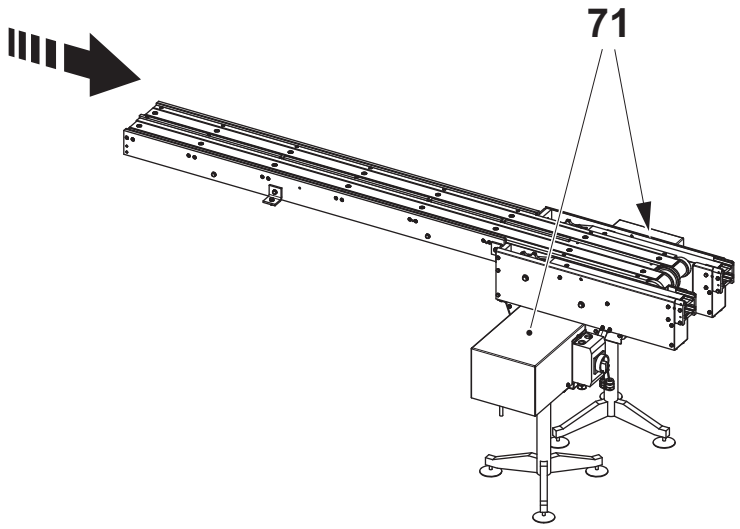

71 Drive motor

(Cont'd)

(Cont'd)

CAUTION
Risk of damage to equipment.
Fork extensions must be used if the forks are not long enough to lift the equipment in a secure manner.

al) With the aid of a hand pallet truck, gently lift up and remove the Card Inserter.

am) With the aid of straps, secure all moving parts of the Card Inserter for transport.

7.5 Storage Preparation

If the machine is going to be transported to a storage site, then see Section for more information about environmental factors, such as acceptable storage humidity and temperature range.

7.6 Moving

DANGER

Immediate danger to life.

The machine may tilt if not observing the centre of gravity or the fork lift points. Failure to observe may result in immediate danger to life and/or major damage to equipment.

Prior to lifting and moving the machine from its production site, do the following:

- Check that the machine can be transported without any problems regarding the ceiling height, doors, passages, etc.
- Make sure that the machine can be lifted in accordance with Section 3.1 Crate Handling.

7.7 Re-crating

Read the instructions in Section 3.4 Unpacking and Inspection.

Re-crate the machine in the reverse order.

7.8 Final Disposal

If the machine is to be permanently disposed of, perform the following operations.

a) Remove all packaging material, such as blanks, rolls of film, etc., and dispose of these according to local regulations.

b) Disassemble the machine as far as possible and separate the following materials:
   - stainless steel (panels and doors)
   - cast iron
   - aluminium
   - glass (windows, etc.)
   - rubber (seals, O-rings, etc.)
   - nylon and other plastics
   - electrical cables
   - hydraulic and pneumatic hoses
   - electrical components (batteries etc.)

c) Recycle or dispose of all materials, groups, and components according to local regulations.

Tetra Pak

Note! *This page is generated* ***automatically****.*
using the ***variable definitions*** *made in the* ***front page*** *file!*

Film Wrapper 68
674968-0400
Issue 2008-12 Doc. No. IM-2879848-0103

Film Wrapper 68 1(2)
674968-0400
Issue 2008-12 Doc. No. IM-2879848-0103

Film Wrapper 68
674968-0400
Issue 2008-12 Doc. No. IM-2879848-0103

Film Wrapper 68 1(2)
674968-0400
Issue 2008-12 Doc. No. IM-2879848-0103

Film Wrapper 68
674968-0400
Issue 2008-12 Doc. No. IM-2879848-0103

Film Wrapper 68 1(2)
674968-0400
Issue 2008-12 Doc. No. IM-2879848-0103

Film Wrapper 68
674968-0400
Issue 2008-12 Doc. No. IM-2879848-0103

Film Wrapper 68 1(2)
674968-0400
Issue 2008-12 Doc. No. IM-2879848-0103

Film Wrapper 68
674968-0400
Issue 2008-12 Doc. No. IM-2879848-0103

Film Wrapper 68 2(2)
674968-0400
Issue 2008-12 Doc. No. IM-2879848-0103

Film Wrapper 68
674968-0400
Issue 2008-12 Doc. No. IM-2879848-0103

Film Wrapper 68 2(2)
674968-0400
Issue 2008-12 Doc. No. IM-2879848-0103

Film Wrapper 68
674968-0400
Issue 2008-12 Doc. No. IM-2879848-0103

Film Wrapper 68 2(2)
674968-0400
Issue 2008-12 Doc. No. IM-2879848-0103

Film Wrapper 68
674968-0400
Issue 2008-12 Doc. No. IM-2879848-0103

Film Wrapper 68 2(2)
674968-0400
Issue 2008-12 Doc. No. IM-2879848-0103

40 mm Full width ***Note!*** *This page is generated* ***automatically****.*
using the ***variable definitions*** *made in the* ***front page*** *file!*

Film Wrapper 68
674968-0400
Issue 2008-12 Doc. No. IM-2879848-0103

Film Wrapper 68 1(2)
674968-0400
Issue 2008-12 Doc. No. IM-2879848-0103

Film Wrapper 68
674968-0400
Issue 2008-12 Doc. No. IM-2879848-0103

Film Wrapper 68 1(2)
674968-0400
Issue 2008-12 Doc. No. IM-2879848-0103

Film Wrapper 68
674968-0400
Issue 2008-12 Doc. No. IM-2879848-0103

Film Wrapper 68 1(2)
674968-0400
Issue 2008-12 Doc. No. IM-2879848-0103

Film Wrapper 68
674968-0400
Issue 2008-12 Doc. No. IM-2879848-0103

Film Wrapper 68 2(2)
674968-0400
Issue 2008-12 Doc. No. IM-2879848-0103

Film Wrapper 68
674968-0400
Issue 2008-12 Doc. No. IM-2879848-0103

Film Wrapper 68 2(2)
674968-0400
Issue 2008-12 Doc. No. IM-2879848-0103

Film Wrapper 68
674968-0400
Issue 2008-12 Doc. No. IM-2879848-0103

Film Wrapper 68 2(2)
674968-0400
Issue 2008-12 Doc. No. IM-2879848-0103