SPC-AM

Spare Parts Catalogue (after market)

Tetra Helix 22

661601-0100

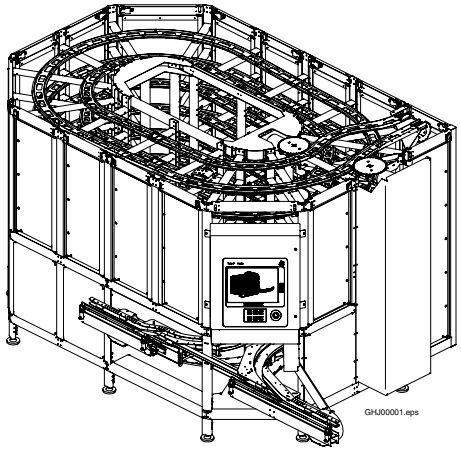

Note!

Refer to this SPC first when looking for spare parts. For spare parts not included, please see SPC-chapter in the TeM that was delivered with the machine.

This SPC does not cover all spare parts on the machine.
It's only a complement to the SPC-chapter in the TeM that was delivered with the machine. The bill of materials and drawings in this SPC will replace the corresponding in the SPC-chapter in the TeM.

This SPC cannot be ordered from the copy department or downloaded from the PIV.
It can be downloaded from ORBIS or sent by mail. For more details about this, please see the following pages.

2.2Front_page_AM_SPC_THX

Tetra Pak

Doc No. SPC-AM_THX22_0100

Tetra Helix 22
661601-0100

Background
At the time when the Tetra Helix 21/22 were produced, the policy at Tetra Pak was to only include chosen spare parts on the externally produced distribution machines, like the Tetra Helix 21/22.
This SPC-AM is meant as a complement to the SPC-chapter in the TeM that was delivered with the machine. It contains additional spare parts that are missing in the original SPC and which have shown to be needed in the spare parts handling.

Where to get it
You can download it from Orbis:

- TPCA - Products - Distribution Equipment - Accumulation - Tetra Helix 22
  http://cartonambient.tetrapak.com/Raptor/9393

- TPCA - Products - Distribution Equipment - Accumulation - Tetra Helix 21
  http://cartonambient.tetrapak.com/Raptor/9392

To get it via e-mail, please send a mail to britt.bjorkenstam@tetrapak.com

These SPC's cannot be ordered from the copy department or downloaded from PIV/Technical Publication Database.

2.2Front_page_AM_SPC_THX

Issue 2006-05

Doc No. SPC-AM_THX22_0100

Tetra Pak

Tetra Pak Carton Ambient AB

SPC
Spare Parts Catalogue

SPIDER UNIT

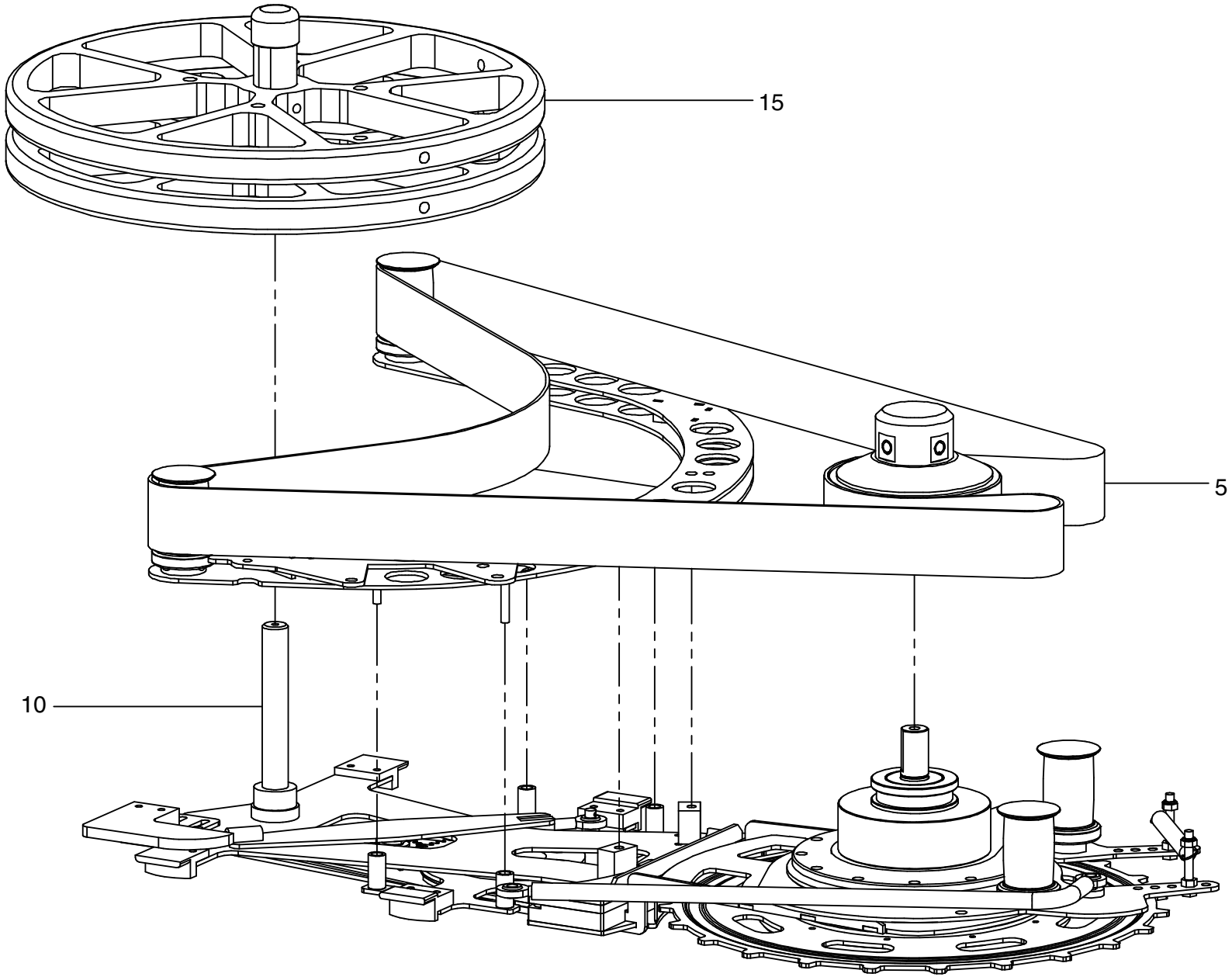

GraphicID: 661610-2.eps
Parent Drw: 661610

ECM: 265011 - 90001231
Group number: 661610-0100
Assembly Drawing: 661610-2_1_AA

Pos	Part No	UN	Qty	Description	Page No
-					
005	2727328-0100		1	BELT SPIDER GUIDES	**1-5**
010	2727329-0100		1	BELT SPIDER BASE	**1-7, 1-9**
015	2502295-0100		1	VOLUME KIT	**1-11**

Pos	Part No	UN	Qty	Description	Page No

BELT SPIDER GUIDES

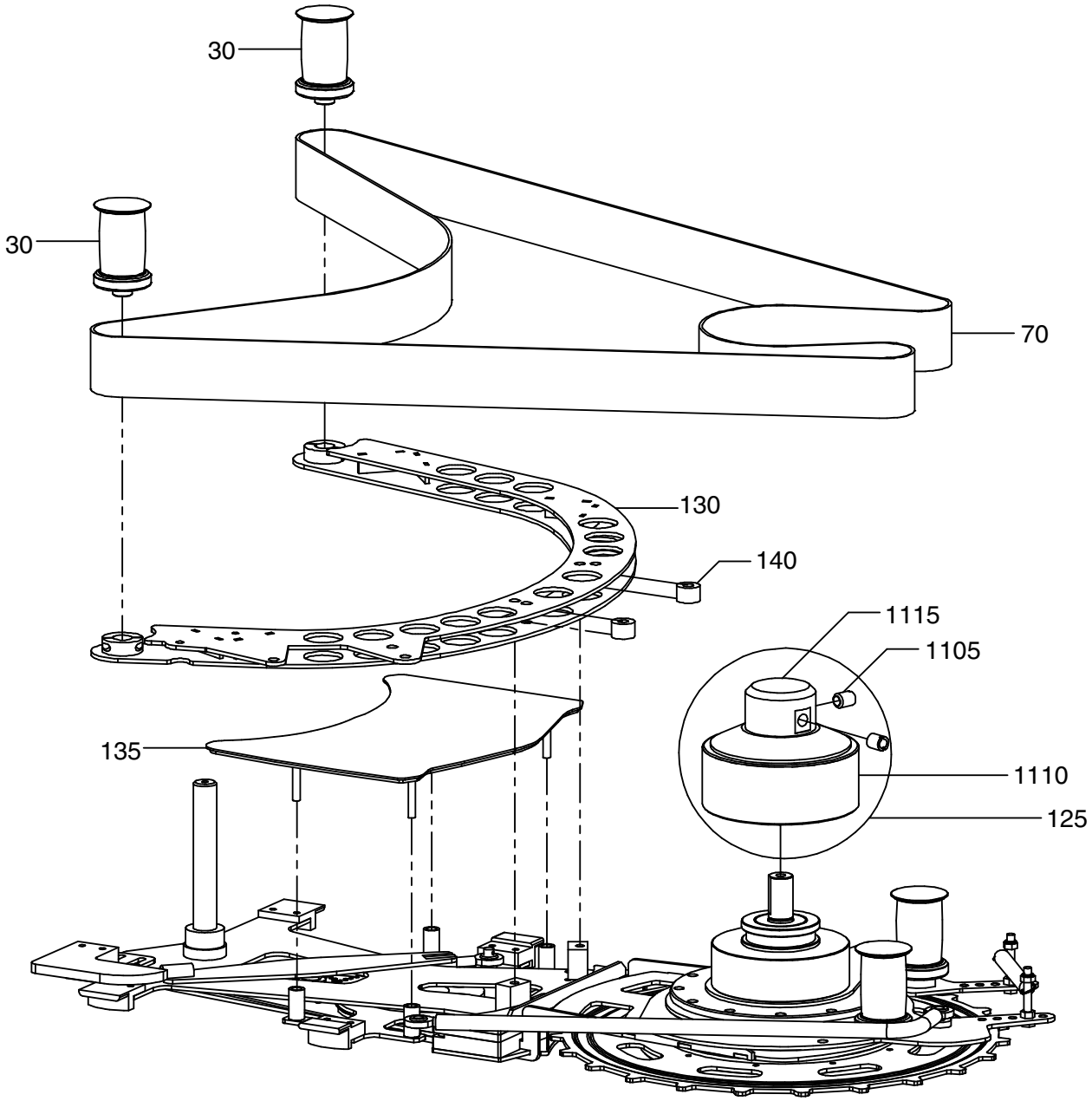

GraphicID: 2727328-1.eps

Parent Drw: 2727328

ECM: 265012 - 90001231
Group number: 2727328-0100
Assembly Drawing: 2727328-1_1_AA

Pos	Part No	UN	Qty	Description	Page No
-					
030	1497115-0000		4	ROLLER	
070	1497174-0000		1	BELT	
125	2502373-0000		1	PULLEY	
1105	*90026-0005*		*2*	*THREADED INSERTS, BUSHING, M8*	
1110	*2502371-0000*		*1*	*BELT*	
1115	*2502372-0000*		*1*	*PULLEY*	
1120	*90153-0048*	*KG*	*1*	*ADHESIVE,DEVCON TYPE 5-MIN-EPOXI 28G*	
130	2727314-0000		1	ROLLER SUPPORT ARM	
135	2727315-0000		1	DEAD PLATE	
140	2727303-0000		2	SPACER	

Pos	Part No	UN	Qty	Description	Page No

BELT SPIDER BASE

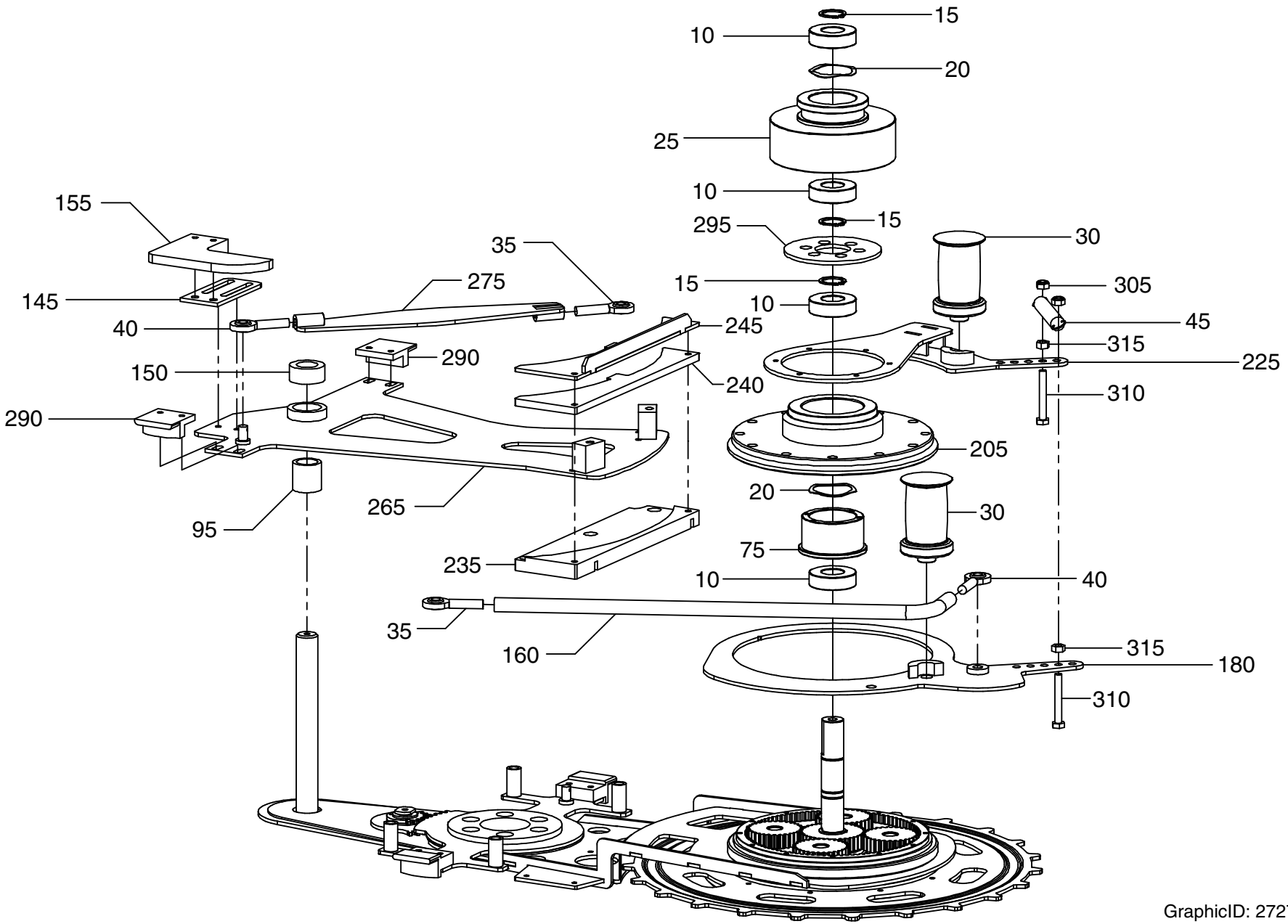

GraphicID: 2727329-1.eps

Parent Drw: 2727329

ECM: 265013 - 90001231
Group number: 2727329-0100
Assembly Drawing: 2727329-1_1_AA

This list covers pages from 1-6 to 1-9

Pos	Part No	UN	Qty	Description	Page No
-					
010	321308-0204		6	BALL BEARING, 20X42X12 MM	
015	315751-0116		6	RETAINING RING FOR SHAFT DIN 471 20 A2	
020	2502305-0000		3	BEARING, SPRING	
025	2502306-0000		1	BUSHING	
035	1497117-0000		2	ROD END M8 X 1.25, RH	
040	1497116-0000		2	ROD END M8 X 1.25, LH	
045	1497118-0000		1	SPRING	
055	2502311-0000		4	GEAR	
065	2502307-0000		1	GEAR	
075	2502312-0000		1	BUSHING	
085	2502308-0000		1	GEAR, DIFFERENTIAL	
090	2502309-0000		1	BEARING	
095	2502310-0000		1	BUSHING	
145	2664416-0000		1	PLATE	
150	2664411-0000		1	COLLAR	
155	2727246-0000		1	GUIDE	
160	2664414-0000		1	ROD, LINK	
165	2727316-0000		1	PLATE	
170	2727317-0000		1	GEAR, DRIVE	
175	2664418-0000		1	KEY	
180	2664409-0000		1	HOLDER	
185	2664408-0000		1	HOLDER	
190	2664407-0000		1	BUSHING	
195	2664406-0000		1	SHAFT	
200	2664405-0000		1	CAP	
205	2664404-0000		1	CAP	
210	2664403-0000		1	SPACER	
215	2664400-0000		4	SHAFT	
220	2727318-0000		1	DECK	
225	2664402-0000		1	ROLLER BRACKET	
230	2664401-0000		1	GEAR	
235	2727319-0000		1	BLOCK	
240	2727320-0000		1	BEARING	
245	2727321-0000		1	BEARING	
250	2727322-0000		1	BEARING	
255	2727323-0000		1	PLATE	
260	1497108-0000		1	BEARING	
265	2727324-0000		1	DECK	
270	2727325-0000		1	SHAFT	
275	2727326-0000		1	LINK	
280	2528367-0000		2	BLOCK	
285	1497114-0000		4	SPRING	
290	2727327-0000		2	BLOCK	
295	2664421-0000		1	CAP	
300	2664419-0000		4	PIN	
305	2664527-0000		2	NUT	
310	312105-0379		2	SCREW M6S ISO 4014 M6X45 A480	
315	312605-0316		2	HEXAGON NUT, M6M M6 A280	

Machine Type | Group Description | Used-In | Group Number | Page No

BELT SPIDER BASE

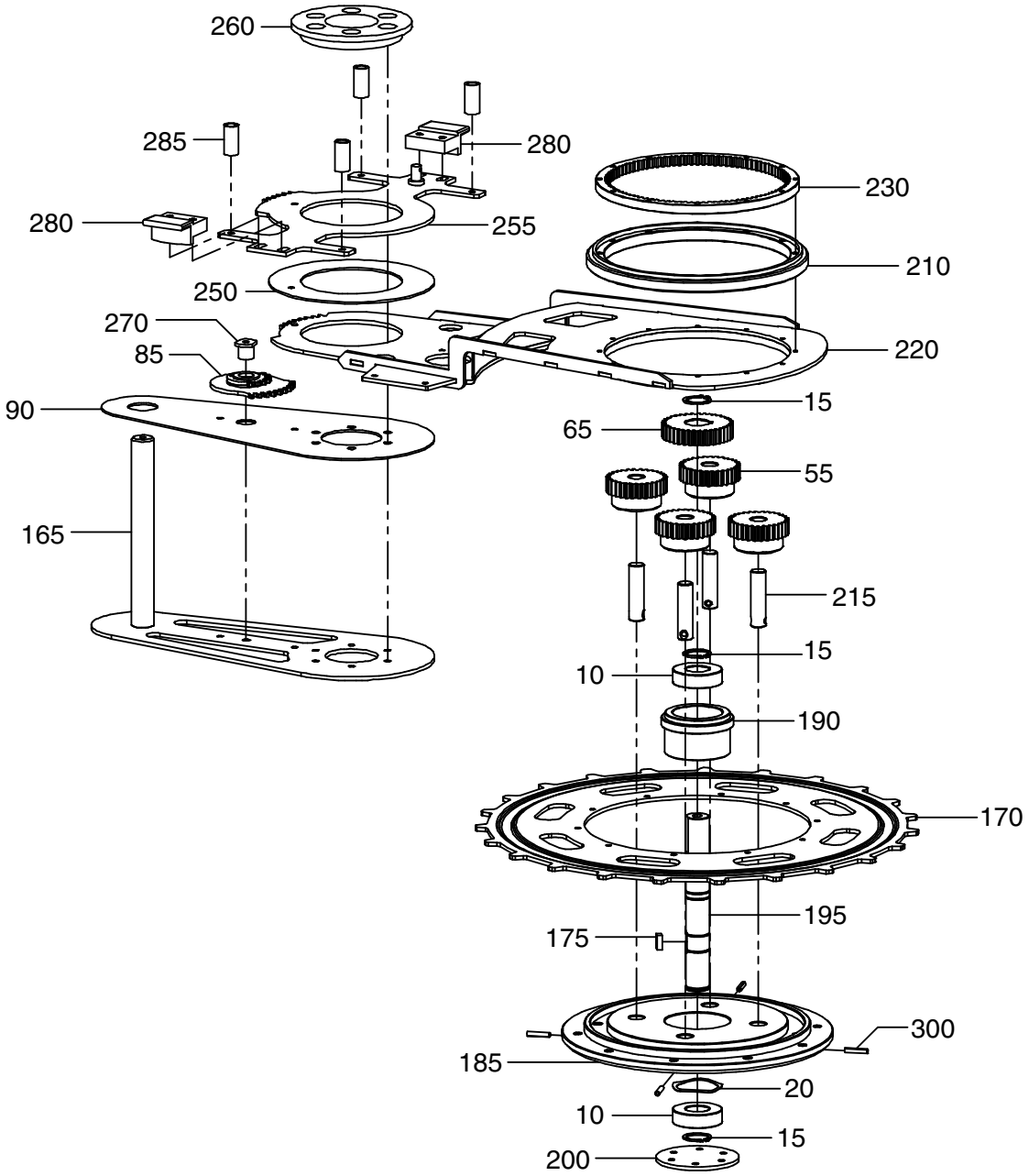

GraphicID: 2727329-2.eps

Parent Drw: 2727329

ECM: 265013 - 90001231
Group number: 2727329-0100
Assembly Drawing: 2727329-2_1_AA

This list covers pages from 1-6 to 1-9

Pos	Part No	UN	Qty	Description	Page No
-					
010	321308-0204		6	BALL BEARING, 20X42X12 MM	
015	315751-0116		6	RETAINING RING FOR SHAFT DIN 471 20 A2	
020	2502305-0000		3	BEARING, SPRING	
025	2502306-0000		1	BUSHING	
035	1497117-0000		2	ROD END M8 X 1.25, RH	
040	1497116-0000		2	ROD END M8 X 1.25, LH	
045	1497118-0000		1	SPRING	
055	2502311-0000		4	GEAR	
065	2502307-0000		1	GEAR	
075	2502312-0000		1	BUSHING	
085	2502308-0000		1	GEAR, DIFFERENTIAL	
090	2502309-0000		1	BEARING	
095	2502310-0000		1	BUSHING	
145	2664416-0000		1	PLATE	
150	2664411-0000		1	COLLAR	
155	2727246-0000		1	GUIDE	
160	2664414-0000		1	ROD, LINK	
165	2727316-0000		1	PLATE	
170	2727317-0000		1	GEAR, DRIVE	
175	2664418-0000		1	KEY	
180	2664409-0000		1	HOLDER	
185	2664408-0000		1	HOLDER	
190	2664407-0000		1	BUSHING	
195	2664406-0000		1	SHAFT	
200	2664405-0000		1	CAP	
205	2664404-0000		1	CAP	
210	2664403-0000		1	SPACER	
215	2664400-0000		4	SHAFT	
220	2727318-0000		1	DECK	
225	2664402-0000		1	ROLLER BRACKET	
230	2664401-0000		1	GEAR	
235	2727319-0000		1	BLOCK	
240	2727320-0000		1	BEARING	
245	2727321-0000		1	BEARING	
250	2727322-0000		1	BEARING	
255	2727323-0000		1	PLATE	
260	1497108-0000		1	BEARING	
265	2727324-0000		1	DECK	
270	2727325-0000		1	SHAFT	
275	2727326-0000		1	LINK	
280	2528367-0000		2	BLOCK	
285	1497114-0000		4	SPRING	
290	2727327-0000		2	BLOCK	
295	2664421-0000		1	CAP	
300	2664419-0000		4	PIN	
305	2664527-0000		2	NUT	
310	312105-0379		2	SCREW M6S ISO 4014 M6X45 A480	
315	312605-0316		2	HEXAGON NUT, M6M M6 A280	

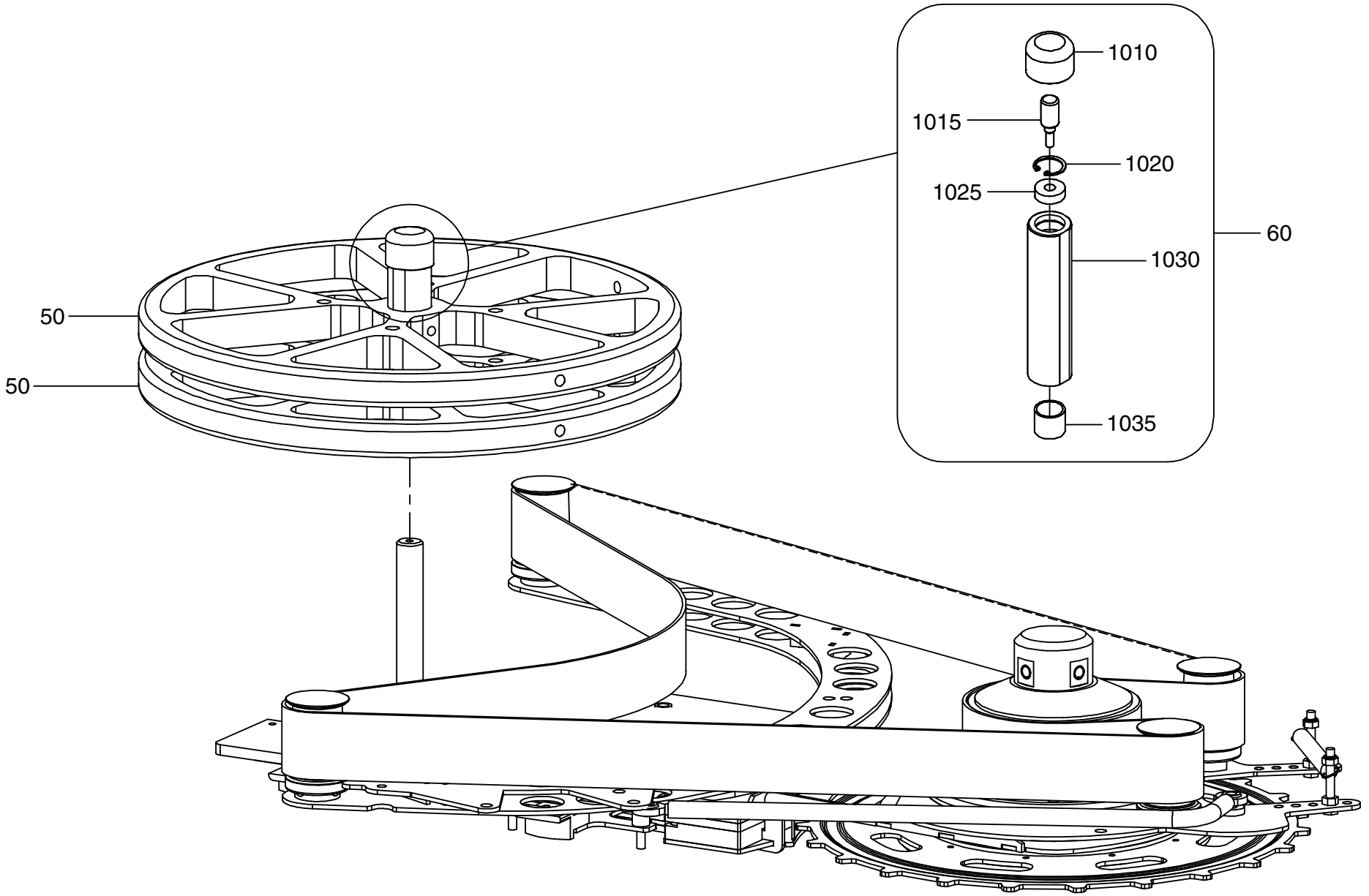

GraphicID: 2502295-1.eps
Parent Drw: 2502295

ECM: 265014 - 90001231
Group number: 2502295-0100
Assembly Drawing: 2502295-1_1_AA

Pos	Part No	UN	Qty	Description	Page No
0200B, 0250B					
050	2502301-0000		2	WHEEL	
0200M, 0250S					
050	2502302-0000		2	WHEEL	
0200S					
050	2502304-0000		2	WHEEL	
1000B					
050	2502303-0000		2	WHEEL	
Common Parts					
060	2502300-0000		1	SLEEVE	
1010	*2727221-0000*		*1*	*CAP*	
1015	*2727222-0000*		*1*	*KNOB*	
1020	*2664459-0000*		*1*	*RETAINING RING*	
1025	*2664449-0000*		*1*	*BALL BEARING*	
1030	*2727223-0000*		*1*	*SHAFT*	
1035	*2727224-0000*		*1*	*BUSHING*	

Pos	Part No	UN	Qty	Description	Page No

Machine Type | Group Description | Used-In | Group Number | Page No

Tetra Pak

SPC
Spare Parts Catalogue

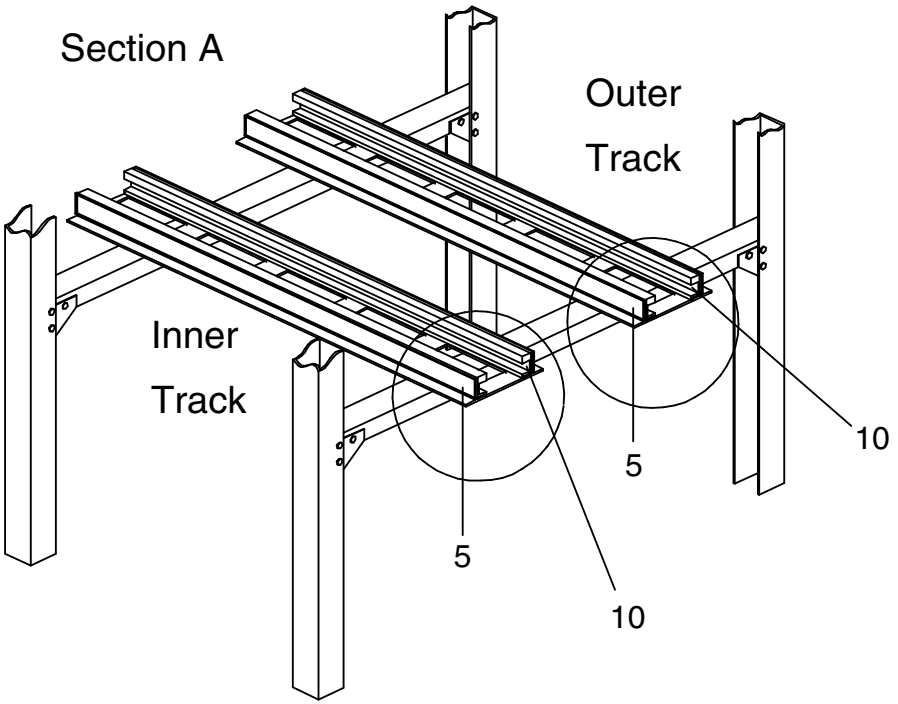

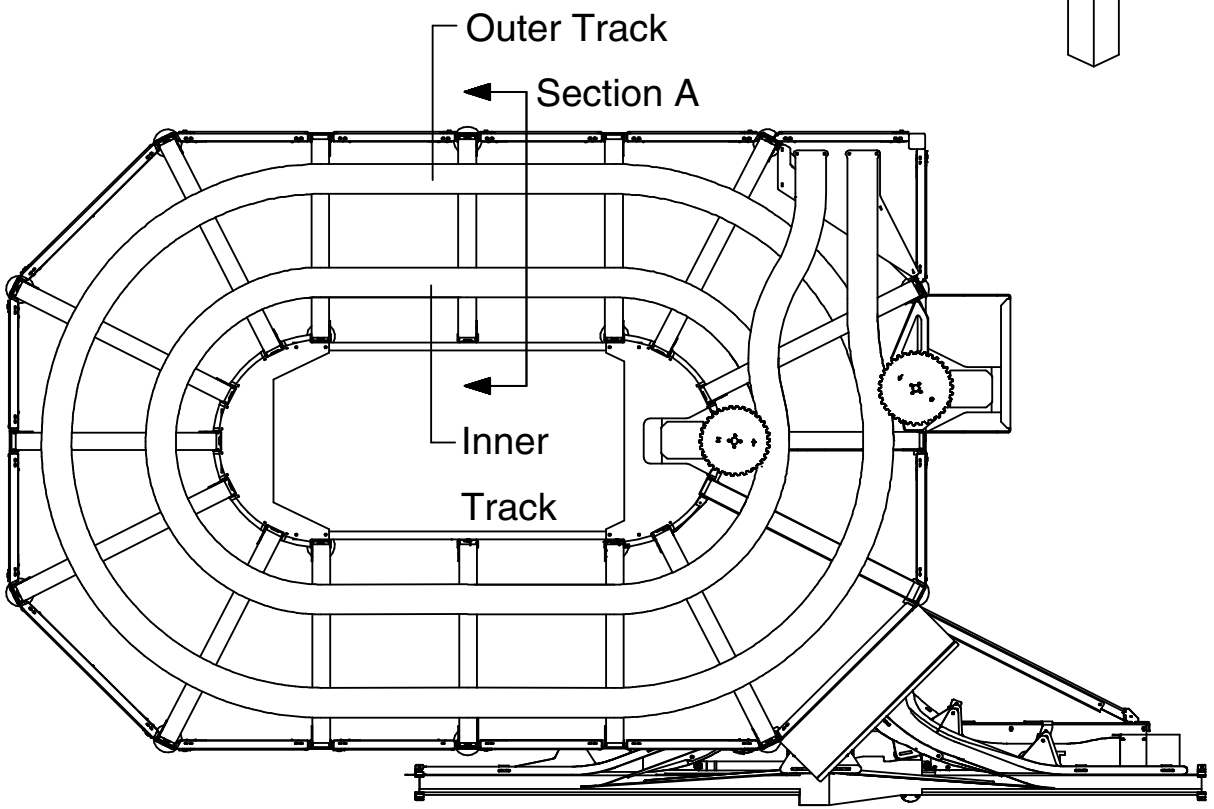

GraphicID: 1497185-6.eps

Parent Drw: 1497185

ECM: 265007 - 90001231
Group number: 1497185-0100
Assembly Drawing: 1497185-6_1_AA

This list covers pages from 2-2 to 2-5

Pos	Part No	UN	Qty	Description	Page No
-					
005	2502296-0000		1	PROFILE, TRACK GUIDE LH	
010	2502297-0000		1	PROFILE, TRACK GUIDE RH	
015	90458-0675		2	PROXIMITY SENSOR, E2EG-X5MB1-5M	
020	1497198-0000		2	TORSION SPRING	
025	90044-0075		2	LIMIT SWITCH TELEMECANIQUE XCK-M106	
030	90232-0117		1	PH.CELL WT4-2P135S10	
035	90232-0103		4	PH.CELL E3S-CT61-L-5M	
040	90232-0104		4	PH.CELL E3S-CT61-D-5M	

Pos	Part No	UN	Qty	Description	Page No

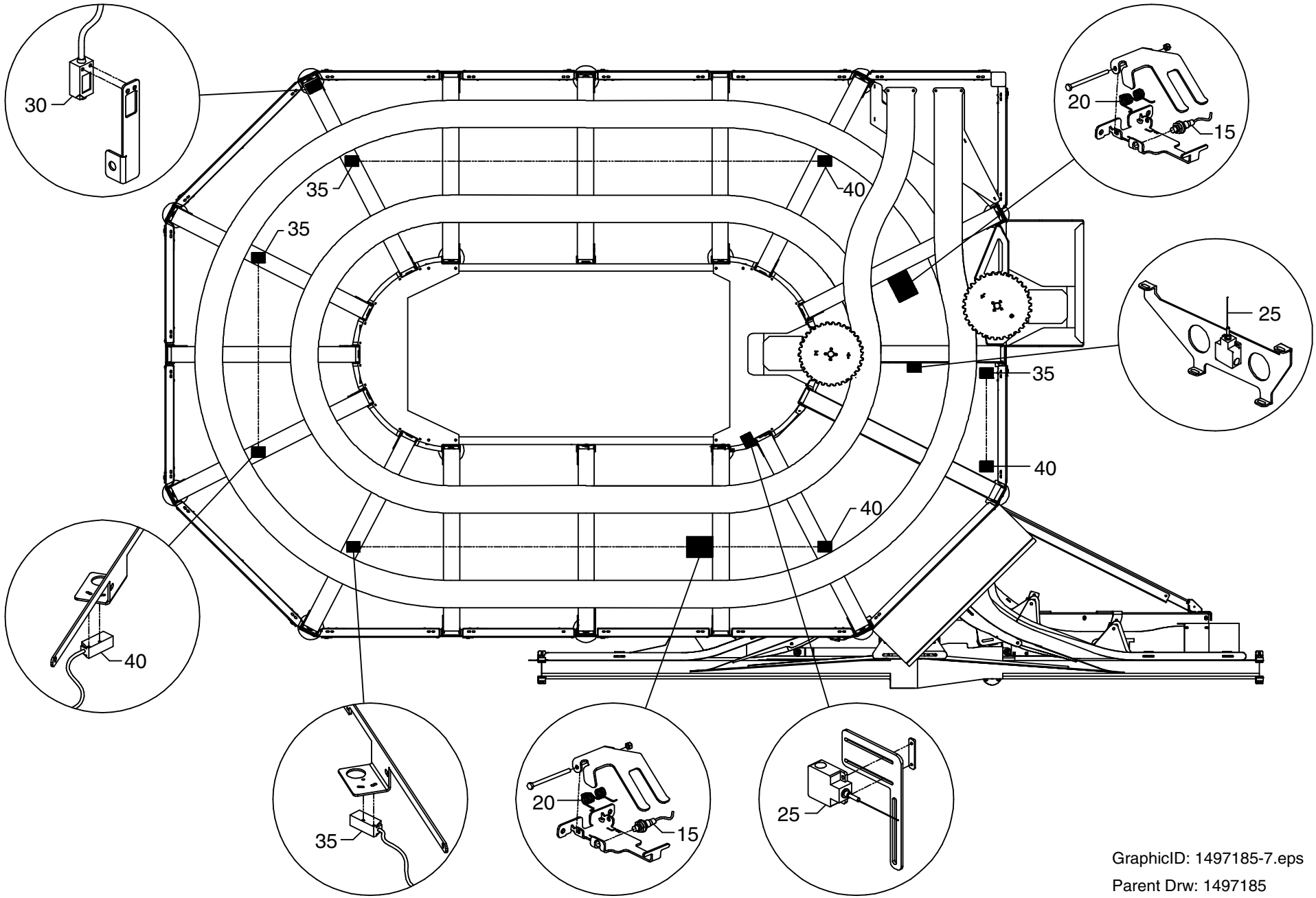

GraphicID: 1497185-7.eps
Parent Drw: 1497185

ECM: 265007 - 90001231
Group number: 1497185-0100
Assembly Drawing: 1497185-7_1_AA

This list covers pages from 2-2 to 2-5

Pos	Part No	UN	Qty	Description	Page No
-					
005	2502296-0000		1	PROFILE, TRACK GUIDE LH	
010	2502297-0000		1	PROFILE, TRACK GUIDE RH	
015	90458-0675		2	PROXIMITY SENSOR, E2EG-X5MB1-5M	
020	1497198-0000		2	TORSION SPRING	
025	90044-0075		2	LIMIT SWITCH TELEMECANIQUE XCK-M106	
030	90232-0117		1	PH.CELL WT4-2P135S10	
035	90232-0103		4	PH.CELL E3S-CT61-L-5M	
040	90232-0104		4	PH.CELL E3S-CT61-D-5M	

Pos	Part No	UN	Qty	Description	Page No

Tetra Pak

SPC
Spare Parts Catalogue

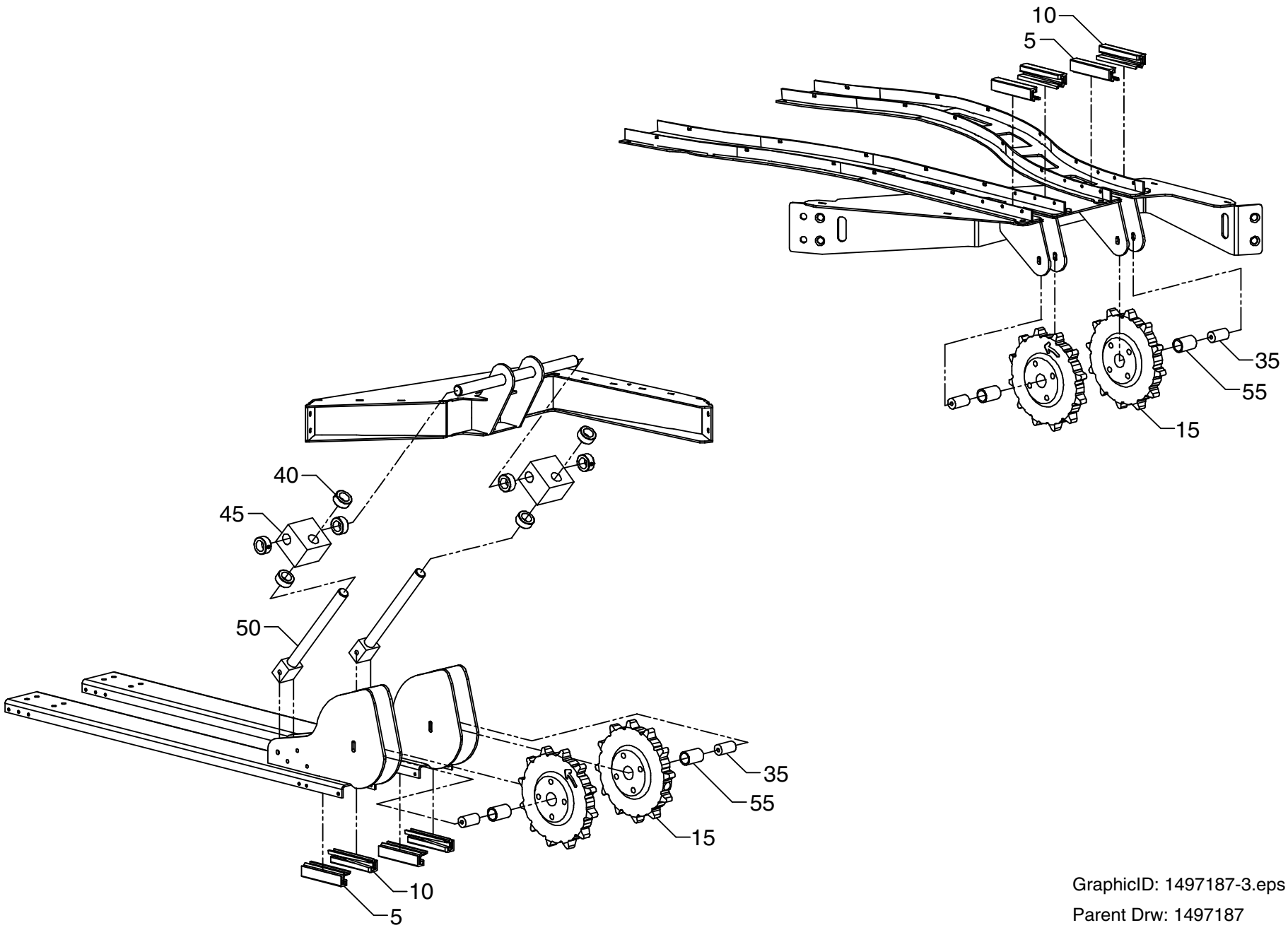

GraphicID: 1497187-3.eps
Parent Drw: 1497187

ECM: 265008 - 90001231
Group number: 1497187-0100
Assembly Drawing: 1497187-3_1_AA

This list covers pages from 3-2 to 3-5

Pos	Part No	UN	Qty	Description	Page No
-					
005	2502290-0000		8	EXTRUSION,END LH	
010	2502289-0000		8	EXTRUSION,END RH	
015	2502298-0000		6	SPROCKET, RETURN	
020	1497194-0060		1	SPARE CHAIN, INSIDE 60PC LINKS	
1205	*1497193-0000*		*60*	*WING, CHAIN*	
020	1497194-0894		1	WHOLE CHAIN, INSIDE 894PC LINKS	
1205	*1497193-0000*		*894*	*WING, CHAIN*	
025	1497195-1182		1	WHOLE CHAIN, OUTSIDE 1182PC LINKS	
1205	*1497193-0000*		*1182*	*WING, CHAIN*	
025	1497195-0060		1	SPARE CHAIN, OUTSIDE 60PC LINKS	
1205	*1497193-0000*		*60*	*WING, CHAIN*	
035	1497100-0000		6	AXLE	
040	1497161-0000		8	COLLAR	
045	2528347-0000		2	COLLAR	
050	2528350-0000		2	ROD	
055	2528357-0000		6	BUSHING	

Pos	Part No	UN	Qty	Description	Page No

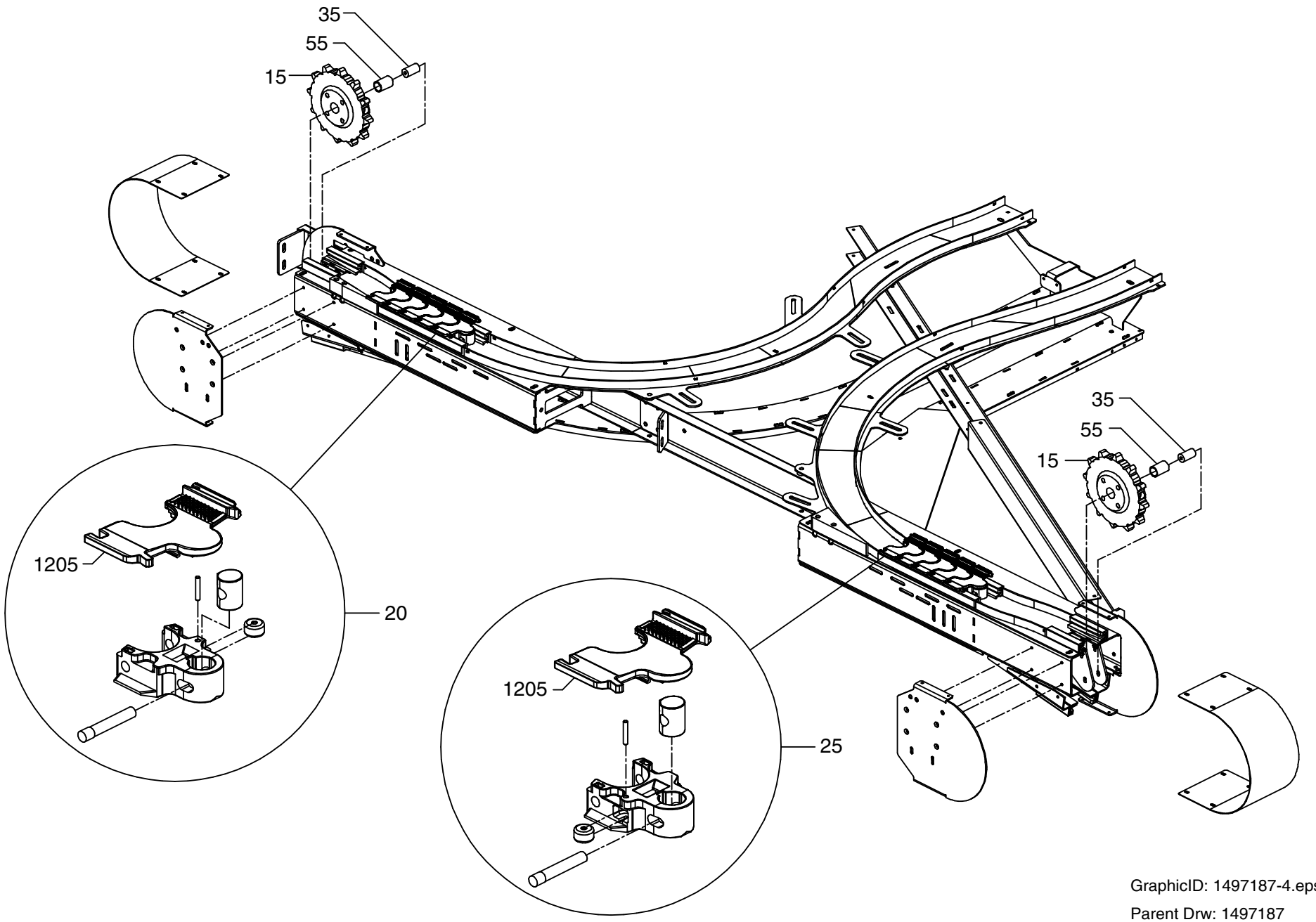

GraphicID: 1497187-4.eps
Parent Drw: 1497187

ECM: 265008 - 90001231
Group number: 1497187-0100
Assembly Drawing: 1497187-4_1_AA

This list covers pages from 3-2 to 3-5

Pos	Part No	UN	Qty	Description	Page No
-					
005	2502290-0000		8	EXTRUSION,END LH	
010	2502289-0000		8	EXTRUSION,END RH	
015	2502298-0000		6	SPROCKET, RETURN	
020	1497194-0060		1	SPARE CHAIN, INSIDE 60PC LINKS	
1205	*1497193-0000*		*60*	*WING, CHAIN*	
020	1497194-0894		1	WHOLE CHAIN, INSIDE 894PC LINKS	
1205	*1497193-0000*		*894*	*WING, CHAIN*	
025	1497195-1182		1	WHOLE CHAIN, OUTSIDE 1182PC LINKS	
1205	*1497193-0000*		*1182*	*WING, CHAIN*	
025	1497195-0060		1	SPARE CHAIN, OUTSIDE 60PC LINKS	
1205	*1497193-0000*		*60*	*WING, CHAIN*	
035	1497100-0000		6	AXLE	
040	1497161-0000		8	COLLAR	
045	2528347-0000		2	COLLAR	
050	2528350-0000		2	ROD	
055	2528357-0000		6	BUSHING	

Pos	Part No	UN	Qty	Description	Page No

Tetra Pak

SPC
Spare Parts Catalogue

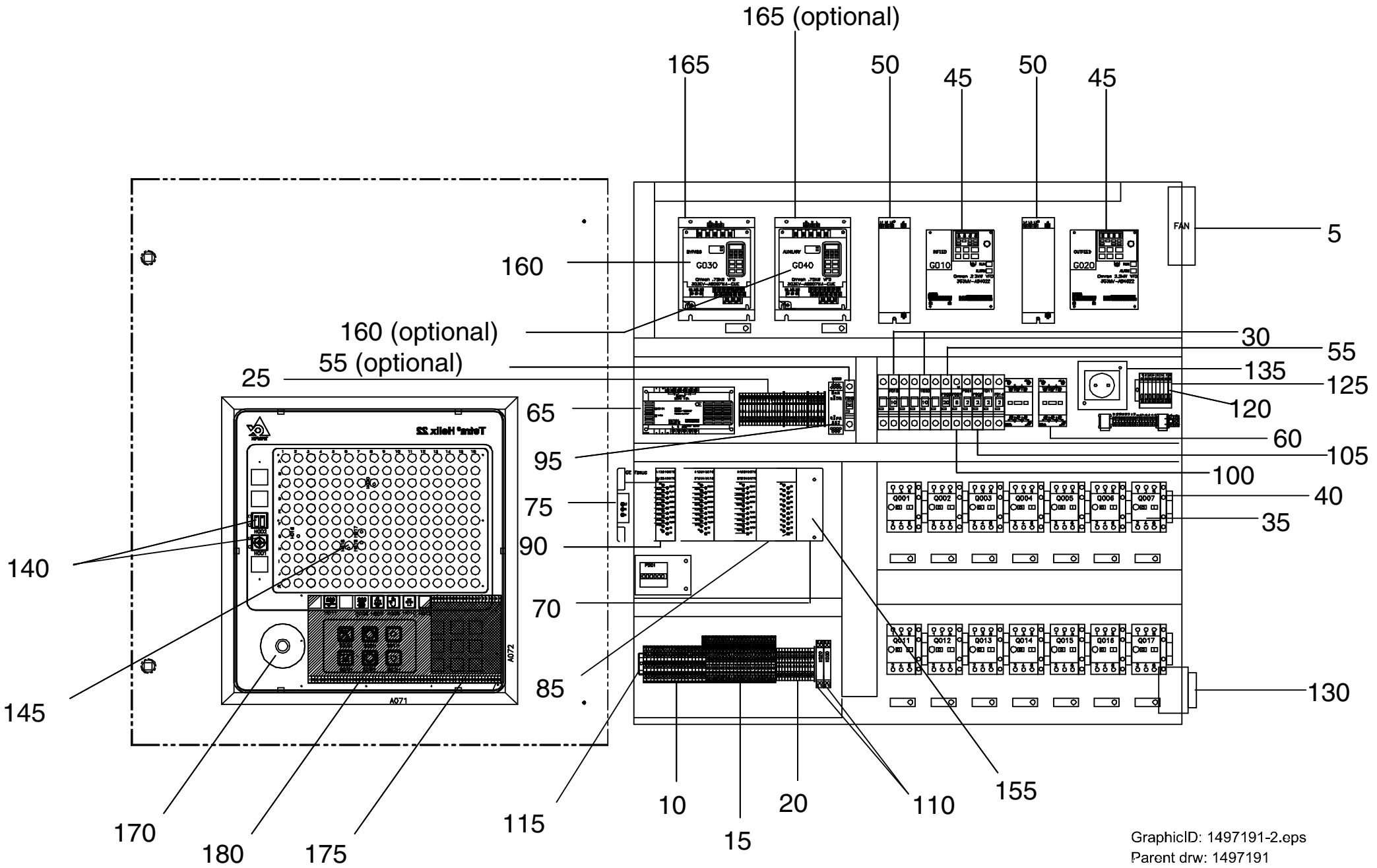

GraphicID: 1497191-2.eps
Parent drw: 1497191

ECM: 265010 - 90001231
Group number: 1497191-0100
Assembly Drawing: 1497191-2_1_AA

This list covers pages from 4-2 to 4-5

Pos	Part No	UN	Qty	Description	Page No
-					
005	90264-0032		1	FAN PAPST 220V 18W	
010	353021-0301		17	TERMINALS,TRIPLE-LEVEL, DLI 2,5/35 PA	
015	353021-0302		31	TERMINALS,TRIPLE-LEVEL, DLD 2,5/35 PA	
020	353021-0212		33	FEED THROUGH TERMINAL, 10200.0	
025	353032-0004		5	END PLATE WAP 2,5-10 BEIGE	
030	90007-0147		2	CIRCUIT BREAKER, 3P 10 A K	
035	90259-0017		14	OVERLOAD RELAY	
040	90259-0307		14	AUX CONTACT	
045	90458-1125		2	FREQUENCY CHANGER CIMR-V7AZ42P20	
050	90458-1128		2	FILTER 3G3MV-PFI3010-E	
055	90007-0132		1	CIRCUIT BREAKER, 1P 20 A K	
060	90075-0127		1	CONTACTOR, 4KW 24VDC	
065	90246-0028		1	POWER SUPPLY 24 VDC/4,2A, S82K	
070	90031-0070		1	CPU313, INTEGRATED IN 5-SLOT BASEPLATE	
075	90031-0068		1	PLC, POWER SUPPLY	
	352551-0134		*1*	*FINE-WIRE FUSE 2 A SLOW,5X20MM*	
	90031-0301		*1*	*SPARE BATTERY CPU,PCM,2PCS*	
080	90031-0058		2	PLC, DIGITAL INPUT MODULE	
085	90031-0059		1	PLC, DIGITAL OUTPUT MODULE	
090	90031-0062		1	PLC, ANALOG OUTPUT MODULE 8PT/CURR/VOLT	
095	90457-0092		1	SAFETY RELAY RT9-24VDC	
100	90007-0128		1	CIRCUIT BREAKER, 1P 6 A K	
105	90007-0127		4	CIRCUIT BREAKER, 1P 2 A K	
110	90119-0063		2	OPTO-RELAY, DC/DC AMMS-10-1/30VDC	
115	353031-0203		3	END SUPPORT, WEW 35/2	
120	353032-0005		2	END PLATE WAP 2,5-10 BLUE	
125	353022-0006		8	NEUTRAL TERMINAL, 10106.8	
130	90111-0132		1	MAIN SWITCH P1-25/EA/SVB-SW/N/HI11/H-P14	
135	90001-0031		1	WALL SOCKET OUTLET	
140	90036-0057		4	LIGHT BULB, BA9S 28V	
145	90038-0045		6	LIGHT DIODE, 24-60V YELLOW	
150	90178-0007		1	HOUR COUNTER, BG 40,17-1 12-48VDC	
155	90031-0031		1	ENHANCED GENIUS COMMUNICATION MODULE	
160	90430-0078		1	FREQ.CONV. 3G3EV-AB007MA-CUE	
165	90430-0331		1	FILTER 3G3EV-PFI1015-E	
170	90064-0124		1	SWITCH, EM. STOP, ZB2-BS844+ZB2-BZ1045	
175	68699-0101		1	MULTIPLEXER CARD 56LED	
010	*578860-0000*		*1*	*CIRCUIT BOARD*	
020	*578861-0001*			*COMPONENTS WITHOUT TP-NO*	
180	583399-0104		1	PUSH BUTTON BOARD	
0001	*582084-0000*		*1*	*PRINTED CIRCUIT BOARD*	

Pos	Part No	UN	Qty	Description	Page No
H012	*90038-0047*		*1*	*DIODE*	
H011	*90038-0047*		*1*	*DIODE*	
H010	*90038-0047*		*1*	*DIODE*	
H009	*90038-0047*		*1*	*DIODE*	
H008	*90038-0047*		*1*	*DIODE*	
H007	*90038-0047*		*1*	*DIODE*	
H006	*90038-0047*		*1*	*DIODE*	
S01H	*90064-0111*		*1*	*PUSH BUTTON, WHITE*	
S02H	*90064-0111*		*1*	*PUSH BUTTON, WHITE*	
S03H	*90064-0111*		*1*	*PUSH BUTTON, WHITE*	
S04H	*90064-0111*		*1*	*PUSH BUTTON, WHITE*	
S05H	*90064-0111*		*1*	*PUSH BUTTON, WHITE*	
S06H	*90064-0111*		*1*	*PUSH BUTTON, WHITE*	
S07H	*90064-0111*		*1*	*PUSH BUTTON, WHITE*	
S08H	*90064-0111*		*1*	*PUSH BUTTON, WHITE*	
S09H	*90064-0111*		*1*	*PUSH BUTTON, WHITE*	
KA,K B	*90129-0016*		*1*	*CONNECTOR, SCOTT 52072 S-070 B-00*	
ROO6	*90121-0121*		*1*	*RESISTANCE FIXED, 0,56 KOHM, 2 W*	
R023	*90121-0121*		*1*	*RESISTANCE FIXED, 0,56 KOHM, 2 W*	
R022	*90121-0121*		*1*	*RESISTANCE FIXED, 0,56 KOHM, 2 W*	
R021	*90121-0121*		*1*	*RESISTANCE FIXED, 0,56 KOHM, 2 W*	
R020	*90121-0121*		*1*	*RESISTANCE FIXED, 0,56 KOHM, 2 W*	
R019	*90121-0121*		*1*	*RESISTANCE FIXED, 0,56 KOHM, 2 W*	
R018	*90121-0121*		*1*	*RESISTANCE FIXED, 0,56 KOHM, 2 W*	
R017	*90121-0121*		*1*	*RESISTANCE FIXED, 0,56 KOHM, 2 W*	
R016	*90121-0121*		*1*	*RESISTANCE FIXED, 0,56 KOHM, 2 W*	
R015	*90121-0121*		*1*	*RESISTANCE FIXED, 0,56 KOHM, 2 W*	
R014	*90121-0121*		*1*	*RESISTANCE FIXED, 0,56 KOHM, 2 W*	
R013	*90121-0121*		*1*	*RESISTANCE FIXED, 0,56 KOHM, 2 W*	
R012	*90121-0121*		*1*	*RESISTANCE FIXED, 0,56 KOHM, 2 W*	
R011	*90121-0121*		*1*	*RESISTANCE FIXED, 0,56 KOHM, 2 W*	
R010	*90121-0121*		*1*	*RESISTANCE FIXED, 0,56 KOHM, 2 W*	
R009	*90121-0121*		*1*	*RESISTANCE FIXED, 0,56 KOHM, 2 W*	
R008	*90121-0121*		*1*	*RESISTANCE FIXED, 0,56 KOHM, 2 W*	
R007	*90121-0121*		*1*	*RESISTANCE FIXED, 0,56 KOHM, 2 W*	
R005	*90121-0121*		*1*	*RESISTANCE FIXED, 0,56 KOHM, 2 W*	
R004	*90121-0121*		*1*	*RESISTANCE FIXED, 0,56 KOHM, 2 W*	
R003	*90121-0121*		*1*	*RESISTANCE FIXED, 0,56 KOHM, 2 W*	
R002	*90121-0121*		*1*	*RESISTANCE FIXED, 0,56 KOHM, 2 W*	
R001	*90121-0121*		*1*	*RESISTANCE FIXED, 0,56 KOHM, 2 W*	
X011 :3	*359011-0808*		*1*	*MARKING PLATES 5-FW 51-100*	
X011 :2	*359011-0807*		*1*	*MARKING PLATES 5-FW 1-50*	

Machine Type | Group Description | Used-In | Group Number | Page No

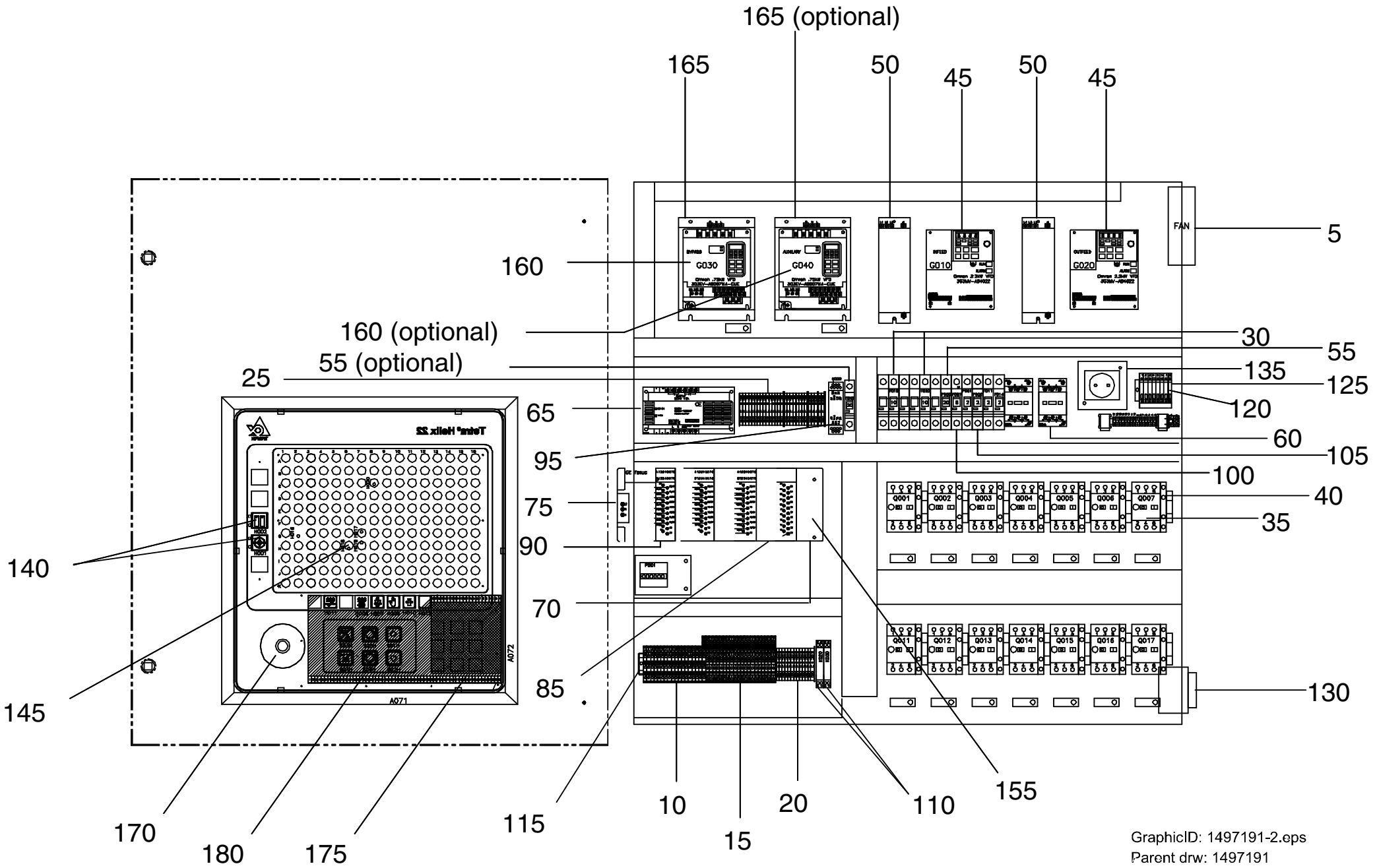

GraphicID: 1497191-2.eps
Parent drw: 1497191

Pos	Part No	UN	Qty	Description	Page No
- (Cont'd)					
180	583399-0104		1	PUSH BUTTON BOARD	
0001	*582084-0000*		*1*	*PRINTED CIRCUIT BOARD*	
H012	*90038-0047*		*1*	*DIODE*	
H011	*90038-0047*		*1*	*DIODE*	
H010	*90038-0047*		*1*	*DIODE*	
H009	*90038-0047*		*1*	*DIODE*	
H008	*90038-0047*		*1*	*DIODE*	
H007	*90038-0047*		*1*	*DIODE*	
H006	*90038-0047*		*1*	*DIODE*	
S01H	*90064-0111*		*1*	*PUSH BUTTON, WHITE*	
S02H	*90064-0111*		*1*	*PUSH BUTTON, WHITE*	
S03H	*90064-0111*		*1*	*PUSH BUTTON, WHITE*	
S04H	*90064-0111*		*1*	*PUSH BUTTON, WHITE*	
S05H	*90064-0111*		*1*	*PUSH BUTTON, WHITE*	
S06H	*90064-0111*		*1*	*PUSH BUTTON, WHITE*	
S07H	*90064-0111*		*1*	*PUSH BUTTON, WHITE*	
S08H	*90064-0111*		*1*	*PUSH BUTTON, WHITE*	
S09H	*90064-0111*		*1*	*PUSH BUTTON, WHITE*	
KA,K B	*90129-0016*		*1*	*CONNECTOR, SCOTT 52072 S-070 B-00*	
ROO6	*90121-0121*		*1*	*RESISTANCE FIXED, 0,56 KOHM, 2 W*	
R023	*90121-0121*		*1*	*RESISTANCE FIXED, 0,56 KOHM, 2 W*	
R022	*90121-0121*		*1*	*RESISTANCE FIXED, 0,56 KOHM, 2 W*	
R021	*90121-0121*		*1*	*RESISTANCE FIXED, 0,56 KOHM, 2 W*	
R020	*90121-0121*		*1*	*RESISTANCE FIXED, 0,56 KOHM, 2 W*	
R019	*90121-0121*		*1*	*RESISTANCE FIXED, 0,56 KOHM, 2 W*	
R018	*90121-0121*		*1*	*RESISTANCE FIXED, 0,56 KOHM, 2 W*	
R017	*90121-0121*		*1*	*RESISTANCE FIXED, 0,56 KOHM, 2 W*	
R016	*90121-0121*		*1*	*RESISTANCE FIXED, 0,56 KOHM, 2 W*	
R015	*90121-0121*		*1*	*RESISTANCE FIXED, 0,56 KOHM, 2 W*	
R014	*90121-0121*		*1*	*RESISTANCE FIXED, 0,56 KOHM, 2 W*	
R013	*90121-0121*		*1*	*RESISTANCE FIXED, 0,56 KOHM, 2 W*	
R012	*90121-0121*		*1*	*RESISTANCE FIXED, 0,56 KOHM, 2 W*	
R011	*90121-0121*		*1*	*RESISTANCE FIXED, 0,56 KOHM, 2 W*	
R010	*90121-0121*		*1*	*RESISTANCE FIXED, 0,56 KOHM, 2 W*	
R009	*90121-0121*		*1*	*RESISTANCE FIXED, 0,56 KOHM, 2 W*	
R008	*90121-0121*		*1*	*RESISTANCE FIXED, 0,56 KOHM, 2 W*	
R007	*90121-0121*		*1*	*RESISTANCE FIXED, 0,56 KOHM, 2 W*	
R005	*90121-0121*		*1*	*RESISTANCE FIXED, 0,56 KOHM, 2 W*	
R004	*90121-0121*		*1*	*RESISTANCE FIXED, 0,56 KOHM, 2 W*	
R003	*90121-0121*		*1*	*RESISTANCE FIXED, 0,56 KOHM, 2 W*	
R002	*90121-0121*		*1*	*RESISTANCE FIXED, 0,56 KOHM, 2 W*	
R001	*90121-0121*		*1*	*RESISTANCE FIXED, 0,56 KOHM, 2 W*	
X011 :3	*359011-0808*		*1*	*MARKING PLATES 5-FW 51-100*	
X011 :2	*359011-0807*		*1*	*MARKING PLATES 5-FW 1-50*	
X011 :1	*90077-0325*		*1*	*END PLATE*	
X011	*90077-0099*		*60*	*PCB TERMINAL GSE 5/1 1-POLE*	

Tetra Pak