SPC-AM

Spare Parts Catalogue (after market)

Tetra Helix 22

661601-0300

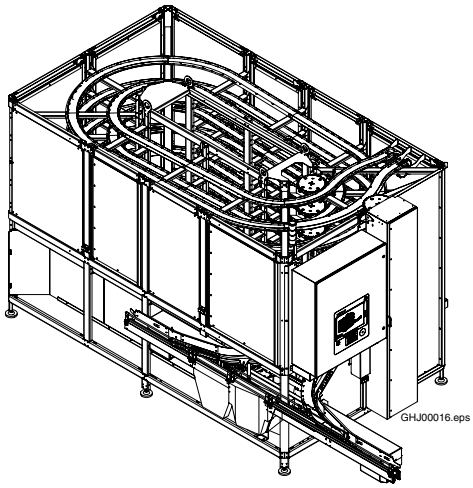

Note!

Refer to this SPC first when looking for spare parts. For spare parts not included, please see SPC-chapter in the TeM that was delivered with the machine.

This SPC does not cover all spare parts on the machine.
It's only a complement to the SPC-chapter in the TeM that was delivered with the machine. The bill of materials and drawings in this SPC will replace the corresponding in the SPC-chapter in the TeM.

This SPC cannot be ordered from the copy department or downloaded from the PIV.
It can be downloaded from ORBIS or sent by mail. For more details about this, please see the following pages.

2.2Front_page_AM_SPC_THX

Tetra Pak

Doc No. SPC-AM_THX22_0300

Tetra Helix 22
661601-0300

Background
At the time when the Tetra Helix 21/22 were produced, the policy at Tetra Pak was to only include chosen spare parts on the externally produced distribution machines, like the Tetra Helix 21/22.
This SPC-AM is meant as a complement to the SPC-chapter in the TeM that was delivered with the machine. It contains additional spare parts that are missing in the original SPC and which have shown to be needed in the spare parts handling.

Where to get it
You can download it from Orbis:

- TPCA - Products - Distribution Equipment - Accumulation - Tetra Helix 22
  http://cartonambient.tetrapak.com/Raptor/9393

- TPCA - Products - Distribution Equipment - Accumulation - Tetra Helix 21
  http://cartonambient.tetrapak.com/Raptor/9392

To get it via e-mail, please send a mail to britt.bjorkenstam@tetrapak.com

These SPC's cannot be ordered from the copy department or downloaded from PIV/Technical Publication Database.

2.2Front_page_AM_SPC_THX

Issue 2006-04

Doc No. SPC-AM_THX22_0300

Tetra Pak

Tetra Pak Carton Ambient AB

SPC

Spare Parts Catalogue

TRACK

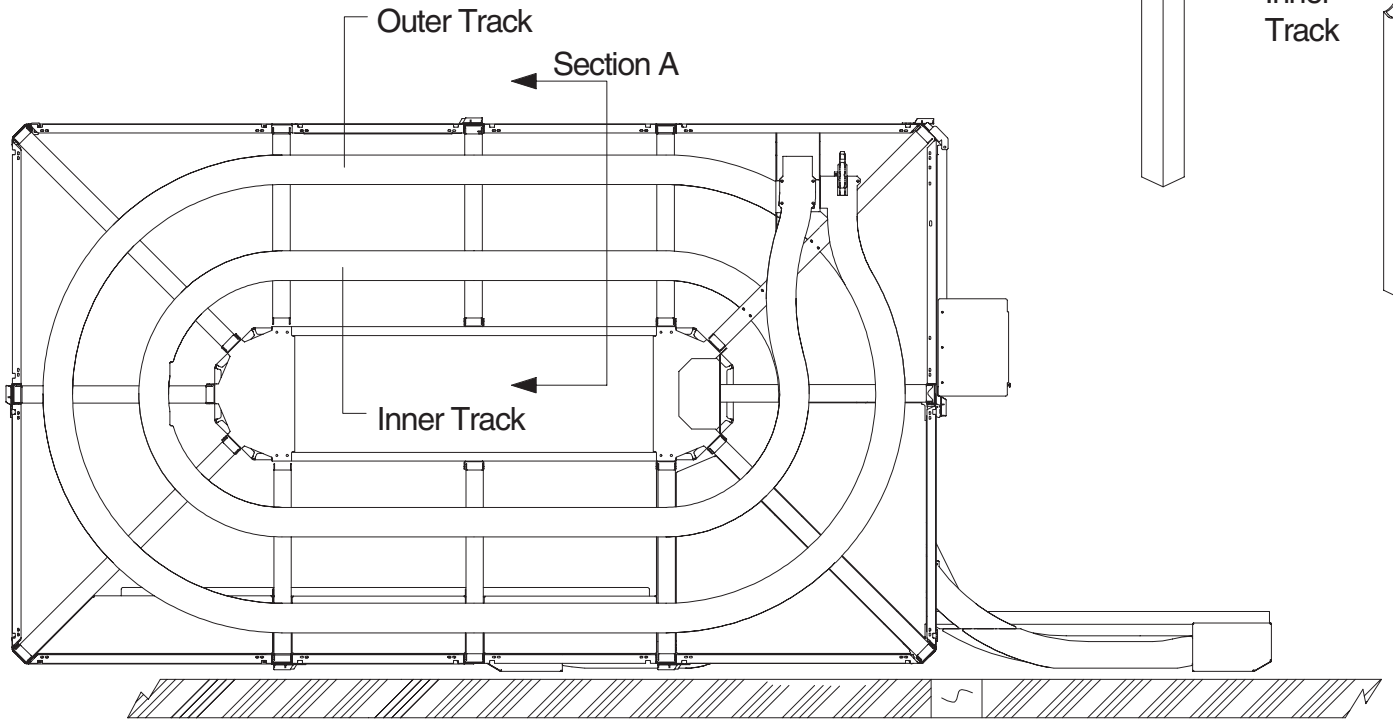

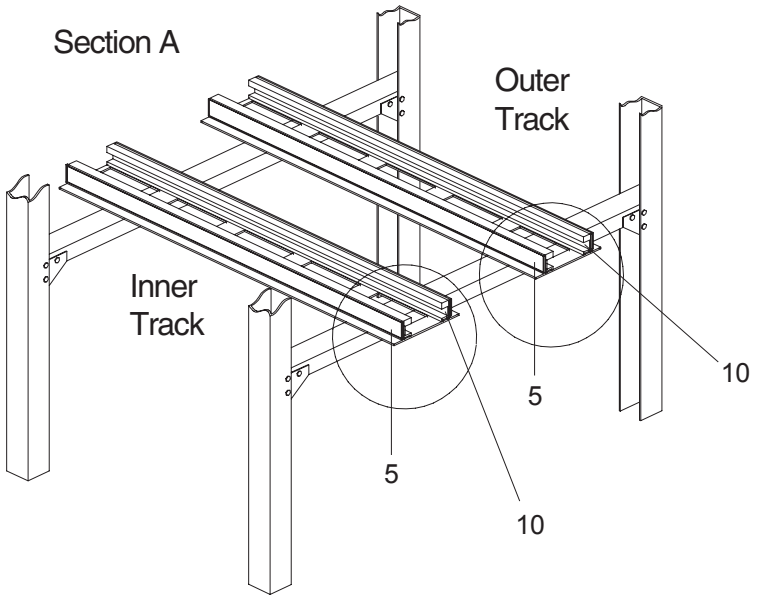

GraphicID: 2502339-5.eps
Parent Drw: 2502339

Pos	Part No	SP	UN	Qty	Description	Page No
005	2502296			1	EXTRUSION, LH-BASE	
010	2502297			1	EXTRUSION, RH-BASE	
100	1497198			2	SPRING, TORSION	
105	90044-0075			2	SWITCH, LIMIT	
110	2528341			1	BASE, LOWER, OVERTRAVEL	
115	2528342			1	BASE, UPPER, OVERTRAVEL	
120	90458-0677			2	SWITCH, PROX.	
125	90458-2620			5	PHOTOCELL,OMRON (INCLUDES REFLECTOR 90232-0333)	
130	90459-0036			7	CABLE,STR, 15 METER	
135	90232-0333			5	REFLECTOR	

Pos	Part No	SP	UN	Qty	Description	Page No

TRACK

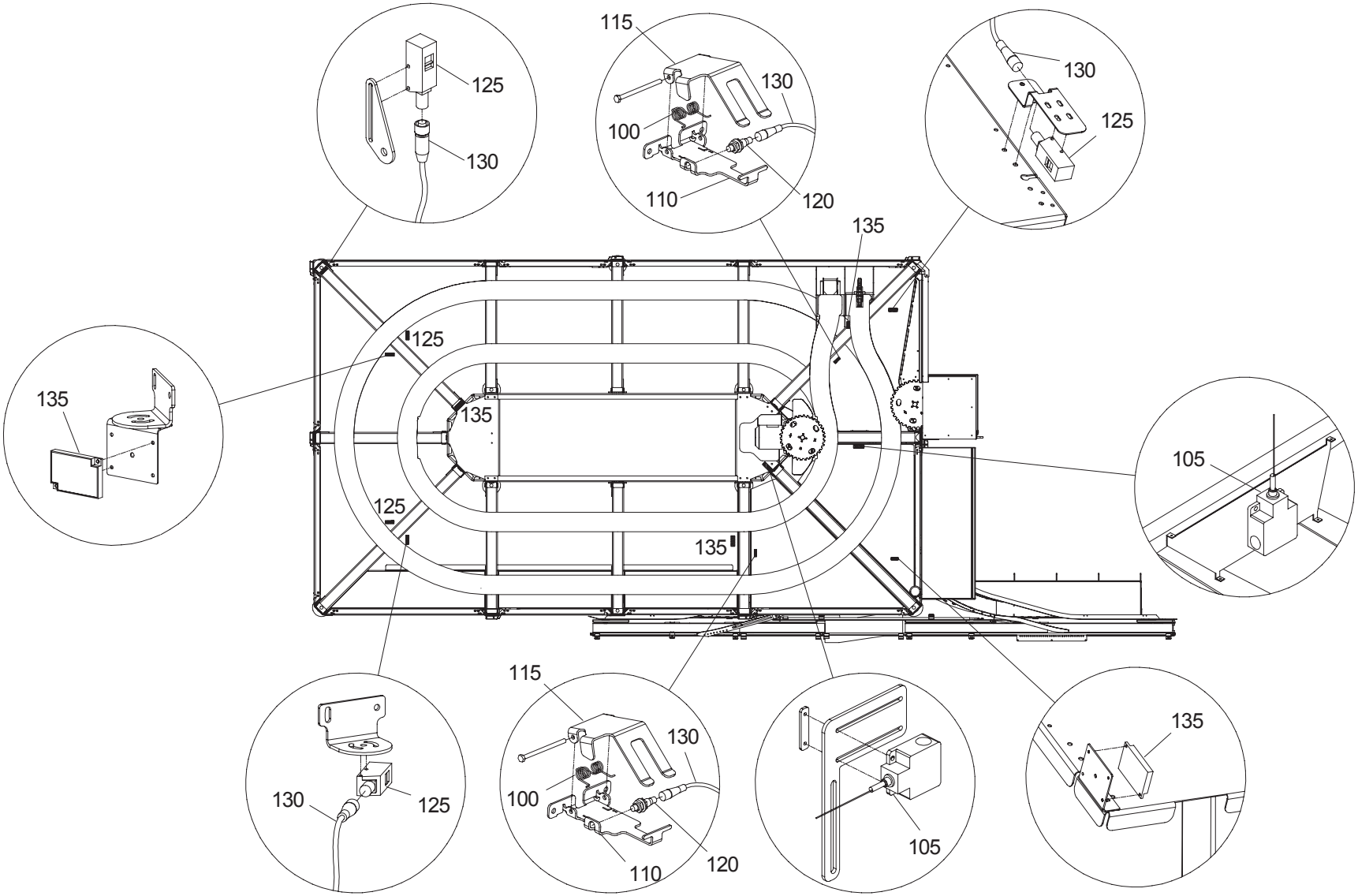

GraphicID: 2502339-6.eps
Parent Drw: 2502339

Pos	Part No	SP	UN	Qty	Description	Page No
005	2502296			1	EXTRUSION, LH-BASE	
010	2502297			1	EXTRUSION, RH-BASE	
100	1497198			2	SPRING, TORSION	
105	90044-0075			2	SWITCH, LIMIT	
110	2528341			1	BASE, LOWER, OVERTRAVEL	
115	2528342			1	BASE, UPPER, OVERTRAVEL	
120	90458-0677			2	SWITCH, PROX.	
125	90458-2620			5	PHOTOCELL,OMRON (INCLUDES REFLECTOR 90232-0333)	
130	90459-0036			7	CABLE,STR, 15 METER	
135	90232-0333			(5)	REFLECTOR	

Pos	Part No	SP	UN	Qty	Description	Page No

TAKE UP/RETURN

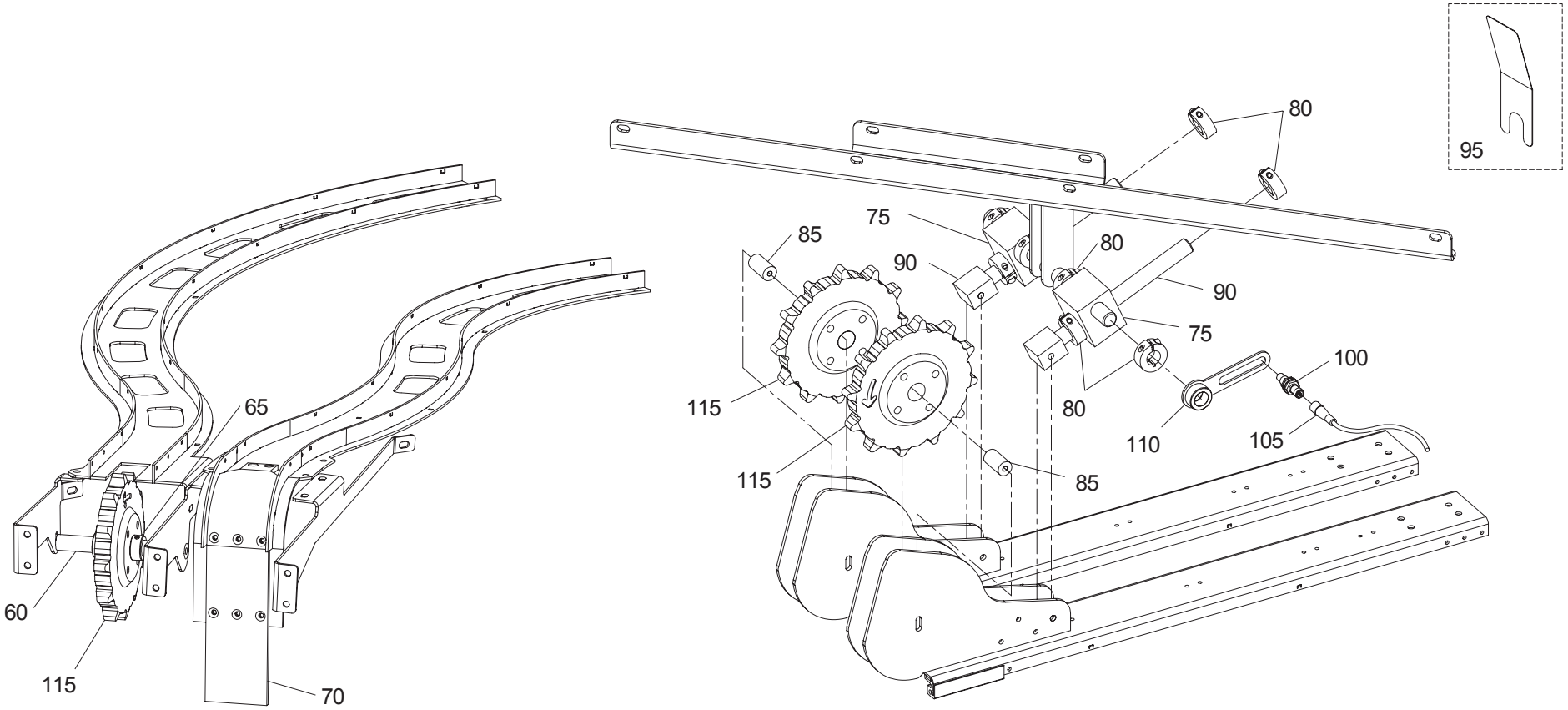

GraphicID: 2502341-3.eps
Parent Drw: 2502341

Pos	Part No	SP	UN	Qty	Description	Page No
005	1497194-0894			1	WHOLE CHAIN,LH,LT,4.5"PLS,ANG,INFEED (46.330m)	
1205	*1497193-0000*			*0894*	*WING CHAIN*	
010	1497195-1182			1	WHOLE CHAIN,LH,RT,4.5"PLS,ANG, OUTFEED (61.570m)	
1205	*1497193-0000*			*1182*	*WING CHAIN*	
005	1497194-0060			1	SPARE CHAIN,LH,LT,4.5"PLS,ANG,INFEED (3.048m)	
1205	*1497193-0000*			*60*	*WING CHAIN*	
010	1497195-0060			1	SPARE CHAIN,LH,RT,4.5"PLS,ANG,OUTFEED (3.048m)	
1205	*1497193-0000*			*60*	*WING CHAIN*	
060	2528344			1	SHAFT	
065	2528345			6	COLLAR, LOCK	
070	2528346			1	PAD, WEAR	
075	2528347			2	BLOCK, PIVOT	
080	2528348			8	COLLAR, CLAMP, 20 MM	
085	2528349			2	AXLE, IDLER	
090	2528350			2	WELD, ROD, SLIDE	
095	2528351			1	TOOL, SPACER, SPROCKET	
100	90458-0677			1	PROXIMITY, OMRON	
105	90459-0036			1	SENSOR CABLE	
110	2664486			1	BRACKET, TAKEUP, SENSOR	
115	2502298			5	SPROCKET, IDLER	
130	2528356			2	SHAFT, IN/OUT	
135	2528357			2	BUSHING, BRONZE	

Pos	Part No	SP	UN	Qty	Description	Page No

TAKE UP/RETURN

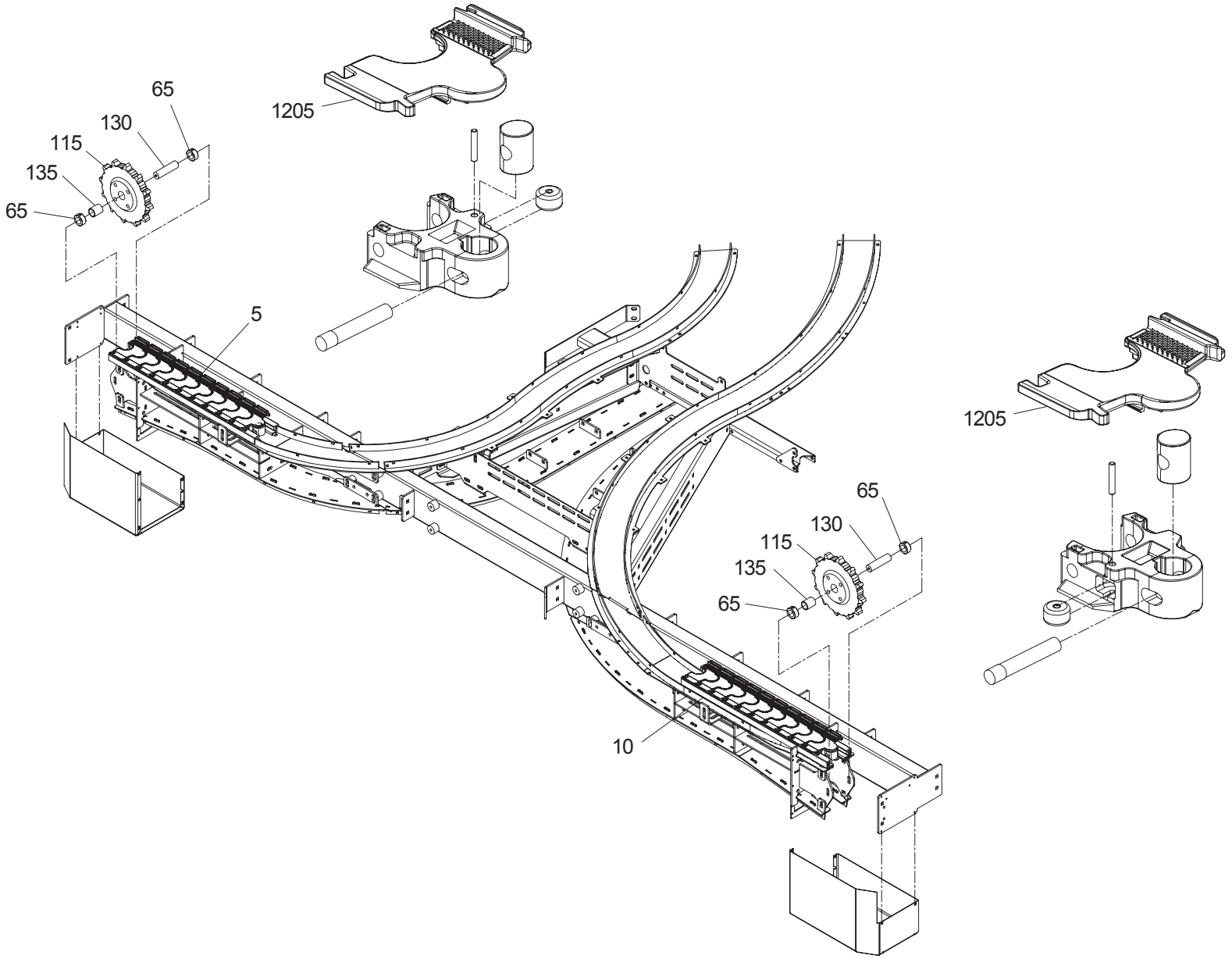

GraphicID: 2502341-4.eps
Parent Drw: 2502341

Pos	Part No	SP	UN	Qty	Description	Page No
005	1497194-0894			1	WHOLE CHAIN,LH,LT,4.5"PLS,ANG,INFEED (46.330m)	
1205	*1497193-0000*			*0894*	*WING CHAIN*	
010	1497195-1182			1	WHOLE CHAIN,LH,RT,4.5"PLS,ANG, OUTFEED (61.570m)	
1205	*1497193-0000*			*1182*	*WING CHAIN*	
005	1497194-0060			1	SPARE CHAIN,LH,LT,4.5"PLS,ANG,INFEED (3.048m)	
1205	*1497193-0000*			*60*	*WING CHAIN*	
010	1497195-0060			1	SPARE CHAIN,LH,RT,4.5"PLS,ANG,OUTFEED (3.048m)	
1205	*1497193-0000*			*60*	*WING CHAIN*	
060	2528344			1	SHAFT	
065	2528345			6	COLLAR, LOCK	
070	2528346			1	PAD, WEAR	
075	2528347			2	BLOCK, PIVOT	
080	2528348			8	COLLAR, CLAMP, 20 MM	
085	2528349			2	AXLE, IDLER	
090	2528350			2	WELD, ROD, SLIDE	
095	2528351			1	TOOL, SPACER, SPROCKET	
100	90458-0677			1	PROXIMITY, OMRON	
105	90459-0036			1	SENSOR CABLE	
110	2664486			1	BRACKET, TAKEUP, SENSOR	
115	2502298			5	SPROCKET, IDLER	
130	2528356			2	SHAFT, IN/OUT	
135	2528357			2	BUSHING, BRONZE	

Pos	Part No	SP	UN	Qty	Description	Page No

SPIDER UNIT

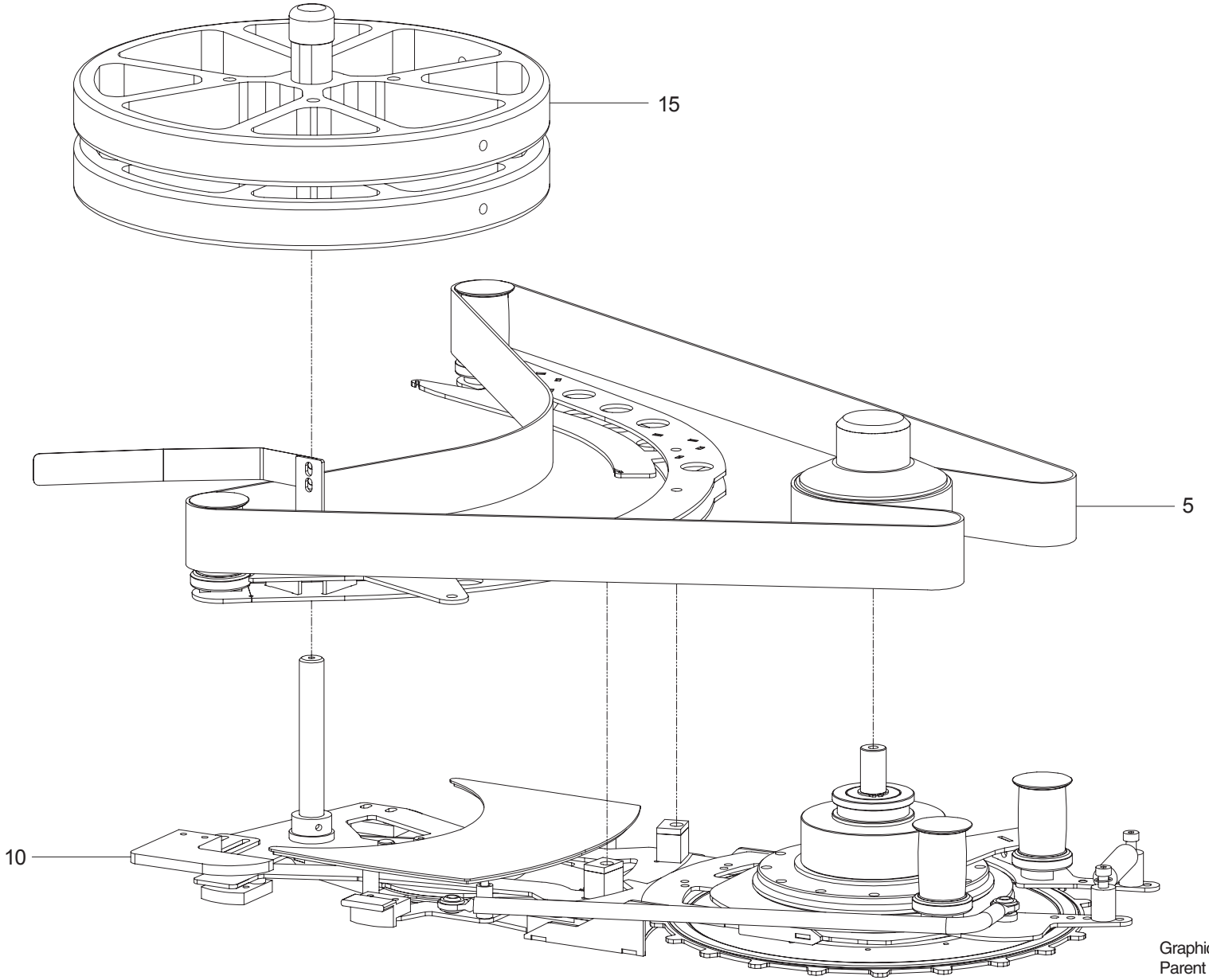

GraphicID: 661610-1.eps
Parent Drw: 661610

Pos	Part No	SP	UN	Qty	Description	Page No
005	2727202-0100			1	BELT SPIDER GUIDES	
010	2727203-0100			1	BELT SPIDER BASE	
015	2502352-0100			1	VOLUME KIT	

Pos	Part No	SP	UN	Qty	Description	Page No

BELT SPIDER GUIDES

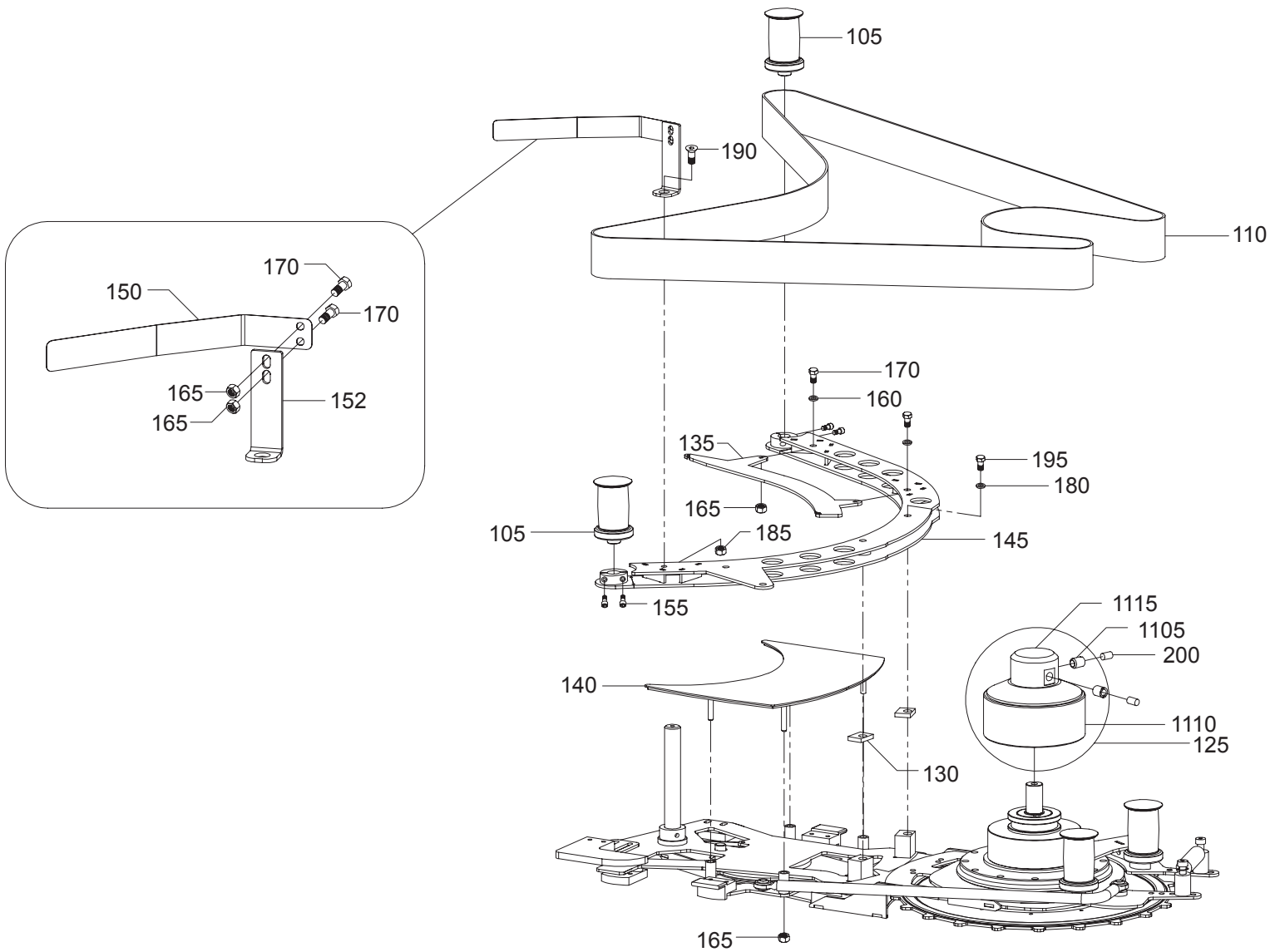

GraphicID: 2727202-1.eps
Parent Drw: 2727202

Pos	Part No	SP	UN	Qty	Description	Page No
105	1497115-0000			2	ROLLER, IDLER	
110	2502367-0000			1	BELT	
125	2502373-0000			1	PULLEY	
1105	*90026-0005*			*2*	*BUSHING*	
1110	*2502371-0000*		*M*	*.64*	*BELT, BROWN, ROUGH 2"*	
1115	*2502372-0000*			*1*	*PULLEY*	
1120	*90153-0048*		*KG*	*1*	*ADHESIVE, DEVCON TYPE 5-MINI-EPOXI 28G*	
130	2727219			2	SPACER	
135	2664423			1	GUIDE, INFEED	
140	2664424			1	ASSY, DEAD PLATE, EMBOSSED	
145	2664425			1	ARM, ROLLER SUPPORT	
150	2727262-0000			1	SPRING, GUIDE	
152	2727263-0000			1	BASE, GUIDE	
155	312115-0327			4	M5 X 12 SOCKET HEAD SCREW	
160	315105-0153			2	M6 FLAT WASHER	
165	312810-0316			8	M6 NYLOCK NUT	
170	312105-0368			4	M6 X 16 HEXHEAD BOLT	
180	315105-0165			2	M8 FLAT WASHER	
185	312810-0318			1	M8 NYLOCK NUT	
190	312155-0449			1	M8 X 6 FLAT HEAD SCREW	
195	312105-0457			2	M8 X 35 HEX HEAD BOLT	
200	312318-0447			2	M8 X 12 SET SCREW	

Pos	Part No	SP	UN	Qty	Description	Page No

BELT SPIDER BASE

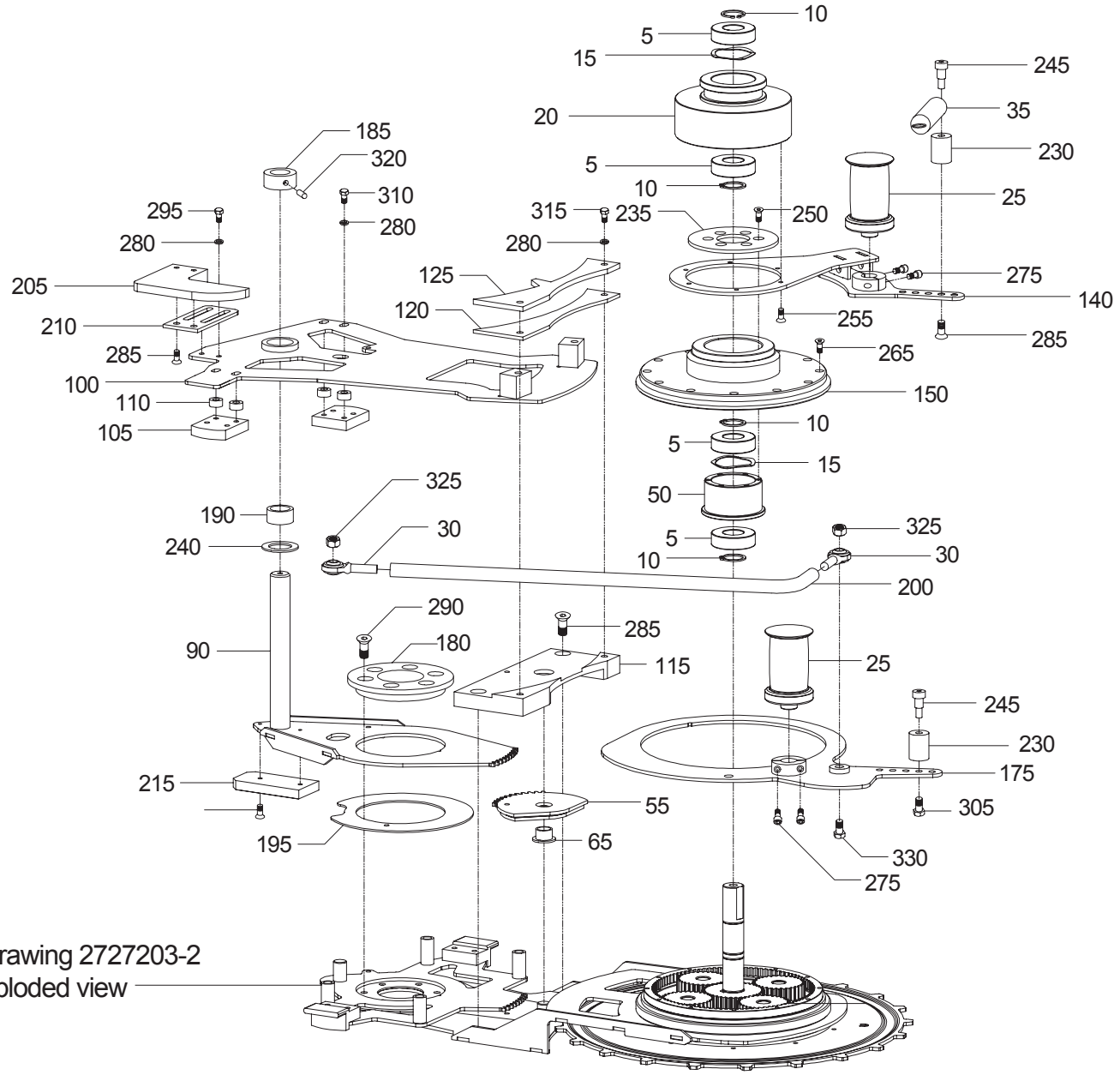

See drawing 2727203-2
for exploded view

Pos	Part No	SP	UN	Qty	Description	Page No
005	321308-0204			6	BEARING	
010	315751-0116			6	RING, RETAINING	
015	2502305			3	BEARING, SPRING	
020	2502306			1	BUSHING	
025	1497115			2	ROLLER, IDLER	
030	90115-0156			2	END, ROD RH	
035	1497118			1	SPRING, TENSION	
040	2727233			4	GEAR	
045	2727234			1	GEAR	
050	2502312			1	BUSHING	
055	2727187			1	GEAR, DIFFERENTIAL	
060	2727188			1	BEARING	
065	2502370			1	BUSHING	
070	1497114			4	SPRING, COMPENSATOR	
075	2727236			1	GEAR, DRIVE	
080	2528366			1	DECK, DEAD PLATE	
085	2528367			2	BLOCK, GUIDE, REAR	
090	2528368			1	DECK, REAR ASSY	
095	2528369			1	DECK, FRONT	
100	2528370			1	"BATTLEH" SUPPORT ASSY	
105	2528371			2	BLOCK, GUIDE, REAR	
110	2664396			4	SPACER, .05OD X .265 X .250	
115	2664397			1	BLOCK, SUPPORT	
120	2664398			1	BEARING	
125	2664399			1	PLATE, HOLD DOWN	
130	2664400			4	SHAFT	
135	2664401			1	GEAR, INTERNAL, 96 TEETH	
140	2664402			1	ROLLER HOLDER	
145	2664403			1	SPACER	
150	2664404			1	CAP	
155	2664405			1	CAP	
160	2664406			1	SHAFT	
165	2664407			1	BUSHING	
170	2727235			1	BASE HOLDER	
175	2664409			1	BASE, ROLLER HOLDER	
180	2664410			1	BEARING, PIVOT CENTER	
185	2664411			1	COLLAR, LOCKING, .75", METRIC	
190	2664412			1	BUSHING, SHAFT, DRIVE	
195	2664413			1	BEARING, DECK, MIDDLE	
200	2664414			1	ROD, LINK, COMPENSATOR	
205	2664415			1	KICKER, SPIDER OUTFEED	
210	2664416			1	PLATE, KICKER	
215	2664417			1	PLATE, SPIDER	

Pos	Part No	SP	UN	Qty	Description	Page No
220	2664418			1	KEY	
225	2664419			4	PIN, ROLL	
230	2727189			2	SPACER, .75,M6-1.0X100	
235	2664421			1	CAP	
240	2664422			1	WASHER, PLATE, TRANSFER	
245	2528358			2	SHSB, SS, M8 X 10	
250	312155-0289			6	M4 X 10 FLAT HEAD SCREW	
255	312155-0291			6	M4 X 12 FLAT HEAD SCREW	
260	312155-0293			2	M4 X 16 FLAT HEAD SCREW	
265	312155-0301			12	M4 X 35 FLAT HEAD SCREW	
270	312155-0327			16	M5 X 12 FLAT HEAD SCREW	
275	312115-0327			4	M5 X 12 SOCKET HEAD SCREW	
280	315105-0153			12	M6 FLAT WASHER	
285	312155-0368			5	M6 X16 FLATHEAD SCREW	
290	312155-0370			6	M6 X 20 FLATHEAD SCREW	
295	312105-0364			2	M6 X 10 HEX HEAD BOLT	
300	312105-0366			4	M6 X 12 HEXHEAD BOLT	
305	312105-0368			1	M6 X 16 HEXHEAD BOLT	
310	312105-0370			4	M6 X 20 HEXHEAD BOLT	
315	312105-0374			2	M6 X 30 HEXHEAD BOLT	
320	312318-0362			1	M6 X 8 SET SCREW	
325	312810-0318			2	M8 NYLOCK NUT	
330	312105-0455			1	M8 X 30 HEX HEAD BOLT	

BELT SPIDER BASE

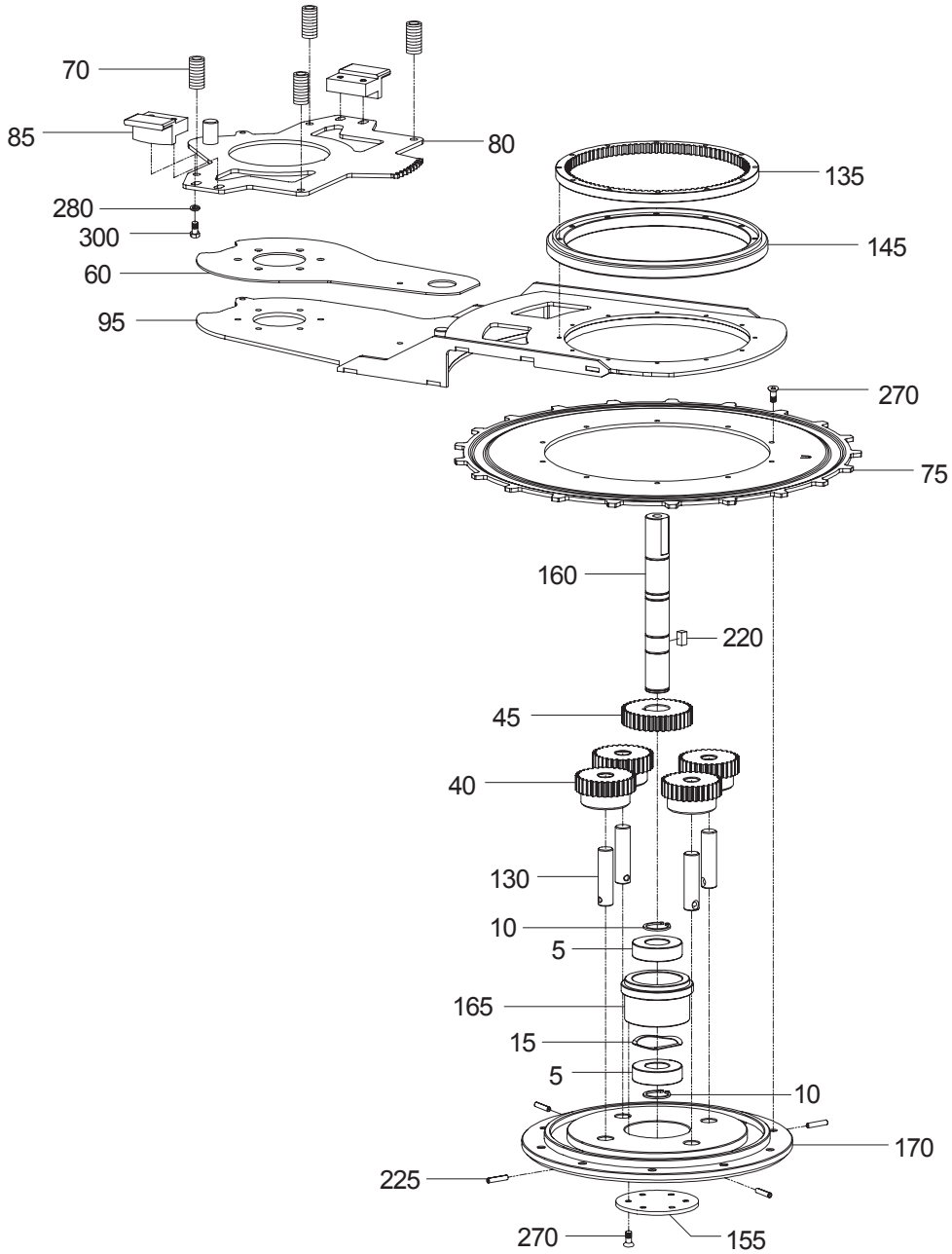

GraphicID: 2727203-2.eps
Parent Drw: 2727203

Pos	Part No	SP	UN	Qty	Description	Page No
005	321308-0204			6	BEARING	
010	315751-0116			6	RING, RETAINING	
015	2502305			3	BEARING, SPRING	
020	2502306			1	BUSHING	
025	1497115			2	ROLLER, IDLER	
030	90115-0156			2	END, ROD RH	
035	1497118			1	SPRING, TENSION	
040	2502311			4	GEAR	
045	2502307			1	GEAR	
050	2502312			1	BUSHING	
055	2727187			1	GEAR, DIFFERENTIAL	
060	2727188			1	BEARING	
065	2502370			1	BUSHING	
070	1497114			4	SPRING, COMPENSATOR	
075	2727236			1	GEAR, DRIVE	
080	2528366			1	DECK, DEAD PLATE	
085	2528367			2	BLOCK, GUIDE, REAR	
090	2528368			1	DECK, REAR ASSY	
095	2528369			1	DECK, FRONT	
100	2528370			1	"BATTLEH" SUPPORT ASSY	
105	2528371			2	BLOCK, GUIDE, REAR	
110	2664396			4	SPACER, .05OD X .265 X .250	
115	2664397			1	BLOCK, SUPPORT	
120	2664398			1	BEARING	
125	2664399			1	PLATE, HOLD DOWN	
130	2664400			4	SHAFT	
135	2664401			1	GEAR, INTERNAL, 96 TEETH	
140	2664402			1	ROLLER HOLDER	
145	2664403			1	SPACER	
150	2664404			1	CAP	
155	2664405			1	CAP	
160	2664406			1	SHAFT	
165	2664407			1	BUSHING	
170	2664408			1	BASE HOLDER	
175	2664409			1	BASE, ROLLER HOLDER	
180	2664410			1	BEARING, PIVOT CENTER	
185	2664411			1	COLLAR, LOCKING, .75", METRIC	
190	2664412			1	BUSHING, SHAFT, DRIVE	
195	2664413			1	BEARING, DECK, MIDDLE	
200	2664414			1	ROD, LINK, COMPENSATOR	
205	2664415			1	KICKER, SPIDER OUTFEED	
210	2664416			1	PLATE, KICKER	
215	2664417			1	PLATE, SPIDER	
220	2664418			1	KEY	
225	2664419			4	PIN, ROLL	
230	2727189			2	SPACER, .75,M6-1.0X100	
235	2664421			1	CAP	
240	2664422			1	WASHER, PLATE, TRANSFER	
245	2528358			2	SHSB, SS, M8 X 10	
250	312155-0289			6	M4 X 10 FLAT HEAD SCREW	
255	312155-0291			6	M4 X 12 FLAT HEAD SCREW	
260	312155-0293			2	M4 X 16 FLAT HEAD SCREW	
265	312155-0301			12	M4 X 35 FLAT HEAD SCREW	
270	312155-0327			16	M5 X 12 FLAT HEAD SCREW	
275	312115-0327			4	M5 X 12 SOCKET HEAD SCREW	
280	315105-0153			12	M6 FLAT WASHER	
285	312155-0368			5	M6 X16 FLATHEAD SCREW	
290	312155-0370			6	M6 X 20 FLATHEAD SCREW	
295	312105-0364			2	M6 X 10 HEX HEAD BOLT	
300	312105-0366			4	M6 X 12 HEXHEAD BOLT	
305	312105-0368			1	M6 X 16 HEXHEAD BOLT	
310	312105-0370			4	M6 X 20 HEXHEAD BOLT	
315	312105-0374			2	M6 X 30 HEXHEAD BOLT	
320	312318-0362			1	M6 X 8 SET SCREW	
325	312810-0318			2	M8 NYLOCK NUT	
330	312105-0455			1	M8 X 30 HEX HEAD BOLT	

VOLUME KIT

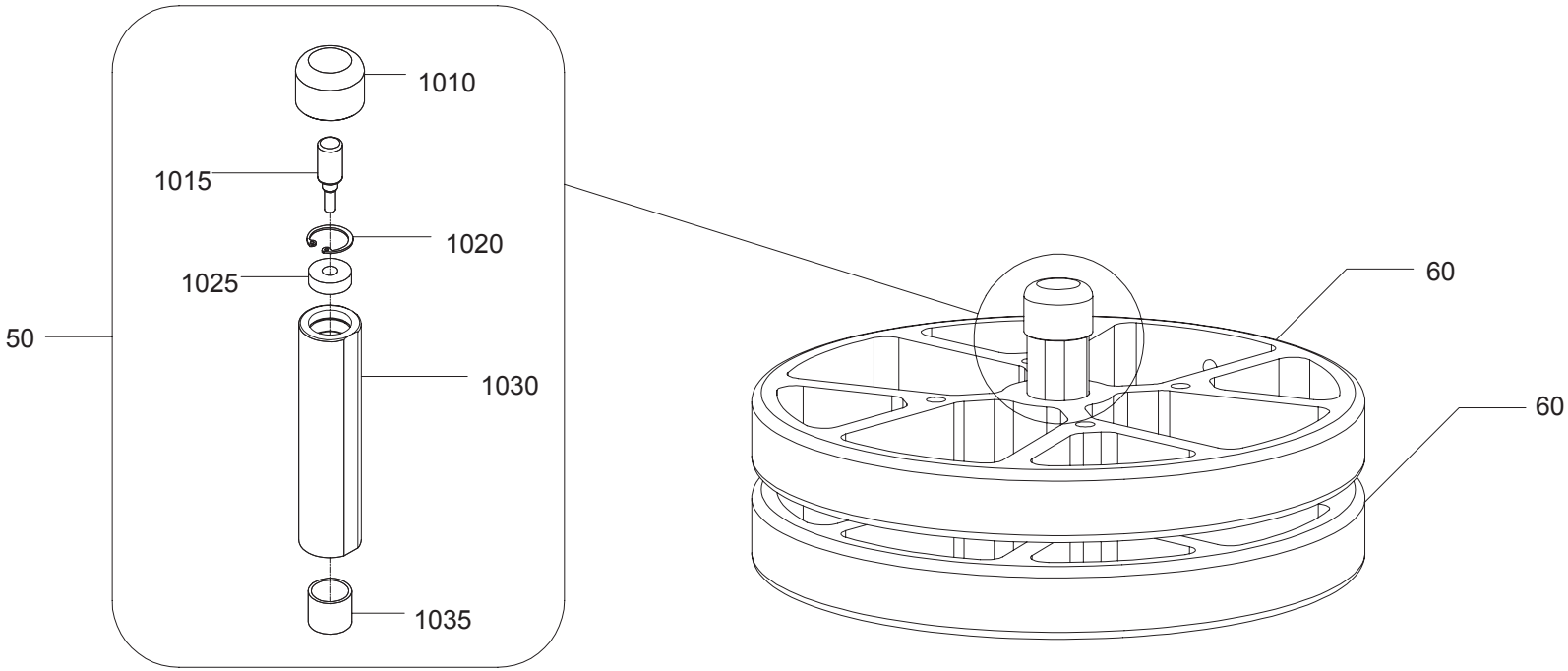

GraphicID: 2502352-1.eps
Parent Drw: 2502352

Pos	Part No	SP	UN	Qty	Description	Page No
2502352-0101 VOLUME 100B,125S,160S,180B,200B,200M,200S,250B,250S,250SQ,284B,300S,330S ML						
060	2502364-0000			2	WHEEL	
2502352-0102 VOLUME 375S,355B,500S,750S ML						
060	2502365-0000			2	WHEEL	
2502352-0103 VOLUME 750B,1000B,500B,1000S,1000SQ,1500B,1500S ML						
060	2502366-0000			2	WHEEL	
2502352-0104 VOLUME 1890S, 2000S						
060	2727231-0000			2	WHEEL	
COMMON PARTS						
050	2502300-0000			1	SLEEVE	
1010	*2727221*			*1*	*CAP*	
1015	*2727222*			*1*	*KNOB*	
1020	*2664459*			*1*	*RING, SNAP*	
1025	*2664449*			*1*	*BEARING*	
1030	*2727223*			*1*	*SHAFT*	
1035	*2727224*			*1*	*BUSHING*	

* Some volume kits are not valid on all machines.

Pos	Part No	SP	UN	Qty	Description	Page No

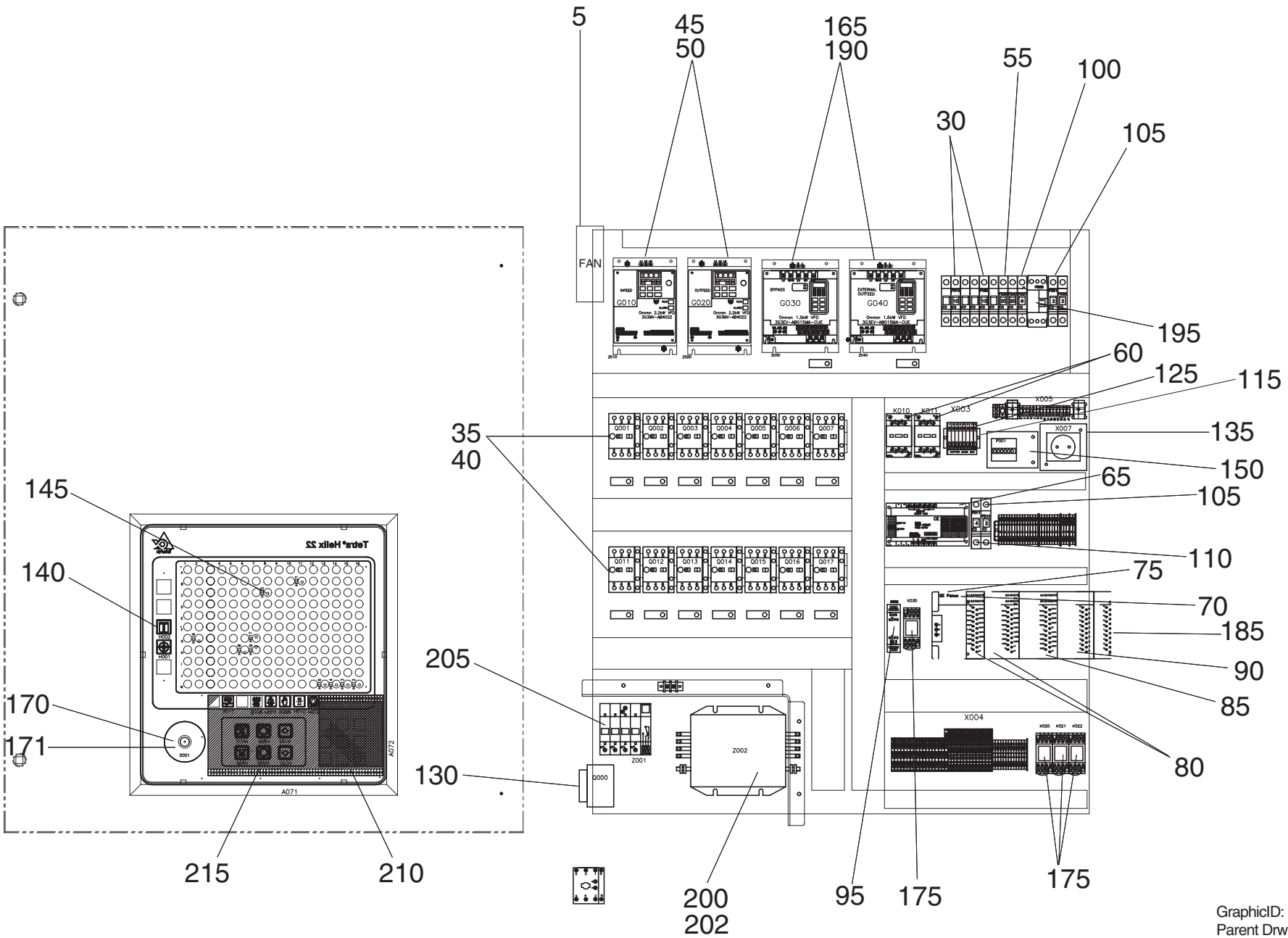

GraphicID: 2502358-2.eps
Parent Drw: 2502358

Pos	Part No	SP	UN	Qty	Description	Page No
005	90264-0032			1	FAN, EXHAUS,120MM, 220VAC	
030	90007-0147			2	CIRCUIT BREAKER, 10A, 3P	
035	90095-0073			14	OVERLOAD, RELAY, 1-1.6A	
040	90259-0317			14	CONTACT, AUX., FOR PKZML	
045	90458-1125			2	FREQUENCY, DRIVE, 2.2KW, OMRON	
050	90458-1128			2	FILTER, VFD, 3PH OMRON	
055	90007-0132			1	CIRCUIT BREAKERS	
060	90075-0127			1	CONTACTOR, 24VDC, DILCOM-G	
065	90246-0028			1	POWER SUPPLY, OMRON, 24VDC, 4.2A	
070	90031-0070			1	PLC, GE, 5 SLOT, CPU 313	
075	90031-0068			1	PLC, GE, 24VDC POWER SUPPLY	
080	90031-0058			2	PLC, GE, 16PT, DC. INPUT, FAST	
085	90031-0059			1	PLC, GE, 16PT, 1A, OUTPUT	
090	90031-0062			1	PLC, GE, 8, OUT, ANALOG	
095	90457-0092			1	JOKAB SAFETY RELAY, RT9	
100	90007-0128			1	CIRCUIT BREAKER, 6A, ABB	
105	90007-0127			3	CIRCUIT BREAKER, 2A, ABB	
110	90007-0156			1	CIRCUIT BREAKER, 4A, ABB	
115	353031-0203			1	BRACKET, END	
125	353022-0006			8	TERMNIAL, NEUTRAL, WDU, WNT2.5, BLU	
130	90111-0132			1	DISCONNECT, ROTARY, TP, 25A	
135	90001-0031			1	OUTLET, 220V, EUROPE, SINGLE	
140	90036-0057			4	LAMP (BULB) 24VDC	
145	90038-0045			10	LED, DIODE, YELLOW	
150	90178-0007			1	METER, HOUR, 24-48VDC	
165	90430-0331			2	FILTER, VFD OMRON, 10A	
170*	90458-1651			1	SWITCH, E-STOP	
171**	90459-1917			1	BLOCK, CONTACT	
175	90119-0086			4	RELAY, OMRON, 2VDC, MY4	
185	90031-0031			1	PLC, GE, GENIUS, ENHANCHED	
190	90458-0063			2	VFD, OMRON	
195	90111-0172			1	BREAKER ELB, CIRCUIT	
200	90457-1031			1	FILTER, POWER LINE	
202	90459-0330			1	FILTER, POWER LINE 50 AMP OPTIONAL	
205	90082-0013			1	PROTECTOR, OVER VOLTAGE	
210	68699-0101			1	I/C BOARD, MULTIPLEX	
215	583399-0104			1	I/C BOARD, PUSH BUTTON	

Pos	Part No	SP	UN	Qty	Description	Page No

* Note: When ordering part number 90458-1651, also order part number 90459-1917.

** Note: When ordering part number 90459-1917, also order part number 90458-1651.

Tetra Pak