SPC
Spare Parts Catalogue

PT21 010V

1282322-010V

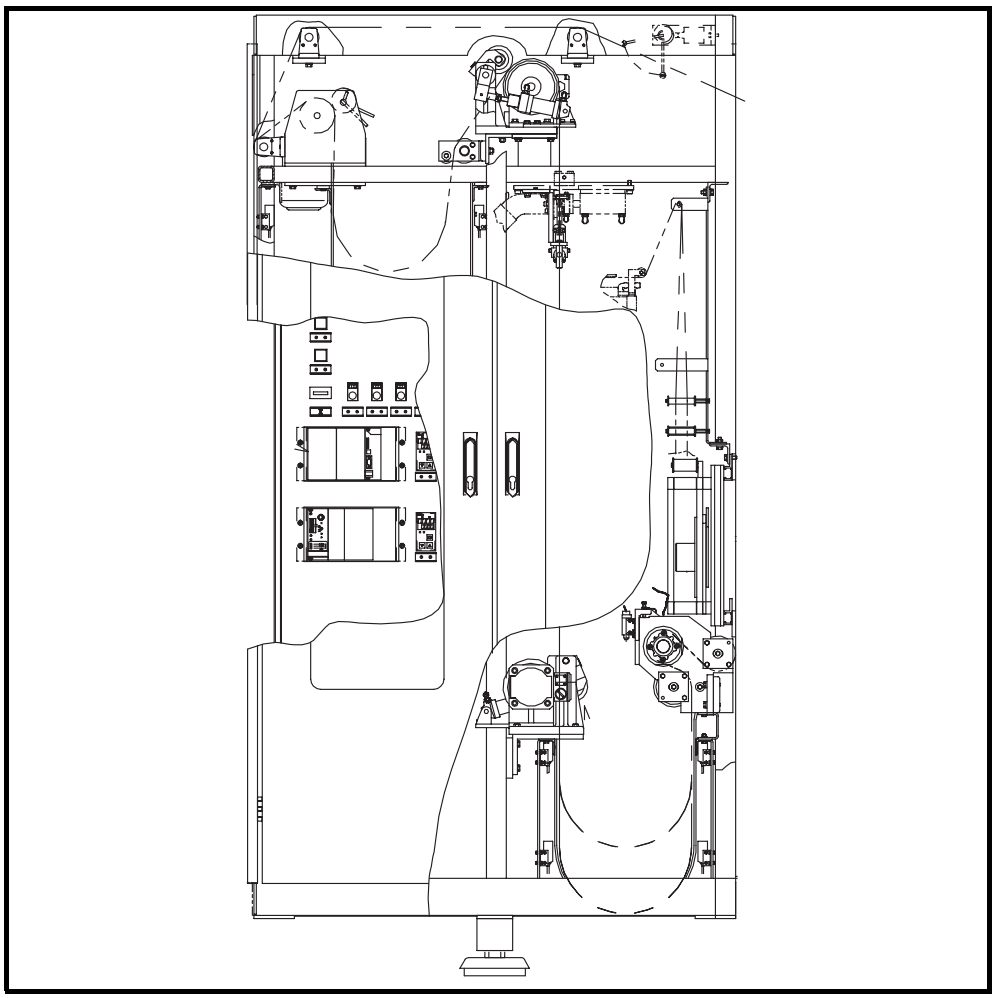

Tetra Pak

Doc No: SPC-82308-0103

Main Groups of the Machine

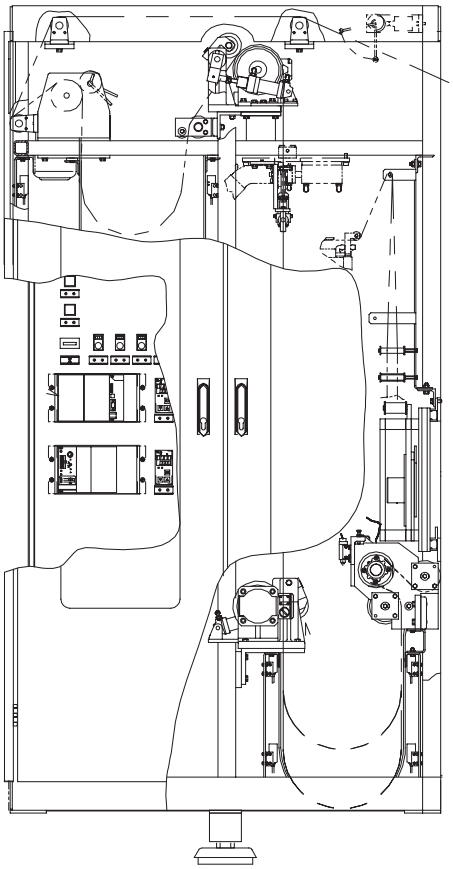

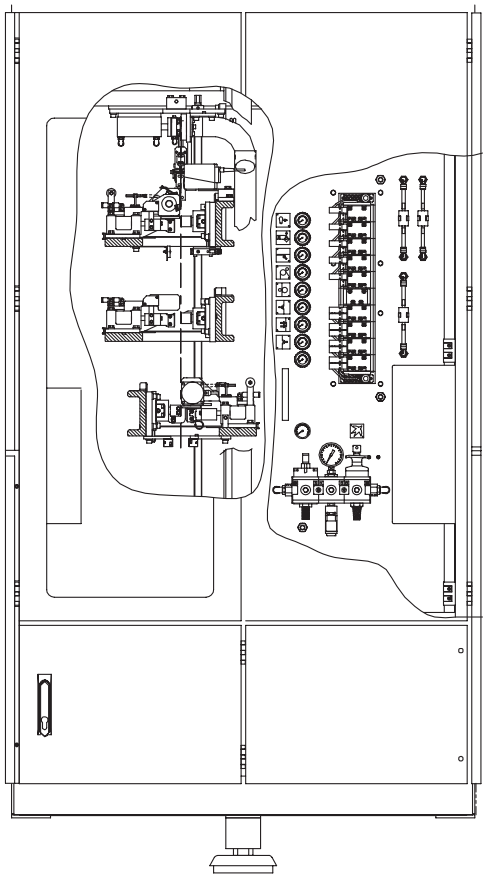

PT21 010V

For the correct machine data, check your machine specification, supplied with the machine!

This document is valid for:

Series No/ Machine No Sign.

SPC
Spare Parts Catalogue

Opening Device PullTab PT21 1282322-010V

for
TBA/21
648570-030V

Doc No: SPC-82308-0103

Issue 2000 - 03

Tetra Pak

Tetra Brik Packaging Systems

Table of Content:

Introduction 5

PullTab unit PT21
C-1282322-010V 9

Part number index 210

General information

Manufacturer

This machine is produced by:
Tetra Brik Packaging Systems
Ruben Rausings gata
221 86 Lund /Sweden

Document producer

This document has been produced by:
Tetra Brik Packaging Systems
Technical Publications
Ruben Rausings gata
221 86 Lund /Sweden

Number of pages

This document contains totally **210 pages,** including the first **8** introduction pages.

Copyright © 2000 Tetra Brik Packaging Systems

All rights reserved. No parts of this document may be reproduced or copied in any forms or by any means, without written permission from Tetra Brik Packaging Systems.

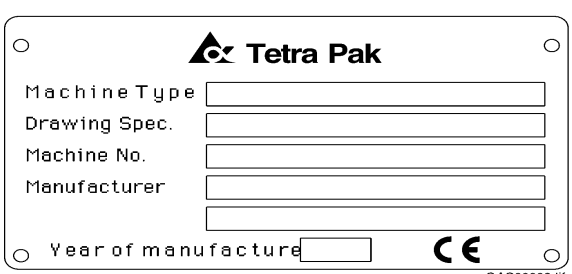

Figure 1

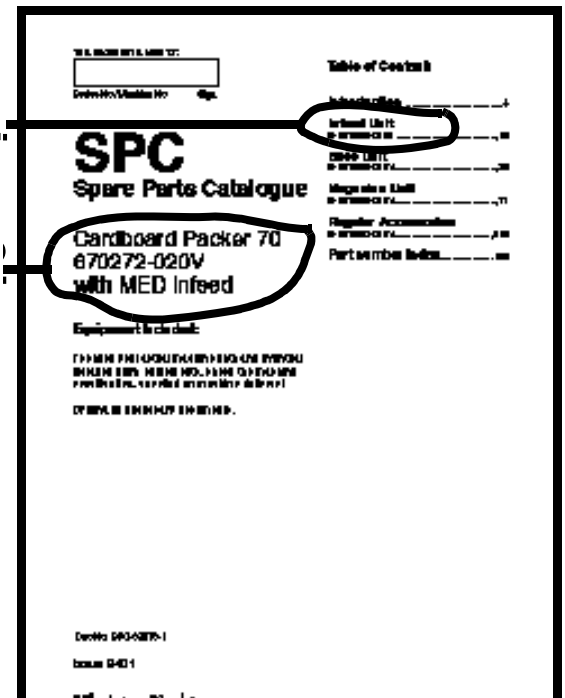

Figure 2

Figure 3



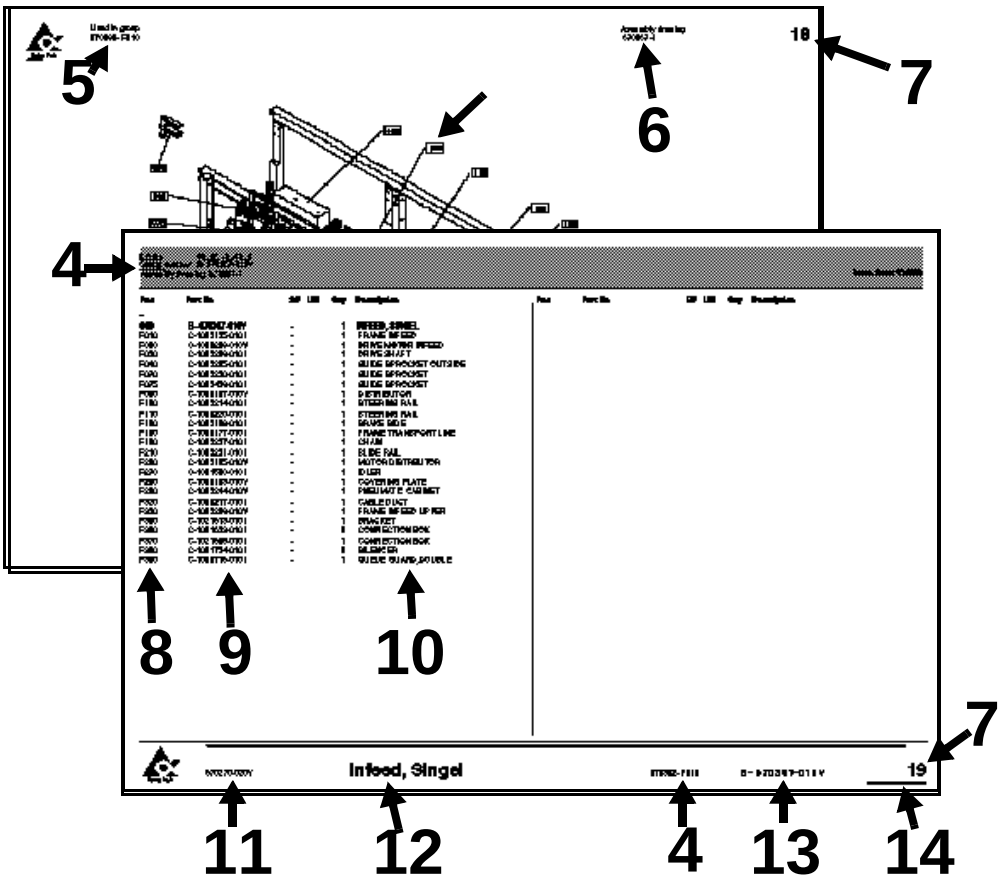

Figure 4

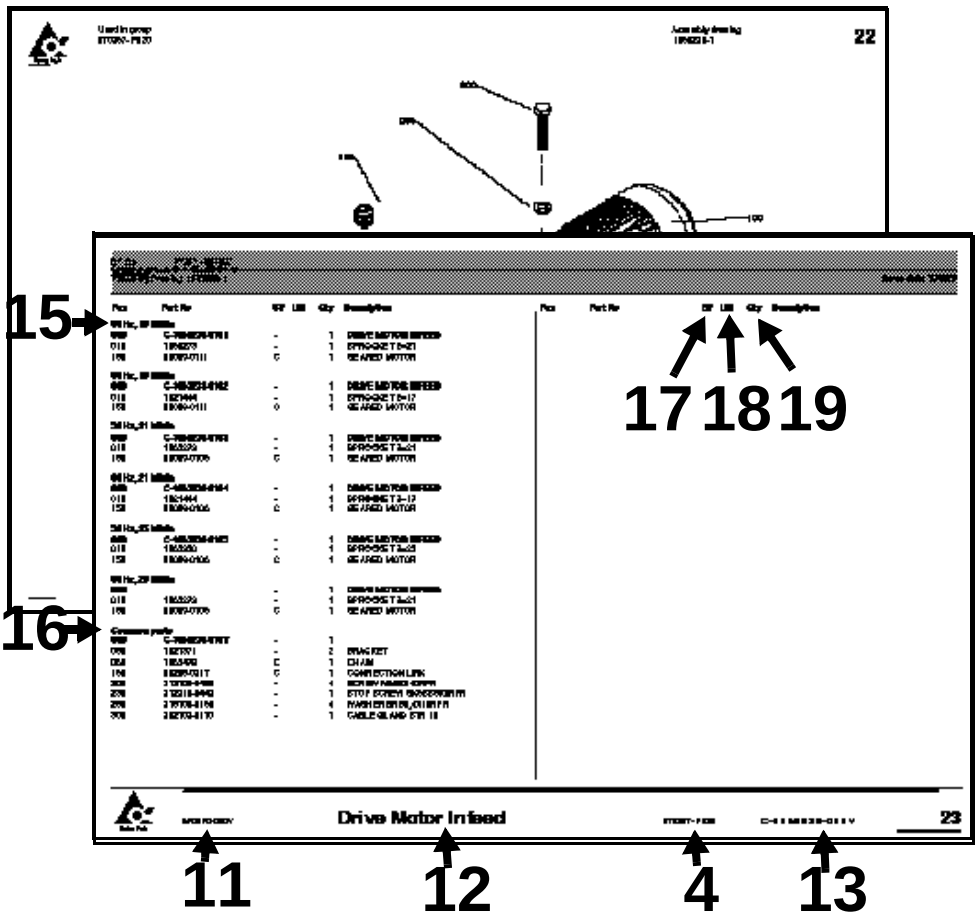

Figure 5

General information

Service

When ordering spare parts for your machine, contact the nearest Tetra Pak service station.

Machine identification

This machine plate is an example of the type of machine plate, attached to the machine frame. The plate carries data needed when contacting Tetra Pak concerning this particular machine.
The location of the different machine plates is shown on the page “Location of machine number plates”, **see page 2**

Purpose of the Spare Parts Catalogue.

The purpose of the Spare Parts Catalogue (SPC) is to provide the technicians and contact personnel with information on how to find and order spare parts for maintenance and service of the machine.
For instructions of how to replace parts and adjust machine setup, see the Maintenance Manual (MM).

Delivered documentation

The technical documentation delivered with this machine is stated in the Machine Specification.
Note! If any of these documents is missing, it must be reported in the document **Start Up Machine Quality Report.** For more information, see chapter 8 Preparation for Commissioning in the Installation Manual.
It is important that you keep these documents for the life of the equipment, and pass the documents on to any subsequent holder or user of the equipment.

Design modification

The content of this document is in accordance with the design and construction of the machine at the time it was delivered from the Tetra Pak machine production facility.

Copyright © 2000 Tetra Brik Packaging Systems

All rights reserved. No parts of this document may be reproduced or copied in any forms or by any means, without written permission from Tetra Brik Packaging Systems.

Further copies

Additional copies can be ordered from the nearest Tetra Pak service station. When ordering technical publications, always quote the document number printed on the front cover of the document concerned.

Tetra Pak Part numbering system

The third and forth digits in the subnumber, specify one unique group which can be ordered. If the forth digit is replaced by a “V”, the number combination only points to a bill-of-material document.
The first and second digits in the sub-number, specify the development step (model) of the machine or group. **(see fig. 3)**
Main number of machine /group /article, depending on level.
Prefix, giving information about level, eg.
A = Machine
B = Main section (*****)
C = Groups and subgroups
***)** Customized distribution machines are registered as B-level as well.

How to find the correct Spare Part Number

A. Check that the data on your machine sign, and /or machine specification, corresponds with the catalogue. **(see fig.1)**

1) Main groups of the machine

B. The second catalogue sheet contains a table of content for the main groups, included in the catalogue. The information regarding machine and main group status MUST correspond with your machine specification.
Locate and choose the main groups page number (1), in which you want to search for spare parts.
(see fig. 2)

2) Main group
3) Machine type

C. Search in the main group illustration, the item number, which may hold your wanted spare part. Go to the text page below and find the page number for the actual group. **(see fig. 4)**

4) Internal information, such as latest Engineering Change, bill-of-material included in the catalogue page.
5) Used-In reference to next higher level in the machine structure
6) Assembly drawing number
7) Continuous page numbering through the document
8) Pos number corresponding to illustration
9) Group or article number.
10) Group or article description. The letter “B” in front of some article numbers indicates that this article contains other parts, shown in an additional page at the end the section. Letter “A” indicatates a subgroup number with an own page directly after the actual page.
11) Machine type including development staus
12) Group description
13) Group number (bill-of-material) including development status
14) Document number

D. Continue to the found page number, and search in the illustration for your spare part. Go to the text row for the found item number, and read the part number. Take eventual variant headings in consideration; if you are unsure, read your machine specification. **(see fig. 5)**

15) Variant heading, eg volume, left /right etc.
16) Heading for common parts
17) SP = Code for articles, which are included into various spare part kits.

A = Stop function, no rep/available/bypassed
B = Stop function, rep/available/bypassed
C = Don’t stop function, can bypassed
D = Seldom break, long time production
E = 100 operating hours
F = 250 operating hours
G = 500 operating hours
H = 750 operating hours
I = 1000 operating hours
J = 2000 operating hours
K = 3000 operating hours
L = 4000 operating hours
M = 5000 operating hours
N = 6000 operating hour
O = 7000 operating hour
P = 8000 operating hour
Q = 9000 operating hour
R = 10000 operating hour
S = 11000 operating hours
T = 12000 operating hours
U = 13000 operating hours
V = 14000 operating hours
W = 15000 operating hour
X = 20000 operating hour
Y = 25000 operating hour
Z = 30000 operating hour

18) UN = Short code for measure units, eg mm, kg etc.
19) Qty = Number of items needed in the complete assembly.

SPC

Spare Parts Catalogue

PULLTAB UNIT PT21

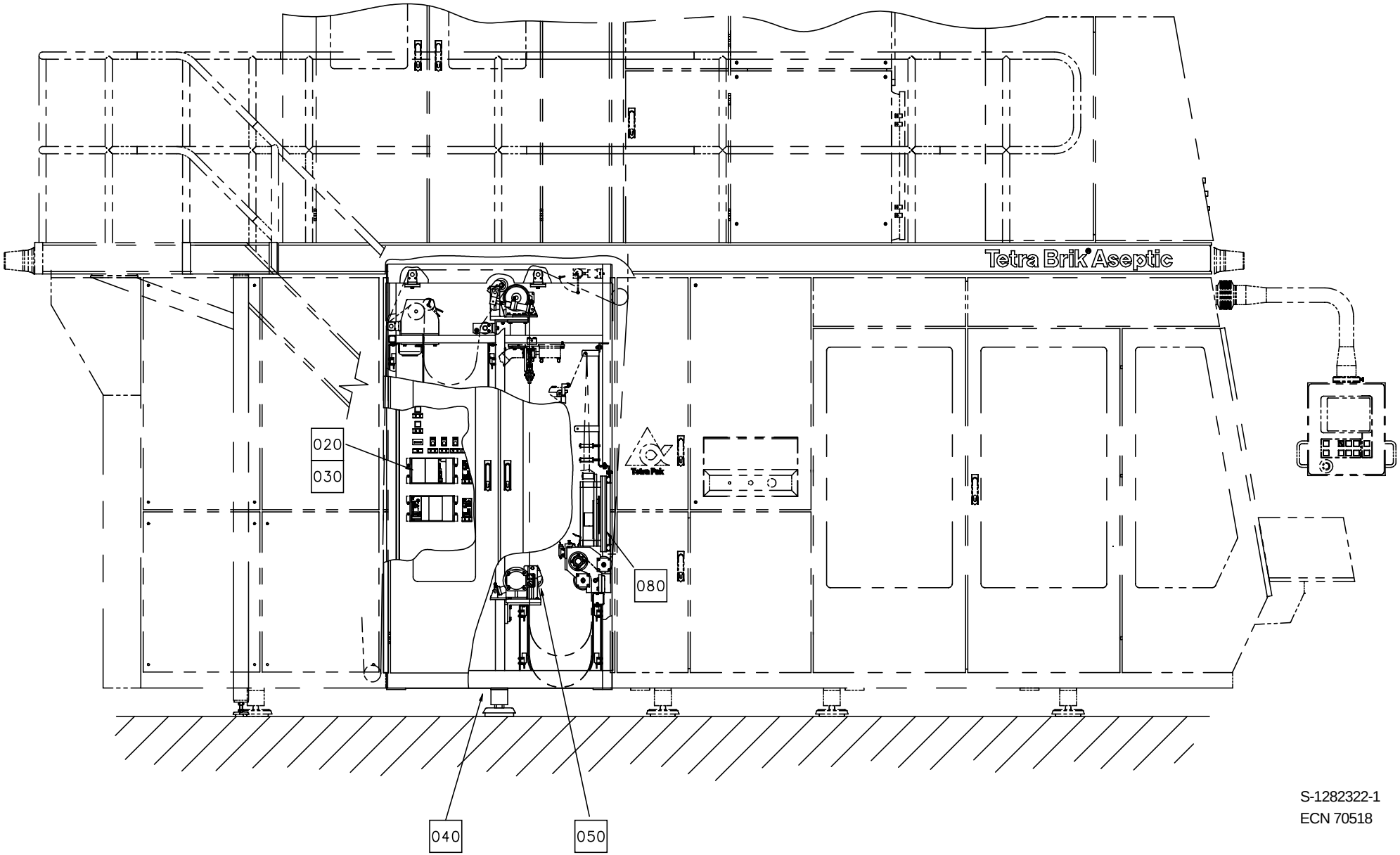

S-1282322-1
ECN 70518

Pos	Part No	SP	UN	Qty	Description	Page No
-						
000	**C-1282322-0101**	**-**		**1**	**PULLTAB UNIT PT21**	
150	1038865	-		4	SPACER DISC	
200	312105-0640	-		4	SCREW 014 M16X100A280	
F005	C- 514938-010V	-		1	TAB FOLDING	17
	C- 907946-010V	-		-	. TAB FOLDING PAPER GUIDE	19
F010	C- 577135-010V	-		1	PIPE-LINE	23
F020	C-1255501-010V	-		1	ELECTRICAL CABINET	25
	C- 67600-0501	-		-	. TPIH 2000 GENERATOR	45
	C-1255953-010V	-		-	. ASSEMBLY PLATE	29
	C-1255954-010V	-		-	. SWING FRAME	31
F030	C-1260684-010V	-		1	CABLE HARNESS	47
	C-1260811-010V	-		-	. CONNECTION BOX	51
	C-1260812-010V	-		-	. CONNECTION BOX	53
	C-1260813-010V	-		-	. CONNECTION BOX	55
F040	C-1095930-010V	-		1	FRAME	57
	C-1185034-010V	-		-	. FRAME ASSEMBLY	59
	C-1035076-010V	-		-	. . LEG	63
	C-1185080-010V	-		-	. PLATFORM	67
F045	C-1095928-010V	-		1	COOLER	69
	C-1285054-010V	-		-	. CONNECTION BOX	71
F050	C-1282323-010V	-		1	PAPER WEB PATH	73
	C- 514993-020V	-		-	. SENSOR	75
	C-1095935-010V	-		-	. DRIVE MOTOR	77
	C-1095942-010V	-		-	. ROLLER ASSEMBLY	79
	C-1095937-010V	-		-	. . GUIDE ROLLER WITH FLA	81
	C-1095938-010V	-		-	. . GUIDE ROLLER	83
	C-1095940-010V	-		-	. . GUIDE ROLLER	85
	C-1095941-010V	-		-	. . TENSION ROLLER	87
	C-1260411-010V	-		-	. . PATCH/TAB SPLICE DETE	89
	C-1095952-010V	-		-	. BENDING ROLLER	91
	C-1095953-010V	-		-	. INFEED UNIT	93
	C-1095952-010V	-		-	. . BENDING ROLLER	91
	C-1095970-010V	-		-	. PAPER BRAKE	95
	C-1095969-010V	-		-	. . BENDING ROLLER FLANGE	97
	C-1334322-010V	-		-	. . .BENDING ROLLER	99
	C-1095952-010V	-		-	. . . .BENDING ROLLER	91
	C-1095979-010V	-		-	. PHOTOCELL UNIT	101
	C-1095980-010V	-		-	. PHOTOCELL UNIT	103
	C-1255601-010V	-		-	. EDGE GUIDE	105
F060	C-1095932-020V	-		1	APPLICATORS	107
	C-1095955-010V	-		-	. WASTE BOX	109
	C-1095992-010V	-		-	. PUNCH BRACKET	111
	C-1095991-010V	-		-	. . PUNCH UNIT	113
	C-1185078-010V	-		-	. LIFTING DEVICE	115
	C-1260419-010V	-		-	. APPLICATOR PATCH	117
	C-1185031-010V	-		-	. . BAR CODE READER	119
	C-1260390-020V	-		-	. . MISSING PATCH DETECTO	121
	C-1260401-010V	-		-	. . SETTING TOOL	123
	C-1260414-010V	-		-	. . PATCH FEEDER	125
	C-1260417-010V	-		-	. . PATCH RESEAL C'JAW UN	129
	C-1260426-010V	-		-	. . PATCH RESEAL BRACKET	131
	C-1260420-010V	-		-	. APPLICATOR RESEAL	133
	C-1260401-010V	-		-	. . SETTING TOOL	123
	C-1260417-010V	-		-	. . PATCH RESEAL C'JAW UN	129
	C-1260418-010V	-		-	. . HEATING JAW-RESEAL	135
	C-1260426-010V	-		-	. . PATCH RESEAL BRACKET	131
	C-1260421-010V	-		-	. APPLICATOR TAB	137
	C-1185029-010V	-		-	. . MISSING TAB DETECTOR	139
	C-1260401-010V	-		-	. . SETTING TOOL	123
	C-1260415-010V	-		-	. . TAB FEEDER	143
	C-1260416-020V	-		-	. . TAB C'JAW UNIT	145
	C-1260427-010V	-		-	. . TAB BRACKET	147
	C-1296882-010V	-		-	. OPENING SPECIFICATION	149
F070	C-1095951-020V	-		1	DOOR	151
	C-1095944-010V	-		-	. DOOR EL-CABINET	153
	C-1095945-020V	-		-	. DOOR	155
	C-1095946-020V	-		-	. DOOR FOR PATCH	157
	C-1095947-020V	-		-	. DOOR FOR PULLTAB	159
	C-1095948-010V	-		-	. DOOR FOR WASTE BOX	161
	C-1095949-010V	-		-	. DOOR FOR TPIH	163
	C-1185000-010V	-		-	. DOOR,INNER	165
F080	C-1185008-010V	-		1	MAGAZINES	167
	C-1095893-010V	-		-	. MAGAZINE PULLTAB	169
	C-1095895-010V	-		-	. . SPLICING DEVICE	173
	C-1095923-010V	-		-	. . GUIDE PULLTAB	175
	C-1095894-010V	-		-	. MAGAZINE PATCH	177
	C-1095895-010V	-		-	. . SPLICING DEVICE	173
	C-1095924-010V	-		-	. . GUIDE PATCH	181
	C-1334066-010V	-		-	. TAB TURNING DEVICE	183
	C-1334065-010V	-		-	. PATCH TURNING DEVICE	185
F090	C-1185049-010V	-		1	VALVE PANEL	187
	C-1185047-010V	-		-	. AIR INLET GROUP	189
	C-1185048-010V	-		-	. VALVE GROUP	191

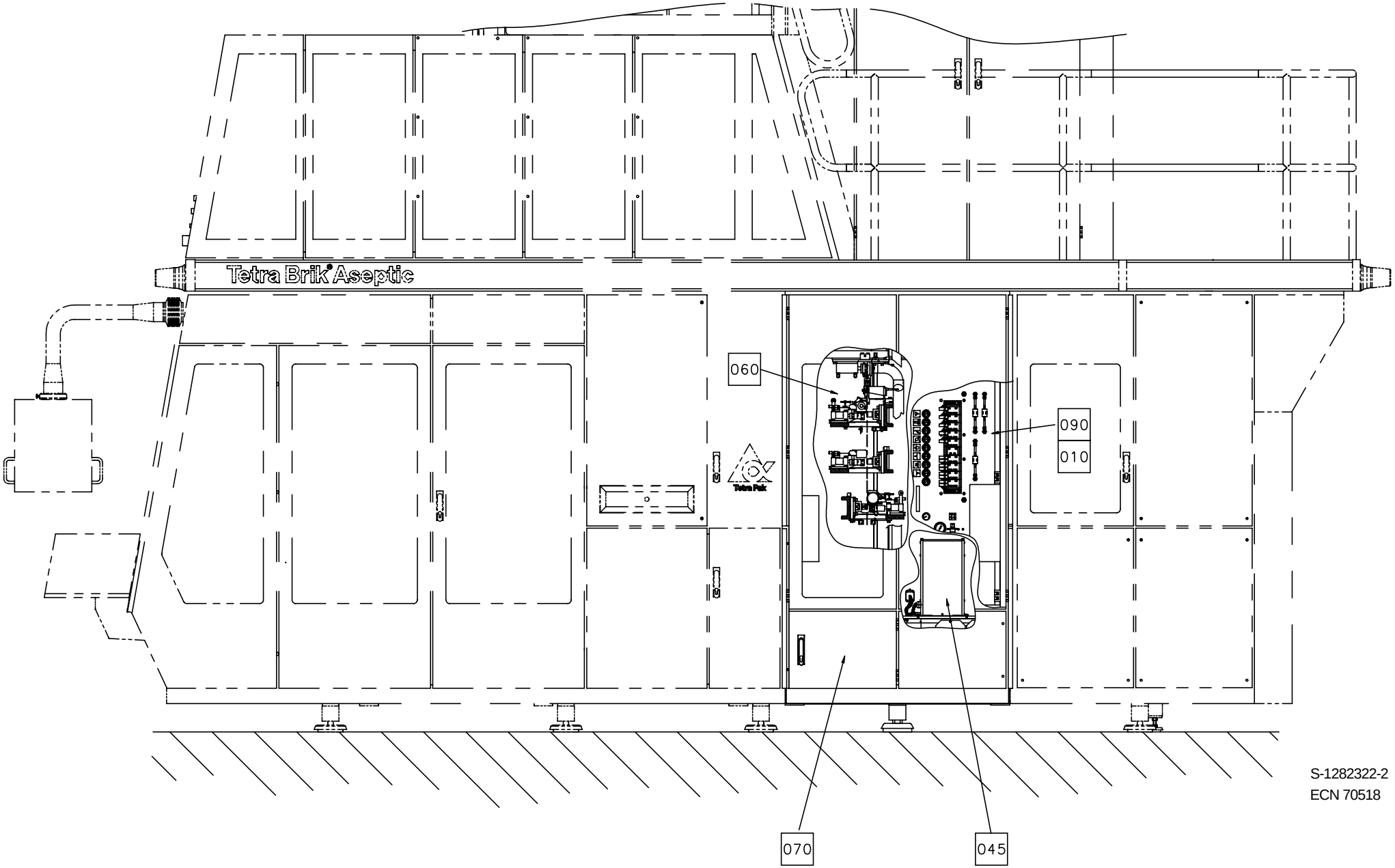
Tetra Brik Aseptic
060
090
010
070
045
S-1282322-2
ECN 70518

Pos	Part No	SP	UN	Qty	Description	Page No
-						
000	**C-1282322-0101**	**-**		**1**	**PULLTAB UNIT PT21**	
150	1038865	-		4	SPACER DISC	
200	312105-0640	-		4	SCREW 014 M16X100A280	
F005	C- 514938-010V	-		1	TAB FOLDING	17
	C- 907946-010V	-		-	. TAB FOLDING PAPER GUIDE	19
F010	C- 577135-010V	-		1	PIPE-LINE	23
F020	C-1255501-010V	-		1	ELECTRICAL CABINET	25
	C- 67600-0501	-		-	. TPIH 2000 GENERATOR	45
	C-1255953-010V	-		-	. ASSEMBLY PLATE	29
	C-1255954-010V	-		-	. SWING FRAME	31
F030	C-1260684-010V	-		1	CABLE HARNESS	47
	C-1260811-010V	-		-	. CONNECTION BOX	51
	C-1260812-010V	-		-	. CONNECTION BOX	53
	C-1260813-010V	-		-	. CONNECTION BOX	55
F040	C-1095930-010V	-		1	FRAME	57
	C-1185034-010V	-		-	. FRAME ASSEMBLY	59
	C-1035076-010V	-		-	. . LEG	63
	C-1185080-010V	-		-	. PLATFORM	67
F045	C-1095928-010V	-		1	COOLER	69
	C-1285054-010V	-		-	. CONNECTION BOX	71
F050	C-1282323-010V	-		1	PAPER WEB PATH	73
	C- 514993-020V	-		-	. SENSOR	75
	C-1095935-010V	-		-	. DRIVE MOTOR	77
	C-1095942-010V	-		-	. ROLLER ASSEMBLY	79
	C-1095937-010V	-		-	. . GUIDE ROLLER WITH FLA	81
	C-1095938-010V	-		-	. . GUIDE ROLLER	83
	C-1095940-010V	-		-	. . GUIDE ROLLER	85
	C-1095941-010V	-		-	. . TENSION ROLLER	87
	C-1260411-010V	-		-	. . PATCH/TAB SPLICE DETE	89
	C-1095952-010V	-		-	. BENDING ROLLER	91
	C-1095953-010V	-		-	. INFEED UNIT	93
	C-1095952-010V	-		-	. . BENDING ROLLER	91
	C-1095970-010V	-		-	. PAPER BRAKE	95
	C-1095969-010V	-		-	. . BENDING ROLLER FLANGE	97
	C-1334322-010V	-		-	. . .BENDING ROLLER	99
	C-1095952-010V	-		-	. . . .BENDING ROLLER	91
	C-1095979-010V	-		-	. PHOTOCELL UNIT	101
	C-1095980-010V	-		-	. PHOTOCELL UNIT	103
	C-1255601-010V	-		-	. EDGE GUIDE	105
F060	C-1095932-020V	-		1	APPLICATORS	107
	C-1095955-010V	-		-	. WASTE BOX	109
	C-1095992-010V	-		-	. PUNCH BRACKET	111
	C-1095991-010V	-		-	. . PUNCH UNIT	113
	C-1185078-010V	-		-	. LIFTING DEVICE	115
	C-1260419-010V	-		-	. APPLICATOR PATCH	117
	C-1185031-010V	-		-	. . BAR CODE READER	119
	C-1260390-020V	-		-	. . MISSING PATCH DETECTO	121
	C-1260401-010V	-		-	. . SETTING TOOL	123
	C-1260414-010V	-		-	. . PATCH FEEDER	125
	C-1260417-010V	-		-	. . PATCH RESEAL C'JAW UN	129
	C-1260426-010V	-		-	. . PATCH RESEAL BRACKET	131
	C-1260420-010V	-		-	. APPLICATOR RESEAL	133
	C-1260401-010V	-		-	. . SETTING TOOL	123
	C-1260417-010V	-		-	. . PATCH RESEAL C'JAW UN	129
	C-1260418-010V	-		-	. . HEATING JAW-RESEAL	135
	C-1260426-010V	-		-	. . PATCH RESEAL BRACKET	131
	C-1260421-010V	-		-	. APPLICATOR TAB	137
	C-1185029-010V	-		-	. . MISSING TAB DETECTOR	139
	C-1260401-010V	-		-	. . SETTING TOOL	123
	C-1260415-010V	-		-	. . TAB FEEDER	143
	C-1260416-020V	-		-	. . TAB C'JAW UNIT	145
	C-1260427-010V	-		-	. . TAB BRACKET	147
	C-1296882-010V	-		-	. OPENING SPECIFICATION	149
F070	C-1095951-020V	-		1	DOOR	151
	C-1095944-010V	-		-	. DOOR EL-CABINET	153
	C-1095945-020V	-		-	. DOOR	155
	C-1095946-020V	-		-	. DOOR FOR PATCH	157
	C-1095947-020V	-		-	. DOOR FOR PULLTAB	159
	C-1095948-010V	-		-	. DOOR FOR WASTE BOX	161
	C-1095949-010V	-		-	. DOOR FOR TPIH	163
	C-1185000-010V	-		-	. DOOR,INNER	165
F080	C-1185008-010V	-		1	MAGAZINES	167
	C-1095893-010V	-		-	. MAGAZINE PULLTAB	169
	C-1095895-010V	-		-	. . SPLICING DEVICE	173
	C-1095923-010V	-		-	. . GUIDE PULLTAB	175
	C-1095894-010V	-		-	. MAGAZINE PATCH	177
	C-1095895-010V	-		-	. . SPLICING DEVICE	173
	C-1095924-010V	-		-	. . GUIDE PATCH	181
	C-1334066-010V	-		-	. TAB TURNING DEVICE	183
	C-1334065-010V	-		-	. PATCH TURNING DEVICE	185
F090	C-1185049-010V	-		1	VALVE PANEL	187
	C-1185047-010V	-		-	. AIR INLET GROUP	189
	C-1185048-010V	-		-	. VALVE GROUP	191

PULLTAB UNIT PT21

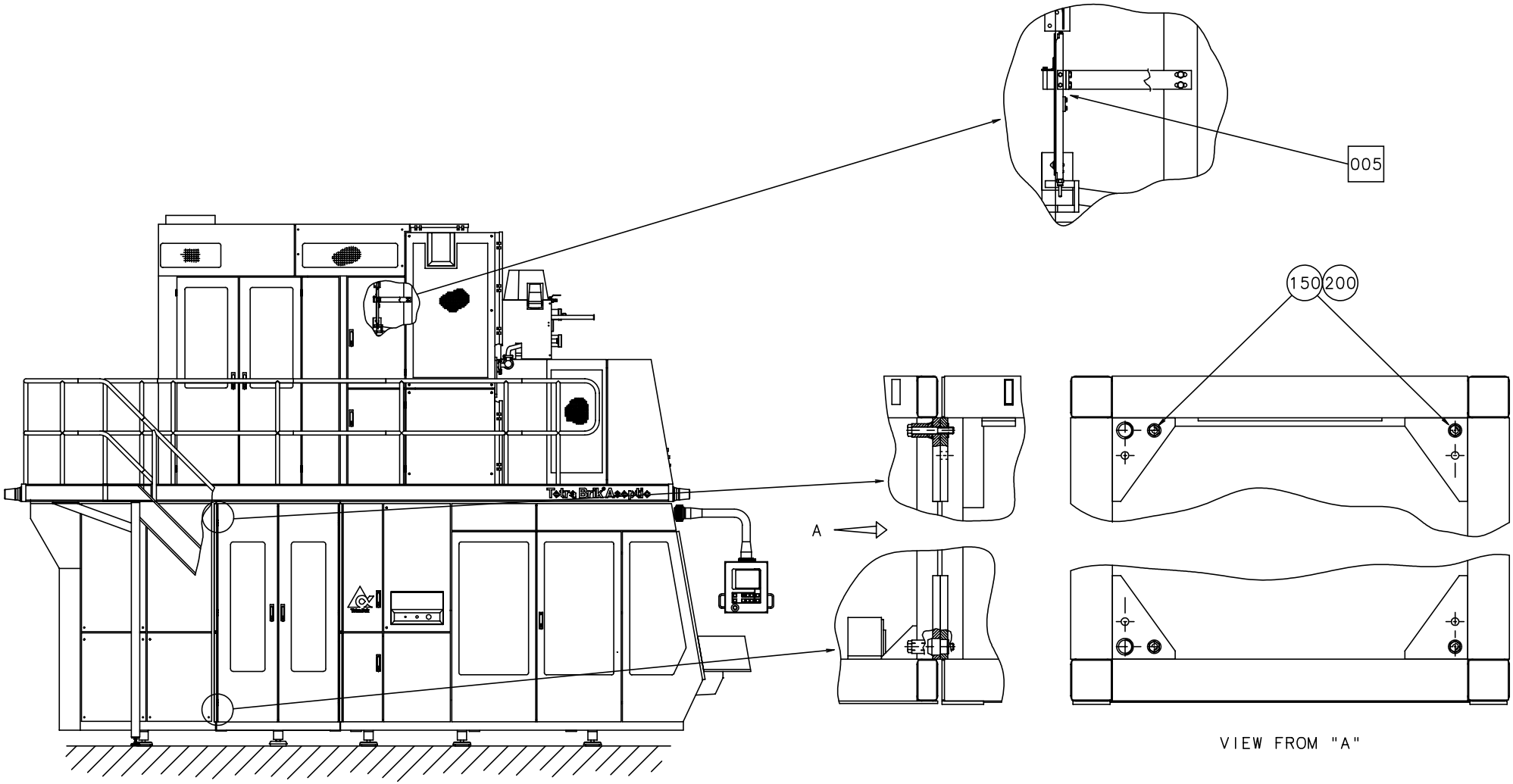

Pos	Part No	SP	UN	Qty	Description	Page No
-						
000	**C-1282322-0101**	**-**		**1**	**PULLTAB UNIT PT21**	
150	1038865	-		4	SPACER DISC	
200	312105-0640	-		4	SCREW 014 M16X100A280	
F005	C- 514938-010V	-		1	TAB FOLDING	17
	C- 907946-010V	-		-	. TAB FOLDING PAPER GUIDE	19
F010	C- 577135-010V	-		1	PIPE-LINE	23
F020	C-1255501-010V	-		1	ELECTRICAL CABINET	25
	C- 67600-0501	-		-	. TPIH 2000 GENERATOR	45
	C-1255953-010V	-		-	. ASSEMBLY PLATE	29
	C-1255954-010V	-		-	. SWING FRAME	31
F030	C-1260684-010V	-		1	CABLE HARNESS	47
	C-1260811-010V	-		-	. CONNECTION BOX	51
	C-1260812-010V	-		-	. CONNECTION BOX	53
	C-1260813-010V	-		-	. CONNECTION BOX	55
F040	C-1095930-010V	-		1	FRAME	57
	C-1185034-010V	-		-	. FRAME ASSEMBLY	59
	C-1035076-010V	-		-	. . LEG	63
	C-1185080-010V	-		-	. PLATFORM	67
F045	C-1095928-010V	-		1	COOLER	69
	C-1285054-010V	-		-	. CONNECTION BOX	71
F050	C-1282323-010V	-		1	PAPER WEB PATH	73
	C- 514993-020V	-		-	. SENSOR	75
	C-1095935-010V	-		-	. DRIVE MOTOR	77
	C-1095942-010V	-		-	. ROLLER ASSEMBLY	79
	C-1095937-010V	-		-	. . GUIDE ROLLER WITH FLA	81
	C-1095938-010V	-		-	. . GUIDE ROLLER	83
	C-1095940-010V	-		-	. . GUIDE ROLLER	85
	C-1095941-010V	-		-	. . TENSION ROLLER	87
	C-1260411-010V	-		-	. . PATCH/TAB SPLICE DETE	89
	C-1095952-010V	-		-	. BENDING ROLLER	91
	C-1095953-010V	-		-	. INFEED UNIT	93
	C-1095952-010V	-		-	. . BENDING ROLLER	91
	C-1095970-010V	-		-	. PAPER BRAKE	95
	C-1095969-010V	-		-	. . BENDING ROLLER FLANGE	97
	C-1334322-010V	-		-	. . .BENDING ROLLER	99
	C-1095952-010V	-		-	. . . .BENDING ROLLER	91
	C-1095979-010V	-		-	. PHOTOCELL UNIT	101
	C-1095980-010V	-		-	. PHOTOCELL UNIT	103
	C-1255601-010V	-		-	. EDGE GUIDE	105
F060	C-1095932-020V	-		1	APPLICATORS	107
	C-1095955-010V	-		-	. WASTE BOX	109
	C-1095992-010V	-		-	. PUNCH BRACKET	111
	C-1095991-010V	-		-	. . PUNCH UNIT	113
	C-1185078-010V	-		-	. LIFTING DEVICE	115
	C-1260419-010V	-		-	. APPLICATOR PATCH	117
	C-1185031-010V	-		-	. . BAR CODE READER	119
	C-1260390-020V	-		-	. . MISSING PATCH DETECTO	121
	C-1260401-010V	-		-	. . SETTING TOOL	123
	C-1260414-010V	-		-	. . PATCH FEEDER	125
	C-1260417-010V	-		-	. . PATCH RESEAL C'JAW UN	129
	C-1260426-010V	-		-	. . PATCH RESEAL BRACKET	131
	C-1260420-010V	-		-	. APPLICATOR RESEAL	133
	C-1260401-010V	-		-	. . SETTING TOOL	123
	C-1260417-010V	-		-	. . PATCH RESEAL C'JAW UN	129
	C-1260418-010V	-		-	. . HEATING JAW-RESEAL	135
	C-1260426-010V	-		-	. . PATCH RESEAL BRACKET	131
	C-1260421-010V	-		-	. APPLICATOR TAB	137
	C-1185029-010V	-		-	. . MISSING TAB DETECTOR	139
	C-1260401-010V	-		-	. . SETTING TOOL	123
	C-1260415-010V	-		-	. . TAB FEEDER	143
	C-1260416-020V	-		-	. . TAB C'JAW UNIT	145
	C-1260427-010V	-		-	. . TAB BRACKET	147
	C-1296882-010V	-		-	. OPENING SPECIFICATION	149
F070	C-1095951-020V	-		1	DOOR	151
	C-1095944-010V	-		-	. DOOR EL-CABINET	153
	C-1095945-020V	-		-	. DOOR	155
	C-1095946-020V	-		-	. DOOR FOR PATCH	157
	C-1095947-020V	-		-	. DOOR FOR PULLTAB	159
	C-1095948-010V	-		-	. DOOR FOR WASTE BOX	161
	C-1095949-010V	-		-	. DOOR FOR TPIH	163
	C-1185000-010V	-		-	. DOOR,INNER	165
F080	C-1185008-010V	-		1	MAGAZINES	167
	C-1095893-010V	-		-	. MAGAZINE PULLTAB	169
	C-1095895-010V	-		-	. . SPLICING DEVICE	173
	C-1095923-010V	-		-	. . GUIDE PULLTAB	175
	C-1095894-010V	-		-	. MAGAZINE PATCH	177
	C-1095895-010V	-		-	. . SPLICING DEVICE	173
	C-1095924-010V	-		-	. . GUIDE PATCH	181
	C-1334066-010V	-		-	. TAB TURNING DEVICE	183
	C-1334065-010V	-		-	. PATCH TURNING DEVICE	185
F090	C-1185049-010V	-		1	VALVE PANEL	187
	C-1185047-010V	-		-	. AIR INLET GROUP	189
	C-1185048-010V	-		-	. VALVE GROUP	191

TAB FOLDING

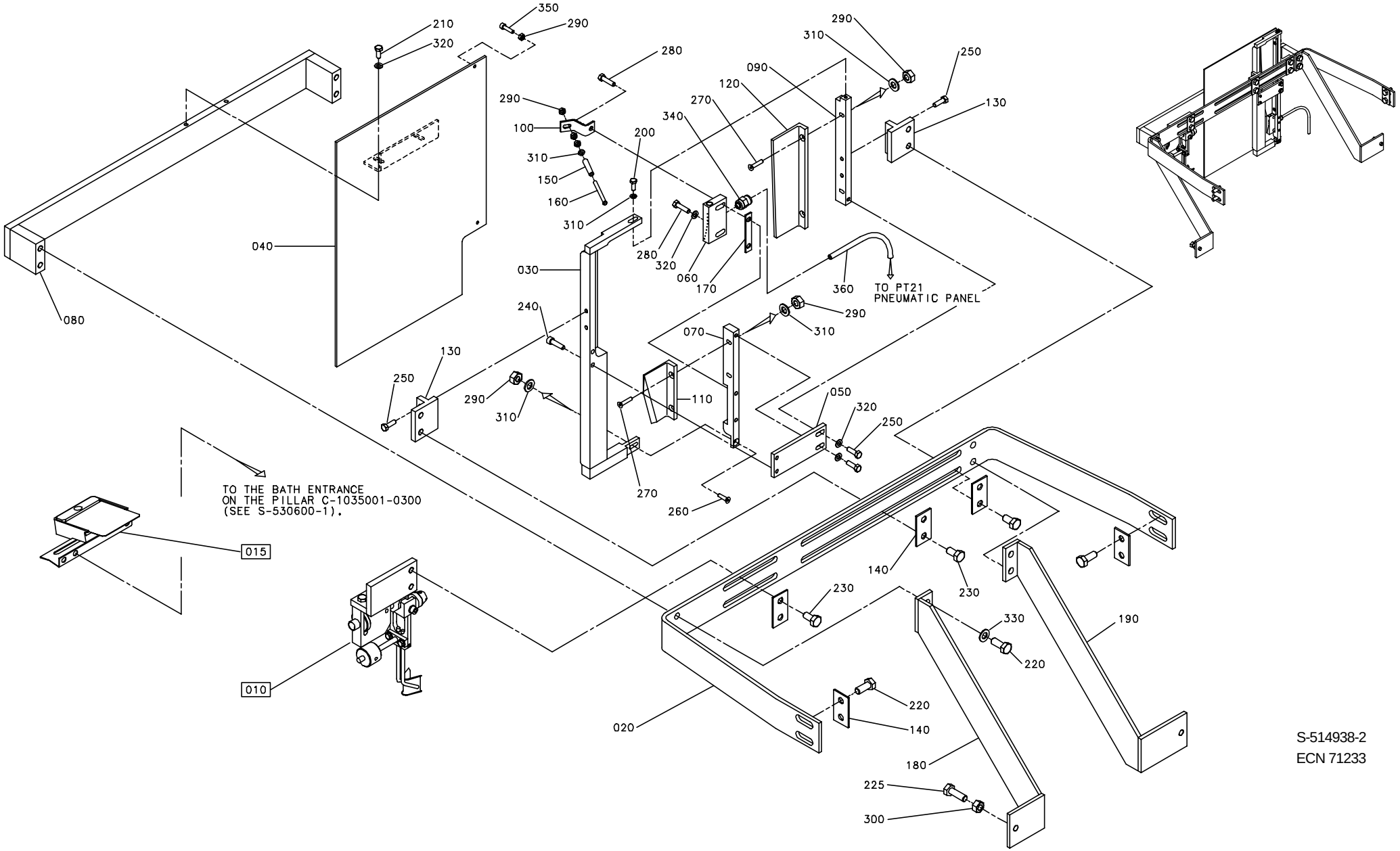

S-514938-2
ECN 71233

Pos	Part No	SP	UN	Qty	Description	Page No
TBA VOLUME 1000 B						
000	**C- 514938-0101**	**-**		**1**	**TAB FOLDING**	
040	1334230-0001	-		1	PLATE	
TBA VOLUME 1000 S						
000	**C- 514938-0102**	**-**		**1**	**TAB FOLDING**	
040	1334230-0002	-		1	PLATE	
TPA VOLUME 1000 S						
000	**C- 514938-0103**	**-**		**1**	**TAB FOLDING**	
040	1334230-0003	-		1	PLATE	
COMMON PARTS						
010	C-907946-010V	-		1	TAB FOLDING PAPER GUIDE	19
015	C-530600-0100	-		1	GUIDING PULLTAB TBA/8	21
020	985343	-		1	BRACKET	
030	1147117	-		1	RAIL BRACKET	
050	985342	-		1	PLATE	
060	1317753	D		1	AIR NOZZLE	
070	1317755	-		1	PLATE	
080	1147015	-		1	BRACKET	
090	985502	-		1	PLATE	
100	1317754	-		1	BRACKET	
110	985444	R		1	GUIDE	
120	985445	R		1	GUIDE	
130	985446	-		2	BRACKET	
140	907983	-		5	PLATE	
150	469464	J		1	ROLL	
160	469463	R		1	SHAFT	
170	1334228	J		1	SHIM	
180	1317971	-		1	REINFORCEMENT	
190	1317972	-		1	REINFORCEMENT	
200	312105-0291	-		1	SCREW M6S ISO 4017 M4X12 A280	
210	312105-0327	-		2	SCREW M6S ISO 4017 M5X12 A280	
220	312105-0451	-		8	SCREW M6S ISO 4017 8X20 A280	
225	312105-0455	-		2	SCREW M6S ISO 4017 M8X30 A280	
230	312105-0449	-		6	SCREW M6S ISO 4017 M8X16 A280	
240	312115-0331	-		2	SCREW MC6S ISO 4762 M5X20 A280	
250	312105-0329	-		6	SCREW M6S ISO 4017 M5X16 A280	
260	312155-0293	-		1	SCREW MF6S DIN 7991 M4X16 A280	
270	312155-0295	-		4	SCREW MF6S DIN 7991 M4X20 A280	
280	312105-0331	-		2	SCREW M6S ISO 4017 M5X20 A280	
290	312605-0312	-		10	NUTS,HEXAGON,M4	
300	312605-0318	-		2	NUTS,HEXAGON,M8	
310	315105-0136	-		7	WASHERS,PLAIN ROUND 4,3X8	
320	315105-0146	-		5	WASHERS,PLAIN ROUND 5,3X10	
330	315105-0165	-		4	WASHERS,PLAIN ROUND 8,4X16	
340	342722-0197	-		1	STRAIGHT COUPL,FOR PLASTIC TUBE 6-M5	
350	312115-0291	-		2	SCREW MC6S ISO 4762 M4X12 A280	
360	90166-0081	-	MM	6000	HOSE 6/4-100M	

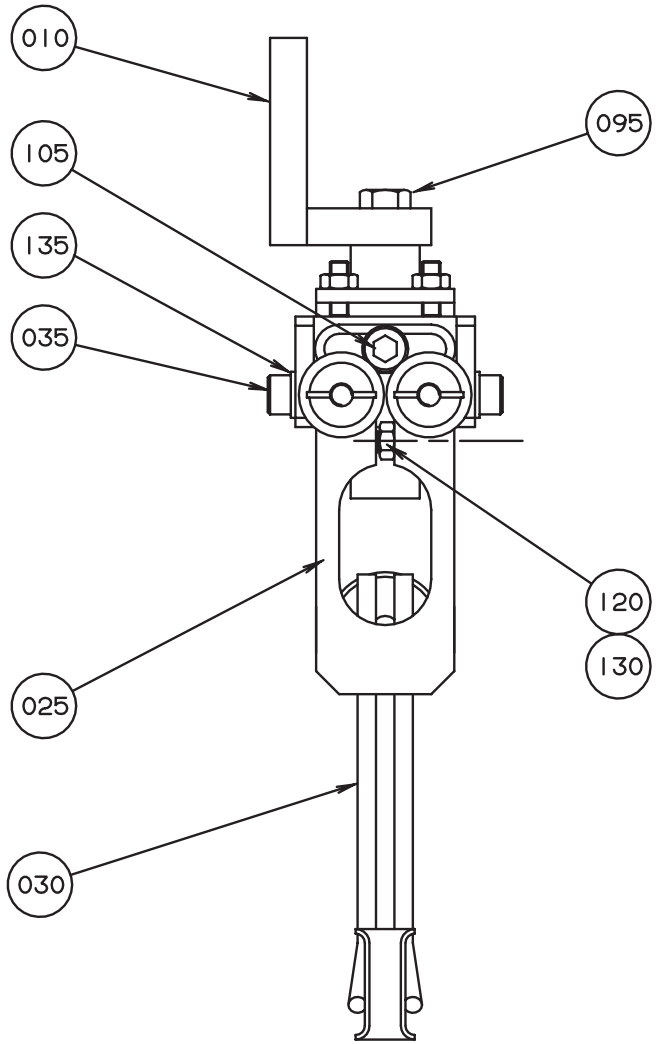

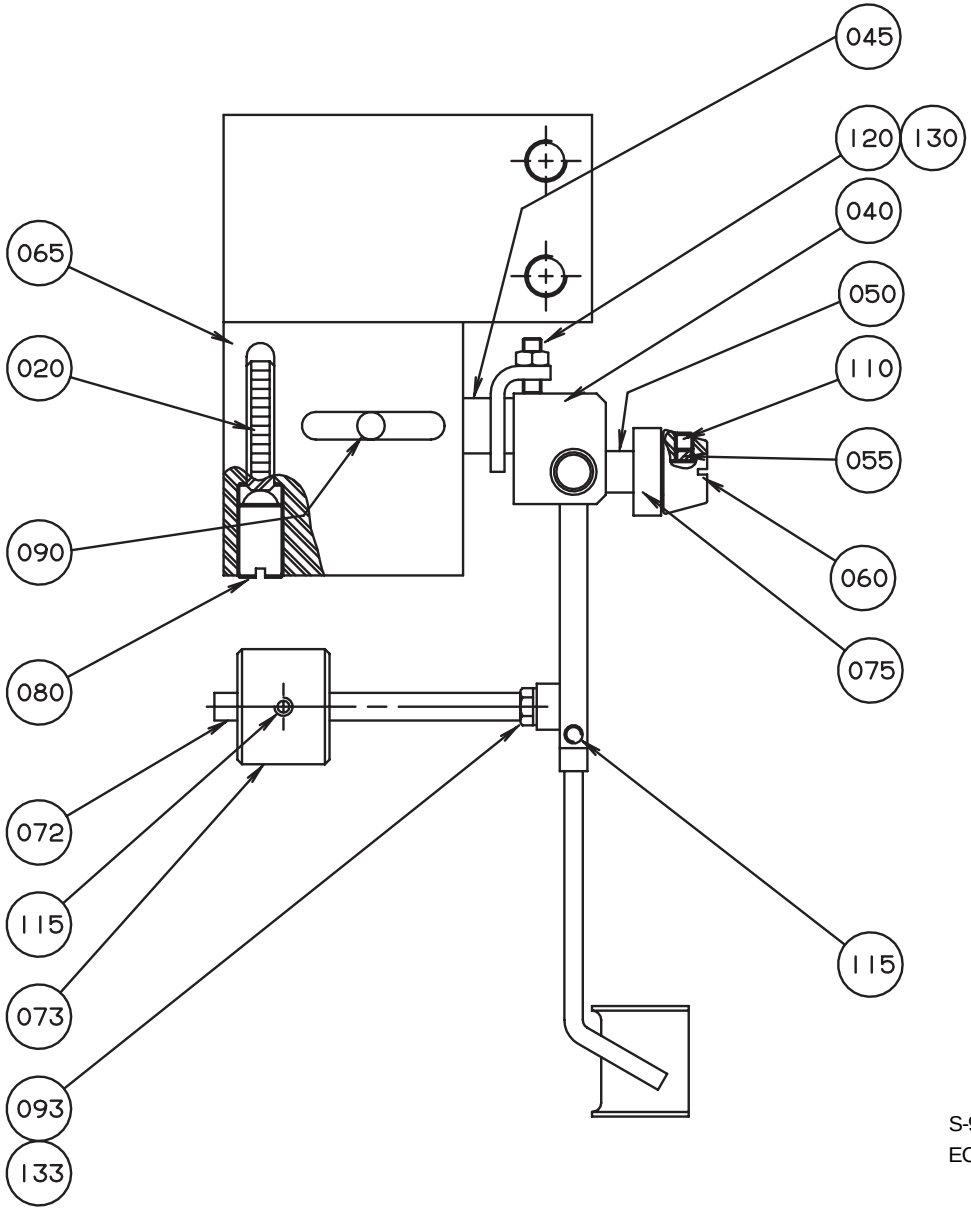

S-907946-1
ECN 10046

Pos	Part No	SP	UN	Qty	Description	Page No
-						
000	**C- 907946-0101**	**-**		**1**	**TAB FOLDING PAPER GUIDE**	
010	907942	-		1	STEERING BRACKET	
020	23580	-		1	SHIFTER HANDLE	
025	905937	-		1	SPRING	
030	23583	-		1	GUIDE FINGER	
035	23584	-		2	SCREW	
040	24351	-		1	BOW CLAMP	
045	24352	-		1	SHAFT	
050	24355	-		2	DOWEL	
055	24356	-		4	PIECE	
060	111543	-		2	GUIDE CONE	
065	245210	-		1	BODY	
072	905938	-		1	BRACKET	
073	905939	-		1	COUNTERWEIGHT	
075	90214-0138	R		2	BALL BEARING	
080	90287-0009	-		1	SPRINGLOADED SCREW	
090	311103-0350	-		1	CYLINDRICACP M6 6X14 RFR	
093	312105-0291	-		2	SCREW O4017 M4X12A280	
095	312105-0368	-		2	SCREW O4017 M6X16A280	
105	312115-0366	-		1	SCREW O4762 M6X12A280	
110	312318-0283	-		4	STOP SCREW SK6SS4X4RFR	
115	312318-0285	-		3	STOP SCREW SK6SS4X6RFR	
120	312318-0291	-		3	STOP SCREW SK6SS4X12RFR	
130	312605-0312	-		3	NUT M6M4 STAINLESS	
133	315105-0136	-		2	WASHER BRB4,3X8RFR	
135	315105-0146	-		2	WASHER BRB5,3X10RFR	

Pos	Part No	SP	UN	Qty	Description	Page No

GUIDING PULLTAB TBA/8

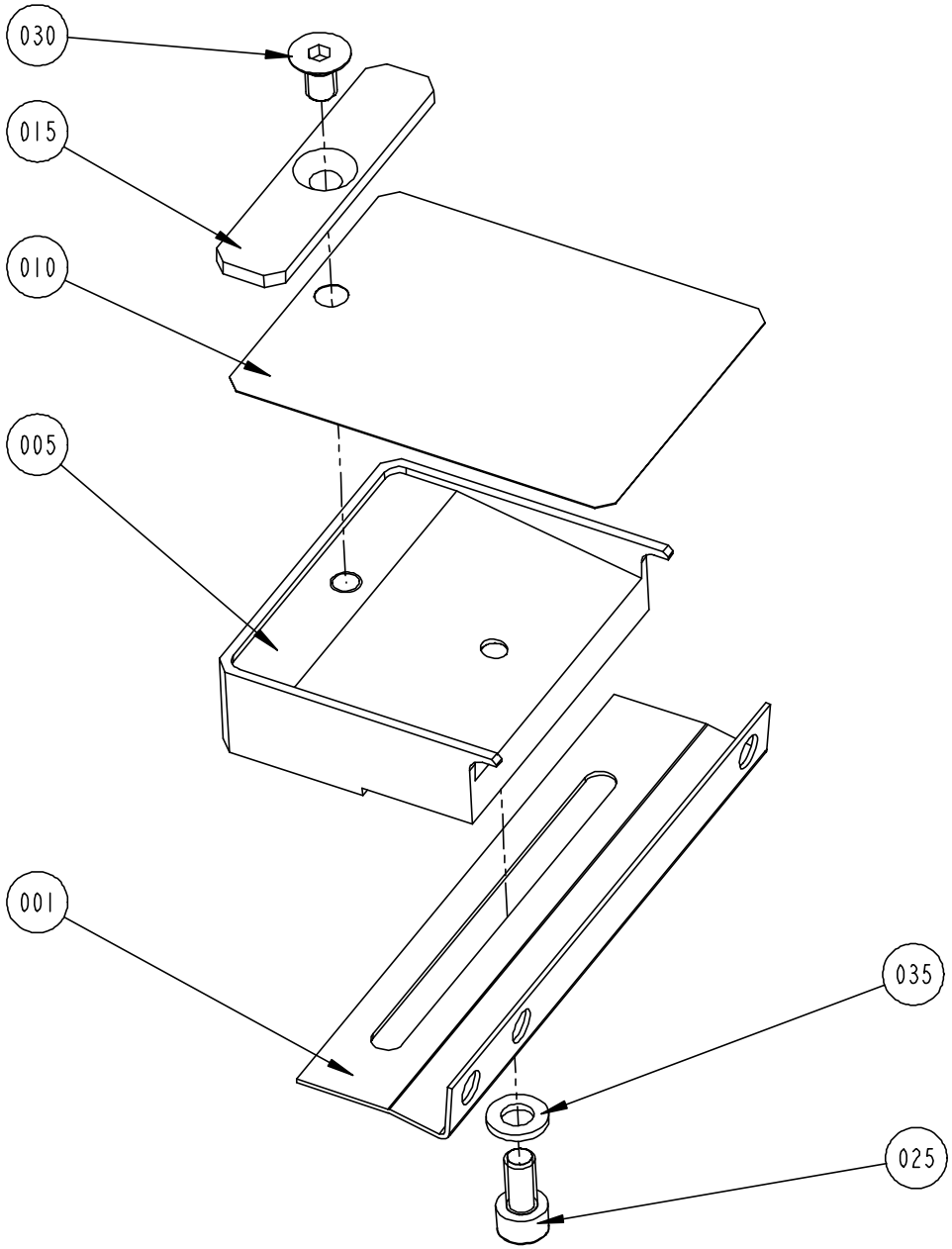

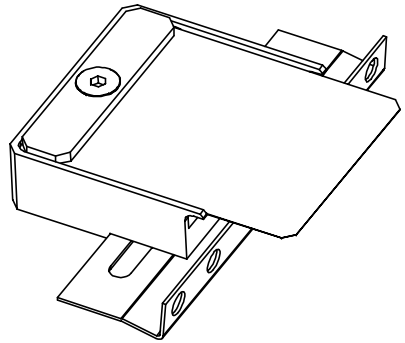

S-530600-1
ECN 72398

Pos	Part No	SP	UN	Qty	Description	Page No
-						
000	**C- 530600-0101**	**-**		**1**	**GUIDING PULLTAB TBA/8**	
001	529146	-		1	ANGLE BRACKET	
005	529147	-		1	SPRING BRACKET	
010	529148	-		1	STEERING	
015	529149	-		1	DOLLY WASHER	
025	312115-0366	-		1	SCREW MC6S ISO 4762 M6X12 A280	
030	312155-0364	-		1	SCREW MF6S6X10RFR	
035	315105-0153	-		1	WASHER,PLAIN ROUND BRB 6,4x12 Stainless	

Pos	Part No	SP	UN	Qty	Description	Page No

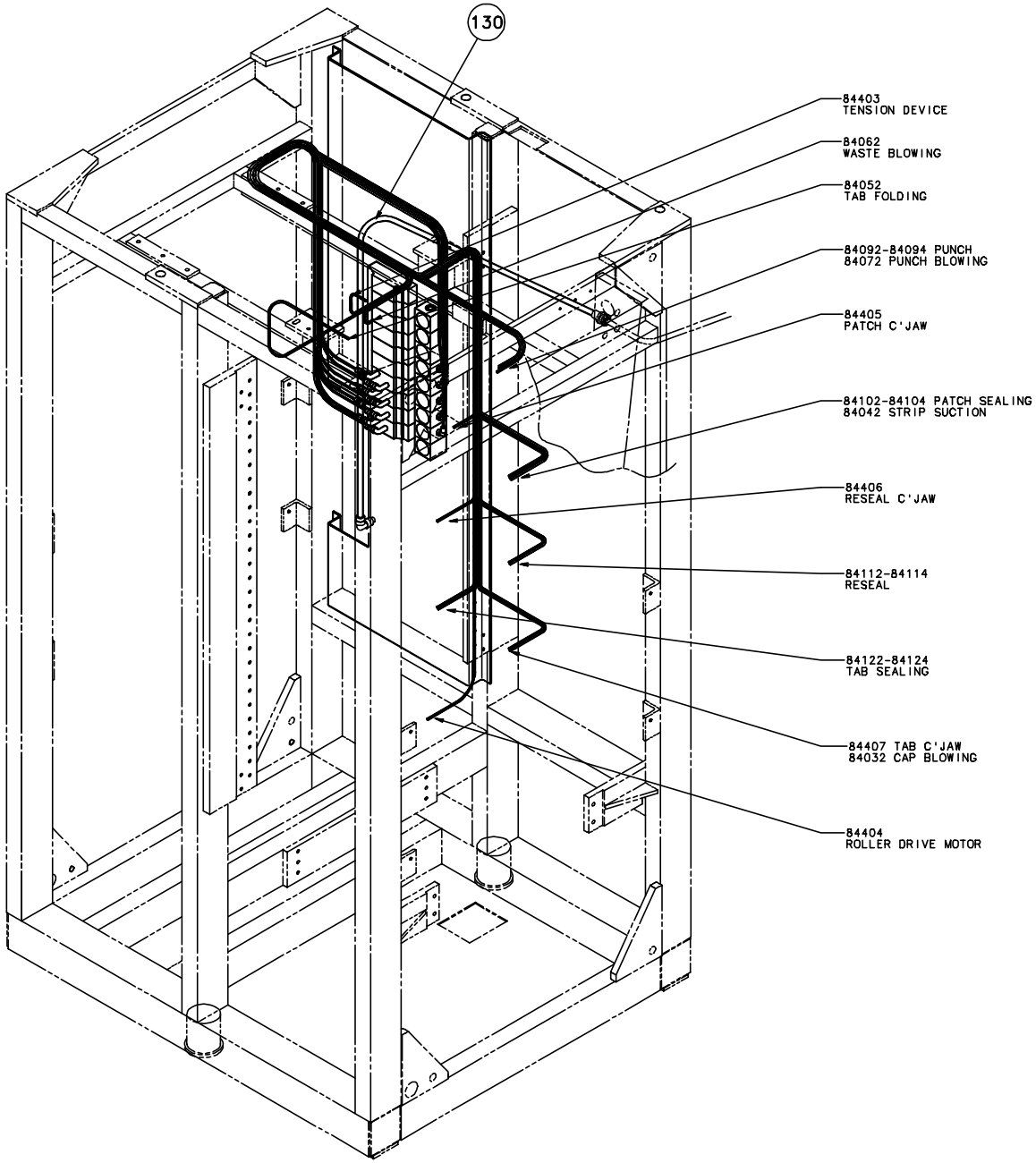

S-577135-1
ECN 71157

Pos	Part No	SP	UN	Qty	Description	Page No
-						
000	**C- 577135-0101**	**-**		**1**	**PIPE-LINE**	
130	90166-0068	-	MM	3000	HOSE 9/12	

Pos	Part No	SP	UN	Qty	Description	Page No

ELECTRICAL CABINET

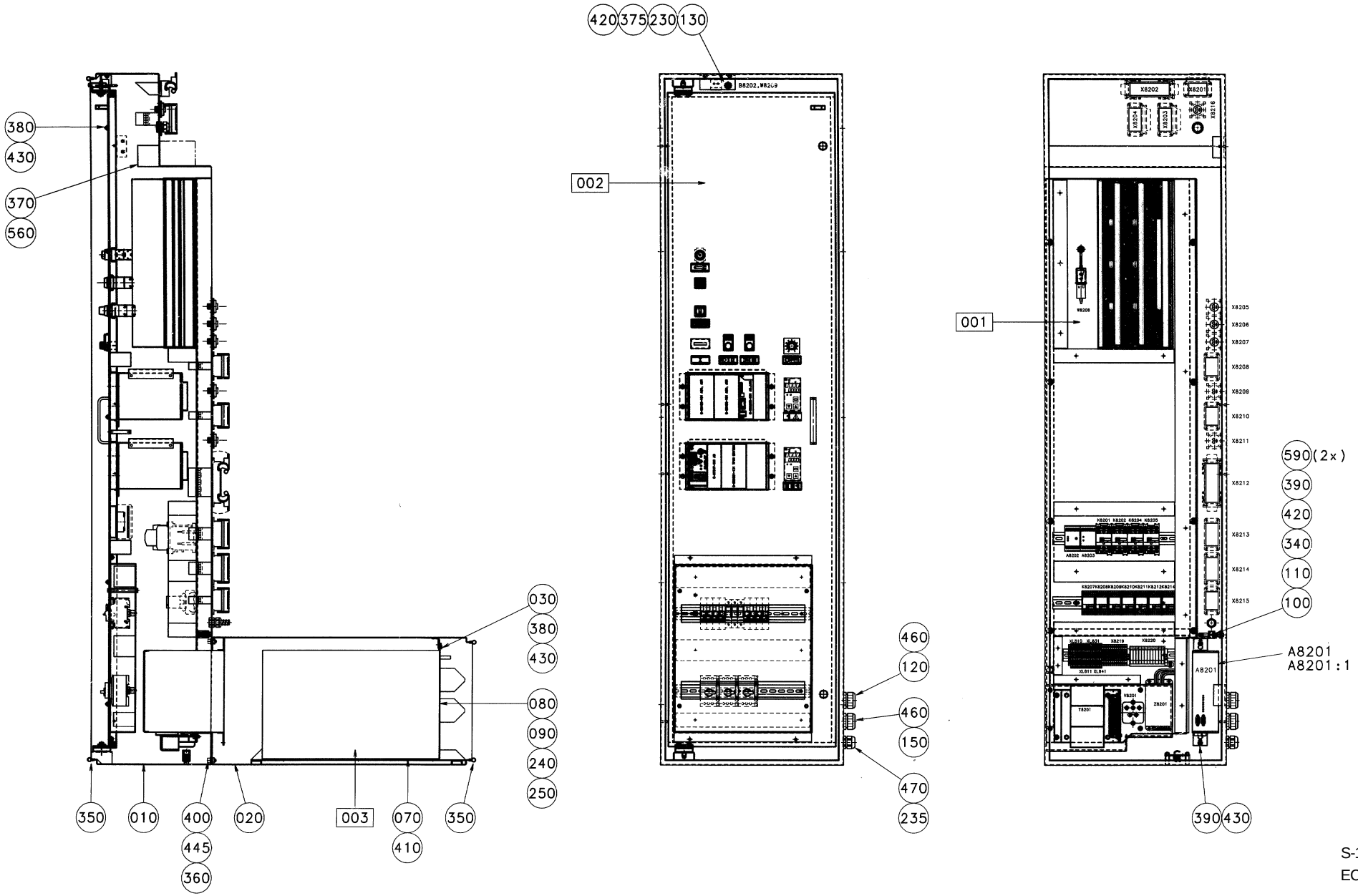

S-1255501-1
ECN 71370

Pos	Part No	SP	UN	Qty	Description	Page No
-						
000	**C-1255501-0101**	**-**		**1**	**ELECTRICAL CABINET**	
001	C-1255953-0100	-		1	ASSEMBLY PLATE	29
002	C-1255954-0100	-		1	SWING FRAME	31
A8201:1	C-48141-0100	-		1	PT21MC-PULLTAB 21 MOTION CONTROL	39
003	C-67600-0501	D		1	TPIH 2000 GENERATOR	45
010	1255951	-		1	CABINET	
020	1255952	-		1	BOX FOR TPIH	
030	1129867	-		1	SHEET	
040	1140314	-		2	STOP LUG	
070	731049	-		4	SLIDING STRIP TPIH	
080	548770-0001	D		2	COAXIAL CABLE L=5000 mm	
090	548770-0007	D		1	COAXIAL CABLE L=3000 mm	
100	1140053	-		4	SPACER	
110	929607	-		2	EARTH BAR	
120	1346824	-		1	INSERT	
130	1260561	-		1	HOLDER	
140	1260901	-		2	INSERT	
150	979974	-		1	INSERT	
230	90044-0124	R		1	INDUCTIVE SWITCH	
235	90099-0119	-		1	NUT PR 28,3 (PG21)	
240	90110-0121	-		2	FEMALECONT.15POLE HARTING	
250	90110-0122	-		2	COVER HARTING	
255	90110-0150	-		2	MALE INSERT 24-P, CABLE	
256	90110-0152	-		2	CABLE HOOD 24-P	
260	90110-0153	-		2	CHASSI HOUSING 24-P	
265	90110-0157	-		2	COVER	
266	90110-0159	-		2	CONTACT	
270	90110-0161	-		3	FEMALE CONTACT 6-POLES	
275	90110-0163	-		1	FEMALE INSERT 6-POLE	
280	90110-0164	-		2	FEMALE CONTACT 24-POLES	
290	90110-0166	-		4	CONTACT HOUSE	
300	90110-0215	-		4	SOCKET	
310	90110-0218	-		4	CONTACT HOUSING	
320	90110-0236	-		6	CHASSIE CONTACT PX0767/S	
330	90110-0349	-		6	COVER/TOOL PX0733	
340	90135-0039	-		2	SHIELD CLAMMER	
350	90143-0057	-	MM	7000	STRIP EMKA 1011-05 21x11mm	
360	90143-0073	-	MM	1800	RUBBER STRIP	
370	90181-0046	-	MM	490	CABEL DUCT 60X60MM	
375	90195-0019	-		1	TERMINAL BK3 KRG 3-POLE	
380	312105-0327	-		13	SCREW M6S ISO 4017 M5X12 A280	
390	312115-0323	-		3	SCREW MC6S ISO 4762 M5X8 A280	
400	312115-0449	-		8	SCREW MC6S ISO 4762 M8X16 A280	
410	312155-0291	-		12	SCREW MF6S DIN 7991 M4X12 A280	
420	312605-0316	-		18	NUT,HEXAGON,A280 M6M6 Stainless	
430	315105-0146	-		15	WASHERS,PLAIN ROUND 5,3X10	
440	315105-0153	-		12	WASHER,PLAIN ROUND BRB 6,4x12 Stainless	
445	315105-0165	-		8	WASHERS,PLAIN ROUND 8,4X16	
450	352103-0108	-		2	CABLE GLAND ST 13	
460	353240-0006	-		4	GLANDS,NORMAL WITHOUT INSERT PG 29	
470	352103-0116	-		1	CABLE GLAND ST 21	
480	352103-0111	-		1	CABLE GLAND ST 16	
490	359005-0050	-		1	MARKING SEATS "X"	
500	359005-0010	-		4	MARKING SESATS 0-9	
510	312125-0287	-		11	SLOTTED CHEESE HEAD ISO 1207 M4X8 RFR	
520	352113-0205	-		11	ANCHOR TM2S8-C100	
530	90099-0117	-		1	NUT PR 18,6 (PG11)	
540	353243-0002	-		2	GLANDS,HOSE,EXTENDED,WITHOUT INSERT PG11	
550	90152-0059	-	M	3	GLANDS,HOSE 18X12	
560	90099-0191	-		2	Nut	
570	90110-0296	-		1	CONTACT SCREW	
580	90110-0370	-		1	BASE HOUSING	
590	90062-0021	-		2	LOCKING WASHER	
A8201	90045-0372	R		1	SERVO AMPLIFIER REPLACED 90045-395	
W8201	351150-0419	-	MM	3500	CABLES,MULTI-CONDUCTOR 5X2,5 MM2	
W8202	351150-0425	-	MM	3500	CABLES,MULTI-CONDUCTOR 25X0,75 MM2	
W8203	90220-0082	-	MM	3500	DATACABLE Pair Twisted 2x0,76mm2	
W8211:1	351172-0104	-	M	3	CABLE AWM BLUE 1,5MM2	
W8211:2	351172-0104	-	M	3	CABLE AWM BLUE 1,5MM2	
W8211:3	351175-0104	-	M	3	CABLE AWM YELL/GREEN 1,5MM2	
W8212	90220-0034	-	M	3	THERMO-CABLE	
W8445	90220-0108	-	M	5	CABLES,MULTI-CONNUCTO,SCREENED 5X1,5 MM2	

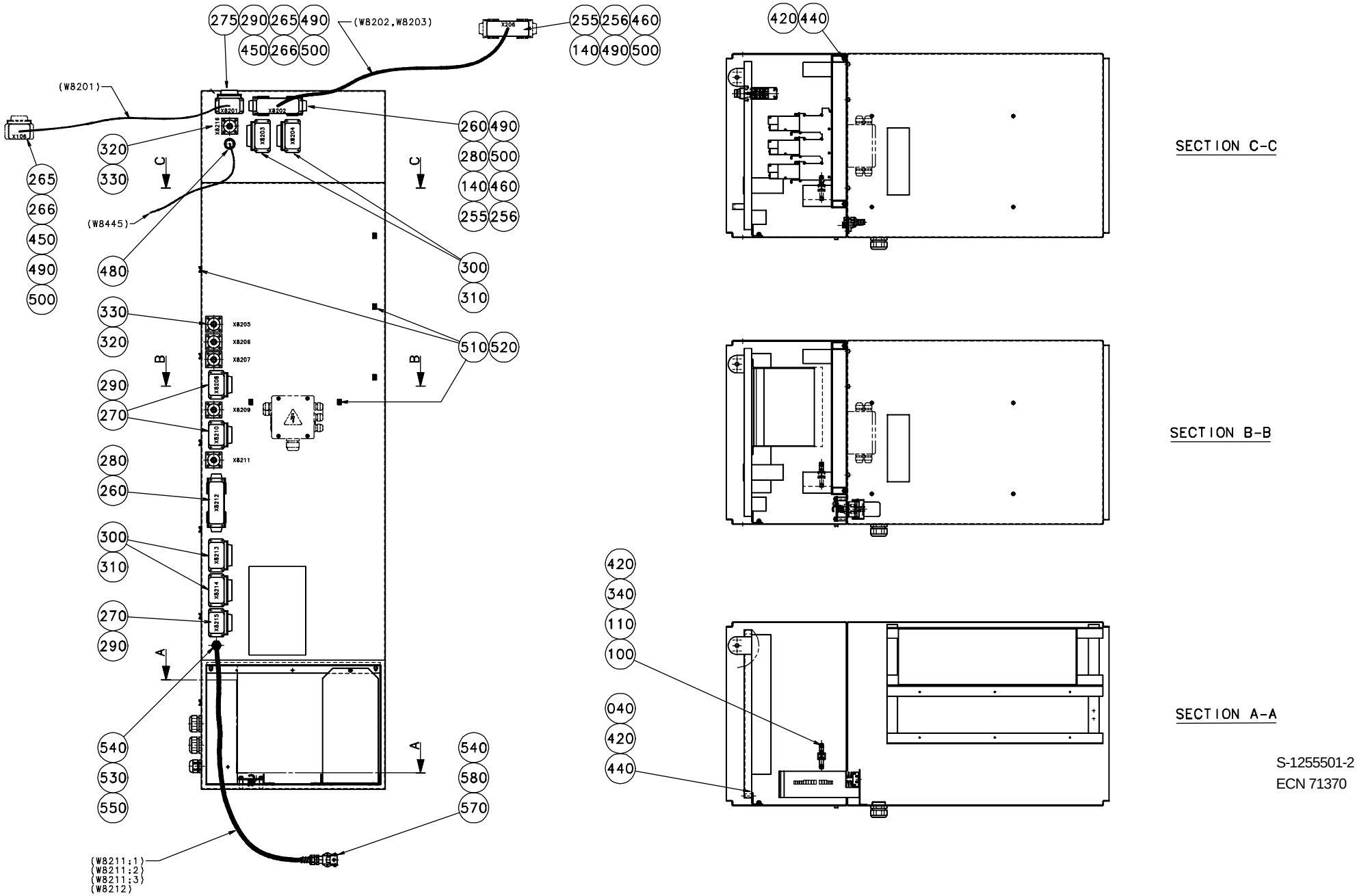

S-1255501-2
ECN 71370

Pos	Part No	SP	UN	Qty	Description	Page No
-						
000	**C-1255501-0101**	**-**		**1**	**ELECTRICAL CABINET**	
001	C-1255953-0100	-		1	ASSEMBLY PLATE	29
002	C-1255954-0100	-		1	SWING FRAME	31
A8201:1	C-48141-0100	-		1	PT21MC-PULLTAB 21 MOTION CONTROL	39
003	C-67600-0501	D		1	TPIH 2000 GENERATOR	45
010	1255951	-		1	CABINET	
020	1255952	-		1	BOX FOR TPIH	
030	1129867	-		1	SHEET	
040	1140314	-		2	STOP LUG	
070	731049	-		4	SLIDING STRIP TPIH	
080	548770-0001	D		2	COAXIAL CABLE L=5000 mm	
090	548770-0007	D		1	COAXIAL CABLE L=3000 mm	
100	1140053	-		4	SPACER	
110	929607	-		2	EARTH BAR	
120	1346824	-		1	INSERT	
130	1260561	-		1	HOLDER	
140	1260901	-		2	INSERT	
150	979974	-		1	INSERT	
230	90044-0124	R		1	INDUCTIVE SWITCH	
235	90099-0119	-		1	NUT PR 28,3 (PG21)	
240	90110-0121	-		2	FEMALECONT.15POLE HARTING	
250	90110-0122	-		2	COVER HARTING	
255	90110-0150	-		2	MALE INSERT 24-P, CABLE	
256	90110-0152	-		2	CABLE HOOD 24-P	
260	90110-0153	-		2	CHASSI HOUSING 24-P	
265	90110-0157	-		2	COVER	
266	90110-0159	-		2	CONTACT	
270	90110-0161	-		3	FEMALE CONTACT 6-POLES	
275	90110-0163	-		1	FEMALE INSERT 6-POLE	
280	90110-0164	-		2	FEMALE CONTACT 24-POLES	
290	90110-0166	-		4	CONTACT HOUSE	
300	90110-0215	-		4	SOCKET	
310	90110-0218	-		4	CONTACT HOUSING	
320	90110-0236	-		6	CHASSIE CONTACT PX0767/S	
330	90110-0349	-		6	COVER/TOOL PX0733	
340	90135-0039	-		2	SHIELD CLAMMER	
350	90143-0057	-	MM	7000	STRIP EMKA 1011-05 21x11mm	
360	90143-0073	-	MM	1800	RUBBER STRIP	
370	90181-0046	-	MM	490	CABEL DUCT 60X60MM	
375	90195-0019	-		1	TERMINAL BK3 KRG 3-POLE	
380	312105-0327	-		13	SCREW M6S ISO 4017 M5X12 A280	
390	312115-0323	-		3	SCREW MC6S ISO 4762 M5X8 A280	
400	312115-0449	-		8	SCREW MC6S ISO 4762 M8X16 A280	
410	312155-0291	-		12	SCREW MF6S DIN 7991 M4X12 A280	
420	312605-0316	-		18	NUT,HEXAGON,A280 M6M6 Stainless	
430	315105-0146	-		15	WASHERS,PLAIN ROUND 5,3X10	
440	315105-0153	-		12	WASHER,PLAIN ROUND BRB 6,4x12 Stainless	
445	315105-0165	-		8	WASHERS,PLAIN ROUND 8,4X16	
450	352103-0108	-		2	CABLE GLAND ST 13	
460	353240-0006	-		4	GLANDS,NORMAL WITHOUT INSERT PG 29	
470	352103-0116	-		1	CABLE GLAND ST 21	
480	352103-0111	-		1	CABLE GLAND ST 16	
490	359005-0050	-		1	MARKING SEATS "X"	
500	359005-0010	-		4	MARKING SESATS 0-9	
510	312125-0287	-		11	SLOTTED CHEESE HEAD ISO 1207 M4X8 RFR	
520	352113-0205	-		11	ANCHOR TM2S8-C100	
530	90099-0117	-		1	NUT PR 18,6 (PG11)	
540	353243-0002	-		2	GLANDS,HOSE,EXTENDED,WITHOUT INSERT PG11	
550	90152-0059	-	M	3	GLANDS,HOSE 18X12	
560	90099-0191	-		2	Nut	
570	90110-0296	-		1	CONTACT SCREW	
580	90110-0370	-		1	BASE HOUSING	
590	90062-0021	-		2	LOCKING WASHER	
A8201	90045-0372	R		1	SERVO AMPLIFIER REPLACED 90045-395	
W8201	351150-0419	-	MM	3500	CABLES,MULTI-CONDUCTOR 5X2,5 MM2	
W8202	351150-0425	-	MM	3500	CABLES,MULTI-CONDUCTOR 25X0,75 MM2	
W8203	90220-0082	-	MM	3500	DATACABLE Pair Twisted 2x0,76mm2	
W8211:1	351172-0104	-	M	3	CABLE AWM BLUE 1,5MM2	
W8211:2	351172-0104	-	M	3	CABLE AWM BLUE 1,5MM2	
W8211:3	351175-0104	-	M	3	CABLE AWM YELL/GREEN 1,5MM2	
W8212	90220-0034	-	M	3	THERMO-CABLE	
W8445	90220-0108	-	M	5	CABLES,MULTI-CONNUCTO,SCREENED 5X1,5 MM2	

ASSEMBLY PLATE

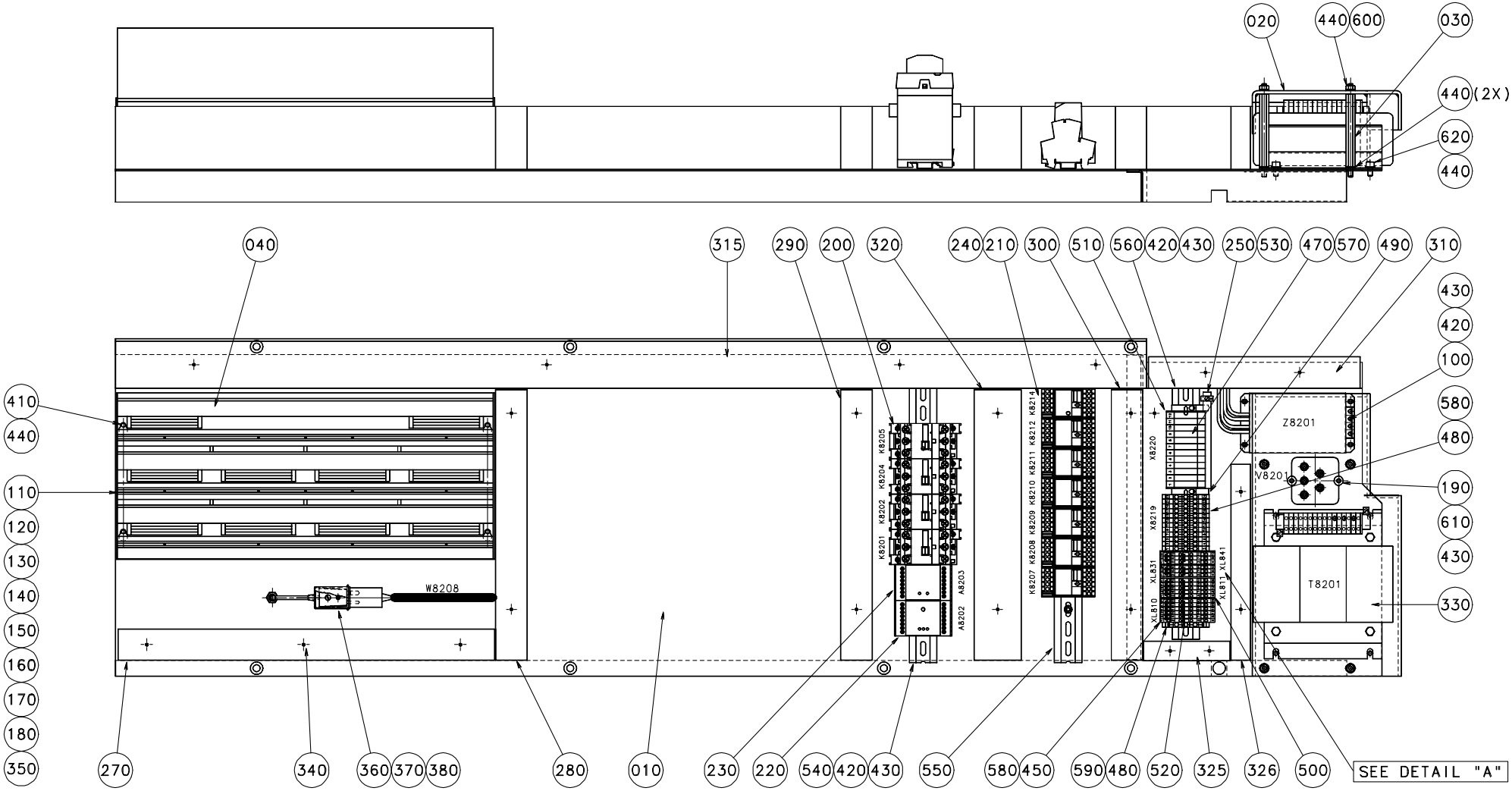

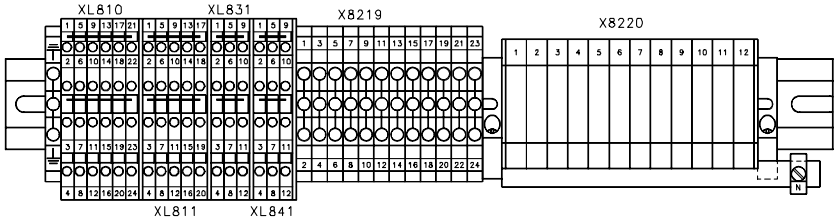

S-1255953-1
ECN 71370

Pos	Part No	SP	UN	Qty	Description	Page No
-						
000	**C-1255953-0101**	**-**		**1**	**ASSEMBLY PLATE**	
010	1260241	-		1	MOUNTING PLATE	
020	1296136	-		1	TOUCH GUARD	
030	1260423	-		4	STUD SCREW	
040	1260396	-		1	SATTBUS CABLE	
100	90024-0037	-		1	FILTER Schaffner FN 251-8-07	
110	90025-0107	D		2	MODULE	
120	90025-0024	D		4	TERMINAL BLOCK	
130	90025-0052	D		1	COMPACT RACK	
140	90025-0053	D		4	OUTPUT MODULE	
150	90025-0054	D		4	TERMINAL PLINTH	
160	90025-0055	D		1	POWER SUPPLY UNIT	
170	90025-0070	D		1	PROCESSOR TPMC CPU 64.1	
180	90025-0094	D		1	TERMINAL BLOCK	
190	90038-0024	D		1	RECTIFIER 50A	
200	90075-0125	-		4	CONTACTOR 7,5KW COIL 24VDC	
210	90119-0056	-		7	PLUG-IN RELAY 24VDC	
220	90119-0089	-		1	RELAY	
230	90119-0084	-		1	RELAY	
240	90129-0006	-		7	BASE 11 POLE	
250	353041-0104	-		1	CLAMPING YOKE PZB 4 K	
270	90181-0053	-	MM	480	CABLE DUCT 40X80MM	
280	90181-0053	-	MM	345	CABLE DUCT 40X80MM	
290	90181-0053	-	MM	345	CABLE DUCT 40X80MM	
300	90181-0053	-	MM	345	CABLE DUCT 40X80MM	
310	90181-0053	-	MM	270	CABLE DUCT 40X80MM	
315	90181-0054	-	MM	1315	CABLE DUCT 60X80MM	
320	90181-0054	-	MM	345	CABLE DUCT 60X80MM	
325	90181-0052	-	MM	110	CABLE DUCT 25X80MM	
326	90181-0052	-	MM	250	CABLE DUCT 25X80MM	
330	23150	D		1	TRANFORMER 3PH,TP-165	
340	90287-0124	-		21	SCREW,NYLON M4X12 DIN84	
350	90334-0006	D		1	BATTERY 3,6V Size AA	
360	90326-0012	-		1	PROTECTIVE COVER	
370	90326-0052	-		1	THERMO ELEMENT	
380	90220-0034	-	MM	2500	THERMO-CABLE	
410	312105-0366	-		4	SCREW M6S ISO 4017 M6X12 A280	
420	312115-0323	-		10	SCREW MC6S ISO 4762 M5X8 A280	
430	315105-0146	-		12	WASHERS,PLAIN ROUND 5,3X10	
440	315105-0153	-		20	WASHER,PLAIN ROUND BRB 6,4x12 Stainless	
450	353021-0120	-		17	FEED THROUGH TERMINAL WDK 2,5	
470	353022-0101	-		12	CONNECTIONMA NT6/35 KRG	
480	353024-0205	-		13	EARTH TERMINAL WPE 4	
490	353031-0201	-		2	END BRACKET EW35	
500	353032-0010	-		4	END PLATE WAP	
510	353033-0101	-		2	SEPARATING HP 6 PA	
520	353034-0030	-		4	BRIDGE CONLECK WQV 2,5/10	
530	353041-0001	-	MM	130	RAIL 10X3mm SSCH	
540	353042-0005	-	MM	350	RAIL TS 35/7.5	
550	353042-0005	-	MM	350	RAIL TS 35/7.5	
560	353042-0005	-	MM	320	RAIL TS 35/7.5	
570	359011-0801	-		1	SIGN BOARD BSFW 1-50	
580	359011-0807	-		10	MARKING PLATES 5-FW 1-50	
590	359011-0834	-		1	SET OF SIGNS 6-GW(EARTH)	
600	312605-0316	-		4	NUT,HEXAGON,A280 M6M6 Stainless	
610	312115-0327	-		2	SCREW MC6S ISO 4762 M5X12 A280	
620	312115-0366	-		4	SCREW MC6S ISO 4762 M6X12 A280	

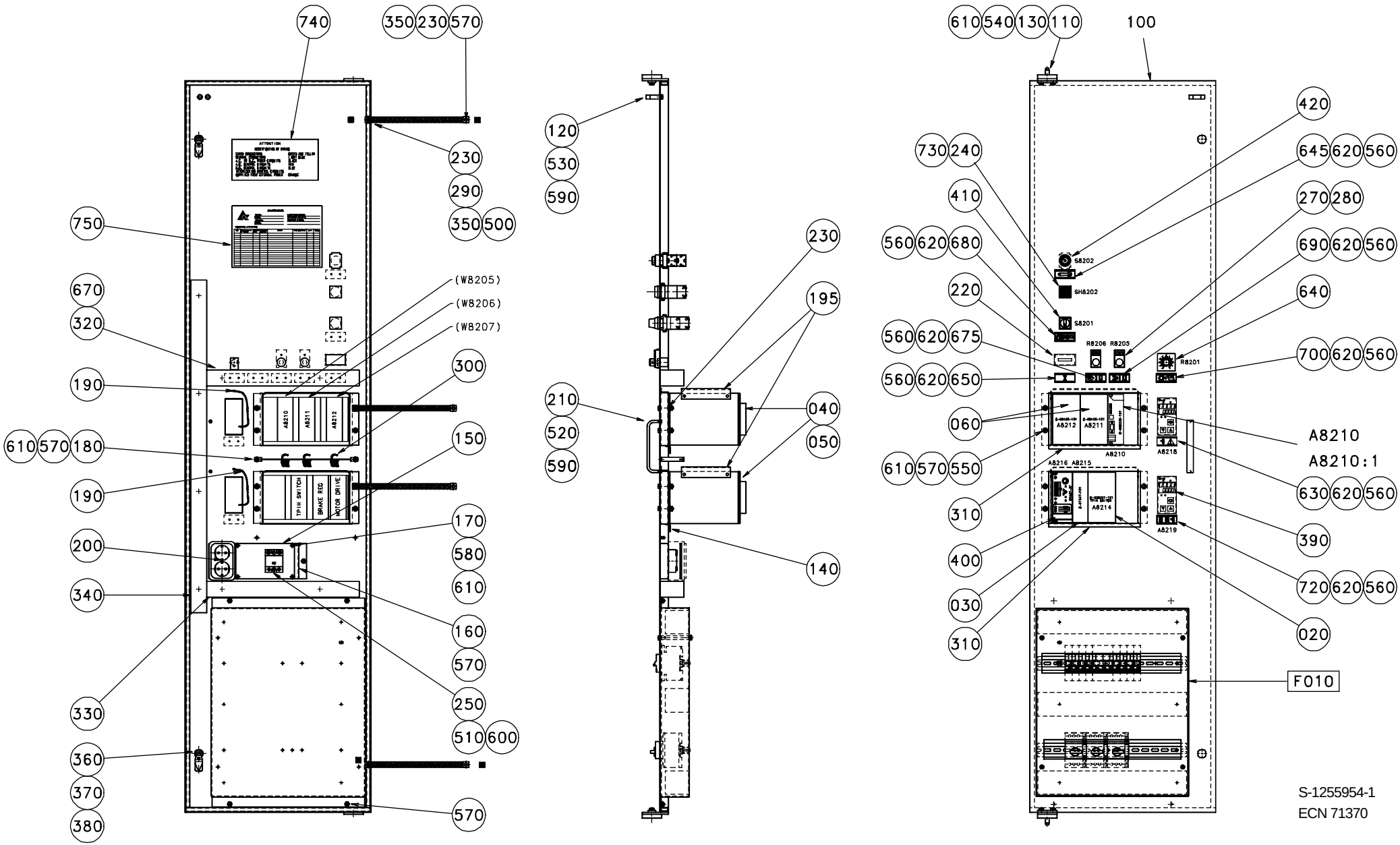
740
350 230 570
230
290
350 500
750
670
320
190
610 570 180
190
200
340
330
360
370
380
(W8205)
(W8206)
(W8207)
300
150
170
580
610
160
570
250
510 600
570
A8210
A8211
A8212
TPIH SWITCH
BRAKE RCC
MOTOR DRIVE
120
530
590
230
195
210
520
590
040
050
140
610 540 130 110
100
730 240
410
560 620 680
220
560 620 675
560 620 650
060
610 570 550
310
400
030
310
420
645 620 560
270 280
690 620 560
640
700 620 560
S8202
SH8202
S8201
R8206 R8205
R8201
A8210
A8210:1
A8212
A8211
A8218
A8216 A8215
A8214
A8219
630 620 560
390
720 620 560
020
F010
S-1255954-1
ECN 71370

Pos	Part No	SP	UN	Qty	Description	Page No
-						
000	**C-1255954-0101**	**-**		**1**	**SWING FRAME**	
F010	C-1185030-0100	-		1	FUSE BOX	33
A8210:1	C-48142-0100	-		1	PT21AF-PULLTAB 21 AUXILIARY FUNCTIO	35
020	C- 558321-0101	D		1	TPIH-SWITCH	
030	C-67347-0101	D		1	CARD BRAKEREG.MAGN.POWDER BR.	
040	C-67388-0101	-		2	FRONT MOUNTED RACK 42TE	
050	C-68262-0101	-		6	BACKPLANE FRONT RACK 8TE	
060	C-68450-0101	D		2	STEPPER MOTOR DRIVER	
	C- 68451-0101	-		-	. STEP. MOT. DR. MAIN CAR	
	C- 68452-0101	-		-	. STEP. MOT. DR. AUX. CAR	
100	1260242	-		1	SWING FRAME	
110	495377	-		2	BUSH	
120	970215	-		1	STOP BLOCK	
130	971346	-		2	GUIDE PIN	
140	1255955	-		2	FRAME	
150	1260438	-		1	TOUCH GUARD	
160	1260431	-		1	PLATE	
170	1260439	-		4	STUD SCREW	
180	1260440	-		1	BRACKET	
190	578874	-		2	HF BRAIDED WIRE 1,6 mm2	
195	1279831	-		2	COVER	
200	90001-0033	-		1	Wall socket Outlet	
210	90017-0017	-		1	HANDLE	
220	90053-0031	-		1	HOUR COUNTER BOWER B906.10	
230	90062-0022	-		28	LOCKING WASHER	
240	B 90064-0082	-		1	PUSH BUTTON WHITE	
250	90119-0043	D		1	OPTO RELAY 22DC 60S-3	
270	90130-0017	-		2	POTENTIOMETER 10 KOHM	
280	90130-0301	-		2	KNOB 3-DIGITS	
290	90135-0035	-		4	LOW IMPEDANCELITZ L=250MM	
300	90135-0039	-		3	SHIELD CLAMMER	
310	90143-0060	-	MM	470	EDGE STRIP 9,5x6,3mm Black PVC	
320	90181-0045	-	MM	390	CABLE DUCT 40X60MM	
330	90181-0045	-	MM	390	CABLE DUCT 40X60MM	
340	90181-0045	-	MM	850	CABLE DUCT 40X60MM	
350	90194-0152	-		4	SIGN "EARTH"	
360	90237-0157	-		2	LOCKING CATCH	
370	90237-0319	-		2	LOCK HOUSING EMKA U134	
380	90237-0320	-		2	LOCK COMPONENT EMKA U136	
390	90410-0051	D		2	TEMPERATURE REGULATOR PHILIPS KS 40	
400	90430-0037	D		1	MOTOR DRIVE CONTR.PME 1802. Repl.by -67	
410	90111-0193	-		1	Rotary switch	
420	90111-0197	-		1	Service Key	
500	312101-0366	-		2	SCREW M6S6X12FZB	
510	312105-0293	-		2	SCREW M6S ISO 4017 M4X16 A280	
520	312115-0287	-		2	SCREW MC6S ISO 4762 M4X8 A280	
530	312121-0325	-		2	SLOTTED HEMCS5X10FZB	
540	312121-0364	-		4	SLOTTED HEMCS6X10FZB	
550	312125-0376	-		8	SLOTTED CHEESE HEAD ISO 1207 M6X35 RFR	
560	311520-0329	-		16	BLANK RIVE2,4X8	
570	312601-0316	-		18	NUT M6M6FZB	
580	312812-0312	-		4	NUTS,HEXAGON,LOCK,WITH NYLON,M4	
590	315101-0146	-		4	WASHER BRB5,3X10FZB	
600	315105-0136	-		2	WASHERS,PLAIN ROUND 4,3X8	
610	315105-0153	-		24	WASHER,PLAIN ROUND BRB 6,4x12 Stainless	
620	359240-0100	-		8	SIGN HOLDER	
630	359241-0336	-		1	SIGN "TEMPP. EL-CABINET"	
640	558389-0101	D		1	MULTI PURPOSE POTENTIOM.	
645	359241-0133	-		1	SIGN "SERVICE SWITCH"	
650	359241-0201	-		1	SIGN "HOUR METER"	
670	90099-0191	-		8	Nut	
675	359241-0470	-		1	Sign" Patch IH Power"	
680	359241-0471	-		1	Sign" Pull Tab Function"	
690	359241-0472	-		1	Sign" Reseal IH Power"	
700	359241-0473	-		1	Sign" Servo Motor Stop Position"	
720	359241-0475	-		1	Sign" Tab Sealing Pad Temperature"	
730	359301-0512	-		1	SIGN"INDEX TO POSITION"	
740	90194-0080	-		1	SIGN "IDENTIF. OF WIRING"	
750	90194-0133	-		1	SIGN "DELIVERED DESIGN"	
A8210	C-558230-0101	D		1	TMCC, CONTROLLER	
W8205	90220-0165	-	MM	2000	Cable	
W8206	90220-0165	-	MM	2000	Cable	
W8207	90220-0165	-	MM	2000	Cable	

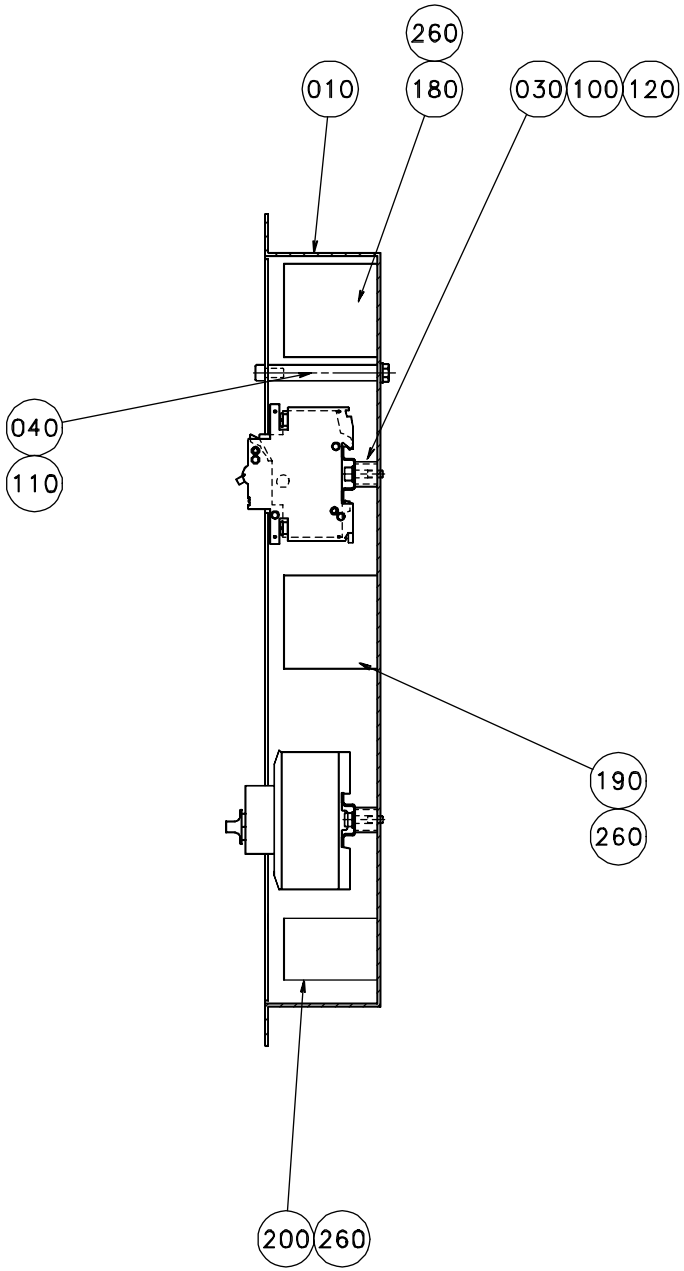

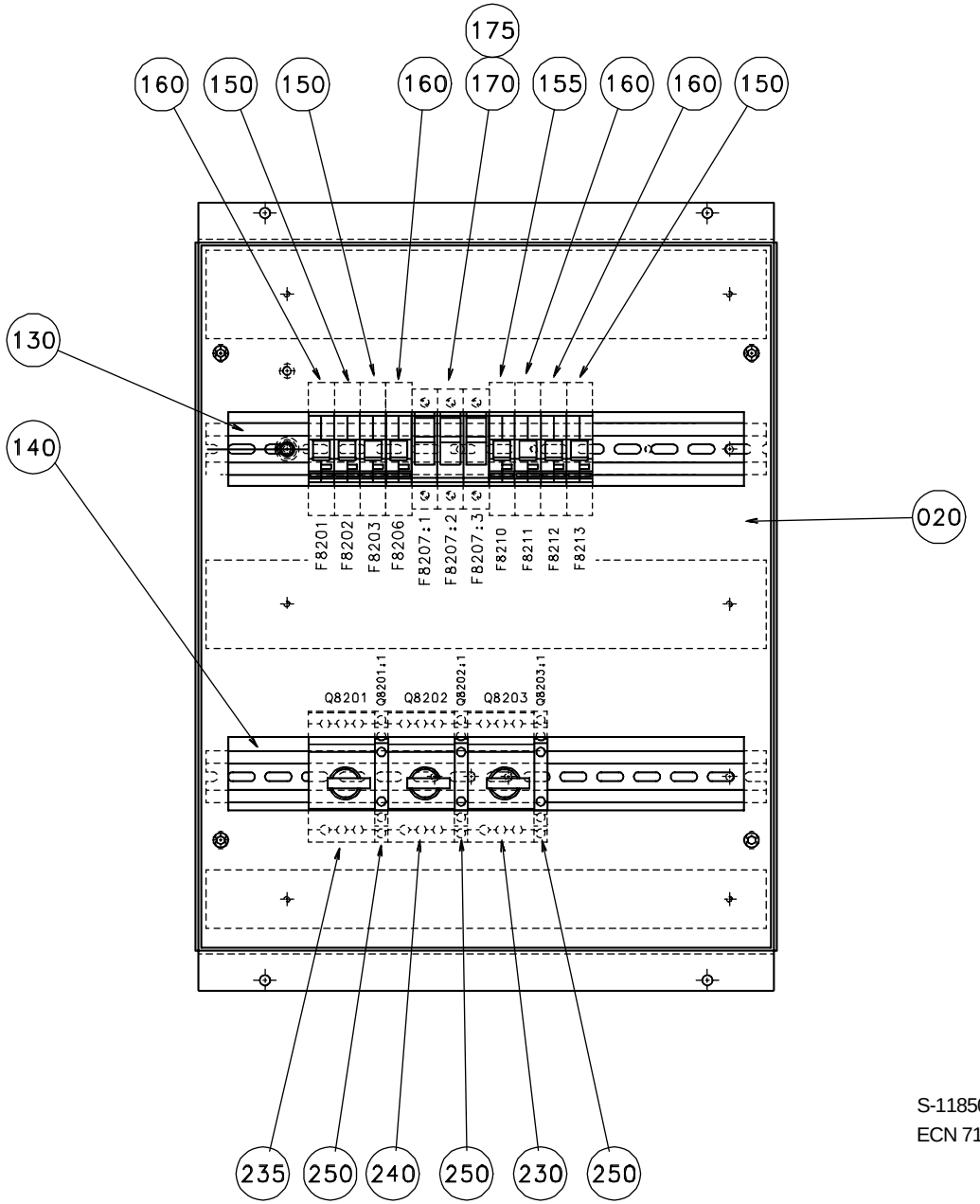

S-1185030-1
ECN 71370

Pos	Part No	SP	UN	Qty	Description	Page No
-						
000	**C-1185030-0101**	**-**		**1**	**FUSE BOX**	
010	734741	-		1	FUSE BOX	
020	734861	-		1	COVER PLATE	
030	495118-0014	-		4	DISTANCE PIPE L=14 MM	
040	495130-0070	-		4	SPACER TUBE L=70MM	
100	312115-0331	-		4	SCREW MC6S ISO 4762 M5X20 A280	
110	312115-0366	-		4	SCREW MC6S ISO 4762 M6X12 A280	
120	315105-0146	-		4	WASHERS,PLAIN ROUND 5,3X10	
130	353042-0005	-	MM	380	RAIL TS 35/7.5	
140	353042-0005	-	MM	380	RAIL TS 35/7.5	
150	90007-0128	-		3	FUSE 1P 6A K	
155	90007-0129	-		1	FUSE ABB-STOTZ 1P 10A K	
160	90007-0156	-		4	FUSE 1P 4A K	
170	90233-0028	-		3	FUSE 10A FERRAZ	
175	90233-0303	-		3	FUSEHOLDER FERRAZ ST10	
180	90181-0046	-	MM	380	CABEL DUCT 60X60MM	
190	90181-0046	-	MM	380	CABEL DUCT 60X60MM	
200	90181-0045	-	MM	380	CABLE DUCT 40X60MM	
230	90095-0072	-		1	OVERLOAD PROTECTION PKZM 1,0A	
235	90095-0077	-		1	OVERLOAD PROTECTION PKZM 10A	
240	90095-0073	-		1	OVERLOAD PROTECTION PKZM 1,6A	
250	90259-0313	-		3	AUX. CONTACT K&M NHI21-PKZM0	
260	90287-0124	-		6	SCREW,NYLON M4X12 DIN84	

Pos	Part No	SP	UN	Qty	Description	Page No

This page is intentionally left blank

Pos	Part No	SP	UN	Qty	Description	Page No
-						
000	**C- 48142-0101**	**-**		**1**	**PT21AF-PULLTAB 21 AUXILIARY FUNCTIONS**	
100	C-42942-0100	-		1	PT21AF-LIST OF DOCUMENTS	37

Pos	Part No	SP	UN	Qty	Description	Page No

This page is intentionally left blank

Pos	Part No	SP	UN	Qty	Description	Page No
-						
000	**C- 42942-0101**	**-**		**1**	**PT21AF-LIST OF DOCUMENTS**	
010	C-48142-0100	-		x	PT21AF-PULLTAB 21 AUXILIARY FUNCTIONS	35
020	C-42942-0100	-		x	PT21AF-LIST OF DOCUMENT	37
100	597743	-		x	Component without TP-no	
110	57801	-		x	Document Description	
120	57802	-		x	Master Diskette	
130	57803	-		x	Manufacturing Instruction	
140	57804	-		x	Short Form Information	
150	57805	-		x	Functional Description	
160	57806	-		x	Program Source	
170	57807	-		x	Document Diskette	
180	57808	-		x	LABEL LAYOUT DRAWING	

Pos	Part No	SP	UN	Qty	Description	Page No

This page is intentionally left blank

Pos	Part No	SP	UN	Qty	Description	Page No
-						
000	**C- 48141-0101**	**-**		**1**	**PT21MC-PULLTAB 21 MOTION CONTROL**	
010	C-42943-0100	-		1	PT21MC-LIST OF DOCUMENTS	41
020	C-42944-0100	-		1	PT21MC-LIST OF MATERIALS	43

Pos	Part No	SP	UN	Qty	Description	Page No

This page is intentionally left blank

Pos	Part No	SP	UN	Qty	Description	Page No
-						
000	**C- 48141-0101**	**-**		**1**	**PT21MC-PULLTAB 21 MOTION CONTROL**	
010	C-48141-0100	-		x	PT21MC-PULLTAB 21 MOTION CONTROL	39
020	C-42943-0100	-		x	PT21MC-LIST OF DOCUMENTS	41
030	C-42944-0100	-		x	PT21MC-LIST OF MATERIALS	43
100	597745	-		x	COMPONENTS WITHOUT TP-NO.	
110	57789	-		x	DOCUMENT DESCRIPTION	
120	57790	-		x	MASTER DISKETTE	
130	57791	-		x	MANUFACTURE INSTRUCTIONS	
140	57792	-		x	SHORT FORM INFORMATION	
150	57793	-		x	FUNCTIONAL DESCRIPTION	
160	57794	-		x	PROGRAM SOURCE	
170	57795	-		x	DOCUMENTATION DISKETTE	
180	57796	-		x	LABEL LAYOUT DRAWING	

Pos	Part No	SP	UN	Qty	Description	Page No

This page is intentionally left blank

Pos	Part No	SP	UN	Qty	Description	Page No
-						
000	**C- 42944-0101**	**-**		**1**	**PT21MC-LIST OF MATERIALS**	
010	90045-0379	-		1	MEMORY EPROM	
020	90003-0509	-		1	BOX	

Pos	Part No	SP	UN	Qty	Description	Page No

This page is intentionally left blank

Pos	Part No	SP	UN	Qty	Description	Page No
-						
000	**C- 67600-0501**	**-**		**2**	**TPIH 2000 GENERATOR**	
10	542036	-		X	SIGN BOARD	
500	565140-0001	-		X	COMPONENTS WITHOUT TP-NO	
510	565144	-		X	LABEL LED	
520	565145	-		X	LABEL X1/X2	
530	565146	-		X	INSULATION SPACER	
540	565147	-		X	GUIDE RAIL LEFT	
550	565148	-		X	GUIDE RAIL RIGHT	
560	565149	-		X	GUIDE RAIL BACK	
570	565150	-		X	FRONT HANDLE	
580	565151	-		X	BOX BOTTOM	
590	565152	-		X	FRAME	
600	565153	-		X	COMPLETE BOX	
610	565154	-		X	BOX UPPER PART	
620	57371-01.01	-		X	PACKING INSTRUCTION	
630	57203-01.01	-		X	TEST INSTRUCTION	
F100	C- 67577-0501	-		X	POWER CARD	
	C- 67564-0101	-		-	. THIH TOROID COIL 1	
	C- 67565-0101	-		-	. TPIH TOROID COIL 2	
	C- 67566-0101	-		-	. TPIH TOROID COIL 3	
	C- 67567-0101	-		-	. TPIH THERMOSTAT CABLE	
	C- 67568-0101	-		-	. TPIH COIL SINGLE LAYER	
	C- 67569-0101	-		-	. TPIH TANK COIL	
	C- 67570-0101	-		-	. TPIH CAPACITOR CARD	
	C- 67573-0101	-		-	. TPIH TRANSISTOR PACKAGE	
	C- 67574-0401	-		-	. OUTPUT TRANSFORMER	
	C- 67581-0101	-		-	. TPIH TRANSISTOR PACKAGE	
	C- 67582-0101	-		-	. TPIH HEATSINK PREREGULA	
F200	C- 67578-0101	-		X	TPIH FAN HOLDER	
	C- 67575-0101	-		-	. TPIH INTERNAL TRANSFORM	
F300	C- 67579-0501	-		X	CONTROL CARD	
	C- 67576-0101	-		-	. TPIHTRANSFORMER CONT.CA	
F400	C- 67580-0201	-		X	FRONT PANEL	

Pos	Part No	SP	UN	Qty	Description	Page No

CABLE HARNESS

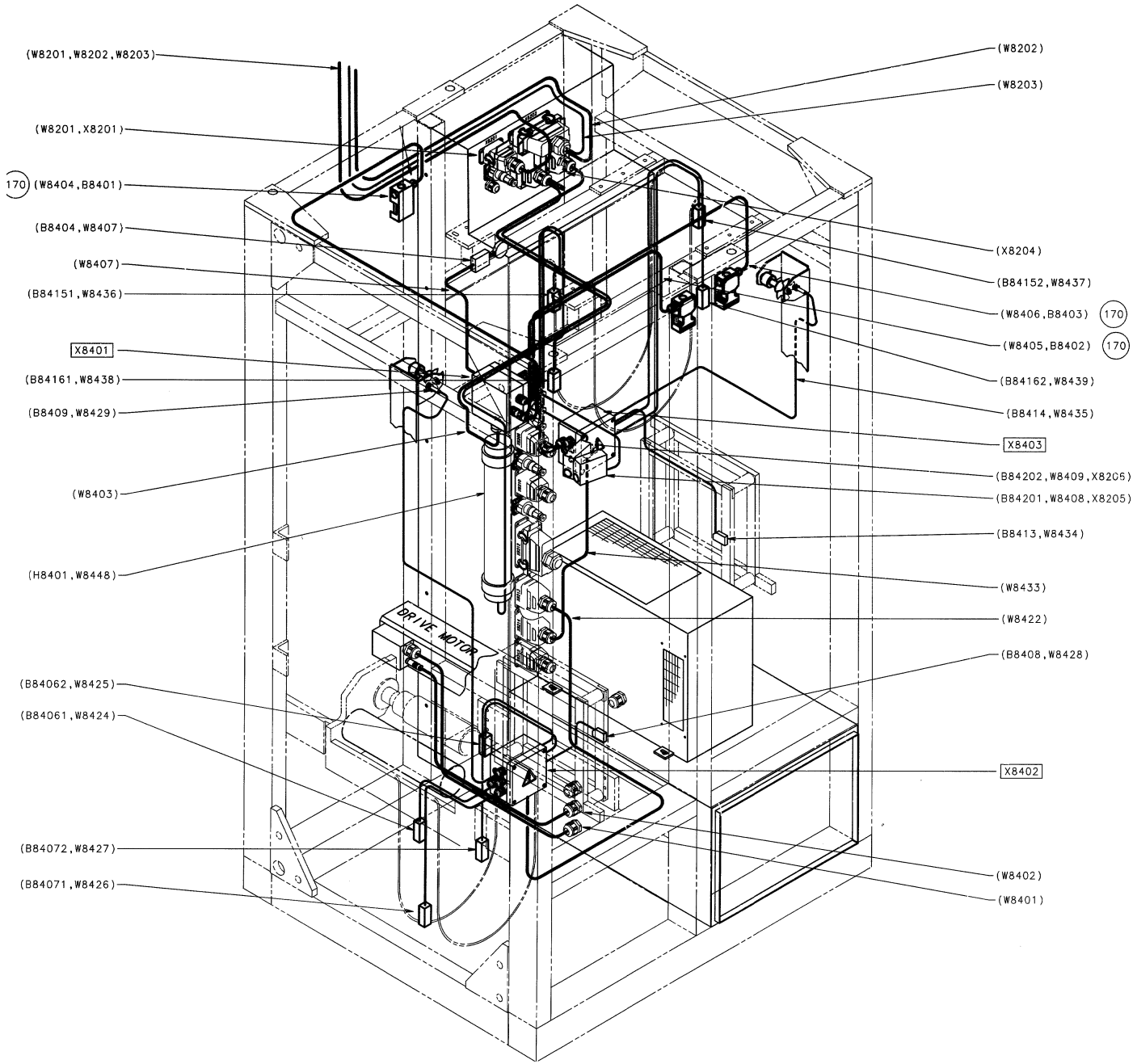

S-1260684-1
ECN 71370

Pos	Part No	SP	UN	Qty	Description	Page No
-						
000	**C-1260684-0101**	**-**		**1**	**CABLE HARNESS**	
X8401	C-1260813-010V	-		1	CONNECTION BOX	55
X8402	C-1260812-010V	-		1	CONNECTION BOX	53
X8403	C-1260811-010V	-		1	CONNECTION BOX	51
050	1282599	-		1	INSERT	
060	1282600	-		1	INSERT	
070	1282787	-		1	INSERT	
090	1260902	-		1	INSERT	
100	90110-0150	-		1	MALE INSERT 24-P, CABLE	
110	90110-0152	-		1	CABLE HOOD 24-P	
120	90110-0157	-		2	COVER	
130	90110-0159	-		2	CONTACT	
140	90110-0216	-		4	MALE PLUG	
150	90110-0217	-		4	COVER	
160	90110-0235	-		6	CABLE CONTACT	
170	352103-0105	-		3	CABLE GLAND STR 11 PR 15,2	
180	352103-0111	-		3	CABLE GLAND ST 16, 10-14MM	
190	353240-0003	-		2	GLAND FITT	
200	353240-0005	-		1	GLAND FITT	
210	353240-0006	-		1	GLAND FITT	
240	359005-0010	-		8	MARKING SET 0-9	
250	359005-0050	-		1	MARKING SET "X"	
260	90089-0008	-		1	SLEEVE	
W8401	90220-0084	-	MM	1000	SERVOCABLE 4X2,5+2(2X0.75)	
W8402	1255692-0010	D		1	CABLE	
W8403	351150-0407	-	MM	1200	CABLES,MULTI-CONDUCTOR 12X0,75 MM2	
W8404	351150-0405	-	MM	1000	CABLE,OLFLEX 5x0,75 MM2	
W8405	351150-0405	-	MM	1000	CABLE,OLFLEX 5x0,75 MM2	
W8406	351150-0405	-	MM	1000	CABLE,OLFLEX 5x0,75 MM2	
W8421	351150-0403	-	MM	2000	CABLE OLFLEX 3x0,75 MM2	
W8422	351150-0407	-	MM	2500	CABLES,MULTI-CONDUCTOR 12X0,75 MM2	
W8433	351150-0407	-	MM	2500	CABLES,MULTI-CONDUCTOR 12X0,75 MM2	
W8446	351150-0413	-	MM	2000	CABLES,MULTI-CONDUCTOR 4X1,5 MM2	
W8448	351150-0412	-	MM	2500	CABLES,MULTI-CONDUCTOR 3X1,5 MM2	

Pos	Part No	SP	UN	Qty	Description	Page No

CABLE HARNESS

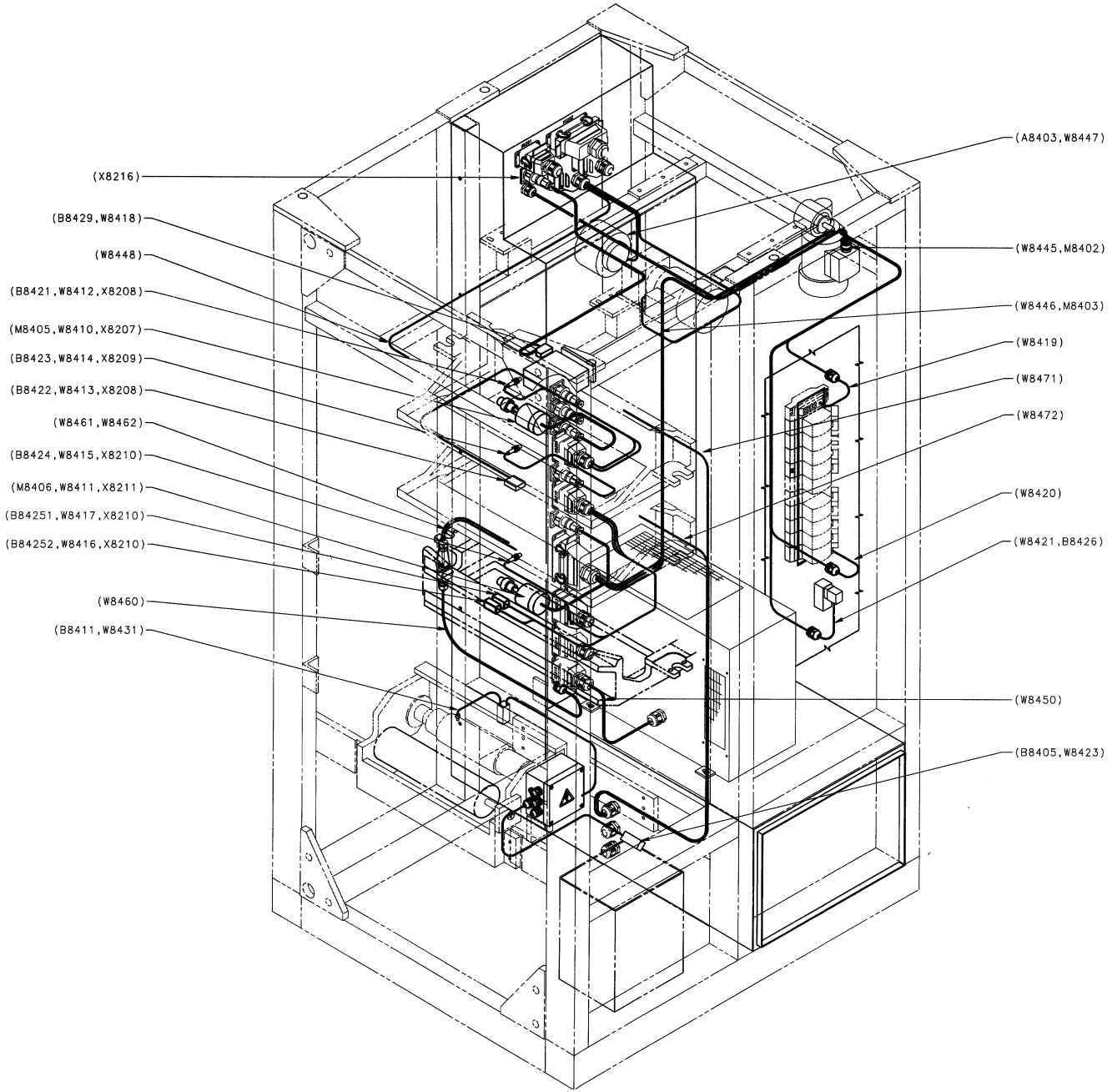

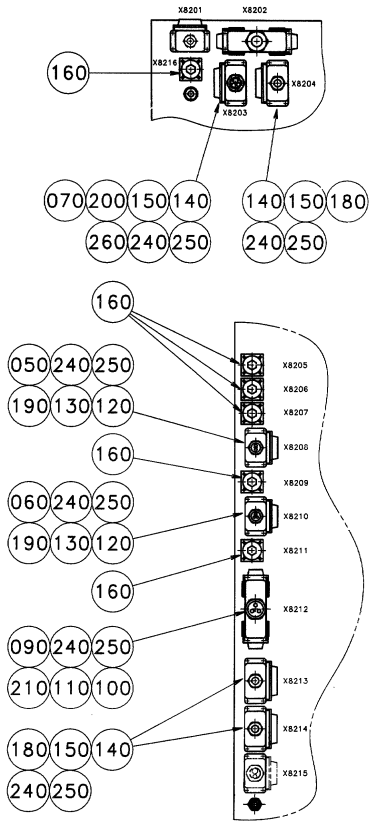

S-1260684-2
ECN 71370

Pos	Part No	SP	UN	Qty	Description	Page No
-						
000	**C-1260684-0101**	**-**		**1**	**CABLE HARNESS**	
X8401	C-1260813-010V	-		1	CONNECTION BOX	55
X8402	C-1260812-010V	-		1	CONNECTION BOX	53
X8403	C-1260811-010V	-		1	CONNECTION BOX	51
050	1282599	-		1	INSERT	
060	1282600	-		1	INSERT	
070	1282787	-		1	INSERT	
090	1260902	-		1	INSERT	
100	90110-0150	-		1	MALE INSERT 24-P, CABLE	
110	90110-0152	-		1	CABLE HOOD 24-P	
120	90110-0157	-		2	COVER	
130	90110-0159	-		2	CONTACT	
140	90110-0216	-		4	MALE PLUG	
150	90110-0217	-		4	COVER	
160	90110-0235	-		6	CABLE CONTACT	
170	352103-0105	-		3	CABLE GLAND STR 11 PR 15,2	
180	352103-0111	-		3	CABLE GLAND ST 16, 10-14MM	
190	353240-0003	-		2	GLAND FITT	
200	353240-0005	-		1	GLAND FITT	
210	353240-0006	-		1	GLAND FITT	
240	359005-0010	-		8	MARKING SET 0-9	
250	359005-0050	-		1	MARKING SET "X"	
260	90089-0008	-		1	SLEEVE	
W8401	90220-0084	-	MM	1000	SERVOCABLE 4X2,5+2(2X0.75)	
W8402	1255692-0010	D		1	CABLE	
W8403	351150-0407	-	MM	1200	CABLES,MULTI-CONDUCTOR 12X0,75 MM2	
W8404	351150-0405	-	MM	1000	CABLE,OLFLEX 5x0,75 MM2	
W8405	351150-0405	-	MM	1000	CABLE,OLFLEX 5x0,75 MM2	
W8406	351150-0405	-	MM	1000	CABLE,OLFLEX 5x0,75 MM2	
W8421	351150-0403	-	MM	2000	CABLE OLFLEX 3x0,75 MM2	
W8422	351150-0407	-	MM	2500	CABLES,MULTI-CONDUCTOR 12X0,75 MM2	
W8433	351150-0407	-	MM	2500	CABLES,MULTI-CONDUCTOR 12X0,75 MM2	
W8446	351150-0413	-	MM	2000	CABLES,MULTI-CONDUCTOR 4X1,5 MM2	
W8448	351150-0412	-	MM	2500	CABLES,MULTI-CONDUCTOR 3X1,5 MM2	

Pos	Part No	SP	UN	Qty	Description	Page No

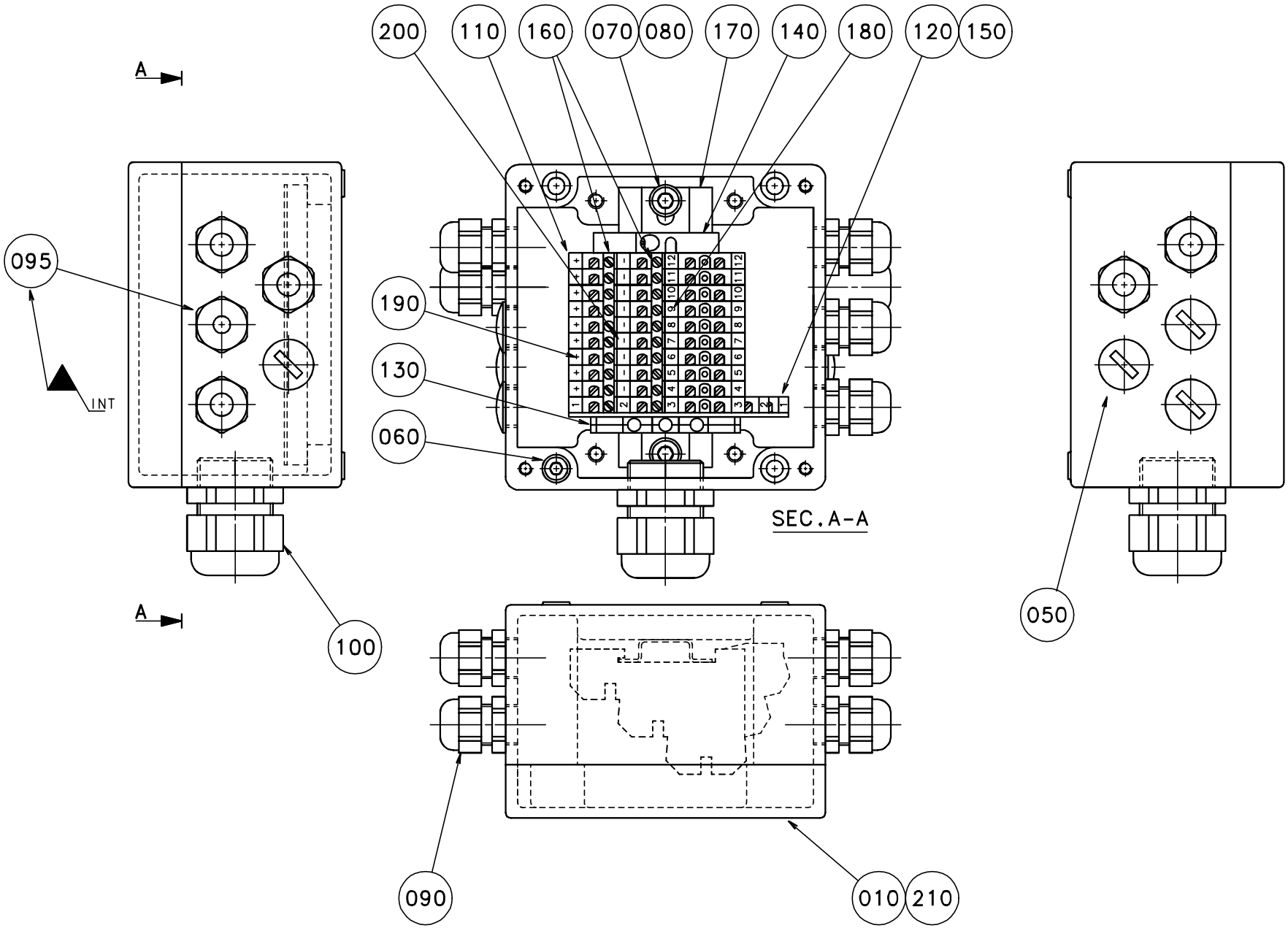

S-1260811-1
ECN 71157

Pos	Part No	SP	UN	Qty	Description	Page No
-						
000	**C-1260811-0101**	**-**		**1**	**CONNECTION BOX**	
010	1260814	-		1	CONNECTION BOX	
050	90002-0013	-		4	BLANK-OFF PLUG 15,2	
060	312115-0331	-		4	SCREW O4762 M5X20A280	
070	312115-0362	-		2	SCREW O4762 M6X8A280	
080	315105-0153	-		2	WASHER BRB6,4X12RFR	
090	352103-0101	-		5	CABLE GLAND ST 9	
095	352103-0100	-		1	CABLE GLAND STR 9 PR15,2	
100	352103-0115	-		1	CABLE GLAND STR 21, 7-16MM	
110	353021-0301	-		9	FEED THROUGH TERM.DLI/2,5	
120	353021-0302	-		1	FEED TROUGH TERM. DLD2,5	
130	353024-0205	-		1	EARTH TERMINAL WPE 4	
140	353031-0201	-		1	END BRACKET EW 35	
150	353032-0302	-		1	END PLATE AP	
160	353034-0404	-		2	BRIDGE CONNECTOR Q10	
170	353042-0005	-	MM	105	RAIL TS35/7.5	
180	359011-0807	-		6	MARKING PLATE 5-FW 1-50	
190	359011-0817	-		1	SYMBOL "+" 50PCS WIDTH5MM	
200	359011-0818	-		1	SYMBOL "-" 50PCS WIDTH5MM	
210	359705-0015	-		1	WARNING SIGN"EL SHOCK"	

Pos	Part No	SP	UN	Qty	Description	Page No

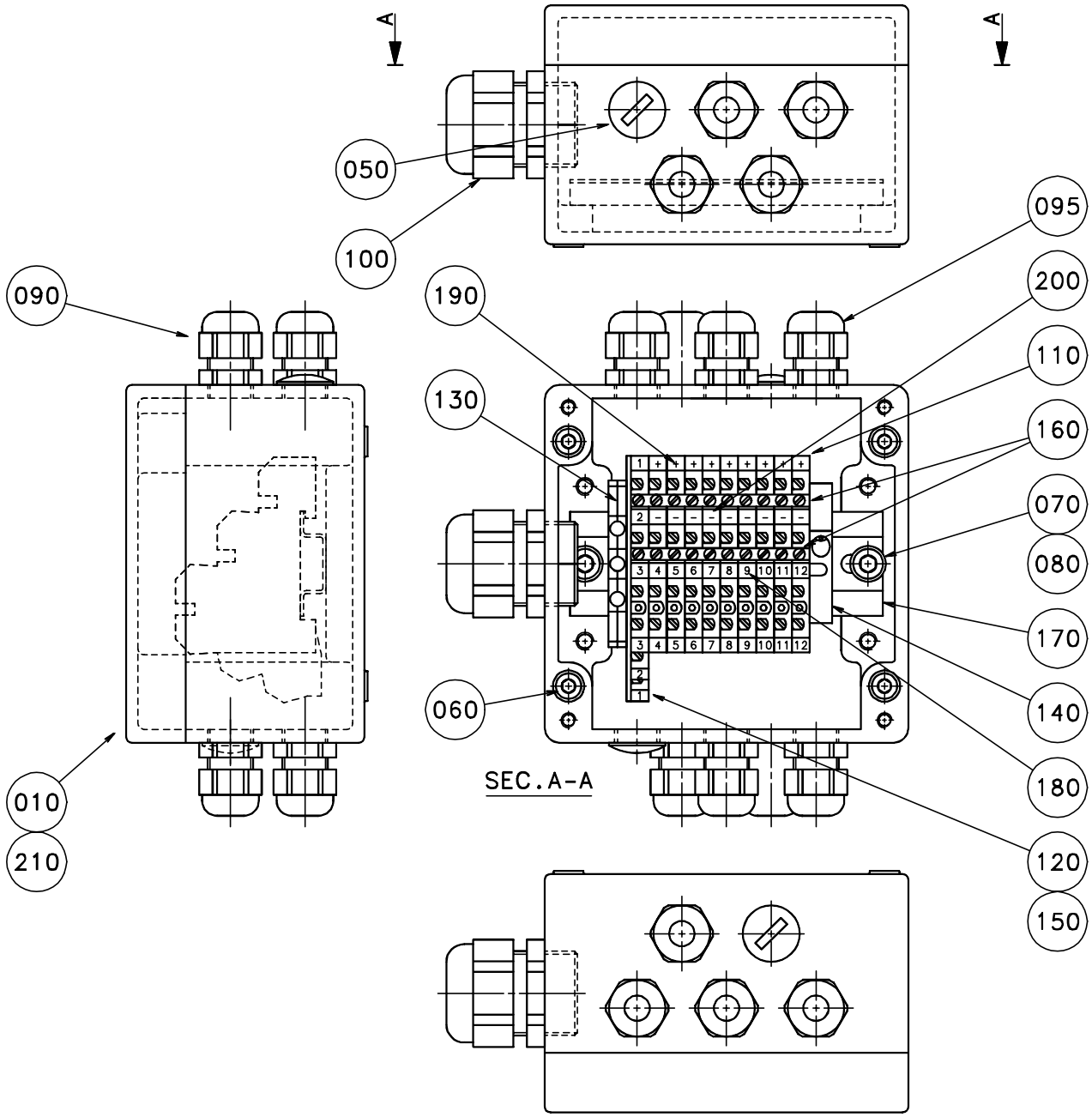

S-1260812-1
ECN 71157

Pos	Part No	SP	UN	Qty	Description	Page No
-						
000	**C-1260812-0101**	**-**		**1**	**CONNECTION BOX**	
010	1260814	-		1	CONNECTION BOX	
050	90002-0013	-		2	BLANK-OFF PLUG 15,2	
060	312115-0331	-		4	SCREW O4762 M5X20A280	
070	312115-0362	-		2	SCREW O4762 M6X8A280	
080	315105-0153	-		2	WASHER BRB6,4X12RFR	
090	352103-0101	-		8	CABLE GLAND ST 9	
095	352103-0100	-		1	CABLE GLAND STR 9 PR15,2	
100	352103-0115	-		1	CABLE GLAND STR 21, 7-16MM	
110	353021-0301	-		8	FEED THROUGH TERM.DLI/2,5	
120	353021-0302	-		1	FEED TROUGH TERM. DLD2,5	
130	353024-0205	-		1	EARTH TERMINAL WPE 4	
140	353031-0201	-		1	END BRACKET EW 35	
150	353032-0302	-		1	END PLATE AP	
160	353034-0404	-		2	BRIDGE CONNECTOR Q10	
170	353042-0005	-	MM	105	RAIL TS35/7.5	
180	359011-0807	-		2	MARKING PLATE 5-FW 1-50	
190	359011-0817	-		1	SYMBOL "+" 50PCS WIDTH5MM	
200	359011-0818	-		1	SYMBOL "-" 50PCS WIDTH5MM	
210	359705-0015	-		1	WARNING SIGN"EL SHOCK"	

Pos	Part No	SP	UN	Qty	Description	Page No

CONNECTION BOX

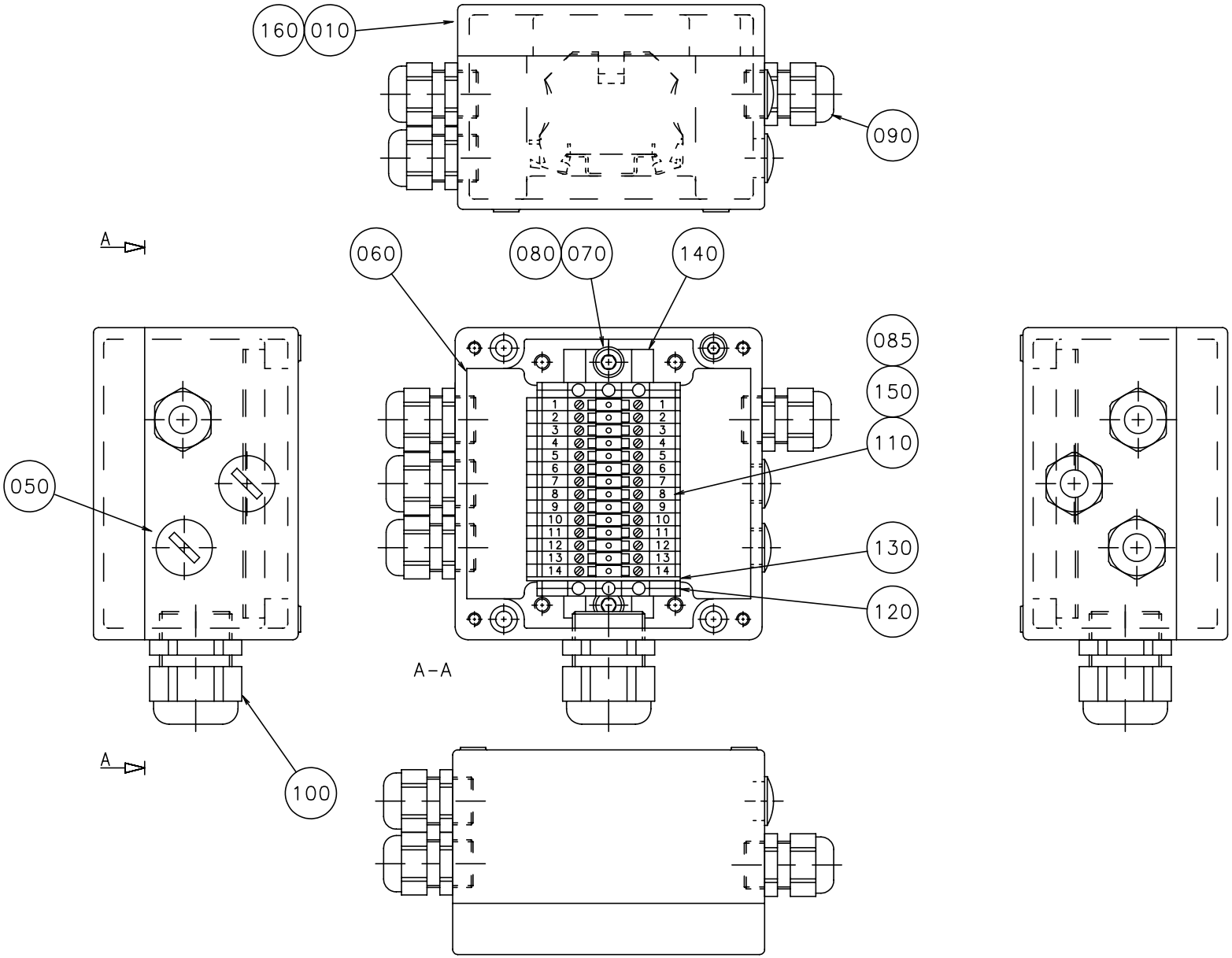

S-1260813-1
ECN 22912

Pos	Part No	SP	UN	Qty	Description	Page No
-						
000	**C-1260813-0101**	**-**		**1**	**CONNECTION BOX**	
010	1260815	-		1	CONNECTION BOX	
050	90002-0009	-		2	BLANK-OFF PLUG 18.6	
060	312115-0331	-		4	SCREW O4762 M5X20A280	
070	312115-0362	-		2	SCREW O4762 M6X8A280	
080	315105-0153	-		2	WASHER BRB6,4X12RFR	
085	351172-0102	-	MM	300	CABLE AWM DARKBLUE 0.75	
090	352103-0106	-		4	CABLE GLAND ST 11	
100	352103-0115	-		1	CABLE GLAND STR 21, 7-16MM	
110	353021-0216	-		14	TERM. WDU 2,5 BLUE WEIDM.	
120	353024-0205	-		2	EARTH TERMINAL WPE 4	
130	353032-0005	-		1	END PLATEWAP 2,5-10	
140	353042-0005	-	MM	105	RAIL TS35/7.5	
150	359011-0807	-		14	MARKING PLATE 5-FW 1-50	
160	359705-0015	-		1	WARNING SIGN"EL SHOCK"	

Pos	Part No	SP	UN	Qty	Description	Page No

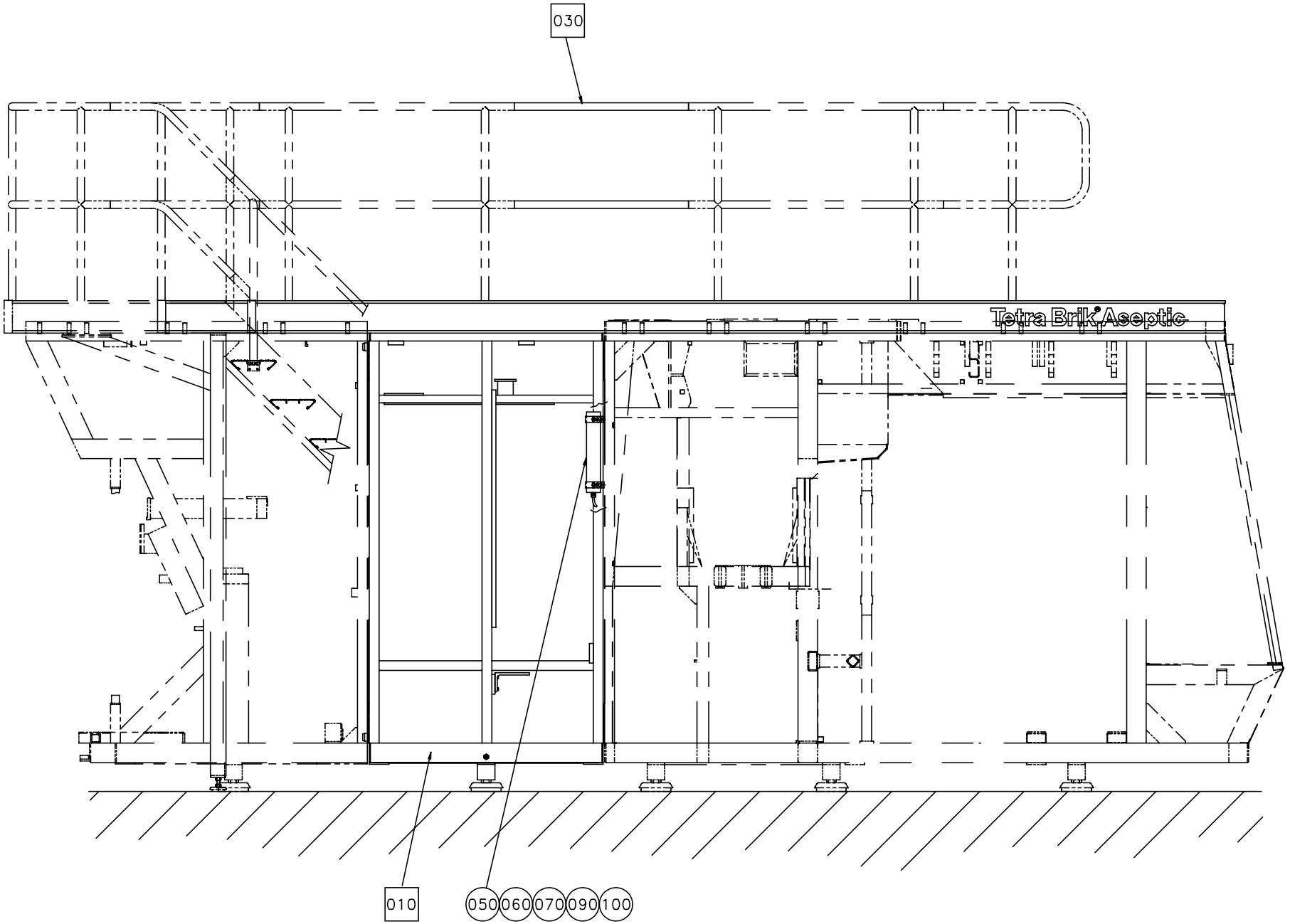

S-1095930-1
ECN 70518

Pos	Part No	SP	UN	Qty	Description	Page No
-						
000	**C-1095930-0101**	**-**		**1**	**FRAME**	
F010	C-1185034-010V	-		1	FRAME ASSEMBLY	59
	C-1035076-010V	-		-	. LEG	63
	C-1035471-010V	-		-	. LEG	65
F030	C-1185080-010V	-		1	PLATFORM	67
050	312105-0366	-		4	SCREW O4017 M6X12A280	
060	315105-0153	-		4	WASHER BRB6,4X12RFR	
070	352103-0106	-		1	CABLE GLAND ST 11	
090	90164-0015	-		1	LIGHT FIXTURE	
100	90164-0302	-		2	BRACKET	

Pos	Part No	SP	UN	Qty	Description	Page No

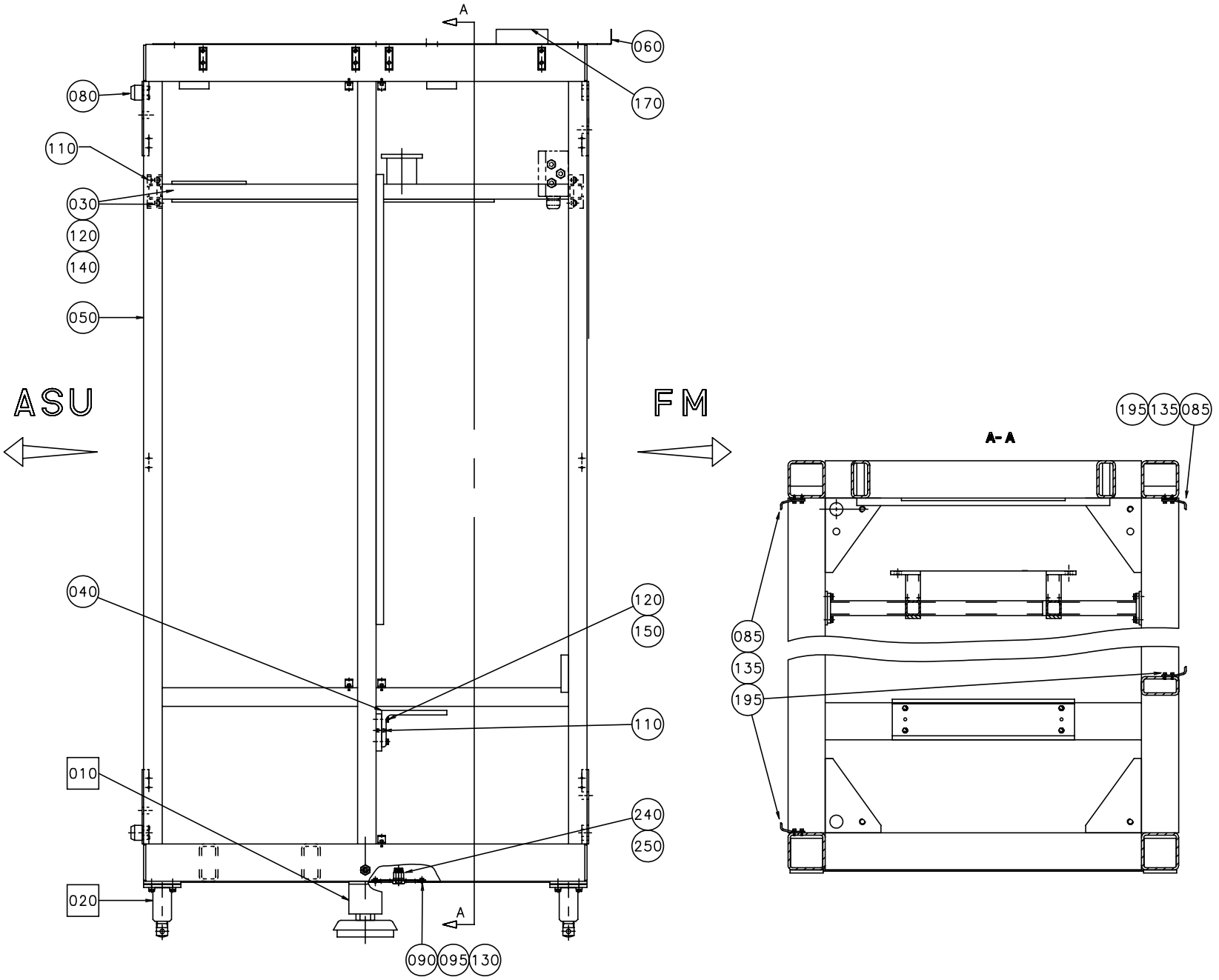

S-1185034-1
ECN 70518

Pos	Part No	SP	UN	Qty	Description	Page No
-						
000	**C-1185034-0101**	**-**		**1**	**FRAME ASSEMBLY**	
F010	C-1035076-010V	-		2	LEG	63
F020	C-1035471-010V	-		4	LEG	65
030	985866	-		1	TOP FRAME	
040	1140427	-		1	BRACKET	
050	1140428	-		1	FRAME	
060	1140669	-		1	PLATE	
080	1037762	-		2	PIN	
085	1036227	-		6	BRACKET	
090	1279832	-		1	PLATE	
095	1279833	-		1	RUBBER STRIP	
110	311112-0377	-		4	SLOTTED TURP 8X24 RFR	
120	312105-0453	-		12	SCREW O4017 M8X25A280	
130	312105-0323	-		4	SCREW O4017 M5X8A280	
135	312115-0327	-		12	SCREW O4762 M5X12A280	
140	315105-0165	-		8	WASHER BRB8,4X16RFR	
150	315115-0165	-		4	WASHER TBRB8,4X16RFR	
170	90143-0059	-	M	1	STRIP	
180	312125-0289	-		33	SLOTTED HEMCS4X10RFR	
190	315105-0136	-		9	WASHER BRB4,3X8RFR	
195	315105-0146	-		12	WASHER BRB5,3X10RFR	
200	352113-0204	-		9	ANCHOR TM3S25-M	
210	352113-0205	-		24	ANCHOR	
240	90055-0096	-		1	STRAIGHT CONNECTION	
250	90330-0038	-		1	NUT	

Pos	Part No	SP	UN	Qty	Description	Page No

FRAME ASSEMBLY

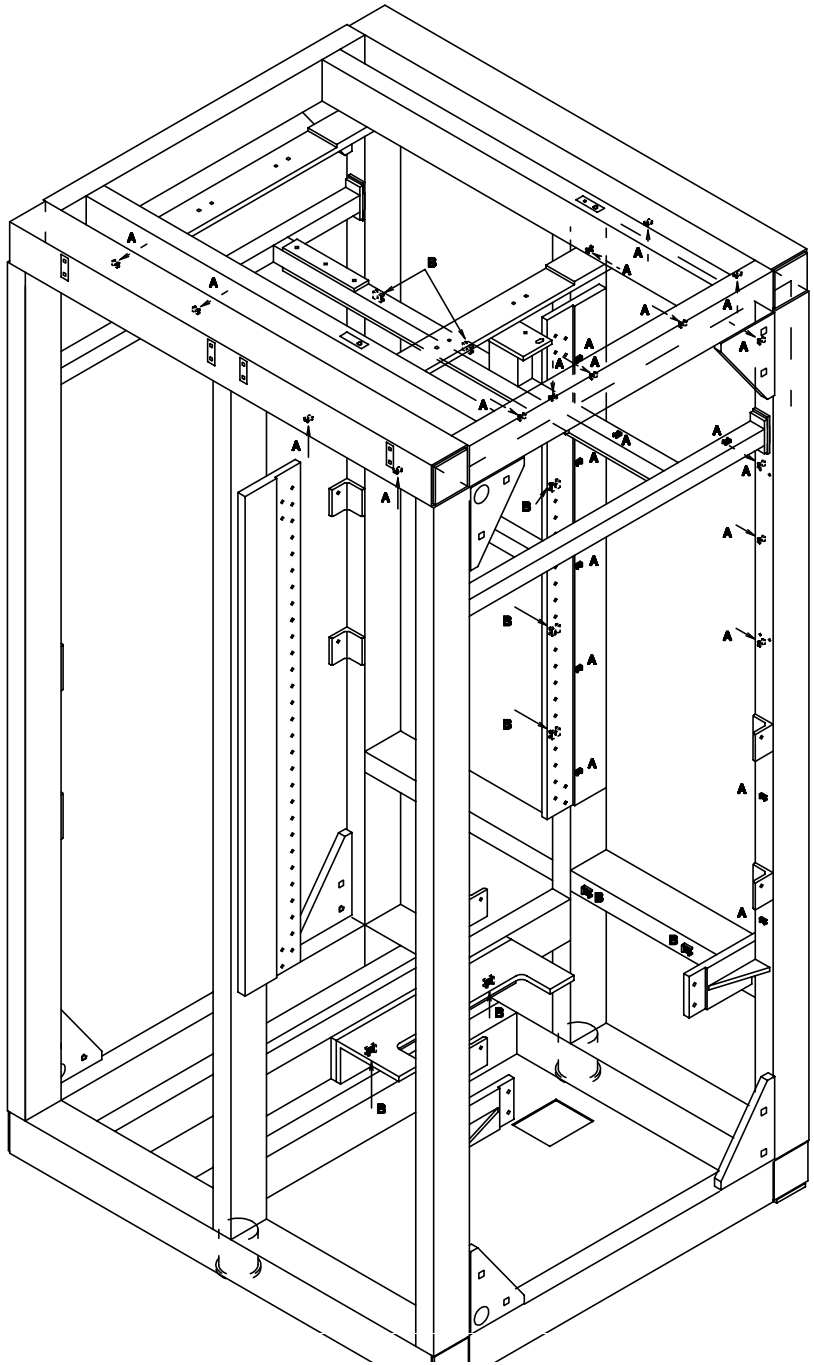

ANCHOR FOR CLIP TYPE "A": SEE POS. (210) (180)

ANCHOR FOR CLIP TYPE "B": SEE POS. (200) (180) (190)

Pos	Part No	SP	UN	Qty	Description	Page No
-						
000	**C-1185034-0101**	**-**		**1**	**FRAME ASSEMBLY**	
F010	C-1035076-010V	-		2	LEG	63
F020	C-1035471-010V	-		4	LEG	65
030	985866	-		1	TOP FRAME	
040	1140427	-		1	BRACKET	
050	1140428	-		1	FRAME	
060	1140669	-		1	PLATE	
080	1037762	-		2	PIN	
085	1036227	-		6	BRACKET	
090	1279832	-		1	PLATE	
095	1279833	-		1	RUBBER STRIP	
110	311112-0377	-		4	SLOTTED TURP 8X24 RFR	
120	312105-0453	-		12	SCREW O4017 M8X25A280	
130	312105-0323	-		4	SCREW O4017 M5X8A280	
135	312115-0327	-		12	SCREW O4762 M5X12A280	
140	315105-0165	-		8	WASHER BRB8,4X16RFR	
150	315115-0165	-		4	WASHER TBRB8,4X16RFR	
170	90143-0059	-	M	1	STRIP	
180	312125-0289	-		33	SLOTTED HEMCS4X10RFR	
190	315105-0136	-		9	WASHER BRB4,3X8RFR	
195	315105-0146	-		12	WASHER BRB5,3X10RFR	
200	352113-0204	-		9	ANCHOR TM3S25-M	
210	352113-0205	-		24	ANCHOR	
240	90055-0096	-		1	STRAIGHT CONNECTION	
250	90330-0038	-		1	NUT	

Pos	Part No	SP	UN	Qty	Description	Page No

LEG

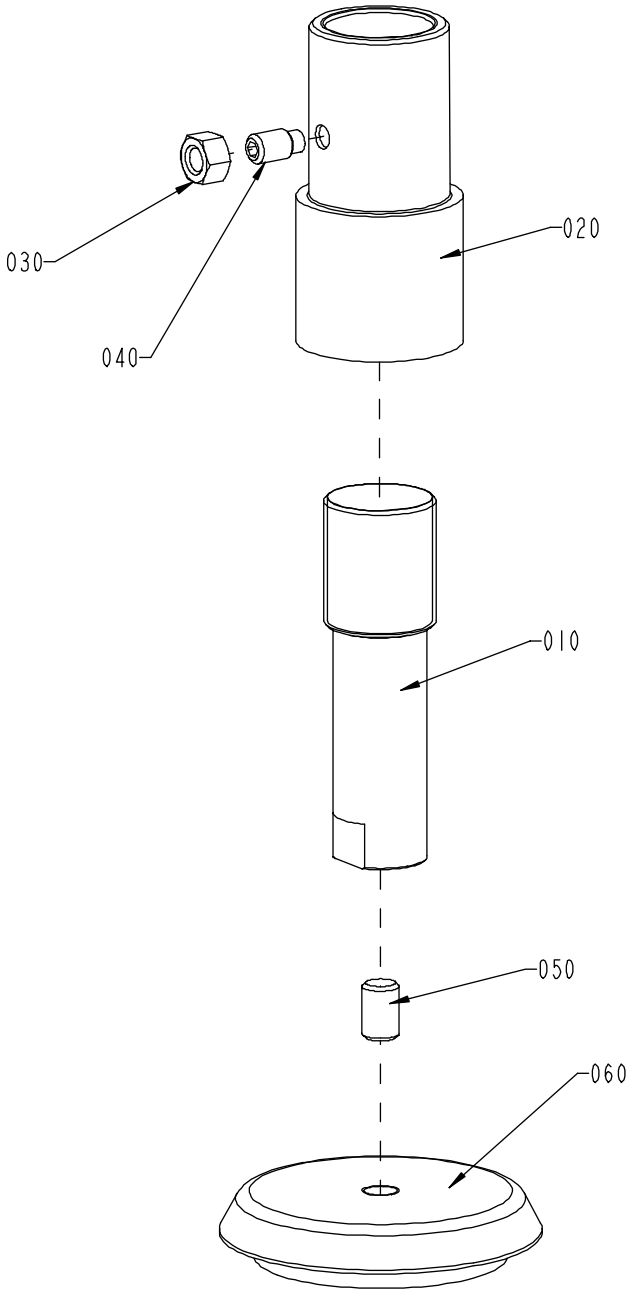

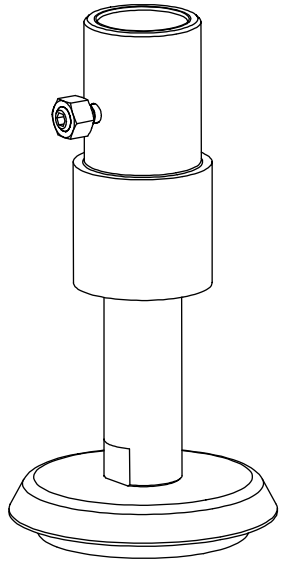

S-1035076-1
ECN 71019

Pos	Part No	SP	UN	Qty	Description	Page No
-						
000	**C-1035076-0101**	**-**		**2**	**LEG**	
010	1036119	-		1	LEG	
020	1036120	-		1	SLEEVE	
030	312605-0324	-		1	NUT M6M16RFR	
040	312311-0624	-		1	STOP SCREW T6SS16X30FZB	
050	90347-0029	-		1	DAMPER	
060	90287-0130	-		1	GRUB SCREW	

Pos	Part No	SP	UN	Qty	Description	Page No

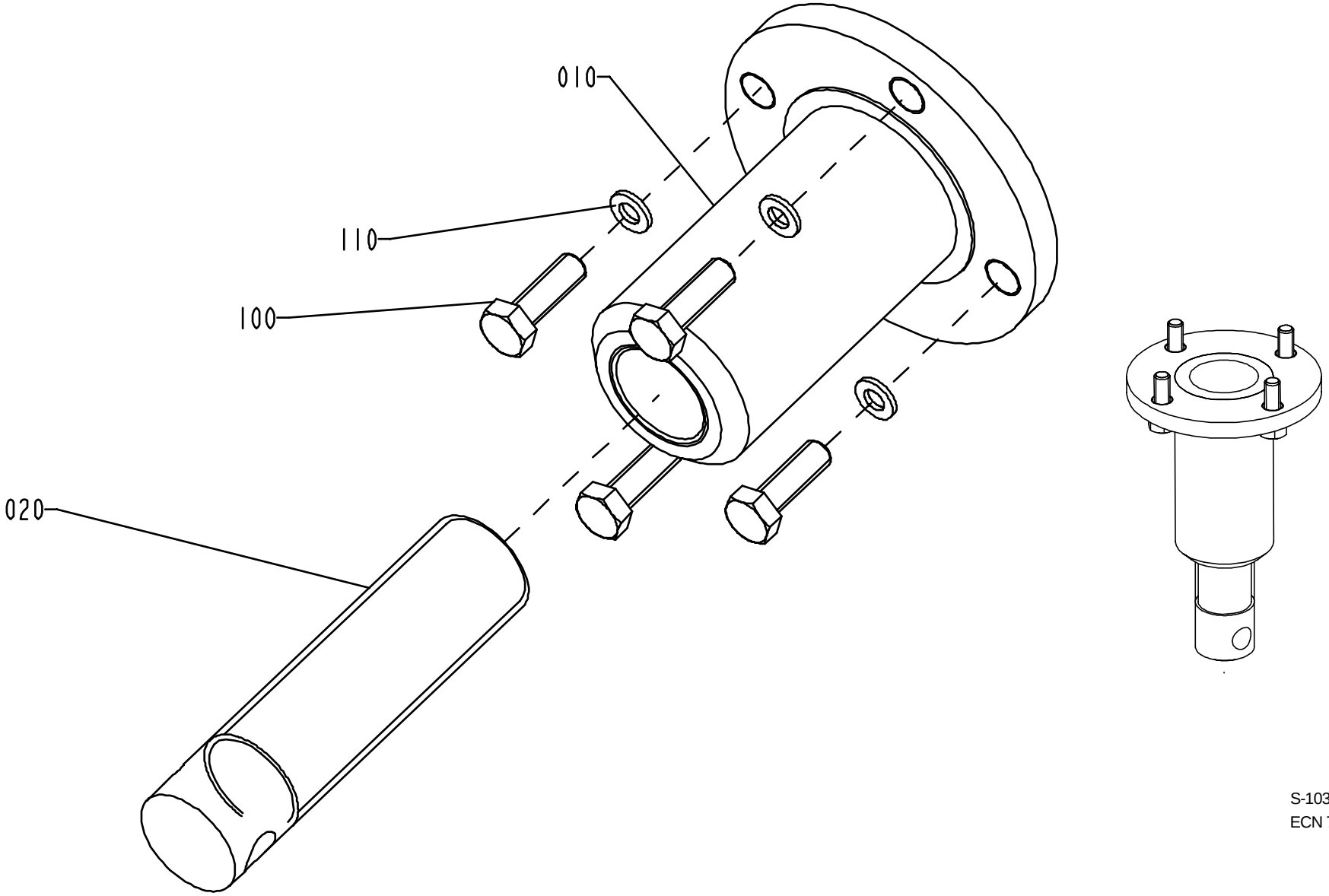

S-1035471-1
ECN 71019

Pos	Part No	SP	UN	Qty	Description	Page No
-						
000	**C-1035471-0101**	**-**		**4**	**LEG**	
010	469095	-		1	HOLDER	
020	469096	-		1	LEG	
100	312105-0453	-		4	SCREW M6S ISO 4017 M8X25 A280	
110	315125-0165	-		4	WASHERS,PLAIN ROUND,CHAMFERED 8,4X26X5	

Pos	Part No	SP	UN	Qty	Description	Page No

PLATFORM

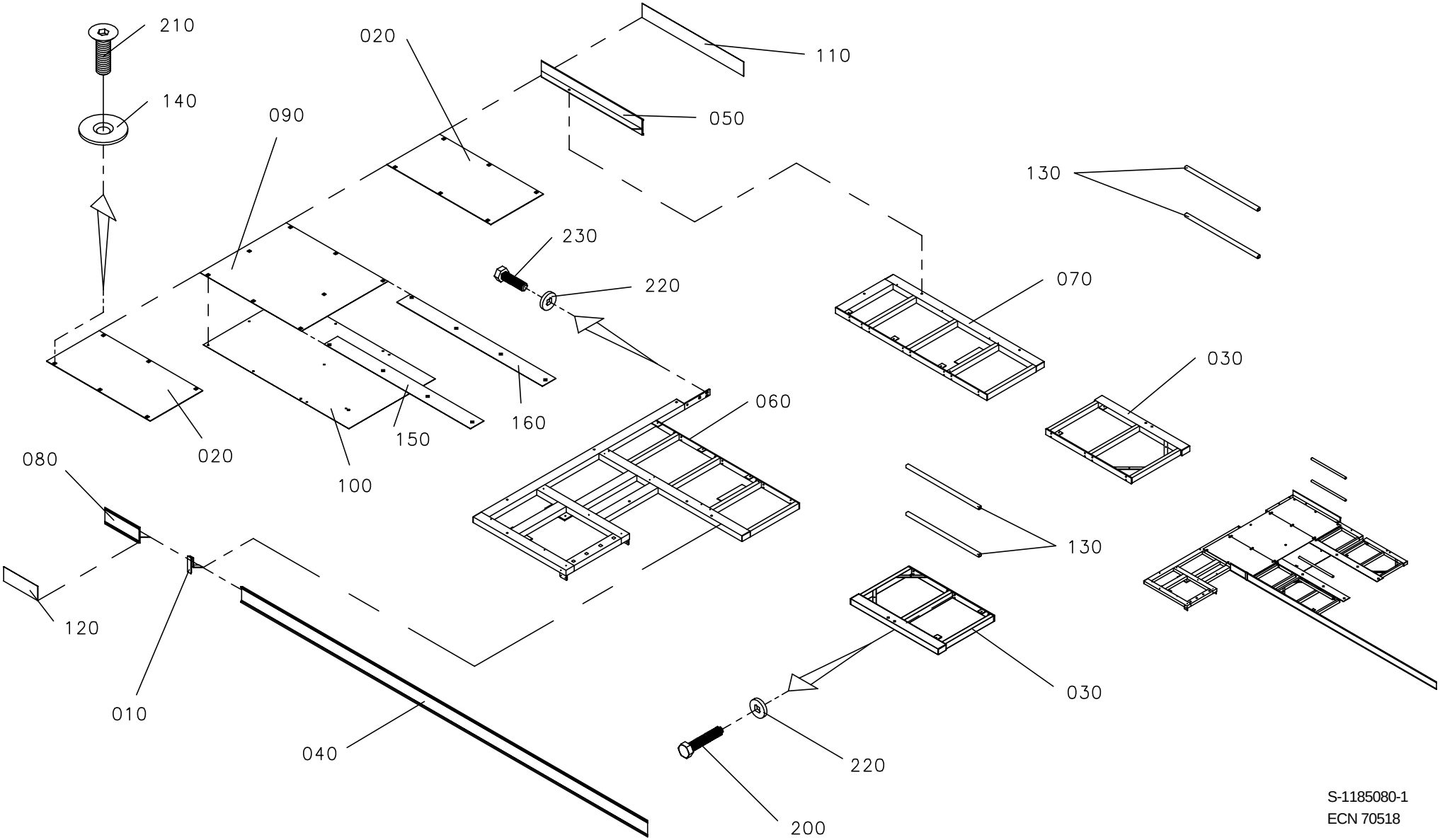

S-1185080-1
ECN 70518

Pos	Part No	SP	UN	Qty	Description	Page No
-						
000	**C-1185080-0101**	**-**		**1**	**PLATFORM**	
010	1041992	-		1	RIM	
020	1140909	-		2	CHECKER PLATE	
030	1140916	-		2	PLATFORM	
040	1140957	-		1	PROFILE	
050	1140965	-		1	PROFILE	
060	1140967	-		1	PLATFORM	
070	1140968	-		1	PLATFORM	
080	1140970	-		1	PROFILE	
090	1140971	-		1	CHECKER PLATE	
100	1147070	-		1	PLATE	
110	1140964	-		1	RIM	
120	1140969	-		1	RIM	
130	1140966	-		4	RAILING	
140	1036241	-		20	WASHER	
150	1255499	-		1	CHECKER PLATE	
160	1255500	-		1	CHECKER PLATE	
200	312105-0495	-		46	SCREW 4017 M10X30A280	
210	312155-0370	-		20	SCREW MF6S6X20RFR	
220	315105-0173	-		48	WASHER BRB10,5X22RFR	
230	312105-0497	-		2	SCREW 4017 M10X35A280	

Pos	Part No	SP	UN	Qty	Description	Page No

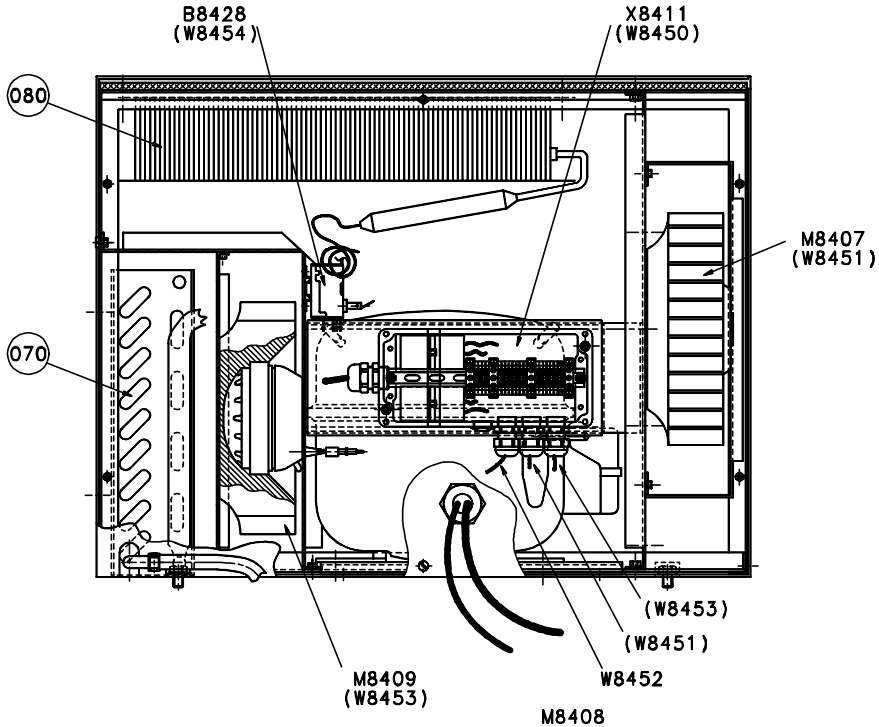

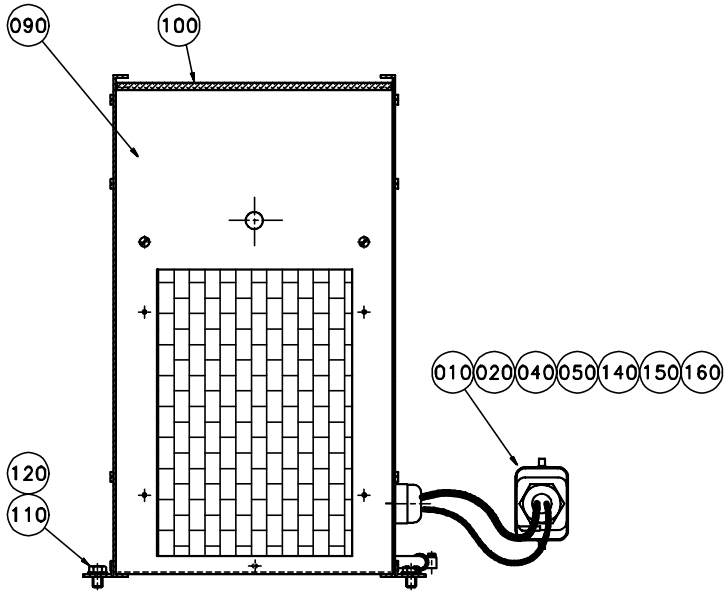

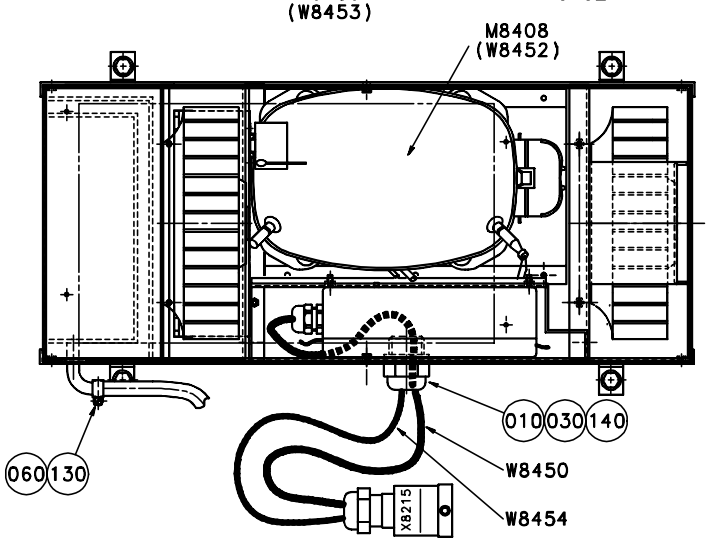

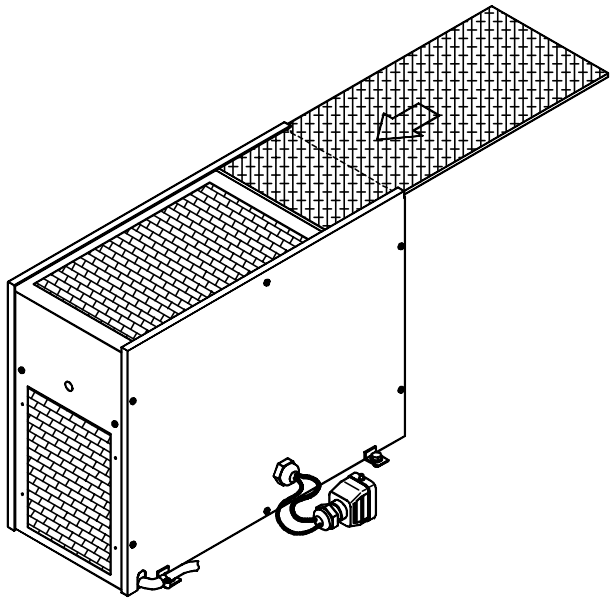

S-1095928-1
ECN 22912

Pos	Part No	SP	UN	Qty	Description	Page No
-						
000	**C-1095928-0101**	**-**		**1**	**COOLER**	
X8411	C-1285054-0100	-		1	CONNECTION BOX	71
010	1282788	D		2	INSERT	
020	90089-0031	-		1	Enlarging Sleeve	
030	90099-0019	-		1	NUT	
040	90110-0157	-		1	COVER	
050	90110-0159	-		1	CONTACT	
060	90166-0126	-	M	2	HOSE	
070	90422-0041	-		1	Evaporator	
080	90422-0042	-		1	CAPACITOR	
090	90422-0316	-		1	Hood	
100	90422-0317	R		1	Filter	
110	312105-0447	-		4	SCREW M6S ISO 4017 M8X12 A280	
120	315105-0165	-		4	WASHERS,PLAIN ROUND 8,4X16	
130	342991-0100	-		1	HOSE CLIP,WORM DRIVE TYPE 10-13	
140	353240-0005	-		2	GLANDS,NORMAL WITHOUT INSERT PG 21	
150	359005-0010	-		1	MARKING SESATS 0-9	
160	359005-0050	-		1	MARKING SEATS "X"	
B8428	90059-0029	R		1	Thermostat	
M8407	90264-0069	R		1	Fan	
M8408	90270-0018	-		1	Compressor	
M8409	90264-0069	R		1	Fan	
W8450	351150-0414	-	MM	1000	CABLES,MULTI-CONDUCTOR 5X1,5 MM2	
W8452	351150-0412	-	MM	300	CABLES,MULTI-CONDUCTOR 3X1,5 MM2	
W8454	351150-0404	-	MM	1200	CABLES,MULTI-CONDUCTOR 4X0,75 MM2	

Pos	Part No	SP	UN	Qty	Description	Page No

CONNECTION BOX

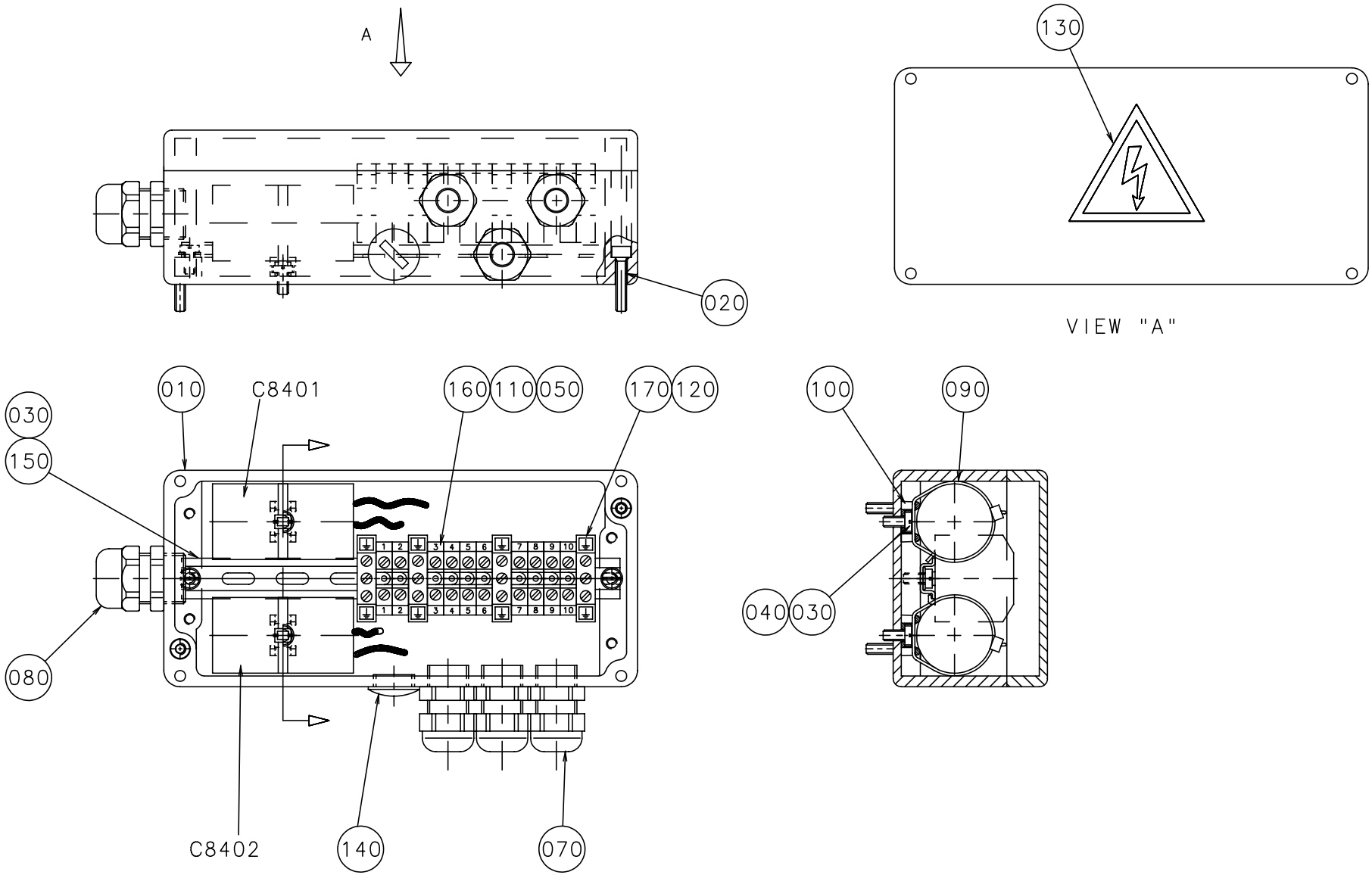

Pos	Part No	SP	UN	Qty	Description	Page No
-						
000	**C-1285054-0101**	**-**		**1**	**CONNECTION BOX**	
010	1350146	-		1	CONNECTION BOX	
020	312115-0295	-		2	SCREW O4762 M4X20A280	
030	312125-0287	-		4	SLOTTED HEMCS4X8RFR	
040	315105-0136	-		2	WASHER BRB4,3X8RFR	
050	351172-0104	-	M	2	CABLE AWM DARKBLUE 1,5	
070	352103-0101	-		3	CABLE GLAND ST 9	
080	352103-0106	-		1	CABLE GLAND ST 11	
090	352113-0102	-		2	RIBBON CLA	
100	352113-0205	-		2	ANCHOR	
110	359011-0807	-		2	MARKING PLATE 5-FW 1-50	
120	359011-0834	-		1	SET OF SIGNS 6-GW EARTH	
130	359705-0015	-		1	WARNING SIGN"EL SHOCK"	
140	90002-0013	-		1	BLANK-OFF PLUG 15,2	
150	90077-0328	-	MM	162	RAIL TS15	
160	90077-0079	-		10	FEED THROUGH TERMINAL	
170	90135-0026	-		4	EARTHING CLAMP	
C8401	90159-0097	R		1	CAPACITOR SIRACO 2MF	
C8402	90159-0097	R		1	CAPACITOR SIRACO 2MF	

Pos	Part No	SP	UN	Qty	Description	Page No

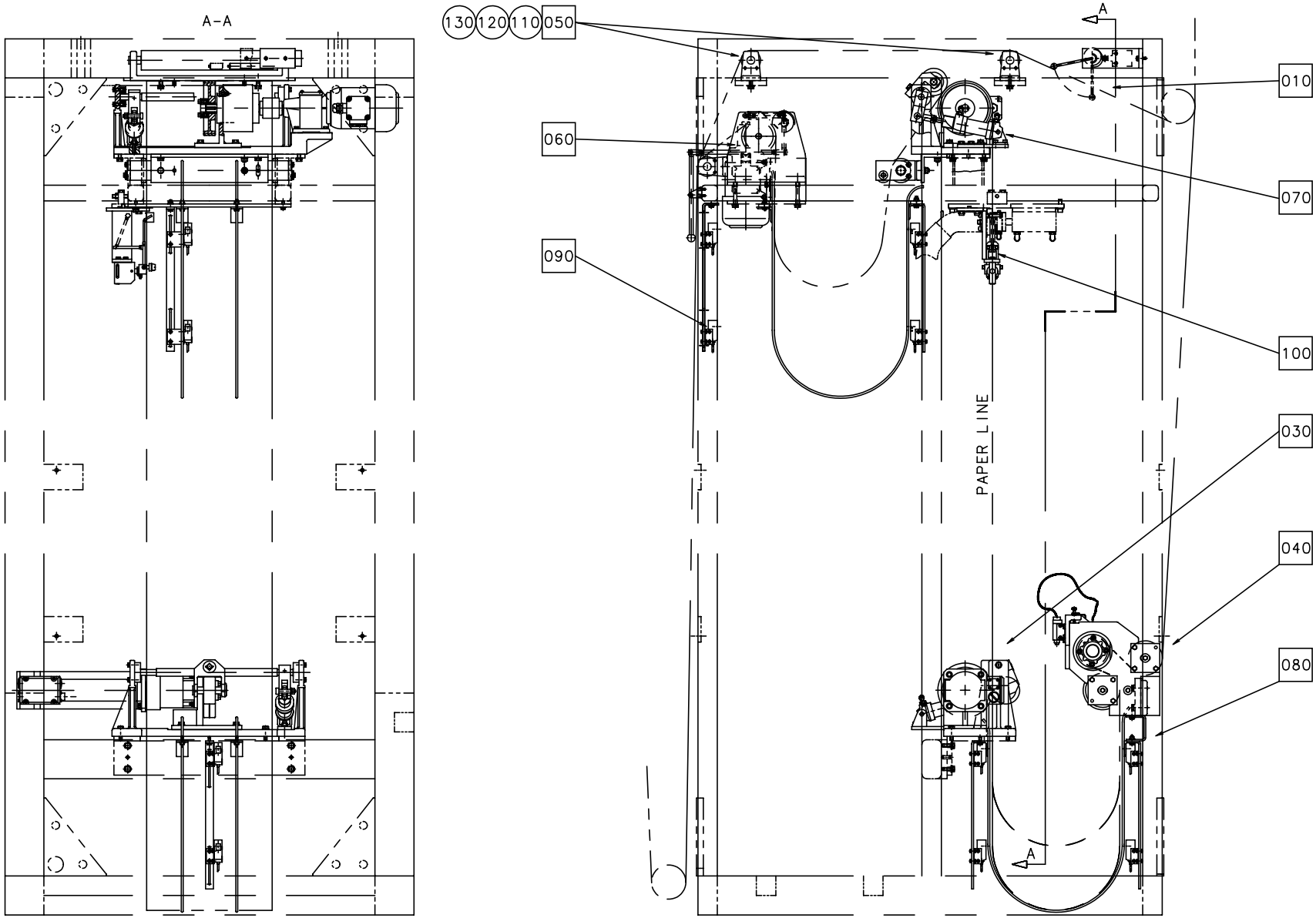

S-1282323-1
ECN 70518

Pos	Part No	SP	UN	Qty	Description	Page No
-						
000	**C-1282323-0101**	**-**		**1**	**PAPER WEB PATH**	
110	311112-0377	-		4	SLOTTED TURP 8X24 RFR	
120	312105-0455	-		4	SCREW O4017 M8X30A280	
130	315115-0165	-		4	WASHER TBRB8,4X16RFR	
F010	C- 514993-020V	-		1	SENSOR	75
F030	C-1095935-010V	-		1	DRIVE MOTOR	77
F040	C-1095942-010V	-		1	ROLLER ASSEMBLY	79
	C-1095937-010V	-		-	. GUIDE ROLLER WITH FLANG	81
	C-1095938-010V	-		-	. GUIDE ROLLER	83
	C-1095940-010V	-		-	. GUIDE ROLLER	85
	C-1095941-010V	-		-	. TENSION ROLLER	87
	C-1260411-010V	-		-	. PATCH/TAB SPLICE DETECT	89
F050	C-1095952-010V	-		2	BENDING ROLLER	91
F060	C-1095953-010V	-		1	INFEED UNIT	93
	C-1095952-010V	-		-	. BENDING ROLLER	91
F070	C-1095970-010V	-		1	PAPER BRAKE	95
	C-1095969-010V	-		-	. BENDING ROLLER FLANGE	97
	C-1334322-010V	-		-	. .BENDING ROLLER	99
	C-1095952-010V	-		-	. . .BENDING ROLLER	91
F080	C-1095979-010V	-		1	PHOTOCELL UNIT	101
F090	C-1095980-010V	-		1	PHOTOCELL UNIT	103
F100	C-1255601-010V	-		1	EDGE GUIDE	105

Pos	Part No	SP	UN	Qty	Description	Page No

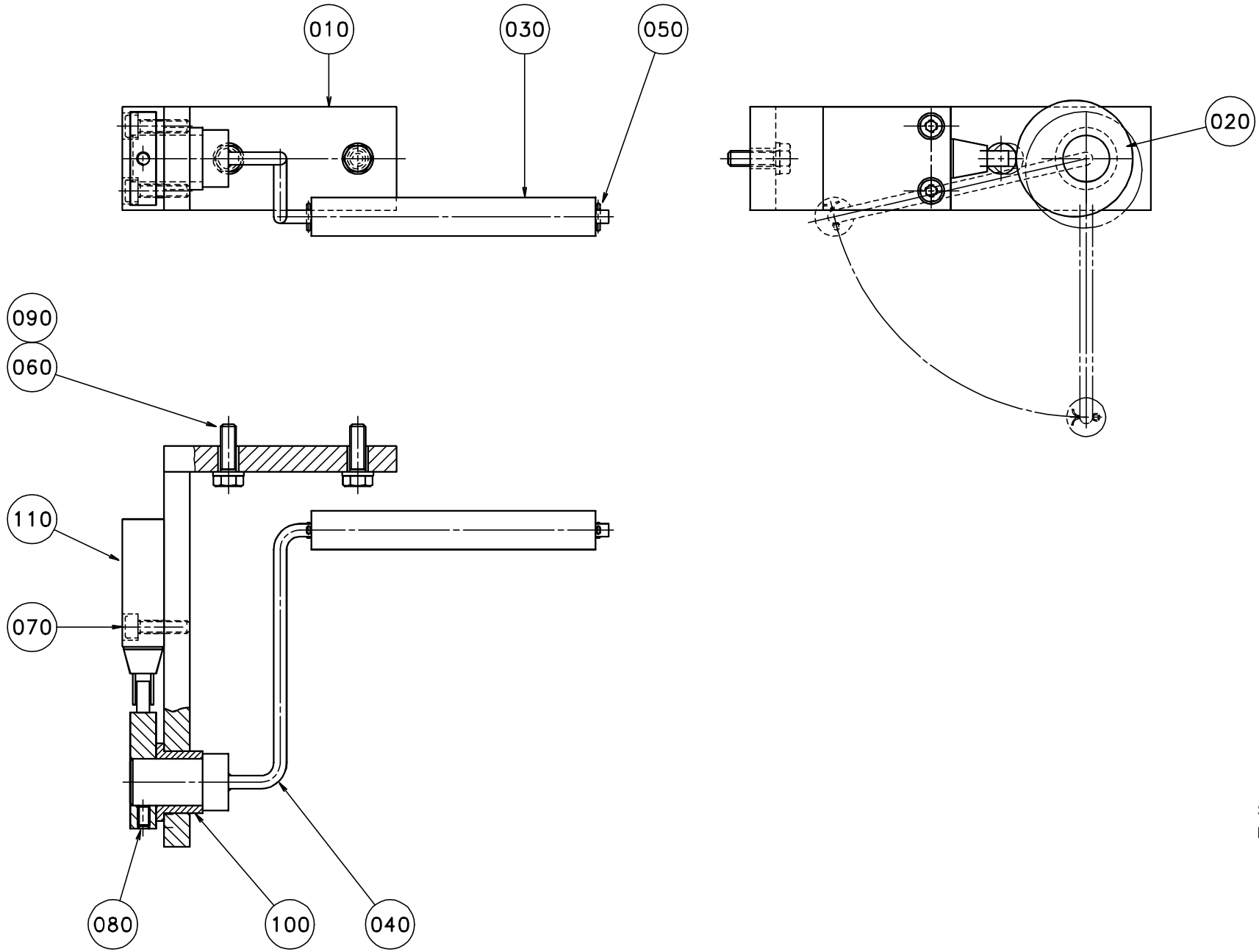

S-514993-1
ECN 71157

Pos	Part No	SP	UN	Qty	Description	Page No
-						
000	**C- 514993-0201**	**-**		**1**	**BY-PASS SENSOR**	
010	1260329	-		1	BRACKET	
020	1255035	D		1	ECCENTRIC	
030	1010814	-		1	ROLLER	
040	1082861	-		1	ARM	
050	311411-0138	-		2	SPLIT PIN SP1,6X12RFR	
060	312105-0370	-		2	SCREW O4017 M6X20A280	
070	312115-0331	-		2	SCREW O4762 M5X20A280	
080	312318-0323	-		1	STOP SCREW SK6SS5X8RFR	
090	315105-0153	-		2	WASHER BRB6,4X12RFR	
100	321111-0274	-		1	FLANGE BUS 18E7X18	
110	90044-0094	R		1	LIMITSW.HONEYWELL 924CE31	

Pos	Part No	SP	UN	Qty	Description	Page No

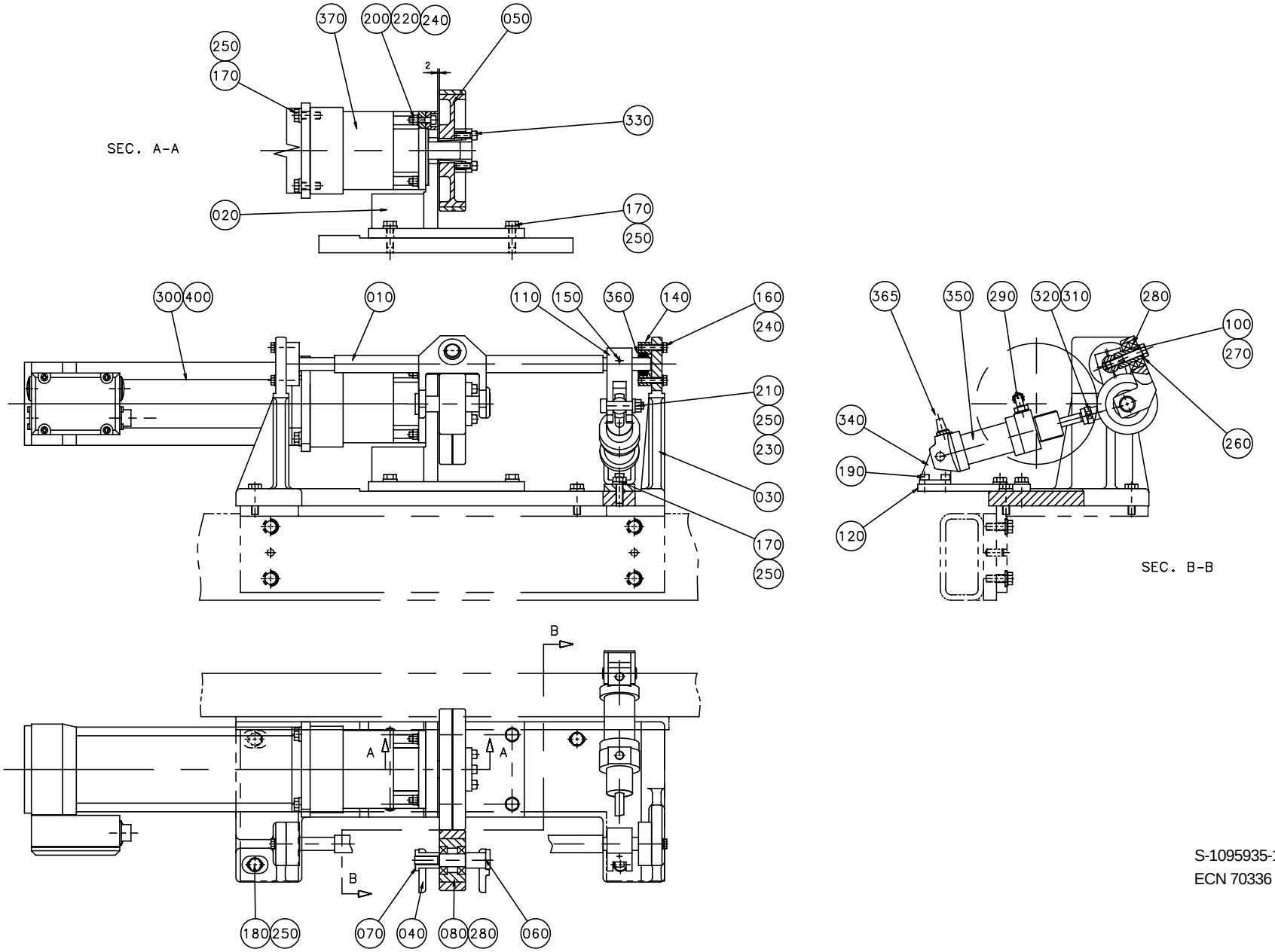

S-1095935-1
ECN 70336

Pos	Part No	SP	UN	Qty	Description	Page No
-						
000	**C-1095935-0101**	**-**		**1**	**DRIVE MOTOR**	
010	1129905	-		1	SHAFT	
020	1129908	-		1	BRACKET	
030	1129909	-		1	BRACKET	
040	263150	-		1	BRACKET	
050	1296871	M		1	WHEEL	
060	263152	D		1	SHAFT	
070	263153	D		1	NUT	
080	266710	M		1	WHEEL	
100	1129906	D		1	PIN	
110	1129907	-		1	LEVER	
120	1140016	-		1	PLATE	
140	1140174	-		2	BEARING HOUSING	
150	311112-0262	-		1	SLOTTED TURP 4X32 RFR	
160	312105-0372	-		4	SCREW ISO 4017 M6X25A280	
170	312105-0453	-		10	SCREW O4017 M8X25A280	
180	312105-0455	-		4	SCREW O4017 M8X30A280	
190	312115-0366	-		2	SCREW O4762 M6X12A280	
200	312115-0372	-		4	SCREW O4762 M6X25A280	
210	312180-0495	-		1	REAMED BOL	
220	312605-0316	-		4	NUT M6M6 A280 STAINLESS	
230	312605-0318	-		1	NUT M6M8RFR	
240	315105-0153	-		8	WASHER BRB6,4X12RFR	
250	315115-0165	-		15	WASHER TBRB8,4X16RFR	
260	315105-0165	-		1	WASHER BRB8,4X16RFR	
270	312109-0460	-		1	SCREW	
280	321308-0202	M		4	BALL BEARISKF6002-2RS	
290	342931-0113	-		1	ELBOW PIPE	
300	90045-0194	D		1	SERVO MOTOR 5,2NM	
310	90099-0102	-		1	NUT	
320	90115-0134	M		1	JOINT	
330	90208-0078	R		1	CLAMPING ELEMENT	
340	90239-0488	-		1	BRACKET	
350	90239-0834	D		1	CYLINDER 133/32/25	
360	90240-0026	D		2	PLAIN BEARING	
365	90328-0003	-		1	SILENCER	
370	90056-0143	D		1	GEAR BOX	
400	353245-0005	-		1	GLAND PG16 CABLE14-16,5MM	

Pos	Part No	SP	UN	Qty	Description	Page No

ROLLER ASSEMBLY

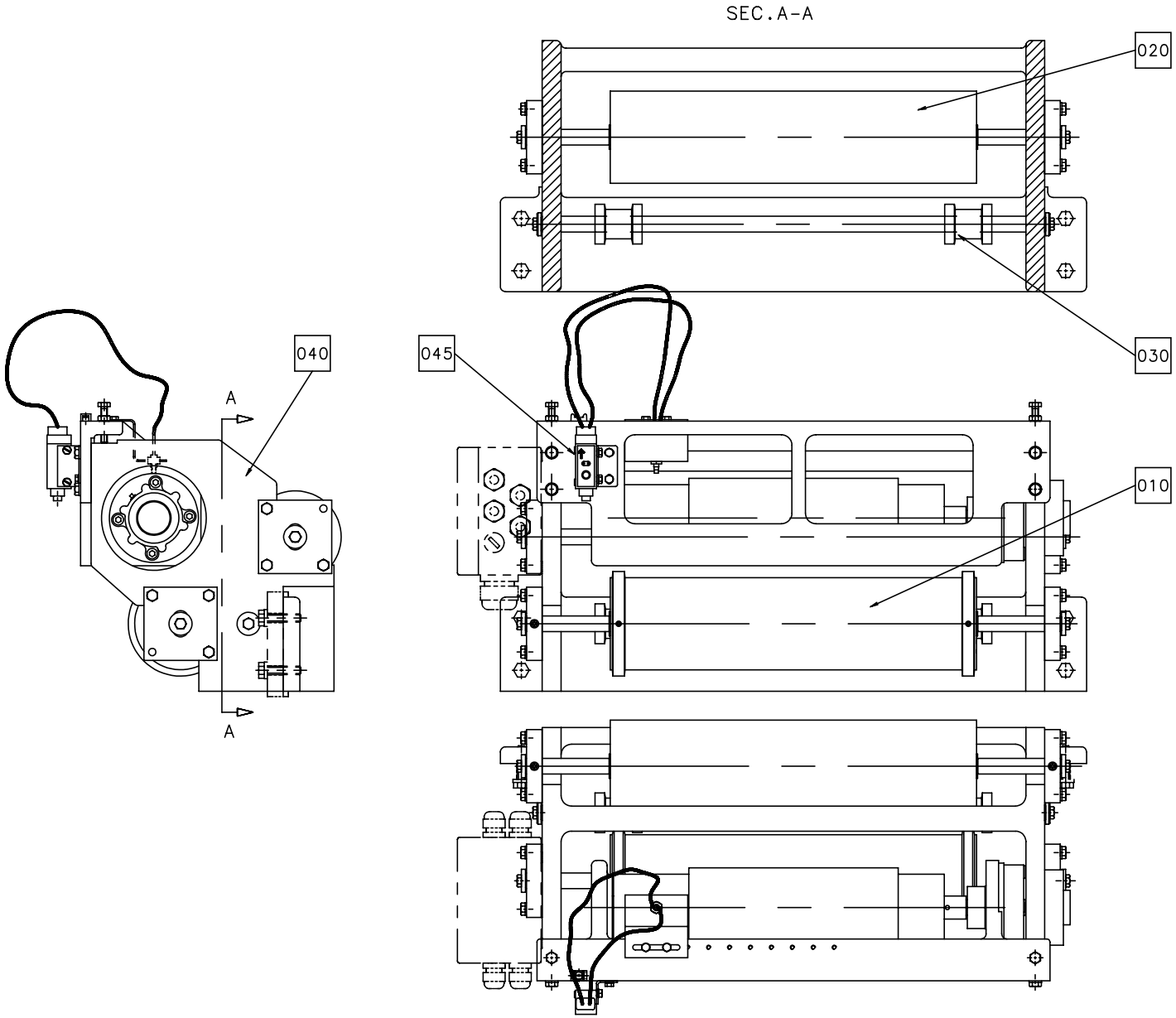

S-1095942-1
ECN 70336

Pos	Part No	SP	UN	Qty	Description	Page No
-						
000	**C-1095942-0101**	**-**		**1**	**ROLLER ASSEMBLY**	
010	C-1095937-010V	-		1	GUIDE ROLLER WITH FLANGE	81
020	C-1095938-010V	-		1	GUIDE ROLLER	83
030	C-1095940-010V	-		1	GUIDE ROLLER	85
040	C-1095941-010V	-		1	TENSION ROLLER	87
045	C-1260411-010V	-		1	PATCH/TAB SPLICE DETECTOR	89

Pos	Part No	SP	UN	Qty	Description	Page No

GUIDE ROLLER WITH FLANGE

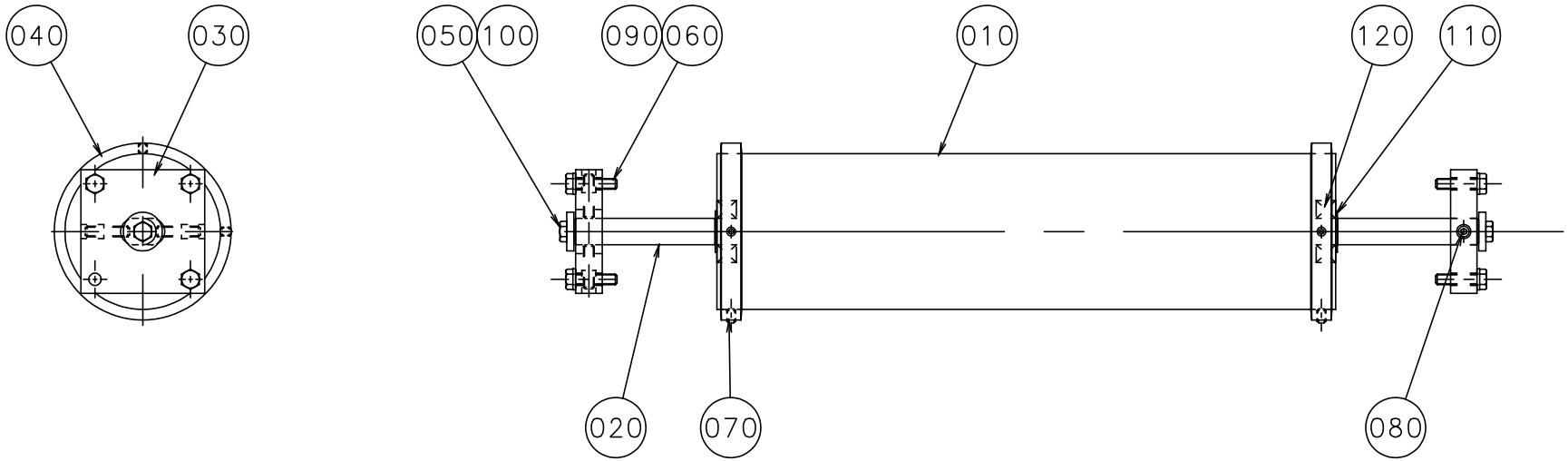

Pos	Part No	SP	UN	Qty	Description	Page No
-						
000	**C-1095937-0101**	**-**		**1**	**GUIDE ROLLER WITH FLANGE**	
010	1035882	D		1	BENDING ROLLER	
020	1129624	D		1	AXLE SUPPORT	
030	1129630	-		2	BEARING SEAT	
040	1140055	-		2	RING	
050	312105-0368	-		2	SCREW O4017 M6X16A280	
060	312105-0372	-		6	SCREW ISO 4017 M6X25A280	
070	312311-0321	-		4	STOP SCREW T6SS5X6FZB	
080	312318-0372	-		4	STOP SCREW SK6SS6X25RFR	
090	315105-0153	-		6	WASHER BRB6,4X12RFR	
100	315125-0153	-		2	WASHER SB 6,4X22X4 RFR	
110	315751-0112	-		2	CIRCLIP SGA15 RFR	
120	321313-0102	M		2	BALL BEARISKF6202-2RS	

Pos	Part No	SP	UN	Qty	Description	Page No

GUIDE ROLLER

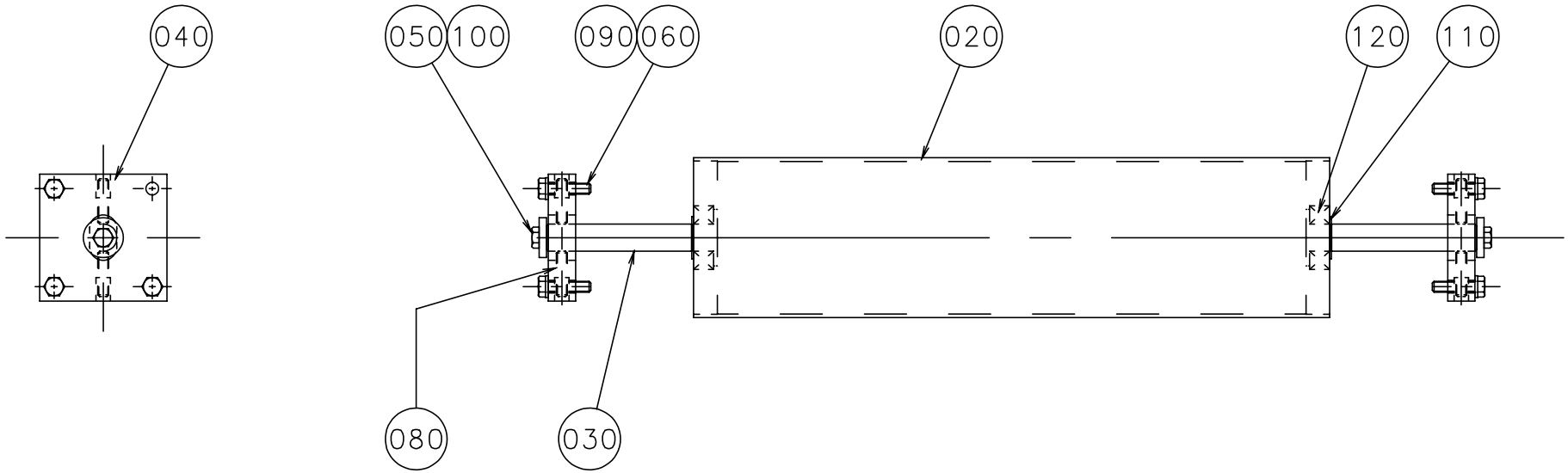

Pos	Part No	SP	UN	Qty	Description	Page No
-						
000	**C-1095938-0101**	**-**		**1**	**GUIDE ROLLER**	
020	1035882	D		1	BENDING ROLLER	
030	1129624	D		1	AXLE SUPPORT	
040	1129630	-		2	BEARING SEAT	
050	312105-0368	-		2	SCREW O4017 M6X16A280	
060	312105-0372	-		6	SCREW ISO 4017 M6X25A280	
080	312318-0372	-		4	SET SCREW ISO 4029 M6X25 RFR	
090	315105-0153	-		6	WASHER BRB6,4X12RFR	
100	315125-0153	-		2	WASHER SB 6,4X22X4 RFR	
110	315751-0112	-		2	CIRCLIP SGA15 RFR	
120	321313-0102	M		2	BALL BEARISKF6202-2RS	

Pos	Part No	SP	UN	Qty	Description	Page No

GUIDE ROLLER

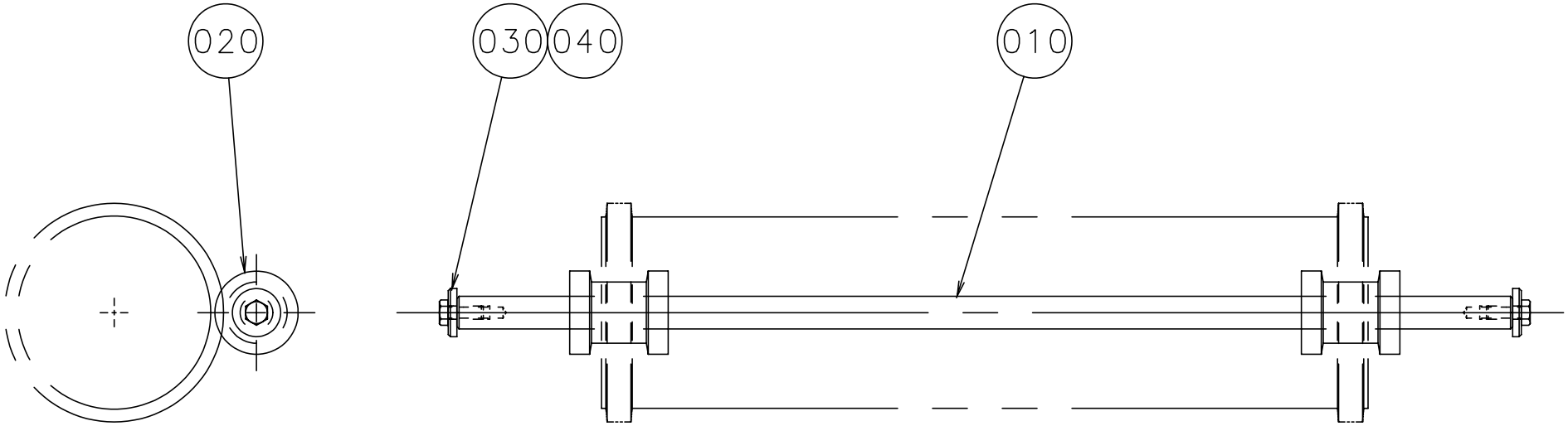

S-1095940-1
ECN 70336

Pos	Part No	SP	UN	Qty	Description	Page No
-						
000	**C-1095940-0101**	**-**		**1**	**GUIDE ROLLER**	
010	1129626	-		1	AXLE SUPPORT	
020	1140135	C		2	ROLLER	
030	312105-0368	-		2	SCREW O4017 M6X16A280	
040	315125-0153	-		2	WASHER SB 6,4X22X4 RFR	

Pos	Part No	SP	UN	Qty	Description	Page No

TENSION ROLLER

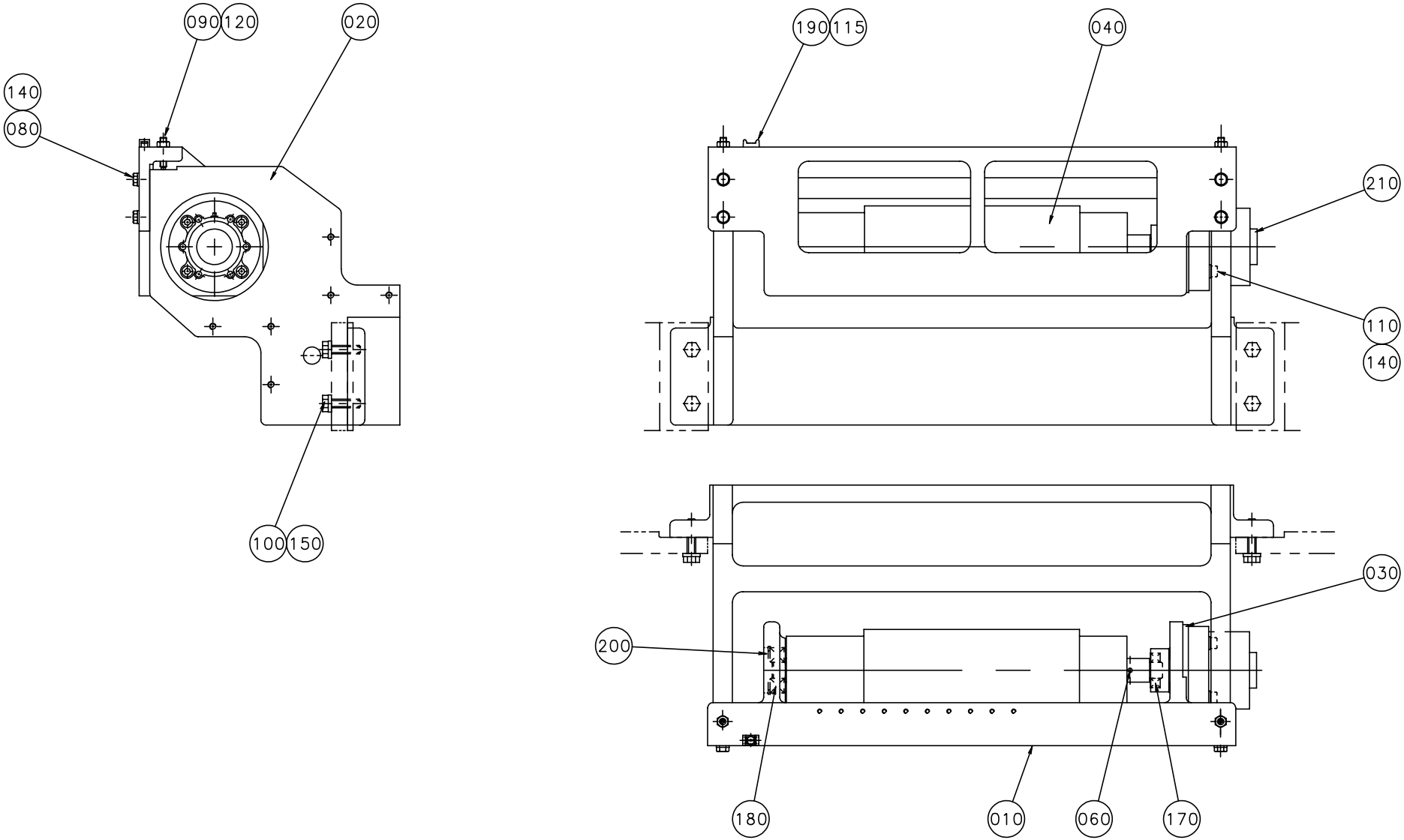

S-1095941-1
ECN 70336

Pos	Part No	SP	UN	Qty	Description	Page No
-						
000	**C-1095941-0101**	**-**		**1**	**TENSION ROLLER**	
010	1129628	-		1	BRACKET	
020	1129629	-		1	BRACKET	
030	522408	-		1	BEARING HOUSING	
040	532719-0001	C		1	FEEDING ROLLER	
060	311112-0256	-		1	SLOTTED TURP 4X20 RFR	
080	312105-0370	-		4	SCREW O4017 M6X20A280	
090	312311-0374	-		2	STOP SCREW T6SS6X30FZB	
100	312105-0455	-		4	SCREW O4017 M8X30A280	
110	312115-0376	-		4	SCREW O4762 M6X35A280	
115	312125-0289	-		1	SLOTTED HEMCS4X10RFR	
120	312605-0316	-		2	NUT M6M6 A280 STAINLESS	
140	315105-0153	-		8	WASHER BRB6,4X12RFR	
150	315115-0165	-		4	WASHER TBRB8,4X16RFR	
170	321308-0202	M		1	BALL BEARISKF6002-2RS	
180	321316-0202	M		1	BALL BEARISKF6302-2RS	
190	352113-0205	-		1	ANCHOR	
200	90141-0020	-		1	LOCK RING	
210	90347-0054	R		1	DAMPER	

Pos	Part No	SP	UN	Qty	Description	Page No

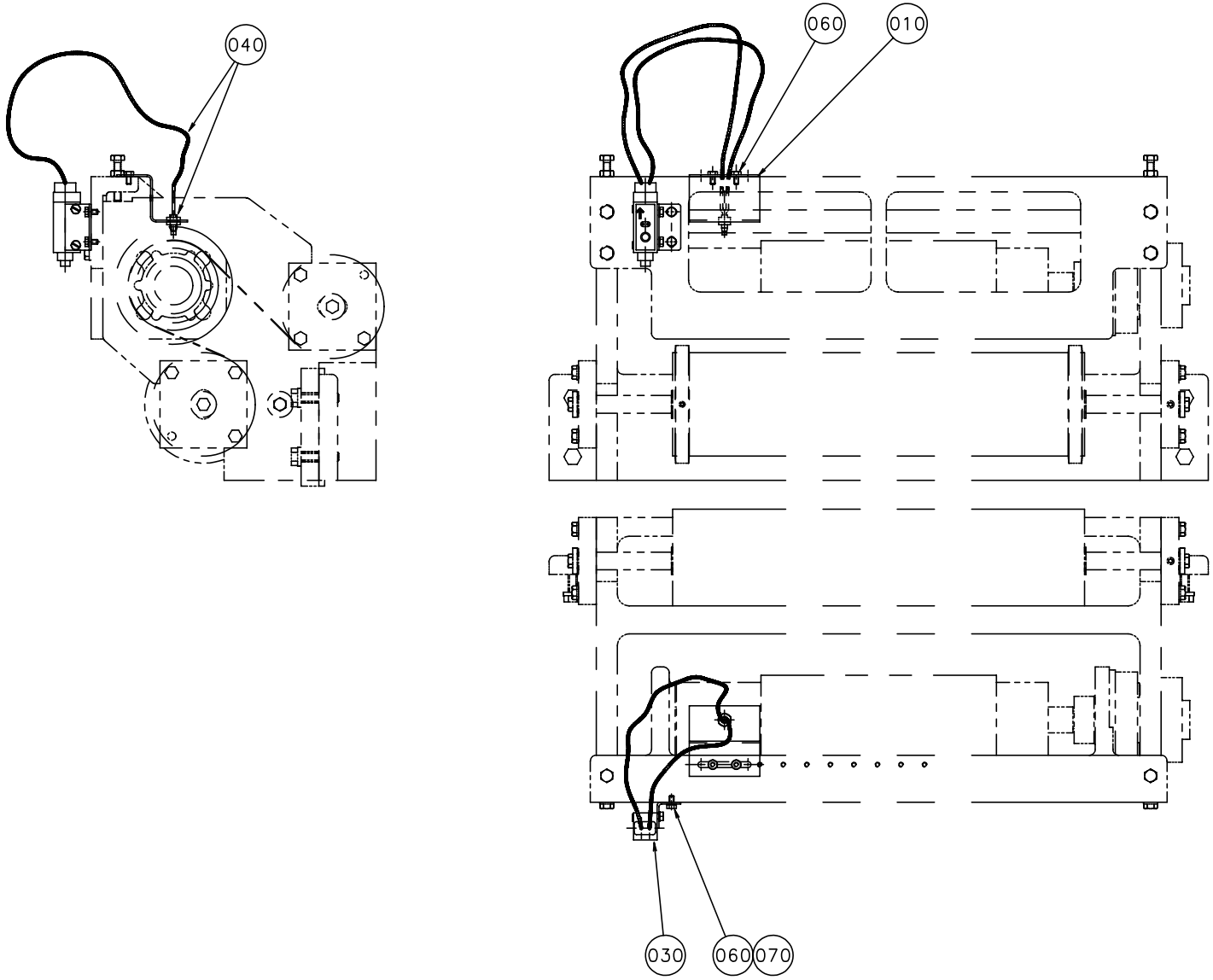

S-1260411-1
ECN 70336

Pos	Part No	SP	UN	Qty	Description	Page No
-						
000	**C-1260411-0101**	**-**		**1**	**PATCH/TAB SPLICE DETE**	
010	1260413	-		1	BRACKET	
030	90232-0067	R		1	PH.CELLOMRON E3S-X3CB45M	
040	90232-0325	R		1	CABLE OMRON E32 DC200	
060	312105-0287	-		4	SCREW O4017 M4X8A280	
070	315105-0136	-		2	WASHER BRB4,3X8RFR	

Pos	Part No	SP	UN	Qty	Description	Page No

BENDING ROLLER

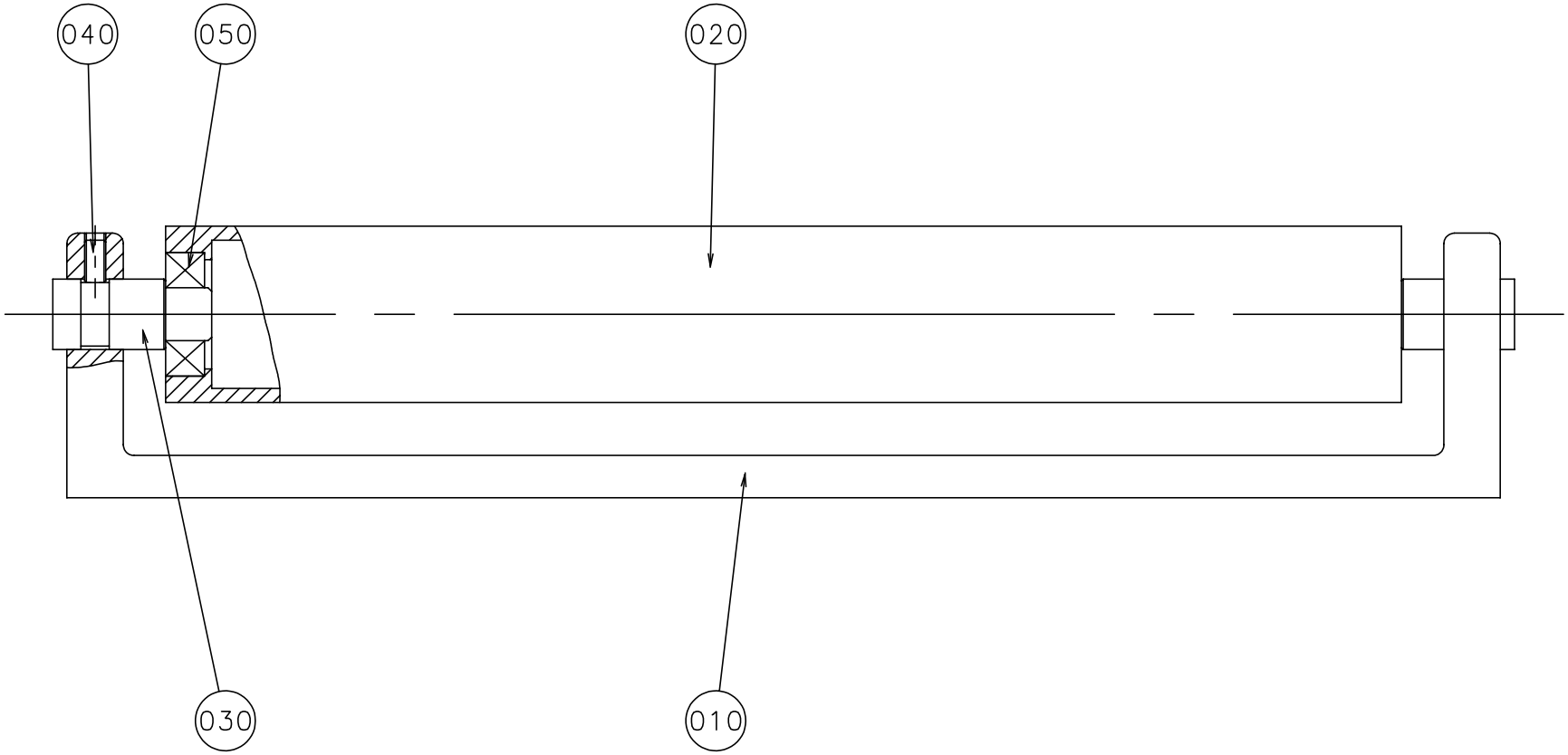

Pos	Part No	SP	UN	Qty	Description	Page No
-						
000	**C-1095952-0101**	**-**		**2**	**BENDING ROLLER**	
010	1129952	-		1	BRACKET	
020	1129951	D		1	BENDING ROLLER	
030	1140133	-		2	AXLE PIN	
040	312318-0366	-		2	STOP SCREW SK6SS6X12RFR	
050	321313-0102	M		2	BALL BEARISKF6202-2RS	

Pos	Part No	SP	UN	Qty	Description	Page No

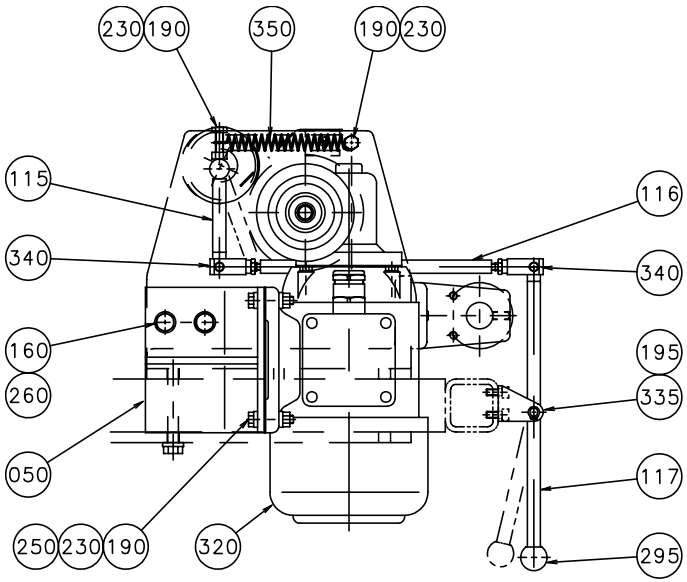

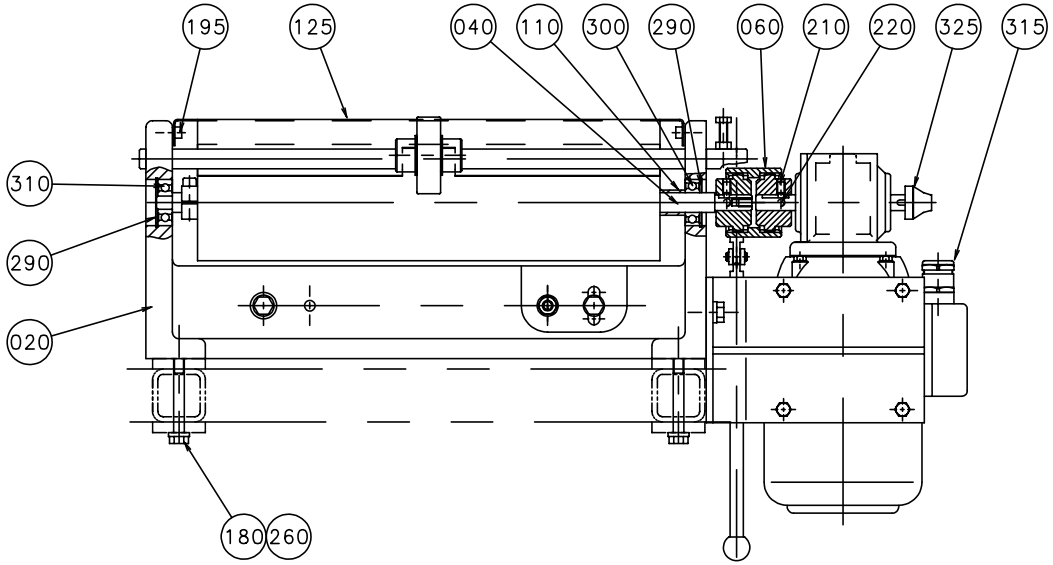

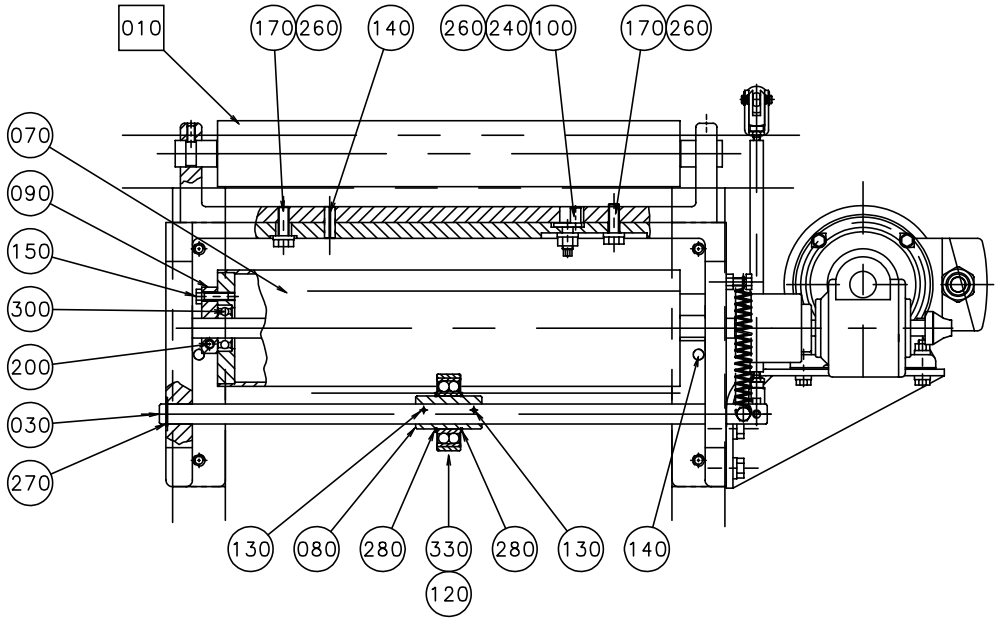

S-1095953-1
ECN 70336

Pos	Part No	SP	UN	Qty	Description	Page No
-						
000	**C-1095953-0101**	**-**		**1**	**INFEED UNIT**	
010	C-1095952-010V	-		1	BENDING ROLLER	91
020	985865	-		1	BRACKET	
030	985856	-		1	SHAFT	
040	1036220	D		1	SHAFT	
050	985854	-		1	BRACKET	
060	985899	D		1	COUPLING	
070	1035882	D		1	BENDING ROLLER	
080	1255631	D		1	ECCENTRIC BUSHING	
090	1036232	-		1	BRACKET	
100	1140132	D		1	ECCENTRIC	
110	985855	-		1	SPACER BUSHING	
115	1260642	-		1	LEVER	
116	1260643	-		1	LEVER	
117	1260644	-		1	LEVER	
120	1260648	M		1	BUSHING	
125	1260649	-		1	PAPER GUIDE	
130	311112-0260	-		2	SLOTTED TURP 4X28 RFR	
140	311112-0377	-		3	SLOTTED TURP 8X24 RFR	
150	312105-0370	-		1	SCREW O4017 M6X20A280	
160	312105-0451	-		2	SCREW SO4017 8X20A280	
170	312105-0453	-		2	SCREW O4017 M8X25A280	
180	312105-0465	-		4	SCREW O4014 M8X70A280	
190	312109-0374	-		6	SCREW M6S6X30HRFR	
195	312115-0327	-		4	SCREW O4762 M5X12A280	
200	312115-0372	-		1	SCREW O4762 M6X25A280	
210	312311-0366	-		2	STOP SCREW T6SS6X12FZB	
220	312318-0362	-		2	STOP SCREW SK6SS6X8RFR	
230	312605-0316	-		6	NUT M6M6 A280 STAINLESS	
240	312605-0318	-		1	NUT M6M8RFR	
250	315115-0153	-		8	WASHER TBRB6,4X12RFR	
260	315115-0165	-		9	WASHER TBRB8,4X16RFR	
270	315751-0112	-		2	CIRCLIP SGA15 RFR	
280	315751-0122	-		2	CIRCLIP SGA30 RFR	
290	315753-0124	-		2	CIRCLIP GH 35 RFR	
295	318800-0102	-		1	HANDLE BALLA D.20-M5	
300	321313-0102	M		3	BALL BEARISKF6202-2RS	
310	321316-0200	M		1	BALL BEARISKF6300-2RS	
315	90012-0137	-		1	CABLE GLAND SCREENED	
320	90069-0281	D		1	WORM GEAR MOTOR OKM 87-60	
325	90015-0021	-		1	BUSHING	
330	90214-0144	M		1	BALL BEARING	
335	90239-0486	-		1	BRACKET	
340	90239-0489	-		2	BRACKET	
350	90335-0091	R		1	SPRING	

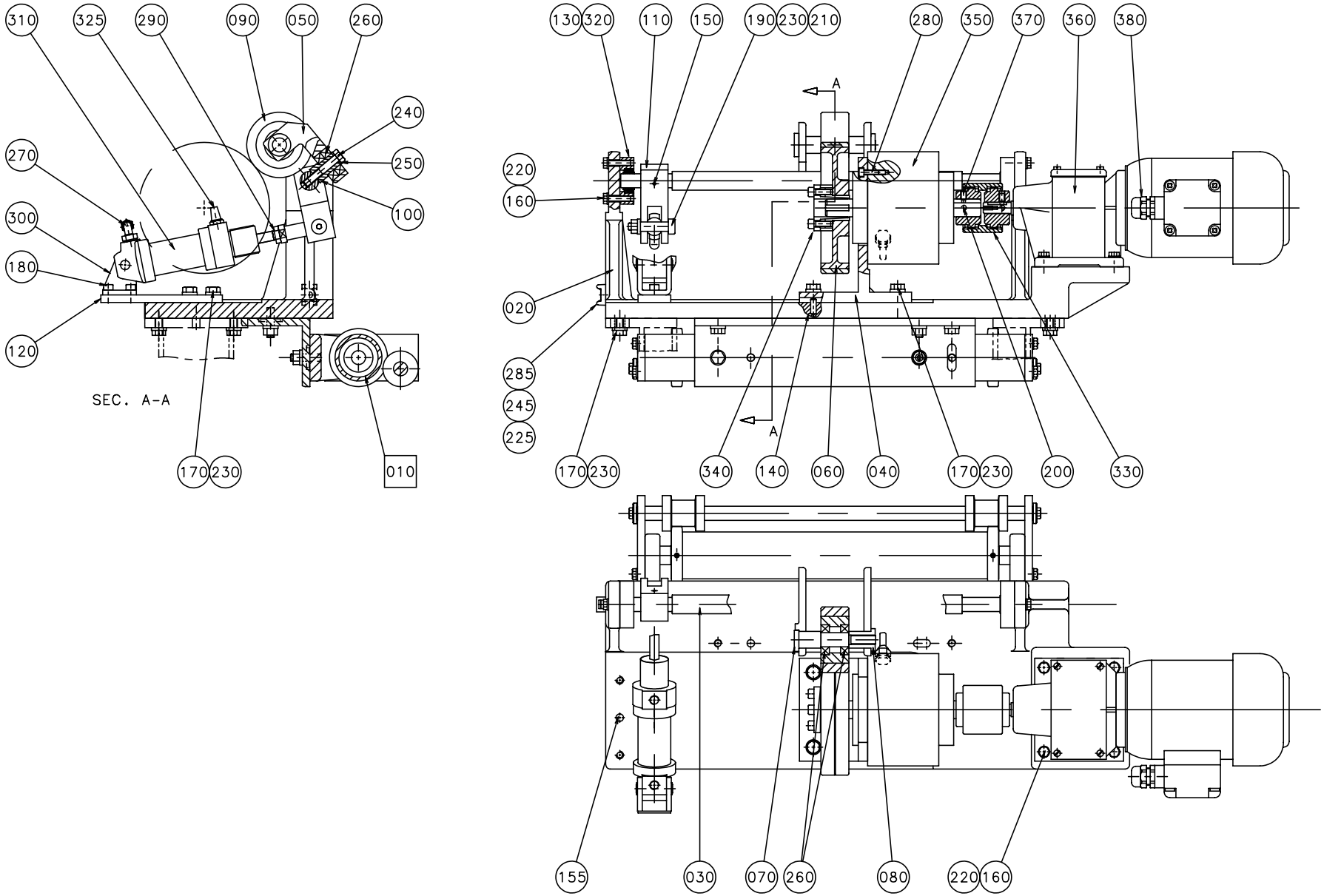

S-1095970-1
ECN 70336

Pos	Part No	SP	UN	Qty	Description	Page No
-						
000	**C-1095970-0101**	**-**		**1**	**PAPER BRAKE**	
010	C-1095969-010V	-		1	BENDING ROLLER FLANGE	97
	C-1334322-010V	-		-	. BENDING ROLLER	99
	C-1095952-010V	-		-	. . BENDING ROLLER	91
020	1140184	-		1	BRACKET	
030	1140185	-		1	SHAFT	
040	1140186	-		1	BRACKET	
050	263150	-		1	BRACKET	
060	1140187	M		1	WHEEL	
070	263152	D		1	SHAFT	
080	263153	D		1	NUT	
090	266710	M		1	WHEEL	
100	1129906	D		1	PIN	
110	1129907	-		1	LEVER	
120	1140016	-		1	PLATE	
130	1140174	-		2	BEARING HOUSING	
140	311103-0351	-		2	CYLINDRICACP M6 6X16 RFR	
150	311112-0262	-		1	SLOTTED TURP 4X32 RFR	
155	311112-0377	-		2	SLOTTED TURP 8X24 RFR	
160	312105-0372	-		8	SCREW ISO 4017 M6X25A280	
170	312105-0453	-		10	SCREW O4017 M8X25A280	
180	312115-0366	-		2	SCREW O4762 M6X12A280	
190	312180-0495	-		1	REAMED BOL	
200	312318-0362	-		2	STOP SCREW SK6SS6X8RFR	
210	312605-0318	-		1	NUT M6M8RFR	
220	315105-0153	-		8	WASHER BRB6,4X12RFR	
225	315105-0136	-		1	WASHER BRB4,3X8RFR	
230	315115-0165	-		11	WASHER TBRB8,4X16RFR	
240	312109-0460	-		1	SCREW	
245	312125-0289	-		1	SLOTTED HEMCS4X10RFR	
250	315105-0165	-		1	WASHER BRB8,4X16RFR	
260	321308-0202	M		4	BALL BEARISKF6002-2RS	
270	342931-0113	-		1	ELBOW PIPE	
280	312115-0329	-		4	SCREW O4762 M5X16A280	
285	352113-0204	-		1	ANCHOR TM3S25-M	
290	90115-0134	M		1	JOINT	
300	90239-0488	-		1	BRACKET	
310	90239-0834	D		1	CYLINDER 133/32/25	
320	90240-0026	D		2	PLAIN BEARING	
325	90328-0003	-		1	SILENCER	
330	985900	R		1	COUPLING	
340	90208-0118	D		1	CLAMPING ELEMENT	
350	90355-0158	R		1	MAGNETIC CLUTCH	
360	90069-0258	D		1	GEARED MOTOR	
370	312311-0366	-		2	STOP SCREW T6SS6X12FZB	
380	352103-0106	-		1	CABLE GLAND ST 11	

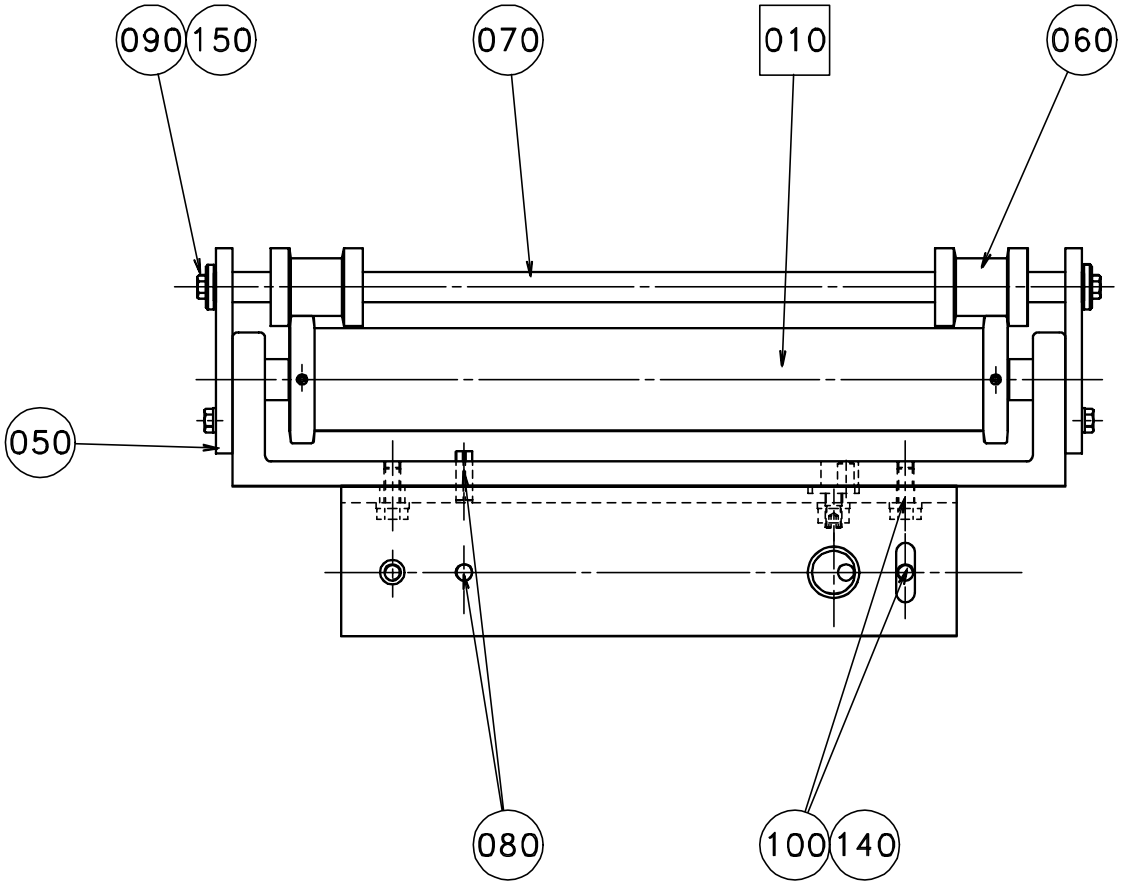

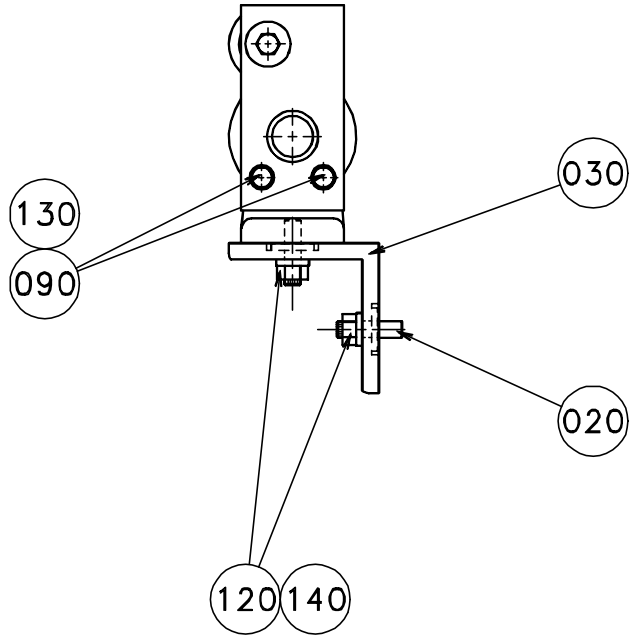

S-1095969-1
ECN 71157

Pos	Part No	SP	UN	Qty	Description	Page No
-						
000	**C-1095969-0101**	**-**		**1**	**BENDING ROLLER FLANGE**	
010	C-1334322-010V	-		1	BENDING ROLLER	99
020	1140132	C		2	ECCENTRIC	
030	1140136	-		1	BRACKET	
040	1140131	S		2	FLANGE	
050	1140134	-		2	PLATE	
060	1140135	C		2	ROLLER	
070	1140137	-		1	SHAFT	
080	311112-0377	-		2	SLOTTED TURP 8X24 RFR	
090	312105-0368	-		6	SCREW O4017 M6X16A280	
100	312105-0451	-		4	SCREW SO4017 8X20A280	
110	312311-0321	-		4	STOP SCREW T6SS5X6FZB	
120	312605-0318	-		2	NUT M6M8RFR	
130	315105-0153	-		4	WASHER BRB6,4X12RFR	
140	315115-0165	-		6	WASHER TBRB8,4X16RFR	
150	315125-0153	-		2	WASHER SB 6,4X22X4 RFR	

Pos	Part No	SP	UN	Qty	Description	Page No

BENDING ROLLER WITH FLANGE

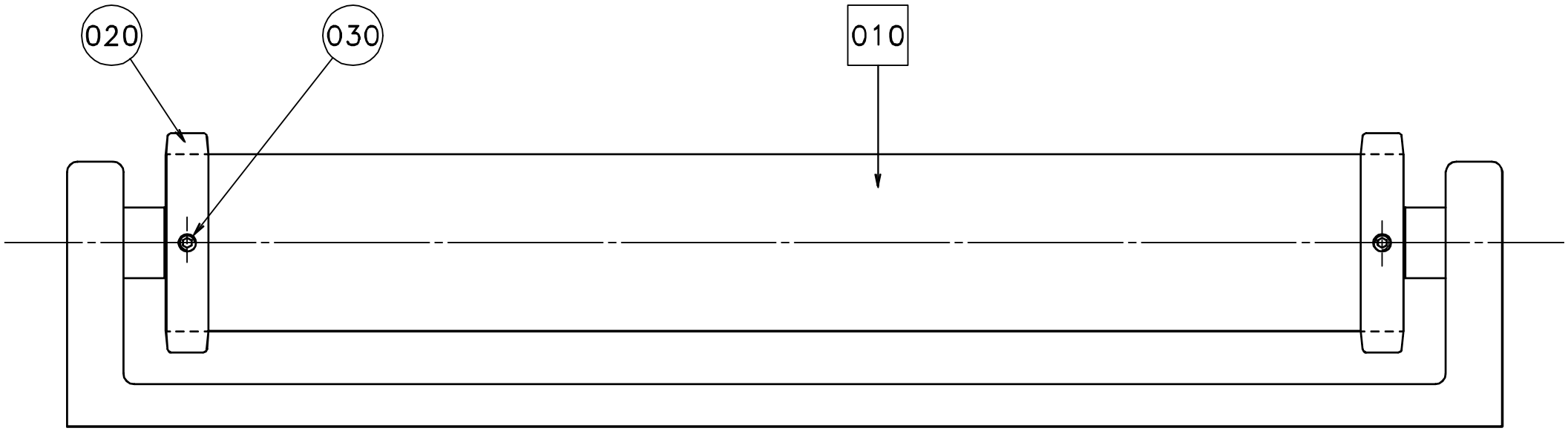

S-1334322-1
ECN 71157

Pos	Part No	SP	UN	Qty	Description	Page No
-						
000	**C-1334322-0101**	**-**		**1**	**BENDING ROLLER WITH FLANGE**	
010	C-1095952-0100	-		1	BENDING ROLLER ASSEMBLY	**91**
020	1140131	-		2	FLANGE	
030	312311-0321	-		4	SET SCREW FULL DOGPOINT ISO 4028 M5X6	

Pos	Part No	SP	UN	Qty	Description	Page No

PHOTOCELL UNIT

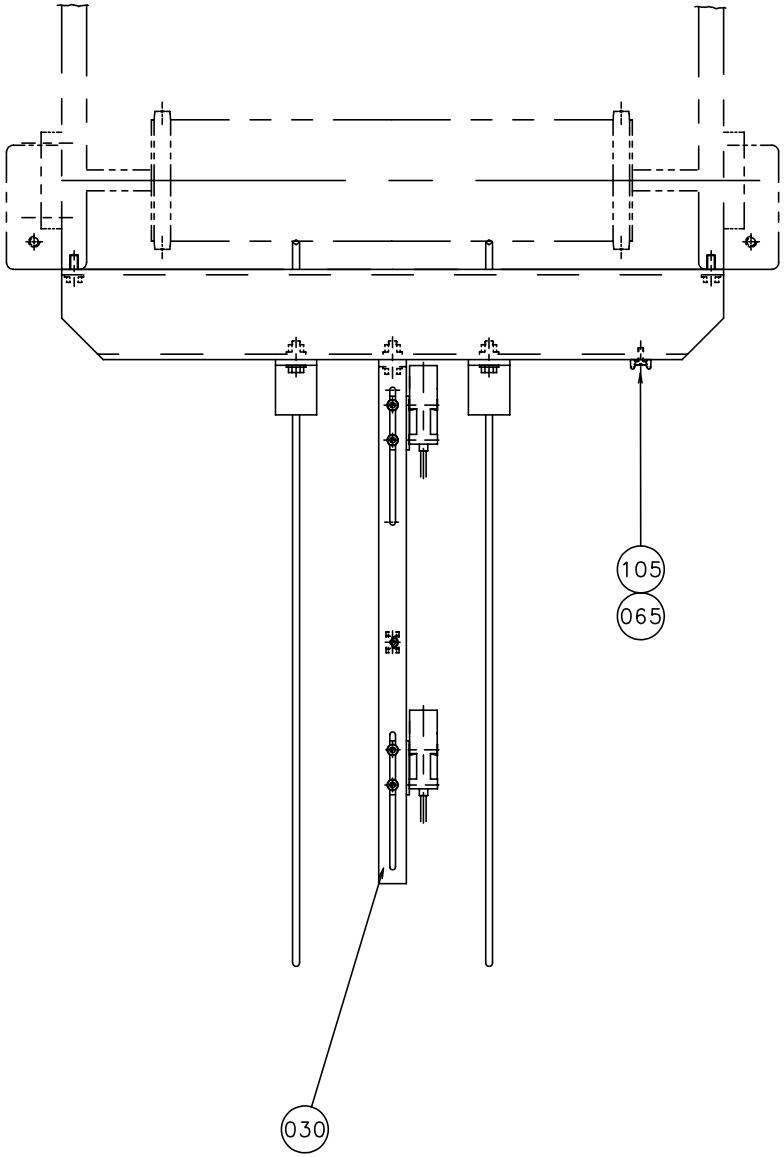

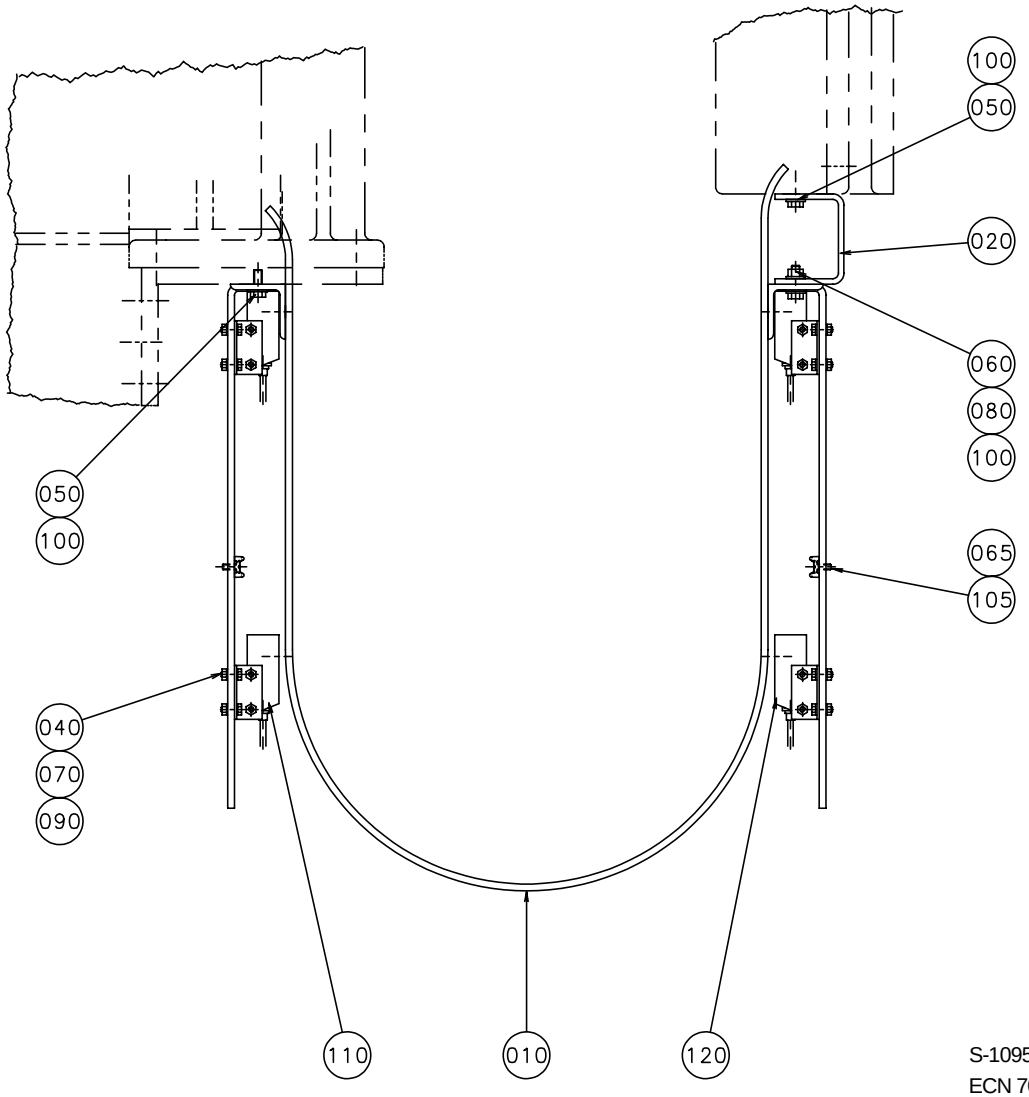

S-1095979-1
ECN 70336

Pos	Part No	SP	UN	Qty	Description	Page No
-						
000	**C-1095979-0101**	**-**		**1**	**PHOTOCELL UNIT**	
010	1140209	-		2	GUIDE	
020	1140210	-		1	BRACKET	
030	1140211	-		2	PHOTOCELL BRACKET	
040	312105-0291	-		8	SCREW O4017 M4X12A280	
050	312105-0368	-		5	SCREW O4017 M6X16A280	
060	312105-0370	-		3	SCREW O4017 M6X20A280	
065	312125-0289	-		3	SLOTTED HEMCS4X10RFR	
070	312605-0312	-		8	NUT M6M4 STAINLESS	
080	312605-0316	-		3	NUT M6M6 A280 STAINLESS	
090	315105-0136	-		16	WASHER BRB4,3X8RFR	
100	315105-0153	-		11	WASHER BRB6,4X12RFR	
105	352113-0205	-		3	ANCHOR	
110	90232-0103	R		2	PH.CELL OMRON E3SCT61L 5M	
120	90232-0104	R		2	RECEIVER OMRON E3SCT61D5M	

Pos	Part No	SP	UN	Qty	Description	Page No

PHOTOCELL UNIT

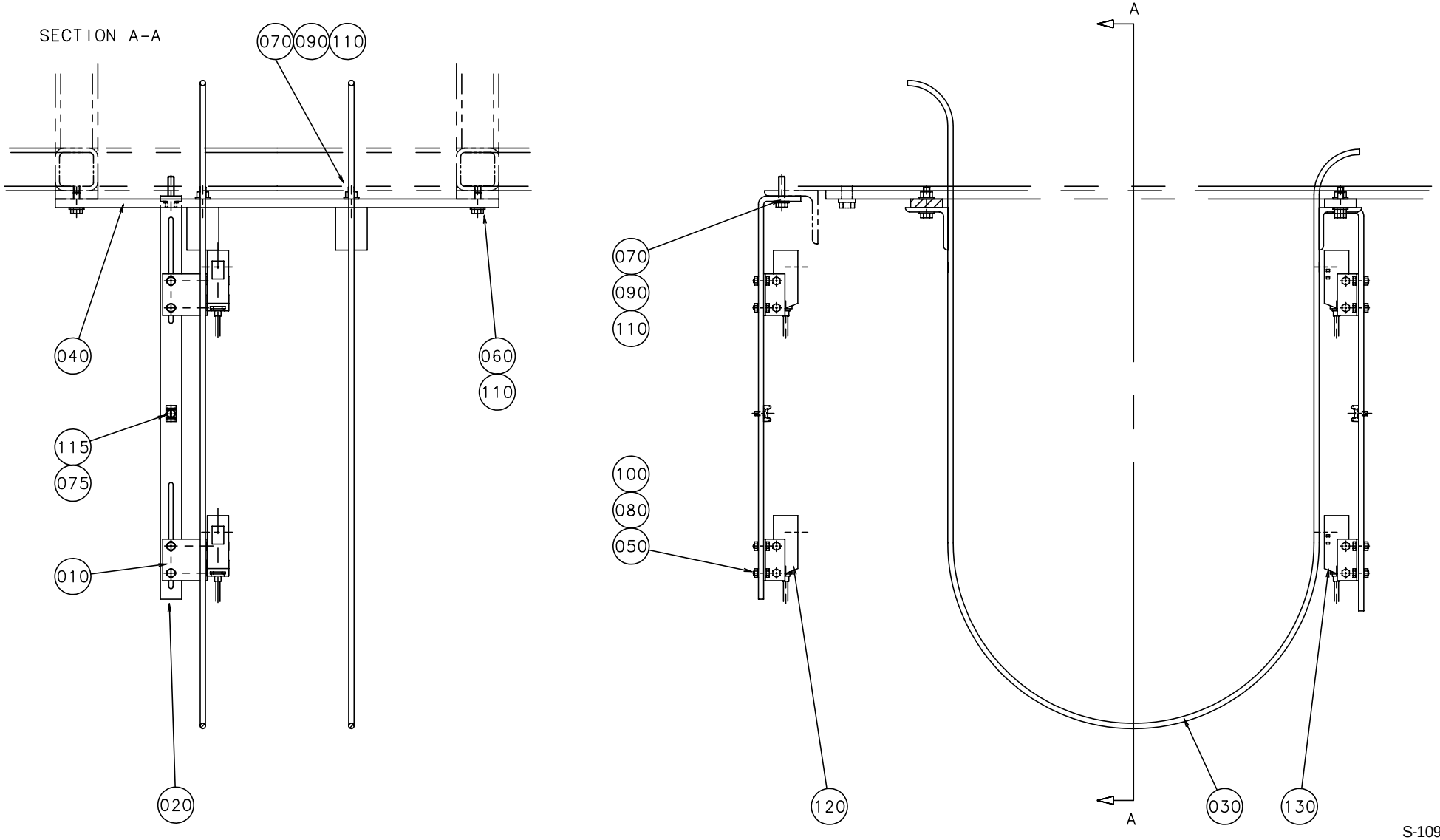

S-1095980-1
ECN 70336

Pos	Part No	SP	UN	Qty	Description	Page No
-						
000	**C-1095980-0101**	**-**		**1**	**PHOTOCELL UNIT**	
010	1082765	-		4	PHOTOCELL BRACKET	
020	1140211	-		2	PHOTOCELL BRACKET	
030	1140212	-		2	GUIDE	
040	1140213	-		2	BRACKET	
050	312105-0291	-		8	SCREW O4017 M4X12A280	
060	312105-0368	-		4	SCREW O4017 M6X16A280	
070	312105-0372	-		6	SCREW ISO 4017 M6X25A280	
075	312125-0289	-		2	SLOTTED HEMCS4X10RFR	
080	312605-0312	-		8	NUT M6M4 STAINLESS	
090	312605-0316	-		6	NUT M6M6 A280 STAINLESS	
100	315105-0136	-		16	WASHER BRB4,3X8RFR	
110	315105-0153	-		16	WASHER BRB6,4X12RFR	
115	352113-0205	-		2	ANCHOR	
120	90232-0103	R		2	PH.CELL OMRON E3SCT61L 5M	
130	90232-0104	R		2	RECEIVER OMRON E3SCT61D5M	

Pos	Part No	SP	UN	Qty	Description	Page No

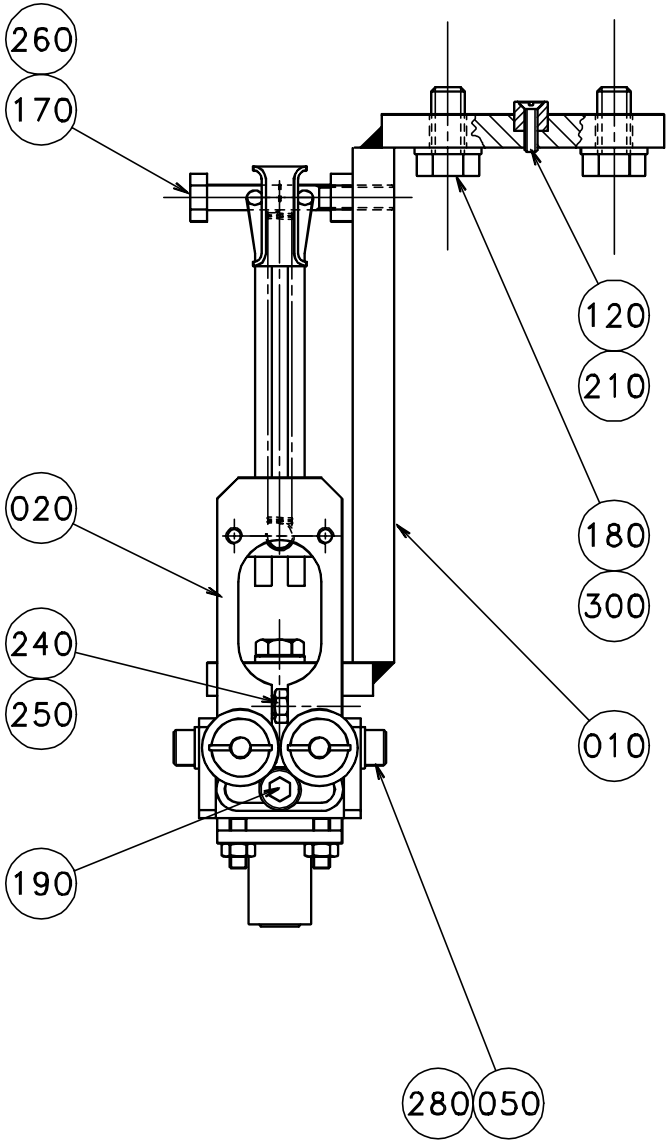

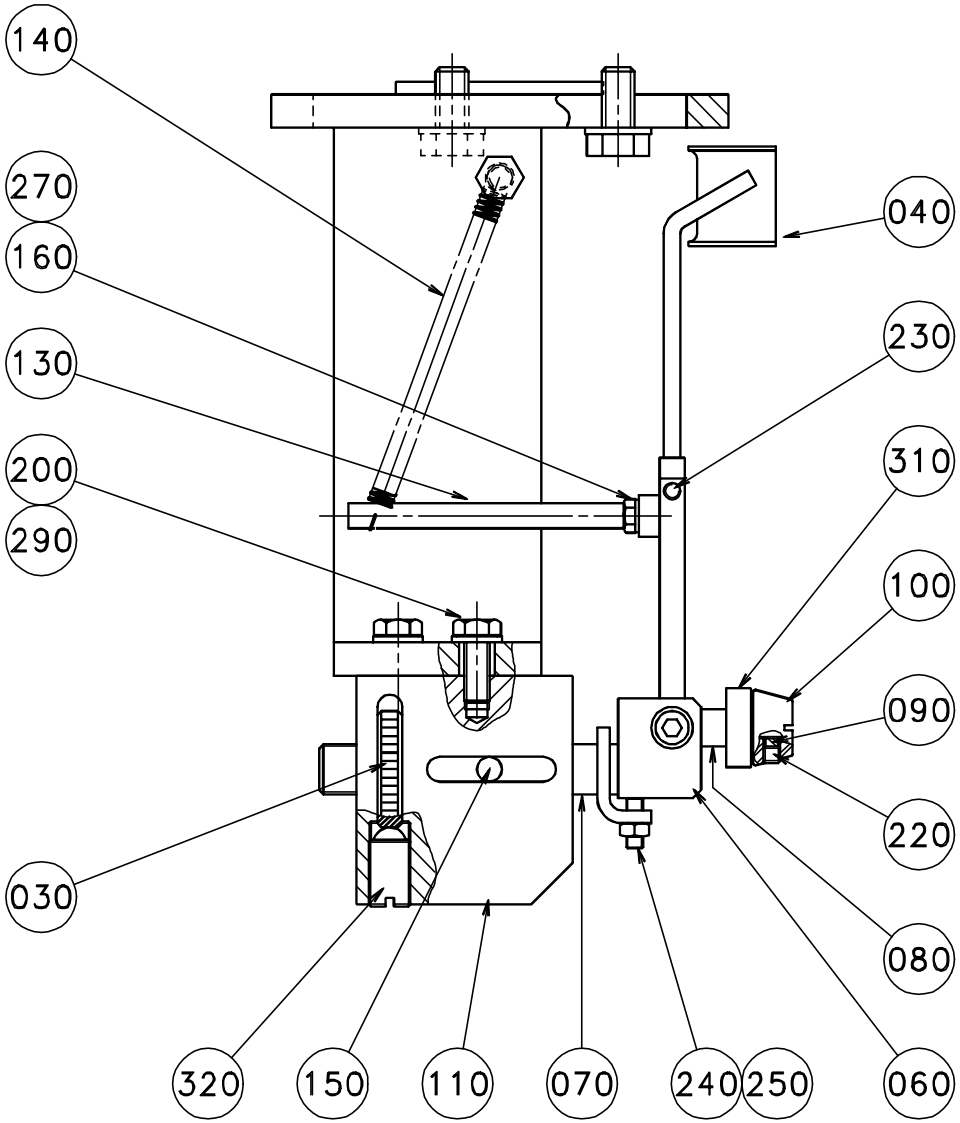

S-1255601-1
ECN 71370

Pos	Part No	SP	UN	Qty	Description	Page No
-						
000	**C-1255601-0101**	**-**		**1**	**EDGE GUIDE**	
010	1255579	-		1	BRACKET	
020	905937	-		1	SPRING	
030	23580	-		1	SHIFTER HANDLE	
040	23583	-		1	GUIDE FINGER	
050	23584	-		2	SCREW	
060	24351	-		1	BOW CLAMP	
070	24352	-		1	SHAFT	
080	24355	-		2	DOWEL	
090	24356	-		4	PIECE	
100	111543	-		2	GUIDE CONE	
110	245210	-		1	BODY	
120	905244	-		1	WEDGE	
130	905938	-		1	BRACKET	
140	90335-0222	R		1	SPRING	
150	311103-0350	-		1	CYLINDRICACP M6 6X14 RFR	
160	312105-0291	-		2	SCREW O4017 M4X12A280	
170	312105-0379	-		1	SCREW O4014 M6X45A280	
180	312105-0449	-		4	SCREW SO4017 M8X16A280	
190	312115-0366	-		1	SCREW O4762 M6X12A280	
200	312105-0368	-		2	SCREW O4017 M6X16A280	
210	312145-0224	-		1	SLOTTED HEMFS3X10RFR	
220	312318-0283	-		4	STOP SCREW SK6SS4X4RFR	
230	312318-0285	-		2	STOP SCREW SK6SS4X6RFR	
240	312318-0291	-		3	STOP SCREW SK6SS4X12RFR	
250	312605-0312	-		3	NUT M6M4 STAINLESS	
260	312605-0316	-		1	NUT M6M6 A280 STAINLESS	
270	315105-0136	-		2	WASHER BRB4,3X8RFR	
280	315105-0146	-		2	WASHER BRB5,3X10RFR	
290	315105-0153	-		2	WASHER BRB6,4X12RFR	
300	315105-0165	-		4	WASHER BRB8,4X16RFR	
310	90214-0138	M		2	BALL BEARING	
320	90287-0009	-		1	SPRINGLOADED SCREW	

Pos	Part No	SP	UN	Qty	Description	Page No

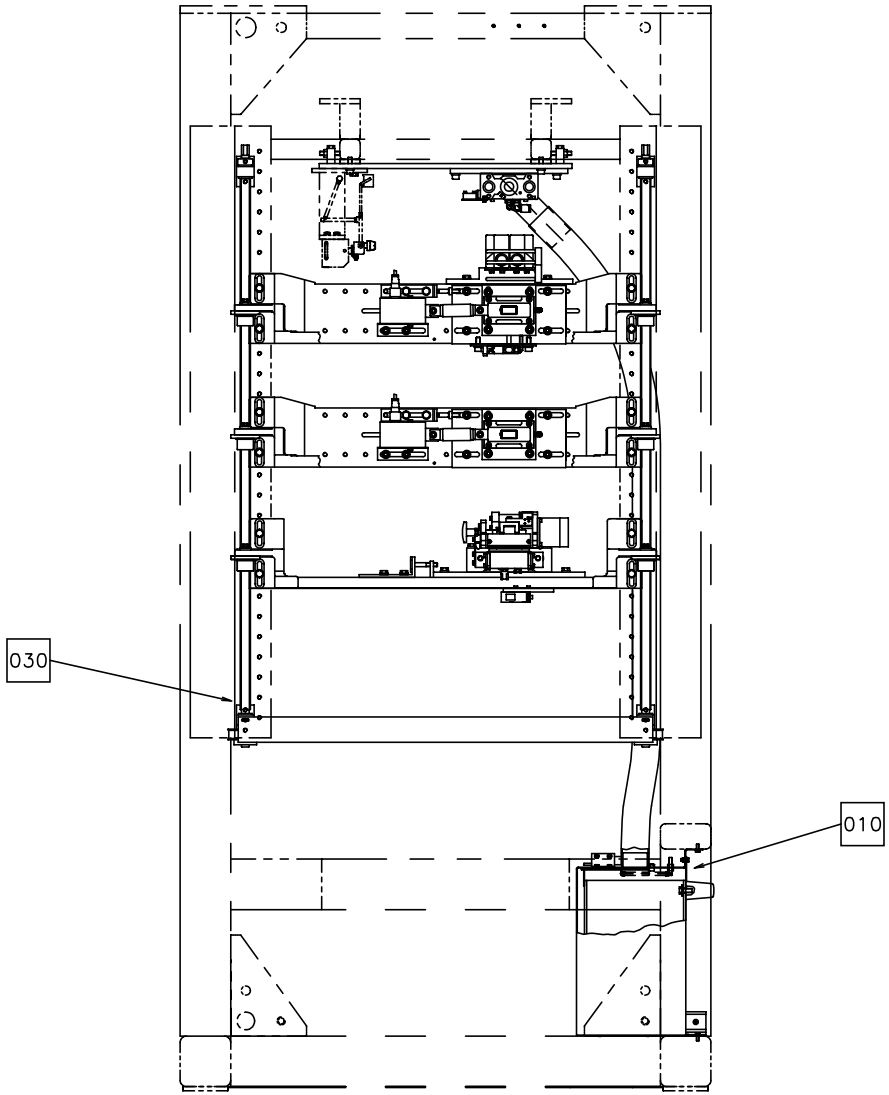
030
010

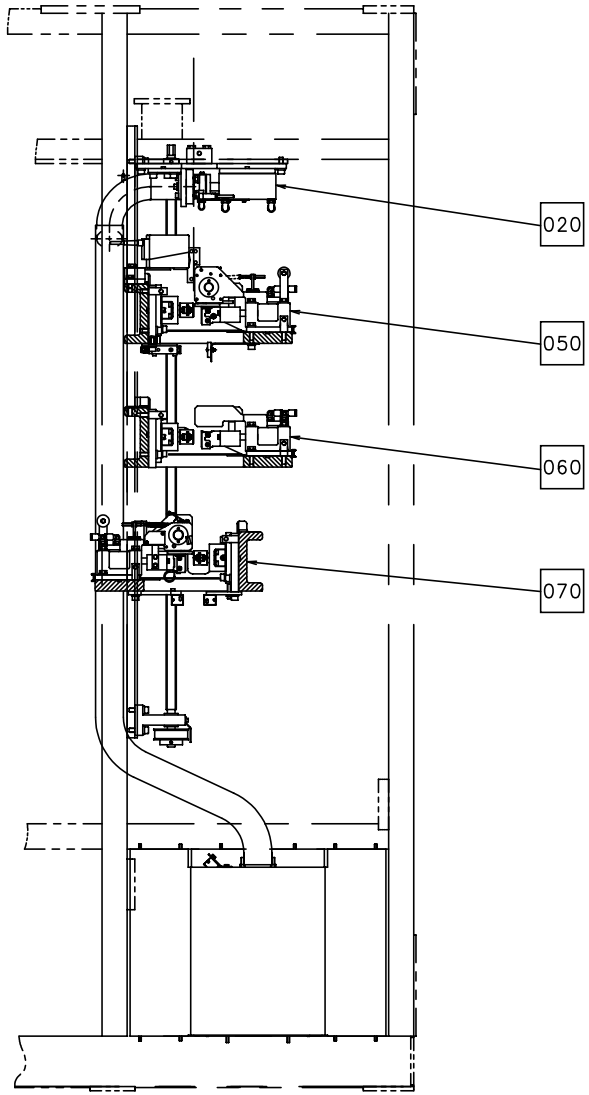
020
050
060
070

Pos	Part No	SP	UN	Qty	Description	Page No
-						
000	**C-1095932-0201**	**-**		**1**	**APPLICATORS**	
010	C-1095955-010V	-		1	WASTE BOX	109
020	C-1095992-010V	-		1	PUNCH BRACKET	111
	C-1095991-010V	-		-	. PUNCH UNIT	113
030	C-1185078-010V	-		1	LIFTING DEVICE	115
050	C-1260419-010V	-		1	APPLICATOR PATCH	117
	C-1185031-010V	-		-	. BAR CODE READER	119
	C-1260390-010V	-		-	. MISSING PATCH DETECTOR	121
	C-1260401-010V	-		-	. SETTING TOOL	123
	C-1260414-010V	-		-	. PATCH FEEDER	125
	C-1260417-010V	-		-	. PATCH RESEAL C'JAW UNIT	129
	C- 67379-0218	-		-	. . IH EQUIPMENT	
	C-1260426-010V	-		-	. PATCH RESEAL BRACKET	131
060	C-1260420-010V	-		1	APPLICATOR RESEAL	133
	C-1260401-010V	-		-	. SETTING TOOL	123
	C-1260417-010V	-		-	. PATCH RESEAL C'JAW UNIT	129
	C- 67379-0218	-		-	. . IH EQUIPMENT	
	C-1260418-010V	-		-	. HEATING JAW-RESEAL	135
	C-1260426-010V	-		-	. PATCH RESEAL BRACKET	131
070	C-1260421-010V	-		1	APPLICATOR TAB	137
	C-1185029-010V	-		-	. MISSING TAB DETECTOR	139
	C-1260401-010V	-		-	. SETTING TOOL	123
	C-1260415-010V	-		-	. TAB FEEDER	141
	C-1260416-010V	-		-	. TAB C'JAW UNIT	145
	C- 67379-0219	-		-	. . IH EQUIPMENT	
	C-1260427-010V	-		-	. TAB BRACKET	147
090	C-1296882-010V	-		1	OPENING SPECIFICATION	149

Pos	Part No	SP	UN	Qty	Description	Page No

WASTE BOX

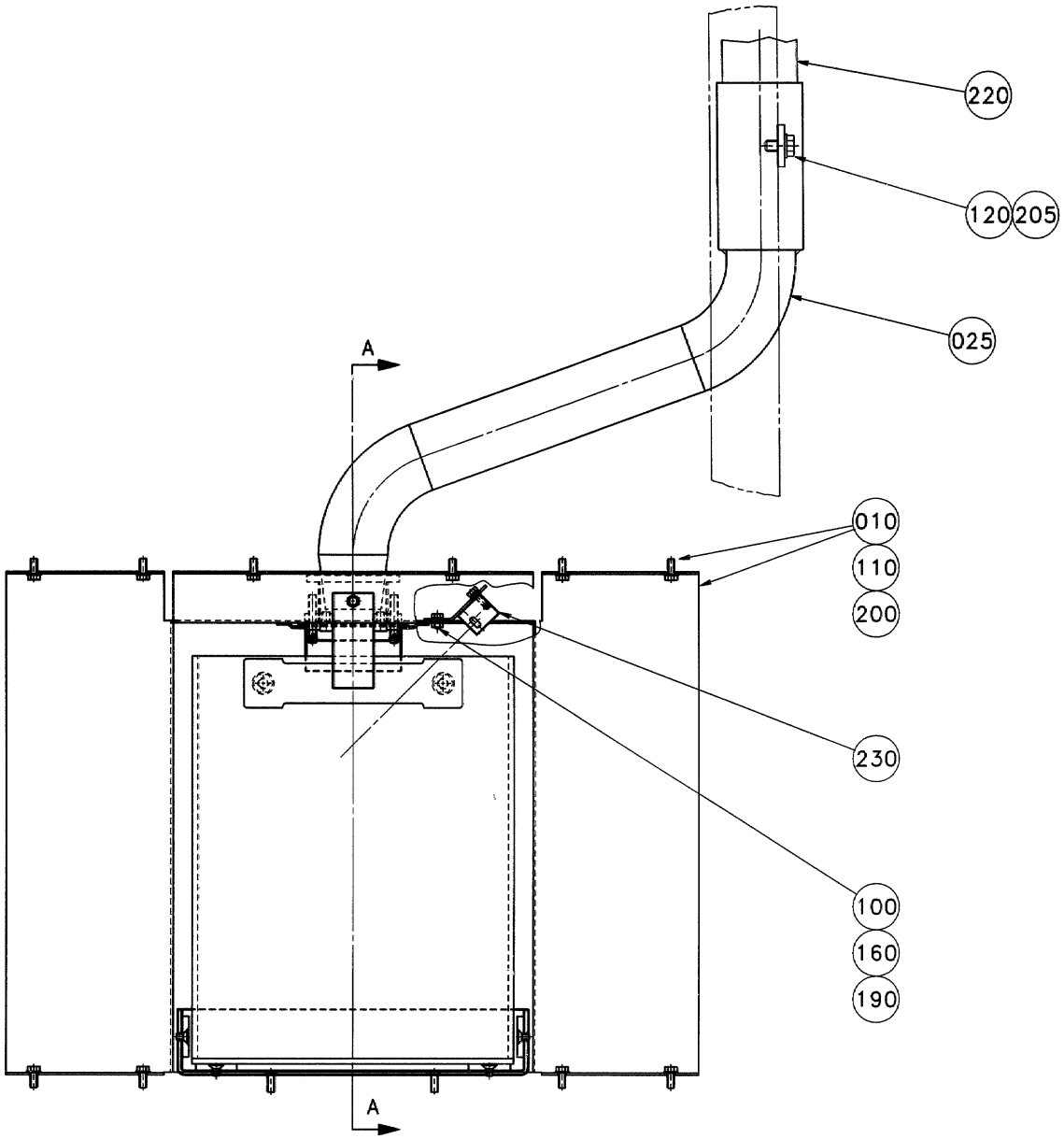

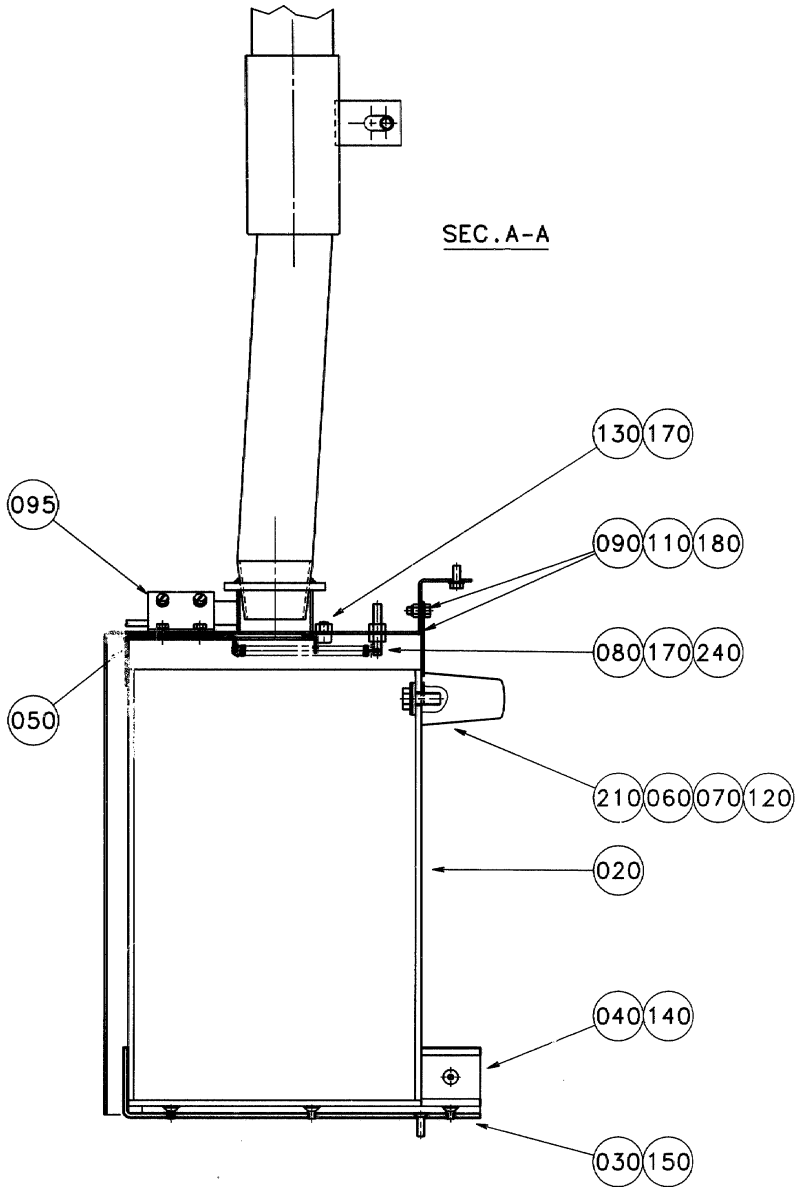

S-1095955-1
ECN 71370

Pos	Part No	SP	UN	Qty	Description	Page No
-						
000	**C-1095955-0101**	**-**		**1**	**WASTE BOX**	
010	1140049	-		1	COVER	
020	1140047	-		1	WASTE BOX	
025	1334535	-		1	WASTE PIPE	
030	1140045	-		1	FRAME	
040	1140046	-		4	RAIL	
050	1140048	-		1	LOCK PLATE	
060	28036	-		2	WASHER	
070	294734	-		2	WASHER	
080	578684	-		2	SPRING BRACKET	
090	1103295	-		1	LOCK PLATE	
095	1255697	-		1	BRACKET	
100	312105-0287	-		2	SCREW O4017 M4X8A280	
110	312105-0327	-		9	SCREW ISO 4017 M5X12A280	
120	312105-0451	-		3	SCREW SO4017 8X20A280	
130	312115-0362	-		2	SCREW O4762 M6X8A280	
140	312155-0323	-		12	SCREW	
150	312155-0329	-		2	SCREW MF6S5X16RFR	
160	312605-0312	-		2	NUT M6M4 STAINLESS	
170	312605-0316	-		6	NUT M6M6 A280 STAINLESS	
180	312812-0314	-		1	LOCK NUT A2-M5RFR	
190	315105-0136	-		2	WASHER BRB4,3X8RFR	
200	315105-0146	-		8	WASHER BRB5,3X10RFR	
205	315105-0165	-		1	WASHERS,PLAIN ROUND 8,4X16	
210	90017-0014	-		1	HANDLE	
220	90152-0026	D	MM	1800	HOSE	
230	90232-0105	R		1	PH.CELL OMRON E3S-CD61-5M	
240	90335-0081	D		2	SPRING	

Pos	Part No	SP	UN	Qty	Description	Page No

PUNCH BRACKET

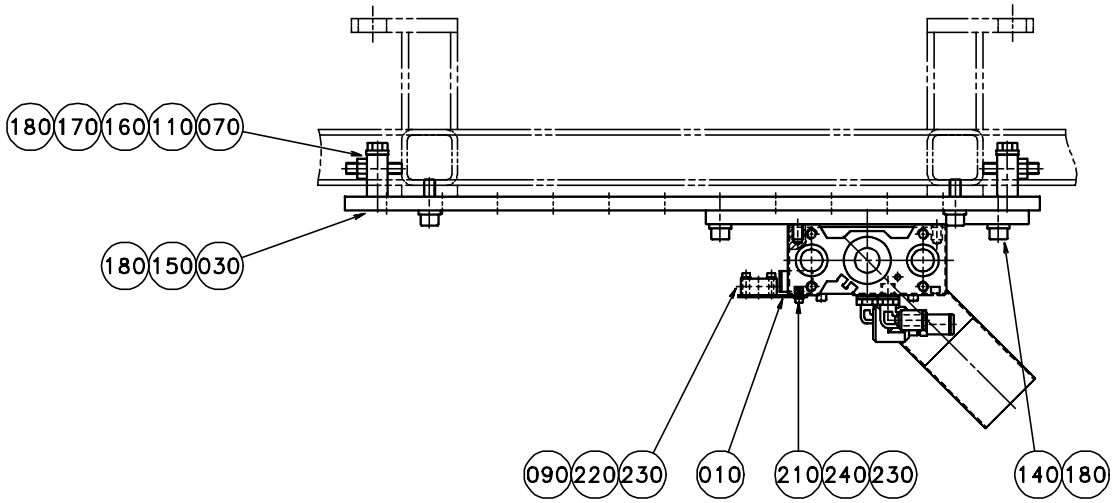

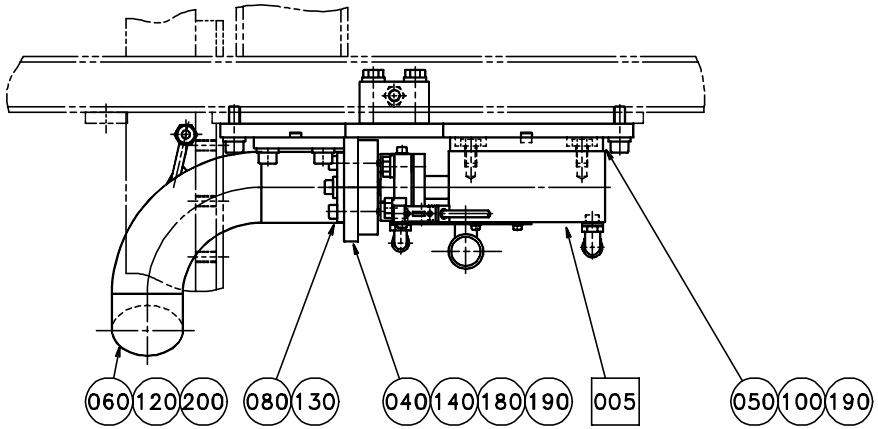

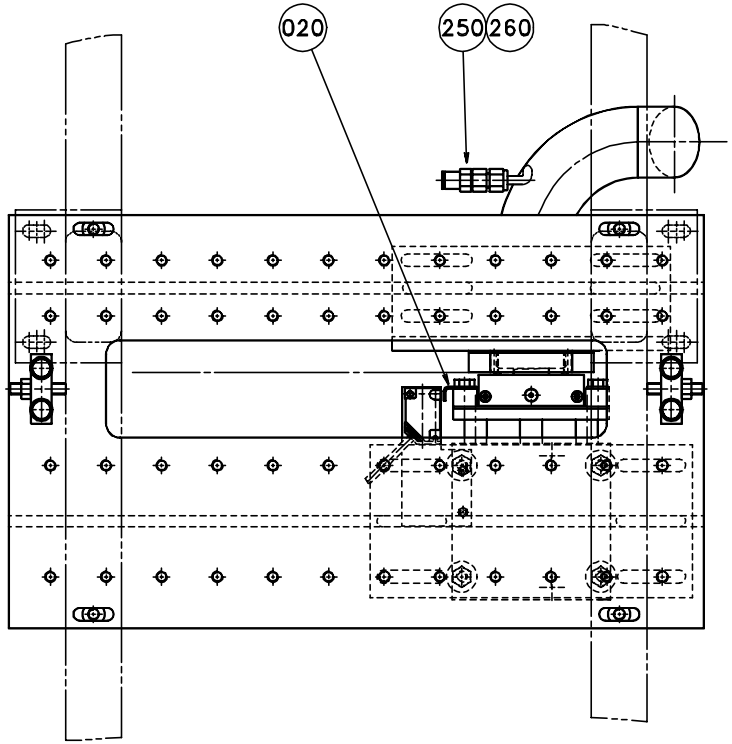

S-1095992-1
ECN 71370

Pos	Part No	SP	UN	Qty	Description	Page No
-						
000	**C-1095992-0101**	**-**		**1**	**PUNCH BRACKET**	
005	C-1095991-0100	-		1	PUNCH UNIT	113
010	1260387	-		1	PHOTOCELL BRACKET	
020	1260239	-		1	ANGLE BRACKET	
030	1140499	-		1	PLATE	
040	1140500	-		1	ANGLE BRACKET	
050	1140501	-		1	PLATE	
060	1334534	D		1	WASTE PIPE	
070	1140503	-		2	ADJUSTMENT BRACKET	
080	1140504	-		2	CONNECTION PLATE	
090	90044-0104	R		1	PROX.SWITCH IFM IN 3002	
100	312105-0447	-		4	SCREW M6S ISO 4017 M8X12 A280	
110	312109-0459	-		4	SCREW M6S ISO 4017 M8X40 A280	
120	312115-0366	-		2	SCREW MC6S ISO 4762 M6X12 A280	
130	312115-0372	-		4	SCREW MC6S ISO 4762 M6X25 A280	
140	312115-0451	-		8	SCREW MC6S ISO 4762 M8X20 A280	
150	312115-0453	-		4	SCREW MC6S ISO 4762 M8X25 A280	
160	312318-0459	-		2	SET SCREW CUP POINT ISO 4029 M8X40 RFR	
170	312605-0318	-		2	NUTS,HEXAGON,M8	
180	315115-0165	-		16	WASHER TBRB8 4x16 Stainless	
190	315705-0272	-		4	KEYS,PARALLEL WITH ROUND ENDS 8X7X50	
200	342991-0109	-		1	HOSE CLIP,WORM DRIVE TYPE (48)-50	
210	312115-0222	-		2	SCREW MC6S ISO 4762 M3X8 A280	
220	312115-0228	-		2	SCREW MC6S ISO 4762 M3X16 A280	
230	315105-0124	-		4	WASHERS,PLAIN ROUND 3,2X6	
240	312605-0310	-		2	NUTS,HEXAGON,M3	
250	342722-0202	-		1	STRAIGHT COUPL,FOR PLASTIC TUBE 6-G1/8"	
260	342723-0102	-		1	STRAIGHT PIPE CONNECTION GAI-6-G1/8"	

Pos	Part No	SP	UN	Qty	Description	Page No

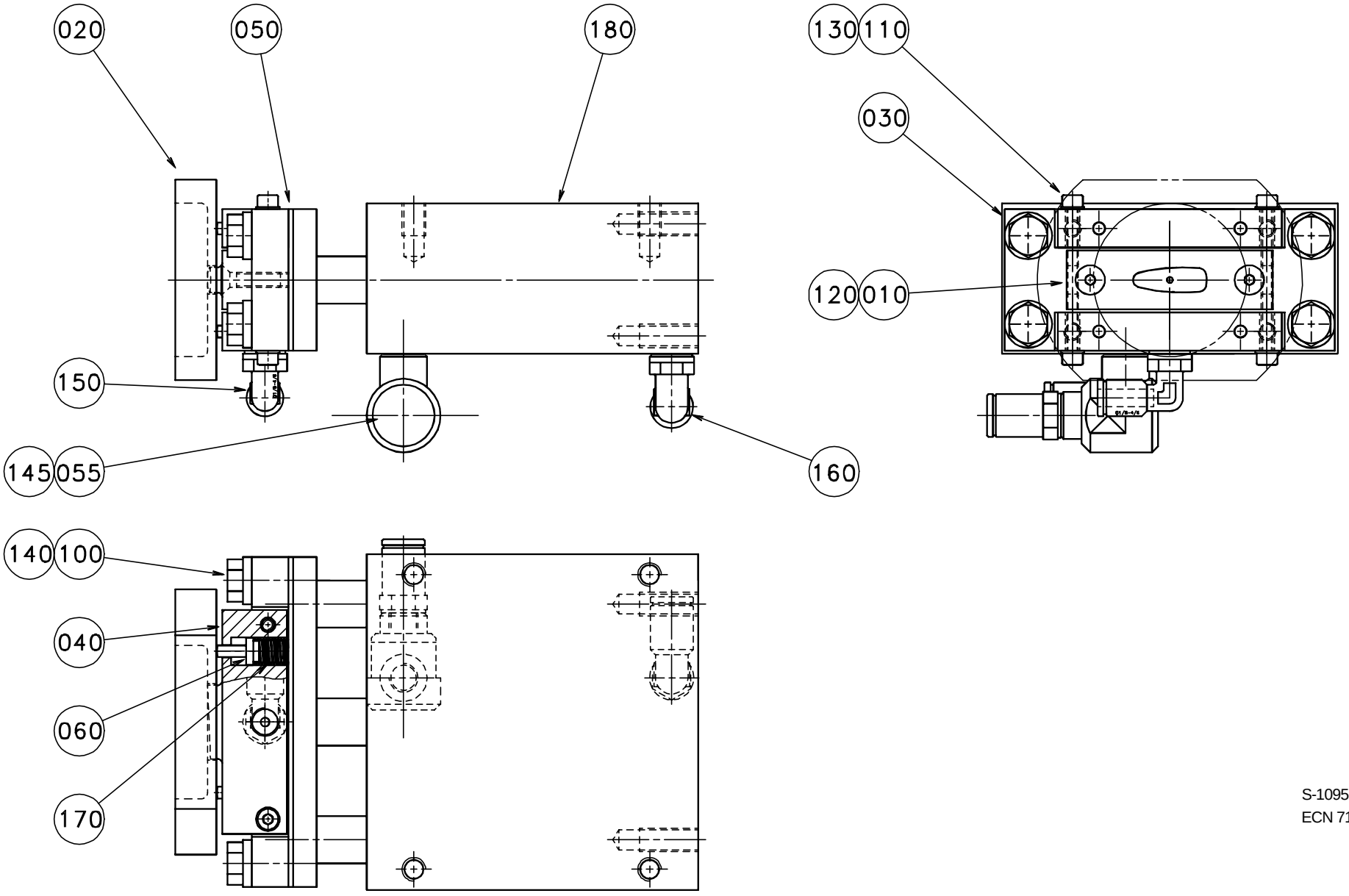

S-1095991-1
ECN 71157

Pos	Part No	SP	UN	Qty	Description	Page No
HOLE50						
000	**C-1095991-0101**	**-**		**1**	**PUNCH UNIT**	
010	1140291	K		1	PUNCH HOLE 50	
020	1140292	K		1	DIE HOLE 50	
HOLE45						
000	**C-1095991-0102**	**-**		**1**	**PUNCH UNIT**	
010	1145233	K		1	PUNCH HOLE 45	
020	985860	K		1	DIE HOLE 45	
HOLE71						
000	**C-1095991-0103**	**-**		**1**	**PUNCH UNIT**	
010	1296794	K		1	PUNCH HOLE71	
020	1296872	K		1	DIE HOLE 71	
Common parts						
030	1140293	-		1	SPACER	
040	1140294-0002	D		2	PIN DISTANCE 36.5	
050	1140387	R		3	SHIM	
055	90235-0206	-		1	VALVE	
060	905285	R		4	STRIPPER PIN	
100	312105-0453	-		4	SCREW M6S ISO 4017 M8X25 A280	
110	312115-0295	-		4	SCREW MC6S ISO 4762 M4X20 A280	
120	312155-0331	-		2	SCREW MF6S DIN 7991 M5X20 A280	
130	315105-0136	-		4	WASHERS,PLAIN ROUND 4,3X8	
140	315105-0165	-		4	WASHERS,PLAIN ROUND 8,4X16	
145	342722-0204	-		1	STRAIGHT COUPL,FOR PLASTIC TUBE 8-G1/8"	
150	342732-0102	-		1	V-COUPL,ADJUST,FOR PLASTIC TUBE 6-G1/8"	
160	342732-0801	-		1	V-COUPL,ADJUST,FOR PLASTIC TUBE 8-G1/8"	
170	90335-0005	R		4	SPRING	
180	90450-0397	R		1	Cylinder	

Pos	Part No	SP	UN	Qty	Description	Page No

LIFTING DEVICE

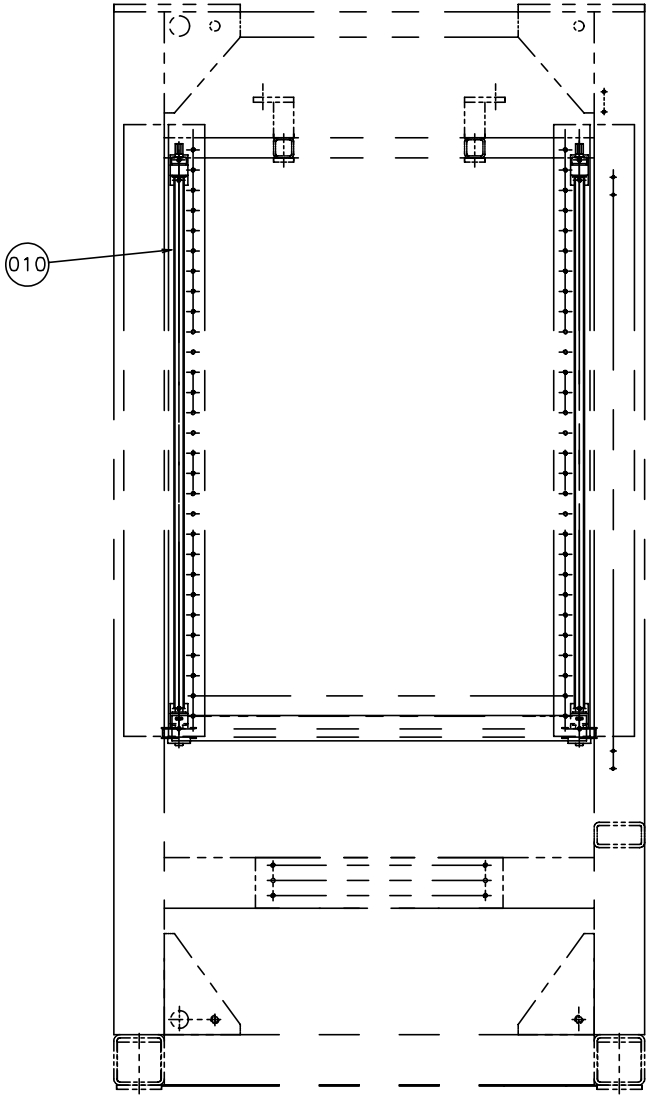

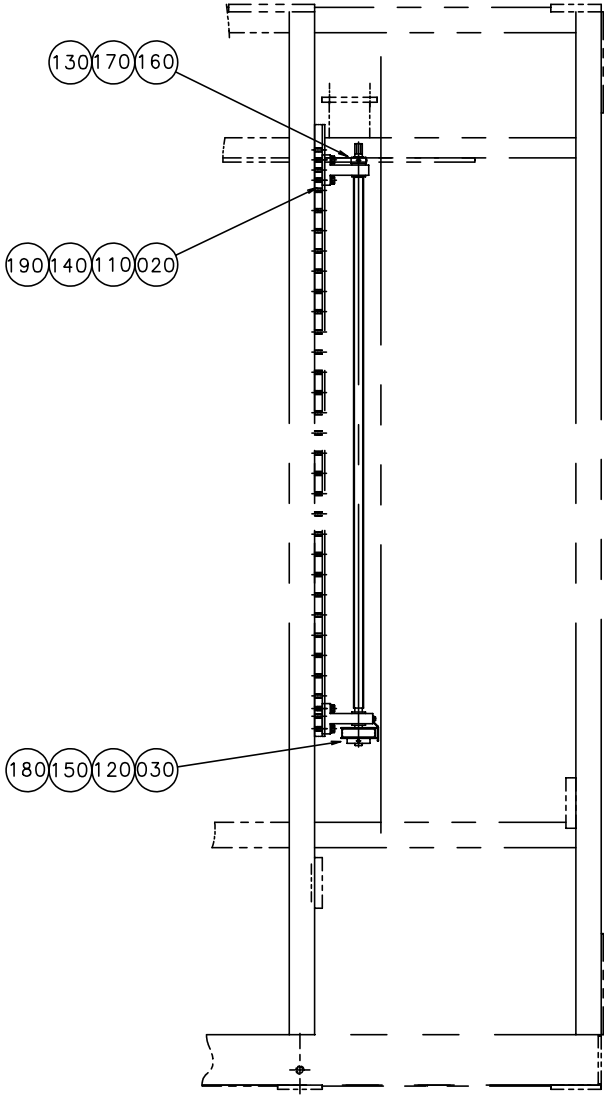

S-1185078-1
ECN 72388

Pos	Part No	SP	UN	Qty	Description	Page No
-						
000	**C-1185078-0101**	**-**		**1**	**LIFTING DEVICE**	
010	1147050	-		2	SCREW	
020	1147049	-		4	BRACKET	
030	1147051	-		2	TOOTHED PULLEY	
110	312105-0455	-		8	SCREW O4017 M8X30A280	
120	312311-0327	-		2	STOP SCREW T6SS5X12FZB	
130	312318-0362	-		4	STOP SCREW SK6SS6X8RFR	
140	315115-0165	-		8	WASHER TBRB8,4X16RFR	
150	315705-0202	-		2	FLAT WEDGE	
160	315742-0111	-		2	RETAINING 15SMS199RFR	
170	315751-0112	C		2	CIRCLIP SGA15 RFR	
180	318172-0179	C		1	TIMING BEL	
190	321111-0211	-		8	FLANGE BUS 15E7X10	

Pos	Part No	SP	UN	Qty	Description	Page No

APPLICATOR PATCH

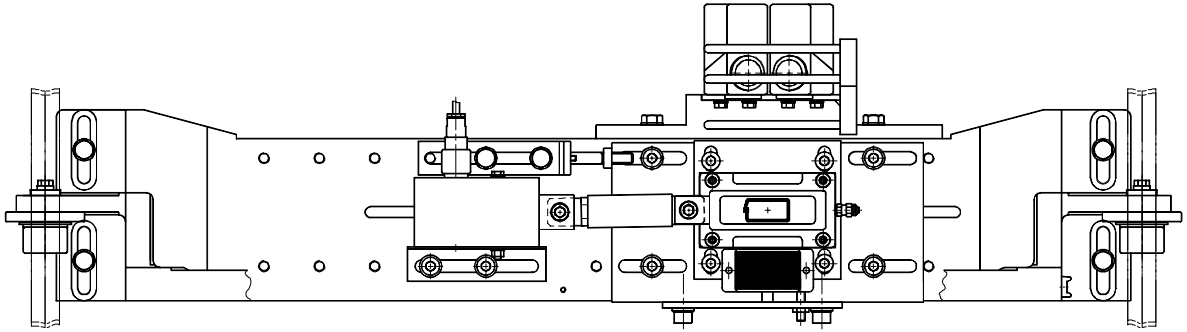

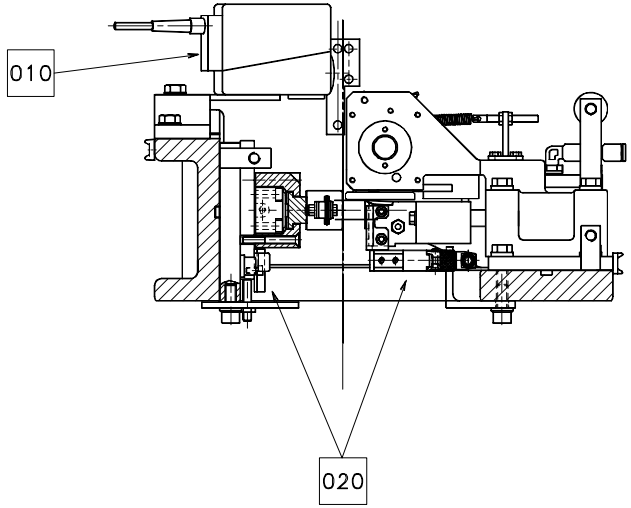

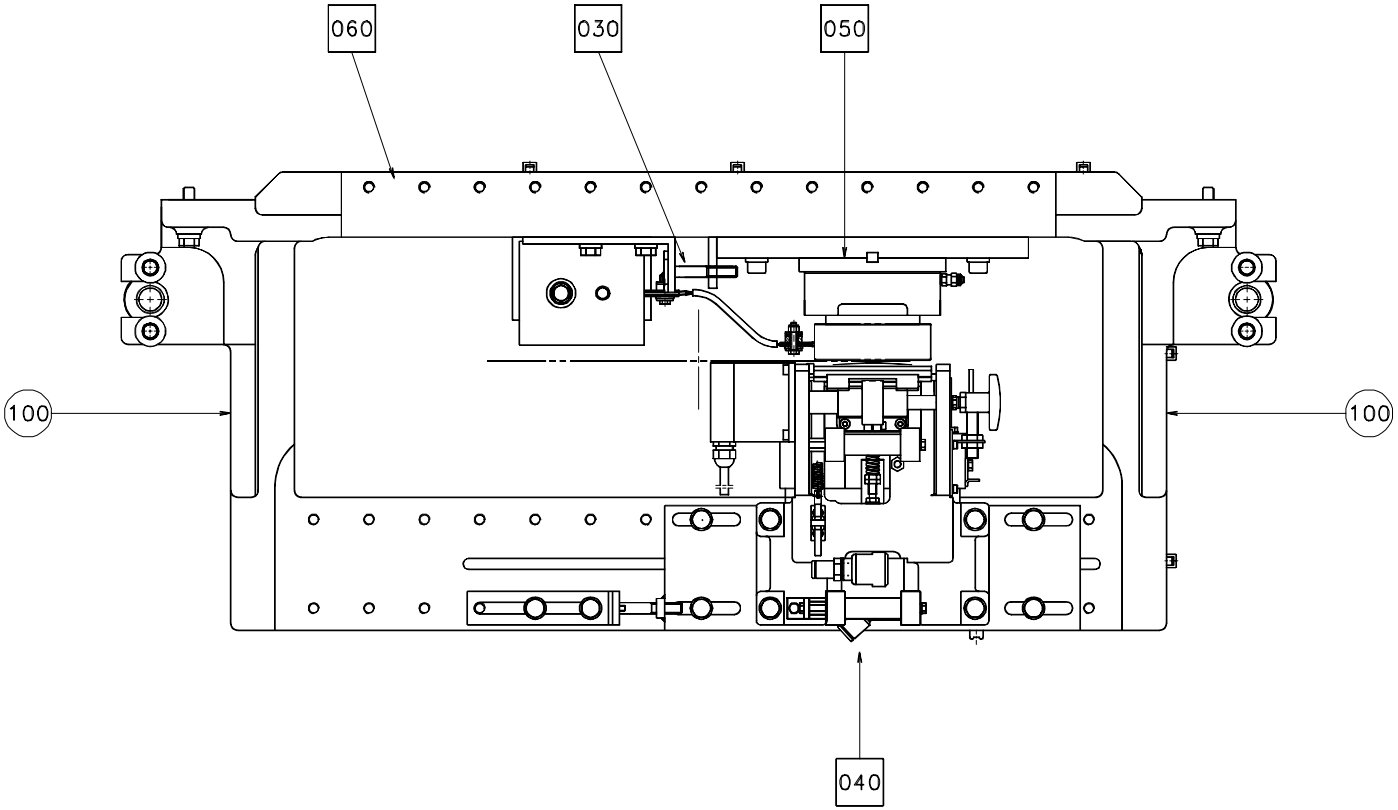

S-1260419-1
ECN 71370

Pos	Part No	SP	UN	Qty	Description	Page No
-						
000	**C-1260419-0101**	**-**		**1**	**APPLICATOR PATCH**	
010	C-1185031-010V	-		1	BAR CODE READER	119
020	C-1260390-020V	-		1	MISSING PATCH DETECTOR	121
030	C-1260401-010V	-		2	SETTING TOOL	123
040	C-1260414-010V	-		1	PATCH FEEDER	125
050	C-1260417-010V	-		1	PATCH RESEAL C'JAW UNIT	129
	C- 67379-0218	-		-	. IH EQUIPMENT	
060	C-1260426-010V	-		1	PATCH RESEAL BRACKET	131
100	359705-0007	-		2	WARNING SIGN"HOT SURFACE"	

Pos	Part No	SP	UN	Qty	Description	Page No

BAR CODE READER

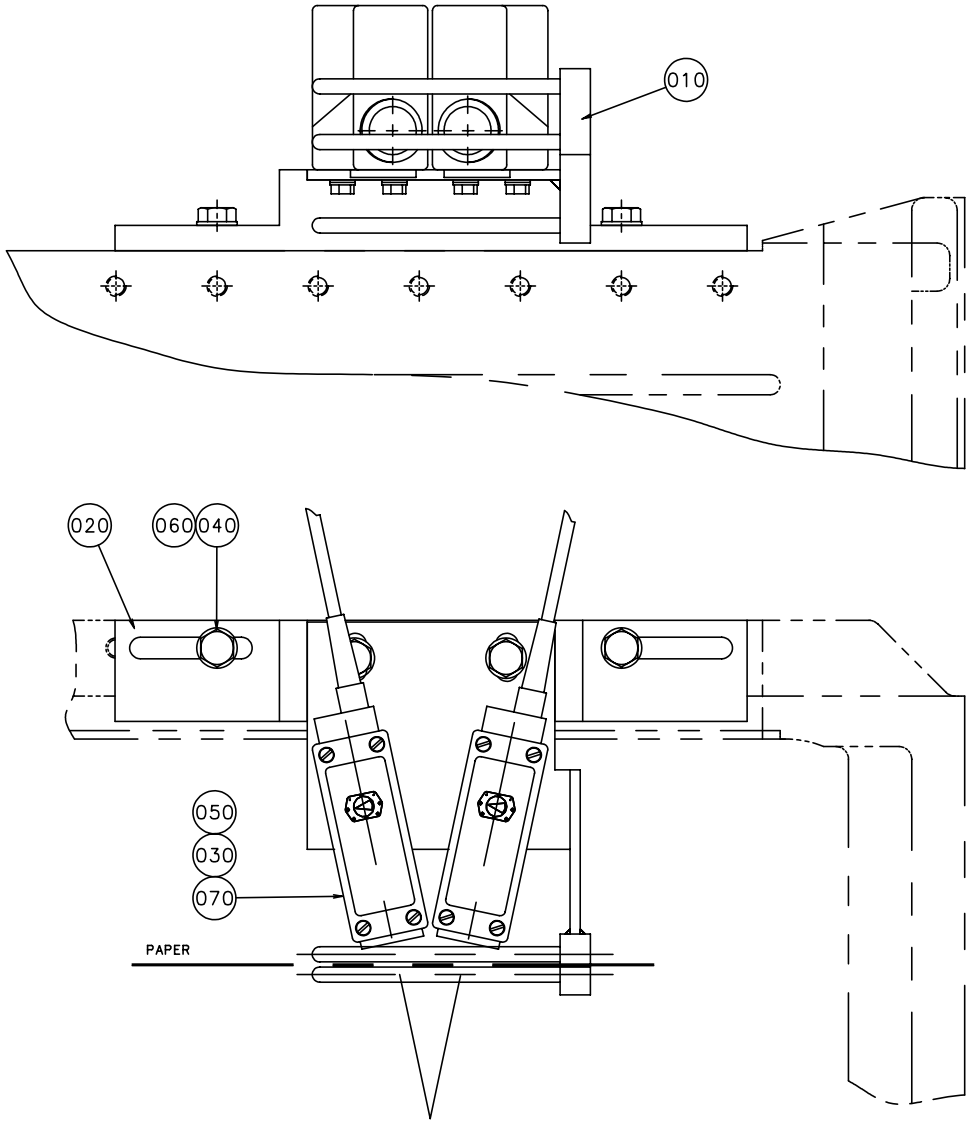

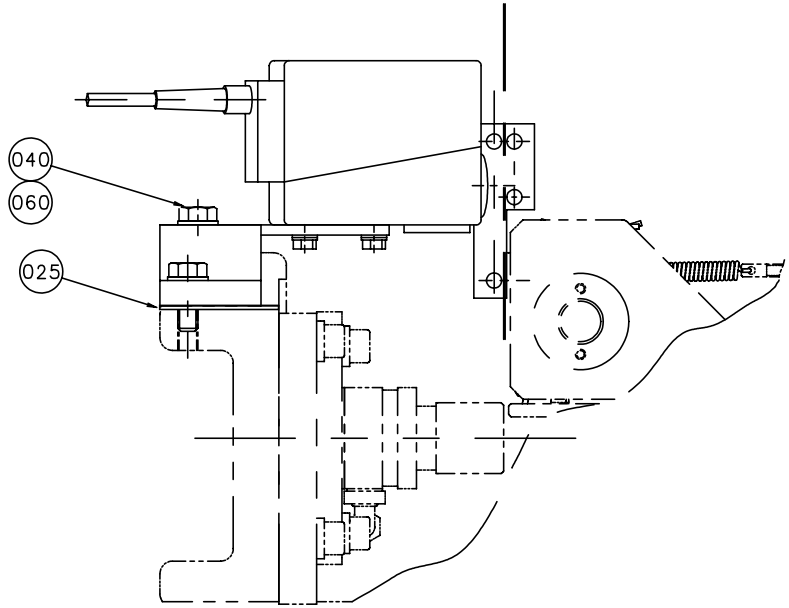

Pos	Part No	SP	UN	Qty	Description	Page No
TPA VOLUME 1000 S, HOLE 71						
025	1487819	-		1	SHIM	
Common Parts						
000	**C-1185031-0101**	**-**		**1**	**BAR CODE READER**	
010	1147012	C		1	PHOTOCELL BRACKET	
020	1147013	-		1	BRACKET	
030	312105-0325	-		8	SCREW M6S5X10 A2 80	
040	312105-0453	-		4	SCREW SO4017 8X25A280	
050	315105-0146	-		8	WASHER BRB5,3X10RFR	
060	315105-0165	-		4	WASHER BRB8,4X16RFR	
070	90232-0112	S		2	PHOTOCELL	

Pos	Part No	SP	UN	Qty	Description	Page No

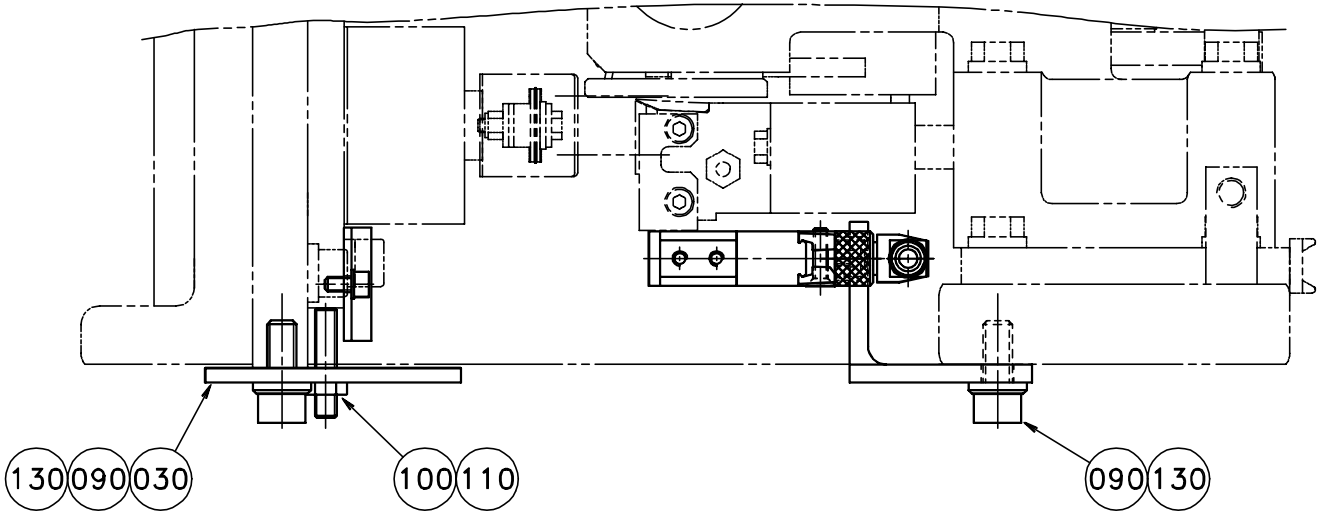
130
090
030
100
110
090
130

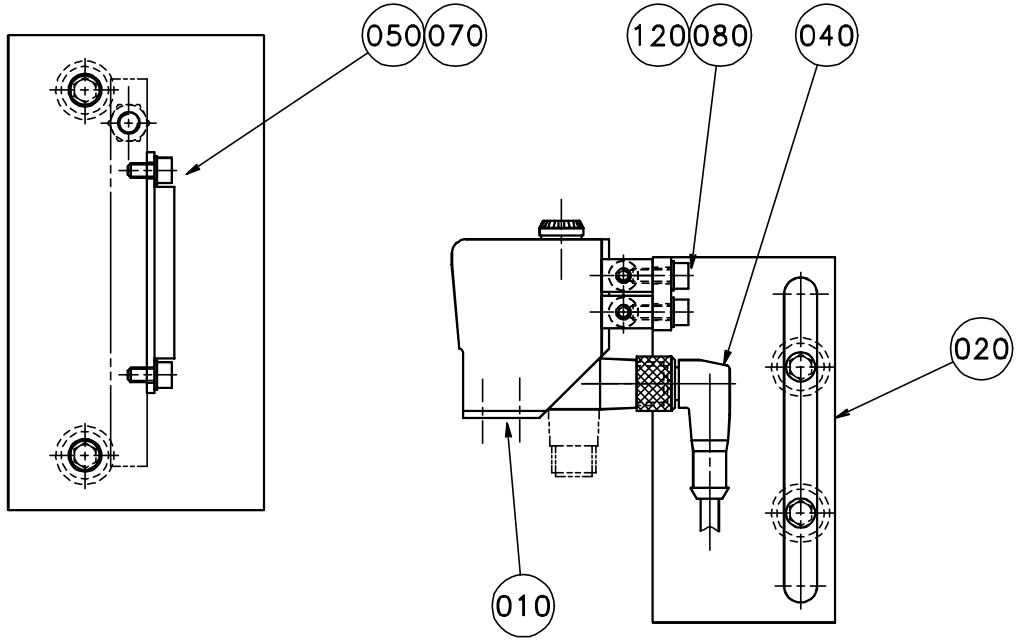
050
070
120
080
040
020
010

Pos	Part No	SP	UN	Qty	Description	Page No
-						
000	**C-1260390-0201**	**-**		**1**	**MISSING PATCH DETECTOR**	
010	1260522	R		1	PHOTOCELL	
020	1346162	-		1	PHOTOCELL BRACKET	
030	1255687	-		1	BRACKET	
040	1260523	R		1	CABLE	
050	1346219	R		1	REFLECTOR	
070	312115-0287	-		2	SCREW MC6S ISO 4762 M4X8 A280	
080	312115-0291	-		2	SCREW MC6S ISO 4762 M4X12 A280	
090	312115-0451	-		4	SCREW MC6S ISO 4762 M8X20 A280	
100	312311-0374	-		1	SET SCREW FULL DOGPOINT ISO 4028 M6X30	
110	312625-0316	-		1	NUTS,HEXAGON,M6	
120	315105-0136	-		2	WASHERS,PLAIN ROUND 4,3X8	
130	315115-0165	-		4	WASHER TBRB8 4x16 Stainless	

Pos	Part No	SP	UN	Qty	Description	Page No

SETTING TOOL

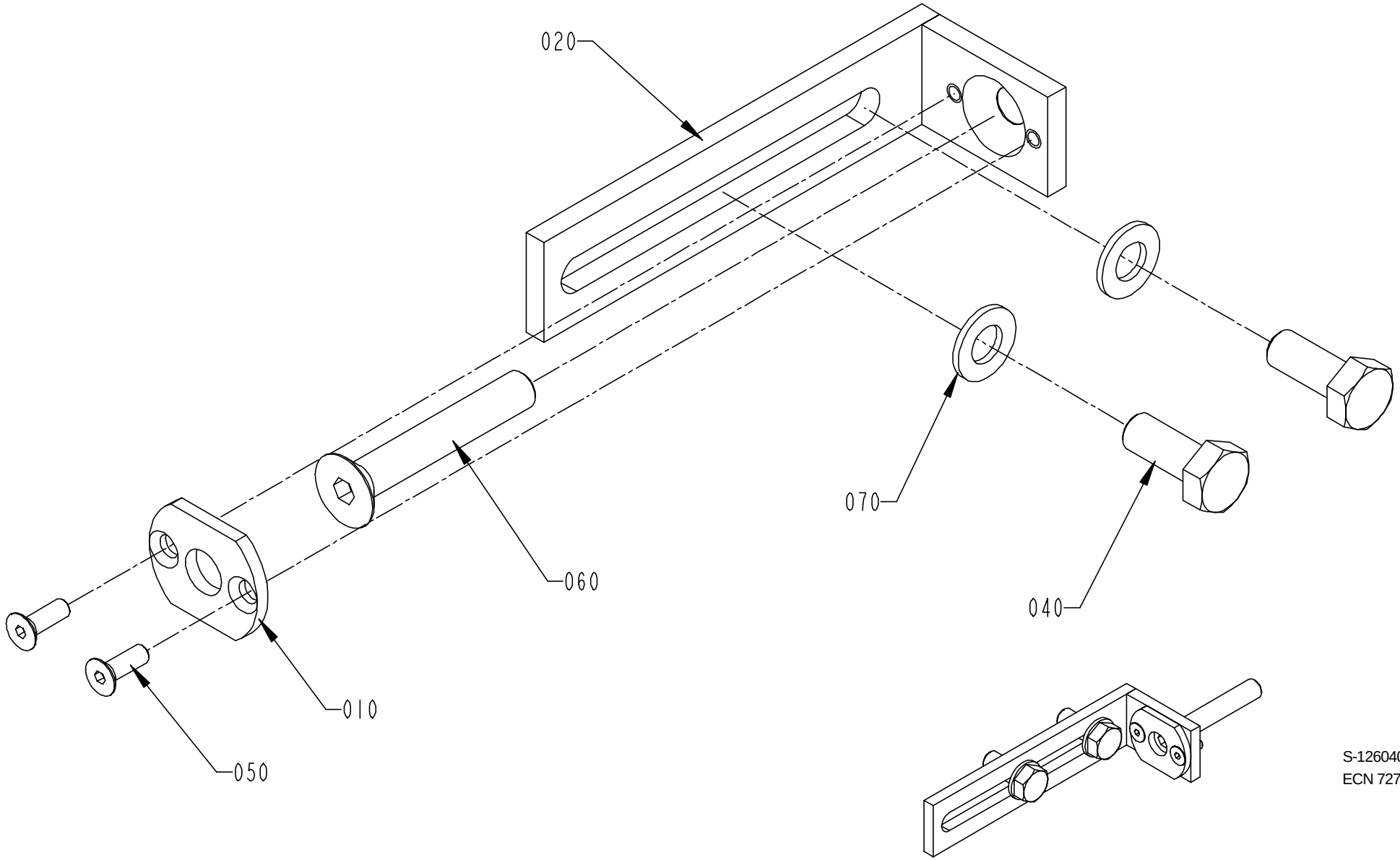

S-1260401-1
ECN 72779

Pos	Part No	SP	UN	Qty	Description	Page No
-						
000	**C-1260401-0101**	**-**		**1**	**SETTING TOOL**	
010	1260400	-		1	COVER	
020	1260402	-		1	BRACKET	
040	312105-0451	-		2	SCREW SO4017 8X20A280	
050	312155-0291	-		3	SCREW MF6S4X12RFR	
060	312155-0461	-		1	SCREW MF6S8X50RFR	
070	315103-0165	-		2	WASHER BRB8,4X16MSGFN	

Pos	Part No	SP	UN	Qty	Description	Page No

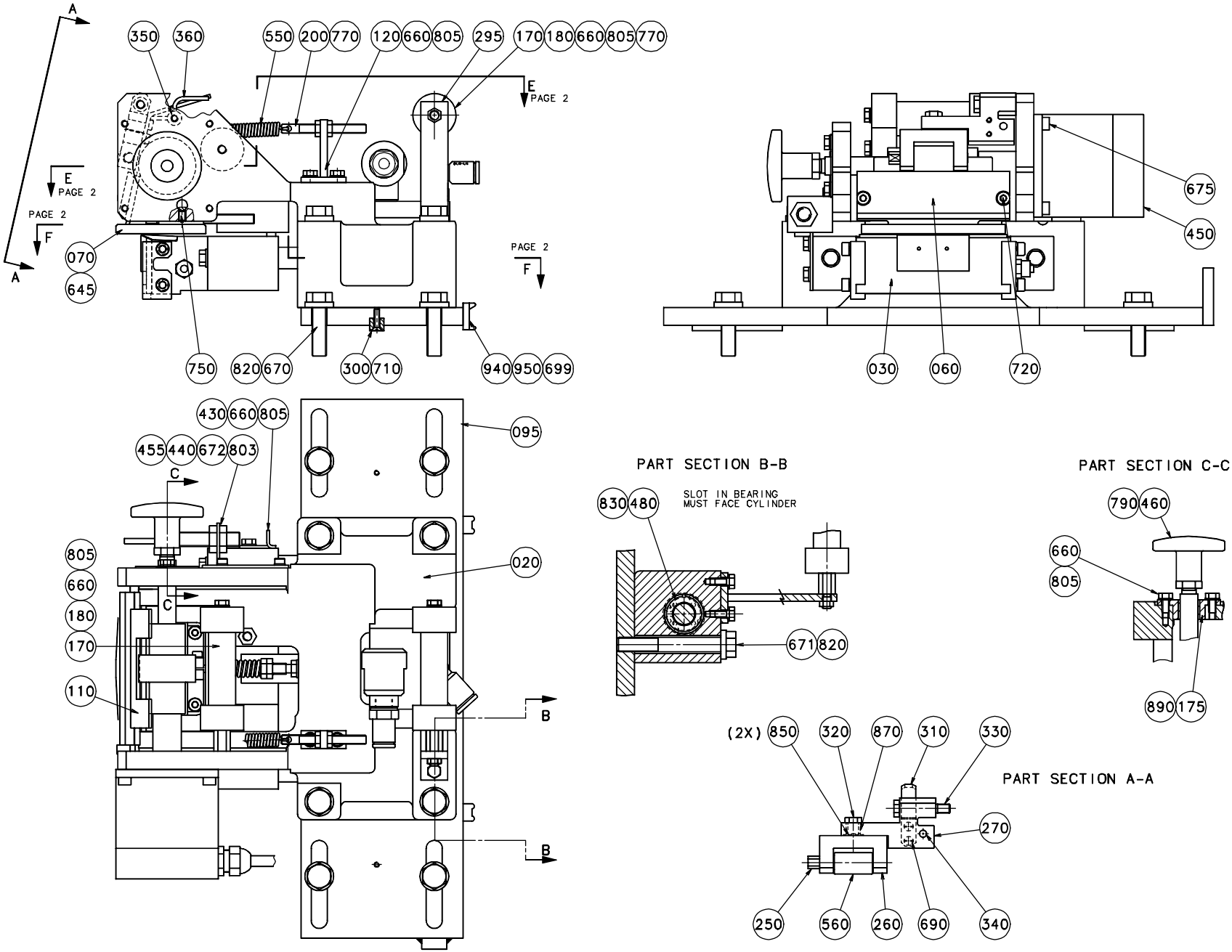

S-1260414-1
ECN 71370

Pos	Part No	SP	UN	Qty	Description	Page No
HOLE50 or HOLE71						
000	**C-1260414-0101**	**-**		**1**	**PATCH FEEDER**	
170	907358-0006	D		2	ROLLER-29	
HOLE45 or HOLE85						
000	**C-1260414-0102**	**-**		**1**	**PATCH FEEDER**	
170	905210	D		2	ROLLER-35	
Common parts						
020	1260389	-		1	CASTING APPLICATOR	
030	1260393-0002	M		1	SEALING PLATE	
050	1260391	D		1	BRACKET	
060	1260395	D		1	PLATE	
070	1145333	J		1	KNIFE-WINDOW	
080	907712	R		1	PIVOT PLATE	
095	1260404	-		1	PLATE	
100	1145332	J		1	KNIFE-FLAT	
110	905174	D		1	STEER PLATE	
120	1140545	-		1	TEE BRACKET	
150	905194	R		1	SHAFT	
160	1140547	R		2	SHAFT	
175	1140548	M		1	FLANGED BEARING BUSHING	
180	1140551	M		2	SHAFT	
190	1260399	D		1	CLAMP	
195	1260422	D		1	CLAMP	
200	905215	D		1	BOLT	
220	905241	D		1	COUPLING	
230	905243	M		1	SHAFT	
250	905413	M		1	SHAFT	
260	905416	D		1	PIVOT BRACKET-SWIVEL	
270	905419	D		1	PIVOT ARM-SWIVEL	
280	905471	J		1	ROLLER-DRIVE	
293	907710	D		1	PIVOT PLATE	
295	1140546	-		1	BRACKET	
300	905244	-		2	WEDGE	
310	905246	-		1	BRACKET	
320	905415	D		1	SHAFT	
330	905417	D		1	SHAFT	
340	905607	-		1	SCREW	
350	905608	-		1	SCREW	
360	905609	-		1	LOCK BAR	
370	905613	D		1	SHAFT	
415	907711	R		1	SHAFT	
430	1296753	-		1	FLAG	
440	1296752	-		1	BRACKET	
450	90045-0192	R		1	Stepping motor	
455	90044-0145	R		1	INDUCTIVE SWITCH	
460	90051-0007	-		1	HANDLE	
480	90189-0003	M		4	BALL BUSHING	
500	90450-0409	M		1	CYLINDER	
505	90235-0206	-		1	VALVE	
510	90239-0489	M		1	ROD END,CLEVIS WITH AXLE,M6	
540	90335-0067	J		1	SPRING	
550	907719	M		1	SPRING	
560	90348-0031	J		1	FREE-WHEEL COUPLING	
580	1350785-0001	J		2	SHIM	
581	1350785-0002	J		2	SHIM	
582	1350785-0003	J		2	SHIM	
583	1350785-0004	J		2	SHIM	
640	311103-0351	-		2	PINS,STRAIGHT 6X16	
645	311112-0205	-		2	PINS,SLOTTED TUBULAR SPRING PIN 3X10	
660	312105-0287	-		10	SCREW M6S ISO 4017 M4X8 A280	
665	312105-0333	-		2	SCREW M6S ISO 4017 M5X25 A280	
670	312105-0455	-		4	SCREW M6S ISO 4017 M8X30 A280	
671	312105-0463	-		4	SCREW M6S ISO 4014 M8X60 A280	
672	312115-0226	-		4	SCREW MC6S ISO 4762 M3X12 A280	
675	312115-0291	-		8	SCREW MC6S ISO 4762 M4X12 A280	
680	312115-0341	-		4	SCREW MC6S 5X50 A4 80	
690	312125-0224	-		2	SLOTTED HEMCS3X10RFR	
699	312125-0287	-		4	SLOTTED CHEESE HEAD ISO 1207 M4X8 RFR	
710	312145-0224	-		2	SLOTTED HEMFS3X10RFR	
720	312155-0291	-		4	SCREW MF6S DIN 7991 M4X12 A280	
740	312311-0333	-		1	SET SCREW FULL DOGPOINT ISO 4028 M5X25	
745	312311-0380	-		1	STOP SCREW T6SS6X50FZB	
750	312318-0285	-		1	SET SCREW CUP POINT ISO 4029 M4X6 RFR	
760	312318-0283	-		4	SET SCREW CUP POINT ISO 4029 M4X4 RFR	
770	312605-0314	-		4	NUT,HEXAGON,M6M5 Stainless	
780	312621-0316	-		4	ROD END,NUT M6	
790	312621-0318	-		1	ROD END,NUT M8	
803	315105-0124	-		4	WASHERS,PLAIN ROUND 3,2X6	
805	315105-0136	-		8	WASHERS,PLAIN ROUND 4,3X8	
810	315105-0146	-		3	WASHERS,PLAIN ROUND 5,3X10	
820	315115-0165	-		8	WASHER TBRB8 4x16 Stainless	
830	315753-0117	-		4	RETAINING RINGS FOR HOLE 22	
850	907487	D		2	WASHER-CURVED	
860	321105-0125	J		1	BUSHING 6F7X12X6	
865	321120-0092	M		2	BUSHING 4/5,5X6	
870	321120-0101	D		1	BEARING BUSHING WITHOUT FLANGE,6/8X6	

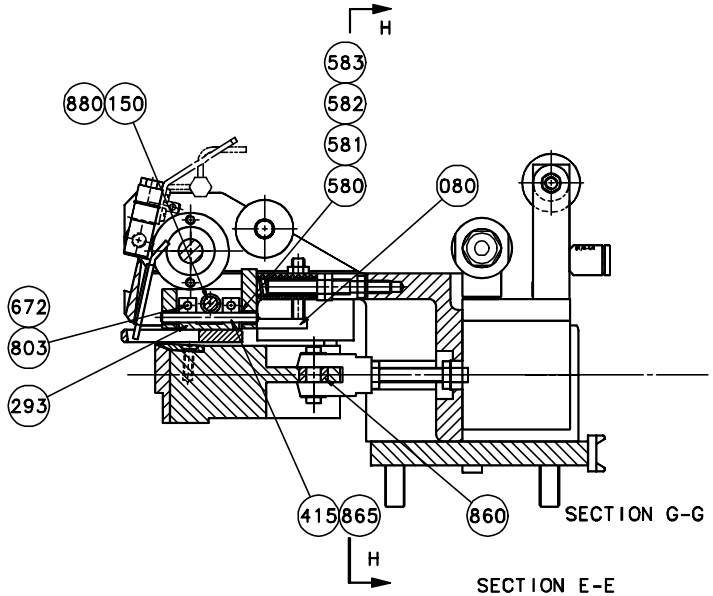

SECTION E-E

SECTION G-G

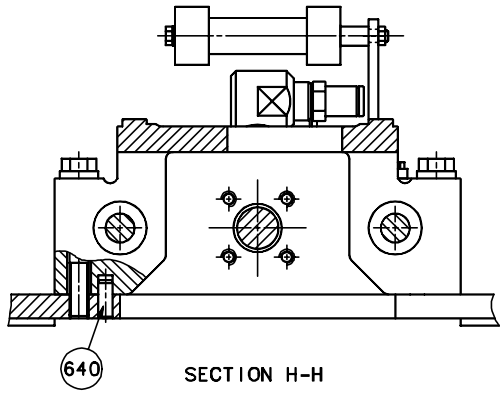

SECTION H-H

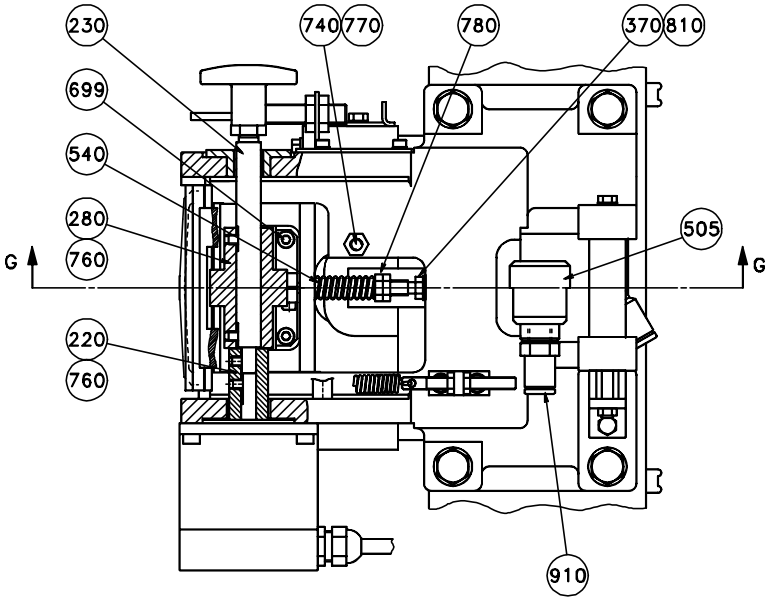

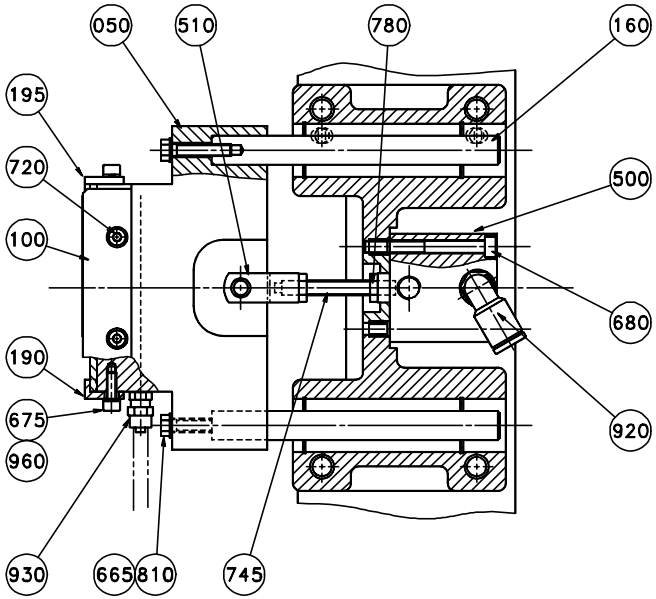

SECTION F-F

FROM PAGE 1

Pos	Part No	SP	UN	Qty	Description	Page No
880	321120-0102	M		2	BEARING BUSHING WITHOUT FLANGE,6/8X10	
890	321120-0104	M		1	BEARING BUSHING WITHOUT FLANGE,10/12X10	
910	342722-0202	-		1	STRAIGHT COUPL,FOR PLASTIC TUBE 6-G1/8"	
920	342732-0102	-		1	V-COUPL,ADJUST,FOR PLASTIC TUBE 6-G1/8"	
930	342921-0111	-		2	STRAIGHT COUPLING,EXT.THREADED 6/4-M5	
940	352113-0102	-		2	RIBBON CLAMP	
950	352113-0205	-		2	ANCHOR TM2S8-C100	
960	315402-0136	-		4	WASHER FBB4,1RFR	

Pos	Part No	SP	UN	Qty	Description	Page No

PATCH RESEAL C'JAW UNIT

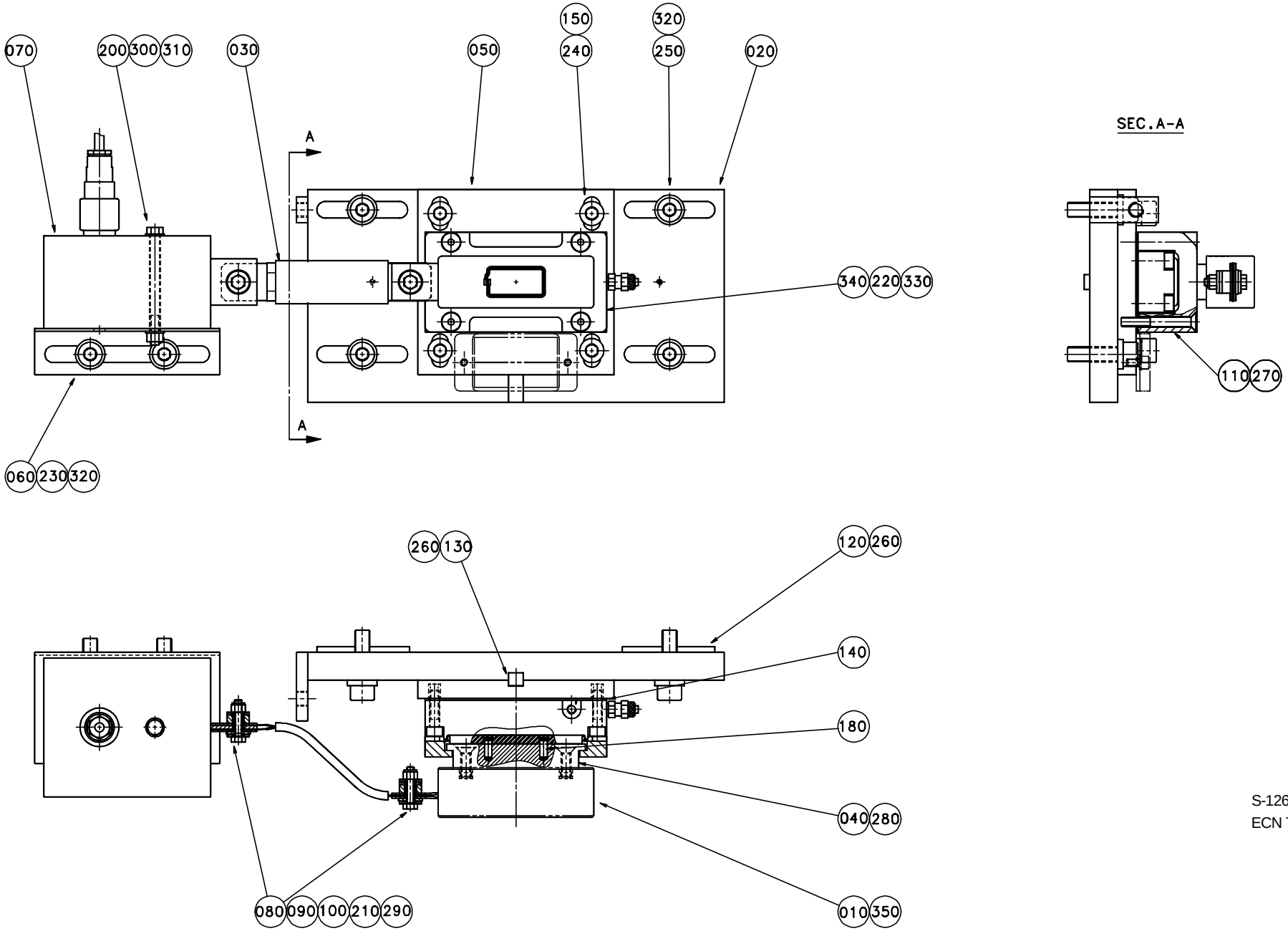

S-1260417-1
ECN 71370

Pos	Part No	SP	UN	Qty	Description	Page No
HOLE50 or HOLE71						
000	**C-1260417-0101**	**-**		**1**	**PATCH RESEAL C'JAW UN**	
010	1140667	J		1	INDUCTOR	
070	67379-0218	M		1	IH TRANSFORMER	
HOLE45 or HOLE85						
000	**C-1260417-0102**	**-**		**1**	**PATCH RESEAL C'JAW UN**	
010	1260651	J		1	INDUCTOR	
070	67379-0224	M		1	IH TRANSFORMER	
Common parts						
020	1260405	-		1	PLATE	
030	1140889	J		1	CABLE	
040	1296298	J		1	BUSHING	
050	1279485	-		1	PLATE	
060	1140890	-		1	TRANSFORMER BRACKET	
080	28509	J		6	WASHER	
090	32544	J		2	INSULATION NUT	
100	32644	J		2	WASHER	
110	928919	-		1	FASTENING PLATE	
120	905244	-		2	WEDGE	
130	905463	-		1	KEY	
140	1279484	J		2	SHIM	
150	1296300	D		4	WASHER	
180	311103-0267	-		2	PINS,STRAIGHT 4X10	
200	312101-0343	-		1	SCREW M6S5X60FZB	
210	312105-0295	-		2	SCREW M6S ISO 4017 M4X20 A280	
220	312115-0331	-		4	SCREW MC6S ISO 4762 M5X20 A280	
230	312115-0447	-		2	SCREW MC6S ISO 4762 M8X12 A280	
240	312115-0453	-		4	SCREW MC6S ISO 4762 M8X25 A280	
250	312115-0455	-		4	SCREW MC6S ISO 4762 M8X30 A280	
260	312145-0226	-		4	SLOTTED HEMFS3X12RFR	
270	312155-0339	-		4	SCREW MF6S DIN 7991 5X40 A280	
280	312155-0329	-		2	SCREW MF6S DIN 7991 M5X16 A280	
290	312812-0312	-		2	NUTS,HEXAGON,LOCK,WITH NYLON,M4	
300	312605-0314	-		1	NUT,HEXAGON,M6M5 Stainless	
310	315105-0146	-		2	WASHERS,PLAIN ROUND 5,3X10	
320	315115-0165	-		6	WASHER TBRB8 4x16 Stainless	
330	342921-0111	-		1	STRAIGHT COUPLING,EXT.THREADED 6/4-M5	
340	90450-0380	M		1	CYLINDER	
350	90144-0030	-	M	x	TAPE	

Pos	Part No	SP	UN	Qty	Description	Page No

PATCH RESEAL BRACKET

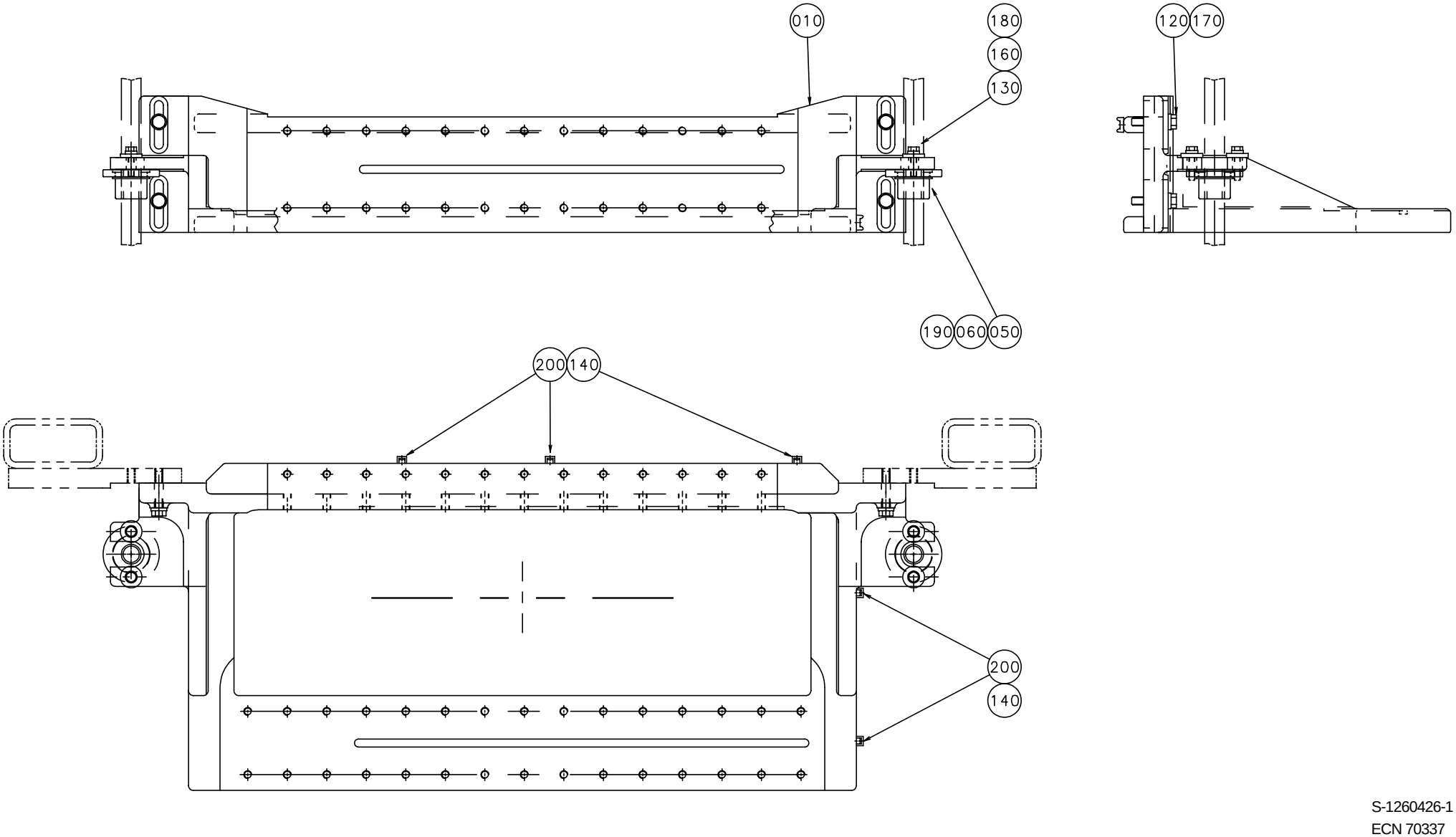

S-1260426-1
ECN 70337

Pos	Part No	SP	UN	Qty	Description	Page No
-						
000	**C-1260426-0101**	**-**		**1**	**PATCH RESEAL BRACKET**	
010	1260397	-		1	BRACKET	
050	1147009	-		2	SPECIAL WASHER	
060	1147010	-		2	BUSHING	
120	312109-0459	-		4	SCREW M6S8X40H A4 80	
130	312109-0374	-		4	SCREW M6S6X30HRFR	
140	312125-0289	-		5	SLOTTED HEMCS4X10RFR	
160	315115-0153	-		4	WASHER TBRB6,4X12RFR	
170	315115-0165	-		4	WASHER TBRB8,4X16RFR	
180	315125-0153	-		4	WASHER SB 6,4X22X4 RFR	
190	315751-0123	-		2	CIRCLIP SGA32 RFR	
200	352113-0205	-		5	ANCHOR	

Pos	Part No	SP	UN	Qty	Description	Page No

APPLICATOR RESEAL

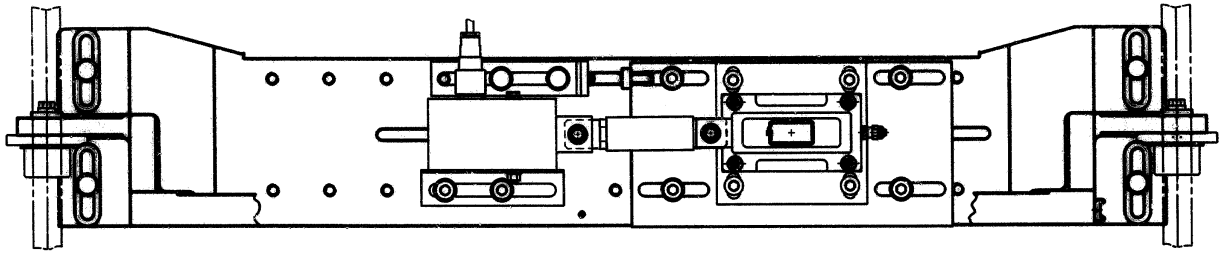

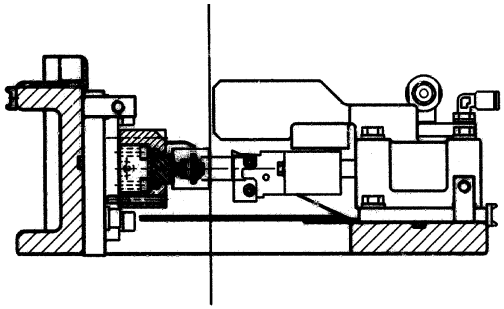

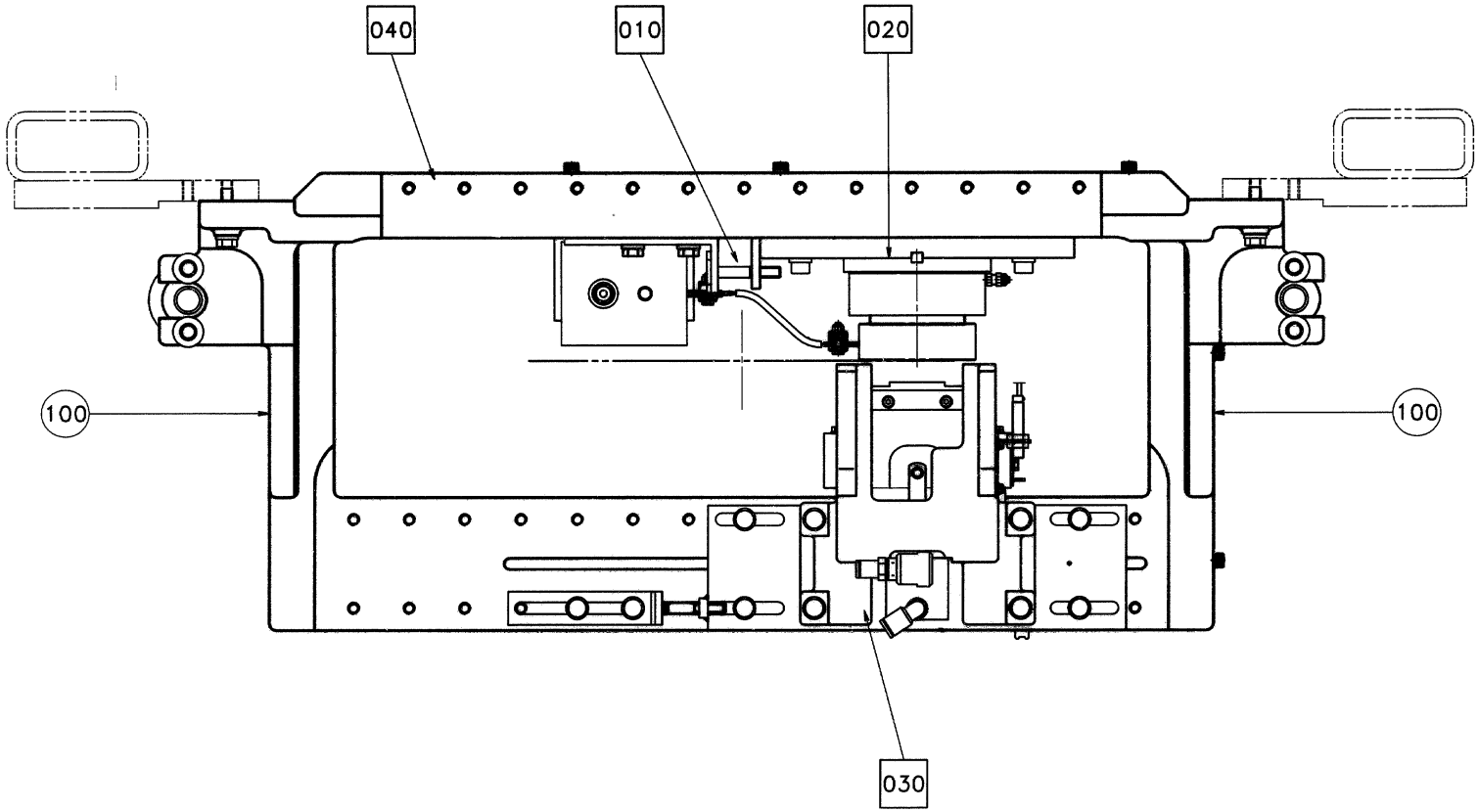

S-1260420-1
ECN 71157

Pos	Part No	SP	UN	Qty	Description	Page No
-						
000	**C-1260420-0101**	**-**		**1**	**APPLICATOR RESEAL**	
100	359705-0007	-		2	WARNING SIGN"HOT SURFACE"	
010	C-1260401-010V	-		2	SETTING TOOL	123
020	C-1260417-010V	-		1	PATCH RESEAL C'JAW UNIT	129
	C- 67379-0218	-		-	. IH EQUIPMENT	
030	C-1260418-010V	-		1	HEATING JAW-RESEAL	135
040	C-1260426-010V	-		1	PATCH RESEAL BRACKET	131

Pos	Part No	SP	UN	Qty	Description	Page No

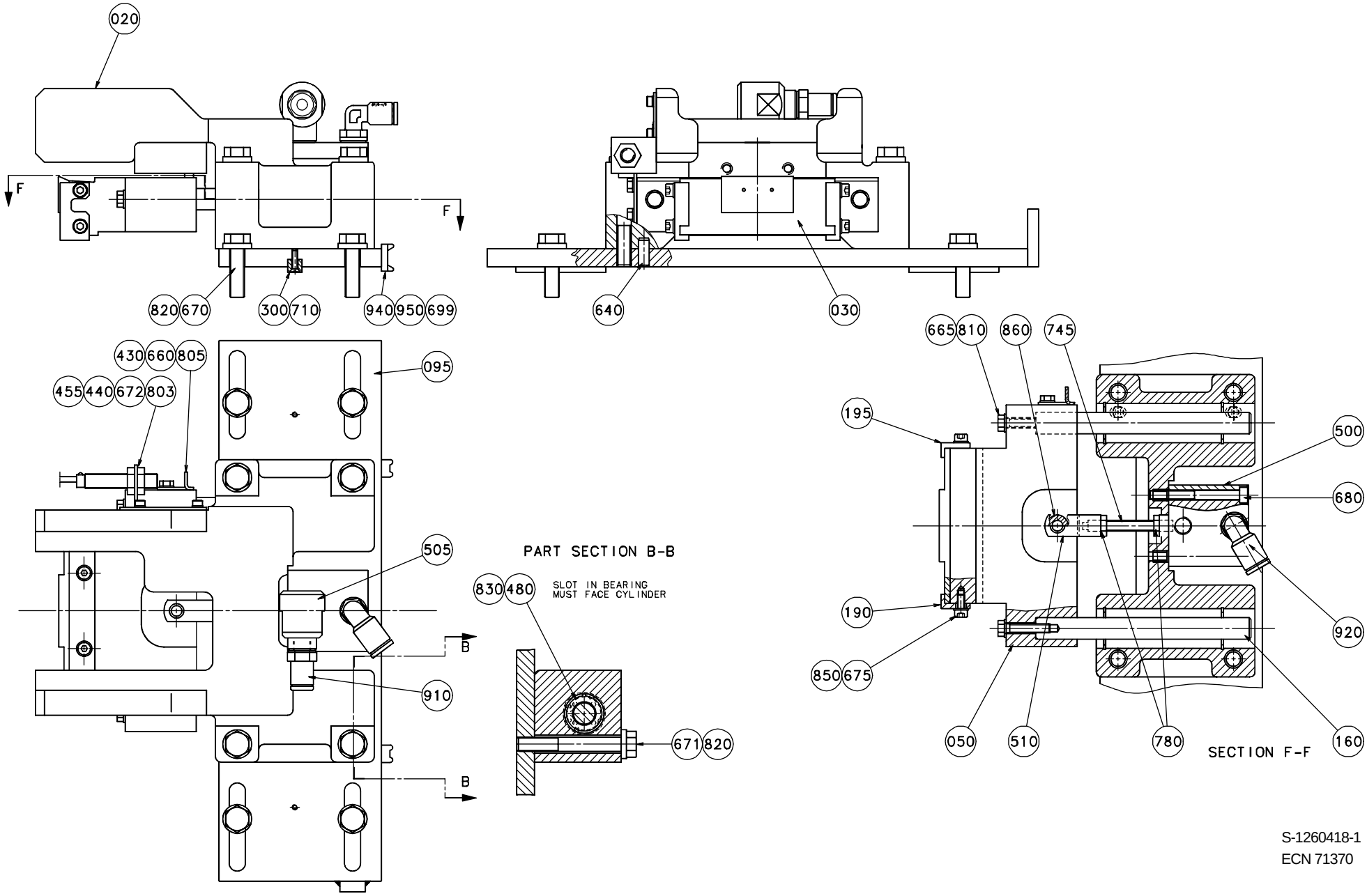

S-1260418-1
ECN 71370

Pos	Part No	SP	UN	Qty	Description	Page No
-						
000	**C-1260418-0101**	**-**		**1**	**HEATING JAW-RESEAL**	
020	1260392	-		1	CASTING APPLICATOR	
030	1260393-0002	M		1	SEALING PLATE	
050	1260391	D		1	BRACKET	
095	1260404	-		1	PLATE	
160	1140547	R		2	SHAFT	
190	1260399	D		1	CLAMP	
195	1260422	D		1	CLAMP	
300	905244	-		2	WEDGE	
430	1296753	-		1	FLAG	
440	1296752	-		1	BRACKET	
455	90044-0145	R		1	INDUCTIVE SWITCH	
480	90189-0003	M		4	BALL BUSHING	
500	90450-0409	M		1	CYLINDER	
505	90235-0206	-		1	VALVE	
510	90239-0489	M		1	ROD END,CLEVIS WITH AXLE,M6	
640	311103-0351	-		2	PINS,STRAIGHT 6X16	
660	312105-0287	-		2	SCREW M6S ISO 4017 M4X8 A280	
665	312105-0333	-		2	SCREW M6S ISO 4017 M5X25 A280	
670	312105-0455	-		4	SCREW M6S ISO 4017 M8X30 A280	
671	312105-0463	-		4	SCREW M6S ISO 4014 M8X60 A280	
672	312115-0226	-		2	SCREW MC6S ISO 4762 M3X12 A280	
675	312115-0291	-		4	SCREW MC6S ISO 4762 M4X12 A280	
680	312115-0341	-		4	SCREW MC6S 5X50 A4 80	
699	312125-0287	-		2	SLOTTED CHEESE HEAD ISO 1207 M4X8 RFR	
710	312145-0224	-		2	SLOTTED HEMFS3X10RFR	
745	312311-0380	-		1	STOP SCREW T6SS6X50FZB	
780	312621-0316	-		2	ROD END,NUT M6	
803	315105-0124	-		2	WASHERS,PLAIN ROUND 3,2X6	
805	315105-0136	-		2	WASHERS,PLAIN ROUND 4,3X8	
810	315105-0146	-		2	WASHERS,PLAIN ROUND 5,3X10	
820	315115-0165	-		8	WASHER TBRB8 4x16 Stainless	
830	315753-0117	-		4	RETAINING RINGS FOR HOLE 22	
850	315402-0136	-		4	WASHER FBB4,1RFR	
860	321105-0125	J		1	BUSHING 6F7X12X6	
910	342722-0202	-		1	STRAIGHT COUPL,FOR PLASTIC TUBE 6-G1/8"	
920	342732-0102	-		1	V-COUPL,ADJUST,FOR PLASTIC TUBE 6-G1/8"	
940	352113-0102	-		2	RIBBON CLAMP	
950	352113-0205	-		2	ANCHOR TM2S8-C100	

Pos	Part No	SP	UN	Qty	Description	Page No

APPLICATOR TAB

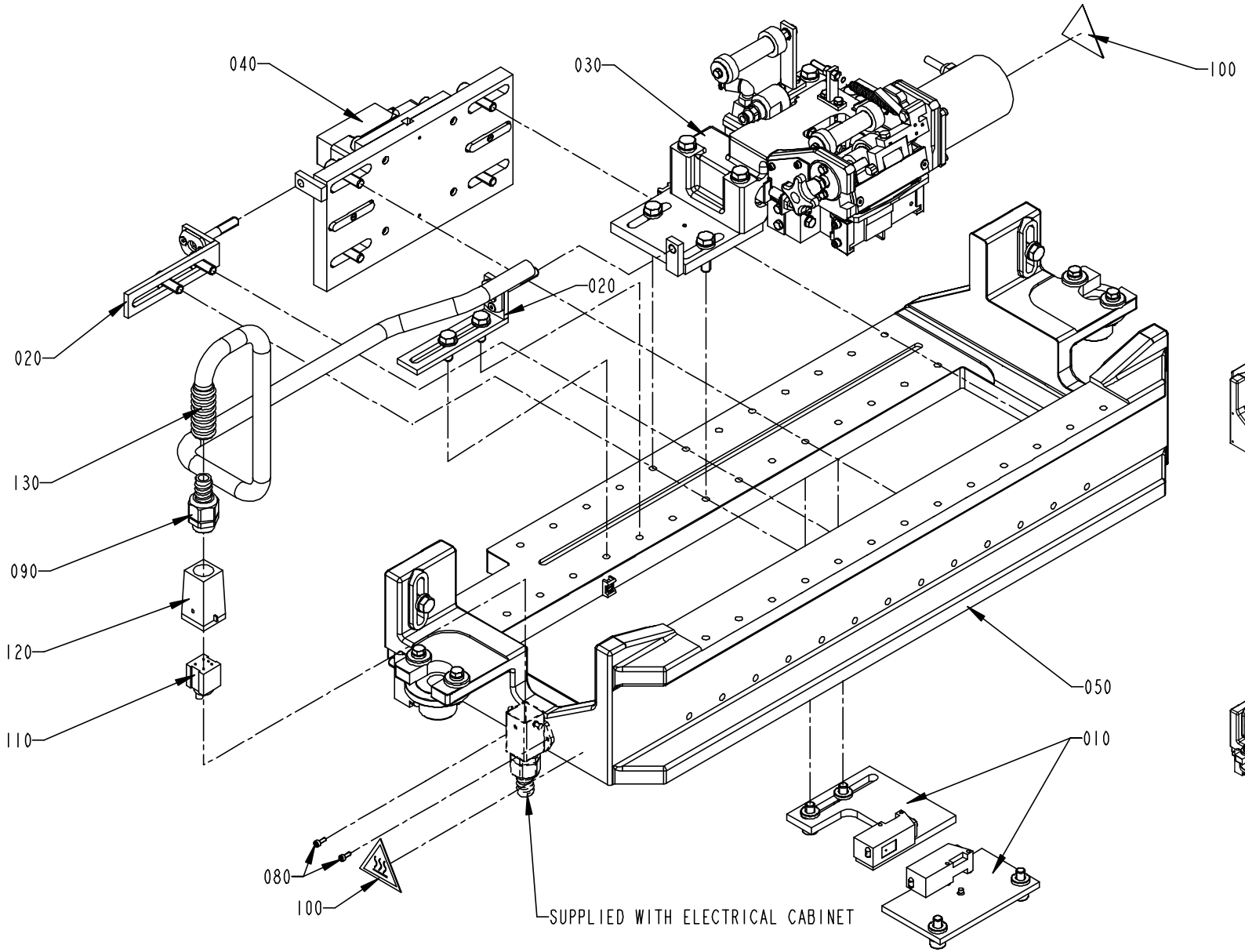

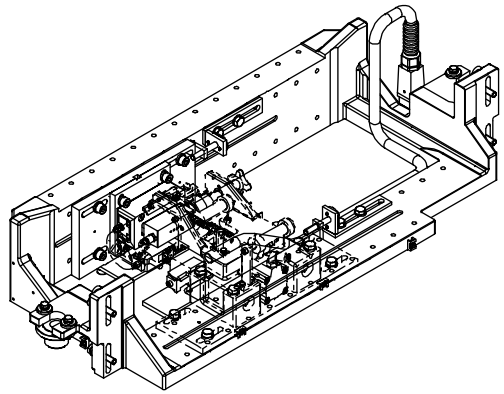

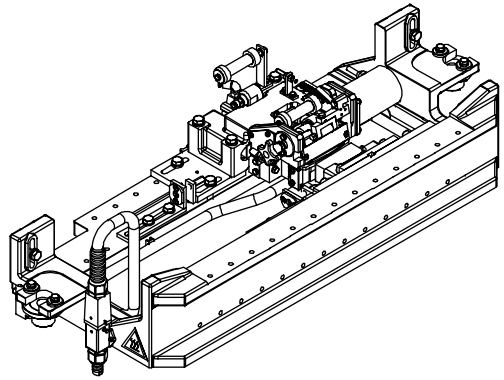

S-1260421-1
ECN 72779

Pos	Part No	SP	UN	Qty	Description	Page No
-						
000	**C-1260421-0101**	**-**		**1**	**APPLICATOR TAB**	
010	C-1185029-0100	-		1	MISSING TAB DETECTOR	139
020	C-1260401-0100	-		2	SETTING TOOL	123
030	C-1260415-0100	-		1	TAB FEEDER	141
040	C-1260416-0200	-		1	TAB C'JAW UNIT	145
050	C-1260427-0100	-		1	TAB BRACKET	147
080	312115-0222	-		2	SCREW MC6S ISO 4762 M3X8 A280	
090	353243-0002	-		1	GLANDS,HOSE,EXTENDED,WITHOUT INSERT PG11	
100	359705-0007	-		2	WARNING SIGN "HOT SURFACE"	
110	90110-0295	-		1	CONTACT SCREW	
120	90110-0371	-		1	PLUG HOOD	
130	90152-0059	-	M	1	GLANDS,HOSE 18X12	

Pos	Part No	SP	UN	Qty	Description	Page No

MISSING TAB DETECTOR

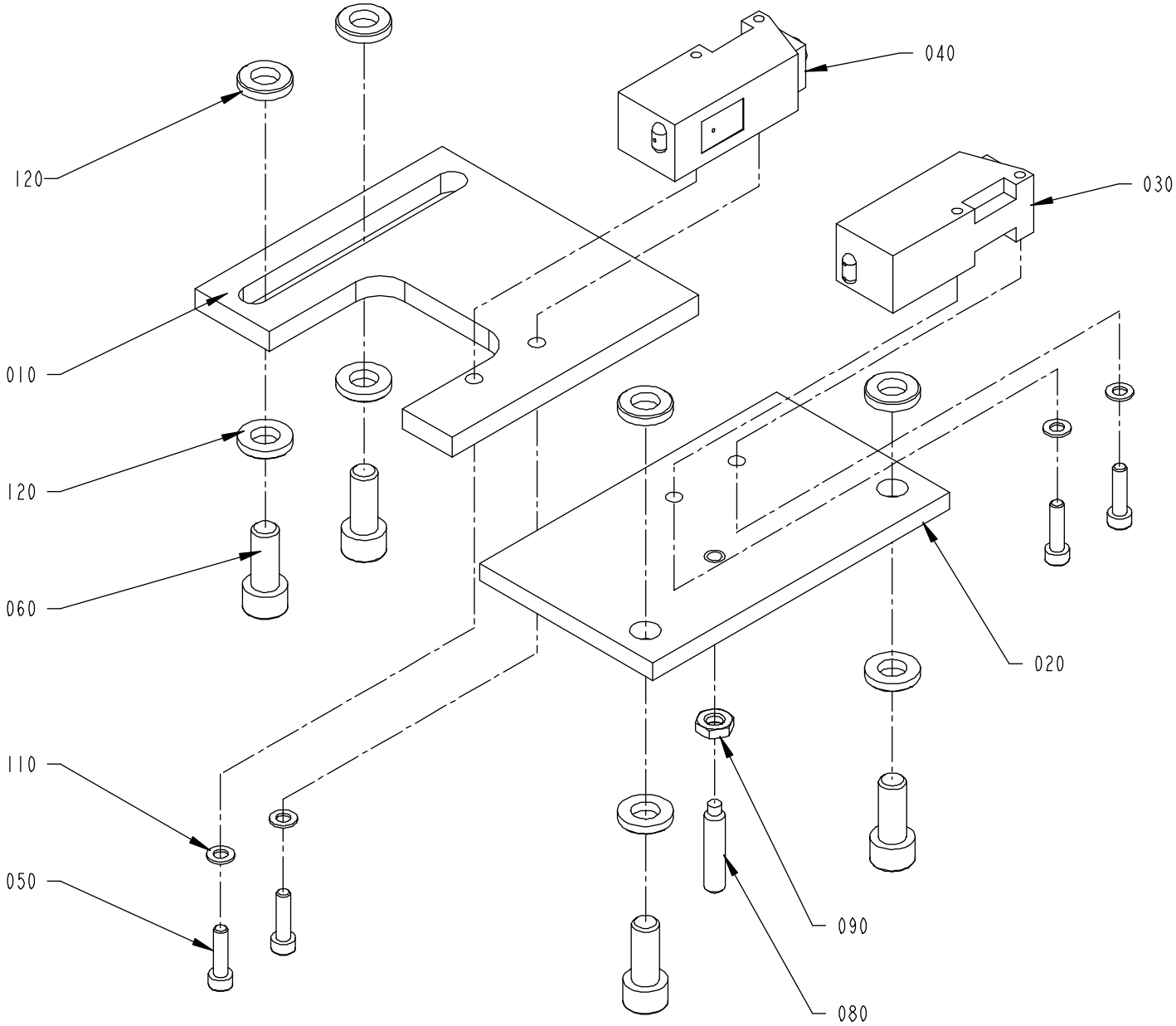

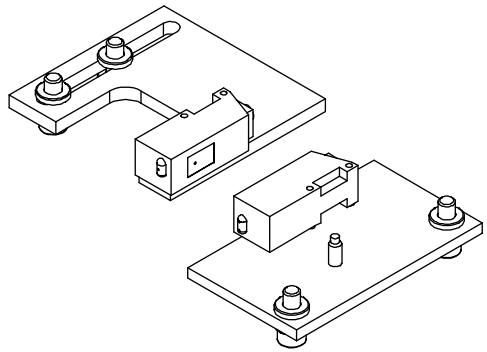

S-1185029-2
ECN 72779

Pos	Part No	SP	UN	Qty	Description	Page No
-						
000	**C-1185029-0101**	**-**		**1**	**MISSING TAB DETECTOR**	
010	1140738	-		1	BRACKET	
020	1140739	-		1	BRACKET	
030	90232-0104	R		1	RECEIVER OMRON E3S-CT61-D-5M	
040	90232-0103	R		1	PH.CELL OMRON E3SCT61-L-5M	
050	312115-0293	-		4	SCREW MC6S ISO 4762 M4X16 A280	
060	312115-0451	-		4	SCREW MC6S ISO 4762 M8X20 A280	
080	312311-0374	-		1	SET SCREW FULL DOGPOINT ISO 4028 M6X30	
090	312625-0316	-		1	NUTS,HEXAGON,M6	
100	315105-0136	-		4	WASHERS,PLAIN ROUND 4,3X8	
110	315105-0136	-		4	WASHERS,PLAIN ROUND 4,3X8	
120	315115-0165	-		4	WASHER TBRB8 4x16 Stainless	

Pos	Part No	SP	UN	Qty	Description	Page No

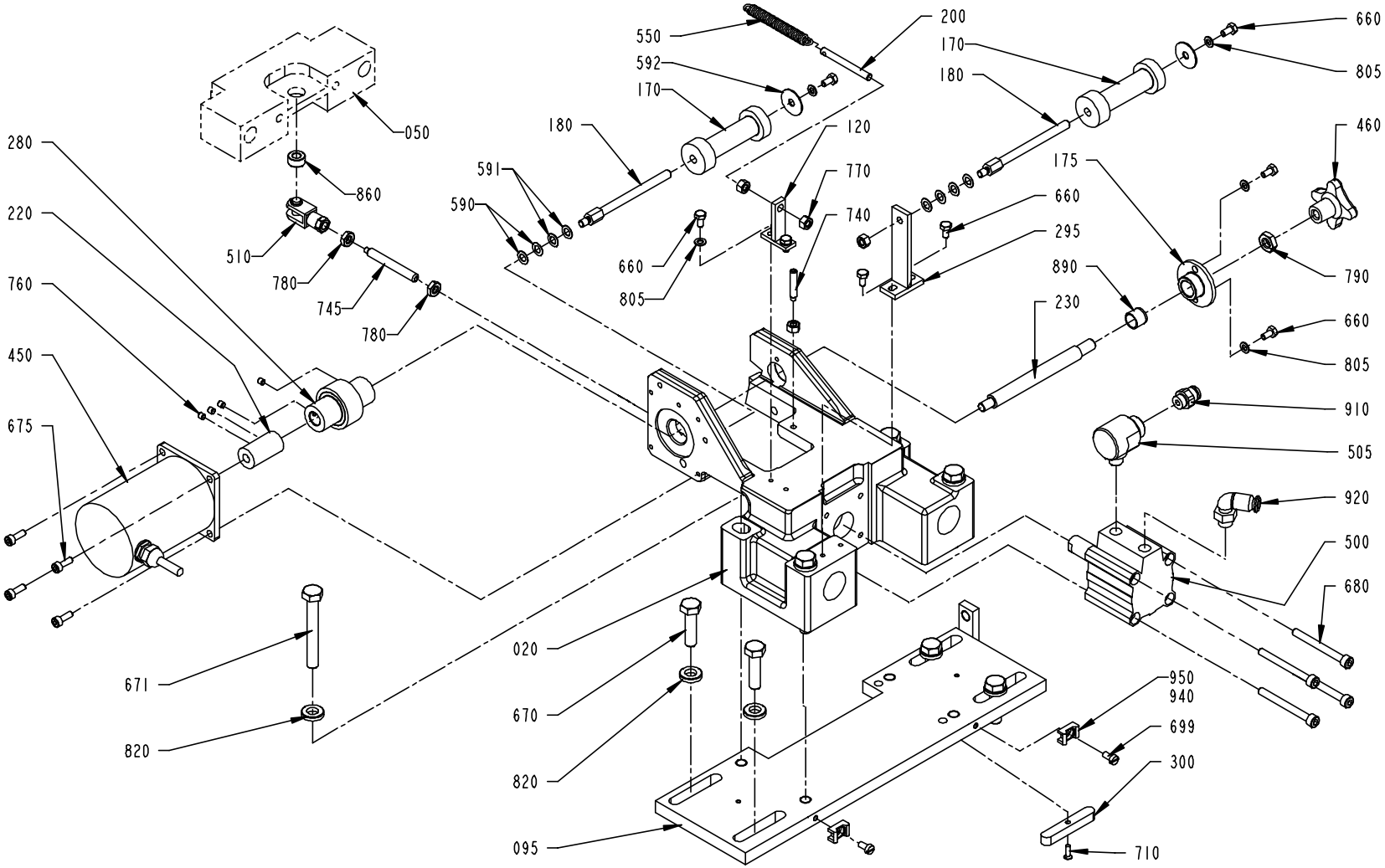

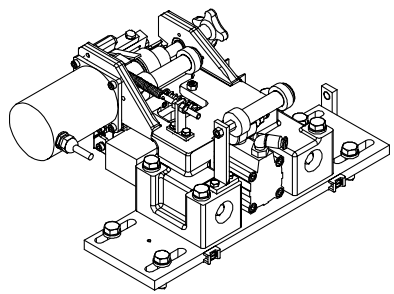

S-1260415-1 (1/2)
ECN 72779

Pos	Part No	SP	UN	Qty	Description	Page No
HOLE50						
000	**C-1260415-0101**	**-**		**1**	**TAB FEEDER**	
030	1350541	J		1	SEALING PLATE	
170	908309	N		2	ROLLER - 47	
HOLE45						
000	**C-1260415-0102**	**-**		**1**	**TAB FEEDER**	
030	1350525	J		1	SEALING PLATE	
170	908309	N		2	ROLLER - 47	
HOLE71						
000	**C-1260415-0103**	**-**		**1**	**TAB FEEDER**	
030	1350526	J		1	SEALING PLATE	
170	907358-0005	N		2	ROLLER - 43.5	
HOLE85						
000	**C-1260415-0104**	**-**		**1**	**TAB FEEDER**	
030	1490292	J		1	SEALING PLATE	
170	908309	N		2	ROLLER - 47	
Common parts						
010	1260551	J		1	TAB HEATER HEAD	
020	1260389	-		1	CASTING APPLICATOR	
050	1140912	D		1	BRACKET	
060	1260395	D		1	PLATE	
070	1145333	J		1	KNIFE-WINDOW	
080	907712	R		1	PIVOT PLATE	
090	1260388	-		1	PLATE	
095	1260406	-		1	PLATE	
100	1145332	J		1	KNIFE-FLAT	
110	905174	D		1	STEER PLATE	
120	1140545	-		1	TEE BRACKET	
150	905194	R		1	SHAFT	
160	1140547	R		2	SHAFT	
175	1140548	M		1	FLANGED BEARING BUSHING	
180	1140551	M		2	SHAFT	
190	1260399	D		1	CLAMP	
195	1260422	D		1	CLAMP	
200	905215	D		1	BOLT	
220	905241	D		1	COUPLING	
230	905243	M		1	SHAFT	
250	905413	M		1	SHAFT	
260	905416	D		1	PIVOT BRACKET-SWIVEL	
270	905419	D		1	PIVOT ARM-SWIVEL	
280	905471	J		1	ROLLER-DRIVE	
293	907710	-		1	PIVOT PLATE	
295	1140546	-		1	BRACKET	
300	905244	-		2	WEDGE	
310	905246	-		1	BRACKET	
320	905415	D		1	SHAFT	
330	905417	D		1	SHAFT	
335	905484	J		1	SHIM	
340	905607	-		1	SCREW	
350	905608	-		1	SCREW	
360	905609	-		1	LOCK BAR	
370	905613	D		1	SHAFT	
415	907711	R		1	SHAFT	
430	1296753	-		1	FLAG	
440	1296752	-		1	BRACKET	
450	90045-0192	R		1	Stepping motor	
455	90044-0145	R		1	INDUCTIVE SWITCH	
460	90051-0007	-		1	HANDLE	
470	907138	-		1	CLAMP	
471	907249	-		1	CLAMP	
480	90189-0003	M		4	BALL BUSHING	
490	1346521	J		1	HEATER	
495	90411-0018	J		2	Insulator	
500	90450-0409	M		1	CYLINDER	
505	90235-0206	-		1	VALVE	
510	90239-0489	M		1	ROD END,CLEVIS WITH AXLE,M6	
520	90298-0033	-		x	WATLUBE HEAT LIQUID	
530	90326-0060	R		1	THERMOCOUPLE CR-AL	
540	90335-0067	J		1	SPRING	
550	907719	M		1	SPRING	
560	90348-0031	J		1	FREE-WHEEL COUPLING	
580	1350785-0001	J		2	SHIM	
581	1350785-0002	J		2	SHIM	
582	1350785-0003	J		2	SHIM	
583	1350785-0004	J		2	SHIM	
640	311103-0351	-		2	PINS,STRAIGHT 6X16	
645	311112-0205	-		2	PINS,SLOTTED TUBULAR SPRING PIN 3X10	
650	312101-0343	-		2	SCREW M6S5X60FZB	
660	312105-0287	-		10	SCREW M6S ISO 4017 M4X8 A280	
665	312105-0333	-		2	SCREW M6S ISO 4017 M5X25 A280	
670	312105-0455	-		4	SCREW M6S ISO 4017 M8X30 A280	
671	312105-0463	-		4	SCREW M6S ISO 4014 M8X60 A280	
672	312115-0226	-		4	SCREW MC6S ISO 4762 M3X12 A280	
674	312115-0287	-		3	SCREW MC6S ISO 4762 M4X8 A280	
675	312115-0291	-		8	SCREW MC6S ISO 4762 M4X12 A280	

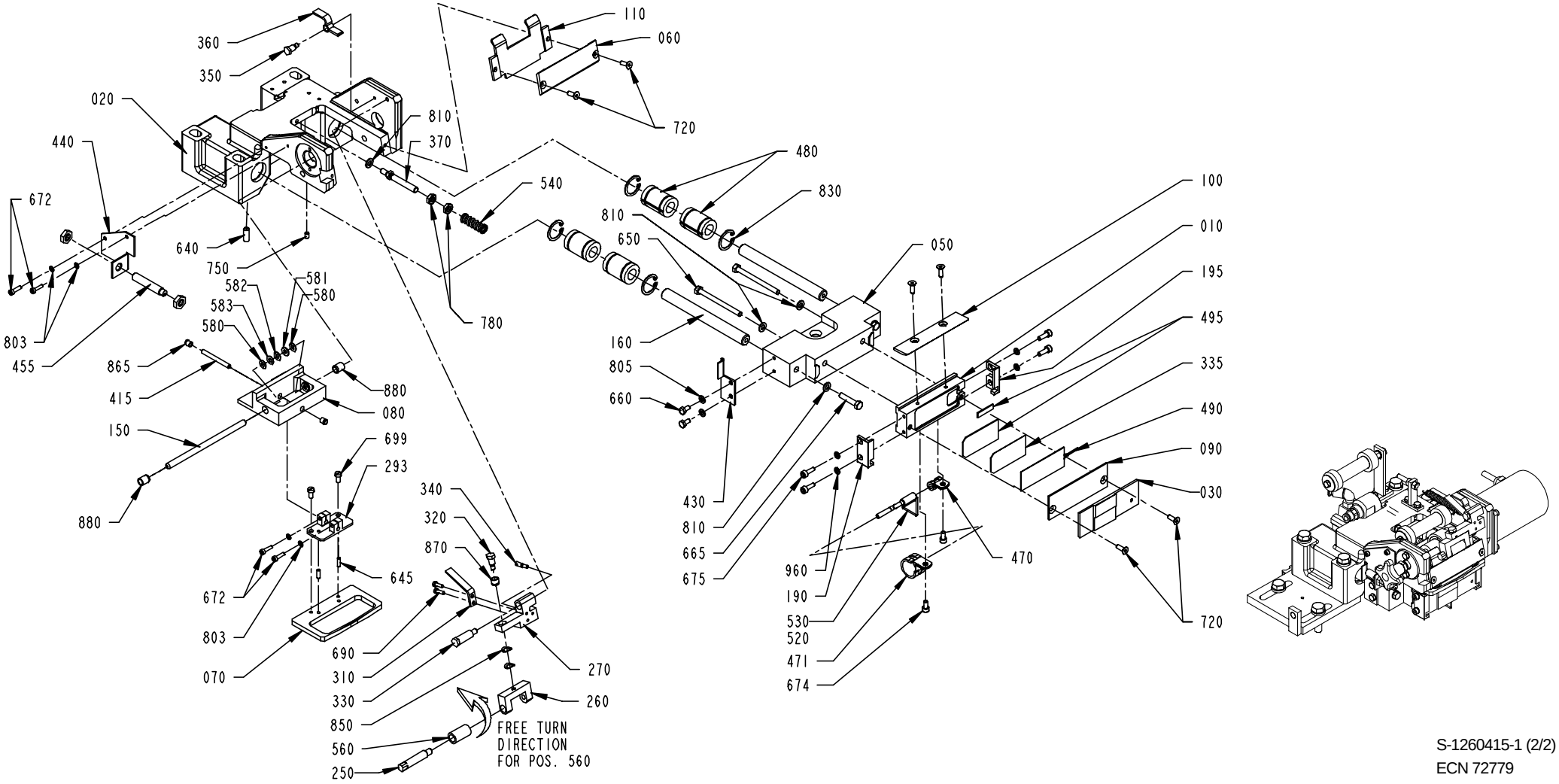
360
350
020
440
672
803
455
865
415
150
880
640
750
582
583
580
581
580
880
080
699
293
645
672
803
070
340
320
870
690
310
330
850
560
250
270
260
FREE TURN
DIRECTION
FOR POS. 560
780
540
810
370
110
060
720
480
830
810
650
160
805
660
430
810
665
675
960
190
530
520
471
674
050
100
010
195
495
335
490
090
030
470
720

Pos	Part No	SP	UN	Qty	Description	Page No
680	312115-0341	-		4	SCREW MC6S 5X50 A4 80	
690	312125-0224	-		2	SLOTTED HEMCS3X10RFR	
699	312125-0287	-		4	SLOTTED CHEESE HEAD ISO 1207 M4X8 RFR	
710	312145-0224	-		2	SLOTTED HEMFS3X10RFR	
720	312155-0291	-		6	SCREW MF6S DIN 7991 M4X12 A280	
740	312311-0333	-		1	SET SCREW FULL DOGPOINT ISO 4028 M5X25	
745	312311-0380	-		1	STOP SCREW T6SS6X50FZB	
750	312318-0285	-		1	SET SCREW CUP POINT ISO 4029 M4X6 RFR	
760	312318-0283	-		4	SET SCREW CUP POINT ISO 4029 M4X4 RFR	
770	312605-0314	-		4	NUT,HEXAGON,M6M5 Stainless	
780	312621-0316	-		4	ROD END,NUT M6	
790	312621-0318	-		1	ROD END,NUT M8	
803	315105-0124	-		4	WASHERS,PLAIN ROUND 3,2X6	
805	315105-0136	-		8	WASHERS,PLAIN ROUND 4,3X8	
810	315105-0146	-		5	WASHERS,PLAIN ROUND 5,3X10	
820	315115-0165	-		8	WASHER TBRB8 4x16 Stainless	
830	315753-0117	-		4	RETAINING RINGS FOR HOLE 22	
850	907487	D		2	WASHER-CURVED	
860	321105-0125	J		1	BUSHING 6F7X12X6	
865	321120-0092	M		2	BUSHING 4/5,5X6	
870	321120-0101	D		1	BEARING BUSHING WITHOUT FLANGE,6/8X6	
880	321120-0102	M		2	BEARING BUSHING WITHOUT FLANGE,6/8X10	
890	321120-0104	M		1	BEARING BUSHING WITHOUT FLANGE,10/12X10	
910	342722-0202	-		1	STRAIGHT COUPL,FOR PLASTIC TUBE 6-G1/8"	
920	342732-0102	-		1	V-COUPL,ADJUST,FOR PLASTIC TUBE 6-G1/8"	
940	352113-0102	-		2	RIBBON CLAMP	
950	352113-0205	-		2	ANCHOR TM2S8-C100	
960	315402-0136	-		4	WASHER FBB4,1RFR	

Pos	Part No	SP	UN	Qty	Description	Page No

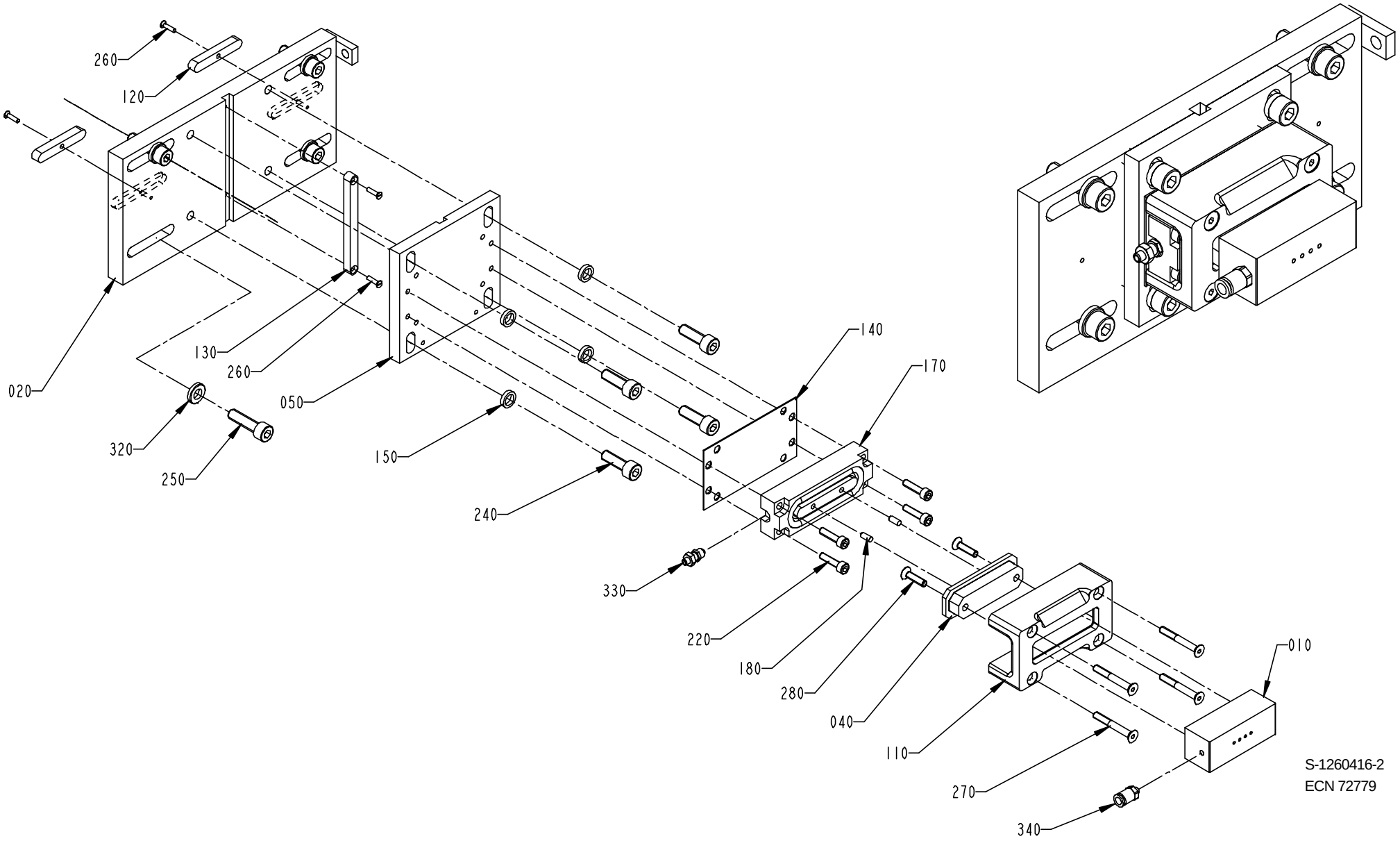
260
120
020
130
260
050
320
250
150
240
140
170
330
220
180
280
040
110
270
340
010
S-1260416-2
ECN 72779

Pos	Part No	SP	UN	Qty	Description	Page No
-						
000	**C-1260416-0201**	**-**		**1**	**TAB C'JAW UNIT**	
010	1346283	J		1	COUNTER PLATE	
020	1260407	-		1	PLATE	
040	1296298	M		1	BUSHING	
050	1279485	-		1	PLATE	
110	928919	-		1	FASTENING PLATE	
120	905244	-		2	WEDGE	
130	905463	-		1	KEY	
140	1279484	J		2	SHIM	
150	1296300	D		4	WASHER	
170	90450-0380	M		1	CYLINDER	
180	311103-0267	-		2	PINS,STRAIGHT 4X10	
220	312115-0331	-		4	SCREW MC6S ISO 4762 M5X20 A280	
240	312115-0453	-		4	SCREW MC6S ISO 4762 M8X25 A280	
250	312115-0455	-		4	SCREW MC6S ISO 4762 M8X30 A280	
260	312145-0226	-		4	SLOTTED HEMFS3X12RFR	
270	312155-0339	-		4	SCREW MF6S DIN 7991 5X40 A280	
280	312155-0331	-		2	SCREW MF6S DIN 7991 M5X20 A280	
320	315115-0165	-		4	WASHER TBRB8 4x16 Stainless	
330	342921-0111	-		1	STRAIGHT COUPLING,EXT.THREADED 6/4-M5	
340	342722-0197	-		1	STRAIGHT COUPL,FOR PLASTIC TUBE 6-M5	

Pos	Part No	SP	UN	Qty	Description	Page No

TAB BRACKET

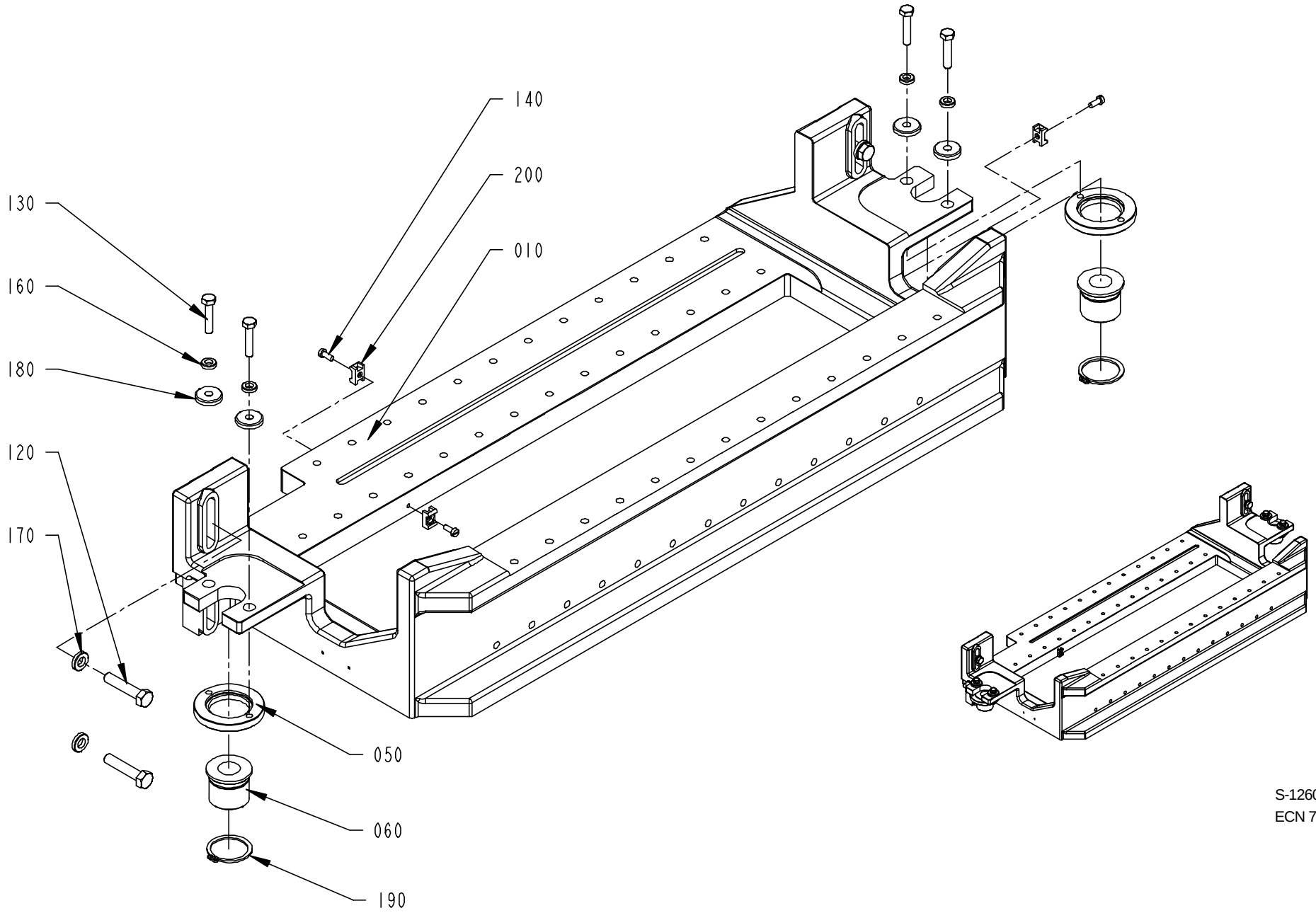

S-1260427-1
ECN 72779

Pos	Part No	SP	UN	Qty	Description	Page No
-						
000	**C-1260427-0101**	**-**		**1**	**TAB BRACKET**	
010	1260398	-		1	BRACKET	
050	1147009	-		2	SPECIAL WASHER	
060	1147010	-		2	BUSHING	
120	312109-0459	-		4	SCREW M6S8X40H A4 80	
130	312109-0374	-		4	SCREW M6S6X30HRFR	
140	312125-0289	-		3	SLOTTED HEMCS4X10RFR	
160	315115-0153	-		4	WASHER TBRB6,4X12RFR	
170	315115-0165	-		4	WASHER TBRB8,4X16RFR	
180	315125-0153	-		4	WASHER SB 6,4X22X4 RFR	
190	315751-0123	-		2	CIRCLIP SGA32 RFR	
200	352113-0205	-		3	ANCHOR	

Pos	Part No	SP	UN	Qty	Description	Page No

This page is intentionally left blank

Pos	Part No	SP	UN	Qty	Description	Page No
HOLE 50, VOLUME 1000 S						
000	**C-1296882-0101**	**-**		**1**	**OPENING SPECIFICATION**	
010	1296876	-		1	OPENING SPECIFICATION	
HOLE 50, VOLUME 1000 B						
000	**C-1296882-0102**	**-**		**1**	**OPENING SPECIFICATION**	
010	1296875	-		1	OPENING SPECIFICATION	

Pos	Part No	SP	UN	Qty	Description	Page No

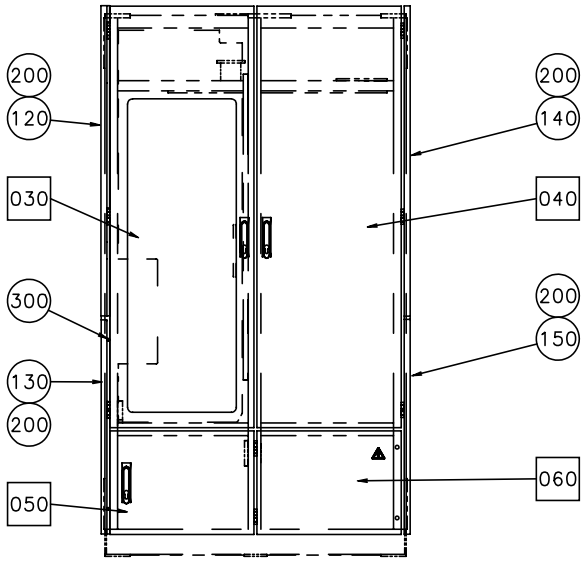

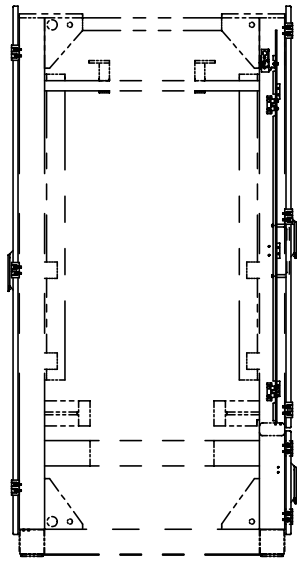

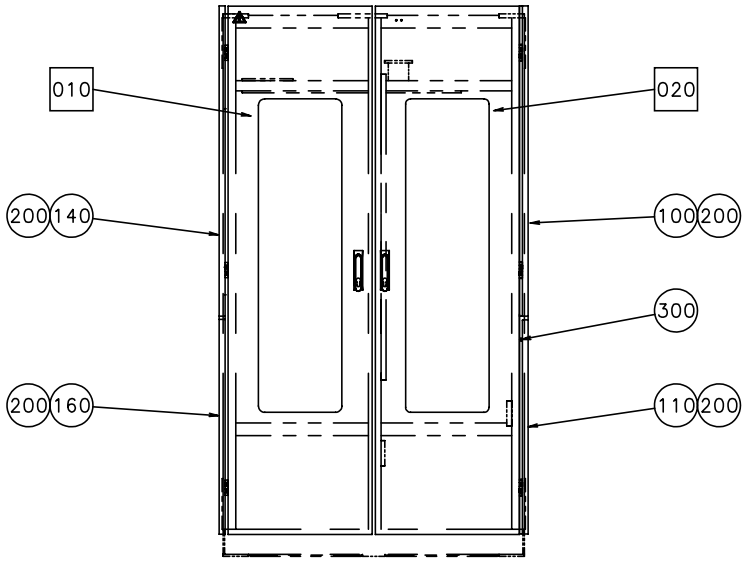

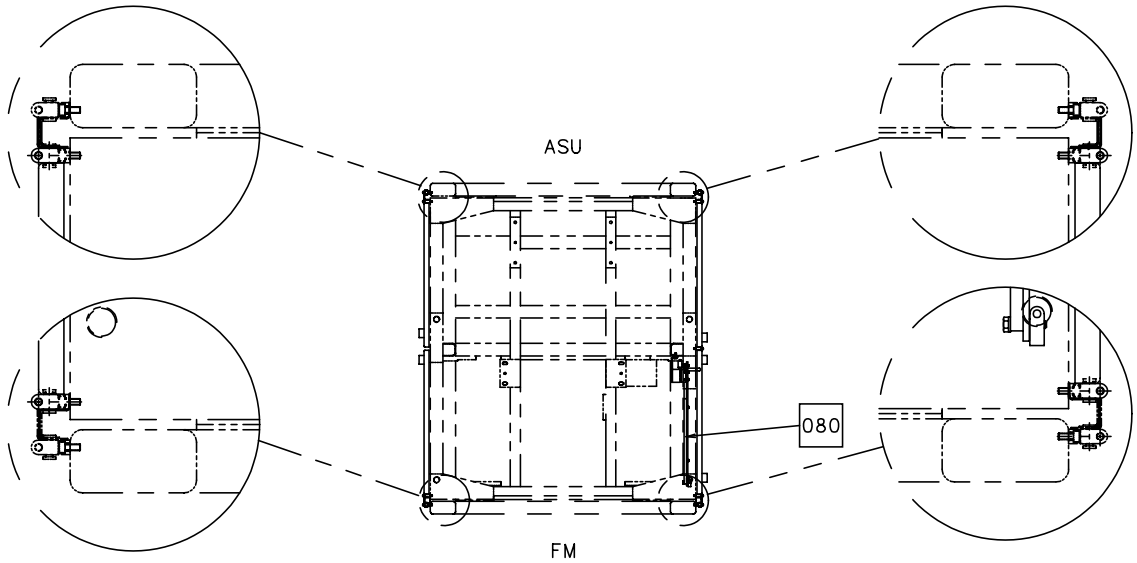

S-1095951-1
ECN 70335

Pos	Part No	SP	UN	Qty	Description	Page No
-						
000	**C-1095951-0201**	**-**		**1**	**DOOR**	
010	C-1095944-010V	-		1	DOOR EL-CABINET	153
020	C-1095945-020V	-		1	DOOR	155
030	C-1095946-020V	-		1	DOOR FOR PATCH	157
040	C-1095947-020V	-		1	DOOR FOR PULLTAB	159
050	C-1095948-010V	-		1	DOOR FOR WASTE BOX	161
060	C-1095949-010V	-		1	DOOR FOR TPIH	163
080	C-1185000-010V	-		1	DOOR,INNER	165
100	1140771	-		1	COVERING PLATE	
110	1140772	-		1	COVERING PLATE	
120	1140773	-		1	COVERING PLATE	
130	1140774	-		1	COVERING PLATE	
140	1140775	-		2	COVERING PLATE	
150	1140776	-		1	COVERING PLATE	
160	1140777	-		1	COVERING PLATE	
200	1129767	-		12	SCREW	
300	312115-0362	-		3	SCREW O4762 M6X8A280	

Pos	Part No	SP	UN	Qty	Description	Page No

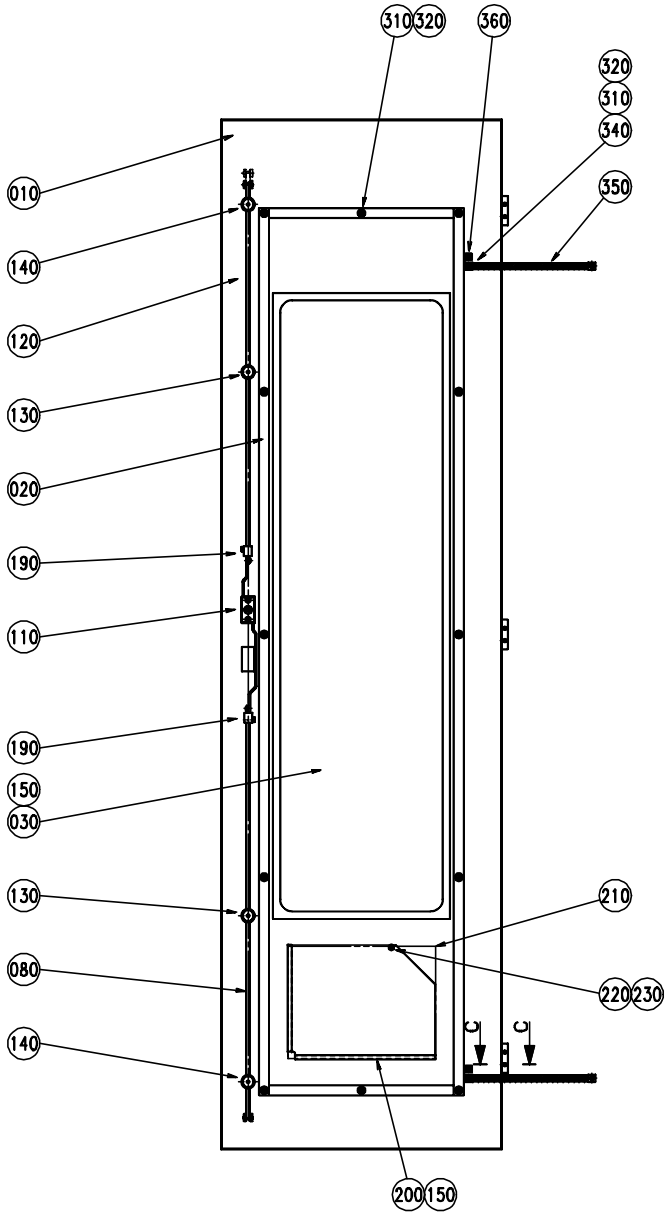

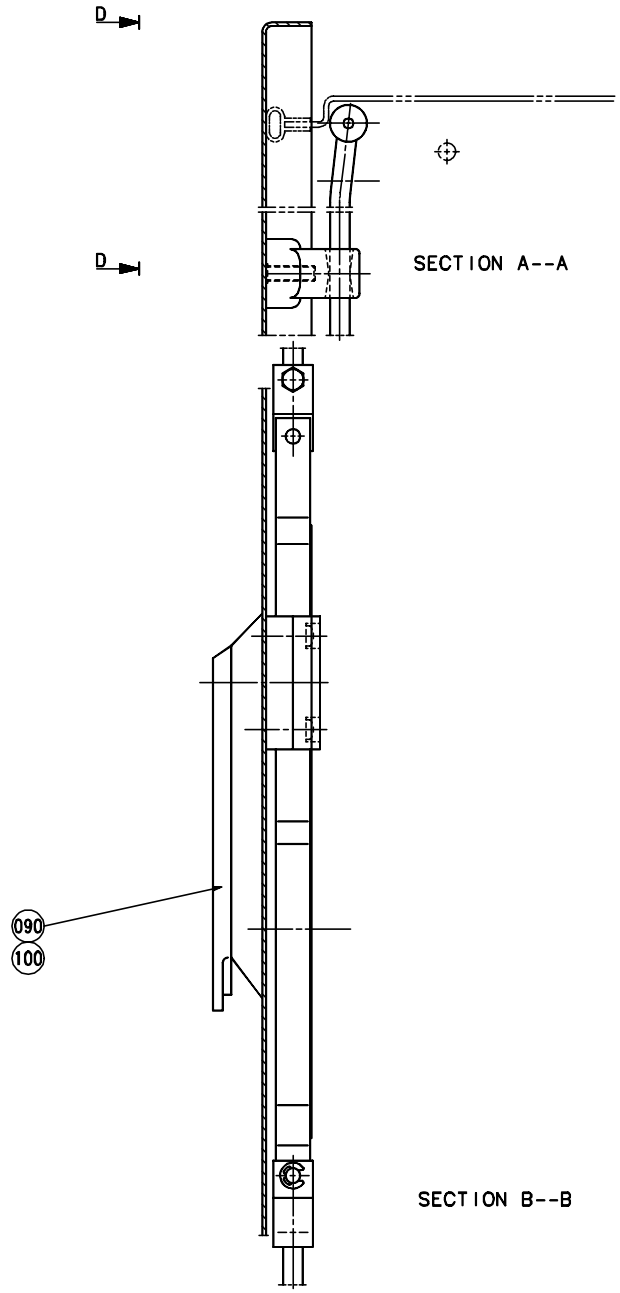

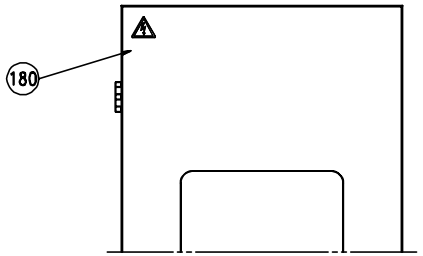

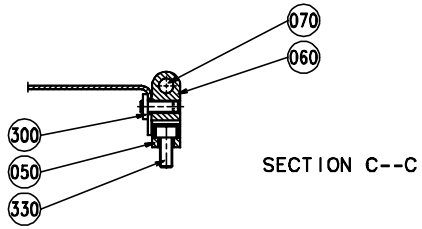

S-1095944-1
ECN 71109

Pos	Part No	SP	UN	Qty	Description	Page No
-						
000	**C-1095944-0101**	**-**		**1**	**DOOR EL-CABINET**	
010	1129931	-		1	DOOR	
020	1129932	-		1	FRAME	
030	1140415	-		1	GLASS PANE	
050	1035792	-		3	E-HINGE	
060	1129770	-		6	BLOCKING PIECE	
070	988685	-		3	PIN	
080	1260552	-		1	ROD	
090	90237-0150	-		1	TURNING HANDLE	
100	90237-0128	-		1	LOCK CYLINDER	
110	90237-0153	-		1	LOCK HOUSING	
120	1260403	-		1	ROD	
130	90237-0151	-		2	STEERING	
140	90237-0152	-		2	STEERING	
150	90157-0041	-	L	x	SEALING COMPOUND	
180	359705-0015	-		1	WARNING SIGN "ELECTRIC SHOCK"	
190	90237-0169	-		2	ADAPTER	
200	1036977	-		1	HOLDER	
210	1296288	-		1	FUSE BOARD	
220	312605-0314	-		1	NUT,HEXAGON,M6M5 Stainless	
230	315105-0146	-		1	WASHERS,PLAIN ROUND 5,3X10	
300	1129767	-		3	SCREW	
310	315105-0153	-		14	WASHER,PLAIN ROUND BRB 6,4x12 Stainless	
320	312605-0316	-		14	NUT,HEXAGON,A280 M6M6 Stainless	
330	312115-0327	-		6	SCREW MC6S ISO 4762 M5X12 A280	
340	90062-0022	-		2	LOCKING WASHER	
350	90135-0035	-		2	LOW IMPEDANCELITZ L=250MM	
360	90194-0152	-		2	SIGN "EARTH"	

Pos	Part No	SP	UN	Qty	Description	Page No

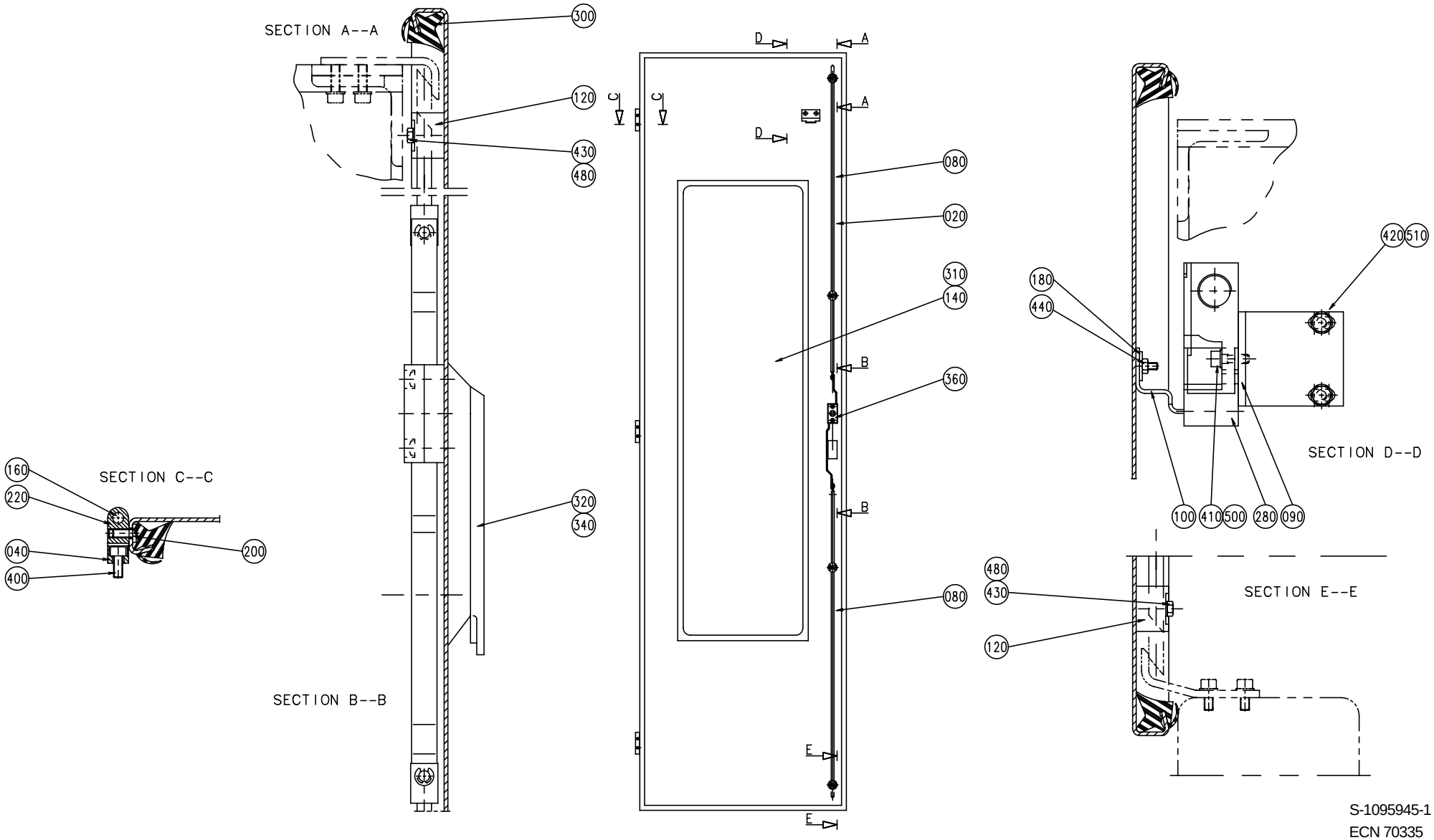

S-1095945-1
ECN 70335

Pos	Part No	SP	UN	Qty	Description	Page No
-						
000	**C-1095945-0201**	**-**		**1**	**DOOR**	
020	1255682	-		1	DOOR	
040	1035792	-		3	E-HINGE	
080	1036304-0020	-		2	LOCKING ARM	
090	1255684	-		1	HOLDER	
100	1129042	-		1	KEY	
120	1129274	-		4	GUIDE LUG	
140	1140415	-		1	GLASS PANE	
160	988685	-		3	PIN	
180	1036563	-		1	WASHER	
200	1129767	-		3	SCREW	
220	1129770	-		6	BLOCKING PIECE	
280	90044-0139	S		1	KEY SAFETY SWITCH	
300	1279828	-		1	SEALING STRIP	
310	90157-0041	-		X	SEALING COMPOUND	
320	90237-0128	-		1	LOCK CYLINDER	
340	90237-0150	-		1	TURNING HANDLE	
360	90237-0153	-		1	LOCK HOUSING	
400	312115-0327	-		6	SCREW O4762 M5X12A280	
410	312115-0329	-		2	SCREW O4762 M5X16A280	
420	312105-0366	-		2	SCREW O4017 M6X12A280	
430	312605-0312	-		8	NUT M6M4 STAINLESS	
440	312812-0312	-		2	LOCK NUT A2-M4RFR	
480	315105-0136	-		8	WASHER BRB4,3X8RFR	
500	315105-0146	-		2	WASHER BRB5,3X10RFR	
510	315105-0153	-		2	WASHER BRB6,4X12RFR	

Pos	Part No	SP	UN	Qty	Description	Page No

DOOR FOR PATCH

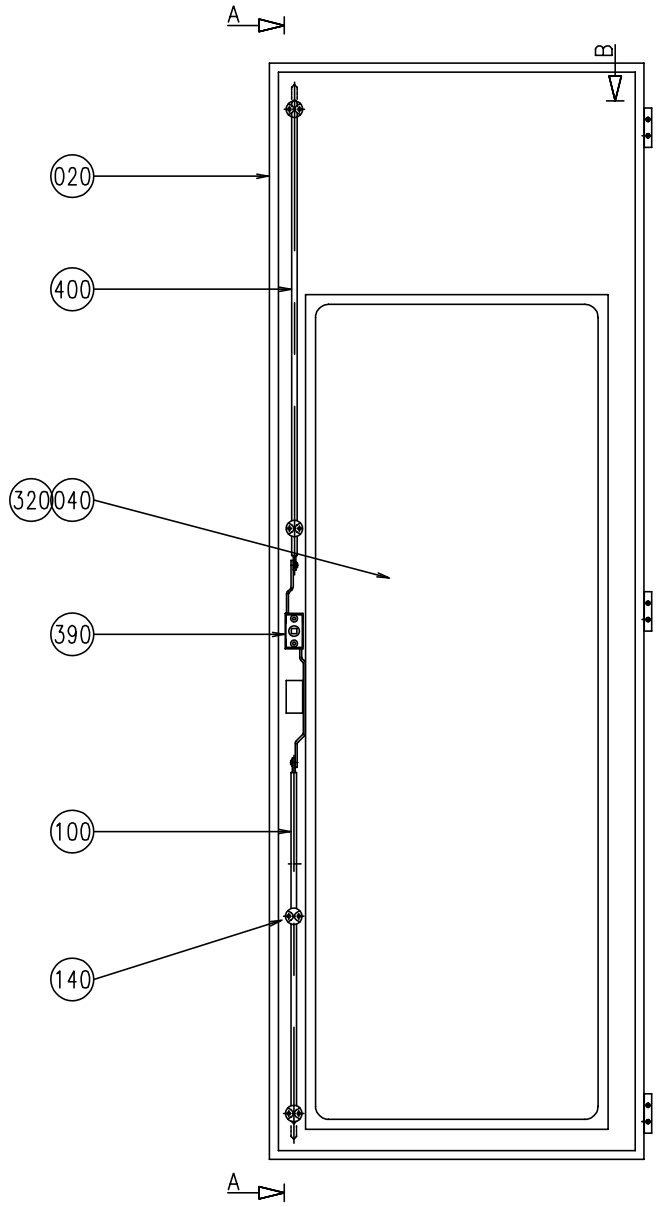

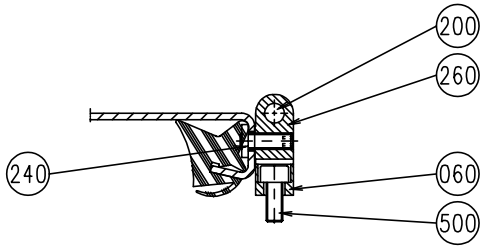

SECTION B--B

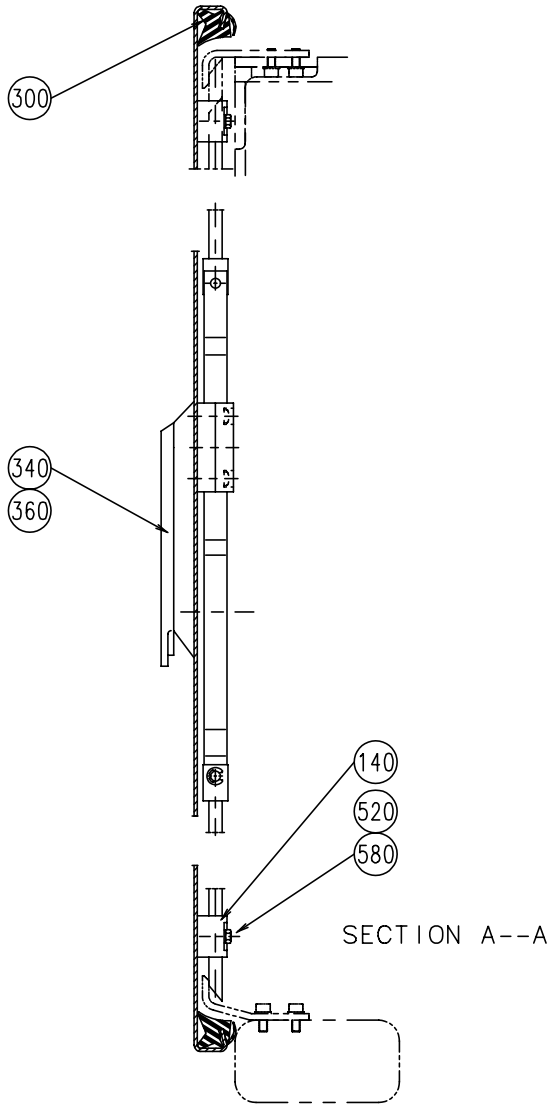

SECTION A--A

S-1095946-1
ECN 70335

Pos	Part No	SP	UN	Qty	Description	Page No
-						
000	**C-1095946-0201**	**-**		**1**	**DOOR FOR PATCH**	
020	1255685	-		1	DOOR	
040	1140416	-		1	GLASS PANE	
060	1035792	-		3	E-HINGE	
100	1036304-0019	-		1	LOCKING ARM	
140	1129274	-		4	GUIDE LUG	
200	988685	-		3	PIN	
240	1129767	-		3	SCREW	
260	1129770	-		6	BLOCKING PIECE	
300	1279829	-		1	SEALING STRIP	
320	90157-0041	-		X	SEALING COMPOUND	
340	90237-0128	-		1	LOCK CYLINDER	
360	90237-0150	-		1	TURNING HANDLE	
390	90237-0153	-		1	LOCK HOUSING	
400	1036304-0005	-		1	LOCKING ARM	
500	312115-0327	-		6	SCREW O4762 M5X12A280	
520	312605-0312	-		8	NUT M6M4 STAINLESS	
580	315105-0136	-		4	WASHER BRB4,3X8RFR	

Pos	Part No	SP	UN	Qty	Description	Page No

DOOR FOR PULLTAB

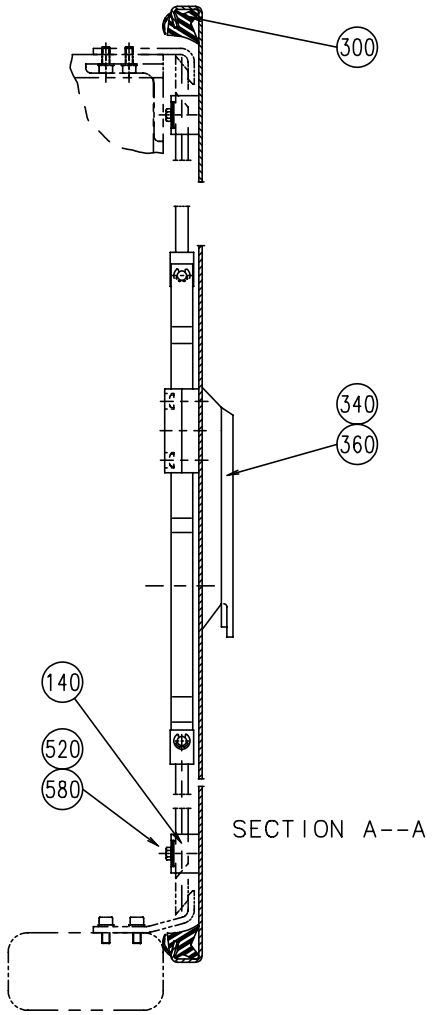

SECTION A--A

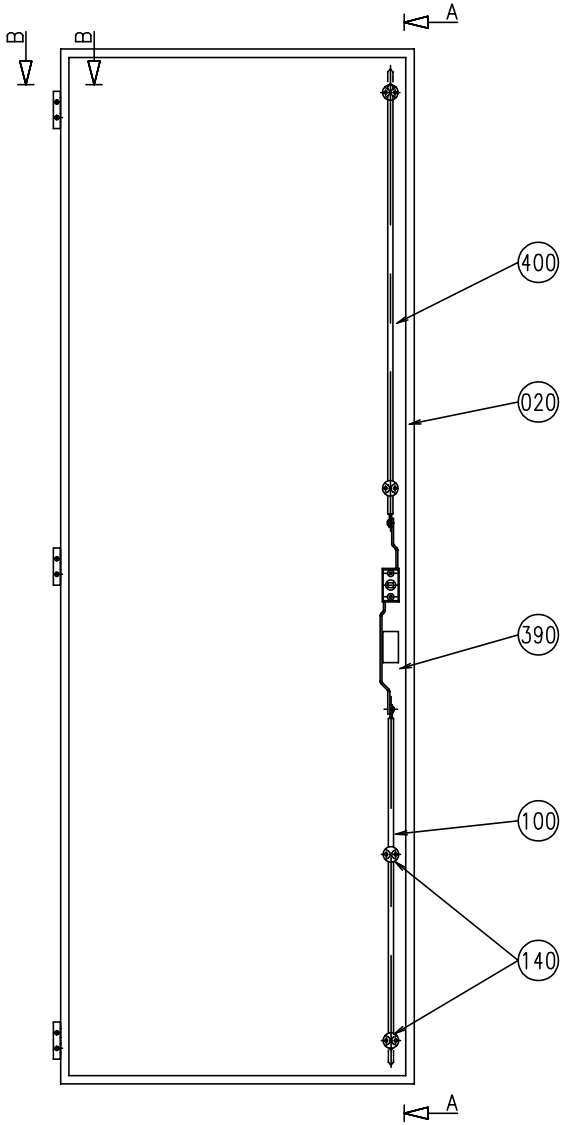

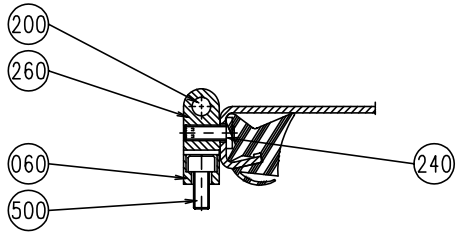

SECTION B--B

S-1095947-1
ECN 70335

Pos	Part No	SP	UN	Qty	Description	Page No
-						
000	**C-1095947-0201**	**-**		**1**	**DOOR FOR PULLTAB**	
020	1255686	-		1	DOOR	
060	1035792	-		3	E-HINGE	
100	1036304-0019	-		1	LOCKING ARM	
140	1129274	-		4	GUIDE LUG	
200	988685	-		3	PIN	
240	1129767	-		3	SCREW	
260	1129770	-		6	BLOCKING PIECE	
300	1279829	-		1	SEALING STRIP	
340	90237-0128	-		1	LOCK CYLINDER	
360	90237-0150	-		1	TURNING HANDLE	
390	90237-0153	-		1	LOCK HOUSING	
400	1036304-0005	-		1	LOCKING ARM	
500	312115-0327	-		6	SCREW O4762 M5X12A280	
520	312605-0312	-		4	NUT M6M4 STAINLESS	
580	315105-0136	-		4	WASHER BRB4,3X8RFR	

Pos	Part No	SP	UN	Qty	Description	Page No

DOOR FOR WASTE BOX

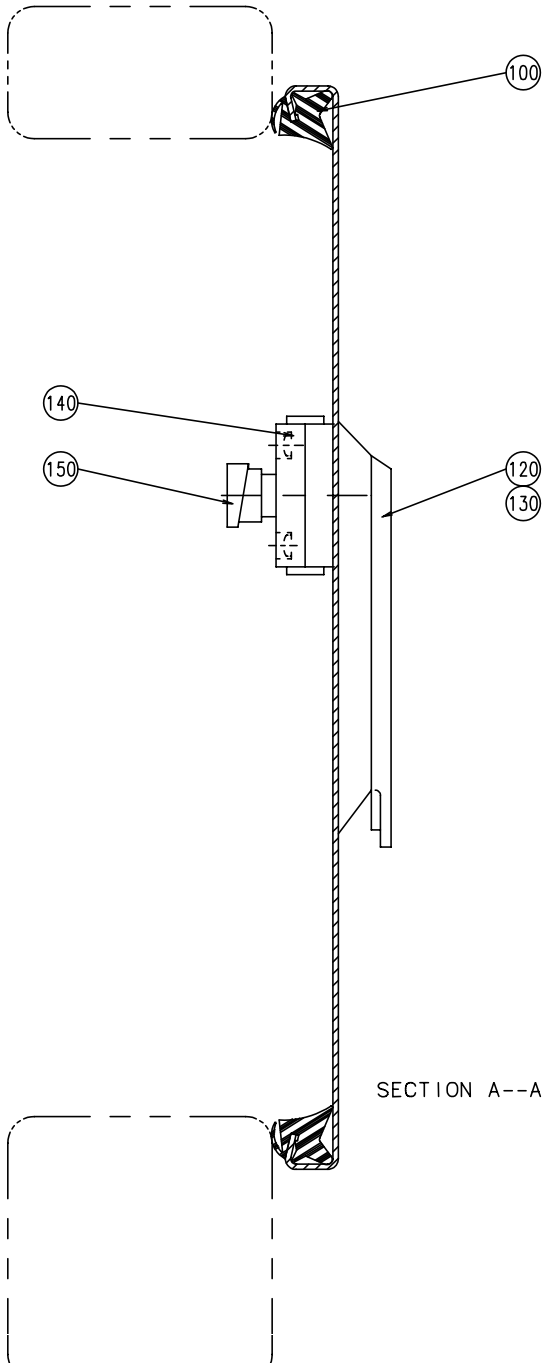

SECTION A--A

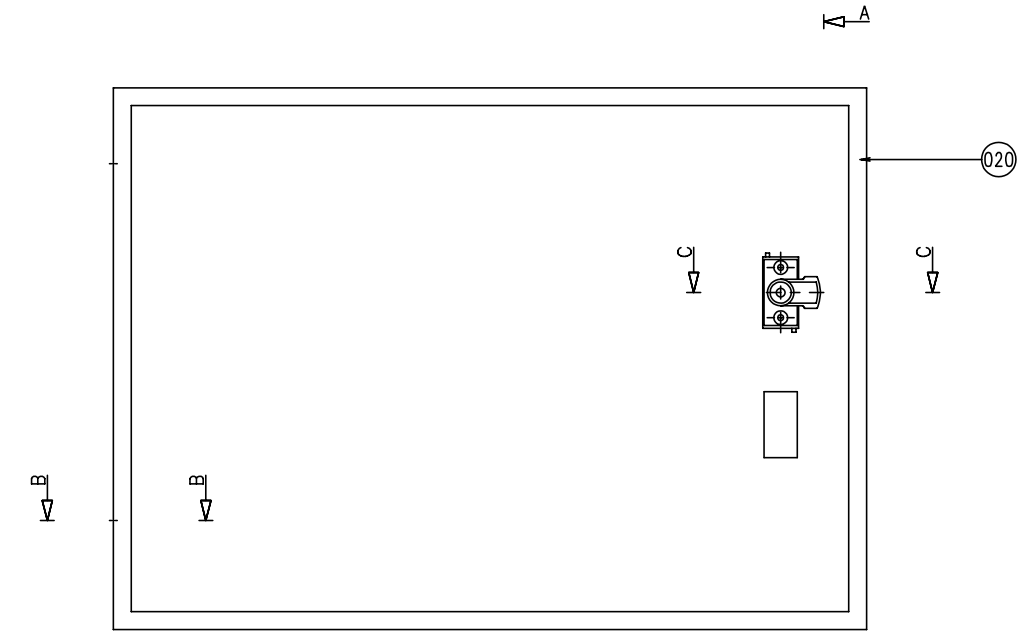

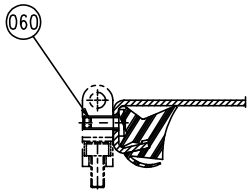

SECTION B--B

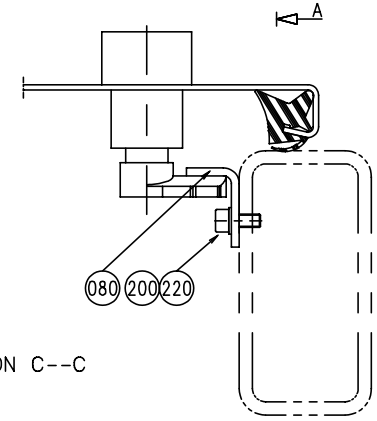

SECTION C--C

S-1095948-1
ECN 70335

Pos	Part No	SP	UN	Qty	Description	Page No
-						
000	**C-1095948-0101**	**-**		**1**	**DOOR FOR WASTE BOX**	
020	1255683	-		1	DOOR	
060	1129767	-		2	SCREW	
080	1129971	-		1	BRACKET	
100	1279830	-		1	SEALING STRIP	
120	90237-0128	-		1	LOCK CYLINDER	
130	90237-0150	-		1	TURNING HANDLE	
140	90237-0154	-		1	LOCK HOUSING	
150	90237-0165	-		1	LATCH	
200	312115-0327	-		2	SCREW O4762 M5X12A280	
220	315105-0146	-		2	WASHER BRB5,3X10RFR	

Pos	Part No	SP	UN	Qty	Description	Page No

DOOR FOR TPIH

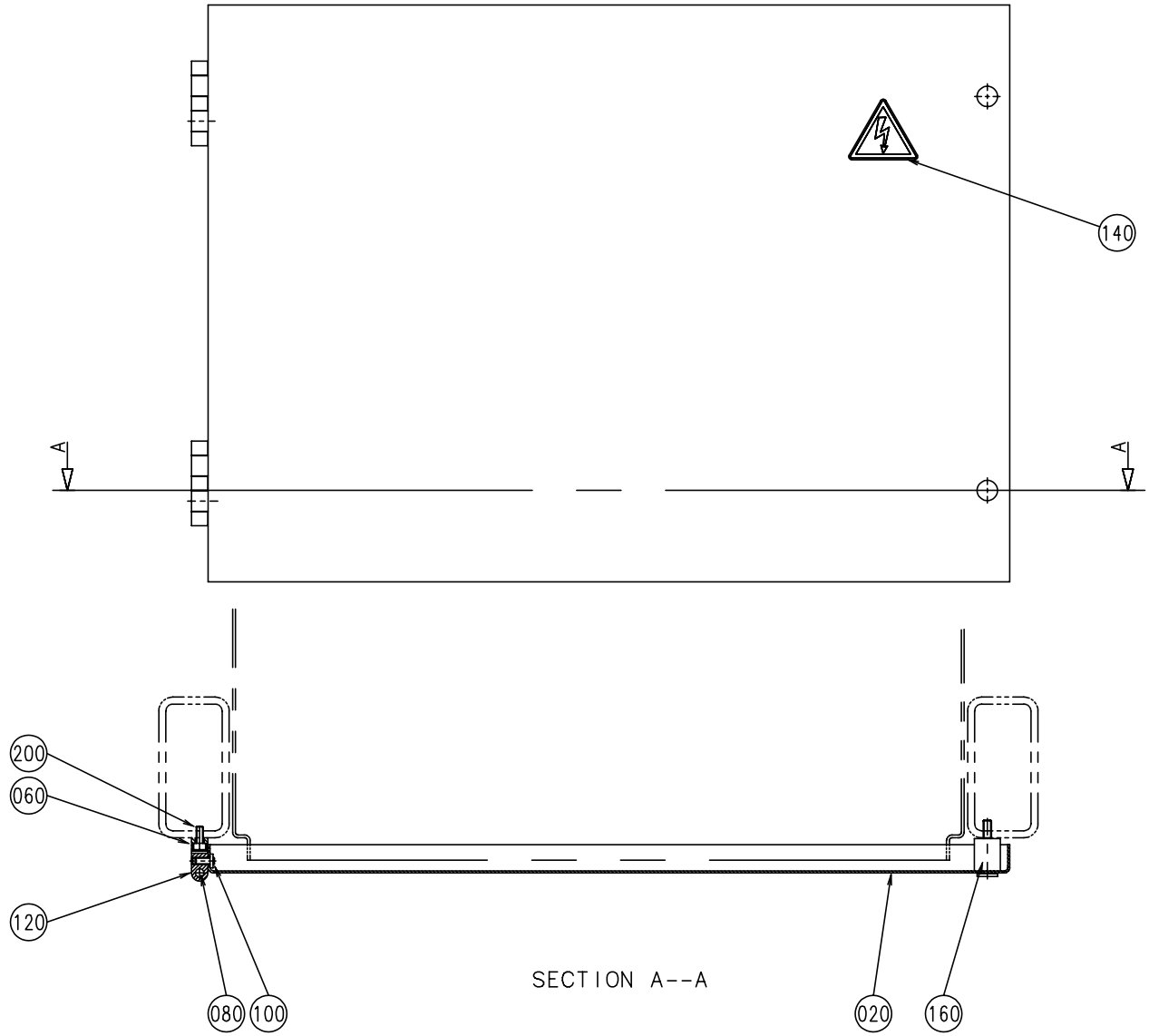

Pos	Part No	SP	UN	Qty	Description	Page No
-						
000	**C-1095949-0101**	**-**		**1**	**DOOR FOR TPIH**	
020	1129930	-		1	DOOR	
060	1035792	-		2	E-HINGE	
080	988685	-		2	PIN	
100	1129767	-		2	SCREW	
120	1129770	-		4	BLOCKING PIECE	
140	359705-0015	-		1	WARNING SIGN"EL SHOCK"	
160	90226-0458	-		2	MOUNTING SCREW	
200	312115-0327	-		4	SCREW O4762 M5X12A280	

Pos	Part No	SP	UN	Qty	Description	Page No

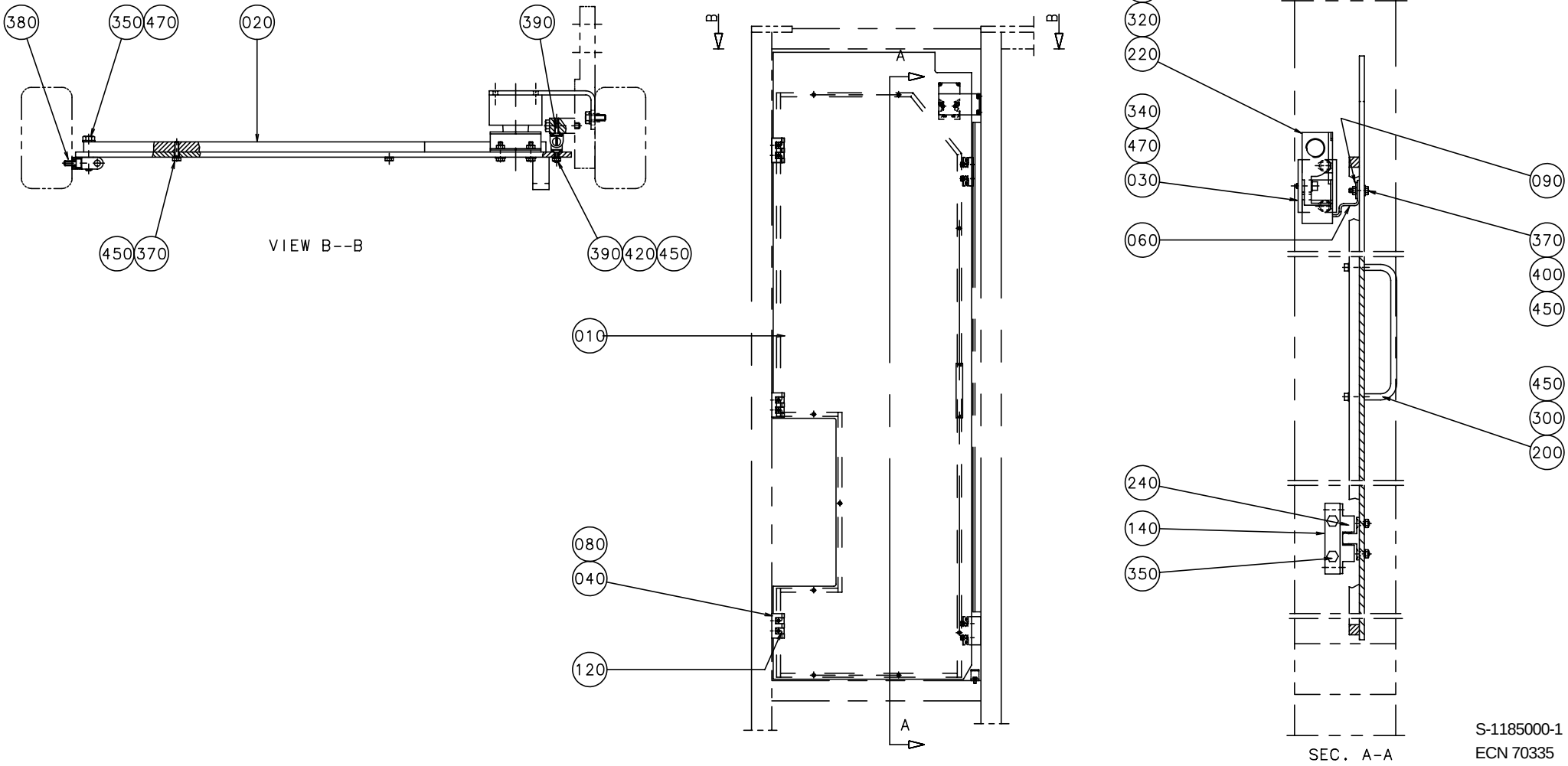

S-1185000-1
ECN 70335

Pos	Part No	SP	UN	Qty	Description	Page No
-						
000	**C-1185000-0101**	**-**		**1**	**DOOR,INNER**	
010	1140509	-		1	DOOR	
020	1260201	-		1	FRAME	
030	1140537	-		1	HOLDER	
040	1035792	-		3	E-HINGE	
060	1129042	-		1	KEY	
080	988685	-		3	PIN	
090	1036563	-		1	WASHER	
120	1129770	-		6	BLOCKING PIECE	
140	1140538	-		2	BLOCKING PIECE	
200	90017-0017	-		1	HANDLE	
220	90044-0139	R		1	KEY SAFETY SWITCH	
240	90237-0070	-		2	LOCK	
300	312115-0295	-		2	SCREW O4762 M4X20A280	
320	312115-0329	-		2	SCREW O4762 M5X16A280	
340	312105-0368	-		2	SCREW O4017 M6X16A280	
350	312105-0374	-		10	SCREW O4017 M6X30A280	
370	312105-0295	-		11	SCREW O4017 M4X20A280	
380	312115-0327	-		6	SCREW O4762 M5X12A280	
390	312155-0291	-		8	SCREW MF6S4X12RFR	
400	312605-0312	-		6	NUT M6M4 STAINLESS	
450	315105-0136	-		19	WASHER BRB4,3X8RFR	
460	315105-0146	-		2	WASHER BRB5,3X10RFR	
470	315105-0153	-		8	WASHER BRB6,4X12RFR	

Pos	Part No	SP	UN	Qty	Description	Page No

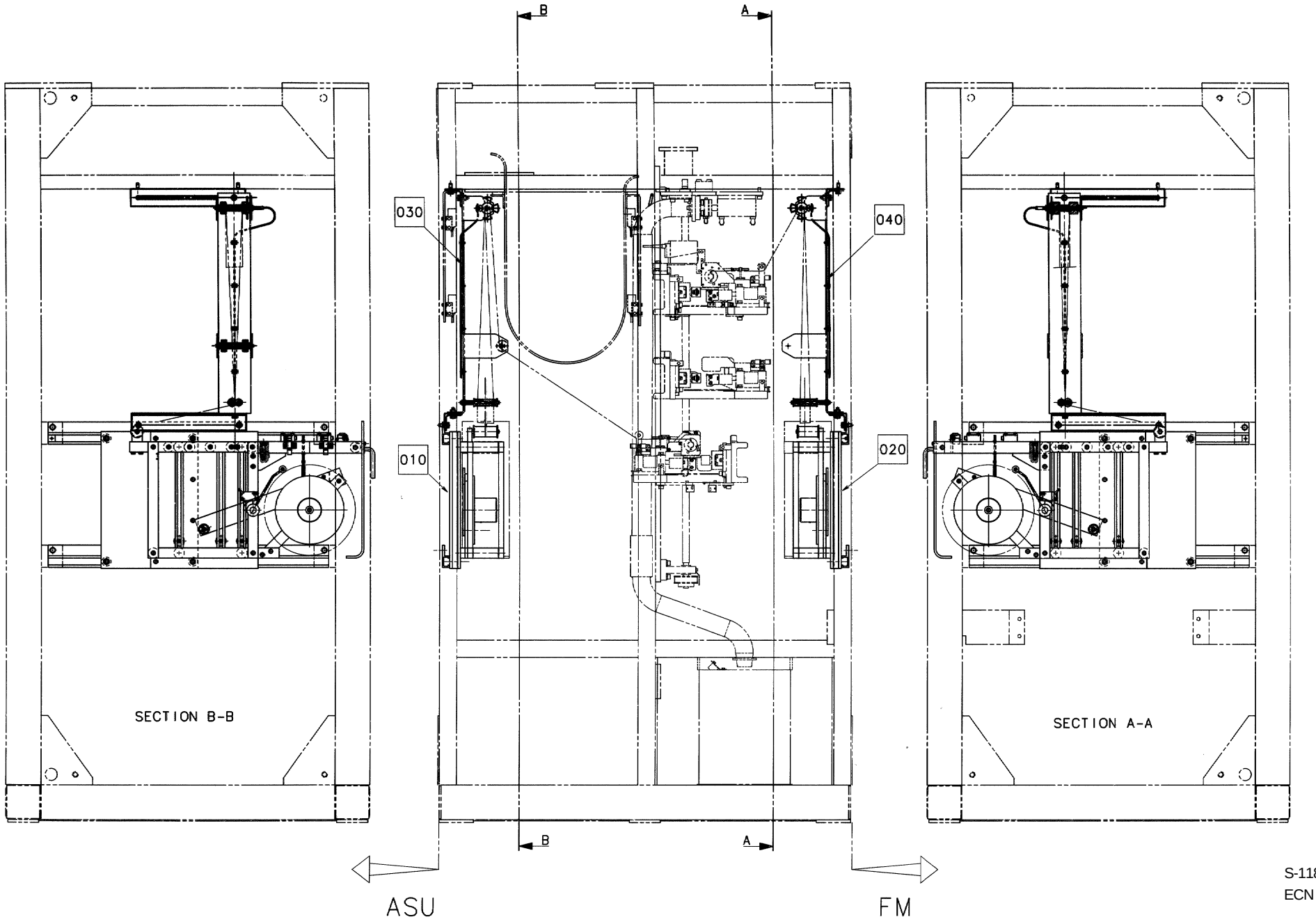

S-1185008-1
ECN 71370

Pos	Part No	SP	UN	Qty	Description	Page No
-						
000	**C-1185008-0101**	**-**		**1**	**MAGAZINES**	
010	C-1095893-010V	-		1	MAGAZINE PULLTAB	169
	C-1095895-010V	-		-	. SPLICING DEVICE	173
	C-1095923-010V	-		-	. GUIDE PULLTAB	175
020	C-1095894-010V	-		1	MAGAZINE PATCH	177
	C-1095895-010V	-		-	. SPLICING DEVICE	173
	C-1095924-010V	-		-	. GUIDE PATCH	181
030	C-1334066-010V	-		1	TAB TURNING DEVICE	183
040	C-1334065-010V	-		1	PATCH TURNING DEVICE	185

Pos	Part No	SP	UN	Qty	Description	Page No

MAGAZINE PULLTAB

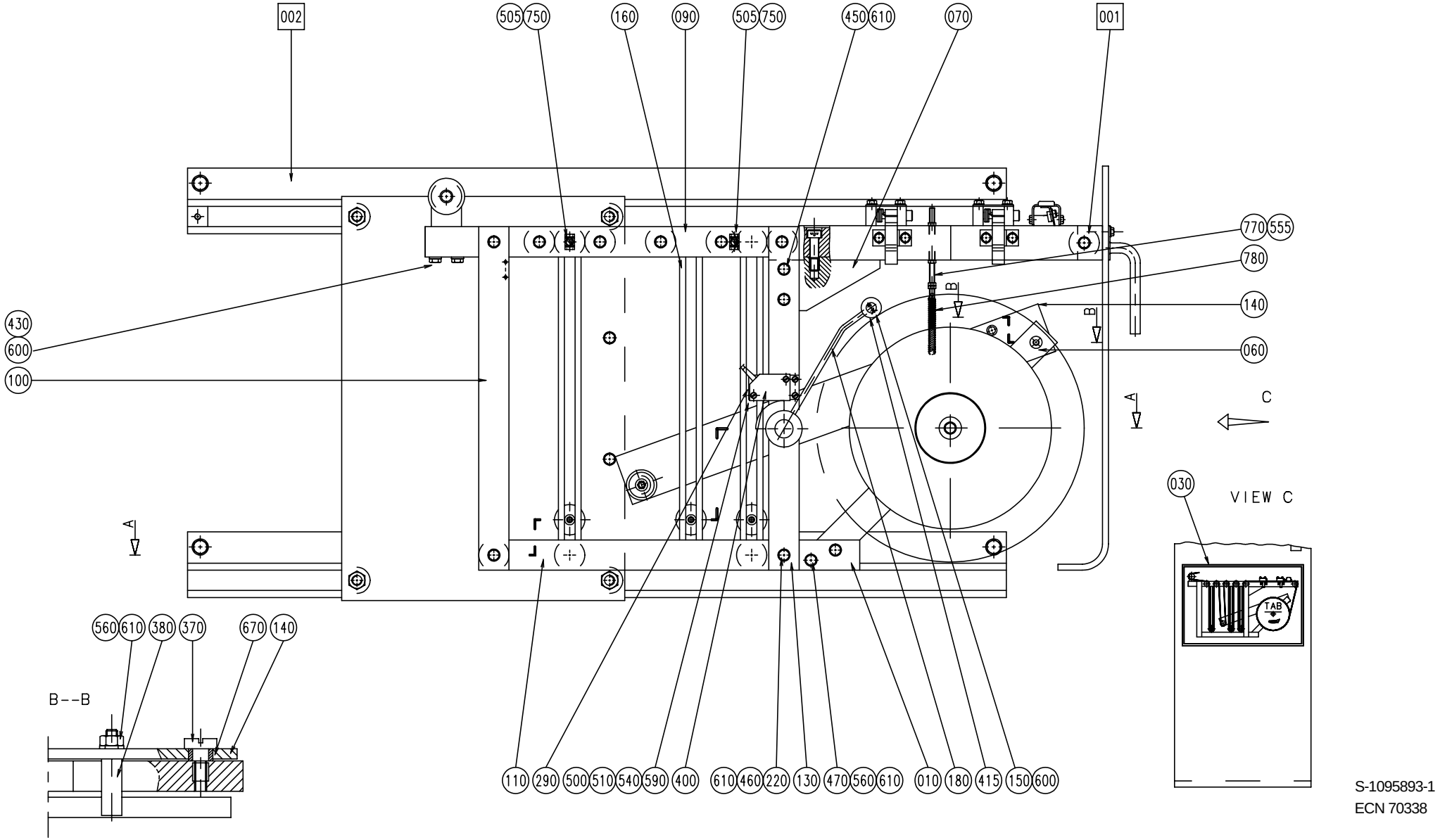

S-1095893-1
ECN 70338

Pos	Part No	SP	UN	Qty	Description	Page No
-						
000	**C-1095893-0101**	**-**		**1**	**MAGAZINE PULLTAB**	
001	C-1095895-010V	-		1	SPLICING DEVICE	173
002	C-1095923-010V	-		1	GUIDE PULLTAB	175
010	1129230	-		1	BEAM	
020	1129223	-		1	BEAM	
030	1285482	-		1	LABEL	
040	1129222	-		1	BOBBIN HOLDER	
050	556539	-		1	BRAKE DISC	
060	546290	-		1	BEAM	
070	1129231	-		1	CANTILEVER	
090	1129224	-		1	BEAM	
100	546294	-		2	BEAM	
110	1129226	-		1	BEAM	
120	546296	-		1	BEAM	
130	546297	-		1	BEAM	
140	1129450	-		1	ARM	
145	2033-0013	-		1	WASHER	
150	234844	J		1	WHEEL	
160	1140632	-		12	POST	
170	533972	-		1	INDICATOR CURVE	
180	1129510	-		1	ARM	
190	534497	-		6	SPACER	
200	538726	-		2	WASHER	
210	538740-0003	-		1	SPACER	
220	1129235	-		8	SHAFT	
230	1129233	-		3	SHAFT	
240	1129780	D		1	ROLL	
250	1129234	D		6	ROLL	
260	1129495	-		1	BLOCKING PIECE	
270	546303	-		1	SHAFT	
290	546305	-		1	SHEET	
300	546306	-		1	SHAFT	
310	1129232	D		3	ROLL	
330	1129237	D		1	ROLL	
340	1129246	D		1	ROLL	
370	556541	-		1	SCREW	
380	556542	-		1	PIN	
390	1129452	-		1	SHAFT	
395	556544	-		1	SPACER	
400	90044-0104	R		1	PROX.SWITCH IFM IN 3002	
410	90287-0009	-		1	SPRINGLOADED SCREW	
415	311411-0138	-		2	SPLIT PIN SP1,6X12RFR	
420	312105-0327	-		1	SCREW ISO 4017 M5X12A280	
430	312105-0339	-		2	SCREW O4014 M5X40A280	
440	312105-0287	-		1	SCREW O4017 M4X8A280	
445	312105-0295	-		1	SCREW O4017 M4X20A280	
450	312105-0370	-		8	SCREW O4017 M6X20A280	
460	312105-0372	-		20	SCREW ISO 4017 M6X25A280	
470	312105-0376	-		2	SCREW O4017 M6X35A280	
480	312115-0368	-		2	SCREW O4762 M6X16A280	
500	312125-0230	-		3	SLOTTED HEMCS3X20RFR	
505	312125-0289	-		2	SLOTTED HEMCS4X10RFR	
510	90287-0069	-		1	SCREW	
520	312318-0323	-		2	STOP SCREW SK6SS5X8RFR	
530	312318-0364	-		5	STOP SCREW SK6SS6X10RFR	
540	312605-0310	-		4	NUT M6M3RFR	
550	312605-0312	-		1	NUT M6M4 STAINLESS	
555	312605-0314	-		4	NUT M6M5RFR	
560	312605-0316	-		4	NUT M6M6 A280 STAINLESS	
570	312605-0318	-		3	NUT M6M8RFR	
580	312705-0318	-		1	CAP NUT MHM 8 A2	
590	315105-0124	-		4	WASHER BRB3,2X6RFR	
595	315105-0136	-		1	WASHER BRB4,3X8RFR	
600	315105-0146	-		5	WASHER BRB5,3X10RFR	
610	315105-0153	-		30	WASHER BRB6,4X12RFR	
620	315105-0165	-		5	WASHER BRB8,4X16RFR	
640	315750-0107	-		1	CIRCLIP SGA10	
650	315753-0117	-		1	CIRCLIP GH 22 RFR	
660	321111-0274	D		1	FLANGE BUS 18E7X18	
670	321116-0095	-		1	BUSHING 8E7/12X6	
700	321300-0098	M		2	BALL BEARISKF608	
750	352113-0205	-		2	ANCHOR	
770	1279834	D		1	BOLT	
780	90335-0081	D		1	SPRING	

MAGAZINE PULLTAB

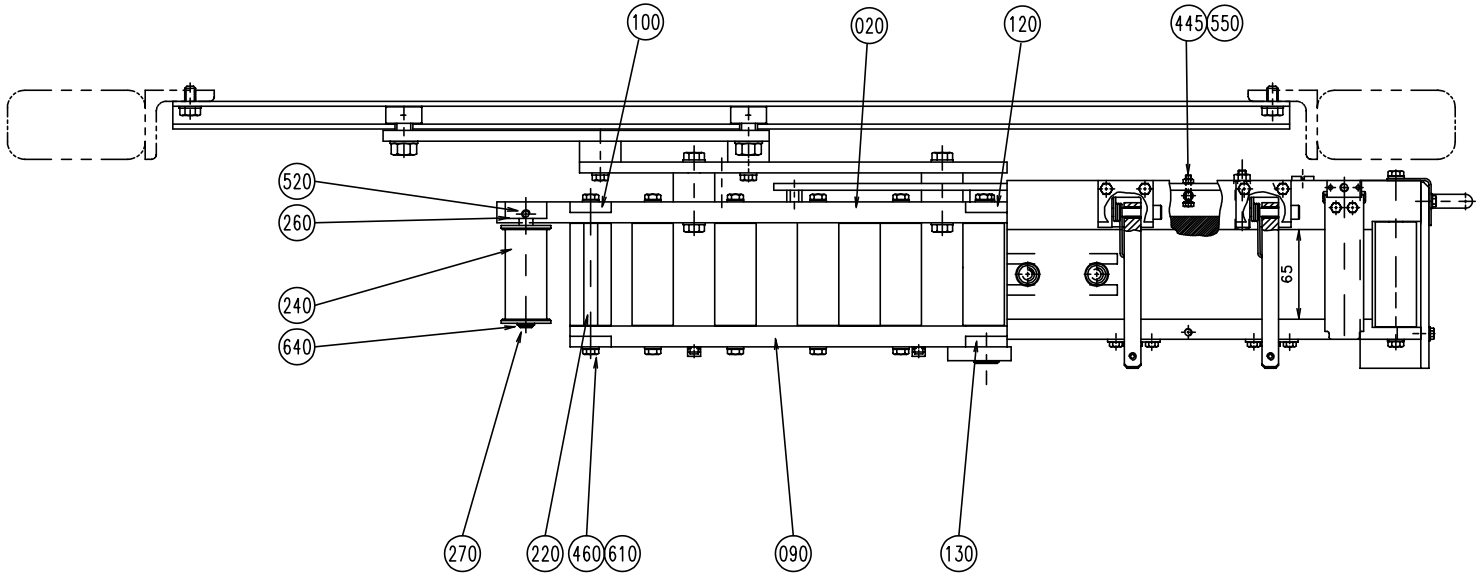

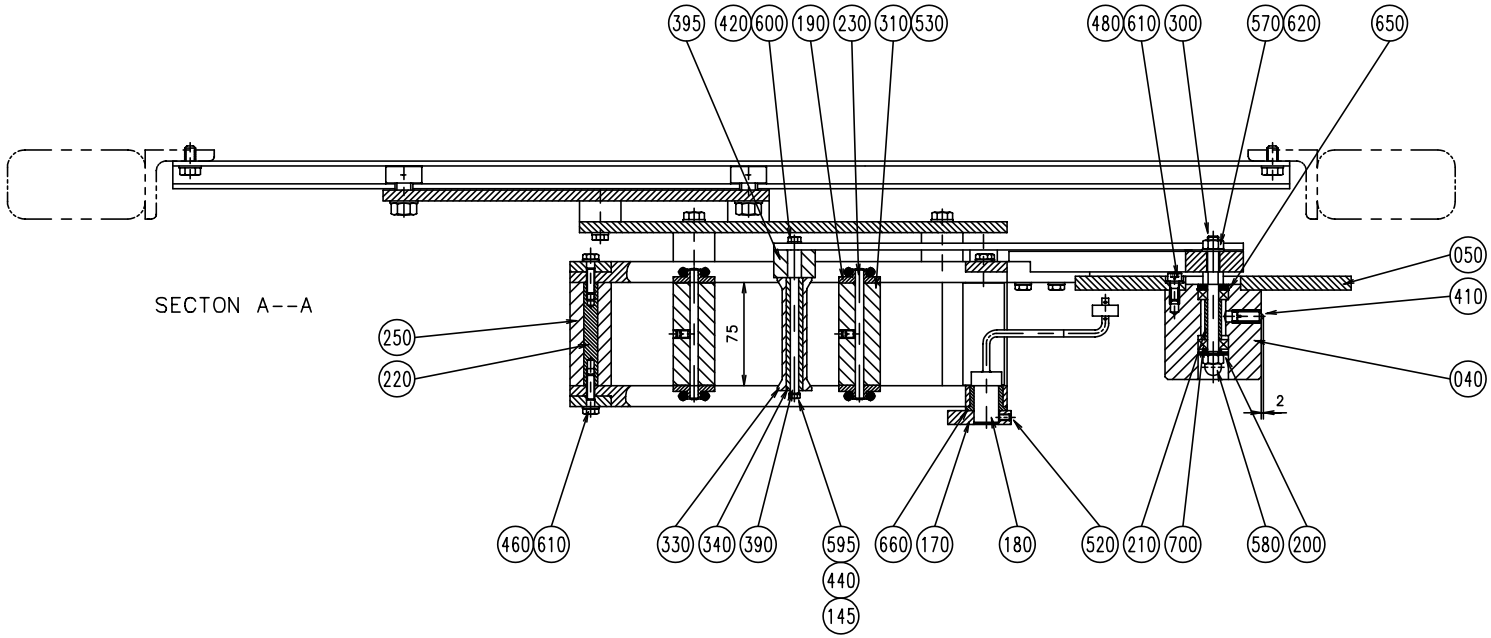

S-1085893-2
ECN 70338

Pos	Part No	SP	UN	Qty	Description	Page No
-						
000	**C-1095893-0101**	**-**		**1**	**MAGAZINE PULLTAB**	
001	C-1095895-010V	-		1	SPLICING DEVICE	173
002	C-1095923-010V	-		1	GUIDE PULLTAB	175
010	1129230	-		1	BEAM	
020	1129223	-		1	BEAM	
030	1285482	-		1	LABEL	
040	1129222	-		1	BOBBIN HOLDER	
050	556539	-		1	BRAKE DISC	
060	546290	-		1	BEAM	
070	1129231	-		1	CANTILEVER	
090	1129224	-		1	BEAM	
100	546294	-		2	BEAM	
110	1129226	-		1	BEAM	
120	546296	-		1	BEAM	
130	546297	-		1	BEAM	
140	1129450	-		1	ARM	
145	2033-0013	-		1	WASHER	
150	234844	J		1	WHEEL	
160	1140632	-		12	POST	
170	533972	-		1	INDICATOR CURVE	
180	1129510	-		1	ARM	
190	534497	-		6	SPACER	
200	538726	-		2	WASHER	
210	538740-0003	-		1	SPACER	
220	1129235	-		8	SHAFT	
230	1129233	-		3	SHAFT	
240	1129780	D		1	ROLL	
250	1129234	D		6	ROLL	
260	1129495	-		1	BLOCKING PIECE	
270	546303	-		1	SHAFT	
290	546305	-		1	SHEET	
300	546306	-		1	SHAFT	
310	1129232	D		3	ROLL	
330	1129237	D		1	ROLL	
340	1129246	D		1	ROLL	
370	556541	-		1	SCREW	
380	556542	-		1	PIN	
390	1129452	-		1	SHAFT	
395	556544	-		1	SPACER	
400	90044-0104	R		1	PROX.SWITCH IFM IN 3002	
410	90287-0009	-		1	SPRINGLOADED SCREW	
415	311411-0138	-		2	SPLIT PIN SP1,6X12RFR	
420	312105-0327	-		1	SCREW ISO 4017 M5X12A280	
430	312105-0339	-		2	SCREW O4014 M5X40A280	
440	312105-0287	-		1	SCREW O4017 M4X8A280	
445	312105-0295	-		1	SCREW O4017 M4X20A280	
450	312105-0370	-		8	SCREW O4017 M6X20A280	
460	312105-0372	-		20	SCREW ISO 4017 M6X25A280	
470	312105-0376	-		2	SCREW O4017 M6X35A280	
480	312115-0368	-		2	SCREW O4762 M6X16A280	
500	312125-0230	-		3	SLOTTED HEMCS3X20RFR	
505	312125-0289	-		2	SLOTTED HEMCS4X10RFR	
510	90287-0069	-		1	SCREW	
520	312318-0323	-		2	STOP SCREW SK6SS5X8RFR	
530	312318-0364	-		5	STOP SCREW SK6SS6X10RFR	
540	312605-0310	-		4	NUT M6M3RFR	
550	312605-0312	-		1	NUT M6M4 STAINLESS	
555	312605-0314	-		4	NUT M6M5RFR	
560	312605-0316	-		4	NUT M6M6 A280 STAINLESS	
570	312605-0318	-		3	NUT M6M8RFR	
580	312705-0318	-		1	CAP NUT MHM 8 A2	
590	315105-0124	-		4	WASHER BRB3,2X6RFR	
595	315105-0136	-		1	WASHER BRB4,3X8RFR	
600	315105-0146	-		5	WASHER BRB5,3X10RFR	
610	315105-0153	-		30	WASHER BRB6,4X12RFR	
620	315105-0165	-		5	WASHER BRB8,4X16RFR	
640	315750-0107	-		1	CIRCLIP SGA10	
650	315753-0117	-		1	CIRCLIP GH 22 RFR	
660	321111-0274	D		1	FLANGE BUS 18E7X18	
670	321116-0095	-		1	BUSHING 8E7/12X6	
700	321300-0098	M		2	BALL BEARISKF608	
750	352113-0205	-		2	ANCHOR	
770	1279834	D		1	BOLT	
780	90335-0081	D		1	SPRING	

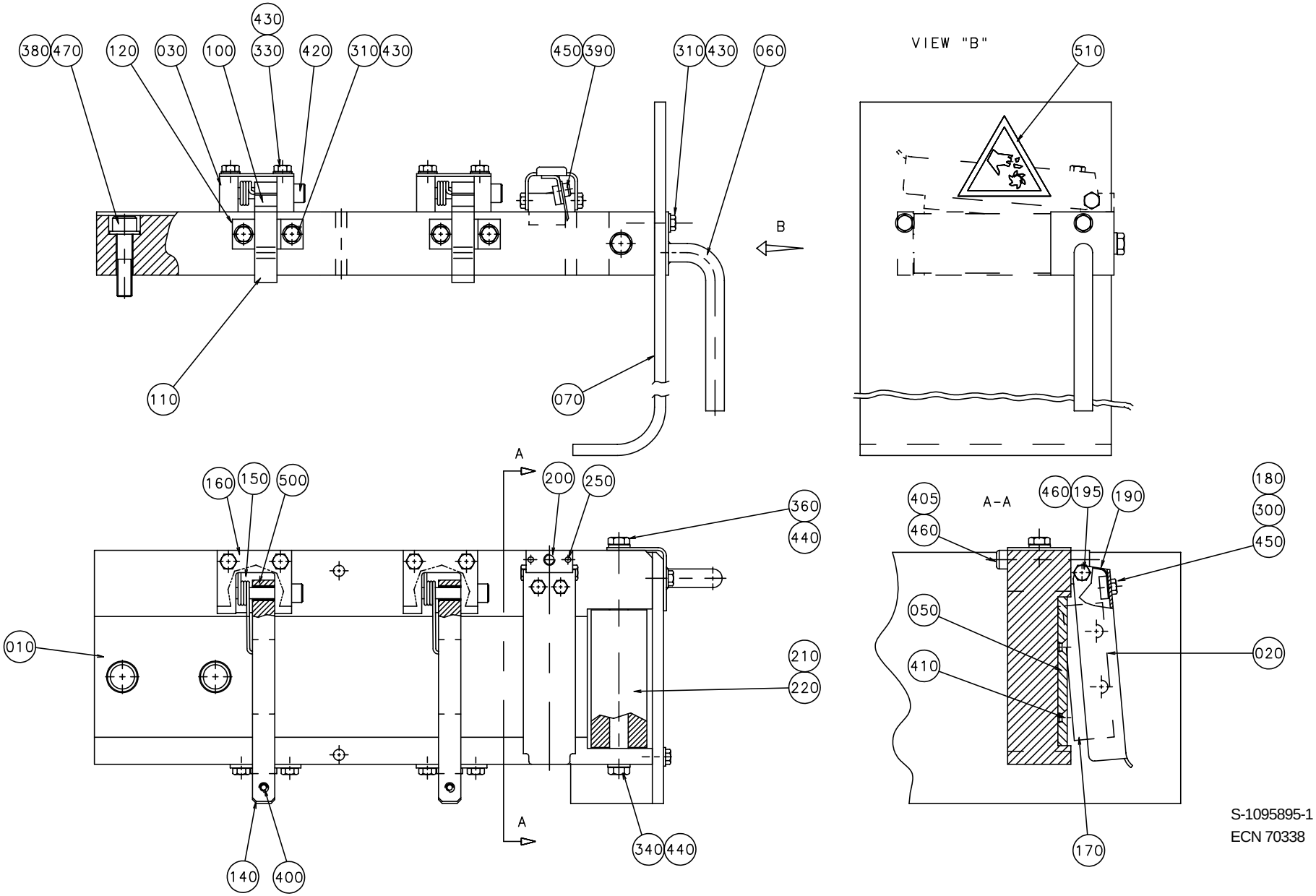

S-1095895-1
ECN 70338

Pos	Part No	SP	UN	Qty	Description	Page No
-						
000	**C-1095895-0101**	**-**		**1**	**SPLICING DEVICE**	
010	1129221	-		1	SPLICING TABLE	
020	1129239	-		1	KNIFE HOLDER	
030	532017	-		2	MOUNTING LUG	
050	544422	D		1	KNIFE	
060	1255834	-		1	HANDLE	
070	1255835	-		1	PROTECTION	
100	532020	-		2	LOCK WASHER	
110	532021	-		2	LOCKING LOOP	
120	532022	-		2	LOCK BAR	
140	1129252	-		2	LOCK GRIP	
150	544427	D		2	TURN SPRING	
160	544428	-		2	SHEET	
170	1129238	D		1	KNIFE	
180	522393	-		1	NUT	
190	522394	D		1	SPRING	
195	522395	-		2	SCREW	
200	552049	-		1	LUG	
210	1129235	-		1	SHAFT	
220	1129234	-		1	ROLL	
250	90258-0031	-		2	HOLLOW PIN	
300	312105-0287	-		2	SCREW O4017 M4X8A280	
310	312105-0327	-		6	SCREW ISO 4017 M5X12A280	
330	312105-0335	-		4	SCREW O4017 M5X30A280	
340	312105-0370	-		1	SCREW O4017 M6X20A280	
360	312105-0379	-		1	SCREW O4014 M6X45A280	
380	312115-0457	-		2	SCREW O4762 M8X35A280	
390	312115-0287	-		2	SCREW O4762 M4X8A280	
400	312155-0291	-		2	SCREW MF6S4X12RFR	
405	312115-0379	-		1	SCREW O4762 M6X45A280	
410	312155-0325	-		2	SCREW MF6S5X10RFR	
420	312180-0374	-		2	REAMED BOL	
430	315105-0146	-		10	WASHER BRB5,3X10RFR	
440	315105-0153	-		2	WASHER BRB6,4X12RFR	
450	315402-0136	-		4	WASHER FBB4,1RFR	
460	315402-0156	-		3	WASHER FBB6,5RFR	
470	315105-0165	-		2	WASHER BRB8,4X16RFR	
500	321120-0102	-		2	BUSHING 6/8X10	
510	359705-0009	-		1	WARNING SIGN"SHARP PART"	

Pos	Part No	SP	UN	Qty	Description	Page No

GUIDE PULLTAB

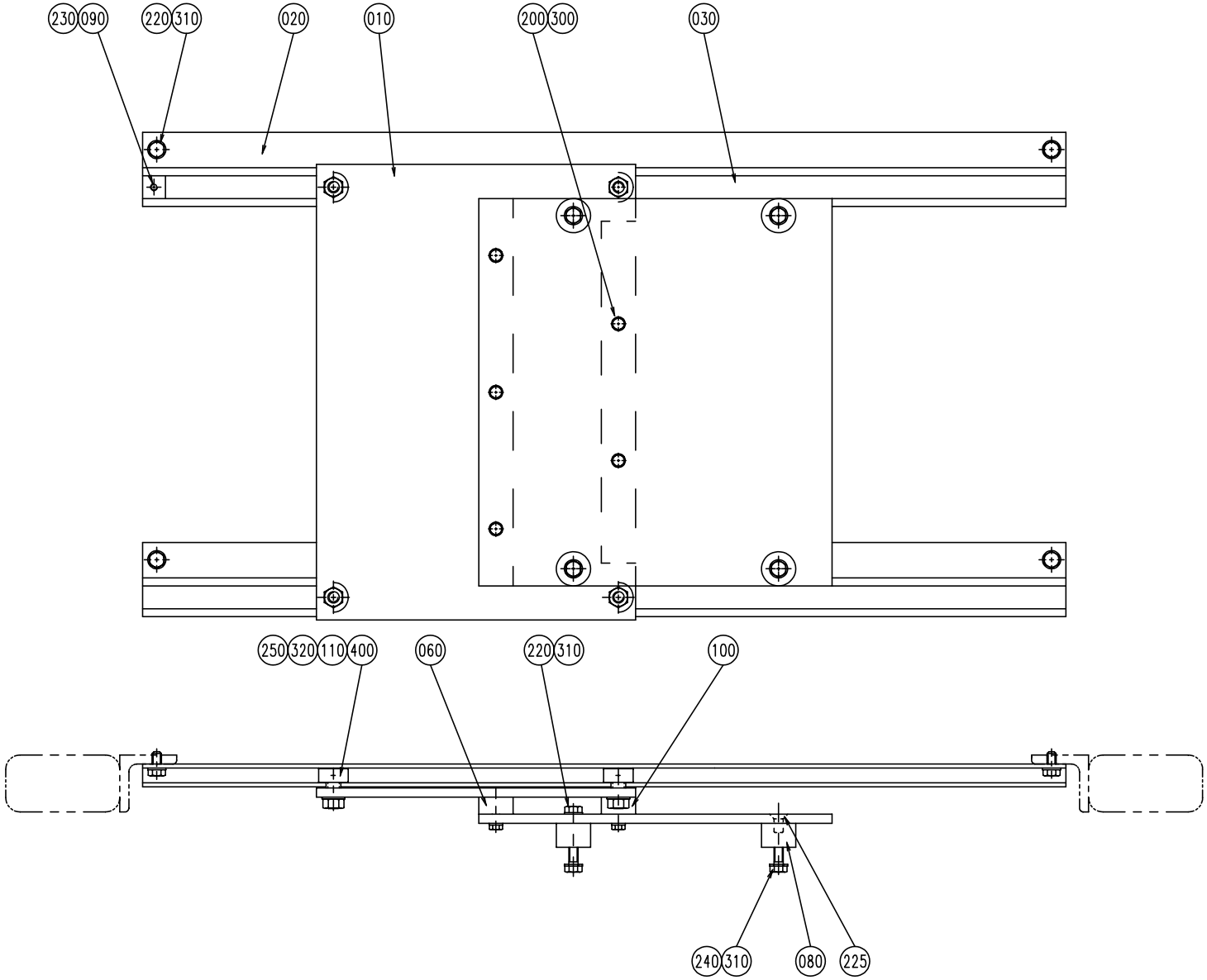

S-1095923-1
ECN 70338

Pos	Part No	SP	UN	Qty	Description	Page No
-						
000	**C-1095923-0101**	**-**		**1**	**GUIDE PULLTAB**	
010	1129240	-		1	SHEET	
020	1129241	-		2	STEERING	
030	1129454	-		1	SHEET	
060	1129462	-		1	SPACER	
080	1129242	-		4	SPACER	
090	1129245	-		2	STOP	
100	1129461	-		1	SPACER	
110	1140626	-		4	SPACER	
200	312105-0374	-		6	SCREW O4017 M6X30A280	
220	312105-0449	-		6	SCREW O4017 M8X16A280	
225	312155-0449	-		2	SCREW MF6S8X16RFR	
230	312318-0366	-		2	STOP SCREW SK6SS6X12RFR	
240	312105-0453	-		4	SCREW O4017 M8X25A280	
245	312125-0289	-		2	SLOTTED HEMCS4X10RFR	
250	312630-0320	-		4	NUT M6M10X1FZB	
300	315105-0153	-		6	WASHER BRB6,4X12RFR	
310	315105-0165	-		10	WASHER BRB8,4X16RFR	
320	315105-0173	-		4	WASHER BRB10,5X22RFR	
400	321582-0150	C		4	CURVE ROLLKR26PP	
410	352113-0205	-		2	ANCHOR	

Pos	Part No	SP	UN	Qty	Description	Page No

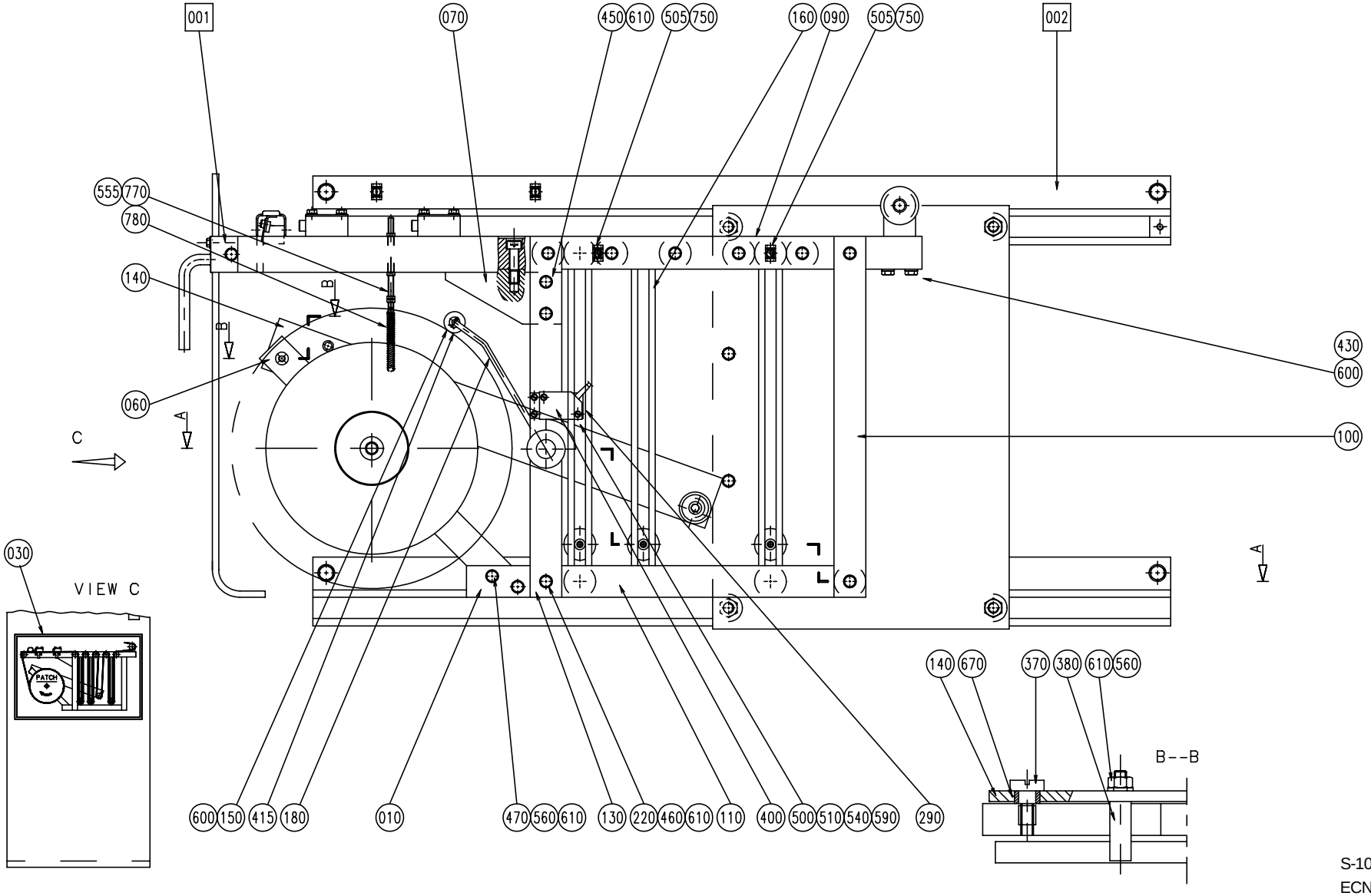

S-1095894-1
ECN 70338

Pos	Part No	SP	UN	Qty	Description	Page No
-						
000	**C-1095894-0101**	**-**		**1**	**MAGAZINE PATCH**	
001	C-1095895-010V	-		1	SPLICING DEVICE	173
002	C-1095924-010V	-		1	GUIDE PATCH	181
010	1129225	-		1	BEAM	
020	1129223	-		1	BEAM	
030	1285481	-		1	LABEL	
040	546256	-		1	BOBBIN HOLDER	
050	556539	-		1	BRAKE DISC	
060	546290	-		1	BEAM	
070	546291	-		1	BRACKET	
090	1129224	-		1	BEAM	
100	546294	-		2	BEAM	
110	1129226	-		1	BEAM	
120	1260379	-		1	BEAM	
130	1129227	-		1	POST	
140	1129450	-		1	ARM	
145	2033-0013	-		1	WASHER	
150	234844	J		1	WHEEL	
160	1140632	-		12	POST	
170	533972	-		1	INDICATOR CURVE	
180	1103845	-		1	ARM	
190	534497	-		6	SPACER	
200	538726	-		2	WASHER	
210	538740-0003	-		1	SPACER	
220	546298	-		8	SHAFT	
230	546299	-		3	SHAFT	
240	546300	D		1	ROLL	
250	546301	D		6	ROLL	
260	1129495	-		1	BLOCKING PIECE	
270	546303	-		1	SHAFT	
290	546305	-		1	SHEET	
300	546306	-		1	SHAFT	
310	546307	D		3	ROLL	
330	547745	D		1	ROLL	
340	547746	D		1	ROLL	
370	556541	-		1	SCREW	
380	556542	-		1	PIN	
390	1129451	-		1	SHAFT	
395	556544	-		1	SPACER	
400	90044-0104	R		1	PROX.SWITCH IFM IN 3002	
410	90287-0009	-		1	SPRINGLOADED SCREW	
415	311411-0138	-		2	SPLIT PIN SP1,6X12RFR	
420	312105-0327	-		1	SCREW ISO 4017 M5X12A280	
430	312105-0339	-		2	SCREW O4014 M5X40A280	
440	312105-0287	-		1	SCREW O4017 M4X8A280	
445	312105-0295	-		1	SCREW O4017 M4X20A280	
450	312105-0370	-		8	SCREW O4017 M6X20A280	
460	312105-0372	-		20	SCREW ISO 4017 M6X25A280	
470	312105-0376	-		2	SCREW O4017 M6X35A280	
480	312115-0368	-		2	SCREW O4762 M6X16A280	
500	312125-0230	-		3	SLOTTED HEMCS3X20RFR	
505	312125-0289	-		2	SLOTTED HEMCS4X10RFR	
510	90287-0069	-		1	SCREW	
520	312318-0323	-		2	STOP SCREW SK6SS5X8RFR	
530	312318-0364	-		5	STOP SCREW SK6SS6X10RFR	
540	312605-0310	-		4	NUT M6M3RFR	
550	312605-0312	-		1	NUT M6M4 STAINLESS	
555	312605-0314	-		4	NUT M6M5RFR	
560	312605-0316	-		4	NUT M6M6 A280 STAINLESS	
570	312605-0318	-		3	NUT M6M8RFR	
580	312705-0318	-		1	CAP NUT MHM 8 A2	
590	315105-0124	-		4	WASHER BRB3,2X6RFR	
595	315105-0136	-		1	WASHER BRB4,3X8RFR	
600	315105-0146	-		5	WASHER BRB5,3X10RFR	
610	315105-0153	-		30	WASHER BRB6,4X12RFR	
620	315105-0165	-		5	WASHER BRB8,4X16RFR	
640	315750-0107	-		1	CIRCLIP SGA10	
650	315753-0117	-		1	CIRCLIP GH 22 RFR	
660	321111-0274	D		1	FLANGE BUS 18E7X18	
670	321116-0095	-		1	BUSHING 8E7/12X6	
700	321300-0098	M		2	BALL BEARISKF608	
750	352113-0205	-		2	ANCHOR	
770	1279834	D		1	BOLT	
780	90335-0081	D		1	SPRING	

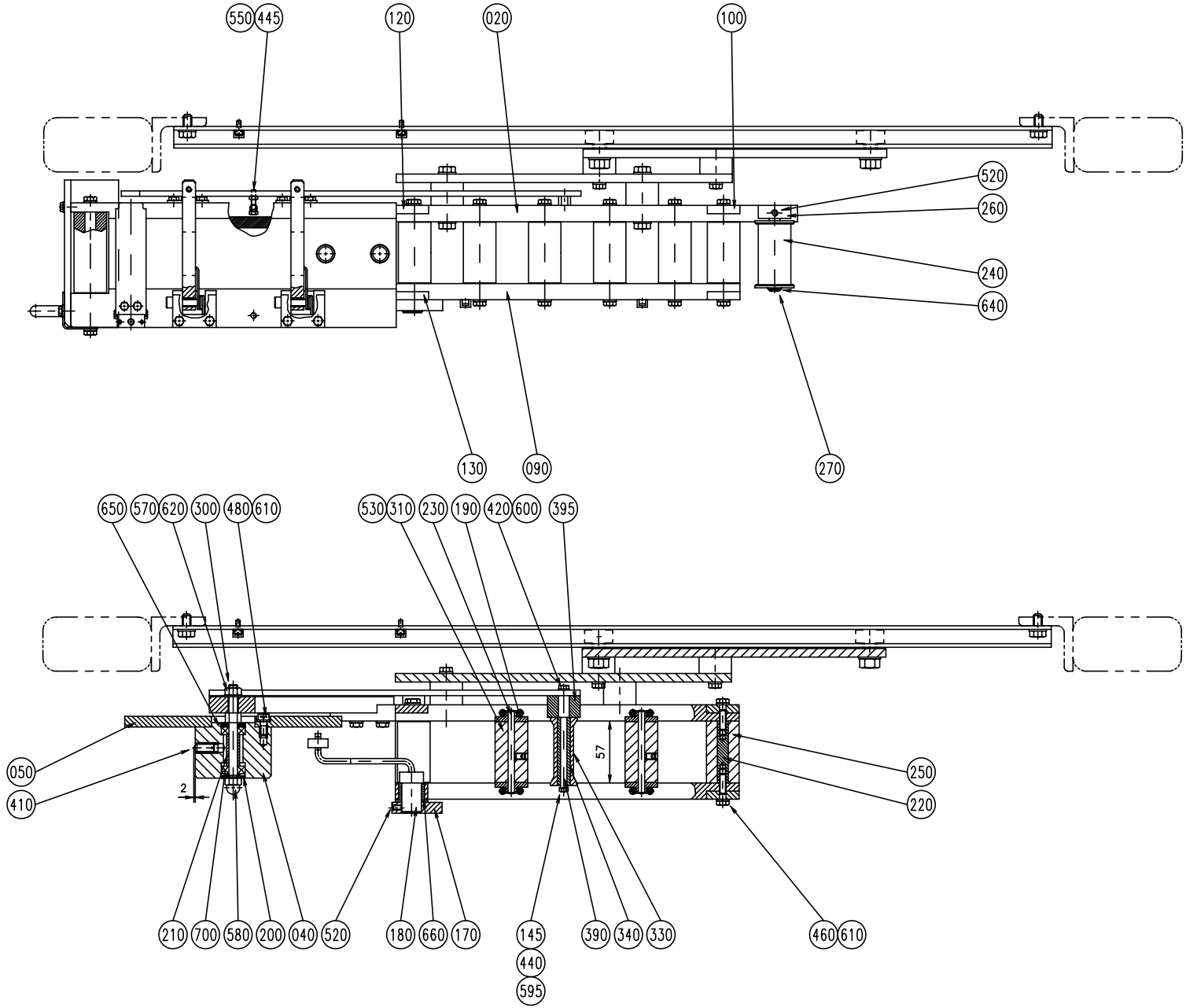

S-1095894-2
ECN 70338

Pos	Part No	SP	UN	Qty	Description	Page No
-						
000	**C-1095894-0101**	**-**		**1**	**MAGAZINE PATCH**	
001	C-1095895-010V	-		1	SPLICING DEVICE	173
002	C-1095924-010V	-		1	GUIDE PATCH	181
010	1129225	-		1	BEAM	
020	1129223	-		1	BEAM	
030	1285481	-		1	LABEL	
040	546256	-		1	BOBBIN HOLDER	
050	556539	-		1	BRAKE DISC	
060	546290	-		1	BEAM	
070	546291	-		1	BRACKET	
090	1129224	-		1	BEAM	
100	546294	-		2	BEAM	
110	1129226	-		1	BEAM	
120	1260379	-		1	BEAM	
130	1129227	-		1	POST	
140	1129450	-		1	ARM	
145	2033-0013	-		1	WASHER	
150	234844	J		1	WHEEL	
160	1140632	-		12	POST	
170	533972	-		1	INDICATOR CURVE	
180	1103845	-		1	ARM	
190	534497	-		6	SPACER	
200	538726	-		2	WASHER	
210	538740-0003	-		1	SPACER	
220	546298	-		8	SHAFT	
230	546299	-		3	SHAFT	
240	546300	D		1	ROLL	
250	546301	D		6	ROLL	
260	1129495	-		1	BLOCKING PIECE	
270	546303	-		1	SHAFT	
290	546305	-		1	SHEET	
300	546306	-		1	SHAFT	
310	546307	D		3	ROLL	
330	547745	D		1	ROLL	
340	547746	D		1	ROLL	
370	556541	-		1	SCREW	
380	556542	-		1	PIN	
390	1129451	-		1	SHAFT	
395	556544	-		1	SPACER	
400	90044-0104	R		1	PROX.SWITCH IFM IN 3002	
410	90287-0009	-		1	SPRINGLOADED SCREW	
415	311411-0138	-		2	SPLIT PIN SP1,6X12RFR	
420	312105-0327	-		1	SCREW ISO 4017 M5X12A280	
430	312105-0339	-		2	SCREW O4014 M5X40A280	
440	312105-0287	-		1	SCREW O4017 M4X8A280	
445	312105-0295	-		1	SCREW O4017 M4X20A280	
450	312105-0370	-		8	SCREW O4017 M6X20A280	
460	312105-0372	-		20	SCREW ISO 4017 M6X25A280	
470	312105-0376	-		2	SCREW O4017 M6X35A280	
480	312115-0368	-		2	SCREW O4762 M6X16A280	
500	312125-0230	-		3	SLOTTED HEMCS3X20RFR	
505	312125-0289	-		2	SLOTTED HEMCS4X10RFR	
510	90287-0069	-		1	SCREW	
520	312318-0323	-		2	STOP SCREW SK6SS5X8RFR	
530	312318-0364	-		5	STOP SCREW SK6SS6X10RFR	
540	312605-0310	-		4	NUT M6M3RFR	
550	312605-0312	-		1	NUT M6M4 STAINLESS	
555	312605-0314	-		4	NUT M6M5RFR	
560	312605-0316	-		4	NUT M6M6 A280 STAINLESS	
570	312605-0318	-		3	NUT M6M8RFR	
580	312705-0318	-		1	CAP NUT MHM 8 A2	
590	315105-0124	-		4	WASHER BRB3,2X6RFR	
595	315105-0136	-		1	WASHER BRB4,3X8RFR	
600	315105-0146	-		5	WASHER BRB5,3X10RFR	
610	315105-0153	-		30	WASHER BRB6,4X12RFR	
620	315105-0165	-		5	WASHER BRB8,4X16RFR	
640	315750-0107	-		1	CIRCLIP SGA10	
650	315753-0117	-		1	CIRCLIP GH 22 RFR	
660	321111-0274	D		1	FLANGE BUS 18E7X18	
670	321116-0095	-		1	BUSHING 8E7/12X6	
700	321300-0098	M		2	BALL BEARISKF608	
750	352113-0205	-		2	ANCHOR	
770	1279834	D		1	BOLT	
780	90335-0081	D		1	SPRING	

GUIDE PATCH

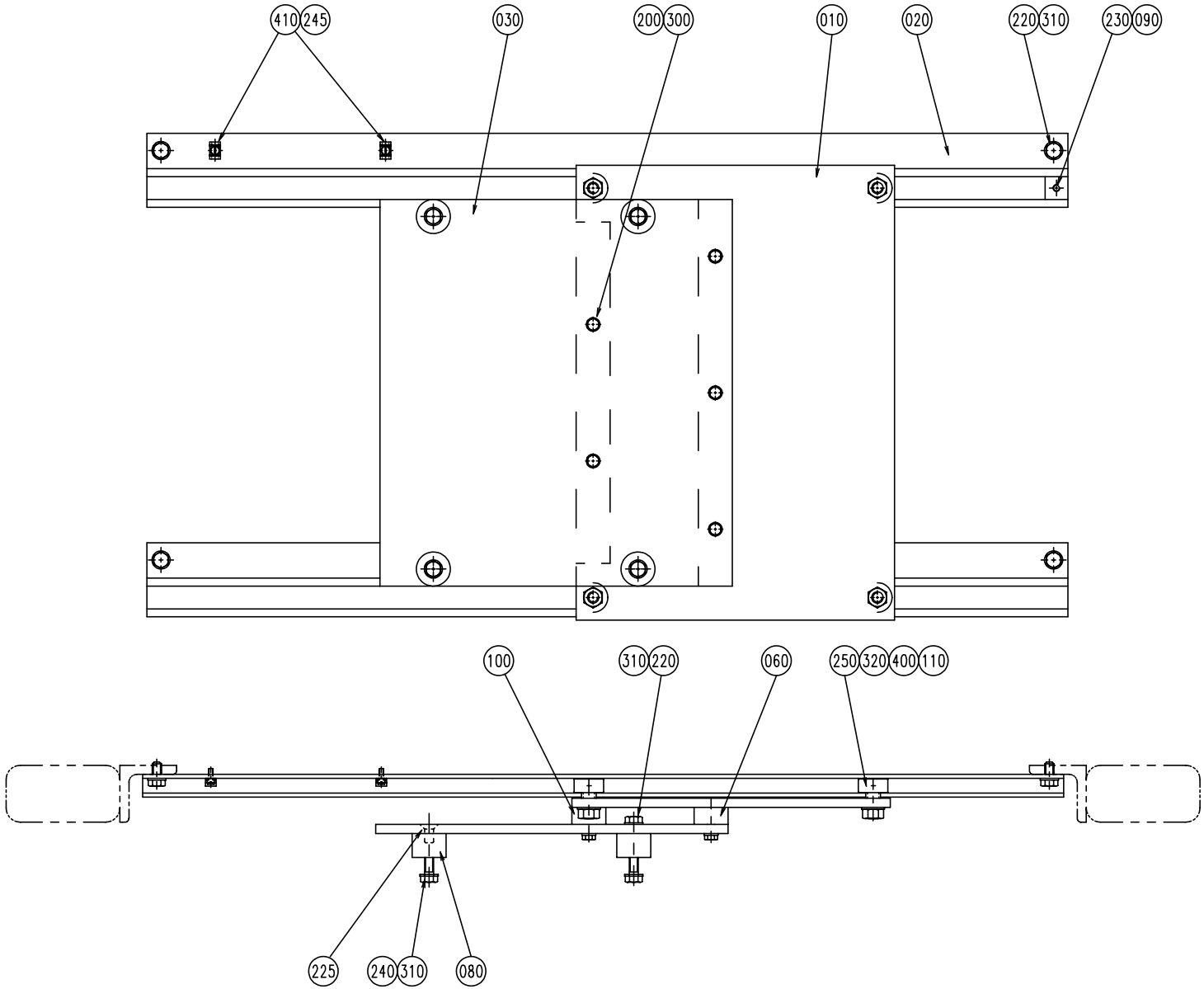

S-1095924-1
ECN 70338

Pos	Part No	SP	UN	Qty	Description	Page No
-						
000	**C-1095924-0101**	**-**		**1**	**GUIDE PATCH**	
010	1129240	-		1	SHEET	
020	1129241	-		2	STEERING	
030	1129454	-		1	SHEET	
060	1129462	-		1	SPACER	
080	1129242	-		4	SPACER	
090	1129245	-		2	STOP	
100	1129461	-		1	SPACER	
110	1140626	-		4	SPACER	
200	312105-0374	-		6	SCREW O4017 M6X30A280	
220	312105-0449	-		6	SCREW O4017 M8X16A280	
225	312155-0449	-		2	SCREW MF6S8X16RFR	
230	312318-0366	-		2	STOP SCREW SK6SS6X12RFR	
240	312105-0453	-		4	SCREW O4017 M8X25A280	
245	312125-0289	-		2	SLOTTED HEMCS4X10RFR	
250	312630-0320	-		4	NUT M6M10X1FZB	
300	315105-0153	-		6	WASHER BRB6,4X12RFR	
310	315105-0165	-		10	WASHER BRB8,4X16RFR	
320	315105-0173	-		4	WASHER BRB10,5X22RFR	
400	321582-0150	C		4	CURVE ROLLKR26PP	
410	352113-0205	-		2	ANCHOR	

Pos	Part No	SP	UN	Qty	Description	Page No

TAB TURNING DEVICE

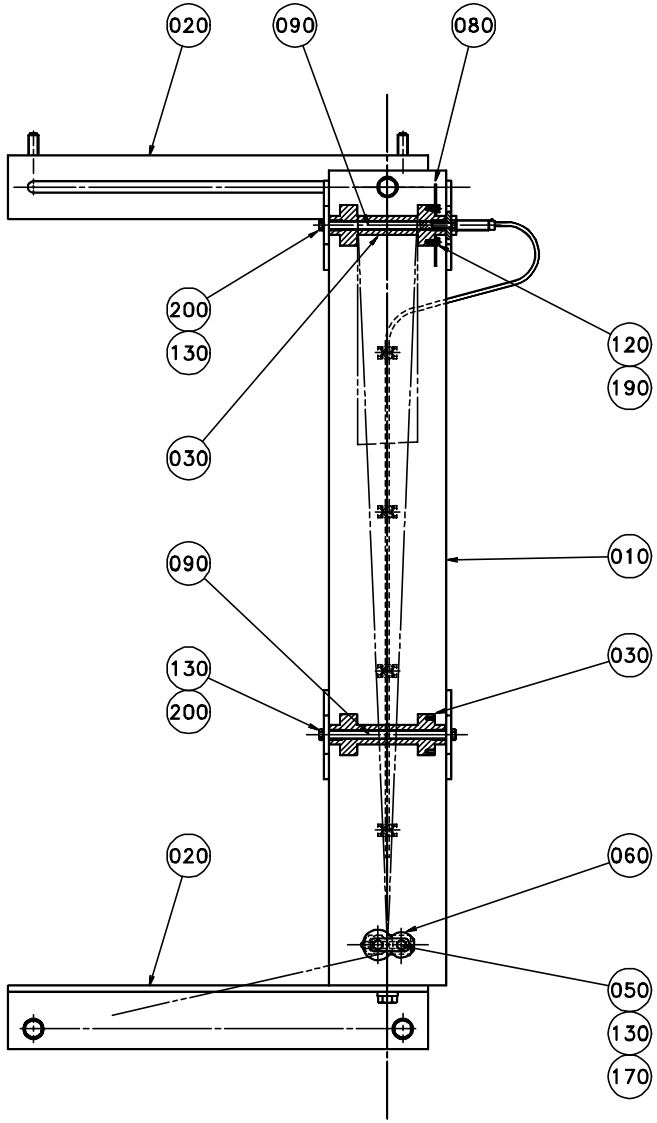

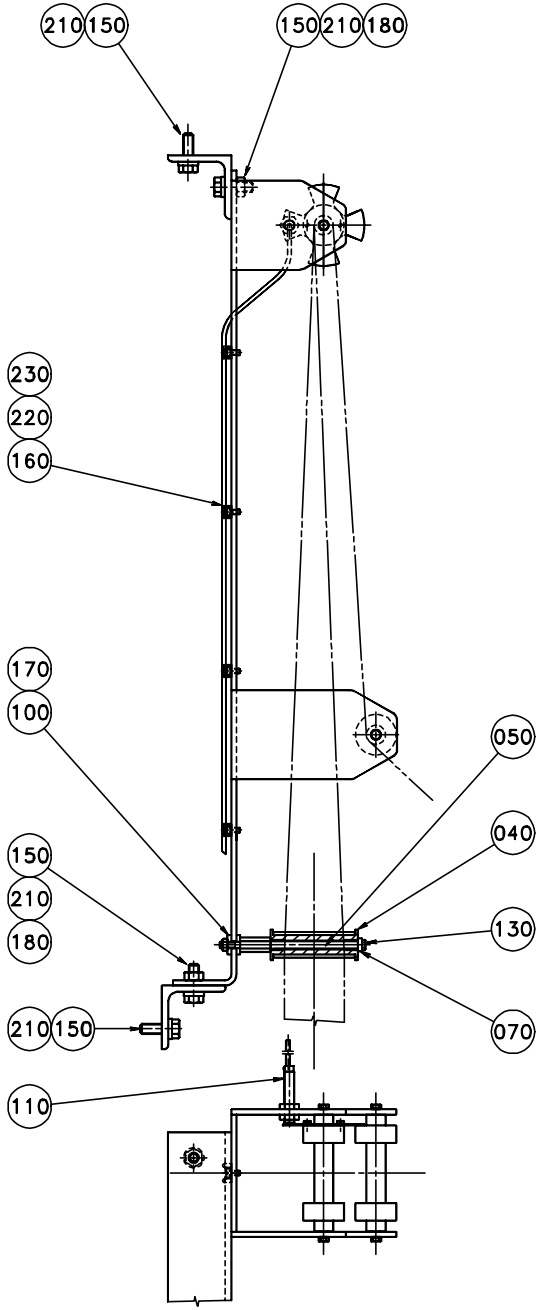

S-1334066-1
ECN 71157

Pos	Part No	SP	UN	Qty	Description	Page No
-						
HOLE45 or HOLE50 or HOLE85						
000	**C-1334066-0101**	**-**		**1**	**TAB TURNING DEVICE**	
030	1317669-0005	M		2	ROLLER	
HOLE71						
000	**C-1334066-0102**	**-**		**1**	**TAB TURNING DEVICE**	
030	1317669-0004	M		2	ROLLER	
Common parts						
010	1317670	-		1	BRACKET	
020	1140817	-		2	BRACKET	
040	1317671	D		1	ROLLER	
050	1317672	M		2	AXLE PIN	
060	1140727	D		1	ROLLER	
070	1317673	-		1	PLATE	
080	1317674	D		1	FLAG	
090	1317675	M		2	AXLE PIN	
100	1317676	-		2	PLATE	
110	90044-0145	R		1	INDUCTIVE SWITCH	
120	90287-0151	-		2	SCREW	
130	312105-0291	-		6	SCREW M6S ISO 4017 M4X12 A280	
150	312105-0453	-		6	SCREW M6S ISO 4017 M8X25 A280	
160	312125-0287	-		4	SLOTTED CHEESE HEAD ISO 1207 M4X8 RFR	
170	312605-0314	-		2	NUT,HEXAGON,M6M5 Stainless	
180	312605-0318	-		2	NUTS,HEXAGON,M8	
190	315105-0124	-		2	WASHERS,PLAIN ROUND 3,2X6	
200	315105-0136	-		4	WASHERS,PLAIN ROUND 4,3X8	
210	315115-0165	-		6	WASHER TBRB8 4x16 Stainless	
220	352113-0102	-		4	RIBBON CLAMP	
230	352113-0205	-		4	ANCHOR TM2S8-C100	

Pos	Part No	SP	UN	Qty	Description	Page No

PATCH TURNING DEVICE

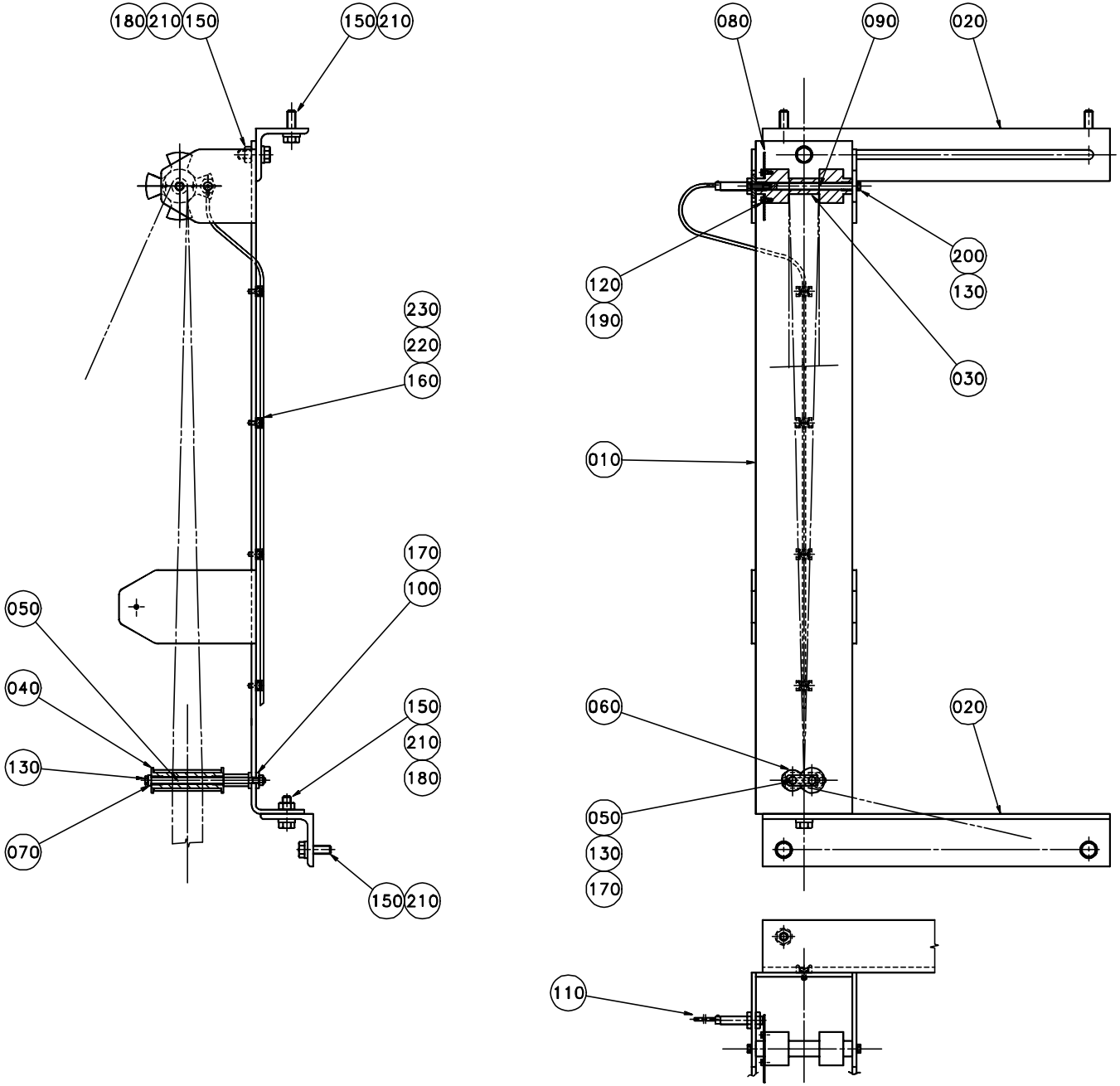

S-1334065-1
ECN 71157

Pos	Part No	SP	UN	Qty	Description	Page No
HOLE50 or HOLE71						
000	**C-1334065-0101**	**-**		**1**	**PATCH TURNING DEVICE**	
030	1317669-0001	M		1	ROLLER	
HOLE45 or HOLE85						
000	**C-1334065-0102**	**-**		**1**	**PATCH TURNING DEVICE**	
030	1317669-0002	M		1	ROLLER	
Common parts						
010	1317670	-		1	BRACKET	
020	1140817	-		2	BRACKET	
040	1317671	D		1	ROLLER	
050	1317672	M		2	AXLE PIN	
060	1140727	D		1	ROLLER	
070	1317673	-		1	PLATE	
080	1317674	D		1	FLAG	
090	1317675	M		1	AXLE PIN	
100	1317676	-		2	PLATE	
110	90044-0145	R		1	INDUCTIVE SWITCH	
120	90287-0151	-		2	SCREW	
130	312105-0291	-		4	SCREW M6S ISO 4017 M4X12 A280	
150	312105-0453	-		6	SCREW M6S ISO 4017 M8X25 A280	
160	312125-0287	-		4	SLOTTED CHEESE HEAD ISO 1207 M4X8 RFR	
170	312605-0314	-		2	NUT,HEXAGON,M6M5 Stainless	
180	312605-0318	-		2	NUTS,HEXAGON,M8	
190	315105-0124	-		2	WASHERS,PLAIN ROUND 3,2X6	
200	315105-0136	-		2	WASHERS,PLAIN ROUND 4,3X8	
210	315115-0165	-		6	WASHER TBRB8 4x16 Stainless	
220	352113-0102	-		4	RIBBON CLAMP	
230	352113-0205	-		4	ANCHOR TM2S8-C100	

Pos	Part No	SP	UN	Qty	Description	Page No

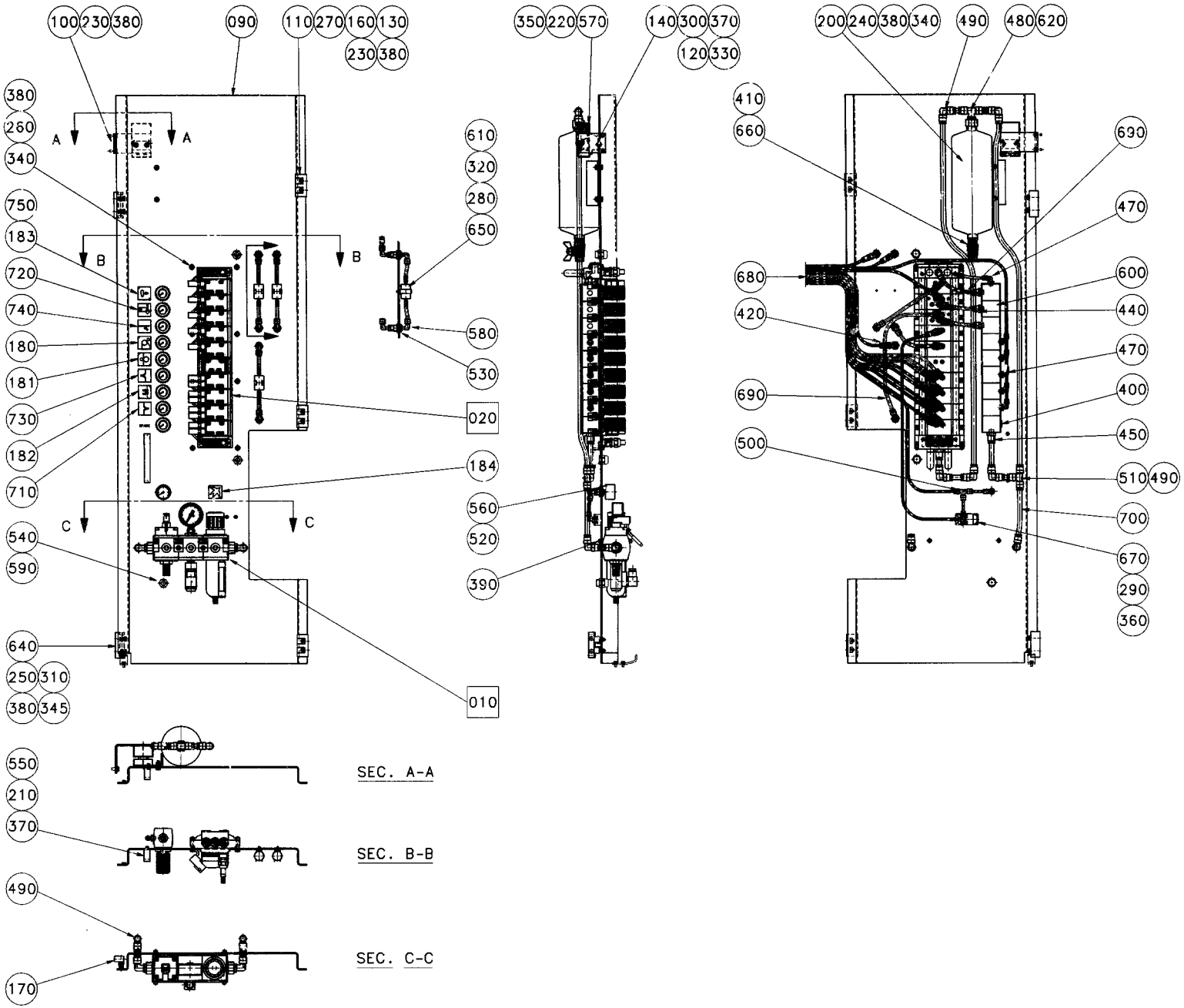
100 230 380
090
110 270 160 130
230 380
350 220 570
140 300 370
120 330
200 240 380 340
490
480 620
380
260
340
750
183
720
740
180
181
730
182
710
540
590
640
250 310
380 345
610
320
280
650
580
530
020
184
560
520
390
410
660
680
420
690
500
690
470
600
440
470
400
450
510 490
700
670
290
360
A
B
C
010
550
210
370
490
170
SEC. A-A
SEC. B-B
SEC. C-C

Pos	Part No	SP	UN	Qty	Description	Page No
-						
000	**C-1185049-010V**	**-**		**1**	**VALVE PANEL**	
010	C-1185047-010V	-		1	AIR INLET GROUP	189
020	C-1185048-010V	-		1	VALVE GROUP	191
050	1140883	-		1	PNEUMATIC DIAGRAM	
090	984082	-		1	PLATE	
100	1082741	-		1	HOLDER	
110	1035792	-		3	E-HINGE	
120	1129042	-		1	KEY	
130	988685	-		3	PIN	
140	1036563	-		1	WASHER	
160	1129770	-		6	BLOCKING PIECE	
170	1140538	-		2	BLOCKING PIECE	
180	359307-0012	-		1	SIGN"PRESS.ROLL.TENS.DEV,	
181	359307-0011	-		1	SIGN"PRESS.ROLL.DR.MOTOR"	
182	1145219	-		1	SIGN	
183	979426	-		1	SIGN	
184	273458	-		1	LABEL (AIR)	
200	907535	-		1	RESERVOIR	
210	312115-0287	-		2	SCREW O4762 M4X8A280	
220	312115-0329	-		2	SCREW O4762 M5X16A280	
230	312105-0366	-		6	SCREW O4017 M6X12A280	
240	312105-0368	-		2	SCREW O4017 M6X16A280	
250	312105-0376	-		4	SCREW O4017 M6X35A280	
260	312109-0376	-		8	SCREW 6X35 H RFR	
270	312115-0327	-		6	SCREW O4762 M5X12A280	
280	312125-0222	-		3	SLOTTED HEMCS3X8RFR	
290	312125-0230	-		2	SLOTTED HEMCS3X20RFR	
300	312105-0291	-		2	SCREW O4017 M4X12A280	
310	312155-0289	-		4	SCREW MF6S4X10RFR	
320	312605-0310	-		3	NUT M6M3RFR	
330	312605-0312	-		2	NUT M6M4 STAINLESS	
340	312605-0316	-		10	NUT M6M6 A280 STAINLESS	
345	312705-0312	-		4	CAP NUT MHM 4 A2	
350	315105-0146	-		4	WASHER BRB5,3X10RFR	
360	315105-0124	-		2	WASHER BRB3,2X6RFR	
370	315105-0136	-		4	WASHER BRB4,3X8RFR	
380	315105-0153	-		28	WASHER BRB6,4X12RFR	
390	312605-0314	-		2	NUT M6M5RFR	
400	342713-0210	-		1	BLIND PLUG	
410	342700-0205	-		1	NIPPLE RNA1/4"-1/2"	
420	342716-0203	-		3	REDUCER 6-8	
440	342722-0205	-		3	PIPE COUPLING D=8-R 1/4"	
450	342722-0209	-		1	STRAIGHT COUPL,FOR PLASTIC TUBE 12-G1/4"	
470	342732-0103	-		6	V-COUPL,ADJUST,FOR PLASTIC TUBE 6-G1/4"	
480	342742-0110	-		1	T-COUPLING,ADJUST,F.PLAST.TUBE 12-G3/8"	
490	342735-0109	-		7	V-JUNCTION COUPLING,FOR PLASTIC TUBE 12	
500	342748-0102	-		1	T-JUNCTION COUPLING,FOR PLASTIC TUBE 6	
510	342748-0109	-		1	T-JUNCTION COUPLING,FOR PLASTIC TUBE 12	
520	342767-0100	-		1	BULKHEAD LR1/8	
530	342768-0103	-		6	BULKHEAD LD=8	
540	352103-0106	-		3	CABLE GLAND ST 11	
550	90017-0017	-		1	HANDLE	
560	90043-0080	-		1	PRESSURE GAUGE	
570	90044-0139	R		1	KEY SAFETY SWITCH	
580	90055-0118	-		12	ELBOW PIPE JOINT	
590	90099-0117	-		3	NUT PR18,6 (PG11)	
600	90113-0095	-		9	PRESSURE REGULATOR	
610	90165-0019	-		3	CLIP	
620	90224-0229	-		1	SLEEVE	
640	90237-0070	-		2	LOCK	
650	90277-0035	J		3	AIR-PRESSURE FILTER	
660	90187-0088	-		1	BALL VALVE 1/4" BRASS	
670	90364-0020	K		1	VACUUMPUMP X10	
680	90166-0081	-	M	48	HOSE 6/4	
690	90166-0013	-	M	60	HOSE 8/6 PA 11/12 BLUE	
700	90166-0068	-	M	3	HOSE 9/12	
710	359307-0002	-		1	SIGN"TAB C'JAW"	
720	359307-0010	-		1	SIGN "WASTE BLOWING"	
730	359307-0004	-		1	SIGN"PATCH C'JAW"	
740	359307-0007	-		1	SIGN"TAB FOLDING"	
750	90144-0043	-		X	TAPE	

AIR INLET GROUP

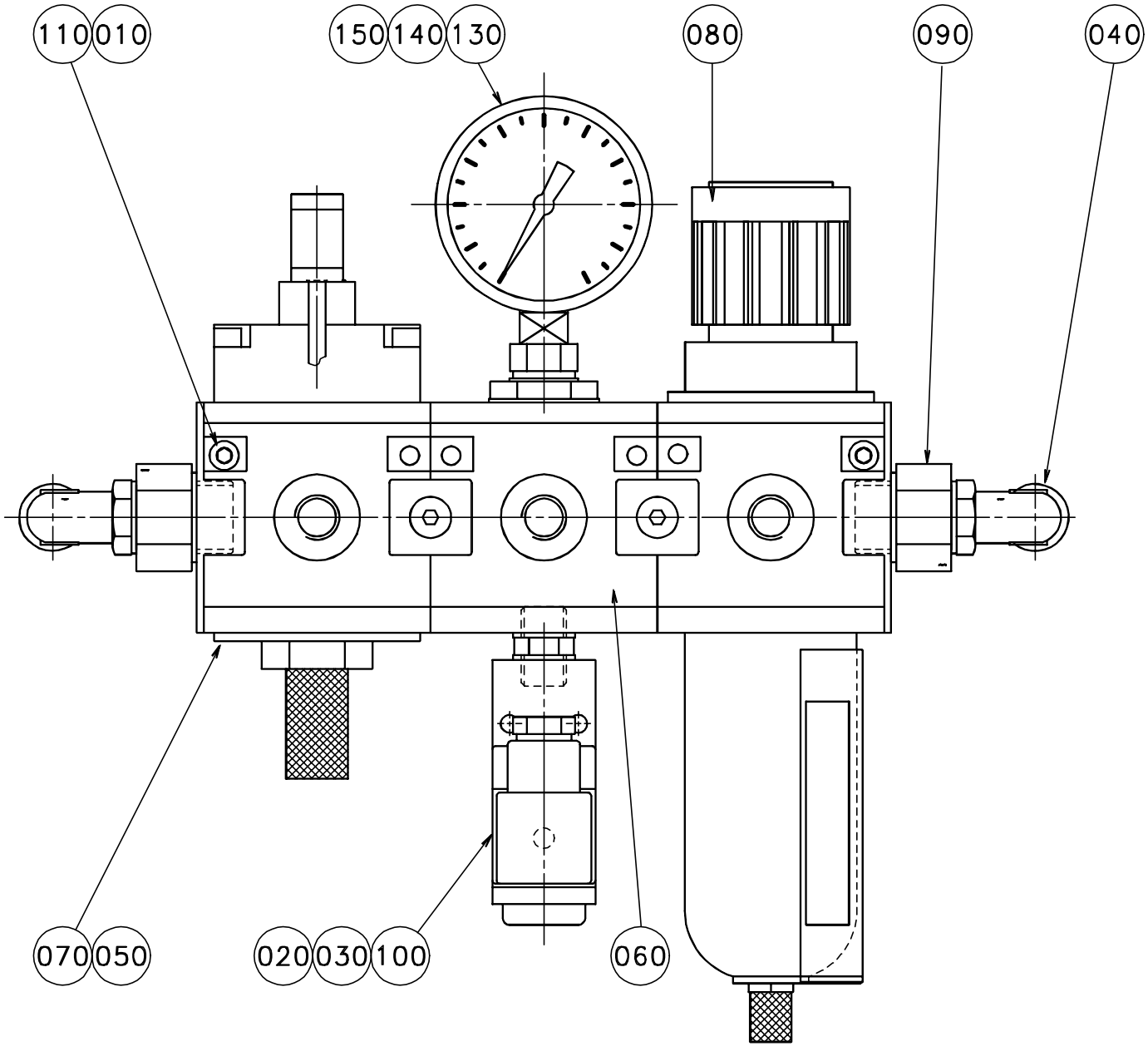

S-1185047-1
ECN 71157

Pos	Part No	SP	UN	Qty	Description	Page No
-						
000	**C-1185047-0101**	**-**		**1**	**AIR INLET GROUP**	
010	315101-0146	-		2	WASHER BRB5,3X10FZB	
020	315233-0110	-		2	PLAIN ROUND,NYLON R1/4"	
030	342700-0110	-		1	NIPPLES,HEXAGON,EXT.G-THREAD G1/4"-G1/4"	
040	342732-0110	-		2	V-COUPL,ADJUST,FOR PLASTIC TUBE 12-G3/8"	
050	90042-0538	-		1	PNEUMATICS,VALVES,PILOT	
060	90113-0375	-		1	PRESSURE DISTRIBUTION	
070	90113-0423	-		1	HIGH SPEED VENTING VALVE	
080	90113-0072	D		1	PRESSURE REGULATOR	
090	90224-0229	-		2	SLEEVE	
100	90274-0056	R		1	PRESSURE SWITCH	
110	90287-0212	-		2	SCREW	
130	90224-0090	-		1	MUFF	
140	90224-0122	-		1	SLEEVE	
150	90043-0020	-		1	PRESSURE GAUGE	

Pos	Part No	SP	UN	Qty	Description	Page No

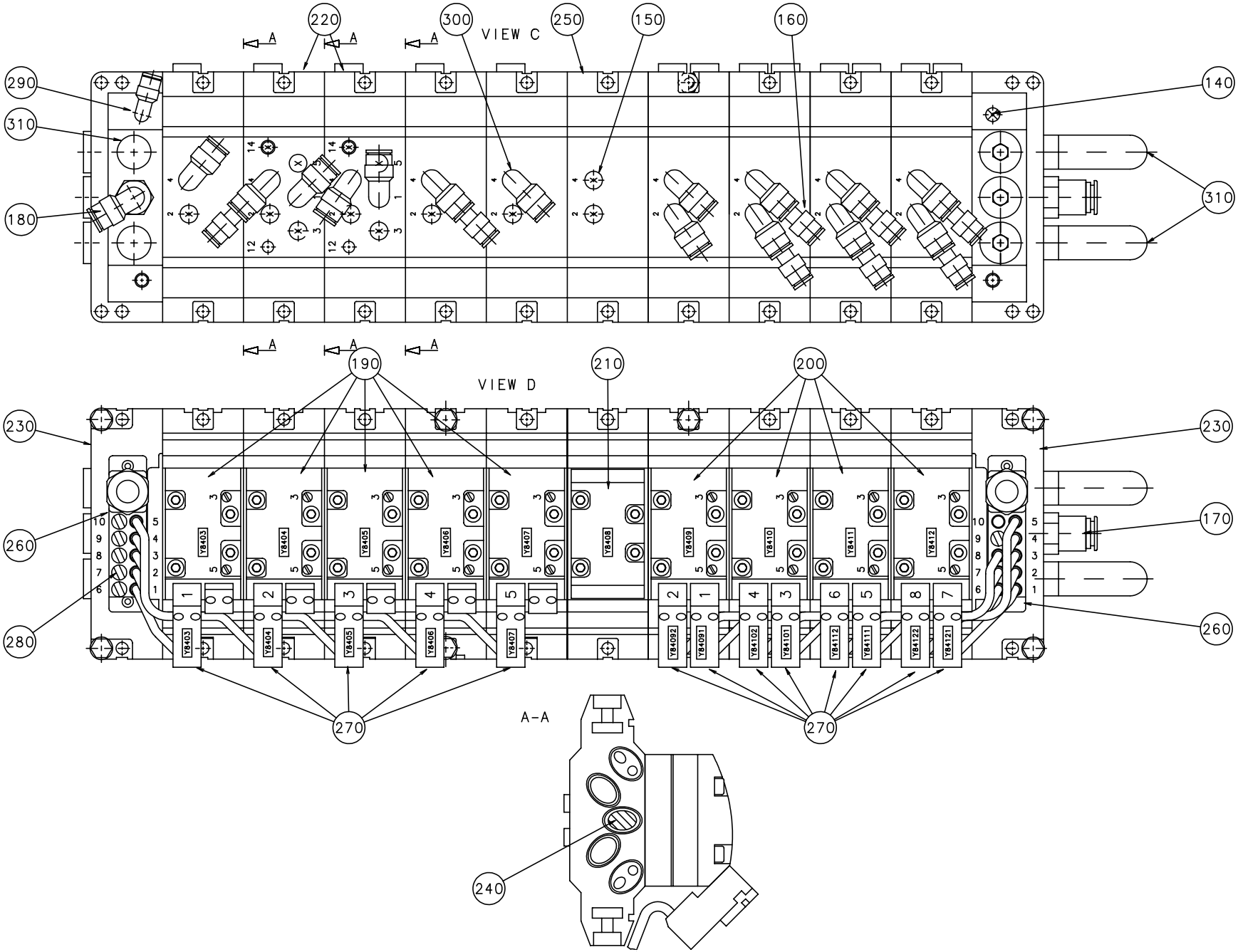

S-1185048-1
ECN 70956

Pos	Part No	SP	UN	Qty	Description	Page No
-						
000	**C-1185048-0101**	**-**		**1**	**VALVE GROUP**	
140	342715-0102	-		1	BLINDPLUG,Plast,FOR QUICK COUPLING D=6mm	
150	342715-0103	-		11	BLIND PLUG,FOR QUICK COUPLING D=8	
160	342716-0203	-		8	REDUCER,FOR PLASTIC TUBE 6-8	
170	342722-0210	-		1	STRAIGHT COUPL,FOR PLASTIC TUBE 12-G3/8"	
180	342732-0105	-		1	ELBOW PIPE D8-R3/8"	
190	90042-0215	-		5	PNEUMATICS,VALVES	
200	90042-0221	-		4	PNEUMATICS,VALVES	
210	90042-0519	-		1	VALVES,ACCESSORIES,BLANKING PLATE	
220	90042-0520	-		2	VALVES,PLATES	
230	90042-0522	-		2	VALVES,PLATES	
240	90042-0528	-		3	VALVES,ACCESSORIES,BLANKING KIT	
250	90042-0532	-		8	VALVES,PLATES	
260	90042-0535	-		2	VALVES,ACCESSORIES,TERMINAL MODULE	
270	90042-0539	-		13	PNEUMATICS,VALVES,PILOT	
280	90042-0550	-		6	VALVES,ACCESSORIES,PROTECTION PLUG	
290	90055-0217	-		1	ELBOW-90 COUPLING,STEM,FPT 6-6	
300	90055-0118	-		15	ELBOW PIPE JOINT	
310	90328-0024	-		4	SILENCERS,THREADED CONNECTION G3/8"	

Pos	Part No	SP	UN	Qty	Description	Page No


Tetra Pak

SPC

Spare Parts Catalogue

Part No	Description	Page No
1010814	ROLLER	75
1035792	E-HINGE	153
1035792	E-HINGE	155, 157, 159, 163, 165, 187
1035882	BENDING ROLLER	81, 83, 93
1036119	LEG	63
1036120	SLEEVE	63
1036220	SHAFT	93
1036227	BRACKET	59, 61
1036232	BRACKET	93
1036241	WASHER	67
1036304-0005	LOCKING ARM	157, 159
1036304-0019	LOCKING ARM	157, 159
1036304-0020	LOCKING ARM	155
1036563	WASHER	155, 165, 187
1036977	HOLDER	153
1037762	PIN	59, 61
1038865	SPACER DISC	11, 13, 15
1041992	RIM	67
1082741	HOLDER	187
1082765	PHOTOCELL BRACKET	103
1082861	ARM	75
1103295	LOCK PLATE	109
1103845	ARM	177, 179
111543	GUIDE CONE	19, 105
1129042	KEY	155, 165, 187
1129221	SPLICING TABLE	173
1129222	BOBBIN HOLDER	169, 171
1129223	BEAM	169, 171, 177, 179
1129224	BEAM	169, 171, 177, 179
1129225	BEAM	177, 179
1129226	BEAM	169, 171, 177, 179
1129227	POST	177, 179
1129230	BEAM	169, 171
1129231	CANTILEVER	169, 171
1129232	ROLL	169, 171
1129233	SHAFT	169, 171
1129234	ROLL	169, 171, 173
1129235	SHAFT	169, 171, 173
1129237	ROLL	169, 171
1129238	KNIFE	173
1129239	KNIFE HOLDER	173
1129240	SHEET	175, 181
1129241	STEERING	175, 181
1129242	SPACER	175, 181
1129245	STOP	175, 181
1129246	ROLL	169, 171
1129252	LOCK GRIP	173
1129274	GUIDE LUG	155, 157, 159
1129450	ARM	169, 171, 177, 179
1129451	SHAFT	177, 179
1129452	SHAFT	169, 171
1129454	SHEET	175, 181
1129461	SPACER	175, 181
1129462	SPACER	175, 181
1129495	BLOCKING PIECE	169, 171, 177, 179
1129510	ARM	169, 171
1129624	AXLE SUPPORT	81, 83
1129626	AXLE SUPPORT	85
1129628	BRACKET	87
1129629	BRACKET	87
1129630	BEARING SEAT	81, 83
1129767	SCREW	153
1129767	SCREW	151, 155, 157, 159, 161, 163
1129770	BLOCKING PIECE	153
1129770	BLOCKING PIECE	155, 157, 159, 163, 165, 187
1129780	ROLL	169, 171
1129867	SHEET	25, 27
1129905	SHAFT	77
1129906	PIN	77, 95
1129907	LEVER	77, 95
1129908	BRACKET	77
1129909	BRACKET	77
1129930	DOOR	163
1129931	DOOR	153
1129932	FRAME	153
1129951	BENDING ROLLER	91
1129952	BRACKET	91
1129971	BRACKET	161
1140016	PLATE	77, 95
1140045	FRAME	109
1140046	RAIL	109
1140047	WASTE BOX	109
1140048	LOCK PLATE	109
1140049	COVER	109
1140053	SPACER	25, 27
1140055	RING	81

Part No	Description	Page No
1140131	FLANGE	99
1140131	FLANGE	97
1140132	ECCENTRIC	93, 97
1140133	AXLE PIN	91
1140134	PLATE	97
1140135	ROLLER	85, 97
1140136	BRACKET	97
1140137	SHAFT	97
1140174	BEARING HOUSING	77, 95
1140184	BRACKET	95
1140185	SHAFT	95
1140186	BRACKET	95
1140187	WHEEL	95
1140209	GUIDE	101
1140210	BRACKET	101
1140211	PHOTOCELL BRACKET	101, 103
1140212	GUIDE	103
1140213	BRACKET	103
1140291	PUNCH HOLE 50	113
1140292	DIE HOLE 50	113
1140293	SPACER	113
1140294-0002	PIN DISTANCE 36.5	113
1140314	STOP LUG	25, 27
1140387	SHIM	113
1140415	GLASS PANE	153
1140415	GLASS PANE	155
1140416	GLASS PANE	157
1140427	BRACKET	59, 61
1140428	FRAME	59, 61
1140499	PLATE	111
1140500	ANGLE BRACKET	111
1140501	PLATE	111
1140503	ADJUSTMENT BRACKET	111
1140504	CONNECTION PLATE	111
1140509	DOOR	165
1140537	HOLDER	165
1140538	BLOCKING PIECE	165, 187
1140545	TEE BRACKET	125, 141
1140546	BRACKET	125, 141
1140547	SHAFT	125, 135, 141
1140548	FLANGED BEARING BUSHING	125, 141
1140551	SHAFT	125, 141
1140626	SPACER	175, 181
1140632	POST	169, 171, 177, 179
1140667	INDUCTOR	129
1140669	PLATE	59, 61
1140727	ROLLER	183, 185
1140738	BRACKET	139
1140739	BRACKET	139
1140771	COVERING PLATE	151
1140772	COVERING PLATE	151
1140773	COVERING PLATE	151
1140774	COVERING PLATE	151
1140775	COVERING PLATE	151
1140776	COVERING PLATE	151
1140777	COVERING PLATE	151
1140817	BRACKET	183, 185
1140883	PNEUMATIC DIAGRAM	187
1140889	CABLE	129
1140890	TRANSFORMER BRACKET	129
1140909	CHECKER PLATE	67
1140912	BRACKET	141
1140916	PLATFORM	67
1140957	PROFILE	67
1140964	RIM	67
1140965	PROFILE	67
1140966	RAILING	67
1140967	PLATFORM	67
1140968	PLATFORM	67
1140969	RIM	67
1140970	PROFILE	67
1140971	CHECKER PLATE	67
1145219	SIGN	187
1145233	PUNCH HOLE 45	113
1145332	KNIFE-FLAT	125, 141
1145333	KNIFE-WINDOW	125, 141
1147009	SPECIAL WASHER	131, 147
1147010	BUSHING	131, 147
1147012	PHOTOCELL BRACKET	119
1147013	BRACKET	119
1147015	BRACKET	17
1147049	BRACKET	115
1147050	SCREW	115
1147051	TOOTHED PULLEY	115
1147070	PLATE	67
1147117	RAIL BRACKET	17

Part No	Description	Page No
1255035	ECCENTRIC	75
1255499	CHECKER PLATE	67
1255500	CHECKER PLATE	67
1255579	BRACKET	105
1255631	ECCENTRIC BUSHING	93
1255682	DOOR	155
1255683	DOOR	161
1255684	HOLDER	155
1255685	DOOR	157
1255686	DOOR	159
1255687	BRACKET	121
1255692-0010	CABLE	47, 49
1255697	BRACKET	109
1255834	HANDLE	173
1255835	PROTECTION	173
1255951	CABINET	25, 27
1255952	BOX FOR TPIH	25, 27
1255955	FRAME	31
1260201	FRAME	165
1260239	ANGLE BRACKET	111
1260241	MOUNTING PLATE	29
1260242	SWING FRAME	31
1260329	BRACKET	75
1260379	BEAM	177, 179
1260387	PHOTOCELL BRACKET	111
1260388	PLATE	141
1260389	CASTING APPLICATOR	125, 141
1260391	BRACKET	125, 135
1260392	CASTING APPLICATOR	135
1260393-0002	SEALING PLATE	125, 135
1260395	PLATE	125, 141
1260396	SATTBUS CABLE	29
1260397	BRACKET	131
1260398	BRACKET	147
1260399	CLAMP	125, 135, 141
1260400	COVER	123
1260402	BRACKET	123
1260403	ROD	153
1260404	PLATE	125, 135
1260405	PLATE	129
1260406	PLATE	141
1260407	PLATE	145
1260413	BRACKET	89
1260422	CLAMP	125, 135, 141
1260423	STUD SCREW	29
1260431	PLATE	31
1260438	TOUCH GUARD	31
1260439	STUD SCREW	31
1260440	BRACKET	31
1260522	PHOTOCELL	121
1260523	CABLE	121
1260551	TAB HEATER HEAD	141
1260552	ROD	153
1260561	HOLDER	25, 27
1260642	LEVER	93
1260643	LEVER	93
1260644	LEVER	93
1260648	BUSHING	93
1260649	PAPER GUIDE	93
1260651	INDUCTOR	129
1260814	CONNECTION BOX	51, 53
1260815	CONNECTION BOX	55
1260901	INSERT	25, 27
1260902	INSERT	47, 49
1279484	SHIM	129, 145
1279485	PLATE	129, 145
1279828	SEALING STRIP	155
1279829	SEALING STRIP	157, 159
1279830	SEALING STRIP	161
1279831	COVER	31
1279832	PLATE	59, 61
1279833	RUBBER STRIP	59, 61
1279834	BOLT	169, 171, 177, 179
1282599	INSERT	47, 49
1282600	INSERT	47, 49
1282787	INSERT	47, 49
1282788	INSERT	69
1285481	LABEL	177, 179
1285482	LABEL	169, 171
1296136	TOUCH GUARD	29
1296288	FUSE BOARD	153
1296298	BUSHING	129, 145
1296300	WASHER	129, 145
1296752	BRACKET	125, 135, 141
1296753	FLAG	125, 135, 141
1296794	PUNCH HOLE71	113

Part No	Description	Page No
1296871	WHEEL	77
1296872	DIE HOLE 71	113
1296875	OPENING SPECIFICATION	149
1296876	OPENING SPECIFICATION	149
1317669-0001	ROLLER	185
1317669-0002	ROLLER	185
1317669-0004	ROLLER	183
1317669-0005	ROLLER	183
1317670	BRACKET	183, 185
1317671	ROLLER	183, 185
1317672	AXLE PIN	183, 185
1317673	PLATE	183, 185
1317674	FLAG	183, 185
1317675	AXLE PIN	183, 185
1317676	PLATE	183, 185
1317753	AIR NOZZLE	17
1317754	BRACKET	17
1317755	PLATE	17
1317971	REINFORCEMENT	17
1317972	REINFORCEMENT	17
1334228	SHIM	17
1334230-0001	PLATE	17
1334230-0002	PLATE	17
1334230-0003	PLATE	17
1334534	WASTE PIPE	111
1334535	WASTE PIPE	109
1346162	PHOTOCELL BRACKET	121
1346219	REFLECTOR	121
1346283	COUNTER PLATE	145
1346521	HEATER	141
1346824	INSERT	25, 27
1350146	CONNECTION BOX	71
1350525	SEALING PLATE	141
1350526	SEALING PLATE	141
1350541	SEALING PLATE	141
1350785-0001	SHIM	125, 141
1350785-0002	SHIM	125, 141
1350785-0003	SHIM	125, 141
1350785-0004	SHIM	125, 141
2033-0013	WASHER	169, 171, 177, 179
23150	TRANFORMER 3PH,TP-165	29
234844	WHEEL	169, 171, 177, 179
23580	SHIFTER HANDLE	19, 105
23583	GUIDE FINGER	19, 105
23584	SCREW	19, 105
24351	BOW CLAMP	19, 105
24352	SHAFT	19, 105
24355	DOWEL	19, 105
24356	PIECE	19, 105
245210	BODY	19, 105
263150	BRACKET	77, 95
263152	SHAFT	77, 95
263153	NUT	77, 95
266710	WHEEL	77, 95
273458	LABEL (AIR)	187
28036	WASHER	109
28509	WASHER	129
294734	WASHER	109
311103-0267	PINS,STRAIGHT 4X10	129, 145
311103-0350	CYLINDRICACP M6 6X14 RFR	19, 105
311103-0351	PINS,STRAIGHT 6X16	125, 135, 141
311103-0351	CYLINDRICACP M6 6X16 RFR	95
311112-0205	PINS,SLOTTED TUBULAR SPRING PIN 3X10	125, 141
311112-0256	SLOTTED TURP 4X20 RFR	87
311112-0260	SLOTTED TURP 4X28 RFR	93
311112-0262	SLOTTED TURP 4X32 RFR	77, 95
311112-0377	SLOTTED TURP 8X24 RFR	59, 61, 73, 93, 95, 97
311411-0138	SPLIT PIN SP1,6X12RFR	75, 169, 171, 177, 179
311520-0329	BLANK RIVE2,4X8	31
312101-0343	SCREW M6S5X60FZB	129, 141
312101-0366	SCREW M6S6X12FZB	31
312105-0287	SCREW M6S ISO 4017 M4X8 A280	125, 135, 141
312105-0287	SCREW O4017 M4X8A280	89, 109, 169, 171, 173, 177, 179
312105-0291	SCREW M6S ISO 4017 M4X12 A280	17, 183, 185
312105-0291	SCREW O4017 M4X12A280	19, 101, 103, 105, 187
312105-0293	SCREW M6S ISO 4017 M4X16 A280	31
312105-0295	SCREW M6S ISO 4017 M4X20 A280	129
312105-0295	SCREW O4017 M4X20A280	165, 169, 171, 177, 179
312105-0323	SCREW O4017 M5X8A280	59, 61
312105-0325	SCREW M6S5X10 A2 80	119
312105-0327	SCREW M6S ISO 4017 M5X12 A280	17, 25, 27
312105-0327	SCREW ISO 4017 M5X12A280	109, 169, 171, 173, 177, 179
312105-0329	SCREW M6S ISO 4017 M5X16 A280	17
312105-0331	SCREW M6S ISO 4017 M5X20 A280	17
312105-0333	SCREW M6S ISO 4017 M5X25 A280	125, 135, 141
312105-0335	SCREW O4017 M5X30A280	173

Part No	Description	Page No
312105-0339	SCREW O4014 M5X40A280	169, 171, 177, 179
312105-0366	SCREW M6S ISO 4017 M6X12 A280	29
312105-0366	SCREW O4017 M6X12A280	57, 155, 187
312105-0368	SCREW O4017 M6X16A280	19, 81, 83, 85, 97, 101, 103, 105, 165, 187
312105-0370	SCREW O4017 M6X20A280	75, 87, 93, 101, 169, 171, 173, 177, 179
312105-0372	SCREW ISO 4017 M6X25A280	77, 81, 83, 95, 103, 169, 171, 177, 179
312105-0374	SCREW O4017 M6X30A280	165, 175, 181
312105-0376	SCREW O4017 M6X35A280	169, 171, 177, 179, 187
312105-0379	SCREW O4014 M6X45A280	105, 173
312105-0447	SCREW M6S ISO 4017 M8X12 A280	69, 111
312105-0449	SCREW M6S ISO 4017 M8X16 A280	17
312105-0449	SCREW ISO4017 M8X16 A280	105
312105-0449	SCREW O4017 M8X16A280	175, 181
312105-0451	SCREW M6S ISO 4017 8X20 A280	17
312105-0451	SCREW SO4017 8X20A280	93, 97, 109, 123
312105-0453	SCREW M6S ISO 4017 M8X25 A280	65, 113, 183, 185
312105-0453	SCREW O4017 M8X25A280	59, 61, 77, 93, 95, 175, 181
312105-0453	SCREW SO4017 8X25A280	119
312105-0455	SCREW M6S ISO 4017 M8X30 A280	17, 125, 135, 141
312105-0455	SCREW O4017 M8X30A280	73, 77, 87, 115
312105-0463	SCREW M6S ISO 4014 M8X60 A280	125, 135, 141
312105-0465	SCREW O4014 M8X70A280	93
312105-0495	SCREW 4017 M10X30A280	67
312105-0497	SCREW 4017 M10X35A280	67
312105-0640	SCREW 014 M16X100A280	11, 13, 15
312109-0374	SCREW M6S6X30HRFR	93, 131, 147
312109-0376	SCREW 6X35 H RFR	187
312109-0459	SCREW M6S ISO 4017 M8X40 A280	111
312109-0459	SCREW M6S8X40H A4 80	131, 147
312109-0460	SCREW	77, 95
312115-0222	SCREW MC6S ISO 4762 M3X8 A280	111, 137
312115-0226	SCREW MC6S ISO 4762 M3X12 A280	125, 135, 141
312115-0228	SCREW MC6S ISO 4762 M3X16 A280	111
312115-0287	SCREW MC6S ISO 4762 M4X8 A280	31, 121, 141
312115-0287	SCREW O4762 M4X8A280	173, 187
312115-0291	SCREW MC6S ISO 4762 M4X12 A280	17, 121, 125, 135, 141
312115-0293	SCREW MC6S ISO 4762 M4X16 A280	139
312115-0295	SCREW MC6S ISO 4762 M4X20 A280	113
312115-0295	SCREW O4762 M4X20A280	71, 165
312115-0323	SCREW MC6S ISO 4762 M5X8 A280	25, 27, 29
312115-0327	SCREW MC6S ISO 4762 M5X12 A280	29, 153
312115-0327	SCREW O4762 M5X12A280	59, 61, 93, 155, 157, 159, 161, 163, 165, 187
312115-0329	SCREW O4762 M5X16A280	95, 155, 165, 187
312115-0331	SCREW MC6S ISO 4762 M5X20 A280	17, 33, 129, 145
312115-0331	SCREW O4762 M5X20A280	51, 53, 55, 75
312115-0341	SCREW MC6S 5X50 A4 80	125, 135, 143
312115-0362	SCREW O4762 M6X8A280	51, 53, 55, 109, 151
312115-0366	SCREW MC6S ISO 4762 M6X12 A280	21, 29, 33, 111
312115-0366	SCREW O4762 M6X12A280	19, 77, 95, 105
312115-0368	SCREW O4762 M6X16A280	169, 171, 177, 179
312115-0372	SCREW MC6S ISO 4762 M6X25 A280	111
312115-0372	SCREW O4762 M6X25A280	77, 93
312115-0376	SCREW O4762 M6X35A280	87
312115-0379	SCREW O4762 M6X45A280	173
312115-0447	SCREW MC6S ISO 4762 M8X12 A280	129
312115-0449	SCREW MC6S ISO 4762 M8X16 A280	25, 27
312115-0451	SCREW MC6S ISO 4762 M8X20 A280	111, 121, 139
312115-0453	SCREW MC6S ISO 4762 M8X25 A280	111, 129, 145
312115-0455	SCREW MC6S ISO 4762 M8X30 A280	129, 145
312115-0457	SCREW O4762 M8X35A280	173
312121-0325	SLOTTED HEMCS5X10FZB	31
312121-0364	SLOTTED HEMCS6X10FZB	31
312125-0222	SLOTTED HEMCS3X8RFR	187
312125-0224	SLOTTED HEMCS3X10RFR	125, 143
312125-0230	SLOTTED HEMCS3X20RFR	169, 171, 177, 179, 187
312125-0287	SLOTTED CHEESE HEAD ISO 1207 M4X8 RFR	25, 27, 125, 135, 143, 183, 185
312125-0287	SLOTTED HEMCS4X8RFR	71
312125-0289	SLOTTED HEMCS4X10RFR	59, 61, 87, 95, 101, 103, 131, 147, 169, 171, 175, 177, 179, 181
312125-0376	SLOTTED CHEESE HEAD ISO 1207 M6X35 RFR	31
312145-0224	SLOTTED HEMFS3X10RFR	125, 135, 143
312145-0224	SLOTTED HEMFS3X10RFR	105
312145-0226	SLOTTED HEMFS3X12RFR	129, 145
312155-0289	SCREW MF6S4X10RFR	187
312155-0291	SCREW MF6S DIN 7991 M4X12 A280	25, 27, 125, 143
312155-0291	SCREW MF6S4X12RFR	123, 165, 173
312155-0293	SCREW MF6S DIN 7991 M4X16 A280	17
312155-0295	SCREW MF6S DIN 7991 M4X20 A280	17
312155-0323	SCREW	109
312155-0325	SCREW MF6S5X10RFR	173
312155-0329	SCREW MF6S DIN 7991 M5X16 A280	129
312155-0329	SCREW MF6S5X16RFR	109
312155-0331	SCREW MF6S DIN 7991 M5X20 A280	113, 145
312155-0339	SCREW MF6S DIN 7991 5X40 A280	129, 145
312155-0364	SCREW MF6S6X10RFR	21
312155-0370	SCREW MF6S6X20RFR	67

Part No	Description	Page No
312155-0449	SCREW MF6S8X16RFR	175, 181
312155-0461	SCREW MF6S8X50RFR	123
312180-0374	REAMED BOL	173
312180-0495	REAMED BOL	77, 95
312311-0321	SET SCREW FULL DOGPOINT ISO 4028 M5X6	99
312311-0321	STOP SCREW T6SS5X6FZB	81, 97
312311-0327	STOP SCREW T6SS5X12FZB	115
312311-0333	SET SCREW FULL DOGPOINT ISO 4028 M5X25	125, 143
312311-0366	STOP SCREW T6SS6X12FZB	93, 95
312311-0374	SET SCREW FULL DOGPOINT ISO 4028 M6X30	121, 139
312311-0374	STOP SCREW T6SS6X30FZB	87
312311-0380	STOP SCREW T6SS6X50FZB	125, 135, 143
312311-0624	STOP SCREW T6SS16X30FZB	63
312318-0283	SET SCREW CUP POINT ISO 4029 M4X4 RFR	125, 143
312318-0283	STOP SCREW SK6SS4X4RFR	19, 105
312318-0285	SET SCREW CUP POINT ISO 4029 M4X6 RFR	125, 143
312318-0285	STOP SCREW SK6SS4X6RFR	19, 105
312318-0291	STOP SCREW SK6SS4X12RFR	19, 105
312318-0323	STOP SCREW SK6SS5X8RFR	75, 169, 171, 177, 179
312318-0362	STOP SCREW SK6SS6X8RFR	93, 95, 115
312318-0364	STOP SCREW SK6SS6X10RFR	169, 171, 177, 179
312318-0366	STOP SCREW SK6SS6X12RFR	91, 175, 181
312318-0372	SET SCREW ISO 4029 M6X25 RFR	83
312318-0372	STOP SCREW SK6SS6X25RFR	81
312318-0459	SET SCREW CUP POINT ISO 4029 M8X40 RFR	111
312601-0316	NUT M6M6FZB	31
312605-0310	NUTS,HEXAGON,M3	111
312605-0310	NUT M6M3RFR	169, 171, 177, 179, 187
312605-0312	NUTS,HEXAGON,M4	17
312605-0312	NUT M6M4 STAINLESS	19, 101, 103, 105, 109, 155, 157, 159, 165, 169, 171, 177, 179, 187
312605-0314	NUT,HEXAGON,M6M5 Stainless	125, 129, 143, 153, 183, 185
312605-0314	NUT M6M5RFR	169, 171, 177, 179, 187
312605-0316	NUT,HEXAGON,A280 M6M6 Stainless	25, 27, 29, 153
312605-0316	NUT M6M6 A280 STAINLESS	77, 87, 93, 101, 103, 105, 109, 169, 171, 177, 179, 187
312605-0318	NUTS,HEXAGON,M8	17, 111, 183, 185
312605-0318	NUT M6M8RFR	77, 93, 95, 97, 169, 171, 177, 179
312605-0324	NUT M6M16RFR	63
312621-0316	ROD END,NUT M6	125, 135, 143
312621-0318	ROD END,NUT M8	125, 143
312625-0316	NUTS,HEXAGON,M6	121, 139
312630-0320	NUT M6M10X1FZB	175, 181
312705-0312	CAP NUT MHM 4 A2	187
312705-0318	CAP NUT MHM 8 A2	169, 171, 177, 179
312812-0312	NUTS,HEXAGON,LOCK,WITH NYLON,M4	31, 129
312812-0312	LOCK NUT A2-M4RFR	155
312812-0314	LOCK NUT A2-M5RFR	109
315101-0146	WASHER BRB5,3X10FZB	31, 189
315103-0165	WASHER BRB8,4X16MSGFN	123
315105-0124	WASHERS,PLAIN ROUND 3,2X6	111, 125, 135, 143, 183, 185
315105-0124	WASHER BRB3,2X6RFR	169, 171, 177, 179, 187
315105-0136	WASHERS,PLAIN ROUND 4,3X8	17, 31, 113, 121, 125, 135, 139, 143, 183, 185
315105-0136	WASHER BRB4,3X8RFR	19, 59, 61, 71, 89, 95, 101, 103, 105, 109, 155, 157, 159, 165, 169, 171, 177, 179, 187
315105-0146	WASHERS,PLAIN ROUND 5,3X10	17, 25, 27, 29, 33, 125, 129, 135, 143, 153
315105-0146	WASHER BRB5,3X10RFR	19, 59, 61, 105, 109, 119, 155, 161, 165, 169, 171, 173, 177, 179, 187
315105-0153	WASHER,PLAIN ROUND BRB 6,4x12 Stainless	21, 25, 27, 29, 31, 153
315105-0153	WASHER BRB6,4X12RFR	51, 53, 55, 57, 75, 77, 81, 83, 87, 95, 97, 101, 103, 105, 155, 165, 169, 171, 173, 175, 177, 179, 181, 187
315105-0165	WASHERS,PLAIN ROUND 8,4X16	17, 25, 27, 69, 109, 113
315105-0165	WASHER BRB8,4X16RFR	59, 61, 77, 95, 105, 119, 169, 171, 173, 175, 177, 179, 181
315105-0173	WASHER BRB10,5X22RFR	67, 175, 181
315115-0153	WASHER TBRB6,4X12RFR	93, 131, 147
315115-0165	WASHER TBRB8 4x16 Stainless	111, 121, 125, 129, 135, 139, 143, 145, 183, 185
315115-0165	WASHER TBRB8,4X16RFR	59, 61, 73, 77, 87, 93, 95, 97, 115, 131, 147
315125-0153	WASHER SB 6,4X22X4 RFR	81, 83, 85, 97, 131, 147
315125-0165	WASHERS,PLAIN ROUND,CHAMFERED 8,4X26X5	65
315233-0110	PLAIN ROUND,NYLON R1/4"	189
315402-0136	WASHER FBB4,1RFR	127, 135, 143
315402-0136	WASHER FBB4,1RFR	173
315402-0156	WASHER FBB6,5RFR	173
315705-0202	FLAT WEDGE	115
315705-0272	KEYS,PARALLEL WITH ROUND ENDS 8X7X50	111
315742-0111	RETAINING 15SMS199RFR	115
315750-0107	CIRCLIP SGA10	169, 171, 177, 179
315751-0112	CIRCLIP SGA15 RFR	81, 83, 93, 115
315751-0122	CIRCLIP SGA30 RFR	93
315751-0123	CIRCLIP SGA32 RFR	131, 147
315753-0117	RETAINING RINGS FOR HOLE 22	125, 135, 143
315753-0117	CIRCLIP GH 22 RFR	169, 171, 177, 179
315753-0124	CIRCLIP GH 35 RFR	93
318172-0179	TIMING BEL	115

Part No	Description	Page No
318800-0102	HANDLE BALLA D.20-M5	93
321105-0125	BUSHING 6F7X12X6	125, 135, 143
321111-0211	FLANGE BUS 15E7X10	115
321111-0274	FLANGE BUS 18E7X18	75, 169, 171, 177, 179
321116-0095	BUSHING 8E7/12X6	169, 171, 177, 179
321120-0092	BUSHING 4/5,5X6	125, 143
321120-0101	BEARING BUSHING WITHOUT FLANGE,6/8X6	125, 143
321120-0102	BEARING BUSHING WITHOUT FLANGE,6/8X10	127, 143
321120-0102	BUSHING 6/8X10	173
321120-0104	BEARING BUSHING WITHOUT FLANGE,10/12X10	127, 143
321300-0098	BALL BEARISKF608	169, 171, 177, 179
321308-0202	BALL BEARISKF6002-2RS	77, 87, 95
321313-0102	BALL BEARISKF6202-2RS	81, 83, 91, 93
321316-0200	BALL BEARISKF6300-2RS	93
321316-0202	BALL BEARISKF6302-2RS	87
321582-0150	CURVE ROLLKR26PP	175, 181
32544	INSULATION NUT	129
32644	WASHER	129
342700-0110	NIPPLES,HEXAGON,EXT.G-THREAD G1/4"-G1/4"	189
342700-0205	NIPPLE RNA1/4"-1/2"	187
342713-0210	BLIND PLUG	187
342715-0102	BLINDPLUG,Plast,FOR QUICK COUPLING D=6mm	191
342715-0103	BLIND PLUG,FOR QUICK COUPLING D=8	191
342716-0203	REDUCER,FOR PLASTIC TUBE 6-8	191
342716-0203	REDUCER 6-8	187
342722-0197	STRAIGHT COUPL,FOR PLASTIC TUBE 6-M5	17, 145
342722-0202	STRAIGHT COUPL,FOR PLASTIC TUBE 6-G1/8"	111, 127, 135, 143
342722-0204	STRAIGHT COUPL,FOR PLASTIC TUBE 8-G1/8"	113
342722-0205	PIPE COUPLING D=8-R 1/4"	187
342722-0209	STRAIGHT COUPL,FOR PLASTIC TUBE 12-G1/4"	187
342722-0210	STRAIGHT COUPL,FOR PLASTIC TUBE 12-G3/8"	191
342723-0102	STRAIGHT PIPE CONNECTION GAI-6-G1/8"	111
342732-0102	V-COUPL,ADJUST,FOR PLASTIC TUBE 6-G1/8"	113, 127, 135, 143
342732-0103	V-COUPL,ADJUST,FOR PLASTIC TUBE 6-G1/4"	187
342732-0105	ELBOW PIPE D8-R3/8"	191
342732-0110	V-COUPL,ADJUST,FOR PLASTIC TUBE 12-G3/8"	189
342732-0801	V-COUPL,ADJUST,FOR PLASTIC TUBE 8-G1/8"	113
342735-0109	V-JUNCTION COUPLING,FOR PLASTIC TUBE 12	187
342742-0110	T-COUPLING,ADJUST,F.PLAST.TUBE 12-G3/8"	187
342748-0102	T-JUNCTION COUPLING,FOR PLASTIC TUBE 6	187
342748-0109	T-JUNCTION COUPLING,FOR PLASTIC TUBE 12	187
342767-0100	BULKHEAD LR1/8	187
342768-0103	BULKHEAD LD=8	187
342921-0111	STRAIGHT COUPLING,EXT.THREADED 6/4-M5	127, 129, 145
342931-0113	ELBOW PIPE	77, 95
342991-0100	HOSE CLIP,WORM DRIVE TYPE 10-13	69
342991-0109	HOSE CLIP,WORM DRIVE TYPE (48)-50	111
351150-0403	CABLE OLFLEX 3x0,75 MM2	47, 49
351150-0404	CABLES,MULTI-CONDUCTOR 4X0,75 MM2	69
351150-0405	CABLE,OLFLEX 5x0,75 MM2	47, 49
351150-0407	CABLES,MULTI-CONDUCTOR 12X0,75 MM2	47, 49
351150-0412	CABLES,MULTI-CONDUCTOR 3X1,5 MM2	47, 49, 69
351150-0413	CABLES,MULTI-CONDUCTOR 4X1,5 MM2	47, 49
351150-0414	CABLES,MULTI-CONDUCTOR 5X1,5 MM2	69
351150-0419	CABLES,MULTI-CONDUCTOR 5X2,5 MM2	25, 27
351150-0425	CABLES,MULTI-CONDUCTOR 25X0,75 MM2	25, 27
351172-0102	CABLE AWM DARKBLUE 0.75	55
351172-0104	CABLE AWM BLUE 1,5MM2	25, 27
351172-0104	CABLE AWM DARKBLUE 1,5	71
351175-0104	CABLE AWM YELL/GREEN 1,5MM2	25, 27
352103-0100	CABLE GLAND STR 9 PR15,2	51, 53
352103-0101	CABLE GLAND ST 9	51, 53, 71
352103-0105	CABLE GLAND STR 11 PR 15,2	47, 49
352103-0106	CABLE GLAND ST 11	55, 57, 71, 95, 187
352103-0108	CABLE GLAND ST 13	25, 27
352103-0111	CABLE GLAND ST 16	25, 27
352103-0111	CABLE GLAND ST 16, 10-14MM	47, 49
352103-0115	CABLE GLAND STR 21, 7-16MM	51, 53, 55
352103-0116	CABLE GLAND ST 21	25, 27
352113-0102	RIBBON CLAMP	127, 135, 143, 183, 185
352113-0102	RIBBON CLA	71
352113-0204	ANCHOR TM3S25-M	59, 61, 95
352113-0205	ANCHOR TM2S8-C100	25, 27, 127, 135, 143, 183, 185
352113-0205	ANCHOR 59, 61, 71, 87, 101, 103, 131, 147, 169, 171, 175, 177, 179, 181	
353021-0120	FEED THROUGH TERMINAL WDK 2,5	29
353021-0216	TERM. WDU 2,5 BLUE WEIDM.	55
353021-0301	FEED THROUGH TERM.DLI/2,5	51, 53
353021-0302	FEED THROUGH TERM. DLD2,5	51, 53
353022-0101	CONNECTIONMA NT6/35 KRG	29
353024-0205	EARTH TERMINAL WPE 4	29
353024-0205	EARTH TERMINAL WPE 4	51, 53, 55
353031-0201	END BRACKET EW35	29
353031-0201	END BRACKET EW 35	51, 53
353032-0005	END PLATEWAP 2,5-10	55
353032-0010	END PLATE WAP	29
353032-0302	END PLATE AP	51, 53

Part No	Description	Page No
353033-0101	SEPARATING HP 6 PA	29
353034-0030	BRIDGE CONLECK WQV 2,5/10	29
353034-0404	BRIDGE CONNECTOR Q10	51, 53
353041-0001	RAIL 10X3mm SSCH	29
353041-0104	CLAMPING YOKE PZB 4 K	29
353042-0005	RAIL TS 35/7.5	29, 33
353042-0005	RAIL TS35/7.5	51, 53, 55
353240-0003	GLAND FITT	47, 49
353240-0005	GLANDS,NORMAL WITHOUT INSERT PG 21	69
353240-0005	GLAND FITT	47, 49
353240-0006	GLANDS,NORMAL WITHOUT INSERT PG 29	25, 27
353240-0006	GLAND FITT	47, 49
353243-0002	GLANDS,HOSE,EXTENDED,WITHOUT INSERT PG11	25, 27, 137
353245-0005	GLAND PG16 CABLE14-16,5MM	77
359005-0010	MARKING SESATS 0-9	25, 27, 69
359005-0010	MARKING SET 0-9	47, 49
359005-0050	MARKING SEATS "X"	25, 27, 69
359005-0050	MARKING SET "X"	47, 49
359011-0801	SIGN BOARD BSFW 1-50	29
359011-0807	MARKING PLATES 5-FW 1-50	29
359011-0807	MARKING PLATE 5-FW 1-50	51, 53, 55, 71
359011-0817	SYMBOL "+" 50PCS WIDTH5MM	51, 53
359011-0818	SYMBOL "-" 50PCS WIDTH5MM	51, 53
359011-0834	SET OF SIGNS 6-GW(EARTH)	29
359011-0834	SET OF SIGNS 6-GW EARTH	71
359240-0100	SIGN HOLDER	31
359241-0133	SIGN "SERVICE SWITCH"	31
359241-0201	SIGN "HOUR METER"	31
359241-0336	SIGN "TEMPP. EL-CABINET"	31
359241-0470	Sign" Patch IH Power"	31
359241-0471	Sign" Pull Tab Function"	31
359241-0472	Sign" Reseal IH Power"	31
359241-0473	Sign" Servo Motor Stop Position"	31
359241-0475	Sign" Tab Sealing Pad Temperature"	31
359301-0512	SIGN"INDEX TO POSITION"	31
359307-0002	SIGN"TAB C	187
359307-0004	SIGN"PATCH C	187
359307-0007	SIGN"TAB FOLDING"	187
359307-0010	SIGN "WASTE BLOWING"	187
359307-0011	SIGN"PRESS.ROLL.DR.MOTOR"	187
359307-0012	SIGN"PRESS.ROLL.TENS.DEV,	187
359705-0007	WARNING SIGN "HOT SURFACE"	137
359705-0007	WARNING SIGN"HOT SURFACE"	117, 133
359705-0009	WARNING SIGN"SHARP PART"	173
359705-0015	WARNING SIGN "ELECTRIC SHOCK"	153
359705-0015	WARNING SIGN"EL SHOCK"	51, 53, 55, 71, 163
469095	HOLDER	65
469096	LEG	65
469463	SHAFT	17
469464	ROLL	17
495118-0014	DISTANCE PIPE L=14 MM	33
495130-0070	SPACER TUBE L=70MM	33
495377	BUSH	31
522393	NUT	173
522394	SPRING	173
522395	SCREW	173
522408	BEARING HOUSING	87
529146	ANGLE BRACKET	21
529147	SPRING BRACKET	21
529148	STEERING	21
529149	DOLLY WASHER	21
532017	MOUNTING LUG	173
532020	LOCK WASHER	173
532021	LOCKING LOOP	173
532022	LOCK BAR	173
532719-0001	FEEDING ROLLER	87
533972	INDICATOR CURVE	169, 171, 177, 179
534497	SPACER	169, 171, 177, 179
538726	WASHER	169, 171, 177, 179
538740-0003	SPACER	169, 171, 177, 179
542036	SIGN BOARD	45
544422	KNIFE	173
544427	TURN SPRING	173
544428	SHEET	173
546256	BOBBIN HOLDER	177, 179
546290	BEAM	169, 171, 177, 179
546291	BRACKET	177, 179
546294	BEAM	169, 171, 177, 179
546296	BEAM	169, 171
546297	BEAM	169, 171
546298	SHAFT	177, 179
546299	SHAFT	177, 179
546300	ROLL	177, 179
546301	ROLL	177, 179
546303	SHAFT	169, 171, 177, 179
546305	SHEET	169, 171, 177, 179

Part No	Description	Page No
546306	SHAFT	169, 171, 177, 179
546307	ROLL	177, 179
547745	ROLL	177, 179
547746	ROLL	177, 179
548770-0001	COAXIAL CABLE L=5000 mm	25, 27
548770-0007	COAXIAL CABLE L=3000 mm	25, 27
552049	LUG	173
556539	BRAKE DISC	169, 171, 177, 179
556541	SCREW	169, 171, 177, 179
556542	PIN	169, 171, 177, 179
556544	SPACER	169, 171, 177, 179
558389-0101	MULTI PURPOSE POTENTIOM.	31
565140-0001	COMPONENTS WITHOUT TP-NO	45
565144	LABEL LED	45
565145	LABEL X1/X2	45
565146	INSULATION SPACER	45
565147	GUIDE RAIL LEFT	45
565148	GUIDE RAIL RIGHT	45
565149	GUIDE RAIL BACK	45
565150	FRONT HANDLE	45
565151	BOX BOTTOM	45
565152	FRAME	45
565153	COMPLETE BOX	45
565154	BOX UPPER PART	45
57203-01.01	TEST INSTRUCTION	45
57371-01.01	PACKING INSTRUCTION	45
57789	DOCUMENT DESCRIPTION	41
57790	MASTER DISKETTE	41
57791	MANUFACTURE INSTRUCTIONS	41
57792	SHORT FORM INFORMATION	41
57793	FUNCTIONAL DESCRIPTION	41
57794	PROGRAM SOURCE	41
57795	DOCUMENTATION DISKETTE	41
57796	LABEL LAYOUT DRAWING	41
57801	Document Description	37
57802	Master Diskette	37
57803	Manufacturing Instruction	37
57804	Short Form Information	37
57805	Functional Description	37
57806	Program Source	37
57807	Document Diskette	37
57808	LABEL LAYOUT DRAWING	37
578684	SPRING BRACKET	109
578874	HF BRAIDED WIRE 1,6 mm2	31
597743	Component without TP-no	37
597745	COMPONENTS WITHOUT TP-NO.	41
67379-0218	IH TRANSFORMER	129
67379-0224	IH TRANSFORMER	129
731049	SLIDING STRIP TPIH	25, 27
734741	FUSE BOX	33
734861	COVER PLATE	33
90001-0033	Wall socket Outlet	31
90002-0009	BLANK-OFF PLUG 18.6	55
90002-0013	BLANK-OFF PLUG 15,2	51, 53, 71
90003-0509	BOX	43
90007-0128	FUSE 1P 6A K	33
90007-0129	FUSE ABB-STOTZ 1P 10A K	33
90007-0156	FUSE 1P 4A K	33
90012-0137	CABLE GLAND SCREENED	93
90015-0021	BUSHING	93
90017-0014	HANDLE	109
90017-0017	HANDLE	31
90017-0017	HANDLE	165, 187
90024-0037	FILTER Schaffner FN 251-8-07	29
90025-0024	TERMINAL BLOCK	29
90025-0052	COMPACT RACK	29
90025-0053	OUTPUT MODULE	29
90025-0054	TERMINAL PLINTH	29
90025-0055	POWER SUPPLY UNIT	29
90025-0070	PROCESSOR TPMC CPU 64.1	29
90025-0094	TERMINAL BLOCK	29
90025-0107	MODULE	29
90038-0024	RECTIFIER 50A	29
90042-0215	PNEUMATICS,VALVES	191
90042-0221	PNEUMATICS,VALVES	191
90042-0519	VALVES,ACCESSORIES,BLANKING PLATE	191
90042-0520	VALVES,PLATES	191
90042-0522	VALVES,PLATES	191
90042-0528	VALVES,ACCESSORIES,BLANKING KIT	191
90042-0532	VALVES,PLATES	191
90042-0535	VALVES,ACCESSORIES,TERMINAL MODULE	191
90042-0538	PNEUMATICS,VALVES,PILOT	189
90042-0539	PNEUMATICS,VALVES,PILOT	191
90042-0550	VALVES,ACCESSORIES,PROTECTION PLUG	191
90043-0020	PRESSURE GAUGE	189
90043-0080	PRESSURE GAUGE	187

Part No	Description	Page No
90044-0094	LIMITSW.HONEYWELL 924CE31	75
90044-0104	PROX.SWITCH IFM IN 3002	111
90044-0104	PROX.SWITCH IFM IN 3002	169, 171, 177, 179
90044-0124	INDUCTIVE SWITCH	25, 27
90044-0139	KEY SAFETY SWITCH	155, 165, 187
90044-0145	INDUCTIVE SWITCH	125, 135, 141, 183, 185
90045-0192	Stepping motor	125, 141
90045-0194	SERVO MOTOR 5,2NM	77
90045-0372	SERVO AMPLIFIER REPLACED 90045-395	25, 27
90045-0379	MEMORY EPROM	43
90051-0007	HANDLE	125, 141
90053-0031	HOUR COUNTER BOWER B906.10	31
90055-0096	STRAIGHT CONNECTION	59, 61
90055-0118	ELBOW PIPE JOINT	191
90055-0118	ELBOW PIPE JOINT	187
90055-0217	ELBOW-90 COUPLING,STEM,FPT 6-6	191
90056-0143	GEAR BOX	77
90059-0029	Thermostat	69
90062-0021	LOCKING WASHER	25, 27
90062-0022	LOCKING WASHER	31, 153
90064-0082	PUSH BUTTON WHITE	31
90069-0258	GEARED MOTOR	95
90069-0281	WORM GEAR MOTOR OKM 87-60	93
90075-0125	CONTACTOR 7,5KW COIL 24VDC	29
90077-0079	FEED THROUGH TERMINAL	71
90077-0328	RAIL TS15	71
90089-0008	SLEEVE	47, 49
90089-0031	Enlarging Sleeve	69
90095-0072	OVERLOAD PROTECTION PKZM 1,0A	33
90095-0073	OVERLOAD PROTECTION PKZM 1,6A	33
90095-0077	OVERLOAD PROTECTION PKZM 10A	33
90099-0019	NUT	69
90099-0102	NUT	77
90099-0117	NUT PR 18,6 (PG11)	25, 27
90099-0117	NUT PR18,6 (PG11)	187
90099-0119	NUT PR 28,3 (PG21)	25, 27
90099-0191	Nut	25, 27, 31
90110-0121	FEMALECONT.15POLE HARTING	25, 27
90110-0122	COVER HARTING	25, 27
90110-0150	MALE INSERT 24-P, CABLE	25, 27
90110-0150	MALE INSERT 24-P, CABLE	47, 49
90110-0152	CABLE HOOD 24-P	25, 27
90110-0152	CABLE HOOD 24-P	47, 49
90110-0153	CHASSI HOUSING 24-P	25, 27
90110-0157	COVER	25, 27, 69
90110-0157	COVER	47, 49
90110-0159	CONTACT	25, 27, 69
90110-0159	CONTACT	47, 49
90110-0161	FEMALE CONTACT 6-POLES	25, 27
90110-0163	FEMALE INSERT 6-POLE	25, 27
90110-0164	FEMALE CONTACT 24-POLES	25, 27
90110-0166	CONTACT HOUSE	25, 27
90110-0215	SOCKET	25, 27
90110-0216	MALE PLUG	47, 49
90110-0217	COVER	47, 49
90110-0218	CONTACT HOUSING	25, 27
90110-0235	CABLE CONTACT	47, 49
90110-0236	CHASSIE CONTACT PX0767/S	25, 27
90110-0295	CONTACT SCREW	137
90110-0296	CONTACT SCREW	25, 27
90110-0349	COVER/TOOL PX0733	25, 27
90110-0370	BASE HOUSING	25, 27
90110-0371	PLUG HOOD	137
90111-0193	Rotary switch	31
90111-0197	Service Key	31
90113-0072	PRESSURE REGULATOR	189
90113-0095	PRESSURE REGULATOR	187
90113-0375	PRESSURE DISTRIBUTION	189
90113-0423	HIGH SPEED VENTING VALVE	189
90115-0134	JOINT	77, 95
90119-0043	OPTO RELAY 22DC 60S-3	31
90119-0056	PLUG-IN RELAY 24VDC	29
90119-0084	RELAY	29
90119-0089	RELAY	29
90129-0006	BASE 11 POLE	29
90130-0017	POTENTIOMETER 10 KOHM	31
90130-0301	KNOB 3-DIGITS	31
90135-0026	EARTHING CLAMP	71
90135-0035	LOW IMPEDANCELITZ L=250MM	31, 153
90135-0039	SHIELD CLAMMER	25, 27, 31
90141-0020	LOCK RING	87
90143-0057	STRIP EMKA 1011-05 21x11mm	25, 27
90143-0059	STRIP	59, 61
90143-0060	EDGE STRIP 9,5x6,3mm Black PVC	31
90143-0073	RUBBER STRIP	25, 27
90144-0030	TAPE	129

Part No	Description	Page No
90144-0043	TAPE	187
90152-0026	HOSE	109
90152-0059	GLANDS,HOSE 18X12	25, 27, 137
90157-0041	SEALING COMPOUND	153
90157-0041	SEALING COMPOUND	155, 157
90159-0097	CAPACITOR SIRACO 2MF	71
90164-0015	LIGHT FIXTURE	57
90164-0302	BRACKET	57
90165-0019	CLIP	187
90166-0013	HOSE 8/6 PA 11/12 BLUE	187
90166-0068	HOSE 9/12	23, 187
90166-0081	HOSE 6/4-100M	17
90166-0081	HOSE 6/4	187
90166-0126	HOSE	69
90181-0045	CABLE DUCT 40X60MM	31, 33
90181-0046	CABEL DUCT 60X60MM	25, 27, 33
90181-0052	CABLE DUCT 25X80MM	29
90181-0053	CABLE DUCT 40X80MM	29
90181-0054	CABLE DUCT 60X80MM	29
90187-0088	BALL VALVE 1/4" BRASS	187
90189-0003	BALL BUSHING	125, 135, 141
90194-0080	SIGN "IDENTIF. OF WIRING"	31
90194-0133	SIGN "DELIVERED DESIGN"	31
90194-0152	SIGN "EARTH"	31, 153
90195-0019	TERMINAL BK3 KRG 3-POLE	25, 27
90208-0078	CLAMPING ELEMENT	77
90208-0118	CLAMPING ELEMENT	95
90214-0138	BALL BEARING	19, 105
90214-0144	BALL BEARING	93
90220-0034	THERMO-CABLE	25, 27, 29
90220-0082	DATACABLE Pair Twisted 2x0,76mm2	25, 27
90220-0084	SERVOCABLE 4X2,5+2(2X0.75)	47, 49
90220-0108	CABLES,MULTI-CONNUCTO,SCREENED 5X1,5 MM2	25, 27
90220-0165	Cable	31
90224-0090	MUFF	189
90224-0122	SLEEVE	189
90224-0229	SLEEVE	189
90224-0229	SLEEVE	187
90226-0458	MOUNTING SCREW	163
90232-0067	PH.CELLOMRON E3S-X3CB45M	89
90232-0103	PH.CELL OMRON E3SCT61-L-5M	139
90232-0103	PH.CELL OMRON E3SCT61L 5M	101, 103
90232-0104	RECEIVER OMRON E3S-CT61-D-5M	139
90232-0104	RECEIVER OMRON E3SCT61D5M	101, 103
90232-0105	PH.CELL OMRON E3S-CD61-5M	109
90232-0112	PHOTOCELL	119
90232-0325	CABLE OMRON E32 DC200	89
90233-0028	FUSE 10A FERRAZ	33
90233-0303	FUSEHOLDER FERRAZ ST10	33
90235-0206	VALVE	113, 125, 135, 141
90237-0070	LOCK	165, 187
90237-0128	LOCK CYLINDER	153
90237-0128	LOCK CYLINDER	155, 157, 159, 161
90237-0150	TURNING HANDLE	153
90237-0150	TURNING HANDLE	155, 157, 159, 161
90237-0151	STEERING	153
90237-0152	STEERING	153
90237-0153	LOCK HOUSING	153
90237-0153	LOCK HOUSING	155, 157, 159
90237-0154	LOCK HOUSING	161
90237-0157	LOCKING CATCH	31
90237-0165	LATCH	161
90237-0169	ADAPTER	153
90237-0319	LOCK HOUSING EMKA U134	31
90237-0320	LOCK COMPONENT EMKA U136	31
90239-0486	BRACKET	93
90239-0488	BRACKET	77, 95
90239-0489	ROD END,CLEVIS WITH AXLE,M6	125, 135, 141
90239-0489	BRACKET	93
90239-0834	CYLINDER 133/32/25	77, 95
90240-0026	PLAIN BEARING	77, 95
90258-0031	HOLLOW PIN	173
90259-0313	AUX. CONTACT K&M NHI21-PKZM0	33
90264-0069	Fan	69
90270-0018	Compressor	69
90274-0056	PRESSURE SWITCH	189
90277-0035	AIR-PRESSURE FILTER	187
90287-0009	SPRINGLOADED SCREW	19, 105, 169, 171, 177, 179
90287-0069	SCREW	169, 171, 177, 179
90287-0124	SCREW,NYLON M4X12 DIN84	29, 33
90287-0130	GRUB SCREW	63
90287-0151	SCREW	183, 185
90287-0212	SCREW	189
90298-0033	WATLUBE HEAT LIQUID	141
90326-0012	PROTECTIVE COVER	29
90326-0052	THERMO ELEMENT	29

Part No	Description	Page No
90326-0060	THERMOCOUPLE CR-AL	141
90328-0003	SILENCER	77, 95
90328-0024	SILENCERS,THREADED CONNECTION G3/8"	191
90330-0038	NUT	59, 61
90334-0006	BATTERY 3,6V Size AA	29
90335-0005	SPRING	113
90335-0067	SPRING	125, 141
90335-0081	SPRING	109, 169, 171, 177, 179
90335-0091	SPRING	93
90335-0222	SPRING	105
90347-0029	DAMPER	63
90347-0054	DAMPER	87
90348-0031	FREE-WHEEL COUPLING	125, 141
90355-0158	MAGNETIC CLUTCH	95
90364-0020	VACUUMPUMP X10	187
90410-0051	TEMPERATURE REGULATOR PHILIPS KS 40	31
90411-0018	Insulator	141
90422-0041	Evaporator	69
90422-0042	CAPACITOR	69
90422-0316	Hood	69
90422-0317	Filter	69
90430-0037	MOTOR DRIVE CONTR.PME 1802. Repl.by -67	31
90450-0380	CYLINDER	129, 145
90450-0397	Cylinder	113
90450-0409	CYLINDER	125, 135, 141
905174	STEER PLATE	125, 141
905194	SHAFT	125, 141
905210	ROLLER-35	125
905215	BOLT	125, 141
905241	COUPLING	125, 141
905243	SHAFT	125, 141
905244	WEDGE	125, 129, 135, 141, 145
905244	WEDGE	105
905246	BRACKET	125, 141
905285	STRIPPER PIN	113
905413	SHAFT	125, 141
905415	SHAFT	125, 141
905416	PIVOT BRACKET-SWIVEL	125, 141
905417	SHAFT	125, 141
905419	PIVOT ARM-SWIVEL	125, 141
905463	KEY	129, 145
905471	ROLLER-DRIVE	125, 141
905484	SHIM	141

Part No	Description	Page No
905607	SCREW	125, 141
905608	SCREW	125, 141
905609	LOCK BAR	125, 141
905613	SHAFT	125, 141
905937	SPRING	19, 105
905938	BRACKET	19, 105
905939	COUNTERWEIGHT	19
907138	CLAMP	141
907249	CLAMP	141
907358-0005	ROLLER - 43.5	141
907358-0006	ROLLER-29	125
907487	WASHER-CURVED	125, 143
907535	RESERVOIR	187
907710	PIVOT PLATE	125, 141
907711	SHAFT	125, 141
907712	PIVOT PLATE	125, 141
907719	SPRING	125, 141
907942	STEERING BRACKET	19
907983	PLATE	17
908309	ROLLER - 47	141
928919	FASTENING PLATE	129, 145
929607	EARTH BAR	25, 27
970215	STOP BLOCK	31
971346	GUIDE PIN	31
979426	SIGN	187
979974	INSERT	25, 27
984082	PLATE	187
985342	PLATE	17
985343	BRACKET	17
985444	GUIDE	17
985445	GUIDE	17
985446	BRACKET	17
985502	PLATE	17
985854	BRACKET	93
985855	SPACER BUSHING	93
985856	SHAFT	93
985860	DIE HOLE 45	113
985865	BRACKET	93
985866	TOP FRAME	59, 61
985899	COUPLING	93
985900	COUPLING	95
988685	PIN	153
988685	PIN	155, 157, 159, 163, 165, 187

Part No	Description	Page No
C		
C- 42942-0101	PT21AF-LIST OF DOCUMENTS	37
C- 42944-0101	PT21MC-LIST OF MATERIALS	43
C- 48141-0101	PT21MC-PULLTAB 21 MOTION CONTROL	39, 41
C- 514938-0101	TAB FOLDING	17
C- 514938-0102	TAB FOLDING	17
C- 514938-0103	TAB FOLDING	17
C- 514938-010V	TAB FOLDING	11, 13, 15
C- 514993-0201	BY-PASS SENSOR	75
C- 514993-020V	. SENSOR	11, 13, 15
C- 514993-020V	SENSOR	73
C- 530600-0101	GUIDING PULLTAB TBA/8	21
C- 577135-0101	PIPE-LINE	23
C- 577135-010V	PIPE-LINE	11, 13, 15
C- 67379-0218	. . IH EQUIPMENT	107
C- 67379-0218	. IH EQUIPMENT	117, 133
C- 67379-0219	. . IH EQUIPMENT	107
C- 67564-0101	. THIH TOROID COIL 1	45
C- 67565-0101	. TPIH TOROID COIL 2	45
C- 67566-0101	. TPIH TOROID COIL 3	45
C- 67567-0101	. TPIH THERMOSTAT CABLE	45
C- 67568-0101	. TPIH COIL SINGLE LAYER	45
C- 67569-0101	. TPIH TANK COIL	45
C- 67570-0101	. TPIH CAPACITOR CARD	45
C- 67573-0101	. TPIH TRANSISTOR PACKAGE	45
C- 67574-0401	. OUTPUT TRANSFORMER	45
C- 67575-0101	. TPIH INTERNAL TRANSFORM	45
C- 67576-0101	. TPIHTRANSFORMER CONT.CA	45
C- 67577-0501	POWER CARD	45
C- 67578-0101	TPIH FAN HOLDER	45
C- 67579-0501	CONTROL CARD	45
C- 67580-0201	FRONT PANEL	45
C- 67581-0101	. TPIH TRANSISTOR PACKAGE	45
C- 67582-0101	. TPIH HEATSINK PREREGULA	45
C- 67600-0501	. TPIH 2000 GENERATOR	11, 13, 15
C- 67600-0501	TPIH 2000 GENERATOR	45
C- 68451-0101	. STEP. MOT. DR. MAIN CAR	31
C- 68452-0101	. STEP. MOT. DR. AUX. CAR	31
C- 907946-0101	TAB FOLDING PAPER GUIDE	19
C- 907946-010V	. TAB FOLDING PAPER GUIDE	11, 13, 15
C- 907946-010V	TAB FOLDING PAPER GUIDE	17
C-1035076-0101	LEG	63
C-1035076-010V	. . LEG	11, 13, 15
C-1035076-010V	. LEG	57
C-1035076-010V	LEG	59, 61
C-1035471-0100	LEG	59, 61
C-1035471-0101	LEG	65
C-1095893-0101	MAGAZINE PULLTAB	169, 171
C-1095893-010V	. MAGAZINE PULLTAB	11, 13, 15
C-1095893-010V	MAGAZINE PULLTAB	167
C-1095894-0101	MAGAZINE PATCH	177, 179
C-1095894-010V	. MAGAZINE PATCH	11, 13, 15
C-1095894-010V	MAGAZINE PATCH	167
C-1095895-0101	SPLICING DEVICE	173
C-1095895-010V	. . SPLICING DEVICE	11, 13, 15
C-1095895-010V	. SPLICING DEVICE	167
C-1095895-010V	SPLICING DEVICE	169, 171, 177, 179
C-1095923-0101	GUIDE PULLTAB	175
C-1095923-010V	. . GUIDE PULLTAB	11, 13, 15
C-1095923-010V	. GUIDE PULLTAB	167
C-1095923-010V	GUIDE PULLTAB	169, 171
C-1095924-0101	GUIDE PATCH	181
C-1095924-010V	. . GUIDE PATCH	11, 13, 15
C-1095924-010V	. GUIDE PATCH	167
C-1095924-010V	GUIDE PATCH	177, 179
C-1095928-0101	COOLER	69
C-1095928-010V	COOLER	11, 13, 15
C-1095930-0101	FRAME	57
C-1095930-010V	FRAME	11, 13, 15
C-1095932-0201	APPLICATORS	107
C-1095932-020V	APPLICATORS	11, 13, 15
C-1095935-0101	DRIVE MOTOR	77
C-1095935-010V	. DRIVE MOTOR	11, 13, 15
C-1095935-010V	DRIVE MOTOR	73
C-1095937-0101	GUIDE ROLLER WITH FLANGE	81
C-1095937-010V	. . GUIDE ROLLER WITH FLA	11, 13, 15
C-1095937-010V	. GUIDE ROLLER WITH FLANG	73
C-1095937-010V	GUIDE ROLLER WITH FLANGE	79
C-1095938-0101	GUIDE ROLLER	83
C-1095938-010V	. . GUIDE ROLLER	11, 13, 15
C-1095938-010V	. GUIDE ROLLER	73
C-1095938-010V	GUIDE ROLLER	79
C-1095940-0101	GUIDE ROLLER	85
C-1095940-010V	. . GUIDE ROLLER	11, 13, 15
C-1095940-010V	. GUIDE ROLLER	73
C-1095940-010V	GUIDE ROLLER	79

Part No	Description	Page No
C-1095941-0101	TENSION ROLLER	87
C-1095941-010V	. . TENSION ROLLER	11, 13, 15
C-1095941-010V	. TENSION ROLLER	73
C-1095941-010V	TENSION ROLLER	79
C-1095942-0101	ROLLER ASSEMBLY	79
C-1095942-010V	. ROLLER ASSEMBLY	11, 13, 15
C-1095942-010V	ROLLER ASSEMBLY	73
C-1095944-0101	DOOR EL-CABINET	153
C-1095944-010V	. DOOR EL-CABINET	11, 13, 15
C-1095944-010V	DOOR EL-CABINET	151
C-1095945-0201	DOOR	155
C-1095945-020V	. DOOR	11, 13, 15
C-1095945-020V	DOOR	151
C-1095946-0201	DOOR FOR PATCH	157
C-1095946-020V	. DOOR FOR PATCH	11, 13, 15
C-1095946-020V	DOOR FOR PATCH	151
C-1095947-0201	DOOR FOR PULLTAB	159
C-1095947-020V	. DOOR FOR PULLTAB	11, 13, 15
C-1095947-020V	DOOR FOR PULLTAB	151
C-1095948-0101	DOOR FOR WASTE BOX	161
C-1095948-010V	. DOOR FOR WASTE BOX	11, 13, 15
C-1095948-010V	DOOR FOR WASTE BOX	151
C-1095949-0101	DOOR FOR TPIH	163
C-1095949-010V	. DOOR FOR TPIH	11, 13, 15
C-1095949-010V	DOOR FOR TPIH	151
C-1095951-0201	DOOR	151
C-1095951-020V	DOOR	11, 13, 15
C-1095952-0100	BENDING ROLLER ASSEMBLY	99
C-1095952-0101	BENDING ROLLER	91
C-1095952-010V	. . . . BENDING ROLLER	11, 13, 15
C-1095952-010V	. . . BENDING ROLLER	73
C-1095952-010V	. . BENDING ROLLER	11, 13, 15, 95
C-1095952-010V	. BENDING ROLLER	11, 13, 15, 73
C-1095952-010V	BENDING ROLLER	73, 93
C-1095953-0101	INFEED UNIT	93
C-1095953-010V	. INFEED UNIT	11, 13, 15
C-1095953-010V	INFEED UNIT	73
C-1095955-0101	WASTE BOX	109
C-1095955-010V	. WASTE BOX	11, 13, 15
C-1095955-010V	WASTE BOX	107
C-1095969-0101	BENDING ROLLER FLANGE	97
C-1095969-010V	. . BENDING ROLLER FLANGE	11, 13, 15
C-1095969-010V	. BENDING ROLLER FLANGE	73
C-1095969-010V	BENDING ROLLER FLANGE	95
C-1095970-0101	PAPER BRAKE	95
C-1095970-010V	. PAPER BRAKE	11, 13, 15
C-1095970-010V	PAPER BRAKE	73
C-1095979-0101	PHOTOCELL UNIT	101
C-1095979-010V	. PHOTOCELL UNIT	11, 13, 15
C-1095979-010V	PHOTOCELL UNIT	73
C-1095980-0101	PHOTOCELL UNIT	103
C-1095980-010V	. PHOTOCELL UNIT	11, 13, 15
C-1095980-010V	PHOTOCELL UNIT	73
C-1095991-0100	PUNCH UNIT	111
C-1095991-0101	PUNCH UNIT	113
C-1095991-0102	PUNCH UNIT	113
C-1095991-0103	PUNCH UNIT	113
C-1095991-010V	. . PUNCH UNIT	11, 13, 15
C-1095991-010V	. PUNCH UNIT	107
C-1095992-0101	PUNCH BRACKET	111
C-1095992-010V	. PUNCH BRACKET	11, 13, 15
C-1095992-010V	PUNCH BRACKET	107
C-1185000-0101	DOOR,INNER	165
C-1185000-010V	. DOOR,INNER	11, 13, 15
C-1185000-010V	DOOR,INNER	151
C-1185008-0101	MAGAZINES	167
C-1185008-010V	MAGAZINES	11, 13, 15
C-1185027-010V	. PATCH TURNING DEVICE	11, 13, 15
C-1185029-0100	MISSING TAB DETECTOR	137
C-1185029-0101	MISSING TAB DETECTOR	139
C-1185029-010V	. . MISSING TAB DETECTOR	11, 13, 15
C-1185029-010V	. MISSING TAB DETECTOR	107
C-1185030-0100	FUSE BOX	31
C-1185030-0101	FUSE BOX	33
C-1185031-0101	BAR CODE READER	119
C-1185031-010V	. . BAR CODE READER	11, 13, 15
C-1185031-010V	. BAR CODE READER	107
C-1185031-010V	BAR CODE READER	117
C-1185034-0101	FRAME ASSEMBLY	59, 61
C-1185034-010V	. FRAME ASSEMBLY	11, 13, 15
C-1185034-010V	FRAME ASSEMBLY	57
C-1185047-0101	AIR INLET GROUP	189
C-1185047-010V	. AIR INLET GROUP	11, 13, 15
C-1185047-010V	AIR INLET GROUP	187
C-1185048-0101	VALVE GROUP	191
C-1185048-010V	. VALVE GROUP	11, 13, 15

Part No	Description	Page No
C-1185048-010V	VALVE GROUP	187
C-1185049-010V	VALVE PANEL	11, 13, 15, 187
C-1185078-0101	LIFTING DEVICE	115
C-1185078-010V	. LIFTING DEVICE	11, 13, 15
C-1185078-010V	LIFTING DEVICE	107
C-1185080-0101	PLATFORM	67
C-1185080-010V	. PLATFORM	11, 13, 15
C-1185080-010V	PLATFORM	57
C-1255501-0101	ELECTRICAL CABINET	25, 27
C-1255501-010V	ELECTRICAL CABINET	11, 13, 15
C-1255601-0101	EDGE GUIDE	105
C-1255601-010V	. EDGE GUIDE	11, 13, 15
C-1255601-010V	EDGE GUIDE	73
C-1255953-0100	ASSEMBLY PLATE	25, 27
C-1255953-0101	ASSEMBLY PLATE	29
C-1255953-010V	. ASSEMBLY PLATE	11, 13, 15
C-1255954-0100	SWING FRAME	25, 27
C-1255954-0101	SWING FRAME	31
C-1255954-010V	. SWING FRAME	11, 13, 15
C-1260390-010V	. MISSING PATCH DETECTOR	107
C-1260390-0201	MISSING PATCH DETECTO	121
C-1260390-020V	. . MISSING PATCH DETECTO	11, 13, 15
C-1260390-020V	MISSING PATCH DETECTOR	117
C-1260401-0100	SETTING TOOL	137
C-1260401-0101	SETTING TOOL	123
C-1260401-010V	. . SETTING TOOL	11, 13, 15
C-1260401-010V	. SETTING TOOL	107
C-1260401-010V	SETTING TOOL	117, 133
C-1260411-0101	PATCH/TAB SPLICE DETE	89
C-1260411-010V	. . PATCH/TAB SPLICE DETE	11, 13, 15
C-1260411-010V	. PATCH/TAB SPLICE DETECT	73
C-1260411-010V	PATCH/TAB SPLICE DETECTOR	79
C-1260414-0101	PATCH FEEDER	125
C-1260414-0102	PATCH FEEDER	125
C-1260414-010V	. . PATCH FEEDER	11, 13, 15
C-1260414-010V	. PATCH FEEDER	107
C-1260414-010V	PATCH FEEDER	117
C-1260415-0100	TAB FEEDER	137
C-1260415-0101	TAB FEEDER	141
C-1260415-0102	TAB FEEDER	141
C-1260415-0103	TAB FEEDER	141
C-1260415-0104	TAB FEEDER	141
C-1260415-010V	. . TAB FEEDER	11, 13, 15
C-1260415-010V	. TAB FEEDER	107
C-1260416-010V	. TAB C	107
C-1260416-0200	TAB CJAWUNIT'	137
C-1260416-0201	TAB C	145
C-1260416-020V	. . TAB C	11, 13, 15
C-1260417-0101	PATCH RESEAL C	129
C-1260417-0102	PATCH RESEAL C	129
C-1260417-010V	. . PATCH RESEAL C	11, 13, 15
C-1260417-010V	. PATCH RESEAL C	107
C-1260417-010V	PATCH RESEAL C	117, 133
C-1260418-0101	HEATING JAW-RESEAL	135
C-1260418-010V	. . HEATING JAW-RESEAL	11, 13, 15
C-1260418-010V	. HEATING JAW-RESEAL	107
C-1260418-010V	HEATING JAW-RESEAL	133
C-1260419-0101	APPLICATOR PATCH	117
C-1260419-010V	. APPLICATOR PATCH	11, 13, 15
C-1260419-010V	APPLICATOR PATCH	107
C-1260420-0101	APPLICATOR RESEAL	133
C-1260420-010V	. APPLICATOR RESEAL	11, 13, 15
C-1260420-010V	APPLICATOR RESEAL	107
C-1260421-0101	APPLICATOR TAB	137
C-1260421-010V	. APPLICATOR TAB	11, 13, 15
C-1260421-010V	APPLICATOR TAB	107
C-1260426-0101	PATCH RESEAL BRACKET	131
C-1260426-010V	. . PATCH RESEAL BRACKET	11, 13, 15
C-1260426-010V	. PATCH RESEAL BRACKET	107
C-1260426-010V	PATCH RESEAL BRACKET	117, 133
C-1260427-0100	TAB BRACKET	137
C-1260427-0101	TAB BRACKET	147
C-1260427-010V	. . TAB BRACKET	11, 13, 15
C-1260427-010V	. TAB BRACKET	107
C-1260684-0101	CABLE HARNESS	47, 49
C-1260684-010V	CABLE HARNESS	11, 13, 15
C-1260811-0101	CONNECTION BOX	51
C-1260811-010V	. CONNECTION BOX	11, 13, 15
C-1260811-010V	CONNECTION BOX	47, 49
C-1260812-0101	CONNECTION BOX	53
C-1260812-010V	. CONNECTION BOX	11, 13, 15
C-1260812-010V	CONNECTION BOX	47, 49
C-1260813-0101	CONNECTION BOX	55
C-1260813-010V	. CONNECTION BOX	11, 13, 15
C-1260813-010V	CONNECTION BOX	47, 49
C-1282322-0101	PULLTAB UNIT PT21	11, 13, 15

Part No	Description	Page No
C-1282323-0101	PAPER WEB PATH	73
C-1282323-010V	PAPER WEB PATH	11, 13, 15
C-1285054-0100	CONNECTION BOX	69
C-1285054-0101	CONNECTION BOX	71
C-1285054-010V	. CONNECTION BOX	11, 13, 15
C-1296882-0101	OPENING SPECIFICATION	149
C-1296882-0102	OPENING SPECIFICATION	149
C-1296882-010V	. OPENING SPECIFICATION	11, 13, 15
C-1296882-010V	OPENING SPECIFICATION	107
C-1334065-0101	PATCH TURNING DEVICE	185
C-1334065-0102	PATCH TURNING DEVICE	185
C-1334065-010V	- - . PATCH TURNING DEVIC	11, 13, 15
C-1334065-010V	PATCH TURNING DEVICE	167
C-1334066-0101	TAB TURNING DEVICE	183
C-1334066-0102	TAB TURNING DEVICE	183
C-1334066-010V	. TAB TURNING DEVICE	11, 13, 15
C-1334066-010V	TAB TURNING DEVICE	167
C-1334322-0101	BENDING ROLLER WITH FLANGE	99
C-1334322-010V	. . . BENDING ROLLER	11, 13, 15
C-1334322-010V	. . BENDING ROLLER	73
C-1334322-010V	. BENDING ROLLER	95
C-1334322-010V	BENDING ROLLER	97
C-42942-0100	PT21AF-LIST OF DOCUMENT	37
C-42942-0100	PT21AF-LIST OF DOCUMENTS	35
C-42943-0100	PT21MC-LIST OF DOCUMENTS	39, 41
C-42944-0100	PT21MC-LIST OF MATERIALS	39, 41
C-48141-0100	PT21MC-PULLTAB 21 MOTION CONTROL	25, 27, 41
C-48142-0100	PT21AF-PULLTAB 21 AUXILIARY FUNCTIONS	31, 37
C-48142-0101	PT21AF-PULLTAB 21 AUXILIARY FUNCTIONS	35
C-530600-0100	GUIDING PULLTAB TBA/8	17
C-558230-0101	TMCC, CONTROLLER	31
C-558321-0101	TPIH-SWITCH	31
C-67347-0101	CARD BRAKEREG.MAGN.POWDER BR.	31
C-67388-0101	FRONT MOUNTED RACK 42TE	31
C-67600-0501	TPIH 2000 GENERATOR	25, 27
C-68262-0101	BACKPLANE FRONT RACK 8TE	31
C-68450-0101	STEPPER MOTOR DRIVER	31

Part No	Description	Page No


Tetra Pak

SPC binder labels. 40 mm Full width *Note! This page is generated **automatically** using the **variable definitions** made in the **front page** file!!*

PT21 010V

Issue: 2000 - 03 Doc No: SPC-82308-0103

PT21 010V

Issue: 2000 - 03 Doc No: SPC-82308-0103

PT21 010V

Issue: 2000 - 03 Doc No: SPC-82308-0103

PT21 010V

Issue: 2000 - 03 Doc No: SPC-82308-0103

PT21 010V

Issue: 2000 - 03 Doc No: SPC-82308-0103

PT21 010V

Issue: 2000 - 03 Doc No: SPC-82308-0103

PT21 010V

Issue: 2000 - 03 Doc No: SPC-82308-0103

PT21 010V

Issue: 2000 - 03 Doc No: SPC-82308-0103

PT21 010V

Issue: 2000 - 03 Doc No: SPC-82308-0103

PT21 010V

Issue: 2000 - 03 Doc No: SPC-82308-0103

PT21 010V

Issue: 2000 - 03 Doc No: SPC-82308-0103

SPC binder labels. 30 mm Half width *Note! This page is generated **automaticall***
*using the **variable definitions** made in the **front page** file!!*

PT21 010V

Issue: 2000 - 03 Doc No: SPC-82308-0103

PT21 010V

Issue: 2000 - 03 Doc No: SPC-82308-0103

PT21 010V

Issue: 2000 - 03 Doc No: SPC-82308-0103

PT21 010V

Issue: 2000 - 03 Doc No: SPC-82308-0103

PT21 010V

Issue: 2000 - 03 Doc No: SPC-82308-0103

PT21 010V

Issue: 2000 - 03 Doc No: SPC-82308-0103

PT21 010V

Issue: 2000 - 03 Doc No: SPC-82308-0103

PT21 010V

Issue: 2000 - 03 Doc No: SPC-82308-0103

PT21 010V

Issue: 2000 - 03 Doc No: SPC-82308-0103

PT21 010V

Issue: 2000 - 03 Doc No: SPC-82308-0103

PT21 010V

Issue: 2000 - 03 Doc No: SPC-82308-0103

PT21 010V

Issue: 2000 - 03 Doc No: SPC-82308-0103

PT21 010V

Issue: 2000 - 03 Doc No: SPC-82308-0103

PT21 010V

Issue: 2000 - 03 Doc No: SPC-82308-0103

PT21 010V

Issue: 2000 - 03 Doc No: SPC-82308-0103

This page intentionally left blank