MM

Maintenance Manual

PT21 030V

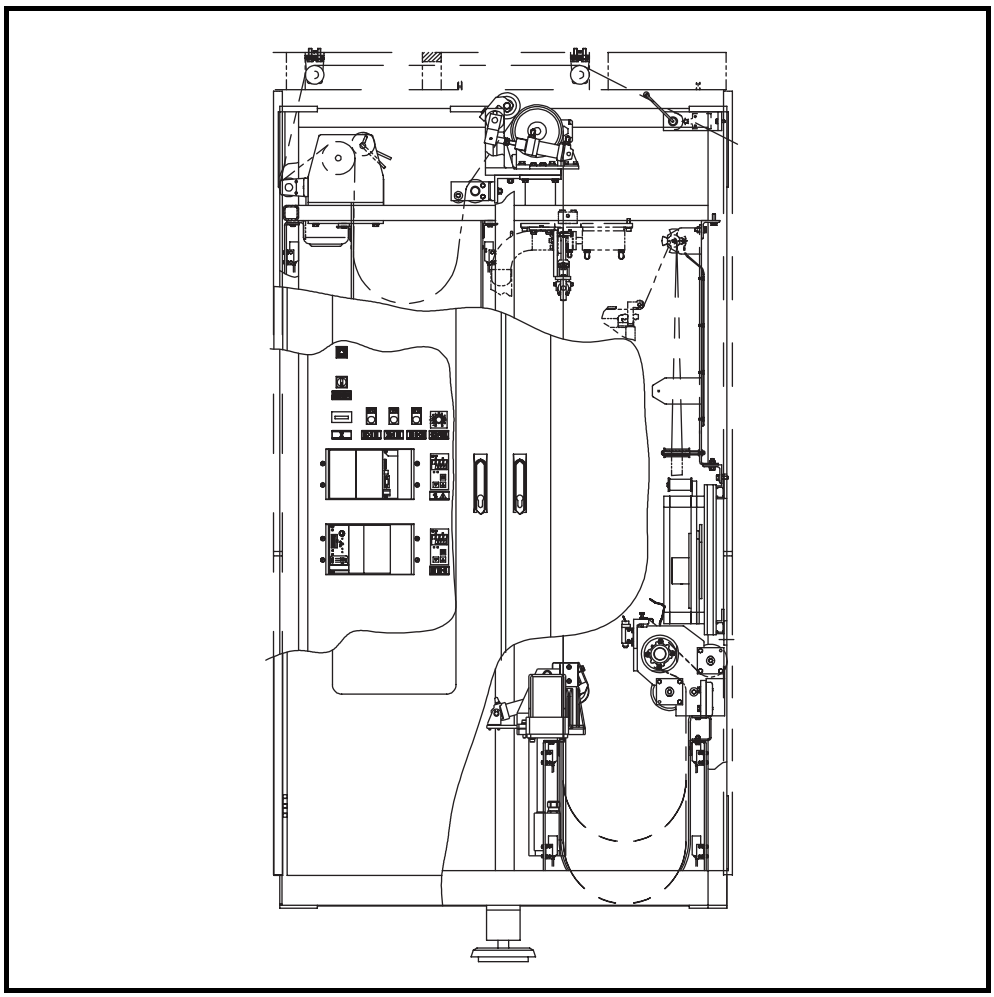

2.282488014fro.fm

Tetra Pak

Doc No. MM-82488-0104

This document is valid for:

Series No/ Machine No Sign.

PullTab Unit
PT21
648508-0300 (TBA/21 040V)

Valid from machines series No. :

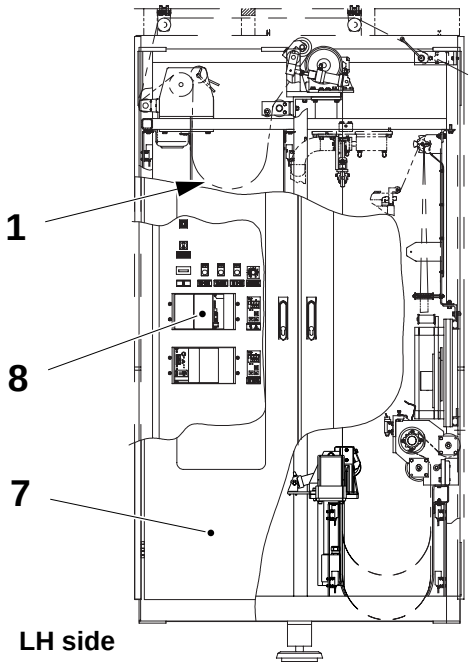

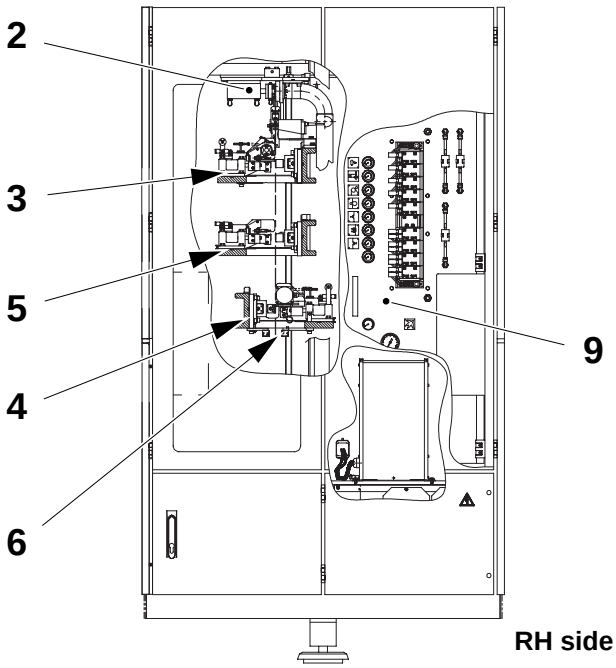

2.282488014fro.fm

1 Paper web path
2 Punch/waste unit
3 Applicator patch
4 Applicator tab
5 Applicator reseal
6 PullTab detection
7 Frame and safety function
8 Electrical cabinet
9 Pneumatic equipment
10 General
11 Checklist overview

Issue 2002-10

Doc No. MM-82488-0104

Tetra Pak

Tetra Pak Carton Ambient

Introduction

Equipment information 2
Document information 3
How to use this manual 4
Abbreviation used in this manual 6
Machine orientation 7
Functional description 8
Main flowchart 10

Safety precautions

Hazard information 12
General 12
Mandatory signs 13
Danger and warning signs 14
Personnel 16
General safety precautions 17
Hygiene 17
High voltage 17
Electrical cabinet 18
Machine safety devices 19
Emergency stop buttons 19
Doors, covers and guards 20
Cooling system (PT21 electrical cabinet) 21
Equipment for lifting and moving loads 22

2.282488014TOC.fm

1 Paper web path

1-0 Paper web path - description 24
1-1 Paper web path - functional description 25

1.1 Setting flow chart 28

1.2 Paper web path 29

1.2-1 Paper web path - check packaging material tracking 29

1.2-2 Paper web path - set alignment rollers 30

1.2-3 Paper web path - set packaging material position 33

1.2.1 Drive motor 34

1.2.1-1 Drive motor - remove clamping element 34

1.2.1-2 Drive motor - assemble clamping element 35

1.2.1-3 Drive motor - check pressure roller and drive wheel 36

1.2.1-4 Drive motor - change bearings 37

1.2.1-5 Drive motor - change drive wheel 38

1.2.1-6 Drive motor - set cylinder 42

1.2.1-7 Drive motor - change 43

1.2.2 Roller assembly 44

1.2.2-1 Roller assembly - check rollers 44

1.2.2-2 Roller assembly - change roller bearings 46

1.2.2-3 Roller assembly - change damper 48

1.2.2-4 Roller assembly - set tension roller 49

1.2.3 Bending roller assembly 50

1.2.3-1 Bending roller assembly - check 50

1.2.3-2 Bending roller assembly - change bearings 50

1.2.4 Infeed unit 51

1.2.4-1 Infeed unit - check rollers 51

1.2.4-2 Infeed unit - check function 52

1.2.4-3 Infeed unit - change carbon brushes 53

1.2.4-4 Infeed unit - set bending roller speed 54

1.2.4-5 Infeed unit - change worm gear motor 57

1.2.4-6 Infeed unit - change bearings 58

1.2.4-7 Infeed unit - check bending roller assembly. 60

2.282488014TOC.fm

1.2.4-8 Infeed unit - set spring bracket 61
1.2.5 Paper brake 62
1.2.5-1 Paper brake - check 62
1.2.5-2 Paper brake - check bending roller flange 63
1.2.5-3 Paper brake - set cylinder 64
1.2.5-4 Paper brake - set brake regulator card 65
1.2.5-5 Paper brake - change wheel 68
1.2.5-6 Paper brake - remove clamping element 68
1.2.5-7 Paper brake - assemble clamping element 68
1.2.6 Edge guide 69
1.2.6-1 Edge guide - check bearings 69
1.2.6-2 Edge guide - change bearings 69
1.2.6-3 Edge guide - set 70
1.2.7 Photocell unit infeed 71
1.2.7-1 Photocell unit infeed - check 71
1.2.7-2 Photocell unit infeed - set 72
1.2.8 Photocell unit outfeed 74
1.2.8-1 Photocell unit outfeed - check 74
1.2.8-2 Photocell unit outfeed - set 75
1.2.9 By-pass sensor 77
1.2.9-1 By-pass sensor - check 77
1.3 Bar code reader 78
1.3-1 Bar code reader - set photocells 78

2 Punch/waste unit

2-0 Punch/waste unit - description 82
2-1 Punch/waste unit - functional description 83
2.1 Setting flow chart 84
2.2 Punch unit 85
2.2-1 Punch unit - set hole position 85

2.282488014TOC.fm

2.2-2 Punch unit - check stripper pins and springs 88
2.2-3 Punch unit - change stripper pins and springs 89
2.2-4 Punch unit - check cylinder 90
2.2-5 Punch unit - change cylinder 91
2.2-6 Punch unit - check punch and die 92
2.2-7 Punch unit - change punch and die 93
2.2-8 Punch unit - set punch and die 94
2.2-9 Punch unit - set proximity switch 96

2.3 Waste box 97

2.3-1 Waste box - check box and waste pipe 97
2.3-2 Waste box - set photocell 98

3 Applicator patch

3-0 Applicator patch - description 100
3-1 Applicator patch - functional description 101

3.1 Setting flow chart 105

3.2 Applicator patch 106

3.2-1 Applicator patch - check patch position 106
3.2-2 Applicator patch - check heat pattern 110

3.2.1 Patch feeder 113

3.2.1-1 Patch feeder - check knives 113
3.2.1-2 Patch feeder - change knives 114
3.2.1-3 Patch feeder - remove 115
3.2.1-4 Patch feeder - set window knife 116
3.2.1-5 Patch feeder - set sealing plate 117
3.2.1-6 Patch feeder - check guides and linear bearings 118
3.2.1-7 Patch feeder - change linear bearings 119
3.2.1-8 Patch feeder - change bushings 120

2.282488014TOC.fm

3.2.1-9 Patch feeder - change cylinder 122
3.2.1-10 Patch feeder - check sealing plate 123
3.2.1-11 Patch feeder - check function 124
3.2.1-12 Patch feeder - set strip feed 125
3.2.1-13 Patch feeder - set proximity switch 126
3.2.1-14 Patch feeder - set position 127
3.2.1-15 Patch feeder - change shims 128

3.2.2 Patch counter jaw 130

3.2.2-1 Patch counter jaw - remove 130
3.2.2-2 Patch counter jaw - check inductor 131
3.2.2-3 Patch counter jaw - change inductor 132
3.2.2-4 Patch counter jaw - check guide bushing 133
3.2.2-5 Patch counter jaw - change cushion cylinder 134
3.2.2-6 Patch counter jaw - set cushion cylinder 135
3.2.2-7 Patch counter jaw - set position 136

3.3 Magazine patch 137

3.3-1 Magazine patch - check 137
3.3-2 Magazine patch - set proximity switch 139
3.3-3 Magazine patch - set strip tension 140
3.3-4 Magazine patch - change bobbin holder bearings 141
3.3-5 Magazine patch - check bobbin holder 142

3.3.1 Splicing device. 143

3.3.1-1 Splicing device - check function 143
3.3.1-2 Splicing device - change knife 144
3.3.1-3 Splicing device - set lock grip 145

3.3.2 Guide patch 146

3.3.2-1 Guide patch - change curve rollers 146

3.3.3 Patch turning device 147

3.3.3-1 Patch turning device - check 147
3.3.3-2 Patch turning device - set rotation monitor proximity switch 148

2.282488014TOC.fm

4 Applicator tab

4-0 Applicator tab - description 150

4-1 Applicator tab - functional description 151

4.1 Setting flow chart 155

4.2 Applicator tab 156

4.2-1 Applicator tab - check tab position 156

4.2-2 Applicator tab - set tab counter jaw position 161

4.2.1 Tab feeder 163

4.2.1-1 Tab feeder - check knives 163

4.2.1-2 Tab feeder - change knives 164

4.2.1-3 Tab feeder - remove 165

4.2.1-4 Tab feeder - set window knife 166

4.2.1-5 Tab feeder - set sealing plate 167

4.2.1-6 Tab feeder - check guides and linear bearings 168

4.2.1-7 Tab feeder - change linear bearings 169

4.2.1-8 Tab feeder - check tab position 170

4.2.1-9 Tab feeder - change bushings 171

4.2.1-10 Tab feeder - change cylinder 173

4.2.1-11 Tab feeder - check sealing plate 174

4.2.1-12 Tab feeder - check function 175

4.2.1-13 Tab feeder - set tab feed 176

4.2.1-14 Tab feeder - set proximity switch 177

4.2.1-15 Tab feeder - set position 178

4.2.1-16 Tab feeder - change heater and thermocouple 179

4.2.2 Tab counter jaw 181

4.2.2-1 Tab counter jaw - remove 181

4.2.2-2 Tab counter jaw - change counter plate 182

4.2.2-3 Tab counter jaw - check guide bushing 183

4.2.2-4 Tab counter jaw - change cushion cylinder 184

2.282488014TOC.fm

4.2.2-5 Tab counter jaw - set cushion cylinder 185
4.2.2-6 Tab counter jaw - set position 186

4.3 Magazine PullTab 187

4.3-1 Magazine PullTab - check 187
4.3-2 Magazine PullTab - set proximity switch 189
4.3-3 Magazine PullTab - set strip tension 190
4.3-4 Magazine PullTab - change bobbin holder bearings 191
4.3-5 Magazine PullTab - check bobbin holder 192

4.3.1 Splicing device. 193

4.3.1-1 Splicing device - check function 193
4.3.1-2 Splicing device - change knife 194
4.3.1-3 Splicing device - set lock grip 195

4.3.2 Guide PullTab. 196

4.3.2-1 Guide PullTab - change curve rollers 196

4.3.3 Tab turning device. 197

4.3.3-1 Tab turning device - check 197
4.3.3-2 Tab turning device - set rotation monitor proximity switch 198

4.4 Tab folding device 199

4.4-1 Tab folding device - check function 199
4.4-2 Tab folding device - set folding device 200
4.4-3 Tab folding device - set paper guide 204
4.4-4 Tab folding device - check paper guide bearings 206
4.4-5 Tab folding device - change paper guide bearings 206

4.5 Tab folding device (alternative solution) 207

4.5-1 Tab folding device - check 207
4.5-2 Tab folding device - set. 209
4.5-3 Tab folding device - set paper guide 220

2.282488014TOC.fm

5 Applicator reseal

5-0 Applicator reseal - description 222
5-1 Applicator reseal - functional description 223

5.1 Setting flow chart 225

5.2 Applicator reseal 226

5.2-1 Applicator reseal - check reseal position 226
5.2-2 Applicator reseal - check heat pattern 228

5.2.1 Reseal heating jaw 233

5.2.1-1 Reseal heating jaw - remove 233
5.2.1-2 Reseal heating jaw - set sealing plate 234
5.2.1-3 Reseal heating jaw - check guides and linear bearings 235
5.2.1-4 Reseal heating jaw - change linear bearings 236
5.2.1-5 Reseal heating jaw - change bushing 237
5.2.1-6 Reseal heating jaw - change cylinder 238
5.2.1-7 Reseal heating jaw - check sealing plate 239
5.2.1-8 Reseal heating jaw - set proximity switch 240

5.2.2 Reseal counter jaw 241

5.2.2-1 Reseal counter jaw - remove 241
5.2.2-2 Reseal counter jaw - check inductor 242
5.2.2-3 Reseal counter jaw - change inductor 243
5.2.2-4 Reseal counter jaw - check guide bushing 244
5.2.2-5 Reseal counter jaw - change cushion cylinder 245
5.2.2-6 Reseal counter jaw - set cushion cylinder 246

2.282488014TOC.fm

6 PullTab detection

6-0 PullTab detection - description 248

6-1 PullTab detection - functional description 249

6.1 Missing patch detector 250

6.1-1 Missing patch detector - check 250

6.1-2 Missing patch detector - set 251

6.2 Missing tab detector 252

6.2-1 Missing tab detector - check 252

6.2-2 Missing tab detector - set 253

6.3 Splice detector 254

6.3-1 Splice detector - check (black tape) detector 254

6.3-2 Splice detector - set (black tape) detector 255

2.282488014TOC.fm

7 Frame and safety function

7-0 Frame and safety function - description 258

7.1 Cover arrangement 259

7.1-1 Cover arrangement - check safety function 259

7.2 Applicators and lifting device 260

7.2.1 Applicators 260

7.2.1-1 Applicators - set brackets position 260

7.2.2 Lifting device 270

7.2.2-1 Lifting device - check 270

7.2.2-2 Lifting device - set timing belt 271

8 Electrical cabinet

8-0 Electrical cabinet - description 274

8-1 Electrical cabinet - PullTab controls 275

8.1 Temperature regulators 276

8.1-1 Temperature regulators - set 276

8.1-2 Temperature regulators - change 280

8.2 Mounting plate 281

8.2.1 Tetra Pak Machine Controller (TPMC) 281

8.2.1-1 TPMC - check battery 281

8.2.1-2 TPMC - set ID selectors 282

8.2.1-3 TPMC - set patch and tab length 283

8.2.2 Safety relays 289

8.2.2-1 Safety relays - check function 289

8.3 TMCC 290

8.3-1 TMCC - function description 290

8.3-2 TMCC - basic set 291

8.3-3 TMCC - change cards 292

8.3-4 TMCC - set control card 295

8.3-5 TMCC - set stepper motor cards 296

8.4 TPIH Generator 297

8.4-1 TPIH Generator - function description 297

8.4-2 TPIH Generator - check function 298

8.4-3 TPIH Generator - check cables 304

8.4-4 TPIH Generator - change transformer 305

8.4-5 TPIH Generator - change generator 306

8.4-6 TPIH Generator - set sealings 307

8.5 DMC card 308

8.5-1 DMC card - function description servo drive 308

8.5-2 DMC card - function description STD 312

8.5-3 DMC card - set basic 316

8.6 Fuse box 318

8.6-1 Fuse box - set overload protection 318

8.6-2 Fuse box - set fuse 319

2.282488014TOC.fm

8.7 Cooler 320

8.7-1 Cooler - check air flow 320

8.7-2 Cooler - clean filter insert 321

9 Pneumatic equipment

9-0 Valve panel - description 324

9.1 Air inlet group 325

9.1-1 Air inlet group - set pressure switch 325

9.1-2 Air inlet group - clean filter insert 326

9.2 Valve panel 327

9.2-1 Valve panel - change air filters 327

10 General

10-0 General - description 330

10.1 Technical data 331

2.282488014TOC.fm

11 Checklist overview

Checklist overview - description. 336

TPMS - description 336

Checklist overview 337

This page intentionally left blank

2.282488014TOC.fm

Introduction

To ensure maximum safety, always read the *Safety precautions* section before doing any work on the equipment or making any adjustments.

2.282488014int.fm

Equipment information

Purpose

The purpose of this Tetra Pak equipment is to apply opening tabs to packaging material entering liquid product filling machines.

Manufacturer

This Tetra Pak equipment has been manufactured by:

Tetra Pak Carton Ambient AB
Ruben Rausings gata
22186 LUND
Sweden
or
Tetra Pak Carton Ambient S.p.A.
Via Delfini 1
41100 MODENA
Italy

Service

Contact the nearest Tetra Pak service station.

Identification

The figure shows an example of the equipment sign. The sign carries data needed when contacting Tetra Pak concerning this specific equipment.

CE marking

This equipment complies with the basic health and safety regulations of the European Economic Area (EEA).

2.282488014int.fm

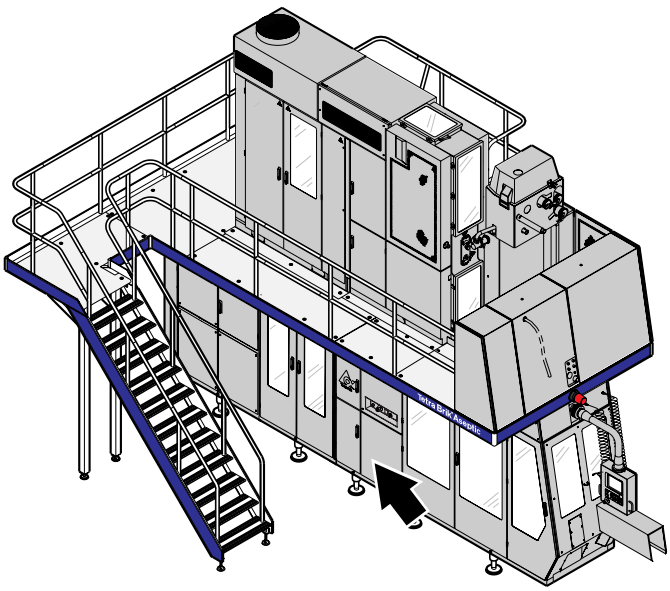

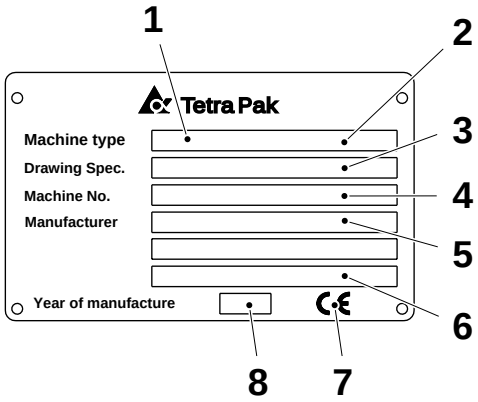

1 Machine type
2 Volume
3 Drawing specifications
4 Machine serial number
5 Manufacturer
6 Designed by
7 CE mark
8 Year of manufacture

Document information

Purpose of Maintenance Manual (MM)

The purpose of this Maintenance Manual is to provide the service technicians with:

- all **scheduled maintenance** procedures listed in the checklists
- information for **unscheduled maintenance** such as:
  - additional maintenance procedures
  - functional descriptions
  - system descriptions

The same **structure**, **codes** and **denominations** used in this MM, are used in the Spare Part Catalogue (SPC) and in the checklists.

It is important to:

- keep the manual for the life of the equipment
- pass the manual on to any subsequent holder or user of the equipment

Design modifications

The directives in this document are in accordance with the design and construction of the equipment at the time it was delivered from the Tetra Pak production plant.

Technical publications

The technical publications for this equipment are:

- Electrical Manual (EM)
- Installation Manual (IM)
- Maintenance Manual (MM)
- Operation Manual (OM)
- Spare Parts Catalogue (SPC)

Additional copies can be ordered from the nearest Tetra Pak service station.

When ordering technical publications, always quote the **document number** that can be found in the machine specification document.

(Cont'd)

2.282488014int.fm

(Cont'd)

Number of pages

This document contains a total of *340* pages.

Copyright © 2001
Tetra Pak Carton Ambient
All rights reserved. No part of this document may be reproduced or copied in any form or by any means without the written permission of Tetra Pak Carton Ambient .

How to use this manual

Page layout

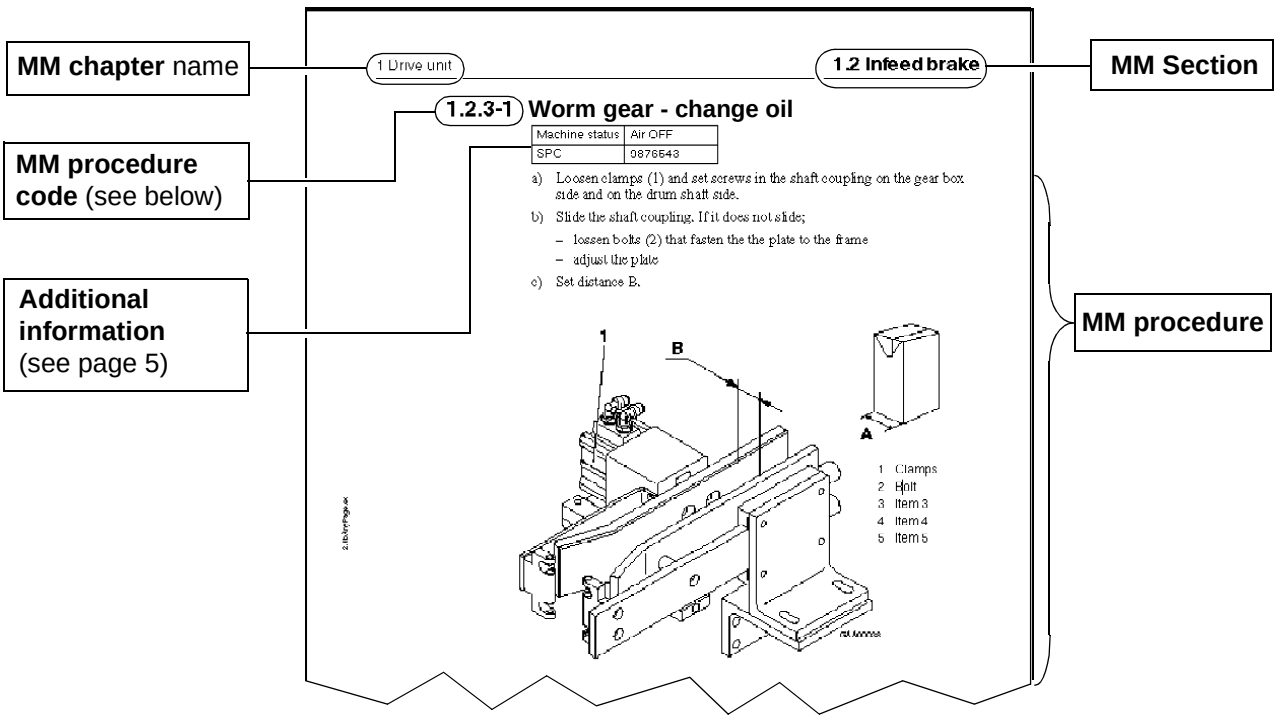

2.282488014int.fm

(Cont'd)

(Cont'd)

MM procedure codes

The maintenance procedures are indicated as shown by the example below:

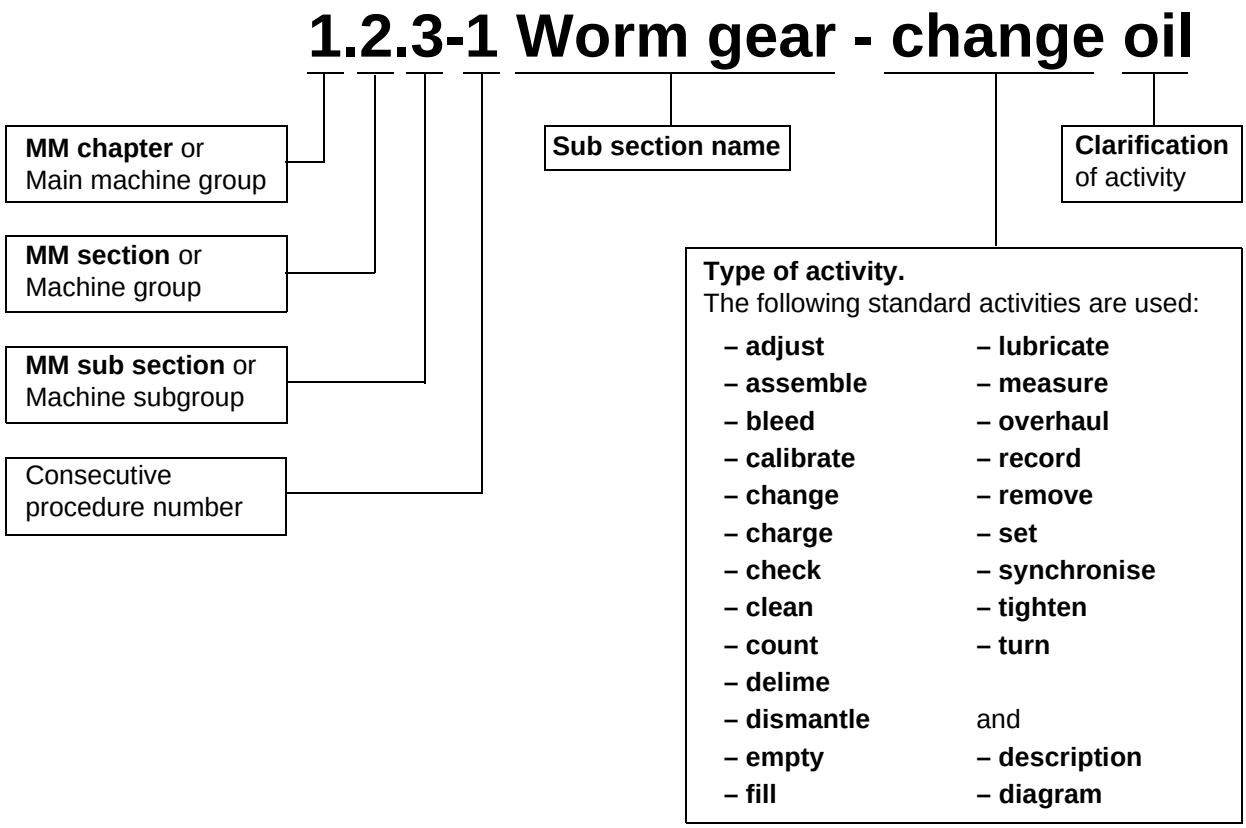

2.282488014int.fm

Additional information

The following additional information is included in each MM procedure as applicable.

1.2.3-1 Worm gear - change oil

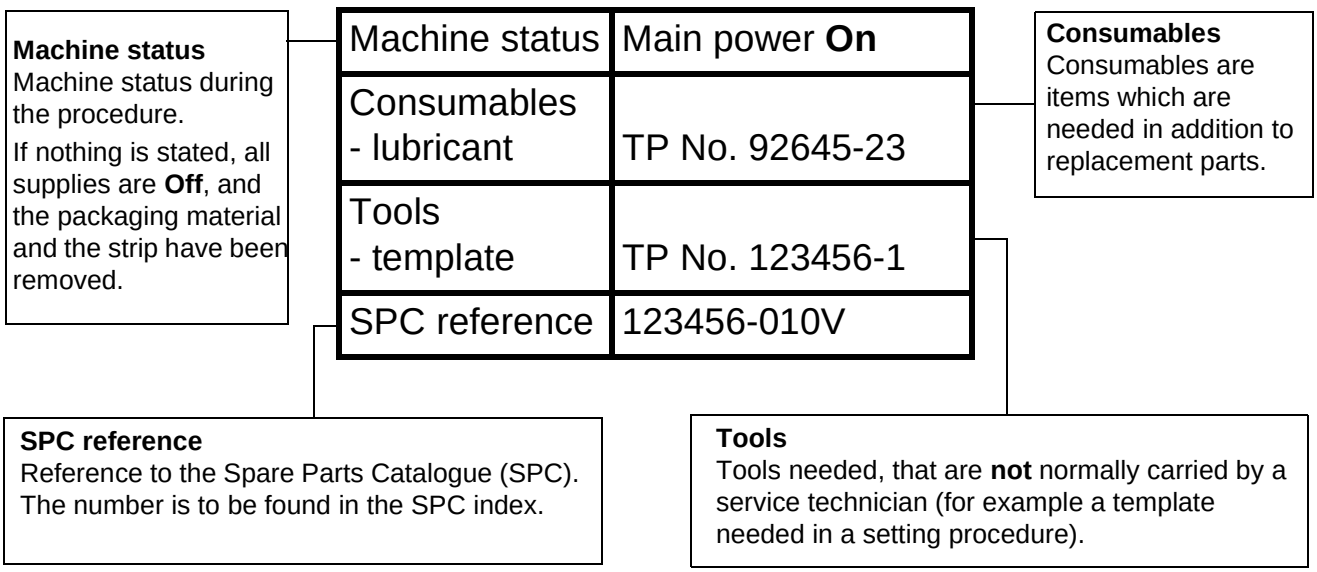

Abbreviation used in this manual

Approx.	Approximately
ASU	Automatic Splicing Unit
DMC	Digital Motion Controller
EM	Electrical Manual
FFU	Final Folder Unit
HSC	High Speed Counter
IM	Installation Manual
IS	Inner Strip
LED	Light Emitting Diode
LH	Left hand side
LSB	Last Significant Bit
min.	Minimum
max.	Maximum
MM	Maintenance Manual
MSB	Most Significant Bit
OM	Operator Manual
OE	Optional Equipment
OK	Optional Kit
PC	Personal Computer
PLC	Programmable Logic Controller
PH	Perforation Heater
RC	Reference Count
RH	Right hand side
SPC	Spare Parts Catalogue
TMCC	Tetra Pak Multi-purpose Compact Controller
TPMS	Tetra Pak Maintenance System
TPIH	Tetra Pak Induction Heating
TPOP	Tetra Pak Operator Panel
TP	Tetra Pak
TPMC	Tetra Pak Machine Control
TS	Transversal Sealing

2.282488014int.fm

Machine orientation

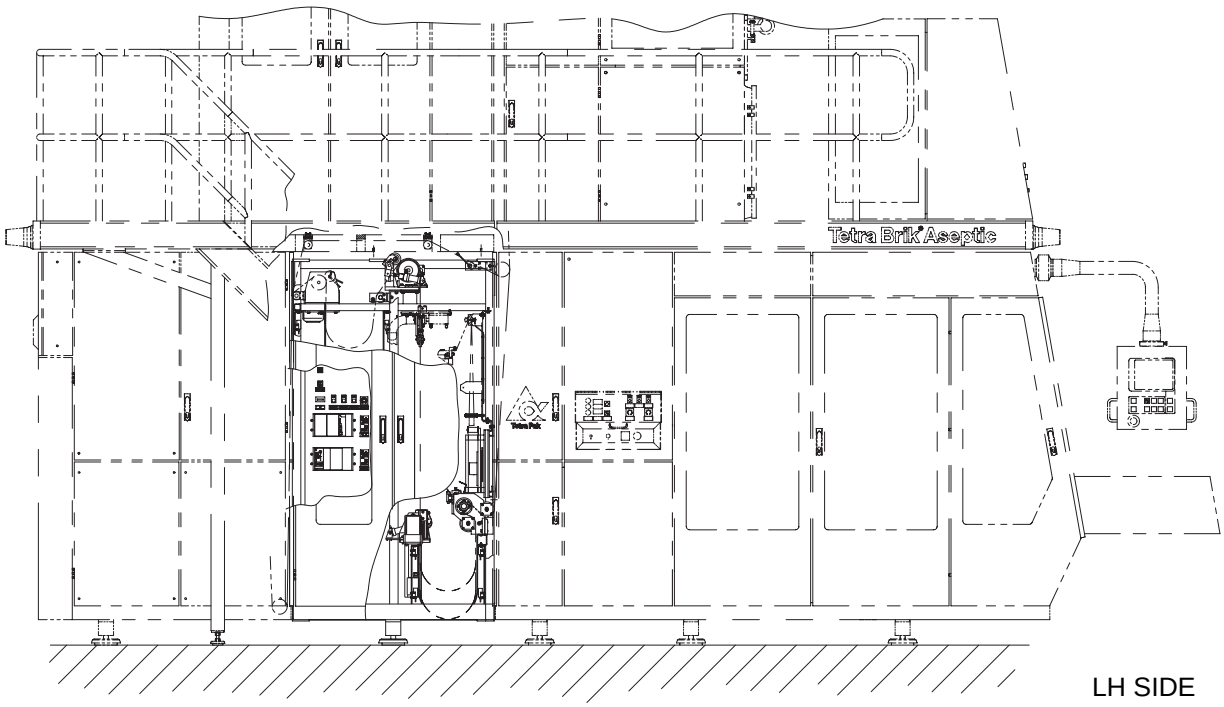

LH SIDE

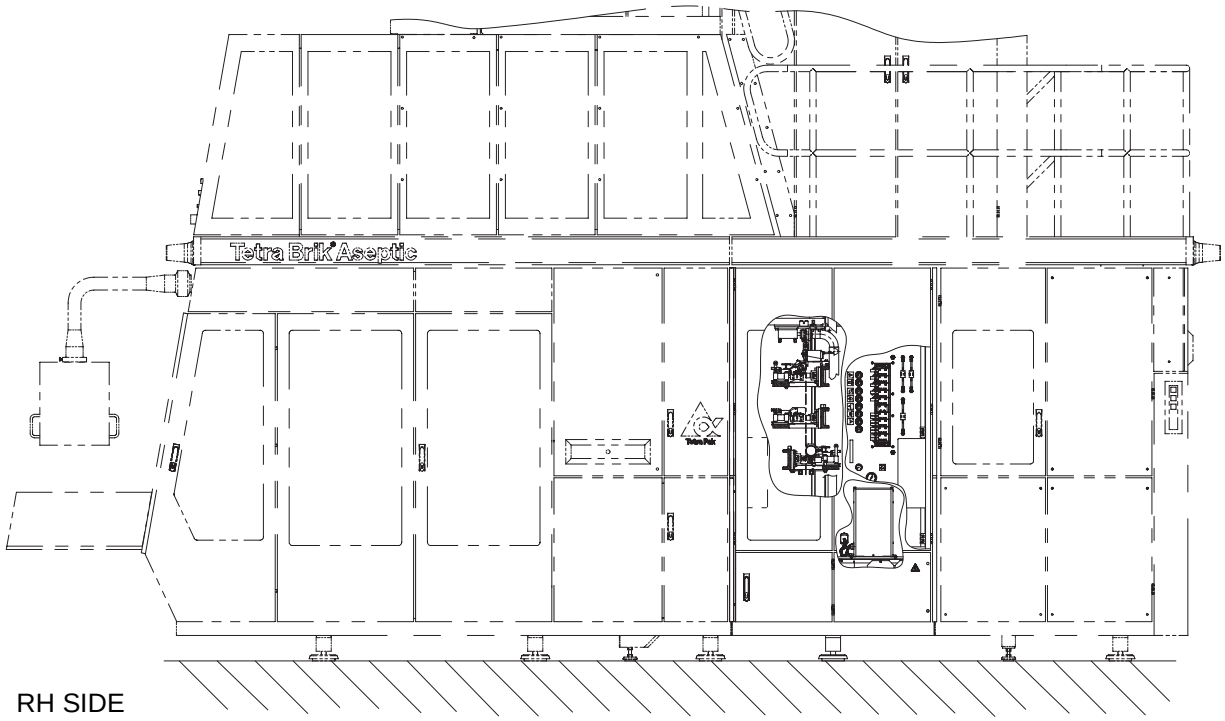

RH SIDE

2.282488014int.fm

Functional description

The PullTab unit processes packaging material as and when required by the filling machine. When the filling machine pulls packaging material, the lower photocell (6) in the outfeed assembly (5) is activated. This starts the PullTab cycle, and one length of packaging material is fed into position.

When the packaging material is in motion, the register mark photocells (3) read the position of the register mark. If the register mark is slightly behind or ahead of its ideal position, the servo motor compensates for this by feeding more or less packaging material the next time, as required.

When the packaging material has moved into position: one PullTab hole is punched into the packaging material at the punch unit (4); an IS patch is applied over the PullTab hole at the IS patch applicator assembly (1), then the packaging material comes to the reseal unit assembly (7) that provides a complete sealing of the IS patch on the packaging material; ultimately a tab is applied over the PullTab hole at the tab applicator assembly (2).

When the cycle has completed, the PullTab unit waits until the lower photocell (6) indicates that the outfeed assembly (5) requires more packaging material, and then the whole cycle is repeated.

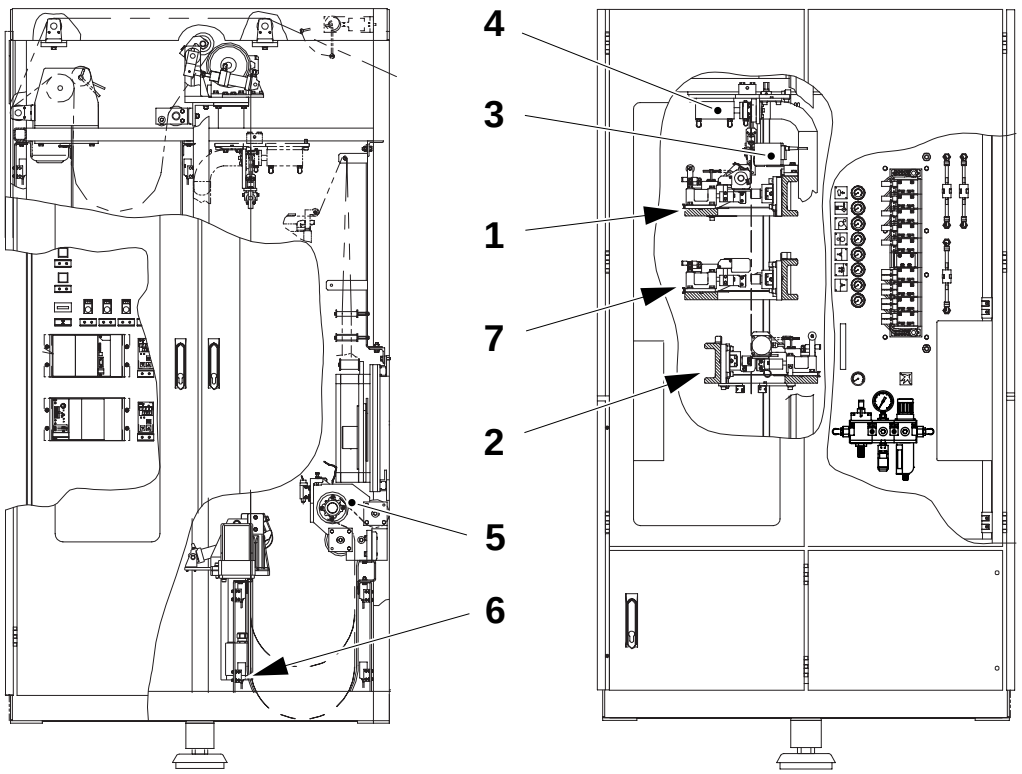

1 IS patch applicator
2 Tab applicator
3 Register mark photocell
4 Punch unit
5 Outfeed assembly
6 Lower photocell
7 Reseal unit

(Cont'd)

2.282488014int.fm

(Cont'd)

When the supply of packaging material in the infeed assembly (13) is low, (lower photocell (15) activated), the infeed motor (11) refills the supply. If the supply of packaging material is used up faster than it is refilled, the infeed motor (11) goes into **fast** mode. If the upper photocell (14) is deactivated, the PullTab and the filling machine go into **Short stop** mode.

If the filling machine is running without the packaging material going through the PT21, the PT21 plus the filling machine will go into **Short stop** mode after 3 seconds and the alarm outfeed loop will be shown on the TPOP panel.

The IS patch magazine (8) and the tab magazine (12) provide a supply of strips to the PullTab unit. Sensors in the magazines monitor the strip supply and activate the appropriate alarms when the supply is low. Other sensors activate the appropriate alarms if the strips break. If any alarm is left unattended for more than five minutes the PullTab plus the filling machine go into **Short stop** mode.

The IS patch detector (9) monitors the absence of an IS patch on the inside of the packaging material, and the tab detector (10) monitors the absence of a tab on the outside of the packaging material. When a tab or IS patch is missing, the PullTab plus the filling machine go into **Short stop.**

The tab-folding device in the filling machine folds back the loose end of the tab in preparation for application of the ReCap.

2.282488014int.fm

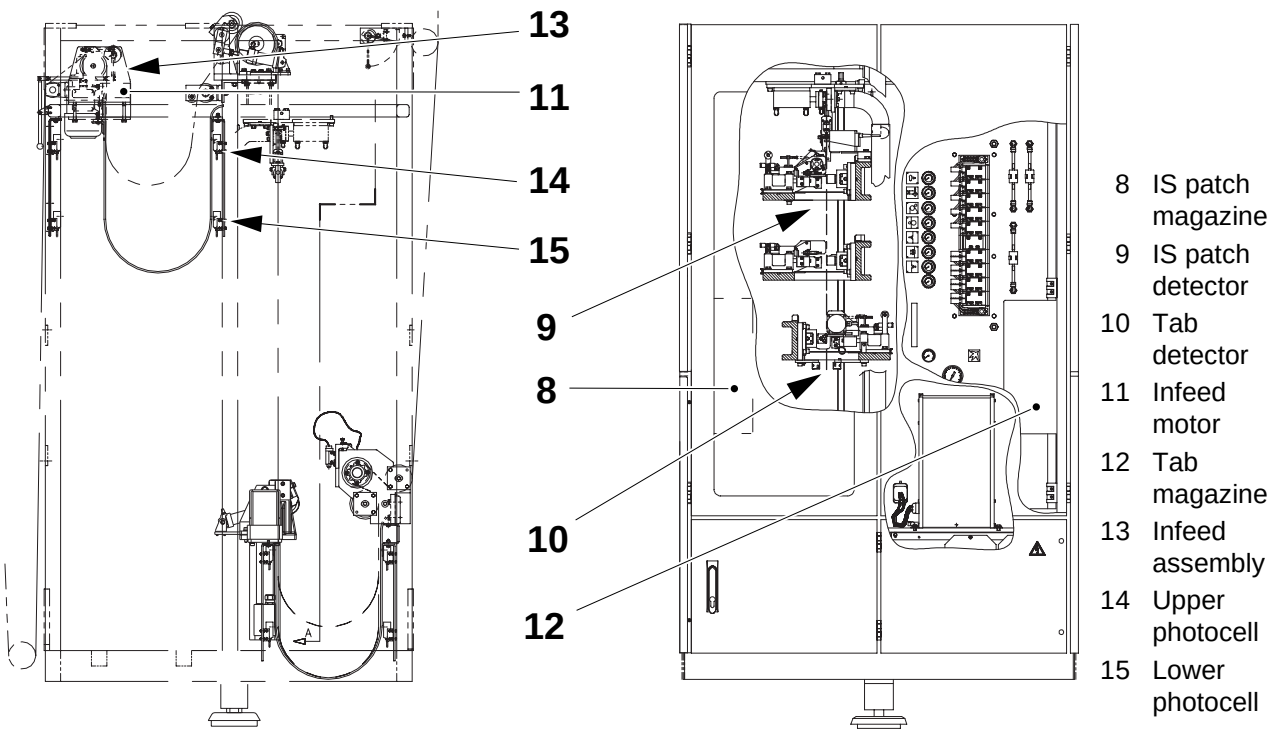

Main flowchart

The following flowchart shows the complete order in which the PullTab unit must be set up.

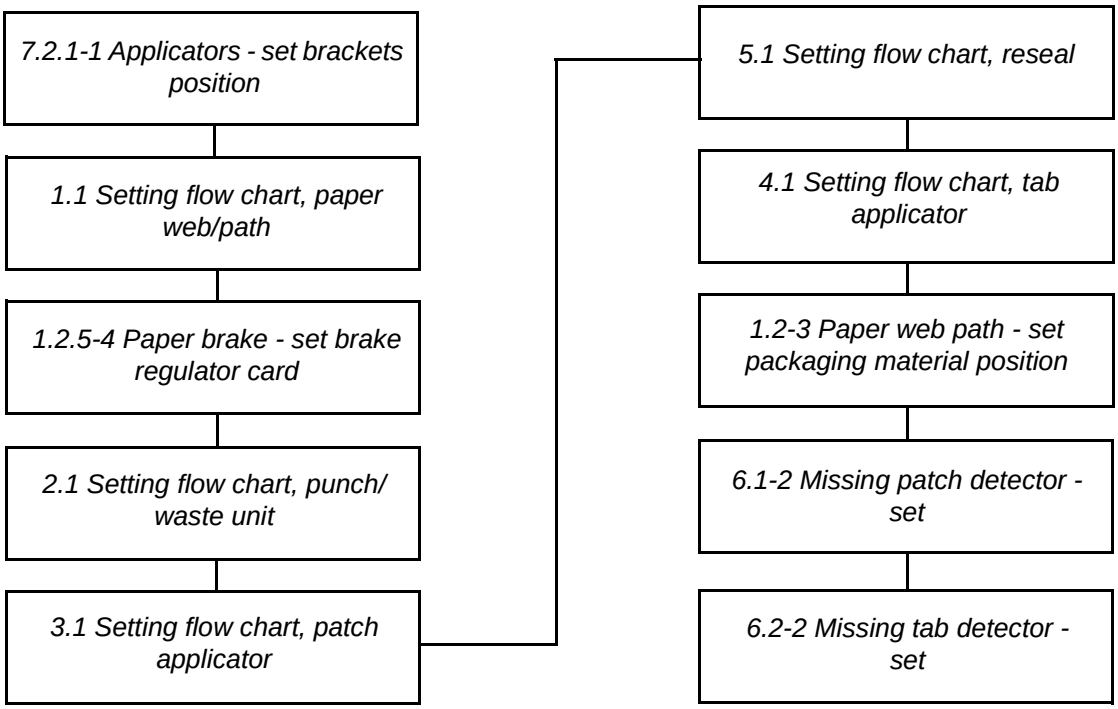

2.282488014int.fm

Safety precautions

To ensure maximum safety, always read this section carefully before doing any work on the equipment or making any adjustments.

2.282488014sp.fm

Hazard information

General



Failure to observe information marked “DANGER!” **puts your life in danger**.



Failure to observe information marked “WARNING!” can result in **personal injury and/or serious damage to or destruction of equipment**.

Caution! Failure to observe information marked “Caution!” can result in **damage to equipment**.

2.282488014sp.fm

Mandatory signs

 **Wear eye protection**	 **Wear hearing protection**
 **Wear head protection**	 **Wear protective gloves**
 **Disinfect hands/gloves**	

2.282488014sp.fm

Danger and warning signs

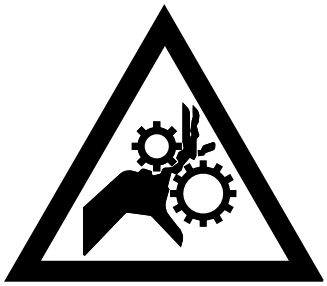 **Risk of entanglement!**	 **Risk of corrosion!**
 **Risk of crushing!**	 **Risk of cutting/amputation!**
 **Risk of burns!**	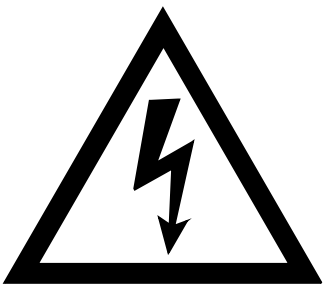 **Risk of electrocution!**

(Cont'd)

2.282488014sp.fm

(Cont'd)

 **Risk of crushing!**	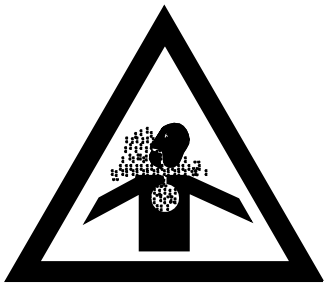 **Risk of intoxication!**
 **Risk of falling!**	 **Risk of residual voltage!**

2.282488014sp.fm

Personnel

Only skilled or instructed people are allowed to work on the equipment.

The manufacturer declines all responsibility for injury or damage if the instructions in this manual are not followed.

Personnel are responsible for:

- the equipment and the work area around the equipment
- all personnel in the vicinity of the equipment
- making sure that all safety devices are fully operational

Personnel must regard all electrical equipment as live. Before carrying out maintenance or repair work, switch the equipment off at the mains power and padlock the switch.

Electricians should be certified according to local regulations and have experience of similar types of installations, proven skills in reading and working from drawings and cable lists, and knowledge of local safety regulations regarding power and automation. Work with the electrical equipment must be performed only by skilled or instructed technicians.

According to EN 60204-1, 3.30 an instructed person is:

– *An individual adequately advised or supervised by a skilled person to enable that individual to avoid hazards which electricity can create (e.g. operating and maintenance staff)*

According to EN 60204-1, 3.55 a skilled person is:

– *An individual with technical knowledge or sufficient experience to enable that individual to avoid hazards which electricity can create.*

2.282488014sp.fm

General safety precautions



Wear hearing protection while the equipment is running.

Hygiene

It is important to keep hands and/or gloves clean.

Disinfect hands and/or gloves before touching the packaging material, the strip(s) or any other equipment part that may come into contact with the product.

Clean the platforms, the ladder and the area around the equipment.

To avoid production faults, it is important that the packaging material and the strip(s) never touch the floor, the platform or the area around the equipment.

High voltage

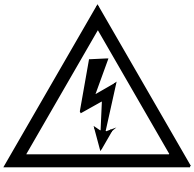

Work with parts marked with this symbol must be performed by **skilled or instructed** persons **only**.

Make sure that the mains power is disconnected before starting any work on electrical equipment marked with this symbol.

In case of accident, call for medical attention immediately.

2.2824880l4sp.fm

Electrical cabinet



There is high voltage in the electrical cabinet (up to 560 V). In case of accident call for medical attention immediately.

Work inside the electrical cabinet must be performed by skilled or instructed persons only.

Electrical cabinet doors locked with screws may be opened only by skilled or instructed persons.

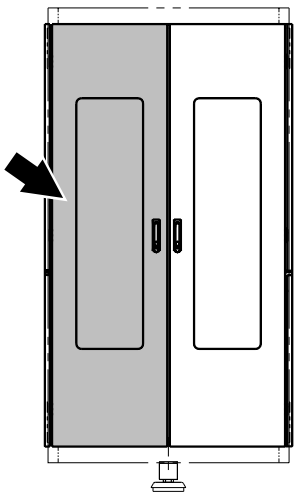

LH side

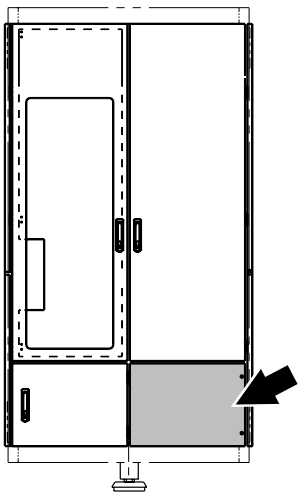

RH side

2.282488014sp.fm

TPIH generator



During operation the voltage in the TPIH generator can be up to 2000 V (400 V when not in operation). In case of accident call for medical attention immediately.

Never open the TPIH generator. Remove and return the unit to an authorised service centre for servicing and repair.

Machine safety devices

Emergency stop buttons

Learn the position of the **Emergency stop** buttons in order to stop the equipment immediately in case of danger to people or damage to the equipment.

The **Emergency stop** buttons do not switch off the power at the mains power switch.

Pushing the **Emergency stop** buttons will reset the equipment program to **Zero** position and deactivate all pneumatic cylinders.

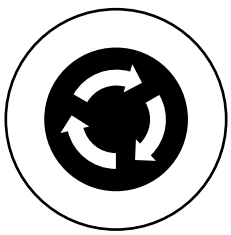

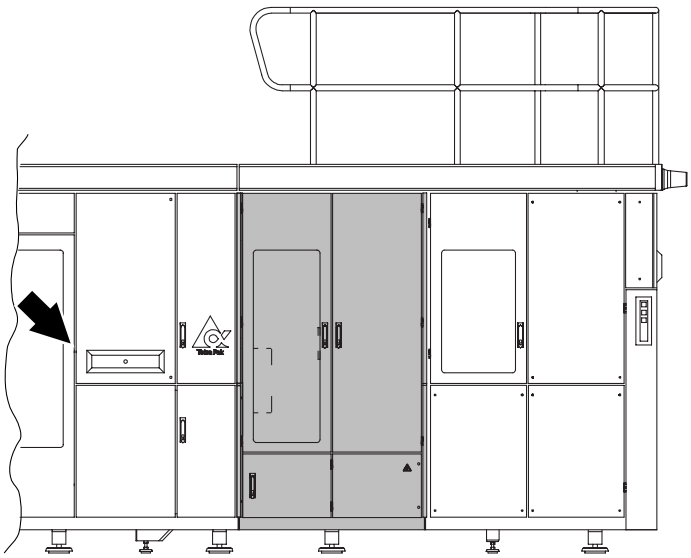

RH side

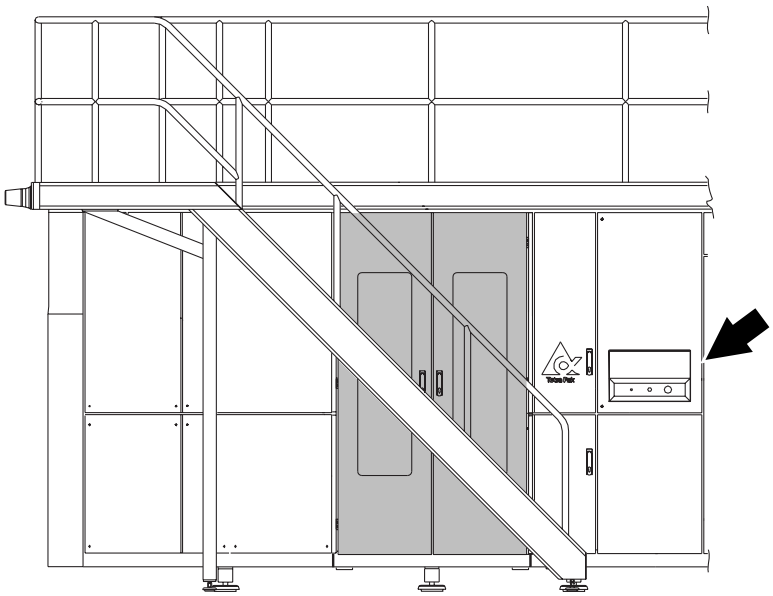

LH side

2.282488014sp.fm

Doors, covers and guards



WARNING!

Make sure that all doors, covers and guards are in place and functioning.

Never remove covers or guards while the equipment is operating.

Certain doors, covers and guards are fitted with safety switches. These switches are part of the safety system and must **never** be bridged, by-passed or otherwise made non-operational.



WARNING!

Never stop the equipment by opening a door or cover fitted with a safety switch.

The equipment may perform a reciprocating movement during the first few seconds after a stop. Some equipment parts may also be hot.

In case of accident, call for medical attention.

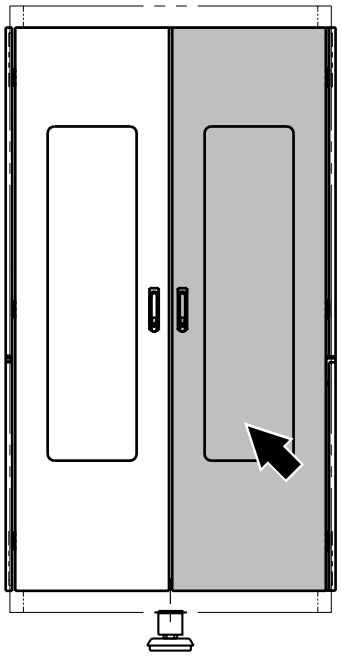

LH side

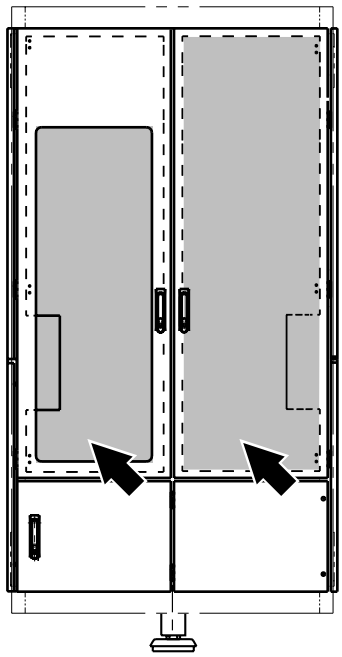

RH side

2.282488014sp.fm

Cooling system (PT21 electrical cabinet)

WARNING!

Risk of personal injury!
Cooling media R134A.
Carefully follow the supplier's instructions for handling and disposal of the R134A (freon).

Cooling media R134A container

- Ensure good ventilation
- Keep the container well closed and in a cool and dry place away from sources of heat
- Avoid direct contact with the product
- Wear suitable protective clothing, gloves, goggles, and eye/face protection
- In case of contact with eyes, rinse immediately with plenty of water for 15 minutes and call for medical attention
- Inhalation of a high concentration can cause shortage of breath and unconsciousness
- In case of inhalation move to fresh air; if needed use oxygen gas or artificial respiration
- Very fast evaporation can cause freezing injuries

Caution! Only specially trained personnel is allowed to operate with the compressor unit in case of compressor leakages.

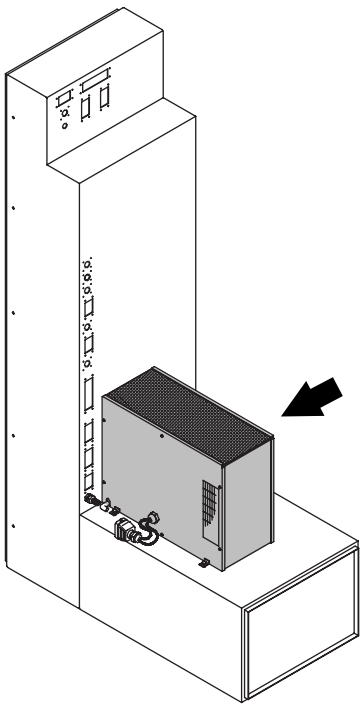

2.282488014sp.fm

Equipment for lifting and moving loads



WARNING!

Make sure that the capacity of the lifting equipment is adequate and that the equipment itself is in good working order.

If lifting tackle has to be joined to make up the necessary lengths, make sure that the joins are secure and have the same lifting capacity as the rest of the tackle.

Always engage the safety clip on lifting hooks to prevent the tackle from slipping off.

Use ropes or poles to steady and manoeuvre loads. Do **not** use hands or feet.

Make sure that the route and the destination are free from obstacles before moving a suspended load. It must be possible to lower the load to the floor quickly and safely in an emergency.

When depositing loads, keep the lifting equipment in place until the stability of the load has been checked.

2.282488014sp.fm

1 Paper web path

2.2B4884A00en.fm

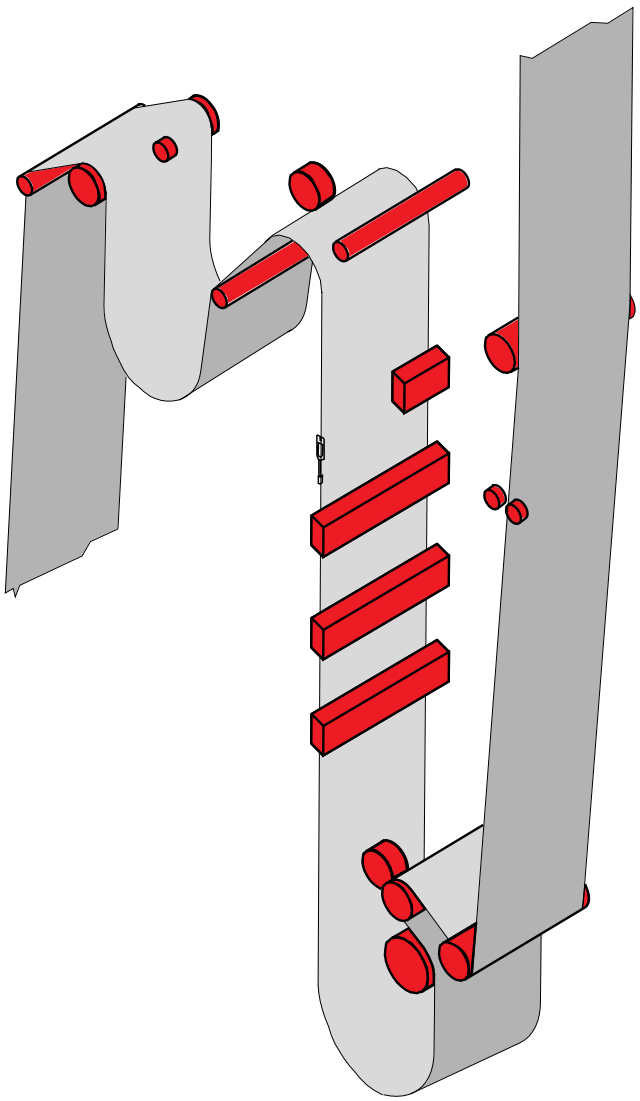

1-0 Paper web path - description

SPC reference	1095931-0200

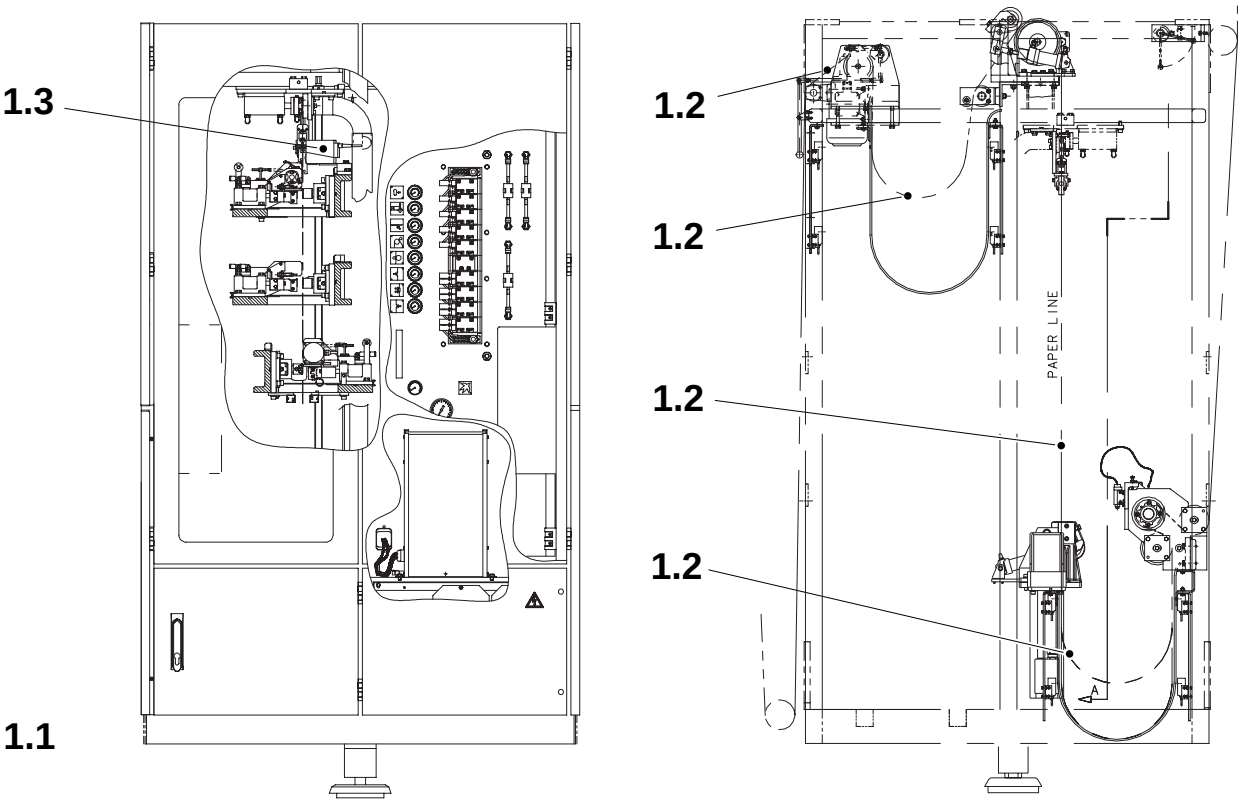

1.1 Setting flow chart
1.2 Paper web path
1.3 Bar code reader

1-1 Paper web path - functional description

SPC reference	1095931-0200

When the filling machine pulls packaging material:

- the PLC receives a signal from the lower photocells in the outfeed paper magazine
- the PLC begins the machine cycle
- the PLC signals to the servo motor to start
- the DMC servo amplifier directs an output to the servo motor, which then makes one index and stops
- as the packaging material is fed, the register mark on the packaging material is detected. The DMC servo amplifier compensates for any variations in the relative position of the register mark.

2.2B4884A00en.fm

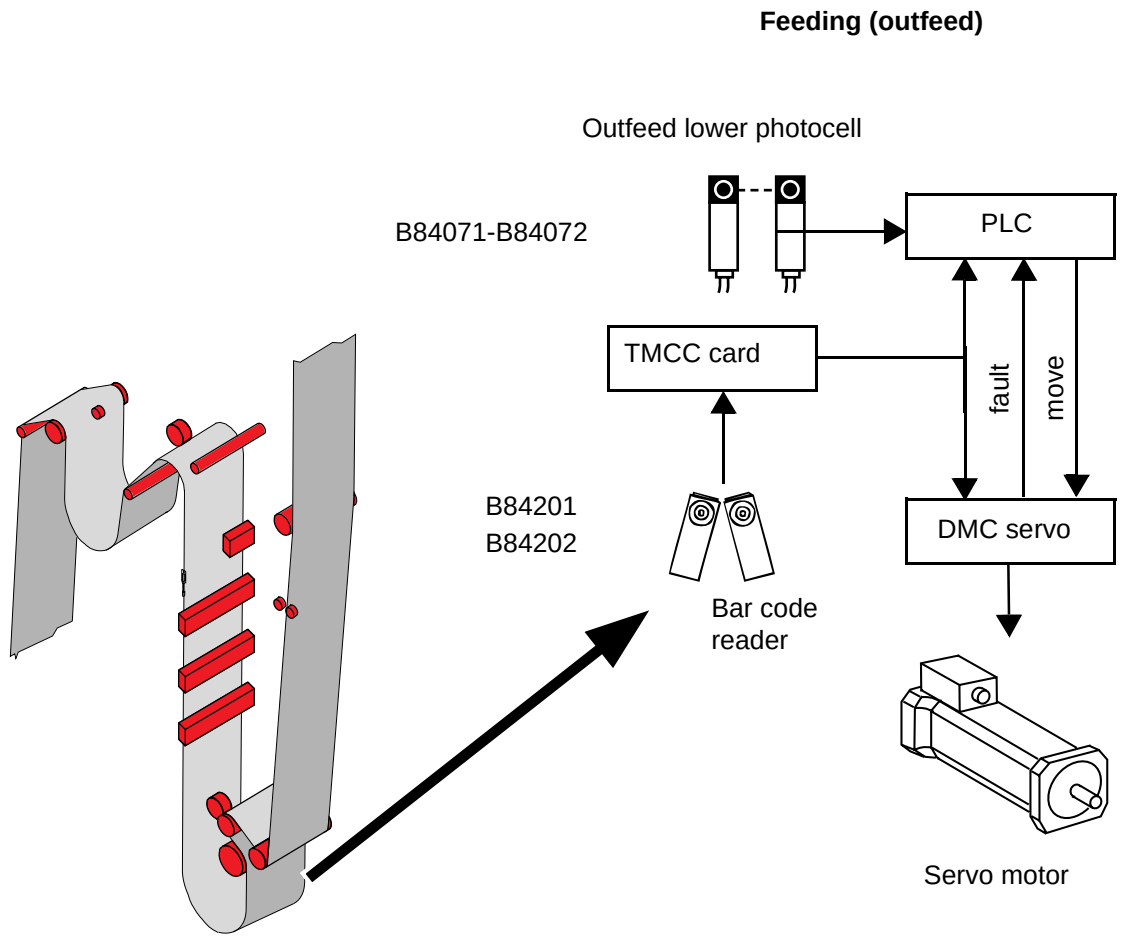

(Cont'd)

(Cont'd)

As the packaging material in the infeed loop is used up:

- the PLC receives a signal from the infeed lower photocell
- the PLC signals the infeed motor, via the DC drive card, to run
- when the lower photocell is activated again, the PLC signals the infeed motor to stop.

Feeding (infeed)

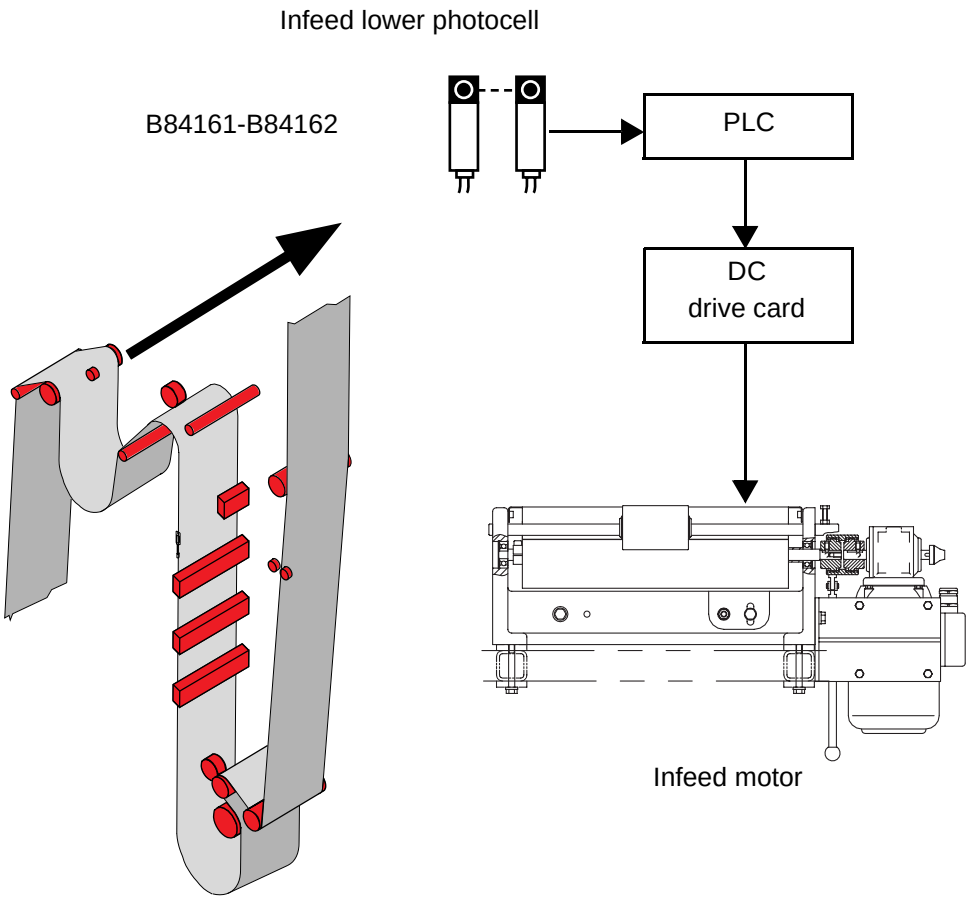

2.2B4884A00en.fm

(Cont'd)

(Cont'd)

During **Production**:

- if the upper photocells in the infeed assembly and/or outfeed assembly are activated because of no paper, the PLC signals the PullTab and the filling machine to go into **Short stop** mode
- if the packaging material web in the PullTab unit is broken, the lower photocells in the outfeed assembly are activated for a fixed period of time. Then the PT21 plus the filling machine will go into **Short stop** mode after three seconds and the alarm outfeed loop will be shown on the TPOP panel.

Paper fault / Broken web

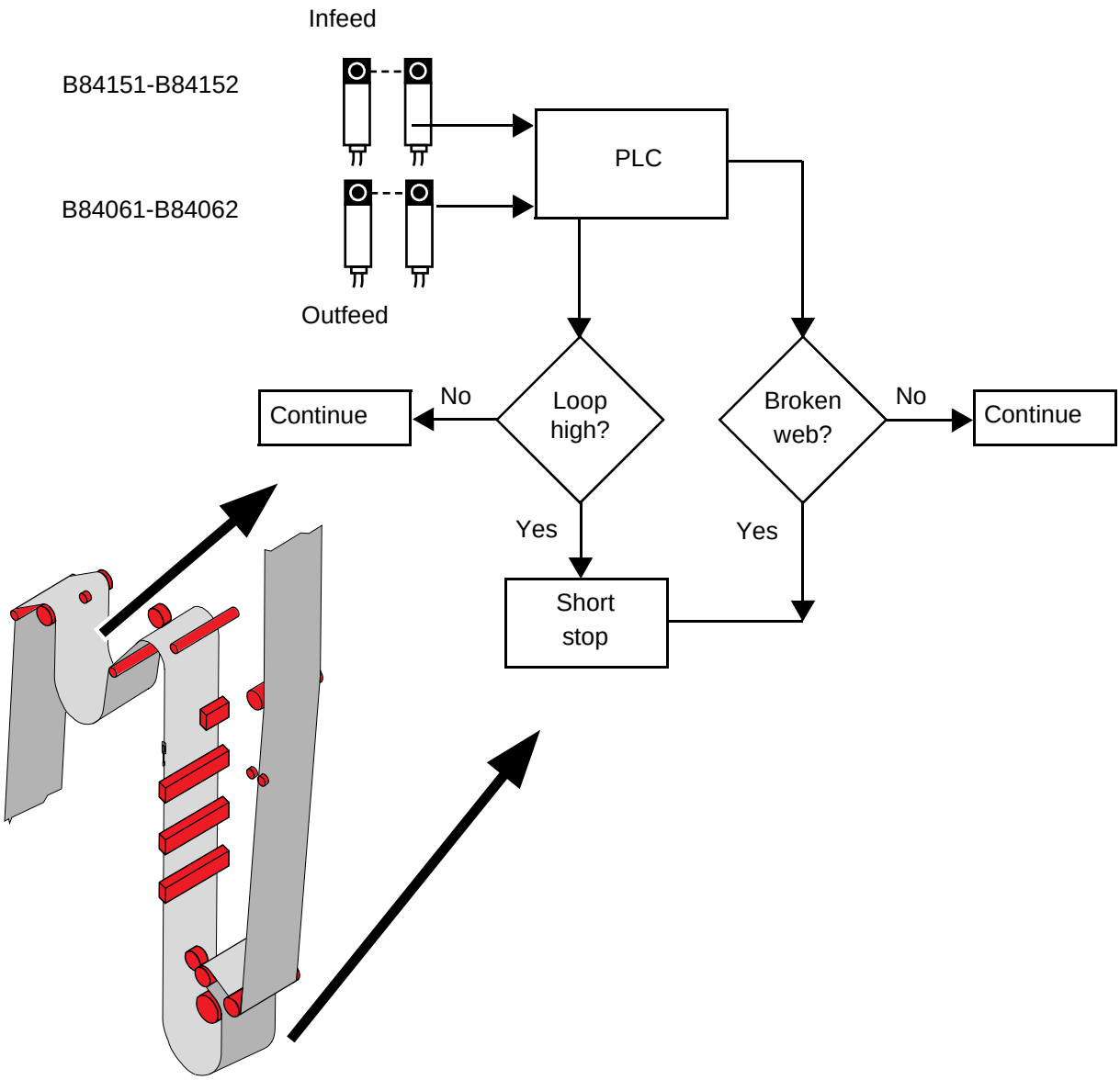

2.2B4884A00en.fm

1.1 Setting flow chart

The following flow chart shows the order in which the various components must be set up.

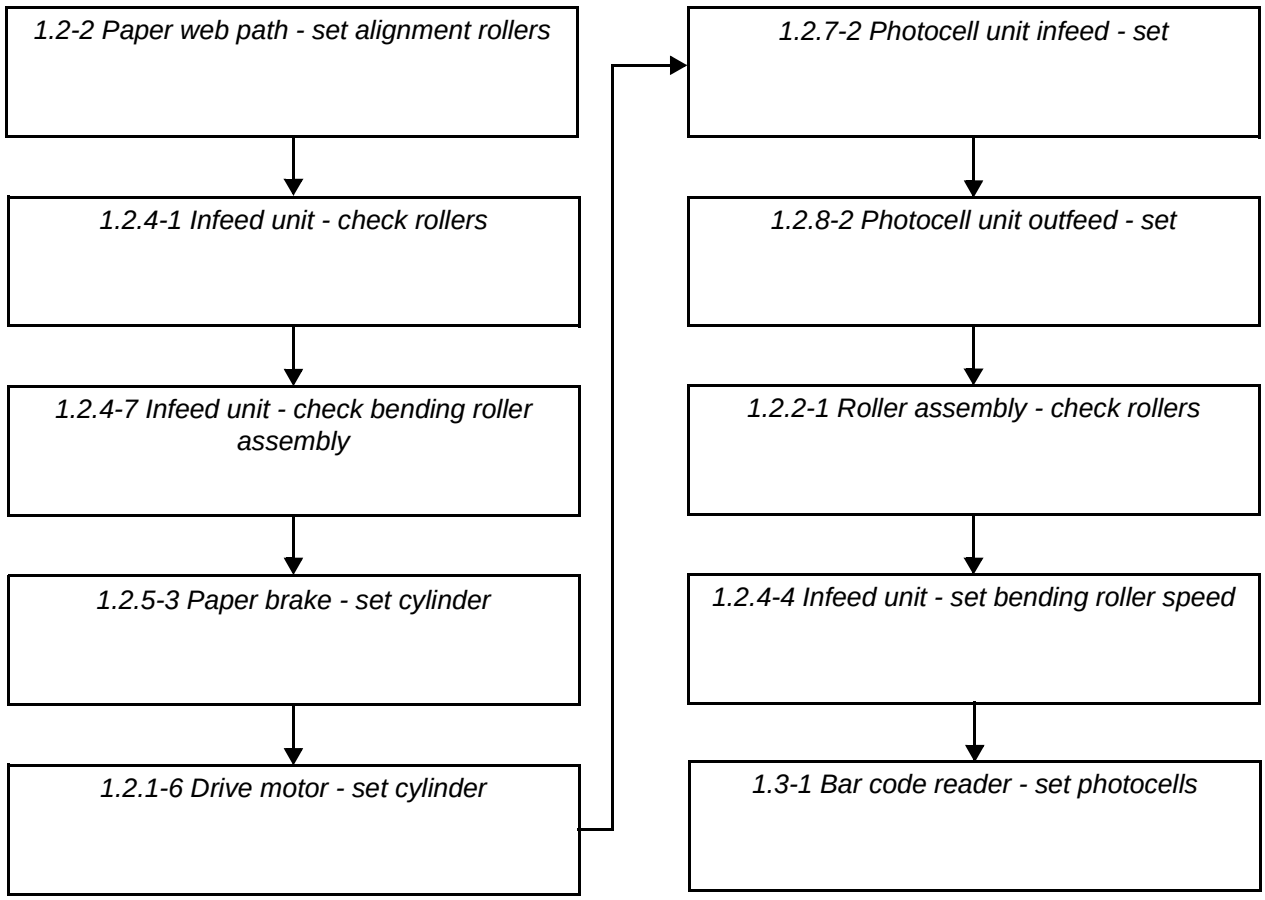

2.2B4884A01en.fm

1.2 Paper web path

SPC reference	1095931-0200

1.2-1 Paper web path - check packaging material tracking

Machine status	**Production**
SPC reference	1095931-0200

Check that the packaging material tracks through the machine without moving from side to side.

Check that the edge of the packaging material does not curl up against the side of the flanges (1) and (2) on the machine rollers.

If required, align the rollers, see *1.2-2 Paper web path - set alignment rollers*.

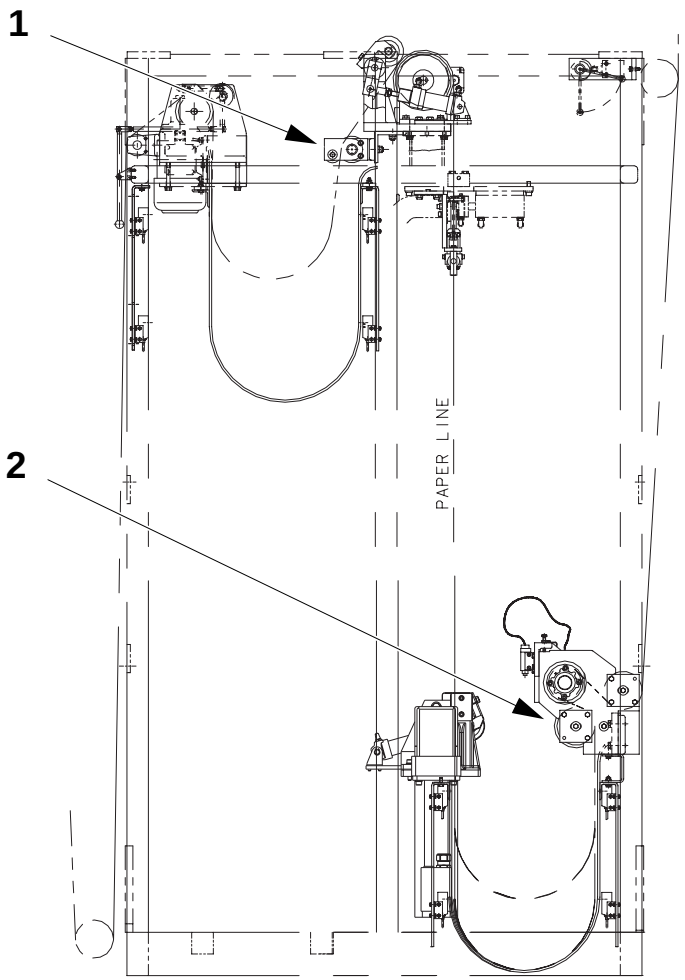

1 Flange
2 Flange

2.2B4884A02en.fm

1.2-2 Paper web path - set alignment rollers

Tools - spirit level	TP No. 90243-163
SPC reference	1095931-0200

Infeed unit

a) On the ASU web magazine, check that the paper is between the flanges of the rollers (1) in order to have a correct packaging material tracking.

b) If required, adjust the bending roller (2) as described below.

c) Slightly loosen the screws (3).

d) Loosen the nut (4) and turn the eccentric (5) until the correct position is obtained.

e) Carefully tighten the nut (4) and the screws (3).

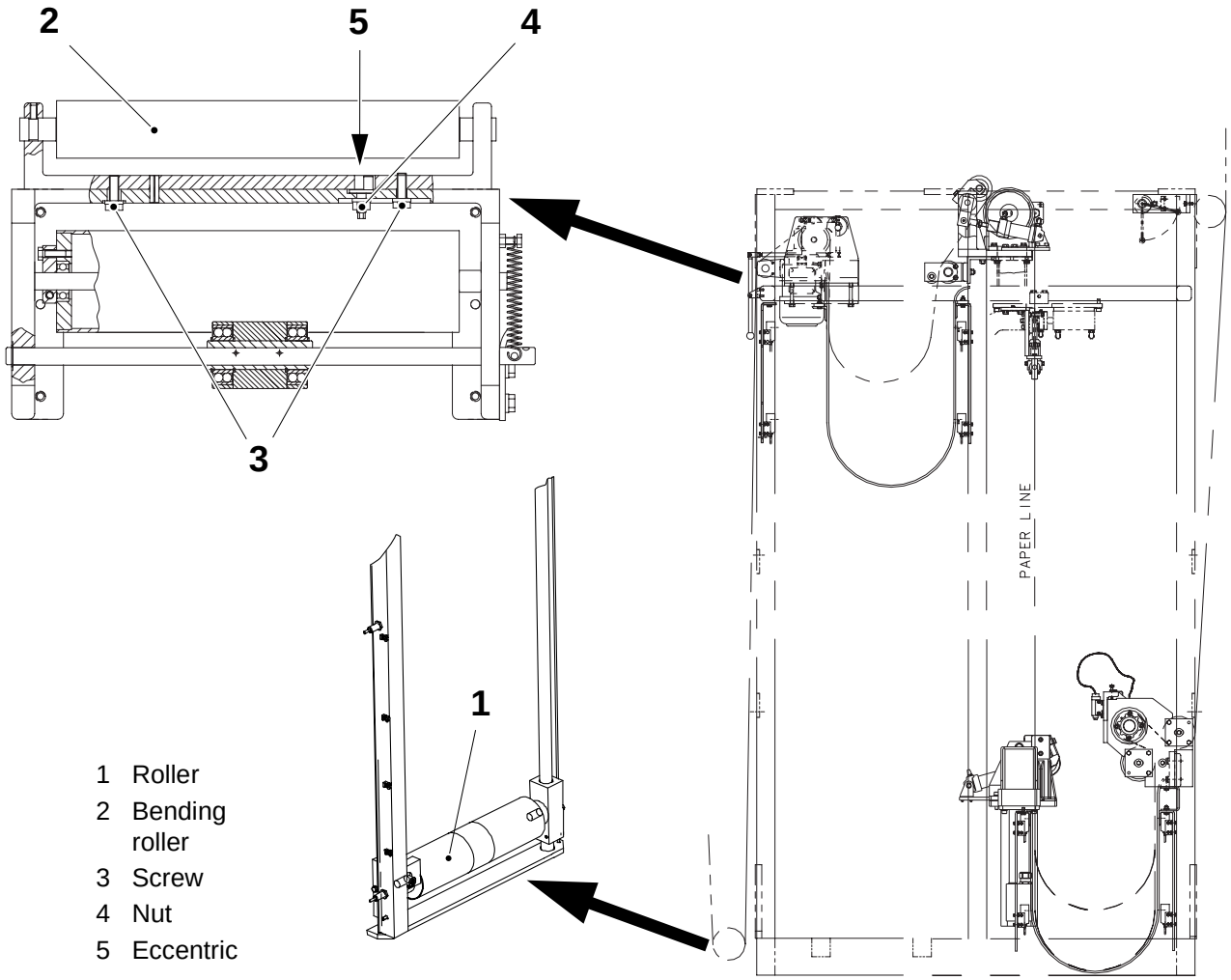

1 Roller
2 Bending roller
3 Screw
4 Nut
5 Eccentric

(Cont'd)

(Cont'd)

Paper brake

a) On the paper brake assembly, check the correct position for the bending roller (6) in order to have correct packaging material tracking.

b) If required, adjust the bending roller (6) as described below.

c) Slightly loosen the screws (7).

d) Loosen the nut (8) and turn the eccentric (9) until the correct position is obtained.

e) Carefully tighten nut (8) and the screws (7).

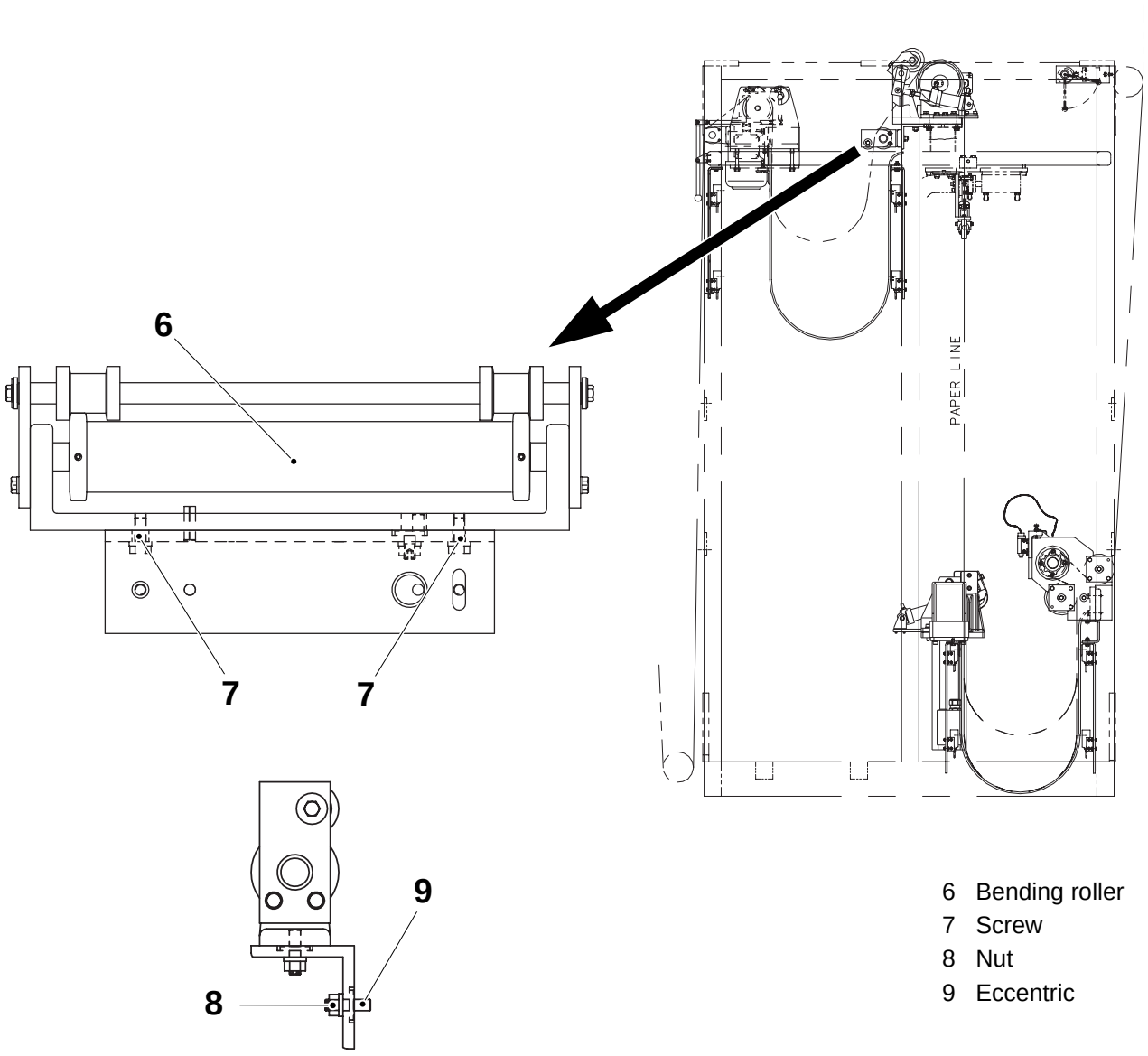

2.2B4884A02en.fm

6 Bending roller
7 Screw
8 Nut
9 Eccentric

(Cont'd)

(Cont'd)

Roller assembly

a) On the roller assembly, use a spirit level to check that the rollers (10), (11), and (12) are levelled in order to have correct packaging material tracking.

b) If required, adjust the rollers (10), (11), and (12) as described below.

c) Adjust the roller (10) by means of the grub screws (13).

d) Adjust the roller (11) by loosening the four screws (14) and turning the screws (15) until the correct position is obtained.

e) Adjust the roller (12) by means of the grub screws (16).

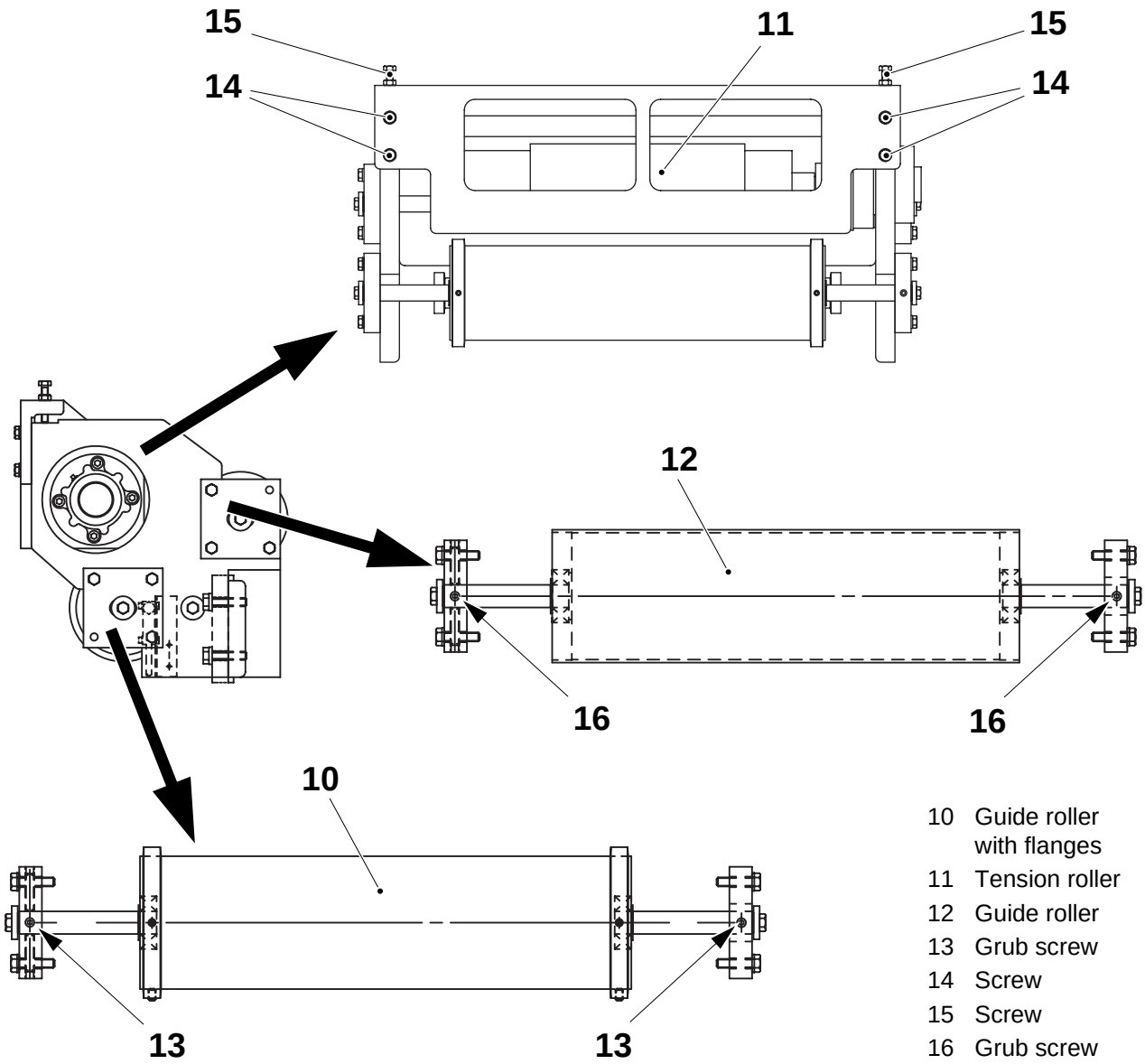

2.2B4884A02en.fm

10 Guide roller with flanges
11 Tension roller
12 Guide roller
13 Grub screw
14 Screw
15 Screw
16 Grub screw

1.2-3 Paper web path - set packaging material position

Machine status	**Production**
SPC reference	1095931-0200

Caution! Do not perform this adjustment until all the other settings in the Main flowchart in the chapter *Introduction* have been completed.

a) On the inside of the package, check distance **A** between the top fin crease (1) and the edge of the PullTab hole (reference only).

b) Run the PullTab unit and adjust distance **A** (hole position) by means of the **stop position packaging material** potentiometer (2).

Note! Increase the potentiometer (2) value to set a longer distance **A**. Decrease the potentiometer (2) value to set a shorter distance **A**.

c) Run at least 40 packages and verify the position again.

Package	Hole type	A ±1.0 (mm)		Package	Hole type	A ±1.0 (mm)
250 B	21	4.0		500 S	55	8.25
500 S	25	6.5		1500 S	85	12.0
1500 S	45	11.0		1000 Sq	85	13.0
1000 B	45	10.0		1000 B	85	11.0
1000 S	45	8.9		1000 S	85	9.9
1000 B	50	11.4		TPA 1000 S	60	8.4
1000 S	50	10.3				

2.2B4884A02en.fm

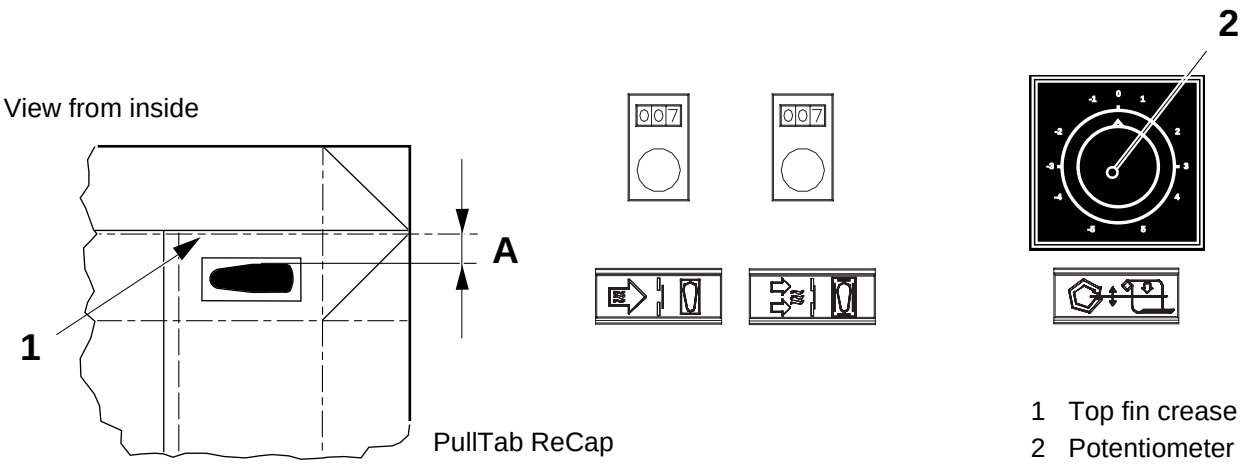

1 Top fin crease
2 Potentiometer

1.2.1 Drive motor

1.2.1-1 Drive motor - remove clamping element

SPC reference	1095935-0100

a) Loosen the screws (1).

b) Fit two screws into the puller holes (2).

c) Tighten the puller hole (2) screws cross-wise until the clamping element (3) comes off.

d) Remove the clamping element (3) and change it if damaged or worn out.

e) Assemble in the reverse order, see *1.2.1-2 Drive motor - assemble clamping element*.

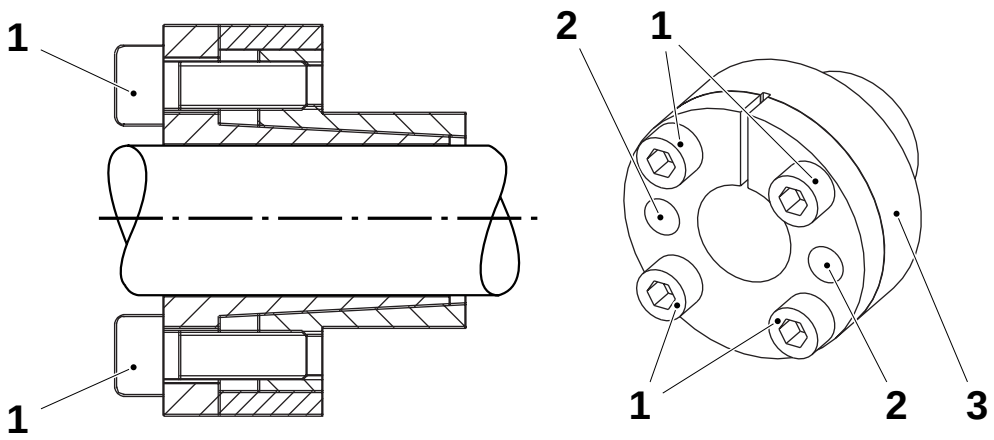

2.2B4884A02en.fm

1 Screw
2 Puller hole
3 Clamping element

1.2.1-2 Drive motor - assemble clamping element

Consumables - silicon grease - torque wrench	 TP No. 92296-0002 min. 17 Nm
SPC reference	1095935-0100

WARNING!

Risk of major damage to the machine!
Never adjust the tightening torque after locking by loosening the screws (1). The result may be that the screws shake loose.

Note! The inner surface **A** and the outer surface **B** of the clamping element must be cleaned before assembling.

Note! Lubricate the screws (1). Apply grease (TP No.92296-0002) **only** onto the clamps inner surface **C**. Grease accidentally applied to other areas of the drive roller will cause packaging material slippage.

a) Put the clamping element (2) in place and tighten the screws (1) crosswise, first by hand and then to **9 ±2** Nm with the aid of a torque wrench.

b) Continue to tighten the screws (1) crosswise to **17 ±2** Nm with the aid of a torque wrench.

c) Tighten the screws (1) several times, with full tightening torque, until it is not possible tighten them further.

2.2B4884A02en.fm

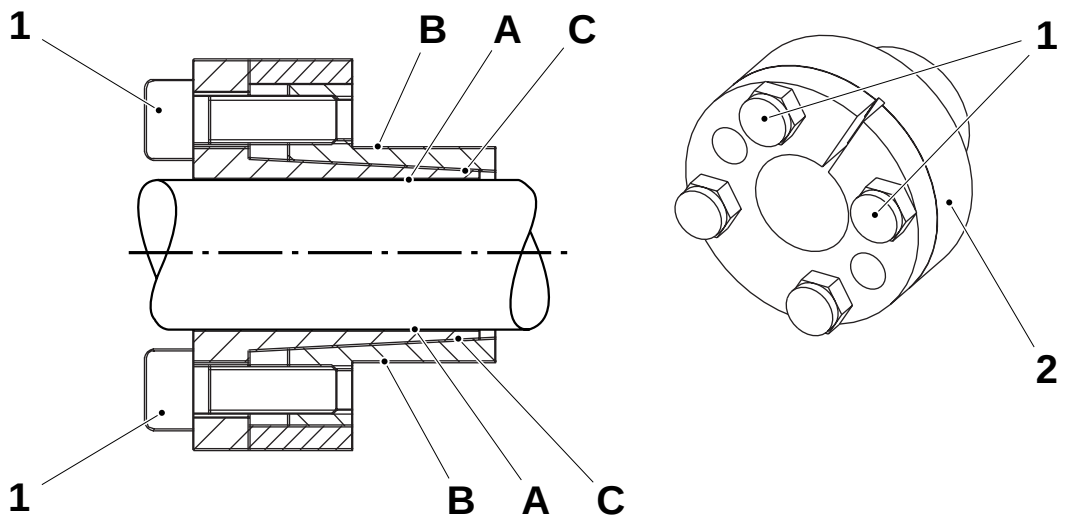

1 Screw
2 Clamping element

1.2.1-3 Drive motor - check pressure roller and drive wheel

SPC reference	1095935-0100

Check that the following parts turn freely and that there are no deformations or cracks:

- the pressure rollers (1)
- the drive wheels (2).

Change as required.

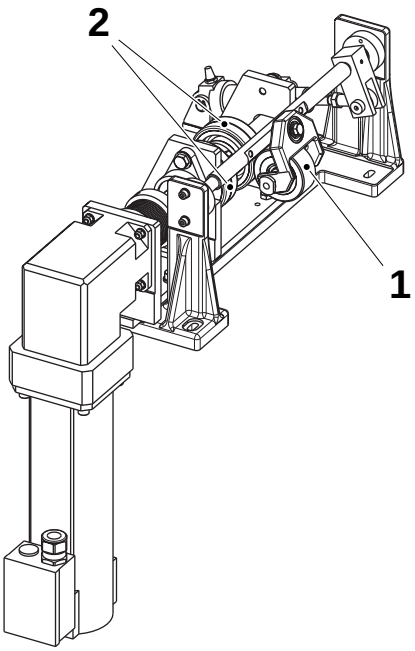

One pressure roller -
for hole 21, TBA 250 B

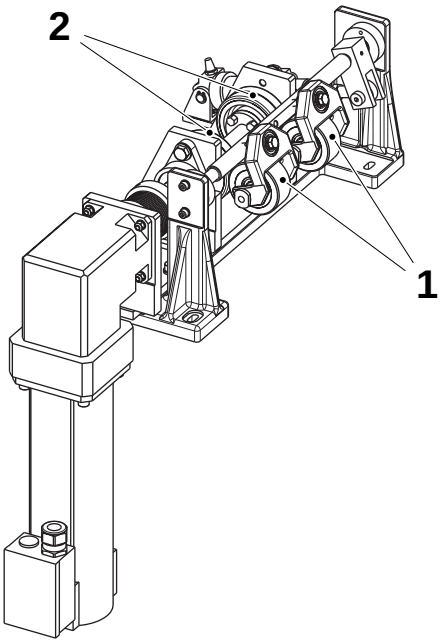

Two pressure rollers -
for all other holes

1 Pressure roller
2 Drive wheel

2.2B4884A02en.fm

1.2.1-4 Drive motor - change bearings

SPC reference	1095935-0100

a) Loosen the screws (1).
b) Remove the nut (2).
c) Pull out the pressure roller (3).
d) Remove the bearings (4) inside and change them if damaged or worn out.
e) Assemble in the reverse order.

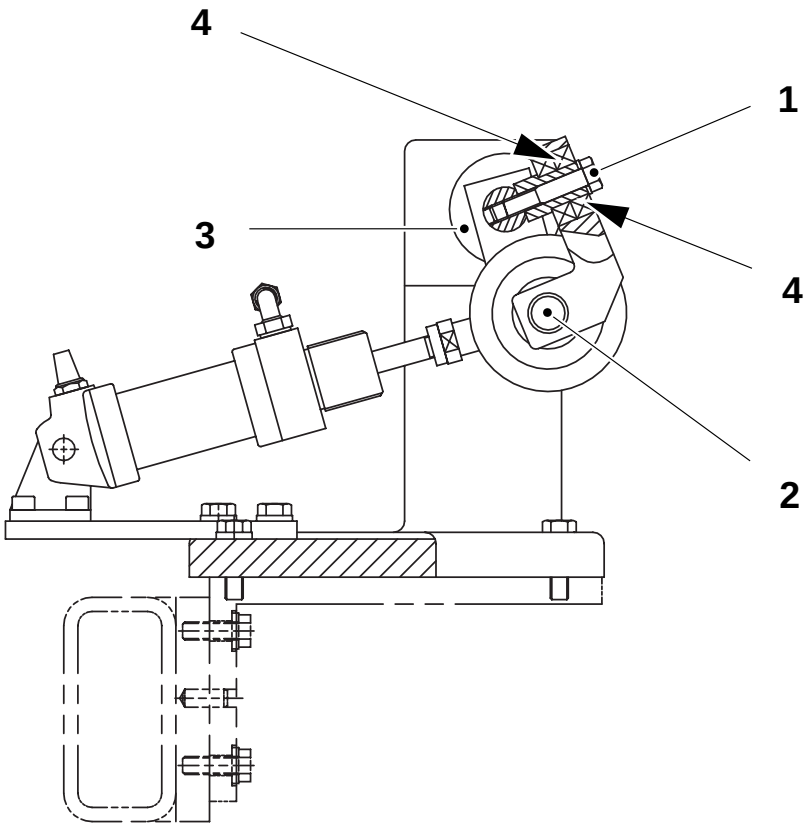

1 Screw
2 Nut
3 Pressure roller
4 Bearings

2.2B4884A02en.fm

1.2.1-5 Drive motor - change drive wheel

SPC reference	1498049-0100

a) Disconnect the pneumatic group (1) by means of the screw (2).

b) Rotate the pressure rollers shaft (3) and fix it to the frame by means of a strip.

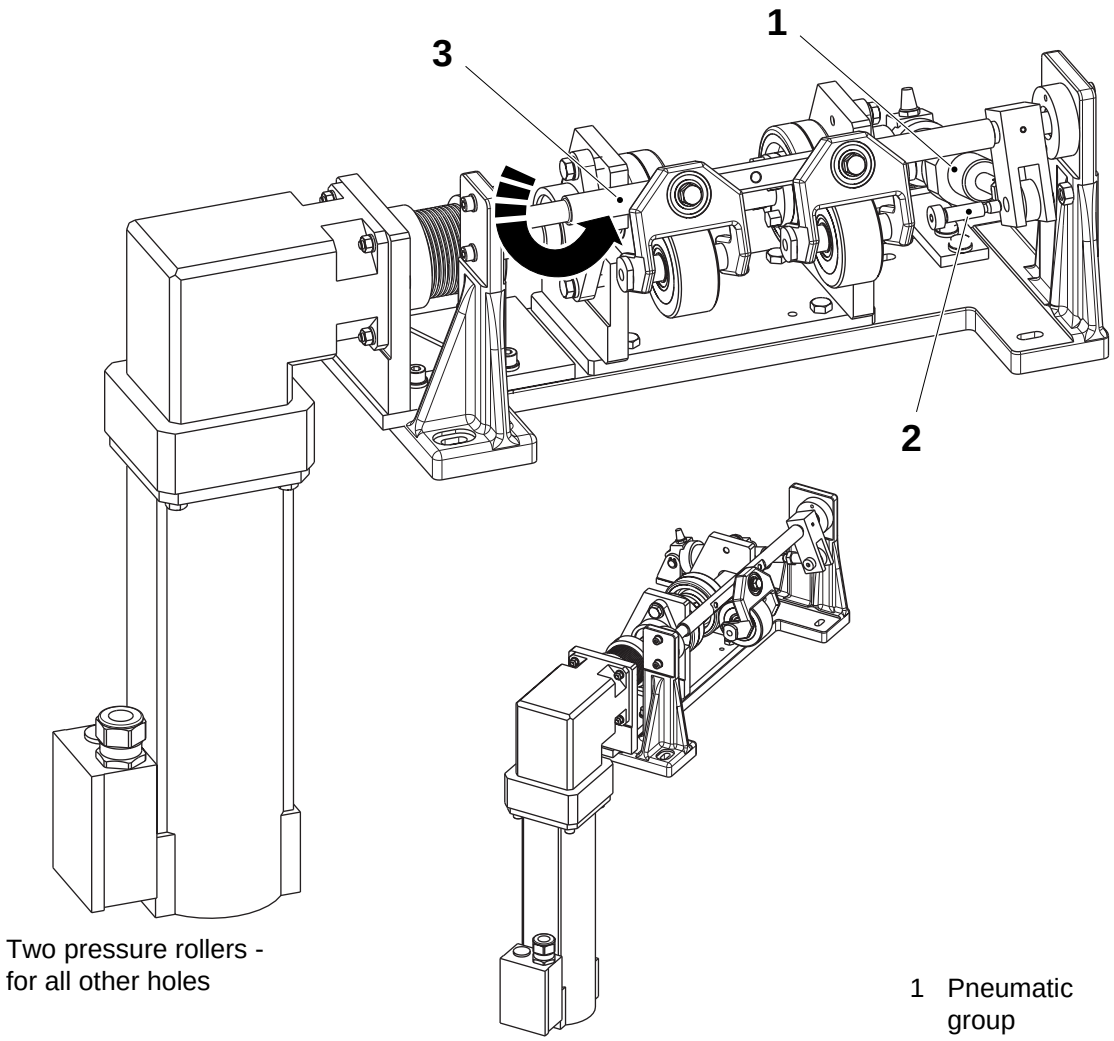

Two pressure rollers - for all other holes

One pressure roller - for hole 21, TBA 250 B

1 Pneumatic group
2 Screw
3 Shaft

2.2B4884A02en.fm

(Cont'd)

(Cont'd)

c) Loosen the socket-head screws (4).

d) Slide the piece (5) towards the support (6) and the pieces (7) towards the gear box (8).

e) Remove the bracket (10) group by means of the four screws (9).

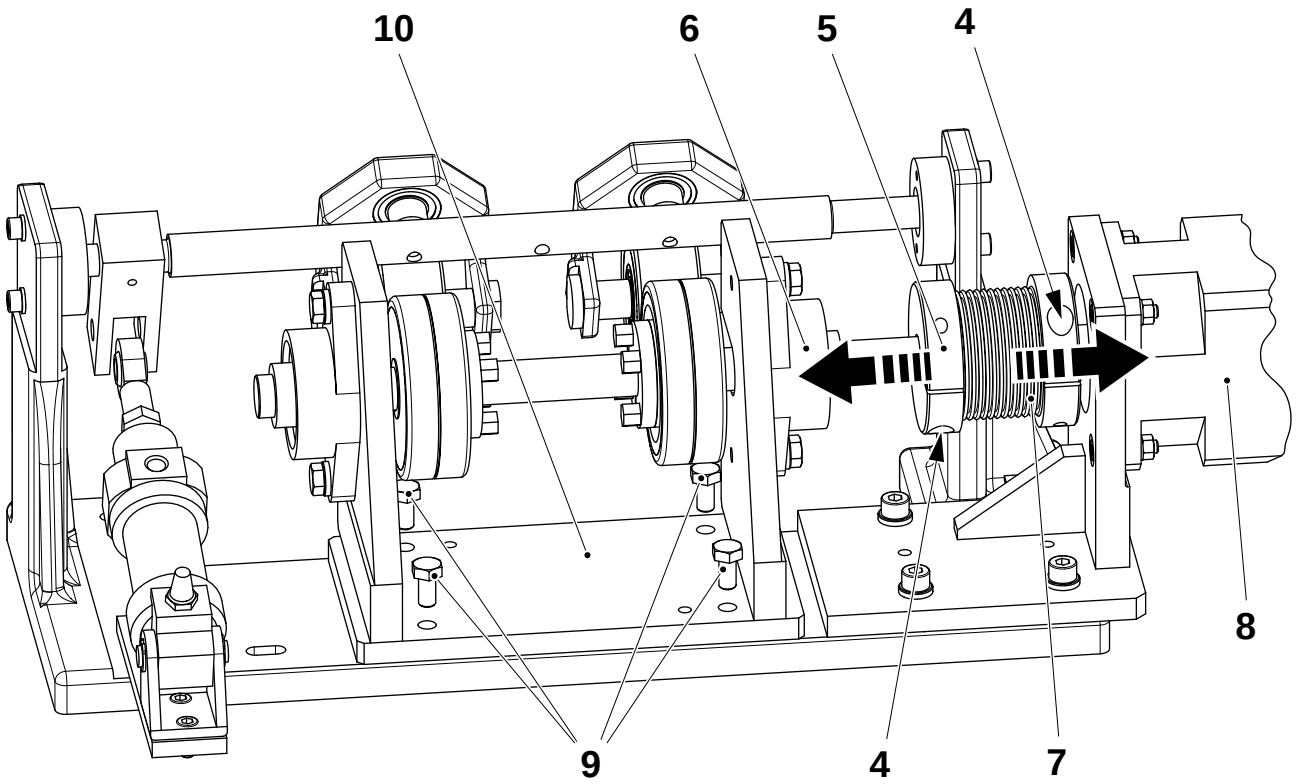

2.2B4884A02en.fm

4 Socket-head screw
5 Piece
6 Support
7 Piece
8 gear box
9 Screw
10 Bracket

(Cont'd)

(Cont'd)

f) Mark the position of the two supports (6) on the bracket (10) and mark the position of the ball bearing (13) on the shaft (12), to prevent loosening the setting.

Note! The marks applied are the settings done by the supplier.

g) Remove the screws (11) and pull out the shaft (12).

h) Remove the ball-bearing (13) by means of the grub-screw (14).

i) Remove the clamping elements (15) from their position, see *1.2.1-1 Drive motor - remove clamping element*.

j) Pull out the drive wheels (16).

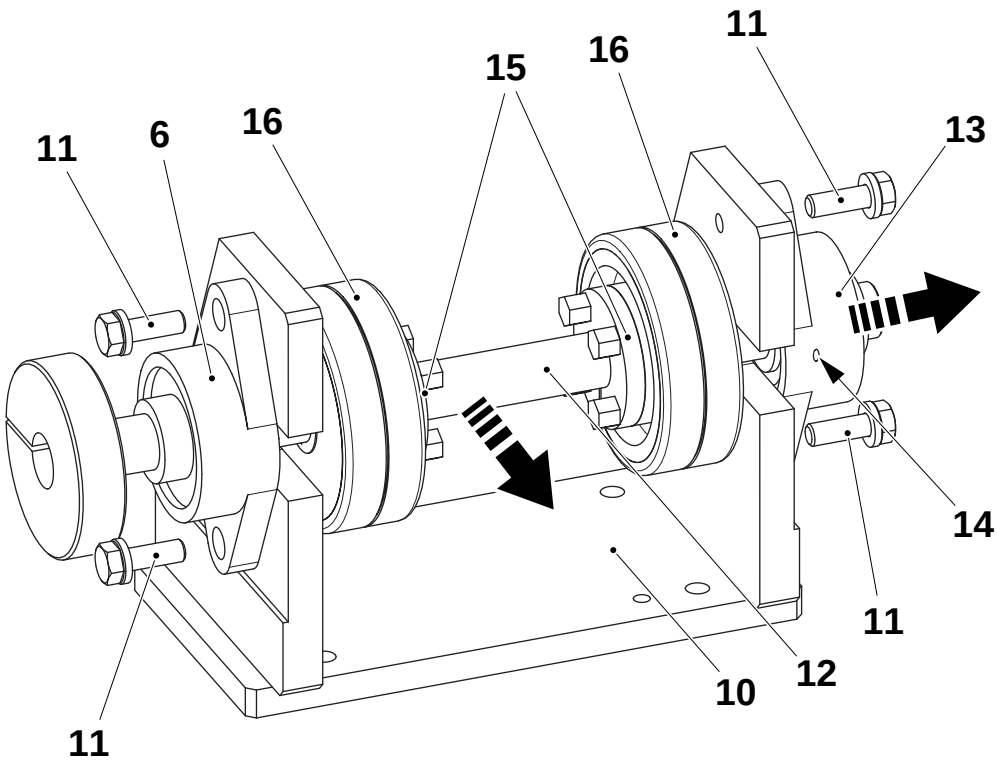

2.2B4884A02en.fm

6	Support	13	Ball-bearing
10	Bracket	14	Grub-screw
11	Screw	15	Clamping element
12	Shaft	16	Drive wheel

(Cont'd)

(Cont'd)

k) Assemble in the reverse order. While assembling set the distance **A** between the bracket (17) and the drive wheels (16) and the distance **B** between the connection (18) and the bracket (19).

Note! For hole 21, TBA 250 B, set the distance **C** instead of the distance **A** between the bracket (17) and the drive wheel (16).

Note! Make sure that the drive wheels (16) are in front of the pressure rollers (20), adjust as required.

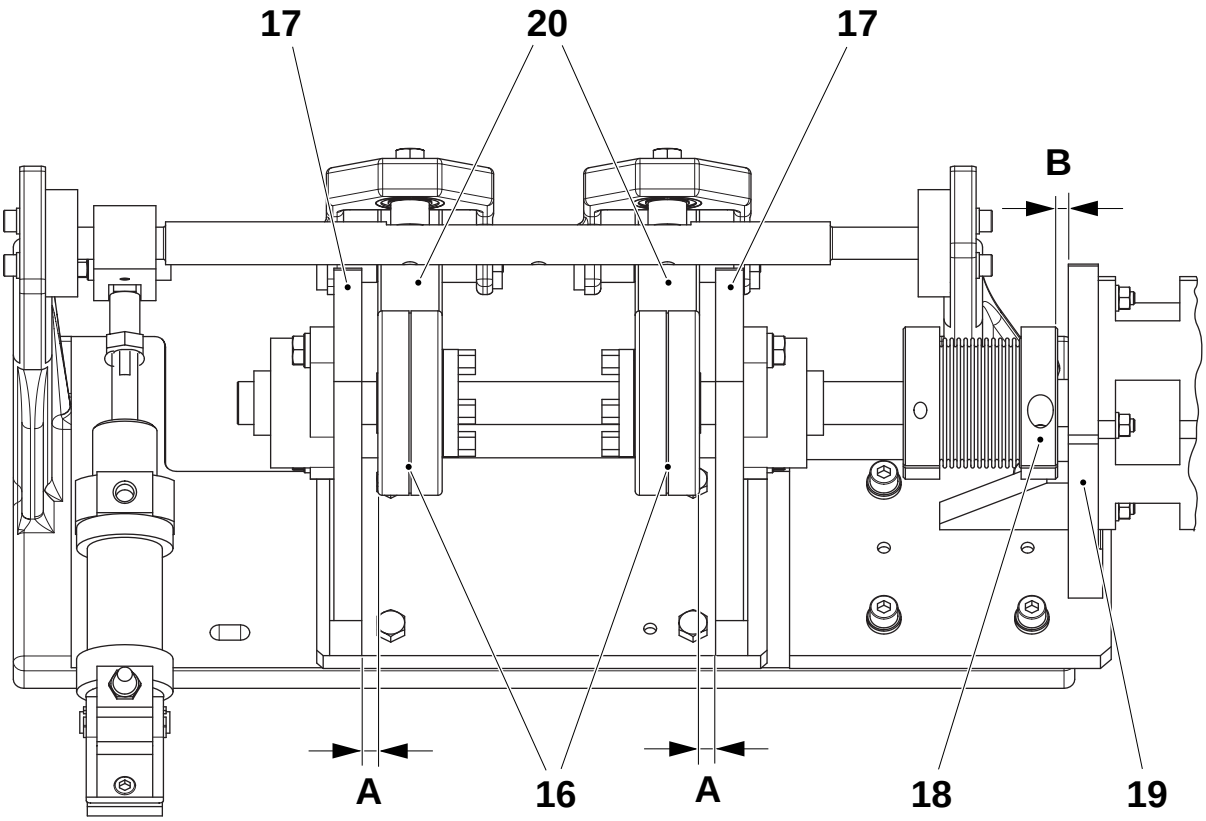

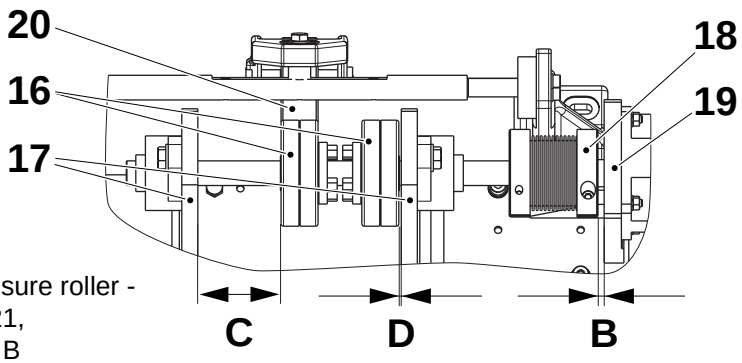

One pressure roller - for hole 21, TBA 250 B

A = 7.5 ±1.0 mm
B = 5.0 ±2.0 mm
C = 67.5 ±1.0 mm
D = 0.5 - 1.0 mm

16 Drive wheel
17 Bracket
18 Connection
19 Bracket
20 Pressure roller

2.2B4884A02en.fm

1.2.1-6 Drive motor - set cylinder

SPC reference	1095935-0100

a) Lift the counter roller (1) as far as it can go.

b) Adjust the cylinder joint (2) in order to set the distance **A** between the nut (3) and the cylinder (4) edge, as shown in the figure.

c) Check the cylinder (4) function once more after the setting.

A = 39 ±1 mm

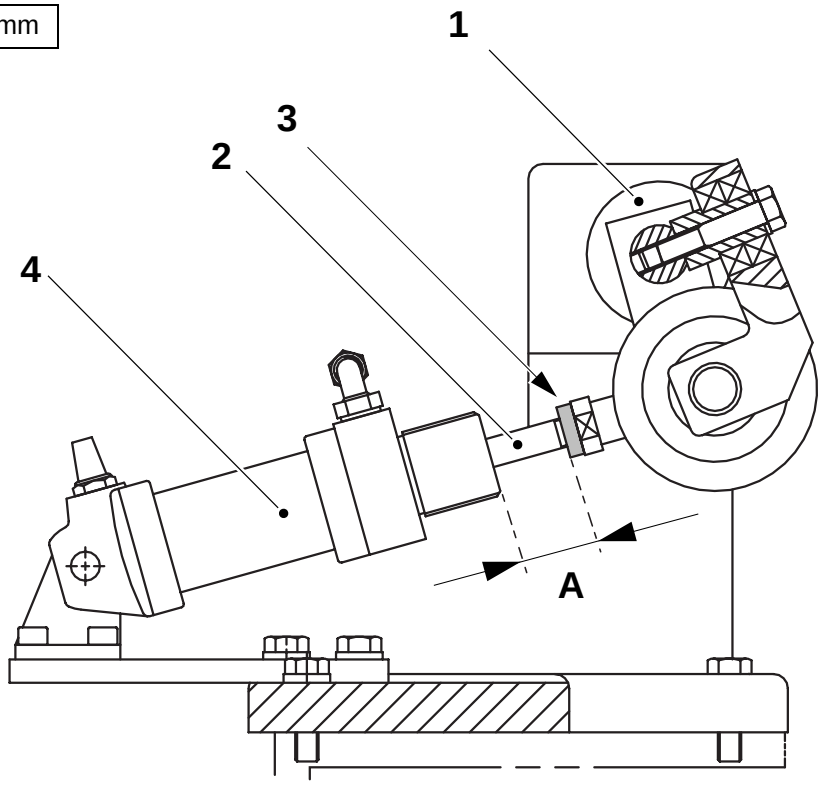

1 Counter roller
2 Joint
3 Nut
4 Cylinder

2.2B4884A02en.fm

1.2.1-7 Drive motor - change

SPC reference	1498049-0100

a) Remove the grub-screw (1).

b) By turning the flange (2) find the right position of the socket-head screw (3) underneath the grub-screw (1) and loosen it.

c) Disconnect the cables (4).

d) Remove the servo motor (5) by means of the screws (6).

Note! Leave the allen key in the socket of the socket-head screw (3) when fitting back the servo motor (5).

e) Assemble in the reverse order.

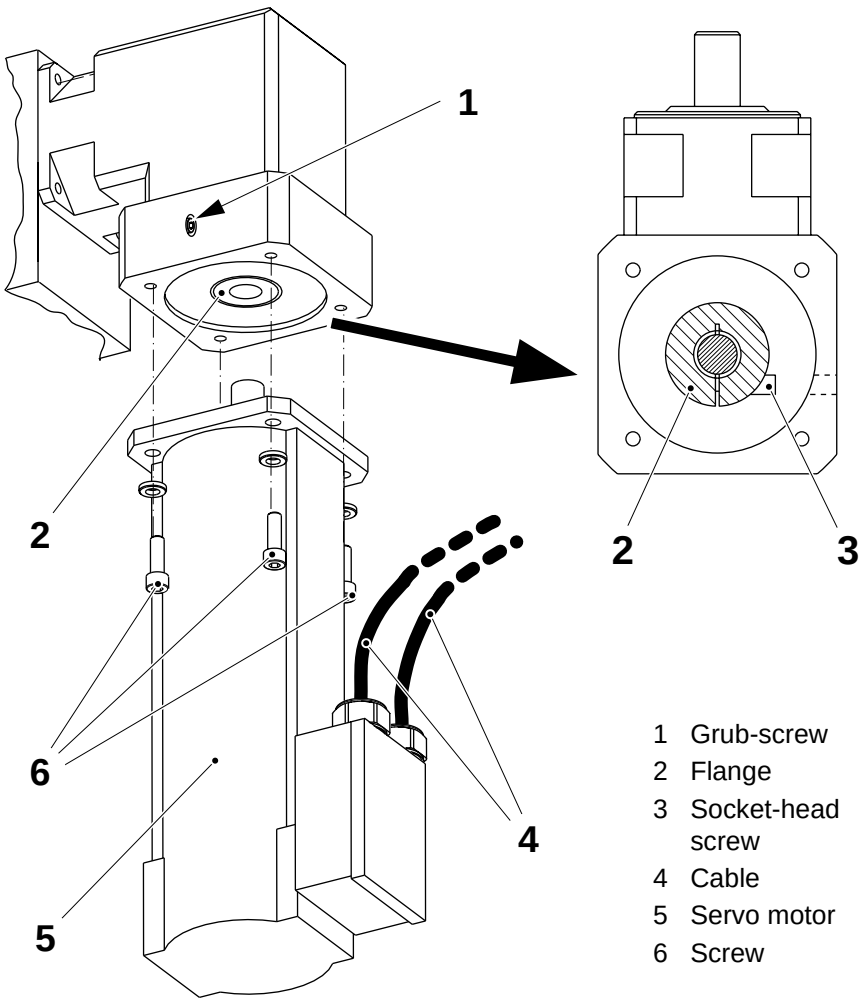

1 Grub-screw
2 Flange
3 Socket-head screw
4 Cable
5 Servo motor
6 Screw

2.2B4884A02en.fm

1.2.2 Roller assembly

1.2.2-1 Roller assembly - check rollers

SPC reference	1095942-0100

Check that the following rollers turn freely and that the surface of the rollers are not scratched or pitted:

- the guide roller with flange (1)
- the guide roller (3)
- the tension roller (2).

Check that the counter rollers (4) are nearly centred with respect to the flanges of the guide roller (1). Also check that the rollers turn freely and that the surface of the rollers (4) are not scratched or pitted.

Change as required.

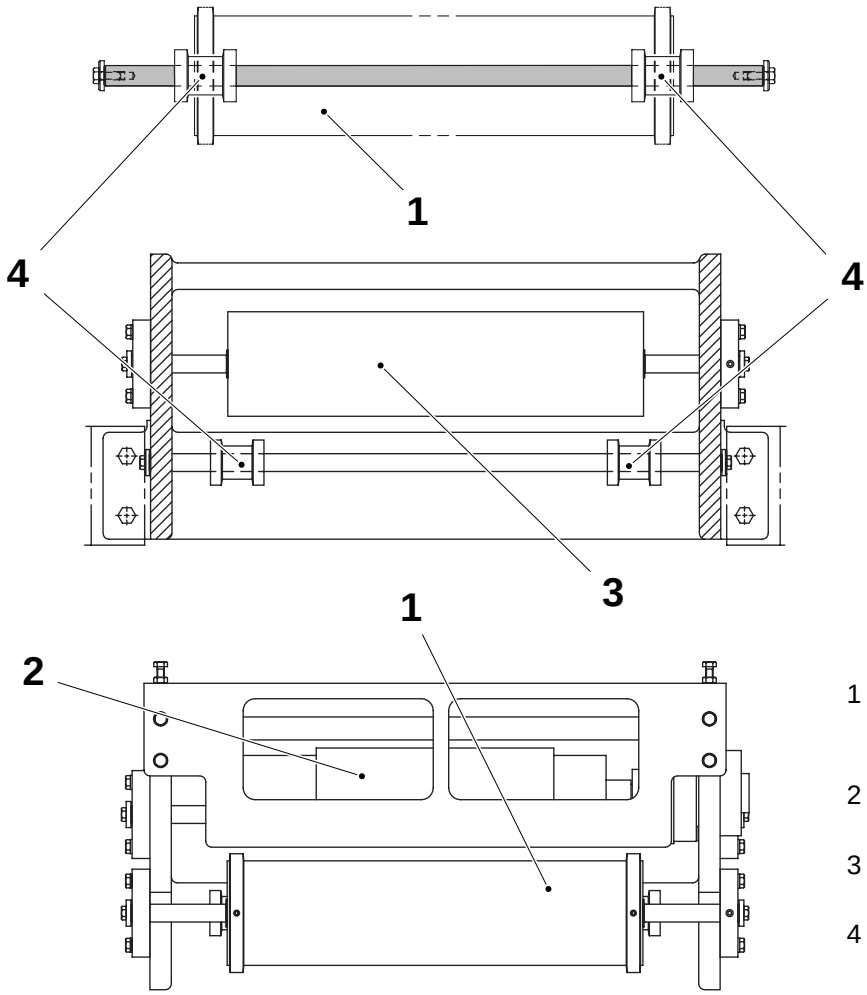

2.2B4884A02en.fm

1 Guide roller with flange
2 Tension roller
3 Guide roller
4 Counter roller

(Cont'd)

(Cont'd)

Check the braking action of the damper (5) by turning the damper knob (6). Set the damper knob (6) if required, see *1.2.2-4 Roller assembly - set tension roller*.

By means of a a spirit level check that all the rollers are level. Set the rollers as required, see *1.2-2 Paper web path - set alignment rollers.*

Change as required.

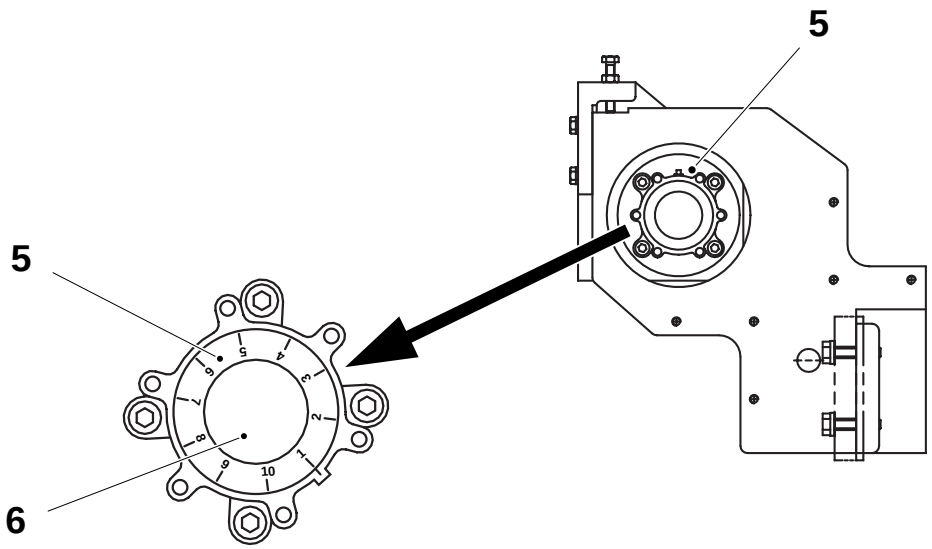

5 Damper
6 Damper knob

2.2B4884A02en.fm

1.2.2-2 Roller assembly - change roller bearings

SPC reference	1095937-0100 1095938-0100 1095942-0100

Guide roller with flange

a) Loosen the screws (1) on the left and right hand plates (2).

b) Remove the roller (3) from the bracket (4).

c) Pull out the axle supports (5) from both sides of the roller (3).

d) Remove the bearings (6) inside. Change if damaged or worn out.

e) Assemble in the reverse order.

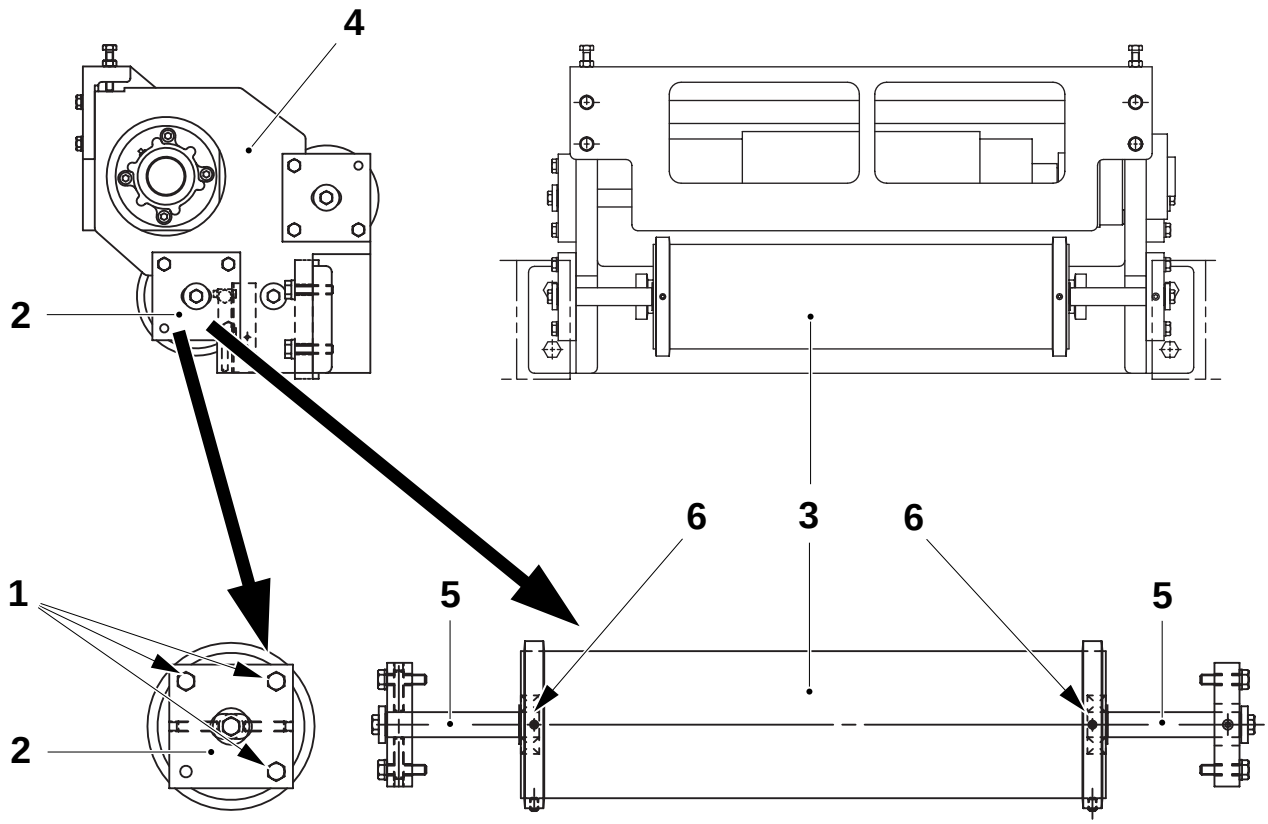

2.2B4884A02en.fm

1 Screw
2 Plate
3 Guide roller with flanges
4 Bracket
5 Axle support
6 Bearing

(Cont'd)

(Cont'd)

Guide roller

a) Loosen the screws (7) on the left and right hand plates (8).

b) Remove the roller (9) from the bracket (4).

c) Pull out the axle supports (10) from both sides of the roller (9).

d) Remove the bearings (11) inside. Change if damaged or worn out.

e) Assemble in the reverse order.

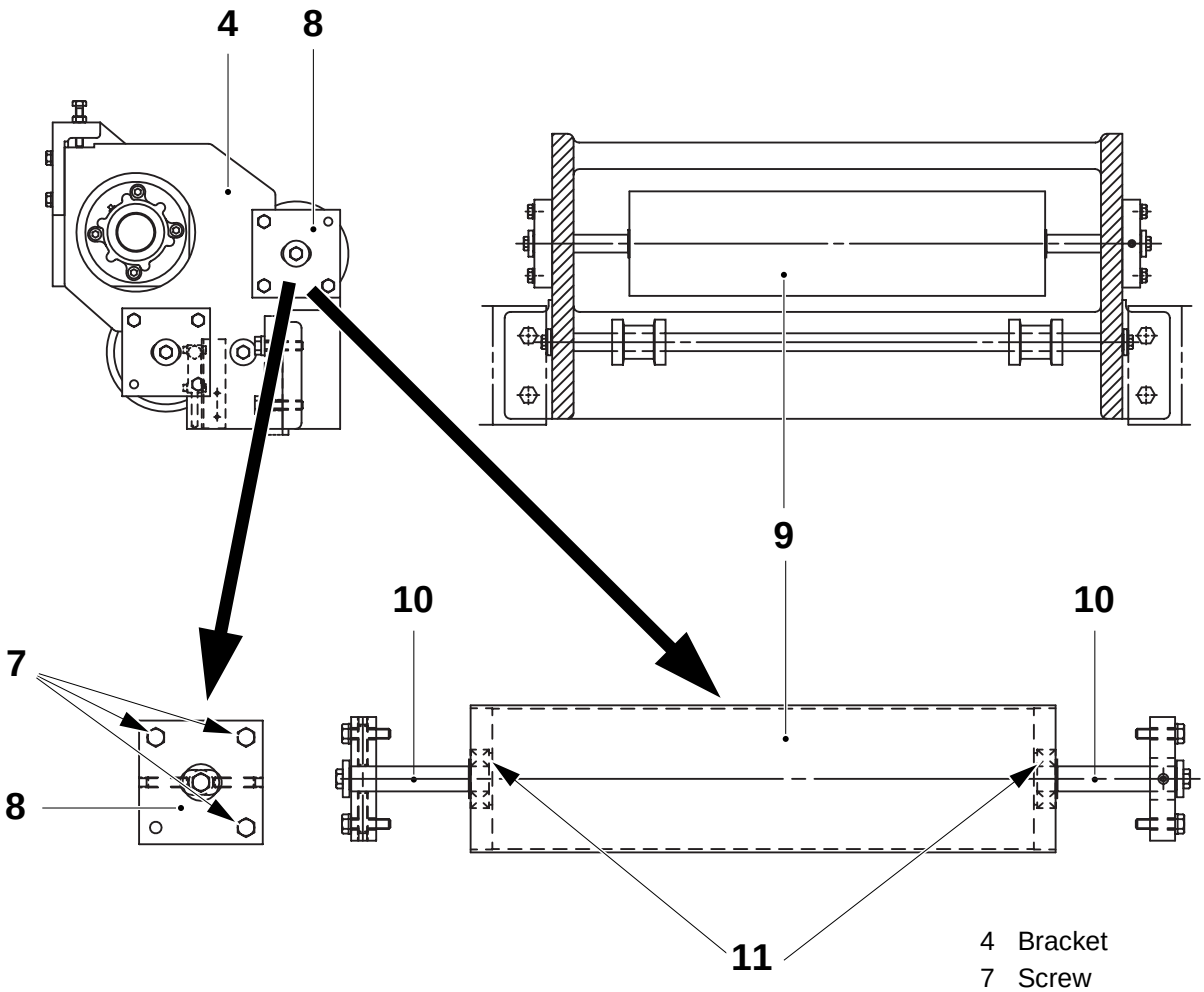

4 Bracket
7 Screw
8 Plate
9 Bending roller
10 Axle support
11 Bearing

2.2B4884A02en.fm

1.2.2-3 Roller assembly - change damper

SPC reference	1095942-0100 1095941-0100

a) Unscrew the screws (1).

b) Pull out the damper (2) as shown in the picture.

c) Change the damper (2) if damaged.

d) Assemble in the reverse order.

e) Set the damper knob (3) if required, see *1.2.2-4 Roller assembly - set tension roller*.

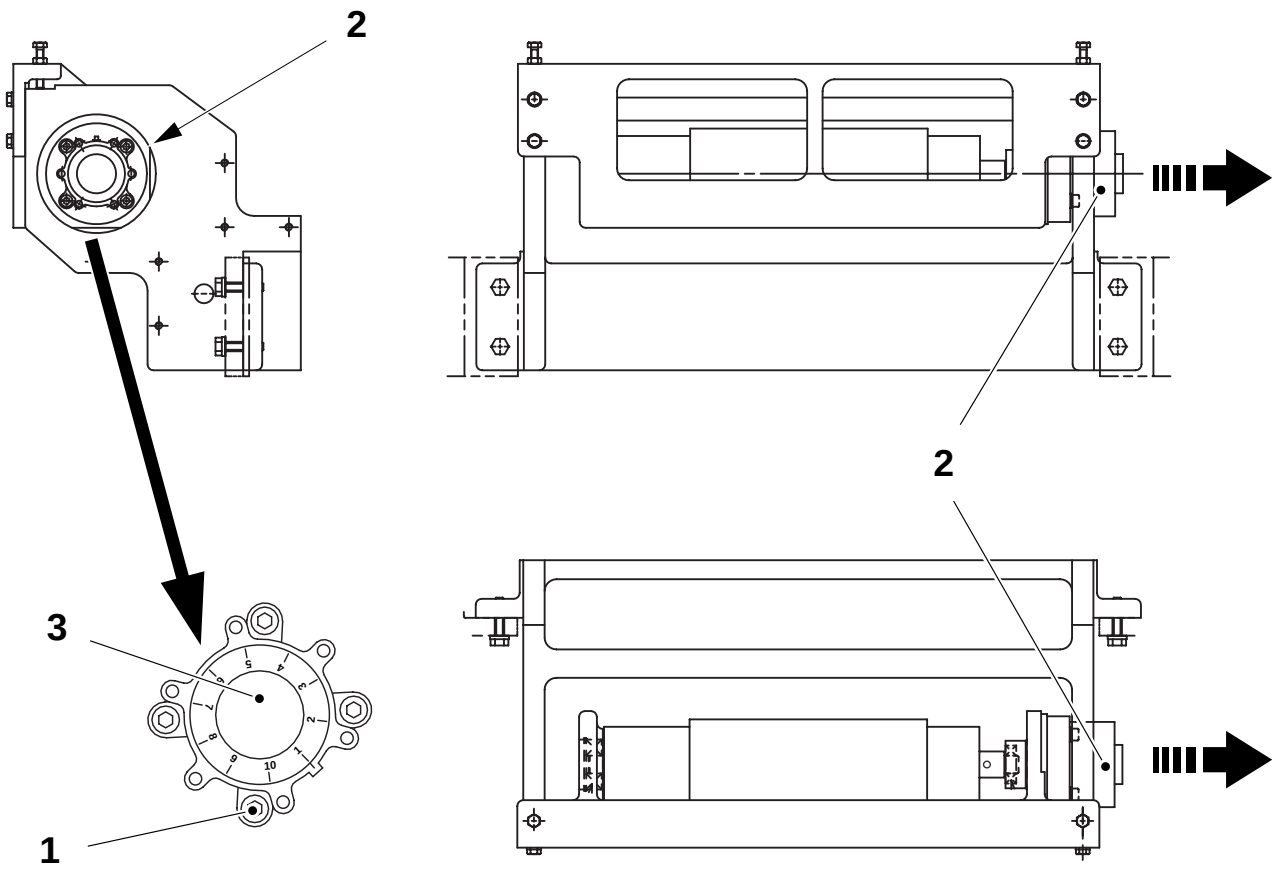

2.2B4884A02en.fm

1 Screw
2 Damper
3 Damper knob

1.2.2-4 Roller assembly - set tension roller

SPC reference	1095942-0100 1095941-0100

a) Set the stretching of the paper by turning the knob (1), on the damper (2) to the position **1**.

b) Check the stretching function of the roller (3) after the setting.

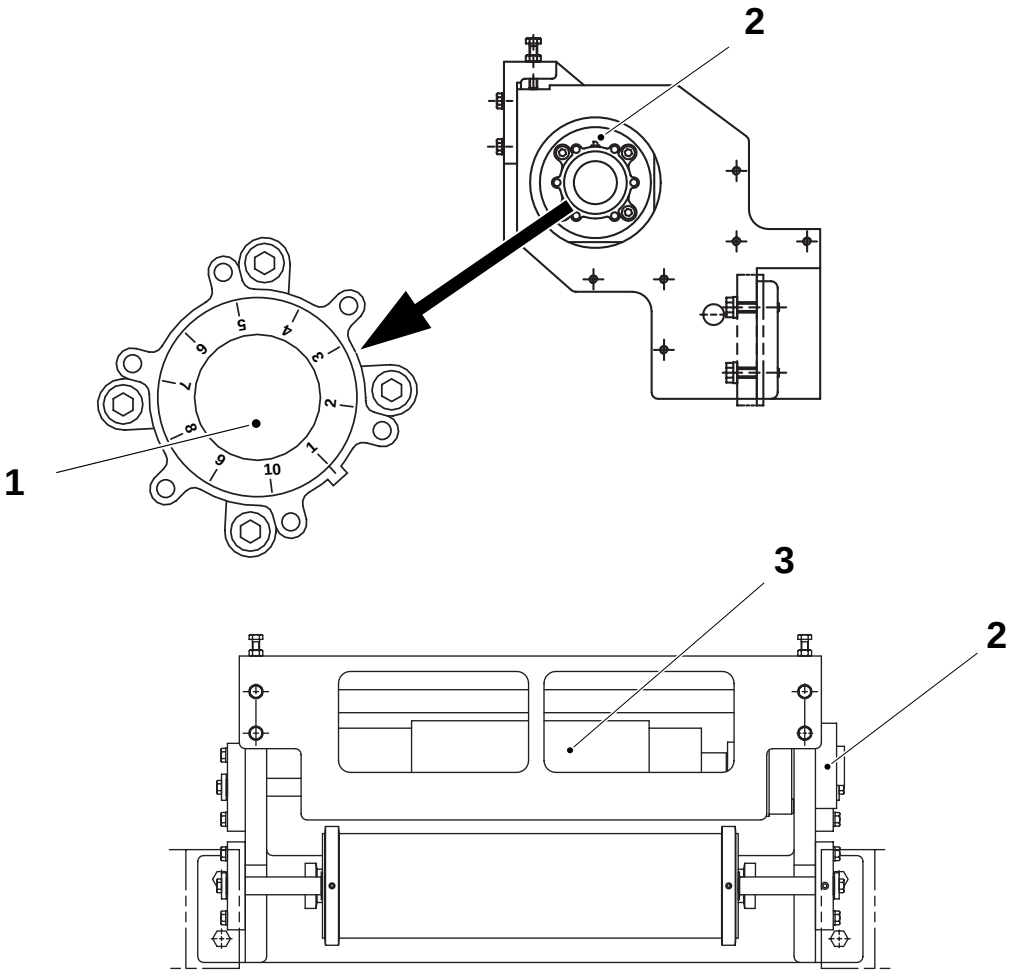

2.2B4884A02en.fm

1 Knob
2 Damper
3 Tension roller

1.2.3 Bending roller assembly

1.2.3-1 Bending roller assembly - check

SPC reference	1095952-0100

Check the surface of the bending roller (1) for wear and/or damage. Pay special attention for any marks on rollers surface.

Check also that the bending roller (1) turns freely.

Change as required.

1.2.3-2 Bending roller assembly - change bearings

SPC reference	1095952-0100

a) Loosen the stop screw (2) on both sides.

b) Remove the axle pin (3) from both sides.

c) Pull out the ball bearings (4) from both sides and change them if damaged or worn out.

d) Assemble in the reverse order.

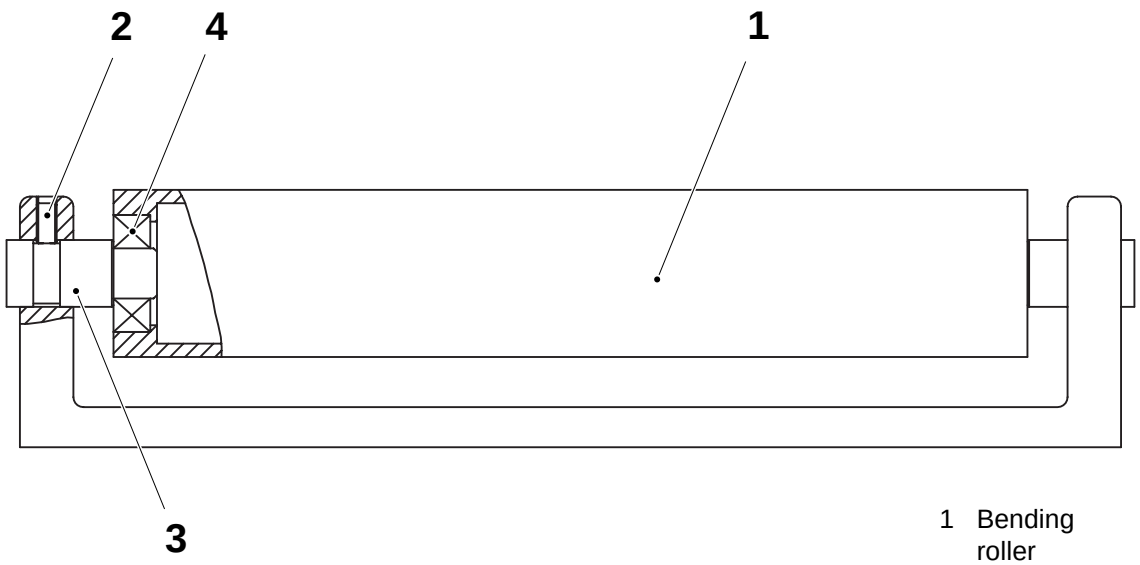

2.2B4884A02en.fm

1 Bending roller
2 Stop screw
3 Axle pin
4 Ball bearing

1.2.4 Infeed unit

1.2.4-1 Infeed unit - check rollers

SPC reference	1095953-0100

Disconnect the electric motor connections.

Check that the following rollers turn freely and that the surface of the rollers are not scratched or pitted:

- the bending roller (1)
- the counter roller (2).

Note! The eccentric bushing (3) in the counter roller (2) must be mounted with the eccentricity upwards.

Change as required.

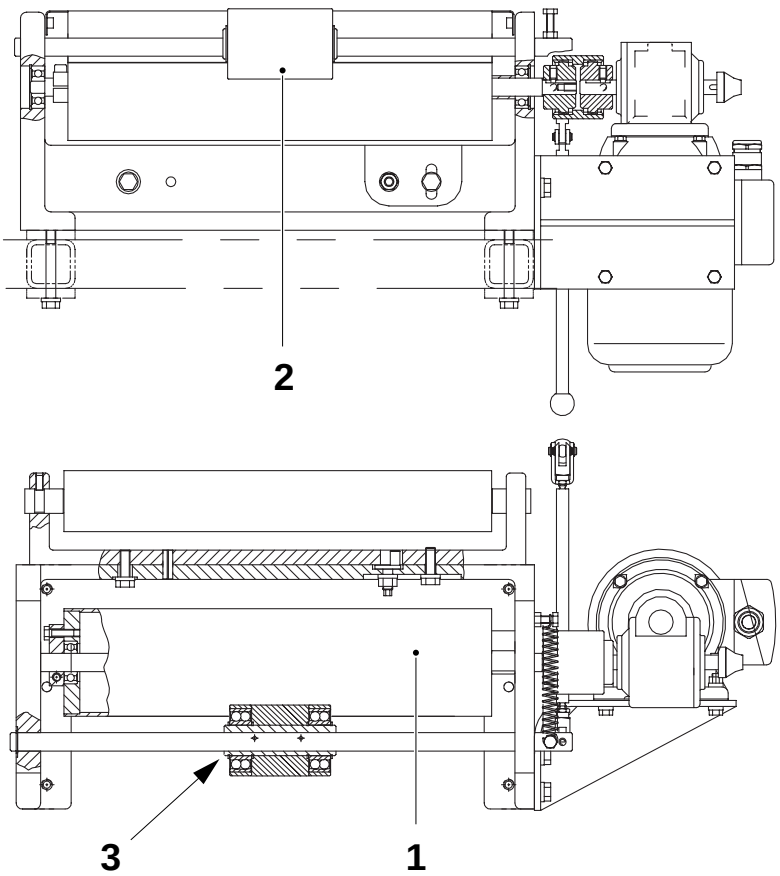

1 Bending roller
2 Counter roller
3 Eccentric bushing

2.2B4884A02en.fm

1.2.4-2 Infeed unit - check function

Machine status	**Production**
SPC reference	1095953-0100

Check that the infeed motor (1) stops immediately when the lower photocell (2), located in the infeed photocell unit, is activated.

With the machine in step **Production** check that the speed of the infeed motor (1) does not cause the packaging material to activate the upper photocell (4), located in the infeed photocell unit.

If required, set the motor drive card, see *1.2.4-4 Infeed unit - set bending roller speed*.

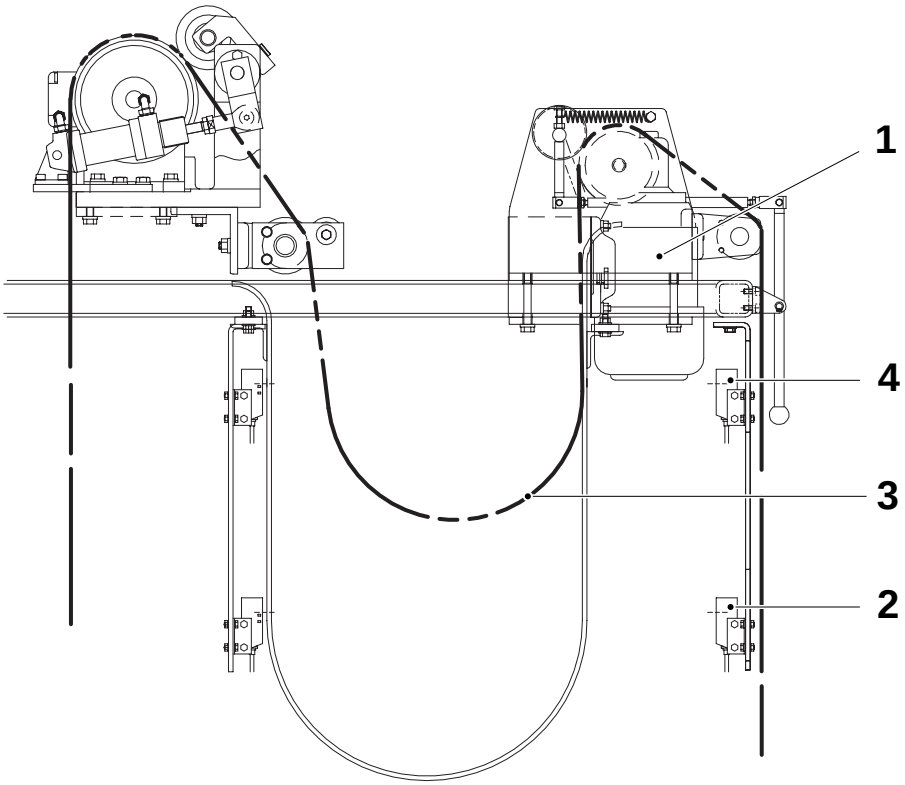

2.2B4884A02en.fm

1 Infeed motor
2 Lower photocell
3 Packaging material
4 Upper photocell

1.2.4-3 Infeed unit - change carbon brushes

SPC reference	1095953-0100

a) Unscrew the screws (1) on the motor (2) and remove the cover (3).
b) Unscrew the screw (4) and remove the washer (5).
c) Remove the plastic fan (6) with the aid of a screwdriver.
d) Unscrew the screws (7) and remove the cover (8).
e) Remove the carbon brushes protection (9), on both sides, with the aid of a screwdriver.
f) Pull out the carbon brushes (10), on both sides.
g) Change the carbon brushes.
h) Assemble in the reverse order.

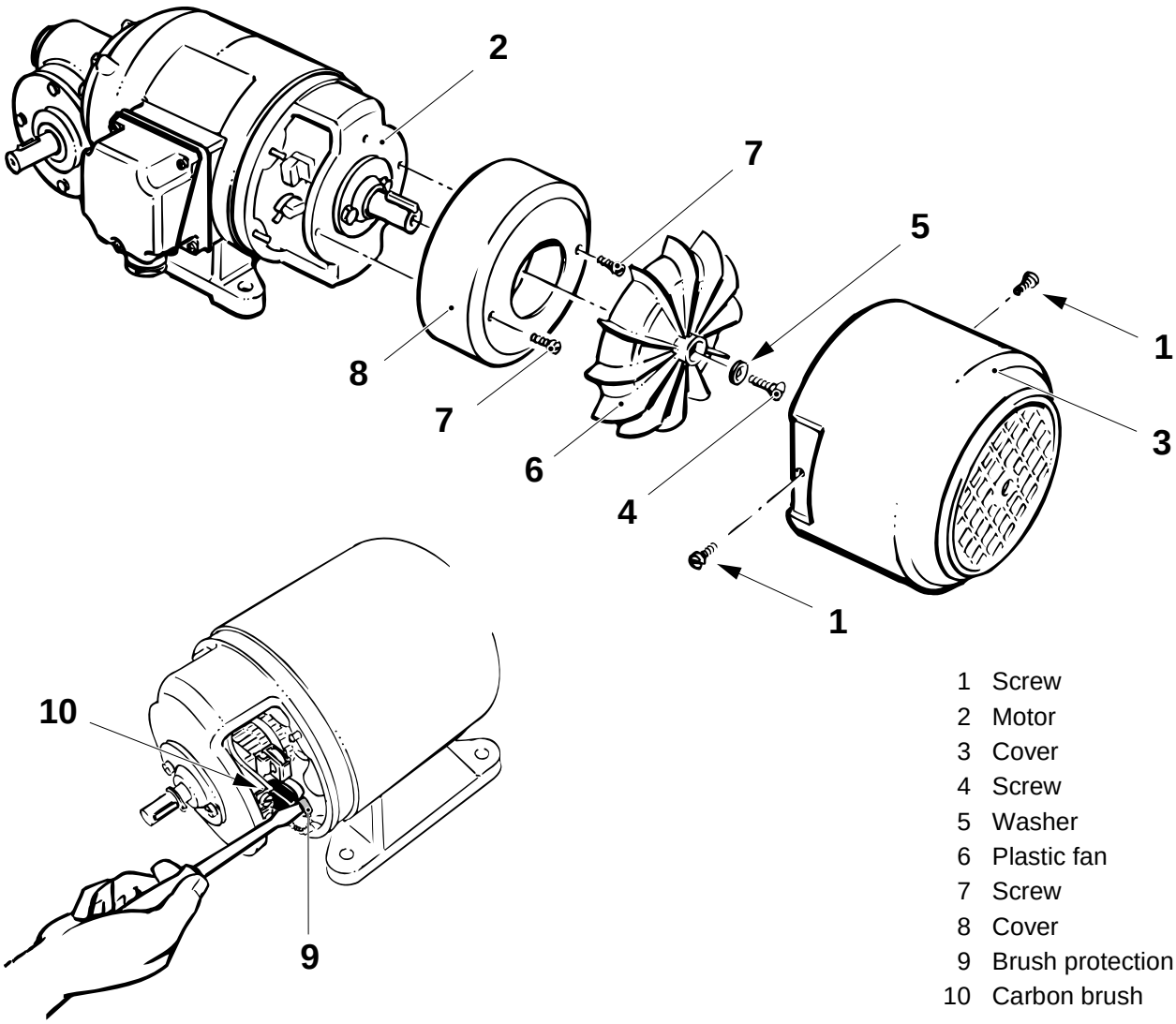

1 Screw
2 Motor
3 Cover
4 Screw
5 Washer
6 Plastic fan
7 Screw
8 Cover
9 Brush protection
10 Carbon brush

2.2B4884A02en.fm

1.2.4-4 Infeed unit - set bending roller speed

Machine status	Mains power **On**
SPC reference	1095953-0100

Basic setting

a) Turn the potentiometer (1), on the motor drive card (2), fully anti-clockwise and then turn it back 30% as a safety margin.

b) Turn the potentiometer (3), on the motor drive card (2), fully anti-clockwise.

c) Check the movement of the bending roller in the infeed unit.

d) If it is slow, turn the potentiometer (1) slightly until the right roller movement is achieved.

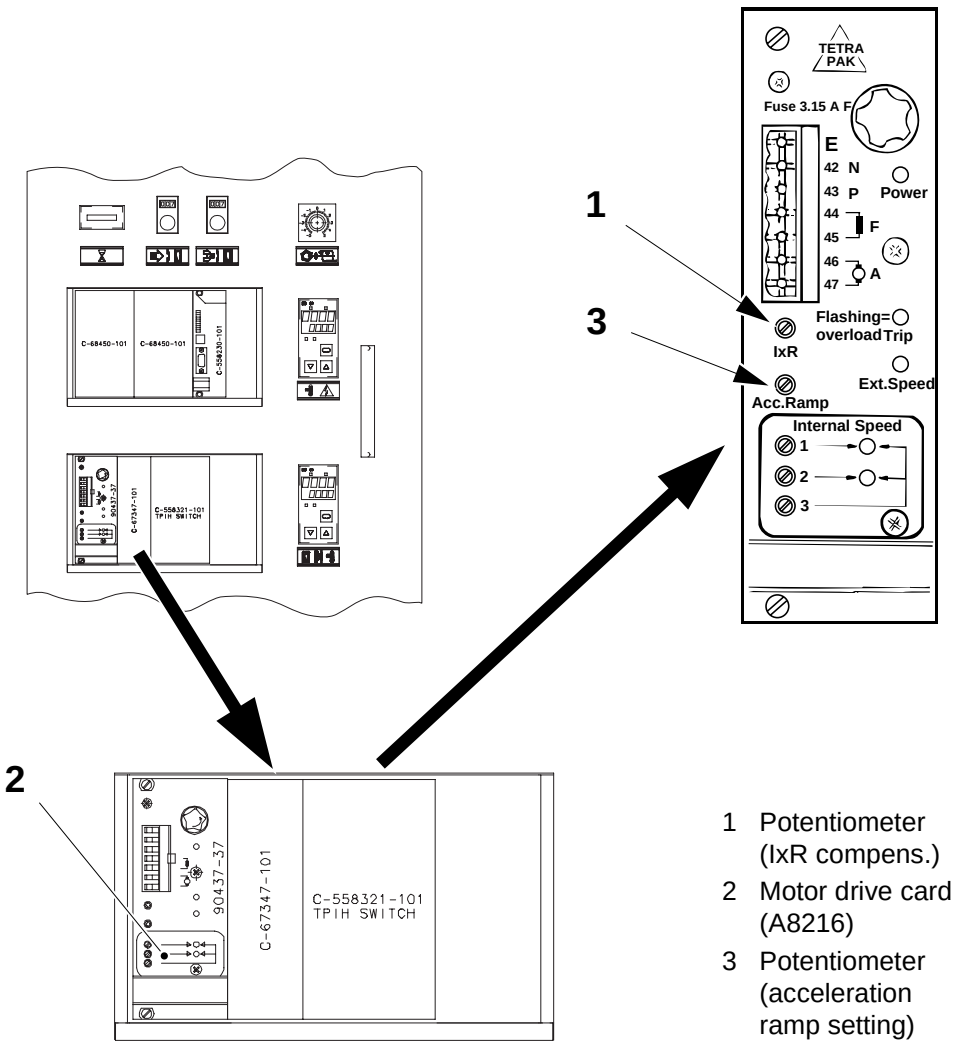

2.2B4884A02en.fm

1 Potentiometer (IxR compens.)
2 Motor drive card (A8216)
3 Potentiometer (acceleration ramp setting)

(Cont'd)

(Cont'd)

Fine setting (low speed)

a) Release the counter roller (4) by means of the handle (5).

b) Start the bending roller motor by forcing the output **O07.06** in the TPMC.

c) Measure the **Low speed** (see table) on the motor shaft (6) of the bending roller with the aid of a tachometer.

d) If required, adjust the **Low speed** by means of the potentiometer (7) on the motor drive card (2).

e) Stop the bending roller motor.

Package	Hole type	Low speed (rpm)
TBA 1000 B	Hole 45-50-85	90 ±5
TBA 1000 S	Hole 45-50-85	106 ±5
TBA 1000 Sq	Hole 85	112 ±5
TPA 1000 S	Hole 60	106 ±5
TBA 1500 S	Hole 45-85	102 ±5
TBA 500 S	Hole 25-55	83 ±5
TBA 250 B	Hole 21	74 ±5

2.2B4884A02en.fm

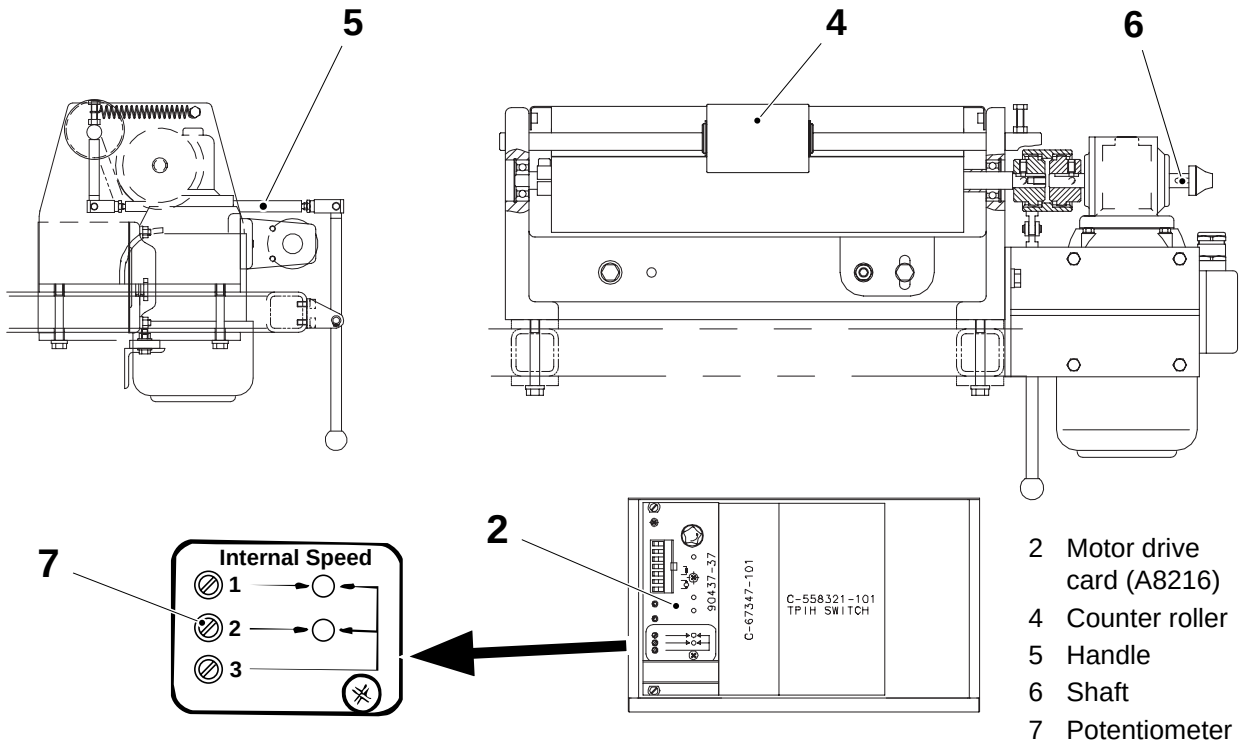

2 Motor drive card (A8216)
4 Counter roller
5 Handle
6 Shaft
7 Potentiometer (low speed)

(Cont'd)

(Cont'd)

Fine setting (high speed)

a) Release the counter roller (4) by means of the handle (5).

b) Start the bending roller motor by forcing the output **O07.07** in the TPMC.

c) Measure the **High speed** (see table) on the motor shaft (6) of the bending roller with the aid of a tachometer.

d) If required, adjust the **High speed** by means of the potentiometer (8) on the motor drive card (2).

e) Stop the bending roller motor.

Package	Hole type	High speed (rpm)
TBA 1000 B	Hole 45-50-85	104 ±5
TBA 1000 S	Hole 45-50-85	114 ±5
TBA 1000 Sq	Hole 85	120 ±5
TPA 1000 S	Hole 60	114 ±5
TBA 1500 S	Hole 45-85	110 ±5
TBA 500 S	Hole 25-55	90 ±5
TBA 250 B	Hole 21	79 ±5

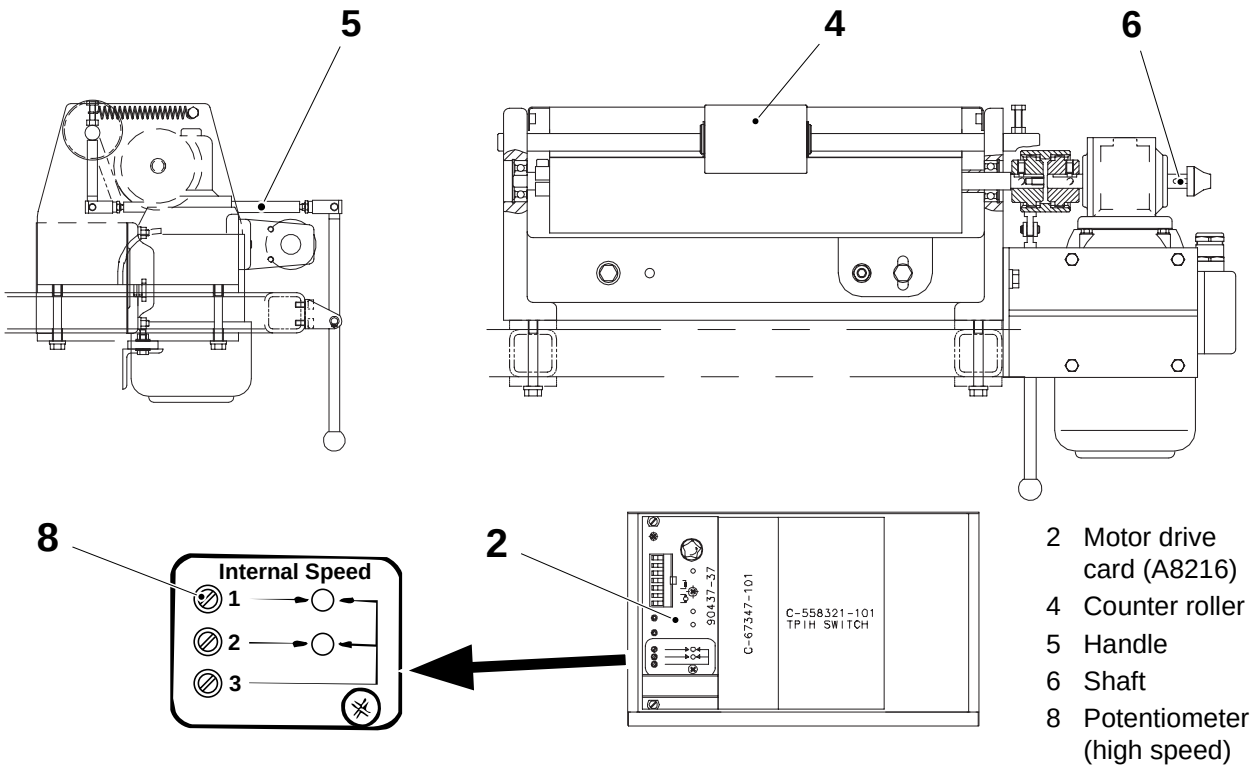

2.2B4884A02en.fm

1.2.4-5 Infeed unit - change worm gear motor

SPC reference	1095953-0100

a) Disconnect the electric motor connections.

b) Loosen the nuts (1) and remove the four screws (2).

c) Remove the coupling (3) from the worm gear motor (4) by loosening the grub screws (5).

d) Change the worm gear motor (4) as required.

e) Assemble in the reverse order.

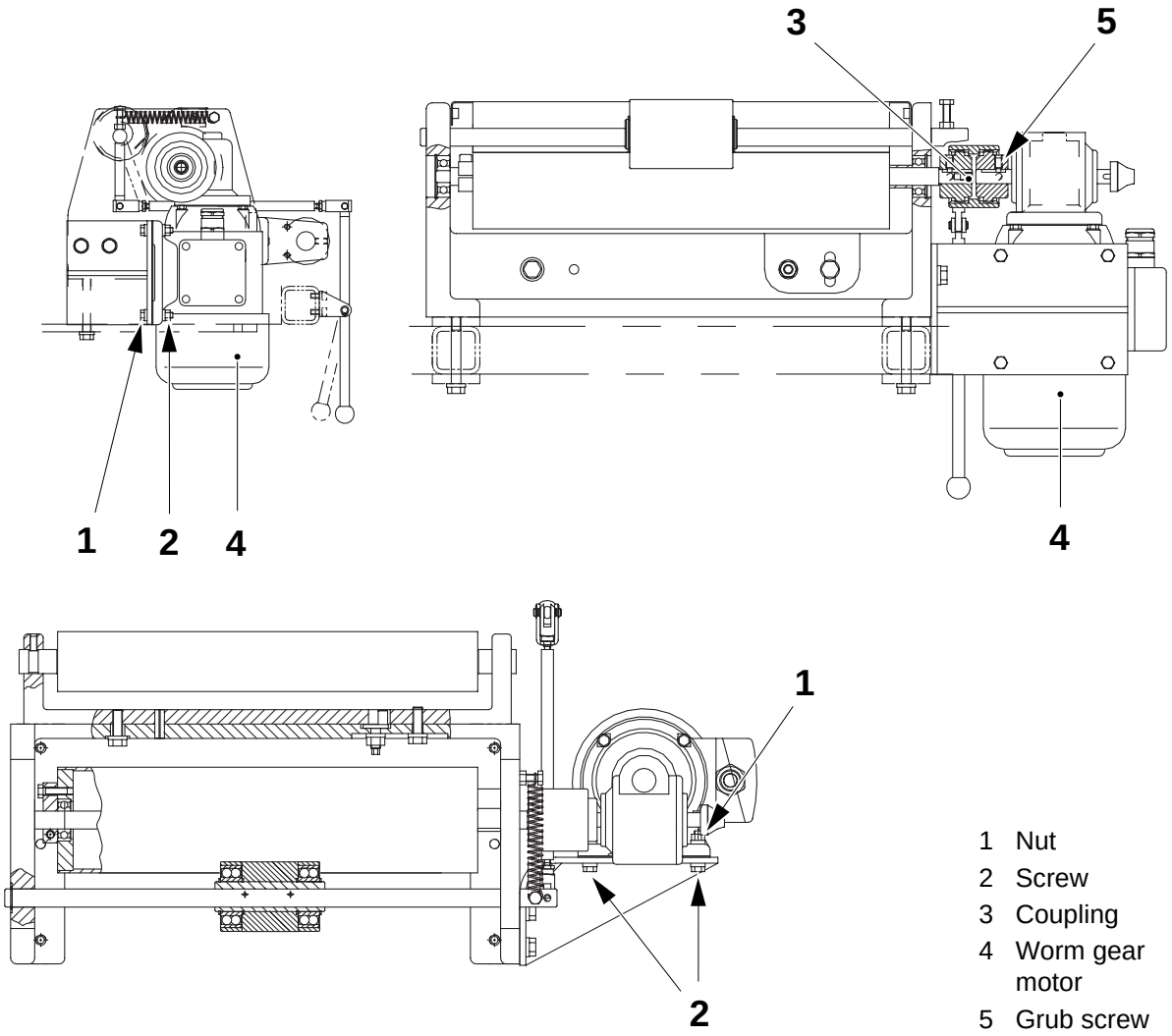

1 Nut
2 Screw
3 Coupling
4 Worm gear motor
5 Grub screw

2.2B4884A02en.fm

1.2.4-6 Infeed unit - change bearings

SPC reference	1095953-0100

a) Disconnect the electric motor connections.

b) Loosen the nuts (1) and remove the four screws (2).

c) Remove the worm gear motor (3), together with its hub (4), from the coupling (5).

d) Remove the hub (6), on the bending roller shaft (7), by loosening the two grub screws (8) and (9).

e) Remove the circlip (10) from the bracket (11).

f) Push the bending roller (12) aside, see figure, until the bearing (13) comes off from the bracket (11).

g) Change the bearing (13) if damaged or worn out.

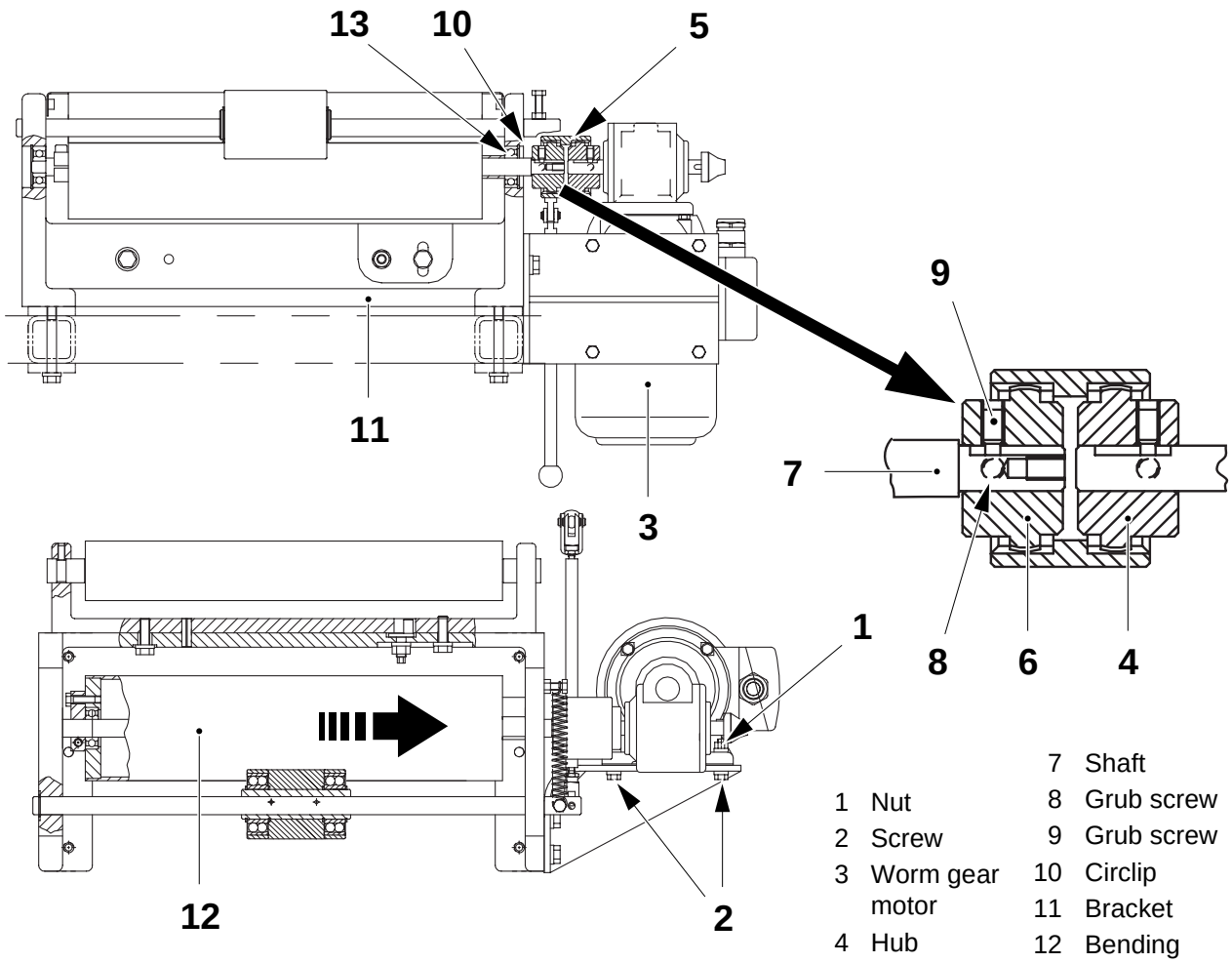

2.2B4884A02en.fm

1	Nut	7	Shaft
2	Screw	8	Grub screw
3	Worm gear motor	9	Grub screw
4	Hub	10	Circlip
5	Coupling	11	Bracket
6	Hub	12	Bending roller
		13	Bearing

(Cont'd)

(Cont'd)

h) Push the bending roller (12) aside, see figure, until the roller shaft (7) is extracted from the bearing (14).

i) Pull out the bearing (14) and change it if damaged or worn out.

j) Assemble in the reverse order.

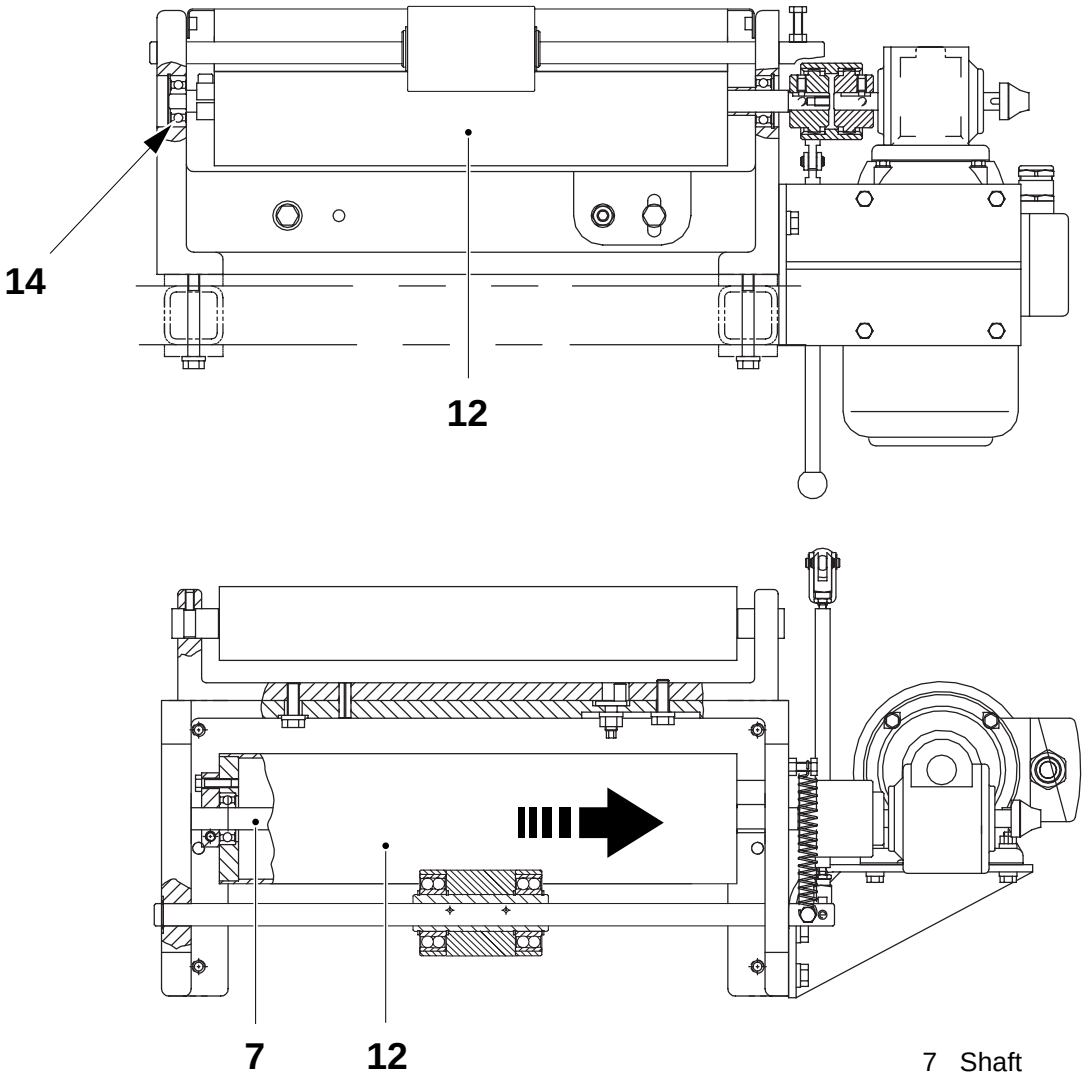

7 Shaft
12 Bending roller
14 Bearing

2.2B4884A02en.fm

1.2.4-7 Infeed unit - check bending roller assembly

SPC reference	1095953-0100 1095952-0100

Check the correct position for the bending roller (1) on the infeed unit assembly in order to have correct packaging material tracking.

If required, adjust the bending roller (1) by slightly loosening the screws (4). Then loosen the nut (2) and turn the eccentric (3) until the correct position is obtained, see *1.2-2 Paper web path - set alignment rollers.*

Check the surface of the bending roller (1), see *1.2.3-1 Bending roller assembly - check.*

Change as required.

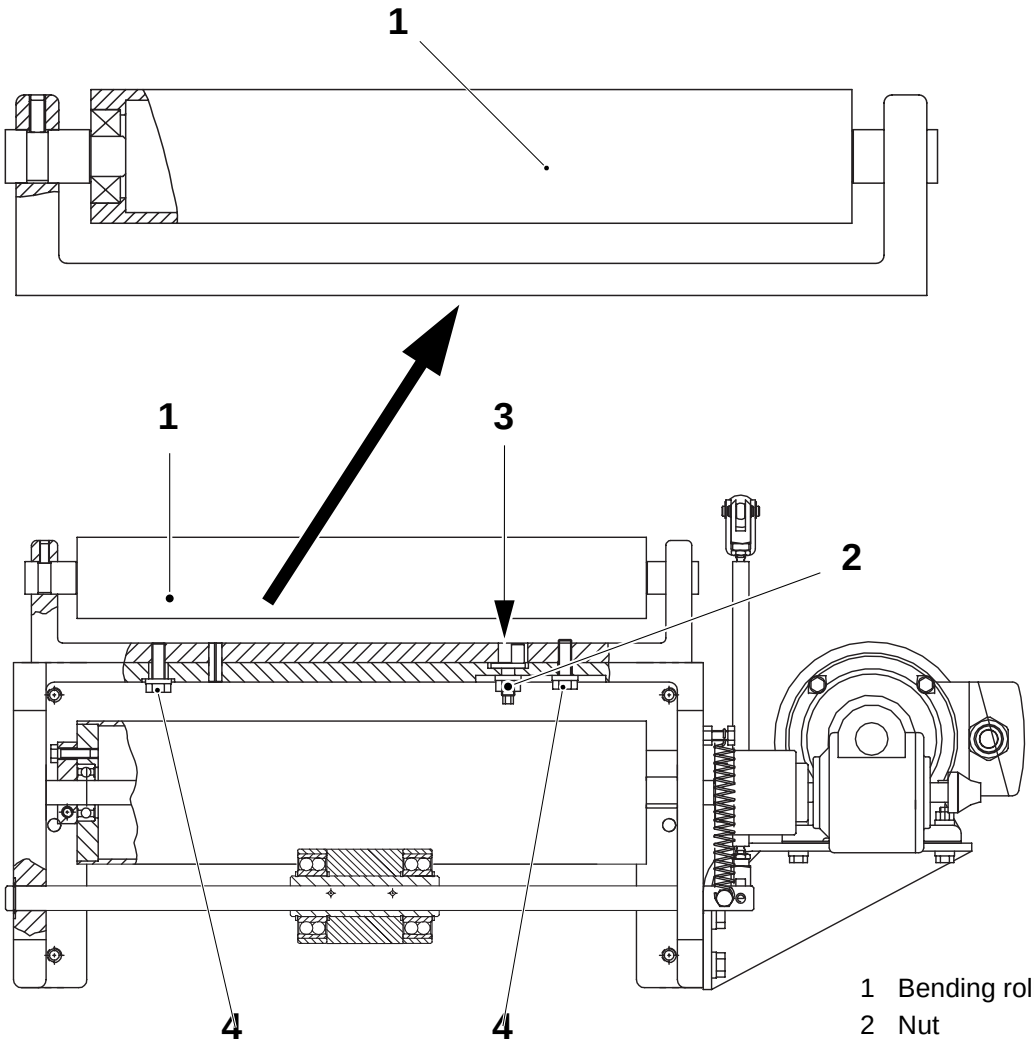

2.2B4884A02en.fm

1 Bending roller
2 Nut
3 Eccentric
4 Screw

1.2.4-8 Infeed unit - set spring bracket

SPC reference	1095953-0100

Set the distance **A** between the spring bracket (1) and the shaft (2) by means of the nut (3).

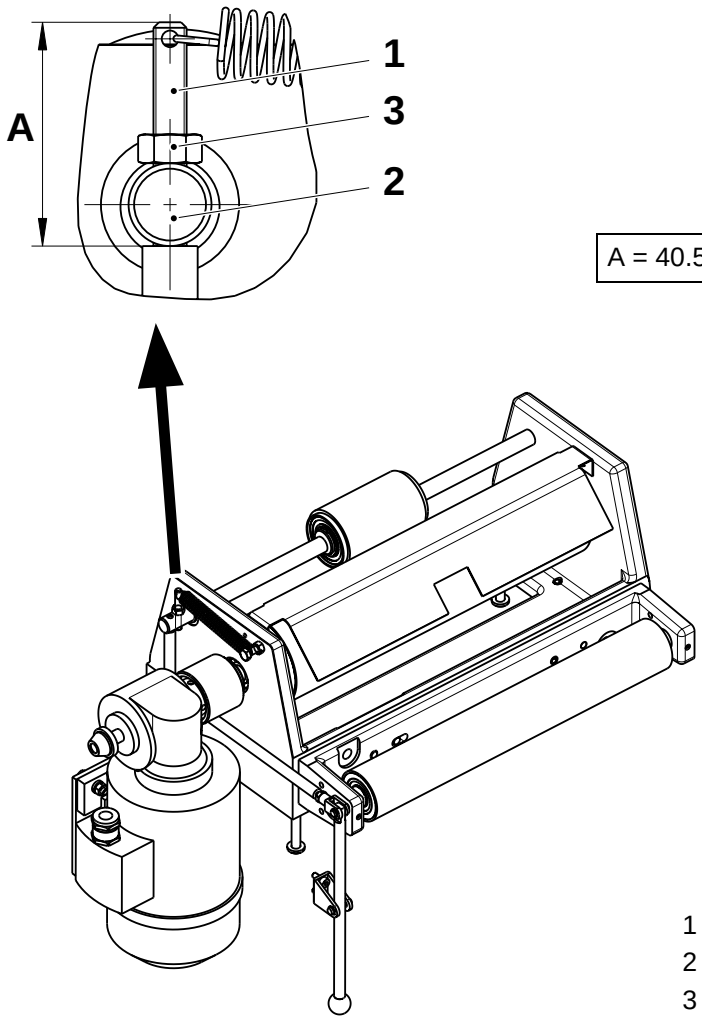

A = 40.5 ±0.5 mm

1 Spring bracket
2 Shaft
3 Nut

2.2B4884A02en.fm

1.2.5 Paper brake

1.2.5-1 Paper brake - check

SPC reference	1095970-0100

Check that the following parts turn freely and that there are no deformations or cracks:

- the wheel (1)
- the counter roller (2).

Change as required.

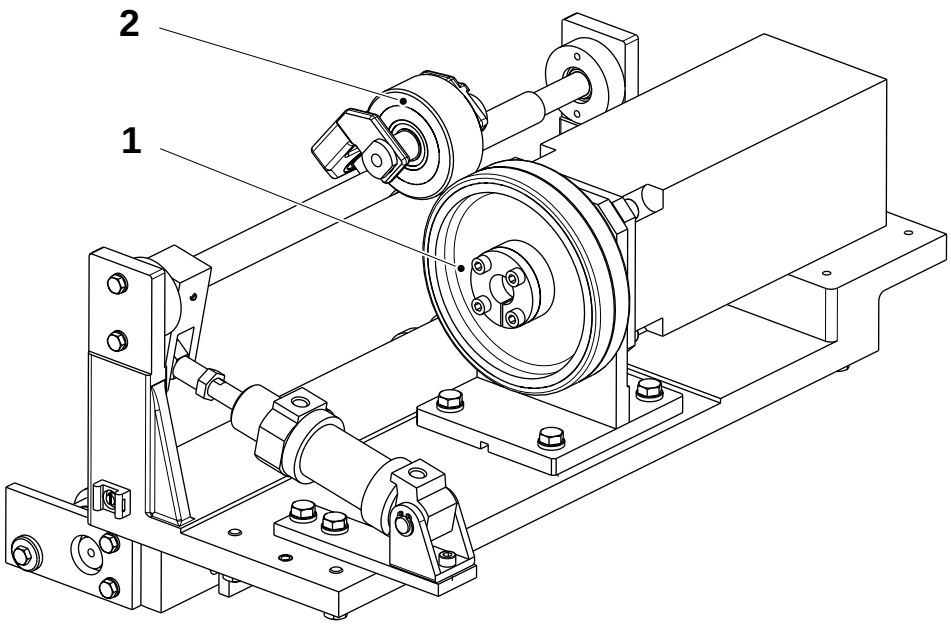

2.2B4884A02en.fm

1 Wheel
2 Counter roller

1.2.5-2 Paper brake - check bending roller flange

SPC reference	1095969-0100 1095970-0100

Check the following parts for wear and/or damage:

- the bending roller with flange (1)
  Check especially the surface of the roller (1) for any marks and also that it turns freely.
- the rollers (2)
  Check especially the surfaces of the rollers (2) for any marks and also that they turn freely. Check also that the rollers (2) are approximately centred with respect to the flanges of the bending roller (1).
- the correct position for the bending roller (1) on the paper brake assembly in order to have correct packaging material tracking.

Change as required.

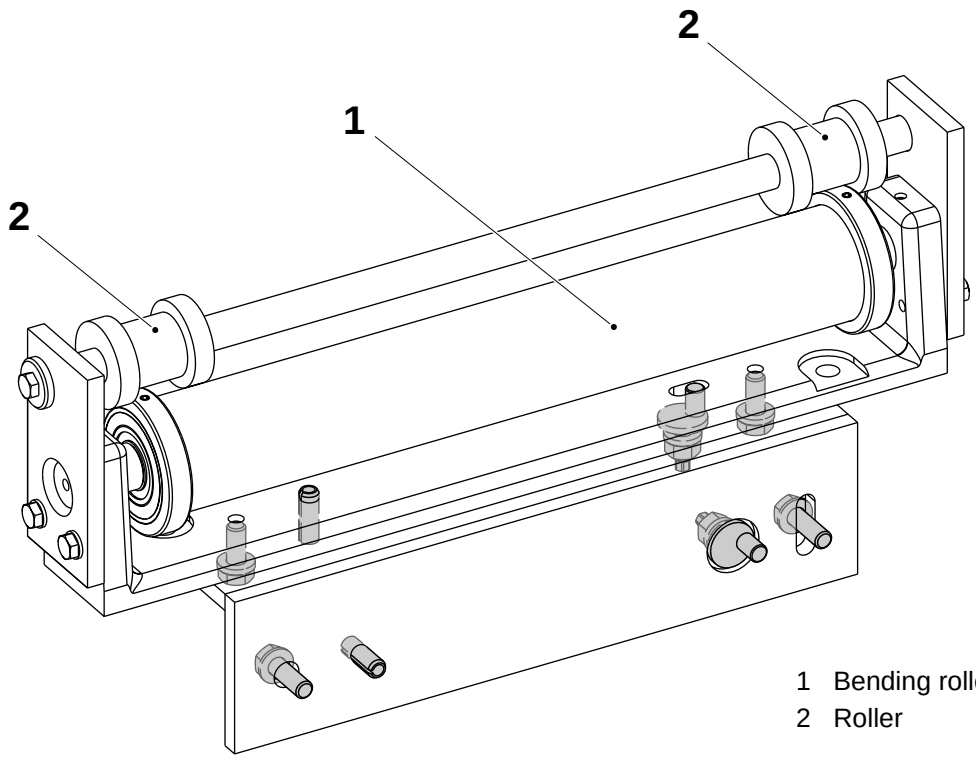

1 Bending roller with flange
2 Roller

2.2B4884A02en.fm

1.2.5-3 Paper brake - set cylinder

SPC reference	1095970-0100

a) Lift the counter roller (1) as far as it can go.

b) Adjust the cylinder joint (2) in order to set the distance **A** between the nut (3) and the cylinder (4) edge, as shown in the picture.

c) Check the cylinder (4) function once more after the setting.

A = 12 ±1 mm

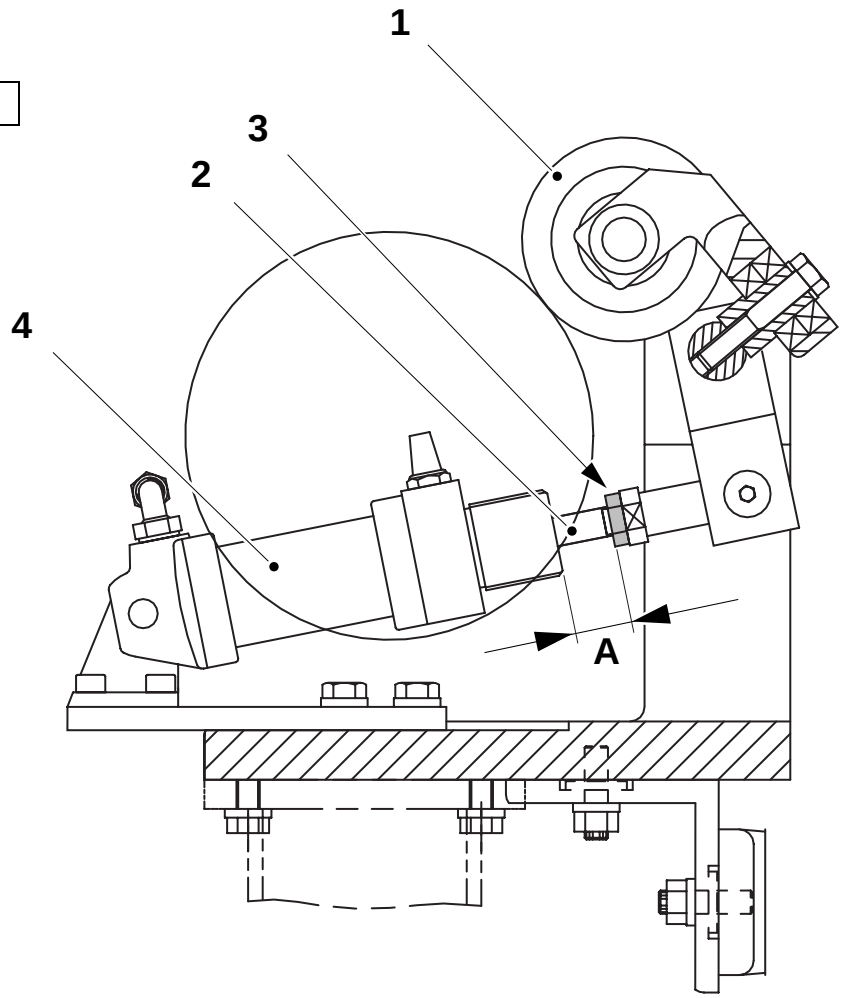

2.2B4884A02en.fm

1 Counter roller
2 Joint
3 Nut
4 Cylinder

1.2.5-4 Paper brake - set brake regulator card

Tools - digital multimeter	TP No. 90220-78
SPC reference	1095970-0100

a) Close all the doors on the machine.

b) On the TPOP, check that there are no active alarms and touch the **Manoeuvre** button (1).

c) Touch the **Maintenance PT21 left** button (2).

d) Touch the **Punch unit and patch applicator** button (3).

e) Touch the **Start** button (4) to activate these stations: punch unit and applicator patch.

f) The **Service and maintenance key** icon (5) starts to flash at the top of the ladder step window.

g) Push the **Program up** button (6) after it starts flashing.

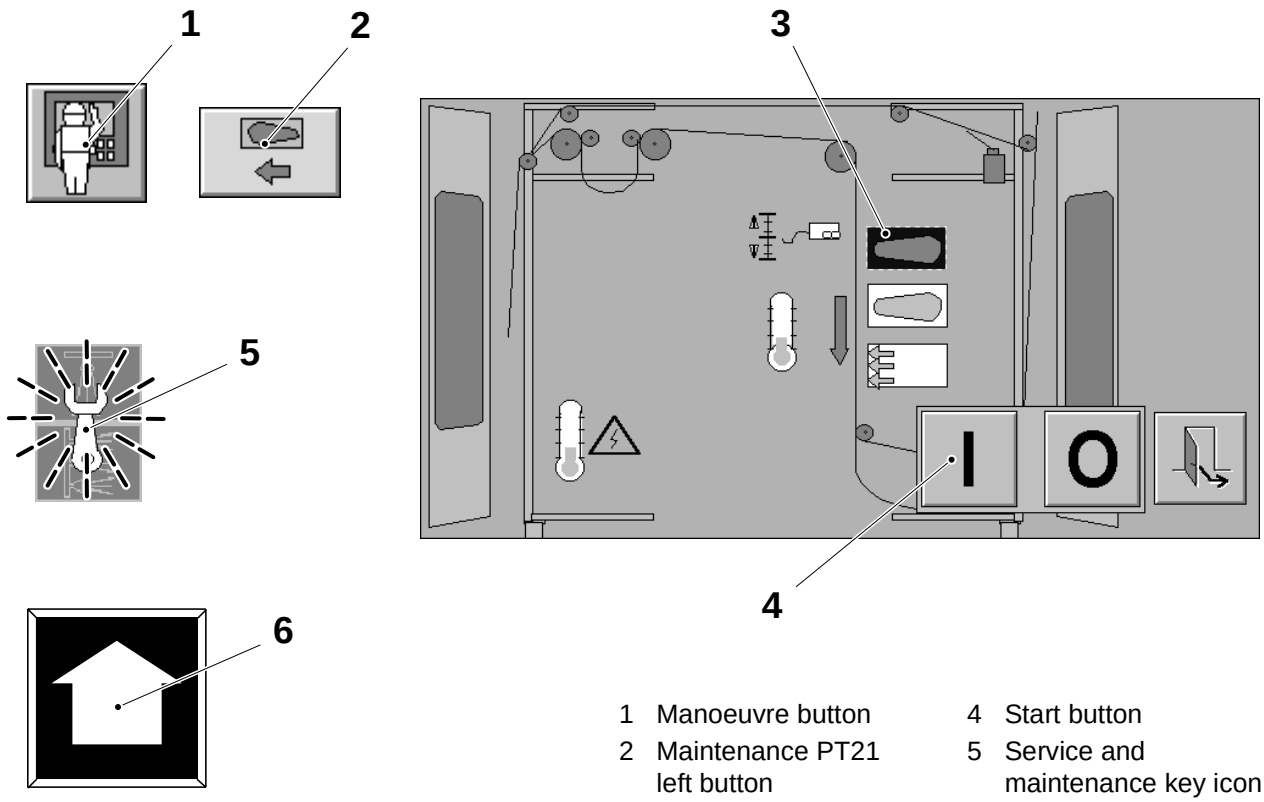

2.2B4884A02en.fm

1 Manoeuvre button
2 Maintenance PT21 left button
3 Punch unit and patch applicator button
4 Start button
5 Service and maintenance key icon
6 Program up button

(Cont'd)

(Cont'd)

h) At the PullTab control panel, push the **Single index** button (7) at least **15 times** and make sure that the packaging material is not folded but wound up in the outfeed loop.

Note! If the **Single index** button (7) does not flash, open and close one of the doors in the PullTab unit. Acknowledge the alarm on the TPOP.

i) Open the door and cut the packaging material that has the test holes and the patches.

j) Place the packaging material on a flat surface and make sure that it lies flat.

k) Measure the length between the first and the last hole. The length should be the packaging material repeat length **x 10** 0/-1 mm.

l) If the measured length is too long increase the current torque value by means of increasing **R1006** and **R1007** in steps of **1** in the TPMC program.

m) If the measured length is too short decrease the current torque value by means of decreasing **R1006** and **R1007** in steps of **1** in the TPMC program.

Note! The default value of **R1006** and **R1007** is **17**.

2.2B4884A02en.fm

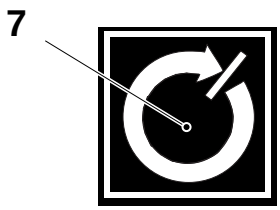

7 Single index button

(Cont'd)

(Cont'd)

n) Close the door and reset the alarm on the TPOP. If required repeat steps *h), i), j)* and *k)* and make adjustments according to steps *l)* and *m)*.

o) Touch the **Stop** button (8).

p) Push the **Program down** button (9) after it starts flashing.

q) Touch the **Exit** button (10).

r) Touch the **Manoeuvre** button (1) to end the setting.

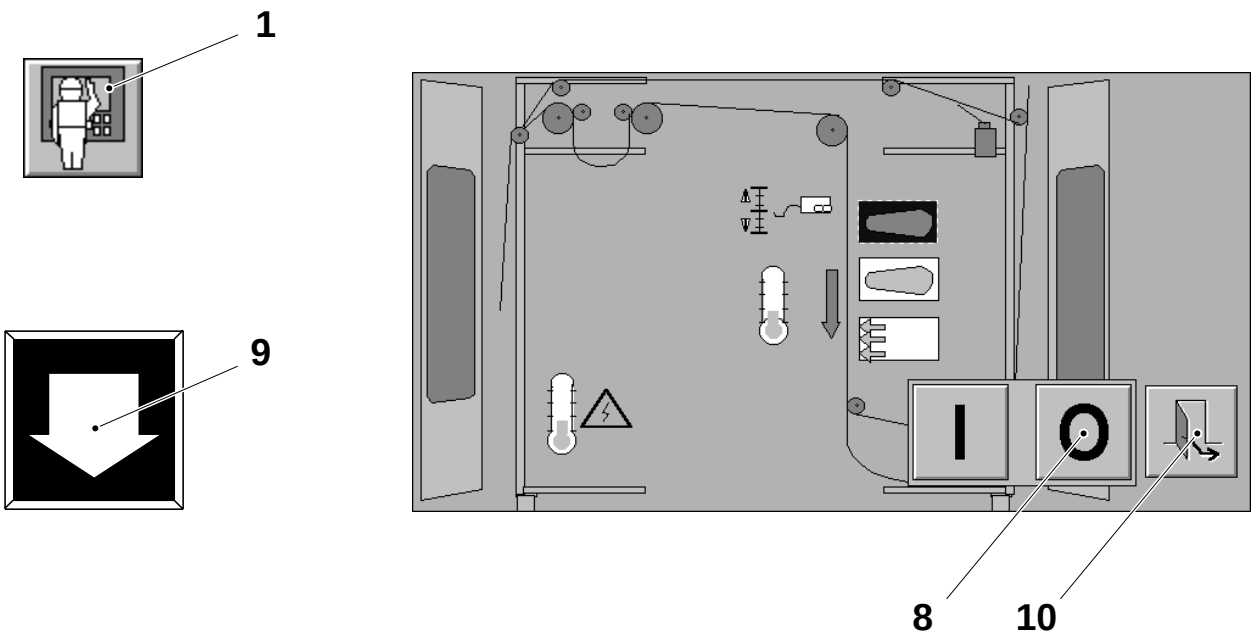

1 Manoeuvre button
8 Stop button
9 Program down button
10 Exit button

2.2B4884A02en.fm

1.2.5-5 Paper brake - change wheel

SPC reference	1095970-0100

a) Remove the clamping element (1) from its place, see *1.2.1-1 Drive motor - remove clamping element*.

b) Pull out the wheel (2).

c) Change the wheel (2) if damaged or worn out.

d) Assemble in the reverse order.

Note! While assembling in the reverse order, check the distance **A** between the drive wheel (2) and the bracket (3).

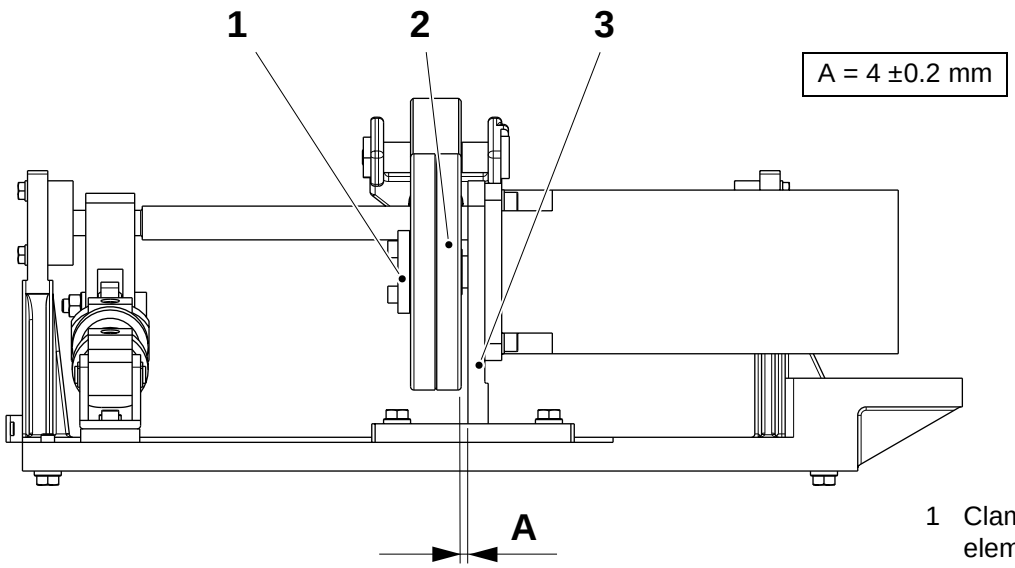

2.2B4884A02en.fm

1 Clamping element
2 Wheel
3 Bracket

1.2.5-6 Paper brake - remove clamping element

SPC reference	1095970-0100

Follow the procedures described in *1.2.1-1 Drive motor - remove clamping element*.

1.2.5-7 Paper brake - assemble clamping element

SPC reference	1095970-0100

Follow the procedures described in *1.2.1-2 Drive motor - assemble clamping element*.

1.2.6 Edge guide

1.2.6-1 Edge guide - check bearings

SPC reference	1255601-0100

Check that the ball bearings (1) rotate freely. If not, clean them with compressed air. Change the ball bearings (1) as required.

1.2.6-2 Edge guide - change bearings

SPC reference	1255601-0100

a) Remove the stop screws (2), the piece (3) and the guide cones (4).

b) Pull out and change the ball bearings (1).

c) Fit the guide cones (4), the piece (3) and the stop screws (2).

d) Loosen the nut (6) and adjust the screw (5) until the bearings are in slight contact with each other.

e) Thread the packaging material, step up the machine to step **Production** and check that the ball bearings (1) do not make any marks on the packaging material.

2.2B4884A02en.fm

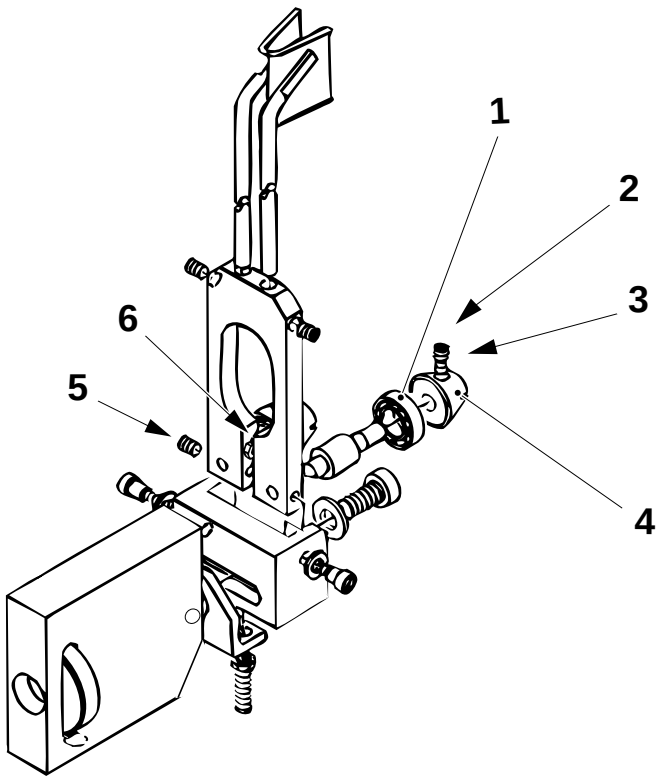

1 Ball bearing
2 Stop screw
3 Piece
4 Guide cone
5 Screw
6 Nut

1.2.6-3 Edge guide - set

SPC reference	1255601-0100

a) Loosen the nut (1) and adjust the stop screws (2) until the bearings (4) are in slight contact with each other.

b) Set the guide fingers parallel with the packaging material sideways by adjusting the shifter handle (3).

c) Step up to step **Production** and check that the ball bearings (4) do not make any marks on the packaging material.

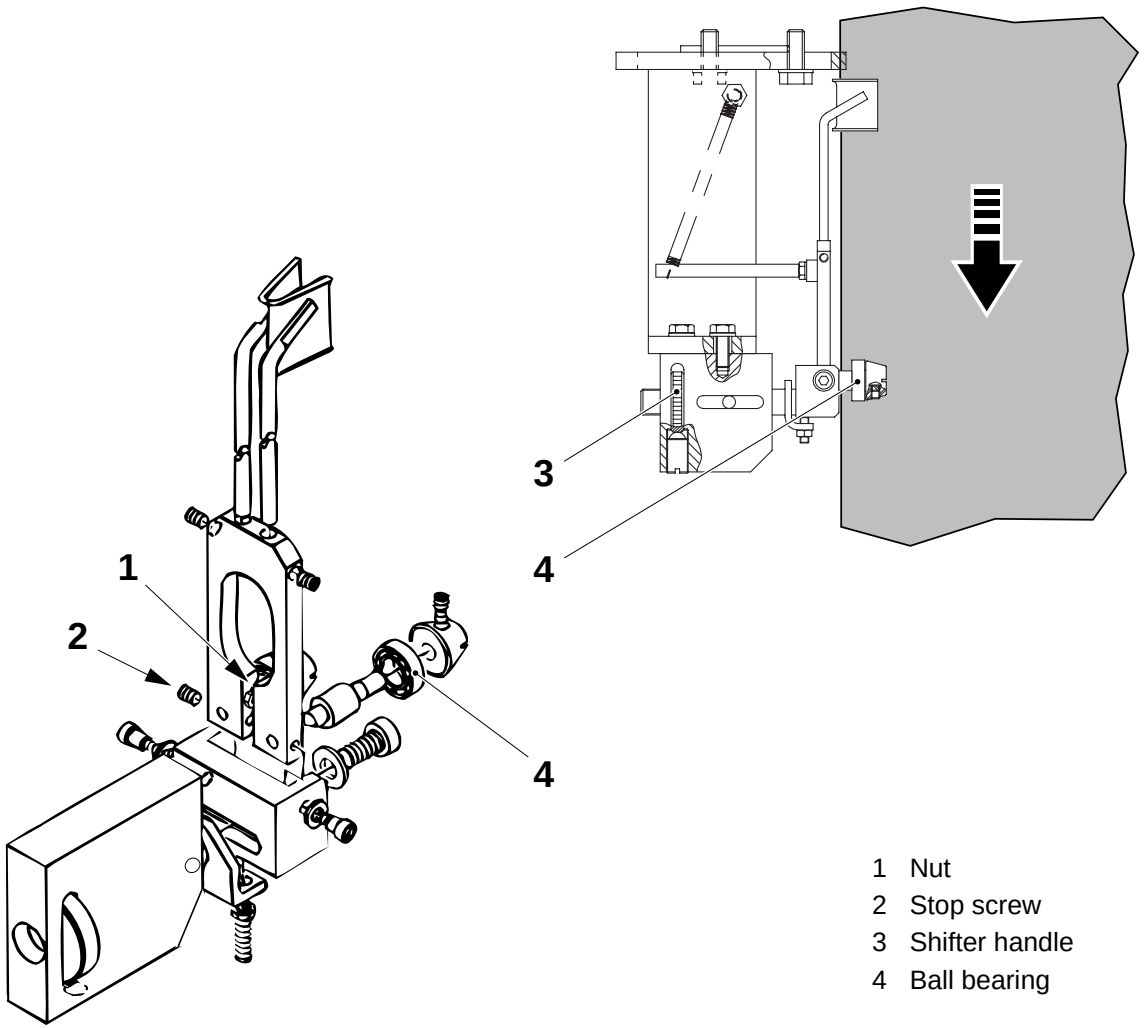

2.2B4884A02en.fm

1 Nut
2 Stop screw
3 Shifter handle
4 Ball bearing

1.2.7 Photocell unit infeed

1.2.7-1 Photocell unit infeed - check

Machine status	Mains power **On**
SPC reference	1095980-0100

Check that the photocell transmitter (2) and the photocell receiver (1) are aligned both vertically and horizontally.

Check the function of the photocells by checking that the red LED (3) is **On** when the photocells are working together.

Change as required.

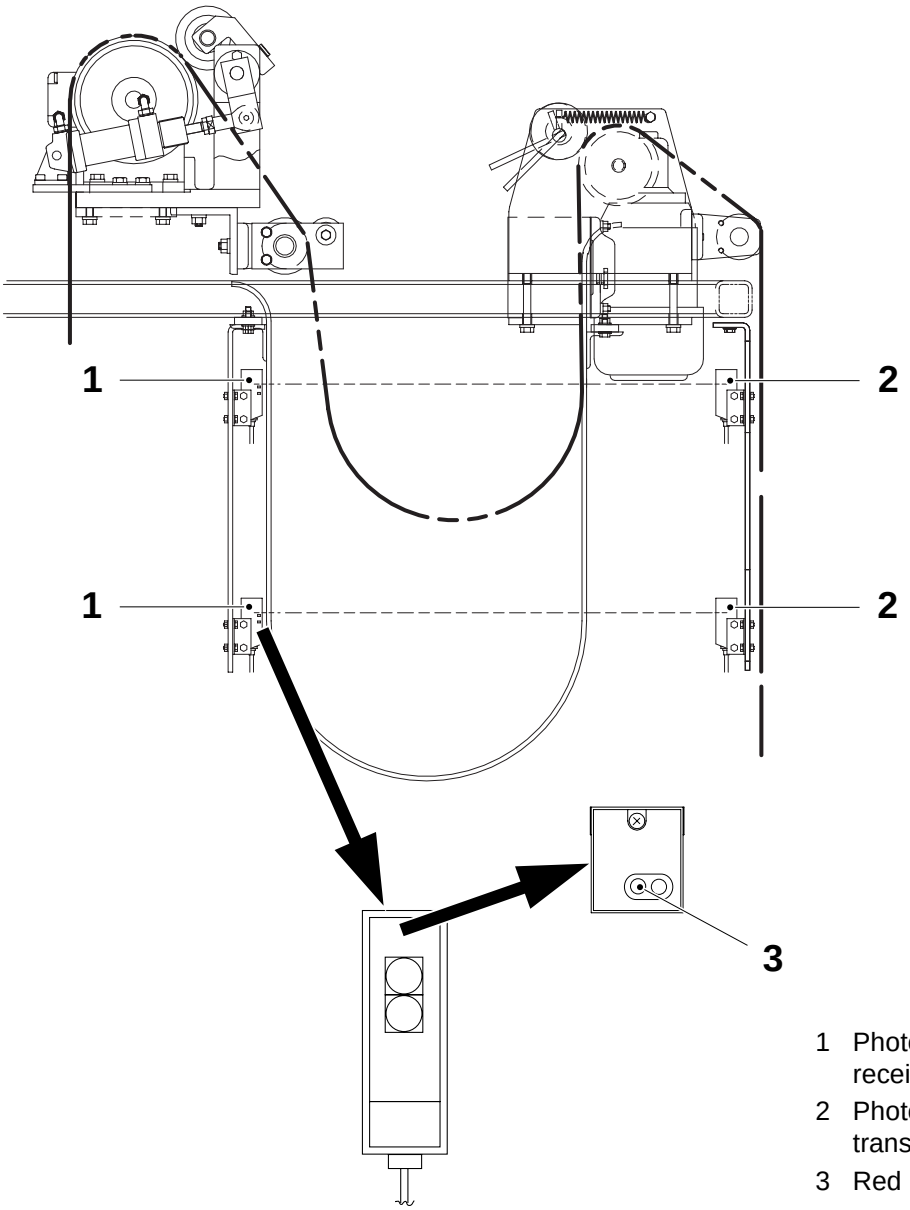

1 Photocell receiver
2 Photocell transmitter
3 Red LED

2.2B4884A02en.fm

1.2.7-2 Photocell unit infeed - set

Machine status	Mains power **On**
SPC reference	1095980-0100

The photocell unit has two transmitters and two receivers that work in pairs: receiver (1) with transmitter (3), and receiver (2) with transmitter (4).

Basic setting

Set the distances **A**, **B**, **C** and **D** by means of the screws (5).

Fine setting

a) Make sure that there is no packaging material between transmitters and receivers.

b) Adjust the position of each photocell according to the distances shown in the table below. When the correct position is found the red LED (6) of the receiver photocells lights up. This means that the photocells are correctly aligned.

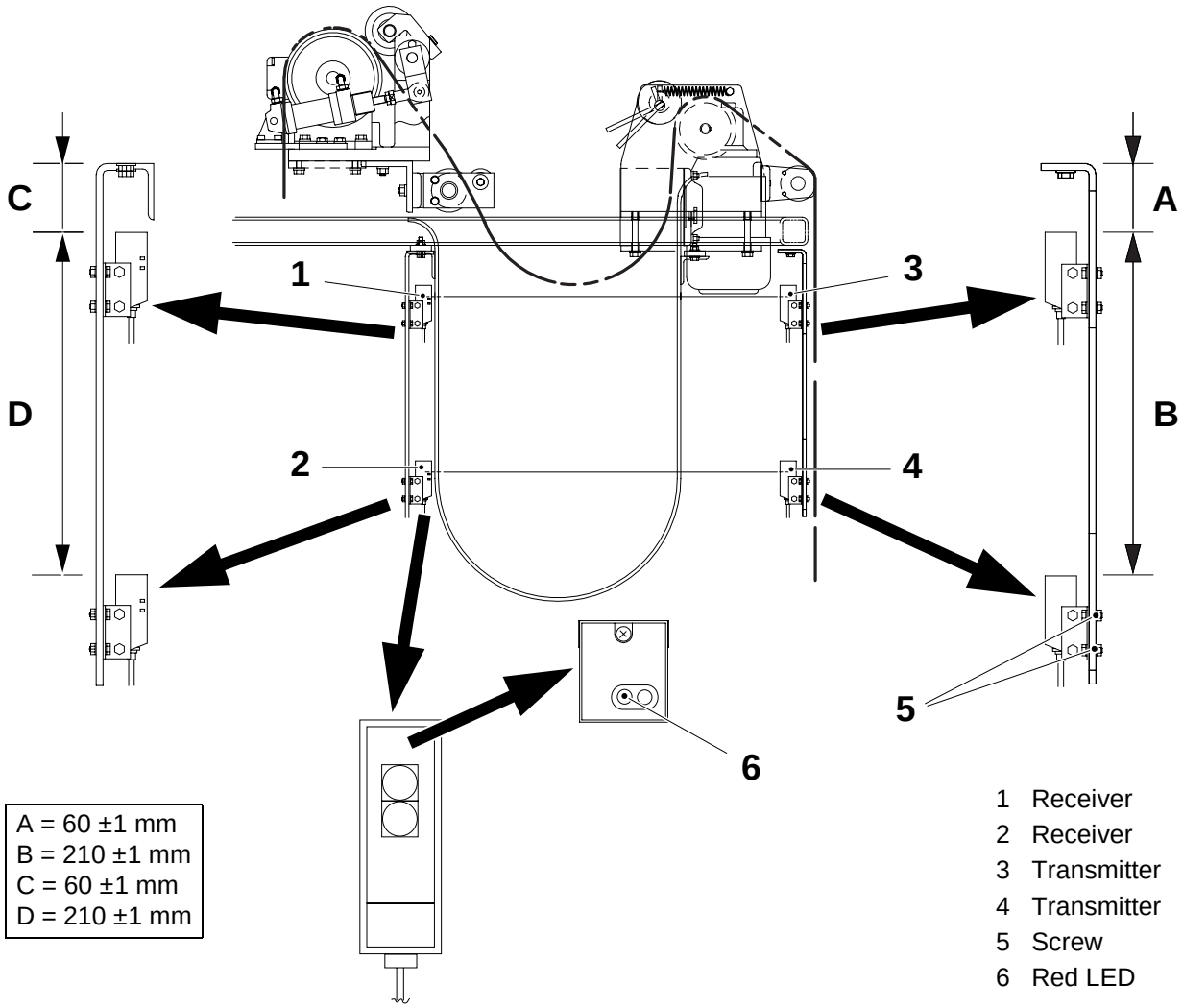

2.2B4884A02en.fm

A = 60 ±1 mm
B = 210 ±1 mm
C = 60 ±1 mm
D = 210 ±1 mm

1 Receiver
2 Receiver
3 Transmitter
4 Transmitter
5 Screw
6 Red LED

(Cont'd)

(Cont'd)

c) Open the cover on the receiver photocells (1) and (2).

d) For the upper receiver photocell (1) make sure that it is set to **PNP** and **D-ON** as shown in the figure.

e) For the lower receiver (2) make sure that it is set to **PNP** and **L-ON** as shown in the figure.

f) Turn the potentiometer (7) fully clockwise (towards **max.**), on the receiver photocells (1) and (2).

g) Close the cover on the receiver photocells (1) and (2).

h) Check the photocells function by putting a hand between the transmitter photocell and the receiver photocell. Check that the red LED (6), on the receiver photocell goes out. Repeat with the other pair of photocells.

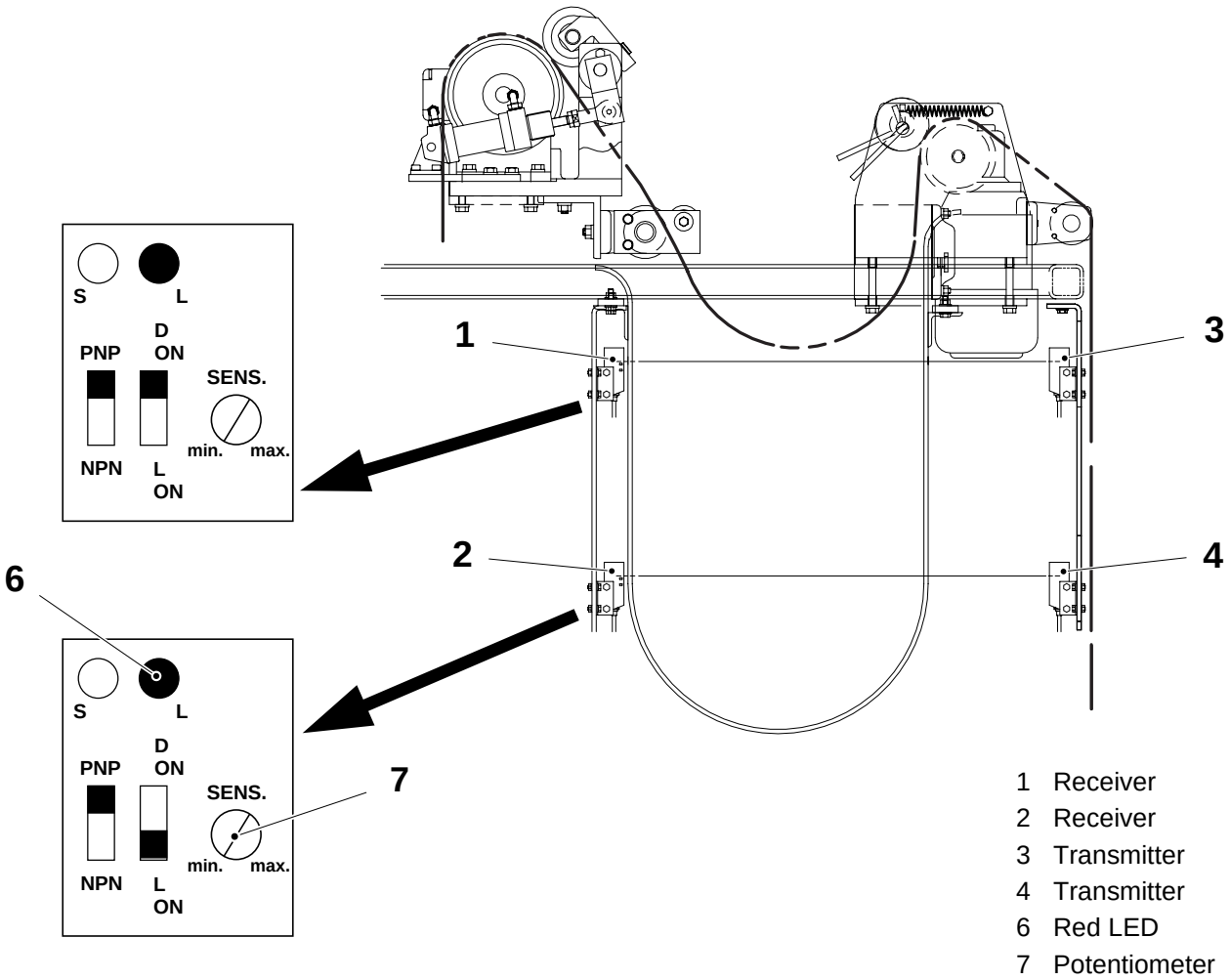

1 Receiver
2 Receiver
3 Transmitter
4 Transmitter
6 Red LED
7 Potentiometer

2.2B4884A02en.fm

1.2.8 Photocell unit outfeed

1.2.8-1 Photocell unit outfeed - check

Machine status	Mains power **On**
SPC reference	1095979-0100

Check that the photocell transmitter (1) and the photocell receiver (2) are aligned both vertically and horizontally.

Check the function of the photocells by checking that the red LED (3) is **On** when the photocells are working together.

Change as required.

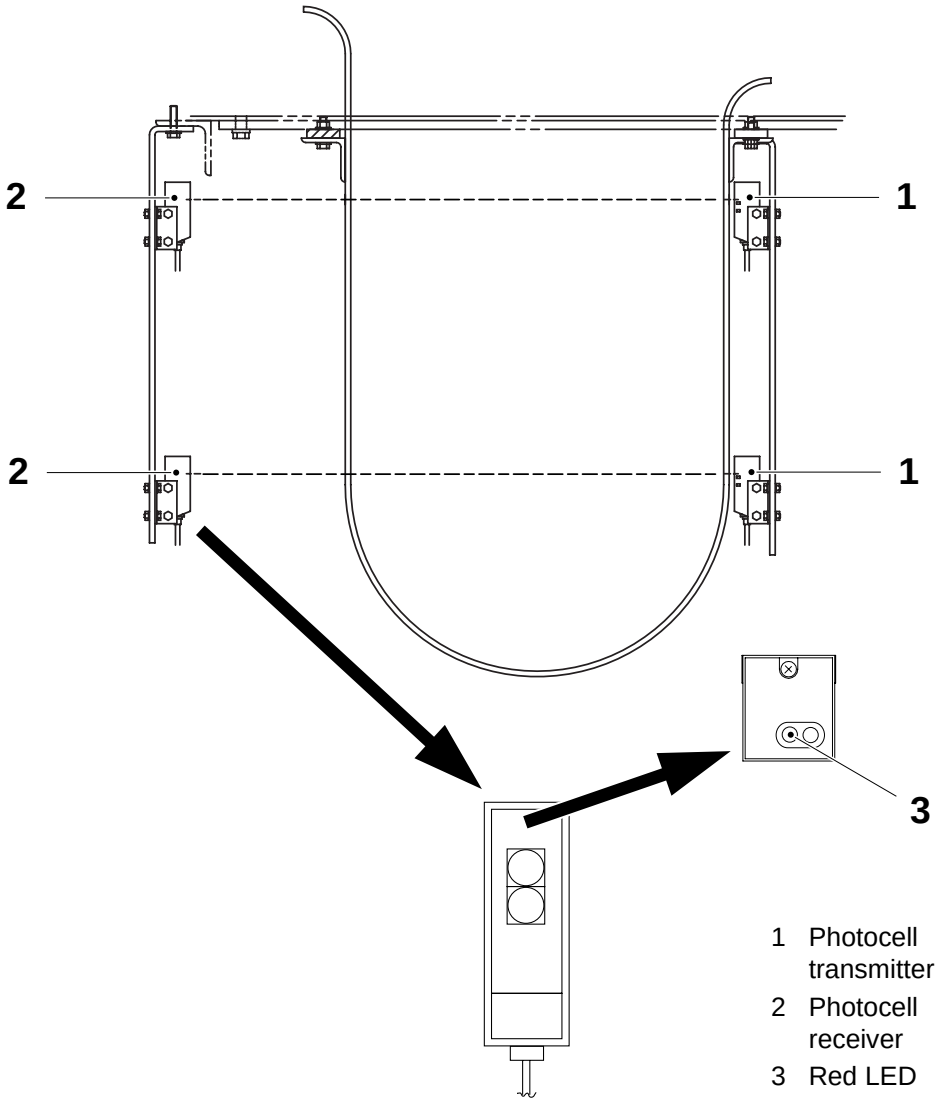

2.2B4884A02en.fm

1 Photocell transmitter
2 Photocell receiver
3 Red LED

1.2.8-2 Photocell unit outfeed - set

Machine status	Mains power **On**
SPC reference	1095979-0100

The photocell unit has two transmitters and two receivers that work in pairs: receiver (3) with transmitter (1), and receiver (4) with transmitter (2).

Basic setting

Set the distances **A**, **B**, **C** and **D** by means of the screws (5).

Fine setting

a) Make sure that there is no packaging material between transmitters and receivers.

b) Adjust the position of each photocell according to the distances shown in the table below. When the correct position is found the red LED (6) of the receiver photocells lights up; this means that the photocells are correctly aligned.

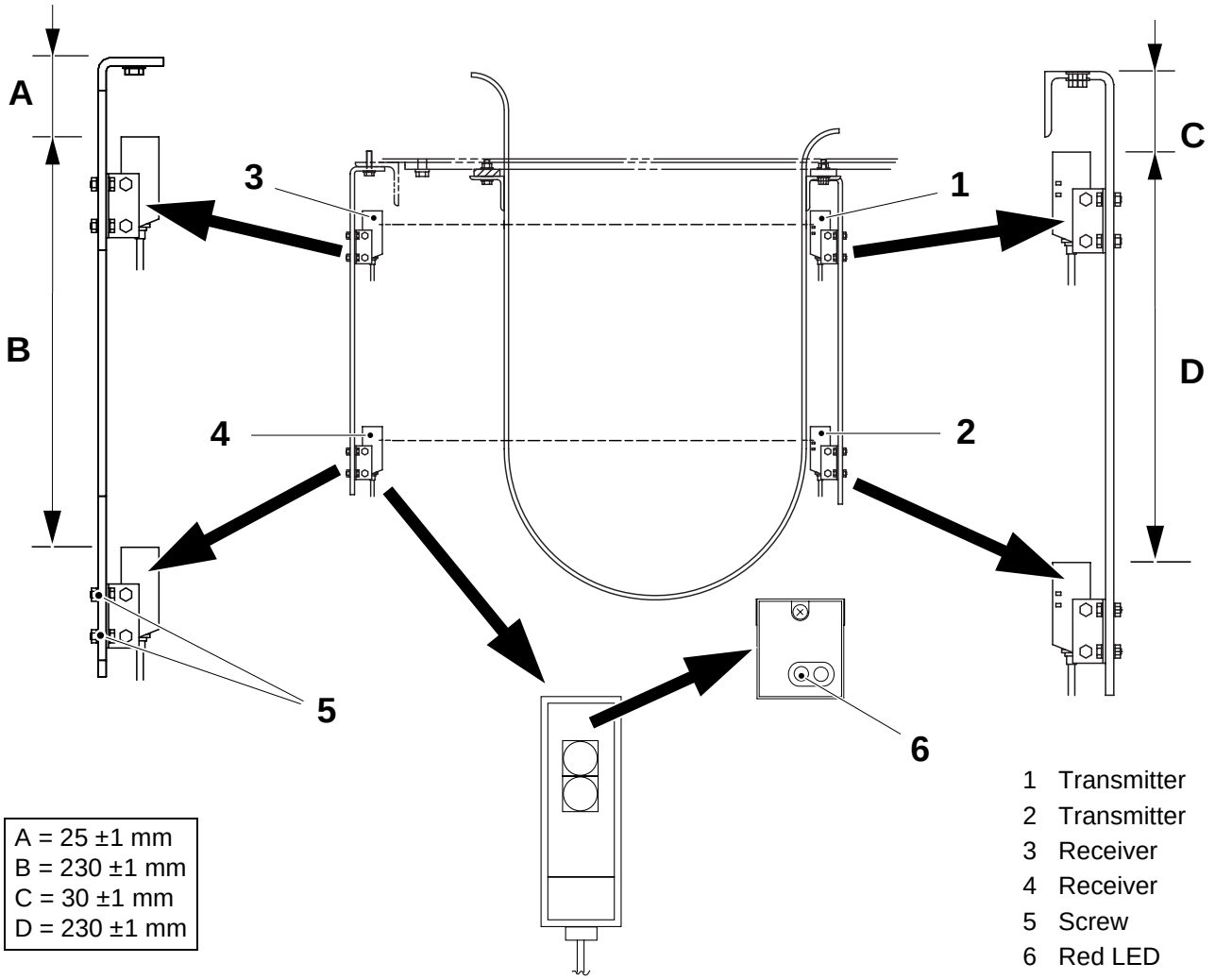

A = 25 ±1 mm	
B = 230 ±1 mm	
C = 30 ±1 mm	
D = 230 ±1 mm	

1 Transmitter
2 Transmitter
3 Receiver
4 Receiver
5 Screw
6 Red LED

(Cont'd)

2.2B4884A02en.fm

(Cont'd)

c) Open the cover on the receiver photocells (3 and 4).

d) For the upper receiver photocell (3) make sure that it is set to **PNP** and **D-ON** as shown in the figure.

e) For the lower receiver (4) make sure that it is set to **PNP** and **L-ON** as shown in the figure.

f) Then turn the potentiometer (7) fully clockwise (towards **max.**) on the receiver photocells (3) and (4).

g) Close the cover on the receiver photocells (3) and (4).

h) Check the photocells function by putting a hand between the transmitter photocells and the receiver photocells. Check that the red LED (6), on the receiver photocell goes out. Repeat with the other pair of photocells.

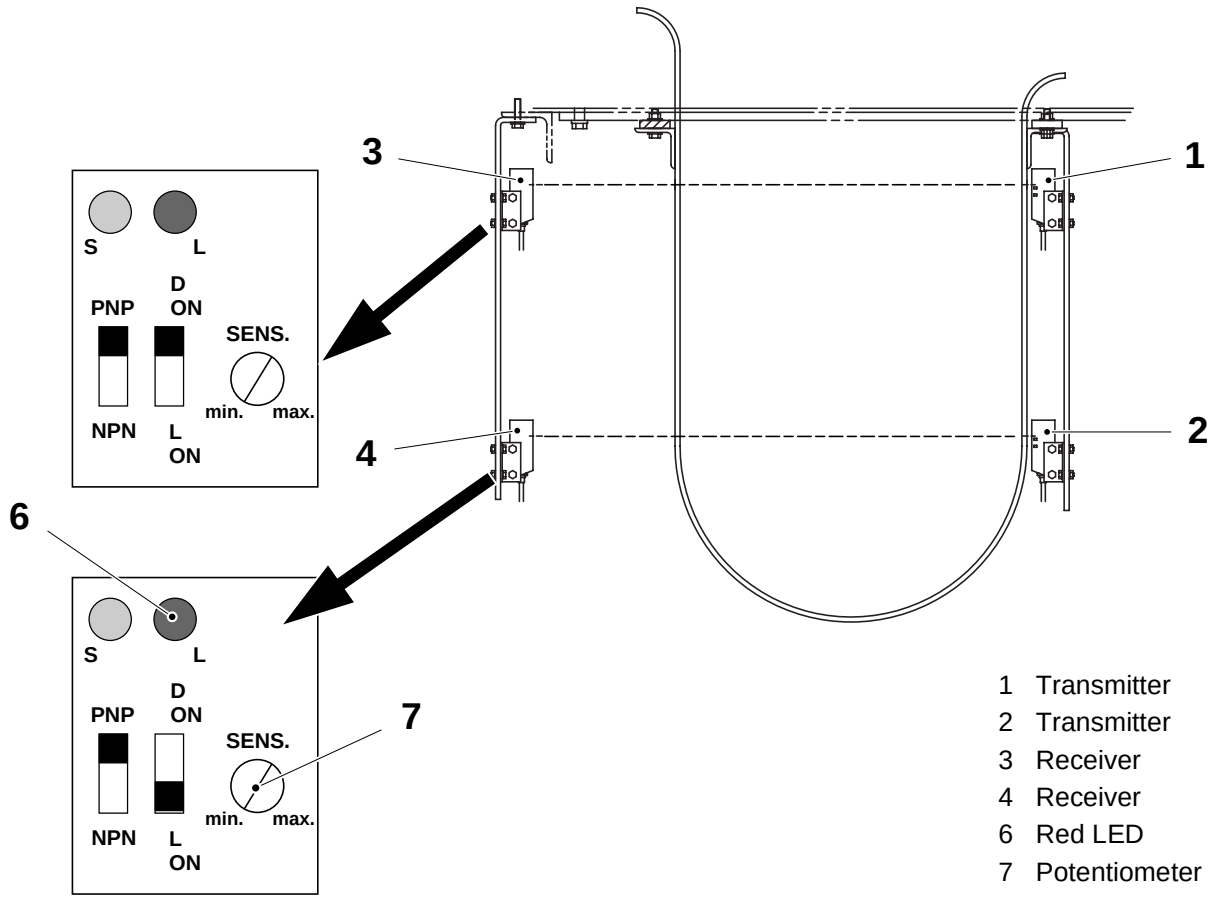

2.2B4884A02en.fm

1.2.9 By-pass sensor

1.2.9-1 By-pass sensor - check

SPC reference	514993-0200

Check the position of the by-pass sensor. For large volumes, fit the sensor using holes (2). For small volumes, fit the sensor using holes (3).

Check that the limit switch (1) is working properly by pulling up and down the arm (4).

Check that the roller (5) rotates freely.

Check that the arm (4) moves smoothly and easily even against the limit switch spring (6).

Change as required.

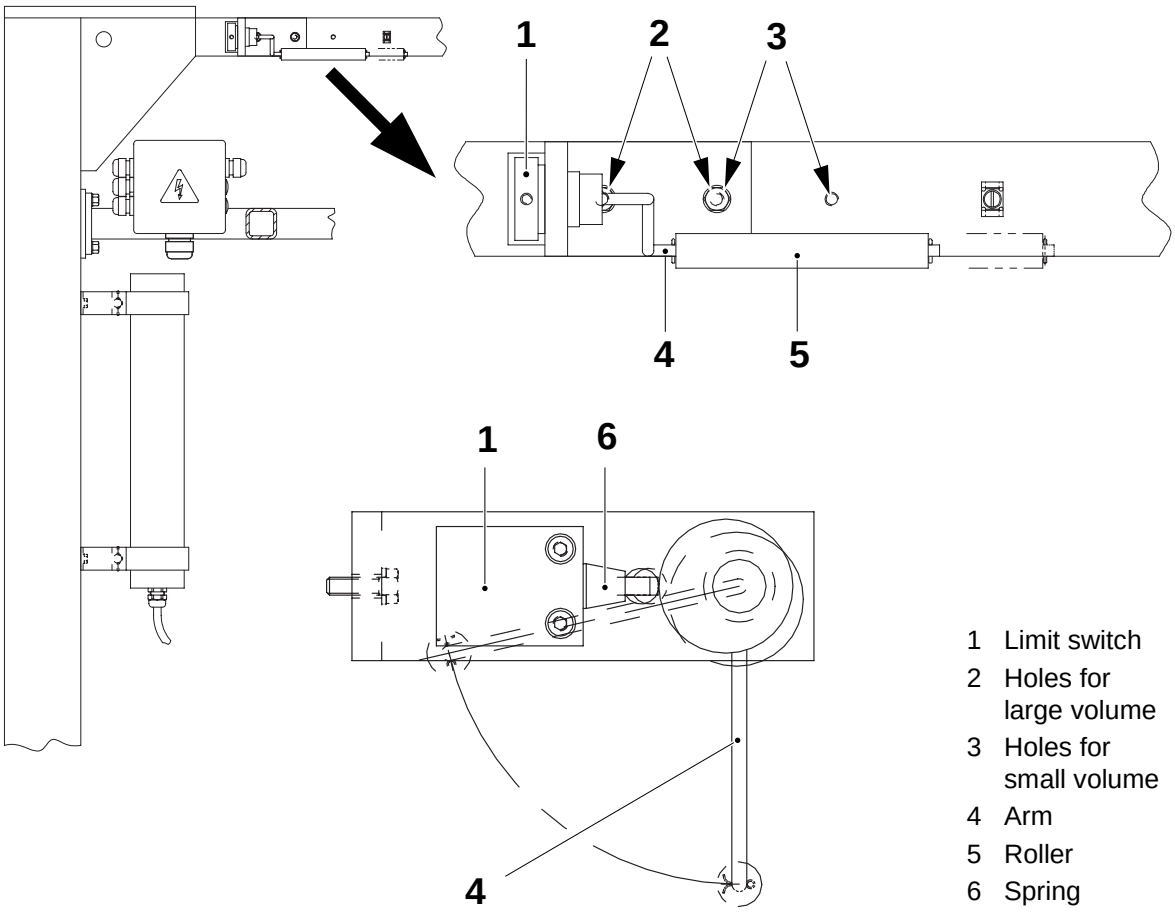

1 Limit switch
2 Holes for large volume
3 Holes for small volume
4 Arm
5 Roller
6 Spring

2.2B4884A02en.fm

1.3 Bar code reader

SPC reference	1185031-0100

1.3-1 Bar code reader - set photocells

Machine status	Mains power **On**
SPC reference	1185031-0100

Note! This setup assumes that the reference applicator is set up in the correct position on the mounting base within the frame.

a) Check that the bar code (1) passes in front of the photocell lenses (3). If not:
   - Loosen the two screws (6).
   - Adjust the bar code reader (7) sideways until the bar code (1) passes in front of the photocell lenses (3).
   - Tighten the two screws (6).

b) Make sure that the switch (5) is set to the position **Q1**.

Note! For more detailed information see *8.3-6 TMCC - set photocells*.

c) Check that the packaging material (4) passes easily through the two fingers (2).

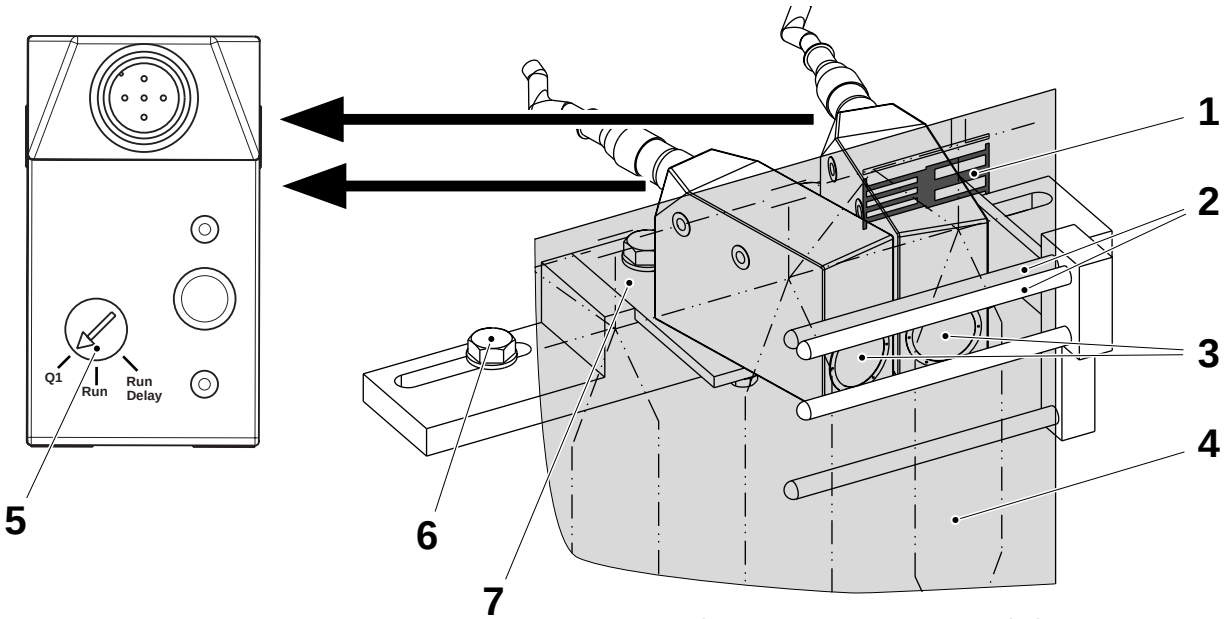

2.2B4884A03en.fm

1 Bar code
2 Finger
3 Lense
4 Packaging material
5 Switch
6 Screw
7 Bar code reader

1.3-2 Bar code reader - change photocells

SPC reference	1185031-0100

a) Disconnect the connectors (1) from the photocells (2).

b) Remove the screws (3) securing the photocell bracket (4) to the bracket (6).

c) Remove the screws (5) securing the photocells (2).

d) Discard the old photocells.

e) Fit the new photocells (2) on the photocell bracket (4).

f) Fit the photocell bracket (4) on to the bracket (6).

g) Connect the connectors (1) to the photocells (2).

h) Set the photocells (2), see *1.3-1 Bar code reader - set photocells*.

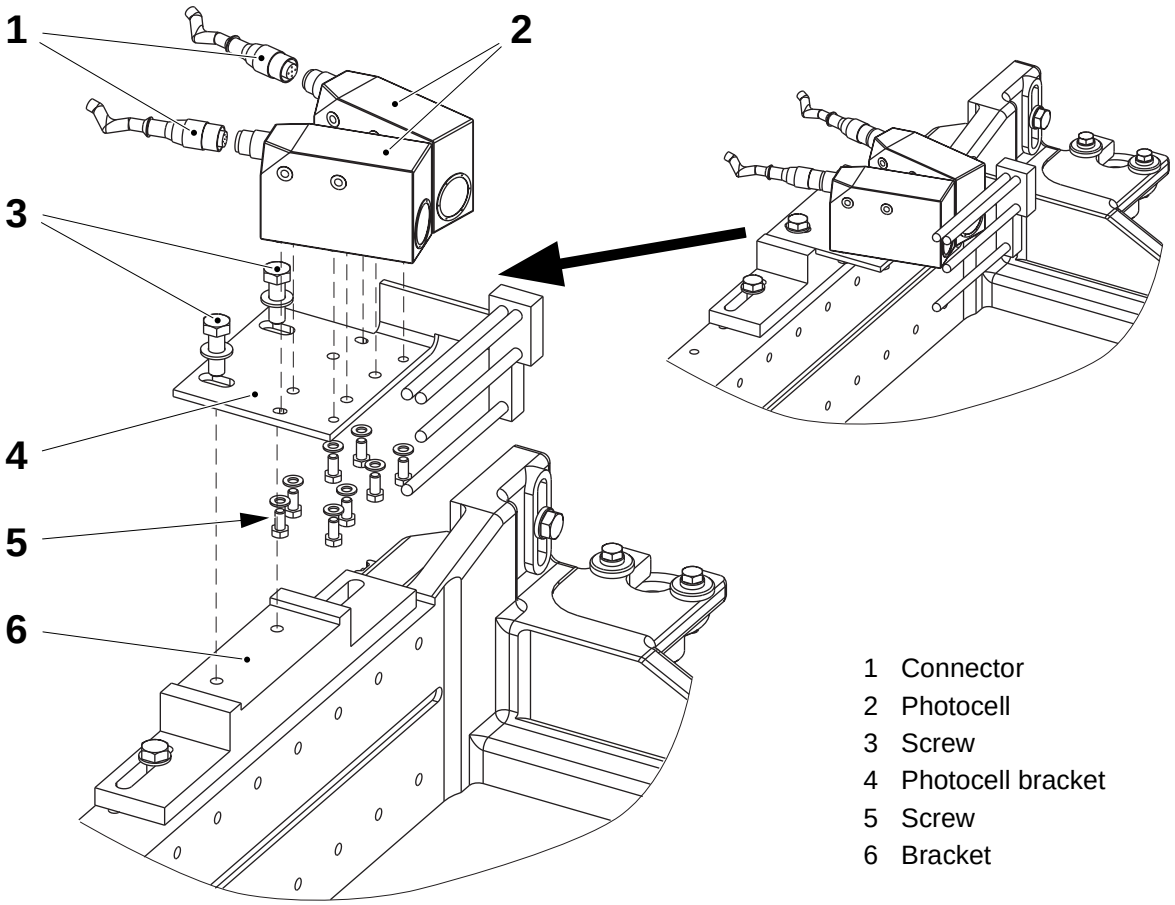

1 Connector
2 Photocell
3 Screw
4 Photocell bracket
5 Screw
6 Bracket

2.2B4884A03en.fm

This page intentionally left blank

2.2B4884A03en.fm

2 Punch/waste unit

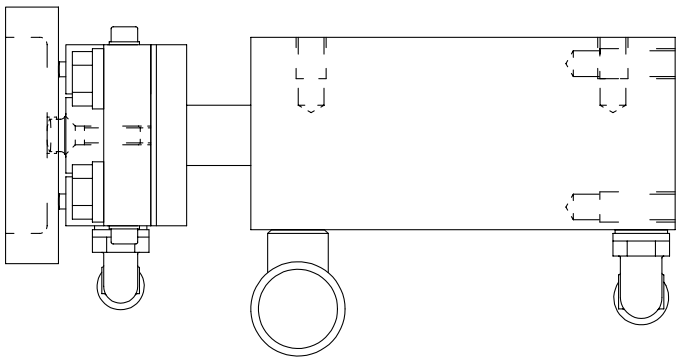

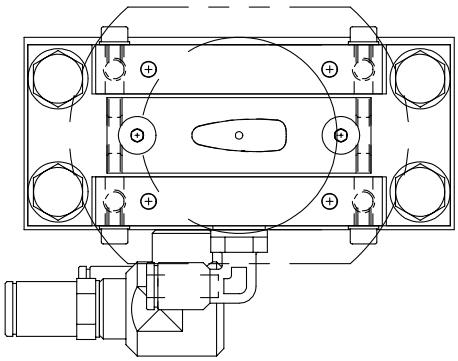

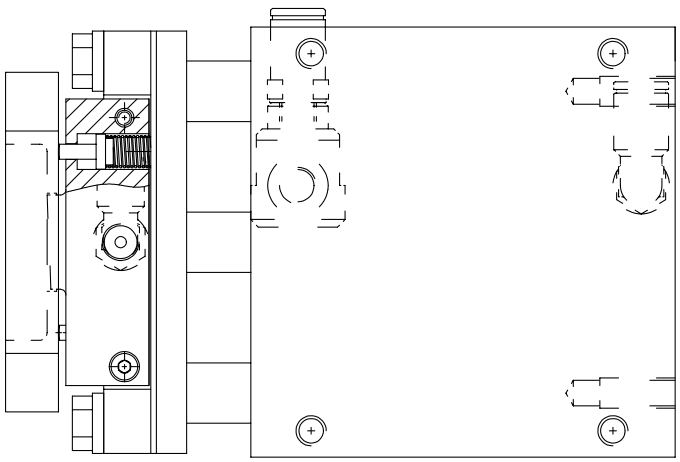

2.2B4884B00en.fm

2-0 Punch/waste unit - description

SPC reference	1095991-0100

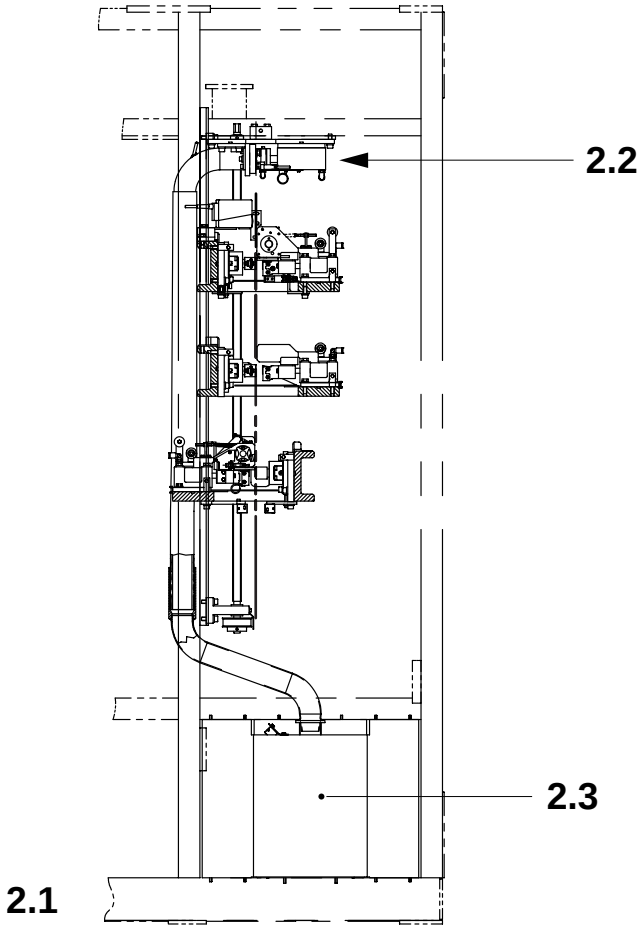

2.1 Setting flow chart
2.2 Punch unit
2.3 Waste box

2.2B4884B00en.fm

2-1 Punch/waste unit - functional description

SPC reference	1095991-0100

After the servo motor in the drive motor assembly stops:

- the PLC signals the solenoid valve to extend the cylinder for punching the PullTab hole
- the PLC signals the solenoid valve to blow material from the punch.

Punching PullTab hole / Punch blowing

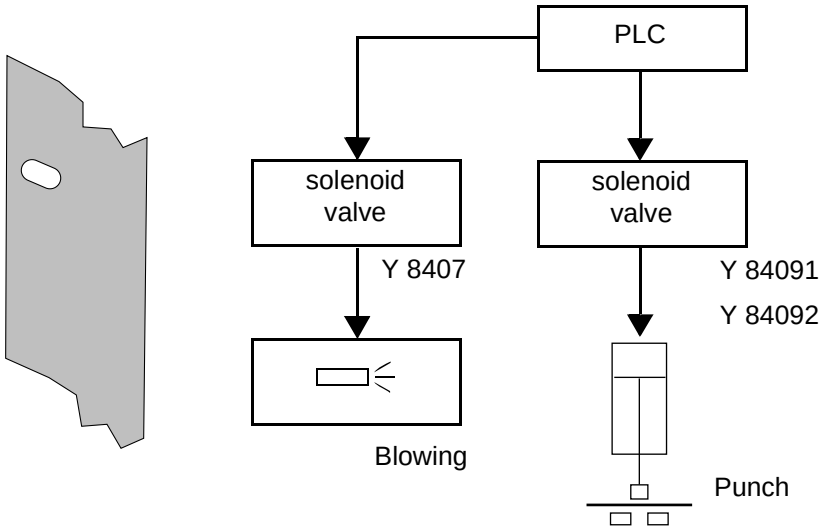

2.2B4884B00en.fm

- during the succeeding index the PLC signals the solenoid valve to blow the waste material from the waste tube

Waste blowing

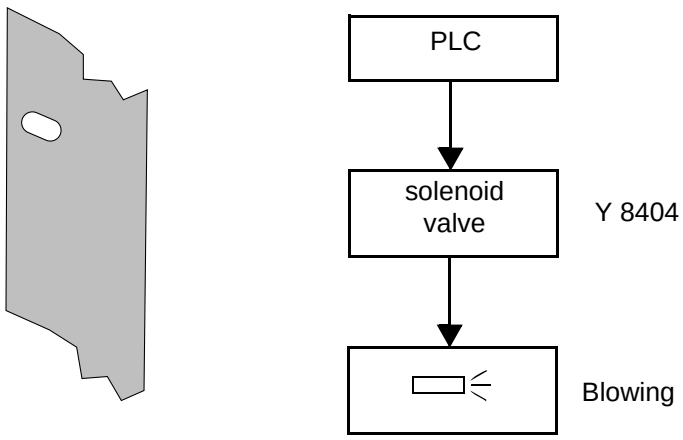

2.1 Setting flow chart

The following flow chart shows the order in which the various components must be set up.

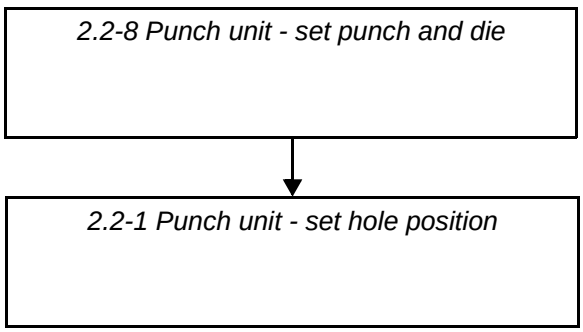

2.2B4884B01en.fm

2.2 Punch unit

SPC reference	1095991-0100

2.2-1 Punch unit - set hole position

SPC reference	1095991-0100

Preparation for making test material with hole and patch

a) Close all doors on the machine.

b) Make sure that the repeat length is correct according to *1.2.5-4 Paper brake - set brake regulator card*.

c) At the TPOP, check that there are no active alarms and touch the **Manoeuvre** button (1).

d) Touch the **Maintenance PT21 left** button (2).

e) Touch the **Punch unit and patch applicator** button (3).

f) Touch the **Start** button (4) to activate these stations: punch unit and applicator patch.

g) The **Service and maintenance key** icon (5) starts to flash at the top of the ladder step window.

h) Push the **Program up** button (6) after it starts flashing.

Make test material

a) At the PullTab control panel, push the **Single index** button (7) six or seven times after it starts flashing.

2.2B4884B02en.fm

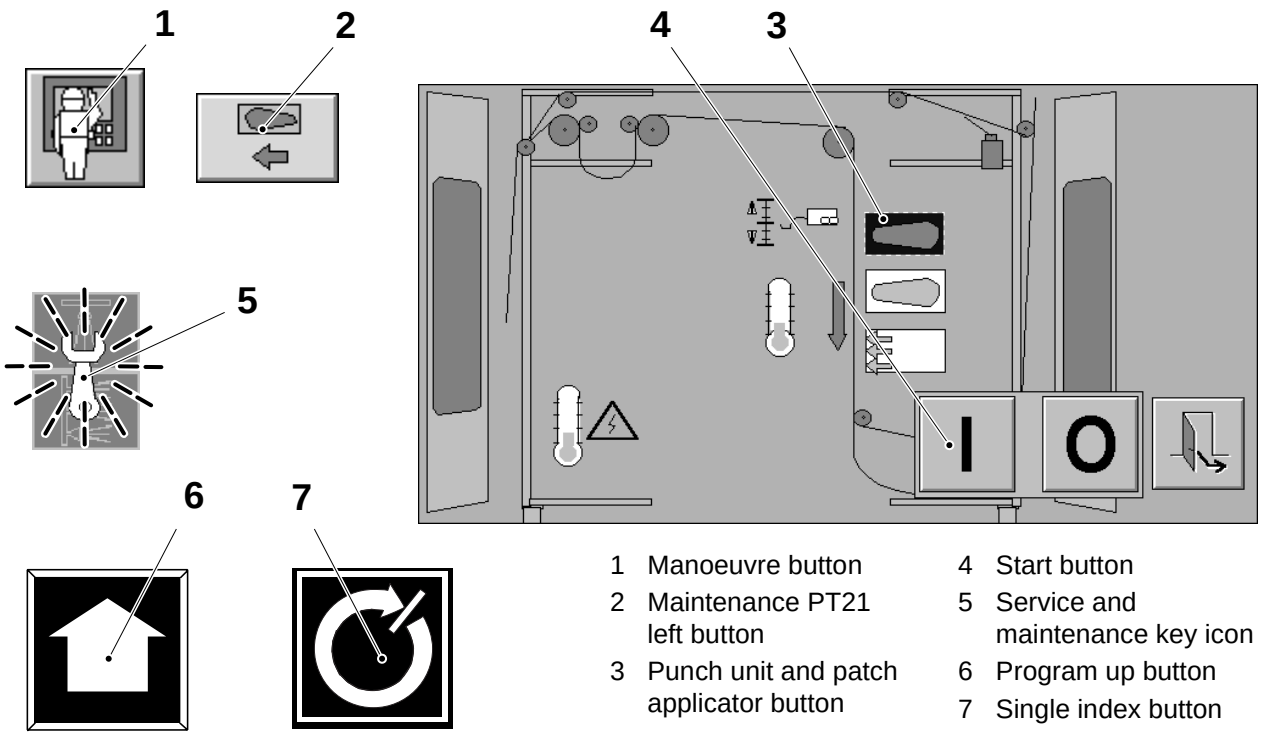

1 Manoeuvre button
2 Maintenance PT21 left button
3 Punch unit and patch applicator button
4 Start button
5 Service and maintenance key icon
6 Program up button
7 Single index button

(Cont'd)

(Cont'd)

Note! If the **Single index** button does not flash, open and close one of the doors in the PullTab unit. Acknowledge the alarm on the TPOP.

b) Open the door and cut out the packaging material that has the test holes and patches.

Check position

Check the distance **A** between the hole and the longitudinal crease. If required adjust the position of the punch unit as described below.

Package	Hole type	A ±1.0 (mm)		Package	Hole type	A ±1.0 (mm)
250 B	21	-2		500 S	55	5.4
500 S	25	-2		1500 S	85	4.5
1500 S	45	5.7		1000 Sq	85	4.5
1000 B	45	5.7		1000 B	85	4.7
1000 S	45	5.7		1000 S	85	4.5
1000 B	50	8.7		TPA 1000 S	60	5.2
1000 S	50	9.0				

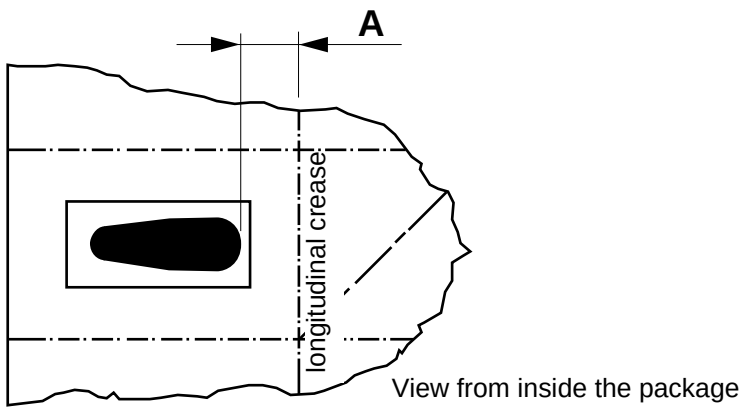

2.2B4884B02en.fm

(Cont'd)

(Cont'd)

Adjust punch unit position

a) To set the distance **A**, loosen the screws (9) and by means of the stop screws (8) move the punch unit horizontally.

b) Check the applicator patches position, see *3.2-1 Applicator patch - check patch position*.

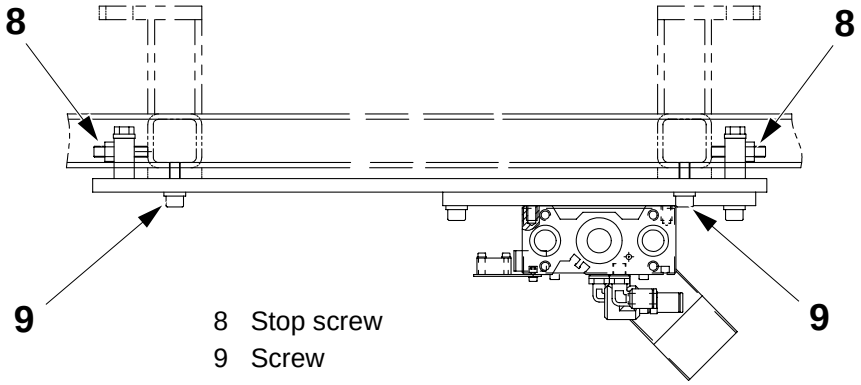

8 Stop screw
9 Screw

2.2B4884B02en.fm

2.2-2 Punch unit - check stripper pins and springs

SPC reference	1095991-0100

Check the following parts for wear and/or damage:

- the four stripper pins (1)
  Check also, by pressing, that the pins move in and out without getting stuck.
- the four springs (2)
  Check also, by pressing, that the spring action is correct.

Change as required, see *2.2-3 Punch unit - change stripper pins and springs*.

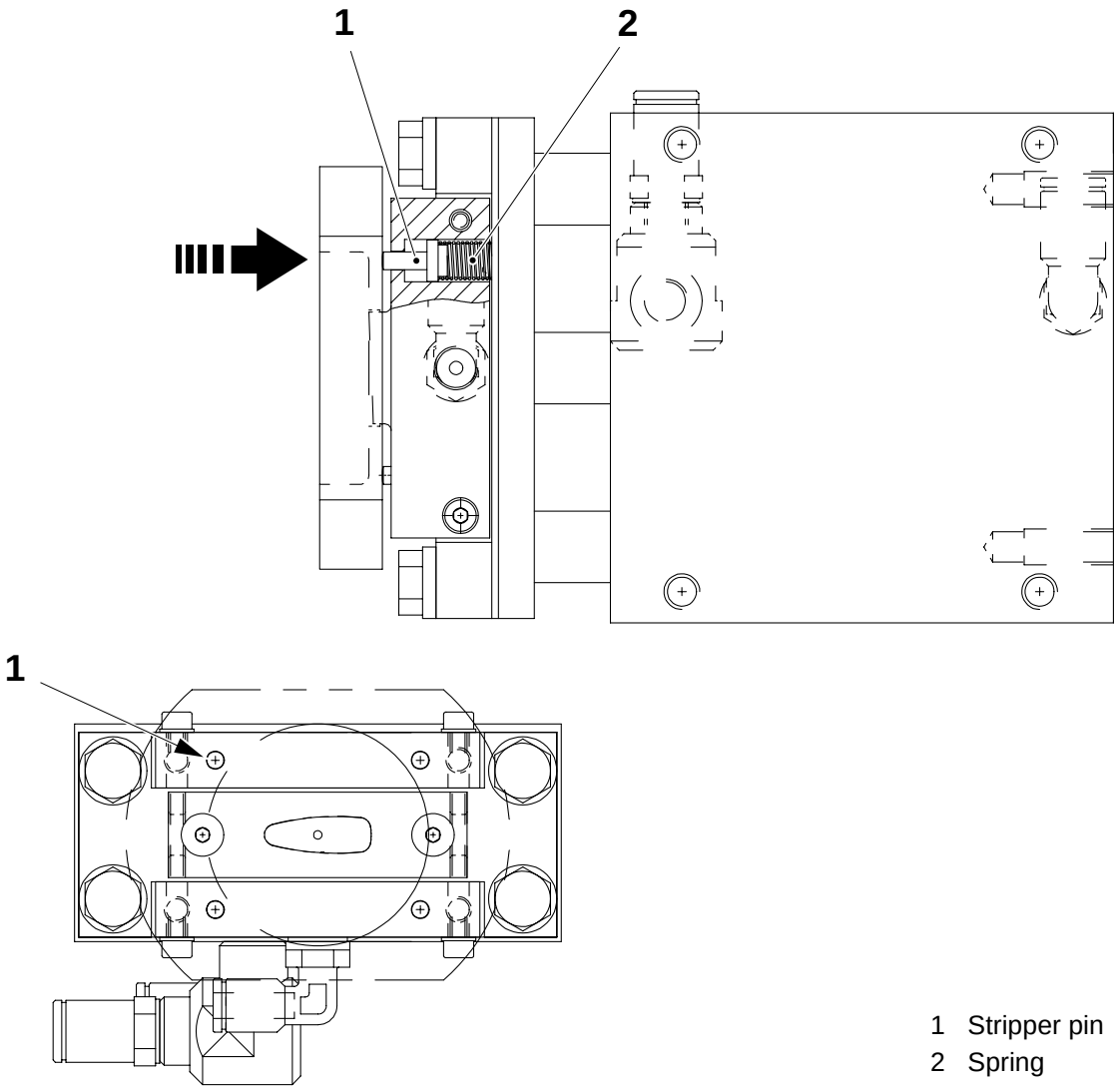

2.2B4884B02en.fm

1 Stripper pin
2 Spring

2.2-3 Punch unit - change stripper pins and springs

SPC reference	1095991-0100

a) Disconnect the air hoses (1).

b) Unscrew the screws (2) and remove the two pin distances (3).

c) Pull out the springs (4) and the stripper pins (5) from the two pin distances (3).

d) Clean the pin distance (3) holes carefully.

e) Change the springs (4) and the stripper pins (5) if required.

Note! Before assembling the punch assembly on the bracket (6) check the springing by pressing the four stripper pins (5).

f) Assemble in the reverse order and set the punch and the die, see *2.2-8 Punch unit - set punch and die*.

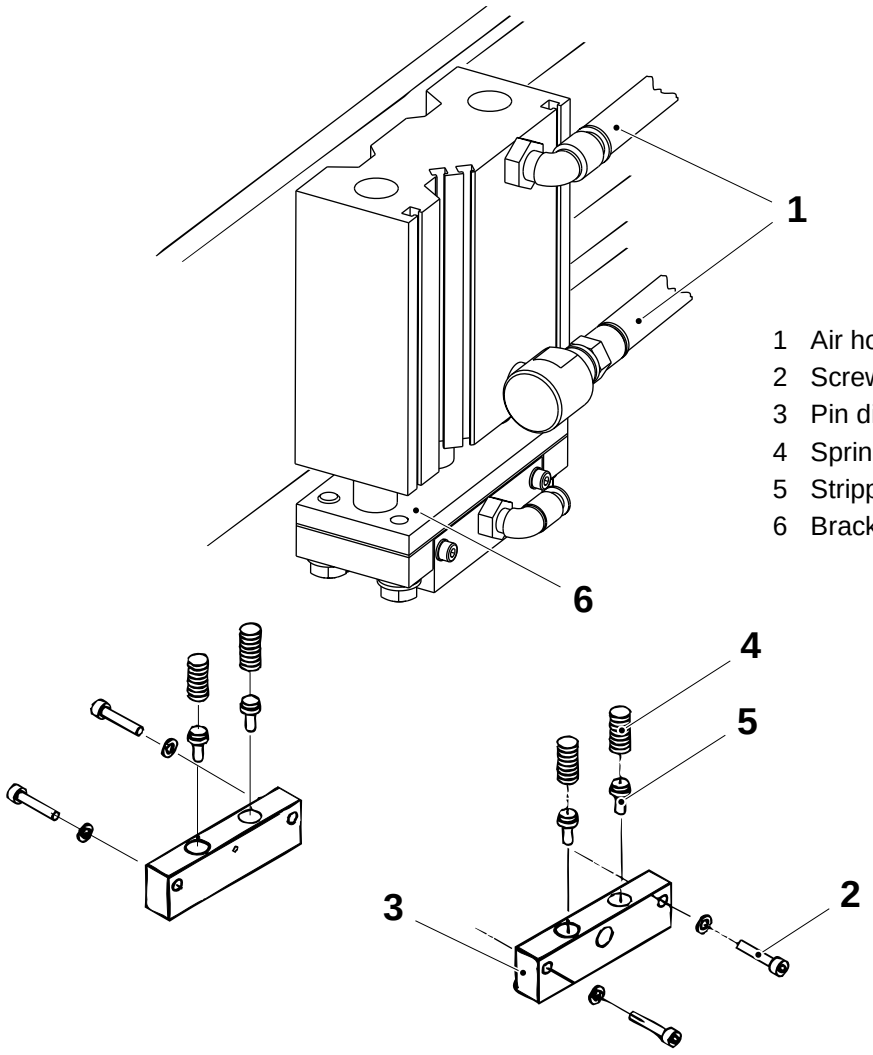

1 Air hose
2 Screw
3 Pin distance
4 Spring
5 Stripper pin
6 Bracket

2.2B4884B02en.fm

2.2-4 Punch unit - check cylinder

SPC reference	1095991-0100

Check that the piston of the cylinder (1) moves easily and properly during its stroke.

Check also that there is no excessive radial play on the guides (2).

Change as required, see *2.2-5 Punch unit - change cylinder*.

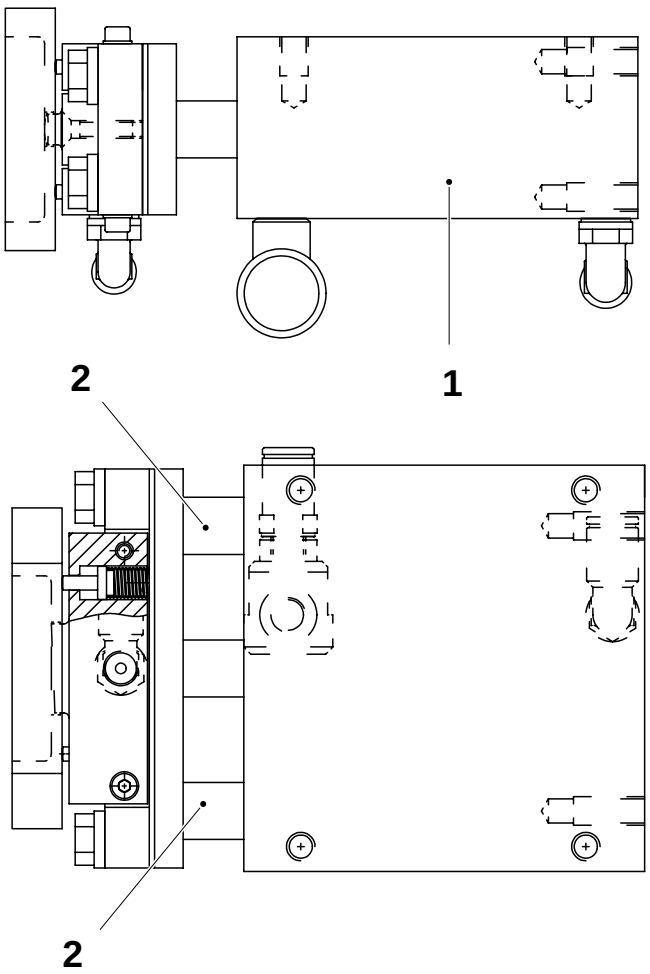

2.2B4884B02en.fm

1 Cylinder
2 Guide

2.2-5 Punch unit - change cylinder

SPC reference	1095991-0100 1095992-0100

a) Disconnect the air hoses (1).

b) Unscrew the four screws (2) and remove the punch unit (3) and the plate (4) together.

c) Unscrew the four screws (5) and remove the plate (4) from the punch unit (3).

d) Unscrew the screws (6) and remove the punch bar, the pin distances and the shims (7) together from the cylinder (8).

e) Remove the connectors (9) from the cylinder (8).

f) Change the cylinder (8) as required.

g) Assemble in the reverse order and set the punch and the die, see *2.2-8 Punch unit - set punch and die*.

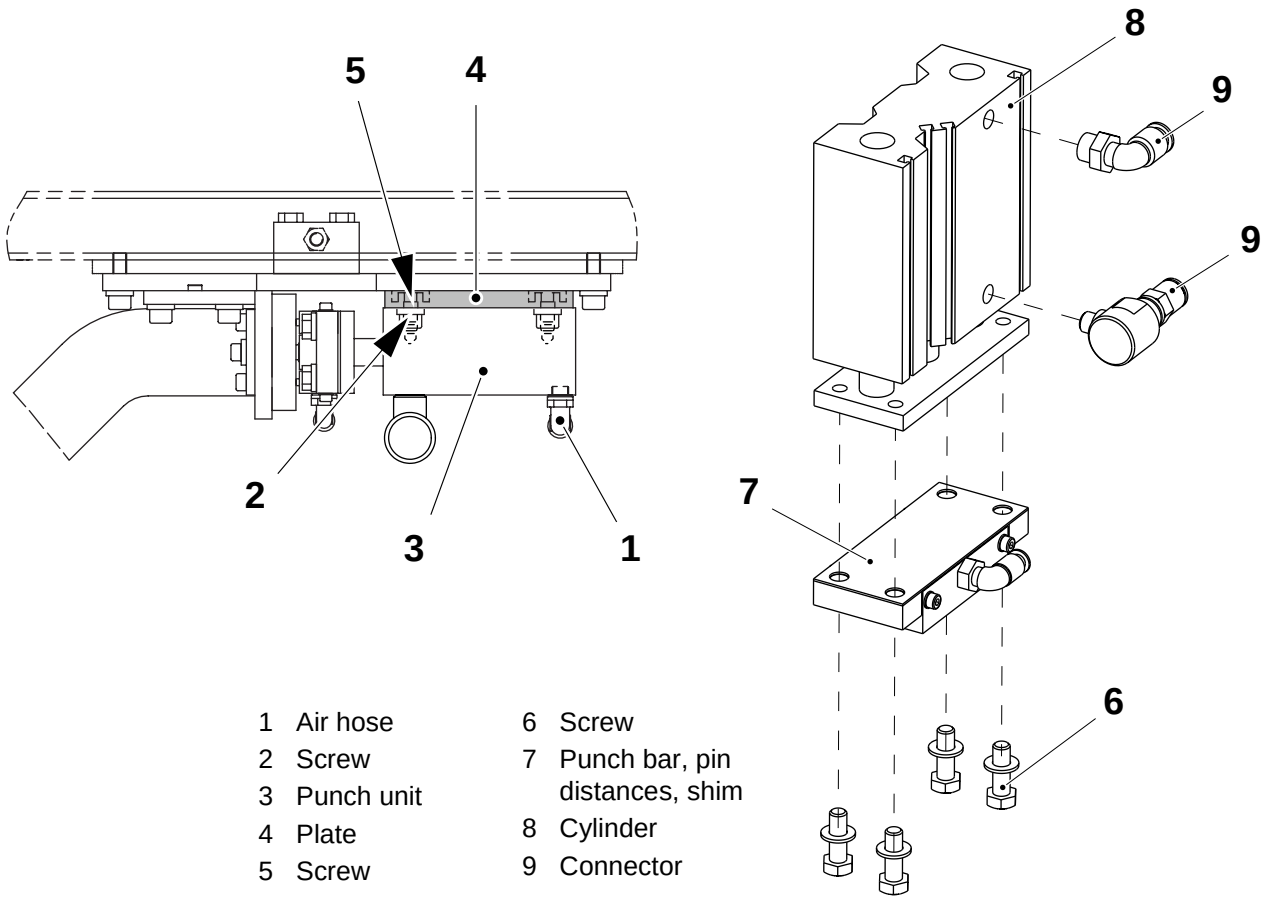

1 Air hose
2 Screw
3 Punch unit
4 Plate
5 Screw
6 Screw
7 Punch bar, pin distances, shim
8 Cylinder
9 Connector

2.2B4884B02en.fm

2.2-6 Punch unit - check punch and die

Machine status	Air **On** Packaging material **threaded**
SPC reference	1095991-0100 1095992-0100



WARNING!

Risk of crushing!
The cylinder piston may move unexpectedly.

Check the edges of the PullTab hole in the packaging material for any irregularities, such as curled edges.

Check that the air vent holes (1) in the punch unit (punch blowing and waste blowing) are not blocked. Clean them as required.

If required set the punch (2) and the die (3), see *2.2-8 Punch unit - set punch and die*.

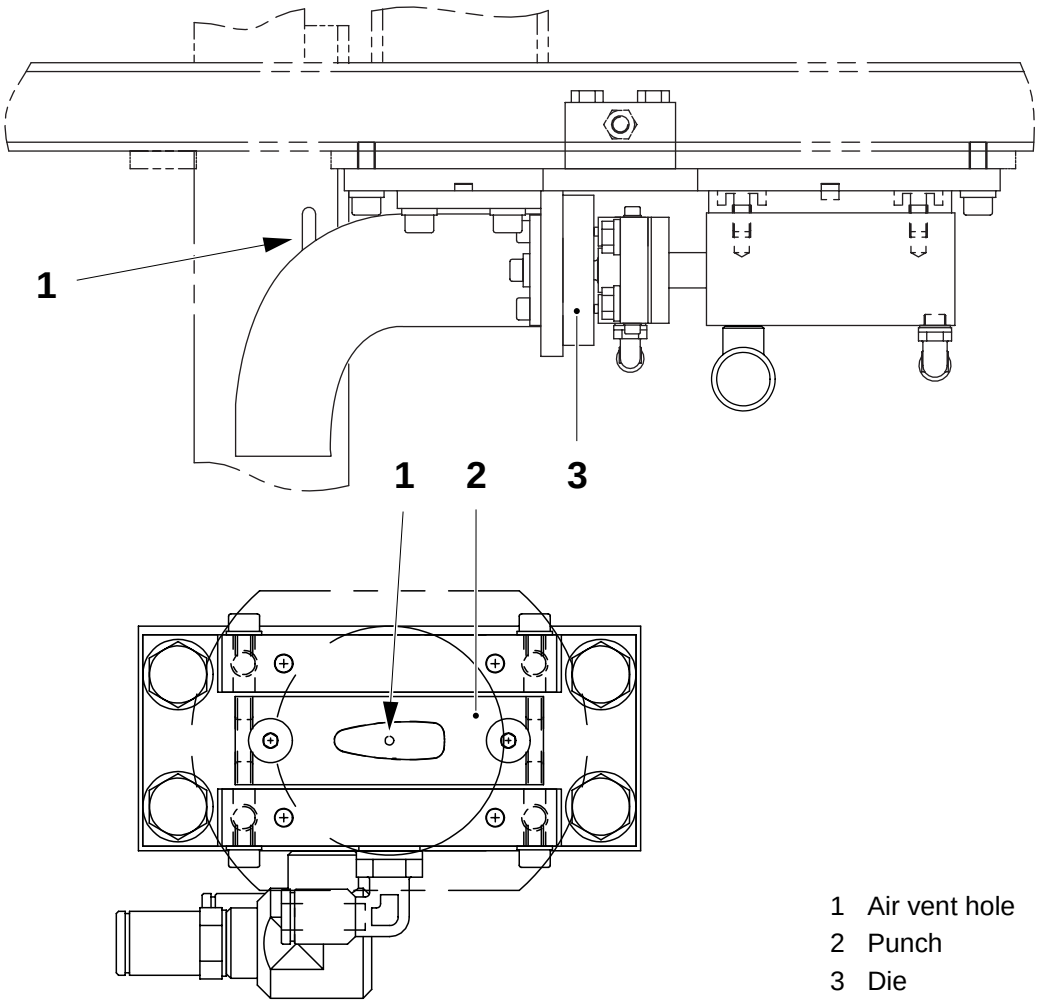

2.2B4884B02en.fm

1 Air vent hole
2 Punch
3 Die

2.2-7 Punch unit - change punch and die

SPC reference	1095991-0100 1095992-0100

a) Unscrew the two screws (1) and remove the waste pipe (2).

b) Unscrew the four screws (3) and remove the die (4).

c) Unscrew the screws (5) and remove the punch (6).

d) Change the punch (6) and the die (4) as required.

e) Assemble in the reverse order and set the punch (6) and the die (4), see *2.2-8 Punch unit - set punch and die*.

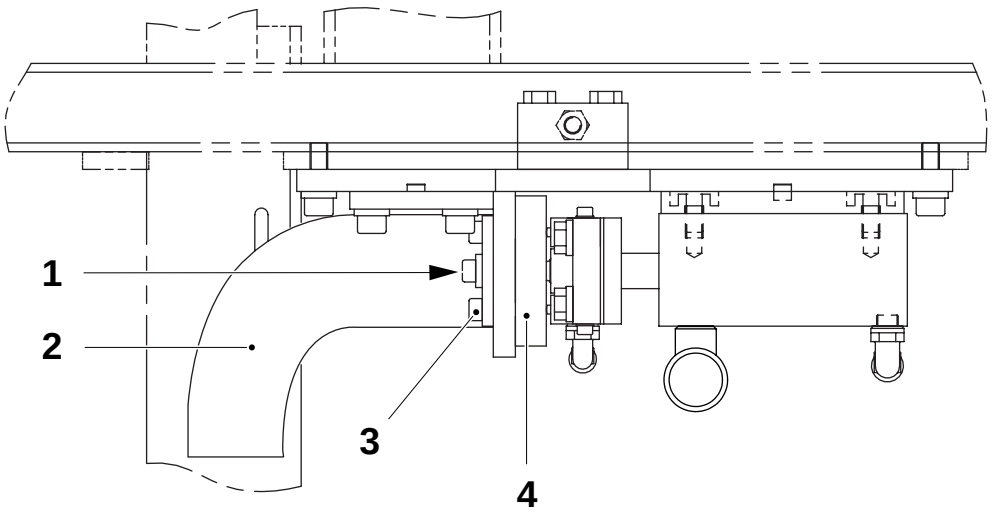

1 Screw
2 Waste pipe
3 Screw
4 Die
5 Screw
6 Punch

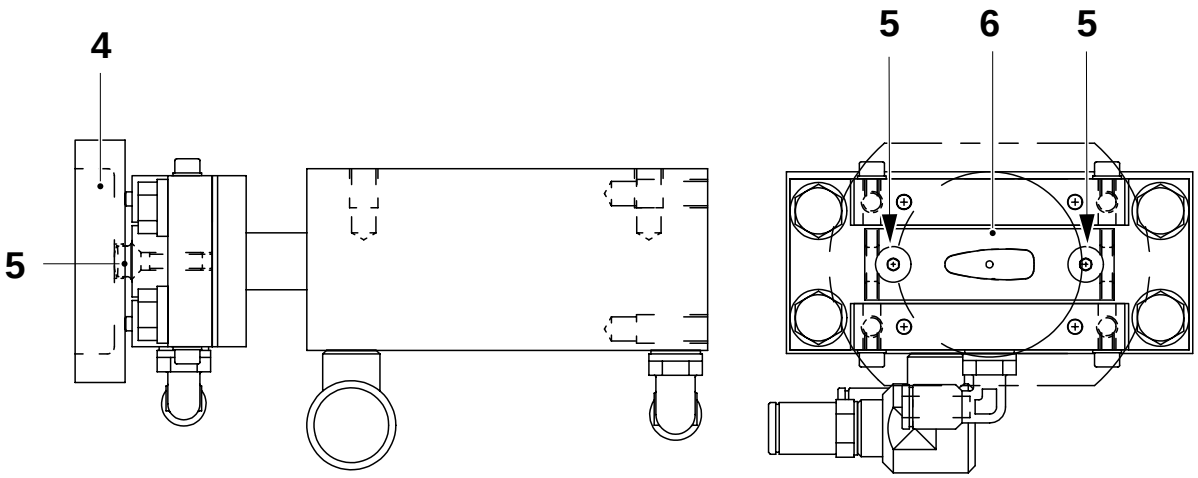

2.2B4884B02en.fm

2.2-8 Punch unit - set punch and die

Machine status	Mains power **On**
SPC reference	1095991-0100 1095992-0100



WARNING!

Risk of crushing!
The cylinder piston may move unexpectedly.

a) Loosen the screws (4) and remove the waste blow pipe (5).

b) Loosen the four screws (1) that hold the die (2).

c) Unscrew the screws (6) and remove the two pin distances (7).

d) Insert a piece of patch strip between the punch (3) and the die (2). Gently push the punch (3) by hand so that it slides into the die (2), (without cutting the patch strip). Centre the punch (3) into the die (2) by using the strip as a spacer, and carefully tighten the four screws (1).

e) Check the cutting action (check/set with tab strip in order to perform the best setting).

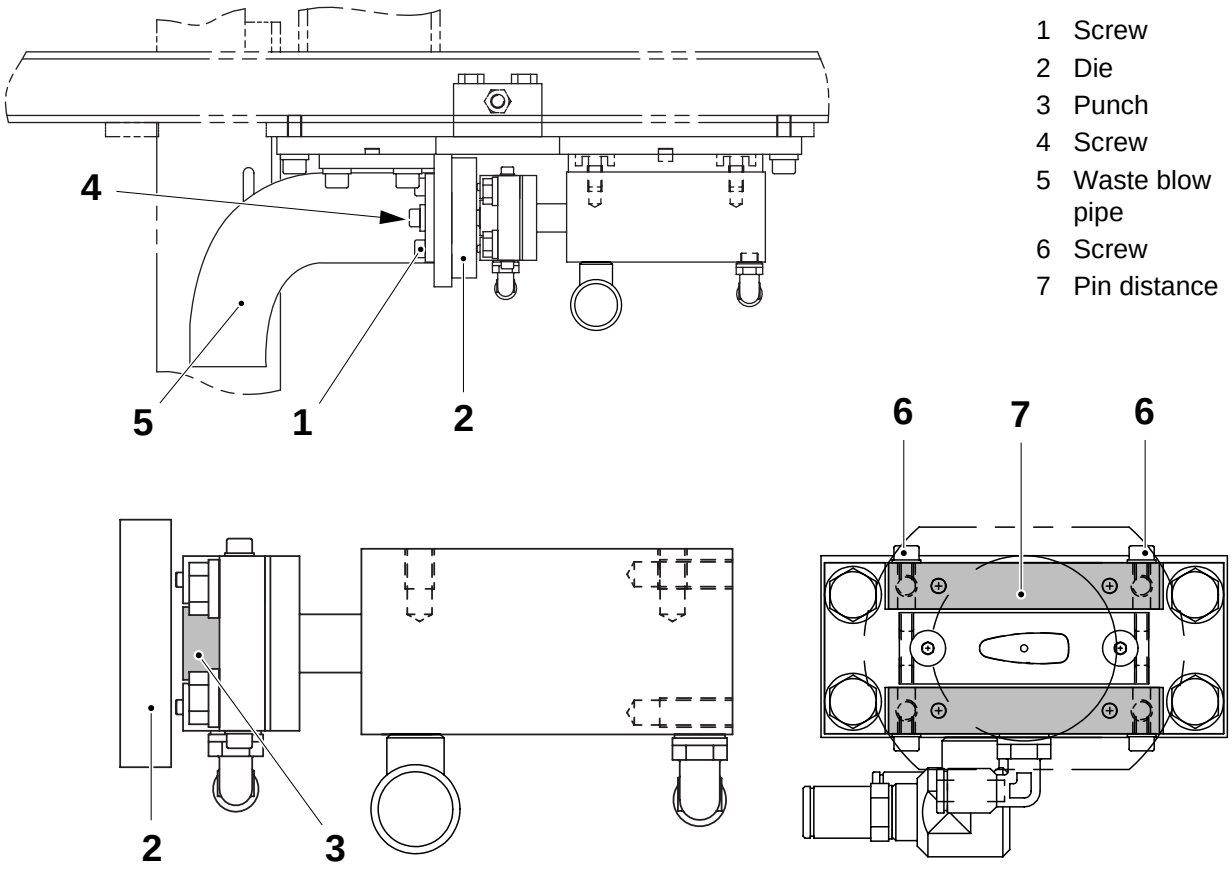

1 Screw
2 Die
3 Punch
4 Screw
5 Waste blow pipe
6 Screw
7 Pin distance

2.2B4884B02en.fm

(Cont'd)

(Cont'd)

f) Switch the selector key, located on the PT21 electrical panel, to position **Service**.

g) Activate the manual override on the valve **Y8409:1** for the cylinder (8).

h) Check that the cylinder (8) is fully extended.

i) Check the distance **A** and if required, unscrew the screws (9) and add/remove the shims (10) until the distance **A**, between the punch (3) and the die (2), is obtained.

Note! Check to make sure the screws (11) do not damage the packaging material when the machine is operating.

j) Check the setting for the punch centring after distance **A** and, if required, repeat from point *b)*.

k) Fit back the two pin distances (7) and tighten the screws (6).

l) Fit back the waste blow pipe (5) and tighten the screws (4).

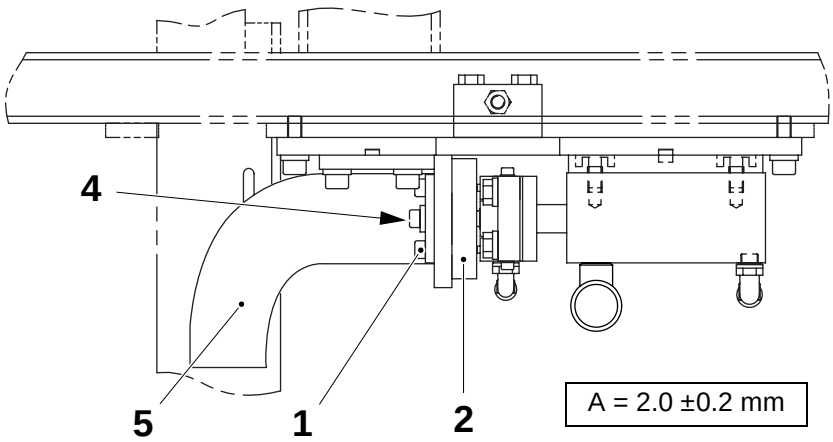

1 Screw
2 Die
3 Punch
4 Screw
5 Waste blow pipe
6 Screw
7 Pin distance
8 Cylinder
9 Screw
10 Shim
11 Screw

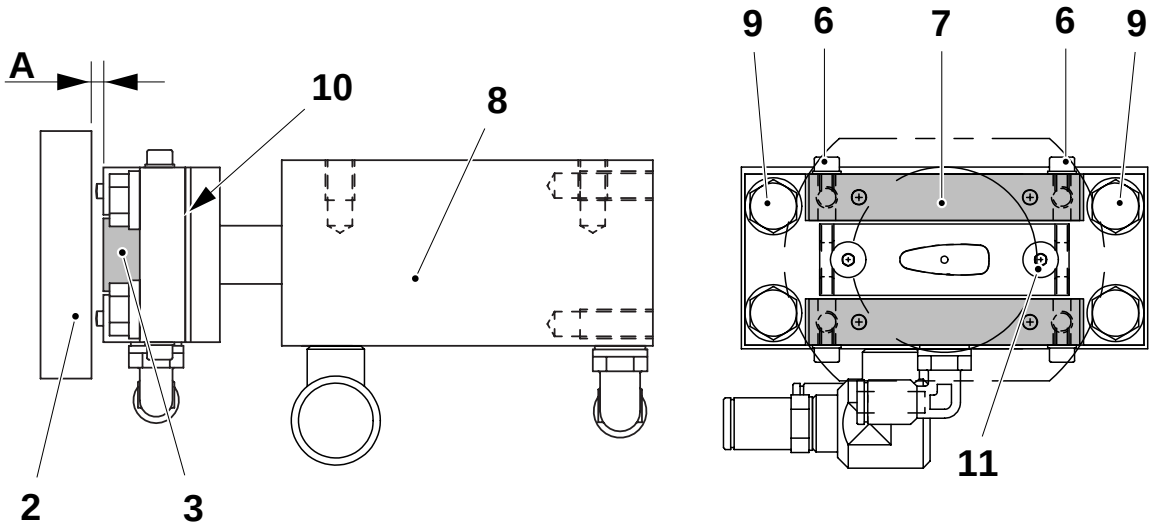

2.2B4884B02en.fm

2.2-9 Punch unit - set proximity switch

Machine status	Mains power **On**
SPC reference	1095991-0100 1095992-0100



WARNING!

Risk of crushing!
The cylinder piston may move unexpectedly.

a) Switch the selector key, located on the PT21 electrical panel, to position **Service**.

b) Activate the valve **Y8409:1** for the cylinder (1). Check that the cylinder is fully extended.

c) Loosen the screws (2) and move the holder (3) against the packaging material (6).

d) Slowly move the proximity switch (4) away from the packaging material until the LED lights up.

e) Check that the proximity switch (4) is not touching the flag (5).

f) Tighten the screws (2).

g) Activate the valve **Y8409:2** and check that the cylinder (1) is fully in.

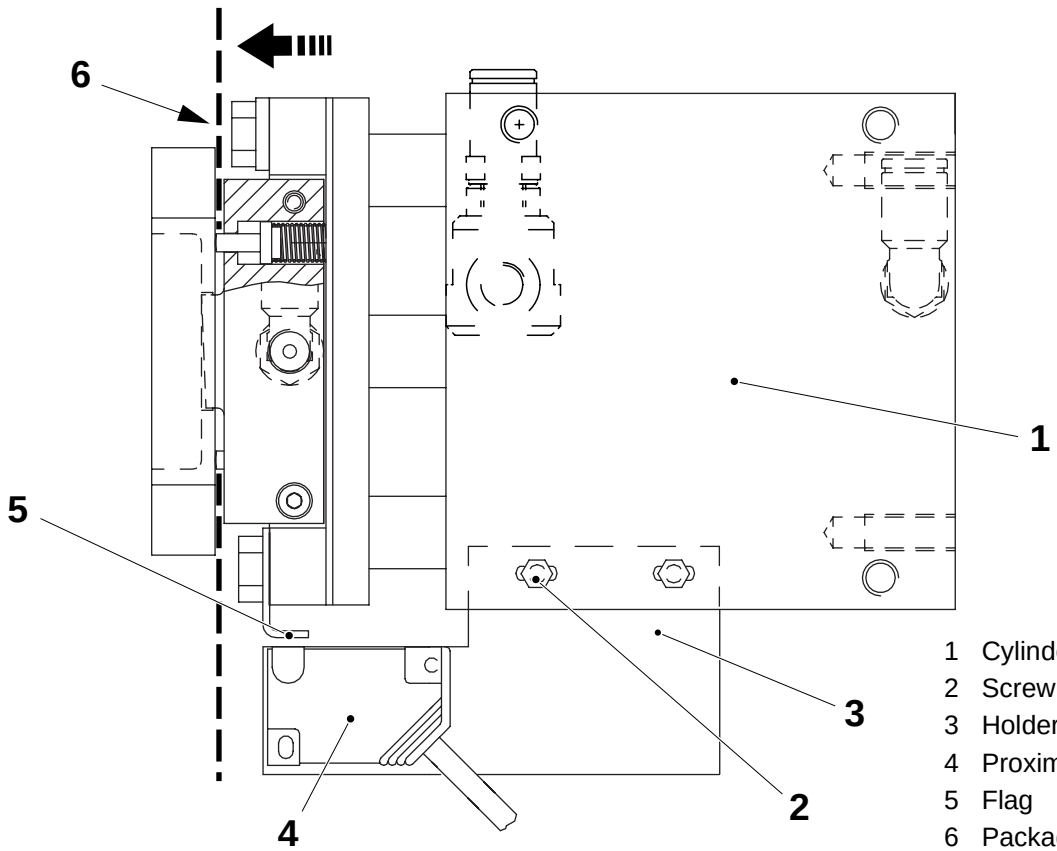

1 Cylinder
2 Screw
3 Holder
4 Proximity switch
5 Flag
6 Packaging mat.

2.2B4884B02en.fm

2.3 Waste box

SPC reference	1095955-0100

2.3-1 Waste box - check box and waste pipe

Machine status	Mains power **On**
SPC reference	1095955-0100

Check that the waste flow from the punch is directed into the waste box (1).

Check that the waste pipe (2) is not blocked.

Check that the photocell (3), that indicates a full waste box, is working by checking that the green LED is **On**.

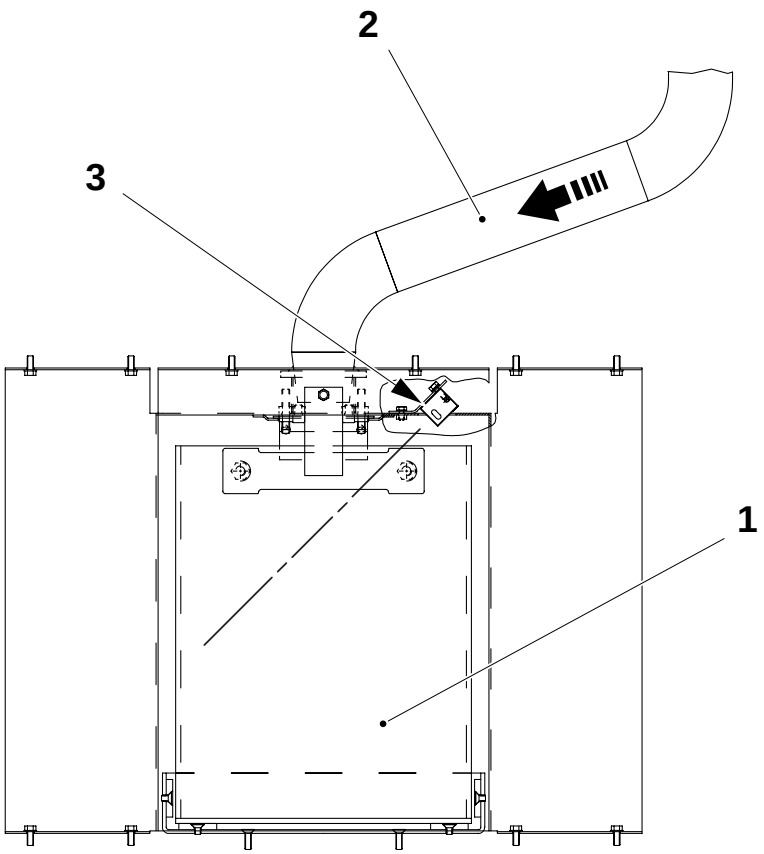

1 Waste box
2 Waste pipe
3 Photocell

2.2B4884B03en.fm

2.3-2 Waste box - set photocell

Machine status	Mains power **On**
SPC reference	1095955-0100

a) Remove the waste box (1).

b) Unscrew the screw (2) and open the cover (3) on the photocell.

c) Make sure that the photocell is set to **PNP** and **D-ON**, as shown in the figure.

d) Turn the sensitivity potentiometer (4) anti-clockwise (toward **min.**), until the red LED (5) goes out and the green LED (6) lights up.

e) Place a piece of packaging material approximately **100 mm** from the photocell source.

f) Slowly turn the sensitivity potentiometer (4) clockwise (toward **max.**), until the red LED (5) lights up and the green LED (6) lights up.

g) Close the cover (3) and tighten the screw (2).

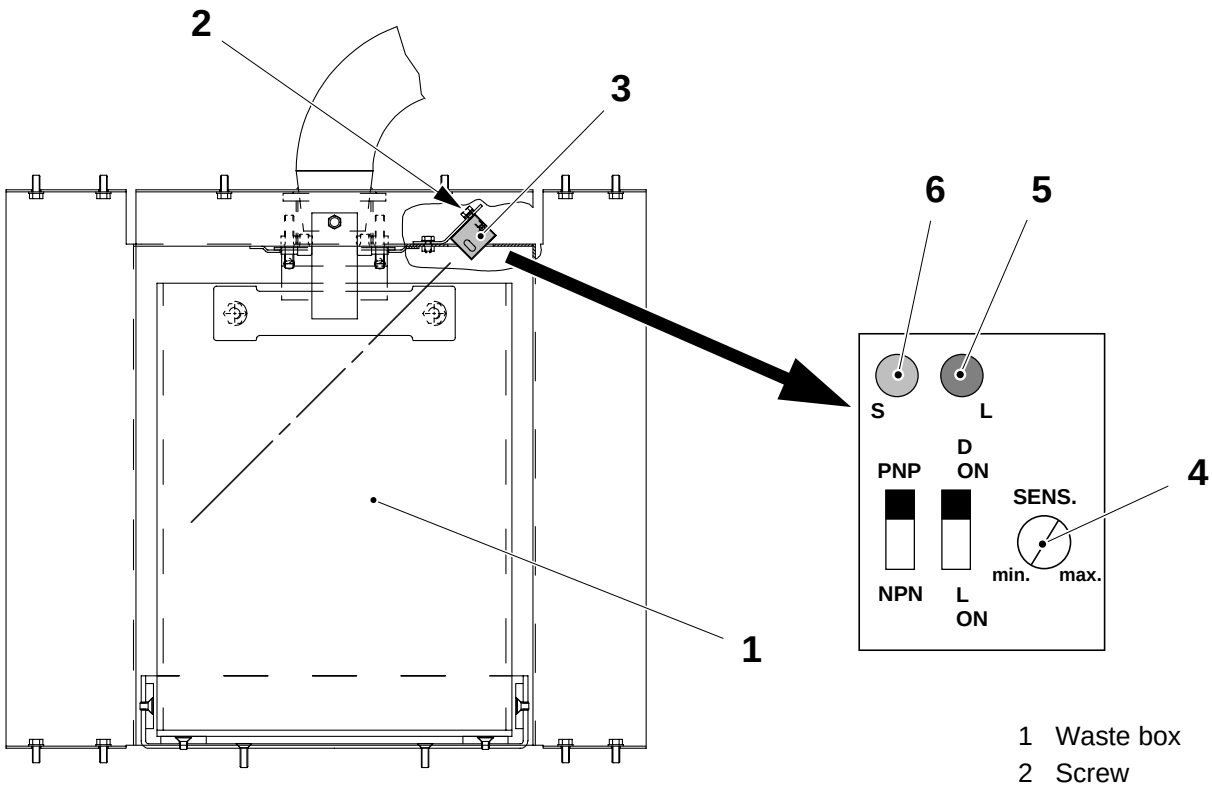

2.2B4884B03en.fm

1 Waste box
2 Screw
3 Cover
4 Potentiometer
5 Red LED
6 Green LED

3 Applicator patch

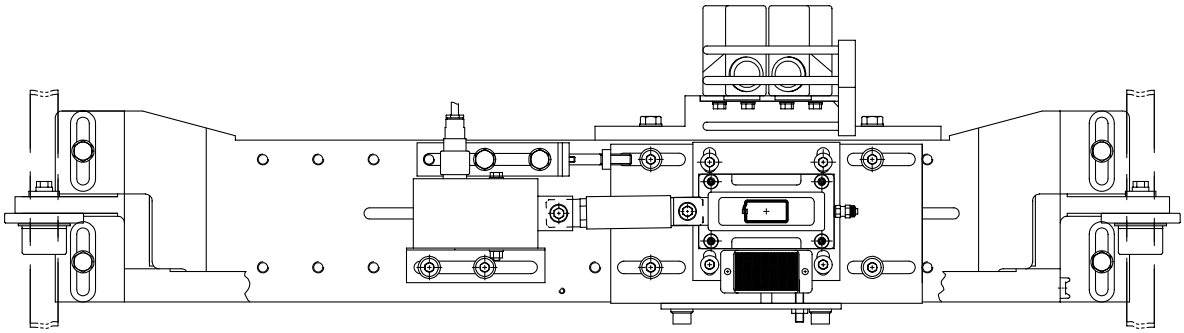

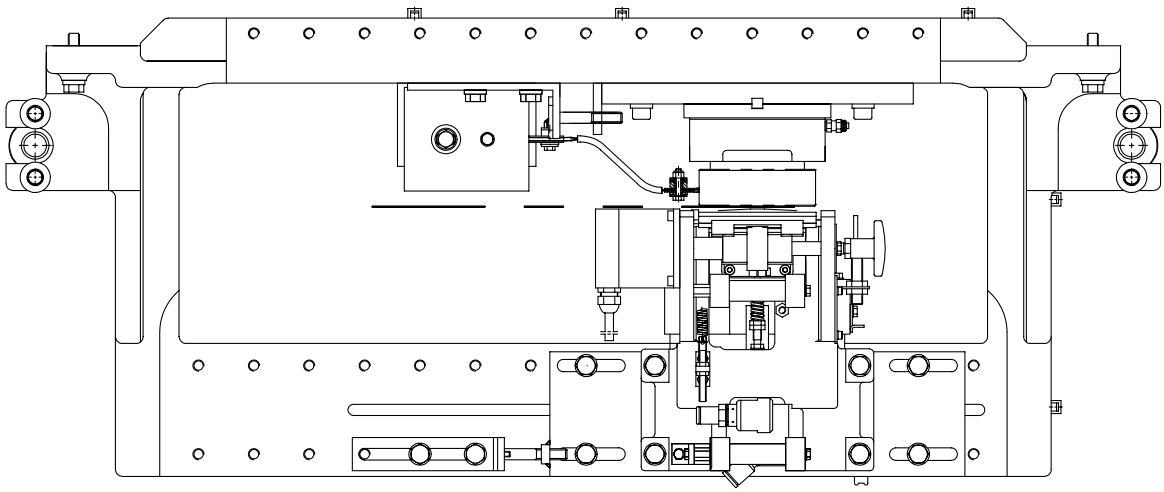

2.2B4884C00en.fm

3-0 Applicator patch - description

SPC reference	1260419-0100

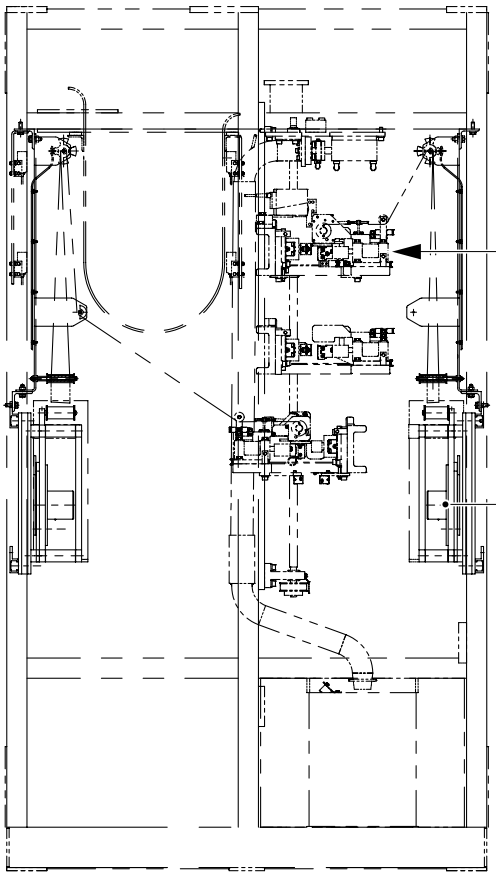

2.2B4884C00en.fm

3.1 Setting flow chart
3.2 Applicator patch
3.3 Magazine patch

3-1 Applicator patch - functional description

SPC reference	1260419-0100

When the filling machine pulls packaging material:

- the PLC begins the machine cycle
- the PLC sends a signal to the TMCC card to start indexing
- the TMCC card sends the pulses to the stepper drive card.

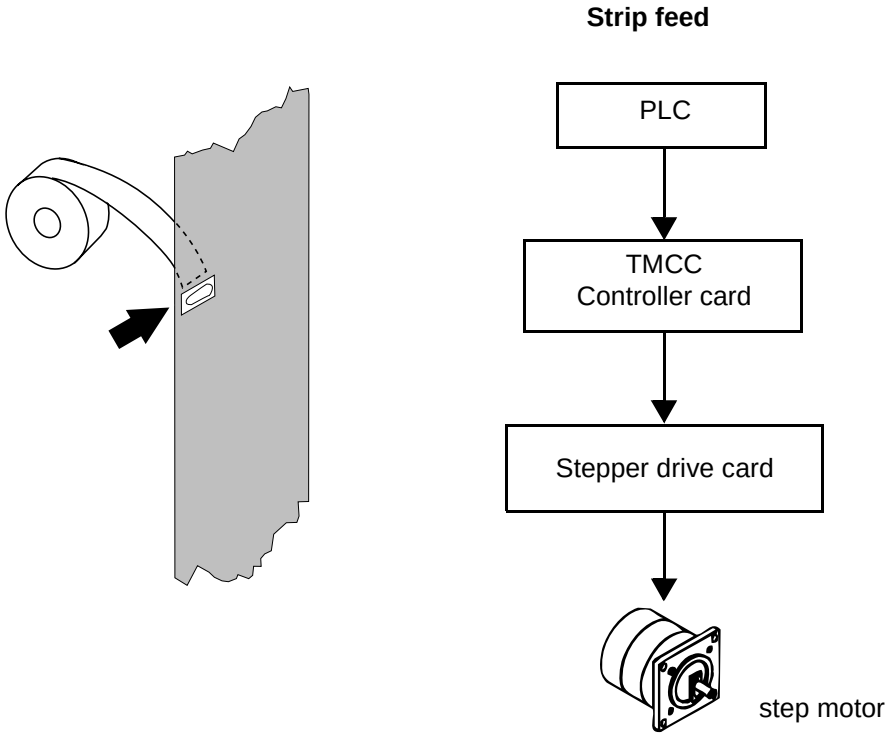

2.2B4884C00en.fm

(Cont'd)

(Cont'd)

As the jaws are closed, the PLC receives signals from the proximity switches and

- the PLC begins the sealing cycle when the patch, reseal and tab jaws are all closed
- the PLC begins a timer to send the sealing pulses to the IH generators
- when the sealing-cycle is timed out, the PLC opens (returns) the applicator stations.

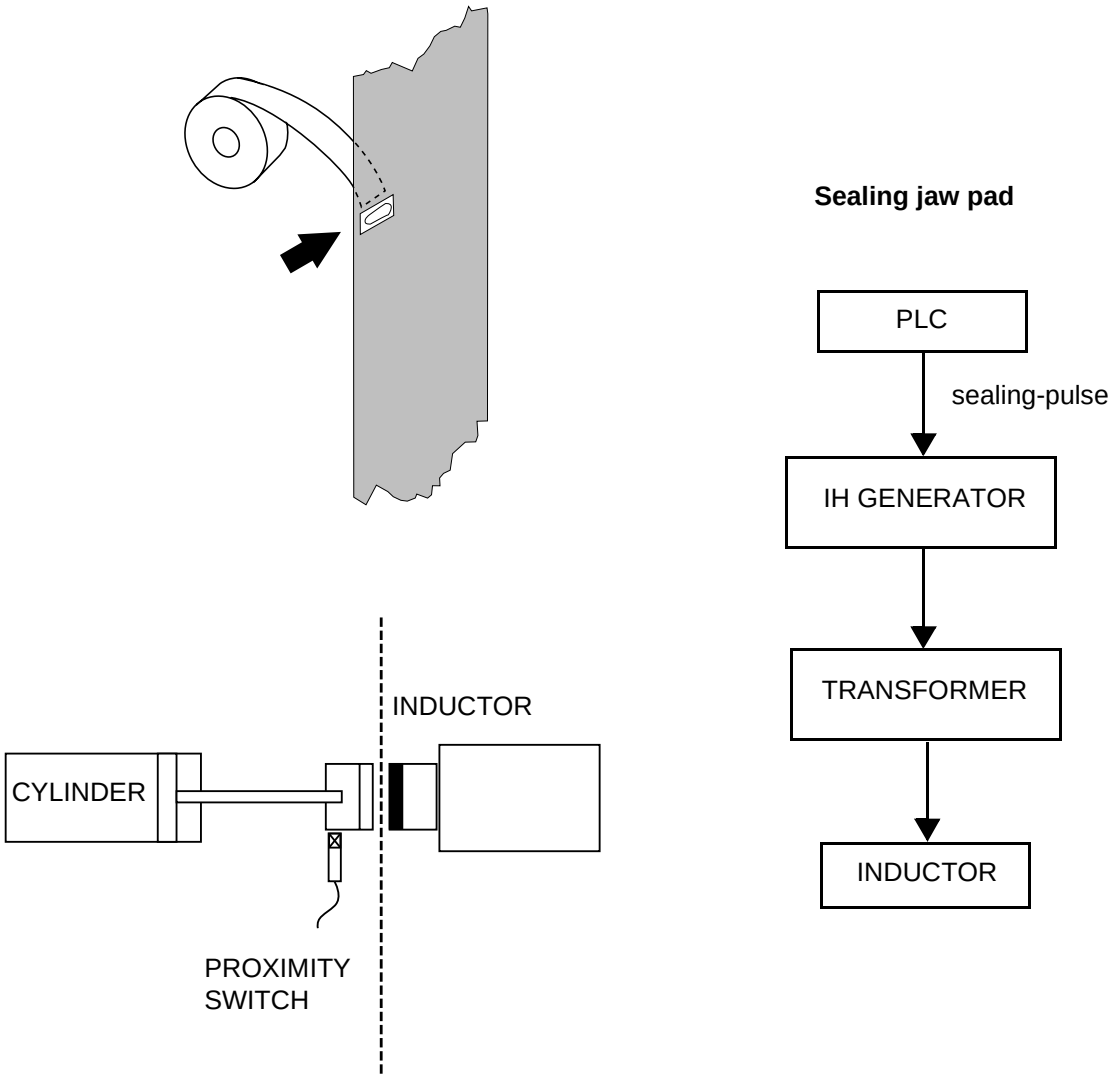

2.2B4884C00en.fm

(Cont'd)

(Cont'd)

While the patch jaw is extending, the PLC signals the solenoid valve to provide vacuum to the sealing jaw pad.

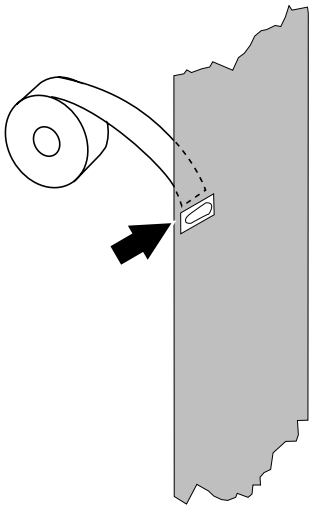

Sealing jaw pad suction

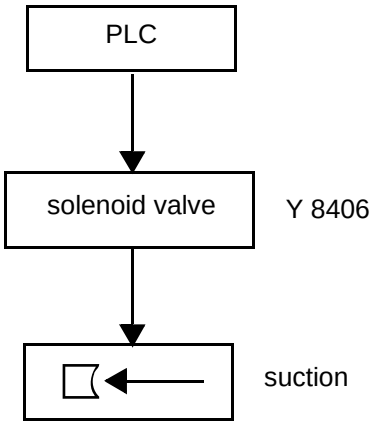

During the PullTab machine cycle, the PLC signals the solenoid valve to extend the cylinder. This action cuts the strip and applies it to the packaging material.

2.2B4884C00en.fm

Cutting and applying

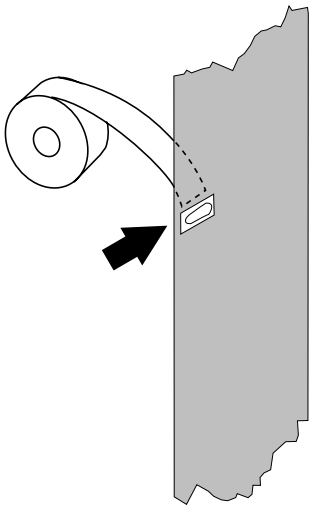

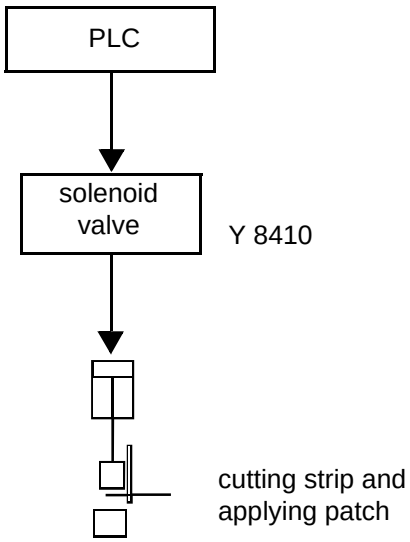

(Cont'd)

(Cont'd)

During **Production**:

- an alarm is activated when the strip supply is low
- if either alarm condition are not fixed within five minutes, the PullTab unit and the filling machines go into **Short stop** mode
- an alarm is activated when the strip does not move (rotation monitor).

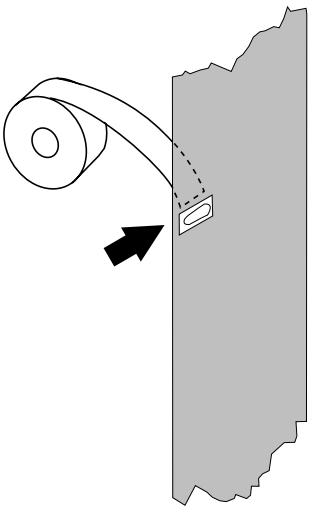

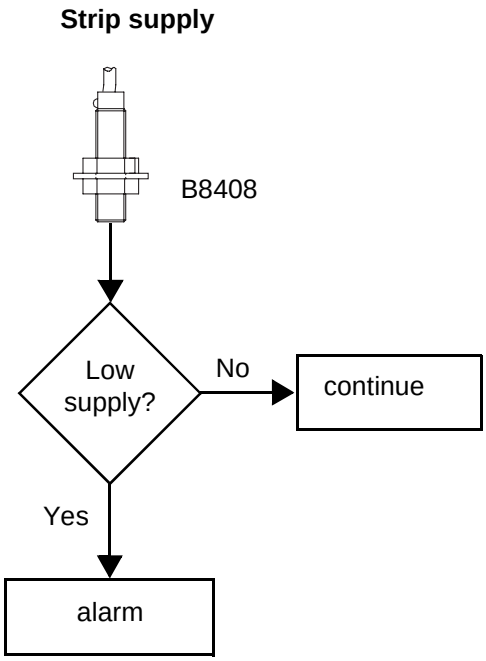

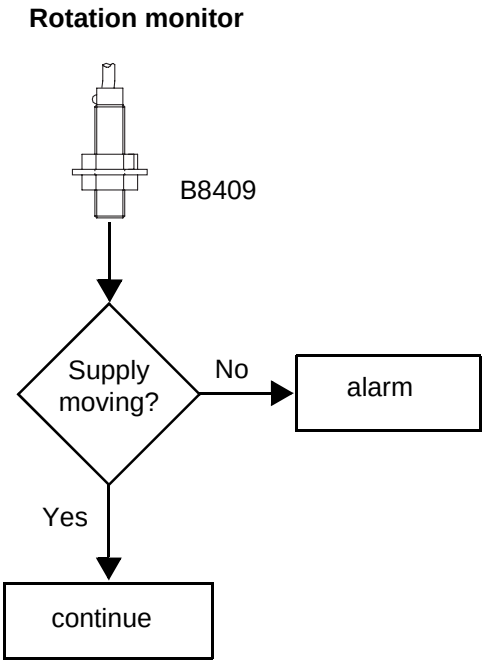

2.2B4884C00en.fm

3.1 Setting flow chart

The following flow chart shows the order in which the various components must be set up.

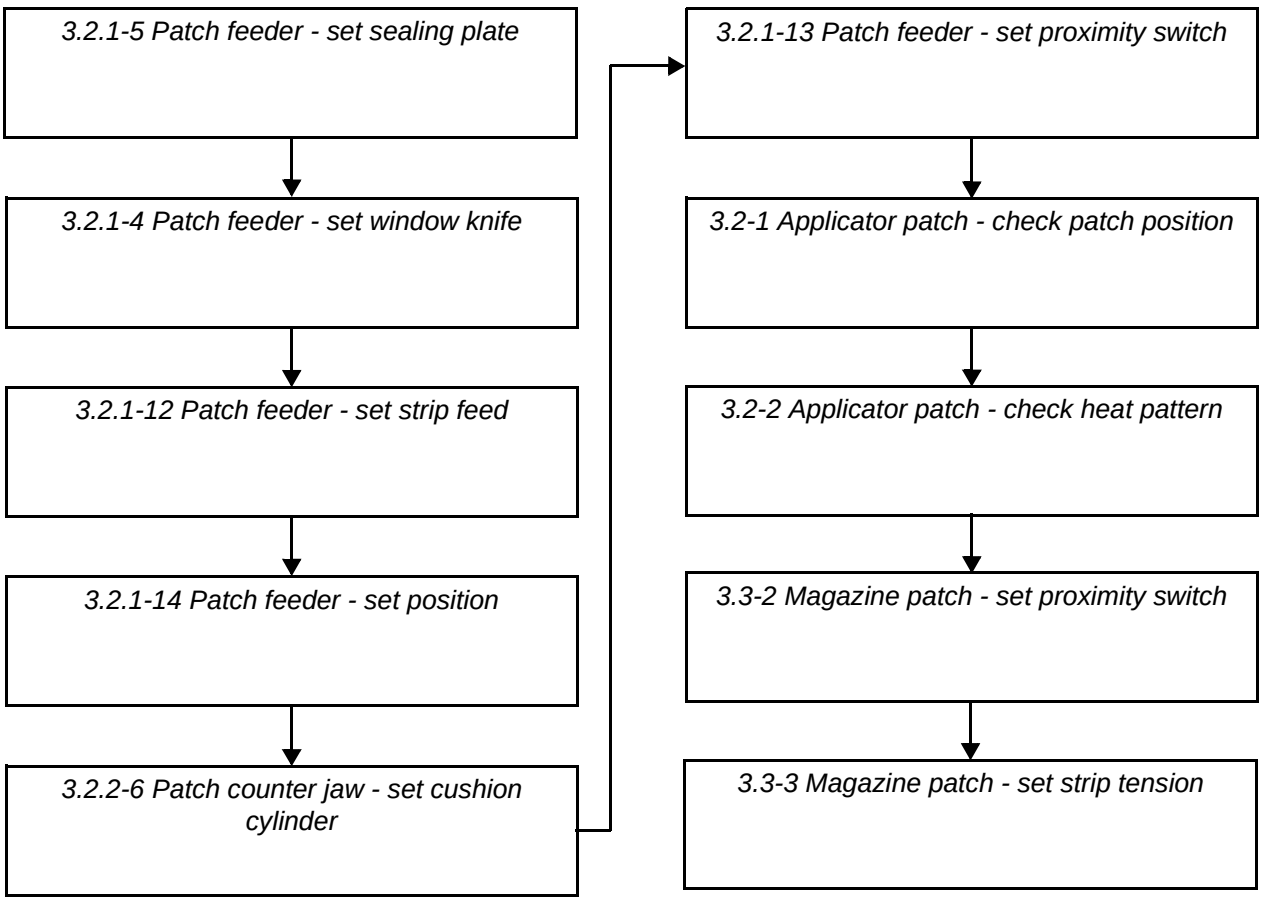

2.2B4884C01en.fm

3.2 Applicator patch

SPC reference	1260419-0100

3.2-1 Applicator patch - check patch position

SPC reference	1260419-0100

Preparation for making test material with hole and patch

a) Close all doors on the machine.

b) Make sure that the repeat length is correct according to *1.2.5-4 Paper brake - set brake regulator card*.

c) On the TPOP, check that there are no active alarms and touch the **Manoeuvre** button (1).

d) Touch the **Maintenance PT21 left** button (2).

e) Touch the **Punch unit and Patch applicator** button (3).

f) Touch the **Start** button (4) to activate these stations: punch unit and applicator patch.

g) The **Service and Maintenance key** symbol (5) starts to flash at the top of the ladder step window.

h) Push the **Program up** button (6) after it starts flashing.

Make test material

a) At the PullTab control panel, push the **Single index** button (7) six or seven times after it starts flashing.

2.2B4884C02en.fm

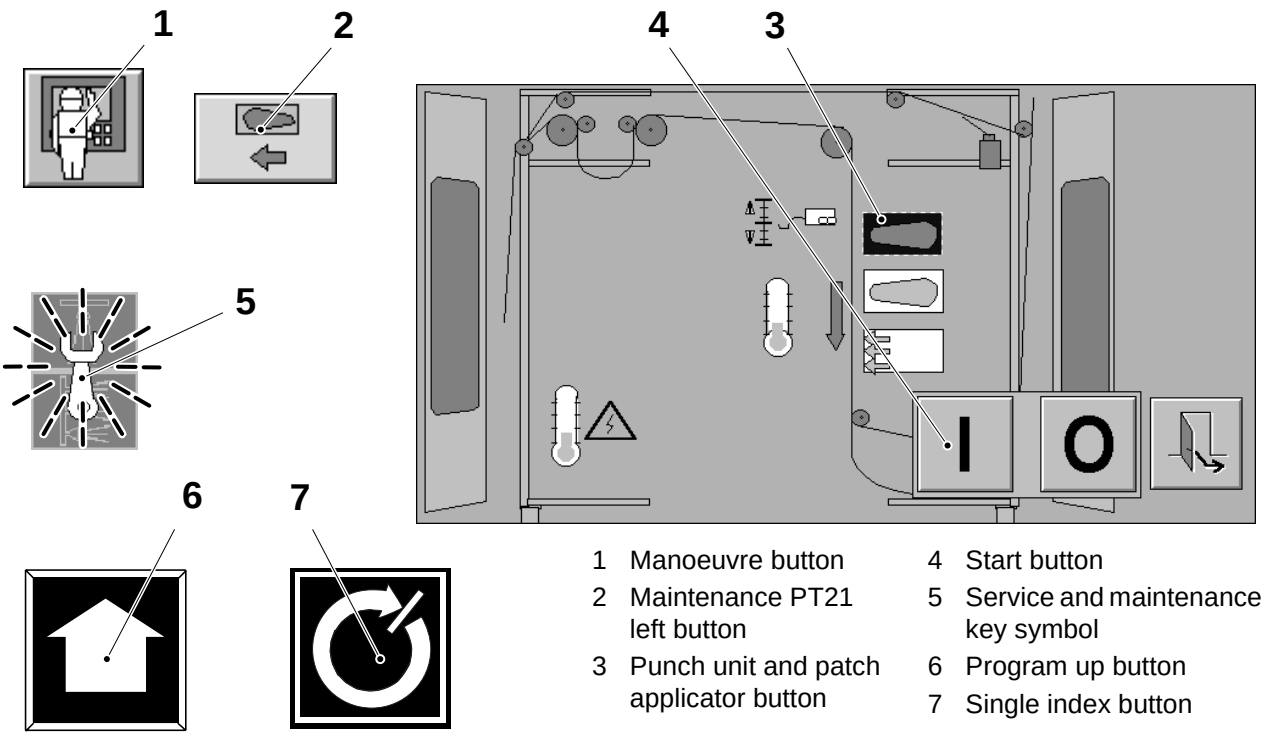

1 Manoeuvre button
2 Maintenance PT21 left button
3 Punch unit and patch applicator button
4 Start button
5 Service and maintenance key symbol
6 Program up button
7 Single index button

(Cont'd)

(Cont'd)

Note! If the **Single index** button does not flash, open and close one of the doors in the PullTab unit. Acknowledge the alarm on the TPOP.

b) Open the door and cut out the packaging material that has the test holes and patches.

Check position

a) Check that the IS patch is not applied crookedly onto the packaging material.

b) Check that the hole is centred evenly inside the patch (distance **A** = distance **B** and distance **C** = distance **D**).

c) If required, adjust the patch feeder as described below.

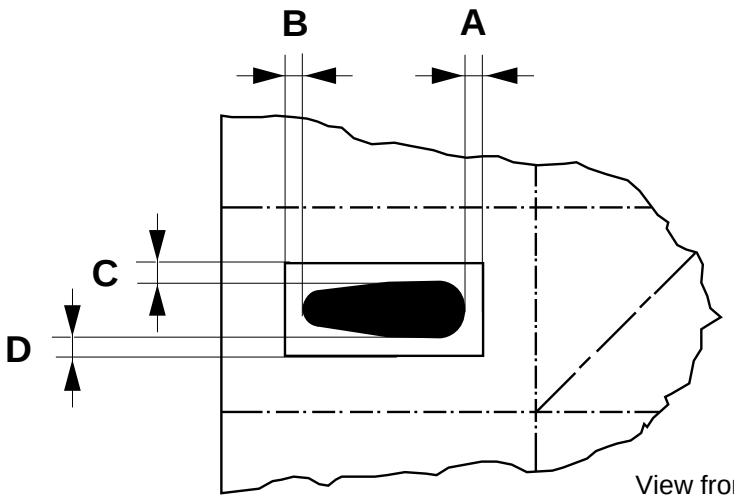

View from inside the package

A = B

C = D

2.2B4884C02en.fm

(Cont'd)

(Cont'd)

Adjust patch feeder position

a) Loosen the screws (1) on the patch feeder.

b) Set the distances **A** and **B**, by means of the setting screw (2).

c) Tighten the screws (1).

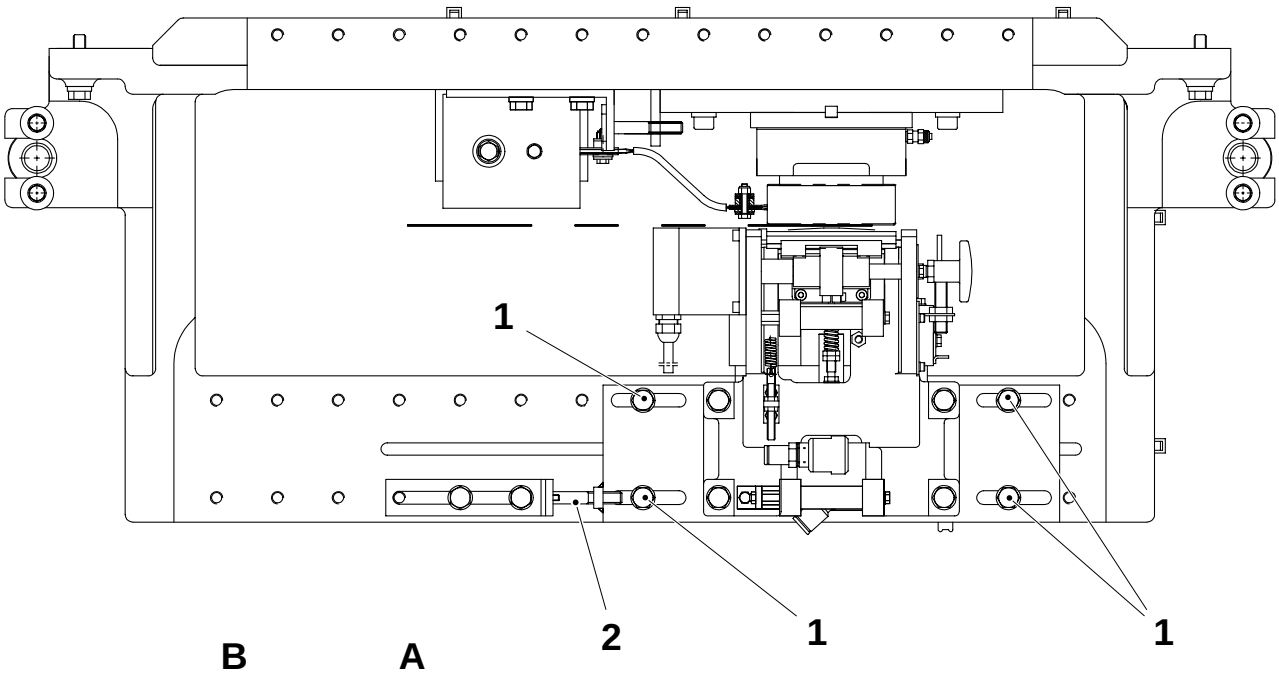

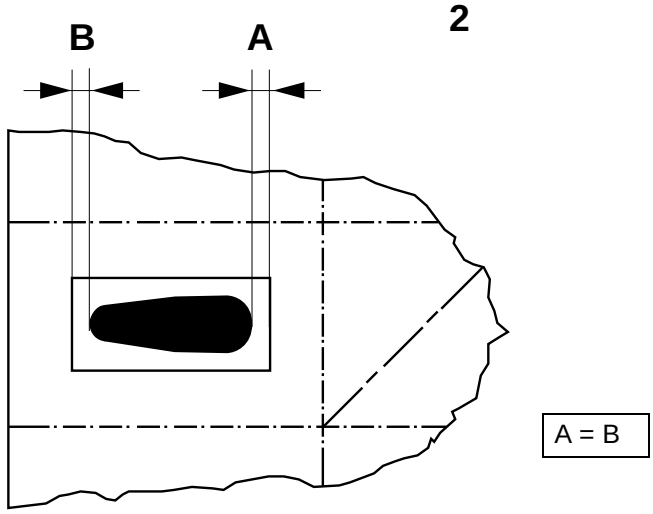

2.2B4884C02en.fm

1 Screw
2 Setting screw

(Cont'd)

(Cont'd)

d) On both LH and RH sides of all three applicator stations (applicator patch, reseal, and tab) loosen the screws (5) to move the brass bushings (3) away from the patch bracket (4).

e) On both LH and RH sides of the applicator patch, tighten the brass bushings (3) until they touch the patch bracket (4).

f) Tighten the two screws (5).

g) Slightly loosen the screws (6) on the patch bracket (4).

h) Set the distances **C** and **D**, by adjusting the screw guides (7).

i) Tighten the screws (6).

j) Check the heat pattern on the patch, see *3.2-2 Applicator patch - check heat pattern*.

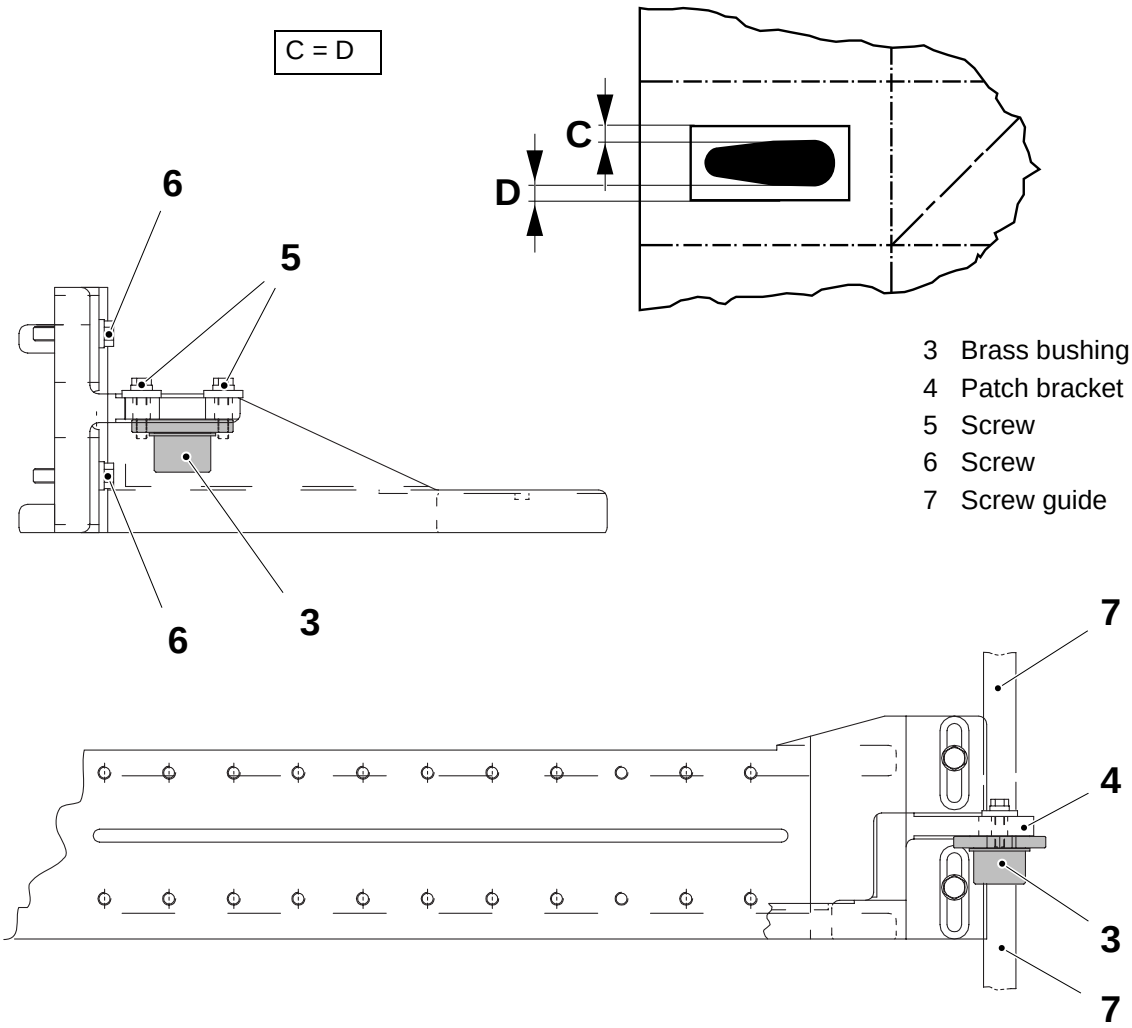

3 Brass bushing
4 Patch bracket
5 Screw
6 Screw
7 Screw guide

2.2B4884C02en.fm

3.2-2 Applicator patch - check heat pattern

Tool - zonoscope	TP No. 90243-203
SPC reference	1260419-0100

Make test material

a) Follow the procedure *Preparation for making test material with hole and patch* as described in *2.2-1 Punch unit - set hole position*.

b) At the PullTab control panel, push the **Single index** button (1) six or seven times after it starts flashing.

c) Open the door and cut out the packaging material that has the test holes and patches.

Check position

a) Check, with the aid of a zonoscope (5), that the position of the heat pattern on the packaging material is centred with respect to the patch.

Note! To more easily see the heat pattern, increase the power of the applicator patch inductor (potentiometer value approximately **650 ± 50** S.U.). Be sure to reset the potentiometer before starting production.

b) Check that all edges are properly sealed except the knife edge (2) where the knife cut the patch strip.
Check the corners (3) and (4) opposite the knife edge (2).

c) If required adjust the patch counter jaw as described below.

2.2B4884C02en.fm

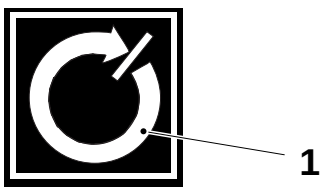

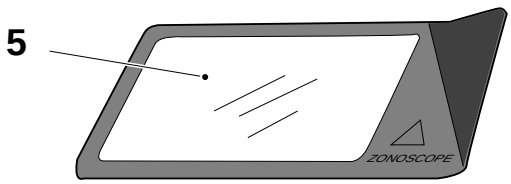

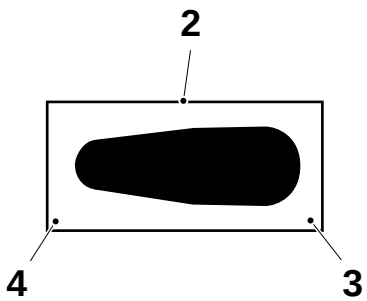

1 Single index button
2 Knife edge
3 Corner
4 Corner
5 Zonoscope

(Cont'd)

(Cont'd)

Adjust patch counter jaw position

a) Loosen the screws (6) and adjust the horizontal position of the heat pattern by means of the setting screw (10).

b) Loosen the screws (7).

c) Loosen the nut (8) and adjust the vertical position of the heat pattern by means of the grub screw (9).

d) Tighten the nut (8), the screws (7) and the screws (6).

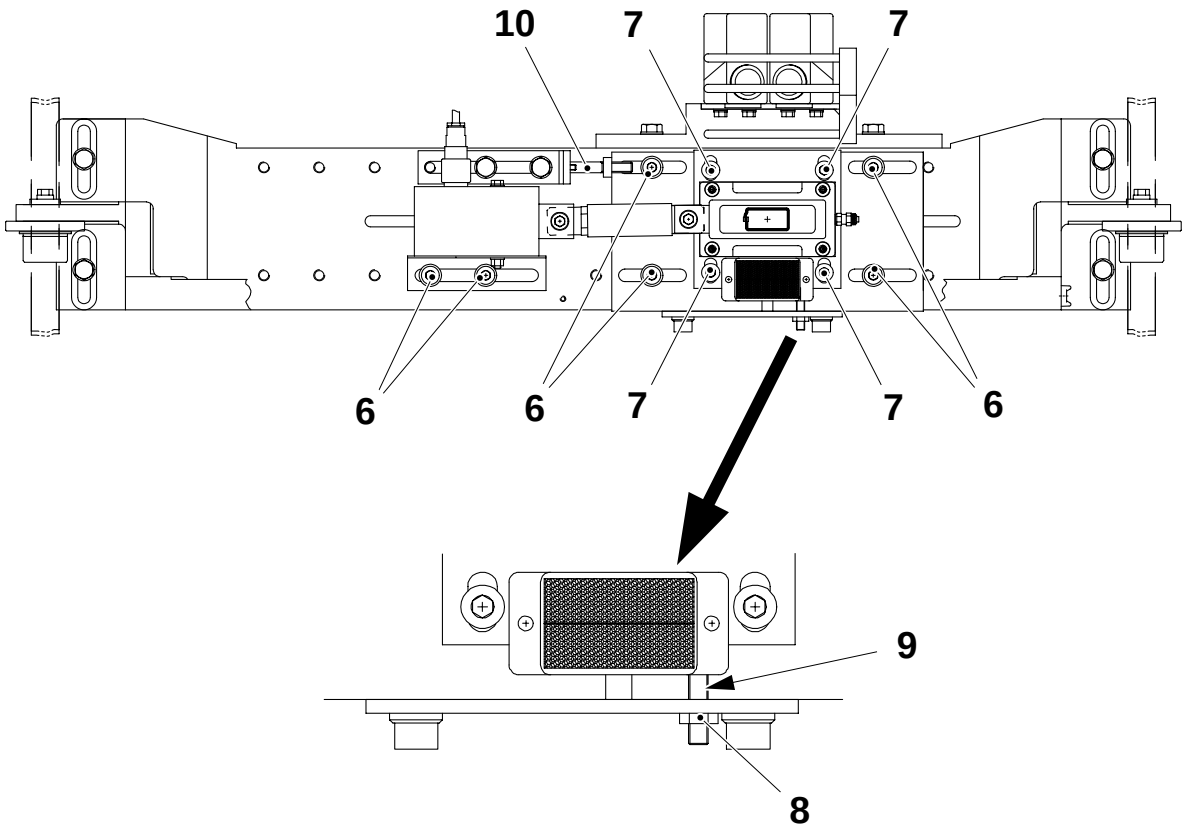

2.2B4884C02en.fm

6 Screw
7 Screw
8 Nut
9 Grub screw
10 Setting screw

(Cont'd)

(Cont'd)

Deactivate PullTab stations

a) Touch the **Stop** button (11) to deactivate the punch unit and applicator patch stations.

b) Push the **Program down** button (12) after it starts flashing.

c) Touch the **Exit** button (13).

d) Touch the **Manoeuvre** button (14) to end the sequence.

e) Check the heat pattern applied by the reseal station, see *5.2-2 Applicator reseal - check heat pattern.*

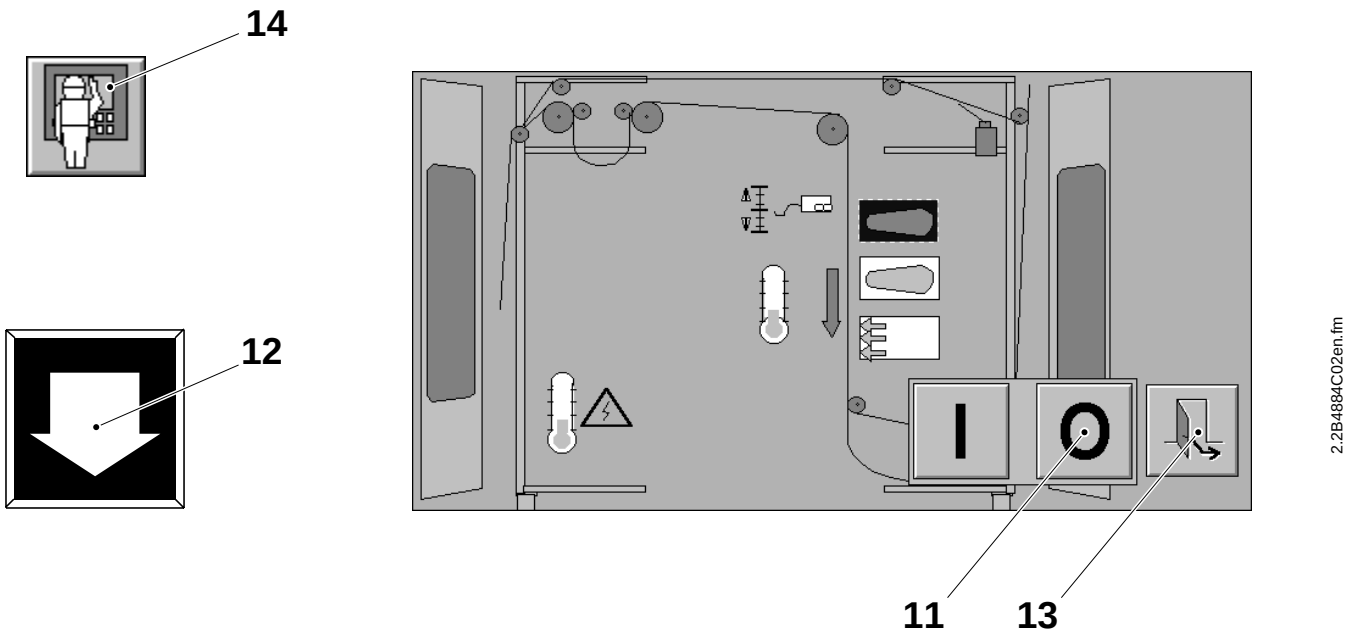

11 Stop button
12 Program button
13 Exit button
14 Manoeuvre button

3.2.1 Patch feeder

3.2.1-1 Patch feeder - check knives

SPC reference	1260414-0100



WARNING!

Risk of burns!
The sealing jaw may be hot. Be careful.

Check the surface of the knives and the space between the flat knife (1) and the sealing plate (3) for any residue of polyethylene.

Check the flat knife (1) and the window knife (2) for wear and/or damage.

Check that the edges of the IS patch are clean cut. If required, set the window knife (2), see *3.2.1-4 Patch feeder - set window knife*.

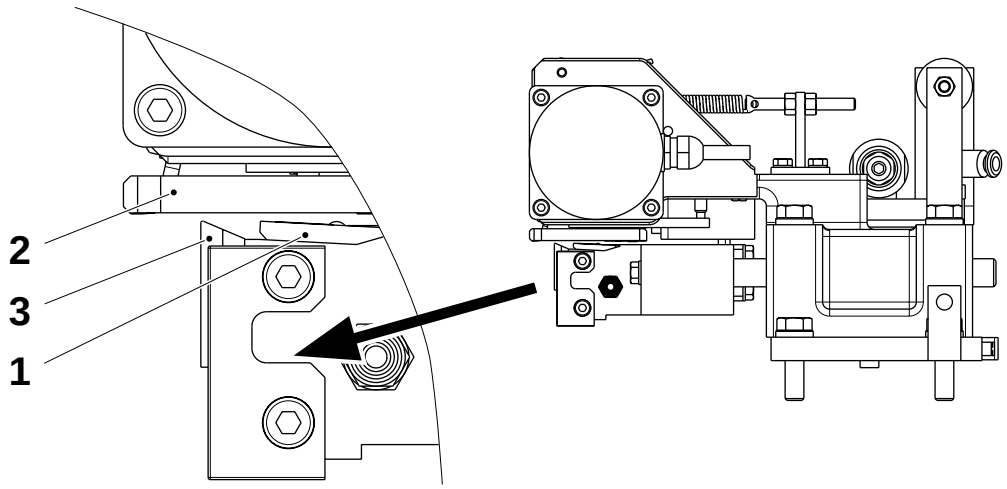

1 Flat knife
2 Window knife
3 Sealing plate

2.2B4884C02en.fm

3.2.1-2 Patch feeder - change knives

SPC reference	1260414-0100



Risk of burns!
The sealing jaw may be hot. Be careful.

a) Remove the feeder, see *3.2.1-3 Patch feeder - remove*.
b) Remove the four screws (1) and the entire bracket (2).
c) Remove the flat knife (3) and change as required.
d) Unscrew the stop screw (4) and remove the two pins (7).
e) Remove the screws (5) and change the window knife (6).

Caution! When changing the window knife (6), make sure that the bevelled side of the window knife (6) (side opposite etched part number) is the side that comes in contact with the flat knife (3).

f) Assemble in the reverse order.
g) Set the sealing jaw, see *3.2.1-5 Patch feeder - set sealing plate*.
h) Set the window knife (6), see *3.2.1-4 Patch feeder - set window knife*.
i) Check the patch position, see *3.2-1 Applicator patch - check patch position*.

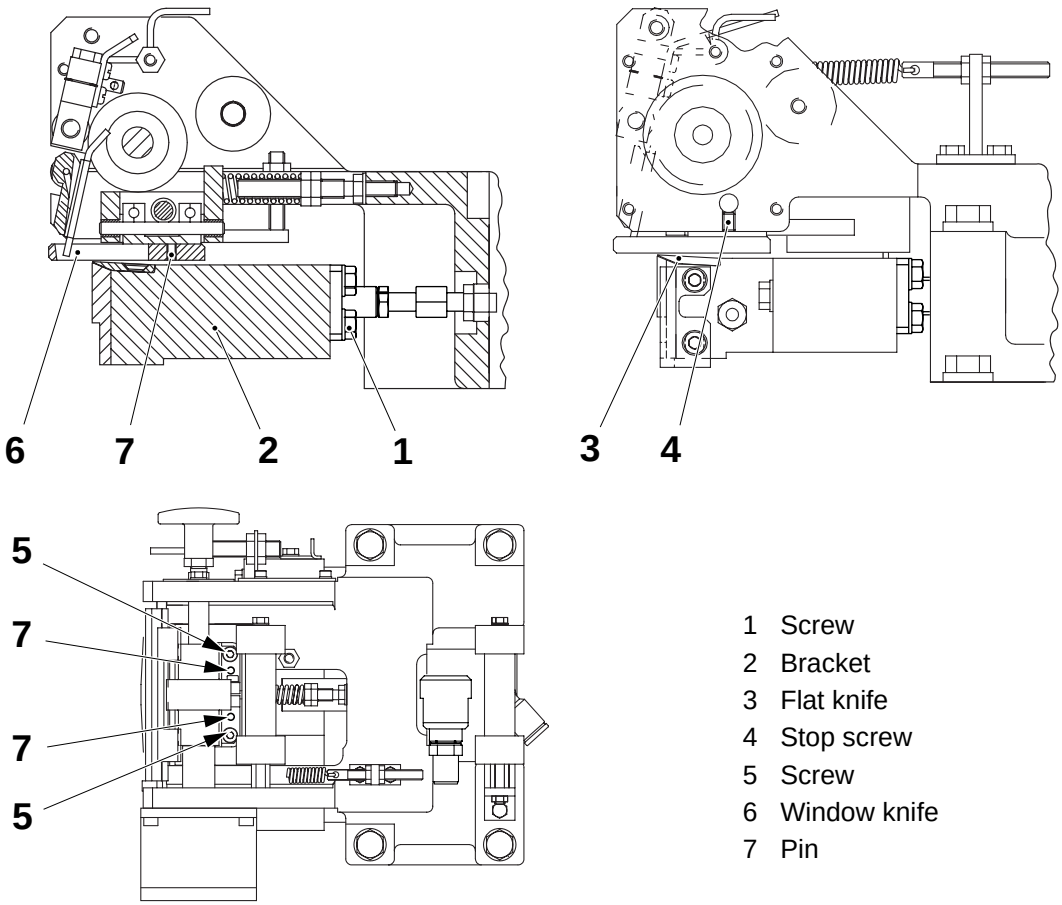

2.2B4884C02en.fm

1 Screw
2 Bracket
3 Flat knife
4 Stop screw
5 Screw
6 Window knife
7 Pin

3.2.1-3 Patch feeder - remove

SPC reference	1260414-0100

a) On the electrical cabinet, disconnect the electrical connector (1) leading to the step motor (2).

b) Disconnect the air hoses (3) and the strip suction hose (6).

c) Loosen the screws (8) and remove the patch jaw monitor proximity switch (7).

d) Remove the screws (4) from the plate (5) and lift out the patch feeder.

e) Assemble in the reverse order.

f) Set the patch feeder, see *3.2.1-14 Patch feeder - set position*.

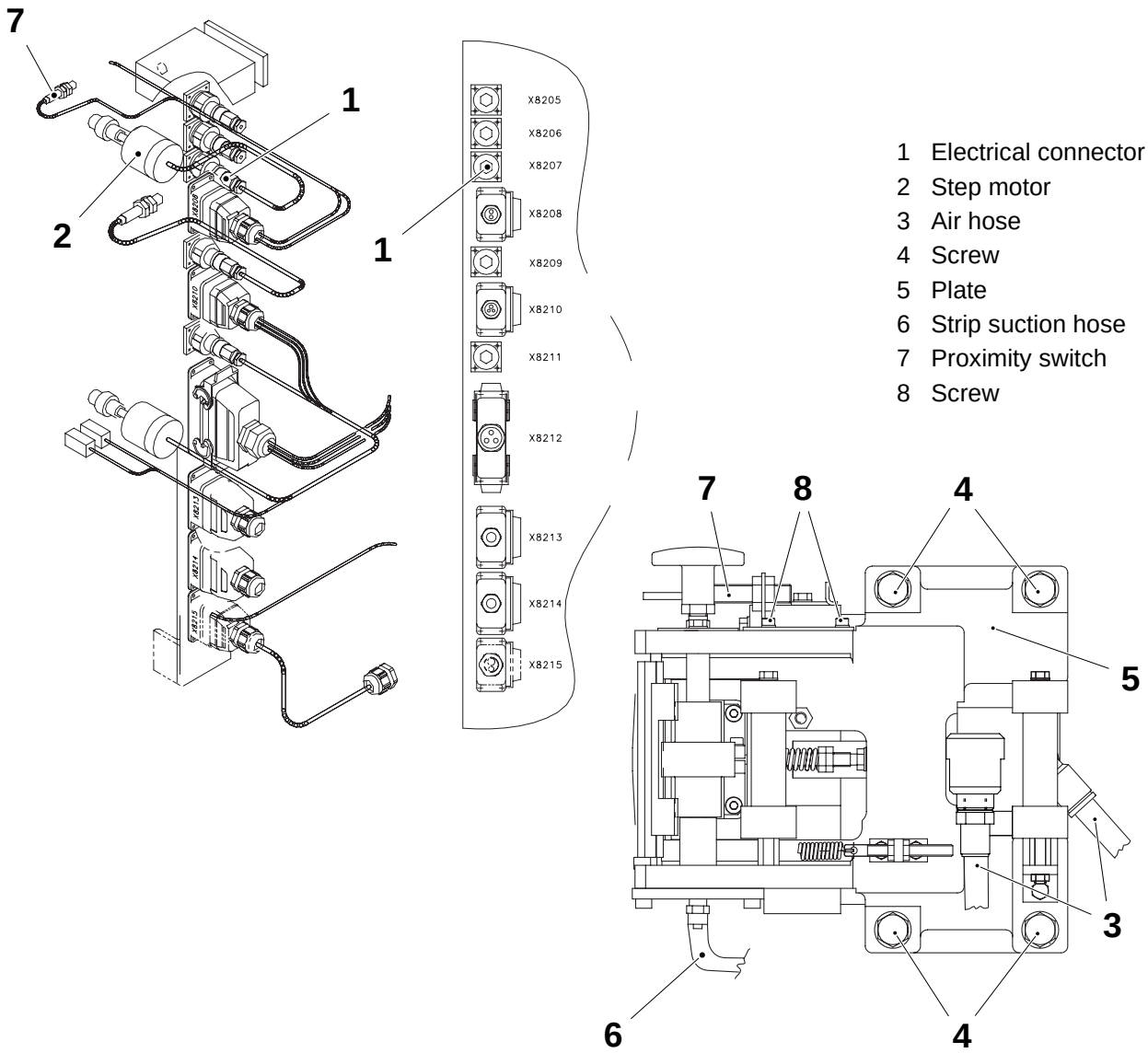

1 Electrical connector
2 Step motor
3 Air hose
4 Screw
5 Plate
6 Strip suction hose
7 Proximity switch
8 Screw

2.2B4884C02en.fm

3.2.1-4 Patch feeder - set window knife

SPC reference	1260414-0100



Risk of burns!
The sealing jaw may be hot. Be careful.

This setup may be performed on a work bench.

a) Remove the feeder, see *3.2.1-3 Patch feeder - remove*.
b) Adjust the nuts (1) until the spring (3) starts to compress.
c) Set the distance **A** between the surface of the sealing plate (5) and the outside edge of the window knife (4).
d) Keep the distance **A** and adjust the screw (2) until the window knife (4) touches the outside edge of the flat knife without any play.
e) Adjust the nuts (1) to set the distance **B**.
f) Check the cutting action after the setting.

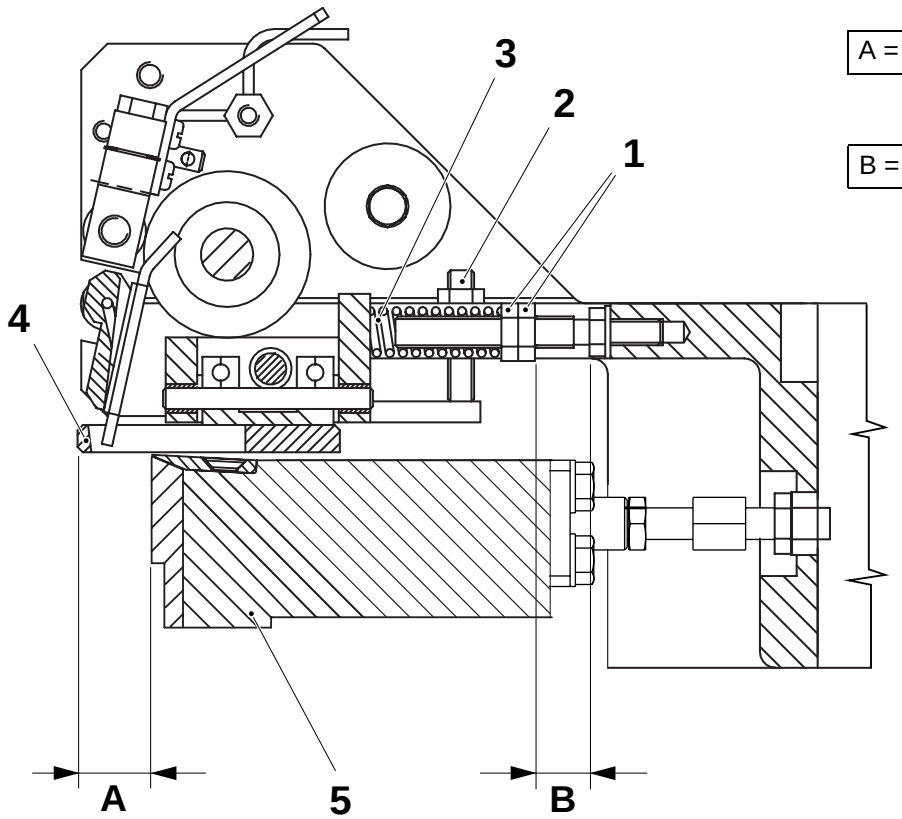

A = 6 ±0.5 mm

B = 12 ±2 mm

2.2B4884C02en.fm

1 Nut
2 Screw
3 Spring
4 Window knife
5 Sealing plate

3.2.1-5 Patch feeder - set sealing plate

SPC reference	1260414-0100



Risk of burns!
The sealing jaw may be hot. Be careful.

a) Remove the feeder, see *3.2.1-3 Patch feeder - remove*.
b) Remove the pin (1) and the entire bracket (2).
c) Loosen the four screws (3).
d) Set the distance **A** between the top of the flat knife (6) and the sealing plate (4). If required, adjust with shims (7).
e) Keep the two clamps (5) pressed aside as shown in the figure, and at the same time tighten the screws (3).
f) Make sure that the clamps (5) lean against the sealing plate (4).
g) Assemble in the reverse order.

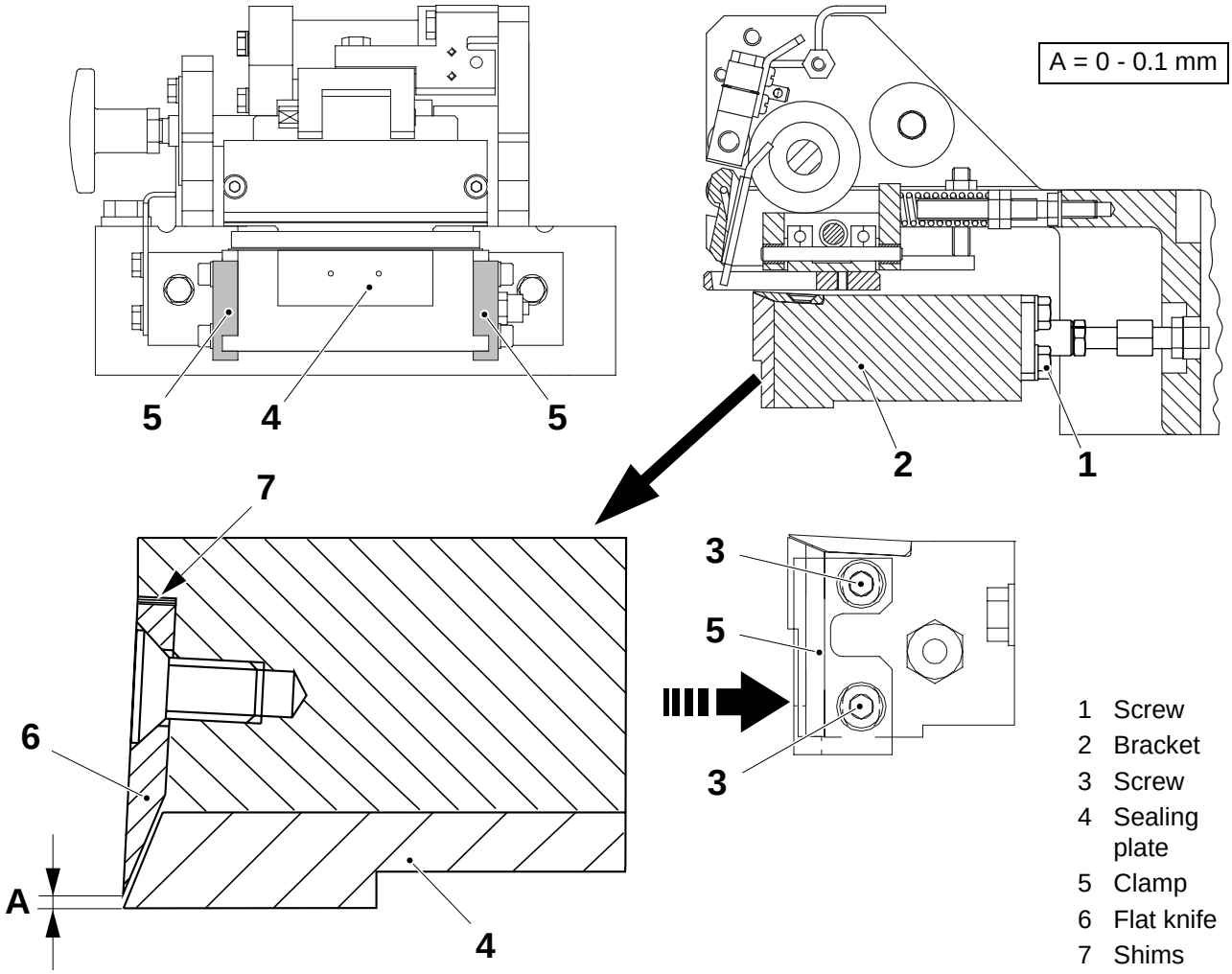

2.2B4884C02en.fm

3.2.1-6 Patch feeder - check guides and linear bearings

SPC reference	1260414-0100

a) Disconnect the air hoses (6) from the cylinder.

b) By hand, move the cylinder to check that the piston (5) moves freely.

c) Remove the feeder, see *3.2.1-3 Patch feeder - remove*.

d) Remove the four screws (1) and the entire bracket (2).

e) Check the guides (3) for wear and/or damage.

f) Check for wear in the linear bearings (4) by using the guide (3). Check the play in one bearing at a time.

g) Change as required, see *3.2.1-7 Patch feeder - change linear bearings*.

h) Fit back the bracket (2) and the four screws (1) after checking.

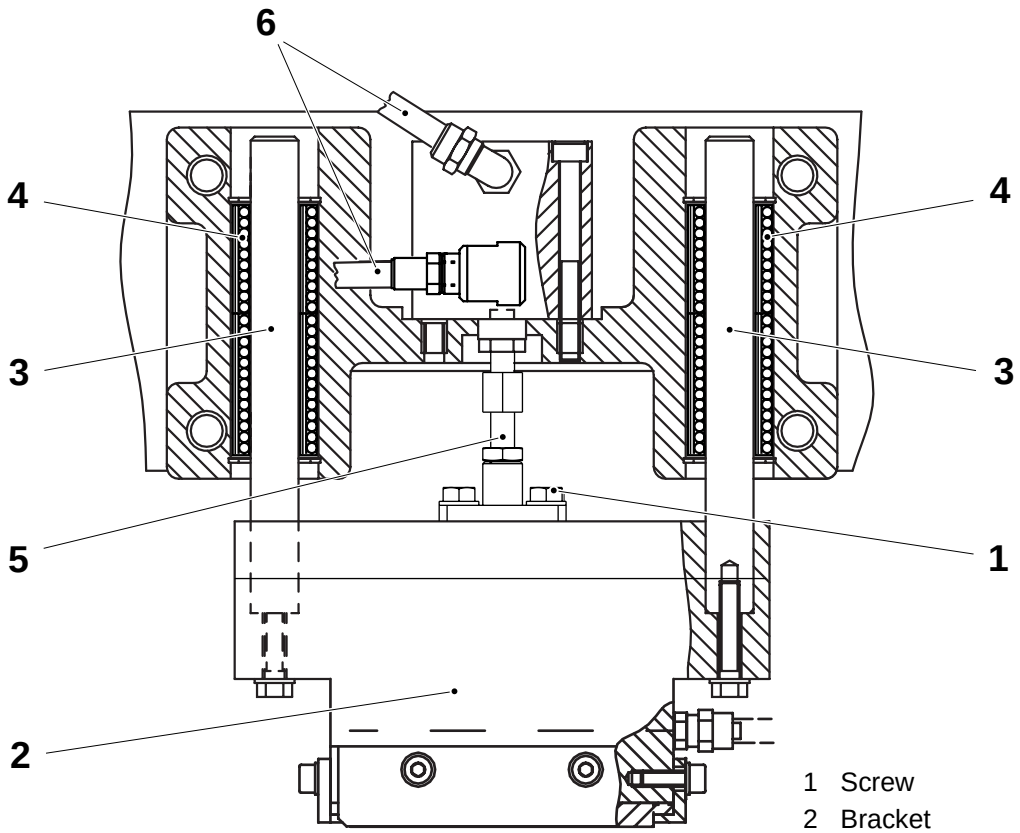

2.2B4884C02en.fm

1 Screw
2 Bracket
3 Guide
4 Linear bearing
5 Piston
6 Air hose

3.2.1-7 Patch feeder - change linear bearings

SPC reference	1260414-0100

a) Remove the feeder, see *3.2.1-3 Patch feeder - remove*.

b) Remove the four screws (1) and the entire bracket (2).

c) Remove the seal rings (3) on each side of the linear bearing (4).

d) Pull out the linear bearings (4) and change them.

e) Assemble in the reverse order.

Note! Make sure that the seal rings (3) are, on both sides, distance **A** inward towards the surface of the applicator casting (5).

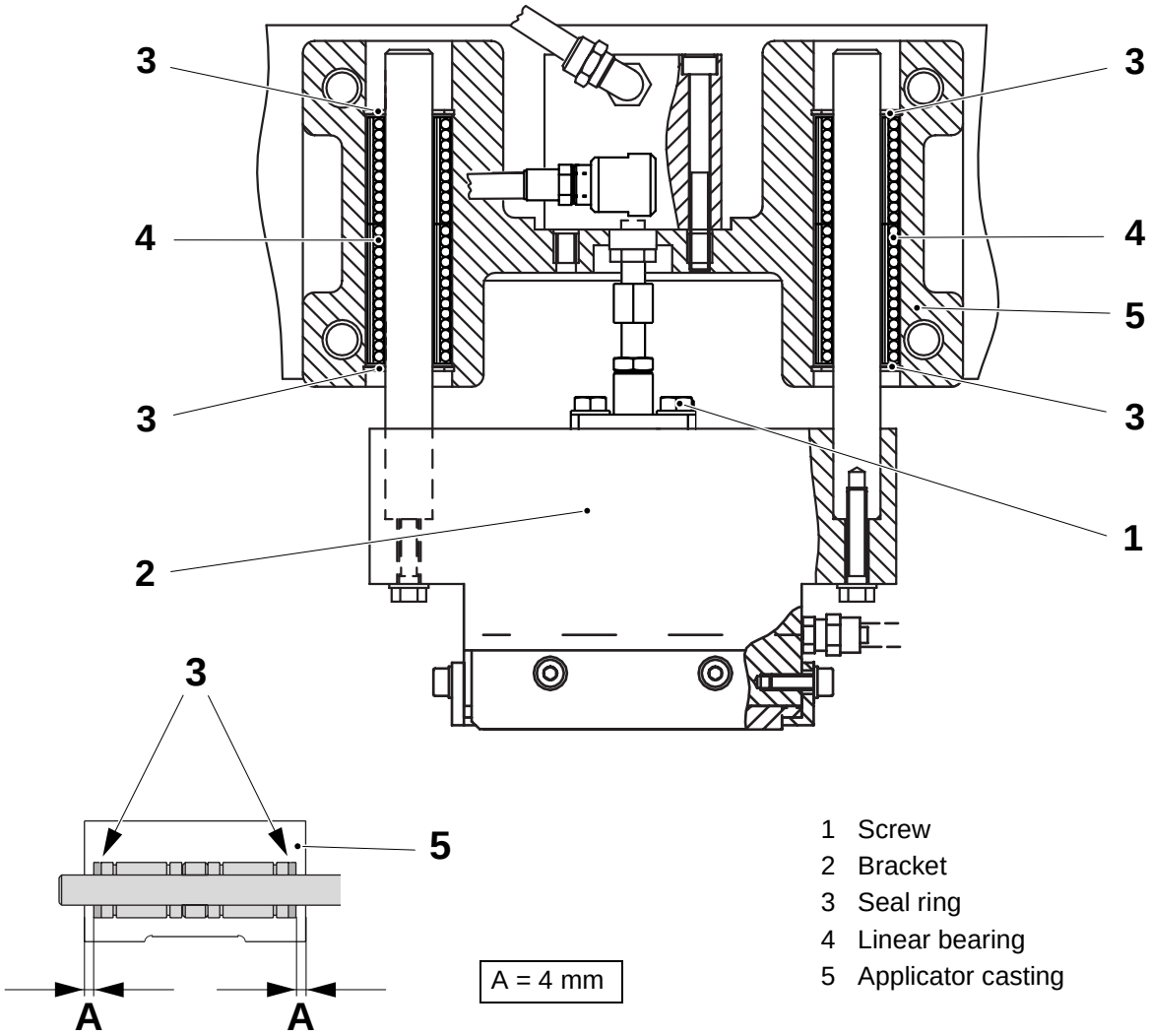

1 Screw
2 Bracket
3 Seal ring
4 Linear bearing
5 Applicator casting

2.2B4884C02en.fm

3.2.1-8 Patch feeder - change bushings

SPC reference	1260414-0100

a) Remove the feeder, see *3.2.1-3 Patch feeder - remove*.

b) Remove the four screws (1) and the entire bracket (2).

c) Unscrew the two grub screws (3) in the coupling (4).

d) Unscrew the four screws (5) and remove the step motor (5).

e) Unscrew the two grub screws (7) in the feeder roller (9).

f) Remove the knob shaft (8), the coupling (4) and the feeder roller (9).

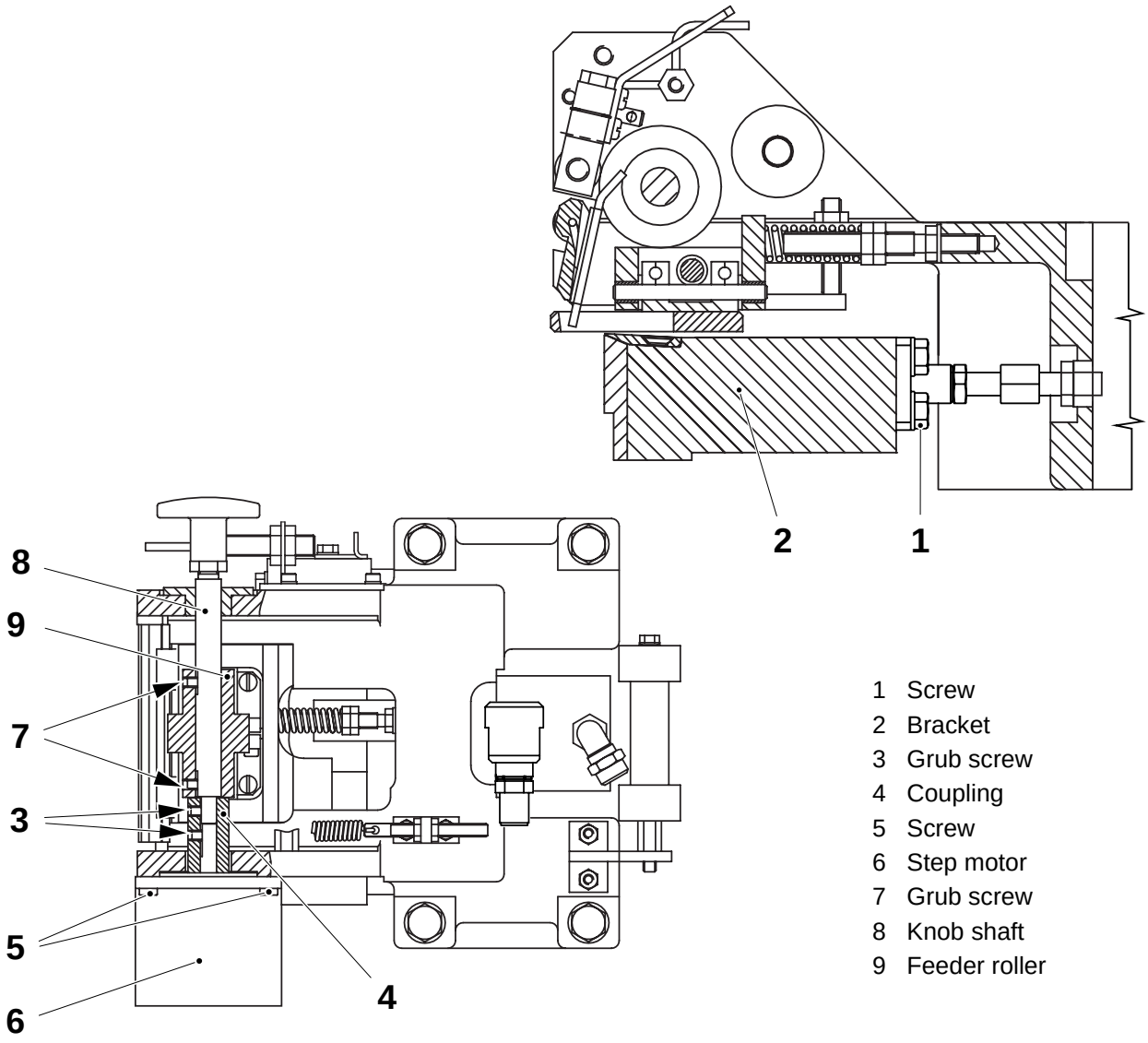

2.2B4884C02en.fm

1 Screw
2 Bracket
3 Grub screw
4 Coupling
5 Screw
6 Step motor
7 Grub screw
8 Knob shaft
9 Feeder roller

(Cont'd)

(Cont'd)

g) Remove the two screws (10) and change the bushing (11).
h) Loosen the spring (12) using the nut (13).
i) Loosen the grub screw (14) and remove the shaft (15).
j) Remove the two bushings (16) and change them if damaged or worn out.
k) Loosen the screws (17) and pull out the shaft (18).
l) Remove the two spring washers (19).
m) Remove the two bushings (20) and change them if damaged or worn out.
n) Assemble in the reverse order.

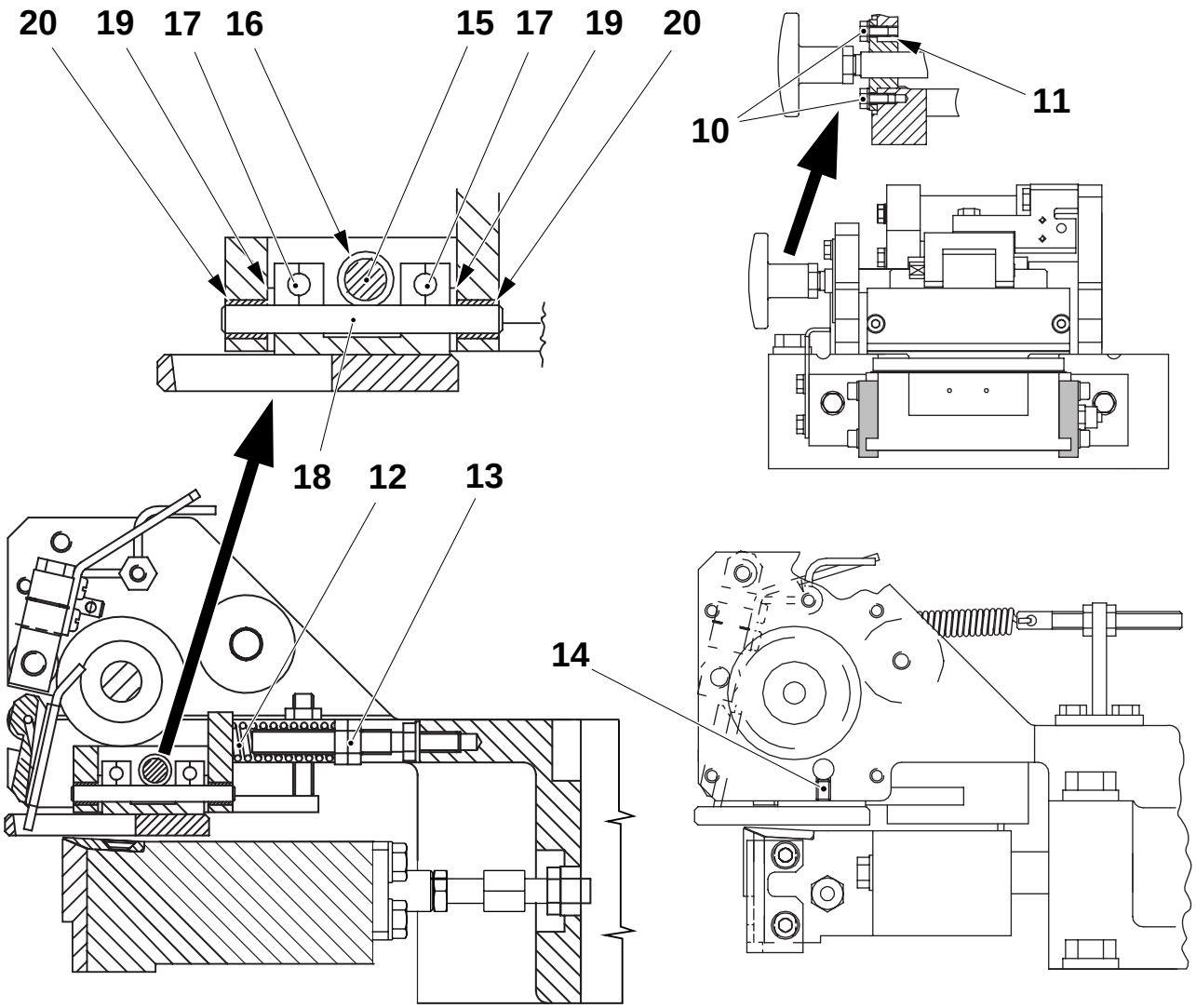

2.2B4884C02en.fm

10	Screw	14	Grub screw	18	Shaft
11	Bushing	15	Coupling	19	Spring washer
12	Spring	16	Knob shaft	20	Bushing
13	Nut	17	Screw		

3.2.1-9 Patch feeder - change cylinder

SPC reference	1260414-0100

a) Remove the four screws (1).

b) Remove the air connections (2) and the screws (3).

c) Remove the cylinder (4) and change it.

d) Assemble in the reverse order.

e) Set the cushion cylinder, see *3.2.2-6 Patch counter jaw - set cushion cylinder*.

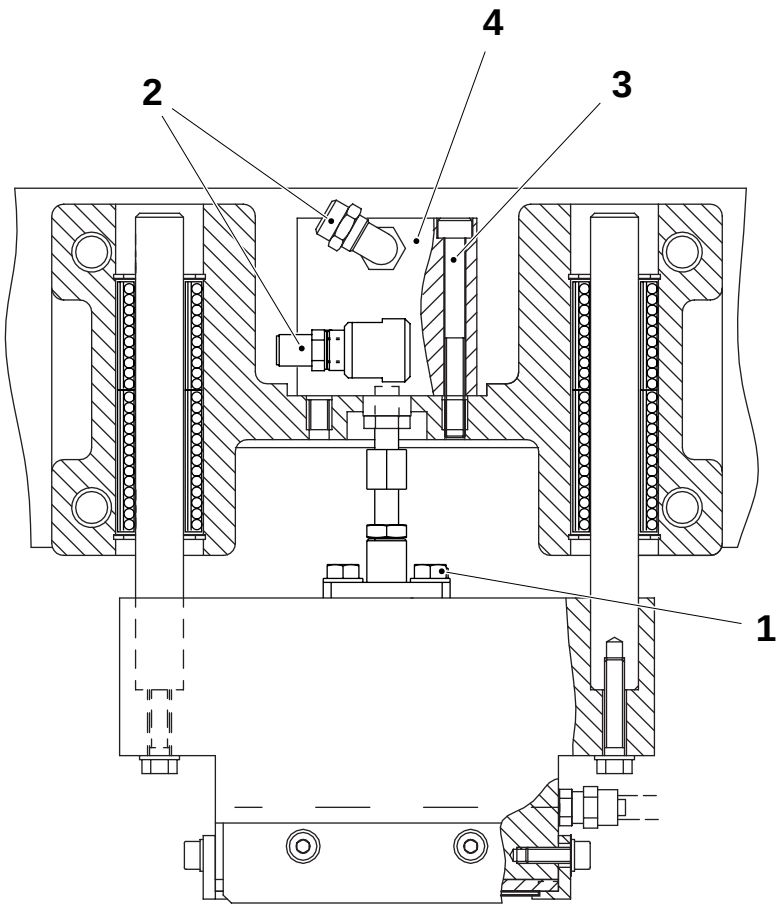

2.2B4884C02en.fm

1 Screw
2 Air connection
3 Screw
4 Cylinder

3.2.1-10 Patch feeder - check sealing plate

SPC reference	1260414-0100



WARNING!

Risk of burns!
The sealing jaw may be hot. Be careful.

a) Loosen the screws (2) and remove the sealing plate (1).

b) Check the surface of the sealing plate (1) for wear and scratches or other damage. Also check for any residue of polyethylene.

c) Check that the suction holes in the plate and the grooves on the back of the plate are not blocked.

d) Assemble in the reverse order.
Set the sealing plate (1), see *3.2.1-5 Patch feeder - set sealing plate*.

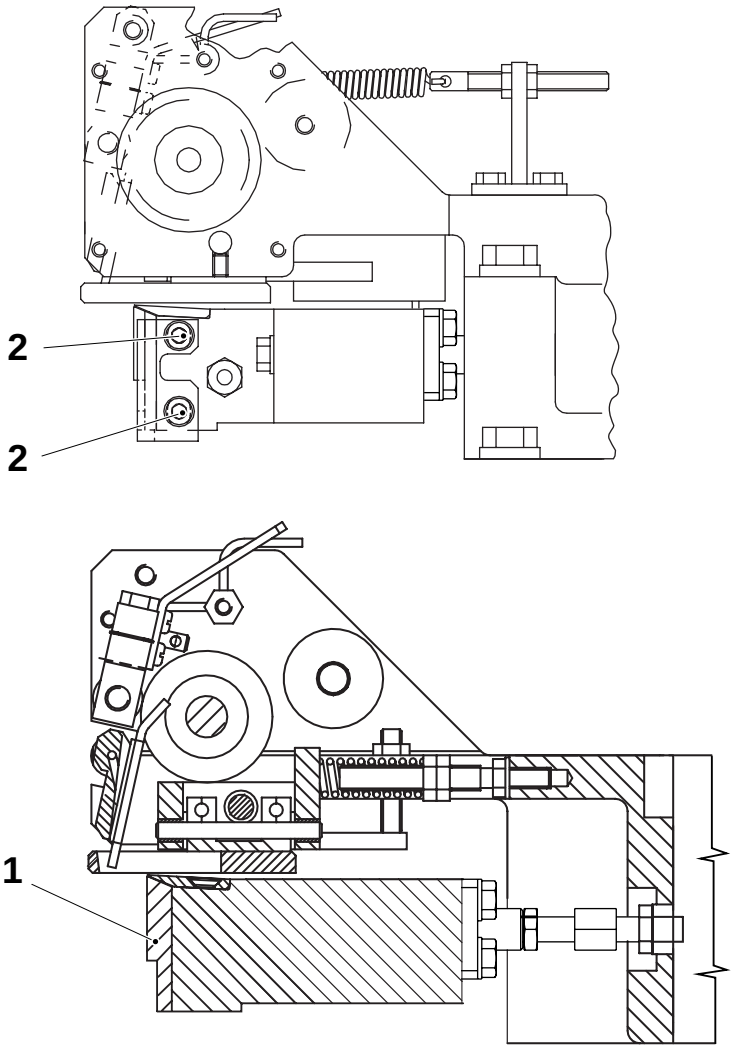

1 Sealing plate
2 Screw

2.2B4884C02en.fm

3.2.1-11 Patch feeder - check function

Consumables - ethanol	
SPC reference	1260414-0100

Remove the feeder, see *3.2.1-3 Patch feeder - remove*, and the screws (1).

Check the cutting and feeding functions and then check the following parts on the patch feeder unit:

- the surfaces of the feeder roller (2) and the one-way bearing (3) for wear and/or damage
- the one-way bearing (3) turns freely
- the steer plate (4) is not jammed with IS patch
  Clean any residue of polyethylene on the steer plate (4) with ethanol.

Note! When fitting back the steer plate (4), push it away from the roller (2) while tightening the screws (1). Otherwise the steer plate (4) will touch the roller (2).

- the feeding action by turning the feed knob (5) manually
  If required, set the strip feed, see *3.2.1-12 Patch feeder - set strip feed*.
  Step up to step **Production** and check the feeding action again.

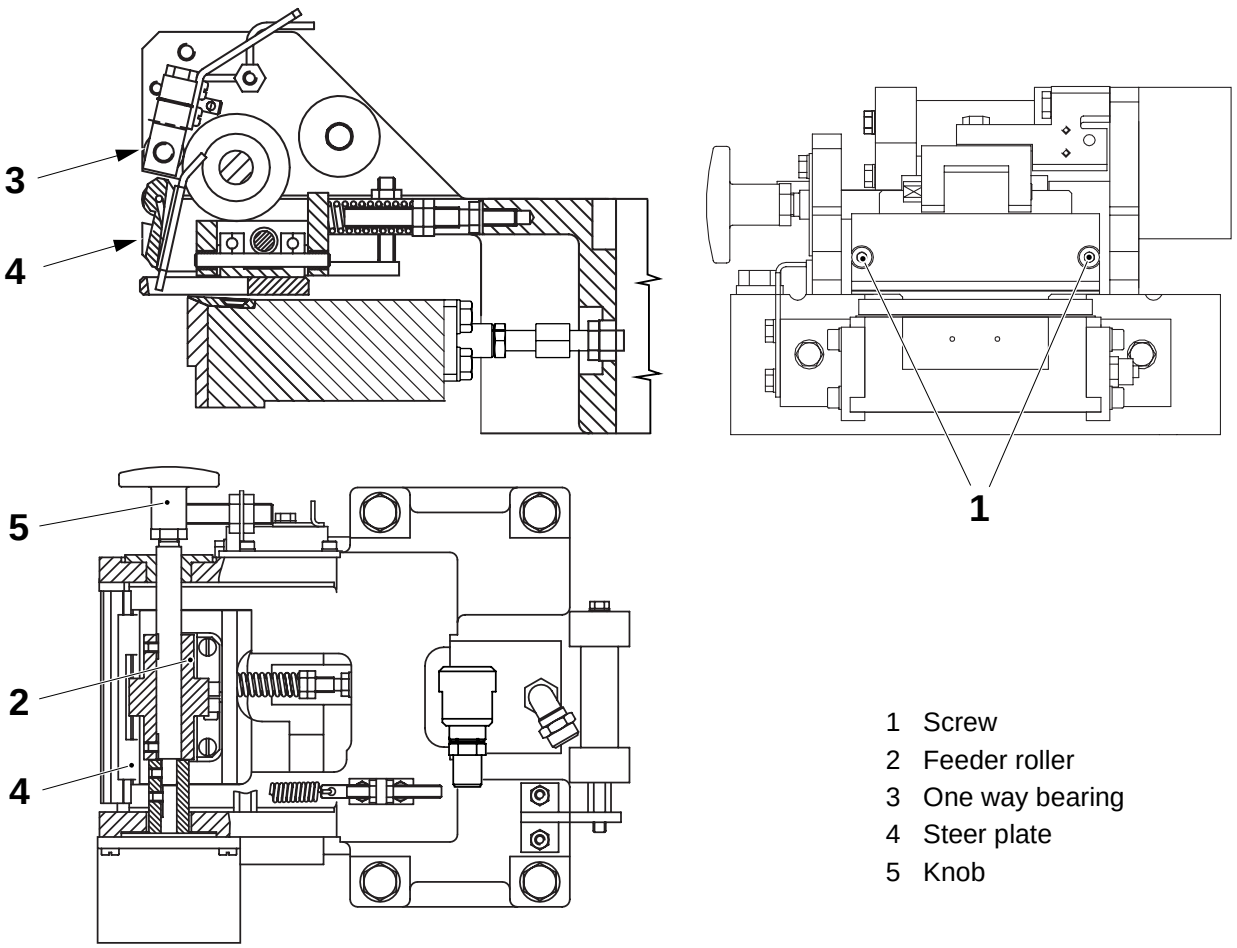

2.2B4884C02en.fm

1 Screw
2 Feeder roller
3 One way bearing
4 Steer plate
5 Knob

3.2.1-12 Patch feeder - set strip feed

SPC reference	1260414-0100

a) Place a piece of IS patch between the feeder roller (1) and the one-way bearing (2).

b) Set the distance **A** between the bracket (3) and the screw (4) by means of the nut (5).

c) Adjust the nut (5) until it is "**impossible**" to pull the strip backwards.

A = 16 ±1 mm

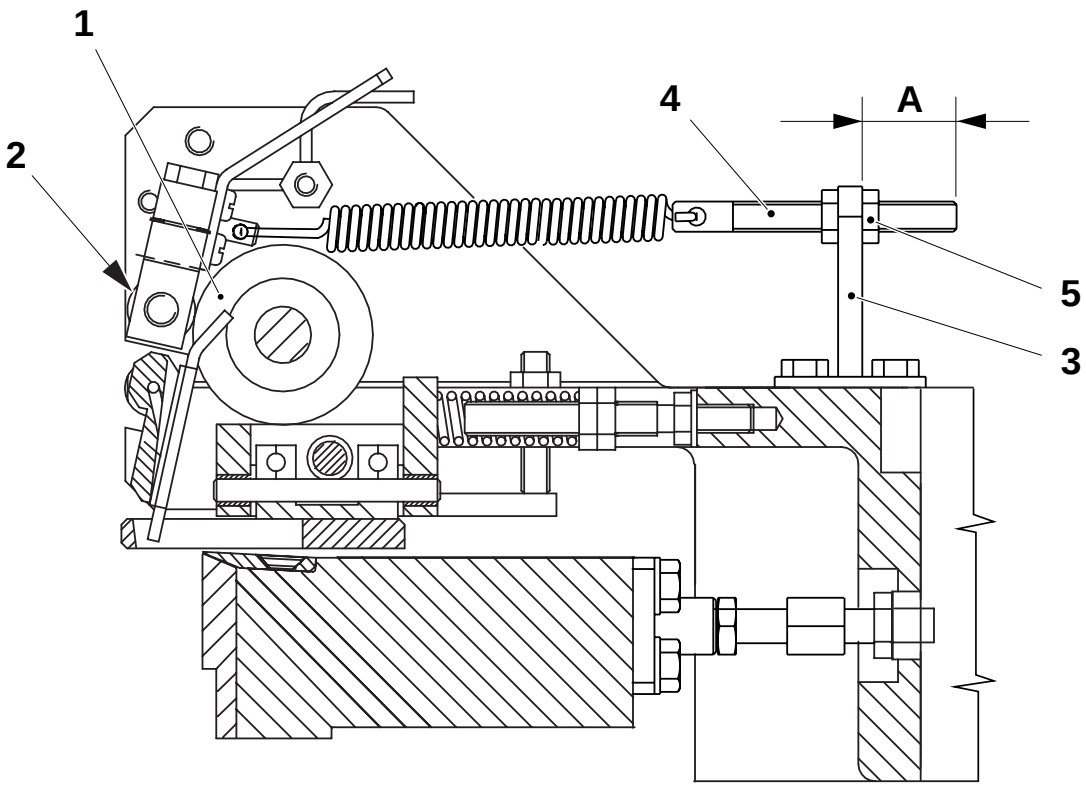

1 Feeder roller
2 One way bearing
3 Bracket
4 Screw
5 Nut

2.2B4884C02en.fm

3.2.1-13 Patch feeder - set proximity switch

Machine status	Mains power **On** Air **On**
SPC reference	1260414-0100



WARNING!

Risk of crushing!
The cylinder piston may move unexpectedly.

a) Switch the selector key, located on the PT21 electrical panel, to position **Service**.

Note! For an accurate setting, the machine must be threaded. If not, place a piece of packaging material between the heating jaw and the counter jaw.

b) Loosen the nuts (1) and move backwards the proximity switch (2).

c) Activate the valve **Y8410:1** for the cylinder (3).

d) Check that the cylinder (3) is fully extended. If required, set the cushion cylinder, see *3.2.2-6 Patch counter jaw - set cushion cylinder*.

e) Set the distance **A** between the proximity switch (2) and the flag (4) by means of the nuts (1).

f) Check that the proximity switch (2) LED lights up.

g) Activate the valve **Y8410:2** and check that the cylinder (3) is fully in.

2.2B4884C02en.fm

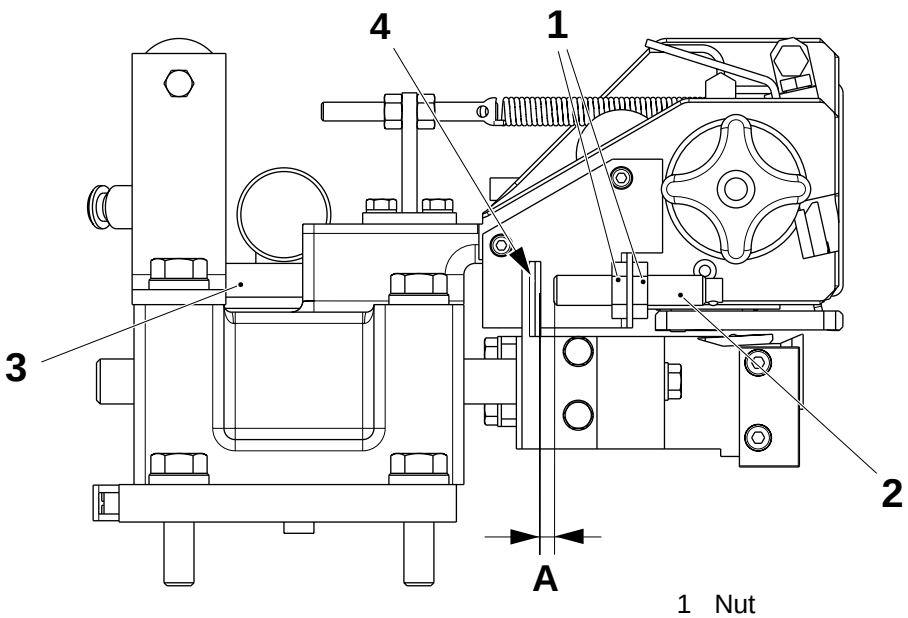

1 Nut
2 Proximity switch
3 Cylinder
4 Flag

A = 0.1 mm

3.2.1-14 Patch feeder - set position

Machine status	**Preparation**
SPC reference	1260414-0100



Risk of burns!
The sealing jaw may be hot. Be careful.

Note! Before carrying out the instructions below make sure that the inductor (2) is correctly positioned according to *7.2.1-1 Applicators - set brackets position* items *r), s), t)* and using the packaging material as a reference.

a) Switch the selector key, located on the PT21 electrical panel, to position **Service**.

b) Check that the cushion cylinder (1) is fully extended.

c) Check the distance **A** between the inductor (2) and the tip of the window knife (3).

d) Loosen the screws (4) and set the distance **A** by shifting the patch feeder assembly (5).

e) Set the patch counter jaw, see *3.2.2-6 Patch counter jaw - set cushion cylinder*.

2.2B4884C02en.fm

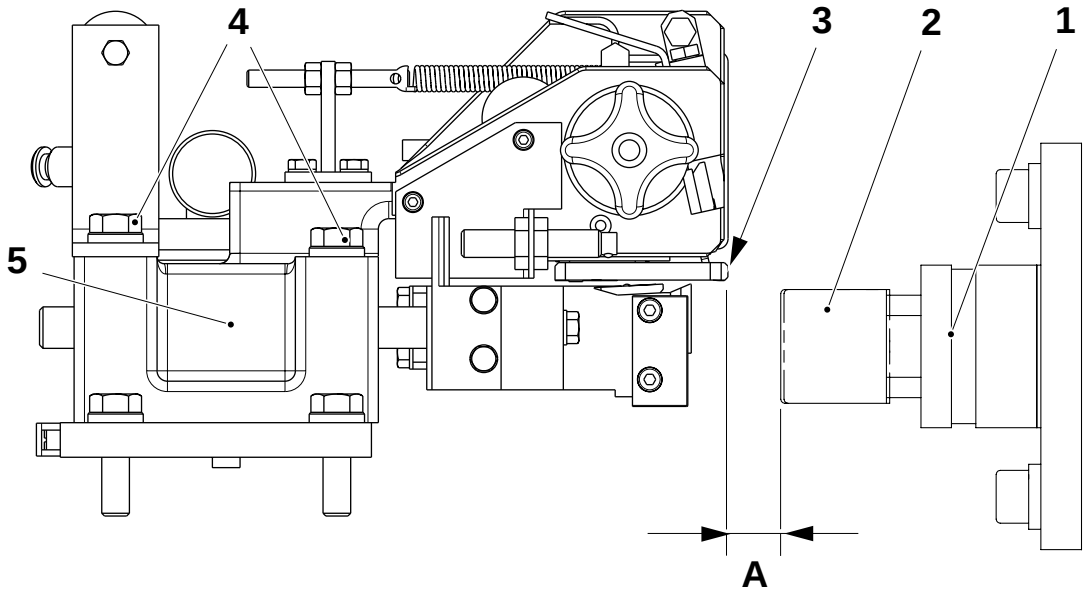

A = 1.5 ±0.2 mm

1 Cushion cylinder
2 Inductor
3 Window knife
4 Screw
5 Patch feeder

3.2.1-15 Patch feeder - change shims

SPC reference	1260414-0100

WARNING!

a) Remove the feeder, see *3.2.1-3 Patch feeder - remove*.
b) Remove the screws (1) and the plates (2) and (3).
c) Loosen the spring (4) by means of the nuts (5).
d) Loosen the stop screw (6) and remove the shaft (7).
e) Remove the screws (8) and the window knife (9).
f) Remove the shaft (10) and the shims (11).

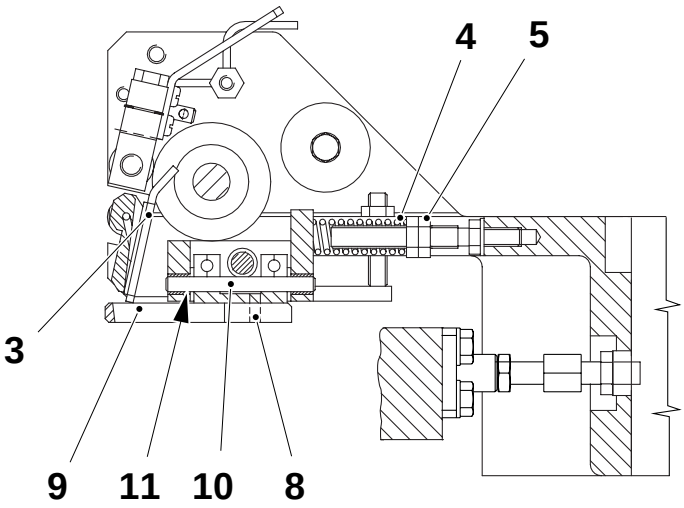

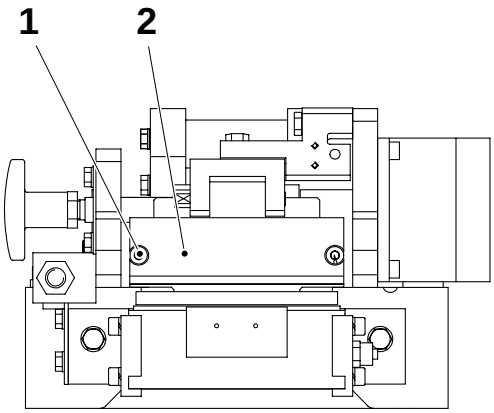

2.2B4884C02en.fm

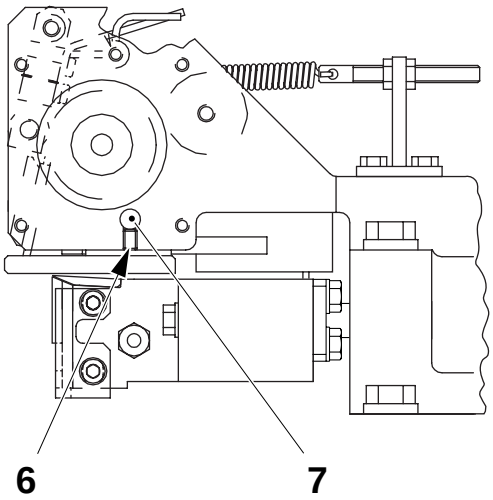

1 Screw
2 Plate
3 Plate
4 Spring
5 Nut
6 Stop screw
7 Shaft
8 Screw
9 Window knife
10 Shaft
11 Shim

(Cont'd)

(Cont'd)

g) Push down the pivot plate (12) against the pivot plate (13).

h) Check and note the play **A** between the pivot plate (12) and the pivot plate (13).

i) Put the new shims (14) with a thickness of distance **B** between the pivot plate (12) and the pivot plate (13) on both sides and put back the shaft (10).

Note! The pivot plate (13) must be free to rotate but without axial plays.

j) Assemble in the reverse order.

k) Set the window knife, see *3.2.1-4 Patch feeder - set window knife*.

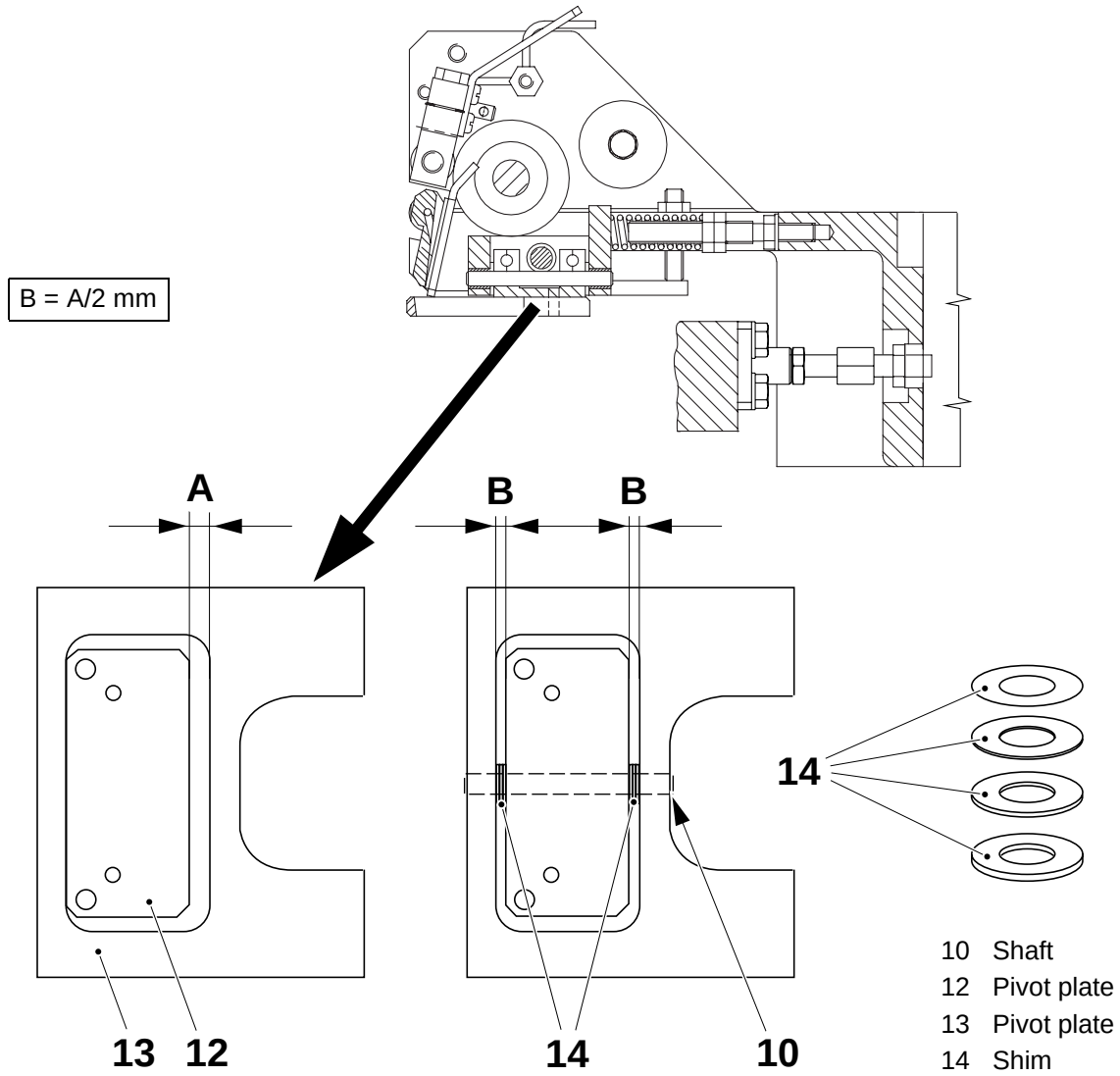

2.2B4884C02en.fm

3.2.2 Patch counter jaw

3.2.2-1 Patch counter jaw - remove

SPC reference	1260417-0100

a) Loosen the screw (1).

b) Disconnect the cable (2) leading to the inductor transformer (3).

c) Disconnect the air hose (4) for the cushion cylinder.

d) Unscrew the screws (5). Slide up the plate (6) to remove the plate (6) with the counter jaw unit attached to it.

e) Assemble in the reverse order.

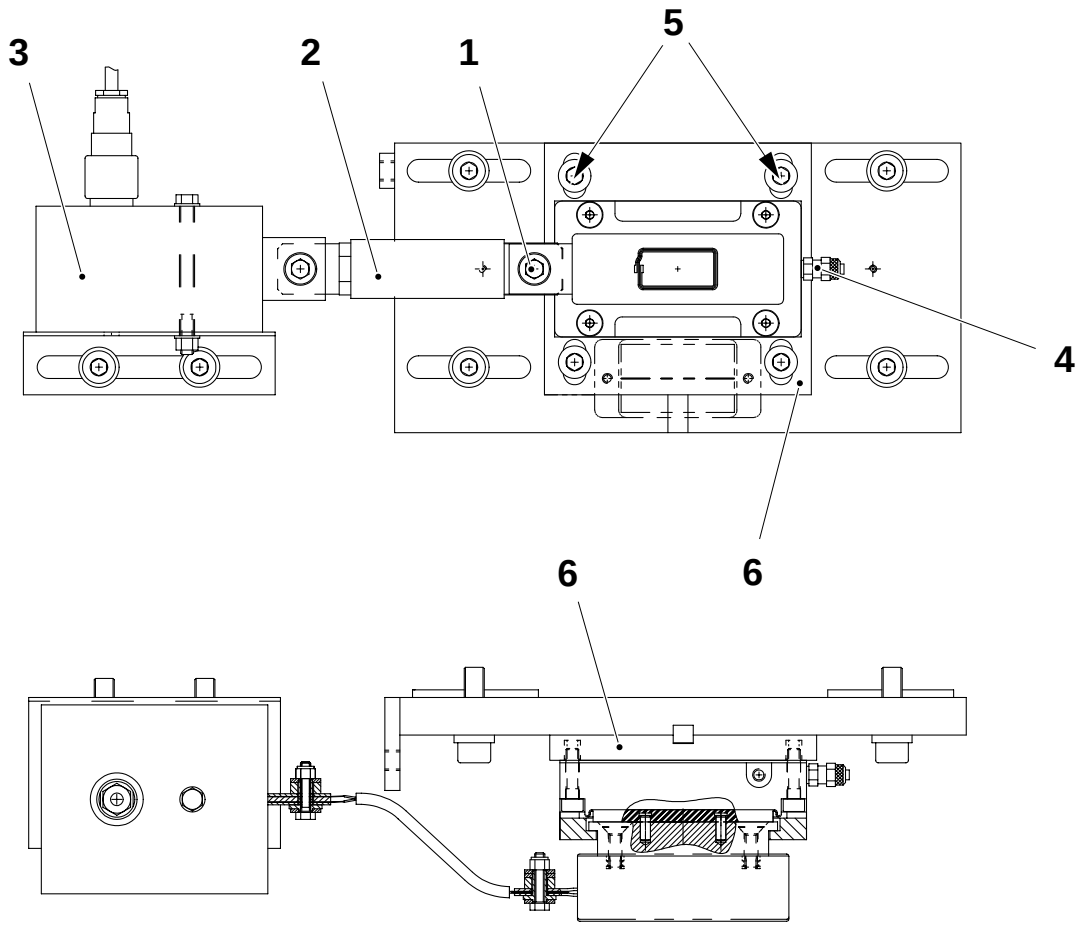

2.2B4884C02en.fm

1 Screw
2 Cable
3 Transformer
4 Air hose
5 Screw
6 Plate

3.2.2-2 Patch counter jaw - check inductor

Consumables - Teflon™ tape	TP No. 90144-30
SPC reference	1260417-0100

Check the following parts for wear and/or damage:

- the Teflon™ tape (2) on the surface of the inductor (1)
- the surfaces of the inductor (1) for any scratches or other damage
- the surfaces of the inductor (1) for any residue of polyethylene.

Change as required.

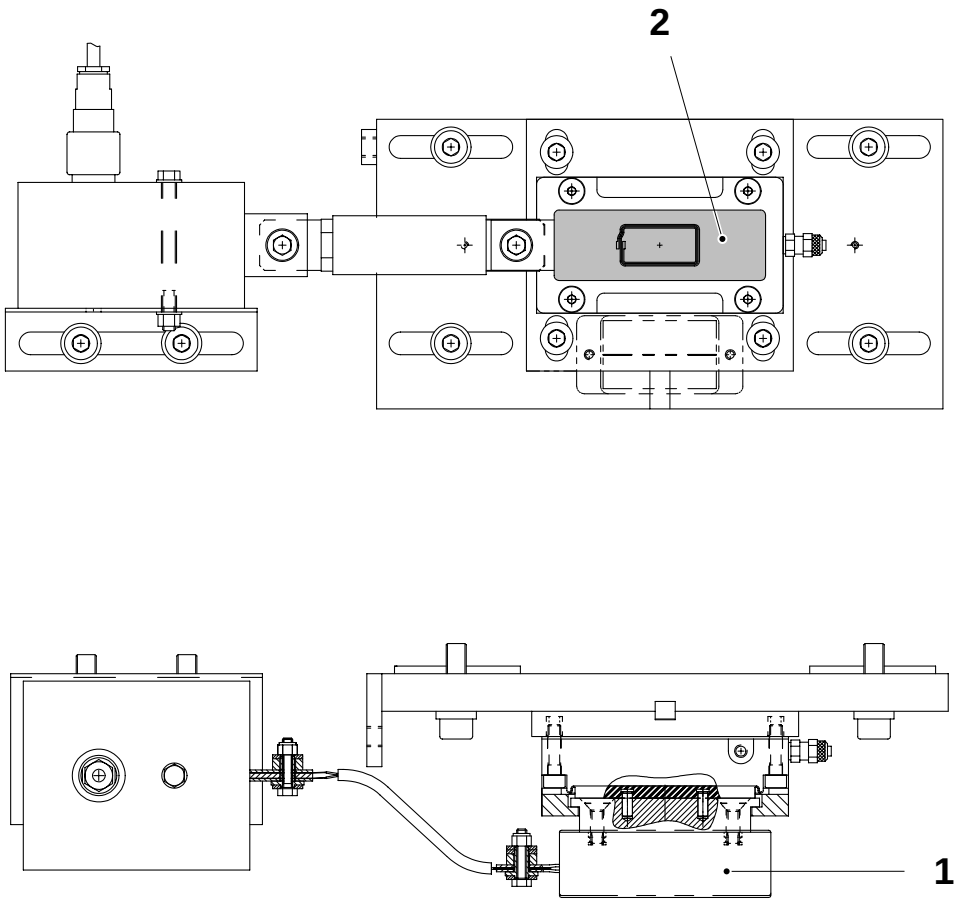

1 Inductor
2 Teflon™ tape

2.2B4884C02en.fm

3.2.2-3 Patch counter jaw - change inductor

Consumables - Teflon™ tape	TP No. 90144-30
SPC reference	1260417-0100

a) Loosen the screw (1).

b) Disconnect the cable (2) leading to the inductor transformer (3).

c) Disconnect the air hose (4) for the cushion cylinder (5).

d) Remove the screws (8). Slide up the plate (9) to remove the plate (9) together with the counter jaw unit.

e) Remove the screws (6).

f) Remove the guide bushing (11) from the inductor (7) by means of the screws (10).

g) Change the inductor (7) and assemble in the reverse order.

h) Set the inductor (7) as required, see *3.2.2-7 Patch counter jaw - set position*.

i) Check the position of the heat pattern, see *3.2-2 Applicator patch - check heat pattern*.

Note! Check the condition of the Teflon™ tape and change it as required.

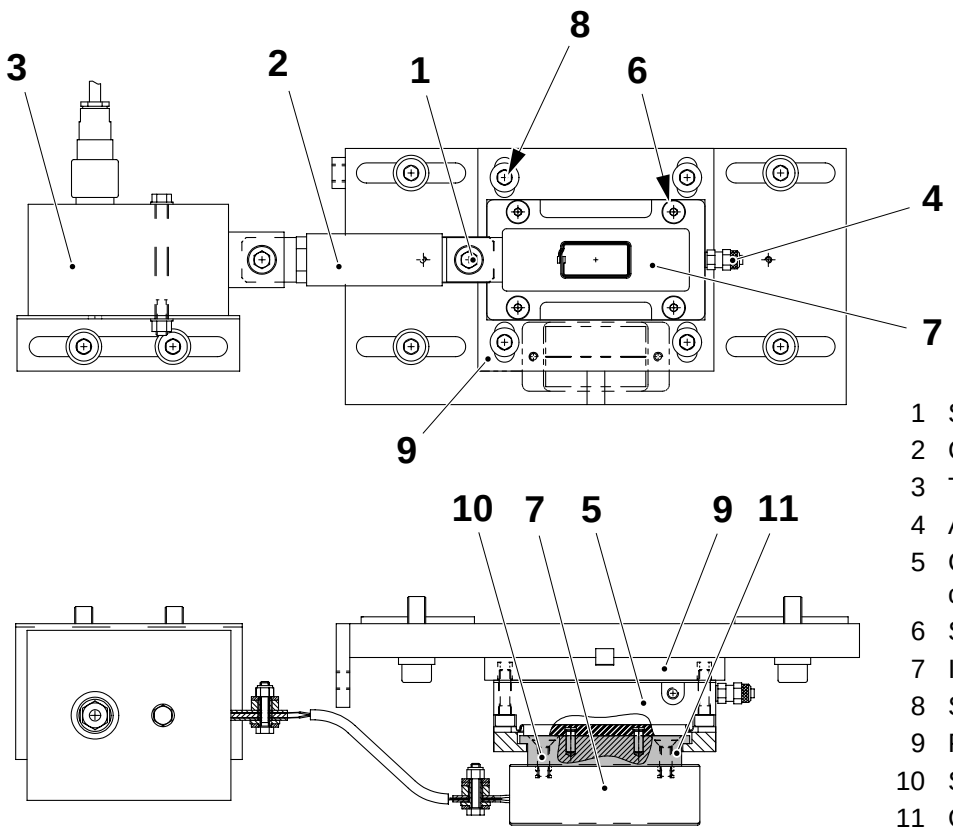

2.2B4884C02en.fm

1 Screw
2 Cable
3 Transformer
4 Air hose
5 Cushion cylinder
6 Screw
7 Inductor
8 Screw
9 Plate
10 Screw
11 Guide bushing

3.2.2-4 Patch counter jaw - check guide bushing

SPC reference	1260417-0100

a) Loosen the screw (1).

b) Disconnect the cable (2) leading to the inductor transformer (3).

c) Disconnect the air hose (4) for the cushion cylinder (5).

d) Remove the screws (8). Slide up the plate (9) to remove the plate (9) together with the counter jaw unit.

e) Remove the screws (6).

f) Remove the guide bushing (11) from the inductor (7) by means of the screws (10).

g) Check the guide bushing (11) for wear and change it as required.

Note! Remove the two pins (12) from the old guide bushing (11) and assemble them into the new one.

h) Assemble in the reverse order.

2.2B4884C02en.fm

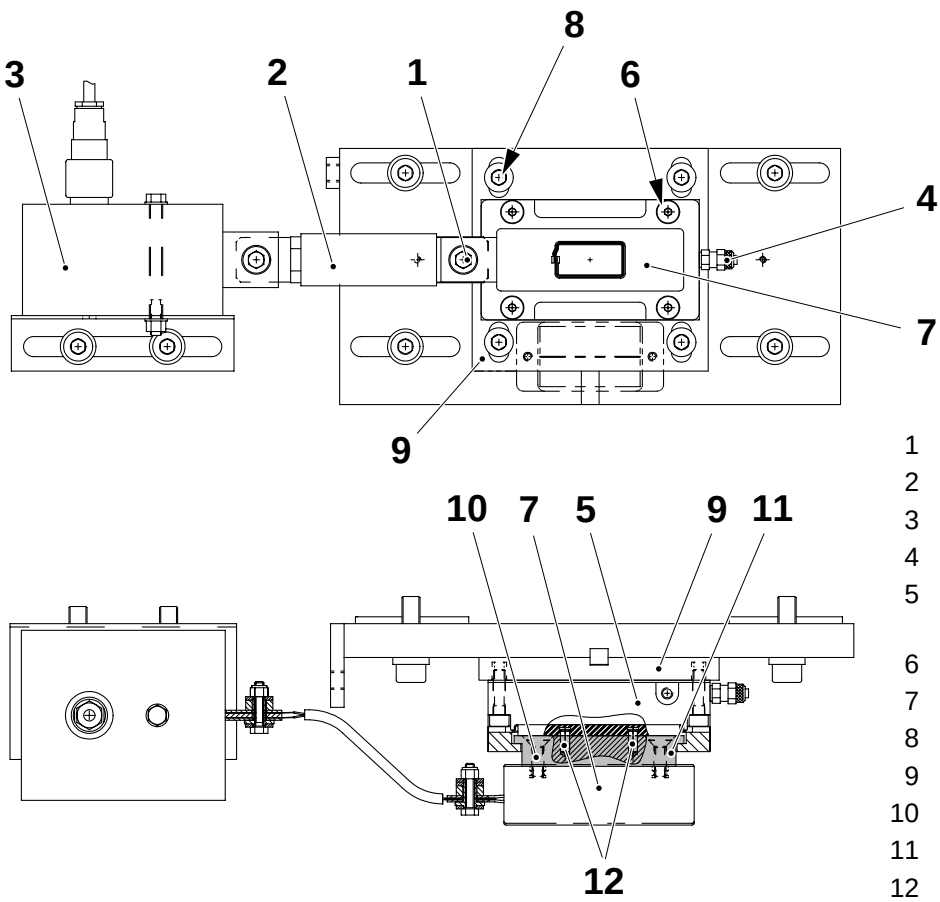

1 Screw
2 Cable
3 Transformer
4 Air hose
5 Cushion cylinder
6 Screw
7 Inductor
8 Screw
9 Plate
10 Screw
11 Guide bushing
12 Pin

3.2.2-5 Patch counter jaw - change cushion cylinder

SPC reference	1260417-0100

a) Loosen the screw (1).

b) Disconnect the cable (2) leading to the inductor transformer (3).

c) Disconnect the air hose (4) for the cushion cylinder (5).

d) Unscrew the four screws (8). Slide up the plate (9) to remove the plate (9) together with the counter jaw unit.

e) Unscrew the four screws (6) and separate the inductor (7) from the cushion cylinder (5).

f) Unscrew the screw (10) and change the cushion cylinder (5).

g) Assemble in the reverse order.

h) Check that the cylinder reaches the end of its stroke.

i) Set the patch counter jaw, see *3.2.2-7 Patch counter jaw - set position*.

j) Check the position of the heat pattern, see *3.2-2 Applicator patch - check heat pattern*.

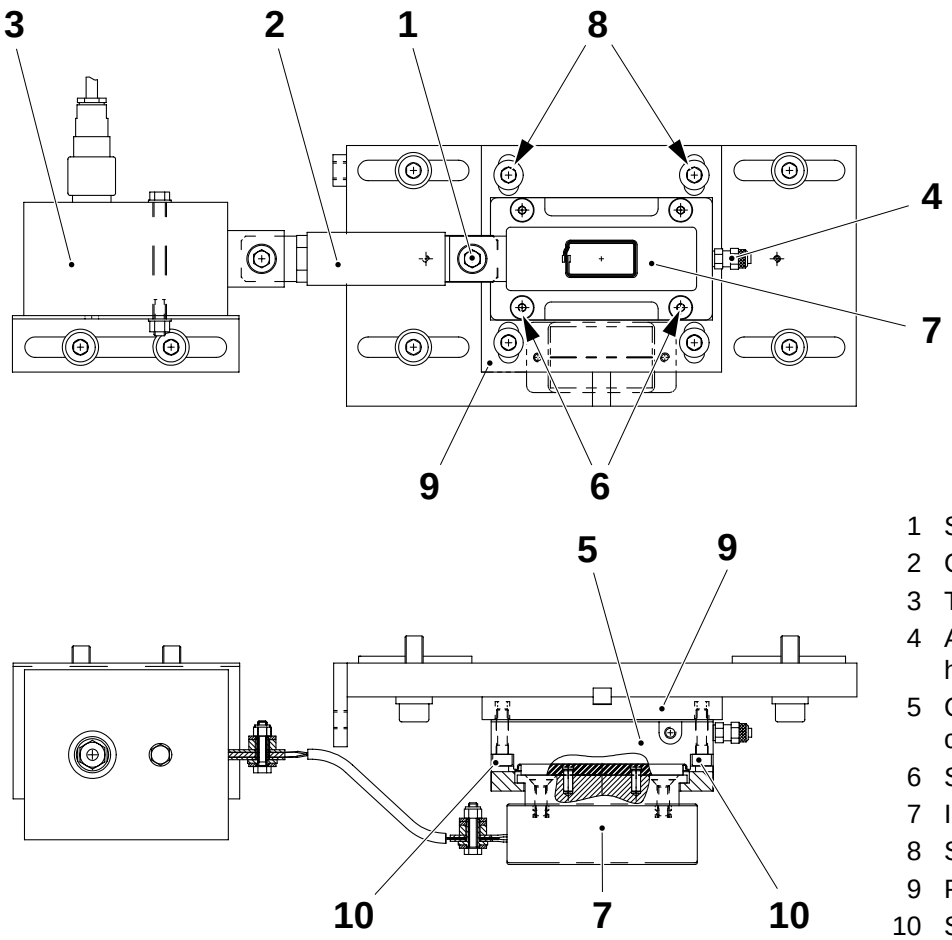

2.2B4884C02en.fm

1 Screw
2 Cable
3 Transformer
4 Air hose
5 Cushion cylinder
6 Screw
7 Inductor
8 Screw
9 Plate
10 Screw

3.2.2-6 Patch counter jaw - set cushion cylinder

Machine status	**Preparation**
SPC reference	1260417-0100



Risk of burns!
The sealing jaw may be hot. Be careful.

a) Set the patch feeder unit, see *3.2.1-14 Patch feeder - set position*.

b) Switch the selector key, located on the PT21 electrical panel, to position **Service**.

c) Check that the cushion cylinder (6) is fully extended.

d) With the aid of a feeler gauge, measure and record the distance **A** on both sides of the inductor (5).

e) Place a piece of packaging material between the sealing jaw plate (4) and the inductor (5).

f) Activate the valve **Y8410:1** for the cylinder (1).

g) Loosen the locknut (3) and adjust the piston rod (2) until the distance **A** is reduced by **0.8 mm**.

h) Tighten the locknut (3).

i) Activate the valve **Y8410:2** and check that the cylinder (1) is fully in.

j) Set the patch feeder, see *3.2.1-13 Patch feeder - set proximity switch*.

Note! If the difference between the distance **A** on one side and the distance **A** on the other side is more than **0.5 mm**, check the cushion cylinder (6), the inductor (5) and the patch feeder.

2.2B4884C02en.fm

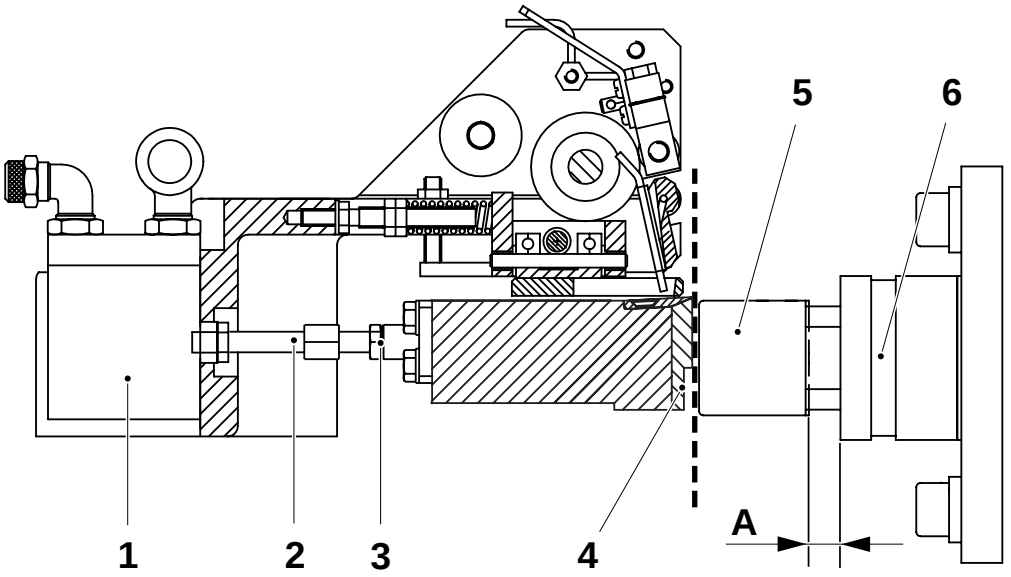

3.2.2-7 Patch counter jaw - set position

Machine status	**Preparation**
SPC reference	1260417-0100



Risk of burns!
The sealing jaw may be hot. Be careful.

Note! The below instructions must be executed **only** if one of the following sections have been performed: *3.2.2-3 Patch counter jaw - change inductor*, *3.2.2-4 Patch counter jaw - check guide bushing*, *3.2.2-5 Patch counter jaw - change cushion cylinder*. If not refer to the basic setting of the counter jaw see *7.2.1-1 Applicators - set brackets position*.

a) Switch the selector key, located on the PT21 electrical panel, to position **Service**.

b) Check that the cushion cylinder (1) is fully extended.

c) Remove the packaging material.

d) Set the distance **A** between the inductor (2) and the tip of the window knife (3) by adding or removing shims (4).

e) Set the cushion cylinder (1), see *3.2.2-6 Patch counter jaw - set cushion cylinder*.

2.2B4884C02en.fm

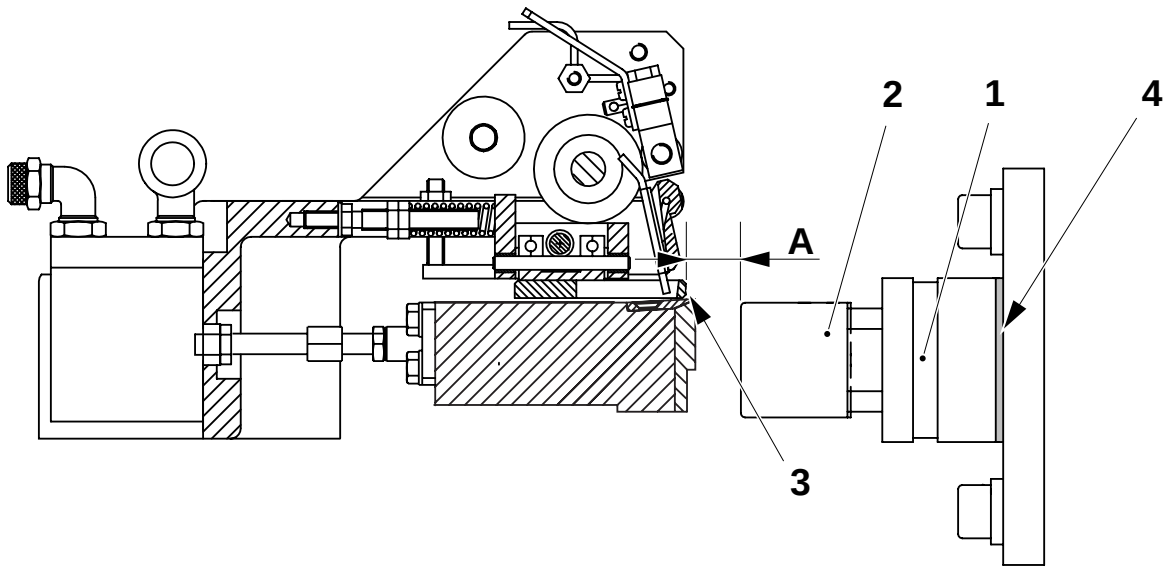

A = 1.5 ±0.2 mm

1 Cushion cylinder
2 Inductor
3 Window knife
4 Shim

3.3 Magazine patch

SPC reference	1095894-0100

3.3-1 Magazine patch - check

Machine status	Mains power **On**
SPC reference	1095894-0100

Check the following parts for wear and/or damage:

- the wheel (1) and the arm (2)
  Check also that they move freely.
- the brake pin (3)
  Check also the brakes function by pulling the arm (4)
- the arm (4)
  Check also that it moves freely.
- the brake disc (5)
  Check also that it moves freely.

2.2B4884C03en.fm

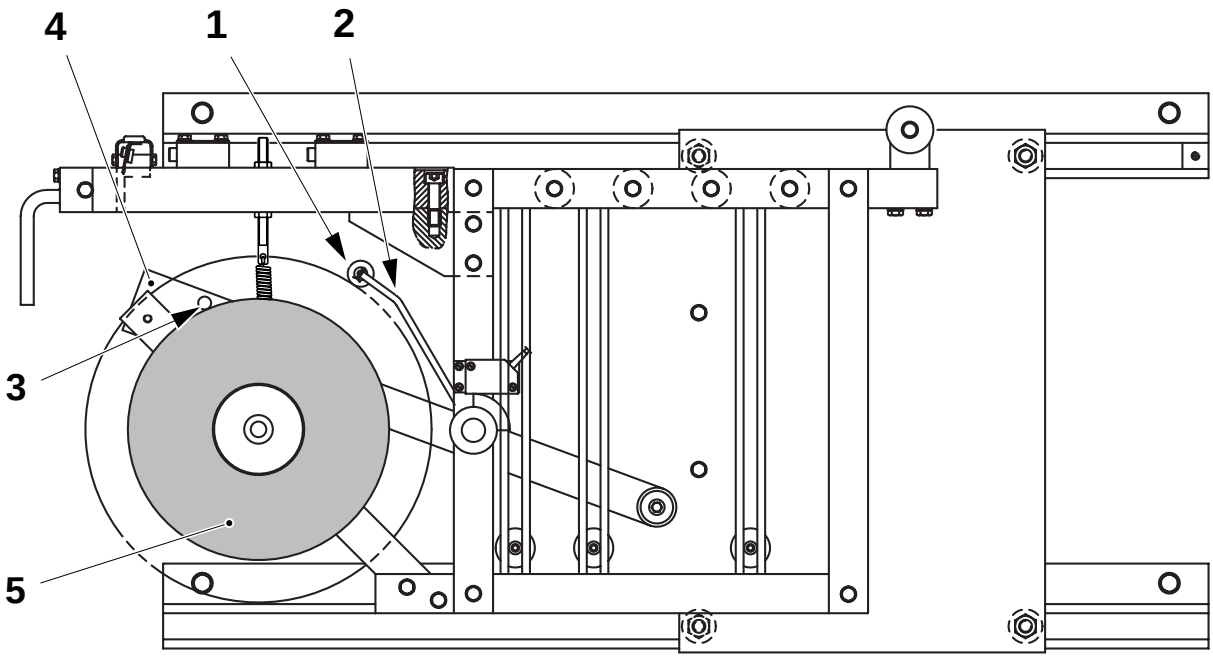

1 Wheel
2 Arm
3 Brake pin
4 Arm
5 Brake disc

(Cont'd)

(Cont'd)

- the rollers (6)
  Check that they turn freely. If not, clean as required. If damaged or worn, change.
- the tension rollers (7)
  Check that they turn freely and that they can slide easily along the guide (8). If not, clean as required. If damaged or worn, change.
- the low supply proximity switch (9)
  Check that the proximity switch LED lights up in working conditions. Set the proximity switch as required, see *3.3-2 Magazine patch - set proximity switch*.

Change as required.

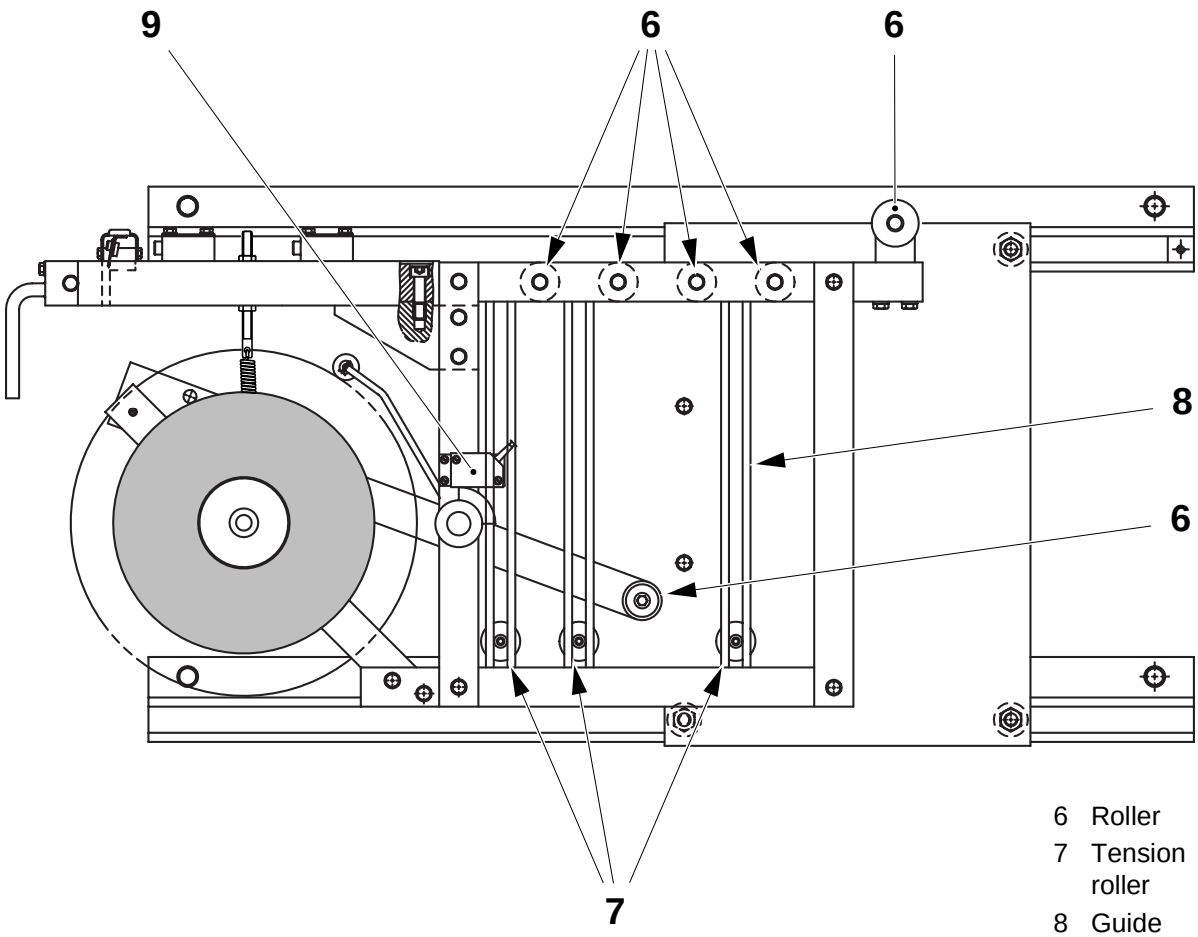

2.2B4884C03en.fm

6 Roller
7 Tension roller
8 Guide
9 Proximity switch

3.3-2 Magazine patch - set proximity switch

Machine status	Mains power **On**
SPC reference	1095894-0100

a) Place a feeler gauge, of **A** thickness, see table below, between the bobbin holder (2) and the wheel (1).

b) Loosen the stop screw on the indicator curve (3) and turn the indicator curve (3) until the LED on the proximity switch (4) goes off.

c) Tighten the stop screw on the indicator curve (3).

d) Remove the feeler gauge.

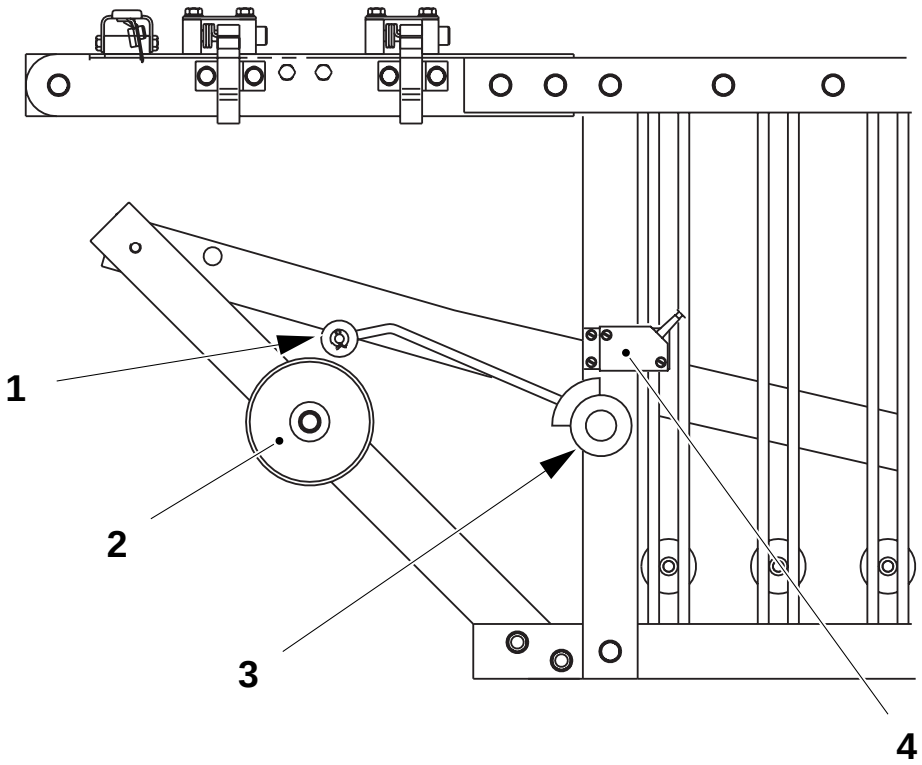

2.2B4884C03en.fm

A = 12 mm

1 Wheel
2 Bobbin holder
3 Indicator curve
4 Proximity switch

3.3-3 Magazine patch - set strip tension

SPC reference	1095894-0100

a) Check that the roller (2) operates at the **bottom** of its stroke and that the roller (3) operates at the **top** of its stroke.

b) If necessary, adjust patch strip tension by means of the nuts (1). Raise the spring to decrease tension or lower the spring to increase tension.

Note! Use a new bobbin (full) to verify the setting.

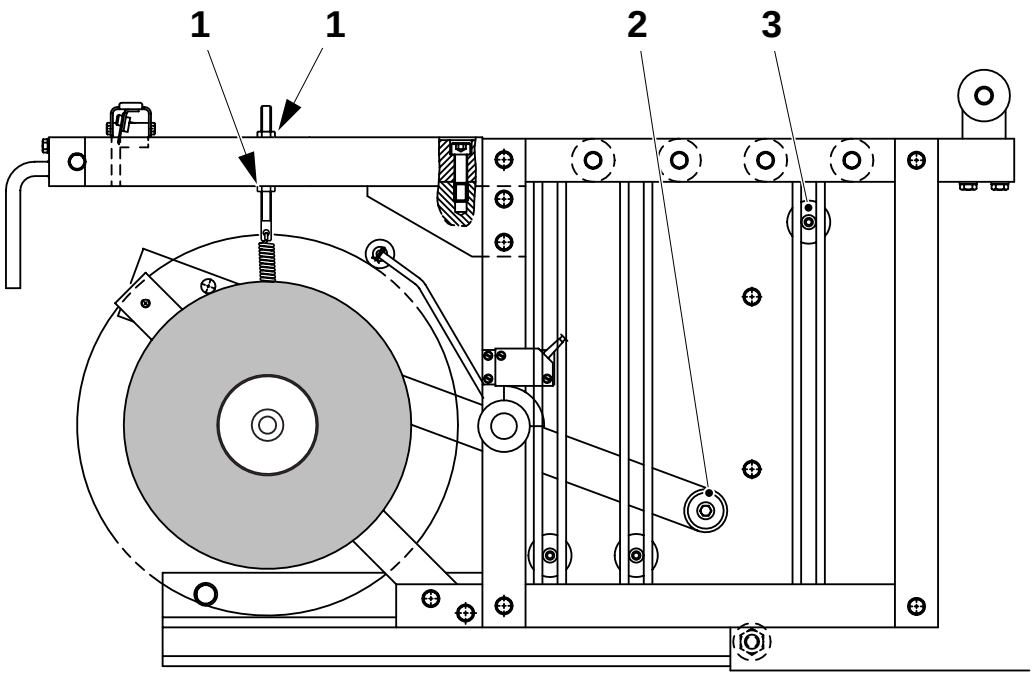

2.2B4884C03en.fm

1 Nut
2 Roller
3 Roller

3.3-4 Magazine patch - change bobbin holder bearings

SPC reference	1095894-0100

a) Unscrew the nut (1) and remove the washer (2).
b) Remove the bobbin holder (3) assembly.
c) Unscrew the cap nut (4) and remove the washer and the ball bearing (5).
d) Unscrew the screws (6) and remove the washer and the brake disc (7).
e) Pull out the shaft (8) and the washer (9).
f) Remove the circlip (10) and remove the ball bearing (11).
g) Change the ball bearings (5) and (11).
h) Assemble in the reverse order.

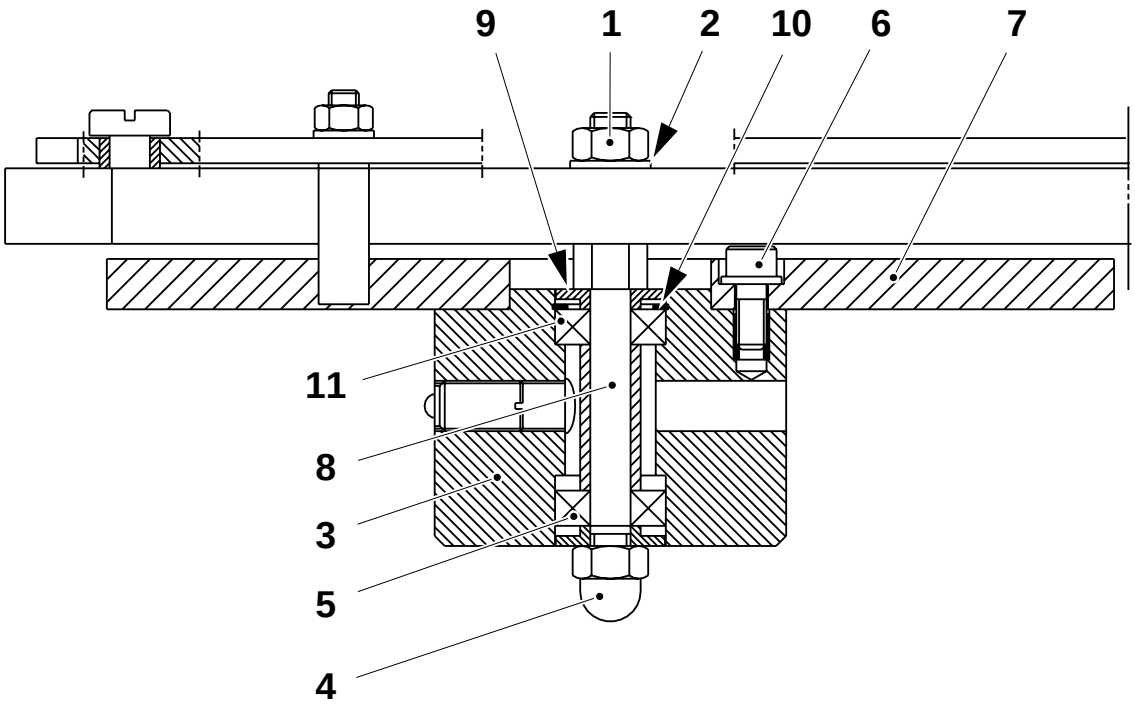

1	Nut	6	Screw
2	Washer	7	Brake disc
3	Bobbin holder	8	Shaft
4	Cap nut	9	Washer
5	Ball bearing	10	Circlip
		11	Ball bearing

2.2B4884C03en.fm

3.3-5 Magazine patch - check bobbin holder

SPC reference	1095894-0100

Check that the bobbin holder (1) rotates easily.

Check the distance **A** between the spring-loaded screw (2) and the bobbin holder (1).

Check that the strip bobbins are securely fixed to the bobbin holder (1).

A = 2.0 ±0.5 mm

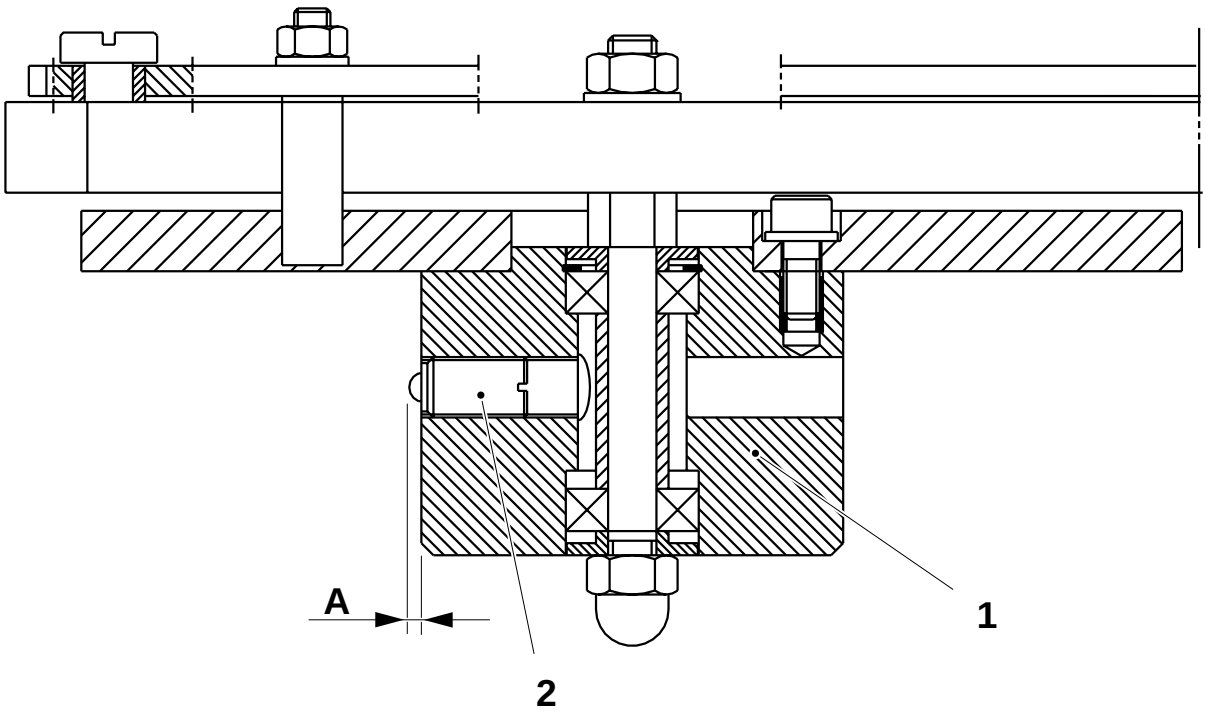

2.2B4884C03en.fm

1 Bobbin holder
2 Spring-loaded screw

3.3.1 Splicing device

3.3.1-1 Splicing device - check function

SPC reference	1095894-0100 1095895-0100

Check that the splicing device (1) slides smoothly and easily on the guide patch (2). If not, change the curve roller (3) on the guide patch (2), see *3.3.2-1 Guide patch - change curve rollers*.

Check that the cutting action of the knife (4) is correct.
If not, change the knife (4), see *3.3.1-2 Splicing device - change knife*.

Check that the lock grips (5) and the knife holder (6) spring to a position that does not interfere with the IS patch feeding.

Change as required.

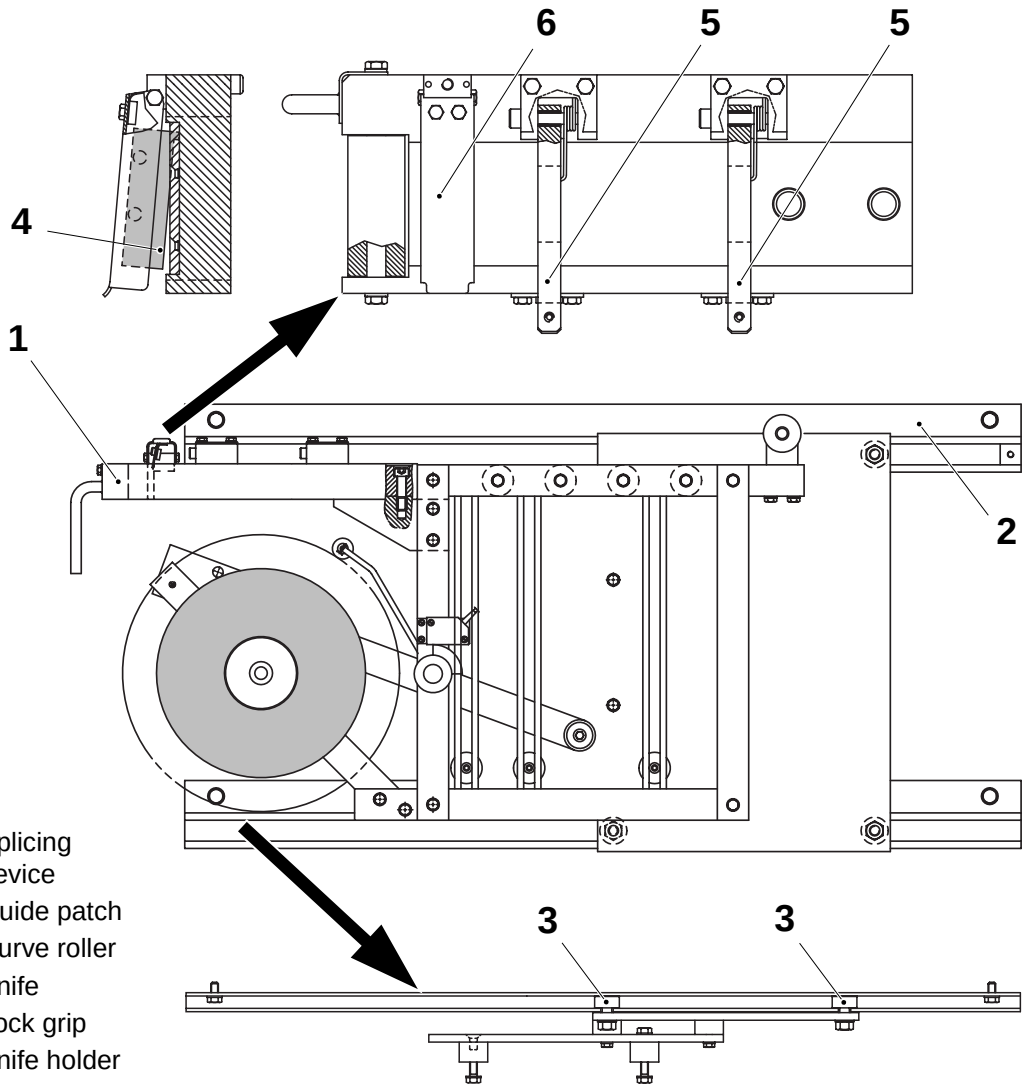

1 Splicing device
2 Guide patch
3 Curve roller
4 Knife
5 Lock grip
6 Knife holder

2.2B4884C03en.fm

3.3.1-2 Splicing device - change knife

SPC reference	1095894-0100 1095895-0100



Risk of cutting injury!
The knife (4) is sharp. Use gloves to avoid injuries.

a) On the side of the knife holder (1), unscrew the two screws (2) with the aid of an allen key.
b) Remove the washers (3).
c) Pull out the knife (4).
d) Change the knife (4).
e) Assemble in the reverse order.

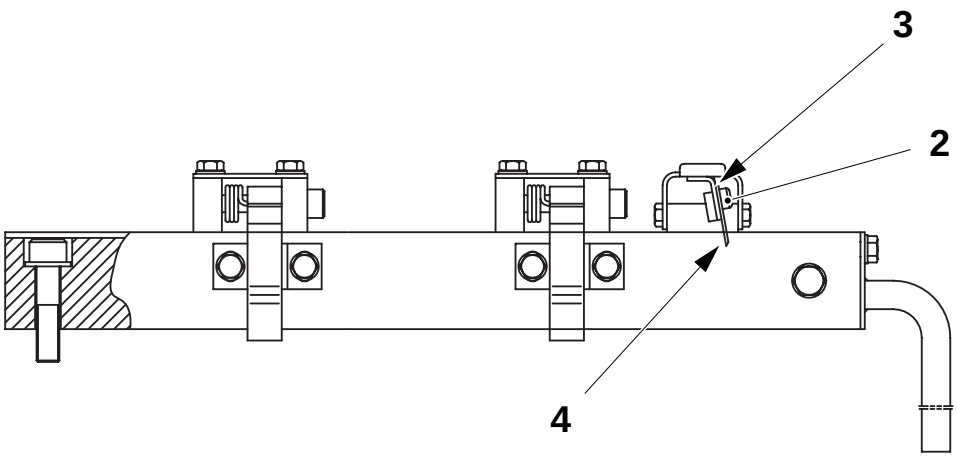

1 Knife holder
2 Screw
3 Washer
4 Knife

2.2B4884C03en.fm

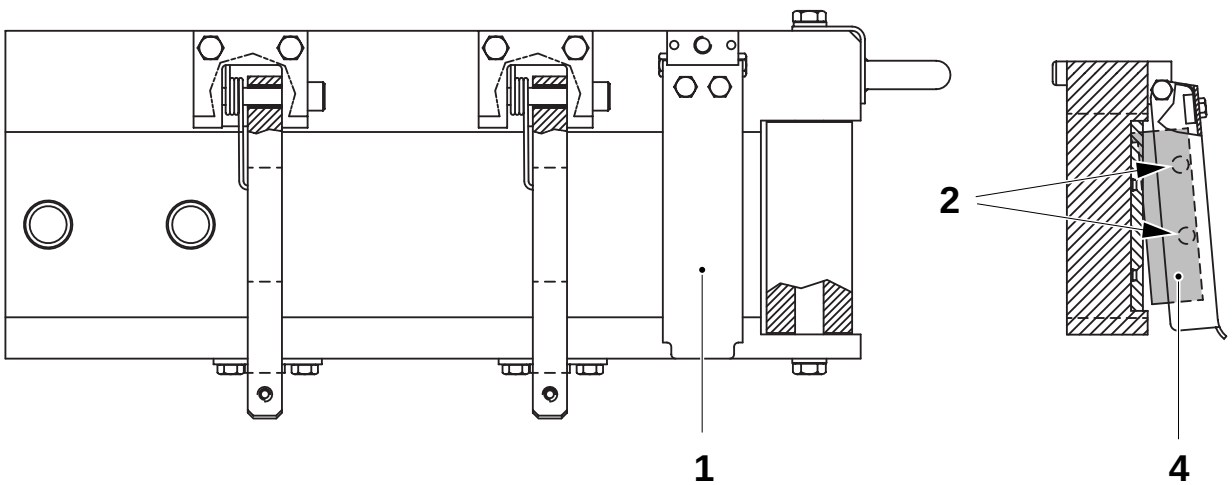

3.3.1-3 Splicing device - set lock grip

SPC reference	1095894-0100 1095895-0100

a) Place a piece of strip under the lock grips (1).

b) Loosen the screws (2).

c) Adjust the plate (3) so that it is **impossible** to pull the patch strip backwards and/or forwards.

d) Tighten the screws (2).

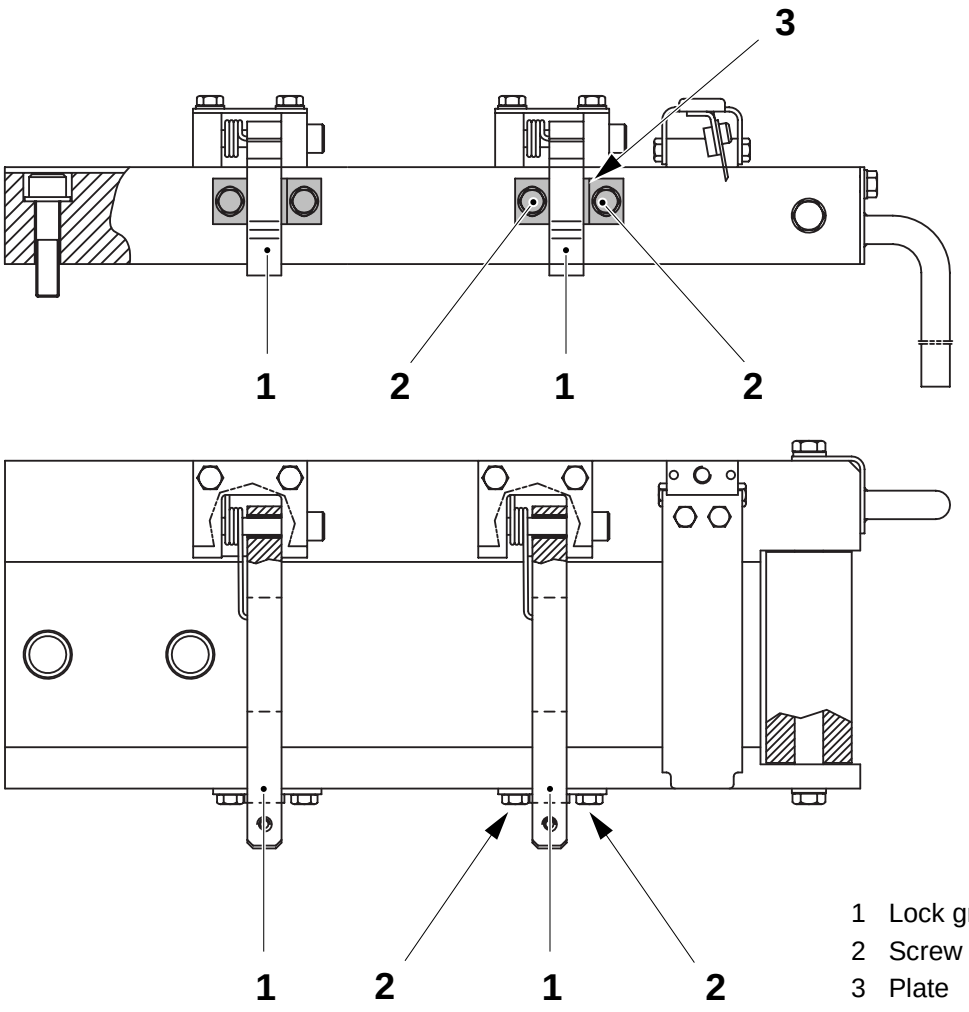

1 Lock grip
2 Screw
3 Plate

2.2B4884C03en.fm

3.3.2 Guide patch

3.3.2-1 Guide patch - change curve rollers

SPC reference	1095924-0100

a) Remove the patch turning device assembly from the guide patch.
b) Unscrew the screws (1).
c) Remove the plate (2) and the strip magazine assembly together.
d) Remove the four nuts (3) and the plate (4).
e) Unscrew the screws (5) and remove the two steerings (6).
f) Remove the curve rollers (7) and change them if damaged or worn out.
g) Assemble in the reverse order.

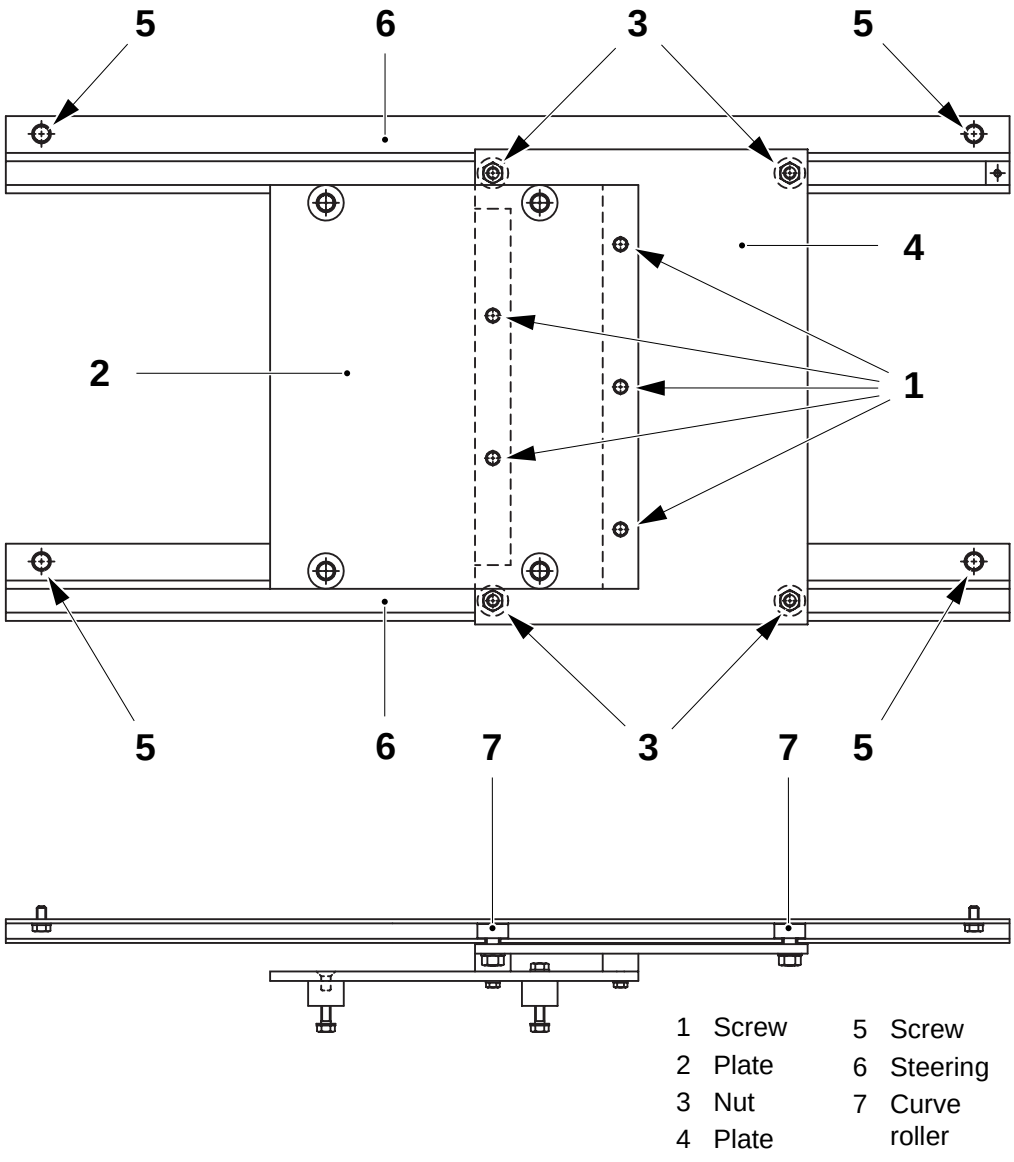

2.2B4884C03en.fm

3.3.3 Patch turning device

3.3.3-1 Patch turning device - check

Machine status	Mains power **On**
SPC reference	1334065-0100

Check the following parts for wear and/or damage:

- the rollers (1)
  Check that they turn freely. If not, clean as required. If damaged or worn, change.
- the flag (2)
  Check that it turns freely simultaneously with the roller (1).
- the function of the rotation monitor proximity switch (3)
  Turn the flag (2) and check that the switch LED lights up when the flag covers the switch source. Set the flag (2) as required, see *3.3.3-2 Patch turning device - set rotation monitor proximity switch*.

Change as required.

2.2B4884C03en.fm

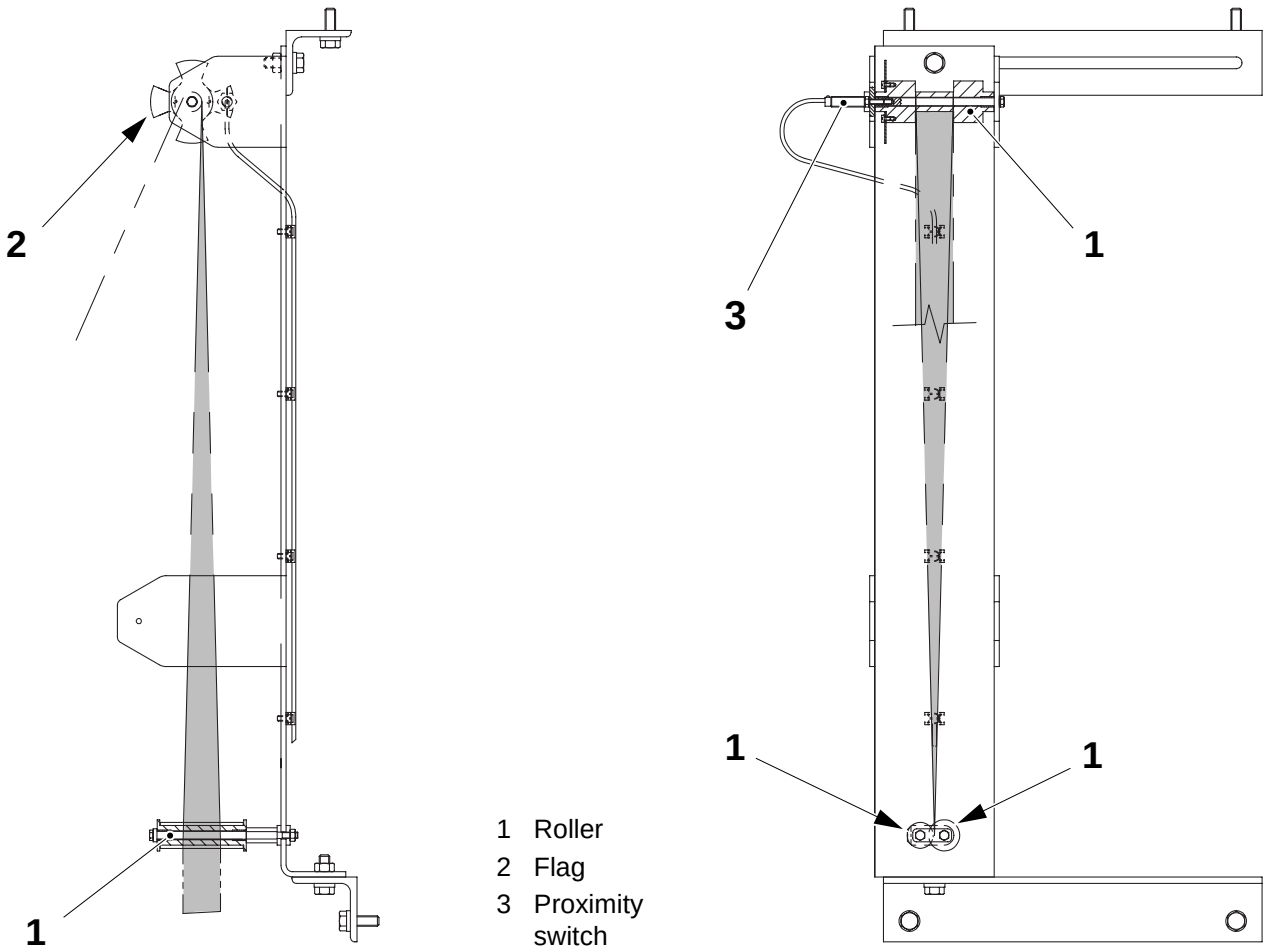

1 Roller
2 Flag
3 Proximity switch

3.3.3-2 Patch turning device - set rotation monitor proximity switch

Machine status	Mains power **On**
SPC reference	1334065-0100

a) On the patch turning unit, pull the roller (1) towards the proximity switch (2).

b) Check the distance **A** between the proximity switch (2) and the flag (3).

c) Set as required by loosening the lock nuts (4) and shifting the proximity switch (2).

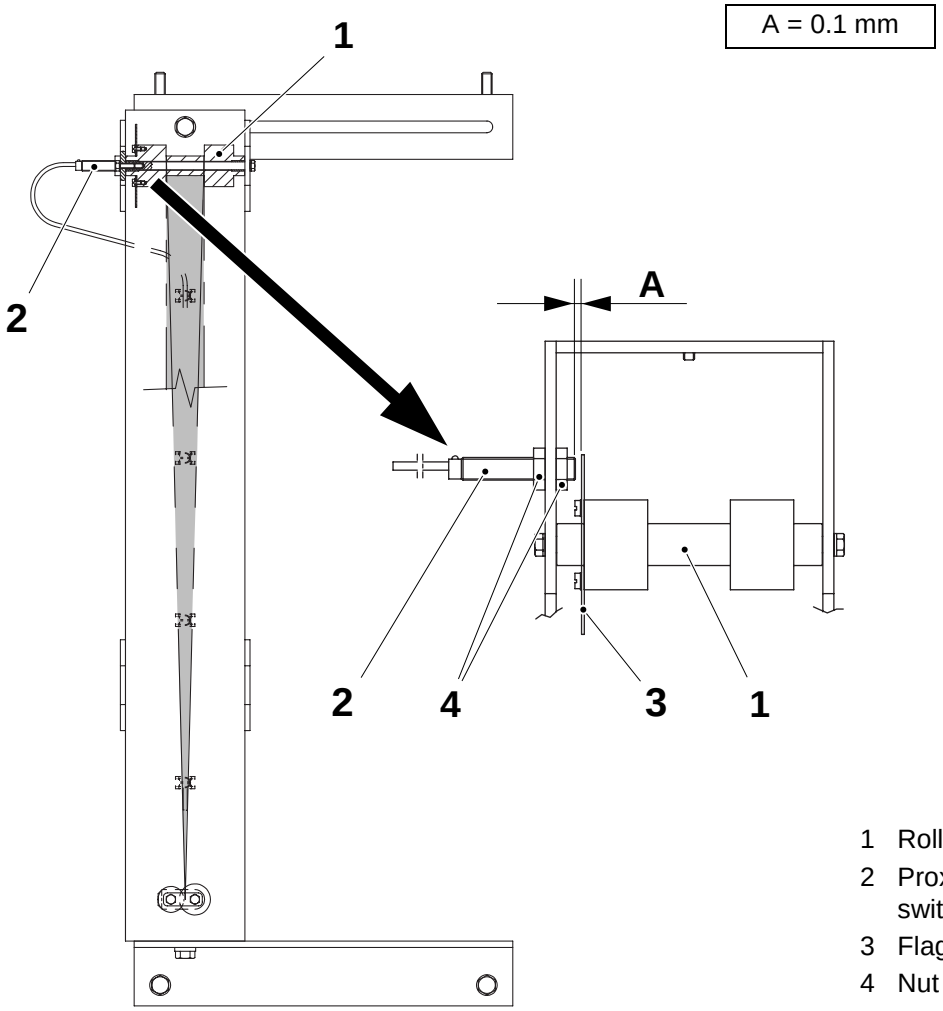

2.2B4884C03en.fm

1 Roller
2 Proximity switch
3 Flag
4 Nut

4 Applicator tab

2.2B4884D00en.fm

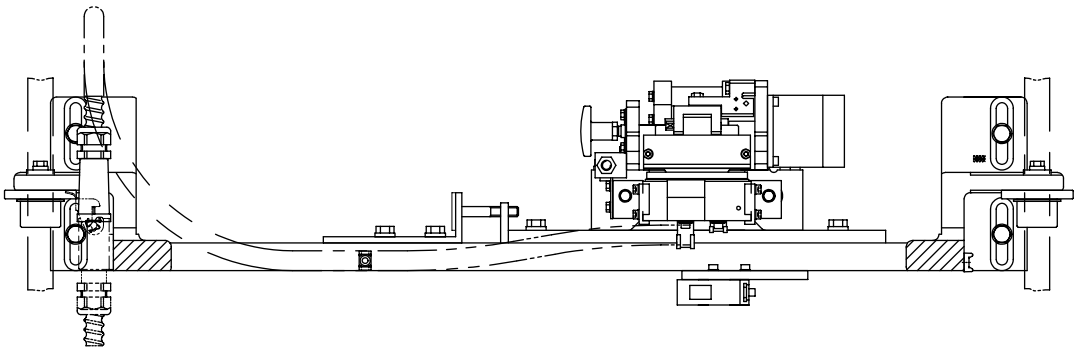

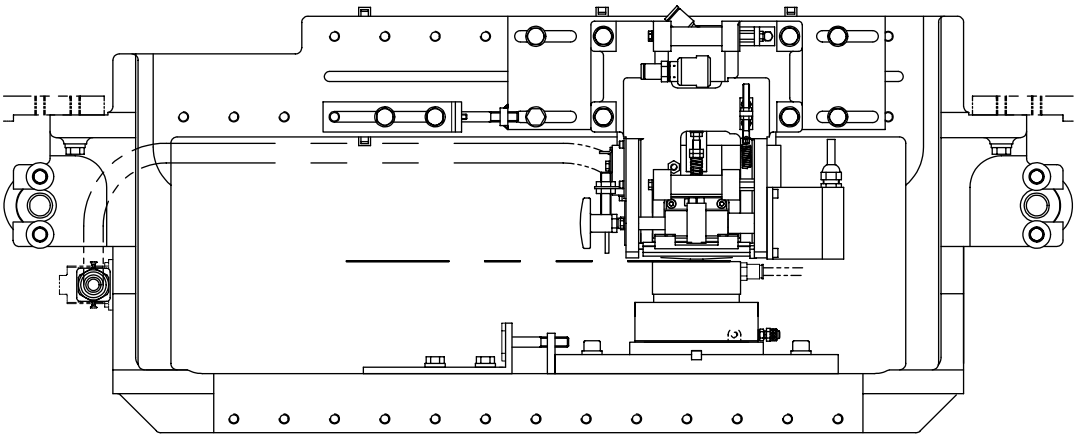

4-0 Applicator tab - description

SPC reference	1260421-0100

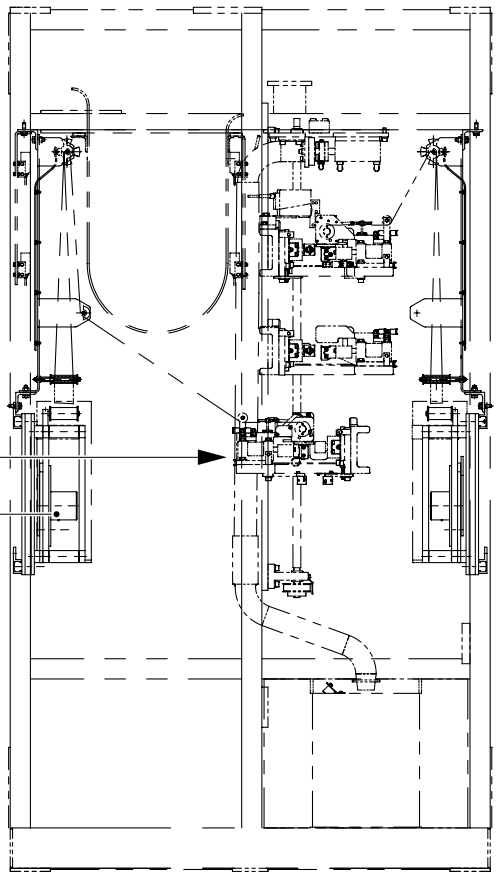

4.1 Setting flow chart
4.2 Applicator tab
4.3 Magazine PullTab
4.4 Tab folding device
4.5 Tab folding device (alternative solution)

2.2B4884D00en.fm

4-1 Applicator tab - functional description

SPC reference	1260421-0100

When the filling machine pulls packaging material:

- the PLC begins machine cycle
- the PLC sends a signal to the TMCC card to start indexing
- the TMCC card sends the pulses to the stepper drive card.

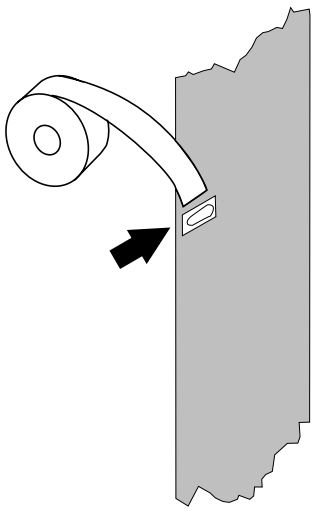

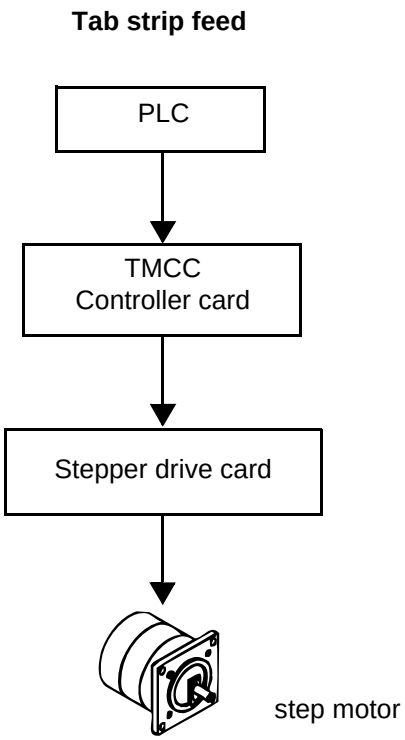

2.2B4884D00en.fm

(Cont'd)

(Cont'd)

As the jaws are closed, the PLC receives signals from the proximity switches and

- the PLC begins the sealing-cycle when the patch, reseal and tab jaws are all closed
- when the sealing cycle is timed out, the PLC opens (returns) the applicator stations.

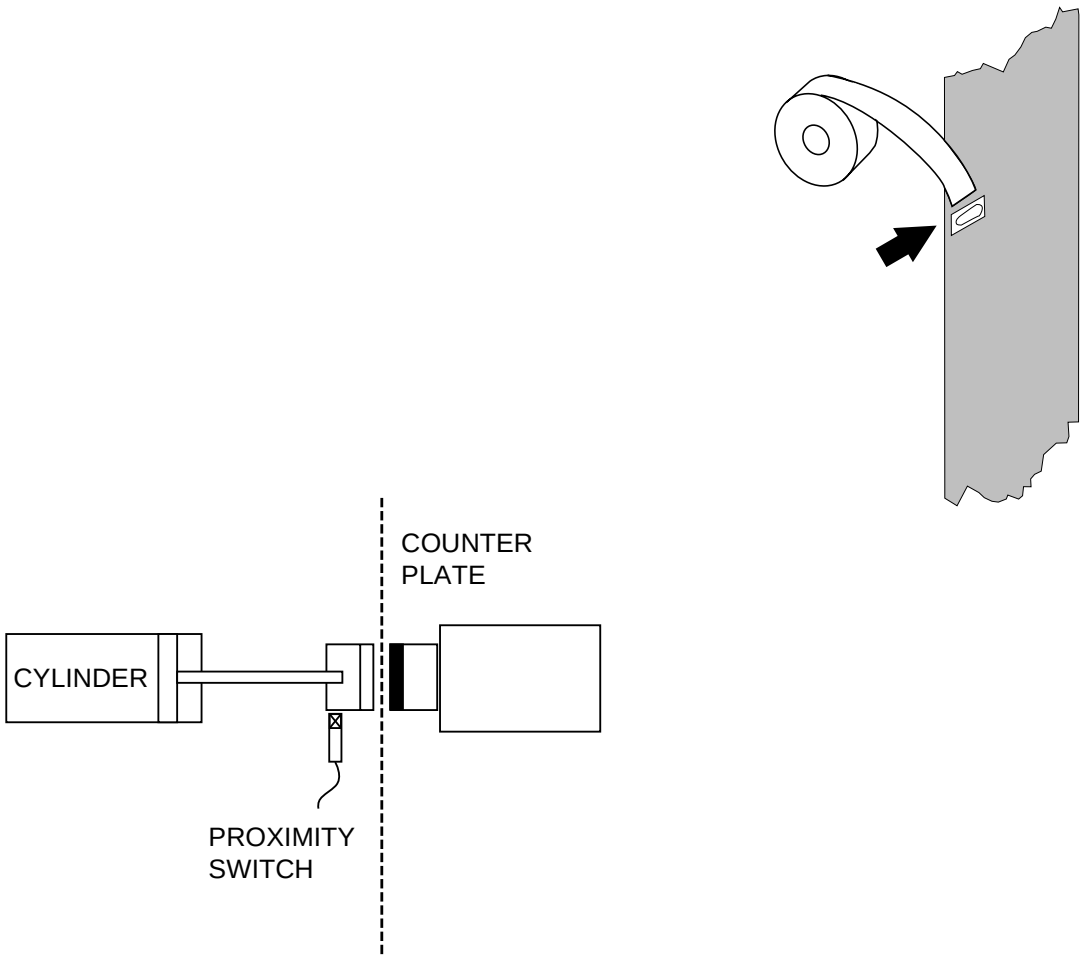

2.2B4884D00en.fm

(Cont'd)

(Cont'd)

During the PullTab machine cycle, the PLC signals the solenoid valve to extend the cylinder. This action cuts the tab strip and applies it to the packaging material.

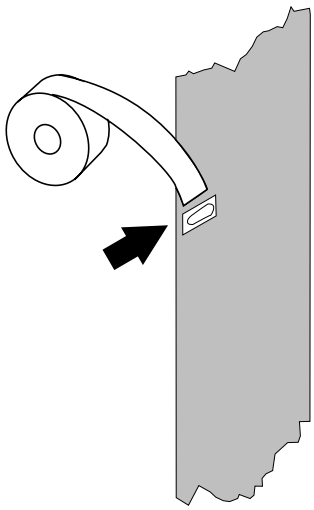

Cutting and applying

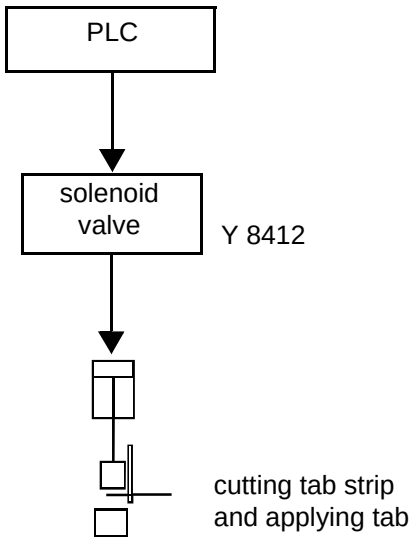

2.2B4884D00en.fm

(Cont'd)

(Cont'd)

During **Production**:

- an alarm is activated when the tab strip supply is low
- if the alarm condition is not fixed within five minutes, the PullTab and the filling machines go into **Short stop** mode
- an alarm is activated when the tab strip does not move (rotation monitor).

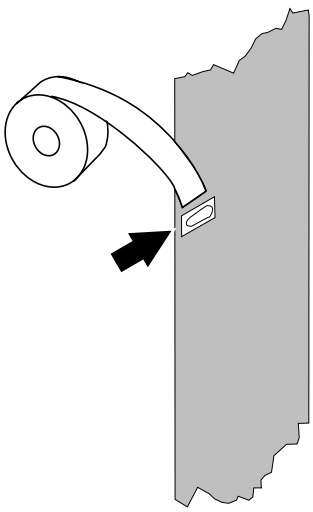

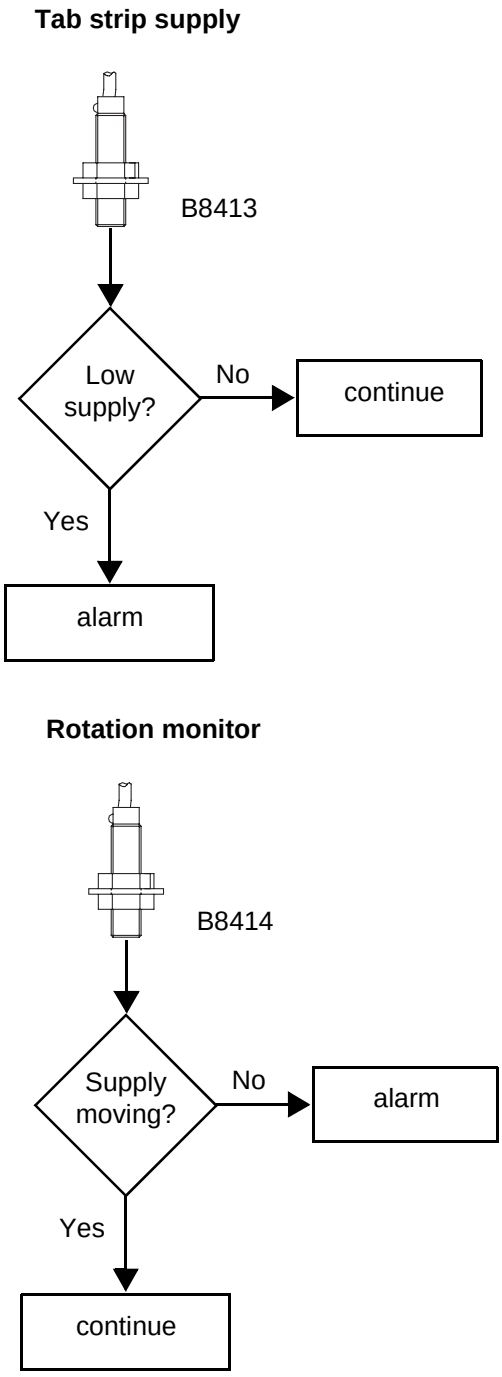

2.2B4884D00en.fm

4.1 Setting flow chart

The following flow chart shows the order in which the various components must be set up.

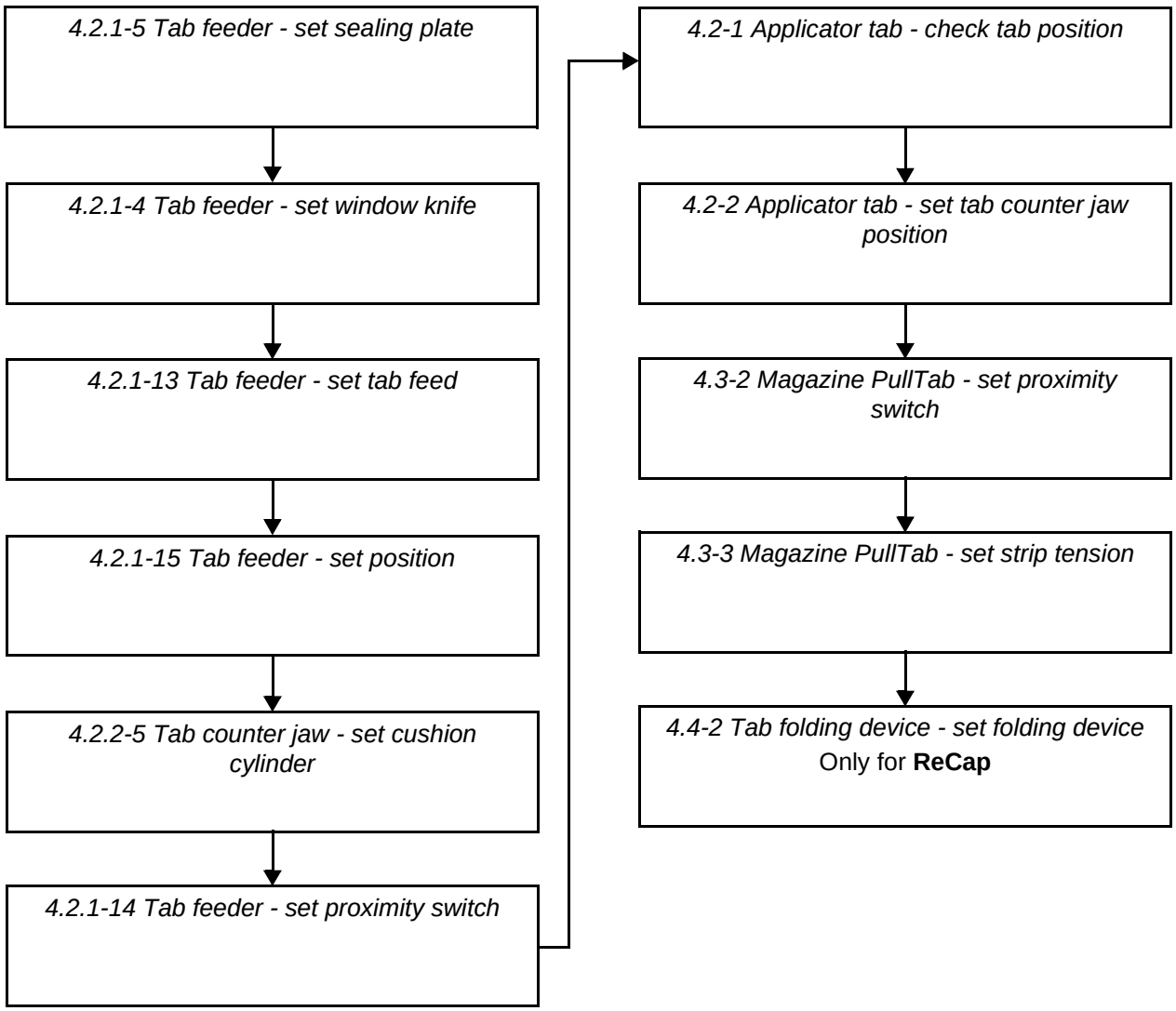

2.2B4884D01en.fm

4.2 Applicator tab

SPC reference	1260421-0100

4.2-1 Applicator tab - check tab position

SPC reference	1260421-0100

Preparation for making test material with hole, patch, reseal, tab

a) Close all doors on the machine.

b) Make sure that the repeat length is correct according to *1.2.5-4 Paper brake - set brake regulator card*.

c) On the TPOP, check that there are no active alarms and touch the **Manoeuvre** button (1).

d) Touch the **Maintenance PT21 left** button (2).

e) Touch the **Tab applicator** button (3).

f) Touch the **Start** button (4) to activate these stations: punch unit, applicator patch, reseal, and tab.

g) The **Service and Maintenance key** symbol (5) starts to flash at the top of the ladder step window.

h) Push the **Program up** button (6) after it starts flashing.

Make test material

a) At the PullTab control panel, push the **Single index** button (7) six or seven times after it starts flashing.

2.2B4884D02en.fm

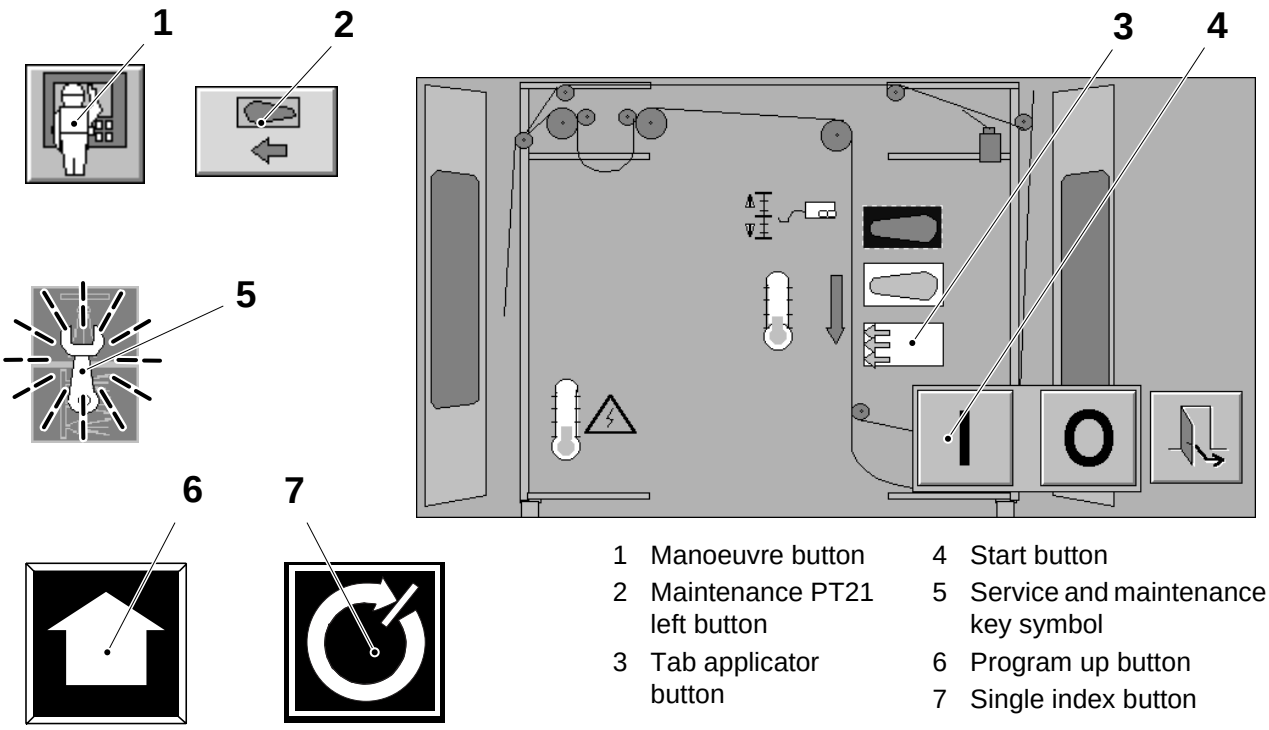

1 Manoeuvre button
2 Maintenance PT21 left button
3 Tab applicator button
4 Start button
5 Service and maintenance key symbol
6 Program up button
7 Single index button

(Cont'd)

(Cont'd)

Note! If the **Single index** button does not flash, open and close one of the doors in the PullTab unit. Acknowledge the alarm on the TPOP.

b) Open the door and cut out the packaging material that has the test tab applications.

Check position

Check the tab position on the packaging material. If required, adjust the position of the tab applicator (distances **A** and **B**) as described below.

Package	Hole type	A ±1.0 (mm)	B ±1.0 (mm)		Package	Hole type	A ±1.0 (mm)	B ±1.0 (mm)
250 B	21	4.75	3.25		500 S	55	4	4
500 S	25	3.75	2		1500 S	85	2.0	1.5
1500 S	45	1.5	1.5		1000 Sq	85	2.0	1.5
1000 B	45	1.5	1.5		1000 B	85	2.0	1.5
1000 S	45	1.5	1.5		1000 S	85	2.0	1.5
1000 B	50	2.7	2.2		TPA 1000 S	60	1.75	2.0
1000 S	50	2.7	2.5					

2.2B4884D02en.fm

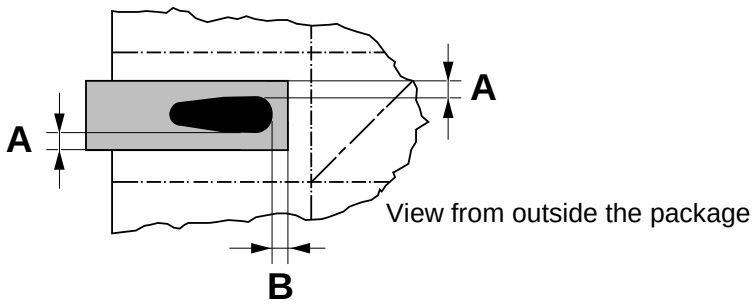

(Cont'd)

(Cont'd)

Adjust tab feeder position

a) Loosen the screws (7) on the tab feeder.

b) Set the distance **B** by means of the setting screw (8).

c) Tighten the screws (7) after adjustment.

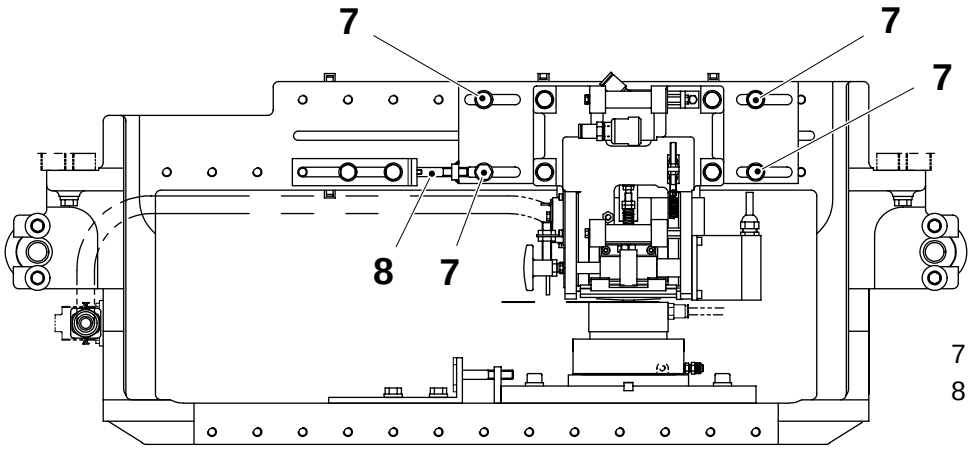

7 Screw
8 Setting screw

(Cont'd)

2.2B4884D02en.fm

(Cont'd)

d) Check once more the horizontal position of the tab counter jaw, see *4.2.2-6 Tab counter jaw - set position*.

e) On both LH and RH sides of all three applicator stations (applicator patch, reseal, and tab) loosen the screws (11) to move the brass bushings (9) away from the bracket (10).

f) On both LH and RH sides of the applicator tab, tighten the brass bushings (9) until they touch the tab bracket (10).

g) Tighten the two screws (11).

h) Slightly loosen the screws (12) on the tab bracket (10).

i) Set the distance **A**, see table in the previous page, by adjusting the screw guides (13).

j) Tighten the screws (12).

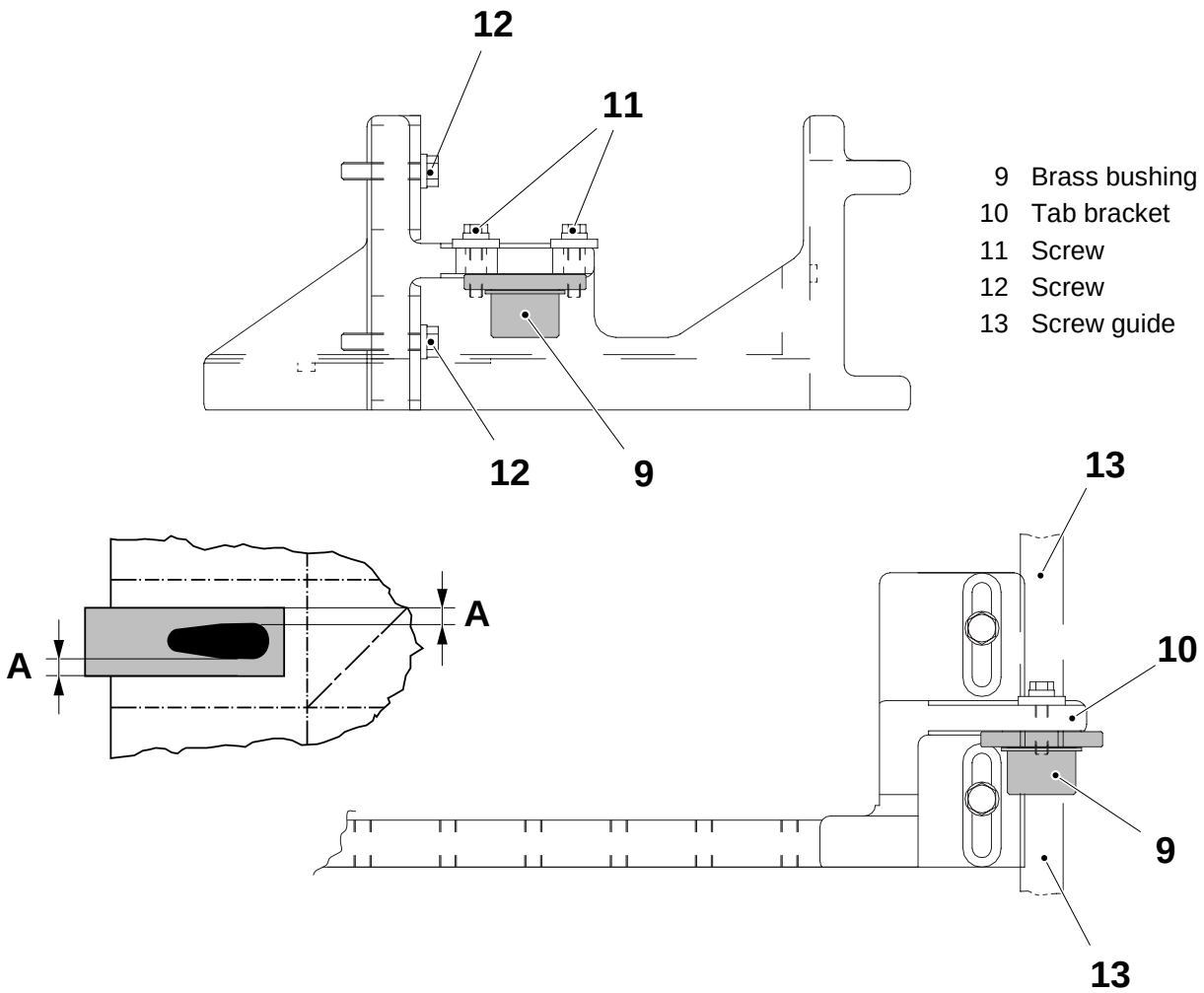

9 Brass bushing
10 Tab bracket
11 Screw
12 Screw
13 Screw guide

2.2B4884D02en.fm

(Cont'd)

(Cont'd)

Deactivate PullTab stations

a) Press the **Stop** button (14) to deactivate the punch unit, applicator patch, reseal, and tab stations.

b) Push the **Program down** button (15) after it starts flashing.

c) Touch the **Exit** button (16).

d) Touch the **Manoeuvre** button (1) to end the sequence.

e) Step up to step **Production** and run for at least 50 packages to verify all the station positions.

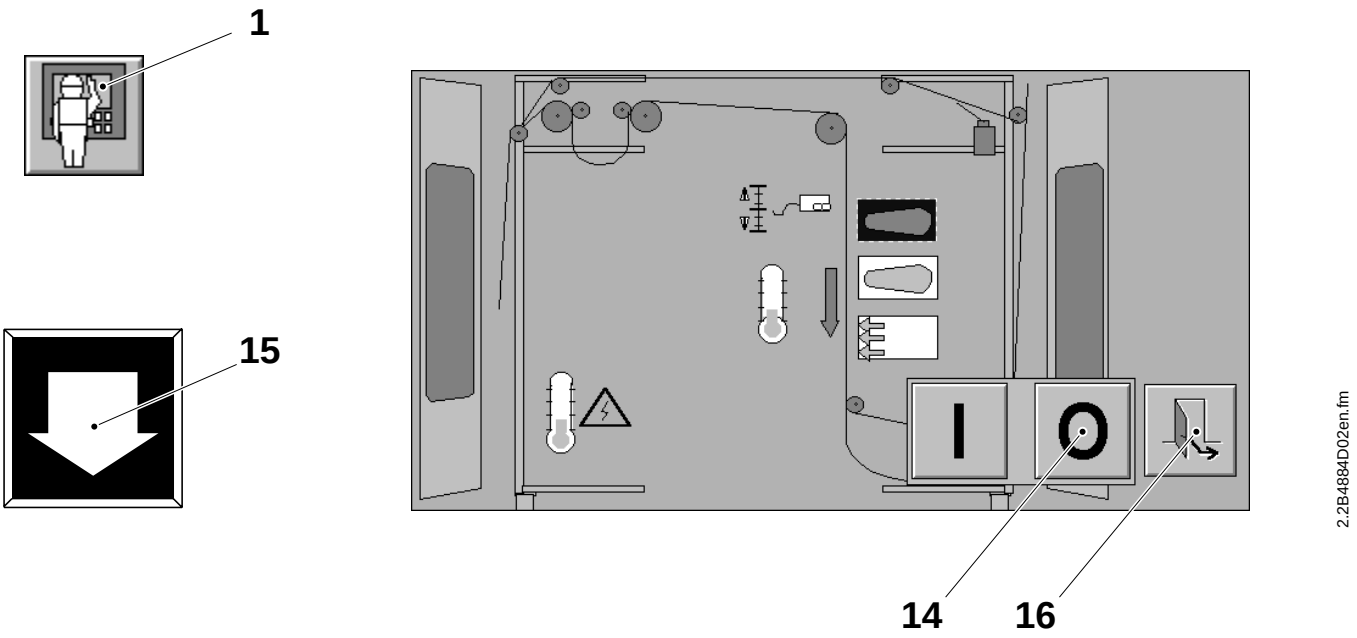

2.2B4884D02en.fm

1 Manoeuvre button
14 Stop button
15 Program down button
16 Exit button

4.2-2 Applicator tab - set tab counter jaw position

Machine status	**Preparation**
SPC reference	1260416-0100

Set tab counter jaw vertical position

a) Switch the selector key, located on the PT21 electrical panel, to position **Service**.

b) Activate the valve **Y8412:1** for the cylinder (1) and make sure that the cushion cylinder (2) is fully extended.

c) Loosen the four screws (3).

d) Loosen the nut (4) and set the distance **A** between the edge of the counter plate (5) and the sealing plate (6) by means of the grub screw (7).

e) Tighten the nut (4) and the four screws (3).

f) Activate the valve **Y8412:2** and check that the cylinder (1) is fully in.

Package	Hole type	A ±1.0 (mm)		Package	Hole type	A ±1.0 (mm)		Package	Hole type	A ±1.0 (mm)
250 B	21	11.8		1000 B	50	11.9		1000 Sq	85	12.1
500 S	25	9.8		1000 S	50	11.9		1000 B	85	12.2
1500 S	45	11.7		500 S	55	13.8		1000 S	85	12.2
1000 B	45	11.7		1500 S	85	12.1		TPA 1000 S	60	12.3
1000 S	45	11.7								

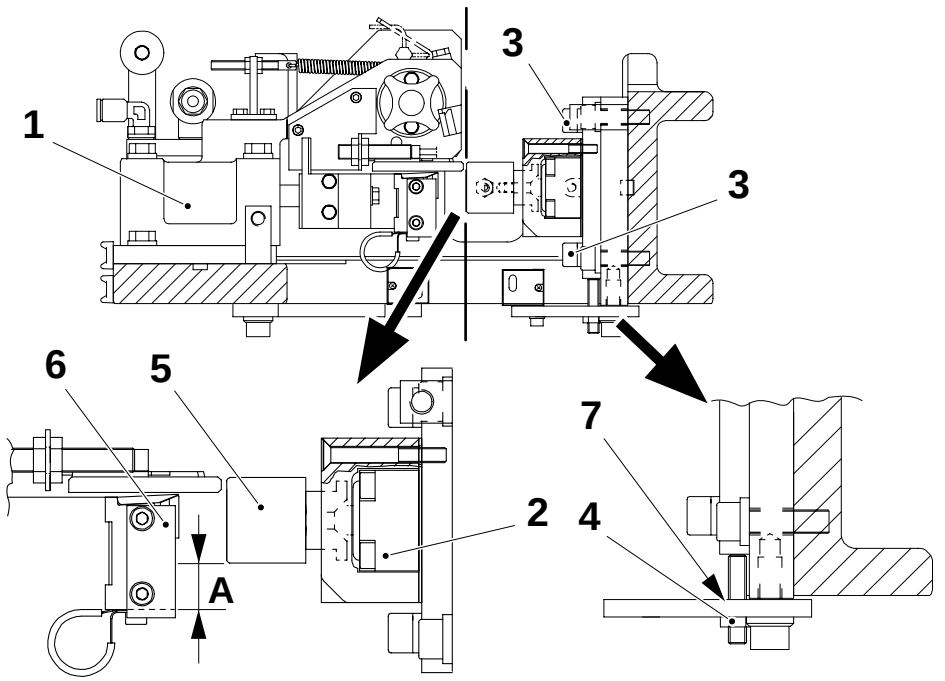

1 Cylinder
2 Cushion cylinder
3 Screw
4 Nut
5 Counter plate
6 Sealing plate
7 Grub screw

(Cont'd)

2.2B4884D02en.fm

(Cont'd)

Set tab counter jaw horizontal position

a) Check the position of the tab according to *4.2-1 Applicator tab - check tab position*.

b) Make sure that the cushion cylinder (2) is fully extended.

c) Loosen the screws (8), located on the tab counter jaw.

d) Set the distance **B** between the edge of the counter plate (5) and the tab feeder (9) head by means of the setting screw (10).

e) Tighten the screws (8).

Note! Use eventually the machined surface **C** to obtain the distance **B**.

Package	Hole type	B ±1.0 (mm)		Package	Hole type	B ±1.0 (mm)		Package	Hole type	B ±1.0 (mm)
250 B	21	36		1000 B	50	40.75		1000 Sq	85	40.0
500 S	25	32		1000 S	50	40.75		1000 B	85	40.0
1500 S	45	40.0		500 S	55	38		1000 S	85	40.0
1000 B	45	40.0		1500 S	85	40.0		TPA 1000 S	60	41.0
1000 S	45	40.0								

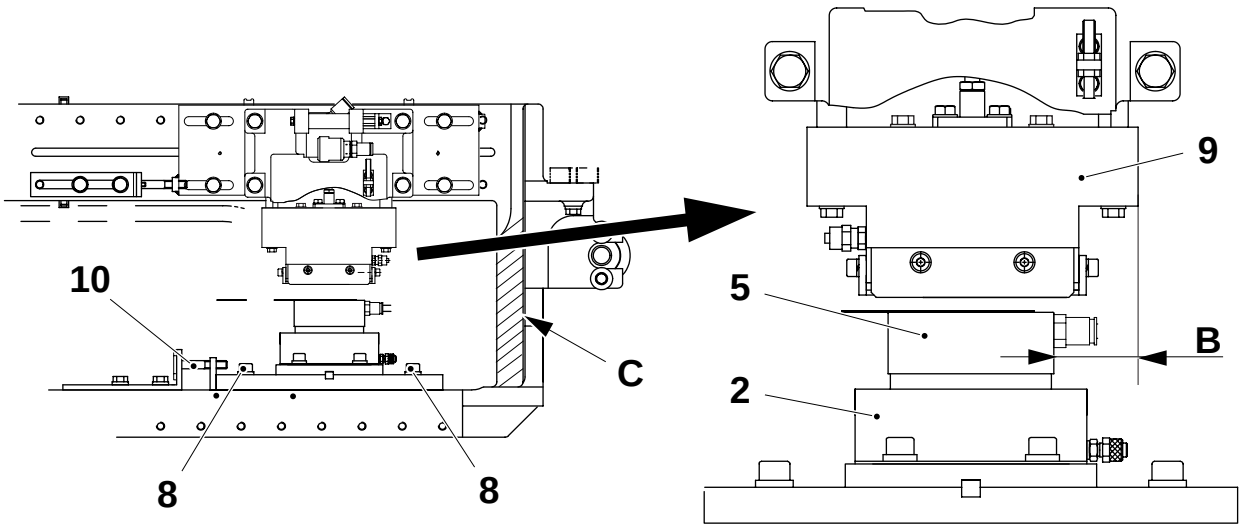

2.2B4884D02en.fm

2 Cushion cylinder
5 Counter plate
8 Screw
9 Tab feeder
10 Setting screw

4.2.1 Tab feeder

4.2.1-1 Tab feeder - check knives

SPC reference	1260415-0100



Risk of burns!
The sealing jaw may be hot. Be careful.

Check the surface of the knives and the space between the flat knife (1) and the sealing plate (3) for any residue of polyethylene.

Check the flat knife (1) and the window knife (2) for wear and/or damage.

Check that the edges of the tab are clean-cut. If required, set the window knife (2), see *4.2.1-4 Tab feeder - set window knife*.

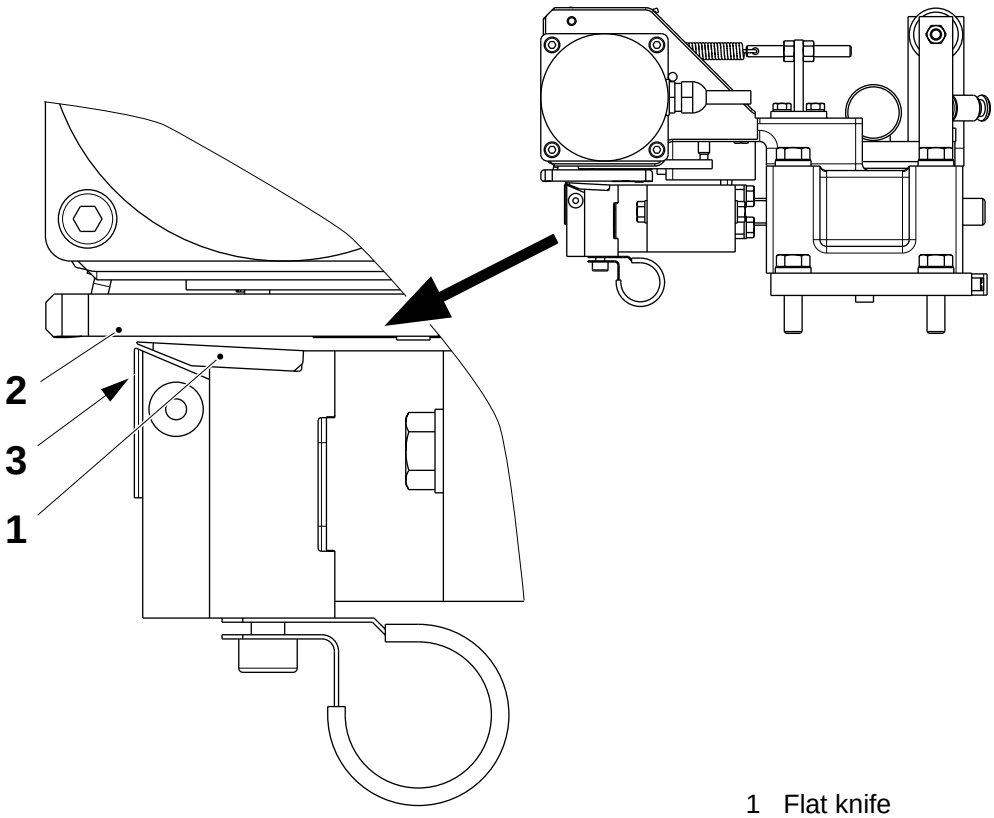

1 Flat knife
2 Window knife
3 Sealing plate

2.2B4884D02en.fm

4.2.1-2 Tab feeder - change knives

SPC reference	1260415-0100

WARNING!

Risk of burns!
The sealing jaw may be hot. Be careful.

a) Remove the feeder, see *4.2.1-3 Tab feeder - remove*.
b) Remove the four screws (1) and the entire bracket (2).
c) Remove the flat knife (3) and change as required.
d) Unscrew the stop screw (4) and remove the two pins (7).
e) Remove the screws (5) and change the window knife (6).

Caution! When changing the window knife (6), make sure that the bevelled side of the window knife (6) (side opposite etched part number) is the side that comes in contact with the flat knife (3).

Note! Do not tighten too much the flat knife (3) when assembling

f) Assemble in the reverse order.
g) Set the sealing jaw, see *4.2.1-5 Tab feeder - set sealing plate*.
h) Set the window knife (6), see *4.2.1-4 Tab feeder - set window knife*.
i) Check the tab position, see *4.2-1 Applicator tab - check tab position*.

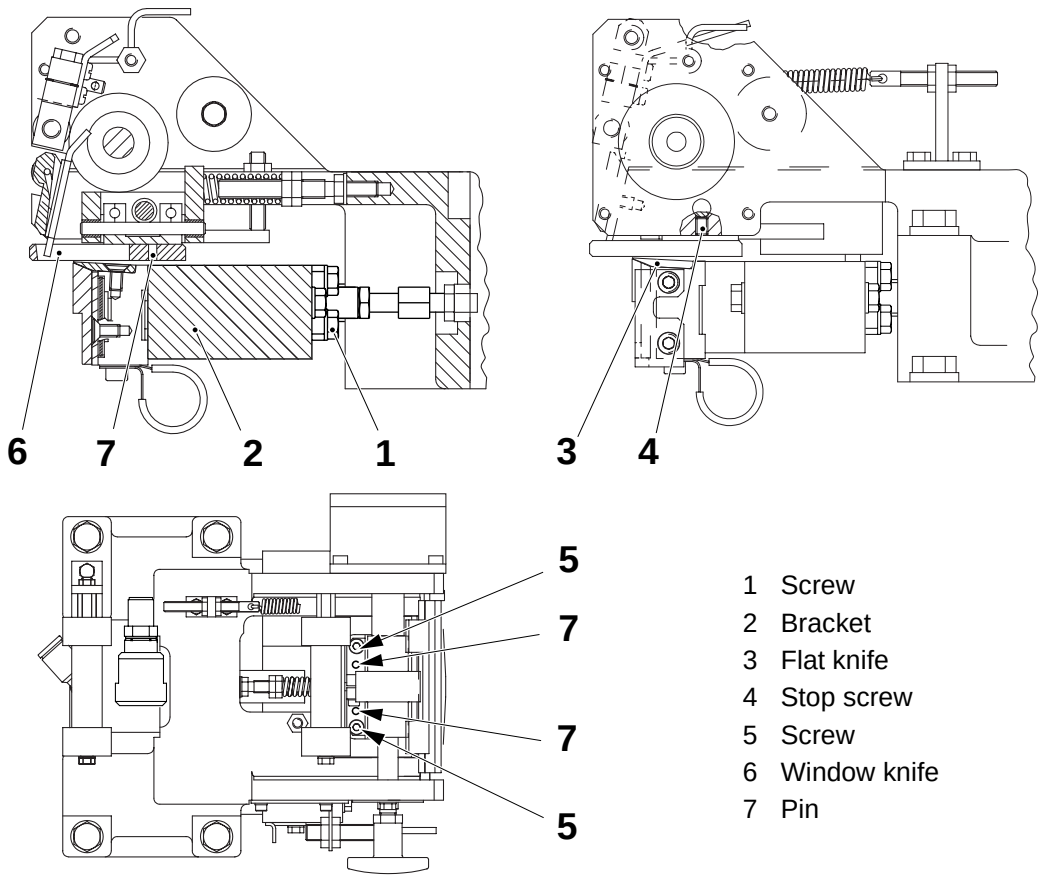

2.2B4884D02en.fm

1 Screw
2 Bracket
3 Flat knife
4 Stop screw
5 Screw
6 Window knife
7 Pin

4.2.1-3 Tab feeder - remove

SPC reference	1260415-0100

a) On the electrical cabinet, disconnect the electrical connector (1) leading to the step motor (2).

b) Disconnect the electrical connector (3) leading to the heater.

c) Disconnect the air hoses (4) from the cylinder.

d) Loosen the screws (7) and remove the tab jaw monitor proximity switch (8).

e) Remove the screws (5) from the plate (6) and lift out the tab feeder unit.

f) Assemble in the reverse order.

g) Set the tab feeder, see *4.2.1-15 Tab feeder - set position*.

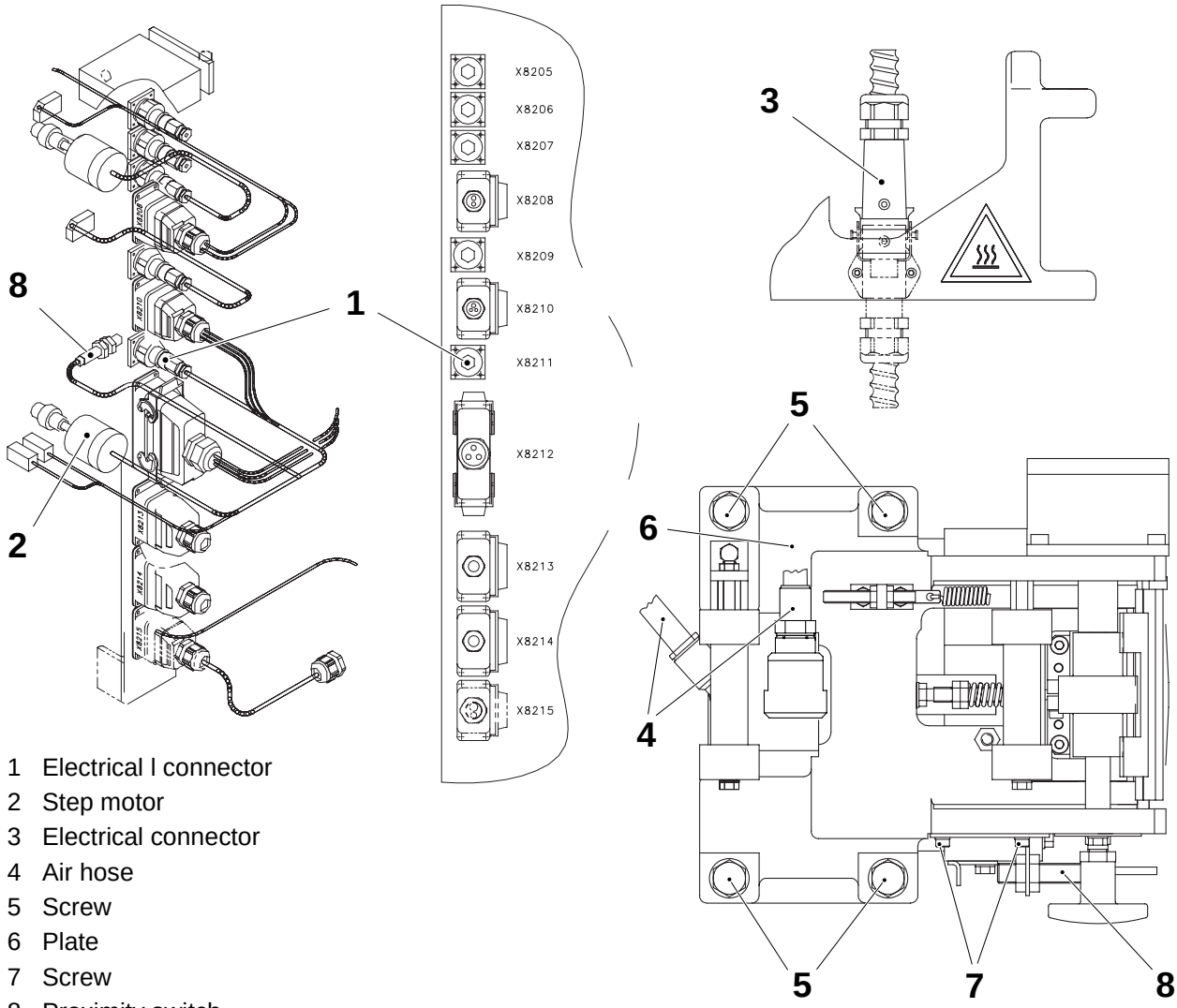

1 Electrical l connector
2 Step motor
3 Electrical connector
4 Air hose
5 Screw
6 Plate
7 Screw
8 Proximity switch

2.2B4884D02en.fm

4.2.1-4 Tab feeder - set window knife

SPC reference	1260415-0100



Risk of burns!
The sealing jaw may be hot. Be careful.

This setup may be performed on a work bench.

a) Remove the feeder, see *4.2.1-3 Tab feeder - remove*.

b) Adjust the nuts (1) until the spring (3) starts to compress.

c) Set the distance **A** between the surface of the sealing plate and the outside edge of the window knife (4).

d) Keep the distance **A** and adjust the screw (2) until the window knife (4) touches the top of the flat knife without any play.

e) Adjust the nuts (1) and set the distance **B**.

f) Check the cutting action after the setting.

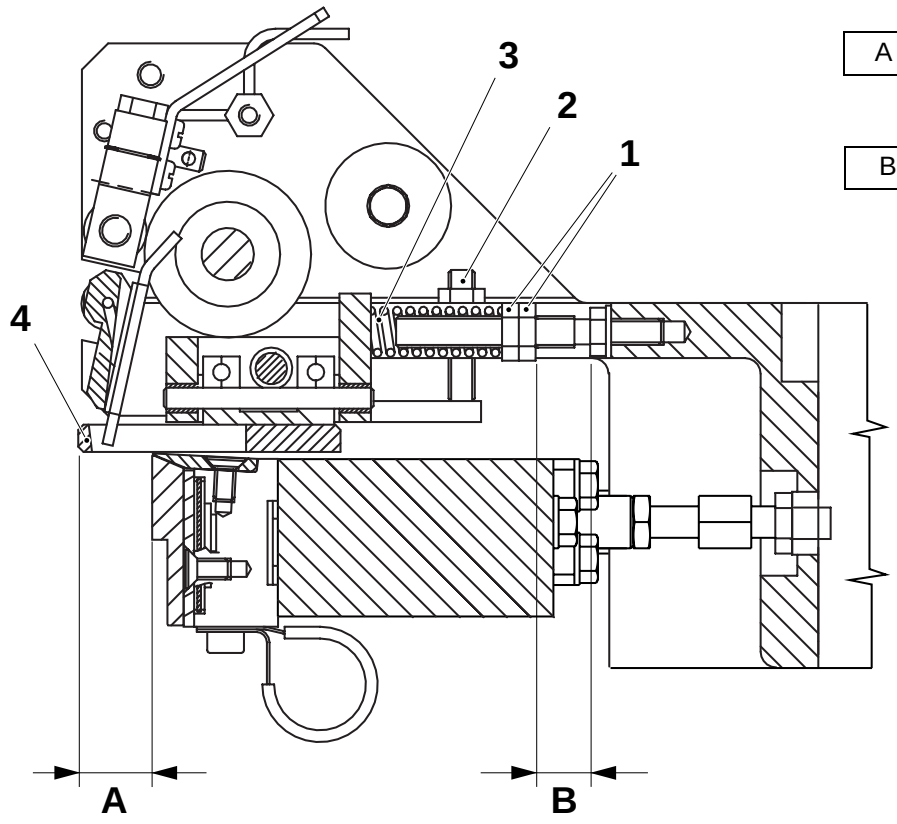

A = 6 ±0.5 mm

B = 12 ±2 mm

2.2B4884D02en.fm

1 Nut
2 Screw
3 Spring
4 Window knife

4.2.1-5 Tab feeder - set sealing plate

SPC reference	1260415-0100

WARNING!

Risk of burns!
The sealing jaw may be hot. Be careful.

a) Remove the feeder, see *4.2.1-3 Tab feeder - remove*.
b) Remove the four screws (1) and the entire bracket (2).
c) Loosen the two screws (3).
d) Set the distance **B** between the top of the flat knife (6) and the sealing plate (4). If required, adjust with shims (7).
e) Loosen the sealing plate (4) and set the distance **A** between the sealing plate (4) and the flat knife (6) with the aid of a feeler gauge.
f) Keep the two clamps (5) pressed aside as shown in the figure, and at the same time tighten the screws (3).
g) Make sure that the clamps (5) lean against the sealing plate (4).
h) Assemble in the reverse order.

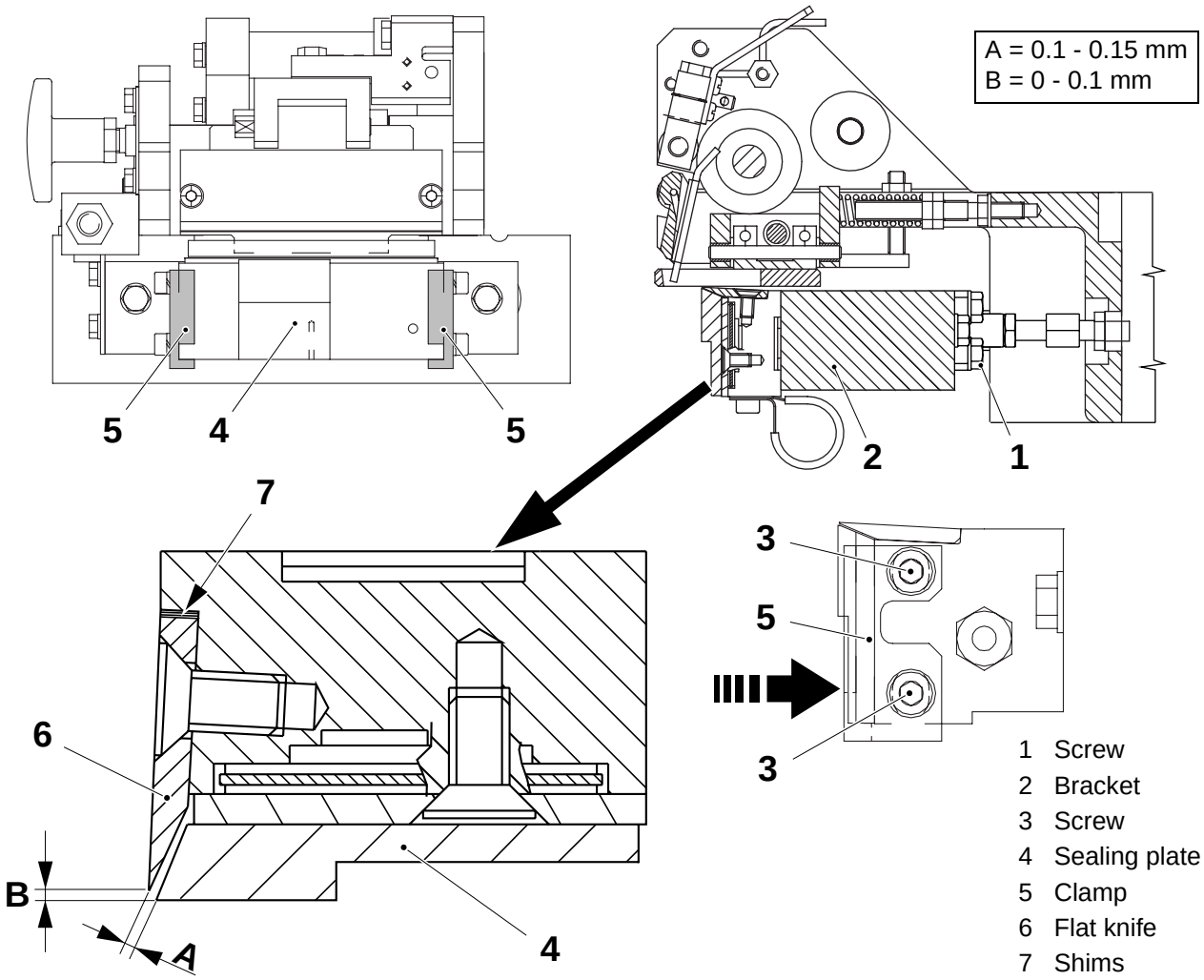

2.2B4884D02en.fm

4.2.1-6 Tab feeder - check guides and linear bearings

SPC reference	1260415-0100

a) Disconnect the air hoses (6) from the cylinder.

b) By hand, move the cylinder to check that the piston (5) moves freely.

c) Remove the feeder, see *4.2.1-3 Tab feeder - remove*.

d) Remove the four screws (1) and the entire bracket (2).

e) Check the guides (3) for wear and/or damage.

f) Check for wear in the linear bearings (4) by using the guide (3). Check the play in one bearing at a time.

g) Change as required, see *4.2.1-7 Tab feeder - change linear bearings*.

h) Fit back the bracket (2) and the four screws (1) after checking.

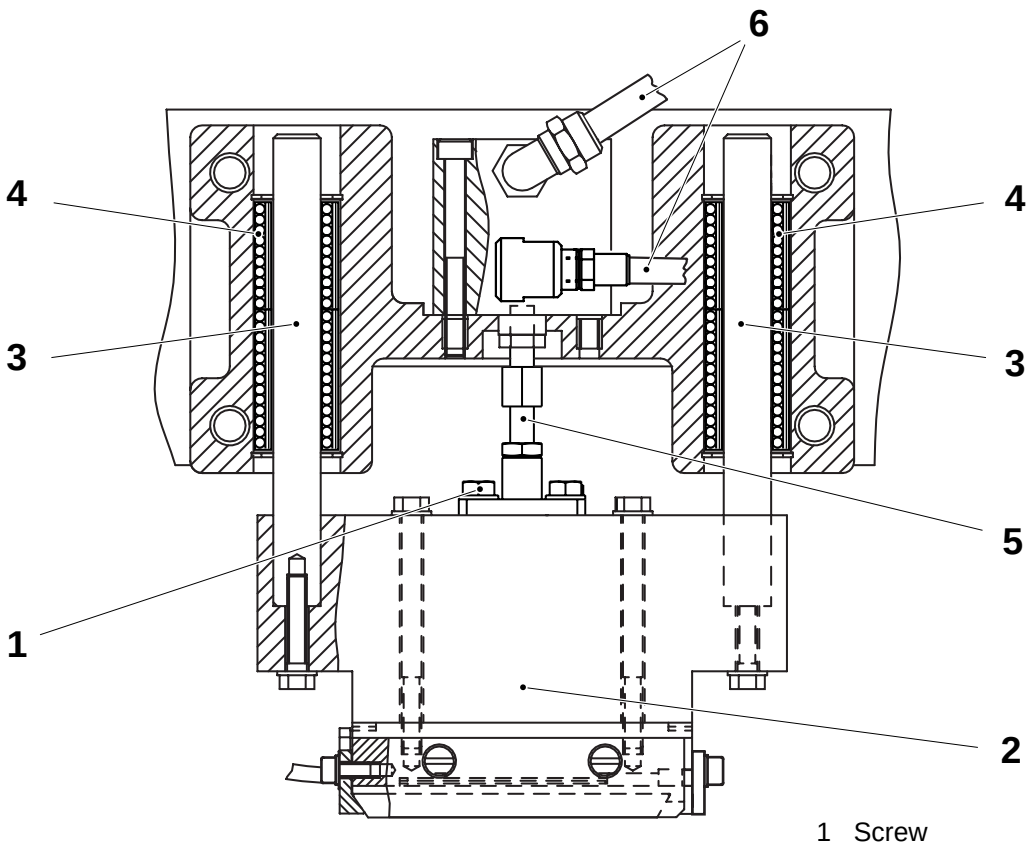

2.2B4884D02en.fm

1 Screw
2 Bracket
3 Guide
4 Linear bearing
5 Piston
6 Air hose

4.2.1-7 Tab feeder - change linear bearings

SPC reference	1260415-0100

a) Remove the feeder, see *4.2.1-3 Tab feeder - remove*.

b) Remove the four screws (1) and the entire bracket (2).

c) Remove the seal rings (3) on each side of the linear bearing (4).

d) Pull out the linear bearings (4) and change them if damaged or worn out.

e) Assemble in the reverse order.

Note! Make sure that the seal rings (3) are, on both sides, distance **A** inward towards the surface of the applicator casting (5).

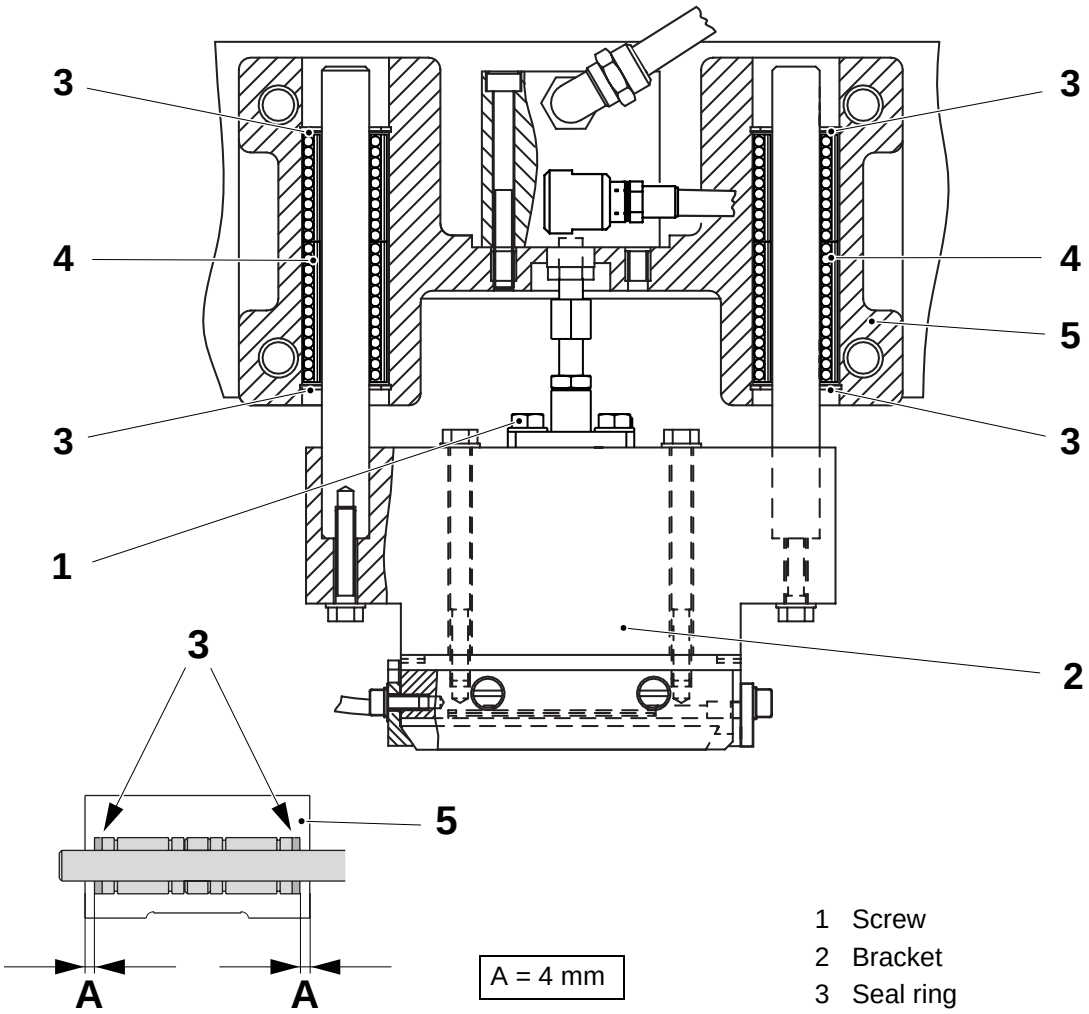

1 Screw
2 Bracket
3 Seal ring
4 Linear bearing
5 Applicator casting

2.2B4884D02en.fm

4.2.1-8 Tab feeder - check tab position

SPC reference	1260415-0100

a) Feed the tab strip in the applicator and check the distance **A** between the edge of the tab (1) and the edge of the sealing plate (2).

b) Adjust as required by means of the shims (3) on the rollers (4).

c) Unscrew the shafts (5) and remove them together with the rollers (4).

d) Fit a number of shims (3) in order to reach the distance **A**.

e) Tighten the shafts (5) on the tab feeder bracket.

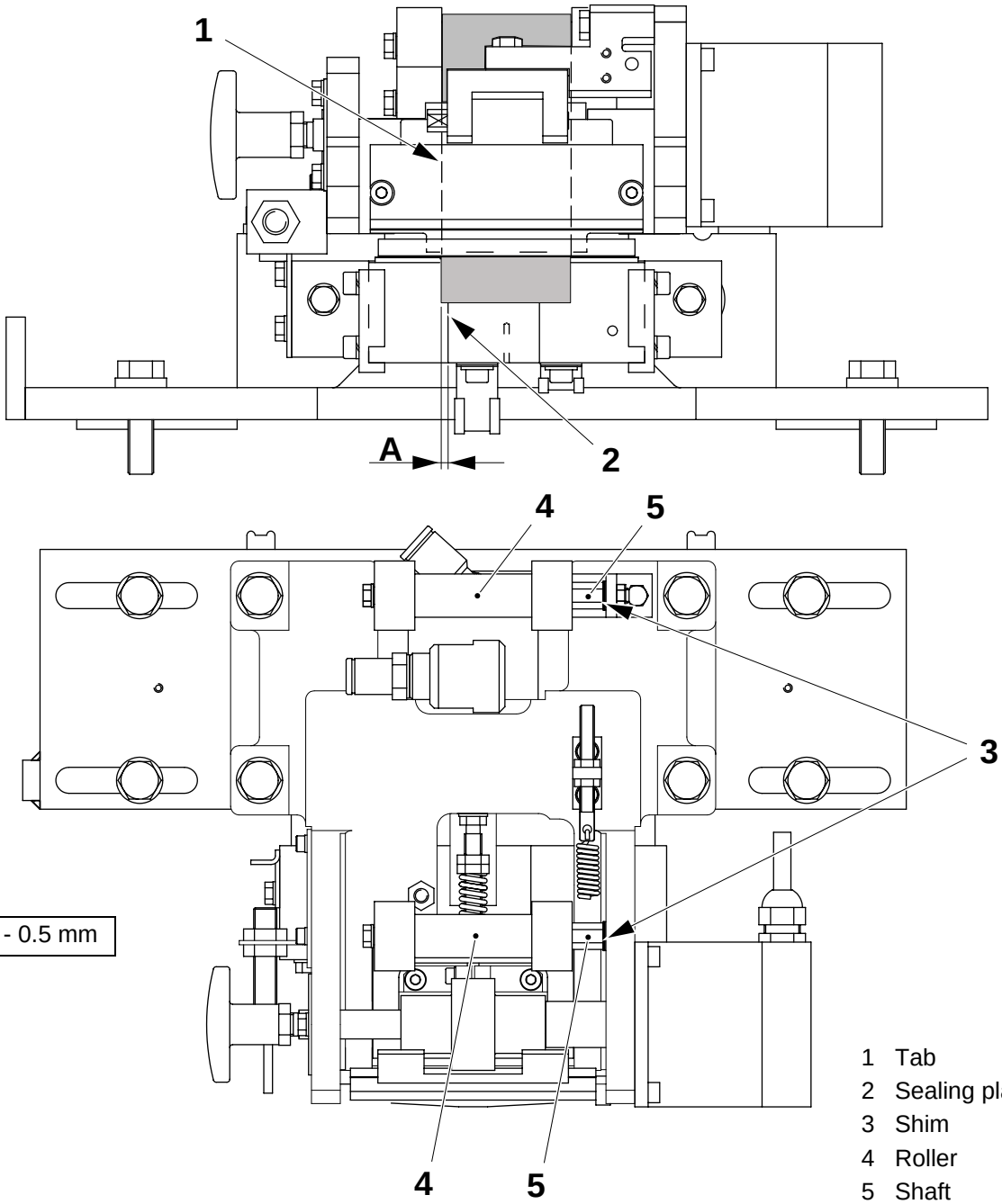

A = 0.2 - 0.5 mm

1 Tab
2 Sealing plate
3 Shim
4 Roller
5 Shaft

2.2B4884D02en.fm

4.2.1-9 Tab feeder - change bushings

SPC reference	1260415-0100

a) Remove the feeder, see *4.2.1-3 Tab feeder - remove*.
b) Remove the four screws (1) and the entire bracket (2).
c) Unscrew the two grub screw (3) in the coupling (4).
d) Unscrew the four screws (5) and remove the step motor (6).
e) Unscrew the two grub screws (7) in the feeder roller (9).
f) Remove the knob shaft (8), the coupling (4) and the feeder roller (9).

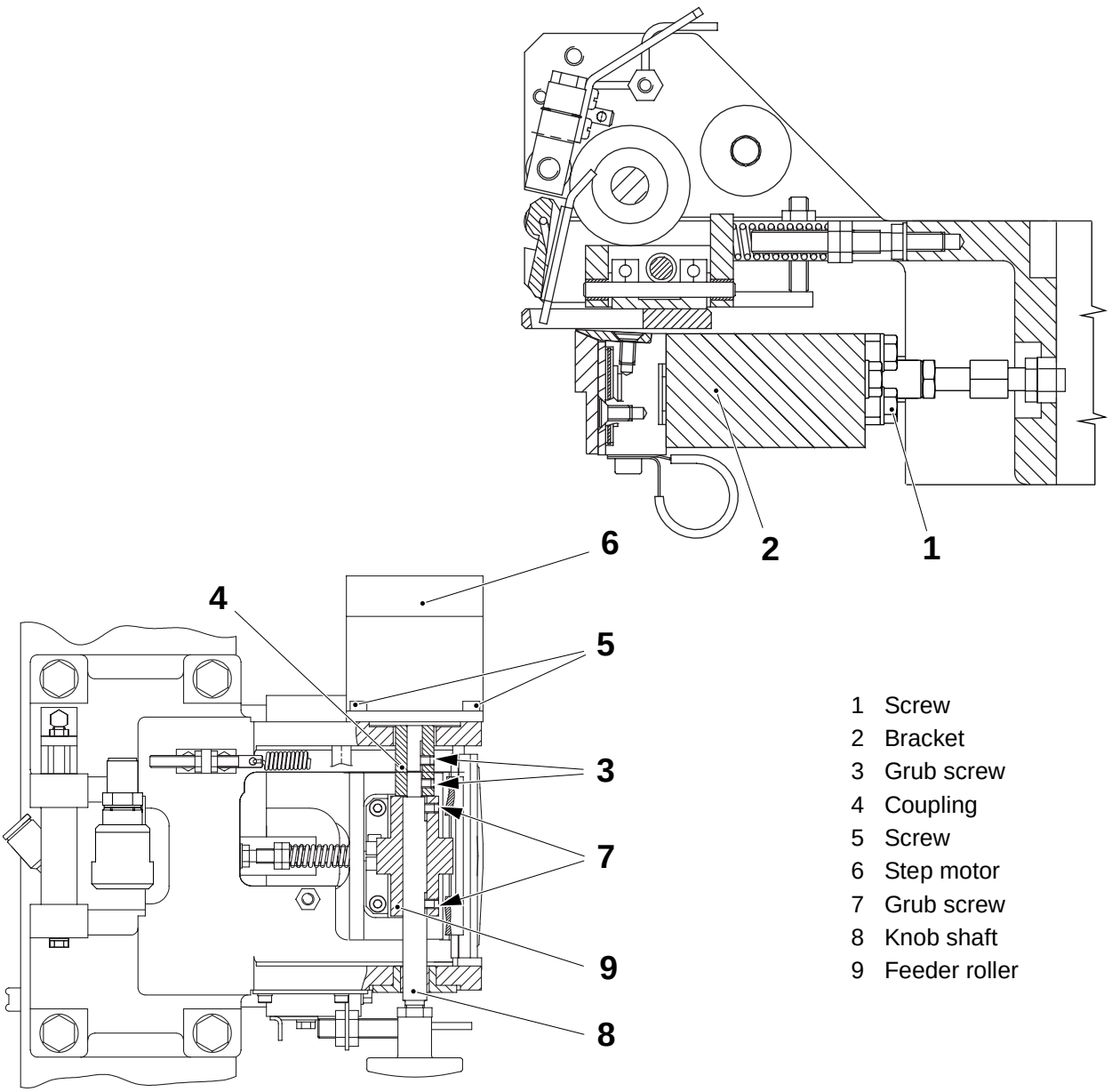

1 Screw
2 Bracket
3 Grub screw
4 Coupling
5 Screw
6 Step motor
7 Grub screw
8 Knob shaft
9 Feeder roller

(Cont'd)

2.2B4884D02en.fm

(Cont'd)

g) Remove the two screws (10) and change the bushing (11).
h) Loosen the spring (12) by means of the nut (13).
i) Loosen the grub screw (14) and remove the shaft (15).
j) Remove the two bushings (16) and change them.
k) Loosen the screws (17) and pull out the shaft (18).
l) Remove the two spring washers (19).
m) Remove the two bushings (20) and change them.
n) Assemble in the reverse order.

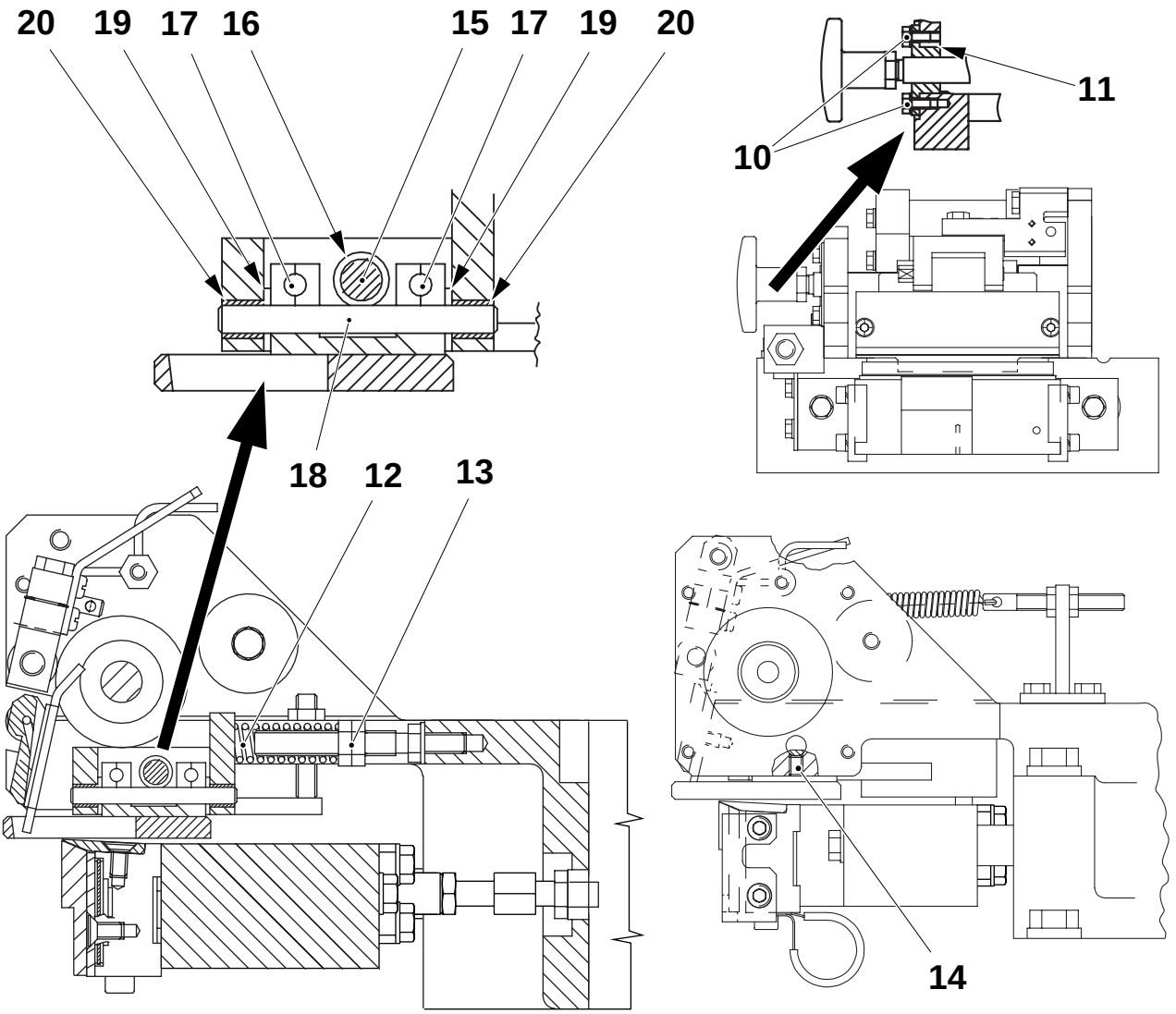

2.2B4884D02en.fm

10 Screw
11 Bushing
12 Spring
13 Nut
14 Grub screw
15 Coupling
16 Knob shaft
17 Screw
18 Shaft
19 Spring washer
20 Bushing

4.2.1-10 Tab feeder - change cylinder

SPC reference	1260415-0100

a) Remove the four screws (1).

b) Remove the air connections (2) and the screws (3).

c) Remove the cylinder (4) and change it.

d) Assemble in the reverse order.

e) Set the cushion cylinder, see *4.2.2-5 Tab counter jaw - set cushion cylinder*.

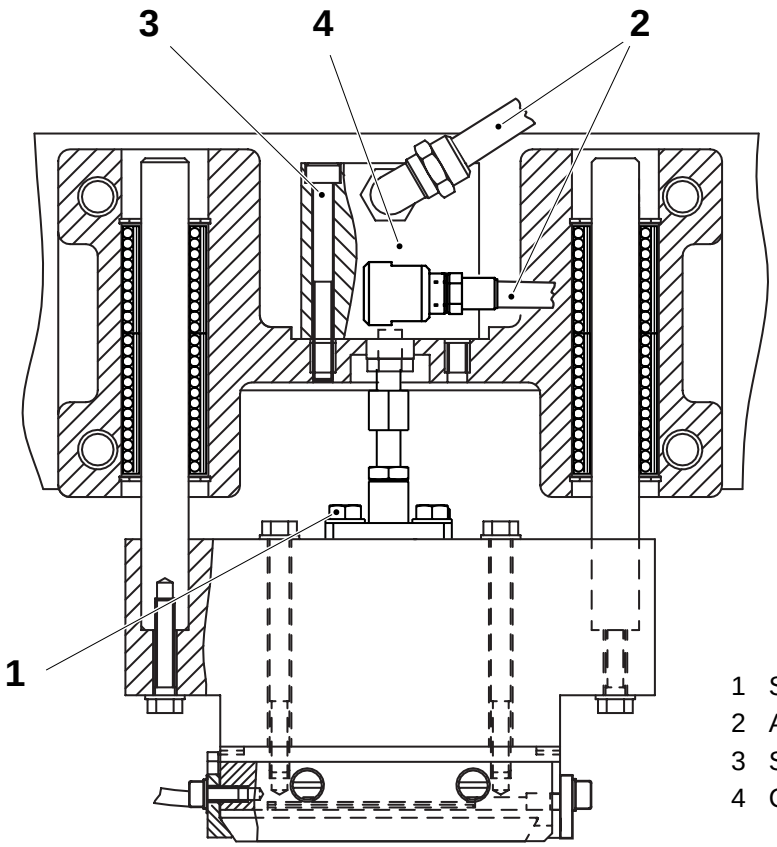

1 Screw
2 Air connection
3 Screw
4 Cylinder

2.2B4884D02en.fm

4.2.1-11 Tab feeder - check sealing plate

SPC reference	1260415-0100

WARNING!

Risk of burns!
The sealing jaw may be hot. Be careful.

a) Pull out the thermocouple (3) tip from the sealing plate (1).

b) Loosen the screws (2) and remove the clamps (4), on both sides, and the sealing plate (1).

c) Check the surface of the sealing plate (1) for wear, scratches or other damage. Also check for any residue of polyethylene.

d) Assemble in the reverse order. Set the sealing plate (1), see *4.2.1-5 Tab feeder - set sealing plate*.

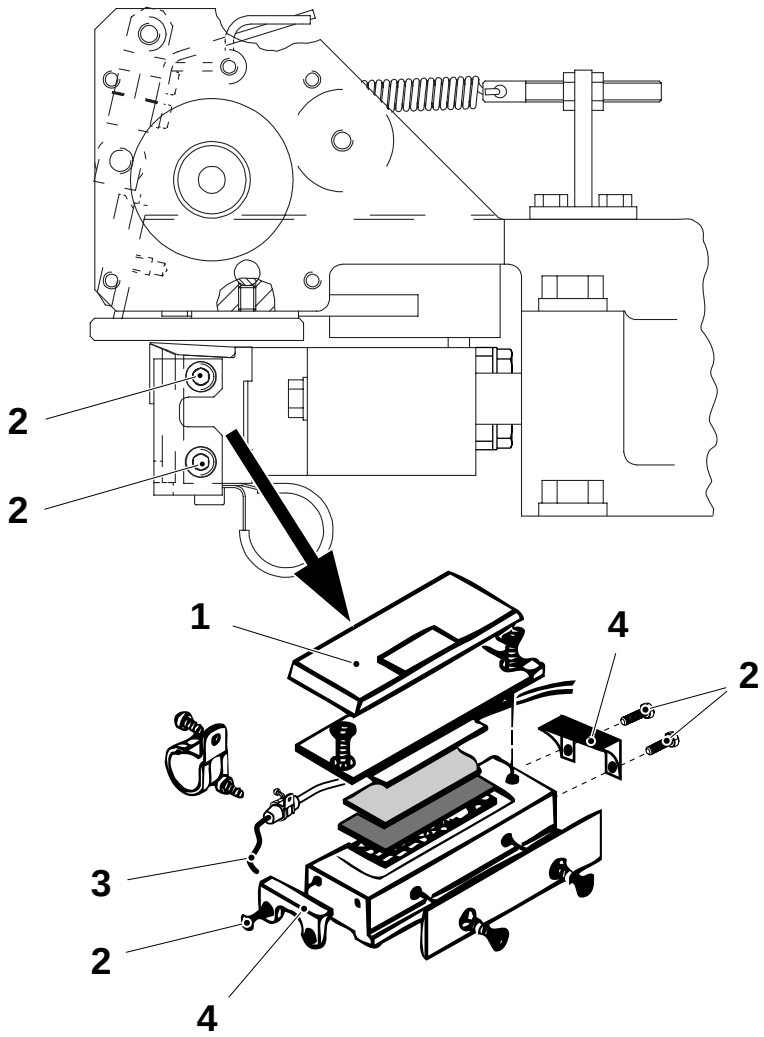

2.2B4884D02en.fm

1 Sealing plate
2 Screw
3 Thermocouple
4 Clamp

4.2.1-12 Tab feeder - check function

Consumables - ethanol	
SPC reference	1260415-0100

Remove the feeder, see *4.2.1-3 Tab feeder - remove*, and the screws (1).

Check the cutting and feeding functions then check the following parts on the tab feeder unit:

- the surfaces of the feeder roller (2) and the one way bearing (3) for wear and/or damage
- the one-way bearing (3) turns freely
- the steer plate (4) is not jammed with tab strip
  Clean any residue of polyethylene on the steer plate (4) with ethanol.

Note! When fitting back the steer plate (4), push it away from the feeder roller (2) while tightening the screws (1). Otherwise the steer plate (4) will touch the feeder roller (2).

- the feeding action by turning the feed knob (5) manually.
  If required, set the tab feed, see *4.2.1-13 Tab feeder - set tab feed*. Step up to step **Production** and check the feeding action again.

2.2B4884D02en.fm

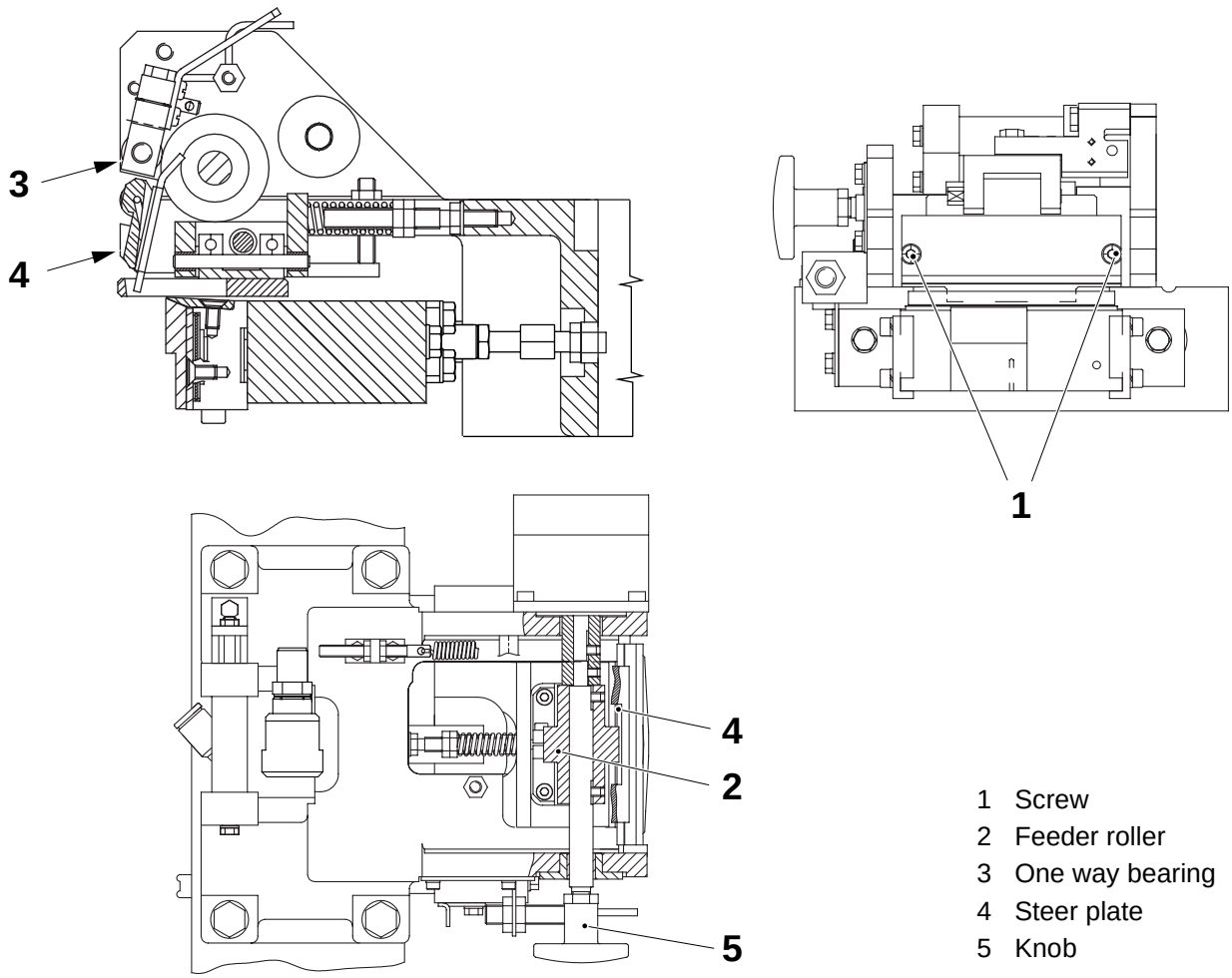

1 Screw
2 Feeder roller
3 One way bearing
4 Steer plate
5 Knob

4.2.1-13 Tab feeder - set tab feed

SPC reference	1260415-0100

a) Place a piece of tab strip between the feeder roller (1) and the one way bearing (2).

b) Set the distance **A** between the bracket (3) and the screw (4) by means of the nut (5).

c) Adjust the nut (5) until it is "**impossible**" to pull the tab strip backwards.

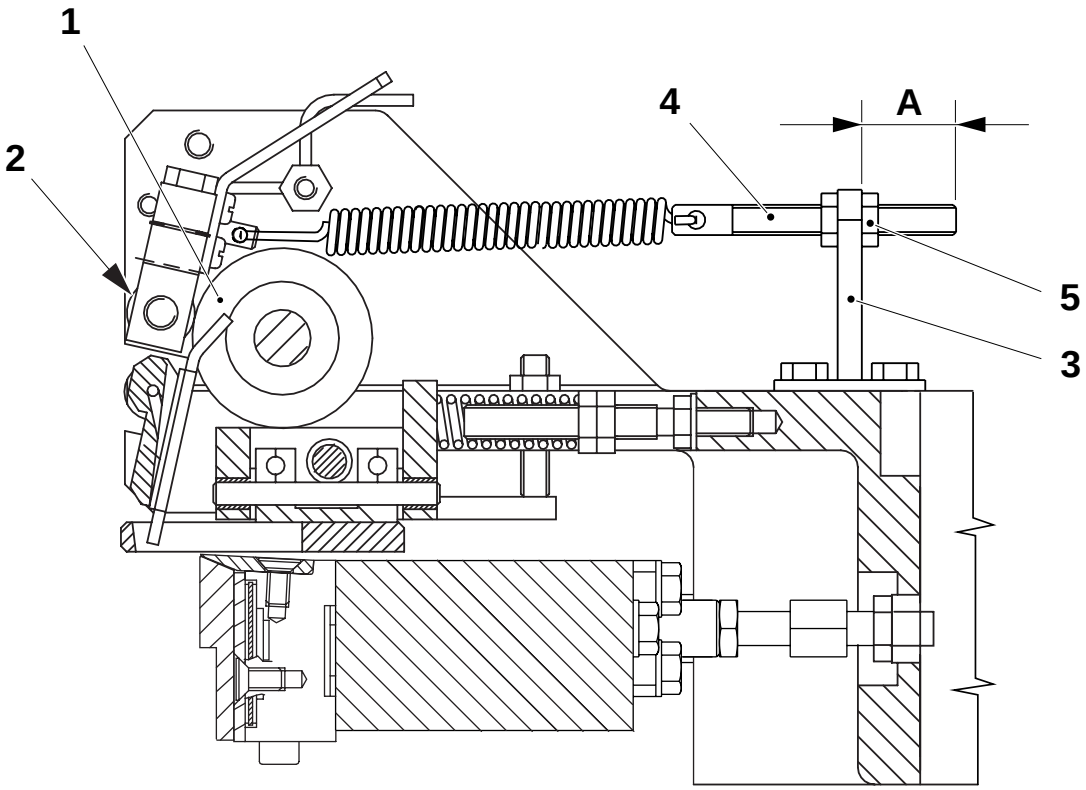

2.2B4884D02en.fm

A = 16 ±1 mm

1 Feeder roller
2 One way bearing
3 Bracket
4 Screw
5 Nut

4.2.1-14 Tab feeder - set proximity switch

Machine status	Mains power **On** Air **On**
SPC reference	1260415-0100



WARNING!

Risk of crushing!
The cylinder piston may move unexpectedly.

a) Switch the selector key, located on the PT21 electrical panel, to position **Service**.

Note! For an accurate setting, the machine must be threaded. If not, place a piece of packaging material between the heating jaw and the counter jaw.

b) Loosen the nuts (1) and move backwards the proximity switch (2).

c) Activate the valve **Y8412:1** for the cylinder (3).

d) Check that the cylinder (3) is fully extended. If required, set the cushion cylinder, see *4.2.2-5 Tab counter jaw - set cushion cylinder*.

e) Set the distance **A** between the proximity switch (2) and the flag (4) by means of the nuts (1).

f) Check that the proximity switch (2) LED lights up.

g) Activate the valve **Y8412:2** and check that the cylinder (3) is fully in.

2.2B4884D02en.fm

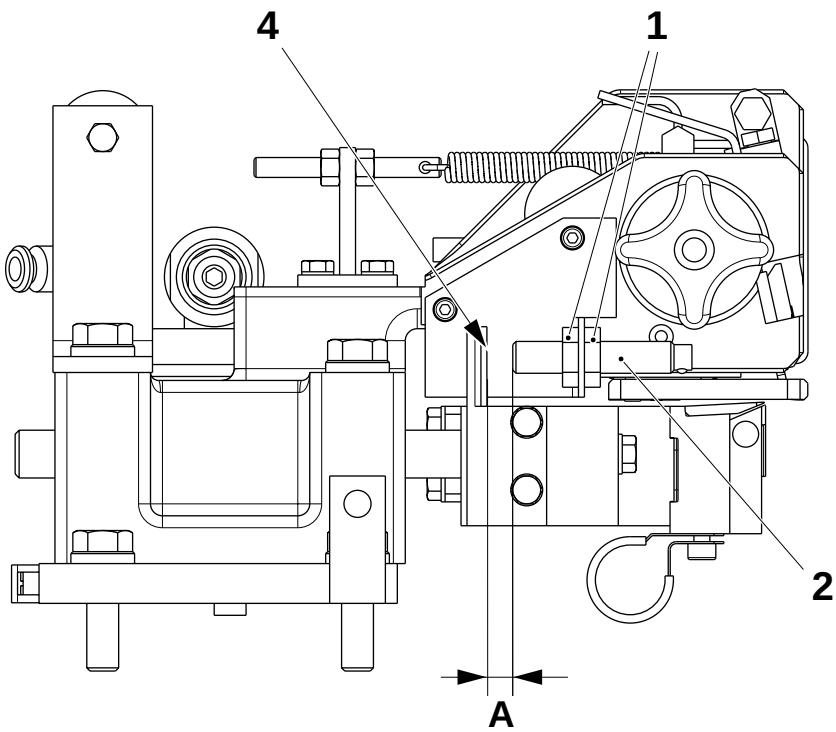

A = 0.1 mm

1 Nut
2 Proximity switch
3 Cylinder
4 Flag

4.2.1-15 Tab feeder - set position

Machine status	**Preparation**
SPC reference	1260415-0100



Risk of burns!
The sealing jaw may be hot. Be careful.

Note! Before carrying out the instructions below make sure that the counter plate (2) is correctly positioned according to *7.2.1-1 Applicators - set brackets position* items *r), s), t)* and using the packaging material as a reference.

a) Switch the selector key, located on the PT21 electrical panel, to position **Service**.

b) Check that the cushion cylinder (3) is fully extended.

c) Check the distance **A** between the counter plate (2) and the tip of the window knife (1).

d) Loosen the screws (4) and set the distance **A** by shifting the tab feeder assembly (5).

e) Set the tab counter jaw, see *4.2.2-5 Tab counter jaw - set cushion cylinder*.

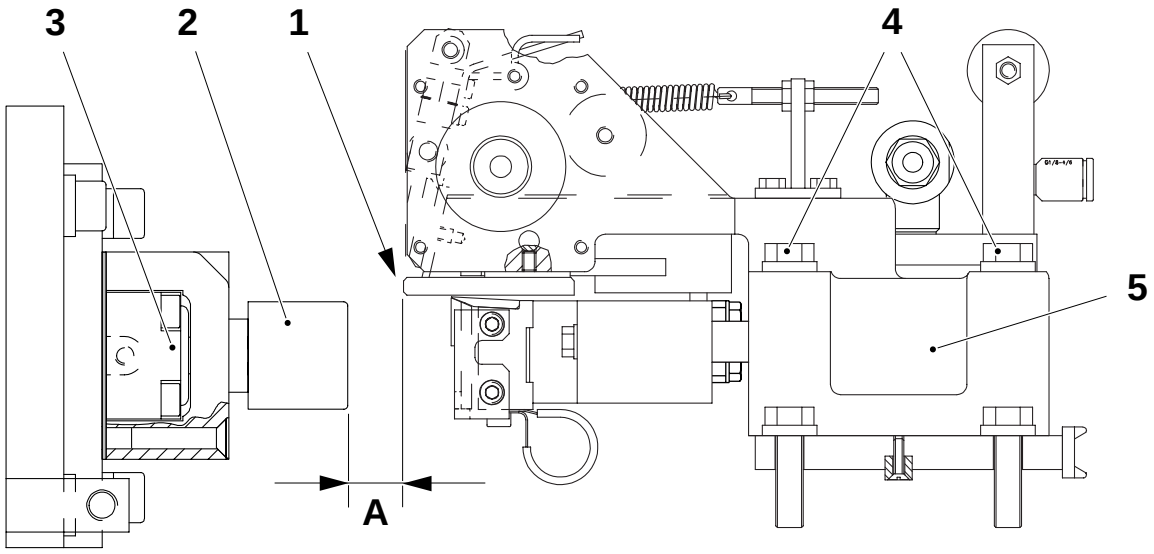

2.2B4884D02en.fm

A = 1.5 ±0.2 mm

1 Window knife
2 Counter plate
3 Cushion cylinder
4 Screw
5 Tab feeder

4.2.1-16 Tab feeder - change heater and thermocouple

Consumables - silicon paste - heat transfer liquid	 TP No. 90296-51 TP No. 90298-33
SPC reference	1260415-0100



WARNING!

Risk of burns!
The sealing jaw may be hot. Be careful.

a) Remove the feeder, see *4.2.1-3 Tab feeder - remove*.
b) Remove the clamp (1) for the hose and the clamp (2) for the thermocouple (3).
c) Pull out the thermocouple (3) tip from the sealing jaw plate.
d) Remove the screws (4) and the clamps (5), on both sides.
e) Remove the sealing plate (6).

2.2B4884D02en.fm

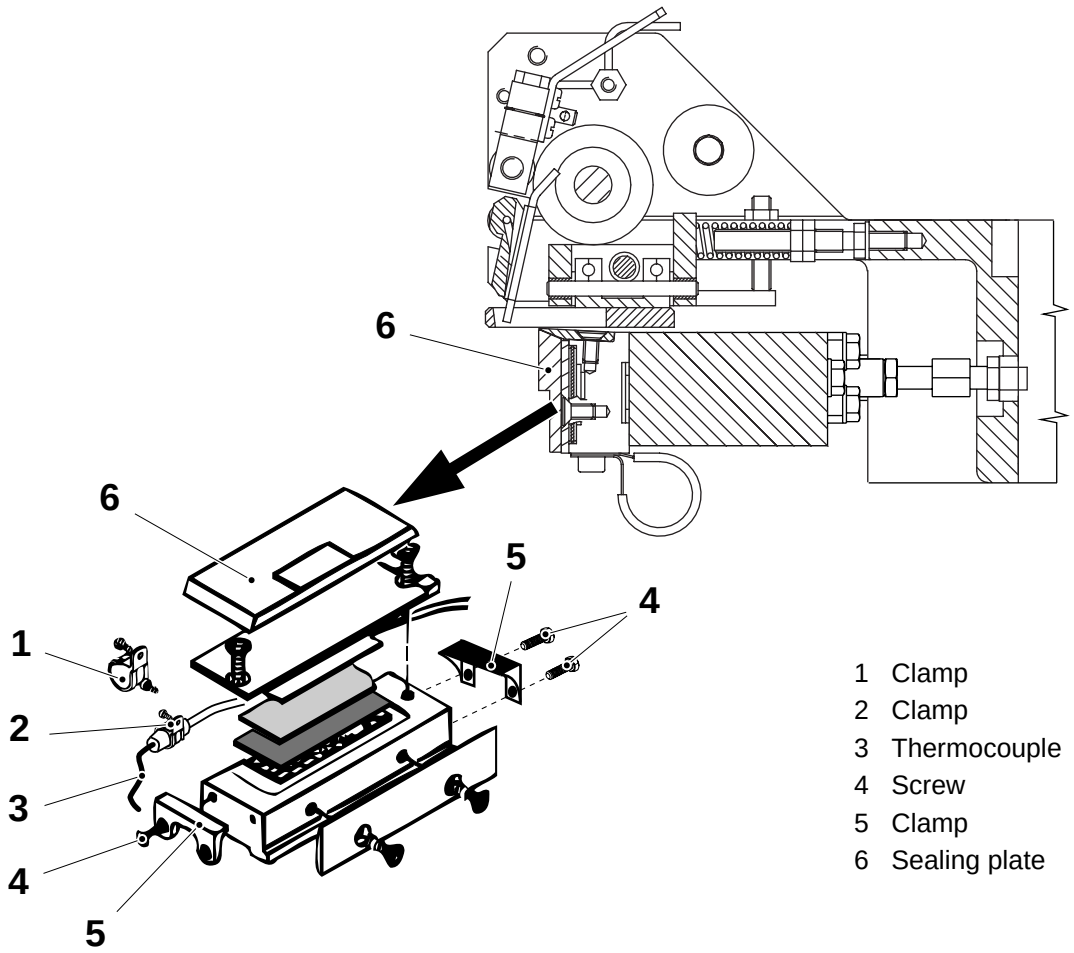

1 Clamp
2 Clamp
3 Thermocouple
4 Screw
5 Clamp
6 Sealing plate

(Cont'd)

(Cont'd)

f) Remove the screws (7) and lift off the lock plate (8).

g) Disconnect the cable from the connector and remove the heater (9) and the thermocouple (3).

h) Change the heater (9) and the thermocouple (3).

Note! When reassembling the lock plate (8) check that the ceramic cloth (10) and the plate (11) are correctly mounted, see figure below.

Note! Apply the heat transfer liquid to the tip of the thermocouple (3) and into the sealing pad channel (12) before assembling in the reverse order.

i) Assemble in the reverse order.

j) Set the sealing plate, see *4.2.1-5 Tab feeder - set sealing plate*.

Caution! Check that the tip of the thermocouple (3) is firmly in place in the sealing plate before turning the mains power **On**.

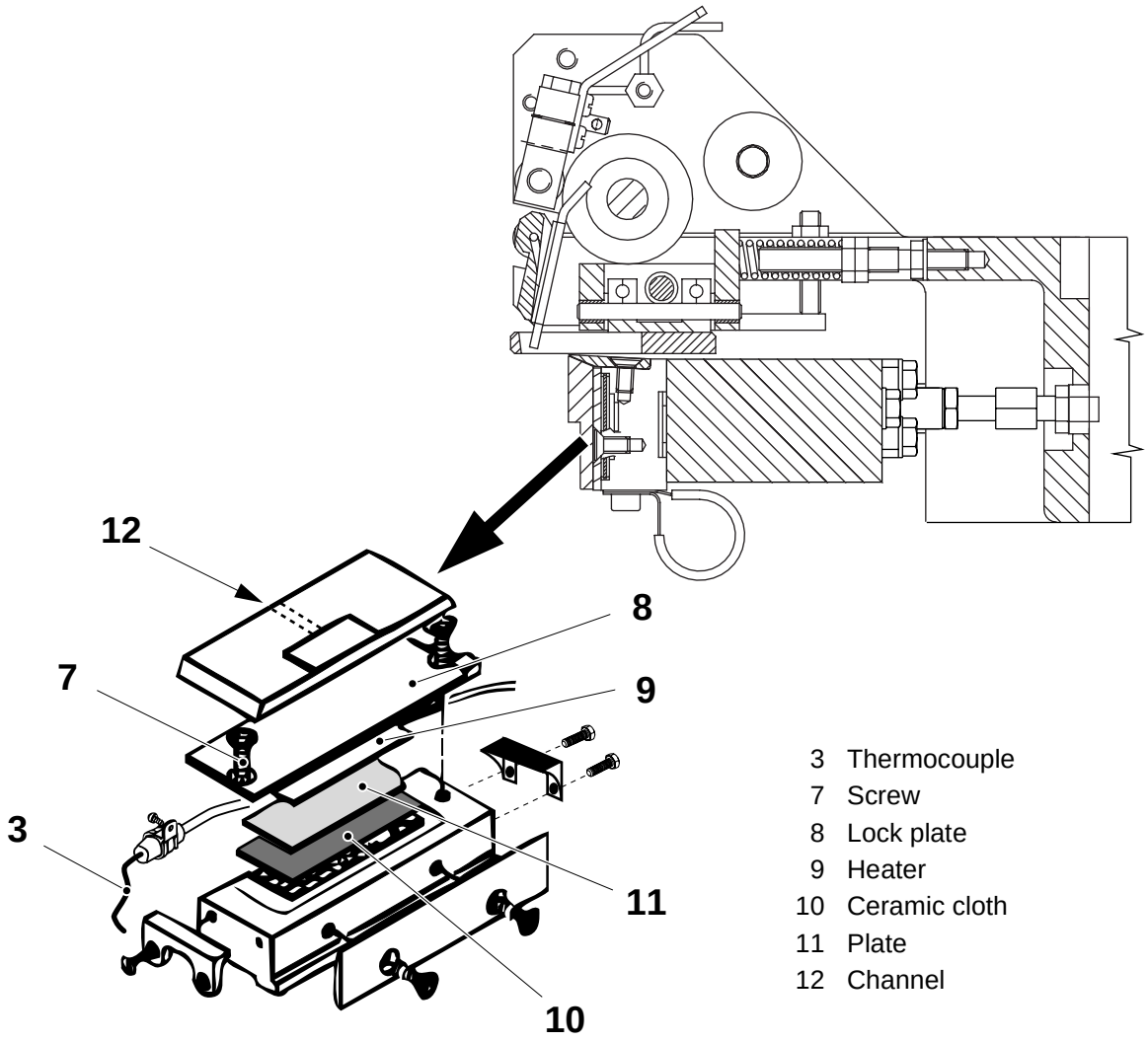

2.2B4884D02en.fm

3 Thermocouple
7 Screw
8 Lock plate
9 Heater
10 Ceramic cloth
11 Plate
12 Channel

4.2.2 Tab counter jaw

4.2.2-1 Tab counter jaw - remove

SPC reference	1260416-0200

a) Disconnect the air hose (1) for the cushion cylinder and the air hose (2) for the cap blowing.

b) Unscrew the screws (3). Slide up the plate (4) to remove the plate (4) with the counter jaw unit attached to it.

c) Assemble in the reverse order.

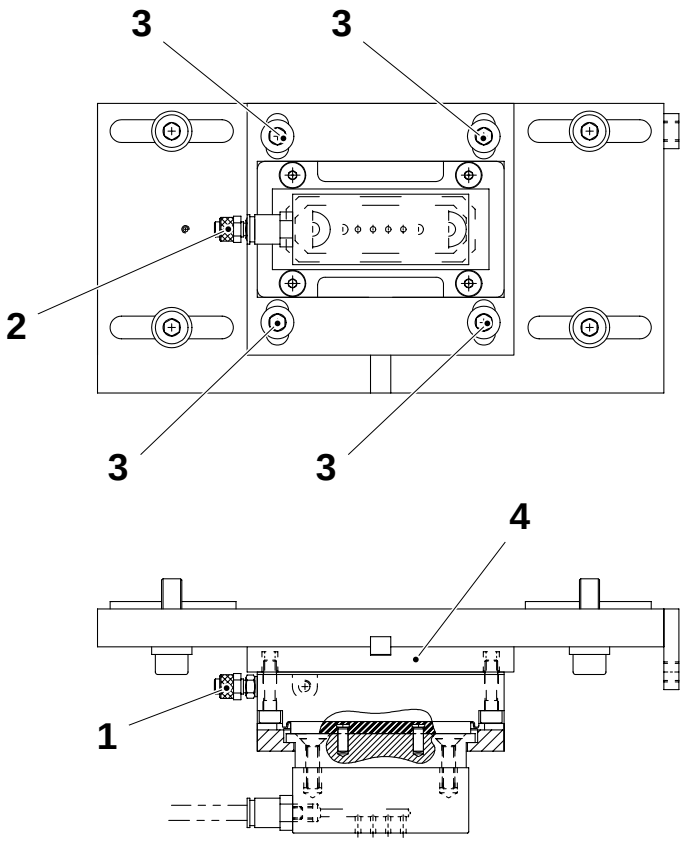

1 Air hose
2 Air hose
3 Screw
4 Side plate

2.2B4884D02en.fm

4.2.2-2 Tab counter jaw - change counter plate

Consumables - Teflon™ tape	TP No. 90144-30
SPC reference	1260416-0200

a) Disconnect the air hose (1) for the cushion cylinder (2) and the air hose (3) for the cap blowing.

b) Remove the screws (4). Slide up the plate (5) to remove the plate (5) together with the counter jaw unit.

c) Remove the screws (6).

d) Remove the guide bushing (9) from the counter plate (8) by means of the screws (7).

e) Remove the air hose (3) connection from the counter plate (8).

f) Change the counter plate (8) and assemble in the reverse order.

g) Set the counter plate (8) as required, see *4.2.2-6 Tab counter jaw - set position*.

h) Check the position of the counter jaw, see *4.2-2 Applicator tab - set tab counter jaw position*.

Note! Check the condition of the Teflon™ tape and change it as required.

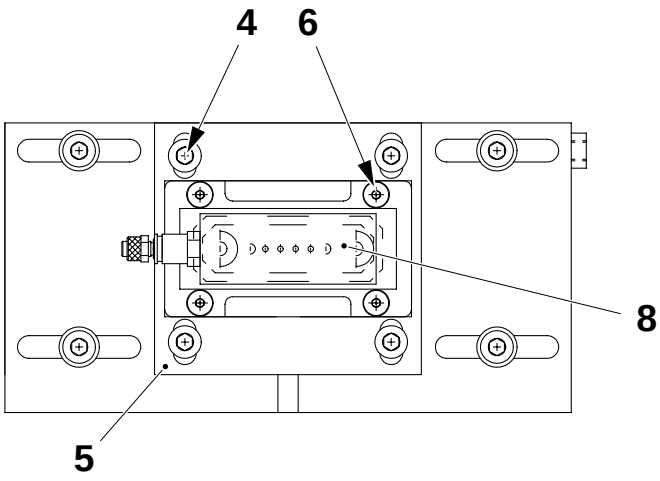

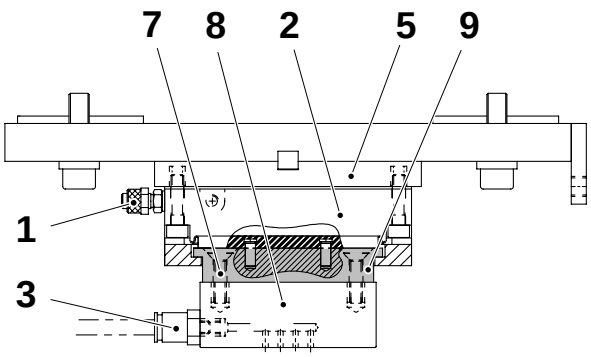

1 Air hose
2 Cushion cylinder
3 Air hose
4 Screw
5 Plate
6 Screw
7 Screw
8 Counter plate
9 Guide bushing

2.2B4884D02en.fm

4.2.2-3 Tab counter jaw - check guide bushing

SPC reference	1260416-0200

a) Disconnect the air hose (1) for the cushion cylinder (2) and the air hose (3) for the cap blowing.

b) Remove the screws (4). Slide up the plate (5) to remove the plate together with the counter jaw unit.

c) Remove the screws (6).

d) Remove the guide bushing (9) from the counter plate (8) by means of the screws (7).

e) Check the guide bushing (9) for wear and change it as required.

Note! Remove the two pins (10) from the old guide bushing (9) and assemble them into the new one.

f) Assemble in the reverse order.

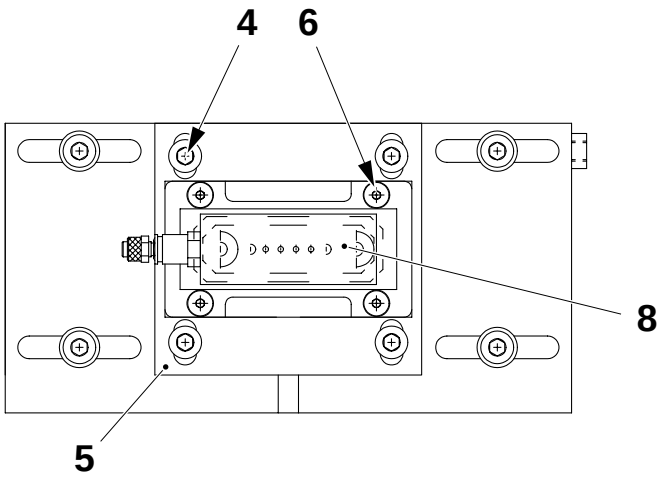

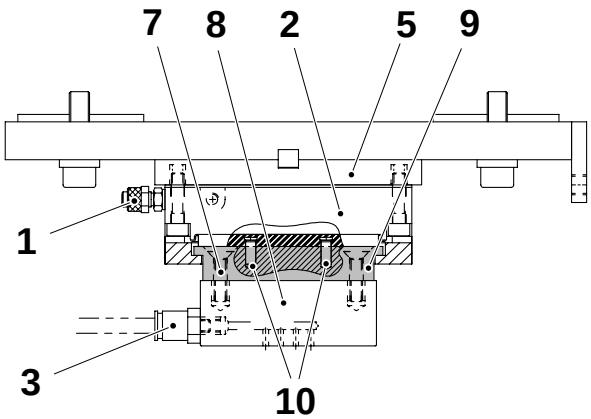

1 Air hose
2 Cushion cylinder
3 Air hose
4 Screw
5 Plate
6 Screw
7 Screw
8 Counter plate
9 Guide bushing
10 Pin

2.2B4884D02en.fm

4.2.2-4 Tab counter jaw - change cushion cylinder

SPC reference	1260416-0200

a) Remove the tab counter jaw unit, see *4.2.2-1 Tab counter jaw - remove*.

b) Unscrew the screws (1) and separate the counter plate (2) from the cushion cylinder (3).

c) Unscrew the screws (4) and change the cushion cylinder (3).

d) Assemble in the reverse order.

e) Check that the cushion cylinder (3) reaches the end of its stroke.

f) Set the tab counter jaw, see *4.2.2-6 Tab counter jaw - set position*.

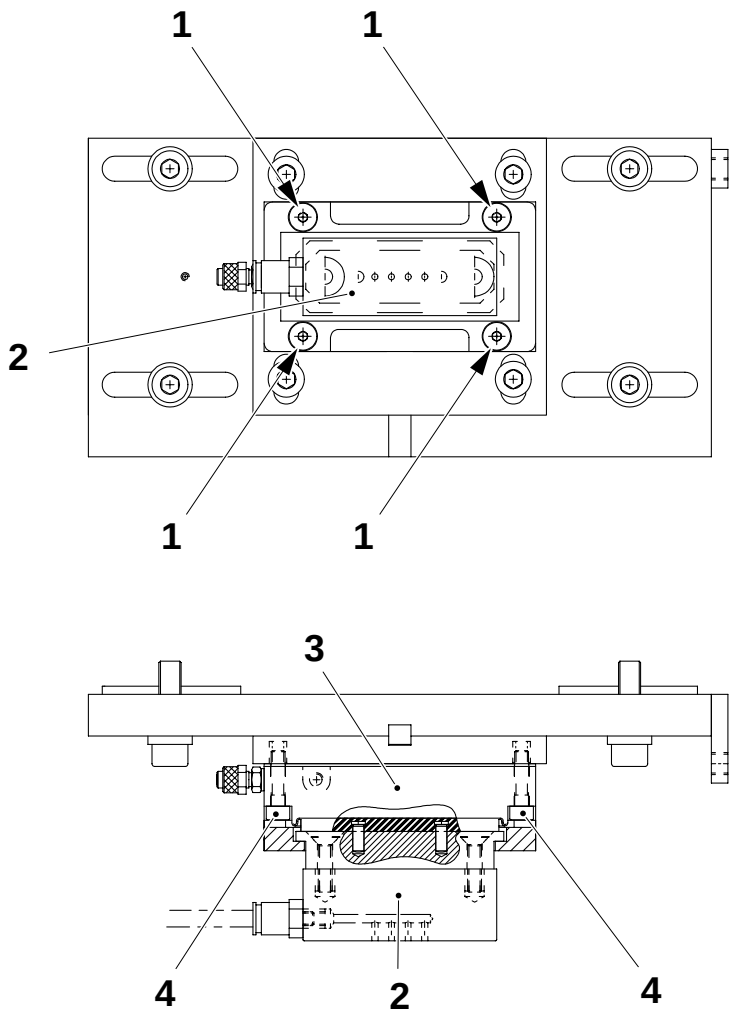

2.2B4884D02en.fm

1 Screw
2 Counter plate
3 Cushion cylinder
4 Screw

4.2.2-5 Tab counter jaw - set cushion cylinder

Machine status	**Preparation**
SPC reference	1260416-0200



Risk of burns!
The sealing jaw may be hot. Be careful.

a) Set the tab feeder unit, see *4.2.1-15 Tab feeder - set position*.

b) Switch the selector key, located on the PT21 electrical panel, to position **Service**.

c) Check that the cushion cylinder (6) is fully extended.

d) With the aid of a feeler gauge measure and record the distance **A** on both sides of the counter plate (5).

e) Place a piece of packaging material between the sealing jaw plate (4) and the counter plate (5).

f) Activate the valve **Y8412:1** for the cylinder (1).

g) Loosen the locknut (3) and adjust the piston rod (2) until the distance **A** is reduced by **0.8 mm** on both sides of the counter plate (5).

h) Tighten the locknut (3).

i) Activate the valve **Y8412:2** and check that the cylinder (1) is fully in.

j) Set the tab feeder, see *4.2.1-14 Tab feeder - set proximity switch*.

Note! If the difference between the distance **A** on one side and the distance **A** on the other side is more than **0.5 mm**, check the cushion cylinder (6), the counter plate (5) and the tab feeder.

2.2B4884D02en.fm

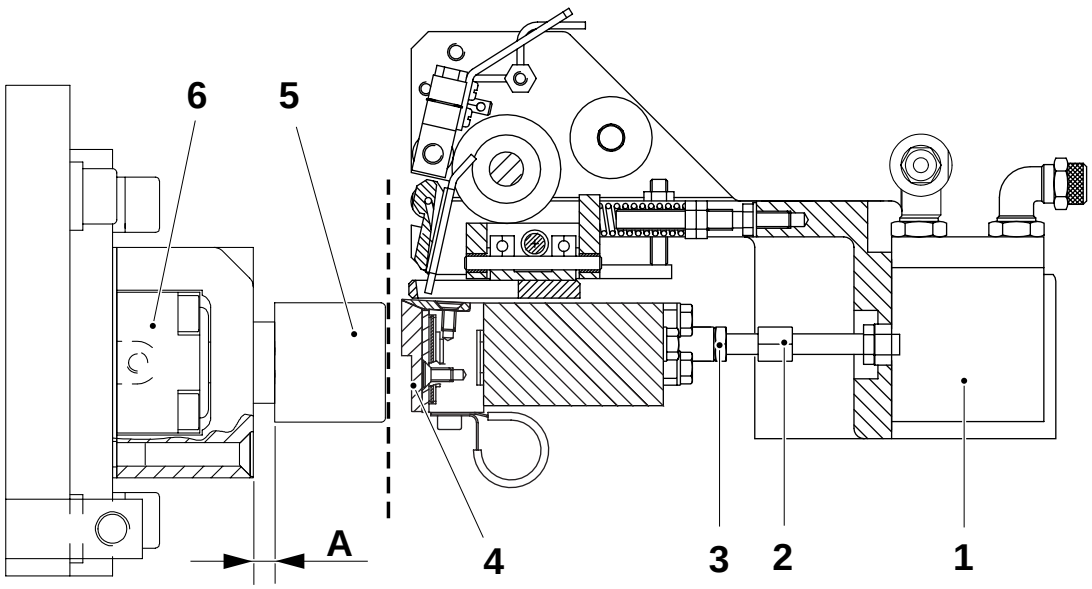

4.2.2-6 Tab counter jaw - set position

Machine status	**Preparation**
SPC reference	1260416-0200



Risk of burns!
The sealing jaw may be hot. Be careful.

Note! The below instructions must be executed **only** if one of the following sections have been performed: *4.2.2-2 Tab counter jaw - change counter plate*, *4.2.2-3 Tab counter jaw - check guide bushing*, *4.2.2-4 Tab counter jaw - change cushion cylinder*. If not refer to the basic setting of the counter jaw see *7.2.1-1 Applicators - set brackets position.*

a) Switch the selector key, located on the PT21 electrical panel, to position **Service**.

b) Check that the cushion cylinder (1) is fully extended.

c) Remove the packaging material.

d) Set the distance **A** between the counter plate (2) and the tip of the window knife (3) by adding or removing shims (4).

e) Set the cushion cylinder (1), see *4.2.2-5 Tab counter jaw - set cushion cylinder*.

2.2B4884D02en.fm

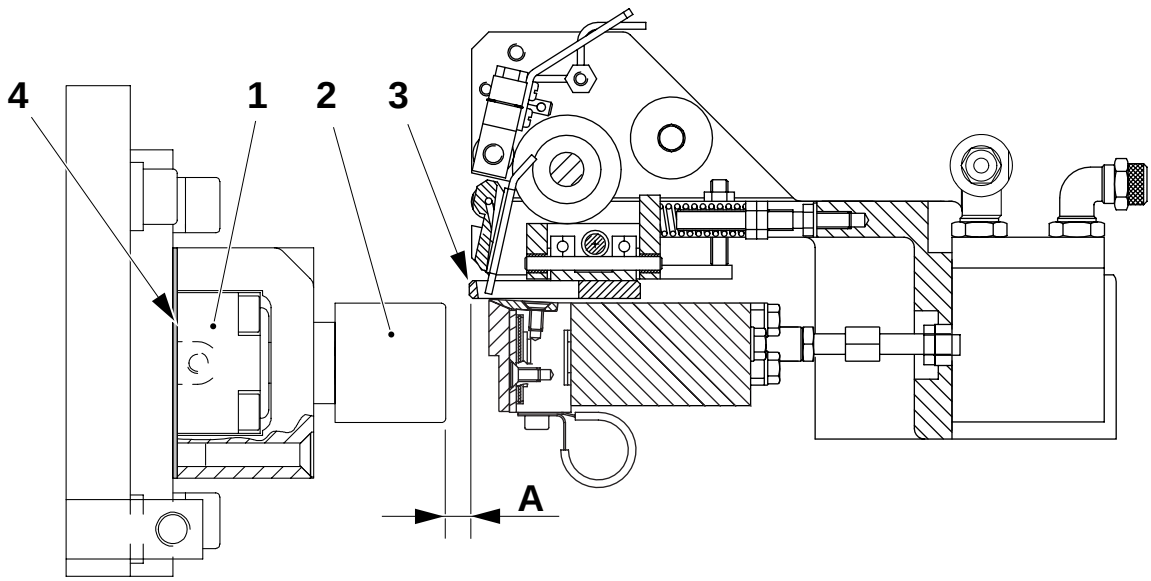

A = 1.5 ±0.2 mm

1 Cushion cylinder
2 Counter plate
3 Window knife
4 Shim

4.3 Magazine PullTab

SPC reference	1095893-0100

4.3-1 Magazine PullTab - check

Machine status	Mains power **On**
SPC reference	1095893-0100

Check the following parts for wear and/or damage:

- the wheel (1) and the arm (2)
  Check also that they move freely.
- the brake pin (3)
  Check also the brake function by pulling the arm (4).
- the arm (4)
  Check also that it moves freely.
- the brake disc (5)
  Check also that it moves freely.

2.2B4884D03en.fm

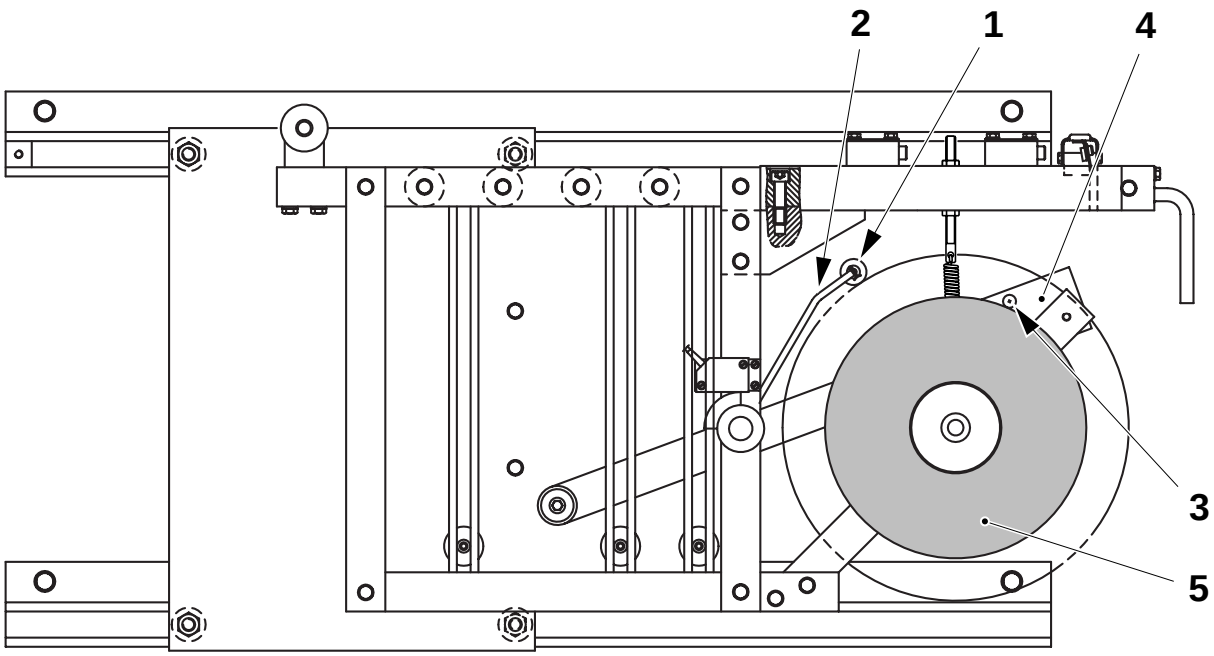

1 Wheel
2 Arm
3 Brake pin
4 Arm
5 Brake disc

(Cont'd)

(Cont'd)

- the rollers (6)
  Check that they turn freely. If not, clean as required. If damaged or worn, change.
- the tension rollers (7)
  Check that they turn freely and that they can slide easily along the guide (8). If not, clean as required. If damaged or worn, change.
- the low supply proximity switch (9)
  Check that the proximity switch LED lights up in working condition. Set the proximity switch as required, see *4.3-2 Magazine PullTab - set proximity switch*.

Change as required.

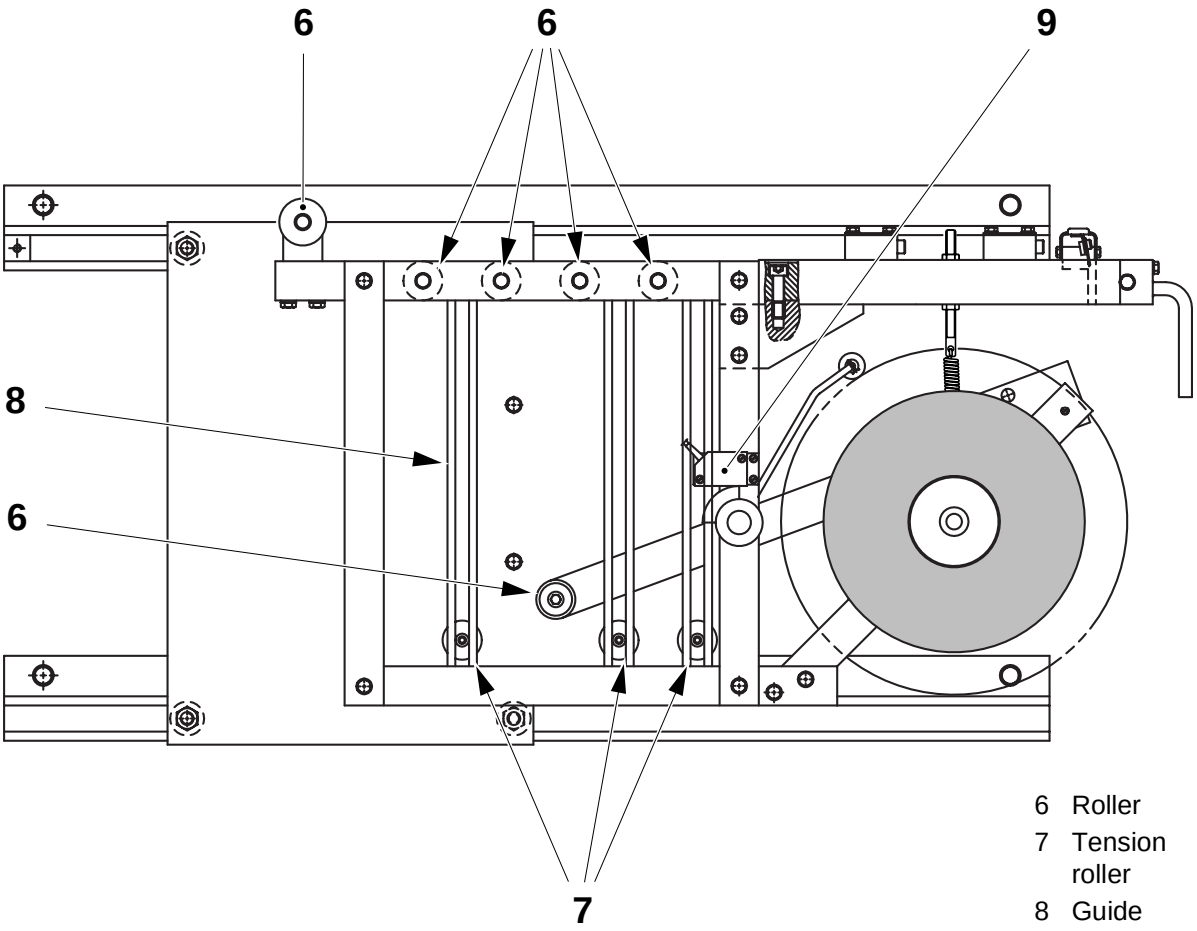

2.2B4884D03en.fm

6 Roller
7 Tension roller
8 Guide
9 Proximity switch

4.3-2 Magazine PullTab - set proximity switch

Machine status	Mains power **On**
SPC reference	1095893-0100

a) Place a feeler gauge, of **A** thickness, see table below, between the bobbin holder (2) and the wheel (1).

b) Loosen the stop screw on the indicator curve (3) and turn the indicator curve (3) until the LED on the proximity switch (4) goes off.

c) Tighten the stop screw on the indicator curve (3).

d) Remove the feeler gauge.

A = 8 mm

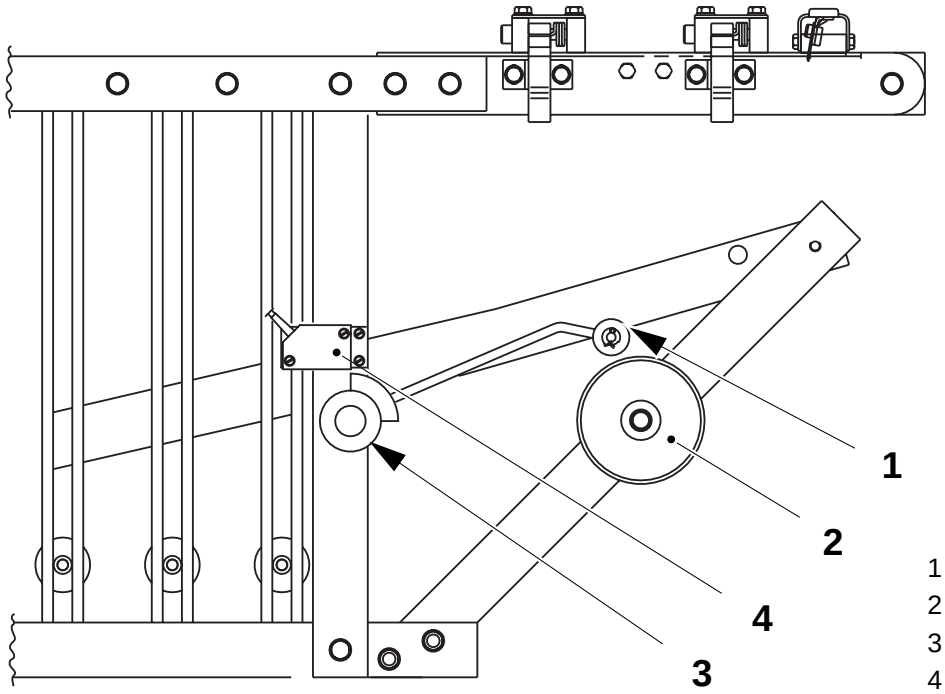

1 Wheel
2 Bobbin holder
3 Indicator curve
4 Proximity switch

2.2B4884D03en.fm

4.3-3 Magazine PullTab - set strip tension

SPC reference	1095893-0100

a) Check that the roller (2) operates at the **bottom** of its stroke and that the roller (3) operates at the **top** of its stroke.

b) If required, adjust patch strip tension by means of the nuts (1). Raise the spring to decrease tension or lower the spring to increase tension.

Note! Use a new bobbin (full) to verify the setting.

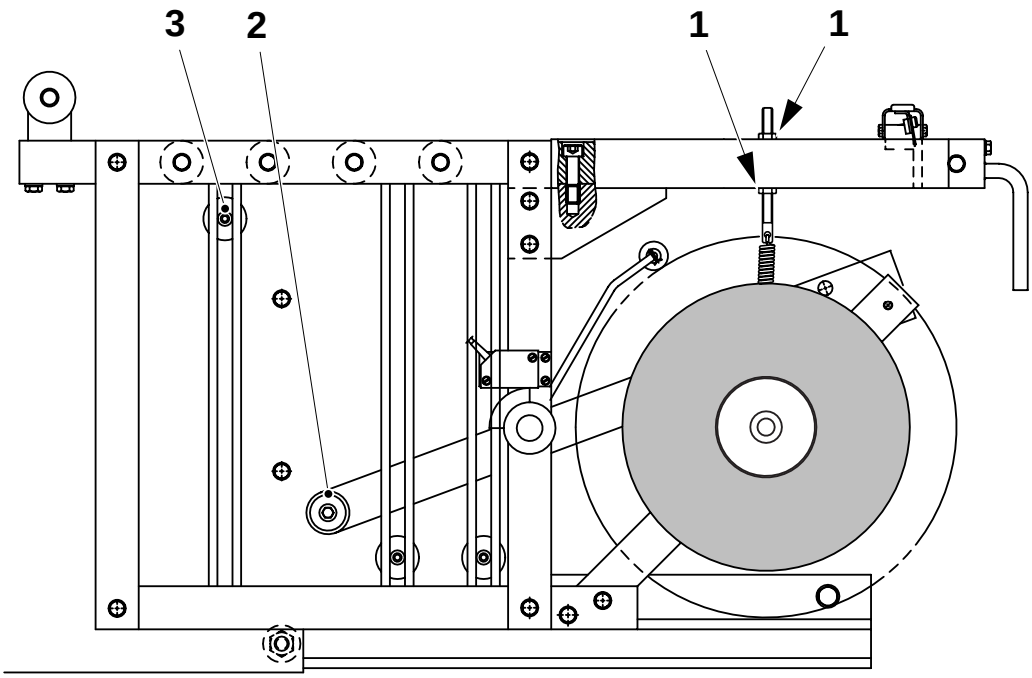

2.2B4884D03en.fm

1 Nut
2 Roller
3 Roller

4.3-4 Magazine PullTab - change bobbin holder bearings

SPC reference	1095893-0100

a) Unscrew the nut (1) and remove the washer (2).
b) Remove the bobbin holder (3) assembly.
c) Unscrew the cap nut (4) and remove the washer and the ball bearing (5).
d) Unscrew the screws (6) and remove the washer and the brake disc (7).
e) Pull out the shaft (8) and the washer (9).
f) Remove the circlip (10) and remove the ball bearing (11).
g) Change the ball bearings (5) and (11).
h) Assemble in the reverse order.

2.2B4884D03en.fm

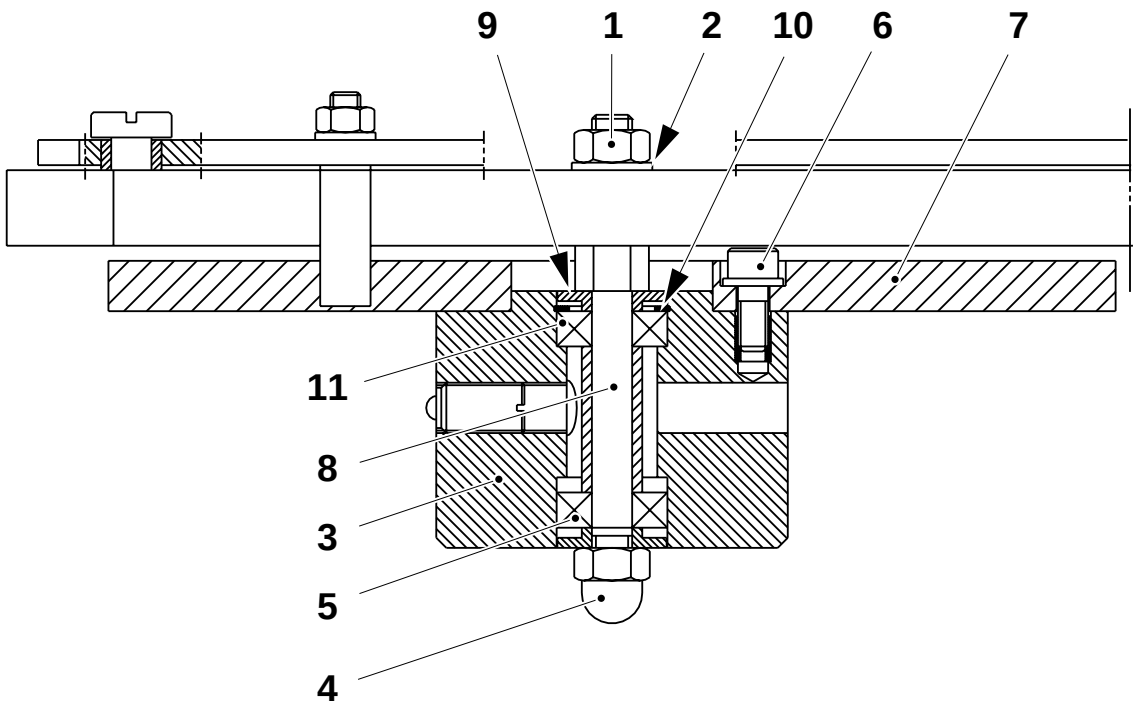

1	Nut	6	Screw
2	Washer	7	Brake disc
3	Bobbin holder	8	Shaft
4	Cap nut	9	Washer
5	Ball bearing	10	Circlip
		11	Ball bearing

4.3-5 Magazine PullTab - check bobbin holder

SPC reference	1095893-0100

Check that the bobbin holder (1) rotates easily.

Check the distance **A** between the spring loaded screw (2) and the bobbin holder (1).

Check that the strip bobbins are securely fixed to the bobbin holder (1).

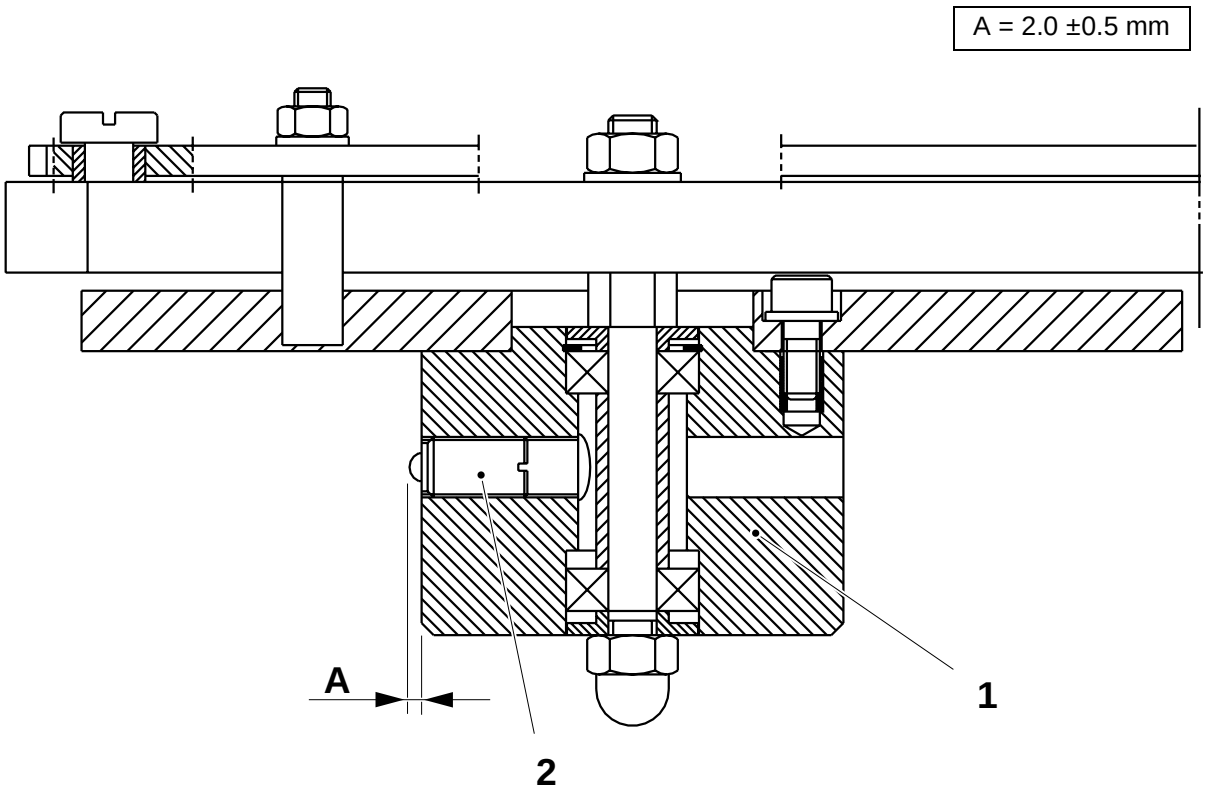

2.2B4884D03en.fm

1 Bobbin holder
2 Spring loaded screw

4.3.1 Splicing device

4.3.1-1 Splicing device - check function

SPC reference	1095893-0100 1095895-0100

Check that the splicing device (1) slides smoothly and easily on the guide tab (2). If not, change the curve roller (3) on the guide tab (2), see *4.3.2-1 Guide PullTab - change curve rollers*.

Check that the cutting action of the knife (4) is correct.
If not, change the knife (4), see on *4.3.1-2 Splicing device - change knife*.

Check that the lock grips (5) and the knife holder (6) spring to a position that does not interfere with the tab feeding.

Change as required.

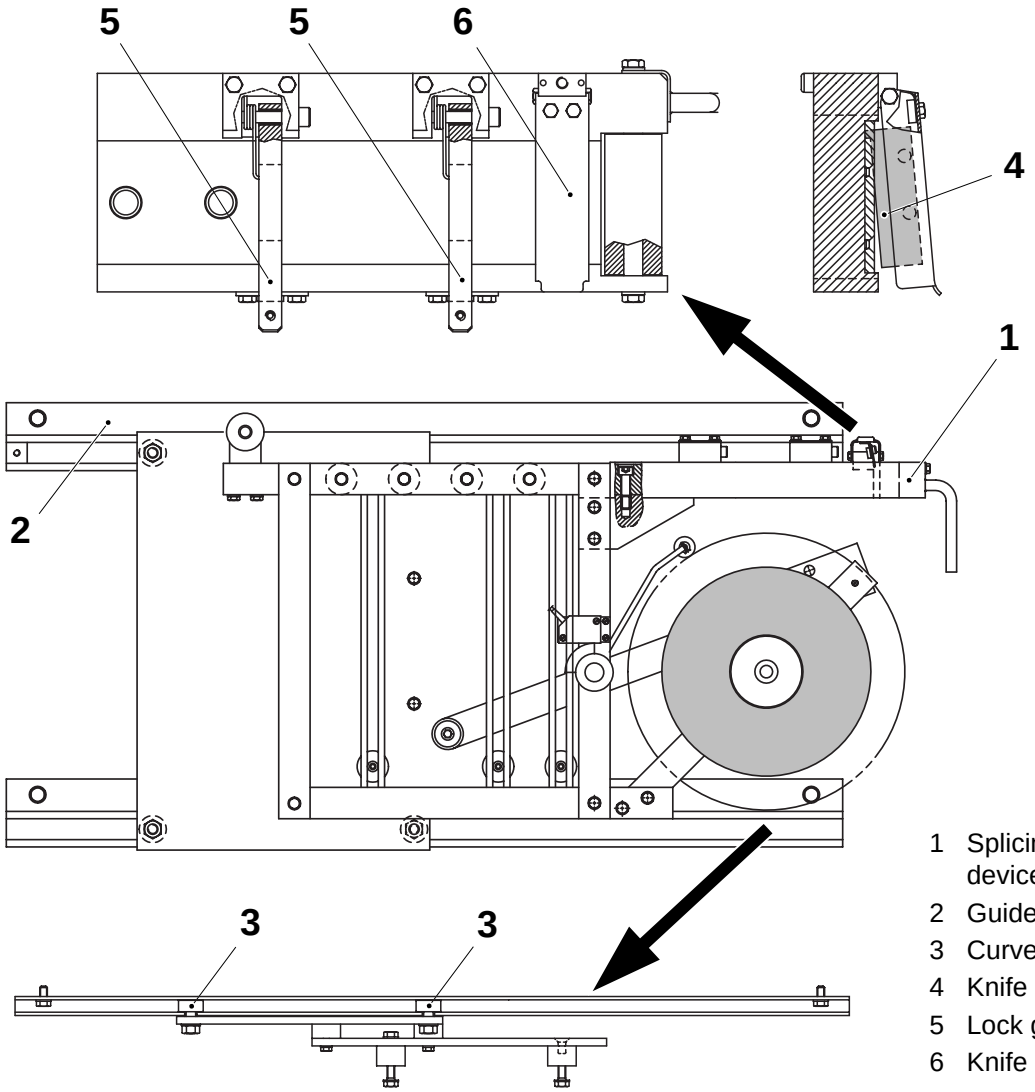

1 Splicing device
2 Guide tab
3 Curve roller
4 Knife
5 Lock grip
6 Knife holder

2.2B4884D03en.fm

4.3.1-2 Splicing device - change knife

SPC reference	1095893-0100 1095895-0100



Risk of cutting injury!
The knife (4) is sharp. Use gloves to avoid injuries.

a) On the side of the knife holder (1), unscrew the two screws (2) with the aid of an allen key.
b) Remove the washers (3).
c) Pull out the knife (4).
d) Change the knife (4).
e) Assemble in the reverse order.

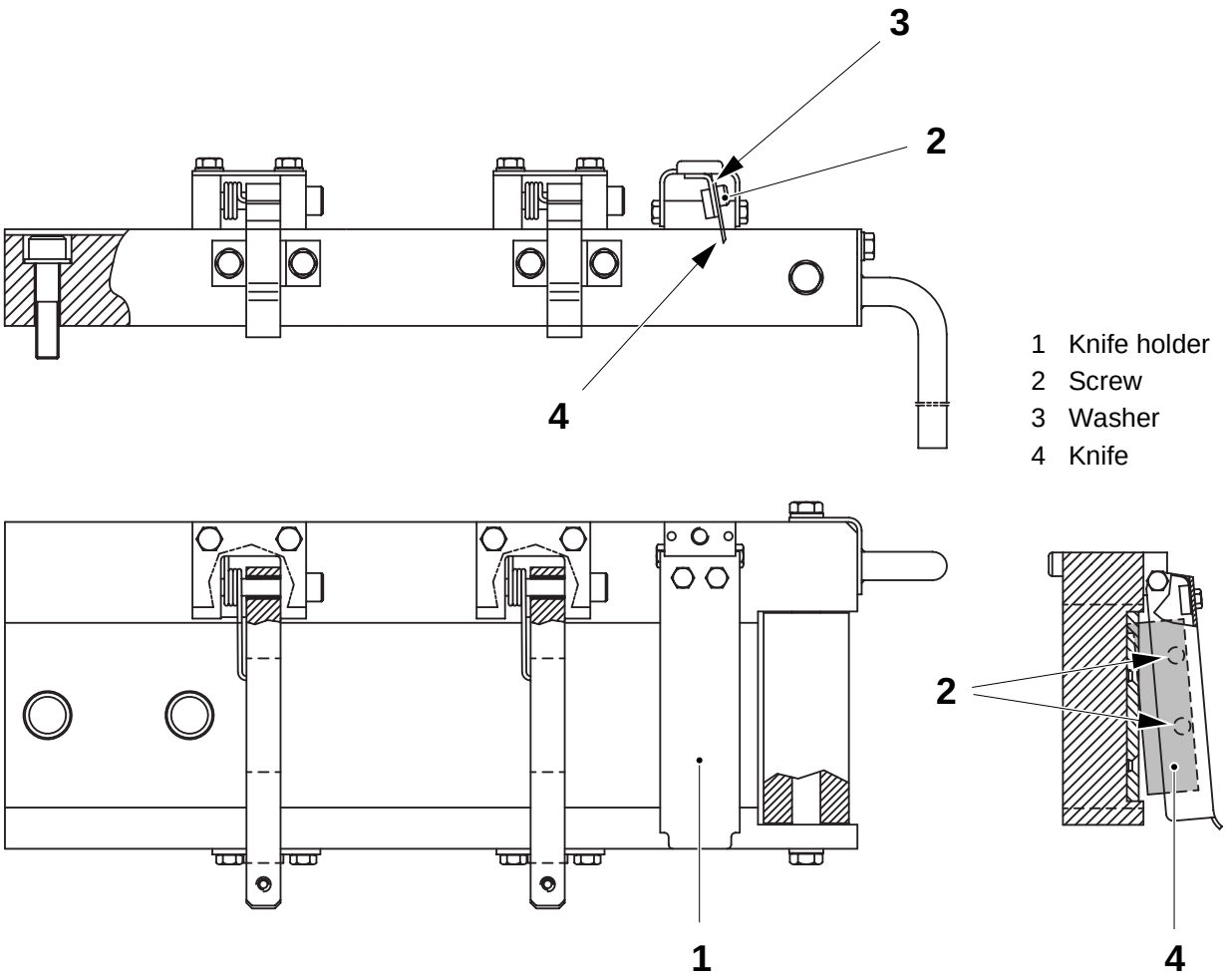

4.3.1-3 Splicing device - set lock grip

SPC reference	1095893-0100 1095895-0100

a) Place a piece of tab strip under the lock grips (1).

b) Loosen the screws (2).

c) Adjust the plate (3) so that it is **impossible** to pull the tab strip backwards and/or forwards.

d) Tighten the screws (2).

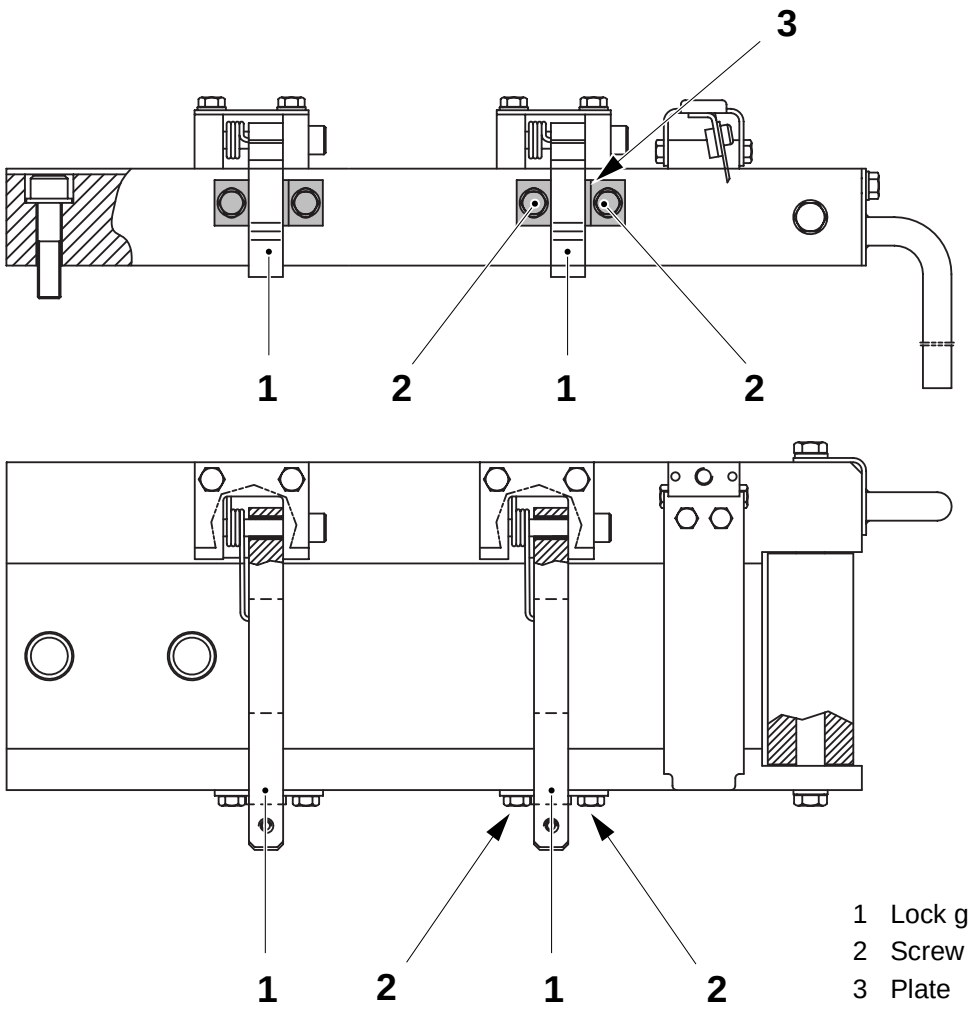

1 Lock grip
2 Screw
3 Plate

2.2B4884D03en.fm

4.3.2 Guide PullTab

4.3.2-1 Guide PullTab - change curve rollers

SPC reference	1095923-0100

a) Remove the tab turning device assembly from the guide tab.
b) Unscrew the screws (1).
c) Remove the plate (2) and the PullTab magazine assembly together.
d) Remove the four nuts (3) and the plate (4).
e) Unscrew the screws (5) and remove the two steerings (6).
f) Remove the curve rollers (7) and change them if damaged or worn out.
g) Assemble in the reverse order.

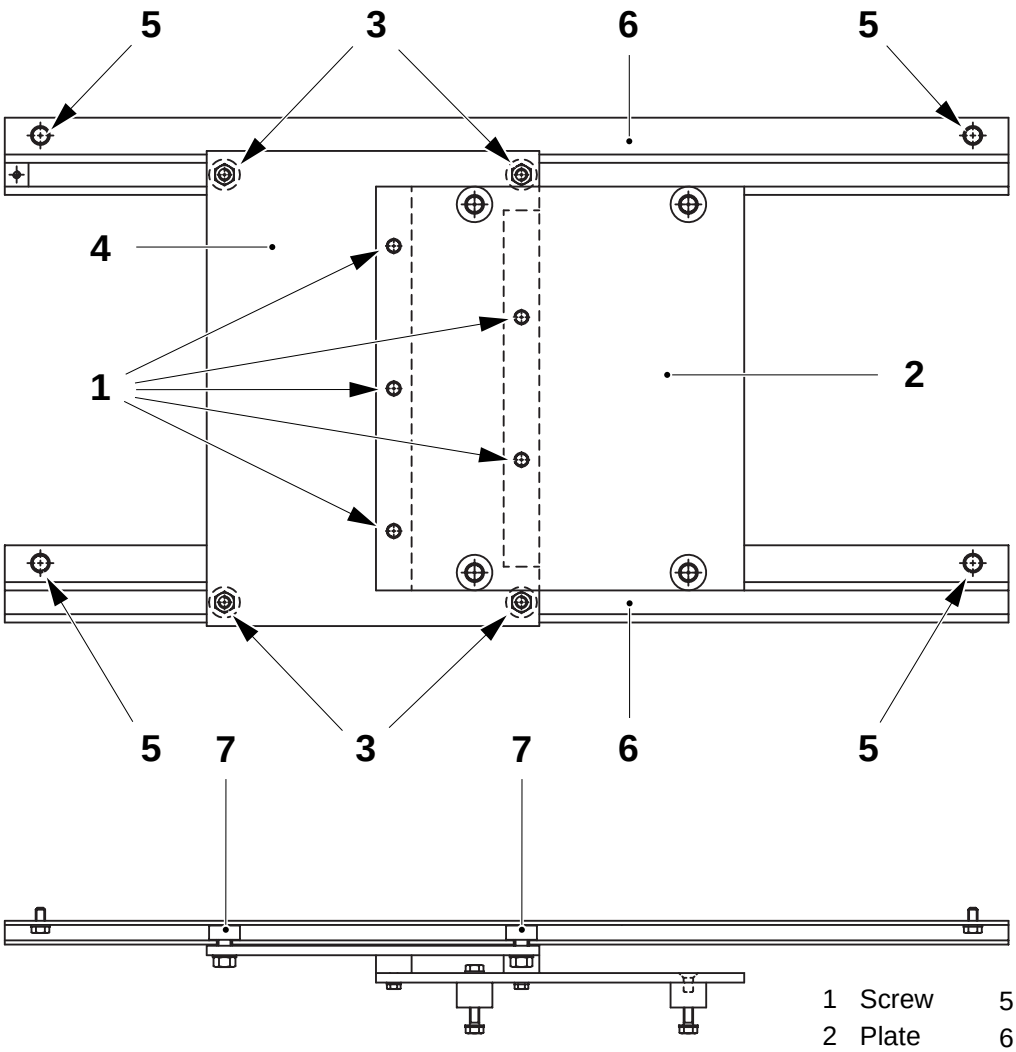

2.2B4884D03en.fm

1 Screw
2 Plate
3 Nut
4 Plate
5 Screw
6 Steering
7 Curve roller

4.3.3 Tab turning device

4.3.3-1 Tab turning device - check

Machine status	Mains power **On**
SPC reference	1334066-0100

Check the following parts for wear and/or damage:

- the rollers (1)
  Check that they turn freely. If not, clean as required. If damaged or worn, change.
- the flag (2)
  Check that it turns freely simultaneously with the roller (1)
- the function of the rotation monitor proximity switch (3)
  Turn the flag (2) and check that the switch LED lights up when the flag (2) covers the switch source. Set the flag (2) as required, see *4.3.3-2 Tab turning device - set rotation monitor proximity switch*.

Change as required.

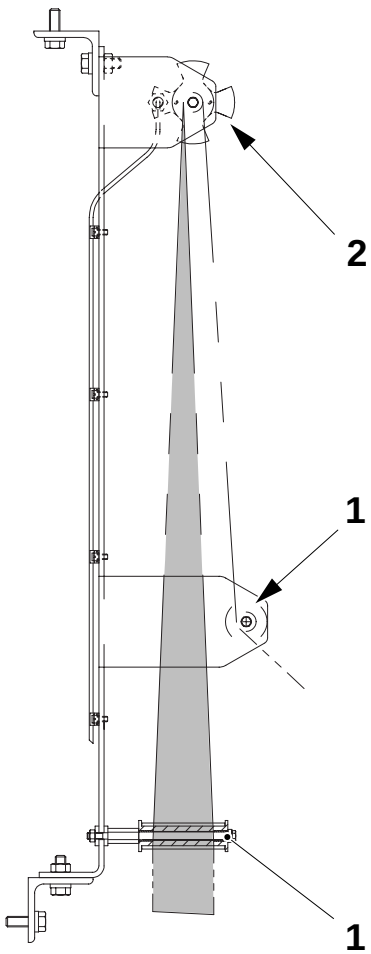

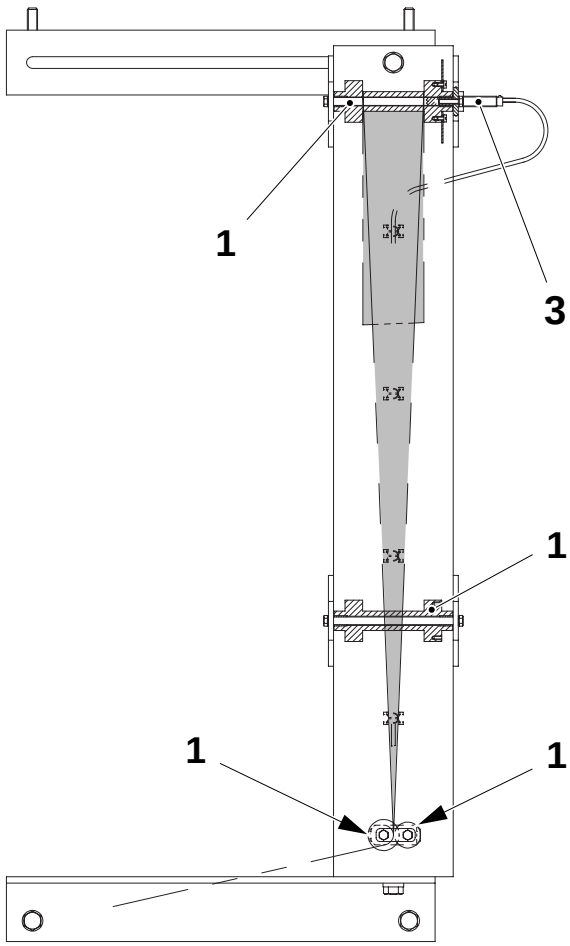

1 Roller
2 Flag
3 Proximity switch

2.2B4884D03en.fm

4.3.3-2 Tab turning device - set rotation monitor proximity switch

Machine status	Mains power **On**
SPC reference	1334066-0100

a) On the patch turning unit, pull the roller (1) towards the proximity switch (2).

b) Check the distance **A** between the proximity switch (2) and the flag (3).

c) Set as required by loosening the lock nuts (4) and shifting the proximity switch (2).

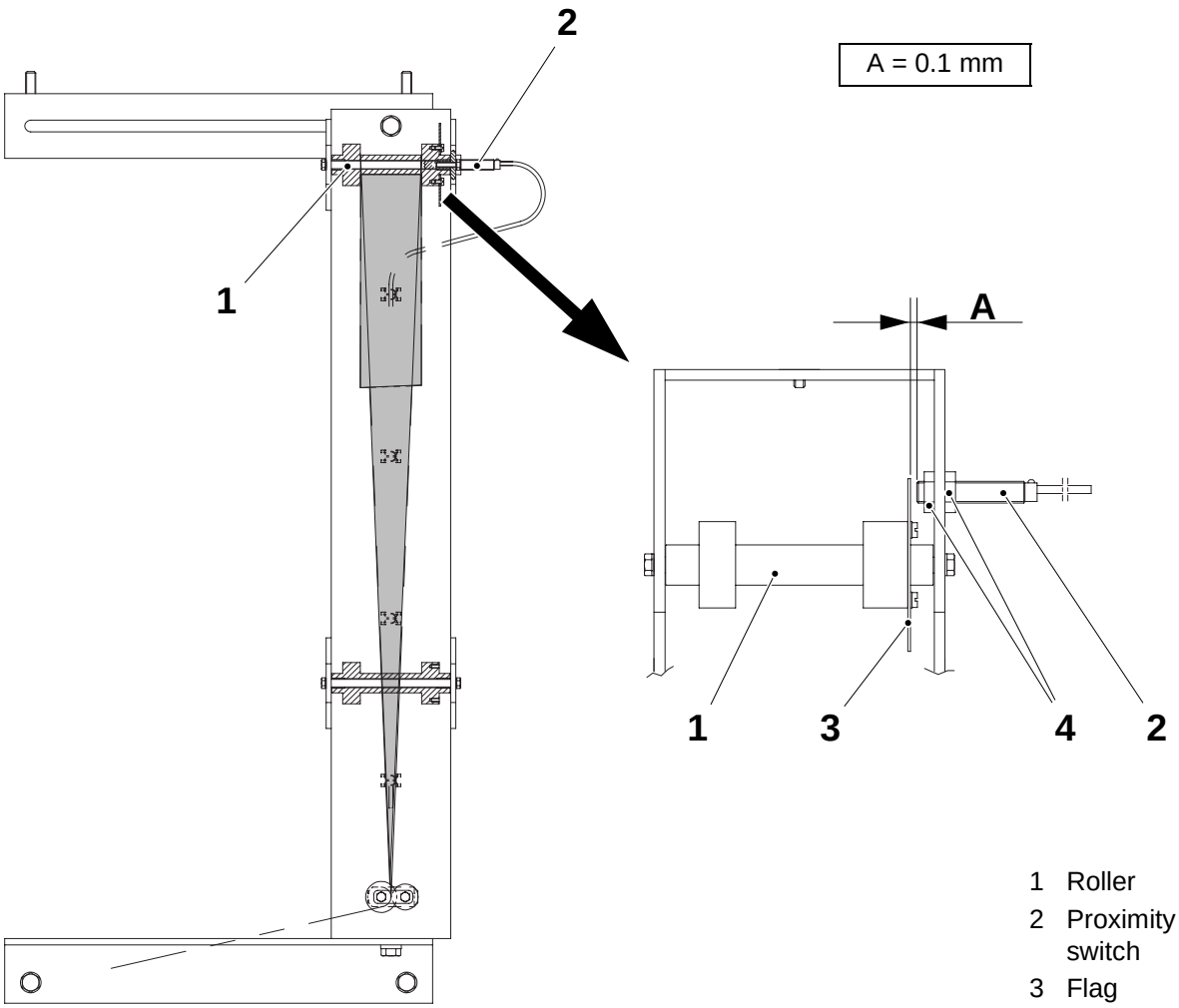

2.2B4884D03en.fm

1 Roller
2 Proximity switch
3 Flag
4 Nut

4.4 Tab folding device

SPC reference	514938-0100

4.4-1 Tab folding device - check function

Machine status	**Production**
SPC reference	514938-0100

a) Check, while the machine is running, the quality of the folded tabs.

b) Set the tab folding device as required, see *4.4-2 Tab folding device - set folding device*.

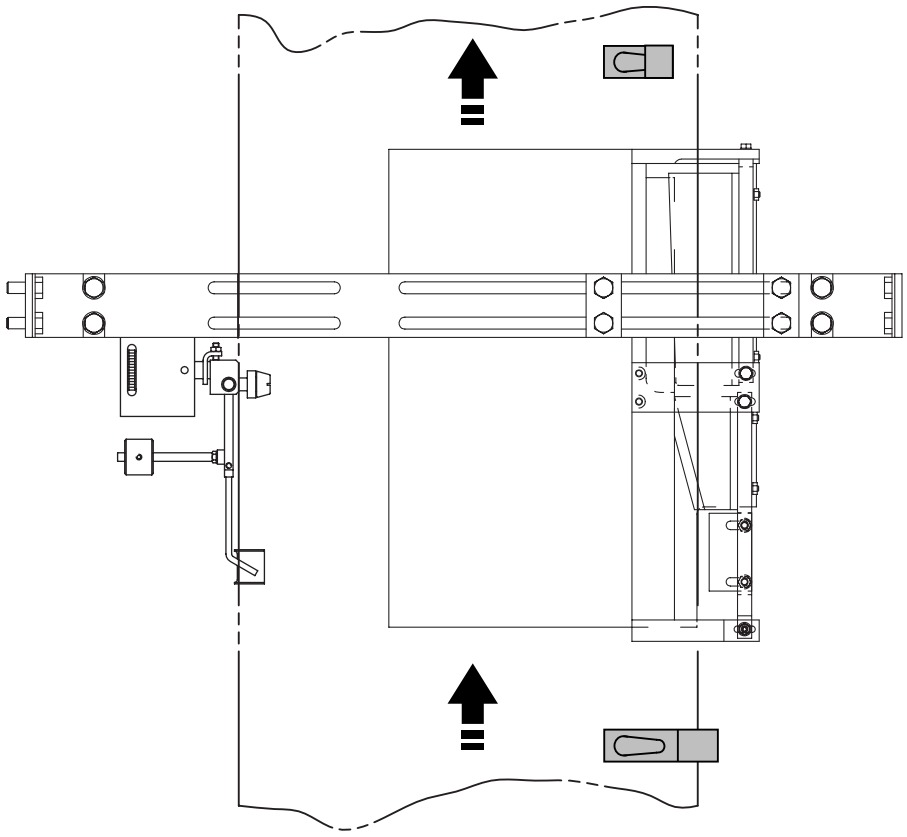

2.2B4884D04en.fm

4.4-2 Tab folding device - set folding device

SPC reference	514938-0100

a) Loosen the screws (3) and set the distance **A** by adjusting the plate (2) so that the double thickness of packaging material can pass between the rail (1) and the plate (2).

b) For the best setting of the distance **A** it could be helpful to use the screws (4) and the nuts (5).

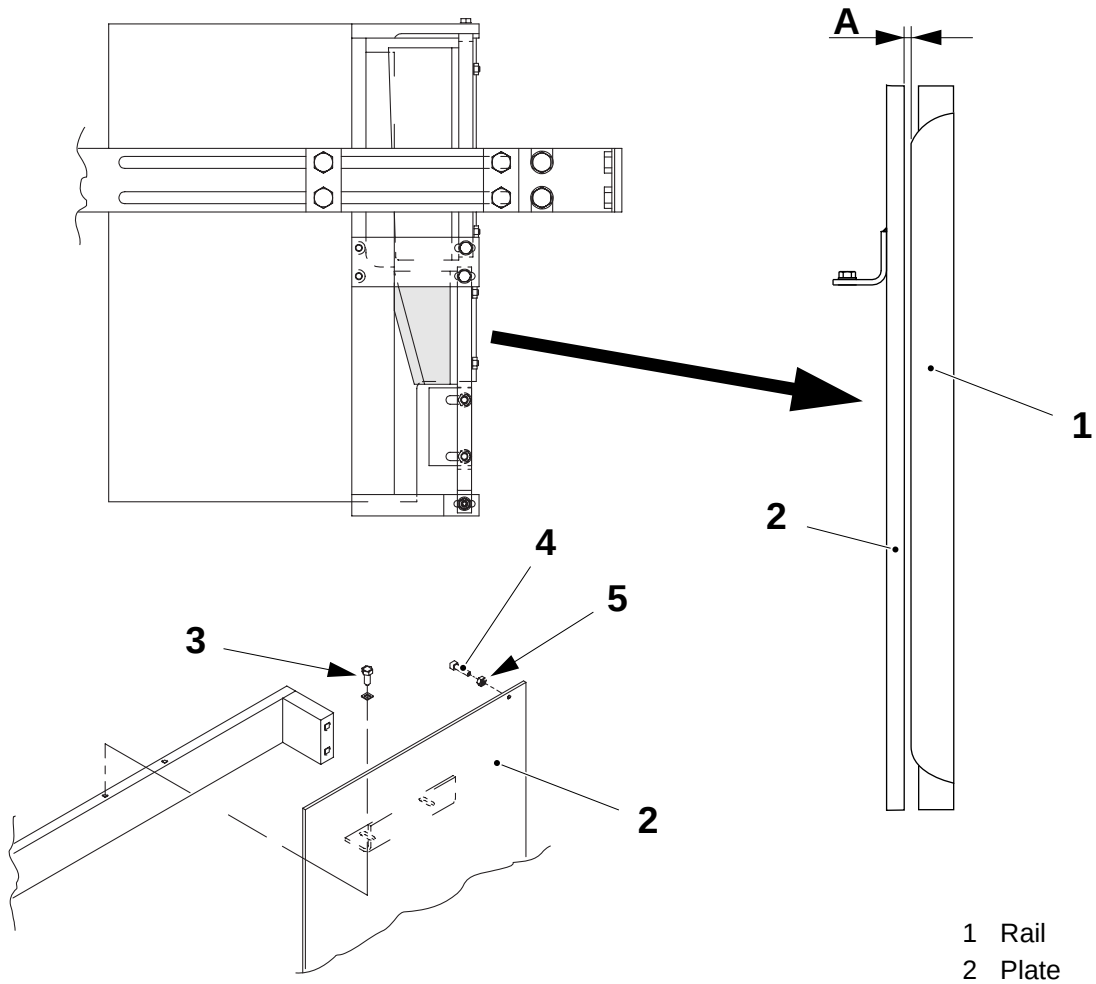

2.2B4884D04en.fm

1 Rail
2 Plate
3 Screw
4 Screw
5 Nut

A = 1 - 1.2 mm

(Cont'd)

(Cont'd)

c) With the aid of a feeler gauge, set the distance **B**, so that the double thickness of packaging material can pass between the guide plate (6) and the plate (2).

d) With the aid of a feeler gauge, set the distance **C** between the guide plate (7) and the rail (1).

B = 1 - 1.2 mm

C = 0.15 mm

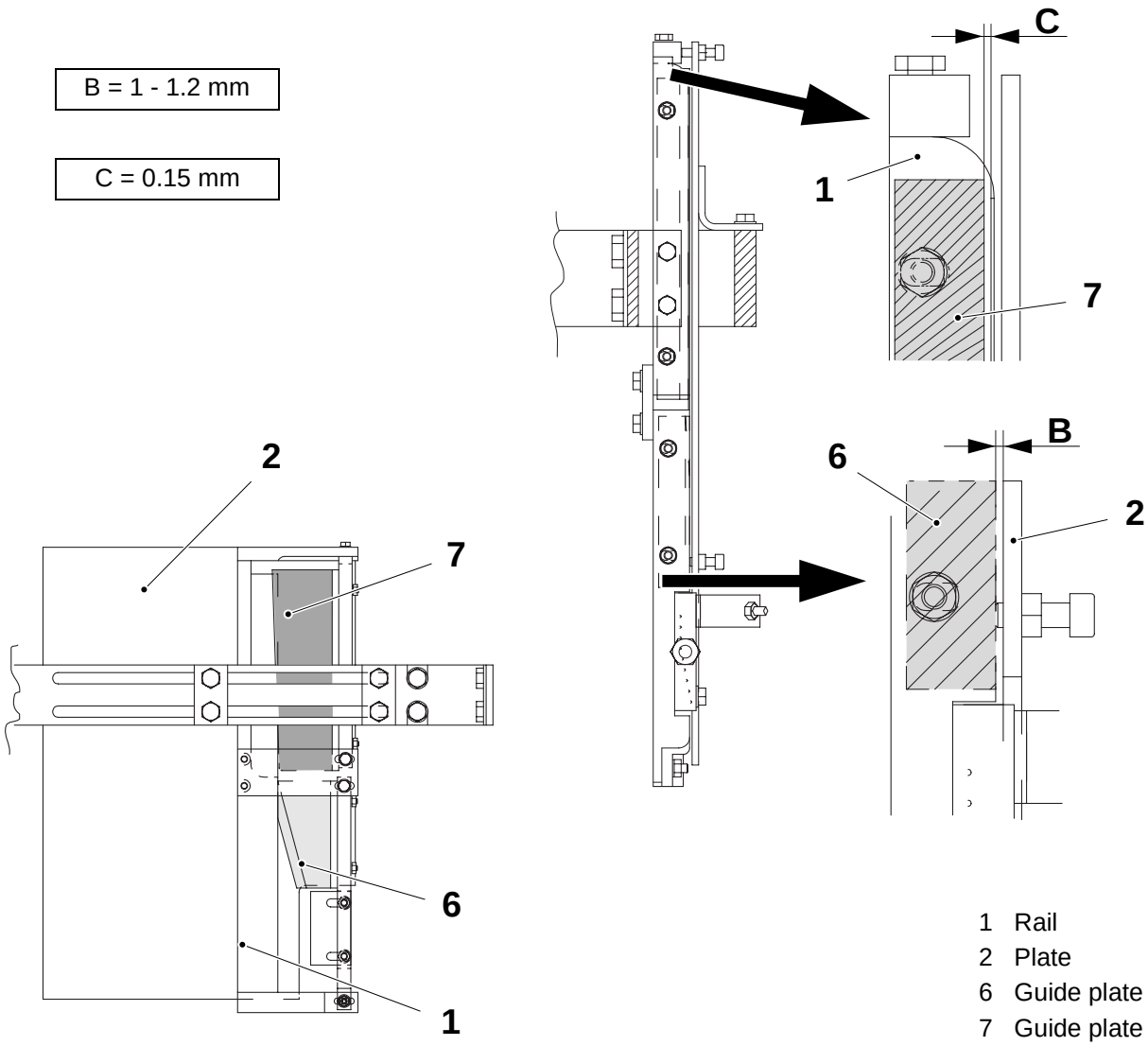

1 Rail
2 Plate
6 Guide plate
7 Guide plate

2.2B4884D04en.fm

(Cont'd)

(Cont'd)

e) Set the guide plate (7) so that it overlaps the edge of the rail (1) by the distance **D**.

f) Set the distance **E** between the edge of the guide plate (6) and the rail (1).

g) Check the correct position of the air nozzle (8). If required set the air nozzle (8) in order that air blows exactly on the tab.

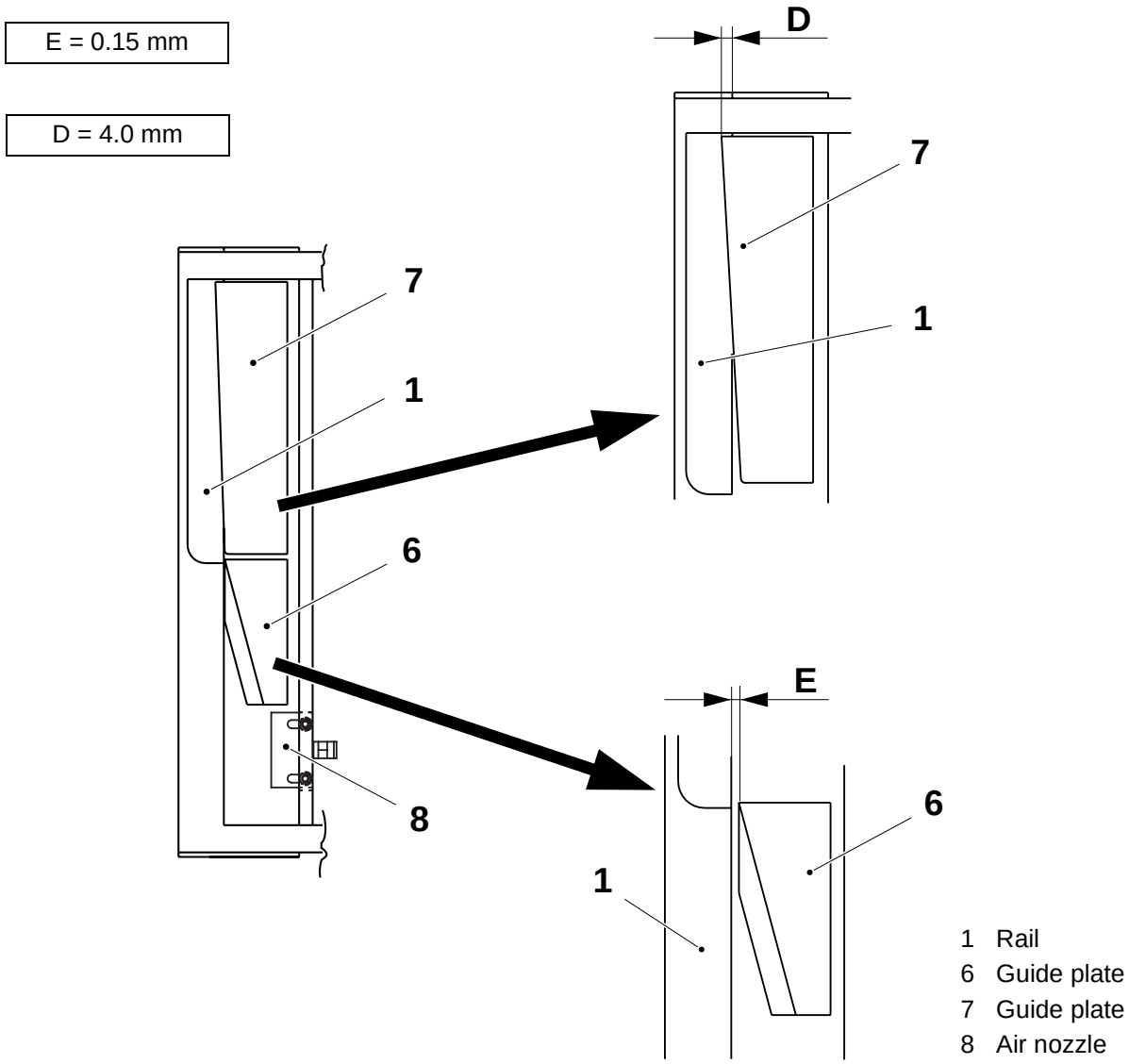

2.2B4884D04en.fm

(Cont'd)

(Cont'd)

h) Loosen the nuts (9).

i) Set the roller (10) in such position that the strip (11) on the packaging material (12) cannot be bent by the air blowing.

j) Tighten the nuts (9).

k) Step up to step **Production** and check that the tab is folded correctly.

l) If not, loosen the screws (13) and adjust the tab folding device (14) position by moving aside the complete unit.

m) Tighten the screws (13).

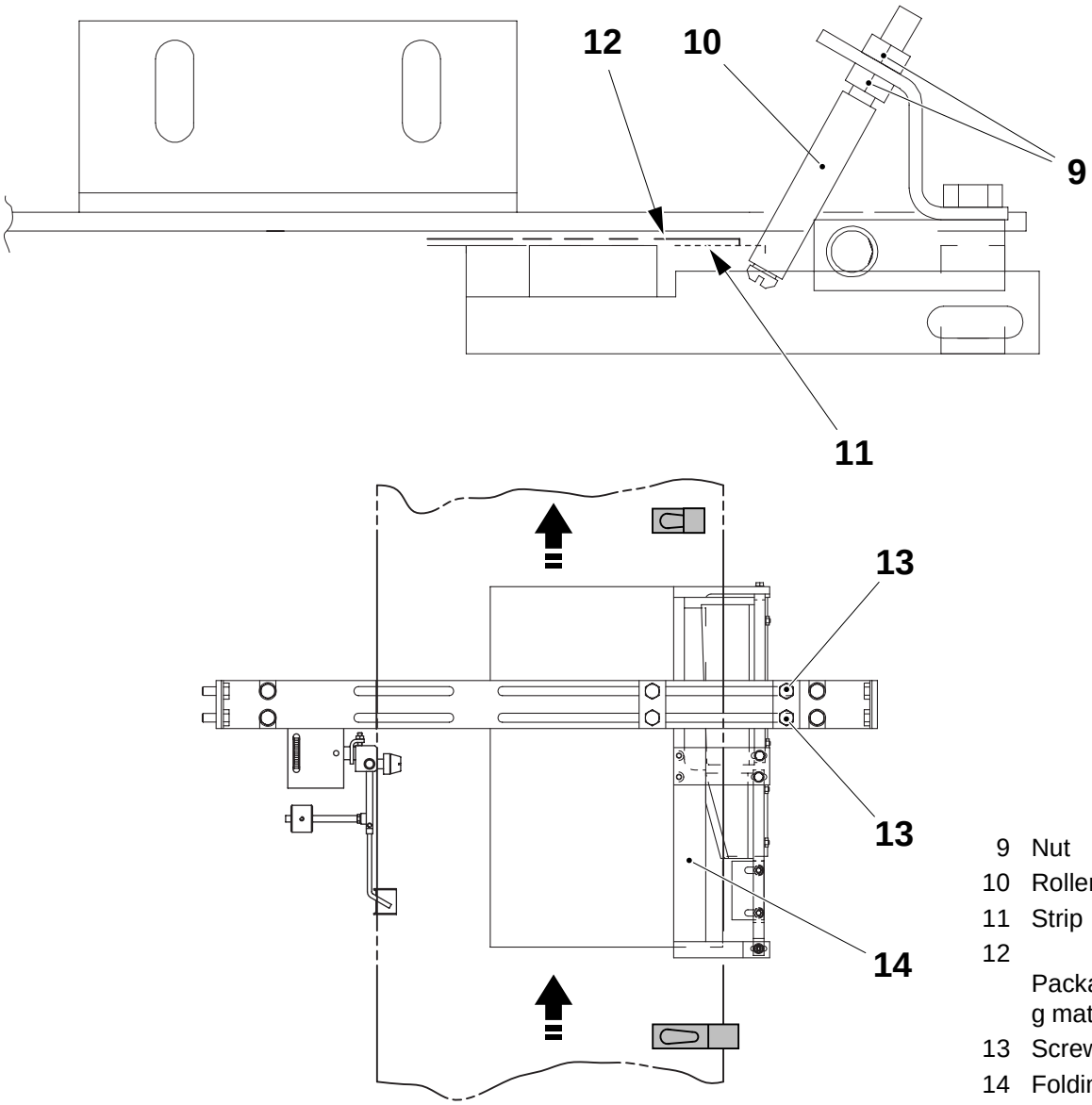

9 Nut
10 Roller
11 Strip
12 Packaging material
13 Screw
14 Folding

2.2B4884D04en.fm

4.4-3 Tab folding device - set paper guide

SPC reference	514938-0100 907946-0100

a) Attach two lead wires between the bending roller (1), located in the superstructure, and the cantilever roller (2), located in the dating unit.

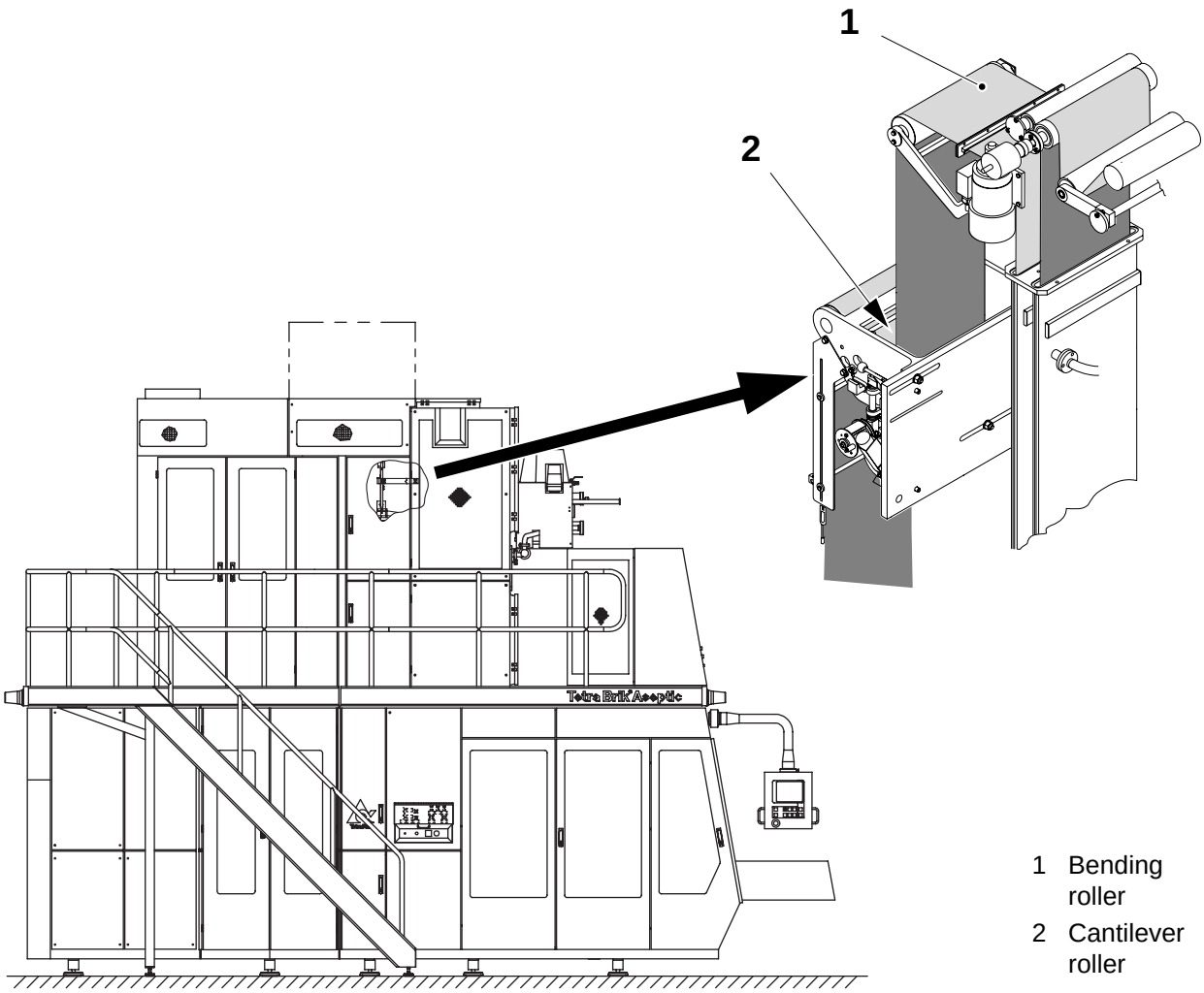

2.2B4884D04en.fm

1 Bending roller
2 Cantilever roller

(Cont'd)

(Cont'd)

b) Loosen the screws (5) and adjust the bracket (7), so that the lead wire is aligned with the gap between the rail (8) and the plate (10). Carefully loosen the screw (3) and adjust the steering mechanism (9) so that the other lead wire is aligned with the two bearings (4). Carefully tighten the screws (5). Check that the bracket (7) is not crooked.

c) Loosen the two screws (6) and adjust the position of the steering mechanism (9).

d) Step up to step **Production** and fine-adjust the steering mechanism (9). Check that the tab is folded properly. Also check that the packaging material runs properly through the folding device.

e) Check that the edge of the rail (8) is parallel to the edge of the packaging material.

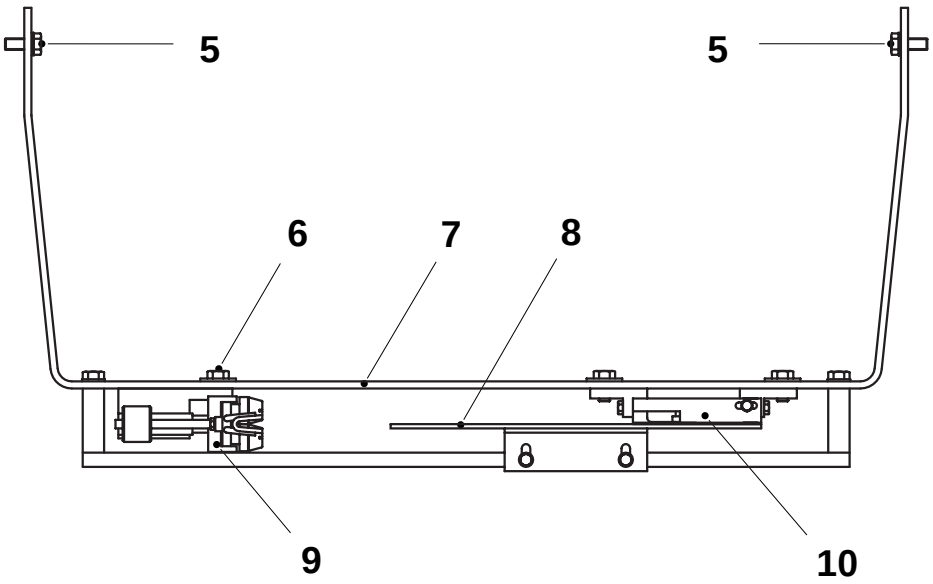

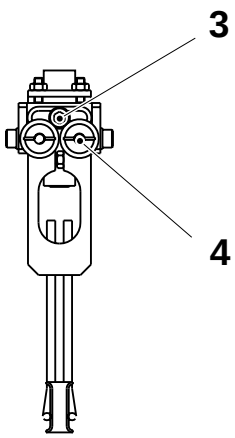

3 Screw
4 Bearings
5 Screw
6 Screw
7 Bracket
8 Rail
9 Steering mechanism
10 Plate

2.2B4884D04en.fm

4.4-4 Tab folding device - check paper guide bearings

SPC reference	514938-0100 907946-0100

Follow the procedure described in *1.2.6-1 Edge guide - check bearings*.

4.4-5 Tab folding device - change paper guide bearings

SPC reference	514938-0100 907946-0100

Follow the procedure described in *1.2.6-2 Edge guide - change bearings*.

2.2B4884D04en.fm

4.5 Tab folding device (alternative solution)

SPC reference	1498276-0100

4.5-1 Tab folding device - check

Machine status	**Production**
SPC reference	1498276-0100

ReCap and ReCap2

a) Remove the tab folder (2) by means of the two screws (1).

b) Check the guide plates (3) and (4) for damage and/or wear. Change as required, see *4.5-4 Tab folding device - overhaul guide plate*.

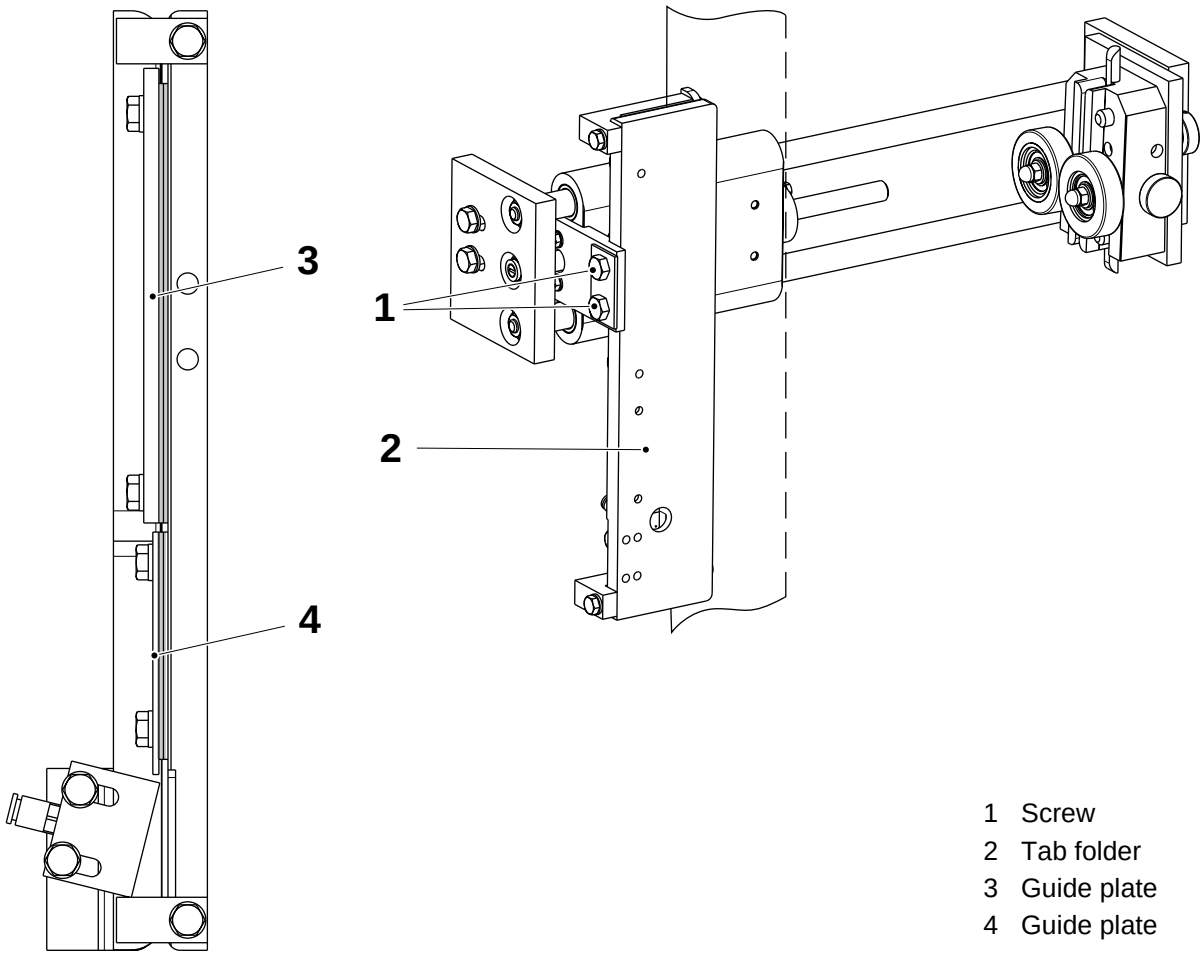

1 Screw
2 Tab folder
3 Guide plate
4 Guide plate

2.2B4884D05en.fm

(Cont'd)

(Cont'd)

ReCap3 and ReCap3P

a) Remove the screws (1) and remove the angle bar (2) of the tab folding unit.

b) Check that the guide plates (3) and (4) are not damaged/or worn.

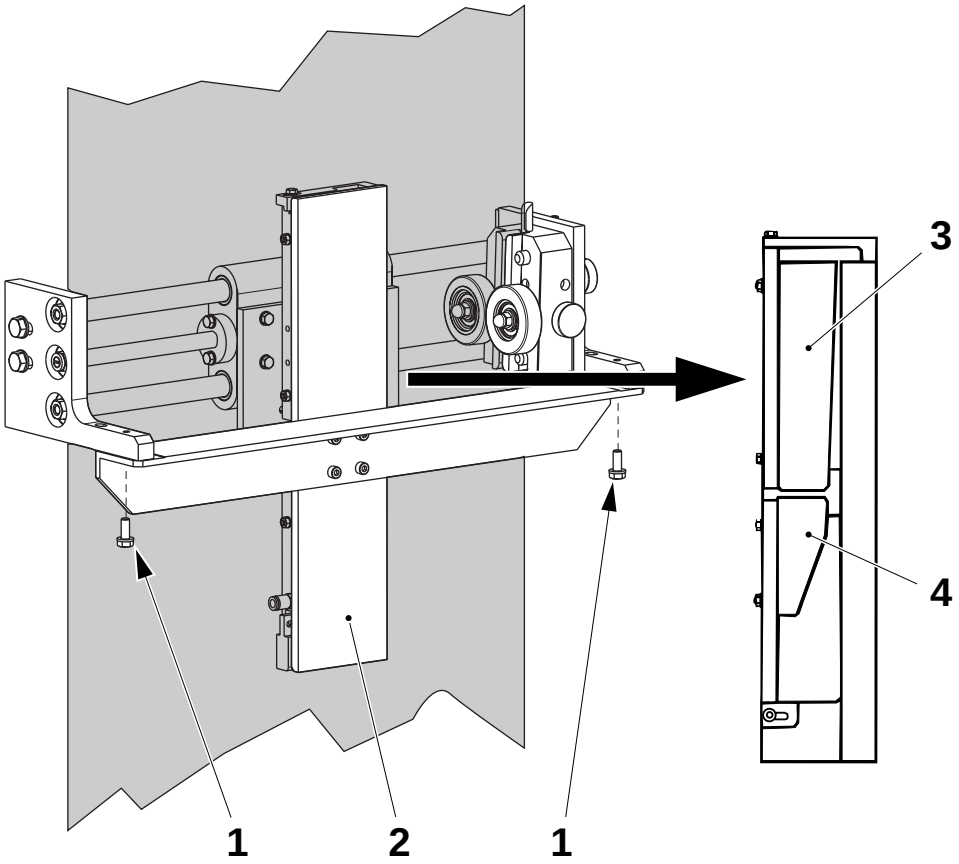

2.2B4884D05en.fm

1 Screw
2 Angle bar (Plate)
3 Guide plate
4 Guide plate

4.5-2 Tab folding device - set

SPC reference	1498276-0100

a) Remove the tab folder (2) by means of the two screws (1).

b) Loosen the screws (5) and set the distance **A** by adjusting the rail (4) so that triple packaging material can pass between the rail plate (4) and the plate (3). Tighten the screws (5).

c) Set the distance **B** by means of the peelable shims (6) under the guide plate (7) so that triple packaging material can pass between the guide plate (7) and the plate (3).

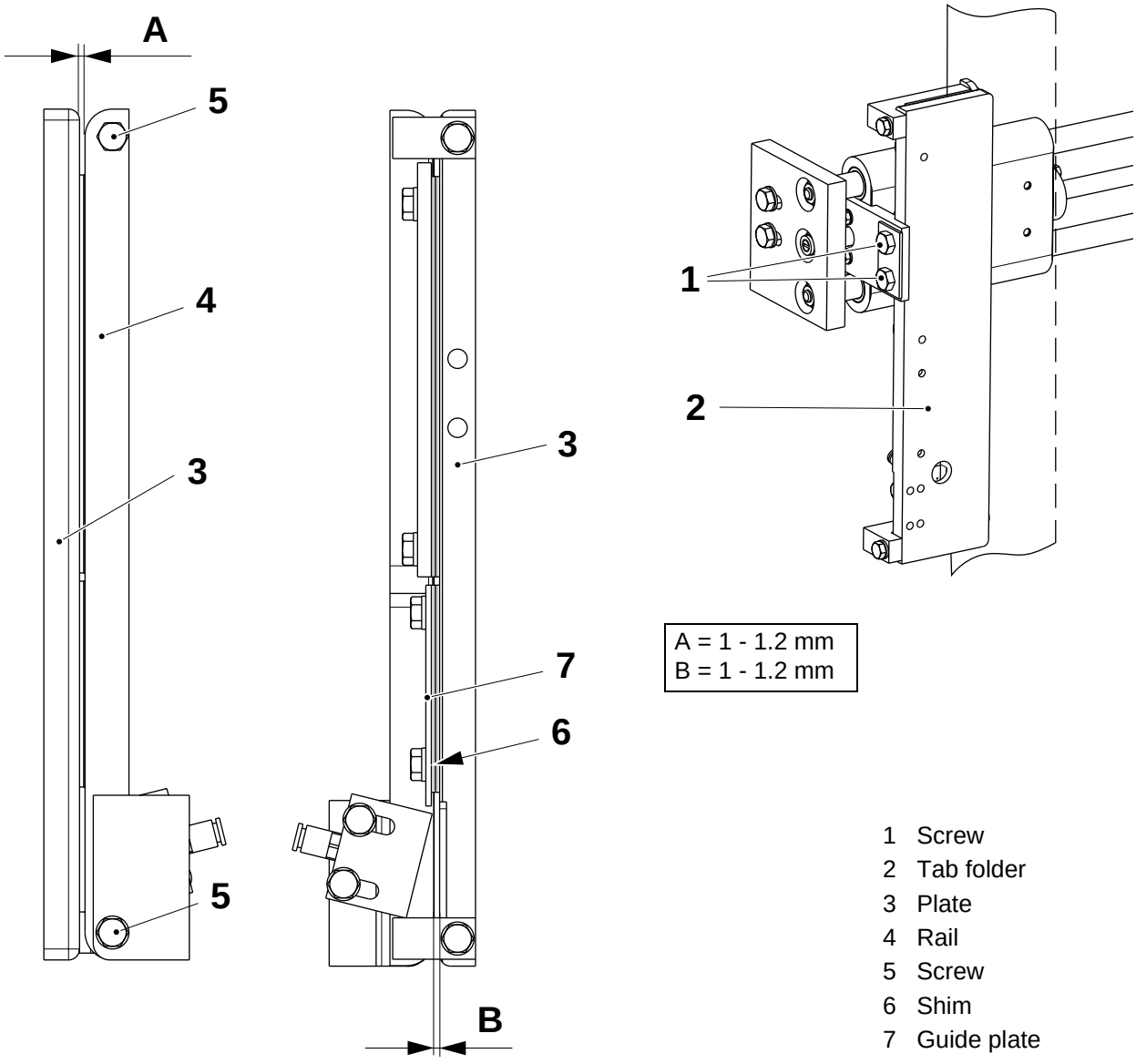

A = 1 - 1.2 mm
B = 1 - 1.2 mm

1 Screw
2 Tab folder
3 Plate
4 Rail
5 Screw
6 Shim
7 Guide plate

2.2B4884D05en.fm

(Cont'd)

(Cont'd)

d) Set the distance **C** between the guide plate (8) and the rail (4) by adjusting the peelable shims (9) under the guide plate (8).

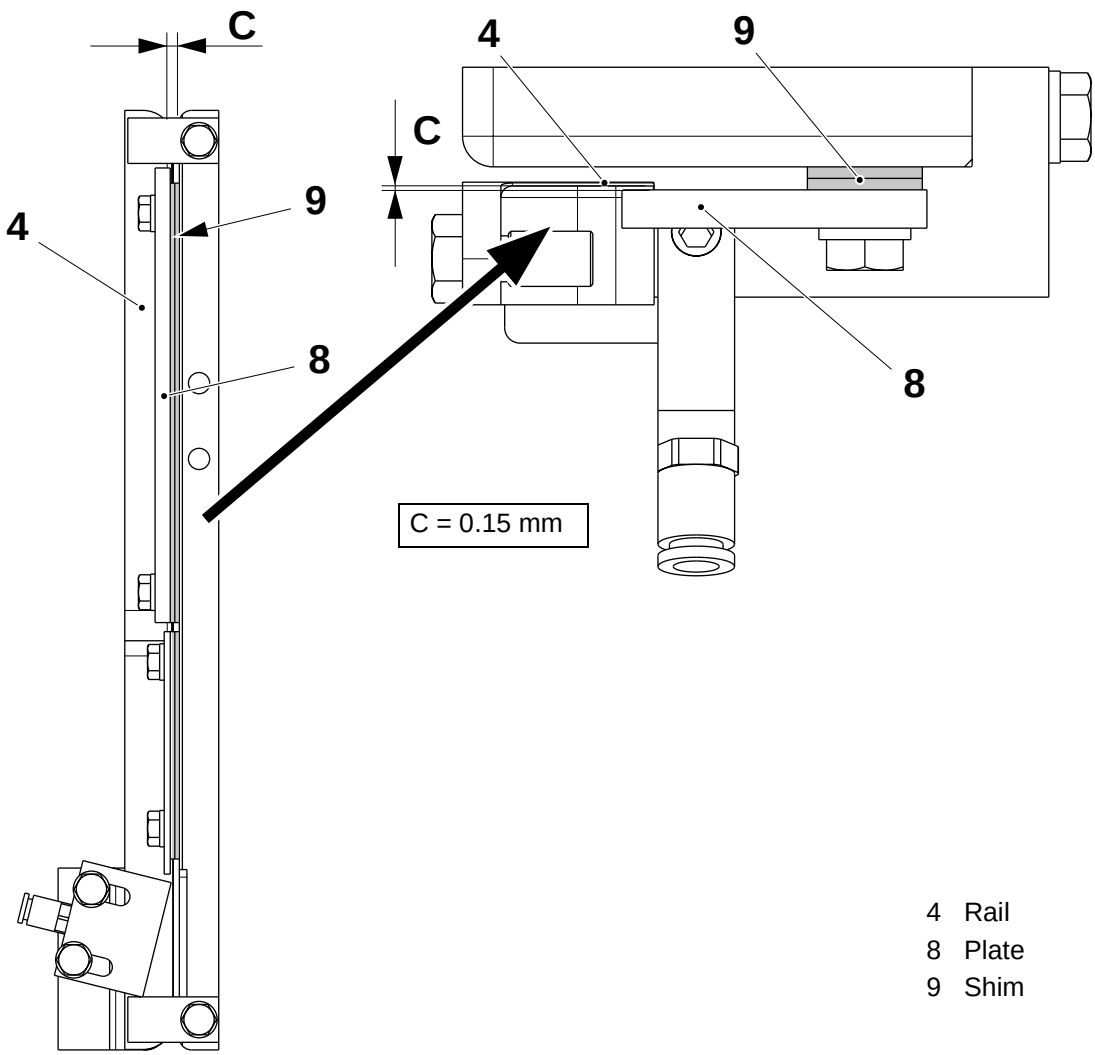

2.2B4884D05en.fm

4 Rail
8 Plate
9 Shim

(Cont'd)

4.5 Tab folding device (alternative solution)

(Cont'd)

e) Set the distance **D** between the edge of the guide plate (7) and the rail (4) by means of the screws (9).

f) Set the guide plate (8), by means of the screws (10), so that it overlaps the edge of the rail (4) by the distance **E** at the top, and by the distance **F** at the bottom.

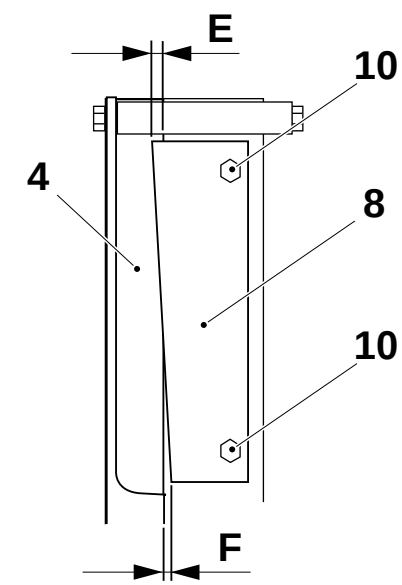

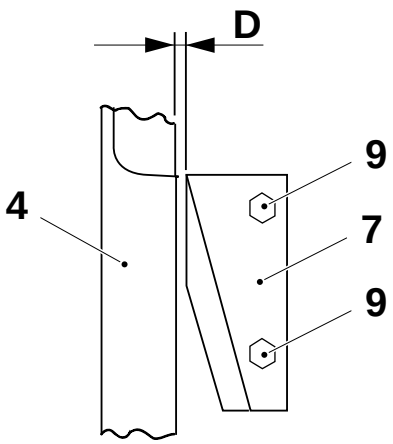

D = 0.15 mm
E = 4 mm
F = 1.5 mm

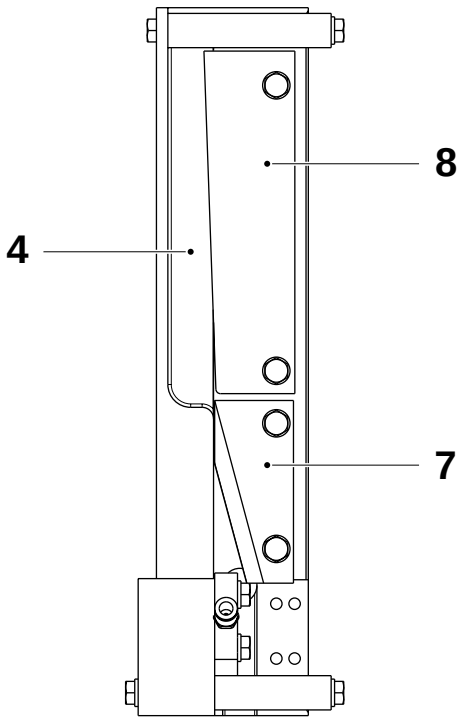

4 Rail
7 Guide plate
8 Guide plate
9 Screw
10 Screw

(Cont'd)

2.2B4884D05en.fm

(Cont'd)

g) Fit the tab folder (2) by means of the screws (1).

h) Set the distance **G** between the edge of the tab folder (2) and the papers edge (14) by means of the adjustment screw (11).

Note! Make sure that the distance **G** is measured from the papers edge (14) and not from the plastic edge (13). The papers edge (14) should be in the middle of the hole (12)

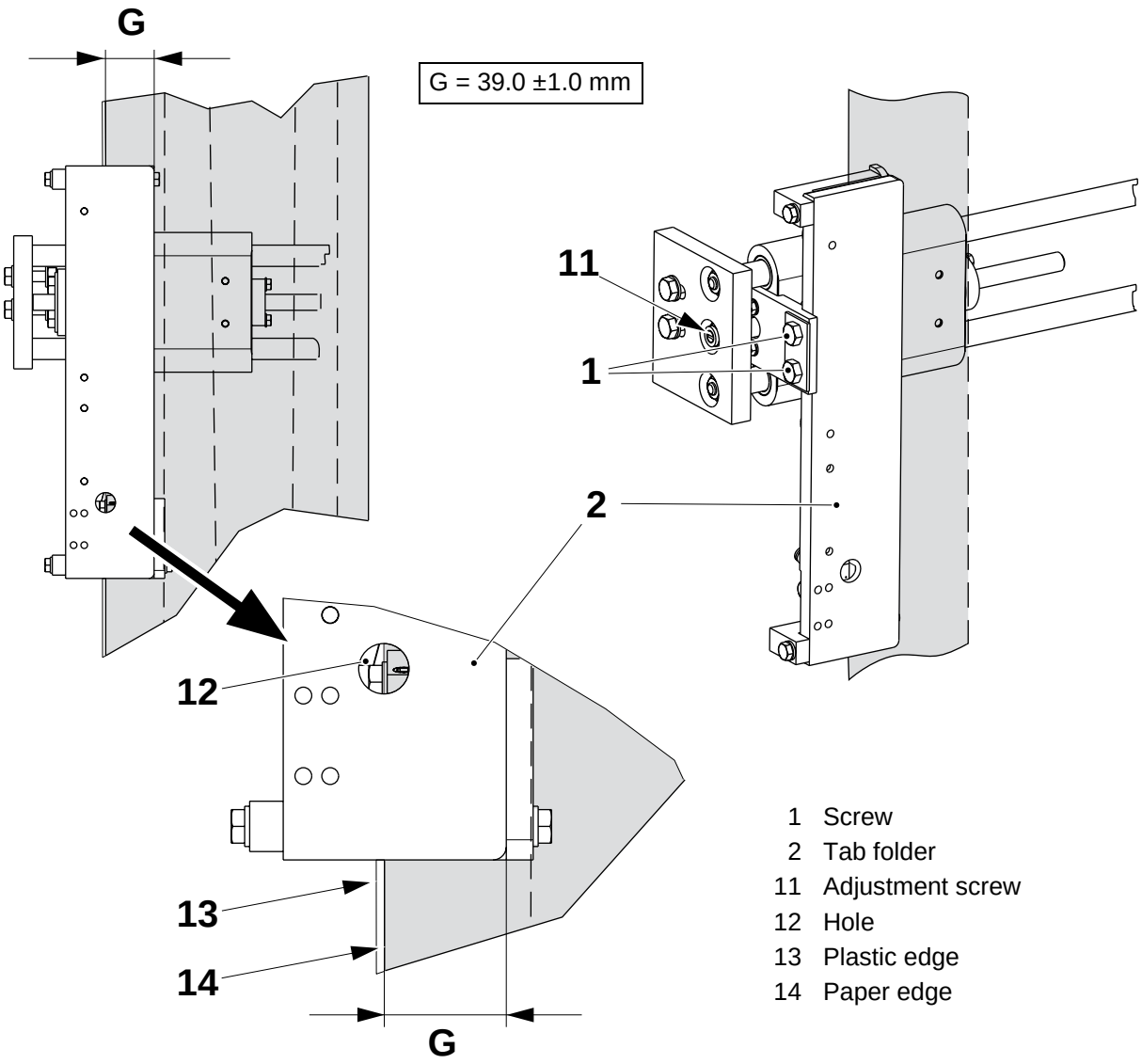

1 Screw
2 Tab folder
11 Adjustment screw
12 Hole
13 Plastic edge
14 Paper edge

2.2B4884D05en.fm

(Cont'd)

(Cont'd)

i) Set the distances **H** and **I** between the upper and the lower edge of the air nozzle (15) and the packaging material web (16) by means of the screws (17).

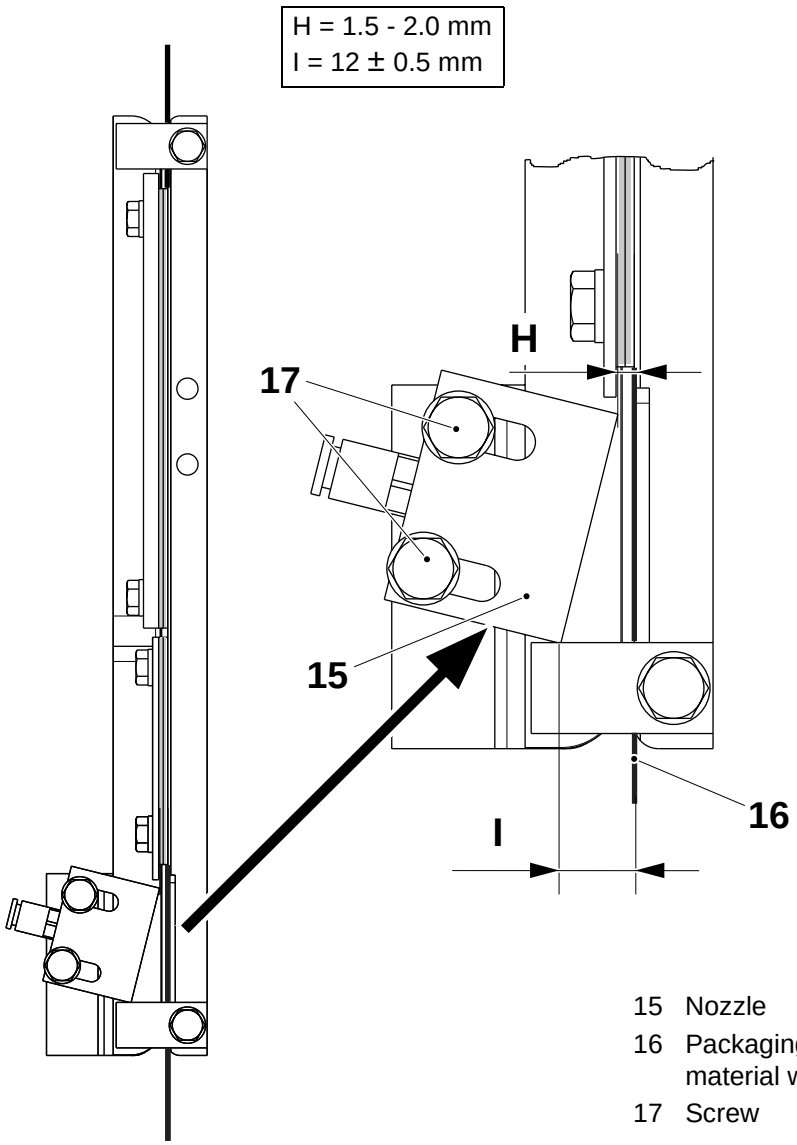

15 Nozzle
16 Packaging material web
17 Screw

(Cont'd)

2.2B4884D05en.fm

(Cont'd)

ReCap3 and ReCap3P

a) Remove the outer tab folding plate (2) from the bracket (3) by means of the screws (1).

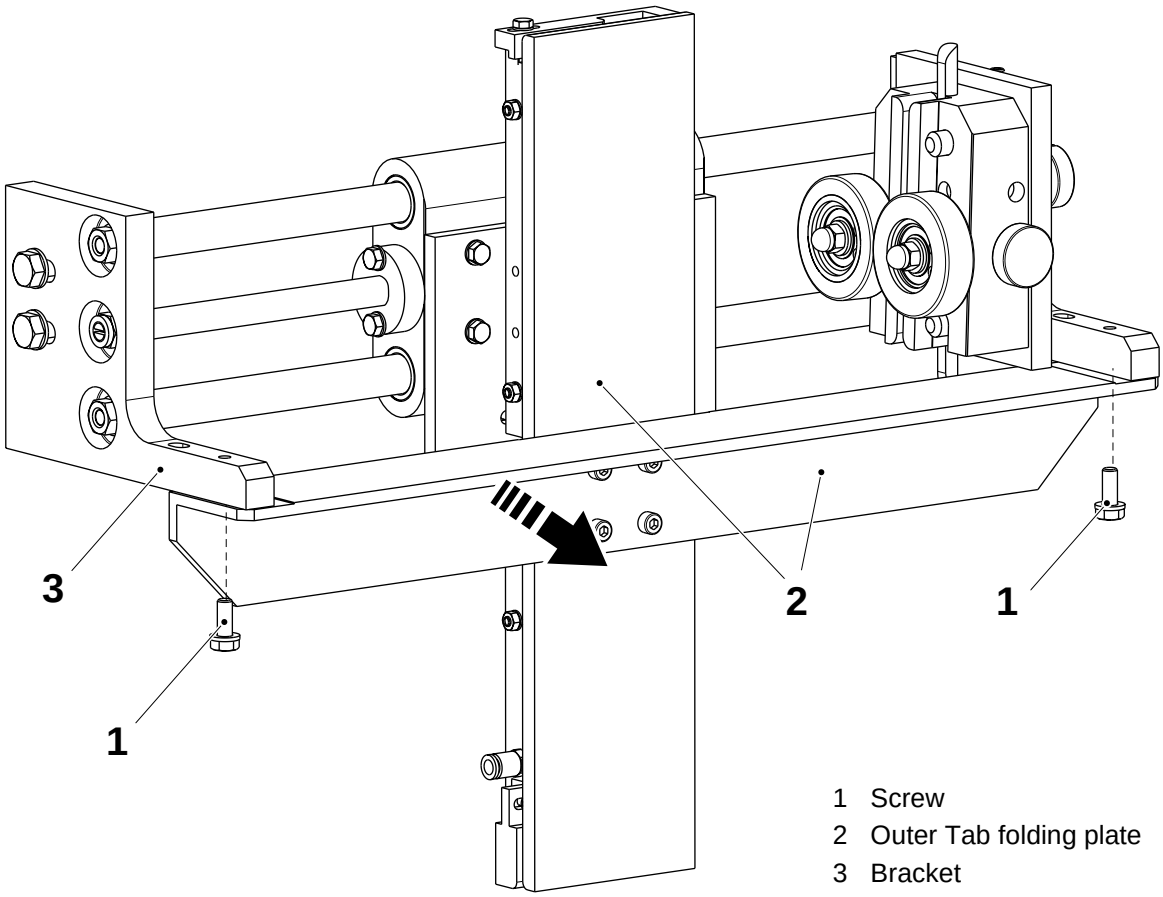

2.2B4884D05en.fm

1 Screw
2 Outer Tab folding plate
3 Bracket

(Cont'd)

4.5 Tab folding device (alternative solution)

(Cont'd)

b) Adjust the position of the guide plate (5) with the screws (6) so that it is aligned with the side of the inner tab folding plate (4) (left arrow).

c) Set the distance **A** between the edge of the guide plate (5) and the inner tab folding plate (4) by means of the screws (7).

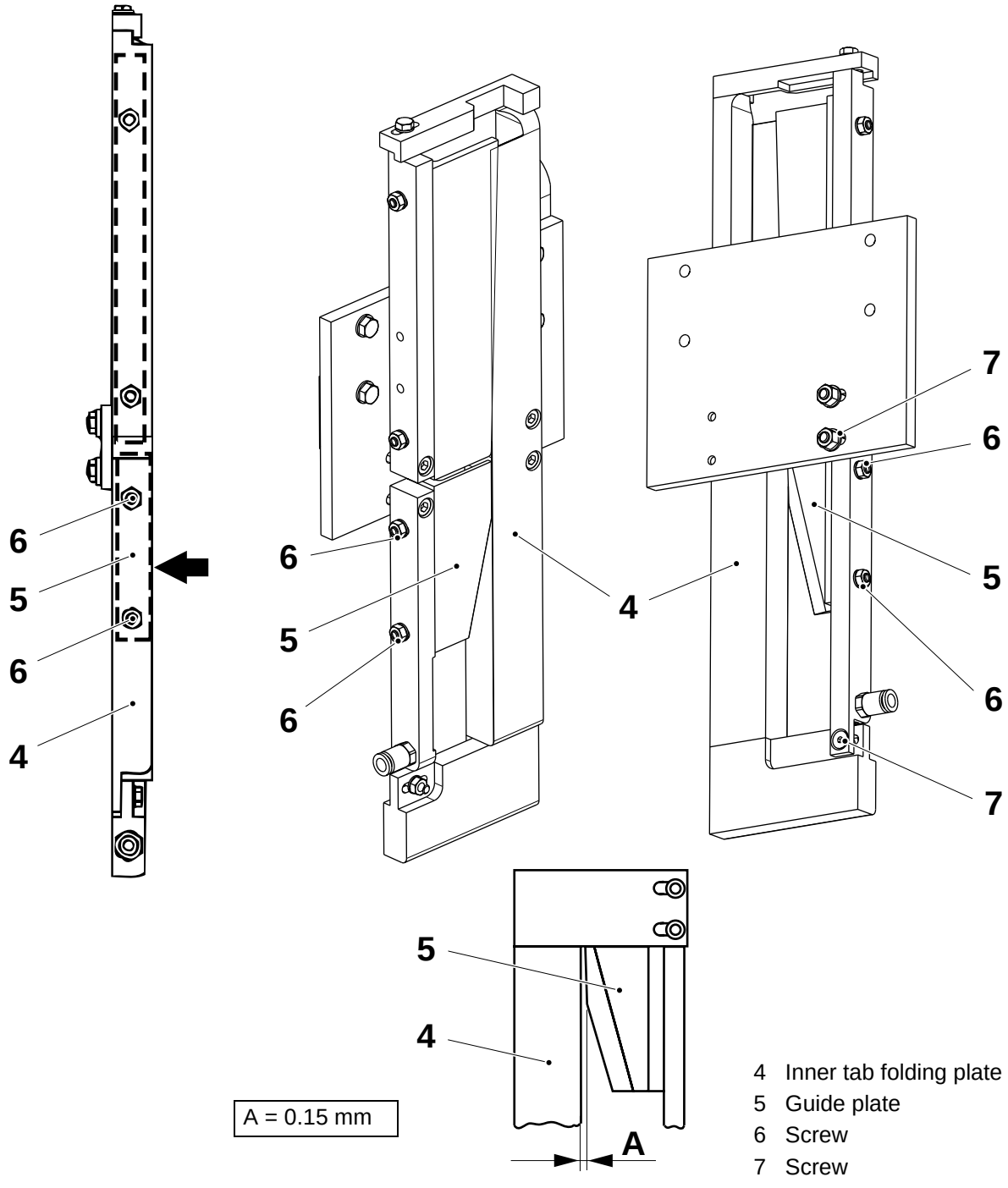

2.2B4884D05en.fm

(Cont'd)

(Cont'd)

d) Set the distance **B** between the edge of the guide plate (8) and the side of the inner tab folding plate (4) by means of the screws (9).

e) Set the guide plate (8) by means of the screws (10) so that it overlaps the edge of the inner tab folding plate (4) by the distance **C** at the top and by the distance **D** at the bottom.

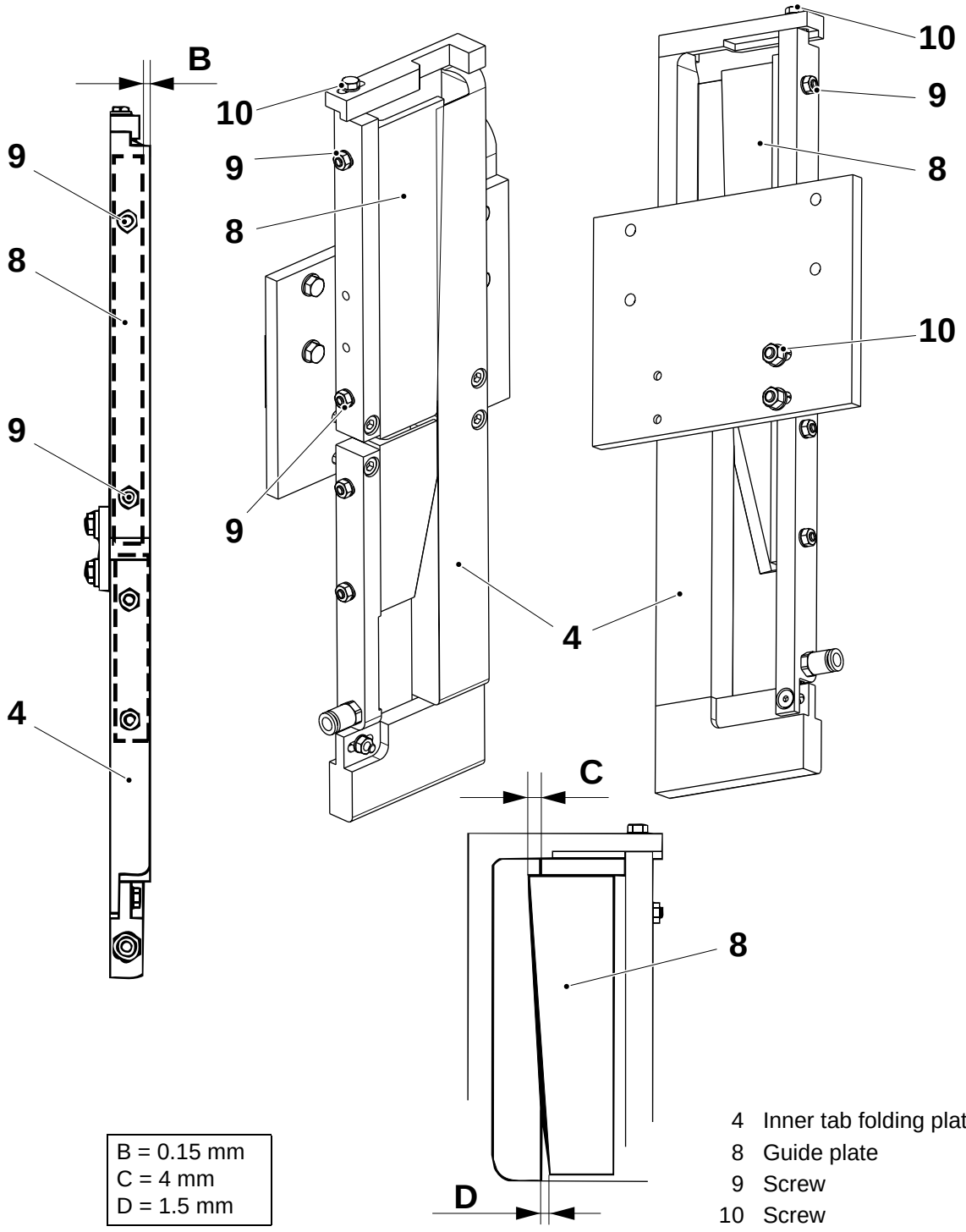

(Cont'd)

4.5 Tab folding device (alternative solution)

(Cont'd)

f) Fit back the outer tab folding plates (2) by means of the screws (1).

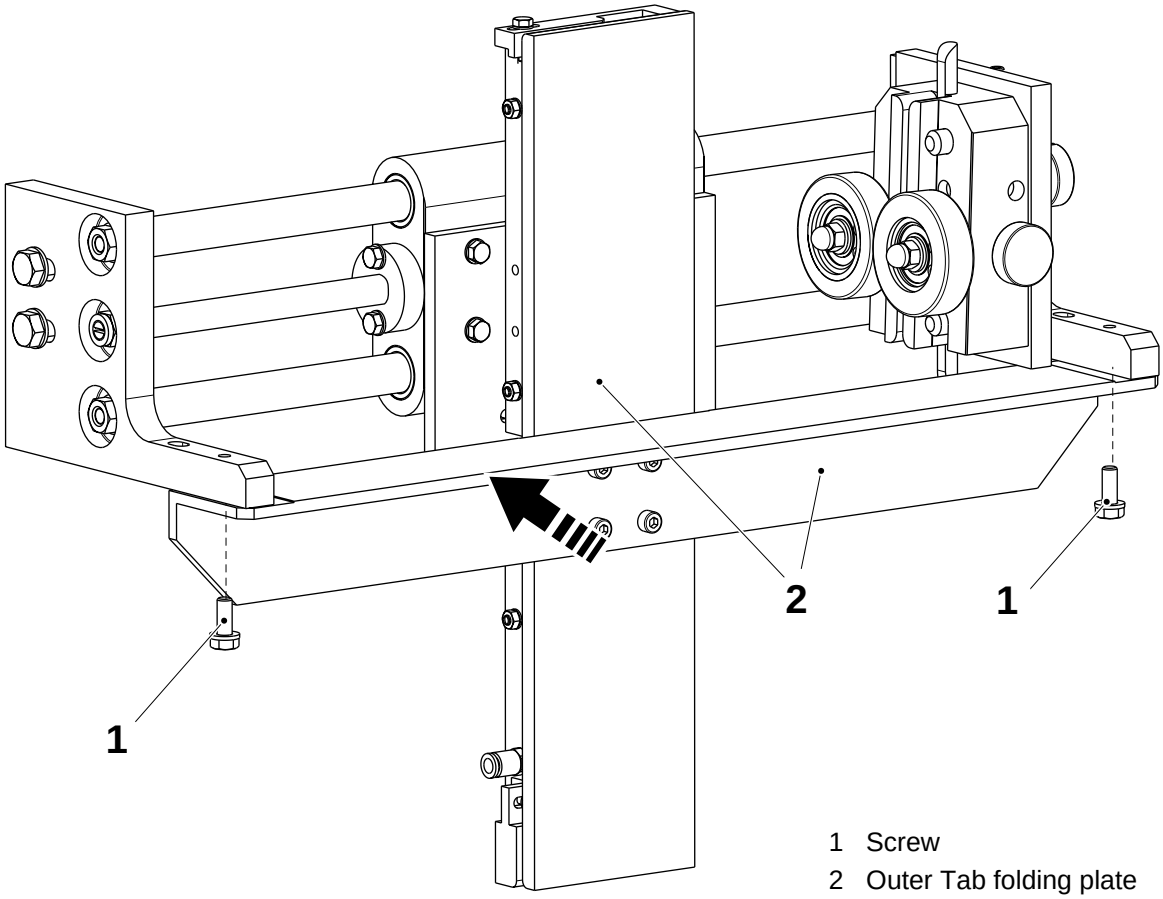

1 Screw
2 Outer Tab folding plate

2.2B4884D05en.fm

(Cont'd)

(Cont'd)

g) Set the outer tab folding plate (2) parallel to the inner tab folding plate (4) by means of the grub screws (11).

h) Set the distance **E** between the inner tab folding plate (4) and the outer tab folding plate (2) by means of the screws (1).

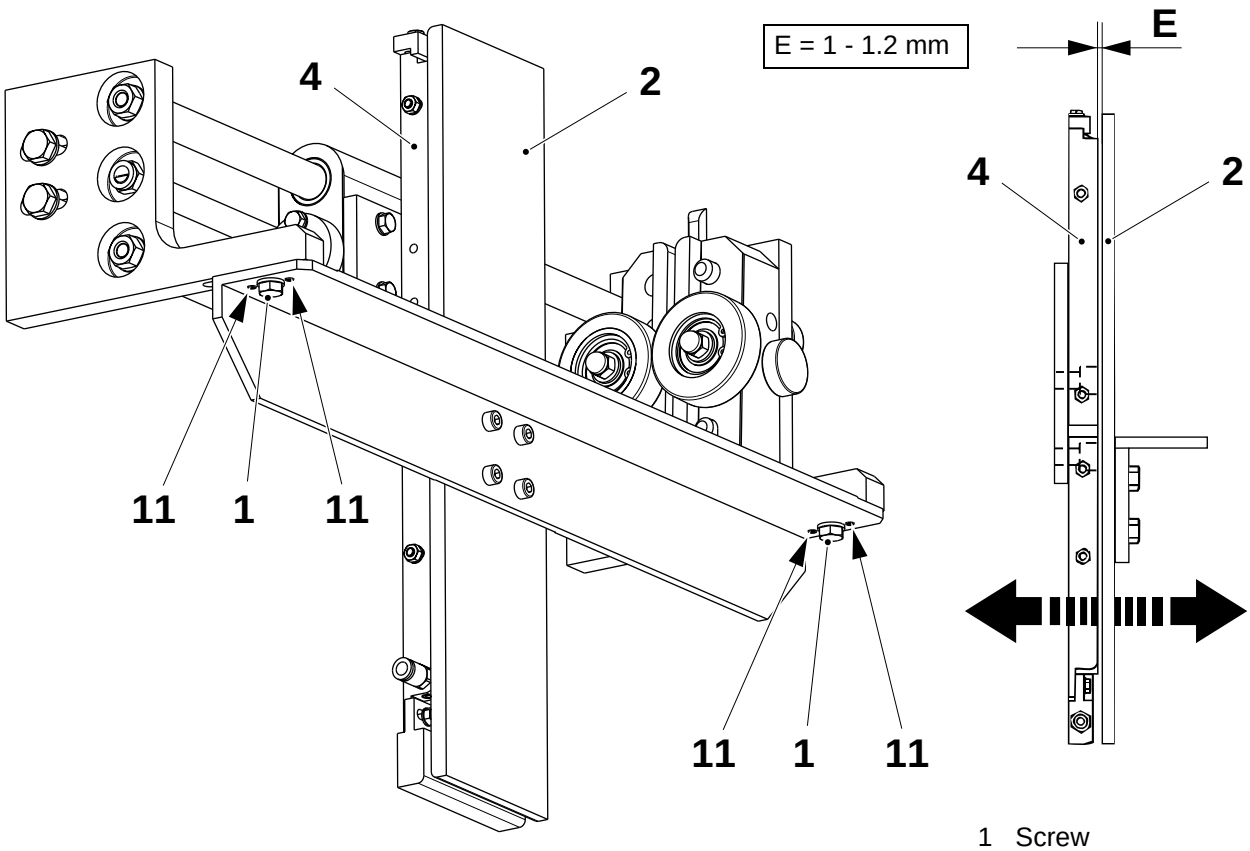

2.2B4884D05en.fm

1 Screw
2 Outer folding plate
4 Inner folding plate
11 Grub screw

(Cont'd)

4.5 Tab folding device (alternative solution)

(Cont'd)

i) Set the distance **F** between the edge of the inner tab folding plate (4) and the edge of the paper web by means of the adjustment screw (12).

j) Step up the machine to **Production** and check the tab position on the packaging material.

Package	Hole type	F ±2.0 (mm)
TBA 1000 Sq ReCap 3	85	114
TPA 1000 S ReCap 3P	60	109

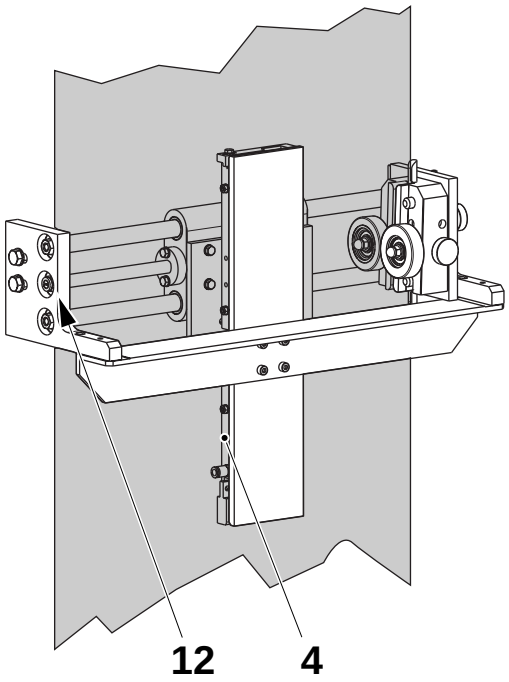

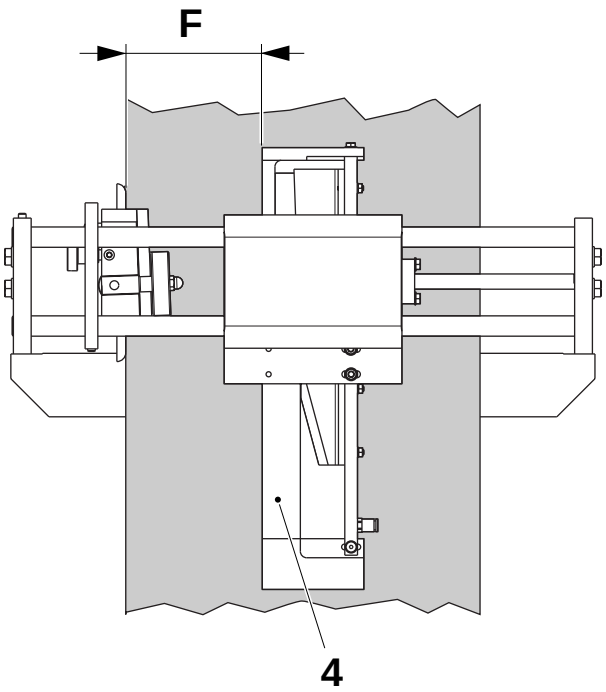

4 Inner folding plate
12 Adjustment screw

2.2B4884D05en.fm

4.5-3 Tab folding device - set paper guide

SPC reference	907955-0200 1143203-0100

a) Test run the machine.

b) Adjust the set knob (2) so it is in the middle of its work range.

c) Stop the machine

d) Remove the packaging material from the tab folding unit.

e) Adjust the set knob (3) so that the gap between the two guide wheels (1) are none and they are merely touching.

f) Thread the packaging material through the machine.

g) Test run the machine.

h) If necessary make final adjustment to the set knobs (2) and (3) so the packaging tracks straight through the tab folding unit.

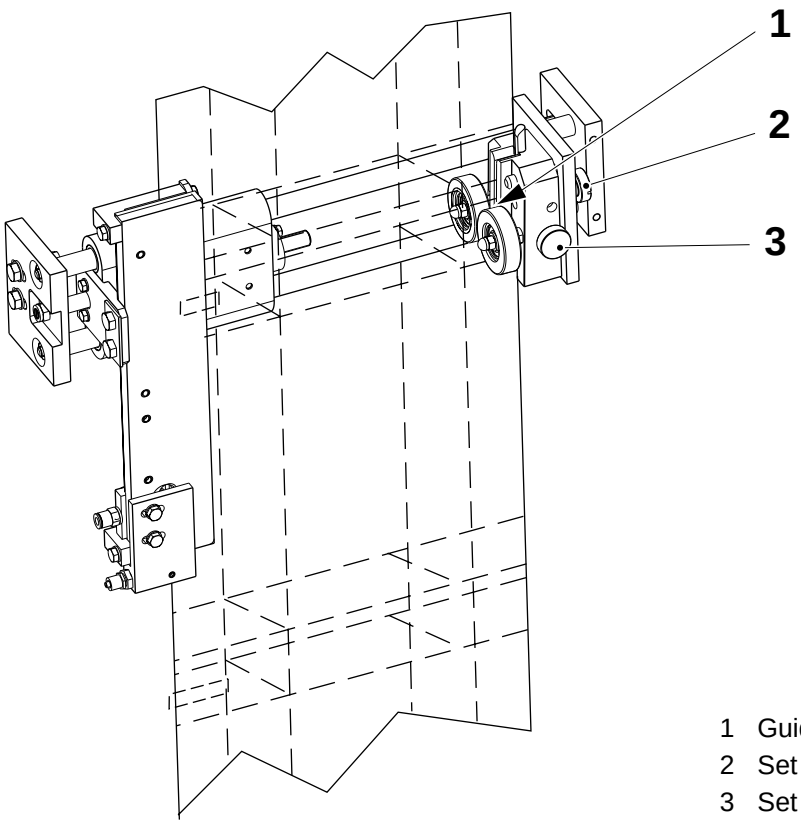

2.2B4884D05en.fm

1 Guide wheels
2 Set knob
3 Set knob

4.5-4 Tab folding device - overhaul guide plate

SPC reference	907955-0200 1143203-0100

ReCap and ReCap2

a) Remove the tab folder (2) by means of the two screws (1).

b) Remove the guide plates (3) and (4) by means of the screws (5) and (6).

c) Assemble in the reverse order.

d) Check the settings, see *4.5-2 Tab folding device - set.*

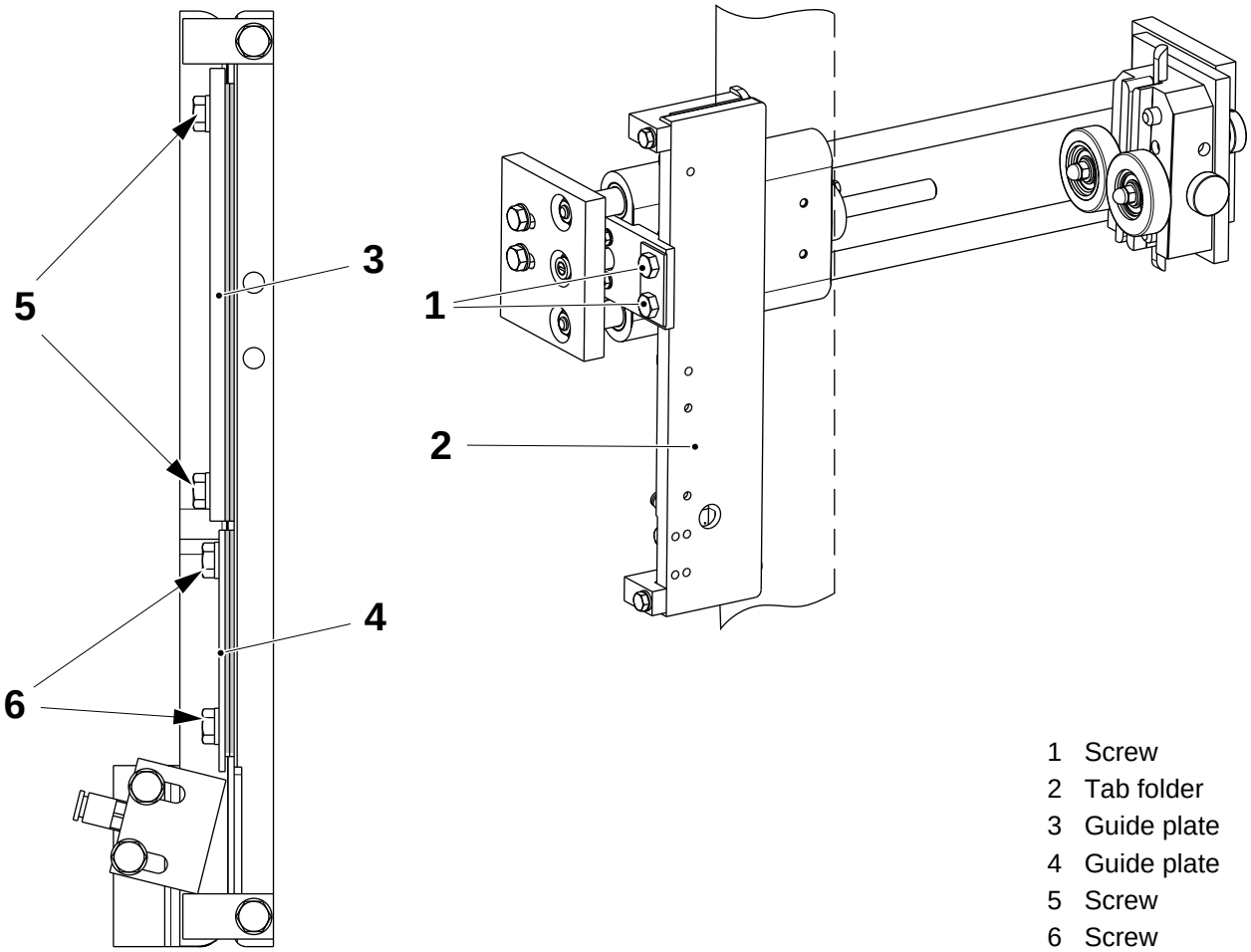

2.2B4884D05en.fm

1 Screw
2 Tab folder
3 Guide plate
4 Guide plate
5 Screw
6 Screw

This page intentionally left blank

2.2B4884D05en.fm

5 Applicator reseal

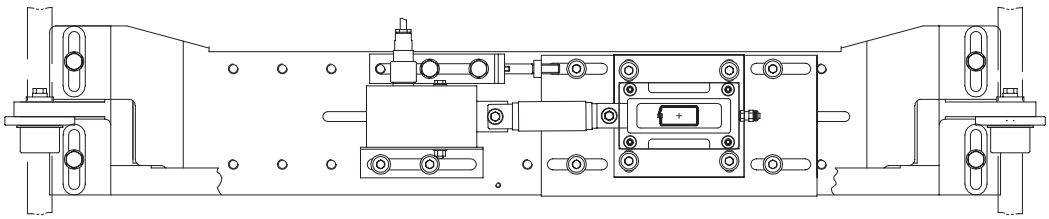

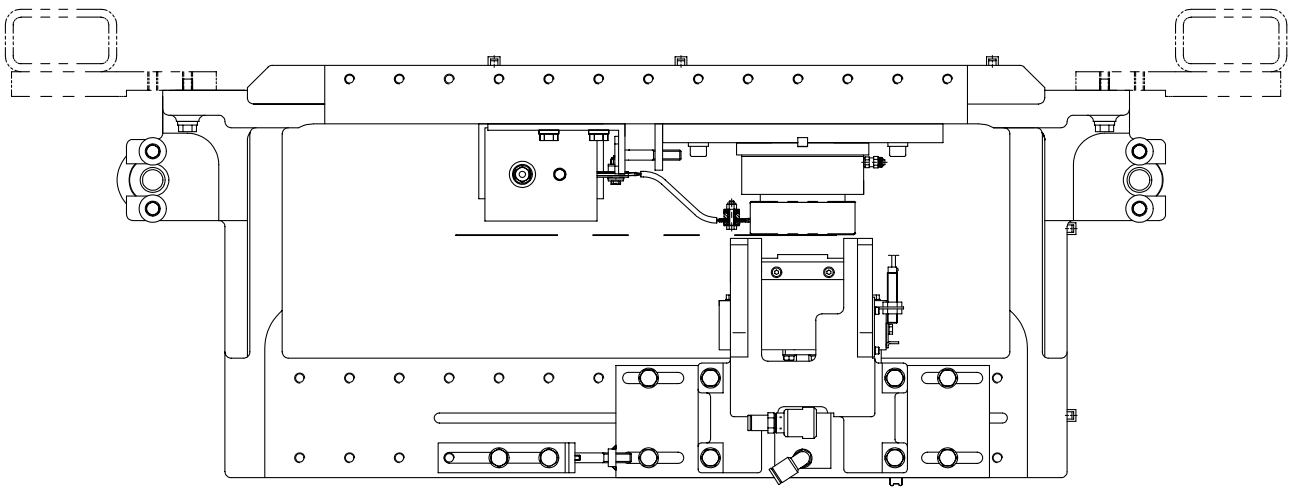

2.2B4884E00en.fm

5-0 Applicator reseal - description

SPC reference	1260420-0100

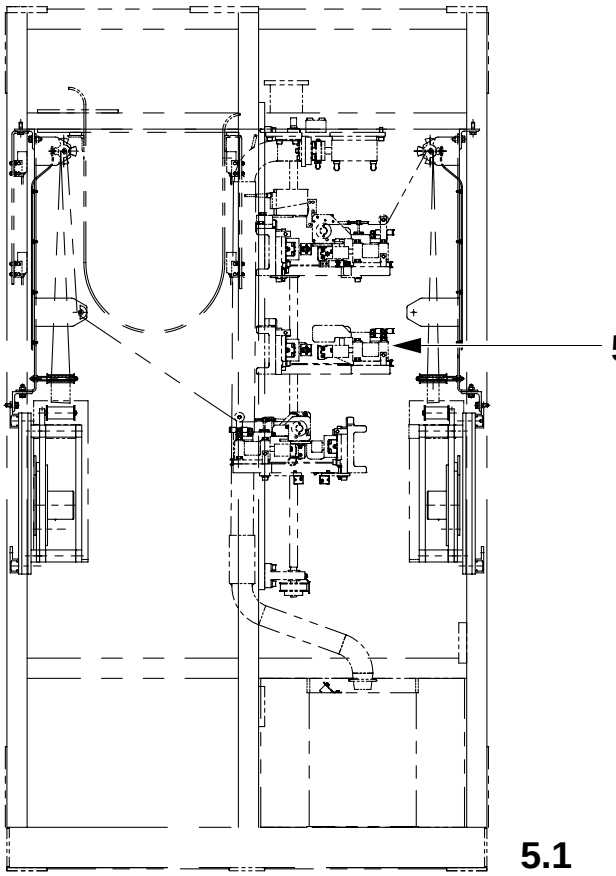

5.1 Setting flow chart
5.2 Applicator reseal

2.2B4884E00en.fm

5-1 Applicator reseal - functional description

SPC reference	1260420-0100

As the jaws are closed, the PLC receives signals from the proximity switches and

- the PLC begins the sealing-cycle when the patch, reseal and tab jaws are all closed
- the PLC begins a timer to sends the sealing pulses to the IH generator
- when the sealing cycle is timed out, the PLC opens (returns) the applicator stations.

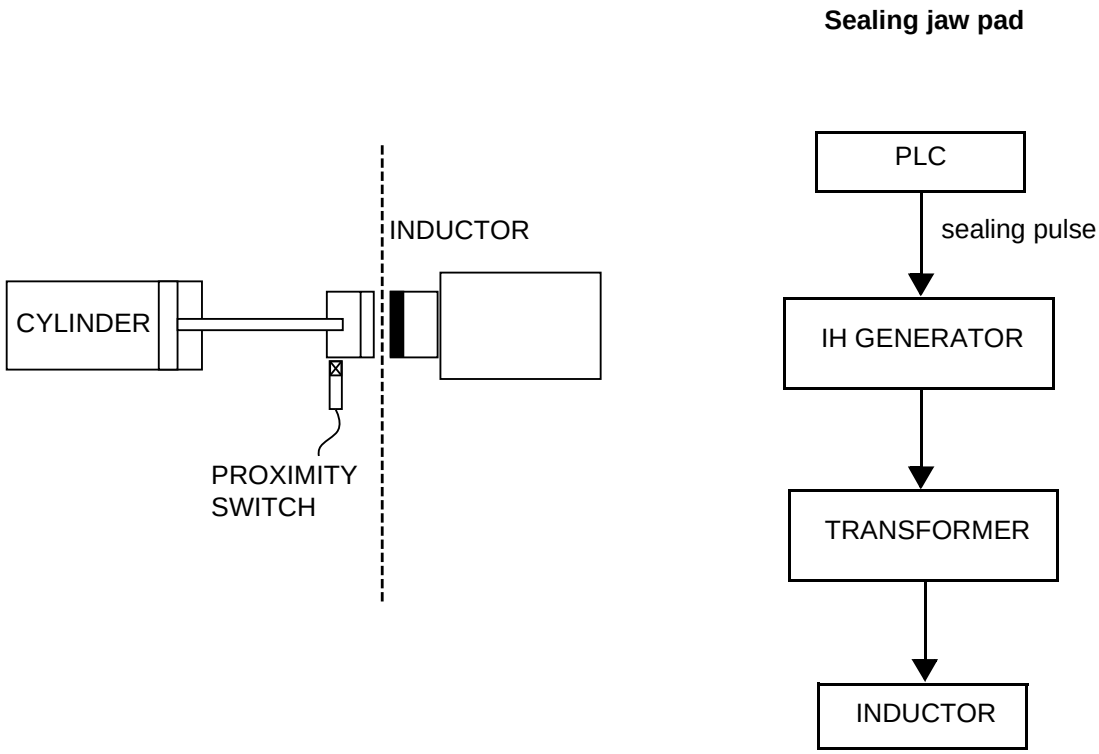

2.2B4884E00en.fm

(Cont'd)

(Cont'd)

During the PullTab unit machine cycle, the PLC signals the solenoid valve to extend the cylinder.

This action is done in order to seal the strip to the packaging material in the best way.

Resealing

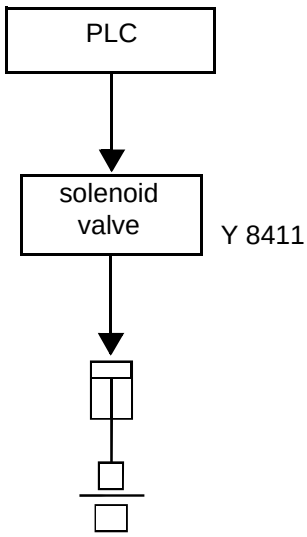

2.2B4884E00en.fm

5.1 Setting flow chart

The following flow chart shows the order in which the various components must be set up.

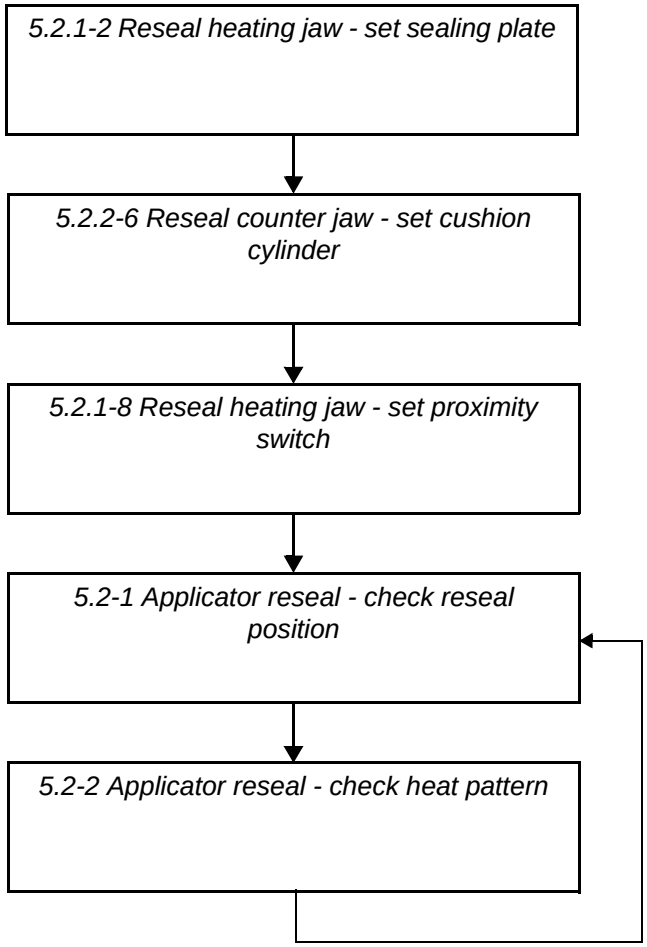

2.2B4884E01en.fm

5.2 Applicator reseal

SPC reference	1260420-0100

5.2-1 Applicator reseal - check reseal position

Machine status	**Preparation**
SPC reference	1260420-0100

Set reseal counter jaw vertical position

a) Switch the selector key, located on the PT21 electrical panel, to position **Service**.

b) Activate the valve **Y8411:1** for the cylinder (1) and make sure that the cushion cylinder (2) is fully extended.

c) Loosen the four screws (3).

d) Set the distance **A** between the edge of the inductor (4) and the sealing plate (5) by hand.

e) Tighten the four screws (3).

f) Activate the valve **Y8411:2** and check that the cylinder (1) is fully in.

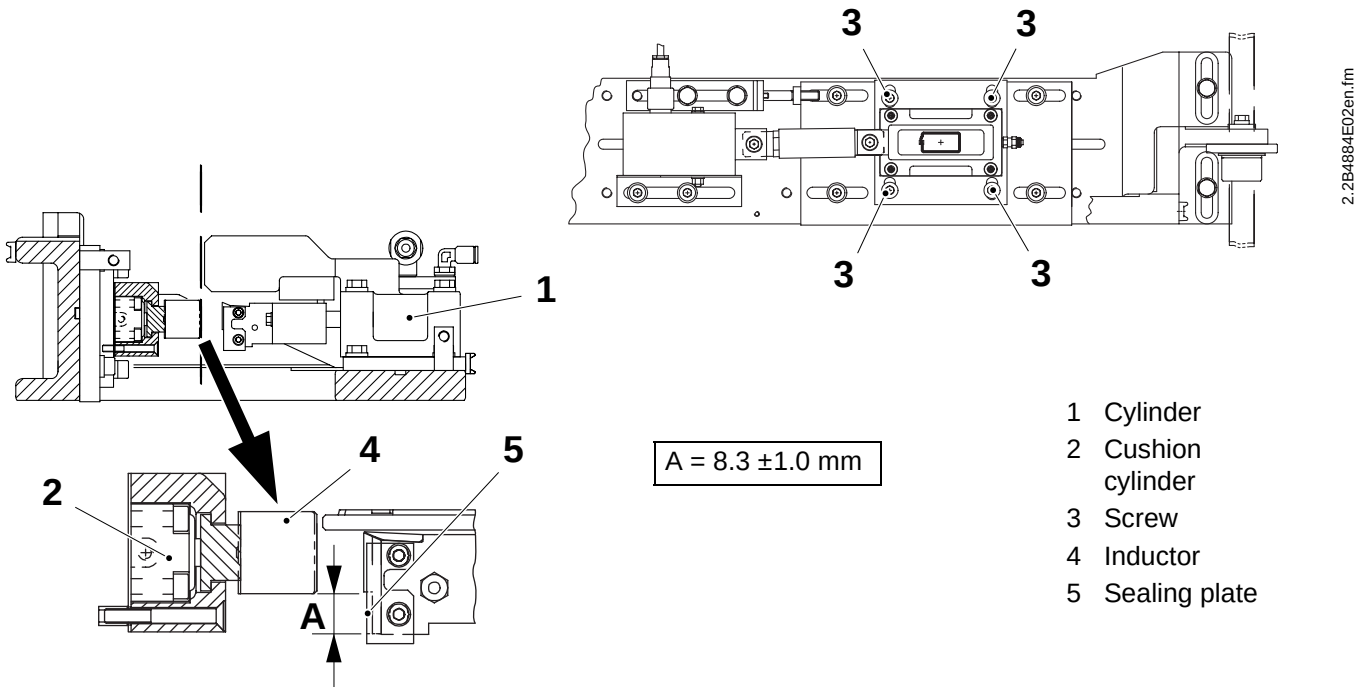

A = 8.3 ±1.0 mm

1 Cylinder
2 Cushion cylinder
3 Screw
4 Inductor
5 Sealing plate

(Cont'd)

(Cont'd)

Set reseal heating jaw horizontal position

a) Make sure that the cushion cylinder (2) is fully extended.

b) Loosen the screws (6), located on the reseal heating jaw (7).

c) Set the distance **B** between the edge of the inductor (4) and the reseal heating jaw (7) head by means of the setting screw (8).

d) Tighten the screws (6).

Note! Use eventually the machined surface **C** to obtain the distance **B**.

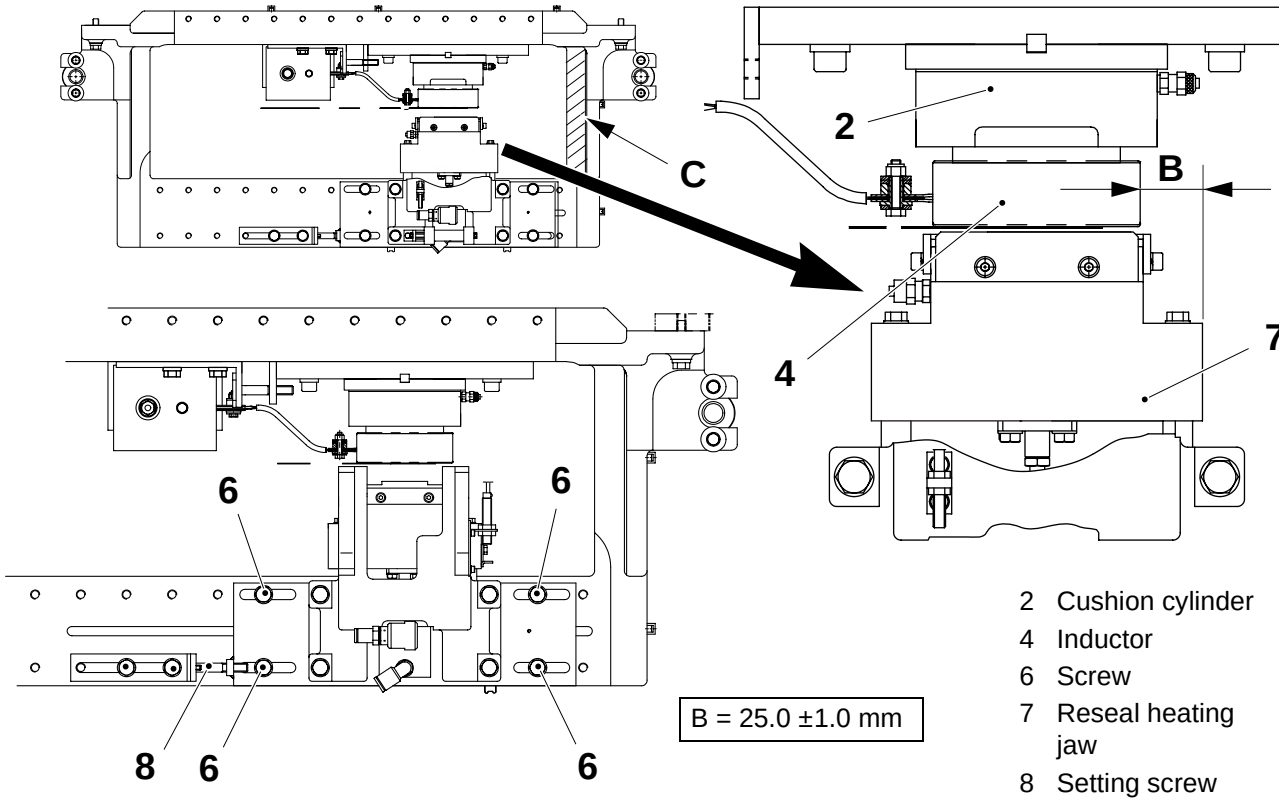

2 Cushion cylinder
4 Inductor
6 Screw
7 Reseal heating jaw
8 Setting screw

2.2B4884E02en.fm

5.2-2 Applicator reseal - check heat pattern

Tool - zonoscope	TP No. 90243-203
SPC reference	1260420-0100

Preparation for making test material with hole, patch and reseal

a) Close all doors on the machine.

b) Make sure that the repeat length is correct according to *1.2.5-4 Paper brake - set brake regulator card*.

c) On the TPOP, check that there are no active alarms and touch the **Manoeuvre** button (1).

d) Touch the **Maintenance PT21 left** button (2).

e) Touch the **Reseal applicator** button (3).

f) Touch the **Start** button (4) to activate these stations: punch unit, applicator patch and reseal.

g) The **Service and Maintenance key** symbol (5) starts to flash at the top of the ladder step window.

h) Push the **Program up** button (6) after it starts flashing.

Make test material

a) At the PullTab control panel, push the **Single index** button (7) six or seven times after it starts flashing.

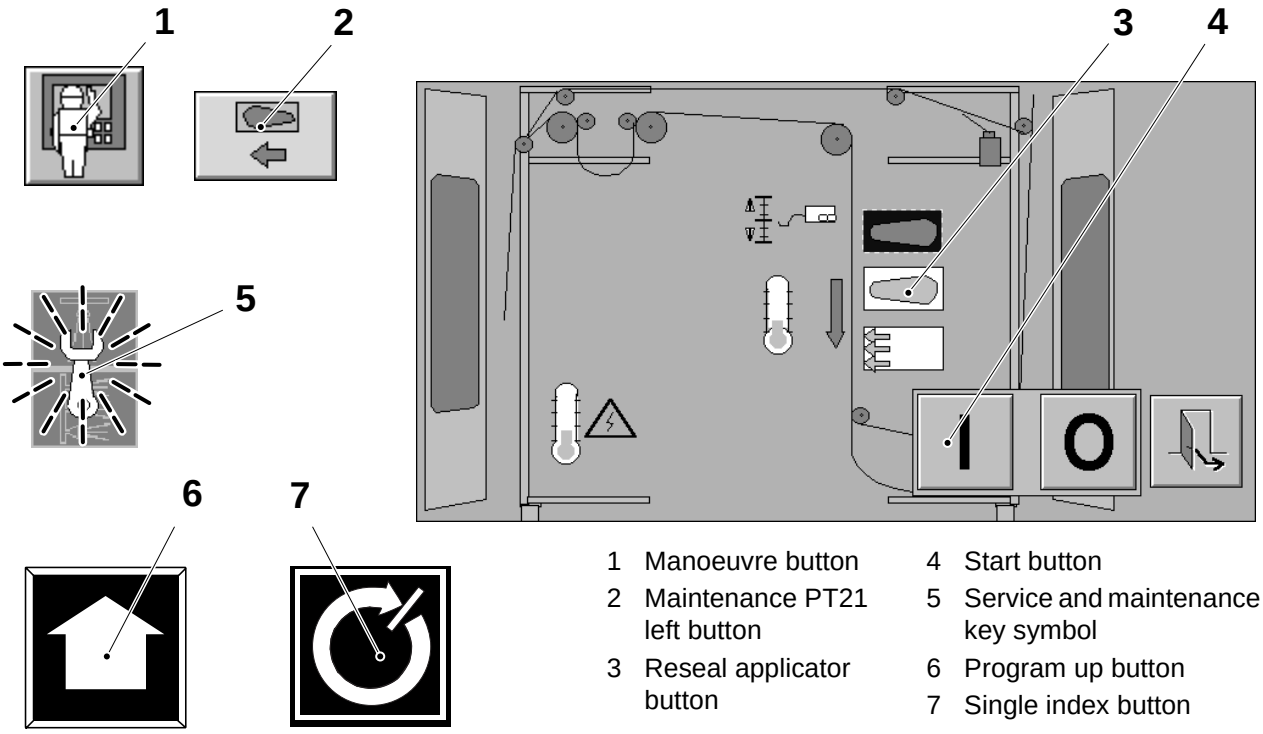

1 Manoeuvre button
2 Maintenance PT21 left button
3 Reseal applicator button
4 Start button
5 Service and maintenance key symbol
6 Program up button
7 Single index button

2.2B4884E02en.fm

(Cont'd)

(Cont'd)

Note! If the **Single index** button does not flash, open and close one of the doors in the PullTab unit. Acknowledge the alarm on the TPOP.

b) Open the door and cut out the packaging material that has the test tab applications.

Check position

a) Check, with the aid of a zonoscope (1), that the heat pattern (2) is centred with respect to the hole and the patch.

Note! To more easily see the heat pattern, increase the power of the reseal inductor (potentiometer value approximately **650 ±50**) and decrease the power of the applicator patch inductor (potentiometer value approximately **400 ±50**). Be sure to reset both potentiometers before starting production.

b) Check that all edges around the patch are sealed. Make a special check of the corners (3) and (4) and of the knife edge (5) between them (the edge where the knife cut the patch strip).

c) If required, adjust the vertical position of the heat pattern as described on the next page.

2.2B4884E02en.fm

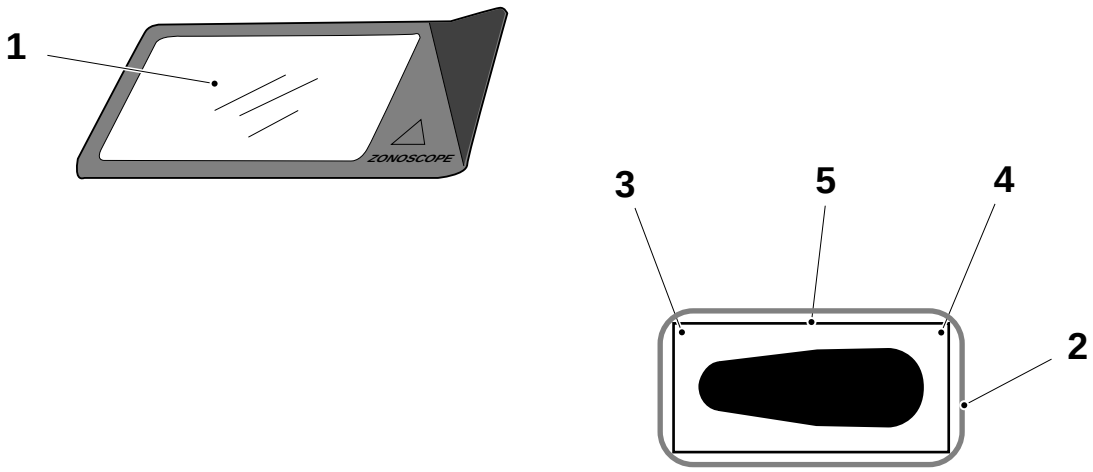

1 Zonoscope
2 Heat pattern
3 Corner
4 Corner
5 Knife edge

(Cont'd)

(Cont'd)

Adjust vertical position of the heat pattern

a) On both LH and RH sides of all three applicator stations (applicator patch, reseal, and tab) loosen the screws (1) to move the brass bushings (2) away from the reseal bracket (3).

b) On both LH and RH sides of the reseal applicator, tighten the brass bushings (2) until they touch the reseal bracket (3).

c) Tighten the two screws (1).

d) Slightly loosen the screws (4) on the reseal bracket (3).

e) Adjust the vertical position of the heat pattern by means of the screw guides (5).

f) Tighten the screws (4).

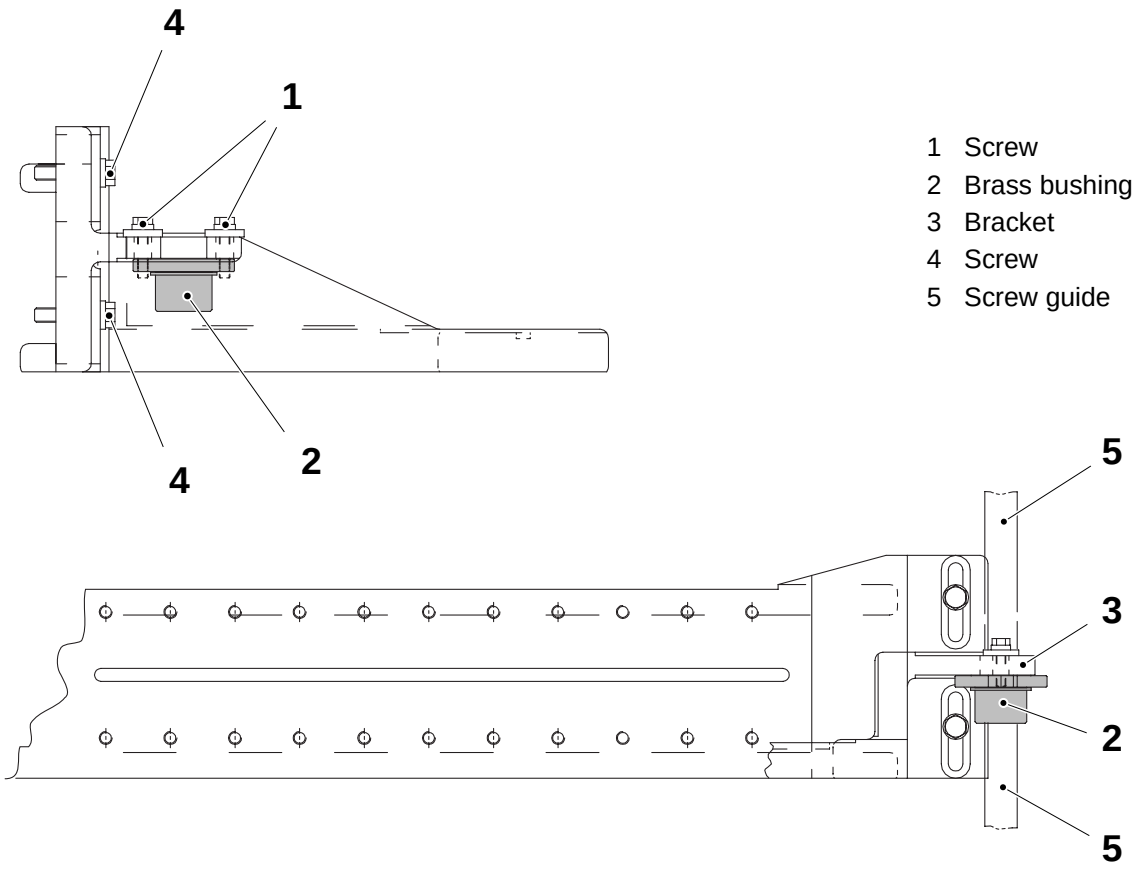

1 Screw
2 Brass bushing
3 Bracket
4 Screw
5 Screw guide

2.2B4884E02en.fm

(Cont'd)

(Cont'd)

Adjust horizontal position of the heat pattern

a) Loosen the screws (1).

b) Adjust the horizontal position of the heat pattern by means of the setting screw (2).

c) Tighten the screws (1).

d) Check once more the horizontal position of the reseal heating jaw according to *5.2-1 Applicator reseal - check reseal position.*

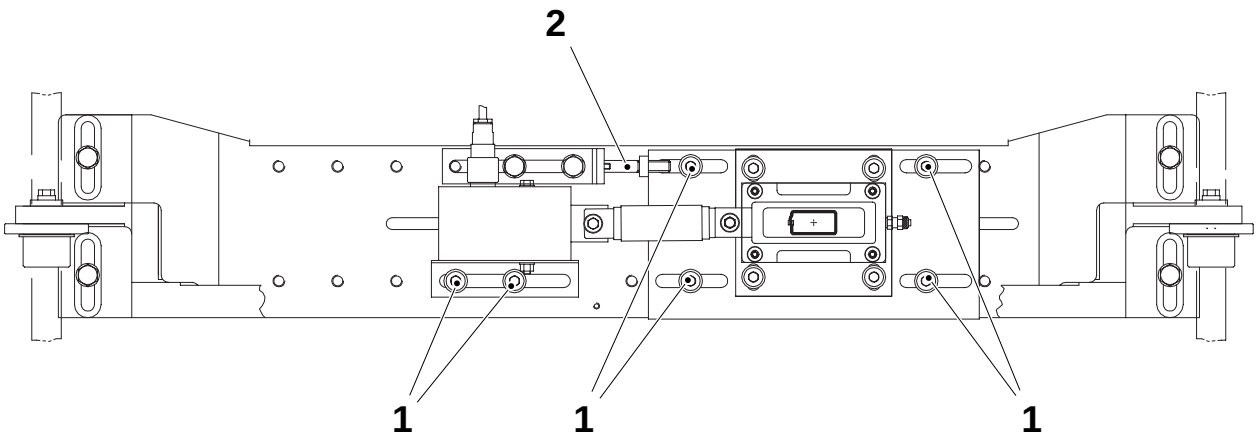

2.2B4884E02en.fm

1 Screw
2 Setting screw

(Cont'd)

(Cont'd)

Deactivate PullTab stations

a) Touch the **Stop** button (1) to deactivate the punch unit, applicator patch, and reseal stations.

b) Push the **Program down** button (2) after it starts flashing.

c) Touch the **Exit** button (3).

d) Touch the **Manoeuvre** button (4) to end the sequence.

e) Check the tabs position, see *4.2-1 Applicator tab - check tab position*.

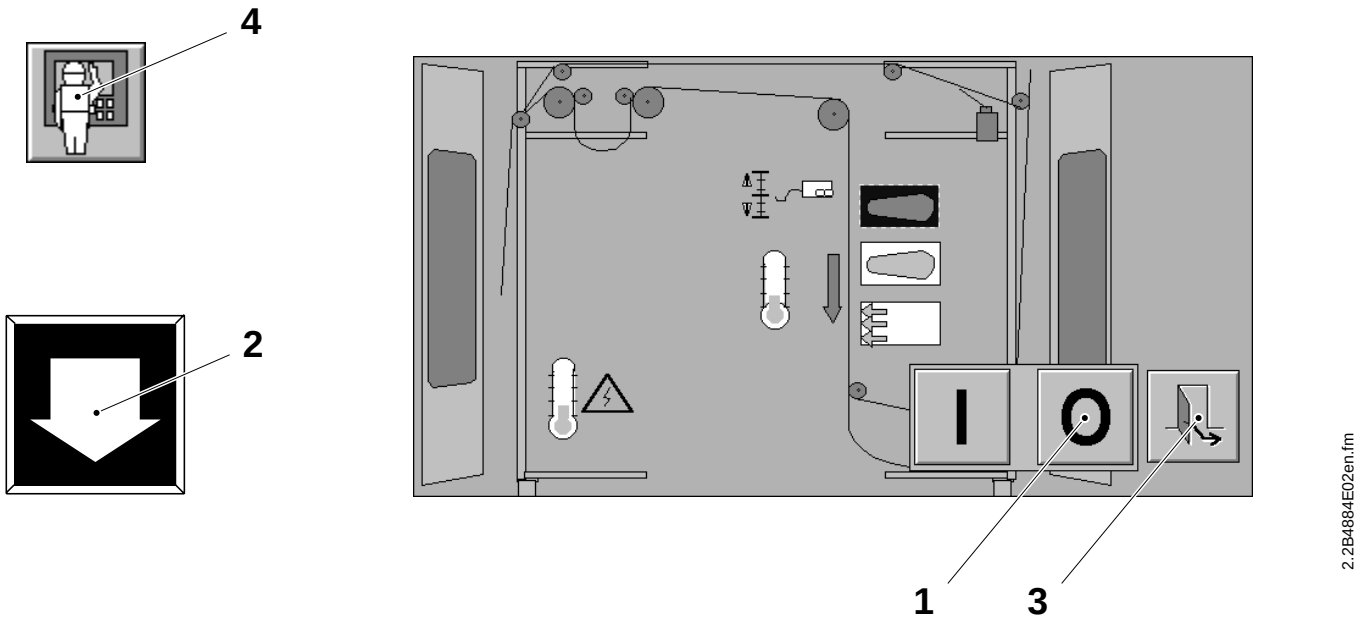

2.2B4884E02en.fm

1 Stop button
2 Program down button
3 Exit button
4 Manoeuvre button

5.2.1 Reseal heating jaw

5.2.1-1 Reseal heating jaw - remove

SPC reference	1260418-0100

a) Disconnect the air hoses (3) from the cylinder.

b) Loosen the screws (1) and remove the reseal jaw monitor proximity switch (2).

c) Remove the screws (4) from the plate (5) and lift out the reseal heating jaw unit.

d) Assemble in the reverse order.

e) Set the reseal heating jaw, see *5.2.2-6 Reseal counter jaw - set cushion cylinder*.

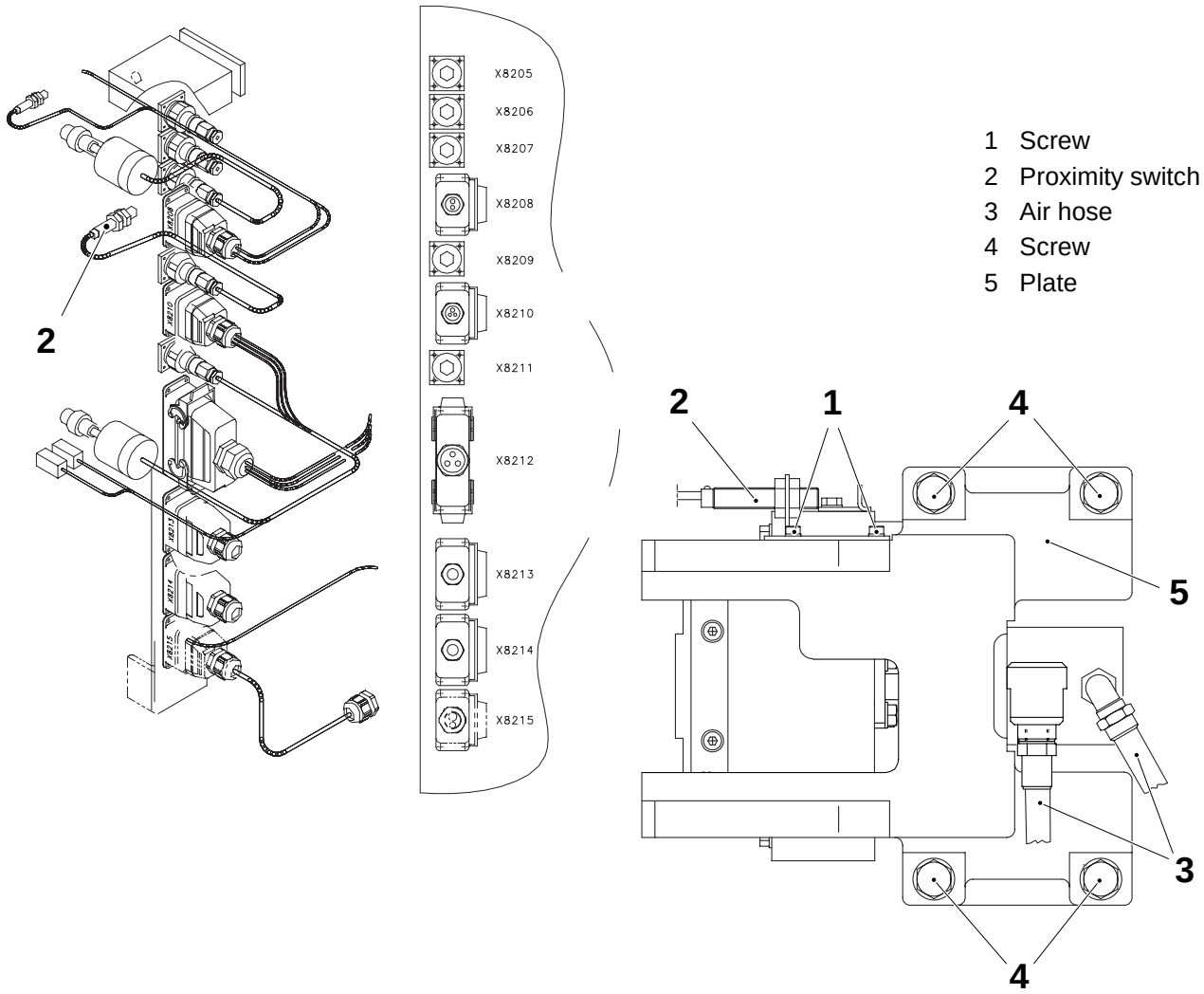

2.2B4884E02en.fm

5.2.1-2 Reseal heating jaw - set sealing plate

SPC reference	1260418-0100



Risk of burns!
The sealing jaw may be hot. Be careful.

a) Remove the reseal heating jaw, see *5.2.1-1 Reseal heating jaw - remove*.
b) Remove the four screws (1) and the entire bracket (2).
c) Loosen the four screws (3).
d) Keep pressed aside the sealing plate (4) until it is blocked in the clamps (5), see figure below.
e) Keep the two clamps (5) pressed aside as shown in the figure, and at the same time tighten the screws (3).
f) Make sure that the clamps (5) lean against the sealing plate (4).

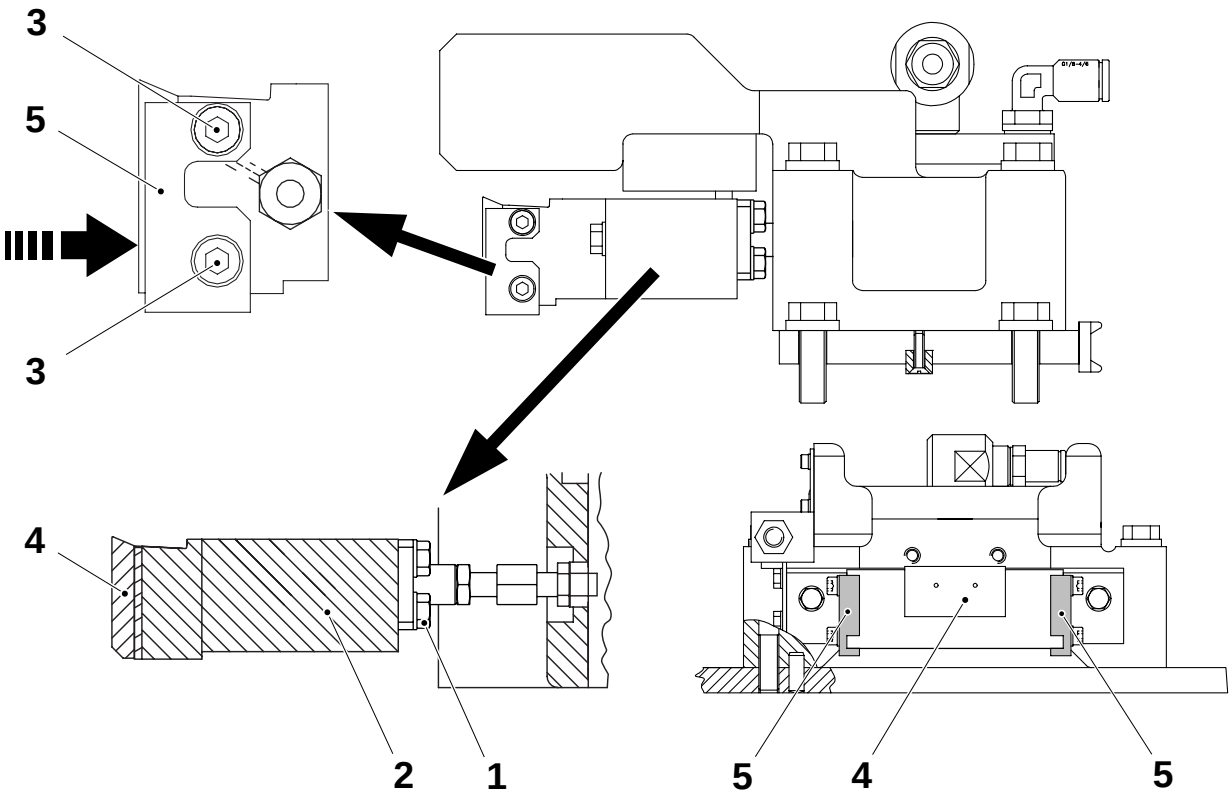

2.2B4884E02en.fm

1 Screw
2 Bracket
3 Screw
4 Sealing plate
5 Clamp

5.2.1-3 Reseal heating jaw - check guides and linear bearings

SPC reference	1260418-0100

a) Disconnect the air hoses (6) from the cylinder.

b) By hand, move the cylinder to check that the piston (5) moves freely.

c) Remove the reseal heating jaw, see *5.2.1-1 Reseal heating jaw - remove*.

d) Remove the four screws (1) and the entire bracket (2).

e) Check the guides (3) for wear and/or damage.

f) Check for wear in the linear bearings (4) by using the guides (3). Check the play on one bearing at a time.

g) Change as required, see *5.2.1-4 Reseal heating jaw - change linear bearings*.

h) Fit back the bracket (2) and the four screws (1) after checking.

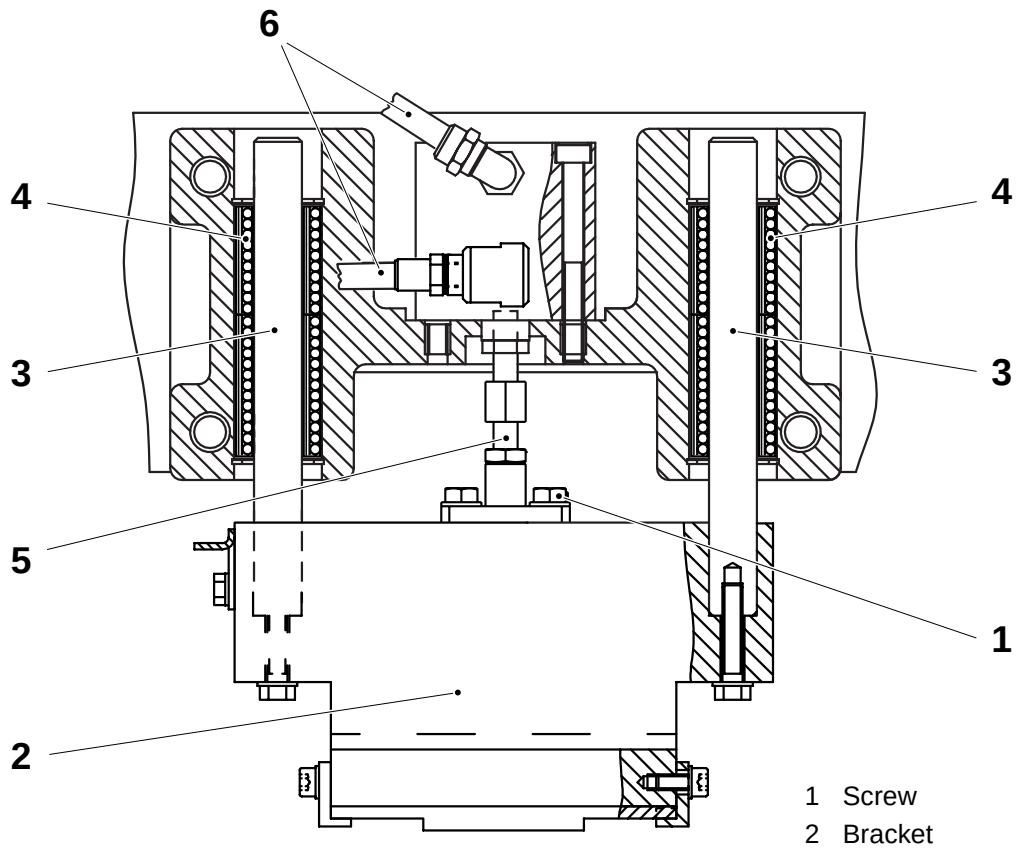

1 Screw
2 Bracket
3 Guide
4 Linear bearing
5 Piston
6 Air hose

2.2B4884E02en.fm

5.2.1-4 Reseal heating jaw - change linear bearings

SPC reference	1260418-0100

a) Remove the reseal heating jaw, see *5.2.1-1 Reseal heating jaw - remove*.

b) Remove the four screws (1) and the entire bracket (2).

c) Remove the seal rings (3) on each side of the linear bearings (4).

d) Pull out the linear bearings (4) and change them.

e) Assemble in the reverse order.

Note! Make sure that the seal rings (3) are, on both sides, distance **A** inward towards the surface of the casting applicator (5).

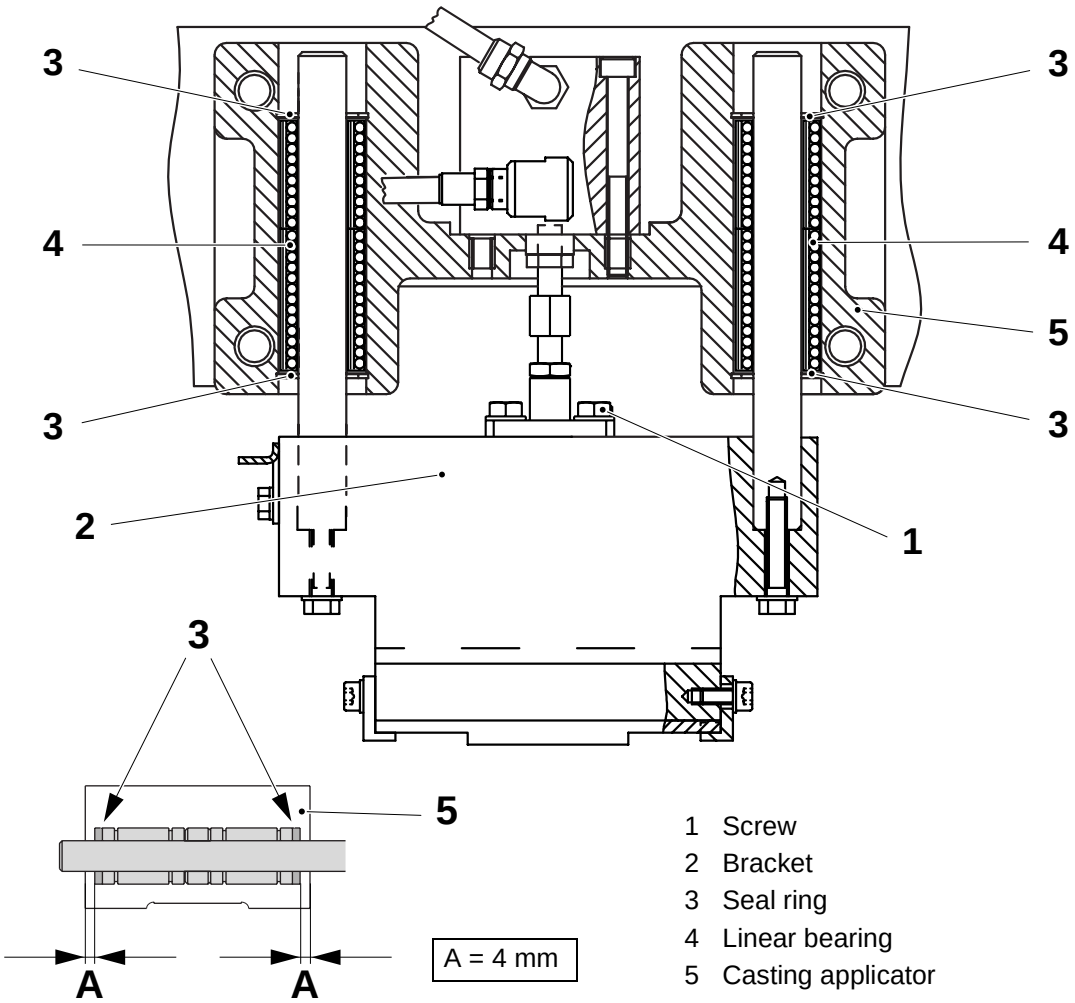

2.2B4884E02en.fm

5.2.1-5 Reseal heating jaw - change bushing

SPC reference	1260418-0100

Only for machines not rebuilt with RK-1538055-0100 PT21 life time applicator

a) Remove the reseal heating jaw, see on *5.2.1-1 Reseal heating jaw - remove*.

b) Remove the pin (1) and the entire bracket (2).

c) Remove the bushing (3) and change it.

d) Assemble in the reverse order.

2.2B4884E02en.fm

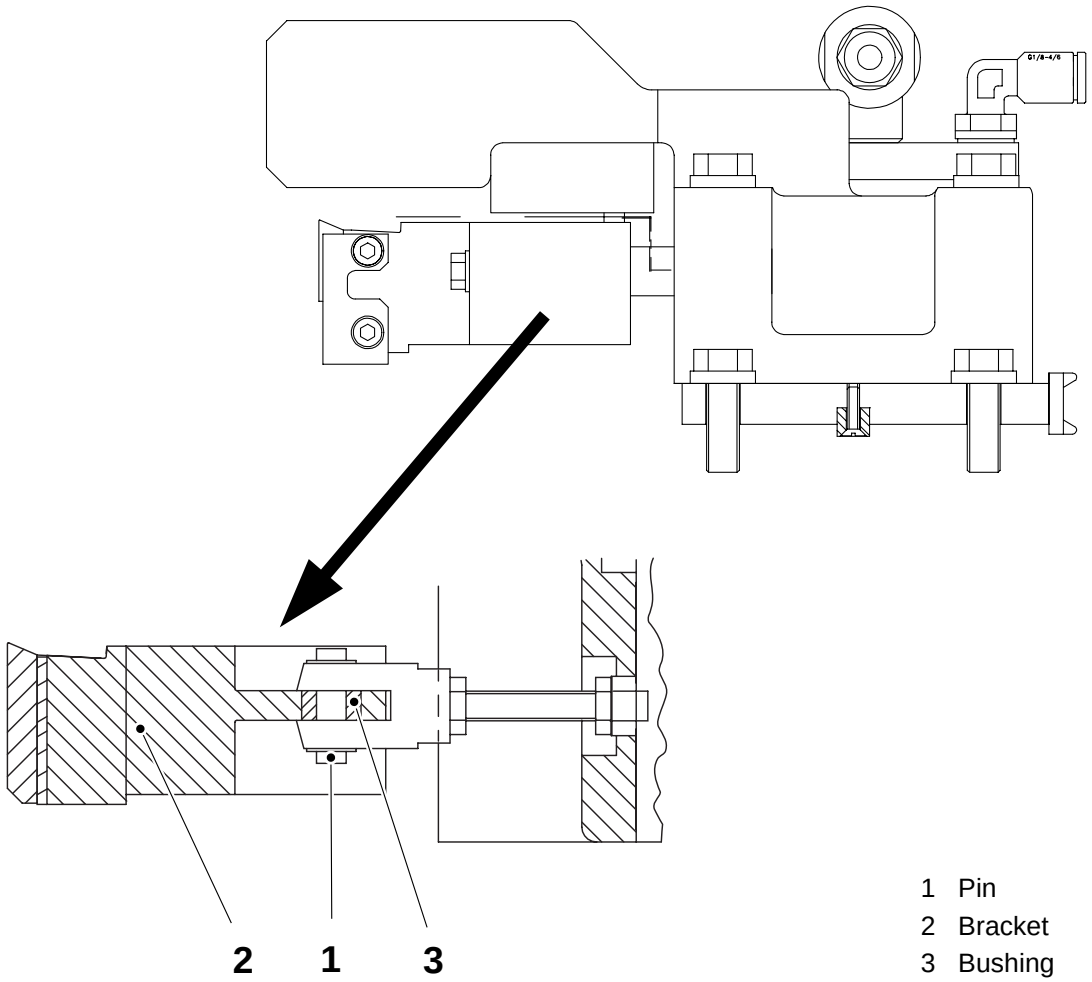

1 Pin
2 Bracket
3 Bushing

5.2.1-6 Reseal heating jaw - change cylinder

SPC reference	1260418-0100

a) Remove the four screws (1).

b) Remove the air connections (2) and the four screws (3).

c) Remove the cylinder (4) and change it.

d) Assemble in the reverse order.

e) Set the cushion cylinder, see *5.2.2-6 Reseal counter jaw - set cushion cylinder*.

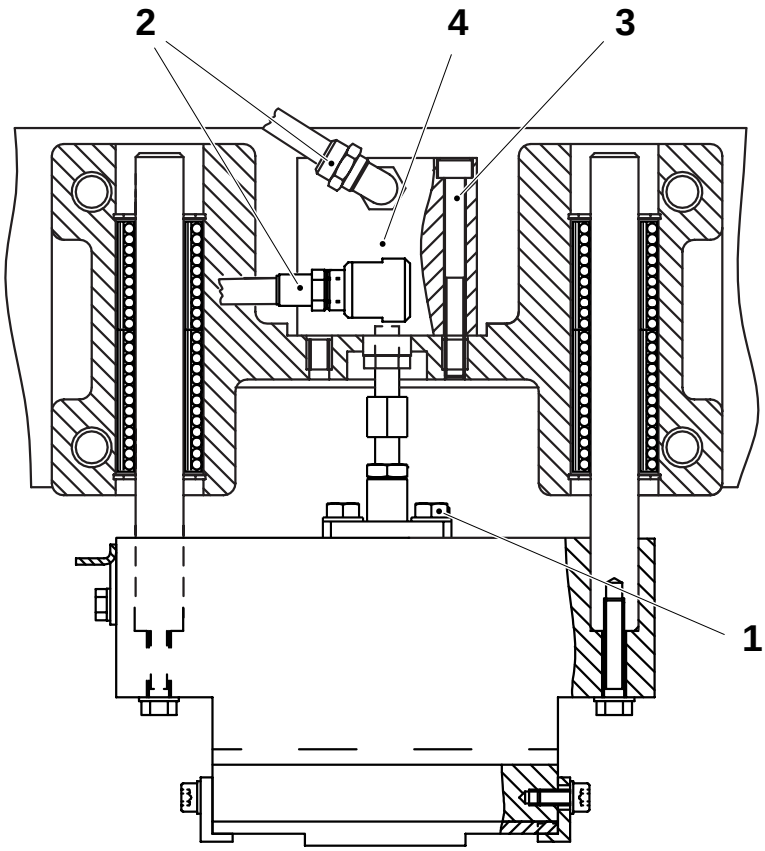

2.2B4884E02en.fm

1 Screw
2 Air connection
3 Screw
4 Cylinder

5.2.1-7 Reseal heating jaw - check sealing plate

SPC reference	1260418-0100



Risk of burns!
The sealing jaw may be hot. Be careful.

a) Loosen the two screws (2) and remove the sealing plate (1).

b) Check the sealing plate (1) surface for wear and scratches or other damage. Also check for any residue of polyethylene.

c) Assemble in the reverse order. Set the sealing plate, see *5.2.1-2 Reseal heating jaw - set sealing plate*.

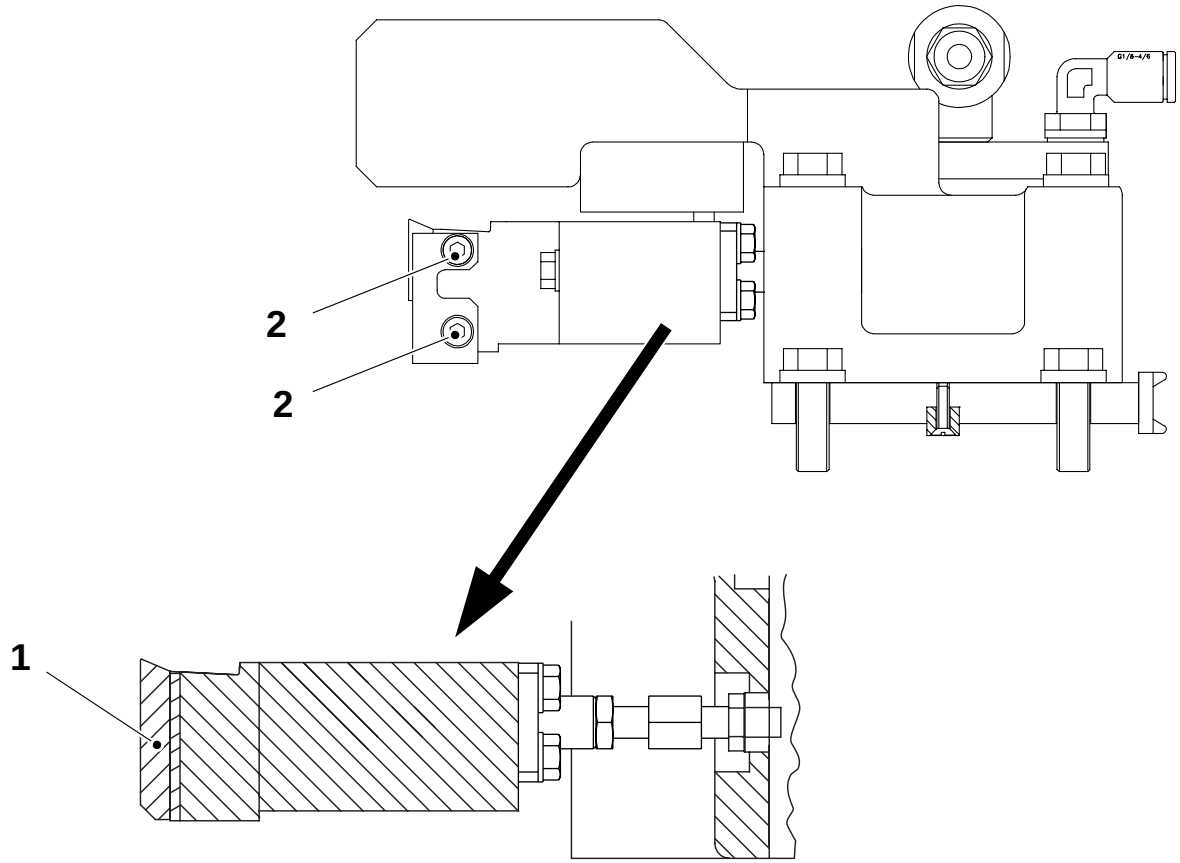

1 Sealing plate
2 Screw

2.2B4884E02en.fm

5.2.1-8 Reseal heating jaw - set proximity switch

Machine status	Mains power **On** Air **On**
SPC reference	1260418-0100



WARNING!

Risk of crushing!
The cylinder piston may move unexpectedly.

a) Switch the selector key, located on the PT21 electrical panel, to position **Service**.

Note! For an accurate setting, the machine must be threaded. If not, place a piece of packaging material between the heating jaw and the counter jaw.

b) Loosen the nuts (1) and move backwards the proximity switch (2).

c) Activate the valve **Y8411:1** for the cylinder (3).

d) Check that the cylinder (3) is fully extended. If required, set the cushion cylinder, see *5.2.2-6 Reseal counter jaw - set cushion cylinder*.

e) Set the distance **A** between the proximity switch (2) and the flag (1) by means of the nuts (1).

f) Check that the proximity switch (2) LED lights up.

g) Activate the valve **Y8411:2** and check that the cylinder (3) is fully in.

2.2B4884E02en.fm

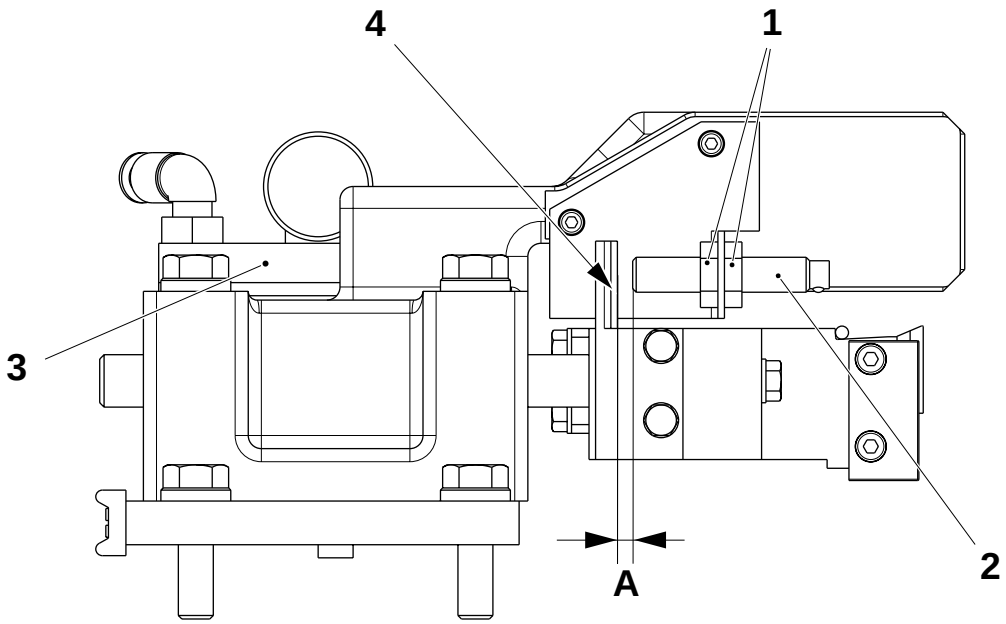

A = 0.1mm

1 Nut
2 Proximity switch
3 Cylinder
4 Flag

5.2.2 Reseal counter jaw

5.2.2-1 Reseal counter jaw - remove

SPC reference	1260417-0100

a) Loosen the screw (1).

b) Disconnect the cable (2) leading to the inductor transformer (3).

c) Disconnect the air hose (4) for the cushion cylinder (6).

d) Unscrew the screws (5). Slide up the plate (6) to remove the plate with the counter jaw unit attached to it.

e) Assemble in the reverse order.

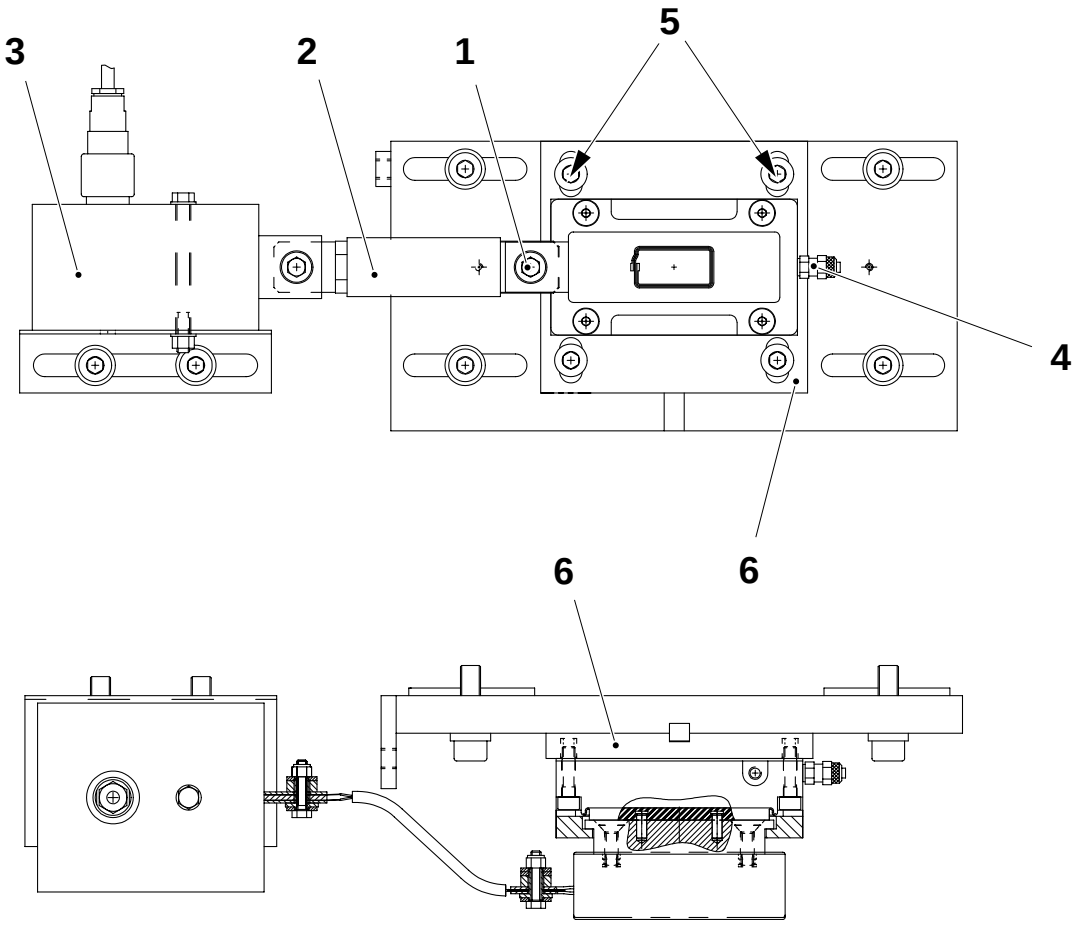

1	Screw	4	Air hose
2	Cable	5	Screw
3	Transformer	6	Plate

2.2B4884E02en.fm

5.2.2-2 Reseal counter jaw - check inductor

Consumables - Teflon™ tape	TP No. 90144-30
SPC reference	1260417-0100

Check the following parts for wear and damage:

- the Teflon™ tape (2) on the surface of the inductor (1)
- the surfaces of the inductor (1) for any scratches or other damage
- the surfaces of the inductor (1) for any residue of polyethylene.

Change as required.

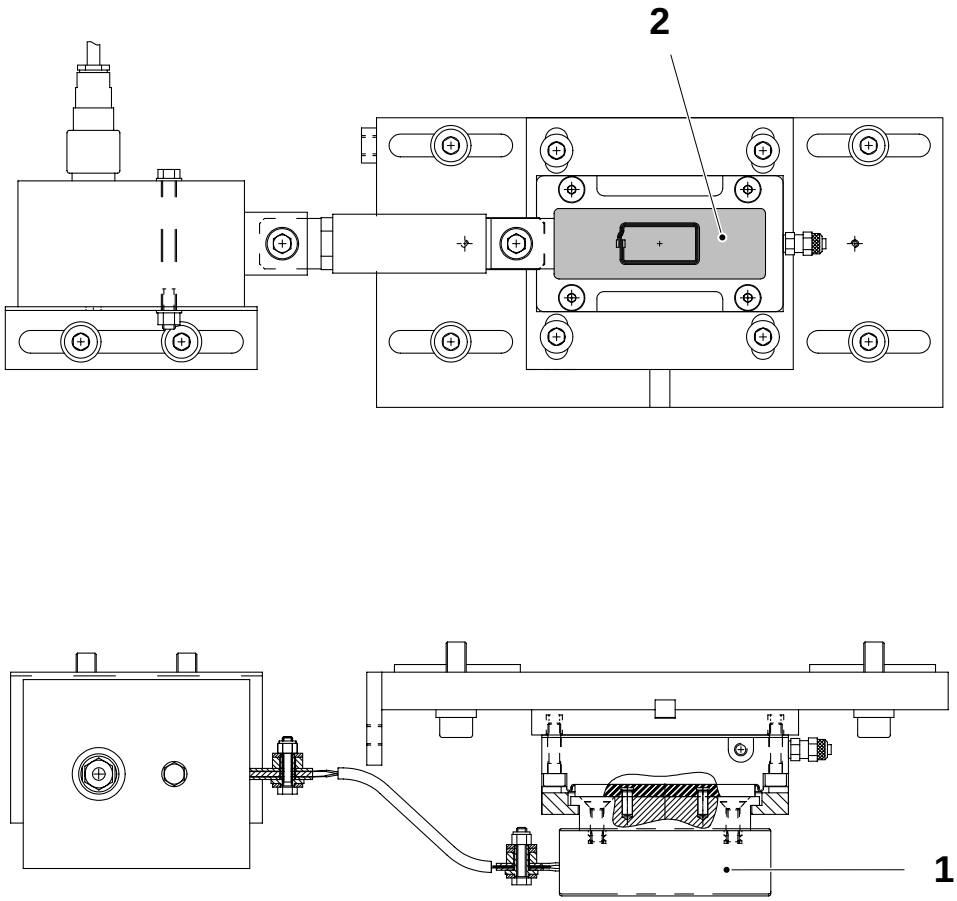

2.2B4884E02en.fm

1 Inductor
2 Teflon™ tape

5.2.2-3 Reseal counter jaw - change inductor

Consumables - Teflon™ tape	TP No. 90144-30
SPC reference	1260417-0100

a) Loosen the screw (1).

b) Disconnect the cable (2) leading to the inductor transformer (3).

c) Disconnect the air hose (4) for the cushion cylinder (5).

d) Remove the screws (8). Slide up the plate (9) to remove the plate (9) together with the counter jaw unit.

e) Remove the screws (6).

f) Remove the guide bushing (11) from the inductor (7) by means of the screws (10).

g) Change the inductor (7) and assemble in the reverse order

h) Check the position of the heat pattern, see *5.2-2 Applicator reseal - check heat pattern*.

Note! Check the condition of the Teflon™ tape and change it as required.

2.2B4884E02en.fm

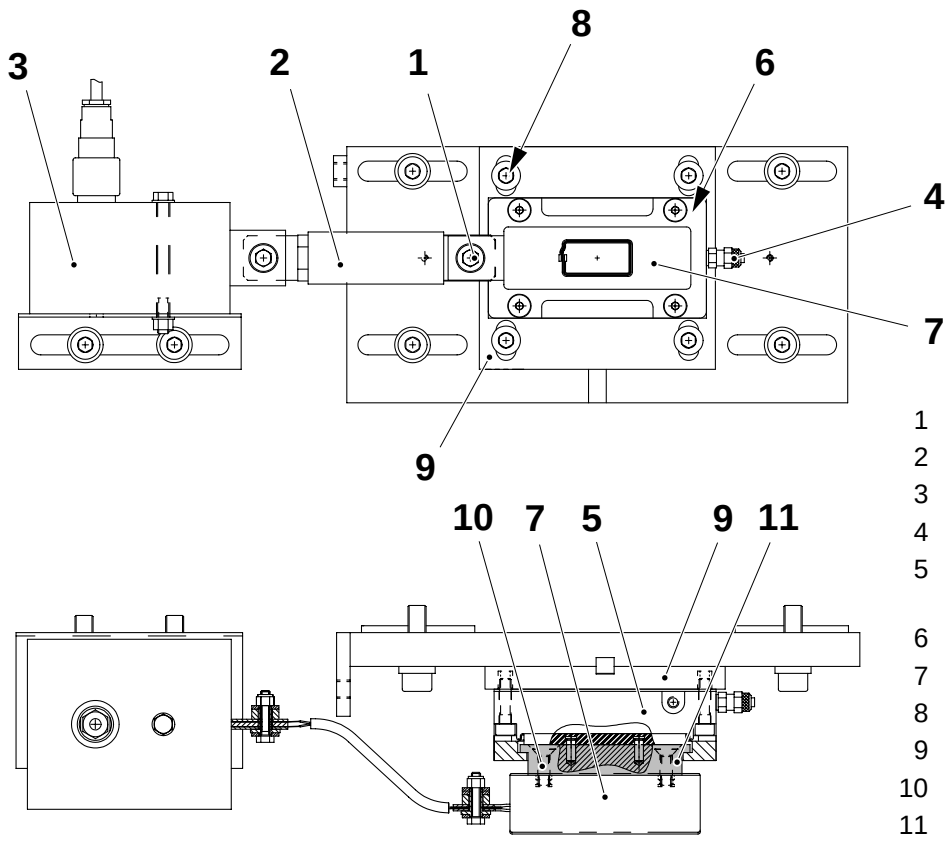

1 Screw
2 Cable
3 Transformer
4 Air hose
5 Cushion cylinder
6 Screw
7 Inductor
8 Screw
9 Plate
10 Screw
11 Guide bushing

5.2.2-4 Reseal counter jaw - check guide bushing

SPC reference	1260417-0100

a) Loosen the screw (1).

b) Disconnect the cable (2) leading to the inductor transformer (3).

c) Disconnect the air hose (4) for the cushion cylinder (5).

d) Remove the screws (8). Slide up the plate (9) to remove the plate (9) together with the counter jaw unit.

e) Remove the screws (6).

f) Remove the guide bushing (11) from the inductor (7) by means of the screws (10).

g) Check the guide bushing (11) for wear and change it as required.

Note! Remove the two pins (12) from the old guide bushing (11) and assemble them in the new one.

h) Assemble in the reverse order.

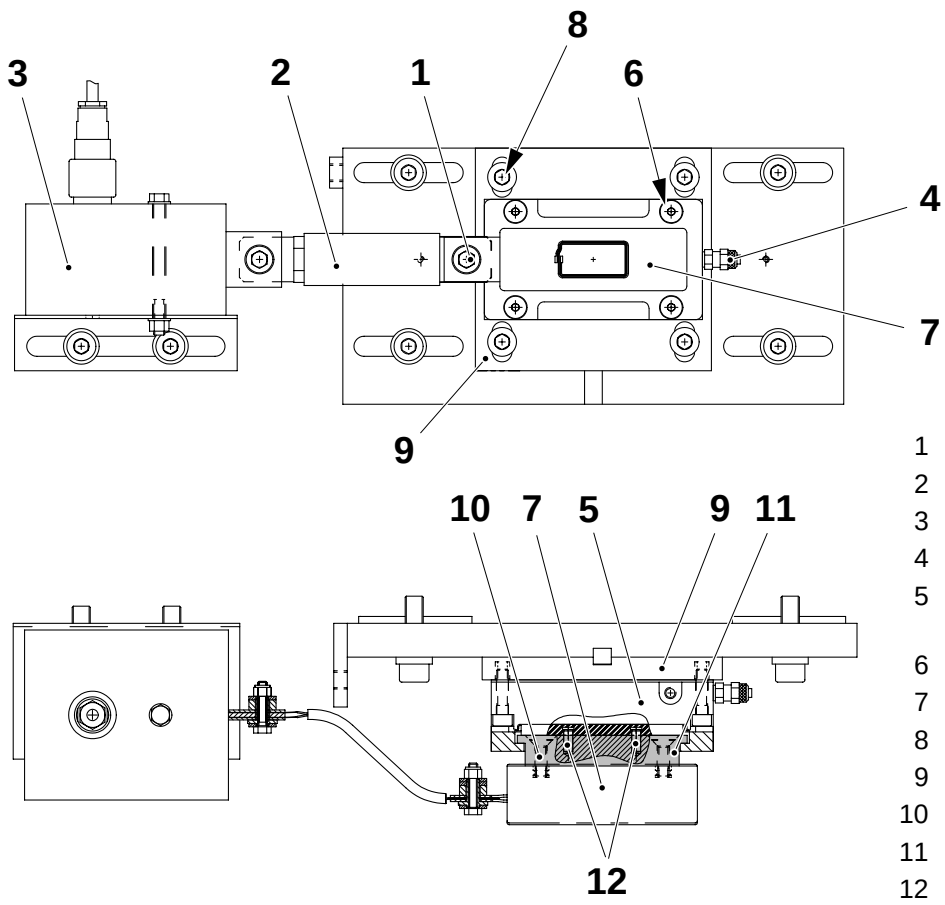

2.2B4884E02en.fm

1 Screw
2 Cable
3 Transformer
4 Air hose
5 Cushion cylinder
6 Screw
7 Inductor
8 Screw
9 Plate
10 Screw
11 Guide bushing
12 Pin

5.2.2-5 Reseal counter jaw - change cushion cylinder

SPC reference	1260417-0100

a) Loosen the screw (1).

b) Disconnect the cable (2) leading to the inductor transformer (3).

c) Disconnect the air hose (4) for the cushion cylinder (5).

d) Unscrew the screws (8). Slide up the plate (9) to remove the plate (9) with the counter jaw unit attached to it.

e) Unscrew the screws (6) and separate the inductor (7) from the cushion cylinder (5).

f) Unscrew the screw (10) and change the cushion cylinder (5).

g) Assemble in the reverse order.

h) Check that the cylinder reaches the end of its stroke.

i) Set the cushion cylinder, see *5.2.2-6 Reseal counter jaw - set cushion cylinder*.

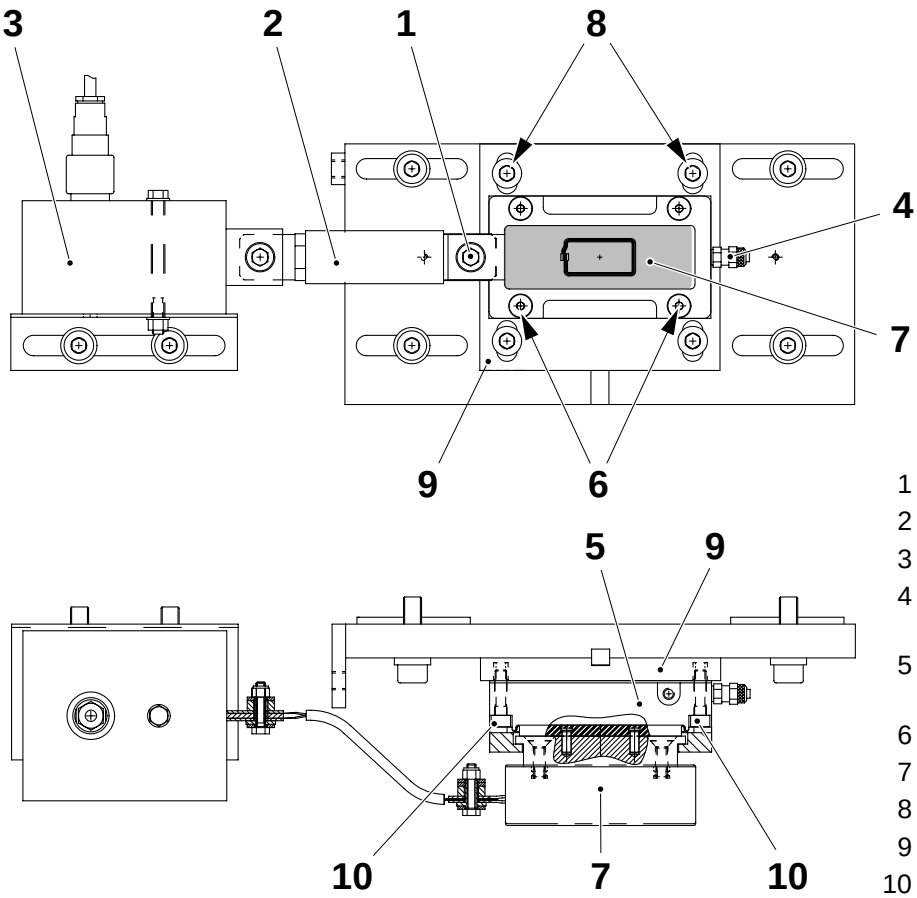

1 Screw
2 Cable
3 Transformer
4 Air hose
5 Cushion cylinder
6 Screw
7 Inductor
8 Screw
9 Plate
10 Screw

2.2B4884E02en.fm

5.2.2-6 Reseal counter jaw - set cushion cylinder

Machine status	**Preparation**
SPC reference	1260417-0100



WARNING!

Risk of burns!
The sealing jaw may be hot. Be careful.

a) Set the reseal counter jaw position, see *5.2-1 Applicator reseal - check reseal position*.

b) Switch the selector key, located on the PT21 electrical panel, to position **Service**.

c) Check that the cushion cylinder (6) is fully extended.

d) With the aid of a feeler gauge measure and record the distance **A** on both sides of the inductor (5).

e) Place a piece of packaging material between the sealing plate (4) and the inductor (5).

f) Activate the valve **Y8411:1** for the cylinder (1).

g) Loosen the locknut (3) and adjust the piston rod (2) until the distance **A** is reduced by **0.8 mm**.

h) Tighten the locknut (3).

i) Activate the valve **Y8411:2** and check that the cylinder (1) is fully in.

j) Set the reseal heating jaw, see *5.2.1-8 Reseal heating jaw - set proximity switch*.

Note! If the difference between the distance **A** on one side and the distance **A** on the other side is more than **0.5 mm**, check the cushion cylinder (6), the inductor (5) and the reseal heating jaw.

2.2B4884E02en.fm

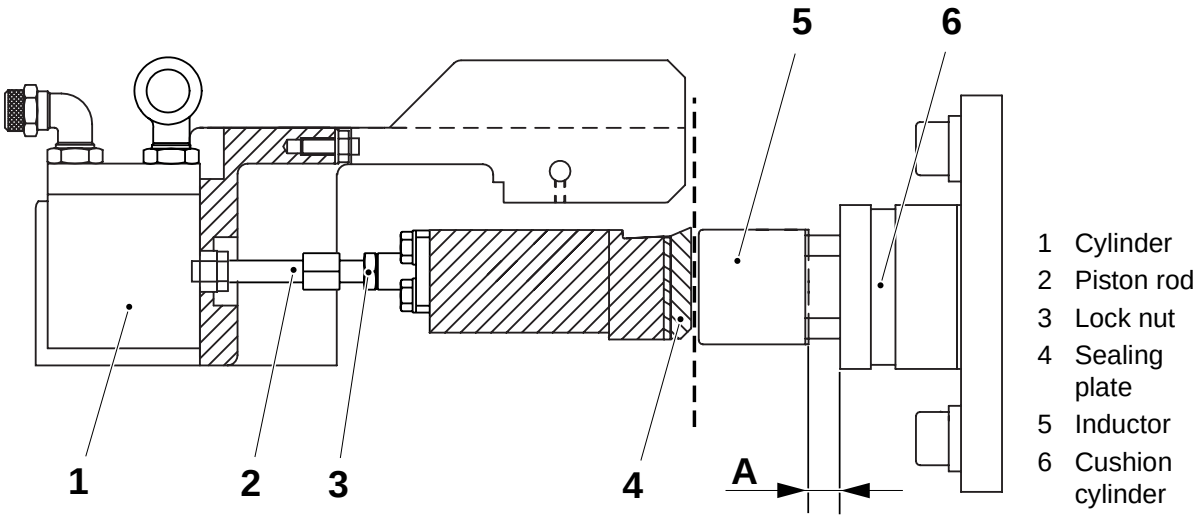

6 PullTab detection

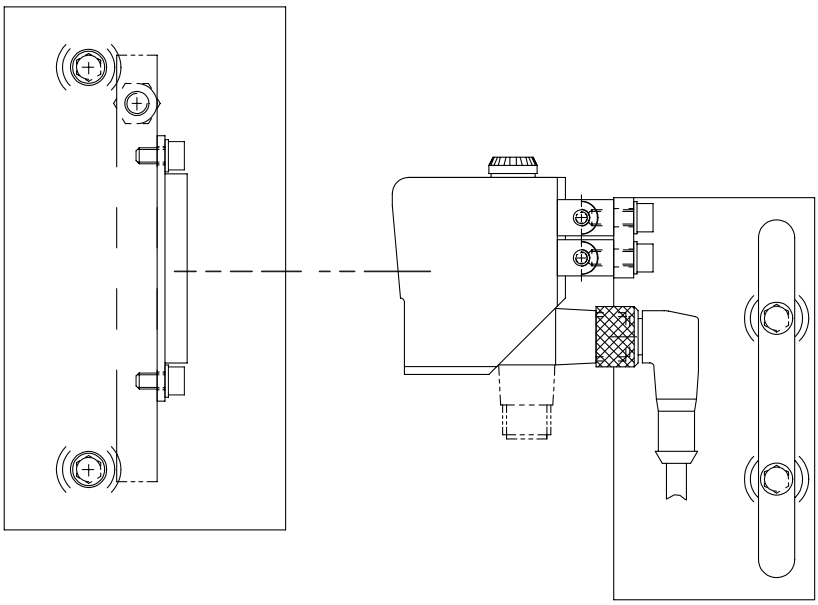

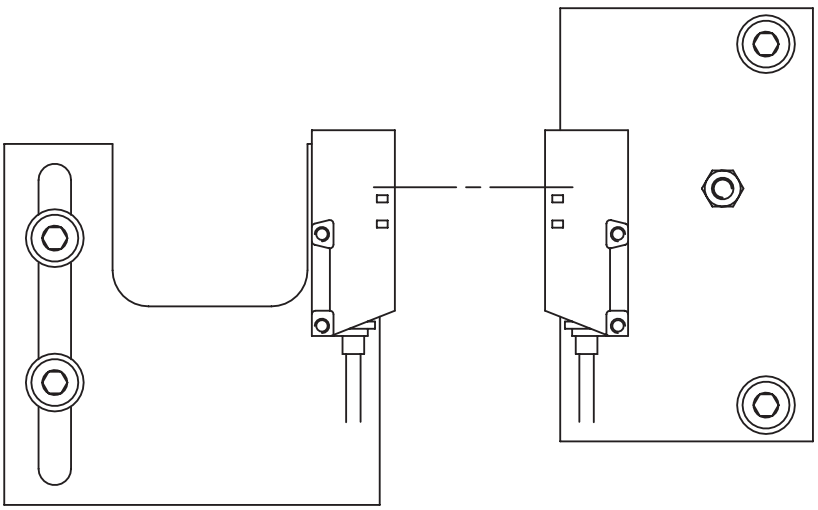

2.2B4884F00en.fm

6-0 PullTab detection - description

SPC reference	1260390-0200 1185029-0100 1260411-0100

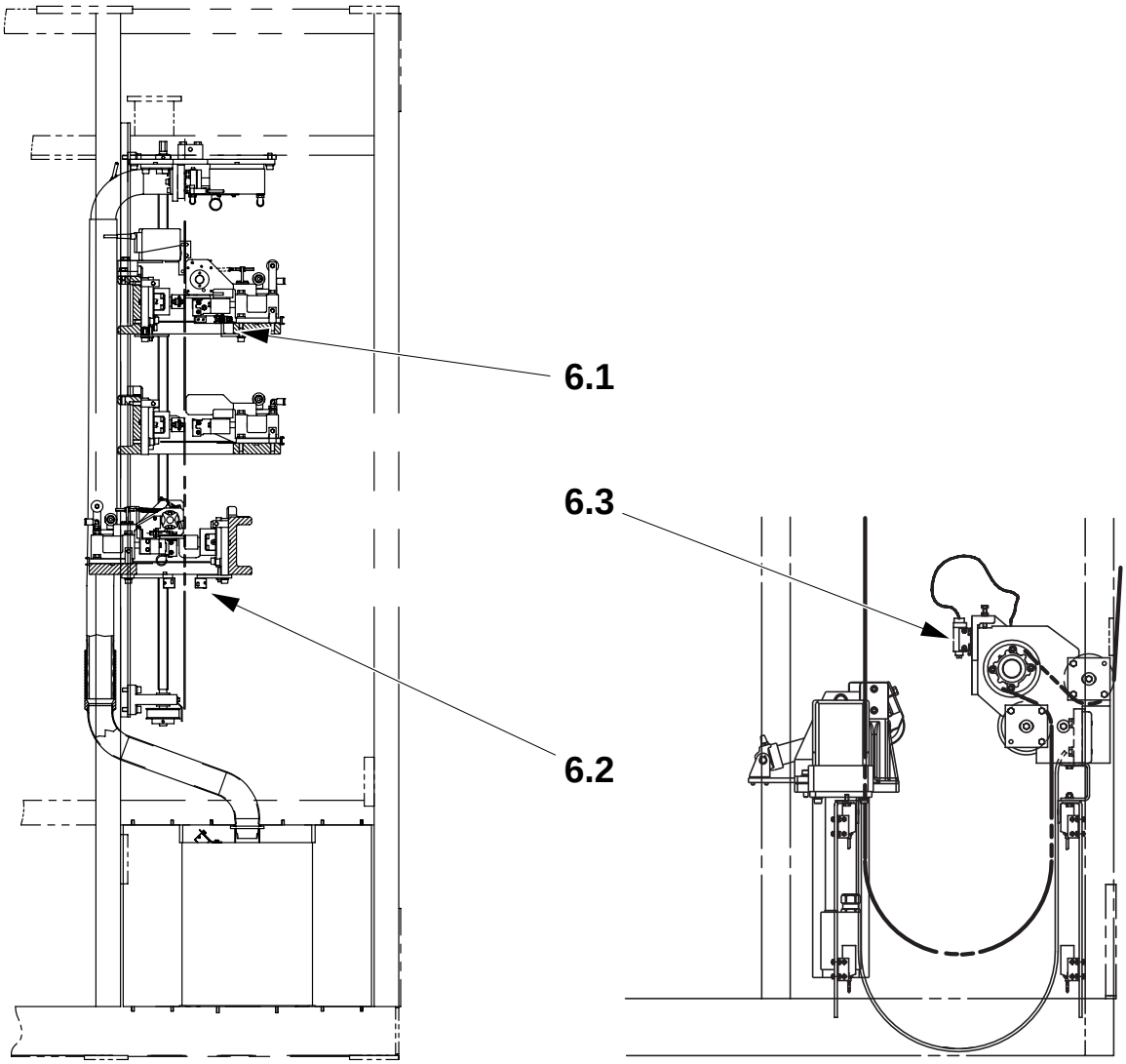

2.2B4884F00en.fm

6.1 Missing patch detector
6.2 Missing tab detector
6.3 Splice detector

6-1 PullTab detection - functional description

This chapter deals with detection of the IS patch and tab on the packaging material.

The IS patch detector is an infrared photocell which detects the absence of an IS patch on the inside of the packaging material. The tab detector are two photocells (receiver and transmitter) which detect the absence of a tab on the outside of the packaging material. The black tape detector is a photoelectric sensor which detects black tape applied over the patch or tab hole.

After the IS patch and tab have been applied and the packaging material is indexed, the IS patch detector and tab detector detect their absence.

If an IS patch or tab is missing, the PLC allows the PullTab unit to complete the cycle and then it goes into a **Short stop** mode.

The operator has to manually apply a piece of black tape over the PullTab hole with the missed IS patch or tab. The filling machine will automatically eject the package without IS patch or tab.

2.2B4884F00en.fm

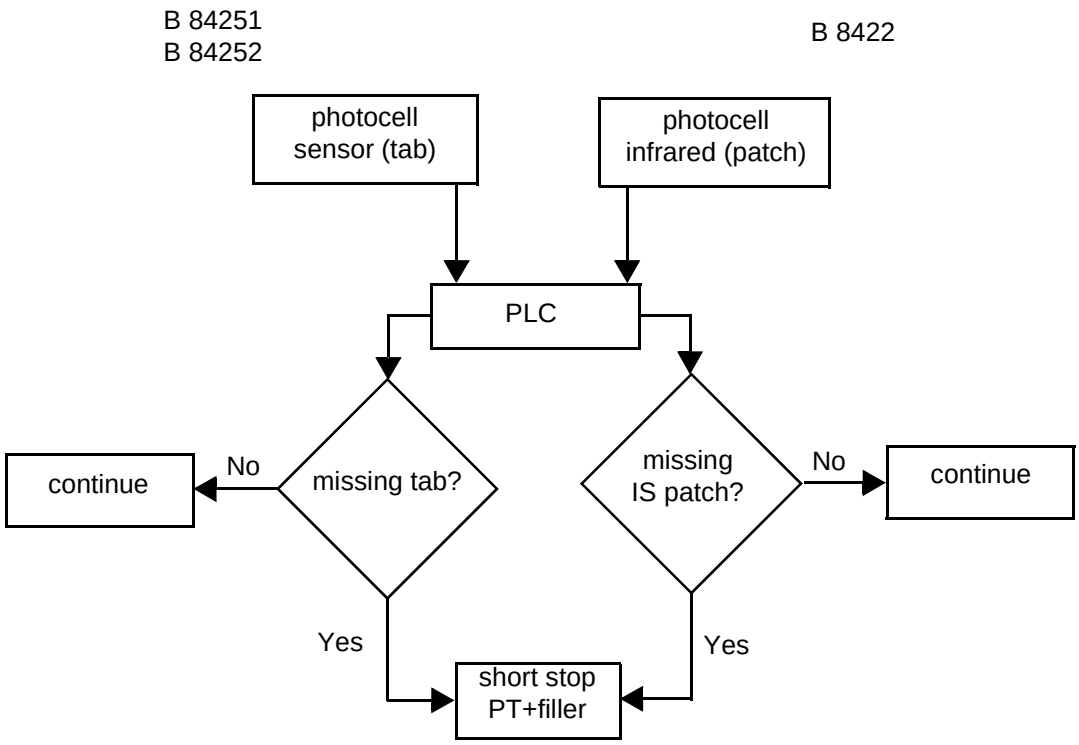

6.1 Missing patch detector

SPC reference	1260390-0200

6.1-1 Missing patch detector - check

Machine status	Ready for **Production**
SPC reference	1260390-0200

Remove the IS patch supply from the IS patch applicator.

Check that the infrared photocell emitter (1) is aligned with the infrared photocell reflector (2).

Check that the infrared photocell detects the missing IS patches by controlling that its alarm is shown on the TPOP panel.

If required, set the infrared photocell, see *6.1-2 Missing patch detector - set*.

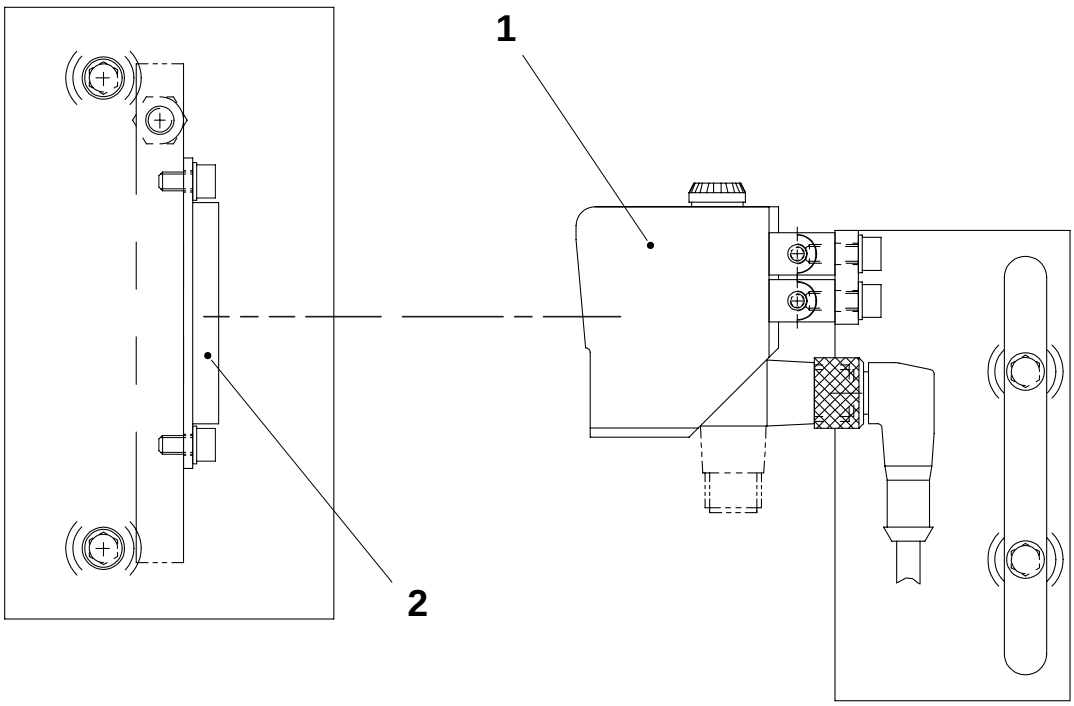

2.2B4884F01en.fm

1 Infrared photocell emitter
2 Infrared photocell reflector

6.1-2 Missing patch detector - set

Machine status	**Preparation**
SPC reference	1260390-0200

a) Close all the doors and make sure that the PT21 finds the home position.

b) Check that there is a hole and a good sealed patch in front of the patch station.

c) Put a punched hole with patch in front of the sensor and place a piece of white paper between the sensor (1) and the reflector (2). The red light beam (5) coming from the sensor (1) must be seen on the white paper and in the middle of the largest part of the punched hole.

d) Remove the white paper.

e) Turn the sensitivity potentiometer (3) anti-clockwise (toward **min.**), on the sensor (1), until the red LED (4) goes out. Then turn the sensitivity potentiometer (3) clockwise (toward **max.**), on the sensor (1), until the red LED (4) lights up.

f) Turn the sensitivity potentiometer (3) half of a turn anti-clockwise (toward **min.**).

2.2B4884F01en.fm

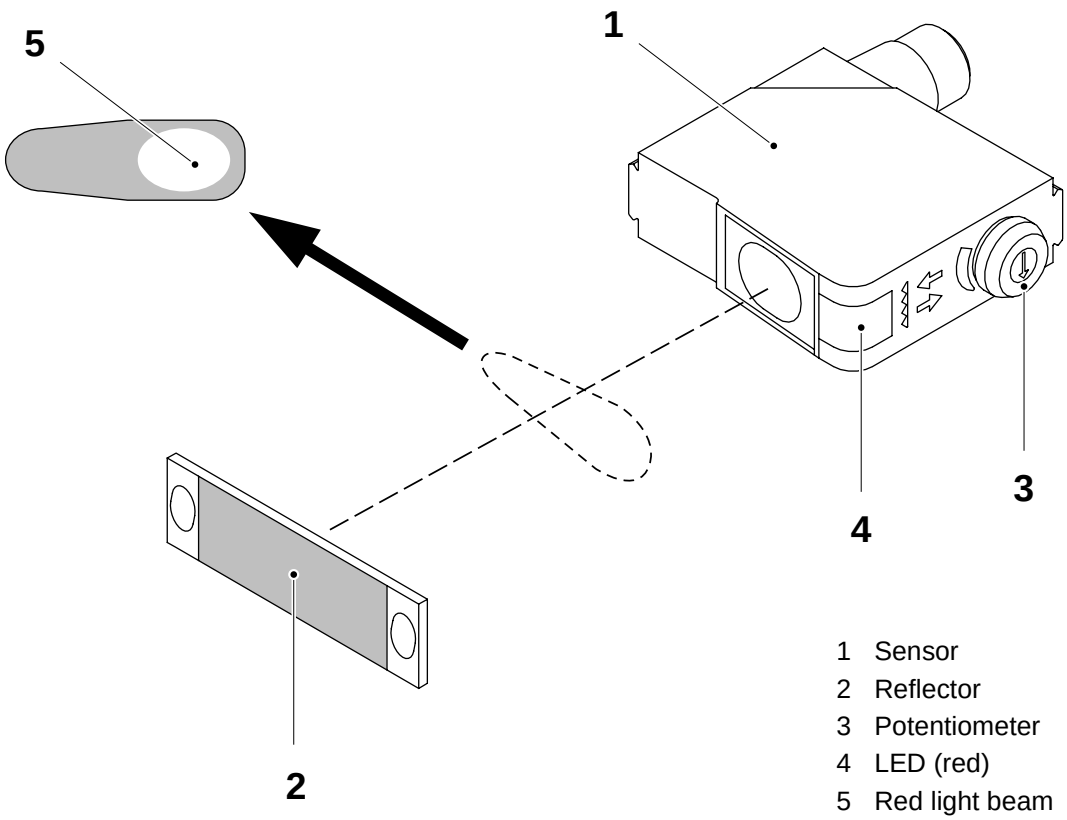

1 Sensor
2 Reflector
3 Potentiometer
4 LED (red)
5 Red light beam

6.2 Missing tab detector

SPC reference	1185029-0100

6.2-1 Missing tab detector - check

Machine status	Ready for **Production**
SPC reference	1185029-0100

Remove the tab supply from the tab applicator.

Check that the photocell emitter (1) is aligned with the photocell receiver (2).

Check that the photocells detects the missing tab by controlling that its alarm is shown on the TPOP panel.

If required set the photocell, see *6.2-2 Missing tab detector - set*.

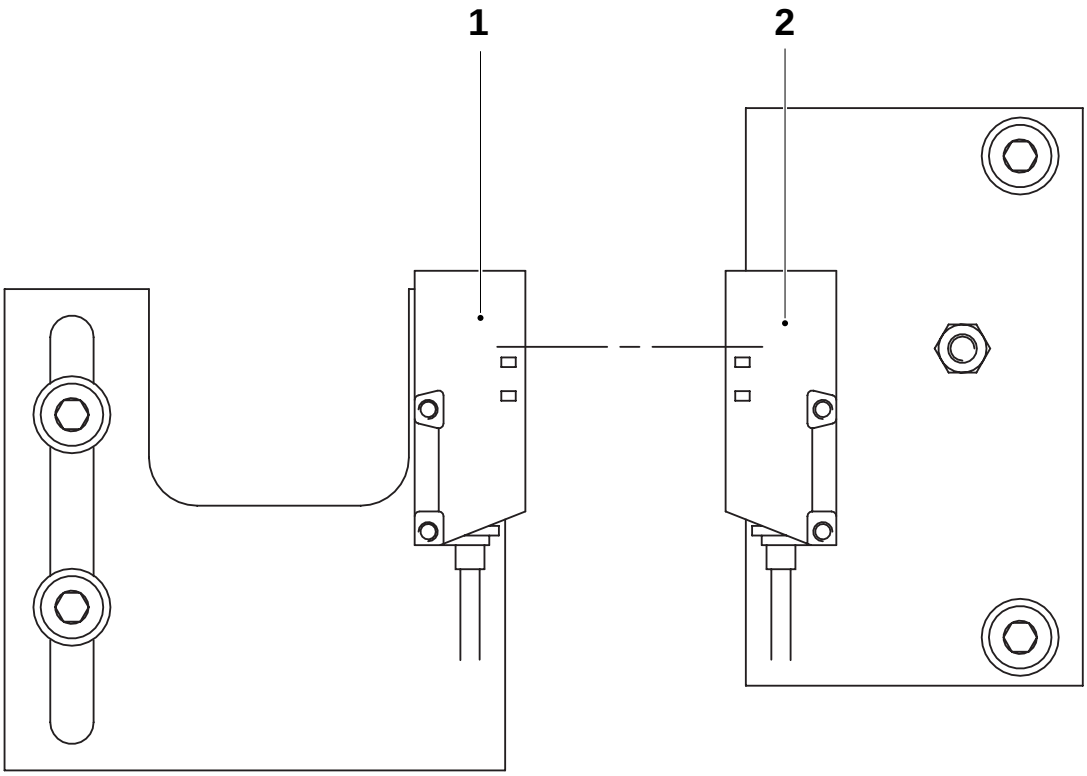

2.2B4884F02en.fm

1 Photocell emitter
2 Photocell receiver

6.2-2 Missing tab detector - set

Machine status	Ready for **Production**
SPC reference	1185029-0100

a) Open the cover of the receiver photocell (1).

b) Make sure that the receiver photocell (1) is set to **PNP** and **D-ON** and that the sensitivity potentiometer (2) is set to **max**, see figure.

c) Close the cover of the receiver photocell (1).

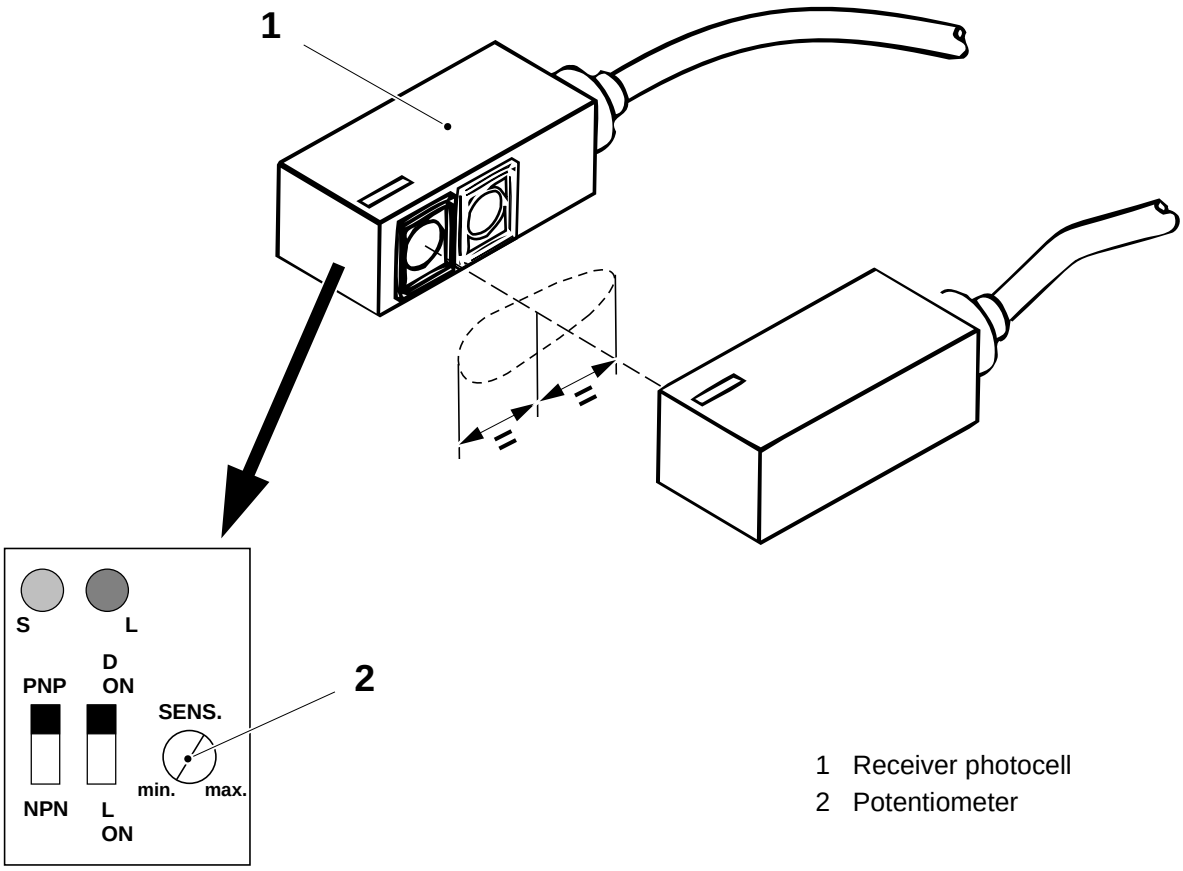

1 Receiver photocell
2 Potentiometer

2.2B4884F02en.fm

6.3 Splice detector

SPC reference	1260411-0100

6.3-1 Splice detector - check (black tape) detector

Machine status	Ready for **Production**
Consumables - black tape	 TP No. 90144-52
SPC reference	1260411-0100

a) Place a piece of a black tape (1) on the on the IS patch (2).

b) Step up the machine to step **Production**.

c) When the black tape (1) passes the reading head (3) of the photocell (4), the splice monitor will get an indication to eject packages. Check that the package with the black tape appears among the ejected packages.

d) If required set the photocell, see *6.3-2 Splice detector - set (black tape) detector*.

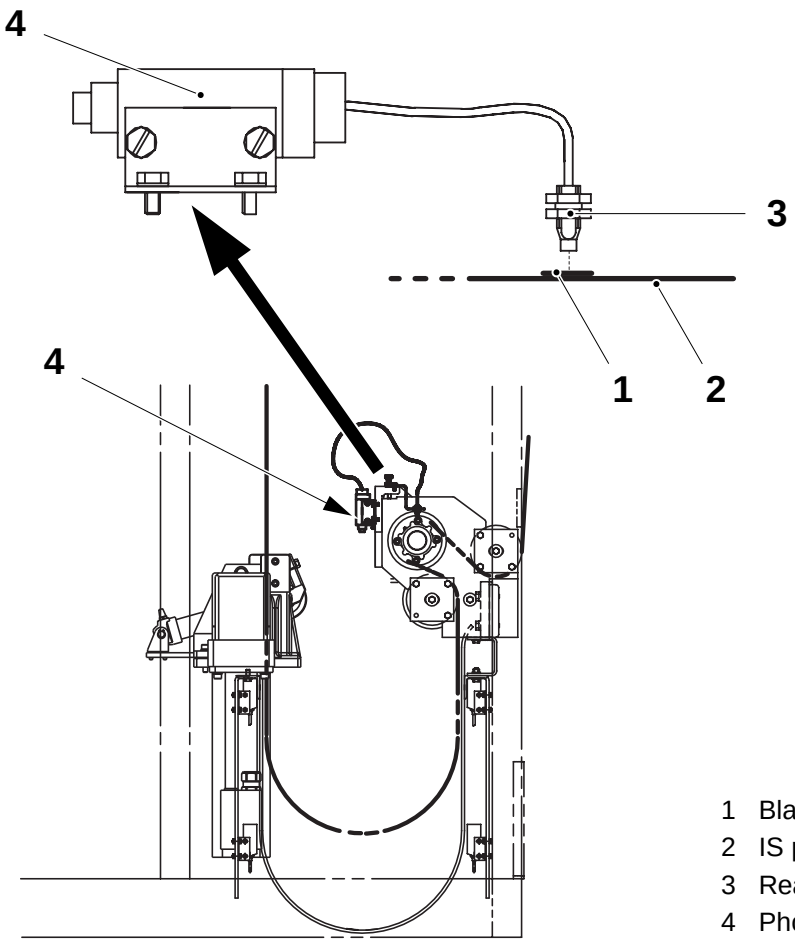

2.2B4884F03en.fm

1 Black tape
2 IS patch
3 Reading head
4 Photocell

6.3-2 Splice detector - set (black tape) detector

Machine status	Ready for **Production**
Consumables - black tape	 TP No. 90144-52
SPC reference	1260411-0100

a) Set the distance **A** between the fibre optic head (1) and the packaging material (2).

b) Turn the sensitivity potentiometer (3) fully clockwise, (**towards +**).

c) Put a piece of black tape (4) on the packaging material and place it in front of the fibre optic head (1).

d) Turn the sensitivity potentiometer (3) anti-clockwise, (**towards -**), until the red LED (5) goes out.

e) Check, by moving the black tape (4) under the fibre optic head (1), that the red LED (5) goes on and off.

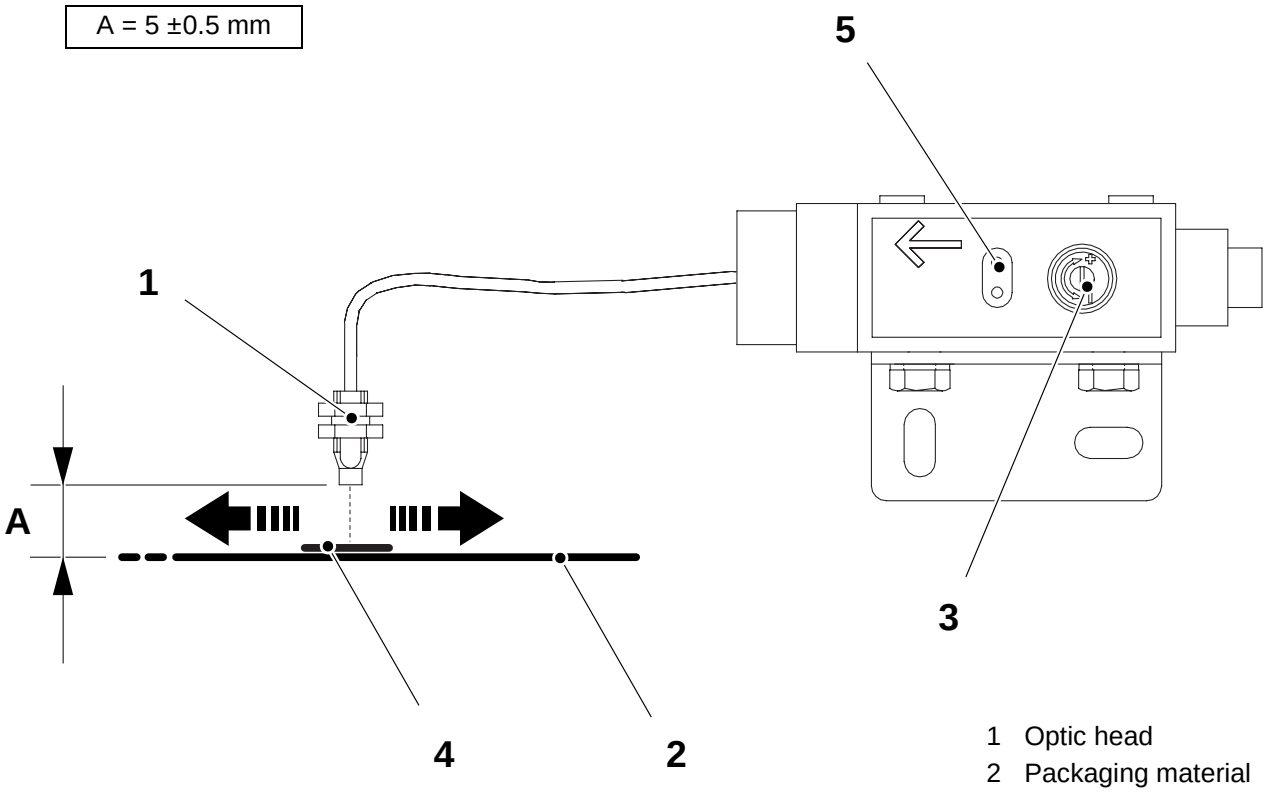

1 Optic head
2 Packaging material
3 Potentiometer
4 Black tape
5 LED (red)

2.2B4884F03en.fm

This page intentionally left blank

2.2B4884F03en.fm

7 Frame and safety function

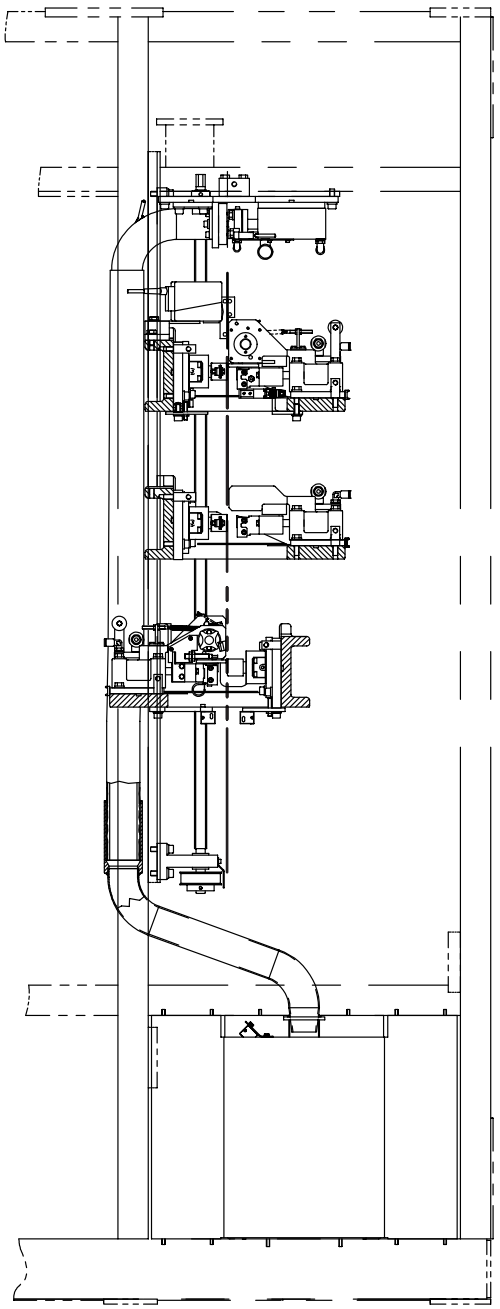

2.2B4884G00en.fm

7-0 Frame and safety function - description

SPC reference	1095951-0200 1185078-0100

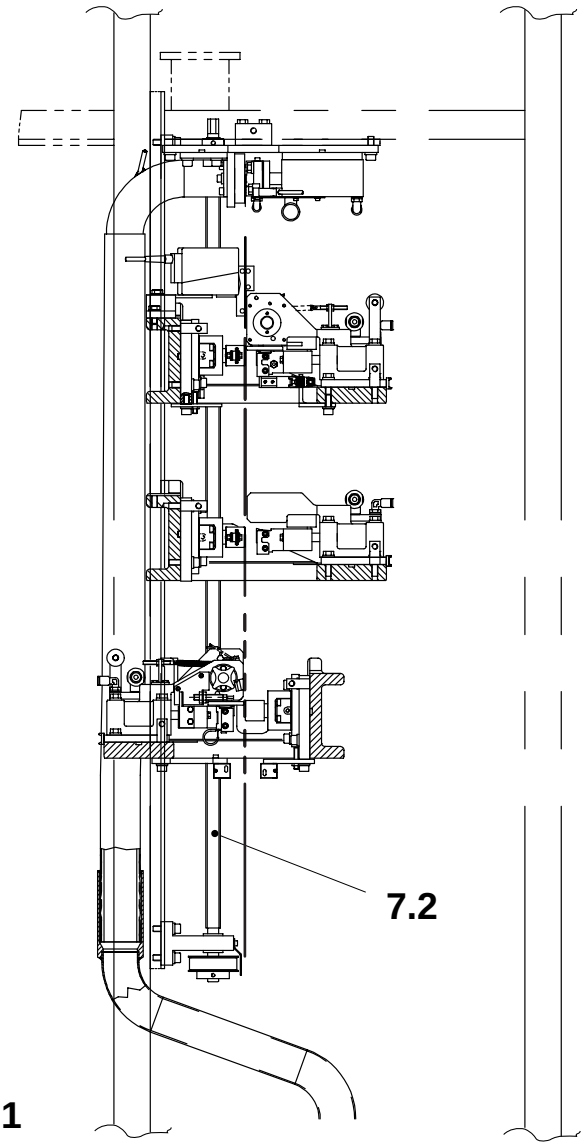

2.2B4884G00en.fm

7.1 Cover arrangement
7.2 Applicators and lifting device

7.1 Cover arrangement

SPC reference	1095951-0200

7.1-1 Cover arrangement - check safety function

Machine status	**Production**
SPC reference	1095951-0200

a) Check that the filling machine and the PullTab unit stop in **Emergency stop** mode when the **Emergency stop** push-buttons are pressed.

b) Check that the PullTab unit stops in **Short stop** when any of the PullTab doors (grey coloured) are opened.

c) Check the position of the door switches. Check for unauthorised tampering.

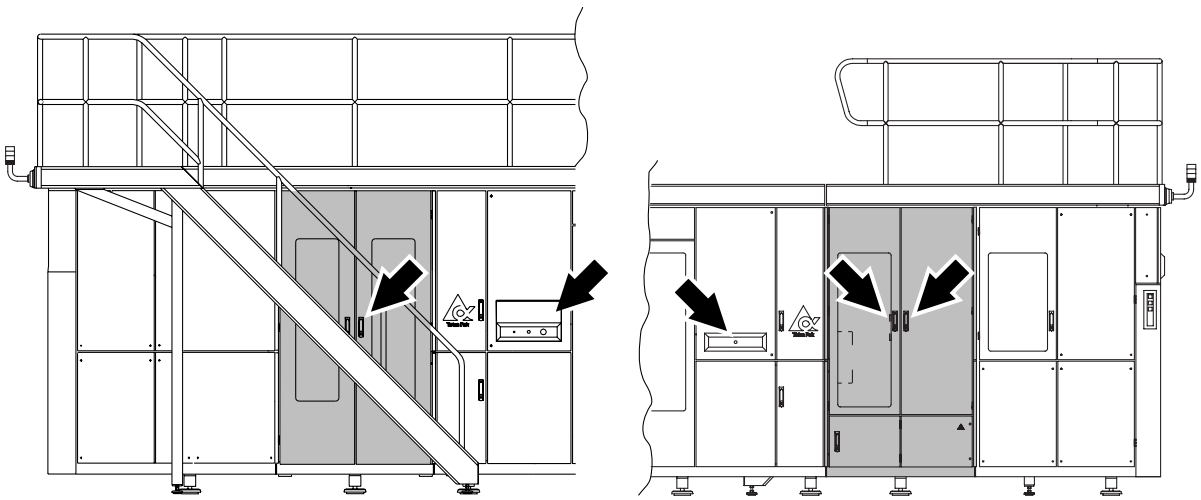

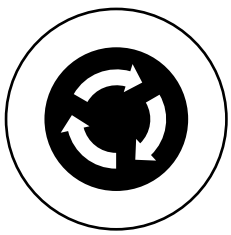

2.2B4884G01en.fm

(Cont'd)

(Cont'd)

d) Check that the warning signs indicated in the figure are present and readable. Replace missing and/or illegible signs. The warning signs corresponding to the respective position numbers are given in the table.

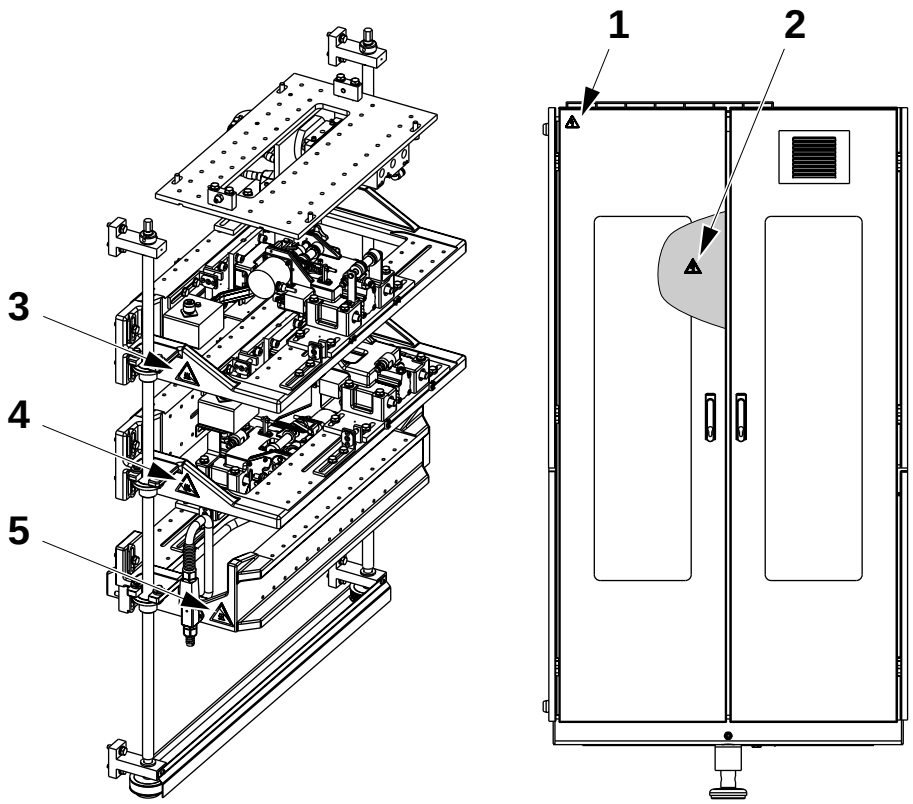

Position	Warning sign
1 and 2	
3, 4 and 5	

2.2B4884G01en.fm

(Cont'd)

(Cont'd)

e) Check that the warning signs indicated in the figure are present and readable. Replace missing and/or illegible signs. The warning signs corresponding to the respective position numbers are given in the table.

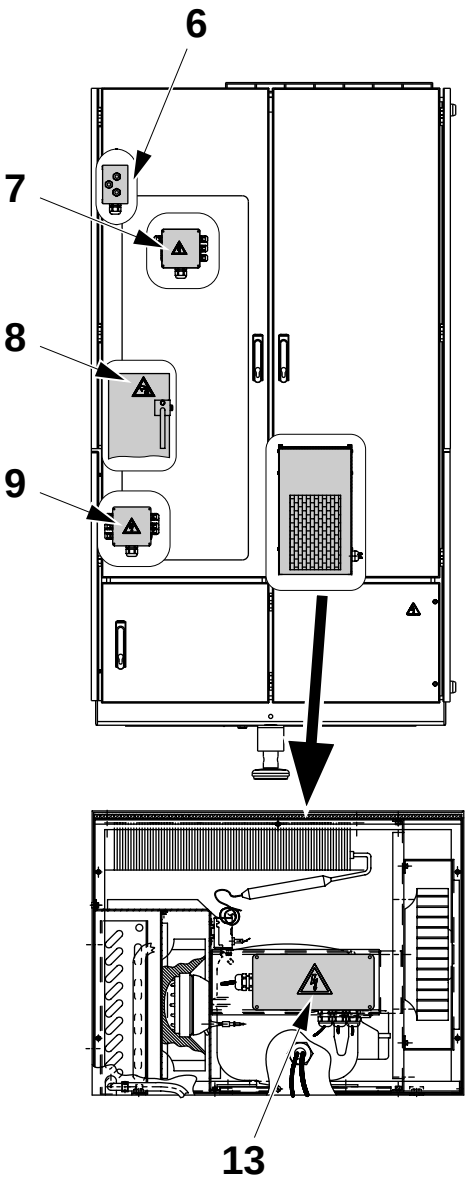

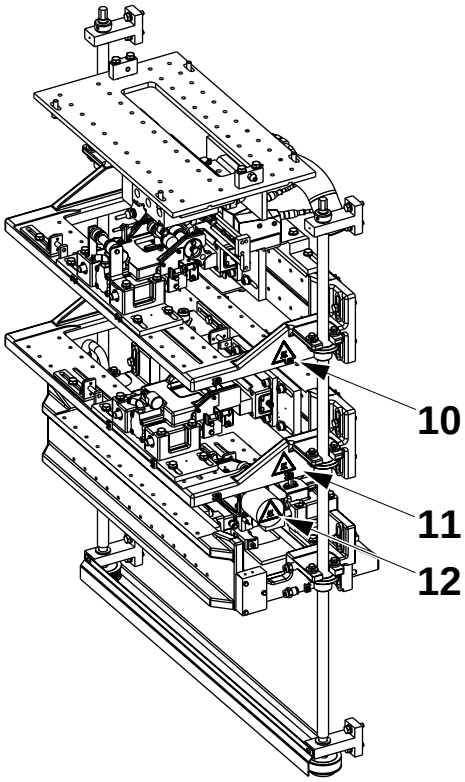

Position	Warning sign
6, 7, 9 and 13	
10, 11 and 12	
8	
	or
	

2.2B4884G01en.fm

7.2 Applicators and lifting device

SPC reference	1260419-0100 1260420-0100 1260421-0100 1185078-0100

7.2.1 Applicators

7.2.1-1 Applicators - set brackets position

SPC reference	1260419-0100 1260420-0100 1260421-0100

a) Set distances **A**, **B** and **C**, see table below, between the brackets (1) of the applicators by following the instructions below.

Package	Hole type	A ±0.5 (mm)	B ±0.5 (mm)	C ±0.5 (mm)		Package	Hole type	A ±0.5 (mm)	B ±0.5 (mm)	C ±0.5 (mm)
250 B	21	403.5	140.6	144.8		500 S	55	289.1	185	193.4
500 S	25	286.8	187.3	189.4		1500 S	85	407.6	306.5	311.7
1500 S	45	407.8	306.3	311.2		1000 Sq	85	362.6	261.5	266.7
1000 B	45	322.8	221.3	226.2		1000 B	85	322.6	221.5	226.7
1000 S	45	347.8	246.3	251.2		1000 S	85	347.6	246.5	251.7
1000 B	50	323.6	220.5	226.4		TPA 1000 S	60	347.8	246.3	251.9
1000 S	50	348.6	245.5	251.4						

2.2B4884G02en.fm

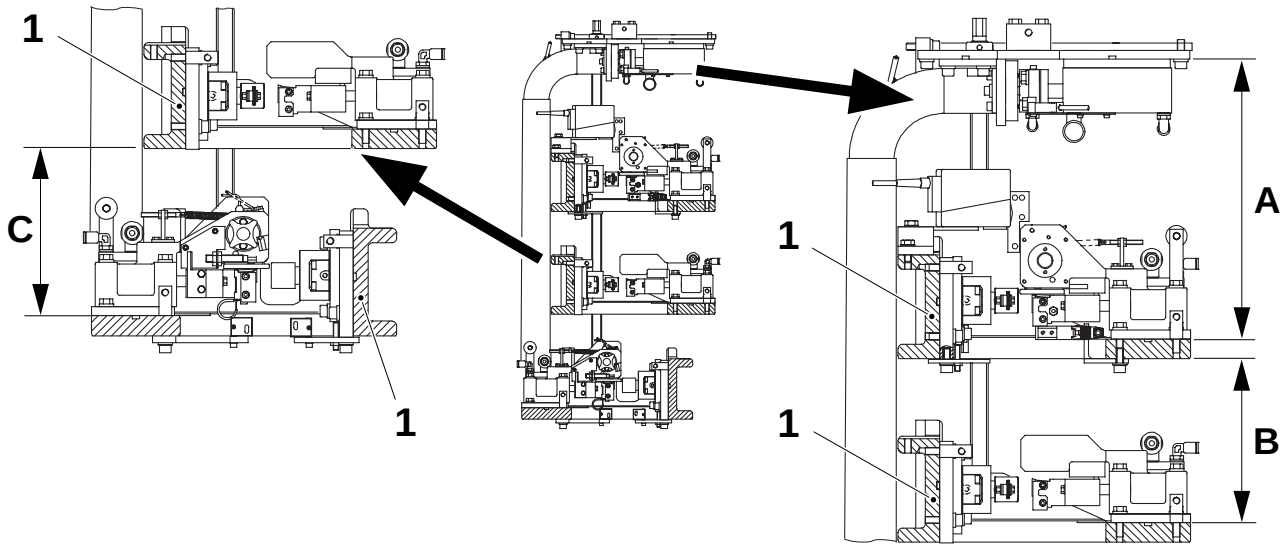

1 Bracket

(Cont'd)

(Cont'd)

Note! Perform the following work on one applicator station at a time.

b) Tighten the brass bushings (2) until they match against the bracket (1).

c) Tighten the two screws (3).

d) Check that in the other two applicator stations the screws (3) are loosen and that the brass bushings (2) are far away from the bracket (1).

Note! Perform the items *b)*, *c)* and *d)* on both sides of the PullTab.

e) Slightly loosen the screws (4) on the bracket (1), and adjust the screw guides (5) until the distances **A**, **B** and **C** are obtained, see previous page.

f) Tighten the screws (4) after adjustment.

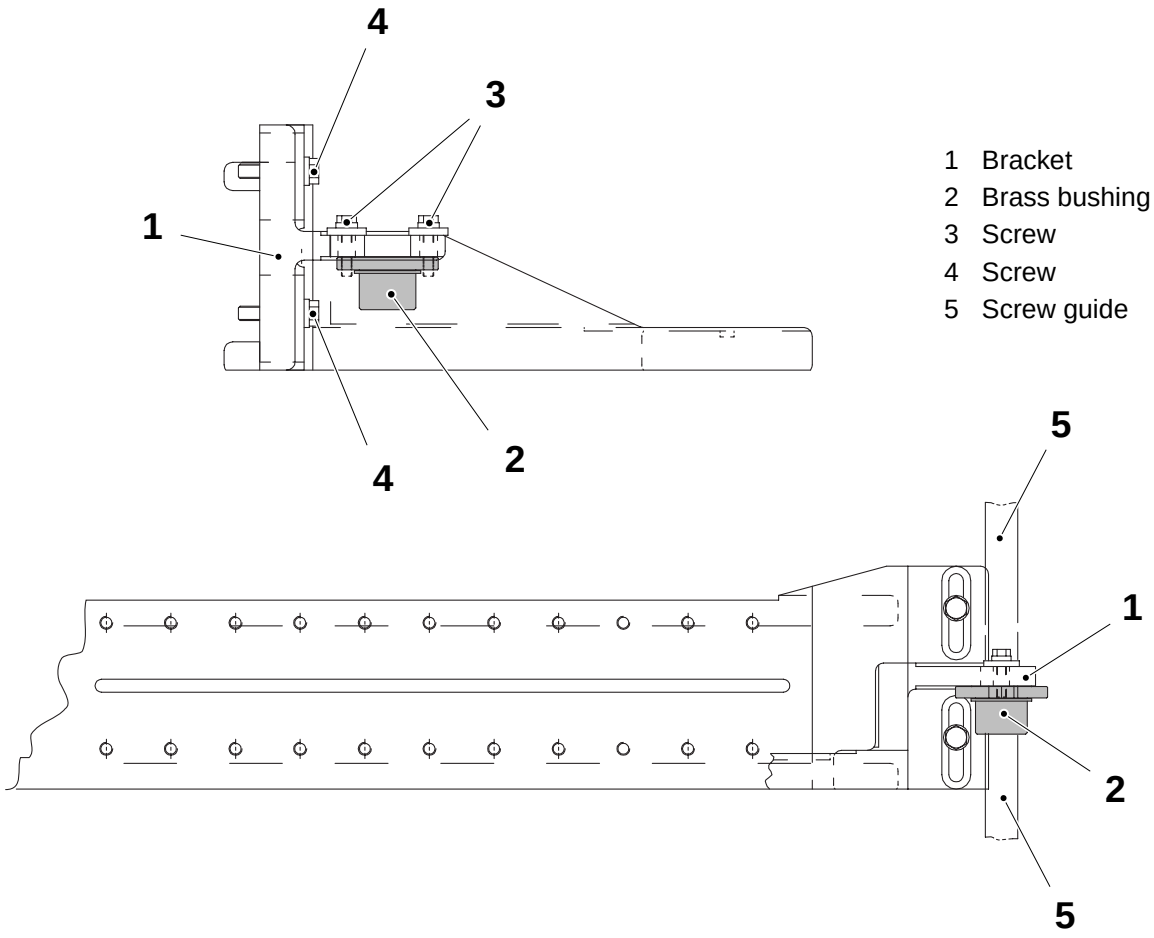

1 Bracket
2 Brass bushing
3 Screw
4 Screw
5 Screw guide

2.2B4884G02en.fm

(Cont'd)

(Cont'd)

Set counter jaw vertical position of patch, reseal and tab

a) Step the machine to step **Preparation**.

b) Switch the selector key, located on the PT21 electrical panel, to position **Service**.

Note! Perform the following work on one applicator station at a time.

c) Activate the valve for the cylinder (6) (**Y8410:1** for patch station, **Y8411:1** for reseal and **Y8412:1** for tab) and make sure that the cushion cylinder (7) is fully extended.

d) Loosen the screws (8) on the counter jaw.

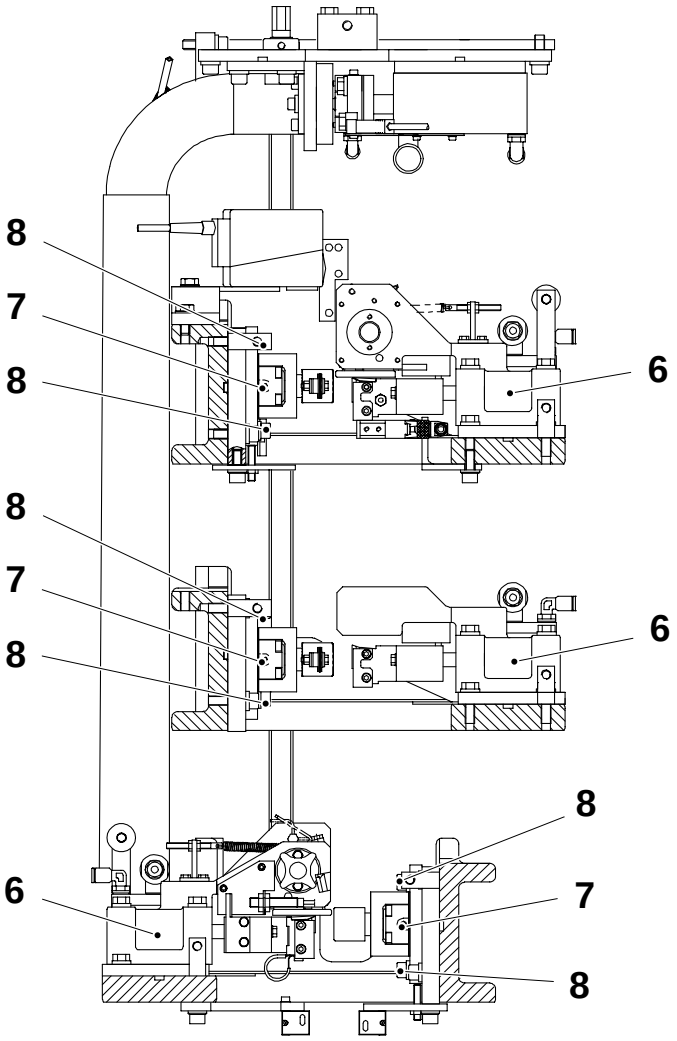

2.2B4884G02en.fm

6 Cylinder
7 Cushion cylinder
8 Screw

(Cont'd)

(Cont'd)

e) Loosen the nut (9) and set the distances **D**, **E** and **F**, between the edge of the inductor (10) and the sealing plate (11) by means of the grub screw (12); (by hand only for the reseal station).

f) Tighten the nut (9) and the screws (8).

g) Deactivate the valve for the cylinder (6).

Package	Hole type	D ±0.5 (mm)	E ±0.5 (mm)	F ±0.5 (mm)		Package	Hole type	D ±0.5 (mm)	E ±0.5 (mm)	F ±0.5 (mm)
250 B	21	9.1	8.3	11.8		500 S	55	11.4	8.3	13.8
500 S	25	9.1	8.3	9.8		1500 S	85	9.9	8.3	12.1
1500 S	45	10.1	8.3	11.6		1000 Sq	85	9.9	8.3	12.1
1000 B	45	10.1	8.3	11.6		1000 B	85	9.9	8.3	12.1
1000 S	45	10.1	8.3	11.6		1000 S	85	9.9	8.3	12.1
1000 B	50	10.9	8.3	11.8		TPA 1000 S	60	10.1	8.3	12.3
1000 S	50	10.9	8.3	11.8						

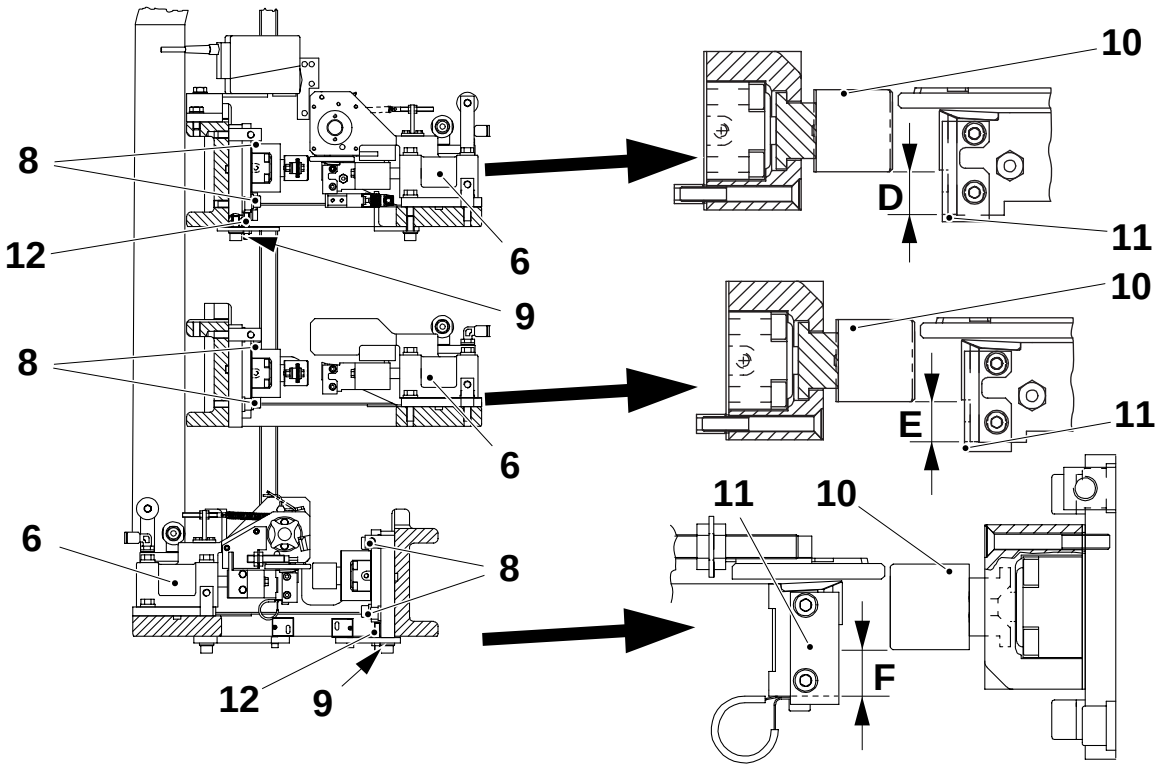

6 Cylinder
8 Screw
9 Nut
10 Inductor
11 Sealing plate
12 Grub screw

(Cont'd)

2.2B4884G02en.fm

(Cont'd)

Set counter jaws position with respect to the paper line

a) Attach a plumb line (13) on the paper brake wheel (14) and let it hang over the drive motor wheel (15).

b) By means of the pressure regulator (16), open the main air inlet for the PT21 and check that the counter roller of the paper brake wheel (14) and of the drive motor wheel (15) are engaged and that the plumb line (13) is in tension.

c) Move the IS patch, reseal and tab counter jaw, one by one, approximately to the centre of their own respective brackets.

d) Check also that the pressure regulators (17), (18) and (19) are correctly set, see *10.1 Technical data*.

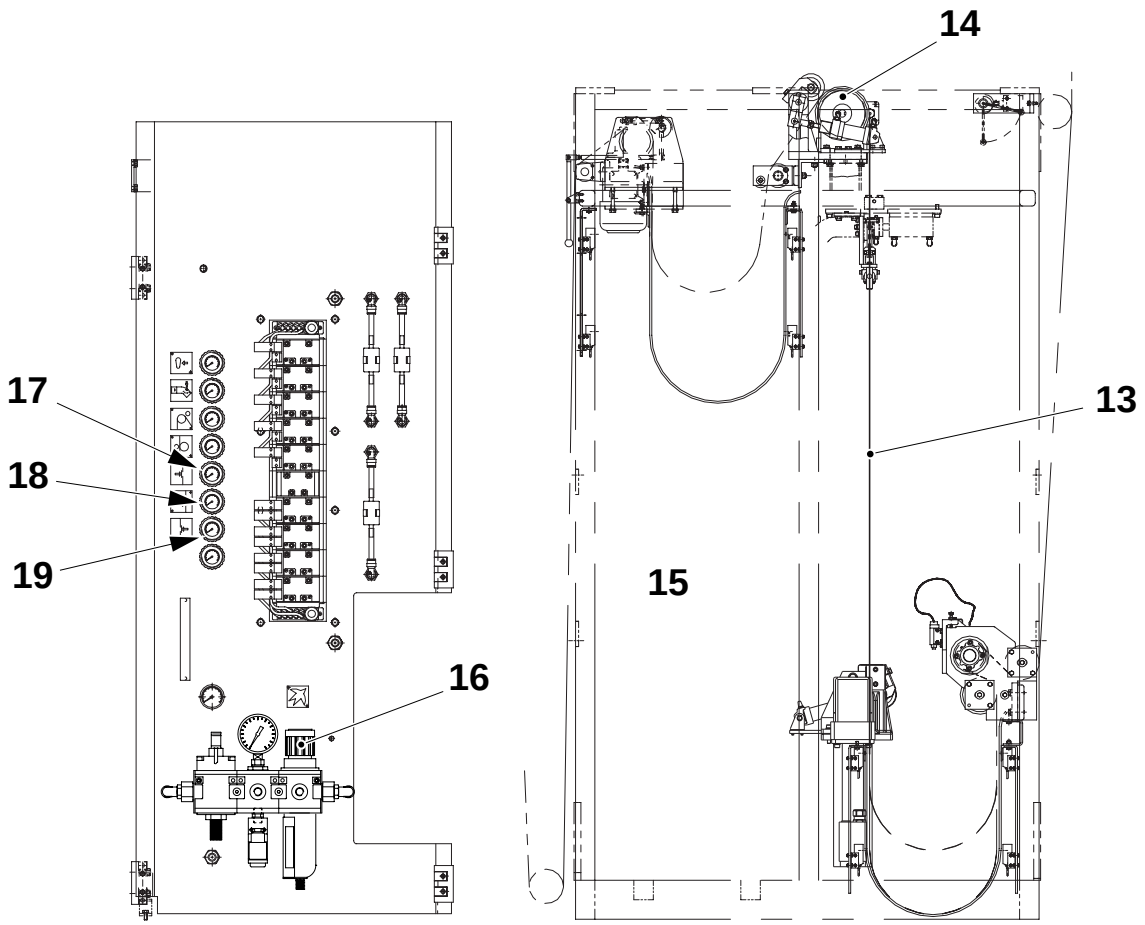

2.2B4884G02en.fm

13 Plumb line
14 Wheel
15 Wheel
16 Pressure regulator
17 Pressure regulator
18 Pressure regulator
19 Pressure regulator

(Cont'd)

(Cont'd)

e) Check that the plumb line (13) just clears, distance **G**, of the face of the three inductors (20).

f) If required, adjust with shims (21) under the cushion cylinders.

g) Remove the plumb line (13).

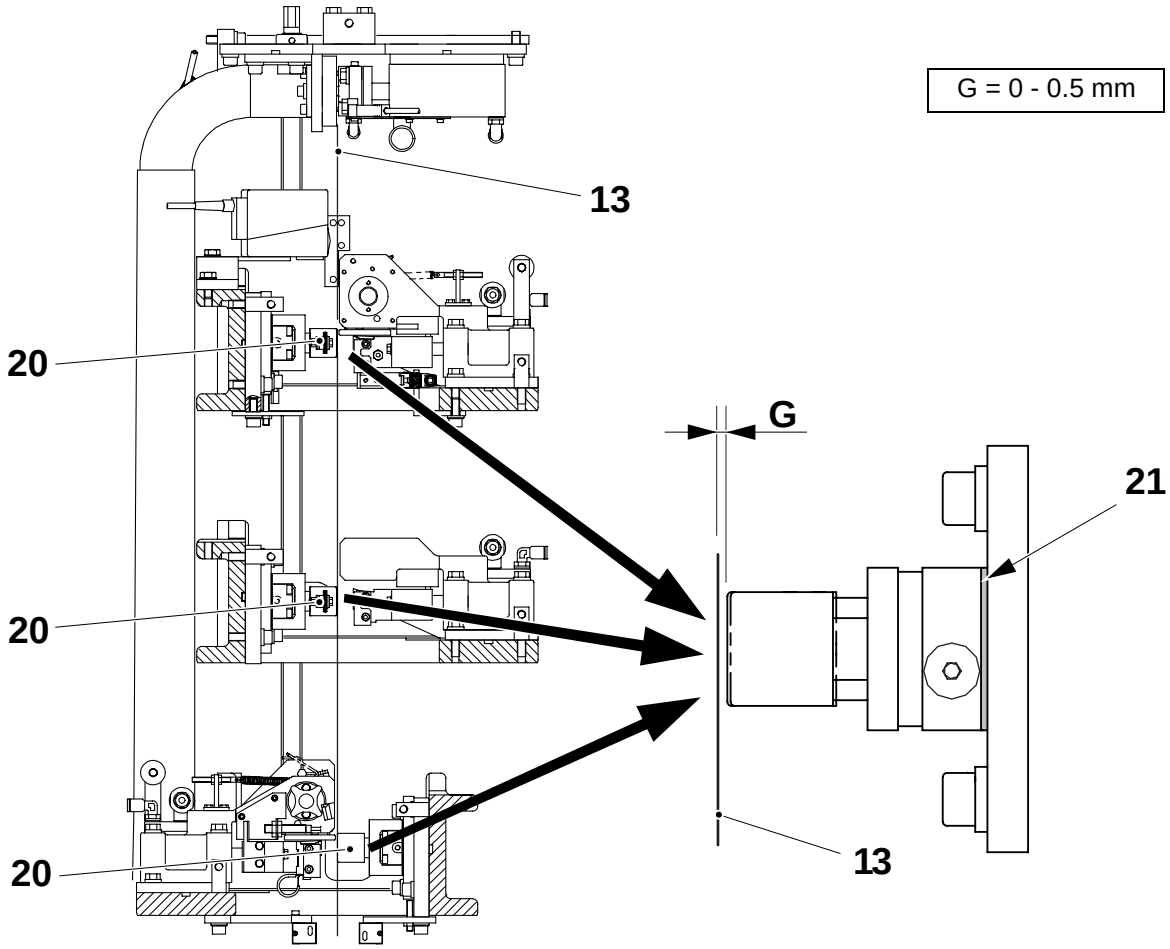

13 Plumb line
20 Inductor
21 Shim

(Cont'd)

2.2B4884G02en.fm

(Cont'd)

Set punch and die unit horizontal position

a) Loosen the four screws (22).

b) Shift the plate (23) by means of the setting screws (24) until the distance **H** between the beam (25) and the side of the plate (23) is obtained.

c) Tighten the four screws (22).

d) Gently push the punch by hand so that it slides into the die.

e) Unscrew the screws (26) and the screws (27).

f) By hand, shift the punch unit and the die unit until the distance **I** between the side of the plate (23) and the punch plate (28) is obtained.

g) Tighten the screws (26) and the screws (27).

Package	Hole type	I ±0.5 (mm)		Package	Hole type	I ±0.5 (mm)		Package	Hole type	I ±0.5 (mm)
250 B	21	44.7		1000 B	50	-1.7		1000 Sq	85	147
500 S	25	32.5		1000 S	50	4.5		1000 B	85	1.0
1500 S	45	-2.2		500 S	55	29.3		1000 S	85	7.5
1000 B	45	-0.2		1500 S	85	-1.0		TPA 1000 S	60	149.05
1000 S	45	6.3								

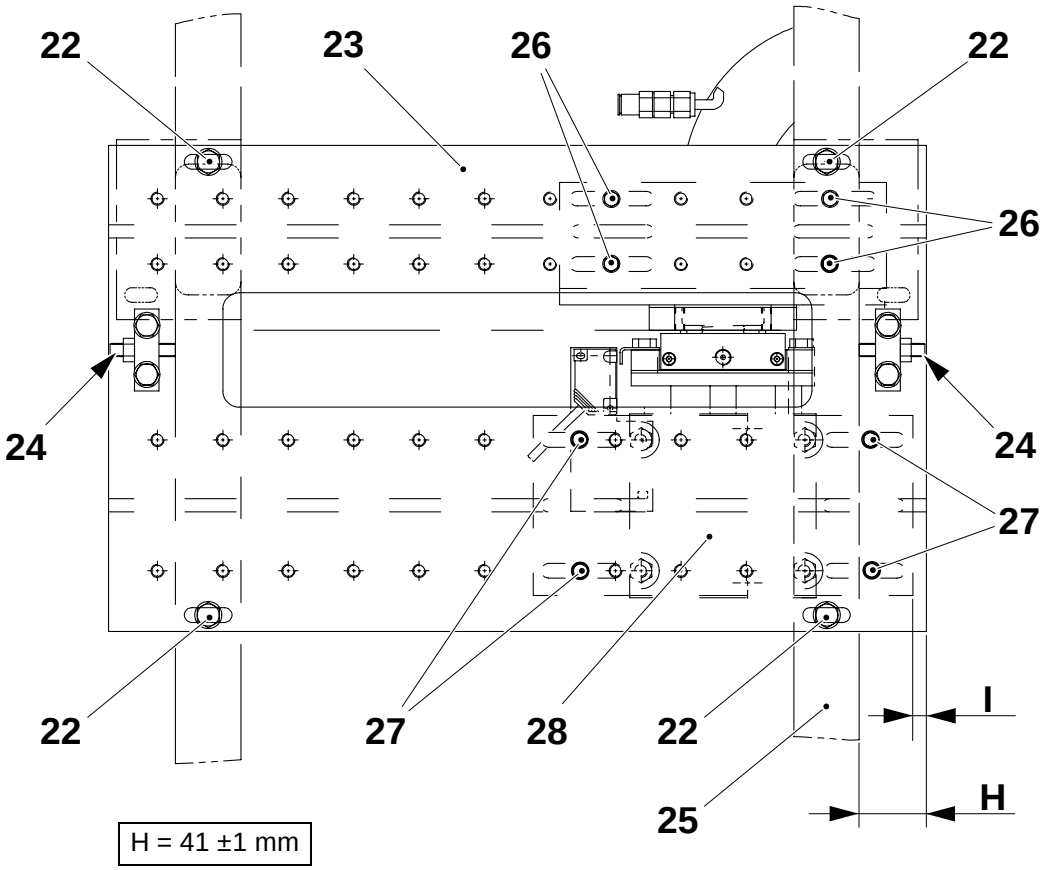

2.2B4884G02en.fm

22 Screw
23 Plate
24 Setting screw
25 Beam
26 Screw
27 Screw
28 Punch plate

(Cont'd)

(Cont'd)

Set patch feeder and patch counter jaw horizontal position

a) Make sure that the cushion cylinder (29) is fully extended.

b) Loosen the screws (30), located on the patch counter jaw.

c) Set the distance **L** between the edge of the inductor (31) and the machined surface **N** by means of the setting screw (32). Tighten the screws (30).

d) Loosen the screws (33), located on the patch feeder.

e) Set the distance **M** between the patch feeder head (35) and the machined surface **N** by means of the setting screw (34). Tighten the screws (33).

Package	Hole type	L ±0.5 (mm)	M ±0.5 (mm)		Package	Hole type	L ±0.5 (mm)	M ±0.5 (mm)
250 B	21	193.7	168.7		500 S	55	178.3	153.3
500 S	25	181.5	156.5		1500 S	85	148.0	123.0
1500 S	45	146.8	121.8		1000 Sq	85	296.0	271.0
1000 B	45	148.8	123.8		1000 B	85	150.0	125.0
1000 S	45	155.3	130.3		1000 S	85	156.5	131.5
1000 B	50	147.3	122.3		TPA 1000 S	60	298.0	273.0
1000 S	50	153.5	128.5					

2.2B4884G02en.fm

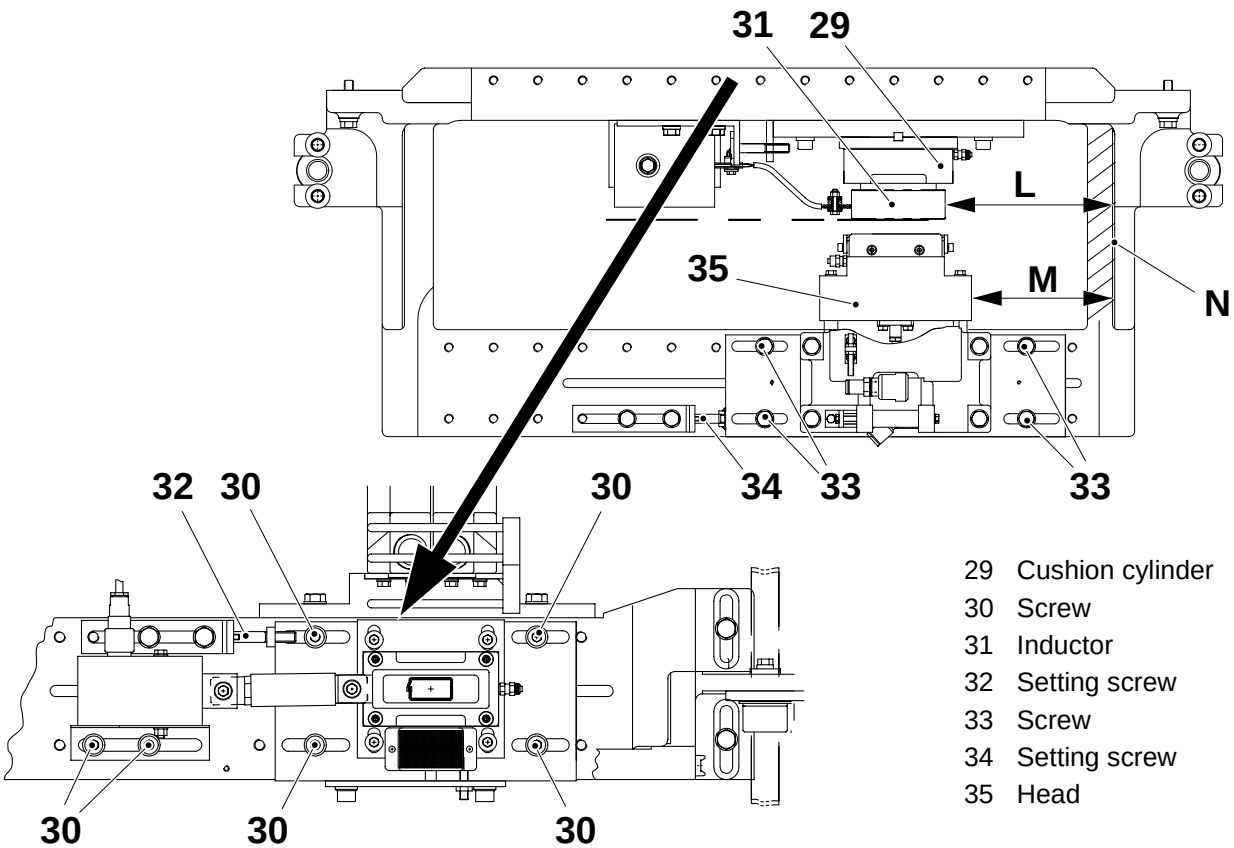

29 Cushion cylinder
30 Screw
31 Inductor
32 Setting screw
33 Screw
34 Setting screw
35 Head

(Cont'd)

(Cont'd)

Set reseal jaw and counter jaw horizontal position

a) Make sure that the cushion cylinder (36) is fully extended.

b) Loosen the screws (37) and set the distance **O** between the edge of the inductor (38) and the machined surface **Q** by means of the setting screw (39). Tighten the screws (37).

c) Loosen the screws (40), located on the reseal heating jaw.

d) Set the distance **P** between the reseal heating jaw head (42) and the machined surface **Q** by means of the setting screw (41). Tighten the screws (40).

Package	Hole type	O ±0.5 (mm)	P ±0.5 (mm)		Package	Hole type	O ±0.5 (mm)	P ±0.5 (mm)
250 B	21	193.7	168.7		500 S	55	178.3	153.3
500 S	25	181.5	156.5		1500 S	85	148.0	123.0
1500 S	45	146.8	121.8		1000 Sq	85	296.0	271.0
1000 B	45	148.8	123.8		1000 B	85	150.0	125.0
1000 S	45	155.3	130.3		1000 S	85	156.5	131.5
1000 B	50	147.3	122.3		TPA 1000 S	60	298.0	273.0
1000 S	50	153.5	128.5					

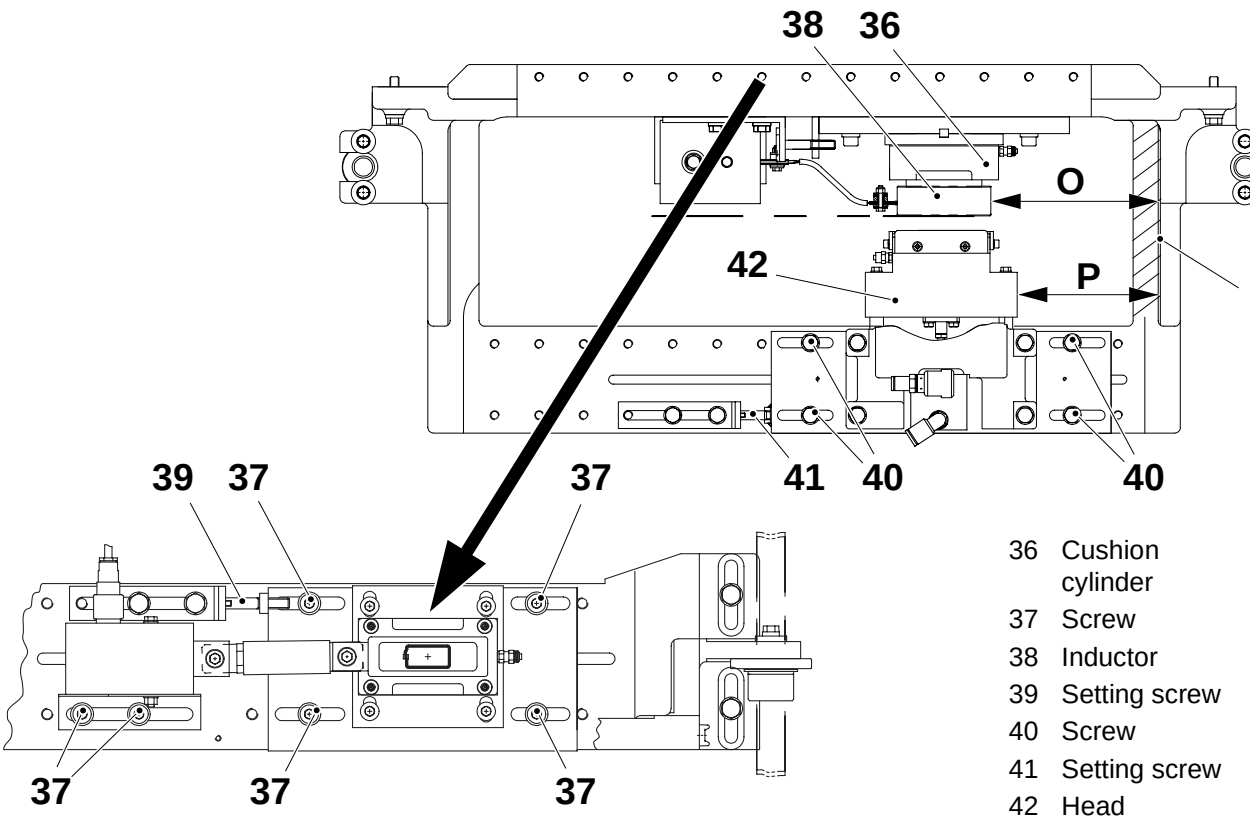

2.2B4884G02en.fm

36 Cushion cylinder
37 Screw
38 Inductor
39 Setting screw
40 Screw
41 Setting screw
42 Head

(Cont'd)

(Cont'd)

Set tab feeder and tab counter jaw horizontal position

a) Make sure that the cushion cylinder (43) is fully extended.

b) Loosen the screws (44), located on the tab counter jaw.

c) Set the distance **R** between the edge of the inductor (45) and the machined surface **T** by means of the setting screw (46). Tighten the screws (44).

d) Loosen the screws (47), located on the tab feeder.

e) Set the distance **S** between the tab feeder head (49) and the machined surface **T** by means of the setting screw (48). Tighten the screws (47).

Package	Hole type	R ±0.5 (mm)	S ±0.5 (mm)		Package	Hole type	R ±0.5 (mm)	S ±0.5 (mm)
250 B	21	200.7	165.0		500 S	55	185.3	147.3
500 S	25	188.5	156.2		1500 S	85	155.0	115.0
1500 S	45	153.8	113.8		1000 Sq	85	303.0	263.0
1000 B	45	155.8	115.8		1000 B	85	156.7	117.0
1000 S	45	162.3	122.3		1000 S	85	163.5	123.5
1000 B	45	154.3	113.5		TPA 1000 S	60	305.5	264.3
1000 S	50	160.5	119.7					

2.2B4884G02en.fm

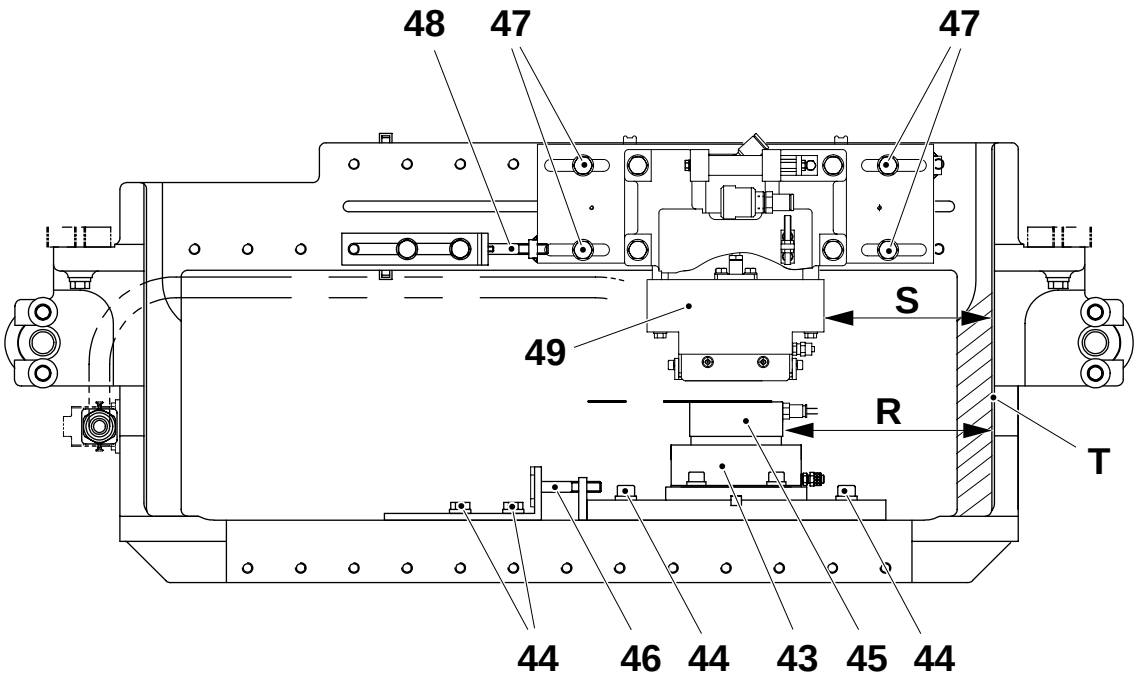

43 Cushion cylinder
44 Screw
45 Inductor
46 Setting screw
47 Screw
48 Setting screw
49 Head

7.2.2 Lifting device

7.2.2-1 Lifting device - check

SPC reference	1185078-0100

Check the following parts for visual wear and/or damage:

- the thread of the screw guides (1)
- the brass bushings (2) and (3)
- the toothed pulleys (4)
- the timing belt (5)
  Check also the belt tension and set as required, see *7.2.2-2 Lifting device - set timing belt*.

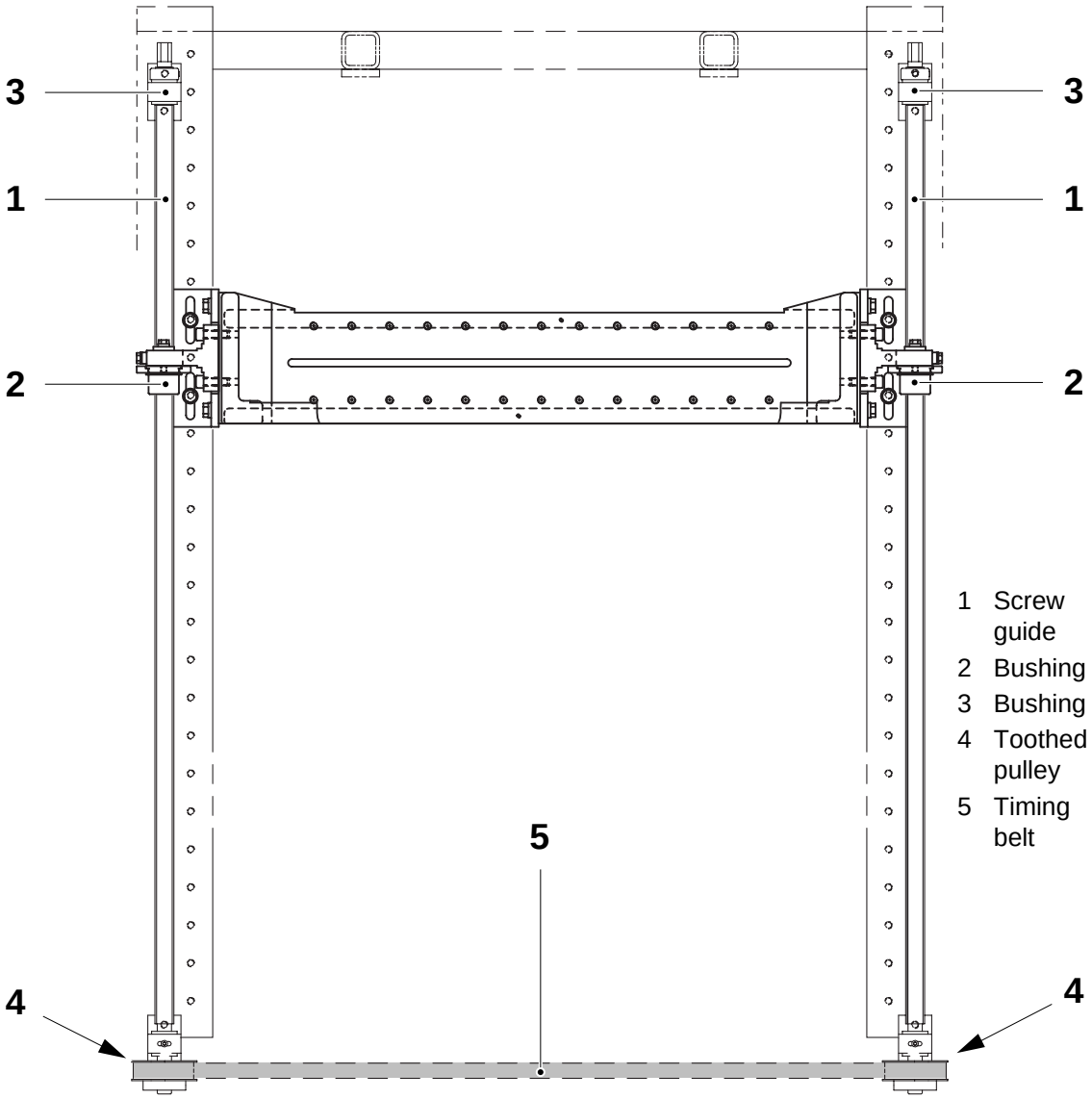

7.2.2-2 Lifting device - set timing belt

SPC reference	1185078-0100

a) Unscrew the screws (1).

b) Remove the cover (2).

c) Set the tension of the timing belt (3) so that it can be flexed approximately **10 ±1 mm** with a load force of **15 ±1 Nm** at the point **A**.

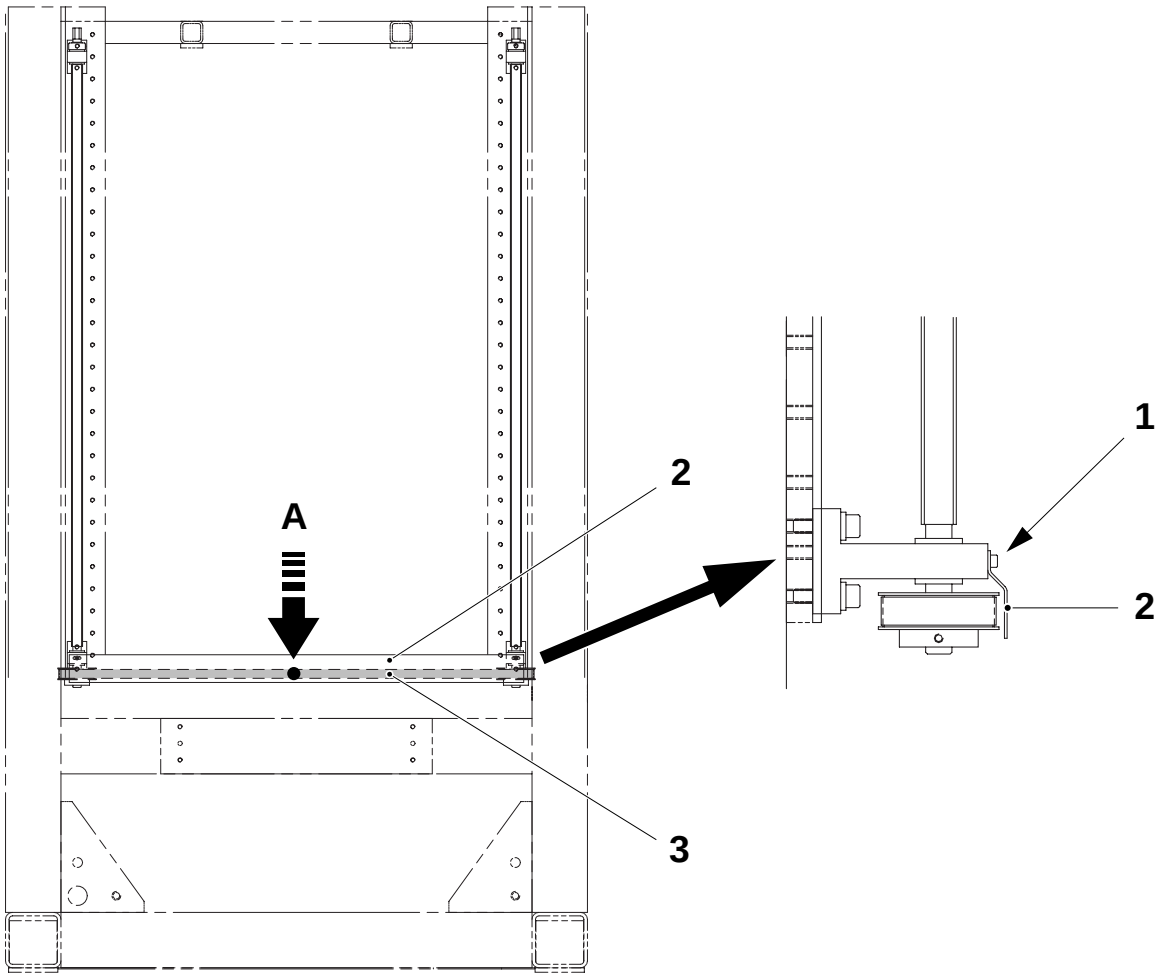

2.2B4884G02en.fm

1 Screw
2 Cover
3 Timing belt

This page intentionally left blank

2.2B4884G02en.fm

8 Electrical cabinet

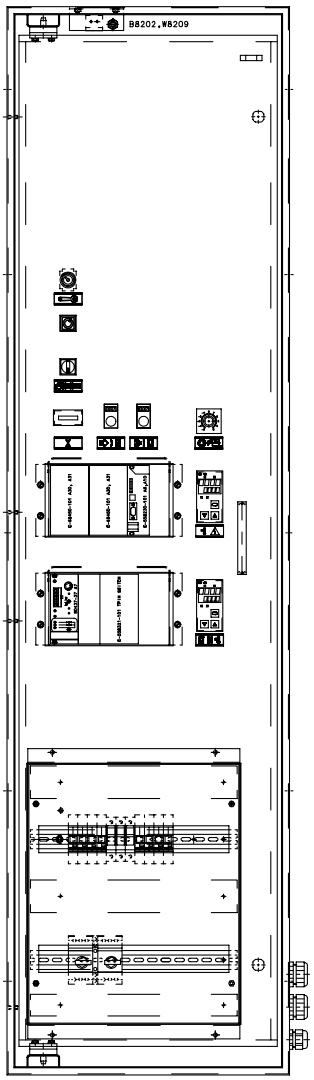

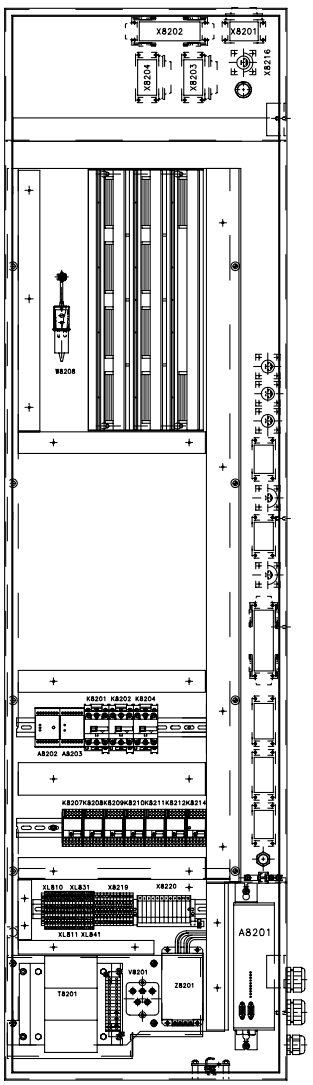

2.2B4884H00en.fm

8-0 Electrical cabinet - description

SPC reference	1255501-0100

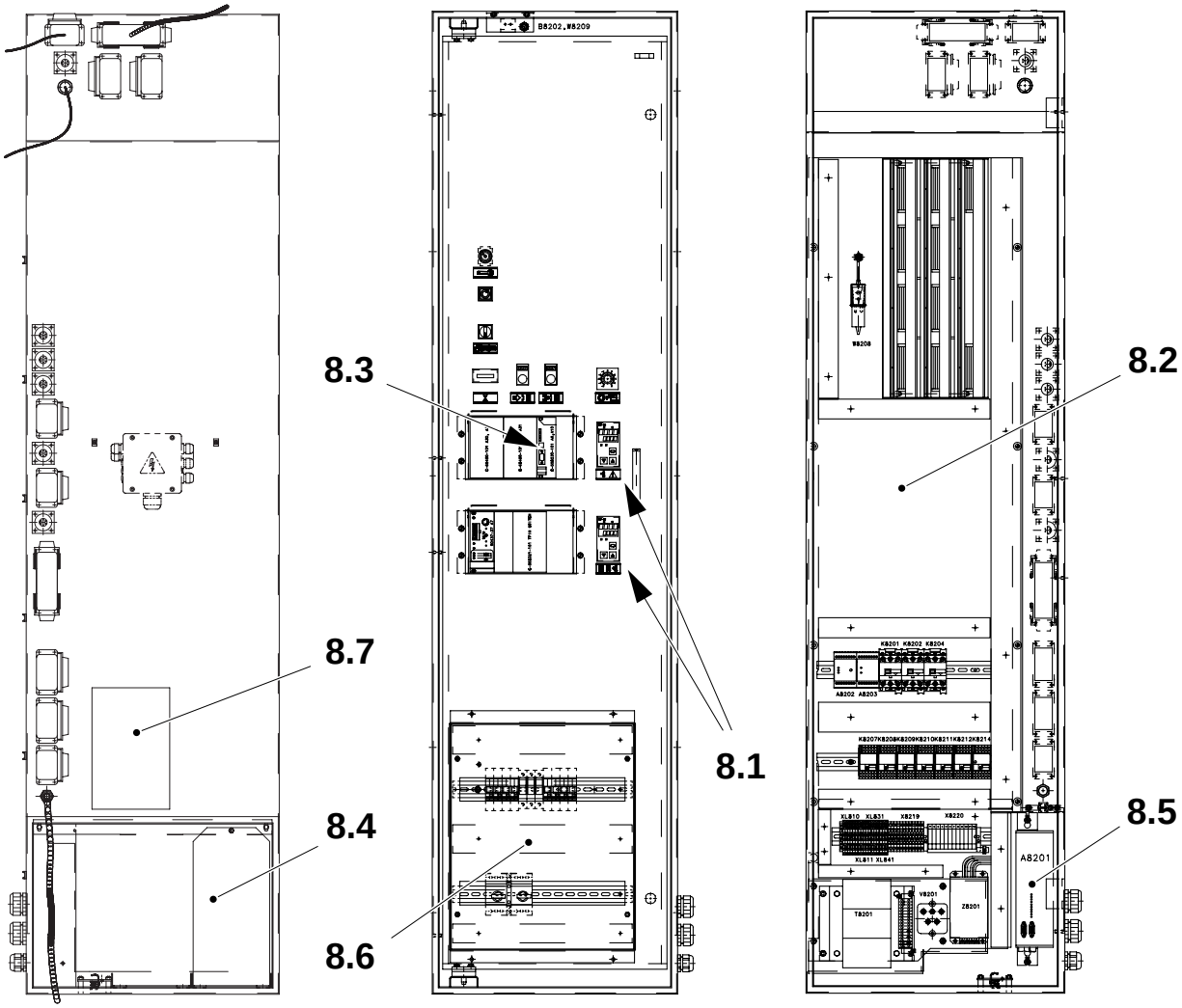

2.2B4884H00en.fm

8.1 Temperature regulator
8.2 Mounting plate
8.3 TMCC card
8.4 TPIH Generator
8.5 DMC card
8.6 Fuse box
8.7 Cooler

8-1 Electrical cabinet - PullTab controls

The illustration shows a diagram of the components involved in the control of the PullTab unit.

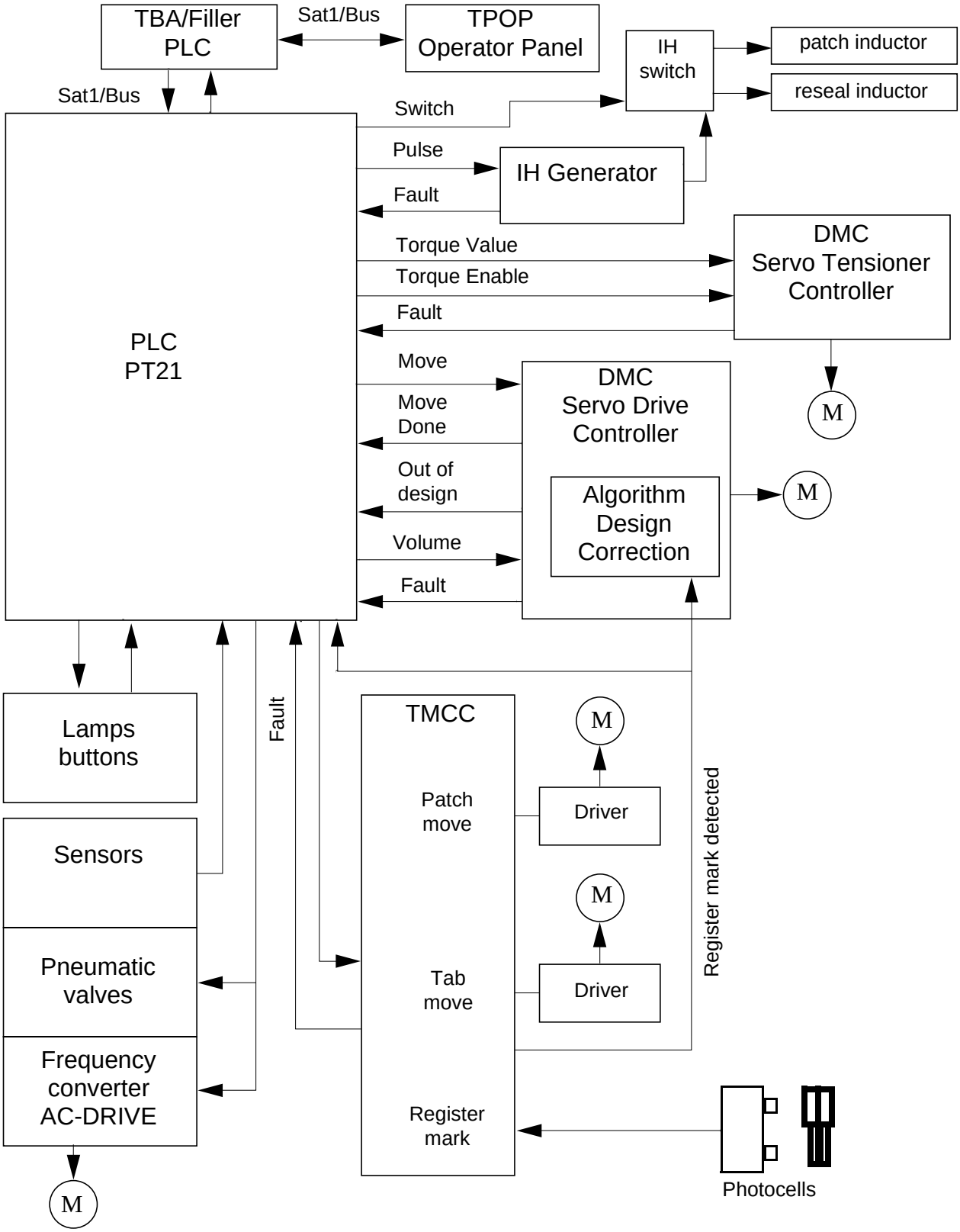

2.2B4884H00en.fm

8.1 Temperature regulators

SPC reference	90410-0051

8.1-1 Temperature regulators - set

Machine status	**Preparation**
SPC reference	90410-0051

a) The actual value/parameter is displayed on the display (3).

b) To change the value, press the increase value button (10) or the decrease value button (9).

c) Set the correct temperature **W** (5), see table next page.

d) Press the menu button (8) for three seconds to step to the parameter level.

e) Push the menu button seven times until parameter **Loc** is displayed and set the value to **0**.

f) Push the menu button and set the values for parameters **SPL**, **SPH**, **Pb1**, **ti**, **td** and **t1**, see table.

g) Press the menu button for three seconds to step to the parameter level. Set the correct values only for parameters **SP2**, **Pt2**, **LCL1**, **LCH1**, **LCL2**, **LCH2** and **HCA**, see table next page.

h) Step to parameter **Loc** and set the value to **1**. Press the menu button once.

Note! When all settings are correct, wait for 30 seconds, and the temperature regulator returns to the operating level automatically.

2.2B4884H01en.fm

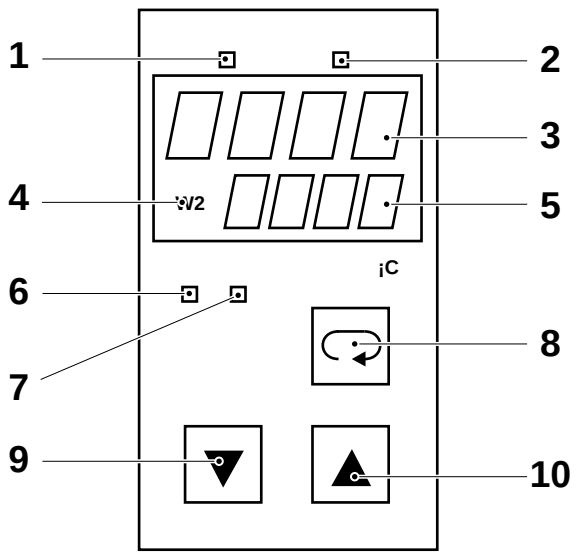

1 Heating LED
2 Cooling LED
3 Actual value/parameter display
4 W2 value (ramp function) LED
5 Set temperature (W)
6 Temperature within limits LED
7 Heating current alarm LED
8 Menu button
9 Decrease value button
10 Increase value button

(Cont'd)

(Cont'd)

Parameters	
Fnc = function (M = Monitor / R = Regulator)	**Loc** = blocking at operation
Des = designation	**SPL** = lower setpoint limit, °C
W = temperature, °C	**SPH** = upper setpoint limit, °C
Sp2 = setpoint, °C	**Pb1** = proportional band Xp1
Pt2 = segment time, min.	**ti** = integral time
LCL = lower OK limit, °C	**td** = derivative time
LCH = upper OK limit, °C	**t1** = cycle time heating

Object	Fnc	Des.	W	Sp2	Pt2	LCL1	LCH1	LCL2	LCH2	Loc	SPL	SPH	Pb1	ti	td	t1
Cooler (11)	M	A8218	30	-	-	1	50	5	1	1	30	38	-	-	-	-
Tab sealing pad heater (12)	R	A8219	*	-	-	10	110	220	10	1	100	220	0.5	5	5	1.1

* see *10.1 Technical data*

2.2B4884H01en.fm

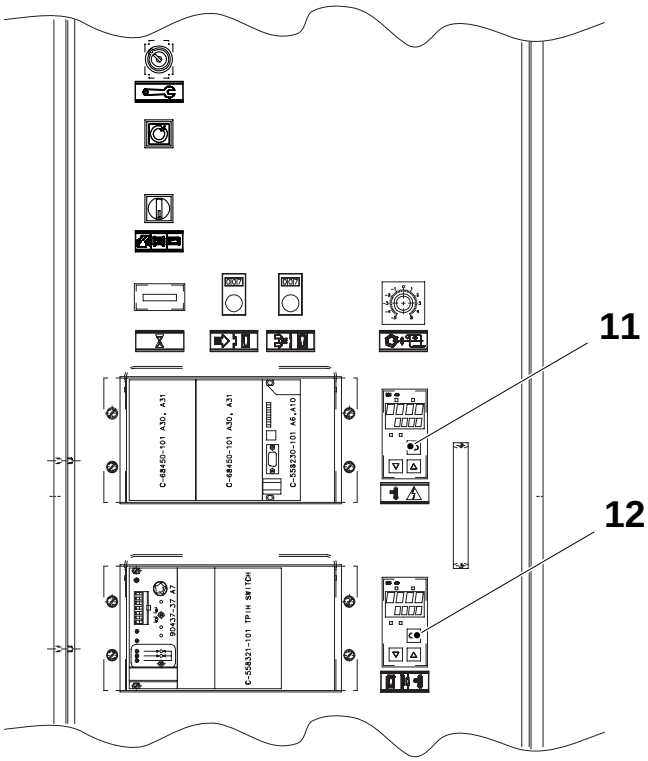

11 Temperature regulator, Cooler

12 Temperature regulator, Tab sealing pad heater

(Cont'd)

(Cont'd)

Selftuning

Selftuning should be performed on all regulators.

a) Step up the machine to step **Ready for production**.

b) Press the menu button (8) for three seconds to step to the parameter level.

c) Press the menu button seven times until parameter **Loc** is displayed and set the value to **0**.

d) Wait for 30 seconds and the temperature regulator returns to operating level automatically.

e) Press the menu button (8) and the increase value button (10) simultaneously.

f) Process value and code **AdA** are displayed alternately on the display (3). After max 10 minutes, code **AdA** disappears and the actual process value is displayed.

g) Push the menu button (8) to return to the operating level, or wait for 30 seconds.

h) Press the menu button for three seconds to step to the parameter level Step to parameter **Loc** and set the value to **1**.

i) Wait for 30 seconds and the temperature regulator returns to operating level automatically.

Note! In case of an error during tuning, the tuning is cancelled and **AdF** is displayed (error signal).

2.2B4884H01en.fm

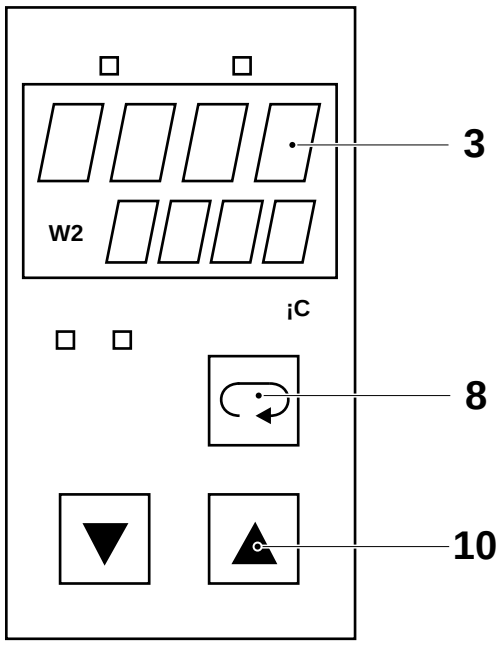

3 Actual value/parameter display
8 Menu button
10 Increase value button

(Cont'd)

(Cont'd)

Error signals

In case of an error, an error signal is displayed on the display (3). The error signal is displayed until the error is acknowledged, or until its cause has been eliminated.

The following error signals can be displayed:

Display	Cause
FdF	Sensor break
POL	Wrong sensor polarity
AdF	Selftuning error

In case of problems with a temperature regulator, check all connections. Change the temperature regulator as required, see *8.1-2 Temperature regulators - change*.

2.2B4884H01en.fm

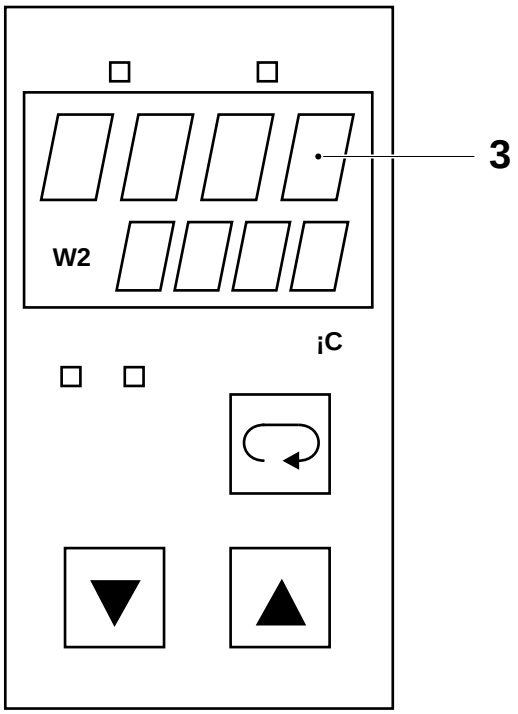

3 Display

8.1-2 Temperature regulators - change

SPC reference	1095927-0100

a) Grip the front panel (1) and pull out the regulator (2) from its case (3).

b) If required, change and set the regulator, see *8.1-1 Temperature regulators - set*.

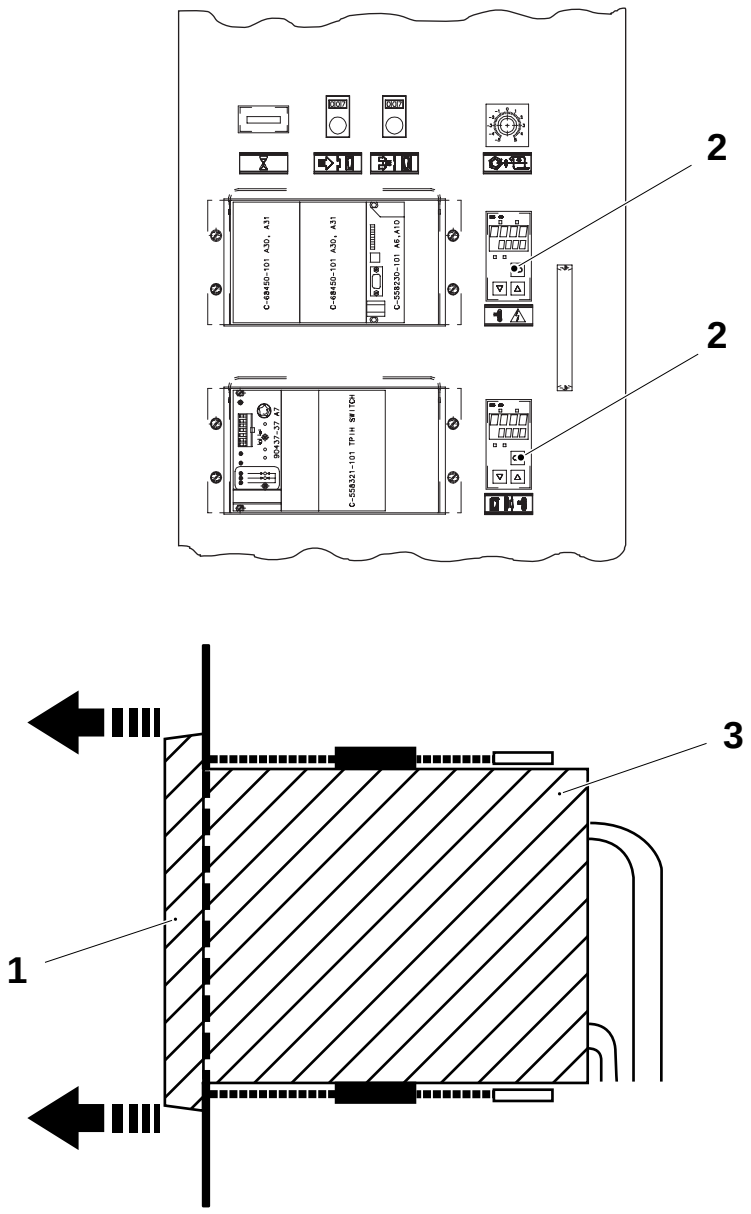

2.2B4884H01en.fm

1 Front panel
2 Regulator
3 Case

8.2 Mounting plate

SPC reference	1255953-0100

8.2.1 Tetra Pak Machine Controller (TPMC)

8.2.1-1 TPMC - check battery

Machine status	Mains power **On**
Consumables - battery	TP No.90334-6
SPC reference	1255953-0100

Check the date (1) marked on the battery. If it is over one year old, or it will be more than one year old before the next service, change the battery.

Caution! The time taken to change the battery must not exceed 20 seconds (after 20 seconds the power to the TPMC is cut).

a) Remove the screws (2) and pull the battery cover (3) forward.

b) Change the battery (4).

c) Stick a label with the current battery change date to the battery cover.

d) Fit back the battery cover (3) and tighten the screws (2).

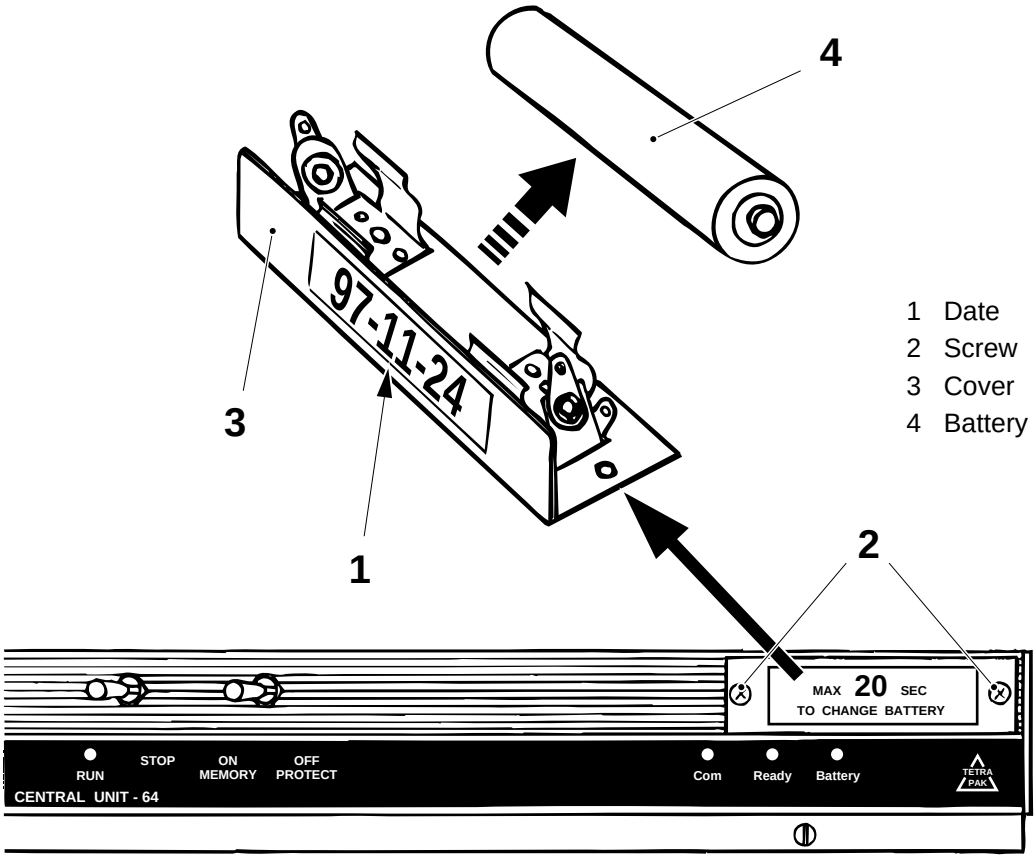

2.2B4884H02en.fm

8.2.1-2 TPMC - set ID selectors

SPC reference	1255953-0100

Note! The ID selectors are fitted in the rack behind the central unit (4).

a) Remove the power connections (1) from the power supply unit (2).

b) Loosen the two screws (3) on the central unit (4).

c) Remove the central unit (4) from the rack.

d) Set the ID selector (5) to the value **"2"** and the ID selector (6) to the value **"9"** as shown in the figure.

e) Fit back the central unit (4) and tighten the two screws (3).

f) Fit back the power connections (1) on the power supply unit (2).

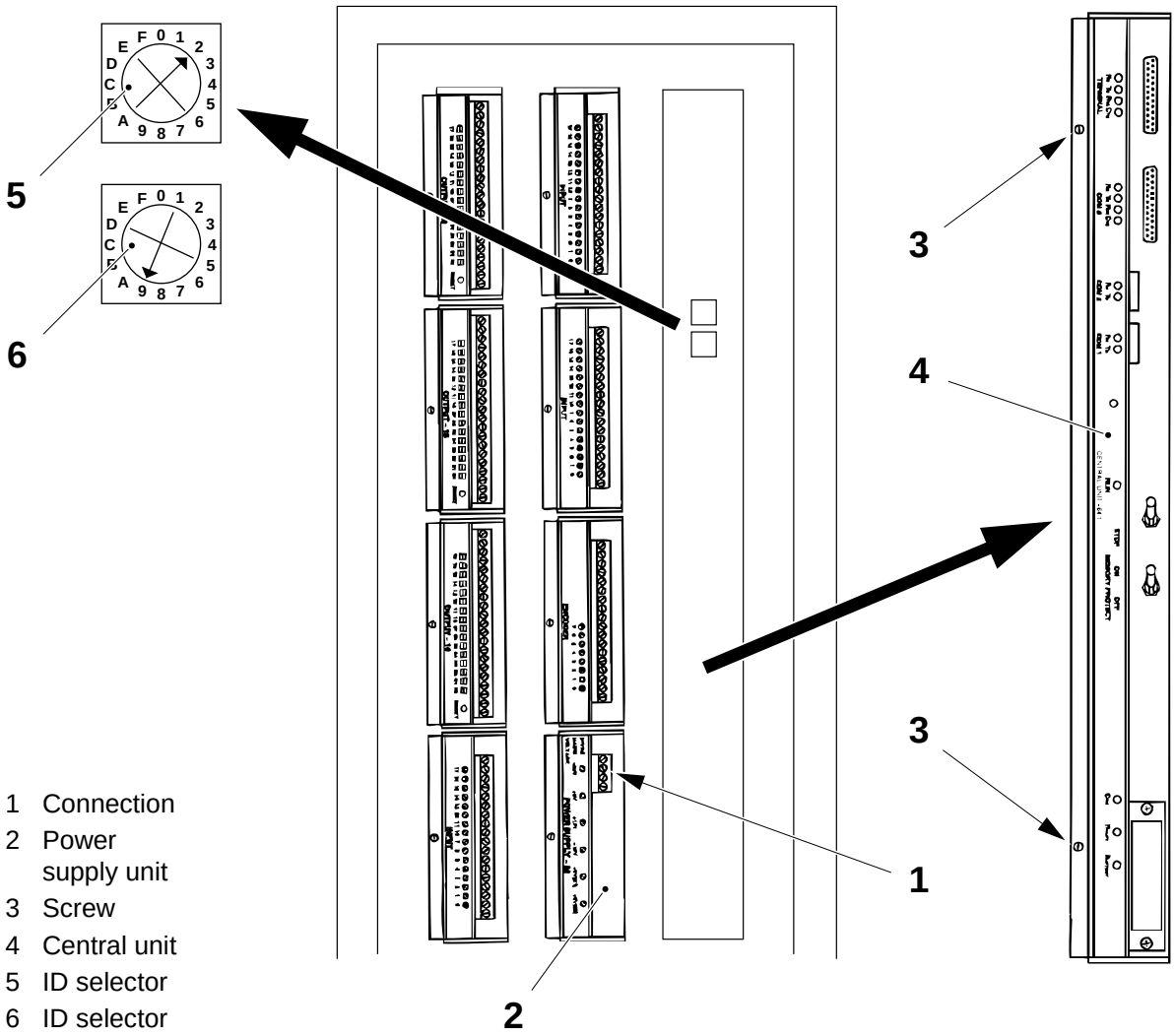

1 Connection
2 Power supply unit
3 Screw
4 Central unit
5 ID selector
6 ID selector

8.2.1-3 TPMC - set patch and tab length

SPC reference	1255953-0100

a) Connect the communication cable between the PC and the TPMC connector (1) and start the “TIT” program.

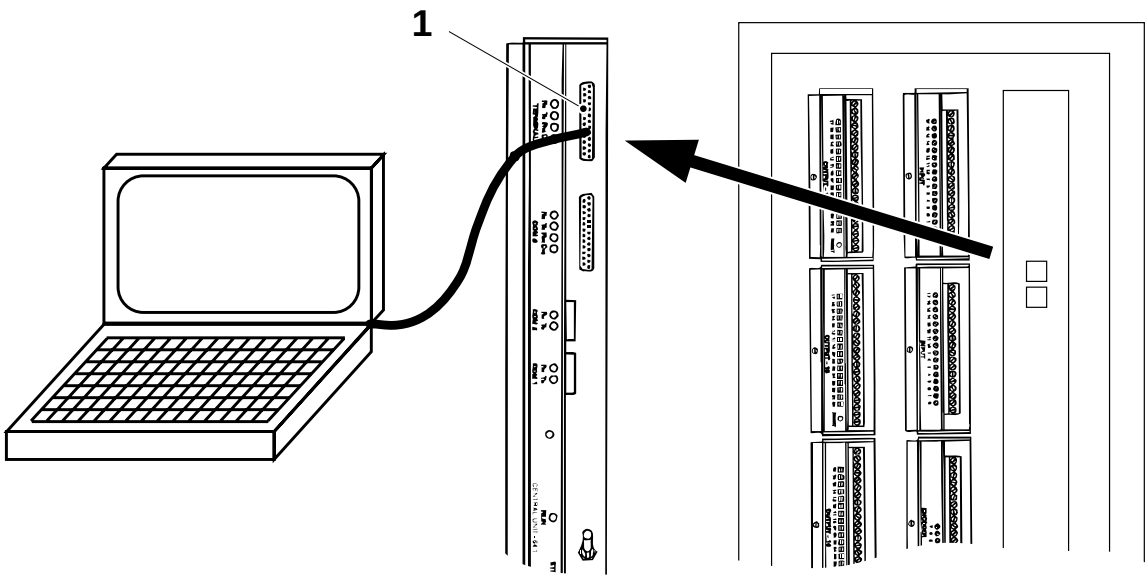

1 TPMC connector

2.2B4884H02en.fm

b) Press **<L+ENTER>** to start the program “LADDER”.

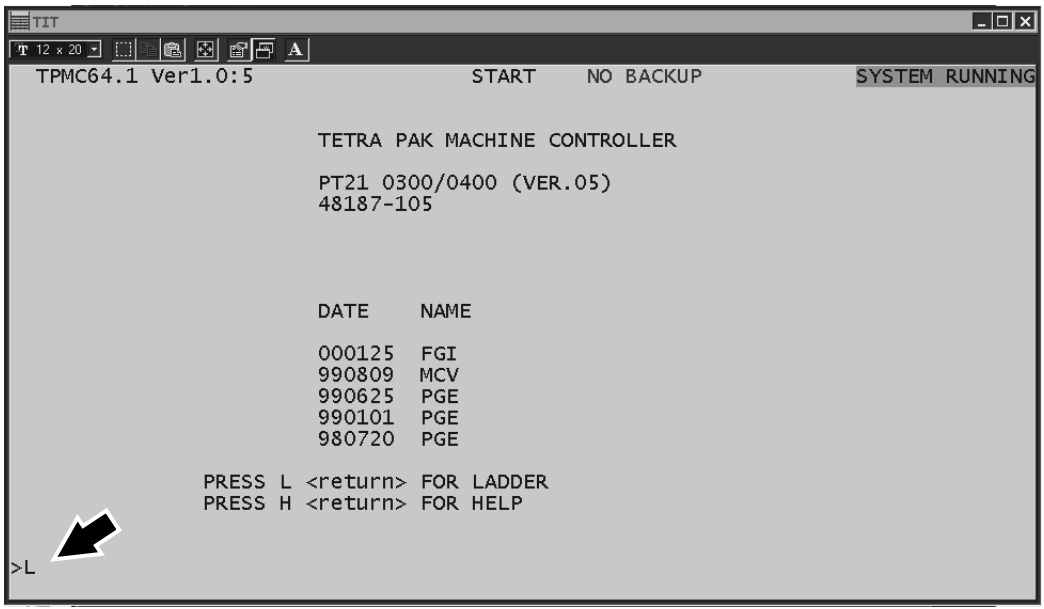

(Cont'd)

(Cont'd)

c) Press **<T+ENTER>** and write **7/1**.

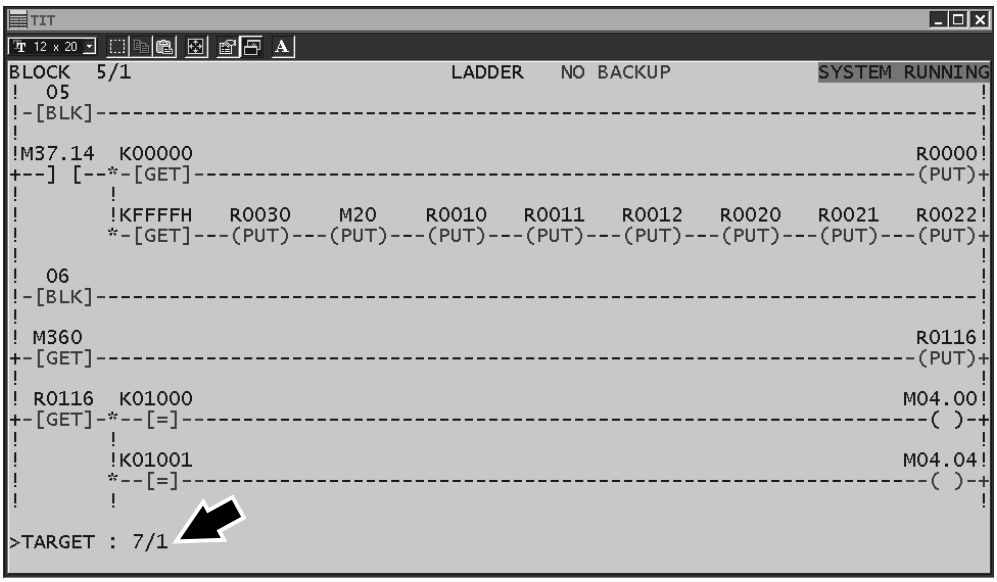

d) Verify which is the highlighted memory and take note of the correspondent JMP block address.

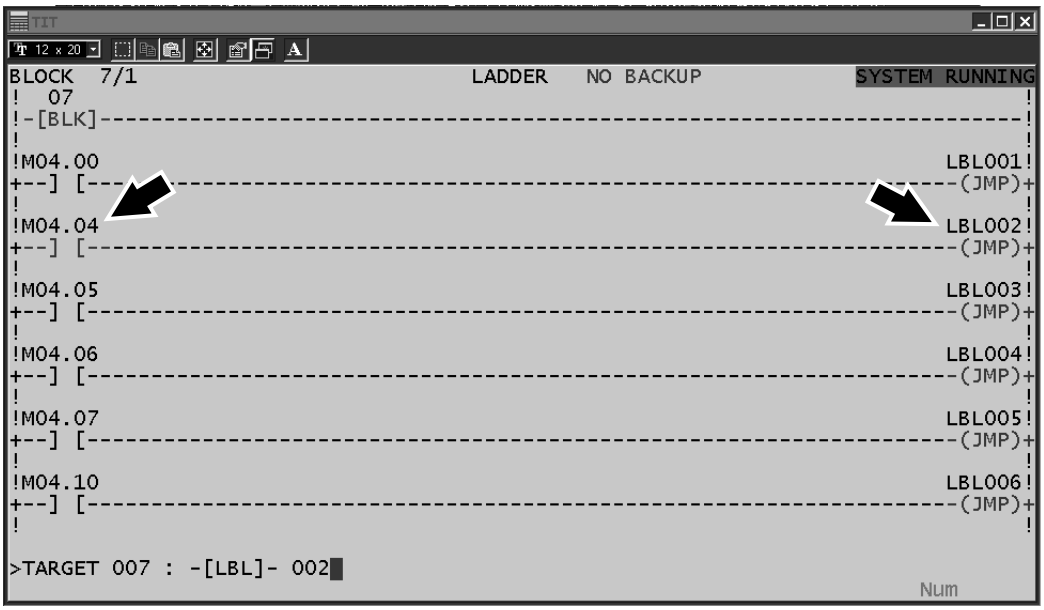

e) Press **<T+ENTER>**.

(Cont'd)

2.2B4884H02en.fm

(Cont'd)

f) Press **<SHIFT+F1>** and insert the address of the JMP instruction. Press **<ENTER>**.



g) Write “STOP” and press **<ENTER>**.

2.2B4884H02en.fm

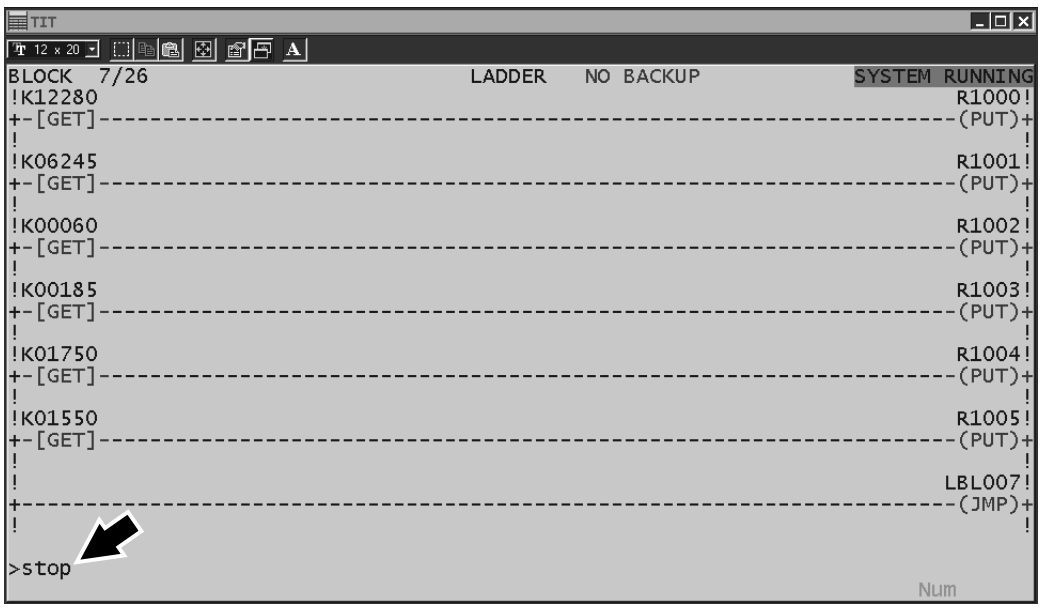

(Cont'd)

(Cont'd)

h) With the **Arrow** keys, select the “PUT” value for R1001 (paper stop position), the value R1004 (Tab length) or the value R1005 (Patch length).

i) Press **<E>** and **<ENTER>**.

j) With the **Arrow** keys, select the “GET” value for R1001 (paper stop position, the value R1004 (Tab length) or the value R1005 (Patch length).

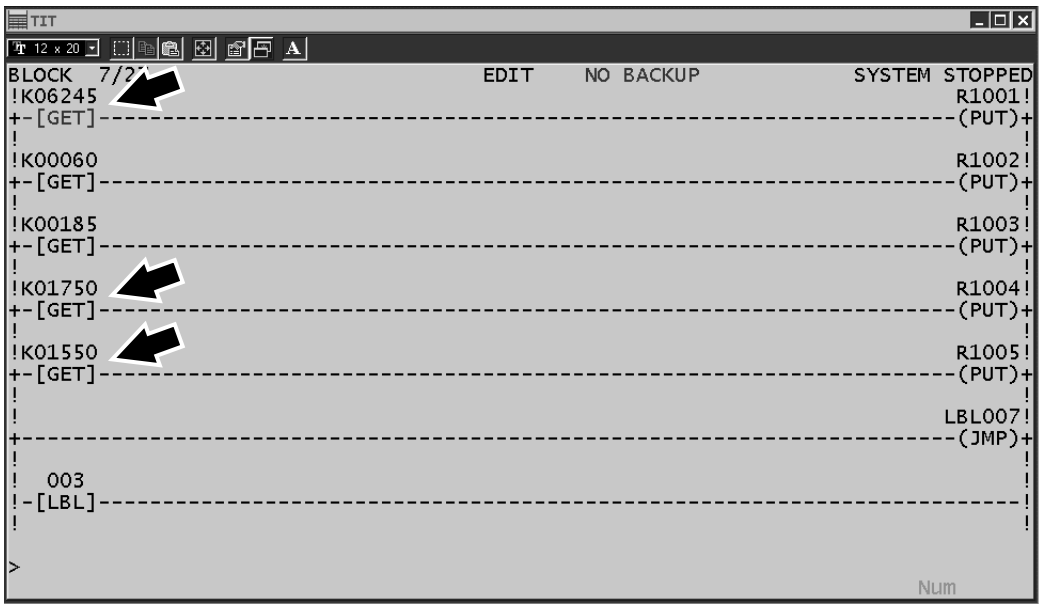

2.2B4884H02en.fm

(Cont'd)

(Cont'd)

k) Press **<A>,** the value “K...” is substituted by an empty field.

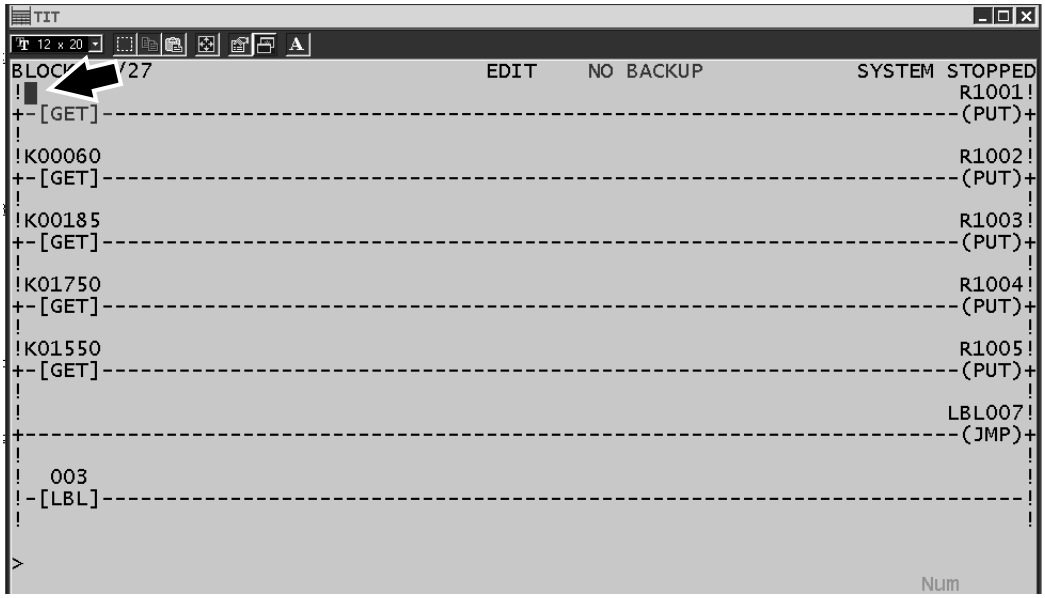

l) Insert the new paper stop position, or Patch, or Tab value.

Note! **“K”** must be written before the value. The value to be used can be find in the table on the next page (for R 1004 and R 1005 value in millimeters multiplied by one hundred. For R 1001 values in increments resolver/10).

m) Press **<ESC>.**

n) Write “**RUN**” and press **<ENTER>.**

o) To verify if the running value of paper stop position, Patch, or Tab is correct write: **“S R1001”** (paper stop position), “**S R1004**” (Tab length), or “**S R1005**” (Patch length) and press **<ENTER>.**

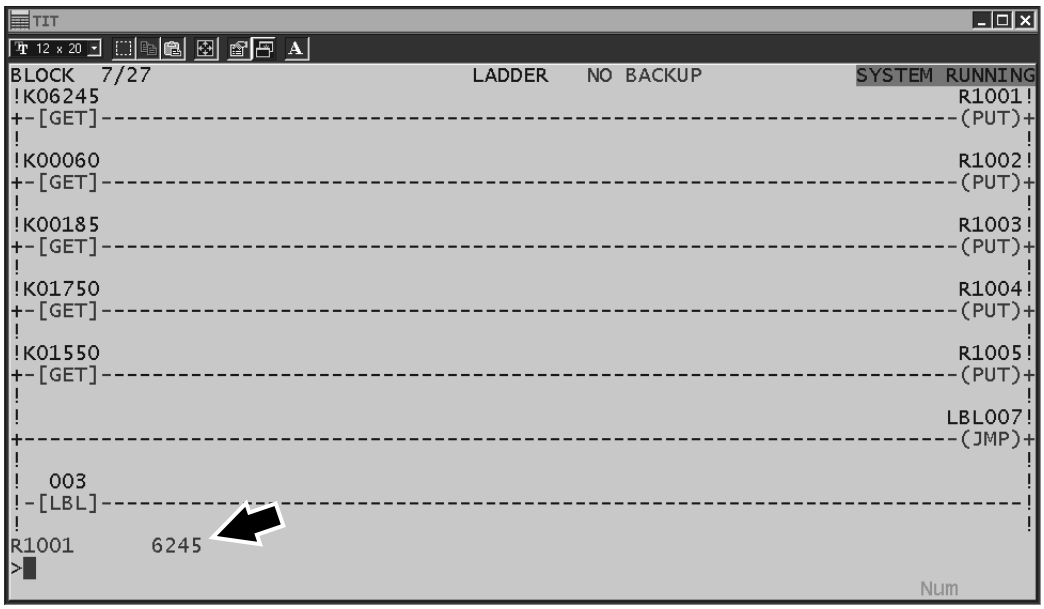

(Cont'd)

2.2B4884H02en.fm

(Cont'd)

Package	Hole	R1001	R1004	R1005
250 B	21	5900	1750	1400
500 S	25	5983	1950	1800
1500 S	45	6383	1750	1550
1000 B	45	6155	1750	1550
1000 S	45	6140	1750	1550
1000 B	50	6179	1600	1400
1000 S	50	6209	1600	1400
500 S	55	5881	1500	1000
1500 S	85	6348	1800	1350
1000 Sq	85	6445	1800	1350
1000 B	85	6222	1800	1350
1000 S	85	6255	1800	1350
TPA 1000 S	60	6089	1750	1300

2.2B4884H02en.fm

8.2.2 Safety relays

8.2.2-1 Safety relays - check function

SPC reference	1255953-0100

Note! Check the relays in case of a safety relay alarm on the TPOP panel.

Check that all the LEDs in the safety relays are activated.
If one or more LEDs of the following relays are not lit up:

Safety relay A8202

Make sure that the LH side door, the RH front side door and the RH rear side door in the PT21 unit are closed and that no emergency push buttons are pressed. Check that all the alarms are reset.

Safety relay A8203

Check that the alarms are reset and that the three LEDs of the relay **A8202** are lit up.

2.2B4884H02en.fm

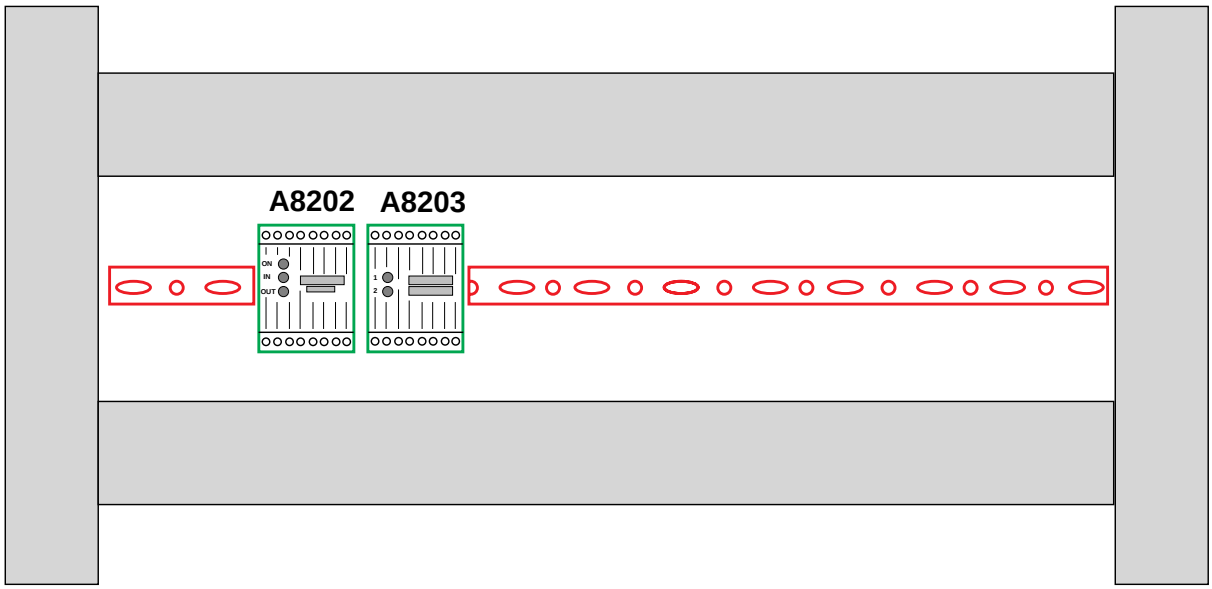

A 8202: PT21 door chain safety monitors
A 8203: Safety stop module - delayed

8.3 TMCC

SPC reference	1255501-0100 558230-0101

8.3-1 TMCC - function description

SPC reference	1255501-0100 558230-0101

TMCC card A8210

The TMCC card A418 is a microprocessor card that has the following functions:

- calculate the output of acceleration and deceleration for the stepper motors when the correct patch and tab length has been received from the PLC
- start the stepper motors when the pulse comes from the PLC
- read and decode the register mark on the packaging material web, which is received by the photocells.

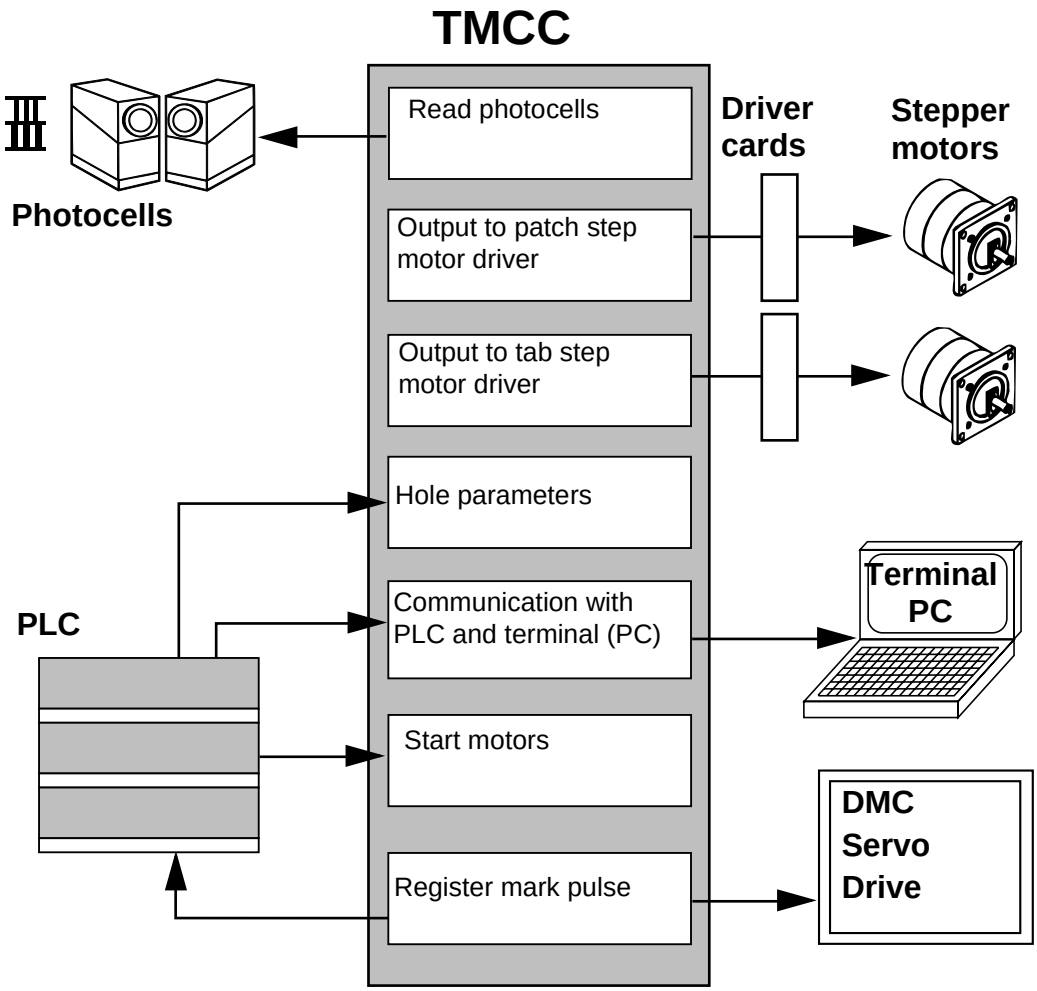

(Cont'd)

(Cont'd)

TMCC front panel switch 1

The switch **SW1** (2) located on the front panel of the TMCC (1) is used to select one of the variables so that it can be monitored for diagnostics.

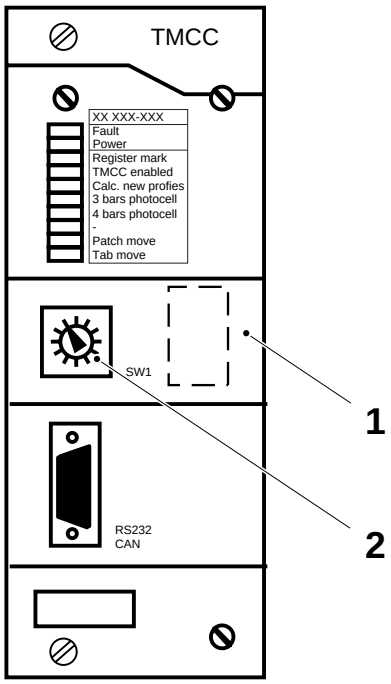

1 TMCC
2 Switch SW1

The following table shows the variables that can be monitored.

SW1 position	Function
0	Programming mode. With the switch in this position it is possible to download the program into the TMCC
1	Production mode. Normal position of the switch.

Note! In normal **Production** mode, switch SW1 (2) should be set to position **1**.

(Cont'd)

2.2B4884H03en.fm

(Cont'd)

Also on the front panel of the TMCC (1) there are LEDs (3).

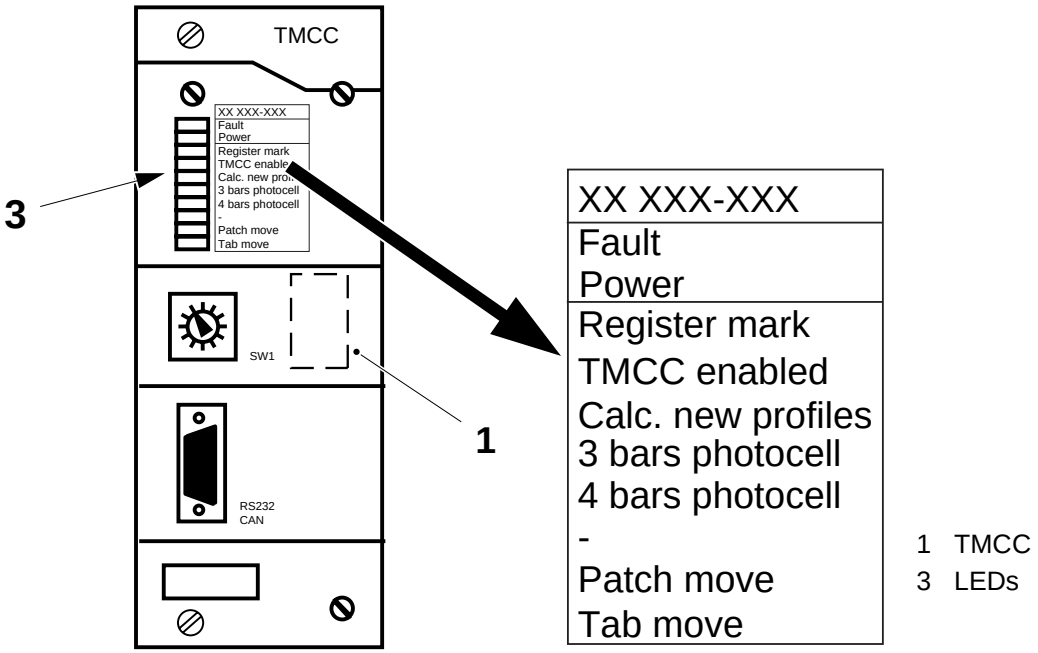

2.2B4884H03en.fm

The LEDs provide the following information when the machine is in the normal **Production** mode.

Card A8210		
LED	**Colour**	**Function**
Fault	Red	During the download of the program
Power	Green	Power supply OK
Register mark	Yellow (S1)	Correct register mark has been detected
TMCC enabled	Yellow (S2)	The TMCC module is ready for production
Calc. new profiles	Yellow (S3)	TMCC is calculating the new feeding profiles
3 bars photocell	Yellow (S4)	Failure of the ‘3 bars’ photocell
4 bars photocell	Yellow (S5)	Failure of the ‘4 bars’ photocell
-	Yellow (S6)	Not used
Patch move	Yellow (S7)	Patch material is moving
Tab move	Yellow (S8)	Tab material is moving

(Cont'd)

(Cont'd)

TMCC switch 2

The switch **SW2** (4) located at the bottom of the TMCC (1) is used to set the photocells so that they function with a particular barcode color, see *8.3-6 TMCC - set photocells*.

TMCC system data

Commands and parameters are entered in the program and data can be read from the TMCC by using a PC, see *8.3-7 TMCC - display report*.

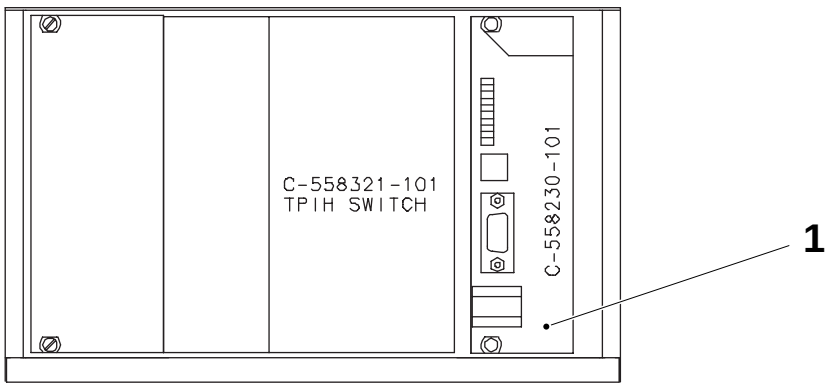

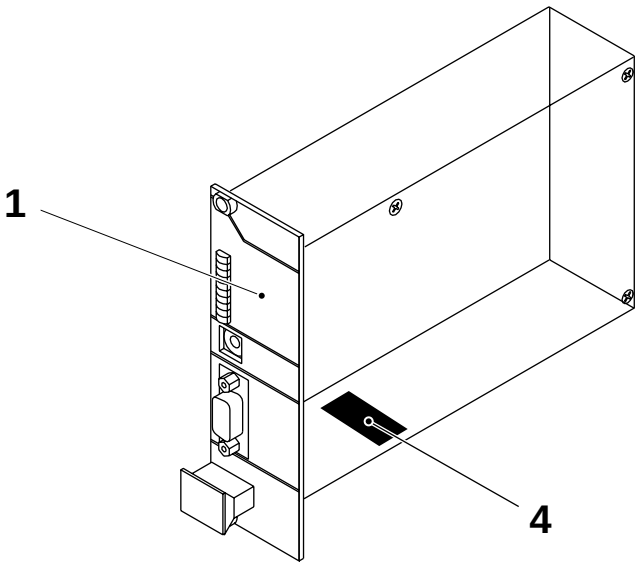

1 TMCC
4 Switch SW2

2.2B4884H03en.fm

8.3-2 TMCC - set communication

Machine status	**Production**
Tools - communication cable - AT compatible PC with diskette station	RS 232-C
SPC	1255501-0100 558230-0101

Note! The following procedure should be used to communicate with a TMCC card.

a) Connect the TMCC to a PC with the connection cable (1).

b) The connections required are:

PC 9-pin female	**TMCC 9-pin male**
2	3
3	2
5	5

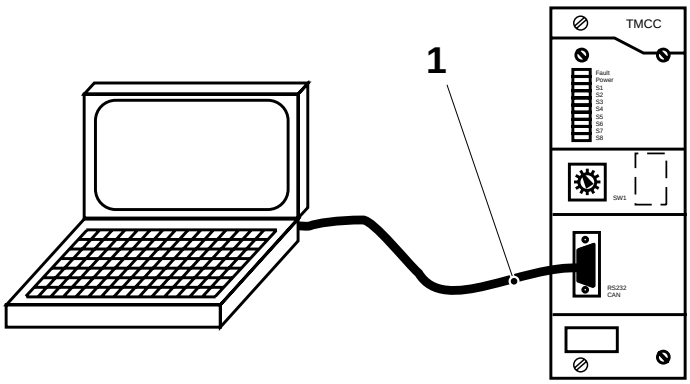

1 Connection cable

2.2B4884H03en.fm

c) Set-up the program to use, e.g. TIT or Windows terminal, as follows:

Baud rate	9600
Parity	None
Bits	8
Stop bits	1
Flow control	None

8.3-3 TMCC - change cards

Machine status	**Production**
Tools - communication cable - AT compatible PC with diskette drive	RS 232-C
SPC reference	1255501-0100 558230-0101

a) Pull out the old TMCC card and fit the new one.

b) Connect the communication cable between the PC and the TMCC connector (1).

c) Set the front panel switch **SW1** (2) to position **0**.

d) Insert the MASTER diskette marked with the current revision number into the PC diskette station, **A:drive**.

e) Enter the command **A:TMCC11<ENTER>** to start the communications program **TMCC11.EXE.**

f) When the program menu appears, enter the communication port in use (normally this is the port number **one**).

g) A directory will appear.
Press **<HOME>** to select the **A: drive**.

h) A list of files on the diskette **A** will appear.

2.2B4884H03en.fm

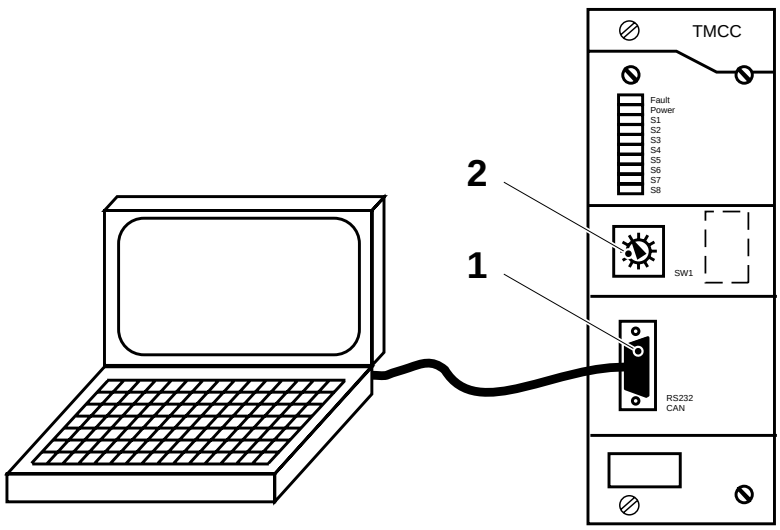

1 TMCC connector
2 Front panel switch SW1

(Cont'd)

(Cont'd)

i) Press the RH **Arrow** key to select the **File** window.

j) Select the program file on the MASTER diskette in the **A:drive**.

k) When the file is selected, press **F2**. The automatic download program starts. The downloading process may be monitored at the lower part of the screen.

l) When all “faces” are filled, the program has been downloaded without errors.

m) Set the TMCC front panel switch **SW1** (2) to position **1**.

LED	Colour	Function
Fault	Red	During the download of the program
Power	Green	Power supply OK
Register mark	Yellow (S1)	Correct register mark has been detected
TMCC enabled	Yellow (S2)	The TMCC module is ready for production
Calc. new profiles	Yellow (S3)	TMCC is calculating the new feeding profiles
3 bars photocell	Yellow (S4)	Failure of the ‘3 bars’ photocell
4 bars photocell	Yellow (S5)	Failure of the ‘4 bars’ photocell
-	Yellow (S6)	Not used
Patch move	Yellow (S7)	Patch material is moving
Tab move	Yellow (S8)	Tab material is moving

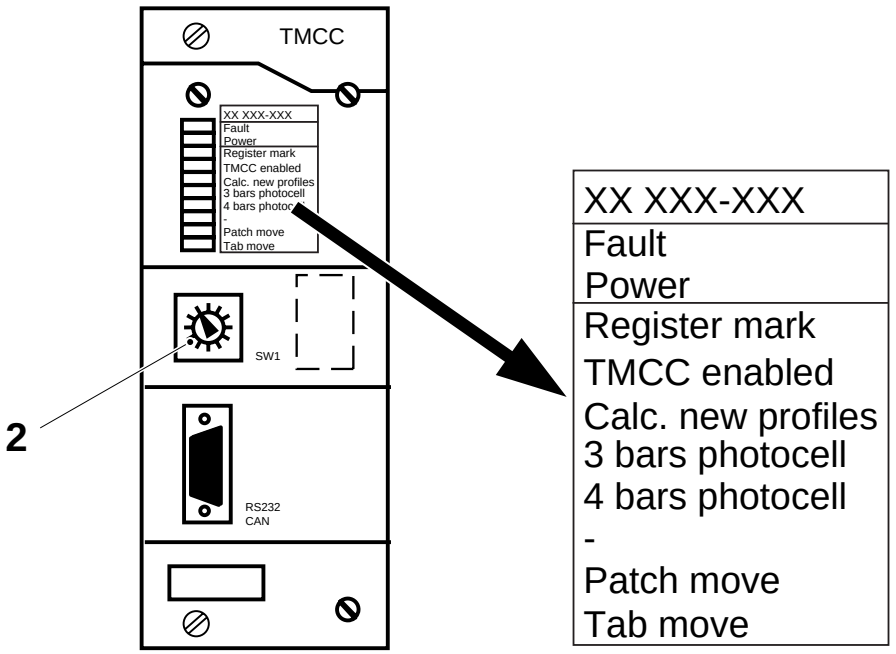

2 Front panel switch SW1

2.2B4884H03en.fm

(Cont'd)

(Cont'd)

n) When the LED **TMCC enabled** on the TMCC card is turned on make sure that the correct patch and tab length, for the specified hole type, has been transferred from the PLC.

o) Press **F10** to exit the **TMCC11.EXE** download program.

p) Fix the label (with the program number and LED functions) to the TMCC front panel, aligned with the row of LEDs.

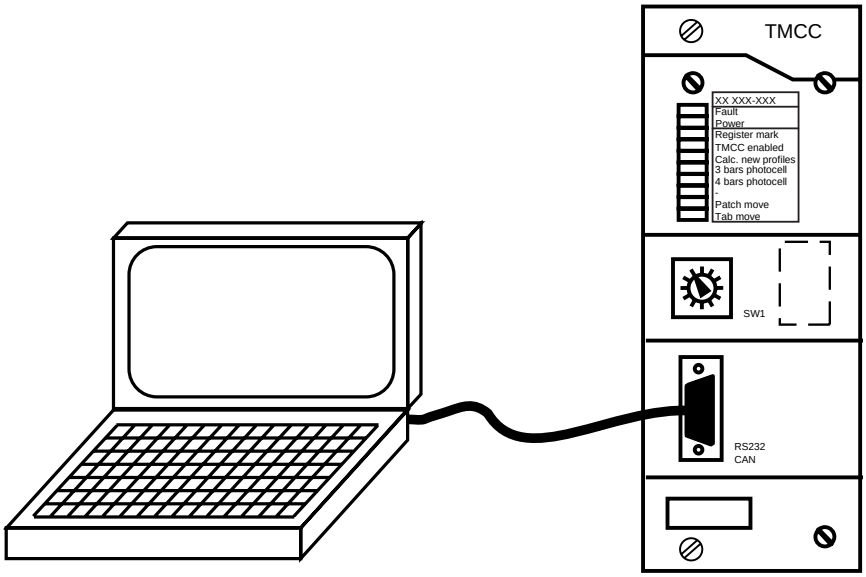

2.2B4884H03en.fm

8.3-4 TMCC - set control card

SPC reference	1255501-0100 558230-0101

Patch and tab feeding

Set the multi-switch **SW1** (1), located on the TMCC card (2), to position "**1**".

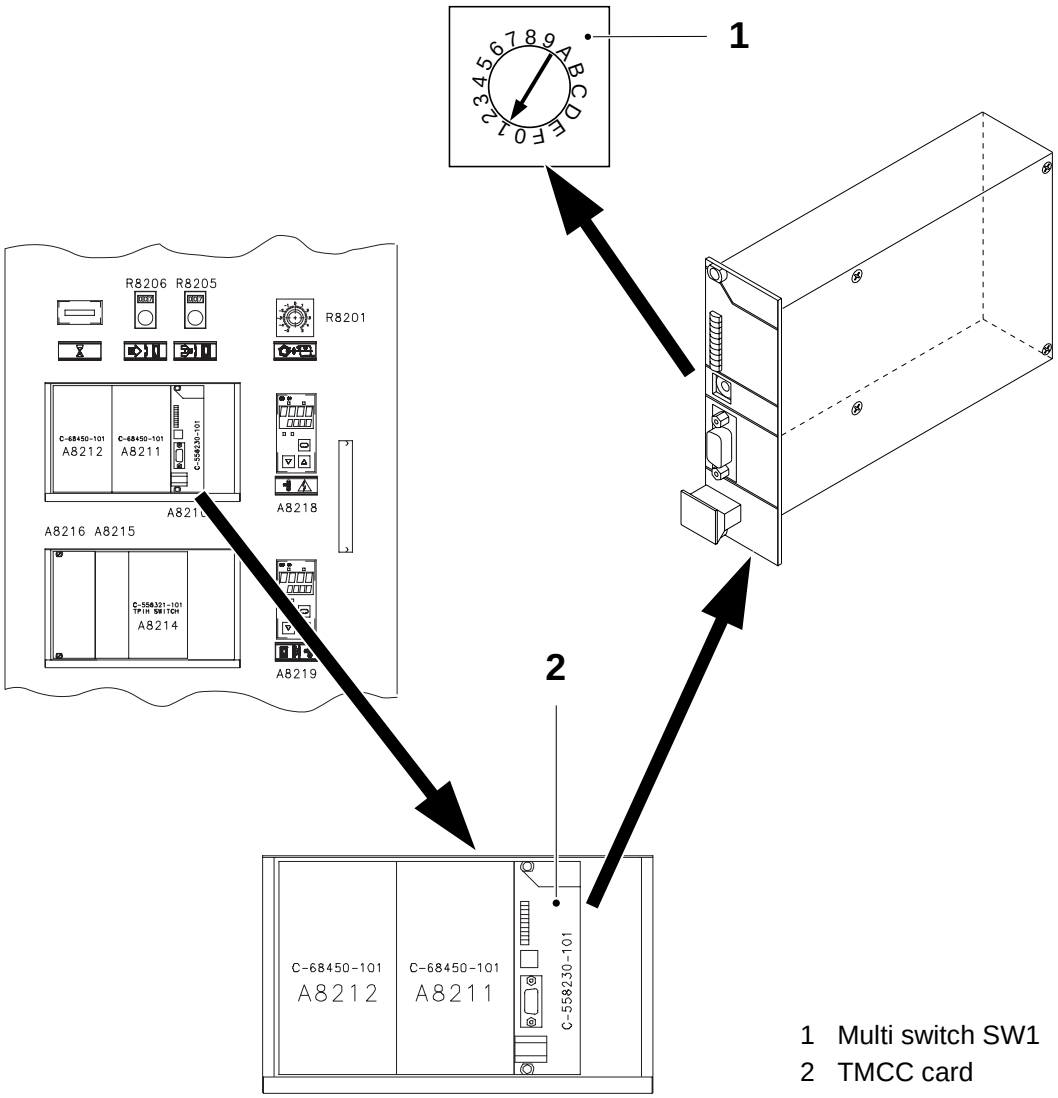

1 Multi switch SW1
2 TMCC card

2.2B4884H03en.fm

8.3-5 TMCC - set stepper motor cards

SPC reference	1255501-0100 68450-0100

Set the multi-switches from **SW1** to **SW14**, located in the patch feed control motor card (1) and in the tab feed control motor card (2) as shown in the table and figure below.

Switch	Tab	Patch	Function
Sw1	F	F	100% gain analog control
Sw2	Right	Right	analog control in direct mode
Sw3	Right	Right	analog control in direct mode
Sw4	Open	Open	analog control in direct mode
Sw5	Right	Right	no analog control of internal clock
Sw6	Open	Open	no start/stop ramp speed 1
Sw7	Open	Open	no start/stop ramp speed 2
Sw8	Right	Right	external clock
Sw9	0	0	clock rate speed 1
Sw10	0	0	clock rate speed 2
Sw11	0	0	clock rate speed 3
Sw12	0	0	clock rate speed 4
Sw13	0	0	2.5 A current
Sw14	Closed	Closed	terminal 32 current input 0-20 mA

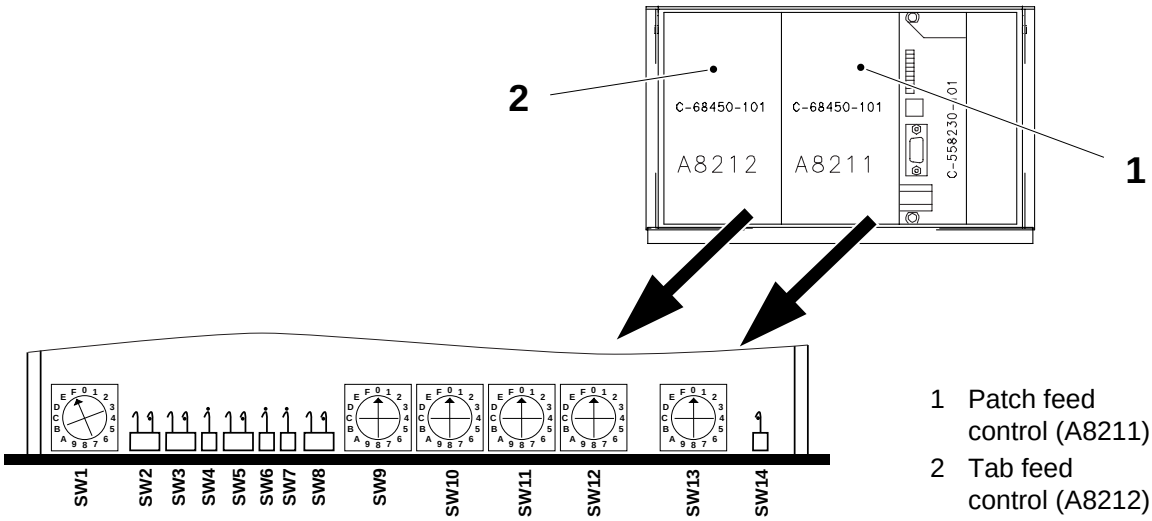

1 Patch feed control (A8211)
2 Tab feed control (A8212)

2.2B4884H03en.fm

8.3-6 TMCC - set photocells

SPC reference	1255501-0100 68450-0100

Automatic setting

By default, the switch **SW2** (1), located at the bottom of the TMCC (2), is set to position **0** so that the photocell produces a green spotlight. For most packaging material this is the correct setting and no further adjustment will be required.

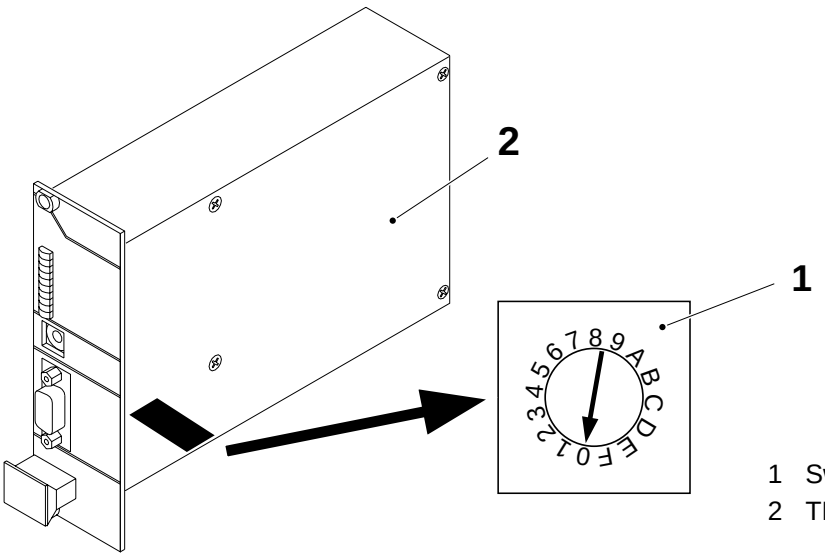

1 Switch SW2
2 TMCC

2.2B4884H03en.fm

If a packaging material is used and a barcode reading error occur, the colour of the spotlight can be changed to match the foreground colour of the barcode. This is done by changing the position of **SW2** (1) as shown in the following table.

Barcode Foreground Colour	SW2 Position	Spot Colour
Black	0, 1 or 2	Green, Red or Blue
Blue	0 or 1	Green or Red
Light blue/Cyan	1	Red
Green	1 or 2	Red or Blue
Yellow	2	Blue
Red	0 or 2	Green or Blue
Magenta	0	Green

(Cont'd)

(Cont'd)

The following table provides similar information to the above and gives details of the other switch settings.

For the manual setting procedure of the switch SW2 on a TMCC, see *Manual setting* on page *302*.

SW2 Position	Photocell setting
0	Spotlight = Green Dynamic threshold = 20h Teach button = Disabled
1	Spotlight = Red Dynamic threshold = 20h Teach button = Disabled
2	Spotlight = Blue Dynamic threshold = 20h Teach button = Disabled
3	Last setting acquired in Teaching mode Teach button = Disabled
4	Teaching mode Teach button = Enabled
5	Service mode Spotlight = Red Dynamic threshold = 20h Teach button = Disabled
6 to 9	Not used

2.2B4884H03en.fm

(Cont'd)

(Cont'd)

Manual setting

By default, the switch **SW2** (1), located at the bottom of the TMCC (2), is set to position **0** so that the photocell produces a green spotlight. If, with the switch set in this position, a barcode reading error occurs, change the position of the switch **SW2** (1) so that the colour of the spotlight matches the foreground colour of the barcode, see *Automatic setting* on page *300*.

If, after the automatic setting, errors continue to occur, set the photocells manually using the method on the following pages.

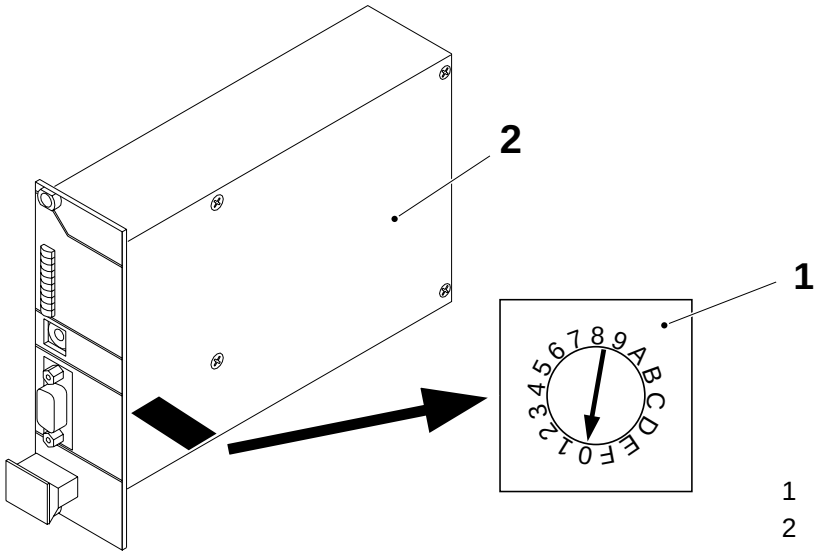

1 Switch SW2
2 TMCC

2.2B4884H03en.fm

(Cont'd)

(Cont'd)

Bar code reader photocells

a) Set the switch SW2 (1) at the bottom of the TMCC (2) to the position **4** with the machine stationary.

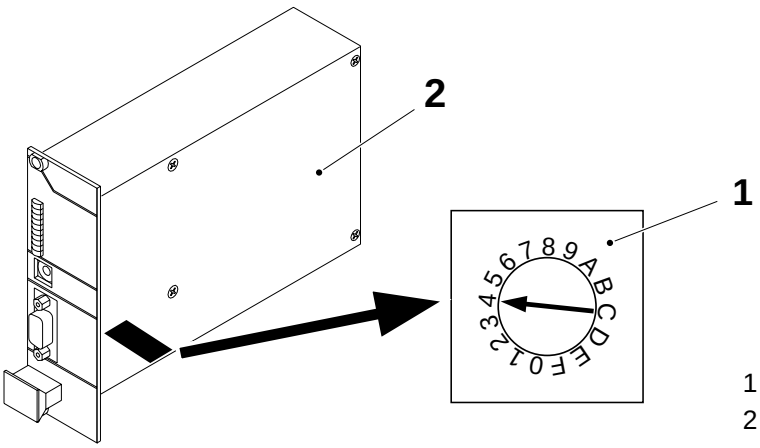

1 Switch SW2
2 TMCC

b) Make sure that the switch (3) is set to the position **Q1**.

c) Move the packaging material until the photocell spot is focused on a white part of the packaging material.

Note! The **ON** LED (5) is lit when power is supplied to the photocell.

d) Push and hold the **Teach** button (4).

e) Move the packaging material until the complete barcode has passed in front of the photocell and then release the **Teach** button (4). The cell automatically calibrates itself.

Note! The **Q/ok** LED (6) is lit when the photocell spot is focused on a dark area of the packaging material.

f) Repeat the steps from *b)* to *e)* for the other photocell.

g) Turn the switch SW2 (1) at the bottom of the TMCC (2) to position **3**.

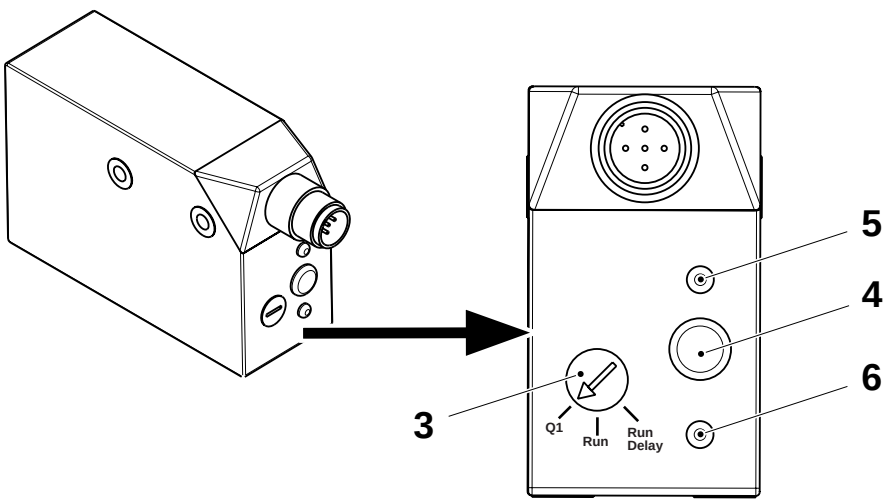

3 Switch
4 Teach button
5 ON LED
6 Q/ok LED

2.2B4884H03en.fm

8.3-7 TMCC - display report

Machine status	**Production**
Tools -AT compatible PC -TMCC connection cable	 RS 232-C
SPC reference	1255501-0100

a) Configure a PC to be used as a TIT or Windows terminal and connect it to the TMCC, see *8.3-2 TMCC - set communication*.

b) Enter the commands and parameters into the TMCC program via the keyboard and execute them by pressing the **<RETURN>** key.
(The commands and parameters are not replicated on the terminal).
The functions described below are available:

S Displays a list of parameters that have been sent from the PLC.

L Descriptions of the functions of the LEDs on the front panel.

X <Password> Formats the TMCC EEPROM:

- Restores to *default values* the photocell parameters (the values acquired during last teach procedure are lost!),
- Resets the values of:
  - Commands Ok,
  - Command Errors,
  - Barcode decoded.

Y Displays detailed status of the photocells for test and service purposes:

Commands failed:	Total number of commands not executed by the photocells.
Commands OK:	Total number of commands executed by the photocells
Barcode decoded:	Total number of barcodes decoded by the TMCC
Dynamic Threshold:	Photocell threshold
Spotlight:	Colour of the spotlight used by the photocells
Output:	Logic of the photocell outputs (Light/Dark switching)
Photoswitch Working Hours	Number of hours that every LED of the photo-cell has been working
Photocell Software ver. / S.N.:	Software version of the photocell firmware and serial number

2.2B4884H03en.fm

8.4 TPIH Generator

SPC reference	1255501-0100 67600-0501

8.4-1 TPIH Generator - function description

SPC reference	1255501-0100 67600-0501

TPIH-Generator is used for:

- patch station (A8205)
- reseal station (A8205).

A complete TPIH-system contains: potentiometer for power setting, generator, coaxial cable, impedance transformer, flexible cable, inductor and IH-Switch.

The pulse duration is controlled by the TPMC program. The power level is set by means of a potentiometer located on the process panel. Three phases 400/230V, single phase 230V, and 24V DC, are needed for the generator.

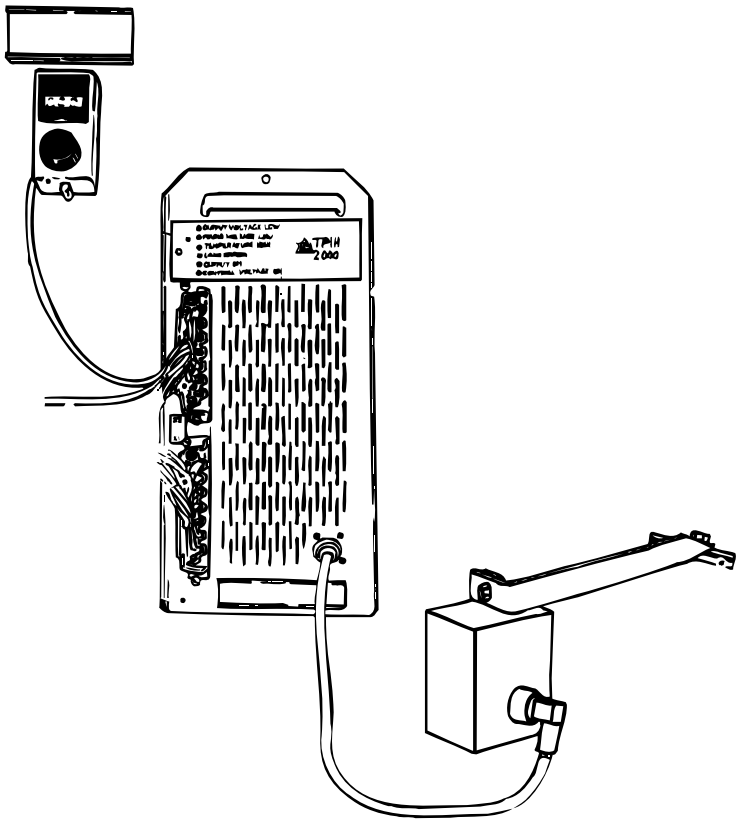

2.2B4884H04en.fm

8.4-2 TPIH Generator - check function

Machine status	Mains power **On**
SPC reference	1255501-0100 67600-0501

Output voltage low

If this is the only LED (1) that has lit up:

- the potentiometer setting is below the minimum value of 350, or
- the potentiometer is broken (the output voltage from the potentiometer does not follow the movement of the potentiometer slider), or
- the +10V DC to the potentiometer is missing, or
- the generator is faulty and must be replaced.

Mains voltage low

If the LED (2) has lit up, at least one of the three phases is below 85% of nominal value and, as a consequence, the generator is not able to deliver the proper output power.

Check the mains supply for a blown fuse. If all three fuses are intact, the problem will disappear when the voltage rises above 85% again.

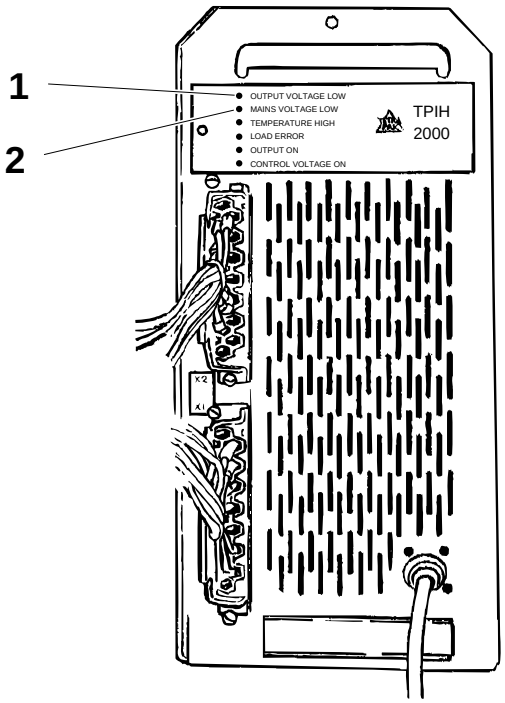

2.2B4884H04en.fm

1 Output voltage low LED
2 Mains voltage low LED

(Cont'd)

(Cont'd)

Temperature high

If the LED (3) has lit up, the temperature of the TPIH generator is too high due to:

- the cooling fan inside the generator not working
- the ambient temperature is above 50°C.

Change the generator if the fan does not operate, see *8.4-5 TPIH Generator - change generator*.

Load error

If the LED (4) has lit up, the generator is unable to transmit a pulse due to faulty load caused by:

- a short circuit in coaxial cable, flatcable, inductor or impedance transformer
- an open circuit in coaxial cable, flatcable, inductor or impedance transformer
- no pressure applied to the inductor
- the wrong type of impedance transformer installed
- the wrong type of inductor installed.

2.2B4884H04en.fm

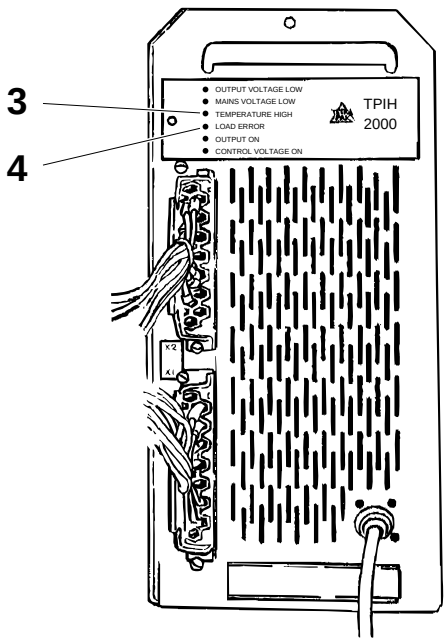

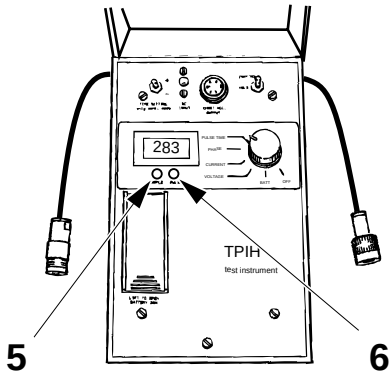

3 Temperature high LED
4 Load error LED
5 Pulse LED
6 Sample LED

The origin of the load error may be located with the aid of test instrument TP No. 68462-0101.

With a load problem only very short pulses are delivered by the generator. During the entire pulse the sample LED (6) lights up, while the pulse LED (5) is off.

(Cont'd)

(Cont'd)

Proceed as follows:

a) Perform a **Short stop**.

b) Connect the test instrument between the coaxial cable (7) and the output coaxial connector (8) of the IH switch or IH generator.

c) Step up the machine to **Production**.

d) Measure the values of voltage, current, phase angle, pulse time and compare these with the values in the table below.

Load examples	Phase angle	Impedance
Optimal load	0°	50 Ω
Normal load (ACCEPTANCE)	±15°	40 - 65 Ω
Short circuit in coaxial cable, contacts or primary of the IH transformer	pos (3)	1 - 10 Ω (1)
Open circuit in coaxial cable, contacts or primary of the IH transformer	neg (3)	200 - 2000 Ω (2)
Short circuit in inductor, current rail or secondary of the IH transformer	pos	10 - 20 Ω
Open circuit in inductor, current rail or secondary of the IH transformer	neg	2 - 5 Ω
No packaging material on the inductor	neg	5 - 15 Ω
No hole punched in packaging material		
No tab material at the inductor		

Note! 1) Greater value = greater distance between problem and instrument.

2) Greater value = shorter distance between problem and instrument.

3) Greater phase difference = greater distance between problem and instrument.

2.2B4884H04en.fm

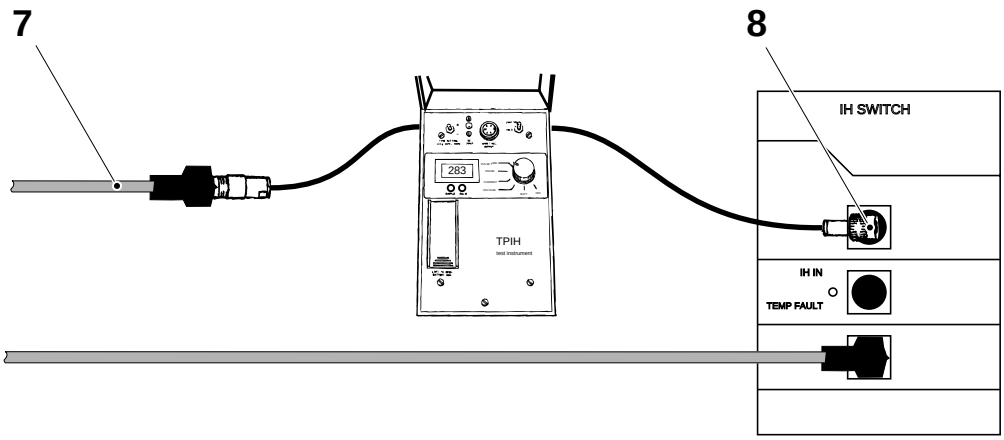

7 Coaxial cable
8 Output coaxial connector

(Cont'd)

(Cont'd)

e) Make a **Short stop**.

f) Connect the test instrument between the coaxial cable (9) and the right out coaxial connector (10) of the IH switch.

g) Step up the machine to step **Production** and repeat item *d)*.

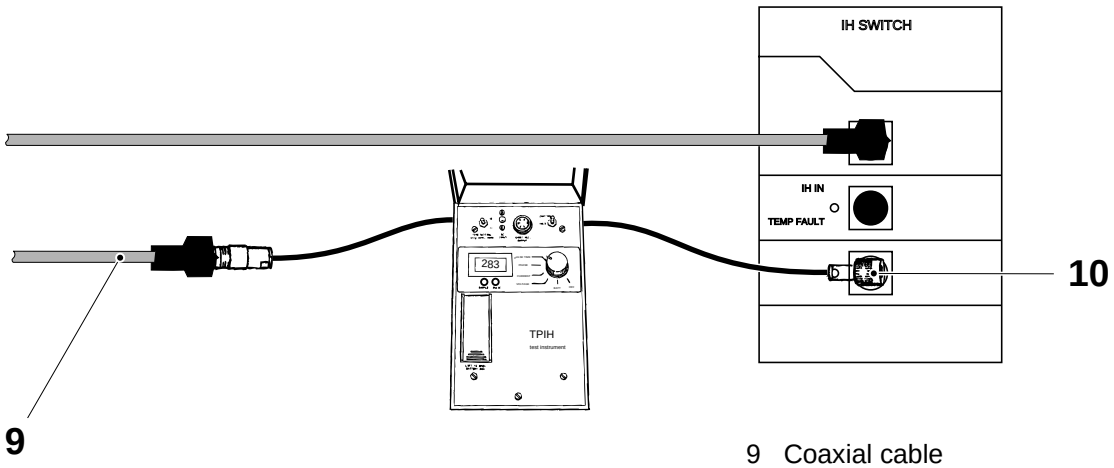

9 Coaxial cable
10 Right out coaxial connector

h) Make a **Short stop**.

i) Connect the test instrument between the coaxial cable (11) and the coaxial connector (12) of the TPIH generator.

j) Step up the machine to step **Production** and repeat item d).

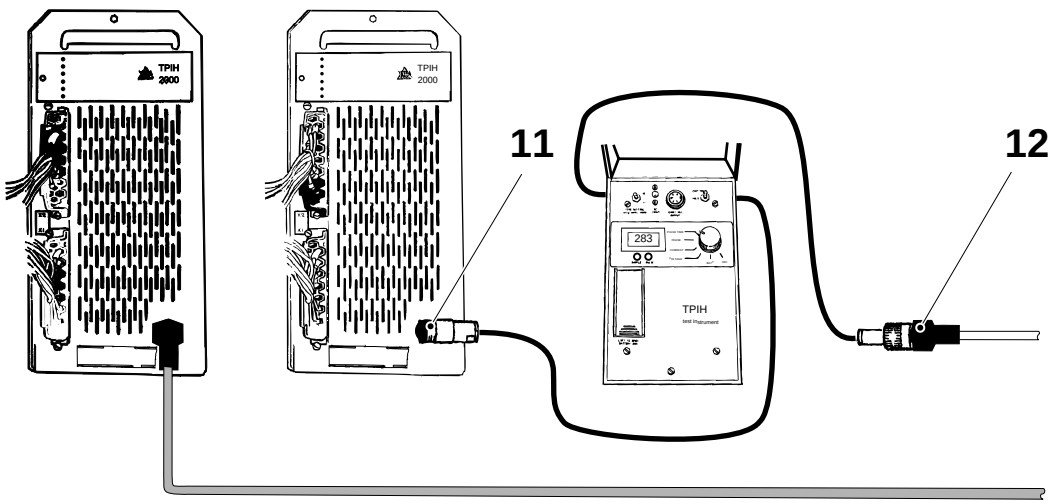

11 Coaxial cable
12 Coaxial connector

(Cont'd)

2.2B4884H04en.fm

(Cont'd)

Output on

When the LED (13) lights up, a pulse is transmitted from the generator into a correct load. The entire generator system is operating perfectly.

Control voltage on

When the LED (14) lights up, 230V is connected to the generator. Alarms are enabled.

Note! This does not check the 400/230V three phase power supply.

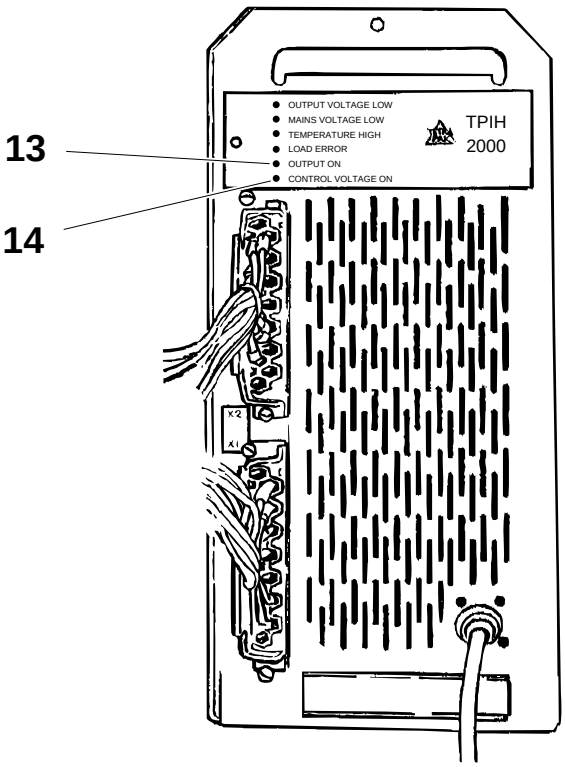

2.2B4884H04en.fm

13 Output on LED
14 Control voltage on LED

(Cont'd)

(Cont'd)

Test instrument TP No. 68462

The TPIH test instrument is used to check the available output power from the IH generator as well as the condition of the coaxial cable, the impedance transformer, the current rail and the inductor. The test instrument is connected in series with the coaxial cable from the generator.

Note! Use the Short stop procedure to prevent the generator from pulsing when the instrument has to be connected or disconnected.

The instrument can be used for the measurement of the following parameters:

- HF voltage
- HF current
- phase shift voltage/current
- pulse duration.

The results of these measurements can be used to calculate the available HF power. The instrument should simplify work when trying to locate the origin of a problem. One 9V battery is used for the instrument and an automatic power-off function is used to minimize battery consumption. A test outlet allows connection of a printer, such as a Gould recorder. Print-out of the HF voltage, HF current and the phase shift as a function of time are possible. The instrument kit contains complete operating instructions as well as a recorder cable and an AC/DC mains adapter.

2.2B4884H04en.fm

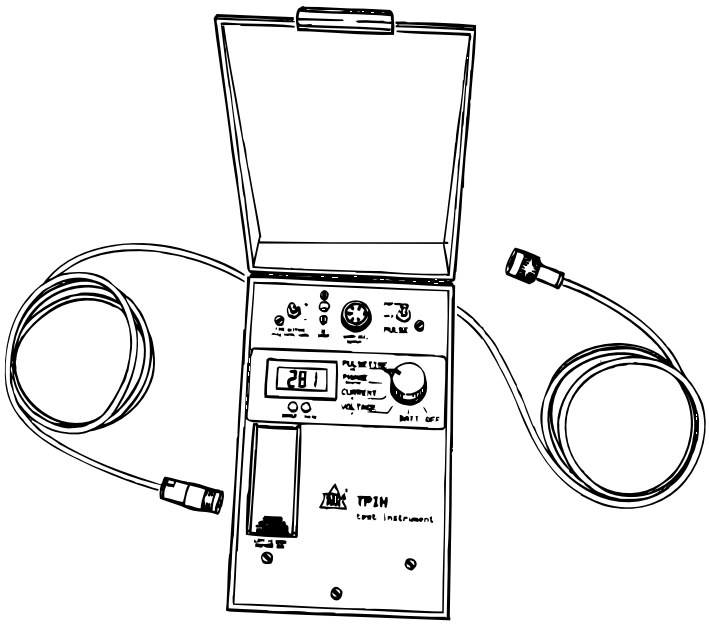

8.4-3 TPIH Generator - check cables

SPC reference	1255501-0100 67600-0501

Check the following parts for wear and/or damage:

- the coaxial connectors (2)
  Make sure that there is no moisture between the male connector and the female connector.
- the rubber gasket (4) in the male connectors
  Make sure that it seals properly (it should not be possible to turn the male connector easily).
- the coaxial cables (3)
  Make sure that the cables are flexible and that there are no cracks where they bend.
- the busbar (1)
  Check the rubber seal and the flat seal. Make sure that there are no signs of damage.
- Check for water/product residue inside the impedance transformer

Clean or change as required.

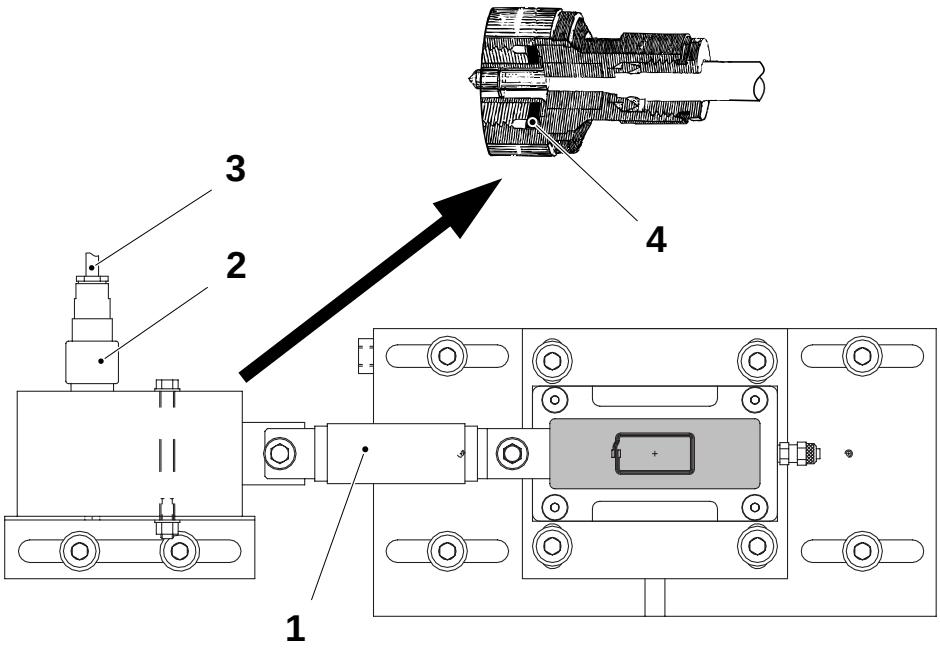

2.2B4884H04en.fm

1 Busbar
2 Coaxial connector
3 Coaxial cable
4 Rubber gasket

8.4-4 TPIH Generator - change transformer

SPC reference	1255501-0100 67600-0501

a) Remove the coaxial cable (1) from the impedance transformer (2).

b) Remove the busbar (3) from the inductor (4).

c) Remove the screw (5) and the impedance transformer (2).

d) Check that the impedance transformer (2) is intact and clean. Pay particular attention to the coil (6) and to the coaxial connector (7) connections.

e) Clean or change the impedance transformer (2) as required.

f) Clean the connections as required.

g) Assemble in the reverse order.

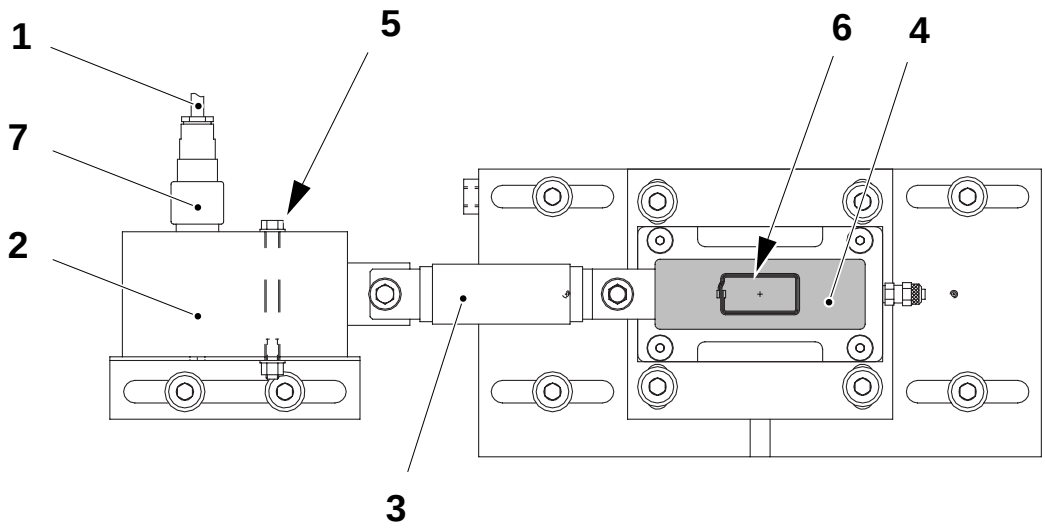

2.2B4884H04en.fm

1 Coaxial cable
2 Transformer
3 Busbar
4 Inductor
5 Screw
6 Coil
7 Coaxial connector

8.4-5 TPIH Generator - change generator

SPC reference	1255501-0100 67600-0501



High voltage!
Do not open the generator.

a) Make sure that the main power switch is **Off** and that it has been padlocked.

b) Remove the connectors **X1** (1) and **X2** (2).

c) Remove the coaxial connector (3).

d) Unscrew the screw (4) and pull out the generator.

e) Change the generator and assemble in the reverse order.

Note! Send the generator to the nearest Tetra Pak service station for cleaning or service.

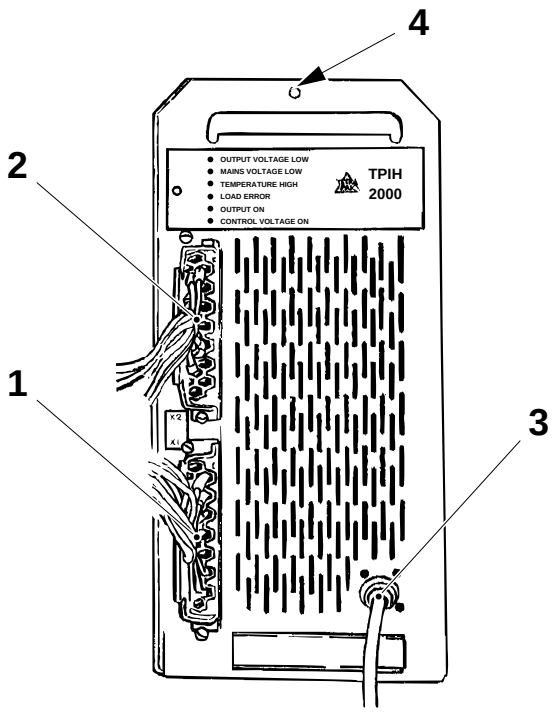

1 Connector X1
2 Connector X2
3 Coaxial connector
4 Screw

2.2B4884H04en.fm

8.4-6 TPIH Generator - set sealings

SPC reference	1255501-0100 67600-0501

The power for the sealings unit is set with the potentiometers (1) and (2). See table below.

Note! Patch, Reseal and the Tab results must be evaluated according to the items in the OM section, Package check. Further adjustments on the potentiometer can be required.

Package	Hole type	Patch *	Reseal *
250 B	Hole 21	550	550
500 S	Hole 25	630	600
1500 S - 1000 B - 1000 S	Hole 45	600	600
1000 B - 1000 S	Hole 50	550	550
500 S	Hole 55	580	600
TPA 1000 S	Hole 60	600	600
1500 S - 1000 B - 1000 S - 1000 Sq	Hole 85	610	610

Note! *: value to increase if the sealing is too cold or to decrease if the sealing is too hot.

2.2B4884H04en.fm

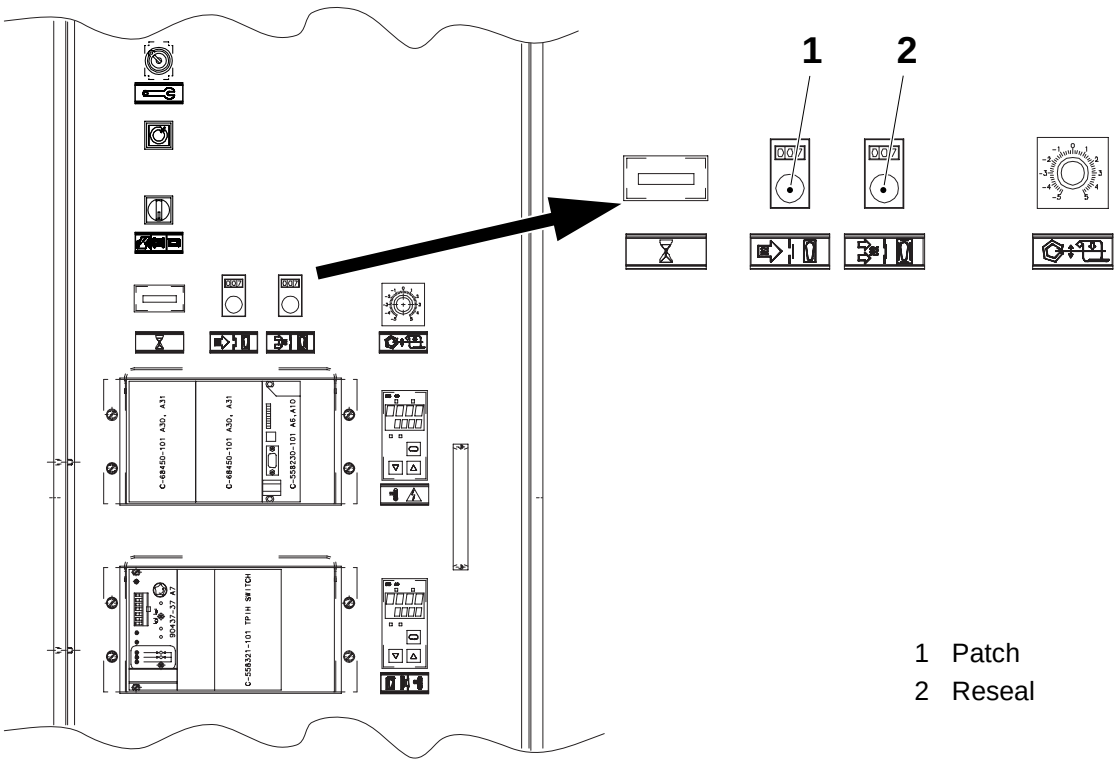

1 Patch
2 Reseal

8.5 DMC card

SPC reference	1255501-0100

8.5-1 DMC card - function description servo drive

Machine status	Mains power **On**
SPC reference	1255501-0100

The DMC card A8204 is used for feeding the packaging material with volume dependent length.

The DMC receives the bar code pulse from the TMCC module and checks the packaging materials position.

The DMC keeps the packaging material in position by adjusting the package length.

Note! The setting range on the MUPP is **± 4 mm**.

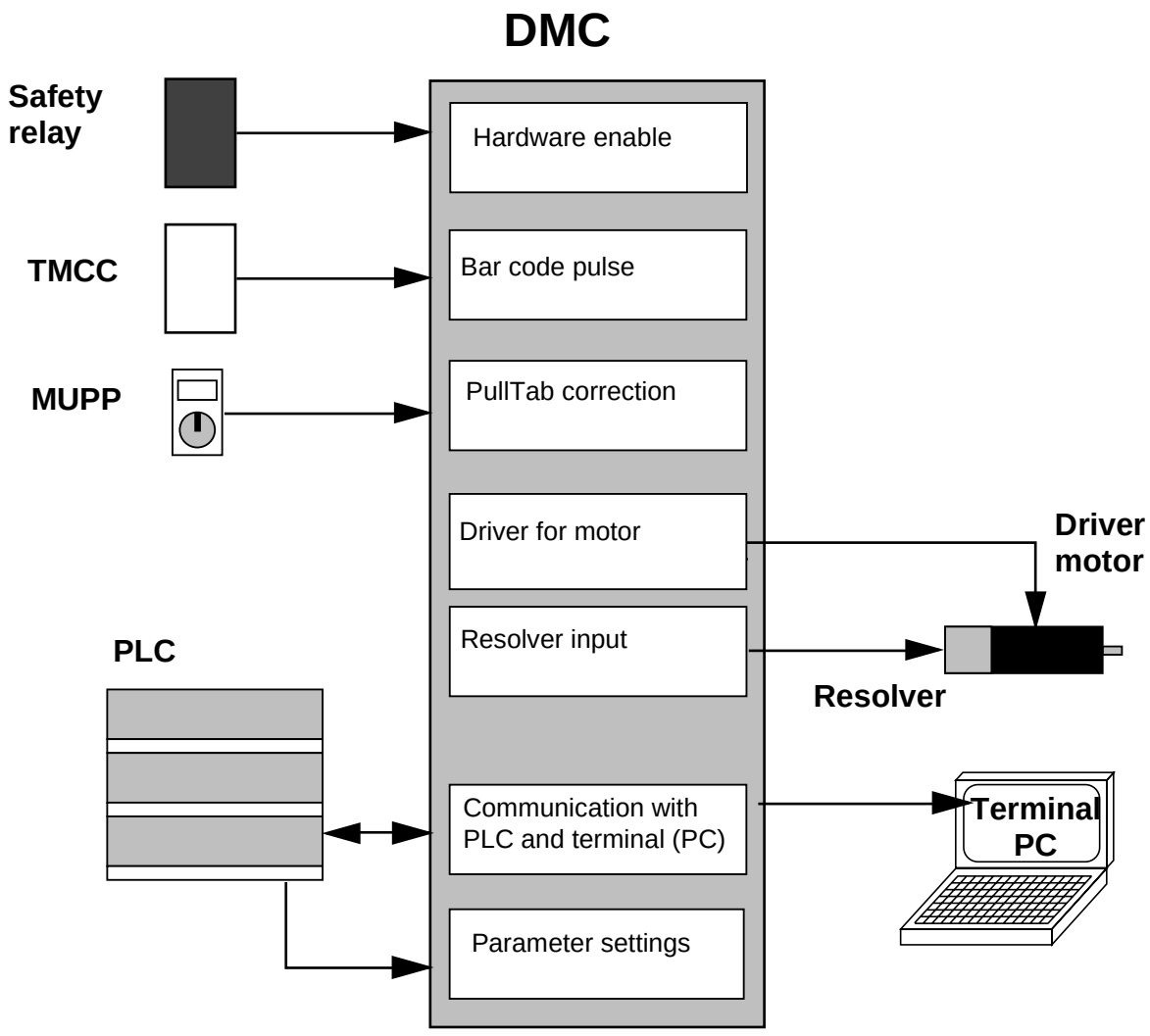

2.2B4884H05en.fm

(Cont'd)

(Cont'd)

Servo drive DMC card A8204		
LED	**Colour**	**Function**
Ready	Green (Led 1)	The servo system hardware is ready (doors closed)
Home position found	Yellow (Led 2)	The servo system has found the home position
Move	Yellow (Led 3)	The servo motor is moving the paper
Move done	Yellow (Led 4)	The servo system has moved the paper
Fault bit 1	Red (Led 5)	See list next page
Fault bit 2	Red (Led 6)	See list next page
Fault bit 3	Red (Led 7)	See list next page
Fault bit 4	Red (Led 8)	See list next page

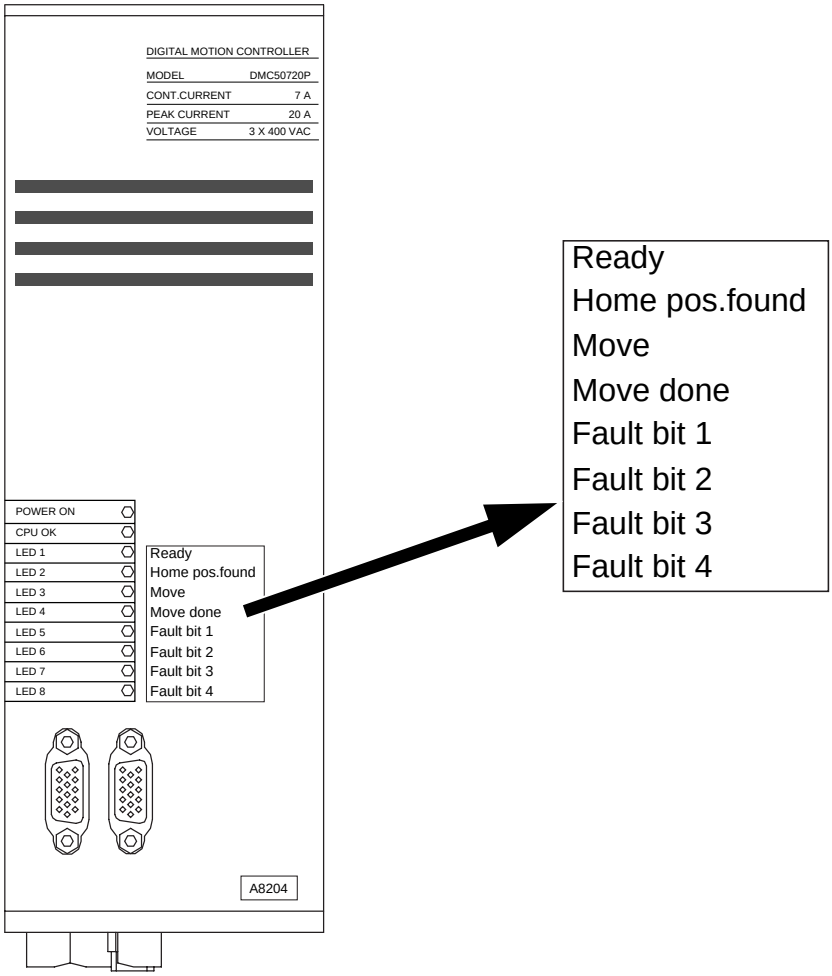

2.2B4884H05en.fm

(Cont'd)

(Cont'd)

Servo drive DMC card A8204 fault list

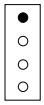	**Hardware disabled** The hardware enable signal from the PLC is low. This is normally not an alarm. But if it happens in an abnormal situation check the connection to the DMC's hardware enable input.
	**System internal hardware fault** Try to restart, if the problem persists or comes back soon again change DMC driver.
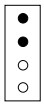	**Position error exceeded** The allowed error between the calculated position and the actual position of the axis of the motor is exceeded. Check for mechanical faults that can stop the motor from turning correctly such as bad bearings, lack of lubrication…
	**Ctrl-C interrupt** Ctrl-C has been pressed on a terminal connected to the drive. 1. Restart.
	**System error** Try to restart, if problem persists or comes back soon again change DMC driver.
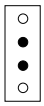	**High temperature in driver or motor** 1. In case of the motor check if the movement is too hard. 2. In case of the drive check the cooling system of the electrical cabinet
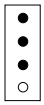	**Software disabled** The software enable signal from the PLC is low. This is normally not an alarm. But if it seems to be a problem check the connection between the PLC's output and the DMC's software enable input.
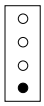	**Current check torque limit exceed** The maximum current limit is exceeded. Check for mechanical faults that can stop the motor from turning correctly such as bad bearings, lack of lubrication…
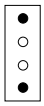	**Cyclical timer interrupt** This alarm is triggered by internal faults in the drive, and is not an alarm if software and hardware enable is low. 1. Close the doors. 2. Check connections to the DMC's hardware and software enable.

(Cont'd)

2.2B4884H05en.fm

(Cont'd)

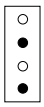	**Data transfer from PLC** The software enable signal from the PLC is low. This is normally not an alarm. But if it seems to be a problem check the connection between the PLC's output and the DMC's software enable input
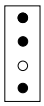	**Resolver fault** Problem with the resolver (the resolver sends information from the motor to the drive from where the drive can calculate the position of the axis). 1. Check the connections for the resolver cable. 2. Change drive or motor
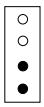	**Home position fault** Check the photocells positions, the photocells functions and the paper tracking.

2.2B4884H05en.fm

8.5-2 DMC card - function description STD

Machine status	Mains power **On**
SPC reference	1317254-0100

The DMC card A8233 is used for keeping the packaging material stretched in the punch, the patch applicator, the reseal and the applicator tab stations.

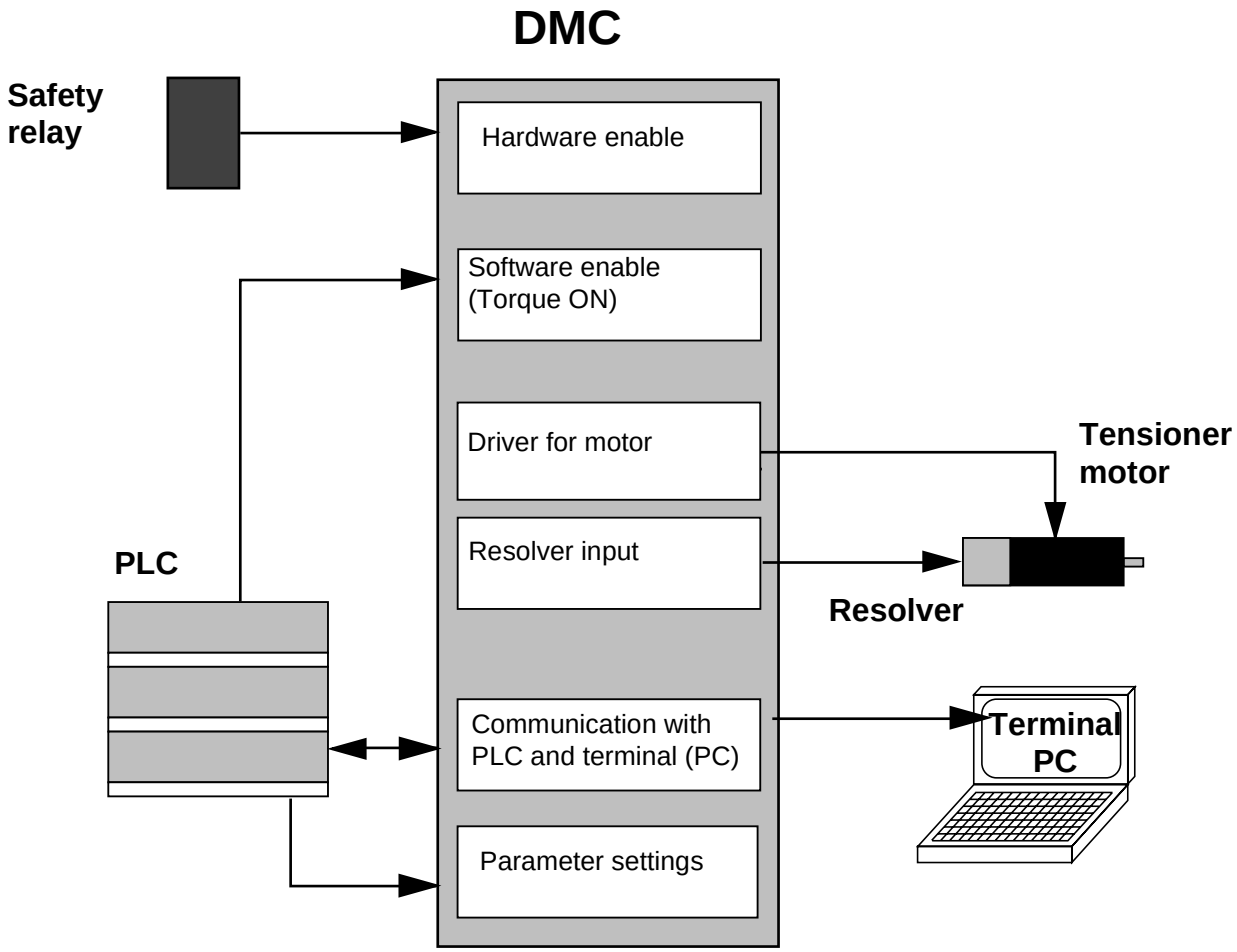

(Cont'd)

(Cont'd)

STD DMC card A8233		
LED	**Colour**	**Function**
Ready	Green (Led 1)	The servo system hardware is ready (doors closed)
Torque enable	Yellow (Led 2)	The servo tensioner is ready
Not used	Yellow (Led 3)	-
Not used	Yellow (Led 4)	-
Fault bit 1	Red (Led 5)	See list next page
Fault bit 2	Red (Led 6)	See list next page
Fault bit 3	Red (Led 7)	See list next page
Fault bit 4	Red (Led 8)	See list next page

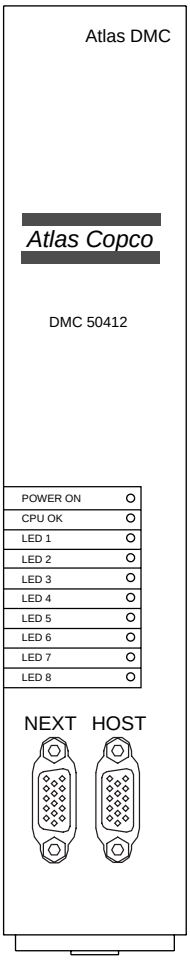

(Cont'd)

2.2B4884H05en.fm

(Cont'd)

STD DMC card A8233 fault list

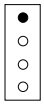	**Hardware disabled** The hardware enable signal from the safety relay is low. This is normally not an alarm. But if it happens in an abnormal situation check the connection to the DMC's hardware enable line.
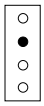	**System internal hardware fault** Try to restart, if the problem persists or comes back soon again change DMC driver.
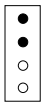	**Position error exceeded** The allowed error between the calculated position and the actual position of the axis of the motor is exceeded. Check for mechanical faults that can stop the motor from turning correctly such as bad bearings, lack of lubrication…
	**Ctrl-C interrupt** Ctrl-C has been pressed on a terminal connected to the drive. 1. Restart.
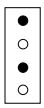	**System error** Try to restart, if problem persists or comes back soon again change DMC driver.
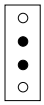	**High temperature in driver or motor** 1. In case of the motor check if the movement is too hard. 2. In case of the drive check the cooling system of the electrical cabinet
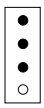	**Software disabled** The software enable signal from the PLC is low. This is normally not an alarm. But if it seems to be a problem check the connection between the PLC's output and the DMC's software enable input.
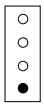	**Current check torque limit exceed** The maximum current limit is exceeded. Check for mechanical faults that can stop the motor from turning correctly such as bad bearings, lack of lubrication…
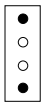	**Cyclical timer interrupt** This alarm is triggered by internal faults in the drive, and is not an alarm if software and hardware enable is low. 1. Close the doors. 2. Check connections to the DMC's hardware and software enable.

(Cont'd)

2.2B4884H05en.fm

(Cont'd)

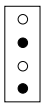	**Data transfer from PLC** The software enable signal from the PLC is low. This is normally not an alarm. But if it seems to be a problem check the connection between the PLC's output and the DMC's software enable input
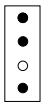	**Resolver fault** Problem with the resolver (the resolver sends information from the motor to the drive from where the drive can calculate the position of the axis). 1. Check the connections for the resolver cable. 2. Change drive or motor.
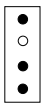	**Tensioner motor speed fault** Maximum speed (positive or negative) exceeded. 1. Check if paper is broken.

2.2B4884H05en.fm

8.5-3 DMC card - set basic

Machine status	**Production**
Tools - communication cable - AT compatible PC with diskette station	RS 232-C
SPC reference	1255501-0100

Connect the DMC to the PC terminal with the cable (1). Necessary connections are:

PC 9-pin female	**DMC 15-pin high density male**
2	3
3	2
5	7
	1 (*)

Note! (*) = shield connection

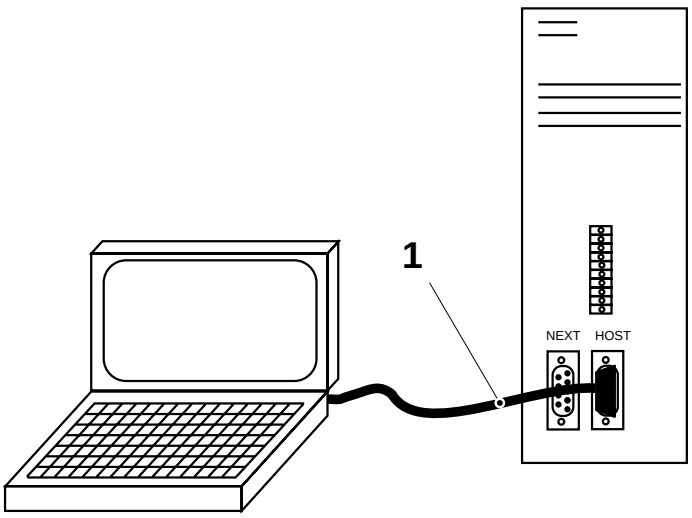

1 RS232 connection cable

2.2B4884H05en.fm

Configure the program to use, for example TIT or Windows terminal, as follows:

Baud rate	9600
Parity	None
Bits	8
Stopbits	1
Flow control	None

(Cont'd)

(Cont'd)

PC terminal communication

A PC with a terminal program can be used for test and service purposes. At start up through the serial interface, it is possible to see the program number (R255). Each time that the volume parameter is required to the PLC, the received value (R52) is sent out onto the screen. For positioning trouble-shooting it is also possible to see different data by on line changing of the register **R120** value.

R120	Register number	Register name	Function
R120 = 0	No display	No display	Default state
R120 = 1	RD 1.RPos R42 R30	 *NewPosOffset* *RegMarkPos*	Real position PullTab correction Register mark position
R120 = 2	R21 R22 R83	*FromRegMark* *AdjfromRegMark* *Error*	Measured value *RegMarkPos* to stop position *DfltFromRegMark+Newposoffset* relative error from Register Mark
R120 = 3	R89 R26 R25	*Movement* *MoveAverage* *MoveError*	Movement after PID calculation Average of the six last *Movement* *Movement - MoveAverage*
R120 = 4	R73 R23 R71	*ActualLength* *PackLength* *DumpPackages*	Measured Package length during *ErrorRoutine* Repeat length of package Number of dumped packages
R120 = 10	Ana.Out1 Ana.Out2	*Ana.Out1* *Ana.Out2*	Connect the *Ana.Out1* to torque Connect the *Ana.Out2* to PosErr

For better performance of the system, keep **R120** = 0 when there is no need of displaying data.

The PT21MC program is resident on an EPROM (2). This should be programmed and assembled during machine production.

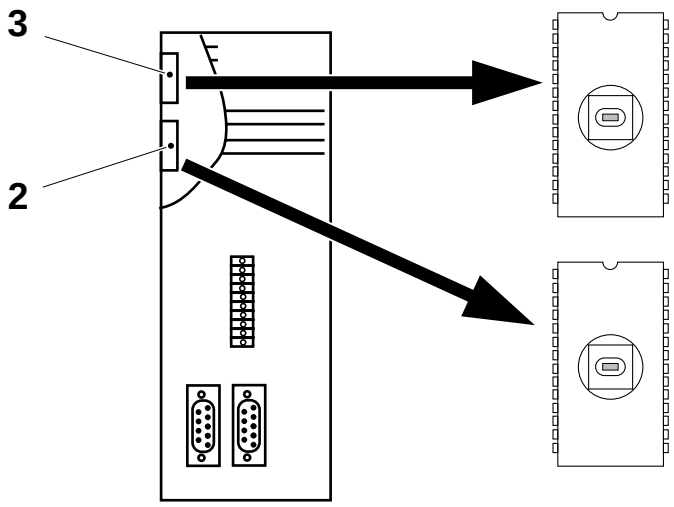

2 Eprom
3 Firmware Eprom

2.2B4884H05en.fm

8.6 Fuse box

SPC reference	1185030-0100

8.6-1 Fuse box - set overload protection

SPC reference	1185030-0100

Set the overload protections by following the table below:

Q8201	Q8202
6.3 A	1.0 A

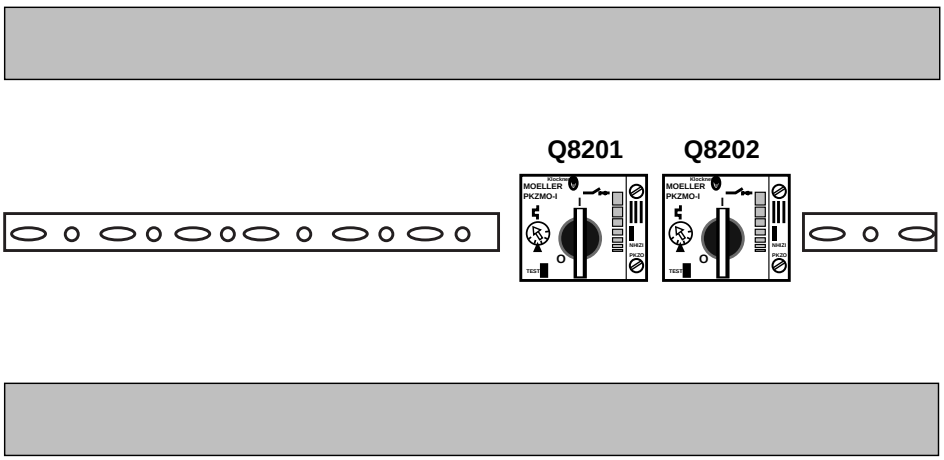

2.2B4884H06en.fm

Q8201: Servomotor digital motion controller
Q8202: DC lines generation

8.6-2 Fuse box - set fuse

SPC reference	1185030-0100

Set the fuse protections by following the table below:

F8201	F8202	F8203	F8206	F8207:1	F8207:2
4 A	6 A	6 A	4 A	10 A	10 A
F8207:3	**F8210**	**F8211**	**F8213**		
10 A	10 A	4 A	6 A		

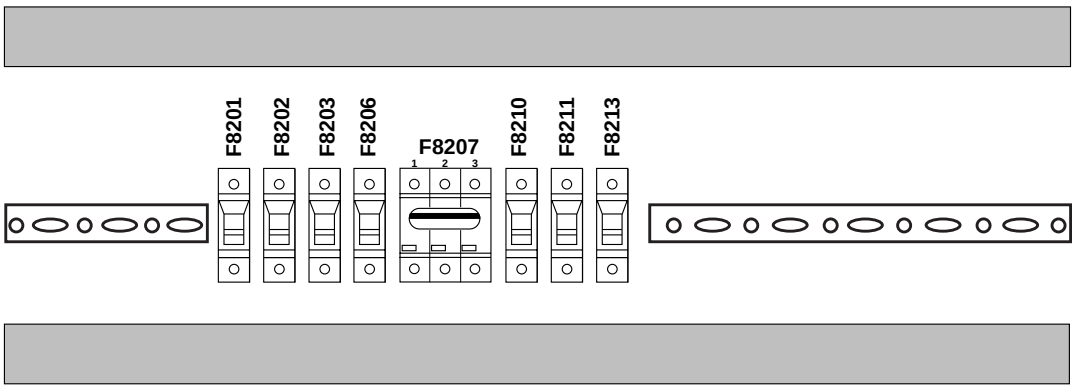

F8201: Infeed motor
F8202: Machine lightning
F8203: Cooler el. cabinet
F8206: Patch - reseal IH control
F8207: Patch - reseal IH power
F8210: Lines 24vdc
F8211: TPMC pws
F8213: Tab sealing pad heater

2.2B4884H06en.fm

8.7 Cooler

SPC reference	1095928-0100

8.7-1 Cooler - check air flow

Machine status	Mains power **On**
SPC reference	1095928-0100

WARNING!

a) Open the PT21 electrical cabinet doors and check that the cooler air flow is working.

b) Check also that the hose (1) for the discharging of the condensed water is in the correct position and not clogged. Clean as required.

c) In the TPOP panel, check the PT21 electrical cabinets temperature in order to have the right temperature inside the cabinet.

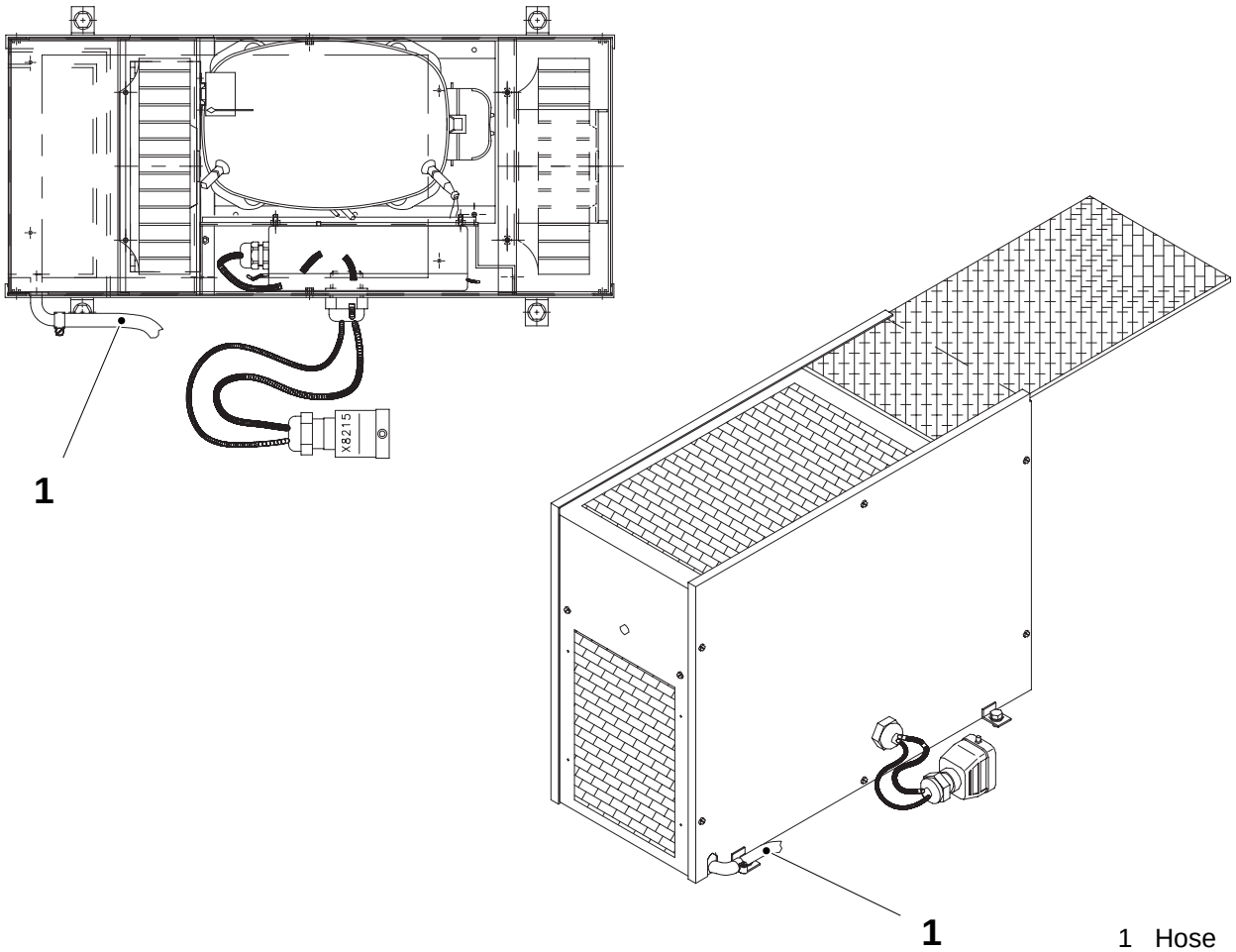

2.2B4884H07en.fm

1 Hose

8.7-2 Cooler - clean filter insert

SPC reference	1095928-0100

WARNING!

Cooling media R134A.
Follow the Safety precautions.

a) Open the PT21 electrical cabinets rear doors.

b) Remove the filter insert (1) from the cooler and clean it with compressed air. Change the filter insert (1) as required.

c) Fit back the filter insert (1).

d) Close the PT21 electrical cabinets rear doors.

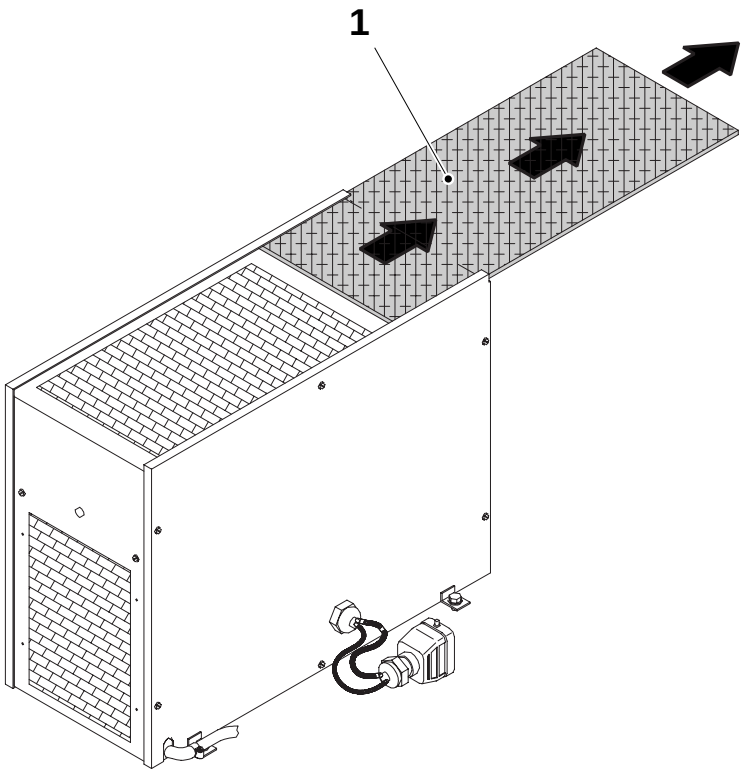

1 Filter insert

2.2B4884H07en.fm

This page intentionally left blank

2.2B4884H07en.fm

9 Pneumatic equipment

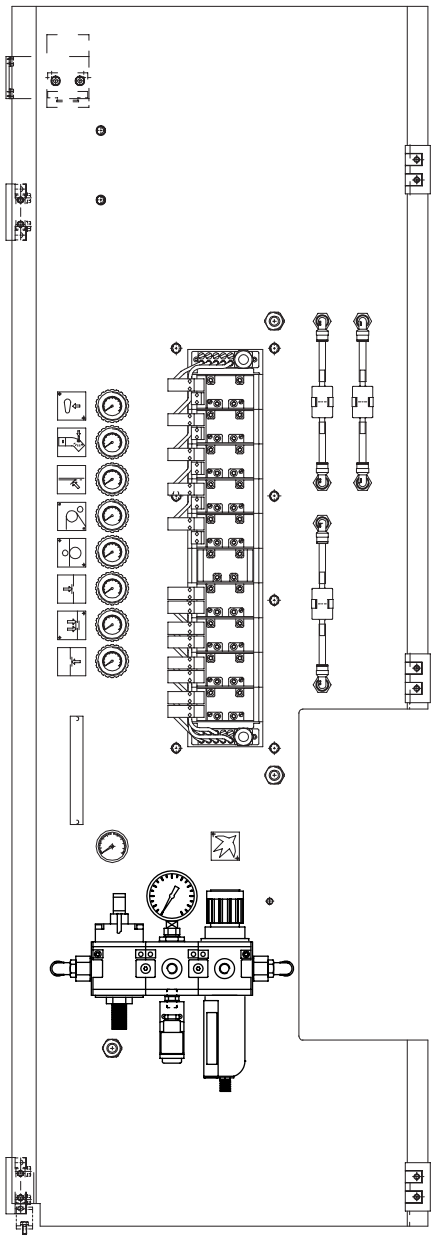

2.2B4884I00en.fm

9-0 Valve panel - description

SPC reference	1185049-0100

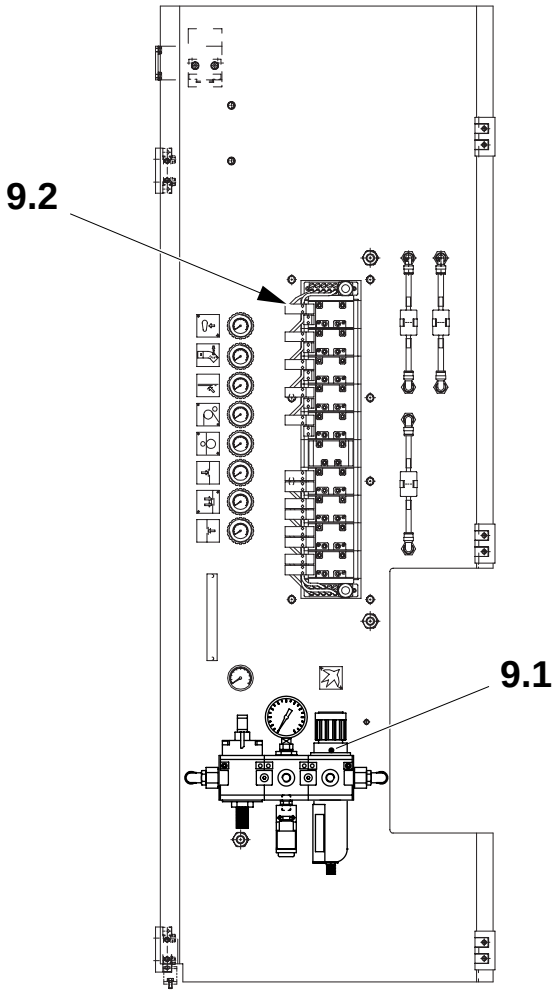

9.1 Air inlet group
9.2 Valve panel

2:2B4884I00en.fm

9.1 Air inlet group

SPC reference	1185047-0100

9.1-1 Air inlet group - set pressure switch

Machine status	Mains power **On** Air **On**
SPC reference	1185047-0100

a) On the PT21, set the main input air pressure to **4.5 bar** (**0.45 MPa**), by means of the pressure regulator (1).

b) Check that the pressure gauge (2) shows the same pressure.

c) Turn the adjuster screw (3) on the top of the pressure switch (4) fully anti-clockwise.

d) Slowly turn the adjuster screw (3) clockwise until the PT21 main air supply alarm starts flashing on the TPOP panel.

e) On the PT21, reset the main air inlet pressure to **6.0 bar**, see *10.1 Technical data*.

2.2B4884I01en.fm

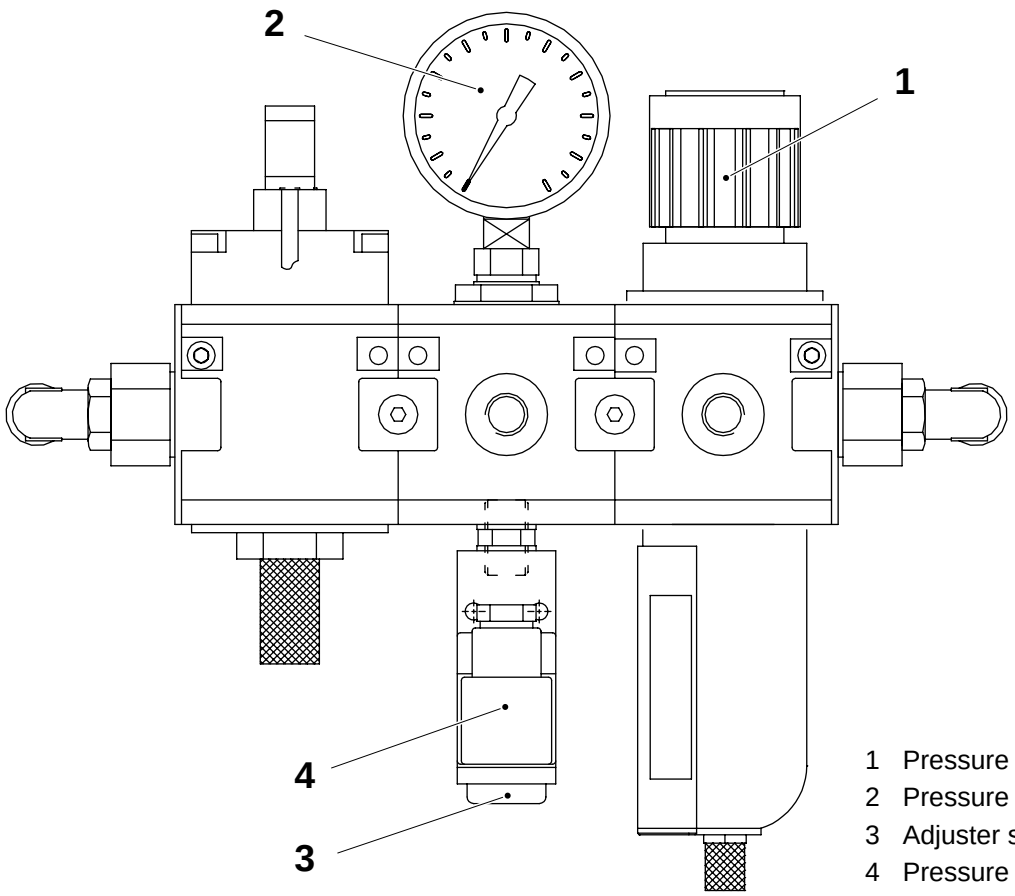

1 Pressure regulator
2 Pressure gauge
3 Adjuster screw
4 Pressure switch

9.1-2 Air inlet group - clean filter insert

Machine status	Air **On**
Consumables - soap	
SPC reference	1185047-0100

a) Remove the reservoir (1) and change the O-ring as required.

b) Clean the reservoir (1) with soapy water and rinse with plenty of water.

c) Remove and clean the filter insert inside the reservoir (1). Change as required.

d) Fit back the reservoir (1) and make sure that the O-ring is correctly fitted.

e) By means of the pressure regulator (2), open the PT21 main air inlet and check for leakages in the reservoir (1).

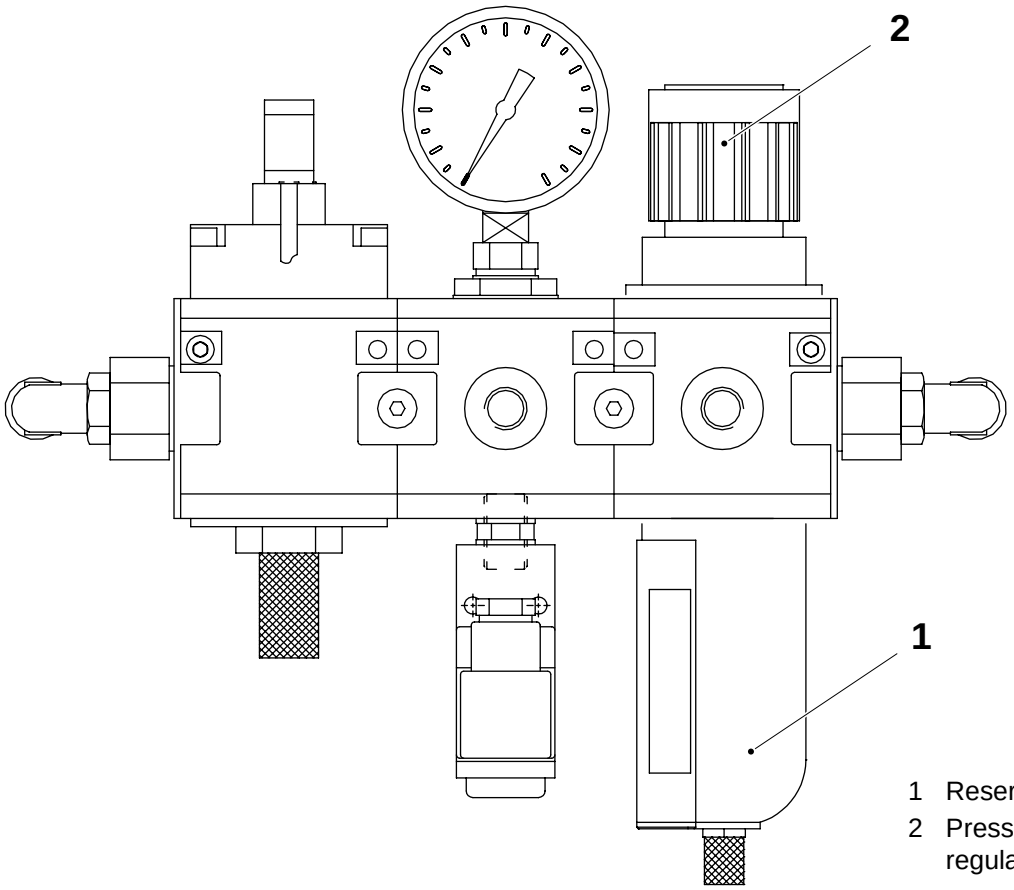

2.2B4884I01en.fm

1 Reservoir
2 Pressure regulator

9.2 Valve panel

SPC reference	1185049-0100

9.2-1 Valve panel - change air filters

SPC reference	1185049-0100

a) Open the RH side PullTab door.

b) Check the air filter (1) for tab folding. If it is coloured **pink**, it must be removed and then changed.

c) Check the air filter (2) for punch blowing. If it is coloured **pink**, it must be removed and then changed.

d) Check the air filter (3) for cap blowing. If it is coloured **pink**, it must be removed and then changed.

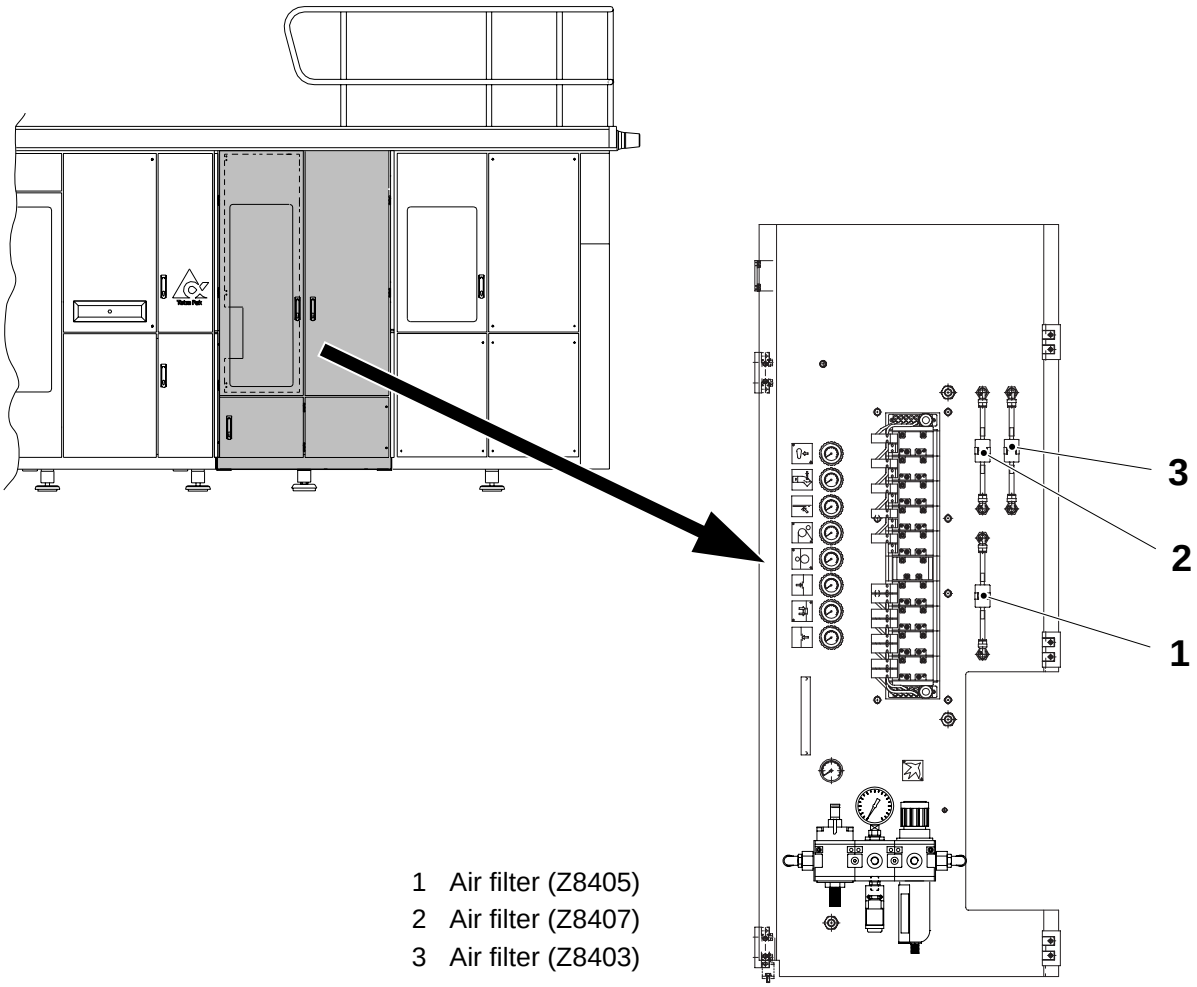

1 Air filter (Z8405)
2 Air filter (Z8407)
3 Air filter (Z8403)

2.2B4884I02en.fm

This page intentionally left blank

2.2B4884I02en.fm

10 General

2.2B4884Y00en.fm

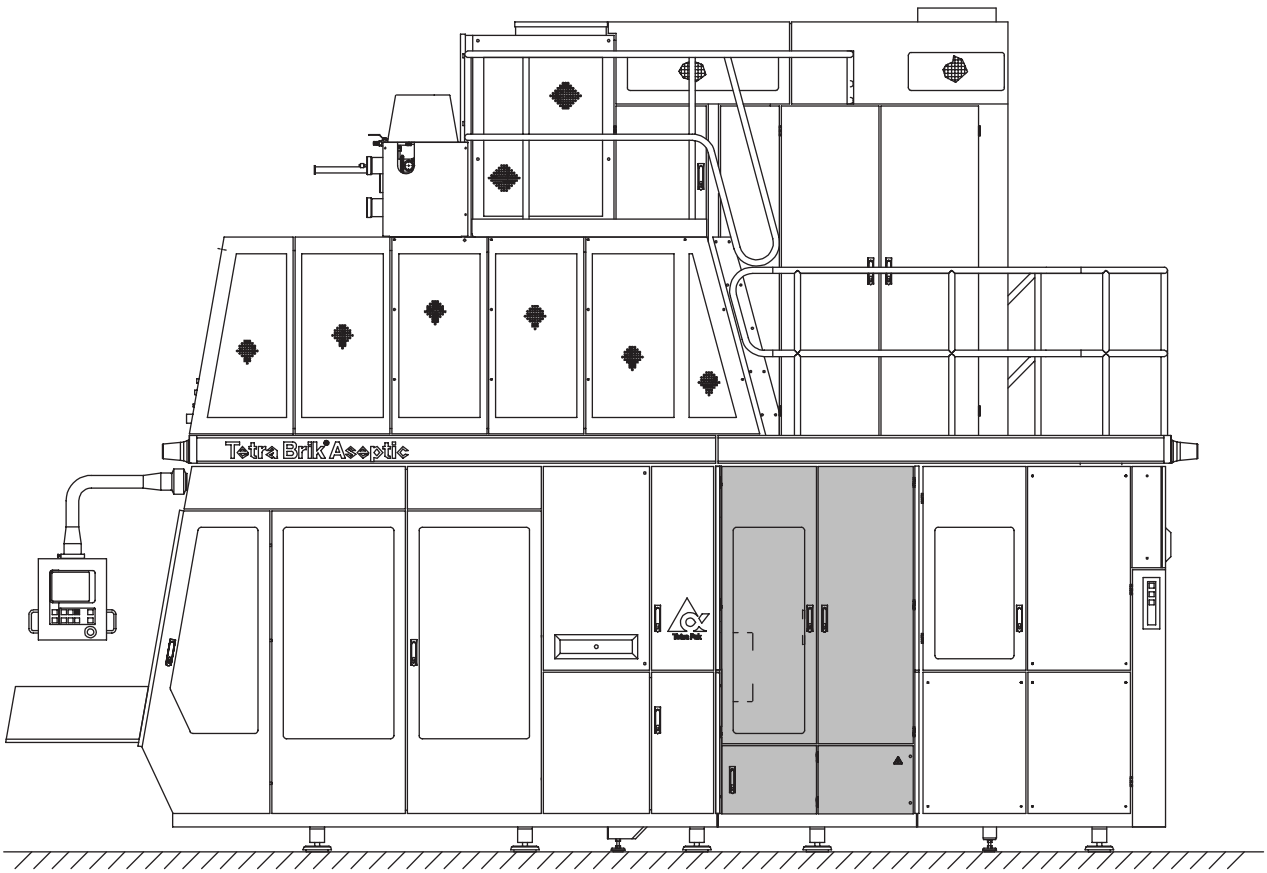

10-0 General - description

SPC reference	648508-0300

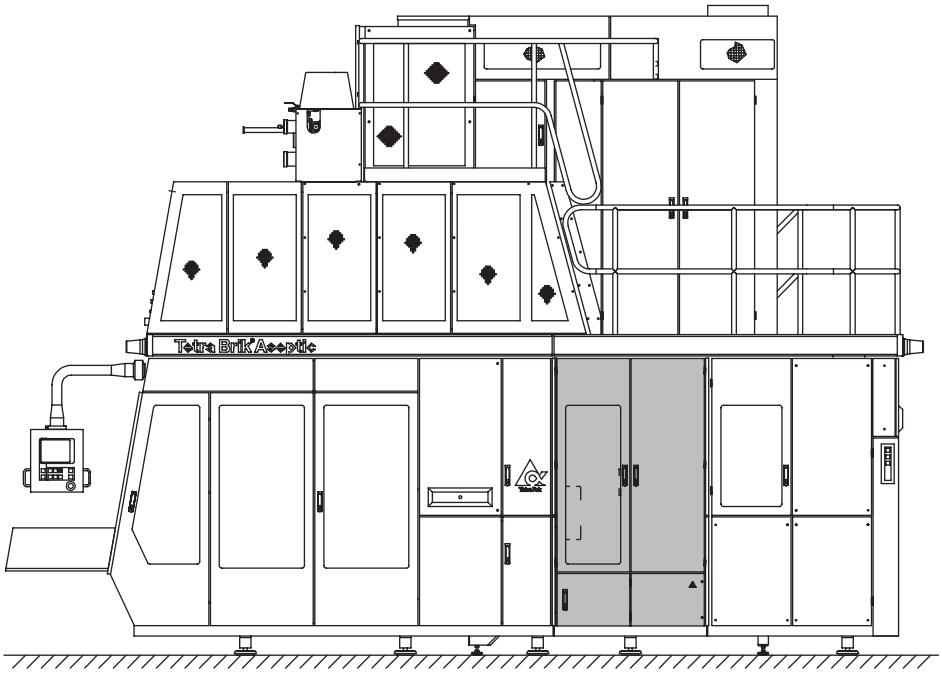

10.1

10.1 Technical data

2.2B4884Y00en.fm

10.1 Technical data

SPC reference	648508-0300

Pressures	Symbol	Unit	Value
Tab counter-jaw - CAP blowing		Bar	2.0
Waste blowing		Bar	3.0
Tab folding air pressure (only ReCap version)		Bar	3.0 - 3.5
Tension unit - pressure roller		Bar	2.0
Drive motor - pressure roller		Bar	4.5
IS patch counter-jaw - sealing pressure		Bar	2.5
Reseal counter-jaw - sealing pressure		Bar	2.5
Tab counter-jaw - sealing pressure		Bar	2.5
PT21 main air inlet		Bar	6.0

Pressure switches		Unit	Value
Low air pressure		Bar	4.5

(Cont'd)

2.2B4884Y01en.fm

(Cont'd)

Temperatures	Unit	Value
Tab constant heat - (hole 21)	°C	185
Tab constant heat - (hole 25)	°C	190
Tab constant heat - (hole 45)	°C	200
Tab constant heat - (hole 50)	°C	170
Tab constant heat - (hole 55)	°C	185
Tab constant heat - (hole 60)	°C	170
Tab constant heat - (hole 85)	°C	190
Reseal sealing jaw - (hole 21)	S.U.	550
Reseal sealing jaw - (hole 25)	S.U.	600
Reseal sealing jaw - (hole 45)	S.U.	600
Reseal sealing jaw - (hole 50)	S.U.	550
Reseal sealing jaw - (hole 55)	S.U.	600
Reseal sealing jaw - (hole 60)	S.U.	600
Reseal sealing jaw - (hole 85)	S.U.	610
IS patch sealing jaw - (hole 21)	S.U.	550
IS patch sealing jaw - (hole 25)	S.U.	630
IS patch sealing jaw - (hole 45)	S.U.	600
IS patch sealing jaw - (hole 50)	S.U.	550
IS patch sealing jaw - (hole 55)	S.U.	580
IS patch sealing jaw - (hole 60)	S.U.	600
IS patch sealing jaw - (hole 85)	S.U.	610
Electrical cabinet	°C	30

2.2B4884Y01en.fm

(Cont'd)

(Cont'd)

Noise declaration (according to ISO 3744)	**Unit**	**Value**
Equivalent sound pressure level (Leq) at 1 m of distance from machinery and at 1.6 m from the floor or access platform.	dB (A)	72.5
Equivalent sound pressure level (Leq), maximum value	dB (A)	---
Peak instantaneous sound pressure level (S.P.L. peak)	dB (C)	under 130
Surface sound pressure level, Log. average (Lpf)	dB (A)	71.5 ± 0.5

Other data PT/21	**Value**
Max. capacity	7240 ± 4% packages/hour
Air	300 - 450 l/min (norm 80 l/min)
Power	max 0.6 kW, 400 V, 50-60 Hz, 3 ph

2.2B4884Y01en.fm

This page intentionally left blank

2.2B4884Y01en.fm

11 Checklist overview

2.2B4884Z00en.fm

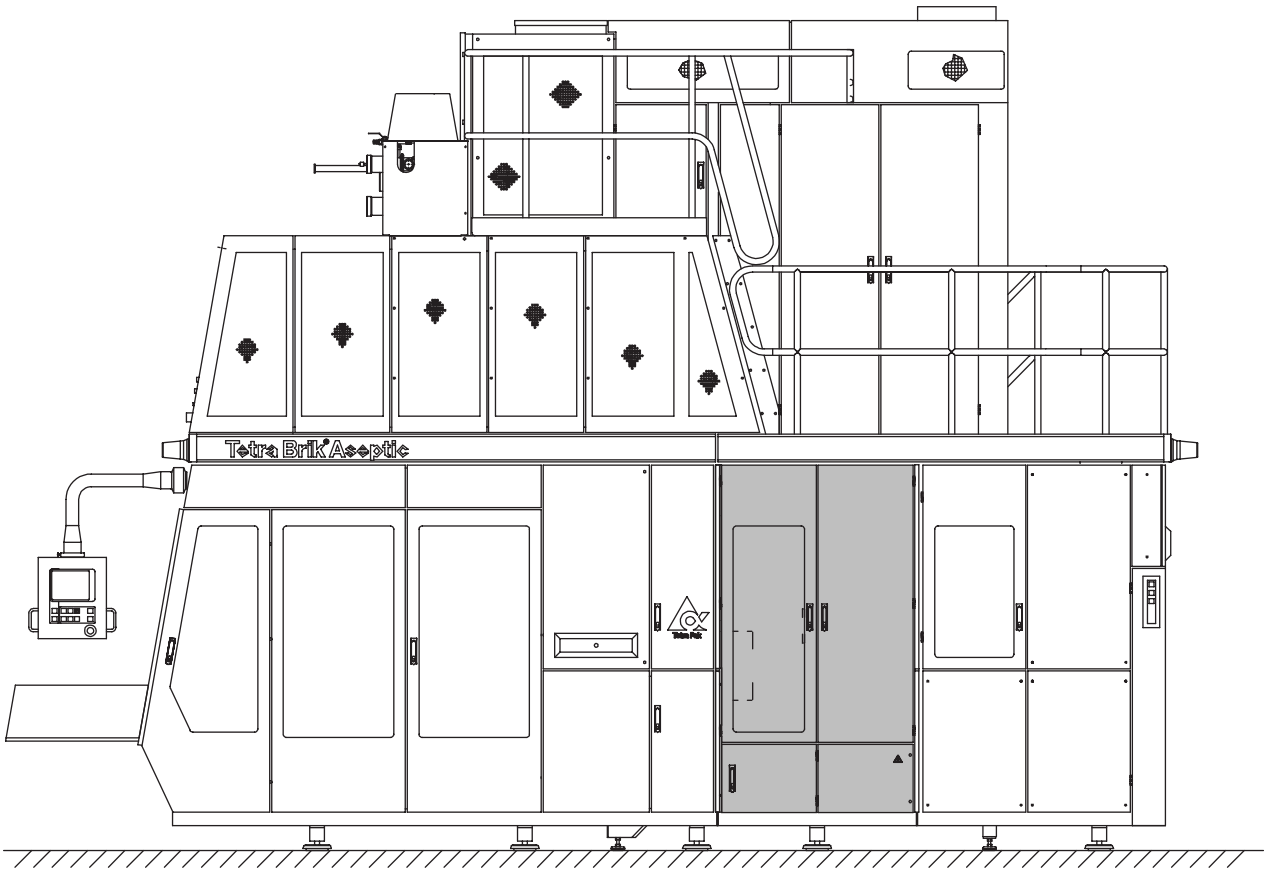

Checklist overview - description

This section of the MM, **is intended for customers who do NOT use the Tetra Pak Maintenance System (TPMS).** The checklist overview contains all the check points for a specified machine type or equipment which are needed in order to keep the equipment in good condition. The following items can be found in the checklist:

- **MM code** – shows where you can find more information about the check point.
- **Text** – name of unit and group. For further information, see MM code.
- **Action** - Type of activity.
- **Interval** – how often the check item should be performed in production hours.

Note! The checklist overview in this manual **may differ from the TPMS checklists** delivered by your local service station, due to the fact that TPMS checklists are continuously updated and adapted to local demands.

TPMS - description

The maintenance system used for equipment from Tetra Pak is called the **Tetra Pak Maintenance System (TPMS)**. If you are using TPMS, the checklists will be delivered directly from your local Tetra Pak service station.

The TPMS checklists are designed to match and keep pace with the ongoing development of new and existing equipment from Tetra Pak, and to meet the demands set by our customers for even higher efficiency and better economy.

Some of the advantages of TPMS are:

- TPMS maintains complete production lines.
- TPMS reduces down-time to a minimum each time maintenance is carried out.
- Updates of the maintenance schedule based on experience gained, improvements, modifications and specific customer requirements are issued.
- Recommendations regarding spare parts, rotation units, tools and templates, etc. are included.

The service life of each item in the equipment is predicted and all items are checked before they affect the efficiency of the equipment. This leads to different maintenance intervals for each item and the check list is unique for each maintenance occasion.

The results of the maintenance are sent back to the Tetra Pak service station. Statistics are evaluated regularly, giving a continuously updated maintenance system.

If you require further information regarding TPMS, please do not hesitate to contact your local Tetra Pak office.

2.2B4884Z00en.fm

Checklist overview

MM code	Text	Interval (h)
	Pre-maintenance checks	
MM	WARNING! Before starting any service work, read the *Safety precaution* in the corresponding Maintenance Manual. Check. Doc. No. MM-82488-0103	250
MM	WARNING! Before starting any service work, read the *Safety precaution* in the corresponding Maintenance Manual. Check. Doc. No. MM-82488-0103	1000
10.1	Technical data; Pressures and pressures - Check and record.	1000
1.2.4-2	Paper web path; Infeed unit, Function - Check.	1000
1.2-1	Paper web path; Packaging material tracking - Check.	1000
OM	Punch and die-Examine the edges of the PullTab hole in the packaging material for any irregularities.	1000
3.2.1-11	Applicator patch; Patch feeder - Check function.	1000
4.2.1-12	Applicator tab; Tab feeder - Check function.	1000
4.4-1	Tab folding device - Check function.	1000
1	**Paper web path**	
1.2.1-3	Paper web path; Drive motor; Roller and drive wheel - Check pressure.	1000
1.2.1-5	Paper web path; Drive motor; Drive wheel - Change.	4000
1.2.3-1	Paper web path; Bending roller assembly - Check.	1000
1.2.4-1	Paper web path; Infeed unit; Rollers - Check.	1000
1.2.4-3	Paper web path; Infeed unit; Carbon brushes - Change.	6000
1.2.5-1	Paper web path; Paper brake - Check.	1000
1.2.5-5	Paper web path; Paper brake; Wheel - Change.	4000
1.2.6-1	Paper web path; Edge guide; Bearings - Check.	500
2	**Punching unit**	
2.2-2	Punch unit; Stripper pins and springs - Check.	500
2.2-4	Punch unit; Cylinder - Check.	1000
2.2-6	Punch unit; Punch and Die - Check.	1500
2.3-1	Waste box; Box and waste tube - Check.	500
3	**IS patch**	
3.2.1-10	Applicator patch; Patch feeder; Sealing jaw plate - Check.	250
3.2.1-1	Applicator patch; Patch feeder; Knives - Check.	500
3.2.1-6	Applicator patch; Patch feeder; Guides and linear bearings - Check.	1000
3.2.2-2	Applicator patch; Patch counter jaw; Inductor - Check.	500
3.2.2-4	Applicator patch; Patch counter jaw; Cushion cylinder - Change.	4000
3.3-1	Magazine patch - Check.	500
3.3.1-1	Magazine patch; Splicing device - Check function.	1000
4	**Tab**	
4.2.1-1	Applicator tab; Tab feeder; Knives - Check.	1000
4.2.1-6	Applicator tab; Tab feeder; Guides and linear bearings - Check.	1000
4.2.1-11	Applicator tab; Tab feeder; Sealing plate- Check.	250
4.2.2-4	Applicator tab; Tab counter jaw; Cushion cylinder - Change.	4000

2.2B4884Z00en.fm

11 Checklist overview

MM code	Text	Interval (h)
4.3-1	Magazine PullTab - Check.	500
4.3.1-1	Magazine PullTab; Splicing device - Check function.	1000
4.4-4	Tab folding device; Paper guide; Bearings - Check.	500
5	**Reseal**	
5.2.1-3	Applicator reseal; Reseal heating jaw; Guides and linear bearings - Check.	1000
5.2.1-7	Applicator reseal; Reseal heating jaw; Sealing plate - Check.	250
5.2.2-2	Applicator reseal; Reseal counter jaw; Inductor - Check.	500
5.2.2-5	Applicator reseal; Reseal counter jaw; Cushion cylinder - Change.	4000
8	**Electrical cabinet**	
8.2.1-1	Mounting plate; TPMC; Battery - Check..	2000
8.4-3	TPIH generator; Cables - Check.	1000
8.7-1	Cooler; Air flow - Check.	250
9	**Pneumatic equipment**	
9.2-1	Valve panel; Air filters - Change.	500
	Start-Up checks	
6.1-1	Missing patch detector - Check.	1000
6.2-1	Missing tab detector - Check.	1000
6.3-1	Splice detector; Black tape detector - Check.	1000
7.1-1	Cover arrangement; Safety functions - Check.	1000
1.2-1	Paper web path; Packaging material tracking - Check.	1000
	After-Maintenance checks	
OM	Package- check package according to OM.	1000

2.2B4884Z00en.fm

Tetra Pak

MM binder labels. 40 mm Full width *Note! This page is generated **automatically** using the **variable definitions** made in the **front page** file!!*

PT21 030V
648508-0300

Issue 2002-10 Doc No. MM-82488-0104

PT21 030V
648508-0300

Issue 2002-10 Doc No. MM-82488-0104

PT21 030V
648508-0300

Issue 2002-10 Doc No. MM-82488-0104

PT21 030V
648508-0300

Issue 2002-10 Doc No. MM-82488-0104

PT21 030V
648508-0300

Issue 2002-10 Doc No. MM-82488-0104

PT21 030V
648508-0300

Issue 2002-10 Doc No. MM-82488-0104

PT21 030V
648508-0300

Issue 2002-10 Doc No. MM-82488-0104

PT21 030V
648508-0300

Issue 2002-10 Doc No. MM-82488-0104

PT21 030V
648508-0300

Issue 2002-10 Doc No. MM-82488-0104

PT21 030V
648508-0300

Issue 2002-10 Doc No. MM-82488-0104

MM binder labels. 30mm Halfwidth *Note! This page is generated **automatically**. using the **variable definitions** made in the **front page** file!!*

PT21 030V
648508-0300
Issue 2002-10 Doc No. MM-82488-0104

PT21 030V
648508-0300
Issue 2002-10 Doc No. MM-82488-0104

PT21 030V
648508-0300
Issue 2002-10 Doc No. MM-82488-0104

PT21 030V
648508-0300
Issue 2002-10 Doc No. MM-82488-0104

PT21 030V
648508-0300
Issue 2002-10 Doc No. MM-82488-0104

PT21 030V
648508-0300
Issue 2002-10 Doc No. MM-82488-0104

PT21 030V
648508-0300
Issue 2002-10 Doc No. MM-82488-0104

PT21 030V
648508-0300
Issue 2002-10 Doc No. MM-82488-0104

PT21 030V
648508-0300
Issue 2002-10 Doc No. MM-82488-0104

PT21 030V
648508-0300
Issue 2002-10 Doc No. MM-82488-0104

PT21 030V
648508-0300
Issue 2002-10 Doc No. MM-82488-0104