SPC
Spare Parts Catalogue

PT21 030V

648508-0300

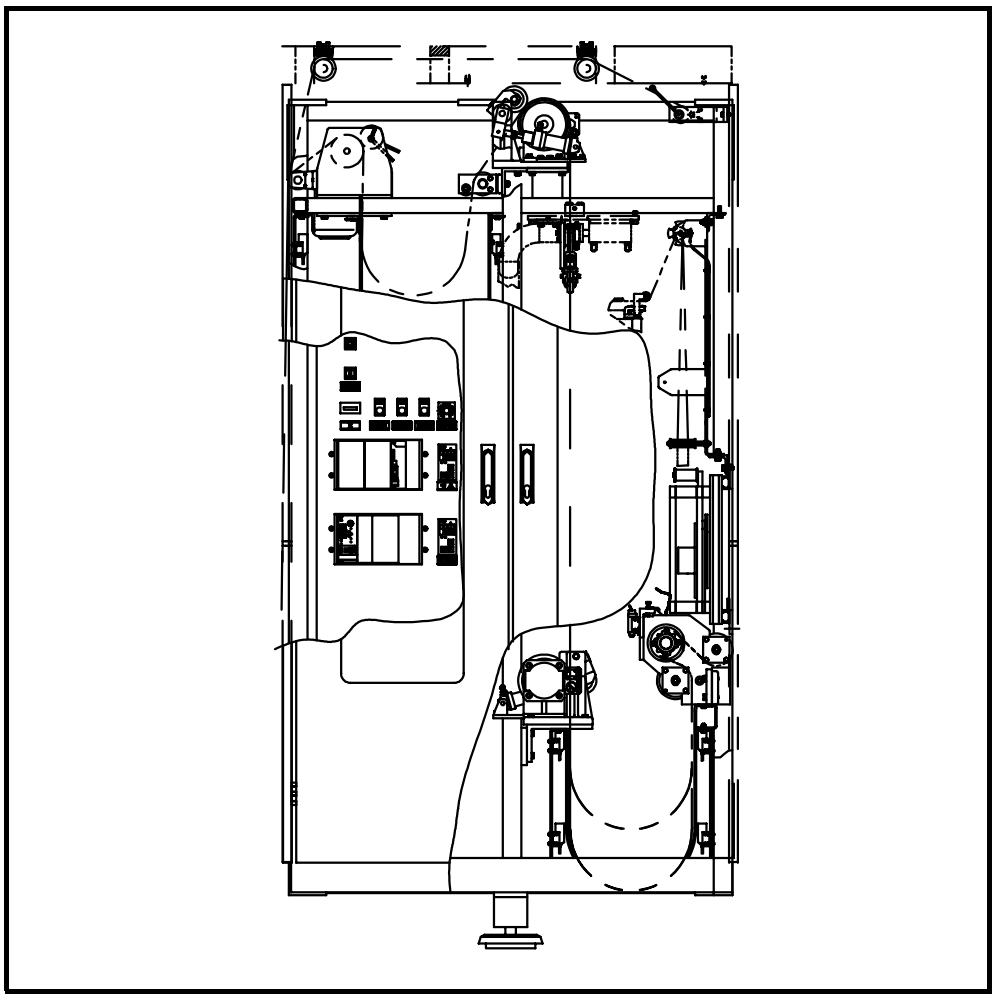

Tetra Pak

Doc No: SPC-82374-0103

Main Groups of the Machine

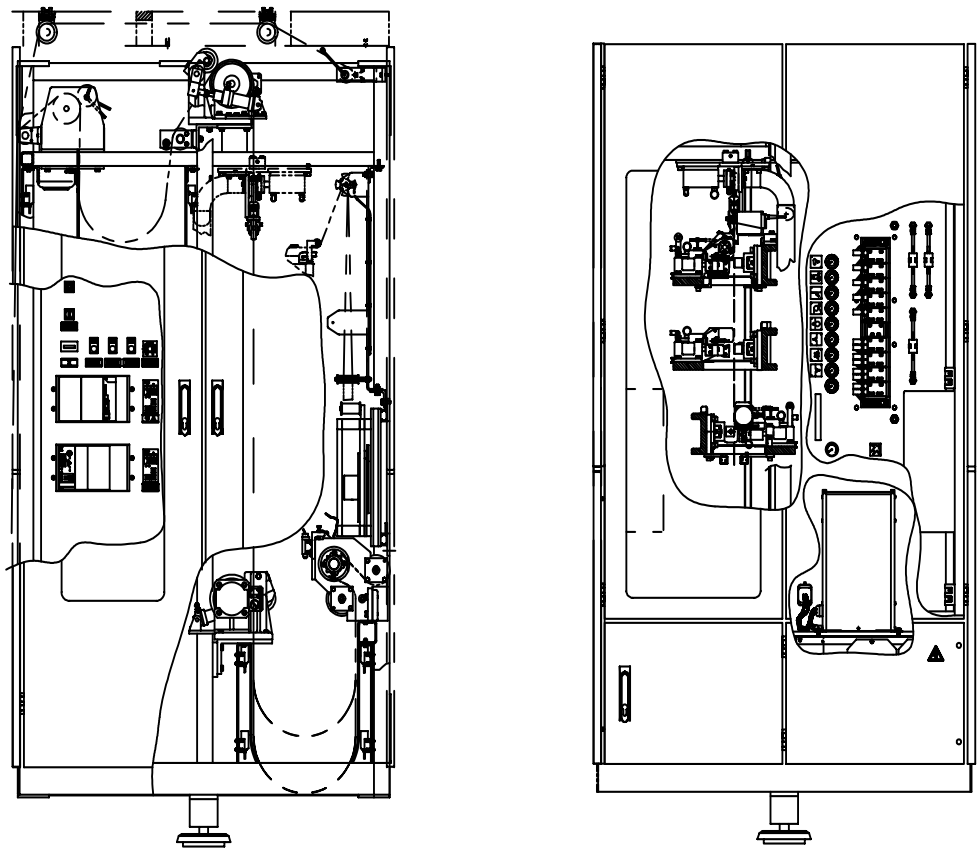

PT21 030V

For the correct machine data, check your machine specification, supplied with the machine!

This document is valid for:

Series No/ Machine No Sign.

SPC
Spare Parts Catalogue

Opening Device PullTab
PT21
648508-0300

for
TBA/21
648570-0400

Table of Content:

Introduction **5**

PullTab Unit PT21
B- 648508-0300 ..... , **9**

Part number index ..... , **195**

Doc No: SPC-82374-0103

Issue 9810

Tetra Pak

Tetra Brik Packaging Systems S.p.A.

General information

Manufacturer

This machine is produced by:
Tetra Brik Packaging Systems S.p.A.
Via Delfini 1
41100 Modena /Italy

Document producer

This document has been produced by:
Tetra Brik Packaging Systems S.p.A.
Technical Publications
Via Delfini 1
41100 Modena /Italy

Number of pages

This document contains totally **210 pages,** including the first **8** introduction pages.

Copyright © 1998 Tetra Brik Packaging Systems S.p.A.

All rights reserved. No parts of this document may be reproduced or copied in any forms or by any means, without written permission from Tetra Brik Packaging Systems S.p.A..

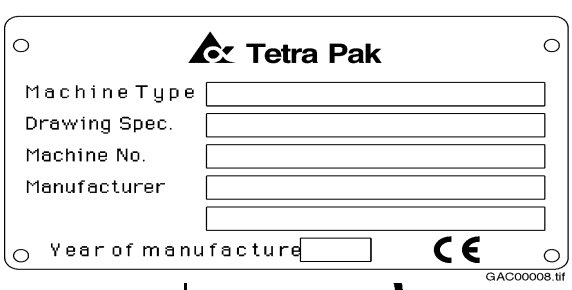

Figure 1

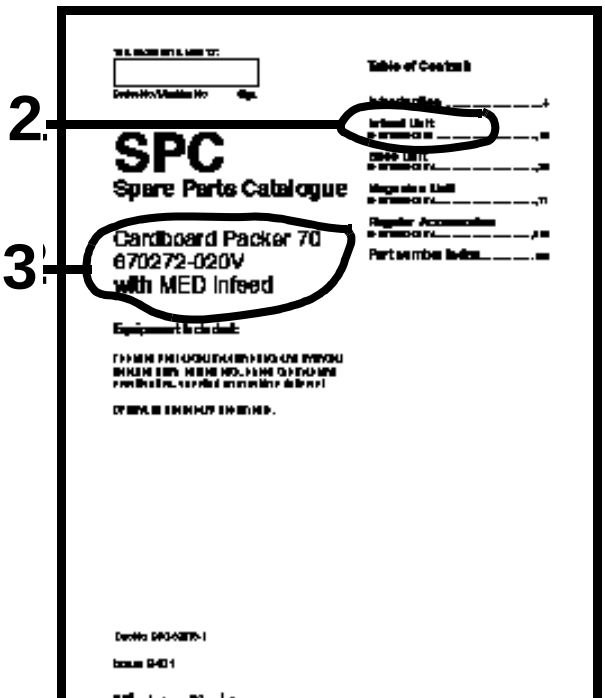

Figure 2

Figure 3



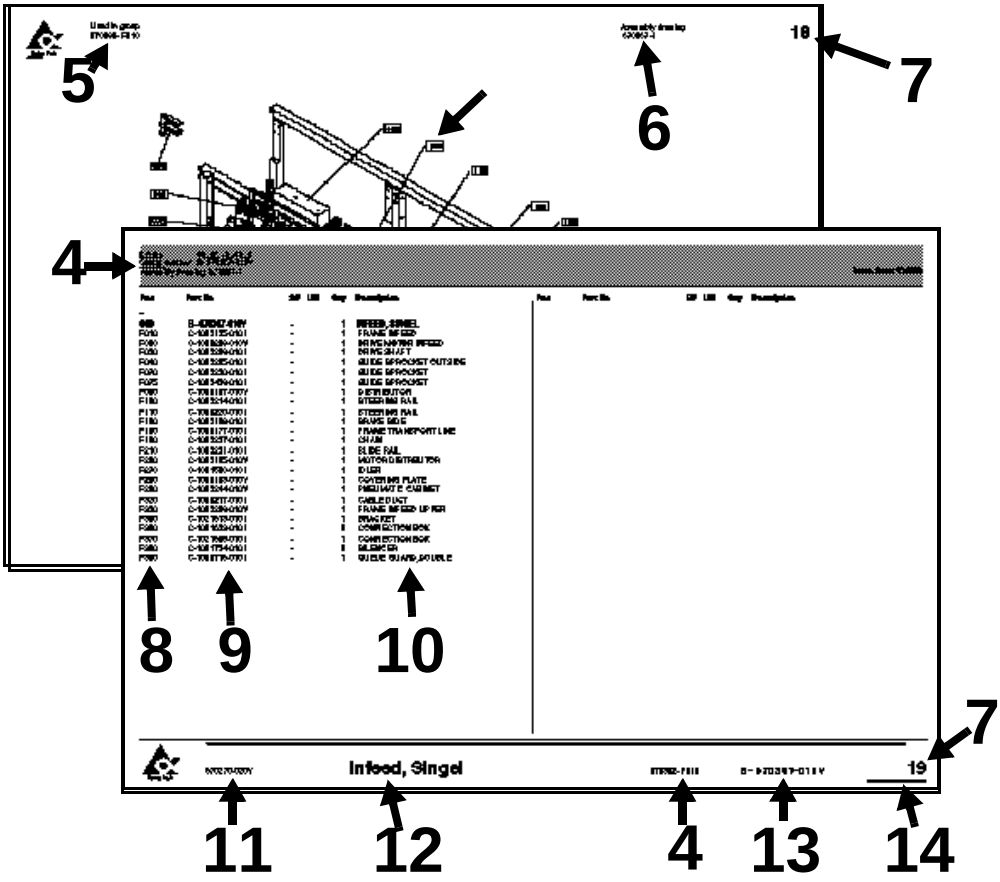

Figure 4

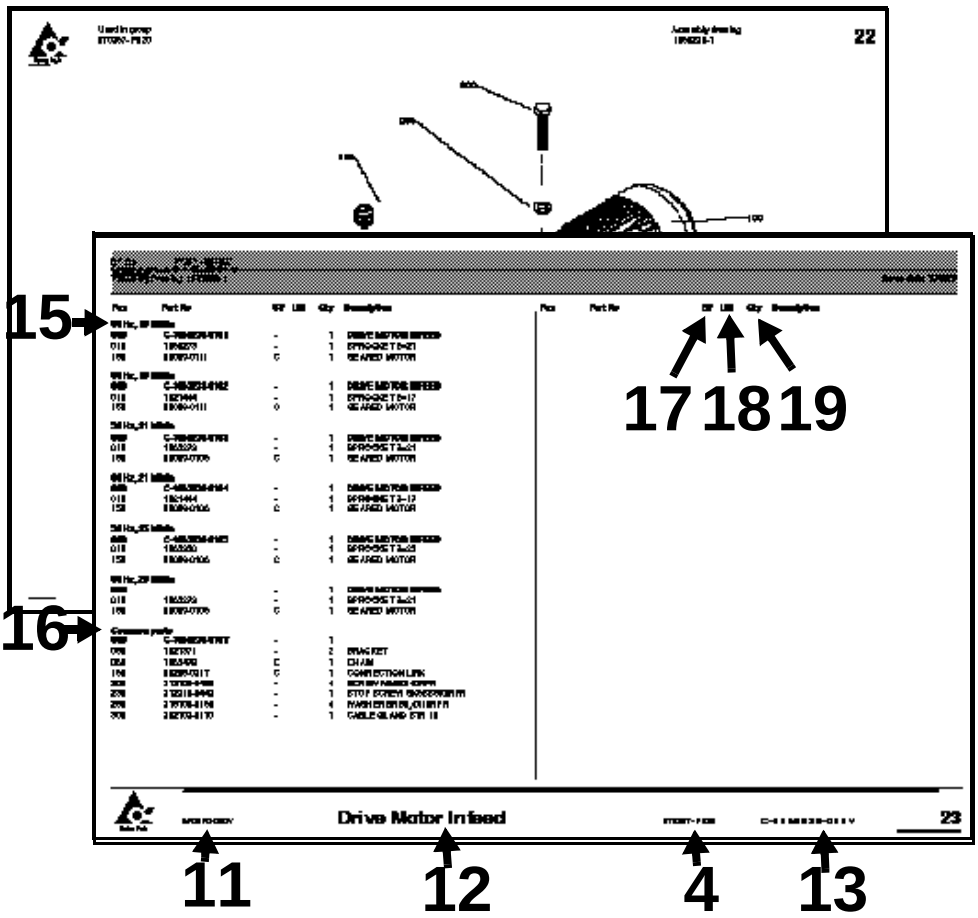

Figure 5

General information

Service

When ordering spare parts for your machine, contact the nearest Tetra Pak service station.

Machine identification

This machine plate is an example of the type of machine plate, attached to the machine frame. The plate carries data needed when contacting Tetra Pak concerning this particular machine.
The location of the different machine plates is shown on the page “Location of machine number plates”, **see page 2**

Purpose of the Spare Parts Catalogue.

The purpose of the Spare Parts Catalogue (SPC) is to provide the technicians and contact personnel with information on how to find and order spare parts for maintenance and service of the machine.
For instructions of how to replace parts and adjust machine setup, see the Maintenance Manual (MM).

Delivered documentation

The technical documentation delivered with this machine is stated in the Machine Specification.
Note! If any of these documents is missing, it must be reported in the document **Start Up Machine Quality Report.** For more information, see chapter 8 Preparation for Commissioning in the Installation Manual.
It is important that you keep these documents for the life of the equipment, and pass the documents on to any subsequent holder or user of the equipment.

Design modification

The content of this document is in accordance with the design and construction of the machine at the time it was delivered from the Tetra Pak machine production facility.

Copyright © 1998 Tetra Brik Packaging Systems S.p.A.

All rights reserved. No parts of this document may be reproduced or copied in any forms or by any means, without written permission from Tetra Brik Packaging Systems S.p.A..

Further copies

Additional copies can be ordered from the nearest Tetra Pak service station. When ordering technical publications, always quote the document number printed on the front cover of the document concerned.

Tetra Pak Part numbering system

The third and forth digits in the subnumber, specify one unique group which can be ordered. If the forth digit is replaced by a “V”, the number combination only points to a bill-of-material document.
The first and second digits in the sub-number, specify the development step (model) of the machine or group. **(see fig. 3)**
Main number of machine /group /article, depending on level.
Prefix, giving information about level, eg.
A = Machine
B = Main section (*****)
C = Groups and subgroups
***)** Customized distribution machines are registered as B-level as well.

How to find the correct Spare Part Number

A. Check that the data on your machine sign, and /or machine specification, corresponds with the catalogue. **(see fig.1)**

1) Main groups of the machine

B. The second catalogue sheet contains a table of content for the main groups, included in the catalogue. The information regarding machine and main group status MUST correspond with your machine specification.
Locate and choose the main groups page number (1), in which you want to search for spare parts.
(see fig. 2)

2) Main group
3) Machine type

C. Search in the main group illustration, the item number, which may hold your wanted spare part. Go to the text page below and find the page number for the actual group. **(see fig. 4)**

4) Internal information, such as latest Engineering Change, bill-of-material included in the catalogue page.
5) Used-In reference to next higher level in the machine structure
6) Assembly drawing number
7) Continuous page numbering through the document
8) Pos number corresponding to illustration
9) Group or article number.
10) Group or article description. The letter “B” in front of some article numbers indicates that this article contains other parts, shown in an additional page at the end the section. Letter “A” indicatates a subgroup number with an own page directly after the actual page.
11) Machine type including development staus
12) Group description
13) Group number (bill-of-material) including development status
14) Document number

D. Continue to the found page number, and search in the illustration for your spare part. Go to the text row for the found item number, and read the part number. Take eventual variant headings in consideration; if you are unsure, read your machine specification. **(see fig. 5)**

15) Variant heading, eg volume, left /right etc.
16) Heading for common parts
17) SP = Code for articles, which are included into various spare part kits.

A = Stop function, no rep/available/bypassed	I = 1000 operating hours
B = Stop function, rep/available/bypassed	J = 2000 operating hours
C = Don’t stop function, can be bypassed	K = 3000 operating hours
D = Seldom break, long time production	L = 4000 operating hours
E = 100 operating hours	M = 5000 operating hours
F = 250 operating hours	N = 6000 operating hours
G = 500 operating hours	O = 7000 operating hours
H = 750 operating hours	P = 8000 operating hours

18) UN = Short code for measure units, eg mm, kg etc.
19) Qty = Number of items needed in the complete assembly.

SPC

Spare Parts Catalogue

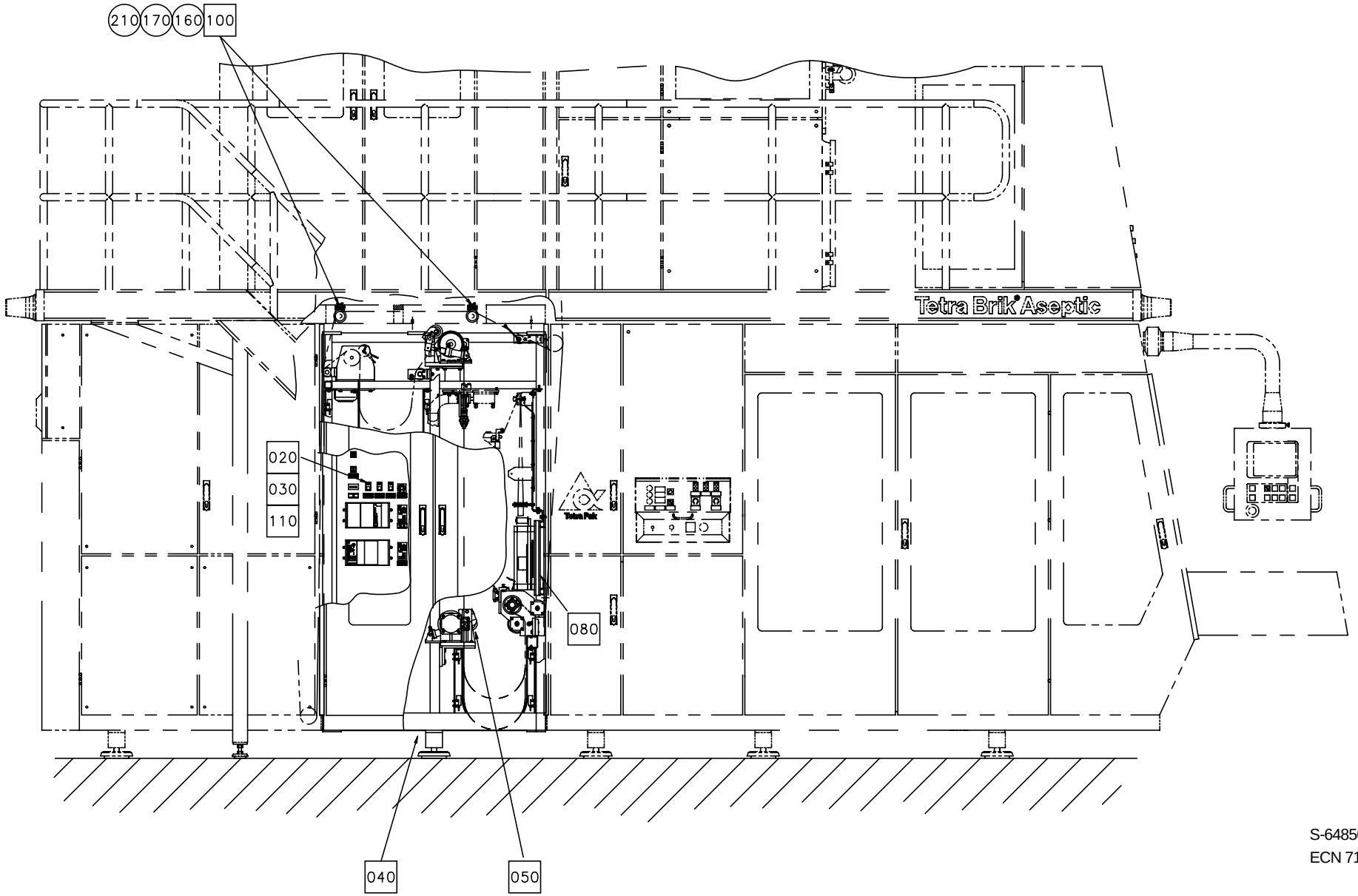

S-648508-2
ECN 71220

Pos	Part No	SP	UN	Qty	Description	Page No
-						
005	A 514938-0100	-		1	TAB FOLDING	**17**
010	A 577135-0100	-		1	PIPE-LINE	**23**
020	A1255501-0100	-		1	ELECTRICAL CABINET	**25**, **27**
030	A1260684-0100	-		1	CABLE HARNESS	**45**, **47**
040	A1260428-0100	-		1	FRAME ASSEMBLY	**55**,**57**
045	A1095928-0100	-		1	COOLER	**63**
050	A1095931-0200	-		1	PAPER WEB PATH	**67**
060	A1095932-0200	-		1	APPLICATORS	**101**
070	A1095951-0200	-		1	DOORS AND COVER	**145**
080	A1185008-0100	-		1	MAGAZINES	**161**
090	A1185049-0100	-		1	VALVE PANEL	**181**
100	A1334322-0100	-		2	BENDING ROLLER WITH FLANGES	**93**
110	A 649060-0400	-		1	ELECTRICAL EQUIPMENT	**187**
150	1038865-0000	-		4	SPACER DISC	
160	311112-0377	-		4	PINS,SLOTTED TUBULAR SPRING PIN 8X24	
170	312105-0451	-		4	SCREW M6S ISO 4017 8X20 A280	
200	312105-0640	-		4	SCREW M6S ISO 4014 M16X100 A280	
210	315115-0165	-		4	WASHER TBRB8;4x16 Stainless	

Pos	Part No	SP	UN	Qty	Description	Page No

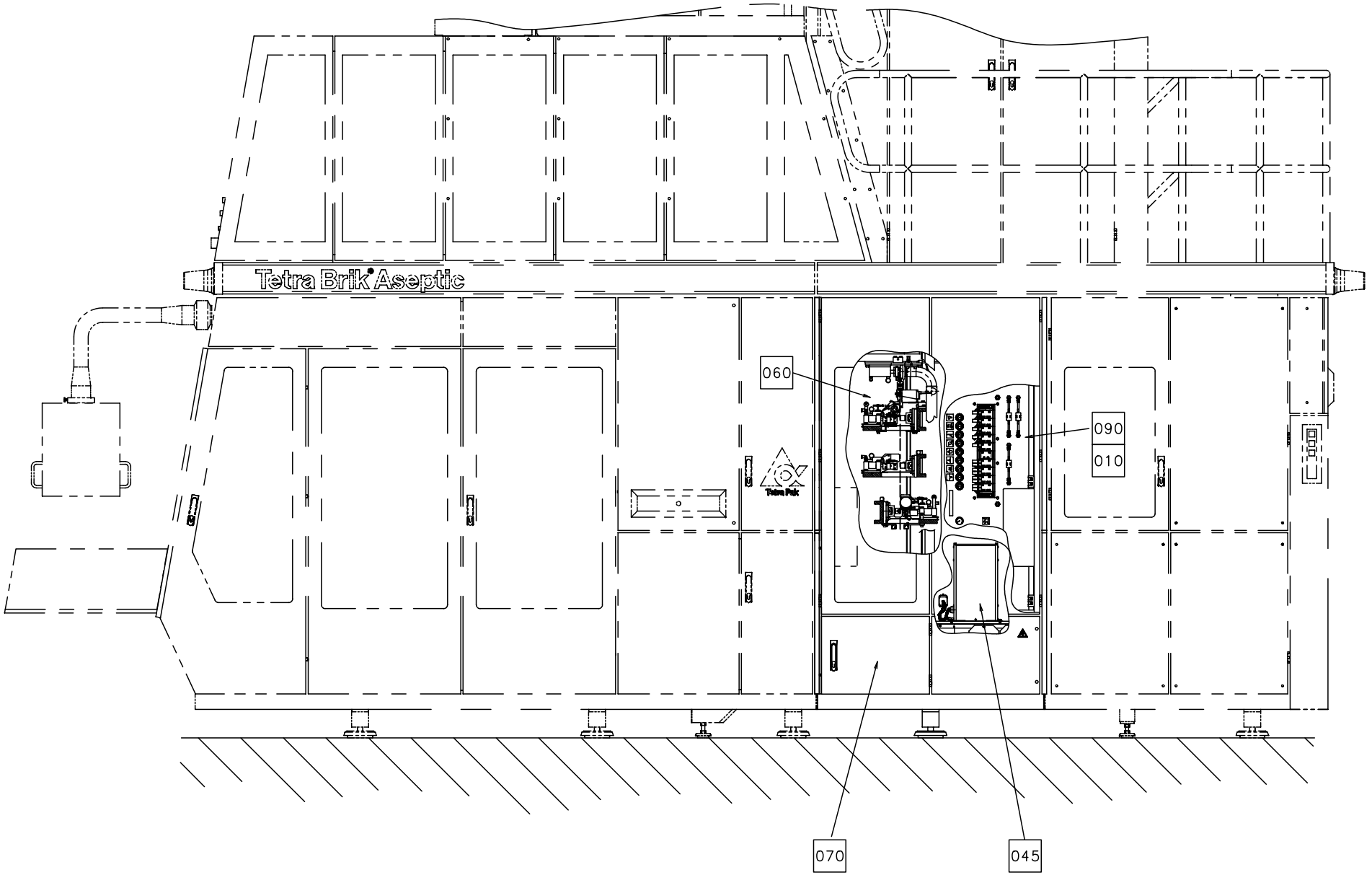
Tetra Brik Aseptic
060
090
010
070
045

Pos	Part No	SP	UN	Qty	Description	Page No
-						
005	A 514938-0100	-		1	TAB FOLDING	**17**
010	A 577135-0100	-		1	PIPE-LINE	**23**
020	A1255501-0100	-		1	ELECTRICAL CABINET	**25**, **27**
030	A1260684-0100	-		1	CABLE HARNESS	**45**, **47**
040	A1260428-0100	-		1	FRAME ASSEMBLY	**55**,**57**
045	A1095928-0100	-		1	COOLER	**63**
050	A1095931-0200	-		1	PAPER WEB PATH	**67**
060	A1095932-0200	-		1	APPLICATORS	**101**
070	A1095951-0200	-		1	DOORS AND COVER	**145**
080	A1185008-0100	-		1	MAGAZINES	**161**
090	A1185049-0100	-		1	VALVE PANEL	**181**
100	A1334322-0100	-		2	BENDING ROLLER WITH FLANGES	**93**
110	A 649060-0400	-		1	ELECTRICAL EQUIPMENT	**187**
150	1038865-0000	-		4	SPACER DISC	
160	311112-0377	-		4	PINS,SLOTTED TUBULAR SPRING PIN 8X24	
170	312105-0451	-		4	SCREW M6S ISO 4017 8X20 A280	
200	312105-0640	-		4	SCREW M6S ISO 4014 M16X100 A280	
210	315115-0165	-		4	WASHER TBRB8;4x16 Stainless	

Pos	Part No	SP	UN	Qty	Description	Page No

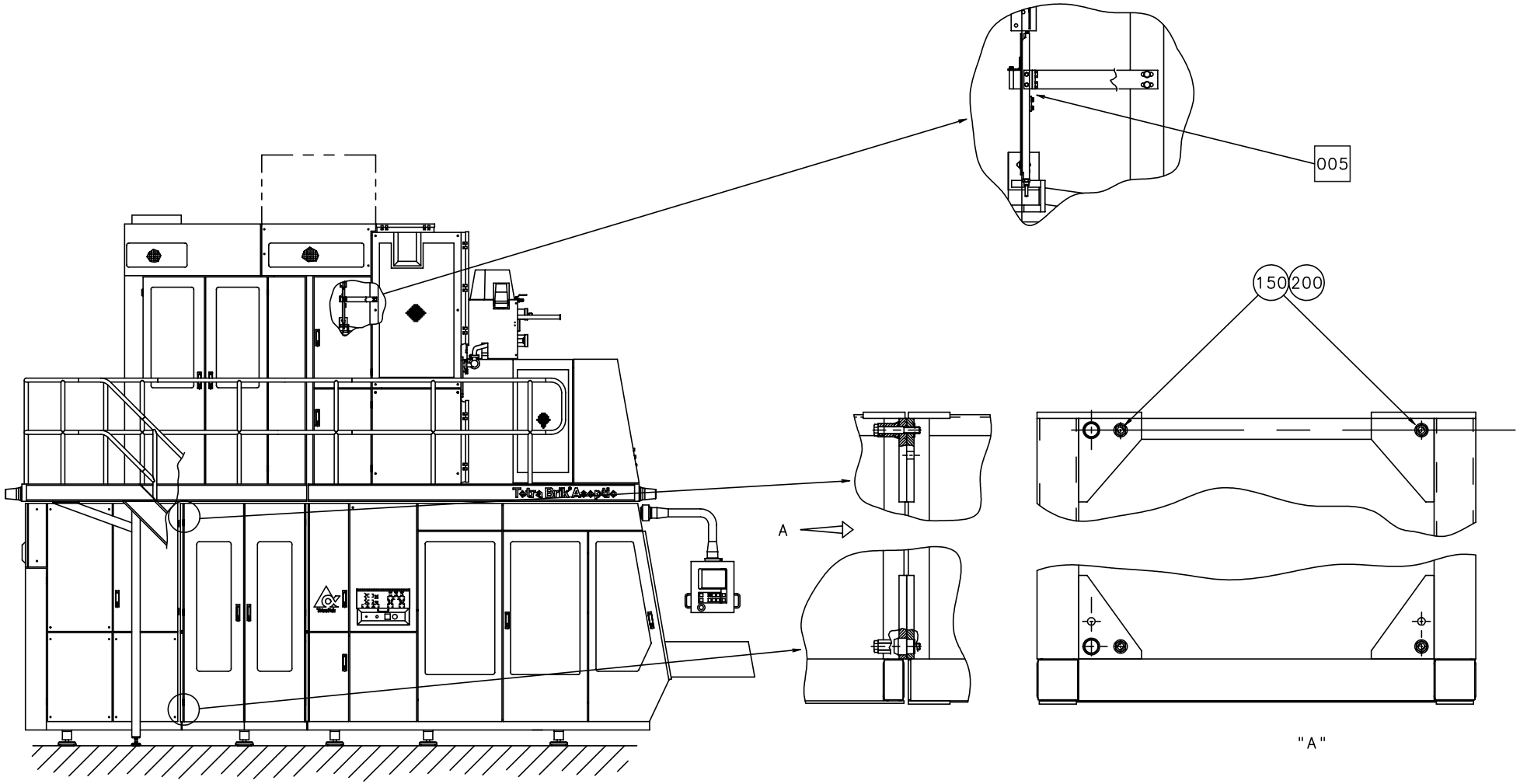

S-648508-4
ECN 71220

Pos	Part No	SP	UN	Qty	Description	Page No
-						
005	A 514938-0100	-		1	TAB FOLDING	**17**
010	A 577135-0100	-		1	PIPE-LINE	**23**
020	A1255501-0100	-		1	ELECTRICAL CABINET	**25**, **27**
030	A1260684-0100	-		1	CABLE HARNESS	**45**, **47**
040	A1260428-0100	-		1	FRAME ASSEMBLY	**55**,**57**
045	A1095928-0100	-		1	COOLER	**63**
050	A1095931-0200	-		1	PAPER WEB PATH	**67**
060	A1095932-0200	-		1	APPLICATORS	**101**
070	A1095951-0200	-		1	DOORS AND COVER	**145**
080	A1185008-0100	-		1	MAGAZINES	**161**
090	A1185049-0100	-		1	VALVE PANEL	**181**
100	A1334322-0100	-		2	BENDING ROLLER WITH FLANGES	**93**
110	A 649060-0400	-		1	ELECTRICAL EQUIPMENT	**187**
150	1038865-0000	-		4	SPACER DISC	
160	311112-0377	-		4	PINS,SLOTTED TUBULAR SPRING PIN 8X24	
170	312105-0451	-		4	SCREW M6S ISO 4017 8X20 A280	
200	312105-0640	-		4	SCREW M6S ISO 4014 M16X100 A280	
210	315115-0165	-		4	WASHER TBRB8;4x16 Stainless	

Pos	Part No	SP	UN	Qty	Description	Page No

TAB FOLDING

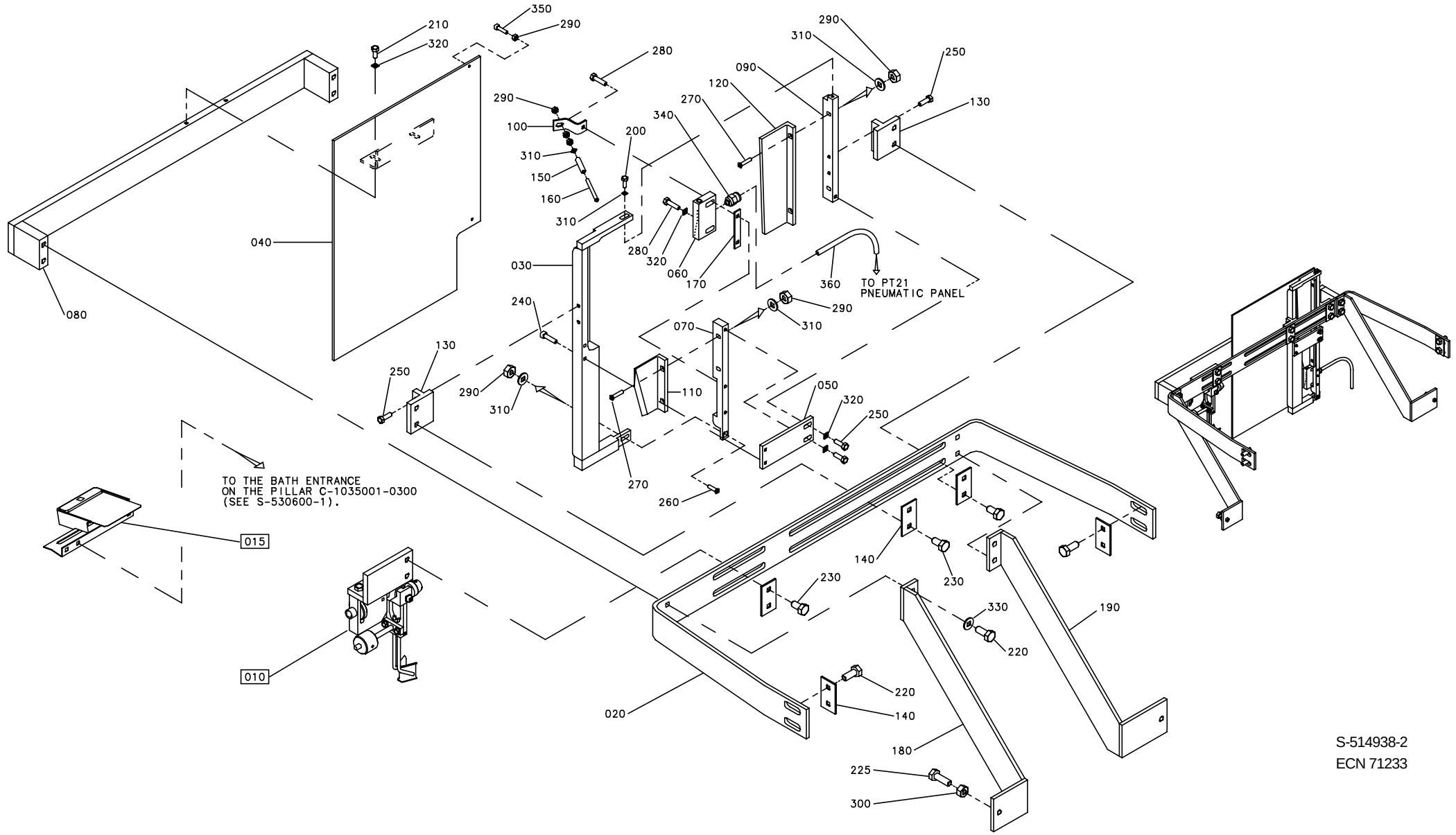

S-514938-2
ECN 71233

Pos	Part No	SP	UN	Qty	Description	Page No
Common parts						
010	A 907946-0100	-		1	TAB FOLDING PAPER GUIDE	**19**
015	A 530600-0100	-		1	GUIDING PULLTAB TBA/8	**21**
020	985343-0000	-		1	BRACKET	
030	1147117-0000	-		1	RAIL BRACKET	
050	985342-0000	-		1	PLATE	
060	1317753-0000	D		1	AIR NOZZLE	
070	1317755-0000	-		1	PLATE	
080	1147015-0000	-		1	BRACKET	
090	985502-0000	-		1	PLATE	
100	1317754-0000	-		1	BRACKET	
110	985444-0000	R		1	GUIDE	
120	985445-0000	R		1	GUIDE	
130	985446-0000	-		2	BRACKET	
140	907983-0000	-		5	PLATE	
150	469464-0000	J		1	ROLL	
160	469463-0000	R		1	SHAFT	
170	1334228-0000	J		1	SHIM	
180	1317971-0000	-		1	REINFORCEMENT	
190	1317972-0000	-		1	REINFORCEMENT	
200	312105-0291	-		1	SCREW M6S ISO 4017 M4X12 A280	
210	312105-0327	-		2	SCREW M6S ISO 4017 M5X12 A280	
220	312105-0451	-		8	SCREW M6S ISO 4017 8X20 A280	
225	312105-0455	-		2	SCREW M6S ISO 4017 M8X30 A280	
230	312105-0449	-		6	SCREW M6S ISO 4017 M8X16 A280	
240	312115-0331	-		2	SCREW MC6S ISO 4762 M5X20 A280	
250	312105-0329	-		6	SCREW M6S ISO 4017 M5X16 A280	
260	312155-0293	-		1	SCREW MF6S DIN 7991 M4X16 A280	
270	312155-0295	-		4	SCREW MF6S DIN 7991 M4X20 A280	
280	312105-0331	-		2	SCREW M6S ISO 4017 M5X20 A280	
290	312605-0312	-		10	NUTS,HEXAGON,M4	
300	312605-0318	-		2	NUTS,HEXAGON,M8	
310	315105-0136	-		7	WASHERS,PLAIN ROUND 4,3X8	
320	315105-0146	-		5	WASHERS,PLAIN ROUND 5,3X10	
330	315105-0165	-		4	WASHERS,PLAIN ROUND 8,4X16	
340	342722-0197	-		1	STRAIGHT COUPL,FOR PLASTIC TUBE 6-M5	
350	312115-0291	-		2	SCREW MC6S ISO 4762 M4X12 A280	
360	90166-0081	-	MM	6000	HOSE 6/4-100M	

Pos	Part No	SP	UN	Qty	Description	Page No
TBA 1000S						
040	1334230-0002	-		1	PLATE	
TBA 1000B						
040	1334230-0001	-		1	PLATE	
TPA 1000S						
040	1334230-0003	-		1	PLATE	

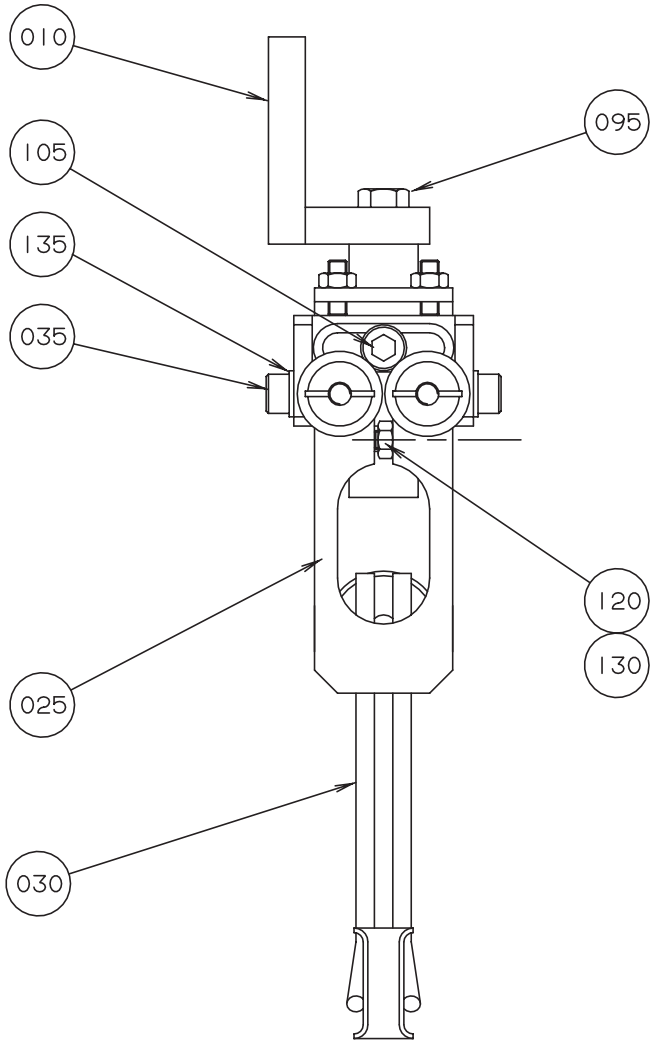

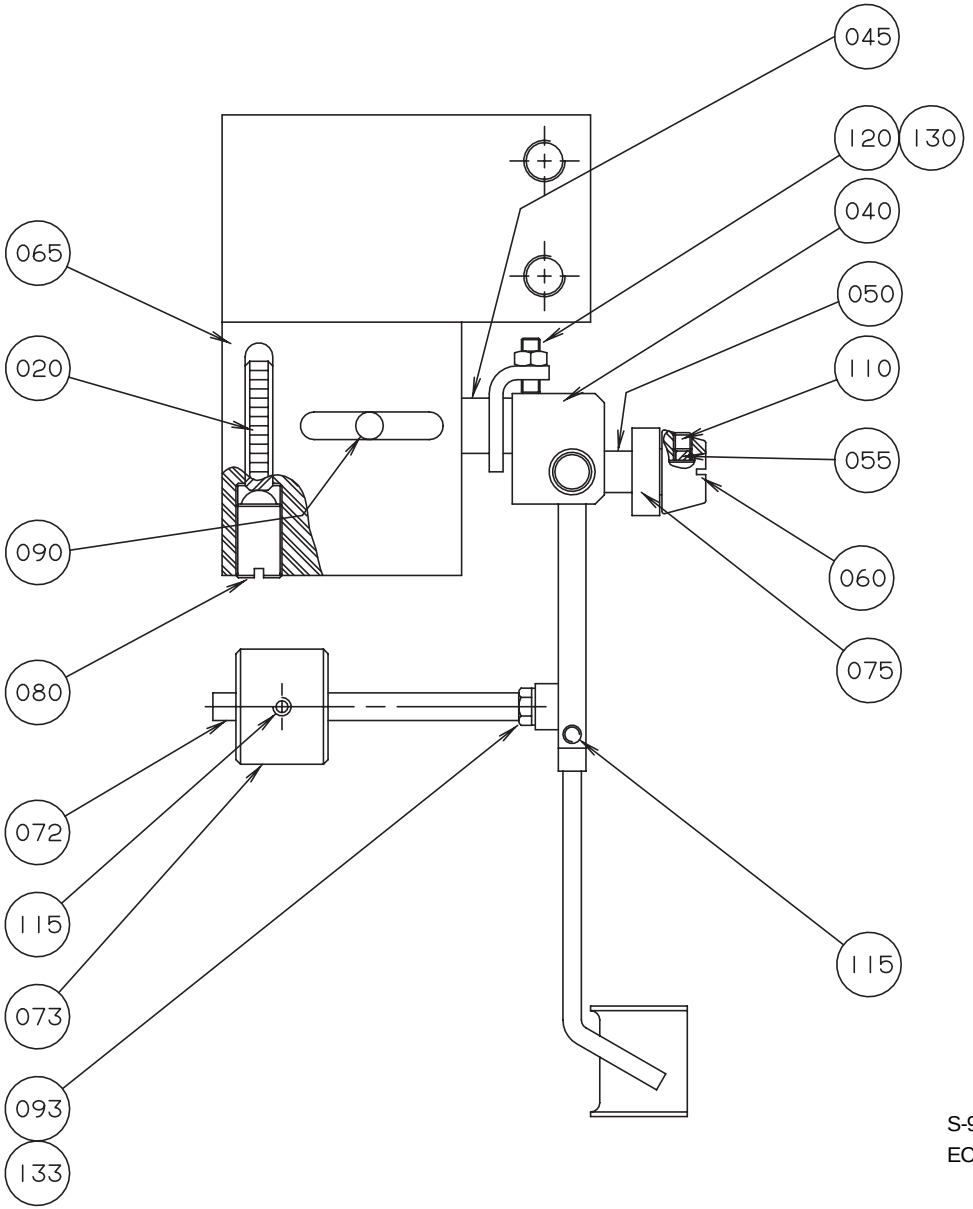

S-907946-1
ECN 10046

Pos	Part No	SP	UN	Qty	Description	Page No
-						
010	907942-0000	-		1	STEERING BRACKET	
020	23580-0000	-		1	SHIFTER HANDLE	
025	905937-0000	-		1	SPRING	
030	23583-0000	-		1	GUIDE FINGER	
035	23584-0000	-		2	SCREW	
040	24351-0000	-		1	BOW CLAMP	
045	24352-0000	-		1	SHAFT	
050	24355-0000	-		2	DOWEL	
055	24356-0000	-		4	PIECE	
060	111543-0000	-		2	GUIDE CONE	
065	245210-0000	-		1	BODY	
072	905938-0000	-		1	BRACKET	
073	905939-0000	-		1	COUNTERWEIGHT	
075	90214-0138	R		2	BEARINGS,BALL BEARING,STAINLESS	
080	90287-0009	-		1	SPRINGLOADED SCREW	
090	311103-0350	-		1	CYLINDRICACP M6 6X14 RFR	
093	312105-0291	-		2	SCREW M6S ISO 4017 M4X12 A280	
095	312105-0368	-		2	SCREW M6S ISO 4017 M6X16 A280	
105	312115-0366	-		1	SCREW MC6S ISO 4762 M6X12 A280	
110	312318-0283	-		4	SET SCREW CUP POINT ISO 4029 M4X4 RFR	
115	312318-0285	-		3	SET SCREW CUP POINT ISO 4029 M4X6 RFR	
120	312318-0291	-		3	SET SCREW CUP POINT ISO 4029 M4X12 RFR	
130	312605-0312	-		3	NUTS,HEXAGON,M4	
133	315105-0136	-		2	WASHERS,PLAIN ROUND 4,3X8	
135	315105-0146	-		2	WASHERS,PLAIN ROUND 5,3X10	

Pos	Part No	SP	UN	Qty	Description	Page No

GUIDING PULLTAB TBA/8

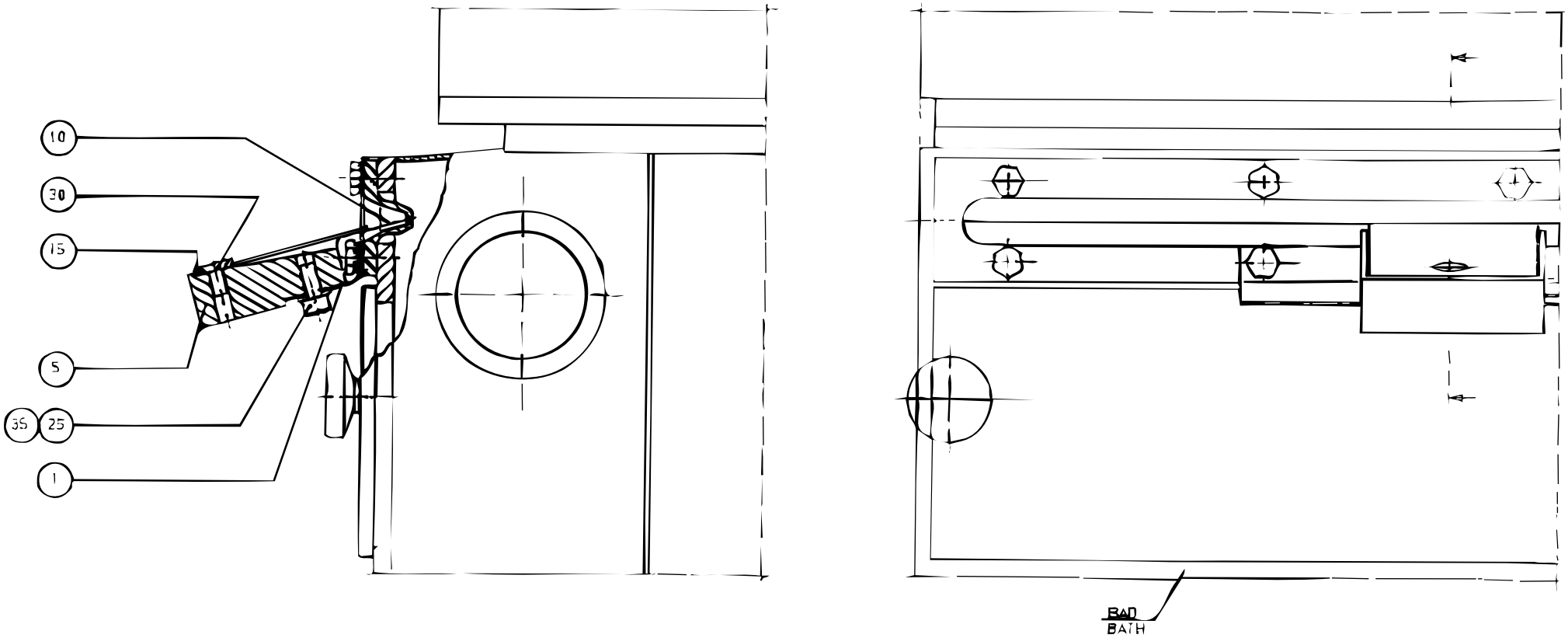

Pos	Part No	SP	UN	Qty	Description	Page No
-						
001	529146-0000	-		1	ANGLE BRACKET	
005	529147-0000	-		1	SPRING BRACKET	
010	529148-0000	-		1	STEERING	
015	529149-0000	-		1	DOLLY WASHER	
025	312115-0366	-		1	SCREW MC6S ISO 4762 M6X12 A280	
030	312155-0364	-		1	SCREW MF6S6X10RFR	
035	315105-0153	-		1	WASHER,PLAIN ROUND BRB 6,4x12 Stainless	

Pos	Part No	SP	UN	Qty	Description	Page No

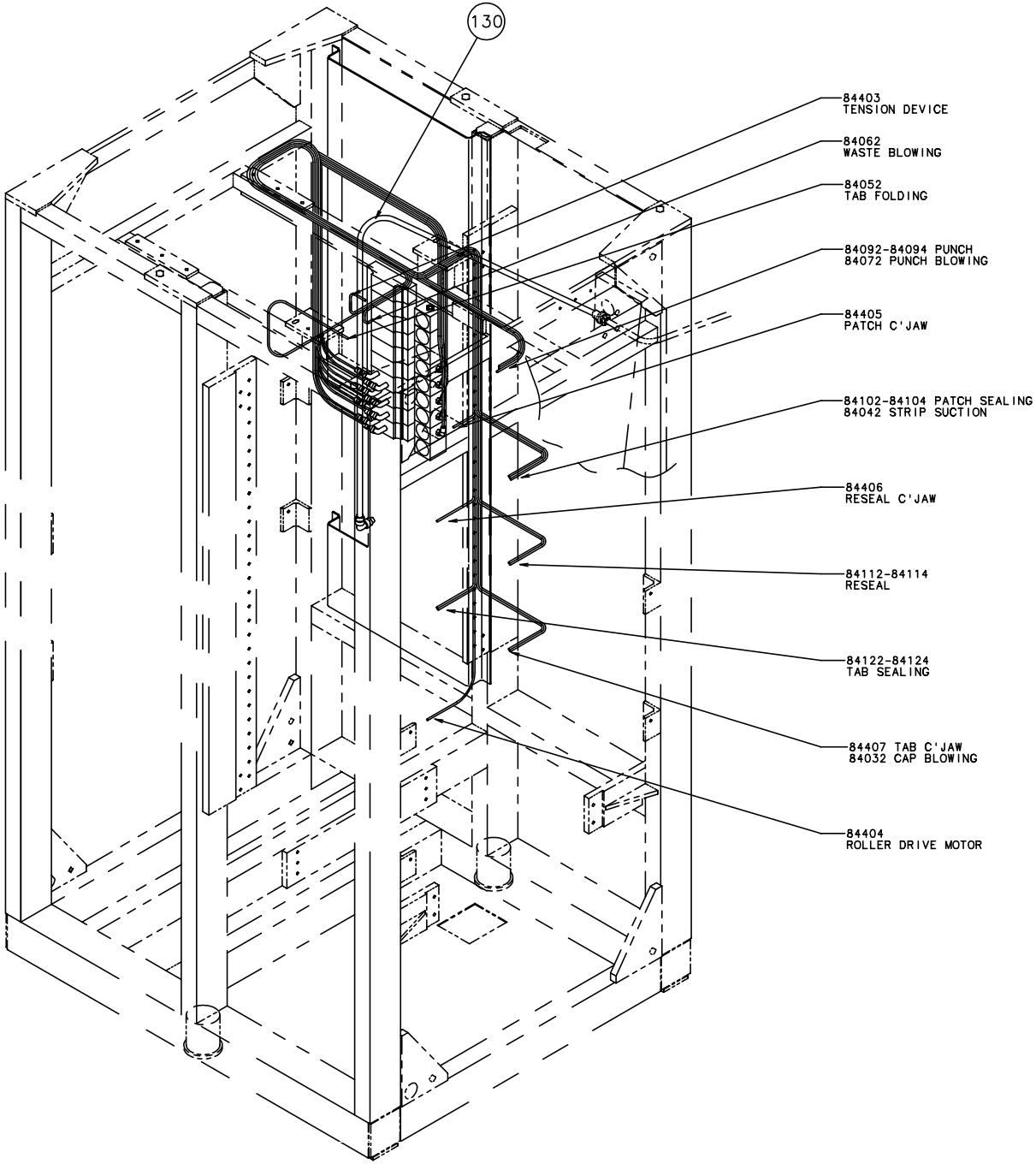

S-577135-1
ECN 71157

Pos	Part No	SP	UN	Qty	Description	Page No
-						
130	90166-0068	-	MM	3000	HOSE	

Pos	Part No	SP	UN	Qty	Description	Page No

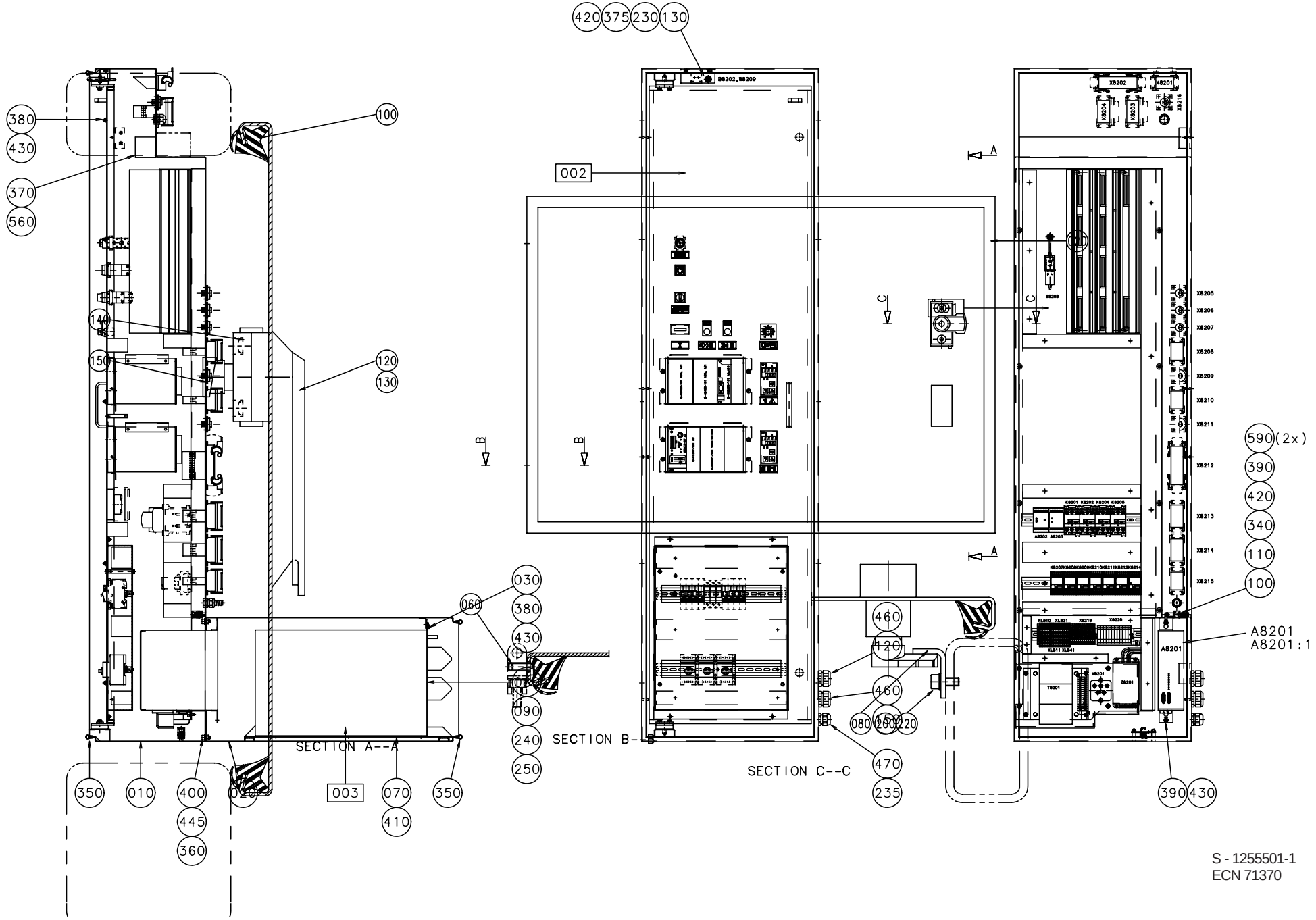
420
375
230
130
380
430
370
560
100
002
140
150
120
130
590 (2x)
390
420
340
110
100
A8201
A8201:1
030
060
380
430
090
240
250
460
120
460
080
260
220
470
235
SECTION A--A
SECTION B--B
SECTION C--C
350
010
400
445
360
020
003
070
410
350
390
430

Pos	Part No	SP	UN	Qty	Description	Page No
-						
001	A1255953-0100	-		1	ASSEMBLY PLATE	29
002	A1255954-0100	-		1	SWING FRAME	31
A8201:1	A 48141-0100	-		1	PT21MC-PULLTAB 21 MOTION CONTROL	39
003	67600-0501	D		1	TPIH 2000 GENERATOR	
010	1255951-0000	-		1	CABINET	
020	1255952-0000	-		1	BOX FOR TPIH	
030	1129867-0000	-		1	SHEET	
040	1140314-0000	-		2	STOP LUG	
070	731049-0000	-		4	SLIDING STRIP TPIH	
080	548770-0001	D		2	COAXIAL CABLE L=5000 mm	
090	548770-0007	D		1	COAXIAL CABLE L=3000 mm	
100	1140053-0000	-		4	SPACER	
110	929607-0000	-		2	EARTH BAR	
120	B1346824-0000	-		1	INSERT	
130	1260561-0000	-		1	HOLDER	
140	B1260901-0000	-		2	INSERT	
150	979974-0000	-		1	INSERT	
230	90044-0124	R		1	INDUCTIVE SWITCH	
235	90099-0119	-		1	NUT PR 28,3 (PG21)	
240	90110-0121	-		2	FEMALECONT.15POLE HARTING	
250	90110-0122	-		2	COVER HARTING	
255	90110-0150	-		2	MALE INSERT 24-P, CABLE	
256	90110-0152	-		2	CABLE HOOD 24-P	
260	90110-0153	-		2	CHASSI HOUSING 24-P	
265	90110-0157	-		2	COVER	
266	90110-0159	-		2	CONTACT	
270	90110-0161	-		3	FEMALE CONTACT 6-POLES	
275	90110-0163	-		1	FEMALE INSERT 6-POLE	
280	90110-0164	-		2	FEMALE CONTACT 24-POLES	
290	90110-0166	-		4	CONTACT HOUSE	
300	90110-0215	-		4	SOCKET	
310	90110-0218	-		4	CONTACT HOUSING	
320	90110-0236	-		6	CHASSIE CONTACT PX0767/S	
330	90110-0349	-		6	COVER/TOOL PX0733	
340	90135-0039	-		2	SHIELD CLAMMER	
350	90143-0057	-	MM	7000	STRIP EMKA 1011-05 21x11mm	
360	90143-0073	-	MM	1800	RUBBER STRIP	
370	90181-0046	-	MM	490	CABEL DUCT 60X60MM	
375	90195-0019	-		1	TERMINAL BK3 KRG 3-POLE	
380	312105-0327	-		13	SCREW M6S ISO 4017 M5X12 A280	
390	312115-0323	-		3	SCREW MC6S ISO 4762 M5X8 A280	
400	312115-0449	-		8	SCREW MC6S ISO 4762 M8X16 A280	
410	312155-0291	-		12	SCREW MF6S DIN 7991 M4X12 A280	
420	312605-0316	-		18	NUT,HEXAGON,A280 M6M6 Stainless	
430	315105-0146	-		15	WASHERS,PLAIN ROUND 5,3X10	
440	315105-0153	-		12	WASHER,PLAIN ROUND BRB 6,4x12 Stainless	
445	315105-0165	-		8	WASHERS,PLAIN ROUND 8,4X16	
450	352103-0108	-		2	CABLE GLAND ST 13	
460	353240-0006	-		4	GLANDS,NORMAL WITHOUT INSERT PG 29	
470	352103-0116	-		1	CABLE GLAND ST 21	
480	352103-0111	-		1	CABLE GLAND ST 16	
490	359005-0050	-		1	MARKING SEATS "X"	
500	359005-0010	-		4	MARKING SESATS 0-9	
510	312125-0287	-		11	SLOTTED CHEESE HEAD ISO 1207 M4X8 RFR	
520	352113-0205	-		11	ANCHOR TM2S8-C100	
530	90099-0117	-		1	NUT PR 18,6 (PG11)	
540	353243-0002	-		2	GLANDS,HOSE,EXTENDED,WITHOUT INSERT PG11	
550	90152-0059	-	M	3	GLANDS,HOSE 18X12	
560	90099-0191	-		2	Nut	
570	90110-0296	-		1	CONTACT SCREW	
580	90110-0370	-		1	BASE HOUSING	
590	90062-0021	-		2	LOCKING WASHER	
A8201	90045-0372	R		1	SERVO AMPLIFIER REPLACED 90045-395	
W8201	351150-0419	-	MM	3500	CABLES,MULTI-CONDUCTOR 5X2,5 MM2	
W8202	351150-0425	-	MM	3500	CABLES,MULTI-CONDUCTOR 25X0,75 MM2	
W8203	90220-0082	-	MM	3500	DATACABLE Pair Twisted 2x0,76mm2	
W8211:1	351172-0104	-	M	3	CABLE AWM BLUE 1,5MM2	
W8211:2	351172-0104	-	M	3	CABLE AWM BLUE 1,5MM2	
W8211:3	351175-0104	-	M	3	CABLE AWM YELL/GREEN 1,5MM2	
W8212	90220-0034	-	M	3	THERMO-CABLE	
W8445	90220-0108	-	M	5	CABLES,MULTI-CONNUCTO,SCREENED 5X1,5 MM2	

ELECTRICAL CABINET

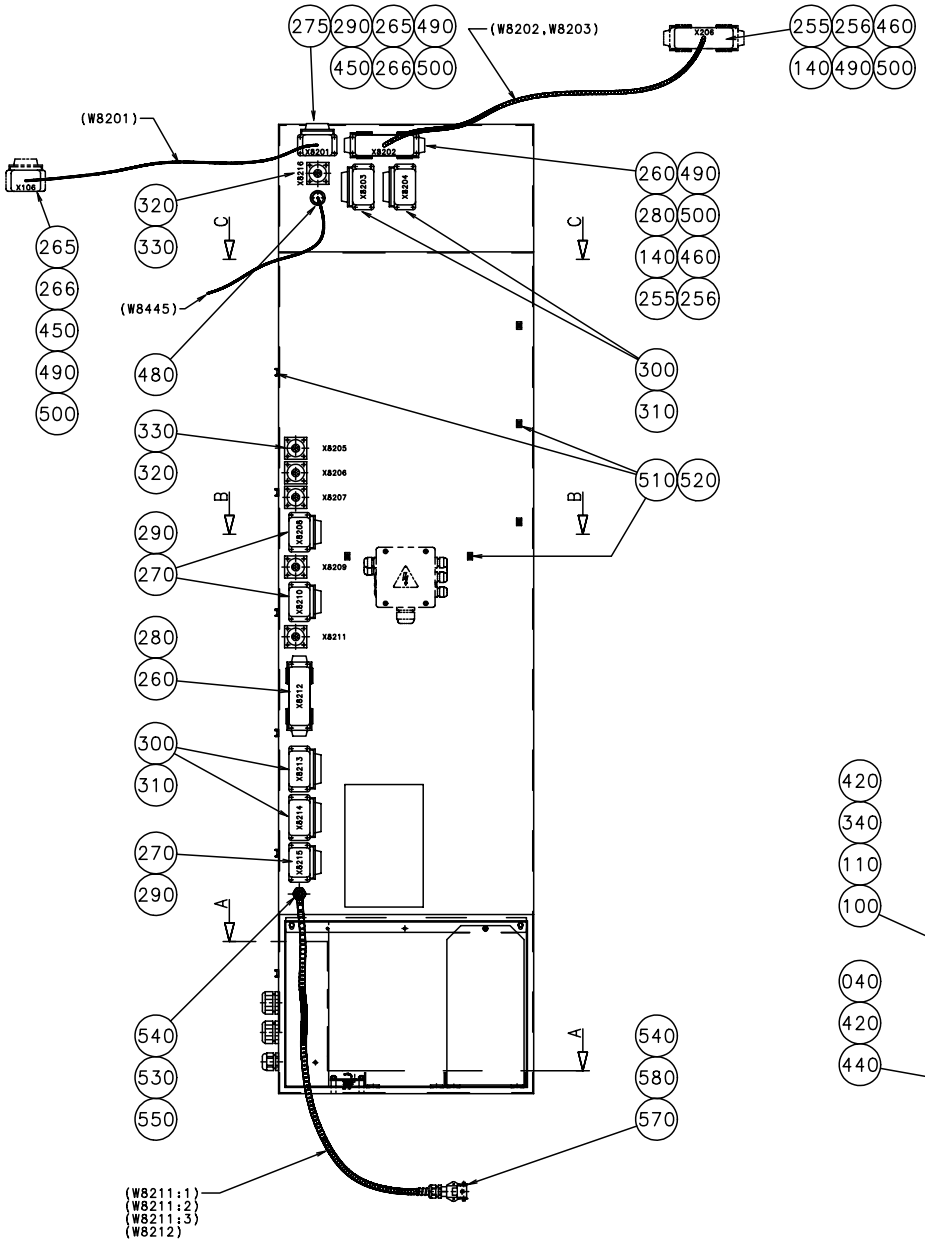

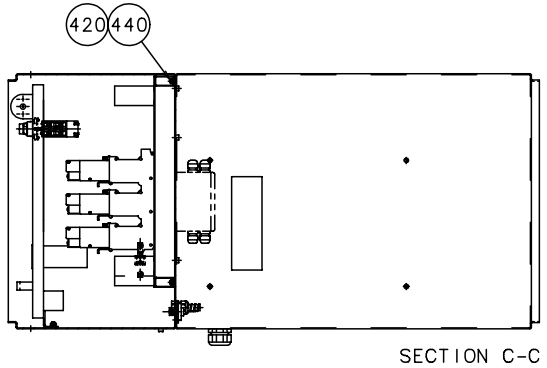

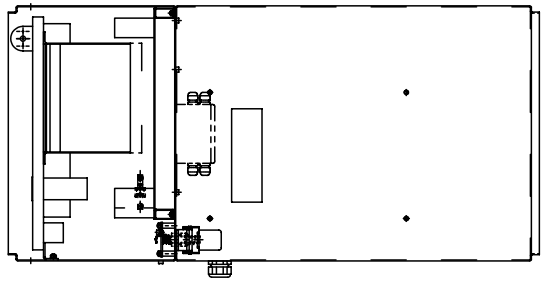

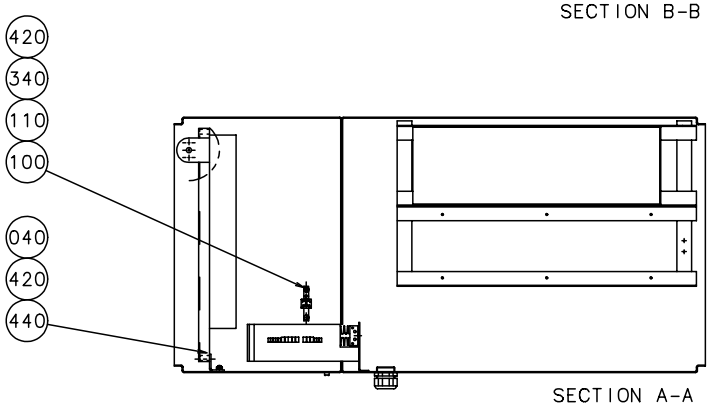

Pos	Part No	SP	UN	Qty	Description	Page No
-						
001	A1255953-0100	-		1	ASSEMBLY PLATE	**29**
002	A1255954-0100	-		1	SWING FRAME	**31**
A8201:1	A 48141-0100	-		1	PT21MC-PULLTAB 21 MOTION CONTROL	**39**
003	67600-0501	D		1	TPIH 2000 GENERATOR	
010	1255951-0000	-		1	CABINET	
020	1255952-0000	-		1	BOX FOR TPIH	
030	1129867-0000	-		1	SHEET	
040	1140314-0000	-		2	STOP LUG	
070	731049-0000	-		4	SLIDING STRIP TPIH	
080	548770-0001	D		2	COAXIAL CABLE L=5000 mm	
090	548770-0007	D		1	COAXIAL CABLE L=3000 mm	
100	1140053-0000	-		4	SPACER	
110	929607-0000	-		2	EARTH BAR	
120	B1346824-0000	-		1	INSERT	
130	1260561-0000	-		1	HOLDER	
140	B1260901-0000	-		2	INSERT	
150	979974-0000	-		1	INSERT	
230	90044-0124	R		1	INDUCTIVE SWITCH	
235	90099-0119	-		1	NUT PR 28,3 (PG21)	
240	90110-0121	-		2	FEMALECONT.15POLE HARTING	
250	90110-0122	-		2	COVER HARTING	
255	90110-0150	-		2	MALE INSERT 24-P, CABLE	
256	90110-0152	-		2	CABLE HOOD 24-P	
260	90110-0153	-		2	CHASSI HOUSING 24-P	
265	90110-0157	-		2	COVER	
266	90110-0159	-		2	CONTACT	
270	90110-0161	-		3	FEMALE CONTACT 6-POLES	
275	90110-0163	-		1	FEMALE INSERT 6-POLE	
280	90110-0164	-		2	FEMALE CONTACT 24-POLES	
290	90110-0166	-		4	CONTACT HOUSE	
300	90110-0215	-		4	SOCKET	
310	90110-0218	-		4	CONTACT HOUSING	
320	90110-0236	-		6	CHASSIE CONTACT PX0767/S	
330	90110-0349	-		6	COVER/TOOL PX0733	
340	90135-0039	-		2	SHIELD CLAMMER	
350	90143-0057	-	MM	7000	STRIP EMKA 1011-05 21x11mm	
360	90143-0073	-	MM	1800	RUBBER STRIP	
370	90181-0046	-	MM	490	CABEL DUCT 60X60MM	
375	90195-0019	-		1	TERMINAL BK3 KRG 3-POLE	
380	312105-0327	-		13	SCREW M6S ISO 4017 M5X12 A280	
390	312115-0323	-		3	SCREW MC6S ISO 4762 M5X8 A280	
400	312115-0449	-		8	SCREW MC6S ISO 4762 M8X16 A280	
410	312155-0291	-		12	SCREW MF6S DIN 7991 M4X12 A280	
420	312605-0316	-		18	NUT,HEXAGON,A280 M6M6 Stainless	
430	315105-0146	-		15	WASHERS,PLAIN ROUND 5,3X10	
440	315105-0153	-		12	WASHER,PLAIN ROUND BRB 6,4x12 Stainless	
445	315105-0165	-		8	WASHERS,PLAIN ROUND 8,4X16	
450	352103-0108	-		2	CABLE GLAND ST 13	
460	353240-0006	-		4	GLANDS,NORMAL WITHOUT INSERT PG 29	
470	352103-0116	-		1	CABLE GLAND ST 21	
480	352103-0111	-		1	CABLE GLAND ST 16	
490	359005-0050	-		1	MARKING SEATS "X"	
500	359005-0010	-		4	MARKING SESATS 0-9	
510	312125-0287	-		11	SLOTTED CHEESE HEAD ISO 1207 M4X8 RFR	
520	352113-0205	-		11	ANCHOR TM2S8-C100	
530	90099-0117	-		1	NUT PR 18,6 (PG11)	
540	353243-0002	-		2	GLANDS,HOSE,EXTENDED,WITHOUT INSERT PG11	
550	90152-0059	-	M	3	GLANDS,HOSE 18X12	
560	90099-0191	-		2	Nut	
570	90110-0296	-		1	CONTACT SCREW	
580	90110-0370	-		1	BASE HOUSING	
590	90062-0021	-		2	LOCKING WASHER	
A8201	90045-0372	R		1	SERVO AMPLIFIER REPLACED 90045-395	
W8201	351150-0419	-	MM	3500	CABLES,MULTI-CONDUCTOR 5X2,5 MM2	
W8202	351150-0425	-	MM	3500	CABLES,MULTI-CONDUCTOR 25X0,75 MM2	
W8203	90220-0082	-	MM	3500	DATACABLE Pair Twisted 2x0,76mm2	
W8211:1	351172-0104	-	M	3	CABLE AWM BLUE 1,5MM2	
W8211:2	351172-0104	-	M	3	CABLE AWM BLUE 1,5MM2	
W8211:3	351175-0104	-	M	3	CABLE AWM YELL/GREEN 1,5MM2	
W8212	90220-0034	-	M	3	THERMO-CABLE	
W8445	90220-0108	-	M	5	CABLES,MULTI-CONNUCTO,SCREENED 5X1,5 MM2	

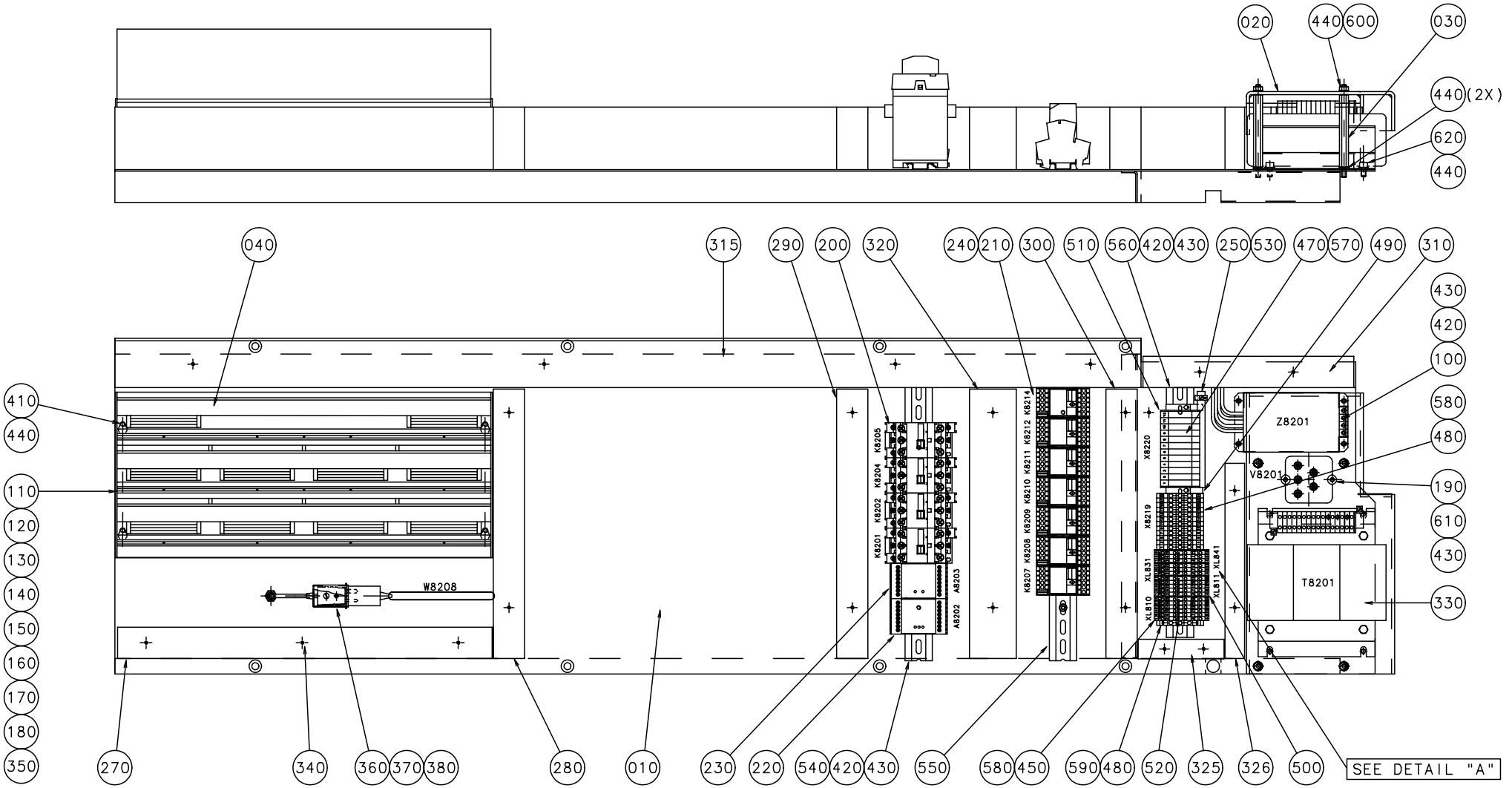
020
440
600
030
440 (2X)
620
440
040
315
290
200
320
240
210
300
510
560
420
430
250
530
470
570
490
310
430
420
100
580
480
190
610
430
330
410
440
110
120
130
140
150
160
170
180
350
270
340
360
370
380
280
010
230
220
540
420
430
550
580
450
590
480
520
325
326
500
SEE DETAIL "A"
W8208
K8201
K8202
K8204
K8205
A8202
A8203
K8207
K8208
K8209
K8210
K8211
K8212
K8214
X8219
X8220
XL831
XL841
XL810
XL811
Z8201
V8201
T8201

DETAIL "A"

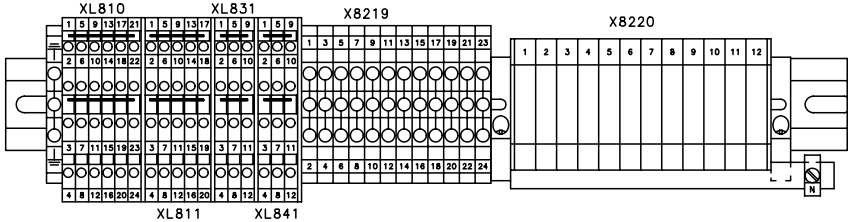
XL810
XL831
X8219
X8220
XL811
XL841

Pos	Part No	SP	UN	Qty	Description	Page No
-						
010	1260241-0000	-		1	MOUNTING PLATE	
020	1296136-0000	-		1	TOUCH GUARD	
030	1260423-0000	-		4	STUD SCREW	
040	B1260396-0000	-		1	SATTBUS CABLE	
100	90024-0037	-		1	FILTER Schaffner FN 251-8-07	
110	90025-0107	D		2	MODULE	
120	90025-0024	D		4	TERMINAL BLOCK	
130	90025-0052	D		1	COMPACT RACK	
140	90025-0053	D		4	OUTPUT MODULE	
150	90025-0054	D		4	TERMINAL PLINTH	
160	90025-0055	D		1	POWER SUPPLY UNIT	
170	90025-0070	D		1	PROCESSOR TPMC CPU 64.1	
180	90025-0094	D		1	TERMINAL BLOCK	
190	90038-0024	D		1	RECTIFIER 50A	
200	B 90075-0125	-		4	CONTACTOR 7,5KW COIL 24VDC	
210	90119-0056	-		7	PLUG-IN RELAY 24VDC	
220	90119-0089	-		1	RELAY	
230	90119-0084	-		1	RELAY	
240	90129-0006	-		7	BASE 11 POLE	
250	353041-0104	-		1	CLAMPING YOKE PZB 4 K	
270	90181-0053	-	MM	480	CABLE DUCT 40X80MM	
280	90181-0053	-	MM	345	CABLE DUCT 40X80MM	
290	90181-0053	-	MM	345	CABLE DUCT 40X80MM	
300	90181-0053	-	MM	345	CABLE DUCT 40X80MM	
310	90181-0053	-	MM	270	CABLE DUCT 40X80MM	
315	90181-0054	-	MM	1315	CABLE DUCT 60X80MM	
320	90181-0054	-	MM	345	CABLE DUCT 60X80MM	
325	90181-0052	-	MM	110	CABLE DUCT 25X80MM	
326	90181-0052	-	MM	250	CABLE DUCT 25X80MM	
330	23150-0000	D		1	TRANFORMER 3PH,TP-165	
340	90287-0124	-		21	SCREW,NYLON M4X12 DIN84	
350	B 90334-0006	D		1	BATTERY 3,6V Size AA	
360	90326-0012	-		1	PROTECTIVE COVER	
370	90326-0052	-		1	THERMO ELEMENT	
380	90220-0034	-	MM	2500	THERMO-CABLE	
410	312105-0366	-		4	SCREW M6S ISO 4017 M6X12 A280	
420	312115-0323	-		10	SCREW MC6S ISO 4762 M5X8 A280	
430	315105-0146	-		12	WASHERS,PLAIN ROUND 5,3X10	
440	315105-0153	-		20	WASHER,PLAIN ROUND BRB 6,4x12 Stainless	
450	353021-0120	-		17	FEED THROUGH TERMINAL WDK 2,5	
470	353022-0101	-		12	CONNECTIONMA NT6/35 KRG	
480	353024-0205	-		13	EARTH TERMINAL WPE 4	
490	353031-0201	-		2	END BRACKET EW35	
500	353032-0010	-		4	END PLATE WAP	
510	353033-0101	-		2	SEPARATING HP 6 PA	
520	353034-0030	-		4	BRIDGE CONLECK WQV 2,5/10	
530	353041-0001	-	MM	130	RAIL 10X3mm SSCH	
540	353042-0005	-	MM	350	RAIL TS 35/7.5	
550	353042-0005	-	MM	350	RAIL TS 35/7.5	
560	353042-0005	-	MM	320	RAIL TS 35/7.5	
570	359011-0801	-		1	SIGN BOARD BSFW 1-50	
580	359011-0807	-		10	MARKING PLATES 5-FW 1-50	
590	359011-0834	-		1	SET OF SIGNS 6-GW(EARTH)	
600	312605-0316	-		4	NUT,HEXAGON,A280 M6M6 Stainless	
610	312115-0327	-		2	SCREW MC6S ISO 4762 M5X12 A280	
620	312115-0366	-		4	SCREW MC6S ISO 4762 M6X12 A280	

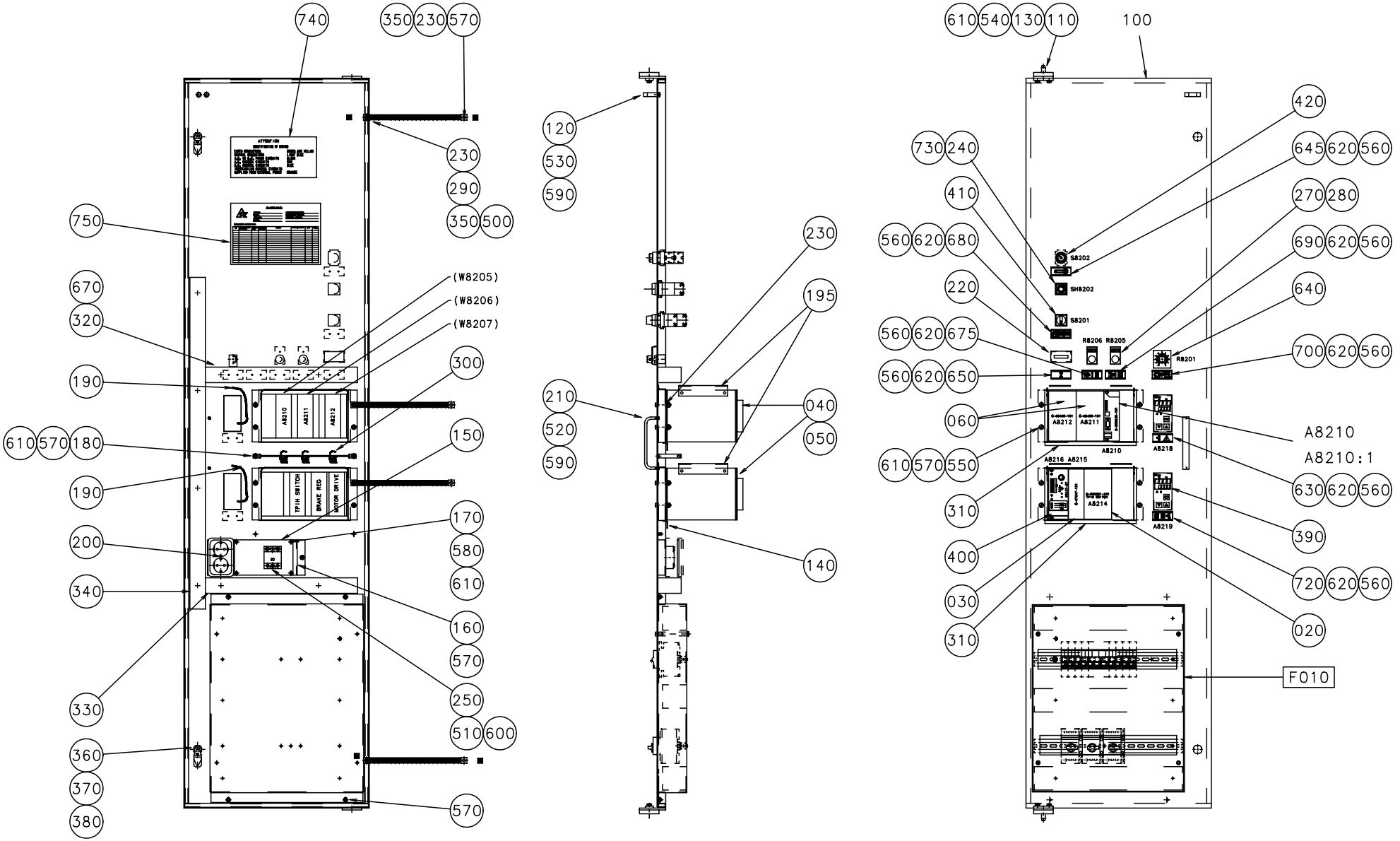
740
350 230 570
230
290
350 500
750
670
320
190
610 570 180
190
200
340
330
360
370
380
(W8205)
(W8206)
(W8207)
300
150
170
580
610
160
570
250
510 600
570
120
530
590
210
520
590
230
195
040
050
140
610 540 130 110
100
730 240
410
560 620 680
220
560 620 675
560 620 650
060
610 570 550
310
400
030
310
420
645 620 560
270 280
690 620 560
640
700 620 560
S8202
SH8202
S8201
R8206 R8205
R8201
A8212
A8211
A8210
A8218
A8216 A8215
A8214
A8219
A8210
A8210:1
630 620 560
390
720 620 560
020
F010

Pos	Part No	SP	UN	Qty	Description	Page No
-						
010	A1185030-0100	-		1	FUSE BOX	33
A8210:1	A 48142-0100	-		1	PT21AF-PULLTAB 21 AUXILIARY FUNCTIONS	35
020	558321-0101	D		1	TPIH-SWITCH	
030	67347-0101	D		1	CARD BRAKEREG.MAGN.POWDER BR.	
040	67388-0101	-		2	FRONT MOUNTED RACK 42TE	
050	68262-0101	-		6	BACKPLANE FRONT RACK 8TE	
060	68450-0101	D		2	STEPPER MOTOR DRIVER	
100	1260242-0000	-		1	SWING FRAME	
110	495377-0000	-		2	BUSH	
120	970215-0000	-		1	STOP BLOCK	
130	971346-0000	-		2	GUIDE PIN	
140	1255955-0000	-		2	FRAME	
150	1260438-0000	-		1	TOUCH GUARD	
160	1260431-0000	-		1	PLATE	
170	1260439-0000	-		4	STUD SCREW	
180	1260440-0000	-		1	BRACKET	
190	578874-0000	-		2	HF BRAIDED WIRE 1,6 mm2	
195	1279831-0000	-		2	COVER	
200	90001-0033	-		1	Wall socket Outlet	
210	90017-0017	-		1	HANDLE	
220	90053-0031	-		1	HOUR COUNTER BOWER B906.10	
230	90062-0022	-		28	LOCKING WASHER	
240	B 90064-0082	-		1	PUSH BUTTON WHITE	
250	90119-0043	D		1	OPTO RELAY 22DC 60S-3	
270	90130-0017	-		2	POTENTIOMETER 10 KOHM	
280	90130-0301	-		2	KNOB 3-DIGITS	
290	90135-0035	-		4	LOW IMPEDANCELITZ L=250MM	
300	90135-0039	-		3	SHIELD CLAMMER	
310	90143-0060	-	MM	470	EDGE STRIP 9,5x6,3mm Black PVC	
320	90181-0045	-	MM	390	CABLE DUCT 40X60MM	
330	90181-0045	-	MM	390	CABLE DUCT 40X60MM	
340	90181-0045	-	MM	850	CABLE DUCT 40X60MM	
350	90194-0152	-		4	SIGN "EARTH"	
360	90237-0157	-		2	LOCKING CATCH	
370	90237-0319	-		2	LOCK HOUSING EMKA U134	
380	90237-0320	-		2	LOCK COMPONENT EMKA U136	
390	90410-0051	D		2	TEMPERATURE REGULATOR PHILIPS KS 40	
400	90430-0037	D		1	MOTOR DRIVE CONTR.PME 1802. Repl.by -67	
410	90111-0193	-		1	Rotary switch	
420	90111-0197	-		1	Service Key	
500	312101-0366	-		2	SCREW M6S6X12FZB	
510	312105-0293	-		2	SCREW M6S ISO 4017 M4X16 A280	
520	312115-0287	-		2	SCREW MC6S ISO 4762 M4X8 A280	
530	312121-0325	-		2	SLOTTED HEMCS5X10FZB	
540	312121-0364	-		4	SLOTTED HEMCS6X10FZB	
550	312125-0376	-		8	SLOTTED CHEESE HEAD ISO 1207 M6X35 RFR	
560	311520-0329	-		16	BLANK RIVE2,4X8	
570	312601-0316	-		18	NUT M6M6FZB	
580	312812-0312	-		4	NUTS,HEXAGON,LOCK,WITH NYLON,M4	
590	315101-0146	-		4	WASHER BRB5,3X10FZB	
600	315105-0136	-		2	WASHERS,PLAIN ROUND 4,3X8	
610	315105-0153	-		24	WASHER,PLAIN ROUND BRB 6,4x12 Stainless	
620	359240-0100	-		8	SIGN HOLDER	
630	359241-0336	-		1	SIGN "TEMPP. EL-CABINET"	
640	558389-0101	D		1	MULTI PURPOSE POTENTIOM.	
645	359241-0133	-		1	SIGN "SERVICE SWITCH"	
650	359241-0201	-		1	SIGN "HOUR METER"	
670	90099-0191	-		8	Nut	
675	359241-0470	-		1	Sign" Patch IH Power"	
680	359241-0471	-		1	Sign" Pull Tab Function"	
690	359241-0472	-		1	Sign" Reseal IH Power"	
700	359241-0473	-		1	Sign" Servo Motor Stop Position"	
720	359241-0475	-		1	Sign" Tab Sealing Pad Temperature"	
730	359301-0512	-		1	SIGN"INDEX TO POSITION"	
740	90194-0080	-		1	SIGN "IDENTIF. OF WIRING"	
750	90194-0133	-		1	SIGN "DELIVERED DESIGN"	
A8210	558230-0101	D		1	TMCC, CONTROLLER	
W8205	90220-0165	-	MM	2000	Cable	
W8206	90220-0165	-	MM	2000	Cable	
W8207	90220-0165	-	MM	2000	Cable	

FUSE BOX

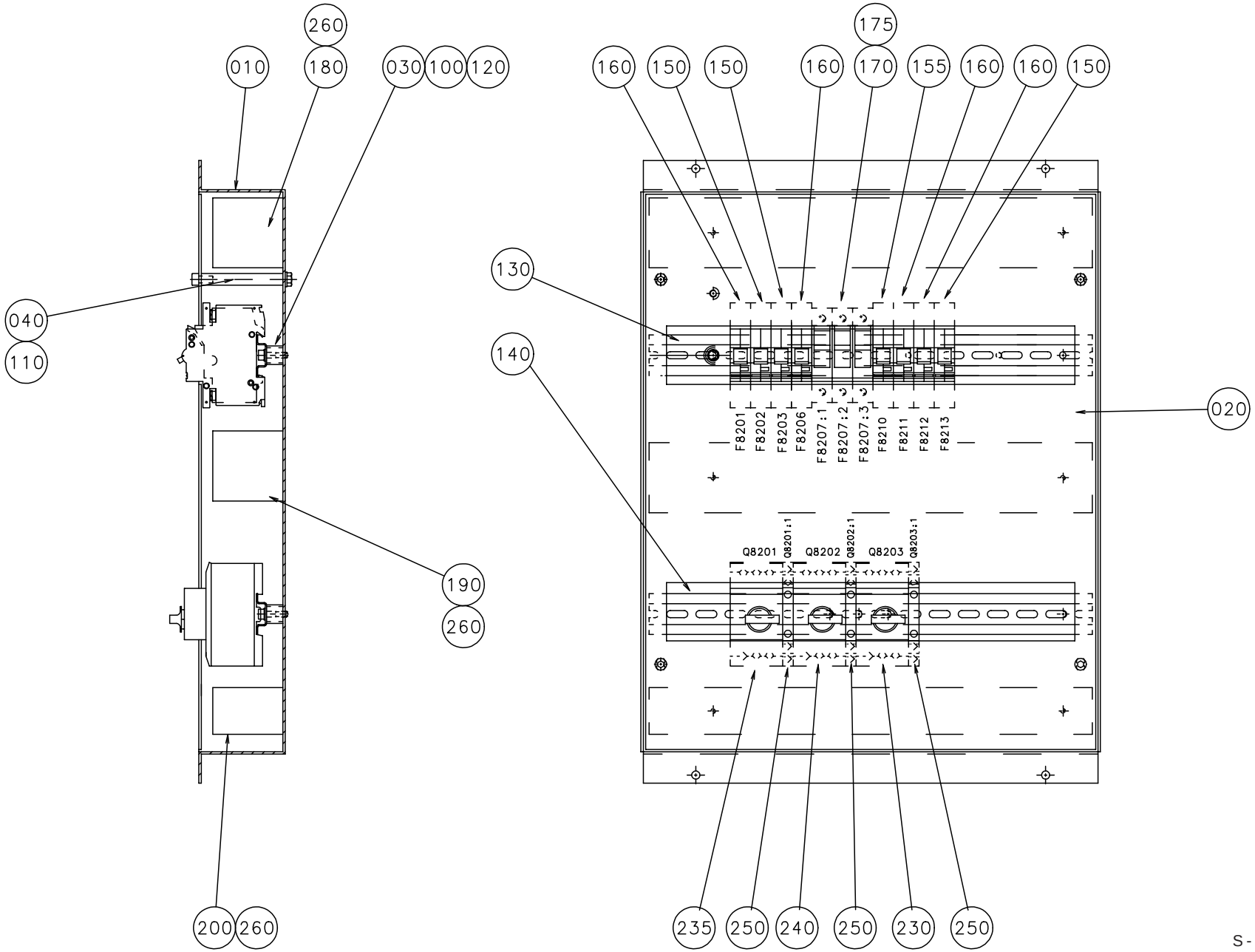
260
010
180
030
100
120
040
110
190
260
200
260
175
160
150
150
160
170
155
160
160
150
130
140
020
F8201
F8202
F8203
F8206
F8207:1
F8207:2
F8207:3
F8210
F8211
F8212
F8213
Q8201
Q8201:1
Q8202
Q8202:1
Q8203
Q8203:1
235
250
240
250
230
250

Pos	Part No	SP	UN	Qty	Description	Page No
-						
010	734741-0000	-		1	FUSE BOX	
020	734861-0000	-		1	COVER PLATE	
030	495118-0014	-		4	DISTANCE PIPE L=14 MM	
040	495130-0070	-		4	SPACER TUBE L=70MM	
100	312115-0331	-		4	SCREW MC6S ISO 4762 M5X20 A280	
110	312115-0366	-		4	SCREW MC6S ISO 4762 M6X12 A280	
120	315105-0146	-		4	WASHERS,PLAIN ROUND 5,3X10	
130	353042-0005	-	MM	380	RAIL TS 35/7.5	
140	353042-0005	-	MM	380	RAIL TS 35/7.5	
150	90007-0128	-		3	FUSE 1P 6A K	
155	90007-0129	-		1	FUSE ABB-STOTZ 1P 10A K	
160	90007-0156	-		4	FUSE 1P 4A K	
170	90233-0028	-		3	FUSE 10A FERRAZ	
175	90233-0303	-		3	FUSEHOLDER FERRAZ ST10	
180	90181-0046	-	MM	380	CABEL DUCT 60X60MM	
190	90181-0046	-	MM	380	CABEL DUCT 60X60MM	
200	90181-0045	-	MM	380	CABLE DUCT 40X60MM	
230	90095-0072	-		1	OVERLOAD PROTECTION PKZM 1,0A	
235	90095-0077	-		1	OVERLOAD PROTECTION PKZM 10A	
240	90095-0073	-		1	OVERLOAD PROTECTION PKZM 1,6A	
250	90259-0313	-		3	AUX. CONTACT K&M NHI21-PKZM0	
260	90287-0124	-		6	SCREW,NYLON M4X12 DIN84	

Pos	Part No	SP	UN	Qty	Description	Page No

This page is intentionally left blank

Pos	Part No	SP	UN	Qty	Description	Page No
-						
0100	A 42942-0100	-		1	PT21AF-LIST OF DOCUMENTS	37

Pos	Part No	SP	UN	Qty	Description	Page No

This page is intentionally left blank

Pos	Part No	SP	UN	Qty	Description	Page No
-						
0010	A 48142-0100	-		x	PT21AF-PULLTAB 21 AUXILIARY FUNCTIONS	**35**
0020	A 42942-0100	-		x	PT21AF-LIST OF DOCUMENT	**37**
0100	B 597743-0000	-		x	Component without TP-no	
0110	B 57801-0000	-		x	Document Description	
0120	B 57802-0000	-		x	Master Diskette	
0130	B 57803-0000	-		x	Manufacturing Instruction	
0140	B 57804-0000	-		x	Short Form Information	
0150	B 57805-0000	-		x	Functional Description	
0160	B 57806-0000	-		x	Program Source	
0170	B 57807-0000	-		x	Document Diskette	
0180	B 57808-0000	-		x	LABEL LAYOUT DRAWING	

Pos	Part No	SP	UN	Qty	Description	Page No

This page is intentionally left blank

Pos	Part No	SP	UN	Qty	Description	Page No
-						
0010	A 42943-0100	-		1	PT21MC-LIST OF DOCUMENTS	41
0020	A 42944-0100	-		1	PT21MC-LIST OF MATERIALS	43

Pos	Part No	SP	UN	Qty	Description	Page No

This page is intentionally left blank

Pos	Part No	SP	UN	Qty	Description	Page No
-						
0010	A 48141-0100	-		x	PT21MC-PULLTAB 21 MOTION CONTROL	39
0020	A 42943-0100	-		x	PT21MC-LIST OF DOCUMENTS	41
0030	A 42944-0100	-		x	PT21MC-LIST OF MATERIALS	43
0100	B 597745-0000	-		x	COMPONENTS WITHOUT TP-NO.	
0110	B 57789-0000	-		x	DOCUMENT DESCRIPTION	
0120	B 57790-0000	-		x	MASTER DISKETTE	
0130	B 57791-0000	-		x	MANUFACTURE INSTRUCTIONS	
0140	B 57792-0000	-		x	SHORT FORM INFORMATION	
0150	B 57793-0000	-		x	FUNCTIONAL DESCRIPTION	
0160	B 57794-0000	-		x	PROGRAM SOURCE	
0170	B 57795-0000	-		x	DOCUMENTATION DISKETTE	
0180	B 57796-0000	-		x	LABEL LAYOUT DRAWING	

Pos	Part No	SP	UN	Qty	Description	Page No

This page is intentionally left blank

Pos	Part No	SP	UN	Qty	Description	Page No
-						
0010	90045-0379	-		1	MEMORY EPROM	
0020	90003-0509	-		1	BOX	

Pos	Part No	SP	UN	Qty	Description	Page No

CABLE HARNESS

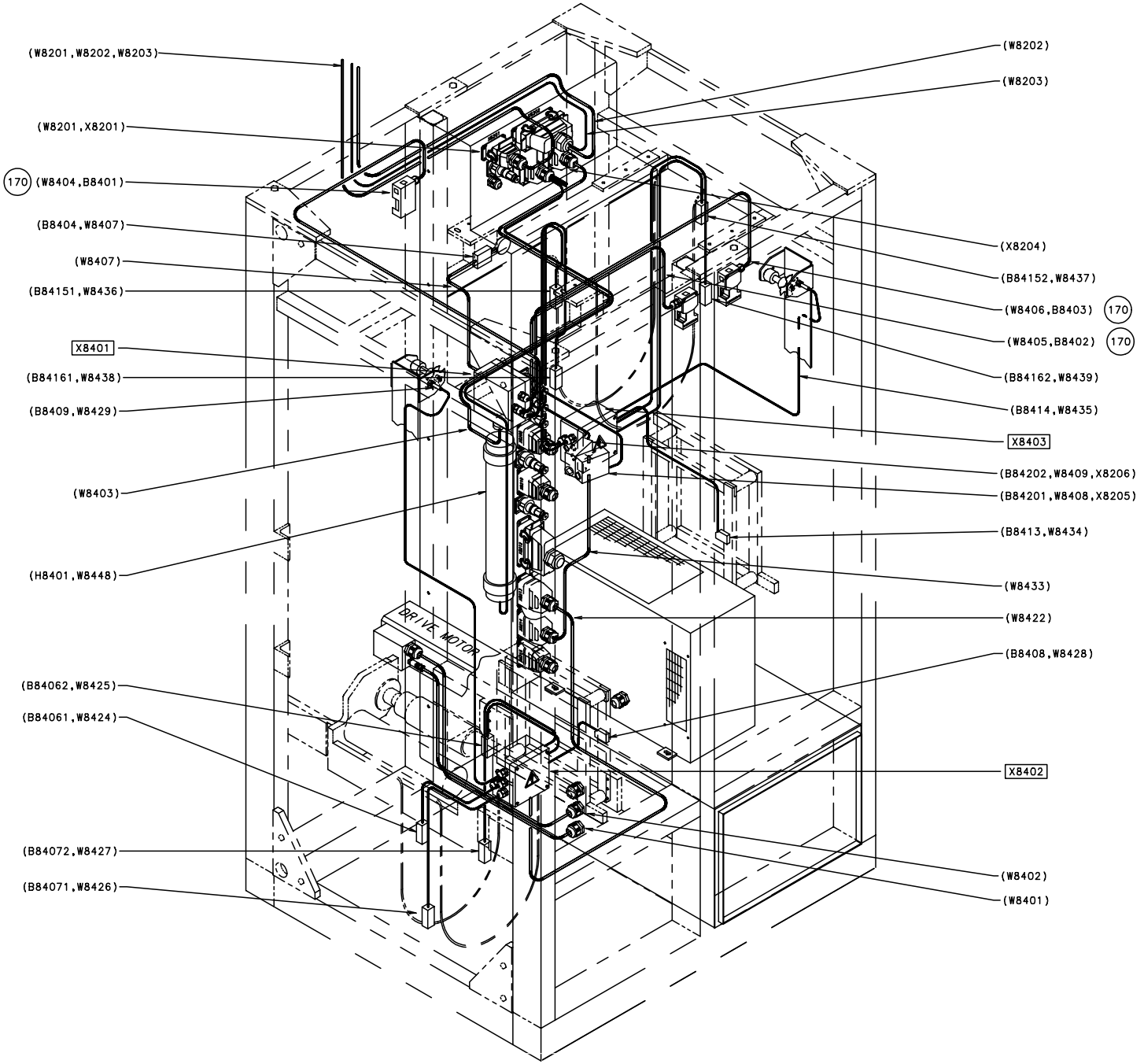

Pos	Part No	SP	UN	Qty	Description	Page No
-						
X8401	A1260813-0100	-		1	CONNECTION BOX	**49**
X8402	A1260812-0100	-		1	CONNECTION BOX	**51**
X8403	A1260811-0100	-		1	CONNECTION BOX	**53**
050	B1282599-0000	-		1	INSERT	
060	B1282600-0000	-		1	INSERT	
070	B1282787-0000	-		1	INSERT	
090	B1260902-0000	-		1	INSERT	
100	90110-0150	-		1	MALE INSERT 24-P, CABLE	
110	90110-0152	-		1	CABLE HOOD 24-P	
120	90110-0157	-		2	COVER	
130	90110-0159	-		2	CONTACT	
140	90110-0216	-		4	MALE PLUG	
150	90110-0217	-		4	COVER	
160	90110-0235	-		6	CABLE CONTACT	
170	352103-0105	-		3	CABLE GLAND STR 11;PR 15,2	
180	352103-0111	-		3	CABLE GLAND ST 16	
190	353240-0003	-		2	GLANDS,NORMAL WITHOUT INSERT PG 13,5	
200	353240-0005	-		1	GLANDS,NORMAL WITHOUT INSERT PG 21	
210	353240-0006	-		1	GLANDS,NORMAL WITHOUT INSERT PG 29	
240	359005-0010	-		8	MARKING SESATS 0-9	
250	359005-0050	-		1	MARKING SEATS "X"	
260	90089-0008	-		1	SLEEVE	
W8401	90220-0084	-	MM	1000	SERVOCABLE 4X2,5+2(2X0.75)	
W8402	A1255692-0010	D		1	CABLE	
W8403	351150-0407	-	MM	1200	CABLES,MULTI-CONDUCTOR 12X0,75 MM2	
W8404	351150-0405	-	MM	1000	CABLE,OLFLEX 5x0,75 MM2	
W8405	351150-0405	-	MM	1000	CABLE,OLFLEX 5x0,75 MM2	
W8406	351150-0405	-	MM	1000	CABLE,OLFLEX 5x0,75 MM2	
W8421	351150-0403	-	MM	2000	CABLE OLFLEX 3x0,75 MM2	
W8422	351150-0407	-	MM	2500	CABLES,MULTI-CONDUCTOR 12X0,75 MM2	
W8433	351150-0407	-	MM	2500	CABLES,MULTI-CONDUCTOR 12X0,75 MM2	
W8446	351150-0413	-	MM	2000	CABLES,MULTI-CONDUCTOR 4X1,5 MM2	
W8448	351150-0412	-	MM	2500	CABLES,MULTI-CONDUCTOR 3X1,5 MM2	

Pos	Part No	SP	UN	Qty	Description	Page No

CABLE HARNESS

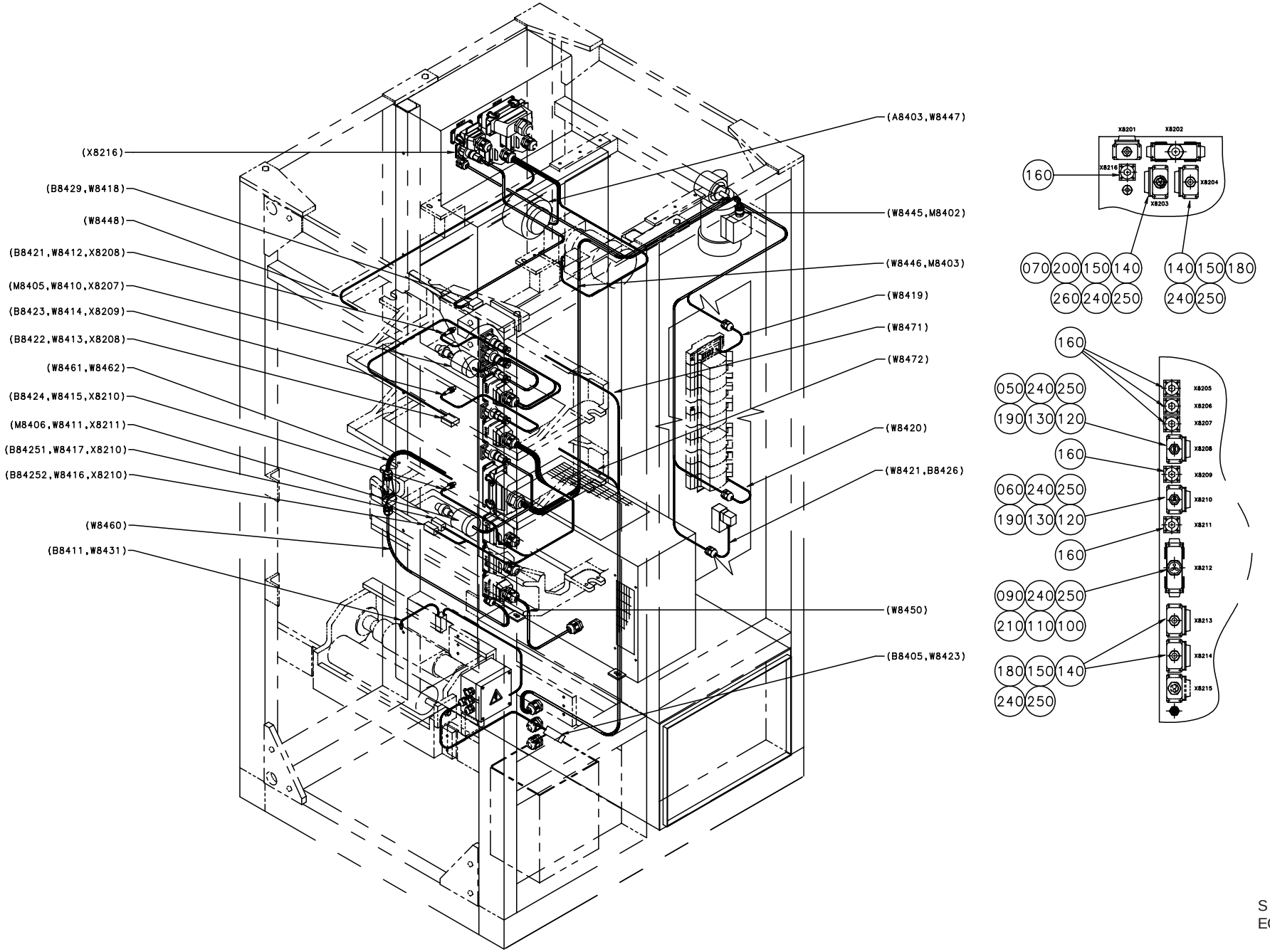

Pos	Part No	SP	UN	Qty	Description	Page No
-						
X8401	A1260813-0100	-		1	CONNECTION BOX	**49**
X8402	A1260812-0100	-		1	CONNECTION BOX	**51**
X8403	A1260811-0100	-		1	CONNECTION BOX	**53**
050	B1282599-0000	-		1	INSERT	
060	B1282600-0000	-		1	INSERT	
070	B1282787-0000	-		1	INSERT	
090	B1260902-0000	-		1	INSERT	
100	90110-0150	-		1	MALE INSERT 24-P, CABLE	
110	90110-0152	-		1	CABLE HOOD 24-P	
120	90110-0157	-		2	COVER	
130	90110-0159	-		2	CONTACT	
140	90110-0216	-		4	MALE PLUG	
150	90110-0217	-		4	COVER	
160	90110-0235	-		6	CABLE CONTACT	
170	352103-0105	-		3	CABLE GLAND STR 11;PR 15,2	
180	352103-0111	-		3	CABLE GLAND ST 16	
190	353240-0003	-		2	GLANDS,NORMAL WITHOUT INSERT PG 13,5	
200	353240-0005	-		1	GLANDS,NORMAL WITHOUT INSERT PG 21	
210	353240-0006	-		1	GLANDS,NORMAL WITHOUT INSERT PG 29	
240	359005-0010	-		8	MARKING SESATS 0-9	
250	359005-0050	-		1	MARKING SEATS "X"	
260	90089-0008	-		1	SLEEVE	
W8401	90220-0084	-	MM	1000	SERVOCABLE 4X2,5+2(2X0.75)	
W8402	A1255692-0010	D		1	CABLE	
W8403	351150-0407	-	MM	1200	CABLES,MULTI-CONDUCTOR 12X0,75 MM2	
W8404	351150-0405	-	MM	1000	CABLE,OLFLEX 5x0,75 MM2	
W8405	351150-0405	-	MM	1000	CABLE,OLFLEX 5x0,75 MM2	
W8406	351150-0405	-	MM	1000	CABLE,OLFLEX 5x0,75 MM2	
W8421	351150-0403	-	MM	2000	CABLE OLFLEX 3x0,75 MM2	
W8422	351150-0407	-	MM	2500	CABLES,MULTI-CONDUCTOR 12X0,75 MM2	
W8433	351150-0407	-	MM	2500	CABLES,MULTI-CONDUCTOR 12X0,75 MM2	
W8446	351150-0413	-	MM	2000	CABLES,MULTI-CONDUCTOR 4X1,5 MM2	
W8448	351150-0412	-	MM	2500	CABLES,MULTI-CONDUCTOR 3X1,5 MM2	

Pos	Part No	SP	UN	Qty	Description	Page No

CONNECTION BOX

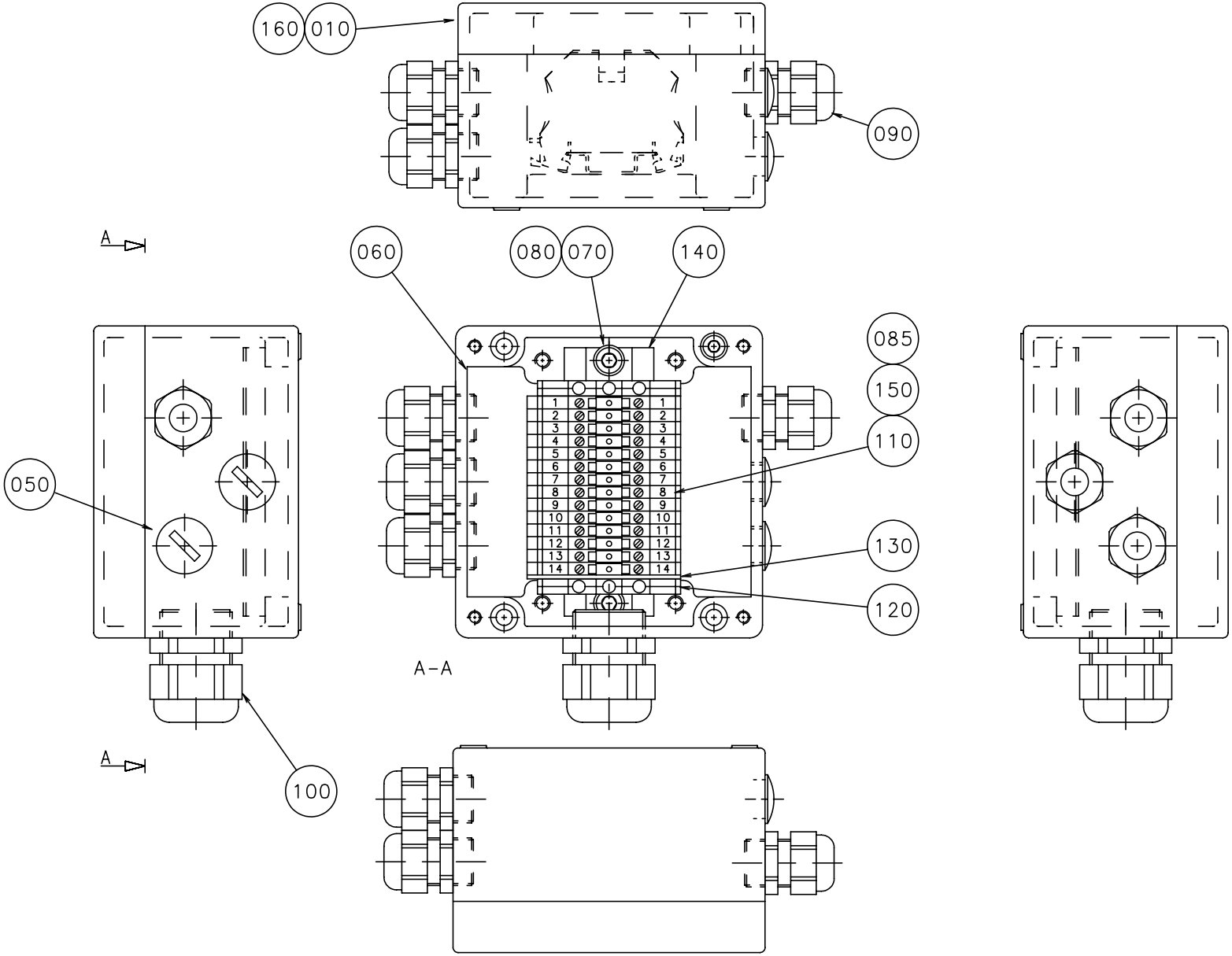

S-1260813-1
ECN 22912

Pos	Part No	SP	UN	Qty	Description	Page No
-						
010	B1260815-0000	-		1	CONNECTION BOX	
050	90002-0009	-		2	BLANK-OFF PLUG 18.6	
060	312115-0331	-		4	SCREW MC6S ISO 4762 M5X20 A280	
070	312115-0362	-		2	SCREW MC6S ISO 4762 M6X8 A280	
080	315105-0153	-		2	WASHER,PLAIN ROUND BRB 6,4x12 Stainless	
085	351172-0102	-	MM	300	CABLE AWM BLUE 0,75MM2	
090	352103-0106	-		4	CABLE GLAND ST 11	
100	352103-0115	-		1	CABLE GLAND STR 21	
110	353021-0216	-		14	FEED THROUGH TERMINAL WDU 2,5	
120	353024-0205	-		2	EARTH TERMINAL WPE 4	
130	353032-0005	-		1	END PLATE WAP 2,5-10	
140	353042-0005	-	MM	105	RAIL TS 35/7.5	
150	359011-0807	-		14	MARKING PLATES 5-FW 1-50	
160	359705-0015	-		1	WARNING SIGN "ELECTRIC SHOCK"	

Pos	Part No	SP	UN	Qty	Description	Page No

CONNECTION BOX

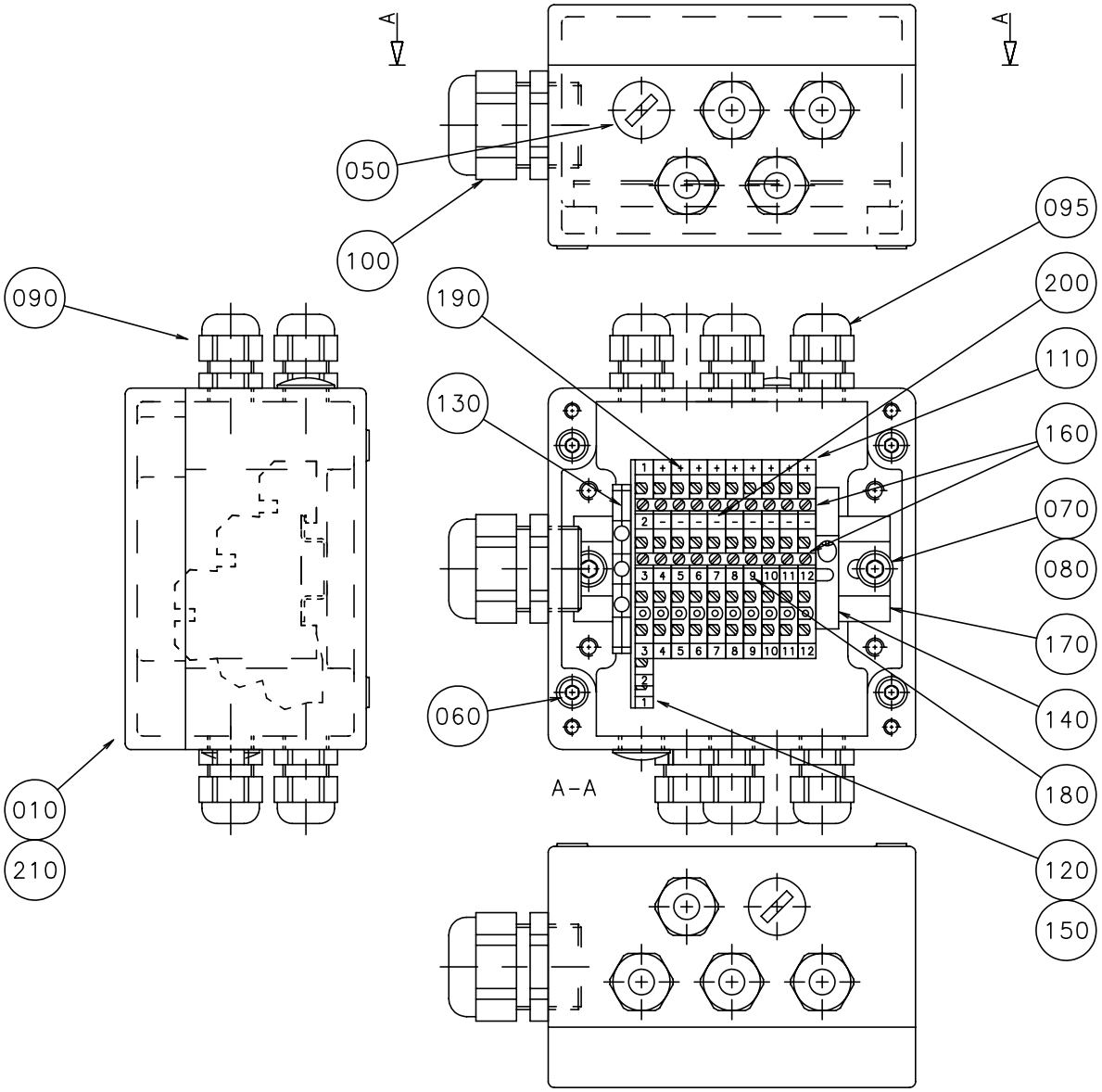

Pos	Part No	SP	UN	Qty	Description	Page No
-						
010	B1260814-0000	-		1	CONNECTION BOX	
050	90002-0013	-		2	BLANK-OFF PLUG 15,2	
060	312115-0331	-		4	SCREW MC6S ISO 4762 M5X20 A280	
070	312115-0362	-		2	SCREW MC6S ISO 4762 M6X8 A280	
080	315105-0153	-		2	WASHER,PLAIN ROUND BRB 6,4x12 Stainless	
090	352103-0101	-		8	CABLE GLAND ST 9	
095	352103-0100	-		1	CABLE GLAND STR 9;PR15,2	
100	352103-0115	-		1	CABLE GLAND STR 21	
110	353021-0301	-		8	TERMINALS,TRIPLE-LEVEL, DLI 2,5/35 PA	
120	353021-0302	-		1	TERMINALS,TRIPLE-LEVEL, DLD 2,5/35 PA	
130	353024-0205	-		1	EARTH TERMINAL WPE 4	
140	353031-0201	-		1	END BRACKET EW35	
150	353032-0302	-		1	END PLATE WAP	
160	353034-0404	-		2	BRIDGE CONLECK Q10	
170	353042-0005	-	MM	105	RAIL TS 35/7.5	
180	359011-0807	-		2	MARKING PLATES 5-FW 1-50	
190	359011-0817	-		1	SYMBOL 5-GW (+) 50pc	
200	359011-0818	-		1	SYMBOL 5-GW (-) 50pc	
210	359705-0015	-		1	WARNING SIGN "ELECTRIC SHOCK"	

Pos	Part No	SP	UN	Qty	Description	Page No

CONNECTION BOX

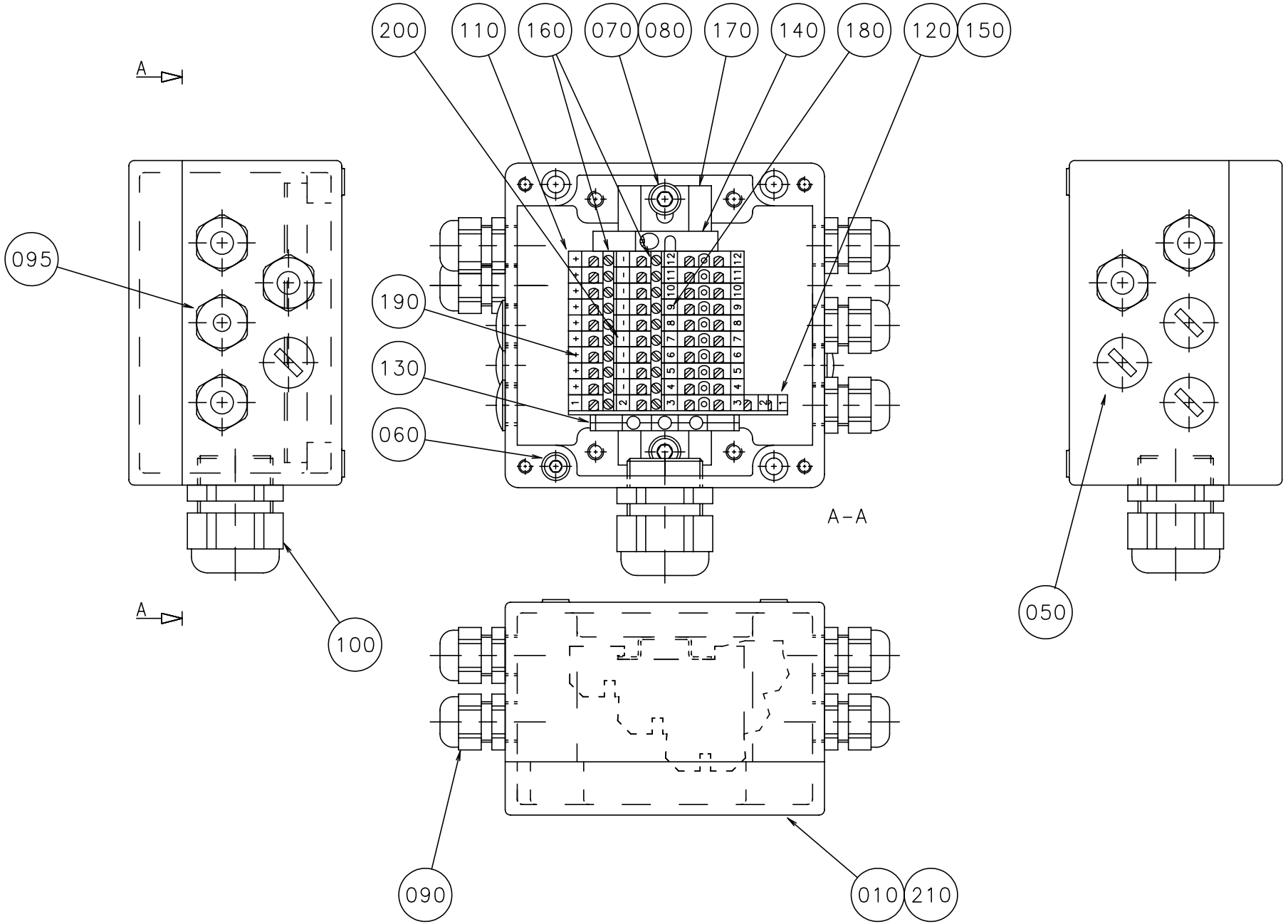

S-1260811
ECN 71157

Pos	Part No	SP	UN	Qty	Description	Page No
-						
010	B1260814-0000	-		1	CONNECTION BOX	
050	90002-0013	-		4	BLANK-OFF PLUG 15,2	
060	312115-0331	-		4	SCREW MC6S ISO 4762 M5X20 A280	
070	312115-0362	-		2	SCREW MC6S ISO 4762 M6X8 A280	
080	315105-0153	-		2	WASHER,PLAIN ROUND BRB 6,4x12 Stainless	
090	352103-0101	-		5	CABLE GLAND ST 9	
095	352103-0100	-		1	CABLE GLAND STR 9;PR15,2	
100	352103-0115	-		1	CABLE GLAND STR 21	
110	353021-0301	-		9	TERMINALS,TRIPLE-LEVEL, DLI 2,5/35 PA	
120	353021-0302	-		1	TERMINALS,TRIPLE-LEVEL, DLD 2,5/35 PA	
130	353024-0205	-		1	EARTH TERMINAL WPE 4	
140	353031-0201	-		1	END BRACKET EW35	
150	353032-0302	-		1	END PLATE WAP	
160	353034-0404	-		2	BRIDGE CONLECK Q10	
170	353042-0005	-	MM	105	RAIL TS 35/7.5	
180	359011-0807	-		6	MARKING PLATES 5-FW 1-50	
190	359011-0817	-		1	SYMBOL 5-GW (+) 50pc	
200	359011-0818	-		1	SYMBOL 5-GW (-) 50pc	
210	359705-0015	-		1	WARNING SIGN "ELECTRIC SHOCK"	

Pos	Part No	SP	UN	Qty	Description	Page No

FRAME ASSEMBLY

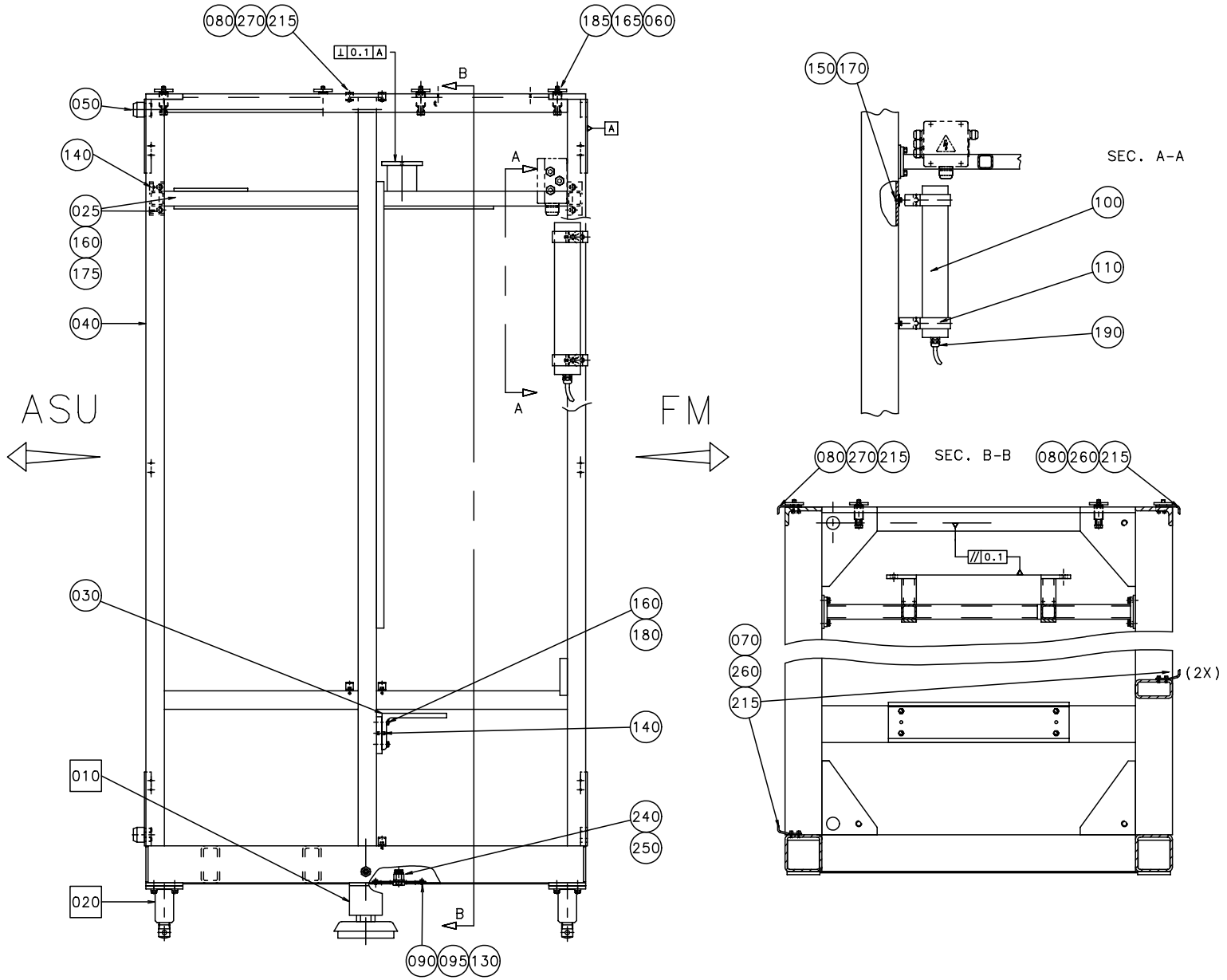

Pos	Part No	SP	UN	Qty	Description	Page No
-						
010	A1035076-0100	-		2	LEG	**59**
020	A1035471-0100	-		4	LEG	**61**
025	985866-0000	-		1	TOP FRAME	
030	1140427-0000	-		1	BRACKET	
040	1255311-0000	-		1	FRAME	
045	1348058-0000	-		1	CABLE DUCT	
050	1037762-0000	-		2	PIN	
055	1103299-0000	-		1	NON-SKID	
060	1116048-0000	-		6	SPACER	
070	1036227-0000	-		3	BRACKET	
080	1296856-0000	-		3	BRACKET	
085	1348057-0000	-		2	BRACKET	
090	1279832-0000	-		1	PLATE	
095	1279833-0000	-		1	RUBBER STRIP	
100	B 90164-0009	-		1	LIGHT FIXTURE	
110	90164-0302	-		2	BRACKET	
120	90165-0060	-		4	PIPE-CLIPS,FOR SINGLE PIPE,ONE SIDE 5	
130	312105-0323	-		4	SCREW M6S ISO 4017 M5X8 A280	
135	312105-0329	-		4	SCREW M6S ISO 4017 M5X16 A280	
140	311112-0377	-		4	PINS,SLOTTED TUBULAR SPRING PIN 8X24	
150	312105-0366	-		4	SCREW M6S ISO 4017 M6X12 A280	
160	312105-0453	-		12	SCREW M6S ISO 4017 M8X25 A280	
165	312105-0505	-		6	SCREW M6S ISO 4014 M10X70 A280	
170	315105-0153	-		4	WASHER,PLAIN ROUND BRB 6,4x12 Stainless	
175	315105-0165	-		8	WASHERS,PLAIN ROUND 8,4X16	
180	315115-0165	-		4	WASHER TBRB8;4x16 Stainless	
185	315105-0173	-		6	WASHERS,PLAIN ROUND 10,5X22	
190	352103-0106	-		1	CABLE GLAND ST 11	
200	312125-0287	-		33	SLOTTED CHEESE HEAD ISO 1207 M4X8 RFR	
210	315105-0136	-		13	WASHERS,PLAIN ROUND 4,3X8	
215	315105-0146	-		16	WASHERS,PLAIN ROUND 5,3X10	
220	352113-0204	-		9	ANCHOR TM3S25-M	
230	352113-0205	-		22	ANCHOR TM2S8-C100	
240	90055-0096	-		1	STRAIGHT COUPL,FOR PLASTIC TUBE 14-G3/8"	
250	90330-0038	-		1	NUT,HEXAGON G3/8"	
260	312115-0327	-		6	SCREW MC6S ISO 4762 M5X12 A280	
270	312115-0329	-		6	SCREW MC6S ISO 4762 M5X16 A280	

Pos	Part No	SP	UN	Qty	Description	Page No

FRAME ASSEMBLY

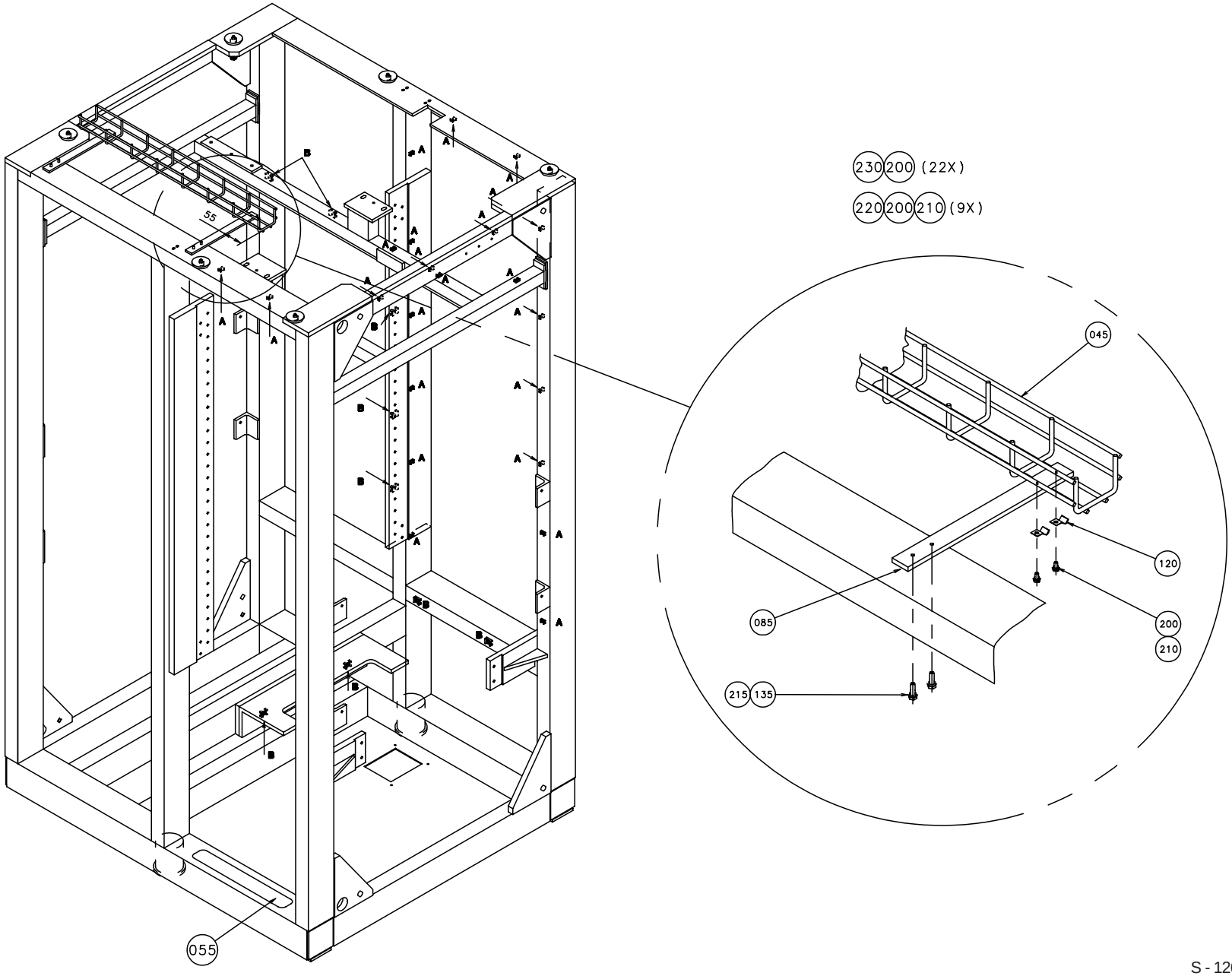

Pos	Part No	SP	UN	Qty	Description	Page No
-						
010	A1035076-0100	-		2	LEG	**59**
020	A1035471-0100	-		4	LEG	**61**
025	985866-0000	-		1	TOP FRAME	
030	1140427-0000	-		1	BRACKET	
040	1255311-0000	-		1	FRAME	
045	1348058-0000	-		1	CABLE DUCT	
050	1037762-0000	-		2	PIN	
055	1103299-0000	-		1	NON-SKID	
060	1116048-0000	-		6	SPACER	
070	1036227-0000	-		3	BRACKET	
080	1296856-0000	-		3	BRACKET	
085	1348057-0000	-		2	BRACKET	
090	1279832-0000	-		1	PLATE	
095	1279833-0000	-		1	RUBBER STRIP	
100	B 90164-0009	-		1	LIGHT FIXTURE	
110	90164-0302	-		2	BRACKET	
120	90165-0060	-		4	PIPE-CLIPS,FOR SINGLE PIPE,ONE SIDE 5	
130	312105-0323	-		4	SCREW M6S ISO 4017 M5X8 A280	
135	312105-0329	-		4	SCREW M6S ISO 4017 M5X16 A280	
140	311112-0377	-		4	PINS,SLOTTED TUBULAR SPRING PIN 8X24	
150	312105-0366	-		4	SCREW M6S ISO 4017 M6X12 A280	
160	312105-0453	-		12	SCREW M6S ISO 4017 M8X25 A280	
165	312105-0505	-		6	SCREW M6S ISO 4014 M10X70 A280	
170	315105-0153	-		4	WASHER,PLAIN ROUND BRB 6,4x12 Stainless	
175	315105-0165	-		8	WASHERS,PLAIN ROUND 8,4X16	
180	315115-0165	-		4	WASHER TBRB8;4x16 Stainless	
185	315105-0173	-		6	WASHERS,PLAIN ROUND 10,5X22	
190	352103-0106	-		1	CABLE GLAND ST 11	
200	312125-0287	-		33	SLOTTED CHEESE HEAD ISO 1207 M4X8 RFR	
210	315105-0136	-		13	WASHERS,PLAIN ROUND 4,3X8	
215	315105-0146	-		16	WASHERS,PLAIN ROUND 5,3X10	
220	352113-0204	-		9	ANCHOR TM3S25-M	
230	352113-0205	-		22	ANCHOR TM2S8-C100	
240	90055-0096	-		1	STRAIGHT COUPL,FOR PLASTIC TUBE 14-G3/8"	
250	90330-0038	-		1	NUT,HEXAGON G3/8"	
260	312115-0327	-		6	SCREW MC6S ISO 4762 M5X12 A280	
270	312115-0329	-		6	SCREW MC6S ISO 4762 M5X16 A280	

Pos	Part No	SP	UN	Qty	Description	Page No

LEG

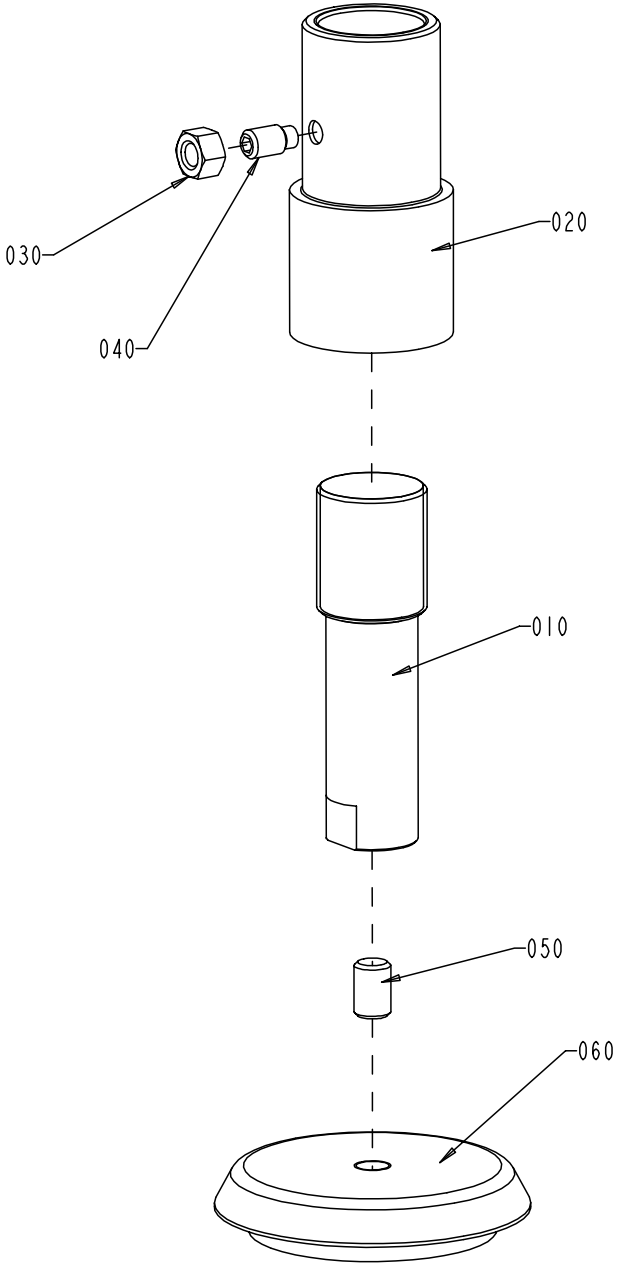

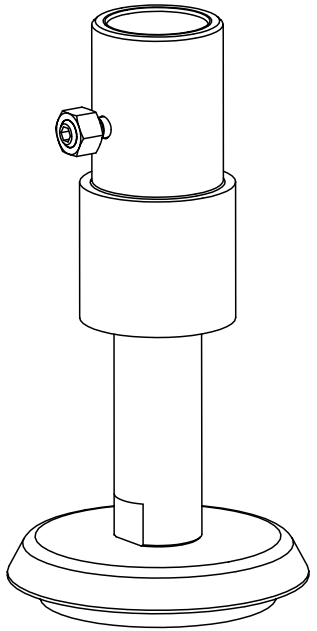

Pos	Part No	SP	UN	Qty	Description	Page No
-						
	1035076-0051	-		x	===CAD MODEL===	
010	1036119-0000	-		1	LEG	
020	1036120-0000	-		1	SLEEVE	
030	312605-0324	-		1	NUTS,HEXAGON,M16	
040	312311-0624	-		1	STOP SCREW T6SS16X30FZB	
050	90347-0029	Q		1	DAMPER	
060	90287-0130	Q		1	GRUB SCREW	

Pos	Part No	SP	UN	Qty	Description	Page No

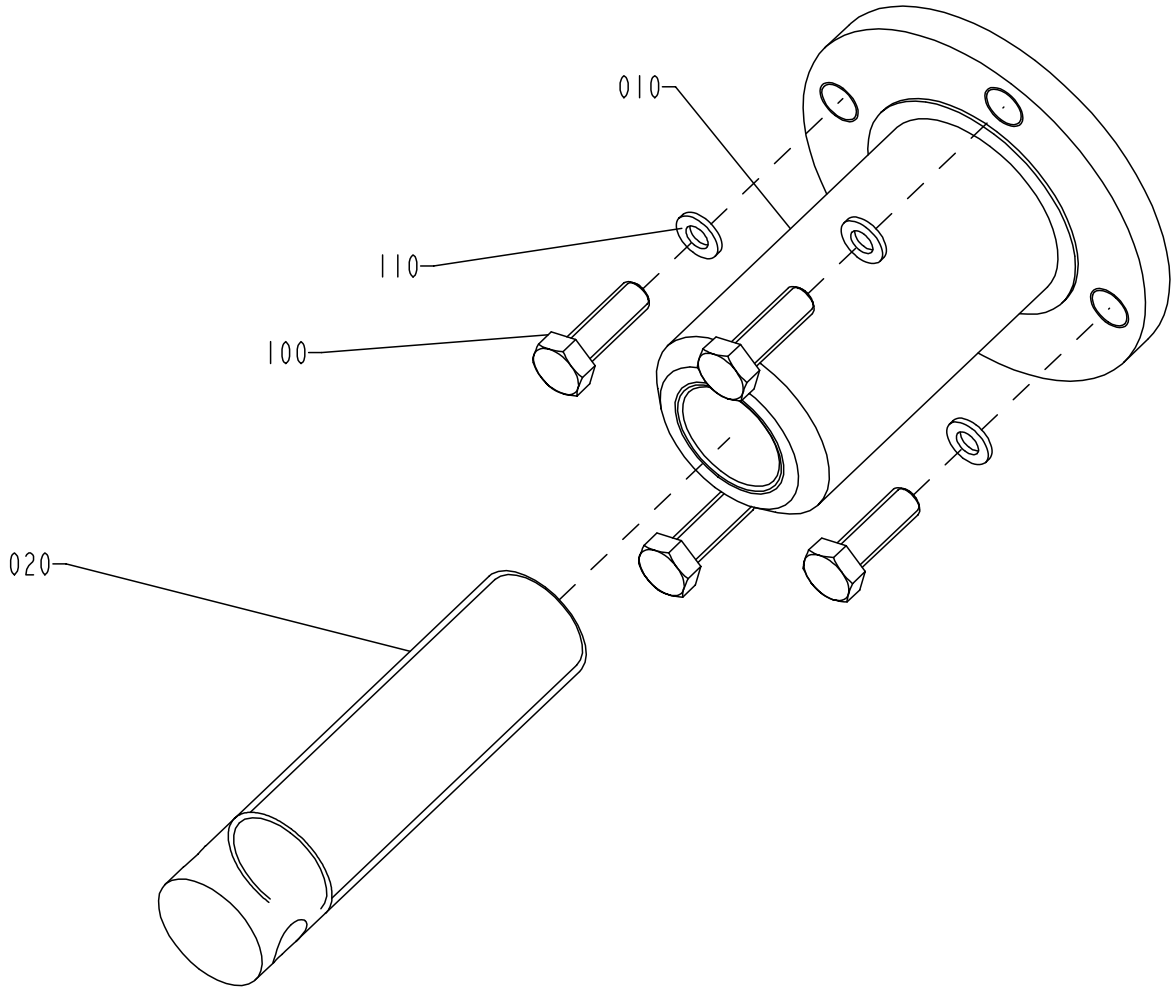
010
110
100
020

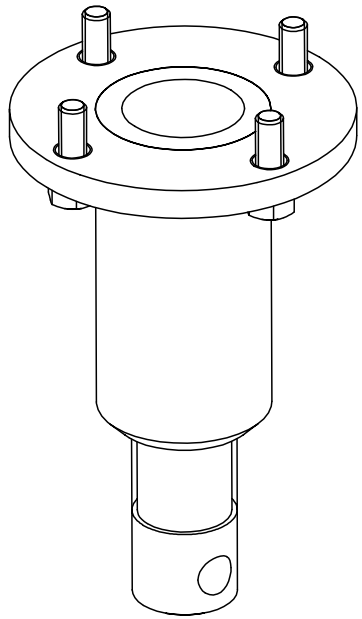

Pos	Part No	SP	UN	Qty	Description	Page No
-						
010	469095-0000	D		1	HOLDER	
020	469096-0000	D		1	LEG	
100	312105-0453	-		4	SCREW M6S ISO 4017 M8X25 A280	
110	315125-0165	-		4	WASHERS,PLAIN ROUND,CHAMFERED 8,4X26X5	

Pos	Part No	SP	UN	Qty	Description	Page No

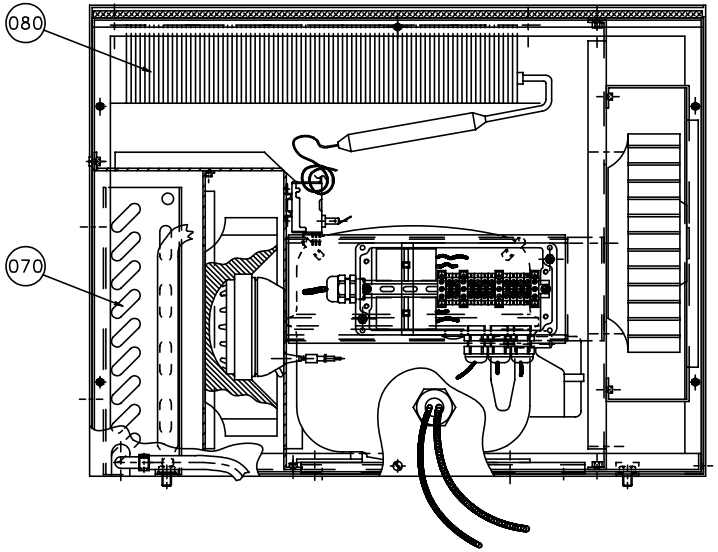

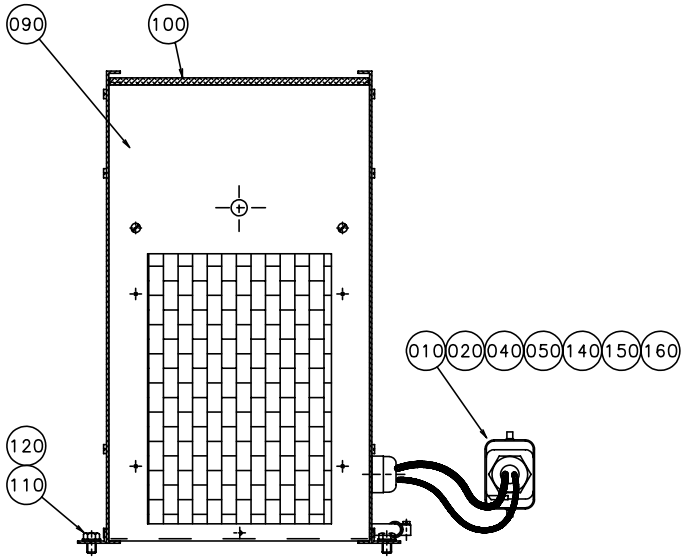

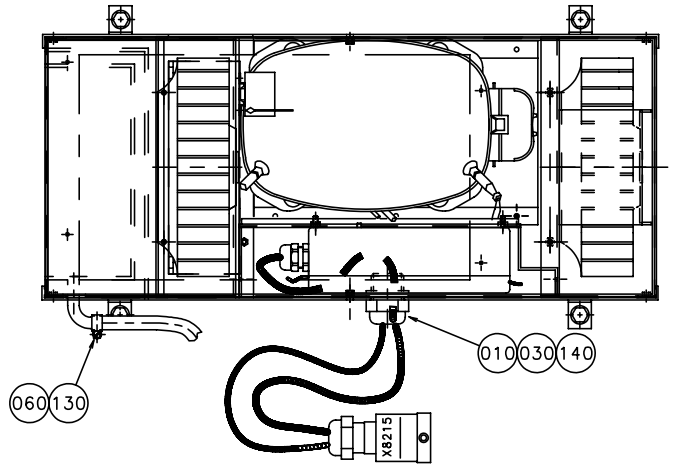

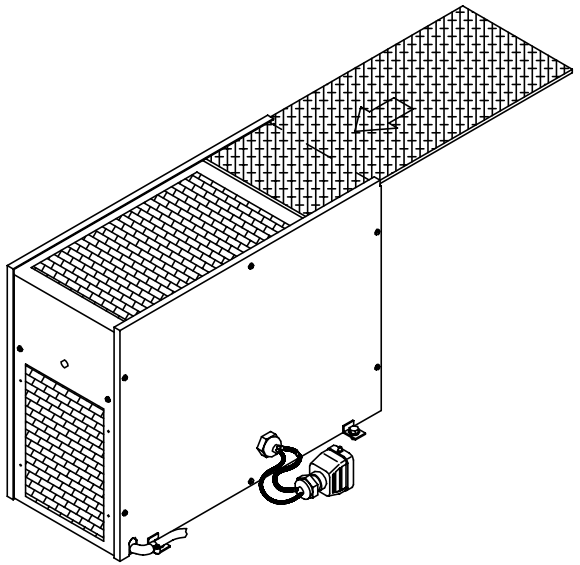

S-1095928-1
ECN 22912

Pos	Part No	SP	UN	Qty	Description	Page No
-						
X8411	A1285054-0100	-		1	CONNECTION BOX	**65**
010	B1282788-0000	D		2	INSERT	
020	90089-0031	-		1	Enlarging Sleeve	
030	90099-0019	-		1	NUT	
040	90110-0157	-		1	COVER	
050	90110-0159	-		1	CONTACT	
060	90166-0126	-	M	2	HOSE	
070	90422-0041	-		1	Evaporator	
080	90422-0042	-		1	CAPACITOR	
090	90422-0316	-		1	Hood	
100	90422-0317	R		1	Filter	
110	312105-0447	-		4	SCREW M6S ISO 4017 M8X12 A280	
120	315105-0165	-		4	WASHERS,PLAIN ROUND 8,4X16	
130	342991-0100	-		1	HOSE CLIP,WORM DRIVE TYPE 10-13	
140	353240-0005	-		2	GLANDS,NORMAL WITHOUT INSERT PG 21	
150	359005-0010	-		1	MARKING SESATS 0-9	
160	359005-0050	-		1	MARKING SEATS "X"	
B8428	90059-0029	R		1	Thermostat	
M8407	90264-0069	R		1	Fan	
M8408	90270-0018	-		1	Compressor	
M8409	90264-0069	R		1	Fan	
W8450	351150-0414	-	MM	1000	CABLES,MULTI-CONDUCTOR 5X1,5 MM2	
W8452	351150-0412	-	MM	300	CABLES,MULTI-CONDUCTOR 3X1,5 MM2	
W8454	351150-0404	-	MM	1200	CABLES,MULTI-CONDUCTOR 4X0,75 MM2	

Pos	Part No	SP	UN	Qty	Description	Page No

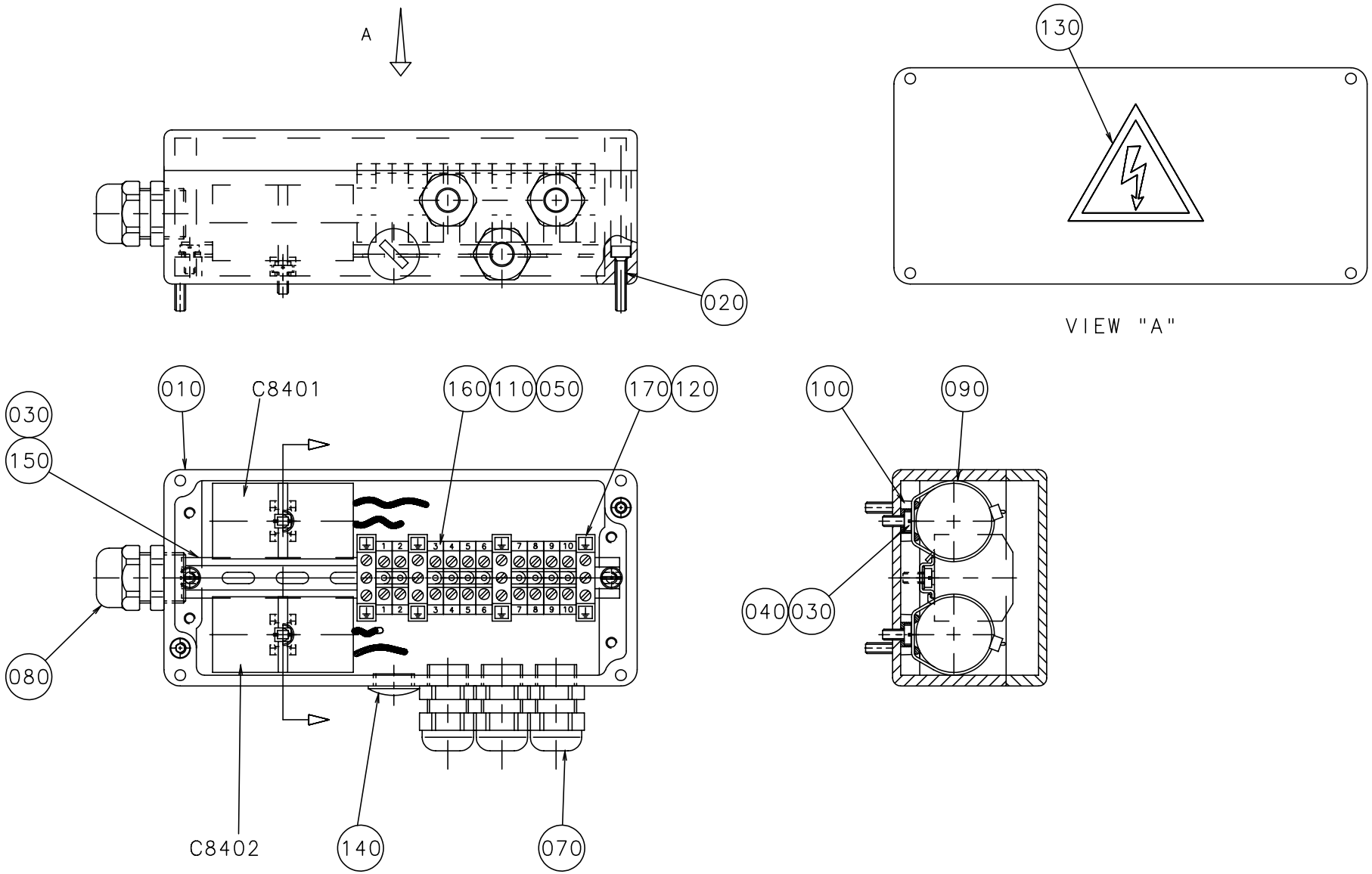
A
020
130
VIEW "A"
010
C8401
160
110
050
170
120
030
150
080
C8402
140
070
100
090
040
030

Pos	Part No	SP	UN	Qty	Description	Page No
-						
010	B1350146-0000	-		1	CONNECTION BOX	
020	312115-0295	-		2	SCREW MC6S ISO 4762 M4X20 A280	
030	312125-0287	-		4	SLOTTED CHEESE HEAD ISO 1207 M4X8 RFR	
040	315105-0136	-		2	WASHERS,PLAIN ROUND 4,3X8	
050	351172-0104	-	M	2	CABLE AWM BLUE 1,5MM2	
070	352103-0101	-		3	CABLE GLAND ST 9	
080	352103-0106	-		1	CABLE GLAND ST 11	
090	352113-0102	-		2	RIBBON CLAMP	
100	352113-0205	-		2	ANCHOR TM2S8-C100	
110	359011-0807	-		2	MARKING PLATES 5-FW 1-50	
120	359011-0834	-		1	SET OF SIGNS 6-GW(EARTH)	
130	359705-0015	-		1	WARNING SIGN "ELECTRIC SHOCK"	
140	90002-0013	-		1	BLANK-OFF PLUG 15,2	
150	90077-0328	-	MM	162	RAIL TS15/5	
160	90077-0079	-		10	FEED THROUGH TERMINAL AKZ 4PA for TS15	
170	90135-0026	-		4	EARTHING CLAMP	
C8401	90159-0097	R		1	Capacitor	
C8402	90159-0097	R		1	Capacitor	

Pos	Part No	SP	UN	Qty	Description	Page No

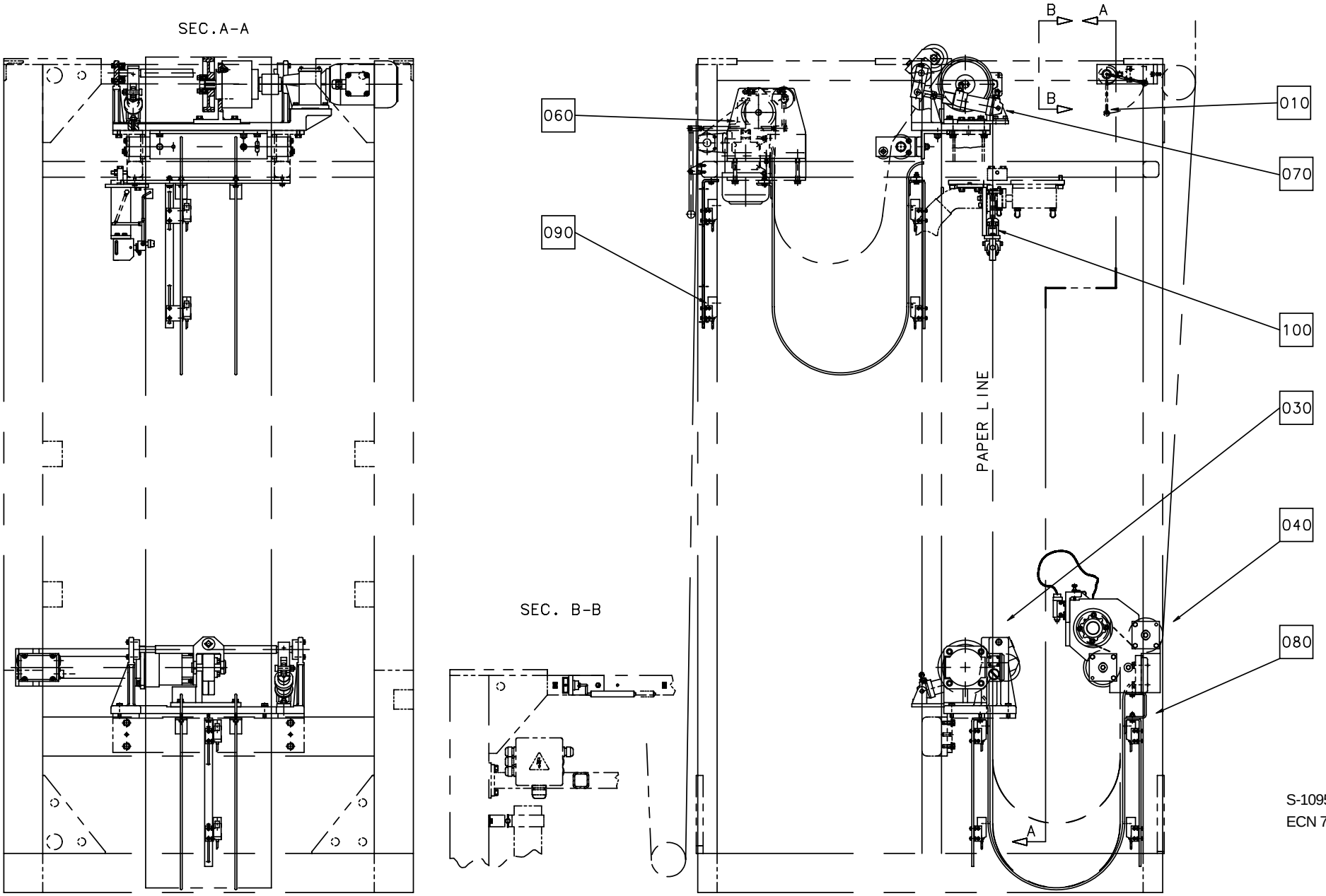

S-1095931-1
ECN 71125

Pos	Part No	SP	UN	Qty	Description	Page No
-						
010	A 514993-0200	-		1	BY-PASS SENSOR	69
030	A1095935-0100	-		1	DRIVE MOTOR	71
040	A1095942-0100	-		1	ROLLER ASSEMBLY	73
060	A1095953-0100	-		1	INFEED UNIT	85
070	A1095970-0100	-		1	PAPER BRAKE	89
080	A1095979-0100	-		1	PHOTOCELL UNIT	95
090	A1095980-0100	-		1	PHOTOCELL UNIT	97
100	A1255601-0100	-		1	EDGE GUIDE	99

Pos	Part No	SP	UN	Qty	Description	Page No

BY-PASS SENSOR

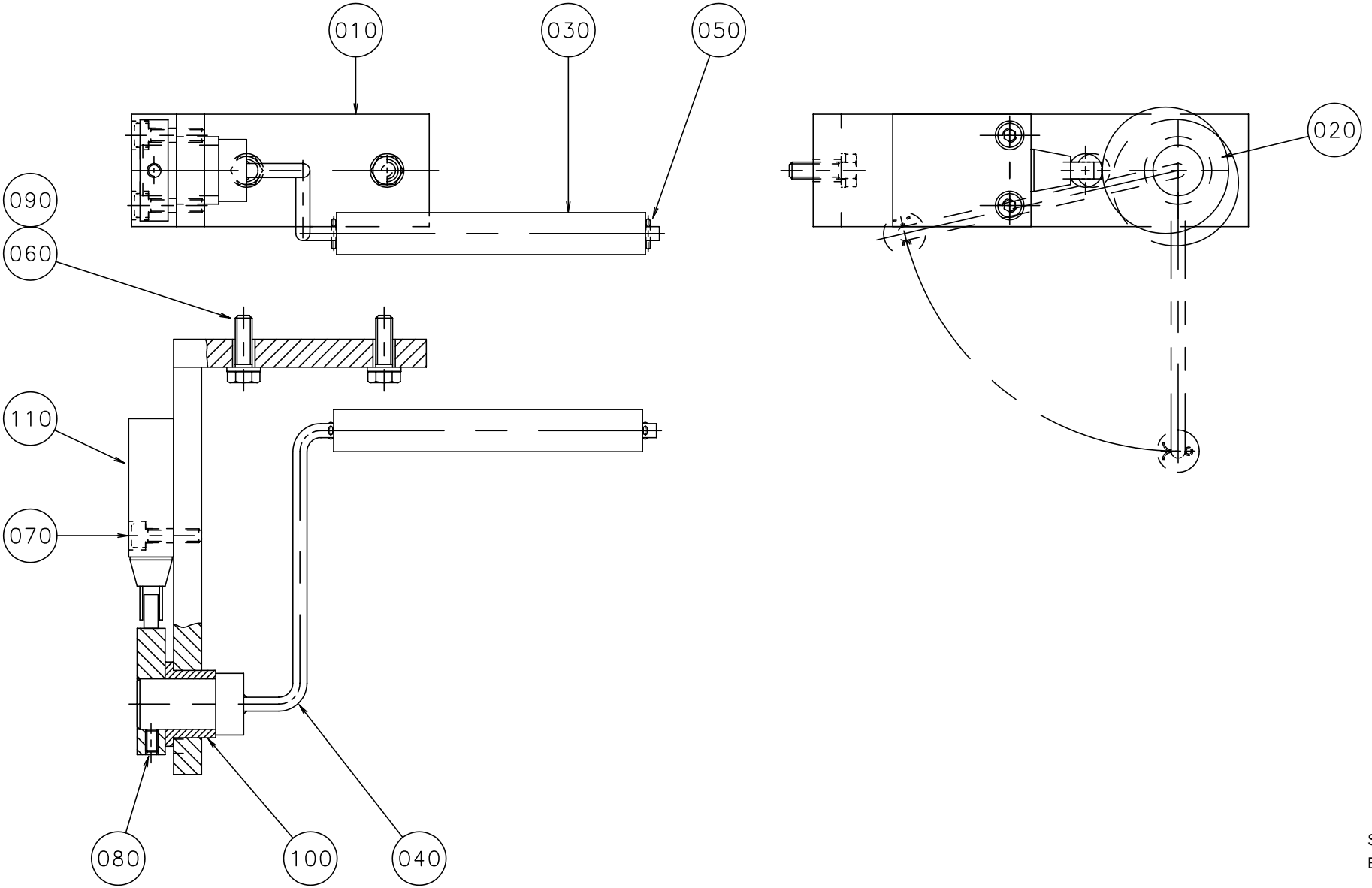

S-514993-1
ECN 71157

Pos	Part No	SP	UN	Qty	Description	Page No
-						
010	1260329-0000	-		1	BRACKET	
020	1255035-0000	D		1	ECCENTRIC	
030	1010814-0000	-		1	ROLLER	
040	1082861-0000	-		1	ARM	
050	311411-0138	-		2	SPLIT PIN SP1,6X12RFR	
060	312105-0370	-		2	SCREW M6S ISO 4017 M6X20 A280	
070	312115-0331	-		2	SCREW MC6S ISO 4762 M5X20 A280	
080	312318-0323	-		1	SET SCREW CUP POINT ISO 4029 M5X8 RFR	
090	315105-0153	-		2	WASHER,PLAIN ROUND BRB 6,4x12 Stainless	
100	321111-0274	-		1	FLANGE BUS 18E7X18	
110	90044-0094	R		1	LIMIT SWITCH HONEYWELL	

Pos	Part No	SP	UN	Qty	Description	Page No

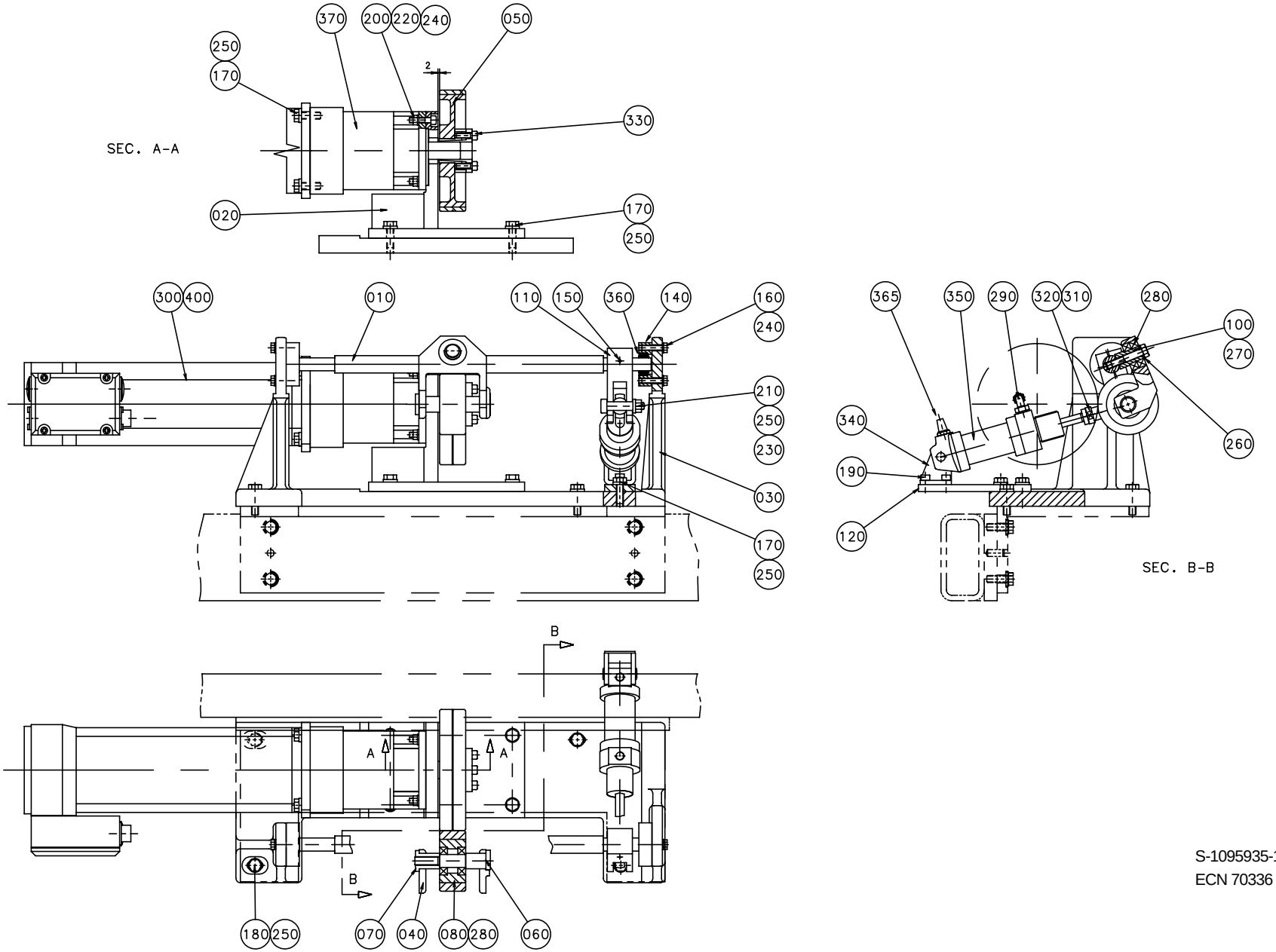

S-1095935-1
ECN 70336

Pos	Part No	SP	UN	Qty	Description	Page No
-						
010	1129905-0000	-		1	SHAFT	
020	1129908-0000	-		1	BRACKET	
030	1129909-0000	-		1	BRACKET	
040	263150-0000	-		1	BRACKET	
050	1296871-0000	M		1	WHEEL	
060	263152-0000	D		1	SHAFT	
070	263153-0000	D		1	NUT	
080	266710-0000	M		1	WHEEL	
100	1129906-0000	D		1	PIN	
110	1129907-0000	-		1	LEVER	
120	1140016-0000	-		1	PLATE	
140	1140174-0000	-		2	BEARING HOUSING	
150	311112-0262	-		1	PINS,SLOTTED TUBULAR SPRING PIN 4X32	
160	312105-0372	-		4	SCREW M6S ISO 4017 M6X25 A280	
170	312105-0453	-		10	SCREW M6S ISO 4017 M8X25 A280	
180	312105-0455	-		4	SCREW M6S ISO 4017 M8X30 A280	
190	312115-0366	-		2	SCREW MC6S ISO 4762 M6X12 A280	
200	312115-0372	-		4	SCREW MC6S ISO 4762 M6X25 A280	
210	312180-0495	-		1	HEX. SOCKET HEAD SHOULD. ISO 7379 M8X30	
220	312605-0316	-		4	NUT,HEXAGON,A280 M6M6 Stainless	
230	312605-0318	-		1	NUTS,HEXAGON,M8	
240	315105-0153	-		8	WASHER,PLAIN ROUND BRB 6,4x12 Stainless	
250	315115-0165	-		15	WASHER TBRB8;4x16 Stainless	
260	315105-0165	-		1	WASHERS,PLAIN ROUND 8,4X16	
270	312109-0460	-		1	SCREW M6S ISO 4017 M8X45 A280	
280	321308-0202	M		4	BALL BEARING 15X32X9	
290	342931-0113	-		1	ELBOW 90 COUPL.,EXT.THREAD 6/4-G1/8"	
300	90045-0194	D		1	Servo motor	
310	90099-0102	-		1	NUT	
320	90115-0134	M		1	ROD ENDS,MAINTENANCE FREE,10-M10X1.25RH	
330	90208-0078	R		1	CLAMPING ELEMENT WITH SLEEVE 20X28	
340	90239-0488	-		1	BRACKET,REAR,CLEVIS FLANGE,MINI-ISO,32	
350	90239-0834	D		1	DOUBLE ACTING,MINI-ISO,CYL.32-25	
360	90240-0026	D		2	PLAIN BEARING	
365	90328-0003	-		1	SILENCER	
370	90056-0143	D		1	Gear box	
400	353245-0005	-		1	GLANDS,EMC EXTENDED WITH INSERT PG16	

Pos	Part No	SP	UN	Qty	Description	Page No

ROLLER ASSEMBLY

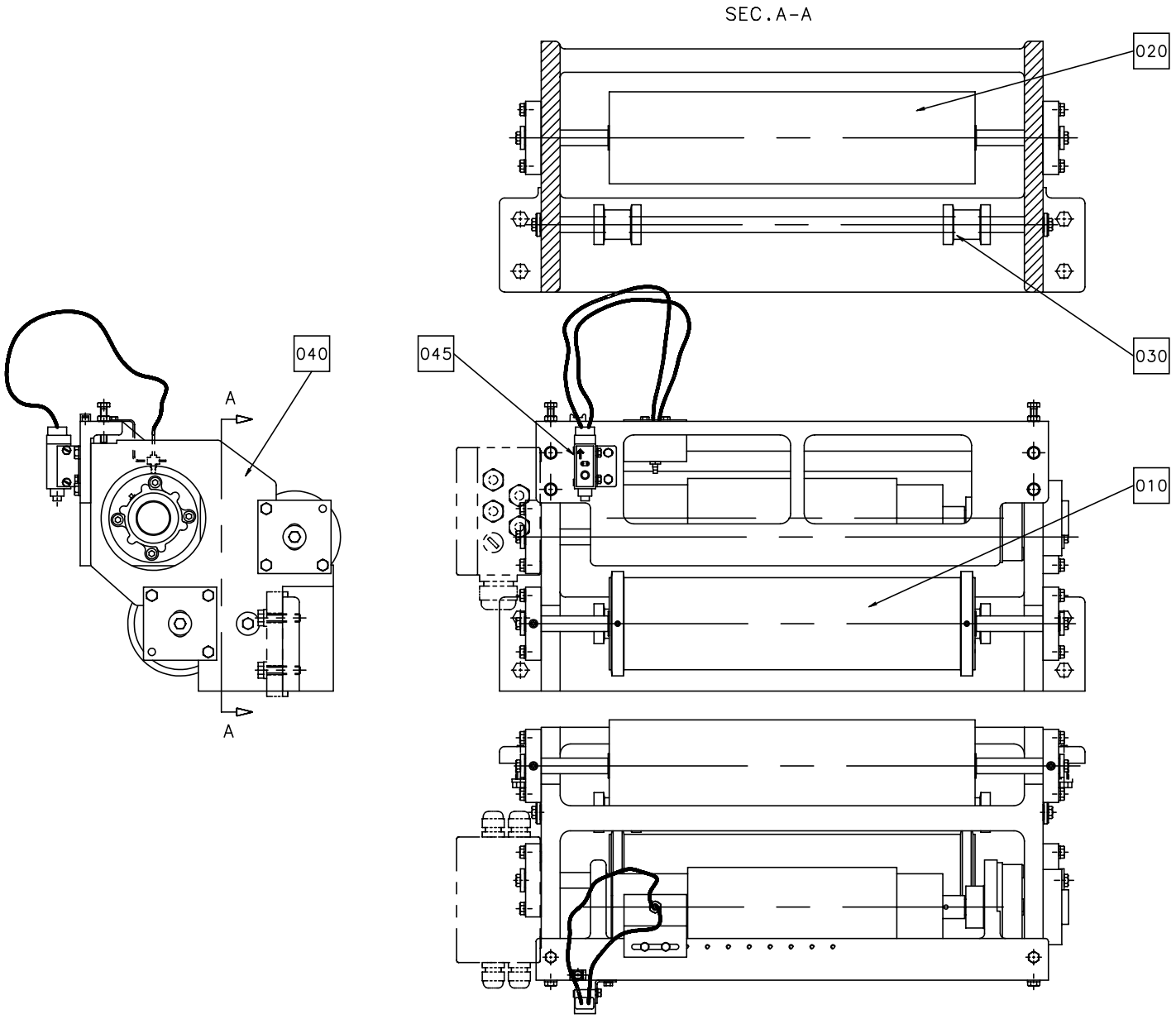

S-1095942-1
ECN 70336

Pos	Part No	SP	UN	Qty	Description	Page No
-						
010	A1095937-0100	-		1	GUIDE ROLLER WITH FLANGE	75
020	A1095938-0100	-		1	GUIDE ROLLER	77
030	A1095940-0100	-		1	GUIDE ROLLER	79
040	A1095941-0100	-		1	TENSION ROLLER	81
045	A1260411-0100	-		1	PATCH/TAB SPLICE DETECTOR	83

Pos	Part No	SP	UN	Qty	Description	Page No

GUIDE ROLLER WITH FLANGE

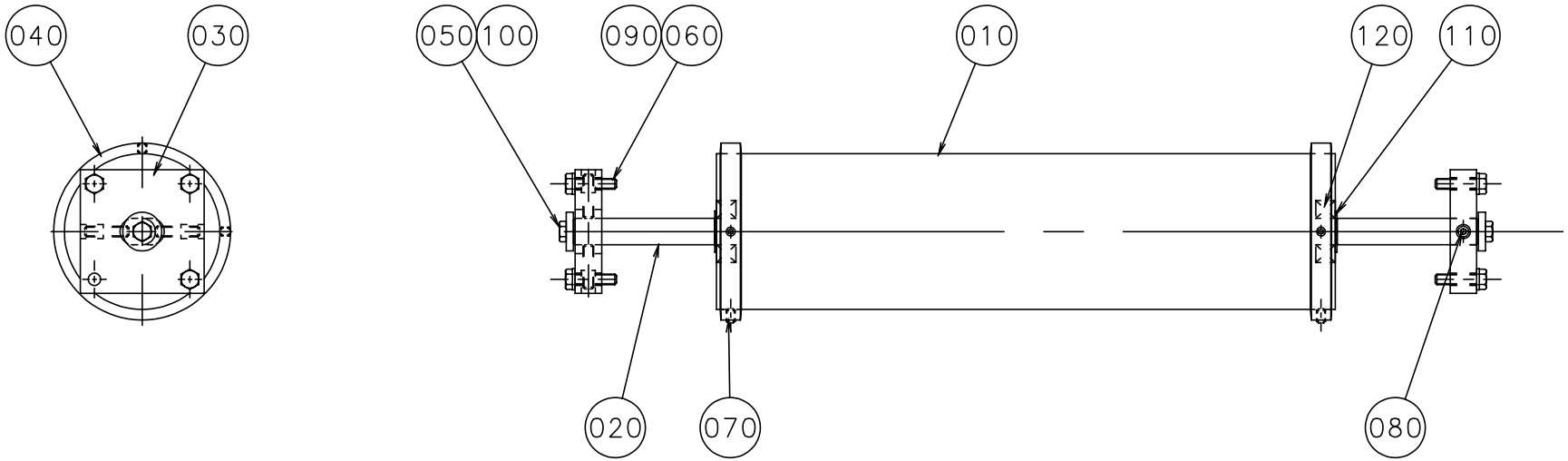

Pos	Part No	SP	UN	Qty	Description	Page No
-						
010	1035882-0000	D		1	BENDING ROLLER	
020	1129624-0000	D		1	AXLE SUPPORT	
030	1129630-0000	-		2	BEARING SEAT	
040	1140055-0000	-		2	RING	
050	312105-0368	-		2	SCREW M6S ISO 4017 M6X16 A280	
060	312105-0372	-		6	SCREW M6S ISO 4017 M6X25 A280	
070	312311-0321	-		4	SET SCREW FULL DOGPOINT ISO 4028 M5X6	
080	312318-0372	-		4	SET SCREW CUP POINT ISO 4029 M6X25 RFR	
090	315105-0153	-		6	WASHER,PLAIN ROUND BRB 6,4x12 Stainless	
100	315125-0153	-		2	WASHERS,PLAIN ROUND,CHAMFERED 6,4X22X4	
110	315751-0112	-		2	RETAINING RINGS FOR SHAFT 15	
120	321313-0102	M		2	BALL BEARING 15X35X11	

Pos	Part No	SP	UN	Qty	Description	Page No

GUIDE ROLLER

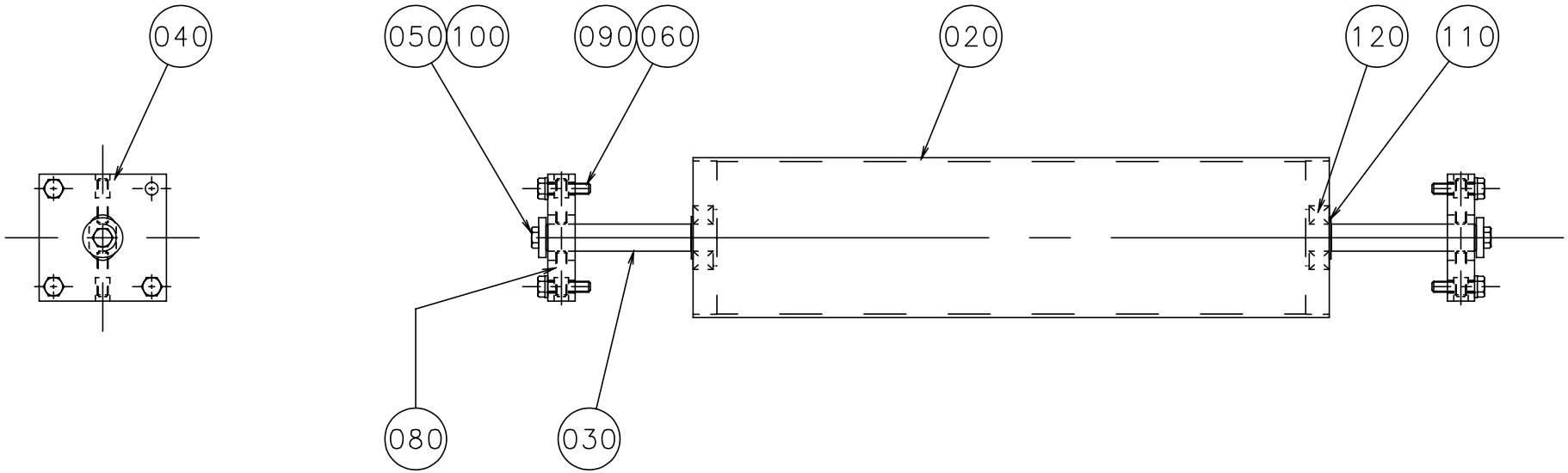

Pos	Part No	SP	UN	Qty	Description	Page No
-						
020	1035882-0000	D		1	BENDING ROLLER	
030	1129624-0000	D		1	AXLE SUPPORT	
040	1129630-0000	-		2	BEARING SEAT	
050	312105-0368	-		2	SCREW M6S ISO 4017 M6X16 A280	
060	312105-0372	-		6	SCREW M6S ISO 4017 M6X25 A280	
080	312318-0372	-		4	SET SCREW CUP POINT ISO 4029 M6X25 RFR	
090	315105-0153	-		6	WASHER,PLAIN ROUND BRB 6,4x12 Stainless	
100	315125-0153	-		2	WASHERS,PLAIN ROUND,CHAMFERED 6,4X22X4	
110	315751-0112	-		2	RETAINING RINGS FOR SHAFT 15	
120	321313-0102	M		2	BALL BEARING 15X35X11	

Pos	Part No	SP	UN	Qty	Description	Page No

GUIDE ROLLER

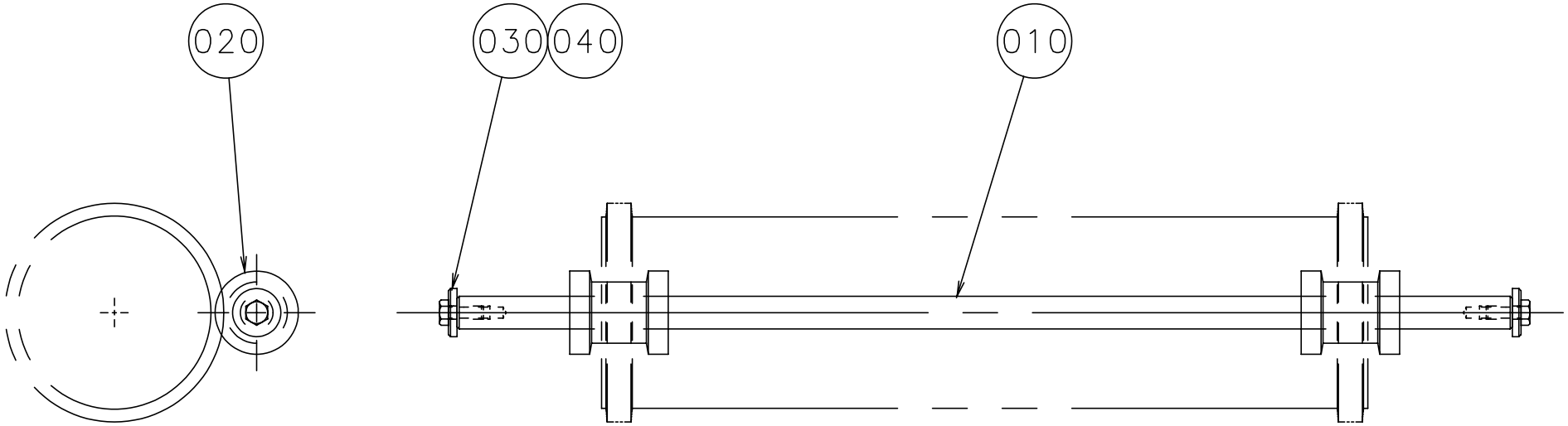

Pos	Part No	SP	UN	Qty	Description	Page No
-						
010	1129626-0000	-		1	AXLE SUPPORT	
020	1140135-0000	D		2	ROLLER	
030	312105-0368	-		2	SCREW M6S ISO 4017 M6X16 A280	
040	315125-0153	-		2	WASHERS,PLAIN ROUND,CHAMFERED 6,4X22X4	

Pos	Part No	SP	UN	Qty	Description	Page No

TENSION ROLLER

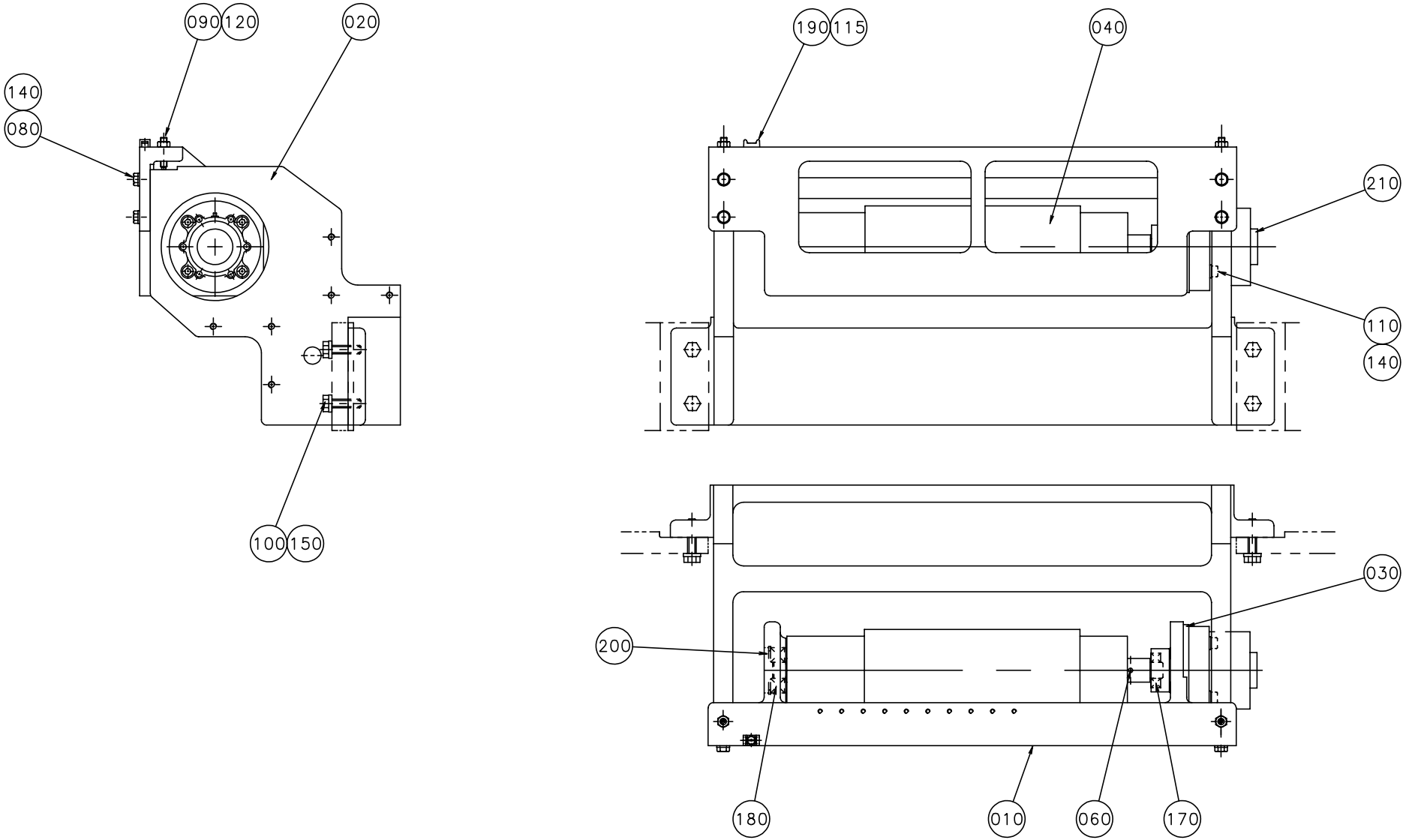

S-1095941-1
ECN 70336

Pos	Part No	SP	UN	Qty	Description	Page No
-						
010	1129628-0000	-		1	BRACKET	
020	1129629-0000	-		1	BRACKET	
030	522408-0000	-		1	BEARING HOUSING	
040	532719-0001	D		1	FEEDING ROLLER	
060	311112-0256	-		1	PINS,SLOTTED TUBULAR SPRING PIN 4X20	
080	312105-0370	-		4	SCREW M6S ISO 4017 M6X20 A280	
090	312311-0374	-		2	SET SCREW FULL DOGPOINT ISO 4028 M6X30	
100	312105-0455	-		4	SCREW M6S ISO 4017 M8X30 A280	
110	312115-0376	-		4	SCREW MC6S ISO 4762 M6X35 A280	
115	312125-0289	-		1	SLOTTED HEMCS4X10RFR	
120	312605-0316	-		2	NUT,HEXAGON,A280 M6M6 Stainless	
140	315105-0153	-		8	WASHER,PLAIN ROUND BRB 6,4x12 Stainless	
150	315115-0165	-		4	WASHER TBRB8;4x16 Stainless	
170	321308-0202	M		1	BALL BEARING 15X32X9	
180	321316-0202	M		1	BALL BEARISKF6302-2RS	
190	352113-0205	-		1	ANCHOR TM2S8-C100	
200	90141-0020	-		1	RETAINING RINGS FOR HOLE 42	
210	90347-0054	R		1	DAMPER	

Pos	Part No	SP	UN	Qty	Description	Page No

PATCH/TAB SPLICE DETECTOR

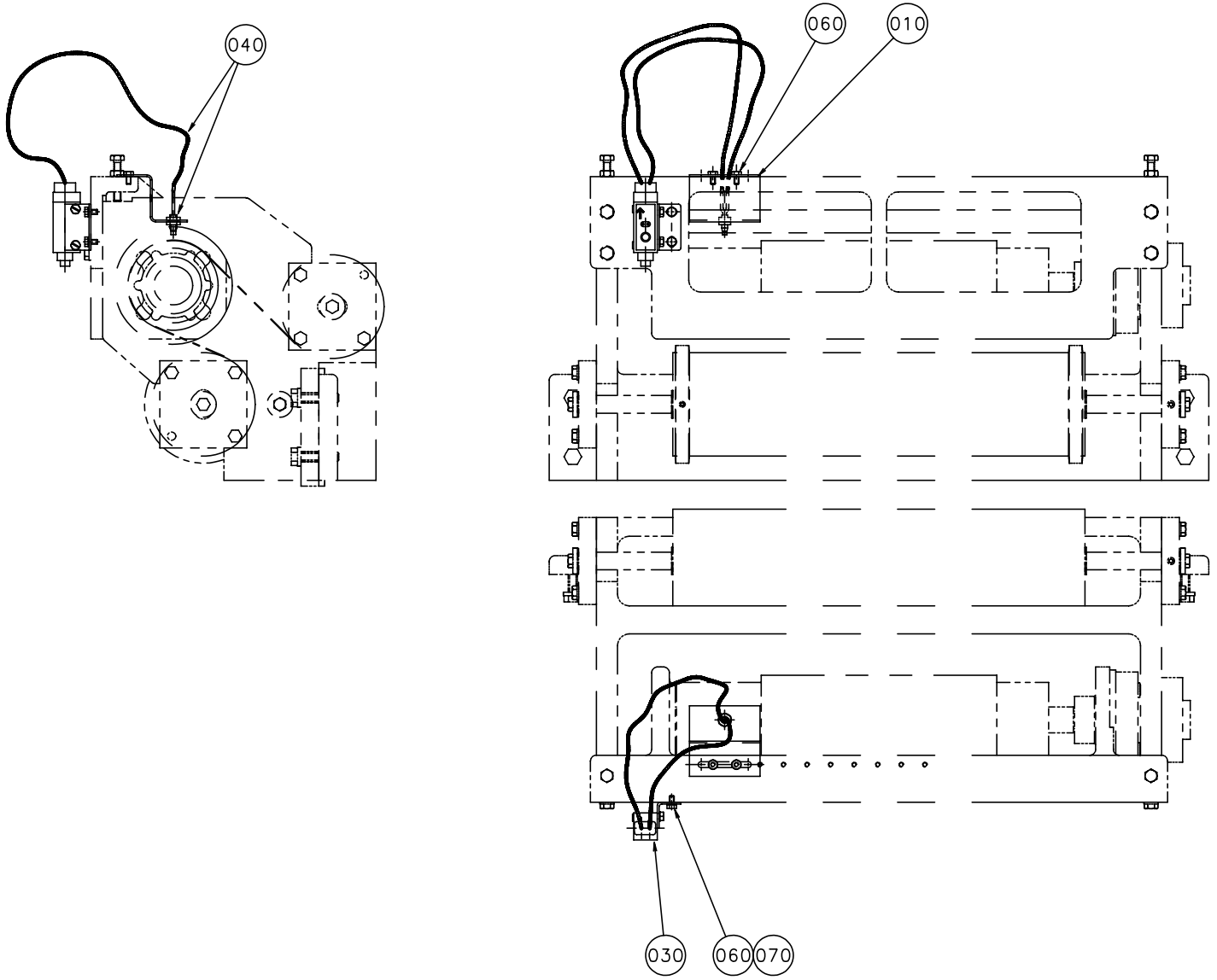

S-1260411-1
ECN 70336

Pos	Part No	SP	UN	Qty	Description	Page No
-						
010	1260413-0000	-		1	BRACKET	
030	90232-0067	R		1	PH.CELLOMRON E3S-X3CB45M	
040	90232-0325	R		1	FIBRE OPTIC OMRON E32 DC200	
060	312105-0287	-		4	SCREW M6S ISO 4017 M4X8 A280	
070	315105-0136	-		2	WASHERS,PLAIN ROUND 4,3X8	

Pos	Part No	SP	UN	Qty	Description	Page No

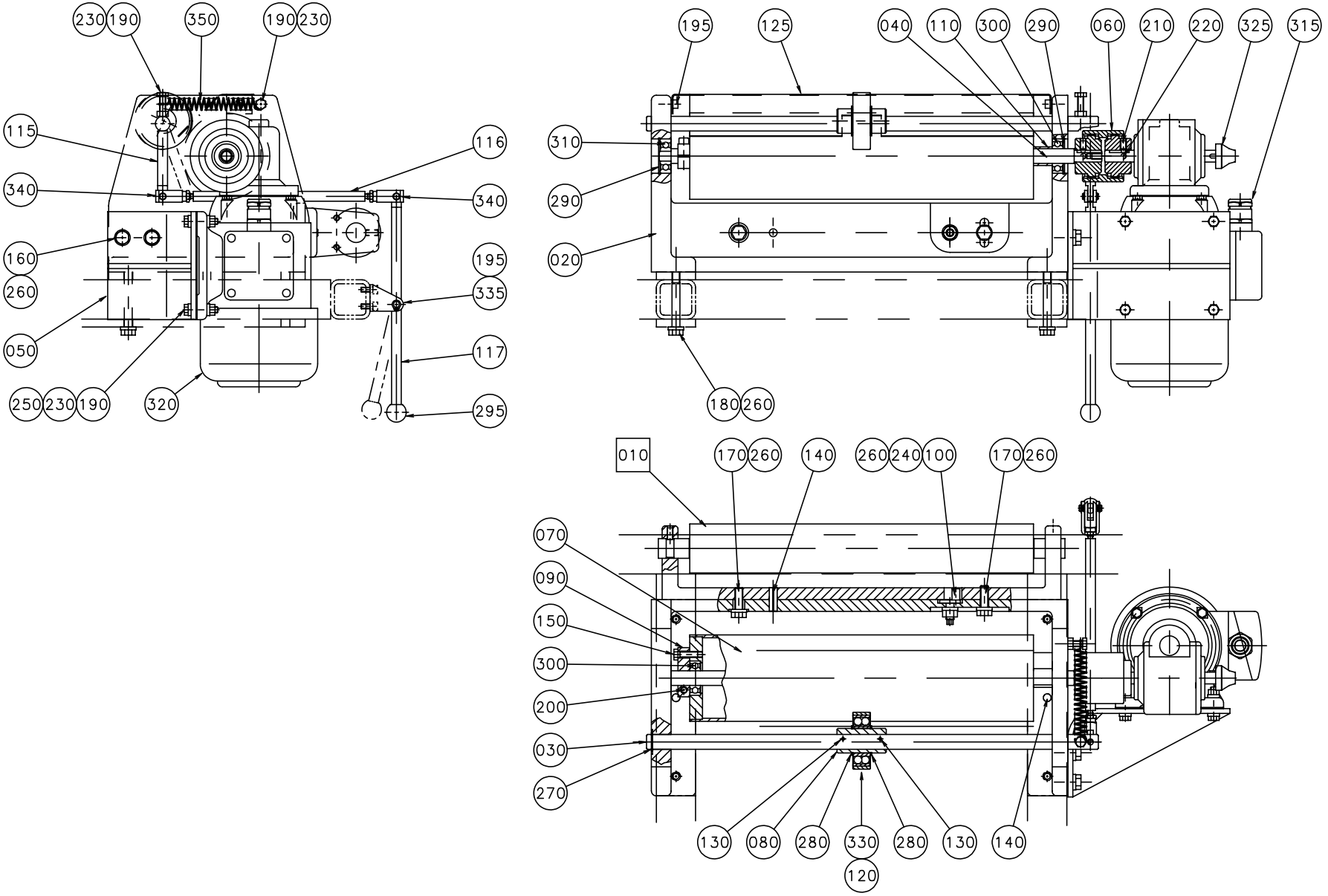

S-1095953-1
ECN 70336

Pos	Part No	SP	UN	Qty	Description	Page No
-						
010	A1095952-0100	-		1	BENDING ROLLER ASSEMBLY	**87**
020	985865-0000	-		1	BRACKET	
030	985856-0000	-		1	SHAFT	
040	1036220-0000	D		1	SHAFT	
050	985854-0000	-		1	BRACKET	
060	B 985899-0000	D		1	COUPLING	
070	1035882-0000	D		1	BENDING ROLLER	
080	1255631-0000	D		1	ECCENTRIC BUSHING	
090	1036232-0000	-		1	BRACKET	
100	1140132-0000	D		1	ECCENTRIC	
110	985855-0000	-		1	SPACER BUSHING	
115	1260642-0000	-		1	LEVER	
116	1260643-0000	-		1	LEVER	
117	1260644-0000	-		1	LEVER	
120	1260648-0000	M		1	BUSHING	
125	1260649-0000	-		1	PAPER GUIDE	
130	311112-0260	-		2	SLOTTED TURP 4X28 RFR	
140	311112-0377	-		3	PINS,SLOTTED TUBULAR SPRING PIN 8X24	
150	312105-0370	-		1	SCREW M6S ISO 4017 M6X20 A280	
160	312105-0451	-		2	SCREW M6S ISO 4017 8X20 A280	
170	312105-0453	-		2	SCREW M6S ISO 4017 M8X25 A280	
180	312105-0465	-		4	SCREW M6S ISO 4014 M8X70 A280	
190	312109-0374	-		6	SCREW M6S ISO 4017 M6X30 A280	
195	312115-0327	-		4	SCREW MC6S ISO 4762 M5X12 A280	
200	312115-0372	-		1	SCREW MC6S ISO 4762 M6X25 A280	
210	312311-0366	-		2	SET SCREW FULL DOGPOINT ISO 4028 M6X12	
220	312318-0362	-		2	SET SCREW CUP POINT ISO 4029 M6X8 RFR	
230	312605-0316	-		6	NUT,HEXAGON,A280 M6M6 Stainless	
240	312605-0318	-		1	NUTS,HEXAGON,M8	
250	315115-0153	-		8	WASHER TBRB 6,4x12 Stainless	
260	315115-0165	-		9	WASHER TBRB8;4x16 Stainless	
270	315751-0112	-		2	RETAINING RINGS FOR SHAFT 15	
280	315751-0122	-		2	RETAINING RINGS FOR SHAFT 30	
290	315753-0124	-		2	RETAINING RINGS FOR HOLE 35	
295	318800-0102	-		1	HANDLES,SPHERICAL KNOB,INT.THRE.,D.20-M5	
300	321313-0102	M		3	BALL BEARING 15X35X11	
310	321316-0200	M		1	BALL BEARISKF6300-2RS	
315	90012-0137	-		1	CABLE GLAND SCREENED PG11 SHVE-120111	
320	90069-0281	D		1	Worm gear motor Grosshop OKM-87-60	
325	90015-0021	-		1	BUSHING	
330	90214-0144	M		1	BEARINGS,BALL BEARING,SPHERICAL,SELF-ALI	
335	90239-0486	-		1	BRACKET,REAR,CLEVIS FLANGE,MINI-ISO,16	
340	90239-0489	-		2	ROD END,CLEVIS WITH AXLE,M6	
350	90335-0091	R		1	SPRING	

BENDING ROLLER ASSEMBLY

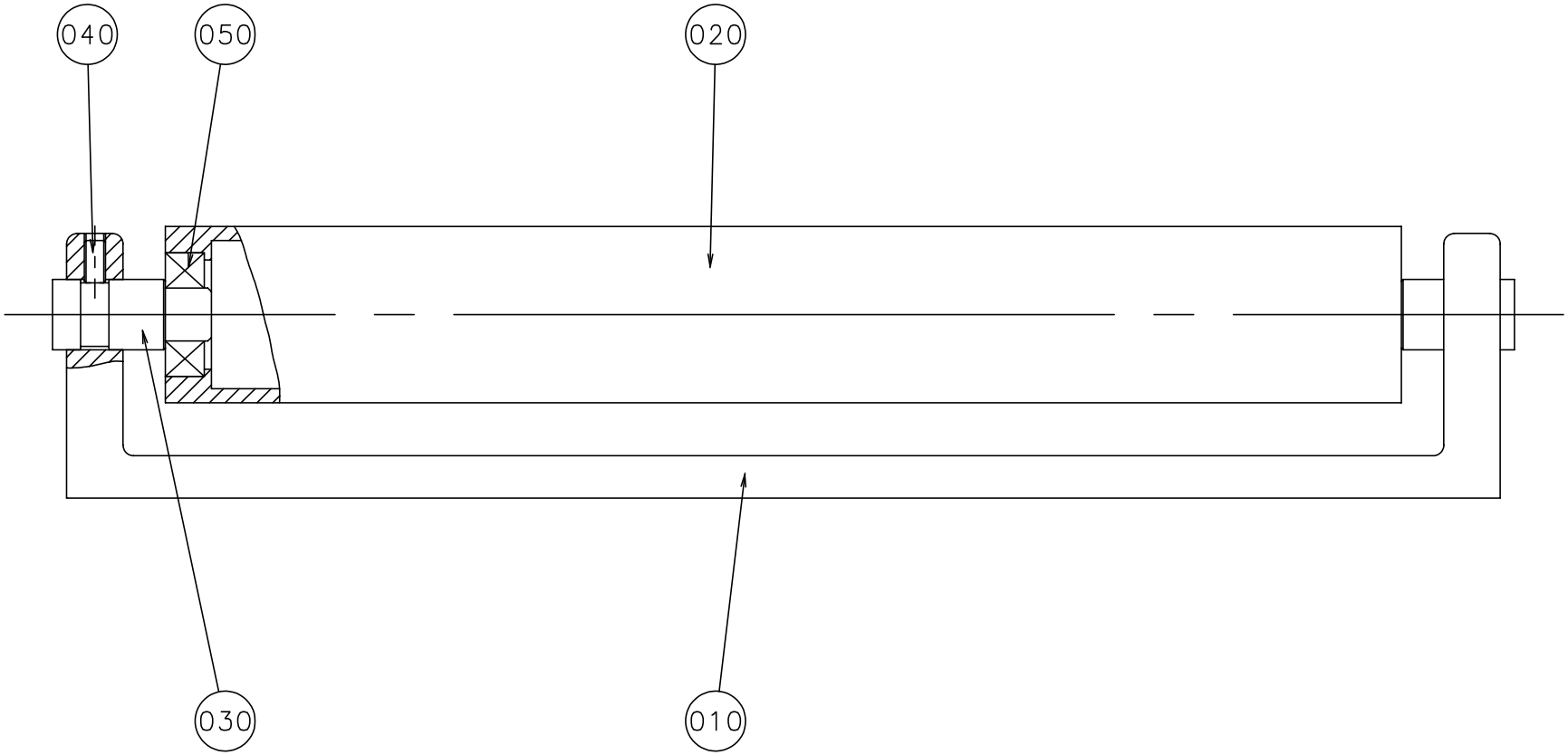

S-1095952-1
ECN 70336

Pos	Part No	SP	UN	Qty	Description	Page No
-						
010	1129952-0000	-		1	BRACKET	
020	1129951-0000	D		1	BENDING ROLLER	
030	1140133-0000	-		2	AXLE PIN	
040	312318-0366	-		2	SET SCREW CUP POINT ISO 4029 M6X12 RFR	
050	321313-0102	M		2	BALL BEARING 15X35X11	

Pos	Part No	SP	UN	Qty	Description	Page No

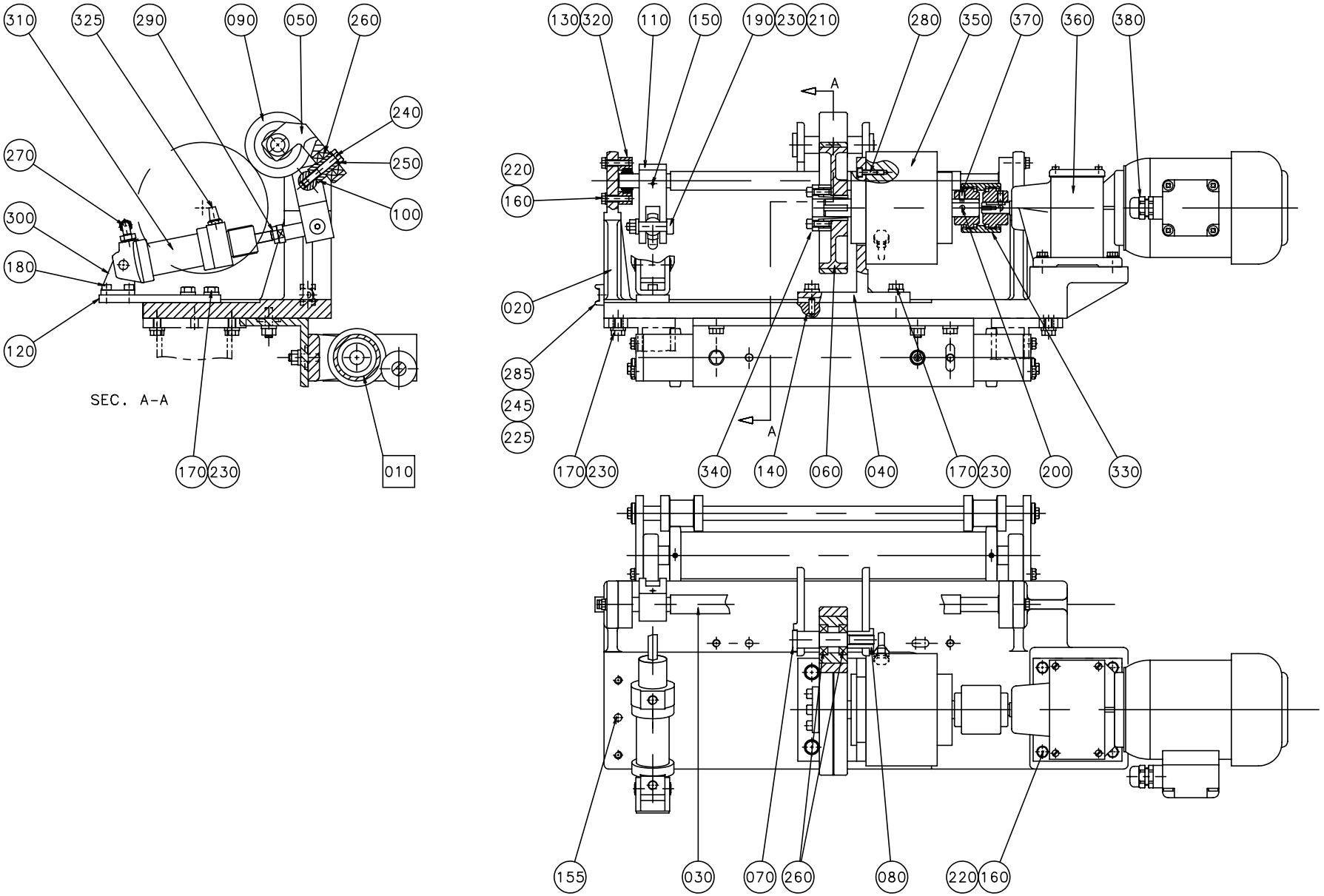

S-1095970-1
ECN 70336

Pos	Part No	SP	UN	Qty	Description	Page No
-						
010	A1095969-0100	-		1	BENDING ROLLER WITH FLANGES	**91**
020	1140184-0000	-		1	BRACKET	
030	1140185-0000	-		1	SHAFT	
040	1140186-0000	-		1	BRACKET	
050	263150-0000	-		1	BRACKET	
060	1140187-0000	M		1	WHEEL	
070	263152-0000	D		1	SHAFT	
080	263153-0000	D		1	NUT	
090	266710-0000	M		1	WHEEL	
100	1129906-0000	D		1	PIN	
110	1129907-0000	-		1	LEVER	
120	1140016-0000	-		1	PLATE	
130	1140174-0000	-		2	BEARING HOUSING	
140	311103-0351	-		2	PINS,STRAIGHT 6X16	
150	311112-0262	-		1	PINS,SLOTTED TUBULAR SPRING PIN 4X32	
155	311112-0377	-		2	PINS,SLOTTED TUBULAR SPRING PIN 8X24	
160	312105-0372	-		8	SCREW M6S ISO 4017 M6X25 A280	
170	312105-0453	-		10	SCREW M6S ISO 4017 M8X25 A280	
180	312115-0366	-		2	SCREW MC6S ISO 4762 M6X12 A280	
190	312180-0495	-		1	HEX. SOCKET HEAD SHOULD. ISO 7379 M8X30	
200	312318-0362	-		2	SET SCREW CUP POINT ISO 4029 M6X8 RFR	
210	312605-0318	-		1	NUTS,HEXAGON,M8	
220	315105-0153	-		8	WASHER,PLAIN ROUND BRB 6,4x12 Stainless	
225	315105-0136	-		1	WASHERS,PLAIN ROUND 4,3X8	
230	315115-0165	-		11	WASHER TBRB8;4x16 Stainless	
240	312109-0460	-		1	SCREW M6S ISO 4017 M8X45 A280	
245	312125-0289	-		1	SLOTTED HEMCS4X10RFR	
250	315105-0165	-		1	WASHERS,PLAIN ROUND 8,4X16	
260	321308-0202	M		4	BALL BEARING 15X32X9	
270	342931-0113	-		1	ELBOW 90 COUPL.,EXT.THREAD 6/4-G1/8"	
280	312115-0329	-		4	SCREW MC6S ISO 4762 M5X16 A280	
285	352113-0204	-		1	ANCHOR TM3S25-M	
290	90115-0134	M		1	ROD ENDS,MAINTENANCE FREE,10-M10X1.25RH	
300	90239-0488	-		1	BRACKET,REAR,CLEVIS FLANGE,MINI-ISO,32	
310	90239-0834	D		1	DOUBLE ACTING,MINI-ISO,CYL.32-25	
320	90240-0026	D		2	PLAIN BEARING	
325	90328-0003	-		1	SILENCER	
330	B 985900-0000	R		1	COUPLING	
340	90208-0118	D		1	CLAMPING ELEMENT	
350	90355-0158	R		1	ELECTROMAGNETIC CLUTCH	
360	90069-0258	D		1	GEAR MOTOR	
370	312311-0366	-		2	SET SCREW FULL DOGPOINT ISO 4028 M6X12	
380	352103-0106	-		1	CABLE GLAND ST 11	

BENDING ROLLER WITH FLANGES

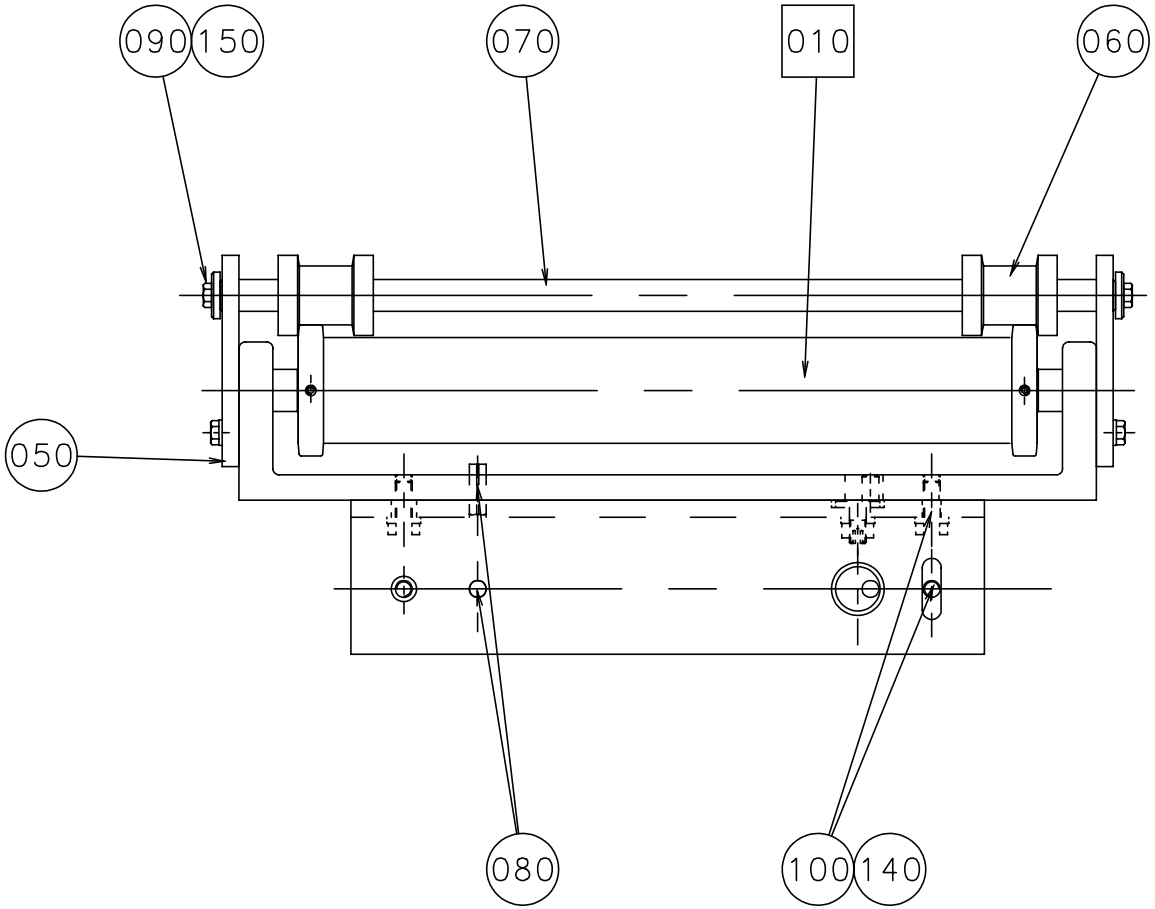

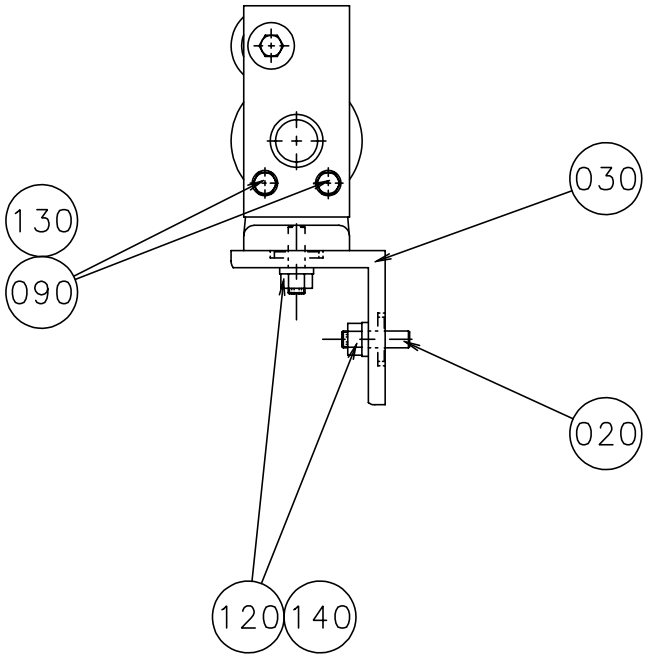

Pos	Part No	SP	UN	Qty	Description	Page No
-						
010	A1334322-0100	-		1	BENDING ROLLER WITH FLANGES	**93**
020	1140132-0000	D		2	ECCENTRIC	
030	1140136-0000	-		1	BRACKET	
050	1140134-0000	-		2	PLATE	
060	1140135-0000	D		2	ROLLER	
070	1140137-0000	-		1	SHAFT	
080	311112-0377	-		2	PINS,SLOTTED TUBULAR SPRING PIN 8X24	
090	312105-0368	-		6	SCREW M6S ISO 4017 M6X16 A280	
100	312105-0451	-		4	SCREW M6S ISO 4017 8X20 A280	
120	312605-0318	-		2	NUTS,HEXAGON,M8	
130	315105-0153	-		4	WASHER,PLAIN ROUND BRB 6,4x12 Stainless	
140	315115-0165	-		6	WASHER TBRB8;4x16 Stainless	
150	315125-0153	-		2	WASHERS,PLAIN ROUND,CHAMFERED 6,4X22X4	

Pos	Part No	SP	UN	Qty	Description	Page No

BENDING ROLLER WITH FLANGES

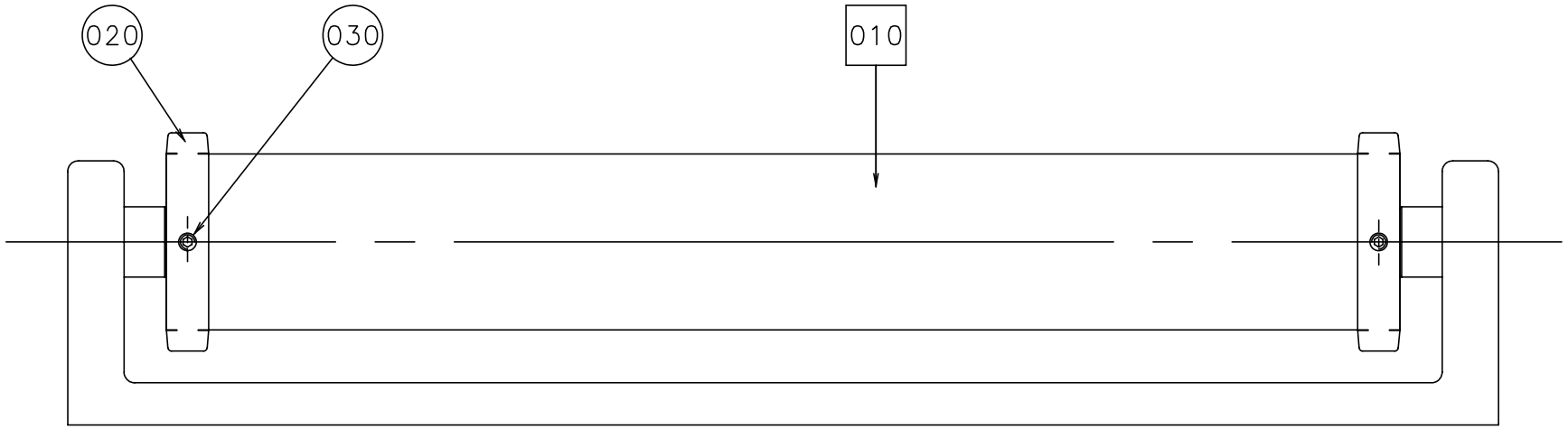

Pos	Part No	SP	UN	Qty	Description	Page No
-						
010	A1095952-0100	-		1	BENDING ROLLER ASSEMBLY	**87**
020	1140131-0000	-		2	FLANGE	
030	312311-0321	-		4	SET SCREW FULL DOGPOINT ISO 4028 M5X6	

Pos	Part No	SP	UN	Qty	Description	Page No

PHOTOCELL UNIT

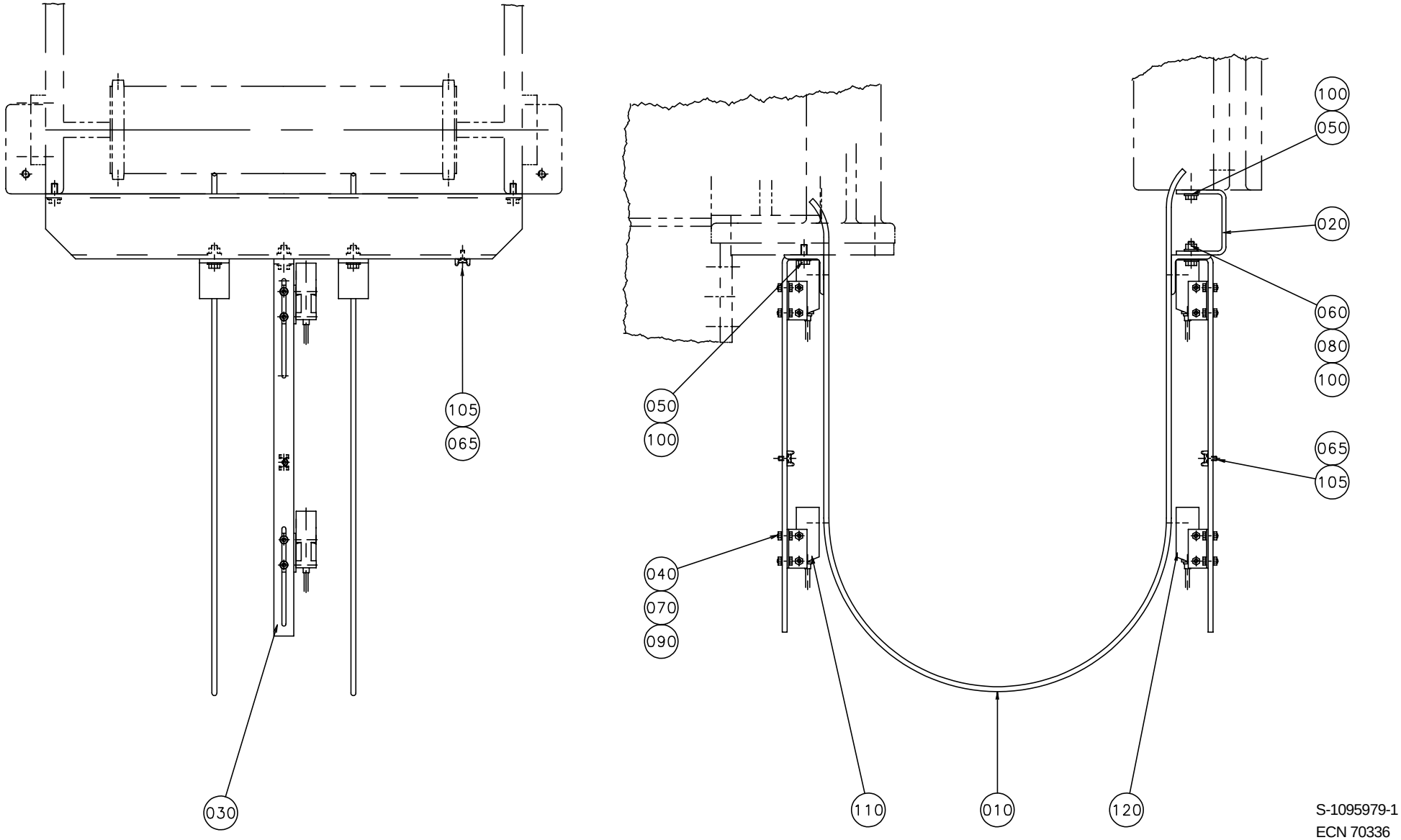

S-1095979-1
ECN 70336

Pos	Part No	SP	UN	Qty	Description	Page No
-						
010	1140209-0000	-		2	GUIDE	
020	1140210-0000	-		1	BRACKET	
030	1140211-0000	-		2	PHOTOCELL BRACKET	
040	312105-0291	-		8	SCREW M6S ISO 4017 M4X12 A280	
050	312105-0368	-		5	SCREW M6S ISO 4017 M6X16 A280	
060	312105-0370	-		3	SCREW M6S ISO 4017 M6X20 A280	
065	312125-0289	-		3	SLOTTED HEMCS4X10RFR	
070	312605-0312	-		8	NUTS,HEXAGON,M4	
080	312605-0316	-		3	NUT,HEXAGON,A280 M6M6 Stainless	
090	315105-0136	-		16	WASHERS,PLAIN ROUND 4,3X8	
100	315105-0153	-		11	WASHER,PLAIN ROUND BRB 6,4x12 Stainless	
105	352113-0205	-		3	ANCHOR TM2S8-C100	
110	90232-0103	R		2	PH.CELL OMRON E3SCT61-L-5M	
120	90232-0104	R		2	RECEIVER OMRON E3S-CT61-D-5M	

Pos	Part No	SP	UN	Qty	Description	Page No

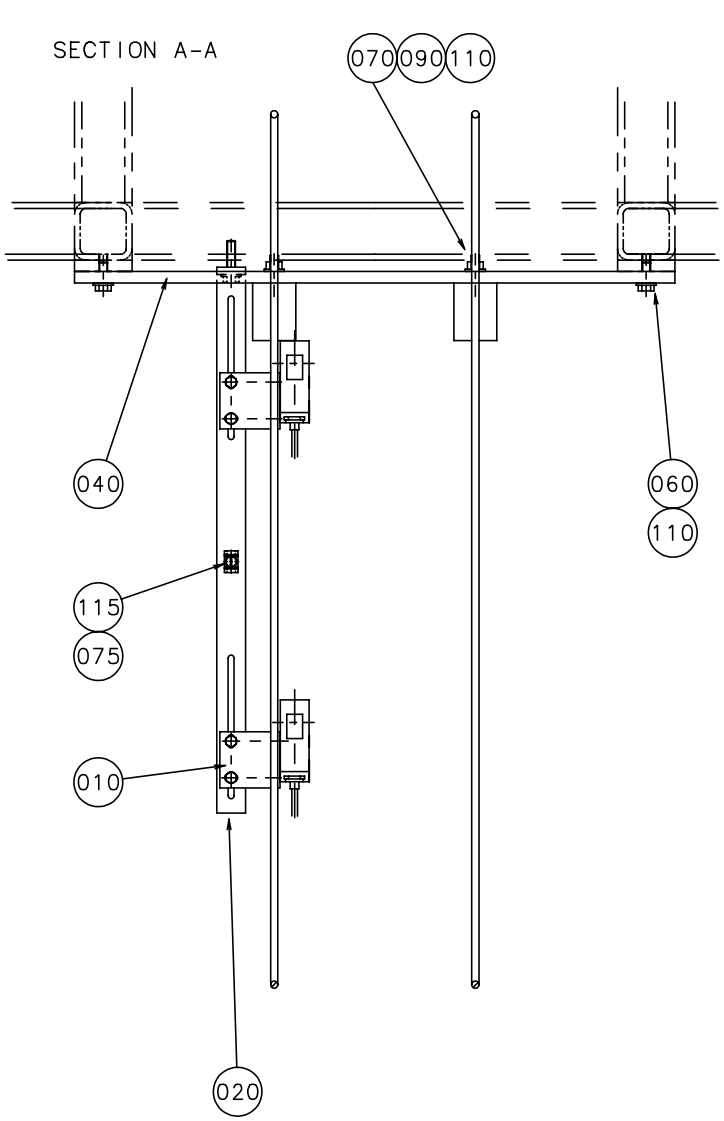

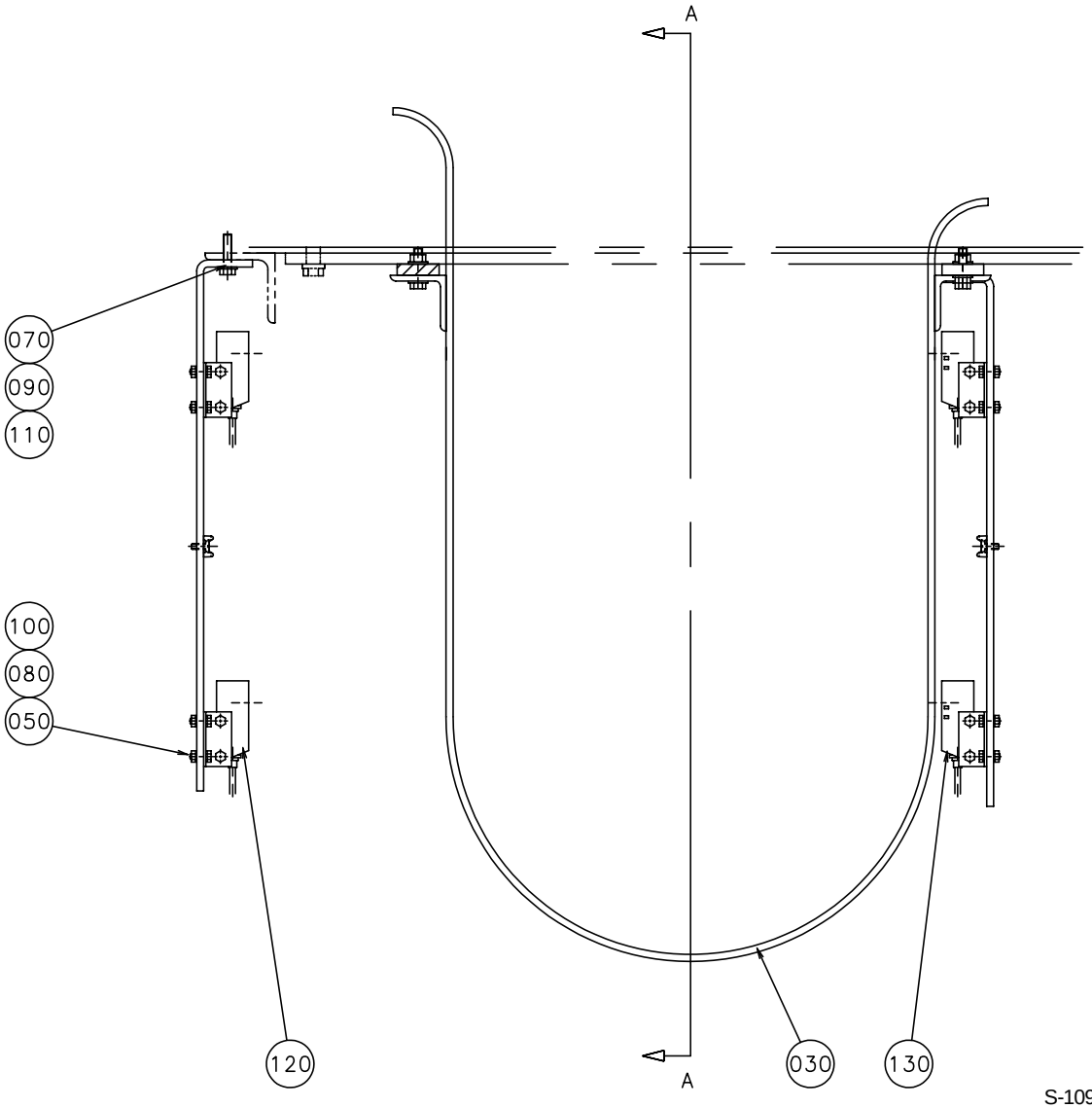

S-1095980-1
ECN 70336

Pos	Part No	SP	UN	Qty	Description	Page No
-						
010	1082765-0000	-		4	PHOTOCELL BRACKET	
020	1140211-0000	-		2	PHOTOCELL BRACKET	
030	1140212-0000	-		2	GUIDE	
040	1140213-0000	-		2	BRACKET	
050	312105-0291	-		8	SCREW M6S ISO 4017 M4X12 A280	
060	312105-0368	-		4	SCREW M6S ISO 4017 M6X16 A280	
070	312105-0372	-		6	SCREW M6S ISO 4017 M6X25 A280	
075	312125-0289	-		2	SLOTTED HEMCS4X10RFR	
080	312605-0312	-		8	NUTS,HEXAGON,M4	
090	312605-0316	-		6	NUT,HEXAGON,A280 M6M6 Stainless	
100	315105-0136	-		16	WASHERS,PLAIN ROUND 4,3X8	
110	315105-0153	-		16	WASHER,PLAIN ROUND BRB 6,4x12 Stainless	
115	352113-0205	-		2	ANCHOR TM2S8-C100	
120	90232-0103	R		2	PH.CELL OMRON E3SCT61-L-5M	
130	90232-0104	R		2	RECEIVER OMRON E3S-CT61-D-5M	

Pos	Part No	SP	UN	Qty	Description	Page No

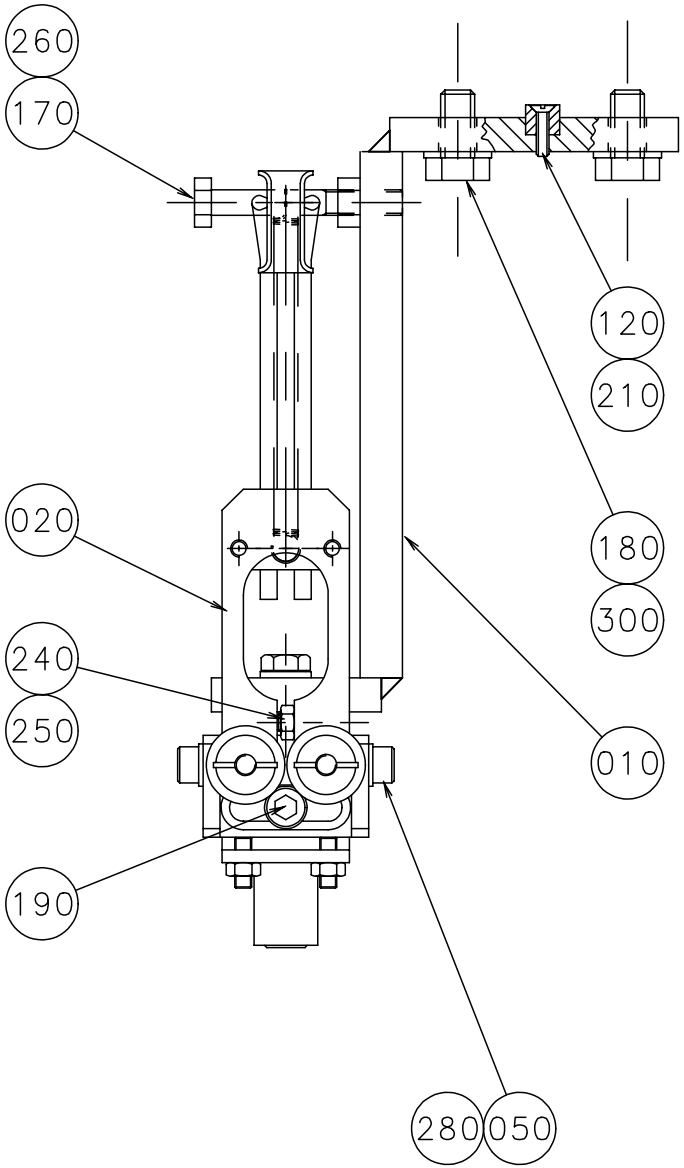
260
170
120
210
020
180
300
240
250
010
190
280
050

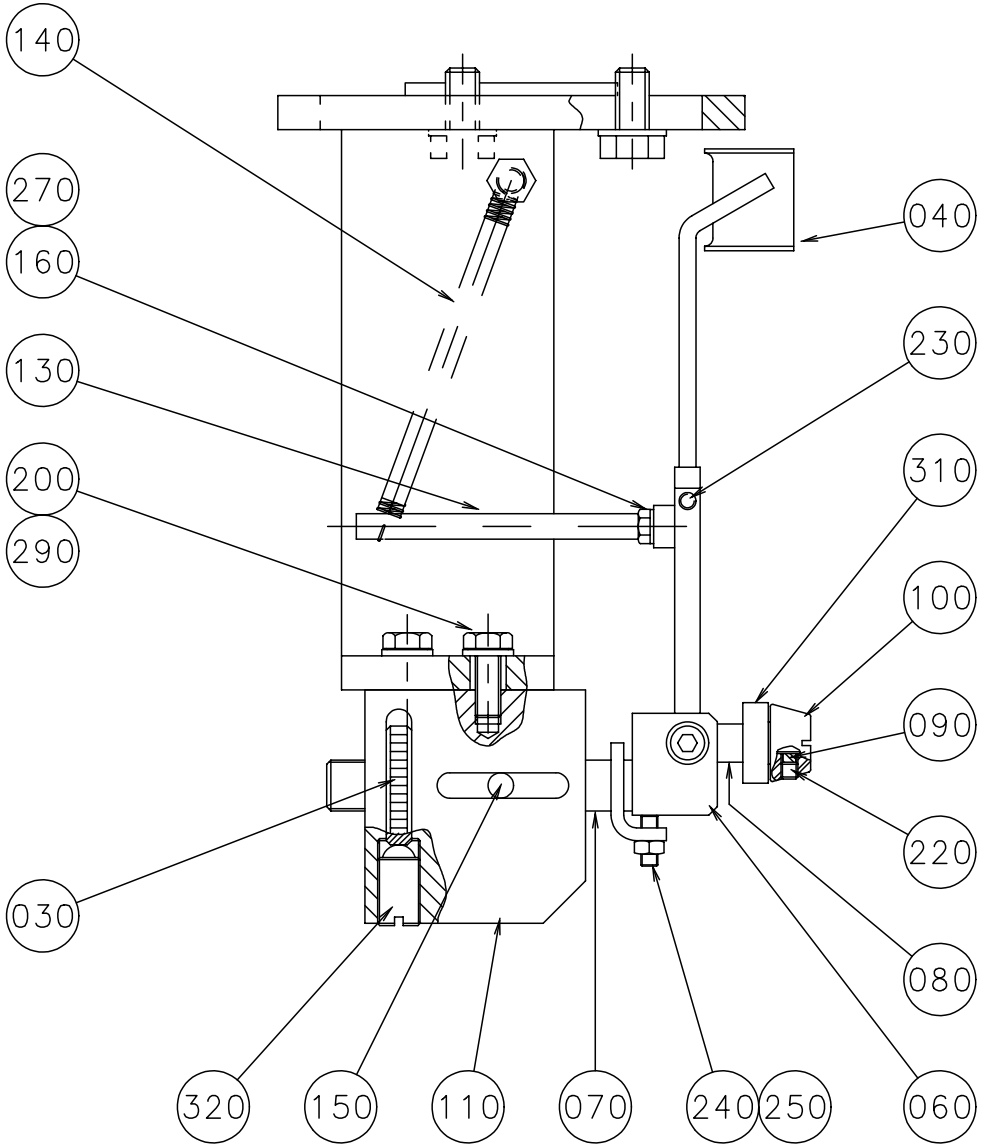
140
270
160
040
230
130
200
310
290
100
090
220
030
080
320
150
110
070
240
250
060

Pos	Part No	SP	UN	Qty	Description	Page No
-						
010	1255579-0000	-		1	BRACKET	
020	905937-0000	-		1	SPRING	
030	23580-0000	-		1	SHIFTER HANDLE	
040	23583-0000	-		1	GUIDE FINGER	
050	23584-0000	-		2	SCREW	
060	24351-0000	-		1	BOW CLAMP	
070	24352-0000	-		1	SHAFT	
080	24355-0000	-		2	DOWEL	
090	24356-0000	-		4	PIECE	
100	111543-0000	-		2	GUIDE CONE	
110	245210-0000	-		1	BODY	
120	905244-0000	-		1	WEDGE	
130	905938-0000	-		1	BRACKET	
140	90335-0222	R		1	SPRING	
150	311103-0350	-		1	CYLINDRICACP M6 6X14 RFR	
160	312105-0291	-		2	SCREW M6S ISO 4017 M4X12 A280	
170	312105-0379	-		1	SCREW M6S ISO 4014 M6X45 A280	
180	312105-0449	-		4	SCREW M6S ISO 4017 M8X16 A280	
190	312115-0366	-		1	SCREW MC6S ISO 4762 M6X12 A280	
200	312105-0368	-		2	SCREW M6S ISO 4017 M6X16 A280	
210	312145-0224	-		1	SLOTTED HEMFS3X10RFR	
220	312318-0283	-		4	SET SCREW CUP POINT ISO 4029 M4X4 RFR	
230	312318-0285	-		2	SET SCREW CUP POINT ISO 4029 M4X6 RFR	
240	312318-0291	-		3	SET SCREW CUP POINT ISO 4029 M4X12 RFR	
250	312605-0312	-		3	NUTS,HEXAGON,M4	
260	312605-0316	-		1	NUT,HEXAGON,A280 M6M6 Stainless	
270	315105-0136	-		2	WASHERS,PLAIN ROUND 4,3X8	
280	315105-0146	-		2	WASHERS,PLAIN ROUND 5,3X10	
290	315105-0153	-		2	WASHER,PLAIN ROUND BRB 6,4x12 Stainless	
300	315105-0165	-		4	WASHERS,PLAIN ROUND 8,4X16	
310	90214-0138	M		2	BEARINGS,BALL BEARING,STAINLESS	
320	90287-0009	-		1	SPRINGLOADED SCREW	

Pos	Part No	SP	UN	Qty	Description	Page No

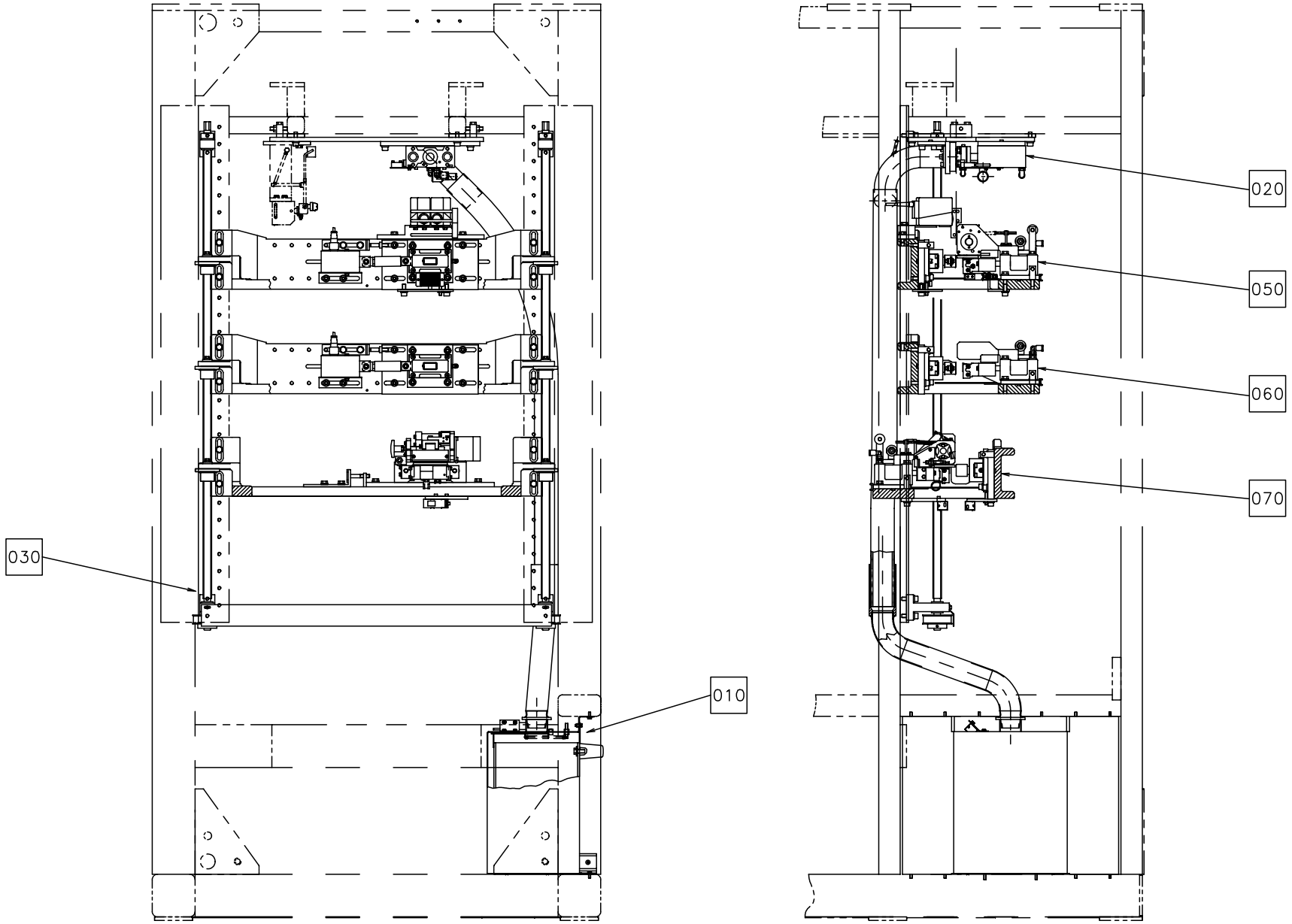
030
010
020
050
060
070

Pos	Part No	SP	UN	Qty	Description	Page No
-						
010	A1095955-0100	-		1	WASTE BOX	**103**
020	A1095992-0100	-		1	PUNCH BRACKET	**105**
030	A1185078-0100	-		1	LIFTING DEVICE	**109**
050	A1260419-0100	-		1	APPLICATOR PATCH	**111**
060	A1260420-0100	-		1	APPLICATOR RESEAL	**127**
070	A1260421-0100	-		1	APPLICATOR TAB	**131**
090	A1296882-0100	-		1	OPENING SPECIFICATION	**143**

WASTE BOX

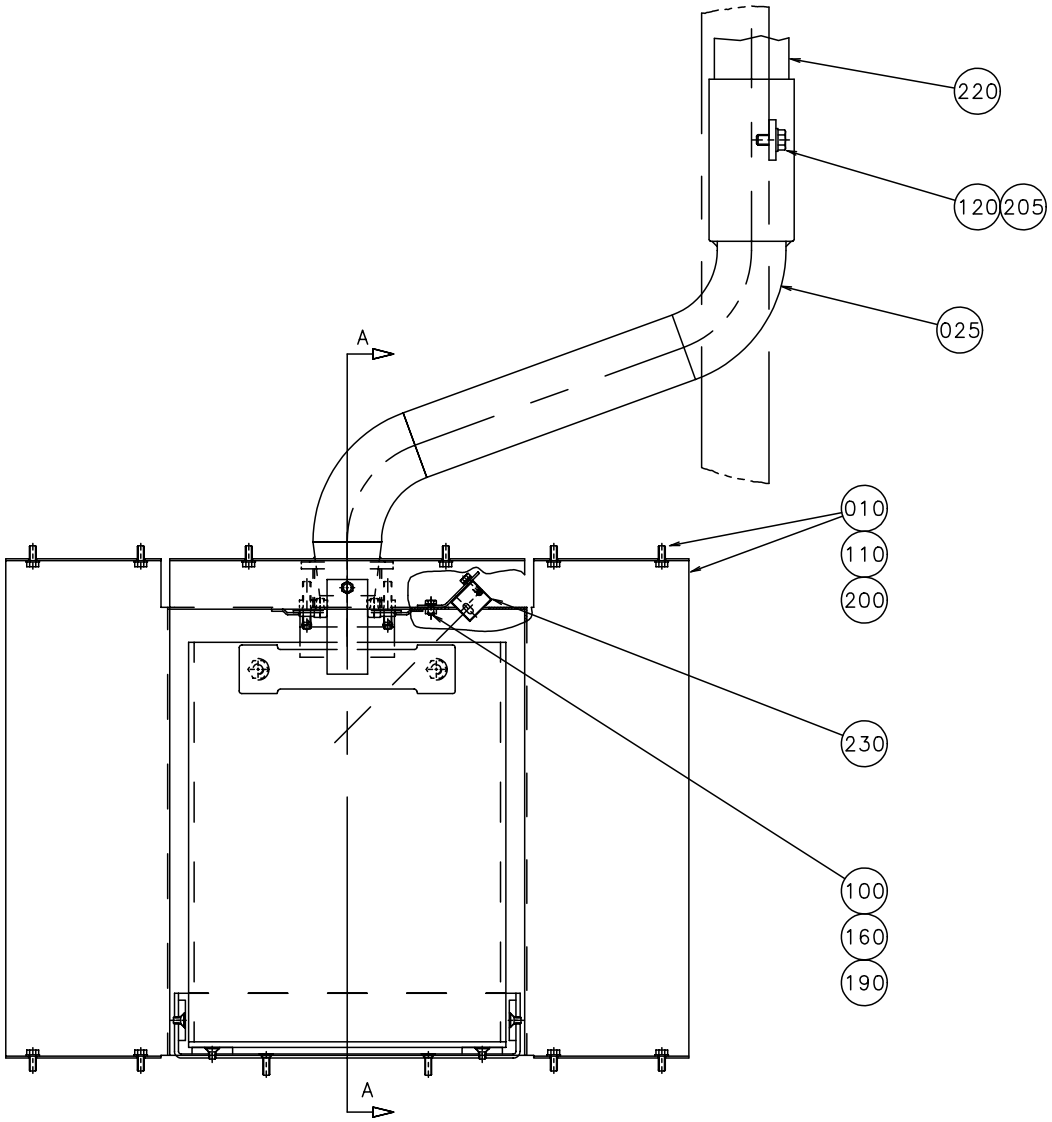
220
120
205
025
A
010
110
200
230
100
160
190
A

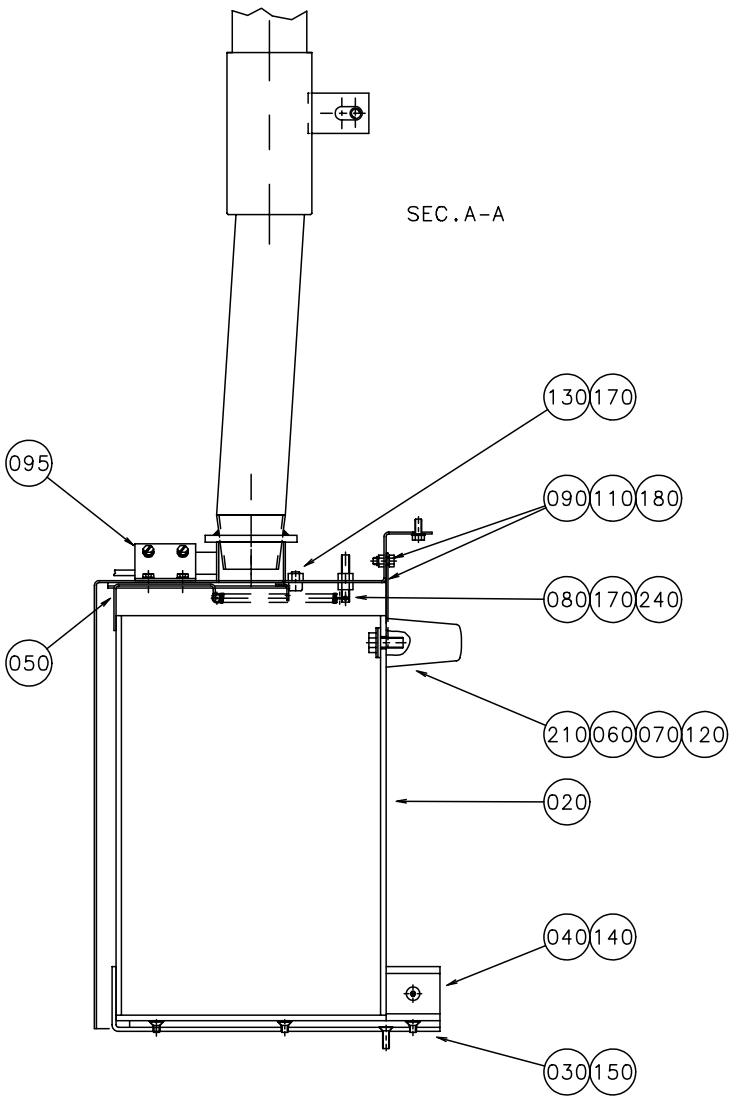
SEC.A-A
130
170
095
090
110
180
080
170
240
050
210
060
070
120
020
040
140
030
150

Pos	Part No	SP	UN	Qty	Description	Page No
-						
010	1140049-0000	-		1	COVER	
020	1140047-0000	-		1	WASTE BOX	
025	1334535-0000	-		1	WASTE PIPE	
030	1140045-0000	-		1	FRAME	
040	1140046-0000	-		4	RAIL	
050	1140048-0000	-		1	LOCK PLATE	
060	28036-0000	-		2	WASHER	
070	294734-0000	-		2	WASHER	
080	578684-0000	-		2	SPRING BRACKET	
090	1103295-0000	-		1	LOCK PLATE	
095	1255697-0000	-		1	BRACKET	
100	312105-0287	-		2	SCREW M6S ISO 4017 M4X8 A280	
110	312105-0327	-		9	SCREW M6S ISO 4017 M5X12 A280	
120	312105-0451	-		3	SCREW M6S ISO 4017 8X20 A280	
130	312115-0362	-		2	SCREW MC6S ISO 4762 M6X8 A280	
140	312155-0323	-		12	SCREW MF6S DIN 7991 M5X8 A280	
150	312155-0329	-		2	SCREW MF6S DIN 7991 M5X16 A280	
160	312605-0312	-		2	NUTS,HEXAGON,M4	
170	312605-0316	-		6	NUT,HEXAGON,A280 M6M6 Stainless	
180	312812-0314	-		1	NUTS,HEXAGON,LOCK,WITH NYLON,M5	
190	315105-0136	-		2	WASHERS,PLAIN ROUND 4,3X8	
200	315105-0146	-		8	WASHERS,PLAIN ROUND 5,3X10	
205	315105-0165	-		1	WASHERS,PLAIN ROUND 8,4X16	
210	90017-0014	-		1	HANDLE	
220	90152-0026	D	MM	1800	HOSE	
230	90232-0105	R		1	PH.CELL OMRON E3S-CD61-5M	
240	90335-0081	D		2	SPRING	

PUNCH BRACKET

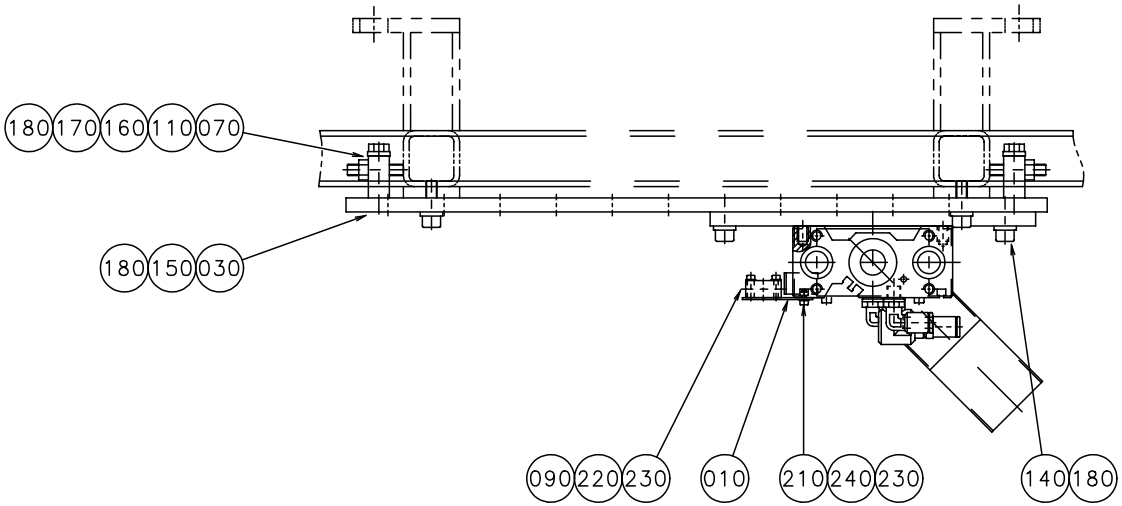

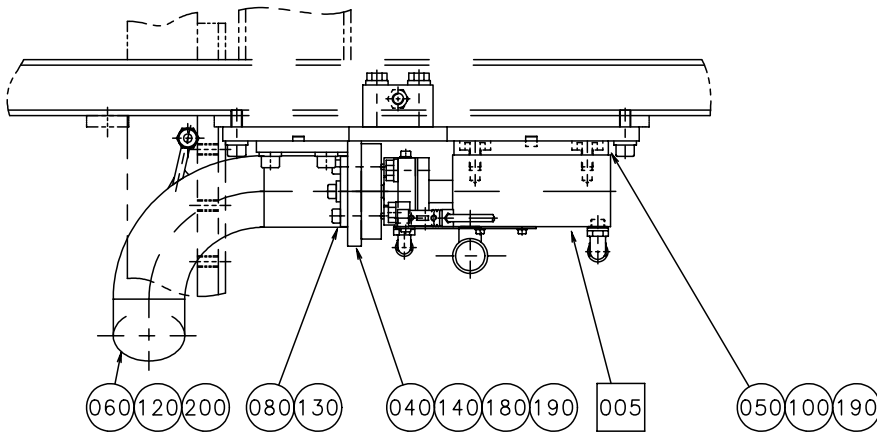

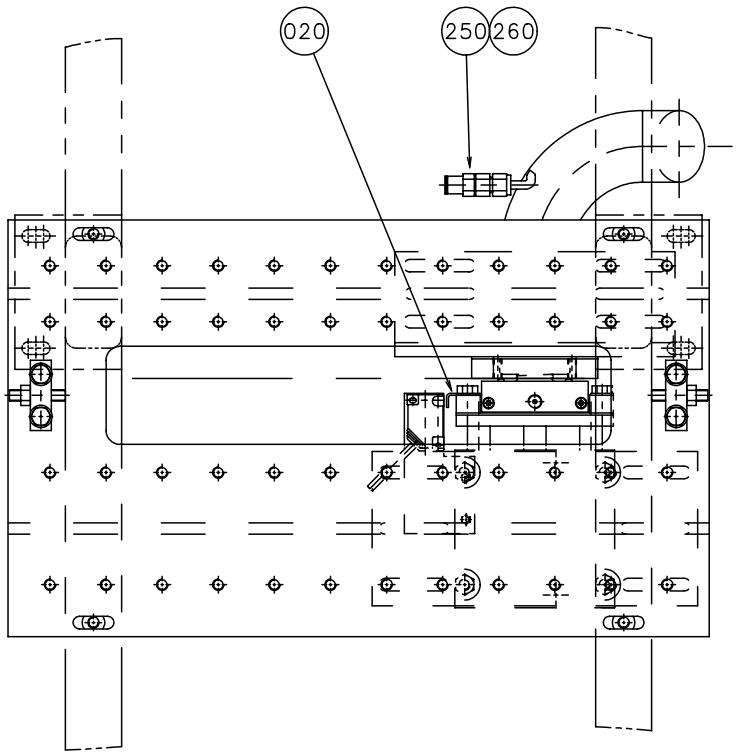

Pos	Part No	SP	UN	Qty	Description	Page No
-						
005	A1095991-0100	-		1	PUNCH UNIT	**145**
010	1260387-0000	-		1	PHOTOCELL BRACKET	
020	1260239-0000	-		1	ANGLE BRACKET	
030	1140499-0000	-		1	PLATE	
040	1140500-0000	-		1	ANGLE BRACKET	
050	1140501-0000	-		1	PLATE	
060	1334534-0000	D		1	WASTE PIPE	
070	1140503-0000	-		2	ADJUSTMENT BRACKET	
080	1140504-0000	-		2	CONNECTION PLATE	
090	90044-0104	R		1	PROX.SWITCH IFM IN 3002	
100	312105-0447	-		4	SCREW M6S ISO 4017 M8X12 A280	
110	312109-0459	-		4	SCREW M6S ISO 4017 M8X40 A280	
120	312115-0366	-		2	SCREW MC6S ISO 4762 M6X12 A280	
130	312115-0372	-		4	SCREW MC6S ISO 4762 M6X25 A280	
140	312115-0451	-		8	SCREW MC6S ISO 4762 M8X20 A280	
150	312115-0453	-		4	SCREW MC6S ISO 4762 M8X25 A280	
160	312318-0459	-		2	SET SCREW CUP POINT ISO 4029 M8X40 RFR	
170	312605-0318	-		2	NUTS,HEXAGON,M8	
180	315115-0165	-		16	WASHER TBRB8;4x16 Stainless	
190	315705-0272	-		4	KEYS,PARALLEL WITH ROUND ENDS 8X7X50	
200	342991-0109	-		1	HOSE CLIP,WORM DRIVE TYPE (48)-50	
210	312115-0222	-		2	SCREW MC6S ISO 4762 M3X8 A280	
220	312115-0228	-		2	SCREW MC6S ISO 4762 M3X16 A280	
230	315105-0124	-		4	WASHERS,PLAIN ROUND 3,2X6	
240	312605-0310	-		2	NUTS,HEXAGON,M3	
250	342722-0202	-		1	STRAIGHT COUPL,FOR PLASTIC TUBE 6-G1/8"	
260	342723-0102	-		1	STRAIGHT PIPE CONNECTION GAI-6-G1/8"	

Pos	Part No	SP	UN	Qty	Description	Page No

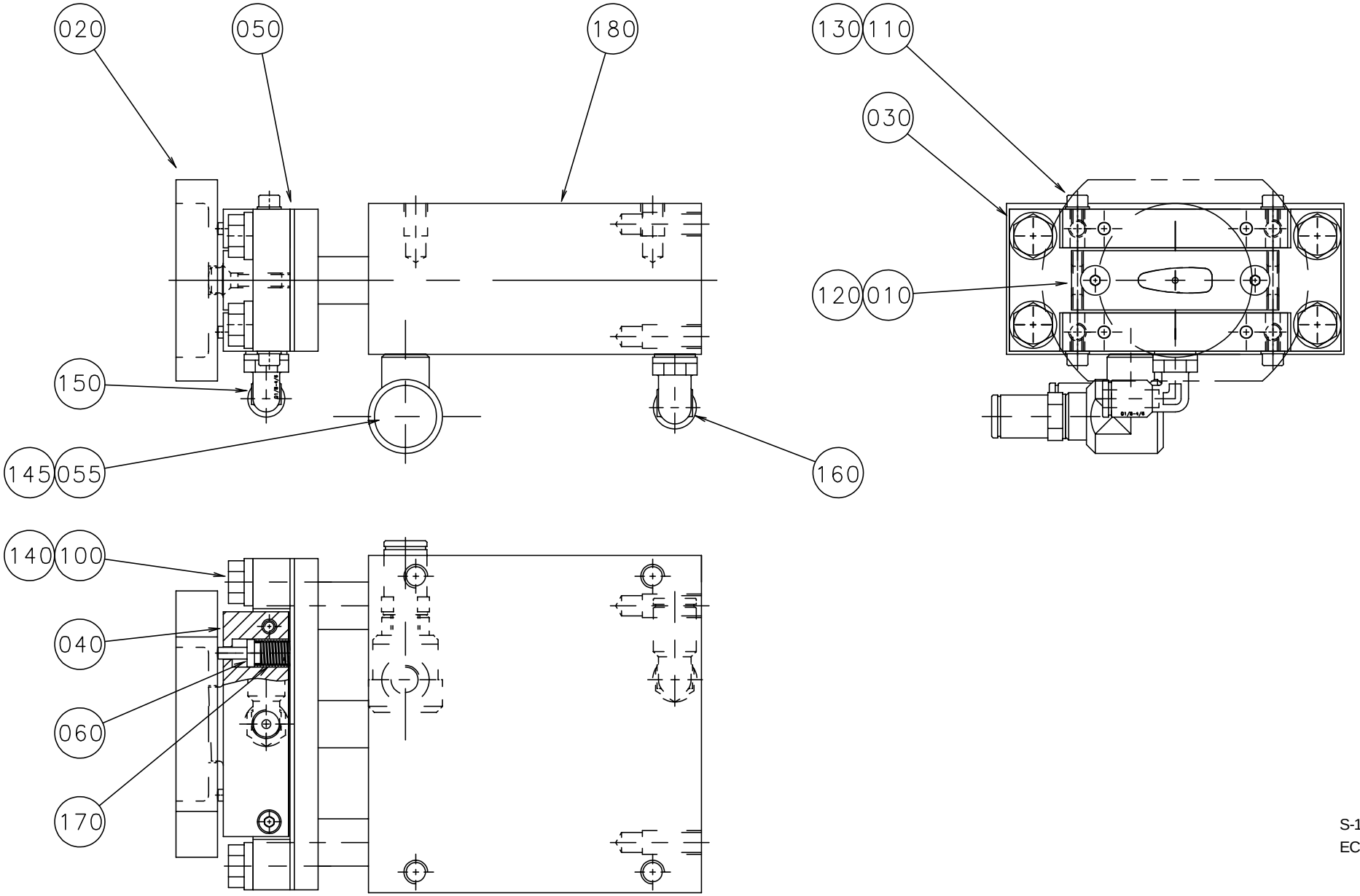

S-1095991-1
ECN 71157

Pos	Part No	SP	UN	Qty	Description	Page No
Common parts						
030	1140293-0000	-		1	SPACER	
040	1140294-0002	D		2	PIN DISTANCE 36.5	
050	1140387-0000	R		3	SHIM	
055	90235-0206	-		1	VALVE	
060	905285-0000	R		4	STRIPPER PIN	
100	312105-0453	-		4	SCREW M6S ISO 4017 M8X25 A280	
110	312115-0295	-		4	SCREW MC6S ISO 4762 M4X20 A280	
120	312155-0331	-		2	SCREW MF6S DIN 7991 M5X20 A280	
130	315105-0136	-		4	WASHERS,PLAIN ROUND 4,3X8	
140	315105-0165	-		4	WASHERS,PLAIN ROUND 8,4X16	
145	342722-0204	-		1	STRAIGHT COUPL,FOR PLASTIC TUBE 8-G1/8"	
150	342732-0102	-		1	V-COUPL,ADJUST,FOR PLASTIC TUBE 6-G1/8"	
160	342732-0801	-		1	V-COUPL,ADJUST,FOR PLASTIC TUBE 8-G1/8"	
170	90335-0005	R		4	SPRING	
180	90450-0397	R		1	Cylinder	
HOLE50						
010	1140291-0000	K		1	PUNCH HOLE 50	
020	1140292-0000	K		1	DIE HOLE 50	
HOLE45						
010	1145233-0000	K		1	PUNCH HOLE 45	
020	985860-0000	K		1	DIE HOLE 45	
HOLE71						
010	1296794-0000	K		1	PUNCH HOLE71	
020	1296872-0000	K		1	DIE HOLE 71	

Pos	Part No	SP	UN	Qty	Description	Page No

LIFTING DEVICE

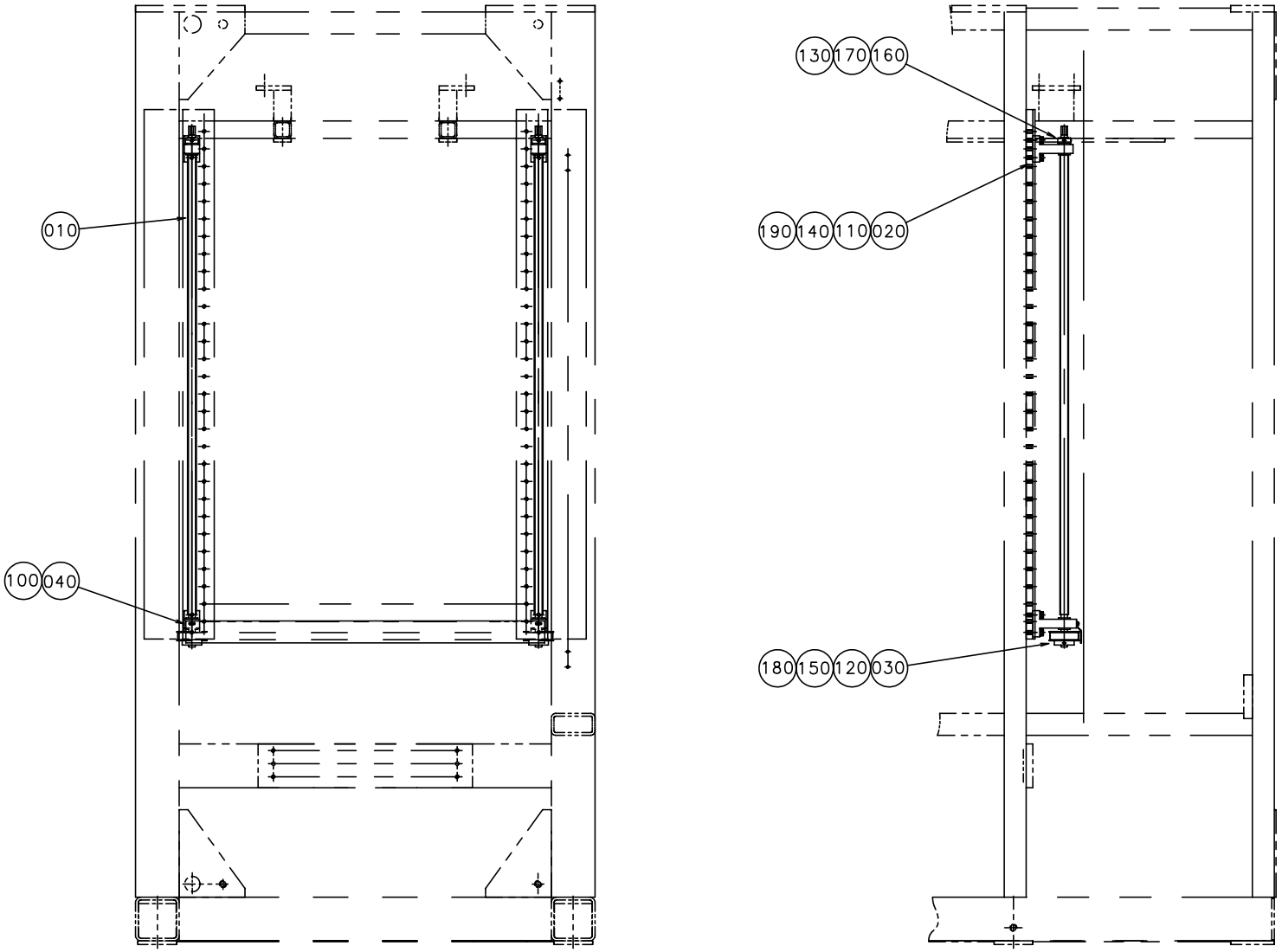

S-1185078-1
ECN 70337

Pos	Part No	SP	UN	Qty	Description	Page No
-						
010	1147050-0000	-		2	SCREW	
020	1147049-0000	-		4	BRACKET	
030	1147051-0000	-		2	TOOTHED PULLEY	
040	1147052-0000	-		1	COVER PLATE	
100	312115-0287	-		2	SCREW MC6S ISO 4762 M4X8 A280	
110	312105-0455	-		8	SCREW M6S ISO 4017 M8X30 A280	
120	312311-0327	-		2	SET SCREW FULL DOGPOINT ISO 4028 M5X12	
130	312318-0362	-		4	SET SCREW CUP POINT ISO 4029 M6X8 RFR	
140	315115-0165	-		8	WASHER TBRB8;4x16 Stainless	
150	315705-0202	-		2	KEYS,PARALLEL WITH ROUND ENDS 5X5X25	
160	315742-0111	-		2	RETAINING RINGS 15	
170	315751-0112	D		2	RETAINING RINGS FOR SHAFT 15	
180	318172-0179	D		1	TIMING BELT T10X1780X16	
190	321111-0211	-		8	FLANGE BUS 15E7X10	

Pos	Part No	SP	UN	Qty	Description	Page No

APPLICATOR PATCH

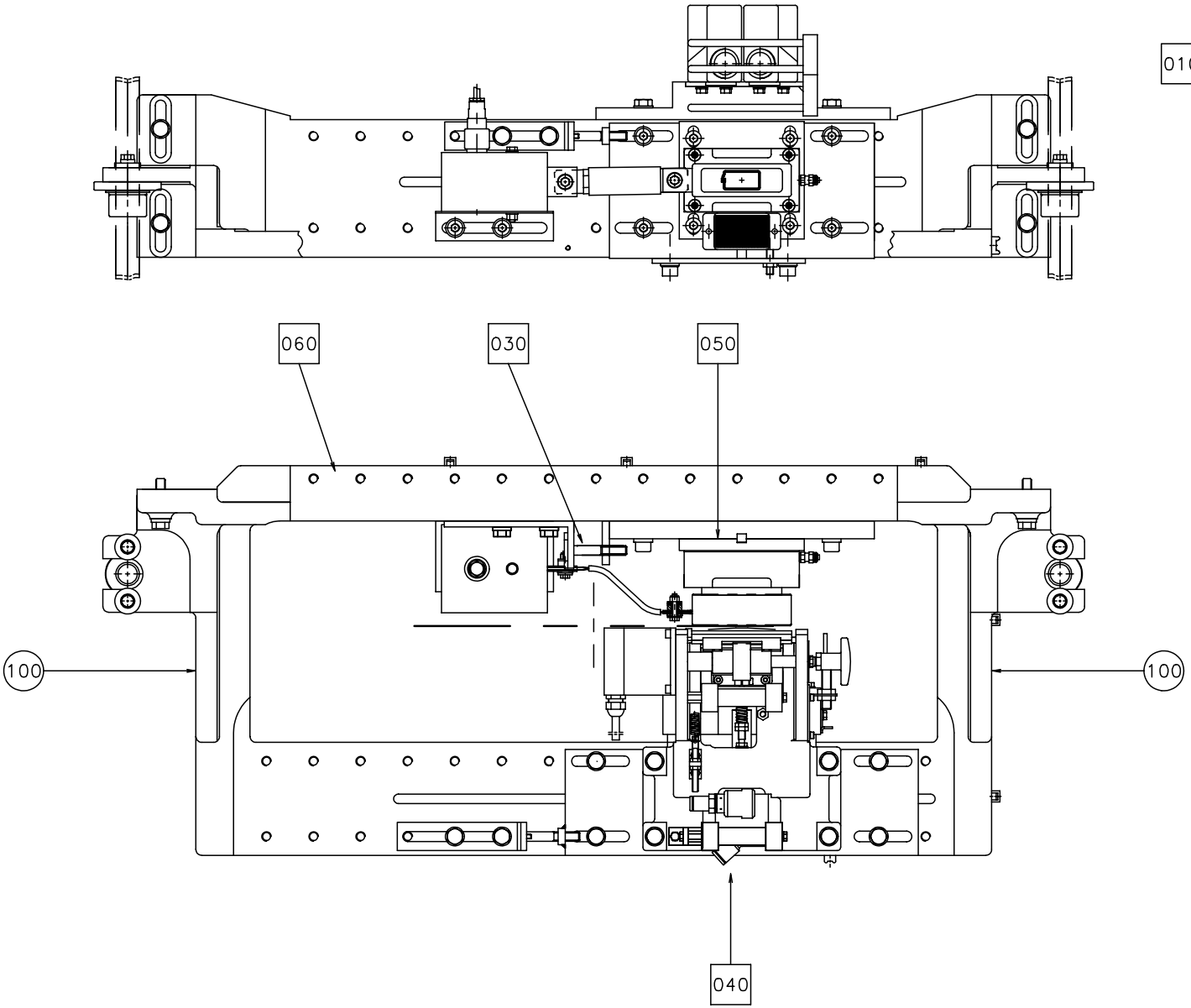

Pos	Part No	SP	UN	Qty	Description	Page No
-						
010	A1185031-0100	-		1	BAR CODE READER	**113**
020	A1260390-0200	-		1	MISSING PATCH DETECTOR	**115**
030	A1260401-0100	-		2	SETTING TOOL	**117**
040	A1260414-0100	-		1	PATCH FEEDER	**119**, **121**
050	A1260417-0100	-		1	PATCH RESEAL C'JAW UNIT	**123**
060	A1260426-0100	-		1	PATCH RESEAL BRACKET	**125**
100	359705-0007	-		2	WARNING SIGN "HOT SURFACE"	

Pos	Part No	SP	UN	Qty	Description	Page No

BAR CODE READER

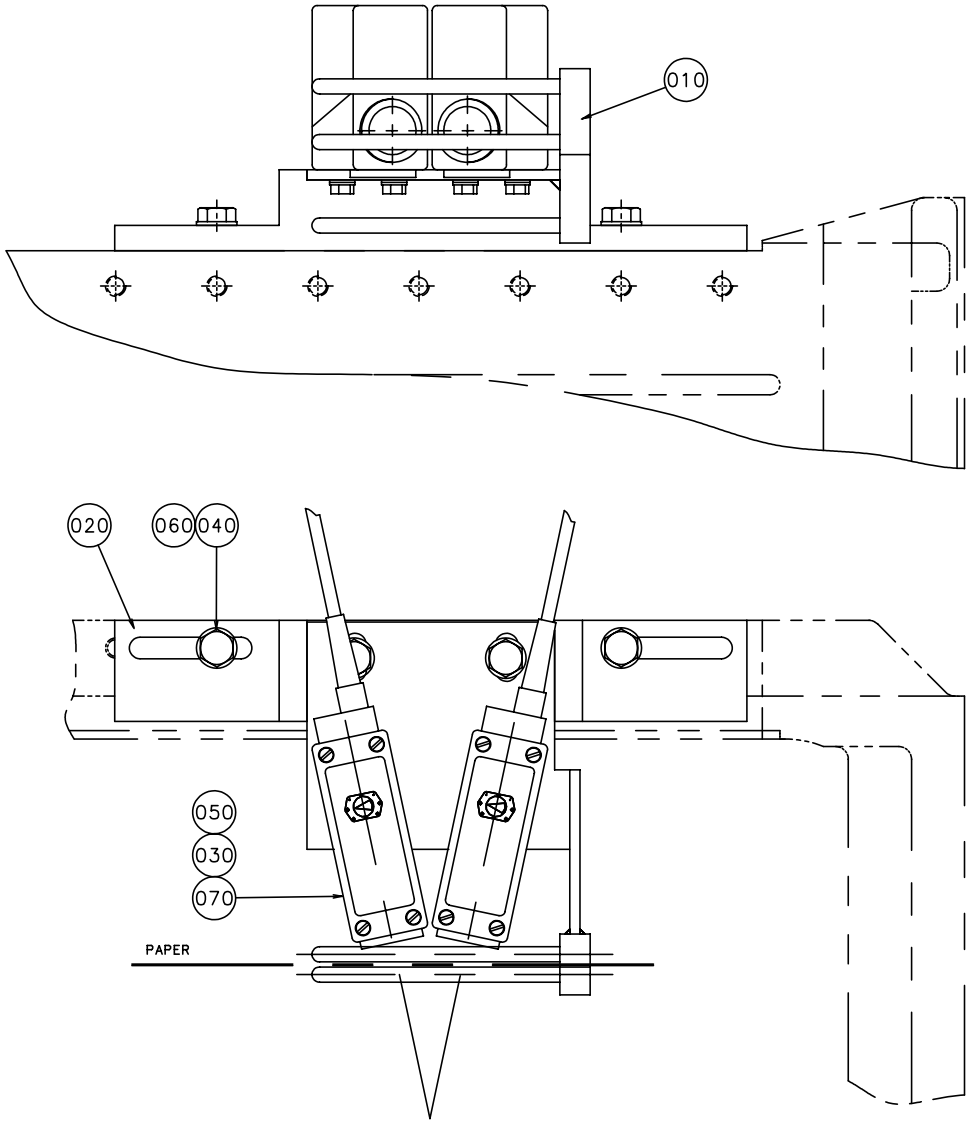

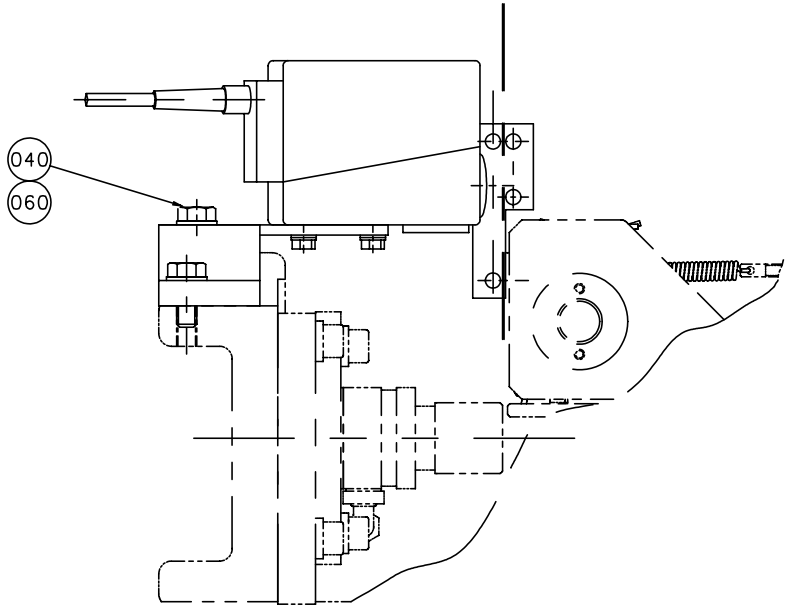

S-1185031-1
ECN 70337

Pos	Part No	SP	UN	Qty	Description	Page No
-						
010	1147012-0000	D		1	PHOTOCELL BRACKET	
020	1147013-0000	-		1	BRACKET	
030	312105-0325	-		8	SCREW M6S5X10 A2 80	
040	312105-0451	-		4	SCREW M6S ISO 4017 8X20 A280	
050	315105-0146	-		8	WASHERS,PLAIN ROUND 5,3X10	
060	315105-0165	-		4	WASHERS,PLAIN ROUND 8,4X16	
070	90232-0112	R		2	Photocell	

Pos	Part No	SP	UN	Qty	Description	Page No

MISSING PATCH DETECTOR

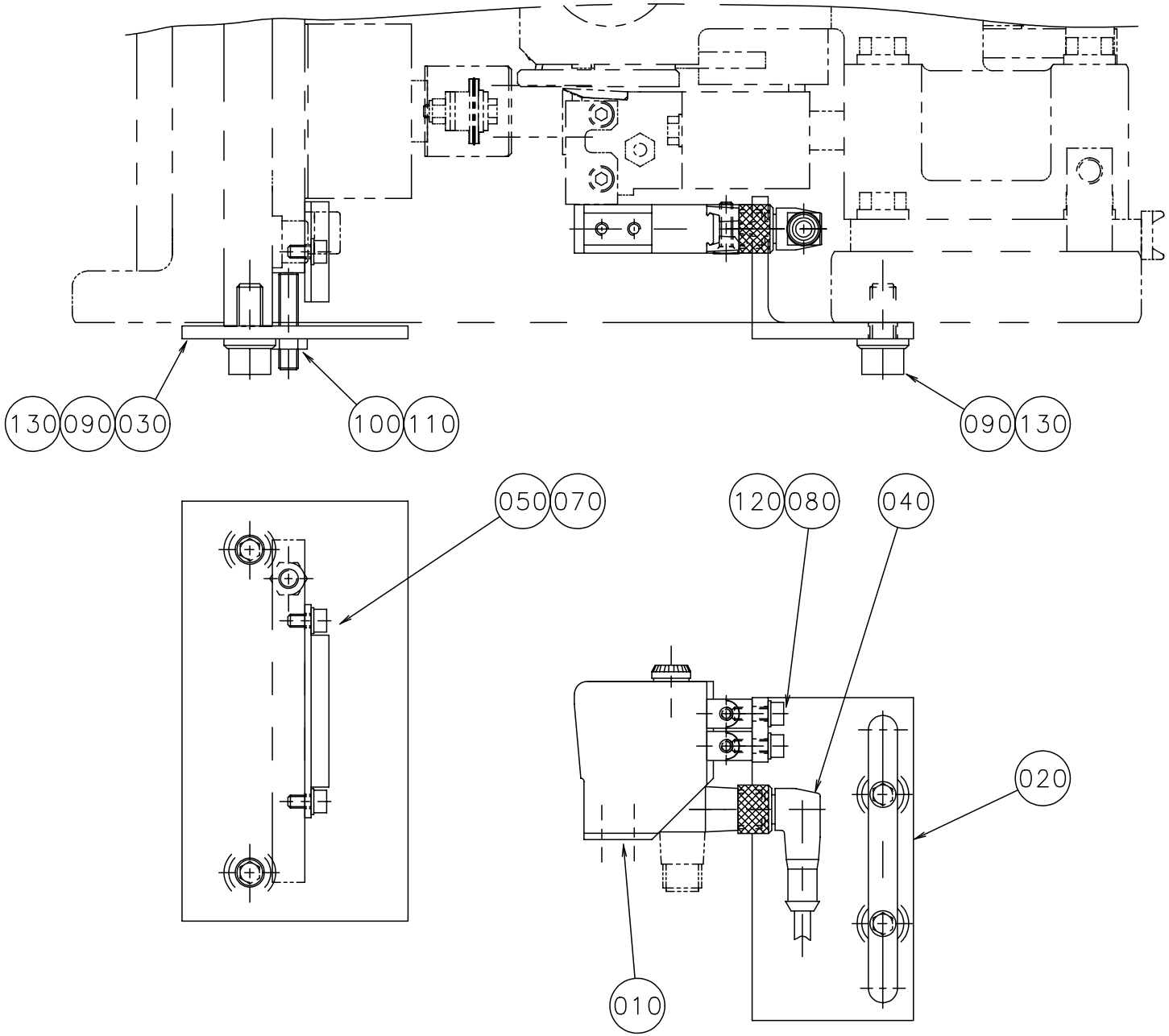

Pos	Part No	SP	UN	Qty	Description	Page No
-						
010	1260522-0000	R		1	PHOTOCELL	
020	1346162-0000	-		1	PHOTOCELL BRACKET	
030	1255687-0000	-		1	BRACKET	
040	1260523-0000	R		1	CABLE	
050	1346219-0000	R		1	REFLECTOR	
070	312115-0287	-		2	SCREW MC6S ISO 4762 M4X8 A280	
080	312115-0291	-		2	SCREW MC6S ISO 4762 M4X12 A280	
090	312115-0451	-		4	SCREW MC6S ISO 4762 M8X20 A280	
100	312311-0374	-		1	SET SCREW FULL DOGPOINT ISO 4028 M6X30	
110	312625-0316	-		1	NUTS,HEXAGON,M6	
120	315105-0136	-		2	WASHERS,PLAIN ROUND 4,3X8	
130	315115-0165	-		4	WASHER TBRB8;4x16 Stainless	

Pos	Part No	SP	UN	Qty	Description	Page No

SETTING TOOL

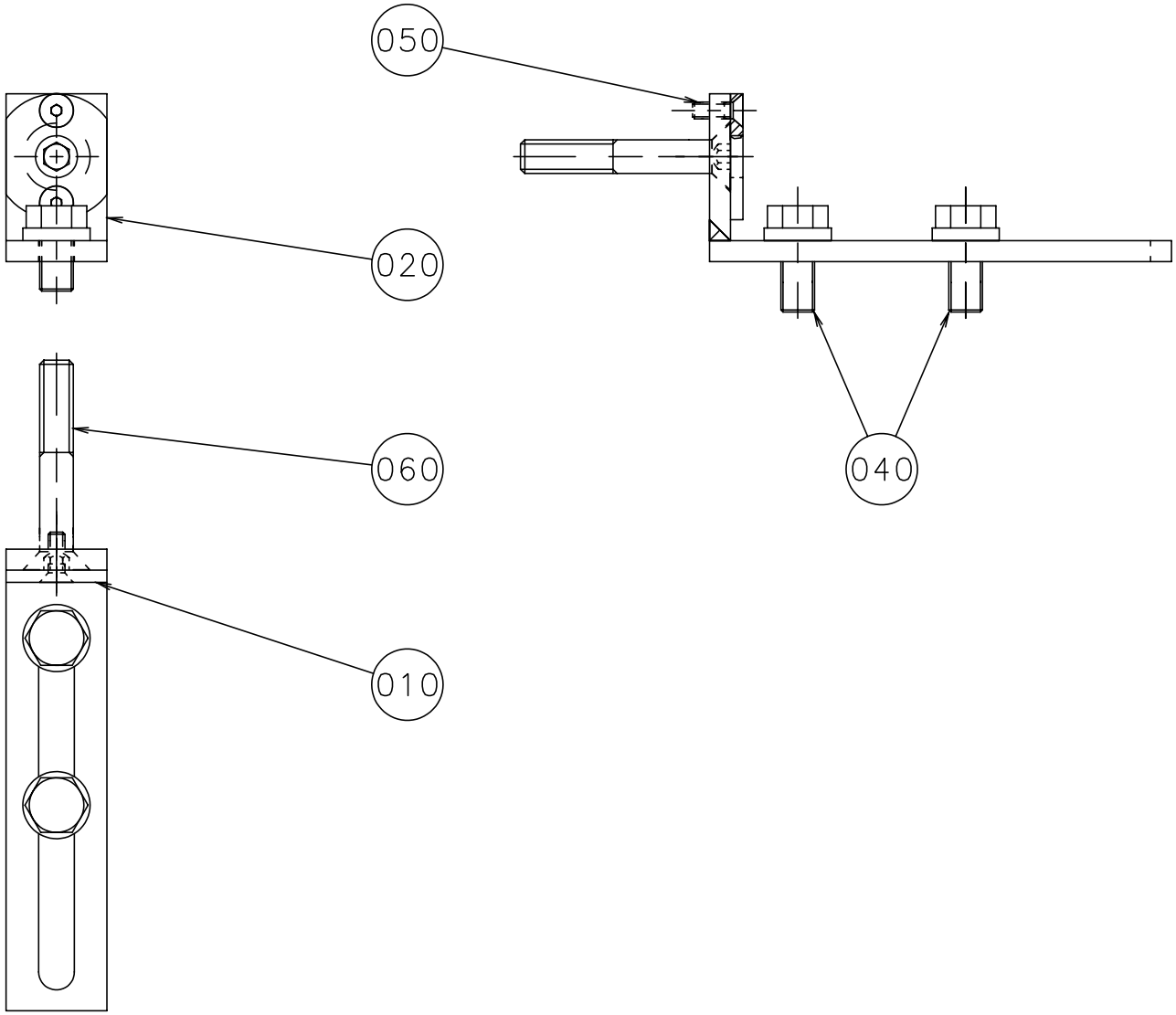

S-1260401-1
ECN 70337

Pos	Part No	SP	UN	Qty	Description	Page No
-						
010	1260400-0000	-		1	COVER	
020	1260402-0000	-		1	BRACKET	
040	312105-0451	-		2	SCREW M6S ISO 4017 8X20 A280	
050	312155-0291	-		3	SCREW MF6S DIN 7991 M4X12 A280	
060	312155-0461	-		1	SCREW MF6S DIN 7991 M8X50 A280	
070	315103-0165	-		2	WASHERS,PLAIN ROUND 8,4X16	

Pos	Part No	SP	UN	Qty	Description	Page No

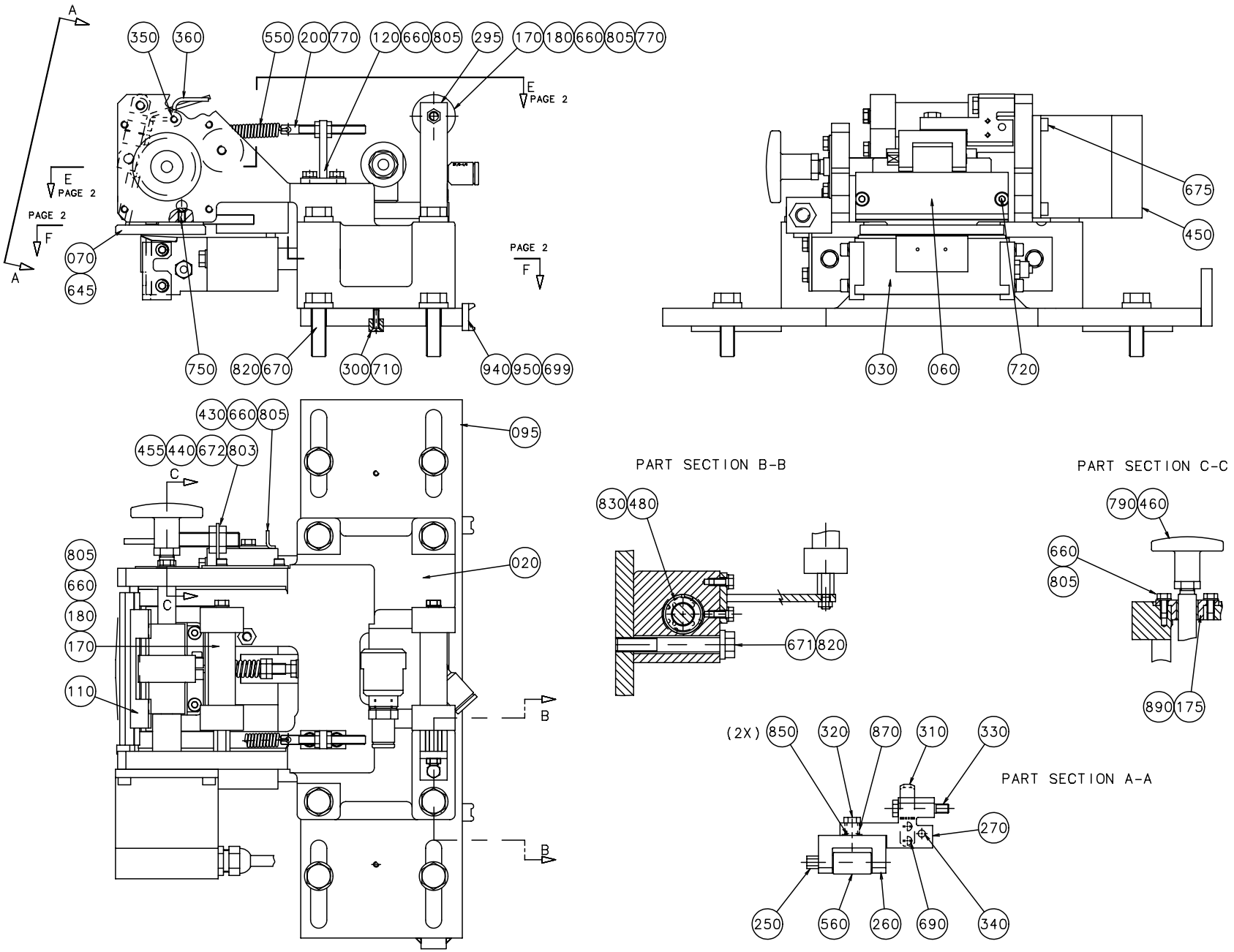
A
350
360
550
200
770
120
660
805
295
170
180
660
805
770
E
PAGE 2
E
PAGE 2
PAGE 2
F
070
645
A
PAGE 2
F
750
820
670
300
710
940
950
699
675
450
030
060
720
430
660
805
455
440
672
803
095
C
020
805
660
180
170
110
C
B
B
PART SECTION B-B
830
480
671
820
PART SECTION C-C
790
460
660
805
890
175
(2X)
850
320
870
310
330
PART SECTION A-A
270
250
560
260
690
340

Pos	Part No	SP	UN	Qty	Description	Page No
Common parts						
020	1260389-0000	-		1	CASTING APPLICATOR	
030	1260393-0002	M		1	SEALING PLATE	
050	1260391-0000	D		1	BRACKET	
060	1260395-0000	D		1	PLATE	
070	1145333-0000	J		1	KNIFE-WINDOW	
080	907712-0000	R		1	PIVOT PLATE	
095	1260404-0000	-		1	PLATE	
100	1145332-0000	J		1	KNIFE-FLAT	
110	905174-0000	D		1	STEER PLATE	
120	1140545-0000	-		1	TEE BRACKET	
150	905194-0000	R		1	SHAFT	
160	1140547-0000	R		2	SHAFT	
175	1140548-0000	M		1	FLANGED BEARING BUSHING	
180	1140551-0000	M		2	SHAFT	
190	1260399-0000	D		1	CLAMP	
195	1260422-0000	D		1	CLAMP	
200	905215-0000	D		1	BOLT	
220	905241-0000	D		1	COUPLING	
230	905243-0000	M		1	SHAFT	
250	905413-0000	M		1	SHAFT	
260	905416-0000	D		1	PIVOT BRACKET-SWIVEL	
270	905419-0000	D		1	PIVOT ARM-SWIVEL	
280	905471-0000	J		1	ROLLER-DRIVE	
293	907710-0000	D		1	PIVOT PLATE	
295	1140546-0000	-		1	BRACKET	
300	905244-0000	-		2	WEDGE	
310	905246-0000	-		1	BRACKET	
320	905415-0000	D		1	SHAFT	
330	905417-0000	D		1	SHAFT	
340	905607-0000	-		1	SCREW	
350	905608-0000	-		1	SCREW	
360	905609-0000	-		1	LOCK BAR	
370	905613-0000	D		1	SHAFT	
415	907711-0000	R		1	SHAFT	
430	1296753-0000	-		1	FLAG	
440	1296752-0000	-		1	BRACKET	
450	90045-0192	R		1	Stepping motor	
455	90044-0145	R		1	INDUCTIVE SWITCH	
460	90051-0007	-		1	HANDLE	
480	90189-0003	M		4	BALL BUSHING	
500	90450-0409	M		1	CYLINDER	
505	90235-0206	-		1	VALVE	
510	90239-0489	M		1	ROD END,CLEVIS WITH AXLE,M6	
540	90335-0067	J		1	SPRING	
550	907719-0000	M		1	SPRING	
560	90348-0031	J		1	FREE-WHEEL COUPLING	
580	1350785-0001	J		2	SHIM	
581	1350785-0002	J		2	SHIM	
582	1350785-0003	J		2	SHIM	
583	1350785-0004	J		2	SHIM	
640	311103-0351	-		2	PINS,STRAIGHT 6X16	
645	311112-0205	-		2	PINS,SLOTTED TUBULAR SPRING PIN 3X10	
660	312105-0287	-		10	SCREW M6S ISO 4017 M4X8 A280	
665	312105-0333	-		2	SCREW M6S ISO 4017 M5X25 A280	
670	312105-0455	-		4	SCREW M6S ISO 4017 M8X30 A280	
671	312105-0463	-		4	SCREW M6S ISO 4014 M8X60 A280	
672	312115-0226	-		4	SCREW MC6S ISO 4762 M3X12 A280	
675	312115-0291	-		8	SCREW MC6S ISO 4762 M4X12 A280	
680	312115-0341	-		4	SCREW MC6S 5X50 A4 80	
690	312125-0224	-		2	SLOTTED HEMCS3X10RFR	
699	312125-0287	-		4	SLOTTED CHEESE HEAD ISO 1207 M4X8 RFR	
710	312145-0224	-		2	SLOTTED HEMFS3X10RFR	
720	312155-0291	-		4	SCREW MF6S DIN 7991 M4X12 A280	
740	312311-0333	-		1	SET SCREW FULL DOGPOINT ISO 4028 M5X25	
745	312311-0380	-		1	STOP SCREW T6SS6X50FZB	
750	312318-0285	-		1	SET SCREW CUP POINT ISO 4029 M4X6 RFR	
760	312318-0283	-		4	SET SCREW CUP POINT ISO 4029 M4X4 RFR	
770	312605-0314	-		4	NUT,HEXAGON,M6M5 Stainless	
780	312621-0316	-		4	ROD END,NUT M6	
790	312621-0318	-		1	ROD END,NUT M8	
803	315105-0124	-		4	WASHERS,PLAIN ROUND 3,2X6	
805	315105-0136	-		8	WASHERS,PLAIN ROUND 4,3X8	
810	315105-0146	-		3	WASHERS,PLAIN ROUND 5,3X10	
820	315115-0165	-		8	WASHER TBRB8;4x16 Stainless	
830	315753-0117	-		4	RETAINING RINGS FOR HOLE 22	
850	907487-0000	D		2	WASHER-CURVED	
860	321105-0125	J		1	BUSHING 6F7X12X6	
865	321120-0092	M		2	BUSHING 4/5,5X6	
870	321120-0101	D		1	BEARING BUSHING WITHOUT FLANGE,6/8X6	
880	321120-0102	M		2	BEARING BUSHING WITHOUT FLANGE,6/8X10	
890	321120-0104	M		1	BEARING BUSHING WITHOUT FLANGE,10/12X10	
910	342722-0202	-		1	STRAIGHT COUPL,FOR PLASTIC TUBE 6-G1/8"	
920	342732-0102	-		1	V-COUPL,ADJUST,FOR PLASTIC TUBE 6-G1/8"	
930	342921-0111	-		2	STRAIGHT COUPLING,EXT.THREADED 6/4-M5	
940	352113-0102	-		2	RIBBON CLAMP	

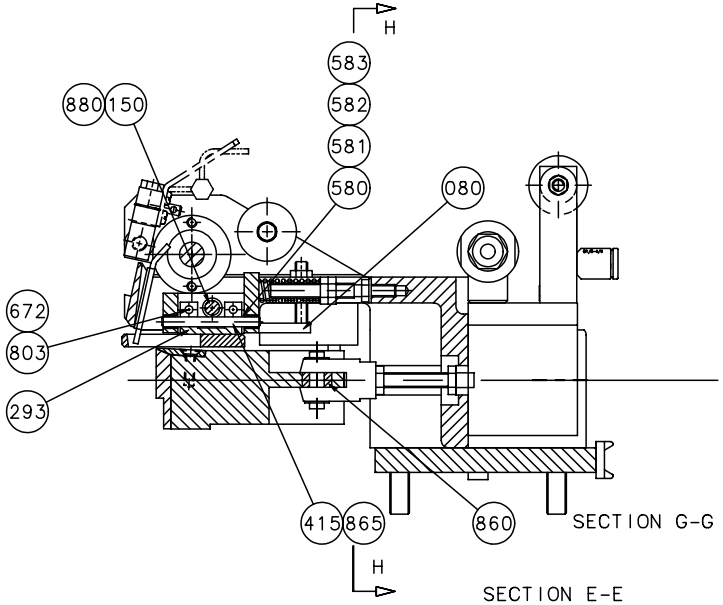

SECTION E-E

SECTION G-G

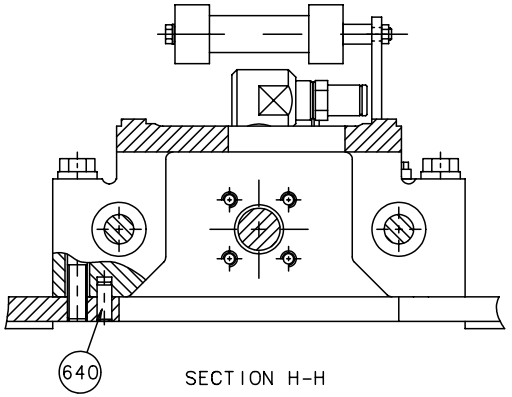

SECTION H-H

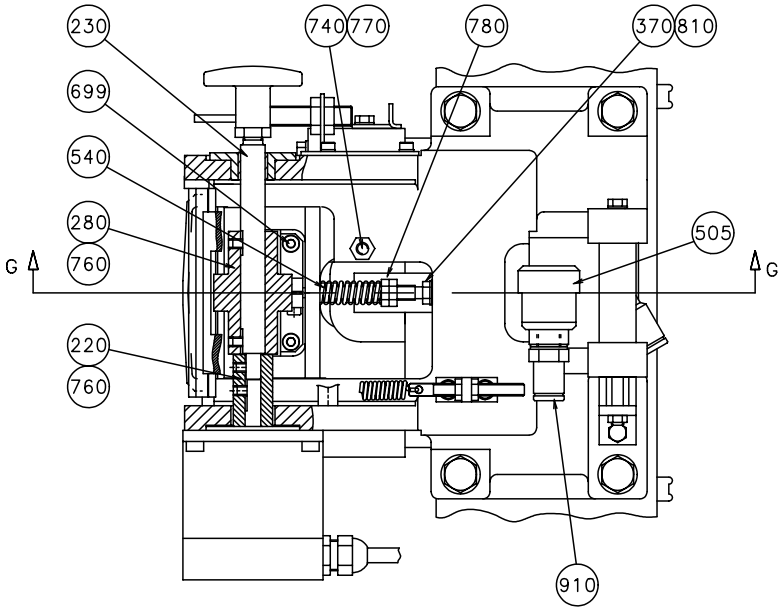

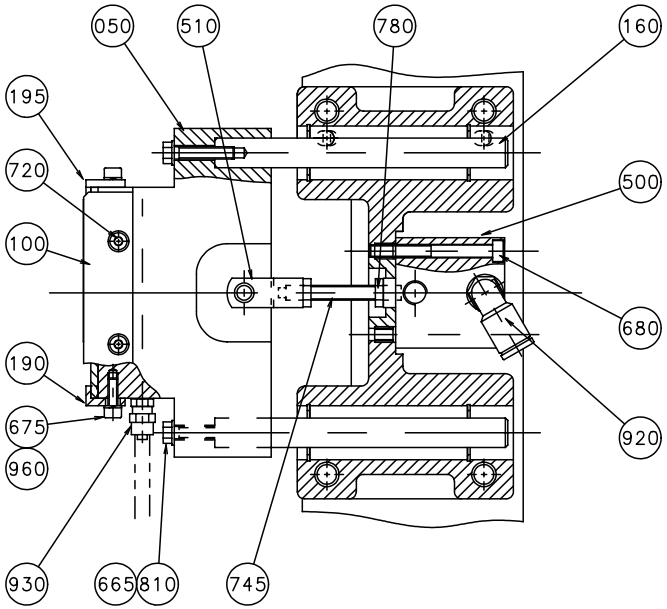

SECTION F-F

Pos	Part No	SP	UN	Qty	Description	Page No
950	352113-0205	-		2	ANCHOR TM2S8-C100	
960	315402-0136	-		4	WASHER FBB4,1RFR	
HOLE50 or HOLE71						
170	907358-0006	D		2	ROLLER-29	
HOLE45						
170	905210-0000	D		2	ROLLER-35	

Pos	Part No	SP	UN	Qty	Description	Page No

PATCH RESEAL C'JAW UNIT

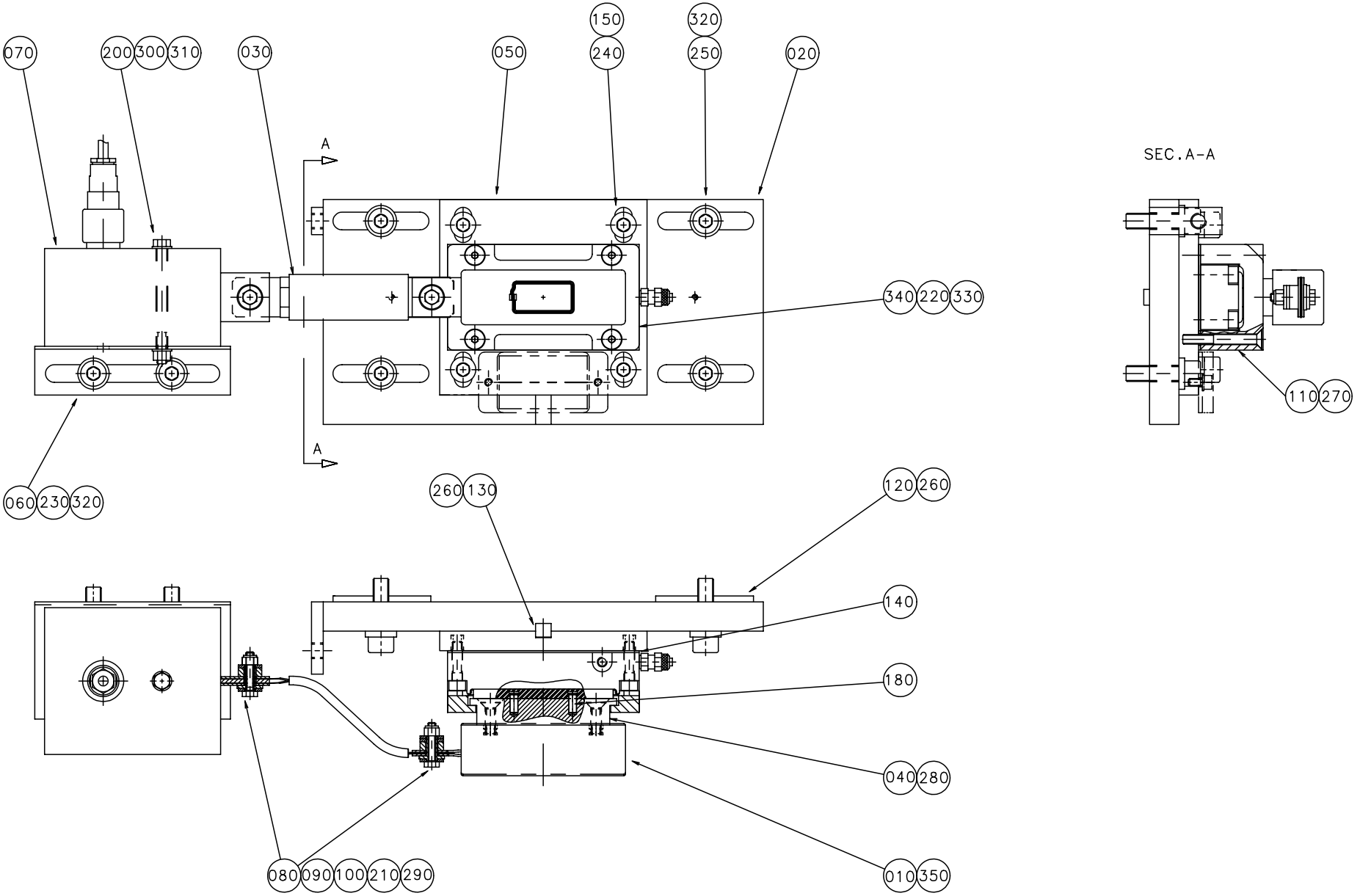

Pos	Part No	SP	UN	Qty	Description	Page No
Common parts						
020	1260405-0000	-		1	PLATE	
030	1140889-0000	J		1	CABLE	
040	1296298-0000	J		1	BUSHING	
050	1279485-0000	-		1	PLATE	
060	1140890-0000	-		1	TRANSFORMER BRACKET	
080	28509-0000	J		6	WASHER	
090	32544-0000	J		2	INSULATION NUT	
100	32644-0000	J		2	WASHER	
110	928919-0000	-		1	FASTENING PLATE	
120	905244-0000	-		2	WEDGE	
130	905463-0000	-		1	KEY	
140	1279484-0000	J		2	SHIM	
150	1296300-0000	D		4	WASHER	
180	311103-0267	-		2	PINS,STRAIGHT 4X10	
200	312101-0343	-		1	SCREW M6S5X60FZB	
210	312105-0295	-		2	SCREW M6S ISO 4017 M4X20 A280	
220	312115-0331	-		4	SCREW MC6S ISO 4762 M5X20 A280	
230	312115-0447	-		2	SCREW MC6S ISO 4762 M8X12 A280	
240	312115-0453	-		4	SCREW MC6S ISO 4762 M8X25 A280	
250	312115-0455	-		4	SCREW MC6S ISO 4762 M8X30 A280	
260	312145-0226	-		4	SLOTTED HEMFS3X12RFR	
270	312155-0339	-		4	SCREW MF6S DIN 7991 5X40 A280	
280	312155-0329	-		2	SCREW MF6S DIN 7991 M5X16 A280	
290	312812-0312	-		2	NUTS,HEXAGON,LOCK,WITH NYLON,M4	
300	312605-0314	-		1	NUT,HEXAGON,M6M5 Stainless	
310	315105-0146	-		2	WASHERS,PLAIN ROUND 5,3X10	
320	315115-0165	-		6	WASHER TBRB8;4x16 Stainless	
330	342921-0111	-		1	STRAIGHT COUPLING,EXT.THREADED 6/4-M5	
340	90450-0380	M		1	CYLINDER	
350	90144-0030	-	M	x	TAPE	
HOLE50 or HOLE71						
010	1140667-0000	J		1	INDUCTOR	
070	67379-0218	M		1	IH TRANSFORMER	
HOLE45						
010	1260651-0000	J		1	INDUCTOR	
070	67379-0224	M		1	IH TRANSFORMER	

Pos	Part No	SP	UN	Qty	Description	Page No

PATCH RESEAL BRACKET

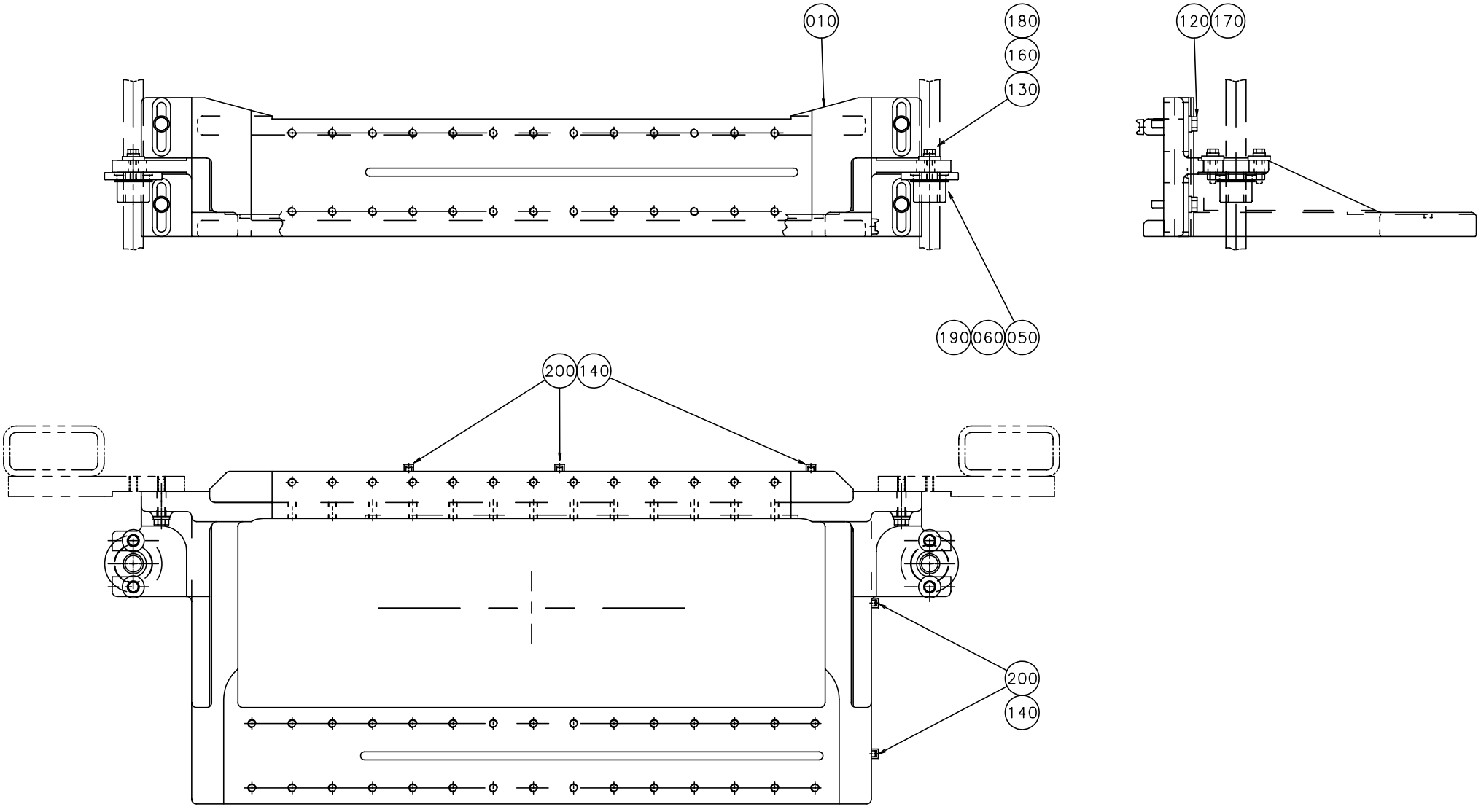

S-1260426-1
ECN 70337

Pos	Part No	SP	UN	Qty	Description	Page No
-						
010	1260397-0000	-		1	BRACKET	
050	1147009-0000	-		2	SPECIAL WASHER	
060	1147010-0000	-		2	BUSHING	
120	312109-0459	-		4	SCREW M6S ISO 4017 M8X40 A280	
130	312109-0374	-		4	SCREW M6S ISO 4017 M6X30 A280	
140	312125-0289	-		5	SLOTTED HEMCS4X10RFR	
160	315115-0153	-		4	WASHER TBRB 6,4x12 Stainless	
170	315115-0165	-		4	WASHER TBRB8;4x16 Stainless	
180	315125-0153	-		4	WASHERS,PLAIN ROUND,CHAMFERED 6,4X22X4	
190	315751-0123	-		2	RETAINING RINGS FOR SHAFT 32	
200	352113-0205	-		5	ANCHOR TM2S8-C100	

Pos	Part No	SP	UN	Qty	Description	Page No

APPLICATOR RESEAL

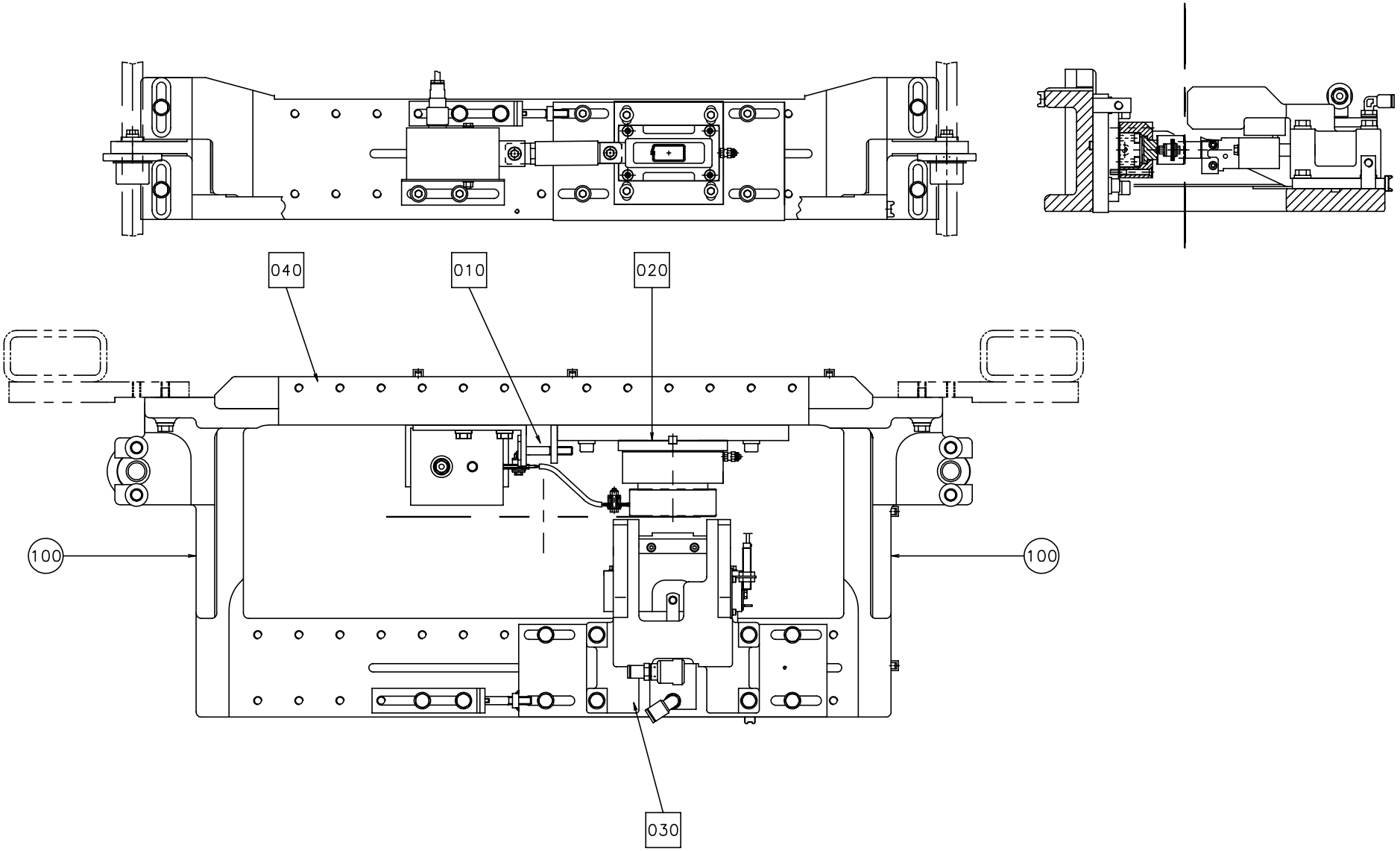

S-1260420-1
ECN 71157

Pos	Part No	SP	UN	Qty	Description	Page No
-						
010	A1260401-0100	-		2	SETTING TOOL	**117**
020	A1260417-0100	-		1	PATCH RESEAL C'JAW UNIT	**123**
030	A1260418-0100	-		1	HEATING JAW - RESEAL	**129**
040	A1260426-0100	-		1	PATCH RESEAL BRACKET	**125**
100	359705-0007	-		2	WARNING SIGN "HOT SURFACE"	

Pos	Part No	SP	UN	Qty	Description	Page No

HEATING JAW - RESEAL

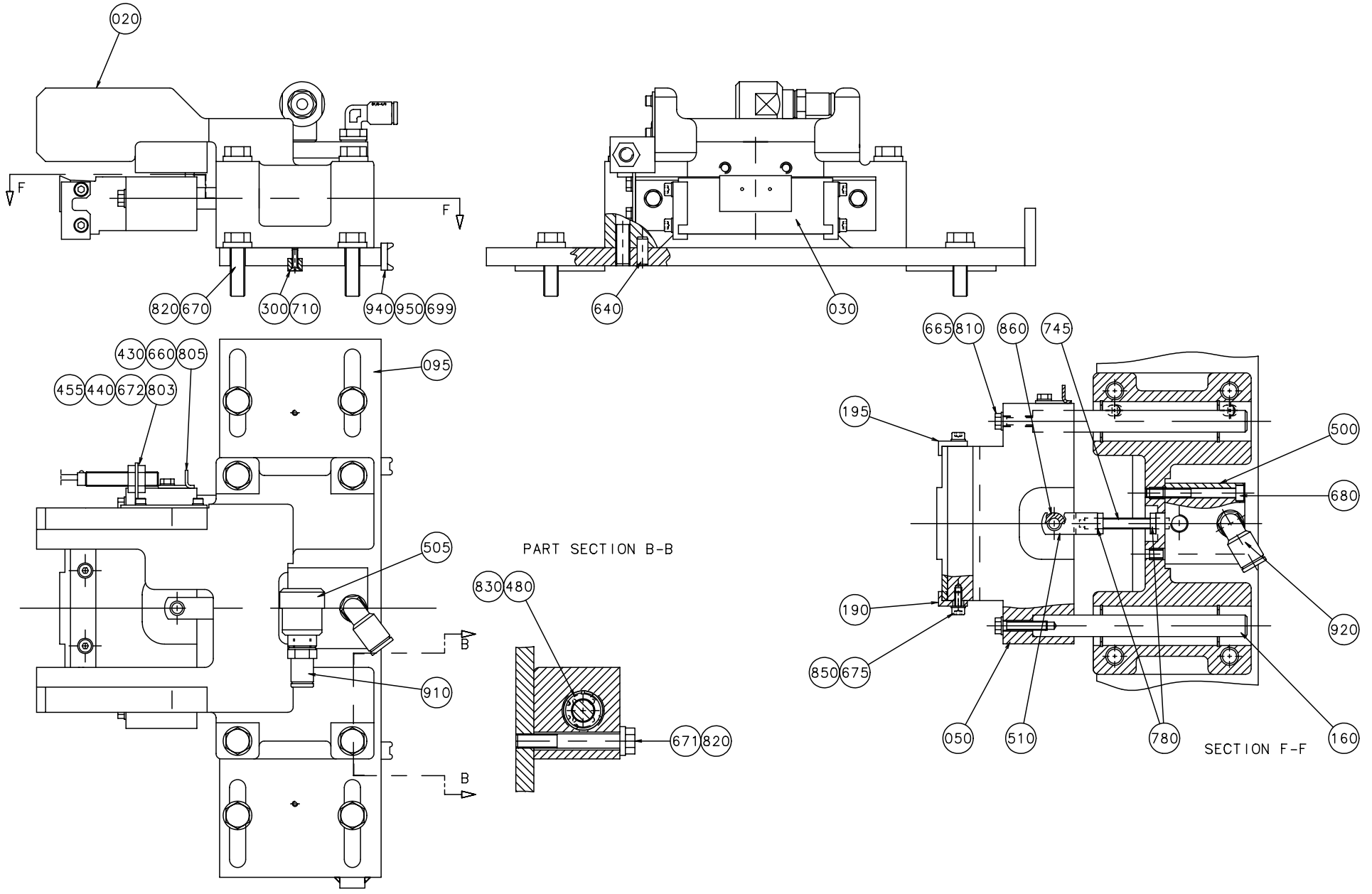

Pos	Part No	SP	UN	Qty	Description	Page No
-						
020	1260392-0000	-		1	CASTING APPLICATOR	
030	1260393-0002	M		1	SEALING PLATE	
050	1260391-0000	D		1	BRACKET	
095	1260404-0000	-		1	PLATE	
160	1140547-0000	R		2	SHAFT	
190	1260399-0000	D		1	CLAMP	
195	1260422-0000	D		1	CLAMP	
300	905244-0000	-		2	WEDGE	
430	1296753-0000	-		1	FLAG	
440	1296752-0000	-		1	BRACKET	
455	90044-0145	R		1	INDUCTIVE SWITCH	
480	90189-0003	M		4	BALL BUSHING	
500	90450-0409	M		1	CYLINDER	
505	90235-0206	-		1	VALVE	
510	90239-0489	M		1	ROD END,CLEVIS WITH AXLE,M6	
640	311103-0351	-		2	PINS,STRAIGHT 6X16	
660	312105-0287	-		2	SCREW M6S ISO 4017 M4X8 A280	
665	312105-0333	-		2	SCREW M6S ISO 4017 M5X25 A280	
670	312105-0455	-		4	SCREW M6S ISO 4017 M8X30 A280	
671	312105-0463	-		4	SCREW M6S ISO 4014 M8X60 A280	
672	312115-0226	-		2	SCREW MC6S ISO 4762 M3X12 A280	
675	312115-0291	-		4	SCREW MC6S ISO 4762 M4X12 A280	
680	312115-0341	-		4	SCREW MC6S 5X50 A4 80	
699	312125-0287	-		2	SLOTTED CHEESE HEAD ISO 1207 M4X8 RFR	
710	312145-0224	-		2	SLOTTED HEMFS3X10RFR	
745	312311-0380	-		1	STOP SCREW T6SS6X50FZB	
780	312621-0316	-		2	ROD END,NUT M6	
803	315105-0124	-		2	WASHERS,PLAIN ROUND 3,2X6	
805	315105-0136	-		2	WASHERS,PLAIN ROUND 4,3X8	
810	315105-0146	-		2	WASHERS,PLAIN ROUND 5,3X10	
820	315115-0165	-		8	WASHER TBRB8;4x16 Stainless	
830	315753-0117	-		4	RETAINING RINGS FOR HOLE 22	
850	315402-0136	-		4	WASHER FBB4,1RFR	
860	321105-0125	J		1	BUSHING 6F7X12X6	
910	342722-0202	-		1	STRAIGHT COUPL,FOR PLASTIC TUBE 6-G1/8"	
920	342732-0102	-		1	V-COUPL,ADJUST,FOR PLASTIC TUBE 6-G1/8"	
940	352113-0102	-		2	RIBBON CLAMP	
950	352113-0205	-		2	ANCHOR TM2S8-C100	

APPLICATOR TAB

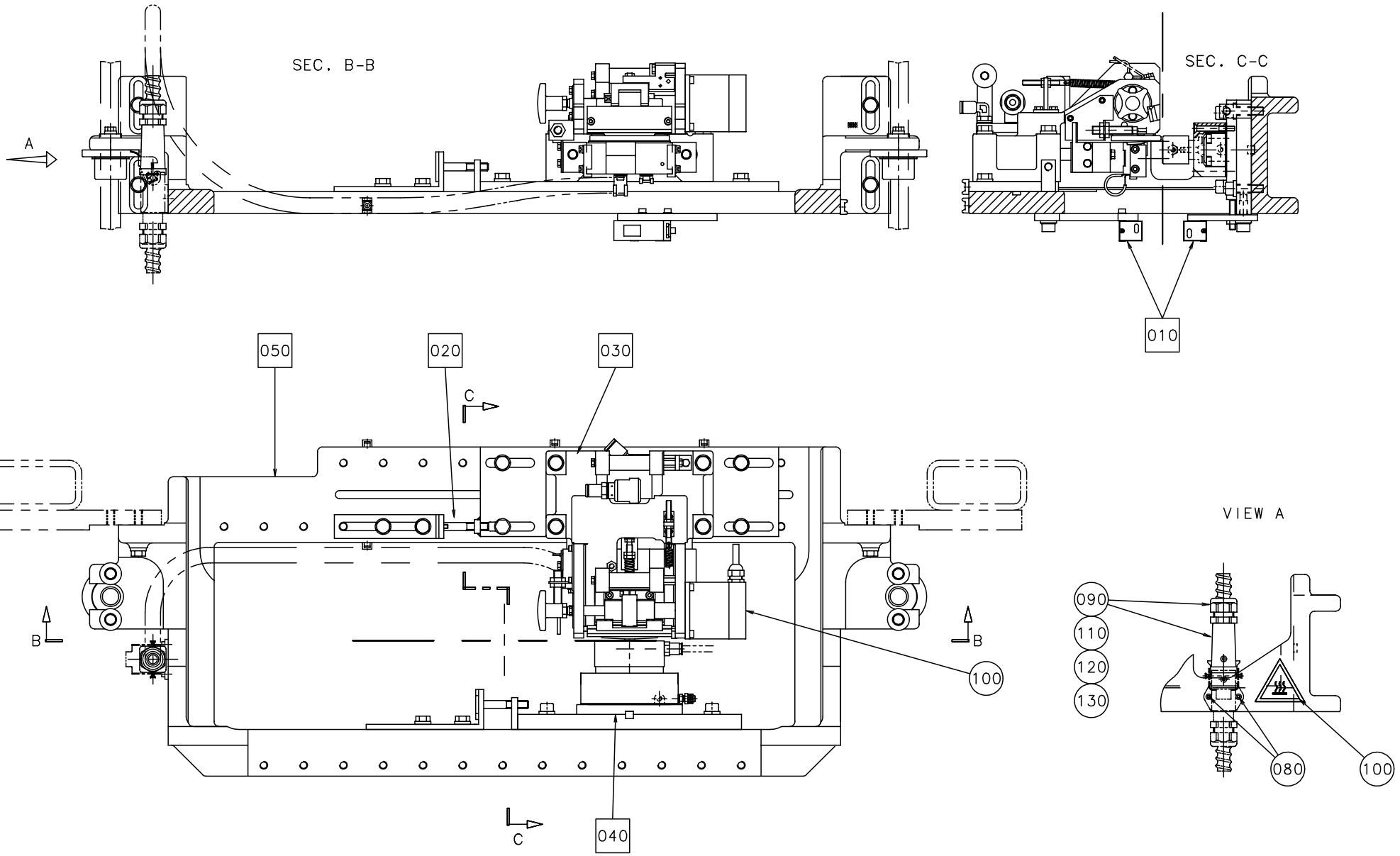

Pos	Part No	SP	UN	Qty	Description	Page No
-						
010	A1185029-0100	-		1	MISSING TAB DETECTOR	**133**
020	A1260401-0100	-		2	SETTING TOOL	**117**
030	A1260415-0100	-		1	TAB FEEDER	**135**, **137**
040	A1260416-0200	-		1	TAB C'JAW UNIT	**139**
050	A1260427-0100	-		1	TAB BRACKET	**141**
080	312115-0222	-		2	SCREW MC6S ISO 4762 M3X8 A280	
090	353243-0002	-		1	GLANDS,HOSE,EXTENDED,WITHOUT INSERT PG11	
100	359705-0007	-		2	WARNING SIGN "HOT SURFACE"	
110	90110-0295	-		1	CONTACT SCREW	
120	90110-0371	-		1	PLUG HOOD	
130	90152-0059	-	M	1	GLANDS,HOSE 18X12	

Pos	Part No	SP	UN	Qty	Description	Page No

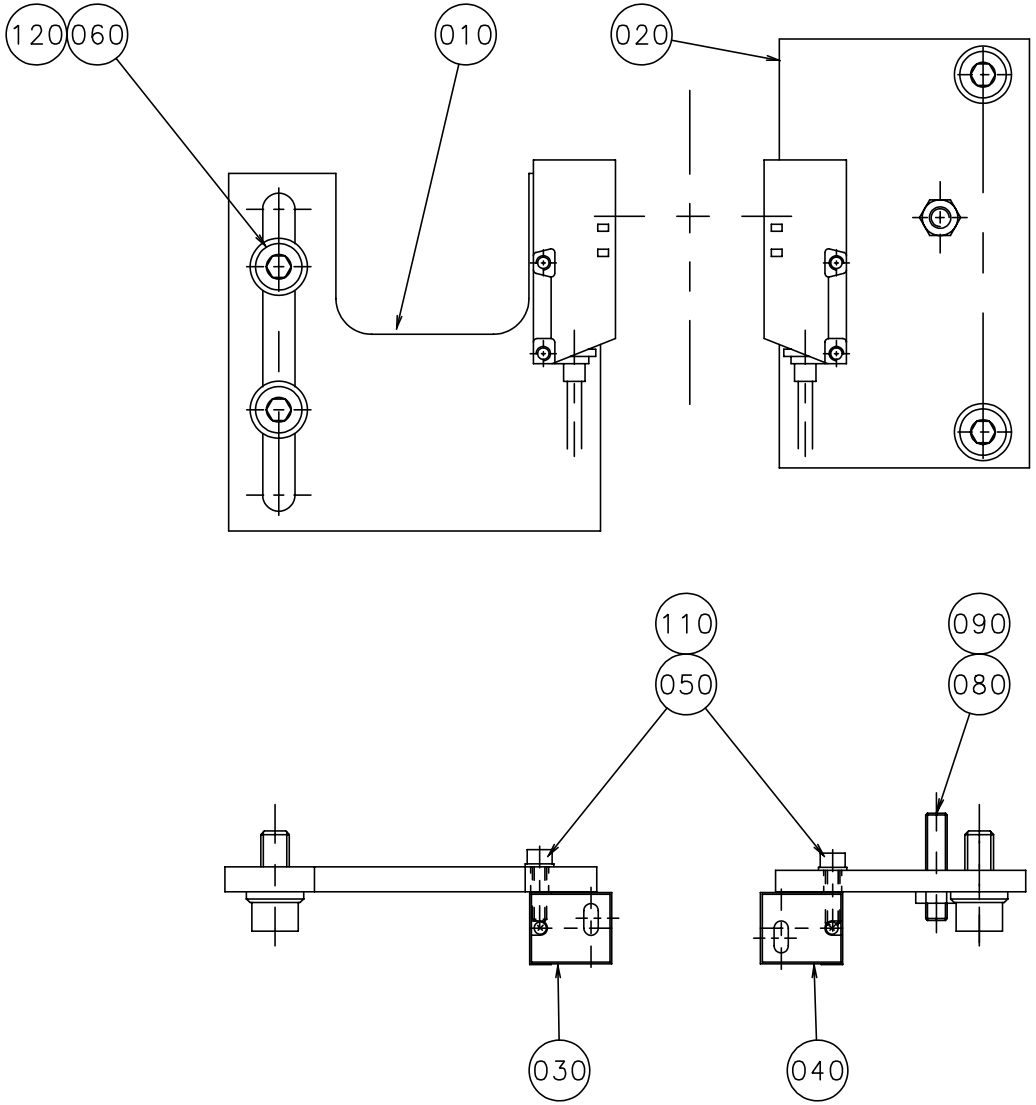
120
060
010
020
110
050
090
080
030
040

Pos	Part No	SP	UN	Qty	Description	Page No
-						
010	1140738-0000	-		1	BRACKET	
020	1140739-0000	-		1	BRACKET	
030	90232-0104	R		1	RECEIVER OMRON E3S-CT61-D-5M	
040	90232-0103	R		1	PH.CELL OMRON E3SCT61-L-5M	
050	312115-0293	-		4	SCREW MC6S ISO 4762 M4X16 A280	
060	312115-0451	-		4	SCREW MC6S ISO 4762 M8X20 A280	
080	312311-0374	-		1	SET SCREW FULL DOGPOINT ISO 4028 M6X30	
090	312625-0316	-		1	NUTS,HEXAGON,M6	
100	315105-0136	-		4	WASHERS,PLAIN ROUND 4,3X8	
110	315105-0136	-		4	WASHERS,PLAIN ROUND 4,3X8	
120	315115-0165	-		4	WASHER TBRB8;4x16 Stainless	

Pos	Part No	SP	UN	Qty	Description	Page No

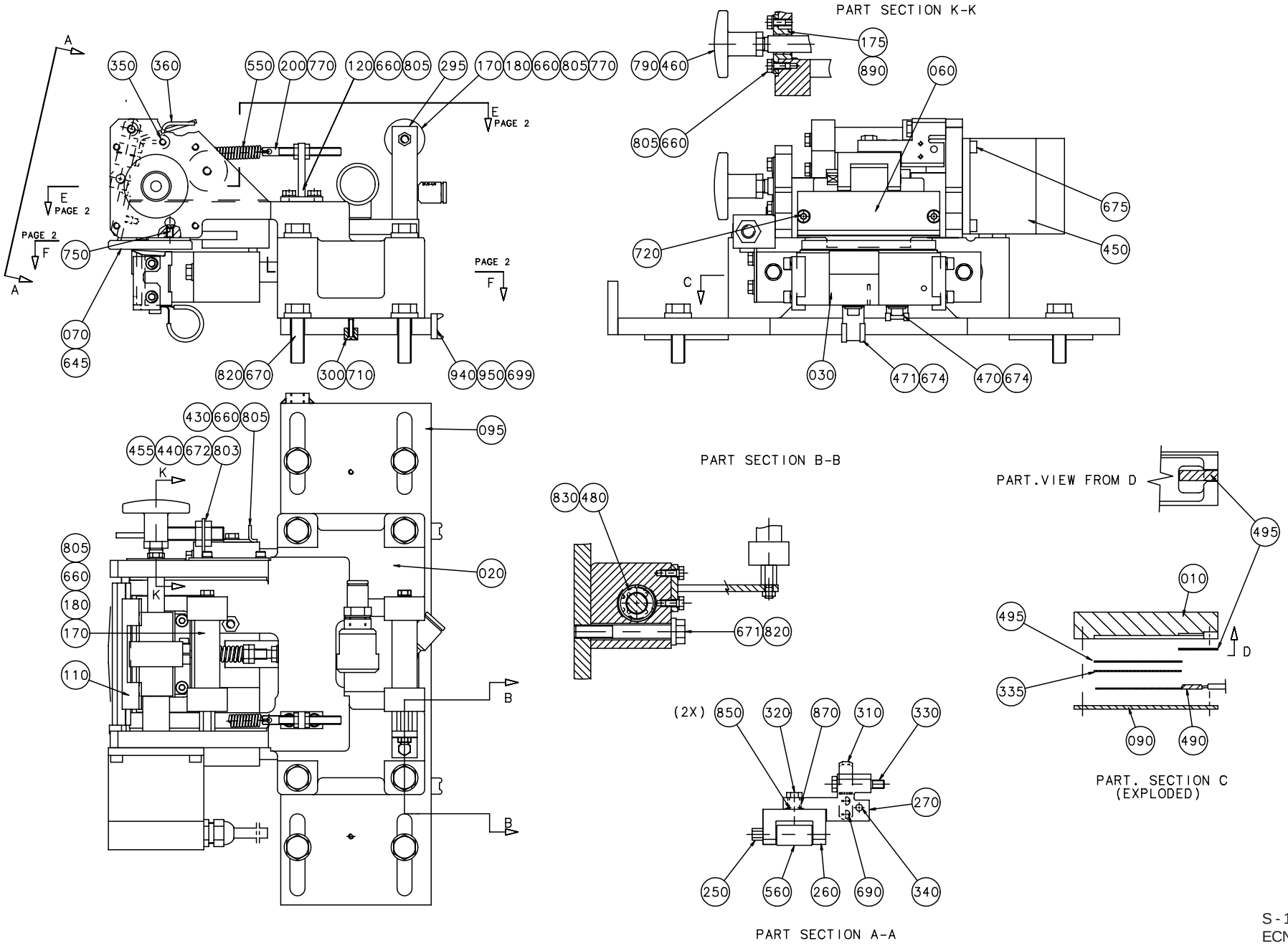
PART SECTION K-K
PART SECTION B-B
PART.VIEW FROM D
PART. SECTION C
(EXPLODED)
PART SECTION A-A
(2X)
PAGE 2

Pos	Part No	SP	UN	Qty	Description	Page No
Common parts						
010	1260551-0000	J		1	TAB HEATER HEAD	
020	1260389-0000	-		1	CASTING APPLICATOR	
050	1140912-0000	D		1	BRACKET	
060	1260395-0000	D		1	PLATE	
070	1145333-0000	J		1	KNIFE-WINDOW	
080	907712-0000	R		1	PIVOT PLATE	
090	1260388-0000	-		1	PLATE	
095	1260406-0000	-		1	PLATE	
100	1145332-0000	J		1	KNIFE-FLAT	
110	905174-0000	D		1	STEER PLATE	
120	1140545-0000	-		1	TEE BRACKET	
150	905194-0000	R		1	SHAFT	
160	1140547-0000	R		2	SHAFT	
175	1140548-0000	M		1	FLANGED BEARING BUSHING	
180	1140551-0000	M		2	SHAFT	
190	1260399-0000	D		1	CLAMP	
195	1260422-0000	D		1	CLAMP	
200	905215-0000	D		1	BOLT	
220	905241-0000	D		1	COUPLING	
230	905243-0000	M		1	SHAFT	
250	905413-0000	M		1	SHAFT	
260	905416-0000	D		1	PIVOT BRACKET-SWIVEL	
270	905419-0000	D		1	PIVOT ARM-SWIVEL	
280	905471-0000	J		1	ROLLER-DRIVE	
293	907710-0000	-		1	PIVOT PLATE	
295	1140546-0000	-		1	BRACKET	
300	905244-0000	-		2	WEDGE	
310	905246-0000	-		1	BRACKET	
320	905415-0000	D		1	SHAFT	
330	905417-0000	D		1	SHAFT	
335	905484-0000	J		1	SHIM	
340	905607-0000	-		1	SCREW	
350	905608-0000	-		1	SCREW	
360	905609-0000	-		1	LOCK BAR	
370	905613-0000	D		1	SHAFT	
415	907711-0000	R		1	SHAFT	
430	1296753-0000	-		1	FLAG	
440	1296752-0000	-		1	BRACKET	
450	90045-0192	R		1	Stepping motor	
455	90044-0145	R		1	INDUCTIVE SWITCH	
460	90051-0007	-		1	HANDLE	
470	907138-0000	-		1	CLAMP	
471	907249-0000	-		1	CLAMP	
480	90189-0003	M		4	BALL BUSHING	
490	1346521-0000	J		1	HEATER	
495	90411-0018	J		2	Insulator	
500	90450-0409	M		1	CYLINDER	
505	90235-0206	-		1	VALVE	
510	90239-0489	M		1	ROD END,CLEVIS WITH AXLE,M6	
520	90298-0033	-		x	WATLUBE HEAT LIQUID	
530	90326-0060	R		1	THERMOCOUPLE CR-AL	
540	90335-0067	J		1	SPRING	
550	907719-0000	M		1	SPRING	
560	90348-0031	J		1	FREE-WHEEL COUPLING	
580	1350785-0001	J		2	SHIM	
581	1350785-0002	J		2	SHIM	
582	1350785-0003	J		2	SHIM	
583	1350785-0004	J		2	SHIM	
640	311103-0351	-		2	PINS,STRAIGHT 6X16	
645	311112-0205	-		2	PINS,SLOTTED TUBULAR SPRING PIN 3X10	
650	312101-0343	-		2	SCREW M6S5X60FZB	
660	312105-0287	-		10	SCREW M6S ISO 4017 M4X8 A280	
665	312105-0333	-		2	SCREW M6S ISO 4017 M5X25 A280	
670	312105-0455	-		4	SCREW M6S ISO 4017 M8X30 A280	
671	312105-0463	-		4	SCREW M6S ISO 4014 M8X60 A280	
672	312115-0226	-		4	SCREW MC6S ISO 4762 M3X12 A280	
674	312115-0287	-		3	SCREW MC6S ISO 4762 M4X8 A280	
675	312115-0291	-		8	SCREW MC6S ISO 4762 M4X12 A280	
680	312115-0341	-		4	SCREW MC6S 5X50 A4 80	
690	312125-0224	-		2	SLOTTED HEMCS3X10RFR	
699	312125-0287	-		4	SLOTTED CHEESE HEAD ISO 1207 M4X8 RFR	
710	312145-0224	-		2	SLOTTED HEMFS3X10RFR	
720	312155-0291	-		6	SCREW MF6S DIN 7991 M4X12 A280	
740	312311-0333	-		1	SET SCREW FULL DOGPOINT ISO 4028 M5X25	
745	312311-0380	-		1	STOP SCREW T6SS6X50FZB	
750	312318-0285	-		1	SET SCREW CUP POINT ISO 4029 M4X6 RFR	
760	312318-0283	-		4	SET SCREW CUP POINT ISO 4029 M4X4 RFR	
770	312605-0314	-		4	NUT,HEXAGON,M6M5 Stainless	
780	312621-0316	-		4	ROD END,NUT M6	
790	312621-0318	-		1	ROD END,NUT M8	
803	315105-0124	-		4	WASHERS,PLAIN ROUND 3,2X6	
805	315105-0136	-		8	WASHERS,PLAIN ROUND 4,3X8	
810	315105-0146	-		5	WASHERS,PLAIN ROUND 5,3X10	
820	315115-0165	-		8	WASHER TBRB8;4x16 Stainless	
830	315753-0117	-		4	RETAINING RINGS FOR HOLE 22	

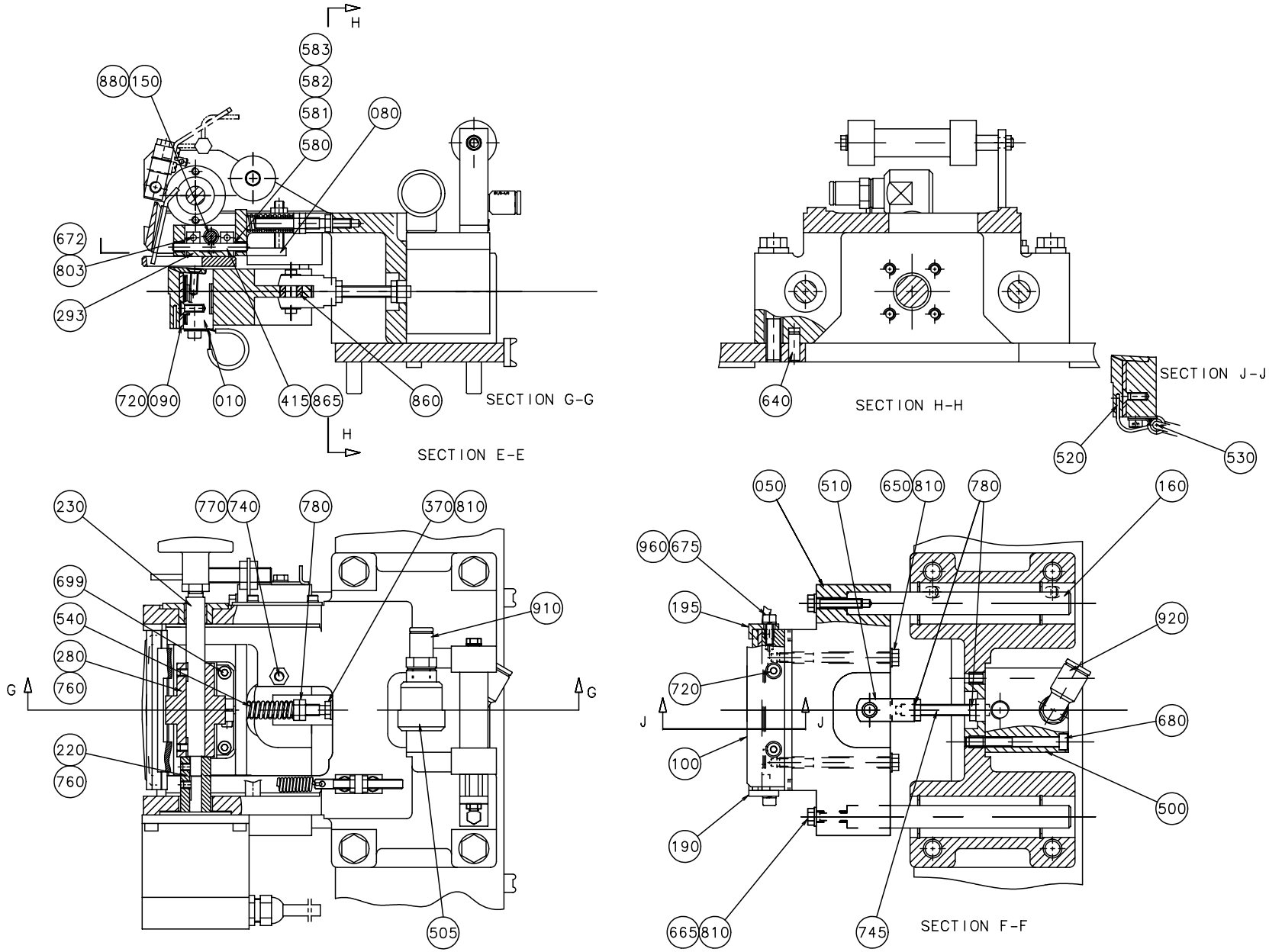
H
583
582
581
580
880
150
080
672
803
293
720
090
010
415
865
860
SECTION G-G
H
SECTION E-E
640
SECTION H-H
SECTION J-J
520
530
230
770
740
780
370
810
699
540
280
760
910
G
G
220
760
505
050
510
650
810
780
160
960
675
195
720
920
J
J
680
100
500
190
665
810
745
SECTION F-F

Pos	Part No	SP	UN	Qty	Description	Page No
850	907487-0000	D		2	WASHER-CURVED	
860	321105-0125	J		1	BUSHING 6F7X12X6	
865	321120-0092	M		2	BUSHING 4/5,5X6	
870	321120-0101	D		1	BEARING BUSHING WITHOUT FLANGE,6/8X6	
880	321120-0102	M		2	BEARING BUSHING WITHOUT FLANGE,6/8X10	
890	321120-0104	M		1	BEARING BUSHING WITHOUT FLANGE,10/12X10	
910	342722-0202	-		1	STRAIGHT COUPL,FOR PLASTIC TUBE 6-G1/8"	
920	342732-0102	-		1	V-COUPL,ADJUST,FOR PLASTIC TUBE 6-G1/8"	
940	352113-0102	-		2	RIBBON CLAMP	
950	352113-0205	-		2	ANCHOR TM2S8-C100	
960	315402-0136	-		4	WASHER FBB4,1RFR	
HOLE50						
030	1350541-0000	J		1	SEALING PLATE	
170	908309-0000	N		2	ROLLER - 47	
HOLE45						
030	1350525-0000	J		1	SEALING PLATE	
170	908309-0000	N		2	ROLLER - 47	
HOLE71						
030	1350526-0000	J		1	SEALING PLATE	
170	907358-0005	N		2	ROLLER - 43.5	

Pos	Part No	SP	UN	Qty	Description	Page No

TAB C'JAW UNIT

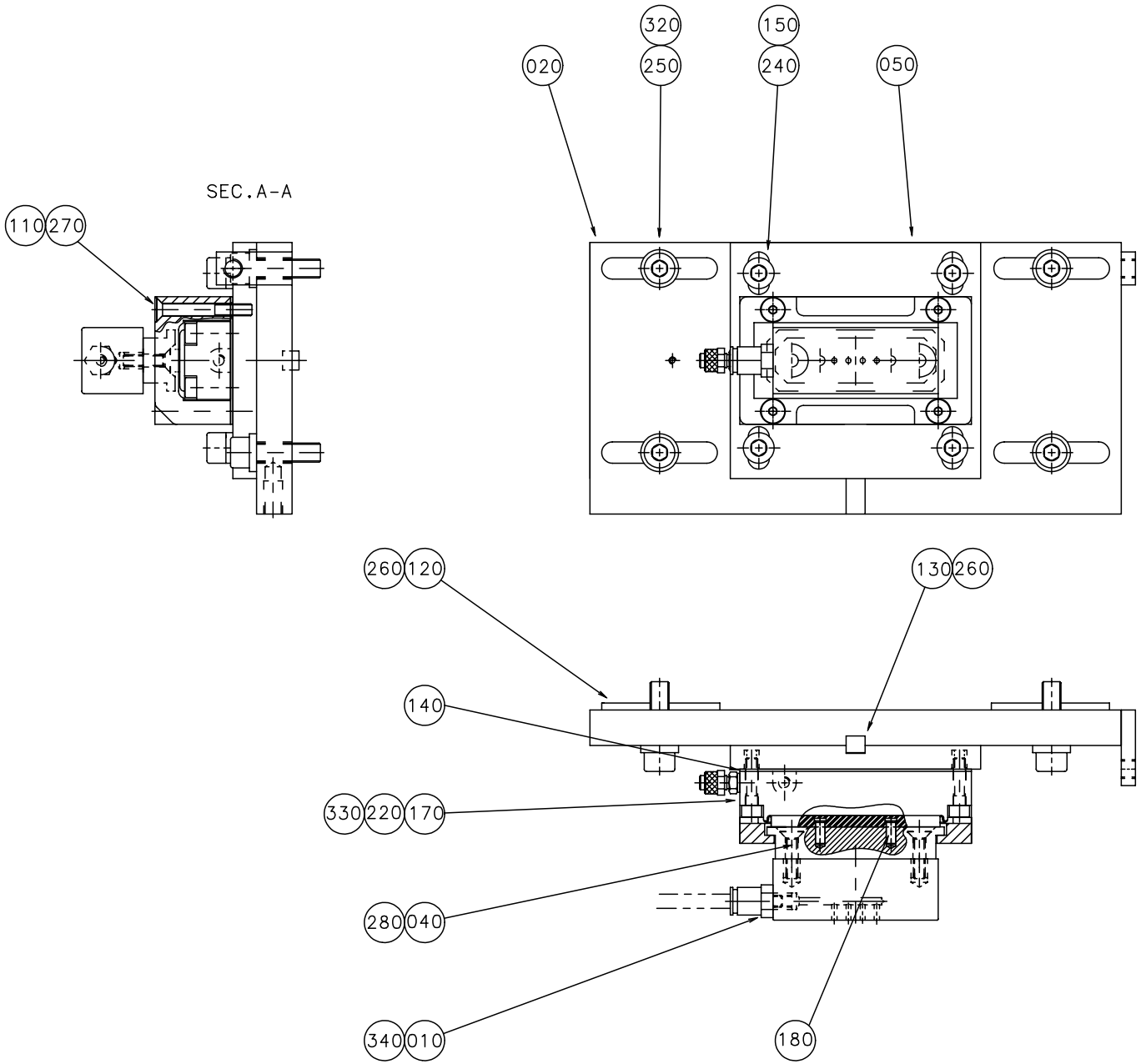

Pos	Part No	SP	UN	Qty	Description	Page No
-						
010	1346283-0000	J		1	COUNTER PLATE	
020	1260407-0000	-		1	PLATE	
040	1296298-0000	M		1	BUSHING	
050	1279485-0000	-		1	PLATE	
110	928919-0000	-		1	FASTENING PLATE	
120	905244-0000	-		2	WEDGE	
130	905463-0000	-		1	KEY	
140	1279484-0000	J		2	SHIM	
150	1296300-0000	D		4	WASHER	
170	90450-0380	M		1	CYLINDER	
180	311103-0267	-		2	PINS,STRAIGHT 4X10	
220	312115-0331	-		4	SCREW MC6S ISO 4762 M5X20 A280	
240	312115-0453	-		4	SCREW MC6S ISO 4762 M8X25 A280	
250	312115-0455	-		4	SCREW MC6S ISO 4762 M8X30 A280	
260	312145-0226	-		4	SLOTTED HEMFS3X12RFR	
270	312155-0339	-		4	SCREW MF6S DIN 7991 5X40 A280	
280	312155-0331	-		2	SCREW MF6S DIN 7991 M5X20 A280	
320	315115-0165	-		4	WASHER TBRB8;4x16 Stainless	
330	342921-0111	-		1	STRAIGHT COUPLING,EXT.THREADED 6/4-M5	
340	342722-0197	-		1	STRAIGHT COUPL,FOR PLASTIC TUBE 6-M5	

Pos	Part No	SP	UN	Qty	Description	Page No

TAB BRACKET

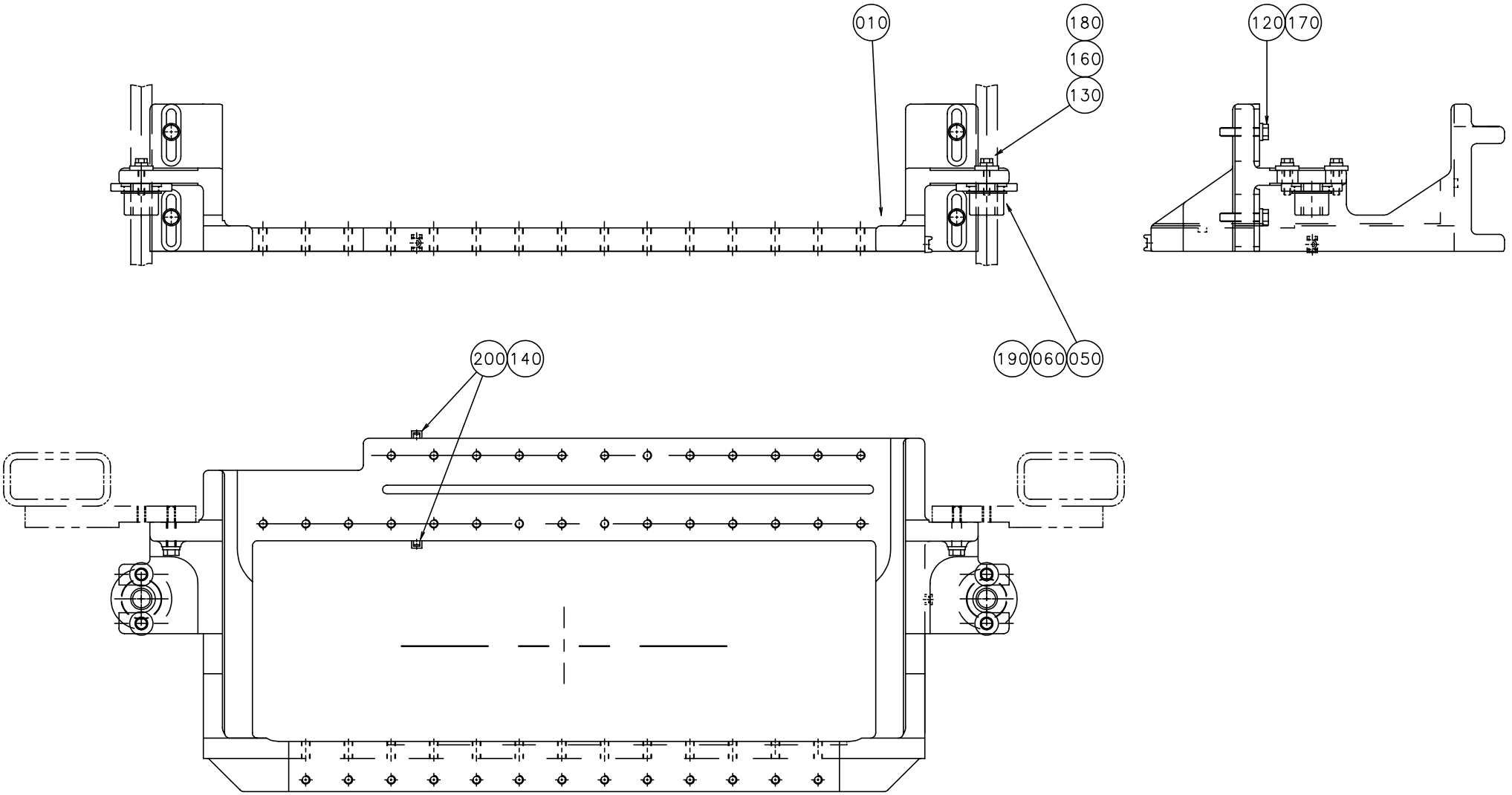

S-1260427-1
ECN 70337

Pos	Part No	SP	UN	Qty	Description	Page No
-						
010	1260398-0000	-		1	BRACKET	
050	1147009-0000	-		2	SPECIAL WASHER	
060	1147010-0000	-		2	BUSHING	
120	312109-0459	-		4	SCREW M6S ISO 4017 M8X40 A280	
130	312109-0374	-		4	SCREW M6S ISO 4017 M6X30 A280	
140	312125-0289	-		3	SLOTTED HEMCS4X10RFR	
160	315115-0153	-		4	WASHER TBRB 6,4x12 Stainless	
170	315115-0165	-		4	WASHER TBRB8;4x16 Stainless	
180	315125-0153	-		4	WASHERS,PLAIN ROUND,CHAMFERED 6,4X22X4	
190	315751-0123	-		2	RETAINING RINGS FOR SHAFT 32	
200	352113-0205	-		3	ANCHOR TM2S8-C100	

Pos	Part No	SP	UN	Qty	Description	Page No

This page is intentionally left blank

Pos	Part No	SP	UN	Qty	Description	Page No
TPA 1000S HOLE71						
010	1145482-0000	-		1	OPENING SPECIFICATION	
TBA 1000B HOLE50						
010	1296875-0000	-		1	OPENING SPECIFICATION	
TBA 1000S HOLE50						
010	1296876-0000	-		1	OPENING SPECIFICATION	
TBA 1000B HOLE45						
010	1143421-0000	-		1	OPENING SPECIFICATION	
TBA 1000S HOLE45						
010	929771-0000	-		1	OPENING SPECIFICATION	

Pos	Part No	SP	UN	Qty	Description	Page No

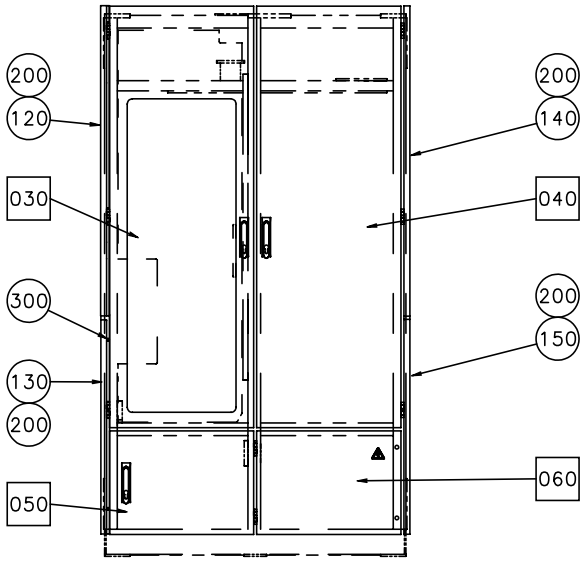

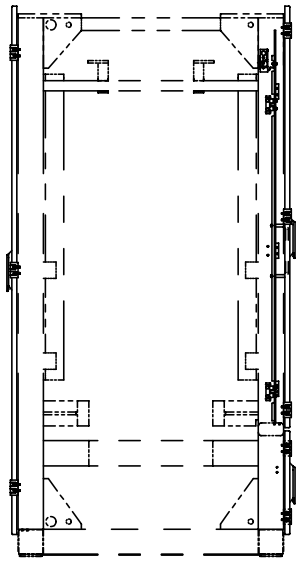

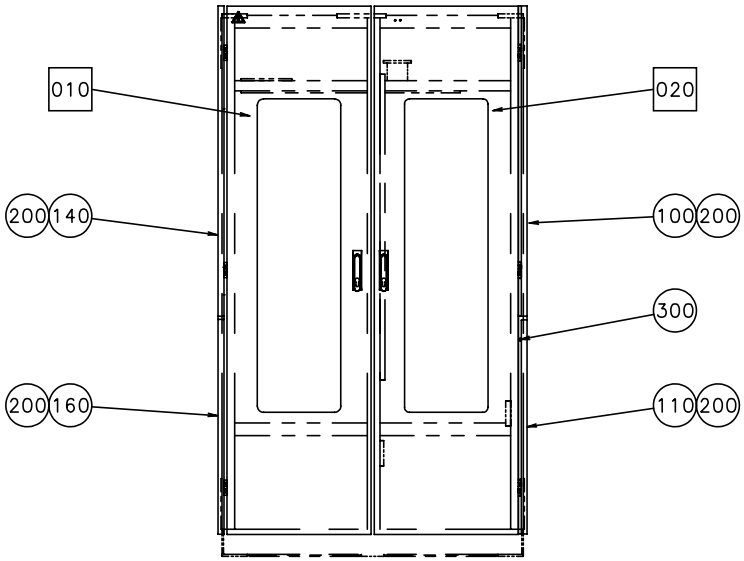

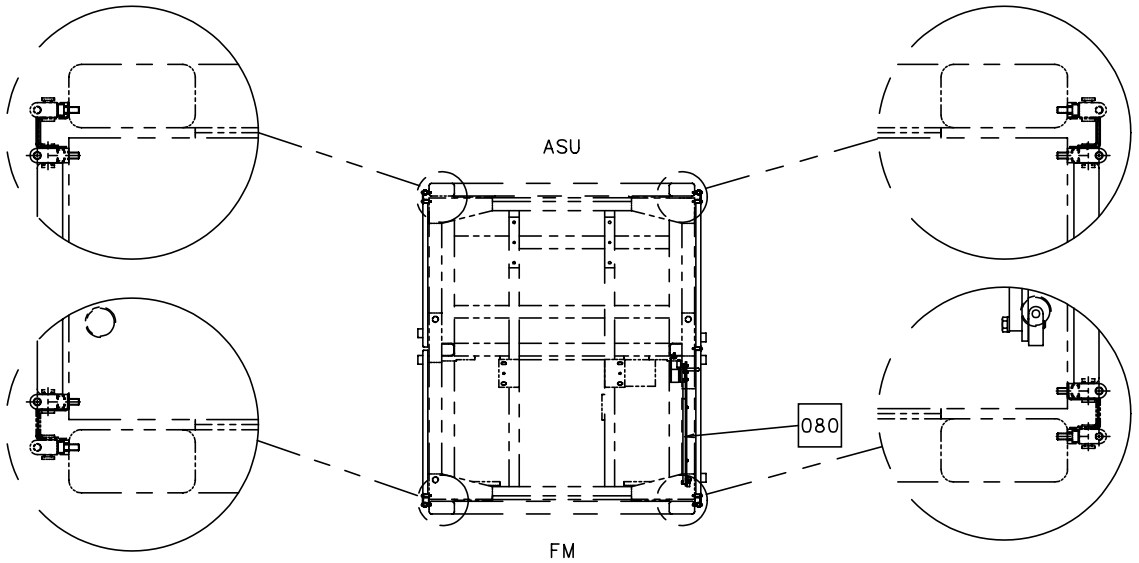

S-1095951-1
ECN 70335

Pos	Part No	SP	UN	Qty	Description	Page No
-						
010	A1095944-0100	-		1	DOOR EL-CABINET	**147**
020	A1095945-0200	-		1	DOOR	**149**
030	A1095946-0200	-		1	DOOR	**151**
040	A1095947-0200	-		1	DOOR	**153**
050	A1095948-0100	-		1	DOOR FOR WASTE BOX	**155**
060	A1095949-0100	-		1	DOOR FOR TPIH	**157**
080	A1185000-0100	-		1	DOOR,INNER	**159**
100	1140771-0000	-		1	COVERING PLATE	
110	1140772-0000	-		1	COVERING PLATE	
120	1140773-0000	-		1	COVERING PLATE	
130	1140774-0000	-		1	COVERING PLATE	
140	1140775-0000	-		2	COVERING PLATE	
150	1140776-0000	-		1	COVERING PLATE	
160	1140777-0000	-		1	COVERING PLATE	
200	1129767-0000	-		12	SCREW	
300	312115-0362	-		3	SCREW MC6S ISO 4762 M6X8 A280	

Pos	Part No	SP	UN	Qty	Description	Page No

DOOR EL-CABINET

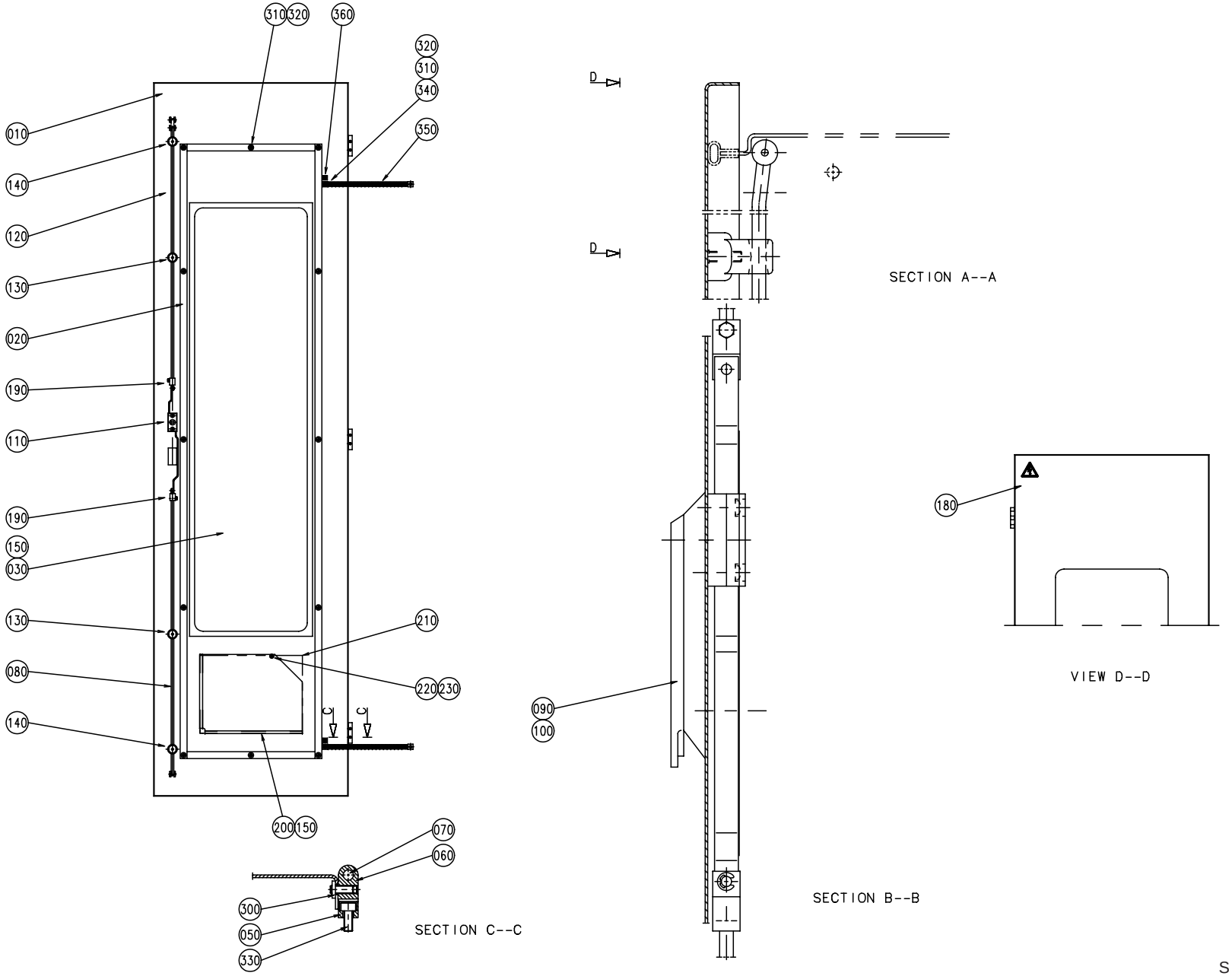

Pos	Part No	SP	UN	Qty	Description	Page No
-						
010	1129931-0000	-		1	DOOR	
020	1129932-0000	-		1	FRAME	
030	1140415-0000	-		1	GLASS PANE	
050	1035792-0000	-		3	E-HINGE	
060	1129770-0000	-		6	BLOCKING PIECE	
070	988685-0000	-		3	PIN	
080	1260552-0000	-		1	ROD	
090	90237-0150	-		1	TURNING HANDLE	
100	90237-0128	-		1	LOCK CYLINDER	
110	90237-0153	-		1	LOCK HOUSING	
120	B1260403-0000	-		1	ROD	
130	90237-0151	-		2	STEERING	
140	90237-0152	-		2	STEERING	
150	90157-0041	-	L	x	SEALING COMPOUND	
180	359705-0015	-		1	WARNING SIGN "ELECTRIC SHOCK"	
190	90237-0169	-		2	ADAPTER	
200	1036977-0000	-		1	HOLDER	
210	1296288-0000	-		1	FUSE BOARD	
220	312605-0314	-		1	NUT,HEXAGON,M6M5 Stainless	
230	315105-0146	-		1	WASHERS,PLAIN ROUND 5,3X10	
300	1129767-0000	-		3	SCREW	
310	315105-0153	-		14	WASHER,PLAIN ROUND BRB 6,4x12 Stainless	
320	312605-0316	-		14	NUT,HEXAGON,A280 M6M6 Stainless	
330	312115-0327	-		6	SCREW MC6S ISO 4762 M5X12 A280	
340	90062-0022	-		2	LOCKING WASHER	
350	90135-0035	-		2	LOW IMPEDANCELITZ L=250MM	
360	90194-0152	-		2	SIGN "EARTH"	

Pos	Part No	SP	UN	Qty	Description	Page No

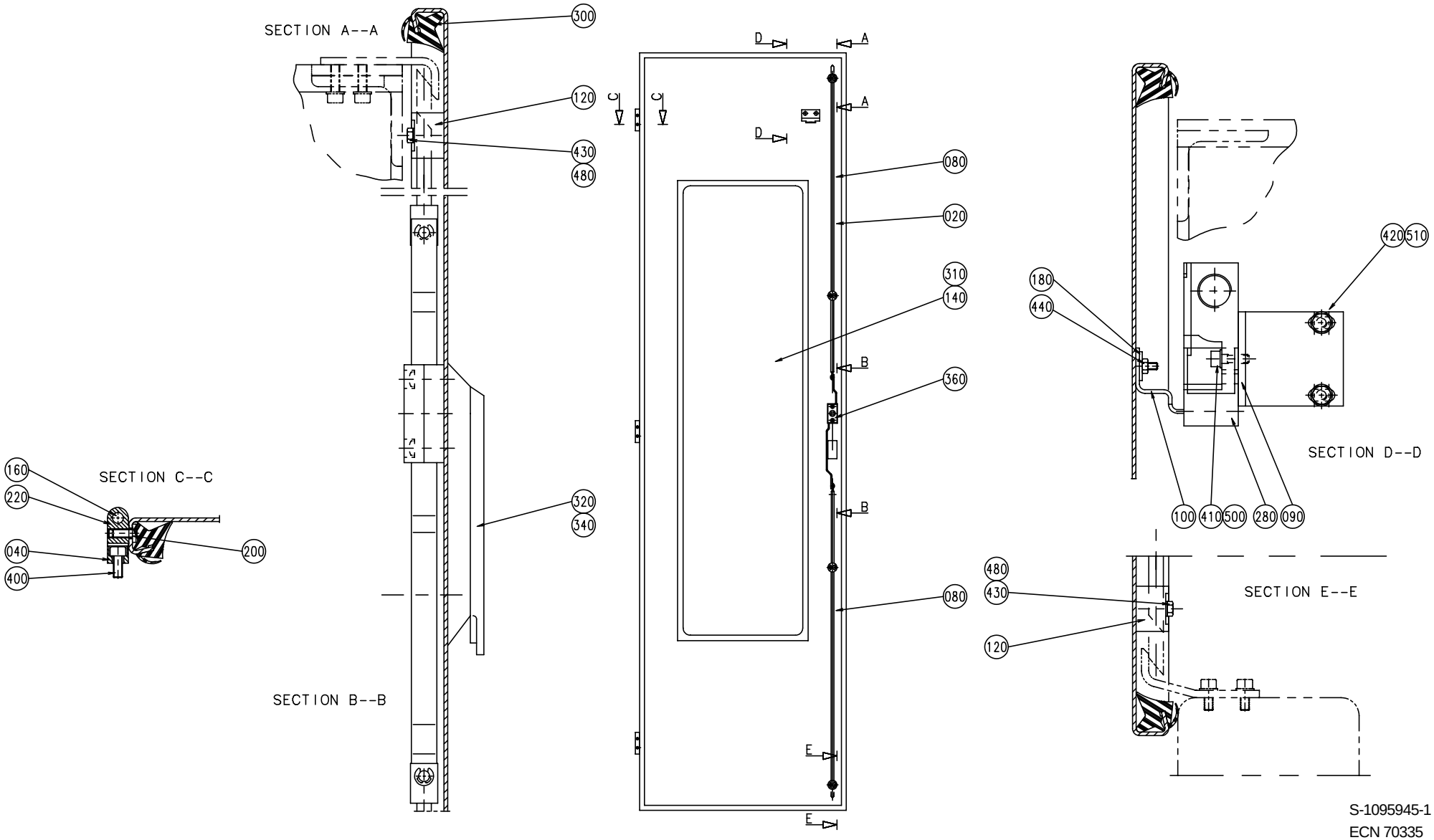

S-1095945-1
ECN 70335

Pos	Part No	SP	UN	Qty	Description	Page No
-						
020	1255682-0000	-		1	DOOR	
040	1035792-0000	-		3	E-HINGE	
080	1036304-0020	-		2	LOCKING ARM	
090	1255684-0000	-		1	HOLDER	
100	1129042-0000	-		1	KEY	
120	1129274-0000	-		4	GUIDE LUG	
140	1140415-0000	-		1	GLASS PANE	
160	988685-0000	-		3	PIN	
180	1036563-0000	-		1	WASHER	
200	1129767-0000	-		3	SCREW	
220	1129770-0000	-		6	BLOCKING PIECE	
280	90044-0139	N		1	KEY SAFETY SWITCH	
300	1279828-0000	-		1	SEALING STRIP	
310	90157-0041	-		x	SEALING COMPOUND	
320	90237-0128	-		1	LOCK CYLINDER	
340	90237-0150	-		1	TURNING HANDLE	
360	90237-0153	-		1	LOCK HOUSING	
400	312115-0327	-		6	SCREW MC6S ISO 4762 M5X12 A280	
410	312115-0329	-		2	SCREW MC6S ISO 4762 M5X16 A280	
420	312105-0366	-		2	SCREW M6S ISO 4017 M6X12 A280	
430	312605-0312	-		8	NUTS,HEXAGON,M4	
440	312812-0312	-		2	NUTS,HEXAGON,LOCK,WITH NYLON,M4	
480	315105-0136	-		8	WASHERS,PLAIN ROUND 4,3X8	
500	315105-0146	-		2	WASHERS,PLAIN ROUND 5,3X10	
510	315105-0153	-		2	WASHER,PLAIN ROUND BRB 6,4x12 Stainless	

Pos	Part No	SP	UN	Qty	Description	Page No

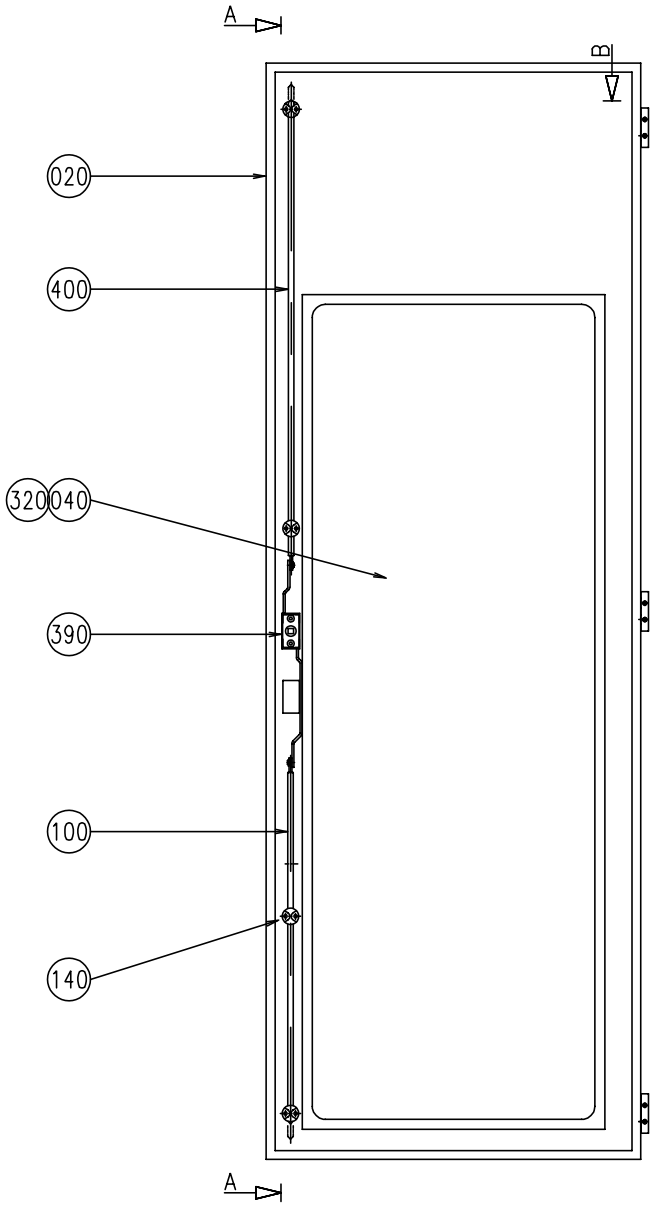

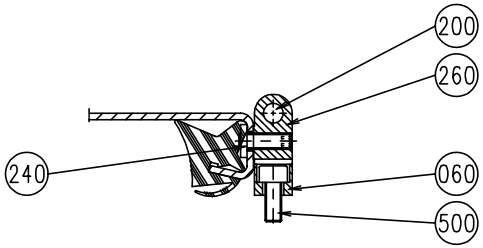

SECTION B--B

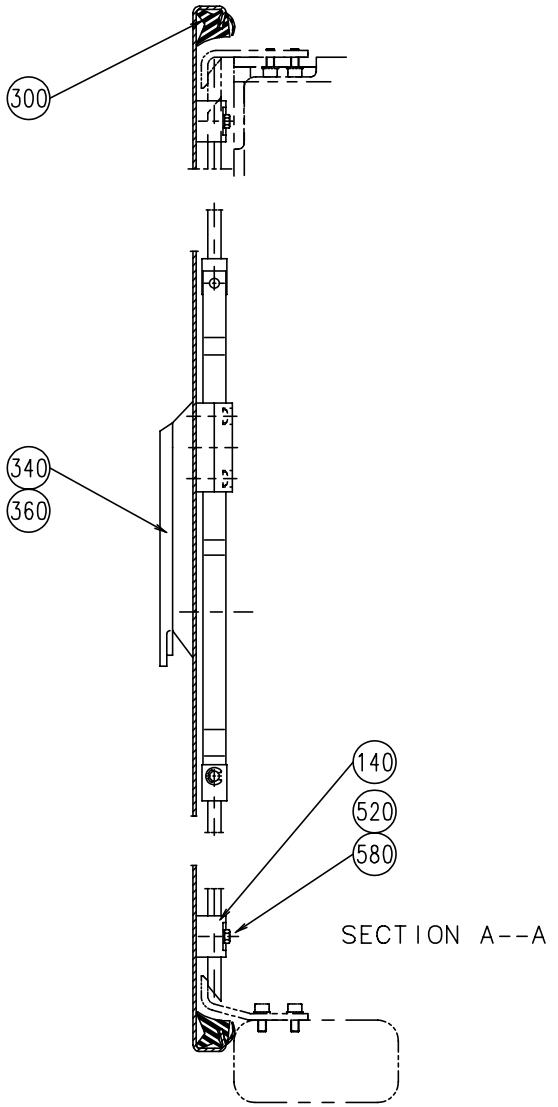

SECTION A--A

S-1095946-1
ECN 70335

Pos	Part No	SP	UN	Qty	Description	Page No
-						
020	1255685-0000	-		1	DOOR	
040	1140416-0000	-		1	GLASS PANE	
060	1035792-0000	-		3	E-HINGE	
100	1036304-0019	-		1	LOCKING ARM	
140	1129274-0000	-		4	GUIDE LUG	
200	988685-0000	-		3	PIN	
240	1129767-0000	-		3	SCREW	
260	1129770-0000	-		6	BLOCKING PIECE	
300	1279829-0000	-		1	SEALING STRIP	
320	90157-0041	-		x	SEALING COMPOUND	
340	90237-0128	-		1	LOCK CYLINDER	
360	90237-0150	-		1	TURNING HANDLE	
390	90237-0153	-		1	LOCK HOUSING	
400	1036304-0005	-		1	LOCKING ARM	
500	312115-0327	-		6	SCREW MC6S ISO 4762 M5X12 A280	
520	312605-0312	-		8	NUTS,HEXAGON,M4	
580	315105-0136	-		4	WASHERS,PLAIN ROUND 4,3X8	

Pos	Part No	SP	UN	Qty	Description	Page No

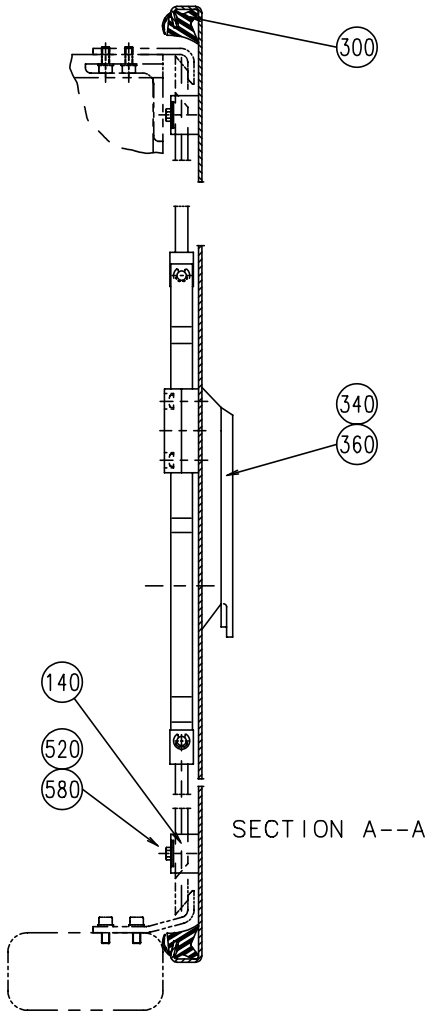

SECTION A--A

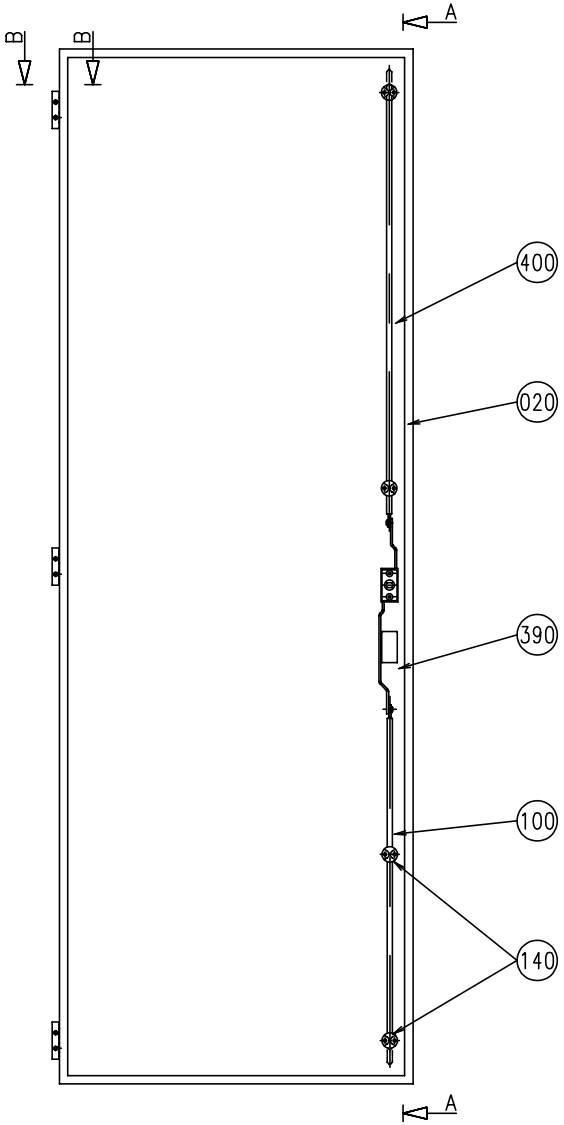

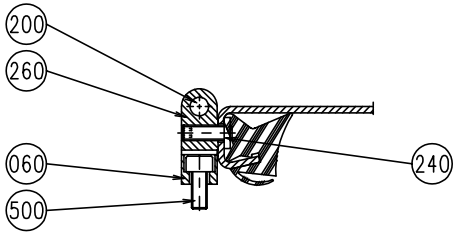

SECTION B--B

S-1095947-1
ECN 70335

Pos	Part No	SP	UN	Qty	Description	Page No
-						
020	1255686-0000	-		1	DOOR	
060	1035792-0000	-		3	E-HINGE	
100	1036304-0019	-		1	LOCKING ARM	
140	1129274-0000	-		4	GUIDE LUG	
200	988685-0000	-		3	PIN	
240	1129767-0000	-		3	SCREW	
260	1129770-0000	-		6	BLOCKING PIECE	
300	1279829-0000	-		1	SEALING STRIP	
340	90237-0128	-		1	LOCK CYLINDER	
360	90237-0150	-		1	TURNING HANDLE	
390	90237-0153	-		1	LOCK HOUSING	
400	1036304-0005	-		1	LOCKING ARM	
500	312115-0327	-		6	SCREW MC6S ISO 4762 M5X12 A280	
520	312605-0312	-		4	NUTS,HEXAGON,M4	
580	315105-0136	-		4	WASHERS,PLAIN ROUND 4,3X8	

Pos	Part No	SP	UN	Qty	Description	Page No

DOOR FOR WASTE BOX

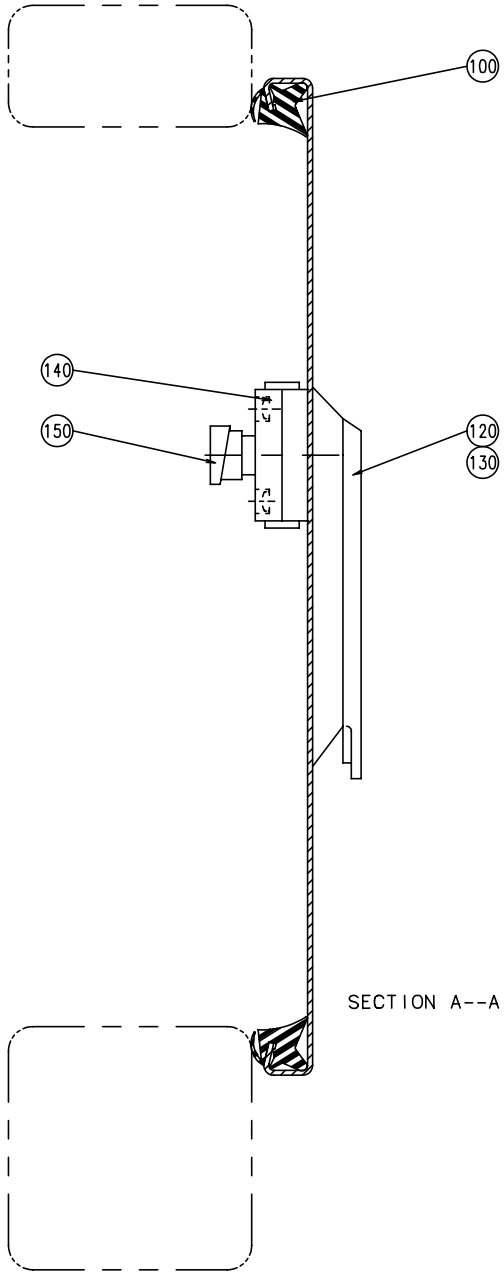

SECTION A--A

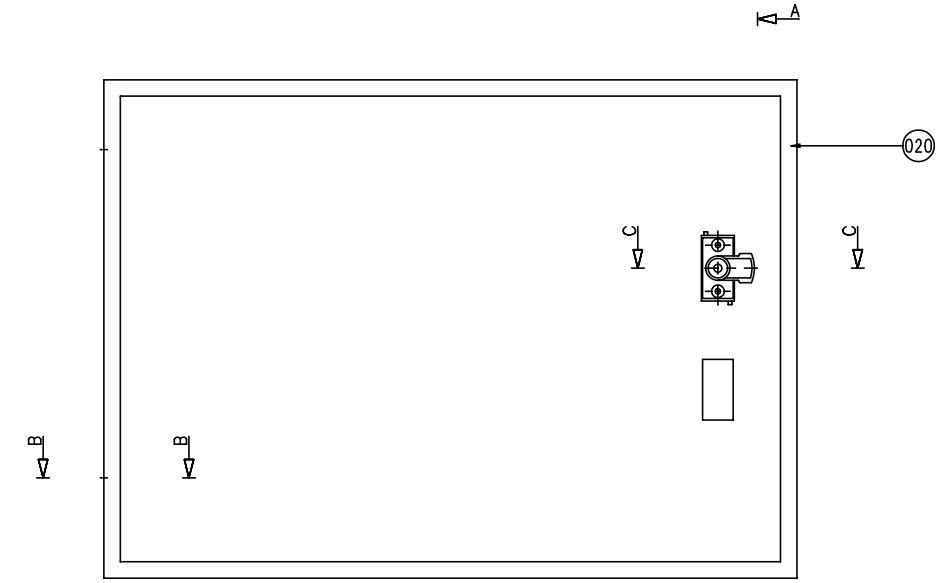

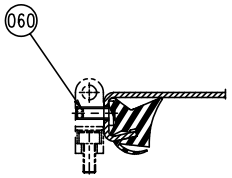

SECTION B--B

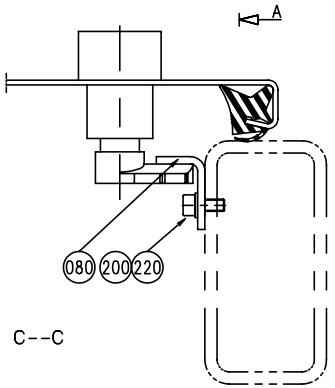

SECTION C--C

S-1095948-1
ECN 70335

Pos	Part No	SP	UN	Qty	Description	Page No
-						
020	1255683-0000	-		1	DOOR	
060	1129767-0000	-		2	SCREW	
080	1129971-0000	-		1	BRACKET	
100	1279830-0000	-		1	SEALING STRIP	
120	90237-0128	-		1	LOCK CYLINDER	
130	90237-0150	-		1	TURNING HANDLE	
140	90237-0154	-		1	LOCK HOUSING	
150	90237-0165	-		1	LATCH	
200	312115-0327	-		2	SCREW MC6S ISO 4762 M5X12 A280	
220	315105-0146	-		2	WASHERS,PLAIN ROUND 5,3X10	

Pos	Part No	SP	UN	Qty	Description	Page No

DOOR FOR TPIH

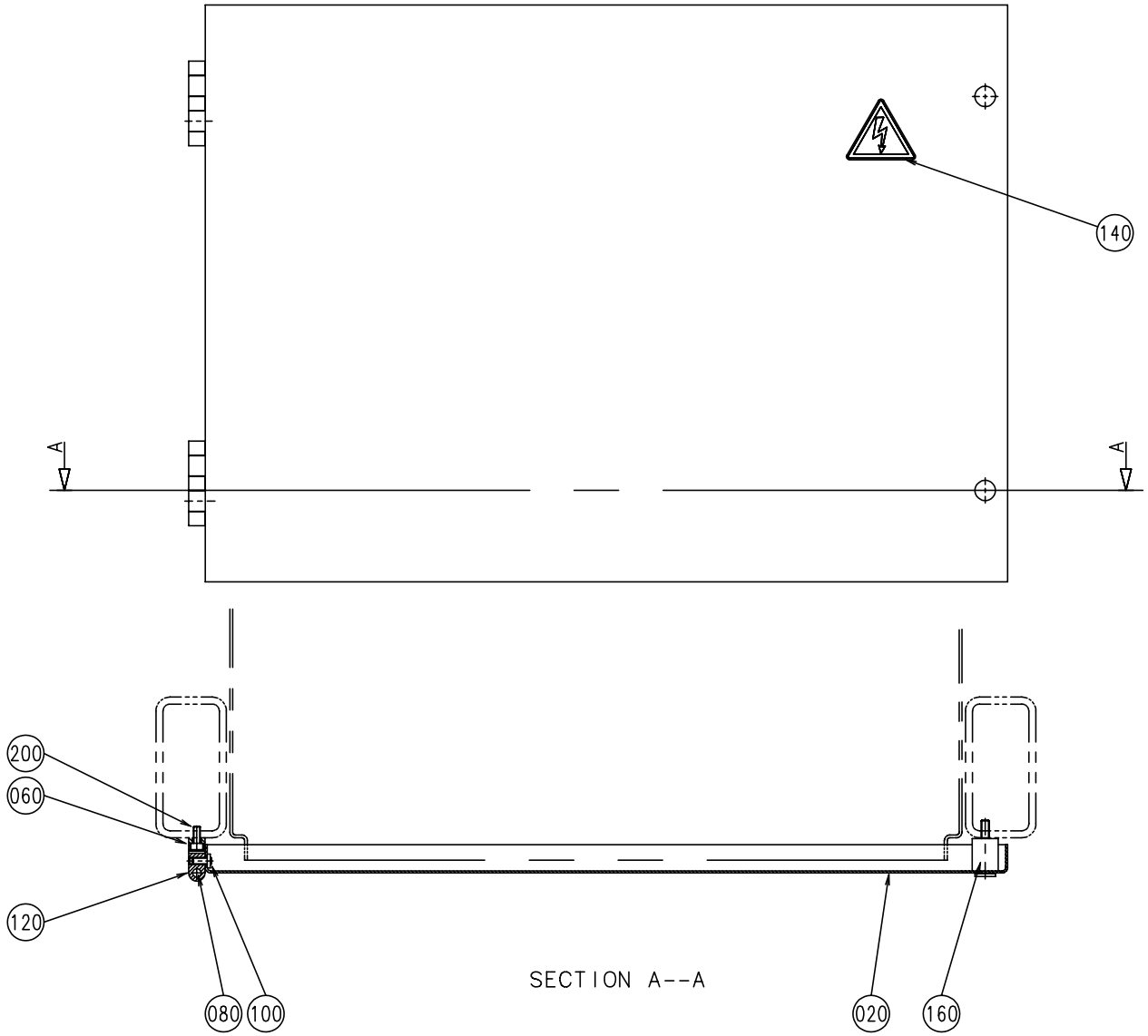

Pos	Part No	SP	UN	Qty	Description	Page No
-						
020	1129930-0000	-		1	DOOR	
060	1035792-0000	-		2	E-HINGE	
080	988685-0000	-		2	PIN	
100	1129767-0000	-		2	SCREW	
120	1129770-0000	-		4	BLOCKING PIECE	
140	359705-0015	-		1	WARNING SIGN "ELECTRIC SHOCK"	
160	90226-0458	-		2	MOUNTING SCREW	
200	312115-0327	-		4	SCREW MC6S ISO 4762 M5X12 A280	

Pos	Part No	SP	UN	Qty	Description	Page No

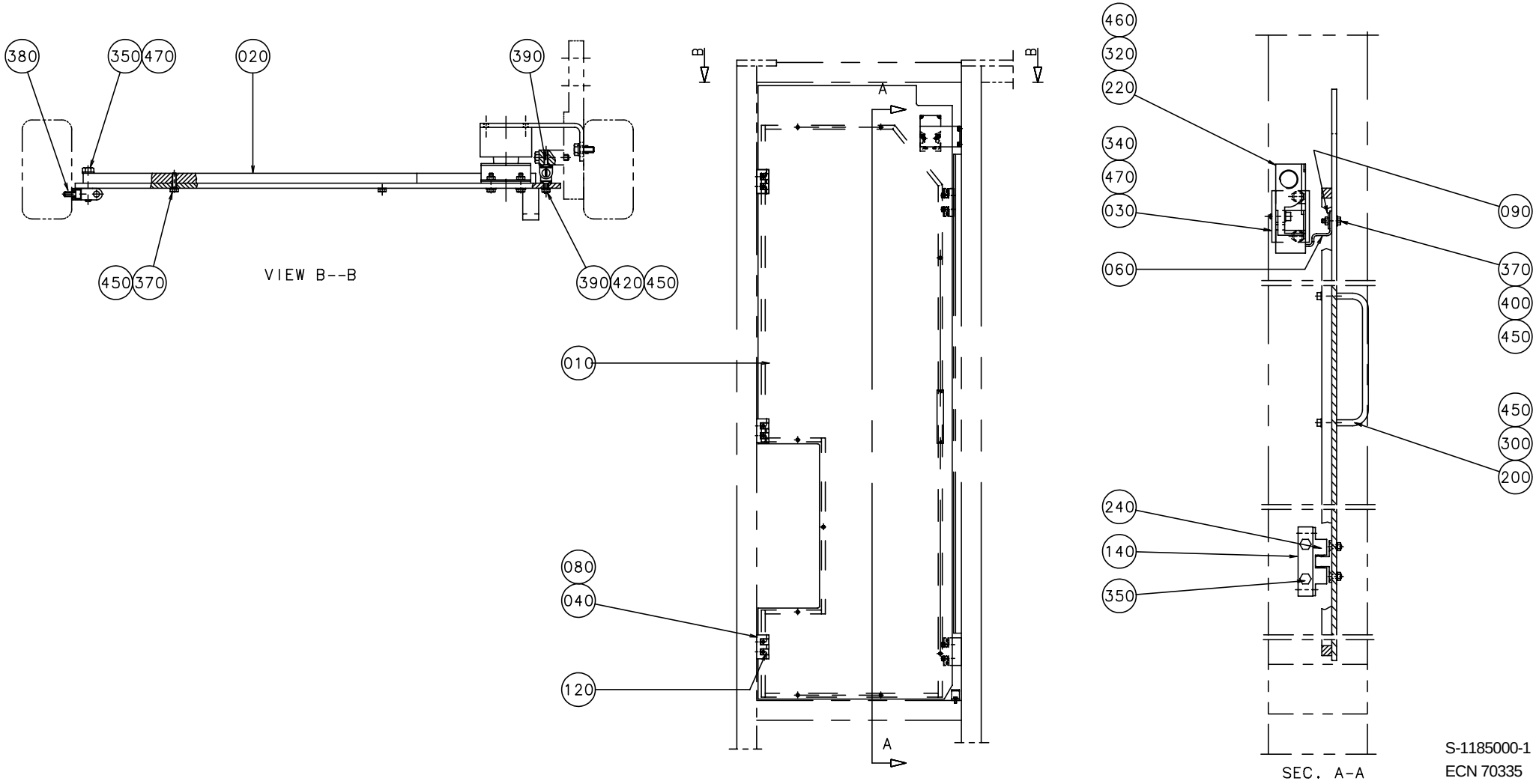

S-1185000-1
ECN 70335

Pos	Part No	SP	UN	Qty	Description	Page No
-						
010	1140509-0000	-		1	DOOR	
020	1260201-0000	-		1	FRAME	
030	1140537-0000	-		1	HOLDER	
040	1035792-0000	-		3	E-HINGE	
060	1129042-0000	-		1	KEY	
080	988685-0000	-		3	PIN	
090	1036563-0000	-		1	WASHER	
120	1129770-0000	-		6	BLOCKING PIECE	
140	1140538-0000	-		2	BLOCKING PIECE	
200	90017-0017	-		1	HANDLE	
220	90044-0139	R		1	KEY SAFETY SWITCH	
240	90237-0070	-		2	LOCK	
300	312115-0295	-		2	SCREW MC6S ISO 4762 M4X20 A280	
320	312115-0329	-		2	SCREW MC6S ISO 4762 M5X16 A280	
340	312105-0368	-		2	SCREW M6S ISO 4017 M6X16 A280	
350	312105-0374	-		10	SCREW M6S ISO 4017 M6X30 A280	
370	312105-0295	-		11	SCREW M6S ISO 4017 M4X20 A280	
380	312115-0327	-		6	SCREW MC6S ISO 4762 M5X12 A280	
390	312155-0291	-		8	SCREW MF6S DIN 7991 M4X12 A280	
400	312605-0312	-		6	NUTS,HEXAGON,M4	
450	315105-0136	-		19	WASHERS,PLAIN ROUND 4,3X8	
460	315105-0146	-		2	WASHERS,PLAIN ROUND 5,3X10	
470	315105-0153	-		8	WASHER,PLAIN ROUND BRB 6,4x12 Stainless	

Pos	Part No	SP	UN	Qty	Description	Page No

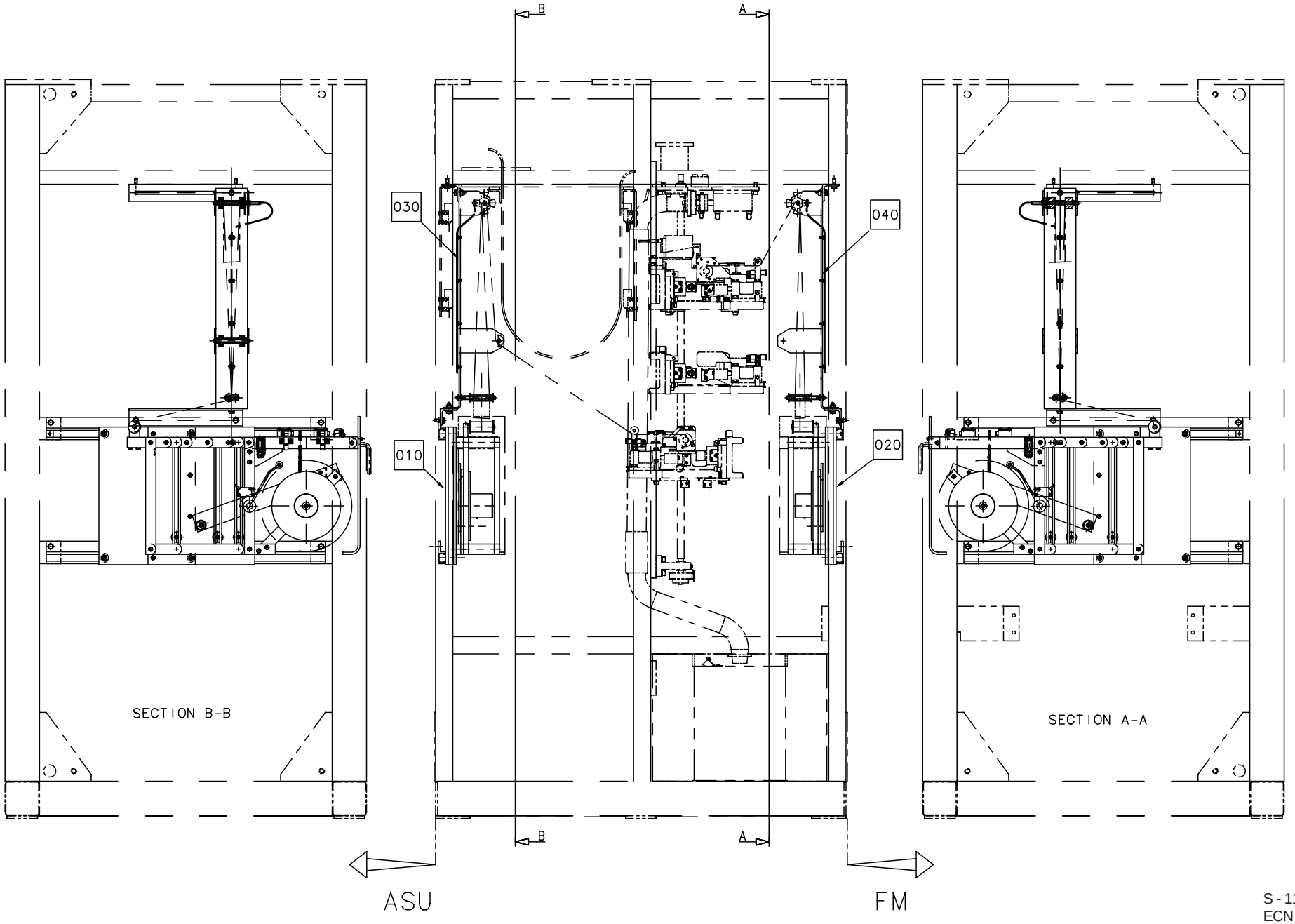
B
A
030
040
010
020
SECTION B-B
SECTION A-A
B
A
ASU
FM

Pos	Part No	SP	UN	Qty	Description	Page No
-						
010	A1095893-0100	-		1	MAGAZINE PULLTAB	**163**
020	A1095894-0100	-		1	MAGAZINE PATCH	**171**, **173**
030	A1334066-0100	-		1	TAB TURNING DEVICE	**177**
040	A1334065-0100	-		1	PATCH TURNING DEVICE	**179**

Pos	Part No	SP	UN	Qty	Description	Page No

MAGAZINE PULLTAB

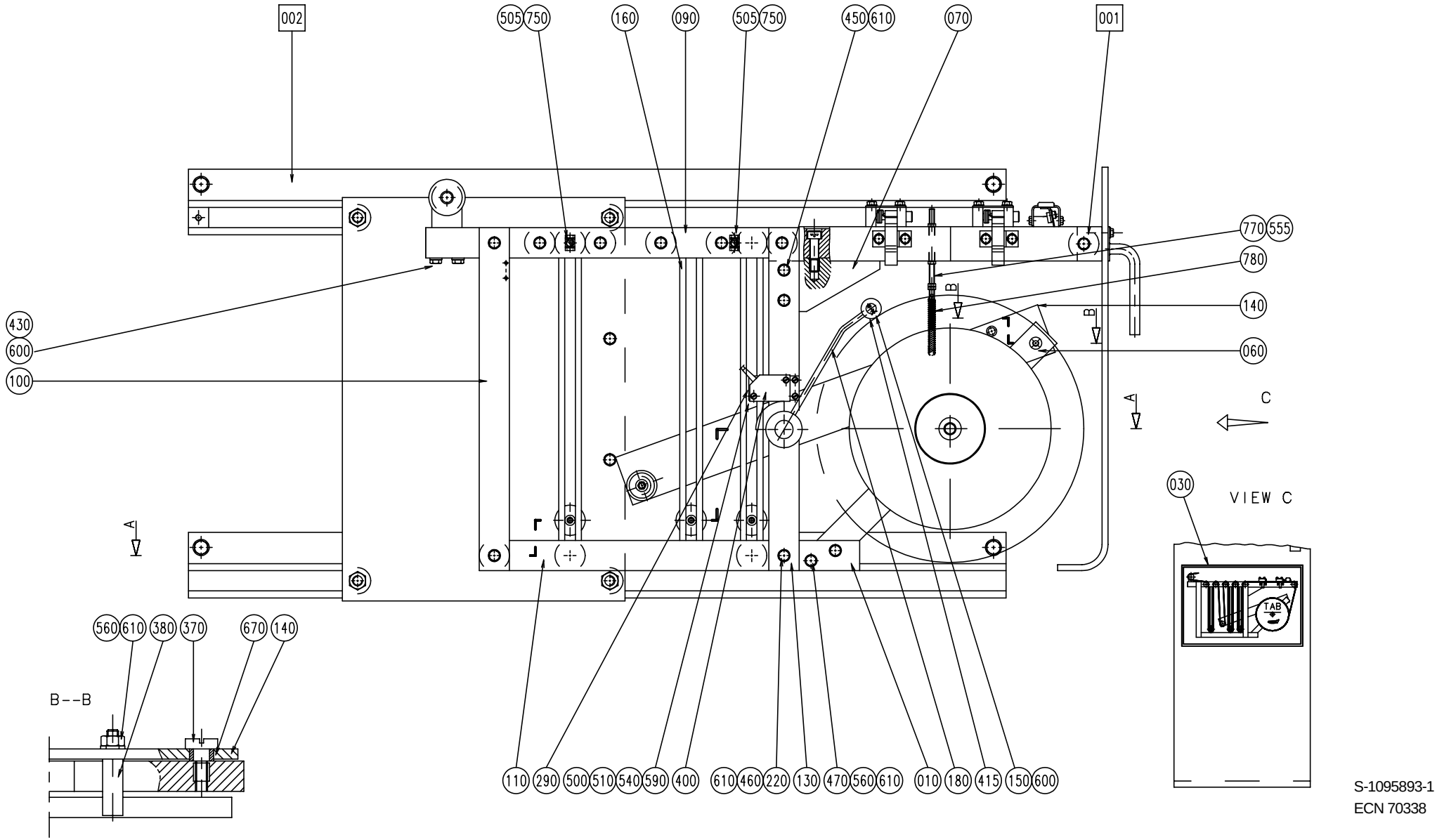

S-1095893-1
ECN 70338

Pos	Part No	SP	UN	Qty	Description	Page No
-						
001	A1095895-0100	-		1	SPLICING DEVICE	**167**
002	A1095923-0100	-		1	GUIDE PULLTAB	**169**
010	1129230-0000	-		1	BEAM	
020	1129223-0000	-		1	BEAM	
030	1285482-0000	-		1	LABEL	
040	1129222-0000	-		1	BOBBIN HOLDER	
050	556539-0000	-		1	BRAKE DISC	
060	546290-0000	-		1	BEAM	
070	1129231-0000	-		1	CANTILEVER	
090	1129224-0000	-		1	BEAM	
100	546294-0000	-		2	BEAM	
110	1129226-0000	-		1	BEAM	
120	546296-0000	-		1	BEAM	
130	546297-0000	-		1	BEAM	
140	1129450-0000	-		1	ARM	
145	2033-0013	-		1	WASHER	
150	234844-0000	J		1	WHEEL	
160	1140632-0000	-		12	POST	
170	533972-0000	-		1	INDICATOR CURVE	
180	1129510-0000	-		1	ARM	
190	534497-0000	-		6	SPACER	
200	538726-0000	-		2	WASHER	
210	538740-0003	-		1	SPACER	
220	1129235-0000	-		8	SHAFT	
230	1129233-0000	-		3	SHAFT	
240	1129780-0000	D		1	ROLL	
250	1129234-0000	D		6	ROLL	
260	1129495-0000	-		1	BLOCKING PIECE	
270	546303-0000	-		1	SHAFT	
290	546305-0000	-		1	SHEET	
300	546306-0000	-		1	SHAFT	
310	1129232-0000	D		3	ROLL	
330	1129237-0000	D		1	ROLL	
340	1129246-0000	D		1	ROLL	
370	556541-0000	-		1	SCREW	
380	556542-0000	-		1	PIN	
390	1129452-0000	-		1	SHAFT	
395	556544-0000	-		1	SPACER	
400	90044-0104	R		1	PROX.SWITCH IFM IN 3002	
410	90287-0009	-		1	SPRINGLOADED SCREW	
415	311411-0138	-		2	SPLIT PIN SP1,6X12RFR	
420	312105-0327	-		1	SCREW M6S ISO 4017 M5X12 A280	
430	312105-0339	-		2	SCREW M6S ISO 4014 M5X40 A280	
440	312105-0287	-		1	SCREW M6S ISO 4017 M4X8 A280	
445	312105-0295	-		1	SCREW M6S ISO 4017 M4X20 A280	
450	312105-0370	-		8	SCREW M6S ISO 4017 M6X20 A280	
460	312105-0372	-		20	SCREW M6S ISO 4017 M6X25 A280	
470	312105-0376	-		2	SCREW M6S ISO 4017 M6X35 A280	
480	312115-0368	-		2	SCREW MC6S ISO 4762 M6X16 A280	
500	312125-0230	-		3	SLOTTED CHEESE HEAD ISO 1207 M3X20 RFR	
505	312125-0289	-		2	SLOTTED HEMCS4X10RFR	
510	90287-0069	-		1	SCREW	
520	312318-0323	-		2	SET SCREW CUP POINT ISO 4029 M5X8 RFR	
530	312318-0364	-		5	STOP SCREW SK6SS6X10RFR	
540	312605-0310	-		4	NUTS,HEXAGON,M3	
550	312605-0312	-		1	NUTS,HEXAGON,M4	
555	312605-0314	-		4	NUT,HEXAGON,M6M5 Stainless	
560	312605-0316	-		4	NUT,HEXAGON,A280 M6M6 Stainless	
570	312605-0318	-		3	NUTS,HEXAGON,M8	
580	312705-0318	-		1	NUTS,DOMED CAP,HEXAGON,M8	
590	315105-0124	-		4	WASHERS,PLAIN ROUND 3,2X6	
595	315105-0136	-		1	WASHERS,PLAIN ROUND 4,3X8	
600	315105-0146	-		5	WASHERS,PLAIN ROUND 5,3X10	
610	315105-0153	-		30	WASHER,PLAIN ROUND BRB 6,4x12 Stainless	
620	315105-0165	-		5	WASHERS,PLAIN ROUND 8,4X16	
640	315750-0107	-		1	CIRCLIP SGA10	
650	315753-0117	-		1	RETAINING RINGS FOR HOLE 22	
660	321111-0274	D		1	FLANGE BUS 18E7X18	
670	321116-0095	-		1	BUSHING 8E7/12X6	
700	321300-0098	M		2	BALL BEARING 8X22X7	
750	352113-0205	-		2	ANCHOR TM2S8-C100	
770	1279834-0000	D		1	BOLT	
780	90335-0081	D		1	SPRING	

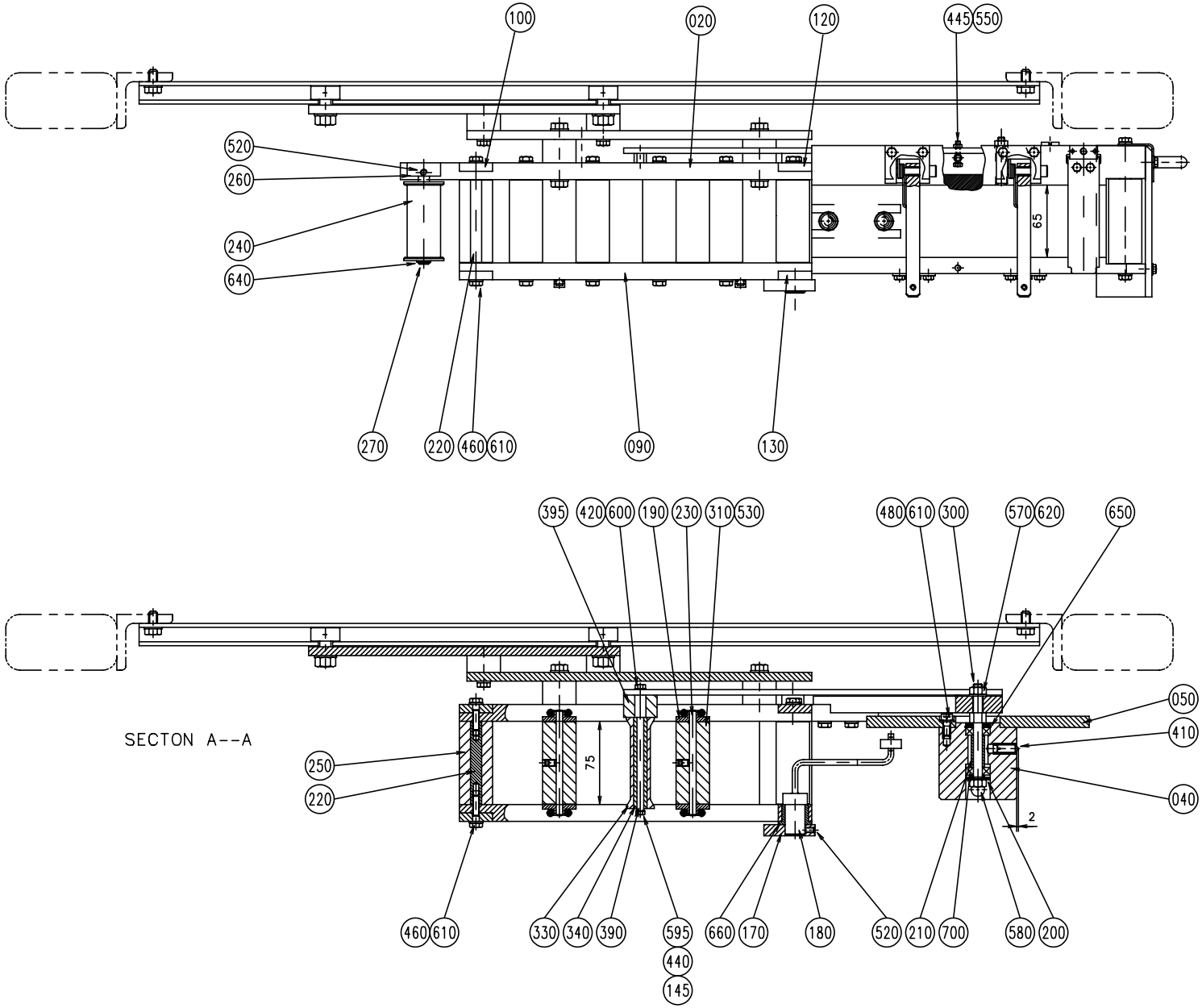

S-1085893-2
ECN 70338

Pos	Part No	SP	UN	Qty	Description	Page No
-						
001	A1095895-0100	-		1	SPLICING DEVICE	**167**
002	A1095923-0100	-		1	GUIDE PULLTAB	**169**
010	1129230-0000	-		1	BEAM	
020	1129223-0000	-		1	BEAM	
030	1285482-0000	-		1	LABEL	
040	1129222-0000	-		1	BOBBIN HOLDER	
050	556539-0000	-		1	BRAKE DISC	
060	546290-0000	-		1	BEAM	
070	1129231-0000	-		1	CANTILEVER	
090	1129224-0000	-		1	BEAM	
100	546294-0000	-		2	BEAM	
110	1129226-0000	-		1	BEAM	
120	546296-0000	-		1	BEAM	
130	546297-0000	-		1	BEAM	
140	1129450-0000	-		1	ARM	
145	2033-0013	-		1	WASHER	
150	234844-0000	J		1	WHEEL	
160	1140632-0000	-		12	POST	
170	533972-0000	-		1	INDICATOR CURVE	
180	1129510-0000	-		1	ARM	
190	534497-0000	-		6	SPACER	
200	538726-0000	-		2	WASHER	
210	538740-0003	-		1	SPACER	
220	1129235-0000	-		8	SHAFT	
230	1129233-0000	-		3	SHAFT	
240	1129780-0000	D		1	ROLL	
250	1129234-0000	D		6	ROLL	
260	1129495-0000	-		1	BLOCKING PIECE	
270	546303-0000	-		1	SHAFT	
290	546305-0000	-		1	SHEET	
300	546306-0000	-		1	SHAFT	
310	1129232-0000	D		3	ROLL	
330	1129237-0000	D		1	ROLL	
340	1129246-0000	D		1	ROLL	
370	556541-0000	-		1	SCREW	
380	556542-0000	-		1	PIN	
390	1129452-0000	-		1	SHAFT	
395	556544-0000	-		1	SPACER	
400	90044-0104	R		1	PROX.SWITCH IFM IN 3002	
410	90287-0009	-		1	SPRINGLOADED SCREW	
415	311411-0138	-		2	SPLIT PIN SP1,6X12RFR	
420	312105-0327	-		1	SCREW M6S ISO 4017 M5X12 A280	
430	312105-0339	-		2	SCREW M6S ISO 4014 M5X40 A280	
440	312105-0287	-		1	SCREW M6S ISO 4017 M4X8 A280	
445	312105-0295	-		1	SCREW M6S ISO 4017 M4X20 A280	
450	312105-0370	-		8	SCREW M6S ISO 4017 M6X20 A280	
460	312105-0372	-		20	SCREW M6S ISO 4017 M6X25 A280	
470	312105-0376	-		2	SCREW M6S ISO 4017 M6X35 A280	
480	312115-0368	-		2	SCREW MC6S ISO 4762 M6X16 A280	
500	312125-0230	-		3	SLOTTED CHEESE HEAD ISO 1207 M3X20 RFR	
505	312125-0289	-		2	SLOTTED HEMCS4X10RFR	
510	90287-0069	-		1	SCREW	
520	312318-0323	-		2	SET SCREW CUP POINT ISO 4029 M5X8 RFR	
530	312318-0364	-		5	STOP SCREW SK6SS6X10RFR	
540	312605-0310	-		4	NUTS,HEXAGON,M3	
550	312605-0312	-		1	NUTS,HEXAGON,M4	
555	312605-0314	-		4	NUT,HEXAGON,M6M5 Stainless	
560	312605-0316	-		4	NUT,HEXAGON,A280 M6M6 Stainless	
570	312605-0318	-		3	NUTS,HEXAGON,M8	
580	312705-0318	-		1	NUTS,DOMED CAP,HEXAGON,M8	
590	315105-0124	-		4	WASHERS,PLAIN ROUND 3,2X6	
595	315105-0136	-		1	WASHERS,PLAIN ROUND 4,3X8	
600	315105-0146	-		5	WASHERS,PLAIN ROUND 5,3X10	
610	315105-0153	-		30	WASHER,PLAIN ROUND BRB 6,4x12 Stainless	
620	315105-0165	-		5	WASHERS,PLAIN ROUND 8,4X16	
640	315750-0107	-		1	CIRCLIP SGA10	
650	315753-0117	-		1	RETAINING RINGS FOR HOLE 22	
660	321111-0274	D		1	FLANGE BUS 18E7X18	
670	321116-0095	-		1	BUSHING 8E7/12X6	
700	321300-0098	M		2	BALL BEARING 8X22X7	
750	352113-0205	-		2	ANCHOR TM2S8-C100	
770	1279834-0000	D		1	BOLT	
780	90335-0081	D		1	SPRING	

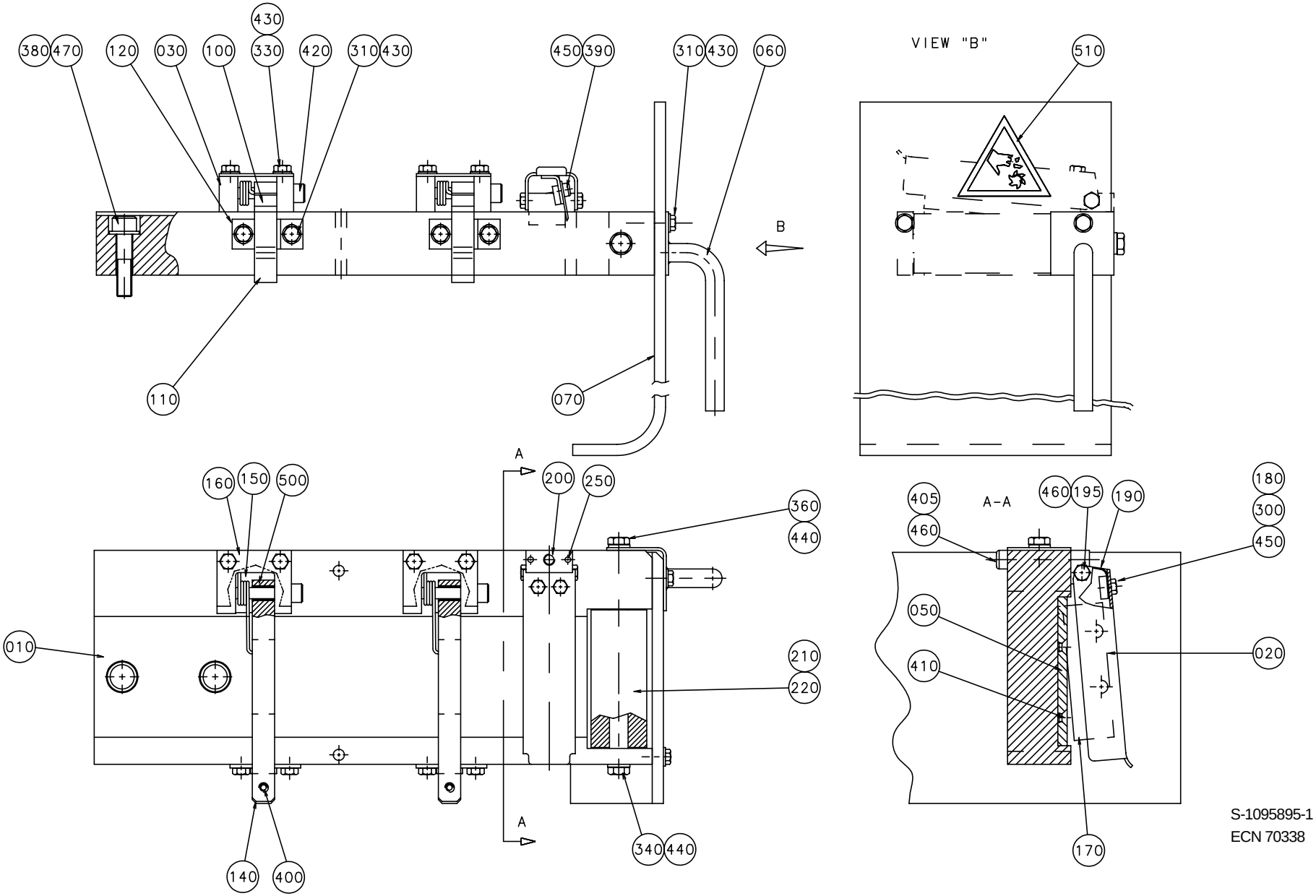

S-1095895-1
ECN 70338

Pos	Part No	SP	UN	Qty	Description	Page No
-						
010	1129221-0000	-		1	SPLICING TABLE	
020	1129239-0000	-		1	KNIFE HOLDER	
030	532017-0000	-		2	MOUNTING LUG	
050	544422-0000	D		1	KNIFE	
060	1255834-0000	-		1	HANDLE	
070	1255835-0000	-		1	PROTECTION	
100	532020-0000	-		2	LOCK WASHER	
110	532021-0000	-		2	LOCKING LOOP	
120	532022-0000	-		2	LOCK BAR	
140	1129252-0000	-		2	LOCK GRIP	
150	544427-0000	D		2	TURN SPRING	
160	544428-0000	-		2	SHEET	
170	1129238-0000	D		1	KNIFE	
180	522393-0000	-		1	NUT	
190	522394-0000	D		1	SPRING	
195	522395-0000	-		2	SCREW	
200	552049-0000	-		1	LUG	
210	1129235-0000	-		1	SHAFT	
220	1129234-0000	-		1	ROLL	
250	90258-0031	-		2	PINS,SLOTTED TUBULAR SPRING PIN 3X20	
300	312105-0287	-		2	SCREW M6S ISO 4017 M4X8 A280	
310	312105-0327	-		6	SCREW M6S ISO 4017 M5X12 A280	
330	312105-0335	-		4	SCREW M6S ISO 4017 M5X30 A280	
340	312105-0370	-		1	SCREW M6S ISO 4017 M6X20 A280	
360	312105-0379	-		1	SCREW M6S ISO 4014 M6X45 A280	
380	312115-0457	-		2	SCREW MC6S ISO 4762 M8X35 A280	
390	312115-0287	-		2	SCREW MC6S ISO 4762 M4X8 A280	
400	312155-0291	-		2	SCREW MF6S DIN 7991 M4X12 A280	
405	312115-0379	-		1	SCREW MC6S ISO 4762 M6X45 A280	
410	312155-0325	-		2	SCREW MF6S5X10RFR	
420	312180-0374	-		2	HEX. SOCKET HEAD SHOULD. ISO 7379 M5X30	
430	315105-0146	-		10	WASHERS,PLAIN ROUND 5,3X10	
440	315105-0153	-		2	WASHER,PLAIN ROUND BRB 6,4x12 Stainless	
450	315402-0136	-		4	WASHER FBB4,1RFR	
460	315402-0156	-		3	WASHER FBB6,5RFR	
470	315105-0165	-		2	WASHERS,PLAIN ROUND 8,4X16	
500	321120-0102	-		2	BEARING BUSHING WITHOUT FLANGE,6/8X10	
510	359705-0009	-		1	WARNING SIGN "SHARP PART"	

Pos	Part No	SP	UN	Qty	Description	Page No

GUIDE PULLTAB

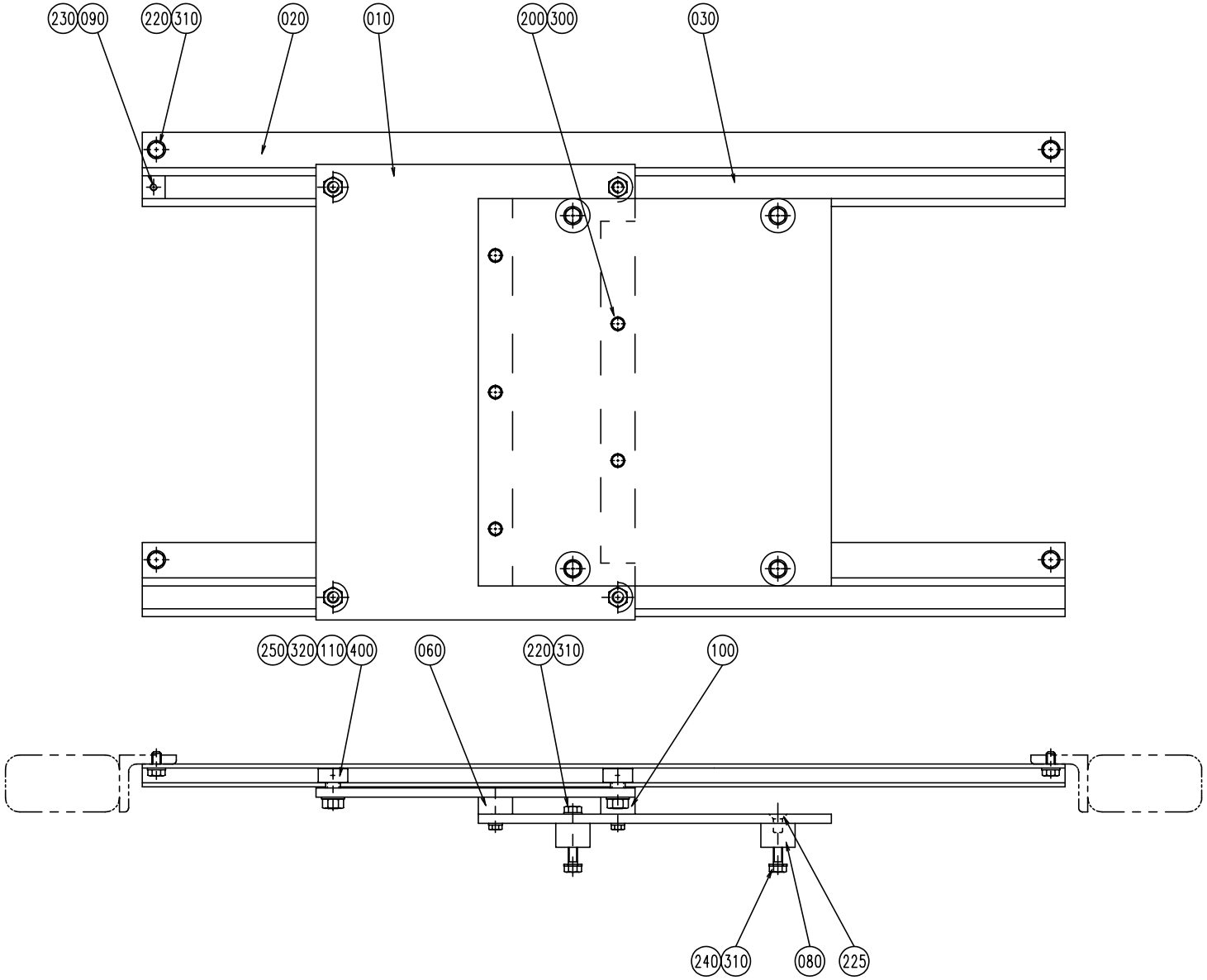

S-1095923-1
ECN 70338

Pos	Part No	SP	UN	Qty	Description	Page No
-						
010	1129240-0000	-		1	SHEET	
020	1129241-0000	-		2	STEERING	
030	1129454-0000	-		1	SHEET	
060	1129462-0000	-		1	SPACER	
080	1129242-0000	-		4	SPACER	
090	1129245-0000	-		2	STOP	
100	1129461-0000	-		1	SPACER	
110	1140626-0000	-		4	SPACER	
200	312105-0374	-		6	SCREW M6S ISO 4017 M6X30 A280	
220	312105-0449	-		6	SCREW M6S ISO 4017 M8X16 A280	
225	312155-0449	-		2	SCREW MF6S DIN 7991 M8X16 A280	
230	312318-0366	-		2	SET SCREW CUP POINT ISO 4029 M6X12 RFR	
240	312105-0453	-		4	SCREW M6S ISO 4017 M8X25 A280	
245	312125-0289	-		2	SLOTTED HEMCS4X10RFR	
250	312630-0320	-		4	NUTS,HEXAGON,M10X1	
300	315105-0153	-		6	WASHER,PLAIN ROUND BRB 6,4x12 Stainless	
310	315105-0165	-		10	WASHERS,PLAIN ROUND 8,4X16	
320	315105-0173	-		4	WASHERS,PLAIN ROUND 10,5X22	
400	321582-0150	D		4	CURVE ROLLKR26PP	
410	352113-0205	-		2	ANCHOR TM2S8-C100	

Pos	Part No	SP	UN	Qty	Description	Page No

MAGAZINE PATCH

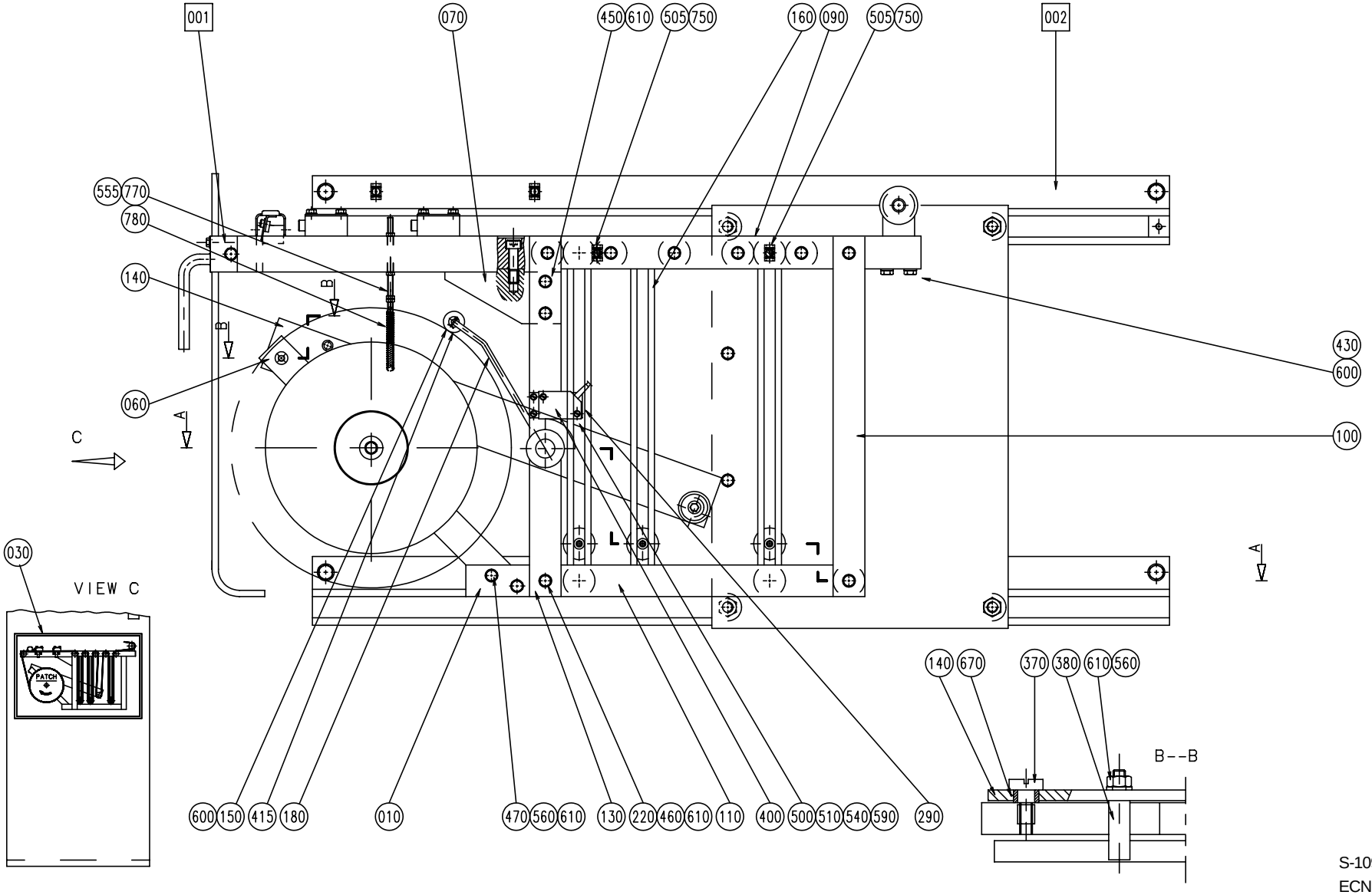

S-1095894-1
ECN 70338

Pos	Part No	SP	UN	Qty	Description	Page No
-						
001	A1095895-0100	-		1	SPLICING DEVICE	**167**
002	A1095924-0100	-		1	GUIDE PATCH	**175**
010	1129225-0000	-		1	BEAM	
020	1129223-0000	-		1	BEAM	
030	1285481-0000	-		1	LABEL	
040	546256-0000	-		1	BOBBIN HOLDER	
050	556539-0000	-		1	BRAKE DISC	
060	546290-0000	-		1	BEAM	
070	546291-0000	-		1	BRACKET	
090	1129224-0000	-		1	BEAM	
100	546294-0000	-		2	BEAM	
110	1129226-0000	-		1	BEAM	
120	1260379-0000	-		1	BEAM	
130	1129227-0000	-		1	POST	
140	1129450-0000	-		1	ARM	
145	2033-0013	-		1	WASHER	
150	234844-0000	J		1	WHEEL	
160	1140632-0000	-		12	POST	
170	533972-0000	-		1	INDICATOR CURVE	
180	1103845-0000	-		1	ARM	
190	534497-0000	-		6	SPACER	
200	538726-0000	-		2	WASHER	
210	538740-0003	-		1	SPACER	
220	546298-0000	-		8	SHAFT	
230	546299-0000	-		3	SHAFT	
240	546300-0000	D		1	ROLL	
250	546301-0000	D		6	ROLL	
260	1129495-0000	-		1	BLOCKING PIECE	
270	546303-0000	-		1	SHAFT	
290	546305-0000	-		1	SHEET	
300	546306-0000	-		1	SHAFT	
310	546307-0000	D		3	ROLL	
330	547745-0000	D		1	ROLL	
340	547746-0000	D		1	ROLL	
370	556541-0000	-		1	SCREW	
380	556542-0000	-		1	PIN	
390	1129451-0000	-		1	SHAFT	
395	556544-0000	-		1	SPACER	
400	90044-0104	R		1	PROX.SWITCH IFM IN 3002	
410	90287-0009	-		1	SPRINGLOADED SCREW	
415	311411-0138	-		2	SPLIT PIN SP1,6X12RFR	
420	312105-0327	-		1	SCREW M6S ISO 4017 M5X12 A280	
430	312105-0339	-		2	SCREW M6S ISO 4014 M5X40 A280	
440	312105-0287	-		1	SCREW M6S ISO 4017 M4X8 A280	
445	312105-0295	-		1	SCREW M6S ISO 4017 M4X20 A280	
450	312105-0370	-		8	SCREW M6S ISO 4017 M6X20 A280	
460	312105-0372	-		20	SCREW M6S ISO 4017 M6X25 A280	
470	312105-0376	-		2	SCREW M6S ISO 4017 M6X35 A280	
480	312115-0368	-		2	SCREW MC6S ISO 4762 M6X16 A280	
500	312125-0230	-		3	SLOTTED CHEESE HEAD ISO 1207 M3X20 RFR	
505	312125-0289	-		2	SLOTTED HEMCS4X10RFR	
510	90287-0069	-		1	SCREW	
520	312318-0323	-		2	SET SCREW CUP POINT ISO 4029 M5X8 RFR	
530	312318-0364	-		5	STOP SCREW SK6SS6X10RFR	
540	312605-0310	-		4	NUTS,HEXAGON,M3	
550	312605-0312	-		1	NUTS,HEXAGON,M4	
555	312605-0314	-		4	NUT,HEXAGON,M6M5 Stainless	
560	312605-0316	-		4	NUT,HEXAGON,A280 M6M6 Stainless	
570	312605-0318	-		3	NUTS,HEXAGON,M8	
580	312705-0318	-		1	NUTS,DOMED CAP,HEXAGON,M8	
590	315105-0124	-		4	WASHERS,PLAIN ROUND 3,2X6	
595	315105-0136	-		1	WASHERS,PLAIN ROUND 4,3X8	
600	315105-0146	-		5	WASHERS,PLAIN ROUND 5,3X10	
610	315105-0153	-		30	WASHER,PLAIN ROUND BRB 6,4x12 Stainless	
620	315105-0165	-		5	WASHERS,PLAIN ROUND 8,4X16	
640	315750-0107	-		1	CIRCLIP SGA10	
650	315753-0117	-		1	RETAINING RINGS FOR HOLE 22	
660	321111-0274	D		1	FLANGE BUS 18E7X18	
670	321116-0095	-		1	BUSHING 8E7/12X6	
700	321300-0098	M		2	BALL BEARING 8X22X7	
750	352113-0205	-		2	ANCHOR TM2S8-C100	
770	1279834-0000	D		1	BOLT	
780	90335-0081	D		1	SPRING	

MAGAZINE PATCH

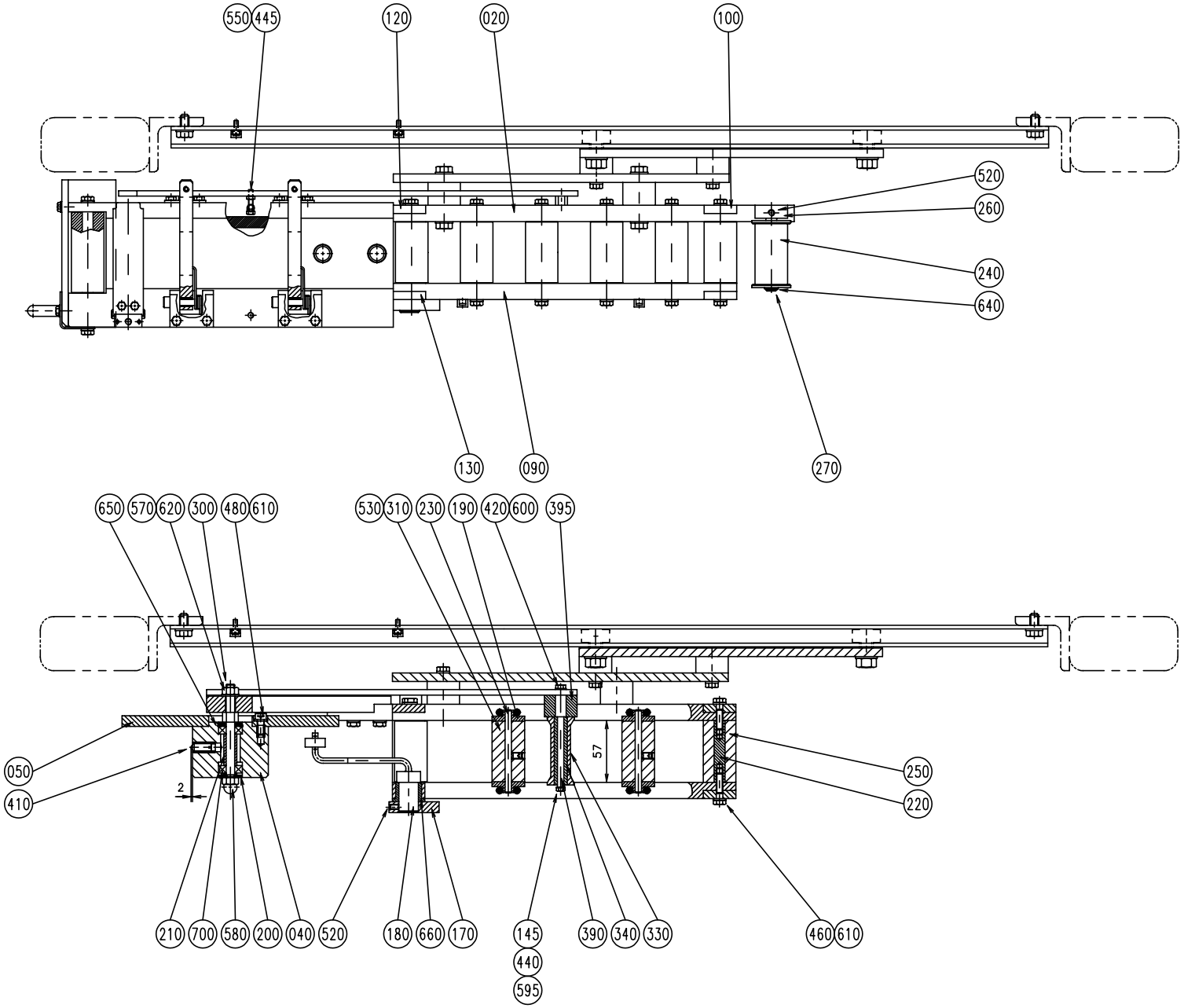

S-1095894-2
ECN 70338

Pos	Part No	SP	UN	Qty	Description	Page No
-						
001	A1095895-0100	-		1	SPLICING DEVICE	**167**
002	A1095924-0100	-		1	GUIDE PATCH	**175**
010	1129225-0000	-		1	BEAM	
020	1129223-0000	-		1	BEAM	
030	1285481-0000	-		1	LABEL	
040	546256-0000	-		1	BOBBIN HOLDER	
050	556539-0000	-		1	BRAKE DISC	
060	546290-0000	-		1	BEAM	
070	546291-0000	-		1	BRACKET	
090	1129224-0000	-		1	BEAM	
100	546294-0000	-		2	BEAM	
110	1129226-0000	-		1	BEAM	
120	1260379-0000	-		1	BEAM	
130	1129227-0000	-		1	POST	
140	1129450-0000	-		1	ARM	
145	2033-0013	-		1	WASHER	
150	234844-0000	J		1	WHEEL	
160	1140632-0000	-		12	POST	
170	533972-0000	-		1	INDICATOR CURVE	
180	1103845-0000	-		1	ARM	
190	534497-0000	-		6	SPACER	
200	538726-0000	-		2	WASHER	
210	538740-0003	-		1	SPACER	
220	546298-0000	-		8	SHAFT	
230	546299-0000	-		3	SHAFT	
240	546300-0000	D		1	ROLL	
250	546301-0000	D		6	ROLL	
260	1129495-0000	-		1	BLOCKING PIECE	
270	546303-0000	-		1	SHAFT	
290	546305-0000	-		1	SHEET	
300	546306-0000	-		1	SHAFT	
310	546307-0000	D		3	ROLL	
330	547745-0000	D		1	ROLL	
340	547746-0000	D		1	ROLL	
370	556541-0000	-		1	SCREW	
380	556542-0000	-		1	PIN	
390	1129451-0000	-		1	SHAFT	
395	556544-0000	-		1	SPACER	
400	90044-0104	R		1	PROX.SWITCH IFM IN 3002	
410	90287-0009	-		1	SPRINGLOADED SCREW	
415	311411-0138	-		2	SPLIT PIN SP1,6X12RFR	
420	312105-0327	-		1	SCREW M6S ISO 4017 M5X12 A280	
430	312105-0339	-		2	SCREW M6S ISO 4014 M5X40 A280	
440	312105-0287	-		1	SCREW M6S ISO 4017 M4X8 A280	
445	312105-0295	-		1	SCREW M6S ISO 4017 M4X20 A280	
450	312105-0370	-		8	SCREW M6S ISO 4017 M6X20 A280	
460	312105-0372	-		20	SCREW M6S ISO 4017 M6X25 A280	
470	312105-0376	-		2	SCREW M6S ISO 4017 M6X35 A280	
480	312115-0368	-		2	SCREW MC6S ISO 4762 M6X16 A280	
500	312125-0230	-		3	SLOTTED CHEESE HEAD ISO 1207 M3X20 RFR	
505	312125-0289	-		2	SLOTTED HEMCS4X10RFR	
510	90287-0069	-		1	SCREW	
520	312318-0323	-		2	SET SCREW CUP POINT ISO 4029 M5X8 RFR	
530	312318-0364	-		5	STOP SCREW SK6SS6X10RFR	
540	312605-0310	-		4	NUTS,HEXAGON,M3	
550	312605-0312	-		1	NUTS,HEXAGON,M4	
555	312605-0314	-		4	NUT,HEXAGON,M6M5 Stainless	
560	312605-0316	-		4	NUT,HEXAGON,A280 M6M6 Stainless	
570	312605-0318	-		3	NUTS,HEXAGON,M8	
580	312705-0318	-		1	NUTS,DOMED CAP,HEXAGON,M8	
590	315105-0124	-		4	WASHERS,PLAIN ROUND 3,2X6	
595	315105-0136	-		1	WASHERS,PLAIN ROUND 4,3X8	
600	315105-0146	-		5	WASHERS,PLAIN ROUND 5,3X10	
610	315105-0153	-		30	WASHER,PLAIN ROUND BRB 6,4x12 Stainless	
620	315105-0165	-		5	WASHERS,PLAIN ROUND 8,4X16	
640	315750-0107	-		1	CIRCLIP SGA10	
650	315753-0117	-		1	RETAINING RINGS FOR HOLE 22	
660	321111-0274	D		1	FLANGE BUS 18E7X18	
670	321116-0095	-		1	BUSHING 8E7/12X6	
700	321300-0098	M		2	BALL BEARING 8X22X7	
750	352113-0205	-		2	ANCHOR TM2S8-C100	
770	1279834-0000	D		1	BOLT	
780	90335-0081	D		1	SPRING	

GUIDE PATCH

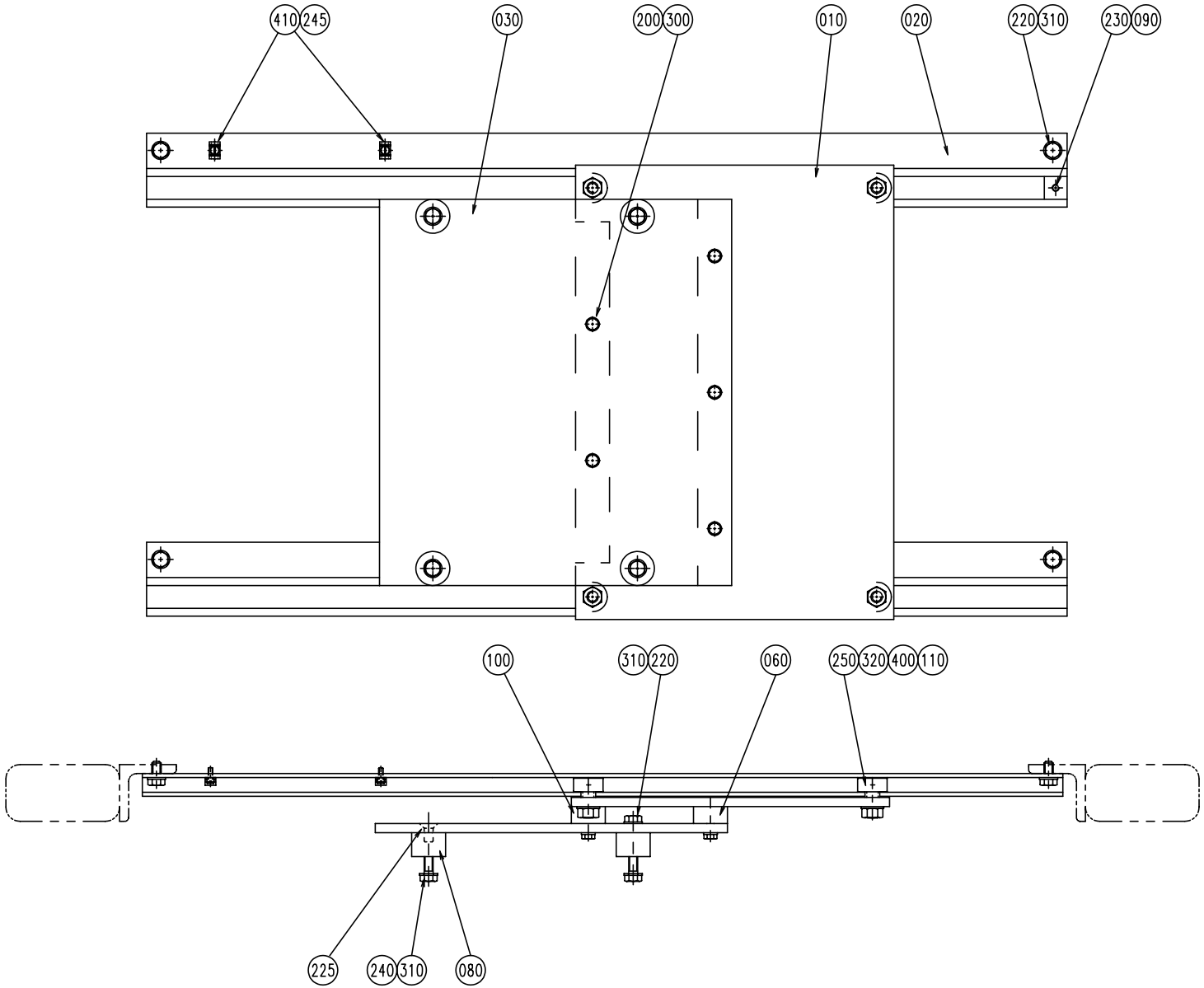

S-1095924-1
ECN 70338

Pos	Part No	SP	UN	Qty	Description	Page No
-						
010	1129240-0000	-		1	SHEET	
020	1129241-0000	-		2	STEERING	
030	1129454-0000	-		1	SHEET	
060	1129462-0000	-		1	SPACER	
080	1129242-0000	-		4	SPACER	
090	1129245-0000	-		2	STOP	
100	1129461-0000	-		1	SPACER	
110	1140626-0000	-		4	SPACER	
200	312105-0374	-		6	SCREW M6S ISO 4017 M6X30 A280	
220	312105-0449	-		6	SCREW M6S ISO 4017 M8X16 A280	
225	312155-0449	-		2	SCREW MF6S DIN 7991 M8X16 A280	
230	312318-0366	-		2	SET SCREW CUP POINT ISO 4029 M6X12 RFR	
240	312105-0453	-		4	SCREW M6S ISO 4017 M8X25 A280	
245	312125-0289	-		2	SLOTTED HEMCS4X10RFR	
250	312630-0320	-		4	NUTS,HEXAGON,M10X1	
300	315105-0153	-		6	WASHER,PLAIN ROUND BRB 6,4x12 Stainless	
310	315105-0165	-		10	WASHERS,PLAIN ROUND 8,4X16	
320	315105-0173	-		4	WASHERS,PLAIN ROUND 10,5X22	
400	321582-0150	D		4	CURVE ROLLKR26PP	
410	352113-0205	-		2	ANCHOR TM2S8-C100	

Pos	Part No	SP	UN	Qty	Description	Page No

TAB TURNING DEVICE

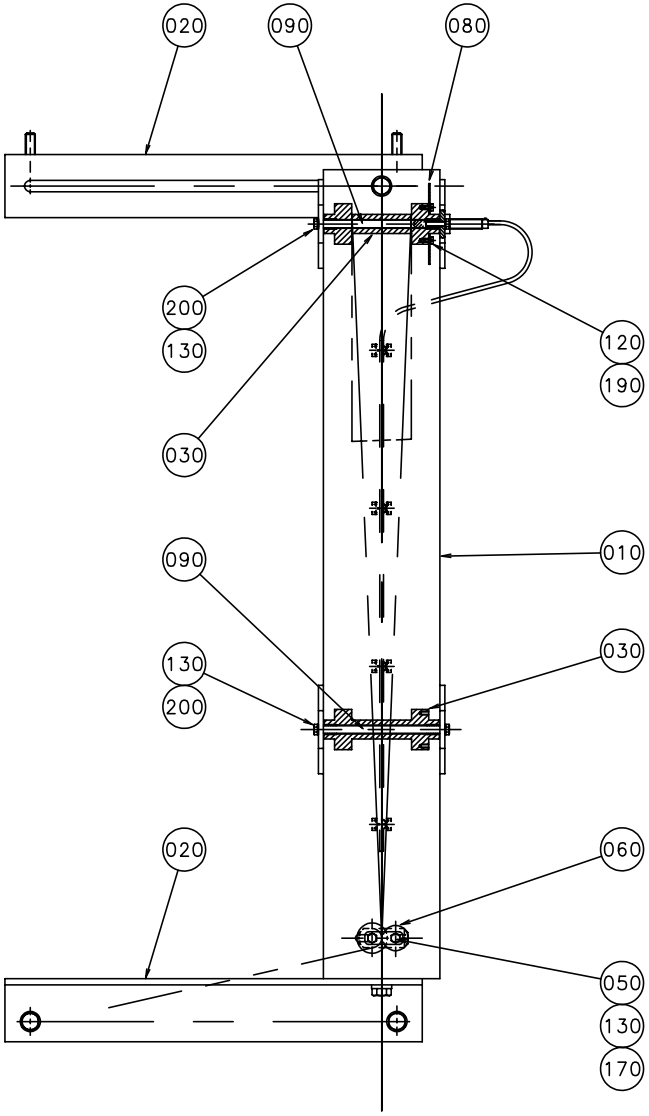

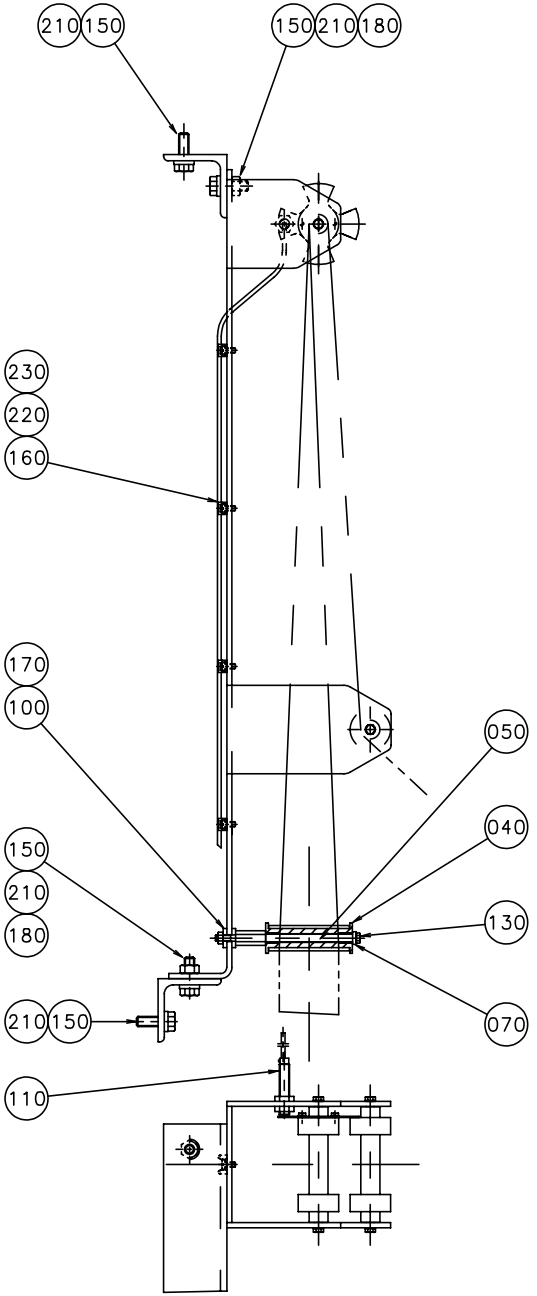

S-1334066-1
ECN 71157

Pos	Part No	SP	UN	Qty	Description	Page No
Common parts						
010	1317670-0000	-		1	BRACKET	
020	1140817-0000	-		2	BRACKET	
040	1317671-0000	D		1	ROLLER	
050	1317672-0000	M		2	AXLE PIN	
060	1140727-0000	D		1	ROLLER	
070	1317673-0000	-		1	PLATE	
080	1317674-0000	D		1	FLAG	
090	1317675-0000	M		2	AXLE PIN	
100	1317676-0000	-		2	PLATE	
110	90044-0145	R		1	INDUCTIVE SWITCH	
120	90287-0151	-		2	SCREW	
130	312105-0291	-		6	SCREW M6S ISO 4017 M4X12 A280	
150	312105-0453	-		6	SCREW M6S ISO 4017 M8X25 A280	
160	312125-0287	-		4	SLOTTED CHEESE HEAD ISO 1207 M4X8 RFR	
170	312605-0314	-		2	NUT,HEXAGON,M6M5 Stainless	
180	312605-0318	-		2	NUTS,HEXAGON,M8	
190	315105-0124	-		2	WASHERS,PLAIN ROUND 3,2X6	
200	315105-0136	-		4	WASHERS,PLAIN ROUND 4,3X8	
210	315115-0165	-		6	WASHER TBRB8;4x16 Stainless	
220	352113-0102	-		4	RIBBON CLAMP	
230	352113-0205	-		4	ANCHOR TM2S8-C100	
HOLE45 or HOLE50						
030	1317669-0005	M		2	ROLLER	
HOLE71						
030	1317669-0004	M		2	ROLLER	

Pos	Part No	SP	UN	Qty	Description	Page No

PATCH TURNING DEVICE

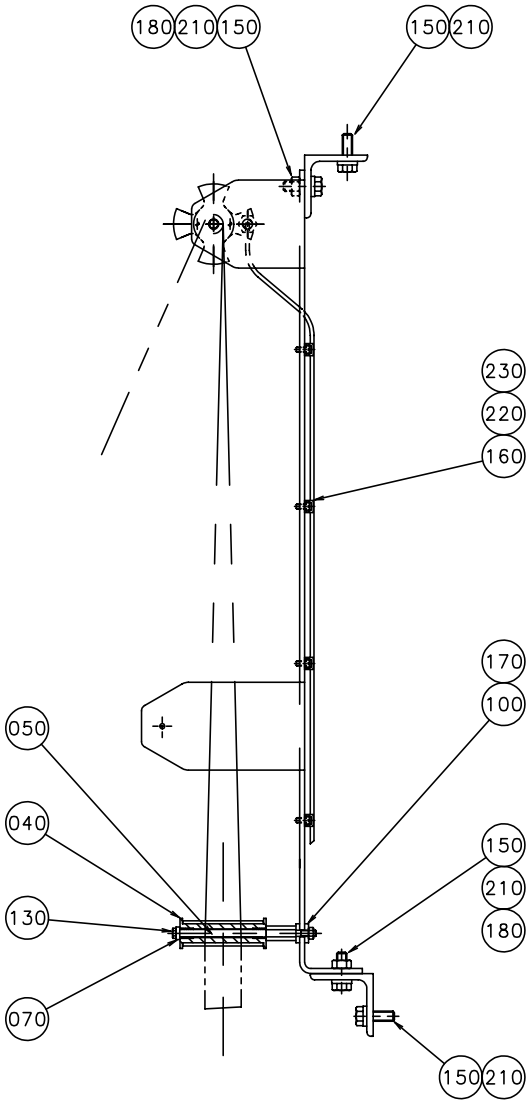

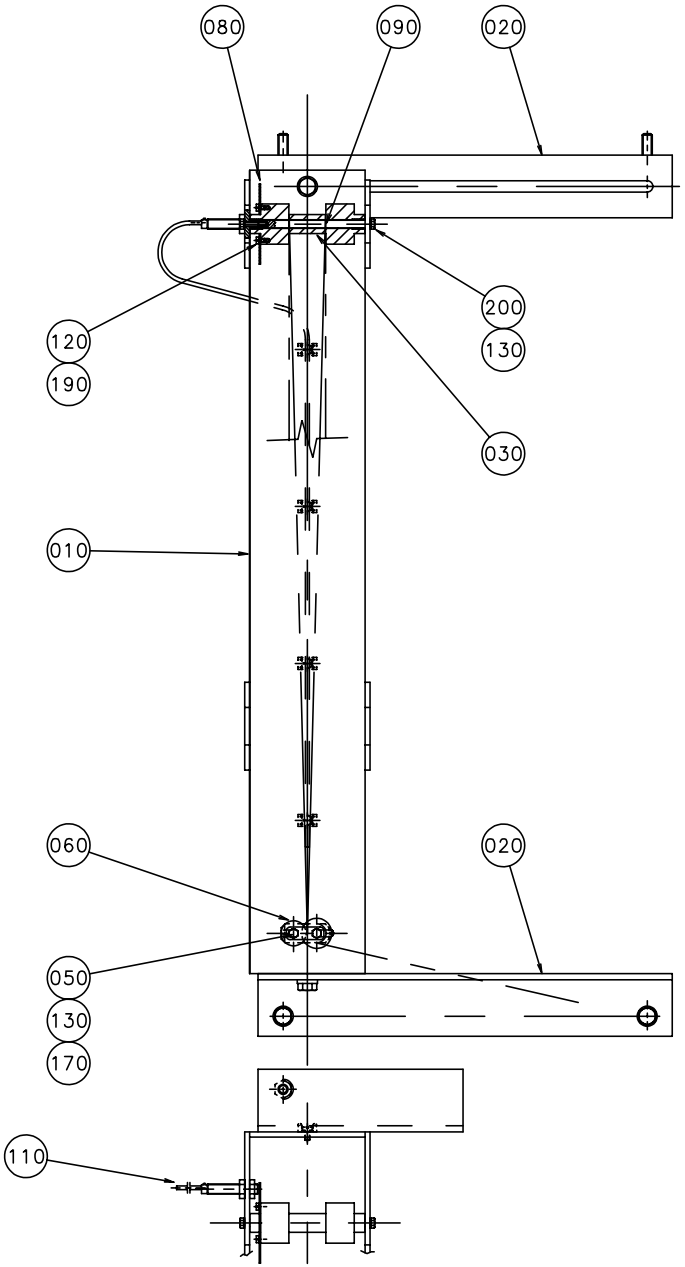

S-1334065-1
ECN 71157

Pos	Part No	SP	UN	Qty	Description	Page No
Common parts						
010	1317670-0000	-		1	BRACKET	
020	1140817-0000	-		2	BRACKET	
040	1317671-0000	D		1	ROLLER	
050	1317672-0000	M		2	AXLE PIN	
060	1140727-0000	D		1	ROLLER	
070	1317673-0000	-		1	PLATE	
080	1317674-0000	D		1	FLAG	
090	1317675-0000	M		1	AXLE PIN	
100	1317676-0000	-		2	PLATE	
110	90044-0145	R		1	INDUCTIVE SWITCH	
120	90287-0151	-		2	SCREW	
130	312105-0291	-		4	SCREW M6S ISO 4017 M4X12 A280	
150	312105-0453	-		6	SCREW M6S ISO 4017 M8X25 A280	
160	312125-0287	-		4	SLOTTED CHEESE HEAD ISO 1207 M4X8 RFR	
170	312605-0314	-		2	NUT,HEXAGON,M6M5 Stainless	
180	312605-0318	-		2	NUTS,HEXAGON,M8	
190	315105-0124	-		2	WASHERS,PLAIN ROUND 3,2X6	
200	315105-0136	-		2	WASHERS,PLAIN ROUND 4,3X8	
210	315115-0165	-		6	WASHER TBRB8;4x16 Stainless	
220	352113-0102	-		4	RIBBON CLAMP	
230	352113-0205	-		4	ANCHOR TM2S8-C100	
HOLE50 or HOLE71						
030	1317669-0001	M		1	ROLLER	
HOLE45						
030	1317669-0002	M		1	ROLLER	

Pos	Part No	SP	UN	Qty	Description	Page No

VALVE PANEL

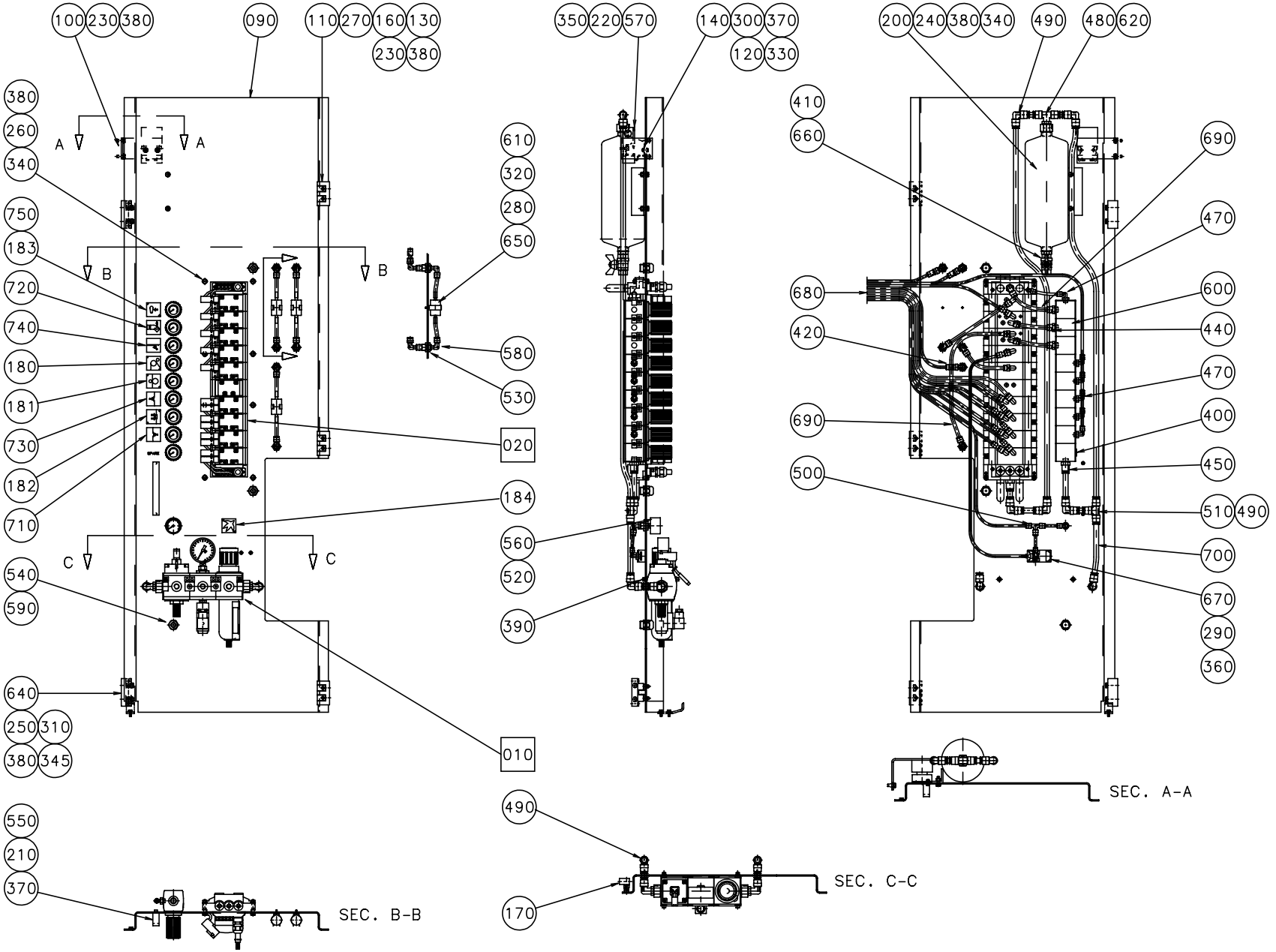

S-1185049-1
ECN 71157

Pos	Part No	SP	UN	Qty	Description	Page No
-						
010	A1185047-0100	-		1	AIR INLET GROUP	**183**
020	A1185048-0100	-		1	VALVE GROUP	**185**
050	1140883-0000	-		1	PNEUMATIC DIAGRAM	
090	984082-0000	-		1	PLATE	
100	1082741-0000	-		1	HOLDER	
110	1035792-0000	-		3	E-HINGE	
120	1129042-0000	-		1	KEY	
130	988685-0000	-		3	PIN	
140	1036563-0000	-		1	WASHER	
160	1129770-0000	-		6	BLOCKING PIECE	
170	1140538-0000	-		2	BLOCKING PIECE	
180	359307-0012	-		1	Sign" Pressure roller Tension Device"	
181	359307-0011	-		1	Sign" Pressure Roller Drive Motor"	
182	1145219-0000	-		1	SIGN	
183	979426-0000	-		1	SIGN	
184	273458-0000	-		1	LABEL (AIR)	
200	907535-0000	-		1	RESERVOIR	
210	312115-0287	-		2	SCREW MC6S ISO 4762 M4X8 A280	
220	312115-0329	-		2	SCREW MC6S ISO 4762 M5X16 A280	
230	312105-0366	-		6	SCREW M6S ISO 4017 M6X12 A280	
240	312105-0368	-		2	SCREW M6S ISO 4017 M6X16 A280	
250	312105-0376	-		4	SCREW M6S ISO 4017 M6X35 A280	
260	312109-0376	-		8	SCREW M6S ISO 4017 M6X35 A280	
270	312115-0327	-		6	SCREW MC6S ISO 4762 M5X12 A280	
280	312125-0222	-		3	SLOTTED CHEESE HEAD ISO 1207 M3X8 RFR	
290	312125-0230	-		2	SLOTTED CHEESE HEAD ISO 1207 M3X20 RFR	
300	312105-0291	-		2	SCREW M6S ISO 4017 M4X12 A280	
310	312155-0289	-		4	SCREW MF6S4X10RFR	
320	312605-0310	-		3	NUTS,HEXAGON,M3	
330	312605-0312	-		2	NUTS,HEXAGON,M4	
340	312605-0316	-		10	NUT,HEXAGON,A280 M6M6 Stainless	
345	312705-0312	-		4	NUTS,DOMED CAP,HEXAGON,M4	
350	315105-0146	-		4	WASHERS,PLAIN ROUND 5,3X10	
360	315105-0124	-		2	WASHERS,PLAIN ROUND 3,2X6	
370	315105-0136	-		4	WASHERS,PLAIN ROUND 4,3X8	
380	315105-0153	-		28	WASHER,PLAIN ROUND BRB 6,4x12 Stainless	
390	312605-0314	-		2	NUT,HEXAGON,M6M5 Stainless	
400	342713-0210	-		1	PLUG,EXT.THREAD,HEXAGON SOCKET 1/4"Brass	
410	342700-0205	-		1	NIPPLES,HEXAGON,EXT.G-THREAD G1/2"-G1/4"	
420	342716-0203	-		3	REDUCER,FOR PLASTIC TUBE 6-8	
440	342722-0205	-		3	STRAIGHT COUPL,FOR PLASTIC TUBE 8-G1/4"	
450	342722-0209	-		1	STRAIGHT COUPL,FOR PLASTIC TUBE 12-G1/4"	
470	342732-0103	-		6	V-COUPL,ADJUST,FOR PLASTIC TUBE 6-G1/4"	
480	342742-0110	-		1	T-COUPLING,ADJUST,F.PLAST.TUBE 12-G3/8"	
490	342735-0109	-		7	V-JUNCTION COUPLING,FOR PLASTIC TUBE 12	
500	342748-0102	-		1	T-JUNCTION COUPLING,FOR PLASTIC TUBE 6	
510	342748-0109	-		1	T-JUNCTION COUPLING,FOR PLASTIC TUBE 12	
520	342767-0100	-		1	BULKHEAD CONNECTOR G1/8"	
530	342768-0103	-		6	BULKHEAD COUPLING,FOR PLASTIC TUBE 8	
540	352103-0106	-		3	CABLE GLAND ST 11	
550	90017-0017	-		1	HANDLE	
560	90043-0080	-		1	PRESSURE GAUGE	
570	90044-0139	R		1	KEY SAFETY SWITCH	
580	90055-0118	-		12	ELBOW PIPE JOINT	
590	90099-0117	-		3	NUT PR 18,6 (PG11)	
600	90113-0095	-		9	PRESSURE REGULATOR	
610	90165-0019	-		3	CLIP	
620	90224-0229	-		1	SLEEVE	
640	90237-0070	-		2	LOCK	
650	90277-0035	J		3	AIR-PRESSURE FILTER	
660	90187-0088	-		1	BALL VALVE	
670	90364-0020	K		1	VACUUMPUMP X10	
680	90166-0081	-	M	48	HOSE 6/4-100M	
690	90166-0013	-	M	60	HOSE	
700	90166-0068	-	M	3	HOSE	
710	359307-0002	-		1	SYMBOL SIGN "TAB C'JAW"	
720	359307-0010	-		1	SIGN "WASTE BLOWING"	
730	359307-0004	-		1	SYMBOL SIGN "PATCH C'JAW"	
740	359307-0007	-		1	SYMBOL SKYLT "TAB FOLDING"	
750	90144-0043	-		x	TAPE	

AIR INLET GROUP

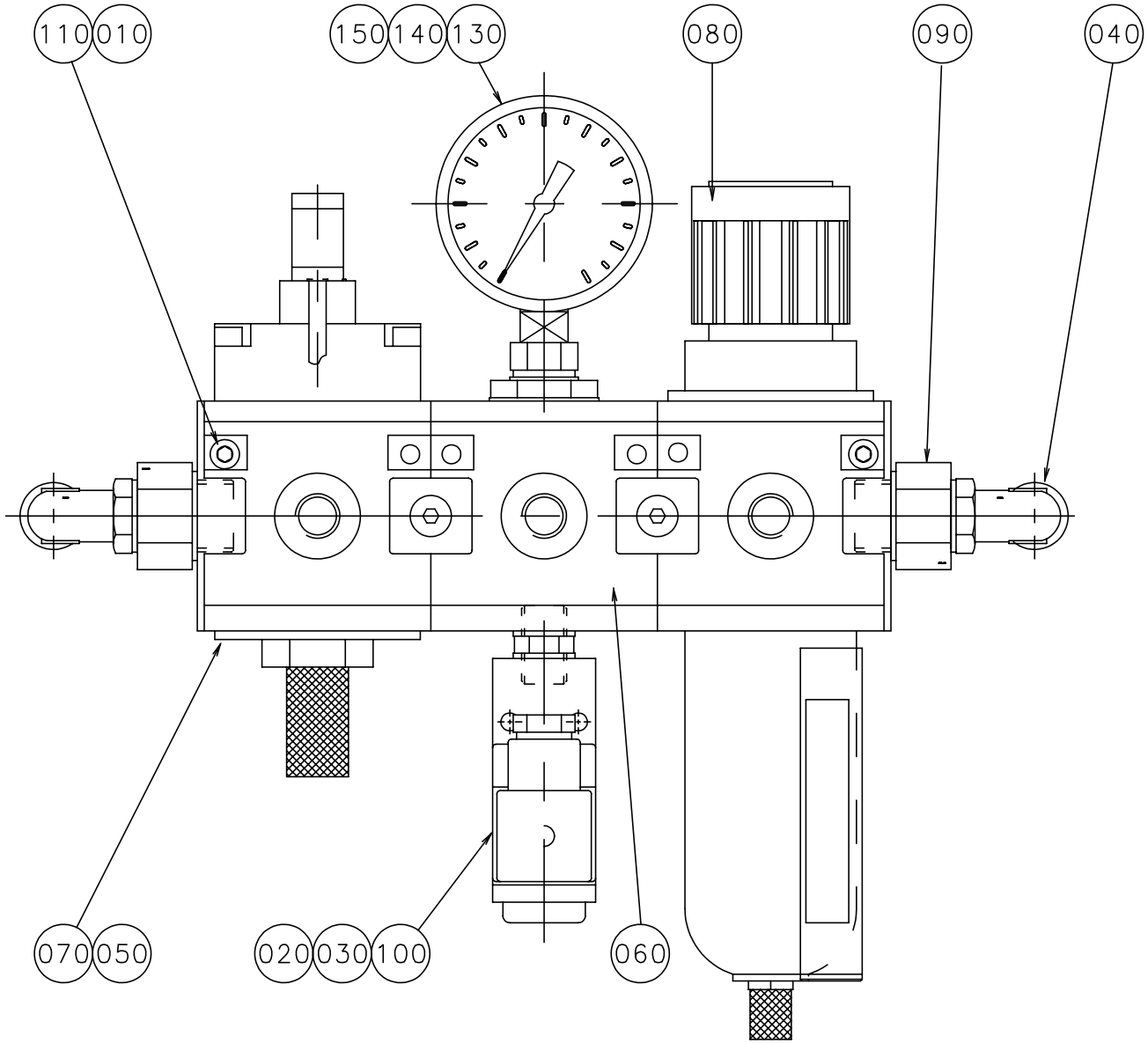

S-1185047-1
ECN 71157

Pos	Part No	SP	UN	Qty	Description	Page No
-						
010	315101-0146	-		2	WASHER BRB5,3X10FZB	
020	315233-0110	-		2	PLAIN ROUND,NYLON R1/4"	
030	342700-0110	-		1	NIPPLES,HEXAGON,EXT.G-THREAD G1/4"-G1/4"	
040	342732-0110	-		2	V-COUPL,ADJUST,FOR PLASTIC TUBE 12-G3/8"	
050	90042-0538	-		1	PNEUMATICS,VALVES,PILOT	
060	90113-0375	-		1	PRESSURE DISTRIBUTION	
070	90113-0423	-		1	High speed venting valve	
080	B 90113-0072	D		1	PRESSURE REGULATOR	
090	90224-0229	-		2	SLEEVE	
100	90274-0056	R		1	PRESSURE SWITCH	
110	90287-0212	-		2	SCREW	
130	90224-0090	-		1	MUFF	
140	90224-0122	-		1	SLEEVE	
150	90043-0020	-		1	PRESSURE GAUGE	

Pos	Part No	SP	UN	Qty	Description	Page No

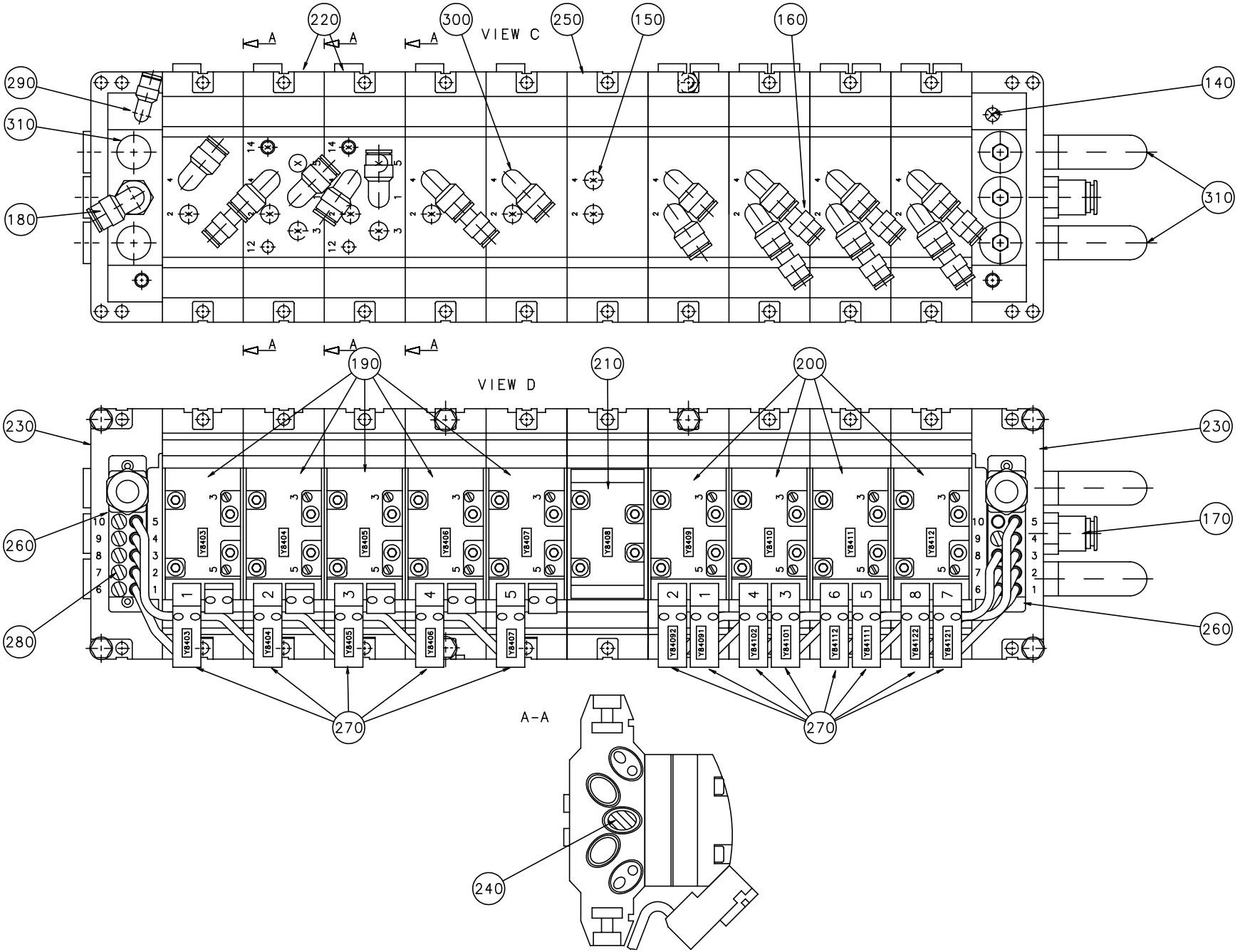

S-1185048-1
ECN 70956

Pos	Part No	SP	UN	Qty	Description	Page No
-						
140	342715-0102	-		1	BLINDPLUG,Plast,FOR QUICK COUPLING D=6mm	
150	342715-0103	-		11	BLIND PLUG,FOR QUICK COUPLING D=8	
160	342716-0203	-		8	REDUCER,FOR PLASTIC TUBE 6-8	
170	342722-0210	-		1	STRAIGHT COUPL,FOR PLASTIC TUBE 12-G3/8"	
180	342732-0105	-		1	ELBOW PIPE D8-R3/8"	
190	90042-0215	-		5	PNEUMATICS,VALVES	
200	90042-0221	-		4	PNEUMATICS,VALVES	
210	90042-0519	-		1	VALVES,ACCESSORIES,BLANKING PLATE	
220	90042-0520	-		2	VALVES,PLATES	
230	90042-0522	-		2	VALVES,PLATES	
240	90042-0528	-		3	VALVES,ACCESSORIES,BLANKING KIT	
250	90042-0532	-		8	VALVES,PLATES	
260	90042-0535	-		2	VALVES,ACCESSORIES,TERMINAL MODULE	
270	90042-0539	-		13	PNEUMATICS,VALVES,PILOT	
280	90042-0550	-		6	VALVES,ACCESSORIES,PROTECTION PLUG	
290	90055-0217	-		1	ELBOW-90 COUPLING,STEM,FPT 6-6	
300	90055-0118	-		15	ELBOW PIPE JOINT	
310	90328-0024	-		4	SILENCERS,THREADED CONNECTION G3/8"	

Pos	Part No	SP	UN	Qty	Description	Page No

This page is intentionally left blank

Pos	Part No	SP	UN	Qty	Description	Page No
-						
0100	A 42841-0400	-		1	ELECTRICAL DOCUMENT	**189**
0200	A 42843-0400	-		1	STANDARD EQUIPMENT	**191**

This page is intentionally left blank

Pos	Part No	SP	UN	Qty	Description	Page No
-						
	B 44702-0000	-		x	CIRCUIT DIAGRAM	
0010	A 649060-0400	-		x	ELECTRICAL EQUIPMENT	**187**
0020	A 42841-0400	-		x	ELECTRICAL DOCUMENT	**189**
0030	A 42843-0400	-		x	STANDARD EQUIPMENT	**191**
0100	B 44702-0000	-		x	CIRCUIT DIAGRAM POSITIONS	
0110	B 44702-0000	-		x	CIRCUIT DIAGRAM LINE SUMMARY	
0120	B 44702-0000	-		x	CIRCUIT DIAGRAM TERM.SUMMARY	
0130	B 44702-0000	-		x	CIRCUIT DIAGRAM	
0140	B 44702-0000	-		x	CIRCUIT DIAGRAM	
0150	B 44702-0000	-		x	CIRCUIT DIAGRAM	
0160	B 44702-0000	-		x	CIRCUIT DIAGRAM	
0170	B 44702-0000	-		x	CIRCUIT DIAGRAM	
0180	B 44702-0000	-		x	CIRCUIT DIAGRAM	
0190	B 44702-0000	-		x	CIRCUIT DIAGRAM	
0200	B 44702-0000	-		x	CIRCUIT DIAGRAM	
0220	B 44702-0000	-		x	CIRCUIT DIAGRAM	
0230	B 44702-0000	-		x	CIRCUIT DIAGRAM	
0240	B 44702-0000	-		x	CIRCUIT DIAGRAM	
0250	B 44702-0000	-		x	CIRCUIT DIAGRAM	
0260	B 44702-0000	-		x	CIRCUIT DIAGRAM	
0270	B 44702-0000	-		x	CIRCUIT DIAGRAM	
0280	B 44702-0000	-		x	CIRCUIT DIAGRAM	
0290	B 44702-0000	-		x	CIRCUIT DIAGRAM	
0300	B 44702-0000	-		x	CIRCUIT DIAGRAM	
0310	B 44702-0000	-		x	CIRCUIT DIAGRAM	
0320	B 44702-0000	-		x	CIRCUIT DIAGRAM	
0330	B 44702-0000	-		x	CIRCUIT DIAGRAM	
0340	B 44702-0000	-		x	CIRCUIT DIAGRAM	
0350	B 44702-0000	-		x	CIRCUIT DIAGRAM	
0360	B 44702-0000	-		x	CIRCUIT DIAGRAM	
0370	B 44702-0000	-		x	CIRCUIT DIAGRAM	
0380	B 44702-0000	-		x	CIRCUIT DIAGRAM	
0390	B 44702-0000	-		x	CIRCUIT DIAGRAM	
0400	B 44702-0000	-		x	CIRCUIT DIAGRAM	
0410	B 44702-0000	-		x	CIRCUIT DIAGRAM	
0420	B 44702-0000	-		x	CIRCUIT DIAGRAM	
0430	B 44702-0000	-		x	CIRCUIT DIAGRAM	
0450	B 44702-0000	-		x	PROTECTIVE GROUNDING	
0500	B 48187-0000	-		x	LIST OF PLC-BLOCKS	
0510	B 48187-0000	-		x	LIST OF PLC-ADDRESSES	
0520	B 48187-0000	-		x	PLC-PROGRAMME LIST	
0530	B 48187-0000	-		x	PLC-PROGRAMME LIST	
0540	B 48187-0000	-		x	PLC-PROGRAMME LIST	
0550	B 48187-0000	-		x	PLC-PROGRAMME LIST	
0560	B 48187-0000	-		x	PLC-PROGRAMME LIST	
0570	B 48187-0000	-		x	PLC-PROGRAMME LIST	
0580	B 48187-0000	-		x	PLC-PROGRAMME LIST	
0590	B 48187-0000	-		x	PLC-PROGRAMME LIST	
0600	B 48187-0000	-		x	PLC-PROGRAMME LIST	
0610	B 48187-0000	-		x	PLC-PROGRAMME LIST	
0620	B 48187-0000	-		x	PLC-PROGRAMME LIST	
0630	B 48187-0000	-		x	PLC-PROGRAMME LIST	
0640	B 48187-0000	-		x	PLC-PROGRAMME LIST	
0650	B 48187-0000	-		x	PLC-PROGRAMME LIST	
0660	B 48187-0000	-		x	PLC-PROGRAMME LIST	
0670	B 48187-0000	-		x	PLC-PROGRAMME LIST	
0680	B 48187-0000	-		x	PLC-PROGRAMME LIST	
0700	B 48187-0000	-		x	PLC-PROGRAMME LIST	
0710	B 48187-0000	-		x	PLC-PROGRAMME LIST	
0720	B 48187-0000	-		x	PLC-PROGRAMME LIST	
0790	B 48187-0000	-		x	PLC-PROGRAMME LIST	
1000	B 61812-0000	-		x	CONNECTION DRAWING	
1010	B 61812-0000	-		x	CONNECTION DRAWING	
1020	B 61812-0000	-		x	CONNECTION DRAWING	
1030	B 61812-0000	-		x	CONNECTION DRAWING	
1040	B 61812-0000	-		x	CONNECTION DRAWING	
1050	B 61812-0000	-		x	CONNECTION DRAWING	
1060	B 61812-0000	-		x	CONNECTION DRAWING	
1070	B 61812-0000	-		x	CONNECTION DRAWING	
1080	B 61812-0000	-		x	CONNECTION DRAWING	
1090	B 61812-0000	-		x	CONNECTION DRAWING	
1100	B 61812-0000	-		x	CONNECTION DRAWING	
1110	B 61812-0000	-		x	CONNECTION DRAWING	
1120	B 61812-0000	-		x	CONNECTION DRAWING	

This page is intentionally left blank

Pos	Part No	SP	UN	Qty	Description	Page No
-						
0100	B 48187-0000	-		x	PLC-DISKETTE TPMC	

Pos	Part No	SP	UN	Qty	Description	Page No

This page is intentionally left blank

Pos	Part No	SP	UN	Qty	Description	Page No
90064-0082						
	90036-0057	F		1	LIGHT BULB BA9S 28V	
90075-0125						
	90075-0313	K		1	AUXILIARY CONTACT K&M 22 DILM.2NO;2NC	
90113-0072						
	90113-0387	-		1	FILTER	
	90113-0431	-		1	O-ring	
90164-0009						
	90297-0009	F		2	FLUORESCENT TUBE 6W	
90334-0006						
	90025-0046	-		1	BATTERY CARRIER	
985899-0000						
	90355-0157	-		1	COUPLING	
985900-0000						
	90355-0157	-		1	COUPLING	
1260396-0000						
	90025-0094	-		1	TERMINAL BLOCK	
	90121-0116	-		1	RESISTANCE 150 Ohm;1/4W ELFA	
	90182-0005	-		1	STRIP 79x2,3mm REPL.BY 352113-101	
	90220-0082	-	M	1	DATACABLE Pair Twisted 2x0,76mm2	
1260403-0000						
	90237-0168	-		1	ROD	
1260814-0000						
	90265-0051	-		1	ACCESSORY BOX	
1260815-0000						
	90265-0051	-		1	ACCESSORY BOX	
1260901-0000						
	353249-0044	-		1	GLANDS,INSERT,SOLID,NORMAL E155G	
1260902-0000						
	353249-0044	-		1	GLANDS,INSERT,SOLID,NORMAL E155G	
1282599-0000						
	353249-0042	-		1	GLANDS,INSERT,SOLID,NORMAL E152G	
1282600-0000						
	353249-0042	-		1	GLANDS,INSERT,SOLID,NORMAL E152G	
1282787-0000						
	353249-0048	-		1	GLANDS,INSERT,SOLID,EXTENDED EK154G	
1282788-0000						
010	353249-0048	-		1	GLANDS,INSERT,SOLID,EXTENDED EK154G	
1346824-0000						
	353249-0044	-		1	GLANDS,INSERT,SOLID,NORMAL E155G	

Pos	Part No	SP	UN	Qty	Description	Page No
1350146-0000						
010	90265-0046	-		1	ACCESSORY BOX	

Tetra Pak

SPC

Spare Parts Catalogue

Part No	Description	Page No
1/4W ELFA		193
1010814-0000	ROLLER	69
1035076-0051	===CAD MODEL===	59
1035076-0100	LEG	55, 57
1035471-0100	LEG	55, 57
1035792-0000	E-HINGE	147, 149, 151, 153, 157, 159, 181
1035882-0000	BENDING ROLLER	75, 77, 85
1036119-0000	LEG	59
1036120-0000	SLEEVE	59
1036220-0000	SHAFT	85
1036227-0000	BRACKET	55, 57
1036232-0000	BRACKET	85
1036304-0005	LOCKING ARM	151, 153
1036304-0019	LOCKING ARM	151, 153
1036304-0020	LOCKING ARM	149
1036563-0000	WASHER	149, 159, 181
1036977-0000	HOLDER	147
1037762-0000	PIN	55, 57
1038865-0000	SPACER DISC	11, 13, 15
1082741-0000	HOLDER	181
1082765-0000	PHOTOCELL BRACKET	97
1082861-0000	ARM	69
1095893-0100	MAGAZINE PULLTAB	161
1095894-0100	MAGAZINE PATCH	161
1095895-0100	SPLICING DEVICE	163, 165, 171, 173
1095923-0100	GUIDE PULLTAB	163, 165
1095924-0100	GUIDE PATCH	171, 173
1095928-0100	COOLER	11, 13, 15
1095931-0200	PAPER WEB PATH	11, 13, 15
1095932-0200	APPLICATORS	11, 13, 15
1095935-0100	DRIVE MOTOR	67
1095937-0100	GUIDE ROLLER WITH FLANGE	73
1095938-0100	GUIDE ROLLER	73
1095940-0100	GUIDE ROLLER	73
1095941-0100	TENSION ROLLER	73
1095942-0100	ROLLER ASSEMBLY	67
1095944-0100	DOOR EL-CABINET	145
1095945-0200	DOOR	145
1095946-0200	DOOR	145
1095947-0200	DOOR	145
1095948-0100	DOOR FOR WASTE BOX	145
1095949-0100	DOOR FOR TPIH	145
1095951-0200	DOORS AND COVER	11, 13, 15
1095952-0100	BENDING ROLLER ASSEMBLY	85, 93
1095953-0100	INFEED UNIT	67
1095955-0100	WASTE BOX	101
1095969-0100	BENDING ROLLER WITH FLANGES	89
1095970-0100	PAPER BRAKE	67
1095979-0100	PHOTOCELL UNIT	67
1095980-0100	PHOTOCELL UNIT	67
1095991-0100	PUNCH UNIT	105
1095992-0100	PUNCH BRACKET	101
1103295-0000	LOCK PLATE	103
1103299-0000	NON-SKID	55, 57
1103845-0000	ARM	171, 173
111543-0000	GUIDE CONE	19, 99
1116048-0000	SPACER	55, 57
1129042-0000	KEY	149, 159, 181
1129221-0000	SPLICING TABLE	167
1129222-0000	BOBBIN HOLDER	163, 165
1129223-0000	BEAM	163, 165, 171, 173
1129224-0000	BEAM	163, 165, 171, 173
1129225-0000	BEAM	171, 173
1129226-0000	BEAM	163, 165, 171, 173
1129227-0000	POST	171, 173
1129230-0000	BEAM	163, 165
1129231-0000	CANTILEVER	163, 165
1129232-0000	ROLL	163, 165
1129233-0000	SHAFT	163, 165
1129234-0000	ROLL	163, 165, 167
1129235-0000	SHAFT	163, 165, 167
1129237-0000	ROLL	163, 165
1129238-0000	KNIFE	167
1129239-0000	KNIFE HOLDER	167
1129240-0000	SHEET	169, 175
1129241-0000	STEERING	169, 175
1129242-0000	SPACER	169, 175
1129245-0000	STOP	169, 175
1129246-0000	ROLL	163, 165
1129252-0000	LOCK GRIP	167
1129274-0000	GUIDE LUG	149, 151, 153
1129450-0000	ARM	163, 165, 171, 173
1129451-0000	SHAFT	171, 173
1129452-0000	SHAFT	163, 165
1129454-0000	SHEET	169, 175
1129461-0000	SPACER	169, 175

Part No	Description	Page No
1129462-0000	SPACER	169, 175
1129495-0000	BLOCKING PIECE	163, 165, 171, 173
1129510-0000	ARM	163, 165
1129624-0000	AXLE SUPPORT	75, 77
1129626-0000	AXLE SUPPORT	79
1129628-0000	BRACKET	81
1129629-0000	BRACKET	81
1129630-0000	BEARING SEAT	75, 77
1129767-0000	SCREW	145, 147, 149, 151, 153, 155, 157
1129770-0000	BLOCKING PIECE	147, 149, 151, 153, 157, 159, 181
1129780-0000	ROLL	163, 165
1129867-0000	SHEET	25, 27
1129905-0000	SHAFT	71
1129906-0000	PIN	71, 89
1129907-0000	LEVER	71, 89
1129908-0000	BRACKET	71
1129909-0000	BRACKET	71
1129930-0000	DOOR	157
1129931-0000	DOOR	147
1129932-0000	FRAME	147
1129951-0000	BENDING ROLLER	87
1129952-0000	BRACKET	87
1129971-0000	BRACKET	155
1140016-0000	PLATE	71, 89
1140045-0000	FRAME	103
1140046-0000	RAIL	103
1140047-0000	WASTE BOX	103
1140048-0000	LOCK PLATE	103
1140049-0000	COVER	103
1140053-0000	SPACER	25, 27
1140055-0000	RING	75
1140131-0000	FLANGE	93
1140132-0000	ECCENTRIC	85, 91
1140133-0000	AXLE PIN	87
1140134-0000	PLATE	91
1140135-0000	ROLLER	79, 91
1140136-0000	BRACKET	91
1140137-0000	SHAFT	91
1140174-0000	BEARING HOUSING	71, 89
1140184-0000	BRACKET	89
1140185-0000	SHAFT	89
1140186-0000	BRACKET	89
1140187-0000	WHEEL	89
1140209-0000	GUIDE	95
1140210-0000	BRACKET	95
1140211-0000	PHOTOCELL BRACKET	95, 97
1140212-0000	GUIDE	97
1140213-0000	BRACKET	97
1140291-0000	PUNCH HOLE 50	107
1140292-0000	DIE HOLE 50	107
1140293-0000	SPACER	107
1140294-0002	PIN DISTANCE 36.5	107
1140314-0000	STOP LUG	25, 27
1140387-0000	SHIM	107
1140415-0000	GLASS PANE	147, 149
1140416-0000	GLASS PANE	151
1140427-0000	BRACKET	55, 57
1140499-0000	PLATE	105
1140500-0000	ANGLE BRACKET	105
1140501-0000	PLATE	105
1140503-0000	ADJUSTMENT BRACKET	105
1140504-0000	CONNECTION PLATE	105
1140509-0000	DOOR	159
1140537-0000	HOLDER	159
1140538-0000	BLOCKING PIECE	159, 181
1140545-0000	TEE BRACKET	119, 135
1140546-0000	BRACKET	119, 135
1140547-0000	SHAFT	119, 129, 135
1140548-0000	FLANGED BEARING BUSHING	119, 135
1140551-0000	SHAFT	119, 135
1140626-0000	SPACER	169, 175
1140632-0000	POST	163, 165, 171, 173
1140667-0000	INDUCTOR	123
1140727-0000	ROLLER	177, 179
1140738-0000	BRACKET	133
1140739-0000	BRACKET	133
1140771-0000	COVERING PLATE	145
1140772-0000	COVERING PLATE	145
1140773-0000	COVERING PLATE	145
1140774-0000	COVERING PLATE	145
1140775-0000	COVERING PLATE	145
1140776-0000	COVERING PLATE	145
1140777-0000	COVERING PLATE	145
1140817-0000	BRACKET	177, 179
1140883-0000	PNEUMATIC DIAGRAM	181
1140889-0000	CABLE	123

Part No	Description	Page No
1140890-0000	TRANSFORMER BRACKET	123
1140912-0000	BRACKET	135
1143421-0000	OPENING SPECIFICATION	143
1145219-0000	SIGN	181
1145233-0000	PUNCH HOLE 45	107
1145332-0000	KNIFE-FLAT	119, 135
1145333-0000	KNIFE-WINDOW	119, 135
1145482-0000	OPENING SPECIFICATION	143
1147009-0000	SPECIAL WASHER	125, 141
1147010-0000	BUSHING	125, 141
1147012-0000	PHOTOCELL BRACKET	113
1147013-0000	BRACKET	113
1147015-0000	BRACKET	17
1147049-0000	BRACKET	109
1147050-0000	SCREW	109
1147051-0000	TOOTHED PULLEY	109
1147052-0000	COVER PLATE	109
1147117-0000	RAIL BRACKET	17
1185000-0100	DOOR,INNER	145
1185008-0100	MAGAZINES	11, 13, 15
1185029-0100	MISSING TAB DETECTOR	131
1185030-0100	FUSE BOX	31
1185031-0100	BAR CODE READER	111
1185047-0100	AIR INLET GROUP	181
1185048-0100	VALVE GROUP	181
1185049-0100	VALVE PANEL	11, 13, 15
1185078-0100	LIFTING DEVICE	101
1255035-0000	ECCENTRIC	69
1255311-0000	FRAME	55, 57
1255501-0100	ELECTRICAL CABINET	11, 13, 15
1255579-0000	BRACKET	99
1255601-0100	EDGE GUIDE	67
1255631-0000	ECCENTRIC BUSHING	85
1255682-0000	DOOR	149
1255683-0000	DOOR	155
1255684-0000	HOLDER	149
1255685-0000	DOOR	151
1255686-0000	DOOR	153
1255687-0000	BRACKET	115
1255692-0010	CABLE	45, 47
1255697-0000	BRACKET	103
1255834-0000	HANDLE	167
1255835-0000	PROTECTION	167

Part No	Description	Page No
1255951-0000	CABINET	25, 27
1255952-0000	BOX FOR TPIH	25, 27
1255953-0100	ASSEMBLY PLATE	25, 27
1255954-0100	SWING FRAME	25, 27
1255955-0000	FRAME	31
1260201-0000	FRAME	159
1260239-0000	ANGLE BRACKET	105
1260241-0000	MOUNTING PLATE	29
1260242-0000	SWING FRAME	31
1260329-0000	BRACKET	69
1260379-0000	BEAM	171, 173
1260387-0000	PHOTOCELL BRACKET	105
1260388-0000	PLATE	135
1260389-0000	CASTING APPLICATOR	119, 135
1260390-0200	MISSING PATCH DETECTOR	111
1260391-0000	BRACKET	119, 129
1260392-0000	CASTING APPLICATOR	129
1260393-0002	SEALING PLATE	119, 129
1260395-0000	PLATE	119, 135
1260396-0000	SATTBUS CABLE	29
1260397-0000	BRACKET	125
1260398-0000	BRACKET	141
1260399-0000	CLAMP	119, 129, 135
1260400-0000	COVER	117
1260401-0100	SETTING TOOL	111, 127, 131
1260402-0000	BRACKET	117
1260403-0000	ROD	147
1260404-0000	PLATE	119, 129
1260405-0000	PLATE	123
1260406-0000	PLATE	135
1260407-0000	PLATE	139
1260411-0100	PATCH/TAB SPLICE DETECTOR	73
1260413-0000	BRACKET	83
1260414-0100	PATCH FEEDER	111
1260415-0100	TAB FEEDER	131
1260416-0200	TAB CJAWUNIT'	131
1260417-0100	PATCH RESEAL CJAWUNIT'	111, 127
1260418-0100	HEATING JAW - RESEAL	127
1260419-0100	APPLICATOR PATCH	101
1260420-0100	APPLICATOR RESEAL	101
1260421-0100	APPLICATOR TAB	101
1260422-0000	CLAMP	119, 129, 135
1260423-0000	STUD SCREW	29

Part No	Description	Page No
1260426-0100	PATCH RESEAL BRACKET	111, 127
1260427-0100	TAB BRACKET	131
1260428-0100	FRAME ASSEMBLY	11, 13, 15
1260431-0000	PLATE	31
1260438-0000	TOUCH GUARD	31
1260439-0000	STUD SCREW	31
1260440-0000	BRACKET	31
1260522-0000	PHOTOCELL	115
1260523-0000	CABLE	115
1260551-0000	TAB HEATER HEAD	135
1260552-0000	ROD	147
1260561-0000	HOLDER	25, 27
1260642-0000	LEVER	85
1260643-0000	LEVER	85
1260644-0000	LEVER	85
1260648-0000	BUSHING	85
1260649-0000	PAPER GUIDE	85
1260651-0000	INDUCTOR	123
1260684-0100	CABLE HARNESS	11, 13, 15
1260811-0100	CONNECTION BOX	45, 47
1260812-0100	CONNECTION BOX	45, 47
1260813-0100	CONNECTION BOX	45, 47
1260814-0000	CONNECTION BOX	51, 53
1260815-0000	CONNECTION BOX	49
1260901-0000	INSERT	25, 27
1260902-0000	INSERT	45, 47
1279484-0000	SHIM	123, 139
1279485-0000	PLATE	123, 139
1279828-0000	SEALING STRIP	149
1279829-0000	SEALING STRIP	151, 153
1279830-0000	SEALING STRIP	155
1279831-0000	COVER	31
1279832-0000	PLATE	55, 57
1279833-0000	RUBBER STRIP	55, 57
1279834-0000	BOLT	163, 165, 171, 173
1282599-0000	INSERT	45, 47
1282600-0000	INSERT	45, 47
1282787-0000	INSERT	45, 47
1282788-0000	INSERT	63
1285054-0100	CONNECTION BOX	63
1285481-0000	LABEL	171, 173
1285482-0000	LABEL	163, 165
1296136-0000	TOUCH GUARD	29
1296288-0000	FUSE BOARD	147
1296298-0000	BUSHING	123, 139
1296300-0000	WASHER	123, 139
1296752-0000	BRACKET	119, 129, 135
1296753-0000	FLAG	119, 129, 135
1296794-0000	PUNCH HOLE71	107
1296856-0000	BRACKET	55, 57
1296871-0000	WHEEL	71
1296872-0000	DIE HOLE 71	107
1296875-0000	OPENING SPECIFICATION	143
1296876-0000	OPENING SPECIFICATION	143
1296882-0100	OPENING SPECIFICATION	101
1317669-0001	ROLLER	179
1317669-0002	ROLLER	179
1317669-0004	ROLLER	177
1317669-0005	ROLLER	177
1317670-0000	BRACKET	177, 179
1317671-0000	ROLLER	177, 179
1317672-0000	AXLE PIN	177, 179
1317673-0000	PLATE	177, 179
1317674-0000	FLAG	177, 179
1317675-0000	AXLE PIN	177, 179
1317676-0000	PLATE	177, 179
1317753-0000	AIR NOZZLE	17
1317754-0000	BRACKET	17
1317755-0000	PLATE	17
1317971-0000	REINFORCEMENT	17
1317972-0000	REINFORCEMENT	17
1334065-0100	PATCH TURNING DEVICE	161
1334066-0100	TAB TURNING DEVICE	161
1334228-0000	SHIM	17
1334230-0001	PLATE	17
1334230-0002	PLATE	17
1334230-0003	PLATE	17
1334322-0100	BENDING ROLLER WITH FLANGES	11, 13, 15, 91
1334534-0000	WASTE PIPE	105
1334535-0000	WASTE PIPE	103
1346162-0000	PHOTOCELL BRACKET	115
1346219-0000	REFLECTOR	115
1346283-0000	COUNTER PLATE	139
1346521-0000	HEATER	135
1346824-0000	INSERT	25, 27
1348057-0000	BRACKET	55, 57

Part No	Description	Page No
1348058-0000	CABLE DUCT	55, 57
1350146-0000	CONNECTION BOX	65
1350525-0000	SEALING PLATE	137
1350526-0000	SEALING PLATE	137
1350541-0000	SEALING PLATE	137
1350785-0001	SHIM	119, 135
1350785-0002	SHIM	119, 135
1350785-0003	SHIM	119, 135
1350785-0004	SHIM	119, 135
2033-0013	WASHER	163, 165, 171, 173
23150-0000	TRANFORMER 3PH,TP-165	29
234844-0000	WHEEL	163, 165, 171, 173
23580-0000	SHIFTER HANDLE	19, 99
23583-0000	GUIDE FINGER	19, 99
23584-0000	SCREW	19, 99
24351-0000	BOW CLAMP	19, 99
24352-0000	SHAFT	19, 99
24355-0000	DOWEL	19, 99
24356-0000	PIECE	19, 99
245210-0000	BODY	19, 99
263150-0000	BRACKET	71, 89
263152-0000	SHAFT	71, 89
263153-0000	NUT	71, 89
266710-0000	WHEEL	71, 89
273458-0000	LABEL (AIR)	181
28036-0000	WASHER	103
28509-0000	WASHER	123
294734-0000	WASHER	103
2NC		193
311103-0267	PINS,STRAIGHT 4X10	123, 139
311103-0350	CYLINDRICACP M6 6X14 RFR	19, 99
311103-0351	PINS,STRAIGHT 6X16	89, 119, 129, 135
311112-0205	PINS,SLOTTED TUBULAR SPRING PIN 3X10	119, 135
311112-0256	PINS,SLOTTED TUBULAR SPRING PIN 4X20	81
311112-0260	SLOTTED TURP 4X28 RFR	85
311112-0262	PINS,SLOTTED TUBULAR SPRING PIN 4X32	71, 89
311112-0377	PINS,SLOTTED TUBULAR SPRING PIN 8X24 .	11, 13, 15, 55, 57, 85, 89, 91
311411-0138	SPLIT PIN SP1,6X12RFR	69, 163, 165, 171, 173
311520-0329	BLANK RIVE2,4X8	31
312101-0343	SCREW M6S5X60FZB	123, 135
312101-0366	SCREW M6S6X12FZB	31
312105-0287	SCREW M6S ISO 4017 M4X8 A280	83, 103, 119, 129, 135, 163, 165, 167, 171, 173
312105-0291	SCREW M6S ISO 4017 M4X12 A280	17, 19, 95, 97, 99, 177, 179, 181
312105-0293	SCREW M6S ISO 4017 M4X16 A280	31
312105-0295	SCREW M6S ISO 4017 M4X20 A280	123, 159, 163, 165, 171, 173
312105-0323	SCREW M6S ISO 4017 M5X8 A280	55, 57
312105-0325	SCREW M6S5X10 A2 80	113
312105-0327	SCREW M6S ISO 4017 M5X12 A280	17, 25, 27, 103, 163, 165, 167, 171, 173
312105-0329	SCREW M6S ISO 4017 M5X16 A280	17, 55, 57
312105-0331	SCREW M6S ISO 4017 M5X20 A280	17
312105-0333	SCREW M6S ISO 4017 M5X25 A280	119, 129, 135
312105-0335	SCREW M6S ISO 4017 M5X30 A280	167
312105-0339	SCREW M6S ISO 4014 M5X40 A280	163, 165, 171, 173
312105-0366	SCREW M6S ISO 4017 M6X12 A280	29, 55, 57, 149, 181
312105-0368	SCREW M6S ISO 4017 M6X16 A280	19, 75, 77, 79, 91, 95, 97, 99, 159, 181
312105-0370	SCREW M6S ISO 4017 M6X20 A280	69, 81, 85, 95, 163, 165, 167, 171, 173
312105-0372	SCREW M6S ISO 4017 M6X25 A280	71, 75, 77, 89, 97, 163, 165, 171, 173
312105-0374	SCREW M6S ISO 4017 M6X30 A280	159, 169, 175
312105-0376	SCREW M6S ISO 4017 M6X35 A280	163, 165, 171, 173, 181
312105-0379	SCREW M6S ISO 4014 M6X45 A280	99, 167
312105-0447	SCREW M6S ISO 4017 M8X12 A280	63, 105
312105-0449	SCREW M6S ISO 4017 M8X16 A280	17, 99, 169, 175
312105-0451	SCREW M6S ISO 4017 8X20 A280	11, 13, 15, 17, 85, 91, 103, 113, 117
312105-0453	SCREW M6S ISO 4017 M8X25 A280	55, 57, 61, 71, 85, 89, 107, 169, 175, 177, 179
312105-0455	SCREW M6S ISO 4017 M8X30 A280	17, 71, 81, 109, 119, 129, 135
312105-0463	SCREW M6S ISO 4014 M8X60 A280	119, 129, 135
312105-0465	SCREW M6S ISO 4014 M8X70 A280	85
312105-0505	SCREW M6S ISO 4014 M10X70 A280	55, 57
312105-0640	SCREW M6S ISO 4014 M16X100 A280	11, 13, 15
312109-0374	SCREW M6S ISO 4017 M6X30 A280	85, 125, 141
312109-0376	SCREW M6S ISO 4017 M6X35 A280	181
312109-0459	SCREW M6S ISO 4017 M8X40 A280	105, 125, 141
312109-0460	SCREW M6S ISO 4017 M8X45 A280	71, 89
312115-0222	SCREW MC6S ISO 4762 M3X8 A280	105, 131
312115-0226	SCREW MC6S ISO 4762 M3X12 A280	119, 129, 135
312115-0228	SCREW MC6S ISO 4762 M3X16 A280	105
312115-0287	SCREW MC6S ISO 4762 M4X8 A280	31, 109, 115, 135, 167, 181
312115-0291	SCREW MC6S ISO 4762 M4X12 A280	17, 115, 119, 129, 135
312115-0293	SCREW MC6S ISO 4762 M4X16 A280	133
312115-0295	SCREW MC6S ISO 4762 M4X20 A280	65, 107, 159
312115-0323	SCREW MC6S ISO 4762 M5X8 A280	25, 27, 29
312115-0327	SCREW MC6S ISO 4762 M5X12 A280	29, 55, 57, 85, 147, 149, 151, 153, 155, 157, 159, 181
312115-0329	SCREW MC6S ISO 4762 M5X16 A280	55, 57, 89, 149, 159, 181

Part No	Description	Page No
312115-0331	SCREW MC6S ISO 4762 M5X20 A280	17, 33, 49, 51, 53, 69, 123, 139
312115-0341	SCREW MC6S 5X50 A4 80	119, 129, 135
312115-0362	SCREW MC6S ISO 4762 M6X8 A280	49, 51, 53, 103, 145
312115-0366	SCREW MC6S ISO 4762 M6X12 A280	19, 21, 29, 33, 71, 89, 99, 105
312115-0368	SCREW MC6S ISO 4762 M6X16 A280	163, 165, 171, 173
312115-0372	SCREW MC6S ISO 4762 M6X25 A280	71, 85, 105
312115-0376	SCREW MC6S ISO 4762 M6X35 A280	81
312115-0379	SCREW MC6S ISO 4762 M6X45 A280	167
312115-0447	SCREW MC6S ISO 4762 M8X12 A280	123
312115-0449	SCREW MC6S ISO 4762 M8X16 A280	25, 27
312115-0451	SCREW MC6S ISO 4762 M8X20 A280	105, 115, 133
312115-0453	SCREW MC6S ISO 4762 M8X25 A280	105, 123, 139
312115-0455	SCREW MC6S ISO 4762 M8X30 A280	123, 139
312115-0457	SCREW MC6S ISO 4762 M8X35 A280	167
312121-0325	SLOTTED HEMCS5X10FZB	31
312121-0364	SLOTTED HEMCS6X10FZB	31
312125-0222	SLOTTED CHEESE HEAD ISO 1207 M3X8 RFR	181
312125-0224	SLOTTED HEMCS3X10RFR	119, 135
312125-0230	SLOTTED CHEESE HEAD ISO 1207 M3X20 RFR	163, 165, 171, 173, 181
312125-0287	SLOTTED CHEESE HEAD ISO 1207 M4X8 RFR	25, 27, 55, 57, 65, 119, 129, 135, 177, 179
312125-0289	SLOTTED HEMCS4X10RFR	81, 89, 95, 97, 125, 141, 163, 165, 169, 171, 173, 175
312125-0376	SLOTTED CHEESE HEAD ISO 1207 M6X35 RFR	31
312145-0224	SLOTTED HEMFS3X10RFR	99, 119, 129, 135
312145-0226	SLOTTED HEMFS3X12RFR	123, 139
312155-0289	SCREW MF6S4X10RFR	181
312155-0291	SCREW MF6S DIN 7991 M4X12 A280	25, 27, 117, 119, 135, 159, 167
312155-0293	SCREW MF6S DIN 7991 M4X16 A280	17
312155-0295	SCREW MF6S DIN 7991 M4X20 A280	17
312155-0323	SCREW MF6S DIN 7991 M5X8 A280	103
312155-0325	SCREW MF6S5X10RFR	167
312155-0329	SCREW MF6S DIN 7991 M5X16 A280	103, 123
312155-0331	SCREW MF6S DIN 7991 M5X20 A280	107, 139
312155-0339	SCREW MF6S DIN 7991 5X40 A280	123, 139
312155-0364	SCREW MF6S6X10RFR	21
312155-0449	SCREW MF6S DIN 7991 M8X16 A280	169, 175
312155-0461	SCREW MF6S DIN 7991 M8X50 A280	117
312180-0374	HEX. SOCKET HEAD SHOULD. ISO 7379 M5X30	167
312180-0495	HEX. SOCKET HEAD SHOULD. ISO 7379 M8X30	71, 89
312311-0321	SET SCREW FULL DOGPOINT ISO 4028 M5X6	75, 93
312311-0327	SET SCREW FULL DOGPOINT ISO 4028 M5X12	109
312311-0333	SET SCREW FULL DOGPOINT ISO 4028 M5X25	119, 135
312311-0366	SET SCREW FULL DOGPOINT ISO 4028 M6X12	85, 89
312311-0374	SET SCREW FULL DOGPOINT ISO 4028 M6X30	81, 115, 133
312311-0380	STOP SCREW T6SS6X50FZB	119, 129, 135
312311-0624	STOP SCREW T6SS16X30FZB	59
312318-0283	SET SCREW CUP POINT ISO 4029 M4X4 RFR	19, 99, 119, 135
312318-0285	SET SCREW CUP POINT ISO 4029 M4X6 RFR	19, 99, 119, 135
312318-0291	SET SCREW CUP POINT ISO 4029 M4X12 RFR	19, 99
312318-0323	SET SCREW CUP POINT ISO 4029 M5X8 RFR	69, 163, 165, 171, 173
312318-0362	SET SCREW CUP POINT ISO 4029 M6X8 RFR	85, 89, 109
312318-0364	STOP SCREW SK6SS6X10RFR	163, 165, 171, 173
312318-0366	SET SCREW CUP POINT ISO 4029 M6X12 RFR	87, 169, 175
312318-0372	SET SCREW CUP POINT ISO 4029 M6X25 RFR	75, 77
312318-0459	SET SCREW CUP POINT ISO 4029 M8X40 RFR	105
312601-0316	NUT M6M6FZB	31
312605-0310	NUTS,HEXAGON,M3	105, 163, 165, 171, 173, 181
312605-0312	NUTS,HEXAGON,M4	17, 19, 95, 97, 99, 103, 149, 151, 153, 159, 163, 165, 171, 173, 181
312605-0314	NUT,HEXAGON,M6M5 Stainless	119, 123, 135, 147, 163, 165, 171, 173, 177, 179, 181
312605-0316	NUT,HEXAGON,A280 M6M6 Stainless	25, 27, 29, 71, 81, 85, 95, 97, 99, 103, 147, 163, 165, 171, 173, 181
312605-0318	NUTS,HEXAGON,M8	17, 71, 85, 89, 91, 105, 163, 165, 171, 173, 177, 179
312605-0324	NUTS,HEXAGON,M16	59
312621-0316	ROD END,NUT M6	119, 129, 135
312621-0318	ROD END,NUT M8	119, 135
312625-0316	NUTS,HEXAGON,M6	115, 133
312630-0320	NUTS,HEXAGON,M10X1	169, 175
312705-0312	NUTS,DOMED CAP,HEXAGON,M4	181
312705-0318	NUTS,DOMED CAP,HEXAGON,M8	163, 165, 171, 173
312812-0312	NUTS,HEXAGON,LOCK,WITH NYLON,M4	31, 123, 149
312812-0314	NUTS,HEXAGON,LOCK,WITH NYLON,M5	103
315101-0146	WASHER BRB5,3X10FZB	31, 183
315103-0165	WASHERS,PLAIN ROUND 8,4X16	117
315105-0124	WASHERS,PLAIN ROUND 3,2X6	105, 119, 129, 135, 163, 165, 171, 173, 177, 179, 181
315105-0136	WASHERS,PLAIN ROUND 4,3X8	17, 19, 31, 55, 57, 65, 83, 89, 95, 97, 99, 103, 107, 115, 119, 129, 133, 135, 149, 151, 153, 159, 163, 165, 171, 173, 177, 179, 181
315105-0146	WASHERS,PLAIN ROUND 5,3X10	17, 19, 25, 27, 29, 33, 55, 57, 99, 103, 113, 119, 123, 129, 135, 147, 149, 155, 159, 163, 165, 167, 171, 173, 181
315105-0153	WASHER,PLAIN ROUND BRB 6,4x12 Stainless	21, 25, 27, 29, 31, 49, 51, 53, 55, 57, 69, 71, 75, 77, 81, 89, 91, 95, 97, 99, 147, 149, 159, 163, 165, 167, 169, 171, 173, 175, 181

Part No	Description	Page No
315105-0165	WASHERS,PLAIN ROUND 8,4X16	17, 25, 27, 55, 57, 63, 71, 89, 99, 103, 107, 113, 163, 165, 167, 169, 171, 173, 175
315105-0173	WASHERS,PLAIN ROUND 10,5X22	55, 57, 169, 175
315115-0153	WASHER TBRB 6,4x12 Stainless	85, 125, 141
315115-0165	WASHER TBRB8	11, 13, 15, 55, 57, 71, 81, 85, 89, 91, 105, 109, 115, 119, 123, 125, 129, 133, 135, 139, 141, 177, 179
315125-0153	WASHERS,PLAIN ROUND,CHAMFERED 6,4X22X4	75, 77, 79, 91, 125, 141
315125-0165	WASHERS,PLAIN ROUND,CHAMFERED 8,4X26X5	61
315233-0110	PLAIN ROUND,NYLON R1/4"	183
315402-0136	WASHER FBB4,1RFR	121, 129, 137, 167
315402-0156	WASHER FBB6,5RFR	167
315705-0202	KEYS,PARALLEL WITH ROUND ENDS 5X5X25	109
315705-0272	KEYS,PARALLEL WITH ROUND ENDS 8X7X50	105
315742-0111	RETAINING RINGS 15	109
315750-0107	CIRCLIP SGA10	163, 165, 171, 173
315751-0112	RETAINING RINGS FOR SHAFT 15	75, 77, 85, 109
315751-0122	RETAINING RINGS FOR SHAFT 30	85
315751-0123	RETAINING RINGS FOR SHAFT 32	125, 141
315753-0117	RETAINING RINGS FOR HOLE 22	119, 129, 135, 163, 165, 171, 173
315753-0124	RETAINING RINGS FOR HOLE 35	85
318172-0179	TIMING BELT T10X1780X16	109
318800-0102	HANDLES,SPHERICAL KNOB,INT.THRE.,D.20-M5	85
321105-0125	BUSHING 6F7X12X6	119, 129, 137
321111-0211	FLANGE BUS 15E7X10	109
321111-0274	FLANGE BUS 18E7X18	69, 163, 165, 171, 173
321116-0095	BUSHING 8E7/12X6	163, 165, 171, 173
321120-0092	BUSHING 4/5,5X6	119, 137
321120-0101	BEARING BUSHING WITHOUT FLANGE,6/8X6	119, 137
321120-0102	BEARING BUSHING WITHOUT FLANGE,6/8X10	119, 137, 167
321120-0104	BEARING BUSHING WITHOUT FLANGE,10/12X10	119, 137
321300-0098	BALL BEARING 8X22X7	163, 165, 171, 173
321308-0202	BALL BEARING 15X32X9	71, 81, 89
321313-0102	BALL BEARING 15X35X11	75, 77, 85, 87
321316-0200	BALL BEARISKF6300-2RS	85
321316-0202	BALL BEARISKF6302-2RS	81
321582-0150	CURVE ROLLKR26PP	169, 175
32544-0000	INSULATION NUT	123
32644-0000	WASHER	123
342700-0110	NIPPLES,HEXAGON,EXT.G-THREAD G1/4"-G1/4"	183
342700-0205	NIPPLES,HEXAGON,EXT.G-THREAD G1/2"-G1/4"	181
342713-0210	PLUG,EXT.THREAD,HEXAGON SOCKET 1/4"Brass	181
342715-0102	BLINDPLUG,Plast,FOR QUICK COUPLING D=6mm	185
342715-0103	BLIND PLUG,FOR QUICK COUPLING D=8	185
342716-0203	REDUCER,FOR PLASTIC TUBE 6-8	181, 185
342722-0197	STRAIGHT COUPL,FOR PLASTIC TUBE 6-M5	17, 139
342722-0202	STRAIGHT COUPL,FOR PLASTIC TUBE 6-G1/8"	105, 119, 129, 137
342722-0204	STRAIGHT COUPL,FOR PLASTIC TUBE 8-G1/8"	107
342722-0205	STRAIGHT COUPL,FOR PLASTIC TUBE 8-G1/4"	181
342722-0209	STRAIGHT COUPL,FOR PLASTIC TUBE 12-G1/4"	181
342722-0210	STRAIGHT COUPL,FOR PLASTIC TUBE 12-G3/8"	185
342723-0102	STRAIGHT PIPE CONNECTION GAI-6-G1/8"	105
342732-0102	V-COUPL,ADJUST,FOR PLASTIC TUBE 6-G1/8"	107, 119, 129, 137
342732-0103	V-COUPL,ADJUST,FOR PLASTIC TUBE 6-G1/4"	181
342732-0105	ELBOW PIPE D8-R3/8"	185
342732-0110	V-COUPL,ADJUST,FOR PLASTIC TUBE 12-G3/8"	183
342732-0801	V-COUPL,ADJUST,FOR PLASTIC TUBE 8-G1/8"	107
342735-0109	V-JUNCTION COUPLING,FOR PLASTIC TUBE 12	181
342742-0110	T-COUPLING,ADJUST,F.PLAST.TUBE 12-G3/8"	181
342748-0102	T-JUNCTION COUPLING,FOR PLASTIC TUBE 6	181
342748-0109	T-JUNCTION COUPLING,FOR PLASTIC TUBE 12	181
342767-0100	BULKHEAD CONNECTOR G1/8"	181
342768-0103	BULKHEAD COUPLING,FOR PLASTIC TUBE 8	181
342921-0111	STRAIGHT COUPLING,EXT.THREADED 6/4-M5	119, 123, 139
342931-0113	ELBOW 90 COUPL.,EXT.THREAD 6/4-G1/8"	71, 89
342991-0100	HOSE CLIP,WORM DRIVE TYPE 10-13	63
342991-0109	HOSE CLIP,WORM DRIVE TYPE (48)-50	105
351150-0403	CABLE OLFLEX 3x0,75 MM2	45, 47
351150-0404	CABLES,MULTI-CONDUCTOR 4X0,75 MM2	63
351150-0405	CABLE,OLFLEX 5x0,75 MM2	45, 47
351150-0407	CABLES,MULTI-CONDUCTOR 12X0,75 MM2	45, 47
351150-0412	CABLES,MULTI-CONDUCTOR 3X1,5 MM2	45, 47, 63
351150-0413	CABLES,MULTI-CONDUCTOR 4X1,5 MM2	45, 47
351150-0414	CABLES,MULTI-CONDUCTOR 5X1,5 MM2	63
351150-0419	CABLES,MULTI-CONDUCTOR 5X2,5 MM2	25, 27
351150-0425	CABLES,MULTI-CONDUCTOR 25X0,75 MM2	25, 27
351172-0102	CABLE AWM BLUE 0,75MM2	49
351172-0104	CABLE AWM BLUE 1,5MM2	25, 27, 65
351175-0104	CABLE AWM YELL/GREEN 1,5MM2	25, 27
352103-0100	CABLE GLAND STR 9	51, 53
352103-0101	CABLE GLAND ST 9	51, 53, 65
352103-0105	CABLE GLAND STR 11	45, 47
352103-0106	CABLE GLAND ST 11	49, 55, 57, 65, 89, 181
352103-0108	CABLE GLAND ST 13	25, 27
352103-0111	CABLE GLAND ST 16	25, 27, 45, 47
352103-0115	CABLE GLAND STR 21	49, 51, 53
352103-0116	CABLE GLAND ST 21	25, 27

Part No	Description	Page No
352113-0102	RIBBON CLAMP	65, 119, 129, 137, 177, 179
352113-0204	ANCHOR TM3S25-M	55, 57, 89
352113-0205	ANCHOR TM2S8-C100	25, 27, 55, 57, 65, 81, 95, 97, 121, 125, 129, 137, 141, 163, 165, 169, 171, 173, 175, 177, 179
353021-0120	FEED THROUGH TERMINAL WDK 2,5	29
353021-0216	FEED THROUGH TERMINAL WDU 2,5	49
353021-0301	TERMINALS,TRIPLE-LEVEL, DLI 2,5/35 PA	51, 53
353021-0302	TERMINALS,TRIPLE-LEVEL, DLD 2,5/35 PA	51, 53
353022-0101	CONNECTIONMA NT6/35 KRG	29
353024-0205	EARTH TERMINAL WPE 4	29, 49, 51, 53
353031-0201	END BRACKET EW35	29, 51, 53
353032-0005	END PLATE WAP 2,5-10	49
353032-0010	END PLATE WAP	29
353032-0302	END PLATE WAP	51, 53
353033-0101	SEPARATING HP 6 PA	29
353034-0030	BRIDGE CONLECK WQV 2,5/10	29
353034-0404	BRIDGE CONLECK Q10	51, 53
353041-0001	RAIL 10X3mm SSCH	29
353041-0104	CLAMPING YOKE PZB 4 K	29
353042-0005	RAIL TS 35/7.5	29, 33, 49, 51, 53
353240-0003	GLANDS,NORMAL WITHOUT INSERT PG 13,5	45, 47
353240-0005	GLANDS,NORMAL WITHOUT INSERT PG 21	45, 47, 63
353240-0006	GLANDS,NORMAL WITHOUT INSERT PG 29	25, 27, 45, 47
353243-0002	GLANDS,HOSE,EXTENDED,WITHOUT INSERT PG11	25, 27, 131
353245-0005	GLANDS,EMC EXTENDED WITH INSERT PG16	71
353249-0042	GLANDS,INSERT,SOLID,NORMAL E152G	193
353249-0044	GLANDS,INSERT,SOLID,NORMAL E155G	193
353249-0048	GLANDS,INSERT,SOLID,EXTENDED EK154G	193
359005-0010	MARKING SESATS 0-9	25, 27, 45, 47, 63
359005-0050	MARKING SEATS "X"	25, 27, 45, 47, 63
359011-0801	SIGN BOARD BSFW 1-50	29
359011-0807	MARKING PLATES 5-FW 1-50	29, 49, 51, 53, 65
359011-0817	SYMBOL 5-GW (+) 50pc	51, 53
359011-0818	SYMBOL 5-GW (-) 50pc	51, 53
359011-0834	SET OF SIGNS 6-GW(EARTH)	29, 65
359240-0100	SIGN HOLDER	31
359241-0133	SIGN "SERVICE SWITCH"	31
359241-0201	SIGN "HOUR METER"	31
359241-0336	SIGN "TEMPP. EL-CABINET"	31
359241-0470	Sign" Patch IH Power"	31
359241-0471	Sign" Pull Tab Function"	31
359241-0472	Sign" Reseal IH Power"	31
359241-0473	Sign" Servo Motor Stop Position"	31
359241-0475	Sign" Tab Sealing Pad Temperature"	31
359301-0512	SIGN"INDEX TO POSITION"	31
359307-0002	SYMBOL SIGN "TAB CJAW"'	181
359307-0004	SYMBOL SIGN "PATCH CJAW"'	181
359307-0007	SYMBOL SKYLT "TAB FOLDING"	181
359307-0010	SIGN "WASTE BLOWING"	181
359307-0011	Sign" Pressure Roller Drive Motor"	181
359307-0012	Sign" Pressure roller Tension Device"	181
359705-0007	WARNING SIGN "HOT SURFACE"	111, 127, 131
359705-0009	WARNING SIGN "SHARP PART"	167
359705-0015	WARNING SIGN "ELECTRIC SHOCK"	49, 51, 53, 65, 147, 157
42841-0400	ELECTRICAL DOCUMENT	187, 189
42843-0400	STANDARD EQUIPMENT	187, 189
42942-0100	PT21AF-LIST OF DOCUMENT	37
42942-0100	PT21AF-LIST OF DOCUMENTS	35
42943-0100	PT21MC-LIST OF DOCUMENTS	39, 41
42944-0100	PT21MC-LIST OF MATERIALS	39, 41
44702-0000	CIRCUIT DIAGRAM	189
44702-0000	CIRCUIT DIAGRAM LINE SUMMARY	189
44702-0000	CIRCUIT DIAGRAM POSITIONS	189
44702-0000	CIRCUIT DIAGRAM TERM.SUMMARY	189
44702-0000	PROTECTIVE GROUNDING	189
469095-0000	HOLDER	61
469096-0000	LEG	61
469463-0000	SHAFT	17
469464-0000	ROLL	17
48141-0100	PT21MC-PULLTAB 21 MOTION CONTROL	25, 27, 41
48142-0100	PT21AF-PULLTAB 21 AUXILIARY FUNCTIONS	31, 37
48187-0000	LIST OF PLC-ADDRESSES	189
48187-0000	LIST OF PLC-BLOCKS	189
48187-0000	PLC-DISKETTE TPMC	191
48187-0000	PLC-PROGRAMME LIST	189
495118-0014	DISTANCE PIPE L=14 MM	33
495130-0070	SPACER TUBE L=70MM	33
495377-0000	BUSH	31
4x16 Stainless		11, 13, 15, 55, 57, 71, 81, 85, 89, 91, 105, 109, 115, 119, 123, 125, 129, 133, 135, 139, 141, 177, 179
514938-0100	TAB FOLDING	11, 13, 15
514993-0200	BY-PASS SENSOR	67
522393-0000	NUT	167
522394-0000	SPRING	167
522395-0000	SCREW	167
522408-0000	BEARING HOUSING	81

Part No	Description	Page No
529146-0000	ANGLE BRACKET	21
529147-0000	SPRING BRACKET	21
529148-0000	STEERING	21
529149-0000	DOLLY WASHER	21
530600-0100	GUIDING PULLTAB TBA/8	17
532017-0000	MOUNTING LUG	167
532020-0000	LOCK WASHER	167
532021-0000	LOCKING LOOP	167
532022-0000	LOCK BAR	167
532719-0001	FEEDING ROLLER	81
533972-0000	INDICATOR CURVE	163, 165, 171, 173
534497-0000	SPACER	163, 165, 171, 173
538726-0000	WASHER	163, 165, 171, 173
538740-0003	SPACER	163, 165, 171, 173
544422-0000	KNIFE	167
544427-0000	TURN SPRING	167
544428-0000	SHEET	167
546256-0000	BOBBIN HOLDER	171, 173
546290-0000	BEAM	163, 165, 171, 173
546291-0000	BRACKET	171, 173
546294-0000	BEAM	163, 165, 171, 173
546296-0000	BEAM	163, 165
546297-0000	BEAM	163, 165
546298-0000	SHAFT	171, 173
546299-0000	SHAFT	171, 173
546300-0000	ROLL	171, 173
546301-0000	ROLL	171, 173
546303-0000	SHAFT	163, 165, 171, 173
546305-0000	SHEET	163, 165, 171, 173
546306-0000	SHAFT	163, 165, 171, 173
546307-0000	ROLL	171, 173
547745-0000	ROLL	171, 173
547746-0000	ROLL	171, 173
548770-0001	COAXIAL CABLE L=5000 mm	25, 27
548770-0007	COAXIAL CABLE L=3000 mm	25, 27
552049-0000	LUG	167
556539-0000	BRAKE DISC	163, 165, 171, 173
556541-0000	SCREW	163, 165, 171, 173
556542-0000	PIN	163, 165, 171, 173
556544-0000	SPACER	163, 165, 171, 173
558230-0101	TMCC, CONTROLLER	31
558321-0101	TPIH-SWITCH	31
558389-0101	MULTI PURPOSE POTENTIOM.	31
577135-0100	PIPE-LINE	11, 13, 15
57789-0000	DOCUMENT DESCRIPTION	41
57790-0000	MASTER DISKETTE	41
57791-0000	MANUFACTURE INSTRUCTIONS	41
57792-0000	SHORT FORM INFORMATION	41
57793-0000	FUNCTIONAL DESCRIPTION	41
57794-0000	PROGRAM SOURCE	41
57795-0000	DOCUMENTATION DISKETTE	41
57796-0000	LABEL LAYOUT DRAWING	41
57801-0000	Document Description	37
57802-0000	Master Diskette	37
57803-0000	Manufacturing Instruction	37
57804-0000	Short Form Information	37
57805-0000	Functional Description	37
57806-0000	Program Source	37
57807-0000	Document Diskette	37
57808-0000	LABEL LAYOUT DRAWING	37
578684-0000	SPRING BRACKET	103
578874-0000	HF BRAIDED WIRE 1,6 mm2	31
597743-0000	Component without TP-no	37
597745-0000	COMPONENTS WITHOUT TP-NO.	41
61812-0000	CONNECTION DRAWING	189
649060-0400	ELECTRICAL EQUIPMENT	11, 13, 15, 189
67347-0101	CARD BRAKEREG.MAGN.POWDER BR.	31
67379-0218	IH TRANSFORMER	123
67379-0224	IH TRANSFORMER	123
67388-0101	FRONT MOUNTED RACK 42TE	31
67600-0501	TPIH 2000 GENERATOR	25, 27
68262-0101	BACKPLANE FRONT RACK 8TE	31
68450-0101	STEPPER MOTOR DRIVER	31
731049-0000	SLIDING STRIP TPIH	25, 27
734741-0000	FUSE BOX	33
734861-0000	COVER PLATE	33
90001-0033	Wall socket Outlet	31
90002-0009	BLANK-OFF PLUG 18.6	49
90002-0013	BLANK-OFF PLUG 15,2	51, 53, 65
90003-0509	BOX	43
90007-0128	FUSE 1P 6A K	33
90007-0129	FUSE ABB-STOTZ 1P 10A K	33
90007-0156	FUSE 1P 4A K	33
90012-0137	CABLE GLAND SCREENED PG11 SHVE-120111	85
90015-0021	BUSHING	85
90017-0014	HANDLE	103

Part No	Description	Page No
90017-0017	HANDLE	31, 159, 181
90024-0037	FILTER Schaffner FN 251-8-07	29
90025-0024	TERMINAL BLOCK	29
90025-0046	BATTERY CARRIER	193
90025-0052	COMPACT RACK	29
90025-0053	OUTPUT MODULE	29
90025-0054	TERMINAL PLINTH	29
90025-0055	POWER SUPPLY UNIT	29
90025-0070	PROCESSOR TPMC CPU 64.1	29
90025-0094	TERMINAL BLOCK	29, 193
90025-0107	MODULE	29
90036-0057	LIGHT BULB BA9S 28V	193
90038-0024	RECTIFIER 50A	29
90042-0215	PNEUMATICS,VALVES	185
90042-0221	PNEUMATICS,VALVES	185
90042-0519	VALVES,ACCESSORIES,BLANKING PLATE	185
90042-0520	VALVES,PLATES	185
90042-0522	VALVES,PLATES	185
90042-0528	VALVES,ACCESSORIES,BLANKING KIT	185
90042-0532	VALVES,PLATES	185
90042-0535	VALVES,ACCESSORIES,TERMINAL MODULE	185
90042-0538	PNEUMATICS,VALVES,PILOT	183
90042-0539	PNEUMATICS,VALVES,PILOT	185
90042-0550	VALVES,ACCESSORIES,PROTECTION PLUG	185
90043-0020	PRESSURE GAUGE	183
90043-0080	PRESSURE GAUGE	181
90044-0094	LIMIT SWITCH HONEYWELL	69
90044-0104	PROX.SWITCH IFM IN 3002	105, 163, 165, 171, 173
90044-0124	INDUCTIVE SWITCH	25, 27
90044-0139	KEY SAFETY SWITCH	149, 159, 181
90044-0145	INDUCTIVE SWITCH	119, 129, 135, 177, 179
90045-0192	Stepping motor	119, 135
90045-0194	Servo motor	71
90045-0372	SERVO AMPLIFIER REPLACED 90045-395	25, 27
90045-0379	MEMORY EPROM	43
90051-0007	HANDLE	119, 135
90053-0031	HOUR COUNTER BOWER B906.10	31
90055-0096	STRAIGHT COUPL,FOR PLASTIC TUBE 14-G3/8"	55, 57
90055-0118	ELBOW PIPE JOINT	181, 185
90055-0217	ELBOW-90 COUPLING,STEM,FPT 6-6	185
90056-0143	Gear box	71
90059-0029	Thermostat	63
90062-0021	LOCKING WASHER	25, 27
90062-0022	LOCKING WASHER	31, 147
90064-0082	PUSH BUTTON WHITE	31
90069-0258	GEAR MOTOR	89
90069-0281	Worm gear motor Grosshop OKM-87-60	85
90075-0125	CONTACTOR 7,5KW COIL 24VDC	29
90075-0313	AUXILIARY CONTACT K&M 22 DILM.2NO	193
90077-0079	FEED THROUGH TERMINAL AKZ 4PA for TS15	65
90077-0328	RAIL TS15/5	65
90089-0008	SLEEVE	45, 47
90089-0031	Enlarging Sleeve	63
90095-0072	OVERLOAD PROTECTION PKZM 1,0A	33
90095-0073	OVERLOAD PROTECTION PKZM 1,6A	33
90095-0077	OVERLOAD PROTECTION PKZM 10A	33
90099-0019	NUT	63
90099-0102	NUT	71
90099-0117	NUT PR 18,6 (PG11)	25, 27, 181
90099-0119	NUT PR 28,3 (PG21)	25, 27
90099-0191	Nut	25, 27, 31
90110-0121	FEMALECONT.15POLE HARTING	25, 27
90110-0122	COVER HARTING	25, 27
90110-0150	MALE INSERT 24-P, CABLE	25, 27, 45, 47
90110-0152	CABLE HOOD 24-P	25, 27, 45, 47
90110-0153	CHASSI HOUSING 24-P	25, 27
90110-0157	COVER	25, 27, 45, 47, 63
90110-0159	CONTACT	25, 27, 45, 47, 63
90110-0161	FEMALE CONTACT 6-POLES	25, 27
90110-0163	FEMALE INSERT 6-POLE	25, 27
90110-0164	FEMALE CONTACT 24-POLES	25, 27
90110-0166	CONTACT HOUSE	25, 27
90110-0215	SOCKET	25, 27
90110-0216	MALE PLUG	45, 47
90110-0217	COVER	45, 47
90110-0218	CONTACT HOUSING	25, 27
90110-0235	CABLE CONTACT	45, 47
90110-0236	CHASSIE CONTACT PX0767/S	25, 27
90110-0295	CONTACT SCREW	131
90110-0296	CONTACT SCREW	25, 27
90110-0349	COVER/TOOL PX0733	25, 27
90110-0370	BASE HOUSING	25, 27
90110-0371	PLUG HOOD	131
90111-0193	Rotary switch	31
90111-0197	Service Key	31
90113-0072	PRESSURE REGULATOR	183

Part No	Description	Page No
90113-0095	PRESSURE REGULATOR	181
90113-0375	PRESSURE DISTRIBUTION	183
90113-0387	FILTER	193
90113-0423	High speed venting valve	183
90113-0431	O-ring	193
90115-0134	ROD ENDS,MAINTENANCE FREE,10-M10X1.25RH	71, 89
90119-0043	OPTO RELAY 22DC 60S-3	31
90119-0056	PLUG-IN RELAY 24VDC	29
90119-0084	RELAY	29
90119-0089	RELAY	29
90121-0116	RESISTANCE 150 Ohm	193
90129-0006	BASE 11 POLE	29
90130-0017	POTENTIOMETER 10 KOHM	31
90130-0301	KNOB 3-DIGITS	31
90135-0026	EARTHING CLAMP	65
90135-0035	LOW IMPEDANCELITZ L=250MM	31, 147
90135-0039	SHIELD CLAMMER	25, 27, 31
90141-0020	RETAINING RINGS FOR HOLE 42	81
90143-0057	STRIP EMKA 1011-05 21x11mm	25, 27
90143-0060	EDGE STRIP 9,5x6,3mm Black PVC	31
90143-0073	RUBBER STRIP	25, 27
90144-0030	TAPE	123
90144-0043	TAPE	181
90152-0026	HOSE	103
90152-0059	GLANDS,HOSE 18X12	25, 27, 131
90157-0041	SEALING COMPOUND	147, 149, 151
90159-0097	Capacitor	65
90164-0009	LIGHT FIXTURE	55, 57
90164-0302	BRACKET	55, 57
90165-0019	CLIP	181
90165-0060	PIPE-CLIPS,FOR SINGLE PIPE,ONE SIDE 5	55, 57
90166-0013	HOSE	181
90166-0068	HOSE	23, 181
90166-0081	HOSE 6/4-100M	17, 181
90166-0126	HOSE	63
90181-0045	CABLE DUCT 40X60MM	31, 33
90181-0046	CABEL DUCT 60X60MM	25, 27, 33
90181-0052	CABLE DUCT 25X80MM	29
90181-0053	CABLE DUCT 40X80MM	29
90181-0054	CABLE DUCT 60X80MM	29
90182-0005	STRIP 79x2,3mm REPL.BY 352113-101	193
90187-0088	BALL VALVE	181
90189-0003	BALL BUSHING	119, 129, 135
90194-0080	SIGN "IDENTIF. OF WIRING"	31
90194-0133	SIGN "DELIVERED DESIGN"	31
90194-0152	SIGN "EARTH"	31, 147
90195-0019	TERMINAL BK3 KRG 3-POLE	25, 27
90208-0078	CLAMPING ELEMENT WITH SLEEVE 20X28	71
90208-0118	CLAMPING ELEMENT	89
90214-0138	BEARINGS,BALL BEARING,STAINLESS	19, 99
90214-0144	BEARINGS,BALL BEARING,SPHERICAL,SELF-ALI	85
90220-0034	THERMO-CABLE	25, 27, 29
90220-0082	DATACABLE Pair Twisted 2x0,76mm2	25, 27, 193
90220-0084	SERVOCABLE 4X2,5+2(2X0.75)	45, 47
90220-0108	CABLES,MULTI-CONNUCTO,SCREENED 5X1,5 MM2	25, 27
90220-0165	Cable	31
90224-0090	MUFF	183
90224-0122	SLEEVE	183
90224-0229	SLEEVE	181, 183
90226-0458	MOUNTING SCREW	157
90232-0067	PH.CELLOMRON E3S-X3CB45M	83
90232-0103	PH.CELL OMRON E3SCT61-L-5M	95, 97, 133
90232-0104	RECEIVER OMRON E3S-CT61-D-5M	95, 97, 133
90232-0105	PH.CELL OMRON E3S-CD61-5M	103
90232-0112	Photocell	113
90232-0325	FIBRE OPTIC OMRON E32 DC200	83
90233-0028	FUSE 10A FERRAZ	33
90233-0303	FUSEHOLDER FERRAZ ST10	33
90235-0206	VALVE	107, 119, 129, 135
90237-0070	LOCK	159, 181
90237-0128	LOCK CYLINDER	147, 149, 151, 153, 155
90237-0150	TURNING HANDLE	147, 149, 151, 153, 155
90237-0151	STEERING	147
90237-0152	STEERING	147
90237-0153	LOCK HOUSING	147, 149, 151, 153
90237-0154	LOCK HOUSING	155
90237-0157	LOCKING CATCH	31
90237-0165	LATCH	155
90237-0168	ROD	193
90237-0169	ADAPTER	147
90237-0319	LOCK HOUSING EMKA U134	31
90237-0320	LOCK COMPONENT EMKA U136	31
90239-0486	BRACKET,REAR,CLEVIS FLANGE,MINI-ISO,16	85
90239-0488	BRACKET,REAR,CLEVIS FLANGE,MINI-ISO,32	71, 89
90239-0489	ROD END,CLEVIS WITH AXLE,M6	85, 119, 129, 135
90239-0834	DOUBLE ACTING,MINI-ISO,CYL.32-25	71, 89

Part No	Description	Page No
90240-0026	PLAIN BEARING	71, 89
90258-0031	PINS,SLOTTED TUBULAR SPRING PIN 3X20	167
90259-0313	AUX. CONTACT K&M NHI21-PKZM0	33
90264-0069	Fan	63
90265-0046	ACCESSORY BOX	193
90265-0051	ACCESSORY BOX	193
90270-0018	Compressor	63
90274-0056	PRESSURE SWITCH	183
90277-0035	AIR-PRESSURE FILTER	181
90287-0009	SPRINGLOADED SCREW	19, 99, 163, 165, 171, 173
90287-0069	SCREW	163, 165, 171, 173
90287-0124	SCREW,NYLON M4X12 DIN84	29, 33
90287-0130	GRUB SCREW	59
90287-0151	SCREW	177, 179
90287-0212	SCREW	183
90297-0009	FLUORESCENT TUBE 6W	193
90298-0033	WATLUBE HEAT LIQUID	135
90326-0012	PROTECTIVE COVER	29
90326-0052	THERMO ELEMENT	29
90326-0060	THERMOCOUPLE CR-AL	135
90328-0003	SILENCER	71, 89
90328-0024	SILENCERS,THREADED CONNECTION G3/8"	185
90330-0038	NUT,HEXAGON G3/8"	55, 57
90334-0006	BATTERY 3,6V Size AA	29
90335-0005	SPRING	107
90335-0067	SPRING	119, 135
90335-0081	SPRING	103, 163, 165, 171, 173
90335-0091	SPRING	85
90335-0222	SPRING	99
90347-0029	DAMPER	59
90347-0054	DAMPER	81
90348-0031	FREE-WHEEL COUPLING	119, 135
90355-0157	COUPLING	193
90355-0158	ELECTROMAGNETIC CLUTCH	89
90364-0020	VACUUMPUMP X10	181
90410-0051	TEMPERATURE REGULATOR PHILIPS KS 40	31
90411-0018	Insulator	135
90422-0041	Evaporator	63
90422-0042	CAPACITOR	63
90422-0316	Hood	63
90422-0317	Filter	63
90430-0037	MOTOR DRIVE CONTR.PME 1802. Repl.by -67	31
90450-0380	CYLINDER	123, 139
90450-0397	Cylinder	107
90450-0409	CYLINDER	119, 129, 135
905174-0000	STEER PLATE	119, 135
905194-0000	SHAFT	119, 135
905210-0000	ROLLER-35	121
905215-0000	BOLT	119, 135
905241-0000	COUPLING	119, 135
905243-0000	SHAFT	119, 135
905244-0000	WEDGE	99, 119, 123, 129, 135, 139
905246-0000	BRACKET	119, 135
905285-0000	STRIPPER PIN	107
905413-0000	SHAFT	119, 135
905415-0000	SHAFT	119, 135
905416-0000	PIVOT BRACKET-SWIVEL	119, 135
905417-0000	SHAFT	119, 135
905419-0000	PIVOT ARM-SWIVEL	119, 135
905463-0000	KEY	123, 139
905471-0000	ROLLER-DRIVE	119, 135
905484-0000	SHIM	135
905607-0000	SCREW	119, 135
905608-0000	SCREW	119, 135
905609-0000	LOCK BAR	119, 135
905613-0000	SHAFT	119, 135
905937-0000	SPRING	19, 99
905938-0000	BRACKET	19, 99
905939-0000	COUNTERWEIGHT	19
907138-0000	CLAMP	135
907249-0000	CLAMP	135
907358-0005	ROLLER - 43.5	137
907358-0006	ROLLER-29	121
907487-0000	WASHER-CURVED	119, 137
907535-0000	RESERVOIR	181
907710-0000	PIVOT PLATE	119, 135
907711-0000	SHAFT	119, 135
907712-0000	PIVOT PLATE	119, 135
907719-0000	SPRING	119, 135
907942-0000	STEERING BRACKET	19
907946-0100	TAB FOLDING PAPER GUIDE	17
907983-0000	PLATE	17
908309-0000	ROLLER - 47	137
928919-0000	FASTENING PLATE	123, 139
929607-0000	EARTH BAR	25, 27
929771-0000	OPENING SPECIFICATION	143

Part No	Description	Page No
970215-0000	STOP BLOCK	31
971346-0000	GUIDE PIN	31
979426-0000	SIGN	181
979974-0000	INSERT	25, 27
984082-0000	PLATE	181
985342-0000	PLATE	17
985343-0000	BRACKET	17
985444-0000	GUIDE	17
985445-0000	GUIDE	17
985446-0000	BRACKET	17
985502-0000	PLATE	17
985854-0000	BRACKET	85
985855-0000	SPACER BUSHING	85
985856-0000	SHAFT	85
985860-0000	DIE HOLE 45	107
985865-0000	BRACKET	85
985866-0000	TOP FRAME	55, 57
985899-0000	COUPLING	85
985900-0000	COUPLING	89
988685-0000	PIN	147, 149, 151, 153, 157, 159, 181

P

PR 15,2		45, 47
PR15,2		51, 53

Part No Description Page No

Part No	Description	Page No

Part No	Description	Page No

Tetra Pak