SPC binder labels. 40 mm Full width *Note! This page is generated **automaticall***
*using the **variable definitions** made in the **front page** file!!*

PT21 040V
648508-0400
Issue: 2000-07 Doc No: SPC-82480-0102

PT21 040V
648508-0400
Issue: 2000-07 Doc No: SPC-82480-0102

PT21 040V
648508-0400
Issue: 2000-07 Doc No: SPC-82480-0102

PT21 040V
648508-0400
Issue: 2000-07 Doc No: SPC-82480-0102

PT21 040V
648508-0400
Issue: 2000-07 Doc No: SPC-82480-0102

PT21 040V
648508-0400
Issue: 2000-07 Doc No: SPC-82480-0102

PT21 040V
648508-0400
Issue: 2000-07 Doc No: SPC-82480-0102

PT21 040V
648508-0400
Issue: 2000-07 Doc No: SPC-82480-0102

PT21 040V
648508-0400
Issue: 2000-07 Doc No: SPC-82480-0102

PT21 040V
648508-0400
Issue: 2000-07 Doc No: SPC-82480-0102

PT21 040V
648508-0400
Issue: 2000-07 Doc No: SPC-82480-0102

SPC binder labels. 30 mm Full width *Note! This page is generated **automaticall***
*using the **variable definitions** made in the **front page** file!!*

PT21 040V
648508-0400
Issue: 2000-07 Doc No: SPC-82480-0102

PT21 040V
648508-0400
Issue: 2000-07 Doc No: SPC-82480-0102

PT21 040V
648508-0400
Issue: 2000-07 Doc No: SPC-82480-0102

PT21 040V
648508-0400
Issue: 2000-07 Doc No: SPC-82480-0102

PT21 040V
648508-0400
Issue: 2000-07 Doc No: SPC-82480-0102

PT21 040V
648508-0400
Issue: 2000-07 Doc No: SPC-82480-0102

PT21 040V
648508-0400
Issue: 2000-07 Doc No: SPC-82480-0102

PT21 040V
648508-0400
Issue: 2000-07 Doc No: SPC-82480-0102

PT21 040V
648508-0400
Issue: 2000-07 Doc No: SPC-82480-0102

PT21 040V
648508-0400
Issue: 2000-07 Doc No: SPC-82480-0102

PT21 040V
648508-0400
Issue: 2000-07 Doc No: SPC-82480-0102

PT21 040V
648508-0400
Issue: 2000-07 Doc No: SPC-82480-0102

PT21 040V
648508-0400
Issue: 2000-07 Doc No: SPC-82480-0102

PT21 040V
648508-0400
Issue: 2000-07 Doc No: SPC-82480-0102

PT21 040V
648508-0400
Issue: 2000-07 Doc No: SPC-82480-0102

SPC
Spare Parts Catalogue

PT21 040V

648508-0400

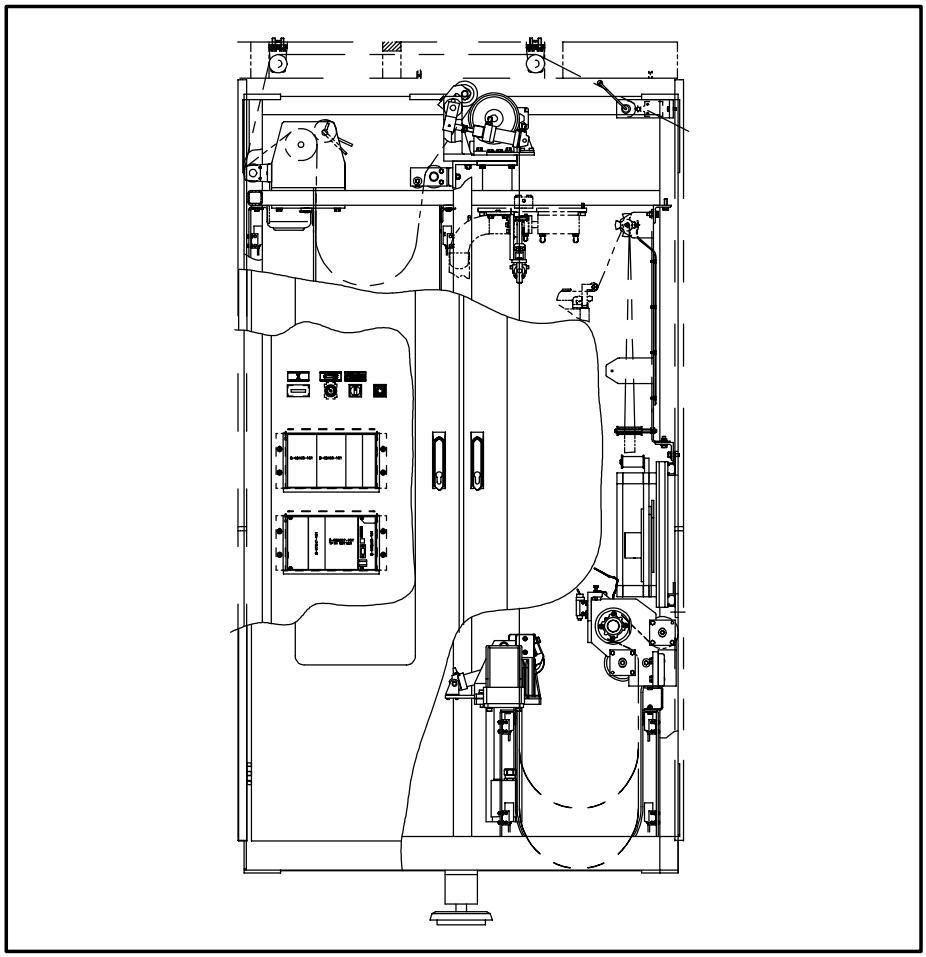

Tetra Pak

Doc. No: SPC-82480-0102

Main Groups of the Machine

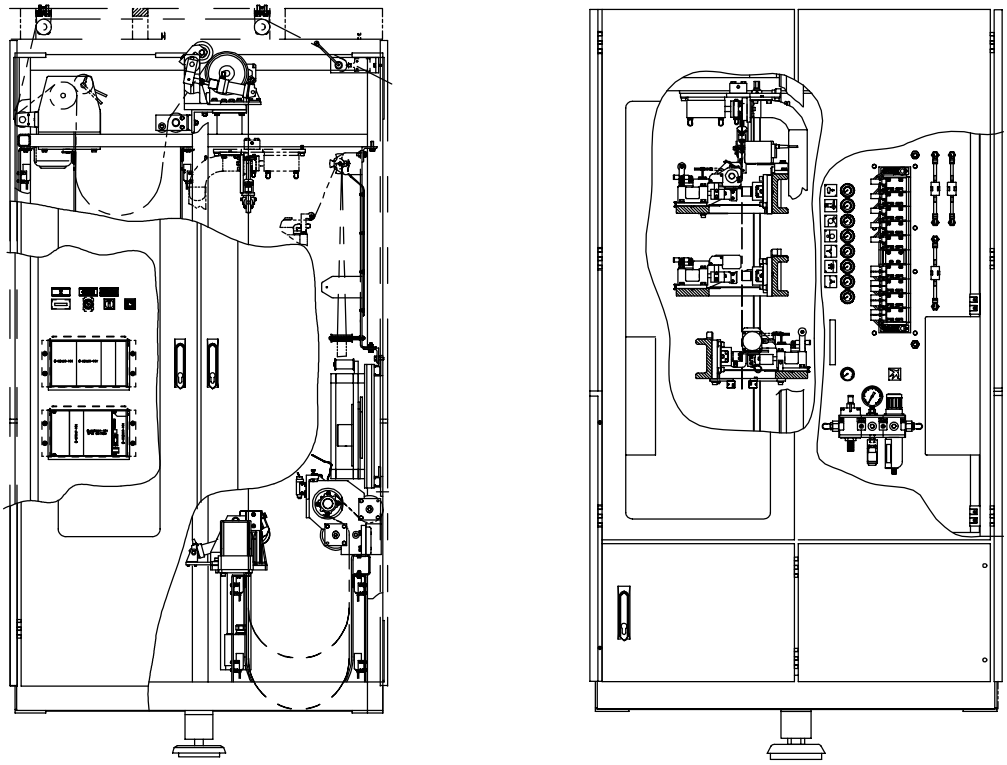

PT21 040V

For the correct machine data, check your machine specification, supplied with the machine!

This document is valid for:

Series No/Machine No Sign.

SPC
Spare Parts Catalogue

Tetra Brik Aseptic
PT21
648508-0400

Table of Content:

Introduction ..... , **5**

Pulltab 21
B- 648508-0400 ..... , **9**

Part Number Index ..... , **183**

Doc. No: SPC-82480-0102

Issue 2000-07

Tetra Pak

Tetra Brik Packaging Systems S.p.A.

General information

Manufacturer

This machine is produced by:
Tetra Brik Packaging Systems S.p.A.
Via Delfini 1
41100 Modena /Italy

Document producer

This document has been produced by:
Tetra Brik Packaging Systems S.p.A.
Technical Publications
Via Delfini 1
41100 Modena /Italy

Number of pages

This document contains totally **196 pages**, including the first **8** introduction pages.

Copyright © 2000 Tetra Brik Packaging Systems S.p.A.

All rights reserved. No parts of this document may be reproduced or copied in any forms or by any means, without written permission from Tetra Brik Packaging Systems S.p.A..

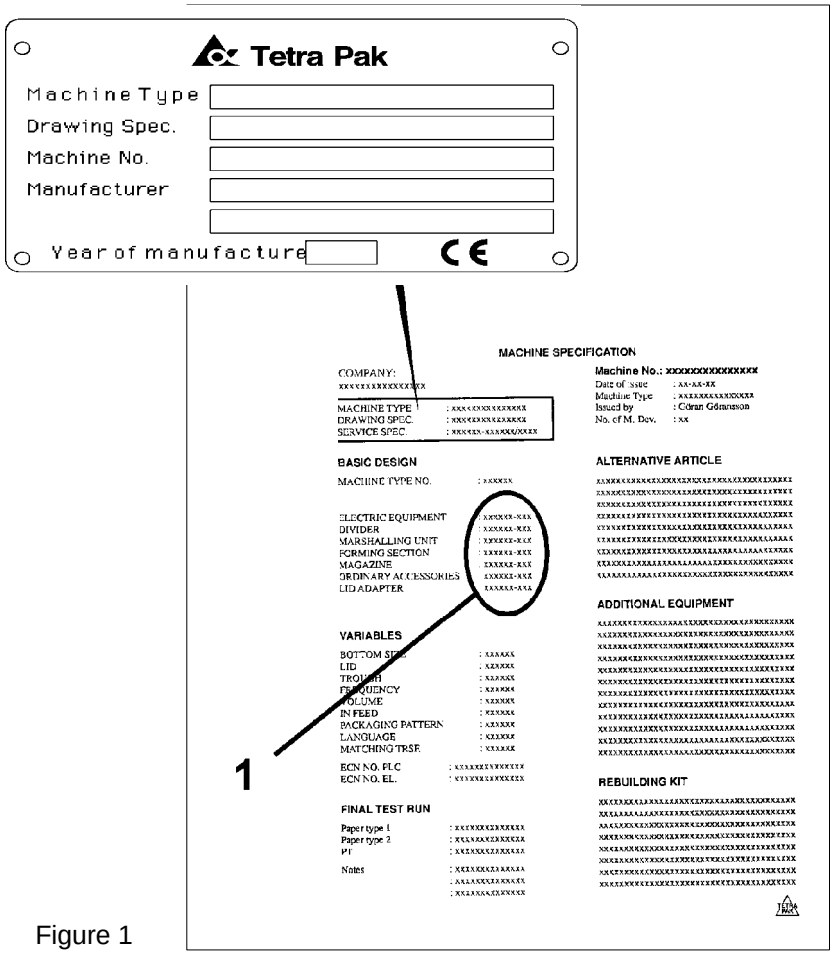

Figure 1

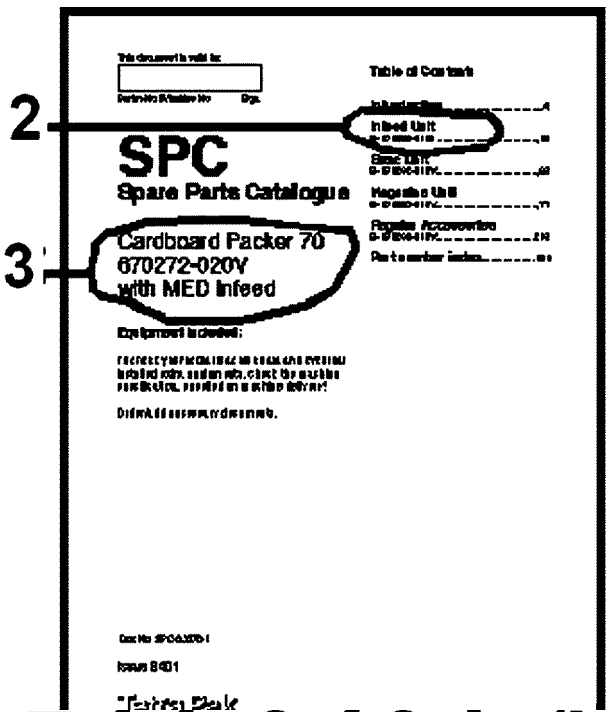

Figure 2

Figure 3

A-678544-0401 (V)

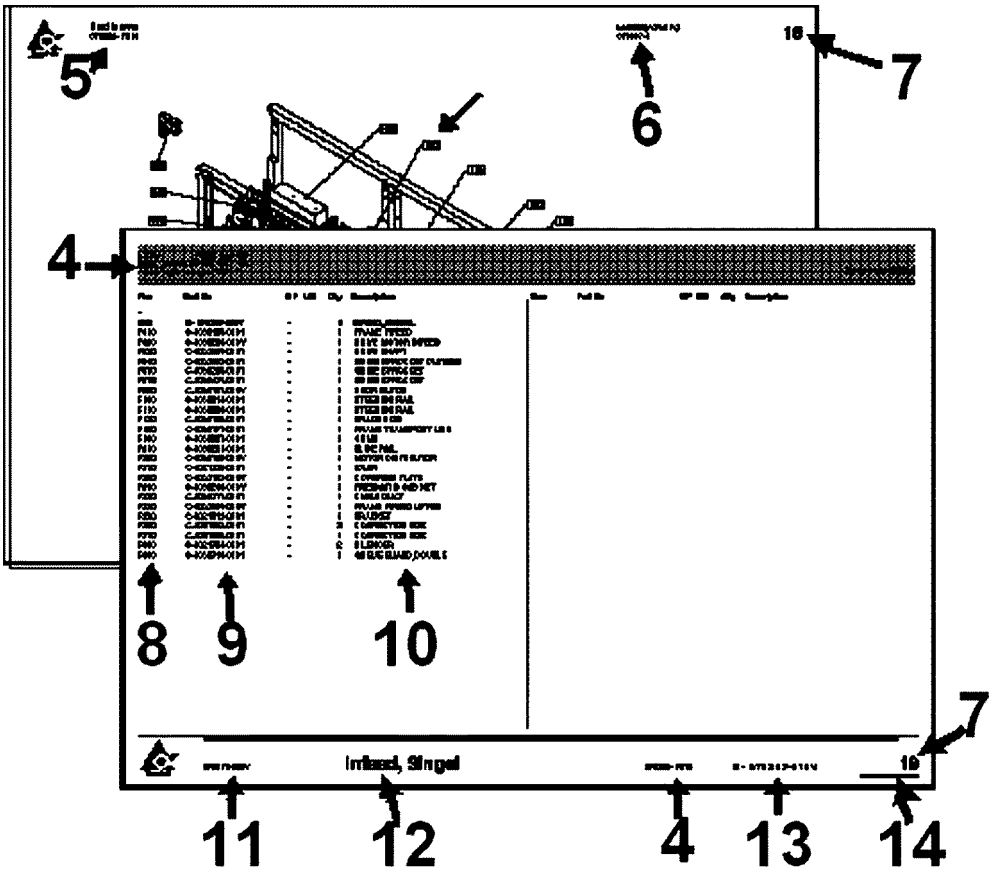

Figure 4

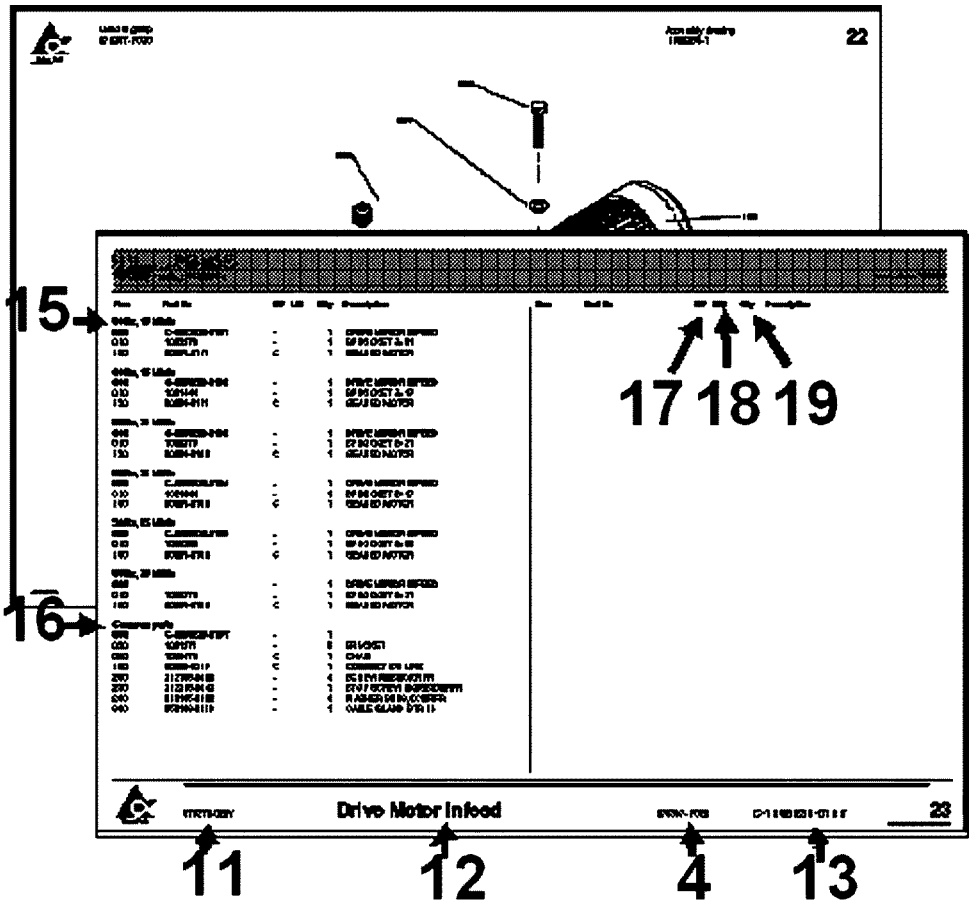

Figure 5

General information

Service

When ordering spare parts for your machine, contact the nearest Tetra Pak service station.

Machine identification

This machine plate is an example of the type of machine plate, attached to the machine frame. The plate carries data needed when contacting Tetra Pak concerning this particular machine.
The location of the different machine plates is shown on the page "Location of machine number plates", **see page 2**

Purpose of the Spare Parts Catalogue.

The purpose of the Spare Parts Catalogue (SPC) is to provide the technicians and contact personnel with information on how to find and order spare parts for maintenance and service of the machine.
For instructions of how to replace parts and adjust machine setup, see the Maintenance Manual (MM).

Delivered documentation

The technical documentation delivered with this machine is stated in the Machine Specification.
Note! If any of these documents is missing, it must be reported in the document **Start Up Machine Quality Report**. For more information, see chapter 8 Preparation for Commissioning in the Installation Manual.
It is important that you keep these documents for the life of the equipment, and pass the documents on to any subsequent holder or user of the equipment.

Design modification

The content of this document is in accordance with the design and construction of the machine at the time it was delivered from the Tetra Pak machine production facility.

Copyright © 2000 Tetra Brik Packaging Systems S.p.A.

All rights reserved. No parts of this document may be reproduced or copied in any forms or by any means, without written permission from Tetra Brik Packaging Systems S.p.A..

Further copies

Additional copies can be ordered from the nearest Tetra Pak service station. When ordering technical publications, always quote the document number printed on the front cover of the document concerned.

Tetra Pak Part numbering system

The third and forth digits in the subnumber, specify one unique group which can be ordered. If the forth digit is replaced by a "V", the number combination only points to a bill-of-material document.
The first and second digits in the sub-number, specify the development step (model) of the machine or group. **(see fig. 3)**
Main number of machine /group /article, depending on level.
Prefix, giving information about level, eg.
A = Machine
B = Main section (*)
C = Groups and subgroups
*) Customized distribution machines are registered as B-level as well.

How to find the correct Spare Part Number

A. Check that the data on your machine sign, and /or machine specification, corresponds with the catalogue. **(see fig.1)**

1) Main groups of the machine

B. The second catalogue sheet contains a table of content for the main groups, included in the catalogue. The information regarding machine and main group status MUST correspond with your machine specification.
Locate and choose the main groups page number (1), in which you want to search for spare parts.
(see fig. 2)

2) Main group

3) Machine type

C. Search in the main group illustration, the item number, which may hold your wanted spare part. Go to the text page below and find the page number for the actual group. **(see fig. 4)**

4) Internal information, such as latest Engineering Change, bill-of-material included in the catalogue page.

5) Used-In reference to next higher level in the machine structure

6) Assembly drawing number

7) Continuous page numbering through the document

8) Pos number corresponding to illustration

9) Group or article number.

10) Group or article description. The letter "B" in front of some article numbers indicates that this article contains other parts, shown in an additional page at the end the section. Letter "A" indicates a subgroup number with an own page directly after the actual page.

11) Machine type including development status

12) Group description

13) Group number (bill-of-material) including development status

14) Document number

D. Continue to the found page number, and search in the illustration for your spare part. Go to the text row for the found item number, and read the part number. Take eventual variant headings in consideration; if you are unsure, read your machine specification. **(see fig. 5)**

15) Variant heading, eg volume, left /right etc.

16) Heading for common parts

17) SP = Code for articles, which are included into various spare part kits.

A = Stop function, no rep/available/bypassed
B = Stop function, rep/available/bypassed
C = Don’t stop function, can bypassed
D = Seldom break, long time production
E = 100 operating hours
F = 250 operating hours
G = 500 operating hours
H = 750 operating hours
I = 1000 operating hours
J = 2000 operating hours
K = 3000 operating hours
L = 4000 operating hours
M = 5000 operating hours
N = 6000 operating hours
O = 7000 operating hours
P = 8000 operating hours
Q = 9000 operating hours
R = 10000 operating hours
S = 11000 operating hours
T = 12000 operating hours
U = 13000 operating hours
V = 14000 operating hours
W = 15000 operating hours
X = 20000 operating hours
Y = 25000 operating hours
Z = 30000 operating hours

18) UN = Short code for measure units, eg mm, kg etc.

19) Qty = Number of items needed in the complete assembly.

SPC

Spare Parts Catalogue

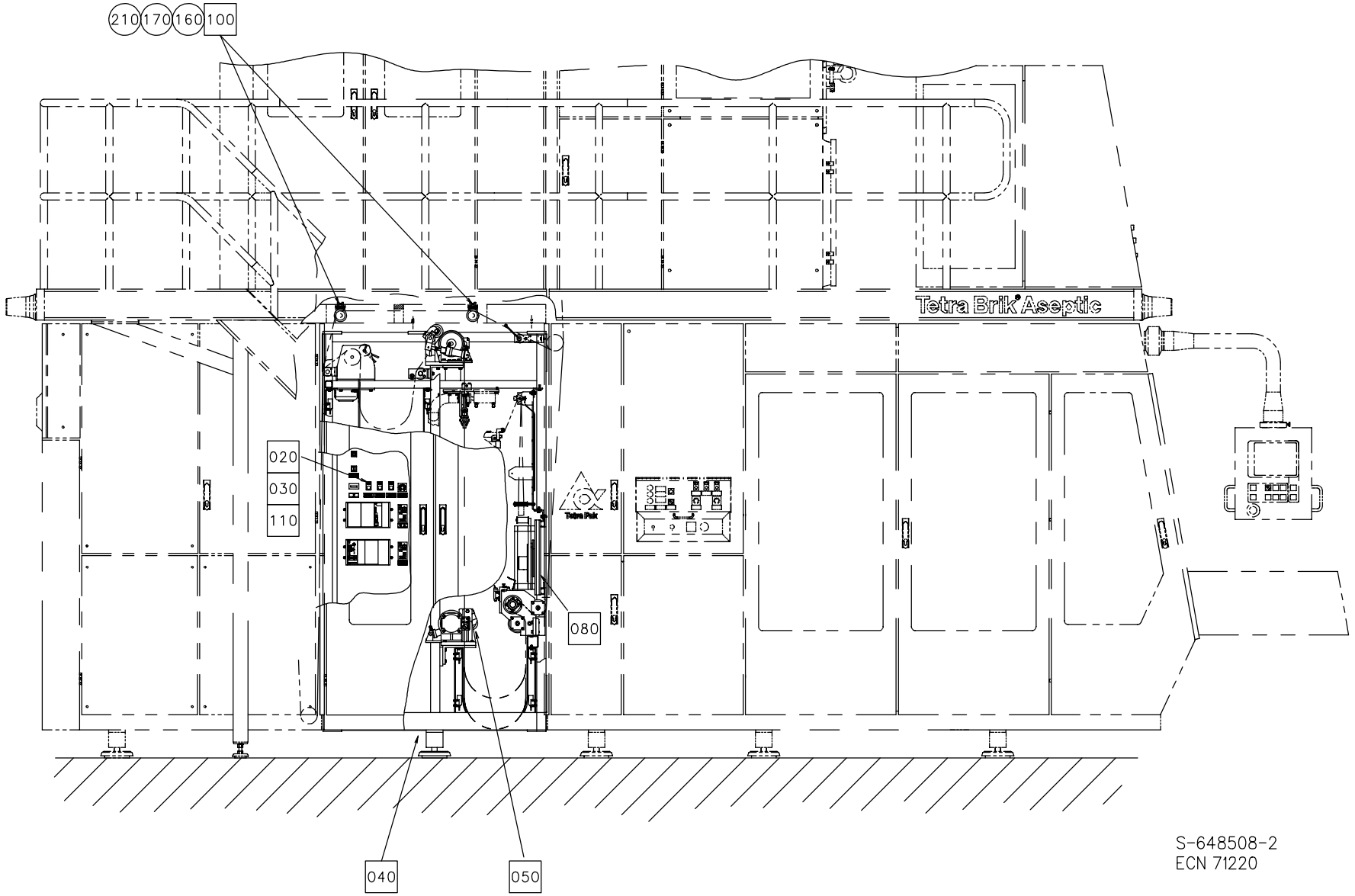
210
170
160
100
Tetra Brik Aseptic
020
030
110
080
040
050
S-648508-2
ECN 71220

Pos	Part No	SP	UN	Qty	Description	Page No
Common parts						
005	A514938-0100	-		1	TAB FOLDING	**17**
010	A577135-0100	-		1	PIPE-LINE	**23**
020	A1317254-0100	-		1	ELECTRICAL CABINET	**25, 27**
030	A1317751-0100	-		1	CABLE HARNESS	**39**
040	A1260428-0100	-		1	FRAME ASSEMBLY	**47, 49**
045	A1095928-0100	-		1	COOLER	**55**
050	A1095931-0200	-		1	PAPER WEB PATH	**59**
060	A1095932-0200	-		1	APPLICATORS	**93**
070	A1095951-0300	-		1	DOORS AND COVER	**137**
080	A1185008-0100	-		1	MAGAZINES	**153**
090	A1185049-0100	-		1	VALVE PANEL	**173**
100	A1334322-0100	-		2	BENDING ROLLER WITH FLANGES	**85**
110	A649475-0100	-		1	ELECTRICAL EQUIPMENT	**179**
150	1038865-0000	-		4	SPACER DISC	
160	311112-0377	-		4	PINS,SLOTTED TUBULAR SPRING PIN 8X24	
170	312105-0451	-		4	SCREW M6S ISO 4017 8X20 A280	
200	312105-0640	-		4	SCREW M6S ISO 4014 M16X100 A280	
210	315115-0165	-		4	WASHER TBRB 8,4X16 STAINLESS	

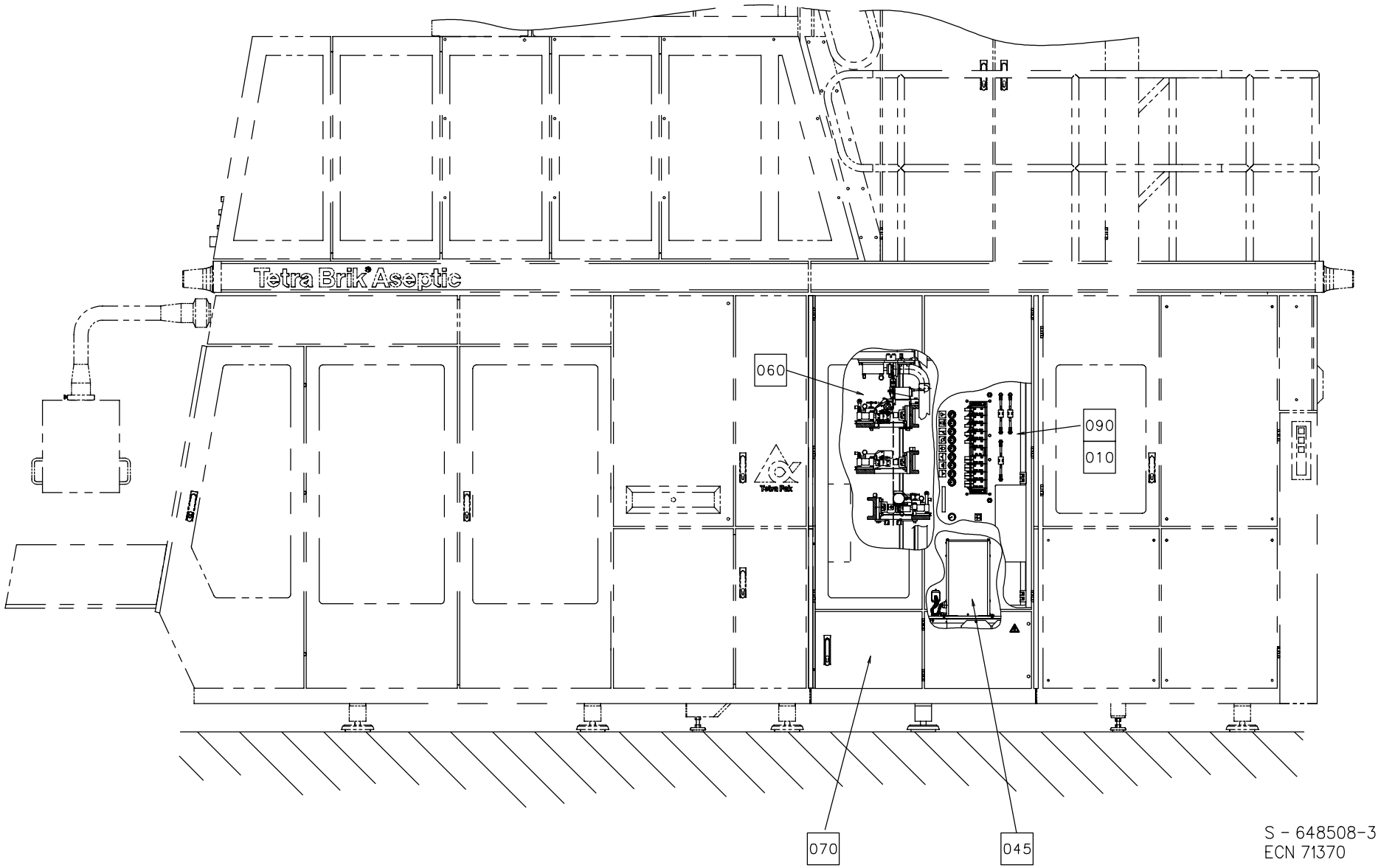
Tetra Brik Aseptic
060
090
010
070
045
S - 648508-3
ECN 71370

Pos	Part No	SP	UN	Qty	Description	Page No
Common parts						
005	A514938-0100	-		1	TAB FOLDING	**17**
010	A577135-0100	-		1	PIPE-LINE	**23**
020	A1317254-0100	-		1	ELECTRICAL CABINET	**25, 27**
030	A1317751-0100	-		1	CABLE HARNESS	**39**
040	A1260428-0100	-		1	FRAME ASSEMBLY	**47, 49**
045	A1095928-0100	-		1	COOLER	**55**
050	A1095931-0200	-		1	PAPER WEB PATH	**59**
060	A1095932-0200	-		1	APPLICATORS	**93**
070	A1095951-0300	-		1	DOORS AND COVER	**137**
080	A1185008-0100	-		1	MAGAZINES	**153**
090	A1185049-0100	-		1	VALVE PANEL	**173**
100	A1334322-0100	-		2	BENDING ROLLER WITH FLANGES	**85**
110	A649475-0100	-		1	ELECTRICAL EQUIPMENT	**179**
150	1038865-0000	-		4	SPACER DISC	
160	311112-0377	-		4	PINS,SLOTTED TUBULAR SPRING PIN 8X24	
170	312105-0451	-		4	SCREW M6S ISO 4017 8X20 A280	
200	312105-0640	-		4	SCREW M6S ISO 4014 M16X100 A280	
210	315115-0165	-		4	WASHER TBRB 8,4X16 STAINLESS	

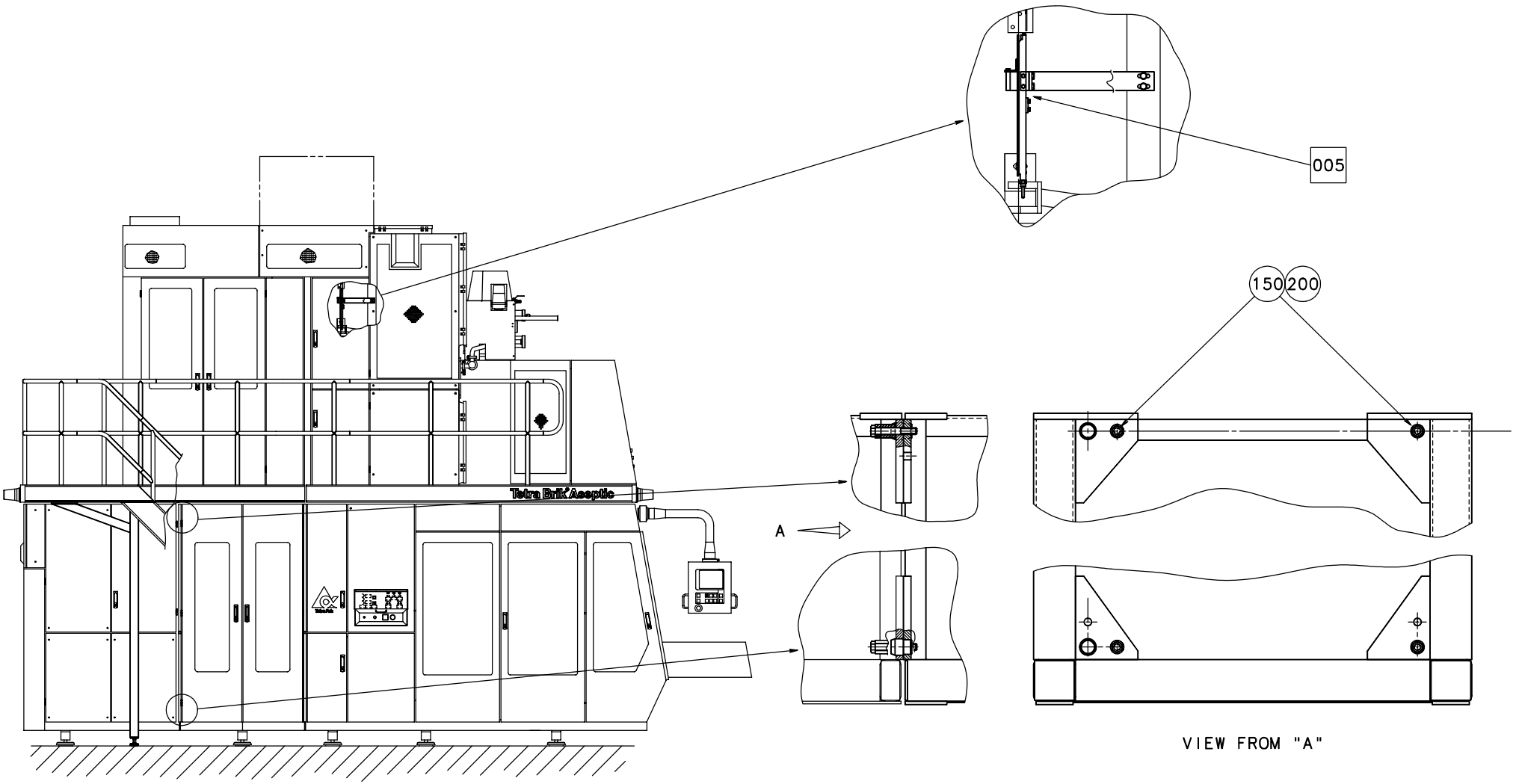

S - 648508-4
ECN 71220

Pos	Part No	SP	UN	Qty	Description	Page No
Common parts						
005	A514938-0100	-		1	TAB FOLDING	**17**
010	A577135-0100	-		1	PIPE-LINE	**23**
020	A1317254-0100	-		1	ELECTRICAL CABINET	**25, 27**
030	A1317751-0100	-		1	CABLE HARNESS	**39**
040	A1260428-0100	-		1	FRAME ASSEMBLY	**47, 49**
045	A1095928-0100	-		1	COOLER	**55**
050	A1095931-0200	-		1	PAPER WEB PATH	**59**
060	A1095932-0200	-		1	APPLICATORS	**93**
070	A1095951-0300	-		1	DOORS AND COVER	**137**
080	A1185008-0100	-		1	MAGAZINES	**153**
090	A1185049-0100	-		1	VALVE PANEL	**173**
100	A1334322-0100	-		2	BENDING ROLLER WITH FLANGES	**85**
110	A649475-0100	-		1	ELECTRICAL EQUIPMENT	**179**
150	1038865-0000	-		4	SPACER DISC	
160	311112-0377	-		4	PINS,SLOTTED TUBULAR SPRING PIN 8X24	
170	312105-0451	-		4	SCREW M6S ISO 4017 8X20 A280	
200	312105-0640	-		4	SCREW M6S ISO 4014 M16X100 A280	
210	315115-0165	-		4	WASHER TBRB 8,4X16 STAINLESS	

TAB FOLDING

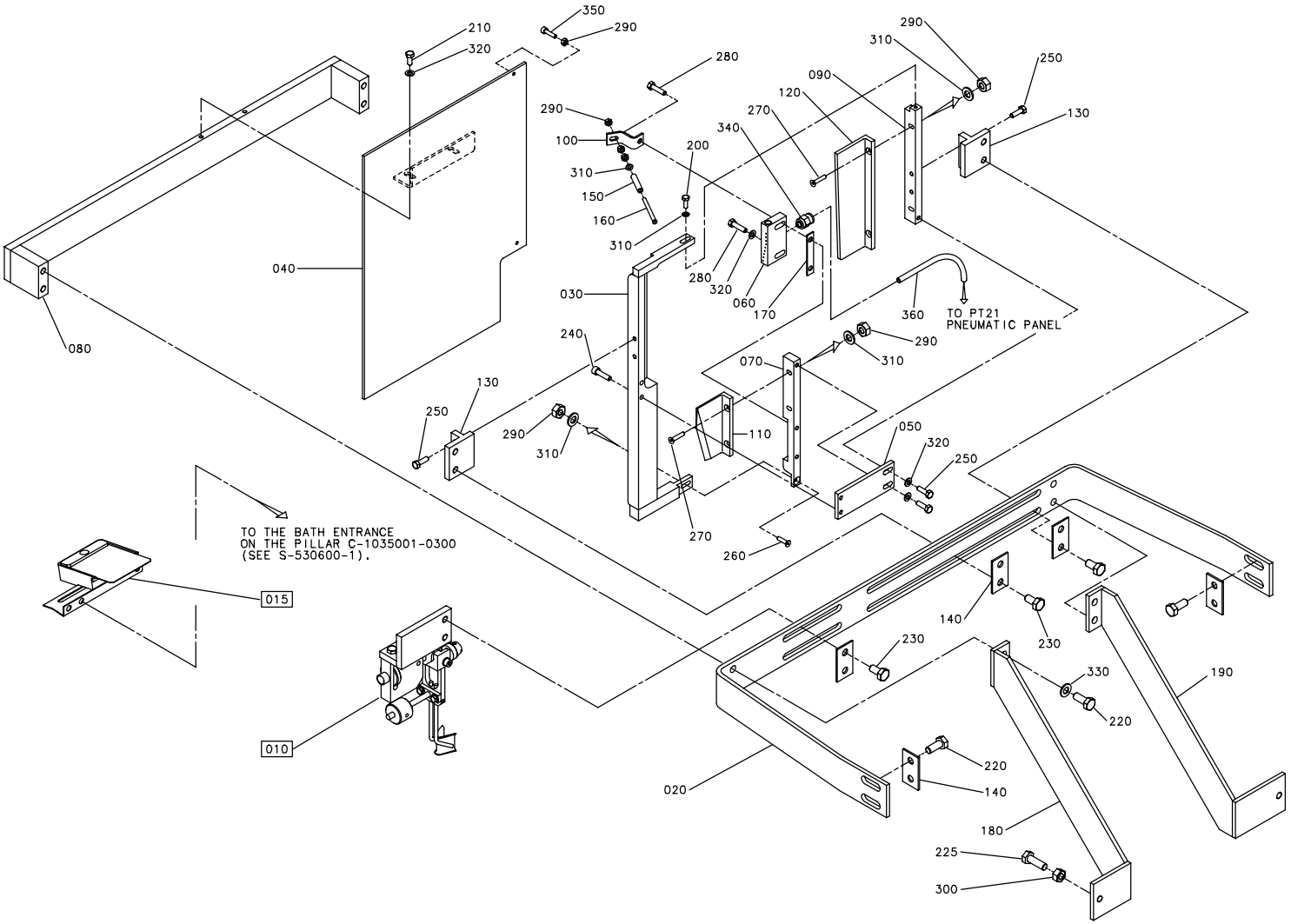

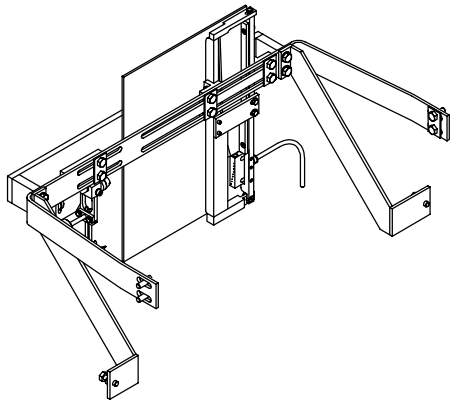

S - 514938-2
ECN 71233

Pos	Part No	SP	UN	Qty	Description	Page No
TBA 1000S						
040	1334230-0002	-		1	PLATE	
TBA 1000B						
040	1334230-0001	-		1	PLATE	
TPA 1000S						
040	1334230-0003	-		1	PLATE	
Common parts						
010	A907946-0100	-		1	TAB FOLDING PAPER GUIDE	**19**
015	A530600-0100	-		1	GUIDING PULLTAB TBA/8	**21**
020	985343-0000	-		1	BRACKET	
030	1147117-0000	-		1	RAIL BRACKET	
050	985342-0000	-		1	PLATE	
060	1317753-0000	D		1	AIR NOZZLE	
070	1317755-0000	-		1	PLATE	
080	1147015-0000	-		1	BRACKET	
090	985502-0000	-		1	PLATE	
100	1317754-0000	-		1	BRACKET	
110	985444-0000	R		1	GUIDE	
120	985445-0000	R		1	GUIDE	
130	985446-0000	-		2	BRACKET	
140	907983-0000	-		5	PLATE	
150	469464-0000	J		1	ROLL	
160	469463-0000	R		1	SHAFT	
170	1334228-0000	J		1	SHIM	
180	1317971-0000	-		1	REINFORCEMENT	
190	1317972-0000	-		1	REINFORCEMENT	
200	312105-0291	-		1	SCREW M6S ISO 4017 M4X12 A280	
210	312105-0327	-		2	SCREW M6S ISO 4017 M5X12 A280	
220	312105-0451	-		8	SCREW M6S ISO 4017 8X20 A280	
225	312105-0455	-		2	SCREW M6S ISO 4017 M8X30 A280	
230	312105-0449	-		6	SCREW M6S ISO 4017 M8X16 A280	
240	312115-0331	-		2	SCREW MC6S ISO 4762 M5X20 A280	
250	312105-0329	-		6	SCREW M6S ISO 4017 M5X16 A280	
260	312155-0293	-		1	SCREW MF6S DIN 7991 M4X16 A480	
270	312155-0295	-		4	SCREW MF6S DIN 7991 M4X20 A480	
280	312105-0331	-		2	SCREW M6S ISO 4017 M5X20 A280	
290	312605-0312	-		10	NUT,HEXAGON,M4 RFR	
300	312605-0318	-		2	NUT,HEXAGON,M8 RFR	
310	315105-0136	-		7	WASHER,PLAIN ROUND 4,3X8 STAINLESS	
320	315105-0146	-		5	WASHER,PLAIN ROUND 5,3X10 STAINLESS	
330	315105-0165	-		4	WASHER,PLAIN ROUND 8,4X16 STAINLESS	
340	342722-0197	-		1	STRAIGHT COUPLING, D=6 MM - M5	
350	312115-0291	-		2	SCREW MC6S ISO 4762 M4X12 A280	
360	90166-0081	-	MM	6000	TUBE 6/4 PA BLUE	

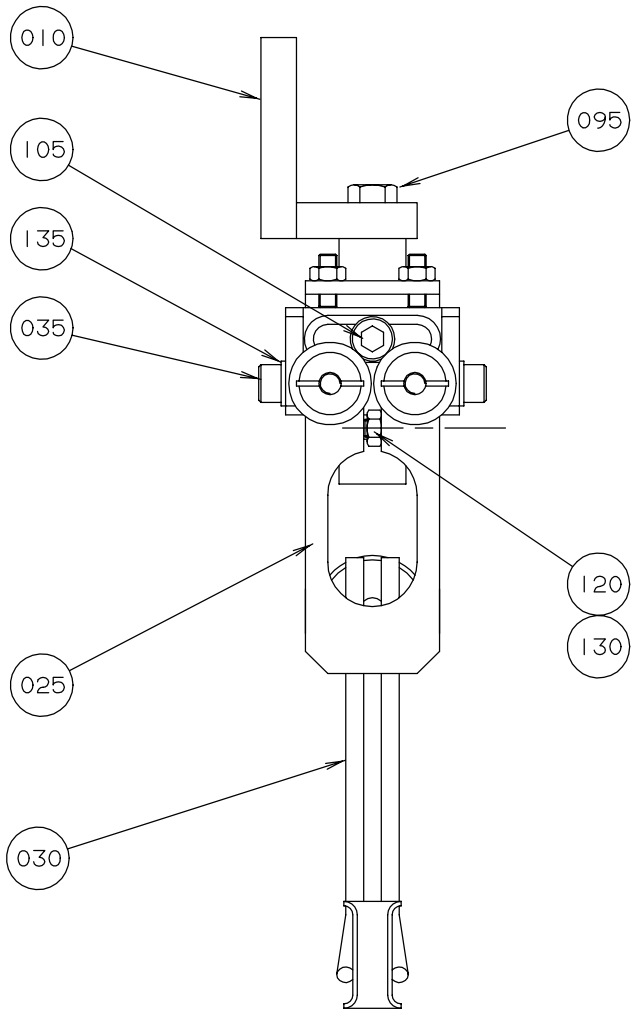
010
095
105
135
035
120
130
025
030

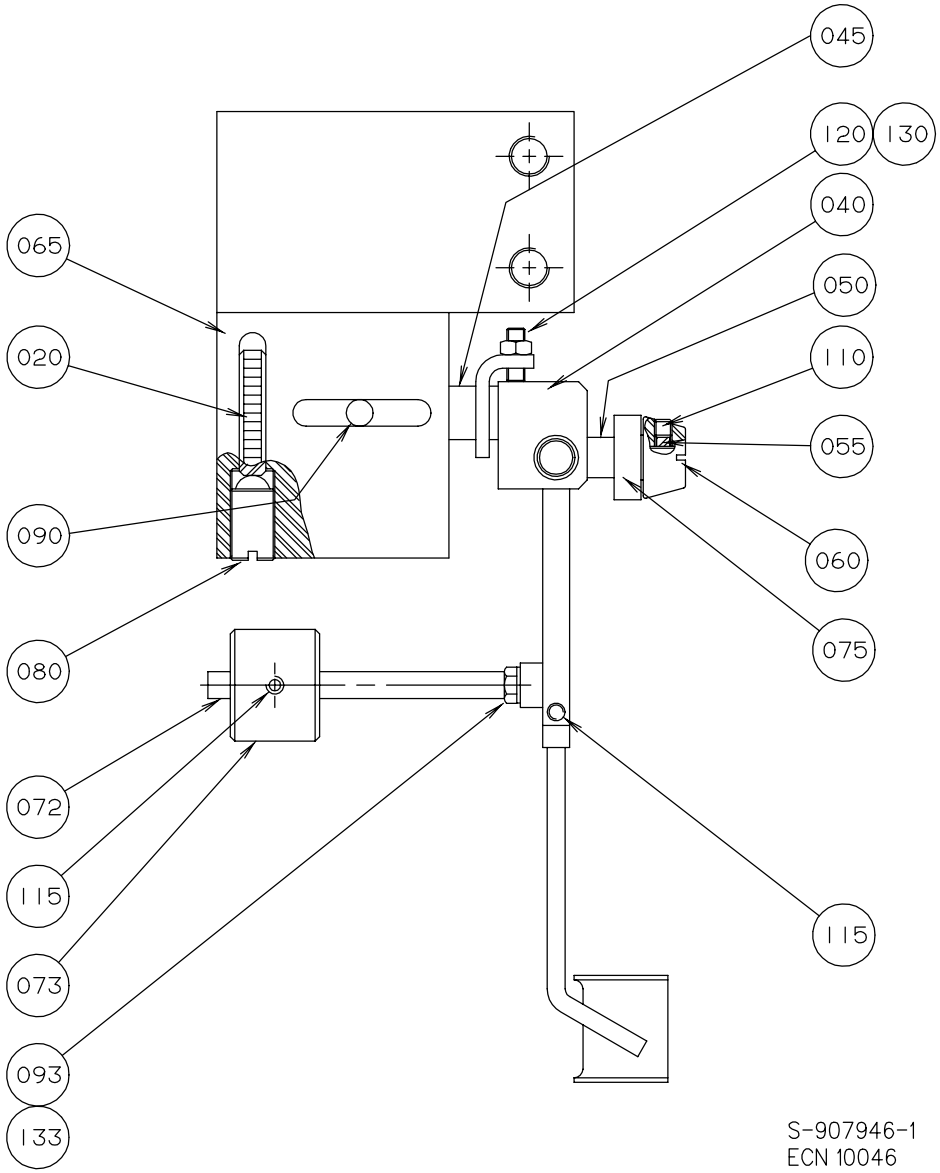
045
120
130
040
065
050
020
110
055
090
060
080
075
072
115
073
093
133
115
S-907946-1
ECN 10046

EC No: - - 20000423
Group number: 907946-0100
Assembly Drawing: 907946-1

Issue: 20000706

Pos	Part No	SP	UN	Qty	Description	Page No
Common parts						
010	907942-0000	-		1	STEERING BRACKET	
020	23580-0000	-		1	SHIFTER HANDLE	
025	905937-0000	-		1	SPRING	
030	23583-0000	-		1	GUIDE FINGER	
035	23584-0000	-		2	SCREW	
040	24351-0000	-		1	BOW CLAMP	
045	24352-0000	-		1	SHAFT	
050	24355-0000	-		2	DOWEL	
055	24356-0000	-		4	PIECE	
060	111543-0000	-		2	GUIDE CONE	
065	245210-0000	-		1	BODY	
072	905938-0000	-		1	BRACKET	
073	905939-0000	-		1	COUNTERWEIGHT	
075	90214-0138	R		2	BALL BEARING,STAINLESS	
080	90287-0009	-		1	SPRINGLOADED SCREW M10X19	
090	311103-0350	-		1	PIN,STRAIGHT M6 6X14 RFR	
093	312105-0291	-		2	SCREW M6S ISO 4017 M4X12 A280	
095	312105-0368	-		2	SCREW M6S ISO 4017 M6X16 A280	
105	312115-0366	-		1	SCREW MC6S ISO 4762 M6X12 A280	
110	312318-0283	-		4	SET SCREW CUP POINT ISO 4029 M4X4 RFR	
115	312318-0285	-		3	STOP SCREW ISO 4029 M4X6 A4	
120	312318-0291	-		3	SET SCREW CUP POINT ISO 4029 M4X12 RFR	
130	312605-0312	-		3	NUT,HEXAGON,M4 RFR	
133	315105-0136	-		2	WASHER,PLAIN ROUND 4,3X8 STAINLESS	
135	315105-0146	-		2	WASHER,PLAIN ROUND 5,3X10 STAINLESS	

Pos	Part No	SP	UN	Qty	Description	Page No

GUIDING PULLTAB TBA/8

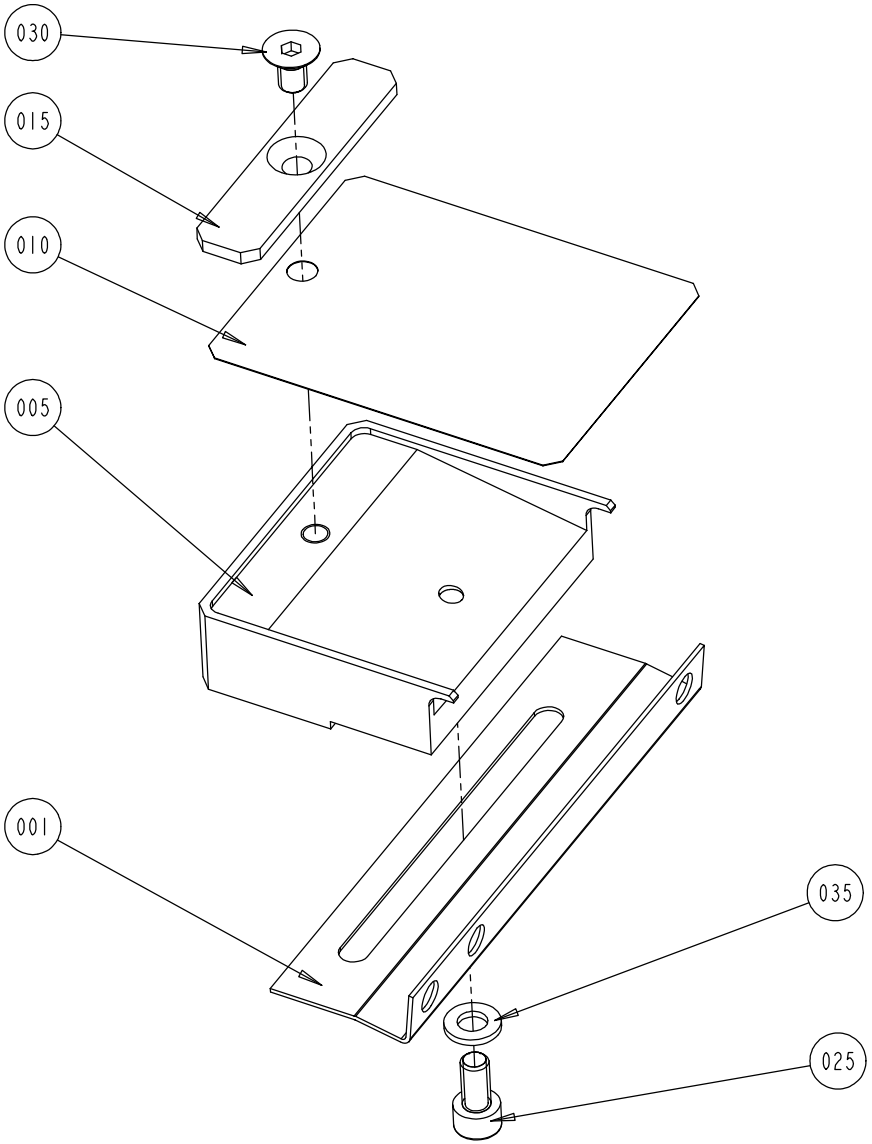

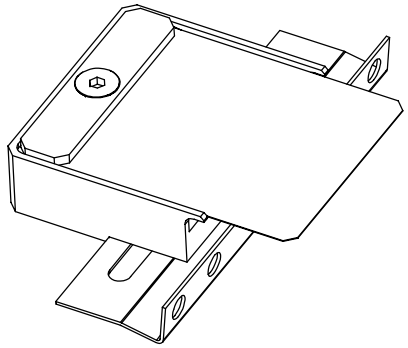

S - 530600-1
ECN 72398

Pos	Part No	SP	UN	Qty	Description	Page No
Common parts						
001	529146-0000	-		1	ANGLE BRACKET	
005	529147-0000	-		1	SPRING BRACKET	
010	529148-0000	-		1	STEERING	
015	529149-0000	-		1	DOLLY WASHER	
025	312115-0366	-		1	SCREW MC6S ISO 4762 M6X12 A280	
030	312155-0364	-		1	SCREW MF6S6X10RFR	
035	315105-0153	-		1	WASHER,PLAIN ROUND 6,4X12 STAINLESS	

Pos	Part No	SP	UN	Qty	Description	Page No

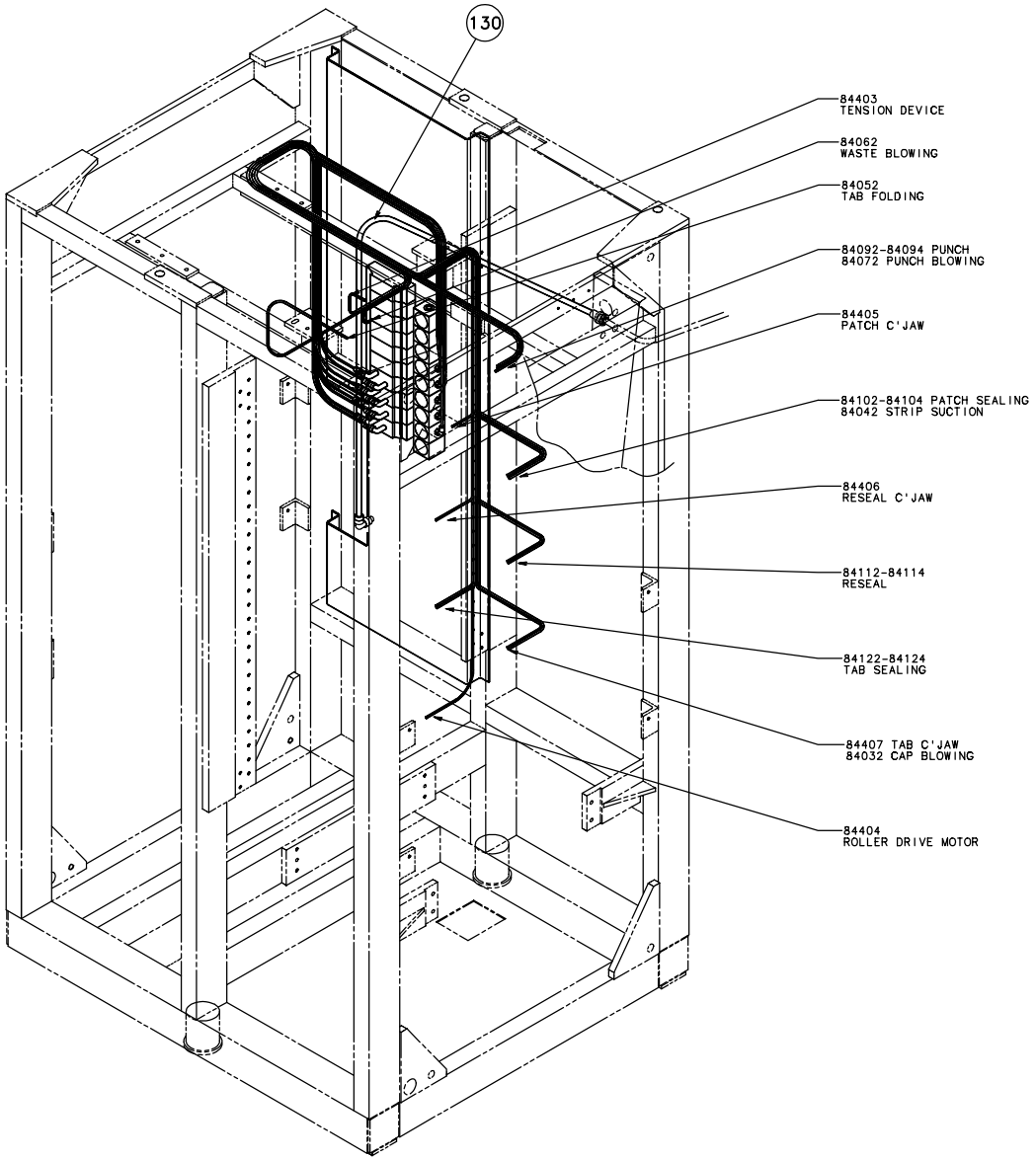

S - 577135-1
ECN 71157

Pos	Part No	SP	UN	Qty	Description	Page No
Common parts						
130	90166-0068	-	MM	3000	TUBE 12 MM PA BLUE	

Pos	Part No	SP	UN	Qty	Description	Page No

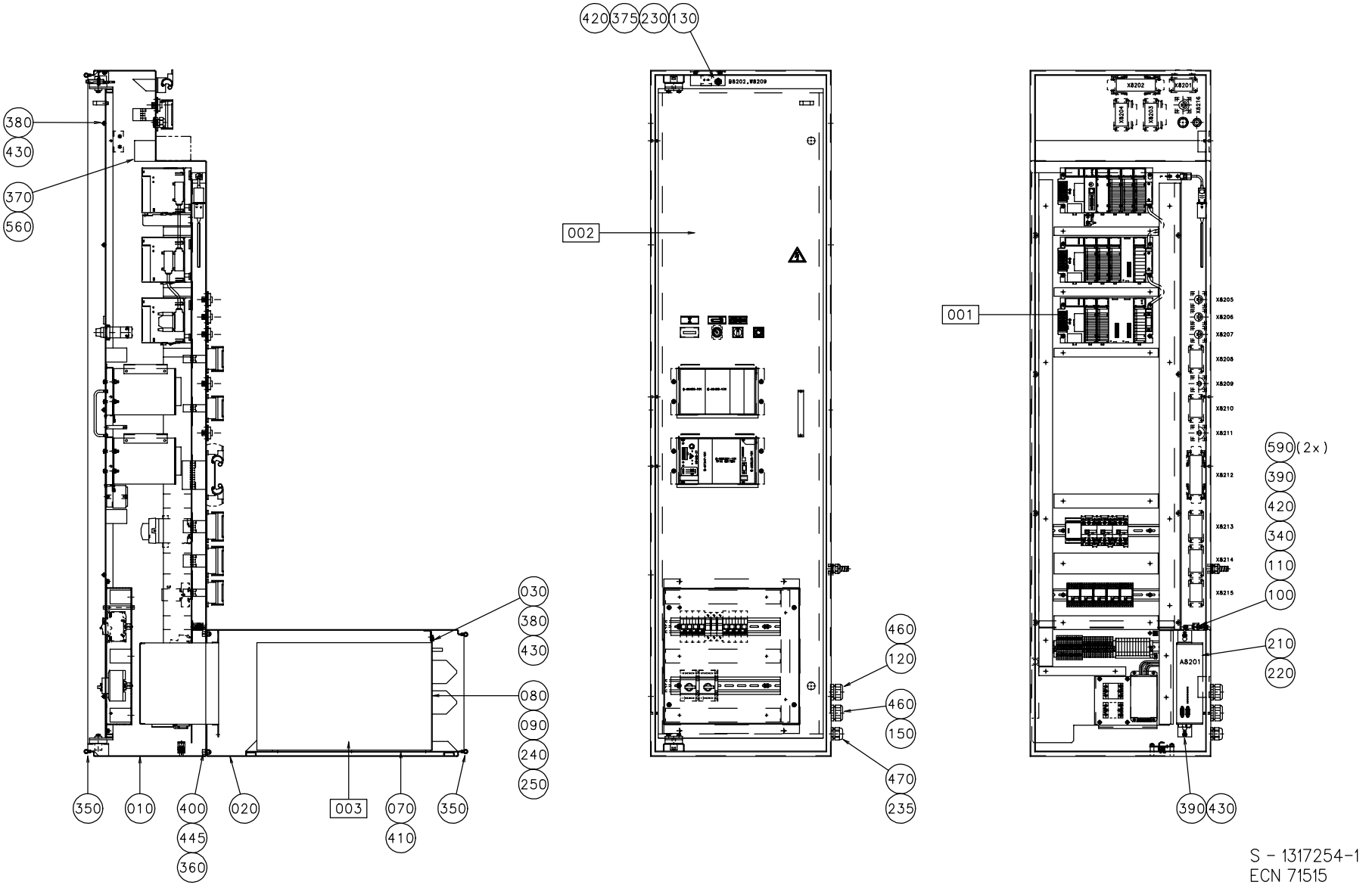
380
430
370
560
030
380
430
080
090
240
250
350
010
400
445
360
020
003
070
410
350
420
375
230
130
002
460
120
460
150
470
235
001
590 (2x)
390
420
340
110
100
210
220
390
430
S - 1317254-1
ECN 71515

Pos	Part No	SP	UN	Qty	Description	Page No
Common parts						
001	A1317354-0100	-		1	MOUNTING PLATE	**29**
002	A1317355-0100	-		1	SWING FRAME	**31**
003	67600-0501	D		1	TPIH 2000 GENERATOR	
010	1317750-0000	-		1	CABINET	
020	1255952-0000	-		1	BOX FOR TPIH	
030	1129867-0000	-		1	SHEET	
040	1140314-0000	-		2	STOP LUG	
070	731049-0000	-		4	SLIDING STRIP TPIH	
080	548770-0001	D		2	COAXIAL CABLE L=5000 MM	
090	548770-0007	D		1	COAXIAL CABLE L=3000 MM	
100	1140053-0000	-		4	SPACER	
110	929607-0000	-		2	EARTH BAR	
120	B1346824-0000	-		1	INSERT	**181**
130	1260561-0000	-		1	HOLDER	
140	1317657-0000	-		2	INSERT	
150	979974-0000	-		1	INSERT	
190	90002-0009	-		1	BLANK-OFF PLUG 18.6	
200	90002-0013	-		1	BLANK-OFF PLUG 15,2(PG 9)	
230	90044-0124	R		1	PROX.SW. 922AB2XM-A9P-050-LZ-876	
235	90099-0119	-		1	NUT PR 28,3 (PG21)	
240	90110-0121	-		2	FEMALECONT.15POLE HARTING	
250	90110-0122	-		2	COVER HARTING	
255	90110-0150	-		2	MALE INSERT 24-P, CABLE	
256	90110-0152	-		2	CABLE HOOD 24-P	
260	90110-0153	-		2	CHASSI HOUSING 24-P	
265	90110-0157	-		2	COVER	
266	90110-0159	-		2	CONTACT	
270	90110-0161	-		3	FEMALE CONTACT 6-POLES	
275	90110-0163	-		1	FEMALE INSERT 6-POLE	
280	90110-0164	-		2	FEMALE CONTACT 24-POLES	
290	90110-0166	-		4	CONTACT HOUSE	
300	90110-0215	-		4	SOCKET	
310	90110-0218	-		4	CONTACT HOUSING	
320	90110-0236	-		6	CHASSIE CONTACT PX0767/S	
330	90110-0349	-		6	COVER/TOOL PX0733	
340	90135-0039	-		2	SHIELD CLIP KLBU 4-13.5	
350	90143-0057	-	MM	7000	STRIP EMKA 1011-05 21X11MM	
360	90143-0073	-	MM	1800	RUBBER STRIP	
370	90181-0046	-	MM	490	CABEL DUCT 60X60MM	
375	90195-0019	-		1	TERMINAL BK3 KRG 3-POLE	
380	312105-0327	-		13	SCREW M6S ISO 4017 M5X12 A280	
390	312115-0323	-		3	SCREW MC6S ISO 4762 M5X8 A280	
400	312115-0449	-		8	SCREW MC6S ISO 4762 M8X16 A280	
410	312155-0291	-		12	SCREW MF6S DIN 7991 M4X12 A480	
420	312605-0316	-		18	NUT,HEXAGON A280 M6M6	
430	315105-0146	-		15	WASHER,PLAIN ROUND 5,3X10 STAINLESS	
440	315105-0153	-		12	WASHER,PLAIN ROUND 6,4X12 STAINLESS	
445	315105-0165	-		8	WASHER,PLAIN ROUND 8,4X16 STAINLESS	
450	352103-0108	-		2	CABLE GLAND ST 13	
460	353240-0006	-		4	GLANDS,NORMAL WITHOUT INSERT PG 29	
470	352103-0116	-		1	CABLE GLAND ST 21	
480	352103-0111	-		1	CABLE GLAND ST 16	
490	359005-0050	-		1	MARKING SEATS "X"	
500	359005-0010	-		4	MARKING SESATS 0-9	
510	312125-0287	-		11	SLOTTED CHEESE HEAD ISO 1207 M4X8 RFR	
515	90099-0104	-		1	NUT PR 15,2 (PG9)	
520	352113-0205	-		11	ANCHOR TM2S8-C100	
530	90099-0117	-		2	NUT PR 18,6 (PG11)	
540	353243-0002	-		2	GLAND,HOSE,EXTENDED,WITHOUT INSERT PG11	
550	90152-0059	-	MM	650	HOSE 18X12	
560	90099-0191	-		2	NYLON NUT M4X0.7 HEXAGON	
570	90110-0296	-		1	CONTACT SCREW	
580	90110-0370	-		1	BASE HOUSING	
590	90062-0021	-		2	LOCKING WASHER A 5,3	
A8201	90045-0372	R		1	SERVO AMPLIFIER REPLACED 90045-395	
A8201.1	A48141-0100	-		1	PT21MC-PULLTAB 21 MOTION CONTROL	**35**
W8201	351150-0419	-	MM	3500	CABLE OLFLEX 5X2,5MM2	
W8202	351150-0416	-	MM	3500	CABLE OILFLEX 12X1,5MM2	
W8203	90220-0183	-	MM	3500	CABLE,MULTI-CONDUCTOR SCREENED 2X0,34MM2	
W8204	90220-0183	-	M	1	CABLE,MULTI-CONDUCTOR SCREENED 2X0,34MM2	
W8211.1	351172-0104	-	M	3	CABLE AWM DARKBLUE 1,5MM2	
W8211.2	351172-0104	-	M	3	CABLE AWM DARKBLUE 1,5MM2	
W8211.3	351175-0104	-	M	3	CABLE AWM GN/YE 1,5MM2	
W8212	90220-0034	-	M	3	THERMO-CABLE	
W8445	90220-0108	-	M	5	CABLE,SCREENED 5X1,5MM2	

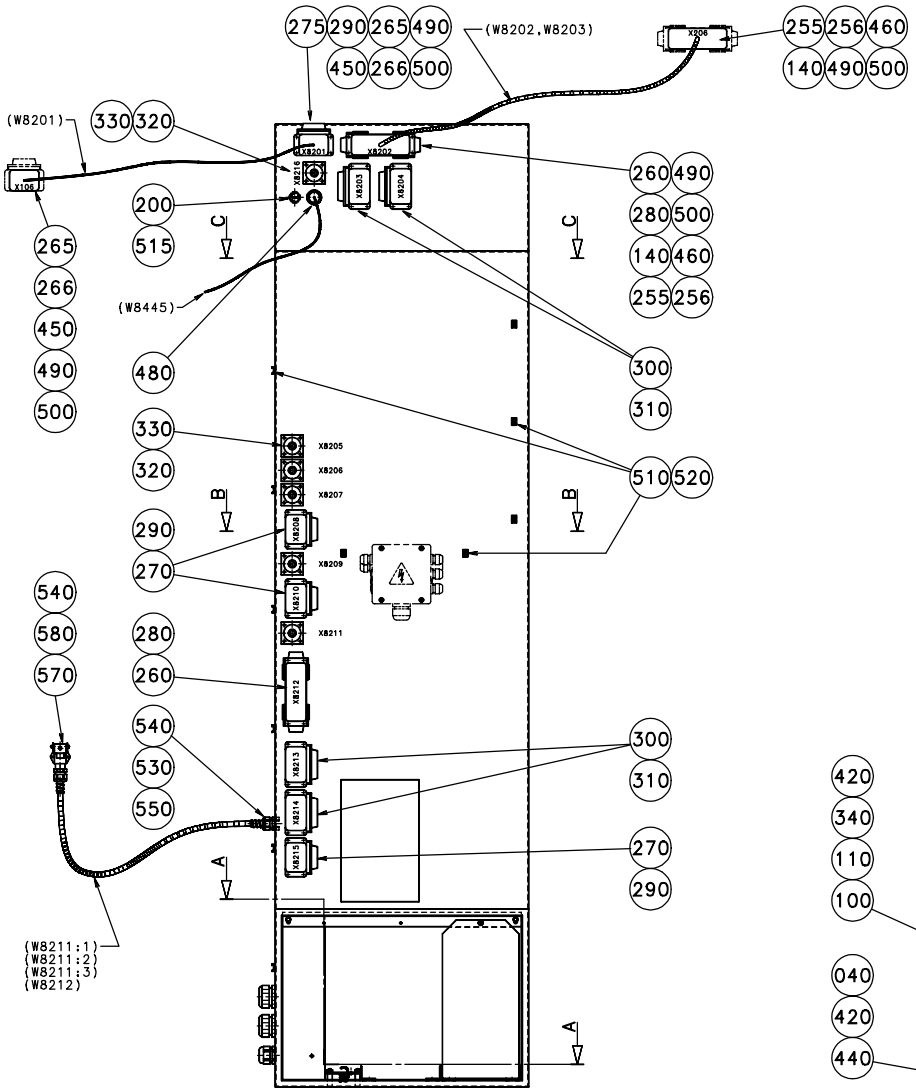

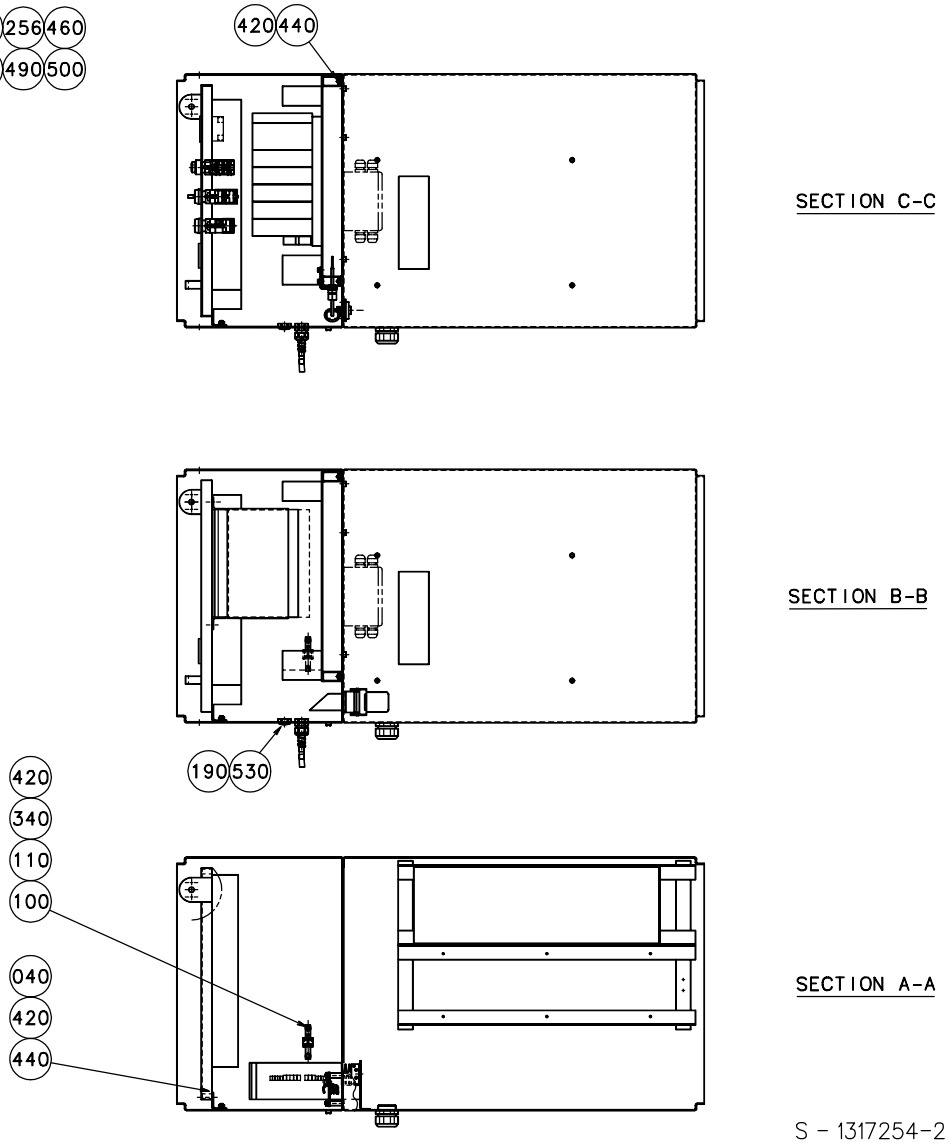

SECTION C-C

SECTION B-B

SECTION A-A

S - 1317254-2
ECN 71515

Pos	Part No	SP	UN	Qty	Description	Page No
Common parts						
001	A1317354-0100	-		1	MOUNTING PLATE	**29**
002	A1317355-0100	-		1	SWING FRAME	**31**
003	67600-0501	D		1	TPIH 2000 GENERATOR	
010	1317750-0000	-		1	CABINET	
020	1255952-0000	-		1	BOX FOR TPIH	
030	1129867-0000	-		1	SHEET	
040	1140314-0000	-		2	STOP LUG	
070	731049-0000	-		4	SLIDING STRIP TPIH	
080	548770-0001	D		2	COAXIAL CABLE L=5000 MM	
090	548770-0007	D		1	COAXIAL CABLE L=3000 MM	
100	1140053-0000	-		4	SPACER	
110	929607-0000	-		2	EARTH BAR	
120	B1346824-0000	-		1	INSERT	**181**
130	1260561-0000	-		1	HOLDER	
140	1317657-0000	-		2	INSERT	
150	979974-0000	-		1	INSERT	
190	90002-0009	-		1	BLANK-OFF PLUG 18.6	
200	90002-0013	-		1	BLANK-OFF PLUG 15,2(PG 9)	
230	90044-0124	R		1	PROX.SW. 922AB2XM-A9P-050-LZ-876	
235	90099-0119	-		1	NUT PR 28,3 (PG21)	
240	90110-0121	-		2	FEMALECONT.15POLE HARTING	
250	90110-0122	-		2	COVER HARTING	
255	90110-0150	-		2	MALE INSERT 24-P, CABLE	
256	90110-0152	-		2	CABLE HOOD 24-P	
260	90110-0153	-		2	CHASSI HOUSING 24-P	
265	90110-0157	-		2	COVER	
266	90110-0159	-		2	CONTACT	
270	90110-0161	-		3	FEMALE CONTACT 6-POLES	
275	90110-0163	-		1	FEMALE INSERT 6-POLE	
280	90110-0164	-		2	FEMALE CONTACT 24-POLES	
290	90110-0166	-		4	CONTACT HOUSE	
300	90110-0215	-		4	SOCKET	
310	90110-0218	-		4	CONTACT HOUSING	
320	90110-0236	-		6	CHASSIE CONTACT PX0767/S	
330	90110-0349	-		6	COVER/TOOL PX0733	
340	90135-0039	-		2	SHIELD CLIP KLBU 4-13.5	
350	90143-0057	-	MM	7000	STRIP EMKA 1011-05 21X11MM	
360	90143-0073	-	MM	1800	RUBBER STRIP	
370	90181-0046	-	MM	490	CABEL DUCT 60X60MM	
375	90195-0019	-		1	TERMINAL BK3 KRG 3-POLE	
380	312105-0327	-		13	SCREW M6S ISO 4017 M5X12 A280	
390	312115-0323	-		3	SCREW MC6S ISO 4762 M5X8 A280	
400	312115-0449	-		8	SCREW MC6S ISO 4762 M8X16 A280	
410	312155-0291	-		12	SCREW MF6S DIN 7991 M4X12 A480	
420	312605-0316	-		18	NUT,HEXAGON A280 M6M6	
430	315105-0146	-		15	WASHER,PLAIN ROUND 5,3X10 STAINLESS	
440	315105-0153	-		12	WASHER,PLAIN ROUND 6,4X12 STAINLESS	
445	315105-0165	-		8	WASHER,PLAIN ROUND 8,4X16 STAINLESS	
450	352103-0108	-		2	CABLE GLAND ST 13	
460	353240-0006	-		4	GLANDS,NORMAL WITHOUT INSERT PG 29	
470	352103-0116	-		1	CABLE GLAND ST 21	
480	352103-0111	-		1	CABLE GLAND ST 16	
490	359005-0050	-		1	MARKING SEATS "X"	
500	359005-0010	-		4	MARKING SESATS 0-9	
510	312125-0287	-		11	SLOTTED CHEESE HEAD ISO 1207 M4X8 RFR	
515	90099-0104	-		1	NUT PR 15,2 (PG9)	
520	352113-0205	-		11	ANCHOR TM2S8-C100	
530	90099-0117	-		2	NUT PR 18,6 (PG11)	
540	353243-0002	-		2	GLAND,HOSE,EXTENDED,WITHOUT INSERT PG11	
550	90152-0059	-	MM	650	HOSE 18X12	
560	90099-0191	-		2	NYLON NUT M4X0.7 HEXAGON	
570	90110-0296	-		1	CONTACT SCREW	
580	90110-0370	-		1	BASE HOUSING	
590	90062-0021	-		2	LOCKING WASHER A 5,3	
A8201	90045-0372	R		1	SERVO AMPLIFIER REPLACED 90045-395	
A8201.1	A48141-0100	-		1	PT21MC-PULLTAB 21 MOTION CONTROL	**35**
W8201	351150-0419	-	MM	3500	CABLE OLFLEX 5X2,5MM2	
W8202	351150-0416	-	MM	3500	CABLE OILFLEX 12X1,5MM2	
W8203	90220-0183	-	MM	3500	CABLE,MULTI-CONDUCTOR SCREENED 2X0,34MM2	
W8204	90220-0183	-	M	1	CABLE,MULTI-CONDUCTOR SCREENED 2X0,34MM2	
W8211.1	351172-0104	-	M	3	CABLE AWM DARKBLUE 1,5MM2	
W8211.2	351172-0104	-	M	3	CABLE AWM DARKBLUE 1,5MM2	
W8211.3	351175-0104	-	M	3	CABLE AWM GN/YE 1,5MM2	
W8212	90220-0034	-	M	3	THERMO-CABLE	
W8445	90220-0108	-	M	5	CABLE,SCREENED 5X1,5MM2	

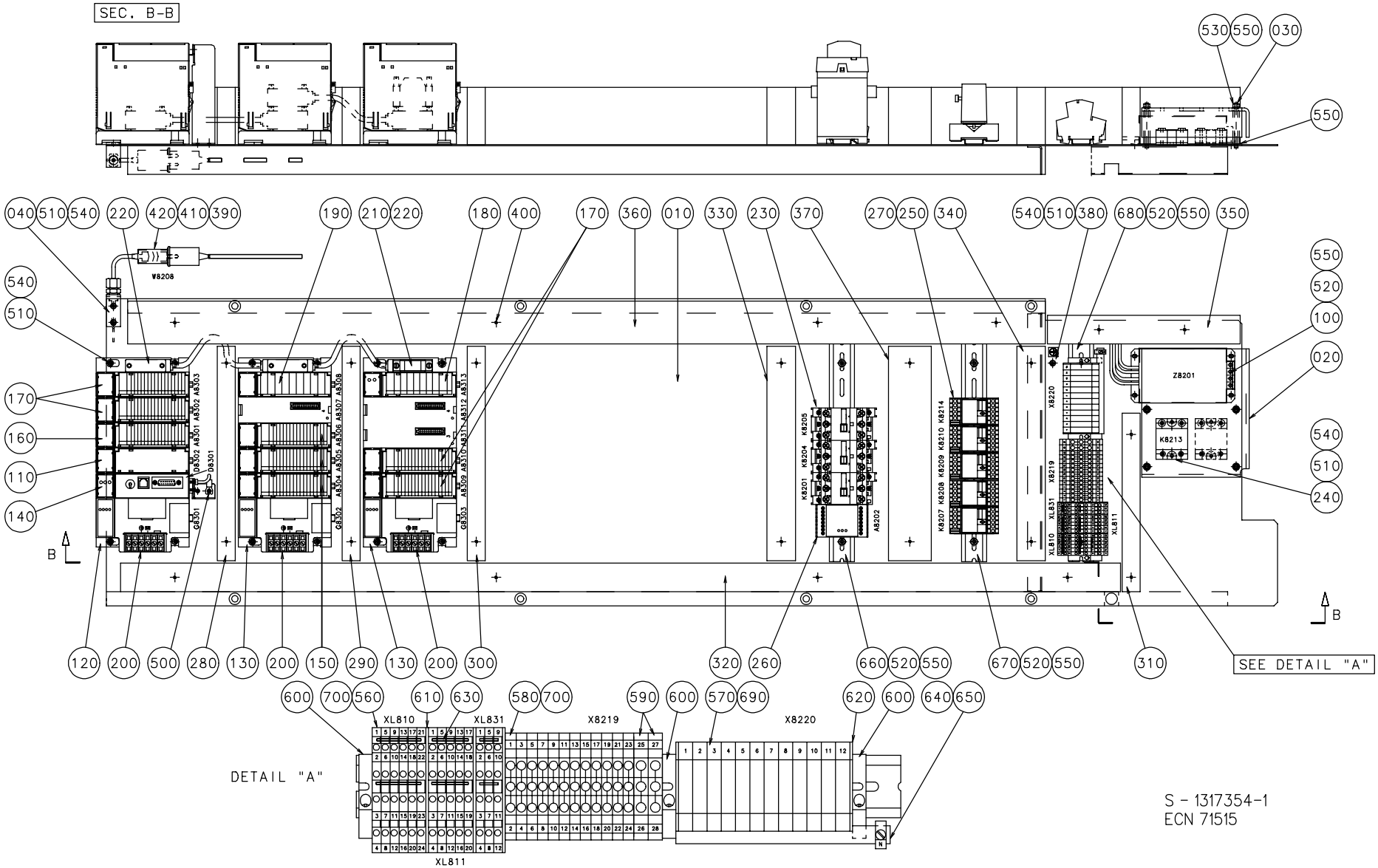
SEC. B-B
530 550 030
550
040 510 540 220 420 410 390 190 210 220 180 400 170 360 010 330 230 370 270 250 340 540 510 380 680 520 550 350
W8208
540
510
170
160
110
140
550
520
100
020
540
510
240
B
B
Z8201
K8213
120 200 500 280 130 200 150 290 130 200 300 320 260 660 520 550 670 520 550 310
SEE DETAIL "A"
600 700 560 610 630 580 700 590 600 570 690 620 600 640 650
XL810
XL831
X8219
X8220
XL811
DETAIL "A"
S - 1317354-1
ECN 71515

EC No: - - 20000423
Group number: 1317354-0100
Assembly Drawing: 1317354-1

Issue: 20000706

Pos	Part No	SP	UN	Qty	Description	Page No
Common parts						
010	1317357-0000	-		1	MOUNTING PLATE	
020	1317483-0000	-		1	TOUCH GUARD	
030	1317484-0000	-		4	STUD SCREW	
040	1317485-0000	-		1	ANGLE BRACKET	
100	90024-0037	-		1	VARISTOR FILTER, 150 V RMS/200 VDC, 13 J	
110	90031-0031	D		1	ENHANCES GENIUS	
120	90031-0050	D		1	PLC BASEPLATE, 5-SLOT	
130	90031-0052	D		2	PLC EXPANSION BASEPLATE, 5-SLOT	
140	90031-0056	D		1	CPU351, SERIAL COMMUNICATION	
150	90031-0057	D		3	PLC, DIGITAL INPUT MODULE 16 PT/24 VDC	
160	90031-0058	D		1	PLC, DIGITAL INPUT MODULE 16 PT/24 VDC	
170	90031-0059	D		4	PLC, DIGITAL OUTPUT MODULE 16 PT/24 VDC	
180	90031-0062	D		1	PLC, ANALOG OUTPUT MODULE 8PT/CURR/VOLT	
190	90031-0065	D		1	PLC, TERMOCOUPLE INPUT MODULE 8 PT	
200	90031-0068	D		3	PLC POWERSUPPLY 120/230 VAC/50 W	
210	90031-0302	D		1	PLC, I/O BUS TERMINATION PLUG	
220	90031-0305	D		2	PLC, BACKPLANE EXPANSION CABLE 0,3 M	
230	B90075-0125	-		3	CONTACTOR 7,5KW COIL 24VDC	**181**
240	90119-0043	-		1	OPTO RELAY 22DC 60S-3	
250	90119-0056	-		5	PLUG-IN RELAY 24VDC	
260	90119-0089	-		1	SAFETY RELAY JSBT4 24VDC	
270	90129-0006	-		5	BASE 11 POLE	
280	90181-0052	-	MM	300	CABLE DUCT 25X80MM	
290	90181-0052	-	MM	300	CABLE DUCT 25X80MM	
300	90181-0052	-	MM	300	CABLE DUCT 25X80MM	
310	90181-0052	-	MM	250	CABLE DUCT 25X80MM	
320	90181-0053	-	MM	1400	CABLE DUCT 40X80MM	
330	90181-0053	-	MM	300	CABLE DUCT 40X80MM	
340	90181-0053	-	MM	300	CABLE DUCT 40X80MM	
350	90181-0053	-	MM	270	CABLE DUCT 40X80MM	
360	90181-0054	-	MM	1285	CABLE DUCT 60X80MM	
370	90181-0054	-	MM	300	CABLE DUCT 60X80MM	
380	90194-0152	-		1	SIGN "EARTH"	
390	90220-0034	-	MM	1000	THERMO-CABLE	
400	90287-0124	-		24	SCREW,CHEESE HEAD,MSCS DIN84, M4X12	
410	90326-0012	-		1	PROTECTIVE COVER	
420	90326-0053	-		1	THERMO ELEMENT	
500	312115-0222	-		2	SCREW MC6S ISO 4762 M3X8 A280	
510	312115-0287	-		17	SCREW MC6S ISO 4762 M4X8 A280	
520	312115-0323	-		10	SCREW MC6S ISO 4762 M5X8 A280	
530	312605-0314	-		4	NUT,HEXAGON,M6M5 STAINLESS	
540	315105-0136	-		17	WASHER,PLAIN ROUND 4,3X8 STAINLESS	
550	315105-0146	-		18	WASHER,PLAIN ROUND 5,3X10 STAINLESS	
560	353021-0120	-		14	FEED THROUGH TERMINAL WDK 2,5	
570	353022-0101	-		12	TERMINAL NT6/35 KRG	
580	353024-0205	-		12	EARTH TERMINAL WPE 4	
590	353024-0206	-		2	EARTH TERMINAL WPE 6	
600	353031-0201	-		3	END BRACKET EW35	
610	353032-0010	-		3	END PLATE WAP	
620	353033-0101	-		2	SEPARATING PLATE HP 6 PA BLUE	
630	353034-0030	-		3	BRIDGE CONLECK WQV 2,5/10	
640 L=120	353041-0001	-			RAIL 10X3MM SSCH	
640??120MM	353041-0001	-			RAIL 10X3MM SSCH	
650	353041-0104	-		1	CLAMPING YOKE PZB 4 K	
660	353042-0004	-	MM	305	RAIL TS 35/7,5	
670	353042-0004	-	MM	305	RAIL TS 35/7,5	
680	353042-0004	-	MM	305	RAIL TS 35/7,5	
690	359011-0801	-		1	SIGN BOARD BSFW 1-50	
700	359011-0807	-		4	MARKING PLATES 5-FW 1-50	
R8301	90121-0116	-		1	RESISTANCE FIXED, 0,15 KOHM, 0,25 W	

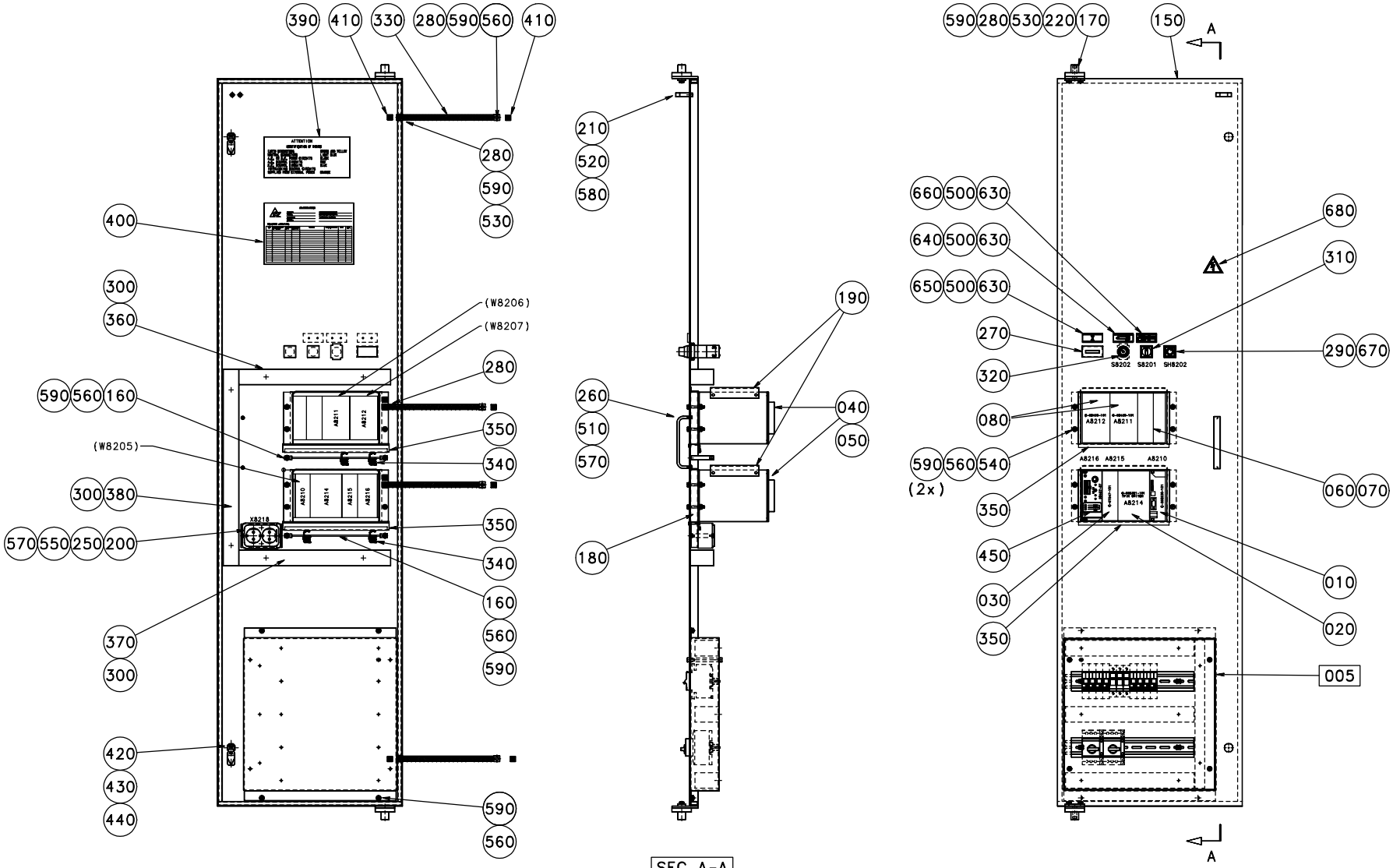
390 410 330 280 590 560 410
280
590
530
400
300
360
(W8206)
(W8207)
280
590 560 160
(W8205)
350
340
300 380
570 550 250 200
350
340
160
560
590
370
300
420
430
440
590
560
210
520
580
190
260
510
570
040
050
180
SEC.A-A
590 280 530 220 170
150
A
660 500 630
640 500 630
650 500 630
680
310
270
320
290 670
S8202 S8201 SH8202
080
590 560 540
(2x)
350
450
030
350
060 070
010
020
005
A8212 A8211
A8216 A8215 A8210
A8214
A
S - 1317355-1
ECN 71515

EC No: - - 20000423
Group number: 1317355-0100
Assembly Drawing: 1317355-1

Issue: 20000706

Pos	Part No	SP	UN	Qty	Description	Page No
Common parts						
010	558230-0101	D		1	TMCC CONTROLLER	
020	558321-0101	D		1	TPIH-SWITCH	
030	67347-0101	D		1	CARD BRAKEREG.MAGN.POWDER BRAKE	
040	67388-0101	-		2	FRONT MOUNTED RACK 42TE	
050	68262-0101	-		6	BACKPLANE FRONT RACK 8TE	
060	68445-0103	-		1	FRONT PLATE 6TE	
070	68445-0104	-		1	FRONT PLATE 8 TE	
080	68450-0101	D		2	STEPPER MOTOR DRIVER	
150	1317358-0000	-		1	SWING FRAME	
160	1260440-0000	-		2	BRACKET	
170	495377-0000	-		2	BUSH	
180	1255955-0000	-		2	FRAME	
190	1279831-0000	-		2	COVER	
200	1317359-0000	-		1	BRACKET	
210	970215-0000	-		1	STOP BLOCK	
220	971346-0000	-		2	GUIDE PIN	
250	90001-0033	-		1	WALL SOCKET OUTLET	
260	90017-0017	-		1	HANDLE,BRASS	
270	90053-0031	-		1	HOUR COUNTER BOWER B906.10	
280	90062-0022	-		12	LOCKING WASHER D=6,4/11	
290	B90064-0082	-		1	PUSH BUTTON WHITE	**181**
300	90099-0191	-		6	NYLON NUT M4X0.7 HEXAGON	
310	90111-0193	-		1	ROTARY SWITCH	
320	90111-0197	-		1	SERVICE KEY	
330	90135-0035	-		4	LOW IMPEDANCELITZ L=250MM	
340	90135-0039	-		4	SHIELD CLIP KLBU 4-13.5	
350	90143-0060	-	MM	1000	EDGE STRIP 9,5X6,3MM BLACK PVC	
360	90181-0045	-	MM	390	CABLE DUCT 40X60MM	
370	90181-0045	-	MM	390	CABLE DUCT 40X60MM	
380	90181-0045	-	MM	505	CABLE DUCT 40X60MM	
390	90194-0080	-		1	SIGN "IDENTIF. OF WIRING"	
400	90194-0133	-		1	SIGN "DELIVERED DESIGN"	
410	90194-0152	-		8	SIGN "EARTH"	
420	90237-0157	-		2	LOCKING CATCH EMKA 1000-230	
430	90237-0319	-		2	LOCK HOUSING EMKA U134	
440	90237-0320	-		2	LOCK COMPONENT EMKA U136	
450	90430-0037	R		1	MOTOR DRIVE CONTR.PME 1802. REPL.BY -67	
500	311520-0329	-		6	BLANK RIVET 2,4X8MM	
510	312115-0287	-		2	SCREW MC6S ISO 4762 M4X8 A280	
520	312115-0323	-		2	SCREW MC6S ISO 4762 M5X8 A280	
530	312115-0366	-		6	SCREW MC6S ISO 4762 M6X12 A280	
540	312125-0378	-		8	SLOTTED CHEESE HEAD ISO 1207 M6X40 RFR	
550	312605-0312	-		2	NUT,HEXAGON,M4 RFR	
560	312605-0316	-		20	NUT,HEXAGON A280 M6M6	
570	315105-0136	-		4	WASHER,PLAIN ROUND 4,3X8 STAINLESS	
580	315105-0146	-		2	WASHER,PLAIN ROUND 5,3X10 STAINLESS	
590	315105-0153	-		34	WASHER,PLAIN ROUND 6,4X12 STAINLESS	
630	359240-0100	-		3	SIGN HOLDER	
640	359241-0133	-		1	SIGN "SERVICE SWITCH"	
650	359241-0201	-		1	SIGN "HOUR GLASS"	
660	359241-0471	-		1	SIGN" PULL TAB FUNCTION"	
670	359301-0512	-		1	SIGN "INDEX TO POSITION"	
680	359705-0015	-		1	WARNING SIGN "ELECTRIC SHOCK"	
F005	A1317356-0100	-		1	FUSE BOX	**33**
W8205	90220-0165	-	MM	2000	CABLE,MULTI-CONDUCTOR SCREENED 5X0,34	
W8206	90220-0165	-	MM	2000	CABLE,MULTI-CONDUCTOR SCREENED 5X0,34	
W8207	90220-0165	-	MM	2000	CABLE,MULTI-CONDUCTOR SCREENED 5X0,34	

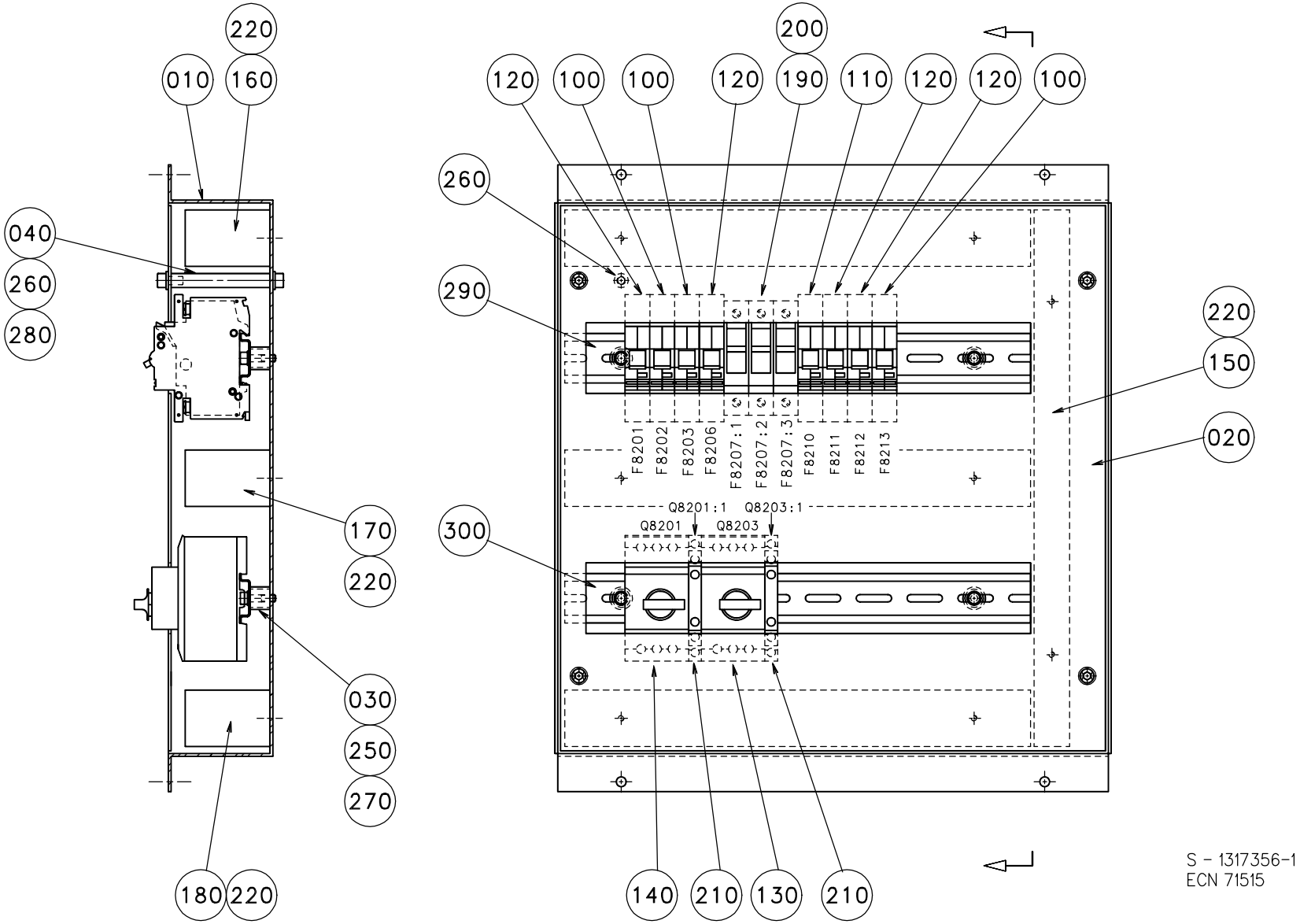
220
010
160
040
260
280
170
220
030
250
270
180
220
200
120
100
100
120
190
110
120
120
100
260
290
300
220
150
020
F8201
F8202
F8203
F8206
F8207:1
F8207:2
F8207:3
F8210
F8211
F8212
F8213
Q8201:1
Q8203:1
Q8201
Q8203
140
210
130
210
S - 1317356-1
ECN 71515

Pos	Part No	SP	UN	Qty	Description	Page No
Common parts						
010	1317360-0000	-		1	FUSE BOX	
020	1317361-0000	-		1	COVER PLATE	
030	495118-0014	-		4	DISTANCE PIPE L=14 MM	
040	495130-0070	-		4	SPACER TUBE L=70MM	
100	90007-0128	-		3	FUSE 1P 6A K	
110	90007-0129	-		1	FUSE 1P 10A K	
120	90007-0156	-		4	FUSE 1P 4A K	
130	90095-0072	-		1	OVERLOAD PROTECTION PKZM 1,0A	
140	90095-0077	-		1	OVERLOAD PROTECTION PKZM 6-10A	
150	90181-0044	-	MM	380	CABEL DUCT 25X60MM	
160	90181-0045	-	MM	330	CABLE DUCT 40X60MM	
170	90181-0045	-	MM	330	CABLE DUCT 40X60MM	
180	90181-0045	-	MM	330	CABLE DUCT 40X60MM	
190	90233-0028	-		3	FUSE 10A FERRAZ	
200	90233-0303	-		3	FUSEHOLDER FERRAZ ST10	
210	90259-0313	-		2	AUX. CONTACT KM NHI21-PKZM0	
220	90287-0124	-		8	SCREW,CHEESE HEAD,MSCS DIN84, M4X12	
250	312115-0331	-		4	SCREW MC6S ISO 4762 M5X20 A280	
260	312115-0366	-		9	SCREW MC6S ISO 4762 M6X12 A280	
270	315105-0146	-		4	WASHER,PLAIN ROUND 5,3X10 STAINLESS	
280	315105-0153	-		8	WASHER,PLAIN ROUND 6,4X12 STAINLESS	
290	353042-0004	-	MM	330	RAIL TS 35/7,5	
300	353042-0004	-	MM	330	RAIL TS 35/7,5	

Pos	Part No	SP	UN	Qty	Description	Page No

This page is intentionally left blank.

Pos	Part No	SP	UN	Qty	Description	Page No
Common parts						
0010	A42943-0100	-		1	PT21MC-LIST OF DOCUMENTS	
0020	A42944-0100	-		1	PT21MC-LIST OF MATERIALS	**37**

Pos	Part No	SP	UN	Qty	Description	Page No

This page is intentionally left blank.

Pos	Part No	SP	UN	Qty	Description	Page No
Common parts						
0010	90045-0379	-		1	MEMORY EPROM	
0020	90003-0509	-		1	BOX	

Pos	Part No	SP	UN	Qty	Description	Page No

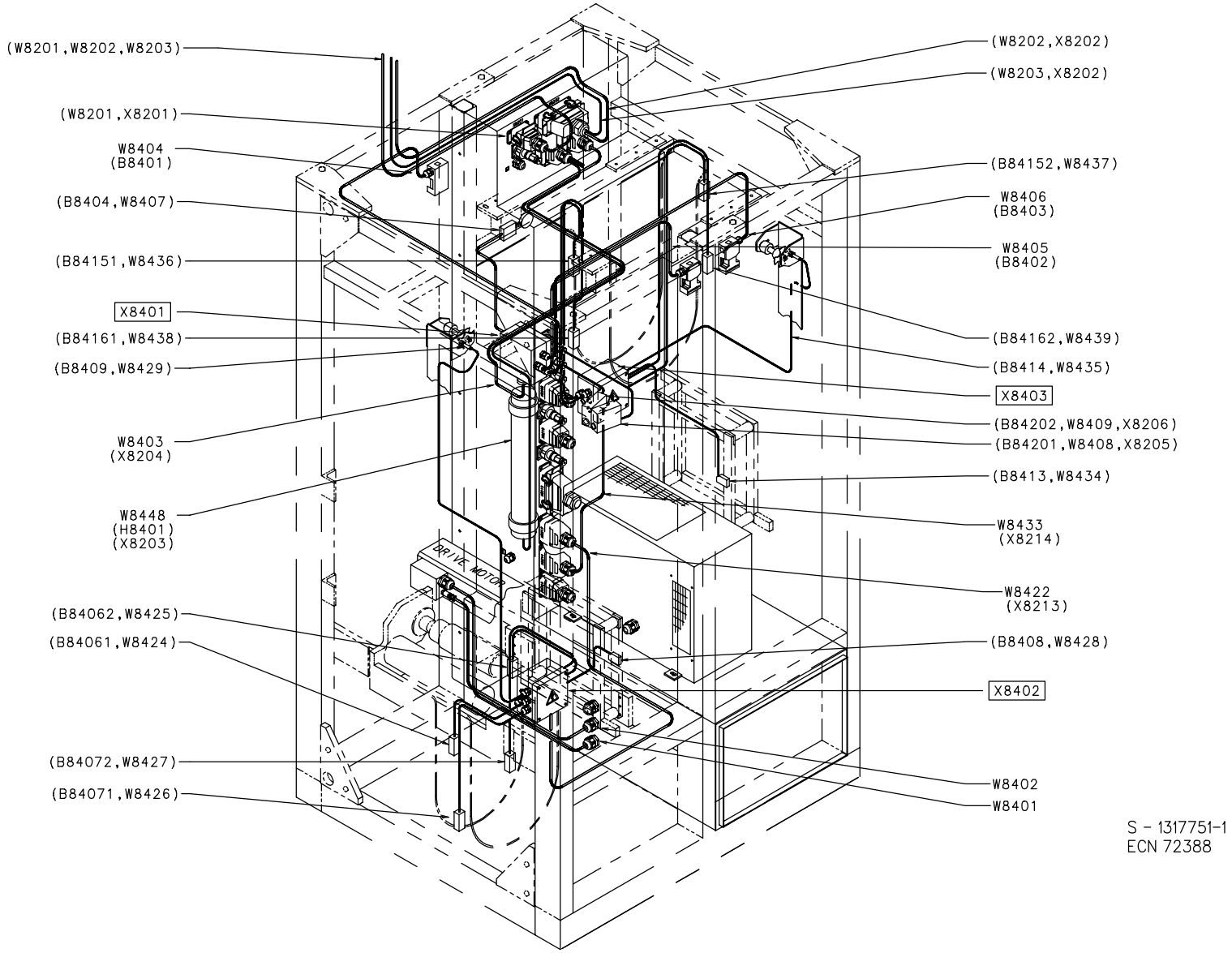

S - 1317751-1
ECN 72388

Pos	Part No	SP	UN	Qty	Description	Page No
Common parts						
050	B1282599-0000	-		1	INSERT	**181**
060	B1282600-0000	-		1	INSERT	**181**
070	B1282787-0000	-		1	INSERT	**181**
090	B1260902-0000	-		1	INSERT	**181**
110	90110-0152	-		1	CABLE HOOD 24-P	
120	90110-0157	-		2	COVER	
150	90110-0217	-		4	COVER	
180	352103-0111	-		3	CABLE GLAND ST 16	
190	353240-0003	-		2	GLANDS,NORMAL WITHOUT INSERT PG 13,5	
200	353240-0005	-		1	GLANDS,NORMAL WITHOUT INSERT PG 21	
210	353240-0006	-		1	GLANDS,NORMAL WITHOUT INSERT PG 29	
240	359005-0010	-		8	MARKING SESATS 0-9	
250	359005-0050	-		1	MARKING SEATS "X"	
260	90089-0008	-		1	SLEEVE PR22,5/28,3;PG16/21	
W8401	90220-0084	-	MM	1000	SERVOCABLE 4X2,5+2(2X0.75)	
W8402	B1255692-0010	D		1	CABLE	**181**
W8403	351150-0407	-	MM	1200	CABLE OLFLEX 12X0,75 MM2	
W8404	351150-0405	-	MM	1000	CABLE,OLFLEX 5X0,75 MM2	
W8405	351150-0405	-	MM	1000	CABLE,OLFLEX 5X0,75 MM2	
W8406	351150-0405	-	MM	1000	CABLE,OLFLEX 5X0,75 MM2	
W8421	351150-0403	-	MM	2000	CABLE OLFLEX 3X0,75 MM2	
W8422	351150-0407	-	MM	2500	CABLE OLFLEX 12X0,75 MM2	
W8433	351150-0407	-	MM	2500	CABLE OLFLEX 12X0,75 MM2	
W8446	351150-0413	-	MM	2000	CABLE OLFLEX 4X1,5MM2	
W8448	351150-0412	-	MM	2500	CABLE OLFLEX 3X1,5MM2	
X8203	90110-0216	-		1	MALE PLUG	
X8204	90110-0216	-		1	MALE PLUG	
X8205	90110-0235	-		1	CABLE CONTACT	
X8206	90110-0235	-		1	CABLE CONTACT	
X8207	90110-0235	-		1	CABLE CONTACT	
X8208	90110-0159	-		1	CONTACT	
X8209	90110-0235	-		1	CABLE CONTACT	
X8210	90110-0159	-		1	CONTACT	
X8211	90110-0235	-		1	CABLE CONTACT	
X8212	90110-0150	-		1	MALE INSERT 24-P, CABLE	
X8213	90110-0216	-		1	MALE PLUG	
X8214	90110-0216	-		1	MALE PLUG	
X8216	90110-0235	-		1	CABLE CONTACT	
X8401	A1260813-0100	-		1	CONNECTION BOX	**41**
X8402	A1260812-0100	-		1	CONNECTION BOX	**43**
X8403	A1260811-0100	-		1	CONNECTION BOX	**45**

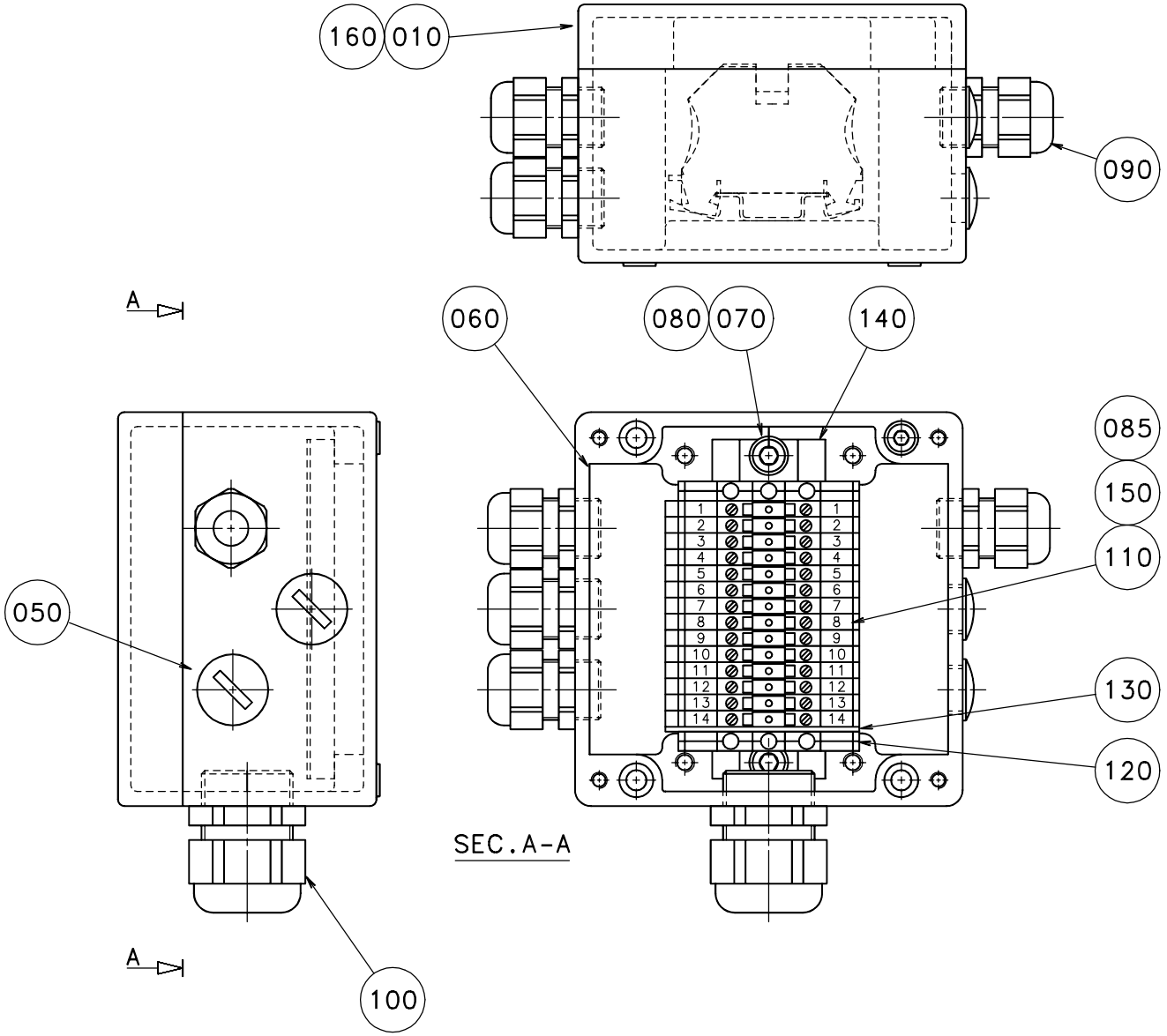

S - 1260813-1
ECN 22912

Pos	Part No	SP	UN	Qty	Description	Page No
Common parts						
010	B1260815-0000	-		1	CONNECTION BOX	**181**
050	90002-0009	-		2	BLANK-OFF PLUG 18.6	
060	312115-0331	-		4	SCREW MC6S ISO 4762 M5X20 A280	
070	312115-0362	-		2	SCREW MC6S ISO 4762 M6X8 A280	
080	315105-0153	-		2	WASHER,PLAIN ROUND 6,4X12 STAINLESS	
085	351172-0102	-	MM	300	CABLE AWM D.BLUE 0,75MM2	
090	352103-0106	-		4	CABLE GLAND ST 11	
100	352103-0115	-		1	CABLE GLAND STR 21	
110	353021-0216	-		14	BY PASS TERMINAL WDU 2,5 BLUE	
120	353024-0205	-		2	EARTH TERMINAL WPE 4	
130	353032-0005	-		1	END PLATE WAP 2,5-10 BLUE	
140	353042-0005	-	MM	105	RAIL TS 35/7.5	
150	359011-0807	-		14	MARKING PLATES 5-FW 1-50	
160	359705-0015	-		1	WARNING SIGN "ELECTRIC SHOCK"	

Pos	Part No	SP	UN	Qty	Description	Page No

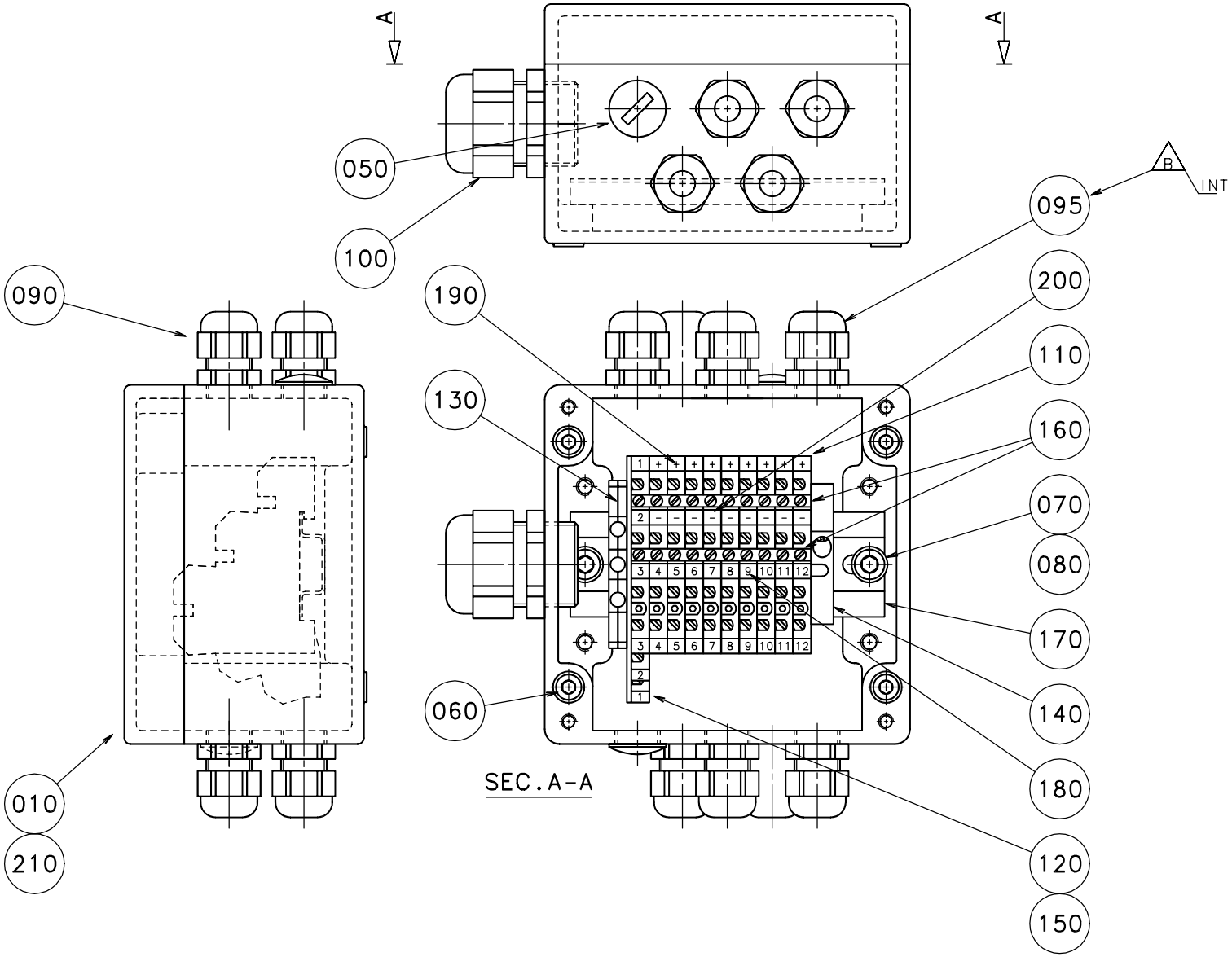

S - 1260812-1
ECN 71157

Pos	Part No	SP	UN	Qty	Description	Page No
Common parts						
010	B1260814-0000	-		1	CONNECTION BOX	**181**
050	90002-0013	-		2	BLANK-OFF PLUG 15,2(PG 9)	
060	312115-0331	-		4	SCREW MC6S ISO 4762 M5X20 A280	
070	312115-0362	-		2	SCREW MC6S ISO 4762 M6X8 A280	
080	315105-0153	-		2	WASHER,PLAIN ROUND 6,4X12 STAINLESS	
090	352103-0101	-		8	CABLE GLAND ST 9;PR15,2/PG9	
095	352103-0100	-		1	CABLE GLAND STR 9;PR15,2	
100	352103-0115	-		1	CABLE GLAND STR 21	
110	353021-0301	-		8	TERMINAL,TRIPLE-LEVEL, DLI 2,5/35 PA	
120	353021-0302	-		1	TERMINAL,TRIPLE-LEVEL, DLD 2,5/35 PA	
130	353024-0205	-		1	EARTH TERMINAL WPE 4	
140	353031-0201	-		1	END BRACKET EW35	
150	353032-0302	-		1	END PLATE WAP	
160	353034-0404	-		2	BRIDGE CONLECK Q10	
170	353042-0005	-	MM	105	RAIL TS 35/7.5	
180	359011-0807	-		2	MARKING PLATES 5-FW 1-50	
190	359011-0817	-		1	SYMBOL 5-GW (+) 50PC	
200	359011-0818	-		1	SYMBOL 5-GW (-) 50PC	
210	359705-0015	-		1	WARNING SIGN "ELECTRIC SHOCK"	

Pos	Part No	SP	UN	Qty	Description	Page No

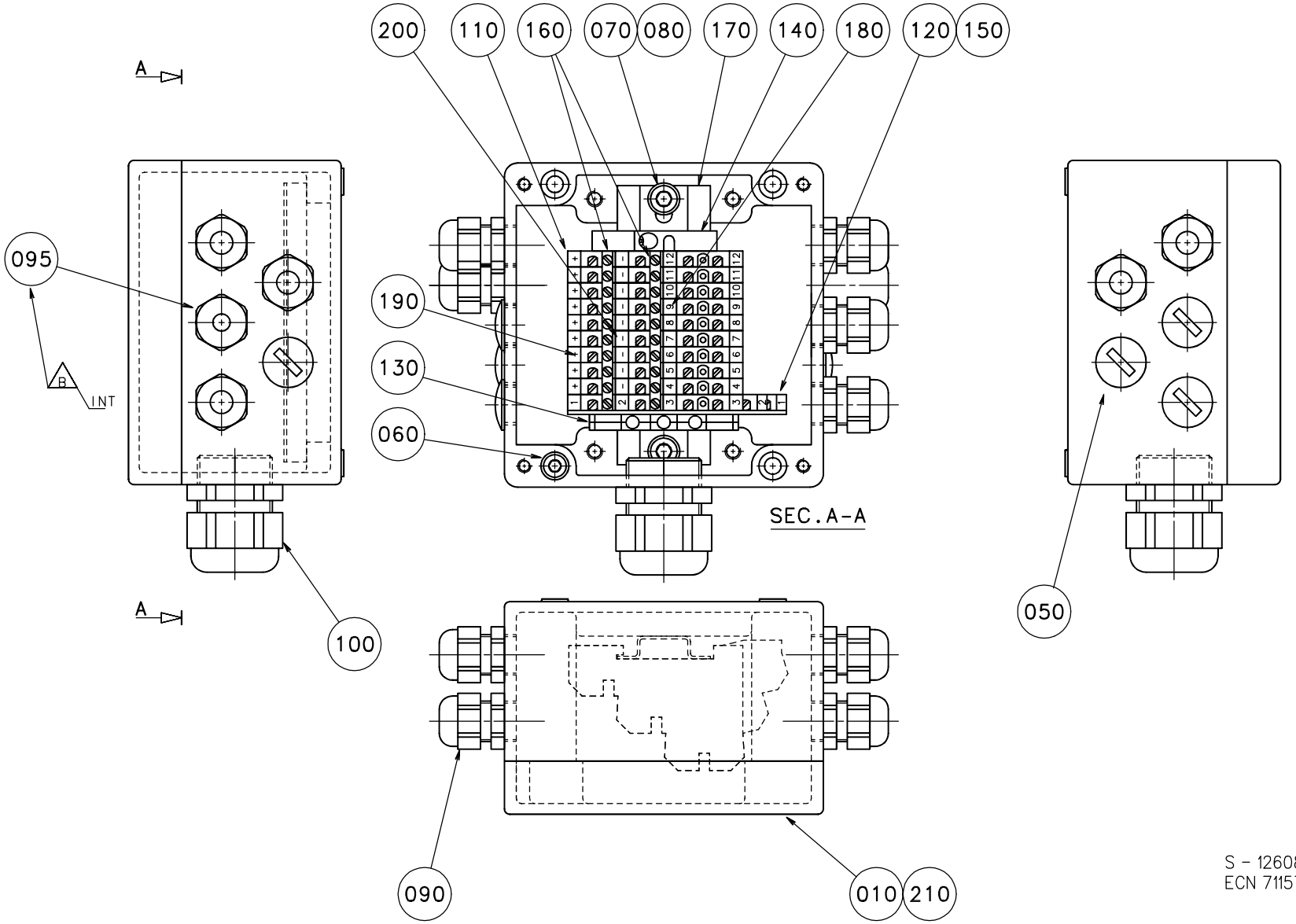

S - 1260811-1
ECN 71157

Pos	Part No	SP	UN	Qty	Description	Page No
Common parts						
010	B1260814-0000	-		1	CONNECTION BOX	**181**
050	90002-0013	-		4	BLANK-OFF PLUG 15,2(PG 9)	
060	312115-0331	-		4	SCREW MC6S ISO 4762 M5X20 A280	
070	312115-0362	-		2	SCREW MC6S ISO 4762 M6X8 A280	
080	315105-0153	-		2	WASHER,PLAIN ROUND 6,4X12 STAINLESS	
090	352103-0101	-		5	CABLE GLAND ST 9;PR15,2/PG9	
095	352103-0100	-		1	CABLE GLAND STR 9;PR15,2	
100	352103-0115	-		1	CABLE GLAND STR 21	
110	353021-0301	-		9	TERMINAL,TRIPLE-LEVEL, DLI 2,5/35 PA	
120	353021-0302	-		1	TERMINAL,TRIPLE-LEVEL, DLD 2,5/35 PA	
130	353024-0205	-		1	EARTH TERMINAL WPE 4	
140	353031-0201	-		1	END BRACKET EW35	
150	353032-0302	-		1	END PLATE WAP	
160	353034-0404	-		2	BRIDGE CONLECK Q10	
170	353042-0005	-	MM	105	RAIL TS 35/7.5	
180	359011-0807	-		6	MARKING PLATES 5-FW 1-50	
190	359011-0817	-		1	SYMBOL 5-GW (+) 50PC	
200	359011-0818	-		1	SYMBOL 5-GW (-) 50PC	
210	359705-0015	-		1	WARNING SIGN "ELECTRIC SHOCK"	

Pos	Part No	SP	UN	Qty	Description	Page No

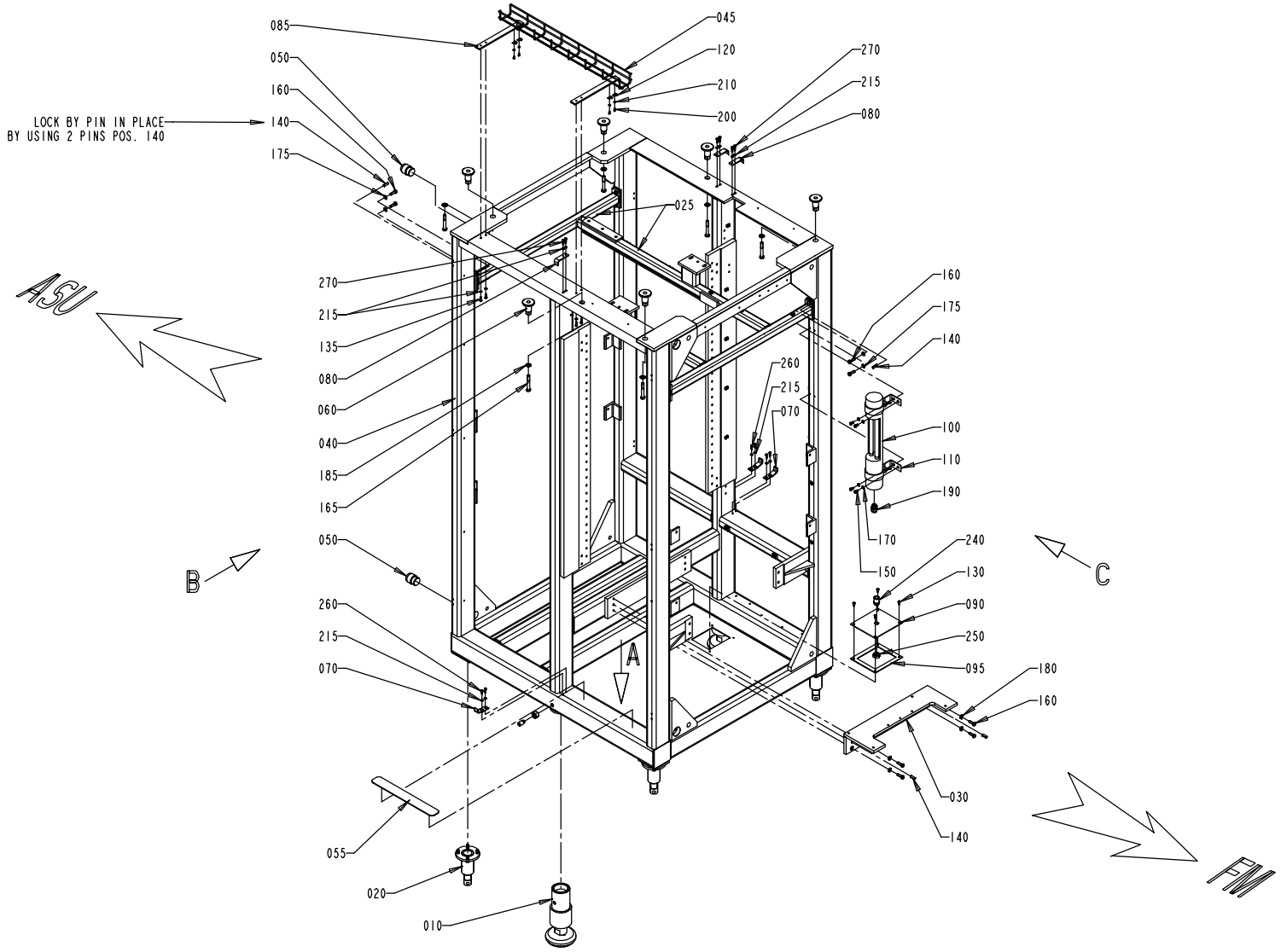

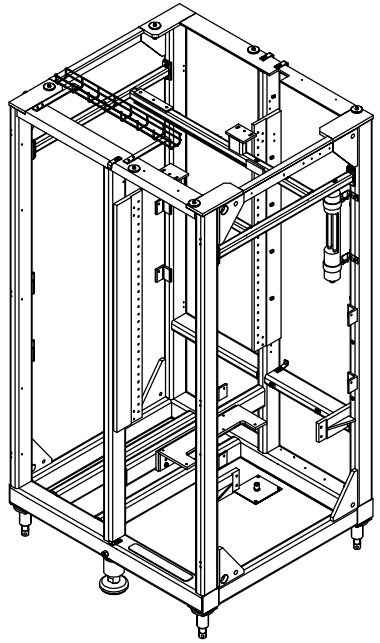

S - 1260428-1(1)
ECN 71457

Pos	Part No	SP	UN	Qty	Description	Page No
Common parts						
010	A1035076-0200	-		2	LEG	**51**
020	A1035471-0100	-		4	LEG	**53**
025	985866-0000	-		1	TOP FRAME	
030	1140427-0000	-		1	BRACKET	
040	1255311-0000	-		1	FRAME	
045	1348058-0000	-		1	CABLE DUCT	
050	1037762-0000	-		2	PIN	
055	1103299-0000	-		1	NON-SKID	
060	1116048-0000	-		6	SPACER	
070	1036227-0000	-		3	BRACKET	
080	1296856-0000	-		3	BRACKET	
085	1348057-0000	-		2	BRACKET	
090	1279832-0000	-		1	PLATE	
095	1279833-0000	-		1	RUBBER STRIP	
100	B90164-0009	-		1	LIGHT FIXTURE	**181**
110	90164-0302	-		2	BRACKET	
120	90165-0060	-		4	PIPE-CLIPS,FOR SINGLE PIPE,ONE SIDE 5	
130	312105-0323	-		4	SCREW M6S ISO 4017 M5X8 A280	
135	312105-0329	-		4	SCREW M6S ISO 4017 M5X16 A280	
140	311112-0377	-		4	PINS,SLOTTED TUBULAR SPRING PIN 8X24	
150	312105-0366	-		4	SCREW M6S ISO 4017 M6X12 A280	
160	312105-0453	-		12	SCREW M6S ISO 4017 M8X25 A280	
165	312105-0505	-		6	SCREW M6S ISO 4014 M10X70 A280	
170	315105-0153	-		4	WASHER,PLAIN ROUND 6,4X12 STAINLESS	
175	315105-0165	-		8	WASHER,PLAIN ROUND 8,4X16 STAINLESS	
180	315115-0165	-		4	WASHER TBRB 8,4X16 STAINLESS	
185	315105-0173	-		6	WASHER,PLAIN ROUND 10,5X22 STAINLESS	
190	352103-0106	-		1	CABLE GLAND ST 11	
200	312125-0287	-		35	SLOTTED CHEESE HEAD ISO 1207 M4X8 RFR	
210	315105-0136	-		13	WASHER,PLAIN ROUND 4,3X8 STAINLESS	
215	315105-0146	-		16	WASHER,PLAIN ROUND 5,3X10 STAINLESS	
220	352113-0204	-		9	ANCHOR TM3S25-M	
230	352113-0205	-		22	ANCHOR TM2S8-C100	
240	90055-0096	-		1	STRAIGHT COUPLING, D=14 MM - G3/8"	
250	90330-0038	-		1	NUT,HEXAGON G3/8"	
260	312115-0327	-		6	SCREW MC6S ISO 4762 M5X12 A280	
270	312115-0329	-		6	SCREW MC6S ISO 4762 M5X16 A280	

Pos	Part No	SP	UN	Qty	Description	Page No

FRAME ASSEMBLY

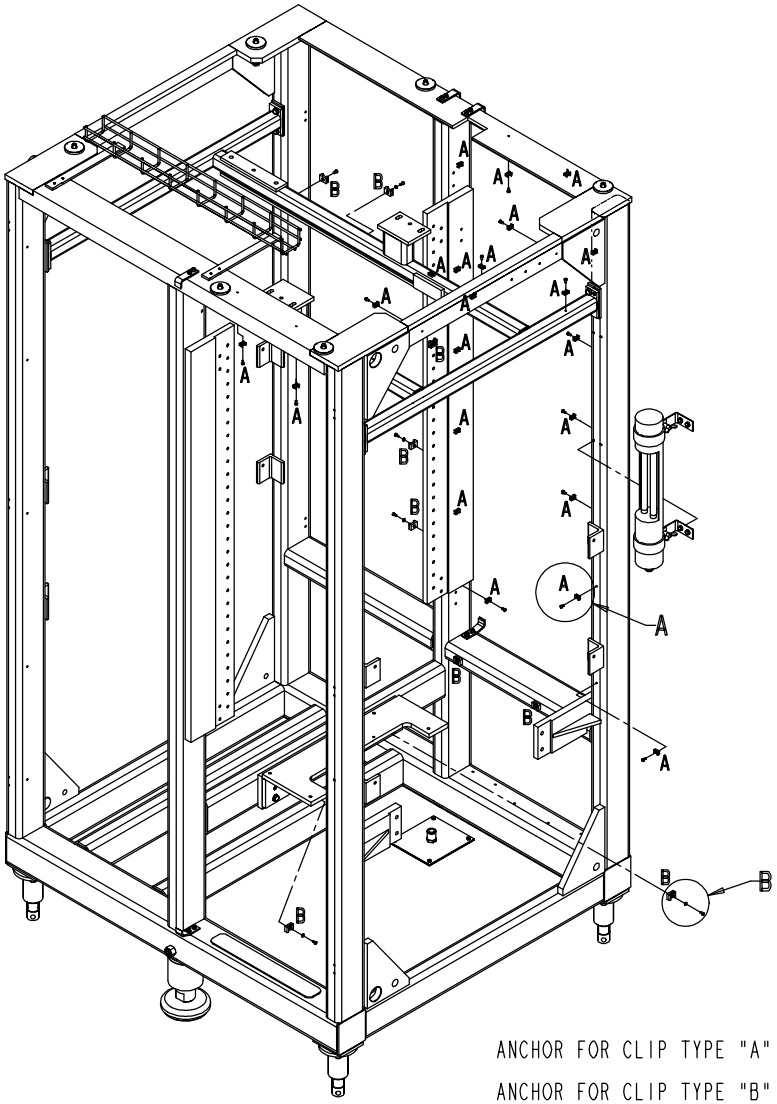

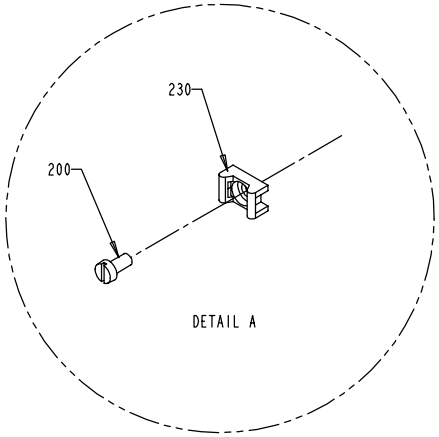

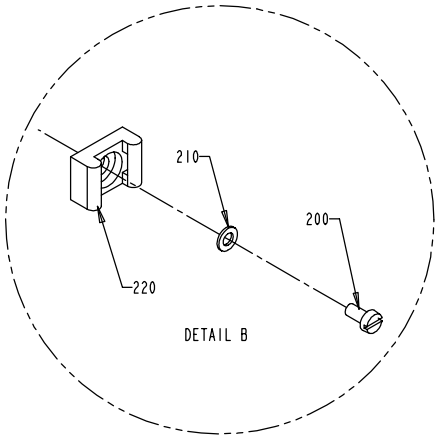

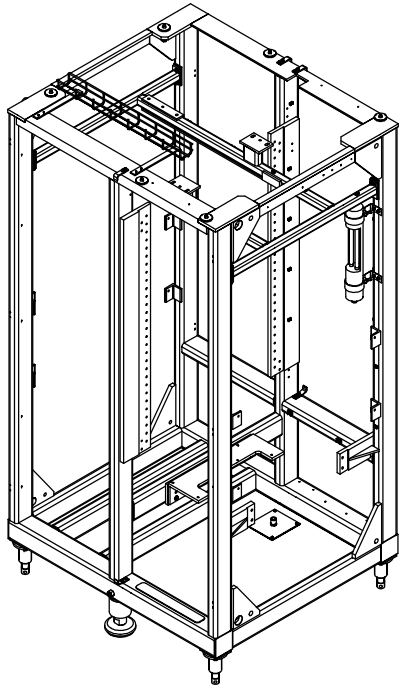

ANCHOR FOR CLIP TYPE "A" : SEE POS. 230 AND 200 (22x)

ANCHOR FOR CLIP TYPE "B" : SEE POS. 220 , 200 AND 210 (9x)

S - 1260428-1(2)
ECN 71457

Pos	Part No	SP	UN	Qty	Description	Page No
Common parts						
010	A1035076-0200	-		2	LEG	**51**
020	A1035471-0100	-		4	LEG	**53**
025	985866-0000	-		1	TOP FRAME	
030	1140427-0000	-		1	BRACKET	
040	1255311-0000	-		1	FRAME	
045	1348058-0000	-		1	CABLE DUCT	
050	1037762-0000	-		2	PIN	
055	1103299-0000	-		1	NON-SKID	
060	1116048-0000	-		6	SPACER	
070	1036227-0000	-		3	BRACKET	
080	1296856-0000	-		3	BRACKET	
085	1348057-0000	-		2	BRACKET	
090	1279832-0000	-		1	PLATE	
095	1279833-0000	-		1	RUBBER STRIP	
100	B90164-0009	-		1	LIGHT FIXTURE	**181**
110	90164-0302	-		2	BRACKET	
120	90165-0060	-		4	PIPE-CLIPS,FOR SINGLE PIPE,ONE SIDE 5	
130	312105-0323	-		4	SCREW M6S ISO 4017 M5X8 A280	
135	312105-0329	-		4	SCREW M6S ISO 4017 M5X16 A280	
140	311112-0377	-		4	PINS,SLOTTED TUBULAR SPRING PIN 8X24	
150	312105-0366	-		4	SCREW M6S ISO 4017 M6X12 A280	
160	312105-0453	-		12	SCREW M6S ISO 4017 M8X25 A280	
165	312105-0505	-		6	SCREW M6S ISO 4014 M10X70 A280	
170	315105-0153	-		4	WASHER,PLAIN ROUND 6,4X12 STAINLESS	
175	315105-0165	-		8	WASHER,PLAIN ROUND 8,4X16 STAINLESS	
180	315115-0165	-		4	WASHER TBRB 8,4X16 STAINLESS	
185	315105-0173	-		6	WASHER,PLAIN ROUND 10,5X22 STAINLESS	
190	352103-0106	-		1	CABLE GLAND ST 11	
200	312125-0287	-		35	SLOTTED CHEESE HEAD ISO 1207 M4X8 RFR	
210	315105-0136	-		13	WASHER,PLAIN ROUND 4,3X8 STAINLESS	
215	315105-0146	-		16	WASHER,PLAIN ROUND 5,3X10 STAINLESS	
220	352113-0204	-		9	ANCHOR TM3S25-M	
230	352113-0205	-		22	ANCHOR TM2S8-C100	
240	90055-0096	-		1	STRAIGHT COUPLING, D=14 MM - G3/8"	
250	90330-0038	-		1	NUT,HEXAGON G3/8"	
260	312115-0327	-		6	SCREW MC6S ISO 4762 M5X12 A280	
270	312115-0329	-		6	SCREW MC6S ISO 4762 M5X16 A280	

Pos	Part No	SP	UN	Qty	Description	Page No

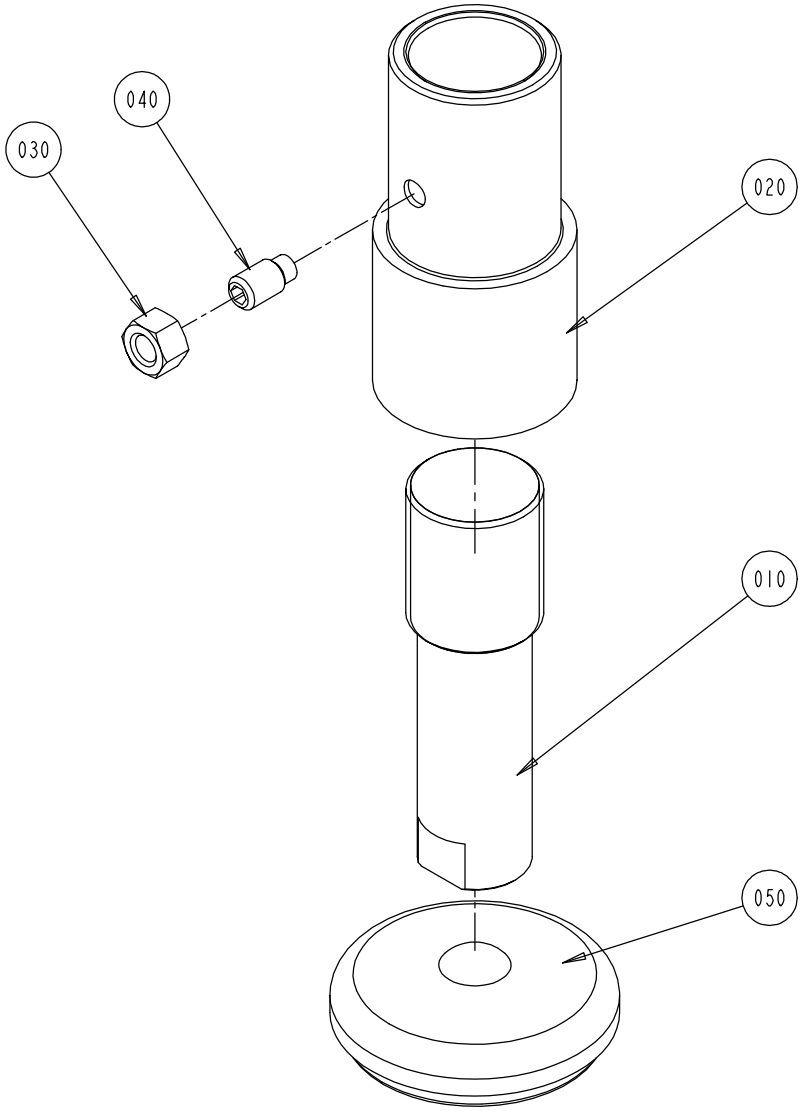

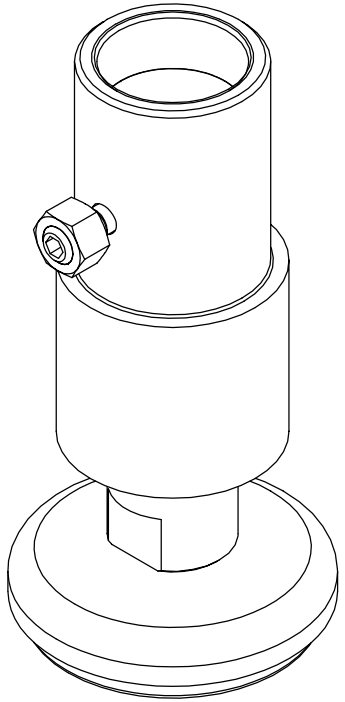

S - 1035076-2
ECN 71457

Pos	Part No	SP	UN	Qty	Description	Page No
Common parts						
010	1487712-0000	-		1	LEG	
020	1036120-0000	-		1	SLEEVE	
030	312605-0324	-		1	NUT,HEXAGON,M16 A280	
040	312311-0624	-		1	STOP SCREW T6SS16X30FZB	
050	90347-0175	-		1	MACHINE SHOE	

Pos	Part No	SP	UN	Qty	Description	Page No

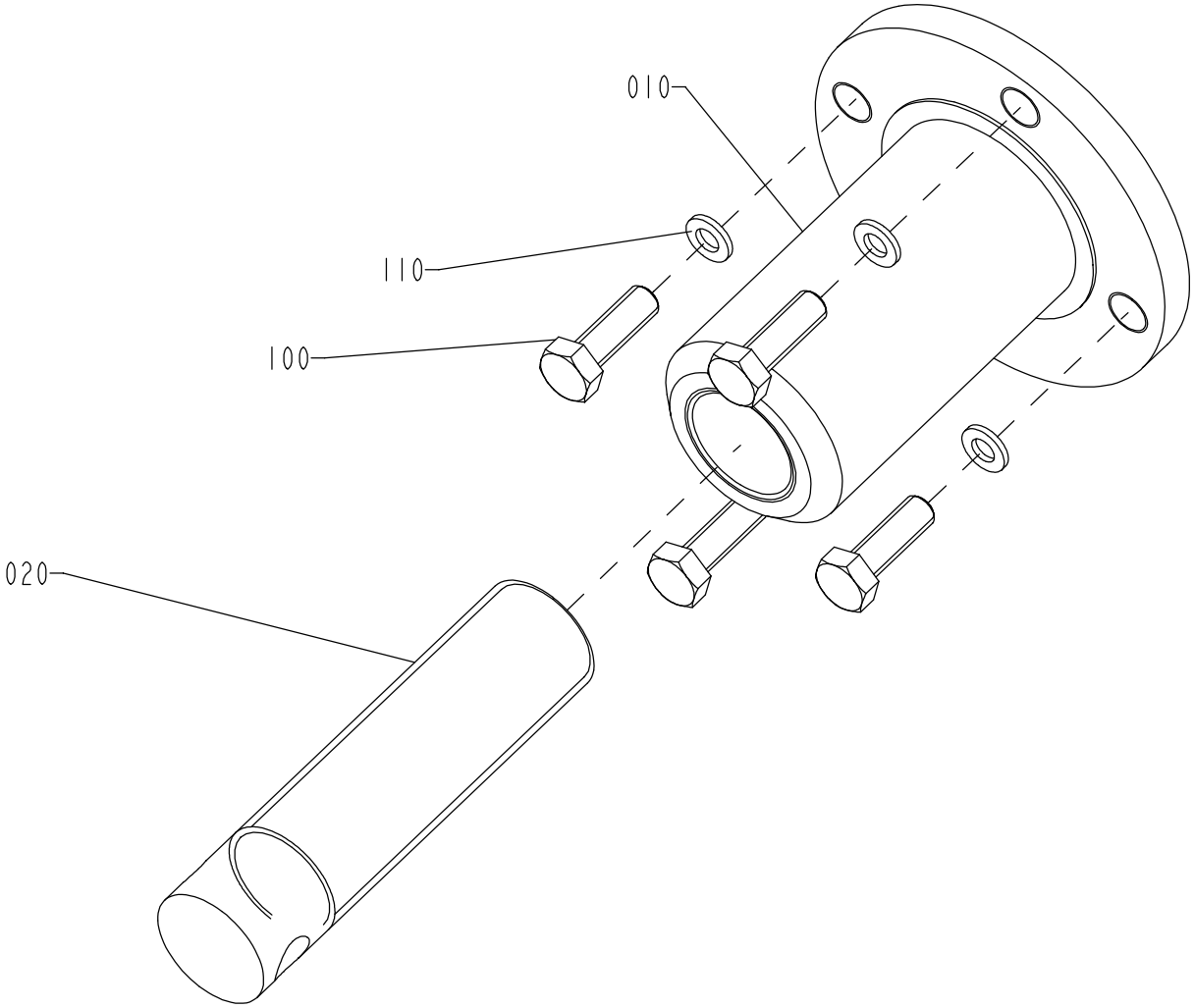

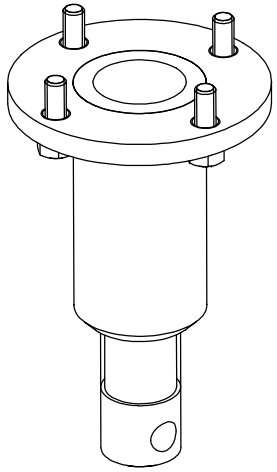

S - 1035471-1
ECN 71019

Pos	Part No	SP	UN	Qty	Description	Page No
Common parts						
010	469095-0000	-		1	HOLDER	
020	469096-0000	-		1	LEG	
100	312105-0453	-		4	SCREW M6S ISO 4017 M8X25 A280	
110	315125-0165	-		4	WASHERS,PLAIN ROUND,CHAMFERED 8,4X26X5	

Pos	Part No	SP	UN	Qty	Description	Page No

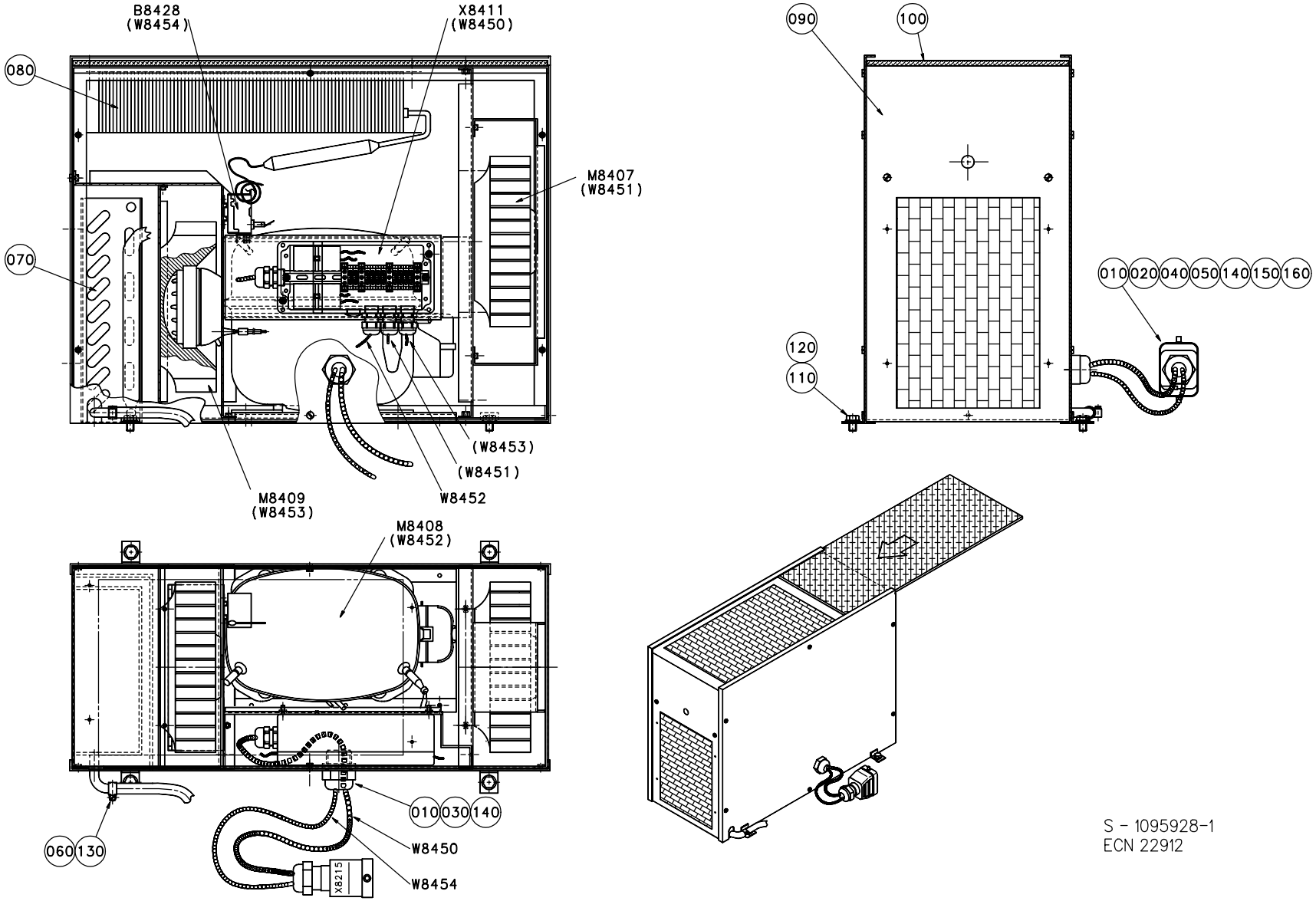

S - 1095928-1
ECN 22912

Pos	Part No	SP	UN	Qty	Description	Page No
Common parts						
010	B1282788-0000	D		2	INSERT	**181**
020	90089-0031	-		1	ENLARGING SLEEVE	
030	90099-0019	-		1	NUTS,HEXAGON, M12X1, DIN439	
040	90110-0157	-		1	COVER	
050	90110-0159	-		1	CONTACT	
060	90166-0126	-	M	2	TUBE 12 MM PA,TRANSP.	
070	90422-0041	-		1	EVAPORATOR	
080	90422-0042	-		1	CAPACITOR	
090	90422-0316	-		1	HOOD	
100	90422-0317	R		1	FILTER	
110	312105-0447	-		4	SCREW M6S ISO 4017 M8X12 A280	
120	315105-0165	-		4	WASHER,PLAIN ROUND 8,4X16 STAINLESS	
130	342991-0100	-		1	HOSE CLIP,WORM DRIVE TYPE 10-13	
140	353240-0005	-		2	GLANDS,NORMAL WITHOUT INSERT PG 21	
150	359005-0010	-		1	MARKING SESATS 0-9	
160	359005-0050	-		1	MARKING SEATS "X"	
B8428	90059-0029	R		1	THERMOSTAT	
M8407	90264-0069	R		1	FAN	
M8408	90270-0018	-		1	COMPRESSOR DANFOSS SC 12G	
M8409	90264-0069	R		1	FAN	
W8450	351150-0414	-	MM	1000	CABLE OILFLEX 5X1,5MM2	
W8452	351150-0412	-	MM	300	CABLE OLFLEX 3X1,5MM2	
W8454	351150-0404	-	MM	1200	CABLE OLFLEX 4X0,75 MM2	
X8411	A1285054-0100	-		1	CONNECTION BOX	**57**

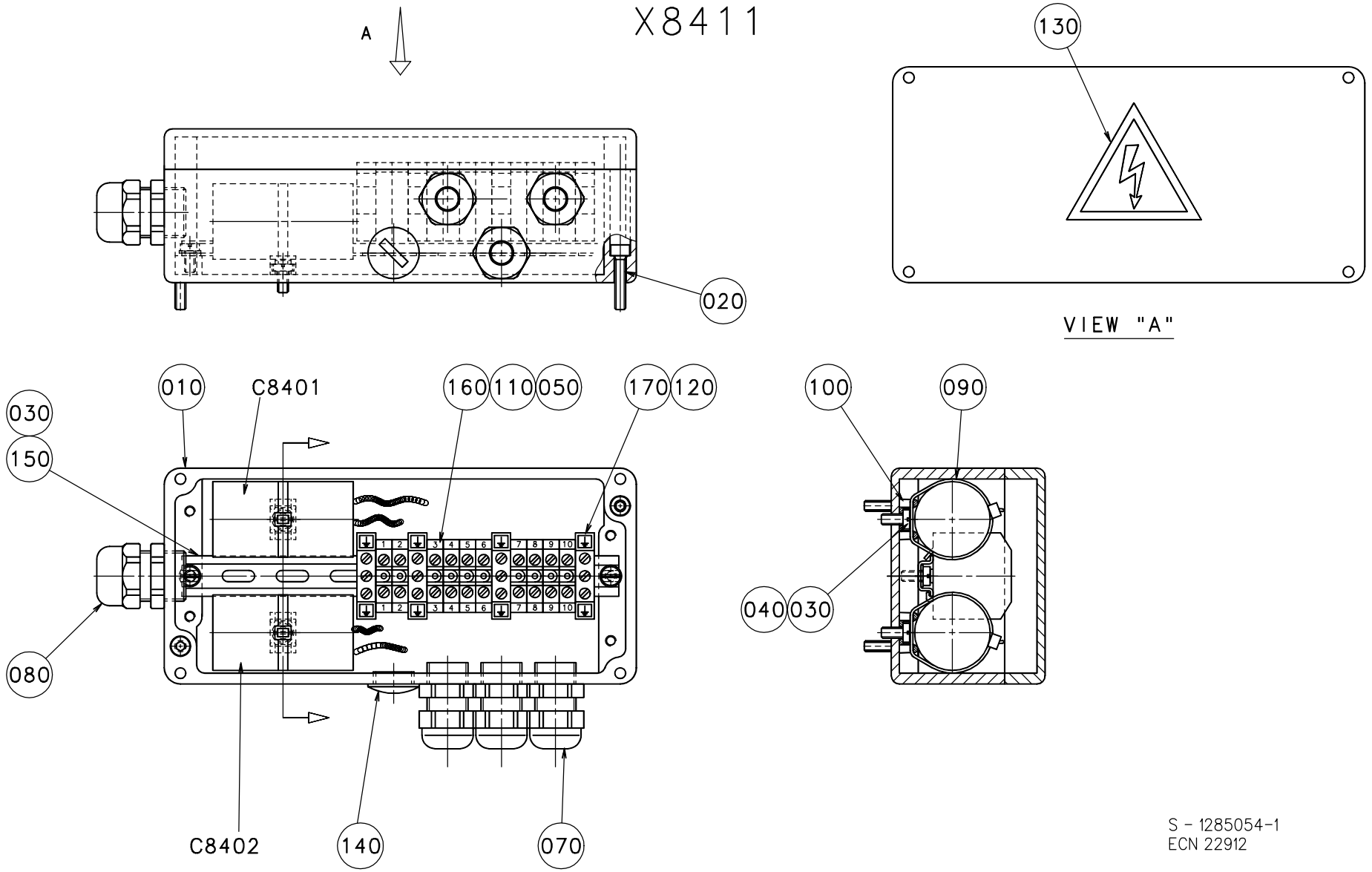

S - 1285054-1
ECN 22912

Pos	Part No	SP	UN	Qty	Description	Page No
Common parts						
010	B1350146-0000	-		1	CONNECTION BOX	**181**
020	312115-0295	-		2	SCREW MC6S ISO 4762 M4X20 A280	
030	312125-0287	-		4	SLOTTED CHEESE HEAD ISO 1207 M4X8 RFR	
040	315105-0136	-		2	WASHER,PLAIN ROUND 4,3X8 STAINLESS	
050	351172-0104	-	M	2	CABLE AWM DARKBLUE 1,5MM2	
070	352103-0101	-		3	CABLE GLAND ST 9;PR15,2/PG9	
080	352103-0106	-		1	CABLE GLAND ST 11	
090	352113-0102	-		2	CLIP-STRIP,BLACK 188X4,8MM	
100	352113-0205	-		2	ANCHOR TM2S8-C100	
110	359011-0807	-		2	MARKING PLATES 5-FW 1-50	
120	359011-0834	-		1	SET OF SIGNS 6-GW(EARTH)	
130	359705-0015	-		1	WARNING SIGN "ELECTRIC SHOCK"	
140	90002-0013	-		1	BLANK-OFF PLUG 15,2(PG 9)	
150	90077-0328	-	MM	162	RAIL TS15/5	
160	90077-0079	-		10	FEED THROUGH TERMINAL AKZ 4PA FOR TS15	
170	90135-0026	-		4	EARTH TERMINAL AKE 4PA	
C8401	90159-0097	R		1	CAPACITOR 2 UF 450VAC	
C8402	90159-0097	R		1	CAPACITOR 2 UF 450VAC	

Pos	Part No	SP	UN	Qty	Description	Page No

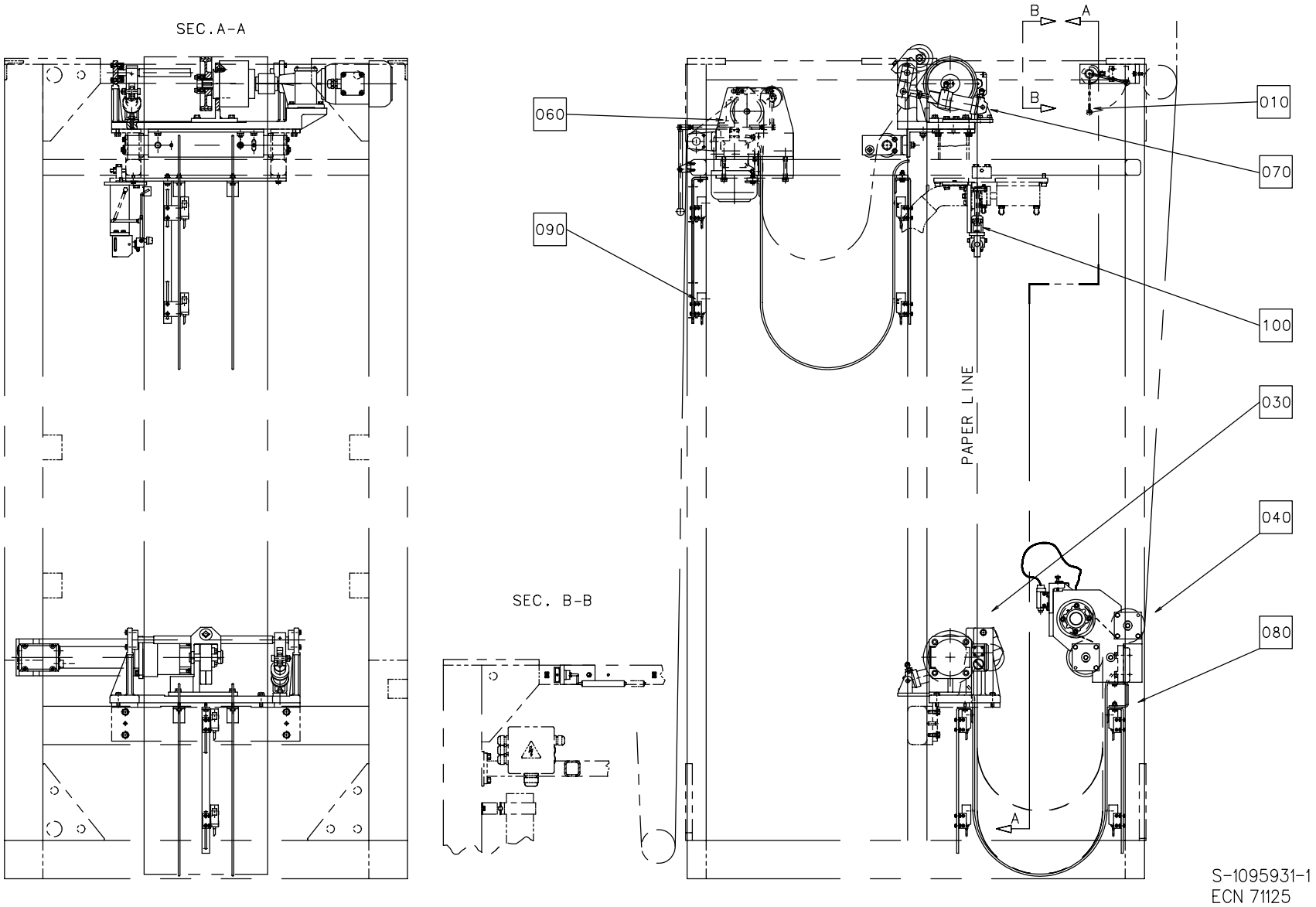
SEC.A-A
SEC. B-B
B
A
B
060
010
070
090
100
030
040
080
PAPER LINE
A
S-1095931-1
ECN 71125

Pos	Part No	SP	UN	Qty	Description	Page No
Common parts						
010	A514993-0200	-		1	BY-PASS SENSOR	**61**
030	A1095935-0100	-		1	DRIVE MOTOR	**63**
040	A1095942-0100	-		1	ROLLER ASSEMBLY	**65**
060	A1095953-0100	-		1	INFEED UNIT	**77**
070	A1095970-0100	-		1	PAPER BRAKE	**81**
080	A1095979-0100	-		1	PHOTOCELL UNIT	**87**
090	A1095980-0100	-		1	PHOTOCELL UNIT	**89**
100	A1255601-0100	-		1	EDGE GUIDE	**91**

Pos	Part No	SP	UN	Qty	Description	Page No

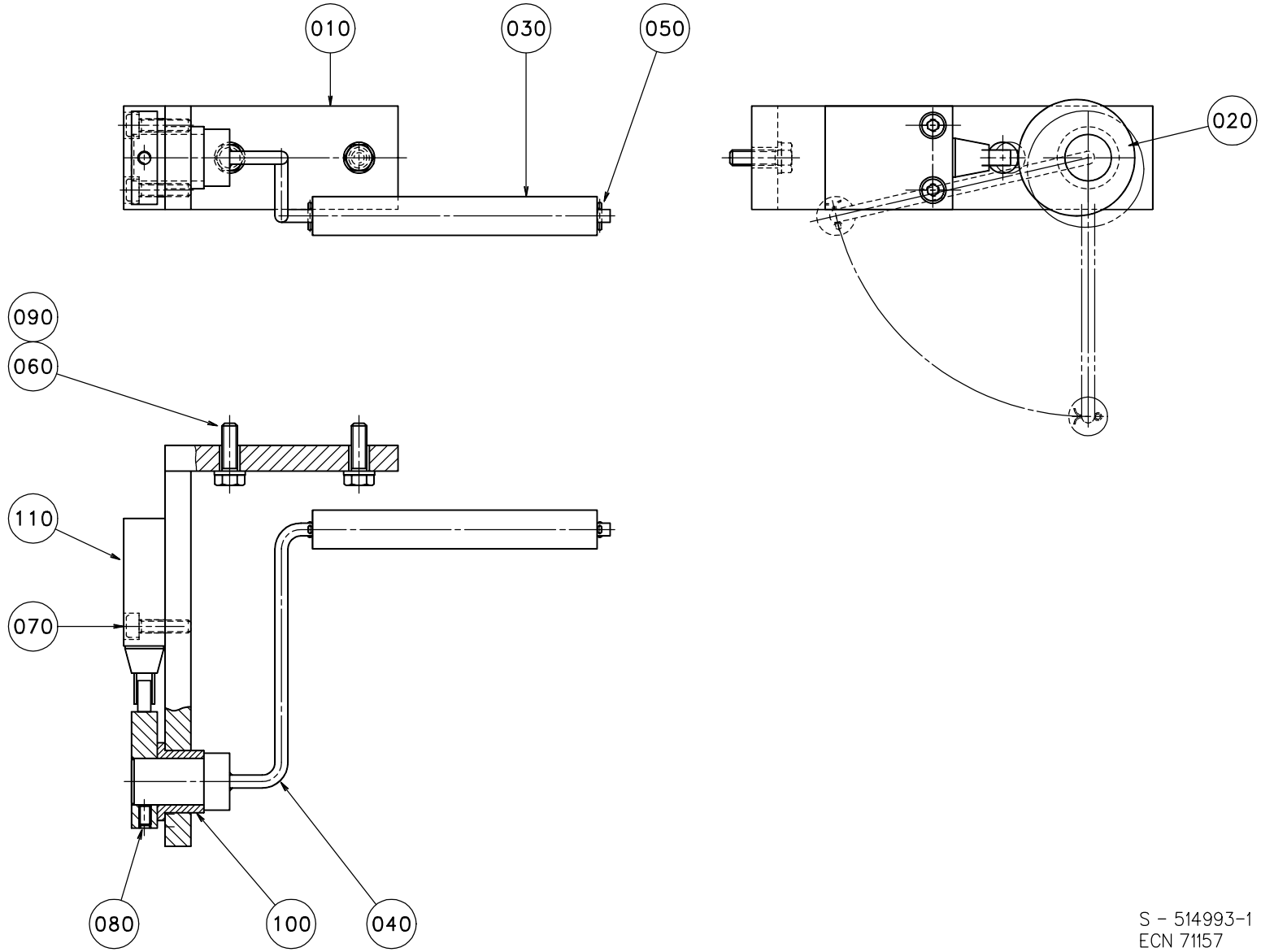

S - 514993-1
ECN 71157

Pos	Part No	SP	UN	Qty	Description	Page No
Common parts						
010	1260329-0000	-		1	BRACKET	
020	1255035-0000	D		1	ECCENTRIC	
030	1010814-0000	-		1	ROLLER	
040	1082861-0000	-		1	ARM	
050	311411-0138	-		2	SPLIT PIN SP1,6X12RFR	
060	312105-0370	-		2	SCREW M6S ISO 4017 M6X20 A280	
070	312115-0331	-		2	SCREW MC6S ISO 4762 M5X20 A280	
080	312318-0323	-		1	SET SCREW CUP POINT ISO 4029 M5X8 RFR	
090	315105-0153	-		2	WASHER,PLAIN ROUND 6,4X12 STAINLESS	
100	321111-0274	-		1	FLANGE BUSHING, 18X24X18	
110	90044-0094	R		1	LIMIT SW. 924 CE31-Y20-X5	

Pos	Part No	SP	UN	Qty	Description	Page No

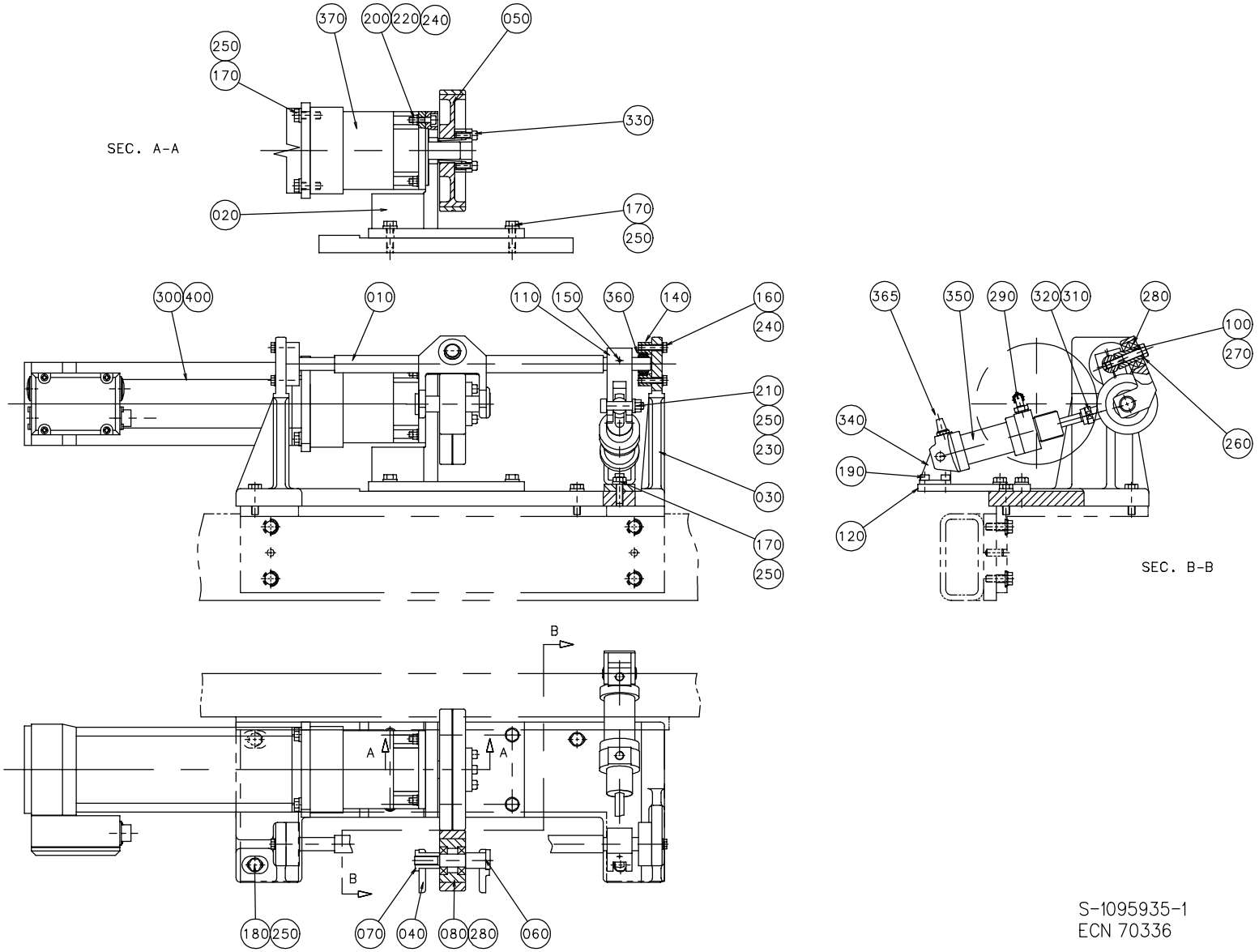

S-1095935-1
ECN 70336

Pos	Part No	SP	UN	Qty	Description	Page No
Common parts						
010	1129905-0000	-		1	SHAFT	
020	1129908-0000	-		1	BRACKET	
030	1129909-0000	-		1	BRACKET	
040	263150-0000	-		1	BRACKET	
050	1296871-0000	M		1	WHEEL	
060	263152-0000	D		1	SHAFT	
070	263153-0000	D		1	NUT	
080	266710-0000	M		1	WHEEL	
100	1129906-0000	D		1	PIN	
110	1129907-0000	-		1	LEVER	
120	1140016-0000	-		1	PLATE	
140	1140174-0000	-		2	BEARING HOUSING	
150	311112-0262	-		1	PINS,SLOTTED TUBULAR SPRING PIN 4X32	
160	312105-0372	-		4	SCREW M6S ISO 4017 M6X25 A280	
170	312105-0453	-		10	SCREW M6S ISO 4017 M8X25 A280	
180	312105-0455	-		4	SCREW M6S ISO 4017 M8X30 A280	
190	312115-0366	-		2	SCREW MC6S ISO 4762 M6X12 A280	
200	312115-0372	-		4	SCREW MC6S ISO 4762 M6X25 A280	
210	312180-0495	-		1	HEX. SOCKET HEAD SHOULD. ISO 7379 M8X30	
220	312605-0316	-		4	NUT,HEXAGON A280 M6M6	
230	312605-0318	-		1	NUT,HEXAGON,M8 RFR	
240	315105-0153	-		8	WASHER,PLAIN ROUND 6,4X12 STAINLESS	
250	315115-0165	-		15	WASHER TBRB 8,4X16 STAINLESS	
260	315105-0165	-		1	WASHER,PLAIN ROUND 8,4X16 STAINLESS	
270	312109-0460	-		1	SCREW M6S ISO 4017 M8X45 A280	
280	321308-0202	M		4	BALL BEARING 15X32X9	
290	342931-0113	-		1	ELBOW 90 COUPL.,EXT.THREAD 6/4-G1/8"	
300	90045-0194	D		1	SERVO MOTOR ELMO	
310	90099-0102	-		1	NUTS,HEXAGON, M10X1,25, DIN439	
320	90115-0134	M		1	ROD ENDS,MAINTENANCE FREE,10-M10X1.25RH	
330	90208-0078	R		1	CLAMPING ELEMENT WITH SLEEVE 20X28	
340	90239-0488	-		1	BRACKET,REAR,CLEVIS FLANGE,MINI-ISO,32	
350	90239-0834	D		1	DOUBLE ACTING, MINI-ISO, CYL. 32-25	
360	90240-0026	D		2	SPHERICAL BEARING, 15X26X12	
365	90328-0003	-		1	SILENCER	
370	90056-0143	D		1	GEAR BOX	
400	353245-0005	-		1	GLAND,EMC,EXTENDED WITH INSERT PR 22,5	

Pos	Part No	SP	UN	Qty	Description	Page No

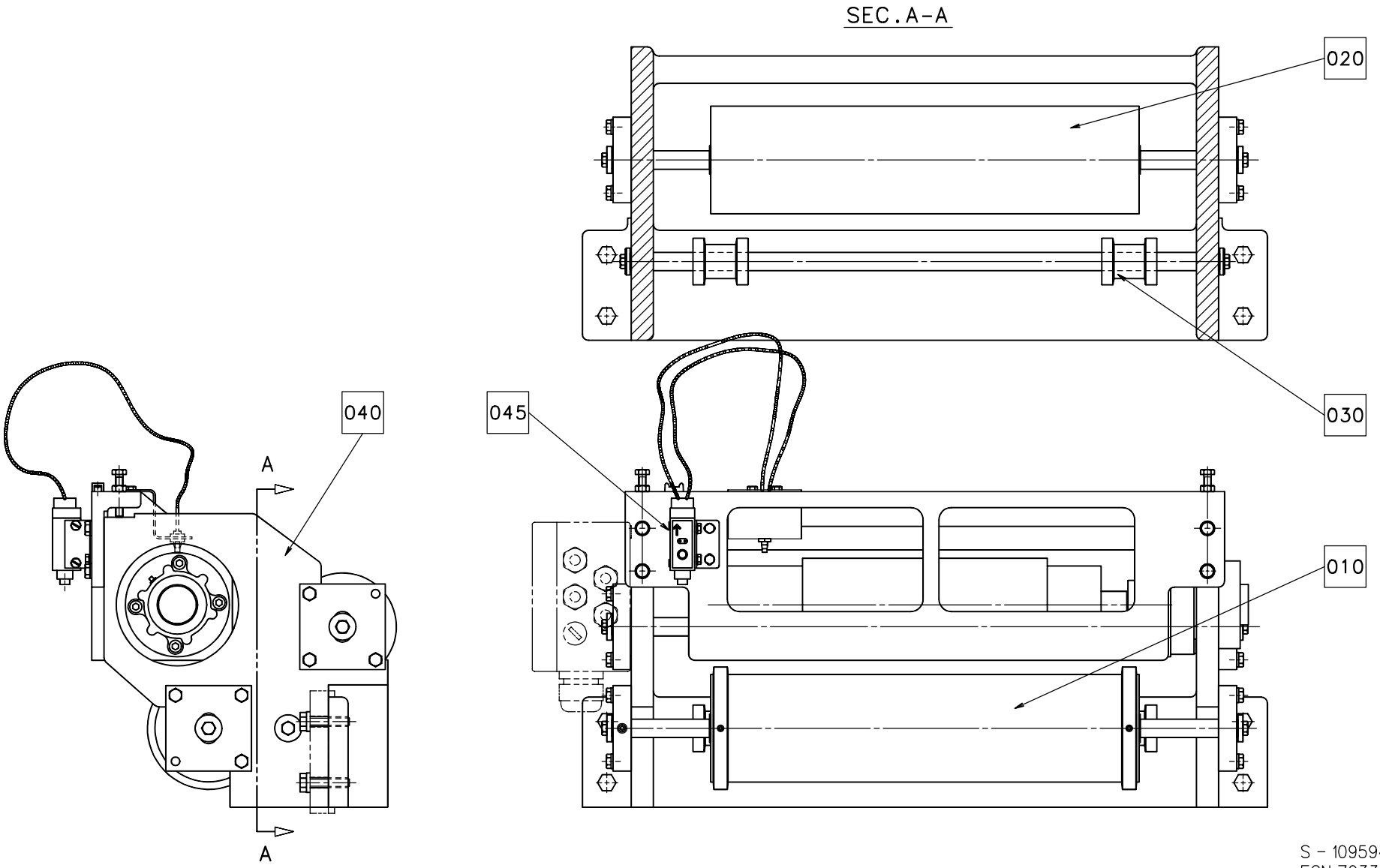

S - 1095942-1
ECN 70336

Pos	Part No	SP	UN	Qty	Description	Page No
Common parts						
010	A1095937-0100	-		1	GUIDE ROLLER WITH FLANGE	**67**
020	A1095938-0100	-		1	GUIDE ROLLER	**69**
030	A1095940-0100	-		1	GUIDE ROLLER	**71**
040	A1095941-0100	-		1	TENSION ROLLER	**73**
045	A1260411-0100	-		1	PATCH/TAB SPLICE DETECTOR	**75**

Pos	Part No	SP	UN	Qty	Description	Page No

GUIDE ROLLER WITH FLANGE

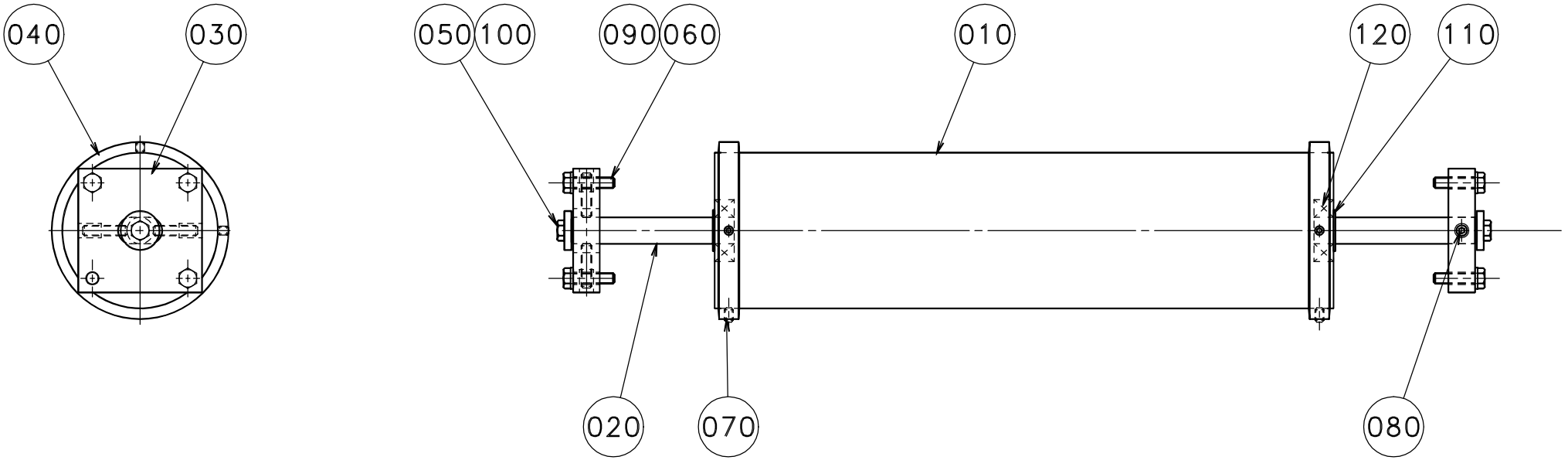

S – 1095937-1
ECN 70336

Pos	Part No	SP	UN	Qty	Description	Page No
Common parts						
010	1035882-0000	D		1	BENDING ROLLER	
020	1129624-0000	D		1	AXLE SUPPORT	
030	1129630-0000	-		2	BEARING SEAT	
040	1140055-0000	-		2	RING	
050	312105-0368	-		2	SCREW M6S ISO 4017 M6X16 A280	
060	312105-0372	-		6	SCREW M6S ISO 4017 M6X25 A280	
070	312311-0321	-		4	SET SCREW FULL DOGPOINT ISO 4028 M5X6	
080	312318-0372	-		4	SET SCREW CUP POINT ISO 4029 M6X25 RFR	
090	315105-0153	-		6	WASHER,PLAIN ROUND 6,4X12 STAINLESS	
100	315125-0153	-		2	WASHERS,PLAIN ROUND,CHAMFERED 6,4X22X4	
110	315751-0112	-		2	RETAINING RINGS FOR SHAFT 15	
120	321313-0102	M		2	BALL BEARING 15X35X11	

Pos	Part No	SP	UN	Qty	Description	Page No

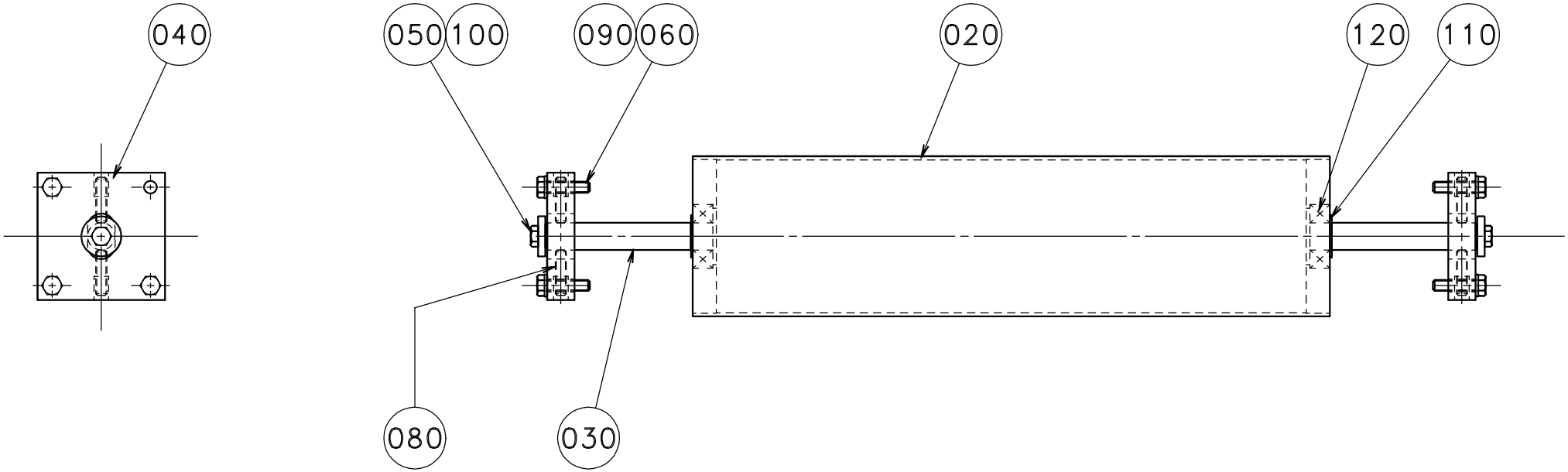

S - 1095938-1
ECN 70336

Pos	Part No	SP	UN	Qty	Description	Page No
Common parts						
020	1035882-0000	D		1	BENDING ROLLER	
030	1129624-0000	D		1	AXLE SUPPORT	
040	1129630-0000	-		2	BEARING SEAT	
050	312105-0368	-		2	SCREW M6S ISO 4017 M6X16 A280	
060	312105-0372	-		6	SCREW M6S ISO 4017 M6X25 A280	
080	312318-0372	-		4	SET SCREW CUP POINT ISO 4029 M6X25 RFR	
090	315105-0153	-		6	WASHER,PLAIN ROUND 6,4X12 STAINLESS	
100	315125-0153	-		2	WASHERS,PLAIN ROUND,CHAMFERED 6,4X22X4	
110	315751-0112	-		2	RETAINING RINGS FOR SHAFT 15	
120	321313-0102	M		2	BALL BEARING 15X35X11	

Pos	Part No	SP	UN	Qty	Description	Page No

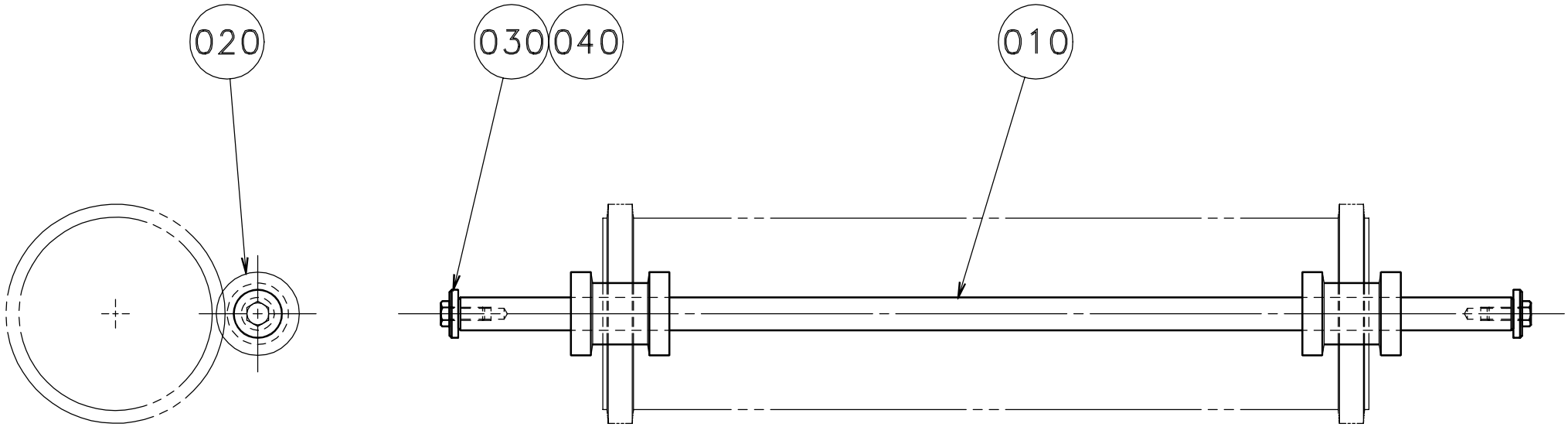

S - 1095940-1
ECN 70336

Pos	Part No	SP	UN	Qty	Description	Page No
Common parts						
010	1129626-0000	-		1	AXLE SUPPORT	
020	1140135-0000	D		2	ROLLER	
030	312105-0368	-		2	SCREW M6S ISO 4017 M6X16 A280	
040	315125-0153	-		2	WASHERS,PLAIN ROUND,CHAMFERED 6,4X22X4	

Pos	Part No	SP	UN	Qty	Description	Page No

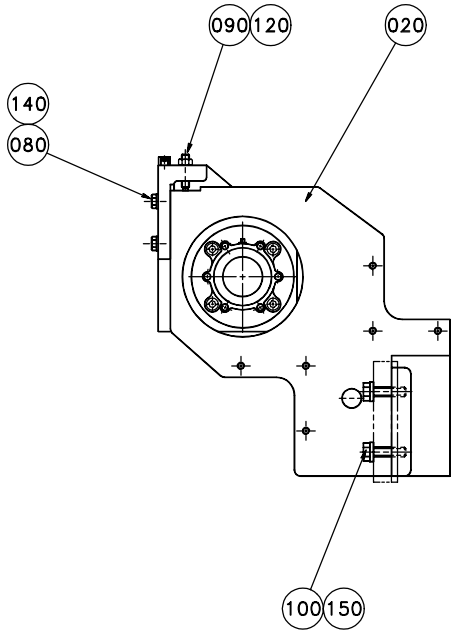

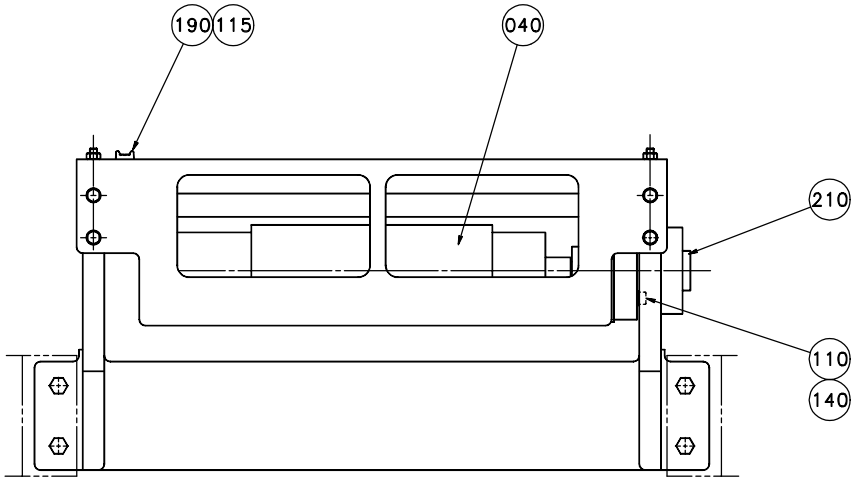

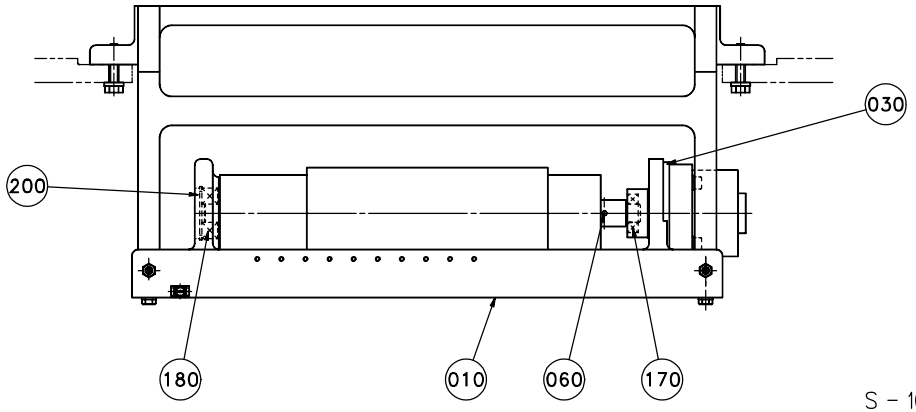

S – 1095941-1
ECN 70336

Pos	Part No	SP	UN	Qty	Description	Page No
Common parts						
010	1129628-0000	-		1	BRACKET	
020	1129629-0000	-		1	BRACKET	
030	522408-0000	-		1	BEARING HOUSING	
040	532719-0001	D		1	FEEDING ROLLER	
060	311112-0256	-		1	PIN,SLOTTED TUBULAR SPRING PIN 4X20	
080	312105-0370	-		4	SCREW M6S ISO 4017 M6X20 A280	
090	312311-0374	-		2	SET SCREW FULL DOGPOINT ISO 4028 M6X30	
100	312105-0455	-		4	SCREW M6S ISO 4017 M8X30 A280	
110	312115-0376	-		4	SCREW MC6S ISO 4762 M6X35 A280	
115	312125-0289	-		1	SLOTTED HEMCS4X10RFR	
120	312605-0316	-		2	NUT,HEXAGON A280 M6M6	
140	315105-0153	-		8	WASHER,PLAIN ROUND 6,4X12 STAINLESS	
150	315115-0165	-		4	WASHER TBRB 8,4X16 STAINLESS	
170	321308-0202	M		1	BALL BEARING 15X32X9	
180	321316-0202	M		1	BEARINGS,BALL BEARING SKF6302-2RS	
190	352113-0205	-		1	ANCHOR TM2S8-C100	
200	90141-0020	-		1	RETAINING RINGS FOR HOLE 42	
210	90347-0054	R		1	DAMPER	

Pos	Part No	SP	UN	Qty	Description	Page No

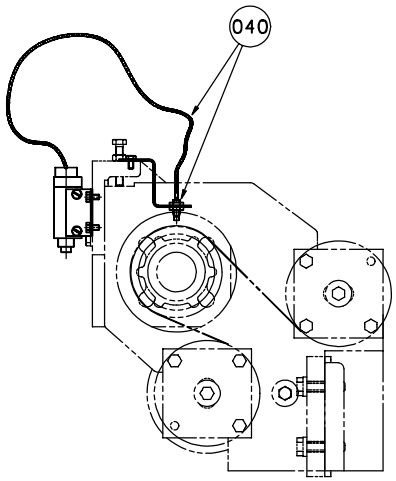

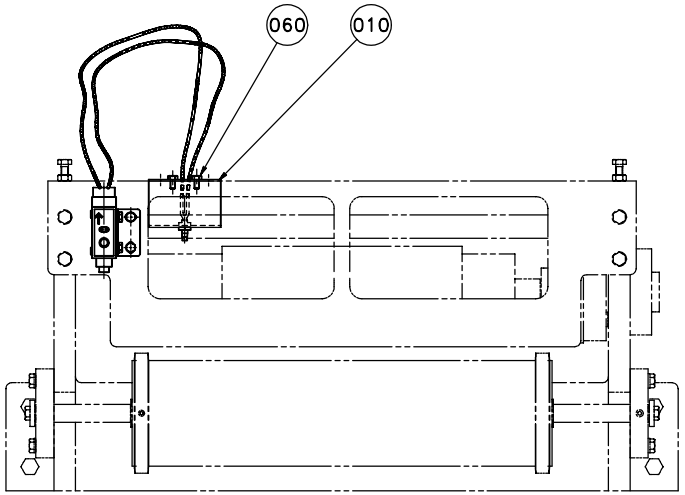

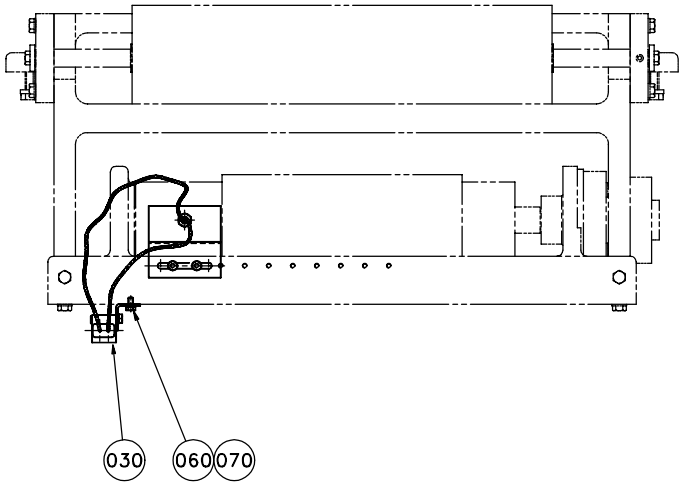

S - 1260411-1
ECN 70336

Pos	Part No	SP	UN	Qty	Description	Page No
Common parts						
010	1260413-0000	-		1	BRACKET	
030	90232-0067	R		1	PHOTOCELL	
040	90232-0325	R		1	FIBRE E32-DC200	
060	312105-0287	-		4	SCREW M6S ISO 4017 M4X8 A280	
070	315105-0136	-		2	WASHER,PLAIN ROUND 4,3X8 STAINLESS	

Pos	Part No	SP	UN	Qty	Description	Page No

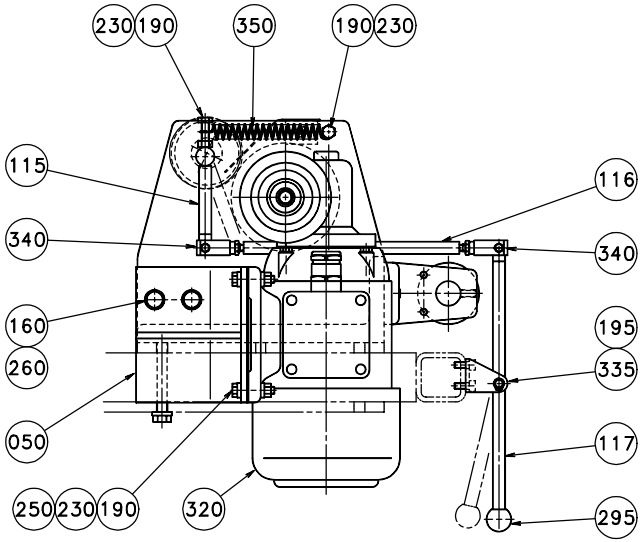

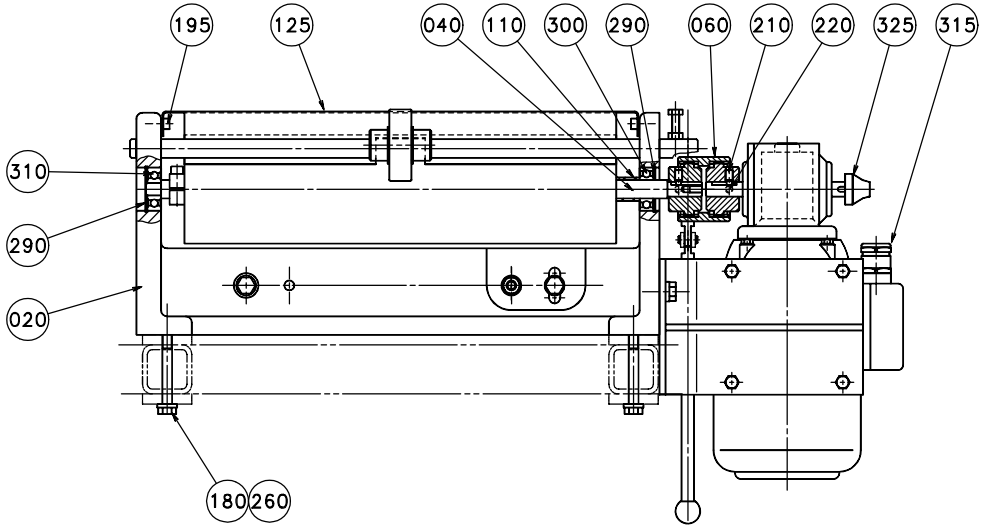

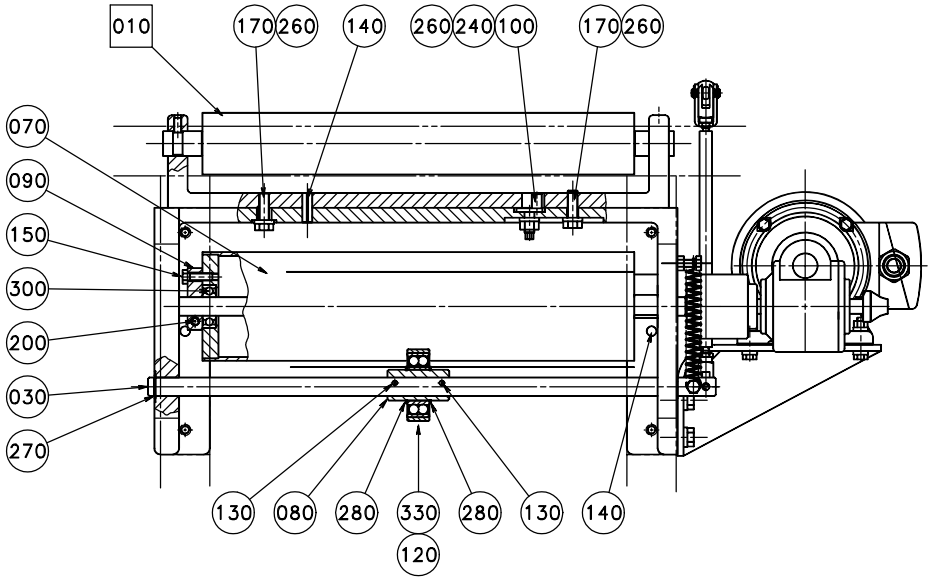

S - 1095953-1
ECN 70336

Pos	Part No	SP	UN	Qty	Description	Page No
Common parts						
010	A1095952-0100	-		1	BENDING ROLLER ASSEMBLY	**79**
020	985865-0000	-		1	BRACKET	
030	985856-0000	-		1	SHAFT	
040	1036220-0000	D		1	SHAFT	
050	985854-0000	-		1	BRACKET	
060	B985899-0000	D		1	COUPLING	**181**
070	1035882-0000	D		1	BENDING ROLLER	
080	1255631-0000	D		1	ECCENTRIC BUSHING	
090	1036232-0000	-		1	BRACKET	
100	1140132-0000	D		1	ECCENTRIC	
110	985855-0000	-		1	SPACER BUSHING	
115	1260642-0000	-		1	LEVER	
116	1260643-0000	-		1	LEVER	
117	1260644-0000	-		1	LEVER	
120	1260648-0000	M		1	BUSHING	
125	1260649-0000	-		1	PAPER GUIDE	
130	311112-0260	-		2	SLOTTED TURP 4X28 RFR	
140	311112-0377	-		3	PINS,SLOTTED TUBULAR SPRING PIN 8X24	
150	312105-0370	-		1	SCREW M6S ISO 4017 M6X20 A280	
160	312105-0451	-		2	SCREW M6S ISO 4017 8X20 A280	
170	312105-0453	-		2	SCREW M6S ISO 4017 M8X25 A280	
180	312105-0465	-		4	SCREW M6S ISO 4014 M8X70 A280	
190	312109-0374	-		6	SCREW M6S ISO 4017 M6X30 A280	
195	312115-0327	-		4	SCREW MC6S ISO 4762 M5X12 A280	
200	312115-0372	-		1	SCREW MC6S ISO 4762 M6X25 A280	
210	312311-0366	-		2	SET SCREW FULL DOGPOINT ISO 4028 M6X12	
220	312318-0362	-		2	SET SCREW CUP POINT ISO 4029 M6X8 RFR	
230	312605-0316	-		6	NUT,HEXAGON A280 M6M6	
240	312605-0318	-		1	NUT,HEXAGON,M8 RFR	
250	315115-0153	-		8	WASHER TBRB 6,4X12 STAINLESS	
260	315115-0165	-		9	WASHER TBRB 8,4X16 STAINLESS	
270	315751-0112	-		2	RETAINING RINGS FOR SHAFT 15	
280	315751-0122	-		2	RETAINING RINGS FOR SHAFT 30	
290	315753-0124	-		2	RETAINING RINGS FOR HOLE 35	
295	318800-0102	-		1	HANDLES,SPHERICAL KNOB,INT.THRE.,D.20-M5	
300	321313-0102	M		3	BALL BEARING 15X35X11	
310	321316-0200	M		1	BEARINGS,BALL BEARING SKF6300-2RS	
315	90012-0137	-		1	GLAND,EMC,EXTENDED WITH INSERT	
320	90069-0281	D		1	WORM GEAR MOTOR GROSSHOPP OKM-87-60	
325	90015-0021	-		1	GLAND,LEAD-IN,IP67	
330	90214-0144	M		1	BEARINGS,BALL BEARING,SPHERICAL,SELF-ALI	
335	90239-0486	-		1	BRACKET,REAR,CLEVIS FLANGE,MINI-ISO,16	
340	90239-0489	-		2	ROD END,CLEVIS WITH AXLE,M6	
350	90335-0091	R		1	SPRING	

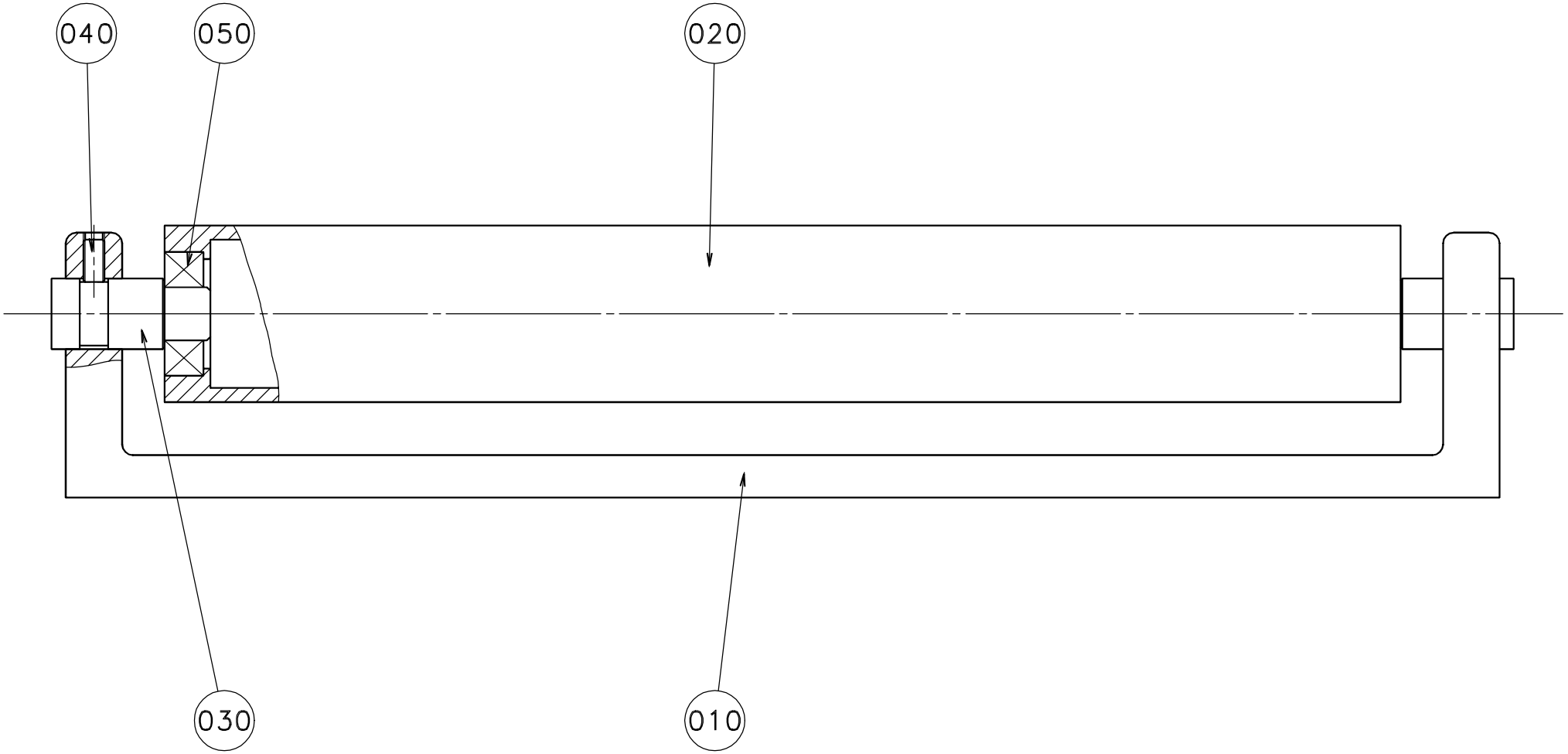

S - 1095952-1
ECN 70336

Pos	Part No	SP	UN	Qty	Description	Page No
Common parts						
010	1129952-0000	-		1	BRACKET	
020	1129951-0000	D		1	BENDING ROLLER	
030	1140133-0000	-		2	AXLE PIN	
040	312318-0366	-		2	SET SCREW CUP POINT ISO 4029 M6X12 RFR	
050	321313-0102	M		2	BALL BEARING 15X35X11	

Pos	Part No	SP	UN	Qty	Description	Page No

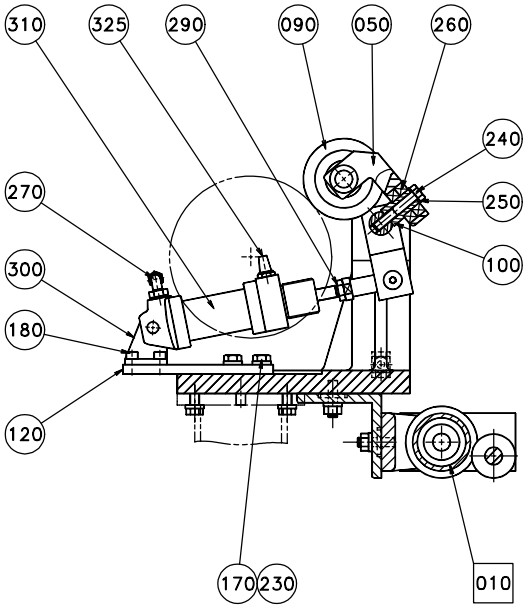

SEC. A-A

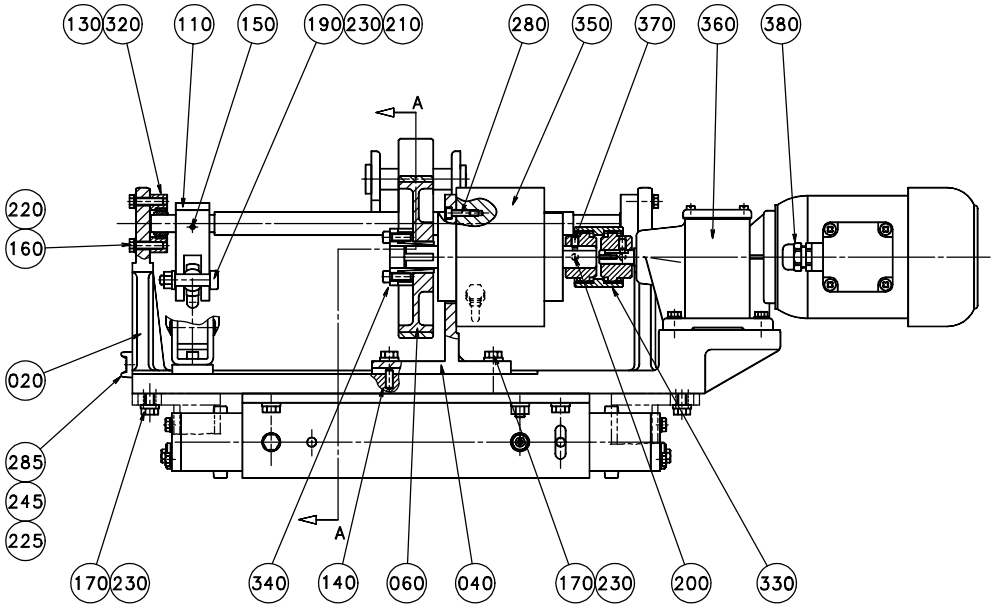

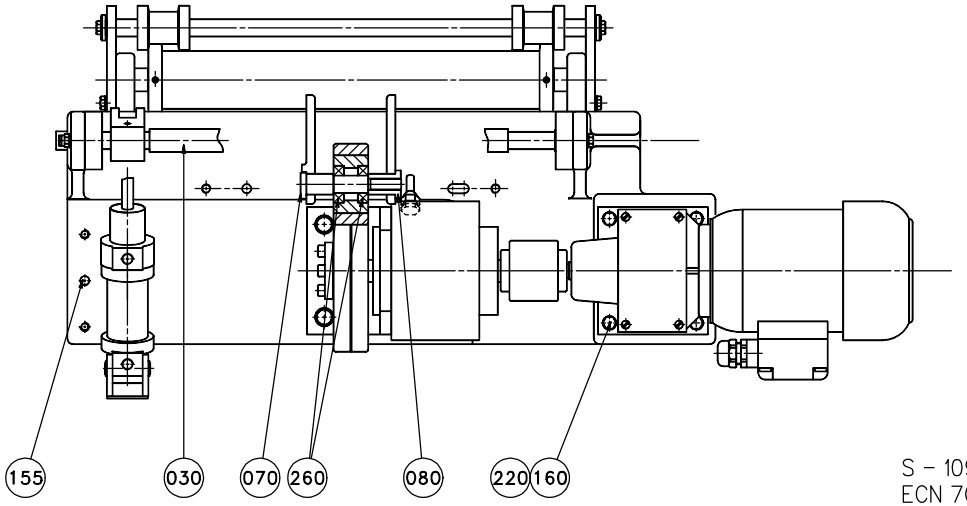

S - 1095970-1
ECN 70336

Pos	Part No	SP	UN	Qty	Description	Page No
Common parts						
010	A1095969-0100	-		1	BENDING ROLLER WITH FLANGES	**83**
020	1140184-0000	-		1	BRACKET	
030	1140185-0000	-		1	SHAFT	
040	1140186-0000	-		1	BRACKET	
050	263150-0000	-		1	BRACKET	
060	1140187-0000	M		1	WHEEL	
070	263152-0000	D		1	SHAFT	
080	263153-0000	D		1	NUT	
090	266710-0000	M		1	WHEEL	
100	1129906-0000	D		1	PIN	
110	1129907-0000	-		1	LEVER	
120	1140016-0000	-		1	PLATE	
130	1140174-0000	-		2	BEARING HOUSING	
140	311103-0351	-		2	PINS,STRAIGHT 6X16	
150	311112-0262	-		1	PINS,SLOTTED TUBULAR SPRING PIN 4X32	
155	311112-0377	-		2	PINS,SLOTTED TUBULAR SPRING PIN 8X24	
160	312105-0372	-		8	SCREW M6S ISO 4017 M6X25 A280	
170	312105-0453	-		10	SCREW M6S ISO 4017 M8X25 A280	
180	312115-0366	-		2	SCREW MC6S ISO 4762 M6X12 A280	
190	312180-0495	-		1	HEX. SOCKET HEAD SHOULD. ISO 7379 M8X30	
200	312318-0362	-		2	SET SCREW CUP POINT ISO 4029 M6X8 RFR	
210	312605-0318	-		1	NUT,HEXAGON,M8 RFR	
220	315105-0153	-		8	WASHER,PLAIN ROUND 6,4X12 STAINLESS	
225	315105-0136	-		1	WASHER,PLAIN ROUND 4,3X8 STAINLESS	
230	315115-0165	-		11	WASHER TBRB 8,4X16 STAINLESS	
240	312109-0460	-		1	SCREW M6S ISO 4017 M8X45 A280	
245	312125-0289	-		1	SLOTTED HEMCS4X10RFR	
250	315105-0165	-		1	WASHER,PLAIN ROUND 8,4X16 STAINLESS	
260	321308-0202	M		4	BALL BEARING 15X32X9	
270	342931-0113	-		1	ELBOW 90 COUPL.,EXT.THREAD 6/4-G1/8"	
280	312115-0329	-		4	SCREW MC6S ISO 4762 M5X16 A280	
285	352113-0204	-		1	ANCHOR TM3S25-M	
290	90115-0134	M		1	ROD ENDS,MAINTENANCE FREE,10-M10X1.25RH	
300	90239-0488	-		1	BRACKET,REAR,CLEVIS FLANGE,MINI-ISO,32	
310	90239-0834	D		1	DOUBLE ACTING, MINI-ISO, CYL. 32-25	
320	90240-0026	D		2	SPHERICAL BEARING, 15X26X12	
325	90328-0003	-		1	SILENCER	
330	B985900-0000	R		1	COUPLING	**181**
340	90208-0118	D		1	CLAMPING ELEMENT	
350	90355-0158	R		1	ELECTROMAGNETIC CLUTCH	
360	90069-0258	D		1	GEAR MOTOR	
370	312311-0366	-		2	SET SCREW FULL DOGPOINT ISO 4028 M6X12	
380	352103-0106	-		1	CABLE GLAND ST 11	

BENDING ROLLER WITH FLANGES

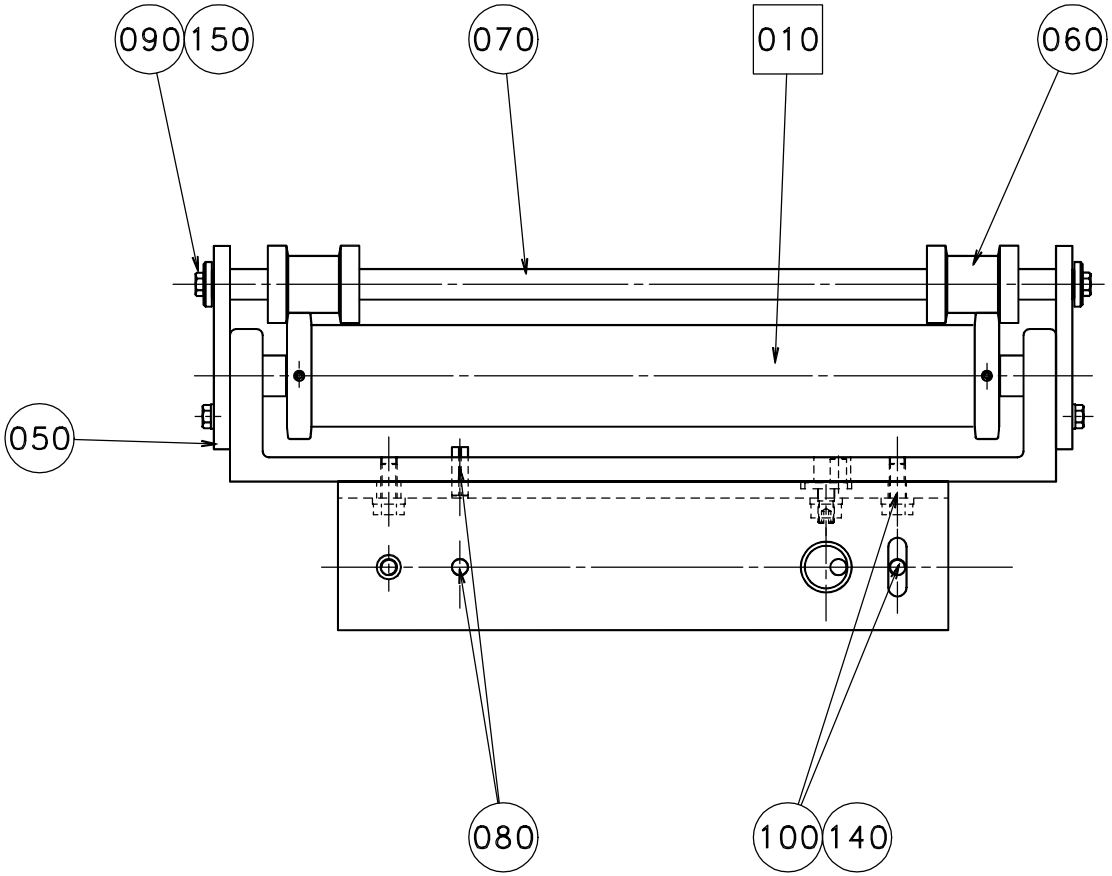

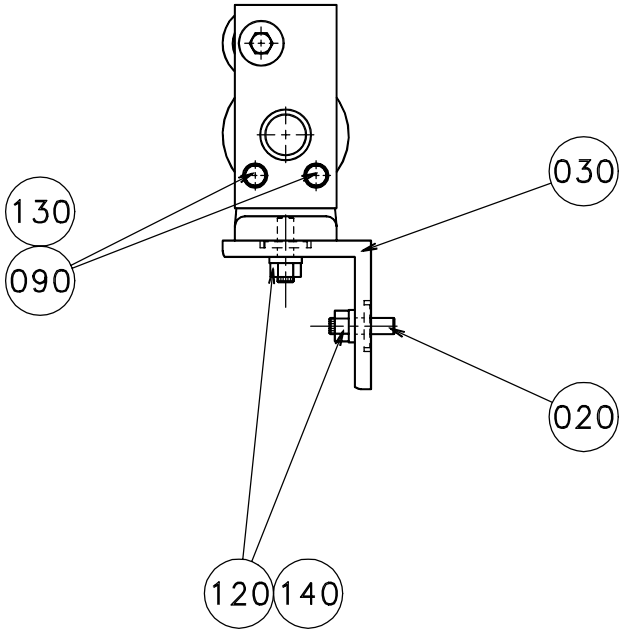

S - 1095969-1
ECN 71157

Pos	Part No	SP	UN	Qty	Description	Page No
Common parts						
010	A1334322-0100	-		1	BENDING ROLLER WITH FLANGES	**85**
020	1140132-0000	D		2	ECCENTRIC	
030	1140136-0000	-		1	BRACKET	
050	1140134-0000	-		2	PLATE	
060	1140135-0000	D		2	ROLLER	
070	1140137-0000	-		1	SHAFT	
080	311112-0377	-		2	PINS,SLOTTED TUBULAR SPRING PIN 8X24	
090	312105-0368	-		6	SCREW M6S ISO 4017 M6X16 A280	
100	312105-0451	-		4	SCREW M6S ISO 4017 8X20 A280	
120	312605-0318	-		2	NUT,HEXAGON,M8 RFR	
130	315105-0153	-		4	WASHER,PLAIN ROUND 6,4X12 STAINLESS	
140	315115-0165	-		6	WASHER TBRB 8,4X16 STAINLESS	
150	315125-0153	-		2	WASHERS,PLAIN ROUND,CHAMFERED 6,4X22X4	

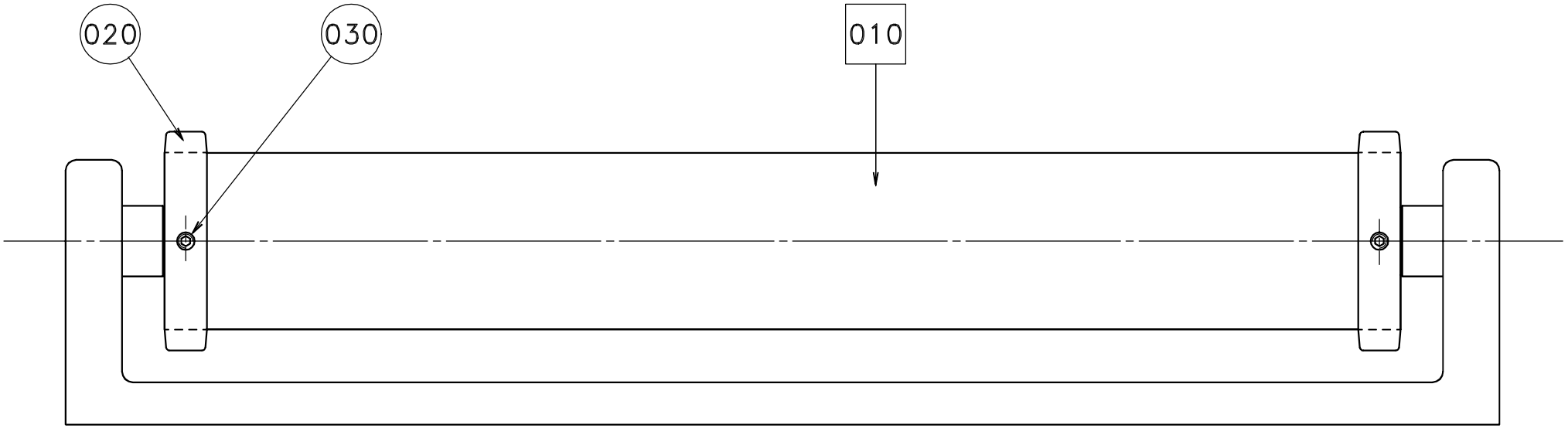

S - 1334322-1
ECN 71157

Pos	Part No	SP	UN	Qty	Description	Page No
Common parts						
010	A1095952-0100	-		1	BENDING ROLLER ASSEMBLY	**79**
020	1140131-0000	-		2	FLANGE	
030	312311-0321	-		4	SET SCREW FULL DOGPOINT ISO 4028 M5X6	

Pos	Part No	SP	UN	Qty	Description	Page No

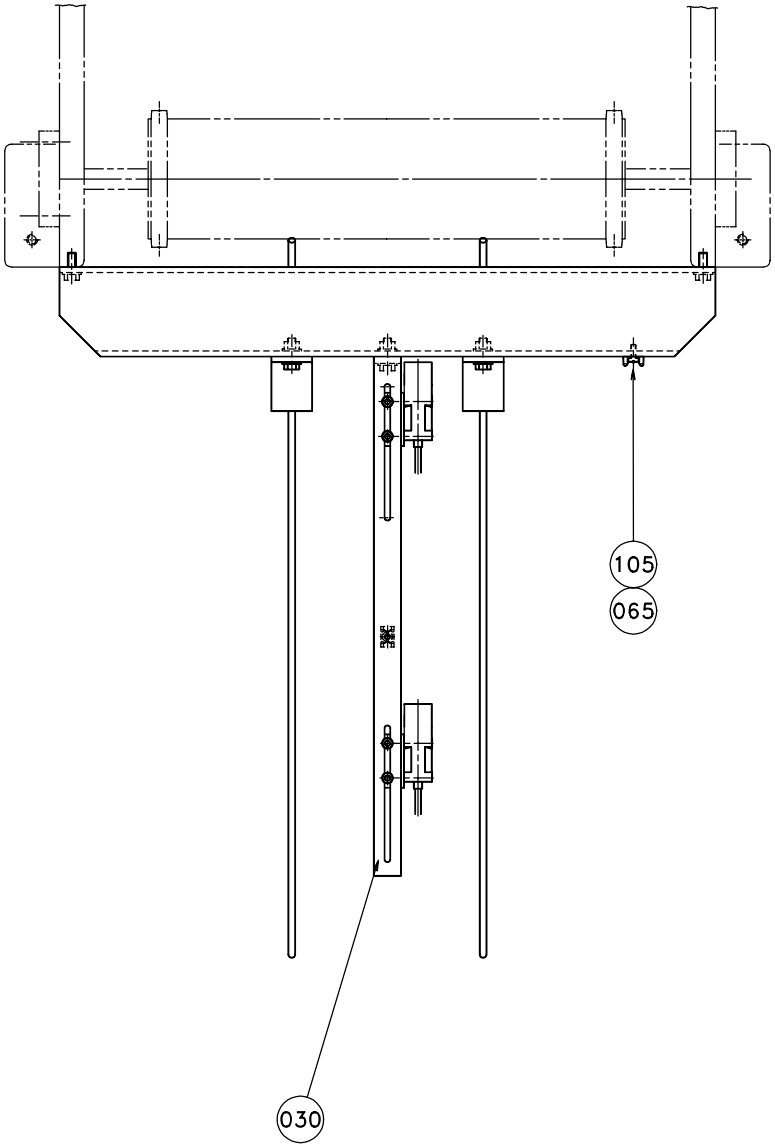
105
065
030

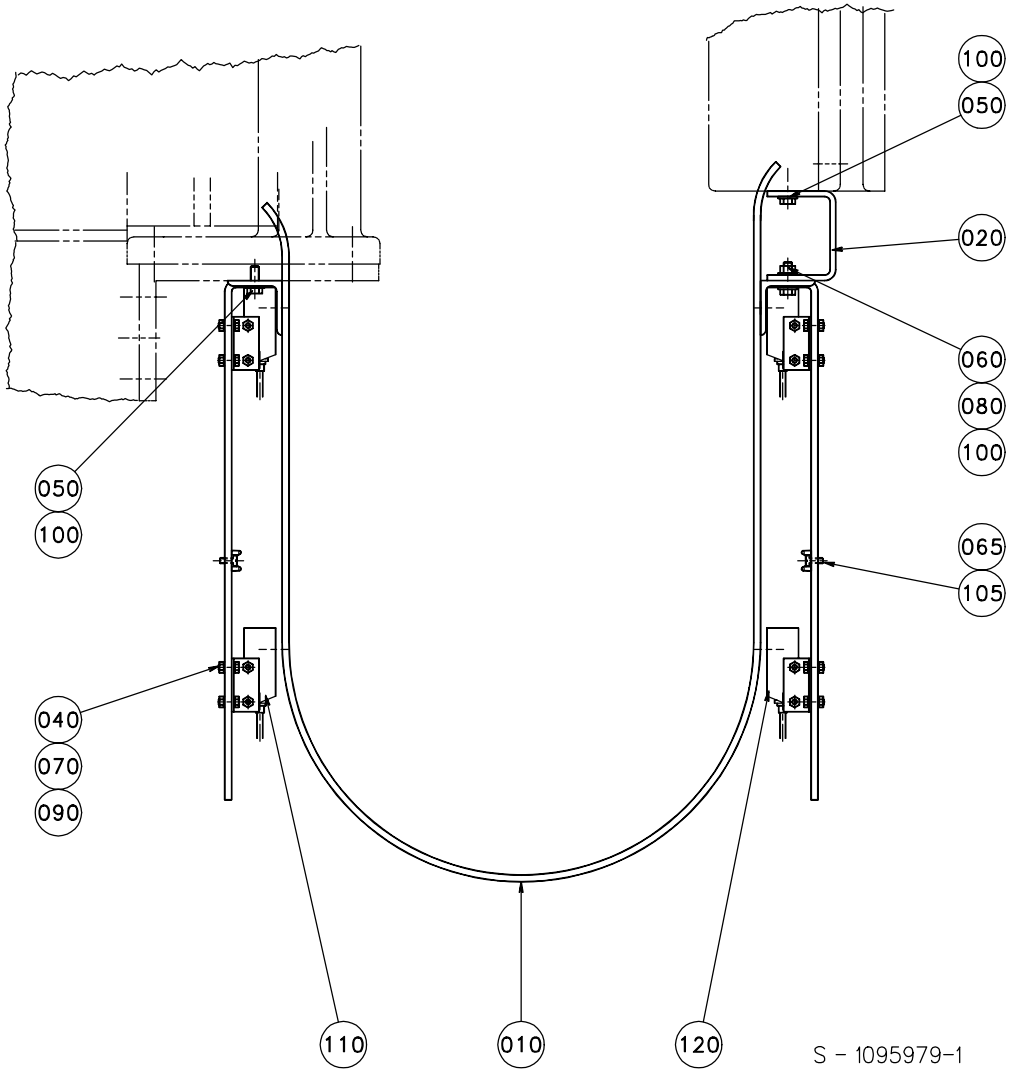
100
050
020
060
080
100
065
105
050
100
040
070
090
110
010
120
S - 1095979-1
ECN 70336

Pos	Part No	SP	UN	Qty	Description	Page No
Common parts						
010	1140209-0000	-		2	GUIDE	
020	1140210-0000	-		1	BRACKET	
030	1140211-0000	-		2	PHOTOCELL BRACKET	
040	312105-0291	-		8	SCREW M6S ISO 4017 M4X12 A280	
050	312105-0368	-		5	SCREW M6S ISO 4017 M6X16 A280	
060	312105-0370	-		3	SCREW M6S ISO 4017 M6X20 A280	
065	312125-0289	-		3	SLOTTED HEMCS4X10RFR	
070	312605-0312	-		8	NUT,HEXAGON,M4 RFR	
080	312605-0316	-		3	NUT,HEXAGON A280 M6M6	
090	315105-0136	-		16	WASHER,PLAIN ROUND 4,3X8 STAINLESS	
100	315105-0153	-		11	WASHER,PLAIN ROUND 6,4X12 STAINLESS	
105	352113-0205	-		3	ANCHOR TM2S8-C100	
110	90232-0103	R		2	PH.CELL E3S-CT61-L-5M	
120	90232-0104	R		2	PH.CELL E3S-CT61-D-5M	

Pos	Part No	SP	UN	Qty	Description	Page No

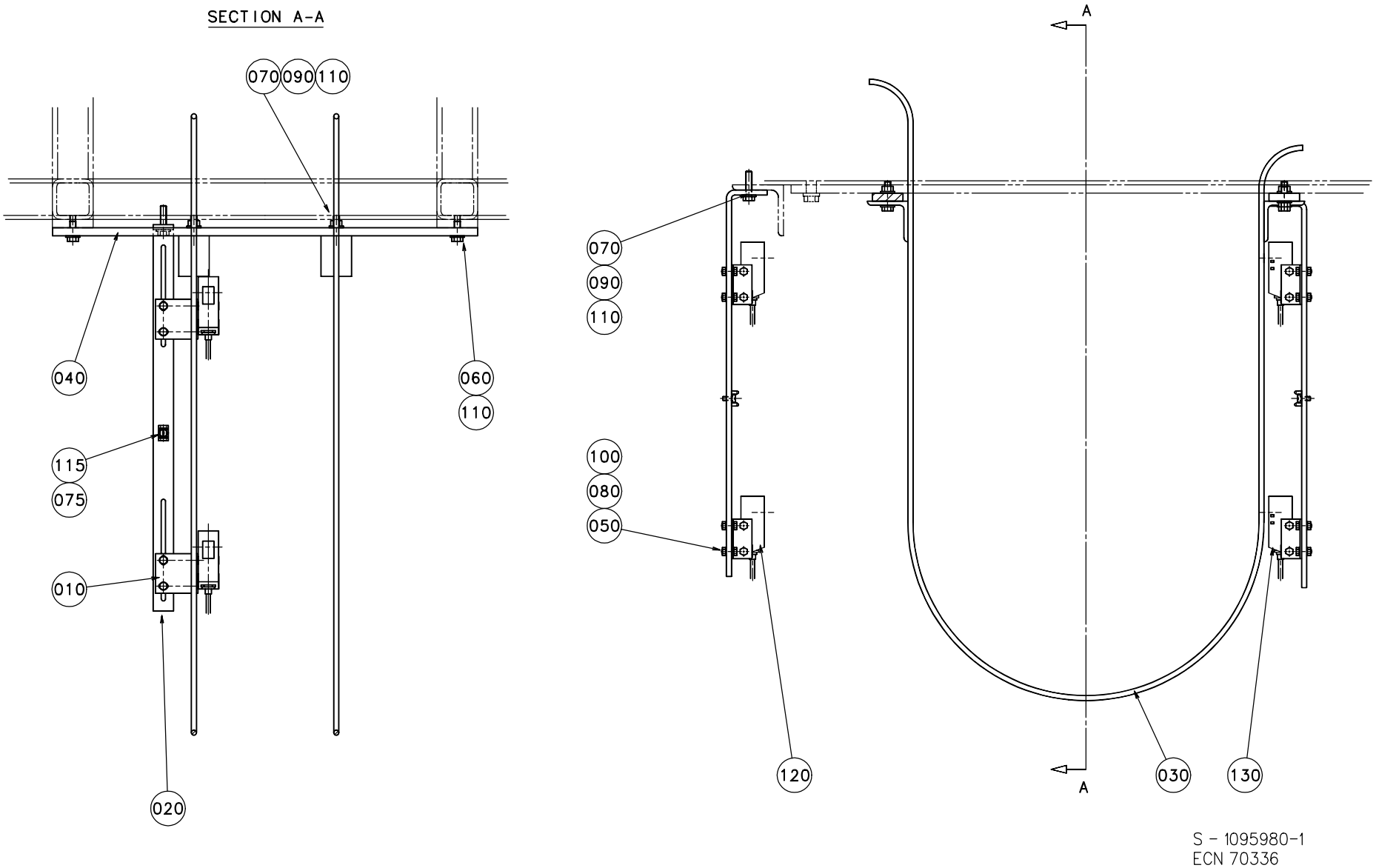
SECTION A-A
070
090
110
040
060
110
115
075
010
020
A
070
090
110
100
080
050
120
030
130
A
S - 1095980-1
ECN 70336

Pos	Part No	SP	UN	Qty	Description	Page No
Common parts						
010	1082765-0000	-		4	PHOTOCELL BRACKET	
020	1140211-0000	-		2	PHOTOCELL BRACKET	
030	1140212-0000	-		2	GUIDE	
040	1140213-0000	-		2	BRACKET	
050	312105-0291	-		8	SCREW M6S ISO 4017 M4X12 A280	
060	312105-0368	-		4	SCREW M6S ISO 4017 M6X16 A280	
070	312105-0372	-		6	SCREW M6S ISO 4017 M6X25 A280	
075	312125-0289	-		2	SLOTTED HEMCS4X10RFR	
080	312605-0312	-		8	NUT,HEXAGON,M4 RFR	
090	312605-0316	-		6	NUT,HEXAGON A280 M6M6	
100	315105-0136	-		16	WASHER,PLAIN ROUND 4,3X8 STAINLESS	
110	315105-0153	-		16	WASHER,PLAIN ROUND 6,4X12 STAINLESS	
115	352113-0205	-		2	ANCHOR TM2S8-C100	
120	90232-0103	R		2	PH.CELL E3S-CT61-L-5M	
130	90232-0104	R		2	PH.CELL E3S-CT61-D-5M	

Pos	Part No	SP	UN	Qty	Description	Page No

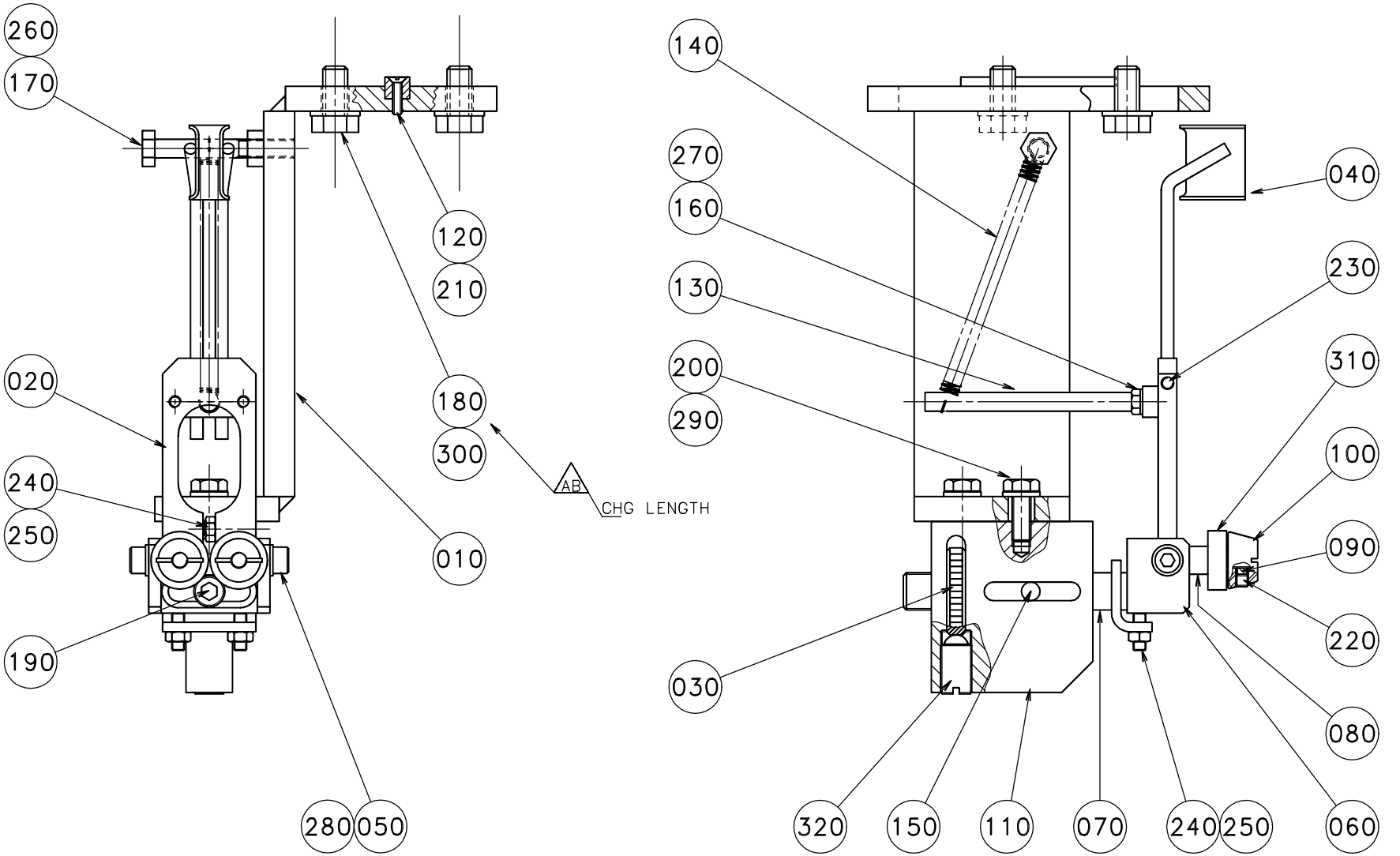

S - 1255601-1
ECN 71370

EC No: - - 20000423
Group number: 1255601-0100
Assembly Drawing: 1255601-1

Issue: 20000706

Pos	Part No	SP	UN	Qty	Description	Page No
Common parts						
010	1255579-0000	-		1	BRACKET	
020	905937-0000	-		1	SPRING	
030	23580-0000	-		1	SHIFTER HANDLE	
040	23583-0000	-		1	GUIDE FINGER	
050	23584-0000	-		2	SCREW	
060	24351-0000	-		1	BOW CLAMP	
070	24352-0000	-		1	SHAFT	
080	24355-0000	-		2	DOWEL	
090	24356-0000	-		4	PIECE	
100	111543-0000	-		2	GUIDE CONE	
110	245210-0000	-		1	BODY	
120	905244-0000	-		1	WEDGE	
130	905938-0000	-		1	BRACKET	
140	90335-0222	R		1	SPRING	
150	311103-0350	-		1	PIN,STRAIGHT M6 6X14 RFR	
160	312105-0291	-		2	SCREW M6S ISO 4017 M4X12 A280	
170	312105-0379	-		1	SCREW M6S ISO 4014 M6X45 A280	
180	312105-0449	-		4	SCREW M6S ISO 4017 M8X16 A280	
190	312115-0366	-		1	SCREW MC6S ISO 4762 M6X12 A280	
200	312105-0368	-		2	SCREW M6S ISO 4017 M6X16 A280	
210	312145-0224	-		1	SLOTTED HEMFS3X10RFR	
220	312318-0283	-		4	SET SCREW CUP POINT ISO 4029 M4X4 RFR	
230	312318-0285	-		2	STOP SCREW ISO 4029 M4X6 A4	
240	312318-0291	-		3	SET SCREW CUP POINT ISO 4029 M4X12 RFR	
250	312605-0312	-		3	NUT,HEXAGON,M4 RFR	
260	312605-0316	-		1	NUT,HEXAGON A280 M6M6	
270	315105-0136	-		2	WASHER,PLAIN ROUND 4,3X8 STAINLESS	
280	315105-0146	-		2	WASHER,PLAIN ROUND 5,3X10 STAINLESS	
290	315105-0153	-		2	WASHER,PLAIN ROUND 6,4X12 STAINLESS	
300	315105-0165	-		4	WASHER,PLAIN ROUND 8,4X16 STAINLESS	
310	90214-0138	M		2	BALL BEARING,STAINLESS	
320	90287-0009	-		1	SPRINGLOADED SCREW M10X19	

Pos	Part No	SP	UN	Qty	Description	Page No

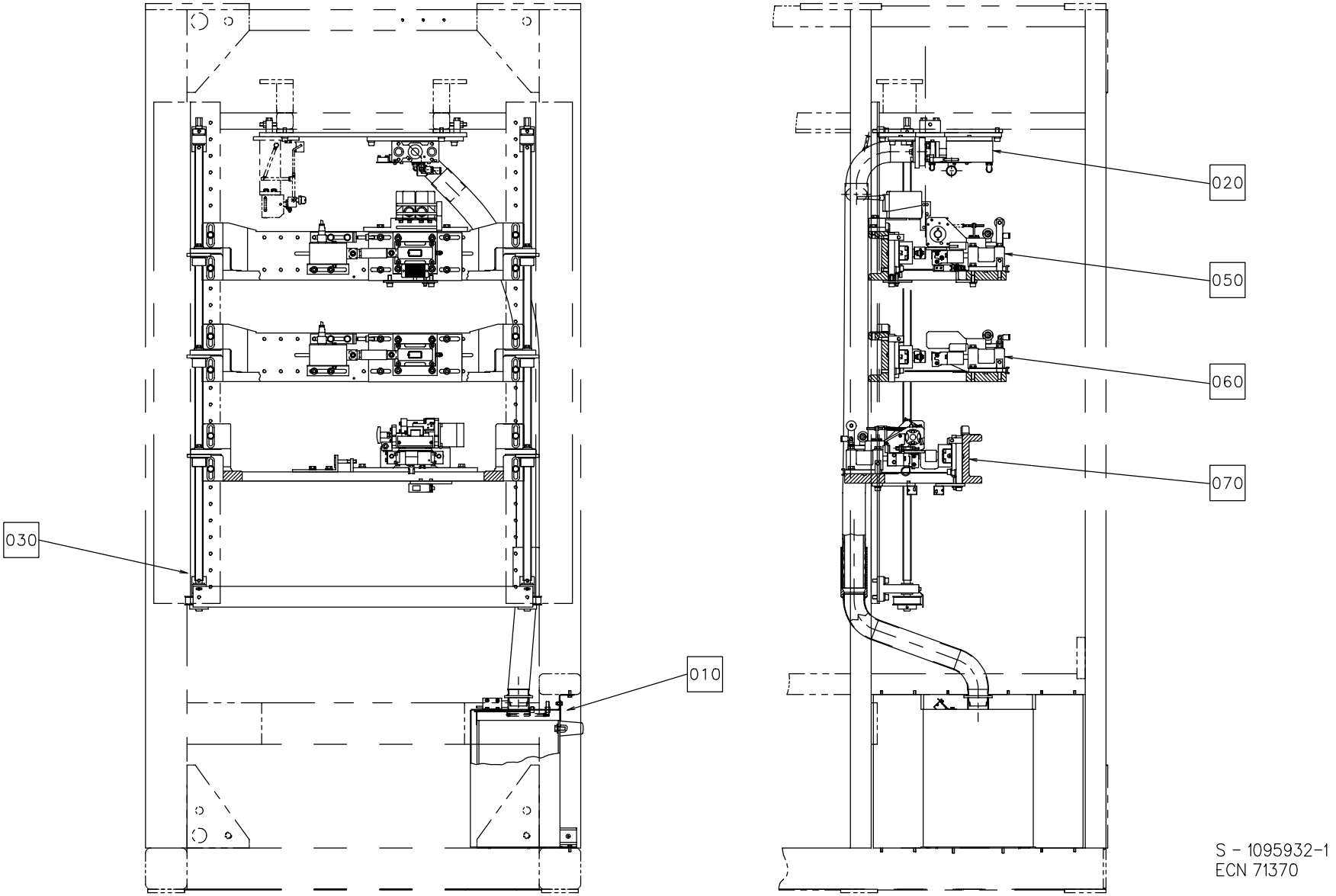
030
010
020
050
060
070
S - 1095932-1
ECN 71370

Pos	Part No	SP	UN	Qty	Description	Page No
Common parts						
010	A1095955-0100	-		1	WASTE BOX	**95**
020	A1095992-0100	-		1	PUNCH BRACKET	**97**
030	A1185078-0100	-		1	LIFTING DEVICE	**101**
050	A1260419-0100	-		1	APPLICATOR PATCH	**103**
060	A1260420-0100	-		1	APPLICATOR RESEAL	**119**
070	A1260421-0100	-		1	APPLICATOR TAB	**123**
090	A1296882-0100	-		1	OPENING SPECIFICATION	**135**

Pos	Part No	SP	UN	Qty	Description	Page No

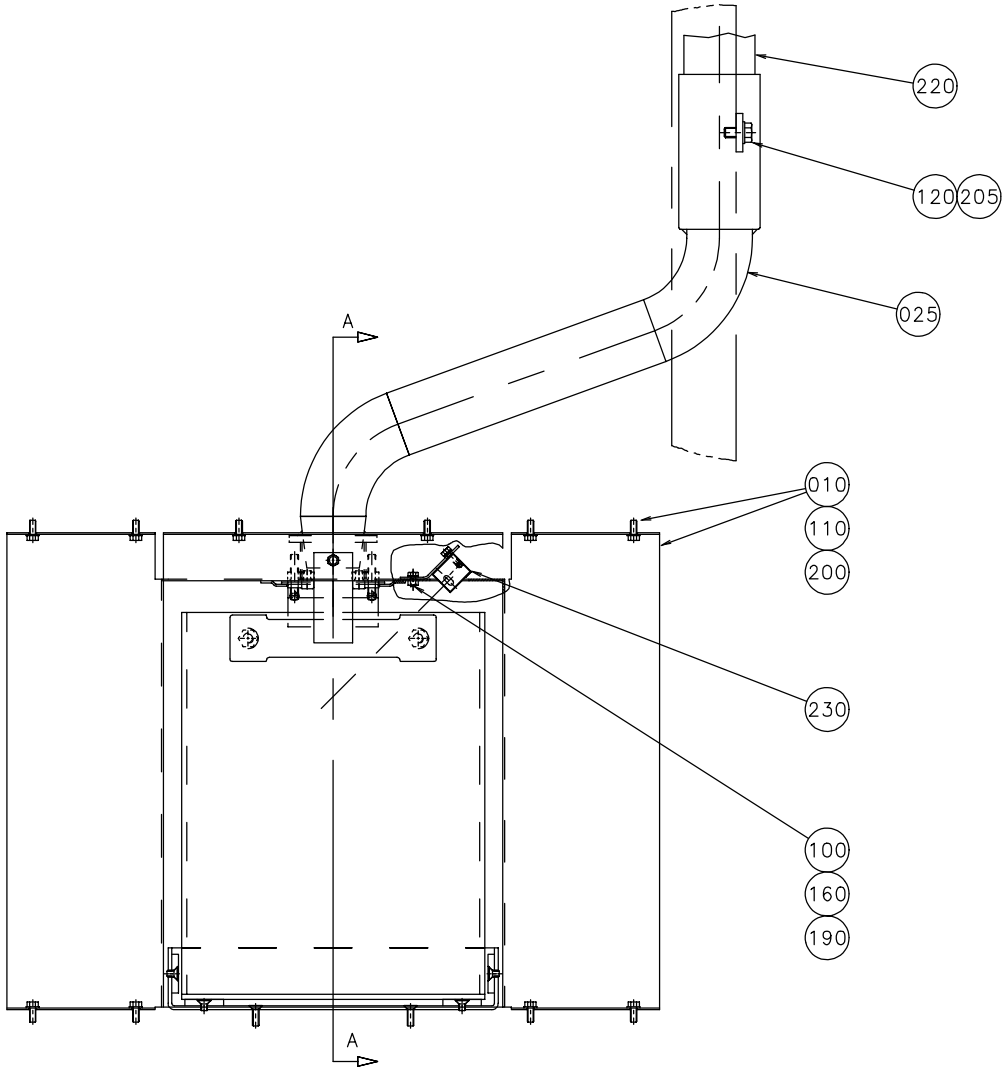

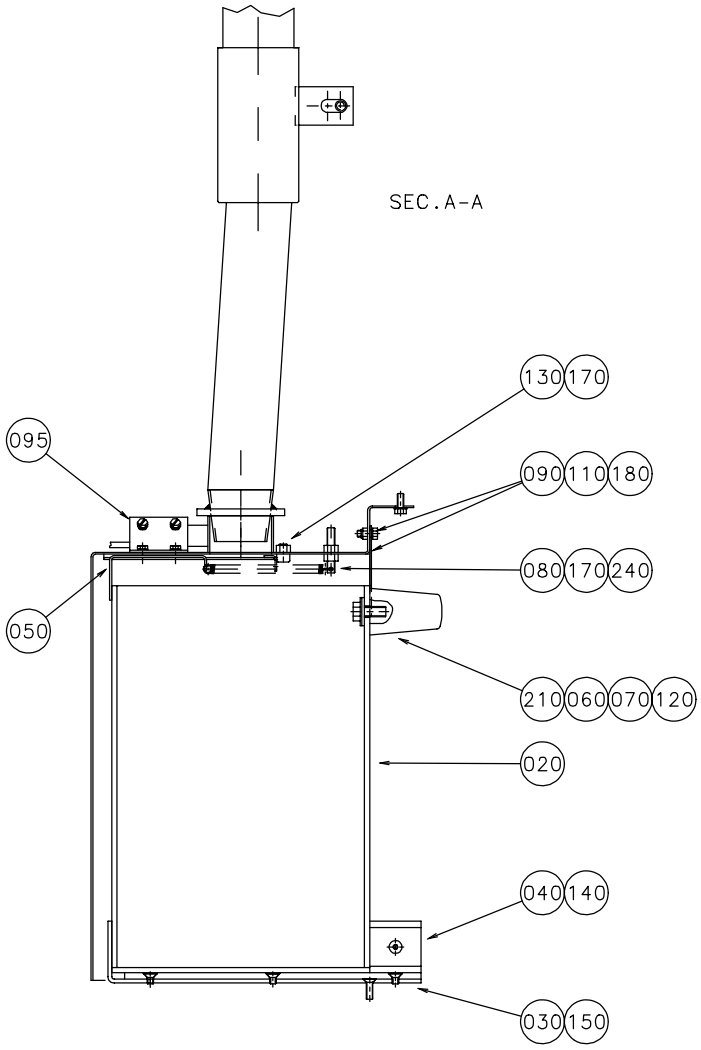

S - 1095955-1
ECN 71370

EC No: - - 20000423
Group number: 1095955-0100
Assembly Drawing: 1095955-1

Issue: 20000706

Pos	Part No	SP	UN	Qty	Description	Page No
Common parts						
010	1140049-0000	-		1	COVER	
020	1140047-0000	-		1	WASTE BOX	
025	1334535-0000	-		1	WASTE PIPE	
030	1140045-0000	-		1	FRAME	
040	1140046-0000	-		4	RAIL	
050	1140048-0000	-		1	LOCK PLATE	
060	28036-0000	-		2	WASHER	
070	294734-0000	-		2	WASHER	
080	578684-0000	-		2	SPRING BRACKET	
090	1103295-0000	-		1	LOCK PLATE	
095	1255697-0000	-		1	BRACKET	
100	312105-0287	-		2	SCREW M6S ISO 4017 M4X8 A280	
110	312105-0327	-		9	SCREW M6S ISO 4017 M5X12 A280	
120	312105-0451	-		3	SCREW M6S ISO 4017 8X20 A280	
130	312115-0362	-		2	SCREW MC6S ISO 4762 M6X8 A280	
140	312155-0323	-		12	SCREW MF6S DIN 7991 M5X8 A280	
150	312155-0329	-		2	SCREW MF6S DIN 7991 M5X16 A280	
160	312605-0312	-		2	NUT,HEXAGON,M4 RFR	
170	312605-0316	-		6	NUT,HEXAGON A280 M6M6	
180	312812-0314	-		1	NUT,HEXAGON,LOCK,WITH NYLON,M5	
190	315105-0136	-		2	WASHER,PLAIN ROUND 4,3X8 STAINLESS	
200	315105-0146	-		8	WASHER,PLAIN ROUND 5,3X10 STAINLESS	
205	315105-0165	-		1	WASHER,PLAIN ROUND 8,4X16 STAINLESS	
210	90017-0014	-		1	HANDLE 8305-2259	
220	90152-0026	D	MM	1800	FLEXIBLE CONDUIT	
230	90232-0105	R		1	PH.CELL E3S-CD61-5M	
240	90335-0081	D		2	SPRING	

Pos	Part No	SP	UN	Qty	Description	Page No

PUNCH BRACKET

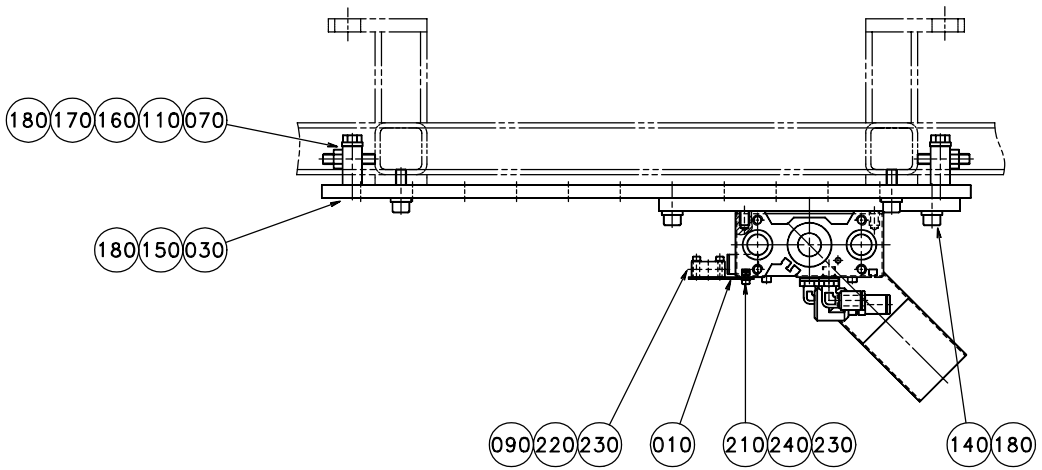

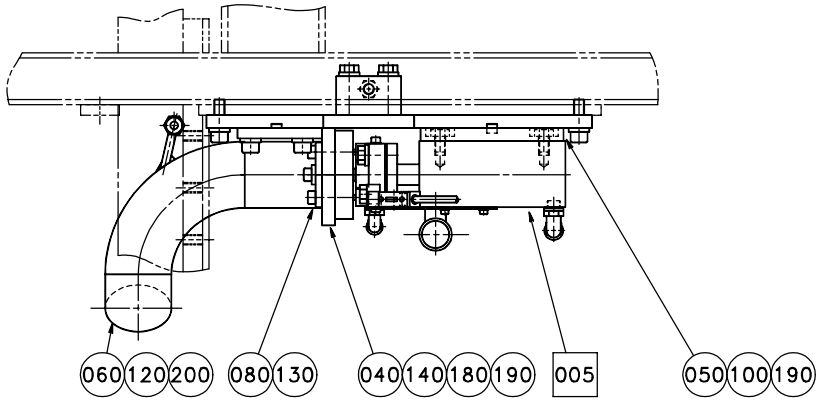

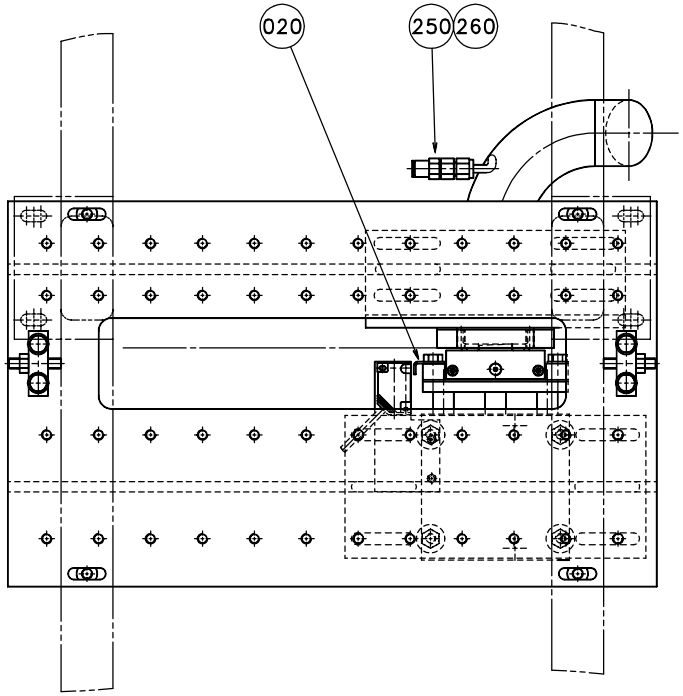

S - 1095992-1
ECN 71370

Pos	Part No	SP	UN	Qty	Description	Page No
Common parts						
005	A1095991-0100	-		1	PUNCH UNIT	**99**
010	1260387-0000	-		1	PHOTOCELL BRACKET	
020	1260239-0000	-		1	ANGLE BRACKET	
030	1140499-0000	-		1	PLATE	
040	1140500-0000	-		1	ANGLE BRACKET	
050	1140501-0000	-		1	PLATE	
060	1334534-0000	D		1	WASTE PIPE	
070	1140503-0000	-		2	ADJUSTMENT BRACKET	
080	1140504-0000	-		2	CONNECTION PLATE	
090	90044-0104	R		1	PROX.SWITCH IFM IN 3002 48VDC	
100	312105-0447	-		4	SCREW M6S ISO 4017 M8X12 A280	
110	312109-0459	-		4	SCREW M6S ISO 4017 M8X40 A280	
120	312115-0366	-		2	SCREW MC6S ISO 4762 M6X12 A280	
130	312115-0372	-		4	SCREW MC6S ISO 4762 M6X25 A280	
140	312115-0451	-		8	SCREW MC6S ISO 4762 M8X20 A280	
150	312115-0453	-		4	SCREW MC6S ISO 4762 M8X25 A280	
160	312318-0459	-		2	SET SCREW CUP POINT ISO 4029 M8X40 RFR	
170	312605-0318	-		2	NUT,HEXAGON,M8 RFR	
180	315115-0165	-		16	WASHER TBRB 8,4X16 STAINLESS	
190	315705-0272	-		4	KEYS,PARALLEL WITH ROUND ENDS 8X7X50	
200	342991-0109	-		1	HOSE CLIP,WORM DRIVE TYPE (48)-50	
210	312115-0222	-		2	SCREW MC6S ISO 4762 M3X8 A280	
220	312115-0228	-		2	SCREW MC6S ISO 4762 M3X16 A280	
230	315105-0124	-		4	WASHER,PLAIN ROUND 3,2X6	
240	312605-0310	-		2	NUT,HEXAGON M6M 3 A2 80	
250	342722-0202	-		1	STRAIGHT COUPLING, D=6MM - G1/8"	
260	342723-0102	-		1	STRAIGHT PIPE CONNECTION GAI-6-G1/8"	

Pos	Part No	SP	UN	Qty	Description	Page No

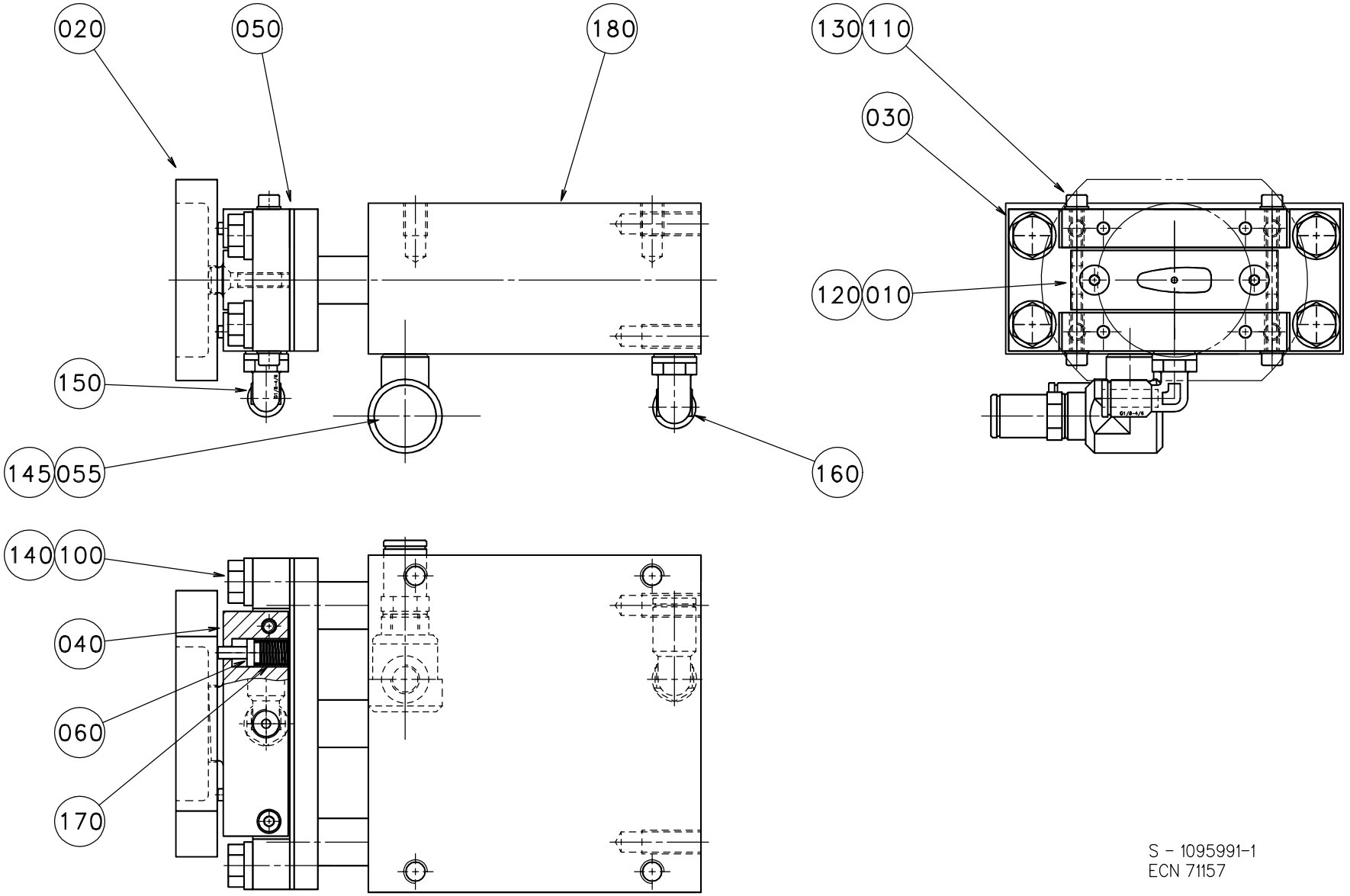

S - 1095991-1
ECN 71157

Pos	Part No	SP	UN	Qty	Description	Page No
HOLE50						
010	1140291-0000	K		1	PUNCH HOLE 50	
020	1140292-0000	K		1	DIE HOLE 50	
HOLE45						
010	1145233-0000	K		1	PUNCH HOLE 45	
020	985860-0000	K		1	DIE HOLE 45	
HOLE71						
010	1296794-0000	K		1	PUNCH HOLE71	
020	1296872-0000	K		1	DIE HOLE 71	
Common parts						
030	1140293-0000	-		1	SPACER	
040	1140294-0002	D		2	PIN DISTANCE 36.5	
050	1140387-0000	R		3	SHIM	
055	90235-0206	-		1	VALVE FESTO SEU-1/8	
060	905285-0000	R		4	STRIPPER PIN	
100	312105-0453	-		4	SCREW M6S ISO 4017 M8X25 A280	
110	312115-0295	-		4	SCREW MC6S ISO 4762 M4X20 A280	
120	312155-0331	-		2	SCREW MF6S DIN 7991 M5X20 A280	
130	315105-0136	-		4	WASHER,PLAIN ROUND 4,3X8 STAINLESS	
140	315105-0165	-		4	WASHER,PLAIN ROUND 8,4X16 STAINLESS	
145	342722-0204	-		1	STRAIGHT COUPLING, D=8 MM - G1/8"	
150	342732-0102	-		1	ELBOW PIPE JOINT,EXT.THREAD,D=6 MM G1/8	
160	342732-0801	-		1	ELBOW PIPE JOINT,EXT.THREAD,D=8 MM G1/8	
170	90335-0005	R		4	SPRING	
180	90450-0397	R		1	CYLINDER	

Pos	Part No	SP	UN	Qty	Description	Page No

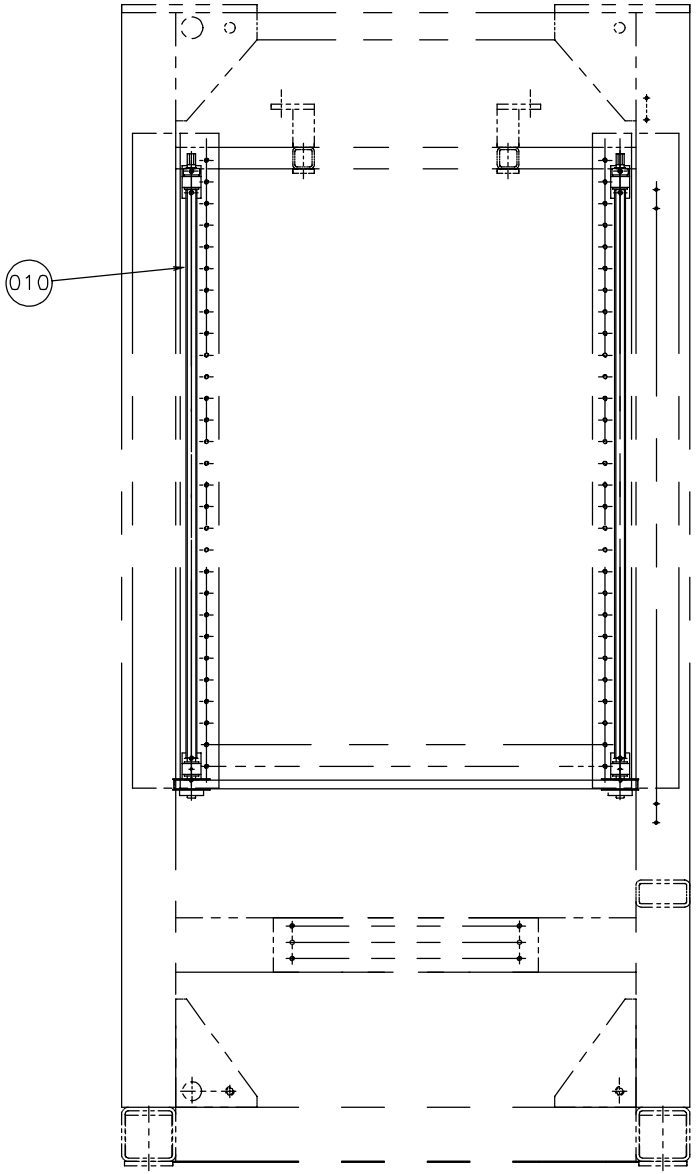

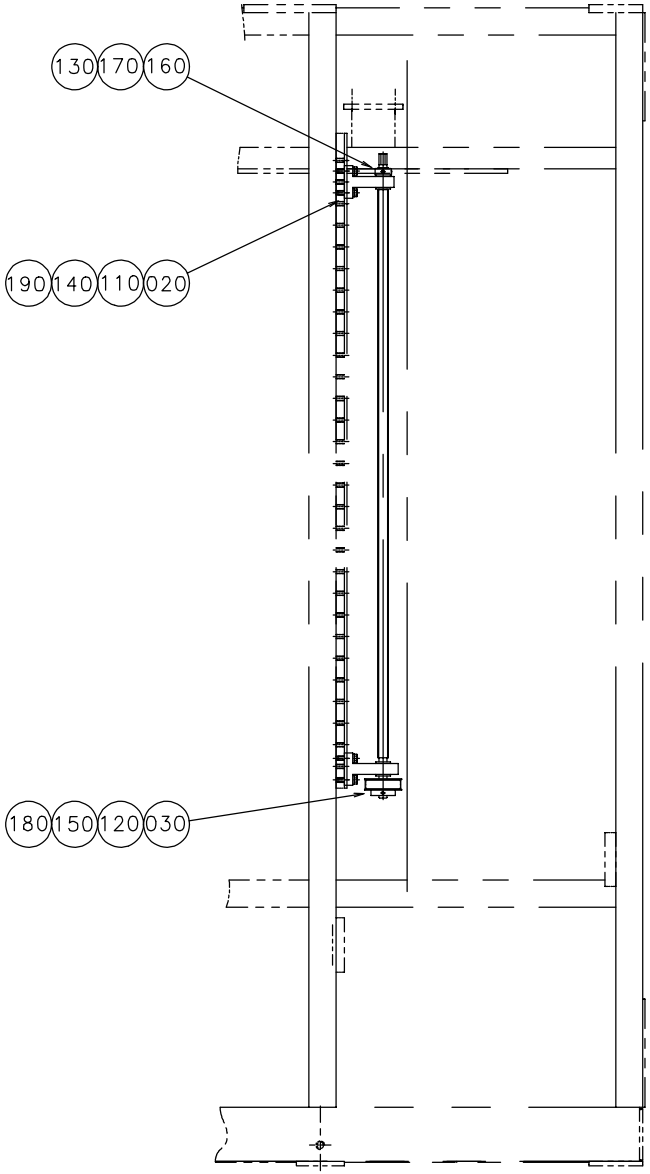

S - 1185078-1
ECN 72388

Pos	Part No	SP	UN	Qty	Description	Page No
Common parts						
010	1147050-0000	-		2	SCREW	
020	1147049-0000	-		4	BRACKET	
030	1147051-0000	-		2	TOOTHED PULLEY	
110	312105-0455	-		8	SCREW M6S ISO 4017 M8X30 A280	
120	312311-0327	-		2	SET SCREW FULL DOGPOINT ISO 4028 M5X12	
130	312318-0362	-		4	SET SCREW CUP POINT ISO 4029 M6X8 RFR	
140	315115-0165	-		8	WASHER TBRB 8,4X16 STAINLESS	
150	315705-0202	-		2	KEYS,PARALLEL WITH ROUND ENDS 5X5X25	
160	315742-0111	-		2	RETAINING RINGS 15	
170	315751-0112	D		2	RETAINING RINGS FOR SHAFT 15	
180	318172-0179	D		1	TIMING BELT T10X1780X16	
190	321111-0211	-		8	FLANGE BUSHING, 15X21X10	

Pos	Part No	SP	UN	Qty	Description	Page No

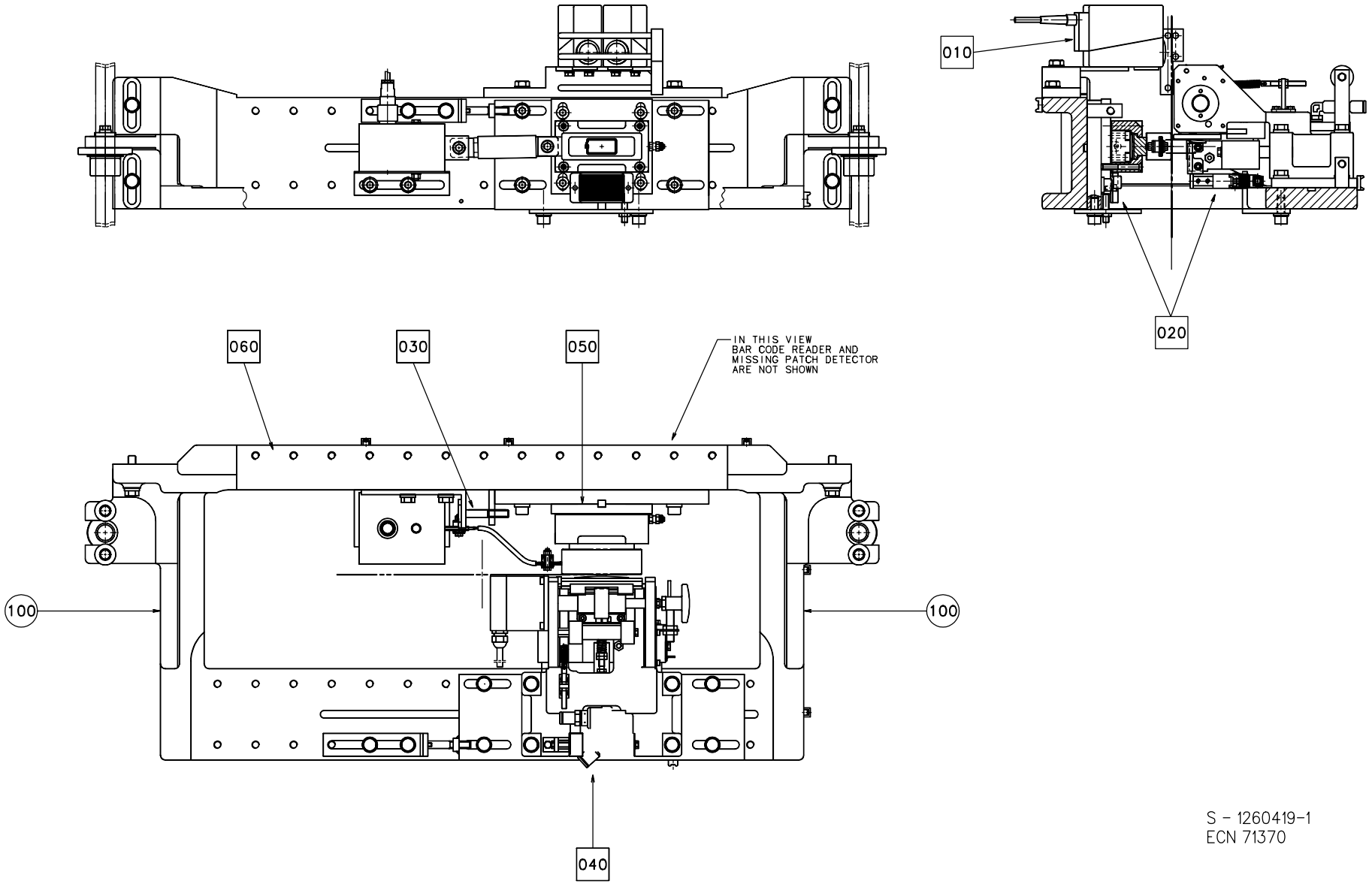

S - 1260419-1
ECN 71370

Pos	Part No	SP	UN	Qty	Description	Page No
Common parts						
010	A1185031-0100	-		1	BAR CODE READER	**105**
020	A1260390-0200	-		1	MISSING PATCH DETECTOR	**107**
030	A1260401-0100	-		2	SETTING TOOL	**109**
040	A1260414-0100	-		1	PATCH FEEDER	**111, 113**
050	A1260417-0100	-		1	PATCH RESEAL C'JAW UNIT	**115**
060	A1260426-0100	-		1	PATCH RESEAL BRACKET	**117**
100	359705-0007	-		2	WARNING SIGN "HOT SURFACE"	

Pos	Part No	SP	UN	Qty	Description	Page No

BAR CODE READER

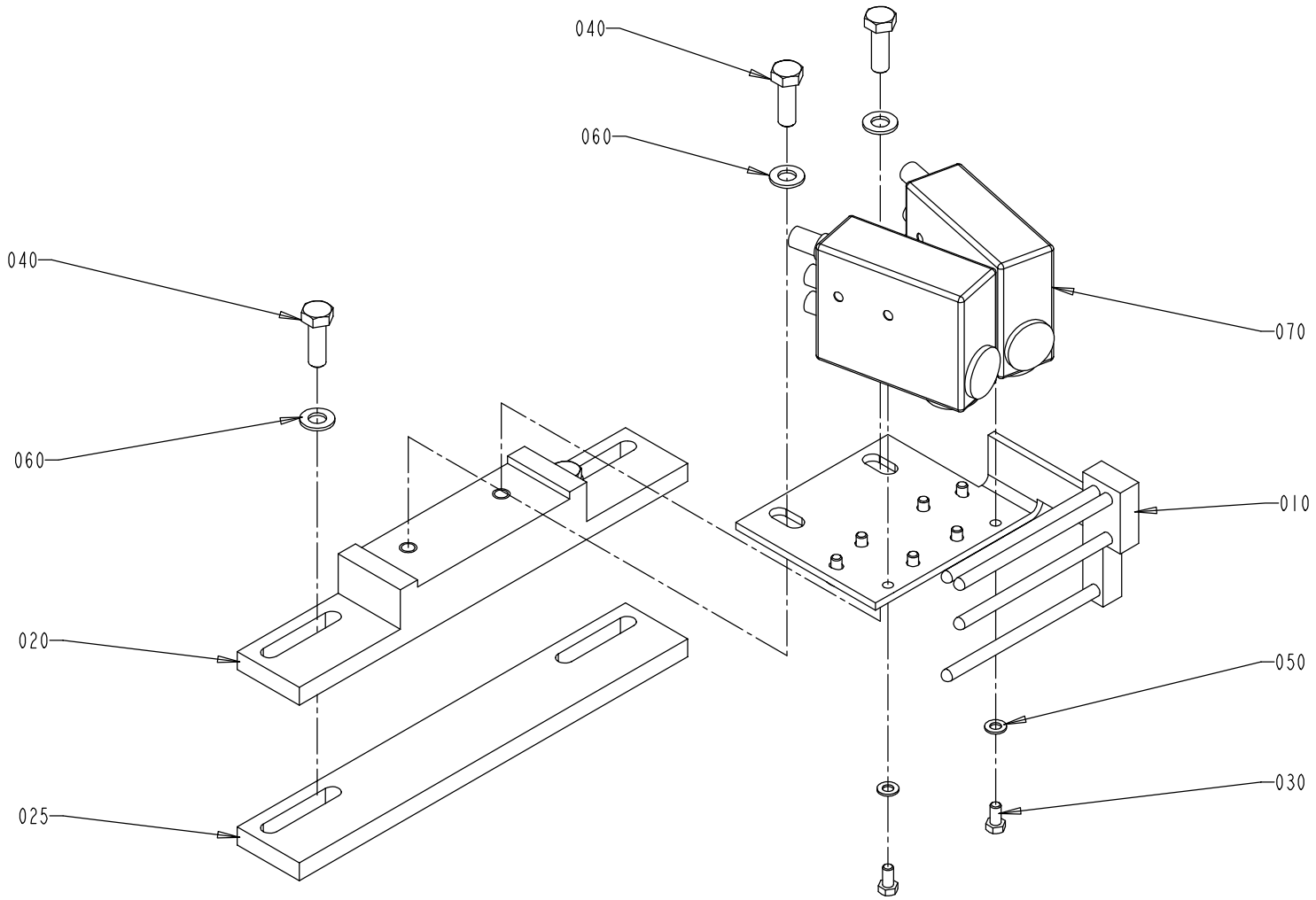

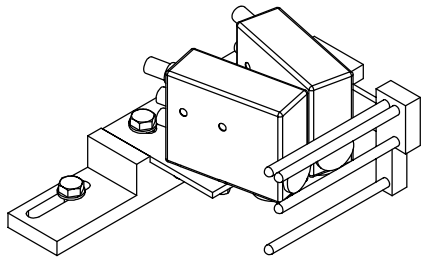

S - 1185031-1
ECN 72388

Pos	Part No	SP	UN	Qty	Description	Page No
TPA 1000S HOLE71						
025	1487819-0000	-		1	SHIM	
Common parts						
010	1147012-0000	D		1	PHOTOCELL BRACKET	
020	1147013-0000	-		1	BRACKET	
030	312105-0325	-		8	SCREW M6S 5X10 A2 80	
040	312105-0453	-		4	SCREW M6S ISO 4017 M8X25 A280	
050	315105-0146	-		8	WASHER,PLAIN ROUND 5,3X10 STAINLESS	
060	315105-0165	-		4	WASHER,PLAIN ROUND 8,4X16 STAINLESS	
070	90232-0112	R		2	PH.CELL NT6-14920E01	

Pos	Part No	SP	UN	Qty	Description	Page No

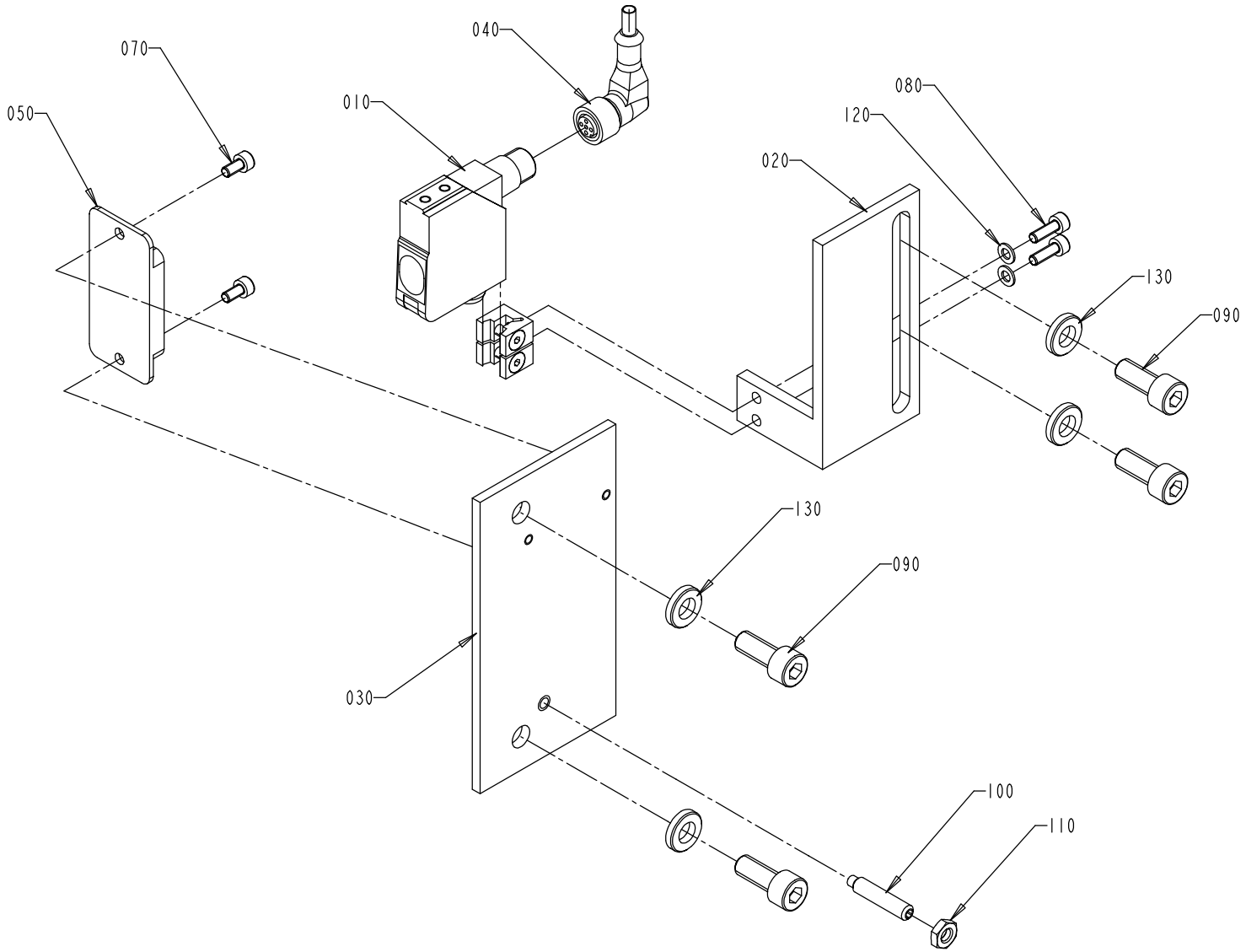

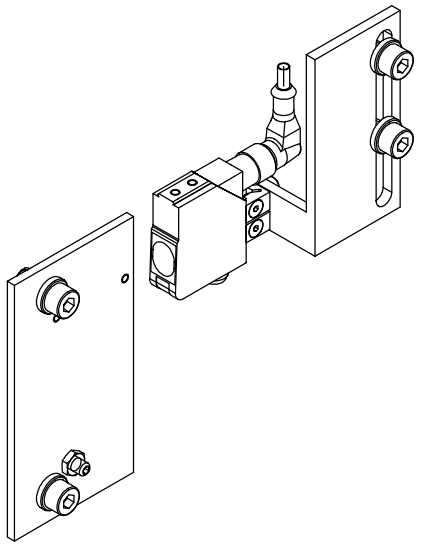

S - 1260390-2
ECN 73275

Pos	Part No	SP	UN	Qty	Description	Page No
Common parts						
010	1260522-0000	R		1	PHOTOCELL	
020	1346162-0000	-		1	PHOTOCELL BRACKET	
030	1255687-0000	-		1	BRACKET	
040	1260523-0000	R		1	CABLE	
050	1346219-0000	R		1	REFLECTOR	
070	312115-0287	-		2	SCREW MC6S ISO 4762 M4X8 A280	
080	312115-0291	-		2	SCREW MC6S ISO 4762 M4X12 A280	
090	312115-0451	-		4	SCREW MC6S ISO 4762 M8X20 A280	
100	312311-0374	-		1	SET SCREW FULL DOGPOINT ISO 4028 M6X30	
110	312625-0316	-		1	NUTS,HEXAGON,M6	
120	315105-0136	-		2	WASHER,PLAIN ROUND 4,3X8 STAINLESS	
130	315115-0165	-		4	WASHER TBRB 8,4X16 STAINLESS	

Pos	Part No	SP	UN	Qty	Description	Page No

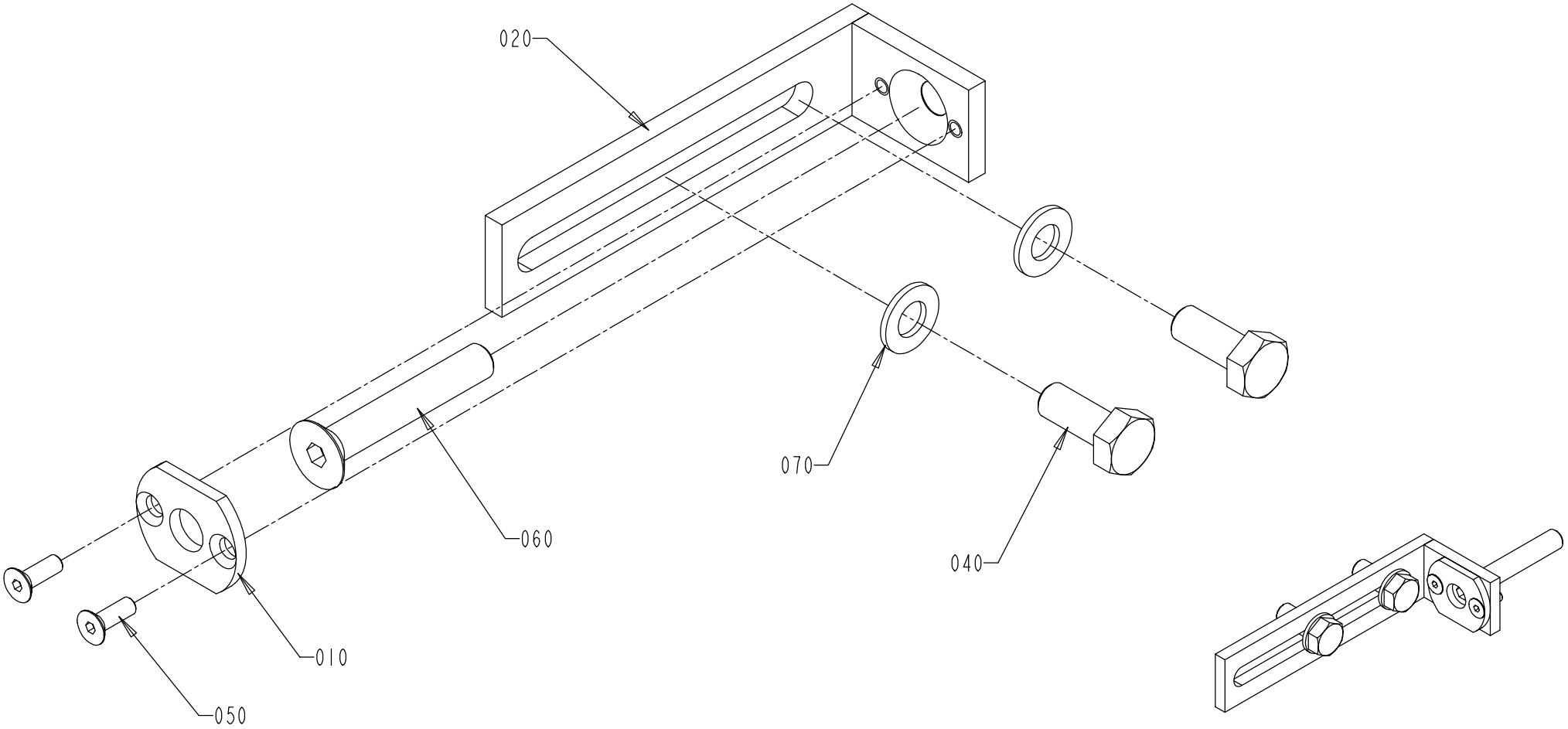

S - 1260401-1
ECN 72779

Pos	Part No	SP	UN	Qty	Description	Page No
Common parts						
010	1260400-0000	-		1	COVER	
020	1260402-0000	-		1	BRACKET	
040	312105-0451	-		2	SCREW M6S ISO 4017 8X20 A280	
050	312155-0291	-		3	SCREW MF6S DIN 7991 M4X12 A480	
060	312155-0461	-		1	SCREW MF6S DIN 7991 M8X50 A280	
070	315103-0165	-		2	WASHERS,PLAIN ROUND 8,4X16	

Pos	Part No	SP	UN	Qty	Description	Page No

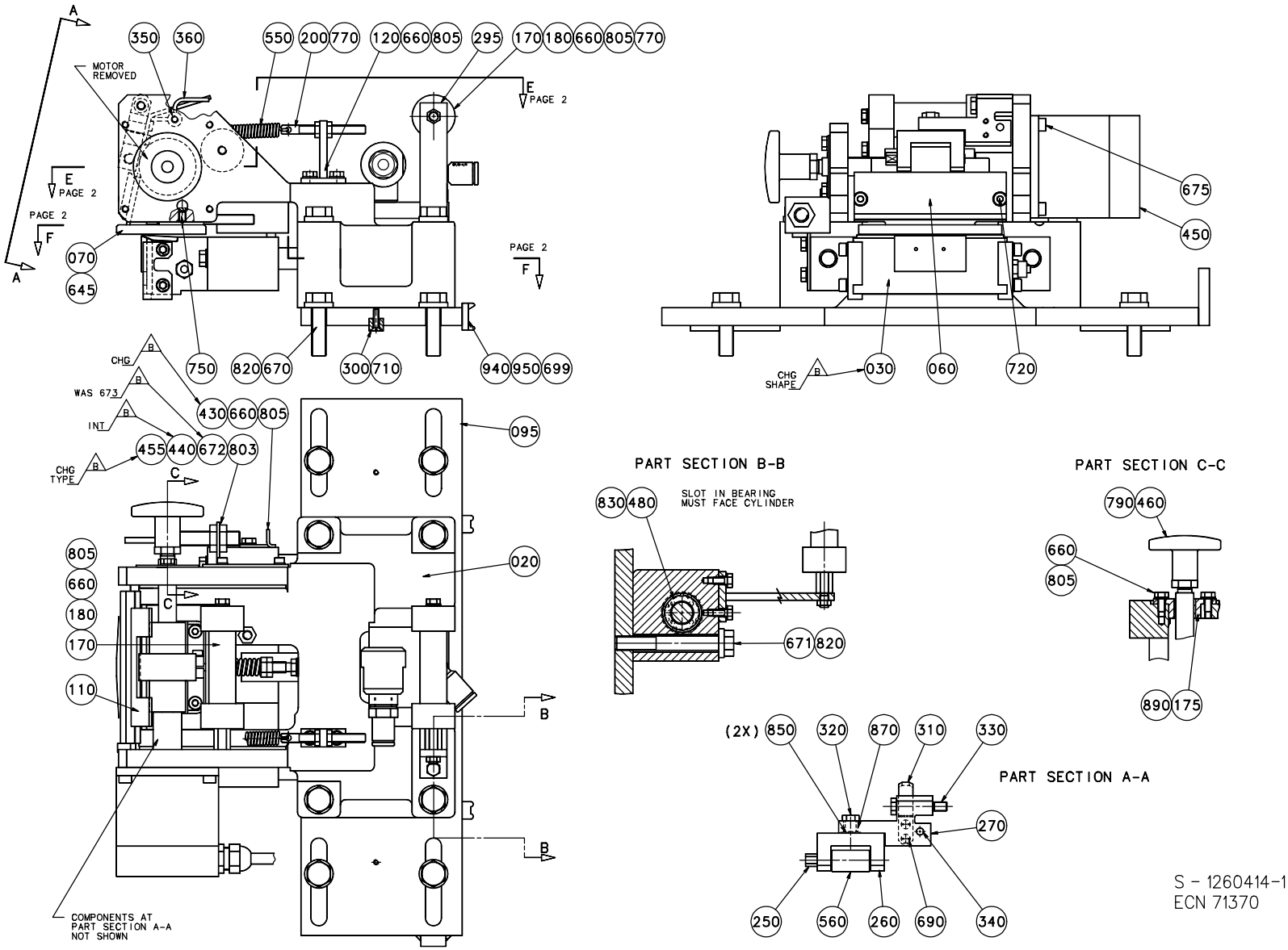
MOTOR REMOVED
PAGE 2
CHG
WAS 673
INT
CHG TYPE
COMPONENTS AT PART SECTION A-A NOT SHOWN
CHG SHAPE
PART SECTION B-B
SLOT IN BEARING MUST FACE CYLINDER
PART SECTION C-C
PART SECTION A-A
(2X)
S - 1260414-1
ECN 71370

EC No: - - 20000423
Group number: 1260414-0100
Assembly Drawing: 1260414-1

Issue: 20000706

Pos	Part No	SP	UN	Qty	Description	Page No
HOLE50 or HOLE71						
170	907358-0006	D		2	ROLLER - 29	
HOLE45 or HOLE85						
170	905210-0000	D		2	ROLLER-35	
Common parts						
020	1260389-0000	-		1	CASTING APPLICATOR	
030	1260393-0002	M		1	SEALING PLATE	
050	1260391-0000	D		1	BRACKET	
060	1260395-0000	D		1	PLATE	
070	1145333-0000	J		1	KNIFE-WINDOW	
080	907712-0000	R		1	PIVOT PLATE	
095	1260404-0000	-		1	PLATE	
100	1145332-0000	J		1	KNIFE-FLAT	
110	905174-0000	D		1	STEER PLATE	
120	1140545-0000	-		1	TEE BRACKET	
150	905194-0000	R		1	SHAFT	
160	1140547-0000	R		2	SHAFT	
175	1140548-0000	M		1	FLANGED BEARING BUSHING	
180	1140551-0000	M		2	SHAFT	
190	1260399-0000	D		1	CLAMP	
195	1260422-0000	D		1	CLAMP	
200	905215-0000	D		1	BOLT	
220	905241-0000	D		1	COUPLING	
230	905243-0000	M		1	SHAFT	
250	905413-0000	M		1	SHAFT	
260	905416-0000	D		1	PIVOT BRACKET-SWIVEL	
270	905419-0000	D		1	PIVOT ARM-SWIVEL	
280	905471-0000	J		1	ROLLER-DRIVE	
293	907710-0000	D		1	PIVOT PLATE	
295	1140546-0000	-		1	BRACKET	
300	905244-0000	-		2	WEDGE	
310	905246-0000	-		1	BRACKET	
320	905415-0000	D		1	SHAFT	
330	905417-0000	D		1	SHAFT	
340	905607-0000	-		1	SCREW	
350	905608-0000	-		1	SCREW	
360	905609-0000	-		1	LOCK BAR	
370	905613-0000	D		1	SHAFT	
415	907711-0000	R		1	SHAFT	
430	1296753-0000	-		1	FLAG	
440	1296752-0000	-		1	BRACKET	
450	90045-0192	R		1	STEPPING MOTOR PACIFIC SCIENTIFIC	
455	90044-0145	R		1	PROX.SW. 922 AAIY-A9P-050-LZ876	
460	90051-0007	-		1	HANDLES, KNOB, INTERNAL THREAD M8-40X25	
480	90189-0003	M		4	BALL BUSHING 12X22X32	
500	90450-0409	M		1	DOUBLE ACTING, COMPACT, CYL 32-15	
505	90235-0206	-		1	VALVE FESTO SEU-1/8	
510	90239-0489	M		1	ROD END,CLEVIS WITH AXLE,M6	
540	90335-0067	J		1	SPRING	
550	907719-0000	M		1	SPRING	
560	90348-0031	J		1	FREE-WHEEL COUPLING	
580	1350785-0001	J		2	SHIM	
581	1350785-0002	J		2	SHIM	
582	1350785-0003	J		2	SHIM	
583	1350785-0004	J		2	SHIM	
640	311103-0351	-		2	PINS,STRAIGHT 6X16	
645	311112-0205	-		2	PINS,SLOTTED TUBULAR SPRING PIN 3X10	
660	312105-0287	-		10	SCREW M6S ISO 4017 M4X8 A280	
665	312105-0333	-		2	SCREW M6S ISO 4017 M5X25 A280	
670	312105-0455	-		4	SCREW M6S ISO 4017 M8X30 A280	
671	312105-0463	-		4	SCREW M6S ISO 4014 M8X60 A280	
672	312115-0226	-		4	SCREW MC6S ISO 4762 M3X12 A280	
675	312115-0291	-		8	SCREW MC6S ISO 4762 M4X12 A280	
680	312115-0341	-		4	SCREW MC6S 5X50 A4 80	
690	312125-0224	-		2	SLOTTED HEMCS3X10RFR	
699	312125-0287	-		4	SLOTTED CHEESE HEAD ISO 1207 M4X8 RFR	
710	312145-0224	-		2	SLOTTED HEMFS3X10RFR	
720	312155-0291	-		4	SCREW MF6S DIN 7991 M4X12 A480	
740	312311-0333	-		1	SET SCREW FULL DOGPOINT ISO 4028 M5X25	
745	312311-0380	-		1	STOP SCREW T6SS6X50FZB	
750	312318-0285	-		1	STOP SCREW ISO 4029 M4X6 A4	
760	312318-0283	-		4	SET SCREW CUP POINT ISO 4029 M4X4 RFR	
770	312605-0314	-		4	NUT,HEXAGON,M6M5 STAINLESS	
780	312621-0316	-		4	ROD END,NUT M6	
790	312621-0318	-		1	ROD END,NUT M8	
803	315105-0124	-		4	WASHER,PLAIN ROUND 3,2X6	
805	315105-0136	-		8	WASHER,PLAIN ROUND 4,3X8 STAINLESS	
810	315105-0146	-		3	WASHER,PLAIN ROUND 5,3X10 STAINLESS	
820	315115-0165	-		8	WASHER TBRB 8,4X16 STAINLESS	
830	315753-0117	-		4	RETAINING RINGS FOR HOLE 22	
850	907487-0000	D		2	WASHER-CURVED	
860	321105-0125	J		1	BUSHING 6F7X12X6	
865	321120-0092	M		2	BUSHING, 4X5,5X6	
870	321120-0101	D		1	BUSHING, 6X8X6	

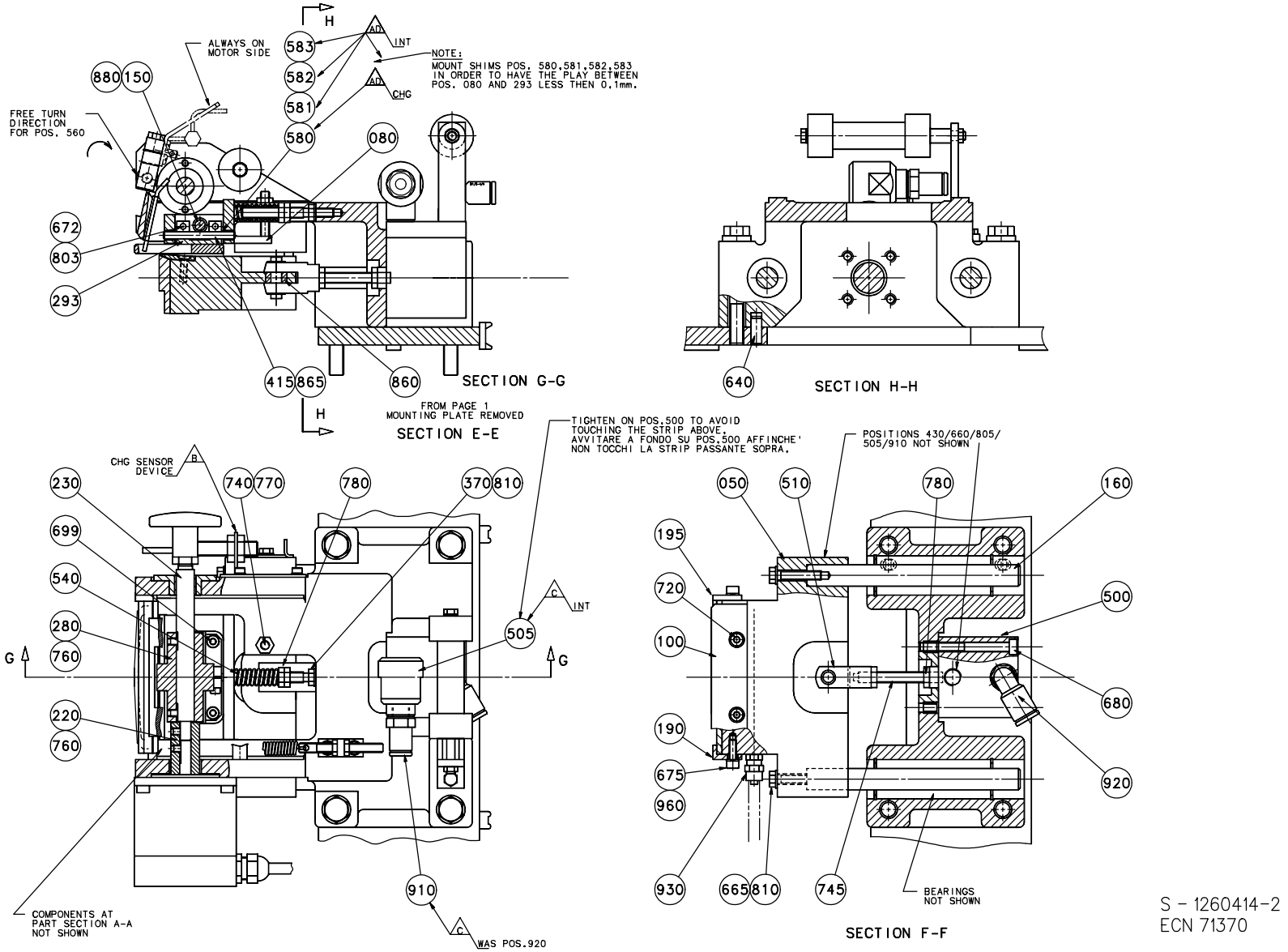

S - 1260414-2
ECN 71370

Pos	Part No	SP	UN	Qty	Description	Page No
Common parts						
880	321120-0102	M		2	BUSHING, 6X8X10	
890	321120-0104	M		1	BUSHING, 10X12X10	
910	342722-0202	-		1	STRAIGHT COUPLING, D=6MM - G1/8"	
920	342732-0102	-		1	ELBOW PIPE JOINT,EXT.THREAD,D=6 MM G1/8	
930	342921-0111	-		2	STRAIGHT COUPLING,EXT.THREADED 6/4-M5	
940	352113-0102	-		2	CLIP-STRIP,BLACK 188X4,8MM	
950	352113-0205	-		2	ANCHOR TM2S8-C100	
960	315402-0136	-		4	WASHER FBB4,1RFR	

Pos	Part No	SP	UN	Qty	Description	Page No

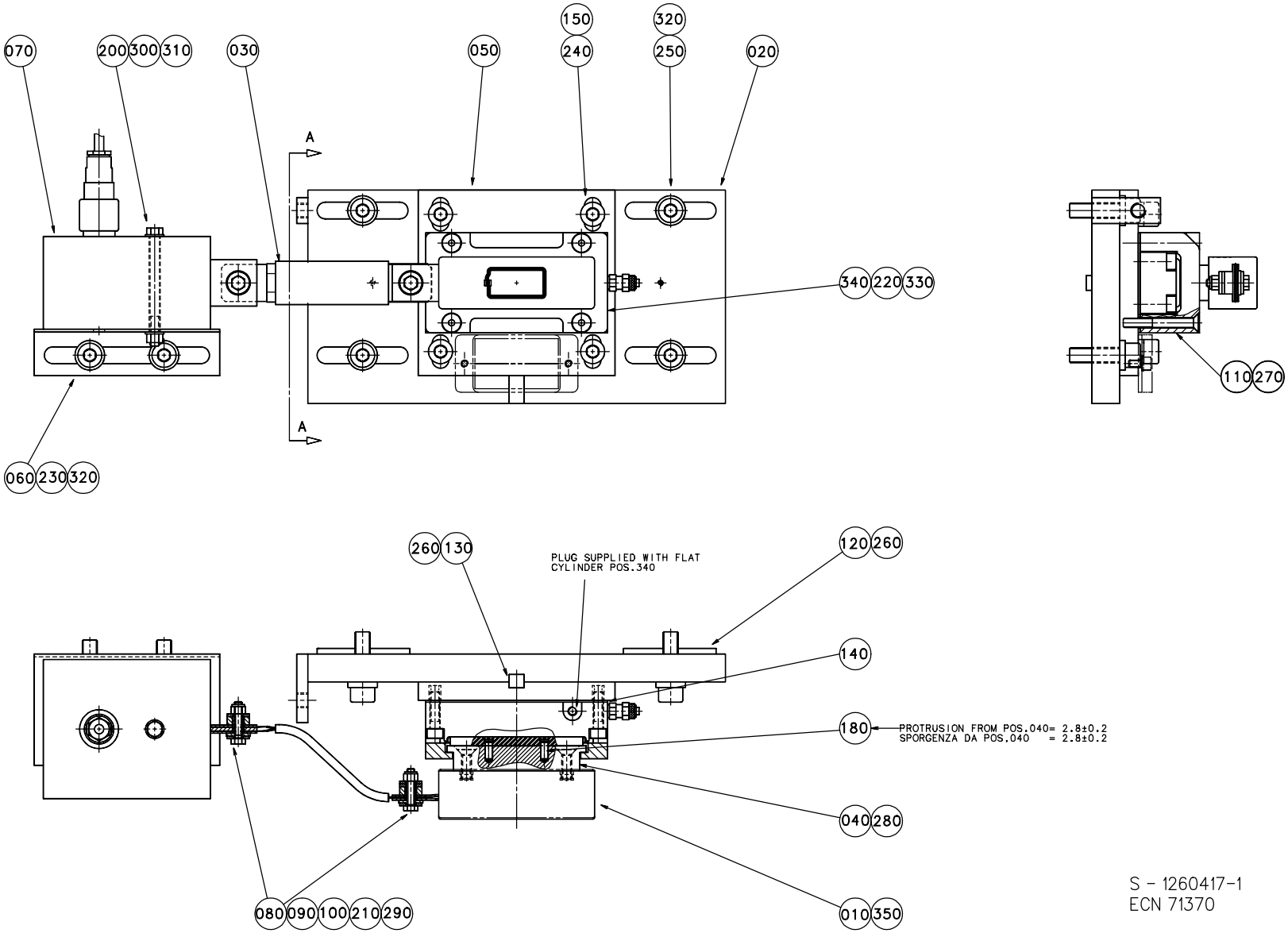

S - 1260417-1
ECN 71370

Pos	Part No	SP	UN	Qty	Description	Page No
HOLE50 or HOLE71						
010	1140667-0000	J		1	INDUCTOR	
070	67379-0218	M		1	IH TRANSF.1.PRIM.5TURNS;C=19,3NF	
HOLE45 or HOLE85						
010	1260651-0000	J		1	INDUCTOR	
070	67379-0224	M		1	IH TRANSF.1.PRIM.4TURNS;C=24,4NF	
Common parts						
020	1260405-0000	-		1	PLATE	
030	1140889-0000	J		1	CABLE	
040	1296298-0000	J		1	BUSHING	
050	1279485-0000	-		1	PLATE	
060	1140890-0000	-		1	TRANSFORMER BRACKET	
080	28509-0000	J		6	WASHER	
090	32544-0000	J		2	INSULATION NUT	
100	32644-0000	J		2	WASHER	
110	928919-0000	-		1	FASTENING PLATE	
120	905244-0000	-		2	WEDGE	
130	905463-0000	-		1	KEY	
140	1279484-0000	J		2	SHIM	
150	1296300-0000	D		4	WASHER	
180	311103-0267	-		2	PIN,STRAIGHT 4X10	
200	312101-0343	-		1	SCREW M6S5X60FZB	
210	312105-0295	-		2	SCREW M6S ISO 4017 M4X20 A280	
220	312115-0331	-		4	SCREW MC6S ISO 4762 M5X20 A280	
230	312115-0447	-		2	SCREW MC6S ISO 4762 M8X12 A280	
240	312115-0453	-		4	SCREW MC6S ISO 4762 M8X25 A280	
250	312115-0455	-		4	SCREW MC6S ISO 4762 M8X30 A280	
260	312145-0226	-		4	SLOTTED HEMFS3X12RFR	
270	312155-0339	-		4	SCREW MF6S DIN 7991 5X40 A280	
280	312155-0329	-		2	SCREW MF6S DIN 7991 M5X16 A280	
290	312812-0312	-		2	LOCK-NUT,HEXAGON,WITH NYLONINSERT,M4	
300	312605-0314	-		1	NUT,HEXAGON,M6M5 STAINLESS	
310	315105-0146	-		2	WASHER,PLAIN ROUND 5,3X10 STAINLESS	
320	315115-0165	-		6	WASHER TBRB 8,4X16 STAINLESS	
330	342921-0111	-		1	STRAIGHT COUPLING,EXT.THREADED 6/4-M5	
340	90450-0380	M		1	SINGLE ACTING, SHORT STROKE	
350	90144-0030	-	M		TAPE	

Pos	Part No	SP	UN	Qty	Description	Page No

PATCH RESEAL BRACKET

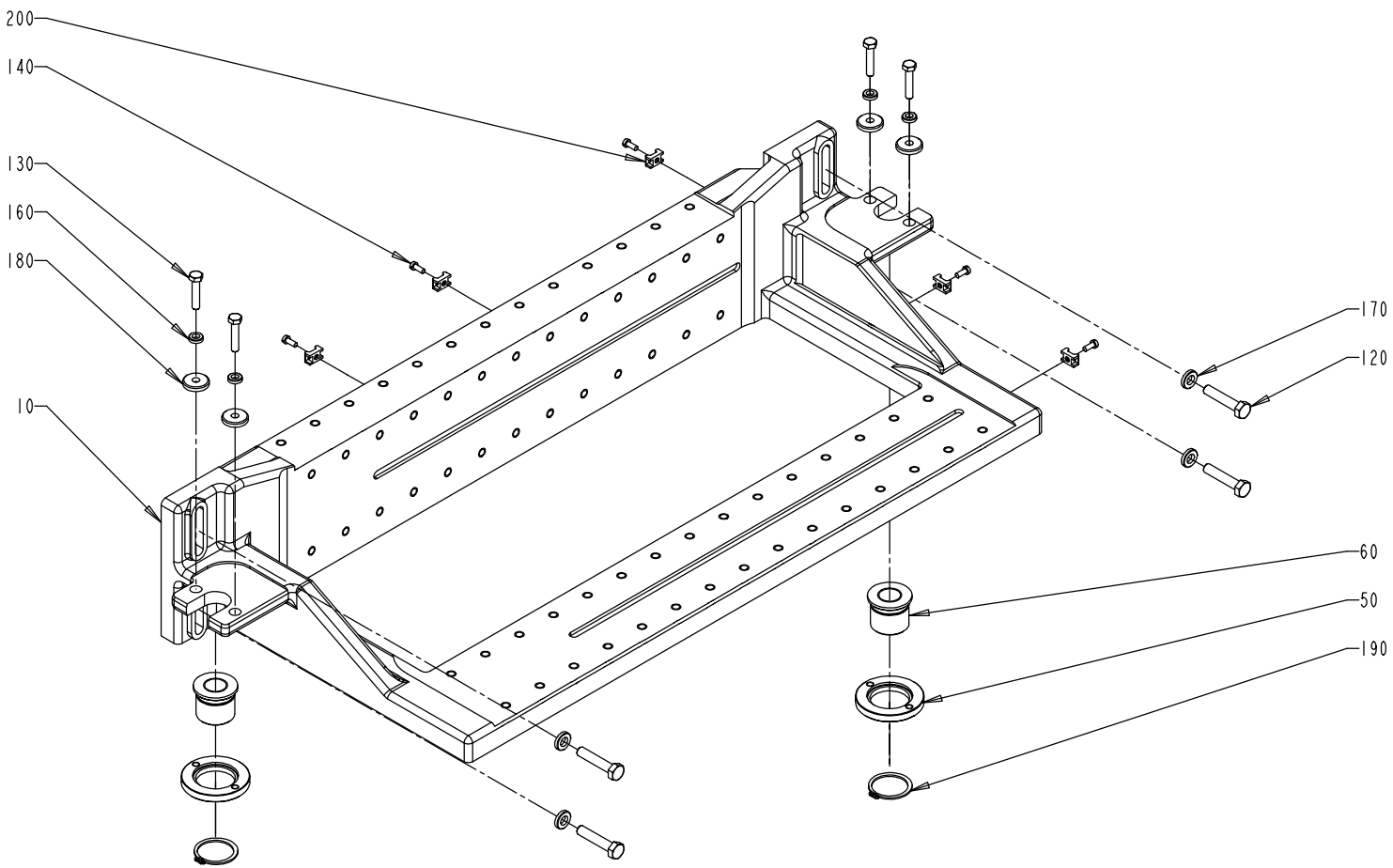

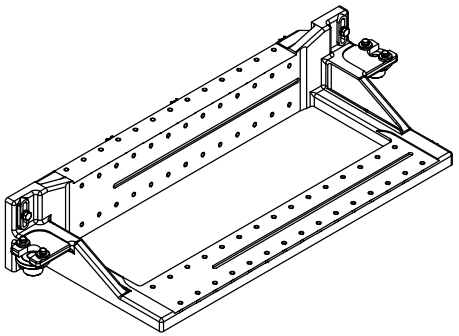

S - 1260426-1
ECN 73275

EC No: - - 20000423
Group number: 1260426-0100
Assembly Drawing: 1260426-1

Issue: 20000706

Pos	Part No	SP	UN	Qty	Description	Page No
Common parts						
010	1260397-0000	-		1	BRACKET	
050	1147009-0000	-		2	SPECIAL WASHER	
060	1147010-0000	-		2	BUSHING	
120	312109-0459	-		4	SCREW M6S ISO 4017 M8X40 A280	
130	312109-0374	-		4	SCREW M6S ISO 4017 M6X30 A280	
140	312125-0289	-		5	SLOTTED HEMCS4X10RFR	
160	315115-0153	-		4	WASHER TBRB 6,4X12 STAINLESS	
170	315115-0165	-		4	WASHER TBRB 8,4X16 STAINLESS	
180	315125-0153	-		4	WASHERS,PLAIN ROUND,CHAMFERED 6,4X22X4	
190	315751-0123	-		2	RETAINING RINGS FOR SHAFT 32	
200	352113-0205	-		5	ANCHOR TM2S8-C100	

Pos	Part No	SP	UN	Qty	Description	Page No

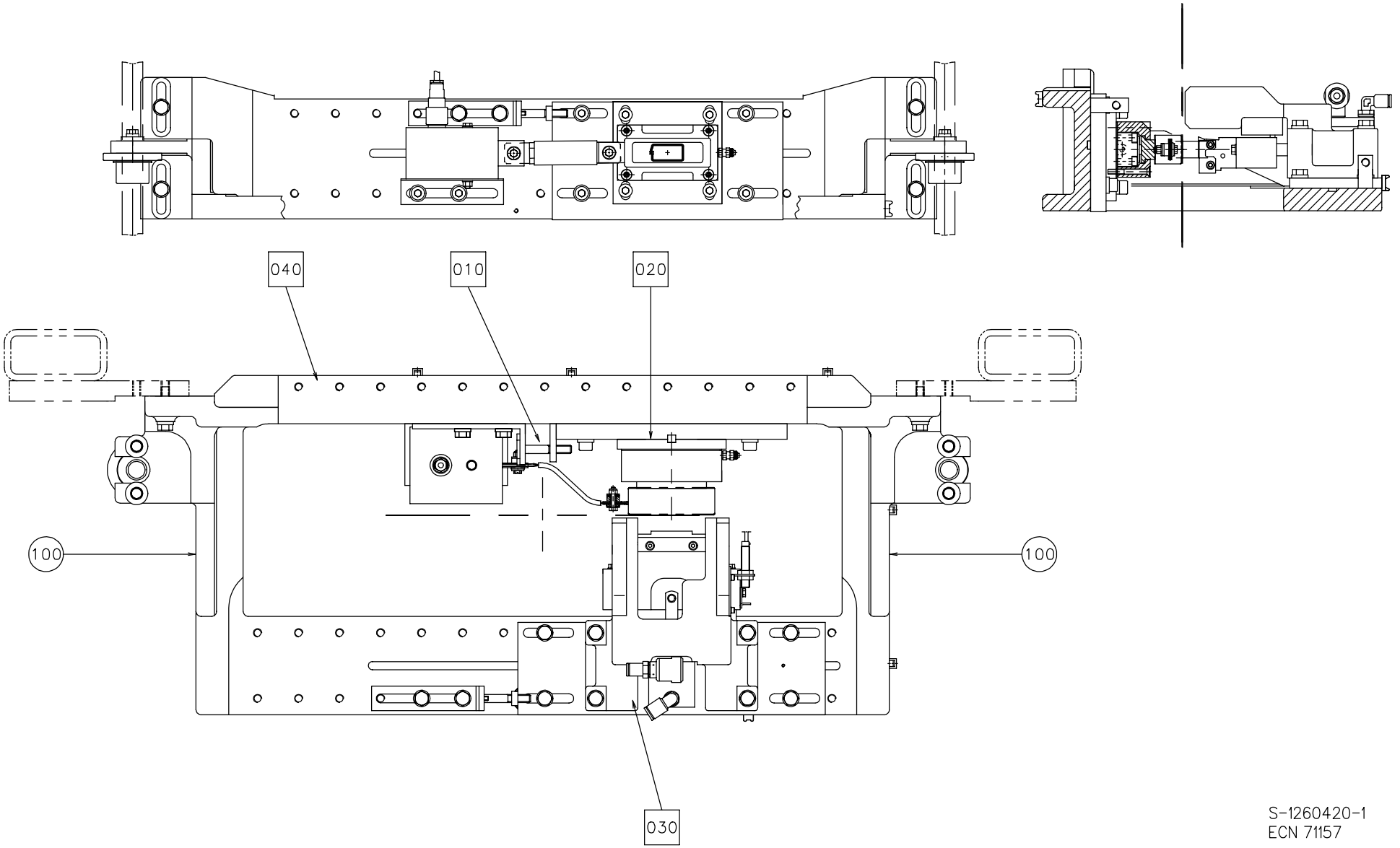

S-1260420-1
ECN 71157

Pos	Part No	SP	UN	Qty	Description	Page No
Common parts						
010	A1260401-0100	-		2	SETTING TOOL	**109**
020	A1260417-0100	-		1	PATCH RESEAL C'JAW UNIT	**115**
030	A1260418-0100	-		1	HEATING JAW - RESEAL	**121**
040	A1260426-0100	-		1	PATCH RESEAL BRACKET	**117**
100	359705-0007	-		2	WARNING SIGN "HOT SURFACE"	

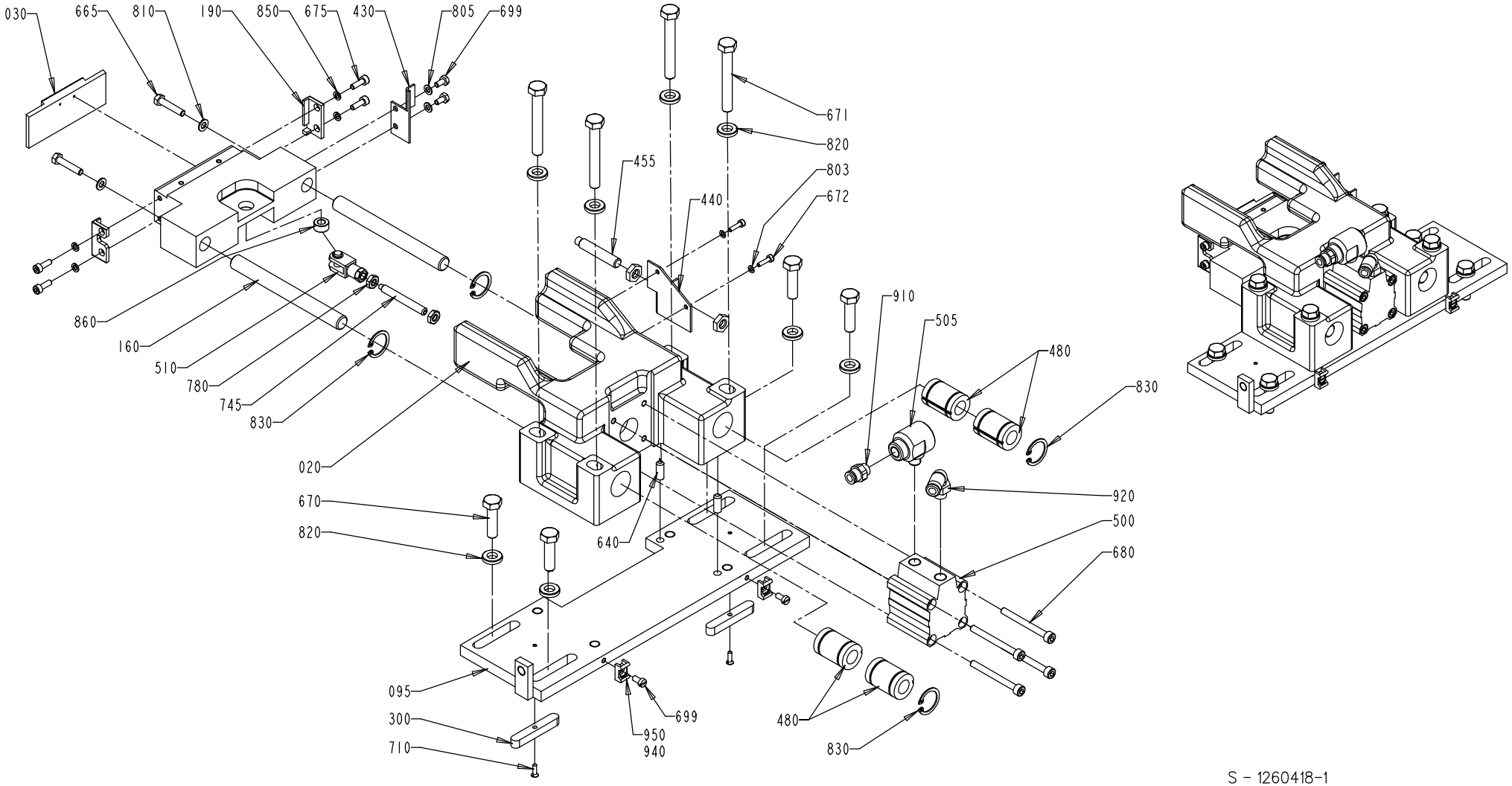

S - 1260418-1
ECN 73275

Pos	Part No	SP	UN	Qty	Description	Page No
Common parts						
020	1260392-0000	-		1	CASTING APPLICATOR	
030	1498488-0000	M		1	SEALING PLATE	
050	1260391-0000	D		1	BRACKET	
095	1260404-0000	-		1	PLATE	
160	1140547-0000	R		2	SHAFT	
190	1260399-0000	D		1	CLAMP	
195	1260422-0000	D		1	CLAMP	
300	905244-0000	-		2	WEDGE	
430	1296753-0000	-		1	FLAG	
440	1296752-0000	-		1	BRACKET	
455	90044-0145	R		1	PROX.SW. 922 AAIY-A9P-050-LZ876	
480	90189-0003	M		4	BALL BUSHING 12X22X32	
500	90450-0409	M		1	DOUBLE ACTING, COMPACT, CYL 32-15	
505	90235-0206	-		1	VALVE FESTO SEU-1/8	
510	90239-0489	M		1	ROD END,CLEVIS WITH AXLE,M6	
640	311103-0351	-		2	PINS,STRAIGHT 6X16	
660	312105-0287	-		2	SCREW M6S ISO 4017 M4X8 A280	
665	312105-0333	-		2	SCREW M6S ISO 4017 M5X25 A280	
670	312105-0455	-		4	SCREW M6S ISO 4017 M8X30 A280	
671	312105-0463	-		4	SCREW M6S ISO 4014 M8X60 A280	
672	312115-0226	-		2	SCREW MC6S ISO 4762 M3X12 A280	
675	312115-0291	-		4	SCREW MC6S ISO 4762 M4X12 A280	
680	312115-0341	-		4	SCREW MC6S 5X50 A4 80	
699	312125-0287	-		2	SLOTTED CHEESE HEAD ISO 1207 M4X8 RFR	
710	312145-0224	-		2	SLOTTED HEMFS3X10RFR	
745	312311-0380	-		1	STOP SCREW T6SS6X50FZB	
780	312621-0316	-		2	ROD END,NUT M6	
803	315105-0124	-		2	WASHER,PLAIN ROUND 3,2X6	
805	315105-0136	-		2	WASHER,PLAIN ROUND 4,3X8 STAINLESS	
810	315105-0146	-		2	WASHER,PLAIN ROUND 5,3X10 STAINLESS	
820	315115-0165	-		8	WASHER TBRB 8,4X16 STAINLESS	
830	315753-0117	-		4	RETAINING RINGS FOR HOLE 22	
850	315402-0136	-		4	WASHER FBB4,1RFR	
860	321105-0125	J		1	BUSHING 6F7X12X6	
910	342722-0202	-		1	STRAIGHT COUPLING, D=6MM - G1/8"	
920	342732-0102	-		1	ELBOW PIPE JOINT,EXT.THREAD,D=6 MM G1/8	
940	352113-0102	-		2	CLIP-STRIP,BLACK 188X4,8MM	
950	352113-0205	-		2	ANCHOR TM2S8-C100	

Pos	Part No	SP	UN	Qty	Description	Page No

APPLICATOR TAB

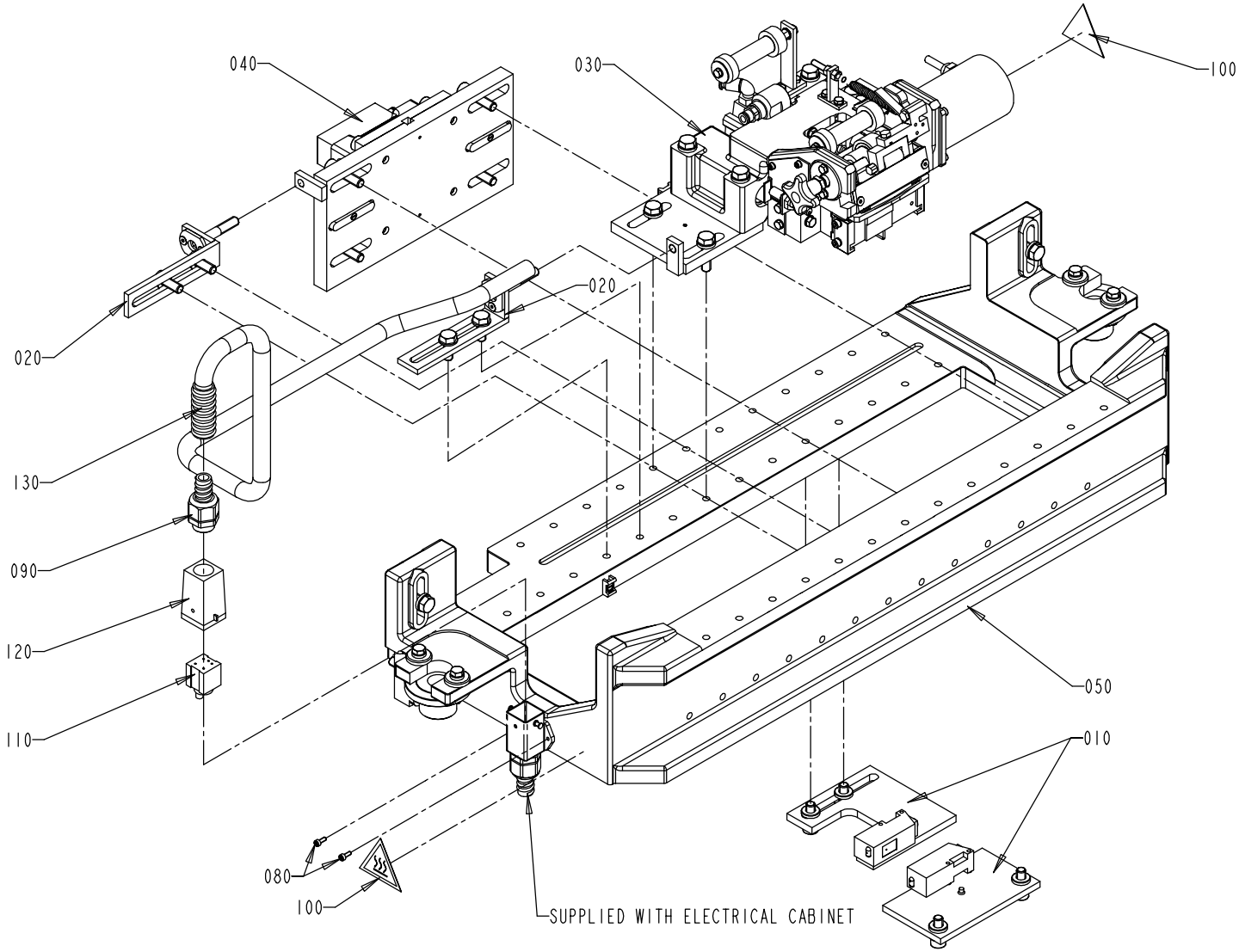

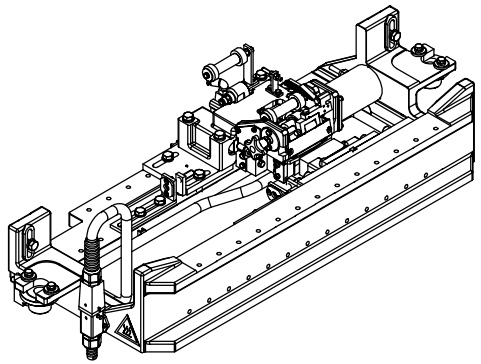

S - 1260421-1
ECN 72779

Pos	Part No	SP	UN	Qty	Description	Page No
Common parts						
010	A1185029-0100	-		1	MISSING TAB DETECTOR	**125**
020	A1260401-0100	-		2	SETTING TOOL	**109**
030	A1260415-0100	-		1	TAB FEEDER	**127, 129**
040	A1260416-0200	-		1	TAB C'JAW UNIT	**131**
050	A1260427-0100	-		1	TAB BRACKET	**133**
080	312115-0222	-		2	SCREW MC6S ISO 4762 M3X8 A280	
090	353243-0002	-		1	GLAND,HOSE,EXTENDED,WITHOUT INSERT PG11	
100	359705-0007	-		2	WARNING SIGN "HOT SURFACE"	
110	90110-0295	-		1	CONTACT SCREW	
120	90110-0371	-		1	PLUG HOOD	
130	90152-0059	-	M	1	HOSE 18X12	

Pos	Part No	SP	UN	Qty	Description	Page No

MISSING TAB DETECTOR

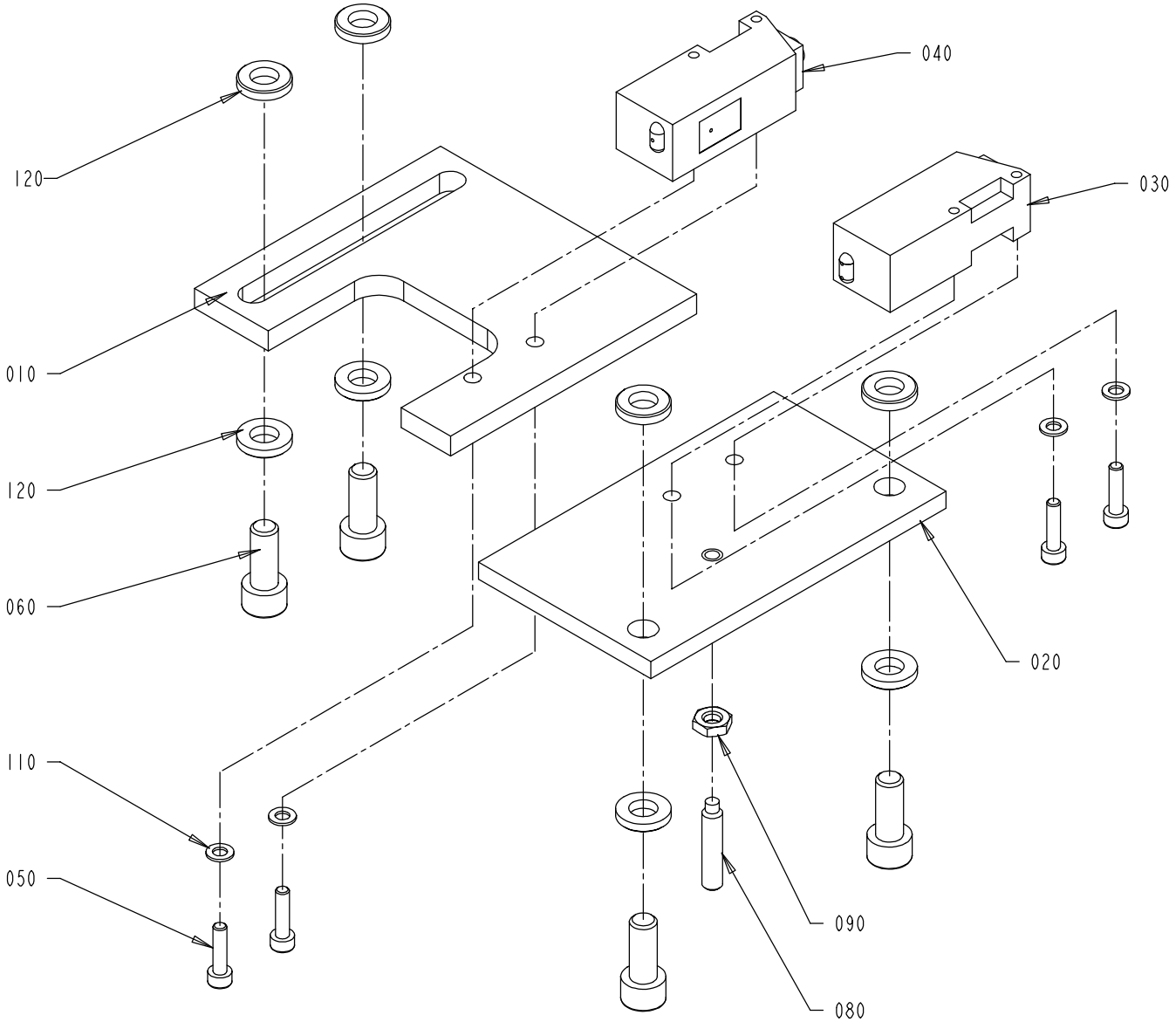

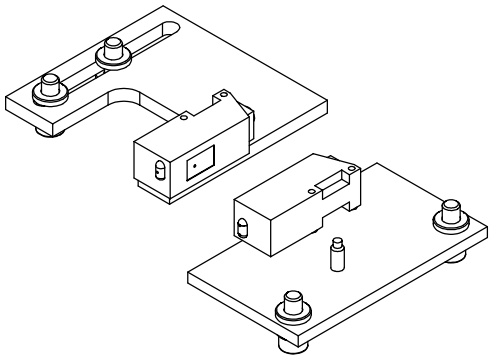

S - 1185029-2
ECN 72779

Pos	Part No	SP	UN	Qty	Description	Page No
Common parts						
010	1140738-0000	-		1	BRACKET	
020	1140739-0000	-		1	BRACKET	
030	90232-0104	R		1	PH.CELL E3S-CT61-D-5M	
040	90232-0103	R		1	PH.CELL E3S-CT61-L-5M	
050	312115-0293	-		4	SCREW MC6S ISO 4762 M4X16 A280	
060	312115-0451	-		4	SCREW MC6S ISO 4762 M8X20 A280	
080	312311-0374	-		1	SET SCREW FULL DOGPOINT ISO 4028 M6X30	
090	312625-0316	-		1	NUTS,HEXAGON,M6	
100	315105-0136	-		4	WASHER,PLAIN ROUND 4,3X8 STAINLESS	
110	315105-0136	-		4	WASHER,PLAIN ROUND 4,3X8 STAINLESS	
120	315115-0165	-		4	WASHER TBRB 8,4X16 STAINLESS	

Pos	Part No	SP	UN	Qty	Description	Page No

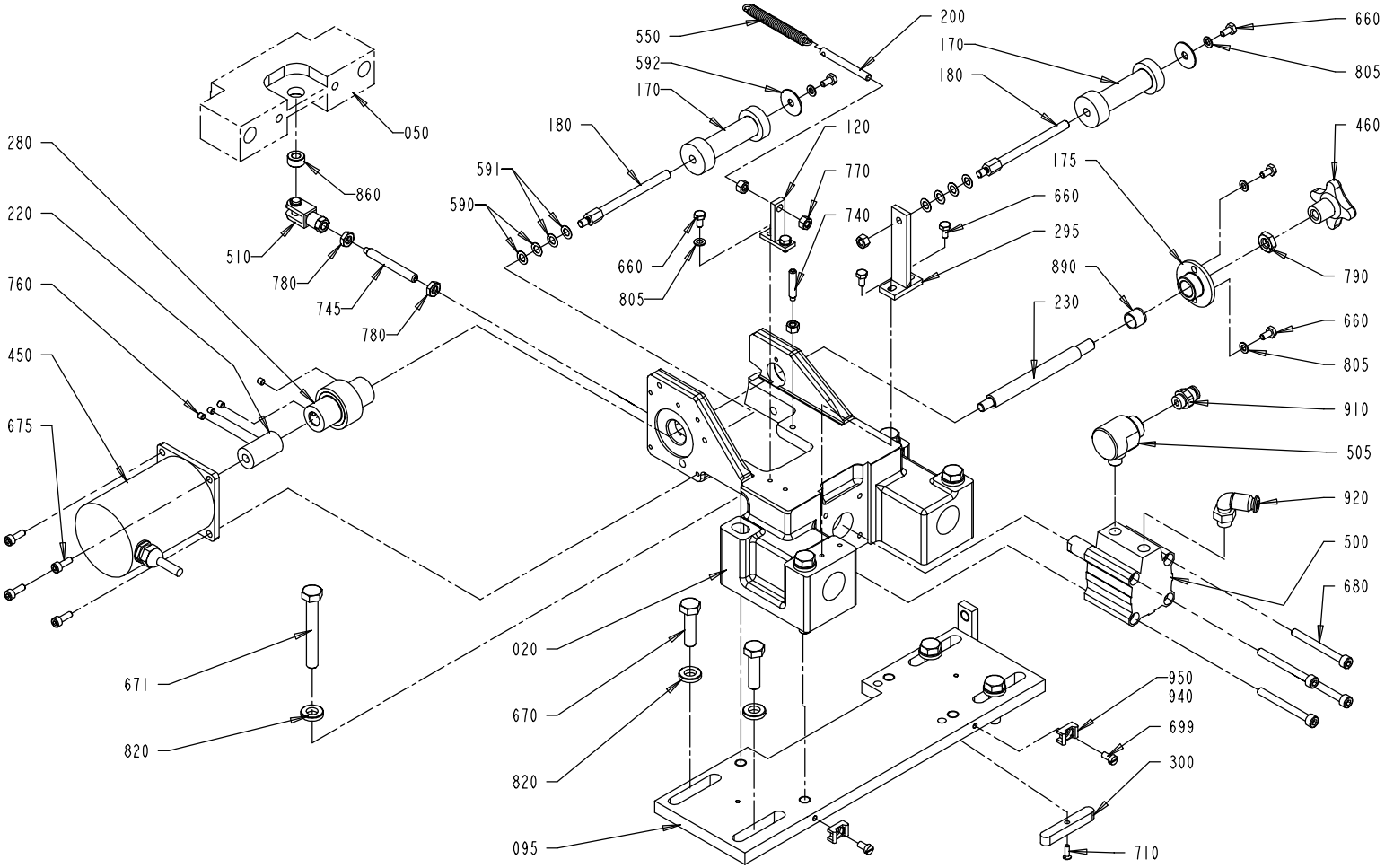

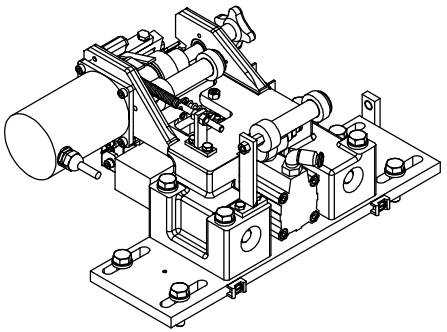

S - 1260415-1(1)
ECN 72779

EC No: - - 20000423
Group number: 1260415-0100
Assembly Drawing: 1260415-1(1)

Issue: 20000706

Pos	Part No	SP	UN	Qty	Description	Page No
HOLE50						
030	1350541-0000	J		1	SEALING PLATE	
170	908309-0000	N		2	ROLLER - 47	
HOLE45						
030	1350525-0000	J		1	SEALING PLATE	
170	908309-0000	N		2	ROLLER - 47	
HOLE71						
030	1350526-0000	J		1	SEALING PLATE	
170	907358-0005	N		2	ROLLER - 43.5	
HOLE85						
030	1490292-0000	-		1	SEALING PLATE	
170	908309-0000	N		2	ROLLER - 47	
Common parts						
010	1260551-0000	J		1	TAB HEATER HEAD	
020	1260389-0000	-		1	CASTING APPLICATOR	
050	1140912-0000	D		1	BRACKET	
060	1260395-0000	D		1	PLATE	
070	1145333-0000	J		1	KNIFE-WINDOW	
080	907712-0000	R		1	PIVOT PLATE	
090	1260388-0000	-		1	PLATE	
095	1260406-0000	-		1	PLATE	
100	1145332-0000	J		1	KNIFE-FLAT	
110	905174-0000	D		1	STEER PLATE	
120	1140545-0000	-		1	TEE BRACKET	
150	905194-0000	R		1	SHAFT	
160	1140547-0000	R		2	SHAFT	
175	1140548-0000	M		1	FLANGED BEARING BUSHING	
180	905212-0000	M		2	SHAFT	
190	1260399-0000	D		1	CLAMP	
195	1260422-0000	D		1	CLAMP	
200	905215-0000	D		1	BOLT	
220	905241-0000	D		1	COUPLING	
230	905243-0000	M		1	SHAFT	
250	905413-0000	M		1	SHAFT	
260	905416-0000	D		1	PIVOT BRACKET-SWIVEL	
270	905419-0000	D		1	PIVOT ARM-SWIVEL	
280	905471-0000	J		1	ROLLER-DRIVE	
293	907710-0000	-		1	PIVOT PLATE	
295	1140546-0000	-		1	BRACKET	
300	905244-0000	-		2	WEDGE	
310	905246-0000	-		1	BRACKET	
320	905415-0000	D		1	SHAFT	
330	905417-0000	D		1	SHAFT	
335	905484-0000	J		1	SHIM	
340	905607-0000	-		1	SCREW	
350	905608-0000	-		1	SCREW	
360	905609-0000	-		1	LOCK BAR	
370	905613-0000	D		1	SHAFT	
415	907711-0000	R		1	SHAFT	
430	1296753-0000	-		1	FLAG	
440	1296752-0000	-		1	BRACKET	
450	90045-0192	R		1	STEPPING MOTOR PACIFIC SCIENTIFIC	
455	90044-0145	R		1	PROX.SW. 922 AAIY-A9P-050-LZ876	
460	90051-0007	-		1	HANDLES, KNOB, INTERNAL THREAD M8-40X25	
470	907138-0000	-		1	CLAMP	
471	907249-0000	-		1	CLAMP	
480	90189-0003	M		4	BALL BUSHING 12X22X32	
490	1346521-0000	J		1	HEATER	
495	90411-0018	J		2	INSULATOR	
500	90450-0409	M		1	DOUBLE ACTING, COMPACT, CYL 32-15	
505	90235-0206	-		1	VALVE FESTO SEU-1/8	
510	90239-0489	M		1	ROD END,CLEVIS WITH AXLE,M6	
520	90298-0033	-			WATLUBE HEAT LIQUID	
530	90326-0060	R		1	THERMOCOUPLE CR-AL	
540	90335-0067	J		1	SPRING	
550	907719-0000	M		1	SPRING	
560	90348-0031	J		1	FREE-WHEEL COUPLING	
580	1350785-0001	J		2	SHIM	
581	1350785-0002	J		2	SHIM	
582	1350785-0003	J		2	SHIM	
583	1350785-0004	J		2	SHIM	
590	2033-0002	-		8	WASHER	
591	2033-0003	-		8	WASHER	
592	2033-0006	-		4	WASHER	
640	311103-0351	-		2	PINS,STRAIGHT 6X16	
645	311112-0205	-		2	PINS,SLOTTED TUBULAR SPRING PIN 3X10	
650	312101-0343	-		2	SCREW M6S5X60FZB	
660	312105-0287	-		10	SCREW M6S ISO 4017 M4X8 A280	
665	312105-0333	-		2	SCREW M6S ISO 4017 M5X25 A280	
670	312105-0455	-		4	SCREW M6S ISO 4017 M8X30 A280	
671	312105-0463	-		4	SCREW M6S ISO 4014 M8X60 A280	
672	312115-0226	-		4	SCREW MC6S ISO 4762 M3X12 A280	
674	312115-0287	-		3	SCREW MC6S ISO 4762 M4X8 A280	
675	312115-0291	-		8	SCREW MC6S ISO 4762 M4X12 A280	

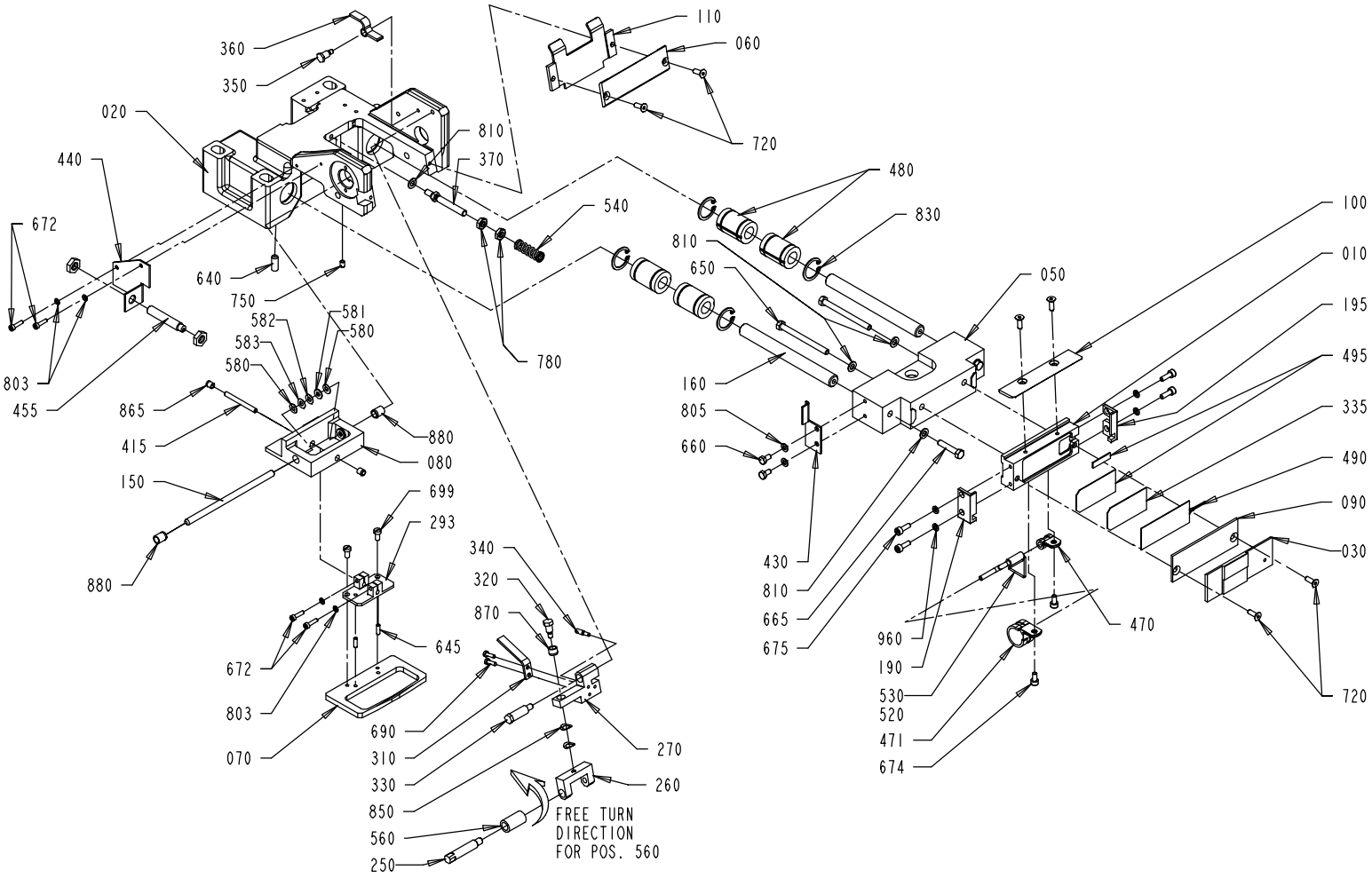

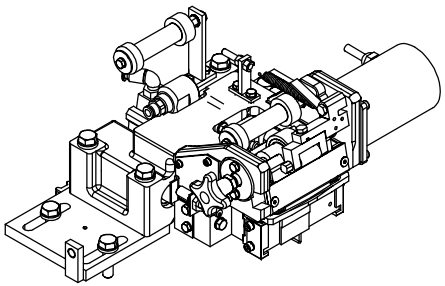

S - 1260415-1(2)
ECN 72779

Pos	Part No	SP	UN	Qty	Description	Page No
Common parts						
680	312115-0341	-		4	SCREW MC6S 5X50 A4 80	
690	312125-0224	-		2	SLOTTED HEMCS3X10RFR	
699	312125-0287	-		4	SLOTTED CHEESE HEAD ISO 1207 M4X8 RFR	
710	312145-0224	-		2	SLOTTED HEMFS3X10RFR	
720	312155-0291	-		6	SCREW MF6S DIN 7991 M4X12 A480	
740	312311-0333	-		1	SET SCREW FULL DOGPOINT ISO 4028 M5X25	
745	312311-0380	-		1	STOP SCREW T6SS6X50FZB	
750	312318-0285	-		1	STOP SCREW ISO 4029 M4X6 A4	
760	312318-0283	-		4	SET SCREW CUP POINT ISO 4029 M4X4 RFR	
770	312605-0314	-		4	NUT,HEXAGON,M6M5 STAINLESS	
780	312621-0316	-		4	ROD END,NUT M6	
790	312621-0318	-		1	ROD END,NUT M8	
803	315105-0124	-		4	WASHER,PLAIN ROUND 3,2X6	
805	315105-0136	-		8	WASHER,PLAIN ROUND 4,3X8 STAINLESS	
810	315105-0146	-		5	WASHER,PLAIN ROUND 5,3X10 STAINLESS	
820	315115-0165	-		8	WASHER TBRB 8,4X16 STAINLESS	
830	315753-0117	-		4	RETAINING RINGS FOR HOLE 22	
850	907487-0000	D		2	WASHER-CURVED	
860	321105-0125	J		1	BUSHING 6F7X12X6	
865	321120-0092	M		2	BUSHING, 4X5,5X6	
870	321120-0101	D		1	BUSHING, 6X8X6	
880	321120-0102	M		2	BUSHING, 6X8X10	
890	321120-0104	M		1	BUSHING, 10X12X10	
910	342722-0202	-		1	STRAIGHT COUPLING, D=6MM - G1/8"	
920	342732-0102	-		1	ELBOW PIPE JOINT,EXT.THREAD,D=6 MM G1/8	
940	352113-0102	-		2	CLIP-STRIP,BLACK 188X4,8MM	
950	352113-0205	-		2	ANCHOR TM2S8-C100	
960	315402-0136	-		4	WASHER FBB4,1RFR	

Pos	Part No	SP	UN	Qty	Description	Page No

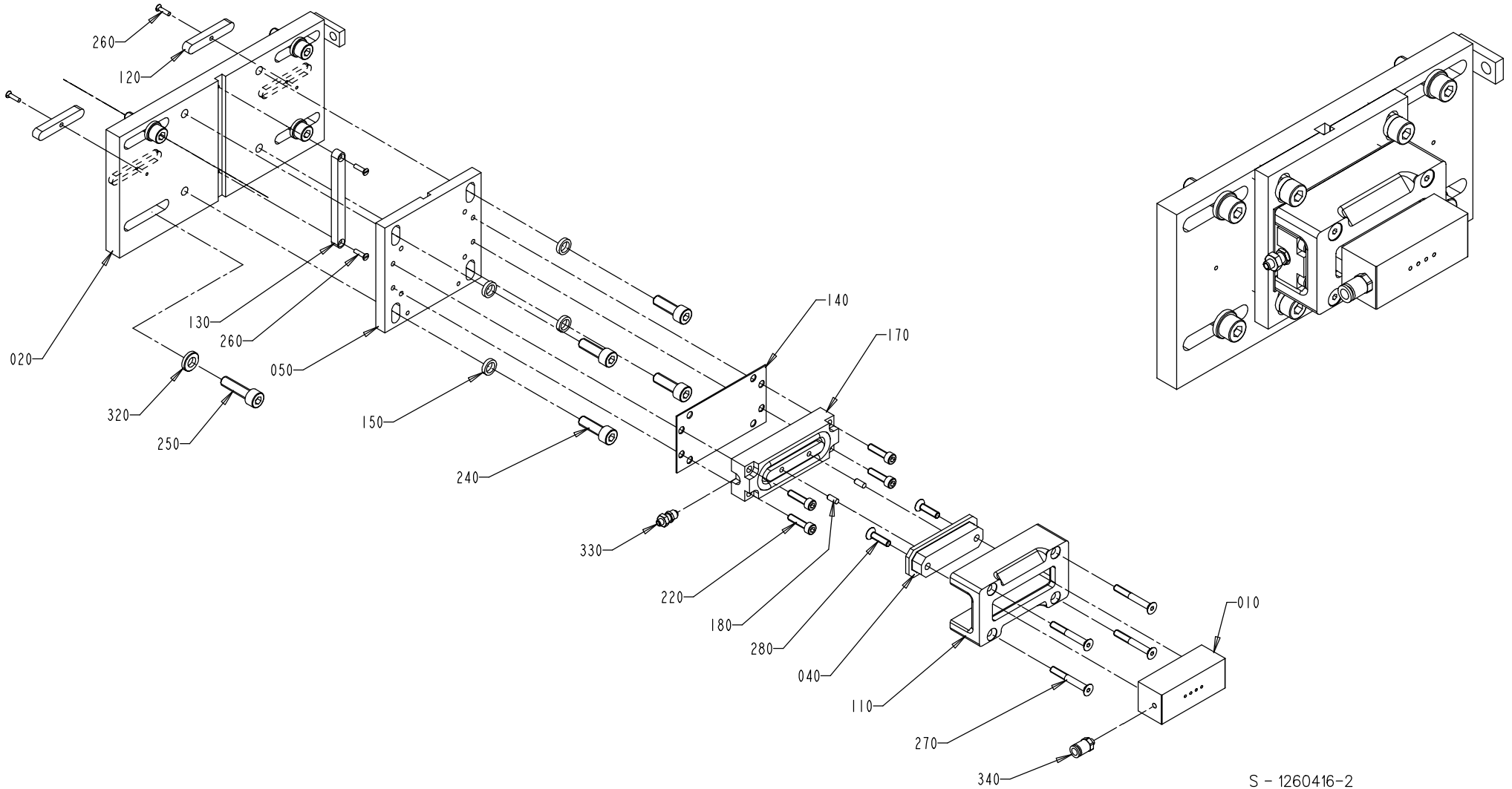
260
120
020
130
260
050
320
250
150
240
140
170
330
220
180
280
040
110
270
340
010
S - 1260416-2
ECN 72779

Pos	Part No	SP	UN	Qty	Description	Page No
Common parts						
010	1346283-0000	J		1	COUNTER PLATE	
020	1260407-0000	-		1	PLATE	
040	1296298-0000	M		1	BUSHING	
050	1279485-0000	-		1	PLATE	
110	928919-0000	-		1	FASTENING PLATE	
120	905244-0000	-		2	WEDGE	
130	905463-0000	-		1	KEY	
140	1279484-0000	J		2	SHIM	
150	1296300-0000	D		4	WASHER	
170	90450-0380	M		1	SINGLE ACTING, SHORT STROKE	
180	311103-0267	-		2	PIN,STRAIGHT 4X10	
220	312115-0331	-		4	SCREW MC6S ISO 4762 M5X20 A280	
240	312115-0453	-		4	SCREW MC6S ISO 4762 M8X25 A280	
250	312115-0455	-		4	SCREW MC6S ISO 4762 M8X30 A280	
260	312145-0226	-		4	SLOTTED HEMFS3X12RFR	
270	312155-0339	-		4	SCREW MF6S DIN 7991 5X40 A280	
280	312155-0331	-		2	SCREW MF6S DIN 7991 M5X20 A280	
320	315115-0165	-		4	WASHER TBRB 8,4X16 STAINLESS	
330	342921-0111	-		1	STRAIGHT COUPLING,EXT.THREADED 6/4-M5	
340	342722-0197	-		1	STRAIGHT COUPLING, D=6 MM - M5	

Pos	Part No	SP	UN	Qty	Description	Page No

TAB BRACKET

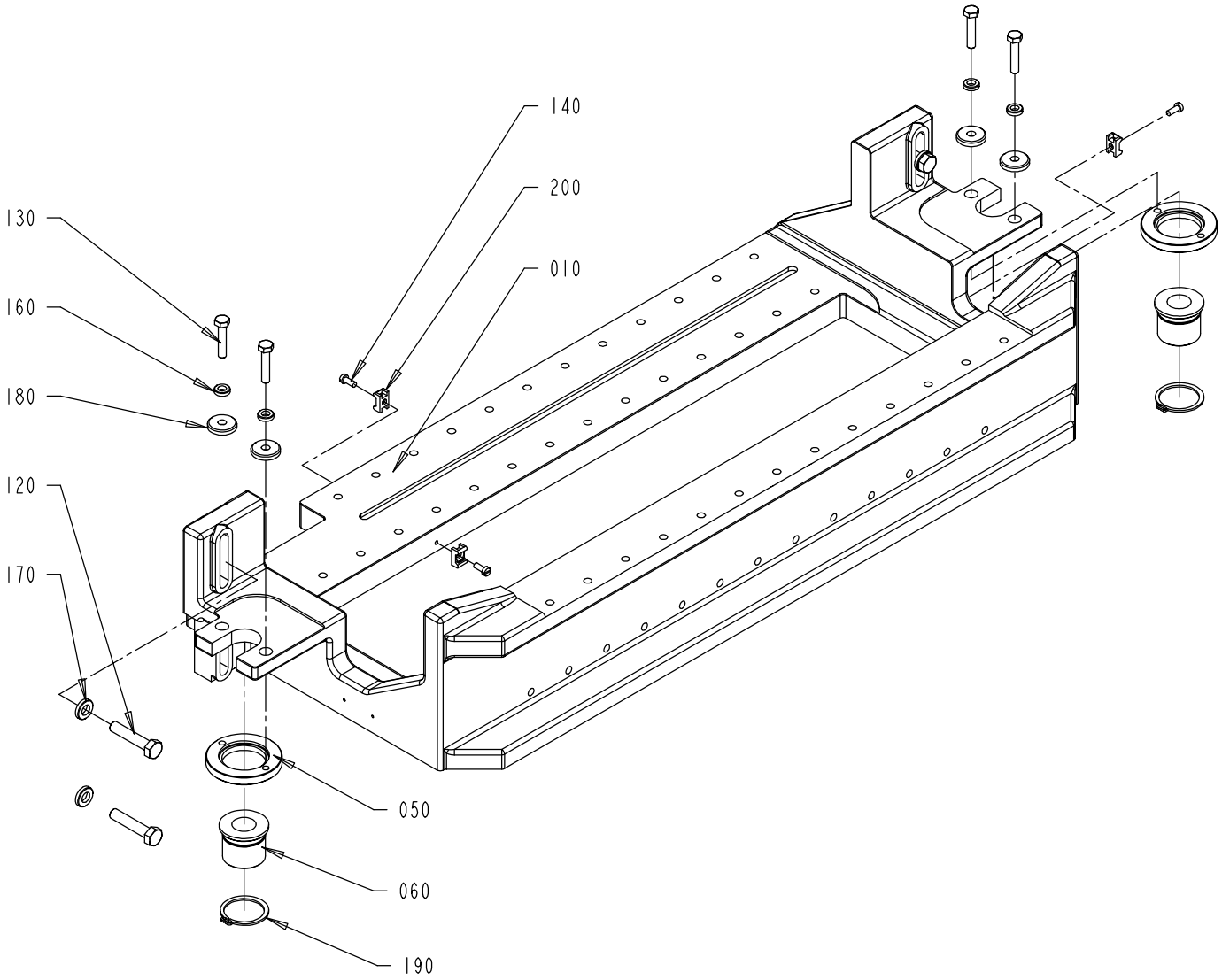

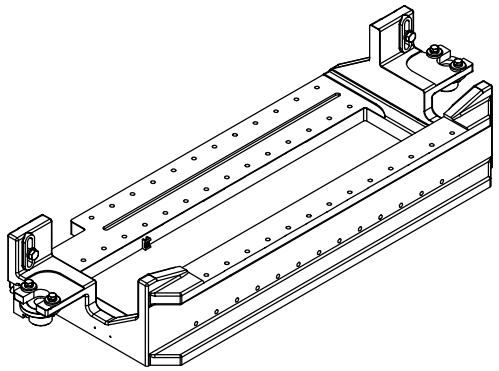

S - 1260427-1
ECN 72779

EC No: - - 20000423
Group number: 1260427-0100
Assembly Drawing: 1260427-1

Issue: 20000706

Pos	Part No	SP	UN	Qty	Description	Page No
Common parts						
010	1260398-0000	-		1	BRACKET	
050	1147009-0000	-		2	SPECIAL WASHER	
060	1147010-0000	-		2	BUSHING	
120	312109-0459	-		4	SCREW M6S ISO 4017 M8X40 A280	
130	312109-0374	-		4	SCREW M6S ISO 4017 M6X30 A280	
140	312125-0289	-		3	SLOTTED HEMCS4X10RFR	
160	315115-0153	-		4	WASHER TBRB 6,4X12 STAINLESS	
170	315115-0165	-		4	WASHER TBRB 8,4X16 STAINLESS	
180	315125-0153	-		4	WASHERS,PLAIN ROUND,CHAMFERED 6,4X22X4	
190	315751-0123	-		2	RETAINING RINGS FOR SHAFT 32	
200	352113-0205	-		3	ANCHOR TM2S8-C100	

Pos	Part No	SP	UN	Qty	Description	Page No

This page is intentionally left blank.

Pos	Part No	SP	UN	Qty	Description	Page No
TBA 1000B HOLE50						
010	1296875-0000	-		1	OPENING SPECIFICATION	
TBA 1000S HOLE50						
010	1296876-0000	-		1	OPENING SPECIFICATION	
TBA 1000B HOLE45						
010	1143421-0000	-		1	OPENING SPECIFICATION	
TBA 1000S HOLE45						
010	929771-0000	-		1	OPENING SPECIFICATION	
TBA 1000B HOLE85						
010	1484136-0000	-		1	OPENING SPECIFICATION	
TBA 1000S HOLE85						
010	1484135-0000	-		1	OPENING SPECIFICATION	
TPA 1000S HOLE60						
010	1498747-0000	-		1	OPENING SPECIFICATION	
TBA 1500S HOLE45						
010	1143632-0000	-		1	OPENING SPECIFICATION	
TBA 1000SQ HOLE85						
010	1499596-0000	-		1	OPENING SPECIFICATION	
TBA 1500S HOLE85						
010	1499597-0000	-		1	OPENING SPECIFICATION	
TBA 1000SQ HOLE45						
010	1143702-0000	-		1	OPENING SPECIFICATION	

Pos	Part No	SP	UN	Qty	Description	Page No

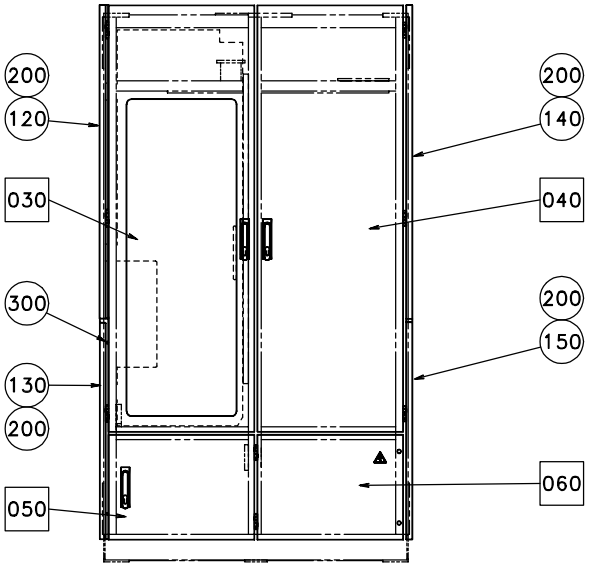

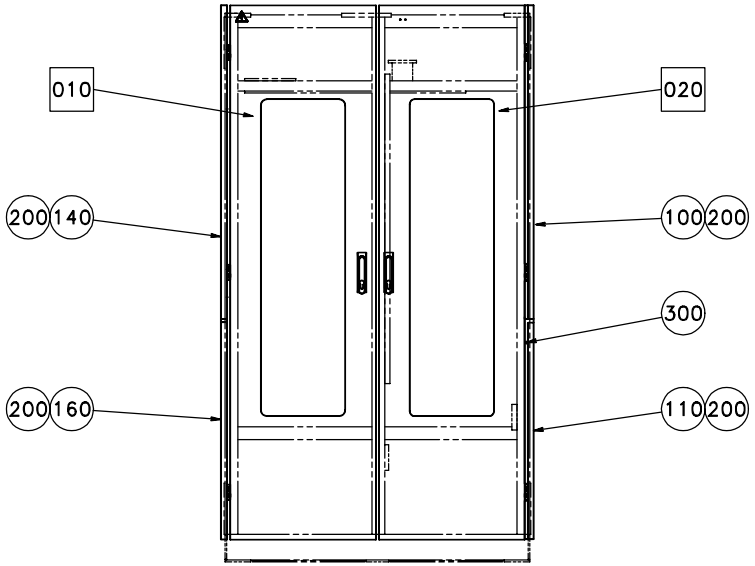

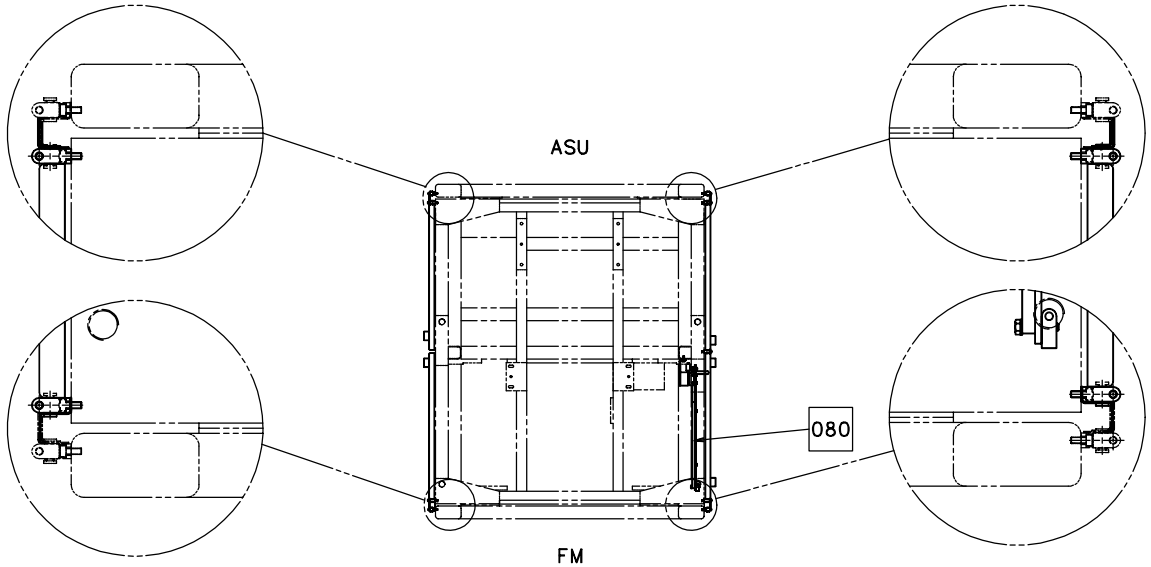

S – 1095951-1
ECN 70335

Pos	Part No	SP	UN	Qty	Description	Page No
Common parts						
010	A1095944-0200	-		1	DOOR EL-CABINET	**139**
020	A1095945-0200	-		1	DOOR	**141**
030	A1095946-0200	-		1	DOOR	**143**
040	A1095947-0200	-		1	DOOR	**145**
050	A1095948-0100	-		1	DOOR FOR WASTE BOX	**147**
060	A1095949-0100	-		1	DOOR FOR TPIH	**149**
080	A1185000-0100	-		1	DOOR,INNER	**151**
100	1140771-0000	-		1	COVERING PLATE	
110	1140772-0000	-		1	COVERING PLATE	
120	1140773-0000	-		1	COVERING PLATE	
130	1140774-0000	-		1	COVERING PLATE	
140	1140775-0000	-		2	COVERING PLATE	
150	1140776-0000	-		1	COVERING PLATE	
160	1140777-0000	-		1	COVERING PLATE	
200	1129767-0000	-		12	SCREW	
300	312115-0362	-		3	SCREW MC6S ISO 4762 M6X8 A280	

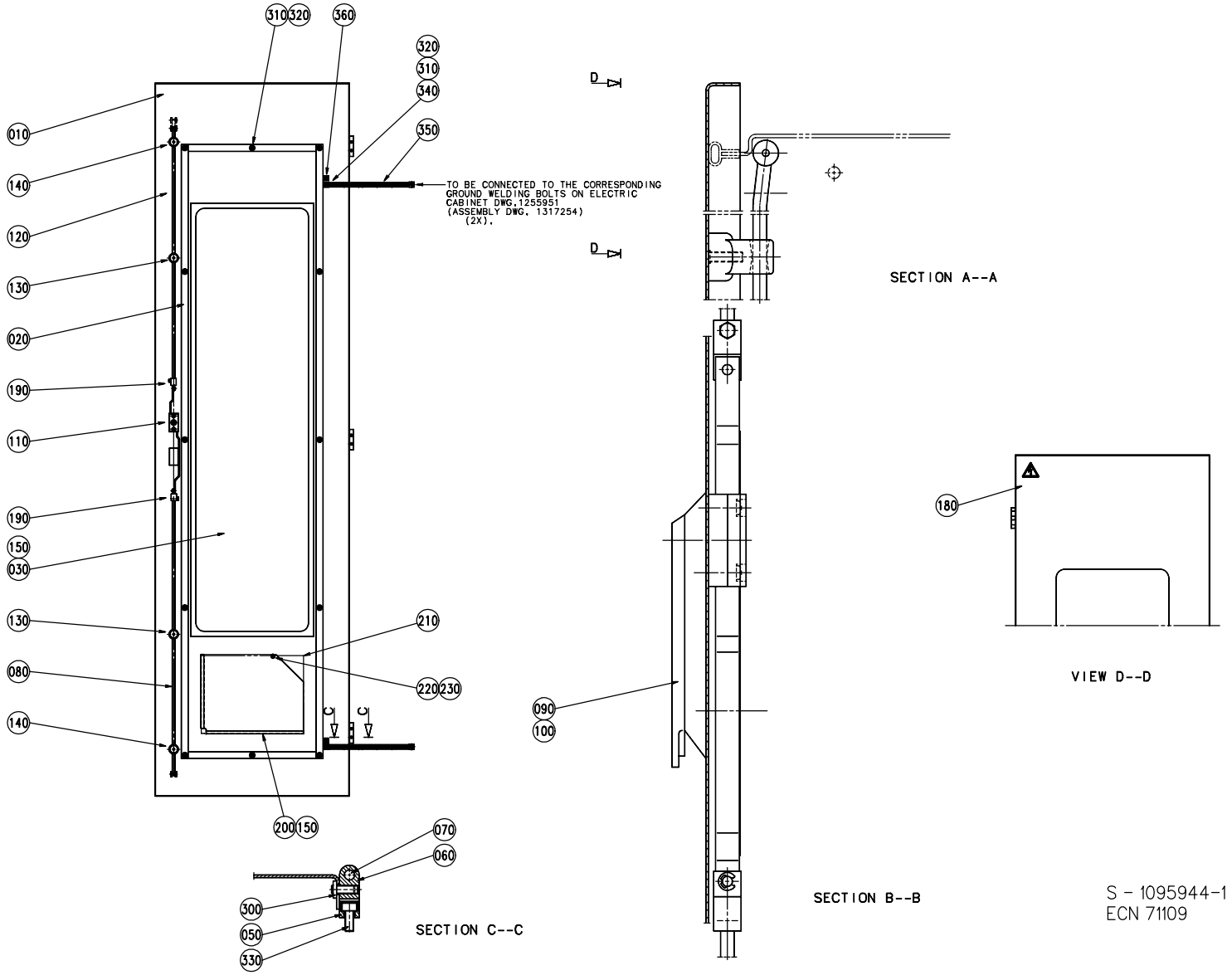
310
320
360
320
310
340
350
010
140
120
130
020
190
110
190
150
030
130
080
140
200
150
070
060
300
050
330
TO BE CONNECTED TO THE CORRESPONDING GROUND WELDING BOLTS ON ELECTRIC CABINET DWG.1255951 (ASSEMBLY DWG. 1317254) (2X).
D
D
C
C
210
220
230
090
100
180
SECTION A--A
VIEW D--D
SECTION B--B
SECTION C--C
S - 1095944-1
ECN 71109

Pos	Part No	SP	UN	Qty	Description	Page No
Common parts						
010	1129931-0000	-		1	DOOR	
020	1129932-0000	-		1	FRAME	
030	1140415-0000	-		1	GLASS PANE	
050	1035792-0000	-		3	E-HINGE	
060	1129770-0000	-		6	BLOCKING PIECE	
070	988685-0000	-		3	PIN	
080	1260552-0000	-		1	ROD	
090	90237-0150	-		1	TURNING HANDLE, BLACK PA	
100	90237-0128	-		1	LOCK CYLINDER	
110	90237-0153	-		1	LOCK HOUSING	
120	B1260403-0000	-		1	ROD	**181**
130	90237-0151	-		2	STEERING GUIDE,BLACK PA	
140	90237-0152	-		2	STEERING	
150	90157-0041	-			SEALING COMPOUND	
180	359705-0015	-		1	WARNING SIGN "ELECTRIC SHOCK"	
190	90237-0169	-		2	LOCK-ADAPTER	
200	1036977-0000	-		1	HOLDER	
210	1347265-0000	-		1	FUSE BOARD	
220	312605-0314	-		1	NUT,HEXAGON,M6M5 STAINLESS	
230	315105-0146	-		1	WASHER,PLAIN ROUND 5,3X10 STAINLESS	
300	1129767-0000	-		3	SCREW	
310	315105-0153	-		14	WASHER,PLAIN ROUND 6,4X12 STAINLESS	
320	312605-0316	-		14	NUT,HEXAGON A280 M6M6	
330	312115-0327	-		6	SCREW MC6S ISO 4762 M5X12 A280	
340	90062-0022	-		2	LOCKING WASHER D=6,4/11	
350	90135-0035	-		2	LOW IMPEDANCELITZ L=250MM	
360	90194-0152	-		2	SIGN "EARTH"	

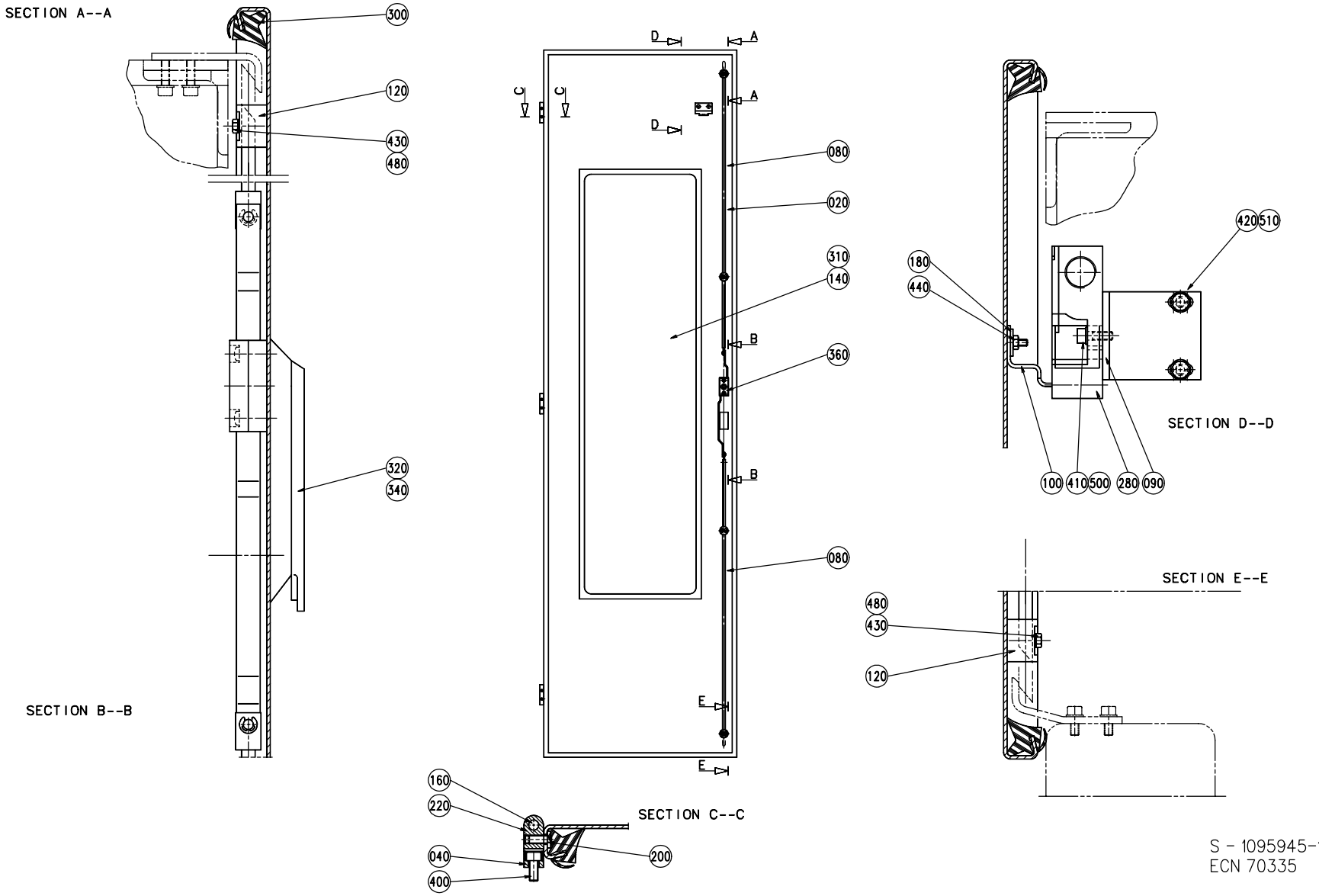

S - 1095945-1
ECN 70335

Pos	Part No	SP	UN	Qty	Description	Page No
Common parts						
020	1255682-0000	-		1	DOOR	
040	1035792-0000	-		3	E-HINGE	
080	1036304-0020	-		2	LOCKING ARM	
090	1255684-0000	-		1	HOLDER	
100	1129042-0000	-		1	KEY	
120	1129274-0000	-		4	GUIDE LUG	
140	1140415-0000	-		1	GLASS PANE	
160	988685-0000	-		3	PIN	
180	1036563-0000	-		1	WASHER	
200	1129767-0000	-		3	SCREW	
220	1129770-0000	-		6	BLOCKING PIECE	
280	90044-0139	N		1	KEY SAF.SW. AZ16-02 ZVR K-2254	
300	1279828-0000	-		1	SEALING STRIP	
310	90157-0041	-			SEALING COMPOUND	
320	90237-0128	-		1	LOCK CYLINDER	
340	90237-0150	-		1	TURNING HANDLE, BLACK PA	
360	90237-0153	-		1	LOCK HOUSING	
400	312115-0327	-		6	SCREW MC6S ISO 4762 M5X12 A280	
410	312115-0329	-		2	SCREW MC6S ISO 4762 M5X16 A280	
420	312105-0366	-		2	SCREW M6S ISO 4017 M6X12 A280	
430	312605-0312	-		8	NUT,HEXAGON,M4 RFR	
440	312812-0312	-		2	LOCK-NUT,HEXAGON,WITH NYLONINSERT,M4	
480	315105-0136	-		8	WASHER,PLAIN ROUND 4,3X8 STAINLESS	
500	315105-0146	-		2	WASHER,PLAIN ROUND 5,3X10 STAINLESS	
510	315105-0153	-		2	WASHER,PLAIN ROUND 6,4X12 STAINLESS	

Pos	Part No	SP	UN	Qty	Description	Page No

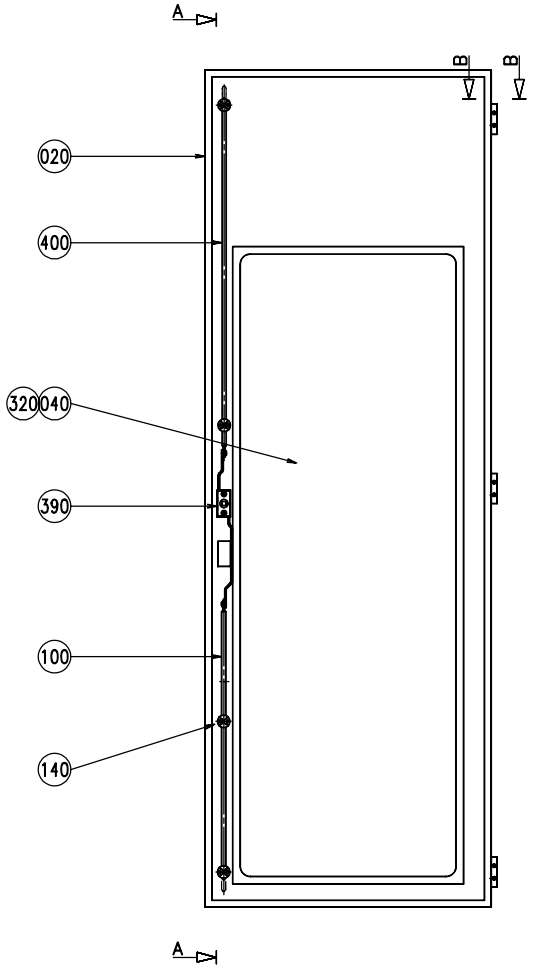

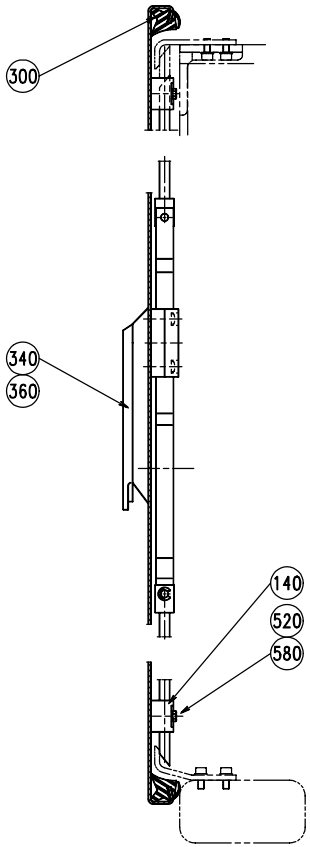

SECTION A--A

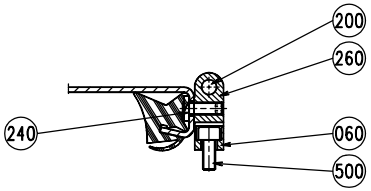

SECTION B--B

S - 1095946-1
ECN 70335

Pos	Part No	SP	UN	Qty	Description	Page No
Common parts						
020	1255685-0000	-		1	DOOR	
040	1140416-0000	-		1	GLASS PANE	
060	1035792-0000	-		3	E-HINGE	
100	1036304-0019	-		1	LOCKING ARM	
140	1129274-0000	-		4	GUIDE LUG	
200	988685-0000	-		3	PIN	
240	1129767-0000	-		3	SCREW	
260	1129770-0000	-		6	BLOCKING PIECE	
300	1279829-0000	-		1	SEALING STRIP	
320	90157-0041	-			SEALING COMPOUND	
340	90237-0128	-		1	LOCK CYLINDER	
360	90237-0150	-		1	TURNING HANDLE, BLACK PA	
390	90237-0153	-		1	LOCK HOUSING	
400	1036304-0005	-		1	LOCKING ARM	
500	312115-0327	-		6	SCREW MC6S ISO 4762 M5X12 A280	
520	312605-0312	-		8	NUT,HEXAGON,M4 RFR	
580	315105-0136	-		4	WASHER,PLAIN ROUND 4,3X8 STAINLESS	

Pos	Part No	SP	UN	Qty	Description	Page No

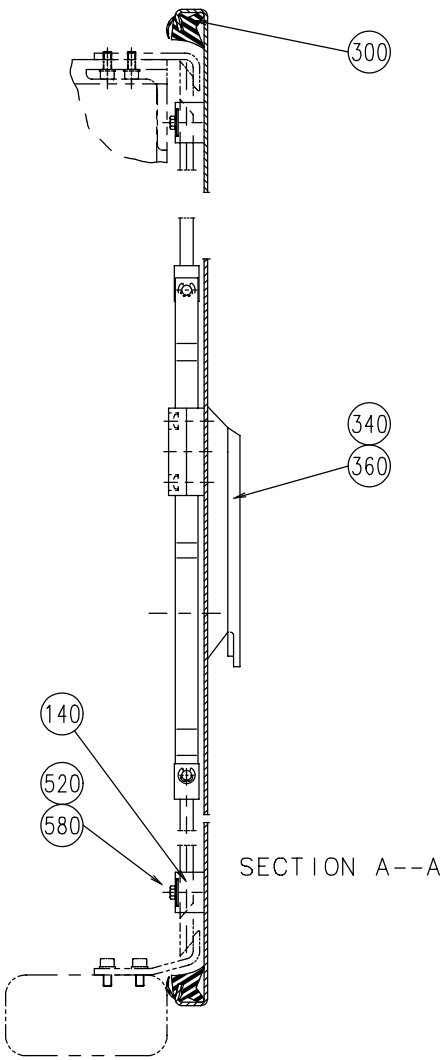

SECTION A--A

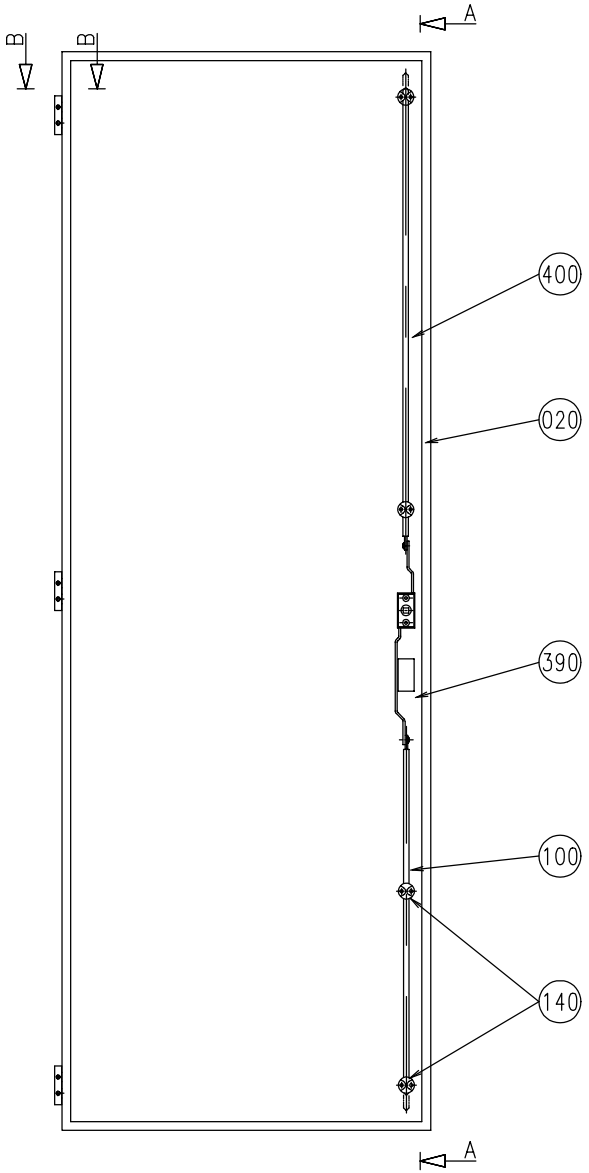

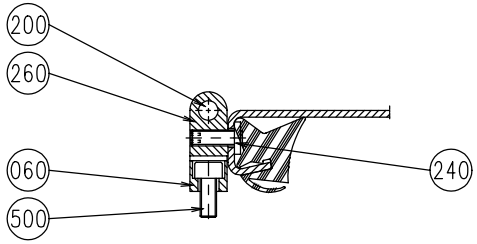

SECTION B--B

S-1095947-1
ECN 70335

Pos	Part No	SP	UN	Qty	Description	Page No
Common parts						
020	1255686-0000	-		1	DOOR	
060	1035792-0000	-		3	E-HINGE	
100	1036304-0019	-		1	LOCKING ARM	
140	1129274-0000	-		4	GUIDE LUG	
200	988685-0000	-		3	PIN	
240	1129767-0000	-		3	SCREW	
260	1129770-0000	-		6	BLOCKING PIECE	
300	1279829-0000	-		1	SEALING STRIP	
340	90237-0128	-		1	LOCK CYLINDER	
360	90237-0150	-		1	TURNING HANDLE, BLACK PA	
390	90237-0153	-		1	LOCK HOUSING	
400	1036304-0005	-		1	LOCKING ARM	
500	312115-0327	-		6	SCREW MC6S ISO 4762 M5X12 A280	
520	312605-0312	-		4	NUT,HEXAGON,M4 RFR	
580	315105-0136	-		4	WASHER,PLAIN ROUND 4,3X8 STAINLESS	

Pos	Part No	SP	UN	Qty	Description	Page No

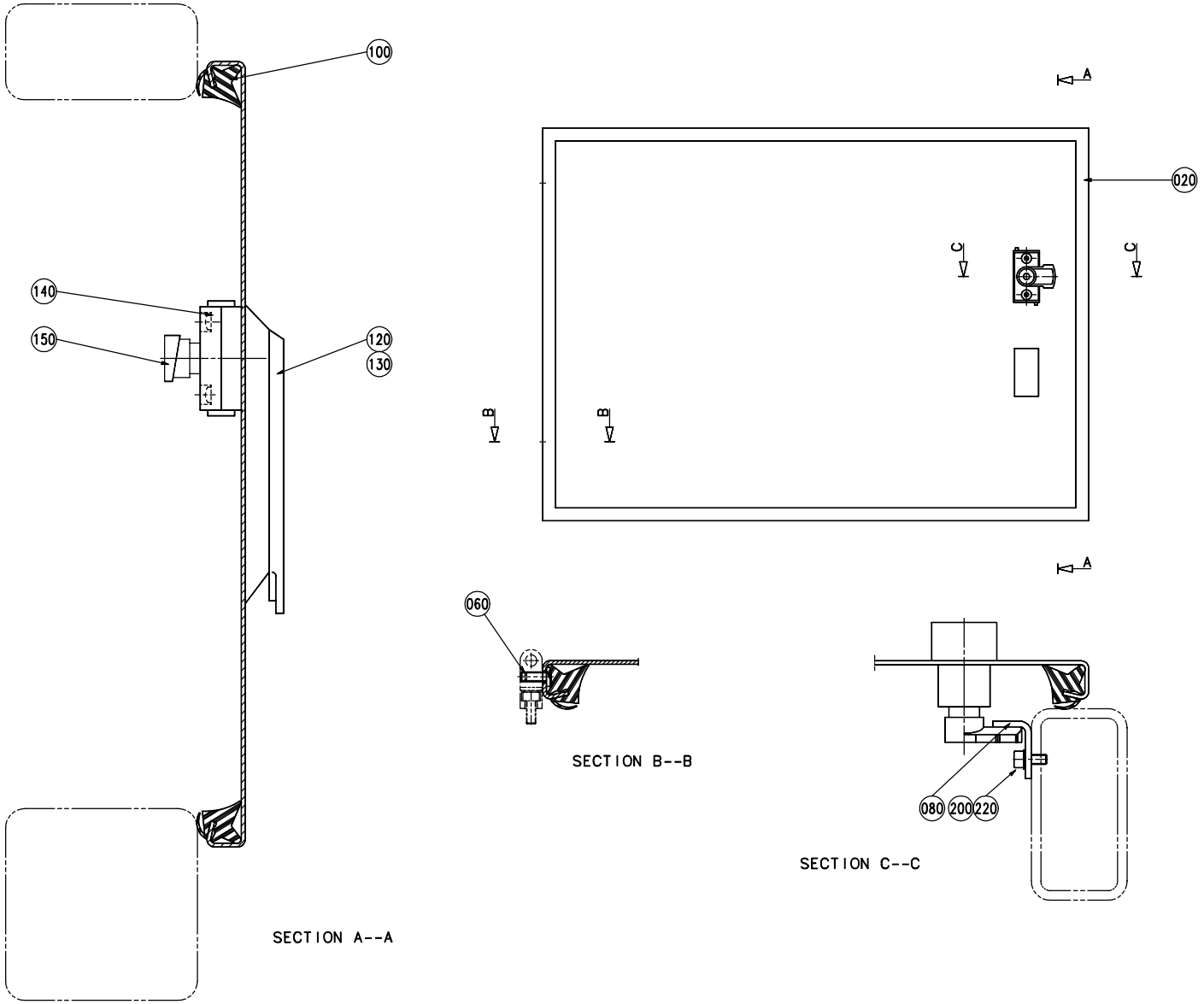

S - 1095948-1
ECN 70335

EC No: - - 20000423
Group number: 1095948-0100
Assembly Drawing: 1095948-1

Issue: 20000706

Pos	Part No	SP	UN	Qty	Description	Page No
Common parts						
020	1255683-0000	-		1	DOOR	
060	1129767-0000	-		2	SCREW	
080	1129971-0000	-		1	BRACKET	
100	1279830-0000	-		1	SEALING STRIP	
120	90237-0128	-		1	LOCK CYLINDER	
130	90237-0150	-		1	TURNING HANDLE, BLACK PA	
140	90237-0154	-		1	LOCK HOUSING,BLACK PA	
150	90237-0165	-		1	LATCH	
200	312115-0327	-		2	SCREW MC6S ISO 4762 M5X12 A280	
220	315105-0146	-		2	WASHER,PLAIN ROUND 5,3X10 STAINLESS	

Pos	Part No	SP	UN	Qty	Description	Page No

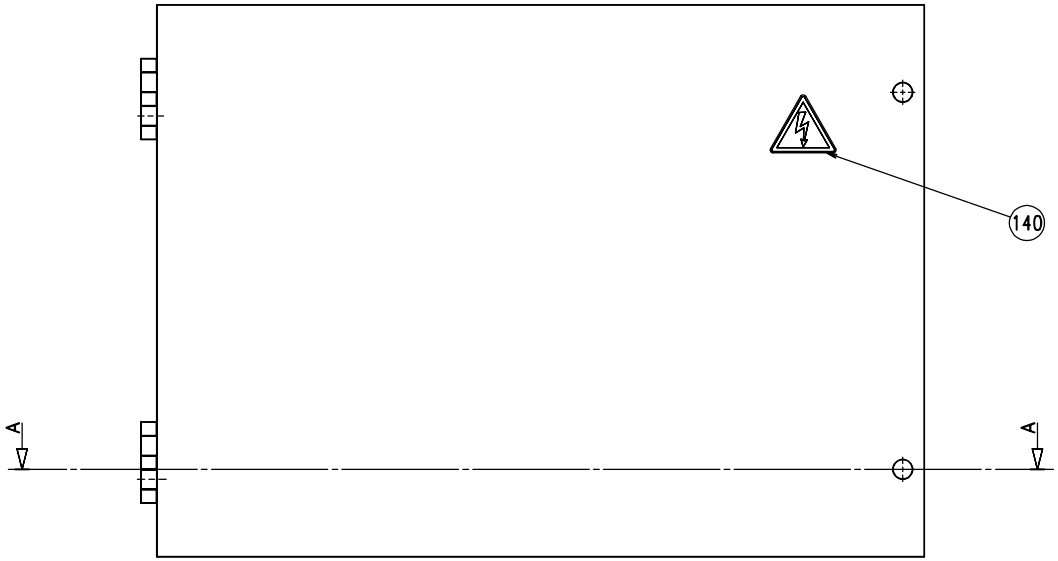

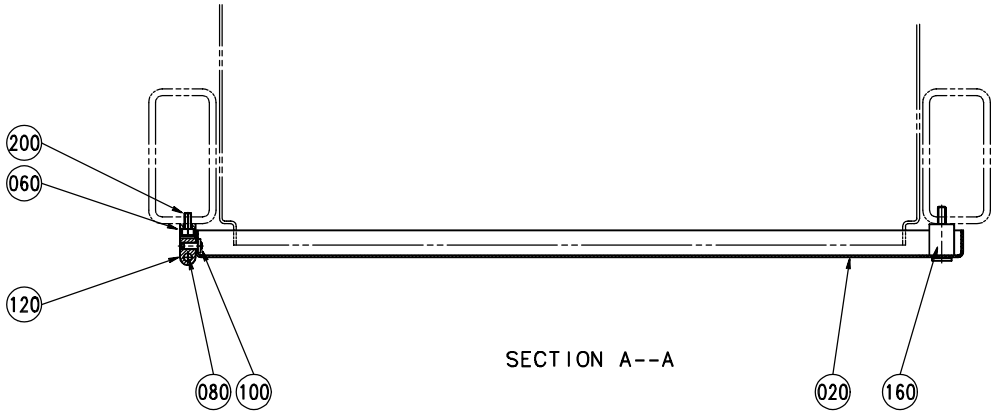

SECTION A--A

S - 1095949-1
ECN 70335

Pos	Part No	SP	UN	Qty	Description	Page No
Common parts						
020	1129930-0000	-		1	DOOR	
060	1035792-0000	-		2	E-HINGE	
080	988685-0000	-		2	PIN	
100	1129767-0000	-		2	SCREW	
120	1129770-0000	-		4	BLOCKING PIECE	
140	359705-0015	-		1	WARNING SIGN "ELECTRIC SHOCK"	
160	90226-0458	-		2	MOUNTING SCREW	
200	312115-0327	-		4	SCREW MC6S ISO 4762 M5X12 A280	

Pos	Part No	SP	UN	Qty	Description	Page No

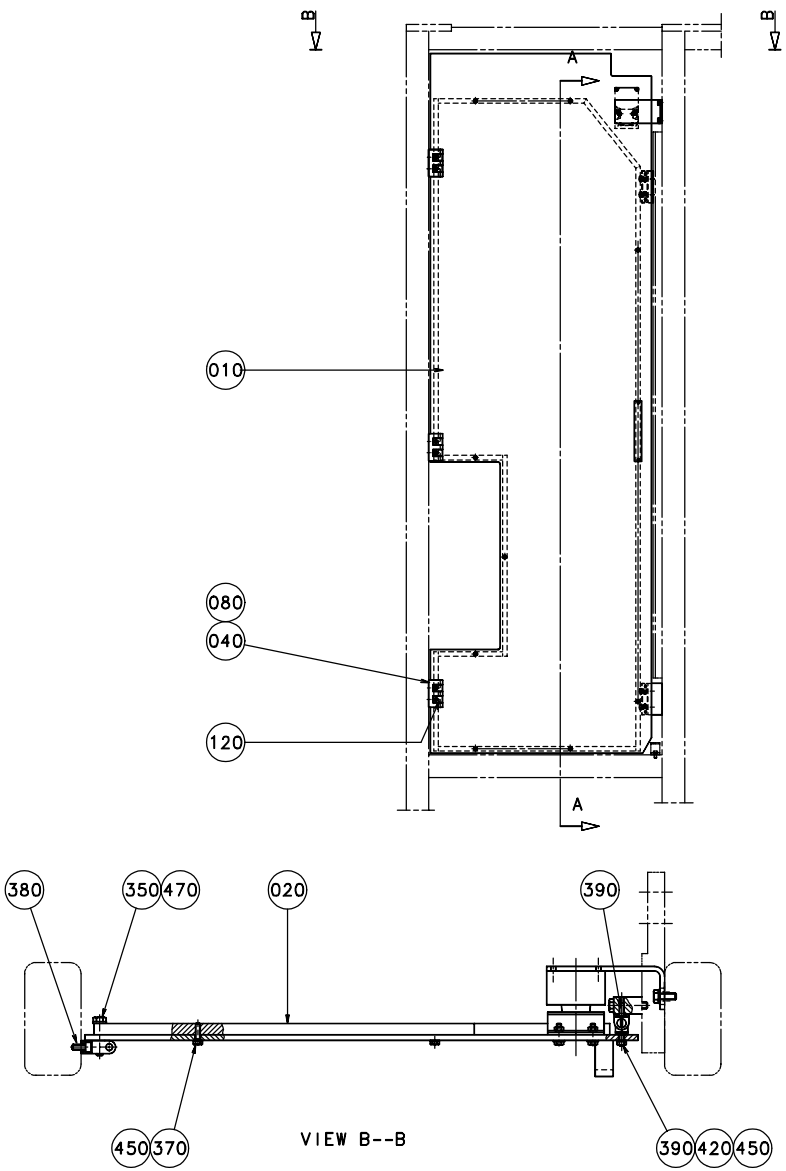

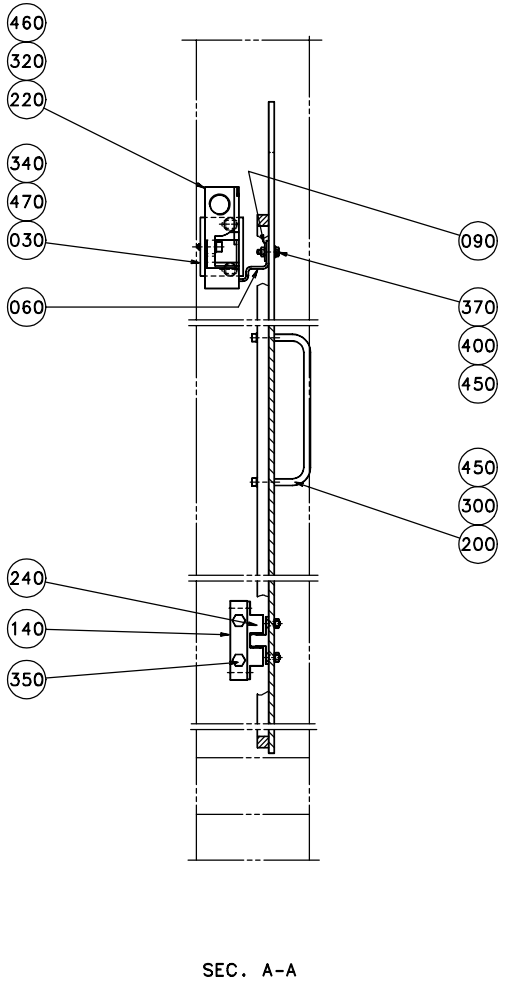

S - 1185000-1
ECN 70335

EC No: - - 20000423
Group number: 1185000-0100
Assembly Drawing: 1185000-1

Issue: 20000706

Pos	Part No	SP	UN	Qty	Description	Page No
Common parts						
010	1140509-0000	-		1	DOOR	
020	1260201-0000	-		1	FRAME	
030	1140537-0000	-		1	HOLDER	
040	1035792-0000	-		3	E-HINGE	
060	1129042-0000	-		1	KEY	
080	988685-0000	-		3	PIN	
090	1036563-0000	-		1	WASHER	
120	1129770-0000	-		6	BLOCKING PIECE	
140	1140538-0000	-		2	BLOCKING PIECE	
200	90017-0017	-		1	HANDLE,BRASS	
220	90044-0139	R		1	KEY SAF.SW. AZ16-02 ZVR K-2254	
240	90237-0070	-		2	SNAP-IN-LOCK	
300	312115-0295	-		2	SCREW MC6S ISO 4762 M4X20 A280	
320	312115-0329	-		2	SCREW MC6S ISO 4762 M5X16 A280	
340	312105-0368	-		2	SCREW M6S ISO 4017 M6X16 A280	
350	312105-0374	-		10	SCREW M6S ISO 4017 M6X30 A280	
370	312105-0295	-		11	SCREW M6S ISO 4017 M4X20 A280	
380	312115-0327	-		6	SCREW MC6S ISO 4762 M5X12 A280	
390	312155-0291	-		8	SCREW MF6S DIN 7991 M4X12 A480	
400	312605-0312	-		6	NUT,HEXAGON,M4 RFR	
450	315105-0136	-		19	WASHER,PLAIN ROUND 4,3X8 STAINLESS	
460	315105-0146	-		2	WASHER,PLAIN ROUND 5,3X10 STAINLESS	
470	315105-0153	-		8	WASHER,PLAIN ROUND 6,4X12 STAINLESS	

Pos	Part No	SP	UN	Qty	Description	Page No

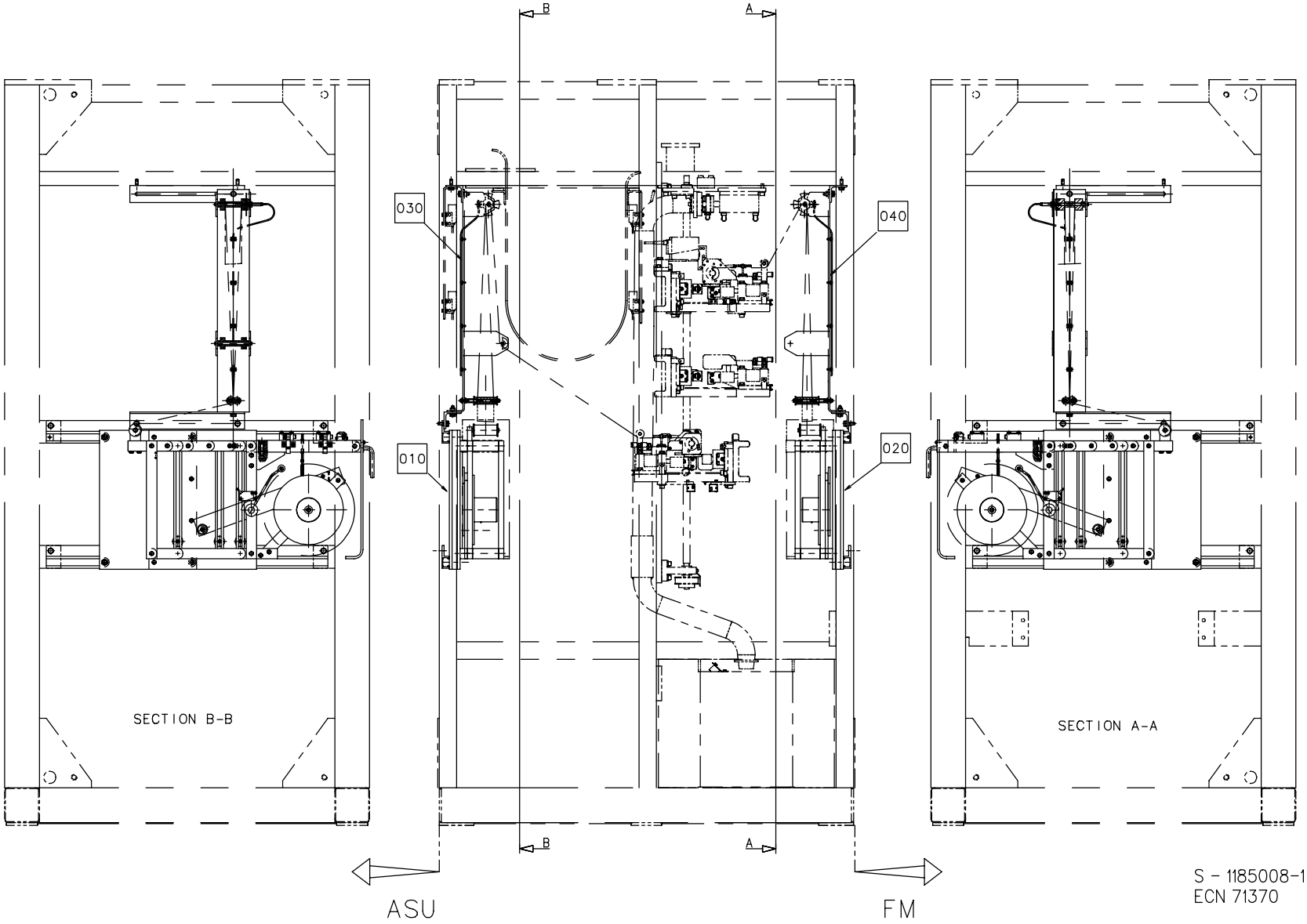
B
A
030
040
010
020
SECTION B-B
SECTION A-A
B
A
ASU
FM
S - 1185008-1
ECN 71370

Pos	Part No	SP	UN	Qty	Description	Page No
Common parts						
010	A1095893-0100	-		1	MAGAZINE PULLTAB	**155, 157**
020	A1095894-0100	-		1	MAGAZINE PATCH	**163, 165**
030	A1334066-0100	-		1	TAB TURNING DEVICE	**169**
040	A1334065-0100	-		1	PATCH TURNING DEVICE	**171**

Pos	Part No	SP	UN	Qty	Description	Page No

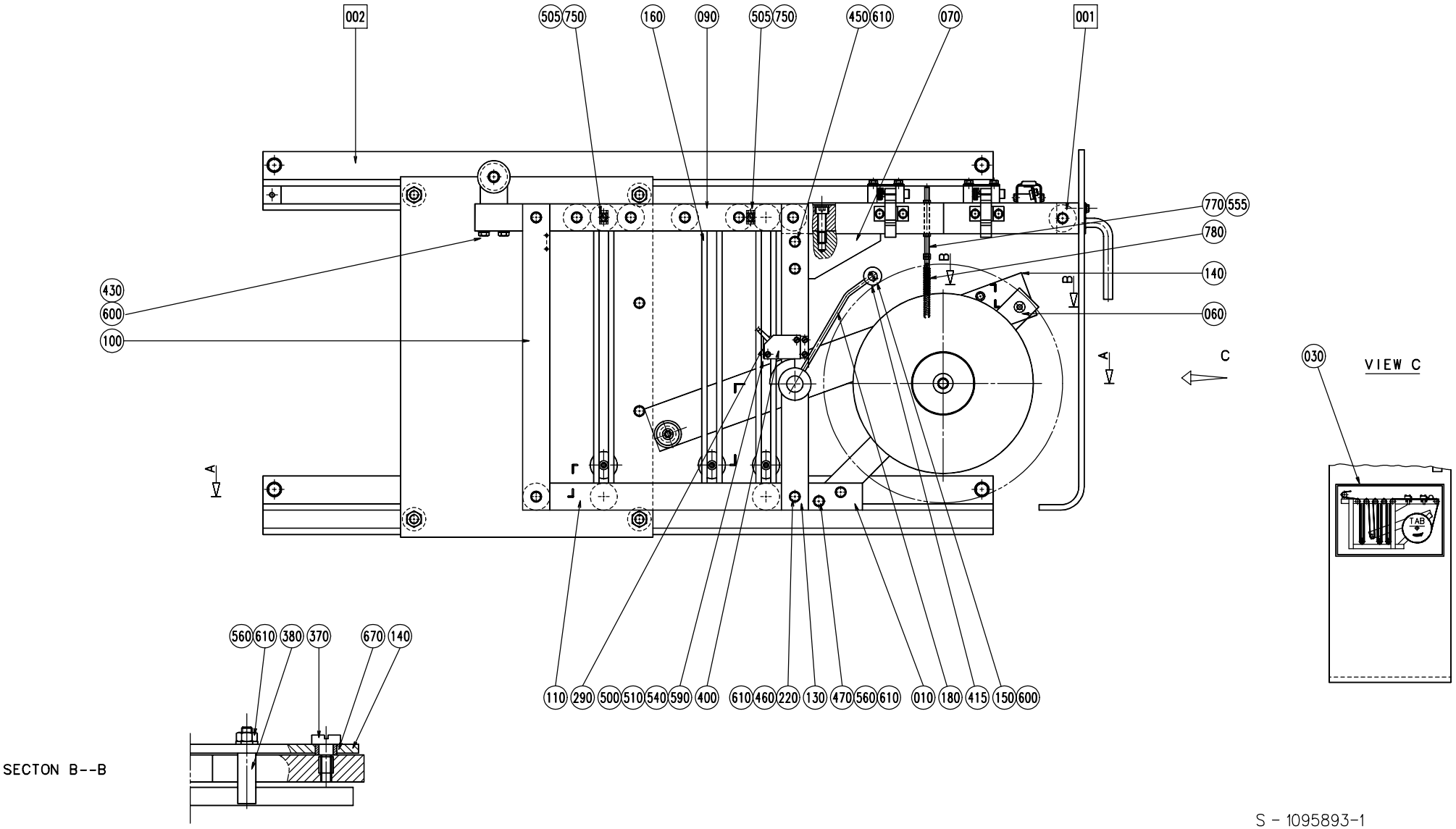

S - 1095893-1
ECN 70338

EC No: - - 20000423
Group number: 1095893-0100
Assembly Drawing: 1095893-1

Issue: 20000706

Pos	Part No	SP	UN	Qty	Description	Page No
Common parts						
001	A1095895-0100	-		1	SPLICING DEVICE	**159**
002	A1095923-0100	-		1	GUIDE PULLTAB	**161**
010	1129230-0000	-		1	BEAM	
020	1129223-0000	-		1	BEAM	
030	1285482-0000	-		1	LABEL	
040	1129222-0000	-		1	BOBBIN HOLDER	
050	556539-0000	-		1	BRAKE DISC	
060	546290-0000	-		1	BEAM	
070	1129231-0000	-		1	CANTILEVER	
090	1129224-0000	-		1	BEAM	
100	546294-0000	-		2	BEAM	
110	1129226-0000	-		1	BEAM	
120	546296-0000	-		1	BEAM	
130	546297-0000	-		1	BEAM	
140	1129450-0000	-		1	ARM	
145	2033-0013	-		1	WASHER	
150	234844-0000	J		1	WHEEL	
160	1140632-0000	-		12	POST	
170	533972-0000	-		1	INDICATOR CURVE	
180	1129510-0000	-		1	ARM	
190	534497-0000	-		6	SPACER	
200	538726-0000	-		2	WASHER	
210	538740-0003	-		1	SPACER	
220	1129235-0000	-		8	SHAFT	
230	1129233-0000	-		3	SHAFT	
240	1129780-0000	D		1	ROLL	
250	1129234-0000	D		6	ROLL	
260	1129495-0000	-		1	BLOCKING PIECE	
270	546303-0000	-		1	SHAFT	
290	546305-0000	-		1	SHEET	
300	546306-0000	-		1	SHAFT	
310	1129232-0000	D		3	ROLL	
330	1129237-0000	D		1	ROLL	
340	1129246-0000	D		1	ROLL	
370	556541-0000	-		1	SCREW	
380	556542-0000	-		1	PIN	
390	1129452-0000	-		1	SHAFT	
395	556544-0000	-		1	SPACER	
400	90044-0104	R		1	PROX.SWITCH IFM IN 3002 48VDC	
410	90287-0009	-		1	SPRINGLOADED SCREW M10X19	
415	311411-0138	-		2	SPLIT PIN SP1,6X12RFR	
420	312105-0327	-		1	SCREW M6S ISO 4017 M5X12 A280	
430	312105-0339	-		2	SCREW M6S ISO 4014 M5X40 A280	
440	312105-0287	-		1	SCREW M6S ISO 4017 M4X8 A280	
445	312105-0295	-		1	SCREW M6S ISO 4017 M4X20 A280	
450	312105-0370	-		8	SCREW M6S ISO 4017 M6X20 A280	
460	312105-0372	-		20	SCREW M6S ISO 4017 M6X25 A280	
470	312105-0376	-		2	SCREW M6S ISO 4017 M6X35 A280	
480	312115-0368	-		2	SCREW MC6S ISO 4762 M6X16 A280	
500	312125-0230	-		3	SLOTTED CHEESE HEAD ISO 1207 M3X20 RFR	
505	312125-0289	-		2	SLOTTED HEMCS4X10RFR	
510	90287-0069	-		1	SCREW, CHEESE HEAD,MCS M3X35 A4	
520	312318-0323	-		2	SET SCREW CUP POINT ISO 4029 M5X8 RFR	
530	312318-0364	-		5	STOP SCREW SK6SS6X10RFR	
540	312605-0310	-		4	NUT,HEXAGON M6M 3 A2 80	
550	312605-0312	-		1	NUT,HEXAGON,M4 RFR	
555	312605-0314	-		4	NUT,HEXAGON,M6M5 STAINLESS	
560	312605-0316	-		4	NUT,HEXAGON A280 M6M6	
570	312605-0318	-		3	NUT,HEXAGON,M8 RFR	
580	312705-0318	-		1	NUT,DOMED CAP,HEXAGON,M8	
590	315105-0124	-		4	WASHER,PLAIN ROUND 3,2X6	
595	315105-0136	-		1	WASHER,PLAIN ROUND 4,3X8 STAINLESS	
600	315105-0146	-		5	WASHER,PLAIN ROUND 5,3X10 STAINLESS	
610	315105-0153	-		30	WASHER,PLAIN ROUND 6,4X12 STAINLESS	
620	315105-0165	-		5	WASHER,PLAIN ROUND 8,4X16 STAINLESS	
640	315750-0107	-		1	CIRCLIP SGA10	
650	315753-0117	-		1	RETAINING RINGS FOR HOLE 22	
660	321111-0274	D		1	FLANGE BUSHING, 18X24X18	
670	321116-0095	-		1	BEARING BUSHING WITHOUT FLANGE, 8X12X6	
700	321300-0098	M		2	BALL BEARING 8X22X7	
750	352113-0205	-		2	ANCHOR TM2S8-C100	
770	1279834-0000	D		1	BOLT	
780	90335-0081	D		1	SPRING	

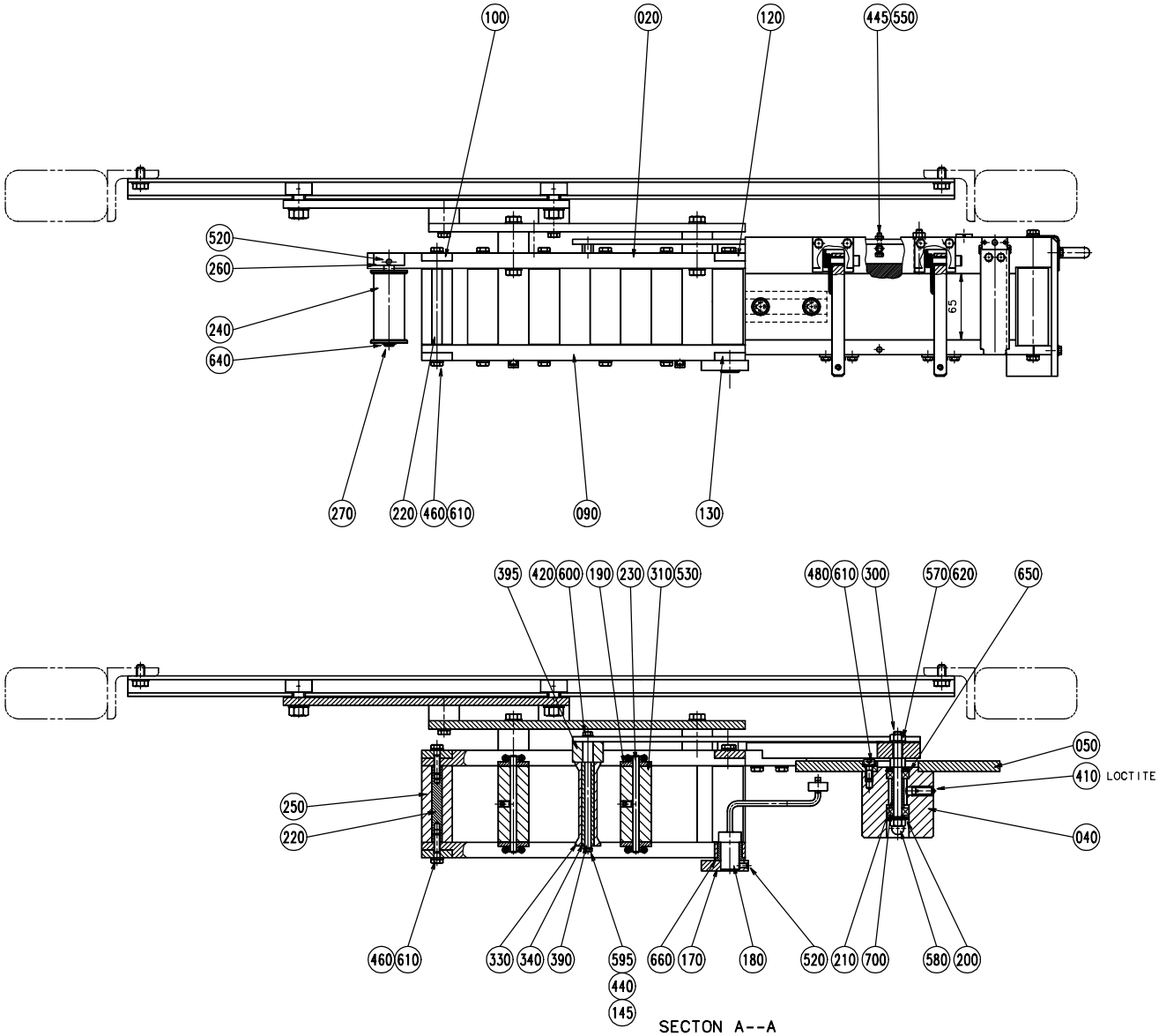

S - 1095893-2
ECN 70338

EC No: - - 20000423
Group number: 1095893-0100
Assembly Drawing: 1095893-2

Issue: 20000706

Pos	Part No	SP	UN	Qty	Description	Page No
Common parts						
001	A1095895-0100	-		1	SPLICING DEVICE	**159**
002	A1095923-0100	-		1	GUIDE PULLTAB	**161**
010	1129230-0000	-		1	BEAM	
020	1129223-0000	-		1	BEAM	
030	1285482-0000	-		1	LABEL	
040	1129222-0000	-		1	BOBBIN HOLDER	
050	556539-0000	-		1	BRAKE DISC	
060	546290-0000	-		1	BEAM	
070	1129231-0000	-		1	CANTILEVER	
090	1129224-0000	-		1	BEAM	
100	546294-0000	-		2	BEAM	
110	1129226-0000	-		1	BEAM	
120	546296-0000	-		1	BEAM	
130	546297-0000	-		1	BEAM	
140	1129450-0000	-		1	ARM	
145	2033-0013	-		1	WASHER	
150	234844-0000	J		1	WHEEL	
160	1140632-0000	-		12	POST	
170	533972-0000	-		1	INDICATOR CURVE	
180	1129510-0000	-		1	ARM	
190	534497-0000	-		6	SPACER	
200	538726-0000	-		2	WASHER	
210	538740-0003	-		1	SPACER	
220	1129235-0000	-		8	SHAFT	
230	1129233-0000	-		3	SHAFT	
240	1129780-0000	D		1	ROLL	
250	1129234-0000	D		6	ROLL	
260	1129495-0000	-		1	BLOCKING PIECE	
270	546303-0000	-		1	SHAFT	
290	546305-0000	-		1	SHEET	
300	546306-0000	-		1	SHAFT	
310	1129232-0000	D		3	ROLL	
330	1129237-0000	D		1	ROLL	
340	1129246-0000	D		1	ROLL	
370	556541-0000	-		1	SCREW	
380	556542-0000	-		1	PIN	
390	1129452-0000	-		1	SHAFT	
395	556544-0000	-		1	SPACER	
400	90044-0104	R		1	PROX.SWITCH IFM IN 3002 48VDC	
410	90287-0009	-		1	SPRINGLOADED SCREW M10X19	
415	311411-0138	-		2	SPLIT PIN SP1,6X12RFR	
420	312105-0327	-		1	SCREW M6S ISO 4017 M5X12 A280	
430	312105-0339	-		2	SCREW M6S ISO 4014 M5X40 A280	
440	312105-0287	-		1	SCREW M6S ISO 4017 M4X8 A280	
445	312105-0295	-		1	SCREW M6S ISO 4017 M4X20 A280	
450	312105-0370	-		8	SCREW M6S ISO 4017 M6X20 A280	
460	312105-0372	-		20	SCREW M6S ISO 4017 M6X25 A280	
470	312105-0376	-		2	SCREW M6S ISO 4017 M6X35 A280	
480	312115-0368	-		2	SCREW MC6S ISO 4762 M6X16 A280	
500	312125-0230	-		3	SLOTTED CHEESE HEAD ISO 1207 M3X20 RFR	
505	312125-0289	-		2	SLOTTED HEMCS4X10RFR	
510	90287-0069	-		1	SCREW, CHEESE HEAD,MCS M3X35 A4	
520	312318-0323	-		2	SET SCREW CUP POINT ISO 4029 M5X8 RFR	
530	312318-0364	-		5	STOP SCREW SK6SS6X10RFR	
540	312605-0310	-		4	NUT,HEXAGON M6M 3 A2 80	
550	312605-0312	-		1	NUT,HEXAGON,M4 RFR	
555	312605-0314	-		4	NUT,HEXAGON,M6M5 STAINLESS	
560	312605-0316	-		4	NUT,HEXAGON A280 M6M6	
570	312605-0318	-		3	NUT,HEXAGON,M8 RFR	
580	312705-0318	-		1	NUT,DOMED CAP,HEXAGON,M8	
590	315105-0124	-		4	WASHER,PLAIN ROUND 3,2X6	
595	315105-0136	-		1	WASHER,PLAIN ROUND 4,3X8 STAINLESS	
600	315105-0146	-		5	WASHER,PLAIN ROUND 5,3X10 STAINLESS	
610	315105-0153	-		30	WASHER,PLAIN ROUND 6,4X12 STAINLESS	
620	315105-0165	-		5	WASHER,PLAIN ROUND 8,4X16 STAINLESS	
640	315750-0107	-		1	CIRCLIP SGA10	
650	315753-0117	-		1	RETAINING RINGS FOR HOLE 22	
660	321111-0274	D		1	FLANGE BUSHING, 18X24X18	
670	321116-0095	-		1	BEARING BUSHING WITHOUT FLANGE, 8X12X6	
700	321300-0098	M		2	BALL BEARING 8X22X7	
750	352113-0205	-		2	ANCHOR TM2S8-C100	
770	1279834-0000	D		1	BOLT	
780	90335-0081	D		1	SPRING	

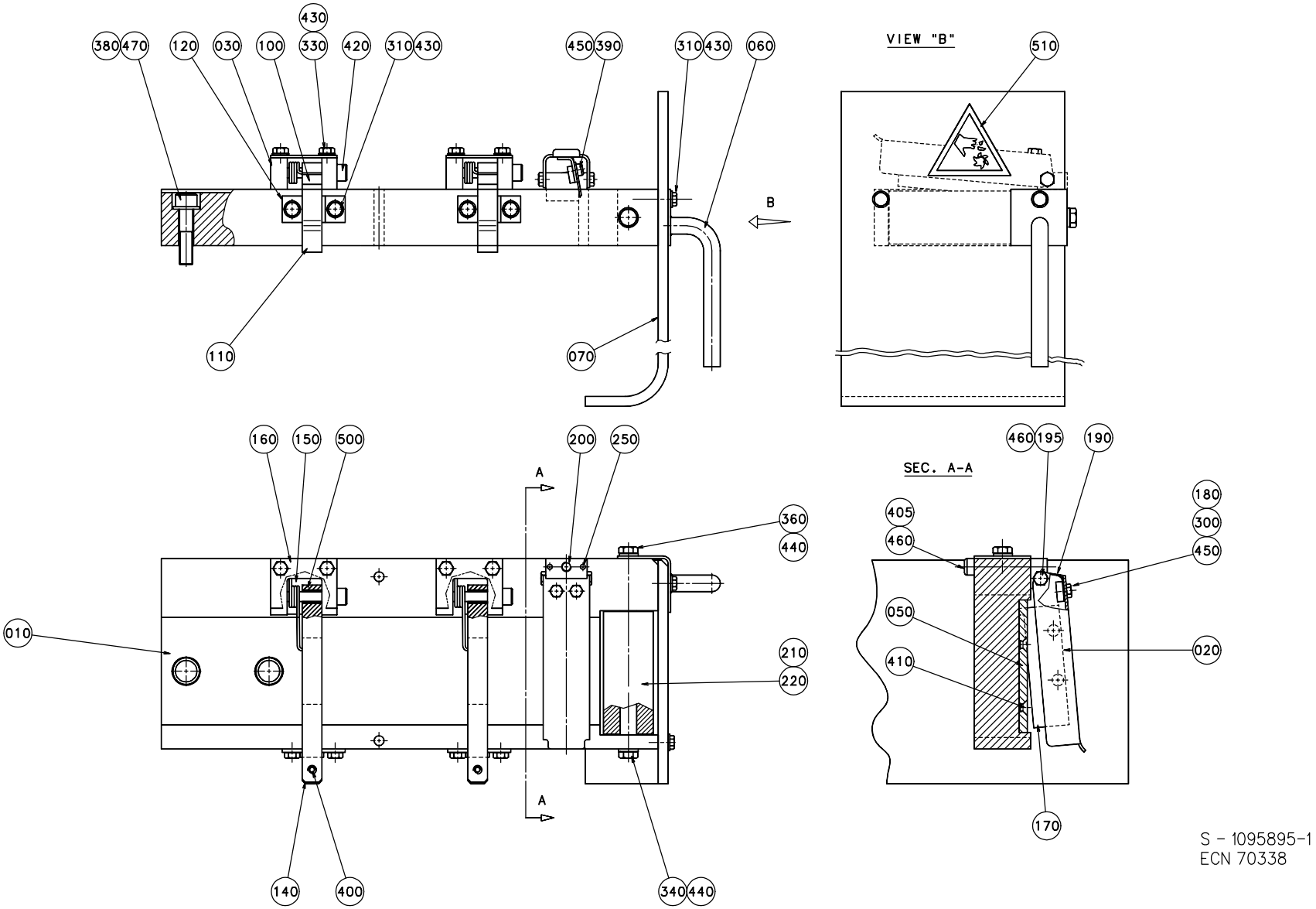

S - 1095895-1
ECN 70338

EC No: - - 20000423
Group number: 1095895-0100
Assembly Drawing: 1095895-1

Issue: 20000706

Pos	Part No	SP	UN	Qty	Description	Page No
Common parts						
010	1129221-0000	-		1	SPLICING TABLE	
020	1129239-0000	-		1	KNIFE HOLDER	
030	532017-0000	-		2	MOUNTING LUG	
050	544422-0000	D		1	KNIFE	
060	1255834-0000	-		1	HANDLE	
070	1255835-0000	-		1	PROTECTION	
100	532020-0000	-		2	LOCK WASHER	
110	532021-0000	-		2	LOCKING LOOP	
120	532022-0000	-		2	LOCK BAR	
140	1129252-0000	-		2	LOCK GRIP	
150	544427-0000	D		2	TURN SPRING	
160	544428-0000	-		2	SHEET	
170	1129238-0000	D		1	KNIFE	
180	522393-0000	-		1	NUT	
190	522394-0000	D		1	SPRING	
195	522395-0000	-		2	SCREW	
200	552049-0000	-		1	LUG	
210	1129235-0000	-		1	SHAFT	
220	1129234-0000	-		1	ROLL	
250	90258-0031	-		2	PINS,SLOTTED TUBULAR, 3X 20, DIN1481	
300	312105-0287	-		2	SCREW M6S ISO 4017 M4X8 A280	
310	312105-0327	-		6	SCREW M6S ISO 4017 M5X12 A280	
330	312105-0335	-		4	SCREW M6S ISO 4017 M5X30 A280	
340	312105-0370	-		1	SCREW M6S ISO 4017 M6X20 A280	
360	312105-0379	-		1	SCREW M6S ISO 4014 M6X45 A280	
380	312115-0457	-		2	SCREW MC6S ISO 4762 M8X35 A280	
390	312115-0287	-		2	SCREW MC6S ISO 4762 M4X8 A280	
400	312155-0291	-		2	SCREW MF6S DIN 7991 M4X12 A480	
405	312115-0379	-		1	SCREW MC6S ISO 4762 M6X45 A280	
410	312155-0325	-		2	SCREW MF6S5X10RFR	
420	312180-0374	-		2	HEX. SOCKET HEAD SHOULD. ISO 7379 M5X30	
430	315105-0146	-		10	WASHER,PLAIN ROUND 5,3X10 STAINLESS	
440	315105-0153	-		2	WASHER,PLAIN ROUND 6,4X12 STAINLESS	
450	315402-0136	-		4	WASHER FBB4,1RFR	
460	315402-0156	-		3	WASHER FBB6,5RFR	
470	315105-0165	-		2	WASHER,PLAIN ROUND 8,4X16 STAINLESS	
500	321120-0102	-		2	BUSHING, 6X8X10	
510	359705-0009	-		1	WARNING SIGN "SHARP PART"	

Pos	Part No	SP	UN	Qty	Description	Page No

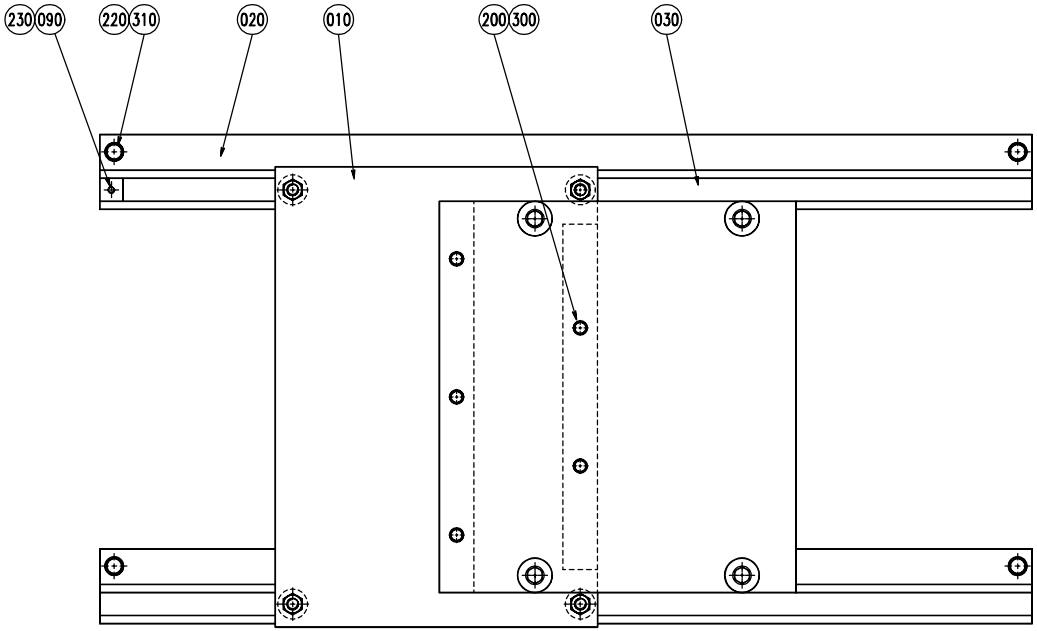

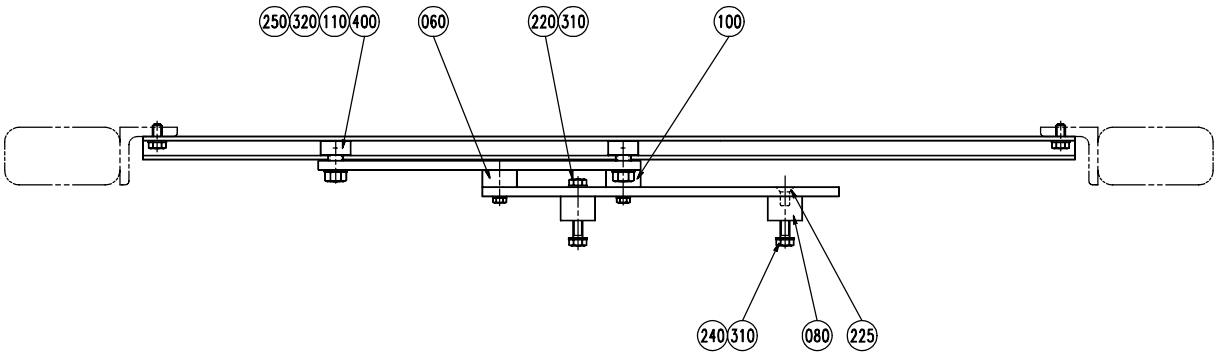

S - 1095923-1
ECN 70338

Pos	Part No	SP	UN	Qty	Description	Page No
Common parts						
010	1129240-0000	-		1	SHEET	
020	1129241-0000	-		2	STEERING	
030	1129454-0000	-		1	SHEET	
060	1129462-0000	-		1	SPACER	
080	1129242-0000	-		4	SPACER	
090	1129245-0000	-		2	STOP	
100	1129461-0000	-		1	SPACER	
110	1140626-0000	-		4	SPACER	
200	312105-0374	-		6	SCREW M6S ISO 4017 M6X30 A280	
220	312105-0449	-		6	SCREW M6S ISO 4017 M8X16 A280	
225	312155-0449	-		2	SCREW MF6S DIN 7991 M8X16 A280	
230	312318-0366	-		2	SET SCREW CUP POINT ISO 4029 M6X12 RFR	
240	312105-0453	-		4	SCREW M6S ISO 4017 M8X25 A280	
245	312125-0289	-		2	SLOTTED HEMCS4X10RFR	
250	312630-0320	-		4	NUTS,HEXAGON,M10X1	
300	315105-0153	-		6	WASHER,PLAIN ROUND 6,4X12 STAINLESS	
310	315105-0165	-		10	WASHER,PLAIN ROUND 8,4X16 STAINLESS	
320	315105-0173	-		4	WASHER,PLAIN ROUND 10,5X22 STAINLESS	
400	321582-0150	D		4	BEARINGS,CAM ROLLER KR26PP	
410	352113-0205	-		2	ANCHOR TM2S8-C100	

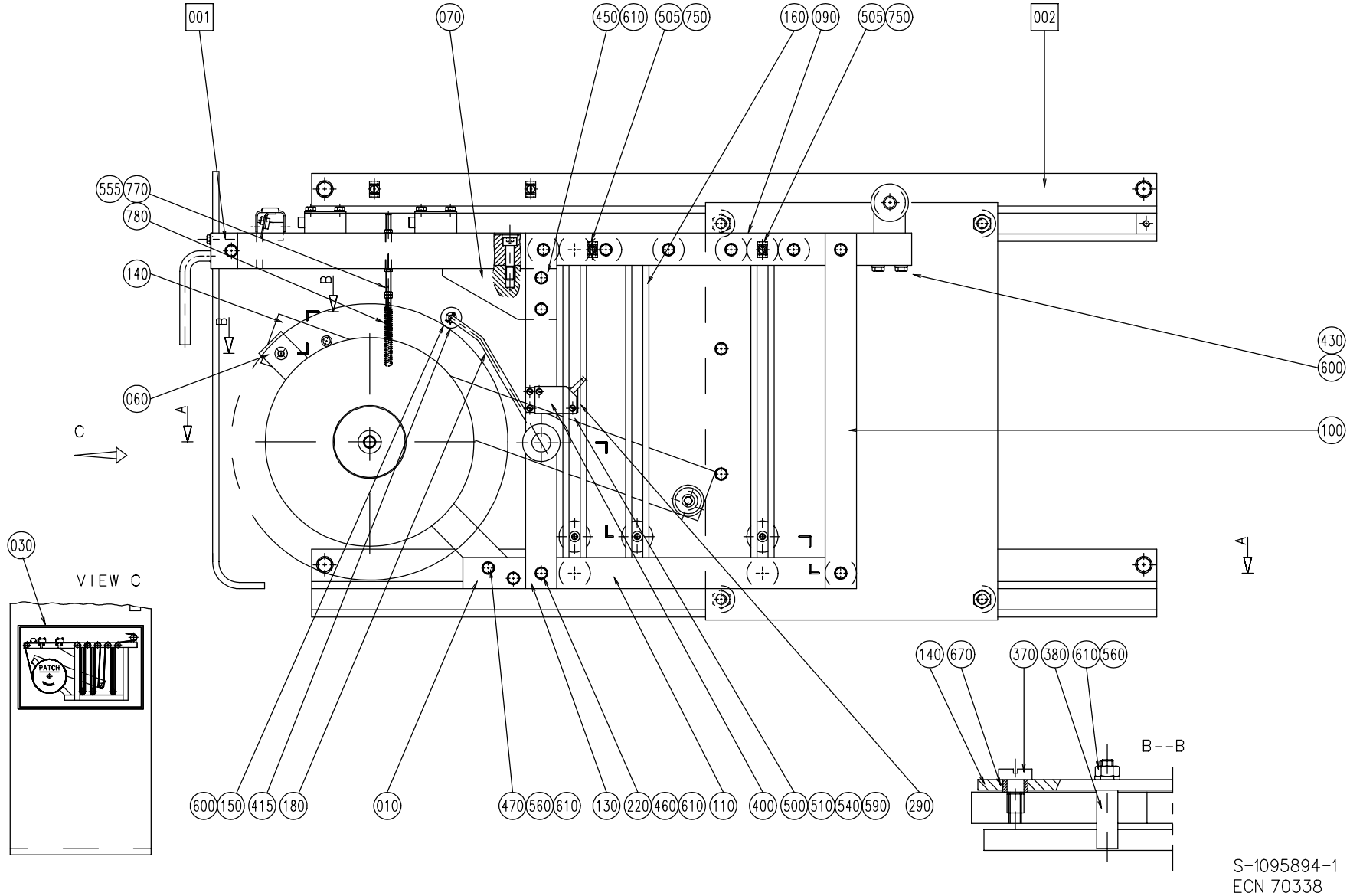
001
070
450
610
505
750
160
090
505
750
002
555
770
780
140
060
430
600
100
030
VIEW C
PATCH
600
150
415
180
010
470
560
610
130
220
460
610
110
400
500
510
540
590
290
140
670
370
380
610
560
B--B
S-1095894-1
ECN 70338

Pos	Part No	SP	UN	Qty	Description	Page No
Common parts						
001	A1095895-0100	-		1	SPLICING DEVICE	**159**
002	A1095924-0100	-		1	GUIDE PATCH	**167**
010	1129225-0000	-		1	BEAM	
020	1129223-0000	-		1	BEAM	
030	1285481-0000	-		1	LABEL	
040	546256-0000	-		1	BOBBIN HOLDER	
050	556539-0000	-		1	BRAKE DISC	
060	546290-0000	-		1	BEAM	
070	546291-0000	-		1	BRACKET	
090	1129224-0000	-		1	BEAM	
100	546294-0000	-		2	BEAM	
110	1129226-0000	-		1	BEAM	
120	1260379-0000	-		1	BEAM	
130	1129227-0000	-		1	POST	
140	1129450-0000	-		1	ARM	
145	2033-0013	-		1	WASHER	
150	234844-0000	J		1	WHEEL	
160	1140632-0000	-		12	POST	
170	533972-0000	-		1	INDICATOR CURVE	
180	1103845-0000	-		1	ARM	
190	534497-0000	-		6	SPACER	
200	538726-0000	-		2	WASHER	
210	538740-0003	-		1	SPACER	
220	546298-0000	-		8	SHAFT	
230	546299-0000	-		3	SHAFT	
240	546300-0000	D		1	ROLL	
250	546301-0000	D		6	ROLL	
260	1129495-0000	-		1	BLOCKING PIECE	
270	546303-0000	-		1	SHAFT	
290	546305-0000	-		1	SHEET	
300	546306-0000	-		1	SHAFT	
310	546307-0000	D		3	ROLL	
330	547745-0000	D		1	ROLL	
340	547746-0000	D		1	ROLL	
370	556541-0000	-		1	SCREW	
380	556542-0000	-		1	PIN	
390	1129451-0000	-		1	SHAFT	
395	556544-0000	-		1	SPACER	
400	90044-0104	R		1	PROX.SWITCH IFM IN 3002 48VDC	
410	90287-0009	-		1	SPRINGLOADED SCREW M10X19	
415	311411-0138	-		2	SPLIT PIN SP1,6X12RFR	
420	312105-0327	-		1	SCREW M6S ISO 4017 M5X12 A280	
430	312105-0339	-		2	SCREW M6S ISO 4014 M5X40 A280	
440	312105-0287	-		1	SCREW M6S ISO 4017 M4X8 A280	
445	312105-0295	-		1	SCREW M6S ISO 4017 M4X20 A280	
450	312105-0370	-		8	SCREW M6S ISO 4017 M6X20 A280	
460	312105-0372	-		20	SCREW M6S ISO 4017 M6X25 A280	
470	312105-0376	-		2	SCREW M6S ISO 4017 M6X35 A280	
480	312115-0368	-		2	SCREW MC6S ISO 4762 M6X16 A280	
500	312125-0230	-		3	SLOTTED CHEESE HEAD ISO 1207 M3X20 RFR	
505	312125-0289	-		2	SLOTTED HEMCS4X10RFR	
510	90287-0069	-		1	SCREW, CHEESE HEAD,MCS M3X35 A4	
520	312318-0323	-		2	SET SCREW CUP POINT ISO 4029 M5X8 RFR	
530	312318-0364	-		5	STOP SCREW SK6SS6X10RFR	
540	312605-0310	-		4	NUT,HEXAGON M6M 3 A2 80	
550	312605-0312	-		1	NUT,HEXAGON,M4 RFR	
555	312605-0314	-		4	NUT,HEXAGON,M6M5 STAINLESS	
560	312605-0316	-		4	NUT,HEXAGON A280 M6M6	
570	312605-0318	-		3	NUT,HEXAGON,M8 RFR	
580	312705-0318	-		1	NUT,DOMED CAP,HEXAGON,M8	
590	315105-0124	-		4	WASHER,PLAIN ROUND 3,2X6	
595	315105-0136	-		1	WASHER,PLAIN ROUND 4,3X8 STAINLESS	
600	315105-0146	-		5	WASHER,PLAIN ROUND 5,3X10 STAINLESS	
610	315105-0153	-		30	WASHER,PLAIN ROUND 6,4X12 STAINLESS	
620	315105-0165	-		5	WASHER,PLAIN ROUND 8,4X16 STAINLESS	
640	315750-0107	-		1	CIRCLIP SGA10	
650	315753-0117	-		1	RETAINING RINGS FOR HOLE 22	
660	321111-0274	D		1	FLANGE BUSHING, 18X24X18	
670	321116-0095	-		1	BEARING BUSHING WITHOUT FLANGE, 8X12X6	
700	321300-0098	M		2	BALL BEARING 8X22X7	
750	352113-0205	-		2	ANCHOR TM2S8-C100	
770	1279834-0000	D		1	BOLT	
780	90335-0081	D		1	SPRING	

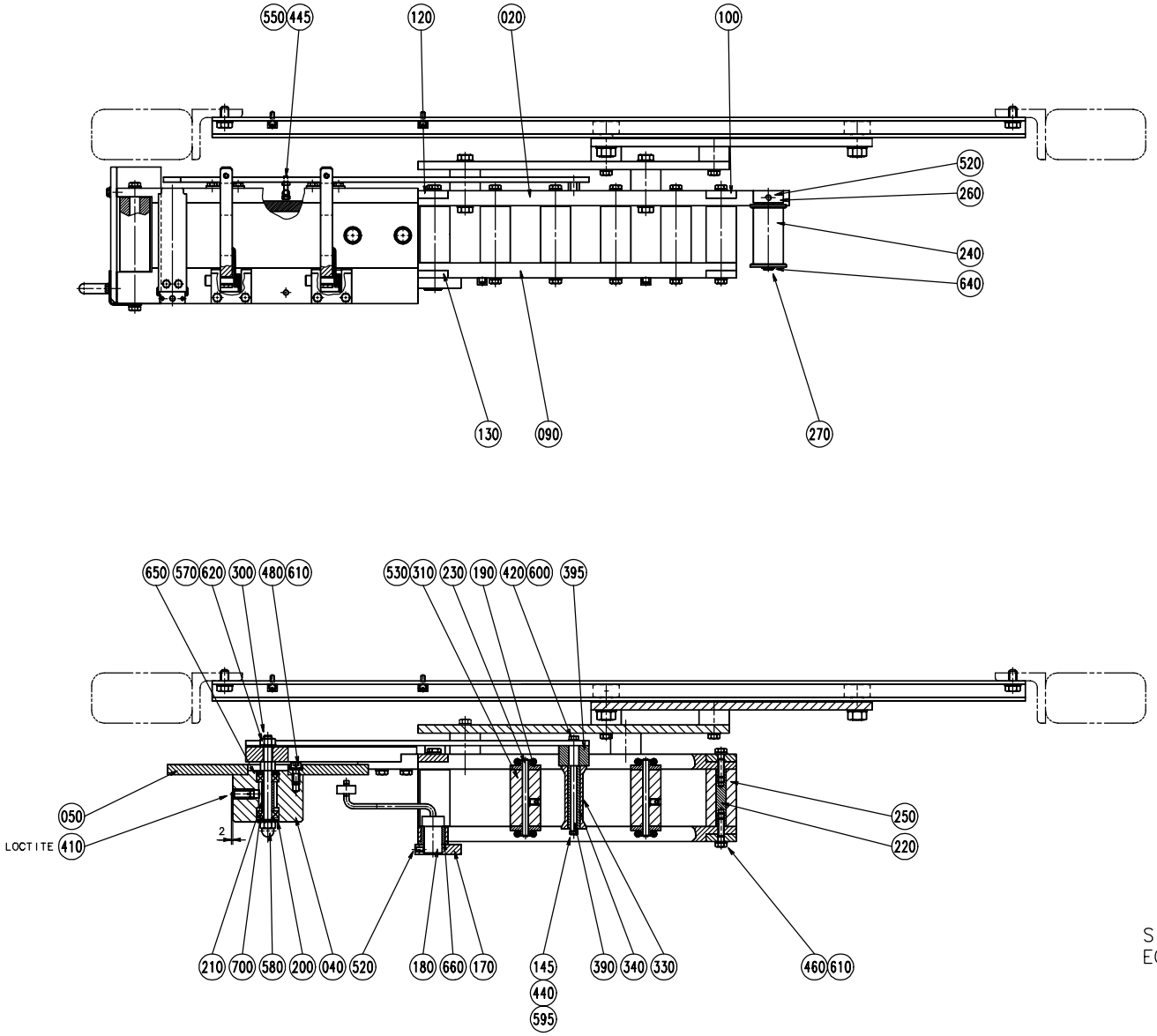

S - 1095894-2
ECN 70338

Pos	Part No	SP	UN	Qty	Description	Page No
Common parts						
001	A1095895-0100	-		1	SPLICING DEVICE	**159**
002	A1095924-0100	-		1	GUIDE PATCH	**167**
010	1129225-0000	-		1	BEAM	
020	1129223-0000	-		1	BEAM	
030	1285481-0000	-		1	LABEL	
040	546256-0000	-		1	BOBBIN HOLDER	
050	556539-0000	-		1	BRAKE DISC	
060	546290-0000	-		1	BEAM	
070	546291-0000	-		1	BRACKET	
090	1129224-0000	-		1	BEAM	
100	546294-0000	-		2	BEAM	
110	1129226-0000	-		1	BEAM	
120	1260379-0000	-		1	BEAM	
130	1129227-0000	-		1	POST	
140	1129450-0000	-		1	ARM	
145	2033-0013	-		1	WASHER	
150	234844-0000	J		1	WHEEL	
160	1140632-0000	-		12	POST	
170	533972-0000	-		1	INDICATOR CURVE	
180	1103845-0000	-		1	ARM	
190	534497-0000	-		6	SPACER	
200	538726-0000	-		2	WASHER	
210	538740-0003	-		1	SPACER	
220	546298-0000	-		8	SHAFT	
230	546299-0000	-		3	SHAFT	
240	546300-0000	D		1	ROLL	
250	546301-0000	D		6	ROLL	
260	1129495-0000	-		1	BLOCKING PIECE	
270	546303-0000	-		1	SHAFT	
290	546305-0000	-		1	SHEET	
300	546306-0000	-		1	SHAFT	
310	546307-0000	D		3	ROLL	
330	547745-0000	D		1	ROLL	
340	547746-0000	D		1	ROLL	
370	556541-0000	-		1	SCREW	
380	556542-0000	-		1	PIN	
390	1129451-0000	-		1	SHAFT	
395	556544-0000	-		1	SPACER	
400	90044-0104	R		1	PROX.SWITCH IFM IN 3002 48VDC	
410	90287-0009	-		1	SPRINGLOADED SCREW M10X19	
415	311411-0138	-		2	SPLIT PIN SP1,6X12RFR	
420	312105-0327	-		1	SCREW M6S ISO 4017 M5X12 A280	
430	312105-0339	-		2	SCREW M6S ISO 4014 M5X40 A280	
440	312105-0287	-		1	SCREW M6S ISO 4017 M4X8 A280	
445	312105-0295	-		1	SCREW M6S ISO 4017 M4X20 A280	
450	312105-0370	-		8	SCREW M6S ISO 4017 M6X20 A280	
460	312105-0372	-		20	SCREW M6S ISO 4017 M6X25 A280	
470	312105-0376	-		2	SCREW M6S ISO 4017 M6X35 A280	
480	312115-0368	-		2	SCREW MC6S ISO 4762 M6X16 A280	
500	312125-0230	-		3	SLOTTED CHEESE HEAD ISO 1207 M3X20 RFR	
505	312125-0289	-		2	SLOTTED HEMCS4X10RFR	
510	90287-0069	-		1	SCREW, CHEESE HEAD,MCS M3X35 A4	
520	312318-0323	-		2	SET SCREW CUP POINT ISO 4029 M5X8 RFR	
530	312318-0364	-		5	STOP SCREW SK6SS6X10RFR	
540	312605-0310	-		4	NUT,HEXAGON M6M 3 A2 80	
550	312605-0312	-		1	NUT,HEXAGON,M4 RFR	
555	312605-0314	-		4	NUT,HEXAGON,M6M5 STAINLESS	
560	312605-0316	-		4	NUT,HEXAGON A280 M6M6	
570	312605-0318	-		3	NUT,HEXAGON,M8 RFR	
580	312705-0318	-		1	NUT,DOMED CAP,HEXAGON,M8	
590	315105-0124	-		4	WASHER,PLAIN ROUND 3,2X6	
595	315105-0136	-		1	WASHER,PLAIN ROUND 4,3X8 STAINLESS	
600	315105-0146	-		5	WASHER,PLAIN ROUND 5,3X10 STAINLESS	
610	315105-0153	-		30	WASHER,PLAIN ROUND 6,4X12 STAINLESS	
620	315105-0165	-		5	WASHER,PLAIN ROUND 8,4X16 STAINLESS	
640	315750-0107	-		1	CIRCLIP SGA10	
650	315753-0117	-		1	RETAINING RINGS FOR HOLE 22	
660	321111-0274	D		1	FLANGE BUSHING, 18X24X18	
670	321116-0095	-		1	BEARING BUSHING WITHOUT FLANGE, 8X12X6	
700	321300-0098	M		2	BALL BEARING 8X22X7	
750	352113-0205	-		2	ANCHOR TM2S8-C100	
770	1279834-0000	D		1	BOLT	
780	90335-0081	D		1	SPRING	

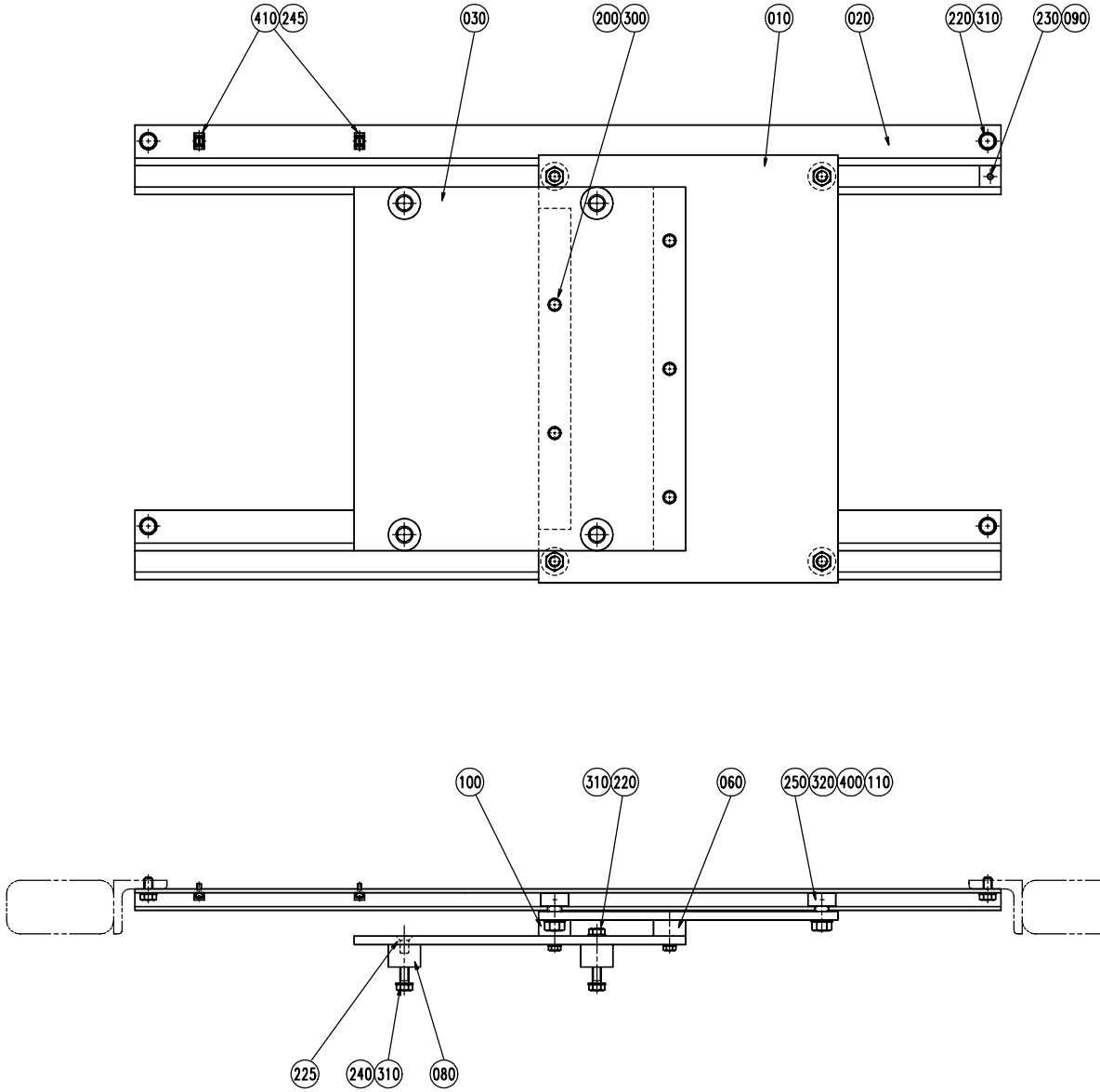

S - 1095924-1
ECN 70338

Pos	Part No	SP	UN	Qty	Description	Page No
Common parts						
010	1129240-0000	-		1	SHEET	
020	1129241-0000	-		2	STEERING	
030	1129454-0000	-		1	SHEET	
060	1129462-0000	-		1	SPACER	
080	1129242-0000	-		4	SPACER	
090	1129245-0000	-		2	STOP	
100	1129461-0000	-		1	SPACER	
110	1140626-0000	-		4	SPACER	
200	312105-0374	-		6	SCREW M6S ISO 4017 M6X30 A280	
220	312105-0449	-		6	SCREW M6S ISO 4017 M8X16 A280	
225	312155-0449	-		2	SCREW MF6S DIN 7991 M8X16 A280	
230	312318-0366	-		2	SET SCREW CUP POINT ISO 4029 M6X12 RFR	
240	312105-0453	-		4	SCREW M6S ISO 4017 M8X25 A280	
245	312125-0289	-		2	SLOTTED HEMCS4X10RFR	
250	312630-0320	-		4	NUTS,HEXAGON,M10X1	
300	315105-0153	-		6	WASHER,PLAIN ROUND 6,4X12 STAINLESS	
310	315105-0165	-		10	WASHER,PLAIN ROUND 8,4X16 STAINLESS	
320	315105-0173	-		4	WASHER,PLAIN ROUND 10,5X22 STAINLESS	
400	321582-0150	D		4	BEARINGS,CAM ROLLER KR26PP	
410	352113-0205	-		2	ANCHOR TM2S8-C100	

Pos	Part No	SP	UN	Qty	Description	Page No

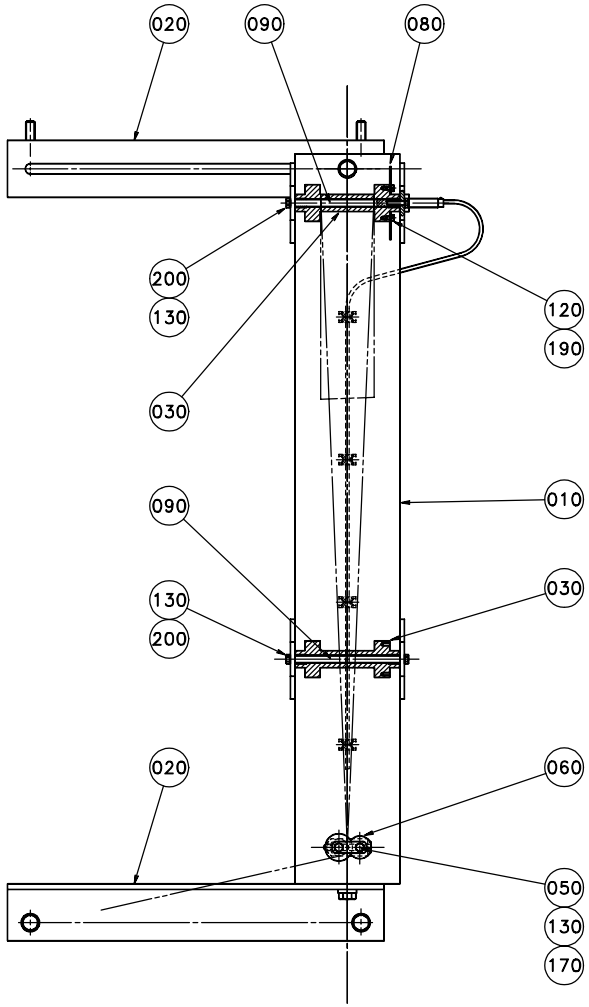

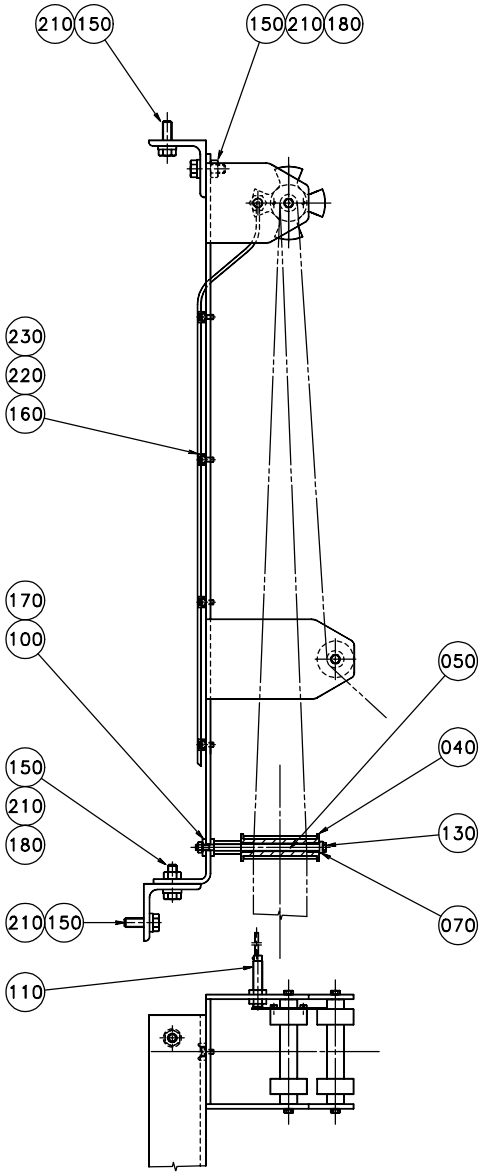

S - 1334066-1
ECN 71157

Pos	Part No	SP	UN	Qty	Description	Page No
HOLE45 or HOLE50 or HOLE85						
030	1317669-0005	M		2	ROLLER	
HOLE71						
030	1317669-0004	M		2	ROLLER	
Common parts						
010	1317670-0000	-		1	BRACKET	
020	1140817-0000	-		2	BRACKET	
040	1317671-0000	D		1	ROLLER	
050	1317672-0000	M		2	AXLE PIN	
060	1140727-0000	D		1	ROLLER	
070	1317673-0000	-		1	PLATE	
080	1317674-0000	D		1	FLAG	
090	1317675-0000	M		2	AXLE PIN	
100	1317676-0000	-		2	PLATE	
110	90044-0145	R		1	PROX.SW. 922 AAIY-A9P-050-LZ876	
120	90287-0151	-		2	SCREW,CHEESE HEAD,MSCS DIN85, M3X5	
130	312105-0291	-		6	SCREW M6S ISO 4017 M4X12 A280	
150	312105-0453	-		6	SCREW M6S ISO 4017 M8X25 A280	
160	312125-0287	-		4	SLOTTED CHEESE HEAD ISO 1207 M4X8 RFR	
170	312605-0314	-		2	NUT,HEXAGON,M6M5 STAINLESS	
180	312605-0318	-		2	NUT,HEXAGON,M8 RFR	
190	315105-0124	-		2	WASHER,PLAIN ROUND 3,2X6	
200	315105-0136	-		4	WASHER,PLAIN ROUND 4,3X8 STAINLESS	
210	315115-0165	-		6	WASHER TBRB 8,4X16 STAINLESS	
220	352113-0102	-		4	CLIP-STRIP,BLACK 188X4,8MM	
230	352113-0205	-		4	ANCHOR TM2S8-C100	

Pos	Part No	SP	UN	Qty	Description	Page No

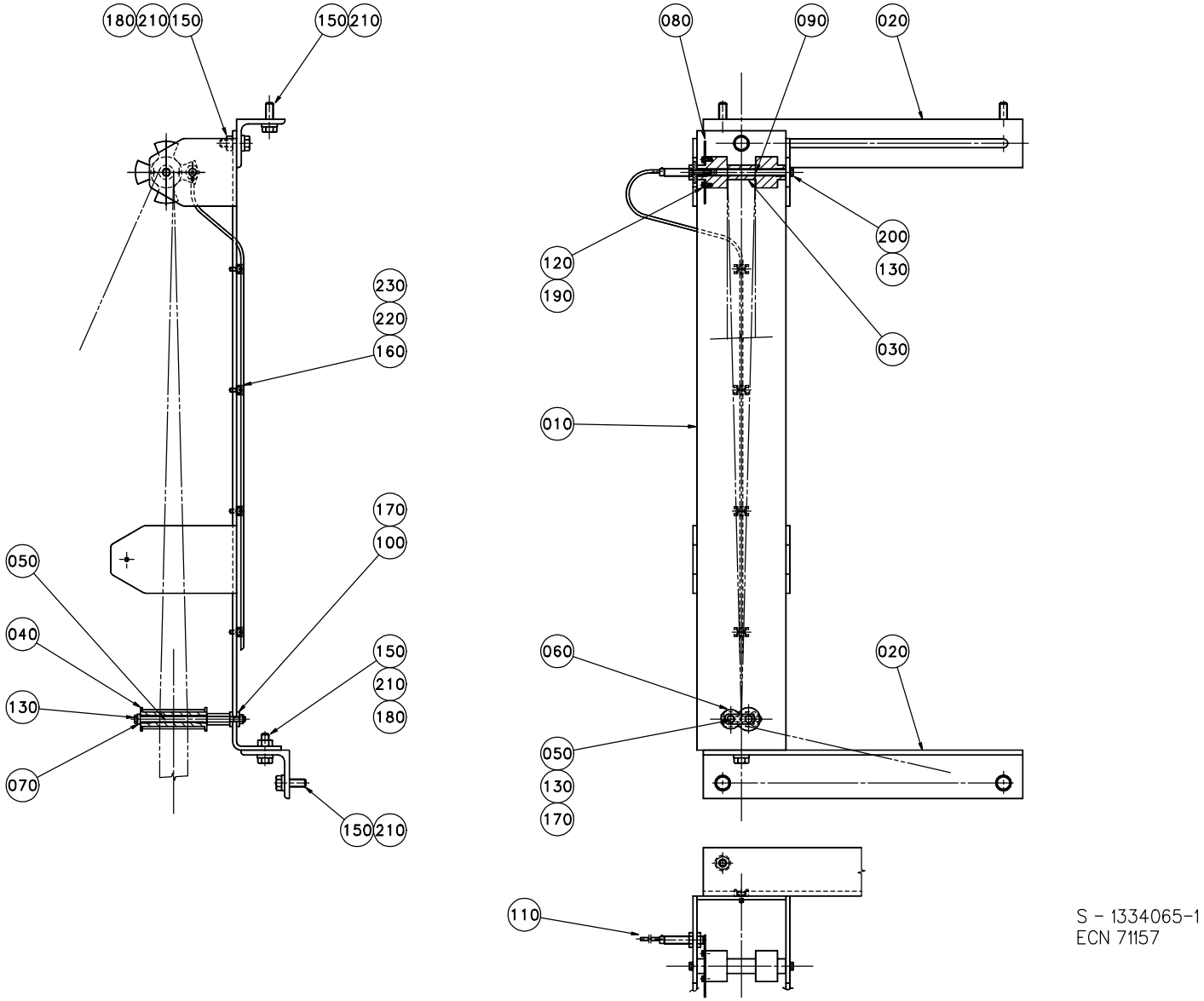

S - 1334065-1
ECN 71157

Pos	Part No	SP	UN	Qty	Description	Page No
HOLE50 or HOLE71						
030	1317669-0001	M		1	ROLLER	
HOLE45 or HOLE85						
030	1317669-0002	M		1	ROLLER	
Common parts						
010	1317670-0000	-		1	BRACKET	
020	1140817-0000	-		2	BRACKET	
040	1317671-0000	D		1	ROLLER	
050	1317672-0000	M		2	AXLE PIN	
060	1140727-0000	D		1	ROLLER	
070	1317673-0000	-		1	PLATE	
080	1317674-0000	D		1	FLAG	
090	1317675-0000	M		1	AXLE PIN	
100	1317676-0000	-		2	PLATE	
110	90044-0145	R		1	PROX.SW. 922 AAIY-A9P-050-LZ876	
120	90287-0151	-		2	SCREW,CHEESE HEAD,MSCS DIN85, M3X5	
130	312105-0291	-		4	SCREW M6S ISO 4017 M4X12 A280	
150	312105-0453	-		6	SCREW M6S ISO 4017 M8X25 A280	
160	312125-0287	-		4	SLOTTED CHEESE HEAD ISO 1207 M4X8 RFR	
170	312605-0314	-		2	NUT,HEXAGON,M6M5 STAINLESS	
180	312605-0318	-		2	NUT,HEXAGON,M8 RFR	
190	315105-0124	-		2	WASHER,PLAIN ROUND 3,2X6	
200	315105-0136	-		2	WASHER,PLAIN ROUND 4,3X8 STAINLESS	
210	315115-0165	-		6	WASHER TBRB 8,4X16 STAINLESS	
220	352113-0102	-		4	CLIP-STRIP,BLACK 188X4,8MM	
230	352113-0205	-		4	ANCHOR TM2S8-C100	

Pos	Part No	SP	UN	Qty	Description	Page No

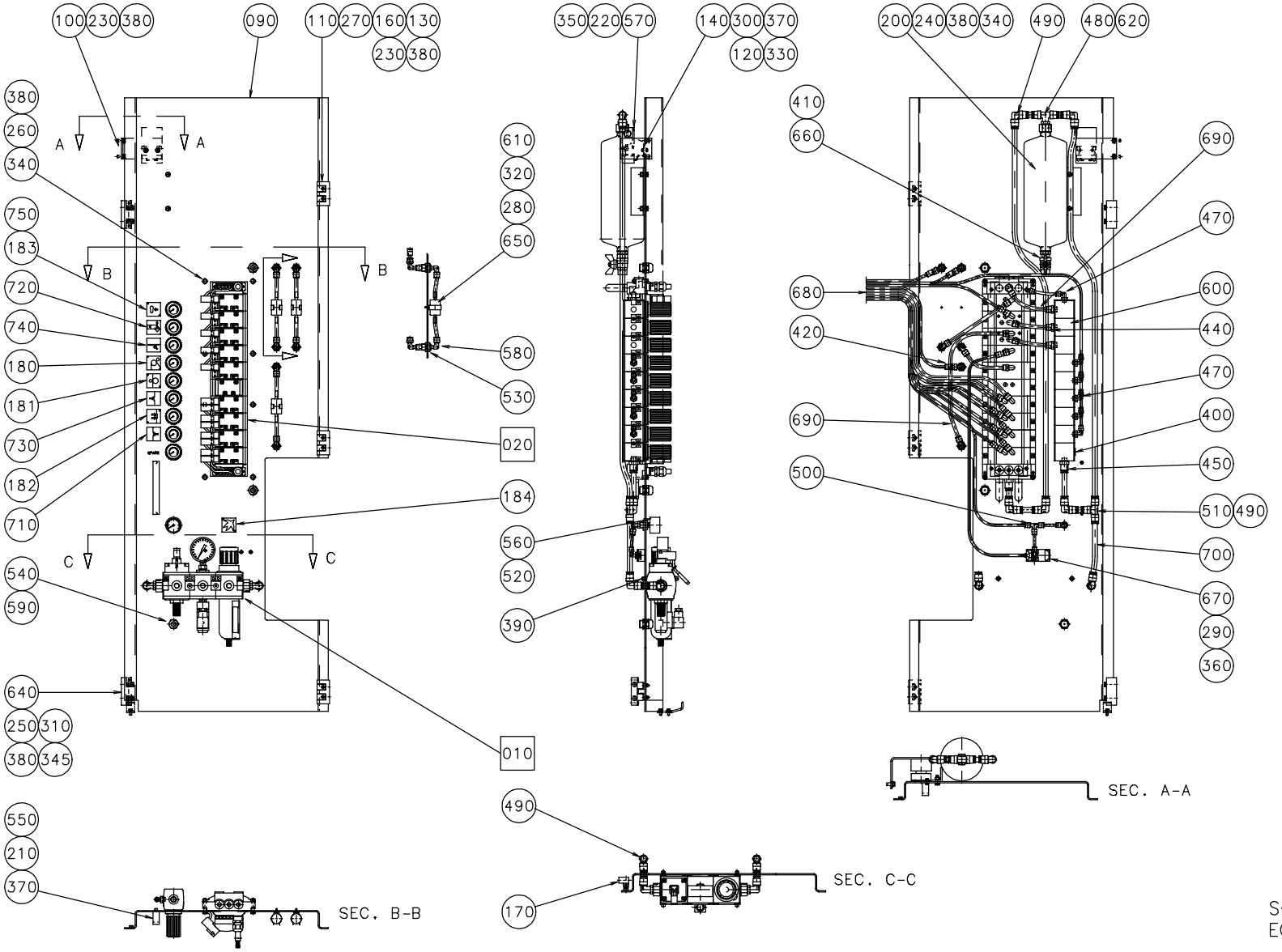

S-1185049-1
ECN 71157

EC No: - - 20000423
Group number: 1185049-0100
Assembly Drawing: 1185049-1

Issue: 20000706

Pos	Part No	SP	UN	Qty	Description	Page No
Common parts						
010	A1185047-0100	-		1	AIR INLET GROUP	**175**
020	A1185048-0100	-		1	VALVE GROUP	**177**
050	1140883-0000	-		1	PNEUMATIC DIAGRAM	
090	984082-0000	-		1	PLATE	
100	1082741-0000	-		1	HOLDER	
110	1035792-0000	-		3	E-HINGE	
120	1129042-0000	-		1	KEY	
130	988685-0000	-		3	PIN	
140	1036563-0000	-		1	WASHER	
160	1129770-0000	-		6	BLOCKING PIECE	
170	1140538-0000	-		2	BLOCKING PIECE	
180	359307-0012	-		1	SIGN" PRESSURE ROLLER TENSION DEVICE"	
181	359307-0011	-		1	SIGN" PRESSURE ROLLER DRIVE MOTOR"	
182	1145219-0000	-		1	SIGN	
183	979426-0000	-		1	SIGN	
184	273458-0000	-		1	LABEL (AIR)	
200	907535-0000	-		1	RESERVOIR	
210	312115-0287	-		2	SCREW MC6S ISO 4762 M4X8 A280	
220	312115-0329	-		2	SCREW MC6S ISO 4762 M5X16 A280	
230	312105-0366	-		6	SCREW M6S ISO 4017 M6X12 A280	
240	312105-0368	-		2	SCREW M6S ISO 4017 M6X16 A280	
250	312105-0376	-		4	SCREW M6S ISO 4017 M6X35 A280	
260	312109-0376	-		8	SCREW M6S ISO 4017 M6X35 A280	
270	312115-0327	-		6	SCREW MC6S ISO 4762 M5X12 A280	
280	312125-0222	-		3	SLOTTED CHEESE HEAD ISO 1207 M3X8 RFR	
290	312125-0230	-		2	SLOTTED CHEESE HEAD ISO 1207 M3X20 RFR	
300	312105-0291	-		2	SCREW M6S ISO 4017 M4X12 A280	
310	312155-0289	-		4	SCREW MF6S 4X10 A480	
320	312605-0310	-		3	NUT,HEXAGON M6M 3 A2 80	
330	312605-0312	-		2	NUT,HEXAGON,M4 RFR	
340	312605-0316	-		10	NUT,HEXAGON A280 M6M6	
345	312705-0312	-		4	NUT,DOMED CAP,HEXAGON,M4	
350	315105-0146	-		4	WASHER,PLAIN ROUND 5,3X10 STAINLESS	
360	315105-0124	-		2	WASHER,PLAIN ROUND 3,2X6	
370	315105-0136	-		4	WASHER,PLAIN ROUND 4,3X8 STAINLESS	
380	315105-0153	-		28	WASHER,PLAIN ROUND 6,4X12 STAINLESS	
390	312605-0314	-		2	NUT,HEXAGON,M6M5 STAINLESS	
400	342713-0210	-		1	PLUG,EXT.THREAD,HEXAGON SOCKET 1/4"BRASS	
410	342700-0205	-		1	NIPPLES,HEXAGON,EXT.G-THREAD G1/2"-G1/4"	
420	342716-0203	-		3	REDUCER 6-8	
440	342722-0205	-		3	STRAIGHT COUPLING, D=8 MM - R1/4"	
450	342722-0209	-		1	STRAIGHT COUPLING, D=12 MM - R1/4"	
470	342732-0103	-		6	ELBOW PIPE JOINT,EXT.THREAD,D=6 MM G1/4	
480	342742-0110	-		1	T-COUPLING,ADJUST,F.PLAST.TUBE 12-G3/8"	
490	342735-0109	-		7	ELBOW PIPE JOINT 12X12 MM	
500	342748-0102	-		1	T-CONNECTION 6 MM	
510	342748-0109	-		1	T-CONNECTION 12 MM	
520	342767-0100	-		1	BULKHEAD CONNECTOR G1/8"	
530	342768-0103	-		6	BULKHEAD CONNECTOR, 8 MM	
540	352103-0106	-		3	CABLE GLAND ST 11	
550	90017-0017	-		1	HANDLE,BRASS	
560	90043-0080	-		1	PRESSURE GAUGE	
570	90044-0139	R		1	KEY SAF.SW. AZ16-02 ZVR K-2254	
580	90055-0118	-		12	ELBOW WITH TAILPIECE	
590	90099-0117	-		3	NUT PR 18,6 (PG11)	
600	90113-0095	-		9	PRESSURE REGULATOR	
610	90165-0019	-		3	CLIP	
620	90224-0229	-		1	SLEEVE	
640	90237-0070	-		2	SNAP-IN-LOCK	
650	90277-0035	J		3	AIR-PRESSURE FILTER	
660	90187-0088	-		1	BALL VALVE	
670	90364-0020	K		1	VACUUMPUMP X10	
680	90166-0081	-	M	48	TUBE 6/4 PA BLUE	
690	90166-0013	-	M	60	TUBE 8/6 PA BLUE	
700	90166-0068	-	M	3	TUBE 12 MM PA BLUE	
710	359307-0002	-		1	SYMBOL SIGN "TAB C'JAW"	
720	359307-0010	-		1	SIGN "WASTE BLOWING"	
730	359307-0004	-		1	SYMBOL SIGN "PATCH C'JAW"	
740	359307-0007	-		1	SYMBOL SKYLT "TAB FOLDING"	
750	90144-0043	-			TAPE TYGAFLOR 108AP/03T 16X0,075X30M	

AIR INLET GROUP

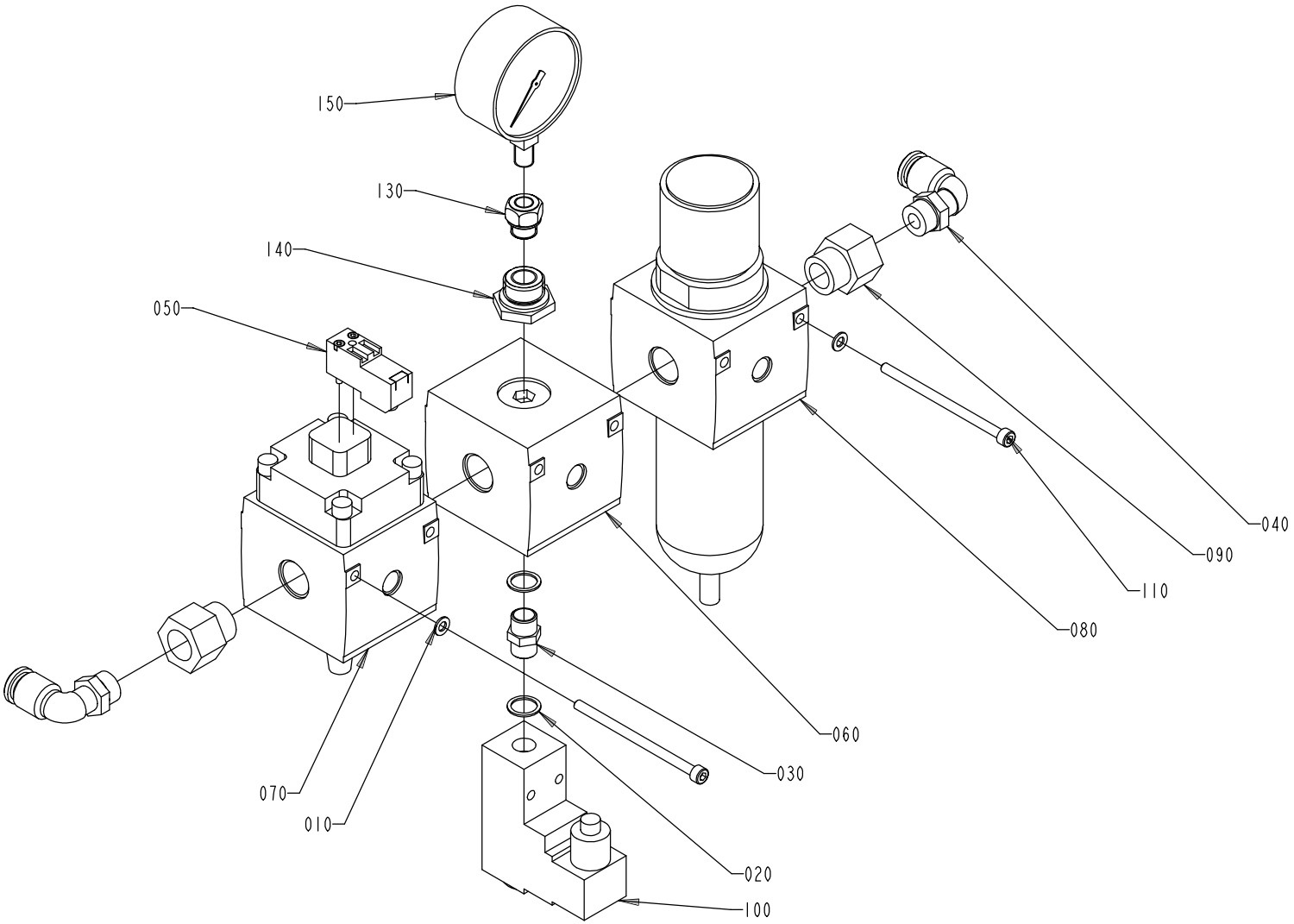

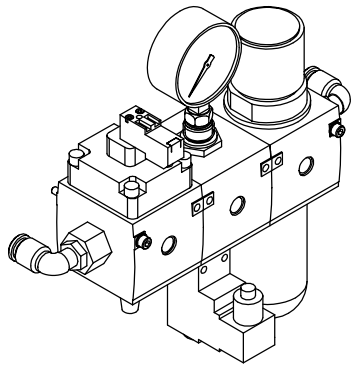

S - 1185047-1
ECN 73193

Pos	Part No	SP	UN	Qty	Description	Page No
Common parts						
010	315101-0146	-		2	WASHER BRB 5,3X10 FZB	
020	315233-0110	-		2	PLAIN ROUND,NYLON R1/4"	
030	342700-0110	-		1	NIPPLES,HEXAGON,EXT.G-THREAD G1/4"-G1/4"	
040	342732-0110	-		2	ELBOW PIPE JOINT,EXT.THREAD,D=12 MM G3/8	
050	90042-0538	-		1	PILOT VALVE, L=500MM	
060	90113-0375	-		1	PRESSURE DISTRIBUTION	
070	90113-0423	-		1	HIGH SPEED VENT VALVE	
080	B90113-0072	D		1	PRESSURE REGULATOR	**181**
090	90224-0229	-		2	SLEEVE	
100	90274-0056	R		1	PRESSURE SWITCH	
110	90287-0212	-		2	SCREW, MC6S DIN912, M5X85 12,9	
130	90224-0090	-		1	MUFF	
140	90224-0122	-		1	SLEEVE	
150	90043-0020	-		1	PRESSURE GAUGE 0-10 BAR	

Pos	Part No	SP	UN	Qty	Description	Page No

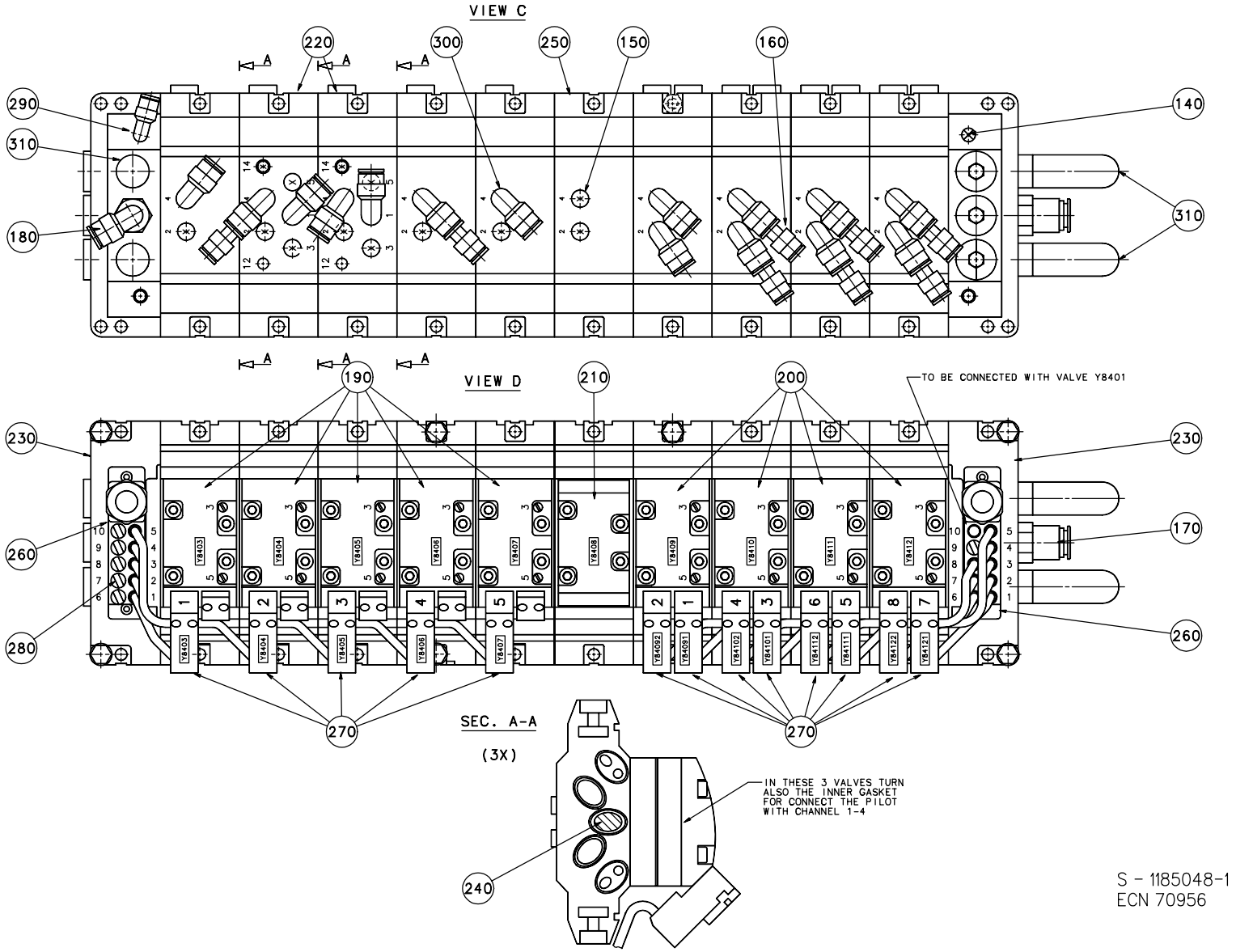
VIEW C
VIEW D
SEC. A-A
(3X)
TO BE CONNECTED WITH VALVE Y8401
IN THESE 3 VALVES TURN
ALSO THE INNER GASKET
FOR CONNECT THE PILOT
WITH CHANNEL 1-4
140
150
160
170
180
190
200
210
220
230
240
250
260
270
280
290
300
310
S - 1185048-1
ECN 70956

Pos	Part No	SP	UN	Qty	Description	Page No
Common parts						
140	342715-0102	-		1	BLIND PLUG 6 MM	
150	342715-0103	-		11	BLIND PLUG 8 MM	
160	342716-0203	-		8	REDUCER 6-8	
170	342722-0210	-		1	STRAIGHT COUPLING, D=12 MM - R3/8"	
180	342732-0105	-		1	ELBOW PIPE D8-R3/8"	
190	90042-0215	-		5	PNEUMATIC VALVE ISO 1, 5/2 UNISTABLE	
200	90042-0221	-		4	PNEUMATIC VALVE ISO 1, 5/2 BISTABLE	
210	90042-0519	-		1	BLANKING PLATE ISO 1	
220	90042-0520	-		2	BASE PLATE ISO 1	
230	90042-0522	-		2	PORTED END PIECE ISO 1	
240	90042-0528	-		3	BLANKING KIT SEALS ISO 1	
250	90042-0532	-		8	BASE PLATE ISO 1	
260	90042-0535	-		2	TERMINAL MODULE 19 CORDS	
270	90042-0539	-		13	PILOT VALVE, L=350MM	
280	90042-0550	-		6	PROTECTION PLUG	
290	90055-0217	-		1	ELBOW WITH TAILPIECE 6/6 MM	
300	90055-0118	-		15	ELBOW WITH TAILPIECE	
310	90328-0024	-		4	SILENCER G3/8	

This page is intentionally left blank.

Pos	Part No	SP	UN	Qty	Description	Page No
Common parts						
0100	A1353005-0100	-		1	ELECTRICAL DOCUMENT	
0200	A42843-0500	-		1	STANDARD EQUIPMENT	

Pos	Part No	SP	UN	Qty	Description	Page No

This page is intentionally left blank.

Pos	Part No	SP	UN	Qty	Description	Page No
90064-0082						
	90036-0057	F		1	LIGHT BULB BA9S 28V	
90075-0125						
	90075-0313	K		1	AUXILIARY CONTACT KM 22 DILM.2NO;2NC	
90113-0072						
	90113-0459	-		1	O-RING	
	90113-0387	-		1	FILTER	
90164-0009						
	90297-0009	F		2	FLUORESCENT TUBE 6W	
985899-0000						
	90355-0157	-		1	COUPLING	
985900-0000						
	90355-0157	-		1	COUPLING	
1255692-0010						
	90220-0131	-	M	1	CABLE,MULTI-COND.SCREENED PAIR TWIST	
	90110-0209	-		6	CONTACT PIN	
	90110-0208	-		1	CABLE CONTACT	
	90110-0145	-		1	COVER 8630-5169014-15-01	
	90110-0142	-		1	PLUG DA15P064TX	
	90012-0117	-		1	GLAND,EMC,EXTENDED WITH INSERT	
1260403-0000						
	90237-0168	-		1	ROUND BAR WITH END WHEEL	
1260814-0000						
	90265-0051	-		1	ACCESSORY BOX ROSE 1121208	
1260815-0000						
	90265-0051	-		1	ACCESSORY BOX ROSE 1121208	
1260902-0000						
	353249-0044	-		1	GLAND,INSERT,SOLID,NORMAL E155G	
1282599-0000						
	353249-0042	-		1	GLAND,INSERT,SOLID,NORMAL E152G	
1282600-0000						
	353249-0042	-		1	GLAND,INSERT,SOLID,NORMAL E152G	
1282787-0000						
	353249-0048	-		1	GLAND,INSERT,SOLID,EXTENDED EK154G	
1282788-0000						
010	353249-0048	-		1	GLAND,INSERT,SOLID,EXTENDED EK154G	
1346824-0000						
	353249-0044	-		1	GLAND,INSERT,SOLID,NORMAL E155G	
1350146-0000						
010	90265-0046	-		1	ACCESSORY BOX ROSE	

Pos	Part No	SP	UN	Qty	Description	Page No

Tetra Pak

SPC

Spare Parts Catalogue

Part No	Description	Page No
2033-0002	WASHER	127, 129
2033-0003	WASHER	127, 129
2033-0006	WASHER	127, 129
2033-0013	WASHER	155, 157, 163, 165
23580-0000	SHIFTER HANDLE	19, 91
23583-0000	GUIDE FINGER	19, 91
23584-0000	SCREW	19, 91
24351-0000	BOW CLAMP	19, 91
24352-0000	SHAFT	19, 91
24355-0000	DOWEL	19, 91
24356-0000	PIECE	19, 91
28036-0000	WASHER	95
28509-0000	WASHER	115
32544-0000	INSULATION NUT	115
32644-0000	WASHER	115
42843-0500	STANDARD EQUIPMENT	179
42943-0100	PT21MC-LIST OF DOCUMENTS	35
42944-0100	PT21MC-LIST OF MATERIALS	35
48141-0100	PT21MC-PULLTAB 21 MOTION CONTROL	25, 27
67347-0101	CARD BRAKEREG.MAGN.POWDER BRAKE	31
67379-0218	IH TRANSF.1.PRIM.5TURNS;C=19,3NF	115
67379-0224	IH TRANSF.1.PRIM.4TURNS;C=24,4NF	115
67388-0101	FRONT MOUNTED RACK 42TE	31
67600-0501	TPIH 2000 GENERATOR	25, 27
68262-0101	BACKPLANE FRONT RACK 8TE	31
68445-0103	FRONT PLATE 6TE	31
68445-0104	FRONT PLATE 8 TE	31
68450-0101	STEPPER MOTOR DRIVER	31
90001-0033	WALL SOCKET OUTLET	31
90002-0009	BLANK-OFF PLUG 18.6	25, 27, 41
90002-0013	BLANK-OFF PLUG 15,2(PG 9)	25, 27, 43, 45, 57
90003-0509	BOX	37
90007-0128	FUSE 1P 6A K	33
90007-0129	FUSE 1P 10A K	33
90007-0156	FUSE 1P 4A K	33
90012-0137	GLAND,EMC,EXTENDED WITH INSERT	77
90015-0021	GLAND,LEAD-IN,IP67	77
90017-0014	HANDLE 8305-2259	95
90017-0017	HANDLE,BRASS	31, 151, 173
90024-0037	VARISTOR FILTER, 150 V RMS/200 VDC, 13 J	29
90031-0031	ENHANCES GENIUS	29
90031-0050	PLC BASEPLATE, 5-SLOT	29
90031-0052	PLC EXPANSION BASEPLATE, 5-SLOT	29
90031-0056	CPU351, SERIAL COMMUNICATION	29
90031-0057	PLC, DIGITAL INPUT MODULE 16 PT/24 VDC	29
90031-0058	PLC, DIGITAL INPUT MODULE 16 PT/24 VDC	29
90031-0059	PLC, DIGITAL OUTPUT MODULE 16 PT/24 VDC	29
90031-0062	PLC, ANALOG OUTPUT MODULE 8PT/CURR/VOLT	29
90031-0065	PLC, TERMOCOUPLE INPUT MODULE 8 PT	29
90031-0068	PLC POWERSUPPLY 120/230 VAC/50 W	29
90031-0302	PLC, I/O BUS TERMINATION PLUG	29
90031-0305	PLC, BACKPLANE EXPANSION CABLE 0,3 M	29
90042-0215	PNEUMATIC VALVE ISO 1, 5/2 UNISTABLE	177
90042-0221	PNEUMATIC VALVE ISO 1, 5/2 BISTABLE	177
90042-0519	BLANKING PLATE ISO 1	177
90042-0520	BASE PLATE ISO 1	177
90042-0522	PORTED END PIECE ISO 1	177
90042-0528	BLANKING KIT SEALS ISO 1	177
90042-0532	BASE PLATE ISO 1	177
90042-0535	TERMINAL MODULE 19 CORDS	177
90042-0538	PILOT VALVE, L=500MM	175
90042-0539	PILOT VALVE, L=350MM	177
90042-0550	PROTECTION PLUG	177
90043-0020	PRESSURE GAUGE 0-10 BAR	175
90043-0080	PRESSURE GAUGE	173
90044-0094	LIMIT SW. 924 CE31-Y20-X5	61
90044-0104	PROX.SWITCH IFM IN 3002 48VDC	97, 155, 157, 163, 165
90044-0124	PROX.SW. 922AB2XM-A9P-050-LZ-876	25, 27
90044-0139	KEY SAF.SW. AZ16-02 ZVR K-2254	141, 151, 173
90044-0145	PROX.SW. 922 AAIY-A9P-050-LZ876	111, 113, 121, 127, 129, 169, 171
90045-0192	STEPPING MOTOR PACIFIC SCIENTIFIC	111, 113, 127, 129
90045-0194	SERVO MOTOR ELMO	63
90045-0372	SERVO AMPLIFIER REPLACED 90045-395	25, 27
90045-0379	MEMORY EPROM	37
90051-0007	HANDLES, KNOB, INTERNAL THREAD M8-40X25	111, 113, 127, 129
90053-0031	HOUR COUNTER BOWER B906.10	31
90055-0096	STRAIGHT COUPLING, D=14 MM - G3/8"	47, 49
90055-0118	ELBOW WITH TAILPIECE	173, 177
90055-0217	ELBOW WITH TAILPIECE 6/6 MM	177
90056-0143	GEAR BOX	63
90059-0029	THERMOSTAT	55
90062-0021	LOCKING WASHER A 5,3	25, 27
90062-0022	LOCKING WASHER D=6,4/11	31, 139
90064-0082	PUSH BUTTON WHITE	31

Part No	Description	Page No
90069-0258	GEAR MOTOR	81
90069-0281	WORM GEAR MOTOR GROSSHOPP OKM-87-60	77
90075-0125	CONTACTOR 7,5KW COIL 24VDC	29
90077-0079	FEED THROUGH TERMINAL AKZ 4PA FOR TS15	57
90077-0328	RAIL TS15/5	57
90089-0008	SLEEVE PR22,5/28,3;PG16/21	39
90089-0031	ENLARGING SLEEVE	55
90095-0072	OVERLOAD PROTECTION PKZM 1,0A	33
90095-0077	OVERLOAD PROTECTION PKZM 6-10A	33
90099-0019	NUTS,HEXAGON, M12X1, DIN439	55
90099-0102	NUTS,HEXAGON, M10X1,25, DIN439	63
90099-0104	NUT PR 15,2 (PG9)	25, 27
90099-0117	NUT PR 18,6 (PG11)	25, 27, 173
90099-0119	NUT PR 28,3 (PG21)	25, 27
90099-0191	NYLON NUT M4X0.7 HEXAGON	25, 27, 31
90110-0121	FEMALECONT.15POLE HARTING	25, 27
90110-0122	COVER HARTING	25, 27
90110-0150	MALE INSERT 24-P, CABLE	25, 27, 39
90110-0152	CABLE HOOD 24-P	25, 27, 39
90110-0153	CHASSI HOUSING 24-P	25, 27
90110-0157	COVER	25, 27, 39, 55
90110-0159	CONTACT	25, 27, 39, 55
90110-0161	FEMALE CONTACT 6-POLES	25, 27
90110-0163	FEMALE INSERT 6-POLE	25, 27
90110-0164	FEMALE CONTACT 24-POLES	25, 27
90110-0166	CONTACT HOUSE	25, 27
90110-0215	SOCKET	25, 27
90110-0216	MALE PLUG	39
90110-0217	COVER	39
90110-0218	CONTACT HOUSING	25, 27
90110-0235	CABLE CONTACT	39
90110-0236	CHASSIE CONTACT PX0767/S	25, 27
90110-0295	CONTACT SCREW	123
90110-0296	CONTACT SCREW	25, 27
90110-0349	COVER/TOOL PX0733	25, 27
90110-0370	BASE HOUSING	25, 27
90110-0371	PLUG HOOD	123
90111-0193	ROTARY SWITCH	31
90111-0197	SERVICE KEY	31
90113-0072	PRESSURE REGULATOR	175
90113-0095	PRESSURE REGULATOR	173
90113-0375	PRESSURE DISTRIBUTION	175
90113-0423	HIGH SPEED VENT VALVE	175
90115-0134	ROD ENDS,MAINTENANCE FREE,10-M10X1.25RH	63, 81
90119-0043	OPTO RELAY 22DC 60S-3	29
90119-0056	PLUG-IN RELAY 24VDC	29
90119-0089	SAFETY RELAY JSBT4 24VDC	29
90121-0116	RESISTANCE FIXED, 0,15 KOHM, 0,25 W	29
90129-0006	BASE 11 POLE	29
90135-0026	EARTH TERMINAL AKE 4PA	57
90135-0035	LOW IMPEDANCELITZ L=250MM	31, 139
90135-0039	SHIELD CLIP KLBU 4-13.5	25, 27, 31
90141-0020	RETAINING RINGS FOR HOLE 42	73
90143-0057	STRIP EMKA 1011-05 21X11MM	25, 27
90143-0060	EDGE STRIP 9,5X6,3MM BLACK PVC	31
90143-0073	RUBBER STRIP	25, 27
90144-0030	TAPE	115
90144-0043	TAPE TYGAFLOR 108AP/03T 16X0,075X30M	173
90152-0026	FLEXIBLE CONDUIT	95
90152-0059	HOSE 18X12	25, 27, 123
90157-0041	SEALING COMPOUND	139, 141, 143
90159-0097	CAPACITOR 2 UF 450VAC	57
90164-0009	LIGHT FIXTURE	47, 49
90164-0302	BRACKET	47, 49
90165-0019	CLIP	173
90165-0060	PIPE-CLIPS,FOR SINGLE PIPE,ONE SIDE 5	47, 49
90166-0013	TUBE 8/6 PA BLUE	173
90166-0068	TUBE 12 MM PA BLUE	23, 173
90166-0081	TUBE 6/4 PA BLUE	17, 173
90166-0126	TUBE 12 MM PA,TRANSP.	55
90181-0044	CABEL DUCT 25X60MM	33
90181-0045	CABLE DUCT 40X60MM	31, 33
90181-0046	CABEL DUCT 60X60MM	25, 27
90181-0052	CABLE DUCT 25X80MM	29
90181-0053	CABLE DUCT 40X80MM	29
90181-0054	CABLE DUCT 60X80MM	29
90187-0088	BALL VALVE	173
90189-0003	BALL BUSHING 12X22X32	111, 113, 121, 127, 129
90194-0080	SIGN "IDENTIF. OF WIRING"	31
90194-0133	SIGN "DELIVERED DESIGN"	31
90194-0152	SIGN "EARTH"	29, 31, 139
90195-0019	TERMINAL BK3 KRG 3-POLE	25, 27
90208-0078	CLAMPING ELEMENT WITH SLEEVE 20X28	63
90208-0118	CLAMPING ELEMENT	81

Part No	Description	Page No
90214-0138	BALL BEARING,STAINLESS	19, 91
90214-0144	BEARINGS,BALL BEARING,SPHERICAL,SELF-ALI	77
90220-0034	THERMO-CABLE	25, 27, 29
90220-0084	SERVOCABLE 4X2,5+2(2X0.75)	39
90220-0108	CABLE,SCREENED 5X1,5MM2	25, 27
90220-0165	CABLE,MULTI-CONDUCTOR SCREENED 5X0,34	31
90220-0183	CABLE,MULTI-CONDUCTOR SCREENED 2X0,34MM2	25, 27
90224-0090	MUFF	175
90224-0122	SLEEVE	175
90224-0229	SLEEVE	173, 175
90226-0458	MOUNTING SCREW	149
90232-0067	PHOTOCELL	75
90232-0103	PH.CELL E3S-CT61-L-5M	87, 89, 125
90232-0104	PH.CELL E3S-CT61-D-5M	87, 89, 125
90232-0105	PH.CELL E3S-CD61-5M	95
90232-0112	PH.CELL NT6-14920E01	105
90232-0325	FIBRE E32-DC200	75
90233-0028	FUSE 10A FERRAZ	33
90233-0303	FUSEHOLDER FERRAZ ST10	33
90235-0206	VALVE FESTO SEU-1/8	99, 111, 113, 121, 127, 129
90237-0070	SNAP-IN-LOCK	151, 173
90237-0128	LOCK CYLINDER	139, 141, 143, 145, 147
90237-0150	TURNING HANDLE, BLACK PA	139, 141, 143, 145, 147
90237-0151	STEERING GUIDE,BLACK PA	139
90237-0152	STEERING	139
90237-0153	LOCK HOUSING	139, 141, 143, 145
90237-0154	LOCK HOUSING,BLACK PA	147
90237-0157	LOCKING CATCH EMKA 1000-230	31
90237-0165	LATCH	147
90237-0169	LOCK-ADAPTER	139
90237-0319	LOCK HOUSING EMKA U134	31
90237-0320	LOCK COMPONENT EMKA U136	31
90239-0486	BRACKET,REAR,CLEVIS FLANGE,MINI-ISO,16	77
90239-0488	BRACKET,REAR,CLEVIS FLANGE,MINI-ISO,32	63, 81
90239-0489	ROD END,CLEVIS WITH AXLE,M6	77, 111, 113, 121, 127, 129
90239-0834	DOUBLE ACTING, MINI-ISO, CYL. 32-25	63, 81
90240-0026	SPHERICAL BEARING, 15X26X12	63, 81
90258-0031	PINS,SLOTTED TUBULAR, 3X 20, DIN1481	159
90259-0313	AUX. CONTACT K&M NHI21-PKZM0	33
90264-0069	FAN	55
90270-0018	COMPRESSOR DANFOSS SC 12G	55
90274-0056	PRESSURE SWITCH	175
90277-0035	AIR-PRESSURE FILTER	173
90287-0009	SPRINGLOADED SCREW M10X19	19, 91, 155, 157, 163, 165
90287-0069	SCREW, CHEESE HEAD,MCS M3X35 A4	155, 157, 163, 165
90287-0124	SCREW,CHEESE HEAD,MSCS DIN84, M4X12	29, 33
90287-0151	SCREW,CHEESE HEAD,MSCS DIN85, M3X5	169, 171
90287-0212	SCREW, MC6S DIN912, M5X85 12,9	175
90298-0033	WATLUBE HEAT LIQUID	127, 129
90326-0012	PROTECTIVE COVER	29
90326-0053	THERMO ELEMENT	29
90326-0060	THERMOCOUPLE CR-AL	127, 129
90328-0003	SILENCER	63, 81
90328-0024	SILENCER G3/8	177
90330-0038	NUT,HEXAGON G3/8"	47, 49
90335-0005	SPRING	99
90335-0067	SPRING	111, 113, 127, 129
90335-0081	SPRING	95, 155, 157, 163, 165
90335-0091	SPRING	77
90335-0222	SPRING	91
90347-0054	DAMPER	73
90347-0175	MACHINE SHOE	51
90348-0031	FREE-WHEEL COUPLING	111, 113, 127, 129
90355-0158	ELECTROMAGNETIC CLUTCH	81
90364-0020	VACUUMPUMP X10	173
90411-0018	INSULATOR	127, 129
90422-0041	EVAPORATOR	55
90422-0042	CAPACITOR	55
90422-0316	HOOD	55
90422-0317	FILTER	55
90430-0037	MOTOR DRIVE CONTR.PME 1802. REPL.BY -67	31
90450-0380	SINGLE ACTING, SHORT STROKE	115, 131
90450-0397	CYLINDER	99
90450-0409	DOUBLE ACTING, COMPACT, CYL 32-15	111, 113, 121, 127, 129
111543-0000	GUIDE CONE	19, 91
234844-0000	WHEEL	155, 157, 163, 165
245210-0000	BODY	19, 91
263150-0000	BRACKET	63, 81
263152-0000	SHAFT	63, 81
263153-0000	NUT	63, 81
266710-0000	WHEEL	63, 81
273458-0000	LABEL (AIR)	173
294734-0000	WASHER	95
311103-0267	PIN,STRAIGHT 4X10	115, 131

Part No	Description	Page No
311103-0350	PIN,STRAIGHT M6 6X14 RFR	19, 91
311103-0351	PINS,STRAIGHT 6X16	81, 111, 113, 121, 127, 129
311112-0205	PINS,SLOTTED TUBULAR SPRING PIN 3X10	111, 113, 127, 129
311112-0256	PIN,SLOTTED TUBULAR SPRING PIN 4X20	73
311112-0260	SLOTTED TURP 4X28 RFR	77
311112-0262	PINS,SLOTTED TUBULAR SPRING PIN 4X32	63, 81
311112-0377	PINS,SLOTTED TUBULAR SPRING PIN 8X24	11, 13, 15, 47, 49, 77, 81, 83
311411-0138	SPLIT PIN SP1,6X12RFR	61, 155, 157, 163, 165
311520-0329	BLANK RIVET 2,4X8MM	31
312101-0343	SCREW M6S5X60FZB	115, 127, 129
312105-0287	SCREW M6S ISO 4017 M4X8 A280	75, 95, 111, 113, 121, 127, 129, 155, 157, 159, 163, 165
312105-0291	SCREW M6S ISO 4017 M4X12 A280	17, 19, 87, 89, 91, 169, 171, 173
312105-0295	SCREW M6S ISO 4017 M4X20 A280	115, 151, 155, 157, 163, 165
312105-0323	SCREW M6S ISO 4017 M5X8 A280	47, 49
312105-0325	SCREW M6S 5X10 A2 80	105
312105-0327	SCREW M6S ISO 4017 M5X12 A280	17, 25, 27, 95, 155, 157, 159, 163, 165
312105-0329	SCREW M6S ISO 4017 M5X16 A280	17, 47, 49
312105-0331	SCREW M6S ISO 4017 M5X20 A280	17
312105-0333	SCREW M6S ISO 4017 M5X25 A280	111, 113, 121, 127, 129
312105-0335	SCREW M6S ISO 4017 M5X30 A280	159
312105-0339	SCREW M6S ISO 4014 M5X40 A280	155, 157, 163, 165
312105-0366	SCREW M6S ISO 4017 M6X12 A280	47, 49, 141, 173
312105-0368	SCREW M6S ISO 4017 M6X16 A280	19, 67, 69, 71, 83, 87, 89, 91, 151, 173
312105-0370	SCREW M6S ISO 4017 M6X20 A280	61, 73, 77, 87, 155, 157, 159, 163, 165
312105-0372	SCREW M6S ISO 4017 M6X25 A280	63, 67, 69, 81, 89, 155, 157, 163, 165
312105-0374	SCREW M6S ISO 4017 M6X30 A280	151, 161, 167
312105-0376	SCREW M6S ISO 4017 M6X35 A280	155, 157, 163, 165, 173
312105-0379	SCREW M6S ISO 4014 M6X45 A280	91, 159
312105-0447	SCREW M6S ISO 4017 M8X12 A280	55, 97
312105-0449	SCREW M6S ISO 4017 M8X16 A280	17, 91, 161, 167
312105-0451	SCREW M6S ISO 4017 8X20 A280	11, 13, 15, 17, 77, 83, 95, 109
312105-0453	SCREW M6S ISO 4017 M8X25 A280	47, 49, 53, 63, 77, 81, 99, 105, 161, 167, 169, 171
312105-0455	SCREW M6S ISO 4017 M8X30 A280	17, 63, 73, 101, 111, 113, 121, 127, 129
312105-0463	SCREW M6S ISO 4014 M8X60 A280	111, 113, 121, 127, 129
312105-0465	SCREW M6S ISO 4014 M8X70 A280	77
312105-0505	SCREW M6S ISO 4014 M10X70 A280	47, 49
312105-0640	SCREW M6S ISO 4014 M16X100 A280	11, 13, 15
312109-0374	SCREW M6S ISO 4017 M6X30 A280	77, 117, 133
312109-0376	SCREW M6S ISO 4017 M6X35 A280	173
312109-0459	SCREW M6S ISO 4017 M8X40 A280	97, 117, 133
312109-0460	SCREW M6S ISO 4017 M8X45 A280	63, 81
312115-0222	SCREW MC6S ISO 4762 M3X8 A280	29, 97, 123
312115-0226	SCREW MC6S ISO 4762 M3X12 A280	111, 113, 121, 127, 129
312115-0228	SCREW MC6S ISO 4762 M3X16 A280	97
312115-0287	SCREW MC6S ISO 4762 M4X8 A280	29, 31, 107, 127, 129, 159, 173
312115-0291	SCREW MC6S ISO 4762 M4X12 A280	17, 107, 111, 113, 121, 127, 129
312115-0293	SCREW MC6S ISO 4762 M4X16 A280	125
312115-0295	SCREW MC6S ISO 4762 M4X20 A280	57, 99, 151
312115-0323	SCREW MC6S ISO 4762 M5X8 A280	25, 27, 29, 31
312115-0327	SCREW MC6S ISO 4762 M5X12 A280	47, 49, 77, 139, 141, 143, 145, 147, 149, 151, 173
312115-0329	SCREW MC6S ISO 4762 M5X16 A280	47, 49, 81, 141, 151, 173
312115-0331	SCREW MC6S ISO 4762 M5X20 A280	17, 33, 41, 43, 45, 61, 115, 131
312115-0341	SCREW MC6S 5X50 A4 80	111, 113, 121, 127, 129
312115-0362	SCREW MC6S ISO 4762 M6X8 A280	41, 43, 45, 95, 137
312115-0366	SCREW MC6S ISO 4762 M6X12 A280	19, 21, 31, 33, 63, 81, 91, 97
312115-0368	SCREW MC6S ISO 4762 M6X16 A280	155, 157, 163, 165
312115-0372	SCREW MC6S ISO 4762 M6X25 A280	63, 77, 97
312115-0376	SCREW MC6S ISO 4762 M6X35 A280	73
312115-0379	SCREW MC6S ISO 4762 M6X45 A280	159
312115-0447	SCREW MC6S ISO 4762 M8X12 A280	115
312115-0449	SCREW MC6S ISO 4762 M8X16 A280	25, 27
312115-0451	SCREW MC6S ISO 4762 M8X20 A280	97, 107, 125
312115-0453	SCREW MC6S ISO 4762 M8X25 A280	97, 115, 131
312115-0455	SCREW MC6S ISO 4762 M8X30 A280	115, 131
312115-0457	SCREW MC6S ISO 4762 M8X35 A280	159
312125-0222	SLOTTED CHEESE HEAD ISO 1207 M3X8 RFR	173
312125-0224	SLOTTED HEMCS3X10RFR	111, 113, 127, 129
312125-0230	SLOTTED CHEESE HEAD ISO 1207 M3X20 RFR	155, 157, 163, 165, 173
312125-0287	SLOTTED CHEESE HEAD ISO 1207 M4X8 RFR	25, 27, 47, 49, 57, 111, 113, 121, 127, 129, 169, 171
312125-0289	SLOTTED HEMCS4X10RFR	73, 81, 87, 89, 117, 133, 155, 157, 161, 163, 165, 167
312125-0378	SLOTTED CHEESE HEAD ISO 1207 M6X40 RFR	31
312145-0224	SLOTTED HEMFS3X10RFR	91, 111, 113, 121, 127, 129
312145-0226	SLOTTED HEMFS3X12RFR	115, 131
312155-0289	SCREW MF6S 4X10 A480	173
312155-0291	SCREW MF6S DIN 7991 M4X12 A480	25, 27, 109, 111, 113, 127, 129, 151, 159
312155-0293	SCREW MF6S DIN 7991 M4X16 A480	17
312155-0295	SCREW MF6S DIN 7991 M4X20 A480	17
312155-0323	SCREW MF6S DIN 7991 M5X8 A280	95
312155-0325	SCREW MF6S5X10RFR	159
312155-0329	SCREW MF6S DIN 7991 M5X16 A280	95, 115
312155-0331	SCREW MF6S DIN 7991 M5X20 A280	99, 131
312155-0339	SCREW MF6S DIN 7991 5X40 A280	115, 131
312155-0364	SCREW MF6S6X10RFR	21

Part No	Description	Page No
312155-0461	SCREW MF6S DIN 7991 M8X50 A280	109
312180-0374	HEX. SOCKET HEAD SHOULD. ISO 7379 M5X30	159
312180-0495	HEX. SOCKET HEAD SHOULD. ISO 7379 M8X30	63, 81
312311-0321	SET SCREW FULL DOGPOINT ISO 4028 M5X6	67, 85
312311-0327	SET SCREW FULL DOGPOINT ISO 4028 M5X12	101
312311-0333	SET SCREW FULL DOGPOINT ISO 4028 M5X25	111, 113, 127, 129
312311-0366	SET SCREW FULL DOGPOINT ISO 4028 M6X12	77, 81
312311-0374	SET SCREW FULL DOGPOINT ISO 4028 M6X30	73, 107, 125
312311-0380	STOP SCREW T6SS6X50FZB	111, 113, 121, 127, 129
312311-0624	STOP SCREW T6SS16X30FZB	51
312318-0283	SET SCREW CUP POINT ISO 4029 M4X4 RFR	19, 91, 111, 113, 127, 129
312318-0285	STOP SCREW ISO 4029 M4X6 A4	19, 91, 111, 113, 127, 129
312318-0291	SET SCREW CUP POINT ISO 4029 M4X12 RFR	19, 91
312318-0323	SET SCREW CUP POINT ISO 4029 M5X8 RFR	61, 155, 157, 163, 165
312318-0362	SET SCREW CUP POINT ISO 4029 M6X8 RFR	77, 81, 101
312318-0364	STOP SCREW SK6SS6X10RFR	155, 157, 163, 165
312318-0366	SET SCREW CUP POINT ISO 4029 M6X12 RFR	79, 161, 167
312318-0372	SET SCREW CUP POINT ISO 4029 M6X25 RFR	67, 69
312318-0459	SET SCREW CUP POINT ISO 4029 M8X40 RFR	97
312605-0310	NUT,HEXAGON M6M 3 A2 80	97, 155, 157, 163, 165, 173
312605-0312	NUT,HEXAGON,M4 RFR	17, 19, 31, 87, 89, 91, 95, 141, 143, 145, 151, 155, 157, 163, 165, 173
312605-0314	NUT,HEXAGON,M6M5 STAINLESS	29, 111, 113, 115, 127, 129, 139, 155, 157, 163, 165, 169, 171, 173
312605-0316	NUT,HEXAGON A280 M6M6	25, 27, 31, 63, 73, 77, 87, 89, 91, 95, 139, 155, 157, 163, 165, 173
312605-0318	NUT,HEXAGON,M8 RFR	17, 63, 77, 81, 83, 97, 155, 157, 163, 165, 169, 171
312605-0324	NUT,HEXAGON,M16 A280	51
312621-0316	ROD END,NUT M6	111, 113, 121, 127, 129
312621-0318	ROD END,NUT M8	111, 113, 127, 129
312625-0316	NUTS,HEXAGON,M6	107, 125
312630-0320	NUTS,HEXAGON,M10X1	161, 167
312705-0312	NUT,DOMED CAP,HEXAGON,M4	173
312705-0318	NUT,DOMED CAP,HEXAGON,M8	155, 157, 163, 165
312812-0312	LOCK-NUT,HEXAGON,WITH NYLONINSERT,M4	115, 141
312812-0314	NUT,HEXAGON,LOCK,WITH NYLON,M5	95
315101-0146	WASHER BRB 5,3X10 FZB	175
315103-0165	WASHERS,PLAIN ROUND 8,4X16	109
315105-0124	WASHER,PLAIN ROUND 3,2X6	97, 111, 113, 121, 127, 129, 155, 157, 163, 165, 169, 171, 173
315105-0136	WASHER,PLAIN ROUND 4,3X8 STAINLESS	17, 19, 29, 31, 47, 49, 57, 75, 81, 87, 89, 91, 95, 99, 107, 111, 113, 121, 125, 127, 129, 141, 143, 145, 151, 155, 157, 163, 165, 169, 171, 173
315105-0146	WASHER,PLAIN ROUND 5,3X10 STAINLESS	17, 19, 25, 27, 29, 31, 33, 47, 49, 91, 95, 105, 111, 113, 115, 121, 127, 129, 139, 141, 147, 151, 155, 157, 159, 163, 165, 173
315105-0153	WASHER,PLAIN ROUND 6,4X12 STAINLESS	21, 25, 27, 31, 33, 41, 43, 45, 47, 49, 61, 63, 67, 69, 73, 81, 83, 87, 89, 91, 139, 141, 151, 155, 157, 159, 161, 163, 165, 167, 173
315105-0165	WASHER,PLAIN ROUND 8,4X16 STAINLESS	17, 25, 27, 47, 49, 55, 63, 81, 91, 95, 99, 105, 155, 157, 159, 161, 163, 165, 167
315105-0173	WASHER,PLAIN ROUND 10,5X22 STAINLESS	47, 49, 161, 167
315115-0153	WASHER TBRB 6,4X12 STAINLESS	77, 117, 133
315115-0165	WASHER TBRB 8,4X16 STAINLESS	11, 13, 15, 47, 49, 63, 73, 77, 81, 83, 97, 101, 107, 111, 113, 115, 117, 121, 125, 127, 129, 131, 133, 169, 171
315125-0153	WASHERS,PLAIN ROUND,CHAMFERED 6,4X22X4	67, 69, 71, 83, 117, 133
315125-0165	WASHERS,PLAIN ROUND,CHAMFERED 8,4X26X5	53
315233-0110	PLAIN ROUND,NYLON R1/4"	175
315402-0136	WASHER FBB4,1RFR	111, 113, 121, 127, 129, 159
315402-0156	WASHER FBB6,5RFR	159
315705-0202	KEYS,PARALLEL WITH ROUND ENDS 5X5X25	101
315705-0272	KEYS,PARALLEL WITH ROUND ENDS 8X7X50	97
315742-0111	RETAINING RINGS 15	101
315750-0107	CIRCLIP SGA10	155, 157, 163, 165
315751-0112	RETAINING RINGS FOR SHAFT 15	67, 69, 77, 101
315751-0122	RETAINING RINGS FOR SHAFT 30	77
315751-0123	RETAINING RINGS FOR SHAFT 32	117, 133
315753-0117	RETAINING RINGS FOR HOLE 22	111, 113, 121, 127, 129, 155, 157, 163, 165
315753-0124	RETAINING RINGS FOR HOLE 35	77
318172-0179	TIMING BELT T10X1780X16	101
318800-0102	HANDLES,SPHERICAL KNOB,INT.THRE.,D.20-M5	77
321105-0125	BUSHING 6F7X12X6	111, 113, 121, 127, 129
321111-0211	FLANGE BUSHING, 15X21X10	101
321111-0274	FLANGE BUSHING, 18X24X18	61, 155, 157, 163, 165
321116-0095	BEARING BUSHING WITHOUT FLANGE, 8X12X6	155, 157, 163, 165
321120-0092	BUSHING, 4X5,5X6	111, 113, 127, 129
321120-0101	BUSHING, 6X8X6	111, 113, 127, 129
321120-0102	BUSHING, 6X8X10	111, 113, 127, 129, 159
321120-0104	BUSHING, 10X12X10	111, 113, 127, 129
321300-0098	BALL BEARING 8X22X7	155, 157, 163, 165
321308-0202	BALL BEARING 15X32X9	63, 73, 81
321313-0102	BALL BEARING 15X35X11	67, 69, 77, 79
321316-0200	BEARINGS,BALL BEARING SKF6300-2RS	77
321316-0202	BEARINGS,BALL BEARING SKF6302-2RS	73
321582-0150	BEARINGS,CAM ROLLER KR26PP	161, 167
342700-0110	NIPPLES,HEXAGON,EXT.G-THREAD G1/4"-G1/4"	175
342700-0205	NIPPLES,HEXAGON,EXT.G-THREAD G1/2"-G1/4"	173
342713-0210	PLUG,EXT.THREAD,HEXAGON SOCKET 1/4"BRASS	173
342715-0102	BLIND PLUG 6 MM	177
342715-0103	BLIND PLUG 8 MM	177
342716-0203	REDUCER 6-8	173, 177

Part No	Description	Page No
342722-0210	STRAIGHT COUPLING, D=12 MM - R3/8"	177
342723-0102	STRAIGHT PIPE CONNECTION GAI-6-G1/8"	97
342732-0102	ELBOW PIPE JOINT,EXT.THREAD,D=6 MM G1/8	99, 111, 113, 121, 127, 129
342732-0103	ELBOW PIPE JOINT,EXT.THREAD,D=6 MM G1/4	173
342732-0105	ELBOW PIPE D8-R3/8"	177
342732-0110	ELBOW PIPE JOINT,EXT.THREAD,D=12 MM G3/8	175
342732-0801	ELBOW PIPE JOINT,EXT.THREAD,D=8 MM G1/8	99
342735-0109	ELBOW PIPE JOINT 12X12 MM	173
342742-0110	T-COUPLING,ADJUST,F.PLAST.TUBE 12-G3/8"	173
342748-0102	T-CONNECTION 6 MM	173
342748-0109	T-CONNECTION 12 MM	173
342767-0100	BULKHEAD CONNECTOR G1/8"	173
342768-0103	BULKHEAD CONNECTOR, 8 MM	173
342921-0111	STRAIGHT COUPLING,EXT.THREADED 6/4-M5	111, 113, 115, 131
342931-0113	ELBOW 90 COUPL.,EXT.THREAD 6/4-G1/8"	63, 81
342991-0100	HOSE CLIP,WORM DRIVE TYPE 10-13	55
342991-0109	HOSE CLIP,WORM DRIVE TYPE (48)-50	97
351150-0403	CABLE OLFLEX 3X0,75 MM2	39
351150-0404	CABLE OLFLEX 4X0,75 MM2	55
351150-0405	CABLE,OLFLEX 5X0,75 MM2	39
351150-0407	CABLE OLFLEX 12X0,75 MM2	39
351150-0412	CABLE OLFLEX 3X1,5MM2	39, 55
351150-0413	CABLE OLFLEX 4X1,5MM2	39
351150-0414	CABLE OILFLEX 5X1,5MM2	55
351150-0416	CABLE OILFLEX 12X1,5MM2	25, 27
351150-0419	CABLE OLFLEX 5X2,5MM2	25, 27
351172-0102	CABLE AWM D.BLUE 0,75MM2	41
351172-0104	CABLE AWM DARKBLUE 1,5MM2	25, 27, 57
351175-0104	CABLE AWM GN/YE 1,5MM2	25, 27
352103-0100	CABLE GLAND STR 9;PR15,2	43, 45
352103-0101	CABLE GLAND ST 9;PR15,2/PG9	43, 45, 57
352103-0106	CABLE GLAND ST 11	41, 47, 49, 57, 81, 173
352103-0108	CABLE GLAND ST 13	25, 27
352103-0111	CABLE GLAND ST 16	25, 27, 39
352103-0115	CABLE GLAND STR 21	41, 43, 45
352103-0116	CABLE GLAND ST 21	25, 27
352113-0102	CLIP-STRIP,BLACK 188X4,8MM	57, 111, 113, 121, 127, 129, 169, 171
352113-0204	ANCHOR TM3S25-M	47, 49, 81
352113-0205	ANCHOR TM2S8-C100	25, 27, 47, 49, 57, 73, 87, 89, 111, 113, 117, 121, 127, 129, 133, 155, 157, 161, 163, 165, 167, 169, 171
353021-0120	FEED THROUGH TERMINAL WDK 2,5	29
353021-0216	BY PASS TERMINAL WDU 2,5 BLUE	41
353021-0301	TERMINAL,TRIPLE-LEVEL, DLI 2,5/35 PA	43, 45
353021-0302	TERMINAL,TRIPLE-LEVEL, DLD 2,5/35 PA	43, 45
353022-0101	TERMINAL NT6/35 KRG	29
353024-0205	EARTH TERMINAL WPE 4	29, 41, 43, 45
353024-0206	EARTH TERMINAL WPE 6	29
353031-0201	END BRACKET EW35	29, 43, 45
353032-0005	END PLATE WAP 2,5-10 BLUE	41
353032-0010	END PLATE WAP	29
353032-0302	END PLATE WAP	43, 45
353033-0101	SEPARATING PLATE HP 6 PA BLUE	29
353034-0030	BRIDGE CONLECK WQV 2,5/10	29
353034-0404	BRIDGE CONLECK Q10	43, 45
353041-0001	RAIL 10X3MM SSCH	29
353041-0104	CLAMPING YOKE PZB 4 K	29
353042-0004	RAIL TS 35/7,5	29, 33
353042-0005	RAIL TS 35/7.5	41, 43, 45
353240-0003	GLANDS,NORMAL WITHOUT INSERT PG 13,5	39
353240-0005	GLANDS,NORMAL WITHOUT INSERT PG 21	39, 55
353240-0006	GLANDS,NORMAL WITHOUT INSERT PG 29	25, 27, 39
353243-0002	GLAND,HOSE,EXTENDED,WITHOUT INSERT PG11	25, 27, 123
353245-0005	GLAND,EMC,EXTENDED WITH INSERT PR 22,5	63
359005-0010	MARKING SESATS 0-9	25, 27, 39, 55
359005-0050	MARKING SEATS "X"	25, 27, 39, 55
359011-0801	SIGN BOARD BSFW 1-50	29
359011-0807	MARKING PLATES 5-FW 1-50	29, 41, 43, 45, 57
359011-0817	SYMBOL 5-GW (+) 50PC	43, 45
359011-0818	SYMBOL 5-GW (-) 50PC	43, 45
359011-0834	SET OF SIGNS 6-GW(EARTH)	57
359240-0100	SIGN HOLDER	31
359241-0133	SIGN "SERVICE SWITCH"	31
359241-0201	SIGN "HOUR GLASS"	31
359241-0471	SIGN" PULL TAB FUNCTION"	31
359301-0512	SIGN "INDEX TO POSITION"	31
359307-0002	SYMBOL SIGN "TAB C'JAW"	173
359307-0004	SYMBOL SIGN "PATCH C'JAW"	173
359307-0007	SYMBOL SKYLT "TAB FOLDING"	173
359307-0010	SIGN "WASTE BLOWING"	173
359307-0011	SIGN" PRESSURE ROLLER DRIVE MOTOR"	173
359307-0012	SIGN" PRESSURE ROLLER TENSION DEVICE"	173
359705-0007	WARNING SIGN "HOT SURFACE"	103, 119, 123
359705-0009	WARNING SIGN "SHARP PART"	159
359705-0015	WARNING SIGN "ELECTRIC SHOCK"	31, 41, 43, 45, 57, 139, 149

Part No	Description	Page No
469096-0000	LEG	53
469463-0000	SHAFT	17
469464-0000	ROLL	17
495118-0014	DISTANCE PIPE L=14 MM	33
495130-0070	SPACER TUBE L=70MM	33
495377-0000	BUSH	31
514938-0100	TAB FOLDING	11, 13, 15
514993-0200	BY-PASS SENSOR	59
522393-0000	NUT	159
522394-0000	SPRING	159
522395-0000	SCREW	159
522408-0000	BEARING HOUSING	73
529146-0000	ANGLE BRACKET	21
529147-0000	SPRING BRACKET	21
529148-0000	STEERING	21
529149-0000	DOLLY WASHER	21
530600-0100	GUIDING PULLTAB TBA/8	17
532017-0000	MOUNTING LUG	159
532020-0000	LOCK WASHER	159
532021-0000	LOCKING LOOP	159
532022-0000	LOCK BAR	159
532719-0001	FEEDING ROLLER	73
533972-0000	INDICATOR CURVE	155, 157, 163, 165
534497-0000	SPACER	155, 157, 163, 165
538726-0000	WASHER	155, 157, 163, 165
538740-0003	SPACER	155, 157, 163, 165
544422-0000	KNIFE	159
544427-0000	TURN SPRING	159
544428-0000	SHEET	159
546256-0000	BOBBIN HOLDER	163, 165
546290-0000	BEAM	155, 157, 163, 165
546291-0000	BRACKET	163, 165
546294-0000	BEAM	155, 157, 163, 165
546296-0000	BEAM	155, 157
546297-0000	BEAM	155, 157
546298-0000	SHAFT	163, 165
546299-0000	SHAFT	163, 165
546300-0000	ROLL	163, 165
546301-0000	ROLL	163, 165
546303-0000	SHAFT	155, 157, 163, 165
546305-0000	SHEET	155, 157, 163, 165
546306-0000	SHAFT	155, 157, 163, 165
546307-0000	ROLL	163, 165
547745-0000	ROLL	163, 165
547746-0000	ROLL	163, 165
548770-0001	COAXIAL CABLE L=5000 MM	25, 27
548770-0007	COAXIAL CABLE L=3000 MM	25, 27
552049-0000	LUG	159
556539-0000	BRAKE DISC	155, 157, 163, 165
556541-0000	SCREW	155, 157, 163, 165
556542-0000	PIN	155, 157, 163, 165
556544-0000	SPACER	155, 157, 163, 165
558230-0101	TMCC CONTROLLER	31
558321-0101	TPIH-SWITCH	31
577135-0100	PIPE-LINE	11, 13, 15
578684-0000	SPRING BRACKET	95
649475-0100	ELECTRICAL EQUIPMENT	11, 13, 15
731049-0000	SLIDING STRIP TPIH	25, 27
905174-0000	STEER PLATE	111, 113, 127, 129
905194-0000	SHAFT	111, 113, 127, 129
905210-0000	ROLLER-35	111, 113
905212-0000	SHAFT	127, 129
905215-0000	BOLT	111, 113, 127, 129
905241-0000	COUPLING	111, 113, 127, 129
905243-0000	SHAFT	111, 113, 127, 129
905244-0000	WEDGE	91, 111, 113, 115, 121, 127, 129, 131
905246-0000	BRACKET	111, 113, 127, 129
905285-0000	STRIPPER PIN	99
905413-0000	SHAFT	111, 113, 127, 129
905415-0000	SHAFT	111, 113, 127, 129
905416-0000	PIVOT BRACKET-SWIVEL	111, 113, 127, 129
905417-0000	SHAFT	111, 113, 127, 129
905419-0000	PIVOT ARM-SWIVEL	111, 113, 127, 129
905463-0000	KEY	115, 131
905471-0000	ROLLER-DRIVE	111, 113, 127, 129
905484-0000	SHIM	127, 129
905607-0000	SCREW	111, 113, 127, 129
905608-0000	SCREW	111, 113, 127, 129
905609-0000	LOCK BAR	111, 113, 127, 129
905613-0000	SHAFT	111, 113, 127, 129
905937-0000	SPRING	19, 91
905938-0000	BRACKET	19, 91
905939-0000	COUNTERWEIGHT	19
907138-0000	CLAMP	127, 129

Part No	Description	Page No
907249-0000	....CLAMP	127, 129
907358-0005	....ROLLER - 43.5	127, 129
907358-0006	....ROLLER - 29	111, 113
907487-0000	....WASHER-CURVED	111, 113, 127, 129
907535-0000	....RESERVOIR	173
907710-0000	....PIVOT PLATE	111, 113, 127, 129
907711-0000	....SHAFT	111, 113, 127, 129
907712-0000	....PIVOT PLATE	111, 113, 127, 129
907719-0000	....SPRING	111, 113, 127, 129
907942-0000	....STEERING BRACKET	19
907946-0100	....TAB FOLDING PAPER GUIDE	17
907983-0000	....PLATE	17
908309-0000	....ROLLER - 47	127, 129
928919-0000	....FASTENING PLATE	115, 131
929607-0000	....EARTH BAR	25, 27
929771-0000	....OPENING SPECIFICATION	135
970215-0000	....STOP BLOCK	31
971346-0000	....GUIDE PIN	31
979426-0000	....SIGN	173
979974-0000	....INSERT	25, 27
984082-0000	....PLATE	173
985342-0000	....PLATE	17
985343-0000	....BRACKET	17
985444-0000	....GUIDE	17
985445-0000	....GUIDE	17
985446-0000	....BRACKET	17
985502-0000	....PLATE	17
985854-0000	....BRACKET	77
985855-0000	....SPACER BUSHING	77
985856-0000	....SHAFT	77
985860-0000	....DIE HOLE 45	99
985865-0000	....BRACKET	77
985866-0000	....TOP FRAME	47, 49
985899-0000	....COUPLING	77
985900-0000	....COUPLING	81
988685-0000	....PIN	139, 141, 143, 145, 149, 151, 173
1010814-0000	..ROLLER	61
1035076-0200	..LEG	47, 49
1035471-0100	..LEG	47, 49
1035792-0000	..E-HINGE	139, 141, 143, 145, 149, 151, 173
1035882-0000	..BENDING ROLLER	67, 69, 77
1036120-0000	..SLEEVE	51
1036220-0000	..SHAFT	77
1036227-0000	..BRACKET	47, 49
1036232-0000	..BRACKET	77
1036304-0005	..LOCKING ARM	143, 145
1036304-0019	..LOCKING ARM	143, 145
1036304-0020	..LOCKING ARM	141
1036563-0000	..WASHER	141, 151, 173
1036977-0000	..HOLDER	139
1037762-0000	..PIN	47, 49
1038865-0000	..SPACER DISC	11, 13, 15
1082741-0000	..HOLDER	173
1082765-0000	..PHOTOCELL BRACKET	89
1082861-0000	..ARM	61
1095893-0100	..MAGAZINE PULLTAB	153
1095894-0100	..MAGAZINE PATCH	153
1095895-0100	..SPLICING DEVICE	155, 157, 163, 165
1095923-0100	..GUIDE PULLTAB	155, 157
1095924-0100	..GUIDE PATCH	163, 165
1095928-0100	..COOLER	11, 13, 15
1095931-0200	..PAPER WEB PATH	11, 13, 15
1095932-0200	..APPLICATORS	11, 13, 15
1095935-0100	..DRIVE MOTOR	59
1095937-0100	..GUIDE ROLLER WITH FLANGE	65
1095938-0100	..GUIDE ROLLER	65
1095940-0100	..GUIDE ROLLER	65
1095941-0100	..TENSION ROLLER	65
1095942-0100	..ROLLER ASSEMBLY	59
1095944-0200	..DOOR EL-CABINET	137
1095945-0200	..DOOR	137
1095946-0200	..DOOR	137
1095947-0200	..DOOR	137
1095948-0100	..DOOR FOR WASTE BOX	137
1095949-0100	..DOOR FOR TPIH	137
1095951-0300	..DOORS AND COVER	11, 13, 15
1095952-0100	..BENDING ROLLER ASSEMBLY	77, 85
1095953-0100	..INFEED UNIT	59
1095955-0100	..WASTE BOX	93
1095969-0100	..BENDING ROLLER WITH FLANGES	81
1095970-0100	..PAPER BRAKE	59
1095979-0100	..PHOTOCELL UNIT	59
1095980-0100	..PHOTOCELL UNIT	59
1095991-0100	..PUNCH UNIT	97

Part No	Description	Page No
1095992-0100	PUNCH BRACKET	93
1103295-0000	LOCK PLATE	95
1103299-0000	NON-SKID	47, 49
1103845-0000	ARM	163, 165
1116048-0000	SPACER	47, 49
1129042-0000	KEY	141, 151, 173
1129221-0000	SPLICING TABLE	159
1129222-0000	BOBBIN HOLDER	155, 157
1129223-0000	BEAM	155, 157, 163, 165
1129224-0000	BEAM	155, 157, 163, 165
1129225-0000	BEAM	163, 165
1129226-0000	BEAM	155, 157, 163, 165
1129227-0000	POST	163, 165
1129230-0000	BEAM	155, 157
1129231-0000	CANTILEVER	155, 157
1129232-0000	ROLL	155, 157
1129233-0000	SHAFT	155, 157
1129234-0000	ROLL	155, 157, 159
1129235-0000	SHAFT	155, 157, 159
1129237-0000	ROLL	155, 157
1129238-0000	KNIFE	159
1129239-0000	KNIFE HOLDER	159
1129240-0000	SHEET	161, 167
1129241-0000	STEERING	161, 167
1129242-0000	SPACER	161, 167
1129245-0000	STOP	161, 167
1129246-0000	ROLL	155, 157
1129252-0000	LOCK GRIP	159
1129274-0000	GUIDE LUG	141, 143, 145
1129450-0000	ARM	155, 157, 163, 165
1129451-0000	SHAFT	163, 165
1129452-0000	SHAFT	155, 157
1129454-0000	SHEET	161, 167
1129461-0000	SPACER	161, 167
1129462-0000	SPACER	161, 167
1129495-0000	BLOCKING PIECE	155, 157, 163, 165
1129510-0000	ARM	155, 157
1129624-0000	AXLE SUPPORT	67, 69
1129626-0000	AXLE SUPPORT	71
1129628-0000	BRACKET	73
1129629-0000	BRACKET	73
1129630-0000	BEARING SEAT	67, 69
1129767-0000	SCREW	137, 139, 141, 143, 145, 147, 149
1129770-0000	BLOCKING PIECE	139, 141, 143, 145, 149, 151, 173
1129780-0000	ROLL	155, 157
1129867-0000	SHEET	25, 27
1129905-0000	SHAFT	63
1129906-0000	PIN	63, 81
1129907-0000	LEVER	63, 81
1129908-0000	BRACKET	63
1129909-0000	BRACKET	63
1129930-0000	DOOR	149
1129931-0000	DOOR	139
1129932-0000	FRAME	139
1129951-0000	BENDING ROLLER	79
1129952-0000	BRACKET	79
1129971-0000	BRACKET	147
1140016-0000	PLATE	63, 81
1140045-0000	FRAME	95
1140046-0000	RAIL	95
1140047-0000	WASTE BOX	95
1140048-0000	LOCK PLATE	95
1140049-0000	COVER	95
1140053-0000	SPACER	25, 27
1140055-0000	RING	67
1140131-0000	FLANGE	85
1140132-0000	ECCENTRIC	77, 83
1140133-0000	AXLE PIN	79
1140134-0000	PLATE	83
1140135-0000	ROLLER	71, 83
1140136-0000	BRACKET	83
1140137-0000	SHAFT	83
1140174-0000	BEARING HOUSING	63, 81
1140184-0000	BRACKET	81
1140185-0000	SHAFT	81
1140186-0000	BRACKET	81
1140187-0000	WHEEL	81
1140209-0000	GUIDE	87
1140210-0000	BRACKET	87
1140211-0000	PHOTOCELL BRACKET	87, 89
1140212-0000	GUIDE	89
1140213-0000	BRACKET	89
1140291-0000	PUNCH HOLE 50	99
1140292-0000	DIE HOLE 50	99

Part No	Description	Page No
1140293-0000	SPACER	99
1140294-0002	PIN DISTANCE 36.5	99
1140314-0000	STOP LUG	25, 27
1140387-0000	SHIM	99
1140415-0000	GLASS PANE	139, 141
1140416-0000	GLASS PANE	143
1140427-0000	BRACKET	47, 49
1140499-0000	PLATE	97
1140500-0000	ANGLE BRACKET	97
1140501-0000	PLATE	97
1140503-0000	ADJUSTMENT BRACKET	97
1140504-0000	CONNECTION PLATE	97
1140509-0000	DOOR	151
1140537-0000	HOLDER	151
1140538-0000	BLOCKING PIECE	151, 173
1140545-0000	TEE BRACKET	111, 113, 127, 129
1140546-0000	BRACKET	111, 113, 127, 129
1140547-0000	SHAFT	111, 113, 121, 127, 129
1140548-0000	FLANGED BEARING BUSHING	111, 113, 127, 129
1140551-0000	SHAFT	111, 113
1140626-0000	SPACER	161, 167
1140632-0000	POST	155, 157, 163, 165
1140667-0000	INDUCTOR	115
1140727-0000	ROLLER	169, 171
1140738-0000	BRACKET	125
1140739-0000	BRACKET	125
1140771-0000	COVERING PLATE	137
1140772-0000	COVERING PLATE	137
1140773-0000	COVERING PLATE	137
1140774-0000	COVERING PLATE	137
1140775-0000	COVERING PLATE	137
1140776-0000	COVERING PLATE	137
1140777-0000	COVERING PLATE	137
1140817-0000	BRACKET	169, 171
1140883-0000	PNEUMATIC DIAGRAM	173
1140889-0000	CABLE	115
1140890-0000	TRANSFORMER BRACKET	115
1140912-0000	BRACKET	127, 129
1143421-0000	OPENING SPECIFICATION	135
1143632-0000	OPENING SPECIFICATION	135
1143702-0000	OPENING SPECIFICATION	135
1145219-0000	SIGN	173
1145233-0000	PUNCH HOLE 45	99
1145332-0000	KNIFE-FLAT	111, 113, 127, 129
1145333-0000	KNIFE-WINDOW	111, 113, 127, 129
1147009-0000	SPECIAL WASHER	117, 133
1147010-0000	BUSHING	117, 133
1147012-0000	PHOTOCELL BRACKET	105
1147013-0000	BRACKET	105
1147015-0000	BRACKET	17
1147049-0000	BRACKET	101
1147050-0000	SCREW	101
1147051-0000	TOOTHED PULLEY	101
1147117-0000	RAIL BRACKET	17
1185000-0100	DOOR,INNER	137
1185008-0100	MAGAZINES	11, 13, 15
1185029-0100	MISSING TAB DETECTOR	123
1185031-0100	BAR CODE READER	103
1185047-0100	AIR INLET GROUP	173
1185048-0100	VALVE GROUP	173
1185049-0100	VALVE PANEL	11, 13, 15
1185078-0100	LIFTING DEVICE	93
1255035-0000	ECCENTRIC	61
1255311-0000	FRAME	47, 49
1255579-0000	BRACKET	91
1255601-0100	EDGE GUIDE	59
1255631-0000	ECCENTRIC BUSHING	77
1255682-0000	DOOR	141
1255683-0000	DOOR	147
1255684-0000	HOLDER	141
1255685-0000	DOOR	143
1255686-0000	DOOR	145
1255687-0000	BRACKET	107
1255692-0010	CABLE	39
1255697-0000	BRACKET	95
1255834-0000	HANDLE	159
1255835-0000	PROTECTION	159
1255952-0000	BOX FOR TPIH	25, 27
1255955-0000	FRAME	31
1260201-0000	FRAME	151
1260239-0000	ANGLE BRACKET	97
1260329-0000	BRACKET	61
1260379-0000	BEAM	163, 165
1260387-0000	PHOTOCELL BRACKET	97

Part No	Description	Page No
1260388-0000	PLATE	127, 129
1260389-0000	CASTING APPLICATOR	111, 113, 127, 129
1260390-0200	MISSING PATCH DETECTOR	103
1260391-0000	BRACKET	111, 113, 121
1260392-0000	CASTING APPLICATOR	121
1260393-0002	SEALING PLATE	111, 113
1260395-0000	PLATE	111, 113, 127, 129
1260397-0000	BRACKET	117
1260398-0000	BRACKET	133
1260399-0000	CLAMP	111, 113, 121, 127, 129
1260400-0000	COVER	109
1260401-0100	SETTING TOOL	103, 119, 123
1260402-0000	BRACKET	109
1260403-0000	ROD	139
1260404-0000	PLATE	111, 113, 121
1260405-0000	PLATE	115
1260406-0000	PLATE	127, 129
1260407-0000	PLATE	131
1260411-0100	PATCH/TAB SPLICE DETECTOR	65
1260413-0000	BRACKET	75
1260414-0100	PATCH FEEDER	103
1260415-0100	TAB FEEDER	123
1260416-0200	TAB C'JAW UNIT	123
1260417-0100	PATCH RESEAL C'JAW UNIT	103, 119
1260418-0100	HEATING JAW - RESEAL	119
1260419-0100	APPLICATOR PATCH	93
1260420-0100	APPLICATOR RESEAL	93
1260421-0100	APPLICATOR TAB	93
1260422-0000	CLAMP	111, 113, 121, 127, 129
1260426-0100	PATCH RESEAL BRACKET	103, 119
1260427-0100	TAB BRACKET	123
1260428-0100	FRAME ASSEMBLY	11, 13, 15
1260440-0000	BRACKET	31
1260522-0000	PHOTOCELL	107
1260523-0000	CABLE	107
1260551-0000	TAB HEATER HEAD	127, 129
1260552-0000	ROD	139
1260561-0000	HOLDER	25, 27
1260642-0000	LEVER	77
1260643-0000	LEVER	77
1260644-0000	LEVER	77
1260648-0000	BUSHING	77
1260649-0000	PAPER GUIDE	77
1260651-0000	INDUCTOR	115
1260811-0100	CONNECTION BOX	39
1260812-0100	CONNECTION BOX	39
1260813-0100	CONNECTION BOX	39
1260814-0000	CONNECTION BOX	43, 45
1260815-0000	CONNECTION BOX	41
1260902-0000	INSERT	39
1279484-0000	SHIM	115, 131
1279485-0000	PLATE	115, 131
1279828-0000	SEALING STRIP	141
1279829-0000	SEALING STRIP	143, 145
1279830-0000	SEALING STRIP	147
1279831-0000	COVER	31
1279832-0000	PLATE	47, 49
1279833-0000	RUBBER STRIP	47, 49
1279834-0000	BOLT	155, 157, 163, 165
1282599-0000	INSERT	39
1282600-0000	INSERT	39
1282787-0000	INSERT	39
1282788-0000	INSERT	55
1285054-0100	CONNECTION BOX	55
1285481-0000	LABEL	163, 165
1285482-0000	LABEL	155, 157
1296298-0000	BUSHING	115, 131
1296300-0000	WASHER	115, 131
1296752-0000	BRACKET	111, 113, 121, 127, 129
1296753-0000	FLAG	111, 113, 121, 127, 129
1296794-0000	PUNCH HOLE71	99
1296856-0000	BRACKET	47, 49
1296871-0000	WHEEL	63
1296872-0000	DIE HOLE 71	99
1296875-0000	OPENING SPECIFICATION	135
1296876-0000	OPENING SPECIFICATION	135
1296882-0100	OPENING SPECIFICATION	93
1317254-0100	ELECTRICAL CABINET	11, 13, 15
1317354-0100	MOUNTING PLATE	25, 27
1317355-0100	SWING FRAME	25, 27
1317356-0100	FUSE BOX	31
1317357-0000	MOUNTING PLATE	29
1317358-0000	SWING FRAME	31
1317359-0000	BRACKET	31

Part No	Description	Page No
1317360-0000	FUSE BOX	33
1317361-0000	COVER PLATE	33
1317483-0000	TOUCH GUARD	29
1317484-0000	STUD SCREW	29
1317485-0000	ANGLE BRACKET	29
1317657-0000	INSERT	25, 27
1317669-0001	ROLLER	171
1317669-0002	ROLLER	171
1317669-0004	ROLLER	169
1317669-0005	ROLLER	169
1317670-0000	BRACKET	169, 171
1317671-0000	ROLLER	169, 171
1317672-0000	AXLE PIN	169, 171
1317673-0000	PLATE	169, 171
1317674-0000	FLAG	169, 171
1317675-0000	AXLE PIN	169, 171
1317676-0000	PLATE	169, 171
1317750-0000	CABINET	25, 27
1317751-0100	CABLE HARNESS	11, 13, 15
1317753-0000	AIR NOZZLE	17
1317754-0000	BRACKET	17
1317755-0000	PLATE	17
1317971-0000	REINFORCEMENT	17
1317972-0000	REINFORCEMENT	17
1334065-0100	PATCH TURNING DEVICE	153
1334066-0100	TAB TURNING DEVICE	153
1334228-0000	SHIM	17
1334230-0001	PLATE	17
1334230-0002	PLATE	17
1334230-0003	PLATE	17
1334322-0100	BENDING ROLLER WITH FLANGES	11, 13, 15, 83
1334534-0000	WASTE PIPE	97
1334535-0000	WASTE PIPE	95
1346162-0000	PHOTOCELL BRACKET	107
1346219-0000	REFLECTOR	107
1346283-0000	COUNTER PLATE	131
1346521-0000	HEATER	127, 129
1346824-0000	INSERT	25, 27
1347265-0000	FUSE BOARD	139
1348057-0000	BRACKET	47, 49
1348058-0000	CABLE DUCT	47, 49
1350146-0000	CONNECTION BOX	57
1350525-0000	SEALING PLATE	127, 129
1350526-0000	SEALING PLATE	127, 129
1350541-0000	SEALING PLATE	127, 129
1350785-0001	SHIM	111, 113, 127, 129
1350785-0002	SHIM	111, 113, 127, 129
1350785-0003	SHIM	111, 113, 127, 129
1350785-0004	SHIM	111, 113, 127, 129
1353005-0100	ELECTRICAL DOCUMENT	179
1484135-0000	OPENING SPECIFICATION	135
1484136-0000	OPENING SPECIFICATION	135
1487712-0000	LEG	51
1487819-0000	SHIM	105
1490292-0000	SEALING PLATE	127, 129
1498488-0000	SEALING PLATE	121
1498747-0000	OPENING SPECIFICATION	135
1499596-0000	OPENING SPECIFICATION	135
1499597-0000	OPENING SPECIFICATION	135

Tetra Pak