EM

Electrical Manual

PT21 050V

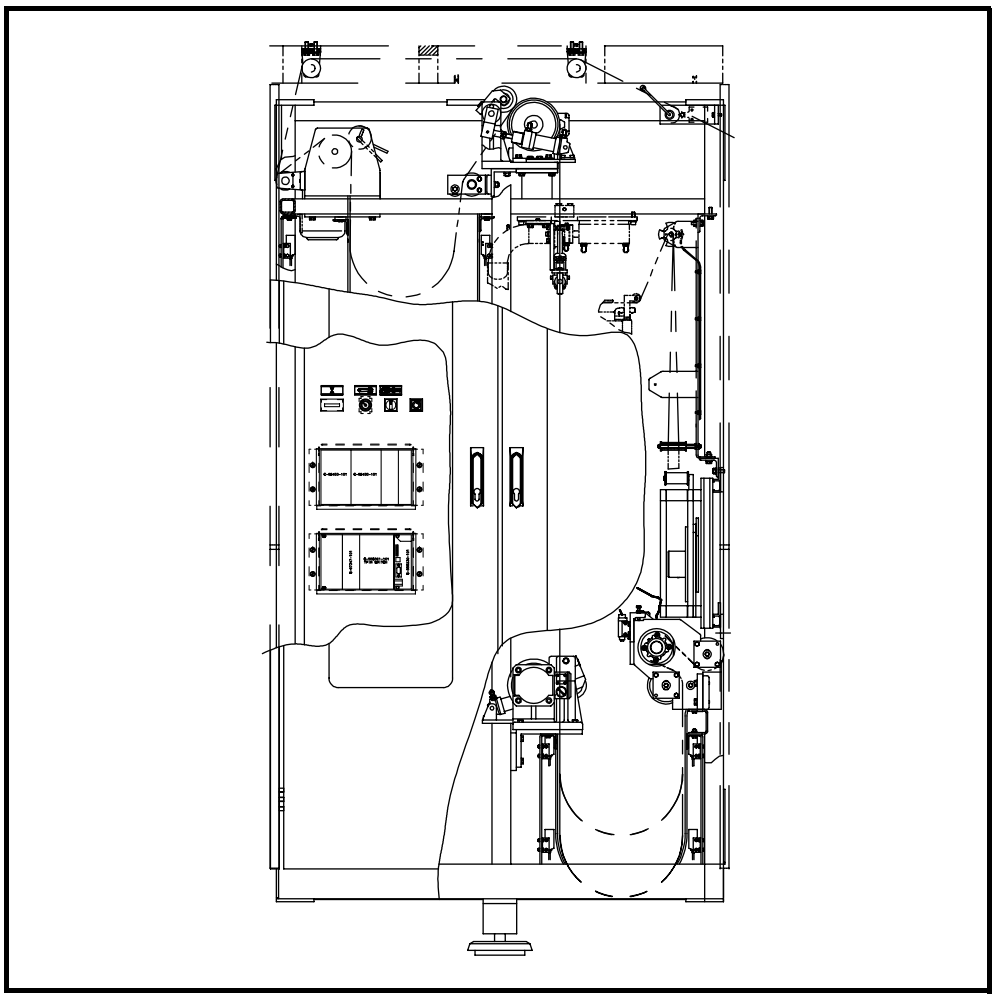

EM3.081547013fro.fm

Tetra Pak

Doc No. EM-81547-0103

This document is valid for:

Series No/ Machine No Sign.

PullTab Unit
PT21
648508-0500

El. ECM:
97501

Valid from Machine Series No.:
22316/00060 (Italy)

1 Introduction
(1-82409-0103)

2 Safety precautions
(2-82415-0102)

3 Electrical system description
(3-82416-0101)

4 Component location
(EM-81547-0103)

5 Engineering change description
(EM-81547-0103)

6 Circuit diagrams
(EM-81547-0103)

7 Connections diagrams
(EM-81547-0103)

8 Mains connections diagrams
(EM-81547-0103)

9 Program documents
(EM-81547-0103)

10 Bills of material
(EM-81547-0103)

11 Fuse panel label
(EM-81547-0103)

12 Other information
(EM-81547-0103)

EM3.081547013fro.fm

Issue 2002-03

Doc No. EM-81547-0103

Tetra Pak

Tetra Pak Carton Ambient

1 Introduction

To ensure maximum safety, always read the *Safety precautions* section before doing any work on the equipment or making any adjustments.

EM3.082409013int.fm

Table of contents

Equipment information 1-3

Document information 1-4

How to use the EM 1-5

Numbering system for components 1-6

How to trace a cable 1-8

How to trace a component 1-12

Supply voltage/Line connection order 1-14

How to trace a line 1-15

How to trace a terminal 1-17

Abbreviations and terminology 1-20

Machine orientation 1-21

EM3.082409013int.fm

Equipment information

Purpose

The purpose of this Tetra Pak equipment is to pack liquid food products.

Manufacturer

This Tetra Pak equipment has been manufactured by:

Tetra Pak Carton Ambient AB
Ruben Rausings gata
221 86 LUND
Sweden

or by:

Tetra Pak Carton Ambient S.p.A.
Via Delfini 1
411 00 MODENA
Italy

Service

Contact the nearest Tetra Pak service station.

Identification

The figure shows an example of the equipment sign. The sign carries data needed when contacting Tetra Pak concerning this specific equipment.

CE marking

This equipment complies with the basic health and safety regulations of the European Economic Area (EEA).

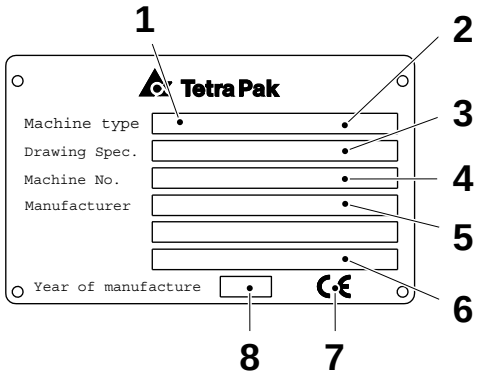

1 Machine type
2 Volume
3 Drawing specifications
4 Machine serial number
5 Manufacturer
6 (Designed by)
7 CE mark
8 Year of manufacture

EM3.082409013int.fm

Document information

Purpose of Electrical Manual (EM)

The purpose of this Electrical Manual is to provide service technicians and electricians with all information on the electrical equipment required for service and maintenance of this Tetra Pak equipment.

It is important to:

- keep the manual for the life of the equipment,
- pass the manual on to any subsequent holder or user of the equipment.

Design modifications

The directives in this document are in accordance with the design and construction of the equipment at the time it was delivered from the Tetra Pak production plant.

Technical publications

The technical publications for this equipment are:

- Electrical Manual (EM)
- Installation Manual (IM)
- Maintenance Manual (MM)
- Operation Manual (OM)
- Spare Parts Catalogue (SPC)

Additional copies can be ordered from the nearest Tetra Pak service station. When ordering technical publications, always quote the **document number**.

EM3.082409013int.fm

Copyright © 2002

Tetra Pak Carton Ambient

All rights reserved. No parts of this document may be reproduced or copied in any form or by any means without the written permission of Tetra Pak Carton Ambient.

How to use the EM

General

How to use the EM is an explanation of how to find your way through the chapters **Circuit diagrams**, **Component location**, **Connection diagrams, Mains connection diagrams** and **Program documents** in the EM.

The first page in each chapter is always a Table of Contents, listing all drawings included in the chapter.

The documents in the above-mentioned chapters are identified by:

- a main number (1)
- a sheet number (2)
- a version number (3)

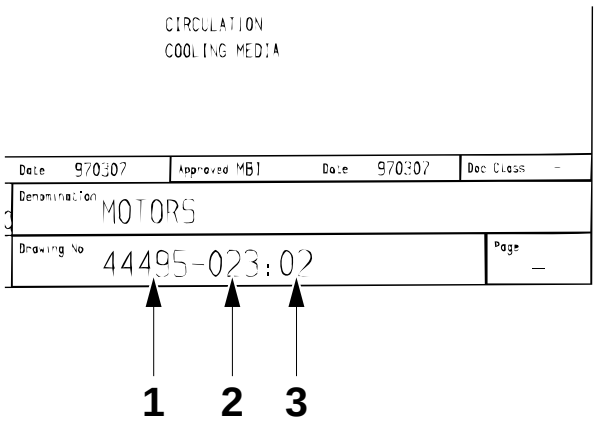

1 Main number
2 Sheet number
3 Version number

The sheet number is the consecutive numbering of the sheets which belong to the main number and is used as a reference in the diagrams.

In the **Circuit diagrams**, the sheet(s):

- 02 is the position summary
- 03 is the line summary
- 04 is the terminal summary
- 05 - 156 are the drawings
- 900 - 902 are the protective bonding circuits

EM3.082409013int.fm

Numbering system for components

The position number is divided into three parts:

- location (1)
- function designation (2)
- running number (3)

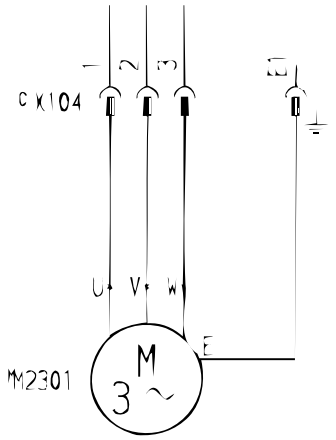

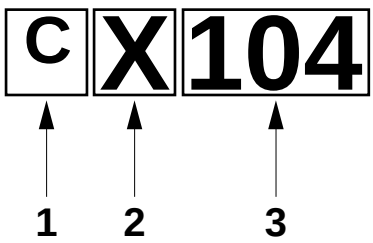

1 Location
2 Function designation
3 Running number

EM3.082409013int.fm

Location (1)

This prefix shows the location of the component.

- the prefix M indicates that the component is fitted on the machine, outside the electrical cabinet
- the prefix C indicates that the component is fitted on the electrical cabinet
- the prefix F indicates that the component is fitted on the filling machine, outside PT21
- the prefix 82 indicates components, or special links, located on the electrical cabinet
- the prefix 83 indicates PLC components
- the prefix 84 indicates components located outside the electrical cabinet

(Cont'd)

(Cont'd)

Function designation (2)

The function designation is indicated in accordance with international standards, see table below.

Designation	Signification in electrical diagram
A	Assemblies, Subassemblies
B	Transducers
C	Capacitors
D	Binary element, Delay devices, Storage devices
E	Miscellaneous
F	Protective devices
G	Generators, Power supplies
H	Signalling devices
K	Relays, Contactors
L	Inductors, Reactors
M	Motors
N	Analogue elements
P	Measuring equipment, Testing equipment
Q	Switching devices for power circuits
R	Resistors
S	Switching devices for control circuits selectors
T	Transformers
U	Modulators, Changers
V	Tubes, Semiconductors
W	Transmission paths, Waveguide aerials
X	Terminals, Plugs, Sockets
Y	Electrically operated mechanical devices
Z	Terminations, Hybrids, Filters, Equalizers, Limiters

Running number (3)

The electrical components are given numbers in a consecutive non-logical order.

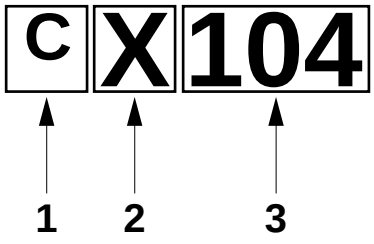

1 Location
2 Function designation
3 Running number

EM3.082409013int.fm

How to trace a cable

Example: How to trace cable No. W1500

a) Go to the **Connection diagrams** chapter.

b) Find cable No. W1500.

c) Note the component connected to the cable (M1101).

d) Go to the **Circuit diagrams** chapter.

e) Go to the **Position summary** (first page(s) in the **Circuit diagrams)**.

f) The sheet No. is located opposite the component No. (pos. M1101). This tells you on which sheet in the **Circuit diagrams** the connection is shown.

g) Go to sheet 023 in the **Circuit diagrams**.

h) Find the component (M1101).

i) If the component, as in this example, is controlled by a separate component, the sheet reference for this component (sheet 133) is found in the **Circuit diagrams**.

(Cont'd)

EM3.082409013int.fm

(Cont'd)

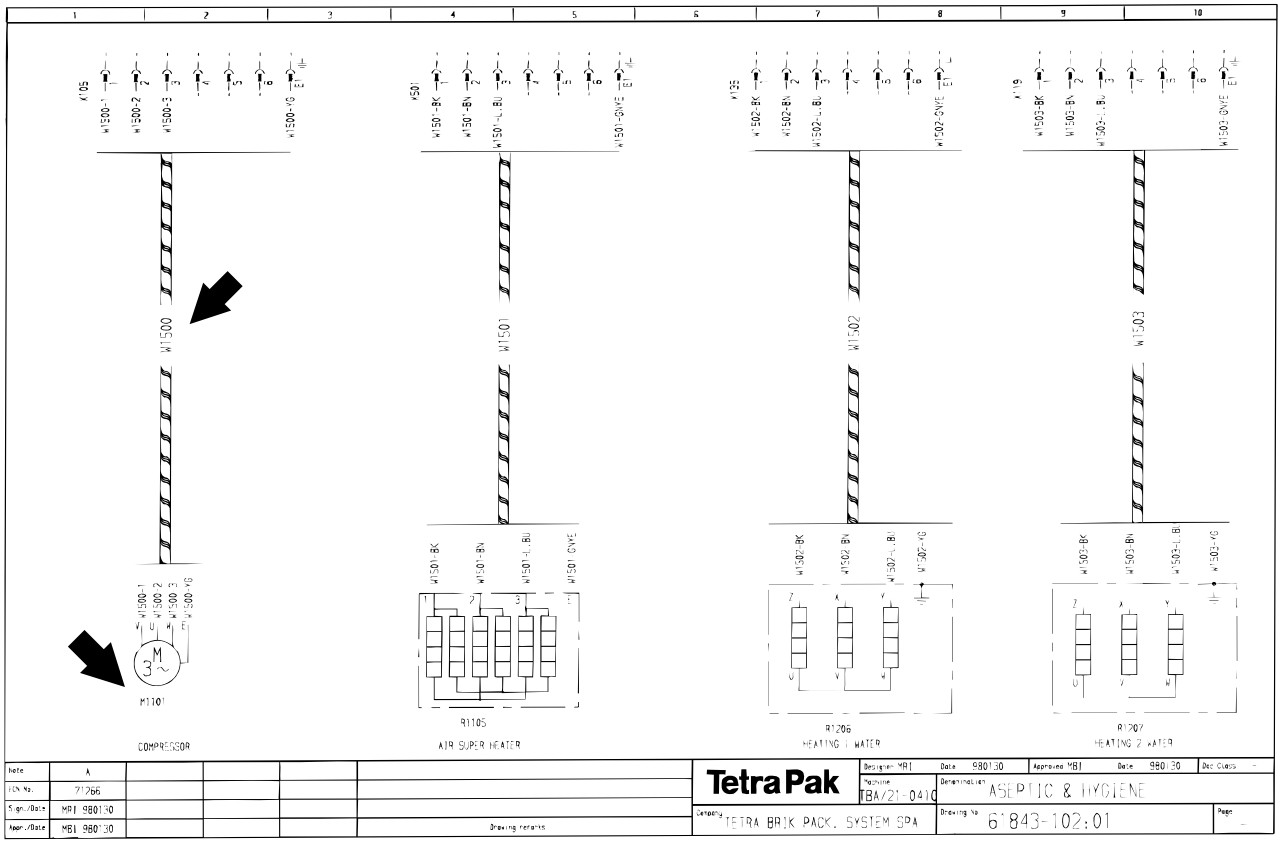

EM3.082409013int.fm

Pos	Comp	L	She	Ver	Pos
6	M***	M	022	01	9
	M001	C	023	01	2
7	M002	C	025	01	2
2	M003	C	025	01	4
3	M1101	M	023	01	4
3	M1205	M	022	01	2
2	M1213	M	022	01	3
3	M1501	M	016	01	2
6	M2301	M	023	01	5
7	M2501	M	023	01	7
2	M2540	M	023	01	9
4	M3102	M	022	01	5
7	M4105	M	019	01	2
9	M4107	M	031	01	5
2	M4302	M	021	01	3
3	M4304	M	020	01	3
3	M5503	M	022	01	7
3	M7208	M	017	01	2
3	M7217	M	017	01	7
3					
3	P002	C	035	01	6
6	P003	C	036	01	7
	P100	C	156	02	4
3	P101	C	156	02	4
7					
8	Q001	C	022	01	2
7	Q001.1	C	106	01	2
6	Q001.1	C	146	01	3
5	Q002	C	022	01	4

POSITION SUMMARY CIRCUIT DESIGN

TBA/21-0410 44794-002:02

3/5

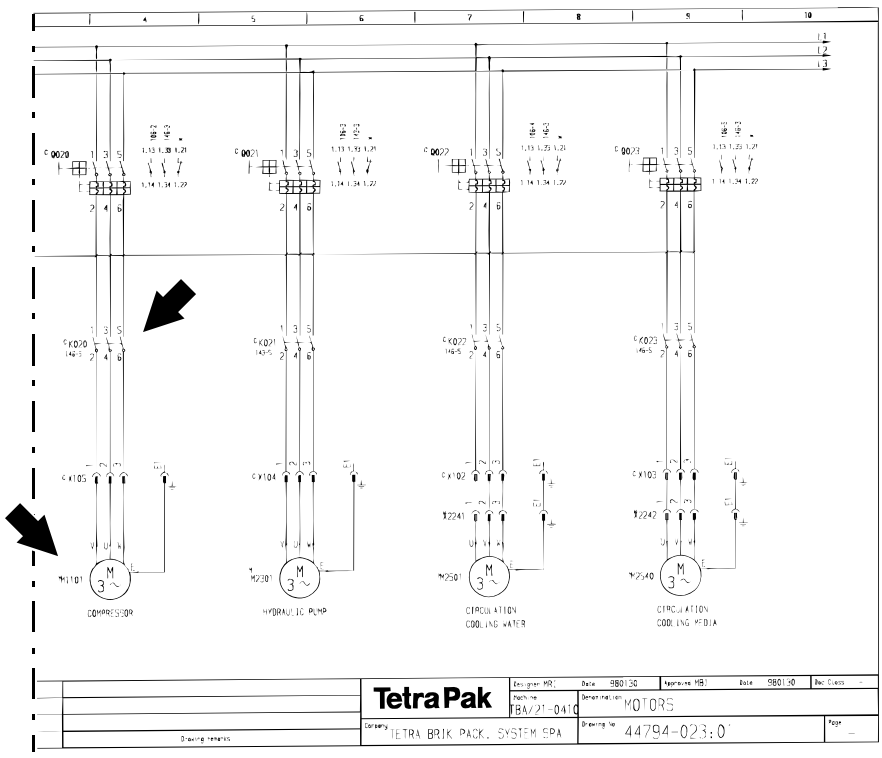

(Cont'd)

(Cont'd)

j) Go to sheet 133 in the **Circuit diagrams**.

k) Find the controlling component. (K020).

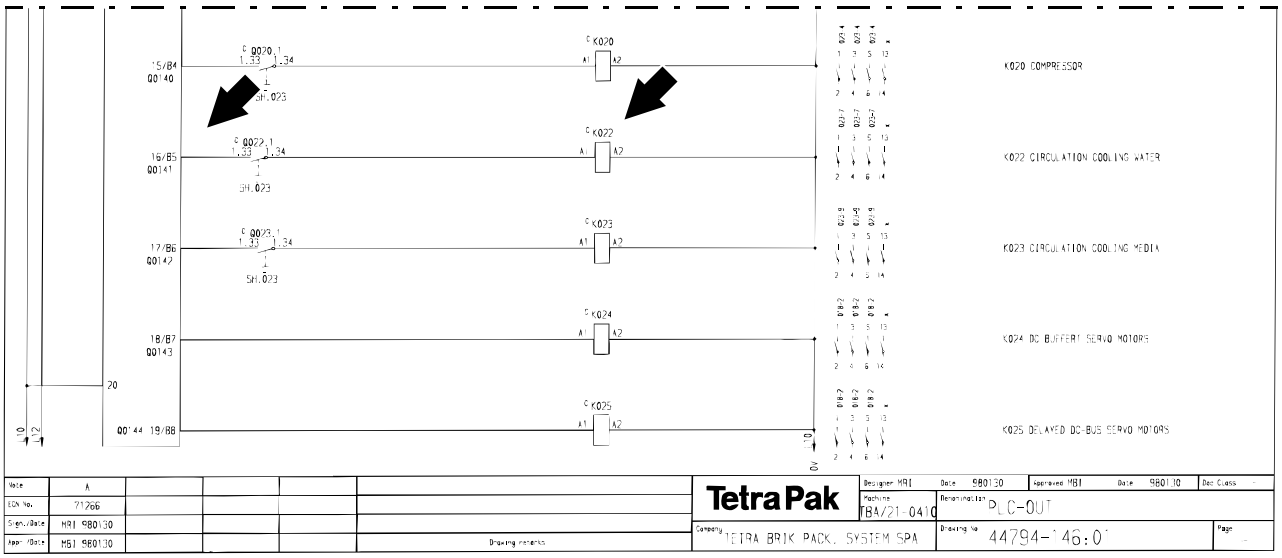

(Cont'd)

EM3.082409013int.fm

(Cont'd)

l) The location M indicates that the component is fitted on the machine.

m) Go to the **Component location** chapter to find the position of the component (M1101).

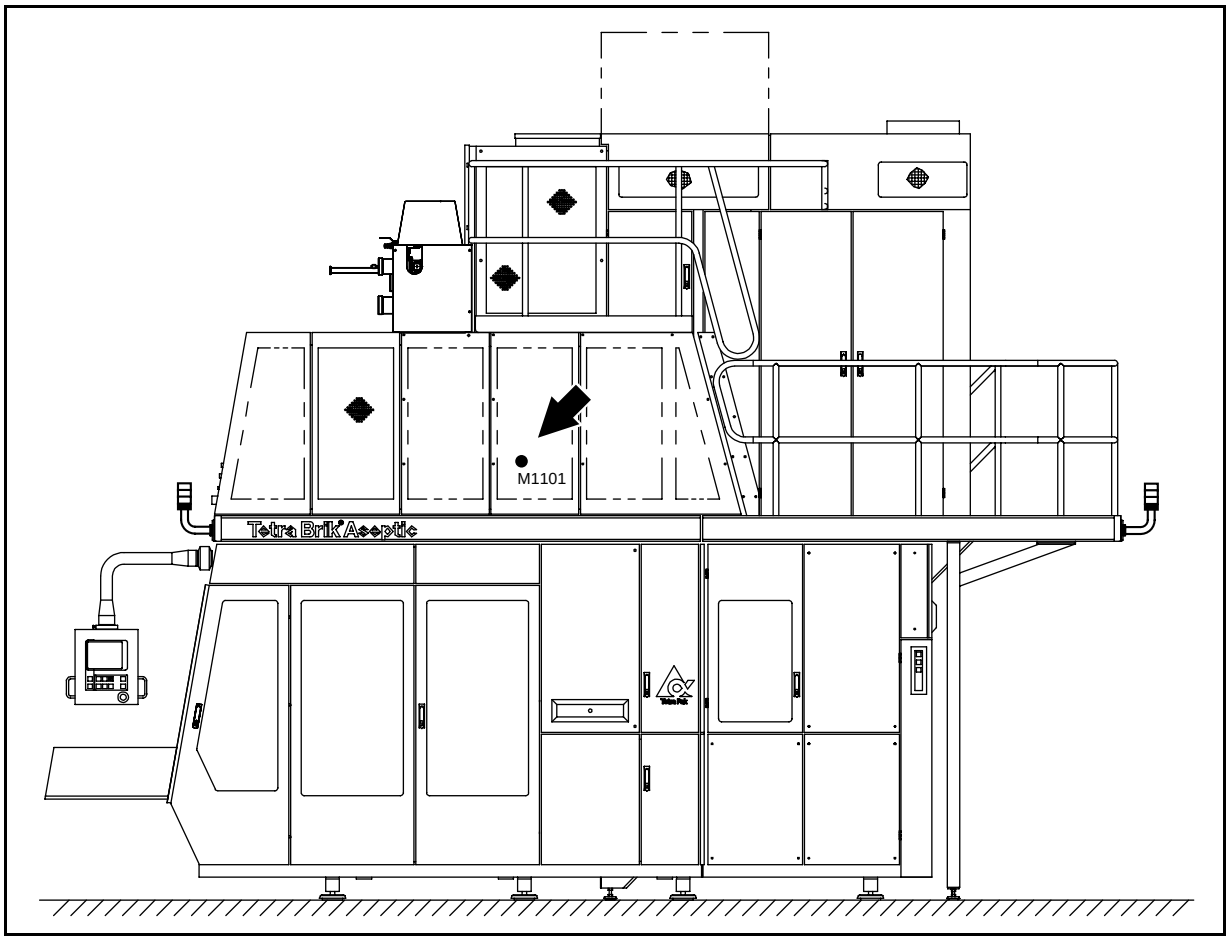

EM3.082409013int.fm

How to trace a component

Example: How to trace sensor B1502

a) Go to the **Circuit diagrams** chapter.

b) Go to the **Position summary** (first page(s) in the **Circuit diagrams**).

c) The sheet No. (sh.109) is located opposite the component No. (pos B1502). This tells you on which sheet in the **Circuit diagrams** the connection is shown.

d) Go to sheet 109 in the **Circuit diagrams**.

e) Find the component (B1502).

f) Note the connections (X1003, 146, 146+, 146-).

g) Go to the **Connection diagrams** chapter.

h) Find the connection (X1003, 146, 146+, 146-).

i) The **Connection diagram** shows how the sensor is connected (in this case via a connection box).

(Cont'd)

EM3.082409013int.fm

(Cont'd)

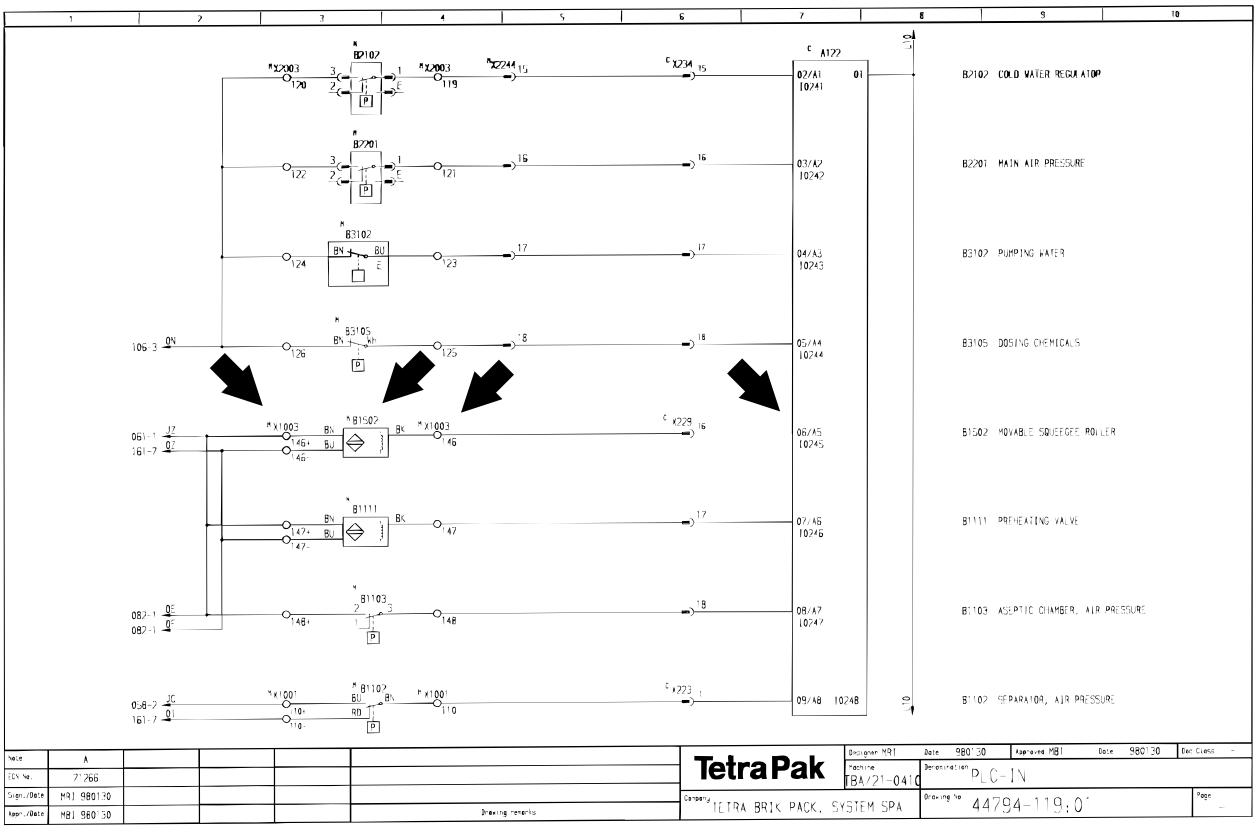

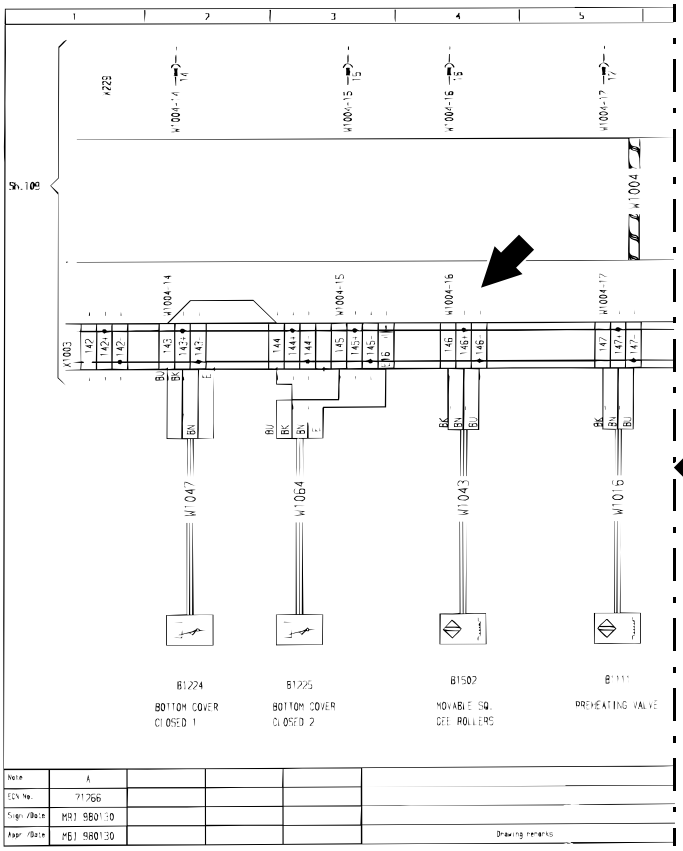

Comp	L	She	Ver	Pos	Comp	L	She	Ver	Pos
B1230	M	046	01	2	B2330	M	126	02	4
B1301	M	120	01	4	B2401	M	126	02	4
B1302	M	120	01	4	B2410	M	126	02	4
B1303	M	120	01	4	B2501	M	122	02	4
B1304	M	049	01	2	B2510	M	088	01	2
B1305	M	126	02	4	B2520	M	047	01	2
B1306	M	120	01	4	B2540	M	122	02	2
B1307	M	120	01	4	B2541	M	122	02	4
B1308	M	120	01	4	B2810	M	063	02	4
B1310	M	087	01	2	B2811	M	063	02	2
B13111	M	120	01	4	B2812	M	063	02	5
B13112	M	120	01	4	B2813	M	063	02	4
B13113	M	121	02	4	B2830	M	063	02	2
B1315	M	050	01	5	B2831	M	063	02	2
B1316	M	016	01	7	B2832	M	063	02	4
B1317	M	122	02	4	B2833	M	063	02	5
B1321	M	121	02	4	B3102	M	119	01	3
B1322	M	047	01	2	B3105	M	119	01	3
B1403	M	082	01	4	B4001	M	081	01	5
B1404	M	121	02	4	B4102	M	065	01	3
B1501	M	095	01	5	B4103	M	081	01	1
B1502	M	119	01	3	B4104	M	082	01	4
B1504	M	061	01	3	B4200	M	126	02	4
B1505	M	061	01	3	B4201	M	126	02	4
B1506	M	061	01	4	B4202	M	126	02	4
B2102	M	119	01	3	B43011	M	052	01	7
B2201	M	119	01	3	B43012	M	052	01	7
B2310	M	122	02	4	B4315	M	127	01	4
B2320	M	122	02	4	B4316	M	127	01	4

INTRODUCED WITH EC NO: 71429 DATE: 980327 SIGN: MRI

ISSUE:
EC NO:
DATE :
SIGN :

EM3.082409013int.fm

Supply voltage/Line connection order

The supply voltage in the electrical cabinet is named:

- L801 - L803: Power voltage

  L810 is reserved for 0V, control voltage.

  L811 is reserved for 24V, control voltage.

  L831 is reserved for 24V, control voltage (safety relay).

  L841 is reserved for 24V, control voltage (safety relay 500 m/sec delayed).

In the **Circuit diagrams** chapter the line connection order is shown in the **Line summary** (sheet 003).

EM3.082409013int.fm

How to trace a line

Example: Line connection L10 to the component A119

a) Go to the **Circuit diagrams** chapter

b) Find the component A119 (Input module)

c) Note the line connection (L10 to pin 01)

d) Go to the **Line summary** (sheet 003)

e) Find the component A119:01

f) Note the relative line terminal connection order (XL10:112)

(Cont'd)

EM3.082409013int.fm

(Cont'd)

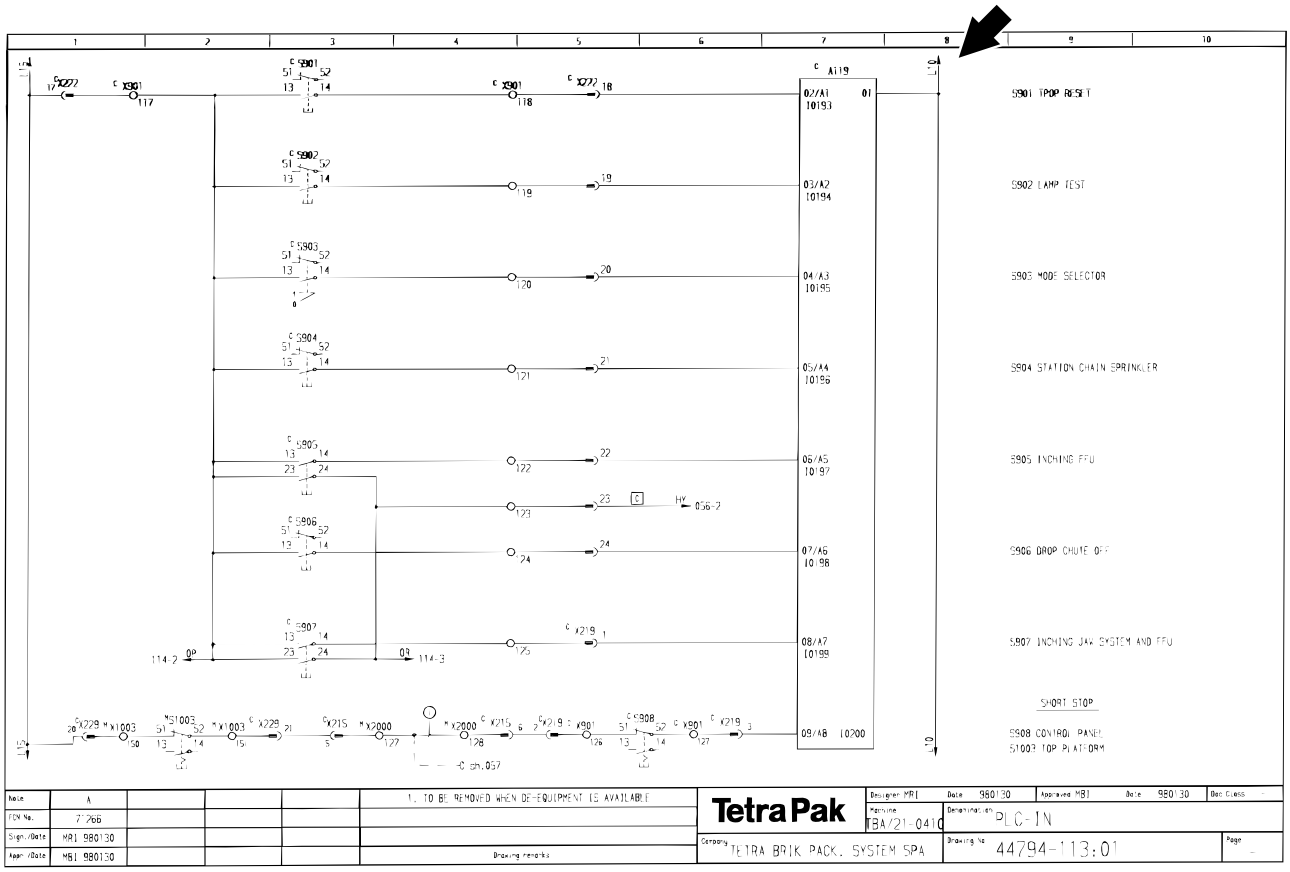

EM3.082409013int.fm

Line	Component	She	Ver	Pos	Area	Color
L10	XL10:101	034:02	3		Not Wired	
L10	XL10:102				0.75 BU	
	A102:1	081:01	8			
L10	XL10:103				0.75 BU	
	A103:10	083:02	2			
	A103:20	084:01	2			
L10	XL10:104				Not Wired	
L10	XL10:105				Not Wired	
L10	XL10:106				Not Wired	
L10	XL10:107				0.75 BU	
	A110:6	095:01	7			
	A110:18	096:01	2			
L10	XL10:108				0.75 BU	
	A111:18	097:01	1			
L10	XL10:109				0.75 BU	
	A114:1	103:02	7			
L10	XL10:110				0.75 BU	
	A115:1	105:01	7			
	A116:1	107:01	7			
L10	XL10:111				0.75 BU	
	A117:1	109:01	7			
	A118:1	111:01	7			
L10	XL10:112				0.75 BU	
	A119:1	113:01	7			
L10	XL10:113				0.75 BU	
	A120:1	115:01	7			
	A121:1	117:01	7			
L10	XL10:114				0.75 BU	
	A122:1	119:01	7			
	A123:1	121:02	7			
L10	XL10:115				0.75 BU	
	A124:1	123:01	7			
	A125:1	125:02	7			
L10	XL10:116				0.75 BU	
	A126:1	127:01	7			
	A127:1	129:01	7			
L10	XL10:117				0.75 BU	
	A128:1	131:01	7			
	A129:1	133:01	7			
L10	XL10:118				0.75 BU	
	A134:10	143:01	2			
	A134:20	144:02	2			
L10	XL10:119				0.75 BU	
	A135:10	145:01	2			
	A135:20	146:01	2			
L10	XL10:120				0.75 BU	
	A136:10	147:01	2			
	A136:20	148:01	2			
L10	XL10:121				0.75 BU	
	A137:10	149:01	2			
	A137:20	150:02	2			
L10	XL10:122				0.75 BU	
	A138:10	151:01	2			
	A138:20	152:01	2			
L10	XL10:123				0.75 BU	
	A139:10	153:01	2			
	A139:20	154:01	2			
L10	XL10:124				0.75 BU	
	A140:10	155:01	2			
	A140:20	156:02	2			
L10	XL10:125				0.75 BU	
	A141:10	157:02	2			
	A141:20	158:02	2			

INTRODUCED WITH EC NO: 71429 DATE: 980327 SIGN: MRI DESCRIPTION: LINE SUMMARY

ISSUE:
EC NO:
DATE :
SIGN :

MACHINE: TBA/21-0410 44794-003:02

1/10

How to trace a terminal

Example: Connection in connection terminal box X7001, block 103, 103+, 103-

a) Go to the **Connection diagrams** chapter.

b) Find the connection box (X7001 terminal block 103, 103+, 103-).

c) Note the component connected (B6201).

d) Go to the **Circuit diagrams** chapter.

e) Go to the **Terminal summary** (sheet 004).

f) The sheet No. (sh.111) is located opposite the terminal No. (pos. X7001, terminal block 103, 103+, 103-). This tells you on which sheet in the **Circuit diagrams** the connection is shown.

g) Go to sheet 111 in the **Circuit diagrams**.

h) Note the connections (X7001, 103, 103+, 103-).

i) Find the component (B6201).

j) The location M indicates that the component is fitted on the machine.

(Cont'd)

EM3.082409013int.fm

(Cont'd)

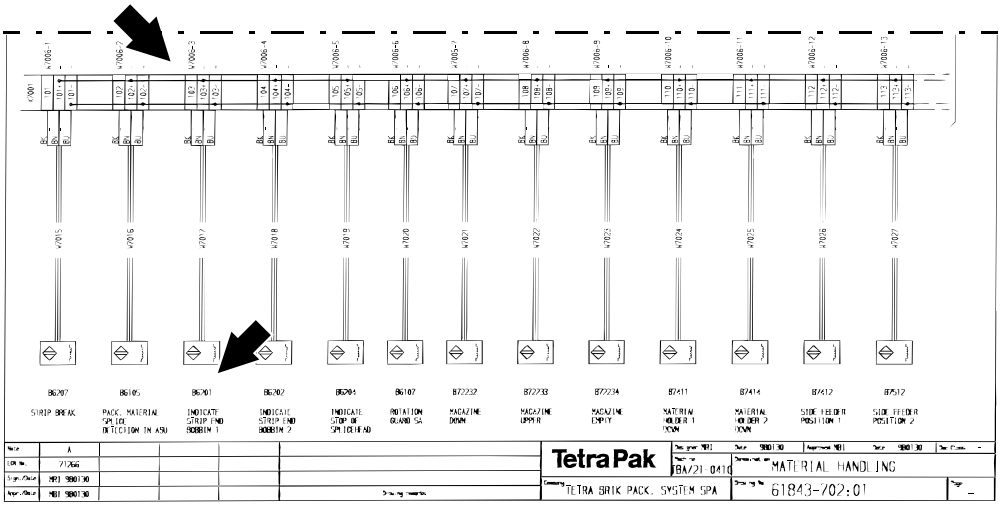

Term	Block	L	She	Ver	Pos	Term	Block	L	She	Ver	Pos	Term	Block	L	She	Ver	Pos	Term	Block	L	She	Ver	Pos
X6001	101	M				X6001	110-	M	051	01	3	X601	5	C				X7001	16	M	011	02	3
	101+	M					111	M	051	01	3		6	C					101	M	123	01	5
	101-	M					111+	M					E1	C	023	01	2		101+	M	123	01	3
	102	M					111-	M											101-	M	123	01	3
	102+	M					112	M	051	01	4	X602	1	C	025	01	2		102	M	082	01	5
	102-	M					112+	M					2	C	025	01	3		102+	M	082	01	2
	103	M					112-	M					3	C	025	01	4		102-	M	082	01	2
	103+	M					113	M	051	01	5		4	C	122	02	1		103	M	123	01	5
	103-	M					113+	M	051	01	3		5	C	122	02	6		103+	M	123	01	3
	104	M					113-	M	051	01	6		6	C					103-	M	123	01	3
	104+	M					114	M	051	01	5		E1	C					104	M	123	01	5
	104-	M					114+	M											104+	M	123	01	3
	105	M					114-	M	051	01	6	X6050	1	M	014	01	7		104-	M	123	01	3
	105+	M					115	M	051	01	4								105	M	123	01	5
	105-	M					115+	M	051	01	3	X7001	1	M	014	01	2		105+	M	123	01	3
	106	M					115-	M					2	M	014	01	2		105-	M	123	01	3
	106+	M					116	M	121	02	5		3	M	014	01	3		106	M	123	01	5
	106-	M					116+	M	121	02	3		4	M	014	01	3		106+	M	123	01	3
	107	M					116-	M	121	02	3		5	M	014	01	2		106-	M	123	01	3
	107+	M					E1	M					6	M	014	01	3		107	M	123	01	5
	107-	M					E2	M					7	M	032	01	5		107+	M	123	01	3
	108	M					E3	M	051	01	4		8	M	032	01	5		107-	M	123	01	3
	108+	M					E4	M	051	01	6		9	M	032	01	6		108	M	123	01	5
	108-	M					E5	M	051	01	6		10	M	032	01	6		108+	M	123	01	3
	109	M											11	M	032	01	7		108-	M	123	01	3
	109+	M				X601	1	C	023	01	2		12	M	032	01	7		109	M	123	01	5
	109-	M					2	C	023	01	2		13	M	056	01	4		109+	M	123	01	3
	110	M	051	01	5		3	C	023	01	2		14	M	056	01	6		109-	M	123	01	3
	110+	M	051	01	3		4	C					15	M	011	02	2		110	M	124	01	5

INTRODUCED WITH EC NO: 71429 DATE: 980327 SIGN: MRI DESCRIPTION: TERMINAL SUMMARY

ISSUE:
EC NO:
DATE :
SIGN :

MACHINE: TBA/21-0410 44794-004:02

20/26

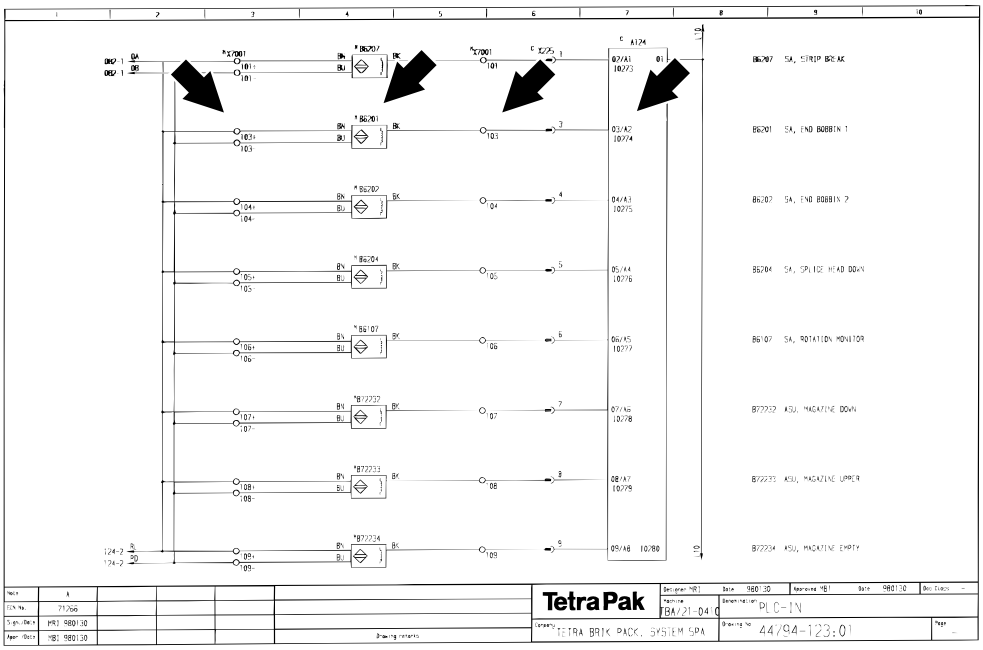

(Cont'd)

EM3.082409013int.fm

(Cont'd)

k) Go to the **Component location** chapter to find the position of the component (B6201) on the machine.

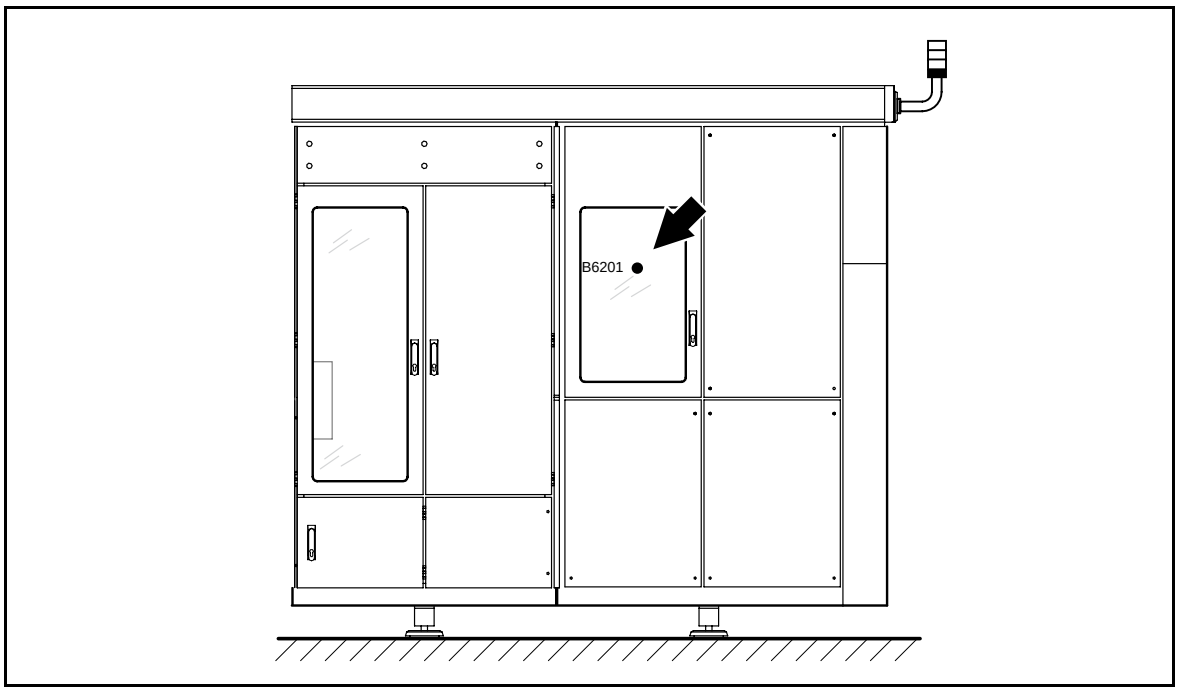

EM3.082409013int.fm

Abbreviations and terminology

Abbreviations and terminology used in this manual.

Abbreviation	Explanation
AB	Aseptic Brik (Step Production)
AP	Aseptic Product
ASSU	Automatic Strip Splicing Unit
ASU	Automatic Splicing Unit
C	Cabinet
CIP	Cleaning In Place
CPU	Central Processing Unit
DMC	Digital Motion Controller
DO	Dairy Office
ECN	Engineering Change Notice
F	Filler
FF	Final Folder
HF	High Frequency
HI	Headspace by Gas Injection
IH	Induction Heating
JUM	Jaw Unit Module
LRF	Level Regulated Filling
LS	Longitudinal Seal(ing)
M	Machine
MM	Main Motor
PE H	Perforation Heater
PLC	Programmable Logic Controller
PLE	Packaging Line Equipment (Distribution Equipment)
PLMS	Production Line Monitoring System
PR REC	Production Recorder
PT	PullTab
SA	Strip Applicator
SASP	Sales Administration Spare Parts
S COMM	TPOP Serial Communication
SS	Short Stop
SU	Splicing Unit
TB	Tetra Brik
TBA	Tetra Brik Aseptic
TMCC	Tetra Pak Multipurpose Compact Controller
TPIH	Tetra Pak Induction Heating
TS	Transversal Seal(ing)
UPG CL	Upgraded Cleaning
WEAC	Work Environment Aseptic Chamber

EM3.082409013int.fm

Machine orientation

LH side of machine

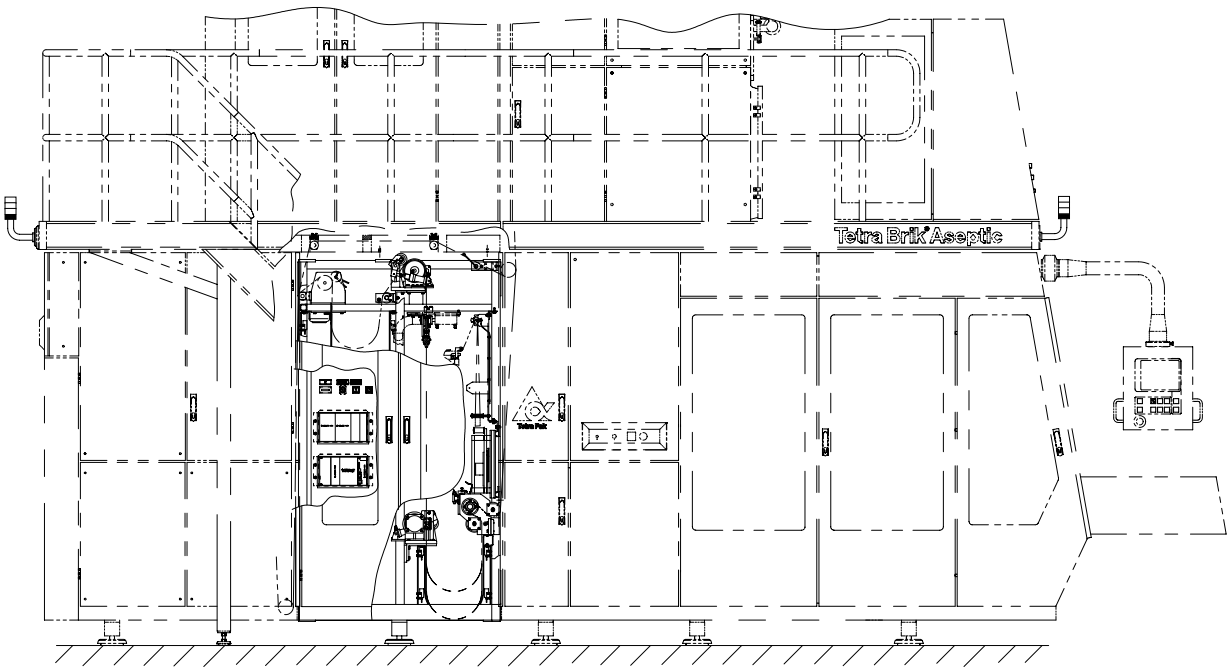

EM3.082409013int.fm

RH side of machine

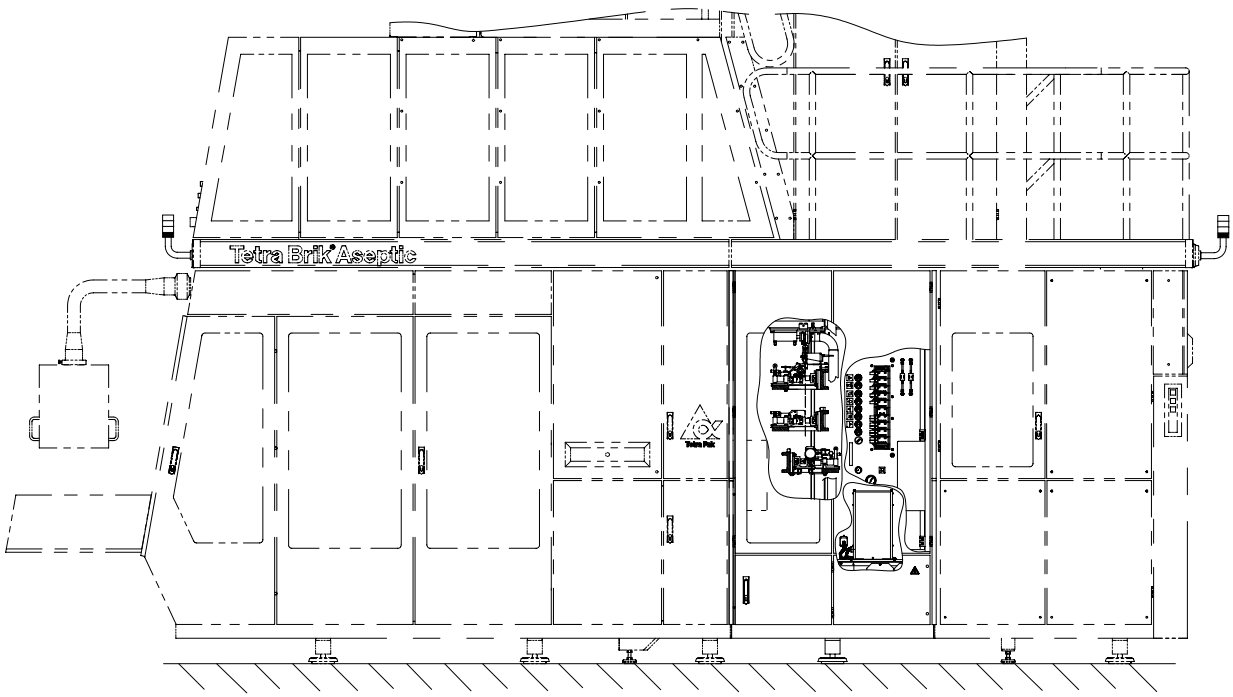

This page intentionally left blank

EM3.082409013int.fm

2 Safety precautions

To ensure maximum safety, always read this section carefully before doing any work on the equipment or making any adjustments.

2.282415012sp.fm

Hazard information

General



Failure to observe information marked “DANGER!” **puts your life in danger**.



Failure to observe information marked “WARNING!” can result in **personal injury and/or serious damage to or destruction of equipment**.

Caution! Failure to observe information marked “Caution!” can result in **damage to equipment**.

2.282415012sp.fm

Mandatory signs

 **Wear eye protection**	 **Wear hearing protection**
 **Wear head protection**	 **Wear protective gloves**
 **Disinfect hands/gloves**	

2.282415012sp.fm

Danger and warning signs

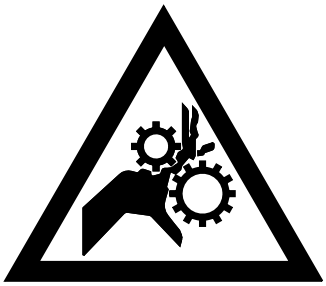

Risk of entanglement!



Risk of corrosion!



Risk of crushing!



Risk of cutting/amputation!



Risk of burns!

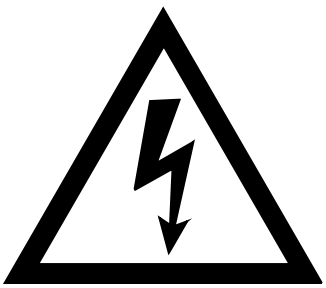

Risk of electrocution!

(Cont'd)

2.282415012sp.fm

(Cont'd)

 **Risk of crushing!**	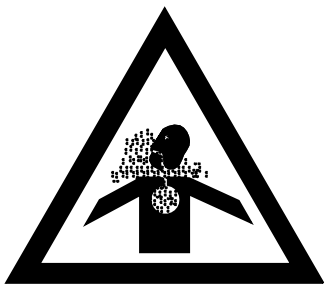 **Risk of intoxication!**
 **Risk of falling!**	

Personnel

Only skilled or instructed persons are allowed to work on the equipment.

The manufacturer declines all responsibility for injury or damage if the instructions in this manual are not followed.

Personnel are responsible for:

- the equipment and the work area around the equipment
- all personnel in the vicinity of the equipment
- making sure that all safety devices are fully operational

Personnel must regard all electrical equipment as live. Before carrying out maintenance or repair work, switch the equipment off at the mains power and padlock the switch.

Electricians should be certified according to local regulations and have experience of similar types of installations, proven skills in reading and working from drawings and cable lists, and knowledge of local safety regulations regarding power and automation. Work with the electrical equipment must be performed only by skilled or instructed technicians.

According to EN 60204-1:1997 clause 3.52 a skilled person is:

– *a person with relevant education and experience to enable him or her to perceive risks and to avoid hazards which electricity can create.*

According to EN 60204-1:1997 clause 3.28 a (electrically) instructed person is:

– *a person adequately advised or supervised by an electrically skilled person to enable him or her to perceive risks and to avoid hazards which electricity can create.*

2.282415012sp.fm

General safety precautions



Wear hearing protection while the equipment is running.

Hygiene

It is important to keep hands and/or gloves clean.

Disinfect hands and/or gloves before touching the packaging material, the strip(s) or any other equipment part that may come into contact with the product.

Clean the platforms, the ladder and the area around the equipment.

To avoid production faults, it is important that the packaging material and the strip(s) never touch the floor, the platform or the area around the equipment.

High voltage

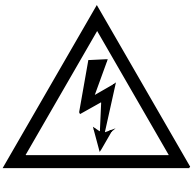

Work with parts marked with this symbol must be performed by **skilled or instructed** persons **only**.

Make sure that the mains power is disconnected before starting any work on electrical equipment marked with this symbol.

In case of accident, call for medical attention immediately.

2.282415012sp.fm

Electrical cabinet



There is high voltage in the electrical cabinet (up to 400 V).

Work inside the electrical cabinet must be performed by skilled or instructed persons only.

Electrical cabinet doors locked with screws may be opened only by skilled or instructed persons.

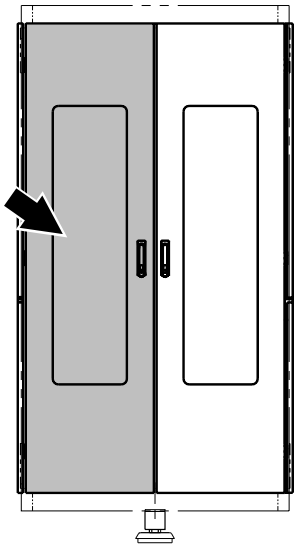

LH side

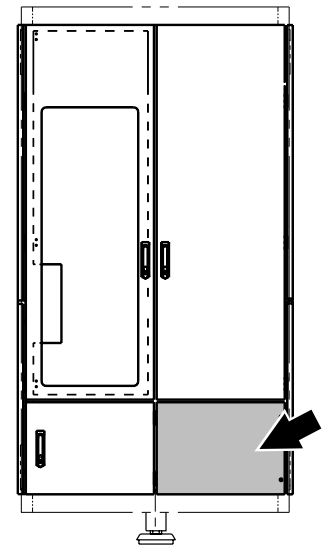

RH side

2.282415012sp.fm

TPIH generator



There is high voltage in the electrical cabinet (up to 2000 V).

Never open the TPIH generator. Remove and return the unit to an authorised service centre for servicing and repair.

Machine safety devices

Emergency stop buttons

Learn the position of the **Emergency stop** buttons in order to stop the equipment immediately in case of danger to people or damage to the equipment.

The **Emergency stop** buttons do not switch off the power at the mains power switch.

Pushing the **Emergency stop** buttons will reset the equipment program to **Zero** position and deactivate all pneumatic cylinders.

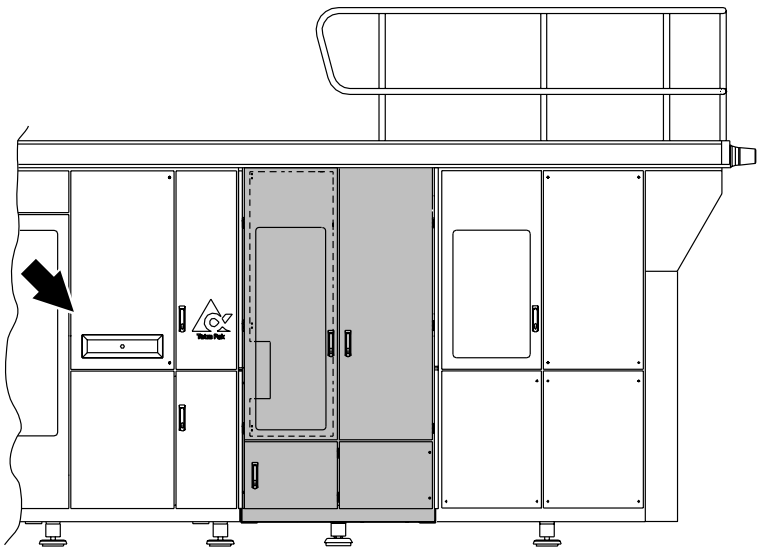

RH side

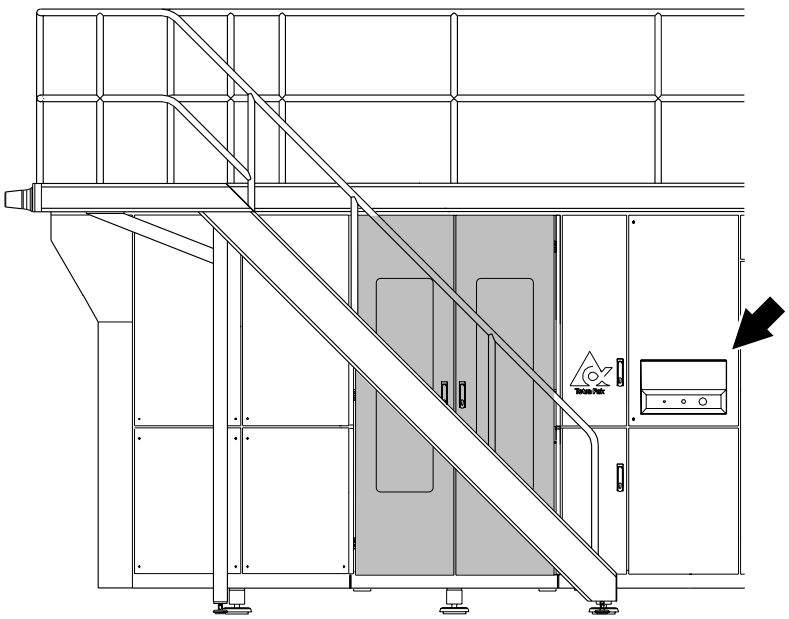

LH side

2.282415012sp.fm

Doors, covers and guards



WARNING!

Make sure that all doors, covers and guards are in place and functioning.

Never remove covers or guards while the equipment is operating.

Certain doors, covers and guards are fitted with safety switches. These switches are part of the safety system and must **never** be bridged, by-passed or otherwise made non-operational.



WARNING!

Never stop the equipment by opening a door or cover with a safety switch.

The equipment may perform a reciprocating movement during the first few seconds after a stop. Some equipment parts may also be hot.

In case of accident, call for medical attention.

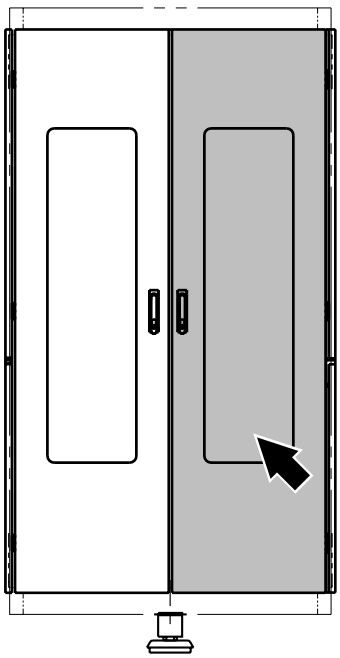

LH side

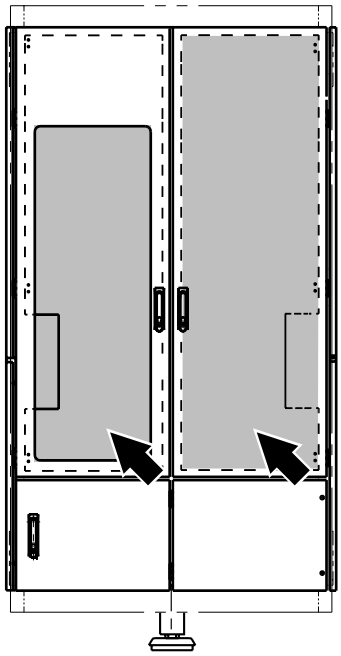

RH side

2.282415012sp.fm

Cooling system (PT21 electrical cabinet)

WARNING!

Risk of personal injury!
Cooling media R134A.
Carefully follow the supplier's instructions for handling and disposal of the R134A (freon).

Cooling media R134A container

- Ensure good ventilation
- Keep the container well closed and in a cool and dry place away from sources of heat
- Avoid direct contact with the product
- Wear suitable protective clothing, gloves, goggles, and eye/face protection
- In case of contact with eyes, rinse immediately with plenty of water for 15 minutes and call for medical attention
- Inhalation of a high concentration can cause shortage of breath and unconsciousness
- In case of inhalation move to fresh air; if needed use oxygen gas or artificial respiration
- Very fast evaporation can cause freezing injuries

Caution! Only specially trained personnel is allowed to operate with the compressor unit in case of compressor leakages.

2.282415012sp.fm

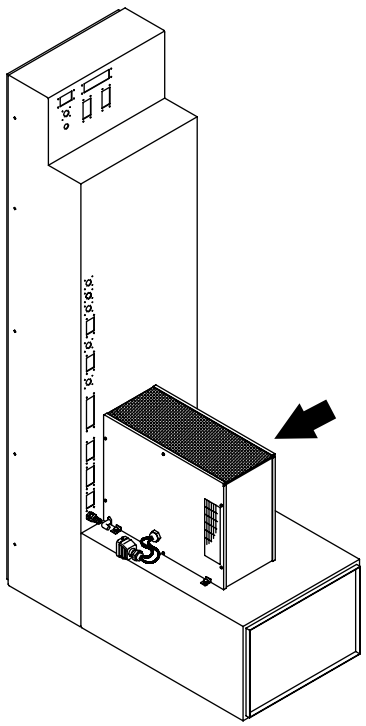

Equipment for lifting and moving loads



WARNING!

Make sure that the capacity of the lifting equipment is adequate and that the equipment itself is in good working order.

If lifting tackle has to be joined to make up the necessary lenghts, make sure that the joins are secure and have the same lifting capacity as the rest of the tackle.

Always engage the safety clip on lifting hooks to prevent the tackle from slipping off.

Use ropes or poles to steady and manoeuvre loads. Do **not** use hands or feet.

Make sure that the route and the destination are free from obstacles before moving a suspended load. It must be possible to lower the load to the floor quickly and safely in an emergency.

When depositing loads, keep the lifting equipment in place until the stability of the load has been checked.

2.282415012sp.fm

3 Electrical system description

EM3.082416011en.fm

Table of contents

Safety system 3-3

EM3.082416011en.fm

Safety system

The safety system is controlled by a safety relay module plus an emergency stop time relay to take advantage of an active breaking in the servo motor system. When the modules are not in a safety condition, the relay outputs contacts are logically true.

An emergency condition is created by pressing the emergency stop buttons. A safety condition is created by opening a door fitted with a safety switch, see the *Safety precautions* section.

To reset the machine from the emergency condition, release the emergency stop buttons and push **Alarm reset**.

To reset the machine from the safety condition, close the door and push **Alarm reset**.

(Cont'd)

(Cont'd)

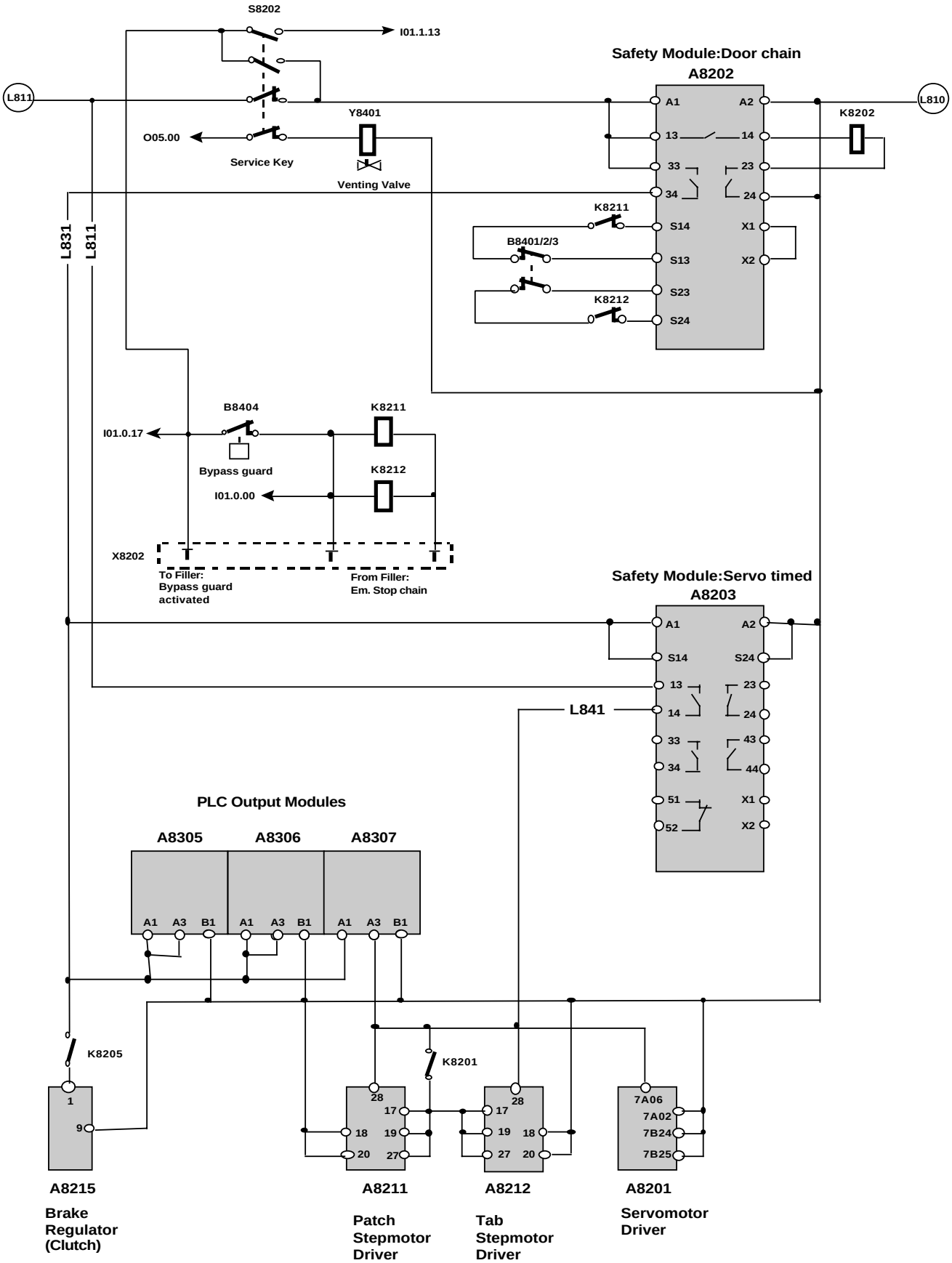

EM3.082416011en.fm

4 Component location

2.2TB045473en.fm

Table of contents

Components on the machine 4-3

2.2TB045473en.fm

Components on the machine

Comp.	Description	Drawing No.	Part n°	Option
B8401	Door guard, left side	4-595043-	2	
B8402	Door guard, right - front side	4-595043-	1	
B8403	Door guard, right - rear side	4-595043-	1	
B8404	Bypass guard switch	4-595043-	1	
B8405	Waste box full	4-595043-	1	
B84061	Outfeed loop high	4-595043-	2	
B84062	Outfeed loop high	4-595043-	2	
B84071	Outfeed loop low	4-595043-	2	
B84072	Outfeed loop low	4-595043-	2	
B8408	Patch material low	4-595043-	1	
B8409	Patch rotation monitor	4-595043-	1	
B8411	Black tape detector	4-595043-	1	
B8413	Tab material low	4-595043-	1	
B8414	Tab rotation monitor	4-595043-	1	
B84151	Infeed loop high	4-595043-	1	
B84152	Infeed loop high	4-595043-	1	
B84161	Infeed loop low	4-595043-	1	
B84162	Infeed loop low	4-595043-	1	
B84201	Register mark data photocell	4-595043-	1	
B84202	Register mark clock photocell	4-595043-	1	
B8421	Patch jaw closed	4-595043-	1	
B8422	Patch missing	4-595043-	2	
B8423	Reseal jaw closed	4-595043-	1	
B8424	Tab jaw closed	4-595043-	2	
B84251	Tab missing sensor	4-595043-	1	
B84252	Tab missing sensor	4-595043-	1	
B8426	PT21 air pressure monitor	4-595043-	1	
B8427	Tab sealing pad heater temperature probe	4-595043-	1	
B8428	Icing monitor	4-595043-	1	
B8429	Punch closed	4-595043-	2	
C8401	Condenser fan starting capacitor	4-595043-	1	
C8402	Evaporator fan starting capacitor	4-595043-	1	
H8401	Machine lighting	4-595043-	1	
L8405	Reseal IH inductor	4-595043-	1	
L8406	Patch IH inductor	4-595043-	1	
M8401	Servo motor	4-595043-	2	
M8402	Infeed motor	4-595043-	1	

2.2TB045473en.fm

4 Component location

Comp.	Description	Drawing No.	Part n°	Option
M8433	Servo tensioner	4-595043-	1	
M8405	Patch feed stepper motor	4-595043-	2	
M8406	Tab feed stepper motor	4-595043-	1	
M8407	Evaporator fan (air cooler)	4-595043-	1	
M8408	Compressor (air cooler)	4-595043-	1	
M8409	Condenser fan (air cooler)	4-595043-	1	
R8401	Tab sealing pad heater	4-595043-	1	
T8405	Reseal IH transformer	4-595043-	2	
T8406	Patch IH transformer	4-595043-	2	
Y8401	Venting valve	4-595043-	1	
Y8403	Cap blowing	4-595043-	1	
Y8404	Waste blowing	4-595043-	1	
Y8406	Strip suction	4-595043-	1	
Y8407	Punch blowing	4-595043-	1	
Y84091	Punch out	4-595043-	1	
Y84092	Punch in	4-595043-	1	
Y84101	Patch out	4-595043-	1	
Y84102	Patch in	4-595043-	1	
Y84111	Reseal out	4-595043-	1	
Y84112	Reseal in	4-595043-	1	
Y84121	Tab out	4-595043-	1	
Y84122	Tab in	4-595043-	1	

2.2TB045473en.fm

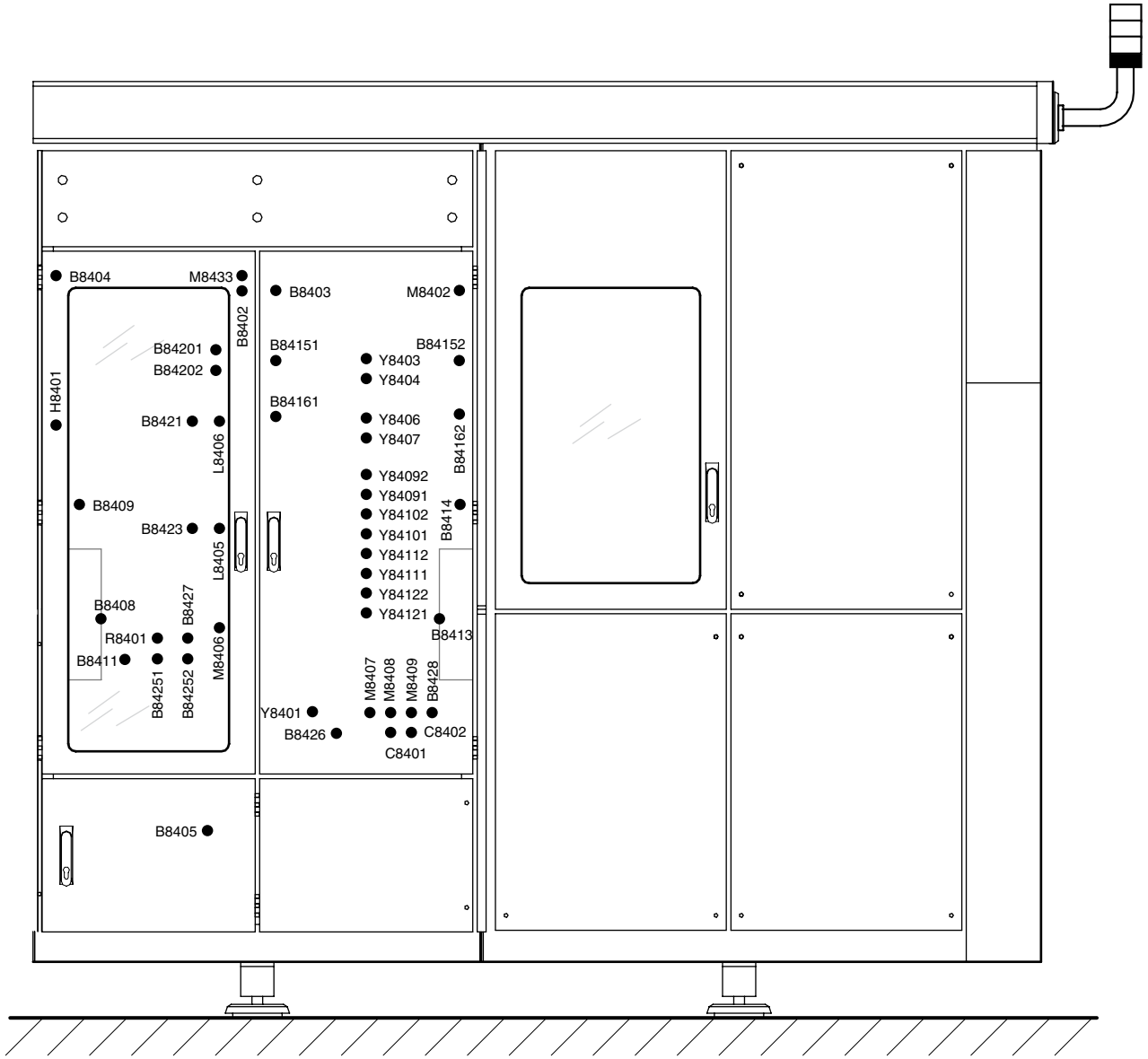

Component location on the PullTab Unit

Designer: FGI	Date: 020318	Mach.: TBA/21 0500	4-595043-0000 001
Approval: MBI	Date: 020318		ECM 97501 Version 03

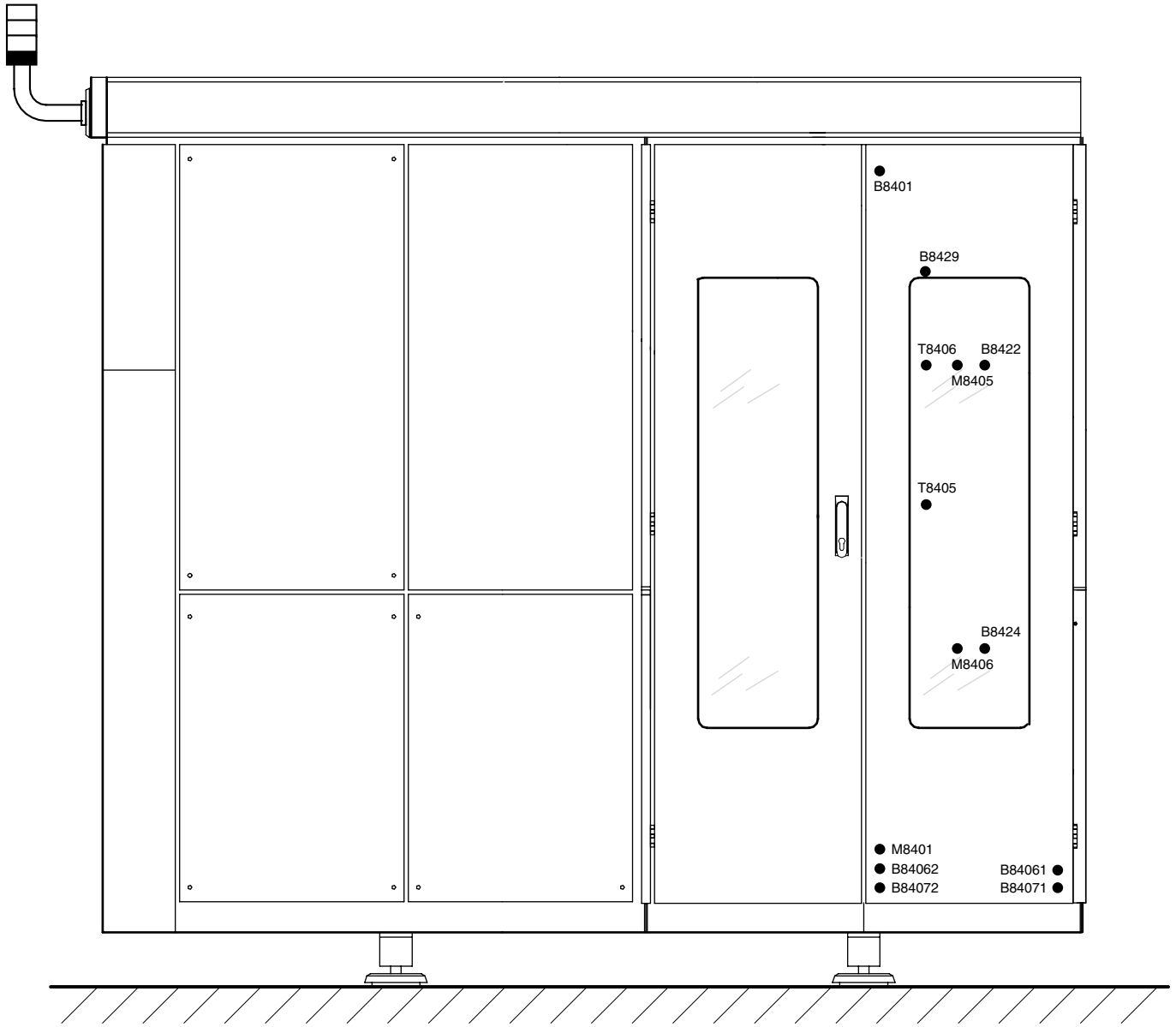

Component location on the PullTab Unit

Designer: FGI	Date: 020318	Mach.: TBA/21 0500	4-595043-0000 002
Approval: MBI	Date: 020318		ECM 97501 Version 03

5 Engineering change description

EM3.0TB055473en.fm

Table of contents

Engineering change description. 595036

EM3.0TB055473en.fm

Ecn No.	Drawing No.	Alteration
72315	-	DOCUMENTATION RELEASED (PT/21-0500)
73001	EM-81547-0101	COMMERCIAL DOCUMENTATION RELEASED.
	-	FOR CHANGES ON LISTS SEE APPENDIX
	48675-000:01	PLC PROGRAM VERSION 01 IS RELEASED. (THIS PROGRAM IS VALID ALSO FOR PT/21-0410)
	44980-002:02	POSITION SUMMARY: CHANGED ACCORDING TO UPDATE CIRCUIT DIAGRAM.
	44980-003:02	LINE SUMMARY: CHANGED ACCORDING TO UPDATE CIRCUIT DIAGRAM.
	44980-004:02	TERMINAL SUMMARY: CHANGED ACCORDING TO CHANGED CIRCUIT DIAGRAM.
	44980-006:02	CONNECTION REFERENCE ERASED.
	44980-007:02	CABLE W8217 IS ERASED. COMPONENTS Z8217 AND Z8218 ARE ADDED. COMPONENT Z8216 IS NOW CONNECT AT THE EARTH. CONNECTION REFERENCE IS ADDED. DELTA CONNECTION REFERENCE IS ADDED ON M8402.
	44980-016:02	CONNECTIONS REFERENCE ARE ADDED.
	44980-032:02	COMPONENT V8201 IS NOW ROTATED IN THE RIGHT WAY.
	44980-034:02	CONNECTION REFERENCE IS ADDED.
	44980-036:02	CONNECTION REFERENCE IS ERASED.
	44980-041:02	CABLE W8210 IS ADDED.
	44980-045:02	CONNECTIONS REFERENCE ARE ADDED.
	44980-051:02	CABLE W8228 IS ADDED. COLOR'S REFERENCE ARE ADDED ON THE CABLES W8220 AND W8221.
	44980-052:02	COLOR'S REFERENCE ARE ADDED ON THE CABLES W8225 AND W8226.

This drawing must not without the consent of Tetra Pak be copied, transmitted or disclosed to any third party.

Ecn No.	Drawing No.	Alteration
	44980-900:02	CHANGE ON X8219:9.
	62060-006:02	DELTA CONNECTION REFERENCE IS ADDED ON M8402.
	595036-0001 (02)	ENGINEERING CHANGE DESCRIPTION: CHANGED ACCORDING TO THIS ECN.
73518	EM-81547-0102	ELECTRICAL MANUAL IS CHANGED ACCORDING TO THIS ECN.
	-	FOR CHANGES ON LISTS SEE APPENDIX
	48675-000:02	PLC PROGRAM VERSION 02 IS RELEASED. (THIS PROGRAM IS VALID ALSO FOR PT/21-0410)
	595036-0001 (03)	ENGINEERING CHANGE DESCRIPTION: CHANGED ACCORDING TO THIS ECN.
97500	EM-81547-0103	ELECTRICAL MANUAL IS CHANGED ACCORDING TO THIS ECN.
	-	FOR CHANGES ON LISTS SEE APPENDIX
	48675-000:02	PLC PROGRAM VERSION 03 IS RELEASED. (THIS PROGRAM IS VALID ALSO FOR PT/21-0410)
	595036-0001 (04)	ENGINEERING CHANGE DESCRIPTION: CHANGED ACCORDING TO THIS ECN.
	44980-002:03	POSITION SUMMARY: CHANGED ACCORDING TO UPDATE CIRCUIT DIAGRAM.
	44980-003:03	LINE SUMMARY: CHANGED ACCORDING TO UPDATE CIRCUIT DIAGRAM.
	44980-004:03	TERMINAL SUMMARY: CHANGED ACCORDING TO CHANGED CIRCUIT DIAGRAM.
	44980-006:03	CONNECTOR FROM A8201:1001/1002/1003 ARE ADDED. CABLE W8233 IS ADDED. CHAIN REFERENCE ARE ADDED IN A8201. TEXTS CHANGED.

This drawing must not without the consent of Tetra Pak be copied, transmitted or disclosed to any third party.

Ecn No.	Drawing No.	Alteration
	44980-008:03	PAGE ADDED
	44980-016:03	B84202, B84201 AND W8205 ARE CHANGED. CONNECTOR AT, BE AND BC ARE ADDED.
	44980-027:03	TEXTS CHANGED
	44980-029:03	TEXTS CHANGED
	44980-034:03	CONNECTOR HAS BEEN ERASED. TEXT CHANGED.
	44980-036:03	CONNECTOR EG HAS BEEN ADDED. TEXT CHANGED.
	44980-043:03	CONNECTOR EF HAS BEEN ADDED.
	44980-045:03	CONNECTOR AT HAS BEEN ADDED.
	44980-046:03	CONNECTOR EC, ED AND EE HAS BEEN ADDED. TEXTS CHANGED.
	62060-006:03	W8233 HAS BEEN ADDED IN A8201:1001/1002/1003.
	62060-009:03	M8433, A8233, W8446, W8447 AND W8233 HAS BEEN ADDED.
	62060-011:03	B84201, B84202, W8408 AND W8409 HAS BEEN CHANGED.

This drawing must not without the consent of Tetra Pak be copied, transmitted or disclosed to any third party.

Ecn No. Drawing No. Alteration

This drawing must not without the consent of Tetra Pak be copied, transmitted or disclosed to any third party.

6 Circuit diagrams

EM3.0TB065473en.fm

Table of contents

Component summary. 44980-002:03
Line summary 44980-003:03
Terminal summary 44980-004:03
Circuit diagram. 44980-005:01
Circuit diagram. 44980-006:03
Circuit diagram. 44980-007:02
Circuit diagram. 44980-008:03
Circuit diagram. 44980-010:01
Circuit diagram. 44980-011:01
Circuit diagram. 44980-012:01
Circuit diagram. 44980-015:01
Circuit diagram. 44980-016:03
Circuit diagram. 44980-021:01
Circuit diagram. 44980-025:01
Circuit diagram. 44980-027:03
Circuit diagram. 44980-028:01
Circuit diagram. 44980-029:03
Circuit diagram. 44980-030:01
Circuit diagram. 44980-031:01
Circuit diagram. 44980-032:02
Circuit diagram. 44980-033:01
Circuit diagram. 44980-034:03
Circuit diagram. 44980-035:01
Circuit diagram. 44980-036:03
Circuit diagram. 44980-037:01
Circuit diagram. 44980-038:01
Circuit diagram. 44980-041:02
Circuit diagram. 44980-043:03
Circuit diagram. 44980-044:01
Circuit diagram. 44980-045:03
Circuit diagram. 44980-046:03
Circuit diagram. 44980-051:02
Circuit diagram. 44980-052:02
Protective bonding 44980-900:02

EM3.0TB065473en.fm

This list must not without the consent of Tetra Pak
be copied, transmitted or disclosed to any third party

Comp	L	She	Ver	Pos	Comp	L	She	Ver	Pos	Comp	L	She	Ver	Pos	Comp	L	She	Ver	Pos	Comp	L	She	Ver	Pos
A8201	C	006	03	2	A8310	C	046	03	2	B8423	M	027	03	4	H8401	M	011	01	2	R8301	C	025	01	2
A8201	C	006	03	7	A8310	C	045	03	2	B8424	M	027	03	4	HS8202	C	045	03	4	R8401	M	012	01	3
A8202	C	021	01	6	A8313	C	051	02	1	B84251	M	028	01	4										
A8205	C	015	01	4	A8313	C	052	02	1	B84252	M	028	01	5	K8201	C	043	03	4	S8201	C	038	01	5
A8210	C	016	03	5						B8426	M	034	03	4	K8204	C	043	03	4	S8202	C	021	01	5
A8211	C	016	03	3	B8201	C	041	02	3	B8427	M	041	02	3	K8206	C	043	03	4	SH8202	C	038	01	5
A8212	C	016	03	3	B8202	C	033	01	4	B8428	M	011	01	9	K8207	C	044	01	4					
A8214	C	015	01	6	B8401	M	021	01	4	B8429	M	027	03	4	K8208	C	044	01	4	T8405	M	015	01	6
A8216	C	007	02	4	B8402	M	021	01	2						K8209	C	044	01	4	T8406	M	015	01	6
A8233	C	008	03	2	B8403	M	021	01	2	C8401	M	011	01	6	K8213	C	012	01	3					
A8233	C	008	03	7	B8404	M	033	01	4	C8402	M	011	01	8	K8214	C	045	03	4	V8201	C	032	02	3
A8300:1	C	010	01	7	B8405	M	035	01	4															
A8300:2	C	010	01	7	B84061	M	035	01	4	D8301	C	010	01	4	L8405	M	015	01	7	X8218	C	011	01	2
A8300:3	C	010	01	7	B84062	M	035	01	5	D8302	C	025	01	1	L8406	M	015	01	6					
A8301	C	028	01	7	B84071	M	027	03	4											Y8401	M	032	02	5
A8301	C	027	03	7	B84072	M	027	03	5	F8201	C	007	02	3	M8401	M	006	03	2	Y8403	M	032	02	5
A8302	C	029	03	2	B8408	M	037	01	4	F8202	C	011	01	1	M8402	M	007	02	5	Y8404	M	032	02	5
A8302	C	030	01	2	B8409	M	028	01	4	F8203	C	011	01	7	M8405	M	016	03	1	Y8406	M	032	02	5
A8303	C	031	01	2	B8411	M	028	01	4	F8206	C	015	01	2	M8406	M	016	03	1	Y8407	M	032	02	5
A8303	C	032	02	2	B8413	M	037	01	4	F8207.1	C	015	01	3	M8407	M	011	01	7	Y84091	M	031	01	4
A8304	C	033	01	7	B8414	M	028	01	4	F8207.2	C	015	01	3	M8408	M	011	01	4	Y84092	M	031	01	4
A8304	C	034	03	7	B84151	M	035	01	4	F8207.3	C	015	01	3	M8409	M	011	01	5	Y84101	M	031	01	4
A8305	C	035	01	7	B84152	M	035	01	5	F8210	C	005	01	8	M8433	M	008	03	2	Y84102	M	031	01	4
A8305	C	036	03	7	B84161	M	035	01	4	F8211	C	010	01	1						Y84111	M	031	01	4
A8306	C	038	01	7	B84162	M	035	01	5	F8213	C	012	01	3	P8201	C	045	03	4	Y84112	M	031	01	4
A8306	C	037	01	7	B84201	M	016	03	8											Y84121	M	032	02	5
A8308	C	041	02	7	B84202	M	016	03	8	G8301	C	010	01	4	Q8201	C	006	03	2	Y84122	M	032	02	5
A8309	C	043	03	2	B8421	M	027	03	4	G8302	C	010	01	4	Q8201.1	C	006	03	3					
A8309	C	044	01	2	B8422	M	028	01	4	G8303	C	010	01	4										

INTRODUCED WITH EC NO: 97500 DATE: 010907 SIGN: AMI DESCRIPTION: POSITION SUMMARY CIRCUIT DESIGN

ISSUE:
EC NO: MACHINE: PT/21-0500 44980-002:03
DATE :
SIGN :

This list must not without the consent of Tetra Pak
be copied, transmitted or disclosed to any third party

Comp	L	She	Ver	Pos	Comp	L	She	Ver	Pos	Comp	L	She	Ver	Pos	Comp	L	She	Ver	Pos	Comp	L	She	Ver	Pos
Z8201	C	006	03	2																				
Z8216	C	007	02	3																				
Z8217	C	007	02	2																				
Z8218	C	007	02	4																				

INTRODUCED WITH EC NO: 97500 DATE: 010907 SIGN: AMI DESCRIPTION: POSITION SUMMARY CIRCUIT DESIGN

ISSUE:
EC NO: MACHINE: PT/21-0500 44980-002:03
DATE :
SIGN :

TETRA PAK

This list must not without the consent of Tetra Pak
be copied, transmitted or disclosed to any third party

Line	Component	She	Ver	Pos	Area	Color	Line	Component	She	Ver	Pos	Area	Color	Line	Component	She	Ver	Pos	Area	Color
L801	X8201:1	005:01	5		2.50	BK		A8211:20	016:03	3		0.75	BU	L810	XL810:10				0.75	BU
	F8201:1	007:02	3					A8212:18	016:03	3					K8213:4	012:01	3			
	F8207.1:1	015:01	3					A8212:20	016:03	3										
	F8211:1	010:01	1					A8210:2	016:03	5				L810	XL810:11				0.75	BU
	Q8201:1	006:03	2												K8201:A1	043:03	4			
							L810	XL810:6				0.75	BU		K8204:A1	043:03	4			
L802	X8201:2	005:01	5		2.50	BK		A8302:10	029:03	2										
	F8202:1	011:01	1					A8302:20	030:01	2				L810	XL810:12				0.75	BU
	F8207.2:1	015:01	3					A8303:10	031:01	2					HS8202:12	045:03	4			
	Q8201:3	006:03	2					A8303:20	032:02	2					P8201:2	045:03	4			
L803	X8201:3	005:01	5		2.50	BK	L810	XL810:7				0.75	BU	L810	XL810:13				0.75	BU
	F8203:1	011:01	7					A8304:1	033:01	7					X8208:2	027:03	4			
	F8207.3:1	015:01	3					A8305:1	035:01	7					X8208:5	028:01	3			
	F8206:1	015:01	2					A8306:1	037:01	7					X8210:2	027:03	4			
	Q8201:5	006:03	2												X8210:5	028:01	3			
							L810	XL810:8				0.75	BU		X8209:2	027:03	4			
L810	XL810:1				0.75	BU		A8309:10	043:03	2										
	X8202:2	005:01	5					A8309:20	044:01	2				L810	XL810:14				0.75	BU
								A8310:10	045:03	2					X8221:2	033:01	3			
L810	XL810:2				0.75	BU		A8310:20	046:03	2										
	A8214:2	015:01	6					A8313:18	051:02	1				L810	XL810:15				0.75	BU
															X8212:19	032:02	7			
L810	XL810:3				1.50	BU	L810	XL810:9				0.75	BU		X8212:20	032:02	7			
	XL810:4							K8206:A1	043:03	4					X8212:21	031:01	7			
								K8207:10	044:01	4					X8212:22	031:01	7			
L810	XL810:5				0.75	BU		K8208:10	044:01	4					X8213:2	035:01	2			
	A8211:18	016:03	3					K8209:10	044:01	4					X8214:2	037:01	2			
	A8301:1	027:03	7					K8214:10	045:03	4										

INTRODUCED WITH EC NO: 97500 DATE: 010907 SIGN: AMI DESCRIPTION: LINE SUMMARY

ISSUE:
EC NO: MACHINE: PT/21-0500 44980-003:03
DATE :
SIGN :

This list must not without the consent of Tetra Pak
be copied, transmitted or disclosed to any third party

Line	Component	She	Ver	Pos	Area	Color
L810	XL810:16				0.75	BU
	X8216:2	027:03		4		
L810	XL810:17				0.75	BU
	A8201:7A02	006:03		7		
L810	XL810:18				0.75	BU
	A8201:7A05	006:03		7		
L810	XL810:19				0.75	BU
	A8201:7B24	006:03		7		
L810	XL810:20				Not Wired	
L810	XL810:21				0.75	BU
	A8205:212	015:01		4		
L810	XL810:22				0.75	BU
	X8410:4	012:01		4		
L810	XL810:23				0.75	BU
	A8216:2	007:02		4		
	A8216:4	007:02		4		
L810	XL810:24				0.75	BU
	X8233:1	008:03		6		
L811	XL811:1				0.75	BU
	F8210:1	005:01		8		
L811	XL811:2				0.75	BU
	A8214:1	015:01		6		
	A8210:1	016:03		5		
L811	XL811:3				1.50	BU
	XL811:4					
L811	XL811:5				0.75	BU
	A8309:11	044:01		2		
	A8310:1	045:03		2		
	A8310:11	046:03		2		
L811	XL811:6				0.75	BU
	Q8201.1:1.13	006:03		3		
L811	XL811:7				0.75	BU
	X8208:1	027:03		4		
	X8208:4	028:01		3		
	X8210:1	027:03		4		
	X8210:4	028:01		3		
	X8209:1	027:03		4		
L811	XL811:8				0.75	BU
	X8215:5	011:01		9		
	X8214:1	037:01		2		
	X8213:1	035:01		2		
	X8212:23	034:03		3		
	X8221:1	033:01		3		
L811	XL811:9				0.75	BU
	A8202:33	021:01		6		
L811	XL811:10				0.75	BU
	X8233:3	008:03		10		
L811	XL811:11				0.75	BU
	A8205:214	015:01		4		
L811	XL811:12				0.75	BU
	A8205:224	015:01		4		
L811	XL811:13				0.75	BU
	S8201:13	038:01		5		
	S8201:22	038:01		5		
	S8201:33	038:01		5		
	SH8202:13	038:01		5		
L811	XL811:14				0.75	BU
	F8213:1	012:01		3		
L811	XL811:15				0.75	BU
	X8216:1	027:03		4		
L811	XL811:16				0.75	BU
	A8313:1	051:02		1		
L811	XL811:17				0.75	BU
	A8201:7B25	006:03		7		

INTRODUCED WITH EC NO: 97500 DATE: 010907 SIGN: AMI DESCRIPTION: LINE SUMMARY

ISSUE:
EC NO: MACHINE: PT/21-0500 44980-003:03
DATE :
SIGN :

This list must not without the consent of Tetra Pak
be copied, transmitted or disclosed to any third party

Line	Component	She	Ver	Pos	Area	Color	Line	Component	She	Ver	Pos	Area	Color	Line	Component	She	Ver	Pos	Area	Color
L811	XL811:18				Not Wired		L831	XL831:9				0.75	BU							
								A8303:1		031:01	2									
L811	XL811:19				Not Wired			A8303:11		032:02	2									
L811	XL811:20				0.75	BU	L831	XL831:10				0.75	BU							
	A8216:20		007:02	4				A8309:1		043:03	2									
L831	XL831:1				0.75	BU	L831	XL831:11				0.75	BU							
	A8202:34		021:01	6				X8233:2		008:03	6									
L831	XL831:2				Not Wired		L831	XL831:12				Not Wired								
L831	XL831:3				0.75	BU														
	XL831:4																			
L831	XL831:5				0.75	BU														
	A8212:28		016:03	3																
	A8211:28		016:03	3																
L831	XL831:6				0.75	BU														
	K8201:43		016:03	2																
L831	XL831:7				0.75	BU														
	A8201:7A06		006:03	7																
	A8302:11		030:01	2																
L831	XL831:8				0.75	BU														
	A8302:1		029:03	2																

INTRODUCED WITH EC NO: 97500 DATE: 010907 SIGN: AMI DESCRIPTION: LINE SUMMARY

ISSUE:
EC NO: MACHINE: PT/21-0500 44980-003:03
DATE :
SIGN :

This list must not without the consent of Tetra Pak
be copied, transmitted or disclosed to any third party

Term	Block	L	She	Ver	Pos	Term	Block	L	She	Ver	Pos	Term	Block	L	She	Ver	Pos	Term	Block	L	She	Ver	Pos
X106	1	F	005	01	3	X206	22	F	005	01	3	X8202	17	C				X8204	8	C			
	2	F	005	01	3		23	F	005	01	3		18	C					9	C	033	01	3
	3	F	005	01	3		24	F	005	01	3		19	C					10	C	033	01	5
	4	F					E	F	005	01	3		20	C					E	C	033	01	5
	5	F											21	C									
	6	F	005	01	3	X8201	1	C	005	01	5		22	C	005	01	5	X8205	1	C	016	03	7
	E	F	005	01	3		2	C	005	01	5		23	C	005	01	5		2	C	016	03	7
							3	C	005	01	5		24	C	005	01	5		3	C	016	03	7
X206	1	F	005	01	3		4	C					E	C	005	01	5		4	C	016	03	7
	2	F	005	01	3		5	C											5	C	016	03	7
	3	F					6	C	005	01	5	X8203	1	C					6	C			
	4	F					E	C	005	01	5		2	C									
	5	F	005	01	3								3	C				X8206	1	C	016	03	7
	6	F	005	01	3	X8202	1	C	005	01	5		4	C	011	01	1		2	C	016	03	7
	7	F	005	01	3		2	C	005	01	5		5	C	011	01	3		3	C	016	03	7
	8	F	005	01	3		3	C					6	C					4	C	016	03	7
	9	F	005	01	3		4	C					7	C					5	C	016	03	7
	10	F	005	01	3		5	C	005	01	5		8	C					6	C			
	11	F	005	01	3		6	C	005	01	5		9	C									
	12	F					7	C	005	01	5		10	C				X8207	1	C	016	03	2
	13	F					8	C	005	01	5		E	C					2	C	016	03	2
	14	F					9	C	005	01	5								3	C	016	03	2
	15	F					10	C	005	01	5	X8204	1	C	021	01	5		4	C	016	03	2
	16	F					11	C	005	01	5		2	C	021	01	5		5	C	016	03	2
	17	F					12	C					3	C	021	01	3		6	C	016	03	2
	18	F					13	C					4	C	021	01	3						
	19	F					14	C					5	C	021	01	5	X8208	1	C	027	03	4
	20	F					15	C					6	C	021	01	5		2	C	027	03	4
	21	F					16	C					7	C					3	C	027	03	6

INTRODUCED WITH EC NO: 97500 DATE: 010907 SIGN: AMI DESCRIPTION: TERMINAL SUMMARY

ISSUE:
EC NO: MACHINE: PT/21-0500 44980-004:03
DATE :
SIGN :

This list must not without the consent of Tetra Pak
be copied, transmitted or disclosed to any third party

Term	Block	L	She	Ver	Pos	Term	Block	L	She	Ver	Pos	Term	Block	L	She	Ver	Pos	Term	Block	L	She	Ver	Pos
X8208	4	C	028	01	3	X8212	3	C	032	02	4	X8213	6	C	037	01	6	X8216	3	C	027	03	6
	5	C	028	01	3		4	C	032	02	4		7	C	028	01	6						
	6	C	028	01	6		5	C	032	02	4		8	C				X8217	+	C	041	02	3
	E	C					6	C					9	C	028	01	6		-	C	041	02	3
							7	C	031	01	3		10	C									
X8209	1	C	027	03	4		8	C	031	01	3		E	C				X8220	1	C	007	02	4
	2	C	027	03	4		9	C	031	01	3								2	C	011	01	3
	3	C	027	03	6		10	C	031	01	3	X8214	1	C	037	01	2		3	C	011	01	7
	4	C					11	C	031	01	3		2	C	037	01	2		6	C	015	01	1
	5	C					12	C	031	01	3		3	C	037	01	6		7	C	015	01	3
	6	C					13	C	032	02	4		4	C	028	01	6		8	C	011	01	4
							14	C	032	02	4		5	C	035	01	6		9	C	010	01	2
X8210	1	C	027	03	4		15	C	032	02	4		6	C	035	01	6		10	C			
	2	C	027	03	4		16	C					7	C					11	C			
	3	C	027	03	6		17	C					8	C					12	C			
	4	C	028	01	3		18	C					9	C					N	C	005	01	8
	5	C	028	01	3		19	C	032	02	7		10	C									
	6	C	028	01	6		20	C	032	02	7		E	C				X8221	1	C	033	01	3
	E	C					21	C	031	01	7								2	C	033	01	3
							22	C	031	01	7	X8215	1	C	011	01	7		3	C	033	01	4
X8211	1	C	016	03	2		23	C	034	03	3		2	C	011	01	7						
	2	C	016	03	2		24	C	034	03	5		3	C	011	01	4	X8230	1	C	032	02	2
	3	C	016	03	2		E	C					4	C	011	01	4		2	C	032	02	3
	4	C	016	03	2								5	C	011	01	9						
	5	C	016	03	2	X8213	1	C	035	01	2		6	C	011	01	10	X8233	1	C	008	03	6
	6	C	016	03	2		2	C	035	01	2		E	C	011	01	9		2	C	008	03	6
							3	C	035	01	6								3	C	008	03	10
X8212	1	C	032	02	4		4	C	035	01	6	X8216	1	C	027	03	4		4	C	008	03	6
	2	C	032	02	4		5	C	027	03	6		2	C	027	03	4		5	C	008	03	6

INTRODUCED WITH EC NO: 97500 DATE: 010907 SIGN: AMI DESCRIPTION: TERMINAL SUMMARY

ISSUE:
EC NO: MACHINE: PT/21-0500 44980-004:03
DATE :
SIGN :

This list must not without the consent of Tetra Pak
be copied, transmitted or disclosed to any third party

Term	Block	L	She	Ver	Pos	Term	Block	L	She	Ver	Pos	Term	Block	L	She	Ver	Pos	Term	Block	L	She	Ver	Pos
X8233	6	C	008	03	6	X8402	4-	M	035	01	3	X8403	3	M	037	01	5	X8404	A1+	M	032	02	5
	7	C	008	03	6		5	M					4	M	028	01	5		A1-	M	032	02	6
	8	C	008	03	10		5+	M	035	01	3		4+	M	028	01	3		A10+	M			
	9	C					5-	M	035	01	3		4-	M	028	01	3		A10-	M			
	10	C					6	M	027	03	6		5	M	035	01	5		A10E	M			
	11	C					6+	M	027	03	4		5+	M	035	01	3		A1E	M	032	02	6
	12	C					6-	M	027	03	4		5-	M	035	01	3		A2+	M	032	02	5
							7	M					6+	M	035	01	3		A2-	M	032	02	6
X8401	1	M	021	01	4		7+	M	027	03	4		6-	M	035	01	3		A2E	M	032	02	6
	2	M	021	01	3		7-	M	027	03	4		7	M	035	01	5		A3+	M	032	02	5
	3	M	021	01	4		8	M	037	01	5		7+	M	035	01	3		A3-	M	032	02	6
	4	M	021	01	3		8+	M	037	01	3		7-	M	035	01	3		A3E	M	032	02	6
	5	M	021	01	2		8-	M	037	01	3		8	M					A4+	M	032	02	5
	6	M	021	01	2		9	M	028	01	5		8+	M	035	01	3		A4-	M	032	02	6
	7	M	021	01	2		9+	M	028	01	3		8-	M	035	01	3		A4E	M	032	02	6
	8	M	021	01	2		9-	M	028	01	3		9	M					A5+	M	032	02	5
	9	M	021	01	2		10	M					9+	M					A5-	M	032	02	6
	10	M	021	01	2		10+	M					9-	M					A5E	M	032	02	6
	11	M	021	01	2		10-	M					10	M					A6+	M			
	12	M	021	01	2		11	M	028	01	5		10+	M					A6-	M			
	13	M	033	01	3		11+	M	028	01	3		10-	M					A6E	M			
	14	M	033	01	4		11-	M	028	01	3		11	M					A7+	M			
	E	M	033	01	4		12	M					11+	M					A7-	M			
							12+	M					11-	M					A7E	M			
X8402	1	M	035	01	3		12-	M					12	M					A8+	M			
	2	M	035	01	2		E	M					12+	M					A8-	M			
	3	M	035	01	5								12-	M					A8E	M			
	4	M	035	01	5	X8403	1	M	037	01	3		E	M					A9+	M			
	4+	M	035	01	3		2	M	037	01	3								A9-	M			

INTRODUCED WITH EC NO: 97500 DATE: 010907 SIGN: AMI DESCRIPTION: TERMINAL SUMMARY

ISSUE:
EC NO: MACHINE: PT/21-0500 44980-004:03
DATE :
SIGN :

This list must not without the consent of Tetra Pak
be copied, transmitted or disclosed to any third party

Term	Block	L	She	Ver	Pos	Term	Block	L	She	Ver	Pos	Term	Block	L	She	Ver	Pos	Term	Block	L	She	Ver	Pos
X8404	A9E	M				X8405	A9+	M				X8420	1	M	016	03	8	XL810	18	C			
							A9-	M					2	M	016	03	8		19	C			
X8405	A1+	M	031	01	4		A9E	M					3	M	016	03	8		20	C			
	A1-	M	031	01	5								4	M	016	03	8		21	C			
	A10+	M	032	02	5	X8406	1	M	015	01	7		5	M	016	03	8		22	C			
	A10-	M	032	02	6														23	C			
	A10E	M	032	02	6	X8407	1	M	015	01	6	X8421	1	M	016	03	8		24	C			
	A1E	M	031	01	5								2	M	016	03	8						
	A2+	M	031	01	4	X8410	1	M	041	02	5		3	M	016	03	8	XL811	1	C			
	A2-	M	031	01	5		2	M	041	02	5		4	M	016	03	8		2	C			
	A2E	M	031	01	5		3	M	012	01	3		5	M	016	03	8		3	C			
	A3+	M	031	01	4		4	M	012	01	4								4	C			
	A3-	M	031	01	5		E	M				XL810	1	C					5	C			
	A3E	M	031	01	5								2	C					6	C			
	A4+	M	031	01	4	X8411	1	M	011	01	4		3	C					7	C			
	A4-	M	031	01	5		2	M	011	01	4		4	C					8	C			
	A4E	M	031	01	5		3	M	011	01	5		5	C					9	C			
	A5+	M	031	01	4		4	M	011	01	5		6	C					10	C			
	A5-	M	031	01	5		5	M	011	01	6		7	C					11	C			
	A5E	M	031	01	5		6	M	011	01	6		8	C					12	C			
	A6+	M	031	01	4		7	M	011	01	7		9	C					13	C			
	A6-	M	031	01	5		8	M	011	01	7		10	C					14	C			
	A6E	M	031	01	5		9	M	011	01	7		11	C					15	C			
	A7+	M	032	02	5		10	M	011	01	8		12	C					16	C			
	A7-	M	032	02	6		E1	M	011	01	5		13	C					17	C			
	A7E	M	032	02	6		E2	M	011	01	6		14	C					18	C			
	A8+	M	032	02	5		E3	M	011	01	8		15	C					19	C			
	A8-	M	032	02	6		E4	M	011	01	8		16	C					20	C			
	A8E	M	032	02	6								17	C									

INTRODUCED WITH EC NO: 97500 DATE: 010907 SIGN: AMI DESCRIPTION: TERMINAL SUMMARY

ISSUE:
EC NO: MACHINE: PT/21-0500 44980-004:03
DATE :
SIGN :

This list must not without the consent of Tetra Pak
be copied, transmitted or disclosed to any third party

Term	Block L	She Ver Pos	Term	Block L	She Ver Pos	Term	Block L	She Ver Pos	Term	Block L	She Ver Pos
XL831	1	C									
	2	C									
	3	C									
	4	C									
	5	C									
	6	C									
	7	C									
	8	C									
	9	C									
	10	C									
	11	C									
	12	C									

PRE-RELEASED/DEVELOPMENT STATE

This drawing must not without the consent of Tetra Pak: be copied, transmitted or disclosed to any third party.

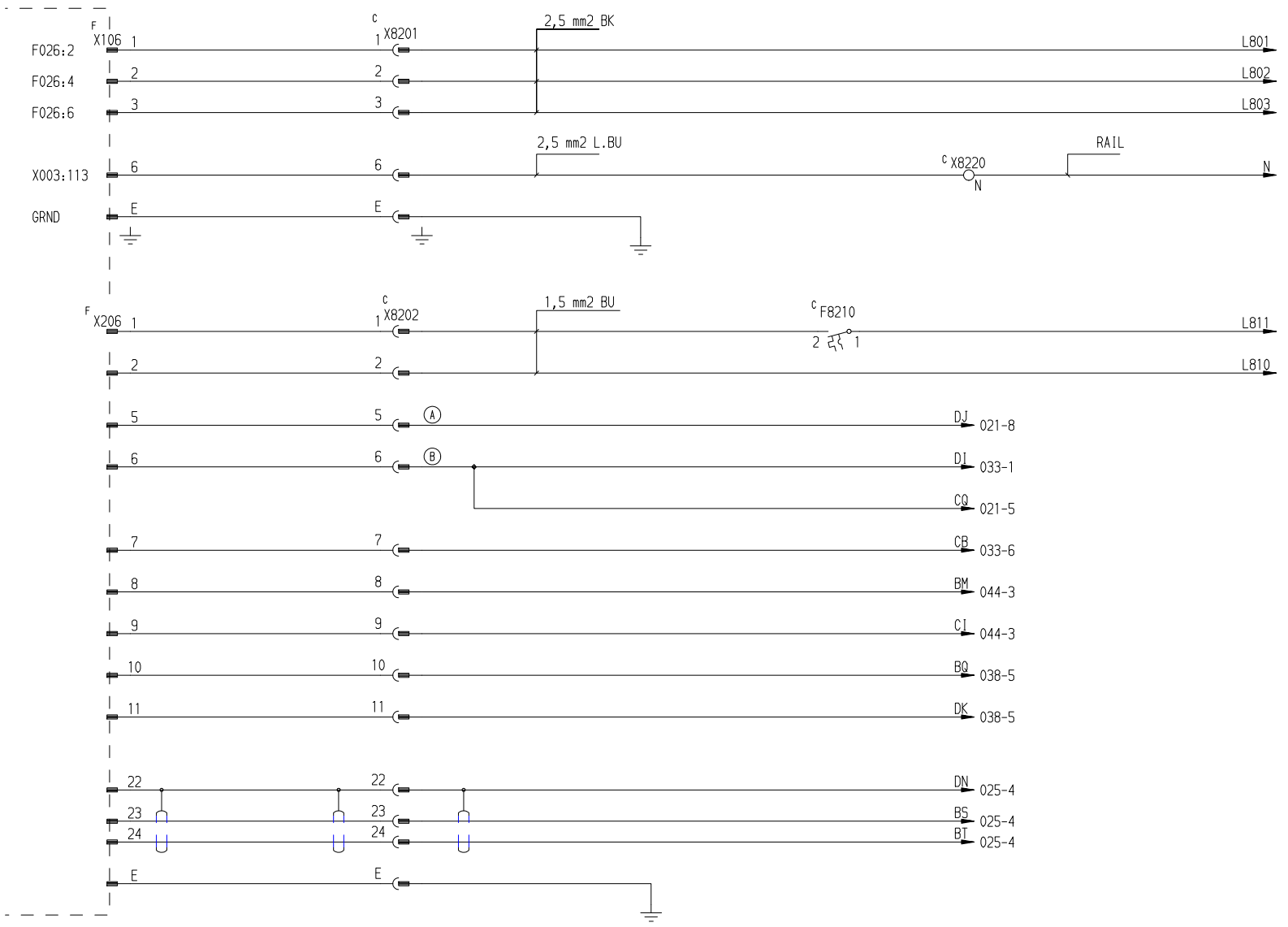

MAINS 400/230V

FOR TYPE OF WIRE, WIRING INSTRUCTIONS ETC.
SEE SPECIFICATION FOR SUBSUPPLIERS TPUS 3502.22

WHERE NOTHING ELSE IS SAID
OR LINE SUMMARY IS VALID: 0.75 mm2 BU

Note	A				
ECN No.	72315				
Sign./Date	AMI 990322				
Appr./Date	BGZ 990322				Drawing remarks

Tetra Pak

Designer AMI	Date 990322	Approved BGZ	Date 990322	Doc.Class –	
Machine PT/21-0500	Denomination MAINS				
Company TETRA BRIK PACKAGING SYSTEMS	Drawing No 44980-005:01			Page –	

PRE-RELEASED/DEVELOPMENT STATE

This drawing must not without the consent of Tetra Pak: be copied, transmitted or disclosed to any third party.

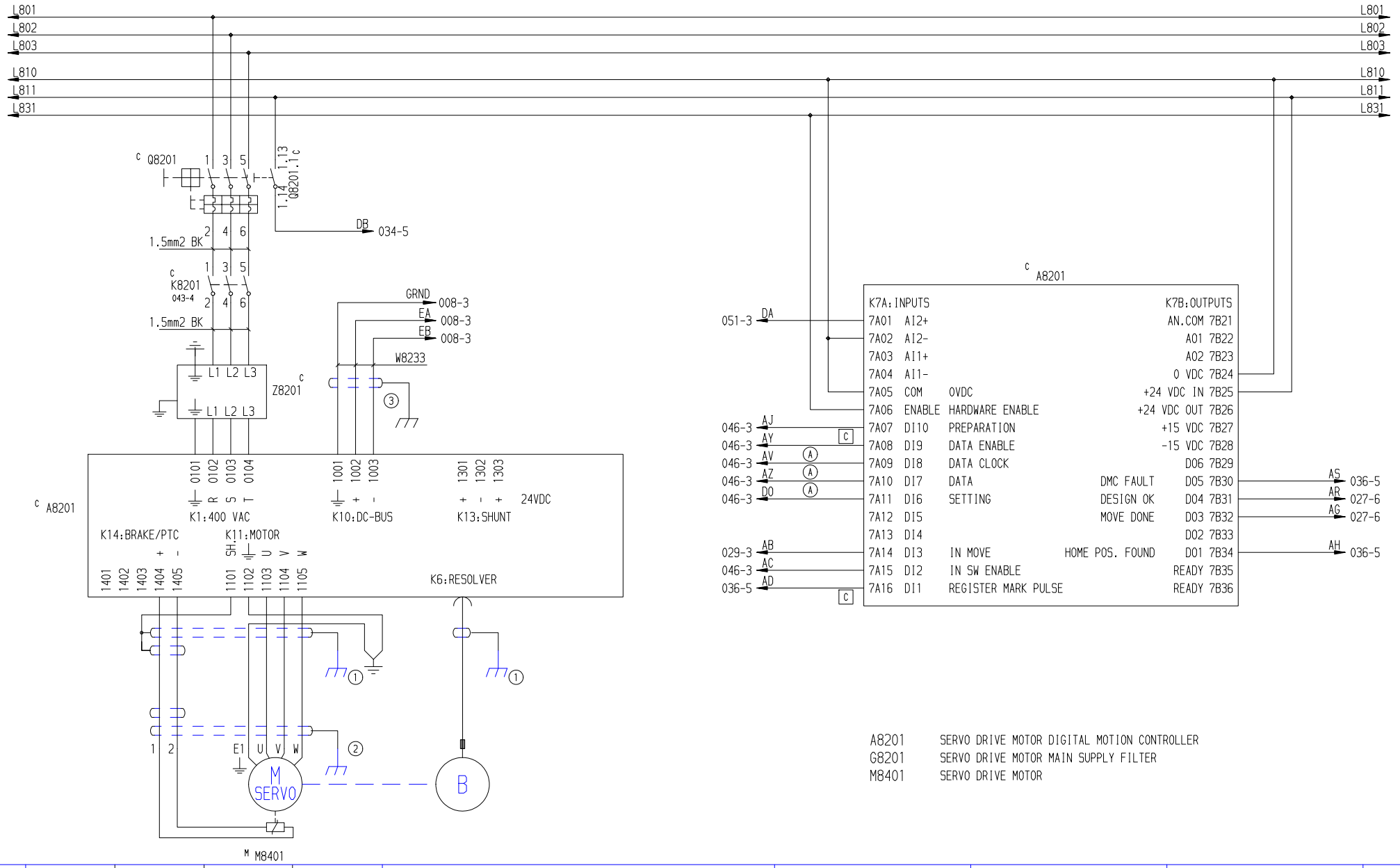

A8201 SERVO DRIVE MOTOR DIGITAL MOTION CONTROLLER
G8201 SERVO DRIVE MOTOR MAIN SUPPLY FILTER
M8401 SERVO DRIVE MOTOR

Note	A				1: SEE DRAWING 1255692-10
ECN No.	97500				2: MOTOR CHASSIS
Sign./Date	AMI 010907				3: SERVO DRIVE GROUNDING CLAMP
Appr./Date	PGE 010907				Drawing remarks

TetraPak

Designer AMI	Date 010907	Approved PGE	Date 010907	Doc.Class –	
Machine PT/21-0500	Denomination SERVO DRIVE MOTOR				
Company TETRA BRIK PACKAGING SYSTEMS	Drawing No 44980-006:03	Page –			

PRE-RELEASED/DEVELOPMENT STATE

This drawing must not without the consent of Tetra Pak: be copied, transmitted or disclosed to any third party.

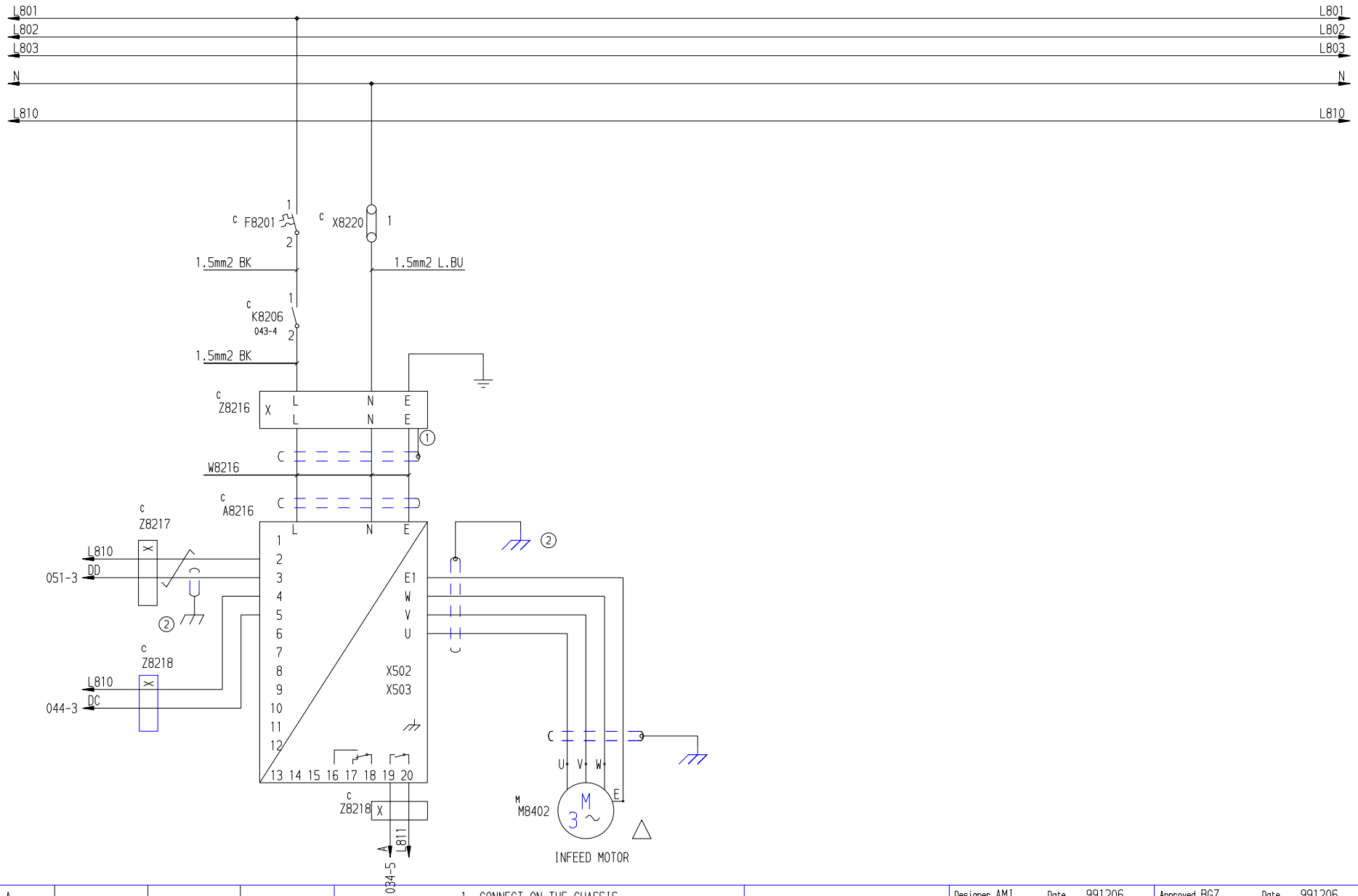

Note	A				1. CONNECT ON THE CHASSIS	TetraPak	Designer AMI	Date 991206	Approved BGZ	Date 991206	Doc.Class –
ECN No.	73001				2. CONNECT TO GROUND CLUMP		Machine PT/21-0500	Denomination INFEED MOTOR		
Sign./Date	AMI 991206						Company TETRA BRIK PACKAGING SYSTEMS	Drawing No 44980-007:02		Page –
Appr./Date	BGZ 991206				Drawing remarks					

PRE-RELEASED/DEVELOPMENT STATE

This drawing must not without the consent of Tetra Pak: be copied, transmitted or disclosed to any third party.

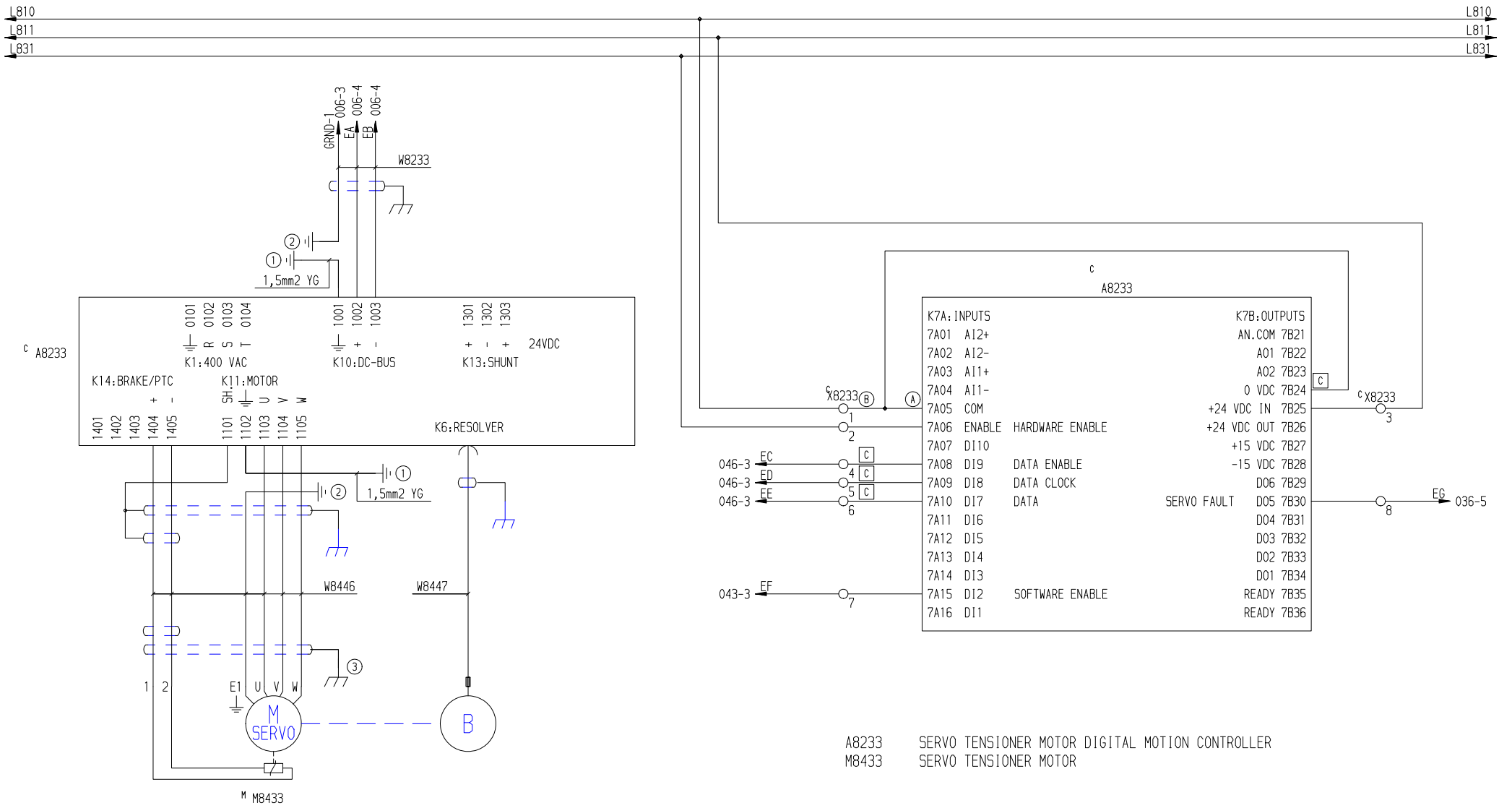

A8233 SERVO TENSIONER MOTOR DIGITAL MOTION CONTROLLER
M8433 SERVO TENSIONER MOTOR

Note	A				1 - CONNECT TO GROUND CLAMP
ECN No.	97500				2 - CONNECT TO HOLDER GROUND SCREW
Sign./Date	AMI 010907				3 - MOTOR CHASSIS VIA CONNECTOR
Appr./Date	PGE 010907				Drawing remarks

Tetra Pak

Designer AMI	Date 010907	Approved PGE	Date 010907
Doc.Class –			
Machine PT/21-0500	Denomination SERVO TENSIONER MOTOR		
Company TETRA BRIK PACKAGING SYSTEMS	Drawing No 44980-008:03	Page –	

PRE-RELEASED/DEVELOPMENT STATE

This drawing must not without the consent of Tetra Pak: be copied, transmitted or disclosed to any third party.

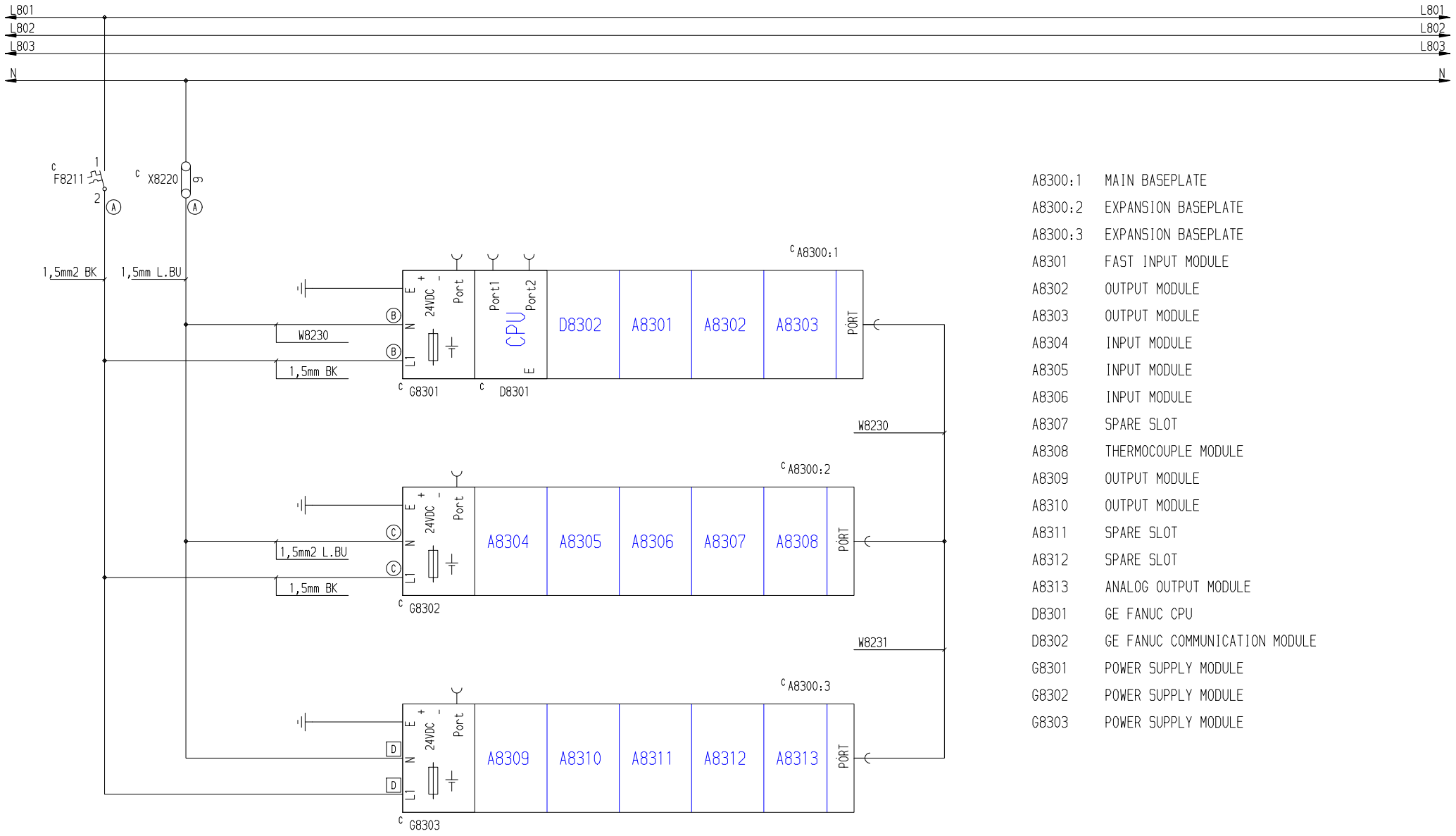

A8300:1	MAIN BASEPLATE
A8300:2	EXPANSION BASEPLATE
A8300:3	EXPANSION BASEPLATE
A8301	FAST INPUT MODULE
A8302	OUTPUT MODULE
A8303	OUTPUT MODULE
A8304	INPUT MODULE
A8305	INPUT MODULE
A8306	INPUT MODULE
A8307	SPARE SLOT
A8308	THERMOCOUPLE MODULE
A8309	OUTPUT MODULE
A8310	OUTPUT MODULE
A8311	SPARE SLOT
A8312	SPARE SLOT
A8313	ANALOG OUTPUT MODULE
D8301	GE FANUC CPU
D8302	GE FANUC COMMUNICATION MODULE
G8301	POWER SUPPLY MODULE
G8302	POWER SUPPLY MODULE
G8303	POWER SUPPLY MODULE

Note	A				
ECN No.	72315				
Sign./Date	AMI 990322				
Appr./Date	BGZ 990322				Drawing remarks

Tetra Pak

Designer AMI	Date 990322	Approved BGZ	Date 990322	Doc.Class –	
Machine PT/21-0500	Denomination POWER SUPPLY/LAYOUT				
Company TETRA BRIK PACKAGING SYSTEMS	Drawing No 44980-010:01	Page –			

PRE-RELEASED/DEVELOPMENT STATE

This drawing must not without the consent of Tetra Pak: be copied, transmitted or disclosed to any third party.

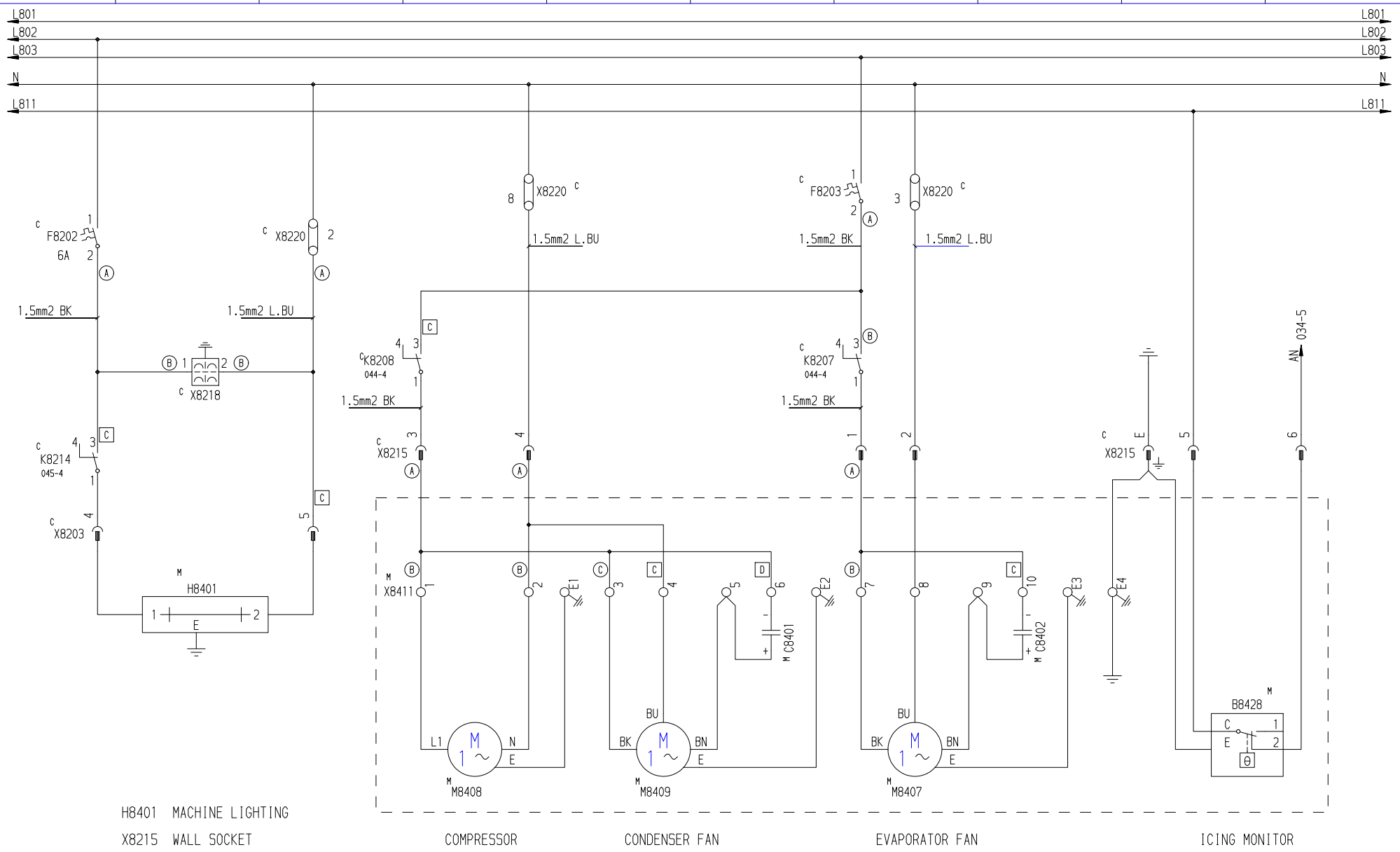

H8401 MACHINE LIGHTING

X8215 WALL SOCKET

COMPRESSOR

CONDENSER FAN

EVAPORATOR FAN

ICING MONITOR

Note	A				
ECN No.	72315				
Sign./Date	AMI 990322				
Appr./Date	BGZ 990322				Drawing remarks

Tetra Pak

Designer AMI	Date 990322	Approved BGZ	Date 990322	Doc.Class –	
Machine PT/21-0500	Denomination LIGTHING /AIR COOLER				
Company TETRA BRIK PACKAGING SYSTEMS	Drawing No 44980-011:01	Page –			

PRE-RELEASED/DEVELOPMENT STATE

This drawing must not without the consent of Tetra Pak: be copied, transmitted or disclosed to any third party.

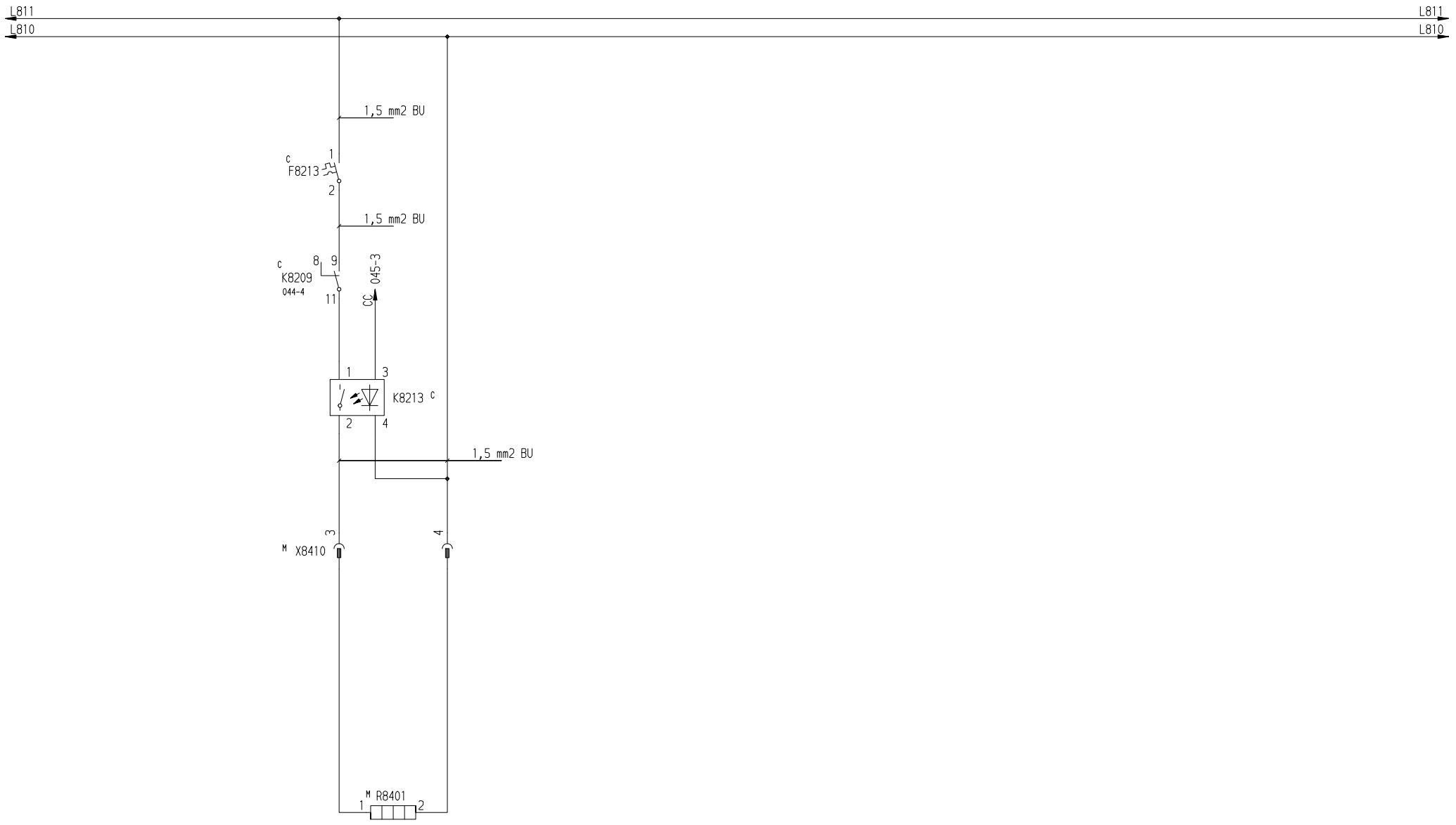

TAB SEALING PAD HEATER

Note	A				
ECN No.	72315				
Sign./Date	AMI 990322				
Appr./Date	BGZ 990322				Drawing remarks

Tetra Pak

Designer AMI	Date 990322	Approved BGZ	Date 990322	Doc.Class –	
Machine PT/21-0500	Denomination TAB SEALING PAD HEATER				
Company TETRA BRIK PACKAGING SYSTEMS	Drawing No 44980-012:01	Page –			

PRE-RELEASED/DEVELOPMENT STATE

This drawing must not without the consent of Tetra Pak: be copied, transmitted or disclosed to any third party.

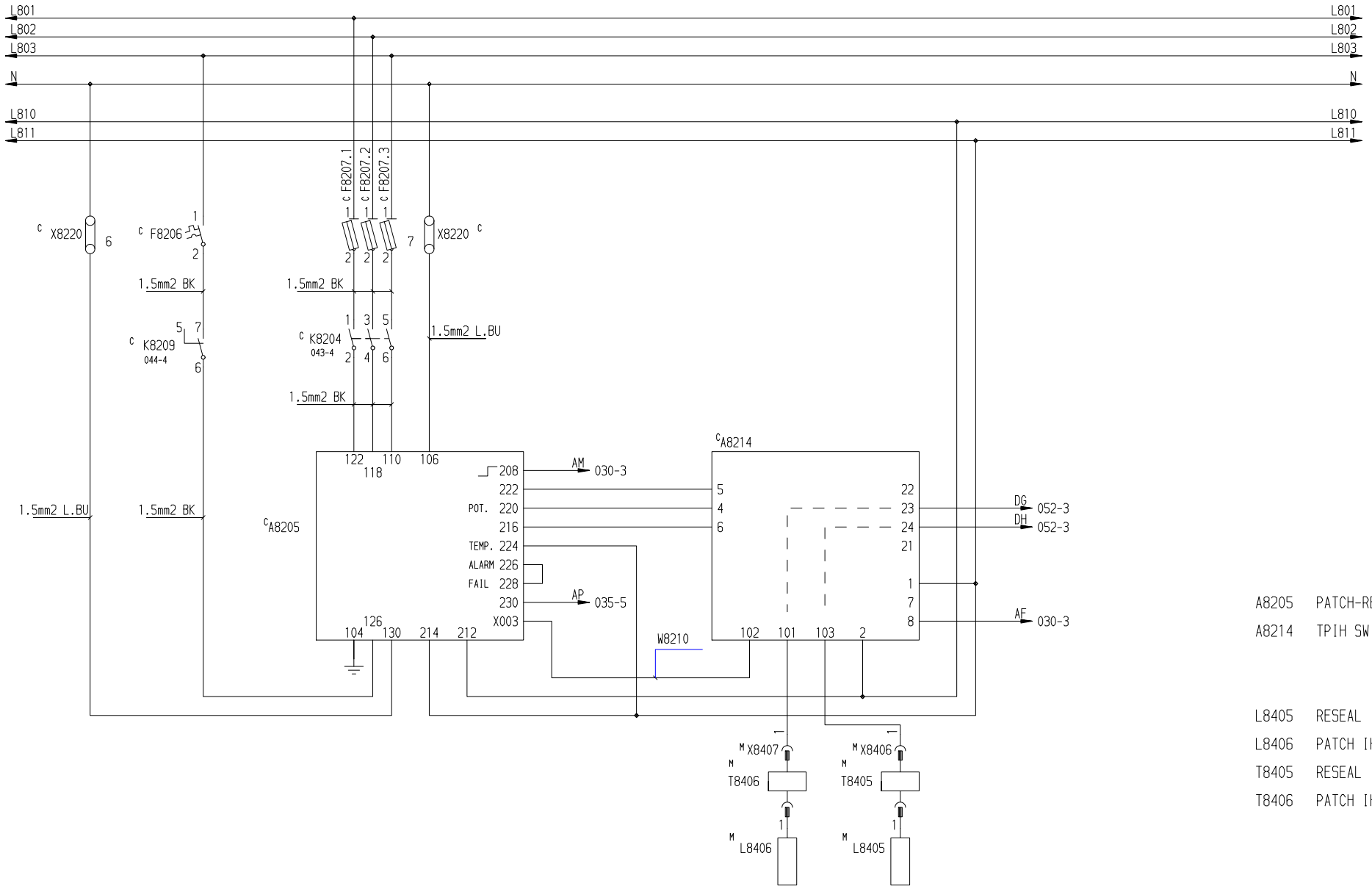

A8205 PATCH-RESEAL IH GENERATOR

A8214 TPIH SWITCH

L8405 RESEAL IH INDUCTOR

L8406 PATCH IH INDUCTOR

T8405 RESEAL IH TRANSFORMER

T8406 PATCH IH TRANSFORMER

Note	A				
ECN No.	72315				
Sign./Date	AMI 990322				
Appr./Date	BGZ 990322				Drawing remarks

Tetra Pak

Designer AMI	Date 990322	Approved BGZ	Date 990322	Doc.Class –	
Machine PT/21-0500	Denomination IH GENERATOR: PATCH AND RESEAL				
Company TETRA BRIK PACKAGING SYSTEMS	Drawing No 44980-015:01	Page –			

PRE-RELEASED/DEVELOPMENT STATE

This drawing must not without the consent of Tetra Pak: be copied, transmitted or disclosed to any third party.

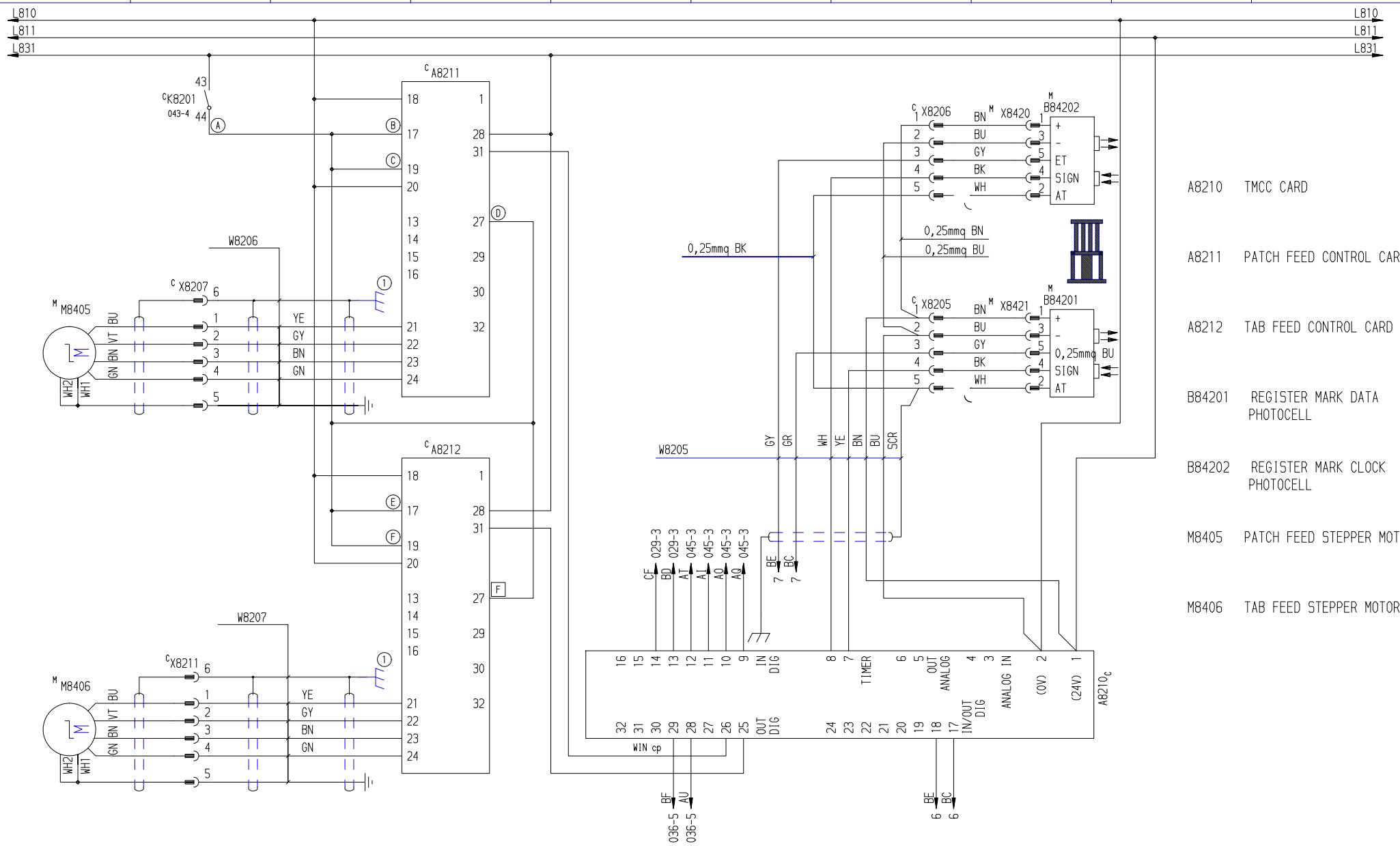

Note					1. CONNECT TO RACK FRAME	Tetra Pak	Designer AMI	Date 010907	Approved PGE Date 010907 Doc.Class –
ECN No.	97500						Machine PT/21-0500	Denomination REG.MARK/PATCH-TAB FEEDERS	
Sign./Date	AMI 010907						Company TETRA BRIK PACKAGING SYSTEMS	Drawing No 44980-016:03	Page –
Appr./Date	PGE 010907				Drawing remarks				

PRE-RELEASED/DEVELOPMENT STATE

This drawing must not without the consent of Tetra Pak: be copied, transmitted or disclosed to any third party.

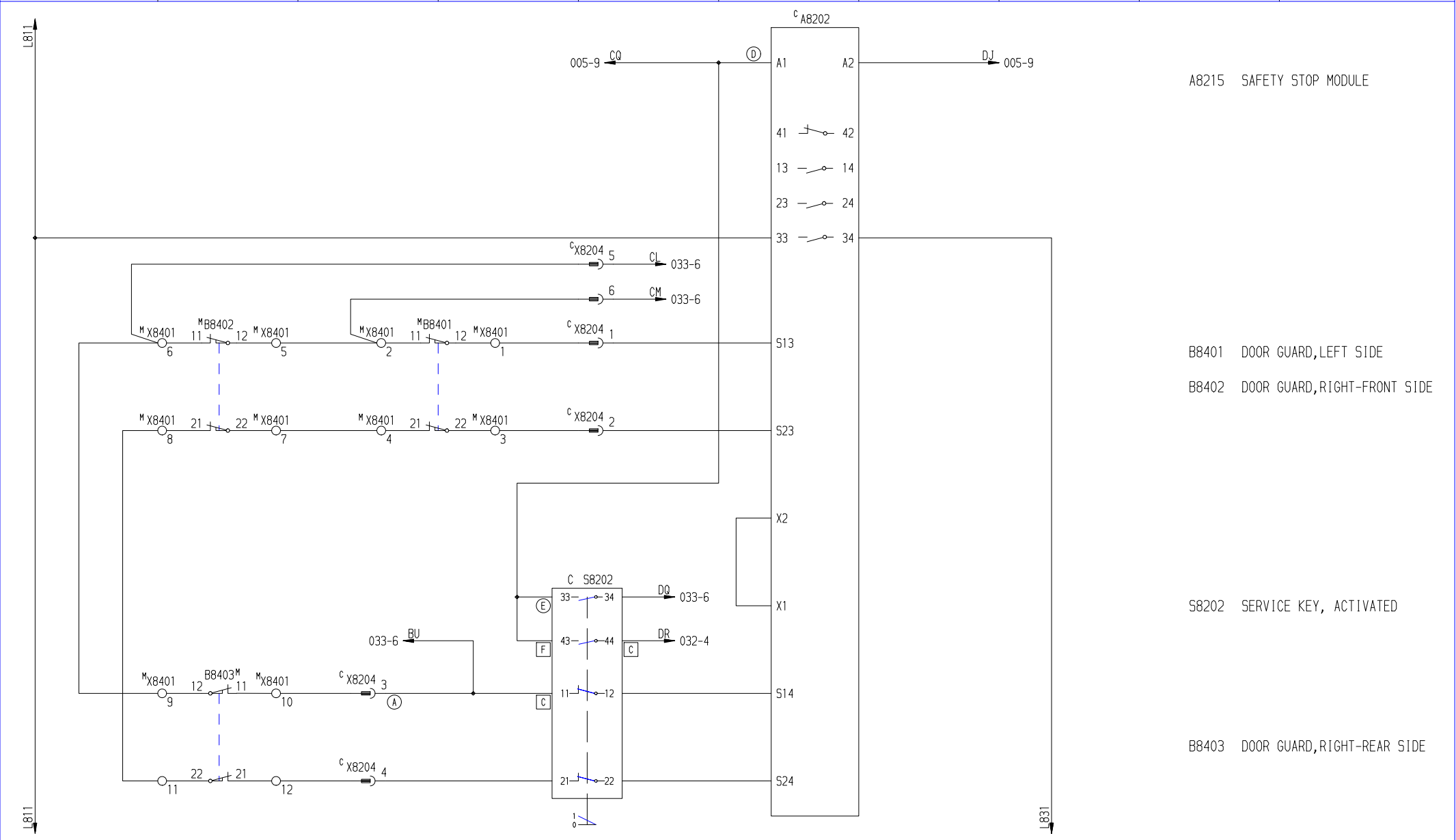

Note	A				
ECN No.	72315				
Sign./Date	AMI 990322				
Appr./Date	BGZ 990322				Drawing remarks

Tetra Pak

Designer AMI	Date 990322	Approved BGZ	Date 990322	Doc.Class –	
Machine PT/21-0500	Denomination SAFETY MODULE: DOOR CHAIN				
Company TETRA BRIK PACKAGING SYSTEMS	Drawing No 44980-021:01	Page –			

PRE-RELEASED/DEVELOPMENT STATE

This drawing must not without the consent of Tetra Pak: be copied, transmitted or disclosed to any third party.

1	2	3	4	5	6	7	8	9	10

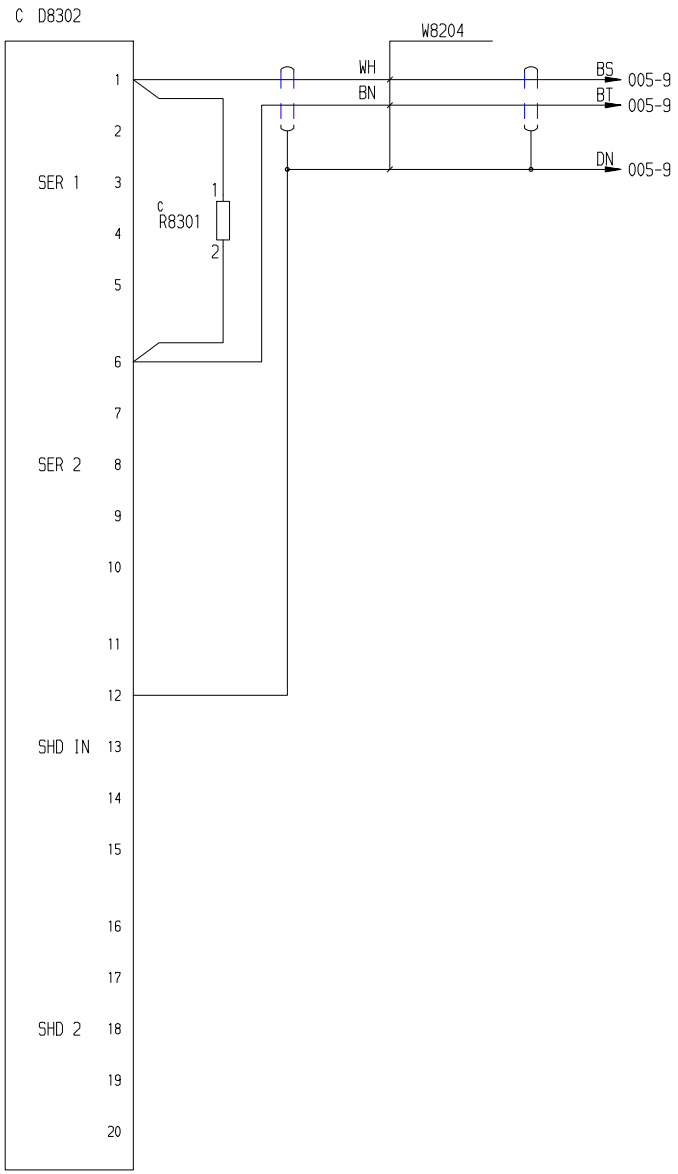

Note	A				
ECN No.	72315				
Sign./Date	AMI 990322				
Appr./Date	BGZ 990322				Drawing remarks

Tetra Pak

Designer AMI	Date 990322	Approved BGZ	Date 990322	Doc.Class –	
Machine PT/21-0500	Denomination PLC COMMUNICATION				
Company TETRA BRIK PACKAGING SYSTEMS	Drawing No 44980-025:01	Page –			

PRE-RELEASED/DEVELOPMENT STATE

This drawing must not without the consent of Tetra Pak: be copied, transmitted or disclosed to any third party.

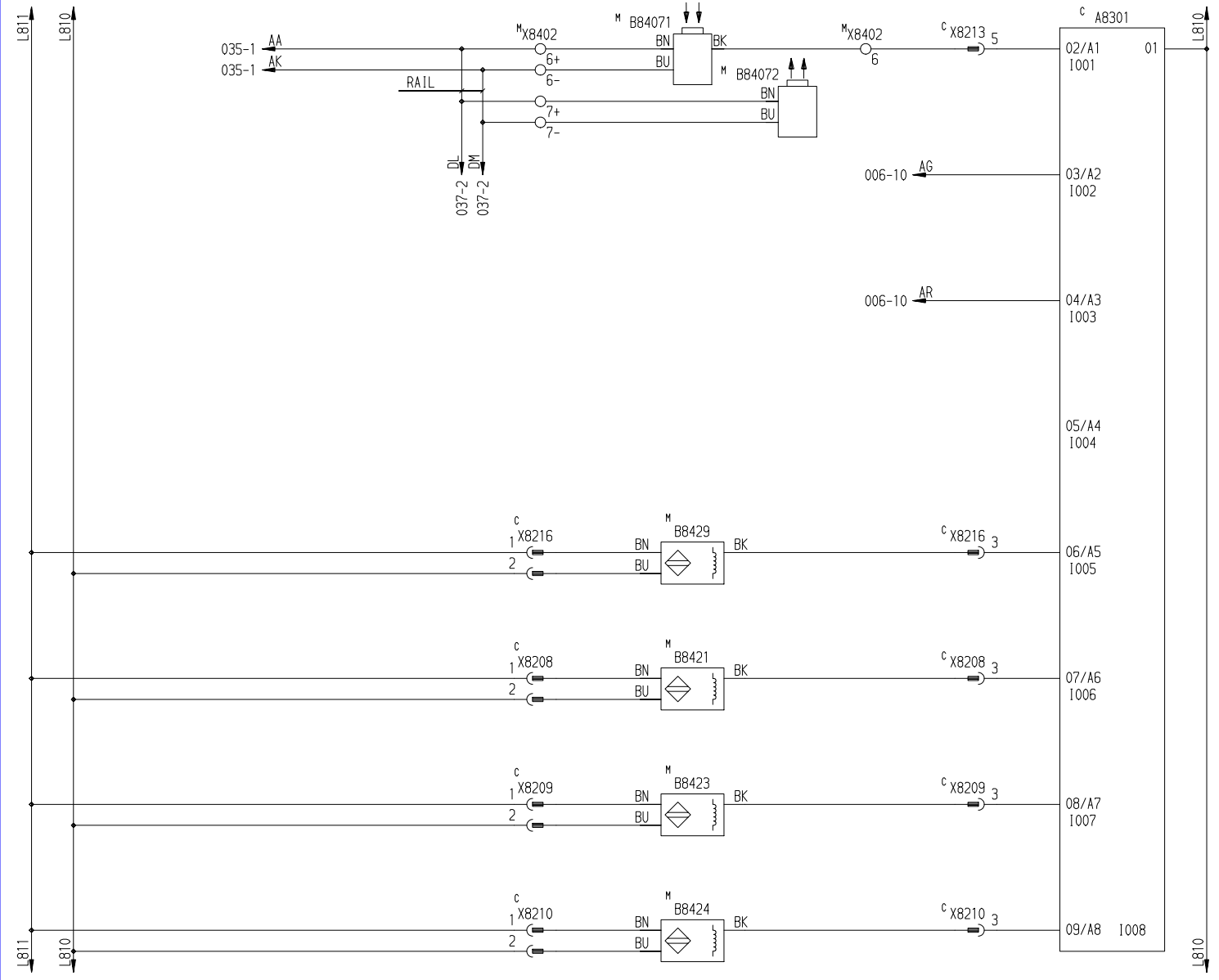

B84071 OUTFEED LOOP, LOW
B84072

SERVO DRIVE, MOVE DONE

SERVO DRIVE, DESIGN OK

B8429 PUNCH JAW, CLOSED

B8421 PATCH JAW, CLOSED

B8423 RESEAL JAW, CLOSED

B8424 TAB JAW, CLOSED

Note	A				
ECN No.	97500				
Sign./Date	AMI 010907				
Appr./Date	PGE 010907				Drawing remarks

Tetra Pak

Designer AMI	Date 010907	Approved PGE	Date 010907	Doc.Class –	
Machine PT/21-0500	Denomination PLC FAST IN				
Company TETRA BRIK PACKAGING SYSTEMS	Drawing No 44980-027:03	Page –			

PRE-RELEASED/DEVELOPMENT STATE

This drawing must not without the consent of Tetra Pak: be copied, transmitted or disclosed to any third party.

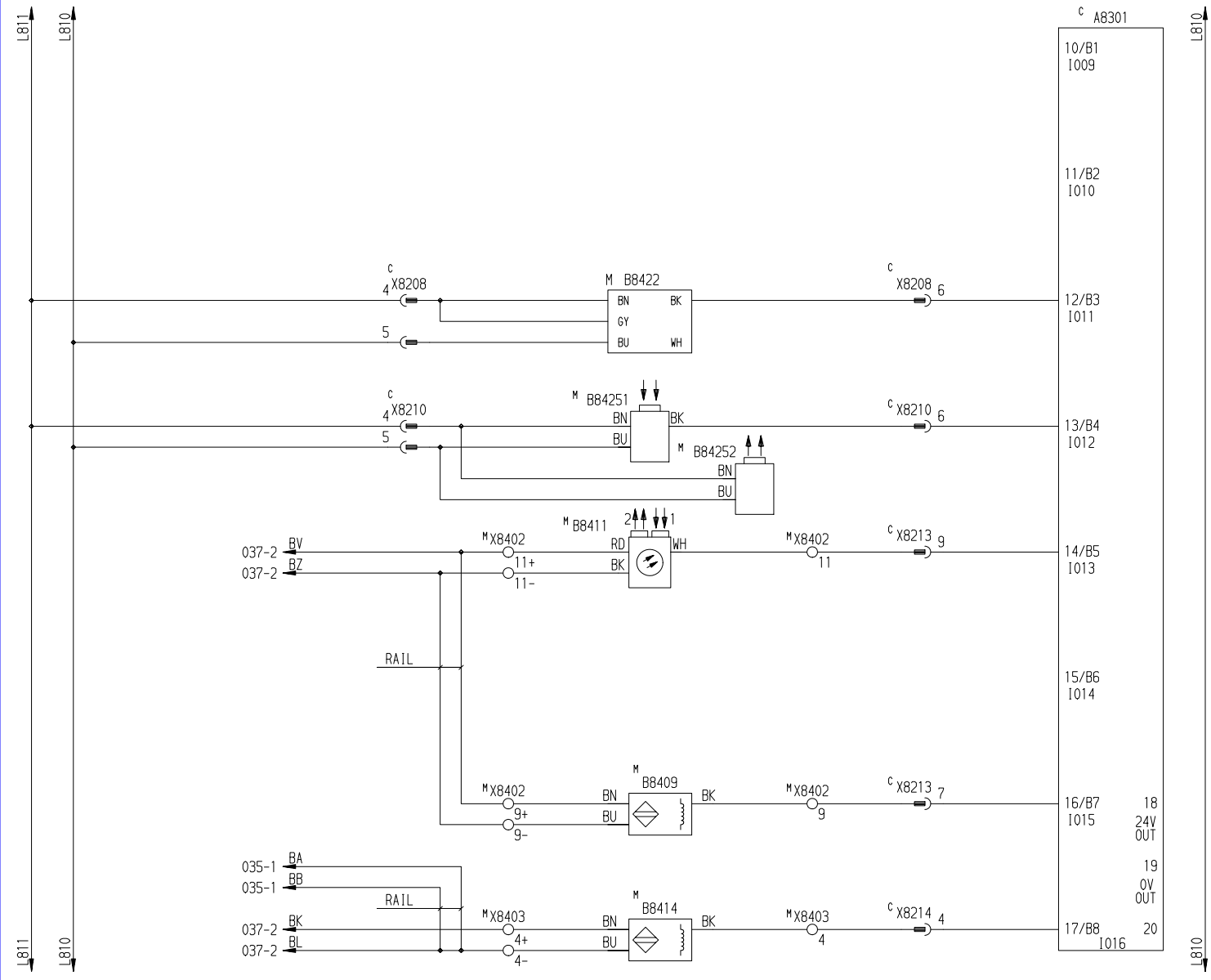

B8422	PATCH, MISSING
B84251 B84252	TAB, MISSING
B8411	BLACK TAPE, DETECDED
B8409	PATCH MATERIAL, ROTATION MONITOR
B8414	TAB MATERIAL, ROTATION MONITOR

Note	A				
ECN No.	72315				
Sign./Date	AMI 990322				
Appr./Date	BGZ 990322				Drawing remarks

Tetra Pak

Designer AMI	Date 990322	Approved BGZ	Date 990322	Doc.Class –	
Machine PT/21-0500	Denomination PLC FAST IN				
Company TETRA BRIK PACKAGING SYSTEMS	Drawing No 44980-028:01	Page –			

This drawing must not without the consent of Tetra Pak: be copied, transmitted or disclosed to any third party.

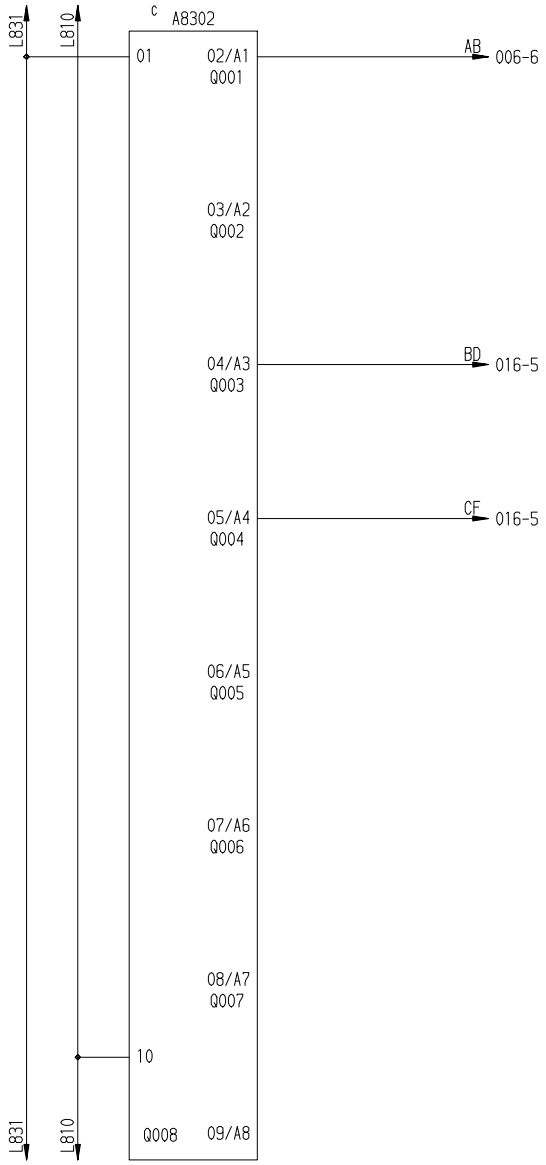

SERVO DRIVE, MOVE

TMCC PATCH MATERIAL, MOVE

TMCC TAB MATERIAL, MOVE

Note	A				
ECN No.	97500				
Sign./Date	AMI 010907				
Appr./Date	PGE 010907				Drawing remarks

TetraPak

Designer AMI	Date 010907	Approved PGE	Date 010907	Doc.Class –
Machine PT/21-0500	Denomination PLC FAST OUT			
Company TETRA BRIK PACKAGING SYSTEMS	Drawing No 44980-029:03			Page –

This drawing must not without the consent of Tetra Pak: be copied, transmitted or disclosed to any third party.

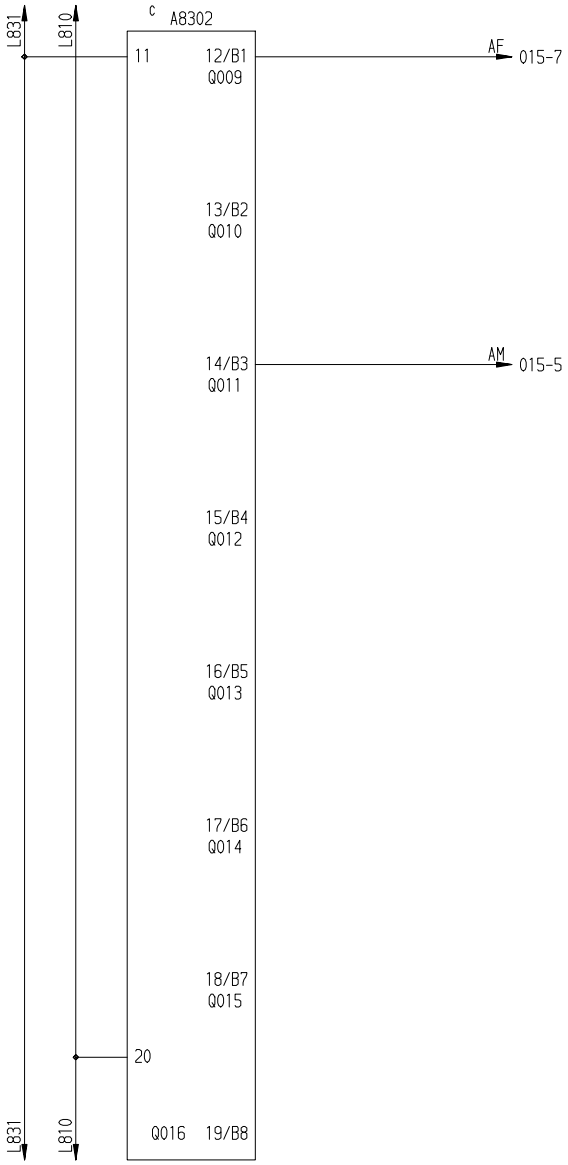

TPIH GENERATOR PATCH/RESEAL, INDUCTOR SWITCH

TPIH GENERATOR PATCH/RESEAL, START

Note	A				
ECN No.	72315				
Sign./Date	AMI 990322				
Appr./Date	BGZ 990322				Drawing remarks

Tetra Pak

Designer AMI	Date 990322	Approved BGZ	Date 990322	Doc.Class –	
Machine PT/21-0500	Denomination PLC FAST OUT				
Company TETRA BRIK PACKAGING SYSTEMS	Drawing No 44980-030:01	Page –			

WIN cp

PRE-RELEASED/DEVELOPMENT STATE

This drawing must not without the consent of Tetra Pak: be copied, transmitted or disclosed to any third party.

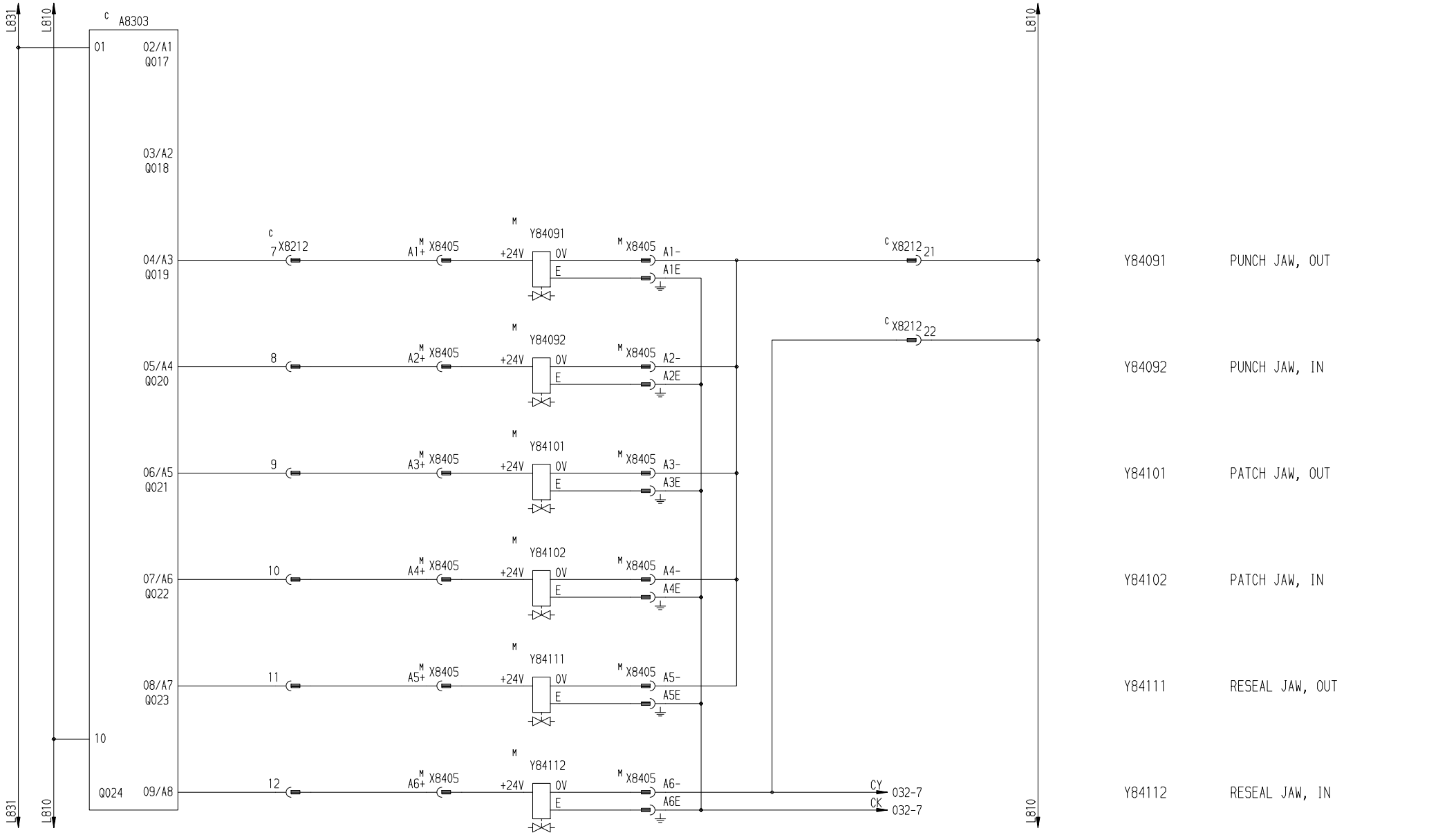

Note	A				
ECN No.	72315				
Sign./Date	AMI 990322				
Appr./Date	BGZ 990322				Drawing remarks

TetraPak

Designer AMI	Date 990322	Approved BGZ	Date 990322	Doc.Class –	
Machine PT/21-0500	Denomination PLC FAST OUT				
Company TETRA BRIK PACKAGING SYSTEMS	Drawing No 44980-031:01	Page –			

PRE-RELEASED/DEVELOPMENT STATE

This drawing must not without the consent of Tetra Pak: be copied, transmitted or disclosed to any third party.

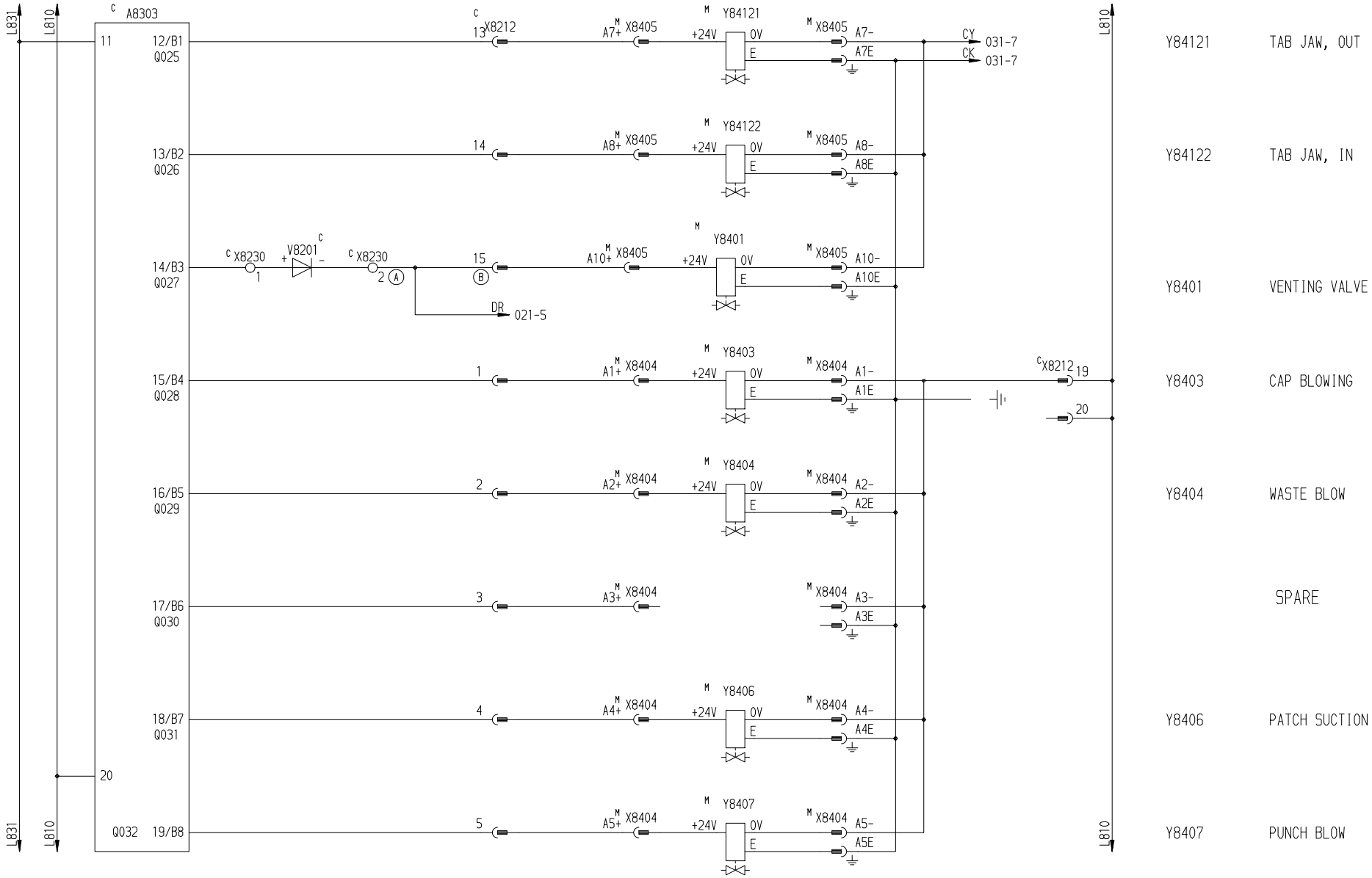

Y84121	TAB JAW, OUT
Y84122	TAB JAW, IN
Y8401	VENTING VALVE
Y8403	CAP BLOWING
Y8404	WASTE BLOW
	SPARE
Y8406	PATCH SUCTION
Y8407	PUNCH BLOW

Note	A					Designer AMI	Date 991206	Approved BGZ	Date 991206	Doc.Class	–
ECN No.	73001					Machine PT/21-0500	Denomination PLC FAST SCAN				
Sign./Date	AMI 991206					Company TETRA BRIK PACKAGING SYSTEMS	Drawing No 44980-032:02			Page	–
Appr./Date	BGZ 991206				Drawing remarks						

PRE-RELEASED/DEVELOPMENT STATE

This drawing must not without the consent of Tetra Pak: be copied, transmitted or disclosed to any third party.

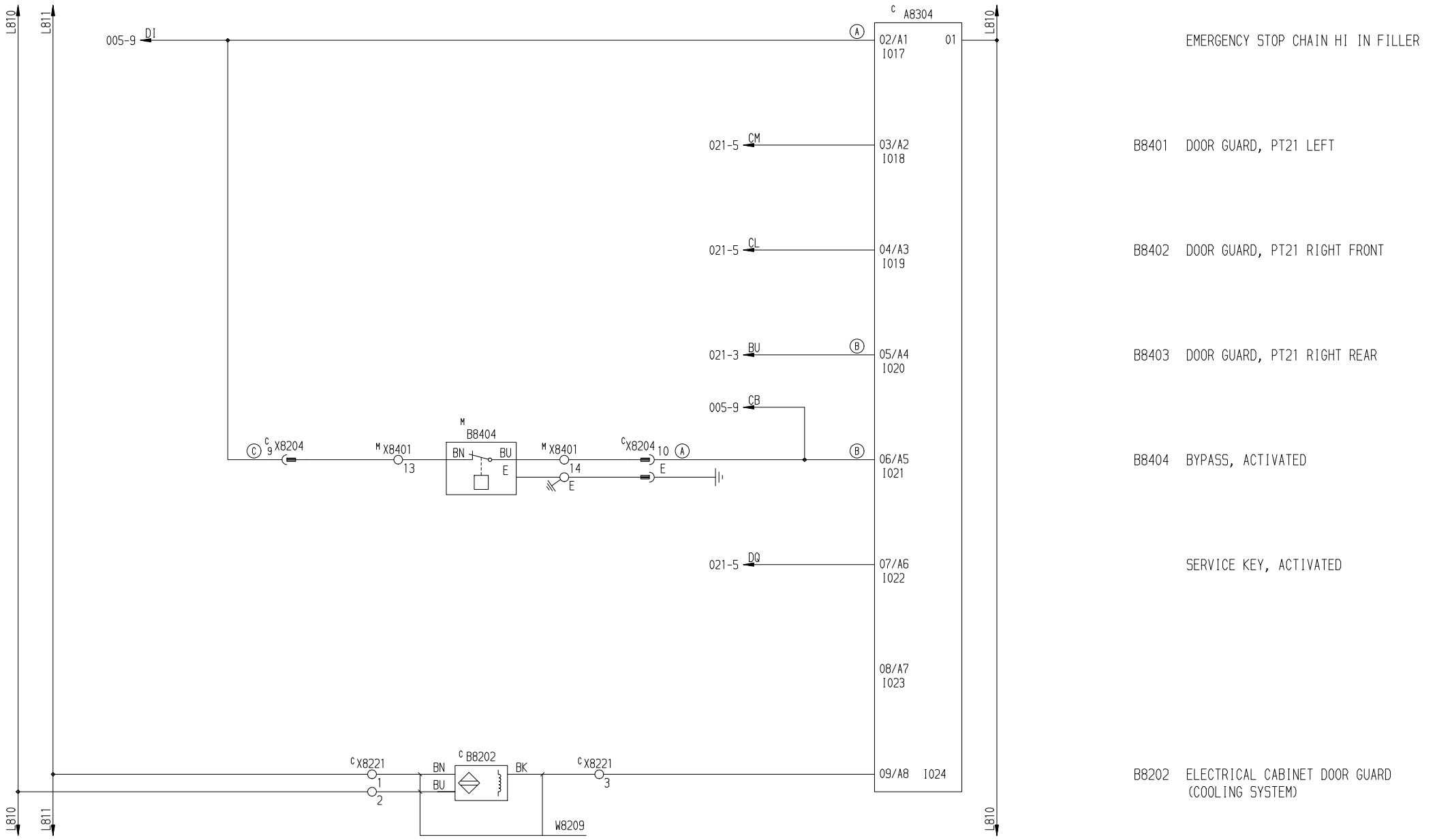

Note	A				
ECN No.	72315				
Sign./Date	AMI 990322				
Appr./Date	BGZ 990322				Drawing remarks

Tetra Pak

Designer AMI	Date 990322	Approved BGZ	Date 990322	Doc.Class –	
Machine PT/21-0500	Denomination PLC IN				
Company TETRA BRIK PACKAGING SYSTEMS	Drawing No 44980-033:01	Page –			

PRE-RELEASED/DEVELOPMENT STATE

This drawing must not without the consent of Tetra Pak: be copied, transmitted or disclosed to any third party.

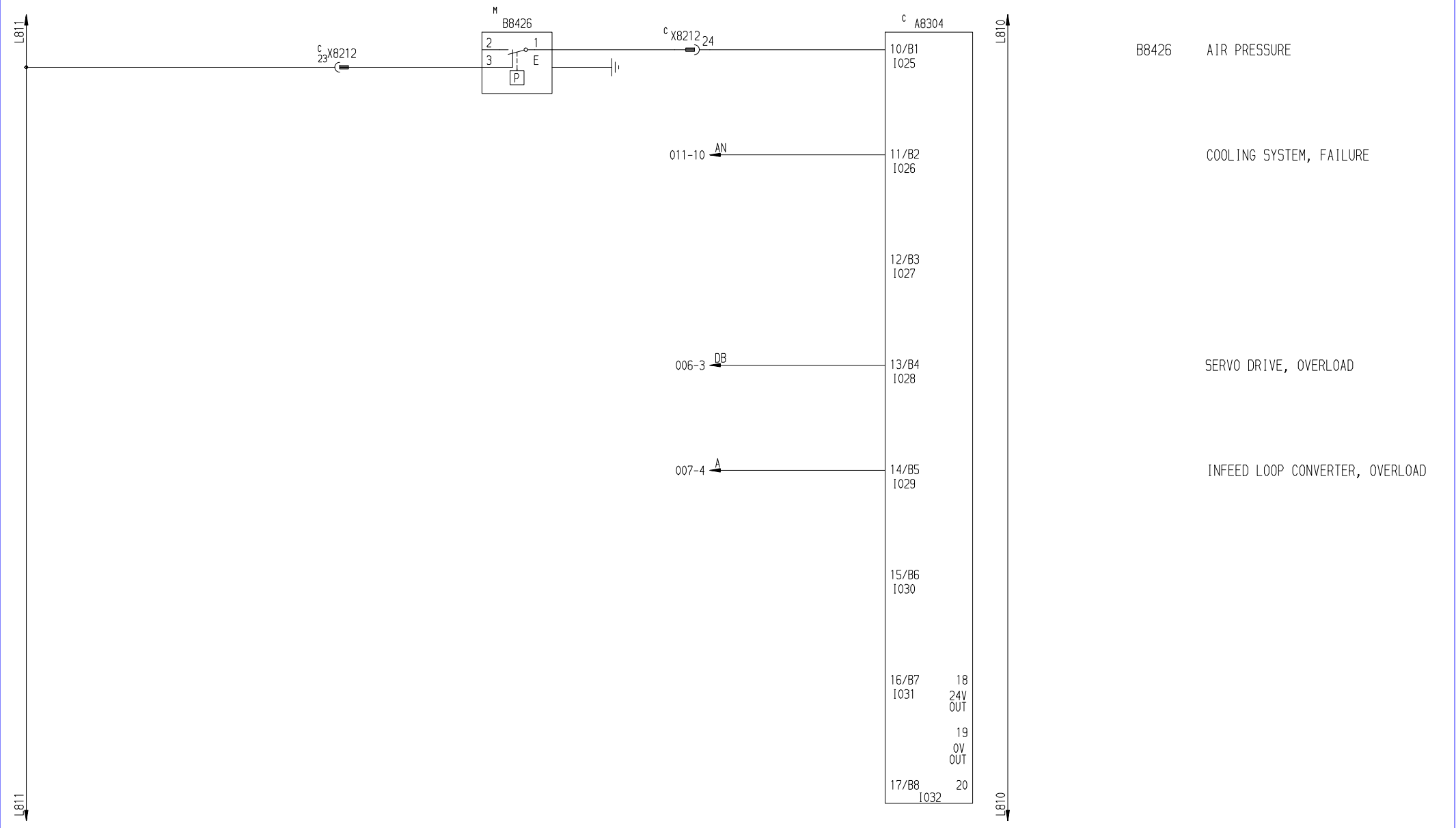

Note	A				
ECN No.	97500				
Sign./Date	AMI 010907				
Appr./Date	PGE 010907				Drawing remarks

TetraPak

Designer AMI	Date 010907	Approved PGE	Date 010907	Doc.Class –
Machine PT/21-0500	Denomination PLC IN			
Company TETRA BRIK PACKAGING SYSTEMS	Drawing No 44980-034:03			Page –

PRE-RELEASED/DEVELOPMENT STATE

This drawing must not without the consent of Tetra Pak: be copied, transmitted or disclosed to any third party.

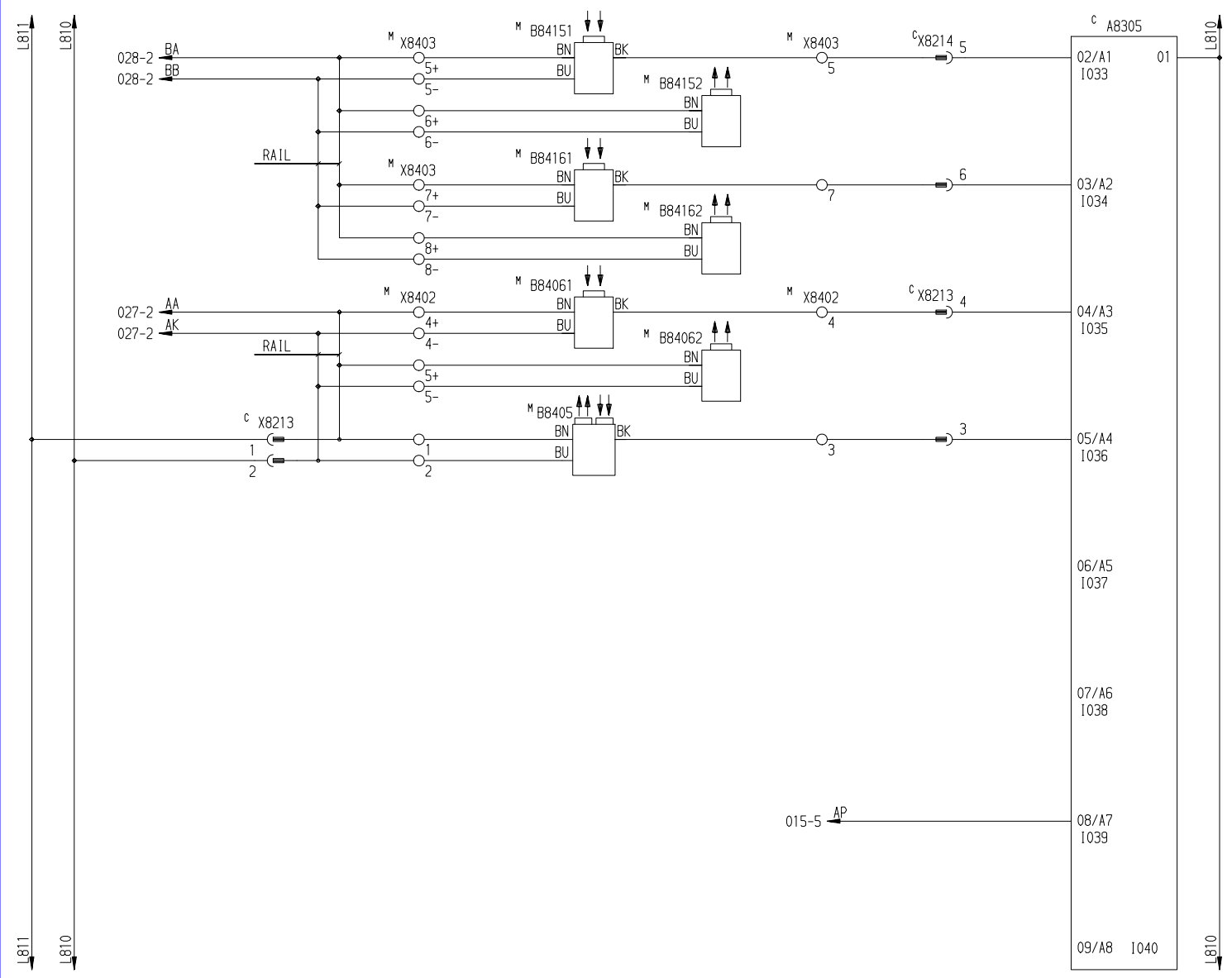

B84151 INFEED LOOP, HIGH
B84152

B84161 INFEED LOOP, LOW
B84162

B84061 OUTFEED LOOP, HIGH
B84062

B8405 WASTEBOX LEVEL, HIGH

TPIH PATCH/RESEAL, FAILURE

Note	A				
ECN No.	72315				
Sign./Date	AMI 990322				
Appr./Date	BGZ 990322				Drawing remarks

Tetra Pak

Designer AMI	Date 990322	Approved BGZ	Date 990322	Doc.Class –	
Machine PT/21-0500	Denomination PLC IN				
Company TETRA BRIK PACKAGING SYSTEMS	Drawing No 44980-035:01	Page –			

PRE-RELEASED/DEVELOPMENT STATE

This drawing must not without the consent of Tetra Pak: be copied, transmitted or disclosed to any third party.

1	2	3	4	5	6	7	8	9	10

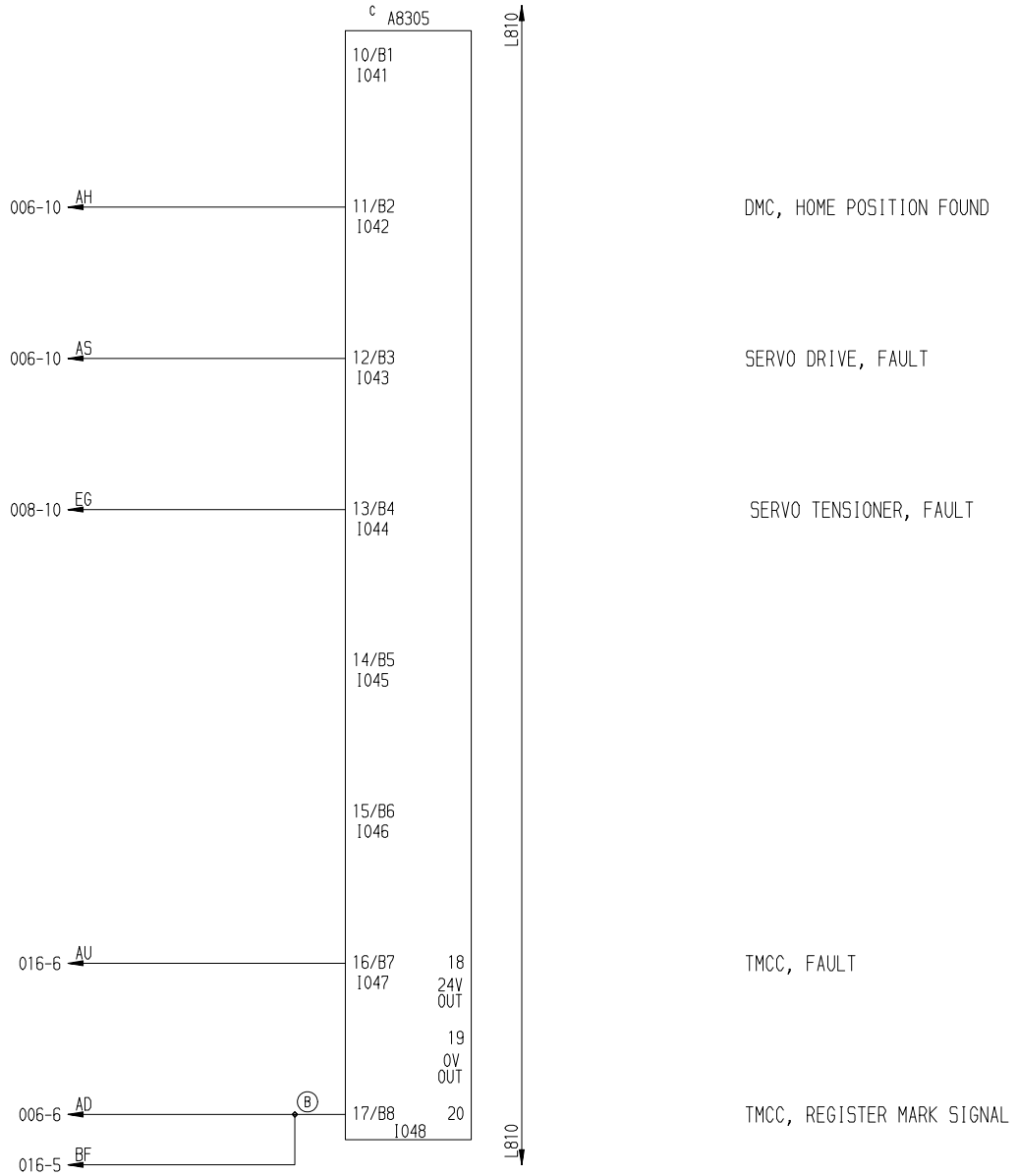

Note	A				
ECN No.	97500				
Sign./Date	AMI 010907				
Appr./Date	PGE 010907				Drawing remarks

Tetra Pak

Designer AMI	Date 010907	Approved PGE	Date 010907	Doc.Class –	
Machine PT/21-0500	Denomination PLC IN				
Company TETRA BRIK PACKAGING SYSTEMS	Drawing No 44980-036:03	Page –			

PRE-RELEASED/DEVELOPMENT STATE

This drawing must not without the consent of Tetra Pak: be copied, transmitted or disclosed to any third party.

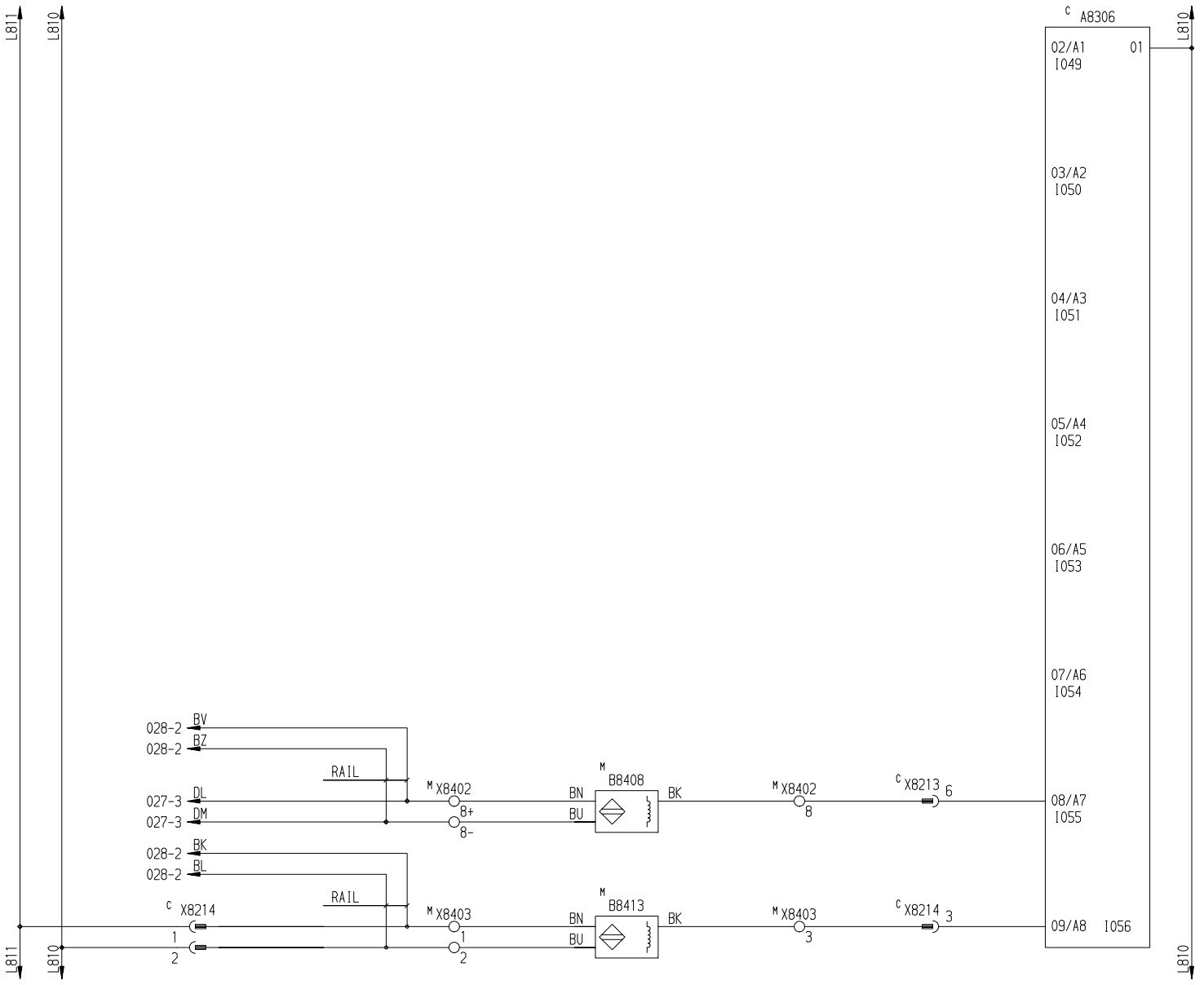

B8408	PATCH MATERIAL, LOW
B8413	TAB MATERIAL, LOW

Note	A				
ECN No.	72315				
Sign./Date	AMI 990322				
Appr./Date	BGZ 990322				Drawing remarks

Tetra Pak

Designer AMI	Date 990322	Approved BGZ	Date 990322	Doc.Class –	
Machine PT/21-0500	Denomination PLC IN				
Company TETRA BRIK PACKAGING SYSTEMS	Drawing No 44980-037:01	Page –			

PRE-RELEASED/DEVELOPMENT STATE

This drawing must not without the consent of Tetra Pak: be copied, transmitted or disclosed to any third party.

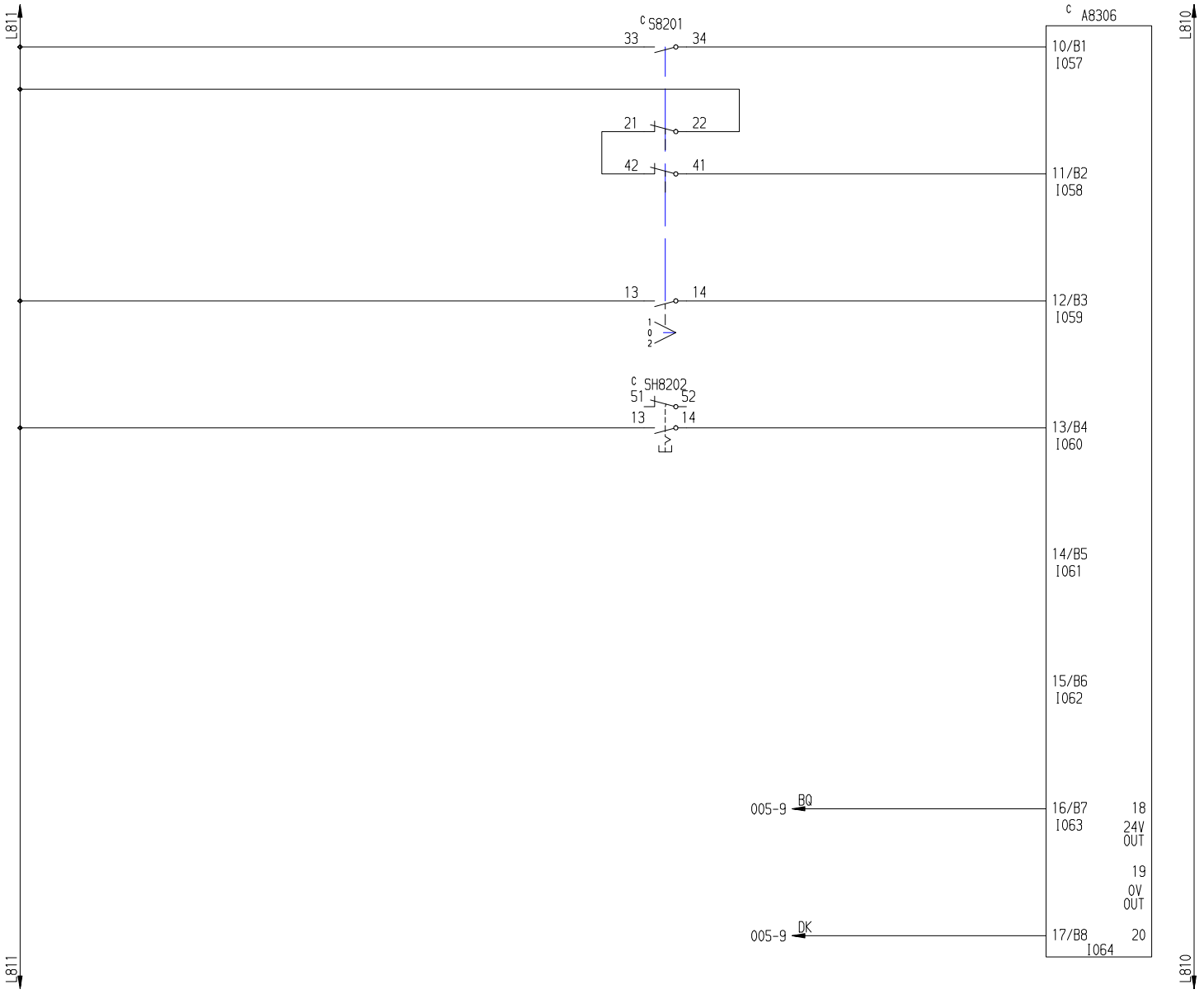

S8201	PRODUCTION, SELECTED
	PRODUCTION DISABLE APPLICATORS, SELECTED
	PREPARATION, SELECTED
SH8202	PUSHBUTTON, SINGLE MODE
	FROM TBA/21, SPARE
	FROM TBA/21, SPARE

Note	A				
ECN No.	72315				
Sign./Date	AMI 990322				
Appr./Date	BGZ 990322				Drawing remarks

Tetra Pak

Designer AMI	Date 990322	Approved BGZ	Date 990322	Doc.Class –	
Machine PT/21-0500	Denomination PLC IN				
Company TETRA BRIK PACKAGING SYSTEMS	Drawing No 44980-038:01	Page –			

PRE-RELEASED/DEVELOPMENT STATE

This drawing must not without the consent of Tetra Pak: be copied, transmitted or disclosed to any third party.

1	2	3	4	5	6	7	8	9	10

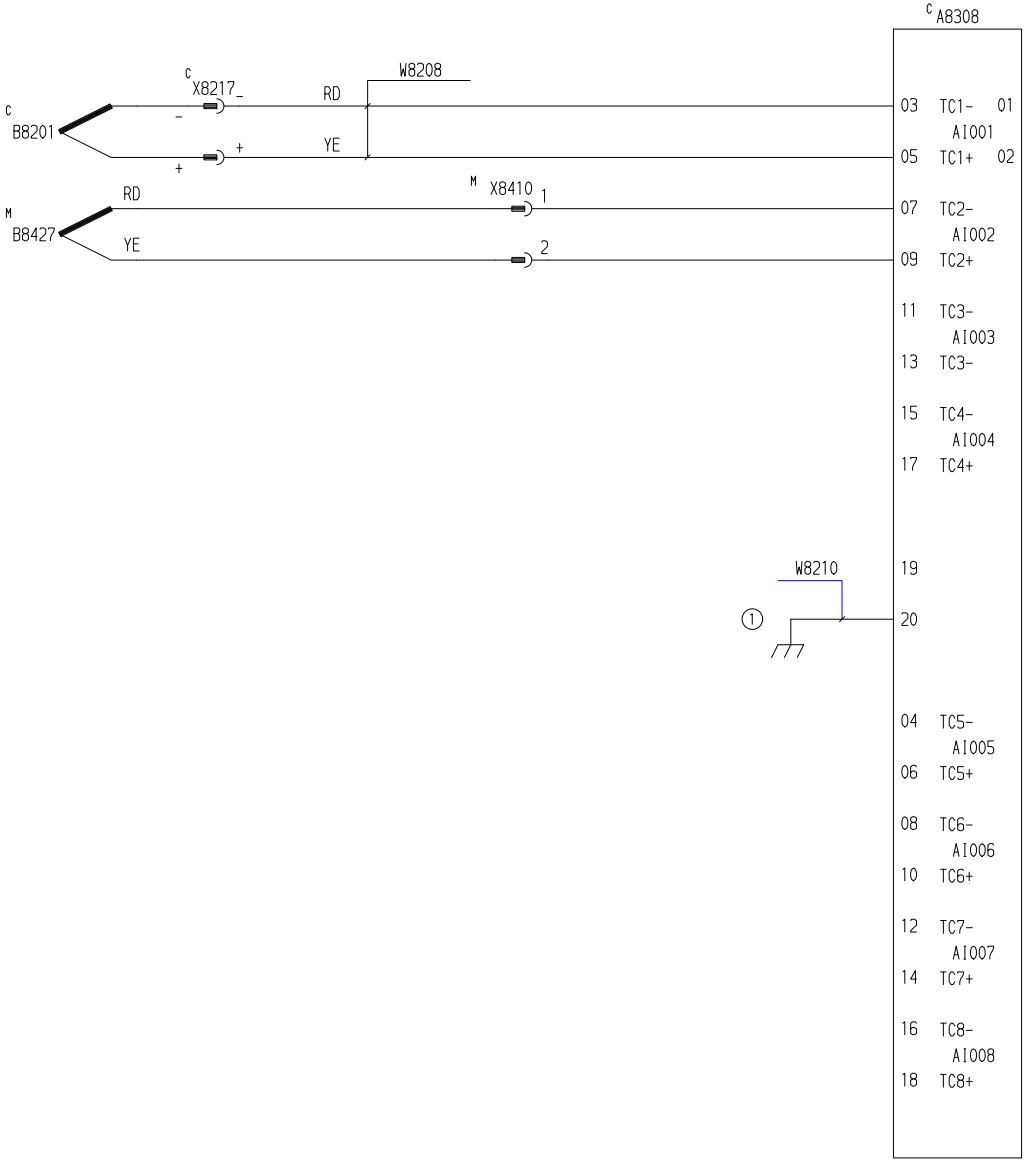

B8201 TEMPERATURE MONITOR, ELECTRICAL CABINET

B8427 TEMPERATURE MONITOR, TAB SEALING PAD

Note	A				1. TO BE CONNECT ON THE PLATE	Tetra Pak	Designer AMI	Date 991206	Approved BGZ	Date 991206	Doc.Class –
ECN No.	73001						Machine PT/21-0500	Denomination THERMOCOUPLES IN			
Sign./Date	AMI 991206						Company TETRA BRIK PACKAGING SYSTEMS	Drawing No 44980-041:02			Page –
Appr./Date	BGZ 991206				Drawing remarks						

PRE-RELEASED/DEVELOPMENT STATE

This drawing must not without the consent of Tetra Pak: be copied, transmitted or disclosed to any third party.

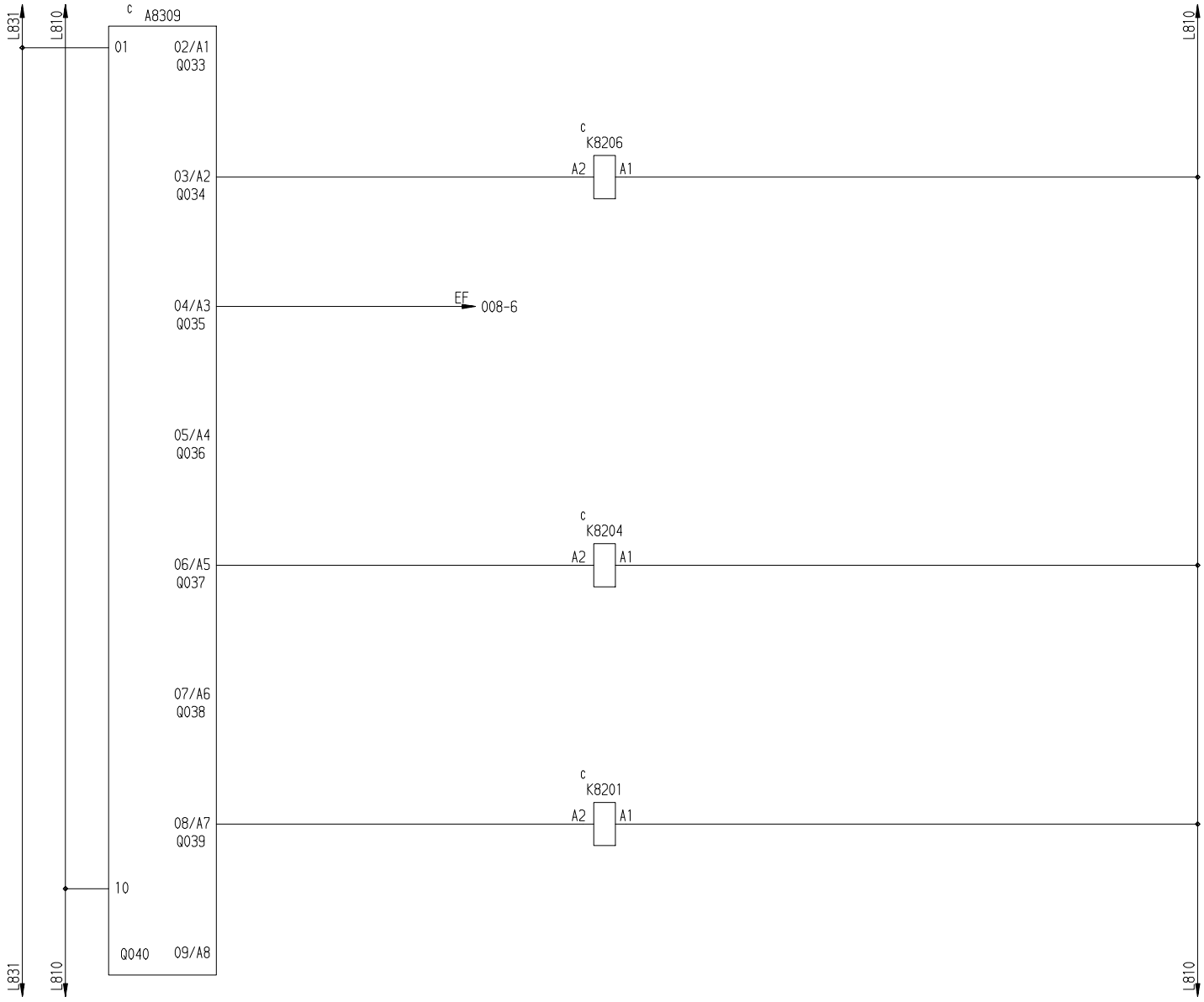

K8206	INFEED LOOP, MAIN SUPPLY
	SERVO TENSIONER
	SOFTWARE ENABLE
K8204	TPIH GENERATOR PATCH/RESEAL, MAIN SUPPLY
K8201	DMC, MAIN SUPPLY

Note	A				
ECN No.	97500				
Sign./Date	AMI 010907				
Appr./Date	PGE 010907				Drawing remarks

Tetra Pak

Designer AMI	Date 010907	Approved PGE	Date 010907	Doc.Class –	
Machine PT/21-0500	Denomination PLC OUT				
Company TETRA BRIK PACKAGING SYSTEMS	Drawing No 44980-043:03	Page –			

PRE-RELEASED/DEVELOPMENT STATE

This drawing must not without the consent of Tetra Pak: be copied, transmitted or disclosed to any third party.

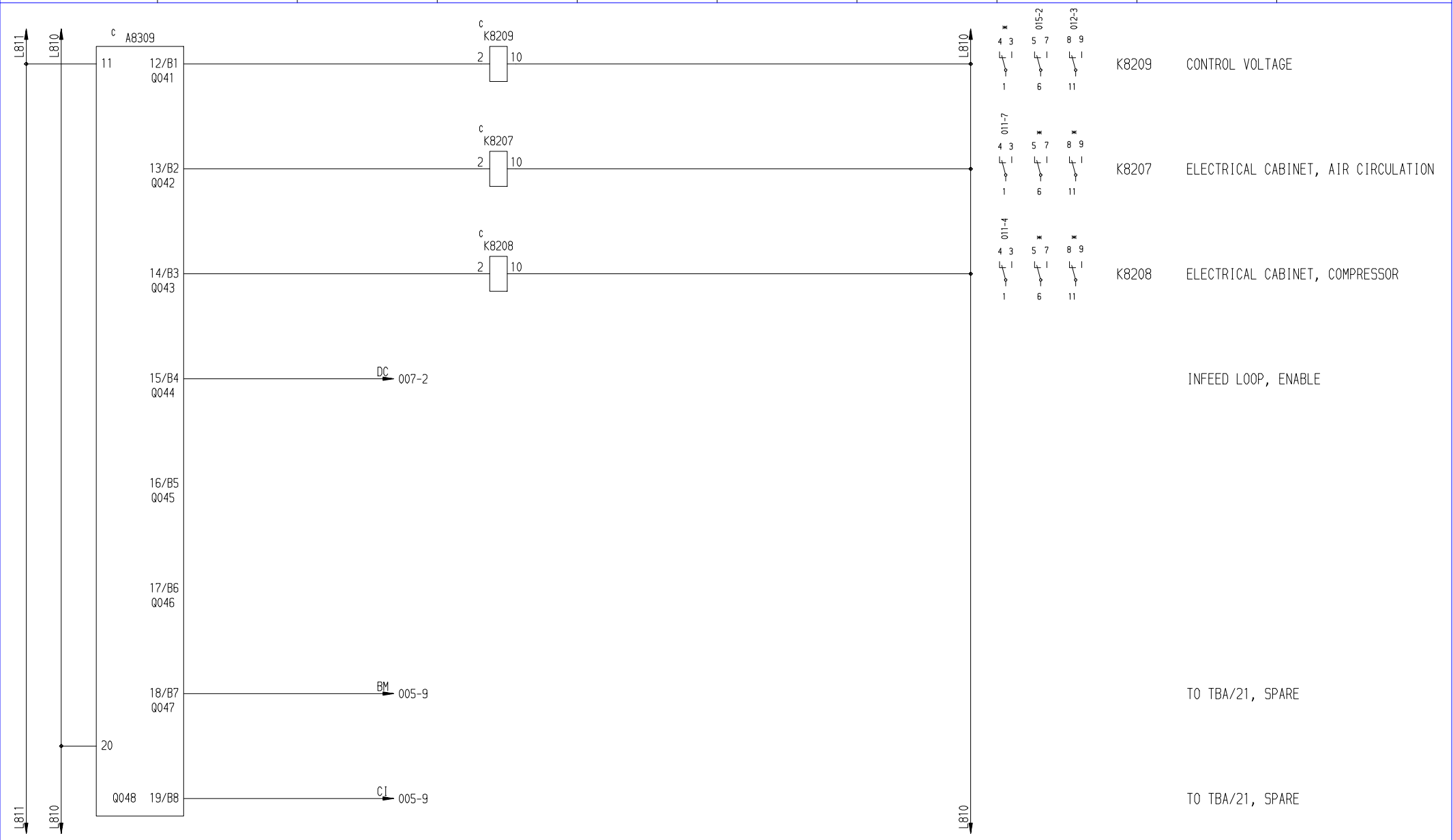

Note	A				
ECN No.	72315				
Sign./Date	AMI 990322				
Appr./Date	BGZ 990322				Drawing remarks

TetraPak

Designer AMI	Date 990322	Approved BGZ	Date 990322	Doc.Class –	
Machine PT/21-0500	Denomination PLC OUT				
Company TETRA BRIK PACKAGING SYSTEMS	Drawing No 44980-044:01	Page –			

PRE-RELEASED/DEVELOPMENT STATE

This drawing must not without the consent of Tetra Pak: be copied, transmitted or disclosed to any third party.

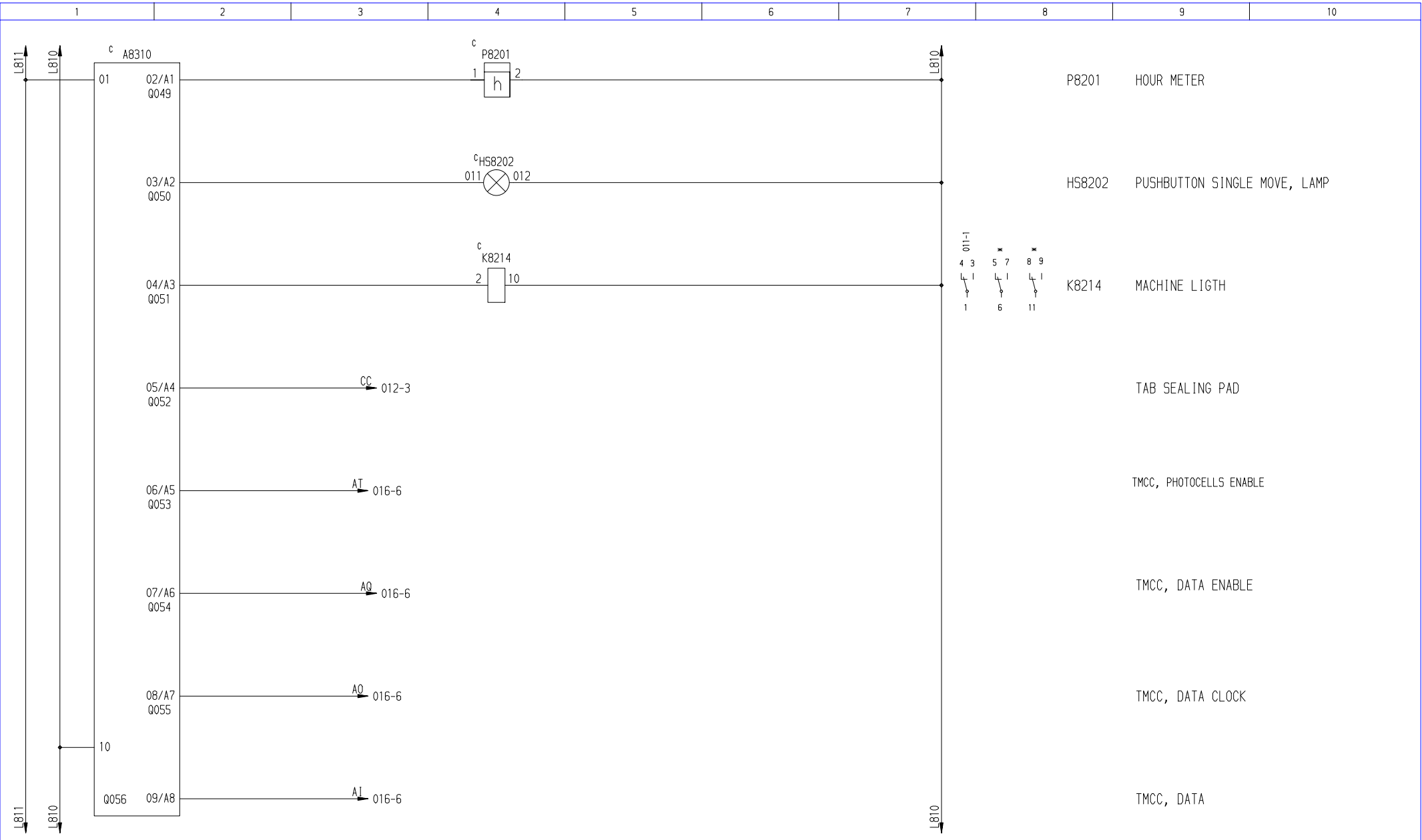

Note	A				
ECN No.	97500				
Sign./Date	AMI 010907				
Appr./Date	PGE 010907				Drawing remarks

Tetra Pak

Designer AMI	Date 010907	Approved PGE	Date 010907	Doc.Class –
Machine PT/21-0500	Denomination PLC OUT			
Company TETRA BRIK PACKAGING SYSTEMS	Drawing No 44980-045:03			Page –

This drawing must not without the consent of Tetra Pak: be copied, transmitted or disclosed to any third party.

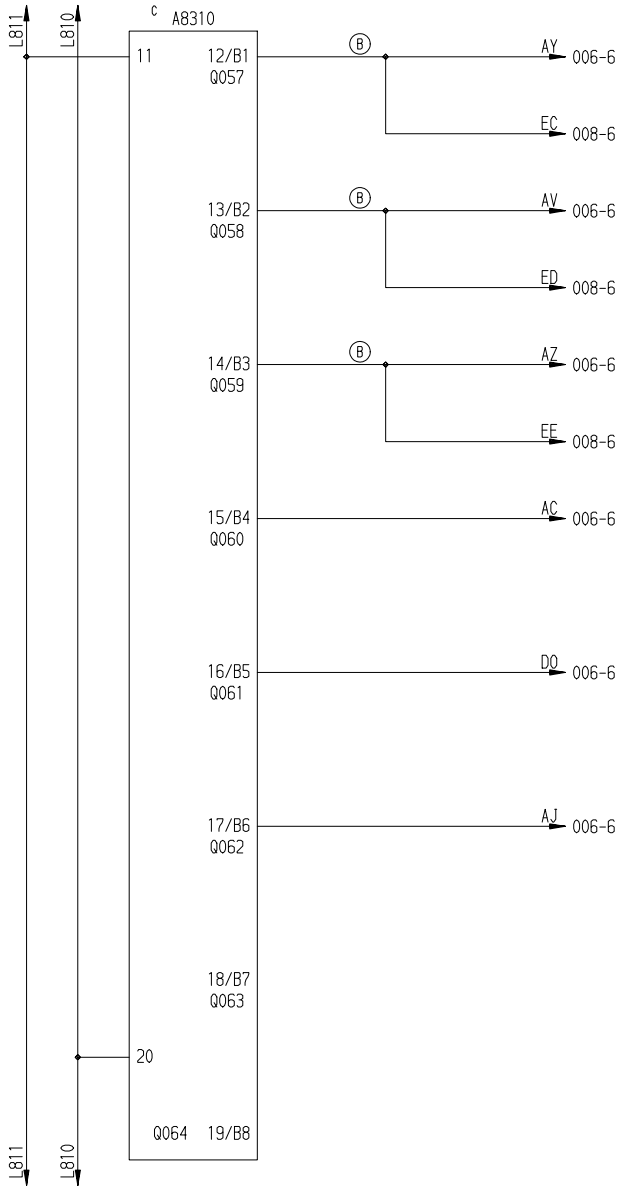

SERVO DRIVE DATA ENABLE

SERVO TENSIONER DATA ENABLE

SERVO DRIVE DATA CLOCK

SERVO TENSIONER DATA CLOCK

SERVO DRIVE DATA

SERVO TENSIONER DATA

SERVO DRIVE, SOFTWARE ENABLE

SERVO DRIVE, SETTING

SERVO DRIVE, PREPARATION

Note	A				
ECN No.	97500				
Sign./Date	AMI 010907				
Appr./Date	PGE 010907				Drawing remarks

Tetra Pak

Designer AMI	Date 010907	Approved PGE	Date 010907	Doc.Class –	
Machine PT/21-0500	Denomination PLC OUT				
Company TETRA BRIK PACKAGING SYSTEMS	Drawing No 44980-046:03	Page –			

This drawing must not without the consent of Tetra Pak: be copied, transmitted or disclosed to any third party.

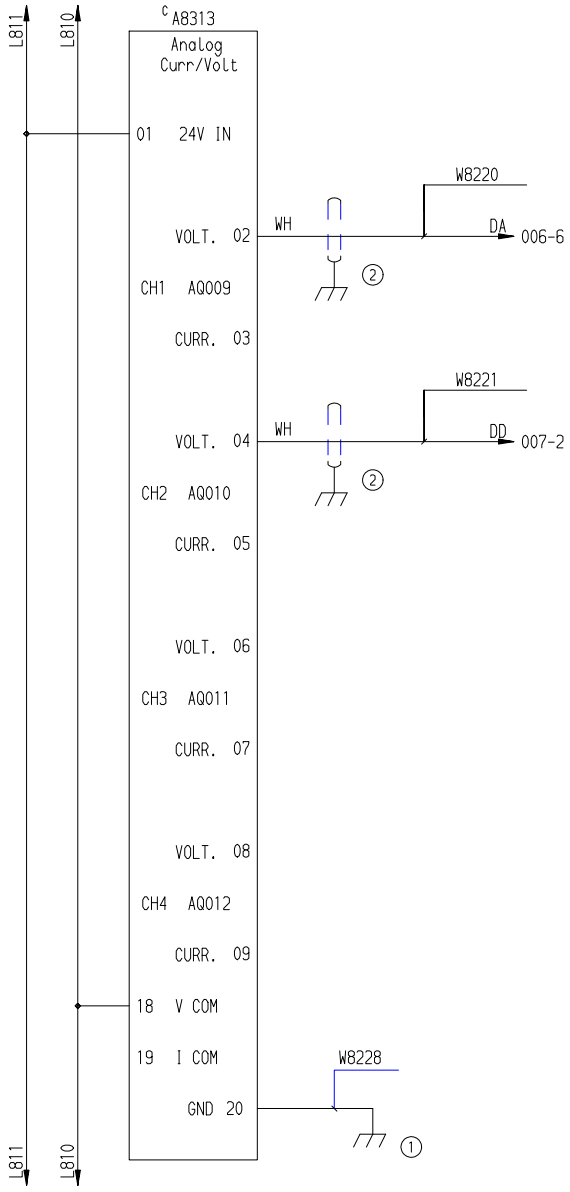

DMC, PULLTAB CORRECTION

INFEED LOOP, SPEED

Note	A				1. TO BE CONNECT ON THE PLATE
ECN No.	73001				2. CONNECT TO PIN 20
Sign./Date	AMI 991206				
Appr./Date	BGZ 991206				Drawing remarks

Tetra Pak

Designer AMI	Date 991206	Approved BGZ	Date 991206	Doc.Class –
Machine PT/21-0500	Denomination PLC ANALOG OUT			
Company TETRA BRIK PACKAGING SYSTEMS	Drawing No 44980-051:02			Page –

PRE-RELEASED/DEVELOPMENT STATE

This drawing must not without the consent of Tetra Pak: be copied, transmitted or disclosed to any third party.

1	2	3	4	5	6	7	8	9	10

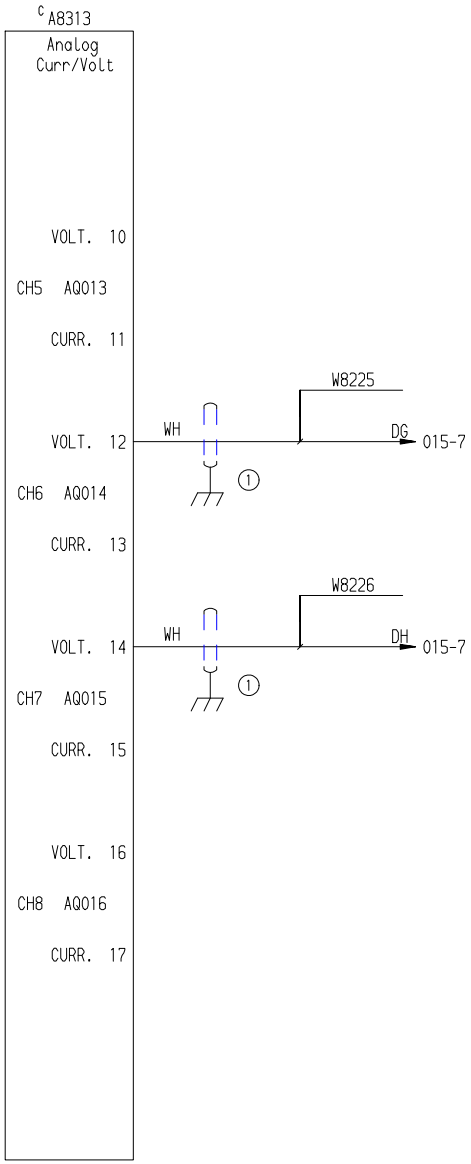

TPIH GENERATOR PATCH, POWER

TPIH GENERATOR RESEAL, POWER

Note	A				1. CONNECT TO PIN 20
ECN No.	73001				
Sign./Date	AMI 991206				
Appr./Date	BGZ 991206				Drawing remarks

Tetra Pak

Designer AMI	Date 991206	Approved BGZ	Date 991206	Doc.Class –	
Machine PT/21-0500	Denomination PLC ANALOG OUT				
Company TETRA BRIK PACKAGING SYSTEMS	Drawing No 44980-052:02	Page –			

This drawing must not without the consent of Tetra Pak: be copied, transmitted or disclosed to any third party.

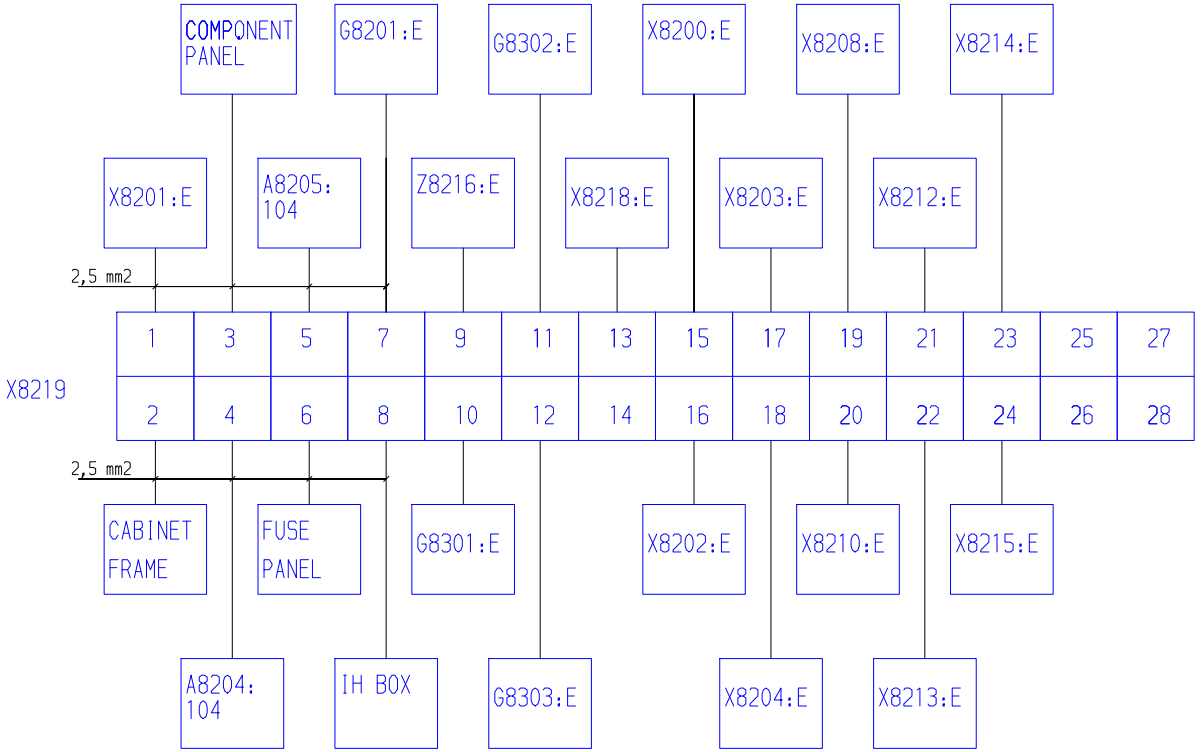

FOR TYPE OF WIRE, WIRING INSTRUCTIONS ETC.
SEE SPECIFICATION FOR SUBSUPPLIERS TPUS 3502.22

WHERE NOTHING ELSE IS SAID
CABLE COLOUR : YELLOW/GREEN
CABLE SECTION : 1,5 mm2

Note	A				
ECN No.	73001				
Sign./Date	AMI 991206				
Appr./Date	BGZ 991206				Drawing remarks

Tetra Pak

Designer AMI	Date 991206	Approved BGZ	Date 991206	Doc.Class –	
Machine PT/21-0500	Denomination PROTECTIVE BOUNDING CIRCUIT				
Company TETRA BRIK PACKAGING SYSTEMS	Drawing No 44980-900:02	Page –			

7 Connections diagrams

EM3.0TB075473en.fm

Table of contents

Connection diagram. 62060-005:01
Connection diagram. 62060-006:03
Connection diagram. 62060-009:03
Connection diagram. 62060-010:01
Connection diagram. 62060-011:03
Connection diagram. 62060-012:01
Connection diagram. 62060-014:01
Connection diagram. 62060-015:01
Connection diagram. 62060-017:01
Connection diagram. 62060-018:01
Connection diagram. 62060-019:01
Connection diagram. 62060-020:01
Connection diagram. 62060-021:01

EM3.0TB075473en.fm

PRE-RELEASED/DEVELOPMENT STATE

This drawing must not without the consent of Tetra Pak: be copied, transmitted or disclosed to any third party.

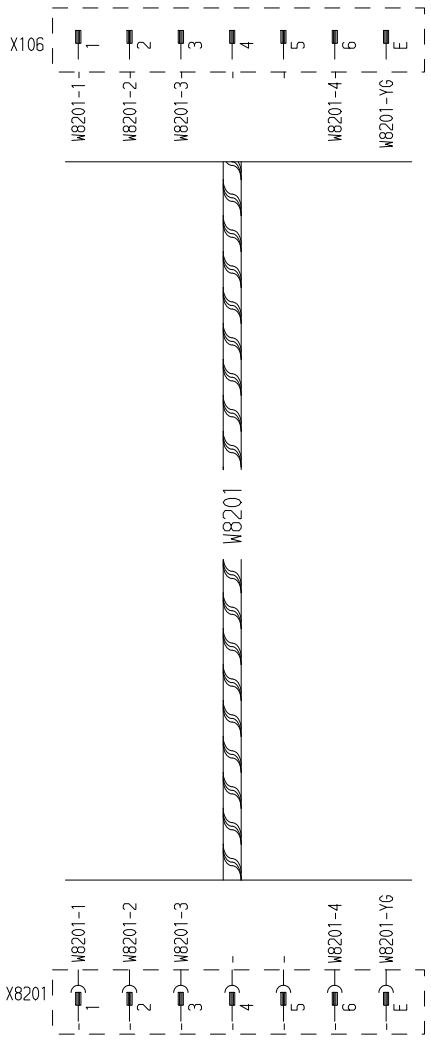

400 VAC POWER SUPPLY

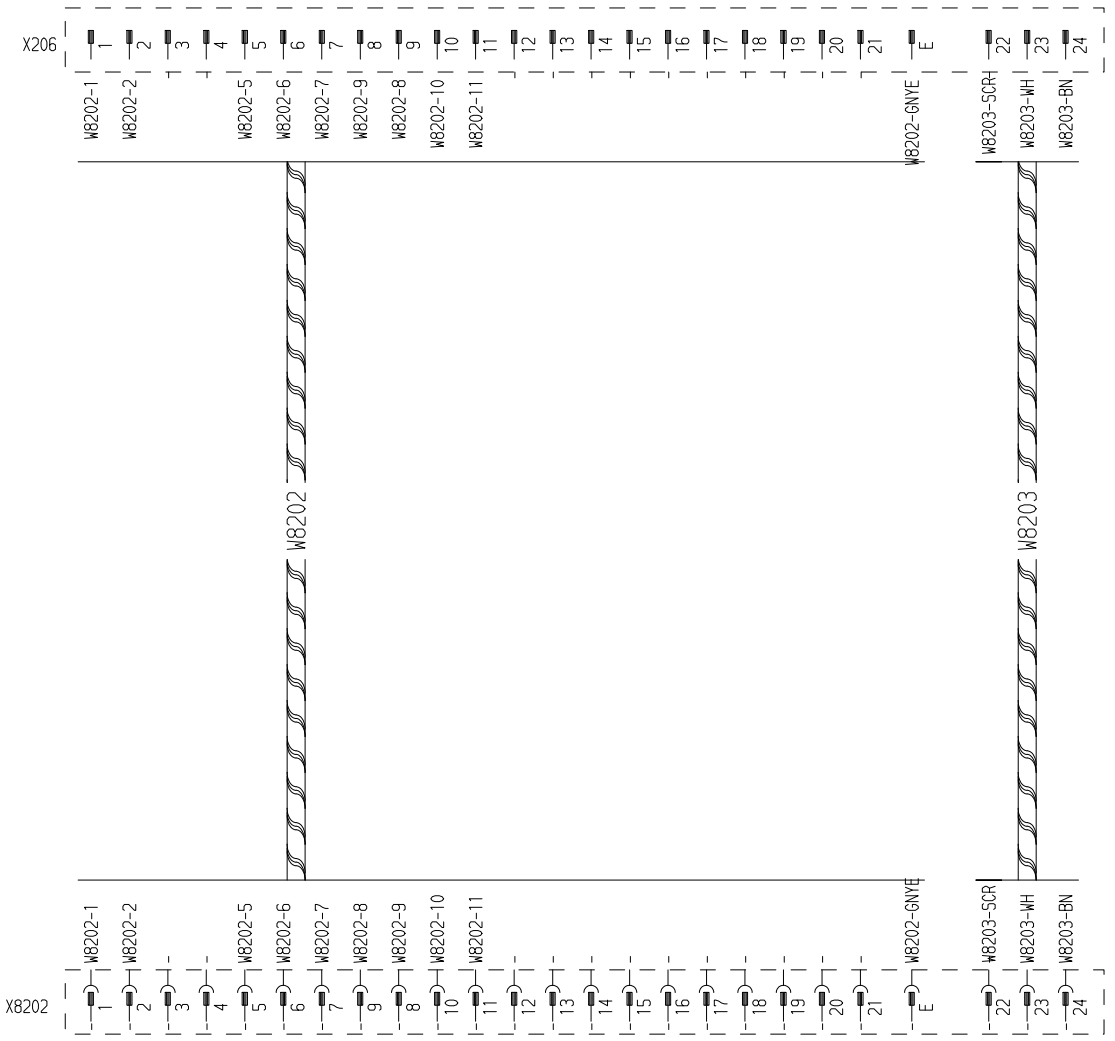

24 VDC POWER SUPPLY AND FILLER HANDSHAKE

Note	A				
ECN No.	72315				
Sign./Date	AMI 990322				
Appr./Date	BGZ 990322				Drawing remarks

Tetra Pak

Designer AMI	Date 990322	Approved BGZ	Date 990322	Doc.Class –	
Machine PT/21-0500	Denomination FILLER INTERFACE				
Company TETRA BRIK PACKAGING SYSTEMS	Drawing No 62060-005:01	Page –			

PRE-RELEASED/DEVELOPMENT STATE

This drawing must not without the consent of Tetra Pak: be copied, transmitted or disclosed to any third party.

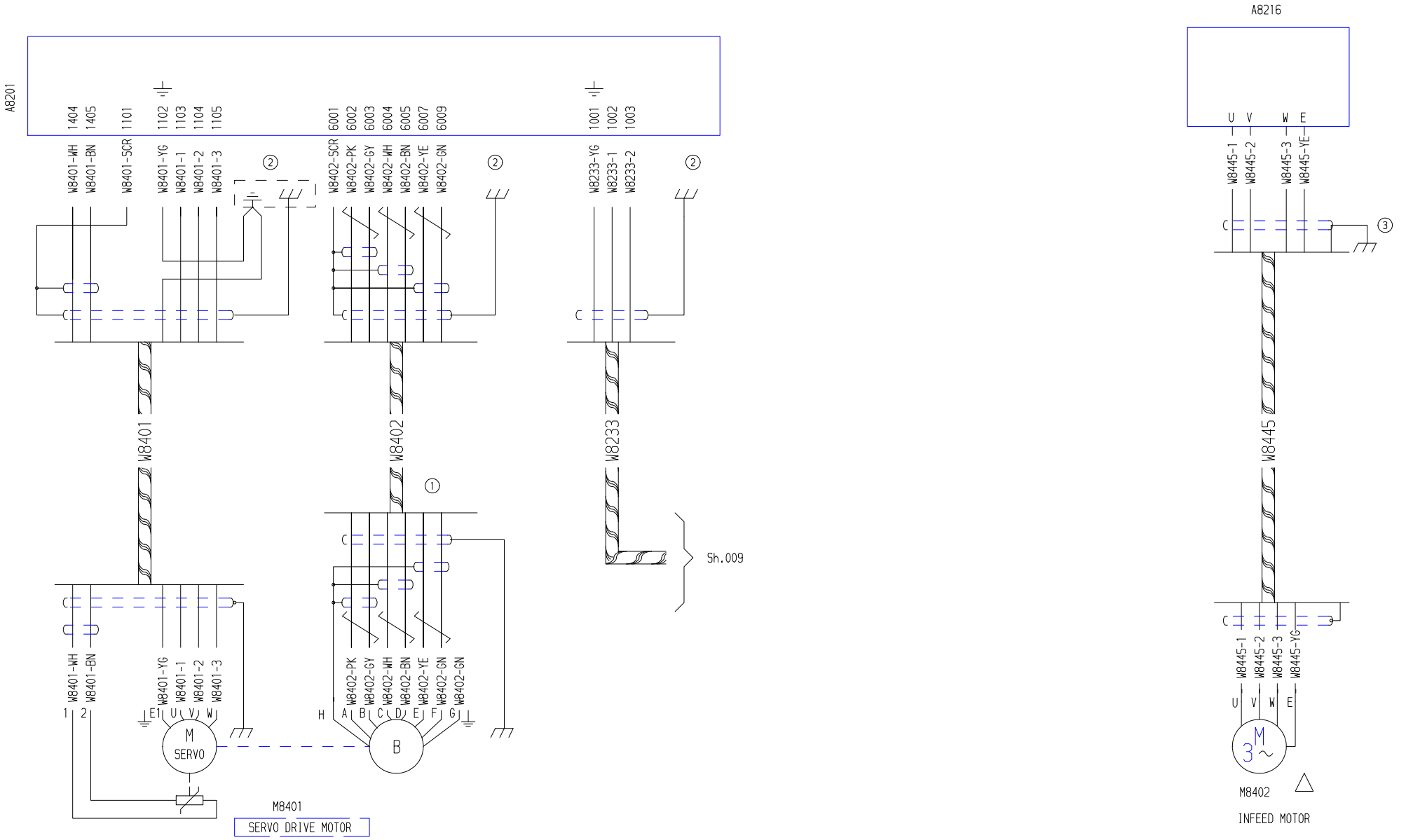

Note	A				1 - DRAWING/PART NUMBER 1255629-10
ECN No.	97500				2 - SERVO DRIVE GROUND CLAMP
Sign./Date	AMI 010907				3 - RACK GROUND CLAMP
Appr./Date	PGE 010907				Drawing remarks

Tetra Pak

Designer AMI	Date 010907	Approved PGE	Date 010907	Doc.Class –
Machine PT/21-0500	Denomination SERVO DRIVE MOTOR			
Company TETRA BRIK PACKAGING SYSTEMS	Drawing No 62060-006:03			Page –

PRE-RELEASED/DEVELOPMENT STATE

This drawing must not without the consent of Tetra Pak: be copied, transmitted or disclosed to any third party.

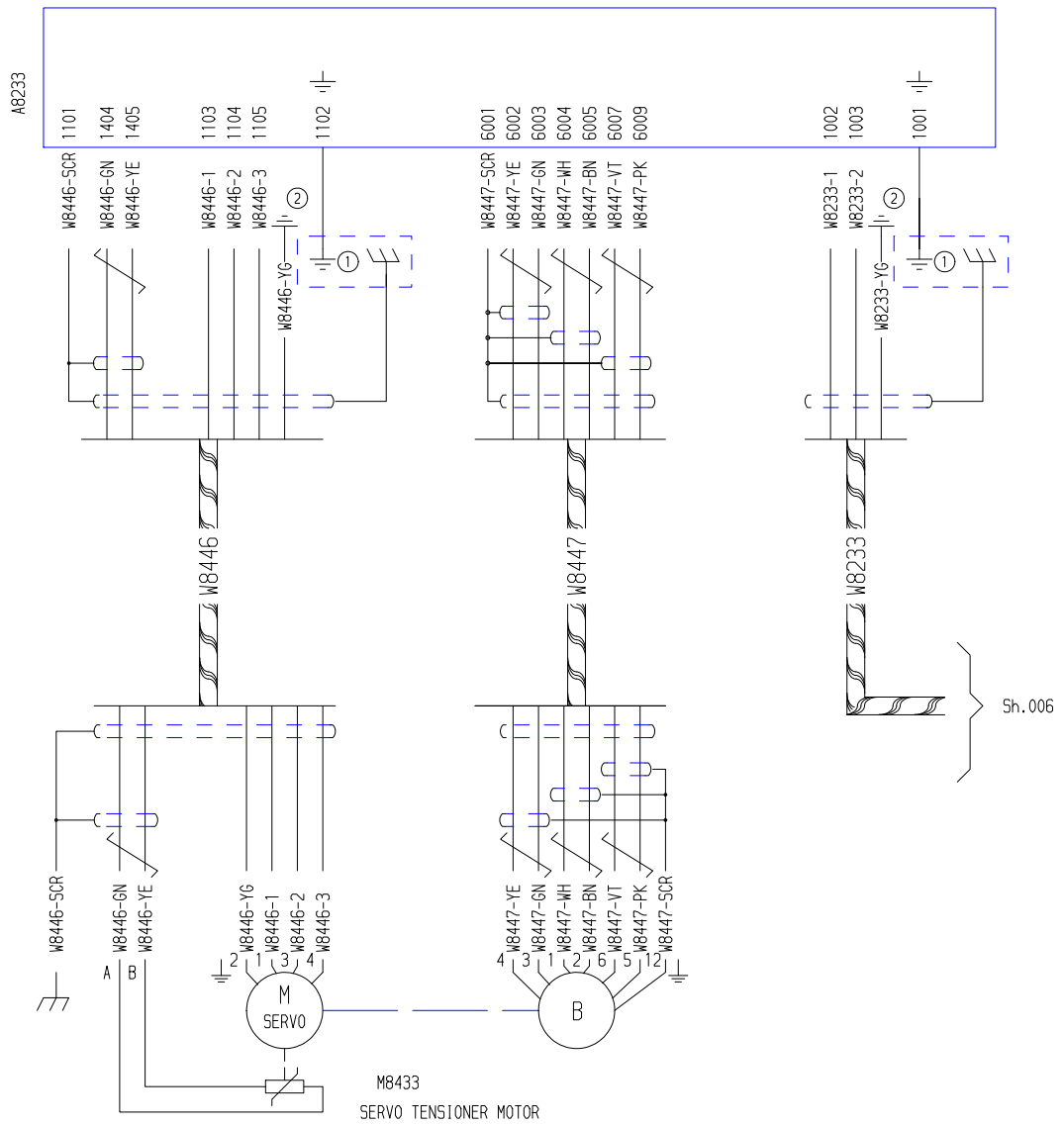

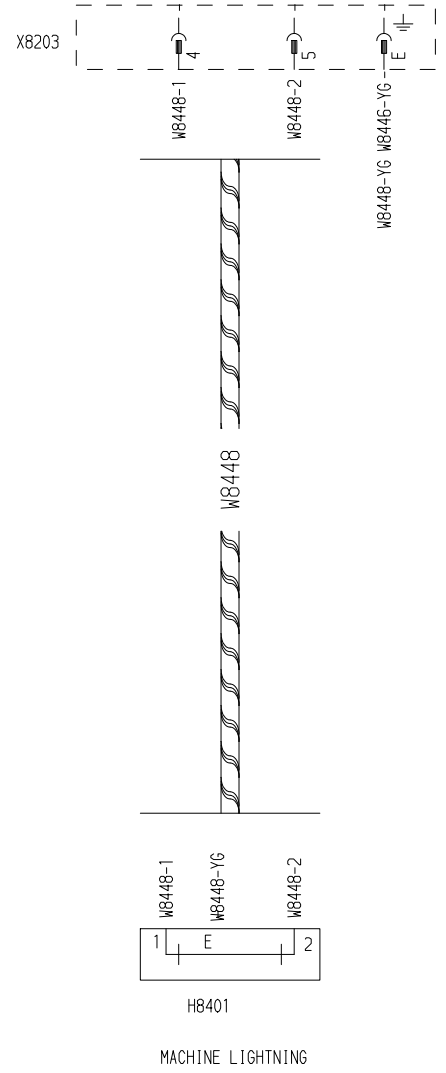

Note	A				1 CARD HOLDER GROUND CLAMP
ECN No.	97500				2 CARD HOLDER GROUND SCREW
Sign./Date	AMI 010907				
Appr./Date	PGE 010907				Drawing remarks

Tetra Pak

Designer AMI	Date 010907	Approved PGE	Date 010907	Doc.Class –
Machine PT/21-0500	Denomination SERVO TENSIONER MOTOR			
Company TETRA BRIK PACKAGING SYSTEMS	Drawing No 62060-009:03			Page –

PRE-RELEASED/DEVELOPMENT STATE

This drawing must not without the consent of Tetra Pak: be copied, transmitted or disclosed to any third party.

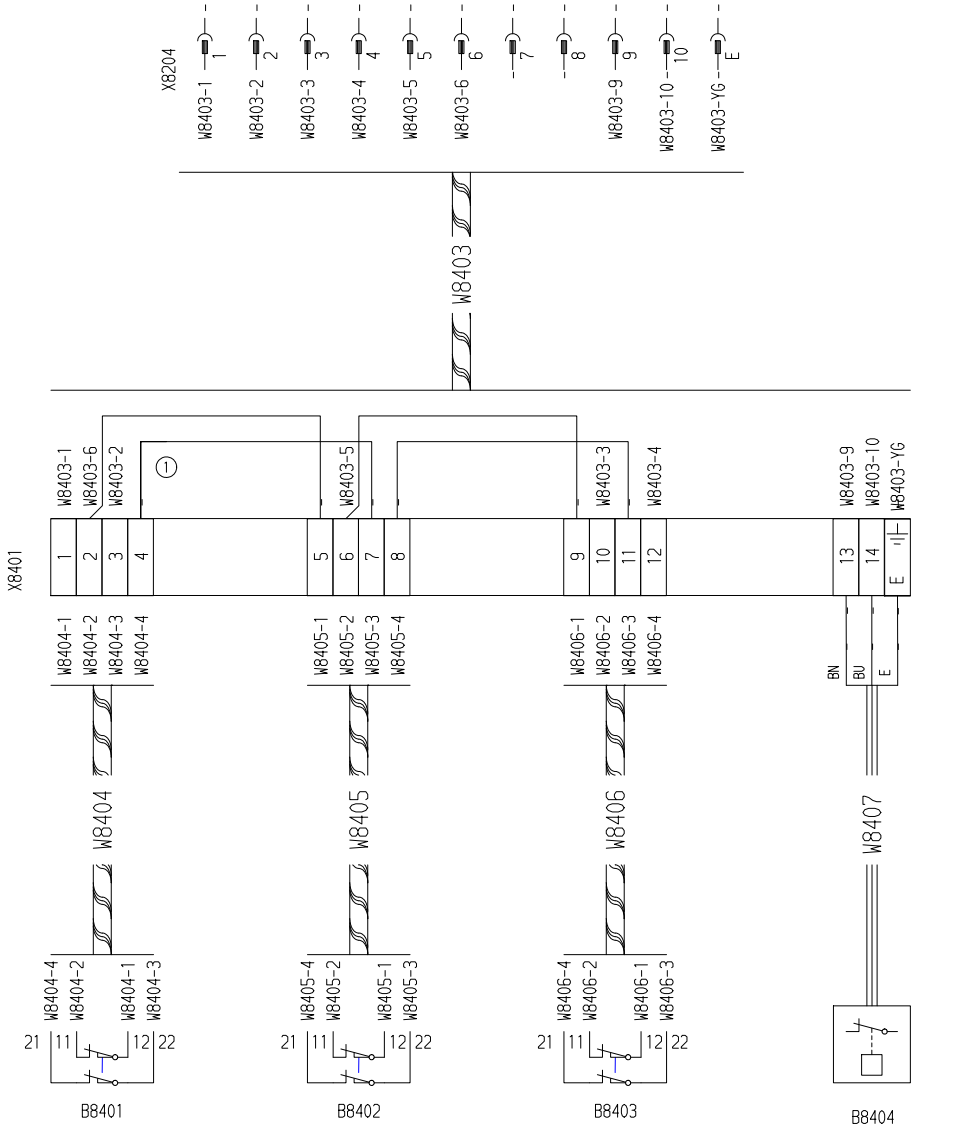

Note	A				1 - BRIDGES IN 0,75mm2 BU WIRE
ECN No.	72315				
Sign./Date	AMI 990322				
Appr./Date	BGZ 990322				Drawing remarks

Tetra Pak

Designer AMI	Date 990322	Approved BGZ	Date 990322	Doc.Class –	
Machine PT/21-0500	Denomination DOOR GUARDS				
Company TETRA BRIK PACKAGING SYSTEMS	Drawing No 62060-010:01	Page –			

PRE-RELEASED/DEVELOPMENT STATE

This drawing must not without the consent of Tetra Pak: be copied, transmitted or disclosed to any third party.

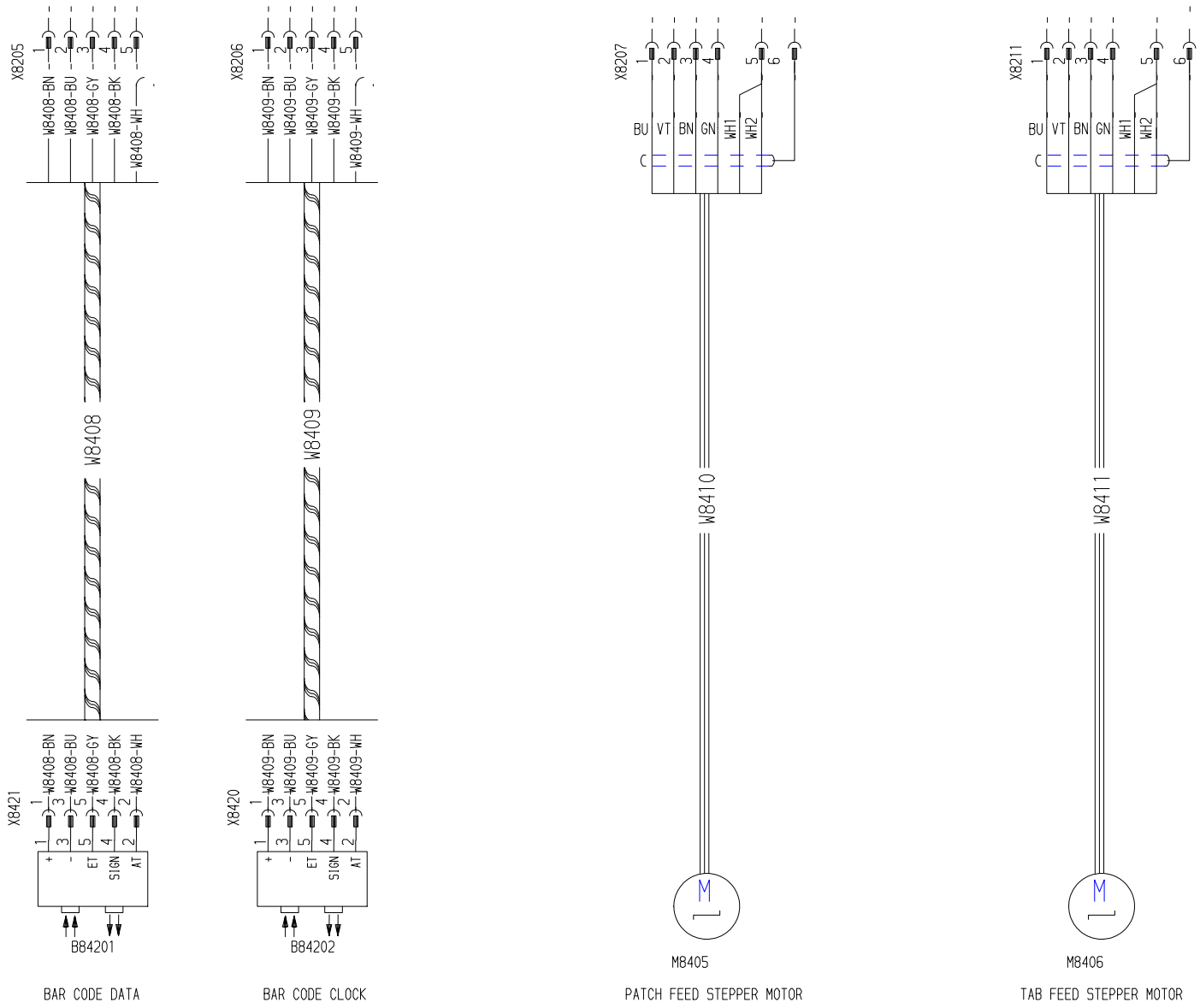

Note	A				
ECN No.	97500				
Sign./Date	AMI 010907				
Appr./Date	PGE 010907				Drawing remarks

Tetra Pak

Designer AMI	Date 010907	Approved PGE	Date 010907	Doc.Class –	
Machine PT/21-0500	Denomination REGISTER MARK/FEEDER				
Company TETRA BRIK PACKAGING SYSTEMS	Drawing No 62060-011:03	Page –			

PRE-RELEASED/DEVELOPMENT STATE

This drawing must not without the consent of Tetra Pak: be copied, transmitted or disclosed to any third party.

1	2	3	4	5	6	7	8	9	10

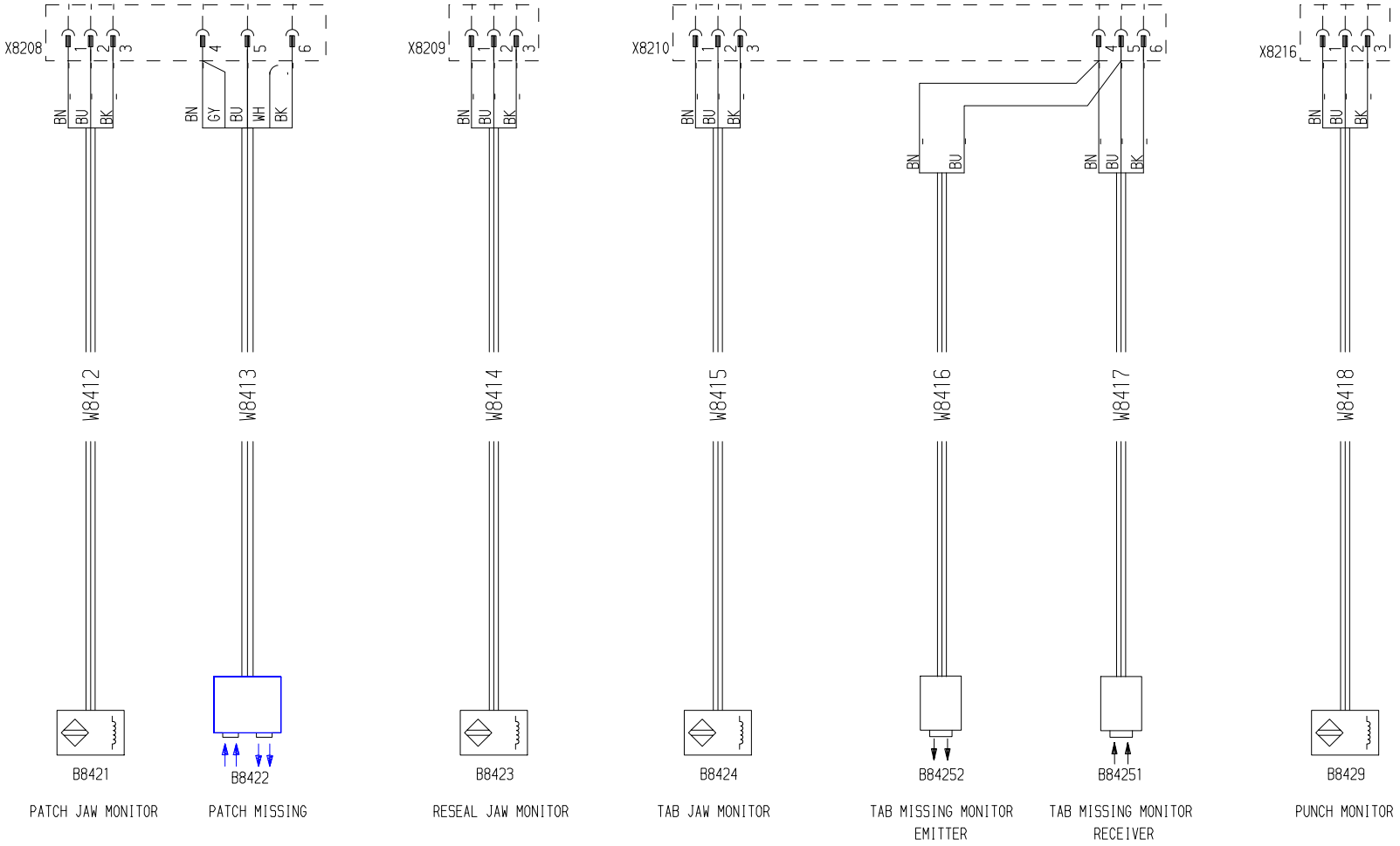

Note	A				
ECN No.	72315				
Sign./Date	AMI 990322				
Appr./Date	BGZ 990322				Drawing remarks

Tetra Pak

Designer AMI	Date 990322	Approved BGZ	Date 990322	Doc.Class –	
Machine PT/21-0500	Denomination STATION SENSORS				
Company TETRA BRIK PACKAGING SYSTEMS	Drawing No 62060-012:01	Page –			

PRE-RELEASED/DEVELOPMENT STATE

This drawing must not without the consent of Tetra Pak: be copied, transmitted or disclosed to any third party.

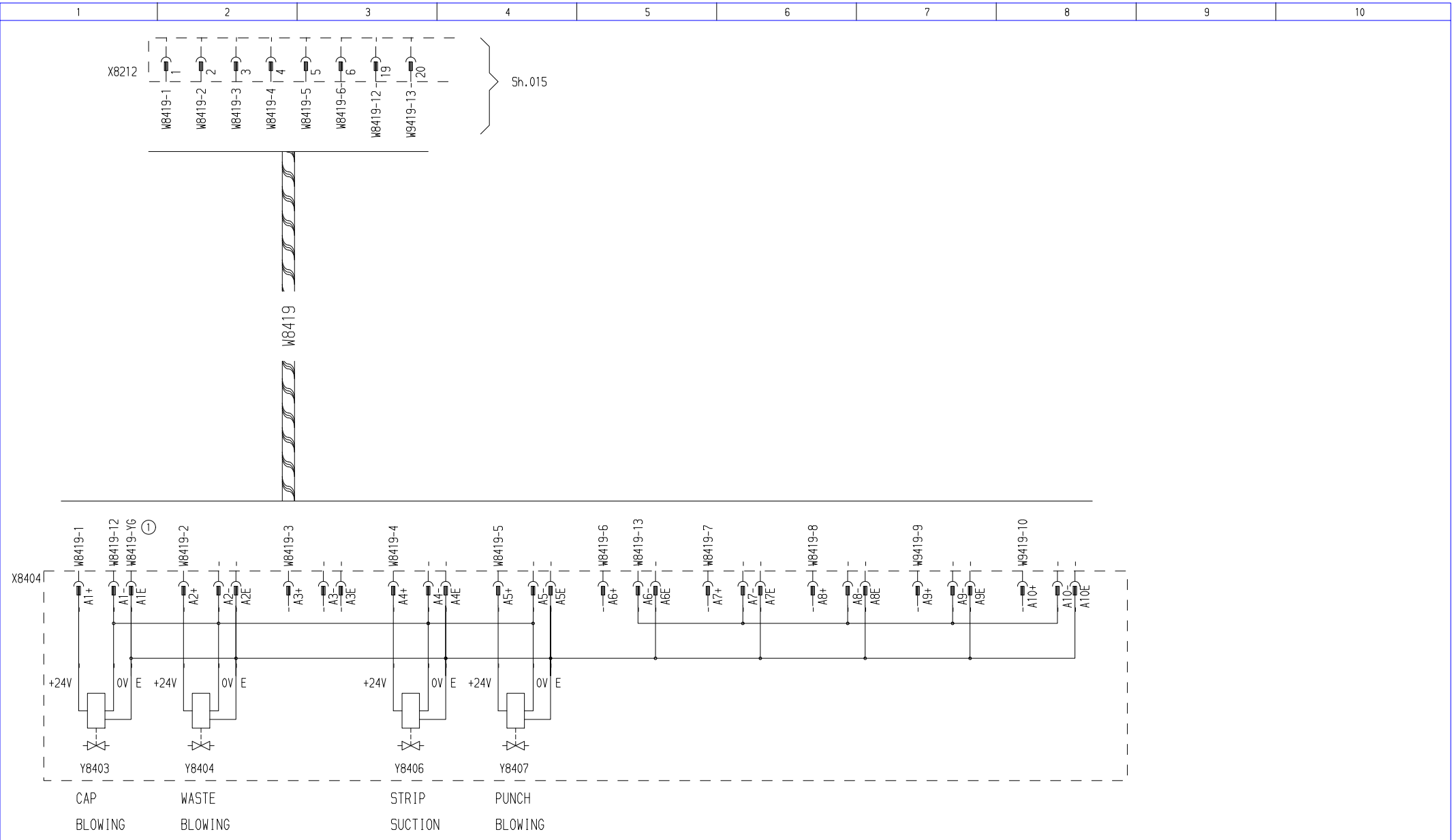

Note	A				1 - CONNECTION ON PAGE 015	Designer AMI	Date 990322	Approved BGZ	Date 990322	Doc.Class –
ECN No.	72315					Machine PT/21-0500	Denomination VALVE BANK 1			
Sign./Date	AMI 990322					Company TETRA BRIK PACKAGING SYSTEMS	Drawing No 62060-014:01			Page –
Appr./Date	BGZ 990322				Drawing remarks					

PRE-RELEASED/DEVELOPMENT STATE

This drawing must not without the consent of Tetra Pak: be copied, transmitted or disclosed to any third party.

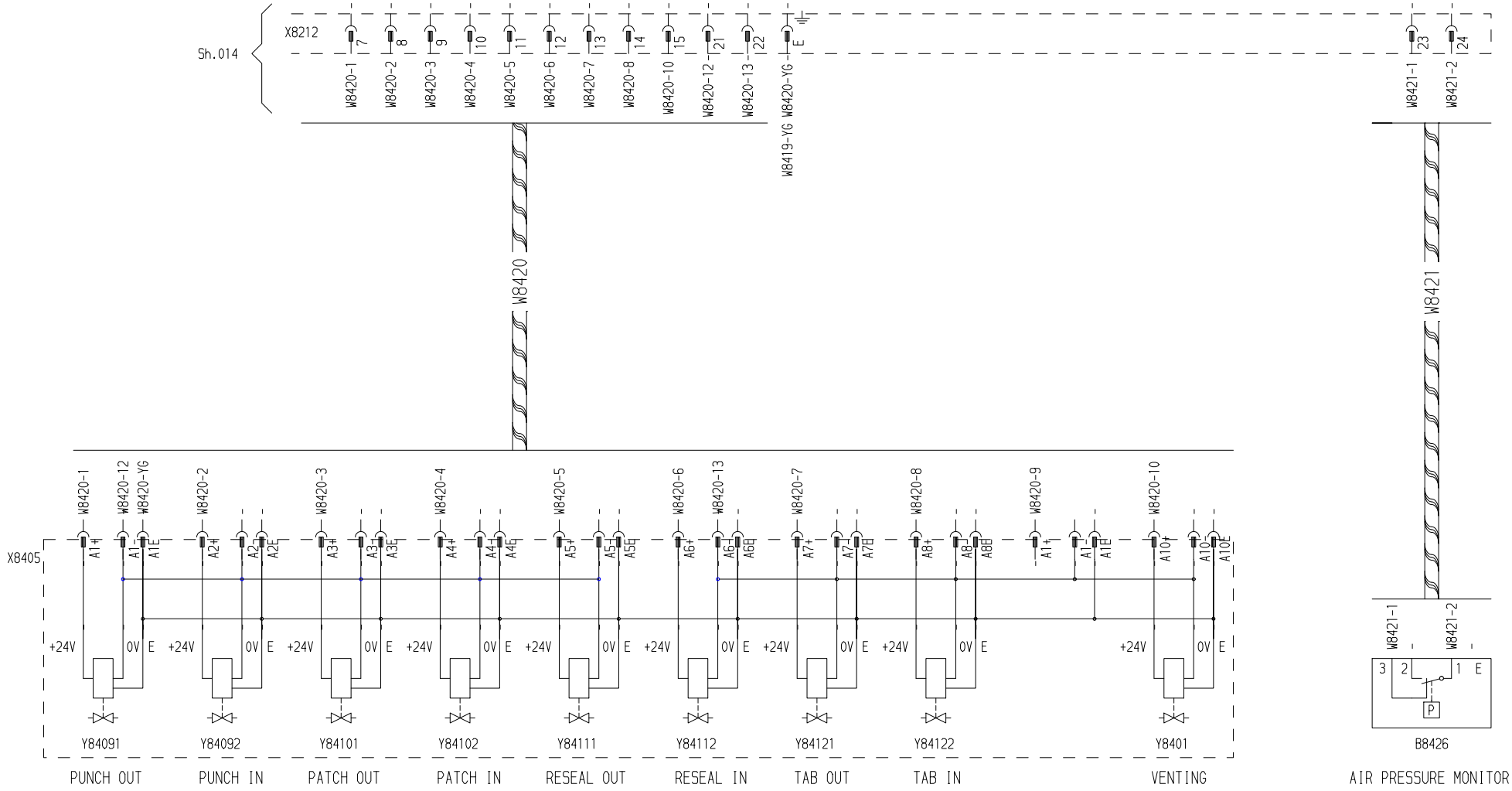

Note	A				
ECN No.	72315				
Sign./Date	AMI 990322				
Appr./Date	BGZ 990322				Drawing remarks

Tetra Pak

Designer AMI	Date 990322	Approved BGZ	Date 990322	Doc.Class –	
Machine PT/21-0500	Denomination VALVE BANK 2				
Company TETRA BRIK PACKAGING SYSTEMS	Drawing No 62060-015:01			Page –	

PRE-RELEASED/DEVELOPMENT STATE

This drawing must not without the consent of Tetra Pak: be copied, transmitted or disclosed to any third party.

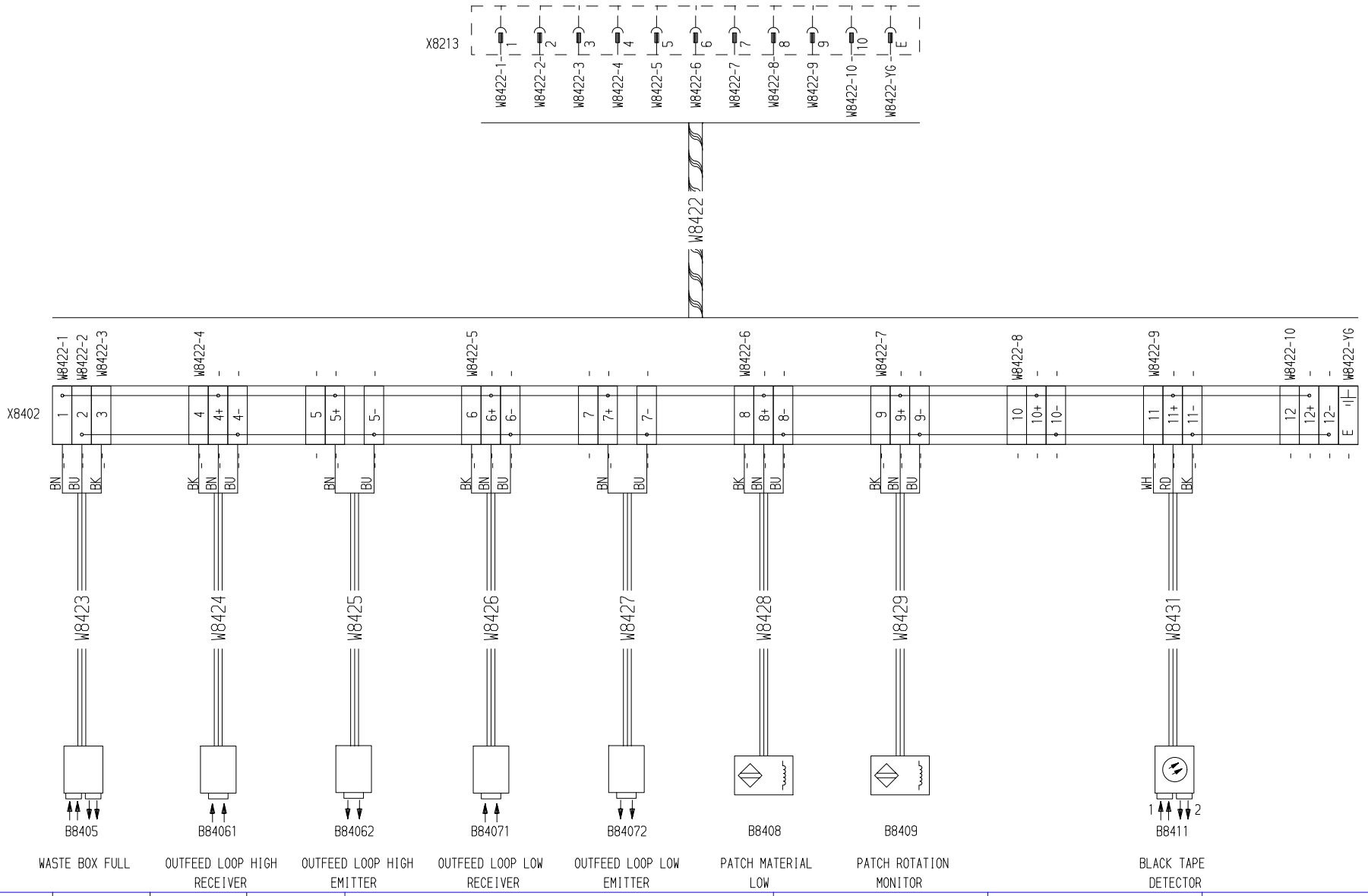

Note	A				
ECN No.	72315				
Sign./Date	AMI 990322				
Appr./Date	BGZ 990322				Drawing remarks

Tetra Pak

Designer AMI	Date 990322	Approved BGZ	Date 990322	Doc.Class –	
Machine PT/21-0500	Denomination OUTFEED LOOP BOX				
Company TETRA BRIK PACKAGING SYSTEMS	Drawing No 62060-017:01	Page –			

PRE-RELEASED/DEVELOPMENT STATE

This drawing must not without the consent of Tetra Pak: be copied, transmitted or disclosed to any third party.

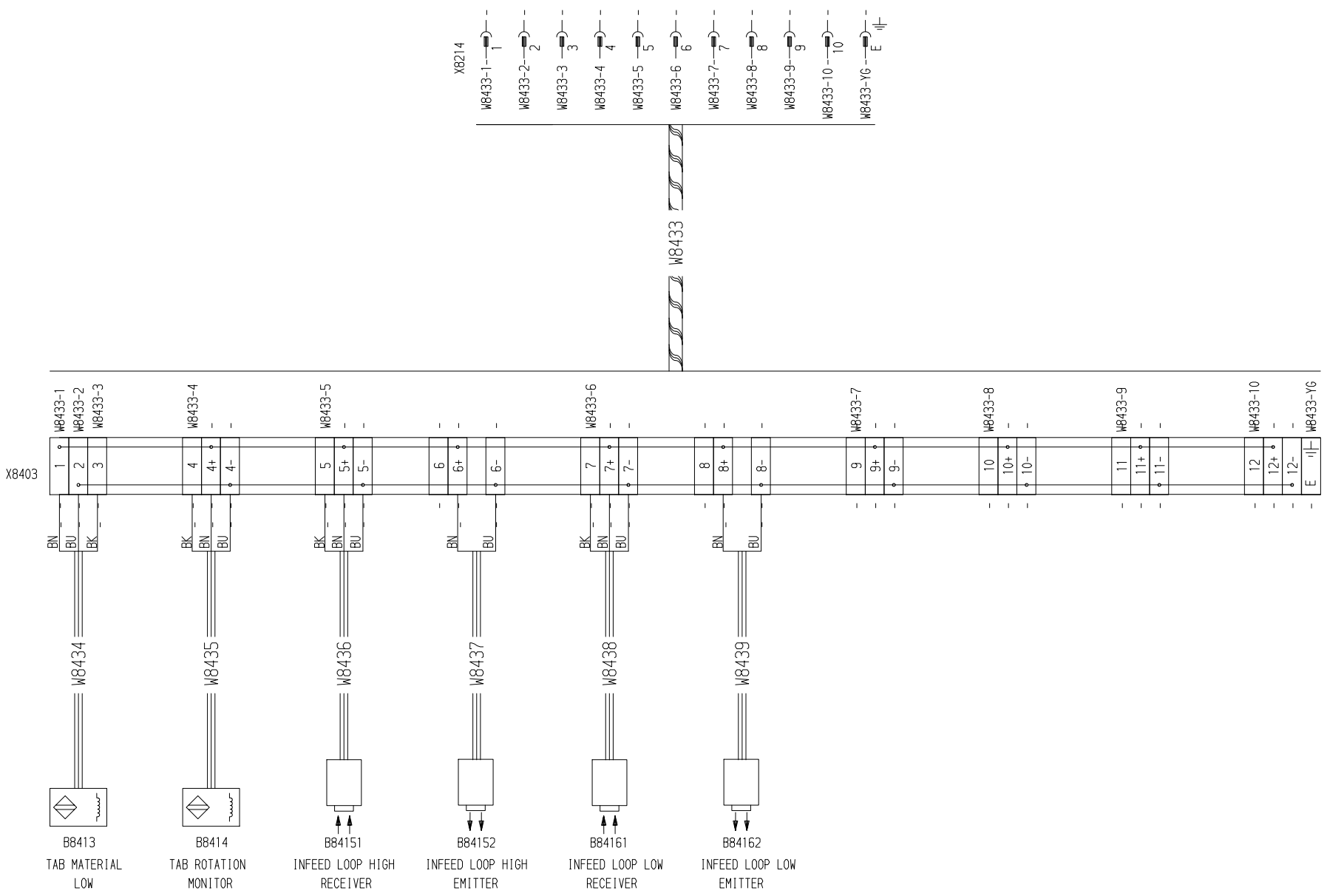

Note	A				
ECN No.	72315				
Sign./Date	AMI 990322				
Appr./Date	BGZ 990322				Drawing remarks

Tetra Pak

Designer AMI	Date 990322	Approved BGZ	Date 990322	Doc.Class –	
Machine PT/21-0500	Denomination INFEED LOOP BOX				
Company TETRA BRIK PACKAGING SYSTEMS	Drawing No 62060-018:01	Page –			

PRE-RELEASED/DEVELOPMENT STATE

This drawing must not without the consent of Tetra Pak: be copied, transmitted or disclosed to any third party.

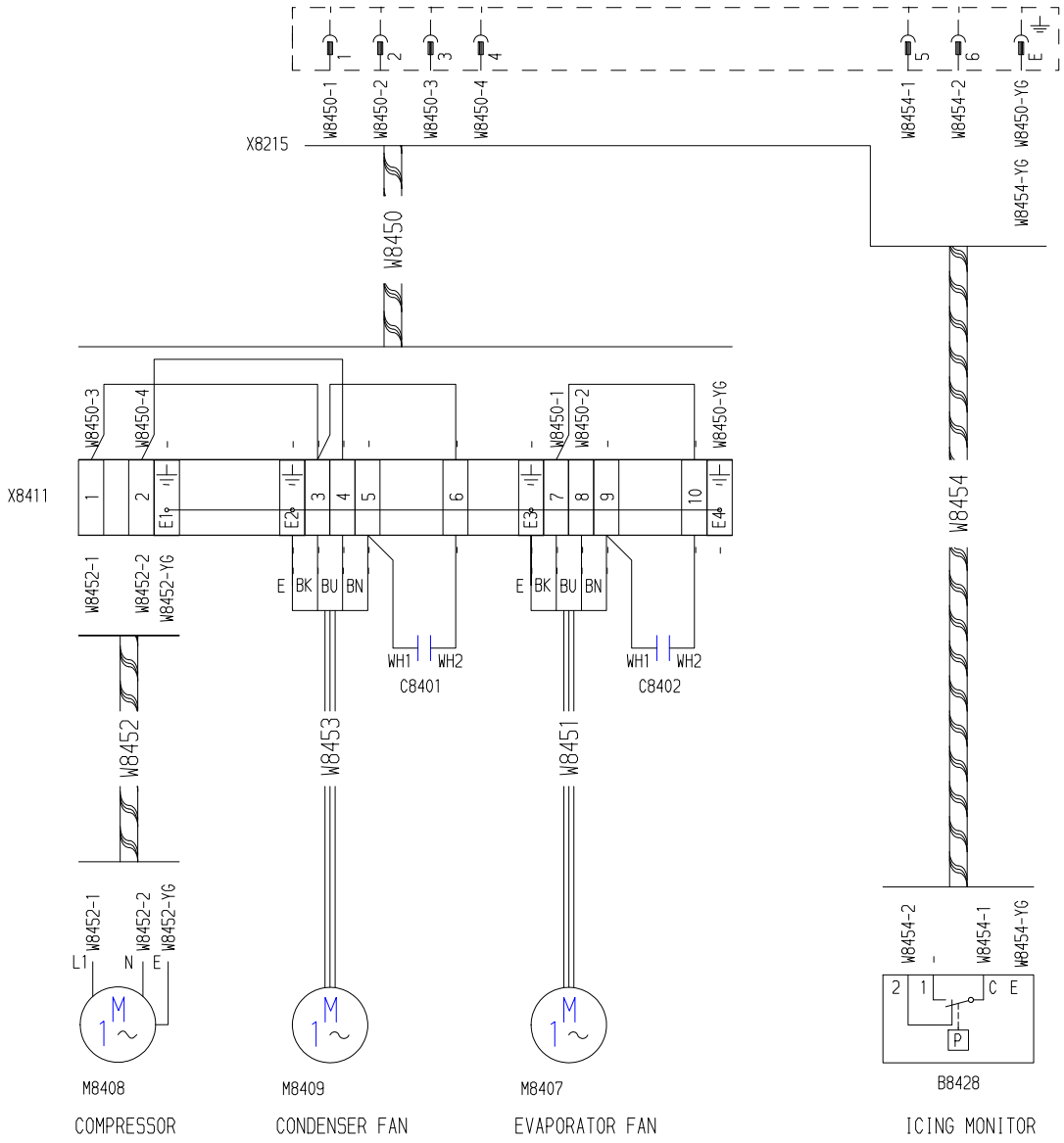

Note	A					Designer AMI	Date 990322	Approved BGZ	Date 990322	Doc.Class –
ECN No.	72315					Machine PT/21-0500	Denomination ELECTRICAL CABINET COOLER			
Sign./Date	AMI 990322					Company TETRA BRIK PACKAGING SYSTEMS	Drawing No 62060-019:01			Page –
Appr./Date	BGZ 990322				Drawing remarks					

PRE-RELEASED/DEVELOPMENT STATE

This drawing must not without the consent of Tetra Pak: be copied, transmitted or disclosed to any third party.

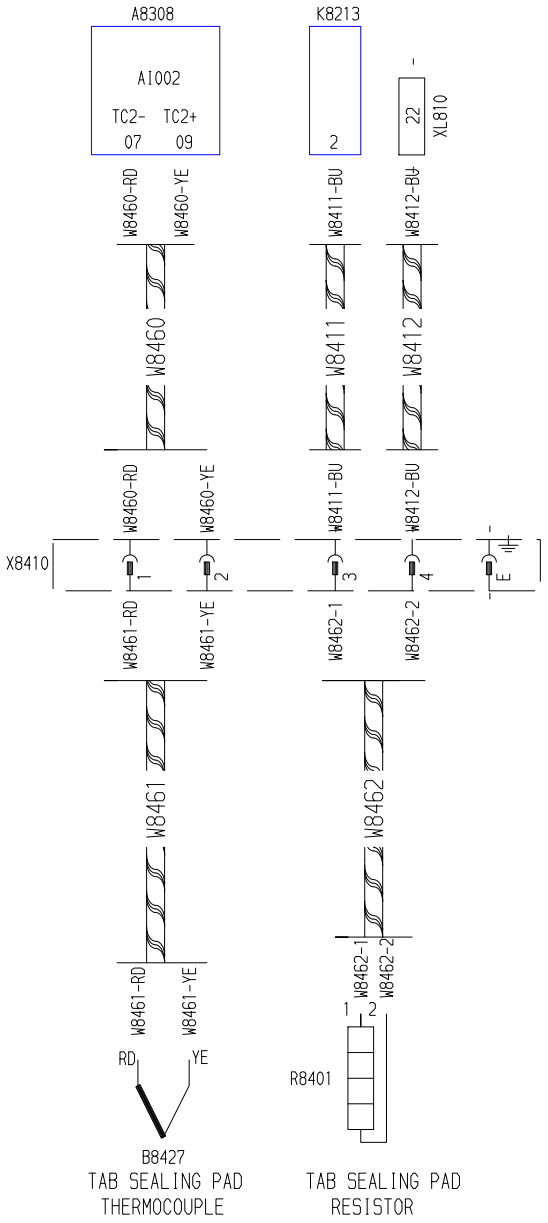

Note	A				
ECN No.	72315				
Sign./Date	AMI 990322				
Appr./Date	BGZ 990322				Drawing remarks

Tetra Pak

Designer AMI	Date 990322	Approved BGZ	Date 990322	Doc.Class –
Machine PT/21-0500	Denomination TEMPERATURE CONTROLES			
Company TETRA BRIK PACKAGING SYSTEMS	Drawing No 62060-020:01			Page –

PRE-RELEASED/DEVELOPMENT STATE

This drawing must not without the consent of Tetra Pak: be copied, transmitted or disclosed to any third party.

1	2	3	4	5	6	7	8	9	10

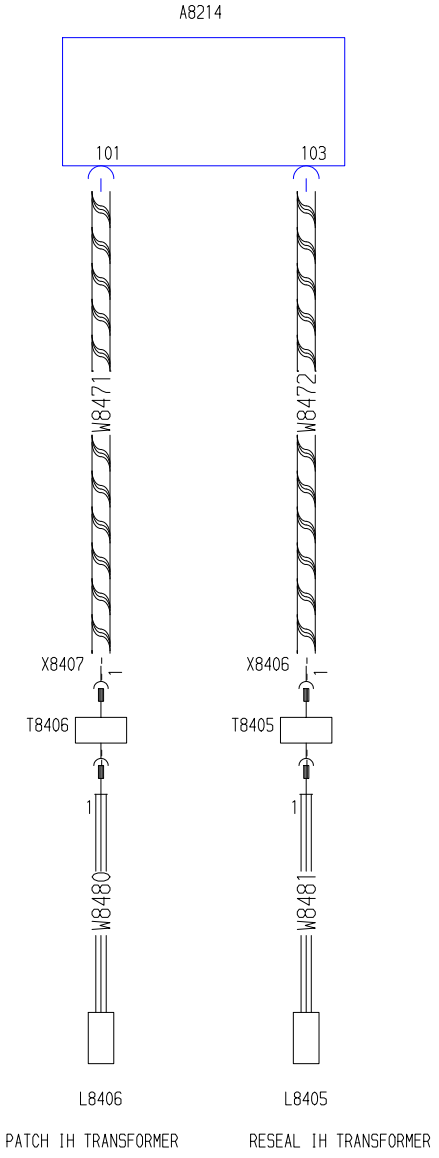

Note	A				
ECN No.	72315				
Sign./Date	AMI 990322				
Appr./Date	BGZ 990322				Drawing remarks

Tetra Pak

Designer AMI	Date 990322	Approved BGZ	Date 990322	Doc.Class –	
Machine PT/21-0500	Denomination INDUCTION HEATING				
Company TETRA BRIK PACKAGING SYSTEMS	Drawing No 62060-021:01	Page –			

8 Mains connections diagrams

EM3.0TB085473en.fm

This page intentionally left blank

EM3.0TB085473en.fm

9 Program documents

EM3.0TB095473en.fm

Table of contents

Main + cross reference 48675-001:03
1T001 fast scan 48675-002:03
PLC programme list 48675-005:03
PLC programme list 48675-501:03
PLC programme list 48675-502:03
PLC programme list 48675-006:03
PLC programme list 48675-008:03
PLC programme list 48675-010:03
PLC programme list 48675-020:03
PLC programme list 48675-021:03
PLC programme list 48675-032:03
PLC programme list 48675-051:03

EM3.0TB095473en.fm

```
|[  START OF LD  PROGRAM EC97500  ]       (* PT21 0410-0500                 *)
|
|[     VARIABLE DECLARATIONS      ]
|
|[       BLOCK DECLARATIONS       ]

                +-------+
 .001 INTR 0001 |1T0001 |       LANG: LD  (* 1ms Machine cycle control       *)
                +-------+

                +-------+
        SUBR  2 |BLK_05 |       LANG: LD  (* Volume handling                *)
                +-------+

                +-------+
        SUBR  3 |BLK_501|       LANG: LD  (* Volumes >330ml                 *)
                +-------+

                +-------+
        SUBR  4 |BLK_502|       LANG: LD  (* Volumes <330ml                 *)
                +-------+

                +-------+
        SUBR  5 |BLK_06 |       LANG: LD  (* Data transfer                  *)
                +-------+

                +-------+
        SUBR  6 |BLK_08 |       LANG: LD  (* Machine steps                  *)
                +-------+

                +-------+
        SUBR  7 |BLK_10 |       LANG: LD  (* Common functions               *)
                +-------+

                +-------+
        SUBR  8 |BLK_20 |       LANG: LD  (* Infeed loop                    *)
                +-------+

                +-------+
        SUBR  9 |BLK_21 |       LANG: LD  (* Patch and Tab material supply   *)
                +-------+

                +-------+
        SUBR 10 |BLK_32 |       LANG: LD  (* Dumping of packages            *)
                +-------+

                +-------+
        SUBR 11 |BLK_51 |       LANG: LD  (* Temperature regulators/monitors *)
                +-------+

|[     START OF PROGRAM LOGIC     ]
|
| (*************************************************************************)
| (* PT21 0410-0500 ECM 97500                                              *)
| (*************************************************************************)
|
```

```
| (*************************************************************************)
| (* Block 05 "Volume handling"                                            *)
| (* -Determine volume sent from TBA21                                     *)
| (* -Set correct volume depended parameters                               *)
| (*************************************************************************)
|
|STEP_0                                                          << RUNG 7  STEP #0004 >>
|%M0100  +-------------+
+--] [--++ CALL BLK_05 +
|       || (SUBROUTINE)|
|STEP_1 |+-------------+
|%M0101 |
+--] [--+
|       |
|STEP_2 |
|%M0102 |
+--] [--+
|
| (*************************************************************************)
| (* Block 06 "Data transfer"                                              *)
| (* -Data transfer to SDV (Servo Drive)                                   *)
| (*  and to STD (Servo Tensioner)                                         *)
| (* -Data transfer to TMCC                                                *)
| (*                                                                       *)
| (* Block 08 "Machine steps"                                             *)
| (* -Step up conditions                                                  *)
| (* -Machine steps                                                       *)
| (* -Set memorycells for machine steps                                   *)
| (*                                                                       *)
| (* Block 10 "Common functions"                                          *)
| (* -All contactors and relays                                          *)
| (* -Power setting TPIH                                                 *)
| (* -Pulltab correction setting                                         *)
| (* -Pulse generating                                                   *)
| (* -Service function                                                   *)
| (* -Common alarms                                                      *)
| (*************************************************************************)
|
|ALW_ON                                                          << RUNG 9  STEP #0009 >>
|%S0007  +-------------+ +-------------+ +-------------+
+--] [---+ CALL BLK_06 +-+ CALL BLK_08 +-+ CALL BLK_10 +
|        | (SUBROUTINE)| | (SUBROUTINE)| | (SUBROUTINE)|
|        +-------------+ +-------------+ +-------------+
|
| (*************************************************************************)
| (* Block 20 "Infeed loop"                                                *)
| (* -Infeed loop control                                                 *)
| (* -Alarms                                                              *)
| (*                                                                       *)
| (* Block 21 "Patch and Tab material supply"                             *)
| (* -Alarms                                                              *)
| (*************************************************************************)
|
|ALW_ON                                                          << RUNG 11  STEP #0014 >>
|%S0007  +-------------+ +-------------+
+--] [---+ CALL BLK_20 +-+ CALL BLK_21 +
|        | (SUBROUTINE)| | (SUBROUTINE)|
|        +-------------+ +-------------+
|
| (*************************************************************************)
| (* Block 32 "Package dumping"                                            *)
| (* -Load dump values                                                     *)
| (* -Shiftregisters package dumping                                       *)
| (*************************************************************************)
|
```

REFERENCE	NICKNAME	REFERENCE DESCRIPTION	REFERENCE	NICKNAME	REFERENCE DESCRIPTION
%S0007	ALW_ON			BLK_20	Infeed loop
	BLK_05	Volume handling		BLK_21	Patch and Tab material supply
	BLK_06	Data transfer	%M0100	STEP_0	Step 0, Off
	BLK_08	Machine steps	%M0101	STEP_1	Step 1, Preparation
	BLK_10	Common functions	%M0102	STEP_2	Step 2, Pre-heating

```
|ALW_ON                                                                << RUNG 13  STEP #0018 >>
|%S0007  +-------------+
+--] [---+ CALL BLK_32 +
|        | (SUBROUTINE)|
|        +-------------+
|
| (*************************************************************************)
| (* Block 51 "Temperature regulators/monitors"                           *)
| (* -Temperature regulator Tab sealing pad                               *)
| (* -Temperature monitor Electrical cabinet                              *)
| (* -Alarms                                                              *)
| (*************************************************************************)
|
|ALW_ON                                                                << RUNG 15  STEP #0021 >>
|%S0007  +-------------+
+--] [---+ CALL BLK_51 +
|        | (SUBROUTINE)|
|        +-------------+
|
|[      END OF PROGRAM LOGIC      ]
|
```

REFERENCE	NICKNAME	REFERENCE DESCRIPTION	REFERENCE	NICKNAME	REFERENCE DESCRIPTION
%S0007	ALW_ON			BLK_51	Temperature regulators/monitors
	BLK_32	Dumping of packages			

GLOBAL (%G) GLOBAL CROSS REFERENCES

REF.	BLOCK	NICKNAME	REF. DESCRIPTION / CROSS REFERENCES
%G0001	BLK_05	FT_VOL1	From TBA21, Volume parameter
			FBIO 4,5,6,7,8,9,10,11,12,13,18,19,21,22
%G0017	BLK_10	FT_PTCO	From TBA21, Pulltab correction
			FBIO 22
%G0033	BLK_10	FT_PAPO	From TBA21, Patch power
			FBIO 20
%G0049	BLK_10	FT_REPO	From TBA21, Reseal power
			FBIO 20
%G0081	BLK_51	FT_L1SP	From TBA21, Loop 1 Setpoint
			FBIO 7,15,21
%G0277	BLK_10	FT_PUPA	From TBA21, Punch+Patch
			-] [- 43,47
	BLK_51		-]/[- 22
%G0279	BLK_10	FT_PPRE	From TBA21, Punch+Patch+Reseal
			-] [- 43,48
	BLK_51		-]/[- 22
%G0281	BLK_10	FT_ALLS	From TBA21, All stations
			-] [- 43,49
%G0305	BLK_10	FT_ALRS	From TBA21, Alarm reset
			-] [- 35,51
%G0306	BLK_08	FT_ST1-	From TBA21, TBA21 Step 1-12
			-] [- 24,26
			-]/[- 23
	BLK_10		-]/[- 46
%G0307	BLK_10	FT_WATD	From TBA21, Watchdog from TBA1
			-] [- 77
			-]/[- 78
%G0308	BLK_10	FT_ASUF	From TBA21, ASU magazine full
			-] [- 36
%G0309	BLK_10	FT_PAHS	From TBA21, Paper high speed
			-] [- 16,53
	BLK_51		-] [- 15
%G0310	BLK_10	FT_JUM	From TBA21, Reg. mark JUM DCS
			-] [- 40
%G0311	BLK_10	FT_MALT	From TBA21, Machine light
			-] [- 8
%G0312	BLK_08	FT_ASUE	From TBA21, ASU magazine empty
			-]/[- 5,12
	BLK_20		-]/[- 7,11
%G0313	BLK_10	FT_STUP	From TBA21, Step Up
			-] [- 37,45
	BLK_51		-] [- 14,15
%G0314	BLK_501	FT_041V	From TBA21, 041V functionality
			-] [- 17,19
			-]/[- 9,13
	BLK_10		-] [- 17
			-]/[- 17
%G0315	BLK_08	FT_STP1	From TBA21, TBA21 Step 1
			-] [- 20
%G0513	BLK_10		FBIO 51
%G0514	BLK_08	TT_OULP	To TBA21, Outfeed loop
			-]/[- 5
	BLK_10		-(SM) 52
%G0515	BLK_08	TT_OURM	To TBA21, Outfeed rotation monit
			-]/[- 5
	BLK_10		-(SM) 54
%G0517	BLK_08	TT_PHCE	To TBA21, Malfunction photocells
			-] [- 26
			-]/[- 5,12,15
	BLK_10		-]/[- 24
			-(SM) 56,57
			-(RM) 55
%G0518	BLK_08	TT_SDV	To TBA21, Servo Drive
			-] [- 26
			-]/[- 9,12
	BLK_10		-(SM) 59
%G0519	BLK_08	TT_OLSE	To TBA21, Overload Servo system
			-] [- 26
			-]/[- 9,11,12
	BLK_10		-(M) 60
%G0520	BLK_08	TT_TAPD	To TBA21, Tab sealing temperatur

REF.	BLOCK	NICKNAME	REF. DESCRIPTION / CROSS REFERENCES
			-]/[- 5,12,16
	BLK_51		-(M) 22
%G0521	BLK_10	TT_BATT	To TBA21, Program battery low
			-(M) 61
%G0522	BLK_10	TT_SERV	To TBA21, Service key
			-(M) 62
%G0523	BLK_08	TT_TMCC	To TBA21, TMCC
			-]/[- 5
	BLK_10		-(SM) 64
%G0527	BLK_10	TT_PREP	To TBA21, Preparation
			-(M) 65
%G0546	1T0001	TT_PAST	To TBA21, Patch station
			-(SM) 44
	BLK_08		-]/[- 5,12,15,16
	BLK_32		-] [- 15
%G0547	BLK_21	TT_PMLW	To TBA21, Patch material low
			-(M) 4
%G0548	BLK_08	TT_PAED	To TBA21, Patch material ended
			-]/[- 5,13,16
	BLK_21		-]/[- 4
			-(M) 5
%G0549	1T0001	TT_TAST	To TBA21, Tab station
			-(SM) 46
	BLK_08		-]/[- 6,13,15,16
	BLK_32		-] [- 35
%G0550	BLK_21	TT_TMLW	To TBA21, Tab material low
			-(M) 6
%G0551	BLK_08	TT_TAED	To TBA21, Tab material ended
			-]/[- 6,13,16
	BLK_21		-]/[- 6
			-(M) 7
%G0552	1T0001	TT_REST	To TBA21, Reseal station
			-(SM) 45
	BLK_08		-]/[- 6,13,15,16
	BLK_32		-] [- 25
%G0553	BLK_10	TT_WAHL	To TBA21, Waste box high level
			-(M) 66
%G0554	BLK_08	TT_WAFL	To TBA21, Waste box full
			-]/[- 6,13,16
	BLK_10		-]/[- 66
			-(M) 67
%G0555	BLK_08	TT_AIR	To TBA21, Air pressure
			-] [- 26
			-]/[- 10,11,13
	BLK_10		-(M) 68
%G0556	BLK_51	TT_COOL	To TBA21, Cooling system
			-(M) 33
%G0557	1T0001	TT_PUST	To TBA21, Punch station
			-(SM) 43
	BLK_08		-]/[- 6,13,15,16
	BLK_32		-] [- 5
%G0558	1T0001	TT_PAMS	To TBA21, Patch missing
			-(SM) 41
	BLK_08		-]/[- 6
	BLK_32		-] [- 15
%G0559	1T0001	TT_TAMS	To TBA21, Tab missing
			-(SM) 41
	BLK_08		-]/[- 6
	BLK_32		-] [- 35
%G0560	BLK_08	TT_INFD	To TBA21, Infeed loop
			-] [- 26
			-]/[- 6,13
	BLK_20		-]/[- 11
			-(SM) 27
%G0561	BLK_08	TT_IHPA	To TBA21, Patch IH fault
			-]/[- 7,17
	BLK_10		-]/[- 70
			-(SM) 70
	BLK_32		-] [- 15
%G0562	BLK_08	TT_IHRE	To TBA21, Reseal IH fault
			-]/[- 7,17
	BLK_10		-]/[- 70
			-(SM) 70
	BLK_32		-] [- 25

REF.	BLOCK	NICKNAME	REF. DESCRIPTION / CROSS REFERENCES
%G0564	1T0001	TT_PARM	To TBA21, Patch rotation monitor
			-(SM) 53
	BLK_08		-]/[- 7,17
%G0565	1T0001	TT_TARM	To TBA21, Tab rotation monitor
			-(SM) 59
	BLK_08		-]/[- 7,17
%G0566	BLK_51	TT_TCAB	To TBA21, Temp. elect. cabinet
			-(M) 34
%G0567	BLK_08	TT_STD	TO TBA21, Servo Tensioner
			-] [- 26
			-]/[- 10,12
	BLK_10		-(SM) 72
%G0577	BLK_10	TT_DTPC	To TBA21, Dflt Pulltab correct.
			FBIO 22
%G0593	BLK_10	TT_DFPP	To TBA21, Dflt Patch power
			FBIO 19
%G0609	BLK_10	TT_DFRP	To TBA21, Dflt Reseal power
			FBIO 19
%G0641	BLK_51	TT_ELPV	To TBA21, El. cab. Process val.
			FBIO 32
%G0657	BLK_51	TT_ELHI	To TBA21, Dflt El.cab. alarm hi
			FBIO 32
%G0673	BLK_51	TT_ELLO	To TBA21, Dflt El.cab. alarm lo
			FBIO 32
%G0689	BLK_51	TT_D1SP	To TBA21, Dflt Loop 1 Setpoint
			FBIO 6
%G0721	BLK_51	TT_D1AH	To TBA21, Dflt Loop 1 Alarm high
			FBIO 6
%G0737	BLK_51	TT_D1AL	To TBA21, Dflt Loop 1 Alarm low
			FBIO 6
%G0800	BLK_20		-(M) 12
%G0849	BLK_51	TT_L1OV	To TBA21, Loop 1 Output value
			FBIO 7
%G0865	BLK_51	TT_L1PV	To TBA21, Loop 1 Process value
			FBIO 7
%G0897	BLK_08	TT_RFPR	To TBA21, Ready for production
			-]/[- 21
			-(M) 19
	BLK_10		-] [- 10,44
%G0899	BLK_32	TT_DPKG	To TBA21, Dump packages
			-(SM) 60
			-(RM) 59
%G0900	BLK_10	TT_PUPA	To TBA21, PT21 pulling paper
			-] [- 79
			-(M) 73
%G0901	BLK_10	TT_RIFO	To TBA21, Door right front
			-(M) 74
%G0902	BLK_10	TT_RIRE	To TBA21, Door right rear
			-(M) 75
%G0903	BLK_10	TT_LEFT	To TBA21, Door left
			-(M) 76
%G0904	BLK_10	TT_WADG	To TBA21, Watchdog to TBA21
			-(SM) 77
			-(RM) 78
%G0905	BLK_51	TT_BRWI	To TBA21, Broken wire
			-(M) 36
%G0906	BLK_10	TT_TBFO	To TBA21, Tab folder ON
			-(M) 17
%G0907	BLK_10	TT_PROD	To TBA21, PT21 in production
			-(M) 79
%G0908	BLK_10	TT_REGM	To TBA21, Register mark PT21
			-(M) 80
%G0909	BLK_10	TT_SFRS	To TBA21, Serv. func. rdy. start
			-] [- 45
			-(M) 44
%G0910	BLK_10	TT_SFAC	To TBA21, Serv. func. active
			-(SM) 45
			-(RM) 46

INPUT (%I) GLOBAL CROSS REFERENCES

REF.	BLOCK	NICKNAME	REF. DESCRIPTION / CROSS REFERENCES
%I0001	1T0001	B84071	Outfeed loop, Low
			-] [- 8
			FBIO 4
	BLK_10		-] [- 10
%I0002	1T0001	SDV32	Servo Drive, Move done
			-] [- 19
	BLK_10		-] [- 26
%I0003	1T0001	SDV31	Servo Drive, Design OK
			-]/[- 11
	BLK_32		-]/[- 7,9,11,13
%I0005	1T0001	B8429	Punch jaw, Closed
			-] [- 26,43
			-]/[- 43
%I0006	1T0001	B8421	Patch jaw, Closed
			-] [- 30,44
			-]/[- 44
%I0007	1T0001	B8423	Reseal jaw, Closed
			-] [- 30,45
			-]/[- 45
%I0008	1T0001	B8424	Tab jaw, Closed
			-] [- 46
			-]/[- 46
%I0011	1T0001	B8422	Patch, Missing
			-]/[- 41
%I0012	1T0001	B84251	Tab, Missing
			-]/[- 41
%I0013	1T0001	B8411	Black tape, Detected
			-]/[- 41
%I0015	1T0001	B8409	Patch material, Rotation monitor
			-] [- 50,51
%I0016	1T0001	B8414	Tab material, Rotation monitor
			-] [- 56,57
			FBIO 4
%I0017	BLK_08	X8211	Emergency Stop
			-] [- 9,11
			-]/[- 23
	BLK_10		-] [- 74,75,76
%I0018	BLK_10	B8401	Door guard, PT21 left
			-] [- 4,74,75
			-]/[- 76
%I0019	BLK_10	B8402	Door guard, PT21 right front
			-] [- 4,75
			-]/[- 74
%I0020	BLK_10	B8403	Door guard, PT21 right rear
			-] [- 4
			-]/[- 75
%I0021	1T0001	B8404	Bypass, Activated
			-]/[- 43,44,45,46
	BLK_08		-] [- 23
			-]/[- 9,11
	BLK_10		-]/[- 60,61,65,66,67,68,74,75,76
	BLK_21		-]/[- 4,5,6,7
%I0022	BLK_08	S8202	Service key, Activated
			-] [- 23
			-]/[- 9,11
	BLK_10		-] [- 62
			-]/[- 74,75,76
%I0024	BLK_51	B8202	Electrical cabinet door, Closed
			-] [- 30
			-]/[- 34
%I0025	BLK_10	B8426	Air pressure
			-]/[- 68
%I0026	BLK_51	B8428	Cooling system, Failure
			-] [- 30
			-]/[- 33
%I0028	BLK_10	Q8201	Servo Drive, Overload
			-]/[- 60
%I0029	BLK_20	CONV_19	Infeed loop, Converter overload
			-]/[- 27
%I0033	BLK_20	B84151	Infeed loop, High
			-] [- 7

REF.	BLOCK	NICKNAME	REF. DESCRIPTION / CROSS REFERENCES
			-]/[- 27
%I0034	BLK_20	B84161	Infeed loop, Low
			-] [- 7,8,11,15,23
			-]/[- 16,24
%I0035	1T0001	B84061	Outfeed loop, High
			-] [- 8
	BLK_10		-] [- 10
			-]/[- 52
	BLK_20		-] [- 8
			-]/[- 7
%I0036	BLK_10	B8405	Wastebox level, High
			-] [- 67
			-]/[- 66,67
%I0039	BLK_10	IHPFAIL	TPIH Patch/Reseal, Failure
			-]/[- 70
%I0042	BLK_08	SDV34	Servo Drive, Home position found
			-] [- 15
			-]/[- 19
	BLK_10		-]/[- 56
	BLK_32		-]/[- 7,9,11,13,17,19,21,23,27,29,31,33
%I0043	1T0001	SDV30	Servo Drive, Fault
			-] [- 17
	BLK_06		-] [- 8
			-]/[- 5,6
	BLK_08		-] [- 14
	BLK_10		-] [- 10,13
			-]/[- 59
%I0044	BLK_06	STD30	Servo Tensioner, Fault
			-] [- 8
			-]/[- 5,6
	BLK_08		-] [- 14
	BLK_10		-] [- 10,13,56
			-]/[- 72
%I0047	BLK_06	TMCC28	TMCC, Enabled
			-]/[- 18,19,20
	BLK_08		-] [- 12,14
	BLK_10		-]/[- 64
%I0048	BLK_10	TMCC29	TMCC, Register mark signal
			-] [- 38,39
			-]/[- 56,57
%I0055	BLK_21	B8408	Patch material, Low
			-] [- 5
			-]/[- 4,5
%I0056	BLK_21	B8413	Tab material, Low
			-] [- 7
			-]/[- 6,7
%I0057	BLK_10	SEL34	Production, Selected
			-] [- 16,57,79
	BLK_32		-] [- 7,9,11,13,17,19,21,23,27,29,31,33
%I0058	1T0001	SEL41	Production disable appl., Selecd
			-] [- 11
	BLK_10		-] [- 41
	BLK_51		-]/[- 19,22
%I0059	BLK_08	SEL14	Preparation, Selected
			-] [- 9
			-]/[- 11
	BLK_10		-] [- 11,65
%I0060	1T0001	SH8202	Push button, Single move
			-] [- 8
	BLK_10		-] [- 37
%I0081	BLK_51	EC_BRWI	El-cab, Temp. mon. broken wire
			-] [- 36
%I0082	BLK_51	L1_BRWI	Loop1, Broken wire
			-] [- 36
			-]/[- 21

========= OUTPUT (%Q) GLOBAL CROSS REFERENCES

REF.	BLOCK	NICKNAME	REF. DESCRIPTION / CROSS REFERENCES
%Q0001	1T0001	SDV14	Servo Drive, Move
			-( ) 17
			FBIO 61

REF.	BLOCK	NICKNAME	REF. DESCRIPTION / CROSS REFERENCES
	BLK_10		-] [- 25
%Q0003	1T0001	TMCC13	TMCC Patch material, Move
			-] [- 48
			-( ) 17
%Q0004	1T0001	TMCC14	TMCC Tab material, Move
			-] [- 54
			-( ) 17
%Q0009	1T0001	A8214	TPIH Switch Patch/Reseal, Switch
			-( ) 37
	BLK_10		-] [- 70
			-]/[- 70
%Q0011	1T0001	IHPSTRT	TPIH Gen. Patch/Reseal, Start
			-(S) 35,36
			-(R) 34
%Q0016	1T0001		FBIO 61
%Q0017	1T0001		FBIO 61
%Q0019	1T0001	Y84091	Punch jaw, Out
			-( ) 23
%Q0020	1T0001	Y84092	Punch jaw, In
			-( ) 27
%Q0021	1T0001	Y84101	Patch jaw, Out
			-( ) 23
%Q0022	1T0001	Y84102	Patch jaw, In
			-( ) 27
%Q0023	1T0001	Y84111	Reseal jaw, Out
			-( ) 23
%Q0024	1T0001	Y84112	Reseal jaw, In
			-( ) 27
%Q0025	1T0001	Y84121	Tab jaw, Out
			-( ) 23
%Q0026	1T0001	Y84122	Tab jaw, In
			-( ) 27
%Q0027	BLK_10	Y8401	Venting Valve
			-( ) 5
%Q0028	1T0001	Y8403	Cap blowing
			-( ) 25
%Q0029	1T0001	Y8404	Waste blow
			-( ) 17
%Q0030	BLK_10	Y8405	Tab folder
			-( ) 17
%Q0031	1T0001	Y8406	Patch suction
			-( ) 25
%Q0032	1T0001	Y8407	Punch blow
			-( ) 26
			FBIO 61
%Q0034	BLK_10	K8210	Main supply, Infeed
			-( ) 7
	BLK_20		-] [- 10
%Q0035	BLK_10	STD15	Servo Tensioner, Software Enable
			-( ) 13
%Q0037	BLK_10	K8204	Main supply, TPIH Patch/Reseal
			-( ) 6
%Q0039	BLK_10	K8201	Servo Drive, main supply
			-( ) 5
%Q0041	BLK_10	K8209	Control voltage
			-] [- 69
			-( ) 7
%Q0042	BLK_51	K8207	El-cab, Air circulation
			-( ) 30
%Q0043	BLK_51	K8208	El-cab, Compressor
			-( ) 30
%Q0044	BLK_20	IFL26	Infeed loop, Enable
			-] [- 11,12,15,16,28
			-( ) 11
%Q0049	BLK_10	P8201	Hour meter
			-( ) 9
%Q0050	BLK_10	HS8202	Push button, Single move lamp
			-( ) 10
%Q0051	BLK_10	K8214	Machine light
			-( ) 8
%Q0052	BLK_51	K8213	Tab sealing pad
			-( ) 19
%Q0053	BLK_10	TMCC12	TMCC, Enable photocells
			-( ) 24

REF.	BLOCK	NICKNAME	REF. DESCRIPTION / CROSS REFERENCES
%Q0054	BLK_06	TMCC09	TMCC,Data Enable
			-] [- 20,24,25
			-]/[- 23
			-( ) 19
%Q0055	BLK_06	TMCC10	TMCC,Data Clock
			-] [- 24
			-(/) 24
			-(S) 23
%Q0056	BLK_06	TMCC11	TMCC,Data
			-( ) 25
%Q0057	BLK_06	SDV08	SDV and STD, Data Enable
			-] [- 6,14,15
			-]/[- 13
			-( ) 5
%Q0058	BLK_06	SDV09	SDV and STD, Data clock
			-] [- 14
			-(/) 14
			-(S) 13
%Q0059	BLK_06	SDV10	SDV and STD, Data
			-( ) 15
%Q0060	BLK_10	SDV15	Servo Drive, Software Enable
			-( ) 13
%Q0061	BLK_10	SDV11	Servo Drive, Service & Setting
			-( ) 12
%Q0062	BLK_10	SDV07	Servo Drive, Preparation
			-( ) 11

INTERNAL (%M) GLOBAL CROSS REFERENCES

REF.	BLOCK	NICKNAME	REF. DESCRIPTION / CROSS REFERENCES
%M0052	1T0001	LONG_CY	Long appl.cycle:volumes >330cc
			-] [- 6
			-]/[- 7
	BLK_05		-(S) 21
			-(R) 22
%M0057	BLK_05	VOL_01	Volume 01, 1000cc Baseline
			-(S) 4
			FBIO 4,5,6,7,8,9,10,11,12,13
	BLK_501		-] [- 5,7
%M0058	BLK_05	VOL_02	Volume 02, 200cc Slimline
			-] [- 14
			-(S) 5
	BLK_32		-] [- 13,23,33,43,52
%M0059	BLK_05	VOL_03	Volume 03, 250cc Baseline
			-] [- 14
			-(S) 6
	BLK_502		-] [- 5,7
	BLK_32		-] [- 13,23,33,43,52
%M0060	BLK_05	VOL_04	Volume 04, 200cc Baseline
			-] [- 14
			-(S) 7
	BLK_32		-] [- 11,21,31,41,50
%M0061	BLK_05	VOL_05	Volume 05, 1000cc Slimline
			-(S) 8
	BLK_501		-] [- 9,11,17
%M0062	BLK_05	VOL_06	Volume 06, 1000cc Prisma
			-(S) 9
	BLK_501		-] [- 13,15,19
%M0063	BLK_05	VOL_07	Volume 07, 1500cc Slimline
			-] [- 15
			-(S) 10
	BLK_501		-] [- 21,23
	BLK_32		-] [- 9,19,29,39
			-]/[- 7,17,27,37
%M0064	BLK_05	VOL_08	Volume 08, 1000cc Square
			-] [- 15
			-(S) 11
	BLK_501		-] [- 25,27
%M0065	BLK_05	VOL_09	Volume 09, 500cc Slimline
			-(S) 12
	BLK_501		-] [- 29,31
%M0066	BLK_05	VOL_10	Volume 10, 1000cc Prisma Square

```
REF.     BLOCK    NICKNAME   REF. DESCRIPTION / CROSS REFERENCES
-------  -------  --------  -------------------------------------
                            -] [- 15
                            -(S)  13
         BLK_501            -] [- 33,35
%M0070   BLK_05   SML_VOL   Small volumes auxiliary memory
                            -( )  14
         BLK_32             -]/[- 7,17,27,37,46
%M0099   BLK_05   BIG_VOL   Big volumes auxiliary memory
                            -( )  15
         BLK_32             -] [- 48
                            -]/[- 46
%M0100   _MAIN    STEP_0    Step 0, Off
                            -] [- 7
         BLK_05             -] [- 17
         BLK_06             -] [- 18
         BLK_08             -] [- 9,11
                            -(S)  23
                            FBIO  23,24,26,27,28,29,30
         BLK_10             -] [- 65
                            -]/[- 5,7,13,16,24,41
         BLK_51             -]/[- 19,30,33,34
%M0101   _MAIN    STEP_1    Step 1, Preparation
                            -] [- 7
         1T0001             -] [- 8
                            -]/[- 17
         BLK_05             -] [- 19
         BLK_08             -] [- 11,23
                            -(S)  24
         BLK_10             -] [- 10,58,65,71
         BLK_20             -] [- 7,8,28
%M0102   _MAIN    STEP_2    Step 2, Pre-heating
                            -] [- 7
         BLK_05             -] [- 19
         BLK_08             -] [- 12,25
                            -(S)  26
         BLK_10             -] [- 10
                            -]/[- 13
         BLK_20             -] [- 11,26,28
         BLK_51             -] [- 22
%M0103   1T0001   STEP_3    Step 3, Find home
                            -] [- 9,38
                            -]/[- 19,30
         BLK_08             -] [- 15,19,32
                            -(S)  27
         BLK_10             -] [- 28,33,56
                            -]/[- 69
         BLK_20             -] [- 11
         BLK_51             -]/[- 14
%M0104   BLK_08   STEP_4    Step 4, Found home
                            -] [- 16,32
                            -(S)  28
         BLK_10             -] [- 10
%M0105   1T0001   STEP_5    Step 5, Production
                            -] [- 8,11,41
         BLK_08             -] [- 19,28,32
                            -(S)  29
         BLK_10             -] [- 29,52,53,57,73
         BLK_32             -] [- 7,9,11,13
%M0106   1T0001   STEP_6    Step 6, Service window
                            -] [- 8
         BLK_08             -] [- 19,28,32
                            -(S)  30
         BLK_10             -] [- 10
%M0120   BLK_08   COND_0    Step 0 Step up condition
                            -] [- 19,24
                            -( )  10
%M0121   BLK_08   COND_1    Step 1 Step up condition
                            -] [- 19,26
                            -( )  11
%M0122   BLK_08   COND_2    Step 2 Step up condition
                            -] [- 19,27
                            -( )  14
%M0123   BLK_08   COND_3    Step 3 Step up condition
                            -] [- 19,28
                            -( )  15
```

REF.	BLOCK	NICKNAME	REF. DESCRIPTION / CROSS REFERENCES
%M0124	BLK_08	COND_4	Step 4 Step up condition
			-] [- 19,29,30
			-( ) 17
%M0130	BLK_08	SSDEM_1	Short stop demand 1
			-] [- 19,29,30
			-]/[- 28
			-( ) 7
%M0140	1T0001	ST_3_6	Step 3-6, Find home - Service
			-] [- 19,30,53,59
	BLK_08		-] [- 26
			-( ) 32
	BLK_10		-] [- 6,58,69,71
	BLK_20		-] [- 26
	BLK_51		-] [- 14,22
%M0145	BLK_08	ST_2DLY	Step 2, delay one scan
			-( ) 25
	BLK_10		-] [- 58,71
%M0150	BLK_08	STEPUP	Step up
			-] [- 27,29,30
			-(S) 20
			-(R) 21
%M0160	BLK_10	PT21RUN	PT21 running
			-] [- 57,67,73
			-]/[- 54
			-( ) 9
	BLK_20		-] [- 11
	BLK_21		-] [- 5,7
	BLK_32		-] [- 54
%M0161	BLK_10	TABFOLD	Tab folder activated
			-] [- 16
			-(/) 15
%M0170	BLK_06	DT_TMCC	TMCC, Data Transfer Start
			-] [- 19,20
			-(S) 17
			-(R) 18
	BLK_10		-] [- 64
%M0181	BLK_10	REGMMIS	Register mark missed
			-] [- 38
			-]/[- 28,29
			-(S) 28,29
			-(R) 27
%M0184	BLK_10	PAP_MOV	Paper move
			-] [- 28,29
			-(S) 25
			-(R) 26
%M0190	BLK_08	ALLDORS	All doors closed
			-] [- 9,11,19
			-]/[- 23,26
	BLK_10		-] [- 5,33,34,58,71
			-( ) 4
	BLK_20		-] [- 10,11
%M0200	1T0001	SERVICE	Service and setting activated
			-]/[- 11,12
	BLK_08		-] [- 11,30
			-]/[- 9,29
	BLK_10		-] [- 10,12,37,44
			-]/[- 11
			-( ) 43
%M0249	1T0001	MTABMEM	Missing tab memory
			-] [- 41
			FBIO 38,39
%M0300	1T0001	MACH_ON	Machine cycle ON
			-]/[- 52,58
			-( ) 15
	BLK_08		-]/[- 28
	BLK_10		-] [- 9
			-]/[- 10
%M0321	1T0001	PA_NORT	Patch no rotation
			-] [- 53
			-(S) 49
			-(R) 52
%M0322	1T0001	TA_NORT	Tab no rotation
			-] [- 59
			-(S) 55

REF.	BLOCK	NICKNAME	REF. DESCRIPTION / CROSS REFERENCES
			-(R) 58
%M0350	1T0001	APPL_ON	Appl. cycle ON
			-]/[- 8,29,43,44,45,46
			-( ) 21
%M0400	1T0001	IHCYSRT	IH cycle start
			-] [- 31
			-(S) 30
			-(R) 29
%M0433	1T0001	BLK_DET	Black tape detected
			-(S) 41
	BLK_32		-] [- 46,48,50,52
			-(R) 46,48,50,52
%M0441	1T0001	TA_ACTV	Tab station activated
			-] [- 17,23,25,46
			-]/[- 13
			FBIO 11,12
	BLK_10		FBIO 47,48,49
%M0442	1T0001	RE_ACTV	Reseal station activated
			-] [- 23,30,36,45
			-]/[- 13,30
%M0443	1T0001	PA_ACTV	Patch station activated
			-] [- 17,23,25,30,35,44
			-]/[- 13,30
%M0444	1T0001	PU_ACTV	Punch station activated
			-] [- 17,23,43
			-]/[- 13
%M0460	1T0001	CHK_OUT	Applicator check OUT
			-] [- 43,44,45,46
			-( ) 42
%M0480	1T0001	ALLCLOS	All holes closed
			-]/[- 19,41
			-( ) 13
	BLK_10		-]/[- 67
	BLK_21		-]/[- 5,7
	BLK_32		-]/[- 7,9,11,13
	BLK_51		-]/[- 19,22
%M0700	BLK_51	L1_TEOK	Loop1, Temperature OK
			-]/[- 22
			-( ) 21
%M0701	BLK_51	L1_PWM	Loop1, PWM pulse
			-]/[- 18
			-( ) 18
%M0705	BLK_10	L1_POOF	Loop1, Tab power OFF
			-]/[- 7
	BLK_51		-]/[- 19
			-( ) 24
%M0800	BLK_51	EC_OK	El-cab, Temp ok (18-38)
			-]/[- 34
			-( ) 26
%M0801	BLK_51	EC_CTRL	El-cab, Control (28-33)
			-] [- 30,34
			-(S) 28
			-(R) 29
%M0900	BLK_20	IL_ASUF	Infeed loop, ASU full delay
			-] [- 11
			-( ) 5
%M0901	BLK_20	IL_PREP	Infeed loop, Preparation
			-] [- 11
			-( ) 8
%M0903	BLK_20	IL_INCR	Infeed loop, Increase speed
			-]/[- 15
			-( ) 15
%M0904	BLK_20	IL_DECR	Infeed loop, Decrease speed
			-]/[- 16
			-( ) 16
%M0905	BLK_20	IL_TOUT	Infeed loop, Timeout while still
			-] [- 27
			-( ) 28
%M0906	BLK_20	IL_FCON	Infeed loop, Freq.Converter ON
			-] [- 11,27
			-( ) 10

TEMPORARY (%T) GLOBAL CROSS REFERENCES

REF.	BLOCK	NICKNAME	REF. DESCRIPTION / CROSS REFERENCES
%T0001	1T0001	P+001	Pulse + Start Machine cycle
			-] [- 11,12,14
			-(^) 9
%T0002	1T0001	P+002	Pulse + Start Applicator cycle
			-] [- 20,39,53,59
			-(^) 19
%T0003	BLK_10	P+003	Pulse + Force Appl. IN position
			-] [- 31
			-(^) 33
%T0004	1T0001	P+004	Pulse + Start Sealing cycle
			-] [- 32
			-(^) 31
%T0005	BLK_10	P+005	Pulse + All doors closed
			-] [- 51
			-(^) 34
%T0006	1T0001	P+006	Pulse + Alarm reset
			-] [- 52,58
	BLK_10		-] [- 55
			-]/[- 58,71
			-(^) 35
%T0007	BLK_10	P+007	Pulse + ASU full
			-(^) 36
	BLK_20		-] [- 5
%T0008	BLK_32	P+008	Pulse + Load dump Punch station
			-] [- 7,9,11,13
			-(^) 5
%T0009	BLK_32	P+009	Pulse + Load dump Patch station
			-] [- 17,19,21,23
			-(^) 15
%T0010	BLK_32	P+010	Pulse + Load dump Reseal station
			-] [- 27,29,31,33
			-(^) 25
%T0011	BLK_32	P+011	Pulse + Load dump Tab station
			-] [- 37,39,41,43
			-(^) 35
%T0012	BLK_05	P+012	Pulse + Check new volume
			-] [- 18
			-(^) 17
%T0013	BLK_05	P+013	Pulse + New volume value
			-(^) 19
	BLK_06		-] [- 17,22
	BLK_10		-]/[- 63
	BLK_20		-] [- 14
%T0014	BLK_08	P+014	Pulse + Machine step up
			-] [- 20
	BLK_10		-(^) 37
%T0016	1T0001	P+016	Pulse + Patch feed started
			-] [- 49
			-(^) 48
%T0017	1T0001	P+017	Pulse + Patch rotation monitor
			-] [- 52
			-(^) 50
%T0018	1T0001	P-018	Pulse - Patch rotation monitor
			-] [- 52
			-(v) 51
%T0019	1T0001	P+019	Pulse + Tab feed started
			-] [- 55
			-(^) 54
%T0020	1T0001	P+020	Pulse + Tab rotation monitor
			-] [- 58
			-(^) 56
%T0021	1T0001	P-021	Pulse - Tab rotation monitor
			-] [- 58
			-(v) 57
%T0022	BLK_10	P+022	Pulse + Index of packaging mat.
			-] [- 80
			-(^) 38
	BLK_32		-] [- 7,9,11,13,17,19,21,23,27,29,31,33,57
%T0023	BLK_10	P+023	Pulse + Register mark detected
			-]/[- 28,29
			-(^) 39

REF.	BLOCK	NICKNAME	REF. DESCRIPTION / CROSS REFERENCES
%T0024	BLK_10	P+024	Pulse + Register mark DCS,JUM
			-] [- 15
			-(^) 40
	BLK_32		-] [- 54,59,60
%T0025	BLK_10	P+025	Pulse + Disable applicators
			-] [- 15
			-(^) 41
%T0051	BLK_06	P+051	Pulse + Servo Drive data transf.
			-] [- 9,10,11,12
			-(^) 8
%T0052	BLK_06	P+052	Pulse + TMCC data transfer
			-] [- 22
			-(^) 21

REGISTER (%R) GLOBAL CROSS REFERENCES

REF.	BLOCK	NICKNAME	REF. DESCRIPTION / CROSS REFERENCES
%R0020	BLK_32	BSHIF01	Bufferregister 01 for pkg dump.
			FBIO 56,57
%R0021	BLK_32	BSHIF02	Bufferregister 02 for pkg dump.
			FBIO 56
%R0022	BLK_32	BSHIF03	Bufferregister 03 for pkg dump.
			FBIO 9,19,29,39,55
%R0023	BLK_32	BSHIF04	Bufferregister 04 for pkg dump.
			FBIO 7,9,17,19,27,29,37,39,55
%R0024	BLK_32	BSHIF05	Bufferregister 05 for pkg dump.
			FBIO 7,17,27,37,55
%R0025	BLK_32	BSHIF06	Bufferregister 06 for pkg dump.
			FBIO 13,23,33,43,54
%R0026	BLK_32	BSHIF07	Bufferregister 07 for pkg dump.
			FBIO 11,13,21,23,31,33,41,43,54
%R0027	BLK_32	BSHIF08	Bufferregister 08 for pkg dump.
			FBIO 11,21,31,41,54
%R0030	BLK_32	SHIFT01	Shiftregister 01 for pkg dump.
			FBIO 56,60
%R0031	BLK_32	SHIFT02	Shiftregister 02 for pkg dump.
			FBIO 56
%R0032	BLK_32	SHIFT03	Shiftregister 03 for pkg dump.
			FBIO 48,55
%R0033	BLK_32	SHIFT04	Shiftregister 04 for pkg dump.
			FBIO 46,48,55
%R0034	BLK_32	SHIFT05	Shiftregister 05 for pkg dump.
			FBIO 46,52,55
%R0035	BLK_32	SHIFT06	Shiftregister 06 for pkg dump.
			FBIO 50,52,54
%R0036	BLK_32	SHIFT07	Shiftregister 07 for pgk dump.
			FBIO 50,54
%R0037	BLK_32	SHIFT08	Shiftregister 08 for pgk dump.
			FBIO 54
%R0051	BLK_05	CHK_VOL	Check for new volume
			FBIO 18,19
%R0080	BLK_06	DMC_CNT	DMC Data transfer, Counter
			FBIO 5,6,7,9
%R0081	BLK_06	DMC_RE1	DMC Data transfer, value1
			FBIO 9,15
%R0082	BLK_06	DMC_RE2	DMC Data transfer, value2
			FBIO 9
%R0083	BLK_06	DMC_RE3	DMC Data transfer, value3
			FBIO 10
%R0084	BLK_06	DMC_RE4	DMC Data transfer, value4
			FBIO 10
%R0085	BLK_06	DMC_RE5	DMC Data transfer, value5
			FBIO 11
%R0086	BLK_06	DMC_RE6	DMC Data transfer, value6
			FBIO 12
%R0087	BLK_06	DMC_RE7	DMC data transfer, value7
			FBIO 12
%R0100	BLK_08	TMR0100	Step 3 delay
			FBIO 27
%R0120	BLK_10	TMR0120	IN sequence Step 3 delay
			FBIO 33
%R0123	BLK_10	OFD0123	PT21 running delay

REF.	BLOCK	NICKNAME	REF. DESCRIPTION / CROSS REFERENCES
			FBIO 9
%R0126	BLK_10	TMR0126	Missed reg. mark delay Home find
			FBIO 28
%R0129	BLK_10	TMR0129	Missed reg. mark delay Productin
			FBIO 29
%R0132	BLK_10	TMR0132	Rotation monitor delay
			FBIO 53
%R0135	BLK_10	TMR0135	Malfunction photocells in Home
			FBIO 56
%R0138	BLK_10	TMR0138	Malfunction photocells in Prod
			FBIO 57
%R0141	BLK_10	TMR0141	Servo fault enable delay
			FBIO 58
%R0144	BLK_10	TMR0144	Waste box high level delay
			FBIO 66
%R0147	BLK_10	TMR0147	Air alarm delay
			FBIO 68
%R0150	BLK_10	OFD0150	Register mark delay to TBA21
			FBIO 80
%R0153	BLK_10	TMR0153	IH fault delay
			FBIO 69
%R0156	BLK_10	OFD0156	Tab folder delay
			FBIO 16
%R0159	BLK_10	CTR0159	Tab folder activated delay
			FBIO 15
%R0162	BLK_10	TMR0162	TMCC alarm delay
			FBIO 63
%R0165	BLK_20	IL_TMR	Inf.loop:max time while still
			FBIO 28
%R0171	BLK_10	TMR0171	Delay, Servo tensioner alarm
			FBIO 71
%R0180	BLK_06	TMCCCNT	TMCC data transfer,counter
			FBIO 19,20,21,22
%R0181	BLK_06	TMCCRE1	TMCC data transfer value 1
			FBIO 22,25
%R0182	BLK_06	TMCCRE2	TMCC data transfer value 2
			FBIO 22
%R0300	BLK_10	CTR0300	Waste box full delay
			FBIO 67
%R0500	BLK_501	PAR_000	Dump. pkg., Punch station
			FBIO 5,9,13,17,19,21,25,29,33
	BLK_502		FBIO 5
	BLK_32		FBIO 7,9,11,13
%R0501	BLK_32	PAR_001	Dump. pkg., Punch station
			FBIO 7,9,11,13
%R0502	BLK_32	PAR_002	Dump. pkg., Patch station
			FBIO 17,19,21,23
%R0503	BLK_32	PAR_003	Dump. pkg., Patch station
			FBIO 17,19,21,23
%R0504	BLK_32	PAR_004	Dump. pkg., Reseal station
			FBIO 27,29,31,33
%R0505	BLK_32	PAR_005	Dump. pkg., Reseal station
			FBIO 27,29,31,33
%R0506	BLK_32	PAR_006	Dump. pkg., Tab station
			FBIO 37,39,41,43
%R0507	BLK_501	PAR_007	Dump. pkg., Tab station
			FBIO 5,9,13,17,19,21,25,29,33
	BLK_502		FBIO 5
	BLK_32		FBIO 37,39,41,43
%R0508	BLK_32	PAR_008	Dump. pkg., Black tape
			FBIO 46,48,50,52
%R0509	BLK_32	PAR_009	Dump. pkg., Black tape
			FBIO 46,48,50,52
%R0600	BLK_501	PAR_100	Dflt. par., Infeed loop speed
			FBIO 5,9,13,17,19,21,25,29,33
	BLK_502		FBIO 5
	BLK_20		FBIO 14,18,19
%R0601	BLK_06	DMC_W1	Servo Drive word1:Repeat Length
			FBIO 9
%R0602	BLK_06	DMC_W2	Servo Drive word2:Stop Position
			FBIO 9
%R0603	BLK_06	DMC_W3	Servo Drive word3:Acc/Dec Time
			FBIO 10
%R0604	BLK_06	DMC_W4	Servo Drive word4:Total Feed Tme

REF.	BLOCK	NICKNAME	REF. DESCRIPTION / CROSS REFERENCES
			FBIO 10
%R0605	BLK_06	TMCC_W1	TMCC Data tr.:Word1
			FBIO 22
%R0606	BLK_06	TMCC_W2	TMCC Data tr.:Word2
			FBIO 22
%R1000	1T0001	MACH_CY	Machine cycle timer
			FBIO 8,14,15,16
%R1001	1T0001	CY_TIME	Machine total cycle time (ms)
			FBIO 6,7,8,15
%R1002	1T0001	CYCLEON	Machine cycle ON
			FBIO 6,7,15
%R1200	1T0001	APPL_CY	Appl. cycle timer
			FBIO 20,21,22,24,27,42
	BLK_10		FBIO 31
%R1400	1T0001	SEAL_CY	Sealing cycle timer
			FBIO 32,33,35,36,37
%R1501	BLK_501	DMC_W5	Servo Tensioner word1:Torque 1
			FBIO 7,11,15,23,27,31,35
	BLK_502		FBIO 7
	BLK_06		FBIO 11
%R1502	BLK_06	DMC_W6	servo Tensioner word2:Torque 2
			FBIO 11
%R1503	BLK_06	DMC_W7	Servo Tens.word3:Max pos.Speed
			FBIO 12
%R1504	BLK_06	DMC_W8	Servo Tens.word4:Max neg.Speed
			FBIO 12
%R1700	BLK_51	L1_TREG	Loop1, Temp. Reg. Tab seal. pad
			FBIO 9,16
%R1702	BLK_51	L1_SMPT	Loop1, Sample time
			FBIO 9
%R1703	BLK_51	L1_UPDB	Loop1, Upper dead band
			FBIO 9
%R1704	BLK_51	L1_LODB	Loop1, Lower dead band
			FBIO 10
%R1705	BLK_51	L1_PGAI	Loop1, Proportional band
			FBIO 10
%R1706	BLK_51	L1_DGAI	Loop1, Derivation band
			FBIO 10
%R1707	BLK_51	L1_IGAI	Loop1, Integral band
			FBIO 11
%R1708	BLK_51	L1_BIAS	Loop1, Bias
			FBIO 11
%R1709	BLK_51	L1_UPCV	Loop1, Upper CV limit
			FBIO 11
%R1710	BLK_51	L1_LOCV	Loop1, Lower CV limit
			FBIO 12
%R1711	BLK_51	L1_MINS	Loop1, Minimum slew time
			FBIO 12
%R1740	BLK_51	L1_CV	Loop1, Control value
			FBIO 16,18
%R1741	BLK_51	L1_SSR	Loop1, Solid state relay
			FBIO 7,18,19
%R1742	BLK_51	L1_ALLO	Loop1, Temperature alarm low
			FBIO 6,21
%R1743	BLK_51	L1_ALHI	Loop1, Temperature alarm high
			FBIO 6,21,24
%R1744	BLK_51	L1_SETP	Loop1, Temperature setpoint
			FBIO 7,15,16
%R1745	BLK_51	TMR1745	Loop1, PWM timer
			FBIO 18,19
%R1748	BLK_51	OFD1748	Loop1, Start temperature delay
			FBIO 14
%R3000	BLK_20	IFL_WS	Infeed loop, Working speed
			FBIO 14,15,16,18,19,21
%R3001	BLK_20	IFL_LLO	Infeed loop, Limit low speed
			FBIO 18
%R3002	BLK_20	IFL_LHI	Infeed loop, Limit high speed
			FBIO 19
%R3100	BLK_20	OFD3100	Infeed loop, ASU full delay
			FBIO 5
%R3103	BLK_20	OFD3103	Infeed loop, Prep. delay
			FBIO 7
%R3106	BLK_20	TMR3106	Infeed loop, High alarm delay
			FBIO 26

REF.	BLOCK	NICKNAME	REF. DESCRIPTION / CROSS REFERENCES
%R3109	BLK_20	TMR3109	Infeed loop, Increase delay
			FBIO 15
%R3112	BLK_20	TMR3112	Infeed loop, Decrease delay
			FBIO 16
%R3115	BLK_20		FBIO 10
%R4100	BLK_21	CTU4100	Patch material ended counter
			FBIO 5
%R4103	BLK_21	CTU4103	Tab material ended counter
			FBIO 7

ANALOG INPUT (%AI) GLOBAL CROSS REFERENCES

REF.	BLOCK	NICKNAME	REF. DESCRIPTION / CROSS REFERENCES
%AI0001	BLK_51	B2101	Electrical cabinet thermo couple
			FBIO 26,28,29,32
%AI0002	BLK_51	B8427	Tab thermo couple
			FBIO 7,16,21,24

ANALOG OUTPUT (%AQ) GLOBAL CROSS REFERENCES

REF.	BLOCK	NICKNAME	REF. DESCRIPTION / CROSS REFERENCES
%AQ009	BLK_10	SDV01	Servo Drive, Pulltab correction
			FBIO 22
%AQ010	BLK_20	IFL27	Speed infeed motor
			FBIO 21,23,24
%AQ014	BLK_10	NEW9	Patch power
			FBIO 20
%AQ015	BLK_10	NEW10	Reseal power
			FBIO 20

SYSTEM REFERENCE (%S) GLOBAL CROSS REFERENCES

REF.	BLOCK	NICKNAME	REF. DESCRIPTION / CROSS REFERENCES
%S0001	BLK_08	FST_SCN	-] [- 23
	BLK_10	FST_SCN	-] [- 51
%S0005	BLK_10	T_SEC	-] [- 10,67
	BLK_21	T_SEC	-] [- 5,7
%S0007	_MAIN	ALW_ON	-] [- 9,11,13,15
	1T0001	ALW_ON	-] [- 4,12,15,16,21,22,24,27,33,34,37,39,42,61
	BLK_05	ALW_ON	-] [- 4,5,6,7,8,9,10,11,12,13,21,22
	BLK_06	ALW_ON	-] [- 7,21
	BLK_10	ALW_ON	-] [- 19,20,22,27
	BLK_20	ALW_ON	-] [- 18,19,21
	BLK_32	ALW_ON	-] [- 57,60
	BLK_51	ALW_ON	-] [- 6,7,9,10,11,12,16,24,26,28,29,32
%S0008	BLK_06	ALW_OFF	-] [- 15,25
	BLK_51	ALW_OFF	-] [- 16
%SA011	BLK_10	LOW_BAT	-] [- 61

IDENTIFIER NAME GLOBAL CROSS REFERENCES

IDENTIFIER	BLOCK	REF. DESCRIPTION / CROSS REFERENCES
BLK_05	_MAIN	Volume handling
		CALL 7
BLK_501	BLK_05	Volumes >330ml
		CALL 21
BLK_502	BLK_05	Volumes <330ml
		CALL 22
BLK_06	_MAIN	Data transfer
		CALL 9
BLK_08	_MAIN	Machine steps
		CALL 9
BLK_10	_MAIN	Common functions
		CALL 9
BLK_20	_MAIN	Infeed loop
		CALL 11

IDENTIFIER	BLOCK	REF. DESCRIPTION / CROSS REFERENCES
BLK_21	_MAIN	Patch and Tab material supply
		CALL 11
BLK_32	_MAIN	Dumping of packages
		CALL 13
BLK_51	_MAIN	Temperature regulators/monitors
		CALL 15

```
|[  START LD SUBROUTINE  1T0001   ]
|
|[     VARIABLE DECLARATIONS      ]
|
|[   START OF SUBROUTINE LOGIC    ]
|
| (*************************************************************************)
| (* Block 1T001 "Machine cycle control"                                   *)
| (*                                                                       *)
| (* The constant 3 shows that the fast input module is located           *)
| (* in slot 3 of the main rack.                                          *)
| (*************************************************************************)
|
|ALW_ON                                                    << RUNG 4  STEP #0002 >>
|%S0007  +-----+
+--] [---+DO_IO+-
|        |     |
|B84071  |     |
|%I0001 -+ST   |
|        |     |
| B8414  |     |
|%I0016 -+END  |
|        |     |
| CONST -+ALT  |
|   0003 +-----+
|
| (*************************************************************************)
| (* Machine cycle                                                         *)
| (*                                                                       *)
| (*                                                                       *)
| (* R1000      Function                                                   *)
| (* ------   ---------------------------------------------               *)
| (* 470 ms   Machine cycle ON for speed 5500 and 7000 pkg/h.             *)
| (* 410 ms   Machine cycle ON for speed 8000 pkg/h.                     *)
| (* 100 ms   DMC move                                                   *)
| (* 100 ms   Patch and Tab material                                     *)
| (* 100 ms   Waste blow                                                 *)
| (*                                                                       *)
| (* R1001    Total machine cycle                                        *)
| (*          490 ms for speed 5500 and 7000 pkg/h.                      *)
| (*          430 ms for speed 8000 pkg/h.                               *)
| (*                                                                       *)
| (*                                                                       *)
| (*************************************************************************)
|
|LONG_CY                                                   << RUNG 6  STEP #0005 >>
|%M0052  +-----+                +-----+
+--] [---+MOVE_+----------------+ SUB_+-
|        | INT |                | INT |
|        |     |                |     |
|        |     | CY_TIME CY_TIME |     | CYCLEON
| CONST -+IN  Q+-%R1001  %R1001 -+I1  Q+-%R1002
| +00490 | LEN |                |     |
|        |00001|                |     |
|        |     |                |     |
|        +-----+         CONST -+I2   |
|                        +00020 +-----+
|
|LONG_CY                                                   << RUNG 7  STEP #0008 >>
|%M0052  +-----+                +-----+
+--]/[---+MOVE_+----------------+ SUB_+-
|        | INT |                | INT |
|        |     |                |     |
|        |     | CY_TIME CY_TIME |     | CYCLEON
| CONST -+IN  Q+-%R1001  %R1001 -+I1  Q+-%R1002
| +00430 | LEN |                |     |
|        |00001|                |     |
|        |     |                |     |
|        +-----+         CONST -+I2   |
|                        +00020 +-----+
|
```

REFERENCE	NICKNAME	REFERENCE DESCRIPTION	REFERENCE	NICKNAME	REFERENCE DESCRIPTION
%S0007	ALW_ON		%R1002	CYCLEON	Machine cycle ON
%I0001	B84071	Outfeed loop, Low	%R1001	CY_TIME	Machine total cycle time (ms)
%I0016	B8414	Tab material, Rotation monitor	%M0052	LONG_CY	Long appl.cycle:volumes >330cc

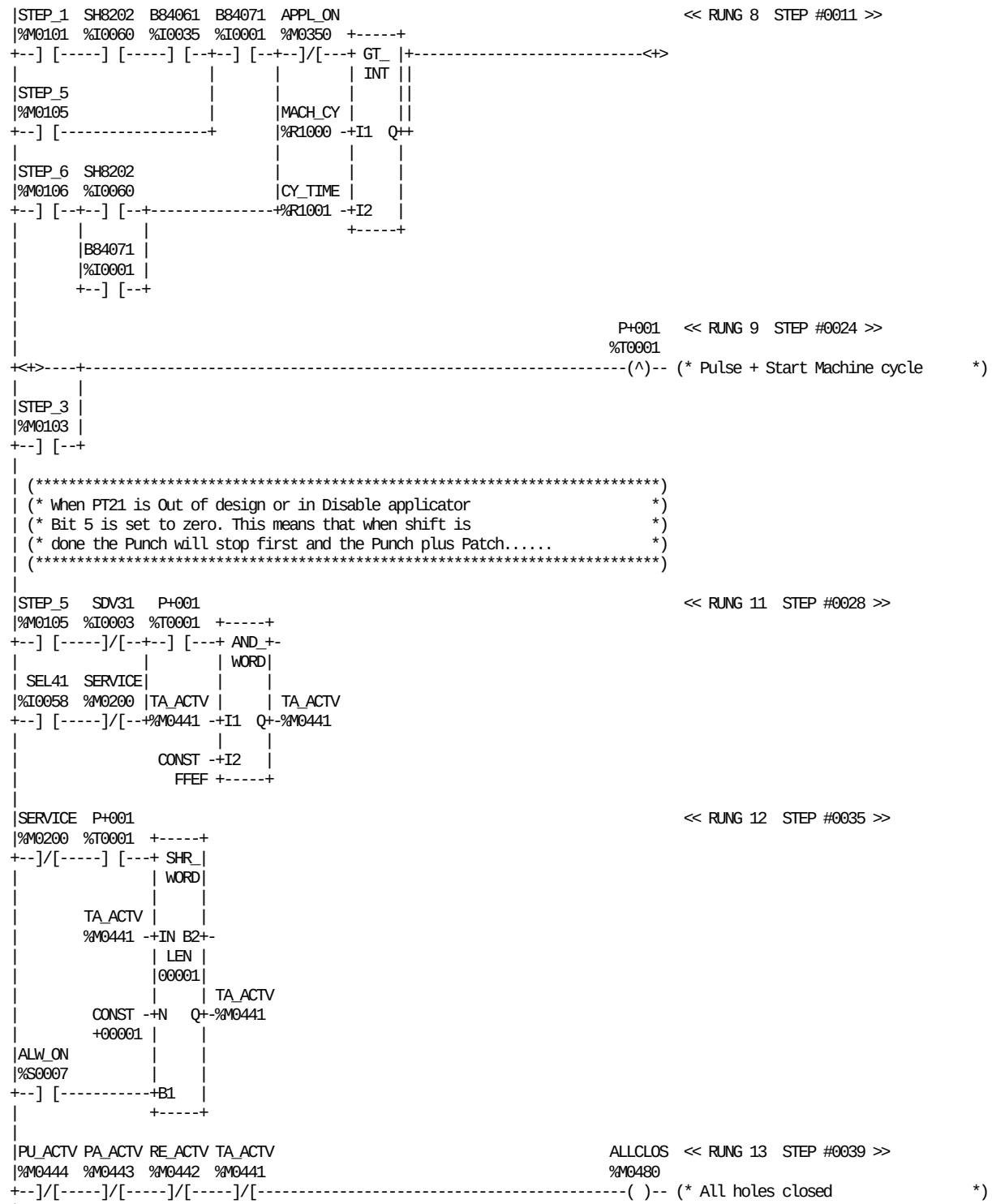

REFERENCE	NICKNAME	REFERENCE DESCRIPTION	REFERENCE	NICKNAME	REFERENCE DESCRIPTION
%M0480	ALLCLOS	All holes closed	%M0442	RE_ACTV	Reseal station activated
%S0007	ALW_ON		%I0003	SDV31	Servo Drive, Design OK
%M0350	APPL_ON	Appl. cycle ON	%I0058	SEL41	Production disable appl., Selecd
%I0035	B84061	Outfeed loop, High	%M0200	SERVICE	Service and setting activated
%I0001	B84071	Outfeed loop, Low	%I0060	SH8202	Push button, Single move
%R1001	CY_TIME	Machine total cycle time (ms)	%M0101	STEP_1	Step 1, Preparation
%R1000	MACH_CY	Machine cycle timer	%M0103	STEP_3	Step 3, Find home
%T0001	P+001	Pulse + Start Machine cycle	%M0105	STEP_5	Step 5, Production
%M0443	PA_ACTV	Patch station activated	%M0106	STEP_6	Step 6, Service window
%M0444	PU_ACTV	Punch station activated	%M0441	TA_ACTV	Tab station activated

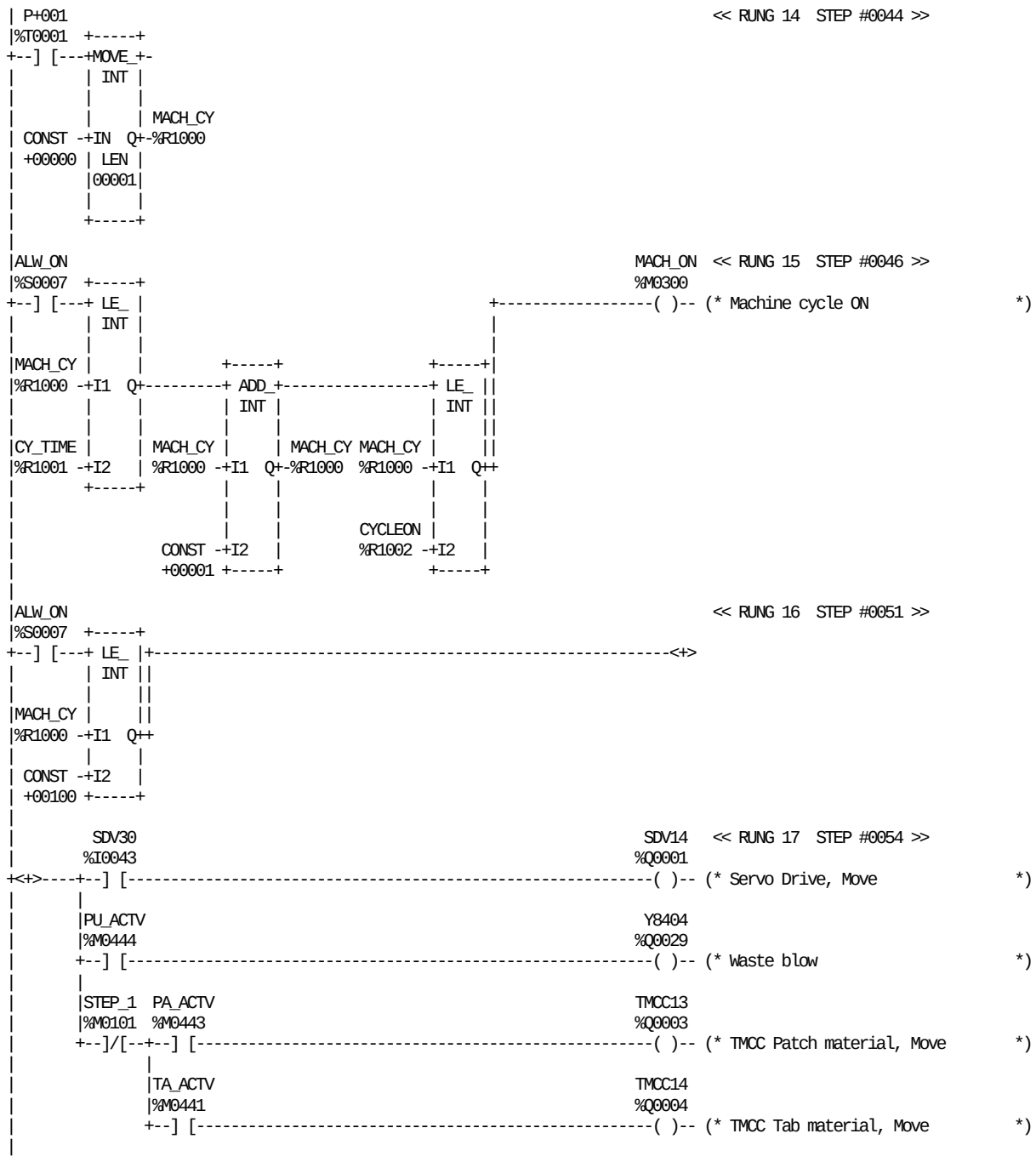

REFERENCE	NICKNAME	REFERENCE DESCRIPTION
%S0007	ALW_ON	
%R1002	CYCLEON	Machine cycle ON
%R1001	CY_TIME	Machine total cycle time (ms)
%R1000	MACH_CY	Machine cycle timer
%M0300	MACH_ON	Machine cycle ON
%T0001	P+001	Pulse + Start Machine cycle
%M0443	PA_ACTV	Patch station activated
%M0444	PU_ACTV	Punch station activated

REFERENCE	NICKNAME	REFERENCE DESCRIPTION
%Q0001	SDV14	Servo Drive, Move
%I0043	SDV30	Servo Drive, Fault
%M0101	STEP_1	Step 1, Preparation
%M0441	TA_ACTV	Tab station activated
%Q0003	TMCC13	TMCC Patch material, Move
%Q0004	TMCC14	TMCC Tab material, Move
%Q0029	Y8404	Waste blow

```
| (*************************************************************************)
| (* Applicator cycle                                                      *)
| (*                                                                       *)
| (* Total applicator cycle is: 280ms.                                     *)
| (*                                                                       *)
| (* R1200        Function                                                *)
| (* ------------  ---------------------------                             *)
| (*   1 - 280 ms  Applicator cycle ON    M0350                            *)
| (*   1 - 50  ms  Punch jaw OUT                                           *)
| (*   1 - 50  ms  Patch jaw OUT                                           *)
| (*   1 - 50  ms  Reseal jaw OUT                                         *)
| (*   1 - 50  ms  Tab jaw OUT                                            *)
| (*   1 - 120 ms  Patch suction                                          *)
| (* Punch closed  Punch blow                                             *)
| (*   1 - 200 ms  Cap blowing                                            *)
| (* 195 - 245 ms  Punch jaw IN                                          *)
| (* 195 - 245 ms  Patch jaw IN                                          *)
| (* 195 - 245 ms  Reseal jaw IN                                        *)
| (* 195 - 245 ms  Tab jaw IN                                           *)
| (*************************************************************************)
|
|ST_3_6  STEP_3  ALLCLOS  SDV32                                  P+002   << RUNG 19  STEP #0071 >>
|%M0140  %M0103  %M0480  %I0002                                 %T0002
+--] [-----]/[-----]/[-----] [-----------------------------------------(^)-- (* Pulse + Start Applicator cycle   *)
|
| P+002                                                                  << RUNG 20  STEP #0076 >>
|%T0002  +-----+
+--] [---+MOVE_+-
|        | INT |
|        |     |
|        |     | APPL_CY
| CONST -+IN  Q+-%R1200
| +00000 | LEN |
|        |00001|
|        |     |
|        +-----+
|
|ALW_ON                                                          APPL_ON  << RUNG 21  STEP #0078 >>
|%S0007  +-----+                                                 %M0350
+--] [---+ LE_ |               +----------------------------------------( )-- (* Appl. cycle ON                 *)
|        | INT |               |
|        |     |               |
|APPL_CY |     |        +-----+|
|%R1200 -+I1  Q+--------+ ADD_++
|        |     |         | INT |
|        |     |         |     |
|        |     | APPL_CY |     | APPL_CY
| CONST -+I2   | %R1200 -+I1  Q+-%R1200
| +00280 +-----+         |     |
|                        |     |
|                CONST -+I2   |
|                +00001 +-----+
|
|ALW_ON                                                                  << RUNG 22  STEP #0082 >>
|%S0007  +-----+
+--] [---+ LE_ |+-------------------------------------------------------------<+>
|        | INT ||
|        |     ||
|APPL_CY |     ||
|%R1200 -+I1  Q++
|        |     |
| CONST -+I2   |
| +00050 +-----+
|
```

REFERENCE	NICKNAME	REFERENCE DESCRIPTION	REFERENCE	NICKNAME	REFERENCE DESCRIPTION
%M0480	ALLCLOS	All holes closed	%T0002	P+002	Pulse + Start Applicator cycle
%S0007	ALW_ON		%I0002	SDV32	Servo Drive, Move done
%R1200	APPL_CY	Appl. cycle timer	%M0103	STEP_3	Step 3, Find home
%M0350	APPL_ON	Appl. cycle ON	%M0140	ST_3_6	Step 3-6, Find home - Service

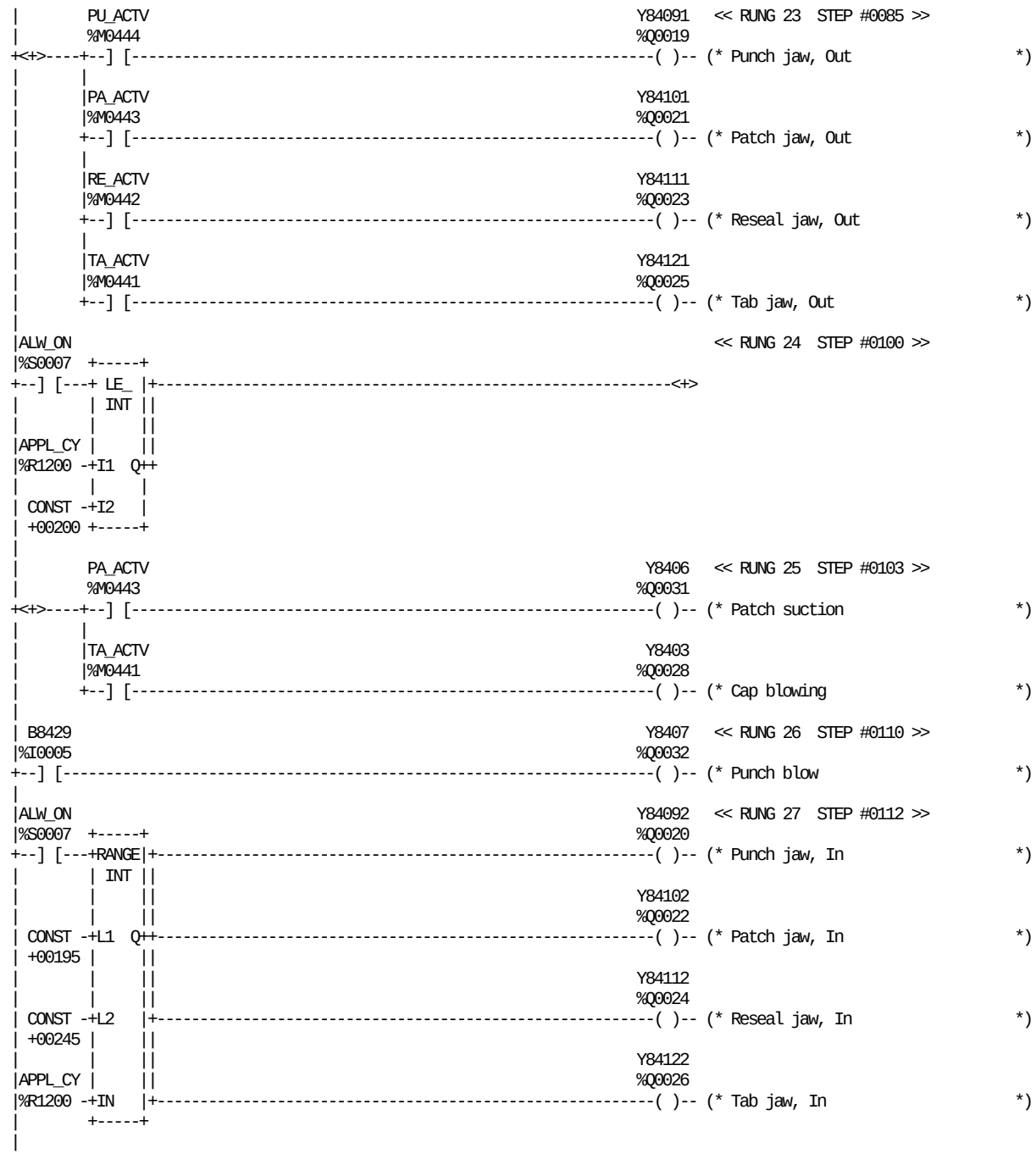

REFERENCE	NICKNAME	REFERENCE DESCRIPTION	REFERENCE	NICKNAME	REFERENCE DESCRIPTION
%S0007	ALW_ON		%Q0032	Y8407	Punch blow
%R1200	APPL_CY	Appl. cycle timer	%Q0019	Y84091	Punch jaw, Out
%I0005	B8429	Punch jaw, Closed	%Q0020	Y84092	Punch jaw, In
%M0443	PA_ACTV	Patch station activated	%Q0021	Y84101	Patch jaw, Out
%M0444	PU_ACTV	Punch station activated	%Q0022	Y84102	Patch jaw, In
%M0442	RE_ACTV	Reseal station activated	%Q0023	Y84111	Reseal jaw, Out
%M0441	TA_ACTV	Tab station activated	%Q0024	Y84112	Reseal jaw, In
%Q0028	Y8403	Cap blowing	%Q0025	Y84121	Tab jaw, Out
%Q0031	Y8406	Patch suction	%Q0026	Y84122	Tab jaw, In

```
| (*************************************************************************)
| (* Sealing cycle                                                         *)
| (*                                                                       *)
| (* Total sealing cycle is: 125ms.                                       *)
| (*                                                                       *)
| (* R1400       Function                                                 *)
| (* ----------  ---------------------                                    *)
| (* 10 -  35 ms Patch sealing pulse                                      *)
| (* 40 - 110 ms Patch/Reseal switch                                      *)
| (* 70 -  95 ms Reseal sealing pulse                                     *)
| (*************************************************************************)
|
|APPL_ON                                                    IHCYSRT  << RUNG 29  STEP #0119 >>
|%M0350                                                     %M0400
+--]/[-------------------------------------------------------------(R)-- (* IH cycle start                *)
|
|ST_3_6  STEP_3  PA_ACTV  B8421   B8423                     IHCYSRT  << RUNG 30  STEP #0121 >>
|%M0140  %M0103  %M0443  %I0006  %I0007                     %M0400
+--] [-----]/[--+--] [--+--] [--+--] [--+-----------------------------(S)-- (* IH cycle start                *)
|               |       |       |       |
|               |RE_ACTV|PA_ACTV|RE_ACTV|
|               |%M0442 |%M0443 |%M0442 |
|               +--] [--+--]/[--+--]/[--+
|
|IHCYSRT                                                     P+004   << RUNG 31  STEP #0133 >>
|%M0400                                                     %T0004
+--] [-------------------------------------------------------------(^)-- (* Pulse + Start Sealing cycle   *)
|
| P+004                                                             << RUNG 32  STEP #0135 >>
|%T0004  +-----+
+--] [---+MOVE_+-
|        | INT |
|        |     |
|        |     | SEAL_CY
| CONST -+IN  Q+-%R1400
| +00000 | LEN |
|        |00001|
|        |     |
|        +-----+
|
|ALW_ON                                                             << RUNG 33  STEP #0137 >>
|%S0007  +-----+
+--] [---+ LE_ |
|        | INT |
|        |     |
|SEAL_CY |     |         +-----+
|%R1400 -+I1  Q+---------+ ADD_+-
|        |     |         | INT |
|        |     |         |     |
|        |     | SEAL_CY |     | SEAL_CY
| CONST -+I2   | %R1400 -+I1  Q+-%R1400
| +00125 +-----+         |     |
|                        |     |
|                CONST -+I2   |
|                +00001 +-----+
|
|ALW_ON                                                     IHPSTRT  << RUNG 34  STEP #0140 >>
|%S0007                                                     %Q0011
+--] [-------------------------------------------------------------(R)-- (* TPIH Gen. Patch/Reseal, Start   *)
|
```

REFERENCE	NICKNAME	REFERENCE DESCRIPTION	REFERENCE	NICKNAME	REFERENCE DESCRIPTION
%S0007	ALW_ON		%T0004	P+004	Pulse + Start Sealing cycle
%M0350	APPL_ON	Appl. cycle ON	%M0443	PA_ACTV	Patch station activated
%I0006	B8421	Patch jaw, Closed	%M0442	RE_ACTV	Reseal station activated
%I0007	B8423	Reseal jaw, Closed	%R1400	SEAL_CY	Sealing cycle timer
%M0400	IHCYSRT	IH cycle start	%M0103	STEP_3	Step 3, Find home
%Q0011	IHPSTRT	TPIH Gen. Patch/Reseal, Start	%M0140	ST_3_6	Step 3-6, Find home - Service

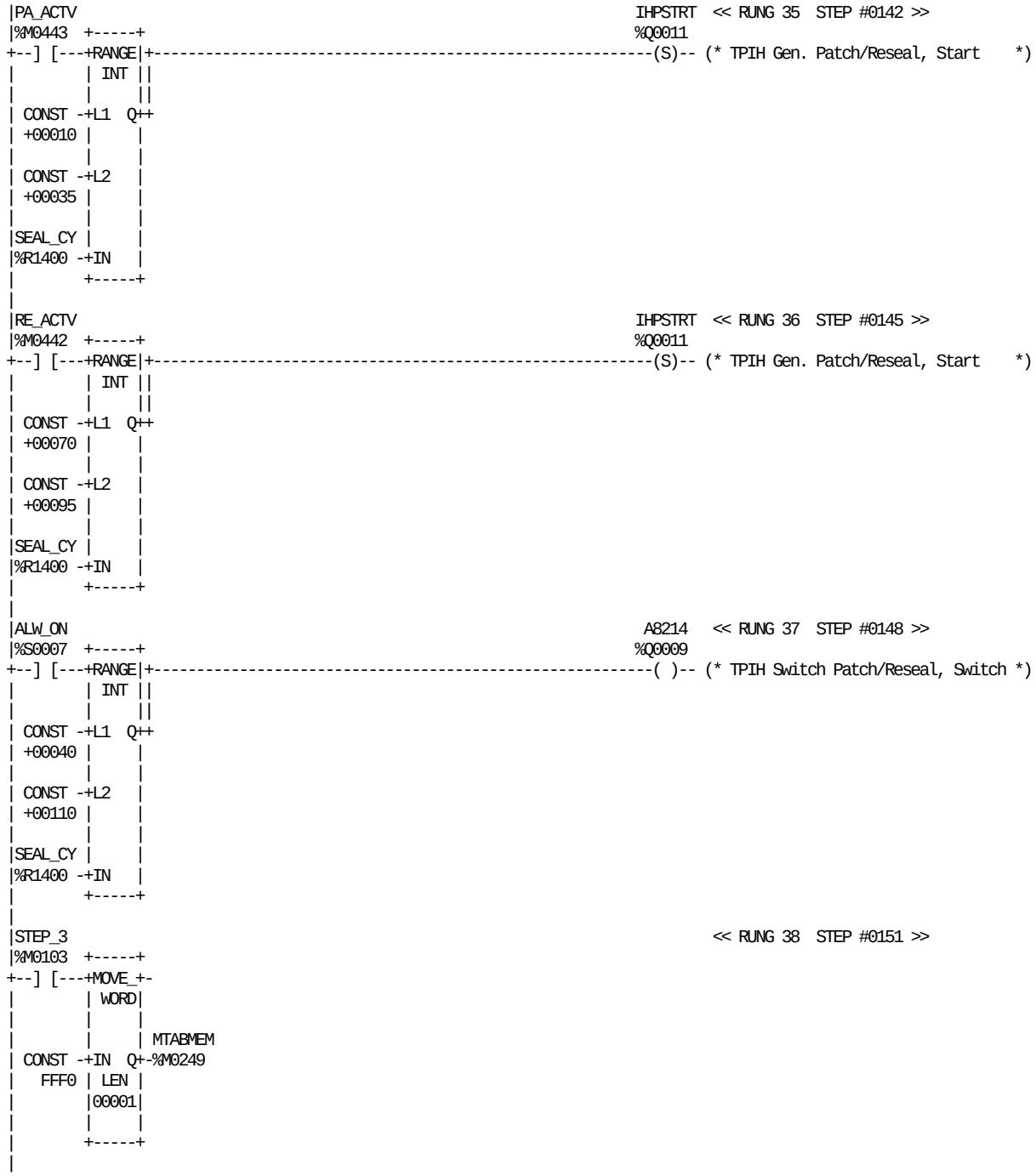

REFERENCE	NICKNAME	REFERENCE DESCRIPTION	REFERENCE	NICKNAME	REFERENCE DESCRIPTION
%Q0009	A8214	TPIH Switch Patch/Reseal, Switch	%M0443	PA_ACTV	Patch station activated
%S0007	ALW_ON		%M0442	RE_ACTV	Reseal station activated
%Q0011	IHPSTRT	TPIH Gen. Patch/Reseal, Start	%R1400	SEAL_CY	Sealing cycle timer
%M0249	MTABMEM	Missing tab memory	%M0103	STEP_3	Step 3, Find home



<< RUNG 39 STEP #0153 >>

REFERENCE NICKNAME		REFERENCE DESCRIPTION
%S0007	ALW_ON	
%M0249	MTABMEM	Missing tab memory

REFERENCE NICKNAME		REFERENCE DESCRIPTION
%T0002	P+002	Pulse + Start Applicator cycle

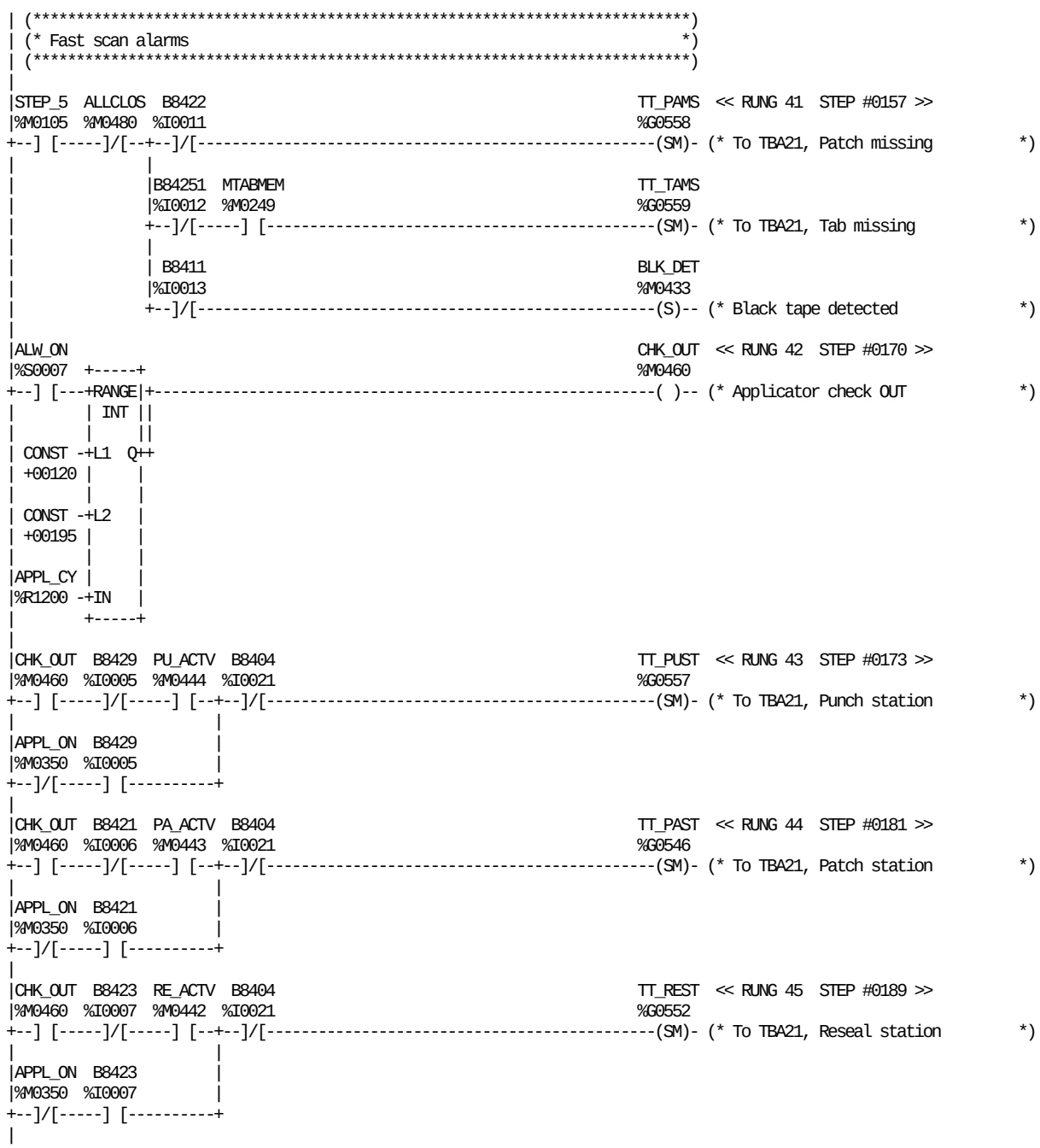

REFERENCE	NICKNAME	REFERENCE DESCRIPTION
%M0480	ALLCLOS	All holes closed
%S0007	ALW_ON	
%R1200	APPL_CY	Appl. cycle timer
%M0350	APPL_ON	Appl. cycle ON
%I0021	B8404	Bypass, Activated
%I0013	B8411	Black tape, Detected
%I0006	B8421	Patch jaw, Closed
%I0011	B8422	Patch, Missing
%I0007	B8423	Reseal jaw, Closed
%I0012	B84251	Tab, Missing
%I0005	B8429	Punch jaw, Closed
%M0433	BLK_DET	Black tape detected

REFERENCE	NICKNAME	REFERENCE DESCRIPTION
%M0460	CHK_OUT	Applicator check OUT
%M0249	MTABMEM	Missing tab memory
%M0443	PA_ACTV	Patch station activated
%M0444	PU_ACTV	Punch station activated
%M0442	RE_ACTV	Reseal station activated
%M0105	STEP_5	Step 5, Production
%G0558	TT_PAMS	To TBA21, Patch missing
%G0546	TT_PAST	To TBA21, Patch station
%G0557	TT_PUST	To TBA21, Punch station
%G0552	TT_REST	To TBA21, Reseal station
%G0559	TT_TAMS	To TBA21, Tab missing

```
|CHK_OUT  B8424  TA_ACTV  B8404                                    TT_TAST  << RUNG 46  STEP #0197 >>
|%M0460  %I0008  %M0441  %I0021                                    %G0549
+--] [-----]/[-----] [--+--]/[-------------------------------------------(SM)- (* To TBA21, Tab station           *)
|                       |
|APPL_ON  B8424         |
|%M0350  %I0008         |
+--]/[-----] [----------+
|
| (*************************************************************************)
| (* Patch and Tab rotation monitor alarms                                 *)
| (*************************************************************************)
|
|TMCC13                                                             P+016   << RUNG 48  STEP #0206 >>
|%Q0003                                                            %T0016
+--] [-------------------------------------------------------------------(^)-- (* Pulse + Patch feed started      *)
|
| P+016                                                            PA_NORT  << RUNG 49  STEP #0208 >>
|%T0016                                                            %M0321
+--] [-------------------------------------------------------------------(S)-- (* Patch no rotation              *)
|
| B8409                                                             P+017   << RUNG 50  STEP #0210 >>
|%I0015                                                            %T0017
+--] [-------------------------------------------------------------------(^)-- (* Pulse + Patch rotation monitor  *)
|
| B8409                                                             P-018   << RUNG 51  STEP #0212 >>
|%I0015                                                            %T0018
+--] [-------------------------------------------------------------------(v)-- (* Pulse - Patch rotation monitor  *)
|
|MACH_ON  P+006                                                    PA_NORT  << RUNG 52  STEP #0214 >>
|%M0300  %T0006                                                    %M0321
+--]/[-----] [--+----------------------------------------------------------(R)-- (* Patch no rotation              *)
|               |
| P+017         |
|%T0017         |
+--] [----------+
|               |
| P-018         |
|%T0018         |
+--] [----------+
|
|ST_3_6   P+002  PA_NORT                                           TT_PARM  << RUNG 53  STEP #0219 >>
|%M0140  %T0002  %M0321                                            %G0564
+--] [-----] [-----] [--------------------------------------------------(SM)- (* To TBA21, Patch rotation monitor *)
|
|TMCC14                                                             P+019   << RUNG 54  STEP #0223 >>
|%Q0004                                                            %T0019
+--] [-------------------------------------------------------------------(^)-- (* Pulse + Tab feed started       *)
|
| P+019                                                            TA_NORT  << RUNG 55  STEP #0225 >>
|%T0019                                                            %M0322
+--] [-------------------------------------------------------------------(S)-- (* Tab no rotation               *)
|
| B8414                                                             P+020   << RUNG 56  STEP #0227 >>
|%I0016                                                            %T0020
+--] [-------------------------------------------------------------------(^)-- (* Pulse + Tab rotation monitor    *)
|
| B8414                                                             P-021   << RUNG 57  STEP #0229 >>
|%I0016                                                            %T0021
+--] [-------------------------------------------------------------------(v)-- (* Pulse - Tab rotation monitor    *)
|
```

REFERENCE	NICKNAME	REFERENCE DESCRIPTION
%M0350	APPL_ON	Appl. cycle ON
%I0021	B8404	Bypass, Activated
%I0015	B8409	Patch material, Rotation monitor
%I0016	B8414	Tab material, Rotation monitor
%I0008	B8424	Tab jaw, Closed
%M0460	CHK_OUT	Applicator check OUT
%M0300	MACH_ON	Machine cycle ON
%T0002	P+002	Pulse + Start Applicator cycle
%T0006	P+006	Pulse + Alarm reset
%T0016	P+016	Pulse + Patch feed started
%T0017	P+017	Pulse + Patch rotation monitor
%T0019	P+019	Pulse + Tab feed started

REFERENCE	NICKNAME	REFERENCE DESCRIPTION
%T0020	P+020	Pulse + Tab rotation monitor
%T0018	P-018	Pulse - Patch rotation monitor
%T0021	P-021	Pulse - Tab rotation monitor
%M0321	PA_NORT	Patch no rotation
%M0140	ST_3_6	Step 3-6, Find home - Service
%M0441	TA_ACTV	Tab station activated
%M0322	TA_NORT	Tab no rotation
%Q0003	TMCC13	TMCC Patch material, Move
%Q0004	TMCC14	TMCC Tab material, Move
%G0564	TT_PARM	To TBA21, Patch rotation monitor
%G0549	TT_TAST	To TBA21, Tab station

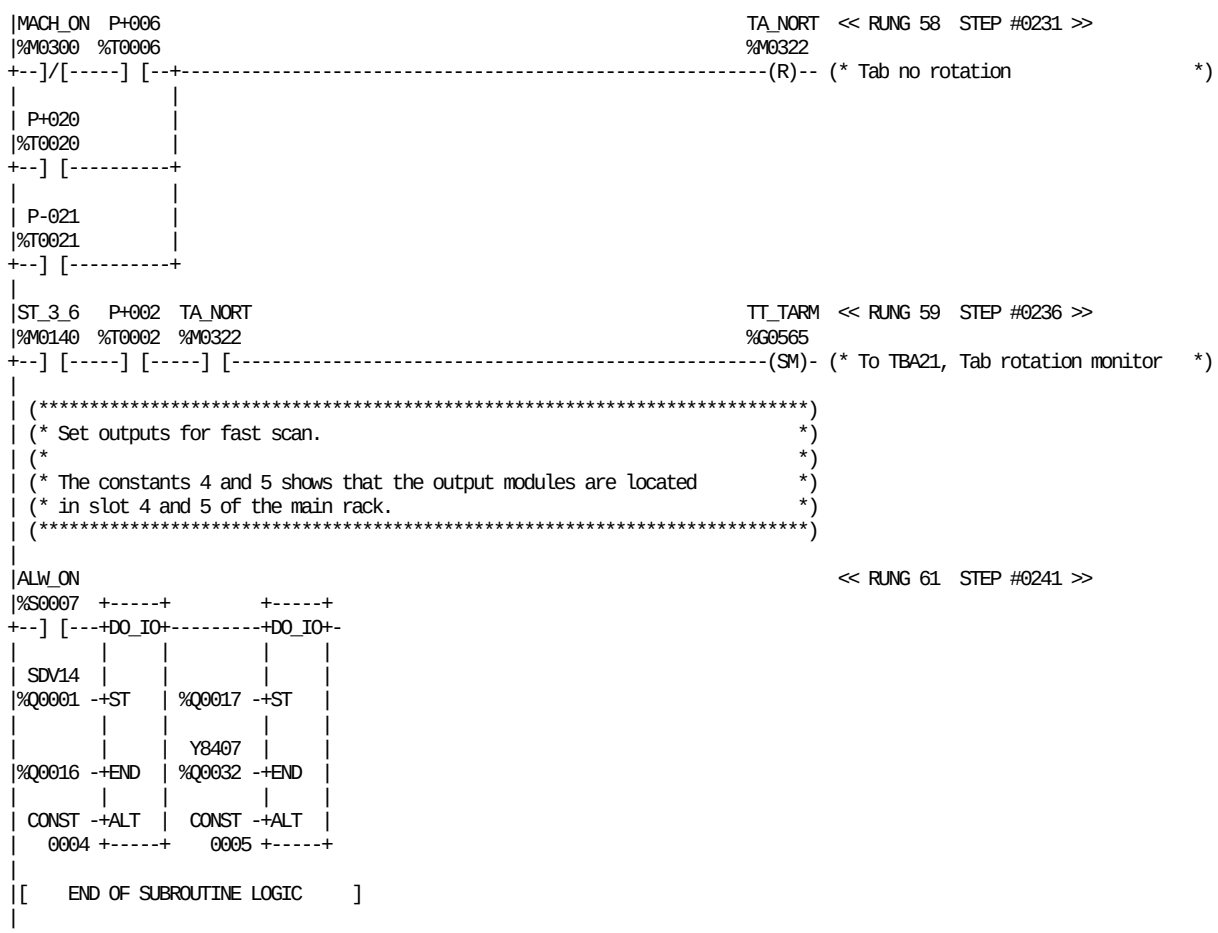

REFERENCE	NICKNAME	REFERENCE DESCRIPTION
%Q0016		
%Q0017		
%S0007	ALW_ON	
%M0300	MACH_ON	Machine cycle ON
%T0002	P+002	Pulse + Start Applicator cycle
%T0006	P+006	Pulse + Alarm reset
%T0020	P+020	Pulse + Tab rotation monitor

REFERENCE	NICKNAME	REFERENCE DESCRIPTION
%T0021	P-021	Pulse - Tab rotation monitor
%Q0001	SDV14	Servo Drive, Move
%M0140	ST_3_6	Step 3-6, Find home - Service
%M0322	TA_NORT	Tab no rotation
%G0565	TT_TARM	To TBA21, Tab rotation monitor
%Q0032	Y8407	Punch blow

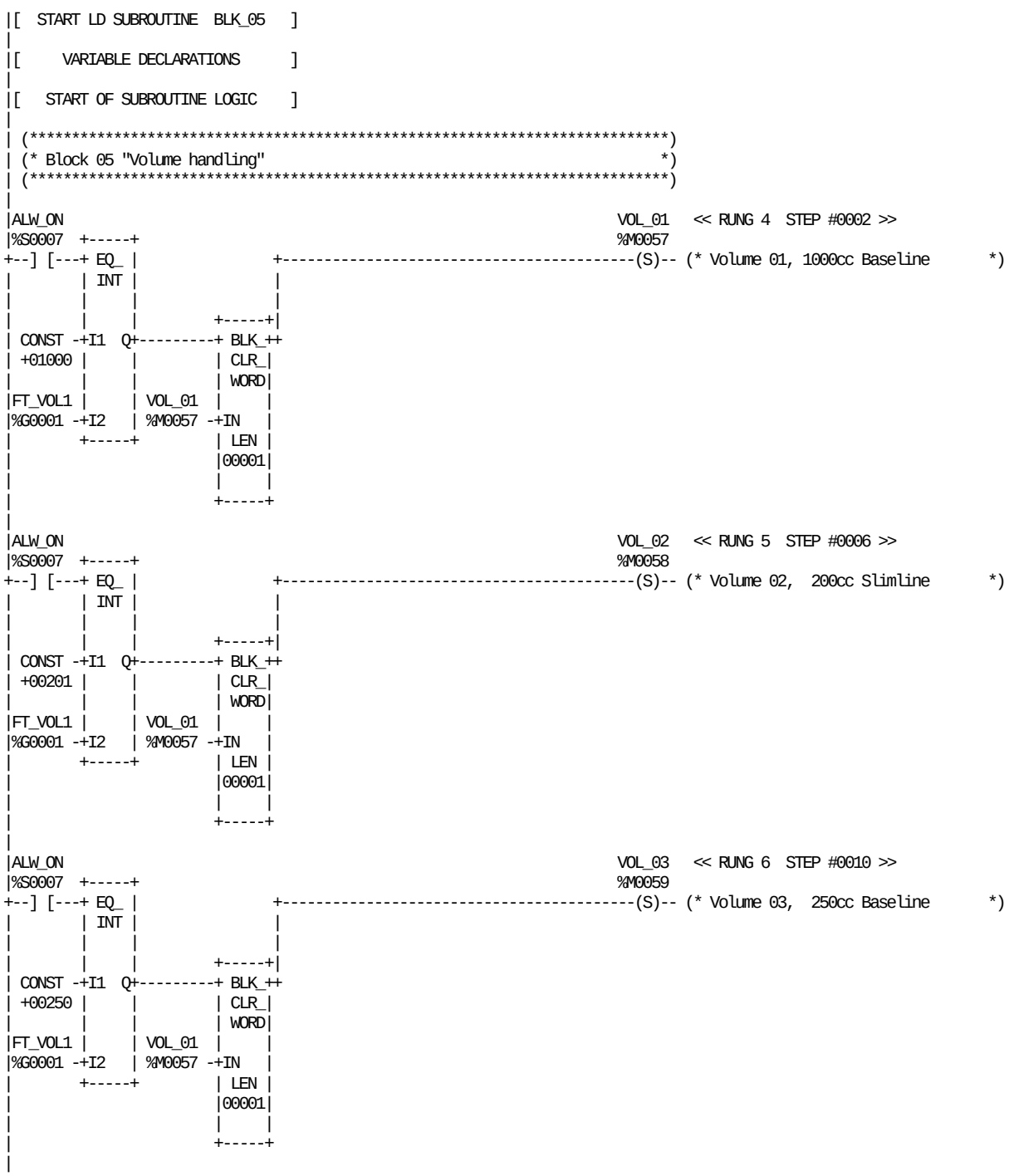

REFERENCE	NICKNAME	REFERENCE DESCRIPTION	REFERENCE	NICKNAME	REFERENCE DESCRIPTION
%S0007	ALW_ON		%M0058	VOL_02	Volume 02, 200cc Slimline
%G0001	FT_VOL1	From TBA21, Volume parameter	%M0059	VOL_03	Volume 03, 250cc Baseline
%M0057	VOL_01	Volume 01, 1000cc Baseline			

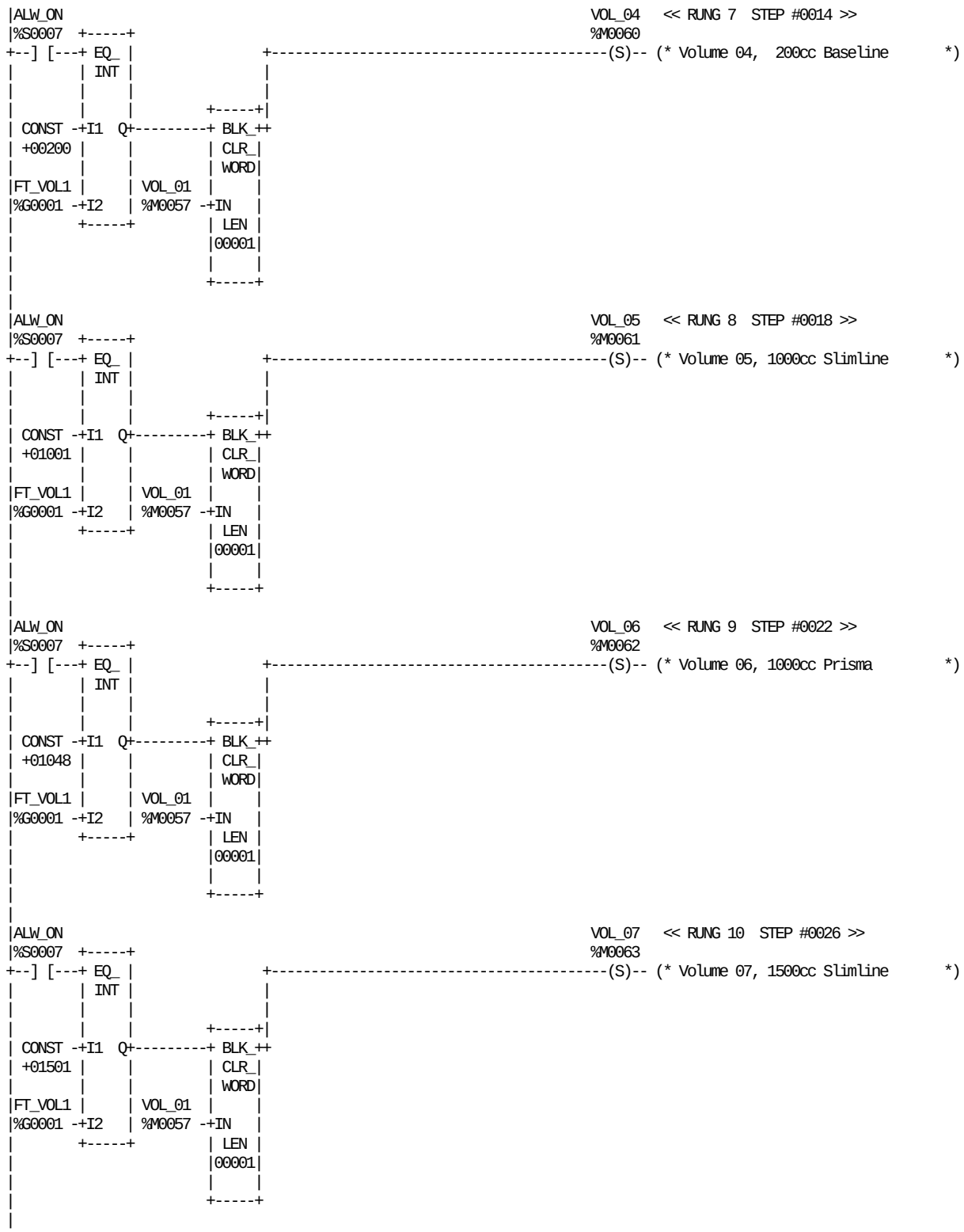

REFERENCE	NICKNAME	REFERENCE DESCRIPTION	REFERENCE	NICKNAME	REFERENCE DESCRIPTION
%S0007	ALW_ON		%M0061	VOL_05	Volume 05, 1000cc Slimline
%G0001	FT_VOL1	From TBA21, Volume parameter	%M0062	VOL_06	Volume 06, 1000cc Prisma
%M0057	VOL_01	Volume 01, 1000cc Baseline	%M0063	VOL_07	Volume 07, 1500cc Slimline
%M0060	VOL_04	Volume 04, 200cc Baseline			

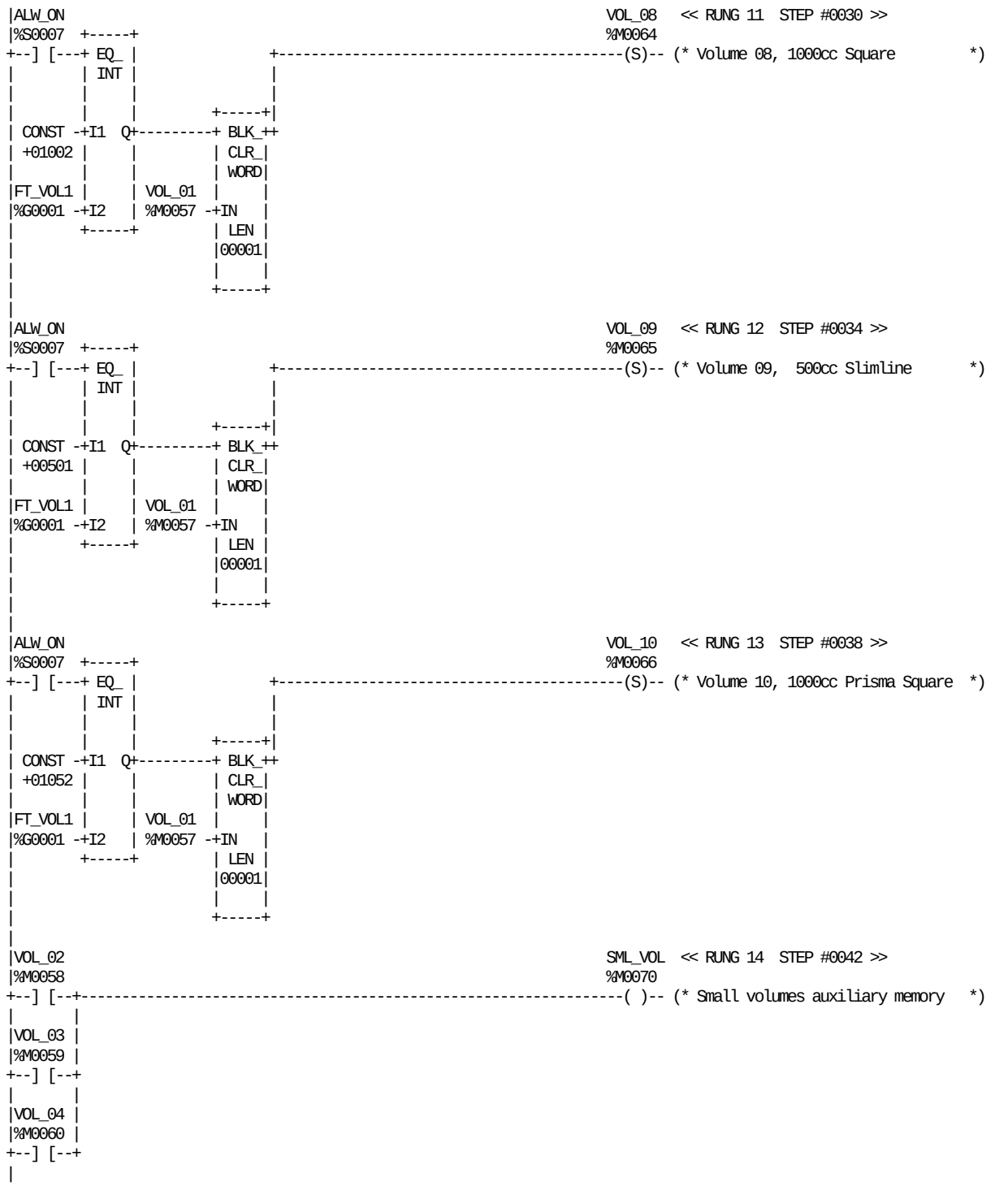

REFERENCE	NICKNAME	REFERENCE DESCRIPTION	REFERENCE	NICKNAME	REFERENCE DESCRIPTION
%S0007	ALW_ON		%M0059	VOL_03	Volume 03, 250cc Baseline
%G0001	FT_VOL1	From TBA21, Volume parameter	%M0060	VOL_04	Volume 04, 200cc Baseline
%M0070	SML_VOL	Small volumes auxiliary memory	%M0064	VOL_08	Volume 08, 1000cc Square
%M0057	VOL_01	Volume 01, 1000cc Baseline	%M0065	VOL_09	Volume 09, 500cc Slimline
%M0058	VOL_02	Volume 02, 200cc Slimline	%M0066	VOL_10	Volume 10, 1000cc Prisma Square

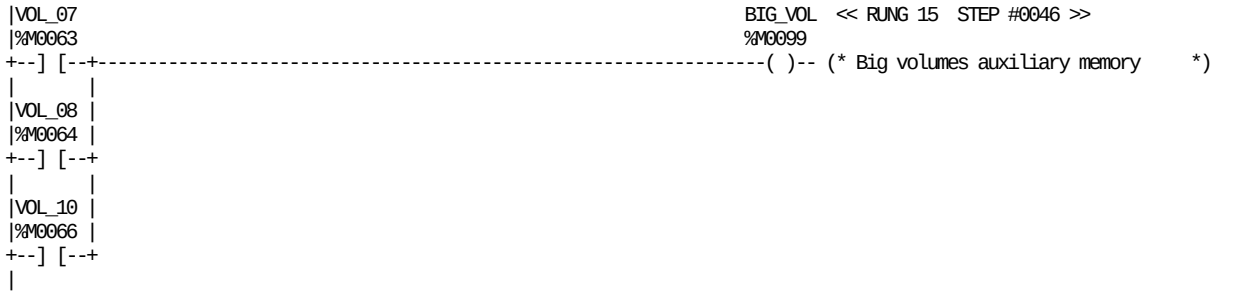

REFERENCE	NICKNAME	REFERENCE DESCRIPTION	REFERENCE	NICKNAME	REFERENCE DESCRIPTION
%M0099	BIG_VOL	Big volumes auxiliary memory	%M0064	VOL_08	Volume 08, 1000cc Square
%M0063	VOL_07	Volume 07, 1500cc Slimline	%M0066	VOL_10	Volume 10, 1000cc Prisma Square

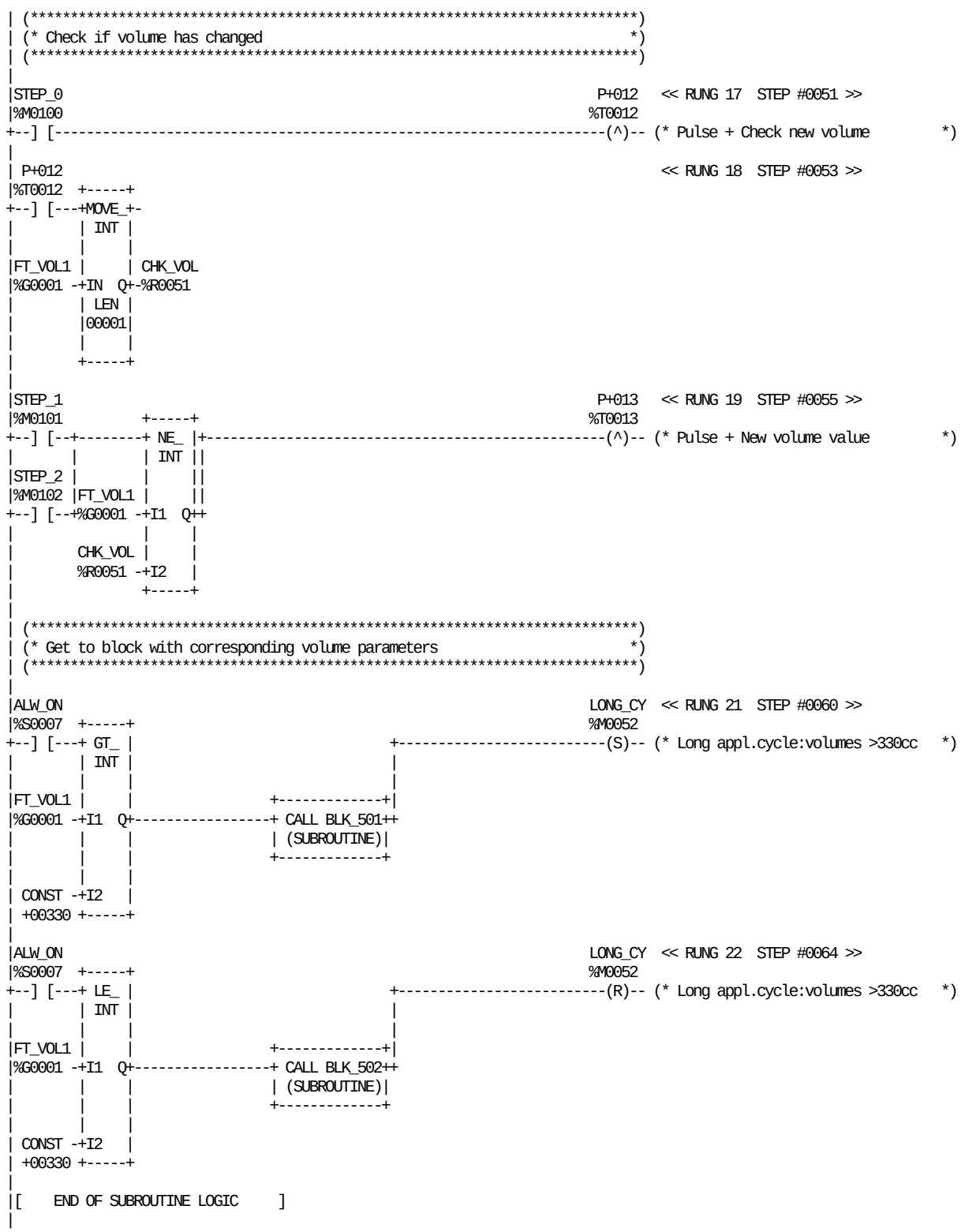

REFERENCE	NICKNAME	REFERENCE DESCRIPTION
%S0007	ALW_ON	
	BLK_501	Volumes >330ml
	BLK_502	Volumes <330ml
%R0051	CHK_VOL	Check for new volume
%G0001	FT_VOL1	From TBA21, Volume parameter
%M0052	LONG_CY	Long appl.cycle:volumes >330cc

REFERENCE	NICKNAME	REFERENCE DESCRIPTION
%T0012	P+012	Pulse + Check new volume
%T0013	P+013	Pulse + New volume value
%M0100	STEP_0	Step 0, Off
%M0101	STEP_1	Step 1, Preparation
%M0102	STEP_2	Step 2, Pre-heating

```
|[  START LD SUBROUTINE  BLK_501  ]
|
|[     VARIABLE DECLARATIONS      ]
|
|[   START OF SUBROUTINE LOGIC    ]
|
| (*****************************************************************************)
| (* Volume values >330cc                                                      *)
| (*                                                                           *)
| (* Reg. Package dumping   Reg.  SDV and TMCC        Reg.   STD default      *)
| (* ---- ---------------   ----  -----------------   -----  --------------   *)
| (* R500 Punch station     R600  Infeed loop speed   R1501  Torque 1          *)
| (* R501 Punch station     R601  Repeat length       R1502  Torque 2          *)
| (* R502 Patch station     R602  Stop Position       R1503  Max pos.Speed     *)
| (* R503 Patch station     R603  Acc/Dec time        R1504  Max neg.Speed     *)
| (* R504 Reseal station    R604  Total Feed Time                              *)
| (* R505 Reseal station    R605  Patch Length                                 *)
| (* R506 Tab station       R606  Tab Length                                   *)
| (* R507 Tab station                                                          *)
| (* R508 Black tape                                                           *)
| (* R509 Black tape                                                           *)
| (*****************************************************************************)
|
| (*****************************************************************************)
| (* Volume values for TBA/21 0500 1000cc Baseline                            *)
| (*****************************************************************************)
|
|VOL_01                                                    << RUNG 5  STEP #0003 >>
|%M0057  +-----+                +-----+                +-----+
+--] [---+BLKMV+----------------+BLKMV+----------------+BLKMV+-
|        | WORD|                | WORD|                | INT |
|        |     |                |     |                |     |
|        |     | PAR_000        |     | PAR_007        |     | PAR_100
| CONST -+IN1 Q+-%R0500   CONST -+IN1 Q+-%R0507   CONST -+IN1 Q+-%R0600
|   FFFF |     |             FFFE |     |            +12500 |     |
|        |     |                  |     |                    |     |
| CONST -+IN2  |            CONST -+IN2  |           CONST -+IN2  |
|   FFF1 |     |              FC7F |     |            +11143 |     |
|        |     |                  |     |                    |     |
| CONST -+IN3  |            CONST -+IN3  |           CONST -+IN3  |
|   FFFF |     |              FFFF |     |            +06222 |     |
|        |     |                  |     |                    |     |
| CONST -+IN4  |            CONST -+IN4  |           CONST -+IN4  |
|   FFF8 |     |              0000 |     |            +00060 |     |
|        |     |                  |     |                    |     |
| CONST -+IN5  |            CONST -+IN5  |           CONST -+IN5  |
|   7FFF |     |              0000 |     |            +00185 |     |
|        |     |                  |     |                    |     |
| CONST -+IN6  |            CONST -+IN6  |           CONST -+IN6  |
|   FFFC |     |              0000 |     |            +01800 |     |
|        |     |                  |     |                    |     |
| CONST -+IN7  |            CONST -+IN7  |           CONST -+IN7  |
|   3FFF +-----+              0000 +-----+           +01350 +-----+
|
| (*****************************************************************************)
| (* Servo Tensioner Parameters for volume 1000cc Baseline                    *)
| (*****************************************************************************)
|
```

REFERENCE	NICKNAME	REFERENCE DESCRIPTION	REFERENCE	NICKNAME	REFERENCE DESCRIPTION
%R0500	PAR_000	Dump. pkg., Punch station	%R0600	PAR_100	Dflt. par., Infeed loop speed
%R0507	PAR_007	Dump. pkg., Tab station	%M0057	VOL_01	Volume 01, 1000cc Baseline

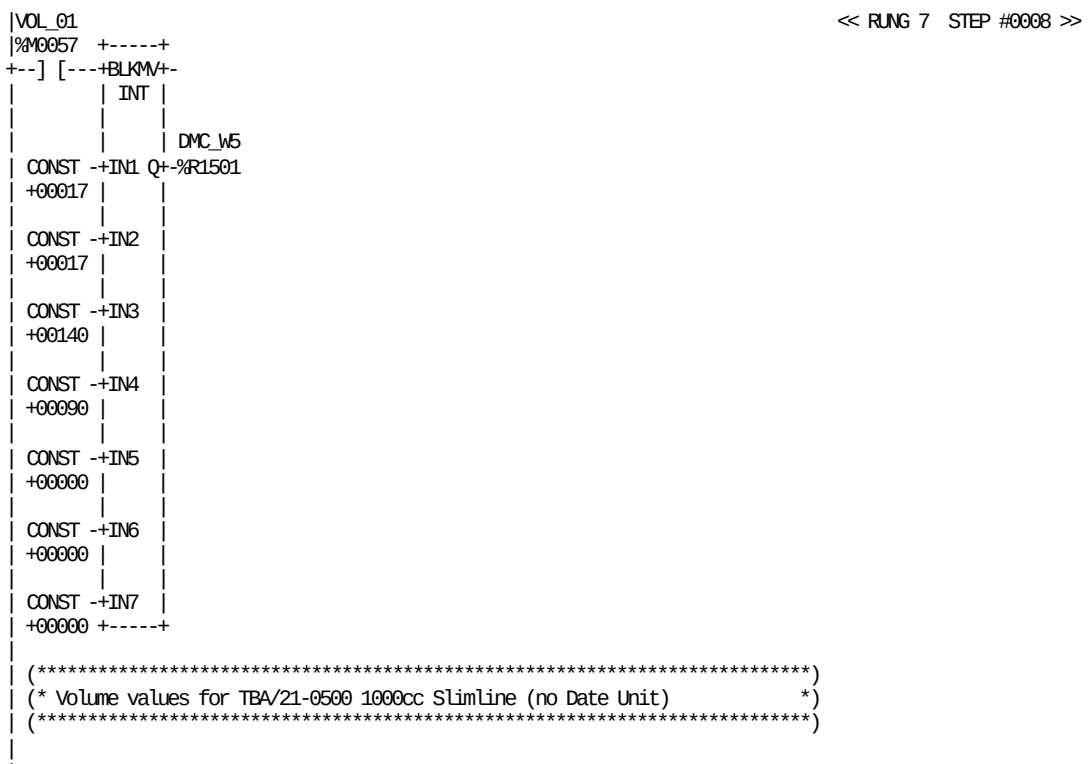

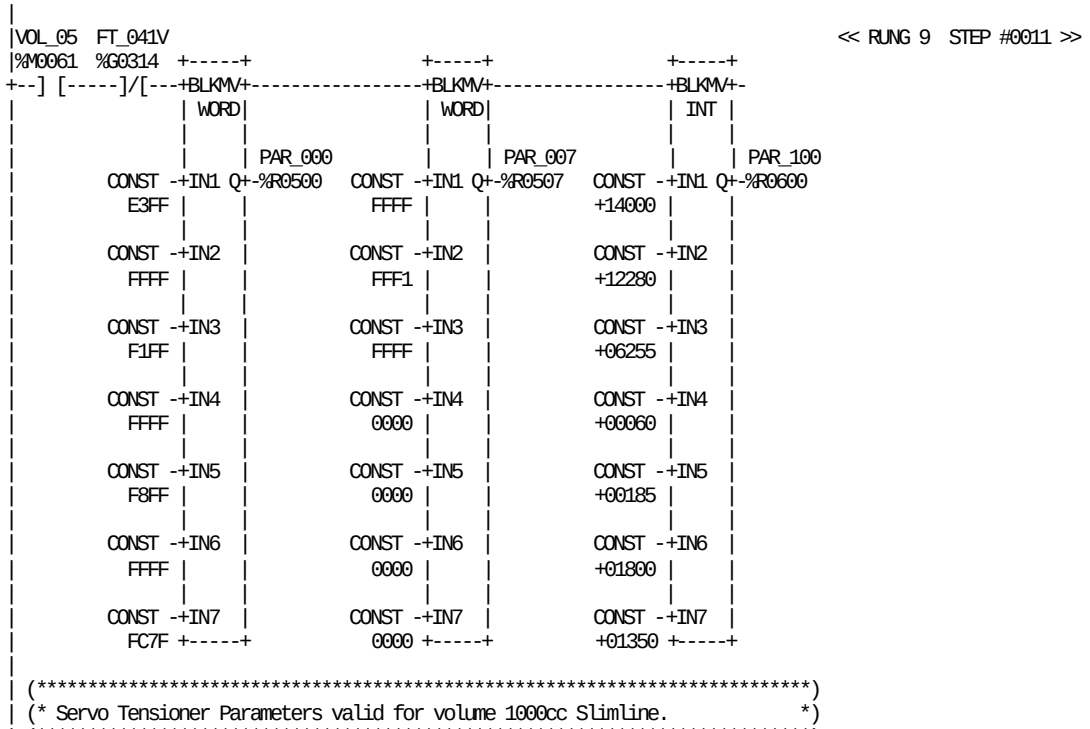

REFERENCE	NICKNAME	REFERENCE DESCRIPTION	REFERENCE	NICKNAME	REFERENCE DESCRIPTION
%R1501	DMC_W5	Servo Tensioner word1:Torque 1	%R0600	PAR_100	Dflt. par., Infeed loop speed
%G0314	FT_041V	From TBA21, 041V functionality	%M0057	VOL_01	Volume 01, 1000cc Baseline
%R0500	PAR_000	Dump. pkg., Punch station	%M0061	VOL_05	Volume 05, 1000cc Slimline
%R0507	PAR_007	Dump. pkg., Tab station			

```
|VOL_05                                                          << RUNG 11  STEP #0017 >>
|%M0061  +-----+
+--] [---+BLKMV+-
|        | INT |
|        |     |
|        |     | DMC_W5
| CONST -+IN1 Q+-%R1501
| +00017 |     |
|        |     |
| CONST -+IN2  |
| +00017 |     |
|        |     |
| CONST -+IN3  |
| +00140 |     |
|        |     |
| CONST -+IN4  |
| +00090 |     |
|        |     |
| CONST -+IN5  |
| +00000 |     |
|        |     |
| CONST -+IN6  |
| +00000 |     |
|        |     |
| CONST -+IN7  |
| +00000 +-----+
|
| (*************************************************************************)
| (* Volume values for TBA/21-0500 1000cc Prisma (no Date Unit)            *)
| (*************************************************************************)
|
|VOL_06  FT_041V                                                 << RUNG 13  STEP #0020 >>
|%M0062  %G0314  +-----+               +-----+               +-----+
+--] [-----]/[---+BLKMV+---------------+BLKMV+---------------+BLKMV+-
|                | WORD|               | WORD|               | INT |
|                |     |               |     |               |     |
|                |     | PAR_000       |     | PAR_007       |     | PAR_100
|         CONST -+IN1 Q+-%R0500  CONST -+IN1 Q+-%R0507  CONST -+IN1 Q+-%R0600
|           E3FF |     |           FFFF |     |          +14000 |     |
|                |     |               |     |                 |     |
|         CONST -+IN2  |         CONST -+IN2  |         CONST -+IN2  |
|           FFFF |     |           FFF1 |     |          +12280 |     |
|                |     |               |     |                 |     |
|         CONST -+IN3  |         CONST -+IN3  |         CONST -+IN3  |
|           F1FF |     |           FFFF |     |          +06089 |     |
|                |     |               |     |                 |     |
|         CONST -+IN4  |         CONST -+IN4  |         CONST -+IN4  |
|           FFFF |     |           0000 |     |          +00060 |     |
|                |     |               |     |                 |     |
|         CONST -+IN5  |         CONST -+IN5  |         CONST -+IN5  |
|           F8FF |     |           0000 |     |          +00185 |     |
|                |     |               |     |                 |     |
|         CONST -+IN6  |         CONST -+IN6  |         CONST -+IN6  |
|           FFFF |     |           0000 |     |          +01750 |     |
|                |     |               |     |                 |     |
|         CONST -+IN7  |         CONST -+IN7  |         CONST -+IN7  |
|           FC7F +-----+           0000 +-----+          +01300 +-----+
|
| (*************************************************************************)
| (* Servo Tensioner Parameters valid for volume 1000cc Prisma.           *)
| (*************************************************************************)
|
```

REFERENCE	NICKNAME	REFERENCE DESCRIPTION	REFERENCE	NICKNAME	REFERENCE DESCRIPTION
%R1501	DMC_W5	Servo Tensioner word1:Torque 1	%R0600	PAR_100	Dflt. par., Infeed loop speed
%G0314	FT_041V	From TBA21, 041V functionality	%M0061	VOL_05	Volume 05, 1000cc Slimline
%R0500	PAR_000	Dump. pkg., Punch station	%M0062	VOL_06	Volume 06, 1000cc Prisma
%R0507	PAR_007	Dump. pkg., Tab station			

```
|VOL_06                                                          << RUNG 15  STEP #0026 >>
|%M0062  +-----+
+--] [---+BLKMV+-
|        | INT |
|        |     |
|        |     | DMC_W5
| CONST -+IN1 Q+-%R1501
| +00017 |     |
|        |     |
| CONST -+IN2  |
| +00017 |     |
|        |     |
| CONST -+IN3  |
| +00140 |     |
|        |     |
| CONST -+IN4  |
| +00090 |     |
|        |     |
| CONST -+IN5  |
| +00000 |     |
|        |     |
| CONST -+IN6  |
| +00000 |     |
|        |     |
| CONST -+IN7  |
| +00000 +-----+
|
| (*************************************************************************)
| (* Volume values for TBA/21 0410 1000cc Slimline with Date Unit.         *)
| (*************************************************************************)
|
|VOL_05  FT_041V                                                 << RUNG 17  STEP #0029 >>
|%M0061  %G0314  +-----+              +-----+              +-----+
+--] [-----] [---+BLKMV+----------------+BLKMV+----------------+BLKMV+-
|                | WORD|              | WORD|              | INT |
|                |     |              |     |              |     |
|                |     | PAR_000      |     | PAR_007      |     | PAR_100
|         CONST -+IN1 Q+-%R0500  CONST -+IN1 Q+-%R0507  CONST -+IN1 Q+-%R0600
|           8FFF |     |            FFFF |     |           +14000 |     |
|                |     |              |     |              |     |
|         CONST -+IN2  |          CONST -+IN2  |          CONST -+IN2  |
|           FFFF |     |            FFC7 |     |           +12280 |     |
|                |     |              |     |              |     |
|         CONST -+IN3  |          CONST -+IN3  |          CONST -+IN3  |
|           C7FF |     |            FFFF |     |           +06255 |     |
|                |     |              |     |              |     |
|         CONST -+IN4  |          CONST -+IN4  |          CONST -+IN4  |
|           FFFF |     |              0000 |     |           +00060 |     |
|                |     |              |     |              |     |
|         CONST -+IN5  |          CONST -+IN5  |          CONST -+IN5  |
|           E3FF |     |              0000 |     |           +00185 |     |
|                |     |              |     |              |     |
|         CONST -+IN6  |          CONST -+IN6  |          CONST -+IN6  |
|           FFFF |     |              0000 |     |           +01800 |     |
|                |     |              |     |              |     |
|         CONST -+IN7  |          CONST -+IN7  |          CONST -+IN7  |
|           F1FF +-----+              0000 +-----+           +01350 +-----+
|
| (*************************************************************************)
| (* Volume values for TBA/21 0410 1000cc Prisma with Date Unit.          *)
| (*************************************************************************)
|
```

REFERENCE	NICKNAME	REFERENCE DESCRIPTION	REFERENCE	NICKNAME	REFERENCE DESCRIPTION
%R1501	DMC_W5	Servo Tensioner word1:Torque 1	%R0600	PAR_100	Dflt. par., Infeed loop speed
%G0314	FT_041V	From TBA21, 041V functionality	%M0061	VOL_05	Volume 05, 1000cc Slimline
%R0500	PAR_000	Dump. pkg., Punch station	%M0062	VOL_06	Volume 06, 1000cc Prisma
%R0507	PAR_007	Dump. pkg., Tab station			

```
|VOL_06  FT_041V                                                          << RUNG 19  STEP #0035 >>
|%M0062 %G0314  +-----+               +-----+               +-----+
+--] [-----] [---+BLKMV+-----------------+BLKMV+-----------------+BLKMV+-
|                | WORD|               | WORD|               | INT |
|                |     |               |     |               |     |
|                |     | PAR_000       |     | PAR_007       |     | PAR_100
|         CONST -+IN1 Q+-%R0500  CONST -+IN1 Q+-%R0507  CONST -+IN1 Q+-%R0600
|           8FFF |     |           FFFF |     |          +14000 |     |
|                |     |                |     |                 |     |
|         CONST -+IN2  |          CONST -+IN2  |          CONST -+IN2  |
|           FFFF |     |           FFC7 |     |          +12280 |     |
|                |     |                |     |                 |     |
|         CONST -+IN3  |          CONST -+IN3  |          CONST -+IN3  |
|           C7FF |     |           FFFF |     |          +06089 |     |
|                |     |                |     |                 |     |
|         CONST -+IN4  |          CONST -+IN4  |          CONST -+IN4  |
|           FFFF |     |           0000 |     |          +00060 |     |
|                |     |                |     |                 |     |
|         CONST -+IN5  |          CONST -+IN5  |          CONST -+IN5  |
|           E3FF |     |           0000 |     |          +00185 |     |
|                |     |                |     |                 |     |
|         CONST -+IN6  |          CONST -+IN6  |          CONST -+IN6  |
|           FFFF |     |           0000 |     |          +01750 |     |
|                |     |                |     |                 |     |
|         CONST -+IN7  |          CONST -+IN7  |          CONST -+IN7  |
|           F1FF +-----+            0000 +-----+          +01300 +-----+
|
| (*****************************************************************************)
| (* Volume values for TBA/21-0500 1500cc Slimline.                          *)
| (*****************************************************************************)
|
|VOL_07                                                                   << RUNG 21  STEP #0041 >>
|%M0063  +-----+               +-----+               +-----+
+--] [---+BLKMV+-----------------+BLKMV+-----------------+BLKMV+-
|        | WORD|               | WORD|               | INT |
|        |     |               |     |               |     |
|        |     | PAR_000       |     | PAR_007       |     | PAR_100
| CONST -+IN1 Q+-%R0500  CONST -+IN1 Q+-%R0507  CONST -+IN1 Q+-%R0600
|   FFFF |     |             FFFE |     |          +14000 |     |
|        |     |                  |     |                 |     |
| CONST -+IN2  |           CONST -+IN2  |          CONST -+IN2  |
|   FFF1 |     |             F8FF |     |          +15009 |     |
|        |     |                  |     |                 |     |
| CONST -+IN3  |           CONST -+IN3  |          CONST -+IN3  |
|   FFFF |     |             FFFF |     |          +06348 |     |
|        |     |                  |     |                 |     |
| CONST -+IN4  |           CONST -+IN4  |          CONST -+IN4  |
|   FFF8 |     |             0000 |     |          +00080 |     |
|        |     |                  |     |                 |     |
| CONST -+IN5  |           CONST -+IN5  |          CONST -+IN5  |
|   7FFF |     |             0000 |     |          +00240 |     |
|        |     |                  |     |                 |     |
| CONST -+IN6  |           CONST -+IN6  |          CONST -+IN6  |
|   FFFC |     |             0000 |     |          +01800 |     |
|        |     |                  |     |                 |     |
| CONST -+IN7  |           CONST -+IN7  |          CONST -+IN7  |
|   3FFF +-----+             0000 +-----+          +01350 +-----+
|
| (*****************************************************************************)
| (* Servo Tensioner Parameters valid for volume 1500cc Slimline.             *)
| (*****************************************************************************)
|
```

REFERENCE NICKNAME		REFERENCE DESCRIPTION	REFERENCE NICKNAME		REFERENCE DESCRIPTION
%G0314	FT_041V	From TBA21, 041V functionality	%R0600	PAR_100	Dflt. par., Infeed loop speed
%R0500	PAR_000	Dump. pkg., Punch station	%M0062	VOL_06	Volume 06, 1000cc Prisma
%R0507	PAR_007	Dump. pkg., Tab station	%M0063	VOL_07	Volume 07, 1500cc Slimline

```
|VOL_07                                                          << RUNG 23  STEP #0046 >>
|%M0063  +-----+
+--] [---+BLKMV+-
|        | INT |
|        |     |
|        |     | DMC_W5
| CONST -+IN1 Q+-%R1501
| +00017 |     |
|        |     |
| CONST -+IN2  |
| +00017 |     |
|        |     |
| CONST -+IN3  |
| +00140 |     |
|        |     |
| CONST -+IN4  |
| +00090 |     |
|        |     |
| CONST -+IN5  |
| +00000 |     |
|        |     |
| CONST -+IN6  |
| +00000 |     |
|        |     |
| CONST -+IN7  |
| +00000 +-----+
|
| (*************************************************************************)
| (* Volume values for TBA/21-0500 1000cc Square                           *)
| (*************************************************************************)
|
|VOL_08                                                          << RUNG 25  STEP #0049 >>
|%M0064  +-----+               +-----+               +-----+
+--] [---+BLKMV+----------------+BLKMV+----------------+BLKMV+-
|        | WORD|               | WORD|               | INT |
|        |     |               |     |               |     |
|        |     | PAR_000       |     | PAR_007       |     | PAR_100
| CONST -+IN1 Q+-%R0500  CONST -+IN1 Q+-%R0507  CONST -+IN1 Q+-%R0600
|   F87F |     |           FFFF |     |          +16000 |     |
|        |     |                |     |                 |     |
| CONST -+IN2  |          CONST -+IN2  |          CONST -+IN2  |
|   FFFF |     |           7FFF |     |          +12962 |     |
|        |     |                |     |                 |     |
| CONST -+IN3  |          CONST -+IN3  |          CONST -+IN3  |
|   FE3F |     |           FFFC |     |          +06445 |     |
|        |     |                |     |                 |     |
| CONST -+IN4  |          CONST -+IN4  |          CONST -+IN4  |
|   FFFF |     |           0000 |     |          +00060 |     |
|        |     |                |     |                 |     |
| CONST -+IN5  |          CONST -+IN5  |          CONST -+IN5  |
|   FF1F |     |           0000 |     |          +00185 |     |
|        |     |                |     |                 |     |
| CONST -+IN6  |          CONST -+IN6  |          CONST -+IN6  |
|   FFFF |     |           0000 |     |          +01800 |     |
|        |     |                |     |                 |     |
| CONST -+IN7  |          CONST -+IN7  |          CONST -+IN7  |
|   FF8F +-----+           0000 +-----+          +01350 +-----+
|
| (*************************************************************************)
| (* Servo Tensioner Parameters valid for volume 1000cc Square.           *)
| (*************************************************************************)
|
```

REFERENCE	NICKNAME	REFERENCE DESCRIPTION	REFERENCE	NICKNAME	REFERENCE DESCRIPTION
%R1501	DMC_W5	Servo Tensioner word1:Torque 1	%R0600	PAR_100	Dflt. par., Infeed loop speed
%R0500	PAR_000	Dump. pkg., Punch station	%M0063	VOL_07	Volume 07, 1500cc Slimline
%R0507	PAR_007	Dump. pkg., Tab station	%M0064	VOL_08	Volume 08, 1000cc Square

```
|VOL_08                                                          << RUNG 27  STEP #0054 >>
|%M0064  +-----+
+--] [---+BLKMV+-
|        | INT |
|        |     |
|        |     | DMC_W5
| CONST -+IN1 Q+-%R1501
| +00017 |     |
|        |     |
| CONST -+IN2  |
| +00017 |     |
|        |     |
| CONST -+IN3  |
| +00140 |     |
|        |     |
| CONST -+IN4  |
| +00090 |     |
|        |     |
| CONST -+IN5  |
| +00000 |     |
|        |     |
| CONST -+IN6  |
| +00000 |     |
|        |     |
| CONST -+IN7  |
| +00000 +-----+
|
| (*************************************************************************)
| (* Volume values for TBA/21-0500 500cc Slimline.                         *)
| (*************************************************************************)
|
|VOL_09                                                          << RUNG 29  STEP #0057 >>
|%M0065  +-----+               +-----+               +-----+
+--] [---+BLKMV+----------------+BLKMV+----------------+BLKMV+-
|        | WORD|               | WORD|               | INT |
|        |     |               |     |               |     |
|        |     | PAR_000       |     | PAR_007       |     | PAR_100
| CONST -+IN1 Q+-%R0500  CONST -+IN1 Q+-%R0507  CONST -+IN1 Q+-%R0600
|   FFFF |     |           E3FF |     |          +12000 |     |
|        |     |                |     |                 |     |
| CONST -+IN2  |          CONST -+IN2  |          CONST -+IN2  |
|   1FFF |     |           FFFF |     |          +09551 |     |
|        |     |                |     |                 |     |
| CONST -+IN3  |          CONST -+IN3  |          CONST -+IN3  |
|   FFFF |     |           FFF8 |     |          +05881 |     |
|        |     |                |     |                 |     |
| CONST -+IN4  |          CONST -+IN4  |          CONST -+IN4  |
|   8FFF |     |           0000 |     |          +00060 |     |
|        |     |                |     |                 |     |
| CONST -+IN5  |          CONST -+IN5  |          CONST -+IN5  |
|   FFFF |     |           0000 |     |          +00185 |     |
|        |     |                |     |                 |     |
| CONST -+IN6  |          CONST -+IN6  |          CONST -+IN6  |
|   C7FF |     |           0000 |     |          +01500 |     |
|        |     |                |     |                 |     |
| CONST -+IN7  |          CONST -+IN7  |          CONST -+IN7  |
|   FFFF +-----+           0000 +-----+          +01000 +-----+
|
| (*************************************************************************)
| (* Servo Tensioner Parameters valid for volume 500cc Slimline.          *)
| (*************************************************************************)
|
```

REFERENCE	NICKNAME	REFERENCE DESCRIPTION	REFERENCE	NICKNAME	REFERENCE DESCRIPTION
%R1501	DMC_W5	Servo Tensioner word1:Torque 1	%R0600	PAR_100	Dflt. par., Infeed loop speed
%R0500	PAR_000	Dump. pkg., Punch station	%M0064	VOL_08	Volume 08, 1000cc Square
%R0507	PAR_007	Dump. pkg., Tab station	%M0065	VOL_09	Volume 09, 500cc Slimline

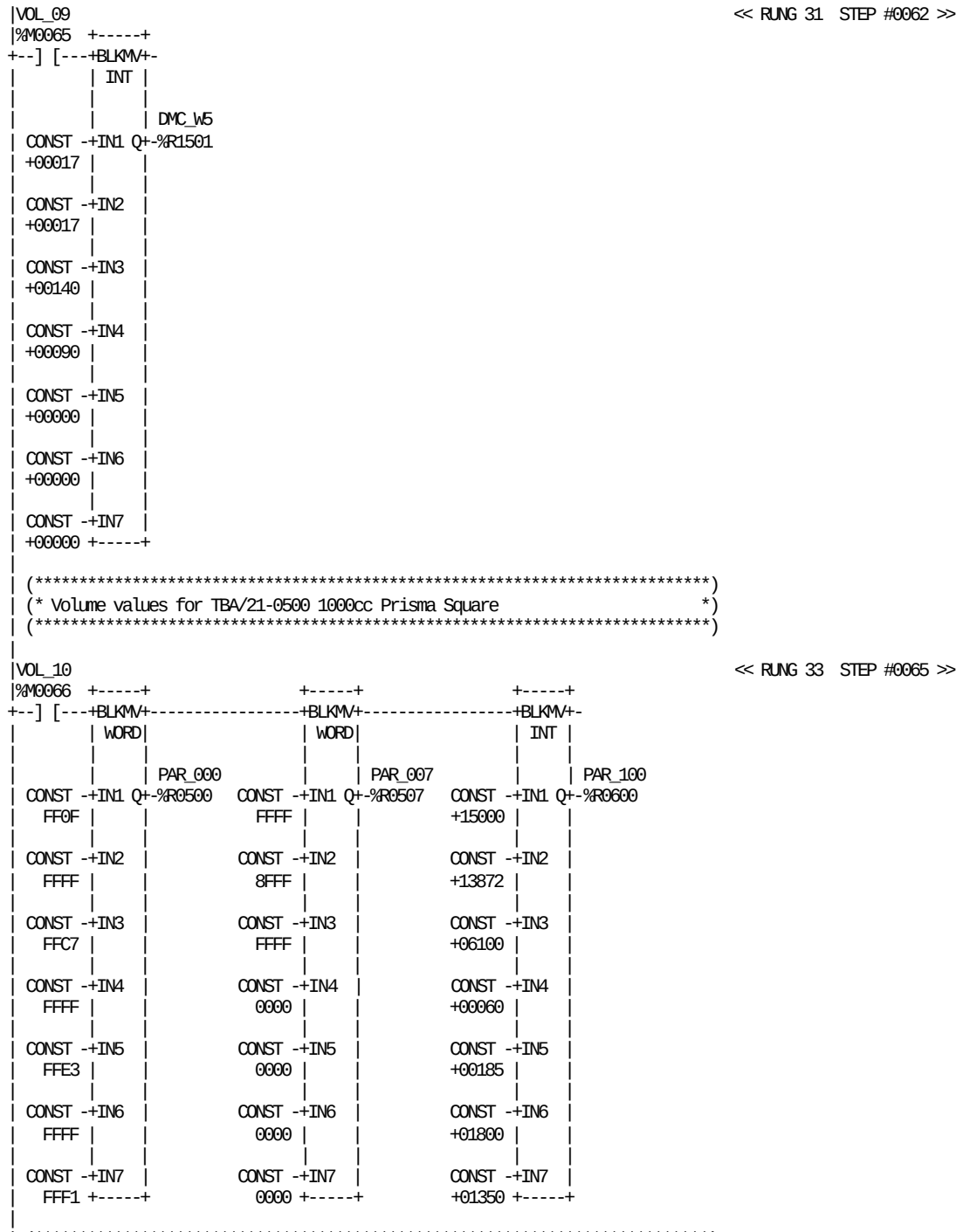

REFERENCE	NICKNAME	REFERENCE DESCRIPTION	REFERENCE	NICKNAME	REFERENCE DESCRIPTION
%R1501	DMC_W5	Servo Tensioner word1:Torque 1	%R0600	PAR_100	Dflt. par., Infeed loop speed
%R0500	PAR_000	Dump. pkg., Punch station	%M0065	VOL_09	Volume 09, 500cc Slimline
%R0507	PAR_007	Dump. pkg., Tab station	%M0066	VOL_10	Volume 10, 1000cc Prisma Square

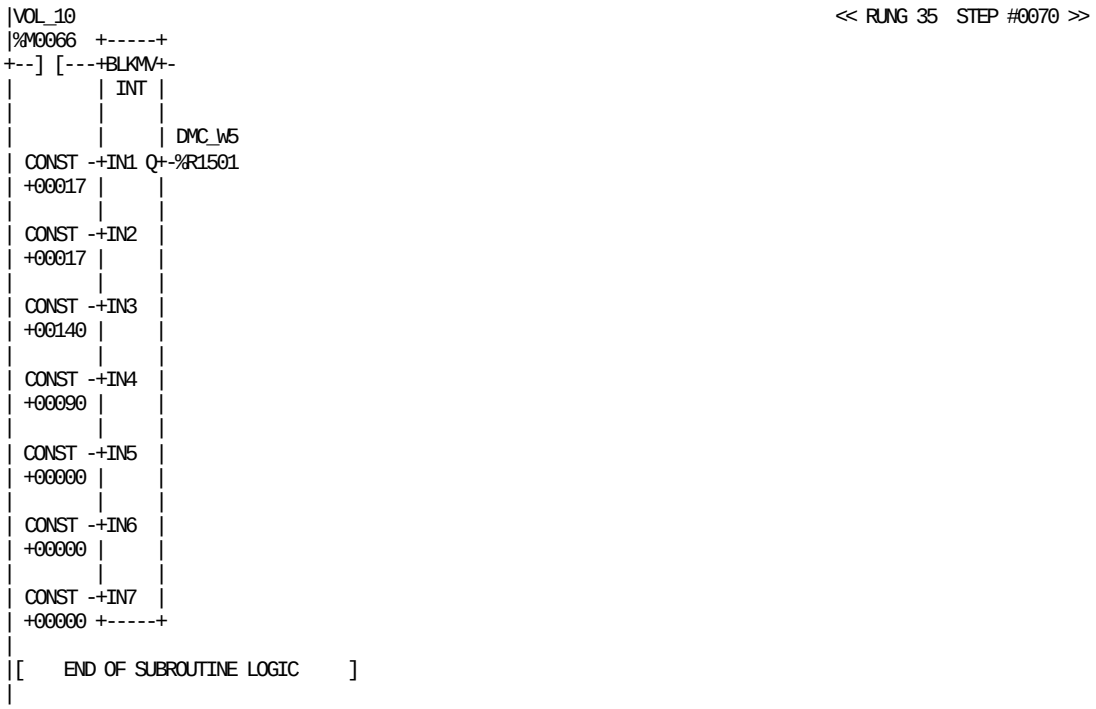

REFERENCE NICKNAME	REFERENCE DESCRIPTION	REFERENCE NICKNAME	REFERENCE DESCRIPTION
%R1501 DMC_W5	Servo Tensioner word1:Torque 1	%M0066 VOL_10	Volume 10, 1000cc Prisma Square

```
|[  START LD SUBROUTINE  BLK_502  ]
|
|[     VARIABLE DECLARATIONS      ]
|
|[   START OF SUBROUTINE LOGIC    ]
|
| (*****************************************************************************)
| (* Volume values <330cc                                                      *)
| (*                                                                           *)
| (* Reg.  Package dumping    Reg.  Default value       Reg.   STD Default   *)
| (* ----  ---------------    ----  -----------------   -----  -----------   *)
| (* R500  Punch station      R600  Infeed loop speed   R1501  Torque 1      *)
| (* R501  Punch station      R601  Repeat length       R1502  Torque 2      *)
| (* R502  Patch station      R602  Stop position       R1503  Max pos.Speed *)
| (* R503  Patch station      R603  Acc./Dec. Time      R1504  Max neg.Speed *)
| (* R504  Resesal station    R604  Total feed time                          *)
| (* R505  Reseal station     R605  Patch length                             *)
| (* R506  Tab station        R606  Tab length                               *)
| (* R507  Tab station                                                       *)
| (* R508  Black tape                                                        *)
| (* R509  Black tape                                                        *)
| (*****************************************************************************)
|
| (*****************************************************************************)
| (* Volume values for TBA/21-0500 250cc Baseline                            *)
| (*****************************************************************************)
|
|VOL_03                                                    << RUNG 5  STEP #0003 >>
|%M0059  +-----+                +-----+                +-----+
+--] [---+BLKMV+----------------+BLKMV+----------------+BLKMV+-
|        | WORD|                | WORD|                | INT |
|        |     |                |     |                |     |
|        |     | PAR_000        |     | PAR_007        |     | PAR_100
| CONST -+IN1 Q+-%R0500   CONST -+IN1 Q+-%R0507   CONST -+IN1 Q+-%R0600
|   FFFF |     |             FFFE |     |            +10200 |     |
|        |     |                  |     |                    |     |
| CONST -+IN2  |           CONST -+IN2  |           CONST -+IN2  |
|   FFF3 |     |             FFFF |     |            +07428 |     |
|        |     |                  |     |                    |     |
| CONST -+IN3  |           CONST -+IN3  |           CONST -+IN3  |
|   FFFF |     |             FFE3 |     |            +05950 |     |
|        |     |                  |     |                    |     |
| CONST -+IN4  |           CONST -+IN4  |           CONST -+IN4  |
|   FFF1 |     |              0000 |     |            +00050 |     |
|        |     |                  |     |                    |     |
| CONST -+IN5  |           CONST -+IN5  |           CONST -+IN5  |
|   7FFF |     |              0000 |     |            +00150 |     |
|        |     |                  |     |                    |     |
| CONST -+IN6  |           CONST -+IN6  |           CONST -+IN6  |
|   FFFC |     |              0000 |     |            +01750 |     |
|        |     |                  |     |                    |     |
| CONST -+IN7  |           CONST -+IN7  |           CONST -+IN7  |
|   3FFF +-----+              0000 +-----+           +01400 +-----+
|
| (*****************************************************************************)
| (* Servo Tensioner Parameters for volume 250cc Baseline                     *)
| (*****************************************************************************)
|
```

REFERENCE NICKNAME		REFERENCE DESCRIPTION	REFERENCE NICKNAME		REFERENCE DESCRIPTION
%R0500	PAR_000	Dump. pkg., Punch station	%R0600	PAR_100	Dflt. par., Infeed loop speed
%R0507	PAR_007	Dump. pkg., Tab station	%M0059	VOL_03	Volume 03, 250cc Baseline

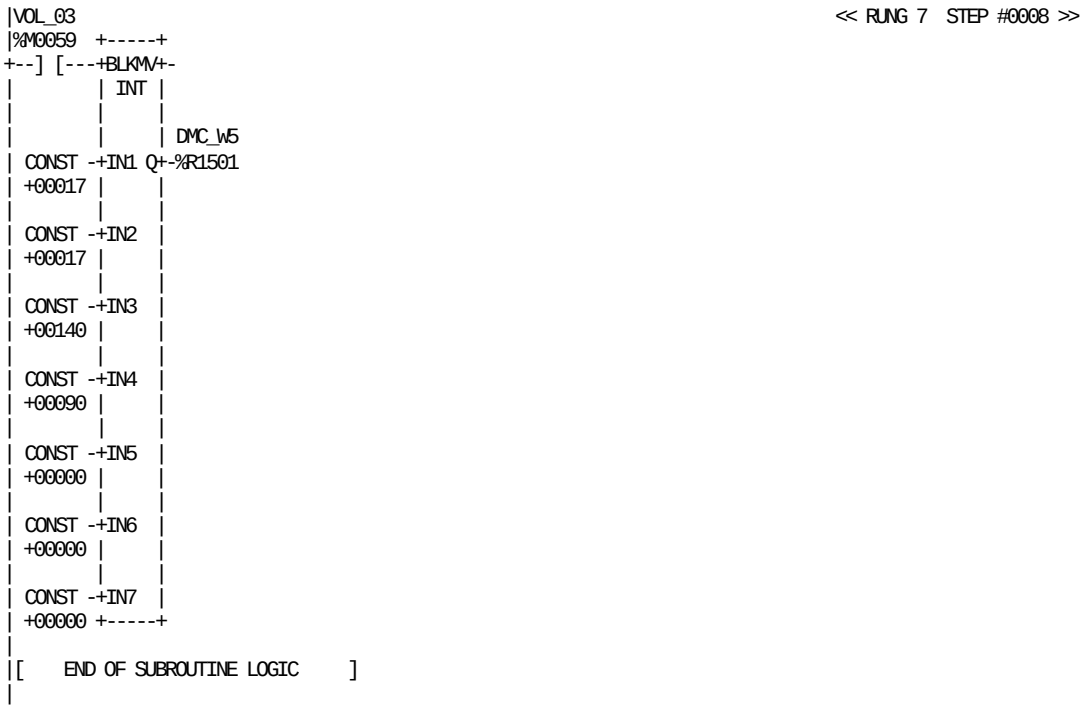

REFERENCE NICKNAME	REFERENCE DESCRIPTION	REFERENCE NICKNAME	REFERENCE DESCRIPTION
%R1501 DMC_W5	Servo Tensioner word1:Torque 1	%M0059 VOL_03	Volume 03, 250cc Baseline

```
|[  START LD SUBROUTINE  BLK_06   ]
|
|[     VARIABLE DECLARATIONS      ]
|
|[   START OF SUBROUTINE LOGIC    ]
|
| (*****************************************************************************)
| (* Block 06 "Data transfer"                                                  *)
| (*****************************************************************************)
|
| (*****************************************************************************)
| (* Servo Drive (SDV) and Servo Tensioner (STD) Data Transfer                 *)
| (*****************************************************************************)
|
| SDV30                                                              SDV08   << RUNG 5  STEP #0003 >>
|%I0043          +-----+                                            %Q0057
+--]/[--+--------+ LT_ |+-----------------------------------------------( )-- (* SDV and STD, Data Enable        *)
|       |        | INT ||
| STD30 |        |     ||
|%I0044 |DMC_CNT |     ||
+--]/[--+%R0080 -+I1  Q++
|       |        |     |
|         CONST -+I2   |
|         +00112 +-----+
|
| SDV08                                                                  << RUNG 6  STEP #0007 >>
|%Q0057          +-----+
+--] [--+--------+ ADD_+-
|       |        | INT |
| SDV30 |        |     |
|%I0043 |DMC_CNT |     | DMC_CNT
+--]/[--+%R0080 -+I1  Q+-%R0080
|       |        |     |
| STD30 |        |     |
|%I0044 |        |     |
+--]/[--+ CONST -+I2   |
|         +00001 +-----+
|
|ALW_ON                                                                  << RUNG 7  STEP #0011 >>
|%S0007  +-----+
+--] [---+ GT_ |+-------------------------------------------------------------<+>
|        | INT ||
|        |     ||
|DMC_CNT |     ||
|%R0080 -+I1  Q++
|        |     |
| CONST -+I2   |
| +00119 +-----+
|
|                                                                     P+051   << RUNG 8  STEP #0014 >>
|                                                                    %T0051
+<+>------------+-------------------------------------------------------(^)-- (* Pulse + Servo Drive data transf. *)
|               |
| SDV30   STD30 |
|%I0043  %I0044 |
+--] [-----] [--+
|
| P+051                                                                  << RUNG 9  STEP #0019 >>
|%T0051  +-----+                +-----+                +-----+
+--] [---+MOVE_+----------------+MOVE_+----------------+MOVE_+-
|        | INT |                | INT |                | INT |
|        |     |                |     |                |     |
|        |     | DMC_CNT DMC_W1 |     | DMC_RE1 DMC_W2 |     | DMC_RE2
| CONST -+IN  Q+-%R0080  %R0601 -+IN  Q+-%R0081  %R0602 -+IN  Q+-%R0082
| +00000 | LEN |                | LEN |                | LEN |
|        |00001|                |00001|                |00001|
|        |     |                |     |                |     |
|        +-----+                +-----+                +-----+
|
```

REFERENCE	NICKNAME	REFERENCE DESCRIPTION	REFERENCE	NICKNAME	REFERENCE DESCRIPTION
%S0007	ALW_ON		%R0602	DMC_W2	Servo Drive word2:Stop Position
%R0080	DMC_CNT	DMC Data transfer, Counter	%T0051	P+051	Pulse + Servo Drive data transf.
%R0081	DMC_RE1	DMC Data transfer, value1	%Q0057	SDV08	SDV and STD, Data Enable
%R0082	DMC_RE2	DMC Data transfer, value2	%I0043	SDV30	Servo Drive, Fault
%R0601	DMC_W1	Servo Drive word1:Repeat Length	%I0044	STD30	Servo Tensioner, Fault

```
| P+051                                                                  << RUNG 10  STEP #0023 >>
|%T0051  +-----+                +-----+
+--] [---+MOVE_+----------------+MOVE_+-
|        | INT |                | INT |
|        |     |                |     |
|DMC_W3  |     | DMC_RE3 DMC_W4 |     | DMC_RE4
|%R0603 -+IN  Q+-%R0083  %R0604 -+IN  Q+-%R0084
|        | LEN |                | LEN |
|        |00001|                |00001|
|        |     |                |     |
|        +-----+                +-----+
|
| P+051                                                                  << RUNG 11  STEP #0026 >>
|%T0051  +-----+                +-----+                +-----+
+--] [---+MOVE_+----------------+ ROL_+----------------+ ADD_+-
|        | INT |                | WORD|                | INT |
|        |     |                |     |                |     |
|DMC_W6  |     | DMC_RE5 DMC_RE5 |     | DMC_RE5 DMC_RE5 |     | DMC_RE5
|%R1502 -+IN  Q+-%R0085  %R0085 -+IN  Q+-%R0085  %R0085 -+I1  Q+-%R0085
|        | LEN |                | LEN |                |     |
|        |00001|                |00001|                |     |
|        |     |                |     |        DMC_W5  |     |
|        +-----+          CONST -+N    |        %R1501 -+I2   |
|                          00008 +-----+                +-----+
|
| P+051                                                                  << RUNG 12  STEP #0030 >>
|%T0051  +-----+                +-----+
+--] [---+MOVE_+----------------+MOVE_+-
|        | INT |                | INT |
|        |     |                |     |
|DMC_W7  |     | DMC_RE6 DMC_W8 |     | DMC_RE7
|%R1503 -+IN  Q+-%R0086  %R1504 -+IN  Q+-%R0087
|        | LEN |                | LEN |
|        |00001|                |00001|
|        |     |                |     |
|        +-----+                +-----+
|
| SDV08                                                                    SDV09   << RUNG 13  STEP #0033 >>
|%Q0057                                                                   %Q0058
+--]/[-----------------------------------------------------------------------(S)-- (* SDV and STD, Data clock          *)
|
| SDV08   SDV09                                                            SDV09   << RUNG 14  STEP #0035 >>
|%Q0057  %Q0058                                                           %Q0058
+--] [-----] [---------------------------------------------------------------(/)-- (* SDV and STD, Data clock          *)
|
| SDV08                                                                    SDV10   << RUNG 15  STEP #0038 >>
|%Q0057  +-----+                                                          %Q0059
+--] [---+ SHR_|+-------------------------------------------------------( )-- (* SDV and STD, Data                *)
|        | WORD||
|        |     ||
|DMC_RE1 |     ||
|%R0081 -+IN B2++
|        | LEN |
|        |00007|
|        |     | DMC_RE1
| CONST -+N   Q+-%R0081
| +00001 |     |
|ALW_OFF |     |
|%S0008  |     |
+--] [---+B1   |
|        +-----+
|
| (*************************************************************************)
| (* TMCC Data Transfer                                                    *)
| (*************************************************************************)
```

REFERENCE	NICKNAME	REFERENCE DESCRIPTION	REFERENCE	NICKNAME	REFERENCE DESCRIPTION
%S0008	ALW_OFF		%R1501	DMC_W5	Servo Tensioner word1:Torque 1
%R0081	DMC_RE1	DMC Data transfer, value1	%R1502	DMC_W6	servo Tensioner word2:Torque 2
%R0083	DMC_RE3	DMC Data transfer, value3	%R1503	DMC_W7	Servo Tens.word3:Max pos.Speed
%R0084	DMC_RE4	DMC Data transfer, value4	%R1504	DMC_W8	Servo Tens.word4:Max neg.Speed
%R0085	DMC_RE5	DMC Data transfer, value5	%T0051	P+051	Pulse + Servo Drive data transf.
%R0086	DMC_RE6	DMC Data transfer, value6	%Q0057	SDV08	SDV and STD, Data Enable
%R0087	DMC_RE7	DMC data transfer, value7	%Q0058	SDV09	SDV and STD, Data clock
%R0603	DMC_W3	Servo Drive word3:Acc/Dec Time	%Q0059	SDV10	SDV and STD, Data
%R0604	DMC_W4	Servo Drive word4:Total Feed Tme			

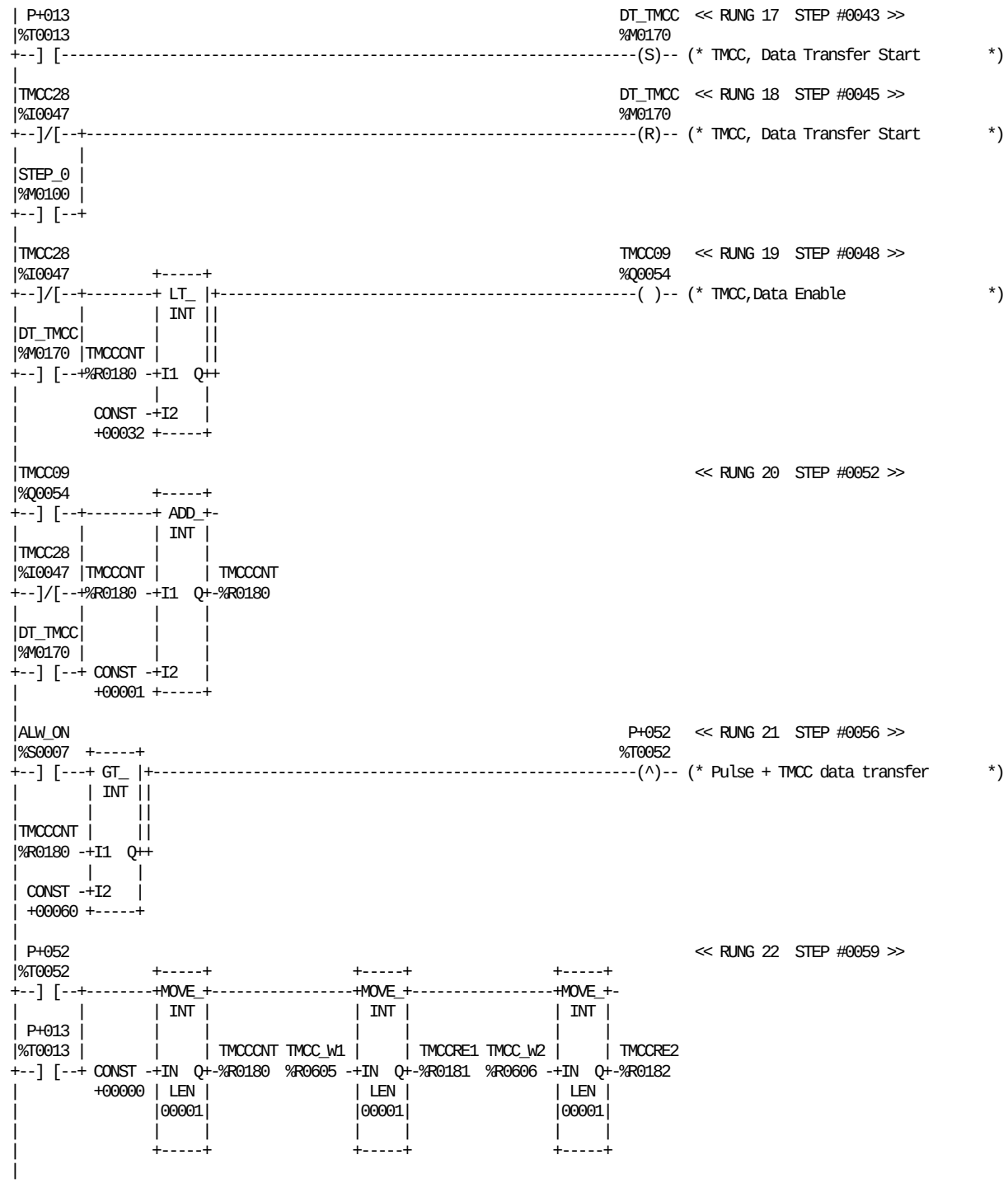

REFERENCE	NICKNAME	REFERENCE DESCRIPTION	REFERENCE	NICKNAME	REFERENCE DESCRIPTION
%S0007	ALW_ON		%I0047	TMCC28	TMCC, Enabled
%M0170	DT_TMCC	TMCC, Data Transfer Start	%R0180	TMCCCNT	TMCC data transfer,counter
%T0013	P+013	Pulse + New volume value	%R0181	TMCCRE1	TMCC data transfer value 1
%T0052	P+052	Pulse + TMCC data transfer	%R0182	TMCCRE2	TMCC data transfer value 2
%M0100	STEP_0	Step 0, Off	%R0605	TMCC_W1	TMCC Data tr.:Word1
%Q0054	TMCC09	TMCC,Data Enable	%R0606	TMCC_W2	TMCC Data tr.:Word2
%Q0055	TMCC10	TMCC,Data Clock			

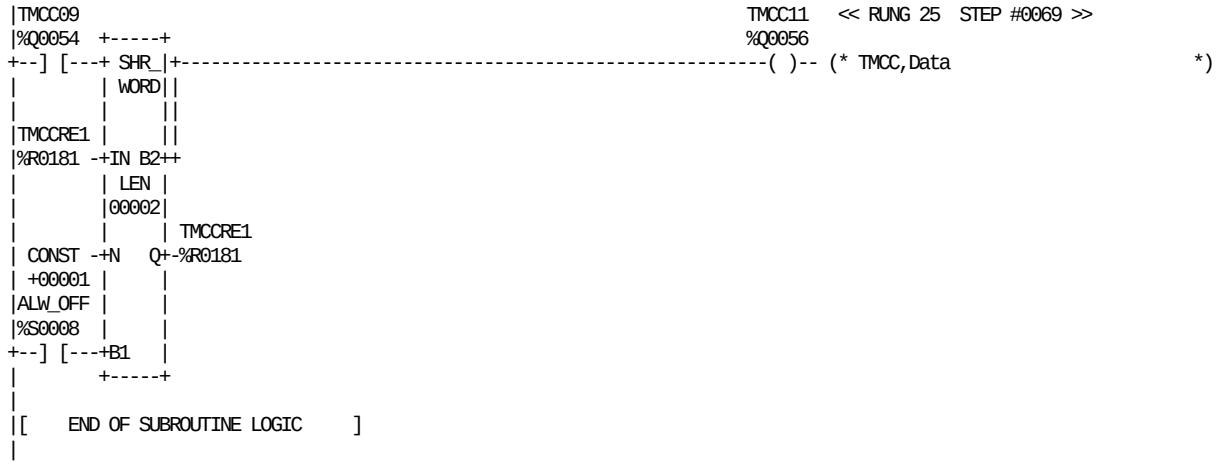

REFERENCE	NICKNAME	REFERENCE DESCRIPTION	REFERENCE	NICKNAME	REFERENCE DESCRIPTION
%S0008	ALW_OFF		%Q0056	TMCC11	TMCC,Data
%Q0054	TMCC09	TMCC,Data Enable	%R0181	TMCCRE1	TMCC data transfer value 1

```
|[  START LD SUBROUTINE  BLK_08   ]
|
|[     VARIABLE DECLARATIONS      ]
|
|[   START OF SUBROUTINE LOGIC    ]
|
| (*************************************************************************)
| (* Block 08 "Machine steps"                                              *)
| (*************************************************************************)
|
| (*************************************************************************)
| (* Short stop demands                                                    *)
| (*************************************************************************)
|
|FT_ASUE TT_OULP TT_OURM TT_PHCE TT_TAPD TT_TMCC TT_PAST TT_PAED                 << RUNG 5  STEP #0003 >>
|%G0312  %G0514  %G0515  %G0517  %G0520  %G0523  %G0546  %G0548
+--]/[-----]/[-----]/[-----]/[-----]/[-----]/[-----]/[-----]/[---------------<+>
|
|        TT_TAST TT_TAED TT_REST TT_WAFL TT_PUST TT_PAMS TT_TAMS TT_INFD         << RUNG 6  STEP #0012 >>
|        %G0549  %G0551  %G0552  %G0554  %G0557  %G0558  %G0559  %G0560
+<+>-------]/[-----]/[-----]/[-----]/[-----]/[-----]/[-----]/[-----]/[-------<+>
|
|        TT_IHPA TT_IHRE TT_PARM TT_TARM                                SSDEM_1  << RUNG 7  STEP #0022 >>
|        %G0561  %G0562  %G0564  %G0565                                %M0130
+<+>-------]/[-----]/[-----]/[-----]/[-----------------------------------( )-- (* Short stop demand 1              *)
|
| (*************************************************************************)
| (* Step conditions                                                       *)
| (*************************************************************************)
|
|STEP_0  ALLDORS SERVICE  X8211   B8404   S8202   SEL14  TT_SDV  TT_OLSE         << RUNG 9  STEP #0029 >>
|%M0100  %M0190  %M0200  %I0017  %I0021  %I0022  %I0059  %G0518  %G0519
+--] [-----] [-----]/[-----] [-----]/[-----]/[-----] [-----]/[-----]/[-------<+>
|
|        TT_AIR  TT_STD                                                 COND_0   << RUNG 10  STEP #0039 >>
|        %G0555  %G0567                                                 %M0120
+<+>-------]/[-----]/[-----------------------------------------------------( )-- (* Step 0 Step up condition        *)
|
|STEP_0   SEL14  ALLDORS  X8211   B8404   S8202  TT_OLSE TT_AIR         COND_1   << RUNG 11  STEP #0043 >>
|%M0100  %I0059  %M0190  %I0017  %I0021  %I0022  %G0519  %G0555         %M0121
+--] [--+--]/[--+--] [-----] [-----]/[-----]/[-----]/[-----]/[------------( )-- (* Step 1 Step up condition        *)
|       |       |
|STEP_1 |SERVICE|
|%M0101 |%M0200 |
+--] [--+--] [--+
|
|STEP_2  FT_ASUE TT_PHCE TT_SDV  TT_OLSE TT_TAPD TMCC28  TT_STD  TT_PAST         << RUNG 12  STEP #0055 >>
|%M0102  %G0312  %G0517  %G0518  %G0519  %G0520  %I0047  %G0567  %G0546
+--] [-----]/[-----]/[-----]/[-----]/[-----]/[-----] [-----]/[-----]/[-------<+>
|
|        TT_PAED TT_TAST TT_TAED TT_REST TT_WAFL TT_AIR  TT_PUST TT_INFD         << RUNG 13  STEP #0065 >>
|        %G0548  %G0549  %G0551  %G0552  %G0554  %G0555  %G0557  %G0560
+<+>-------]/[-----]/[-----]/[-----]/[-----]/[-----]/[-----]/[-----]/[-------<+>
|
```

REFERENCE	NICKNAME	REFERENCE DESCRIPTION	REFERENCE	NICKNAME	REFERENCE DESCRIPTION
%M0190	ALLDORS	All doors closed	%G0515	TT_OURM	To TBA21, Outfeed rotation monit
%I0021	B8404	Bypass, Activated	%G0548	TT_PAED	To TBA21, Patch material ended
%M0120	COND_0	Step 0 Step up condition	%G0558	TT_PAMS	To TBA21, Patch missing
%M0121	COND_1	Step 1 Step up condition	%G0564	TT_PARM	To TBA21, Patch rotation monitor
%G0312	FT_ASUE	From TBA21, ASU magazine empty	%G0546	TT_PAST	To TBA21, Patch station
%I0022	S8202	Service key, Activated	%G0517	TT_PHCE	To TBA21, Malfunction photocells
%I0059	SEL14	Preparation, Selected	%G0557	TT_PUST	To TBA21, Punch station
%M0200	SERVICE	Service and setting activated	%G0552	TT_REST	To TBA21, Reseal station
%M0130	SSDEM_1	Short stop demand 1	%G0518	TT_SDV	To TBA21, Servo Drive
%M0100	STEP_0	Step 0, Off	%G0567	TT_STD	TO TBA21, Servo Tensioner
%M0101	STEP_1	Step 1, Preparation	%G0551	TT_TAED	To TBA21, Tab material ended
%M0102	STEP_2	Step 2, Pre-heating	%G0559	TT_TAMS	To TBA21, Tab missing
%I0047	TMCC28	TMCC, Enabled	%G0520	TT_TAPD	To TBA21, Tab sealing temperatur
%G0555	TT_AIR	To TBA21, Air pressure	%G0565	TT_TARM	To TBA21, Tab rotation monitor
%G0561	TT_IHPA	To TBA21, Patch IH fault	%G0549	TT_TAST	To TBA21, Tab station
%G0562	TT_IHRE	To TBA21, Reseal IH fault	%G0523	TT_TMCC	To TBA21, TMCC
%G0560	TT_INFD	To TBA21, Infeed loop	%G0554	TT_WAFL	To TBA21, Waste box full
%G0519	TT_OLSE	To TBA21, Overload Servo system	%I0017	X8211	Emergency Stop
%G0514	TT_OULP	To TBA21, Outfeed loop			

```
|         SDV30   STD30  TMCC28                                          COND_2   << RUNG 14  STEP #0075 >>
|        %I0043  %I0044  %I0047                                          %M0122
+<+>-------] [-----] [-----] [-----------------------------------------( )-- (* Step 2 Step up condition         *)
|
|STEP_3   SDV34  TT_PHCE TT_PAST TT_TAST TT_REST TT_PUST                 COND_3   << RUNG 15  STEP #0080 >>
|%M0103  %I0042  %G0517  %G0546  %G0549  %G0552  %G0557                  %M0123
+--] [-----] [-----]/[-----]/[-----]/[-----]/[-----]/[-------------------( )-- (* Step 3 Step up condition         *)
|
|STEP_4  TT_TAPD TT_PAST TT_TAST TT_PAED TT_TAED TT_REST TT_WAFL TT_PUST          << RUNG 16  STEP #0088 >>
|%M0104  %G0520  %G0546  %G0549  %G0548  %G0551  %G0552  %G0554  %G0557
+--] [-----]/[-----]/[-----]/[-----]/[-----]/[-----]/[-----]/[-----]/[-------<+>
|
|        TT_IHPA TT_IHRE TT_PARM TT_TARM                                  COND_4   << RUNG 17  STEP #0098 >>
|        %G0561  %G0562  %G0564  %G0565                                  %M0124
+<+>-------]/[-----]/[-----]/[-----]/[-------------------------------------( )-- (* Step 4 Step up condition         *)
|
```

REFERENCE	NICKNAME	REFERENCE DESCRIPTION	REFERENCE	NICKNAME	REFERENCE DESCRIPTION
%M0122	COND_2	Step 2 Step up condition	%G0548	TT_PAED	To TBA21, Patch material ended
%M0123	COND_3	Step 3 Step up condition	%G0564	TT_PARM	To TBA21, Patch rotation monitor
%M0124	COND_4	Step 4 Step up condition	%G0546	TT_PAST	To TBA21, Patch station
%I0043	SDV30	Servo Drive, Fault	%G0517	TT_PHCE	To TBA21, Malfunction photocells
%I0042	SDV34	Servo Drive, Home position found	%G0557	TT_PUST	To TBA21, Punch station
%I0044	STD30	Servo Tensioner, Fault	%G0552	TT_REST	To TBA21, Reseal station
%M0103	STEP_3	Step 3, Find home	%G0551	TT_TAED	To TBA21, Tab material ended
%M0104	STEP_4	Step 4, Found home	%G0520	TT_TAPD	To TBA21, Tab sealing temperatur
%I0047	TMCC28	TMCC, Enabled	%G0565	TT_TARM	To TBA21, Tab rotation monitor
%G0561	TT_IHPA	To TBA21, Patch IH fault	%G0549	TT_TAST	To TBA21, Tab station
%G0562	TT_IHRE	To TBA21, Reseal IH fault	%G0554	TT_WAFL	To TBA21, Waste box full

```
| (*************************************************************************)
| (* Step function                                                         *)
| (*************************************************************************)
|
|COND_0         ALLDORS                                          TT_RFPR  << RUNG 19  STEP #0105 >>
|%M0120         %M0190                                           %G0897
+--] [--+------+--] [-------------------------------------------------(M)-- (* To TBA21, Ready for production   *)
|       |      |
|COND_1 |      |
|%M0121 |      |
+--] [--+      |
|       |      |
|COND_2 |      |
|%M0122 |      |
+--] [--+      |
|              |
|STEP_3  COND_3 |
|%M0103  %M0123 |
+--] [--+--] [--+
|       |      |
|       | SDV34 |
|       |%I0042 |
|       +--]/[--+
|              |
|COND_4  SSDEM_1|
|%M0124  %M0130 |
+--] [-----] [--+
|              |
|STEP_5  SSDEM_1|
|%M0105  %M0130 |
+--] [-----] [--+
|              |
|STEP_6  SSDEM_1|
|%M0106  %M0130 |
+--] [-----] [--+
|
| P+014                                                           STEPUP   << RUNG 20  STEP #0124 >>
|%T0014                                                           %M0150
+--] [--+-------------------------------------------------------------(S)-- (* Step up                          *)
|       |
|FT_STP1|
|%G0315 |
+--] [--+
|
|TT_RFPR                                                          STEPUP   << RUNG 21  STEP #0127 >>
|%G0897                                                           %M0150
+--]/[-------------------------------------------------------------(R)-- (* Step up                          *)
|
```

REFERENCE	NICKNAME	REFERENCE DESCRIPTION	REFERENCE	NICKNAME	REFERENCE DESCRIPTION
%M0190	ALLDORS	All doors closed	%I0042	SDV34	Servo Drive, Home position found
%M0120	COND_0	Step 0 Step up condition	%M0130	SSDEM_1	Short stop demand 1
%M0121	COND_1	Step 1 Step up condition	%M0150	STEPUP	Step up
%M0122	COND_2	Step 2 Step up condition	%M0103	STEP_3	Step 3, Find home
%M0123	COND_3	Step 3 Step up condition	%M0105	STEP_5	Step 5, Production
%M0124	COND_4	Step 4 Step up condition	%M0106	STEP_6	Step 6, Service window
%G0315	FT_STP1	From TBA21, TBA21 Step 1	%G0897	TT_RFPR	To TBA21, Ready for production
%T0014	P+014	Pulse + Machine step up			

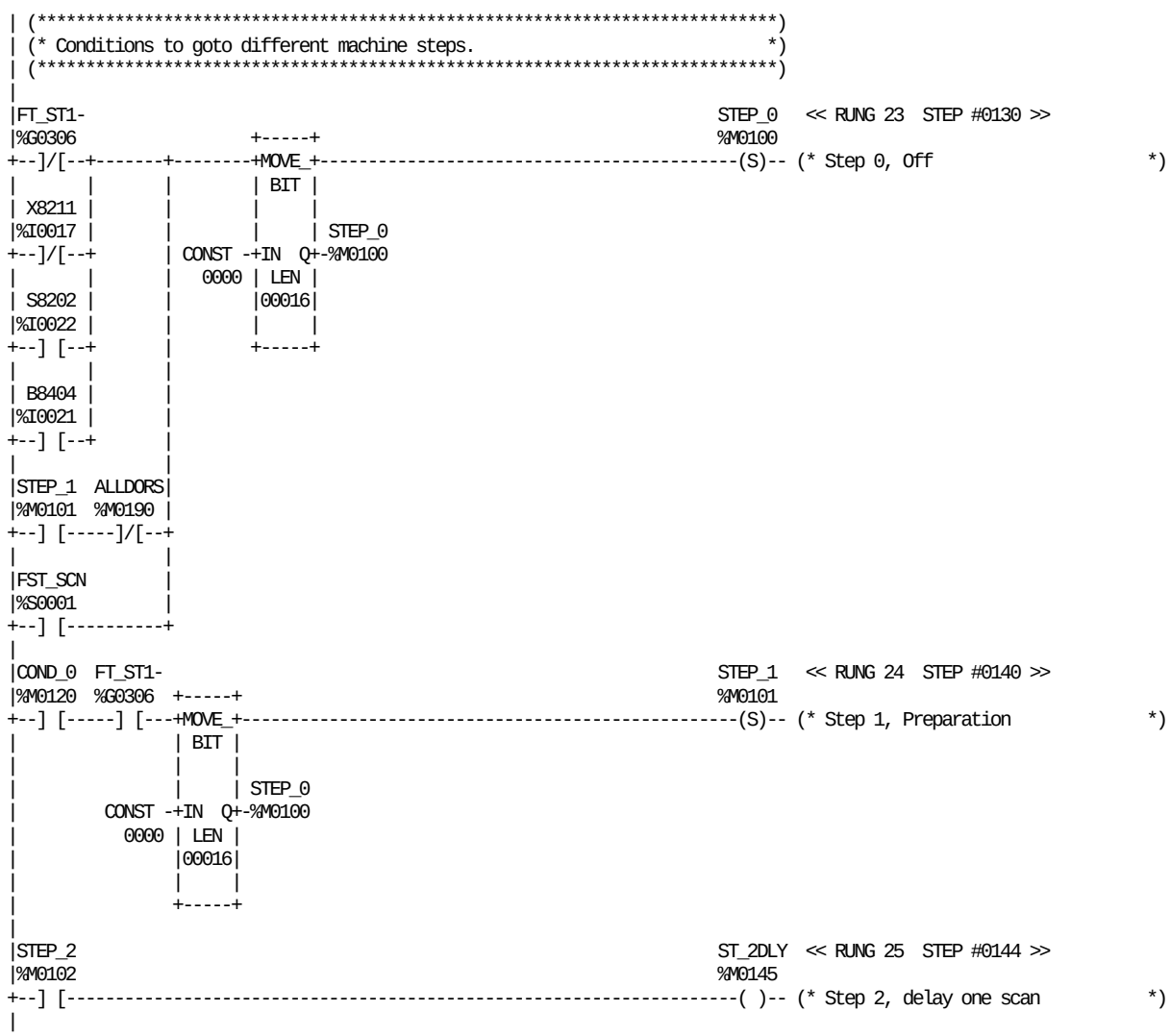

REFERENCE	NICKNAME	REFERENCE DESCRIPTION	REFERENCE	NICKNAME	REFERENCE DESCRIPTION
%M0190	ALLDORS	All doors closed	%M0100	STEP_0	Step 0, Off
%I0021	B8404	Bypass, Activated	%M0101	STEP_1	Step 1, Preparation
%M0120	COND_0	Step 0 Step up condition	%M0102	STEP_2	Step 2, Pre-heating
%S0001	FST_SCN		%M0145	ST_2DLY	Step 2, delay one scan
%G0306	FT_ST1-	From TBA21, TBA21 Step 1-12	%I0017	X8211	Emergency Stop
%I0022	S8202	Service key, Activated			

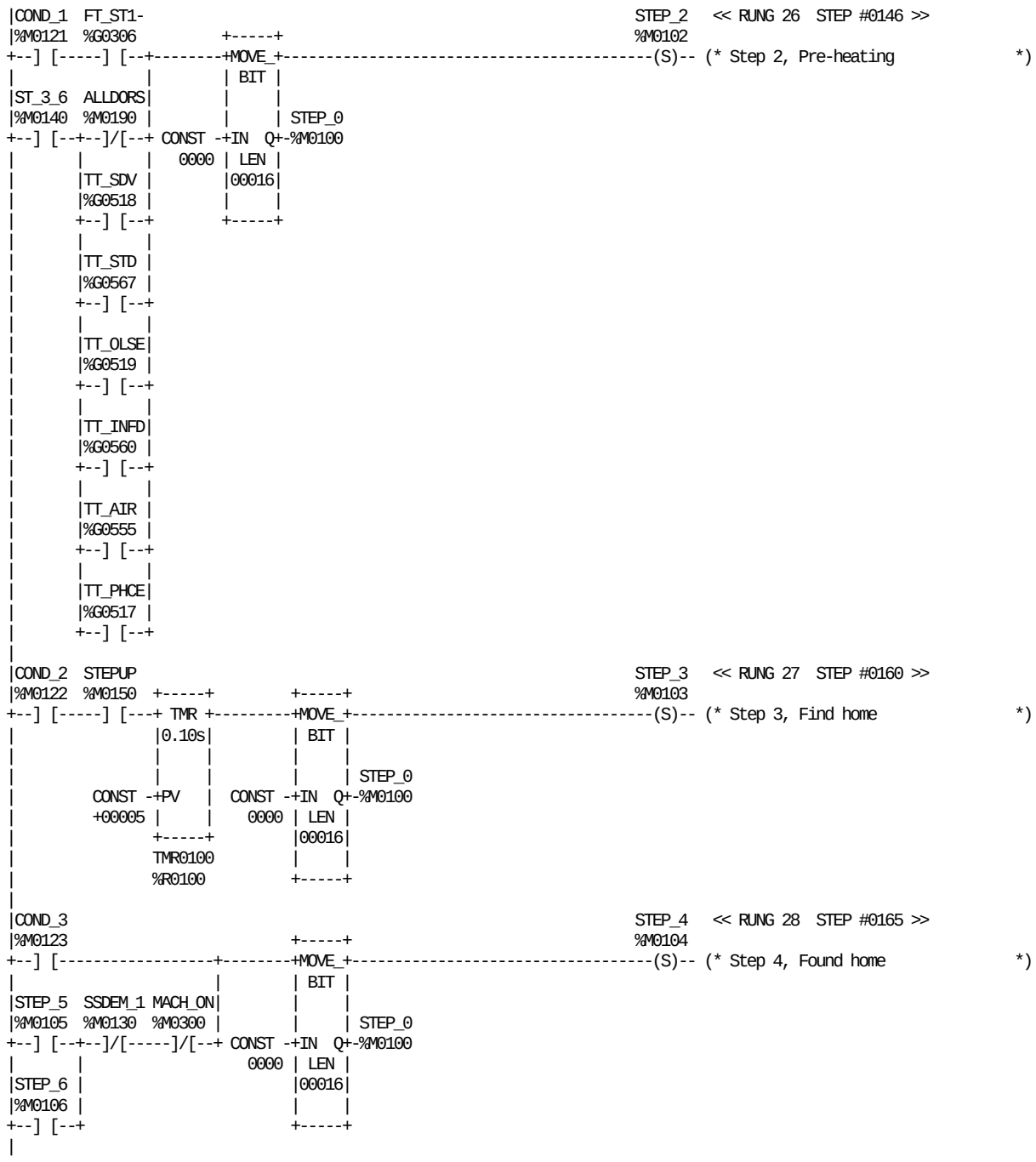

REFERENCE	NICKNAME	REFERENCE DESCRIPTION
%M0190	ALLDORS	All doors closed
%M0121	COND_1	Step 1 Step up condition
%M0122	COND_2	Step 2 Step up condition
%M0123	COND_3	Step 3 Step up condition
%G0306	FT_ST1-	From TBA21, TBA21 Step 1-12
%M0300	MACH_ON	Machine cycle ON
%M0130	SSDEM_1	Short stop demand 1
%M0150	STEPUP	Step up
%M0100	STEP_0	Step 0, Off
%M0102	STEP_2	Step 2, Pre-heating
%M0103	STEP_3	Step 3, Find home

REFERENCE	NICKNAME	REFERENCE DESCRIPTION
%M0104	STEP_4	Step 4, Found home
%M0105	STEP_5	Step 5, Production
%M0106	STEP_6	Step 6, Service window
%M0140	ST_3_6	Step 3-6, Find home - Service
%R0100	TMR0100	Step 3 delay
%G0555	TT_AIR	To TBA21, Air pressure
%G0560	TT_INFD	To TBA21, Infeed loop
%G0519	TT_OLSE	To TBA21, Overload Servo system
%G0517	TT_PHCE	To TBA21, Malfunction photocells
%G0518	TT_SDV	To TBA21, Servo Drive
%G0567	TT_STD	TO TBA21, Servo Tensioner

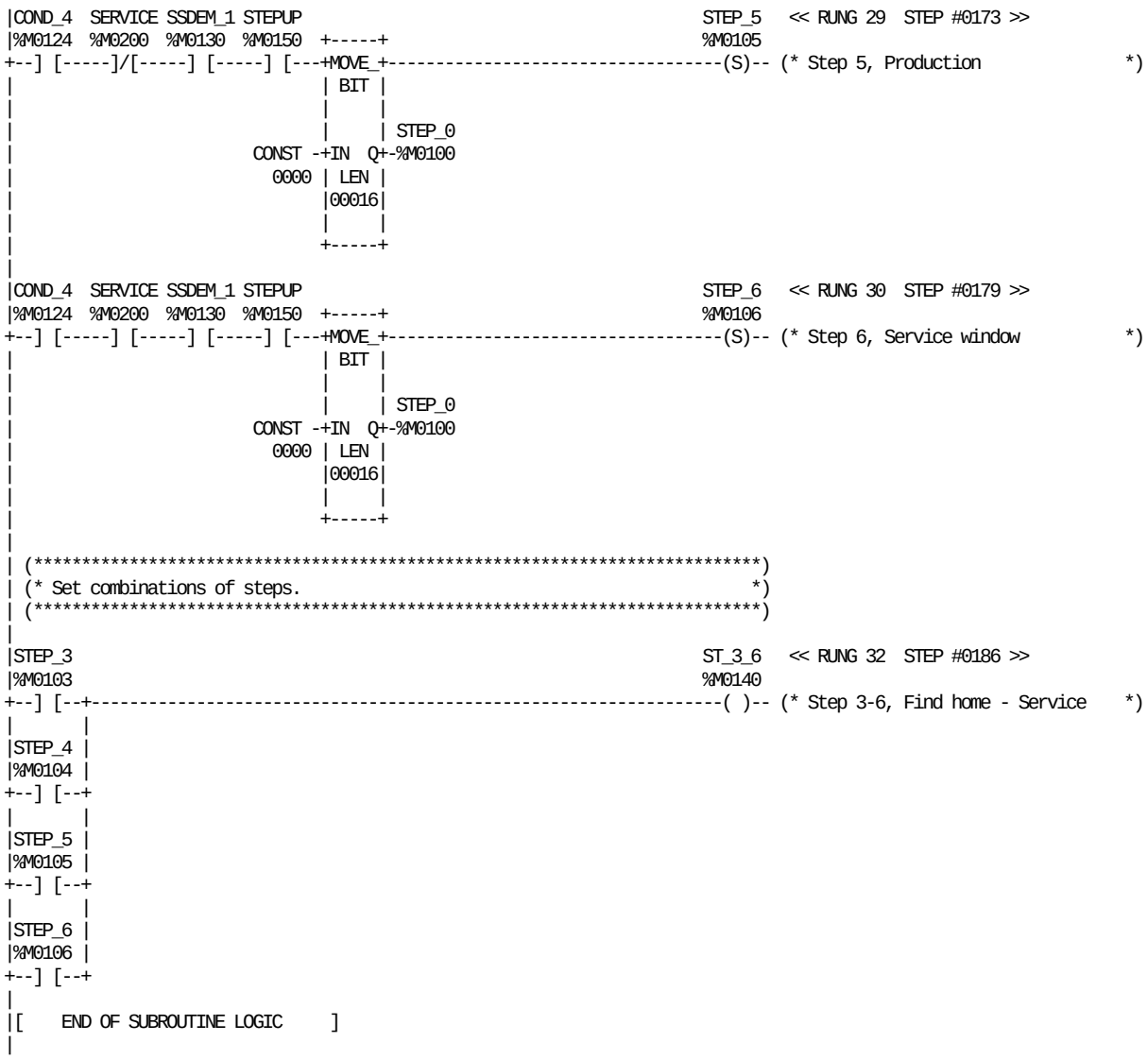

REFERENCE	NICKNAME	REFERENCE DESCRIPTION	REFERENCE	NICKNAME	REFERENCE DESCRIPTION
%M0124	COND_4	Step 4 Step up condition	%M0103	STEP_3	Step 3, Find home
%M0200	SERVICE	Service and setting activated	%M0104	STEP_4	Step 4, Found home
%M0130	SSDEM_1	Short stop demand 1	%M0105	STEP_5	Step 5, Production
%M0150	STEPUP	Step up	%M0106	STEP_6	Step 6, Service window
%M0100	STEP_0	Step 0, Off	%M0140	ST_3_6	Step 3-6, Find home - Service

```
|[  START LD SUBROUTINE  BLK_10   ]
|
|[     VARIABLE DECLARATIONS      ]
|
|[   START OF SUBROUTINE LOGIC    ]
|
| (*************************************************************************)
| (* Block 10 "Common functions"                                           *)
| (*************************************************************************)
|
| B8403   B8402   B8401                                          ALLDORS  << RUNG 4  STEP #0002 >>
|%I0020  %I0019  %I0018                                          %M0190
+--] [-----] [-----] [-----------------------------------------------( )-- (* All doors closed               *)
|
|STEP_0  ALLDORS                                                  Y8401   << RUNG 5  STEP #0006 >>
|%M0100  %M0190                                                  %Q0027
+--]/[--+--] [-----------------------------------------------------( )-- (* Venting Valve                  *)
|       |
|       |                                                         K8201
|       |                                                        %Q0039
|       +-----------------------------------------------------------( )-- (* Servo Drive, main supply       *)
|
|ST_3_6                                                           K8204   << RUNG 6  STEP #0012 >>
|%M0140                                                          %Q0037
+--] [-----------------------------------------------------------( )-- (* Main supply, TPIH Patch/Reseal  *)
|
|STEP_0  L1_POOF                                                  K8209   << RUNG 7  STEP #0014 >>
|%M0100  %M0705                                                  %Q0041
+--]/[--+--]/[-----------------------------------------------------( )-- (* Control voltage               *)
|       |
|       |                                                         K8210
|       |                                                        %Q0034
|       +-----------------------------------------------------------( )-- (* Main supply, Infeed           *)
|
|FT_MALT                                                          K8214   << RUNG 8  STEP #0020 >>
|%G0311                                                          %Q0051
+--] [-----------------------------------------------------------( )-- (* Machine light                 *)
|
|MACH_ON                                                         PT21RUN  << RUNG 9  STEP #0022 >>
|%M0300  +-----+                                                 %M0160
+--] [---+OFDT ++-----------------------------------------------------( )-- (* PT21 running                 *)
|        |0.01s||
|        |     ||                                                 P8201
|        |     ||                                                %Q0049
| CONST -+PV   |+-----------------------------------------------------( )-- (* Hour meter                   *)
| +00070 |     |
|        +-----+
|        OFD0123
|        %R0123
|
```

REFERENCE	NICKNAME	REFERENCE DESCRIPTION	REFERENCE	NICKNAME	REFERENCE DESCRIPTION
%M0190	ALLDORS	All doors closed	%Q0051	K8214	Machine light
%I0018	B8401	Door guard, PT21 left	%M0705	L1_POOF	Loop1, Tab power OFF
%I0019	B8402	Door guard, PT21 right front	%M0300	MACH_ON	Machine cycle ON
%I0020	B8403	Door guard, PT21 right rear	%R0123	OFD0123	PT21 running delay
%G0311	FT_MALT	From TBA21, Machine light	%Q0049	P8201	Hour meter
%Q0039	K8201	Servo Drive, main supply	%M0160	PT21RUN	PT21 running
%Q0037	K8204	Main supply, TPIH Patch/Reseal	%M0100	STEP_0	Step 0, Off
%Q0041	K8209	Control voltage	%M0140	ST_3_6	Step 3-6, Find home - Service
%Q0034	K8210	Main supply, Infeed	%Q0027	Y8401	Venting Valve

```
|STEP_1  B84061  B84071          SDV30   STD30   T_SEC                HS8202   << RUNG 10  STEP #0026 >>
|%M0101 %I0035  %I0001         %I0043  %I0044  %S0005                %Q0050
+--] [-----] [-----] [----------+--] [-----] [-----] [----------------------( )-- (* Push button, Single move lamp    *)
|                               |
|STEP_2  SERVICE TT_RFPR MACH_ON|
|%M0102  %M0200  %G0897  %M0300 |
+--] [--+--] [-----] [-----]/[--+
|       |
|STEP_4 |
|%M0104 |
+--] [--+
|       |
|STEP_6 |
|%M0106 |
+--] [--+
|
|SERVICE  SEL14                                                        SDV07   << RUNG 11  STEP #0040 >>
|%M0200  %I0059                                                       %Q0062
+--]/[-----] [-------------------------------------------------------------( )-- (* Servo Drive, Preparation        *)
|
|SERVICE                                                               SDV11   << RUNG 12  STEP #0043 >>
|%M0200                                                               %Q0061
+--] [-------------------------------------------------------------------( )-- (* Servo Drive, Service & Setting   *)
|
|STEP_0  STEP_2   SDV30   STD30                                        SDV15   << RUNG 13  STEP #0045 >>
|%M0100  %M0102  %I0043  %I0044                                       %Q0060
+--]/[-----]/[-----] [-----] [--+-----------------------------------------( )-- (* Servo Drive, Software Enable     *)
|                               |
|                               |                                       STD15
|                               |                                      %Q0035
|                               +-----------------------------------------( )-- (* Servo Tensioner, Software Enable *)
|
| (*****************************************************************************)
| (* Tab folder control only 041V                                            *)
| (*****************************************************************************)
|
| P+024                                                                TABFOLD  << RUNG 15  STEP #0052 >>
|%T0024  +-----+                                                      %M0161
+--] [--->DNCTR+-------------------------------------------------------------(/)-- (* Tab folder activated            *)
|       |     |
| P+025 |     |
|%T0025 |     |
+--] [---+R    |
|       |     |
| CONST -+PV   |
| +00070 |     |
|       +-----+
|       CTR0159
|       %R0159
|
```

REFERENCE	NICKNAME	REFERENCE DESCRIPTION
%I0035	B84061	Outfeed loop, High
%I0001	B84071	Outfeed loop, Low
%R0159	CTR0159	Tab folder activated delay
%Q0050	HS8202	Push button, Single move lamp
%M0300	MACH_ON	Machine cycle ON
%T0024	P+024	Pulse + Register mark DCS,JUM
%T0025	P+025	Pulse + Disable applicators
%Q0062	SDV07	Servo Drive, Preparation
%Q0061	SDV11	Servo Drive, Service & Setting
%Q0060	SDV15	Servo Drive, Software Enable
%I0043	SDV30	Servo Drive, Fault
%I0059	SEL14	Preparation, Selected

REFERENCE	NICKNAME	REFERENCE DESCRIPTION
%M0200	SERVICE	Service and setting activated
%Q0035	STD15	Servo Tensioner, Software Enable
%I0044	STD30	Servo Tensioner, Fault
%M0100	STEP_0	Step 0, Off
%M0101	STEP_1	Step 1, Preparation
%M0102	STEP_2	Step 2, Pre-heating
%M0104	STEP_4	Step 4, Found home
%M0106	STEP_6	Step 6, Service window
%M0161	TABFOLD	Tab folder activated
%G0897	TT_RFPR	To TBA21, Ready for production
%S0005	T_SEC	

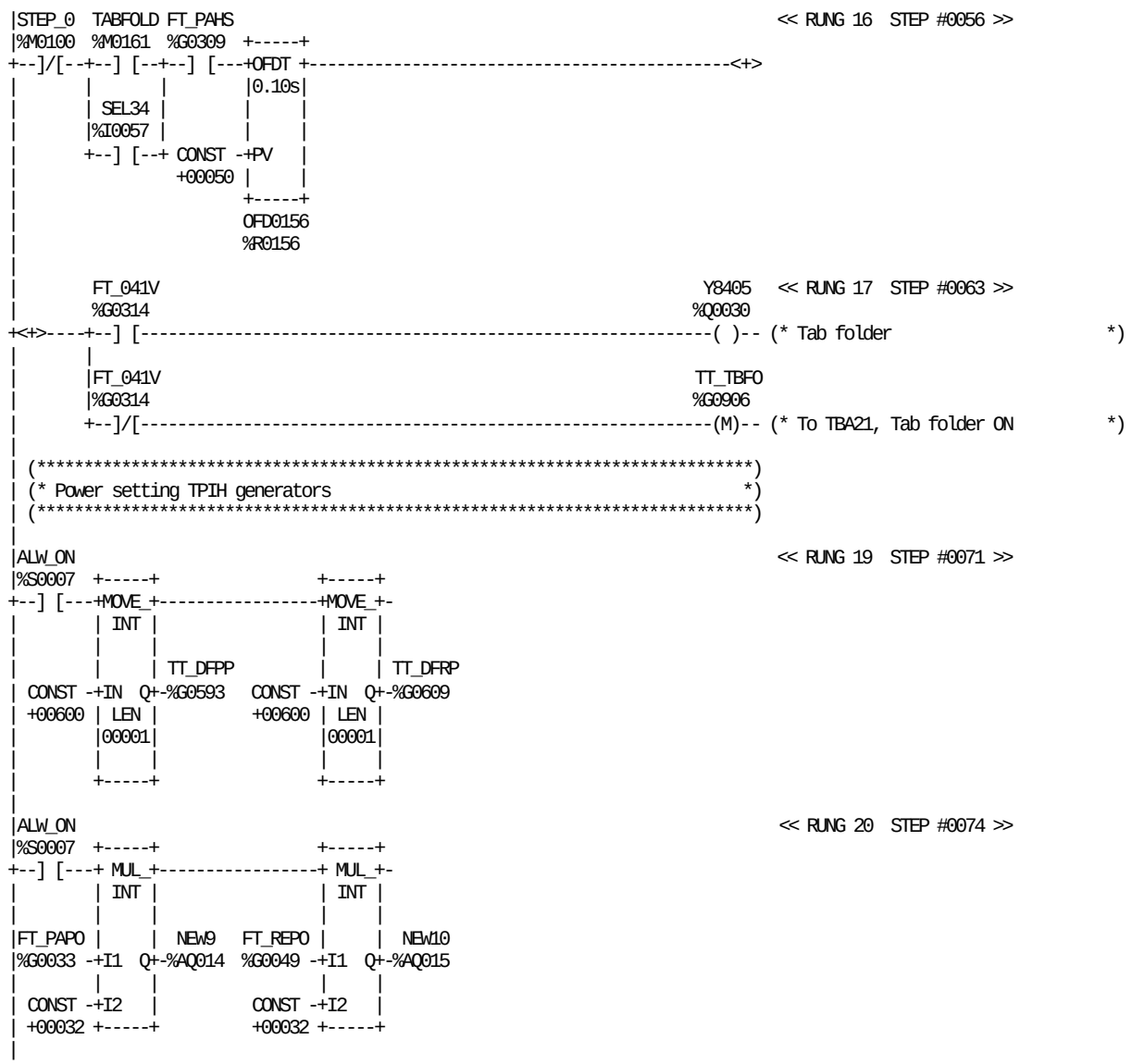

REFERENCE	NICKNAME	REFERENCE DESCRIPTION
%S0007	ALW_ON	
%G0314	FT_041V	From TBA21, 041V functionality
%G0309	FT_PAHS	From TBA21, Paper high speed
%G0033	FT_PAPO	From TBA21, Patch power
%G0049	FT_REPO	From TBA21, Reseal power
%AQ015	NEW10	Reseal power
%AQ014	NEW9	Patch power
%R0156	OFD0156	Tab folder delay

REFERENCE	NICKNAME	REFERENCE DESCRIPTION
%I0057	SEL34	Production, Selected
%M0100	STEP_0	Step 0, Off
%M0161	TABFOLD	Tab folder activated
%G0593	TT_DFPP	To TBA21, Dflt Patch power
%G0609	TT_DFRP	To TBA21, Dflt Reseal power
%G0906	TT_TBFO	To TBA21, Tab folder ON
%Q0030	Y8405	Tab folder

```
| (*************************************************************************)
| (* Pull tab correction setting                                           *)
| (*************************************************************************)
|
|ALW_ON                                                          << RUNG 22  STEP #0078 >>
|%S0007  +-----+               +-----+
+--] [---+MOVE_+---------------+MOVE_+-
|        | INT |               | INT |
|        |     |               |     |
|        |     | TT_DTPC FT_PTCO |     |  SDV01
| CONST -+IN  Q+-%G0577  %G0017 -+IN  Q+-%AQ009
| +16000 | LEN |               | LEN |
|        |00001|               |00001|
|        |     |               |     |
|        +-----+               +-----+
|
| (*************************************************************************)
| (* Register mark handling                                               *)
| (*************************************************************************)
|
|STEP_0  TT_PHCE                                                  TMCC12   << RUNG 24  STEP #0082 >>
|%M0100  %G0517                                                   %Q0053
+--]/[-----]/[-------------------------------------------------------------( )-- (* TMCC, Enable photocells          *)
|
| SDV14                                                           PAP_MOV  << RUNG 25  STEP #0085 >>
|%Q0001                                                           %M0184
+--] [-------------------------------------------------------------------(S)-- (* Paper move                      *)
|
| SDV32                                                           PAP_MOV  << RUNG 26  STEP #0087 >>
|%I0002                                                           %M0184
+--] [-------------------------------------------------------------------(R)-- (* Paper move                      *)
|
|ALW_ON                                                           REGMMIS  << RUNG 27  STEP #0089 >>
|%S0007                                                           %M0181
+--] [-------------------------------------------------------------------(R)-- (* Register mark missed            *)
|
|STEP_3  PAP_MOV  P+023  REGMMIS                                  REGMMIS  << RUNG 28  STEP #0091 >>
|%M0103  %M0184  %T0023  %M0181  +-----+                          %M0181
+--] [-----] [-----]/[-----]/[---+ TMR +-----------------------------------(S)-- (* Register mark missed            *)
|                                |.001s|
|                                |     |
|                          CONST -+PV   |
|                          +01200 |     |
|                                 +-----+
|                                 TMR0126
|                                 %R0126
|
|STEP_5  PAP_MOV  P+023  REGMMIS                                  REGMMIS  << RUNG 29  STEP #0097 >>
|%M0105  %M0184  %T0023  %M0181  +-----+                          %M0181
+--] [-----] [-----]/[-----]/[---+ TMR +-----------------------------------(S)-- (* Register mark missed            *)
|                                |.001s|
|                                |     |
|                          CONST -+PV   |
|                          +00150 |     |
|                                 +-----+
|                                 TMR0129
|                                 %R0129
|
| (*************************************************************************)
| (* This sequence is used to make sure that the applicators is in the     *)
| (* IN position before the Home find procedure starts.                    *)
| (*************************************************************************)
|
```

REFERENCE	NICKNAME	REFERENCE DESCRIPTION	REFERENCE	NICKNAME	REFERENCE DESCRIPTION
%S0007	ALW_ON		%M0100	STEP_0	Step 0, Off
%G0017	FT_PTCO	From TBA21, Pulltab correction	%M0103	STEP_3	Step 3, Find home
%T0023	P+023	Pulse + Register mark detected	%M0105	STEP_5	Step 5, Production
%M0184	PAP_MOV	Paper move	%Q0053	TMCC12	TMCC, Enable photocells
%M0181	REGMMIS	Register mark missed	%R0126	TMR0126	Missed reg. mark delay Home find
%AQ009	SDV01	Servo Drive, Pulltab correction	%R0129	TMR0129	Missed reg. mark delay Productin
%Q0001	SDV14	Servo Drive, Move	%G0577	TT_DTPC	To TBA21, Dflt Pulltab correct.
%I0002	SDV32	Servo Drive, Move done	%G0517	TT_PHCE	To TBA21, Malfunction photocells

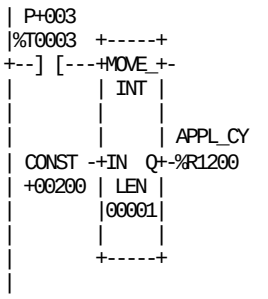

REFERENCE NICKNAME	REFERENCE DESCRIPTION	REFERENCE NICKNAME	REFERENCE DESCRIPTION
%R1200 APPL_CY	Appl. cycle timer	%T0003 P+003	Pulse + Force Appl. IN position

```
| (*************************************************************************)
| (* Pulse generating                                                      *)
| (*************************************************************************)
|
|STEP_3                                                          P+003   << RUNG 33  STEP #0107 >>
|%M0103         +-----+                                         %T0003
+--] [--+--------+ TMR +-------------------------------------------------(^)-- (* Pulse + Force Appl. IN position  *)
|       |        |0.10s|
|ALLDORS|        |     |
|%M0190 |        |     |
+--] [--+ CONST -+PV   |
|         +00005 |     |
|                +-----+
|                TMR0120
|                %R0120
|
|ALLDORS                                                         P+005   << RUNG 34  STEP #0111 >>
|%M0190                                                         %T0005
+--] [-----------------------------------------------------------------(^)-- (* Pulse + All doors closed        *)
|
|FT_ALRS                                                         P+006   << RUNG 35  STEP #0113 >>
|%G0305                                                         %T0006
+--] [-----------------------------------------------------------------(^)-- (* Pulse + Alarm reset             *)
|
|FT_ASUF                                                         P+007   << RUNG 36  STEP #0115 >>
|%G0308                                                         %T0007
+--] [-----------------------------------------------------------------(^)-- (* Pulse + ASU full                *)
|
|FT_STUP                                                         P+014   << RUNG 37  STEP #0117 >>
|%G0313                                                         %T0014
+--] [----------+-------------------------------------------------------(^)-- (* Pulse + Machine step up         *)
|               |
|SERVICE SH8202 |
|%M0200  %I0060 |
+--] [-----] [--+
|
|TMCC29                                                          P+022   << RUNG 38  STEP #0122 >>
|%I0048                                                         %T0022
+--] [--+-------------------------------------------------------------(^)-- (* Pulse + Index of packaging mat.  *)
|       |
|REGMMIS|
|%M0181 |
+--] [--+
|
|TMCC29                                                          P+023   << RUNG 39  STEP #0125 >>
|%I0048                                                         %T0023
+--] [-----------------------------------------------------------------(^)-- (* Pulse + Register mark detected   *)
|
|FT_JUM                                                          P+024   << RUNG 40  STEP #0127 >>
|%G0310                                                         %T0024
+--] [-----------------------------------------------------------------(^)-- (* Pulse + Register mark DCS,JUM    *)
|
|STEP_0   SEL41                                                  P+025   << RUNG 41  STEP #0129 >>
|%M0100  %I0058                                                 %T0025
+--]/[-----] [---------------------------------------------------------(^)-- (* Pulse + Disable applicators      *)
|
```

REFERENCE	NICKNAME	REFERENCE DESCRIPTION
%M0190	ALLDORS	All doors closed
%G0305	FT_ALRS	From TBA21, Alarm reset
%G0308	FT_ASUF	From TBA21, ASU magazine full
%G0310	FT_JUM	From TBA21, Reg. mark JUM DCS
%G0313	FT_STUP	From TBA21, Step Up
%T0003	P+003	Pulse + Force Appl. IN position
%T0005	P+005	Pulse + All doors closed
%T0006	P+006	Pulse + Alarm reset
%T0007	P+007	Pulse + ASU full
%T0014	P+014	Pulse + Machine step up
%T0022	P+022	Pulse + Index of packaging mat.

REFERENCE	NICKNAME	REFERENCE DESCRIPTION
%T0023	P+023	Pulse + Register mark detected
%T0024	P+024	Pulse + Register mark DCS,JUM
%T0025	P+025	Pulse + Disable applicators
%M0181	REGMMIS	Register mark missed
%I0058	SEL41	Production disable appl., Selecd
%M0200	SERVICE	Service and setting activated
%I0060	SH8202	Push button, Single move
%M0100	STEP_0	Step 0, Off
%M0103	STEP_3	Step 3, Find home
%I0048	TMCC29	TMCC, Register mark signal
%R0120	TMR0120	IN sequence Step 3 delay

```
| (*************************************************************************)
| (* Service function                                                      *)
| (*                                                                       *)
| (* If Service function is choosed new mask will be performed.           *)
| (*                                                                       *)
| (* FFFC = Punch + Patch                                                 *)
| (* FFFE = Punch + Patch + Reseal                                        *)
| (* FFFF = Punch + Patch + Reseal + Tab                                  *)
| (*************************************************************************)
|
|FT_PUPA                                                    SERVICE  << RUNG 43  STEP #0133 >>
|%G0277                                                     %M0200
+--] [--+-------------------------------------------------------( )-- (* Service and setting activated    *)
|       |
|FT_PPRE|
|%G0279 |
+--] [--+
|       |
|FT_ALLS|
|%G0281 |
+--] [--+
|
|SERVICE TT_RFPR                                            TT_SFRS  << RUNG 44  STEP #0137 >>
|%M0200  %G0897                                             %G0909
+--] [-----] [-----------------------------------------------------(M)-- (* To TBA21, Serv. func. rdy. start *)
|
|TT_SFRS FT_STUP                                            TT_SFAC  << RUNG 45  STEP #0140 >>
|%G0909  %G0313                                             %G0910
+--] [-----] [-----------------------------------------------------(SM)- (* To TBA21, Serv. func. active     *)
|
|FT_ST1-                                                    TT_SFAC  << RUNG 46  STEP #0143 >>
|%G0306                                                     %G0910
+--]/[-----------------------------------------------------------(RM)- (* To TBA21, Serv. func. active     *)
|
|FT_PUPA                                                                << RUNG 47  STEP #0145 >>
|%G0277  +-----+
+--] [---+MOVE_+-
|        | WORD|
|        |     |
|        |     | TA_ACTV
| CONST -+IN  Q+-%M0441
|   FFFC | LEN |
|        |00001|
|        |     |
|        +-----+
|
|FT_PPRE                                                                << RUNG 48  STEP #0147 >>
|%G0279  +-----+
+--] [---+MOVE_+-
|        | WORD|
|        |     |
|        |     | TA_ACTV
| CONST -+IN  Q+-%M0441
|   FFFE | LEN |
|        |00001|
|        |     |
|        +-----+
|
|FT_ALLS                                                                << RUNG 49  STEP #0149 >>
|%G0281  +-----+
+--] [---+MOVE_+-
|        | WORD|
|        |     |
|        |     | TA_ACTV
| CONST -+IN  Q+-%M0441
|   FFFF | LEN |
|        |00001|
|        |     |
|        +-----+
|
```

REFERENCE	NICKNAME	REFERENCE DESCRIPTION	REFERENCE	NICKNAME	REFERENCE DESCRIPTION
%G0281	FT_ALLS	From TBA21, All stations	%M0200	SERVICE	Service and setting activated
%G0279	FT_PPRE	From TBA21, Punch+Patch+Reseal	%M0441	TA_ACTV	Tab station activated
%G0277	FT_PUPA	From TBA21, Punch+Patch	%G0897	TT_RFPR	To TBA21, Ready for production
%G0306	FT_ST1-	From TBA21, TBA21 Step 1-12	%G0910	TT_SFAC	To TBA21, Serv. func. active
%G0313	FT_STUP	From TBA21, Step Up	%G0909	TT_SFRS	To TBA21, Serv. func. rdy. start

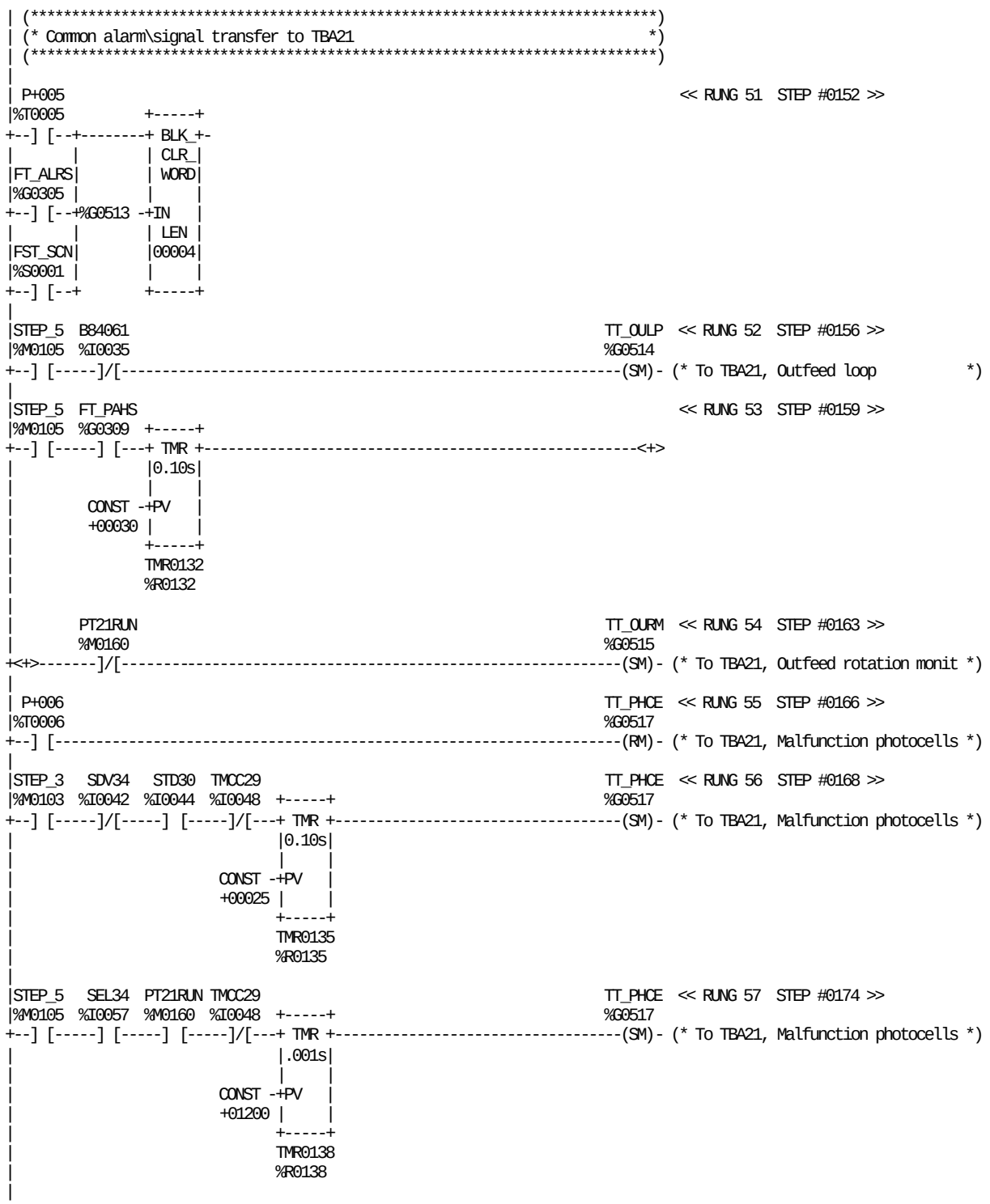

REFERENCE	NICKNAME	REFERENCE DESCRIPTION	REFERENCE	NICKNAME	REFERENCE DESCRIPTION
%G0513			%I0044	STD30	Servo Tensioner, Fault
%I0035	B84061	Outfeed loop, High	%M0103	STEP_3	Step 3, Find home
%S0001	FST_SCN		%M0105	STEP_5	Step 5, Production
%G0305	FT_ALRS	From TBA21, Alarm reset	%I0048	TMCC29	TMCC, Register mark signal
%G0309	FT_PAHS	From TBA21, Paper high speed	%R0132	TMR0132	Rotation monitor delay
%T0005	P+005	Pulse + All doors closed	%R0135	TMR0135	Malfunction photocells in Home
%T0006	P+006	Pulse + Alarm reset	%R0138	TMR0138	Malfunction photocells in Prod
%M0160	PT21RUN	PT21 running	%G0514	TT_OULP	To TBA21, Outfeed loop
%I0042	SDV34	Servo Drive, Home position found	%G0515	TT_OURM	To TBA21, Outfeed rotation monit
%I0057	SEL34	Production, Selected	%G0517	TT_PHCE	To TBA21, Malfunction photocells

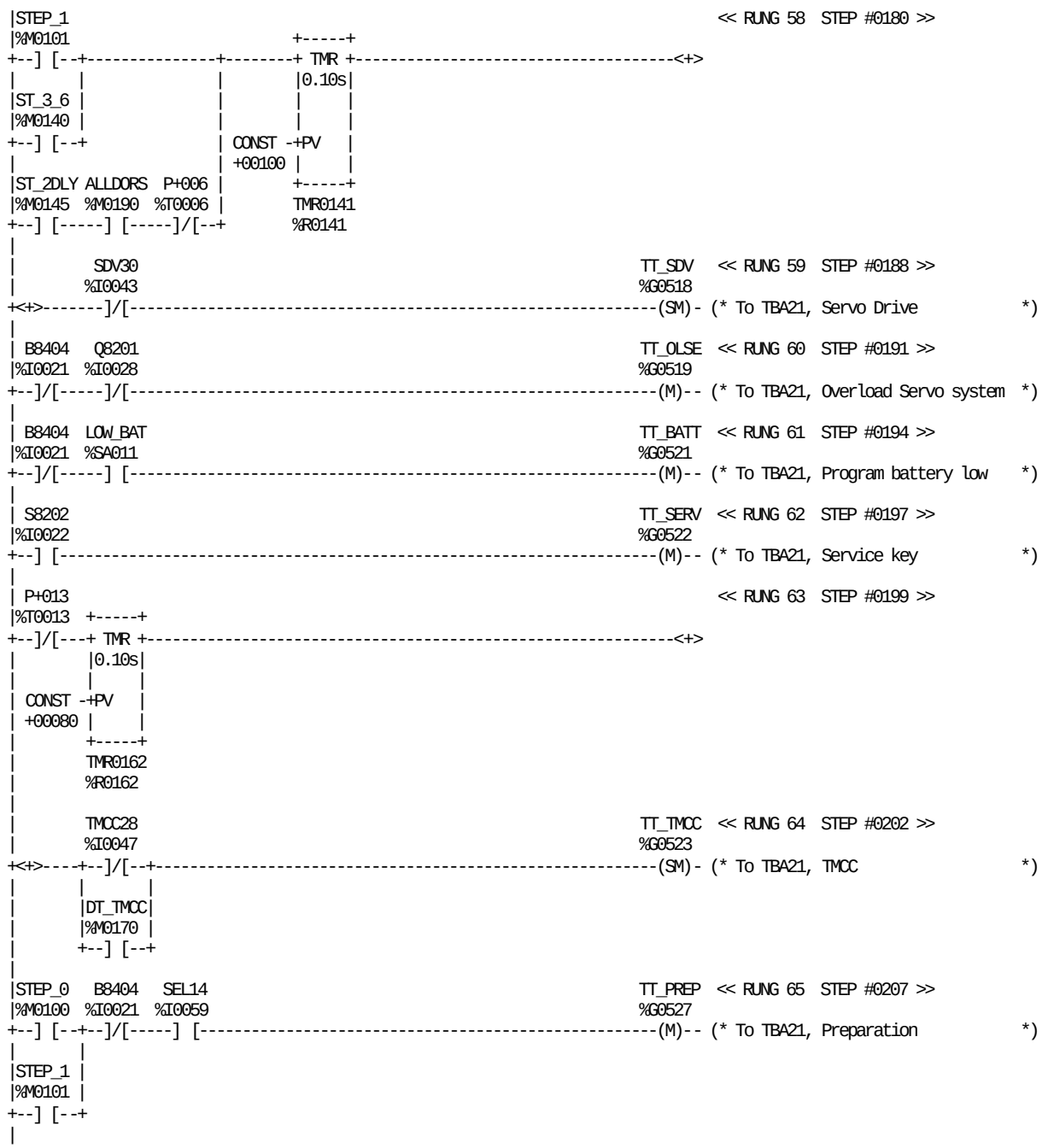

REFERENCE	NICKNAME	REFERENCE DESCRIPTION
%M0190	ALLDORS	All doors closed
%I0021	B8404	Bypass, Activated
%M0170	DT_TMCC	TMCC, Data Transfer Start
%SA011	LOW_BAT	
%T0006	P+006	Pulse + Alarm reset
%T0013	P+013	Pulse + New volume value
%I0028	Q8201	Servo Drive, Overload
%I0022	S8202	Service key, Activated
%I0043	SDV30	Servo Drive, Fault
%I0059	SEL14	Preparation, Selected
%M0100	STEP_0	Step 0, Off
%M0101	STEP_1	Step 1, Preparation

REFERENCE	NICKNAME	REFERENCE DESCRIPTION
%M0145	ST_2DLY	Step 2, delay one scan
%M0140	ST_3_6	Step 3-6, Find home - Service
%I0047	TMCC28	TMCC, Enabled
%R0141	TMR0141	Servo fault enable delay
%R0162	TMR0162	TMCC alarm delay
%G0521	TT_BATT	To TBA21, Program battery low
%G0519	TT_OLSE	To TBA21, Overload Servo system
%G0527	TT_PREP	To TBA21, Preparation
%G0518	TT_SDV	To TBA21, Servo Drive
%G0522	TT_SERV	To TBA21, Service key
%G0523	TT_TMCC	To TBA21, TMCC

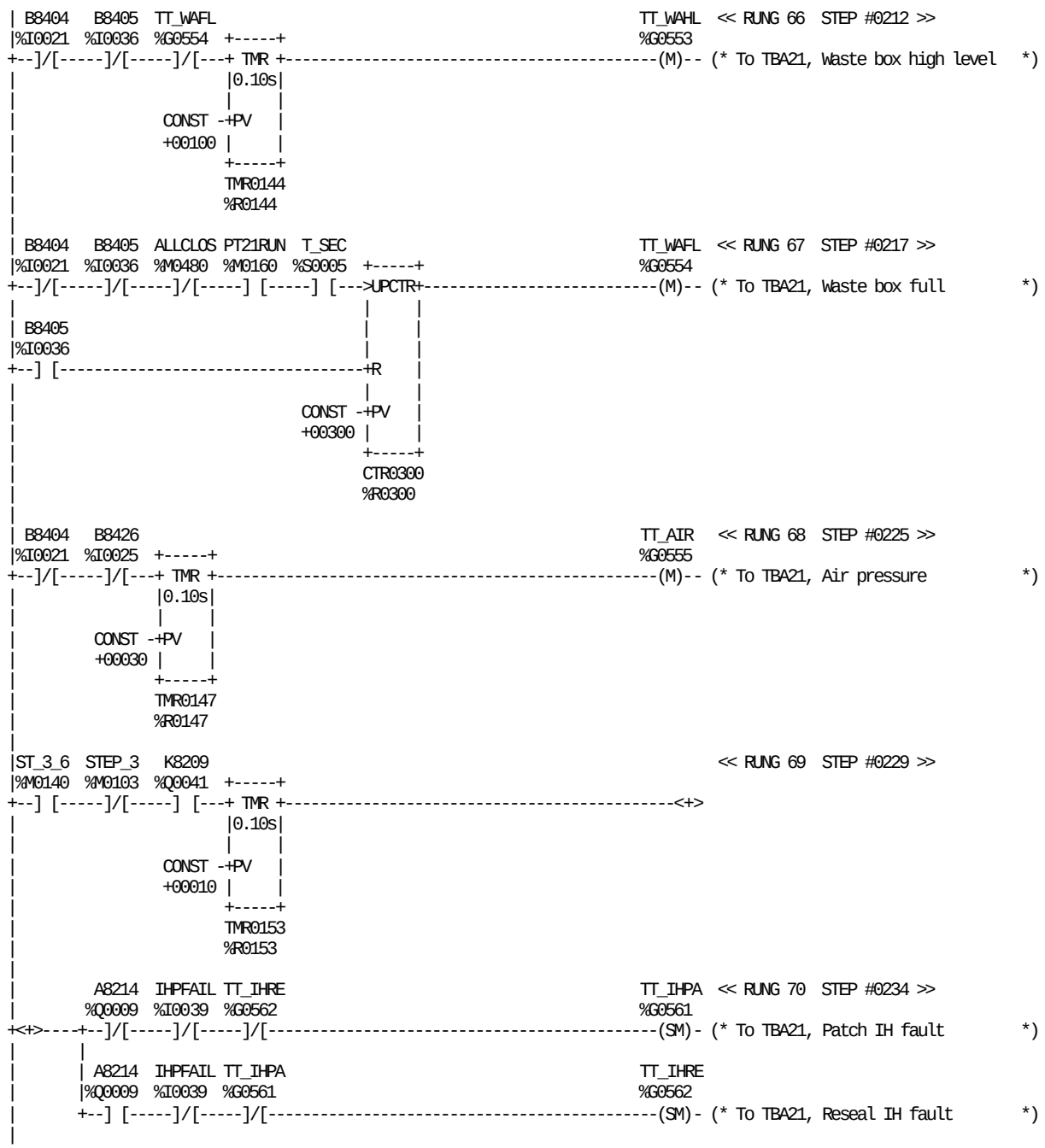

REFERENCE	NICKNAME	REFERENCE DESCRIPTION
%Q0009	A8214	TPIH Switch Patch/Reseal, Switch
%M0480	ALLCLOS	All holes closed
%I0021	B8404	Bypass, Activated
%I0036	B8405	Wastebox level, High
%I0025	B8426	Air pressure
%R0300	CTR0300	Waste box full delay
%I0039	IHPFAIL	TPIH Patch/Reseal, Failure
%Q0041	K8209	Control voltage
%M0160	PT21RUN	PT21 running
%M0103	STEP_3	Step 3, Find home

REFERENCE	NICKNAME	REFERENCE DESCRIPTION
%M0140	ST_3_6	Step 3-6, Find home - Service
%R0144	TMR0144	Waste box high level delay
%R0147	TMR0147	Air alarm delay
%R0153	TMR0153	IH fault delay
%G0555	TT_AIR	To TBA21, Air pressure
%G0561	TT_IHPA	To TBA21, Patch IH fault
%G0562	TT_IHRE	To TBA21, Reseal IH fault
%G0554	TT_WAFL	To TBA21, Waste box full
%G0553	TT_WAHL	To TBA21, Waste box high level
%S0005	T_SEC	

```
|STEP_1                                                                  << RUNG 71  STEP #0245 >>
|%M0101                          +-----+
+--] [--+--------------+--------+ TMR +-------------------------------------<+>
|       |              |        |0.10s|
|ST_3_6 |              |        |     |
|%M0140 |              |        |     |
+--] [--+              | CONST -+PV   |
|                      | +00180 |     |
|ST_2DLY ALLDORS  P+006 |        +-----+
|%M0145  %M0190  %T0006 |        TMR0171
+--] [-----] [-----]/[--+        %R0171
|
|        STD30                                                    TT_STD   << RUNG 72  STEP #0253 >>
|       %I0044                                                    %G0567
+<+>-------]/[-----------------------------------------------------------(SM)- (* TO TBA21, Servo Tensioner       *)
|
|STEP_5  PT21RUN                                                  TT_PUPA  << RUNG 73  STEP #0256 >>
|%M0105  %M0160                                                   %G0900
+--] [-----] [-----------------------------------------------------------(M)-- (* To TBA21, PT21 pulling paper    *)
|
| X8211   B8404   S8202   B8402   B8401                           TT_RIFO  << RUNG 74  STEP #0259 >>
|%I0017  %I0021  %I0022  %I0019  %I0018                           %G0901
+--] [-----]/[-----]/[-----]/[-----] [-------------------------------(M)-- (* To TBA21, Door right front      *)
|
| X8211   B8404   S8202   B8403   B8402   B8401                   TT_RIRE  << RUNG 75  STEP #0265 >>
|%I0017  %I0021  %I0022  %I0020  %I0019  %I0018                   %G0902
+--] [-----]/[-----]/[-----]/[-----] [-----] [---------------------------(M)-- (* To TBA21, Door right rear      *)
|
| X8211   B8404   S8202   B8401                                   TT_LEFT  << RUNG 76  STEP #0272 >>
|%I0017  %I0021  %I0022  %I0018                                   %G0903
+--] [-----]/[-----]/[-----]/[-----------------------------------------(M)-- (* To TBA21, Door left             *)
|
|FT_WATD                                                          TT_WADG  << RUNG 77  STEP #0277 >>
|%G0307                                                           %G0904
+--] [-----------------------------------------------------------(SM)- (* To TBA21, Watchdog to TBA21     *)
|
|FT_WATD                                                          TT_WADG  << RUNG 78  STEP #0279 >>
|%G0307                                                           %G0904
+--]/[-----------------------------------------------------------(RM)- (* To TBA21, Watchdog to TBA21     *)
|
|TT_PUPA  SEL34                                                   TT_PROD  << RUNG 79  STEP #0281 >>
|%G0900  %I0057                                                   %G0907
+--] [-----] [-----------------------------------------------------------(M)-- (* To TBA21, PT21 in production    *)
|
| P+022                                                           TT_REGM  << RUNG 80  STEP #0284 >>
|%T0022  +-----+                                                  %G0908
+--] [---+OFDT +-----------------------------------------------------------(M)-- (* To TBA21, Register mark PT21    *)
|        |0.01s|
|        |     |
| CONST -+PV   |
| +00010 |     |
|        +-----+
|        OFD0150
|        %R0150
|
|[    END OF SUBROUTINE LOGIC     ]
|
```

REFERENCE	NICKNAME	REFERENCE DESCRIPTION
%M0190	ALLDORS	All doors closed
%I0018	B8401	Door guard, PT21 left
%I0019	B8402	Door guard, PT21 right front
%I0020	B8403	Door guard, PT21 right rear
%I0021	B8404	Bypass, Activated
%G0307	FT_WATD	From TBA21, Watchdog from TBA1
%R0150	OFD0150	Register mark delay to TBA21
%T0006	P+006	Pulse + Alarm reset
%T0022	P+022	Pulse + Index of packaging mat.
%M0160	PT21RUN	PT21 running
%I0022	S8202	Service key, Activated
%I0057	SEL34	Production, Selected
%I0044	STD30	Servo Tensioner, Fault
%M0101	STEP_1	Step 1, Preparation

REFERENCE	NICKNAME	REFERENCE DESCRIPTION
%M0105	STEP_5	Step 5, Production
%M0145	ST_2DLY	Step 2, delay one scan
%M0140	ST_3_6	Step 3-6, Find home - Service
%R0171	TMR0171	Delay, Servo tensioner alarm
%G0903	TT_LEFT	To TBA21, Door left
%G0907	TT_PROD	To TBA21, PT21 in production
%G0900	TT_PUPA	To TBA21, PT21 pulling paper
%G0908	TT_REGM	To TBA21, Register mark PT21
%G0901	TT_RIFO	To TBA21, Door right front
%G0902	TT_RIRE	To TBA21, Door right rear
%G0567	TT_STD	TO TBA21, Servo Tensioner
%G0904	TT_WADG	To TBA21, Watchdog to TBA21
%I0017	X8211	Emergency Stop

```
|[  START LD SUBROUTINE  BLK_20   ]
|
|[     VARIABLE DECLARATIONS      ]
|
|[   START OF SUBROUTINE LOGIC    ]
|
| (*************************************************************************)
| (* Block 20 "Infeed loop"                                                 *)
| (*************************************************************************)
|
| (*************************************************************************)
| (* Infeed motor will run for 200ms when ASU magazine full                *)
| (* to tension the material in the ASU magazine.                           *)
| (*************************************************************************)
|
| P+007                                                          IL_ASUF  << RUNG 5  STEP #0003 >>
|%T0007  +-----+                                                 %M0900
+--] [---+OFDT +-----------------------------------------------------( )-- (* Infeed loop, ASU full delay     *)
|        |0.10s|
|        |     |
| CONST -+PV   |
| +00002 |     |
|        +-----+
|        OFD3100
|        %R3100
|
| (*************************************************************************)
| (* Infeed loop in Preparation to feed material                           *)
| (*************************************************************************)
|
|STEP_1  FT_ASUE B84061  B84151  B84161                                  << RUNG 7  STEP #0007 >>
|%M0101  %G0312  %I0035  %I0033  %I0034  +-----+
+--] [-----]/[-----]/[-----] [-----] [---+OFDT +----------------------------<+>
|                                        |0.10s|
|                                        |     |
|                                 CONST -+PV   |
|                                 +00070 |     |
|                                        +-----+
|                                        OFD3103
|                                        %R3103
|
|                                                                IL_PREP  << RUNG 8  STEP #0014 >>
|                                                                %M0901
+<+>--------------------+-----------------------------------------------( )-- (* Infeed loop, Preparation        *)
|                       |
|STEP_1  B84061  B84161 |
|%M0101  %I0035  %I0034 |
+--] [-----] [-----] [--+
|
| (*************************************************************************)
| (* Enable Infeed motor                                                   *)
| (*************************************************************************)
|
| K8210  ALLDORS                                                 IL_FCON  << RUNG 10  STEP #0021 >>
|%Q0034  %M0190  +-----+                                         %M0906
+--] [-----] [---+ TMR +-----------------------------------------------( )-- (* Infeed loop, Freq.Converter ON   *)
|                |0.10s|
|                |     |
|         CONST -+PV   |
|         +00020 |     |
|                +-----+
|
|                %R3115
|
```

REFERENCE	NICKNAME	REFERENCE DESCRIPTION	REFERENCE	NICKNAME	REFERENCE DESCRIPTION
%R3115			%M0906	IL_FCON	Infeed loop, Freq.Converter ON
%M0190	ALLDORS	All doors closed	%M0901	IL_PREP	Infeed loop, Preparation
%I0035	B84061	Outfeed loop, High	%Q0034	K8210	Main supply, Infeed
%I0033	B84151	Infeed loop, High	%R3100	OFD3100	Infeed loop, ASU full delay
%I0034	B84161	Infeed loop, Low	%R3103	OFD3103	Infeed loop, Prep. delay
%G0312	FT_ASUE	From TBA21, ASU magazine empty	%T0007	P+007	Pulse + ASU full
%M0900	IL_ASUF	Infeed loop, ASU full delay	%M0101	STEP_1	Step 1, Preparation

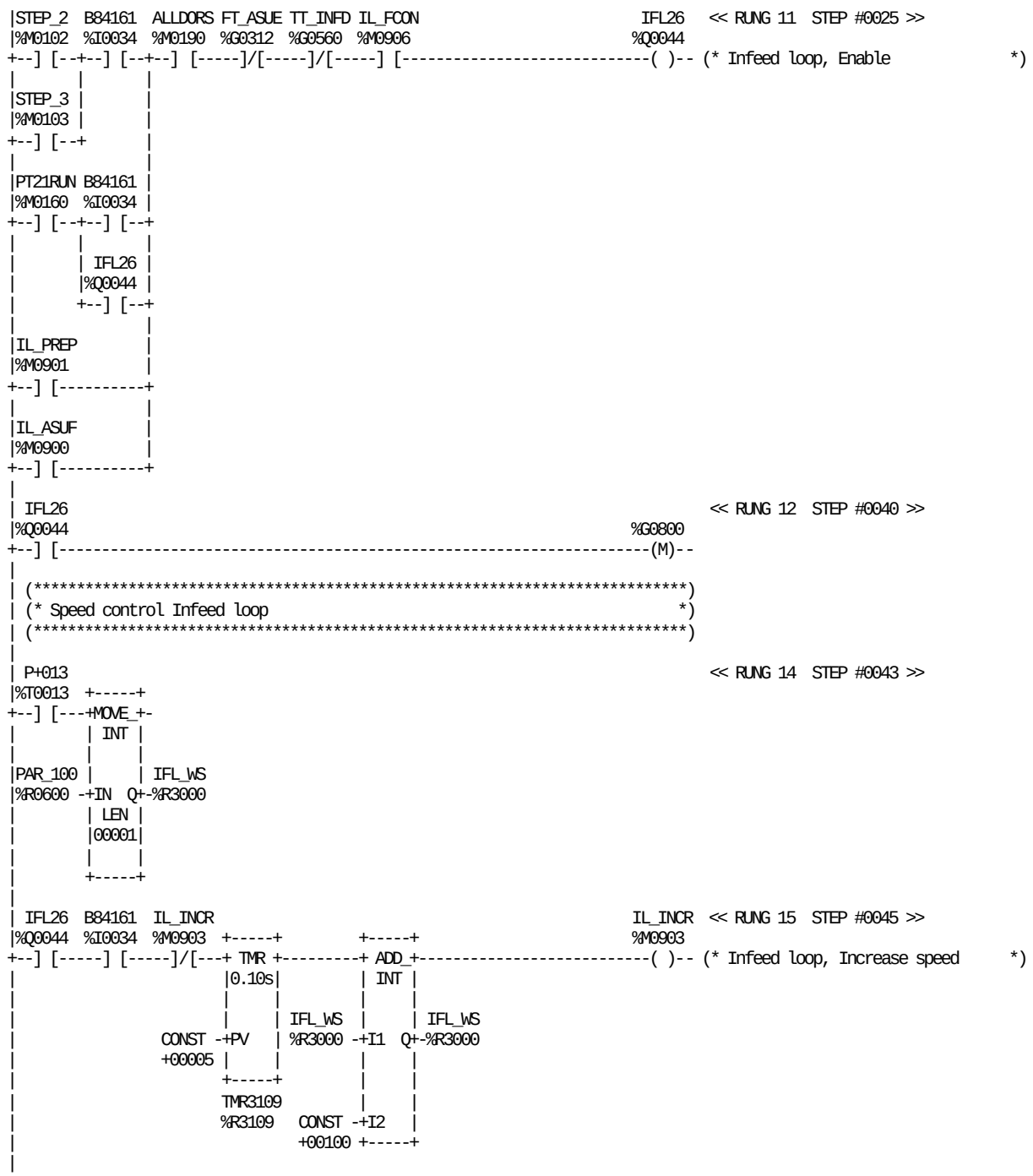

REFERENCE	NICKNAME	REFERENCE DESCRIPTION
%G0800		
%M0190	ALLDORS	All doors closed
%I0034	B84161	Infeed loop, Low
%G0312	FT_ASUE	From TBA21, ASU magazine empty
%Q0044	IFL26	Infeed loop, Enable
%R3000	IFL_WS	Infeed loop, Working speed
%M0900	IL_ASUF	Infeed loop, ASU full delay
%M0906	IL_FCON	Infeed loop, Freq.Converter ON
%M0903	IL_INCR	Infeed loop, Increase speed
%M0901	IL_PREP	Infeed loop, Preparation
%T0013	P+013	Pulse + New volume value
%R0600	PAR_100	Dflt. par., Infeed loop speed
%M0160	PT21RUN	PT21 running
%M0102	STEP_2	Step 2, Pre-heating
%M0103	STEP_3	Step 3, Find home
%R3109	TMR3109	Infeed loop, Increase delay
%G0560	TT_INFD	To TBA21, Infeed loop

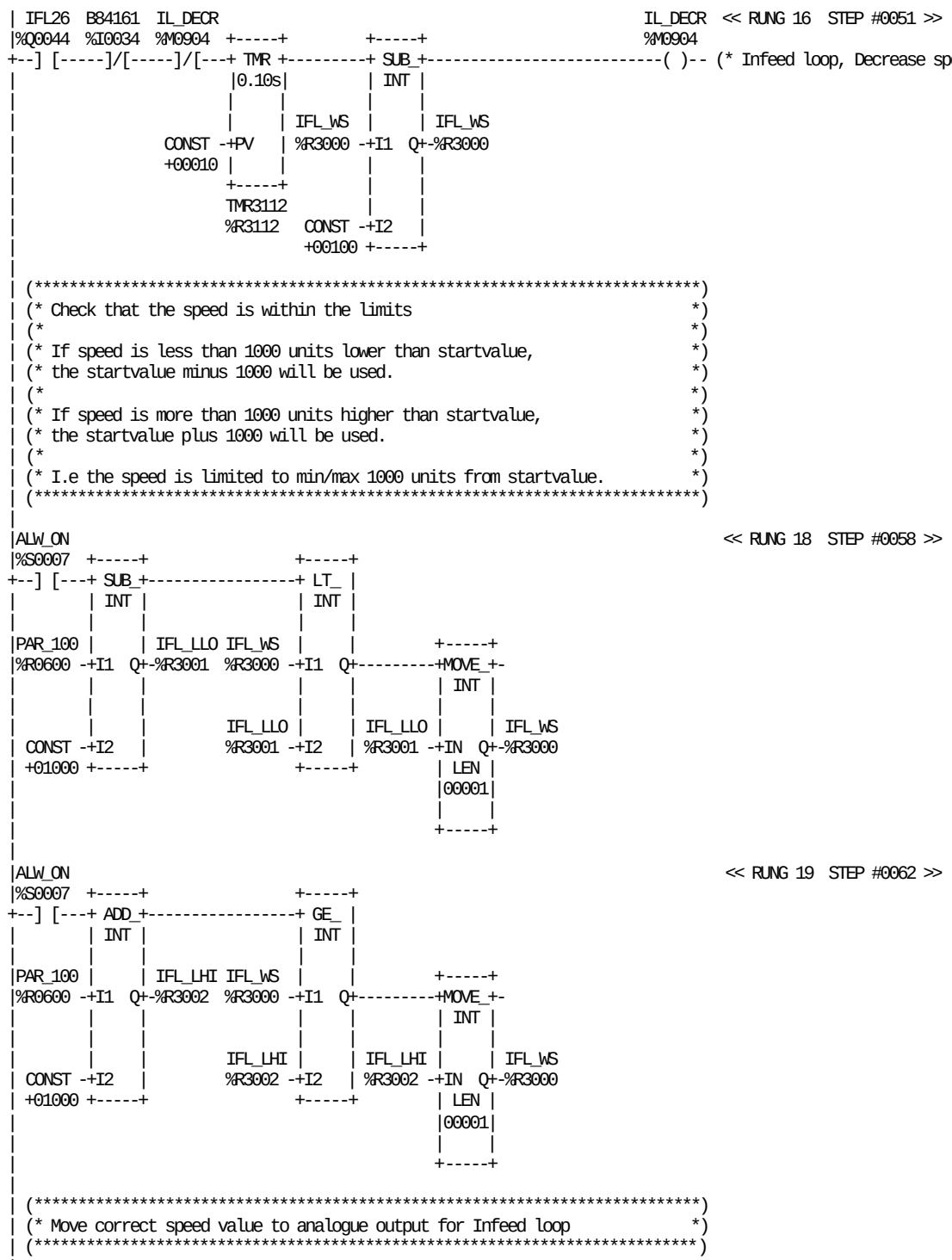

REFERENCE	NICKNAME	REFERENCE DESCRIPTION
%S0007	ALW_ON	
%I0034	B84161	Infeed loop, Low
%Q0044	IFL26	Infeed loop, Enable
%R3002	IFL_LHI	Infeed loop, Limit high speed
%R3001	IFL_LLO	Infeed loop, Limit low speed

REFERENCE	NICKNAME	REFERENCE DESCRIPTION
%R3000	IFL_WS	Infeed loop, Working speed
%M0904	IL_DECR	Infeed loop, Decrease speed
%R0600	PAR_100	Dflt. par., Infeed loop speed
%R3112	TMR3112	Infeed loop, Decrease delay

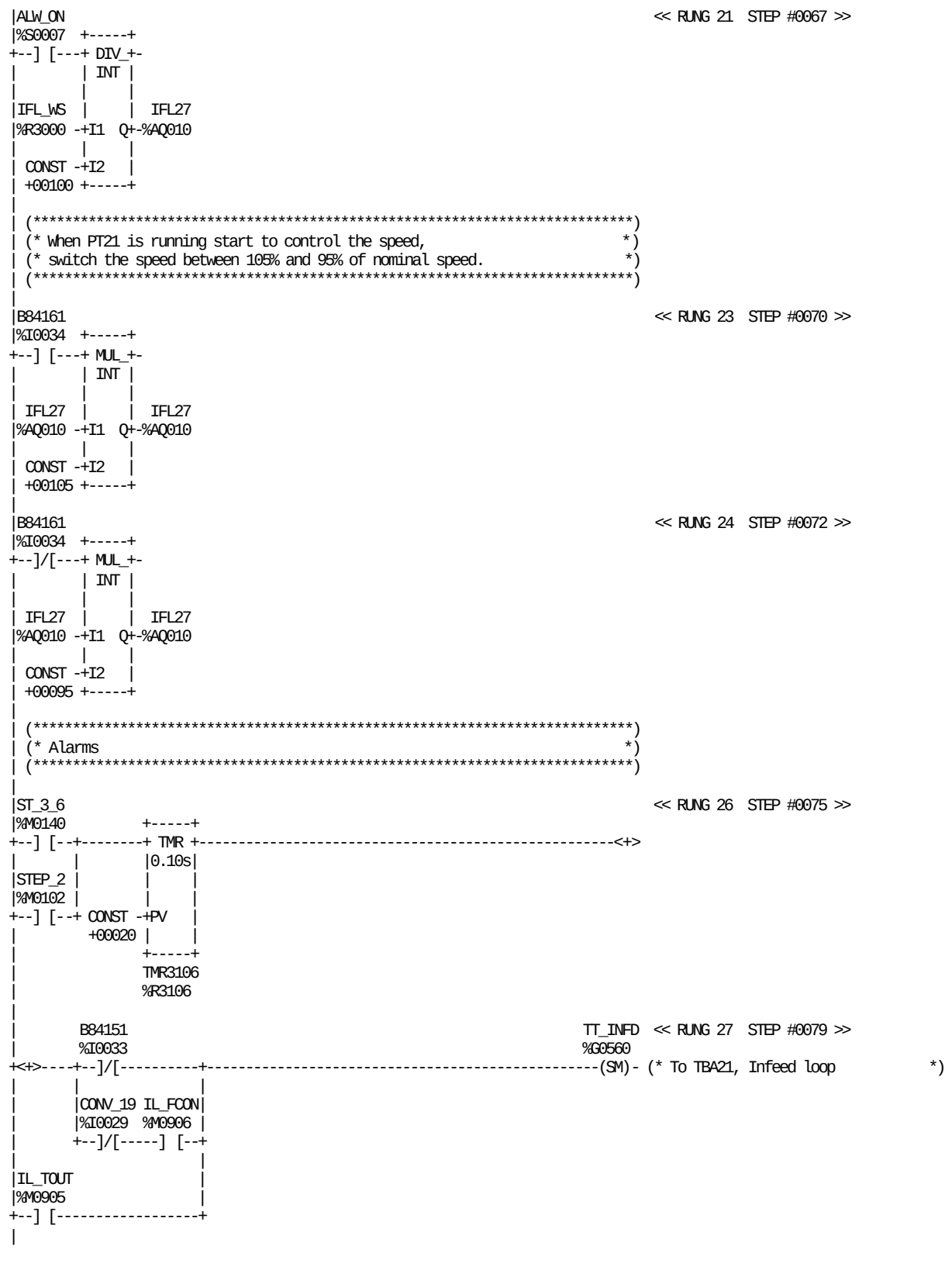

REFERENCE	NICKNAME	REFERENCE DESCRIPTION	REFERENCE	NICKNAME	REFERENCE DESCRIPTION
%S0007	ALW_ON		%M0906	IL_FCON	Infeed loop, Freq.Converter ON
%I0033	B84151	Infeed loop, High	%M0905	IL_TOUT	Infeed loop, Timeout while still
%I0034	B84161	Infeed loop, Low	%M0102	STEP_2	Step 2, Pre-heating
%I0029	CONV_19	Infeed loop, Converter overload	%M0140	ST_3_6	Step 3-6, Find home - Service
%AQ010	IFL27	Speed infeed motor	%R3106	TMR3106	Infeed loop, High alarm delay
%R3000	IFL_WS	Infeed loop, Working speed	%G0560	TT_INFD	To TBA21, Infeed loop

PT21-0410/0500
BLOCK: INFEED LOOP

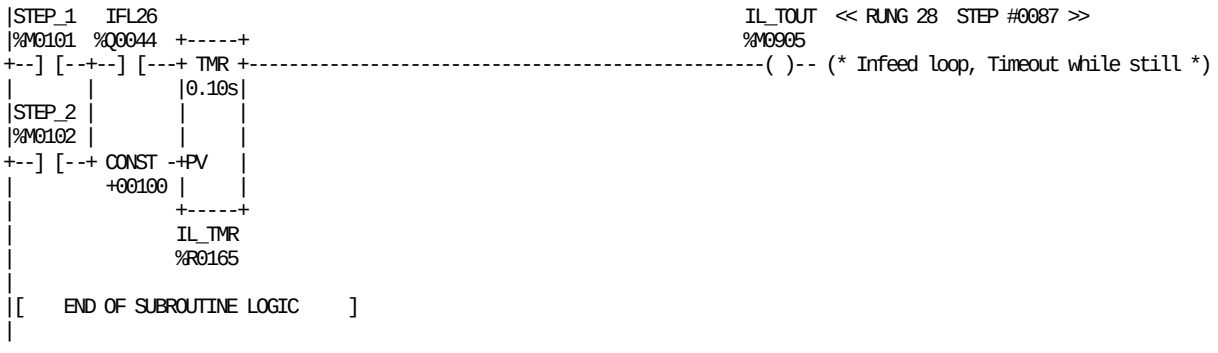

REFERENCE	NICKNAME	REFERENCE DESCRIPTION	REFERENCE	NICKNAME	REFERENCE DESCRIPTION
%Q0044	IFL26	Infeed loop, Enable	%M0101	STEP_1	Step 1, Preparation
%R0165	IL_TMR	Inf.loop:max time while still	%M0102	STEP_2	Step 2, Pre-heating
%M0905	IL_TOUT	Infeed loop, Timeout while still			

```
|[  START LD SUBROUTINE  BLK_21   ]
|
|[     VARIABLE DECLARATIONS      ]
|
|[   START OF SUBROUTINE LOGIC    ]
|
| (*************************************************************************)
| (* Block 21 "Patch and Tab material supply"                              *)
| (*************************************************************************)
|
| B8404   B8408  TT_PAED                                          TT_PMLW  << RUNG 4  STEP #0002 >>
|%I0021  %I0055  %G0548                                           %G0547
+--]/[-----]/[-----]/[-------------------------------------------------(M)-- (* To TBA21, Patch material low     *)
|
| B8404   B8408  ALLCLOS PT21RUN  T_SEC                           TT_PAED  << RUNG 5  STEP #0006 >>
|%I0021  %I0055  %M0480  %M0160  %S0005  +-----+                  %G0548
+--]/[-----]/[-----]/[-----] [-----] [--->UPCTR+-------------------------(M)-- (* To TBA21, Patch material ended   *)
|                                        |     |
| B8408                                  |     |
|%I0055                                  |     |
+--] [-----------------------------------+R    |
|                                        |     |
|                                CONST -+PV    |
|                                +00300 |     |
|                                       +-----+
|                                       CTU4100
|                                       %R4100
|
| B8404   B8413  TT_TAED                                          TT_TMLW  << RUNG 6  STEP #0014 >>
|%I0021  %I0056  %G0551                                           %G0550
+--]/[-----]/[-----]/[-------------------------------------------------(M)-- (* To TBA21, Tab material low       *)
|
| B8404   B8413  ALLCLOS PT21RUN  T_SEC                           TT_TAED  << RUNG 7  STEP #0018 >>
|%I0021  %I0056  %M0480  %M0160  %S0005  +-----+                  %G0551
+--]/[-----]/[-----]/[-----] [-----] [--->UPCTR+-------------------------(M)-- (* To TBA21, Tab material ended     *)
|                                        |     |
| B8413                                  |     |
|%I0056                                  |     |
+--] [-----------------------------------+R    |
|                                        |     |
|                                CONST -+PV    |
|                                +00300 |     |
|                                       +-----+
|                                       CTU4103
|                                       %R4103
|
|[    END OF SUBROUTINE LOGIC     ]
|
```

REFERENCE	NICKNAME	REFERENCE DESCRIPTION	REFERENCE	NICKNAME	REFERENCE DESCRIPTION
%M0480	ALLCLOS	All holes closed	%M0160	PT21RUN	PT21 running
%I0021	B8404	Bypass, Activated	%G0548	TT_PAED	To TBA21, Patch material ended
%I0055	B8408	Patch material, Low	%G0547	TT_PMLW	To TBA21, Patch material low
%I0056	B8413	Tab material, Low	%G0551	TT_TAED	To TBA21, Tab material ended
%R4100	CTU4100	Patch material ended counter	%G0550	TT_TMLW	To TBA21, Tab material low
%R4103	CTU4103	Tab material ended counter	%S0005	T_SEC	

```
|[  START LD SUBROUTINE  BLK_32   ]
|
|[     VARIABLE DECLARATIONS      ]
|
|[   START OF SUBROUTINE LOGIC    ]
|
| (*****************************************************************************)
| (* Block 32 "Dumping of packages"                                            *)
| (*****************************************************************************)
|
| (*****************************************************************************)
| (* Load dump values for Punch Station.                                       *)
| (*****************************************************************************)
|
|TT_PUST                                                          P+008   << RUNG 5  STEP #0003 >>
|%G0557                                                          %T0008
+--] [-------------------------------------------------------------------(^)-- (* Pulse + Load dump Punch station  *)
|
| (*****************************************************************************)
| (* Load dump values for Punch Station (Not for: 200B, 200S, 250B, 1500S)    *)
| (*****************************************************************************)
|
| P+008                 VOL_07  SML_VOL                                       << RUNG 7  STEP #0006 >>
|%T0008                 %M0063  %M0070  +-----+                +-----+
+--] [-----------------+--]/[-----]/[---+ AND_+----------------+ AND_+-
|                       |               | WORD|                | WORD|
| SDV34   SEL34   P+022 |               |     |                |     |
|%I0042  %I0057  %T0022 |       BSHIF05 |     | BSHIF05 BSHIF04 |     | BSHIF04
+--]/[-----] [-----] [--+       %R0024 -+I1  Q+-%R0024  %R0023 -+I1  Q+-%R0023
|                       |               |     |                |     |
|STEP_5  ALLCLOS  SDV31 |               |     |                |     |
|%M0105  %M0480  %I0003 |       PAR_001 |     |         PAR_000 |     |
+--] [-----]/[-----]/[--+       %R0501 -+I2   |         %R0500 -+I2   |
|                               +-----+                +-----+
|
| (*****************************************************************************)
| (* Load dump values for 1500cc Slimline Punch Station.                       *)
| (*****************************************************************************)
|
| P+008                 VOL_07                                                << RUNG 9  STEP #0020 >>
|%T0008                 %M0063  +-----+                +-----+
+--] [-----------------+--] [---+ AND_+----------------+ AND_+-
|                       |        | WORD|                | WORD|
| SDV34   SEL34   P+022 |        |     |                |     |
|%I0042  %I0057  %T0022 |BSHIF04 |     | BSHIF04 BSHIF03 |     | BSHIF03
+--]/[-----] [-----] [--+%R0023 -+I1  Q+-%R0023  %R0022 -+I1  Q+-%R0022
|                       |        |     |                |     |
|STEP_5  ALLCLOS  SDV31 |        |     |                |     |
|%M0105  %M0480  %I0003 |PAR_001 |     |         PAR_000 |     |
+--] [-----]/[-----]/[--+%R0501 -+I2   |         %R0500 -+I2   |
|                               +-----+                +-----+
|
| (*****************************************************************************)
| (* Load dump values for 200cc Baseline Punch Station.                        *)
| (*****************************************************************************)
|
```

REFERENCE	NICKNAME	REFERENCE DESCRIPTION
%M0480	ALLCLOS	All holes closed
%R0022	BSHIF03	Bufferregister 03 for pkg dump.
%R0023	BSHIF04	Bufferregister 04 for pkg dump.
%R0024	BSHIF05	Bufferregister 05 for pkg dump.
%T0008	P+008	Pulse + Load dump Punch station
%T0022	P+022	Pulse + Index of packaging mat.
%R0500	PAR_000	Dump. pkg., Punch station
%R0501	PAR_001	Dump. pkg., Punch station

REFERENCE	NICKNAME	REFERENCE DESCRIPTION
%I0003	SDV31	Servo Drive, Design OK
%I0042	SDV34	Servo Drive, Home position found
%I0057	SEL34	Production, Selected
%M0070	SML_VOL	Small volumes auxiliary memory
%M0105	STEP_5	Step 5, Production
%G0557	TT_PUST	To TBA21, Punch station
%M0063	VOL_07	Volume 07, 1500cc Slimline

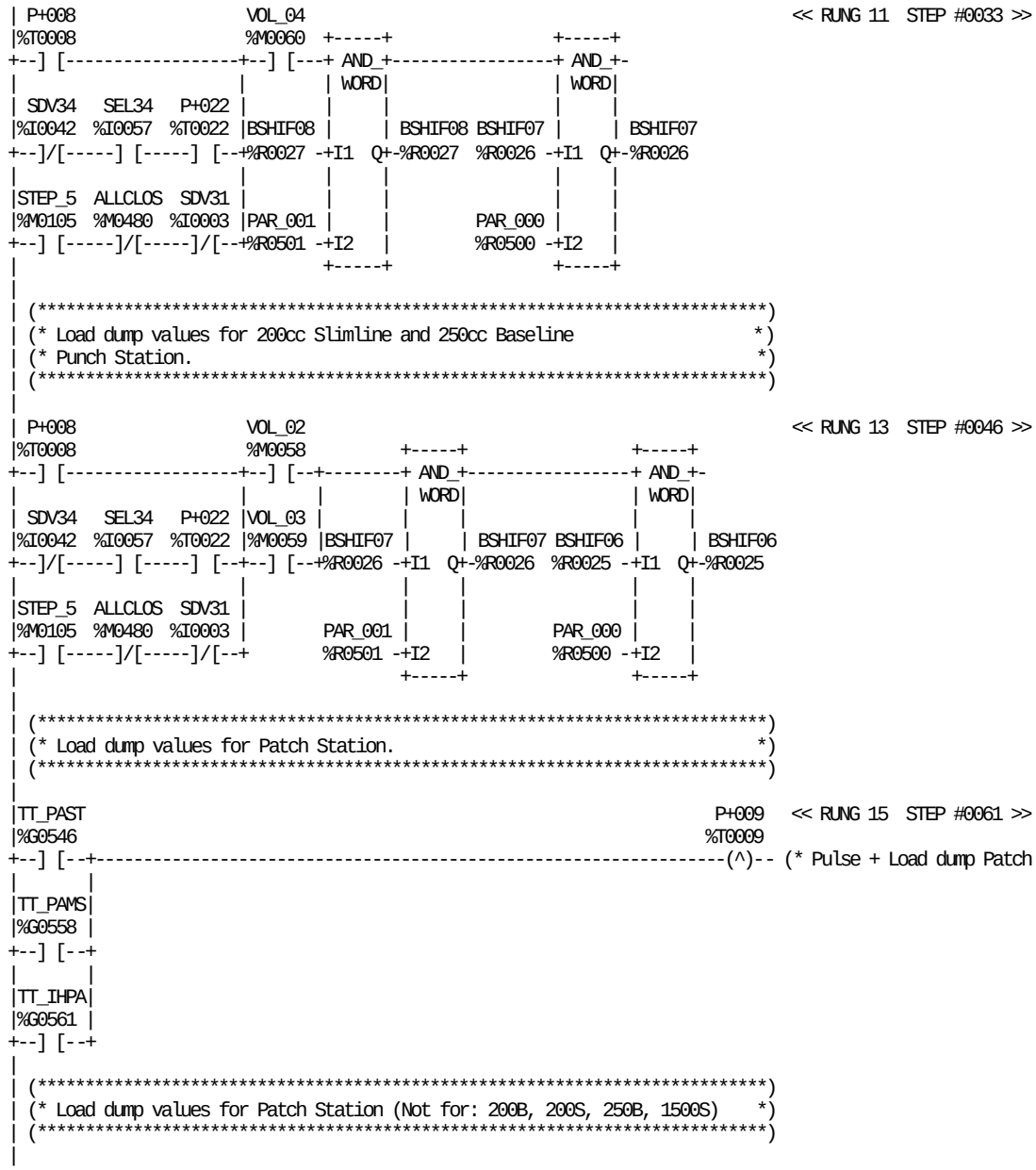

REFERENCE	NICKNAME	REFERENCE DESCRIPTION
%M0480	ALLCLOS	All holes closed
%R0025	BSHIF06	Bufferregister 06 for pkg dump.
%R0026	BSHIF07	Bufferregister 07 for pkg dump.
%R0027	BSHIF08	Bufferregister 08 for pkg dump.
%T0008	P+008	Pulse + Load dump Punch station
%T0009	P+009	Pulse + Load dump Patch station
%T0022	P+022	Pulse + Index of packaging mat.
%R0500	PAR_000	Dump. pkg., Punch station
%R0501	PAR_001	Dump. pkg., Punch station
%I0003	SDV31	Servo Drive, Design OK

REFERENCE	NICKNAME	REFERENCE DESCRIPTION
%I0042	SDV34	Servo Drive, Home position found
%I0057	SEL34	Production, Selected
%M0105	STEP_5	Step 5, Production
%G0561	TT_IHPA	To TBA21, Patch IH fault
%G0558	TT_PAMS	To TBA21, Patch missing
%G0546	TT_PAST	To TBA21, Patch station
%M0058	VOL_02	Volume 02, 200cc Slimline
%M0059	VOL_03	Volume 03, 250cc Baseline
%M0060	VOL_04	Volume 04, 200cc Baseline

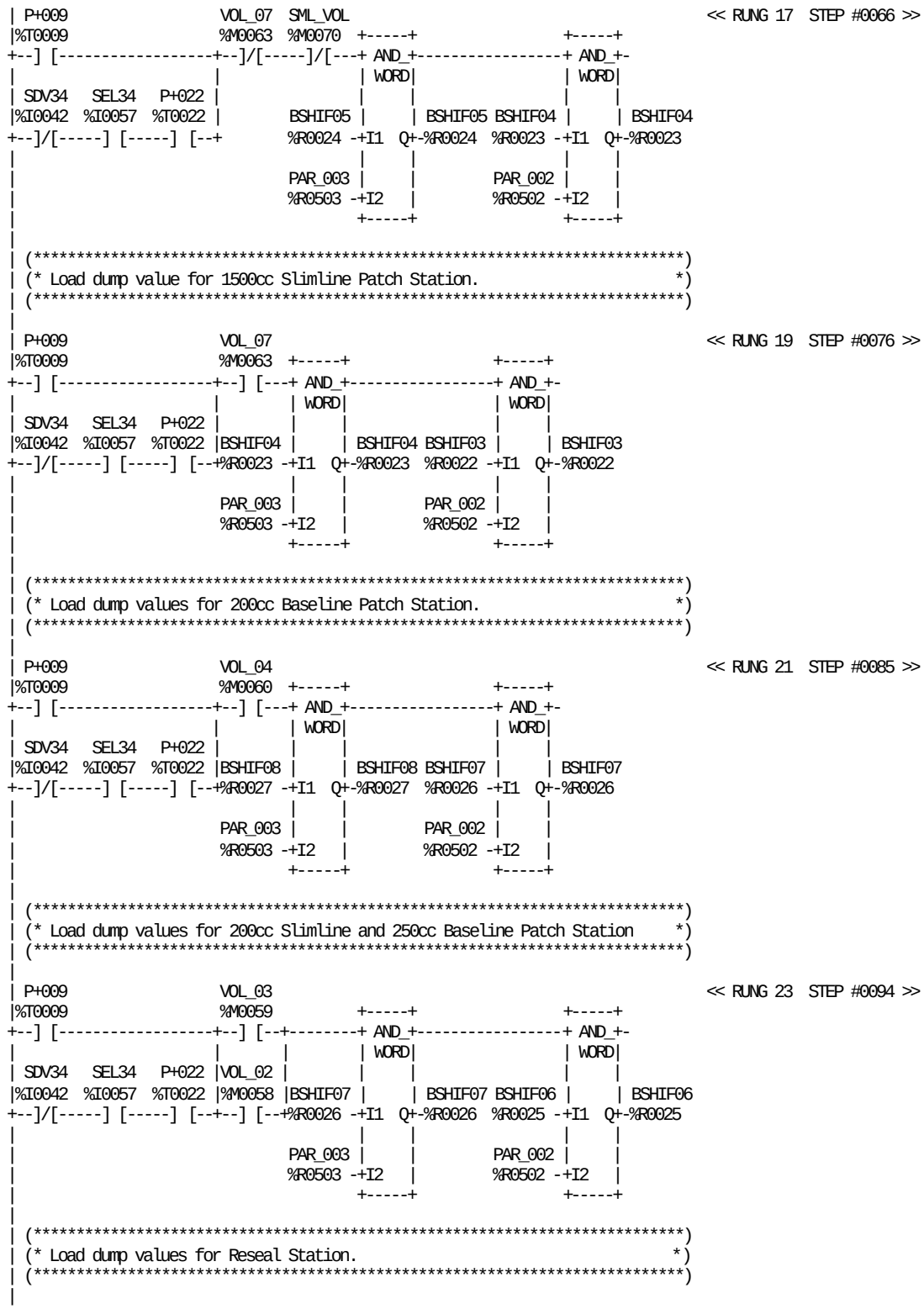

REFERENCE	NICKNAME	REFERENCE DESCRIPTION
%R0022	BSHIF03	Bufferregister 03 for pkg dump.
%R0023	BSHIF04	Bufferregister 04 for pkg dump.
%R0024	BSHIF05	Bufferregister 05 for pkg dump.
%R0025	BSHIF06	Bufferregister 06 for pkg dump.
%R0026	BSHIF07	Bufferregister 07 for pkg dump.
%R0027	BSHIF08	Bufferregister 08 for pkg dump.
%T0009	P+009	Pulse + Load dump Patch station
%T0022	P+022	Pulse + Index of packaging mat.
%R0502	PAR_002	Dump. pkg., Patch station
%R0503	PAR_003	Dump. pkg., Patch station
%I0042	SDV34	Servo Drive, Home position found
%I0057	SEL34	Production, Selected
%M0070	SML_VOL	Small volumes auxiliary memory
%M0058	VOL_02	Volume 02, 200cc Slimline
%M0059	VOL_03	Volume 03, 250cc Baseline
%M0060	VOL_04	Volume 04, 200cc Baseline
%M0063	VOL_07	Volume 07, 1500cc Slimline

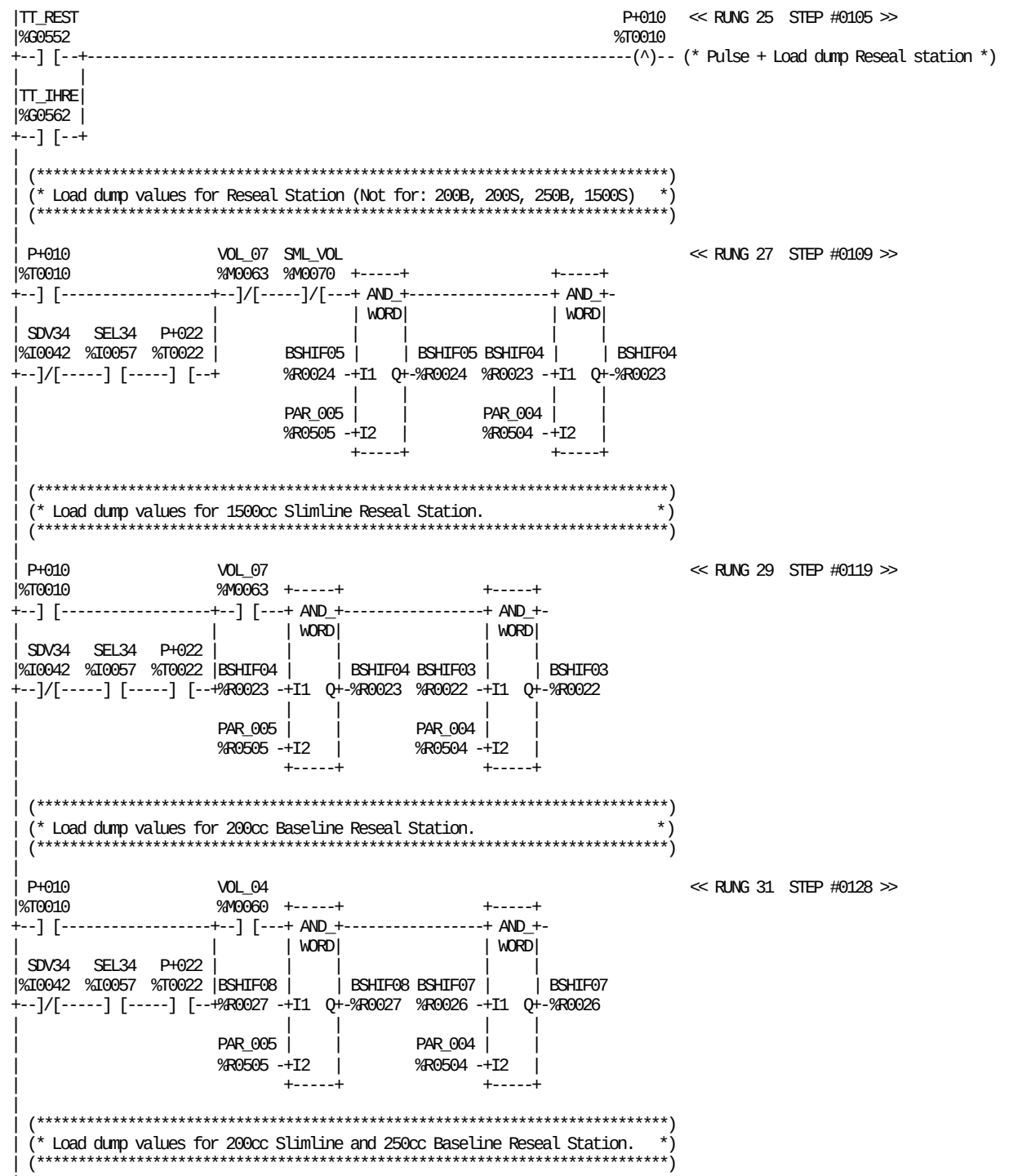

REFERENCE	NICKNAME	REFERENCE DESCRIPTION	REFERENCE	NICKNAME	REFERENCE DESCRIPTION
%R0022	BSHIF03	Bufferregister 03 for pkg dump.	%R0505	PAR_005	Dump. pkg., Reseal station
%R0023	BSHIF04	Bufferregister 04 for pkg dump.	%I0042	SDV34	Servo Drive, Home position found
%R0024	BSHIF05	Bufferregister 05 for pkg dump.	%I0057	SEL34	Production, Selected
%R0026	BSHIF07	Bufferregister 07 for pkg dump.	%M0070	SML_VOL	Small volumes auxiliary memory
%R0027	BSHIF08	Bufferregister 08 for pkg dump.	%G0562	TT_IHRE	To TBA21, Reseal IH fault
%T0010	P+010	Pulse + Load dump Reseal station	%G0552	TT_REST	To TBA21, Reseal station
%T0022	P+022	Pulse + Index of packaging mat.	%M0060	VOL_04	Volume 04, 200cc Baseline
%R0504	PAR_004	Dump. pkg., Reseal station	%M0063	VOL_07	Volume 07, 1500cc Slimline

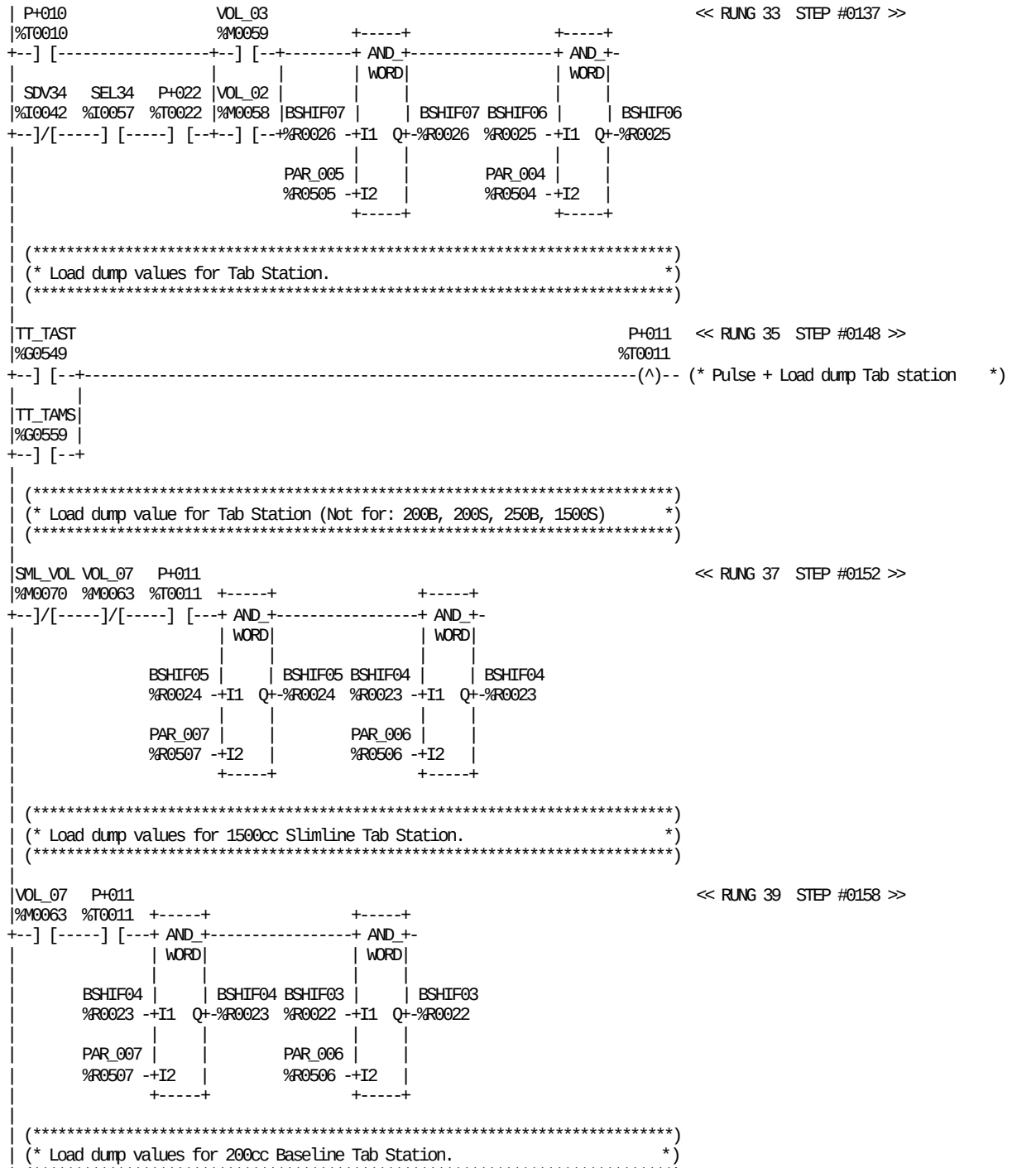

REFERENCE	NICKNAME	REFERENCE DESCRIPTION	REFERENCE	NICKNAME	REFERENCE DESCRIPTION
%R0022	BSHIF03	Bufferregister 03 for pkg dump.	%R0506	PAR_006	Dump. pkg., Tab station
%R0023	BSHIF04	Bufferregister 04 for pkg dump.	%R0507	PAR_007	Dump. pkg., Tab station
%R0024	BSHIF05	Bufferregister 05 for pkg dump.	%I0042	SDV34	Servo Drive, Home position found
%R0025	BSHIF06	Bufferregister 06 for pkg dump.	%I0057	SEL34	Production, Selected
%R0026	BSHIF07	Bufferregister 07 for pkg dump.	%M0070	SML_VOL	Small volumes auxiliary memory
%T0010	P+010	Pulse + Load dump Reseal station	%G0559	TT_TAMS	To TBA21, Tab missing
%T0011	P+011	Pulse + Load dump Tab station	%G0549	TT_TAST	To TBA21, Tab station
%T0022	P+022	Pulse + Index of packaging mat.	%M0058	VOL_02	Volume 02, 200cc Slimline
%R0504	PAR_004	Dump. pkg., Reseal station	%M0059	VOL_03	Volume 03, 250cc Baseline
%R0505	PAR_005	Dump. pkg., Reseal station	%M0063	VOL_07	Volume 07, 1500cc Slimline

```
|VOL_04   P+011                                                    << RUNG 41  STEP #0163 >>
|%M0060  %T0011  +-----+               +-----+
+--] [-----] [---+ AND_+----------------+ AND_+-
|                | WORD|               | WORD|
|                |     |               |     |
|        BSHIF08 |     | BSHIF08 BSHIF07 |     | BSHIF07
|        %R0027 -+I1  Q+-%R0027  %R0026 -+I1  Q+-%R0026
|                |     |               |     |
|        PAR_007 |     |        PAR_006 |     |
|        %R0507 -+I2   |        %R0506 -+I2   |
|                +-----+               +-----+
|
| (*************************************************************************)
| (* Load dump values for 200cc Slimline and 250cc Baseline Tab Station.  *)
| (*************************************************************************)
|
|VOL_03   P+011                                                    << RUNG 43  STEP #0168 >>
|%M0059  %T0011  +-----+               +-----+
+--] [--+--] [---+ AND_+----------------+ AND_+-
|       |        | WORD|               | WORD|
|VOL_02 |        |     |               |     |
|%M0058 |BSHIF07 |     | BSHIF07 BSHIF06 |     | BSHIF06
+--] [--+%R0026 -+I1  Q+-%R0026  %R0025 -+I1  Q+-%R0025
|                |     |               |     |
|        PAR_007 |     |        PAR_006 |     |
|        %R0507 -+I2   |        %R0506 -+I2   |
|                +-----+               +-----+
|
| (*************************************************************************)
| (* Load dump values for Black tape detected                             *)
| (* When black tape is detected this will be shifted into                *)
| (* R0030,R0031 directly.                                                 *)
| (*************************************************************************)
|
| (*************************************************************************)
| (* Load dump values for Black Tape (Not for: Small Volumes,             *)
| (* 1000cc Square, 1000cc Prisma Square, 1500cc Slimline.)               *)
| (*************************************************************************)
|
|SML_VOL BIG_VOL BLK_DET                                          BLK_DET  << RUNG 46  STEP #0175 >>
|%M0070  %M0099  %M0433  +-----+               +-----+           %M0433
+--]/[-----]/[-----] [---+ AND_+----------------+ AND_+----------(R)-- (* Black tape detected          *)
|                        | WORD|               | WORD|
|                        |     |               |     |
|                SHIFT05 |     | SHIFT05 SHIFT04 |     | SHIFT04
|                %R0034 -+I1  Q+-%R0034  %R0033 -+I1  Q+-%R0033
|                        |     |               |     |
|                PAR_009 |     |        PAR_008 |     |
|                %R0509 -+I2   |        %R0508 -+I2   |
|                        +-----+               +-----+
|
| (*************************************************************************)
| (* Load dump values for 1000cc Square and 1000cc Prisma Square          *)
| (* and 1500cc Slimline Black tape.                                      *)
| (*************************************************************************)
|
```

REFERENCE	NICKNAME	REFERENCE DESCRIPTION	REFERENCE	NICKNAME	REFERENCE DESCRIPTION
%M0099	BIG_VOL	Big volumes auxiliary memory	%R0508	PAR_008	Dump. pkg., Black tape
%M0433	BLK_DET	Black tape detected	%R0509	PAR_009	Dump. pkg., Black tape
%R0025	BSHIF06	Bufferregister 06 for pkg dump.	%R0033	SHIFT04	Shiftregister 04 for pkg dump.
%R0026	BSHIF07	Bufferregister 07 for pkg dump.	%R0034	SHIFT05	Shiftregister 05 for pkg dump.
%R0027	BSHIF08	Bufferregister 08 for pkg dump.	%M0070	SML_VOL	Small volumes auxiliary memory
%T0011	P+011	Pulse + Load dump Tab station	%M0058	VOL_02	Volume 02, 200cc Slimline
%R0506	PAR_006	Dump. pkg., Tab station	%M0059	VOL_03	Volume 03, 250cc Baseline
%R0507	PAR_007	Dump. pkg., Tab station	%M0060	VOL_04	Volume 04, 200cc Baseline

```
|BIG_VOL BLK_DET                                                    BLK_DET  << RUNG 48  STEP #0182 >>
|%M0099  %M0433  +-----+               +-----+                     %M0433
+--] [-----] [---+ AND_+---------------+ AND_+-------------------------(R)-- (* Black tape detected            *)
|                | WORD|               | WORD|
|                |     |               |     |
|        SHIFT04 |     | SHIFT04 SHIFT03 |     | SHIFT03
|        %R0033 -+I1  Q+-%R0033  %R0032 -+I1  Q+-%R0032
|                |     |               |     |
|        PAR_009 |     |        PAR_008 |     |
|        %R0509 -+I2   |        %R0508 -+I2   |
|                +-----+               +-----+
|
| (*************************************************************************)
| (* Load dump values for 200cc Baseline Black Tape.                       *)
| (*************************************************************************)
|
|VOL_04  BLK_DET                                                    BLK_DET  << RUNG 50  STEP #0188 >>
|%M0060  %M0433  +-----+               +-----+                     %M0433
+--] [-----] [---+ AND_+---------------+ AND_+-------------------------(R)-- (* Black tape detected            *)
|                | WORD|               | WORD|
|                |     |               |     |
|        SHIFT07 |     | SHIFT07 SHIFT06 |     | SHIFT06
|        %R0036 -+I1  Q+-%R0036  %R0035 -+I1  Q+-%R0035
|                |     |               |     |
|        PAR_009 |     |        PAR_008 |     |
|        %R0509 -+I2   |        %R0508 -+I2   |
|                +-----+               +-----+
|
| (*************************************************************************)
| (* Load dump values for 200cc Slimline and 250cc Baseline Black Tape.    *)
| (*************************************************************************)
|
|VOL_03  BLK_DET                                                    BLK_DET  << RUNG 52  STEP #0194 >>
|%M0059  %M0433  +-----+               +-----+                     %M0433
+--] [--+--] [---+ AND_+---------------+ AND_+-------------------------(R)-- (* Black tape detected            *)
|       |        | WORD|               | WORD|
|VOL_02 |        |     |               |     |
|%M0058 |SHIFT06 |     | SHIFT06 SHIFT05 |     | SHIFT05
+--] [--+%R0035 -+I1  Q+-%R0035  %R0034 -+I1  Q+-%R0034
|                |     |               |     |
|        PAR_009 |     |        PAR_008 |     |
|        %R0509 -+I2   |        %R0508 -+I2   |
|                +-----+               +-----+
|
| (*************************************************************************)
| (* p                                                                     *)
| (* This shift instruction shifts the bits in the 8                       *)
| (* bufferregisters for package dumping to the right.                     *)
| (*                                                                       *)
| (* The registers are used when the PT21 is indexing without              *)
| (* running the TBA21.(Find home procedure)                               *)
| (*                                                                       *)
| (* The array start at the Punch station and ends at the                  *)
| (* at the drop chute in the TBA21, like this:                           *)
| (* R27,R26,R25,R24,R23,R22,R21,R20.                                     *)
| (*                                                                       *)
| (* The registers R20-R27 will be moved into R30-R37 when                 *)
| (* both PT21 and TBA21 are running together.                            *)
| (*************************************************************************)
|
```

REFERENCE	NICKNAME	REFERENCE DESCRIPTION	REFERENCE	NICKNAME	REFERENCE DESCRIPTION
%M0099	BIG_VOL	Big volumes auxiliary memory	%R0034	SHIFT05	Shiftregister 05 for pkg dump.
%M0433	BLK_DET	Black tape detected	%R0035	SHIFT06	Shiftregister 06 for pkg dump.
%R0508	PAR_008	Dump. pkg., Black tape	%R0036	SHIFT07	Shiftregister 07 for pgk dump.
%R0509	PAR_009	Dump. pkg., Black tape	%M0058	VOL_02	Volume 02, 200cc Slimline
%R0032	SHIFT03	Shiftregister 03 for pkg dump.	%M0059	VOL_03	Volume 03, 250cc Baseline
%R0033	SHIFT04	Shiftregister 04 for pkg dump.	%M0060	VOL_04	Volume 04, 200cc Baseline

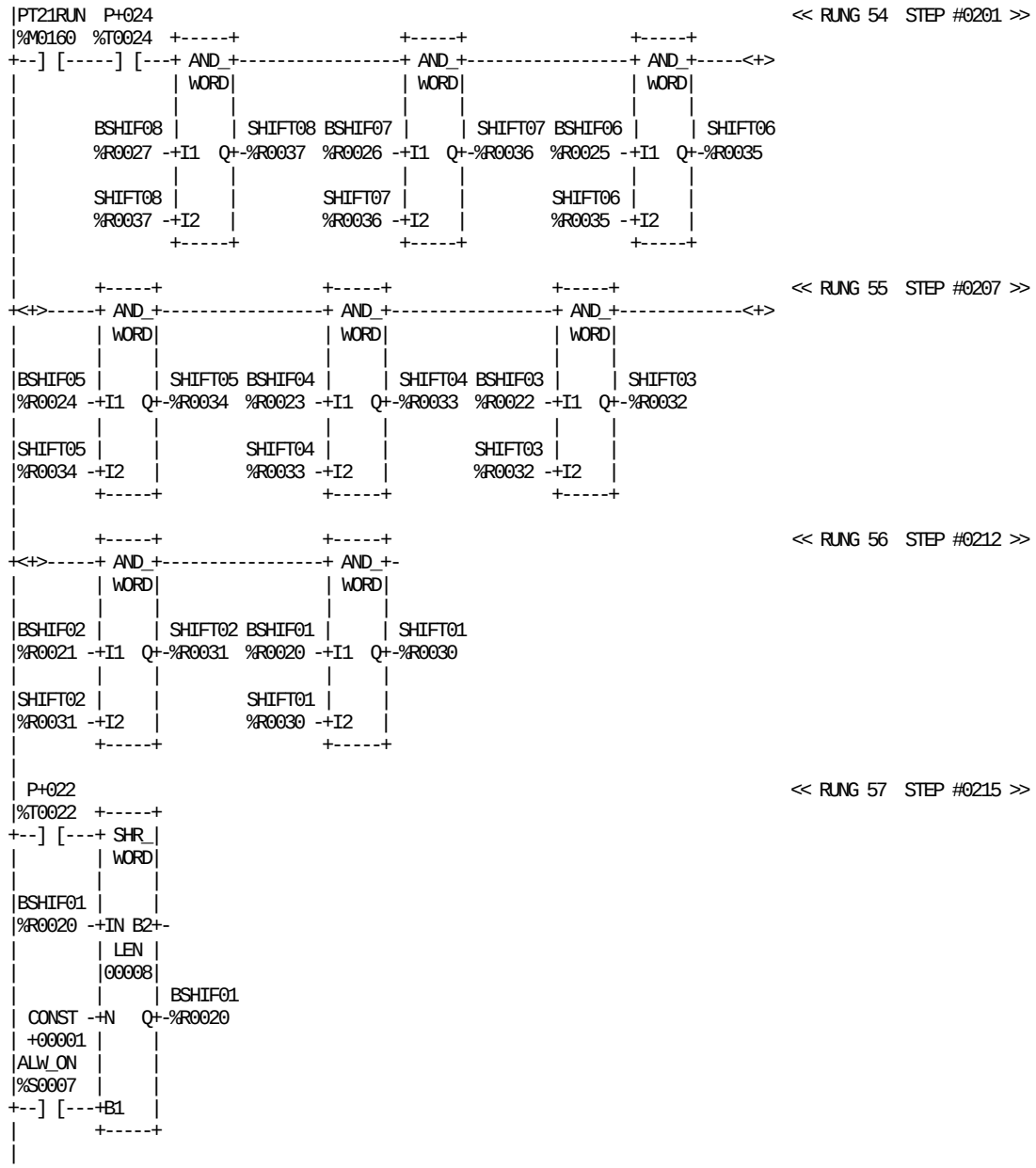

REFERENCE	NICKNAME	REFERENCE DESCRIPTION
%S0007	ALW_ON	
%R0020	BSHIF01	Bufferregister 01 for pkg dump.
%R0021	BSHIF02	Bufferregister 02 for pkg dump.
%R0022	BSHIF03	Bufferregister 03 for pkg dump.
%R0023	BSHIF04	Bufferregister 04 for pkg dump.
%R0024	BSHIF05	Bufferregister 05 for pkg dump.
%R0025	BSHIF06	Bufferregister 06 for pkg dump.
%R0026	BSHIF07	Bufferregister 07 for pkg dump.
%R0027	BSHIF08	Bufferregister 08 for pkg dump.
%T0022	P+022	Pulse + Index of packaging mat.

REFERENCE	NICKNAME	REFERENCE DESCRIPTION
%T0024	P+024	Pulse + Register mark DCS,JUM
%M0160	PT21RUN	PT21 running
%R0030	SHIFT01	Shiftregister 01 for pkg dump.
%R0031	SHIFT02	Shiftregister 02 for pkg dump.
%R0032	SHIFT03	Shiftregister 03 for pkg dump.
%R0033	SHIFT04	Shiftregister 04 for pkg dump.
%R0034	SHIFT05	Shiftregister 05 for pkg dump.
%R0035	SHIFT06	Shiftregister 06 for pkg dump.
%R0036	SHIFT07	Shiftregister 07 for pgk dump.
%R0037	SHIFT08	Shiftregister 08 for pgk dump.

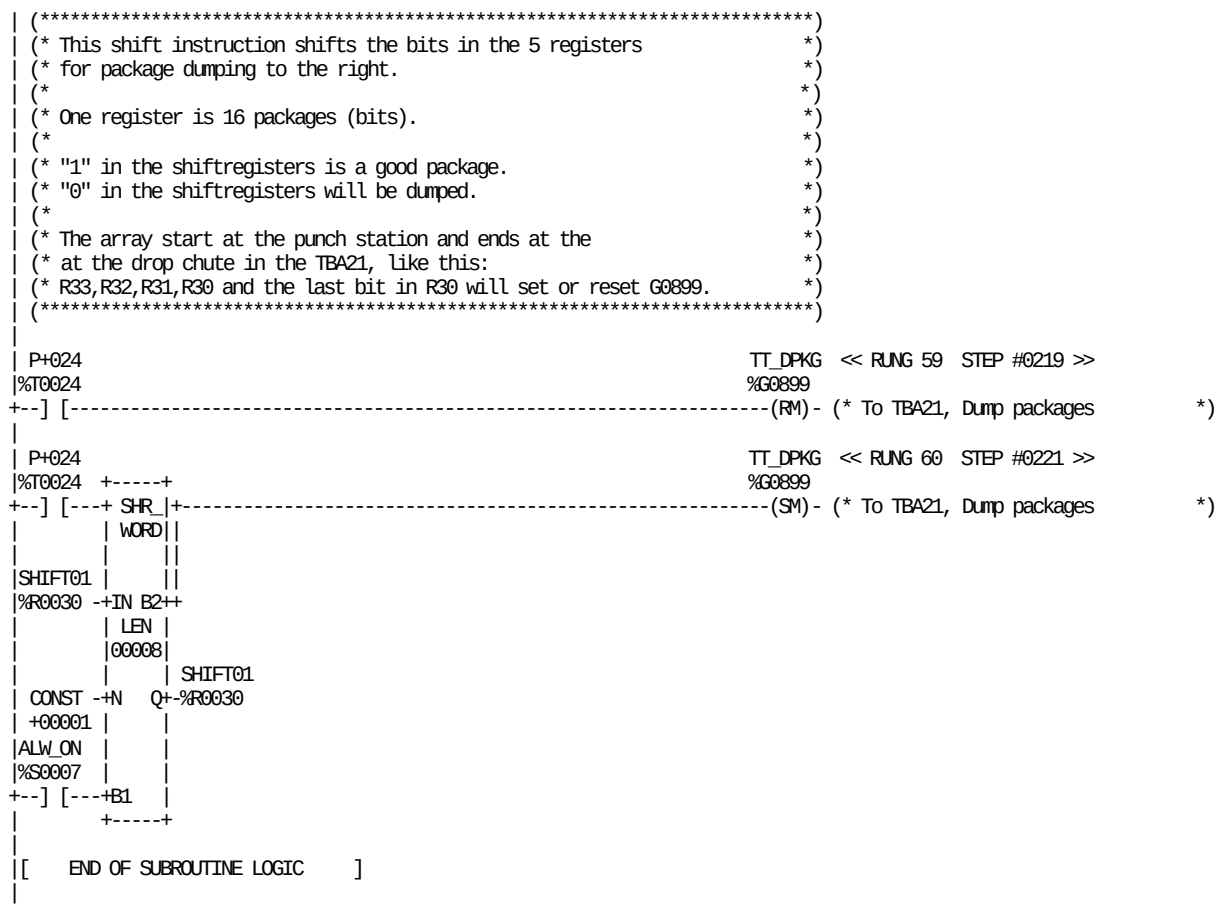

REFERENCE	NICKNAME	REFERENCE DESCRIPTION	REFERENCE	NICKNAME	REFERENCE DESCRIPTION
%S0007	ALW_ON		%R0030	SHIFT01	Shiftregister 01 for pkg dump.
%T0024	P+024	Pulse + Register mark DCS,JUM	%G0899	TT_DPKG	To TBA21, Dump packages

```
|[  START LD SUBROUTINE  BLK_51   ]
|
|[     VARIABLE DECLARATIONS      ]
|
|[   START OF SUBROUTINE LOGIC    ]
|
| (*************************************************************************)
| (* Block 51 "Temperature regulators and monitors"                        *)
| (*                                                                       *)
| (* Temperature regulator loops      PID reference  TPOP G-adress         *)
| (* Loop 1  Temperature Tab (A8219)      R1700       G689 - G881         *)
| (* Loop 2  Spare                        R1760                           *)
| (* Loop 3  Spare                        R1820                           *)
| (* Loop 4  Spare                        R1880                           *)
| (* Loop 5  Spare                        R1940                           *)
| (*************************************************************************)
|
| (*************************************************************************)
| (* Internal registers for PID regulators                                 *)
| (*  Ref+0: Loop numbers.                                                 *)
| (*  Ref+2: Sample period, time in increments of 0.01 sec between         *)
| (*         execution of the function block.                              *)
| (*  Ref+3: Upper dead band, in counts 0-32000 equals 0-100% of the error.*)
| (*  Ref+4: Lower dead band, in counts 0-32000 equals 0-100% of the error.*)
| (*  Ref+5: Proportional gain, in 0.01%/%                                *)
| (*  Ref+6: Derivate gain, in 0.01 sec.                                  *)
| (*  Ref+7: Integral gain, in repeats per 1000 sec.                      *)
| (*  Ref+8: Bias, in counts 0-32000 equals 0-100%,Feed forward function. *)
| (*  Ref+9: Upper output clamp, in counts 0-32000,upper limit for CV output. *)
| (* Ref+10: Lower output clamp, in counts 0-32000,lower limit for CV output. *)
| (* Ref+11: Minimum slew time, in seconds per full travel,limits how quickly *)
| (*         the output is allowed to change from 0-100%.                  *)
| (*************************************************************************)
|
| (*************************************************************************)
| (* Loop 1, Tab values transfer of registers to\from TBA21                *)
| (*************************************************************************)
|
|ALW_ON                                                          << RUNG 6  STEP #0004 >>
|%S0007  +-----+               +-----+               +-----+
+--] [---+MOVE_+---------------+MOVE_+---------------+MOVE_+-
|        | INT |               | INT |               | INT |
|        |     |               |     |               |     |
|        |     | TT_D1SP L1_ALLO |     | TT_D1AL L1_ALHI |     | TT_D1AH
| CONST -+IN  Q+-%G0689  %R1742 -+IN  Q+-%G0737  %R1743 -+IN  Q+-%G0721
| +01700 | LEN |               | LEN |               | LEN |
|        |00001|               |00001|               |00001|
|        |     |               |     |               |     |
|        +-----+               +-----+               +-----+
|
|ALW_ON                                                          << RUNG 7  STEP #0008 >>
|%S0007  +-----+               +-----+               +-----+
+--] [---+MOVE_+---------------+MOVE_+---------------+MOVE_+-
|        | INT |               | INT |               | INT |
|        |     |               |     |               |     |
|L1_SSR  |     | TT_L1OV  B8427  |     | TT_L1PV FT_L1SP |     | L1_SETP
|%R1741 -+IN  Q+-%G0849  %AI0002-+IN  Q+-%G0865  %G0081 -+IN  Q+-%R1744
|        | LEN |               | LEN |               | LEN |
|        |00001|               |00001|               |00001|
|        |     |               |     |               |     |
|        +-----+               +-----+               +-----+
|
```

REFERENCE	NICKNAME	REFERENCE DESCRIPTION	REFERENCE	NICKNAME	REFERENCE DESCRIPTION
%S0007	ALW_ON		%R1741	L1_SSR	Loop1, Solid state relay
%AI0002	B8427	Tab thermo couple	%G0721	TT_D1AH	To TBA21, Dflt Loop 1 Alarm high
%G0081	FT_L1SP	From TBA21, Loop 1 Setpoint	%G0737	TT_D1AL	To TBA21, Dflt Loop 1 Alarm low
%R1743	L1_ALHI	Loop1, Temperature alarm high	%G0689	TT_D1SP	To TBA21, Dflt Loop 1 Setpoint
%R1742	L1_ALLO	Loop1, Temperature alarm low	%G0849	TT_L1OV	To TBA21, Loop 1 Output value
%R1744	L1_SETP	Loop1, Temperature setpoint	%G0865	TT_L1PV	To TBA21, Loop 1 Process value

```
| (*************************************************************************)
| (* PID setting of Loop 1: Temperature Tab sealing pad.                   *)
| (* This Temp. reg controls the temperature of the Tab sealing pad.      *)
| (*************************************************************************)
|
|ALW_ON                                                          << RUNG 9  STEP #0013 >>
|%S0007  +-----+               +-----+               +-----+
+--] [---+MOVE_+---------------+MOVE_+---------------+MOVE_+-
|        | INT |               | INT |               | INT |
|        |     |               |     |               |     |
|        |     | L1_TREG       |     | L1_SMPT       |     | L1_UPDB
| CONST -+IN  Q+-%R1700  CONST -+IN  Q+-%R1702  CONST -+IN  Q+-%R1703
| +00001 | LEN |         +00025 | LEN |         +00320 | LEN |
|        |00001|                |00001|                |00001|
|        |     |                |     |                |     |
|        +-----+                +-----+                +-----+
|
|ALW_ON                                                          << RUNG 10  STEP #0017 >>
|%S0007  +-----+               +-----+               +-----+
+--] [---+MOVE_+---------------+MOVE_+---------------+MOVE_+-
|        | INT |               | INT |               | INT |
|        |     |               |     |               |     |
|        |     | L1_LODB       |     | L1_PGAI       |     | L1_DGAI
| CONST -+IN  Q+-%R1704  CONST -+IN  Q+-%R1705  CONST -+IN  Q+-%R1706
| +00320 | LEN |         +25000 | LEN |         +00800 | LEN |
|        |00001|                |00001|                |00001|
|        |     |                |     |                |     |
|        +-----+                +-----+                +-----+
|
|ALW_ON                                                          << RUNG 11  STEP #0021 >>
|%S0007  +-----+               +-----+               +-----+
+--] [---+MOVE_+---------------+MOVE_+---------------+MOVE_+-
|        | INT |               | INT |               | INT |
|        |     |               |     |               |     |
|        |     | L1_IGAI       |     | L1_BIAS       |     | L1_UPCV
| CONST -+IN  Q+-%R1707  CONST -+IN  Q+-%R1708  CONST -+IN  Q+-%R1709
| +06000 | LEN |         +16000 | LEN |         +32000 | LEN |
|        |00001|                |00001|                |00001|
|        |     |                |     |                |     |
|        +-----+                +-----+                +-----+
|
|ALW_ON                                                          << RUNG 12  STEP #0025 >>
|%S0007  +-----+               +-----+
+--] [---+MOVE_+---------------+MOVE_+-
|        | INT |               | INT |
|        |     |               |     |
|        |     | L1_LOCV       |     | L1_MINS
| CONST -+IN  Q+-%R1710  CONST -+IN  Q+-%R1711
| +00000 | LEN |         +00000 | LEN |
|        |00001|                |00001|
|        |     |                |     |
|        +-----+                +-----+
|
```

REFERENCE	NICKNAME	REFERENCE DESCRIPTION	REFERENCE	NICKNAME	REFERENCE DESCRIPTION
%S0007	ALW_ON		%R1711	L1_MINS	Loop1, Minimum slew time
%R1708	L1_BIAS	Loop1, Bias	%R1705	L1_PGAI	Loop1, Proportional band
%R1706	L1_DGAI	Loop1, Derivation band	%R1702	L1_SMPT	Loop1, Sample time
%R1707	L1_IGAI	Loop1, Integral band	%R1700	L1_TREG	Loop1, Temp. Reg. Tab seal. pad
%R1710	L1_LOCV	Loop1, Lower CV limit	%R1709	L1_UPCV	Loop1, Upper CV limit
%R1704	L1_LODB	Loop1, Lower dead band	%R1703	L1_UPDB	Loop1, Upper dead band

```
| (*************************************************************************)
| (* During 60 seconds after the start up the temperature will be increased  *)
| (* with 5 'C to avoid too much drop on the temperature.                     *)
| (*************************************************************************)
|
|ST_3_6  STEP_3  FT_STUP                                          << RUNG 14  STEP #0029 >>
|%M0140  %M0103  %G0313  +-----+
+--] [-----]/[-----] [---+OFDT +-----------------------------------------<+>
|                        |0.10s|
|                        |     |
|                 CONST -+PV   |
|                 +00600 |     |
|                        +-----+
|                        OFD1748
|                        %R1748
|
|        FT_STUP                                                  << RUNG 15  STEP #0034 >>
|        %G0313          +-----+
+<+>----+--] [--+--------+ ADD_+-
|       |       |        | INT |
|       |FT_PAHS|        |     |
|       |%G0309 |        |     | L1_SETP
|       +--] [--+ CONST -+I1  Q+-%R1744
|                 +00050 |     |
|                        |     |
|                FT_L1SP |     |
|                %G0081 -+I2   |
|                        +-----+
|
|ALW_ON                                                           << RUNG 16  STEP #0039 >>
|%S0007  +-----+
+--] [---+ PID_+-
|        | IND |
|        |     |
|L1_SETP |     |  L1_CV
|%R1744 -+SP CV+-%R1740
|        |     |
| B8427  |     |
|%AI0002-+PV   |
|        |     |
|ALW_OFF |     |
|%S0008  |     |
+--] [---+MAN  |
|        |     |
|ALW_OFF |     |
|%S0008  |     |
+--] [---+UP   |
|        |     |
|ALW_OFF |     |
|%S0008  |     |
+--] [---+DN   |
|        |     |
|        +-----+
|        L1_TREG
|        %R1700
|
| (*************************************************************************)
| (* PWM timer for Loop 1 Timebase 1000 msec                                 *)
| (*************************************************************************)
|
```

REFERENCE	NICKNAME	REFERENCE DESCRIPTION	REFERENCE	NICKNAME	REFERENCE DESCRIPTION
%S0008	ALW_OFF		%R1740	L1_CV	Loop1, Control value
%S0007	ALW_ON		%R1744	L1_SETP	Loop1, Temperature setpoint
%AI0002	B8427	Tab thermo couple	%R1700	L1_TREG	Loop1, Temp. Reg. Tab seal. pad
%G0081	FT_L1SP	From TBA21, Loop 1 Setpoint	%R1748	OFD1748	Loop1, Start temperature delay
%G0309	FT_PAHS	From TBA21, Paper high speed	%M0103	STEP_3	Step 3, Find home
%G0313	FT_STUP	From TBA21, Step Up	%M0140	ST_3_6	Step 3-6, Find home - Service

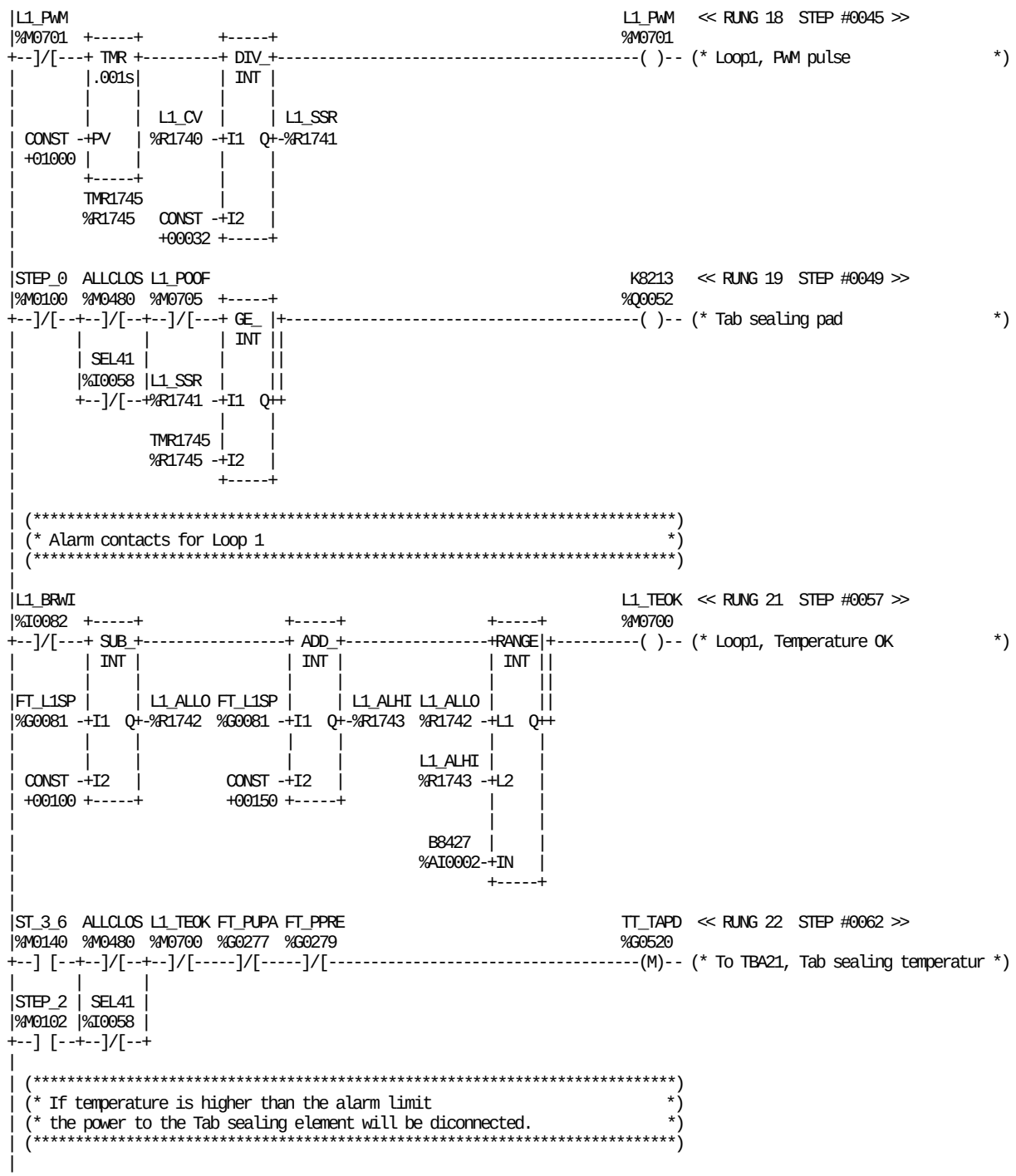

REFERENCE	NICKNAME	REFERENCE DESCRIPTION	REFERENCE	NICKNAME	REFERENCE DESCRIPTION
%M0480	ALLCLOS	All holes closed	%M0705	L1_POOF	Loop1, Tab power OFF
%AI0002	B8427	Tab thermo couple	%M0701	L1_PWM	Loop1, PWM pulse
%G0081	FT_L1SP	From TBA21, Loop 1 Setpoint	%R1741	L1_SSR	Loop1, Solid state relay
%G0279	FT_PPRE	From TBA21, Punch+Patch+Reseal	%M0700	L1_TEOK	Loop1, Temperature OK
%G0277	FT_PUPA	From TBA21, Punch+Patch	%I0058	SEL41	Production disable appl., Selecd
%Q0052	K8213	Tab sealing pad	%M0100	STEP_0	Step 0, Off
%R1743	L1_ALHI	Loop1, Temperature alarm high	%M0102	STEP_2	Step 2, Pre-heating
%R1742	L1_ALLO	Loop1, Temperature alarm low	%M0140	ST_3_6	Step 3-6, Find home - Service
%I0082	L1_BRWI	Loop1, Broken wire	%R1745	TMR1745	Loop1, PWM timer
%R1740	L1_CV	Loop1, Control value	%G0520	TT_TAPD	To TBA21, Tab sealing temperatur

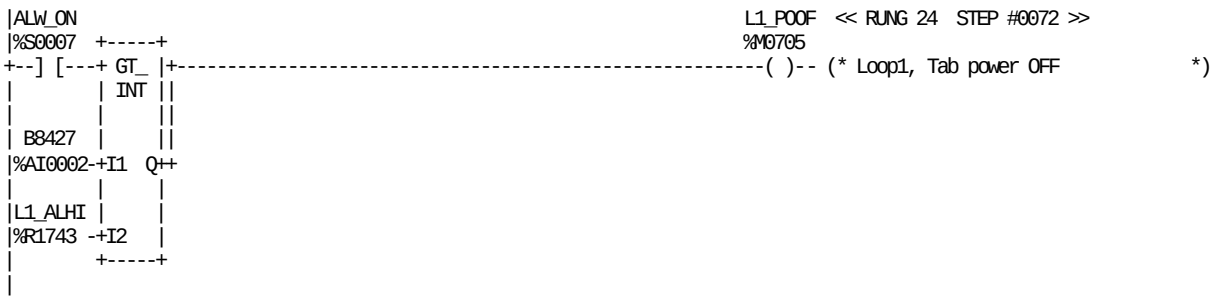

REFERENCE	NICKNAME	REFERENCE DESCRIPTION	REFERENCE	NICKNAME	REFERENCE DESCRIPTION
%S0007	ALW_ON		%R1743	L1_ALHI	Loop1, Temperature alarm high
%AI0002	B8427	Tab thermo couple	%M0705	L1_POOF	Loop1, Tab power OFF

```
| (*************************************************************************)
| (* Electrical cabinet cooler                                             *)
| (*                                                                       *)
| (* Alarm level transfer from TBA21                                       *)
| (*************************************************************************)
|
|ALW_ON                                                          EC_OK   << RUNG 26  STEP #0076 >>
|%S0007  +-----+                                                %M0800
+--] [---+RANGE|+-------------------------------------------------------( )-- (* El-cab, Temp ok (18-38)         *)
|        | INT ||
|        |     ||
| CONST -+L1  Q++
| +00180 |     |
|        |     |
| CONST -+L2   |
| +00380 |     |
|        |     |
| B2101  |     |
|%AI0001-+IN   |
|        +-----+
|
| (*************************************************************************)
| (* Control of compressor                                                 *)
| (* < 30'C stop compressor                                                *)
| (* > 36'C start compressor                                              *)
| (*************************************************************************)
|
|ALW_ON                                                          EC_CTRL  << RUNG 28  STEP #0080 >>
|%S0007  +-----+                                                %M0801
+--] [---+ GE_ |+-------------------------------------------------------(S)-- (* El-cab, Control (28-33)         *)
|        | INT ||
|        |     ||
| B2101  |     ||
|%AI0001-+I1  Q++
|        |     |
| CONST -+I2   |
| +00330 +-----+
|
|ALW_ON                                                          EC_CTRL  << RUNG 29  STEP #0083 >>
|%S0007  +-----+                                                %M0801
+--] [---+ LT_ |+-------------------------------------------------------(R)-- (* El-cab, Control (28-33)         *)
|        | INT ||
|        |     ||
| B2101  |     ||
|%AI0001-+I1  Q++
|        |     |
| CONST -+I2   |
| +00280 +-----+
|
|STEP_0                                                           K8207   << RUNG 30  STEP #0086 >>
|%M0100                                                          %Q0042
+--]/[--+-------------------------------------------------------------( )-- (* El-cab, Air circulation         *)
|       |
|       | B8428   B8202  EC_CTRL                                  K8208
|       |%I0026  %I0024  %M0801                                  %Q0043
|       +--] [-----] [-----] [-----------------------------------------( )-- (* El-cab, Compressor              *)
|
| (*************************************************************************)
| (* Transfer of registers to TBA21                                        *)
| (* Broken wire, Process value, Alarm level high, Alarm level low         *)
| (*************************************************************************)
|
```

REFERENCE	NICKNAME	REFERENCE DESCRIPTION	REFERENCE	NICKNAME	REFERENCE DESCRIPTION
%S0007	ALW_ON		%M0800	EC_OK	El-cab, Temp ok (18-38)
%AI0001	B2101	Electrical cabinet thermo couple	%Q0042	K8207	El-cab, Air circulation
%I0024	B8202	Electrical cabinet door, Closed	%Q0043	K8208	El-cab, Compressor
%I0026	B8428	Cooling system, Failure	%M0100	STEP_0	Step 0, Off
%M0801	EC_CTRL	El-cab, Control (28-33)			

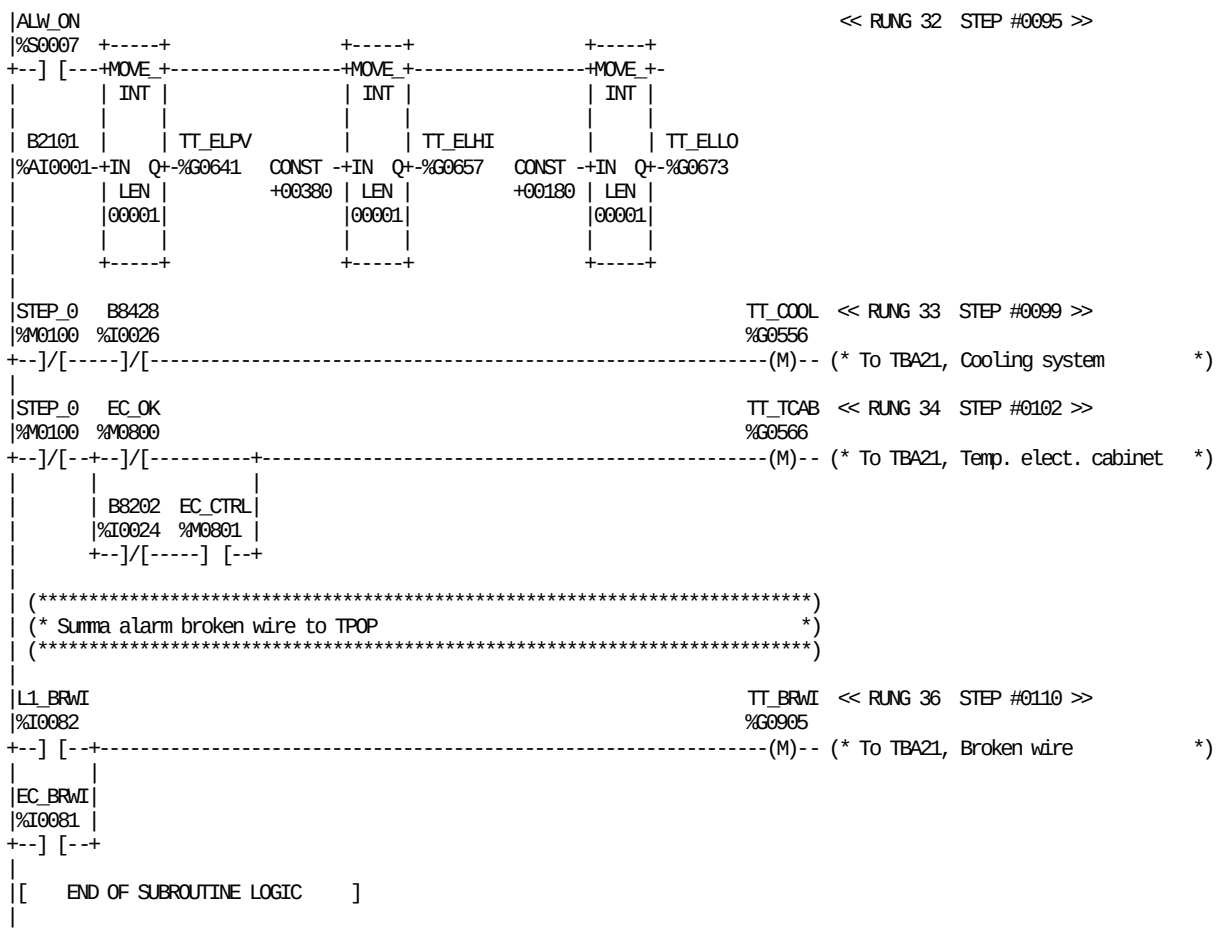

REFERENCE	NICKNAME	REFERENCE DESCRIPTION
%S0007	ALW_ON	
%AI0001	B2101	Electrical cabinet thermo couple
%I0024	B8202	Electrical cabinet door, Closed
%I0026	B8428	Cooling system, Failure
%I0081	EC_BRWI	El-cab, Temp. mon. broken wire
%M0801	EC_CTRL	El-cab, Control (28-33)
%M0800	EC_OK	El-cab, Temp ok (18-38)
%I0082	L1_BRWI	Loop1, Broken wire

REFERENCE	NICKNAME	REFERENCE DESCRIPTION
%M0100	STEP_0	Step 0, Off
%G0905	TT_BRWI	To TBA21, Broken wire
%G0556	TT_COOL	To TBA21, Cooling system
%G0657	TT_ELHI	To TBA21, Dflt El.cab. alarm hi
%G0673	TT_ELLO	To TBA21, Dflt El.cab. alarm lo
%G0641	TT_ELPV	To TBA21, El. cab. Process val.
%G0566	TT_TCAB	To TBA21, Temp. elect. cabinet

10 Bills of material

EM3.0TB105473en.fm

Table of contents

Electrical equipment (ECM 73001) 649060-0500

Electrical document (ECM 98137) 42841-0500

Standard equipment (ECM 102651) 42843-0500

EM3.0TB105473en.fm

ECM		72315	73001										
Release date		1999.04.29	1999.12.15										
Chg	Position	Sp	SH	Description	As	Size	Identity	DTp	Prt	Vs	Unit	Column quantity All	ECM
	0010			ELECTRICAL DOCUMENT	X	A4	42841-0500				PC	1	72315
I	0020			STANDARD EQUIPMENT	X	A4	42843-0500				PC	1	73001

ECM		72315	73001	73518	P98137(L97501)								
Release date		1999.04.29	1999.12.15	2000.04.07	2001.11.04								
Chg	Position	Sp	SH	Description	As	Size	Identity	DTp	Prt	Vs	Unit	Column quantity All	ECM
I	0090			ENGINEERING CHANGE DESCRIPTION	A4-		595036-0000	ELD	004	AA		x	98137
I	0102			COMPONENT SUMMARY CIRCUIT DESIGN	A4-		44980-0002	ELD	003	AA		x	98137
I	0103			CIRCUIT DIAGRAM LINE SUMMARY	A4-		44980-0003	ELD	003	AA		x	98137
I	0104			CIRCUIT DIAGRAM TERMINAL SUMMARY	A4-		44980-0004	ELD	003	AA		x	98137
	0105			CIRCUIT DIAGRAM	A4-		44980-0005	ELD	001	AA		x	72315
I	0106			CIRCUIT DIAGRAM	A4-		44980-0006	ELD	003	AA		x	98137
	0107			CIRCUIT DIAGRAM	A4-		44980-0007	ELD	002	AA		x	73001
I	0108			CIRCUIT DIAGRAM	A4-		44980-0008	ELD	003	AA		x	98137
	0110			CIRCUIT DIAGRAM	A4-		44980-0010	ELD	001	AA		x	72315
	0111			CIRCUIT DIAGRAM	A4-		44980-0011	ELD	001	AA		x	72315
	0112			CIRCUIT DIAGRAM	A4-		44980-0012	ELD	001	AA		x	72315
	0115			CIRCUIT DIAGRAM	A4-		44980-0015	ELD	001	AA		x	72315
I	0116			CIRCUIT DIAGRAM	A4-		44980-0016	ELD	003	AA		x	98137
	0121			CIRCUIT DIAGRAM	A4-		44980-0021	ELD	001	AA		x	72315
	0125			CIRCUIT DIAGRAM	A4-		44980-0025	ELD	001	AA		x	72315
I	0127			CIRCUIT DIAGRAM	A4-		44980-0027	ELD	003	AA		x	98137
	0128			CIRCUIT DIAGRAM	A4-		44980-0028	ELD	001	AA		x	72315
I	0129			CIRCUIT DIAGRAM	A4-		44980-0029	ELD	003	AA		x	98137
	0130			CIRCUIT DIAGRAM	A4-		44980-0030	ELD	001	AA		x	72315
	0131			CIRCUIT DIAGRAM	A4-		44980-0031	ELD	001	AA		x	72315
	0132			CIRCUIT DIAGRAM	A4-		44980-0032	ELD	002	AA		x	73001
	0133			CIRCUIT DIAGRAM	A4-		44980-0033	ELD	001	AA		x	72315

I	0134	CIRCUIT DIAGRAM	A4-	44980-0034	ELD 003 AA	x	98137
	0135	CIRCUIT DIAGRAM	A4-	44980-0035	ELD 001 AA	x	72315
I	0136	CIRCUIT DIAGRAM	A4-	44980-0036	ELD 003 AA	x	98137
	0137	CIRCUIT DIAGRAM	A4-	44980-0037	ELD 001 AA	x	72315
	0138	CIRCUIT DIAGRAM	A4-	44980-0038	ELD 001 AA	x	72315
	0141	CIRCUIT DIAGRAM	A4-	44980-0041	ELD 002 AA	x	73001
I	0143	CIRCUIT DIAGRAM	A4-	44980-0043	ELD 003 AA	x	98137
	0144	CIRCUIT DIAGRAM	A4-	44980-0044	ELD 001 AA	x	72315
I	0145	CIRCUIT DIAGRAM	A4-	44980-0045	ELD 003 AA	x	98137
I	0146	CIRCUIT DIAGRAM	A4-	44980-0046	ELD 003 AA	x	98137
	0151	CIRCUIT DIAGRAM	A4-	44980-0051	ELD 002 AA	x	73001
	0152	CIRCUIT DIAGRAM	A4-	44980-0052	ELD 002 AA	x	73001
	0200	CIRCUIT DIAGRAM-	A4-	44980-0900	ELD 002 AA	x	73001

Chg	Position	Sp	SH	Description	As	Size	Identity	DTp	Prt	Vs	Unit	Column quantity All	ECM
				PROTECTIVE BONDING									
I	0500			MAIN + CROSS REFERENCE	A4	-	48675-0001	ELD	003	AA		x	98137
I	0510			1T001 FAST SCAN	A4	-	48675-0002	ELD	003	AA		x	98137
I	0520			PLC PROGRAM LIST	A4	-	48675-0005	ELD	003	AA		x	98137
I	0530			PLC PROGRAM LIST	A4	-	48675-0501	ELD	003	AA		x	98137
I	0540			PLC PROGRAM LIST	A4	-	48675-0502	ELD	003	AA		x	98137
I	0550			PLC PROGRAM LIST	A4	-	48675-0006	ELD	003	AA		x	98137
I	0560			PLC PROGRAM LIST	A4	-	48675-0008	ELD	003	AA		x	98137
I	0570			PLC PROGRAM LIST	A4	-	48675-0010	ELD	003	AA		x	98137
I	0580			PLC PROGRAM LIST	A4	-	48675-0020	ELD	003	AA		x	98137
I	0590			PLC PROGRAM LIST	A4	-	48675-0021	ELD	003	AA		x	98137
I	0600			PLC PROGRAM LIST	A4	-	48675-0032	ELD	003	AA		x	98137
I	0610			PLC PROGRAM LIST	A4	-	48675-0051	ELD	003	AA		x	98137
	1005			CONNECTION DIAGRAM	A4	-	62060-0005	ELD	001	AA		x	72315
I	1006			CONNECTION DIAGRAM	A4	-	62060-0006	ELD	003	AA		x	98137
I	1009			CONNECTION DIAGRAM	A4	-	62060-0009	ELD	003	AA		x	98137
	1010			CONNECTION DIAGRAM	A4	-	62060-0010	ELD	001	AA		x	72315
I	1011			CONNECTION DIAGRAM	A4	-	62060-0011	ELD	003	AA		x	98137
	1012			CONNECTION DIAGRAM	A4	-	62060-0012	ELD	001	AA		x	72315
	1014			CONNECTION DIAGRAM	A4	-	62060-0014	ELD	001	AA		x	72315
	1015			CONNECTION DIAGRAM	A4	-	62060-0015	ELD	001	AA		x	72315
	1017			CONNECTION DIAGRAM	A4	-	62060-0017	ELD	001	AA		x	72315
	1018			CONNECTION DIAGRAM	A4	-	62060-0018	ELD	001	AA		x	72315
	1019			CONNECTION DIAGRAM	A4	-	62060-0019	ELD	001	AA		x	72315
	1020			CONNECTION DIAGRAM	A4	-	62060-0020	ELD	001	AA		x	72315
	1021			CONNECTION DIAGRAM	A4	-	62060-0021	ELD	001	AA		x	72315

Information 'valid to' 2001.11.04

Chg	Position	Sp	SH	Description	As	Size	Identity	DTp	Prt	Vs	Unit	Column quantity All	ECM
D	0010			ELECTRICAL EQUIPMENT	A4-		649060-0500	BOM	000	AB		x	73001
D	0020			ELECTRICAL DOCUMENT	A4-		42841-0500	BOM	000	AC		x	73518
D	0030			STANDARD EQUIPMENT	A4-		42843-0500	BOM	000	AB		x	73518
D	0090			ENGINEERING CHANGE DESCRIPTION	A4-		595036-0000	ELD	003	AA		x	73518
D	0102			COMPONENT SUMMARY CIRCUIT DESIGN	A4-		44980-0002	ELD	002	AA		x	73001
D	0103			CIRCUIT DIAGRAM LINE SUMMARY	A4-		44980-0003	ELD	002	AA		x	73001
D	0104			CIRCUIT DIAGRAM TERMINAL SUMMARY	A4-		44980-0004	ELD	002	AA		x	73001
D	0106			CIRCUIT DIAGRAM	A4-		44980-0006	ELD	002	AA		x	73001
D	0108			CIRCUIT DIAGRAM	A4-		44980-0008	ELD	001	AA		x	72315
D	0116			CIRCUIT DIAGRAM	A4-		44980-0016	ELD	002	AA		x	73001
D	0127			CIRCUIT DIAGRAM	A4-		44980-0027	ELD	001	AA		x	72315
D	0129			CIRCUIT DIAGRAM	A4-		44980-0029	ELD	001	AA		x	72315
D	0134			CIRCUIT DIAGRAM	A4-		44980-0034	ELD	002	AA		x	73001
D	0136			CIRCUIT DIAGRAM	A4-		44980-0036	ELD	002	AA		x	73001
D	0143			CIRCUIT DIAGRAM	A4-		44980-0043	ELD	001	AA		x	72315
D	0145			CIRCUIT DIAGRAM	A4-		44980-0045	ELD	002	AA		x	73001
D	0146			CIRCUIT DIAGRAM	A4-		44980-0046	ELD	001	AA		x	72315
D	0500			MAIN + CROSS REFERENCE	A4-		48675-0001	ELD	002	AA		x	73518
D	0510			1T001 FAST SCAN	A4-		48675-0002	ELD	002	AA		x	73518
D	0520			PLC PROGRAM LIST	A4-		48675-0005	ELD	002	AA		x	73518

D	0530	PLC PROGRAM LIST	A4-	48675-0501 ELD 002 AA	x	73518
D	0540	PLC PROGRAM LIST	A4-	48675-0502 ELD 002 AA	x	73518
D	0550	PLC PROGRAM LIST	A4-	48675-0006 ELD 002 AA	x	73518
D	0560	PLC PROGRAM LIST	A4-	48675-0008 ELD 002 AA	x	73518
D	0570	PLC PROGRAM LIST	A4-	48675-0010 ELD 002 AA	x	73518
D	0580	PLC PROGRAM LIST	A4-	48675-0020 ELD 002 AA	x	73518
D	0590	PLC PROGRAM LIST	A4-	48675-0021 ELD 002 AA	x	73518
D	0600	PLC PROGRAM LIST	A4-	48675-0032 ELD 002 AA	x	73518
D	0610	PLC PROGRAM LIST	A4-	48675-0051 ELD 002 AA	x	73518
D	1006	CONNECTION DIAGRAM	A4-	62060-0006 ELD 002 AA	x	73001
D	1009	CONNECTION DIAGRAM	A4-	62060-0009 ELD 001 AA	x	72315
D	1011	CONNECTION DIAGRAM	A4-	62060-0011 ELD 001 AA	x	72315

ECM	73001	73518	P102651(L97501)
Release date	1999.12.15	2000.04.07	2001.11.04

Chg	Position	Sp	SH	Description	As	Size	Identity	DTp	Prt	Vs	Unit	Column quantity All	ECM
I	0010			PLC-DISKETTE GE-FANUC	A4-		48675-0000	ELD	003	AA		x	102651

Information 'valid to' 2001.11.04

Chg	Position	Sp	SH	Description	As	Size	Identity	DTp	Prt	Vs	Unit	Column quantity All	ECM
D	0010			PLC-DISKETTE GE-FANUC	A4-		48675-0000	ELD	002	AA		x	73518

11 Fuse panel label

EM3.0TB115473en.fm

Table of contents

Fuse board. 1487757

EM3.0TB115473en.fm

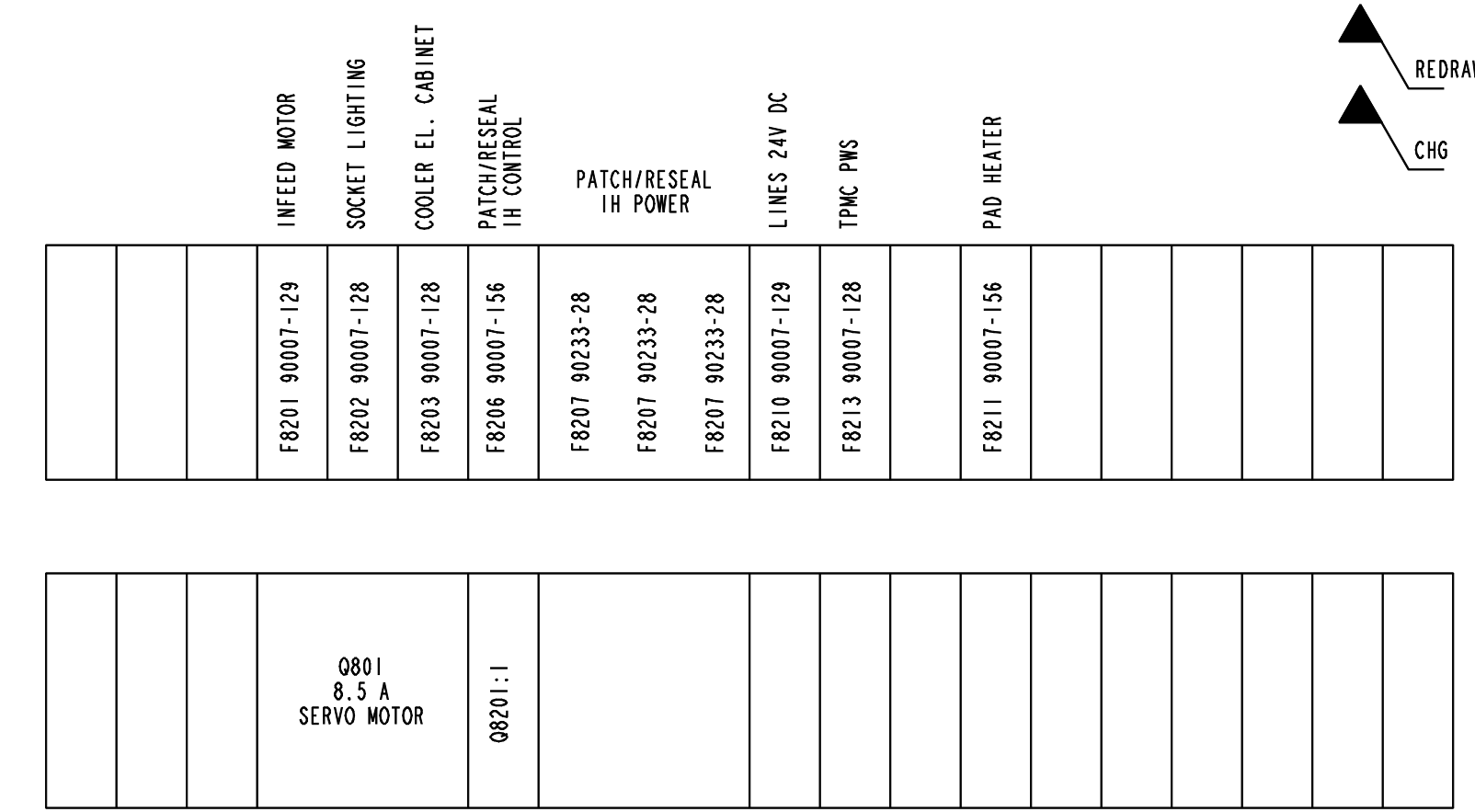

REDRAWN IN PRO/E

CHG

THIS DOCUMENT IS TO BE TREATED AS AN INVENTORY AND THE FOLLOWING PROCEDURES SHALL BE FOLLOWED:
REDUCE TO: A4 ☒ REDUCE TO: A3 ☐
PLASTICIZED ACCORDING TO DS 202.36

Release Level: released		ECN No: 80916	Pro/PDM Revision: Drawing 1.2 Model 1.1
Marked with PART NUMBER		Unless otherwise stated: SHARP EDGES BROKEN	Surface Roughness:
Method/Size: SST/3 B 2103.10		Scale: 1:1	
Material: -		Surface Treatment: -	
Designer: LFI	Date: 0105	Denomination: FUSE BOARD -	
Company: Tetra Brik PS S.p.A.			
Tetra Pak	Drawing No: 1487757	Document Type: DRA	Version: AB / Page: 1(1)

This drawing must not without the consent of Tetra Pak be copied, transmitted or disclosed to any third party.

A3_2

12 Other information

EM3.0TB125473en.fm

This page intentionally left blank

EM3.0TB125473en.fm

Tetra Pak

EM binder labels. 30mm Halfwidth *Note! This page is generated **automatically**. using the **variable definitions** made in the **front page** file!!*

PT21 050V

Issue 2002-03 Doc No. EM-81547-0103

PT21 050V

Issue 2002-03 Doc No. EM-81547-0103

PT21 050V

Issue 2002-03 Doc No. EM-81547-0103

PT21 050V

Issue 2002-03 Doc No. EM-81547-0103

PT21 050V

Issue 2002-03 Doc No. EM-81547-0103

PT21 050V

Issue 2002-03 Doc No. EM-81547-0103

PT21 050V

Issue 2002-03 Doc No. EM-81547-0103

PT21 050V

Issue 2002-03 Doc No. EM-81547-0103

PT21 050V

Issue 2002-03 Doc No. EM-81547-0103

PT21 050V

Issue 2002-03 Doc No. EM-81547-0103

PT21 050V

Issue 2002-03 Doc No. EM-81547-0103

PT21 050V

Issue 2002-03 Doc No. EM-81547-0103

PT21 050V

Issue 2002-03 Doc No. EM-81547-0103

PT21 050V

Issue 2002-03 Doc No. EM-81547-0103

EM binder labels. 40 mm Full width *Note! This page is generated **automatically**. using the **variable definitions** made in the **front page** file!!*

PT21 050V

Issue 2002-03 Doc No. EM-81547-0103

PT21 050V

Issue 2002-03 Doc No. EM-81547-0103

PT21 050V

Issue 2002-03 Doc No. EM-81547-0103

PT21 050V

Issue 2002-03 Doc No. EM-81547-0103

PT21 050V

Issue 2002-03 Doc No. EM-81547-0103

PT21 050V

Issue 2002-03 Doc No. EM-81547-0103

PT21 050V

Issue 2002-03 Doc No. EM-81547-0103

PT21 050V

Issue 2002-03 Doc No. EM-81547-0103

PT21 050V

Issue 2002-03 Doc No. EM-81547-0103

PT21 050V

Issue 2002-03 Doc No. EM-81547-0103