MM

MM Manual

PT21 050V

648508-0500

TechPub_2614345_0103 - 81535018fro.fm

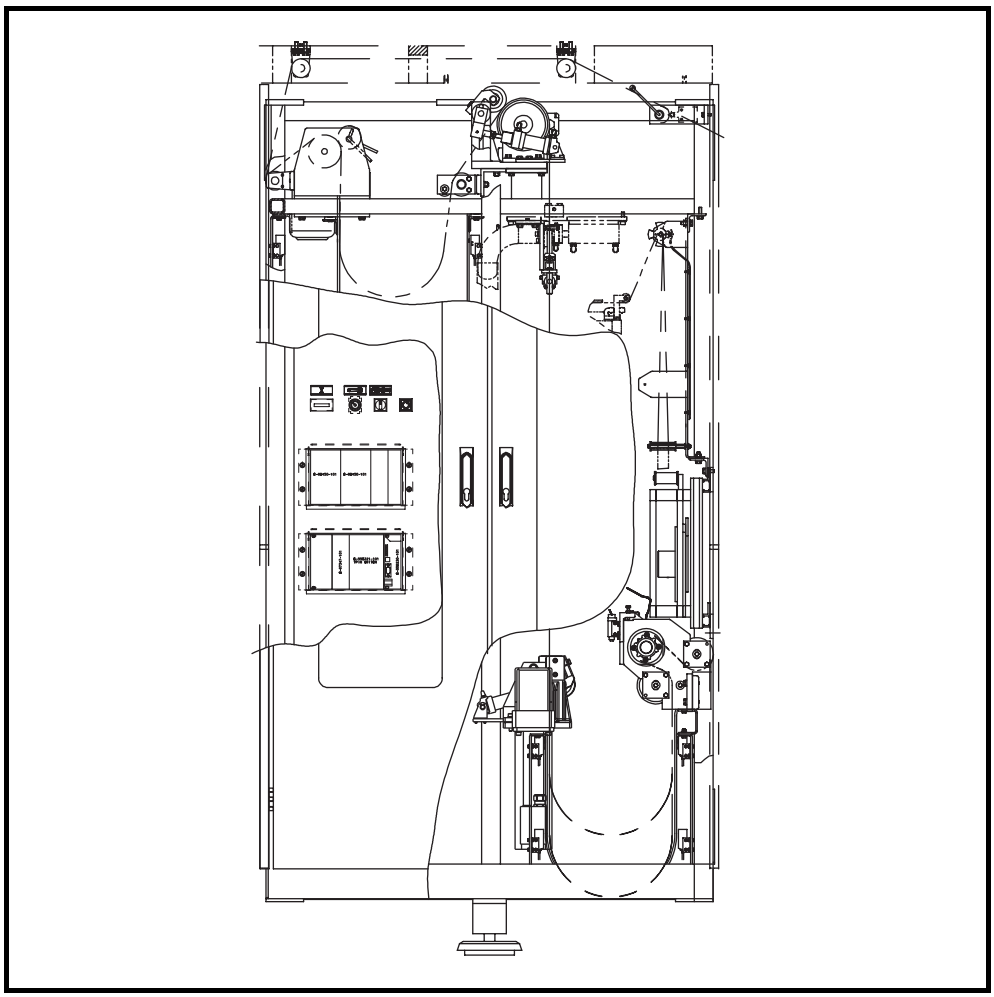

WARNING

Read and follow all safety precautions before working on or near this equipment.

Read all safety precautions throughout this manual and on safety signs attached to this equipment. Failure to follow all safety precautions could result in death or serious injury.

Tetra Pak

Doc. No. MM-81535-0108

Copyright © 2004 Tetra Pak Group

All rights reserved. No part of this document may be reproduced or copied in any form or by any means without written permission from Tetra Pak Carton Ambient S.p.A.

Tetra Pak and all Tetra Pak products are trademarks belonging to the Tetra Pak Group.

The content of this manual is in accordance with the design and construction of the machine or equipment at the time of publishing. Tetra Pak reserves the right to introduce design modifications without prior notice.

This document was produced by:

Tetra Pak Carton Ambient S.p.A.
Via Delfini 1
41100 MODENA
Italy

Additional copies can be ordered from Tetra Pak Parts or the nearest Tetra Pak office. When ordering additional copies, always provide the **document number. This can** be found in the machine specification document. It is also printed on the front cover and in the footer on each page of the manual.

Doc. No. MM-81535-0108

Issue 2004-02

TechPub_2614345_0103 - 81535018fro.fm

This manual is valid for:

Series No./ Machine No. Sign.

MM

MM Manual

PT21 050V
648508-0500
(TBA/21 050V)

i Introduction

ii Safety Precautions

1 Paper Web Path

2 Punch/waste Unit

3 Applicator Patch

4 Applicator Tab

5 Applicator Reseal

6 Pulltab Detection

7 Frame and Safety Function

8 Electrical Cabinet

9 Pneumatic Equipment

10 General

11 Checklist Overview

A list of all optional equipment, optional kits, and rebuilding kits that this manual is valid for is found on the next page.

Doc. No. MM-81535-0108

Issue 2004-02

Tetra Pak

Tetra Pak Carton Ambient S.p.A.

TechPub_2614345_0103 - 81535018fro.fm

Valid for:

PT21 Safety improvements
2603693-0100

PT21 Holes
1519822-0100

New bending roller infeed unit
2555126-0100

PT21 register mark photocells & software upgrade
2506594-0200

PT21 setting tool
2527632-0100

Servo tension device
1517497-0100

Drive motor PT21
1499415-0100

PT21 Cooling air outlet
1484857-0100

PT21 life time applicator
1538055-0100

PT21 Infeed unit
1538056-0100

ReCap 3
1487746-0100

TechPub_2614345_0103 - 81535018fro.fm

Update Log for Doc. No. MM-81535-0108

This table shows all changes made to this manual, such as kits installed and pages added or removed.

Date	Installed Kit	Added Pages (Doc. No.)	Removed Pages	Signature

TechPub_2614345_0103 - 81535018fro.fm

Date	Installed Kit	Added Pages (Doc. No.)	Removed Pages	Signature

TechPub_2614345_0103 - 81535018fro.fm

i Introduction

TechPub_2614345_0103 - 81535018int.fm

About the Introduction Chapter

This chapter contains basic information about this manual and related Tetra Pak equipment.

Manual Information

Tetra Pak recommends reading all delivered manuals carefully. Make sure that the delivered manuals are available to personnel who operate or maintain the equipment.

It is important to keep this manual for the lifetime of the equipment and to pass the manual on to any subsequent holder or user.

Tetra Pak will not be held responsible for any damage to the equipment caused by not following the instructions given in this manual.

Delivered Manuals

The manuals delivered with this equipment include

- Conversion Manual (CM)
  This manual provides technicians with information on converting the equipment between different production modes.
- Electrical Manual (EM)
  This manual provides technicians with information about the equipment’s electrical system.
- Installation Manual (IM)
  This manual provides technicians with information required to safely install the equipment.
- Maintenance Manual (MM)
  This manual provides technicians with information on maintaining the equipment.
- Operation Manual (OM)
  This manual provides the operator with information on handling and operating the equipment before, during, and after production.
- Spare Parts Catalogue (SPC)
  This manual provides the information necessary to order spare parts from Tetra Pak

TechPub_2614345_0103 - 81535018int.fm

Page Layout . . . . . i - 5
Page Numbering. . . . . i - 6
Typographical Conventions . . . . . i - 6
Symbols . . . . . i - 6

Machine Introduction . . . . . i - 7
Intended Use of the Equipment . . . . . i - 7
Manufacturer . . . . . i - 7
Service . . . . . i - 7

Identification . . . . . i - 8
CE Classification . . . . . i - 8
Machine Plate . . . . . i - 8

Orientation . . . . . i - 9

Hygiene. . . . . i - 10

Abbreviations and Terminology . . . . . i - 11

How to Use This Maintenance Manual . . . . . i - 12
MM Procedure Codes . . . . . i - 12
Procedure Start Table . . . . . i - 13
Tetra Pak Maintenance System. . . . . i - 14
Planned Maintenance Program . . . . . i - 14
Checklists and Spare Parts Recommendations. . . . . i - 14

Functional Description . . . . . i - 15

Main Flowchart . . . . . i - 17

TechPub_2614345_0103 - 81535018int.fm

This page intentionally left blank

TechPub_2614345_0103 - 81535018int.fm

Page Layout

Every main page in a manual contains a header and a footer. The page header contains the section name (1) and the chapter name (2). The page footer contains the manual's document number (3), and the page number (4). See also the Page Numbering section.

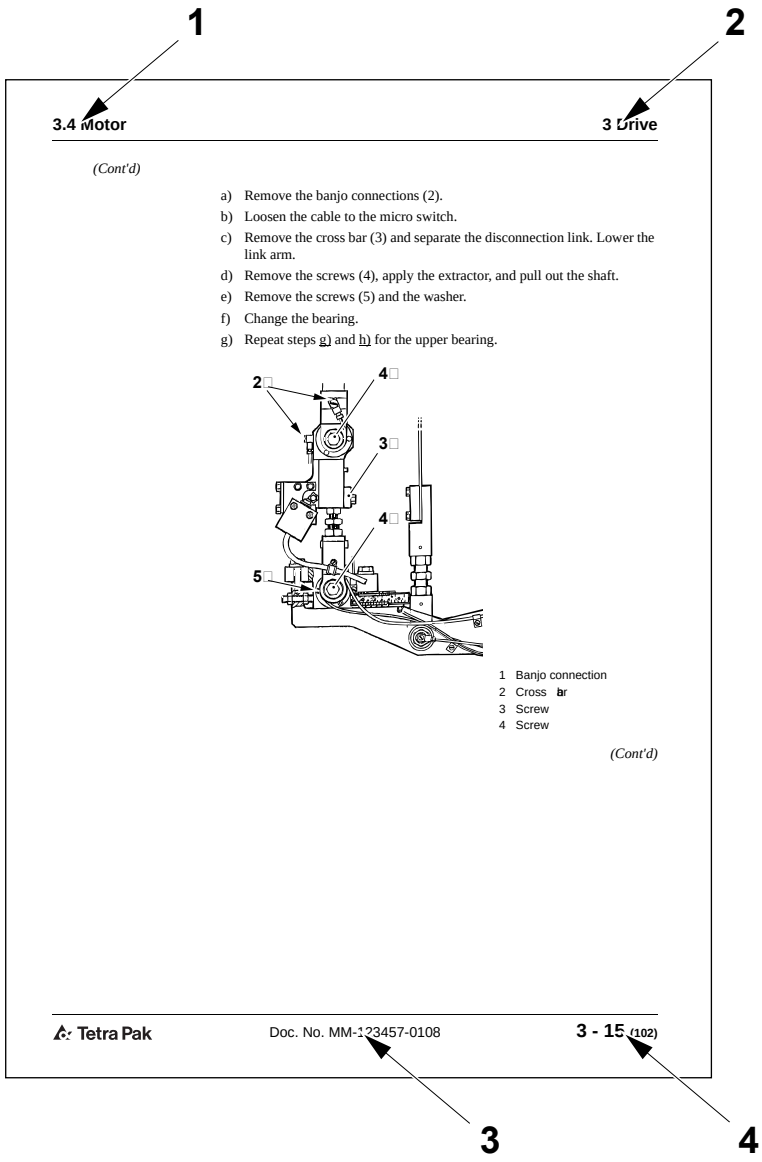

1 Section name
2 Chapter name
3 Document number
4 Page number

TechPub_2614345_0103 - 81535018int.fm

Page Numbering

A page number has three parts:

- chapter number (1)
- consecutive page number (2) within the chapter
- total number of pages (3) in the chapter.

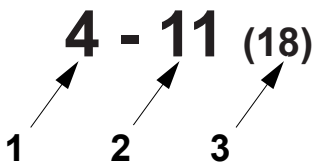

1 Chapter number
2 Consecutive page number
3 Total number of pages

Typographical Conventions

Controls on the operator panel, emergency stop devices, and program steps are printed in CAPITAL LETTERS.

Cross-references are underlined.

Symbols

The following symbols are used in illustrations:

- A pointer arrow (1) indicates the position of an object.
- A zoom arrow (2) indicates that an object view is enlarged. The arrow points towards the enlarged view of the object.
- A rotation movement arrow (3) indicates rotational movement of an object. The arrow points in the direction of rotation.
- A straight movement arrow (4) indicates movement of an object. The arrow points in the direction of movement.

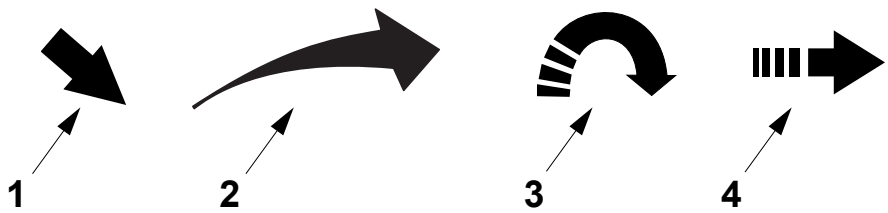

1 Pointer arrow
2 Zoom arrow
3 Rotation movement arrow
4 Straight movement arrow

TechPub_2614345_0103 - 81535018int.fm

Machine Introduction

Intended Use of the Equipment

The intended use of this Tetra Pak equipment is to...

All other use is prohibited. Tetra Pak will not be held responsible for injury or damage if the equipment is used for any other purpose.

Manufacturer

This Tetra Pak equipment has been manufactured by

Tetra Pak Carton Ambient S.p.A.
Via Delfini 1
41100 MODENA
Italy

Service

If you encounter problems when operating this equipment, contact the nearest Tetra Pak office.

Contact the Liaison with other inquiries, comments, or suggestions for improvement regarding the equipment and its documentation.

TechPub_2614345_0103 - 81535018int.fm

Identification

CE Classification

This equipment complies with the basic health and safety regulations of the European Economic Area (EEA).

Machine Plate

The illustration below shows an example of the machine plate and its location on the equipment. The machine plate carries data needed when contacting Tetra Pak concerning this specific equipment.

Make sure that the equipment data in the front pages of this manual corresponds to the machine plate data and the machine specification.

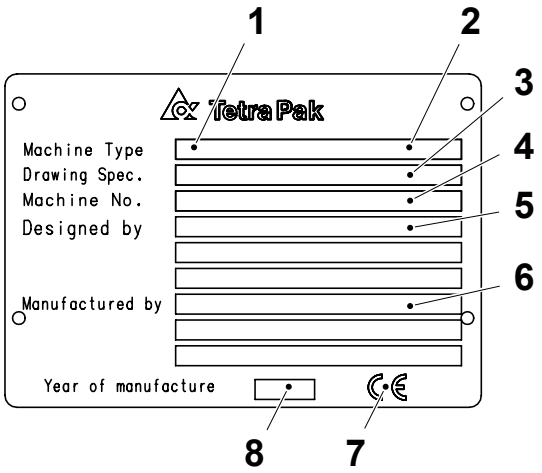

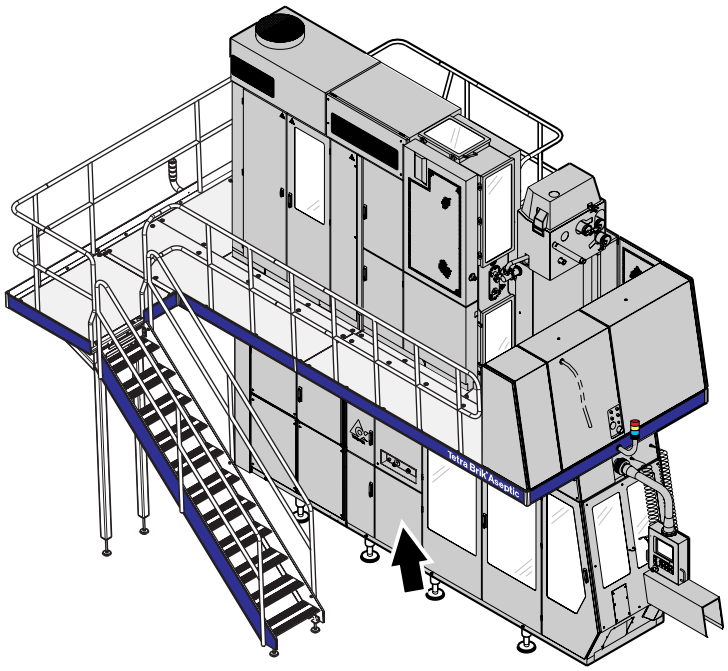

1 Machine type
2 Volume
3 Drawing specifications
4 Machine serial number
5 Designed by
6 Manufacturer
7 CE mark
8 Year of manufacture

TechPub_2614345_0103 - 81535018int.fm

Orientation

The illustration below shows the orientation of the equipment. This orientation information will be used throughout this manual.

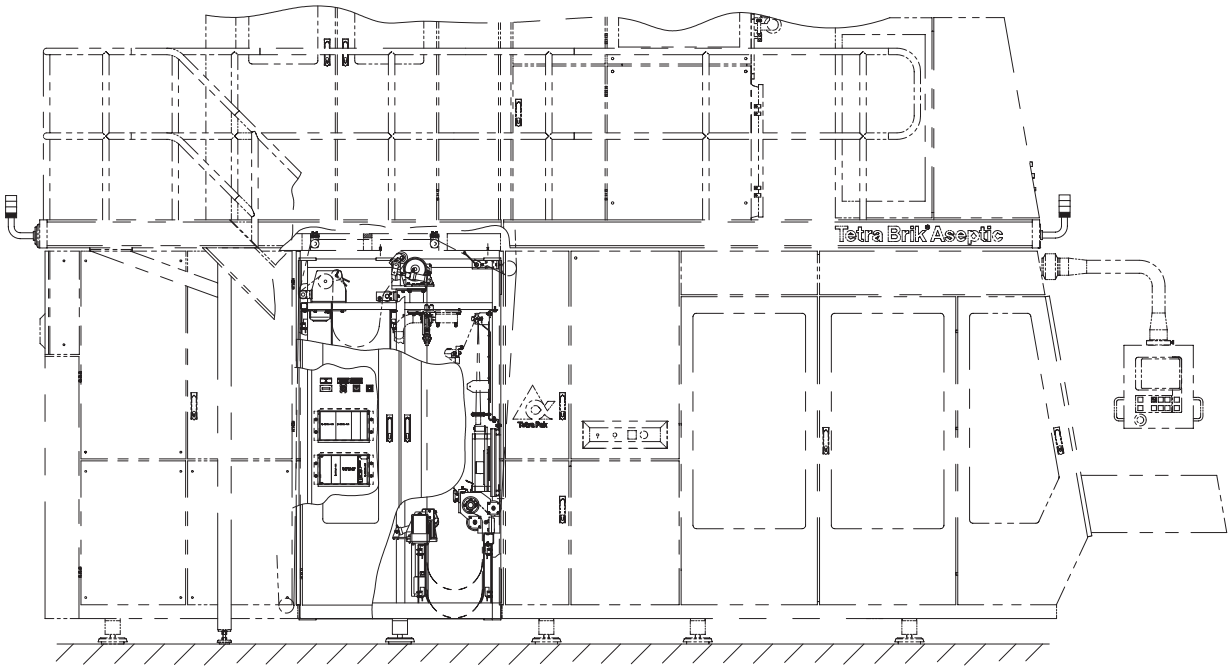

LH SIDE

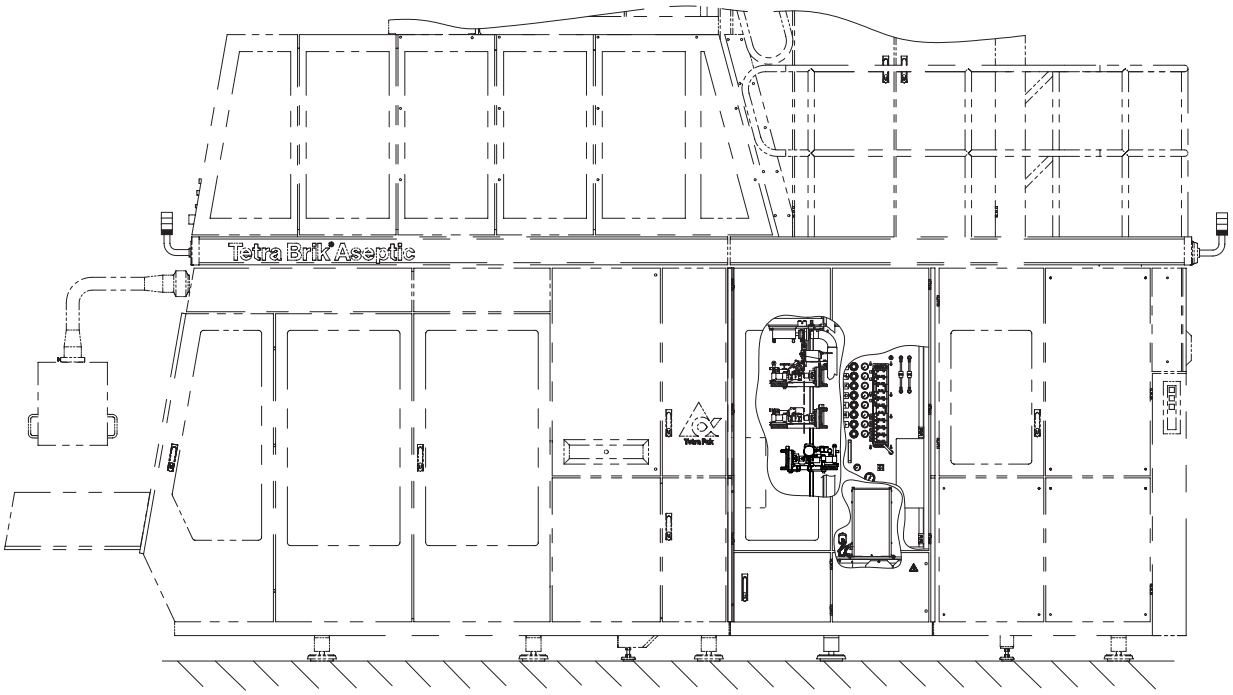

RH SIDE

TechPub_2614345_0103 - 81535018int.fm

Hygiene

Avoid microbiological pollution of the packaging material:

- Always keep the doors to the filling room (area) closed. To prevent contamination via air streams, never open a window when the equipment is in production.
- Never clean the floors or the equipment in the filling room (area) when the equipment is in production.
- Compressed air used for cleaning purposes is to be used only for cleaning filters and should only be used outside of the filling room (area) or in the final folder compartment of the filling machine.
- Prepare the splicing of the packaging material as late as possible.
- Disinfect your hands before touching anything that may come into contact with the product. Use disinfectant code H. See the Technical Data chapter.
- Keep your hands and gloves clean.
- Always wear some type of hair protection (cap or hairnet) and clean clothes (preferably white).
- Do not wear a watch, ring, necklace, earrings, or any other exposed jewellery.

TechPub_2614345_0103 - 81535018int.fm

Abbreviations and Terminology

Abbreviation/ Terminology	Meaning	Translation
Approx.	Approximately	
ASU	Automatic Splicing Unit	
DMC	Digital Motion Controller	
EM	Electrical Manual	
FFU	Final Folder Unit	
IM	Installation Manual	
IS	Inner Strip	
LED	Light Emitting Diode	
LH	Left hand side	
LSB	Last Significant Bit	
min.	Minimum	
max.	Maximum	
MM	Maintenance Manual	
MSB	Most Significant Bit	
OM	Operator Manual	
OE	Optional Equipment	
OK	Optional Kit	
PC	Position Control	
PH	Perforation Heater	
PLC	Programmable Logic Controller	
PT	PullTab	
RC	Reference Count	
RH	Right hand side	
SPC	Spare Parts Catalogue	
TMCC	Tetra Pak Multi-purpose Compact Controller	
TP	Tetra Pak	
TPMS	Tetra Pak Maintenance System	
TPIH	Tetra Pak Induction Heating	
TPOP	Tetra Pak Operator Panel	
TPMC	Tetra Pak Machine Control	
TS	Transversal Sealing	

TechPub_2614345_0103 - 81535018int.fm

How to Use This Maintenance Manual

MM Procedure Codes

Maintenance procedures are designated as shown in the example.

1.2.3-1 Worm Gear - Change Oil

MM Chapter or main machine group

MM Section or machine group

MM Subsection or machine subgroup

Sequential procedure number

Subsection Name

Subject of activity

Types of Procedure

The following types of procedure are used:

- adjust
- assemble
- bleed
- calibrate
- change
- charge
- check
- clean
- count
- delime
- dismantle
- empty
- fill
- install
- lubricate
- measure
- overhaul
- record
- remove
- set
- synchronise
- tighten
- turn

(Cont'd)

TechPub_2614345_0103 - 81535018int.fm

(Cont'd)

Procedure Start Table

Each maintenance procedure described in this manual begins with a table containing information needed to begin the procedure. This information includes the following:

- **Machine Status** (1) shows actuator status, program step, and any other machine status necessary to begin the procedure
- **Special Equipment** (2) shows a list of personal protective equipment and special tools that are not normally carried by a service technician, but are needed in the procedure
- **Consumables** (3) shows items, such as lubricants, that are required to perform the procedure. Consumables do not include replacement parts.
- **SPC Reference** (4) shows the assembly number, found in the index of the Spare Parts Catalogue (SPC)

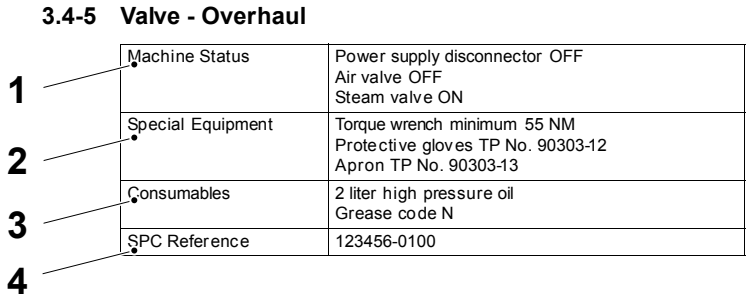

1 Machine Status
2 Special Equipment
3 Consumables
4 SPC Reference

TechPub_2614345_0103 - 81535018int.fm

Tetra Pak Maintenance System

To ensure uninterrupted production, all equipment must be maintained on a regular basis.

Tetra Pak has developed a planned maintenance system to keep pace with the ongoing development of new and existing equipment from Tetra Pak, and to meet the demands set by customers for higher efficiency and better economy.

Planned Maintenance Program

The Tetra Pak planned maintenance system reduces unplanned downtime and maintenance time for complete production lines, as well as for individual equipment.

With the Tetra Pak planned maintenance system, preventive maintenance can be performed before production is affected. The system is continually updated based on experience with Tetra Pak equipment worldwide.

The Tetra Pak planned maintenance system maintains records of when maintenance is performed, when parts are changed, whether alterations are made, and so on. These records, combined with usage statistics, enable reliable predictions of the service life of all equipment parts.

Checklists and Spare Parts Recommendations

Customers using the Tetra Pak planned maintenance system receive checklists from their local Tetra Pak office whenever planned maintenance is due. These checklists are individualised for each customer, according to the type of equipment, equipment usage, and maintenance occasion. In addition, the system recommends spare parts, rotation units, tools, and templates according to the statistics collected.

Tip! Contact the local Tetra Pak office for additional information about the Tetra Pak Maintenance System and its planned maintenance program.

TechPub_2614345_0103 - 81535018int.fm

Functional Description

The PullTab unit processes packaging material as and when required by the filling machine. When the filling machine pulls packaging material, the lower photocell (6) in the outfeed assembly (5) is activated. This starts the PullTab cycle, and one length of packaging material is fed into position.

When the packaging material is in motion, the register mark photocells (3) read the position of the register mark. If the register mark is slightly behind or ahead of its ideal position, the servo motor compensates for this by feeding more or less packaging material the next time, as required.

When the packaging material has moved into position: one PullTab hole is punched into the packaging material at the punch unit (4); an IS patch is applied over the PullTab hole at the IS patch applicator assembly (1), then the packaging material comes to the reseal unit assembly (7) that provides a complete sealing of the IS patch on the packaging material; ultimately a tab is applied over the PullTab hole at the tab applicator assembly (2).

When the cycle has completed, the PullTab unit waits until the lower photocell (6) indicates that the outfeed assembly (5) requires more packaging material, and then the whole cycle is repeated.

TechPub_2614345_0103 - 81535018int.fm

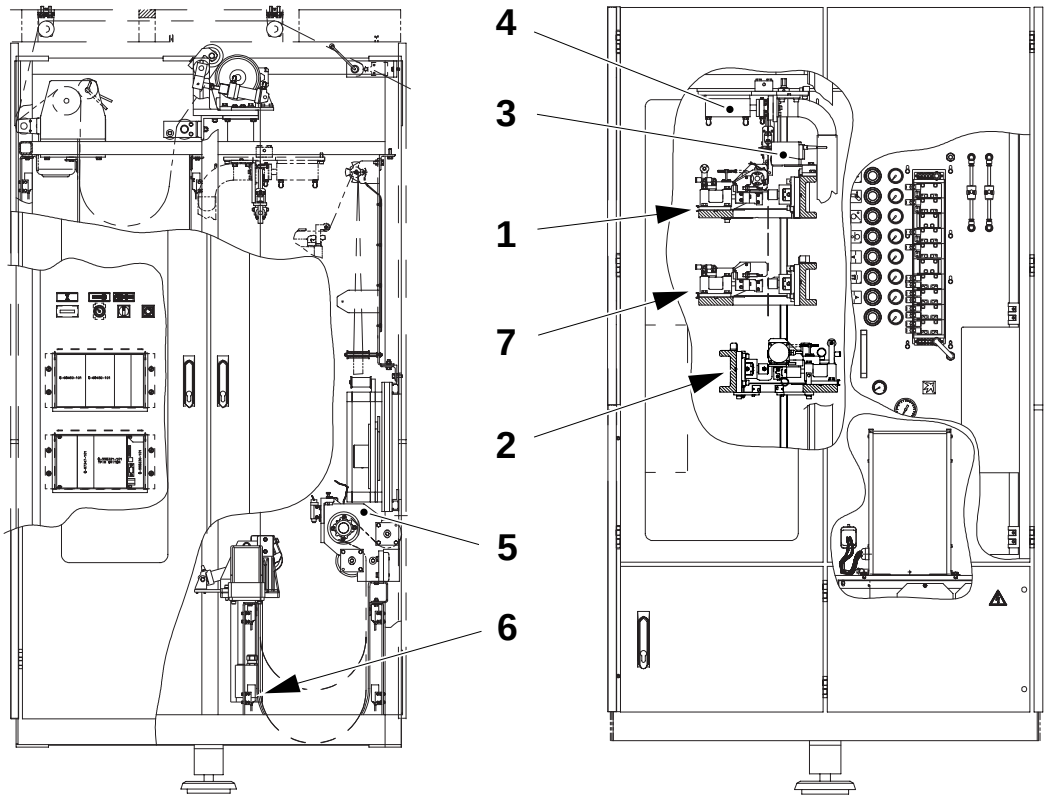

1 IS patch applicator
2 Tab applicator
3 Register mark photocell
4 Punch unit
5 Outfeed assembly
6 Lower photocell
7 Reseal unit

(Cont'd)

(Cont'd)

When the supply of packaging material in the infeed assembly (13) is low, (lower photocell (15) activated), the infeed motor (11) refills the supply. If the supply of packaging material is used up faster than it is refilled, the infeed motor (11) goes into **fast** mode. If the upper photocell (14) is deactivated, the PullTab and the filling machine go into SHORT STOP mode.

If the filling machine is running without the packaging material going through the PT21, the PT21 plus the filling machine will go into SHORT STOP mode after 3 seconds and the alarm outfeed loop will be shown on the TPOP panel.

The IS patch magazine (8) and the tab magazine (12) provide a supply of strips to the PullTab unit. Sensors in the magazines monitor the strip supply and activate the appropriate alarms when the supply is low. Other sensors activate the appropriate alarms if the strips break. If any alarm is left unattended for more than five minutes the PullTab plus the filling machine go into SHORT STOP mode.

The IS patch detector (9) monitors the absence of an IS patch on the inside of the packaging material, and the tab detector (10) monitors the absence of a tab on the outside of the packaging material. When a tab or IS patch is missing, the PullTab plus the filling machine go into SHORT STOP.

The tab-folding device in the filling machine folds back the loose end of the tab in preparation for application of the ReCap.

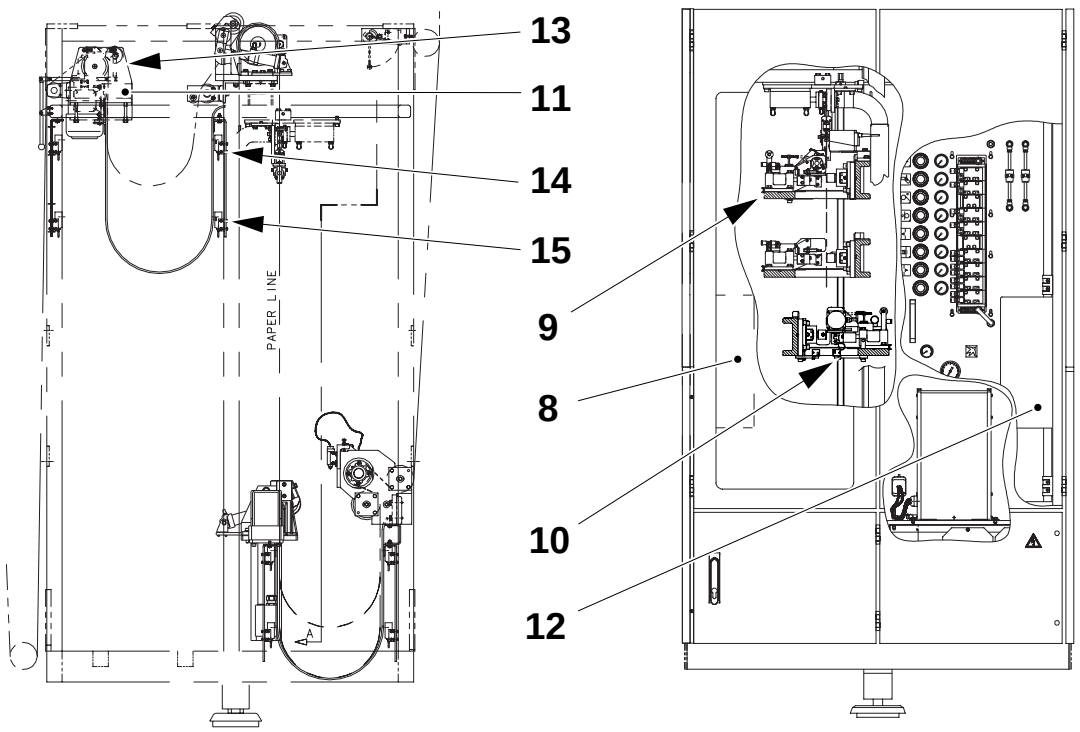

8 IS patch magazine
9 IS patch detector
10 Tab detector
11 Infeed motor
12 Tab magazine
13 Infeed assembly
14 Upper photocell
15 Lower photocell

TechPub_2614345_0103 - 81535018int.fm

Main Flowchart

The following flowchart shows the complete order in which the PullTab unit must be set up.

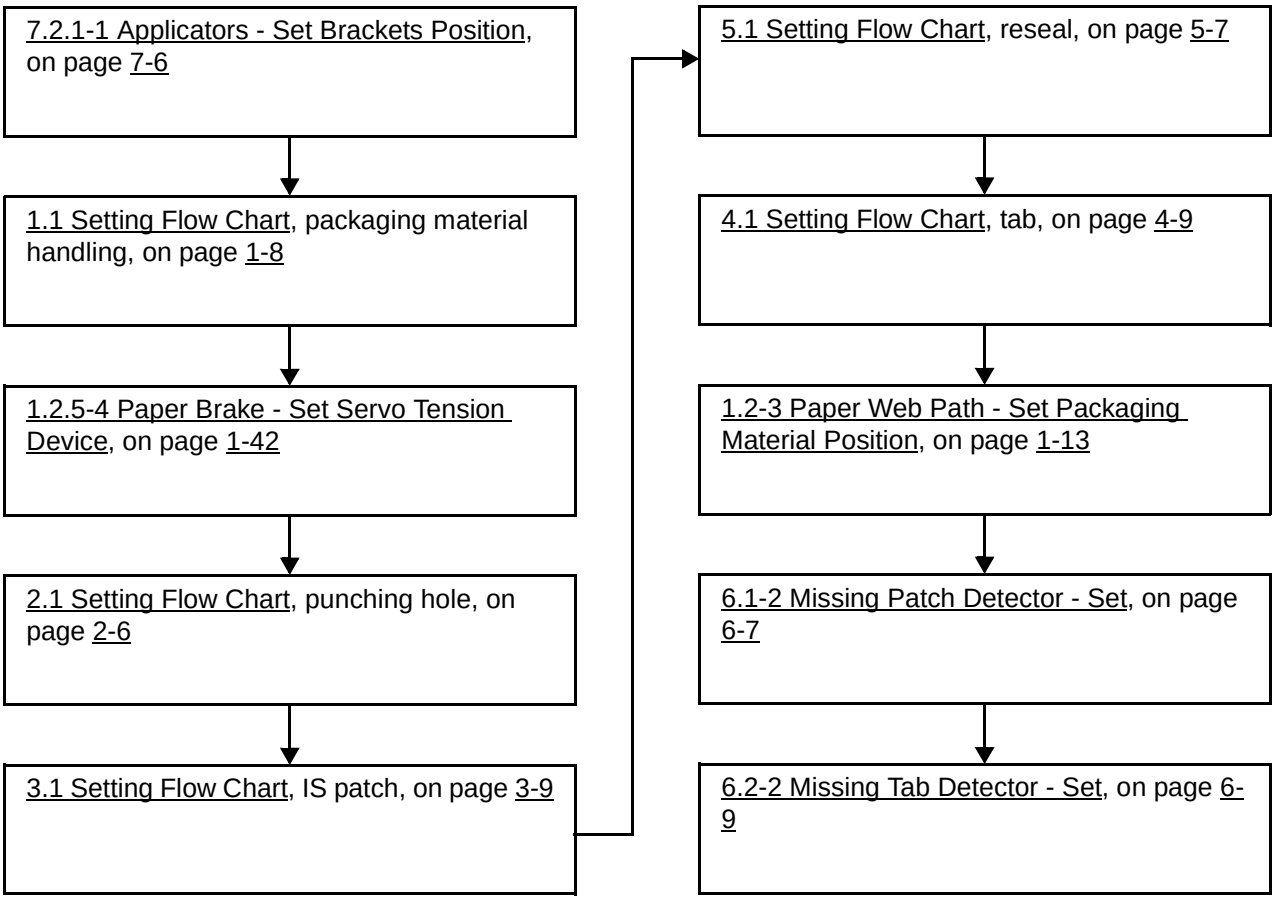

TechPub_2614345_0103 - 81535018int.fm

This page intentionally left blank

TechPub_2614345_0103 - 81535018int.fm

ii Safety Precautions

TechPub_2614345_0103 - 81535018sp.fm

Read the Safety Precautions

WARNING

Read and follow all safety precautions before working on or near this equipment.

Read all safety precautions throughout this manual and on safety signs attached to this equipment. Failure to follow all safety precautions could result in death or serious injury.

Definitions

Energy Isolating Device. A mechanical device that physically prevents transmission or release of energy.

Power Supply Disconnector. The energy isolating device for the electrical power supply to the equipment.

Lockout. The use of a device, such as a padlock, to make sure that an energy isolating device, such as a power supply disconnector, cannot be operated.

Lockout Procedure. A procedure to put each necessary energy isolating device in its safe position to prevent the energising of the equipment, such as when a maintenance procedure should be carried out.Safety Messages Description

A safety message is always accompanied by a safety alert symbol and a signal word.



This is the **safety alert symbol**. It is used to alert about potential personal injury hazards. To avoid hazards, obey all safety messages that follow this symbol.

TechPub_2614345_0103 - 81535018sp.fm

Personnel Requirements . . . . . ii - 6
Skilled Person . . . . . ii - 6
Instructed Person. . . . . ii - 6
Safety Signs . . . . . ii - 7
Locations of Safety Signs . . . . . ii - 8
Safety Devices . . . . . ii - 10
Emergency Stop . . . . . ii - 10
Emergency Stop Push-Buttons . . . . . ii - 11
Safeguards . . . . . ii - 12
Warning Lamp . . . . . ii - 13
Audible Alarm . . . . . ii - 13
Personal Protection. . . . . ii - 14
Noise Hazard . . . . . ii - 14
Entanglement Hazard . . . . . ii - 14
Hazardous Materials . . . . . ii - 15
Cooling Media R134a . . . . . ii - 16
Emergency Procedures. . . . . ii - 16
Handling and Storage of Cooling Media R134a . . . . . ii - 16
Disposal of Cooling Media R134a . . . . . ii - 16
Supply Systems . . . . . ii - 17
Electrical Cabinet . . . . . ii - 17
Socket Outlet . . . . . ii - 18
Power Supply . . . . . ii - 19
Air Supply . . . . . ii - 20
Equipment for Lifting and Moving Loads . . . . ii - 21

TechPub_2614345_0103 - 81535018sp.fm

This page intentionally left blank

TechPub_2614345_0103 - 81535018sp.fm

The following safety alert symbols and **signal words** are used in this manual to inform the user of hazards.

DANGER

Danger indicates an imminently hazardous situation which, if not avoided, **will** result in **death or serious injury**.

WARNING

Warning indicates a potentially hazardous situation which, if not avoided, **could** result in **death or serious injury**.

CAUTION

Caution indicates a potentially hazardous situation which, if not avoided, **may** result in **minor or moderate injury.** It may also be used to alert against unsafe practices.

CAUTION

Caution without the safety alert symbol indicates a potentially hazardous situation which, if not avoided, **may** result in **property damage**.

TechPub_2614345_0103 - 81535018sp.fm

Personnel Requirements

Note! Personnel includes all persons working on or near this equipment.

Only skilled or instructed persons are allowed to work with this equipment.

Skilled Person

A skilled person must have relevant education and experience to enable him or her to identify hazards, analyse risks, and avoid hazards which electricity, machinery, chemicals, other energies, and supply systems on this equipment can create.

Skilled persons must meet local regulations, such as certifications and qualifications for working with electricity, mechanical systems, and so on.

Instructed Person

An instructed person must be adequately advised or supervised by a skilled person. The skilled person enables the instructed person to identify hazards, analyse risks, and avoid hazards which electricity, machinery, chemicals, other energies, and supply systems on this equipment can create.

TechPub_2614345_0103 - 81535018sp.fm

Safety Signs

WARNING

Damaged or missing safety signs increase the risk of death or serious injury.

Replace all missing or damaged safety signs immediately.

There are two types of safety sign

- ISO signs are used worldwide
- ANSI signs are used in the United States only

The table shows all safety signs that are located on this equipment.

Note! The position numbers (Pos.) in the table refer to the positions in the illustration(s) in the Locations of Safety Signs section.

Pos.	ISO sign	ANSI sign
1		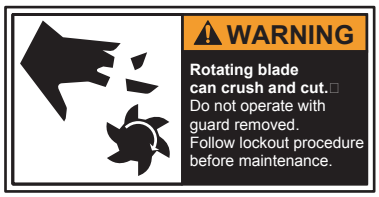
	Rotating blade can crush and cut. Do not operate with guard removed. Follow lockout procedure before maintenance.	
2		
	Hazardous voltage. Will shock, burn, or cause death. Follow lockout procedure before maintenance.	
3		
	Hot surface. Do not touch. Follow lockout procedure before maintenance.	

TechPub_2614345_0103 - 81535018sp.fm

Locations of Safety Signs

Note! Make sure that each safety sign is undamaged and in its correct position after installation and maintenance. Replace all missing or damaged safety signs immediately.

The illustration shows where the safety signs are located. The position numbers refer to the table in the Safety Signs section.

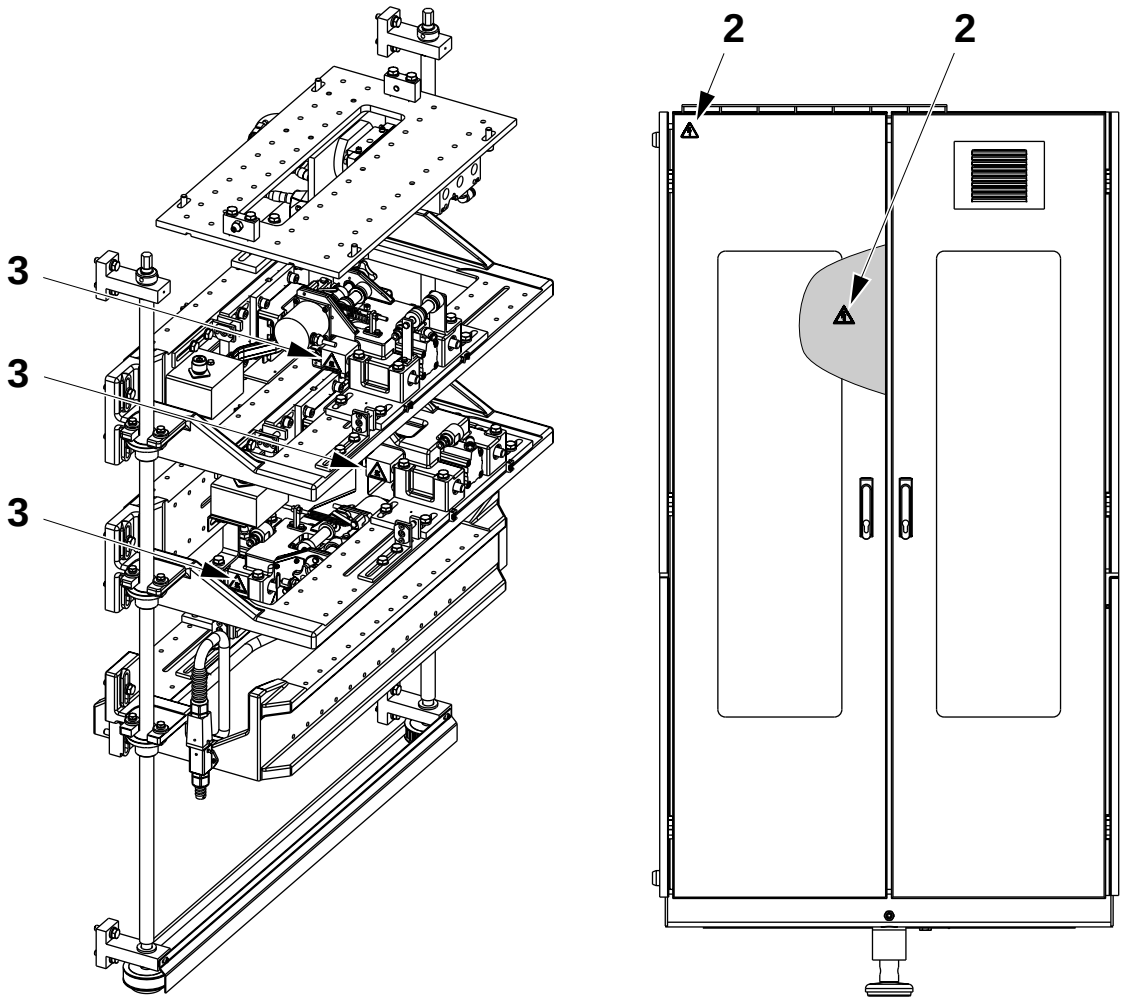

(Cont'd)

TechPub_2614345_0103 - 81535018sp.fm

(Cont'd)

The illustration shows where the safety signs are located. The position numbers refer to the table in the Safety Signs section.

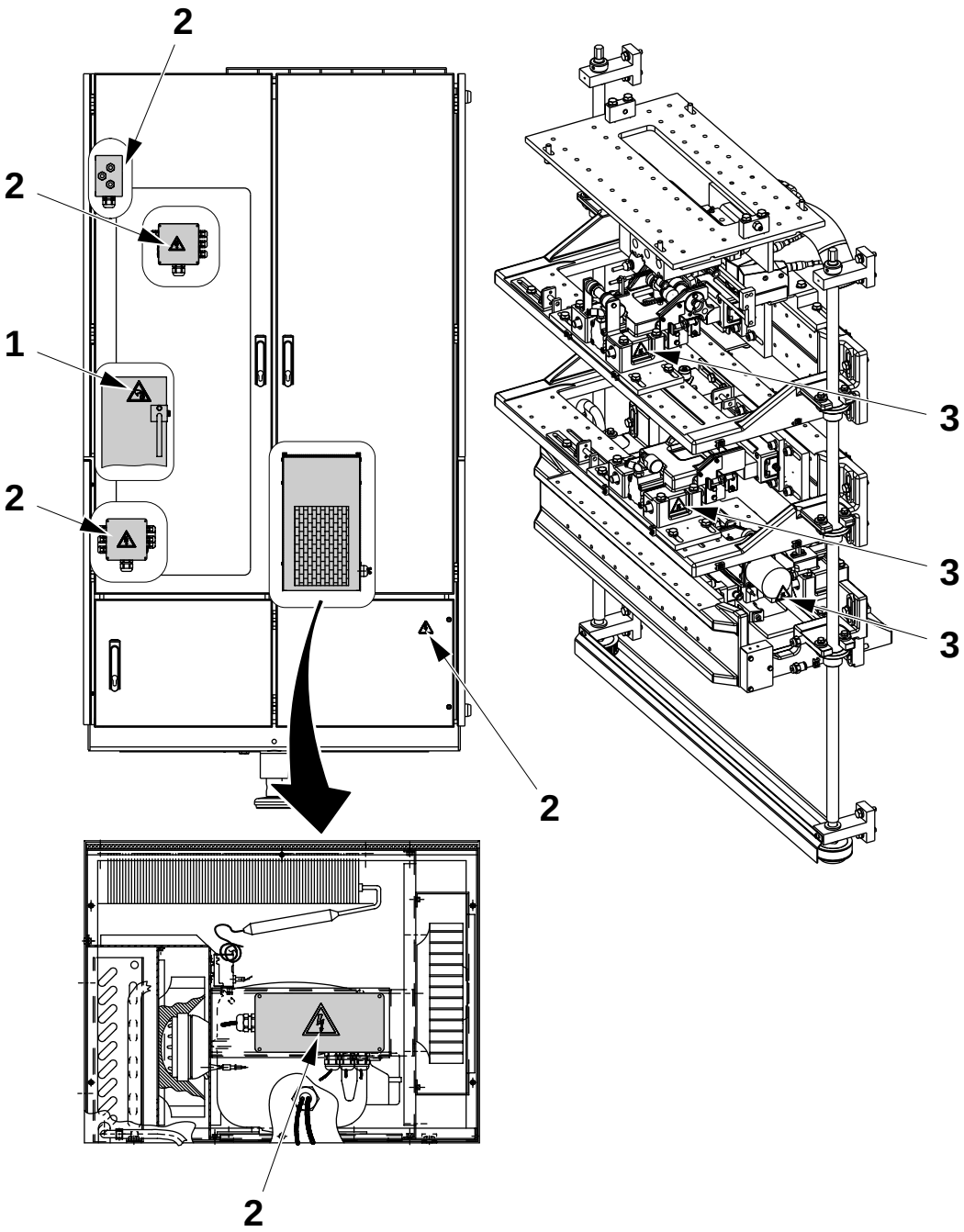

TechPub_2614345_0103 - 815350l8sp.fm

Safety Devices

WARNING
Unshielded hazards.
Never inch or run this equipment if any safety device is inoperative.

Change inoperative components of the safety system immediately.

WARNING
Hazardous Voltage.
Activating a safety device, such as pressing an EMERGENCY STOP push-button or opening a door, does not disconnect the power supply from this equipment.

Emergency Stop

Emergency stop devices are used to stop this equipment immediately in an emergency. Learn the positions of all emergency stop devices and how to use them.

Instructions for a normal production stop are included in the Stop chapter of the Operation Manual.

TechPub_2614345_0103 - 81535018sp.fm

Emergency Stop Push-Buttons

Push one of the EMERGENCY STOP push-buttons to stop this equipment immediately.

The illustration shows an EMERGENCY STOP push-button. The location of each EMERGENCY STOP push-button is shown by an arrow.

Note! The EMERGENCY STOP push-buttons for the filling machine control also the PullTab unit.

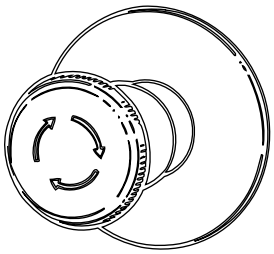

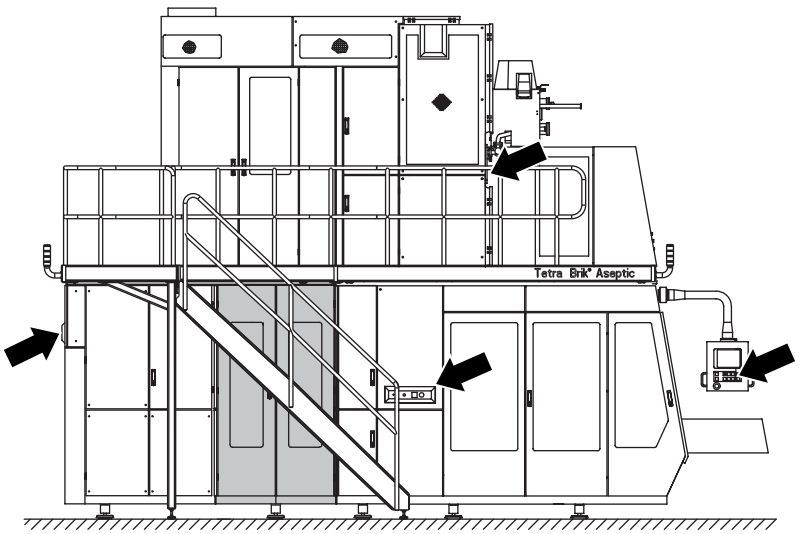

LH side

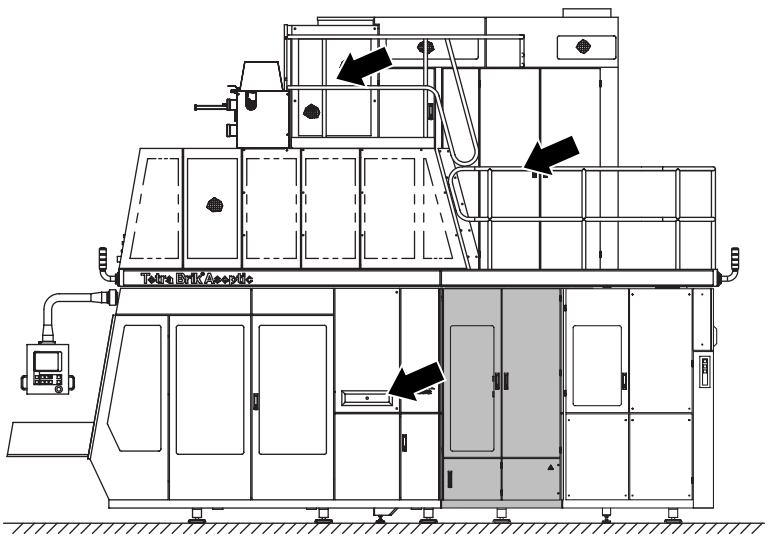

RH side

TechPub_2614345_0103 - 81535018sp.fm

Safeguards

WARNING
Moving machinery.
Never defeat or bypass the interlocking devices.

All movable guards, such as doors and covers, leading to hazardous areas are fitted with interlocking devices, usually electric safety switches. These devices are part of the safety system and must never be defeated, bypassed, or otherwise made inoperative.

CAUTION
Burn hazard.
Parts of this equipment protected by safeguards may be thermally hot after operation.

After installation and maintenance, and before this equipment is inched or run, check that all safeguards are in place and that they operate correctly.

CAUTION
Equipment damage.
Never stop this equipment by opening a movable guard.

The location of each movable guard is shown by an arrow.

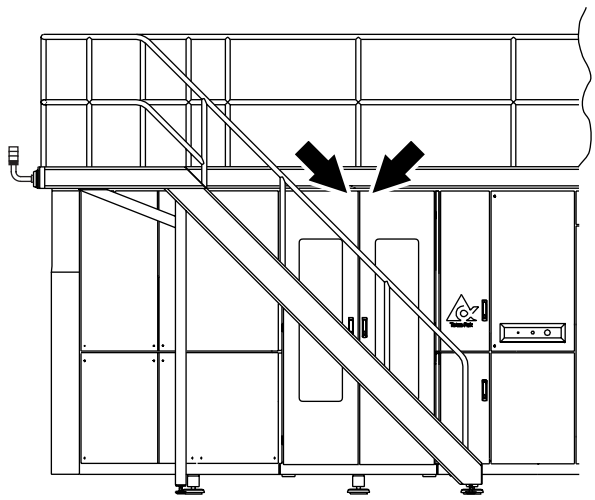

LH side

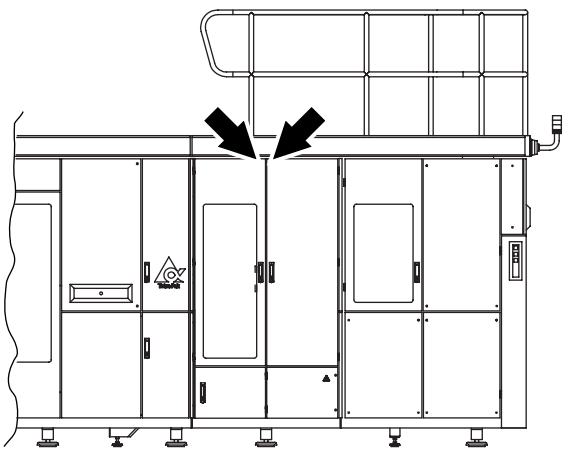

RH side

TechPub_2614345_0103 - 81535018sp.fm

Warning Lamp

A warning lamp is a column of warning lights:

- A red **light** (1) indicates a hazardous condition. This is an emergency situation that requires immediate action.
- A yellow **light** (2) indicates an abnormal condition. This is an impending critical condition calling for action by the operator.
- A blue **light** (3) indicates that operator action is required.

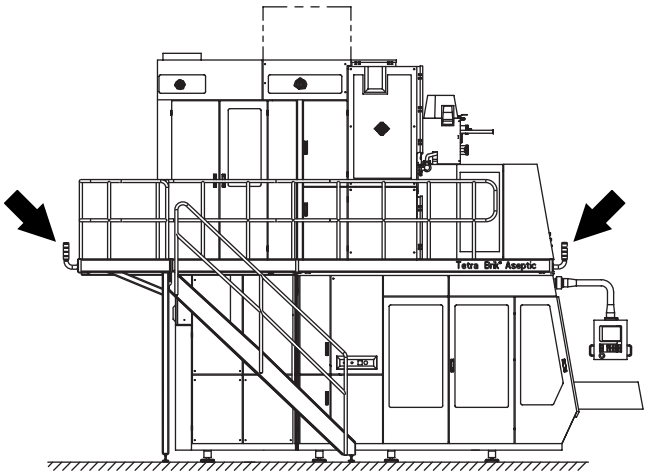

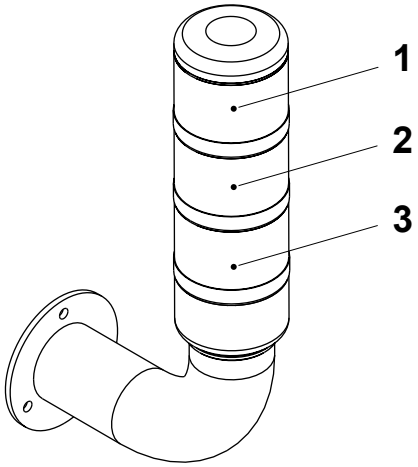

1 Red light
2 Yellow light
3 Blue light

A warning light flashes when operator action is required. The light stops flashing and remains lit when the alarm is acknowledged. After the fault is corrected or the operator takes the appropriate action, the warning light goes off.

Audible Alarm

The audible alarm produces a warning signal every time this equipment is about to start. The warning signal sounds for approximately three seconds prior to starting to alert personnel.

TechPub_2614345_0103 - 815350018sp.fm

Personal Protection

This section applies to all personnel at all times when this equipment is in operation. For special personal protection required when handling hazardous materials, see the Hazardous Materials section.

Noise Hazard

CAUTION
Hazardous noise.
Risk of impaired hearing.
Hearing protection is recommended whenever this equipment is in operation.

Entanglement Hazard

WARNING
Risk of entanglement.
Do not wear jewellery or loose clothing when working on or near this equipment. Long hair may not be loose.

TechPub_2614345_0103 - 81535018sp.fm

Hazardous Materials

WARNING

Contact with chemicals can cause death, serious injury, and illness.

Always follow the chemical manufacturer’s instructions when handling chemicals.

Make sure that

- the showers work
- an eyewash device, movable or wall-mounted, is available and operational
- additional washing facilities are nearby

Note! Learn the locations of all washing facilities in order to act immediately in case of an accident.





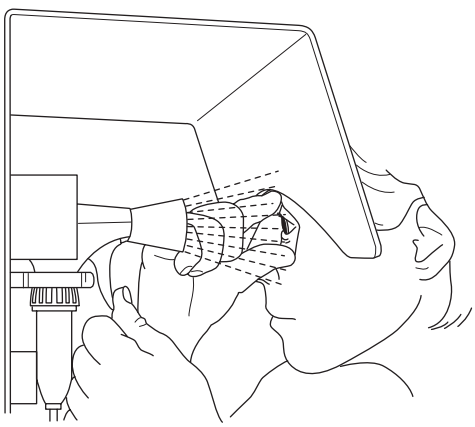

TechPub_2614345_0103 - 81535018sp.fm

Cooling Media R134a

WARNING

Refrigerant gas.

High concentration of cooling media R134a vapour can cause dizziness, headache, confusion and unconsciousness. In liquid form R134a can cause frostbite injuries on contact with skin. Always wear personal protective equipment.

Emergency Procedures

Inhaling large quantities of cooling media R134a vapour can cause dizziness, headache, confusion and unconsciousness. In liquid form cooling media R134a can cause frostbite injuries on contact with skin.

In the case of an accidental release of this refrigerant:

- leave the affected area immediately
- remove victims to fresh air and if necessary administer expired air resuscitation and/or cardiopulmonary resuscitation. Call for immediate medical attention
- in case of contact with eyes or skin, soak the exposed areas with luke warm water, not hot or cold. Call for immediate medical attention
- allow the vapour to dissipate, use auxiliary ventilation if available.

Handling and Storage of Cooling Media R134a

When handling cooling media R134a, make sure that:

- the cylinders are stored in a cool dry place away from direct sunlight or sources of heat
- the areas used for the storage and handling of this refrigerant are adequately ventilated
- the cylinders are transported carefully
- the cylinder valves are opened slowly.

Disposal of Cooling Media R134a

Cooling media R134a should whenever possible be reprocessed or recycled. Contact the manufacturer or supplier for information on authorised refrigerant reclamation and recycling programs.

TechPub_2614345_0103 - 81535018sp.fm

Supply Systems

Electrical Cabinet

DANGER

Hazardous voltage.
Will shock, burn, or cause death.
The power supply disconnector must be switched off and secured with a lock before maintenance inside the electrical cabinet.

Note! The key to the lock must be removed by the technician and retained in his/her possession until all work is completed.

Make sure that the electrical cabinet doors are closed after working inside the electrical cabinet. Doors with lock must be locked.

The location of each electrical cabinet is shown by an arrow.

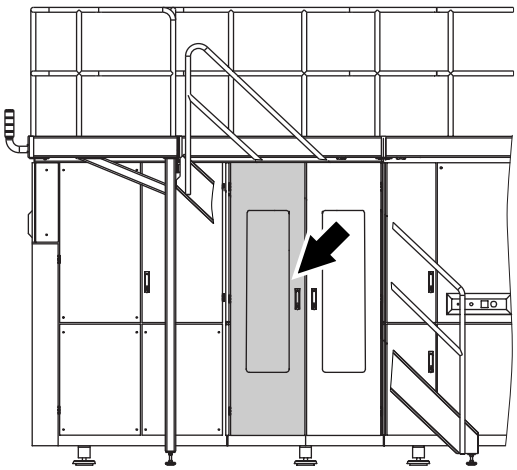

LH side

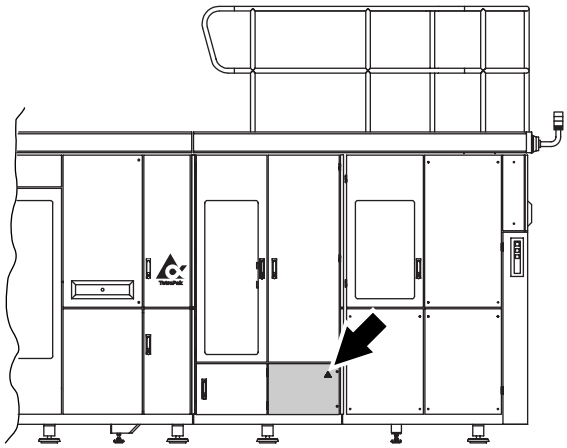

RH side

TechPub_2614345_0103 - 81535018sp.fm

Socket Outlet

WARNING
Hazardous voltage.
Can shock, burn, or cause death. Read the Maintenance Manual before using this socket outlet.

The illustrations show the socket outlet (1) and the residual current device (2). Their locations in the electrical cabinet (3) are shown by arrows.

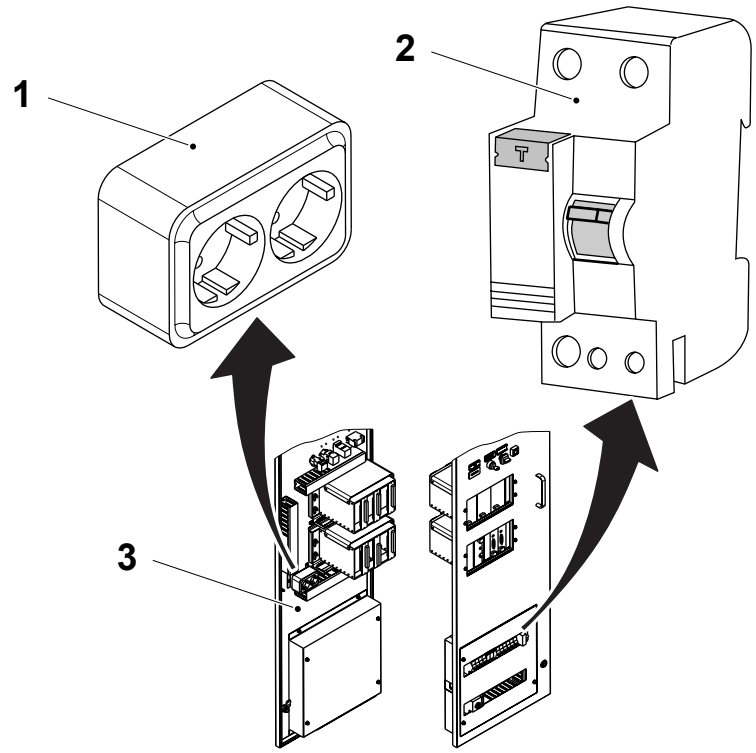

1 Socket outlet
2 Residual current device F029
3 Electrical cabinet

TechPub_2614345_0103 - 81535018sp.fm

Power Supply

DANGER

Hazardous voltage and moving machinery.
The power supply disconnector must be switched off and secured with a lock before any maintenance.

Note! The key to the lock must be removed by the technician and retained in his/her possession until all work is completed.

Certain maintenance procedures may require power supply systems to be on. These exceptions are clearly stated in the Maintenance Manual.

The illustration shows the power supply disconnector. The arrow shows its location on this equipment.

Note! The PullTab is supplied with power from the filling machines service unit.

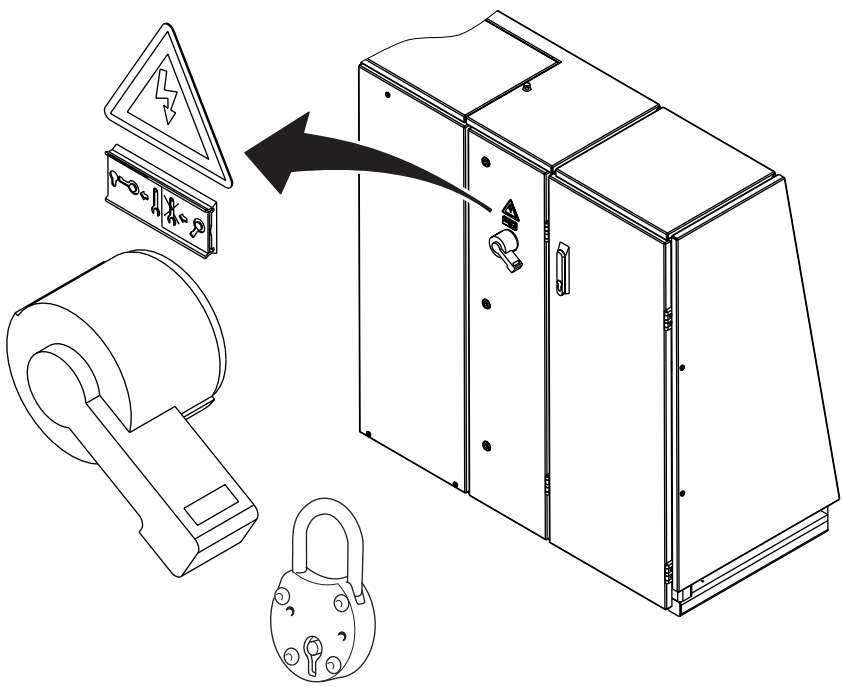

TechPub_2614345_0103 - 81535018sp.fm

Air Supply

WARNING
Compressed air and moving machinery.
Close the main air valve and secure it with a lock before any maintenance.

Note! The key to the lock must be removed by the technician and retained in his/her possession until all work is completed.

Certain maintenance procedures may require air supply systems to be on. These exceptions are clearly stated in the Maintenance Manual.

The illustrations show the main air valve (1) and the lock (2). Their locations are shown by arrows.

Note! The PullTab is supplied with air from the filling machines service unit.

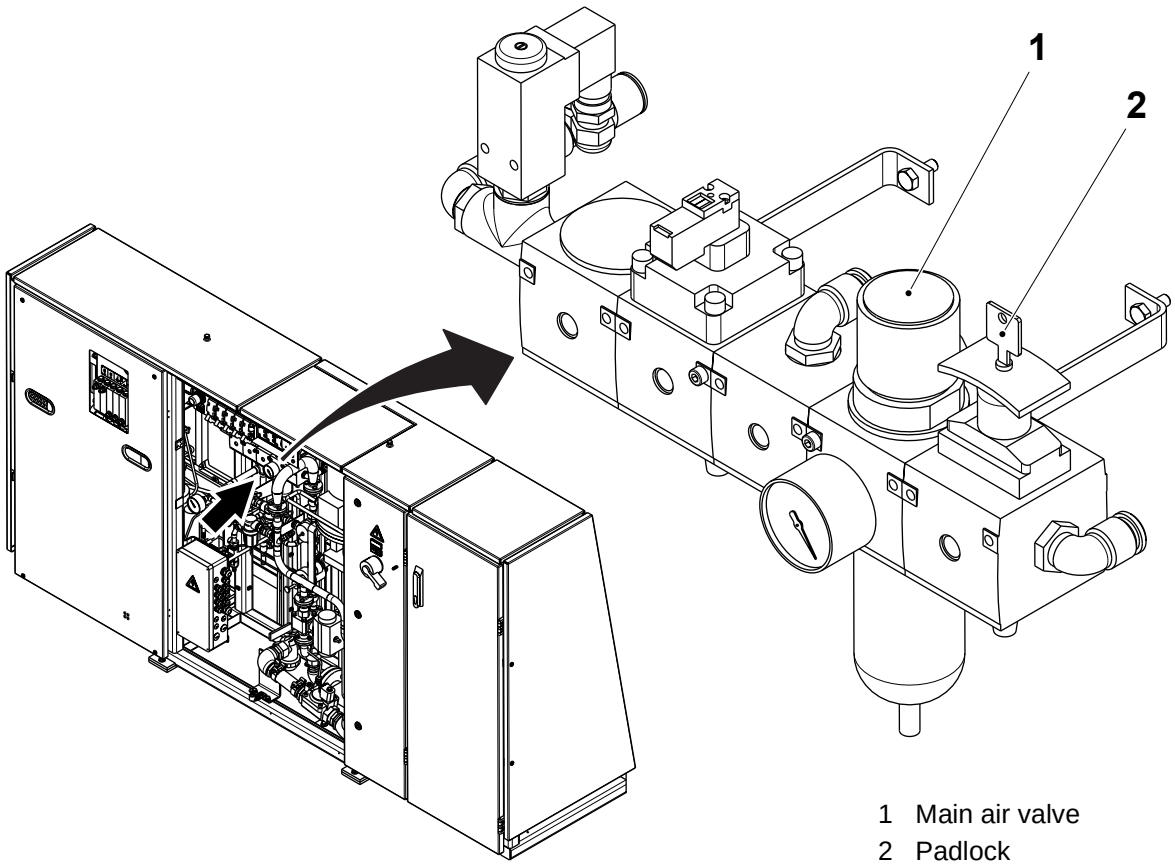

1 Main air valve
2 Padlock

TechPub_2614345_0103 - 81535018sp.fm

Equipment for Lifting and Moving Loads

WARNING

Risk of crushing injury.

Make sure that the capacity of the lifting equipment is adequate and that the equipment itself is in proper working order.

If lifting tackle must be joined to make up the necessary lengths, make sure that the joints are secure and have the same lifting capacity as the rest of the lifting tackle.

Always engage safety clips fitted to lifting hooks to prevent the lifting tackle from slipping off.

Use ropes or poles to steady and manoeuvre suspended loads. Do **not** use hands or feet.

Make sure that the route and destination are free from obstacles before moving a suspended load. It must always be possible to quickly and safely lower the load to the floor in an emergency.

When depositing loads, keep lifting tackle in place until the stability of the load has been substantiated.

TechPub_2614345_0103 - 81535018sp.fm

This page intentionally left blank

TechPub_2614345_0103 - 81535018sp.fm

1 Paper Web Path

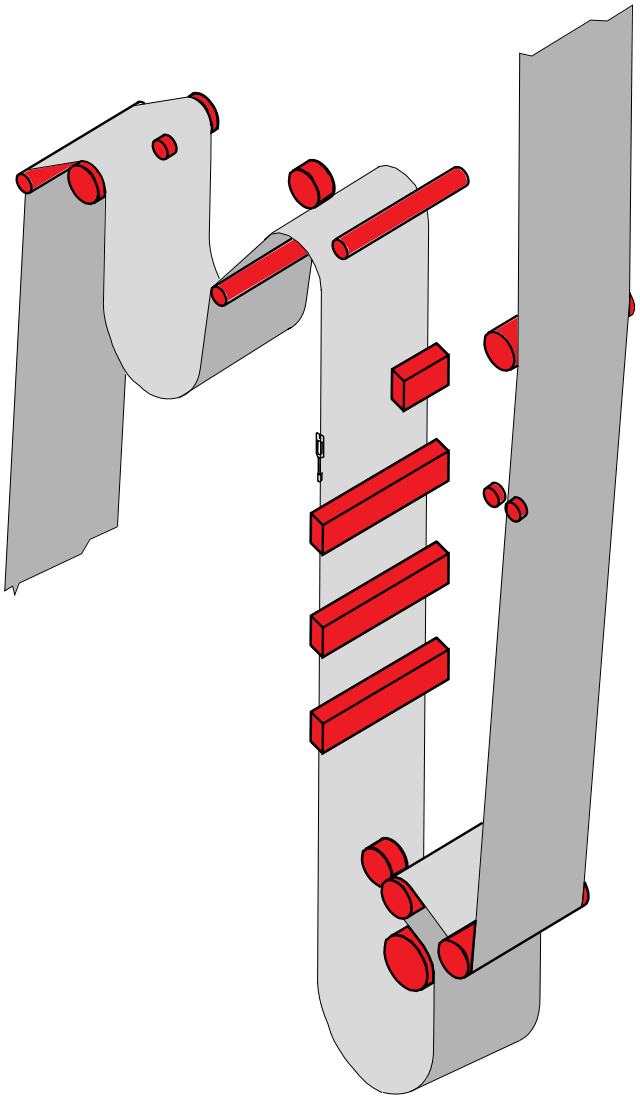

TechPub_2614345_0103 - B5358A00en.fm

Paper Web Path - Description

SPC Reference	1095931-0300

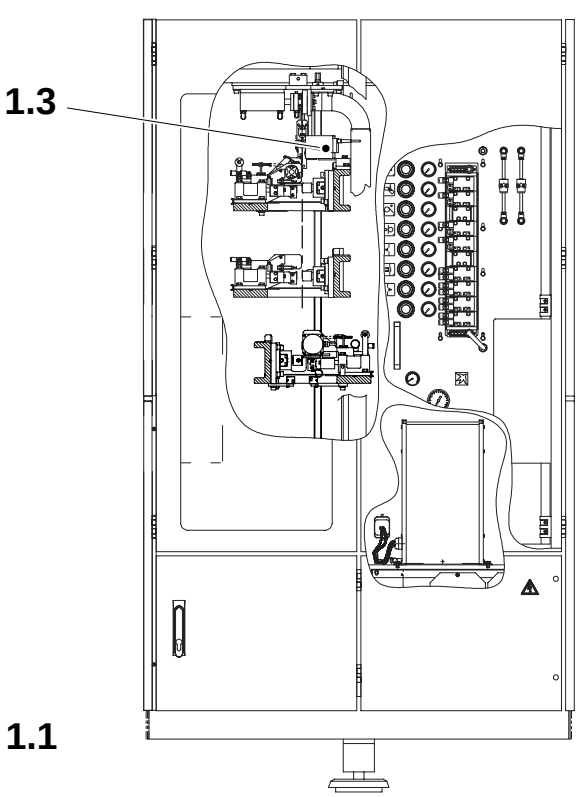

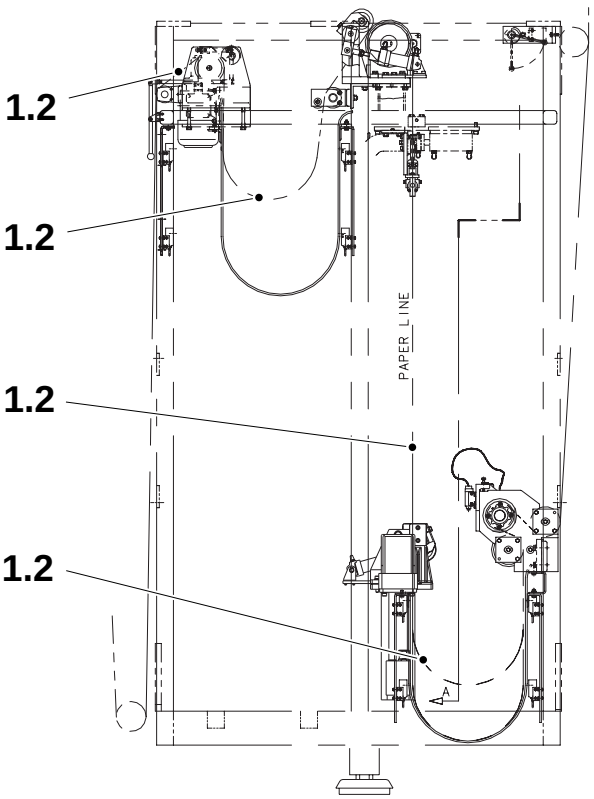

1.1 Setting Flow Chart
1.2 Paper Web Path
1.3 Bar Code Reader

TechPub_2614345_0103 - B5358A00en.fm

1-1 Paper Web Path - Functional Description . . . . . 1 - 5

1.1 Setting Flow Chart . . . . . 1 - 8

1.2 Paper Web Path . . . . . 1 - 9

1.2-1 Paper Web Path - Check Packaging Material Tracking . . . . . 1 - 9

1.2-2 Paper Web Path - Set Alignment Rollers . . . . . 1 - 10

1.2-3 Paper Web Path - Set Packaging Material Position . . . . . 1 - 13

1.2.1 Drive Motor . . . . . 1 - 15

1.2.1-1 Drive Motor - Remove Clamping Element . . . . 1 - 15

1.2.1-2 Drive Motor - Assemble Clamping Element . . . . . 1 - 16

1.2.1-3 Drive Motor - Check Pressure Roller and Drive Wheel . . . . . 1 - 17

1.2.1-4 Drive Motor - Change Bearings . . . . . 1 - 18

1.2.1-5 Drive Motor - Change Drive Wheel . . . . . 1 - 19

1.2.1-6 Drive Motor - Set Cylinder . . . . . 1 - 23

1.2.1-7 Drive Motor - Change . . . . . 1 - 24

1.2.2 Roller Assembly . . . . . 1 - 25

1.2.2-1 Roller Assembly - Check Rollers . . . . . 1 - 25

1.2.2-2 Roller Assembly - Change Roller Bearings . . . . . 1 - 27

1.2.2-3 Roller Assembly - Change Damper . . . . . 1 - 29

1.2.2-4 Roller Assembly - Set Tension Roller . . . . . 1 - 30

1.2.3 Bending Roller Assembly . . . . . 1 - 31

1.2.3-1 Bending Roller Assembly - Check . . . . . 1 - 31

1.2.3-2 Bending Roller Assembly - Change Bearings . . . . . 1 - 31

1.2.4 Infeed Unit. . . . . 1 - 32

1.2.4-1 Infeed Unit - Check Rollers . . . . . 1 - 32

1.2.4-2 Infeed Unit - Check Function . . . . . 1 - 33

1.2.4-3 Infeed Unit - Change Worm Gear Motor . . . . . 1 - 34

1.2.4-4 Infeed Unit - Change Bearings . . . . . 1 - 35

1.2.4-5 Infeed Unit - Check Bending Roller Assembly . . . . . 1 - 37

TechPub_2614345_0103 - B5358A00en.fm

1.2.4-6 Infeed Unit - Set Spring Bracket . . . . . 1 - 38

1.2.5 Paper Brake . . . . . 1 - 39

1.2.5-1 Paper Brake - Check . . . . . 1 - 39

1.2.5-2 Paper Brake - Check Bending Roller Flange . . . . . 1 - 40

1.2.5-3 Paper Brake - Set Cylinder . . . . . 1 - 41

1.2.5-4 Paper Brake - Set Servo Tension Device . . . . . 1 - 42

1.2.5-5 Paper Brake - Change Wheel . . . . . 1 - 45

1.2.5-6 Paper Brake - Remove Clamping Element . . . . . 1 - 45

1.2.5-7 Paper Brake - Assemble Clamping Element . . . . . 1 - 45

1.2.6 Edge Guide . . . . . 1 - 46

1.2.6-1 Edge Guide - Check Bearings . . . . . 1 - 46

1.2.6-2 Edge Guide - Change Bearings . . . . . 1 - 48

1.2.6-3 Edge Guide - Set . . . . . 1 - 49

1.2.6-4 Edge Guide - Set . . . . . 1 - 50

1.2.7 Photocell Unit Infeed. . . . . 1 - 51

1.2.7-1 Photocell Unit Infeed - Check . . . . . 1 - 51

1.2.7-2 Photocell Unit Infeed - Set . . . . . 1 - 52

1.2.8 Photocell Unit Outfeed . . . . . 1 - 54

1.2.8-1 Photocell Unit Outfeed - Check . . . . . 1 - 54

1.2.8-2 Photocell Unit Outfeed - Set . . . . . 1 - 55

1.2.9 By-pass Sensor . . . . . 1 - 57

1.2.9-1 By-pass Sensor - Check . . . . . 1 - 57

1.3 Bar Code Reader . . . . . 1 - 58

1.3-1 Bar Code Reader - Set Photocells . . . . . 1 - 58

1.3-2 Bar Code Reader - Change Photocells . . . . . 1 - 59

TechPub_2614345_0103 - B5358A00en.fm

1-1 Paper Web Path - Functional Description

SPC Reference	1095931-0300

When the filling machine pulls packaging material:

- the PLC receives a signal from the lower photocells in the outfeed paper magazine
- the PLC begins the machine cycle
- the PLC signals to the servo motor to start
- the DMC servo amplifier directs an output to the servo motor, which then makes one index and stops
- as the packaging material is fed, the register mark on the packaging material is detected. The DMC servo amplifier compensates for any variations in the relative position of the register mark

Feeding (outfeed)

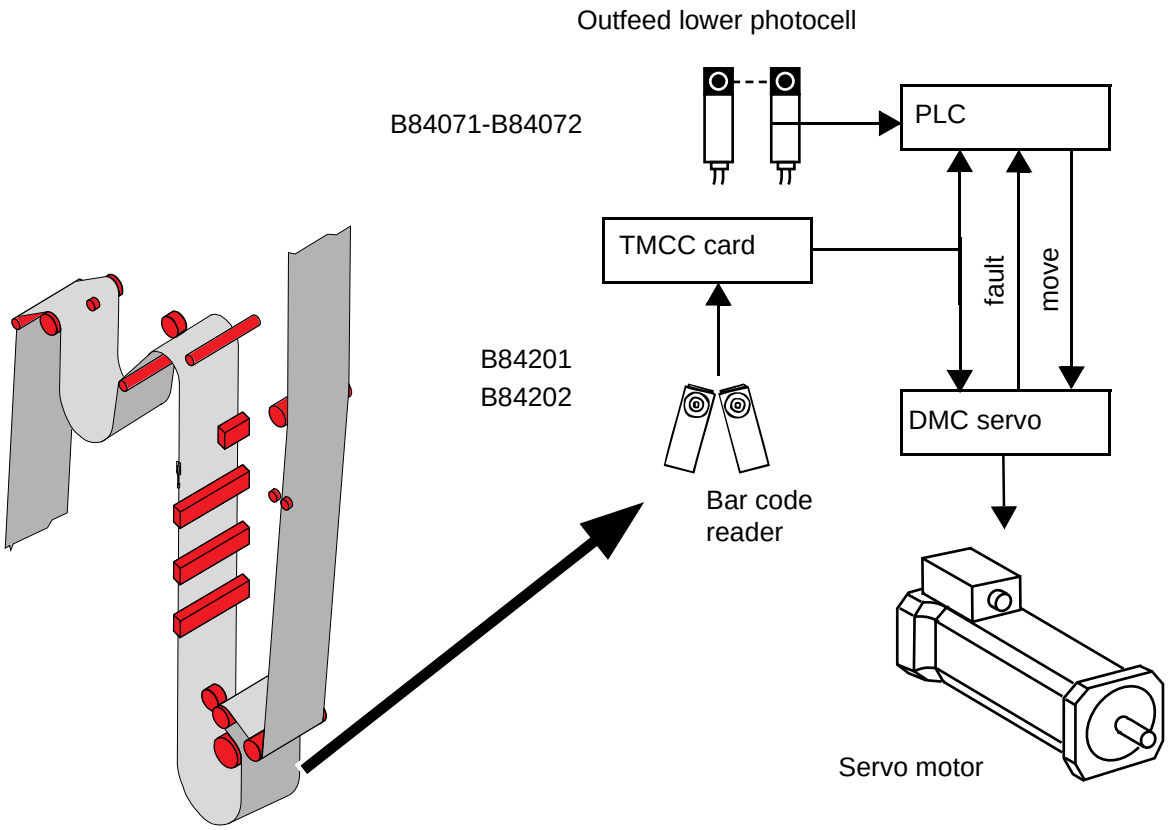

(Cont'd)

TechPub_2614345_0103 - B5358A00en.fm

(Cont'd)

As the packaging material in the infeed loop is used up:

- the PLC receives a signal from the infeed lower photocell
- the PLC signals the infeed motor, via the DC drive card, to run
- when the lower photocell is activated again, the PLC signals the infeed motor to stop

Feeding (infeed)

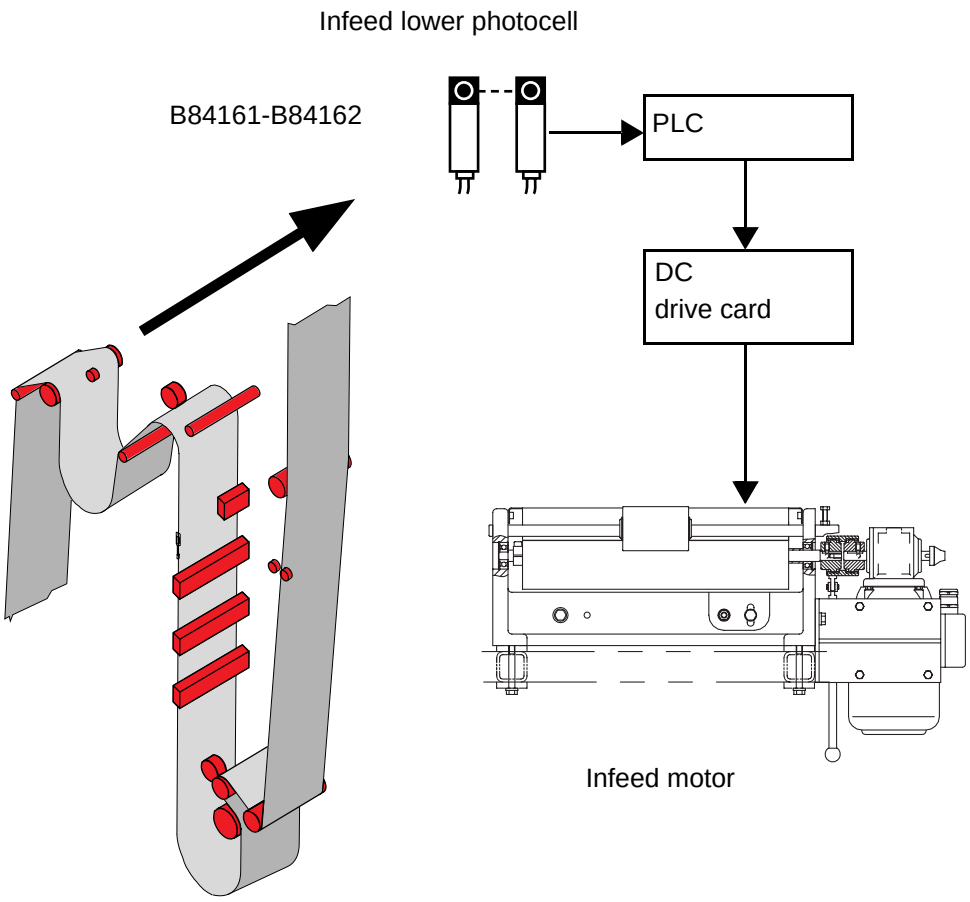

(Cont'd)

TechPub_2614345_0103 - B5358A00en.fm

(Cont'd)

During PRODUCTION:

- if the upper photocells in the infeed assembly and/or outfeed assembly are activated because of no paper, the PLC signals the PullTab and the filling machine to go into SHORT STOP mode.
- if the packaging material web in the PullTab unit is broken, the lower photocells in the outfeed assembly are activated for a fixed period of time. Then the PT21 plus the filling machine will go into SHORT STOP mode after three seconds and the alarm outfeed loop will be shown on the TPOP panel.

Paper fault / Broken web

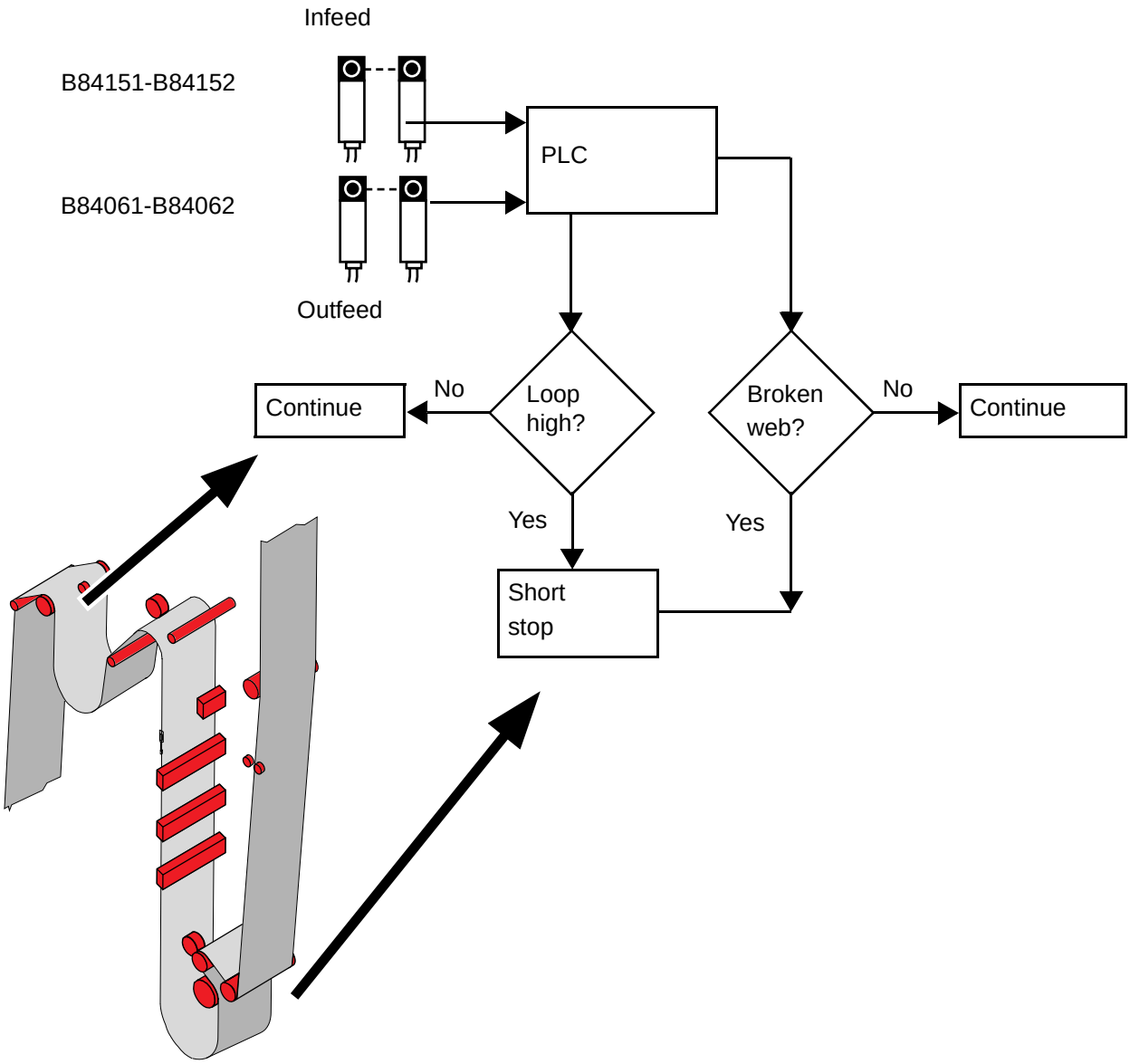

TechPub_2614345_0103 - B5358A00en.fm

1.1 Setting Flow Chart

The following flow chart shows the order in which the various components must be set up.

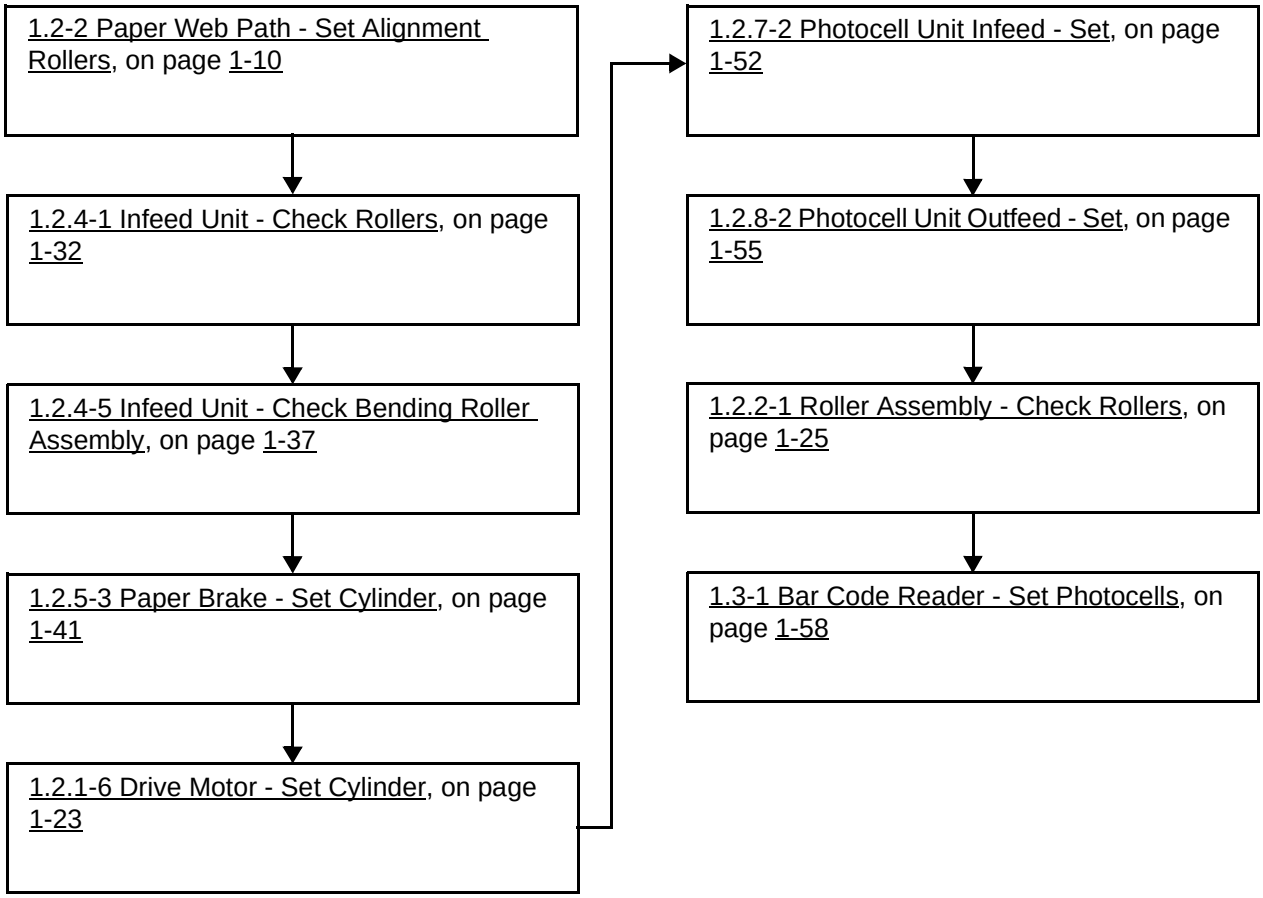

TechPub_2614345_0103 - B5358A01en.fm

1.2 Paper Web Path

SPC Reference	1095931-0300

1.2-1 Paper Web Path - Check Packaging Material Tracking

Machine Status	PRODUCTION
SPC Reference	1095931-0300

Check that the packaging material tracks through the machine without moving from side to side.

Check that the edge of the packaging material does not curl up against the side of the flanges (1) and (2) on the machine rollers.

If required, align the rollers, see 1.2-2 Paper Web Path - Set Alignment Rollers.

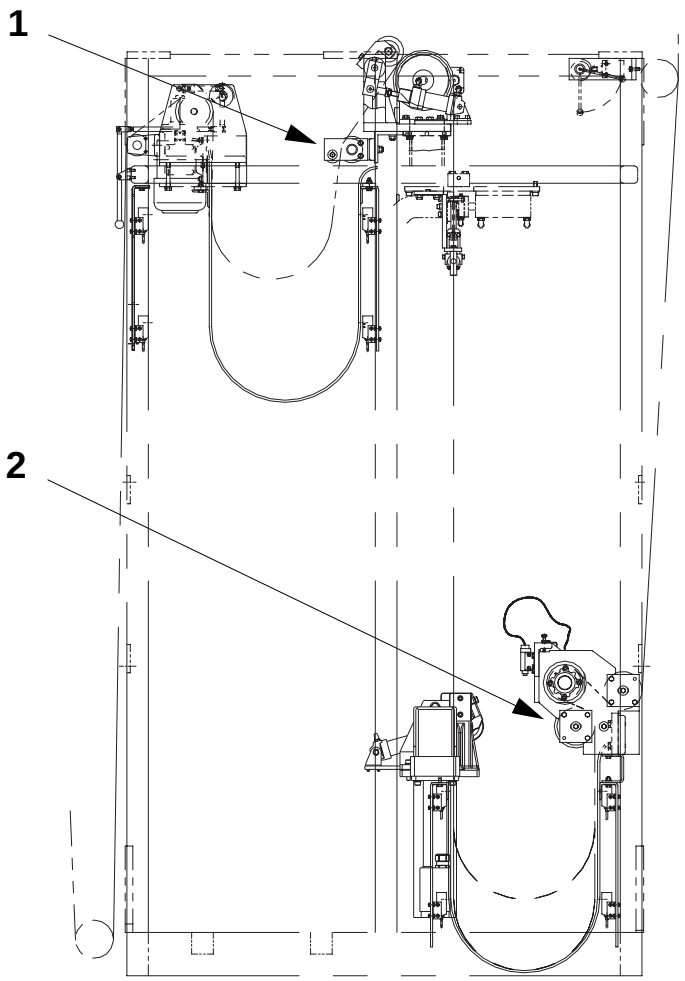

1 Flange
2 Flange

TechPub_2614345_0103 - B5358A02en.fm

1.2-2 Paper Web Path - Set Alignment Rollers

Machine Status	Air **OFF** Mains power **OFF**
Special Equipment	Spirit level TP No. 90243-163
SPC Reference	1095931-0300

Infeed Unit

a) On the ASU web magazine, check that the paper is in the middle of the rollers (1) in order to have a correct packaging material tracking.

b) If required, adjust the bending roller (2) as described below.

c) Slightly loosen the screws (3).

d) Loosen the nut (4) and turn the eccentric (5) until the correct position is obtained.

e) Carefully tighten the nut (4) and the screws (3).

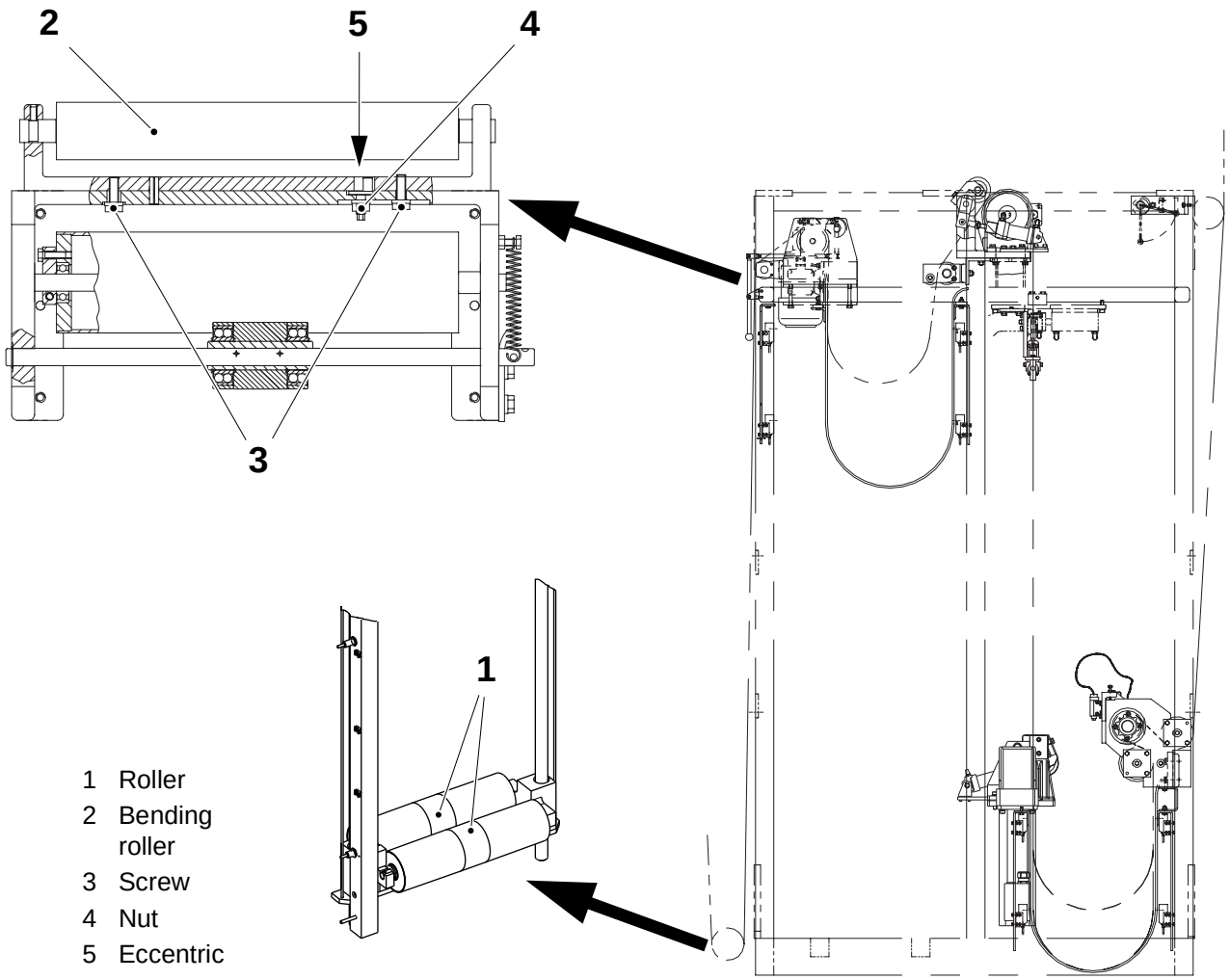

1 Roller
2 Bending roller
3 Screw
4 Nut
5 Eccentric

(Cont'd)

TechPub_2614345_0103 - B5358A02en.fm

(Cont'd)

Paper Brake

a) On the paper brake assembly, check the correct position for the bending roller (6) in order to have correct packaging material tracking.

b) If required, adjust the bending roller (6) as described below.

c) Slightly loosen the screws (7).

d) Loosen the nut (8) and turn the eccentric (9) until the correct position is obtained.

e) Carefully tighten nut (8) and the screws (7).

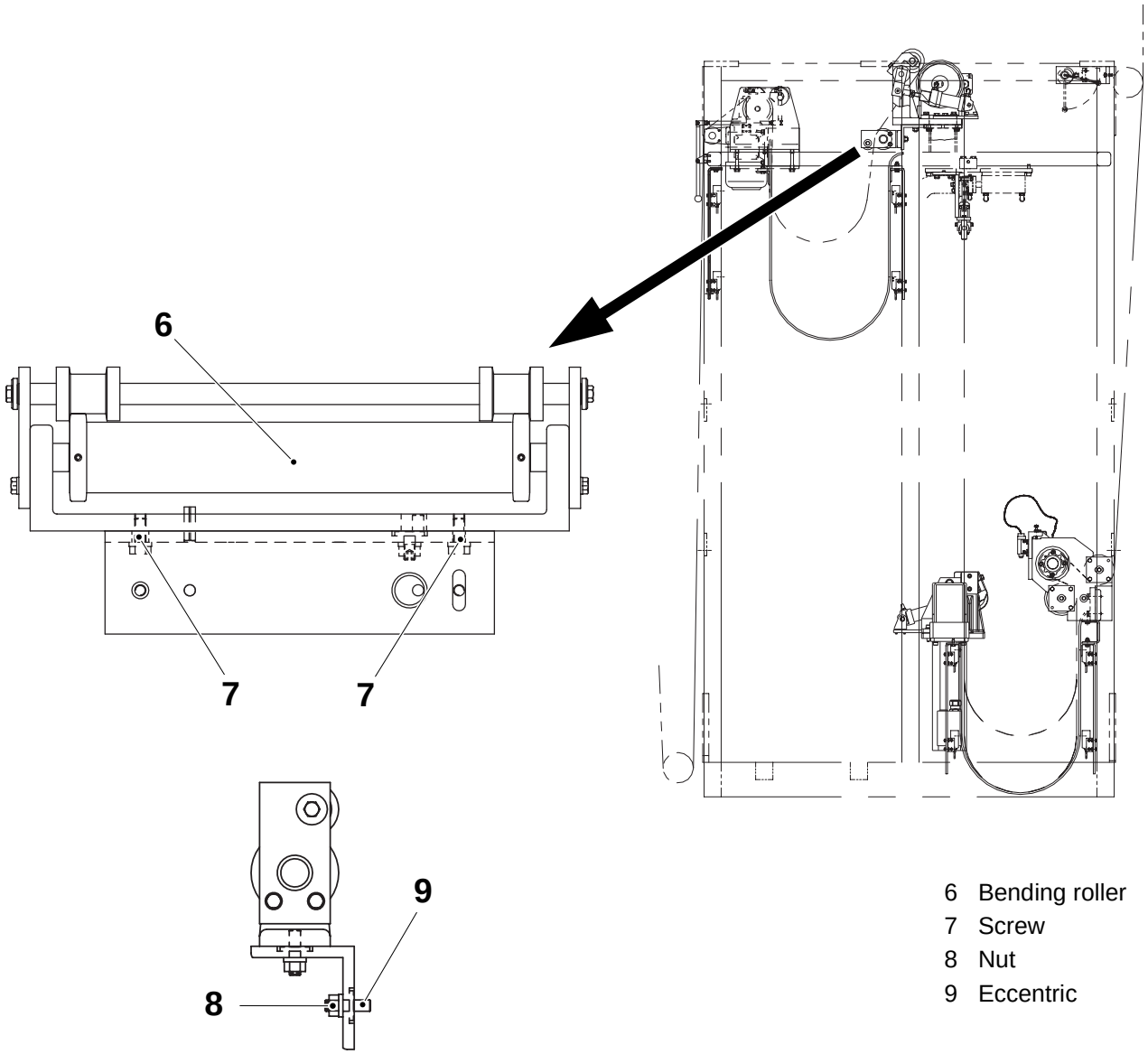

6 Bending roller
7 Screw
8 Nut
9 Eccentric

(Cont'd)

TechPub_2614345_0103 - B5358A02en.fm

(Cont'd)

Roller Assembly

a) On the roller assembly, use a spirit level to check that the rollers (10), (11), and (12) are levelled in order to have correct packaging material tracking.

b) If required, adjust the rollers (10), (11), and (12) as described below.

c) Adjust the roller (10) by means of the grub screws (13).

d) Adjust the roller (11) by loosening the four screws (14) and turning the screws (15) until the correct position is obtained.

e) Adjust the roller (12) by means of the grub screws (16).

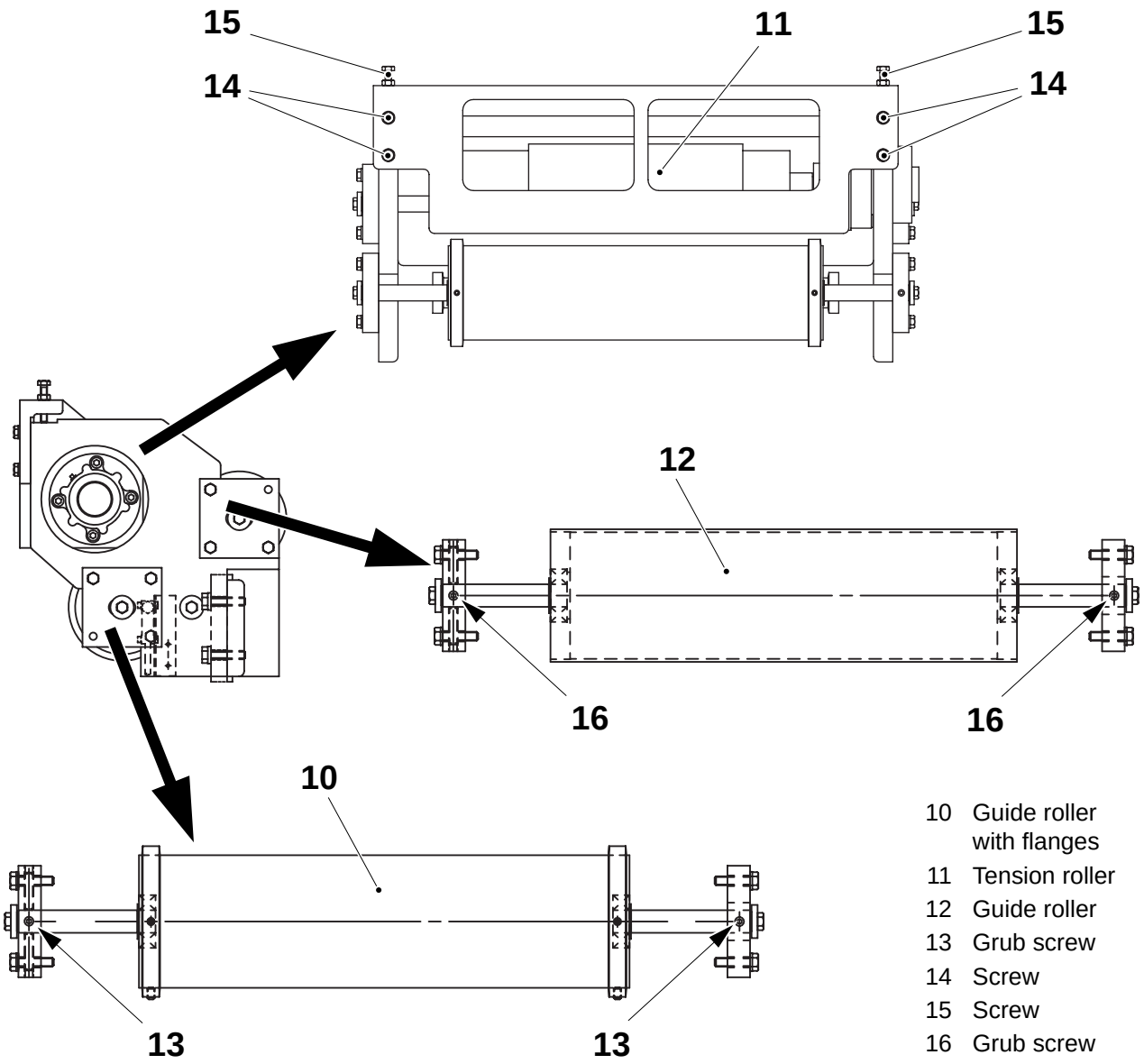

10 Guide roller with flanges
11 Tension roller
12 Guide roller
13 Grub screw
14 Screw
15 Screw
16 Grub screw

TechPub_2614345_0103 - B5358A02en.fm

1.2-3 Paper Web Path - Set Packaging Material Position

Machine Status	PRODUCTION
SPC Reference	1095931-0300

CAUTION
Risk of damage to the equipment!
Do not perform this adjustment until all the other settings in the Main flowchart in the chapter i Introduction have been completed.

a) On the inside of the package, check the distance **A** between the top fin crease (1) and the edge of the PullTab hole (reference only).

b) Run the PullTab unit and adjust the distance **A**, (hole position), as described below.

c) Close all the doors on the machine.

d) On the TPOP, check that there are no active alarms and touch the MANOEUVRE button (2).

e) Touch the MAINTENANCE PT21 LEFT button (3).

f) Touch the HOLE POSITION PHOTOCELLS button (4).

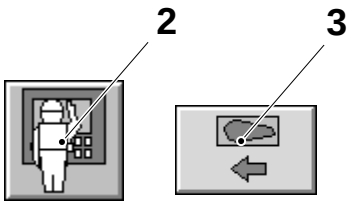

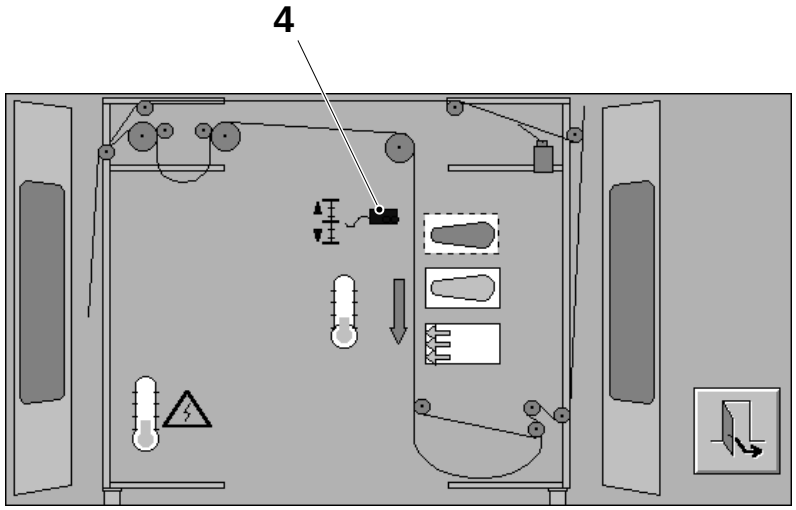

View from inside

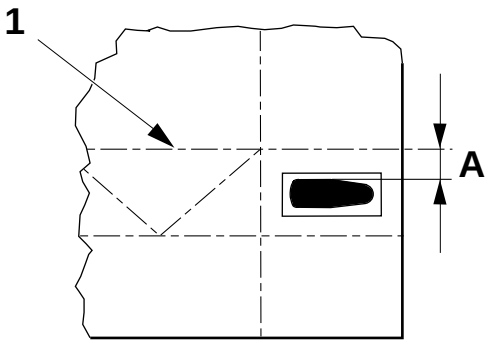

PullTab ReCap

1 Top fin crease
2 MANOEUVRE button
3 MAINTENANCE PT21 LEFT button
4 HOLE POSITION PHOTOCELLS button

(Cont'd)

TechPub_2614345_0103 - B5358A02en.fm

(Cont'd)

g) Set the **Photocells value** (5) window by means of the buttons (6) and (7).

h) Increase the **Photocells value** (5) window, by means of the buttons (6), to set a longer distance **A**.

i) Decrease the **Photocells value** (5) window, by means of the buttons (7), to set a shorter distance **A**.

j) Touch the EXIT button (8) and the MANOEUVRE button (2) to end the setting.

k) Run at least 40 packages and verify the holes position once more.

Package	Hole type	A ±1.0 (mm)		Package	Hole type	A ±1.0 (mm)
TBA 250 B	21	4.0		TPA 1000 S	60	8.4
TBA 500 S	25	6.5		TPA 1000 Sq	60	11.0
TBA 1500 S	45	11.0		TBA 1500 S	85	12.0
TBA 1000 B	45	10.0		TBA 1000 Sq	85	13.0
TBA 1000 S	45	8.9		TBA 1000 B	85	11.0
TBA 1000 B	50	11.4		TBA 1000 S	85	9.9
TBA 1000 S	50	10.3		TBA 1000 S	90	9.7
TBA 500 S	55	8.25		TBA 1500 S	90	9.7

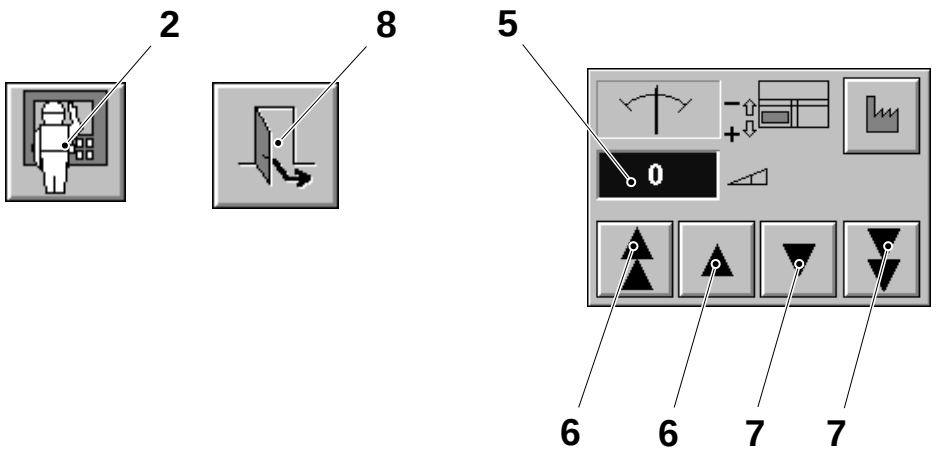

View from inside

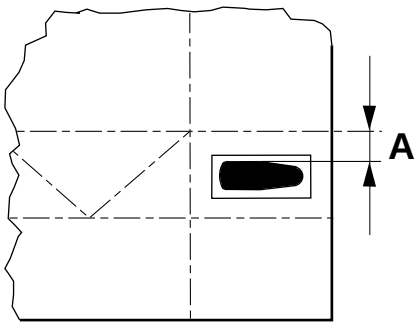

PullTab ReCap

2 MANOEUVRE button
5 Photocells value
6 Button
7 Button
8 EXIT button

TechPub_2614345_0103 - B5358A02en.fm

1.2.1 Drive Motor

1.2.1-1 Drive Motor - Remove Clamping Element

Machine Status	Air **OFF** Mains power **OFF**
SPC Reference	1498049-0100

a) Loosen the screws (1).

b) Fit two screws into the puller holes (2).

c) Tighten the puller hole (2) screws cross-wise until the clamping element (3) comes off.

d) Remove the clamping element (3) and change it if damaged or worn out.

e) Assemble in the reverse order, see 1.2.1-2 Drive Motor - Assemble Clamping Element.

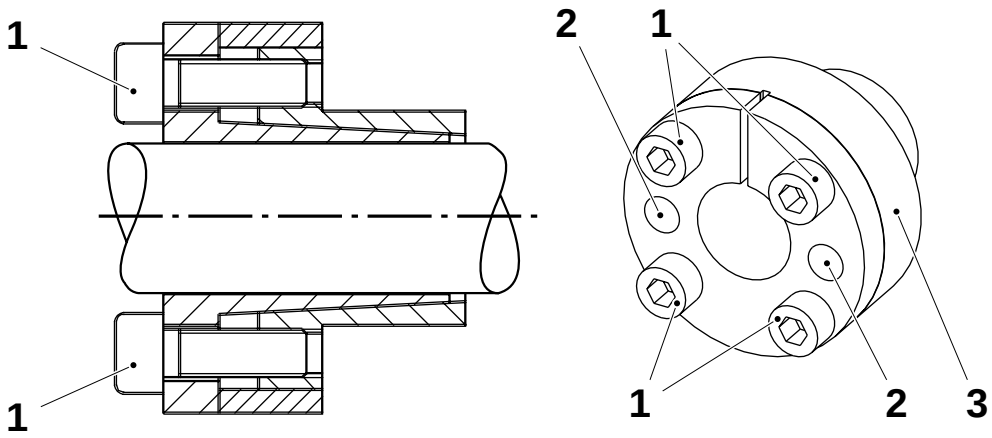

1 Screw
2 Puller hole
3 Clamping element

TechPub_2614345_0103 - B5358A02en.fm

1.2.1-2 Drive Motor - Assemble Clamping Element

Machine Status	Air **OFF** Mains power **OFF**
Consumables	Silicon grease TP No. 92296-0002 Torque wrench min. 17 Nm
SPC Reference	1498049-0100

CAUTION
Risk of major damage to the machine!
Never adjust the tightening torque after locking by loosening the screws (1). The result may be that the screws shake loose.

Note! The inner surface **A** and the outer surface **B** of the clamping element must be cleaned before assembling.

Note! Lubricate the screws (1). Apply grease (TP No.92296-0002) **only** onto the clamps inner surface **C**. Grease accidently applied to other areas of the drive roller will cause packaging material slippage.

a) Put the clamping element (2) in place and tighten the screws (1) crosswise, first by hand and then to **9 ±2 Nm** with the aid of a torque wrench.

b) Continue to tighten the screws (1) crosswise to **17 ±2 Nm** with the aid of a torque wrench.

c) Tighten the screws (1) several times, with full tightening torque, until it is not possible tighten them further.

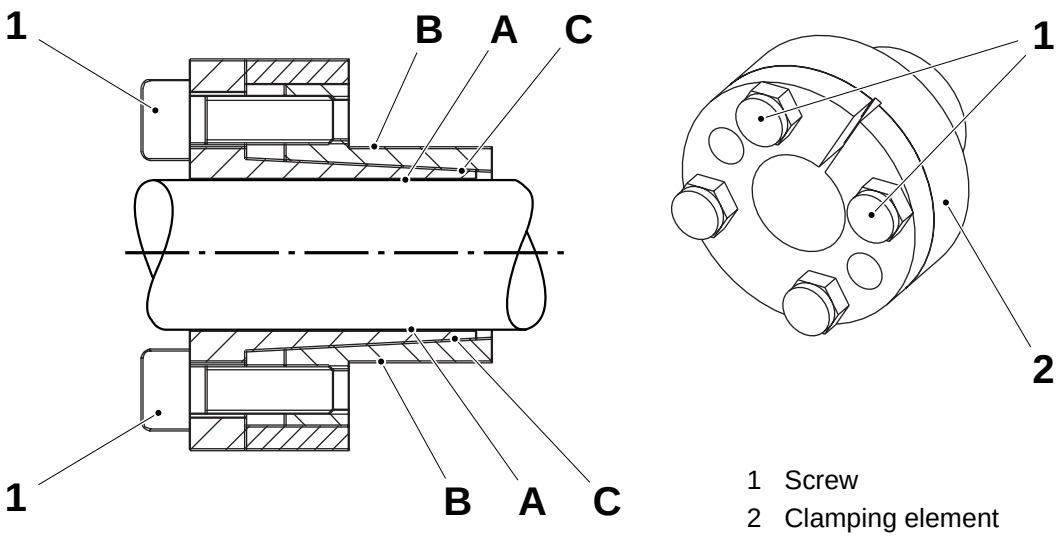

1 Screw
2 Clamping element

TechPub_2614345_0103 - B5358A02en.fm

1.2.1-3 Drive Motor - Check Pressure Roller and Drive Wheel

Machine Status	Air **OFF** Mains power **OFF**
SPC Reference	1498049-0100

Check that the following parts turn freely and that there are no deformations or cracks:

- the pressure rollers (1)
- the drive wheels (2)

Change as required.

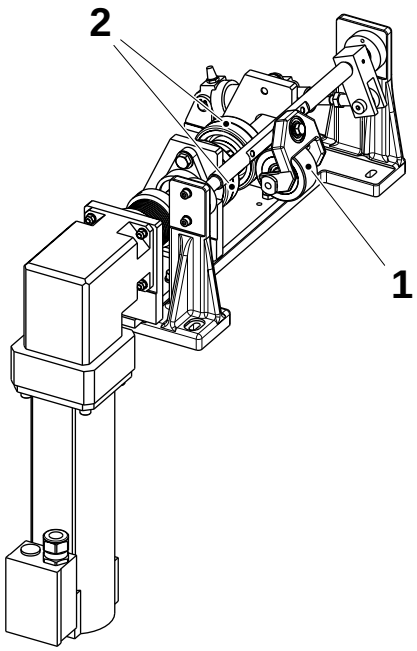

One pressure roller -
for hole 21, TBA 250 B

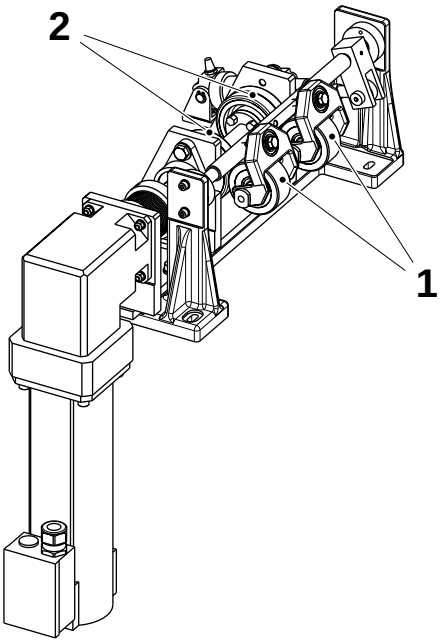

Two pressure rollers -
for all other holes

1 Pressure roller
2 Drive wheel

TechPub_2614345_0103 - B5358A02en.fm

1.2.1-4 Drive Motor - Change Bearings

Machine Status	Air **OFF** Mains power **OFF**
SPC Reference	1498049-0100

a) Loosen the screws (1).

b) Remove the nut (2).

c) Pull out the pressure roller (3).

d) Remove the bearings (4) inside and change them if damaged or worn out.

e) Assemble in the reverse order.

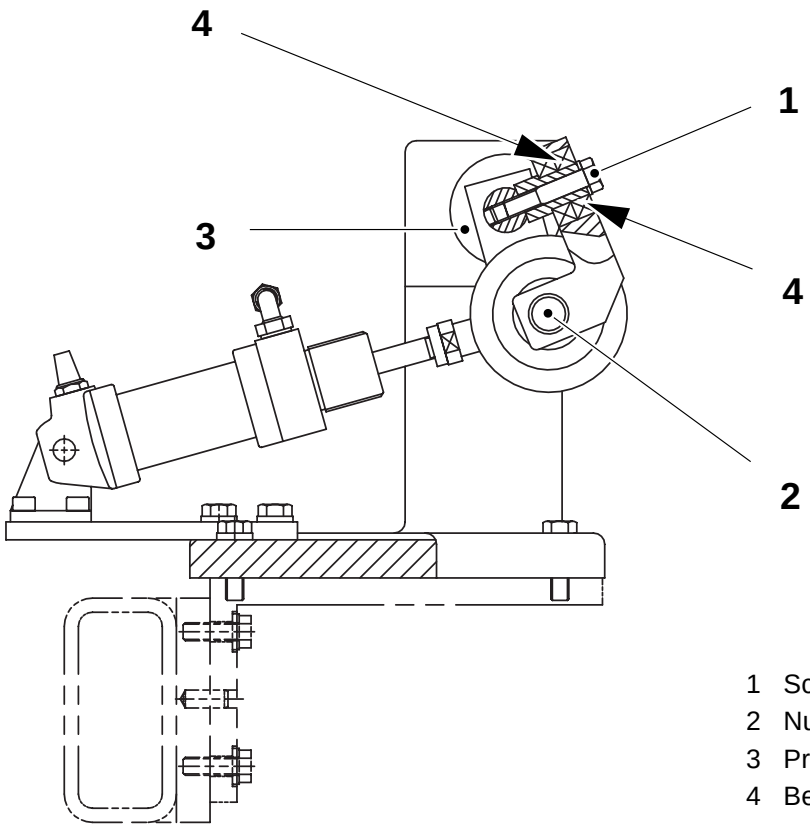

1 Screw
2 Nut
3 Pressure roller
4 Bearings

TechPub_2614345_0103 - B5358A02en.fm

1.2.1-5 Drive Motor - Change Drive Wheel

Machine Status	Air **OFF** Mains power **OFF**
SPC Reference	1498049-0100

a) Disconnect the pneumatic group (1) by means of the screw (2).

b) Rotate the pressure rollers shaft (3) and fix it to the frame by means of a strip.

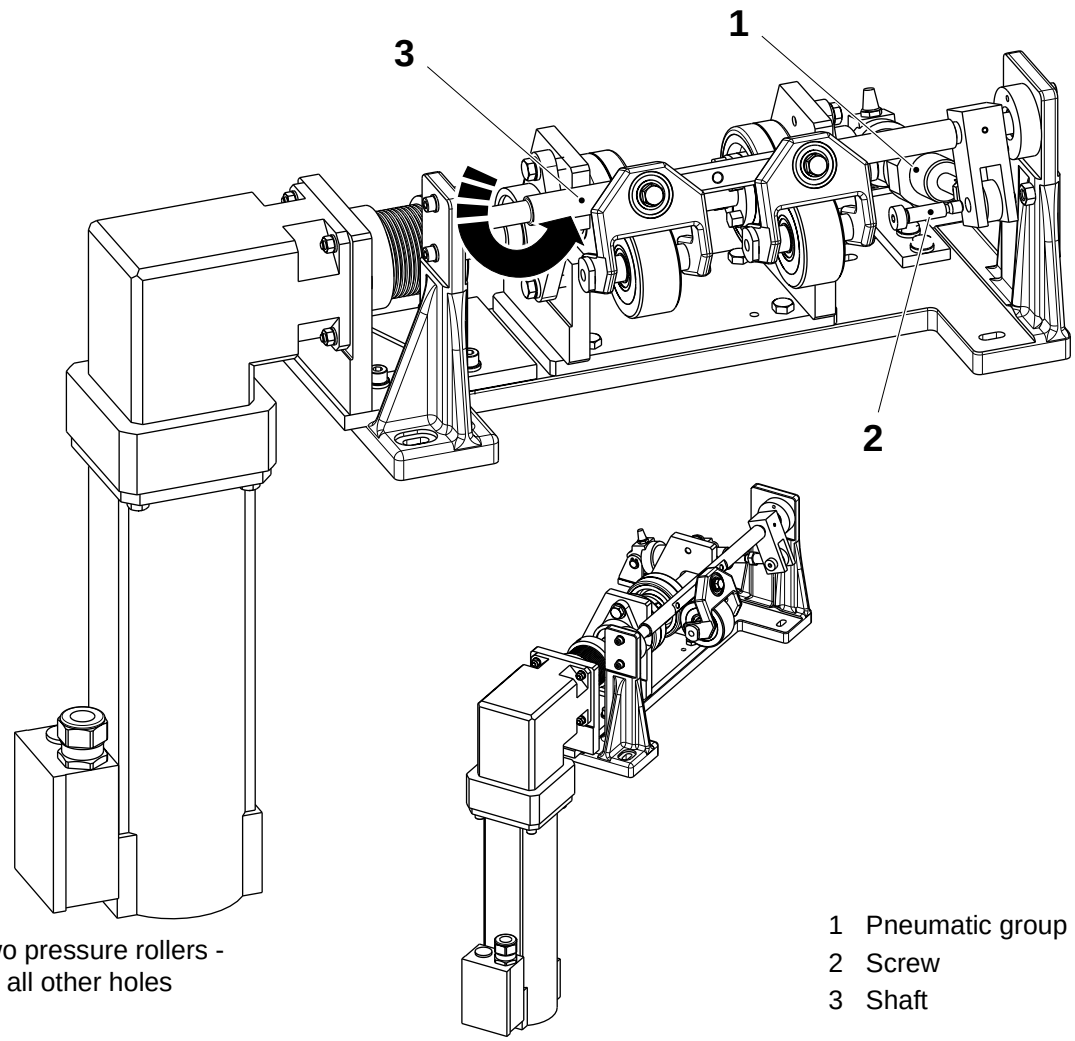

Two pressure rollers -
for all other holes

One pressure roller -
for hole 21, TBA 250 B

1 Pneumatic group
2 Screw
3 Shaft

(Cont'd)

TechPub_2614345_0103 - B5358A02en.fm

(Cont'd)

c) Loosen the socket-head screws (4).

d) Slide the piece (5) towards the support (6) and the pieces (7) towards the gear box (8).

e) Remove the bracket (10) group by means of the four screws (9).

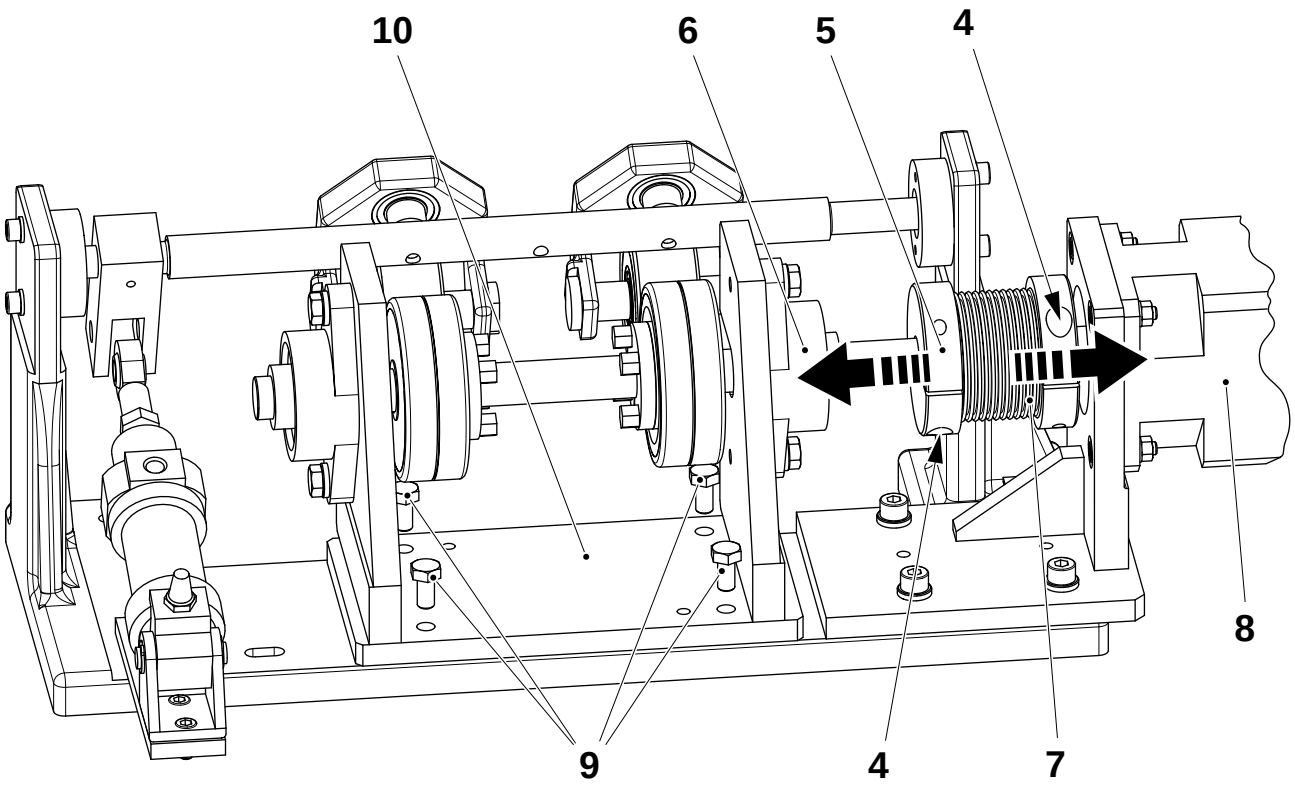

4 Socket-head screw
5 Piece
6 Support
7 Piece
8 Gear box
9 Screw
10 Bracket

TechPub_2614345_0103 - B5358A02en.fm

(Cont'd)

(Cont'd)

f) Mark the position of the two supports (6) on the bracket (10) and mark the position of the ball bearing (13) on the shaft (12), to prevent loosening the setting.

Note! The marks applied are the settings done by the supplier.

g) Remove the screws (11) and pull out the shaft (12).

h) Remove the ball-bearing (13) by means of the grub-screw (14).

i) Remove the clamping elements (15) from their position, see 1.2.1-1 Drive Motor - Remove Clamping Element.

j) Pull out the drive wheels (16).

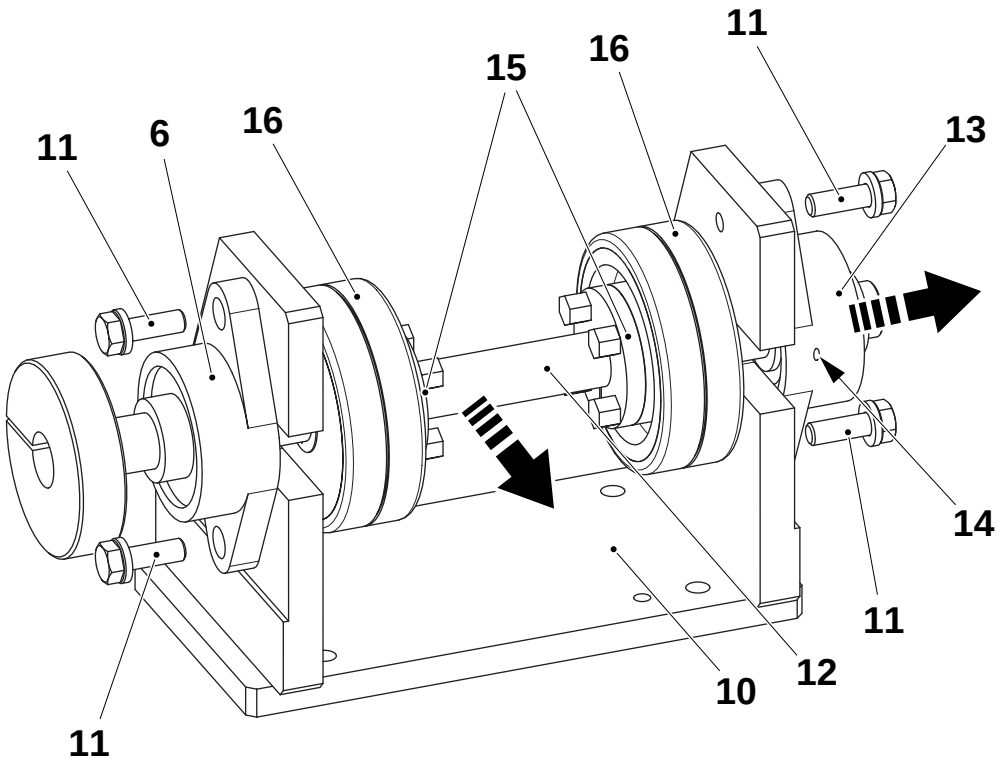

6	Support	13	Ball-bearing
10	Bracket	14	Grub-screw
11	Screw	15	Clamping element
12	Shaft	16	Drive wheel

(Cont'd)

TechPub_2614345_0103 - B5358A02en.fm

(Cont'd)

k) Assemble in the reverse order. While assembling set the distance **A** between the bracket (17) and the drive wheels (16) and the distance **B** between the connection (18) and the bracket (19).

Note! For hole 21, TBA 250 B, set the distance **C** instead of the distance **A** between the bracket (17) and the drive wheel (16).

Note! Make sure that the drive wheels (16) are in front of the pressure rollers (20), adjust as required.

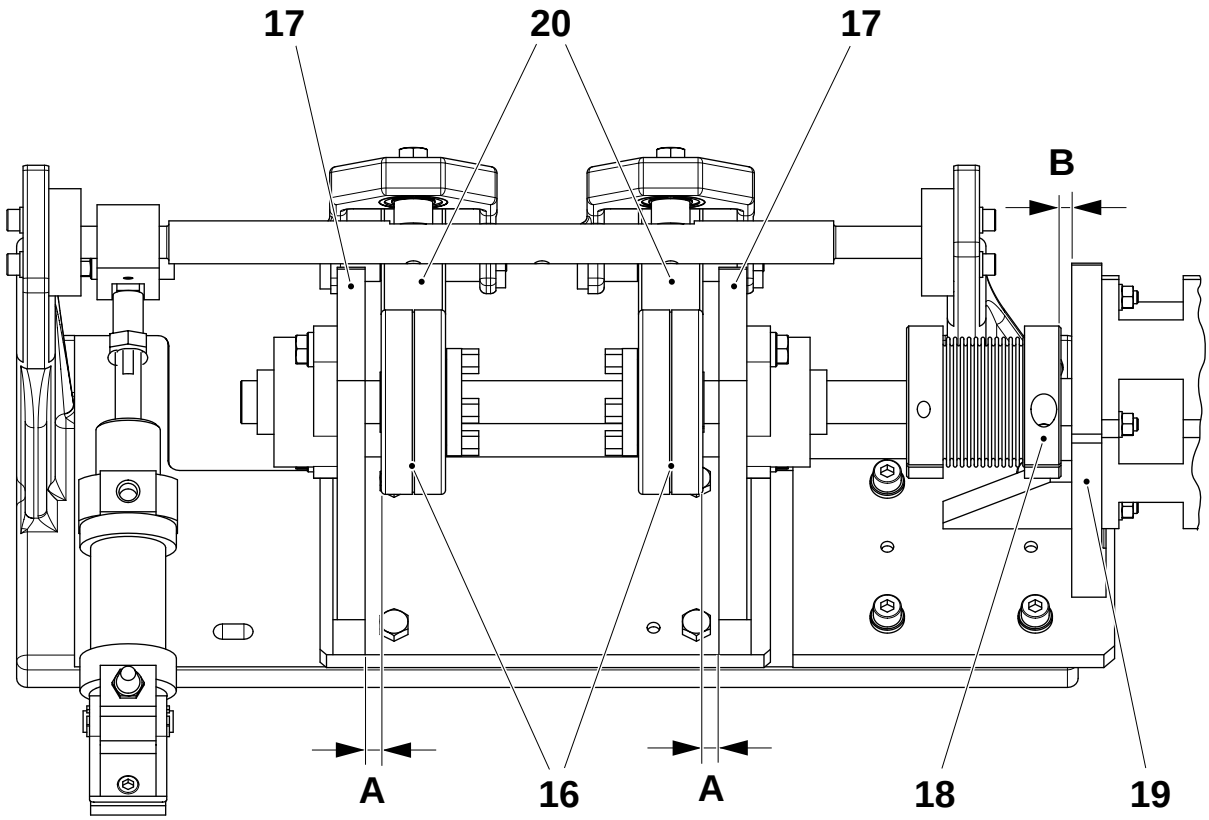

A = 7.5 ±1.0 mm
B = 5.0 ±2.0 mm
C = 67.5 ±1.0 mm
D = 0.5 - 1.0 mm

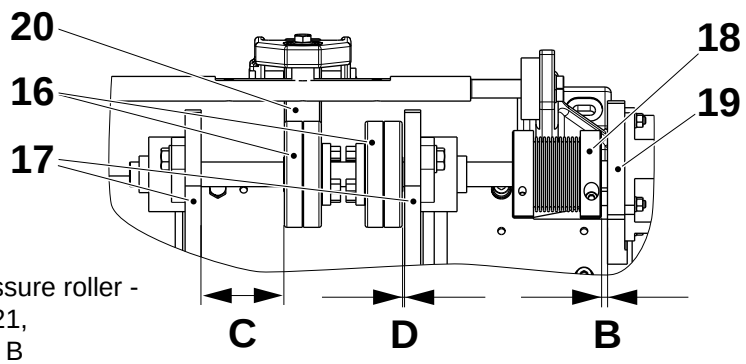

One pressure roller - for hole 21, TBA 250 B

16 Drive wheel
17 Bracket
18 Connection
19 Bracket
20 Pressure roller

TechPub_2614345_0103 - B5358A02en.fm

1.2.1-6 Drive Motor - Set Cylinder

Machine Status	Air **OFF** Mains power **OFF**
SPC Reference	1498049-0100

a) Lift the counter roller (1) as far as it can go.

b) Adjust the cylinder joint (2) in order to set the distance **A** between the nut (3) and the cylinder (4) edge, as shown in the figure.

c) Check the cylinder (4) function once more after the setting.

A = 39 ±1 mm

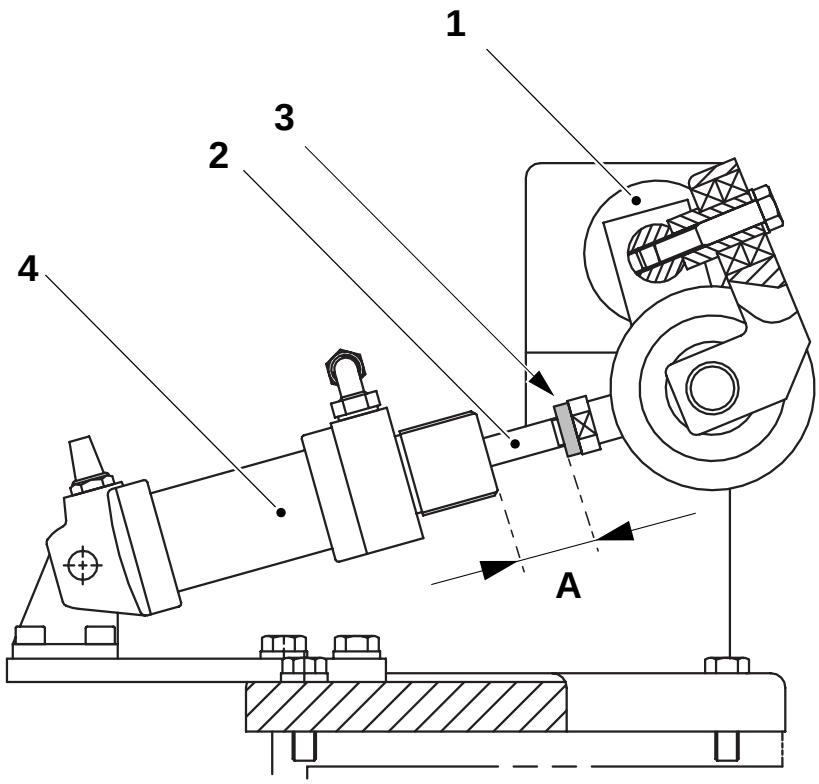

1 Counter roller
2 Joint
3 Nut
4 Cylinder

TechPub_2614345_0103 - B5358A02en.fm

1.2.1-7 Drive Motor - Change

Machine Status	Air **OFF** Mains power **OFF**
SPC Reference	1498049-0100

a) Remove the grub-screw (1).

b) By turning the flange (2) find the right position of the socket-head screw (3) underneath the grub-screw (1) and loosen it.

c) Disconnect the cables (4).

d) Remove the servo motor (5) by means of the screws (6).

Note! Leave the allen key in the socket of the socket-head screw (3) when fitting back the servo motor (5).

e) Assemble in the reverse order.

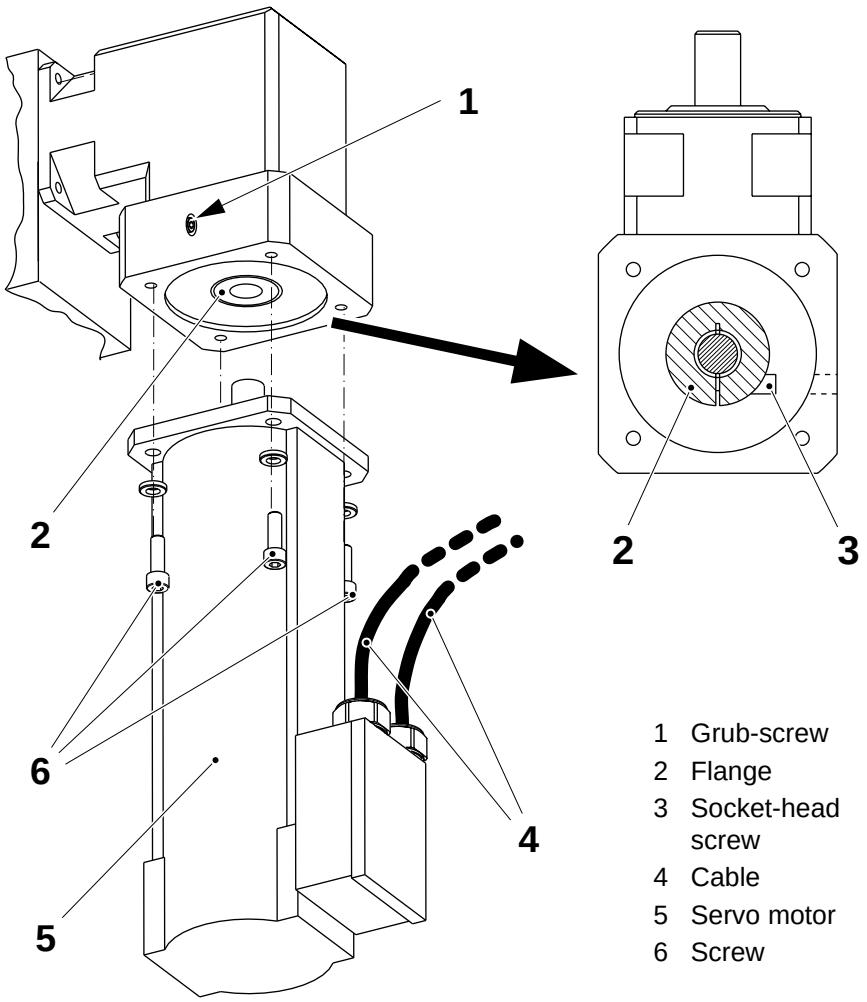

1 Grub-screw
2 Flange
3 Socket-head screw
4 Cable
5 Servo motor
6 Screw

TechPub_2614345_0103 - B5358A02en.fm

1.2.2 Roller Assembly

1.2.2-1 Roller Assembly - Check Rollers

Machine Status	Air **OFF** Mains power **OFF**
SPC Reference	1095942-0100

Check that the following rollers turn freely and that the surface of the rollers are not scratched or pitted:

- the guide roller with flange (1)
- the guide roller (3)
- the tension roller (2)

Check that the counter rollers (4) are nearly centred with respect to the flanges of the guide roller (1). Also check that the rollers turn freely and that the surface of the rollers (4) are not scratched or pitted.

Change as required.

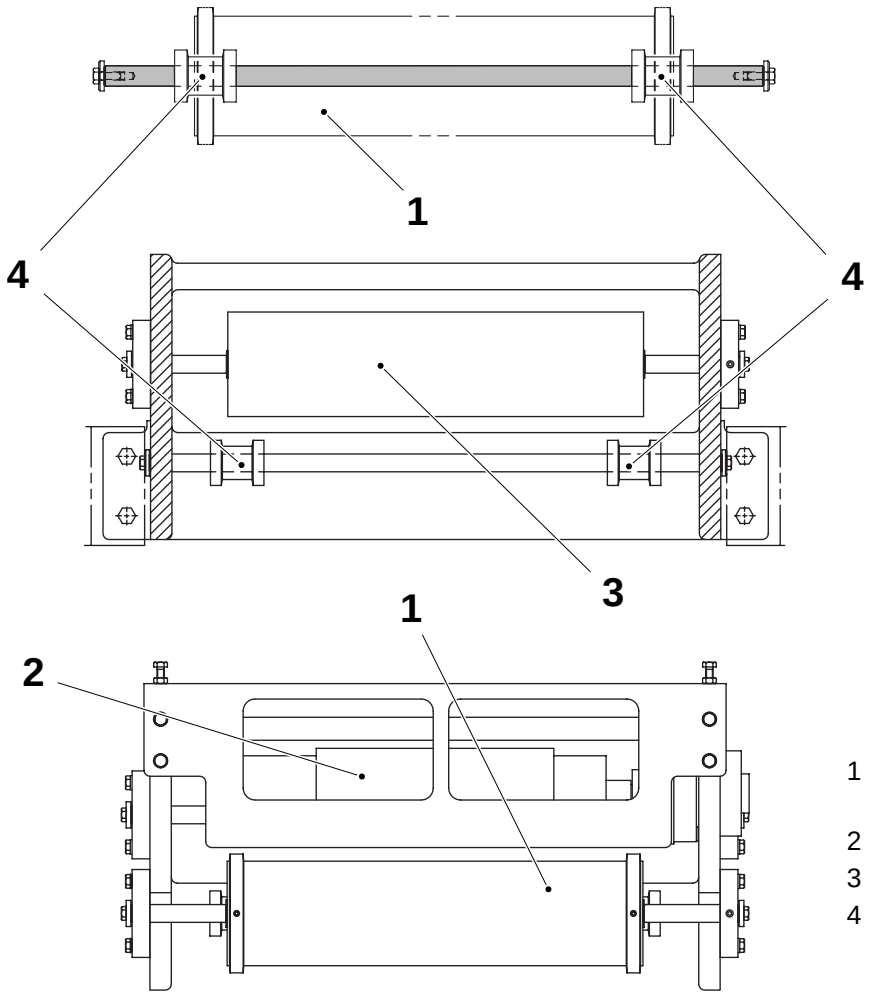

1 Guide roller with flange
2 Tension roller
3 Guide roller
4 Counter roller

(Cont'd)

TechPub_2614345_0103 - B5358A02en.fm

(Cont'd)

Check the braking action of the damper (5) by turning the damper knob (6). Set the damper knob (6) if required, see 1.2.2-4 Roller Assembly - Set Tension Roller.

By means of a a spirit level check that all the rollers are level. Set the rollers as required, see 1.2-2 Paper Web Path - Set Alignment Rollers.

Change as required.

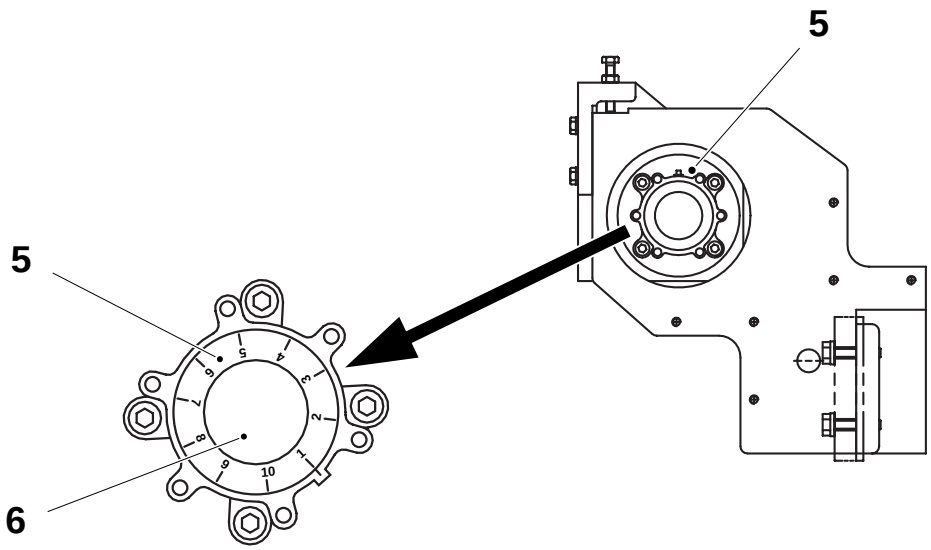

5 Damper
6 Damper knob

TechPub_2614345_0103 - B5358A02en.fm

1.2.2-2 Roller Assembly - Change Roller Bearings

Machine Status	Air **OFF** Mains power **OFF**
SPC Reference	1095937-0100 1095938-0100 1095942-0100

Guide Roller with Flange

a) Loosen the screws (1) on the left and right hand plates (2).

b) Remove the roller (3) from the bracket (4).

c) Pull out the axle supports (5) from both sides of the roller (3).

d) Remove the bearings (6) inside. Change if damaged or worn out.

e) Assemble in the reverse order.

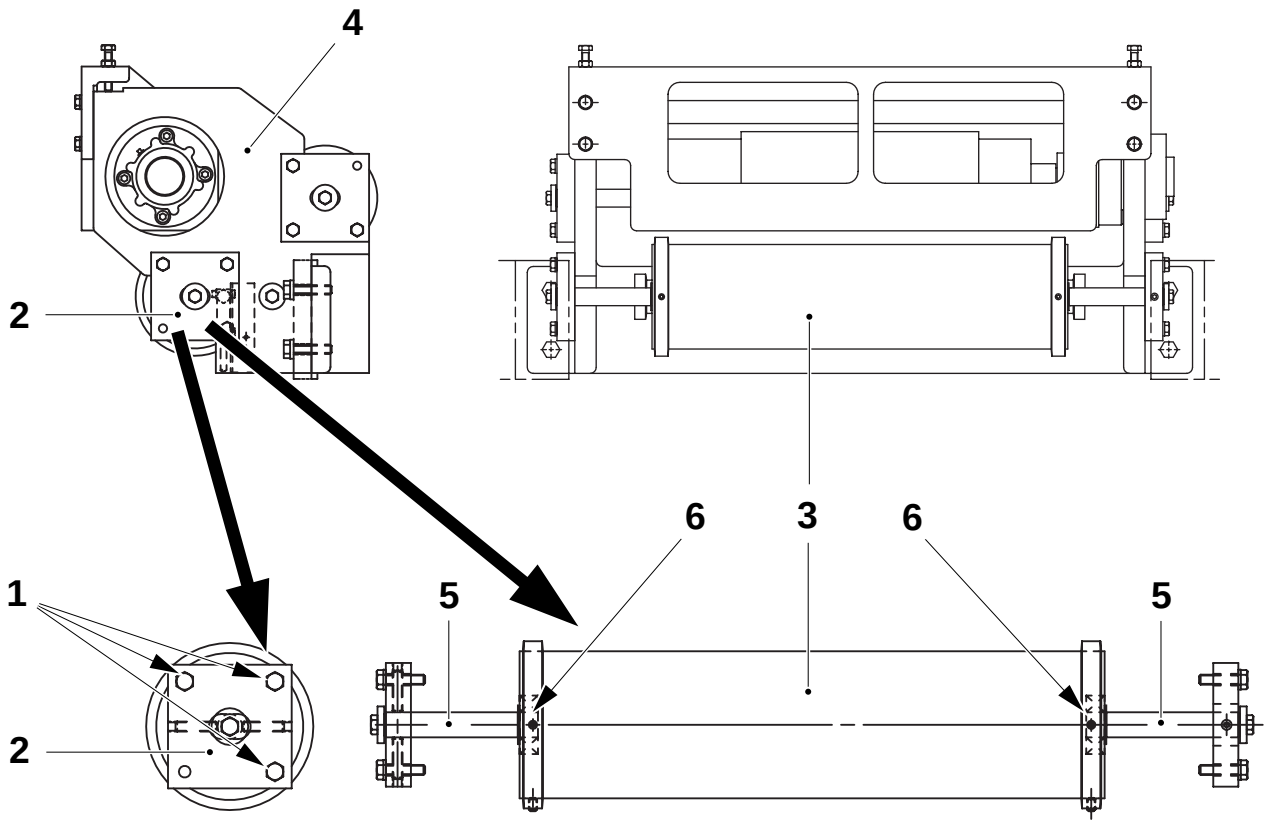

1 Screw
2 Plate
3 Guide roller with flanges
4 Bracket
5 Axle support
6 Bearing

(Cont'd)

TechPub_2614345_0103 - B5358A02en.fm

(Cont'd)

Guide Roller

a) Loosen the screws (7) on the left and right hand plates (8).

b) Remove the roller (9) from the bracket (4).

c) Pull out the axle supports (10) from both sides of the roller (9).

d) Remove the bearings (11) inside. Change if damaged or worn out.

e) Assemble in the reverse order.

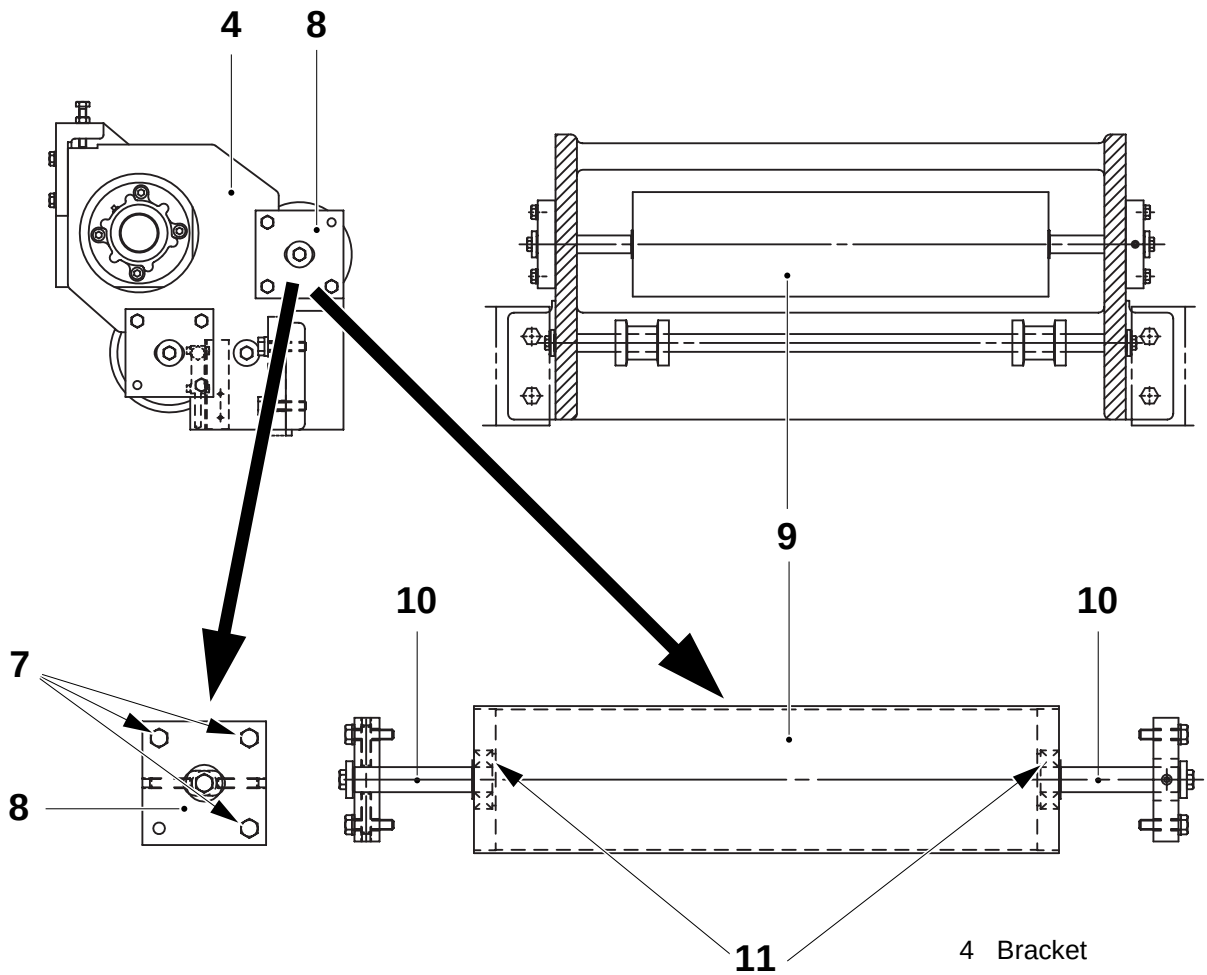

4 Bracket
7 Screw
8 Plate
9 Bending roller
10 Axle support
11 Bearing

TechPub_2614345_0103 - B5358A02en.fm

1.2.2-3 Roller Assembly - Change Damper

Machine Status	Air **OFF** Mains power **OFF**
SPC Reference	1095942-0100 1095941-0100

a) Unscrew the screws (1).

b) Pull out the damper (2) as shown in the picture.

c) Change the damper (2) if damaged.

d) Assemble in the reverse order.

e) Set the damper knob (3) if required, see 1.2.2-4 Roller Assembly - Set Tension Roller.

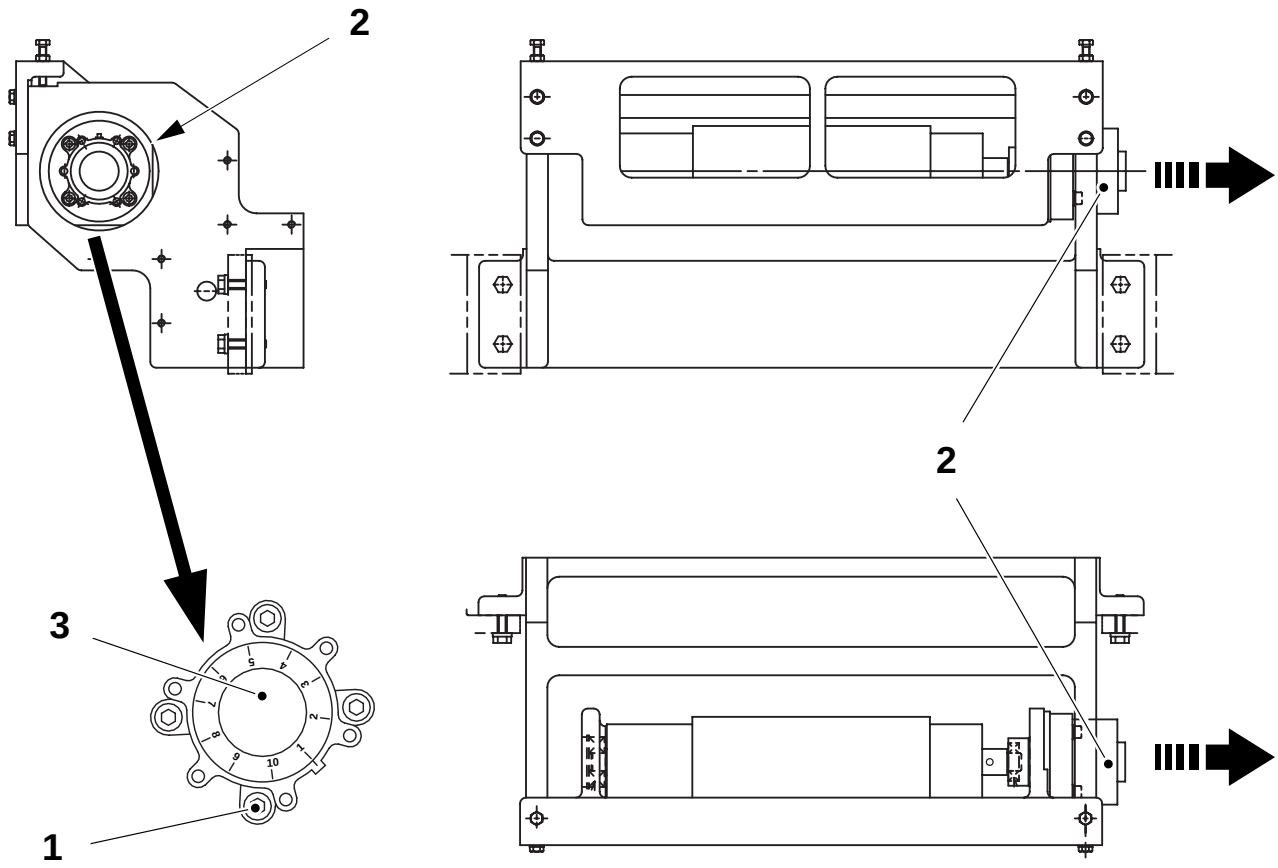

1 Screw
2 Damper
3 Damper knob

TechPub_2614345_0103 - B5358A02en.fm

1.2.2-4 Roller Assembly - Set Tension Roller

Machine Status	Air **OFF** Mains power **OFF**
SPC Reference	1095942-0100 1095941-0100

a) Set the stretching of the paper by turning the knob (1), on the damper (2) to the position **1**.

b) Check the stretching function of the roller (3) after the setting.

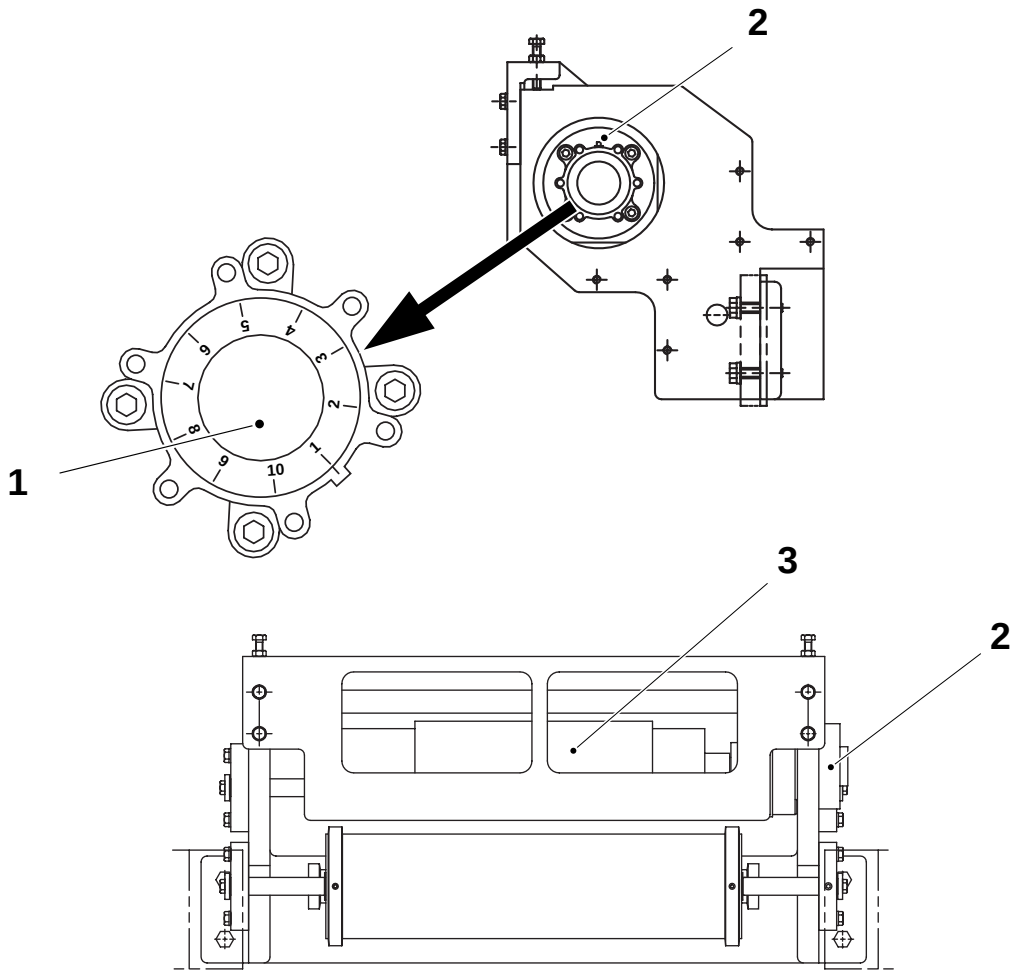

1 Knob
2 Damper
3 Tension roller

TechPub_2614345_0103 - B5358A02en.fm

1.2.3 Bending Roller Assembly

1.2.3-1 Bending Roller Assembly - Check

Machine Status	Air **OFF** Mains power **OFF**
SPC Reference	1095952-0100

Check the surface of the bending roller (1) for wear and/or damage. Pay special attention for any marks on rollers surface.

Check also that the bending roller (1) turns freely.

Change as required.

1.2.3-2 Bending Roller Assembly - Change Bearings

Machine Status	Air **OFF** Mains power **OFF**
SPC Reference	1095952-0100

a) Loosen the stop screw (2) on both sides.

b) Remove the axle pin (3) from both sides.

c) Pull out the ball bearings (4) from both sides and replace them if damaged or worn out.

d) Assemble in the reverse order.

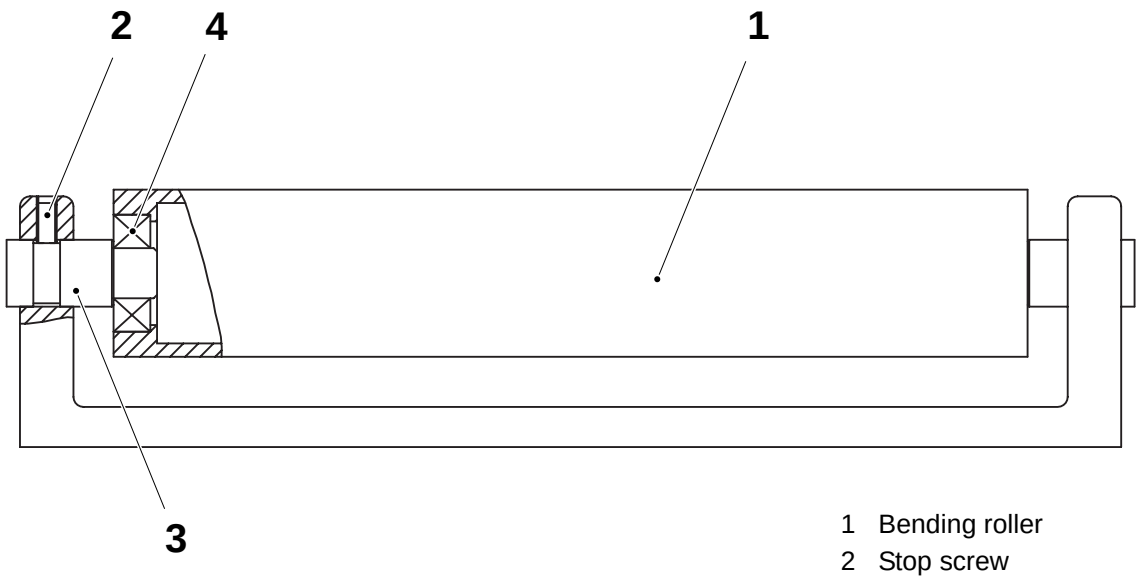

1 Bending roller
2 Stop screw
3 Axle pin
4 Ball bearing

TechPub_2614345_0103 - B5358A02en.fm

1.2.4 Infeed Unit

1.2.4-1 Infeed Unit - Check Rollers

Machine Status	Air **OFF** Mains power **OFF**
SPC Reference	1095953-0200

Disconnect the electric motor connections.

Check that the following rollers turn freely and that the surface of the rollers are not scratched or pitted:

- the bending roller (1)
- the counter roller (2)

Note! The eccentric bushing (3) in the counter roller (2) must be mounted with the eccentricity upwards.

Change as required.

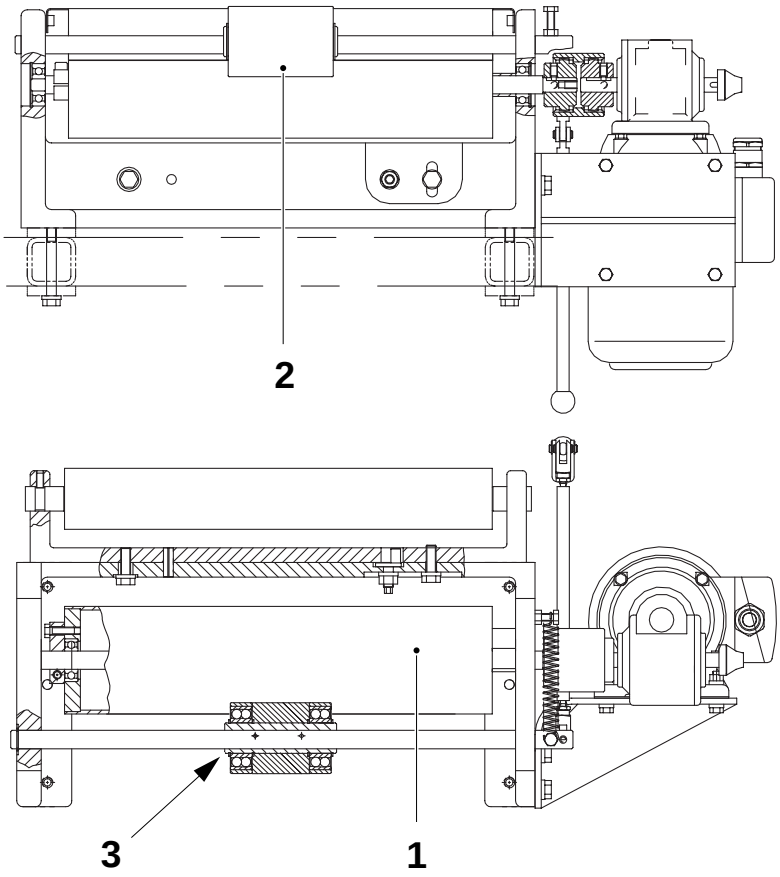

1 Bending roller
2 Counter roller
3 Eccentric bushing

TechPub_2614345_0103 - B5358A02en.fm

1.2.4-2 Infeed Unit - Check Function

Machine Status	PRODUCTION
SPC Reference	1095953-0200

Check that the infeed motor (1) stops immediately when the lower photocell (2), located in the infeed photocell unit, is activated.

With the machine in step PRODUCTION check that the speed of the infeed motor (1) does not cause the packaging material to activate the upper photocell (4), located in the infeed photocell unit. Set the infeed motor (1) as required.

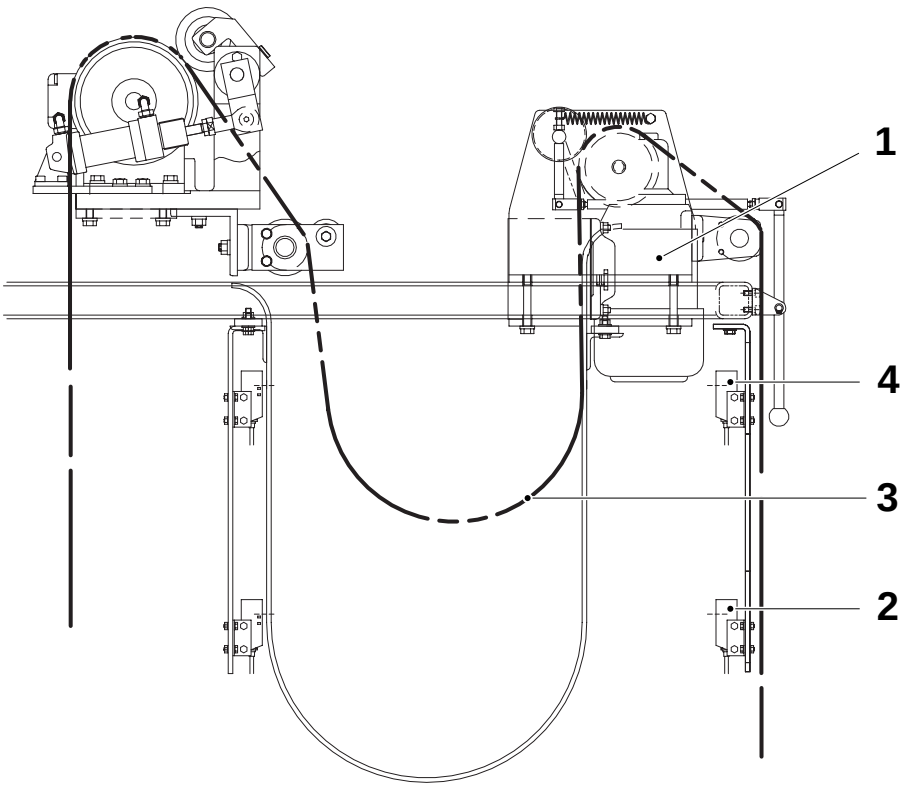

1 Infeed motor
2 Lower photocell
3 Packaging material
4 Upper photocell

TechPub_2614345_0103 - B5358A02en.fm

1.2.4-3 Infeed Unit - Change Worm Gear Motor

Machine Status	Air **OFF** Mains power **OFF**
SPC Reference	1095953-0200

a) Disconnect the electric motor connections.

b) Loosen the nuts (1) and remove the four screws (2).

c) Remove the coupling (3) from the worm gear motor (4) by loosening the grub screws (5).

d) Change the worm gear motor (4) as required.

e) Assemble in the reverse order.

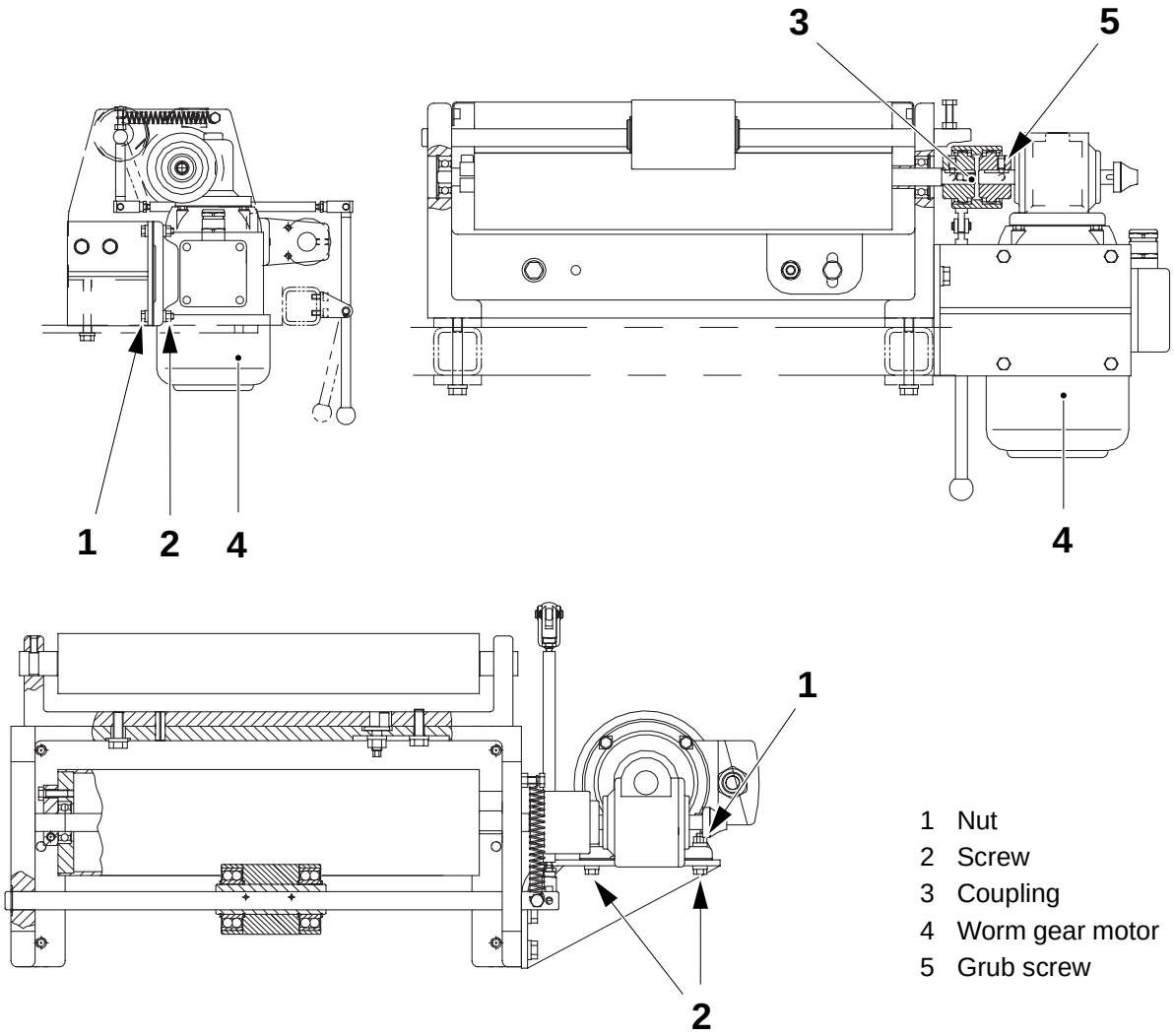

1 Nut
2 Screw
3 Coupling
4 Worm gear motor
5 Grub screw

TechPub_2614345_0103 - B5358A02en.fm

1.2.4-4 Infeed Unit - Change Bearings

Machine Status	Air **OFF** Mains power **OFF**
SPC Reference	1095953-0200

a) Disconnect the electric motor connections.

b) Loosen the nuts (1) and remove the four screws (2).

c) Remove the worm gear motor (3), together with its hub (4), from the coupling (5).

d) Remove the hub (6), on the bending roller shaft (7), by loosening the two grub screws (8) and (9).

e) Remove the circlip (10) from the bracket (11).

f) Push the bending roller (12) aside, see figure, until the bearing (13) comes off from the bracket (11).

g) Change the bearing (13) if damaged or worn out.

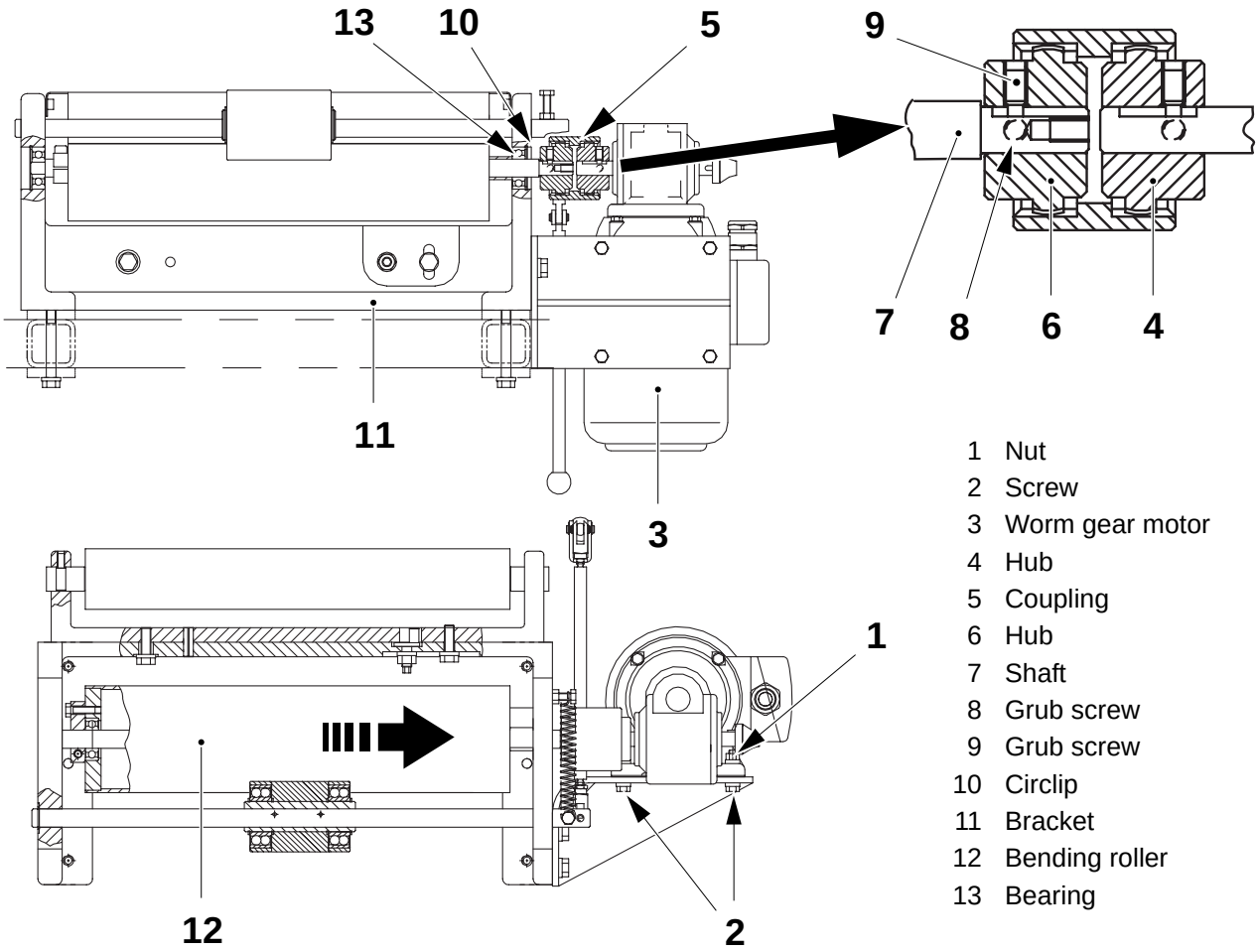

1 Nut
2 Screw
3 Worm gear motor
4 Hub
5 Coupling
6 Hub
7 Shaft
8 Grub screw
9 Grub screw
10 Circlip
11 Bracket
12 Bending roller
13 Bearing

(Cont'd)

TechPub_2614345_0103 - B5358A02en.fm

(Cont'd)

h) Push the bending roller (12) aside, see figure, until the roller shaft (7) is extracted from the bearing (14).

i) Pull out the bearing (14) and change it if damaged or worn out.

j) Assemble in the reverse order.

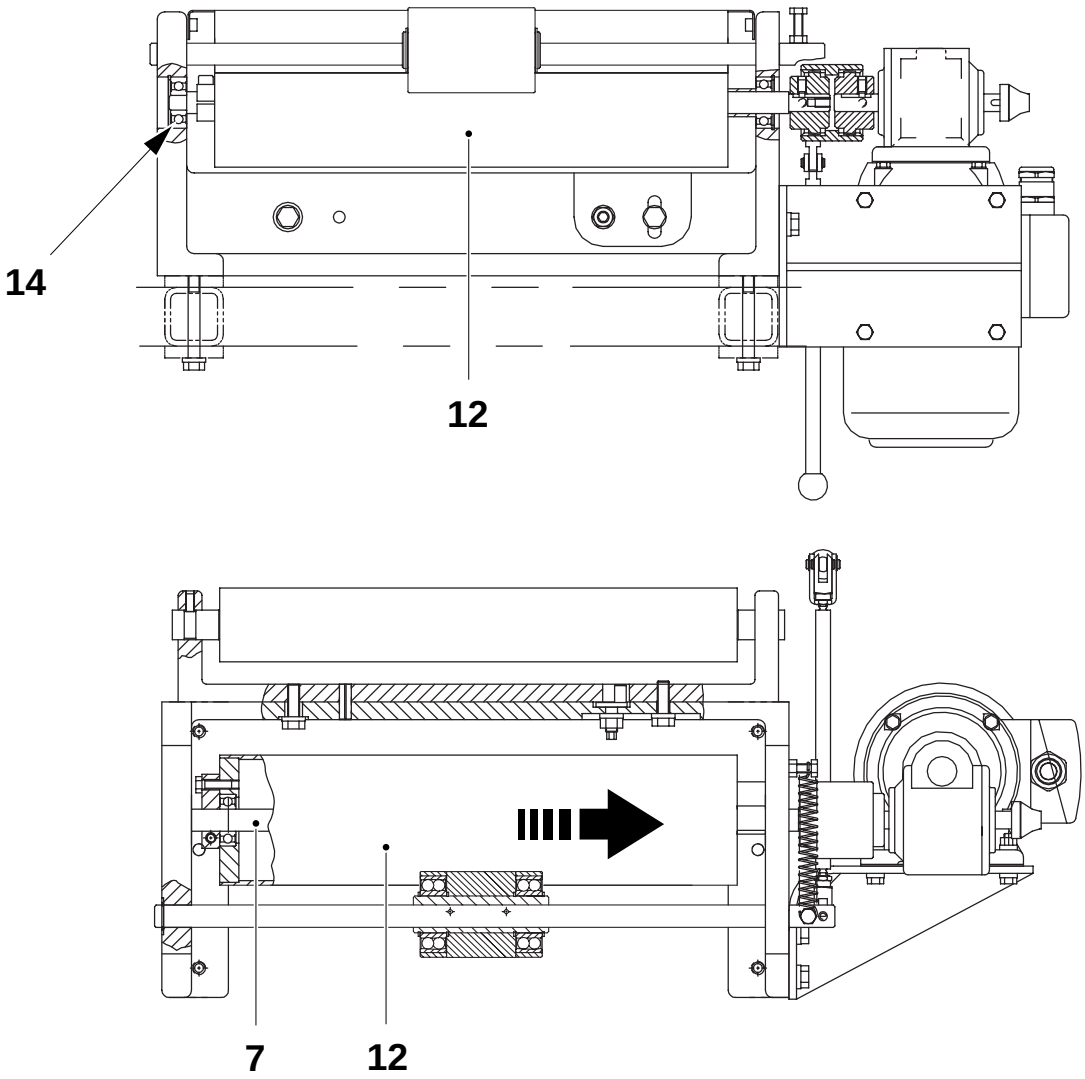

7 Shaft
12 Bending roller
14 Bearing

TechPub_2614345_0103 - B5358A02en.fm

1.2.4-5 Infeed Unit - Check Bending Roller Assembly

Machine Status	Air **OFF** Mains power **OFF**
SPC Reference	1095953-0200 1095952-0100

Check the correct position for the bending roller (1) on the infeed unit assembly in order to have correct packaging material tracking.

If required, adjust the bending roller (1) by slightly loosening the screws (4). Then loosen the nut (2) and turn the eccentric (3) until the correct position is obtained, see 1.2-2 Paper Web Path - Set Alignment Rollers.

Check the surface of the bending roller (1), see 1.2.3-1 Bending Roller Assembly - Check.

Change as required.

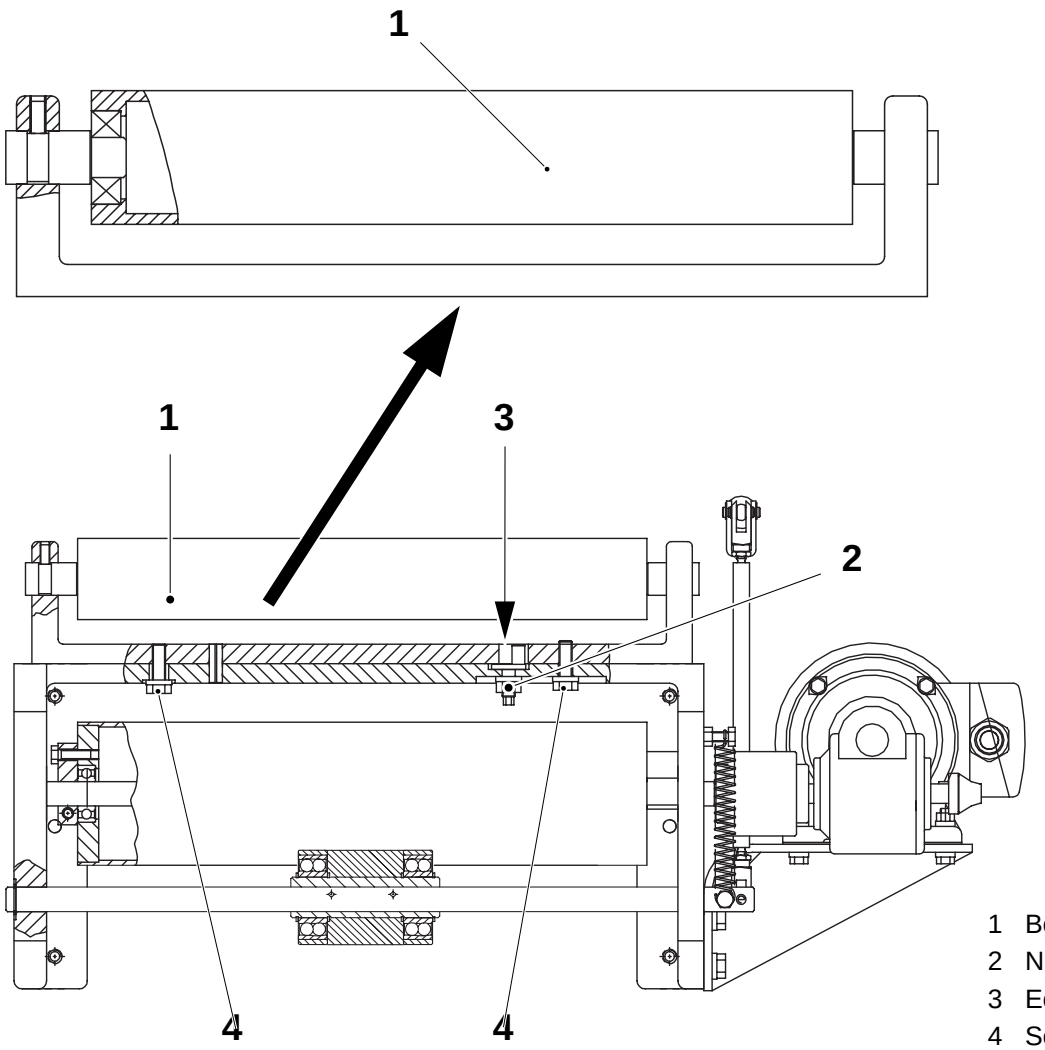

1 Bending roller
2 Nut
3 Eccentric
4 Screw

TechPub_2614345_0103 - B5358A02en.fm

1.2.4-6 Infeed Unit - Set Spring Bracket

Machine Status	Air **OFF** Mains power **OFF**
SPC Reference	1095953-0200

Set the distance **A** between the spring bracket (1) and the shaft (2) by means of the nut (3).

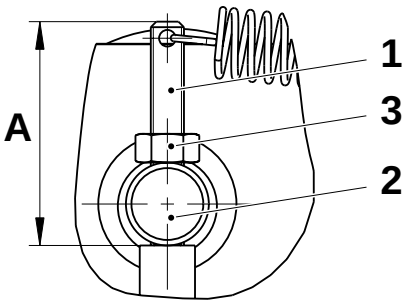

A = 40.5 ±0.5 mm

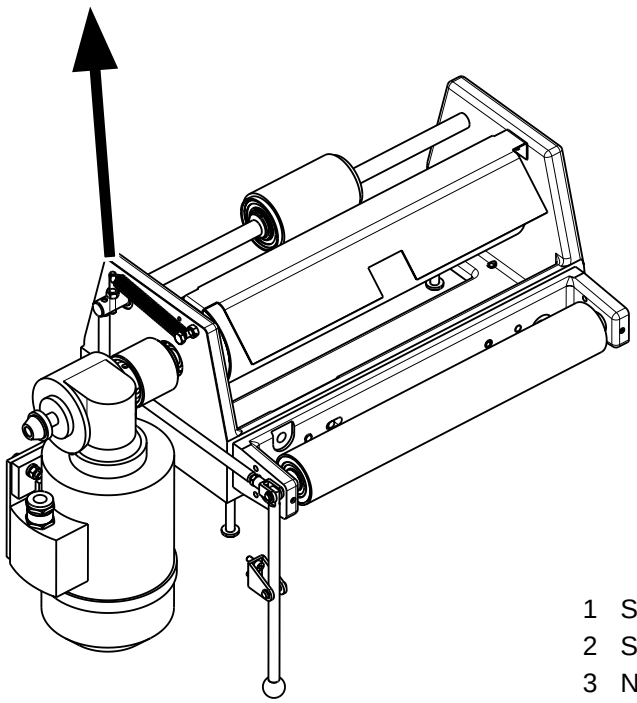

1 Spring bracket
2 Shaft
3 Nut

TechPub_2614345_0103 - B5358A02en.fm

1.2.5 Paper Brake

1.2.5-1 Paper Brake - Check

Machine Status	Air **OFF** Mains power **OFF**
SPC Reference	1095970-0100

Check that the following parts turn freely and that there are no deformations or cracks:

- the wheel (1)
- the counter roller (2).

Change as required.

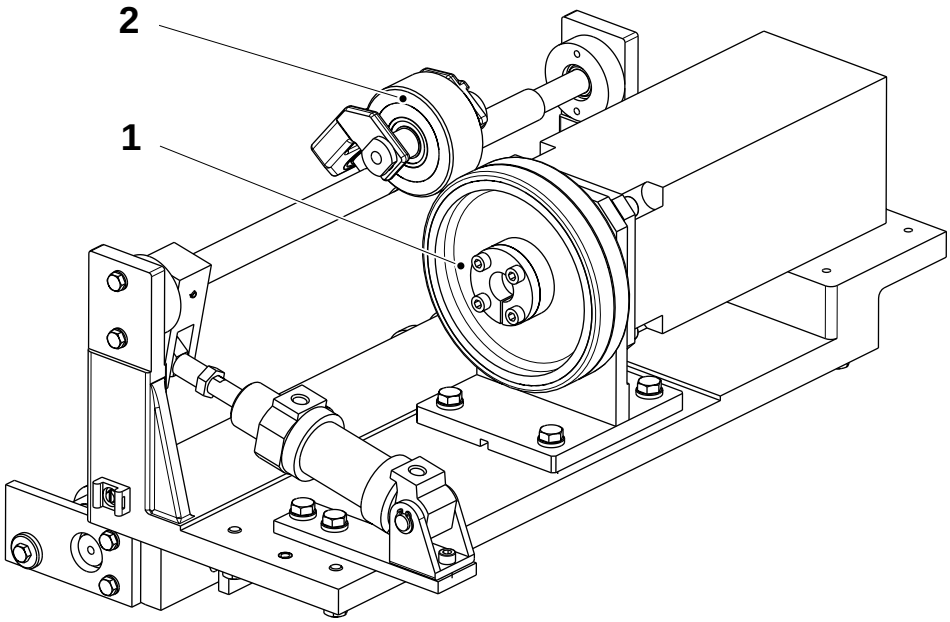

1 Wheel
2 Counter roller

TechPub_2614345_0103 - B5358A02en.fm

1.2.5-2 Paper Brake - Check Bending Roller Flange

Machine Status	Air **OFF** Mains power **OFF**
SPC Reference	1095969-0100 1095970-0100

Check the following parts for wear and/or damage:

- the bending roller with flange (1)
  Check especially the surface of the roller (1) for any marks and also that it turns freely.
- the rollers (2)
  Check especially the surfaces of the rollers (2) for any marks and also that they turn freely. Check also that the rollers (2) are approximately centred with respect to the flanges of the bending roller (1).
- the correct position for the bending roller (1) on the paper brake assembly in order to have correct packaging material tracking.

Change as required.

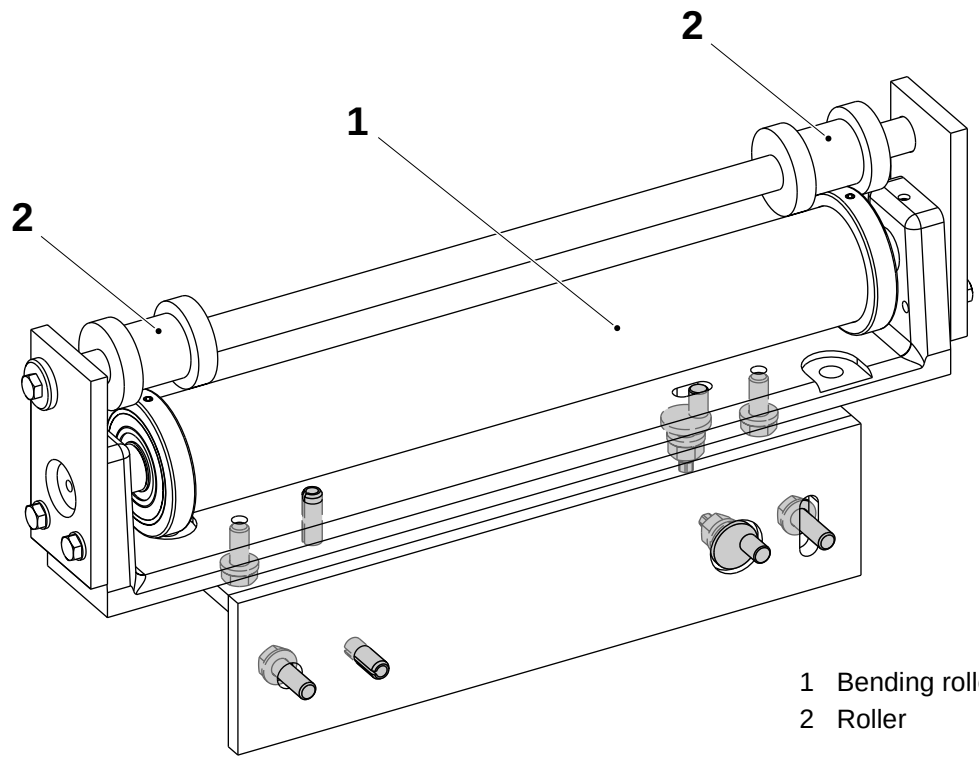

1 Bending roller with flange
2 Roller

TechPub_2614345_0103 - B5358A02en.fm

1.2.5-3 Paper Brake - Set Cylinder

Machine Status	Air **OFF** Mains power **OFF**
SPC Reference	1095970-0100

a) Lift the counter roller (1) as far as it can go.

b) Adjust the cylinder joint (2) in order to set the distance **A** between the nut (3) and the cylinder (4) edge, as shown in the picture.

c) Check the cylinder (4) function once more after the setting.

A = 12 ±1 mm

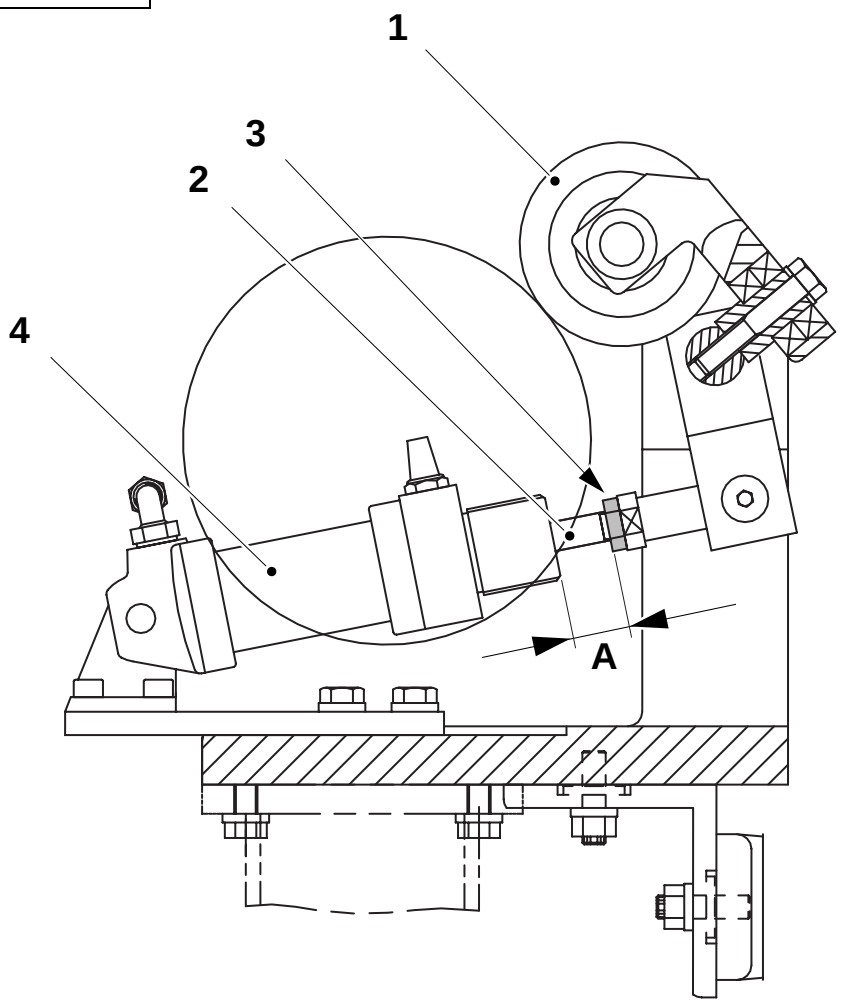

1 Counter roller
2 Joint
3 Nut
4 Cylinder

TechPub_2614345_0103 - B5358A02en.fm

1.2.5-4 Paper Brake - Set Servo Tension Device

Machine Status	Air **ON** Mains power **ON**
Special Equipment	Digital multimeter TP No. 90220-78
SPC Reference	1095970-0100

a) Close all the doors on the machine.

b) On the TPOP, check that there are no active alarms and touch the MANOEUVRE button (1).

c) Touch the MAINTENANCE PT21 LEFT button (2).

d) Touch the PUNCH UNIT AND PATCH APPLICATOR button (3).

e) Touch the START button (4) to activate these stations: punch unit and applicator patch.

f) The **Service and maintenance key** icon (5) starts to flash at the top of the ladder step window.

g) Push the PROGRAM UP button (6) after it starts flashing.

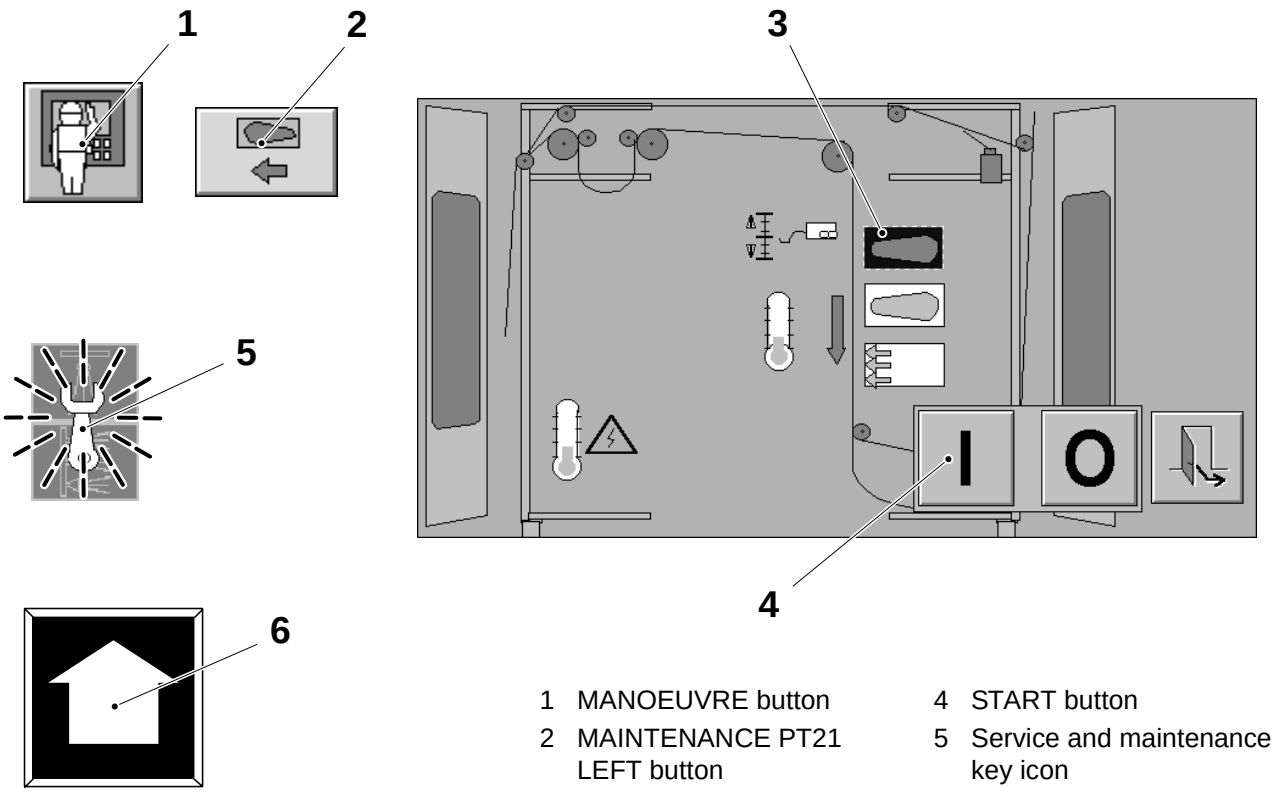

1 MANOEUVRE button
2 MAINTENANCE PT21 LEFT button
3 PUNCH UNIT AND PATCH APPLICATOR button
4 START button
5 Service and maintenance key icon
6 PROGRAM UP button

(Cont'd)

TechPub_2614345_0103 - B5358A02en.fm

(Cont'd)

h) At the PullTab control panel, push the SINGLE INDEX button (7) at least **15 times** and make sure that the packaging material is not folded but wound up in the outfeed loop.

Note! If the SINGLE INDEX button (7) does not flash, open and close one of the doors in the PullTab unit. Acknowledge the alarm on the TPOP.

i) Open the door and cut the packaging material that has the test holes and the patches.

j) Place the packaging material on a flat surface and make sure that it lies flat.

k) Measure the length between the first and the last hole. The length should be the packaging material repeat length **x 10 0/-1 mm**.

l) If the measured length is too long increase the current torque value by means of increasing **R1501** and **R1502** in steps of **1** in the GE Fanuc program.

Note! To modify the content of the registers **R1501** and **R1502** follow the procedure in 8.1.1-5 PLC - Set Tension Device Torque.

m) If the measured length is too short decrease the current torque value by means of decreasing **R1501** and **R1502** in steps of **1** in the GE Fanuc program.

Note! The default value of **R1501** and **R1502** is **17**.

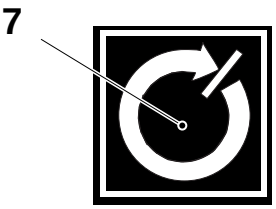

7 SINGLE INDEX button

(Cont'd)

TechPub_2614345_0103 - B5358A02en.fm

(Cont'd)

n) Close the door and reset the alarm on the TPOP. If required repeat steps h), i), j) and k) and make adjustments according to steps l) and m).

o) Touch the STOP button (8).

p) Push the PROGRAM DOWN button (9) after it starts flashing.

q) Touch the EXIT button (10).

r) Touch the MANOEUVRE button (1) to end the setting.

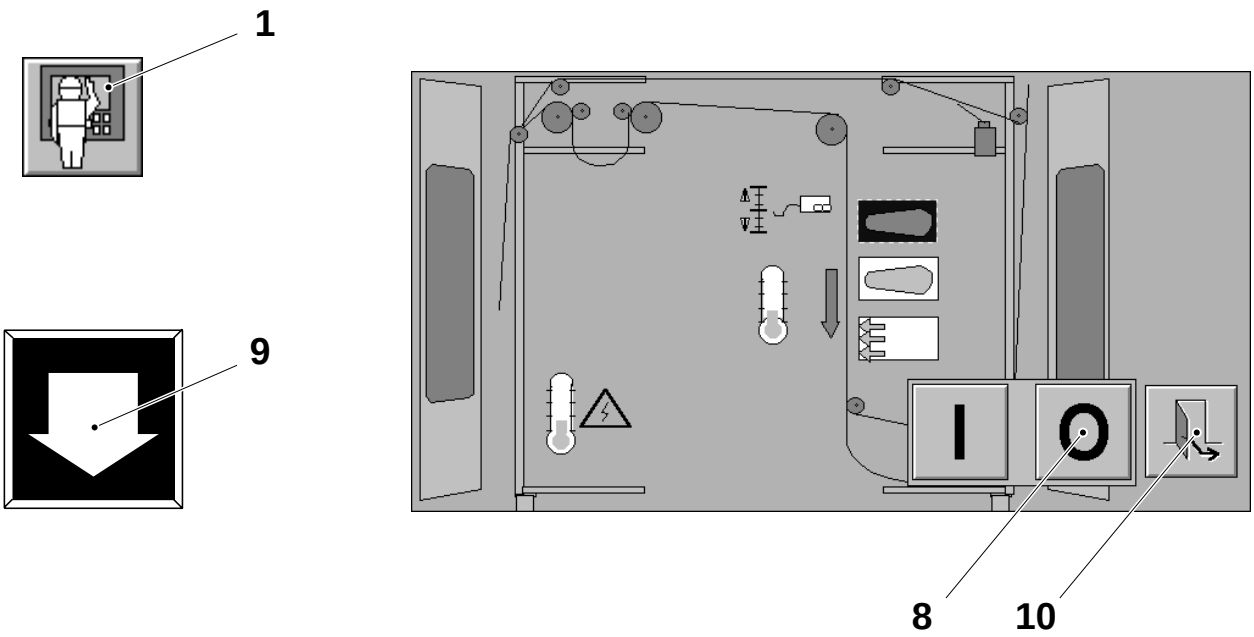

1 MANOEUVRE button
8 STOP button
9 PROGRAM DOWN button
10 EXIT button

TechPub_2614345_0103 - B5358A02en.fm

1.2.5-5 Paper Brake - Change Wheel

Machine Status	Air **OFF** Mains power **OFF**
SPC Reference	1095970-0100

a) Remove the clamping element (1) from its place, see 1.2.1-1 Drive Motor - Remove Clamping Element.

b) Pull out the wheel (2).

c) Change the wheel (2) if damaged or worn out.

d) Assemble in the reverse order.

Note! While assembling in the reverse order, check the distance **A** between the drive wheel (2) and the bracket (3).

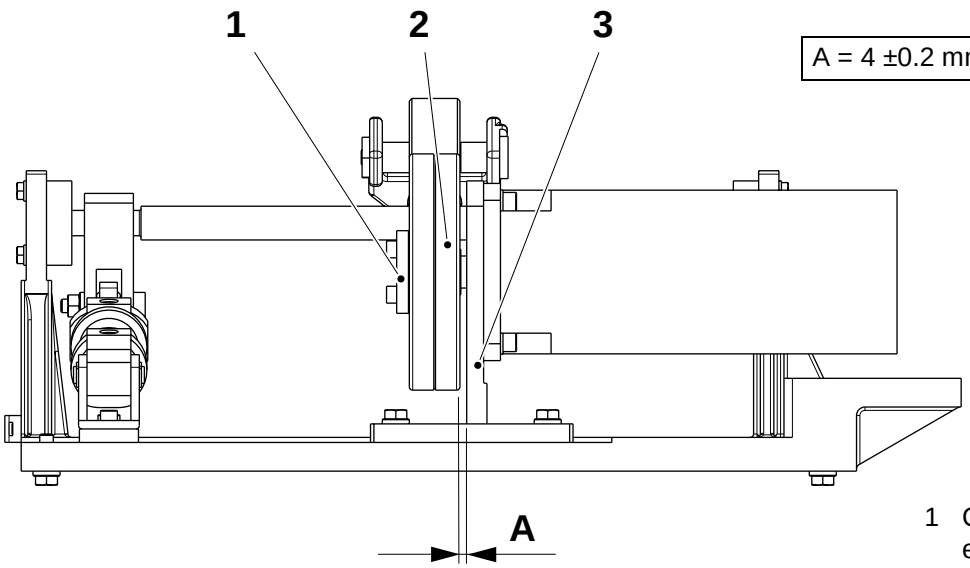

1 Clamping element
2 Wheel
3 Bracket

1.2.5-6 Paper Brake - Remove Clamping Element

SPC Reference	1095970-0100

Follow the procedures described in 1.2.1-1 Drive Motor - Remove Clamping Element.

1.2.5-7 Paper Brake - Assemble Clamping Element

SPC Reference	1095970-0100

Follow the procedures described in 1.2.1-2 Drive Motor - Assemble Clamping Element.

TechPub_2614345_0103 - B5358A02en.fm

1.2.6 Edge Guide

1.2.6-1 Edge Guide - Check Bearings

Machine Status	Air **OFF** Mains power **OFF**
SPC Reference	1255601-0100 2504609-0100

Old Variant

Check that the ball bearings (1) rotate freely. If not, clean them with compressed air.

Change the ball bearings (1) as required, see 1.2.6-2 Edge Guide - Change Bearings.

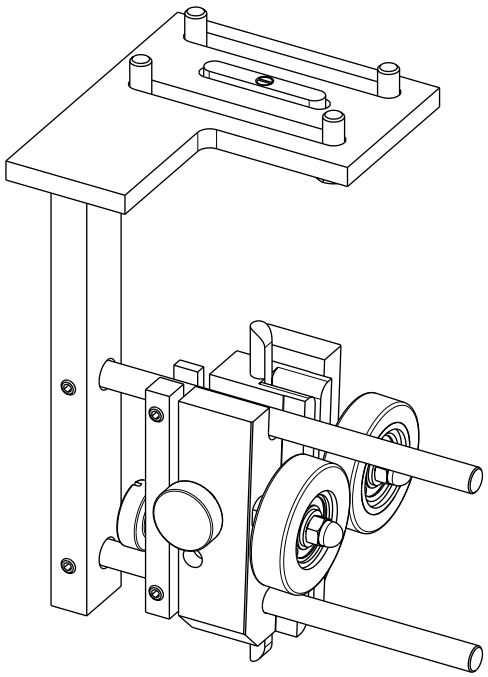

New variant - paper guide

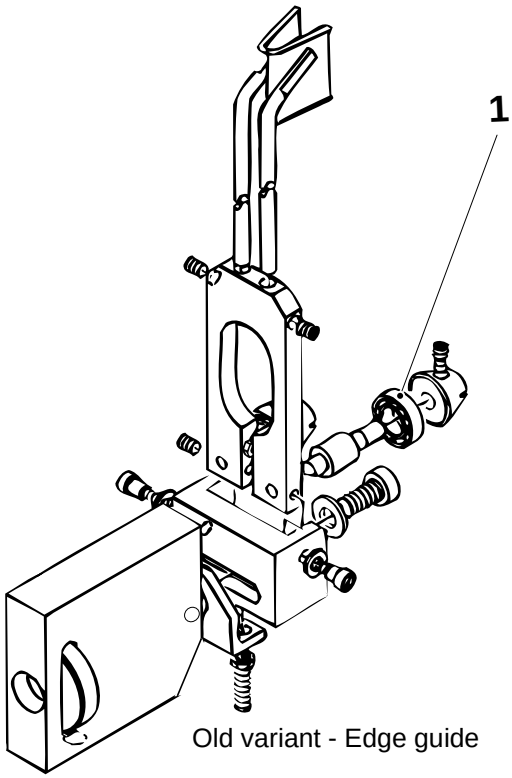

Old variant - Edge guide

1 Ball bearing

(Cont'd)

TechPub_2614345_0103 - B5358A02en.fm

(Cont'd)

New Variant

Check that the roller surfaces are not damaged.

Check that the rollers rotate freely.

If not:

a) Remove the nuts (2), the washers and the retaining rings (3).

b) Change the ball bearings (4) and/or the rollers (5) as required.

c) Check that the guide (6) is clean, pull out and clean the guide (6) as required.

Note! The rubber roller must be fitted on the printed side of the packaging material web.

d) Assemble in the reverse order.

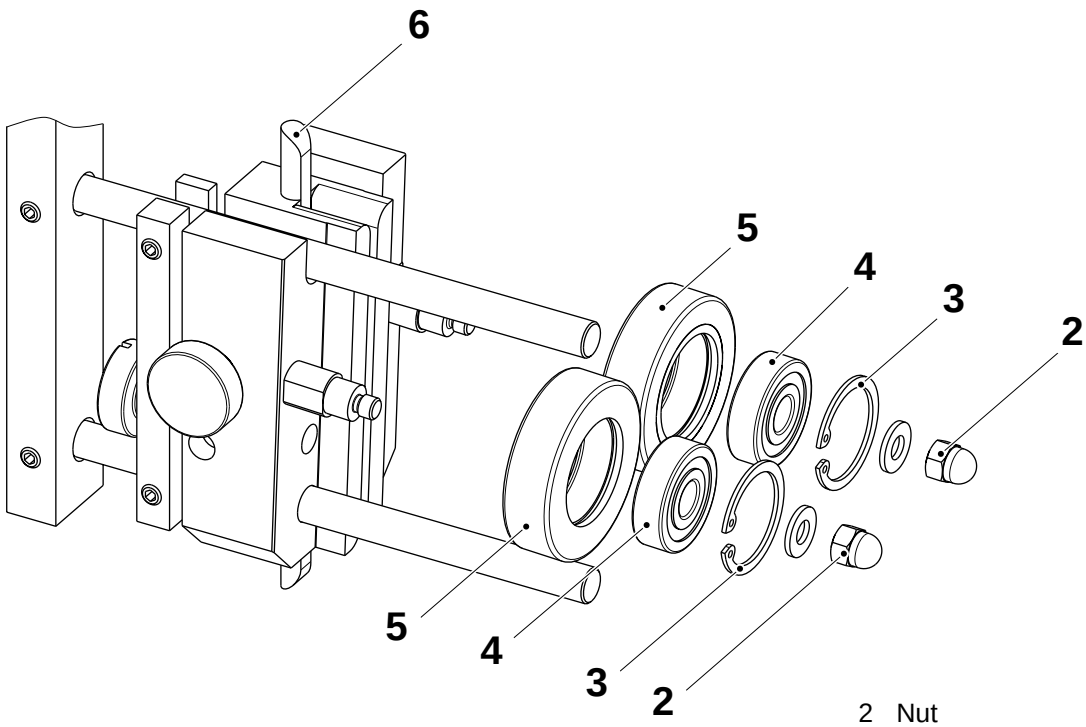

2 Nut
3 Retaining ring
4 Ball bearing
5 Roller
6 Guide

TechPub_2614345_0103 - B5358A02en.fm

1.2.6-2 Edge Guide - Change Bearings

Machine Status	Air **OFF** Mains power **OFF**
SPC Reference	1255601-0100

Valid for the Old Variant

a) Remove the stop screws (2), the piece (3) and the guide cones (4).

b) Pull out and change the ball bearings (1).

c) Fit the guide cones (4), the piece (3) and the stop screws (2).

d) Loosen the nut (6) and adjust the screw (5) until the bearings are in slight contact with each other.

e) Thread the packaging material, step up the machine to step PRODUCTION and check that the ball bearings (1) do not make any marks on the packaging material.

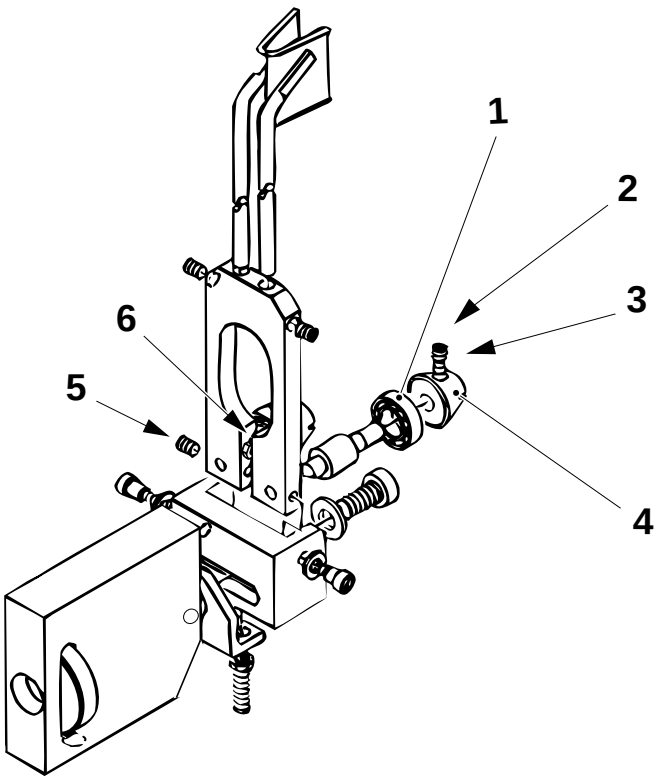

1 Ball bearing
2 Stop screw
3 Piece
4 Guide cone
5 Screw
6 Nut

TechPub_2614345_0103 - B5358A02en.fm

1.2.6-3 Edge Guide - Set

Machine Status	Air **OFF** Mains power **OFF**
SPC Reference	1255601-0100

Valid for the Old Variant

a) Loosen the nut (1) and adjust the stop screws (2) until the bearings (4) are in slight contact with each other.

b) Set the guide fingers parallel with the packaging material sideways by adjusting the shifter handle (3).

c) Step up to step PRODUCTION and check that the ball bearings (4) do not make any marks on the packaging material.

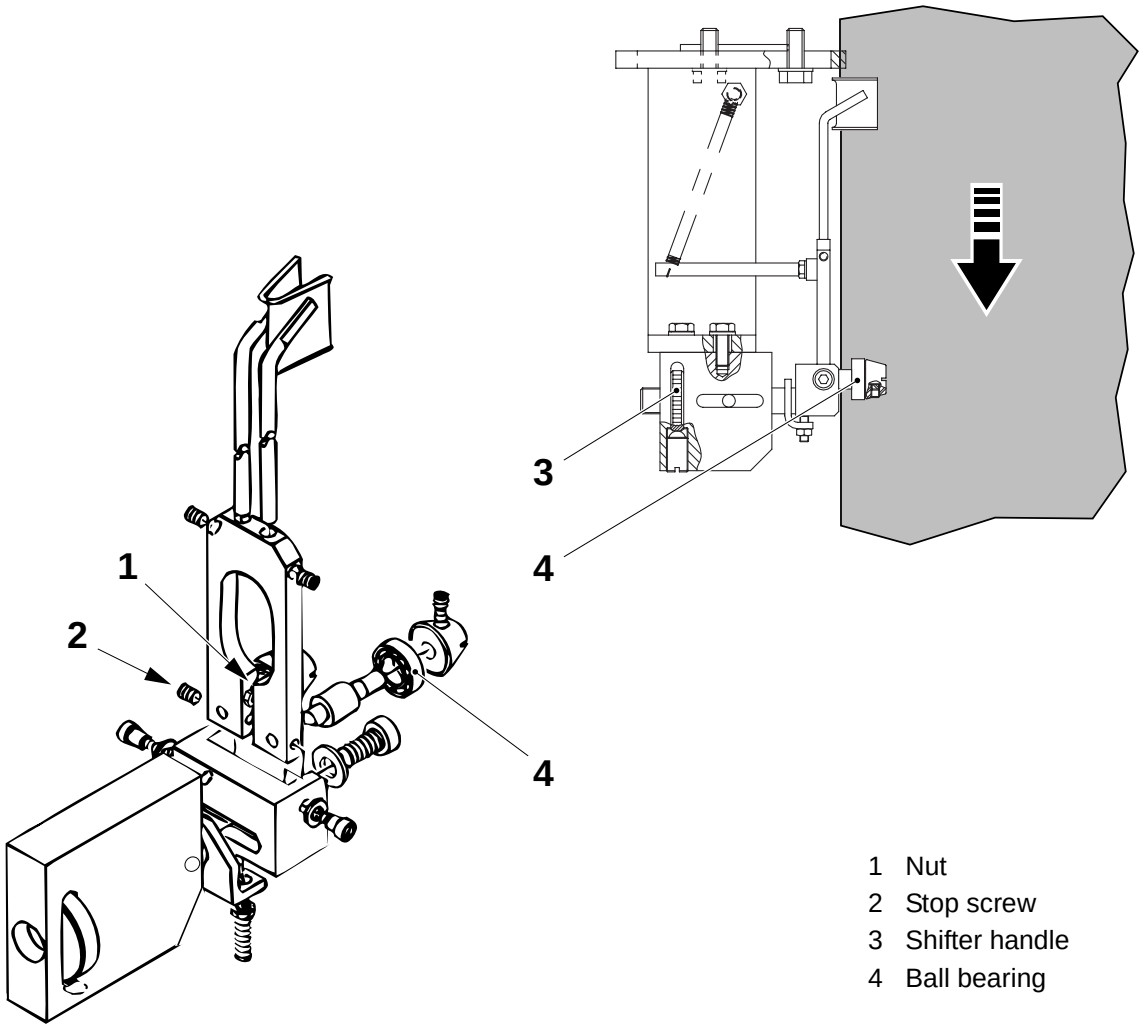

1 Nut
2 Stop screw
3 Shifter handle
4 Ball bearing

TechPub_2614345_0103 - B5358A02en.fm

1.2.6-4 Edge Guide - Set

Machine Status	Air **OFF** Mains power **OFF**
SPC Reference	2504609-0100

Valid for the New Variant

a) Adjust the gap between the rollers (1) and (2), the distance **A**, by means of the shaft (6). The two rollers must grip the packaging material firmly without marking it. Tighten the locking screw for the shaft (6) after adjustment.

Note! The rubber roller (1) must be mounted on the printed web side.

b) Make sure to have a correct packaging material tracking, see 1.2-1 Paper Web Path - Check Packaging Material Tracking.

c) To obtain a correct packaging material tracking, perform the main adjustment of the paper guide (4) by means of the grub screws (3).

d) Loosen the grub screw (7).

e) Fine set by means of the shaft (5).

f) Tighten the grub screw (7).

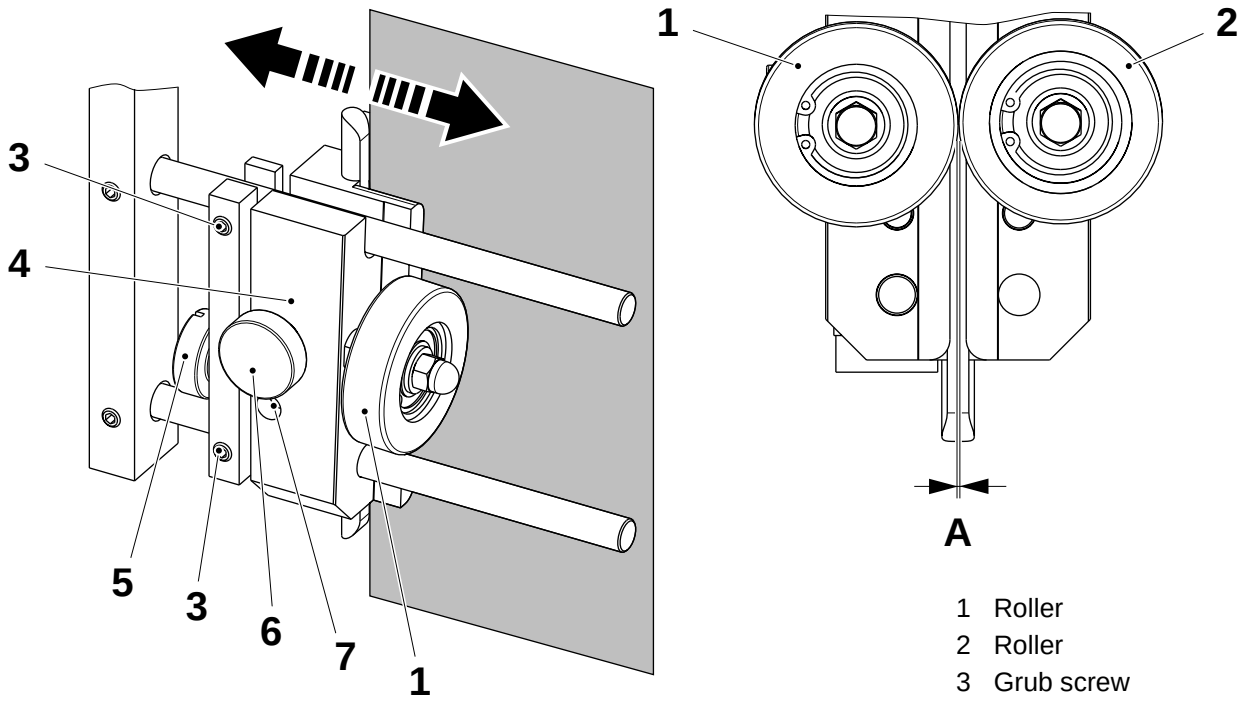

1 Roller
2 Roller
3 Grub screw
4 Paper guide
5 Shaft
6 Shaft
7 Grub screw

TechPub_2614345_0103 - B5358A02en.fm

1.2.7 Photocell Unit Infeed

1.2.7-1 Photocell Unit Infeed - Check

Machine Status	Air **OFF** Mains power **ON**
SPC Reference	1095980-0100

Check that the photocell transmitter (2) and the photocell receiver (1) are aligned both vertically and horizontally.

Check the function of the photocells by checking that the red LED (3) is **On** when the photocells are working together.

Change as required.

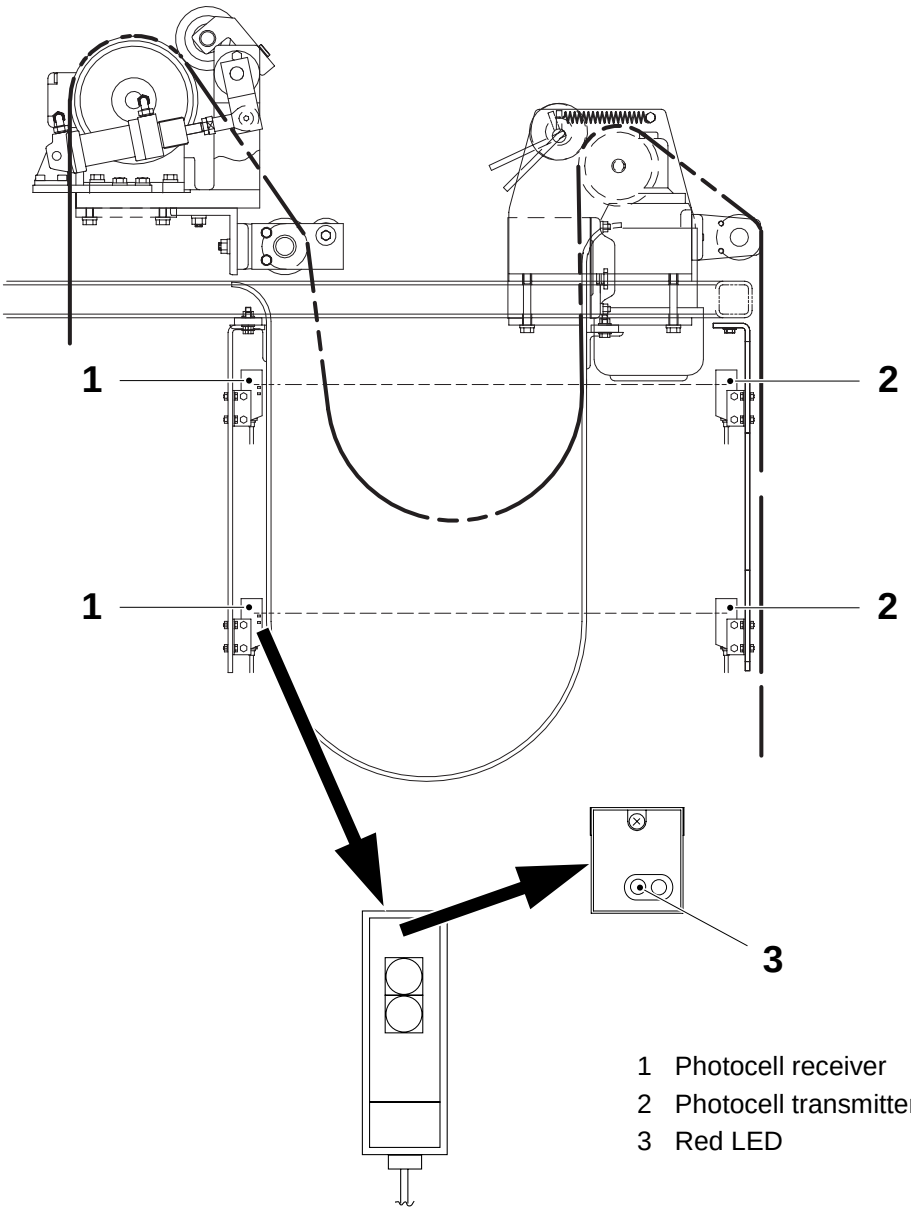

1 Photocell receiver
2 Photocell transmitter
3 Red LED

TechPub_2614345_0103 - B5358A02en.fm

1.2.7-2 Photocell Unit Infeed - Set

Machine Status	Air **OFF** Mains power **ON**
SPC Reference	1095980-0100

The photocell unit has two transmitters and two receivers that work in pairs: receiver (1) with transmitter (3), and receiver (2) with transmitter (4).

Basic Setting

Set the distances **A**, **B**, **C** and **D** by means of the screws (5).

Fine Setting

a) Make sure that there is no packaging material between transmitters and receivers.

b) Adjust the position of each photocell according to the distances shown in the table below. When the correct position is found the red LED (6) of the receiver photocells lights up. This means that the photocells are correctly aligned.

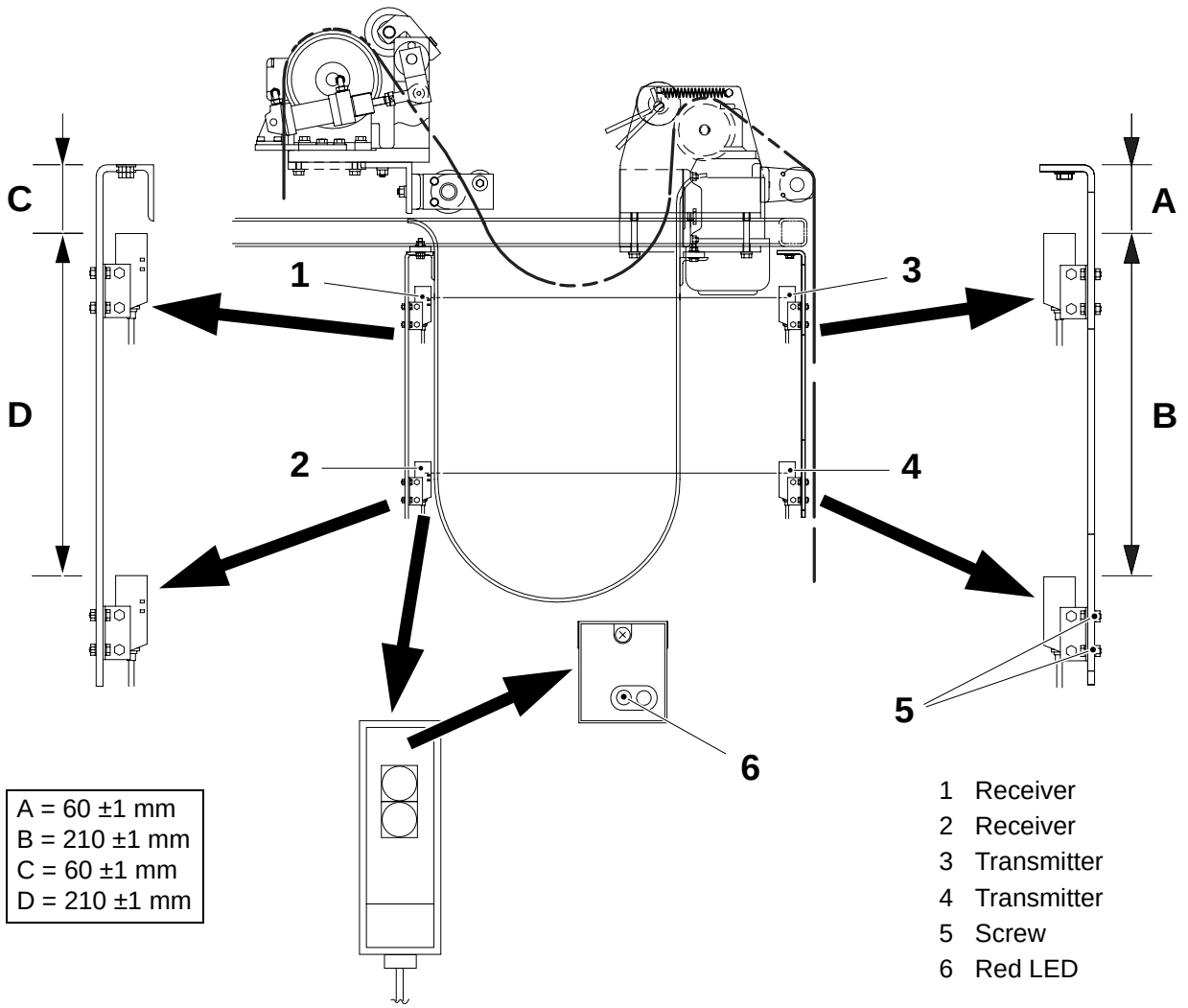

A = 60 ±1 mm
B = 210 ±1 mm
C = 60 ±1 mm
D = 210 ±1 mm

1 Receiver
2 Receiver
3 Transmitter
4 Transmitter
5 Screw
6 Red LED

(Cont'd)

TechPub_2614345_0103 - B5358A02en.fm

(Cont'd)

c) Open the cover on the receiver photocells (1) and (2).

d) For the upper receiver photocell (1) make sure that it is set to **PNP** and **D-ON** as shown in the figure.

e) For the lower receiver (2) make sure that it is set to **PNP** and **L-ON** as shown in the figure.

f) Turn the potentiometer (7) fully clockwise (towards **max.**), on the receiver photocells (1) and (2).

g) Close the cover on the receiver photocells (1) and (2).

h) Check the photocells function by putting a hand between the transmitter photocell and the receiver photocell. Check that the red LED (6), on the receiver photocell goes out. Repeat with the other pair of photocells.

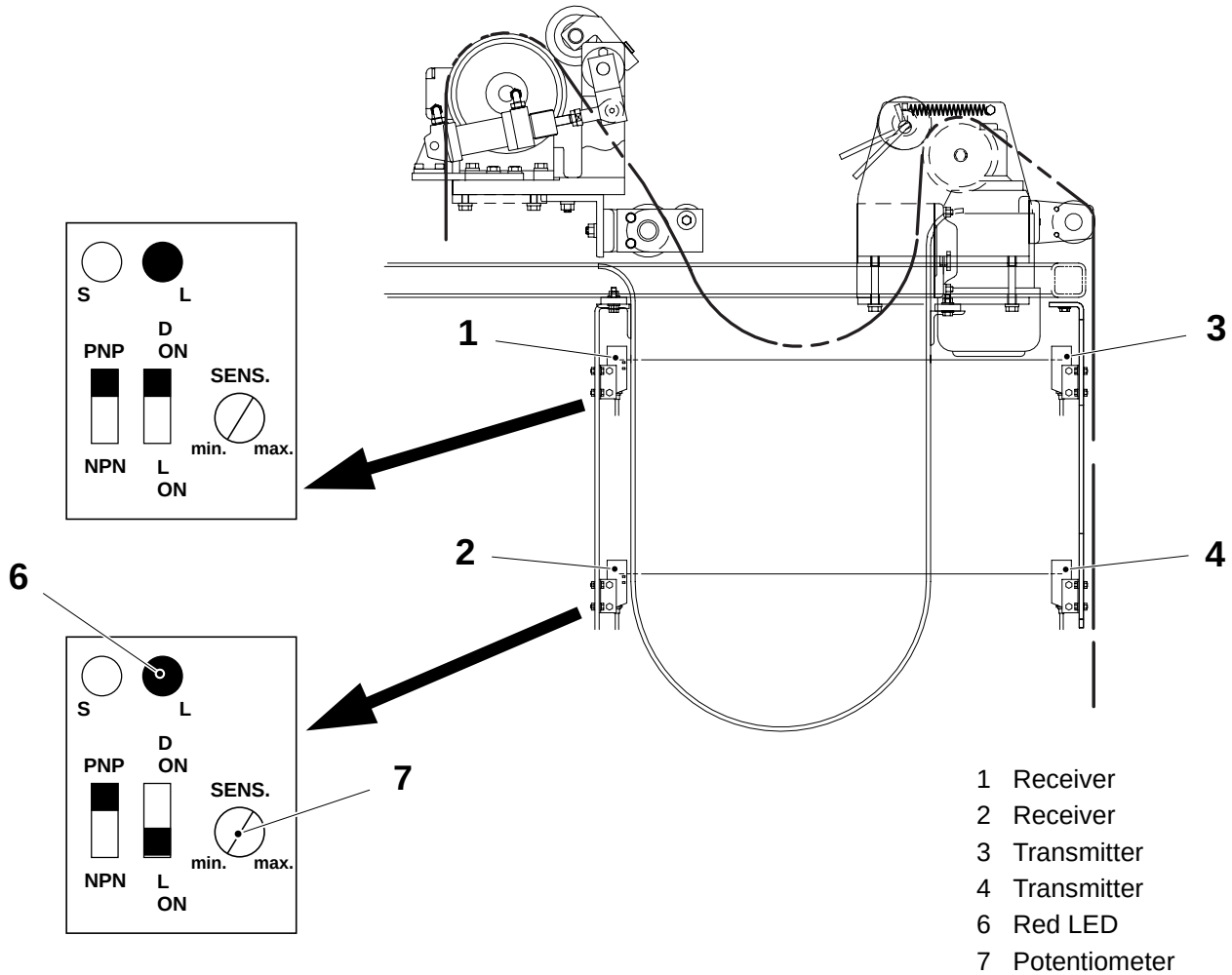

TechPub_2614345_0103 - B5358A02en.fm

1.2.8 Photocell Unit Outfeed

1.2.8-1 Photocell Unit Outfeed - Check

Machine Status	Air **OFF** Mains power **ON**
SPC Reference	1095979-0100

Check that the photocell transmitter (1) and the photocell receiver (2) are aligned both vertically and horizontally.

Check the function of the photocells by checking that the red LED (3) is **On** when the photocells are working together.

Change as required.

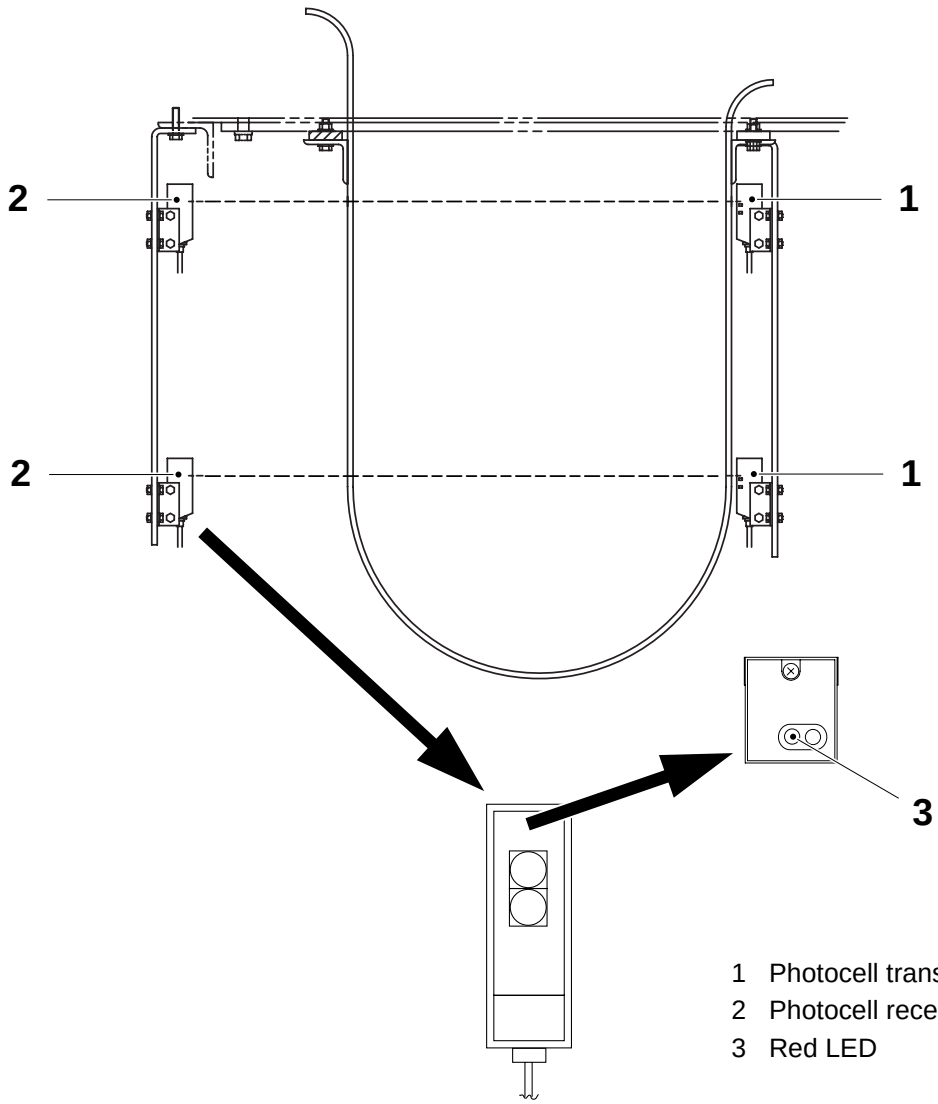

1 Photocell transmitter
2 Photocell receiver
3 Red LED

TechPub_2614345_0103 - B5358A02en.fm

1.2.8-2 Photocell Unit Outfeed - Set

Machine Status	Air **OFF** Mains power **ON**
SPC Reference	1095979-0100

The photocell unit has two transmitters and two receivers that work in pairs: receiver (3) with transmitter (1), and receiver (4) with transmitter (2).

Basic Setting

Set the distances **A**, **B**, **C** and **D** by means of the screws (5).

Fine Setting

a) Make sure that there is no packaging material between transmitters and receivers.

b) Adjust the position of each photocell according to the distances shown in the table below. When the correct position is found the red LED (6) of the receiver photocells lights up; this means that the photocells are correctly aligned.

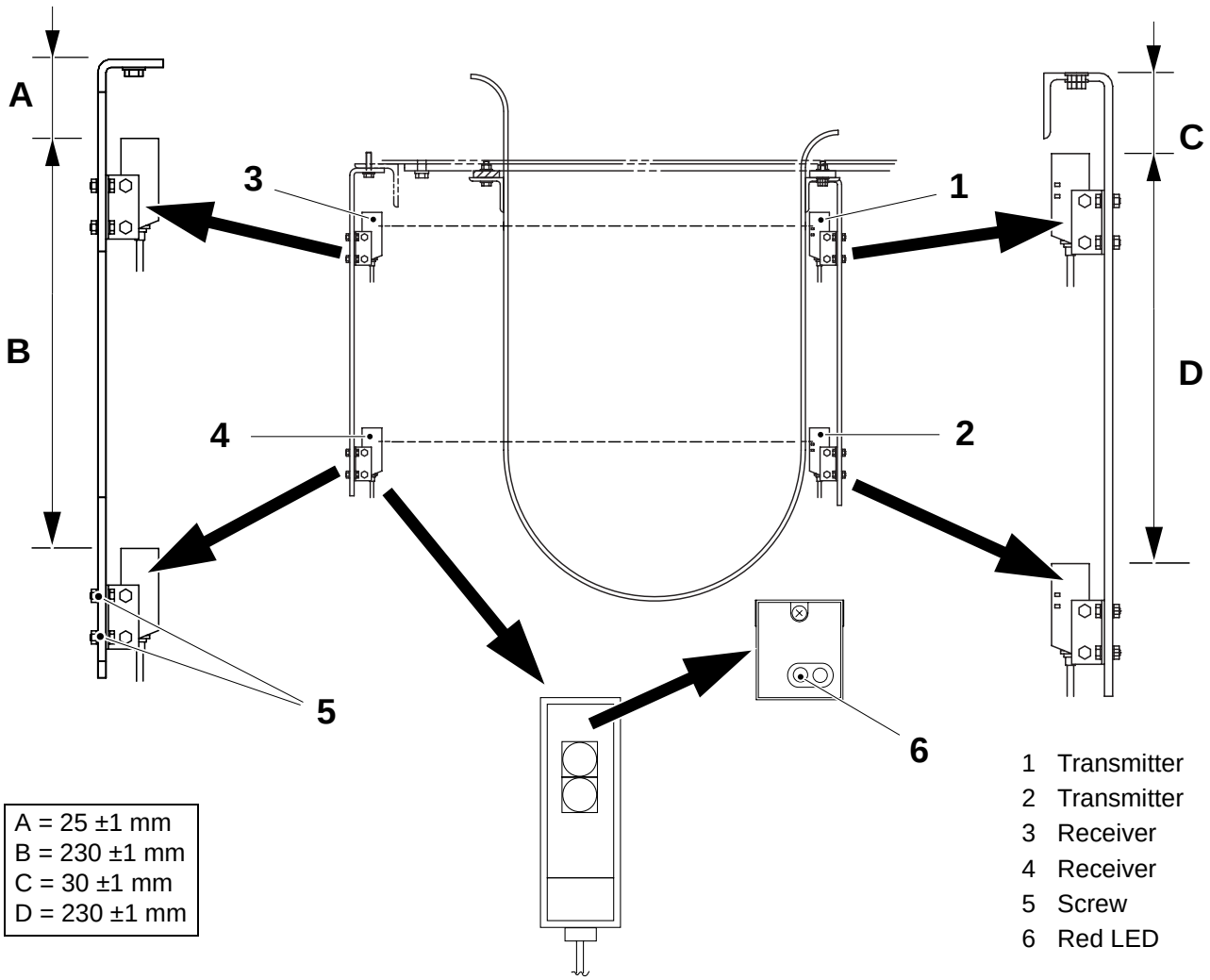

A = 25 ±1 mm
B = 230 ±1 mm
C = 30 ±1 mm
D = 230 ±1 mm

1 Transmitter
2 Transmitter
3 Receiver
4 Receiver
5 Screw
6 Red LED

(Cont'd)

TechPub_2614345_0103 - B5358A02en.fm

(Cont'd)

c) Open the cover on the receiver photocells (3 and 4).

d) For the upper receiver photocell (3) make sure that it is set to **PNP** and **D-ON** as shown in the figure.

e) For the lower receiver (4) make sure that it is set to **PNP** and **L-ON** as shown in the figure.

f) Then turn the potentiometer (7) fully clockwise (towards **max.**) on the receiver photocells (3) and (4).

g) Close the cover on the receiver photocells (3) and (4).

h) Check the photocells function by putting a hand between the transmitter photocells and the receiver photocells. Check that the red LED (6), on the receiver photocell goes out. Repeat with the other pair of photocells.

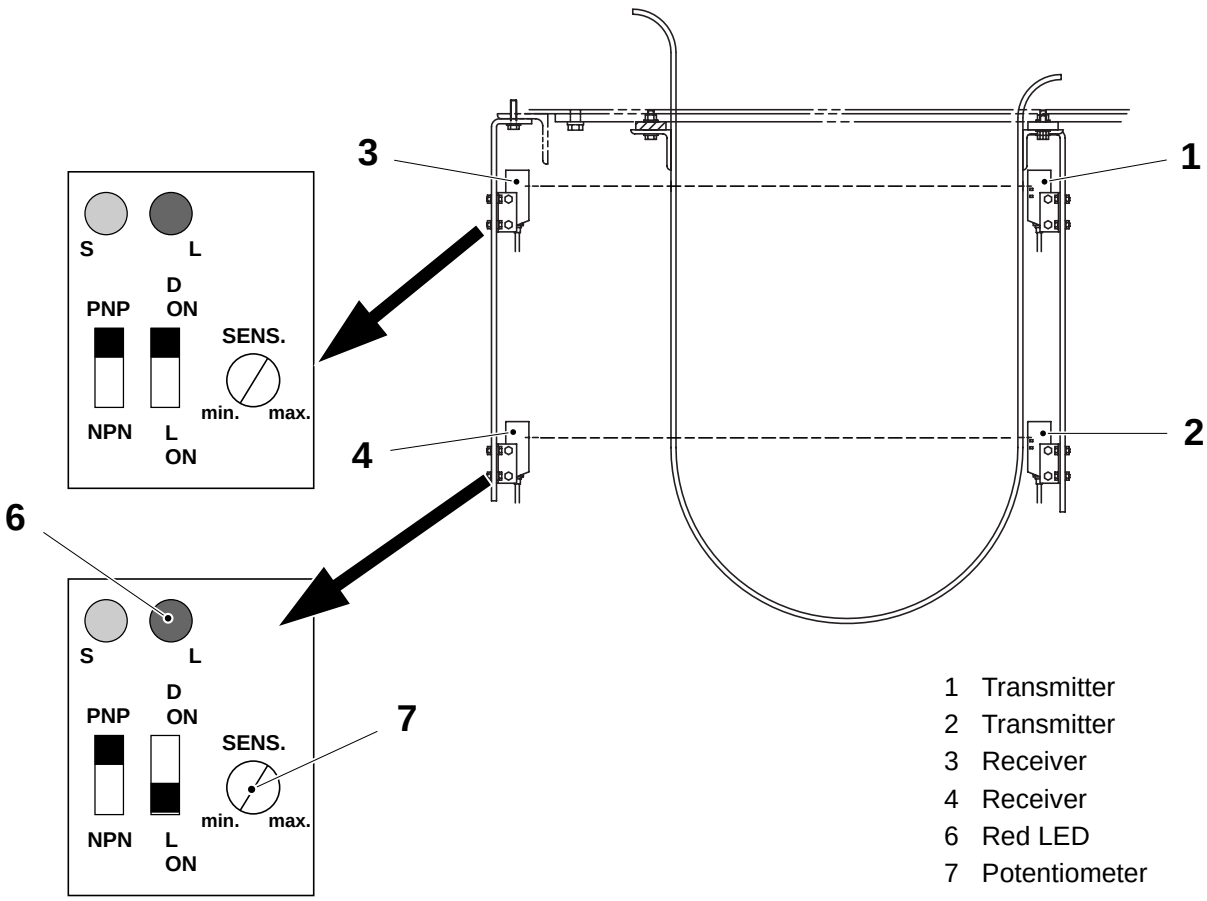

1 Transmitter
2 Transmitter
3 Receiver
4 Receiver
6 Red LED
7 Potentiometer

TechPub_2614345_0103 - B5358A02en.fm

1.2.9 By-pass Sensor

1.2.9-1 By-pass Sensor - Check

Machine Status	Air **OFF** Mains power **OFF**
SPC Reference	514993-0200

Check the position of the by-pass sensor. For large volumes, fit the sensor using holes (2). For small volumes, fit the sensor using holes (3).

Check that the limit switch (1) is working properly by pulling up and down the arm (4).

Check that the roller (5) rotates freely.

Check that the arm (4) moves smoothly and easily even against the limit switch spring (6).

Change as required.

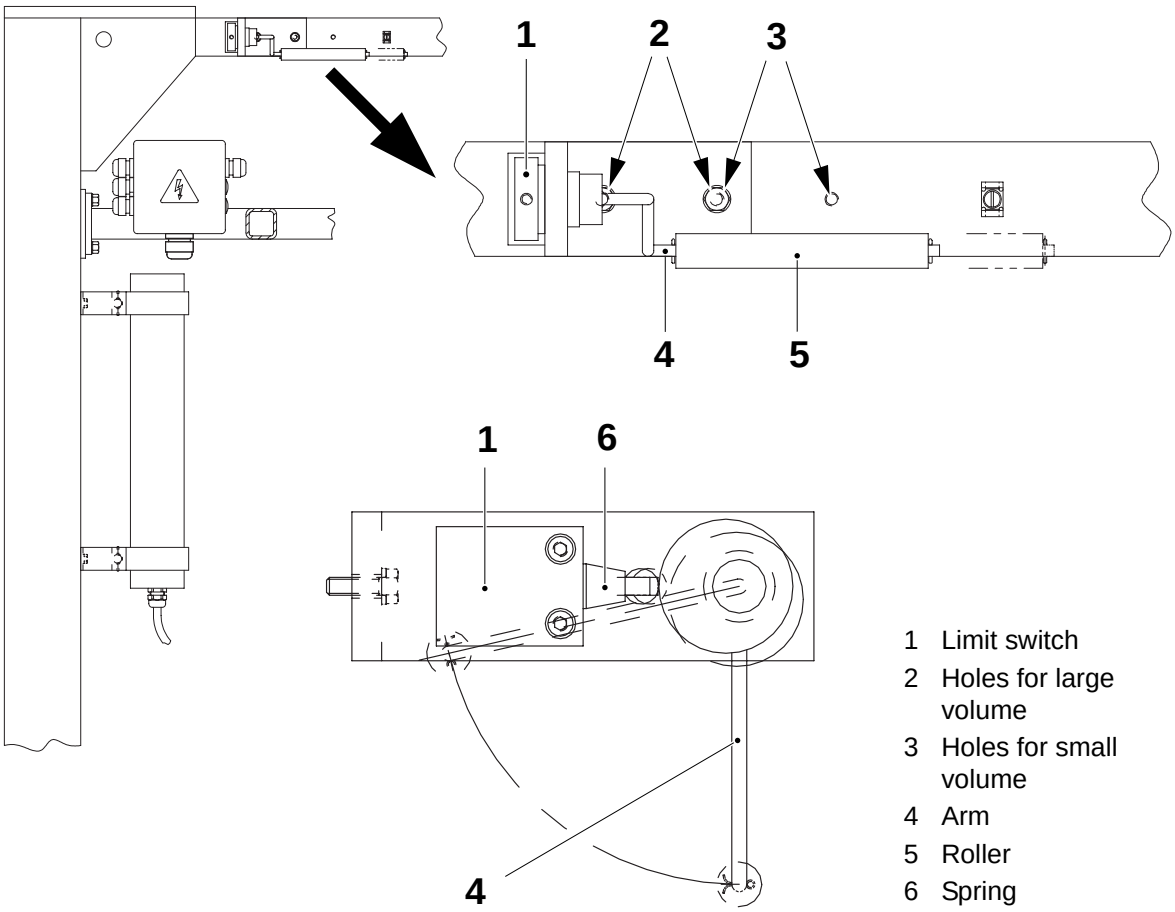

1 Limit switch
2 Holes for large volume
3 Holes for small volume
4 Arm
5 Roller
6 Spring

TechPub_2614345_0103 - B5358A02en.fm

1.3 Bar Code Reader

SPC Reference	1185031-0200

1.3-1 Bar Code Reader - Set Photocells

Machine Status	Air **OFF** Mains power **ON**
SPC Reference	1185031-0200

Note! This setup assumes that the reference applicator is set up in the correct position on the mounting base within the frame.

a) Check that the bar code (1) passes in front of the photocell lenses (3). If not:
   - Loosen the two screws (6).
   - Adjust the bar code reader (7) sideways until the bar code (1) passes in front of the photocell lenses (3).
   - Tighten the two screws (6).

b) Make sure that the switch (5) is set to the position **Q1**.

Note! For more detailed information see 8.2.1-6 TMCC - Set Photocells.

c) Check that the packaging material (4) passes easily through the two fingers (2).

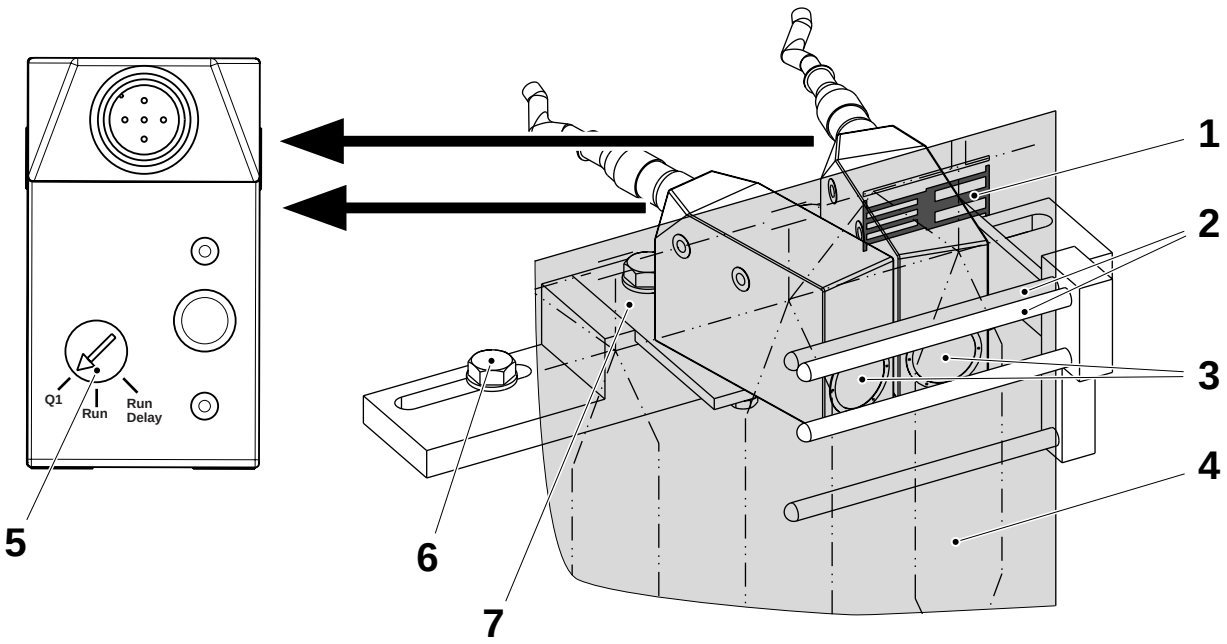

1 Bar code
2 Finger
3 Lense
4 Packaging material
5 Switch
6 Screw
7 Bar code reader

TechPub_2614345_0103 - B5358A03en.fm

1.3-2 Bar Code Reader - Change Photocells

Machine Status	Air **OFF** Mains power **OFF**
SPC Reference	1185031-0200

a) Disconnect the connectors (1) from the photocells (2).

b) Remove the screws (3) securing the photocell bracket (4) to the bracket (6).

c) Remove the screws (5) securing the photocells (2).

d) Discard the old photocells.

e) Fit the new photocells (2) on the photocell bracket (4).

f) Fit the photocell bracket (4) on to the bracket (6).

g) Connect the connectors (1) to the photocells (2).

h) Set the photocells (2), see 1.3-1 Bar Code Reader - Set Photocells.

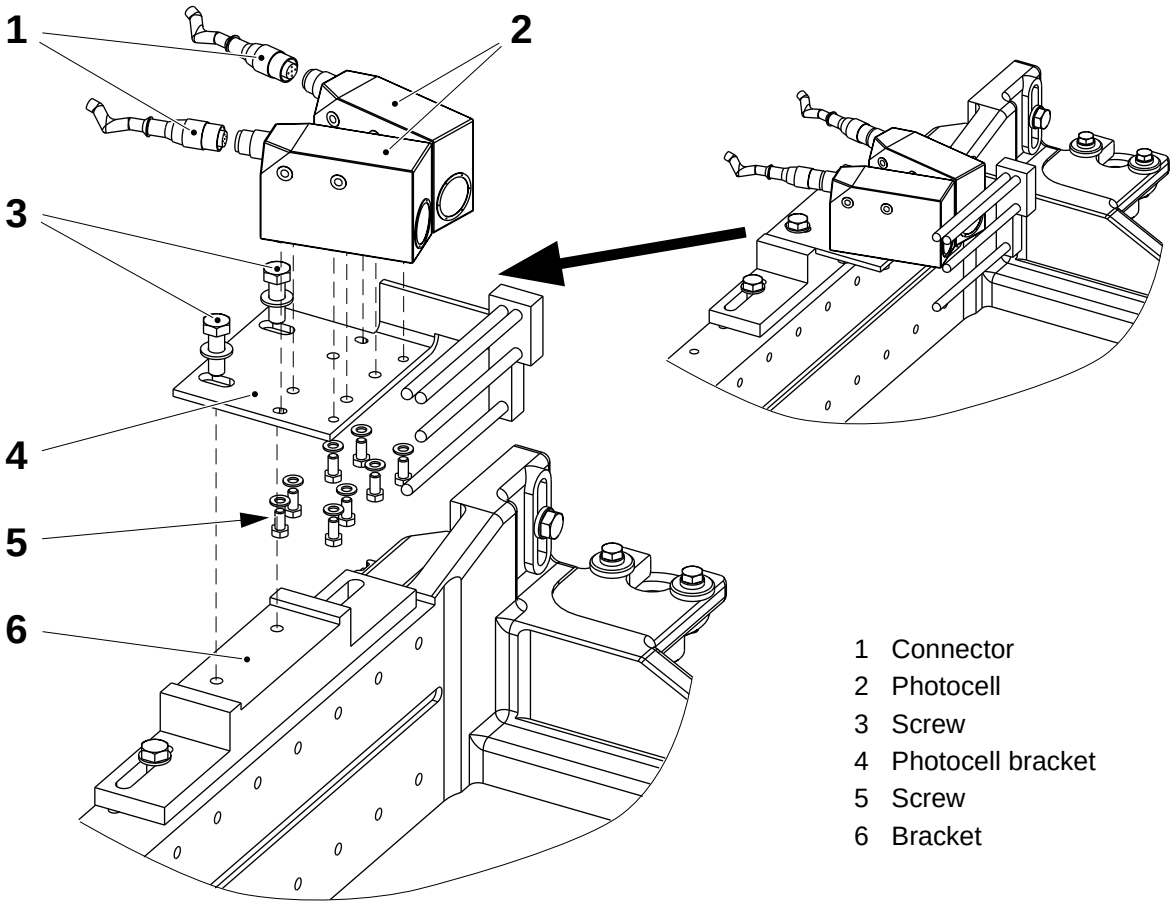

1 Connector
2 Photocell
3 Screw
4 Photocell bracket
5 Screw
6 Bracket

TechPub_2614345_0103 - B5358A03en.fm

This page intentionally left blank

TechPub_2614345_0103 - B5358A03en.fm

2 Punch/waste Unit

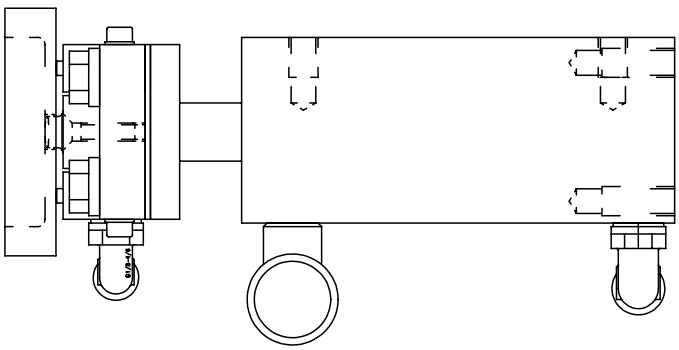

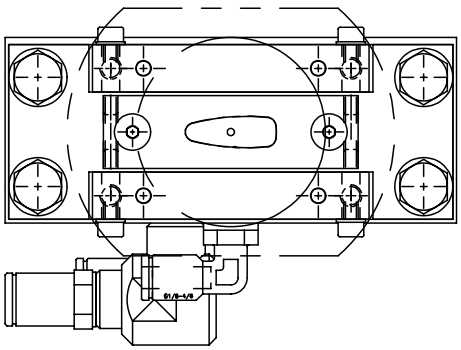

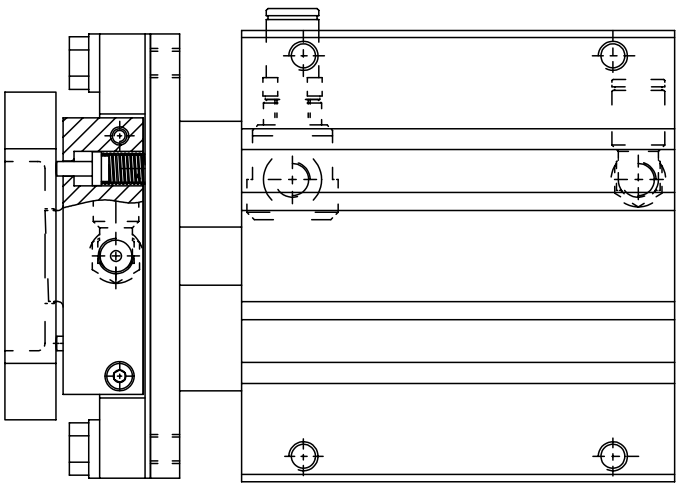

TechPub_2614345_0103 - B5358B00en.fm

Punch/waste Unit - Description

SPC Reference	1095991-0300

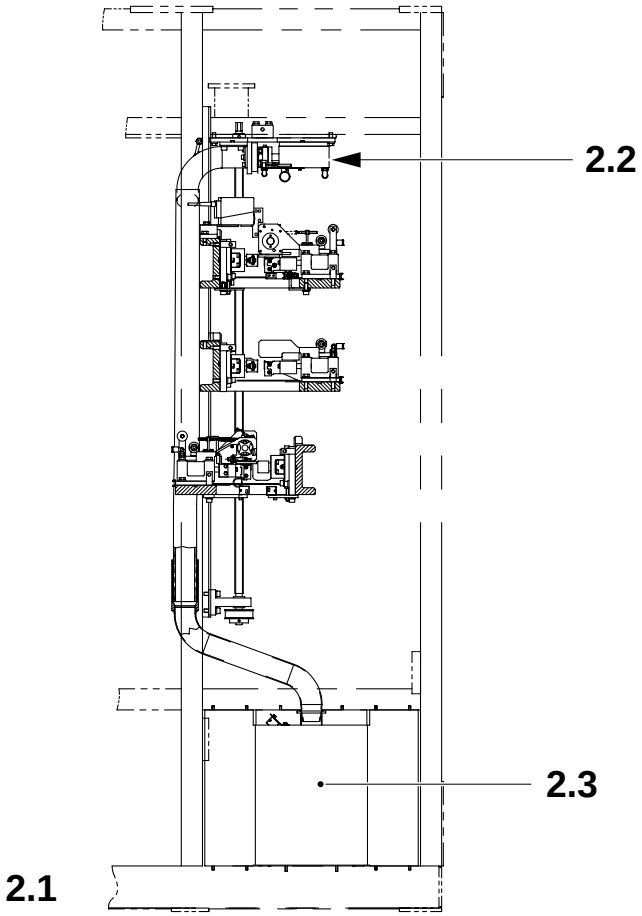

2.1 Setting Flow Chart
2.2 Punch Unit
2.3 Waste Box

TechPub_2614345_0103 - B5358B00en.fm

2-1 Punch/waste Unit - Functional Description . . . . . 2 - 5

2.1 Setting Flow Chart . . . . . 2 - 6

2.2 Punch Unit . . . . . 2 - 7

2.2-1 Punch Unit - Set Hole Position . . . . . 2 - 7

2.2-2 Punch Unit - Check Stripper Pins and Springs . . . . . 2 - 10

2.2-3 Punch Unit - Change Stripper Pins and Springs . . . . . 2 - 11

2.2-4 Punch Unit - Check Cylinder . . . . . 2 - 12

2.2-5 Punch Unit - Change Cylinder . . . . . 2 - 13

2.2-6 Punch Unit - Check Punch and Die . . . . . 2 - 14

2.2-7 Punch Unit - Change Punch and Die . . . . . 2 - 15

2.2-8 Punch Unit - Set Punch and Die . . . . . 2 - 16

2.2-9 Punch Unit - Set Proximity Switch . . . . . 2 - 18

2.3 Waste Box . . . . . 2 - 19

2.3-1 Waste Box - Check Box and Waste Pipe . . . . . 2 - 19

2.3-2 Waste Box - Set Photocell . . . . . 2 - 20

TechPub_2614345_0103 - B5358B00en.fm

This page intentionally left blank

TechPub_2614345_0103 - B5358B00en.fm

2-1 Punch/waste Unit - Functional Description

SPC Reference	1095991-0300

After the servo motor in the drive motor assembly stops:

- the PLC signals the solenoid valve to extend the cylinder for punching the PullTab hole
- the PLC signals the solenoid valve to blow material from the punch

Punching PullTab hole / Punch blowing

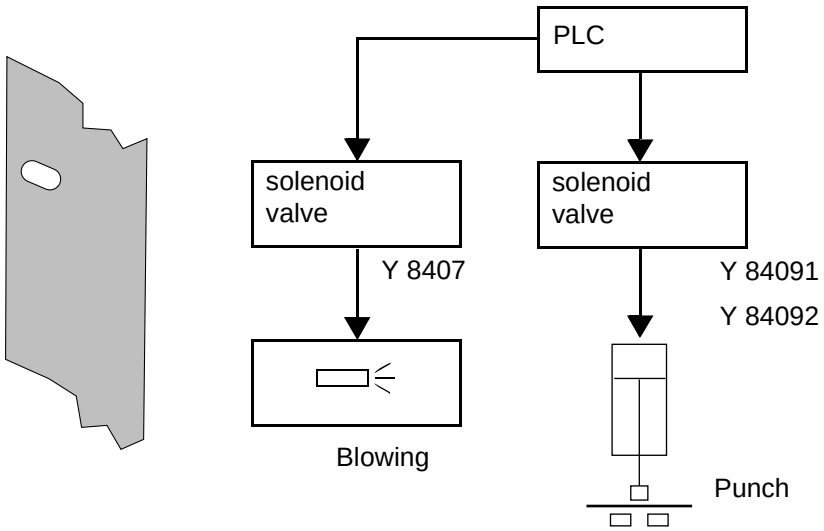

- during the succeeding index the PLC signals the solenoid valve to blow the waste material from the waste tube.

Waste blowing

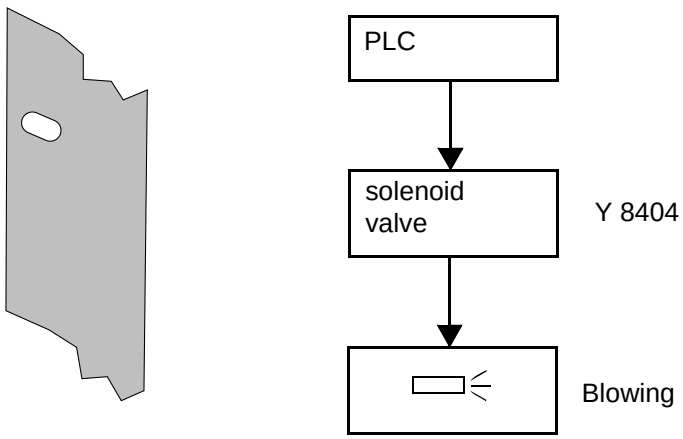

TechPub_2614345_0103 - B5358B00en.fm

2.1 Setting Flow Chart

The following flow chart shows the order in which the various components must be set up.

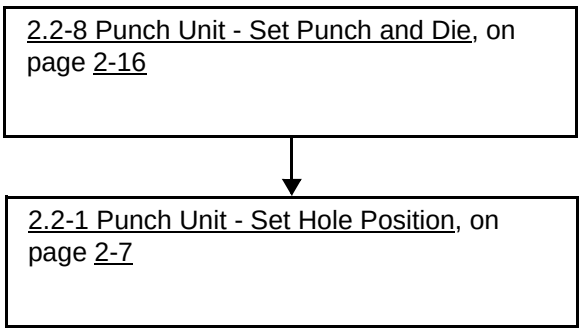

TechPub_2614345_0103 - B5358B01en.fm

2.2 Punch Unit

SPC Reference	1095991-0300

2.2-1 Punch Unit - Set Hole Position

Machine Status	Air **ON** Mains power **ON** Packaging material **threaded**
SPC Reference	1095991-0300

Preparation for Making Test Material with Hole and Patch

a) Close all doors on the machine.

b) Make sure that the repeat length is correct according to 1.2.5-4 Paper Brake - Set Servo Tension Device.

c) At the TPOP, check that there are no active alarms and touch the MANOEUVRE button (1).

d) Touch the MAINTENANCE PT21 LEFT button (2).

e) Touch the PUNCH UNIT AND PATCH APPLICATOR button (3).

f) Touch the START button (4) to activate these stations: punch unit and applicator patch.

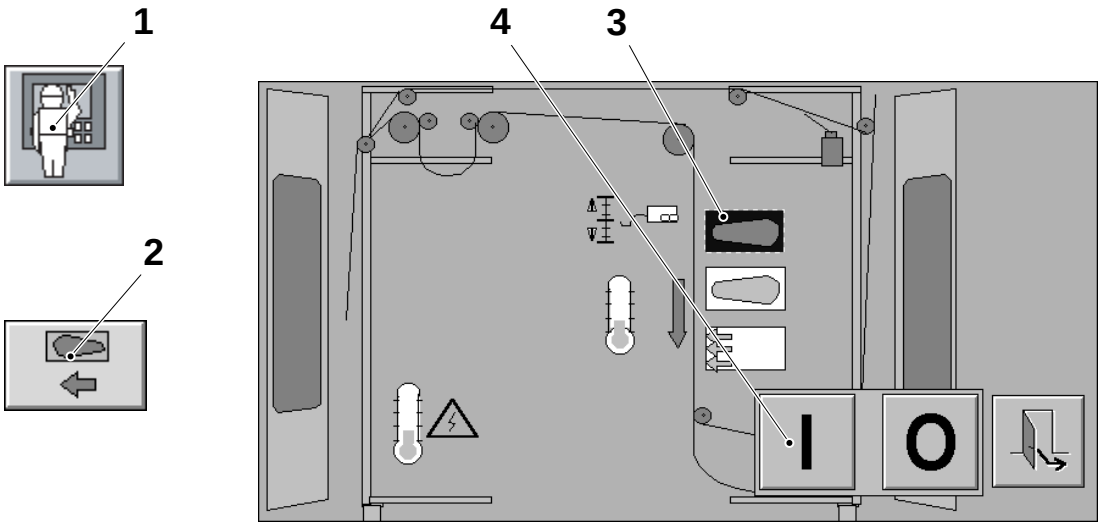

1 MANOEUVRE button
2 MAINTENANCE PT21 LEFT button
3 PUNCH UNIT AND PATCH APPLICATOR button
4 START button

(Cont'd)

TechPub_2614345_0103 - B5358B02en.fm

(Cont'd)

g) The **Service and maintenance key** icon (5) starts to flash at the top of the ladder step window.

h) Push the PROGRAM UP button (6) after it starts flashing.

Make Test Material

a) At the PullTab control panel, push the SINGLE INDEX button (7) six or seven times after it starts flashing.

Note! If the SINGLE INDEX button (7) does not flash, open and close one of the doors in the PullTab unit. Acknowledge the alarm on the TPOP.

b) Open the door and cut out the packaging material that has the test holes and patches.

Check Position

Check the distance **A** between the hole and the longitudinal crease. If required adjust the position of the punch unit as described below.

Package	Hole type	A ±1.0 (mm)		Package	Hole type	A ±1.0 (mm)
TBA 250 B	21	-2		TPA 1000 S	60	5.2
TBA 500 S	25	-2		TPA 1000 Sq	60	5.2
TBA 1500 S	45	5.7		TBA 1500 S	85	4.5
TBA 1000 B	45	5.7		TBA 1000 Sq	85	4.5
TBA 1000 S	45	5.7		TBA 1000 B	85	4.7
TBA 1000 B	50	8.7		TBA 1000 S	85	4.5
TBA 1000 S	50	9.0		TBA 1000 S	90	5.5
TBA 500 S	55	5.4		TBA 1500 S	90	5.5

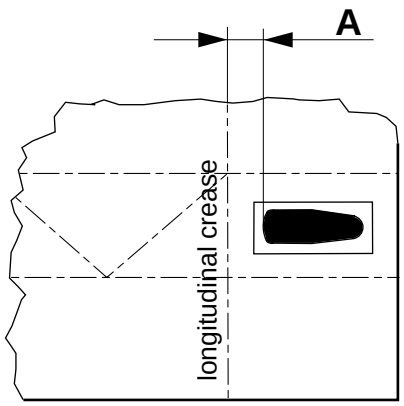

View from inside the package

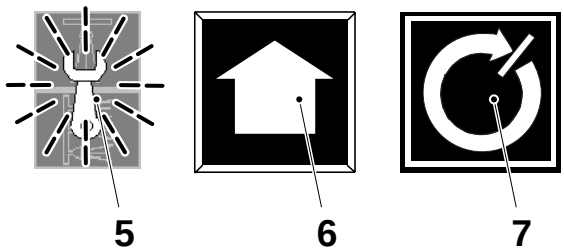

5 Service and maintenance key icon
6 PROGRAM UP button
7 SINGLE INDEX button

(Cont'd)

TechPub_2614345_0103 - B5358B02en.fm

(Cont'd)

Adjust Punch Unit Position

a) To set the distance **A**, loosen the screws (9) and by means of the stop screws (8) move the punch unit horizontally.

b) Check the applicator patchs position, see 3.2-1 Applicator Patch - Check Patch Position.

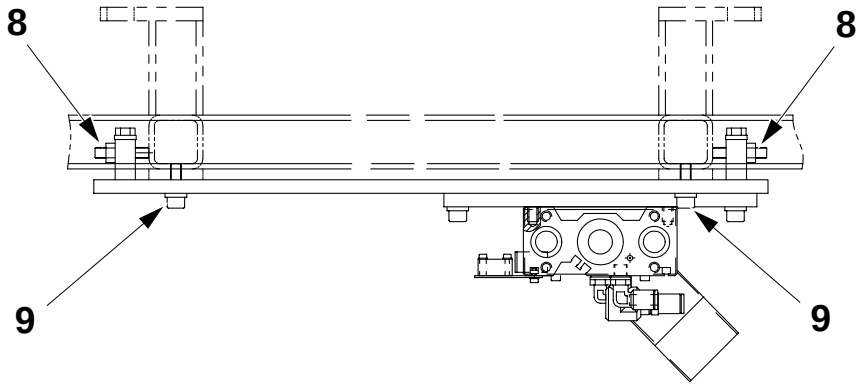

8 Stop screw
9 Screw

TechPub_2614345_0103 - B5358B02en.fm

2.2-2 Punch Unit - Check Stripper Pins and Springs

Machine Status	Air **OFF** Mains power **OFF**
SPC Reference	1095991-0300

Check the following parts for wear and/or damage:

- the four stripper pins (1)
  Check also, by pressing, that the pins move in and out without getting stuck.
- the four springs (2)
  Check also, by pressing, that the spring action is correct.

Change as required, see 2.2-3 Punch Unit - Change Stripper Pins and Springs.

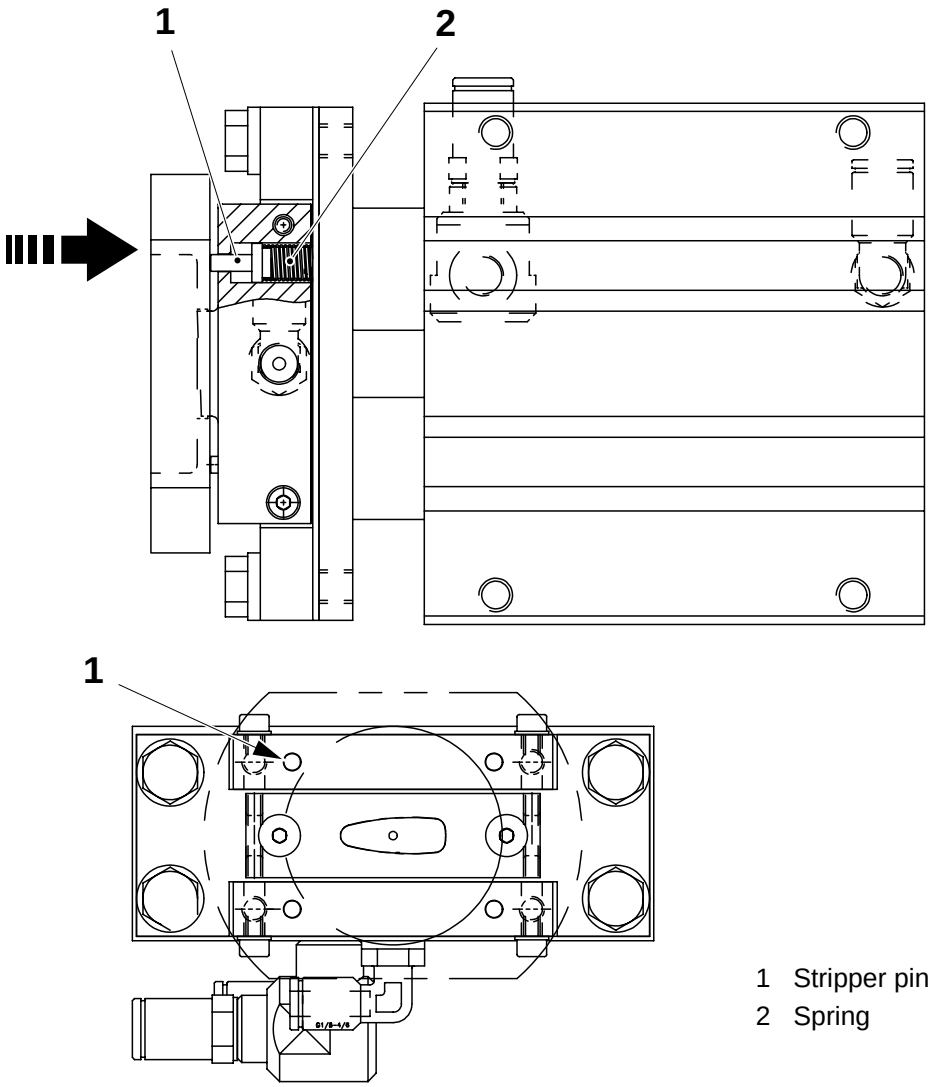

1 Stripper pin
2 Spring

TechPub_2614345_0103 - B5358B02en.fm

2.2-3 Punch Unit - Change Stripper Pins and Springs

Machine Status	Air **OFF** Mains power **OFF**
SPC Reference	1095991-0300

a) Disconnect the air hoses (1).

b) Unscrew the screws (2) and remove the two pin distances (3).

c) Pull out the springs (4) and the stripper pins (5) from the two pin distances (3).

d) Clean the pin distance (3) holes carefully.

e) Change the springs (4) and the stripper pins (5) if required.

Note! Before assembling the punch assembly on the bracket (6) check the springing by pressing the four stripper pins (5).

f) Assemble in the reverse order and set the punch and the die, see 2.2-8 Punch Unit - Set Punch and Die.

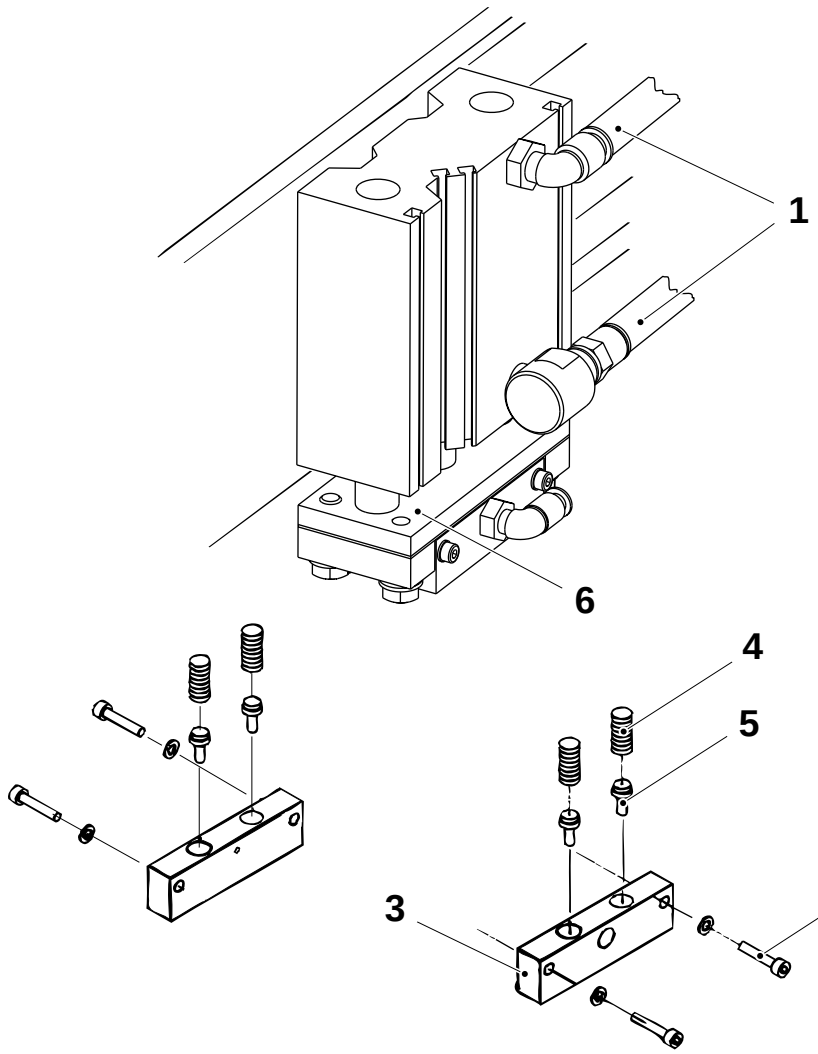

1 Air hose
2 Screw
3 Pin distance
4 Spring
5 Stripper pin
6 Bracket

TechPub_2614345_0103 - B5358B02en.fm

2.2-4 Punch Unit - Check Cylinder

Machine Status	Air **OFF** Mains power **OFF**
SPC Reference	1095991-0300

Check that the piston of the cylinder (1) moves easily and properly during its stroke.

Check also that there is no excessive radial play on the guides (2).

Change as required, see 2.2-5 Punch Unit - Change Cylinder.

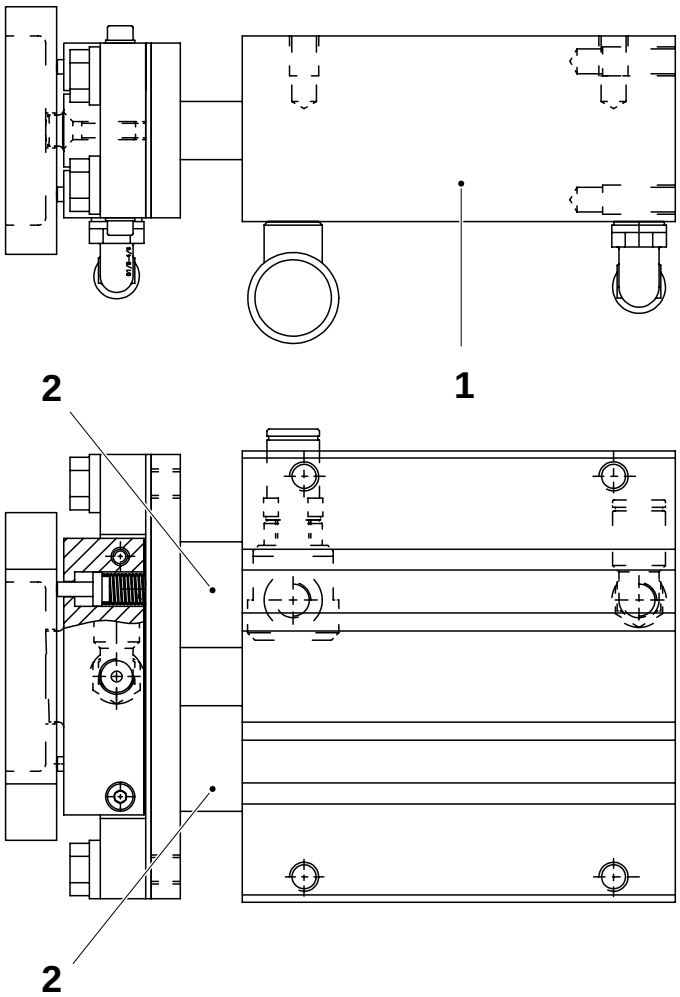

1 Cylinder
2 Guide

TechPub_2614345_0103 - B5358B02en.fm

2.2-5 Punch Unit - Change Cylinder

Machine Status	Air **OFF** Mains power **OFF**
SPC Reference	1095991-0300 1095992-0300

a) Disconnect the air hoses (1).

b) Unscrew the four screws (2) and remove the punch unit (3) and the plate (4) together.

c) Unscrew the four screws (5) and remove the plate (4) from the punch unit (3).

d) Unscrew the screws (6) and remove the punch bar, the pin distances and the shims (7) together from the cylinder (8).

e) Remove the connectors (9) from the cylinder (8).

f) Change the cylinder (8) as required.

g) Assemble in the reverse order and set the punch and the die, see 2.2-8 Punch Unit - Set Punch and Die.

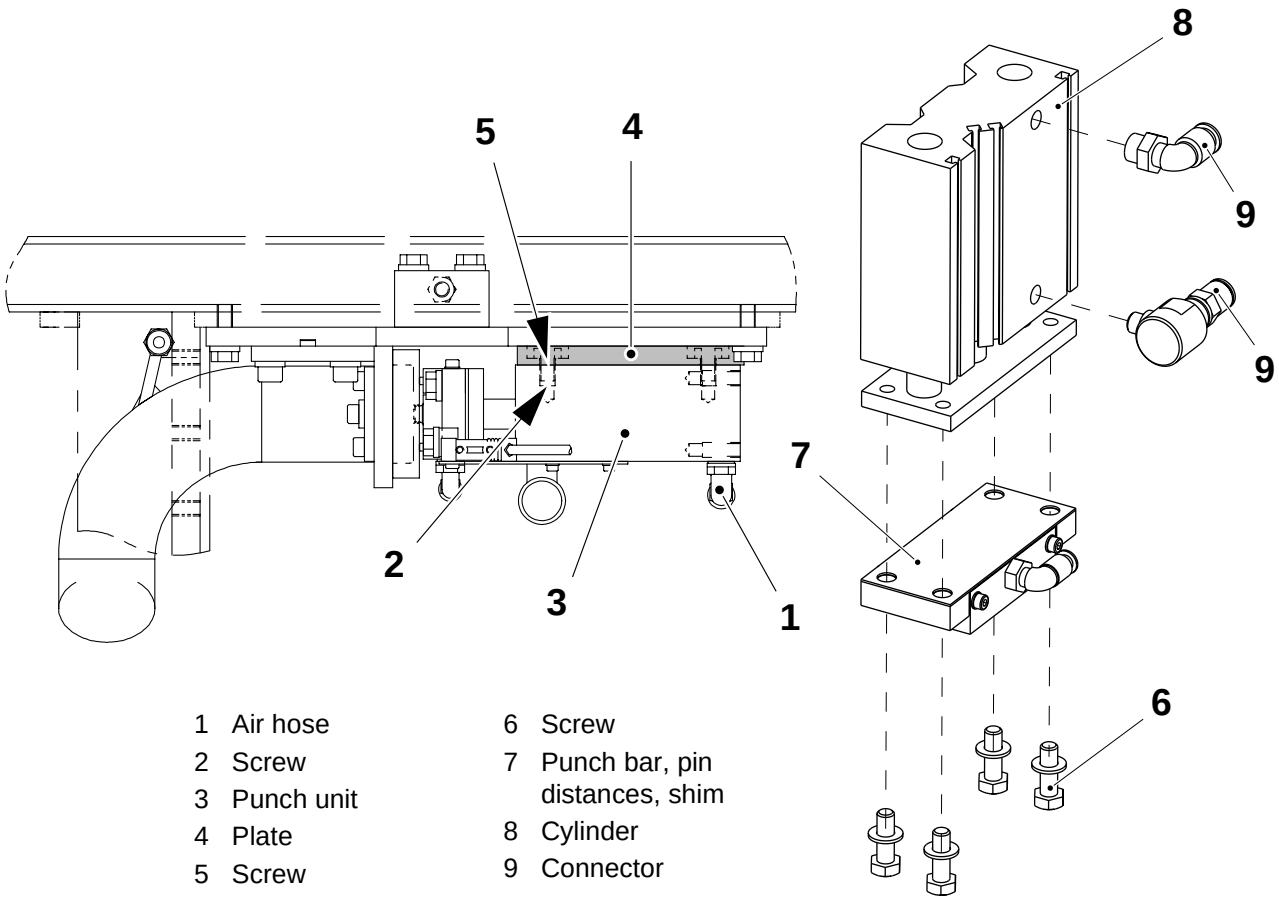

1 Air hose
2 Screw
3 Punch unit
4 Plate
5 Screw
6 Screw
7 Punch bar, pin distances, shim
8 Cylinder
9 Connector

TechPub_2614345_0103 - B5358B02en.fm

2.2-6 Punch Unit - Check Punch and Die

Machine Status	Air **ON** Mains power **OFF** Packaging material **threaded**
SPC Reference	1095991-0300 1095992-0300

WARNING
Risk of crushing!
The cylinder piston may move unexpectedly.

Check the edges of the PullTab hole in the packaging material for any irregularities, such as curled edges.

Check that the air vent holes (1) in the punch unit (punch blowing and waste blowing) are not blocked. Clean them as required.

If required set the punch (2) and the die (3), see 2.2-8 Punch Unit - Set Punch and Die.

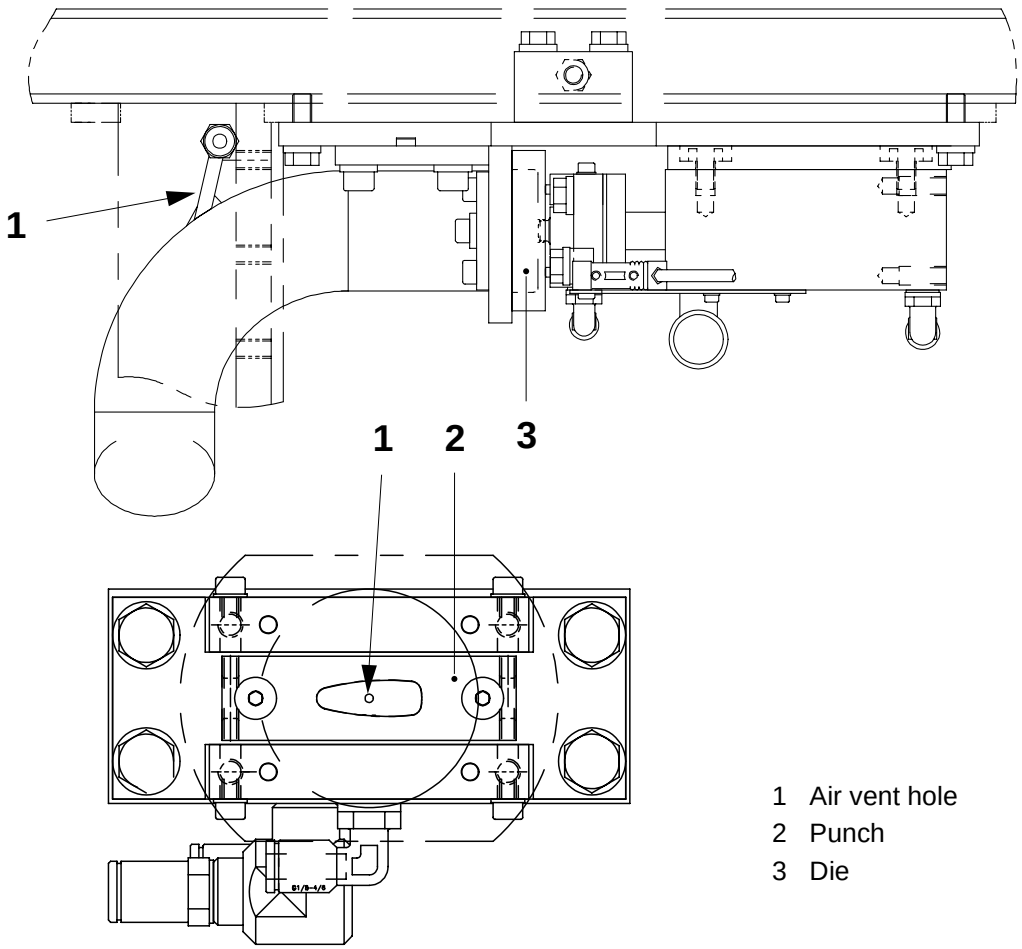

1 Air vent hole
2 Punch
3 Die

TechPub_2614345_0103 - B5358B02en.fm

2.2-7 Punch Unit - Change Punch and Die

Machine Status	Air **OFF** Mains power **OFF**
SPC Reference	1095991-0300 1095992-0300

a) Unscrew the two screws (1) and remove the waste pipe (2).

b) Unscrew the four screws (3) and remove the die (4).

c) Unscrew the screws (5) and remove the punch (6).

d) Change the punch (6) and the die (4) as required.

e) Assemble in the reverse order and set the punch (6) and the die (4), see 2.2-8 Punch Unit - Set Punch and Die.

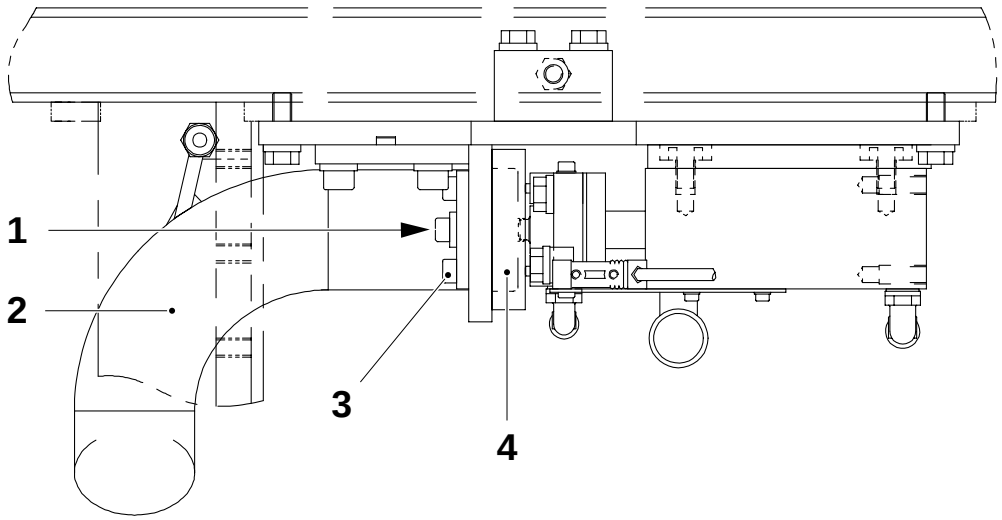

1 Screw
2 Waste pipe
3 Screw
4 Die
5 Screw
6 Punch

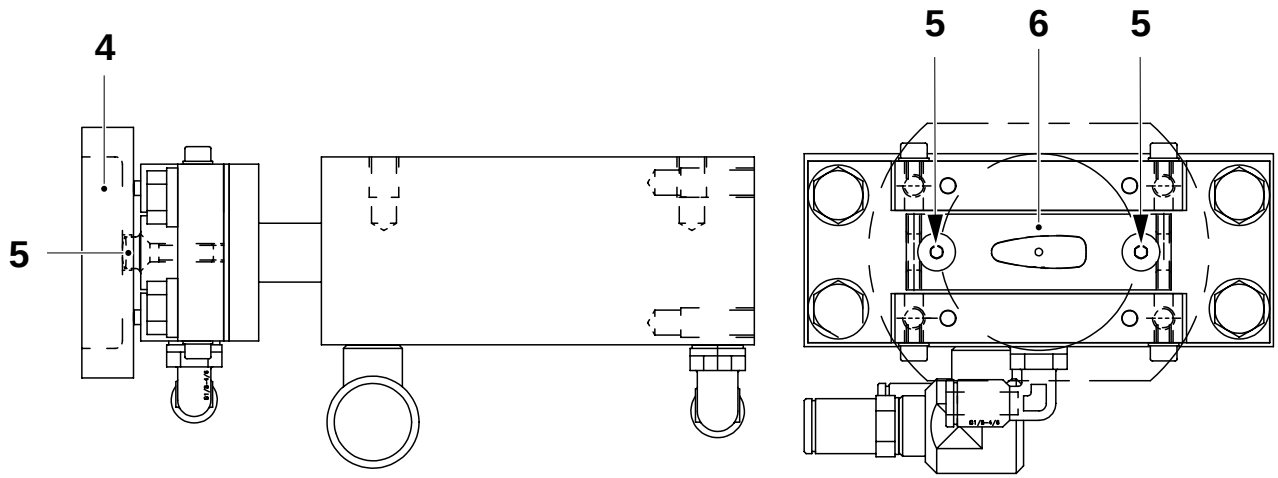

TechPub_2614345_0103 - B5358B02en.fm

2.2-8 Punch Unit - Set Punch and Die

Machine Status	Air **OFF** Mains power **ON**
SPC Reference	1095991-0300 1095992-0300

WARNING

Risk of crushing!

The cylinder piston may move unexpectedly.

a) Loosen the screws (4) and remove the waste blow pipe (5).

b) Loosen the four screws (1) that hold the die (2).

c) Unscrew the screws (6) and remove the two pin distances (7).

d) Insert a piece of patch strip between the punch (3) and the die (2). Gently push the punch (3) by hand so that it slides into the die (2), (without cutting the patch strip). Centre the punch (3) into the die (2) by using the strip as a spacer, and carefully tighten the four screws (1).

e) Check the cutting action (check/set with tab strip in order to perform the best setting).

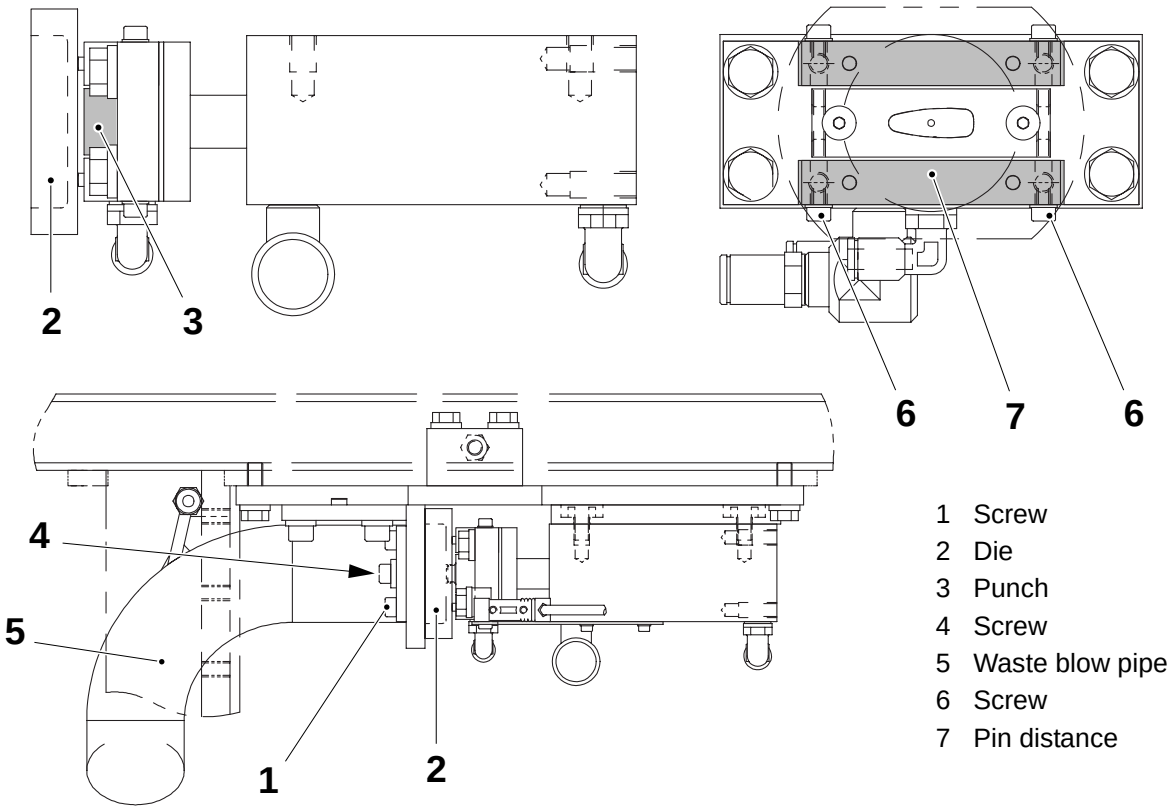

1 Screw
2 Die
3 Punch
4 Screw
5 Waste blow pipe
6 Screw
7 Pin distance

(Cont'd)

TechPub_2614345_0103 - B5358B02en.fm

(Cont'd)

f) Switch the selector key, located on the PT21 electrical panel, to position SERVICE.

g) Activate the manual override on the valve **Y8409:1** for the cylinder (8).

h) Check that the cylinder (8) is fully extended.

i) Check the distance **A** and if required, unscrew the screws (9) and add/ remove the shims (10) until the distance **A**, between the punch (3) and the die (2), is obtained.

Note! Check to make sure the screws (11) do not damage the packaging material when the machine is operating.

j) Check the setting for the punch centring after distance **A** and, if required, repeat from point b).

k) Fit back the two pin distances (7) and tighten the screws (6).

l) Fit back the waste blow pipe (5) and tighten the screws (4).

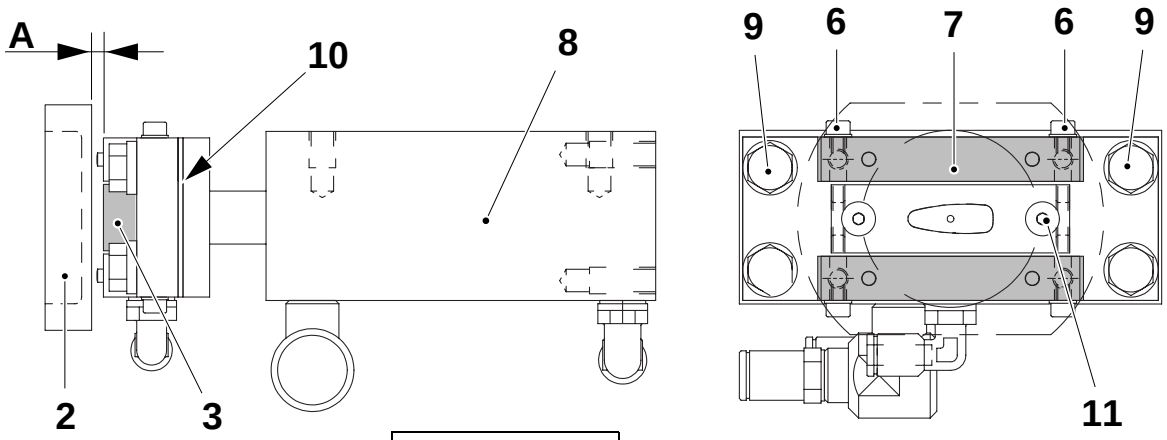

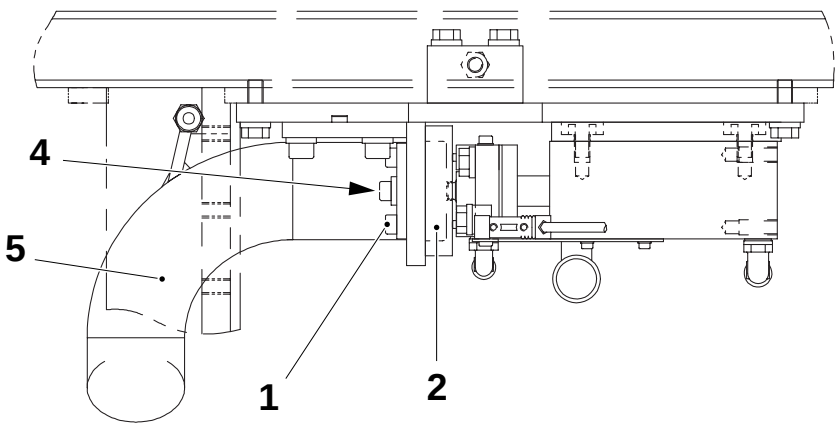

1 Screw
2 Die
3 Punch
4 Screw
5 Waste blow pipe
6 Screw
7 Pin distance
8 Cylinder
9 Screw
10 Shim
11 Screw

TechPub_2614345_0103 - B5358B02en.fm

2.2-9 Punch Unit - Set Proximity Switch

Machine Status	Air **OFF** Mains power **ON**
SPC Reference	1095991-0300 1095992-0300

WARNING

Risk of crushing!

The cylinder piston may move unexpectedly.

a) Switch the selector key, located on the PT21 electrical panel, to position SERVICE.

b) Activate the valve **Y8409:1** for the cylinder (1). Check that the cylinder is fully extended.

c) Loosen the screws (2) and move the holder (3) against the packaging material (6).

d) Slowly move the proximity switch (4) away from the packaging material until the LED lights up.

e) Check that the proximity switch (4) is not touching the flag (5).

f) Tighten the screws (2).

g) Activate the valve **Y8409:2** and check that the cylinder (1) is fully in.

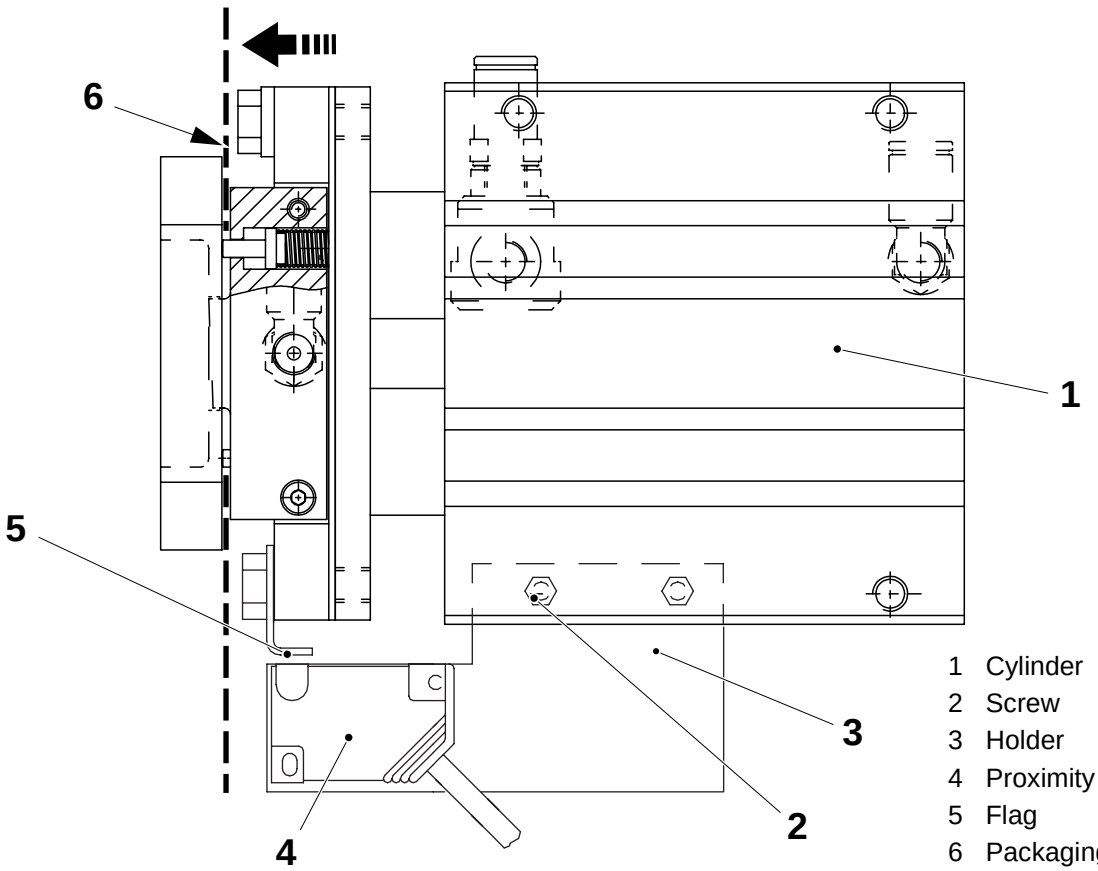

1 Cylinder
2 Screw
3 Holder
4 Proximity switch
5 Flag
6 Packaging mat.

TechPub_2614345_0103 - B5358B02en.fm

2.3 Waste Box

SPC Reference	1095955-0100

2.3-1 Waste Box - Check Box and Waste Pipe

Machine Status	Air **OFF** Mains power **ON**
SPC Reference	1095955-0100

Check that the waste flow from the punch is directed into the waste box (1).

Check that the waste pipe (2) is not blocked.

Check that the photocell (3), that indicates a full waste box, is working by checking that the green LED is **On**.

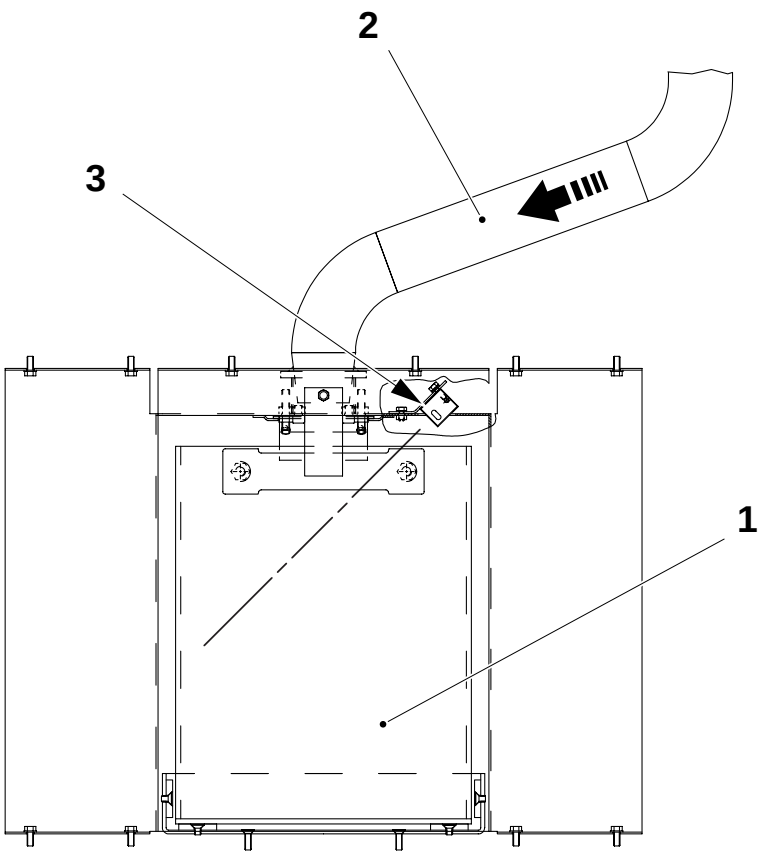

1 Waste box
2 Waste pipe
3 Photocell

TechPub_2614345_0103 - B5358B03en.fm

2.3-2 Waste Box - Set Photocell

Machine Status	Air **OFF** Mains power **ON**
SPC Reference	1095955-0100

a) Remove the waste box (1).

b) Unscrew the screw (2) and open the cover (3) on the photocell.

c) Make sure that the photocell is set to **PNP** and **D-ON**, as shown in the figure.

d) Turn the sensitivity potentiometer (4) anti-clockwise (toward **min.**), until the red LED (5) goes out and the green LED (6) lights up.

e) Place a piece of packaging material approximately **100 mm** from the photocell source.

f) Slowly turn the sensitivity potentiometer (4) clockwise (toward **max.**), until the red LED (5) lights up and the green LED (6) lights up.

g) Close the cover (3) and tighten the screw (2).

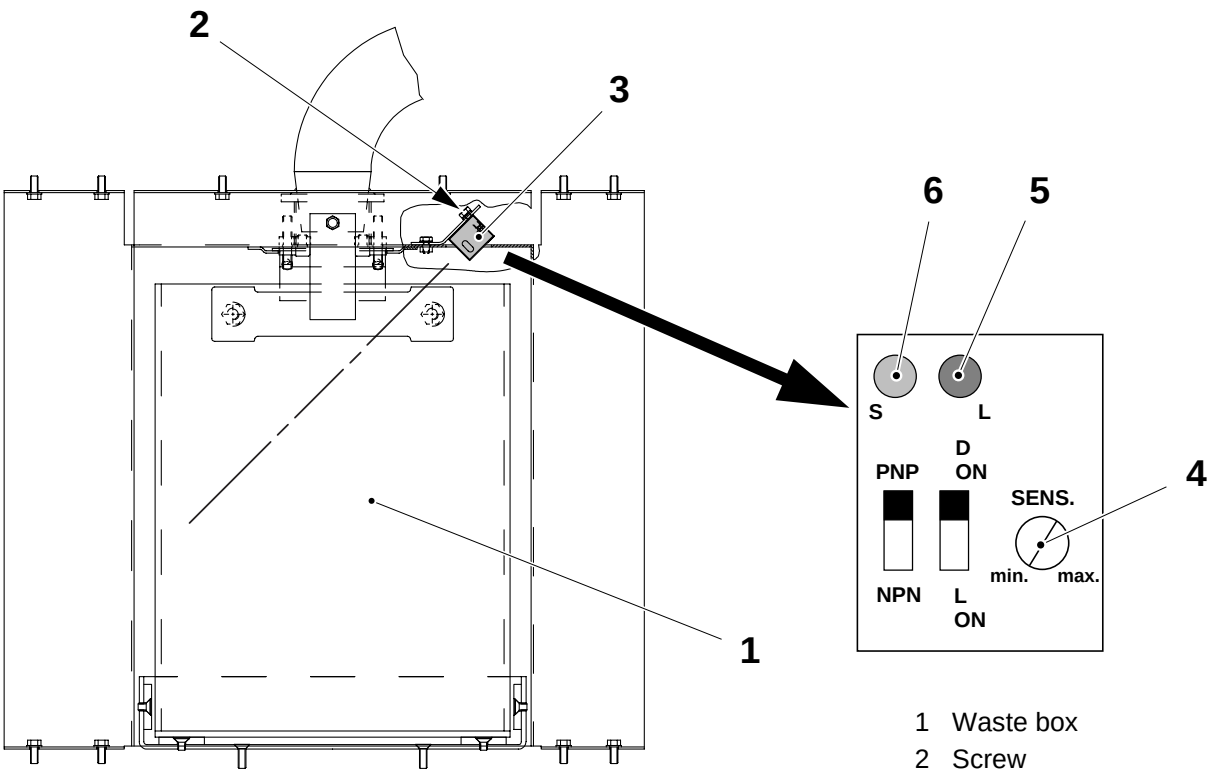

1 Waste box
2 Screw
3 Cover
4 Potentiometer
5 Red LED
6 Green LED

TechPub_2614345_0103 - B5358B03en.fm

3 Applicator Patch

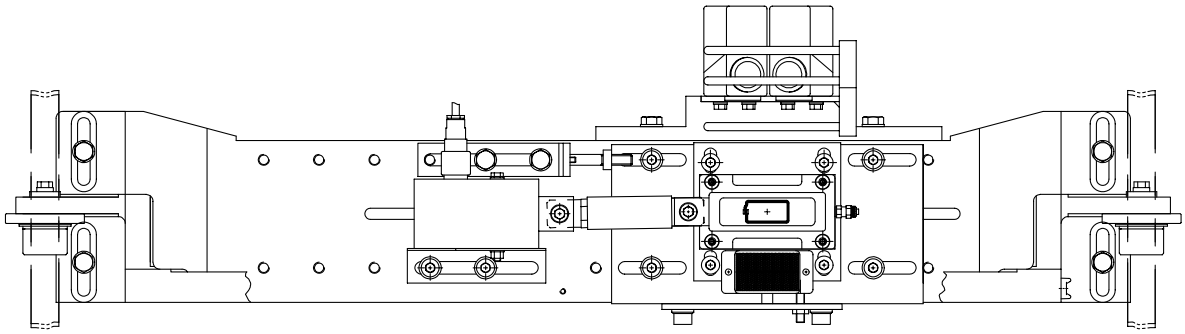

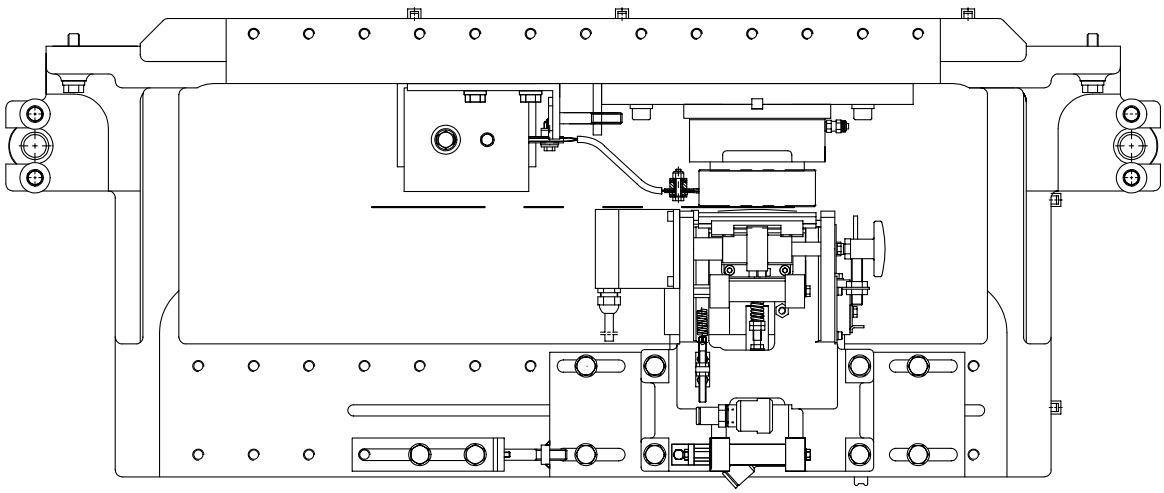

TechPub_2614345_0103 - B5358C00en.fm

Applicator Patch - Description

SPC Reference	1260419-0200

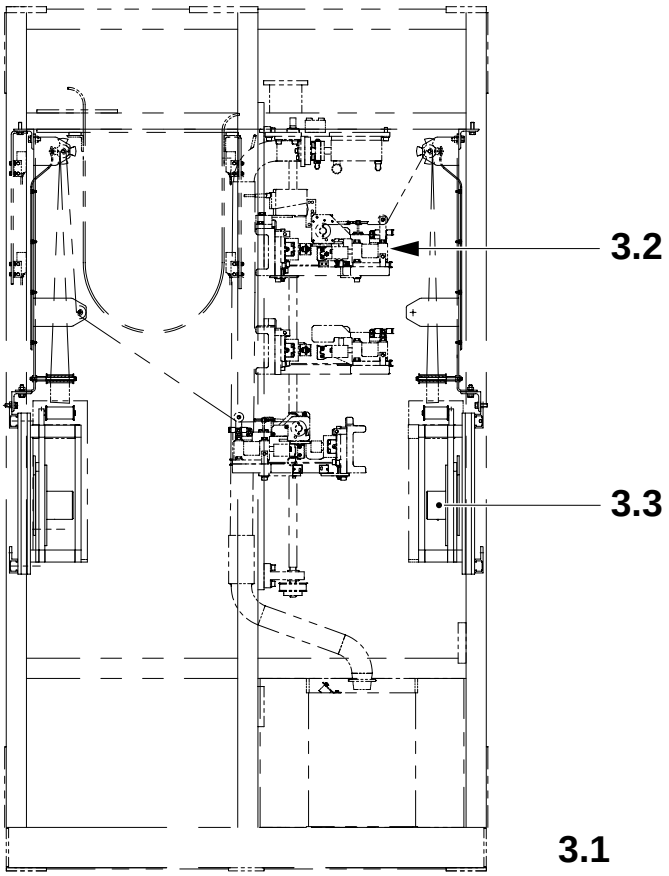

3.1 Setting Flow Chart
3.2 Applicator Patch
3.3 Magazine Patch

TechPub_2614345_0103 - B5358C00en.fm

3-1 Applicator Patch - Functional Description . . . . . 3 - 5

3.1 Setting Flow Chart . . . . . 3 - 9

3.2 Applicator Patch . . . . . 3 - 10

3.2-1 Applicator Patch - Check Patch Position . . . . . 3 - 10

3.2-2 Applicator Patch - Check Heat Pattern . . . . . 3 - 14

3.2.1 Patch Feeder . . . . . 3 - 17

3.2.1-1 Patch Feeder - Check Knives . . . . . 3 - 17

3.2.1-2 Patch Feeder - Change Knives . . . . . 3 - 18

3.2.1-3 Patch Feeder - Remove . . . . . 3 - 20

3.2.1-4 Patch Feeder - Set Window Knife . . . . . 3 - 21

3.2.1-5 Patch Feeder - Set Sealing Plate . . . . . 3 - 22

3.2.1-6 Patch Feeder - Check Guides and Linear Bearings . . . . . 3 - 23

3.2.1-7 Patch Feeder - Change Linear Bearings . . . . . 3 - 24

3.2.1-8 Patch Feeder - Change Bushings . . . . . 3 - 25

3.2.1-9 Patch Feeder - Change Cylinder . . . . . 3 - 27

3.2.1-10 Patch Feeder - Check Sealing Plate . . . . . 3 - 28

3.2.1-11 Patch Feeder - Check Function . . . . . 3 - 29

3.2.1-12 Patch Feeder - Set Strip Feed . . . . . 3 - 30

3.2.1-13 Patch Feeder - Set Proximity Switch . . . . . 3 - 31

3.2.1-14 Patch Feeder - Set Position . . . . . 3 - 32

3.2.1-15 Patch Feeder - Change Shims . . . . . 3 - 33

3.2.2 Patch Counter Jaw . . . . . 3 - 35

3.2.2-1 Patch Counter Jaw - Remove . . . . . 3 - 35

3.2.2-2 Patch Counter Jaw - Check Inductor . . . . . 3 - 36

3.2.2-3 Patch Counter Jaw - Change Inductor . . . . . 3 - 37

3.2.2-4 Patch Counter Jaw - Check Guide Bushing . . . . . 3 - 39

3.2.2-5 Patch Counter Jaw - Change Cushion Cylinder . . . . . 3 - 40

3.2.2-6 Patch Counter Jaw - Set Cushion Cylinder . . . . . 3 - 41

3.2.2-7 Patch Counter Jaw - Set Position . . . . . 3 - 42

TechPub_2614345_0103 - B5358C00en.fm

3.3 Magazine Patch . . . . . 3 - 43

3.3-1 Magazine Patch - Check . . . . . 3 - 43

3.3-2 Magazine Patch - Set Proximity Switch . . . . . 3 - 45

3.3-3 Magazine Patch - Set Strip Tension . . . . . 3 - 46

3.3-4 Magazine Patch - Change Bobbin Holder Bearings . . . . . 3 - 47

3.3-5 Magazine Patch - Check Bobbin Holder . . . . . 3 - 48

3.3.1 Splicing Device . . . . . 3 - 49

3.3.1-1 Splicing Device - Check Function . . . . . 3 - 49

3.3.1-2 Splicing Device - Change Knife . . . . . 3 - 50

3.3.1-3 Splicing Device - Set Lock Grip . . . . . 3 - 51

3.3.2 Guide Patch . . . . . 3 - 52

3.3.2-1 Guide Patch - Change Curve Rollers . . . . . 3 - 52

3.3.3 Patch Turning Device . . . . . 3 - 53

3.3.3-1 Patch Turning Device - Check . . . . . 3 - 53

3.3.3-2 Patch Turning Device - Set Rotation Monitor Proximity Switch . . . . . 3 - 54

TechPub_2614345_0103 - B5358C00en.fm

3-1 Applicator Patch - Functional Description

SPC Reference	1260419-0200

When the filling machine pulls packaging material:

- the PLC begins the machine cycle
- the PLC sends a signal to the TMCC card to start indexing
- the TMCC card sends the pulses to the stepper drive card.

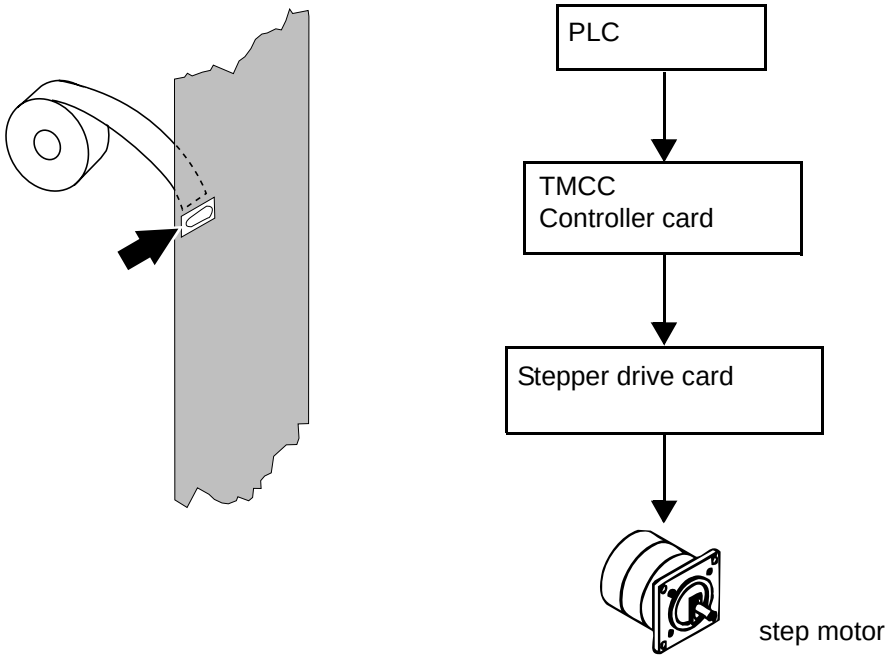

TechPub_2614345_0103 - B5358C00en.fm

(Cont'd)

(Cont'd)

As the jaws are closed, the PLC receives signals from the proximity switches and

- the PLC begins the sealing cycle when the patch, reseal and tab jaws are all closed
- the PLC begins a timer to send the sealing pulses to the IH generators
- when the sealing-cycle is timed out, the PLC opens (returns) the applicator stations.

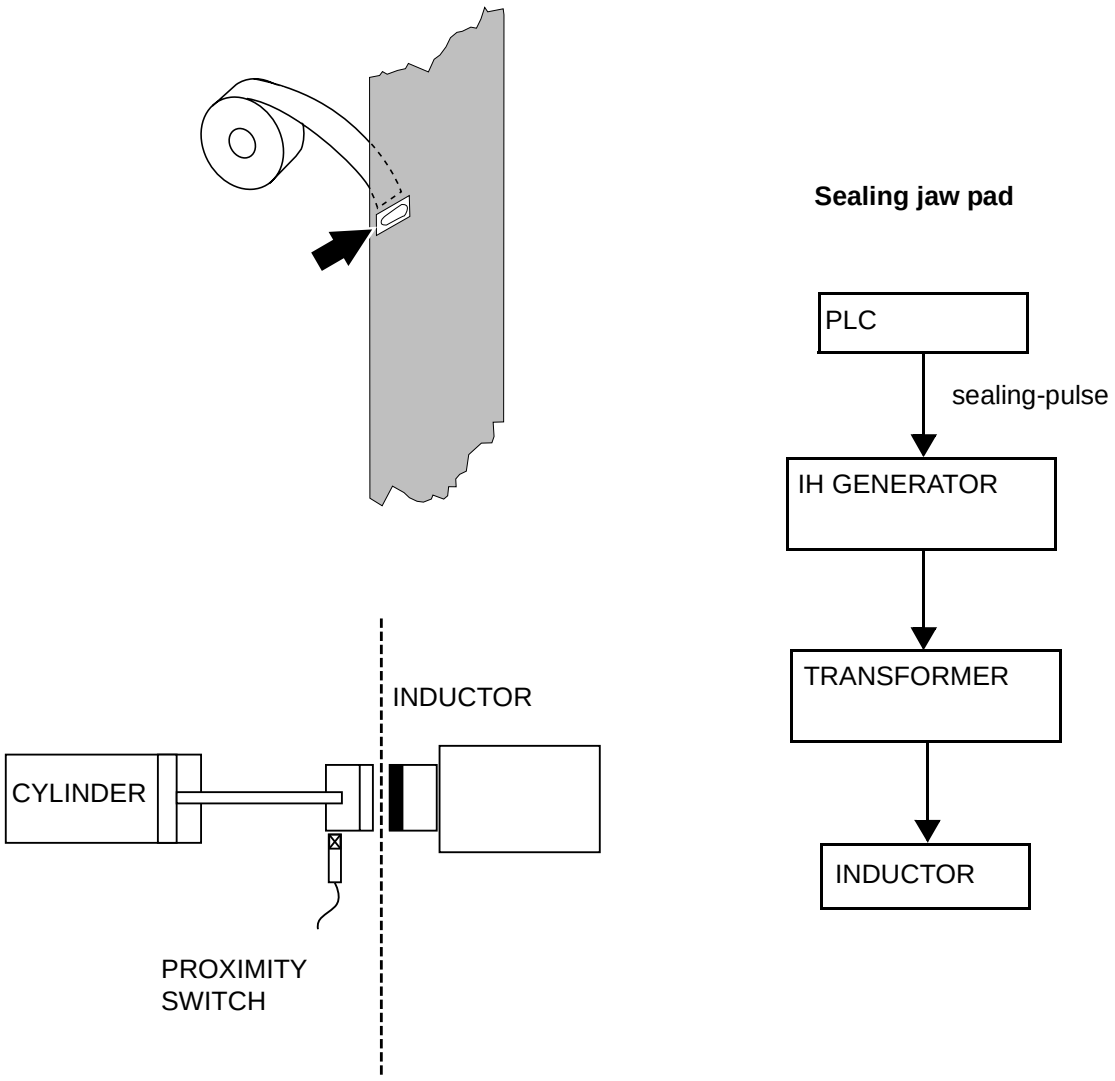

(Cont'd)

TechPub_2614345_0103 - B5358C00en.fm

(Cont'd)

While the patch jaw is extending, the PLC signals the solenoid valve to provide vacuum to the sealing jaw pad.

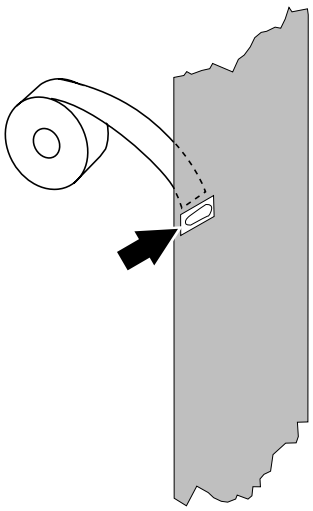

Sealing jaw pad suction

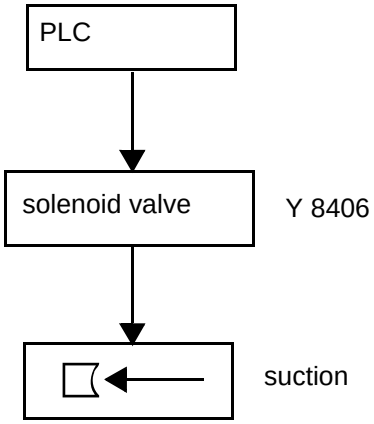

During the PullTab machine cycle, the PLC signals the solenoid valve to extend the cylinder. This action cuts the strip and applies it to the packaging material.

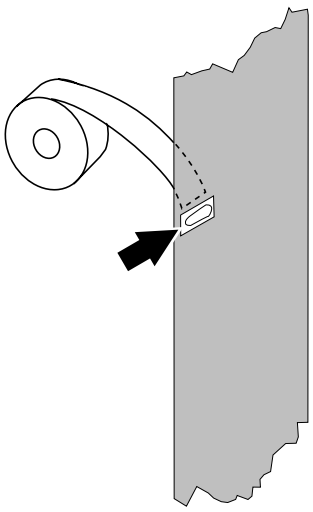

Cutting and applying

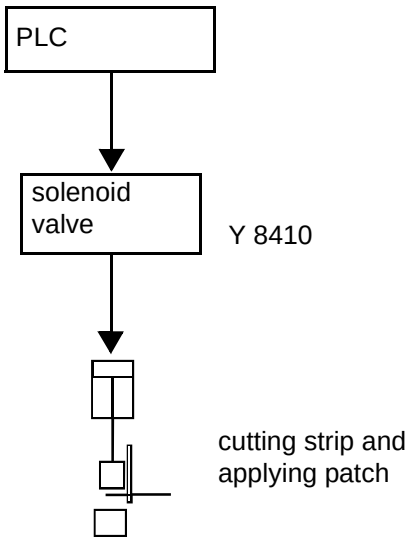

(Cont'd)

TechPub_2614345_0103 - B5358C00en.fm

(Cont'd)

During PRODUCTION:

- an alarm is activated when the strip supply is low
- if either alarm condition are not fixed within five minutes, the PullTab unit and the filling machines go into SHORT STOP mode
- an alarm is activated when the strip does not move (rotation monitor).

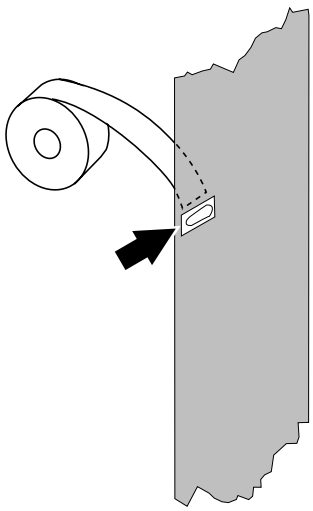

Strip supply

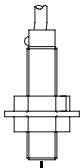

B8408

Low supply?

No

continue

Yes

alarm

Rotation monitor

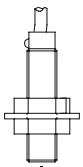

B8409

Supply moving?

No

alarm

Yes

continue

TechPub_2614345_0103 - B5358C00en.fm

3.1 Setting Flow Chart

The following flow chart shows the order in which the various components must be set up.

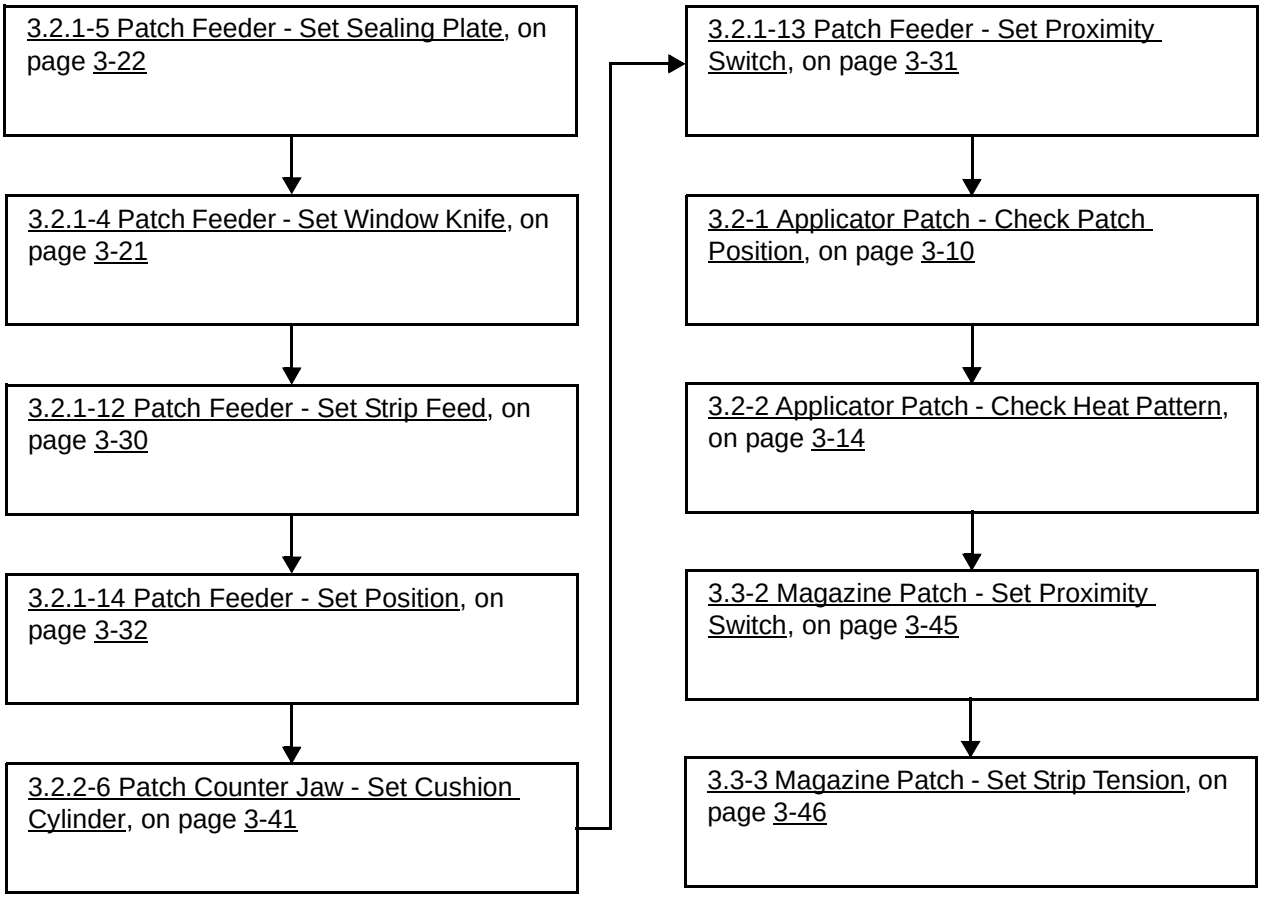

TechPub_2614345_0103 - B5358C01en.fm

3.2 Applicator Patch

SPC Reference	1260419-0200

3.2-1 Applicator Patch - Check Patch Position

Machine Status	Air **ON** Mains power **ON** Packaging material **threaded**
SPC Reference	1260419-0200

Preparation for Making Test Material with Hole and Patch

a) Close all doors on the machine.

b) Make sure that the repeat length is correct according to 1.2.5-4 Paper Brake - Set Servo Tension Device.

c) At the TPOP, check that there are no active alarms and touch the MANOEUVRE button (1).

d) Touch the MAINTENANCE PT21 LEFT button (2).

e) Touch the PUNCH UNIT AND PATCH APPLICATOR button (3).

f) Touch the START button (4) to activate these stations: punch unit and applicator patch.

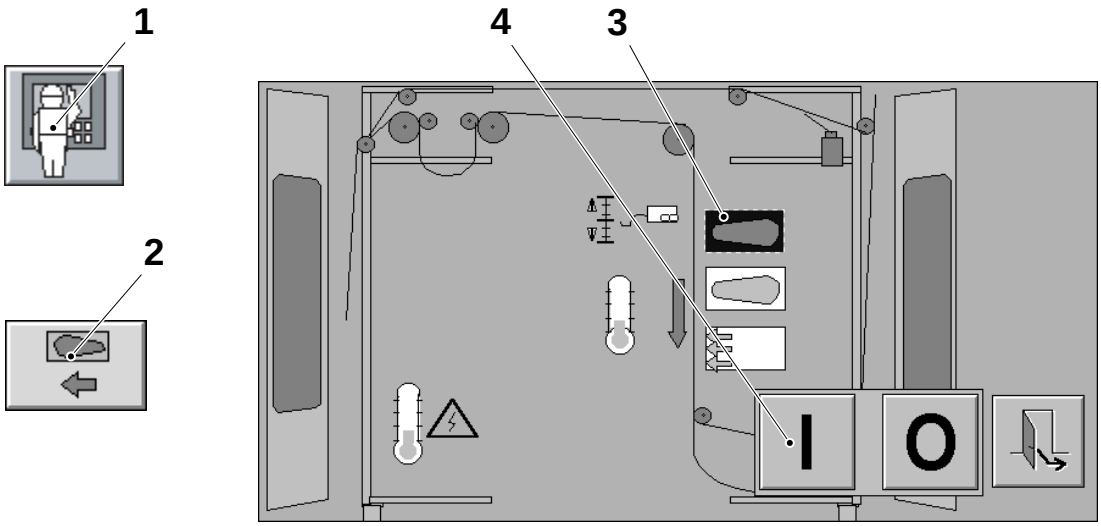

1 MANOEUVRE button
2 MAINTENANCE PT21 LEFT button
3 PUNCH UNIT AND PATCH APPLICATOR button
4 START button

(Cont'd)

TechPub_2614345_0103 - B5358C02en.fm

(Cont'd)

g) The **Service and maintenance key** icon (5) starts to flash at the top of the ladder step window.

h) Push the PROGRAM UP button (6) after it starts flashing.

Make Test Material

a) At the PullTab control panel, push the SINGLE INDEX button (7) six or seven times after it starts flashing.

Note! If the SINGLE INDEX button (7) does not flash, open and close one of the doors in the PullTab unit. Acknowledge the alarm on the TPOP.

b) Open the door and cut out the packaging material that has the test holes and patches.

Check position

a) Check that the IS patch is not applied crookedly onto the packaging material.

b) Check that the hole is centred evenly inside the patch (distance **A** = distance **B** and distance **C** = distance **D**).

c) If required, adjust the patch feeder as described below.

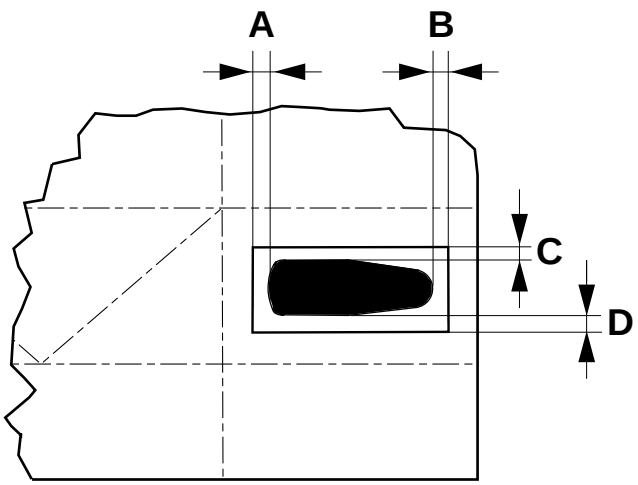

View from inside the package

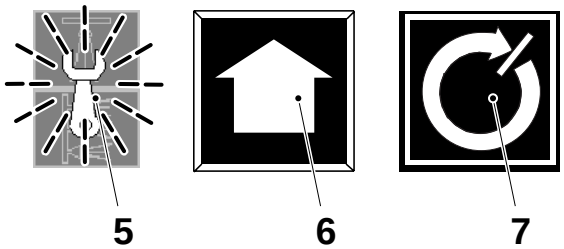

A = B

C = D

5 Service and maintenance key icon
6 PROGRAM UP button
7 SINGLE INDEX button

(Cont'd)

TechPub_2614345_0103 - B5358C02en.fm

(Cont'd)

Adjust Patch Feeder Position

a) Loosen the screws (1) on the patch feeder.

b) Set the distances **A** and **B**, by means of the setting screw (2).

c) Tighten the screws (1).

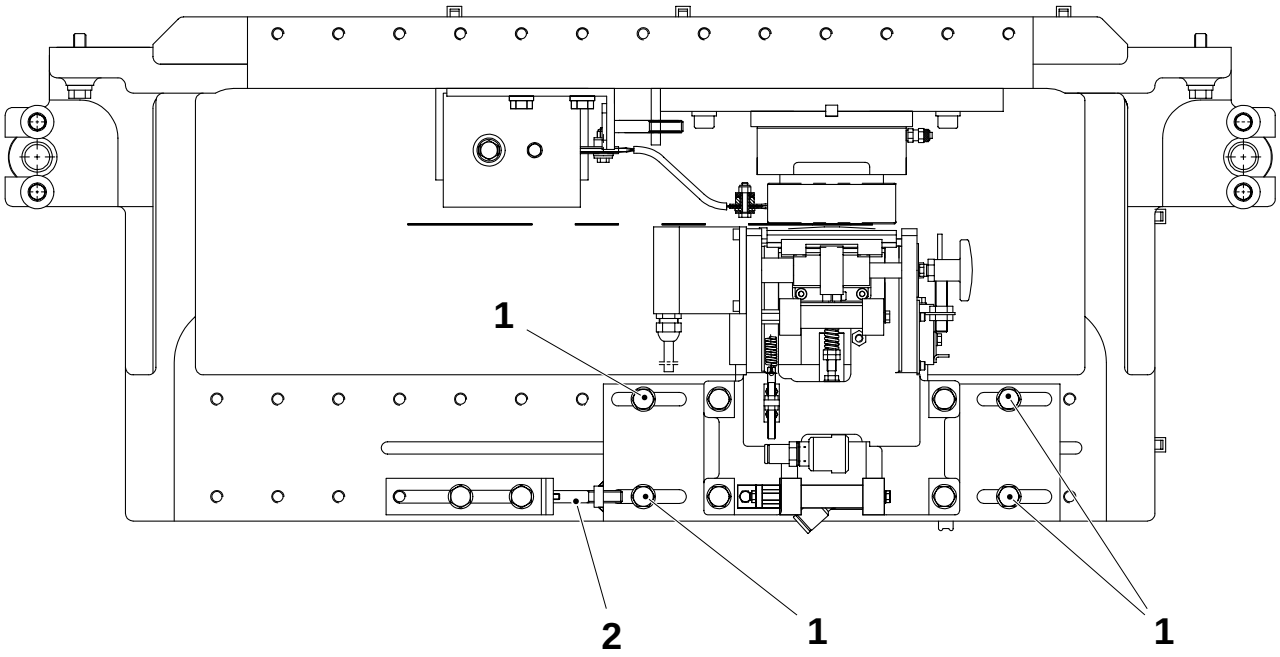

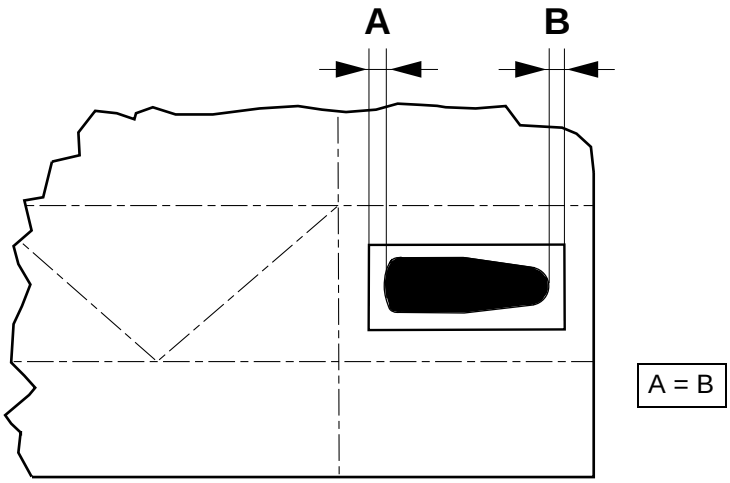

1 Screw
2 Setting screw

(Cont'd)

TechPub_2614345_0103 - B5358C02en.fm

(Cont'd)

d) On both LH and RH sides of all three applicator stations (applicator patch, reseal, and tab) loosen the screws (5) to move the brass bushings (3) away from the patch bracket (4).

e) On both LH and RH sides of the applicator patch, tighten the brass bushings (3) until they touch the patch bracket (4).

f) Tighten the two screws (5).

g) Slightly loosen the screws (6) on the patch bracket (4).

h) Set the distances **C** and **D**, by adjusting the screw guides (7).

i) Tighten the screws (6).

j) Check the heat pattern on the patch, see 3.2-2 Applicator Patch - Check Heat Pattern.

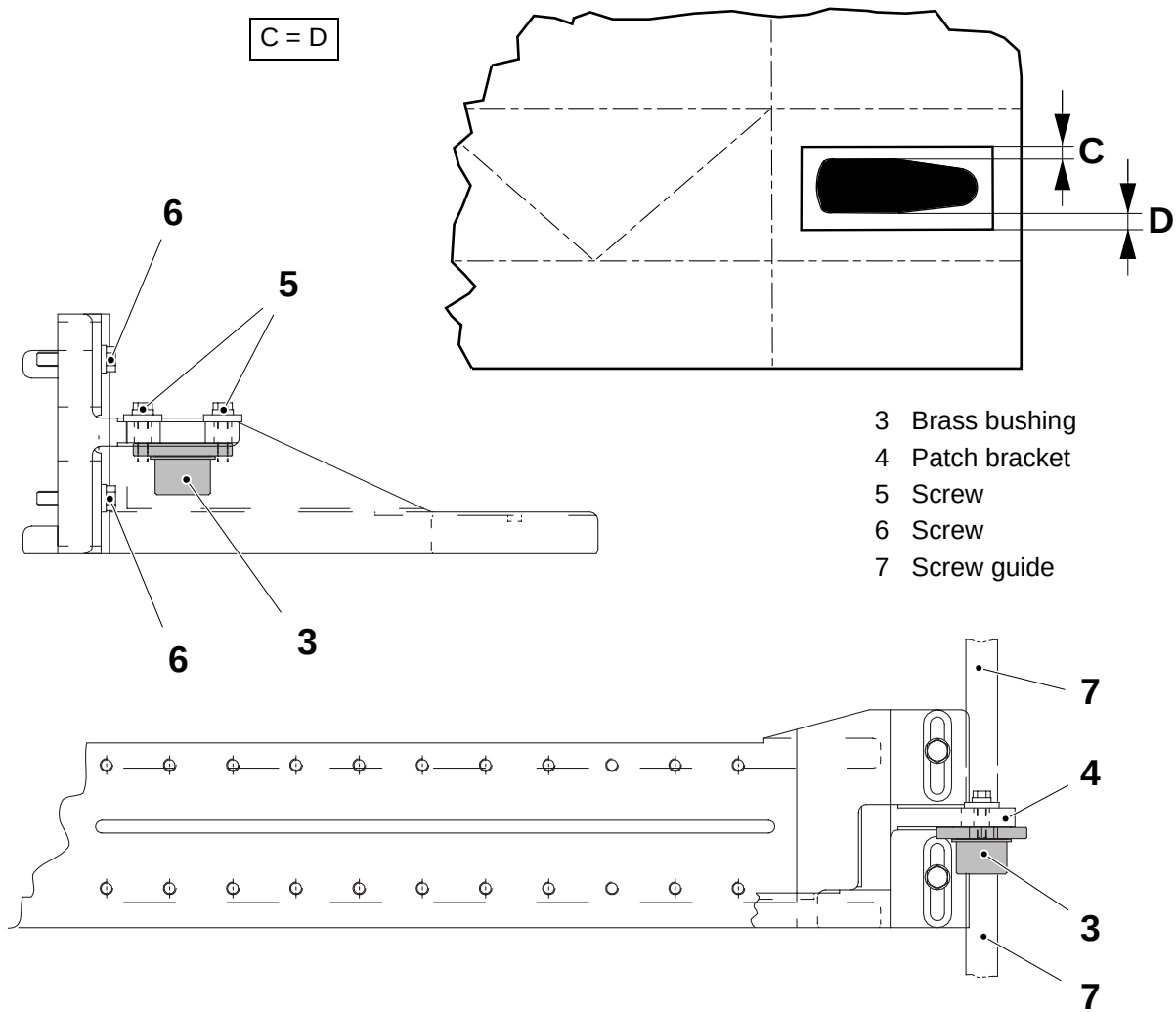

3 Brass bushing
4 Patch bracket
5 Screw
6 Screw
7 Screw guide

TechPub_2614345_0103 - B5358C02en.fm

3.2-2 Applicator Patch - Check Heat Pattern

Machine Status	Air **ON** Mains power **ON** Packaging material **threaded**
Special Equipment	Zonoscope TP No. 90243-203
SPC Reference	1260419-0200

Make Test Material

a) Follow the procedure Preparation for Making Test Material with Hole and Patch as described in 3.2-1 Applicator Patch - Check Patch Position.

b) At the PullTab control panel, push the SINGLE INDEX button (1) six or seven times after it starts flashing.

c) Open the door and cut out the packaging material that has the test holes and patches.

Check Position

a) Check, with the aid of a zonoscope (5), that the position of the heat pattern on the packaging material is centred with respect to the patch.

Note! To more easily see the heat pattern, increase the power of the applicator patch inductor (potentiometer value approximately **650 ±50** S.U.). Be sure to reset the potentiometer before starting production.

b) Check that all edges are properly sealed except the knife edge (2) where the knife cut the patch strip. Check the corners (3) and (4) opposite the knife edge (2).

c) If required adjust the patch counter jaw as described below.

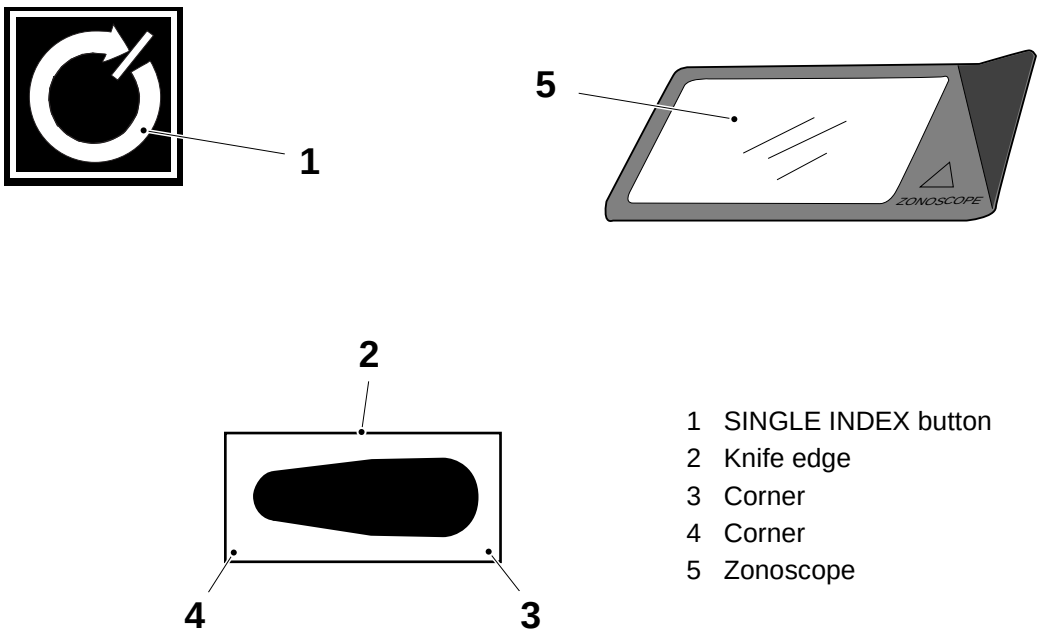

1 SINGLE INDEX button
2 Knife edge
3 Corner
4 Corner
5 Zonoscope

(Cont'd)

TechPub_2614345_0103 - B5358C02en.fm

(Cont'd)

Adjust Patch Counter Jaw Position

a) Loosen the screws (6) and adjust the horizontal position of the heat pattern by means of the setting screw (10).

b) Loosen the screws (7).

c) Loosen the nut (8) and adjust the vertical position of the heat pattern by means of the grub screw (9).

d) Tighten the nut (8), the screws (7) and the screws (6).

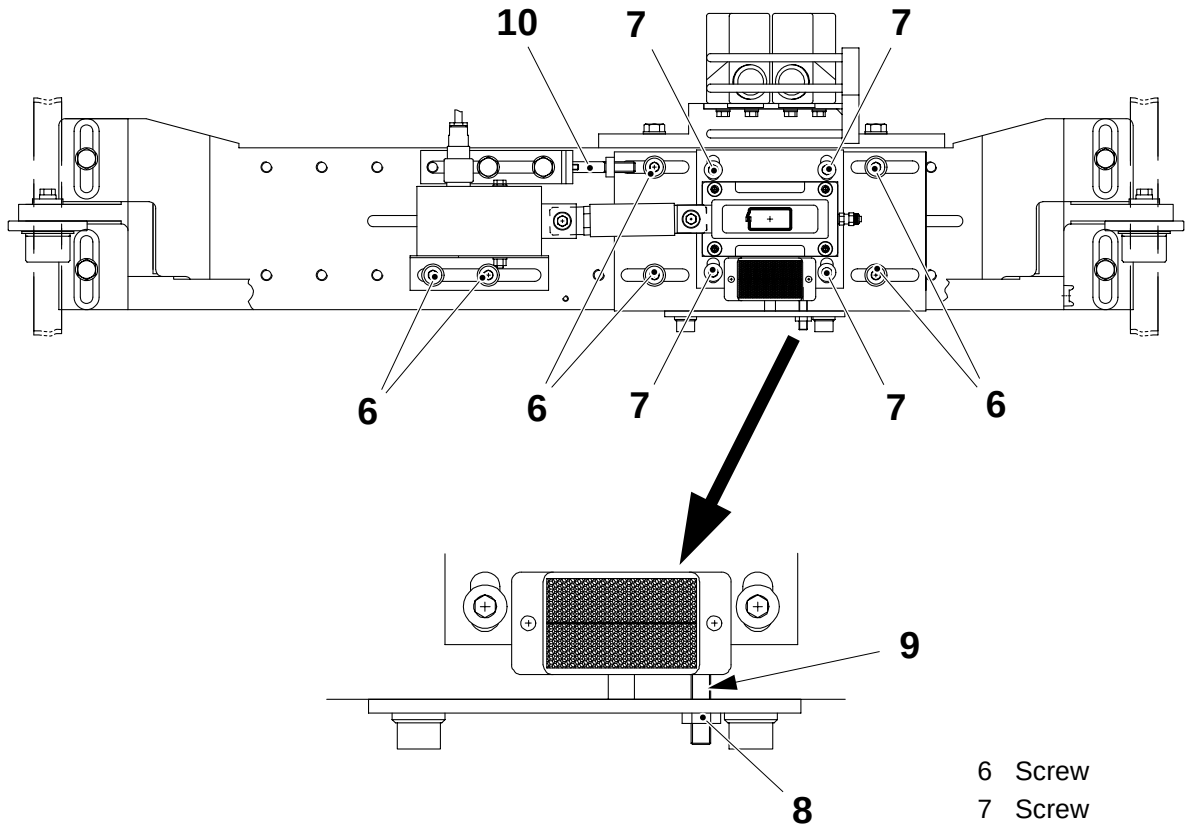

6 Screw
7 Screw
8 Nut
9 Grub screw
10 Setting screw

(Cont'd)

TechPub_2614345_0103 - B5358C02en.fm

(Cont'd)

Deactivate Pulltab Stations

a) Touch the STOP button (11) to deactivate the punch unit and applicator patch stations.

b) Push the PROGRAM DOWN button (12) after it starts flashing.

c) Touch the EXIT button (13).

d) Touch the MANOEUVRE button (14) to end the sequence.

e) Check the heat pattern applied by the reseal station, see 5.2-2 Applicator Reseal - Check Heat Pattern.

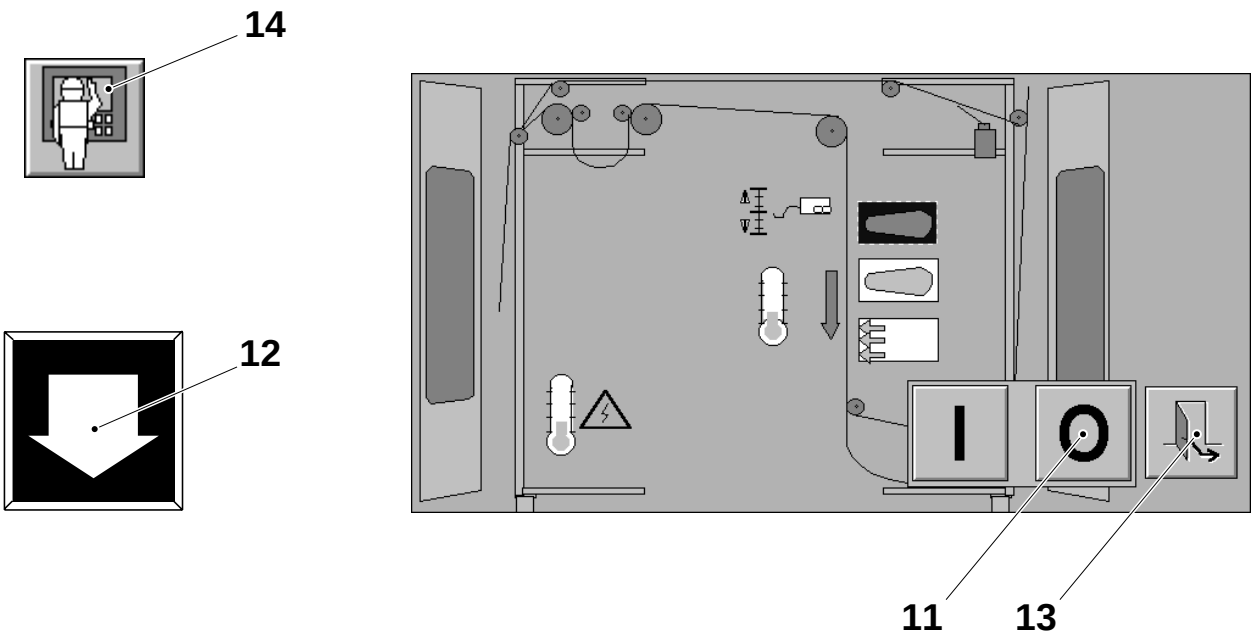

11 STOP button
12 PROGRAM button
13 EXIT button
14 MANOEUVRE button

TechPub_2614345_0103 - B5358C02en.fm

3.2.1 Patch Feeder

3.2.1-1 Patch Feeder - Check Knives

Machine Status	Air **OFF** Mains power **OFF**
SPC Reference	1260414-0200

WARNING
Risk of burns!
The sealing jaw may be hot. Be careful.

Check the surface of the knives and the space between the flat knife (1) and the sealing plate (3) for any residue of polyethylene.

Check the flat knife (1) and the window knife (2) for wear and/or damage.

Check that the edges of the IS patch are clean cut. If required, set the window knife (2), see 3.2.1-4 Patch Feeder - Set Window Knife.

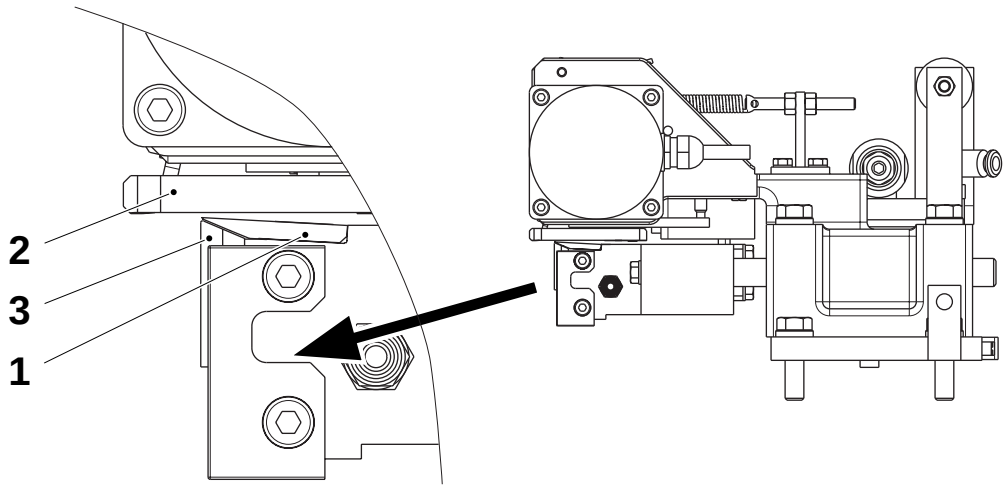

1 Flat knife
2 Window knife
3 Sealing plate

TechPub_2614345_0103 - B5358C02en.fm

3.2.1-2 Patch Feeder - Change Knives

Machine Status	Air **OFF** Mains power **OFF**
SPC Reference	1260414-0200

WARNING
Risk of burns!
The sealing jaw may be hot. Be careful.

a) Remove the feeder, see 3.2.1-3 Patch Feeder - Remove.
b) Remove the four screws (1) and the entire bracket (2).
c) Remove the flat knife (3) and change as required.
d) Unscrew the stop screw (4) and remove the two pins (5).

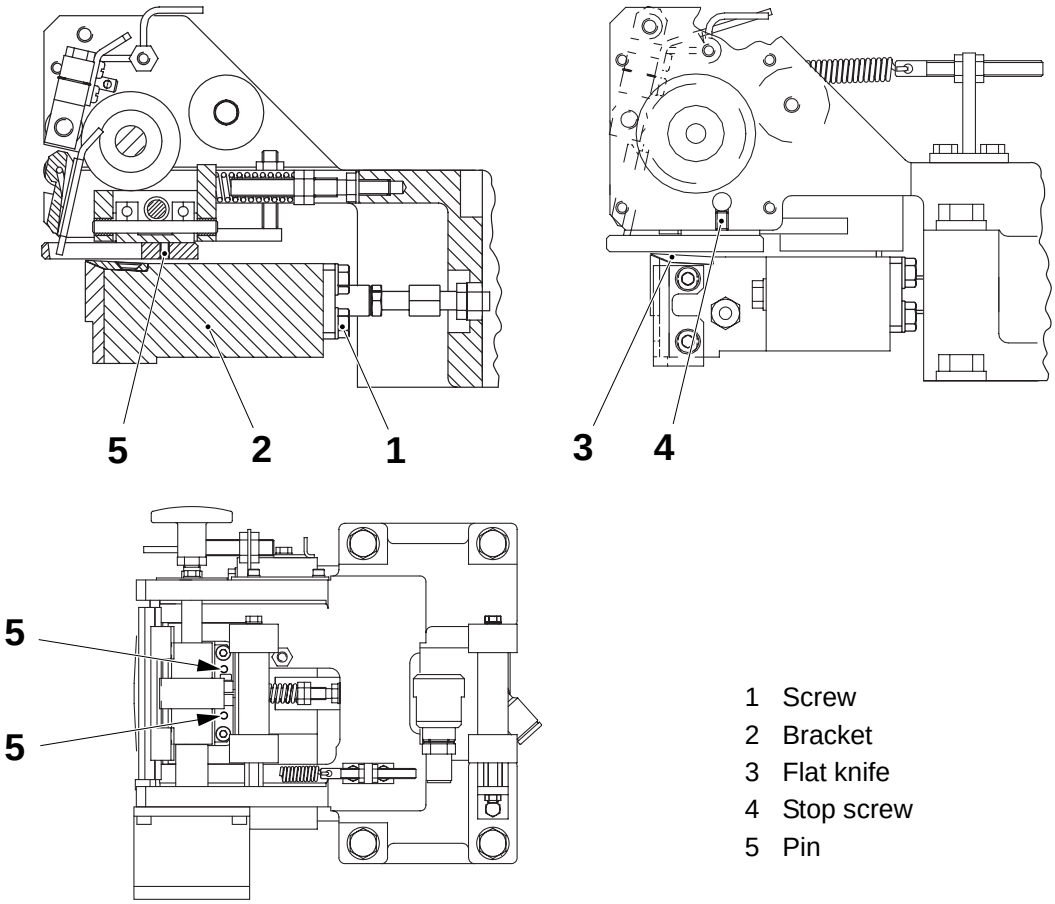

1 Screw
2 Bracket
3 Flat knife
4 Stop screw
5 Pin

(Cont'd)

TechPub_2614345_0103 - B5358C02en.fm

(Cont'd)

e) Remove the screws (6) and change the window knife (7).

CAUTION
Risk of damage to the equipment!
When changing the window knife (7), make sure that the bevelled side of the window knife (7) (side opposite etched part number) is the side that comes in contact with the flat knife (3).

f) Assemble in the reverse order.

g) Set the sealing jaw, see 3.2.1-5 Patch Feeder - Set Sealing Plate.

h) Set the window knife (7), see 3.2.1-4 Patch Feeder - Set Window Knife.

i) Check the patch position, see 3.2-1 Applicator Patch - Check Patch Position.

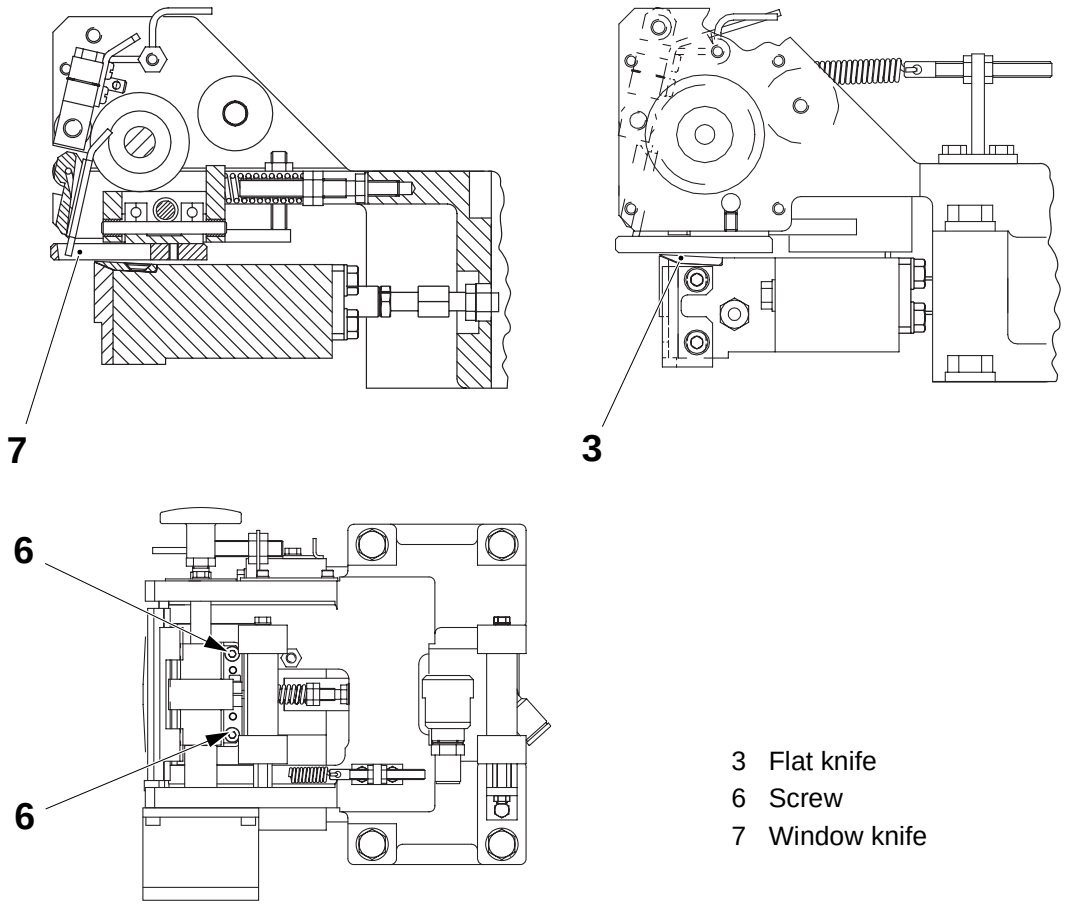

3 Flat knife
6 Screw
7 Window knife

TechPub_2614345_0103 - B5358C02en.fm

3.2.1-3 Patch Feeder - Remove

Machine Status	Air **OFF** Mains power **OFF**
SPC Reference	1260414-0200

a) On the electrical cabinet, disconnect the electrical connector (1) leading to the step motor (2).

b) Disconnect the air hoses (3) and the strip suction hose (6).

c) Loosen the screws (8) and remove the patch jaw monitor proximity switch (7).

d) Remove the screws (4) from the plate (5) and lift out the patch feeder.

e) Assemble in the reverse order.

f) Set the patch feeder, see <u>3.2.1-14 Patch Feeder - Set Position</u>.

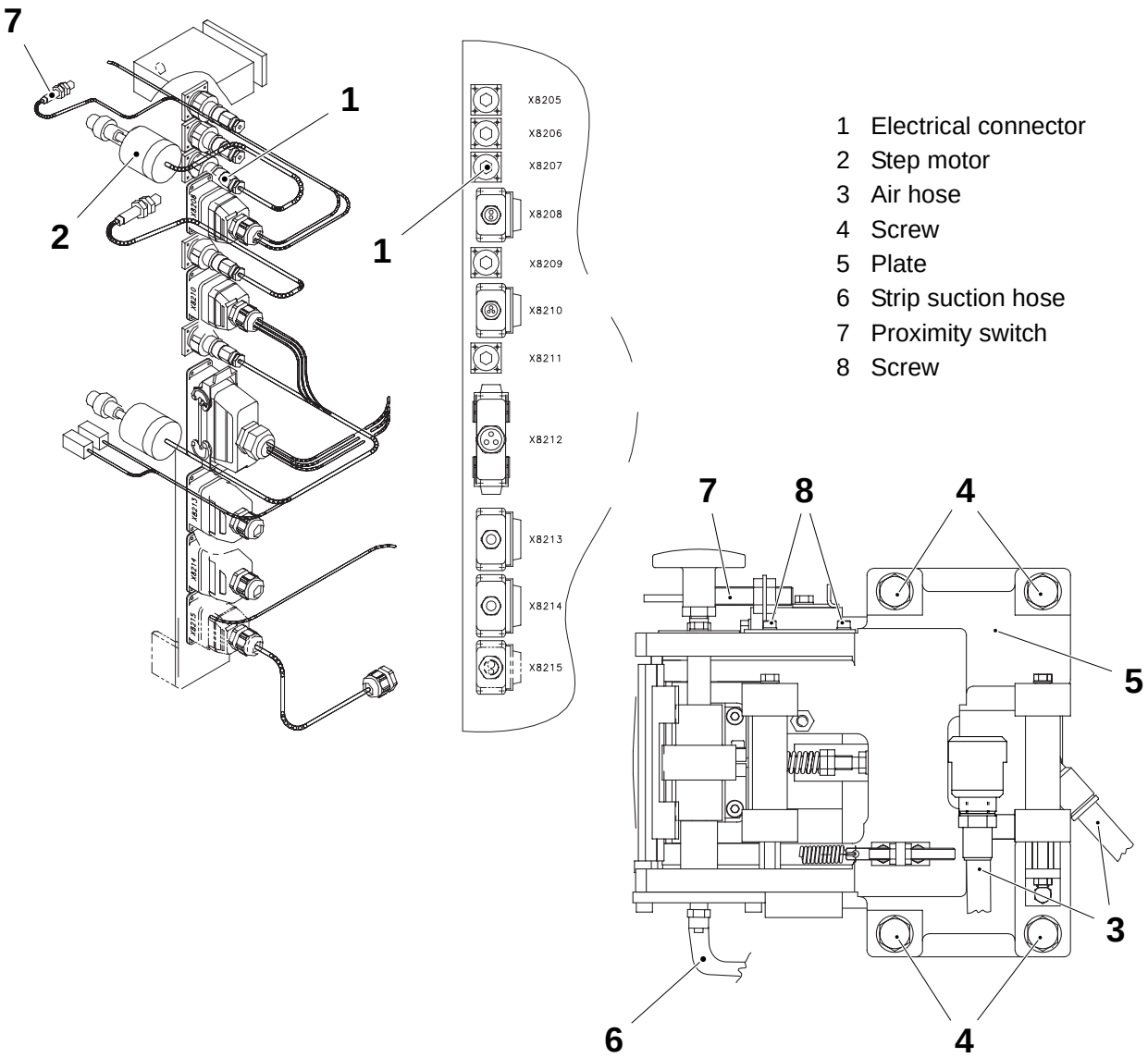

TechPub_2614345_0103 - B5358C02en.fm

3.2.1-4 Patch Feeder - Set Window Knife

Machine Status	Air **OFF** Mains power **OFF**
SPC Reference	1260414-0200

WARNING
Risk of burns!
The sealing jaw may be hot. Be careful.

This setup may be performed on a work bench.

a) Remove the feeder, see 3.2.1-3 Patch Feeder - Remove.
b) Adjust the nuts (1) until the spring (3) starts to compress.
c) Set the distance **A** between the surface of the sealing plate (5) and the outside edge of the window knife (4).
d) Keep the distance **A** and adjust the screw (2) until the window knife (4) touches the outside edge of the flat knife without any play.
e) Adjust the nuts (1) to set the distance **B**.
f) Check the cutting action after the setting.

TechPub_2614345_0103 - B5358C02en.fm

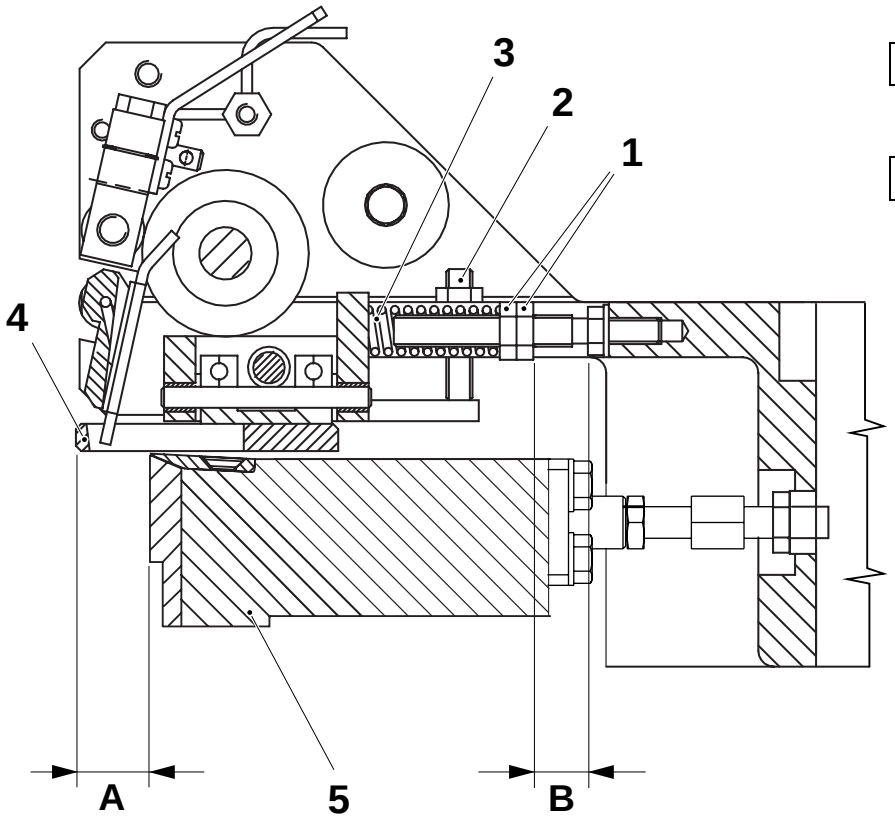

A = 6 ±0.5 mm

B = 12 ±2 mm

1 Nut
2 Screw
3 Spring
4 Window knife
5 Sealing plate

3.2.1-5 Patch Feeder - Set Sealing Plate

Machine Status	Air **OFF** Mains power **OFF**
SPC Reference	1260414-0200

WARNING
Risk of burns!
The sealing jaw may be hot. Be careful.

a) Remove the feeder, see 3.2.1-3 Patch Feeder - Remove.
b) Remove the four screws (1) and the entire bracket (2).
c) Loosen the four screws (3).
d) Set the distance **A** between the top of the flat knife (6) and the sealing plate (4). If required, adjust with shims (7).
e) Keep the two clamps (5) pressed aside as shown in the figure, and at the same time tighten the screws (3).
f) Make sure that the clamps (5) lean against the sealing plate (4).
g) Assemble in the reverse order.

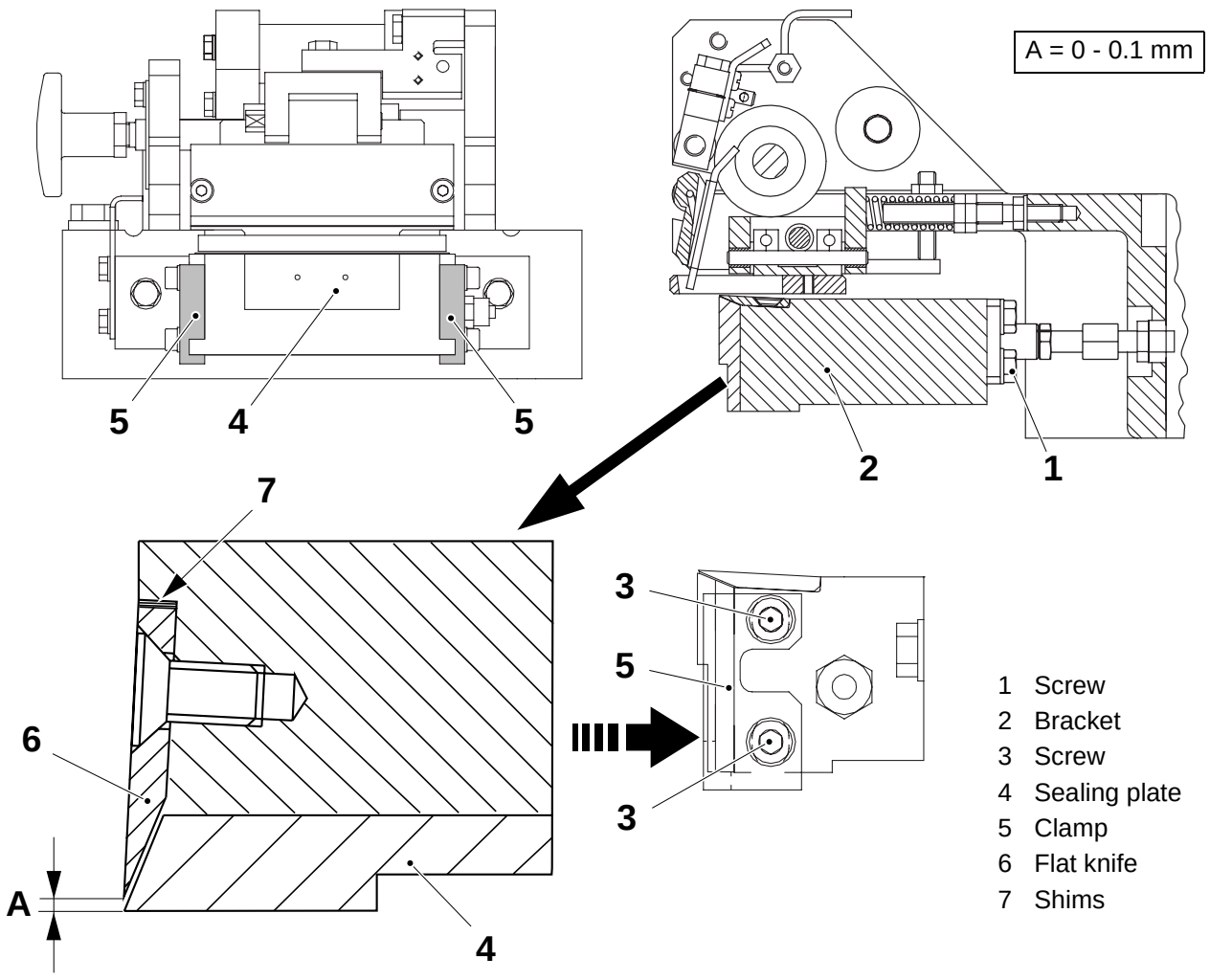

TechPub_2614345_0103 - B5358C02en.fm

3.2.1-6 Patch Feeder - Check Guides and Linear Bearings

Machine Status	Air **OFF** Mains power **OFF**
SPC Reference	1260414-0200

a) Disconnect the air hoses (6) from the cylinder.

b) By hand, move the cylinder to check that the piston (5) moves freely.

c) Remove the feeder, see 3.2.1-3 Patch Feeder - Remove.

d) Remove the four screws (1) and the entire bracket (2).

e) Check the guides (3) for wear and/or damage.

f) Check for wear in the linear bearings (4) by using the guide (3). Check the play in one bearing at a time.

g) Change as required, see 3.2.1-7 Patch Feeder - Change Linear Bearings.

h) Fit back the bracket (2) and the four screws (1) after checking.

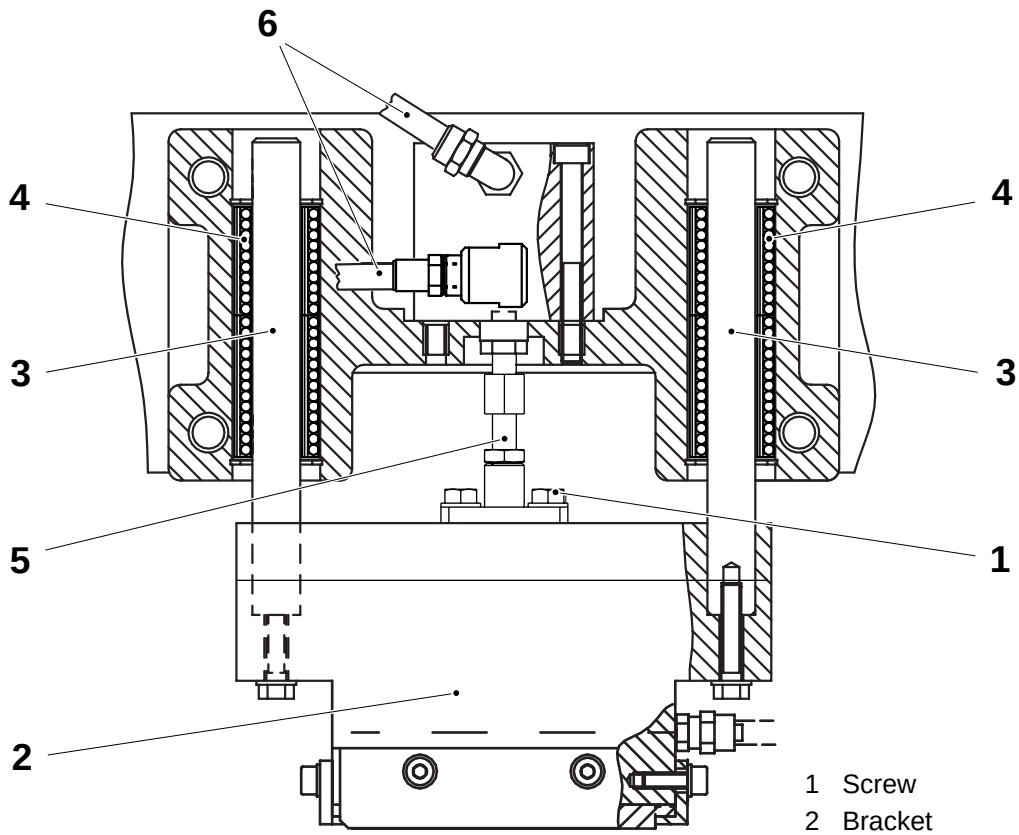

1 Screw
2 Bracket
3 Guide
4 Linear bearing
5 Piston
6 Air hose

TechPub_2614345_0103 - B5358C02en.fm

3.2.1-7 Patch Feeder - Change Linear Bearings

Machine Status	Air **OFF** Mains power **OFF**
SPC Reference	1260414-0200

a) Remove the feeder, see 3.2.1-3 Patch Feeder - Remove.

b) Remove the four screws (1) and the entire bracket (2).

c) Remove the seal rings (3) on each side of the linear bearing (4).

d) Pull out the linear bearings (4) and change them.

e) Assemble in the reverse order.

Note! Make sure that the seal rings (3) are, on both sides, distance **A** inward towards the surface of the applicator casting (5).

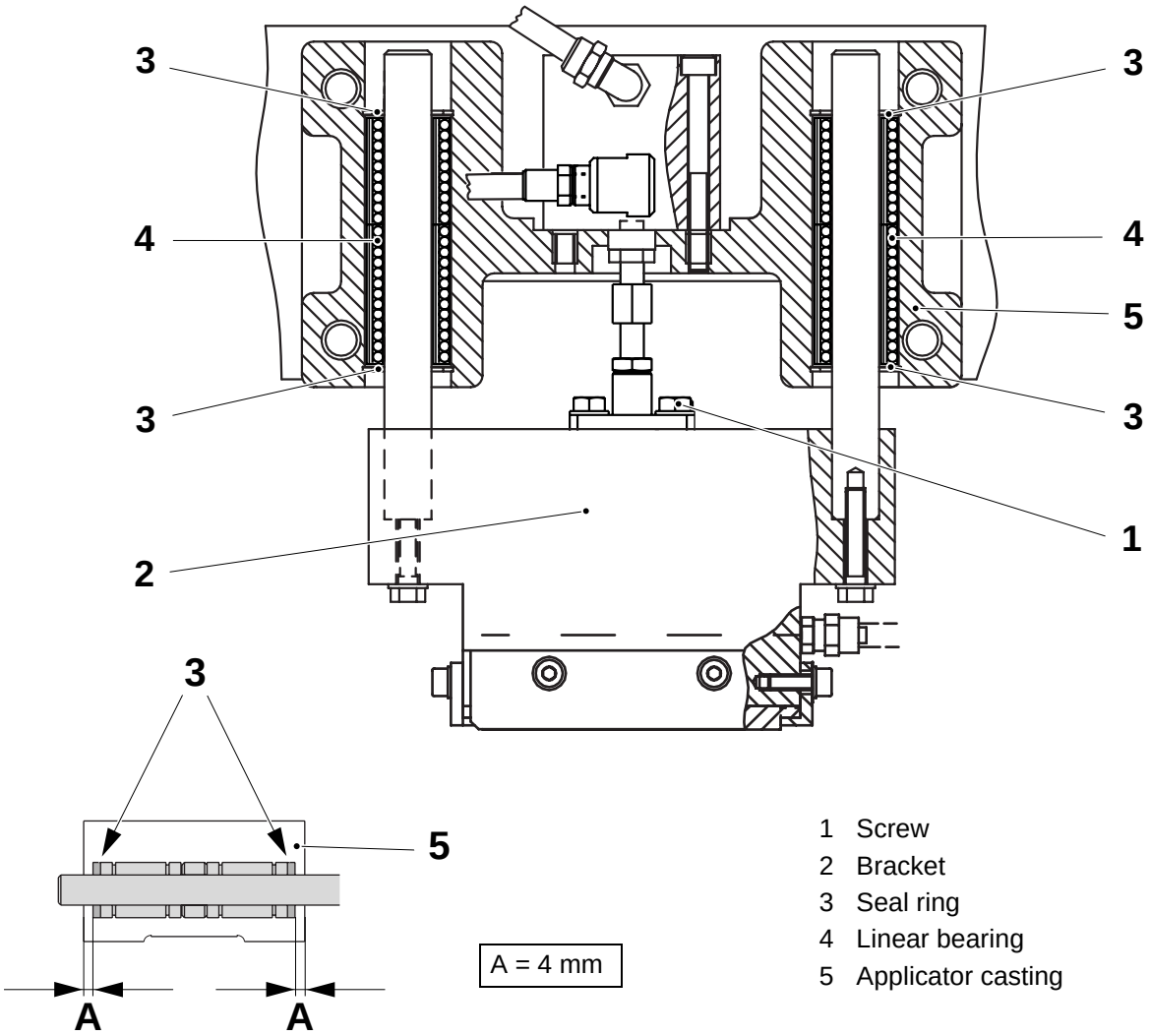

1 Screw
2 Bracket
3 Seal ring
4 Linear bearing
5 Applicator casting

TechPub_2614345_0103 - B5358C02en.fm

3.2.1-8 Patch Feeder - Change Bushings

Machine Status	Air **OFF** Mains power **OFF**
SPC Reference	1260414-0200

a) Remove the feeder, see 3.2.1-3 Patch Feeder - Remove.
b) Remove the four screws (1) and the entire bracket (2).
c) Unscrew the two grub screws (3) in the coupling (4).
d) Unscrew the four screws (5) and remove the step motor (5).
e) Unscrew the two grub screws (7) in the feeder roller (9).
f) Remove the knob shaft (8), the coupling (4) and the feeder roller (9).

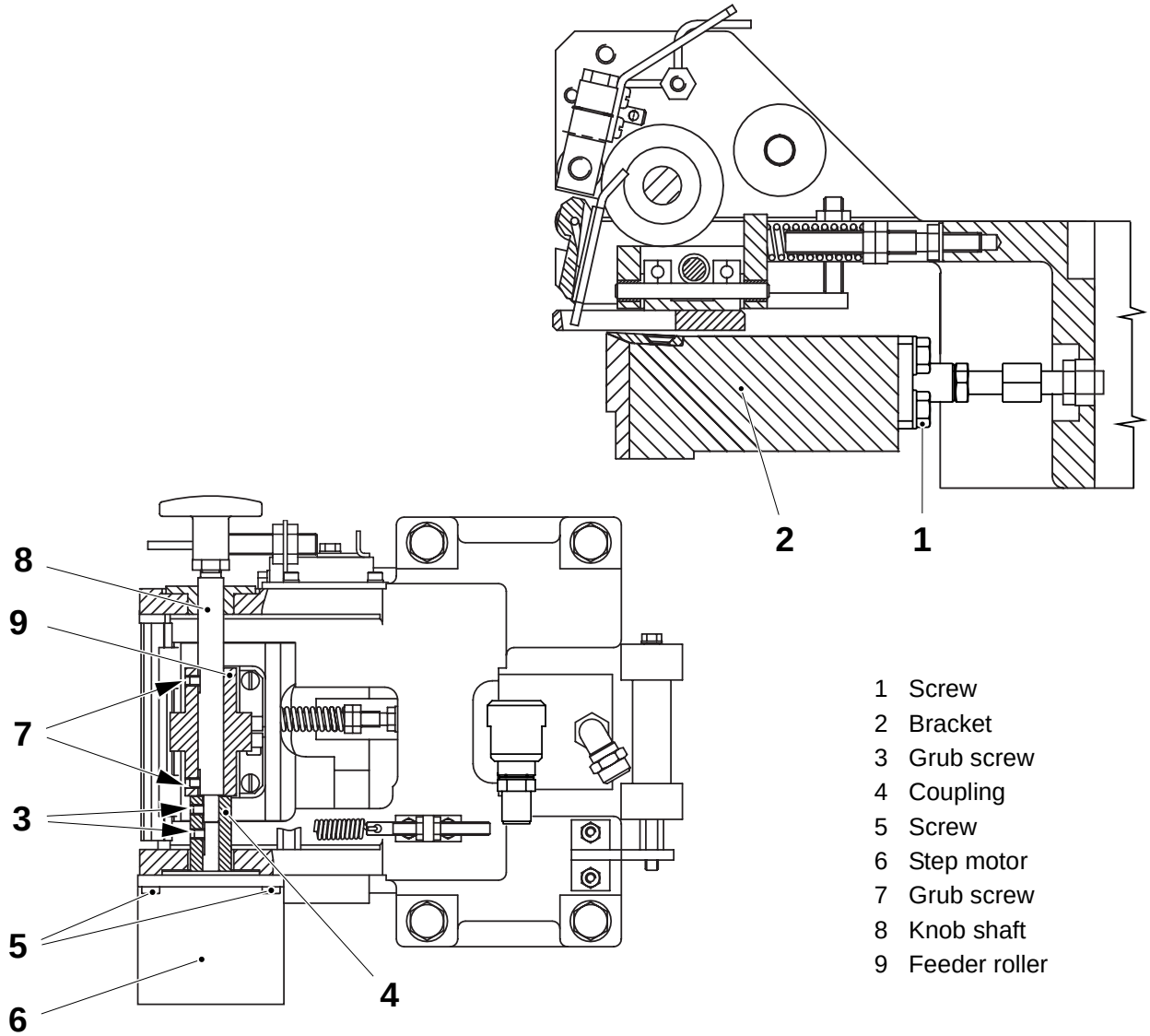

1 Screw
2 Bracket
3 Grub screw
4 Coupling
5 Screw
6 Step motor
7 Grub screw
8 Knob shaft
9 Feeder roller

(Cont'd)

TechPub_2614345_0103 - B5358C02en.fm

(Cont'd)

g) Remove the two screws (10) and change the bushing (11).
h) Loosen the spring (12) using the nut (13).
i) Loosen the grub screw (14) and remove the shaft (15).
j) Remove the two bushings (16) and change them if damaged or worn out.
k) Loosen the screws (17) and pull out the shaft (18).
l) Remove the two spring washers (19).
m) Remove the two bushings (20) and change them if damaged or worn out.
n) Assemble in the reverse order.

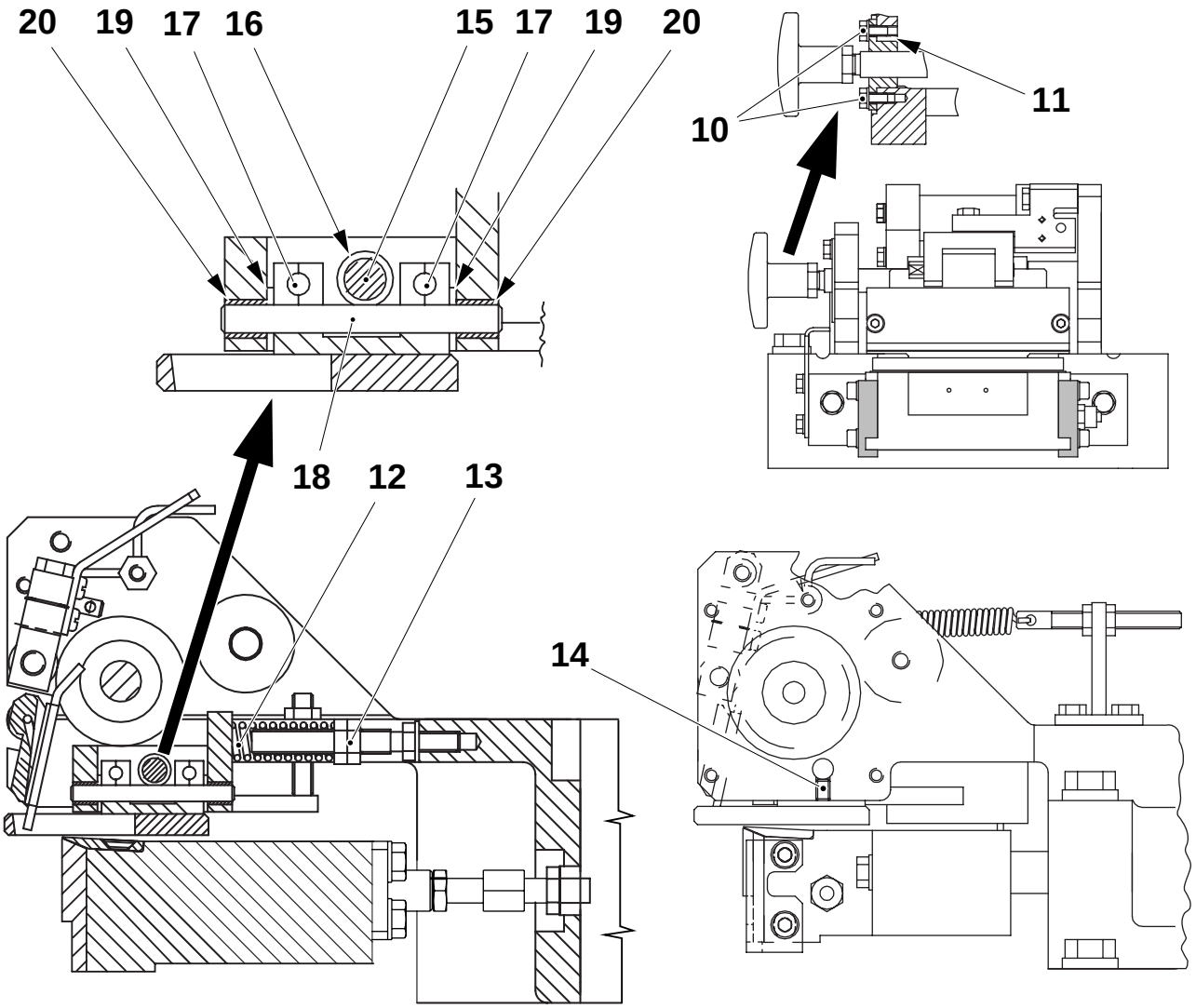

10 Screw
11 Bushing
12 Spring
13 Nut
14 Grub screw
15 Shaft
16 Bushing
17 Screw
18 Shaft
19 Spring washer
20 Bushing

TechPub_2614345_0103 - B5358C02en.fm

3.2.1-9 Patch Feeder - Change Cylinder

Machine Status	Air **OFF** Mains power **OFF**
SPC Reference	1260414-0200

a) Remove the four screws (1).

b) Remove the air connections (2) and the screws (3).

c) Remove the cylinder (4) and change it.

d) Assemble in the reverse order.

e) Set the cushion cylinder, see 3.2.2-6 Patch Counter Jaw - Set Cushion Cylinder.

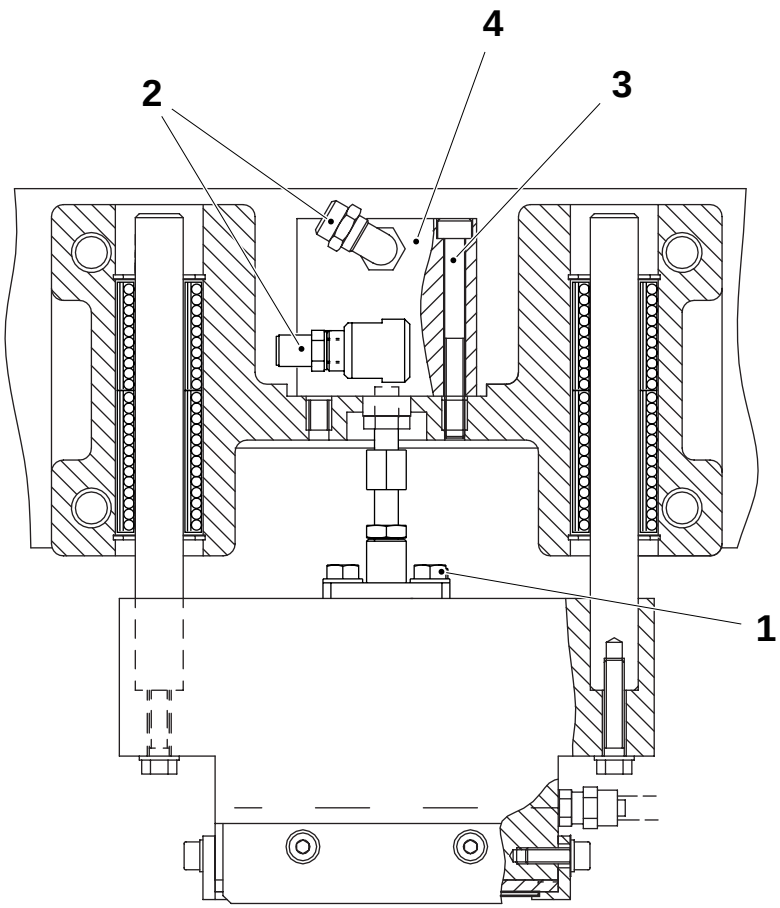

1 Screw
2 Air connection
3 Screw
4 Cylinder

TechPub_2614345_0103 - B5358C02en.fm

3.2.1-10 Patch Feeder - Check Sealing Plate

Machine Status	Air **OFF** Mains power **OFF**
SPC Reference	1260414-0200

WARNING
Risk of burns!
The sealing jaw may be hot. Be careful.

a) Loosen the screws (2) and remove the sealing plate (1).

b) Check the surface of the sealing plate (1) for wear and scratches or other damage. Also check for any residue of polyethylene.

c) Check that the suction holes in the plate and the grooves on the back of the plate are not blocked.

d) Assemble in the reverse order. Set the sealing plate (1), see 3.2.1-5 Patch Feeder - Set Sealing Plate.

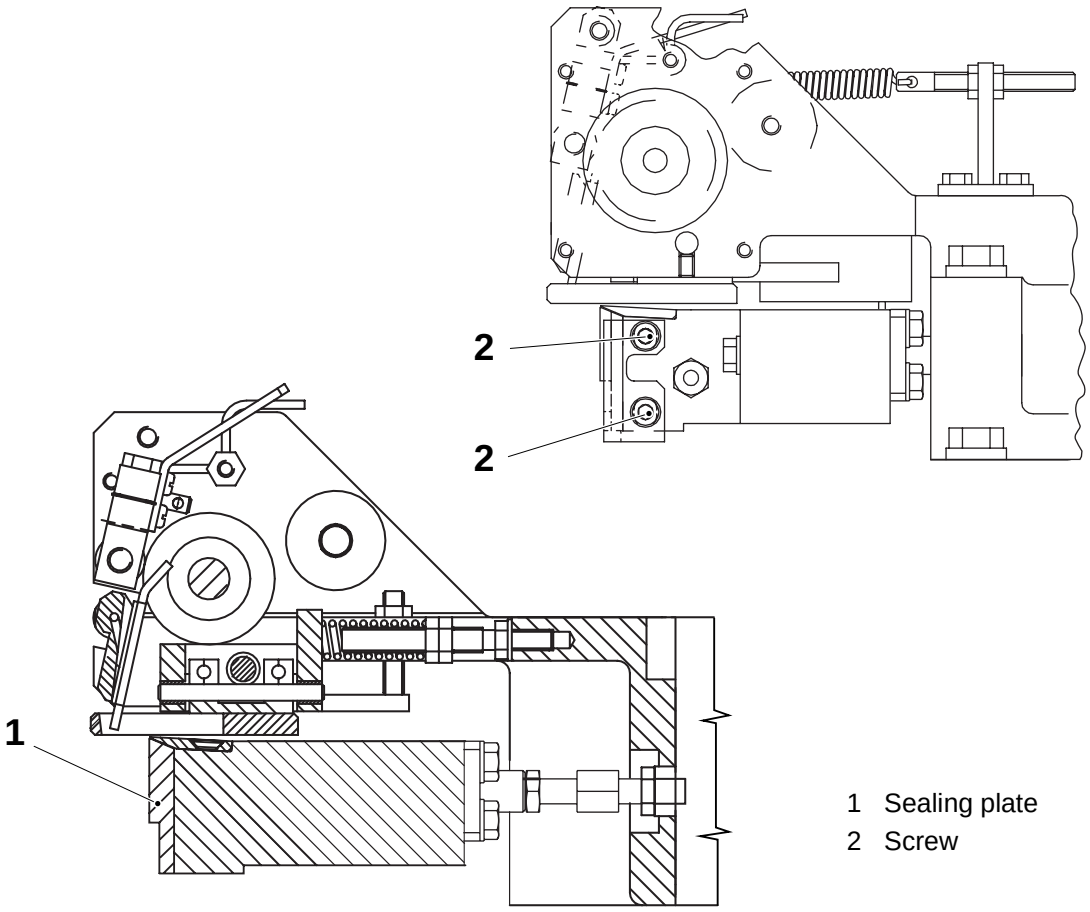

1 Sealing plate
2 Screw

TechPub_2614345_0103 - B5358C02en.fm

3.2.1-11 Patch Feeder - Check Function

Machine Status	Air **OFF** Mains power **OFF**
Consumables	Ethanol
SPC Reference	1260414-0200

Remove the feeder, see 3.2.1-3 Patch Feeder - Remove, and the screws (1).

Check the cutting and feeding functions and then check the following parts on the patch feeder unit:

- the surfaces of the feeder roller (2) and the one-way bearing (3) for wear and/or damage
- the one-way bearing (3) turns freely
- the steer plate (4) is not jammed with IS patch
  Clean any residue of polyethylene on the steer plate (4) with ethanol.

Note! When fitting back the steer plate (4), push it away from the roller (2) while tightening the screws (1). Otherwise the steer plate (4) will touch the roller (2).

- the feeding action by turning the feed knob (5) manually. If required, set the strip feed, see 3.2.1-12 Patch Feeder - Set Strip Feed. Step up to step PRODUCTION and check the feeding action again.

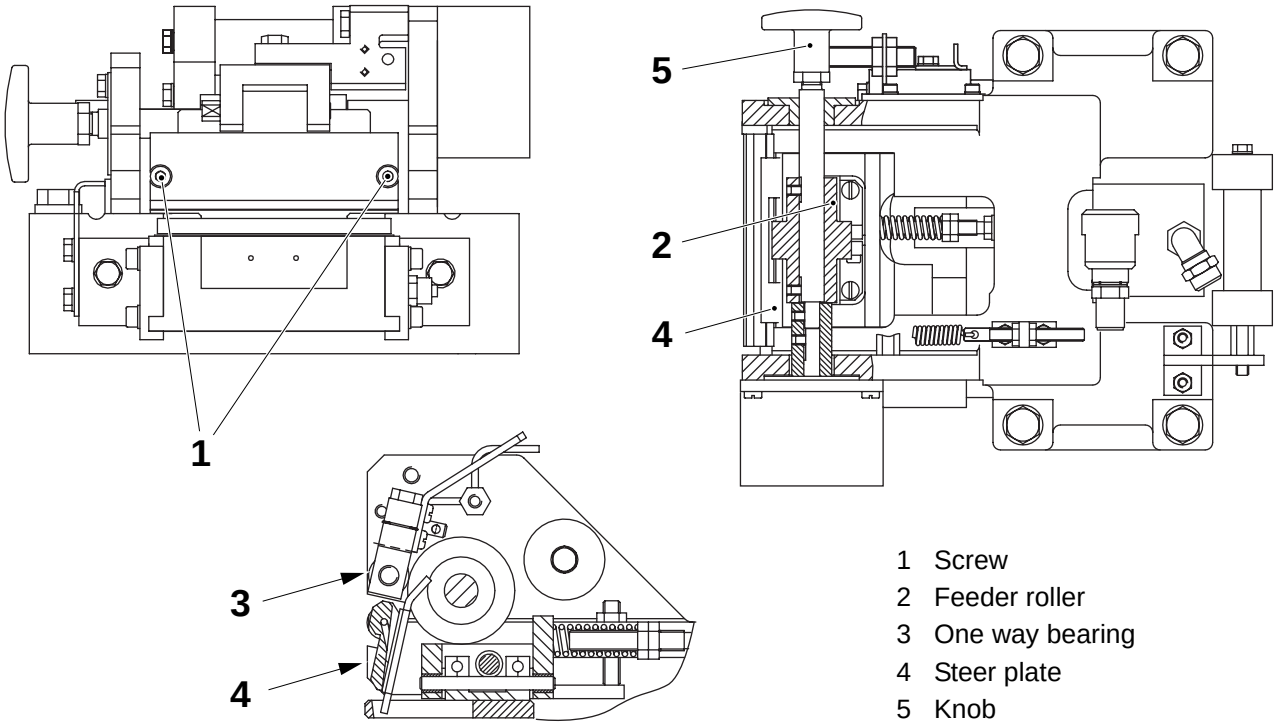

1 Screw
2 Feeder roller
3 One way bearing
4 Steer plate
5 Knob

TechPub_2614345_0103 - B5358C02en.fm

3.2.1-12 Patch Feeder - Set Strip Feed

Machine Status	Air **OFF** Mains power **OFF**
SPC Reference	1260414-0200

a) Place a piece of IS patch between the feeder roller (1) and the one-way bearing (2).

b) Set the distance **A** between the bracket (3) and the screw (4) by means of the nut (5).

c) Adjust the nut (5) until it is **"impossible"** to pull the strip backwards.

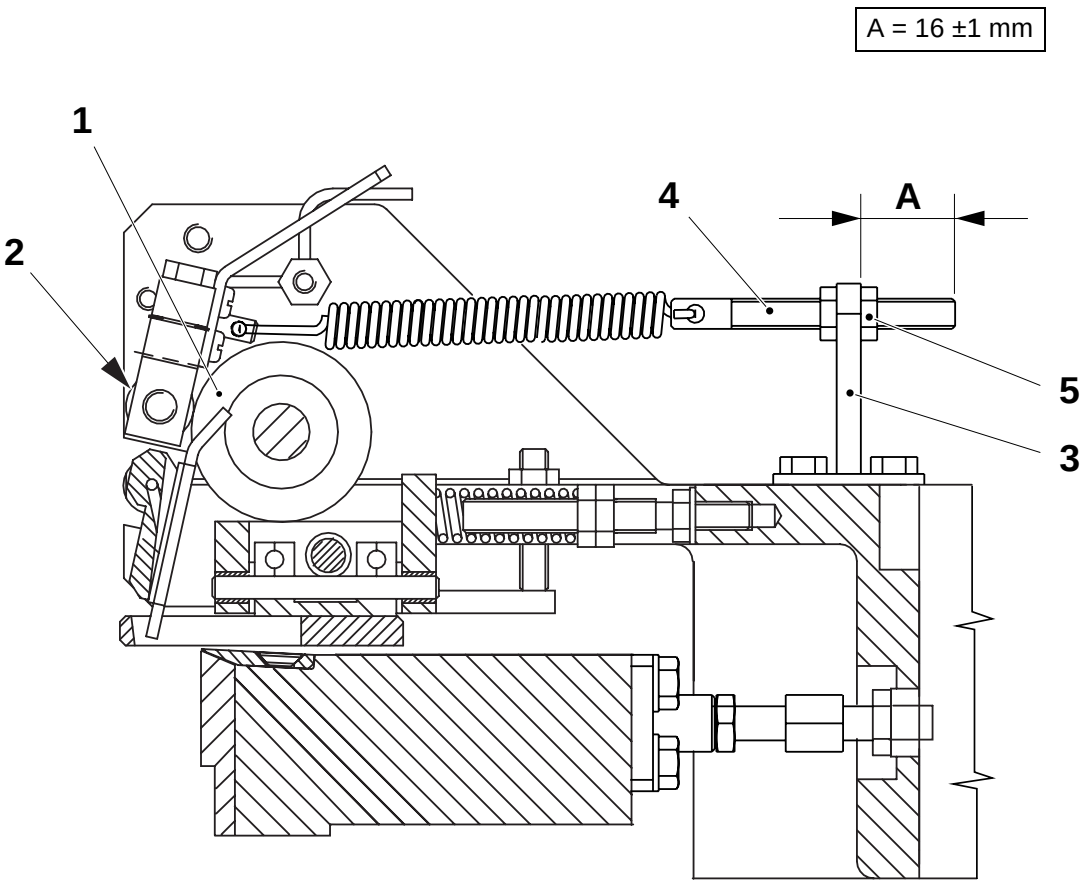

1 Feeder roller
2 One way bearing
3 Bracket
4 Screw
5 Nut

TechPub_2614345_0103 - B5358C02en.fm

3.2.1-13 Patch Feeder - Set Proximity Switch

Machine Status	Air **ON** Mains Power **ON**
SPC Reference	1260414-0200

WARNING

Risk of crushing!

The cylinder piston may move unexpectedly.

a) Switch the selector key, located on the PT21 electrical panel, to position SERVICE.

Note! For an accurate setting, the machine must be threaded. If not, place a piece of packaging material between the heating jaw and the counter jaw.

b) Loosen the nuts (1) and move backwards the proximity switch (2).

c) Activate the valve **Y8410:1** for the cylinder (3).

d) Check that the cylinder (3) is fully extended. If required, set the cushion cylinder, see 3.2.2-6 Patch Counter Jaw - Set Cushion Cylinder.

e) Set the distance **A** between the proximity switch (2) and the flag (4) by means of the nuts (1).

f) Check that the proximity switch (2) LED lights up.

g) Activate the valve **Y8410:2** and check that the cylinder (3) is fully in.

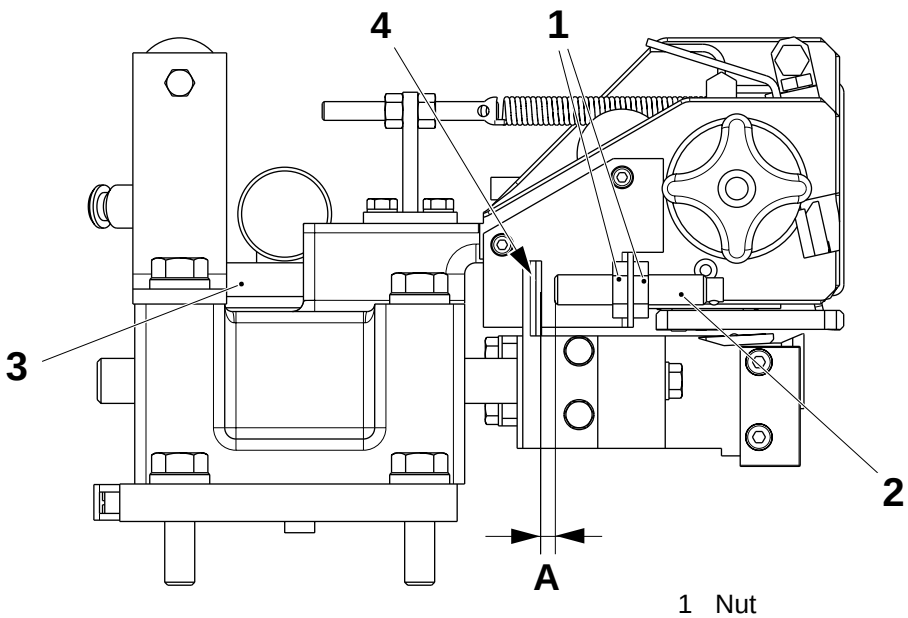

A = 0.1 mm

1 Nut
2 Proximity switch
3 Cylinder
4 Flag

TechPub_2614345_0103 - B5358C02en.fm

3.2.1-14 Patch Feeder - Set Position

Machine Status	PREPARATION
SPC Reference	1260414-0200

WARNING
Risk of burns!
The sealing jaw may be hot. Be careful.

Note! Before carrying out the instructions below make sure that the inductor (2) is correctly positioned according to 7.2.1-1 Applicators - Set Brackets Position items e), f), g) and using the packaging material as a reference.

a) Switch the selector key, located on the PT21 electrical panel, to position SERVICE.

b) Check that the cushion cylinder (1) is fully extended.

c) Check the distance **A** between the inductor (2) and the tip of the window knife (3).

d) Loosen the screws (4) and set the distance **A** by shifting the patch feeder assembly (5).

e) Set the patch counter jaw, see 3.2.2-6 Patch Counter Jaw - Set Cushion Cylinder.

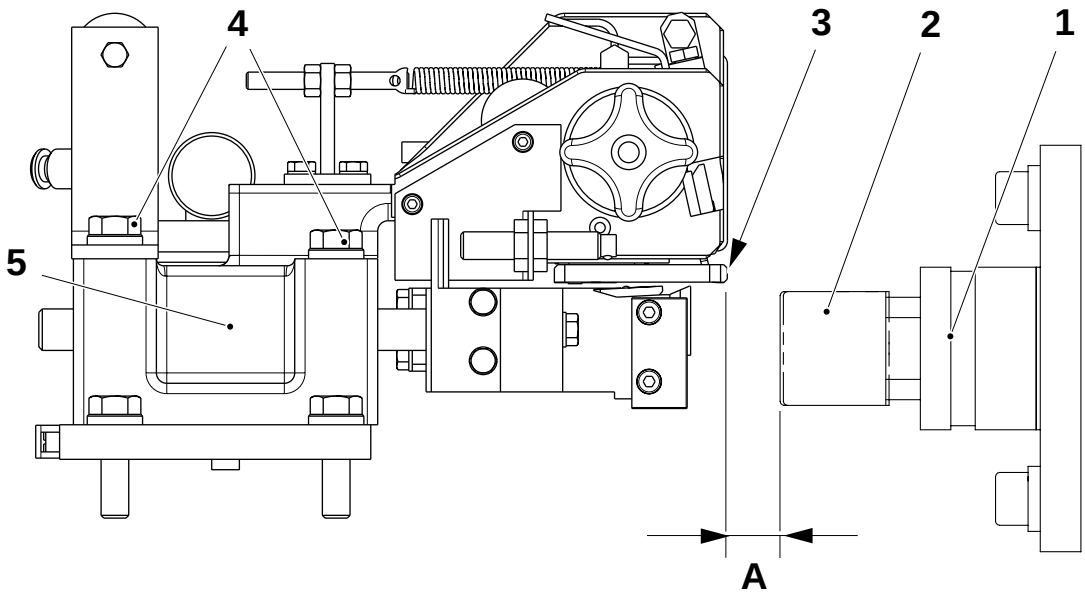

A = 1.5 ±0.2 mm

1 Cushion cylinder
2 Inductor
3 Window knife
4 Screw
5 Patch feeder

TechPub_2614345_0103 - B5358C02en.fm

3.2.1-15 Patch Feeder - Change Shims

Machine Status	Air **OFF** Mains power **OFF**
SPC Reference	1260414-0200

WARNING
Risk of burns!
The sealing jaw may be hot. Be careful.

a) Remove the feeder, see 3.2.1-3 Patch Feeder - Remove.
b) Remove the screws (1) and the plates (2) and (3).
c) Loosen the spring (4) by means of the nuts (5).
d) Loosen the stop screw (6) and remove the shaft (7).
e) Remove the screws (8) and the window knife (9).
f) Remove the shaft (10) and the shims (11).

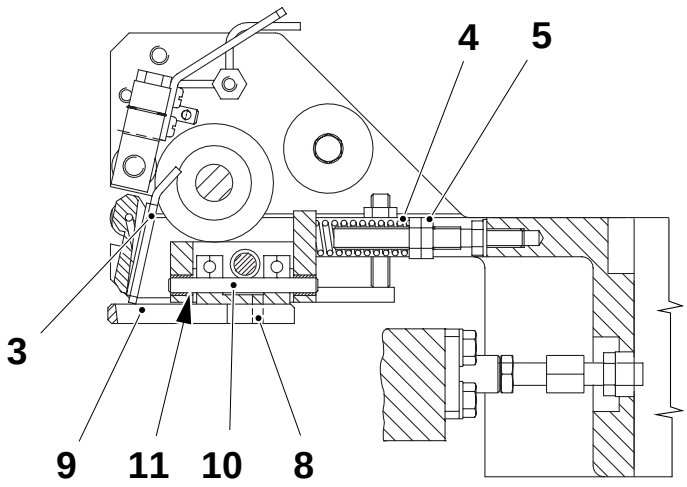

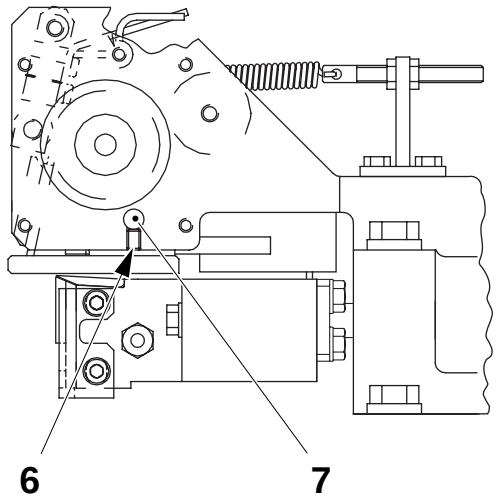

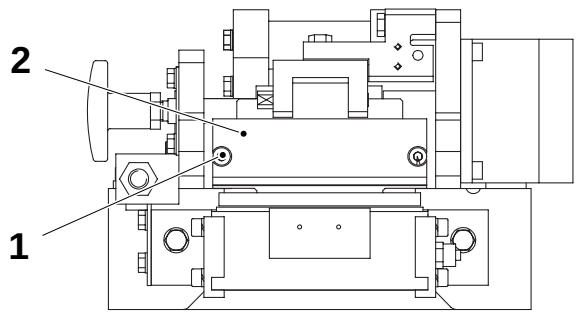

1 Screw
2 Plate
3 Plate
4 Spring
5 Nut
6 Stop screw
7 Shaft
8 Screw
9 Window knife
10 Shaft
11 Shim

(Cont'd)

TechPub_2614345_0103 - B5358C02en.fm

(Cont'd)

g) Push down the pivot plate (12) against the pivot plate (13).

h) Check and note the play **A** between the pivot plate (12) and the pivot plate (13).

i) Put the new shims (14) with a thickness of distance **B** between the pivot plate (12) and the pivot plate (13) on both sides and put back the shaft (10).

Note! The pivot plate (13) must be free to rotate but without axial plays.

j) Assemble in the reverse order.

k) Set the window knife, see 3.2.1-4 Patch Feeder - Set Window Knife.

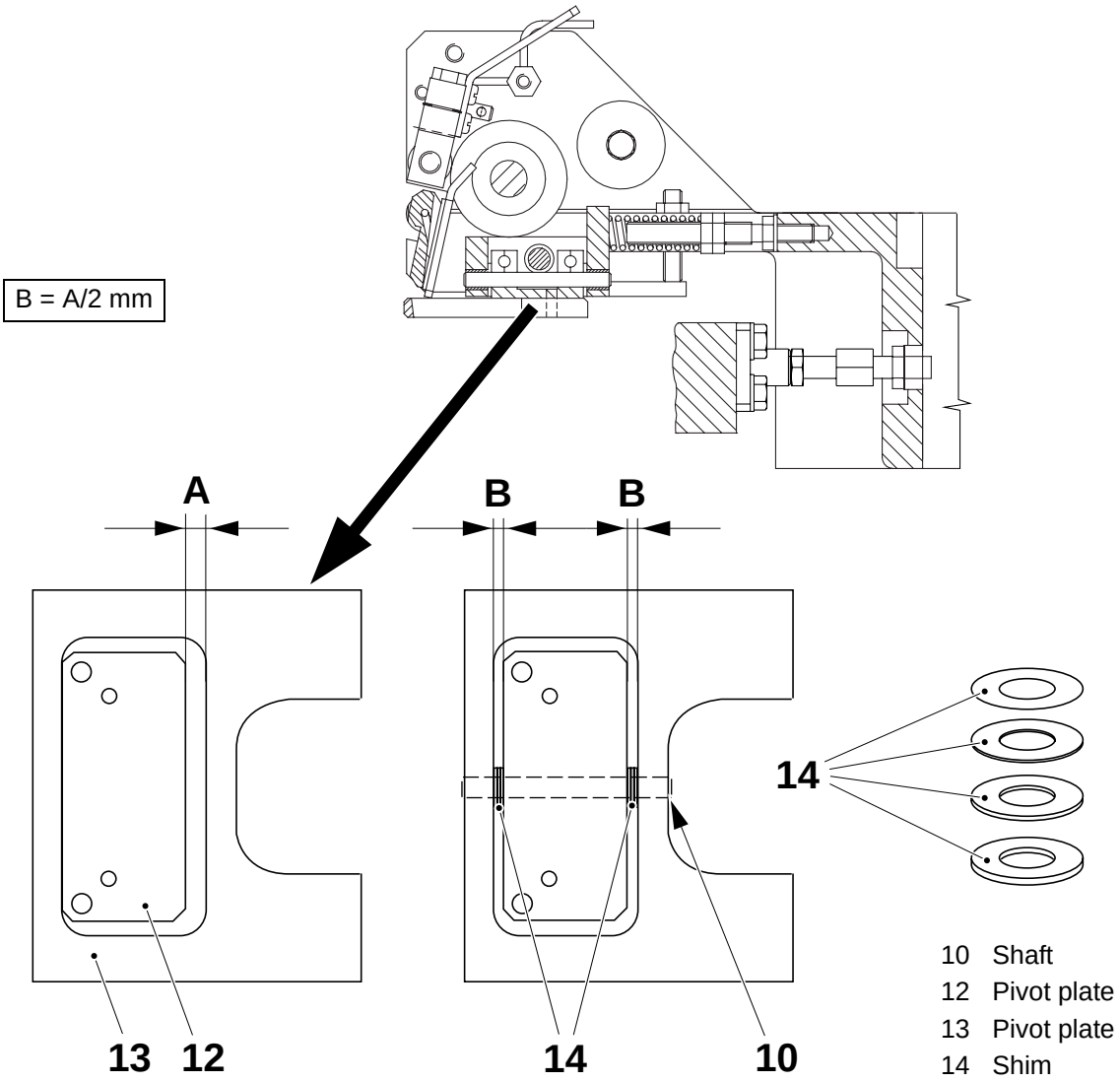

TechPub_2614345_0103 - B5358C02en.fm

3.2.2 Patch Counter Jaw

3.2.2-1 Patch Counter Jaw - Remove

Machine Status	Air **OFF** Mains power **OFF**
SPC Reference	1260417-0200

a) Loosen the screw (1).

b) Disconnect the cable (2) leading to the inductor transformer (3).

c) Disconnect the air hose (4) for the cushion cylinder.

d) Unscrew the screws (5). Slide up the plate (6) to remove the plate (6) with the counter jaw unit attached to it.

e) Assemble in the reverse order.

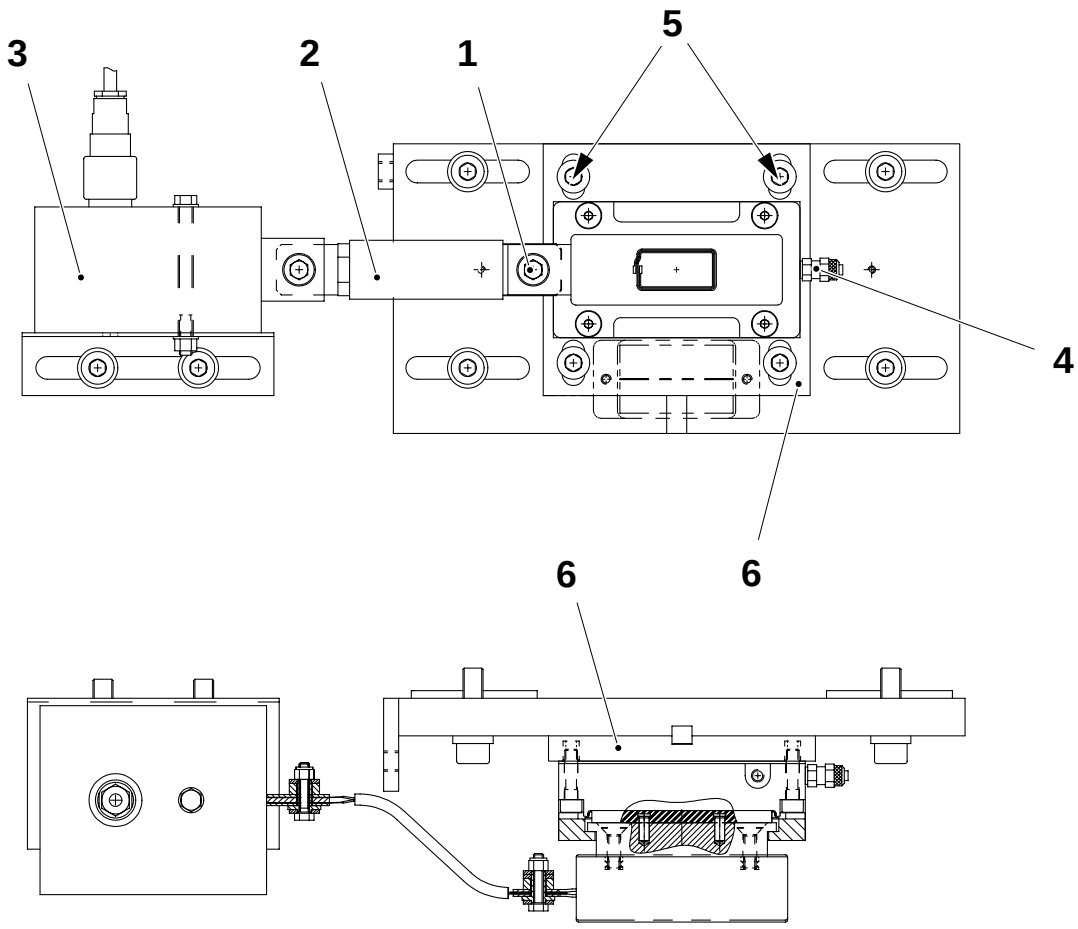

1 Screw
2 Cable
3 Transformer
4 Air hose
5 Screw
6 Plate

TechPub_2614345_0103 - B5358C02en.fm

3.2.2-2 Patch Counter Jaw - Check Inductor

Machine Status	Air **OFF** Mains power **OFF**
Consumables	Teflon™ tape TP No. 90144-30
SPC Reference	1260417-0200

Check the following parts for wear and/or damage:

- the Teflon™ tape (2) on the surface of the inductor (1)
- the surfaces of the inductor (1) for any scratches or other damage
- the surfaces of the inductor (1) for any residue of polyethylene

Change as required.

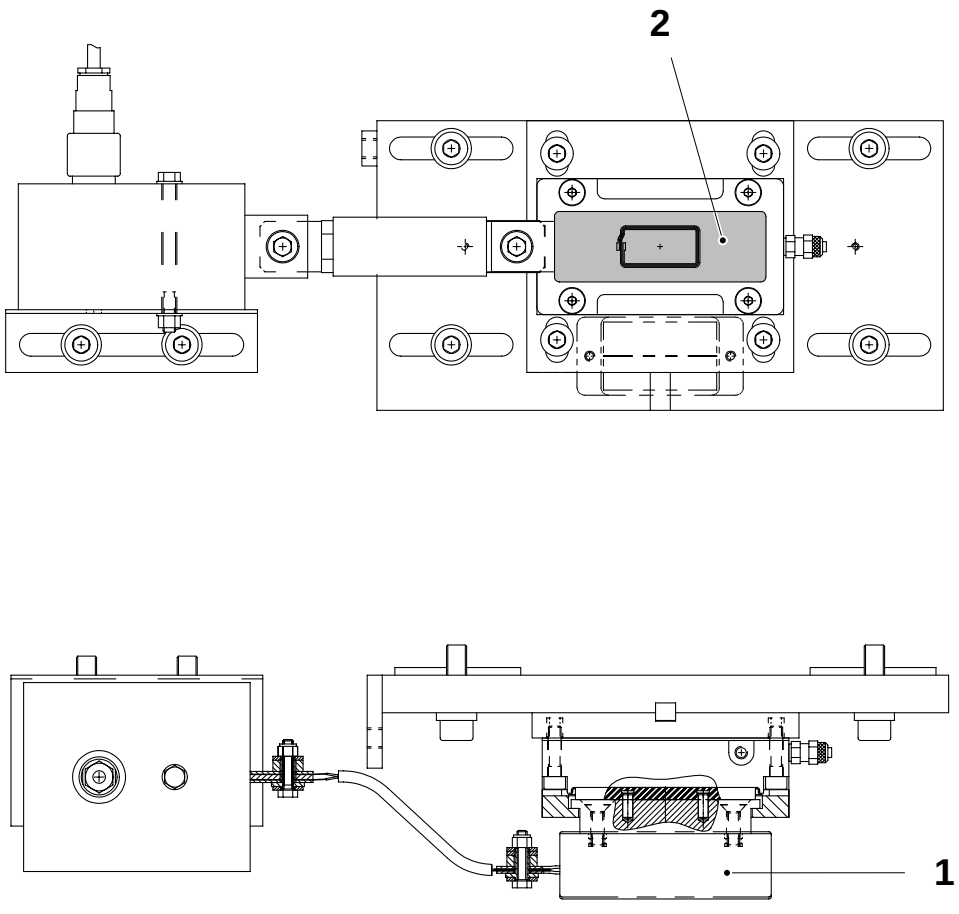

1 Inductor
2 Teflon™ tape

TechPub_2614345_0103 - B5358C02en.fm

3.2.2-3 Patch Counter Jaw - Change Inductor

Machine Status	Air **OFF** Mains power **OFF**
Consumables	Teflon™ tape TP No. 90144-30
SPC Reference	1260417-0200

a) Loosen the screw (1).

b) Disconnect the cable (2) leading to the inductor transformer (3).

c) Disconnect the air hose (4) for the cushion cylinder (5).

d) Remove the screws (8). Slide up the plate (9) to remove the plate (9) together with the counter jaw unit.

e) Remove the screws (6).

f) Remove the guide bushing (11) from the inductor (7) by means of the screws (10).

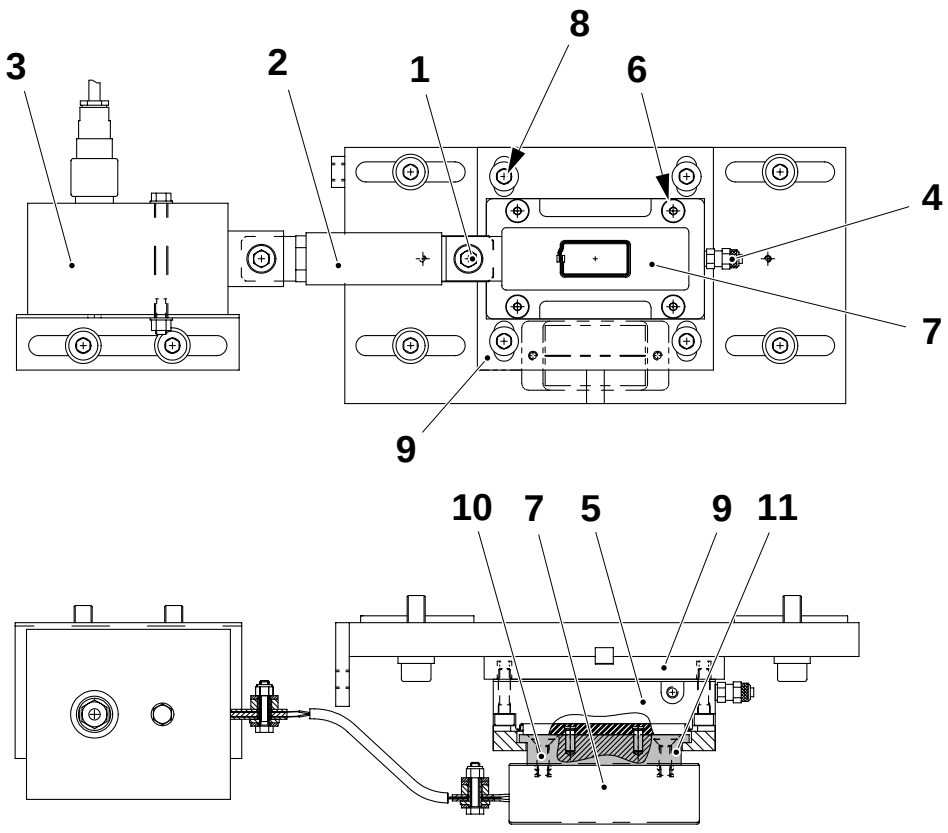

1 Screw
2 Cable
3 Transformer
4 Air hose
5 Cushion cylinder
6 Screw
7 Inductor
8 Screw
9 Plate
10 Screw
11 Guide bushing

(Cont'd)

TechPub_2614345_0103 - B5358C02en.fm

(Cont'd)

Note! Check the condition of the Teflon™ tape and change it as required.

g) Change the inductor (7) and assemble in the reverse order.

h) Set the inductor (7) as required, see 3.2.2-7 Patch Counter Jaw - Set Position.

i) Check the position of the heat pattern, see 3.2-2 Applicator Patch - Check Heat Pattern.

Note! Check the condition of the Teflon™ tape and change it as required.

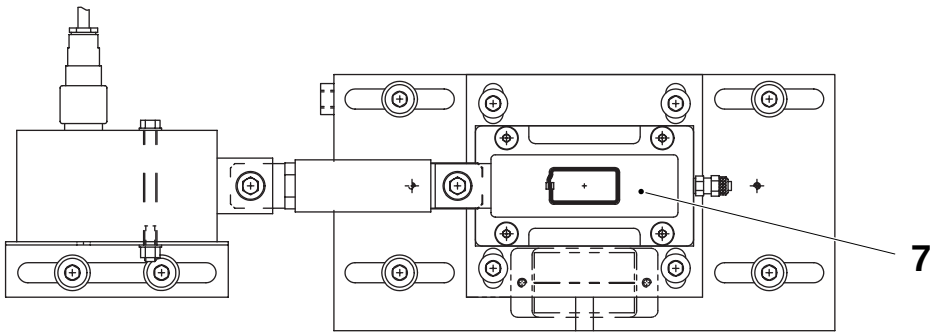

7 Inductor

TechPub_2614345_0103 - B5358C02en.fm

3.2.2-4 Patch Counter Jaw - Check Guide Bushing

Machine Status	Air **OFF** Mains power **OFF**
SPC Reference	1260417-0200

a) Loosen the screw (1).

b) Disconnect the cable (2) leading to the inductor transformer (3).

c) Disconnect the air hose (4) for the cushion cylinder (5).

d) Remove the screws (8). Slide up the plate (9) to remove the plate (9) together with the counter jaw unit.

e) Remove the screws (6).

f) Remove the guide bushing (11) from the inductor (7) by means of the screws (10).

g) Check the guide bushing (11) for wear and change it as required.

Note! Remove the two pins (12) from the old guide bushing (11) and assemble them into the new one.

h) Assemble in the reverse order.

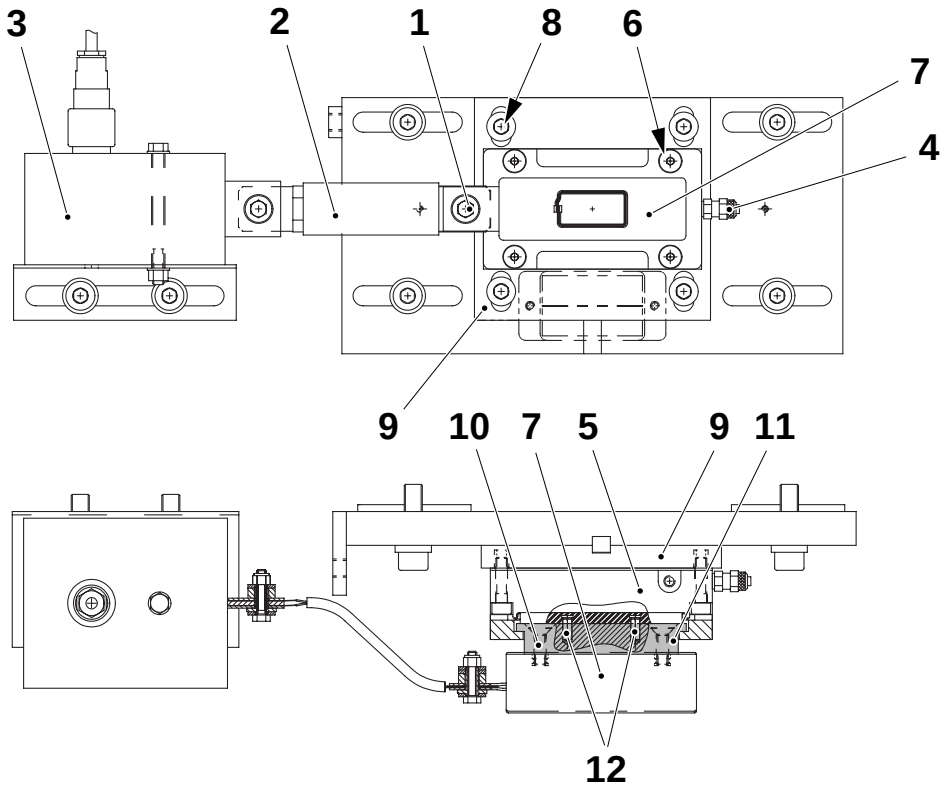

1 Screw
2 Cable
3 Transformer
4 Air hose
5 Cushion cylinder
6 Screw
7 Inductor
8 Screw
9 Plate
10 Screw
11 Guide bushing
12 Pin

TechPub_2614345_0103 - B5358C02en.fm

3.2.2-5 Patch Counter Jaw - Change Cushion Cylinder

Machine Status	Air **OFF** Mains power **OFF**
SPC Reference	1260417-0200

a) Loosen the screw (1).

b) Disconnect the cable (2) leading to the inductor transformer (3).

c) Disconnect the air hose (4) for the cushion cylinder (5).

d) Unscrew the four screws (8). Slide up the plate (9) to remove the plate (9) together with the counter jaw unit.

e) Unscrew the four screws (6) and separate the inductor (7) from the cushion cylinder (5).

f) Unscrew the screw (10) and change the cushion cylinder (5).

g) Assemble in the reverse order.

h) Check that the cylinder reaches the end of its stroke.

i) Set the patch counter jaw, see 3.2.2-7 Patch Counter Jaw - Set Position.

j) Check the position of the heat pattern, see 3.2-2 Applicator Patch - Check Heat Pattern.

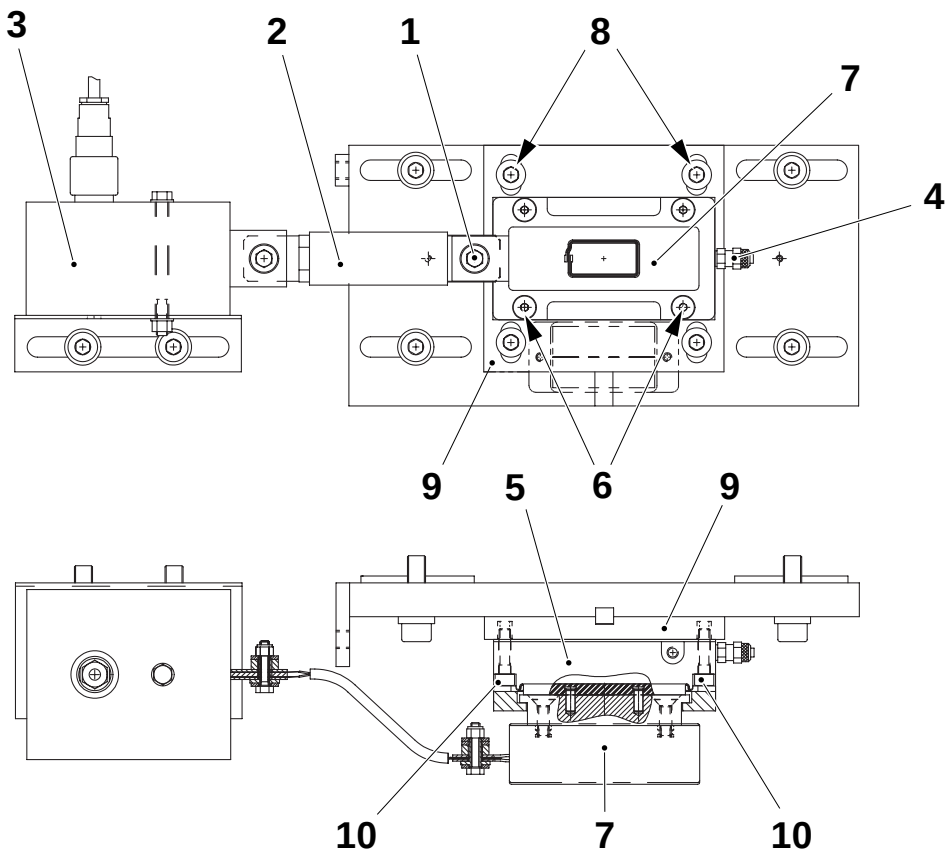

1 Screw
2 Cable
3 Transformer
4 Air hose
5 Cushion cylinder
6 Screw
7 Inductor
8 Screw
9 Plate
10 Screw

TechPub_2614345_0103 - B5358C02en.fm

3.2.2-6 Patch Counter Jaw - Set Cushion Cylinder

Machine Status	PREPARATION
SPC Reference	1260417-0200

WARNING
Risk of burns!
The sealing jaw may be hot. Be careful.

a) Set the patch feeder unit, see 3.2.1-14 Patch Feeder - Set Position.
b) Switch the selector key, located on the PT21 electrical panel, to position SERVICE.
c) Check that the cushion cylinder (6) is fully extended.
d) With the aid of a feeler gauge, measure and record the distance **A** on both sides of the inductor (5).
e) Place a piece of packaging material between the sealing jaw plate (4) and the inductor (5).
f) Activate the valve **Y8410:1** for the cylinder (1).
g) Loosen the locknut (3) and adjust the piston rod (2) until the distance **A** is reduced by **0.8 mm**.
h) Tighten the locknut (3).
i) Activate the valve **Y8410:2** and check that the cylinder (1) is fully in.
j) Set the patch feeder, see 3.2.1-13 Patch Feeder - Set Proximity Switch.

Note! If the difference between the distance **A** on one side and the distance **A** on the other side is more than **0.5 mm**, check the cushion cylinder (6), the inductor (5) and the patch feeder.

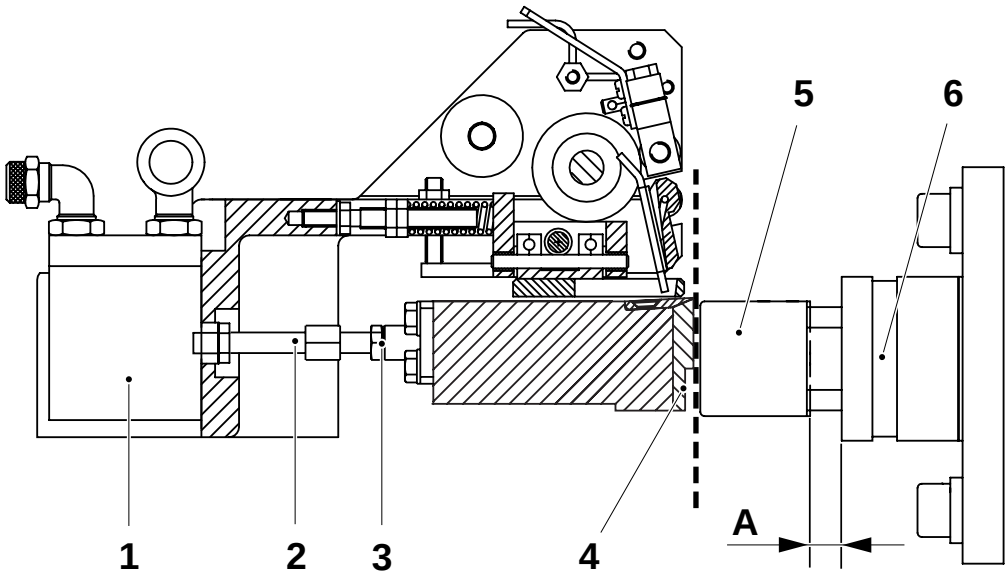

1 Cylinder
2 Piston rod
3 Lock nut
4 Sealing jaw plate
5 Inductor
6 Cushion cylinder

TechPub_2614345_0103 - B5358C02en.fm

3.2.2-7 Patch Counter Jaw - Set Position

Machine Status	PREPARATION
SPC Reference	1260417-0200

WARNING
Risk of burns!
The sealing jaw may be hot. Be careful.

Note! The below instructions must be executed **only** if one of the following sections have been performed: 3.2.2-3 Patch Counter Jaw - Change Inductor, 3.2.2-5 Patch Counter Jaw - Change Cushion Cylinder, 3.2.2-4 Patch Counter Jaw - Check Guide Bushing. If not refer to the basic setting of the counter jaw see 7.2.1-1 Applicators - Set Brackets Position.

a) Switch the selector key, located on the PT21 electrical panel, to position SERVICE.
b) Check that the cushion cylinder (1) is fully extended.
c) Remove the packaging material.
d) Set the distance **A** between the inductor (2) and the tip of the window knife (3) by adding or removing shims (4).
e) Set the cushion cylinder (1), see 3.2.2-6 Patch Counter Jaw - Set Cushion Cylinder.

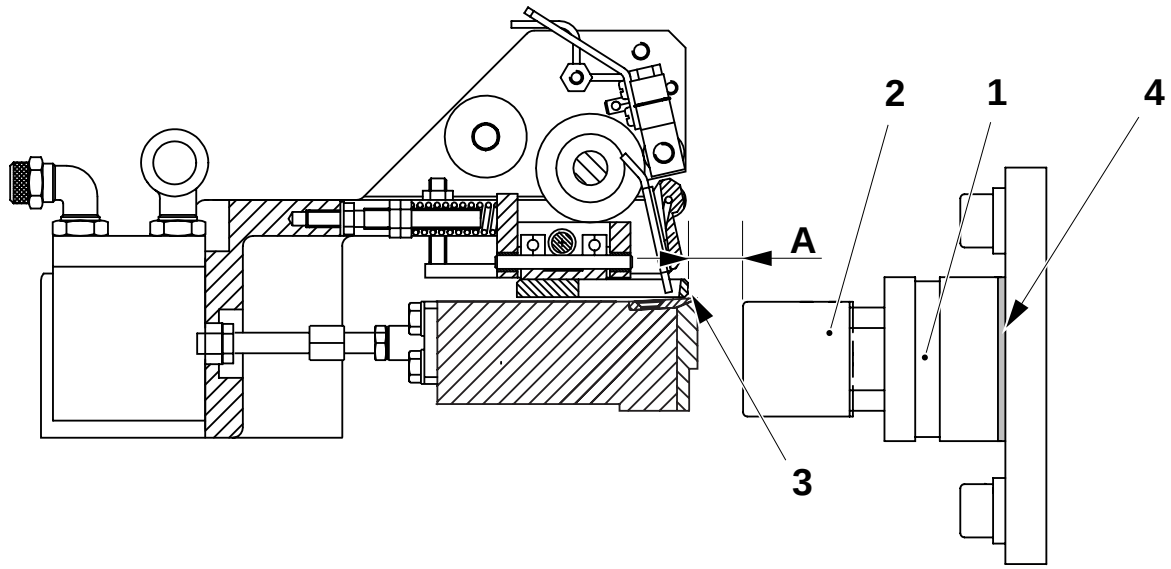

A = 1.5 ±0.2 mm

1 Cushion cylinder
2 Inductor
3 Window knife
4 Shim

TechPub_2614345_0103 - B5358C02en.fm

3.3 Magazine Patch

SPC Reference	1095894-0100

3.3-1 Magazine Patch - Check

Machine Status	Air **OFF** Mains power **ON**
SPC Reference	1095894-0100

Check the following parts for wear and/or damage:

- the wheel (1) and the arm (2)
  Check also that they move freely.
- the brake pin (3)
  Check also the brakes function by pulling the arm (4)
- the arm (4)
  Check also that it moves freely.
- the brake disc (5)
  Check also that it moves freely.

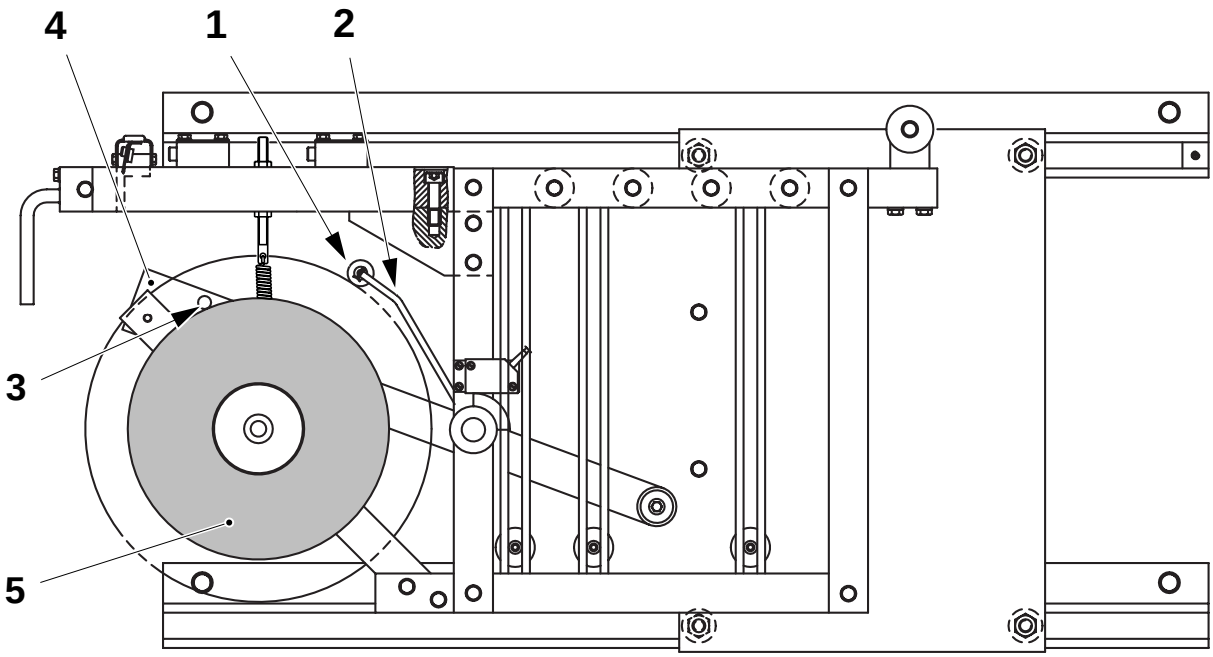

1 Wheel
2 Arm
3 Brake pin
4 Arm
5 Brake disc

(Cont'd)

TechPub_2614345_0103 - B5358C03en.fm

(Cont'd)

- the rollers (6)
  Check that they turn freely. If not, clean as required. If damaged or worn, change.
- the tension rollers (7)
  Check that they turn freely and that they can slide easily along the guide (8). If not, clean as required. If damaged or worn, change.
- the low supply proximity switch (9)
  Check that the proximity switch LED lights up in working conditions. Set the proximity switch as required, see 3.3-2 Magazine Patch - Set Proximity Switch.

Change as required.

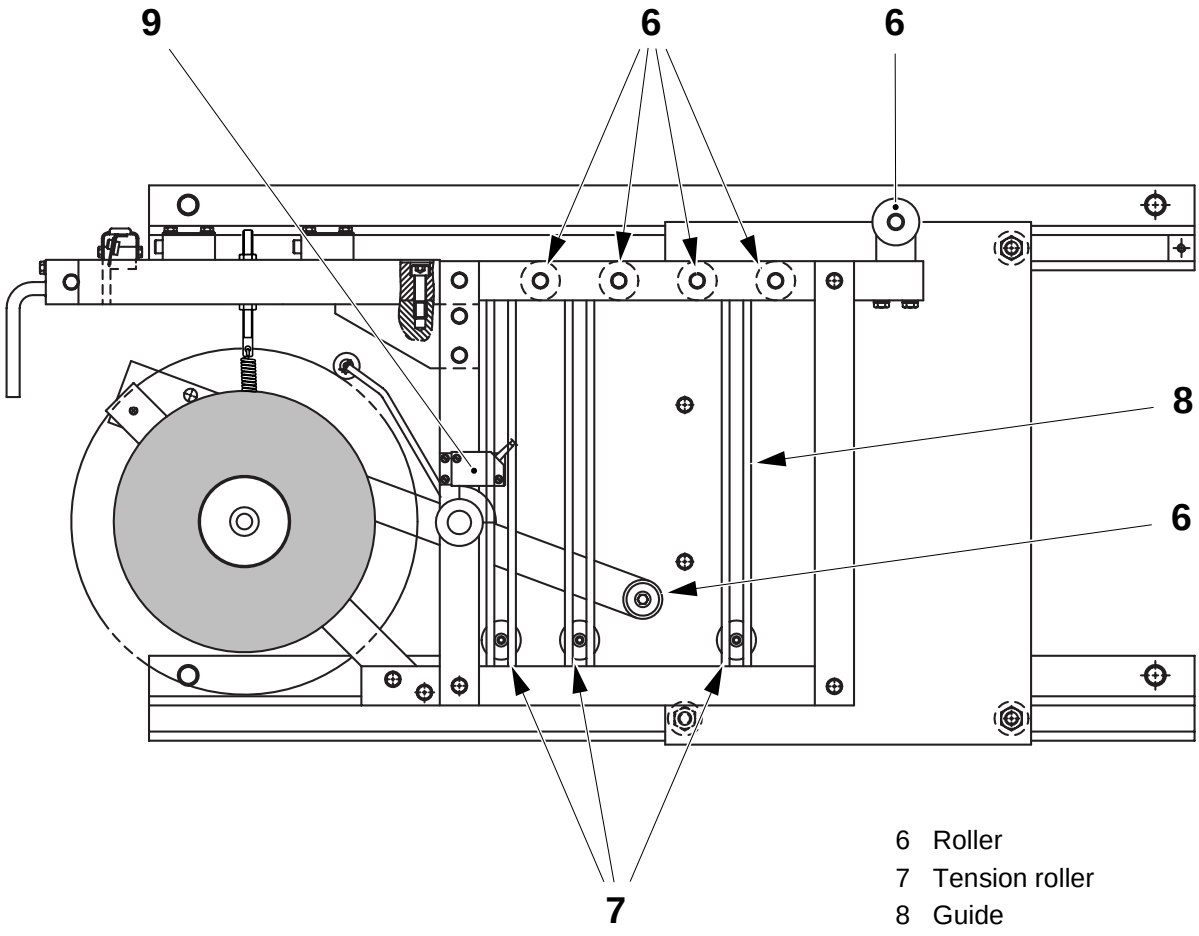

6 Roller
7 Tension roller
8 Guide
9 Proximity switch

TechPub_2614345_0103 - B5358C03en.fm

3.3-2 Magazine Patch - Set Proximity Switch

Machine Status	Air **OFF** Mains power **ON**
SPC Reference	1095894-0100

a) Place a feeler gauge, of **A** thickness, see table below, between the bobbin holder (2) and the wheel (1).

b) Loosen the stop screw on the indicator curve (3) and turn the indicator curve (3) until the LED on the proximity switch (4) goes off.

c) Tighten the stop screw on the indicator curve (3).

d) Remove the feeler gauge.

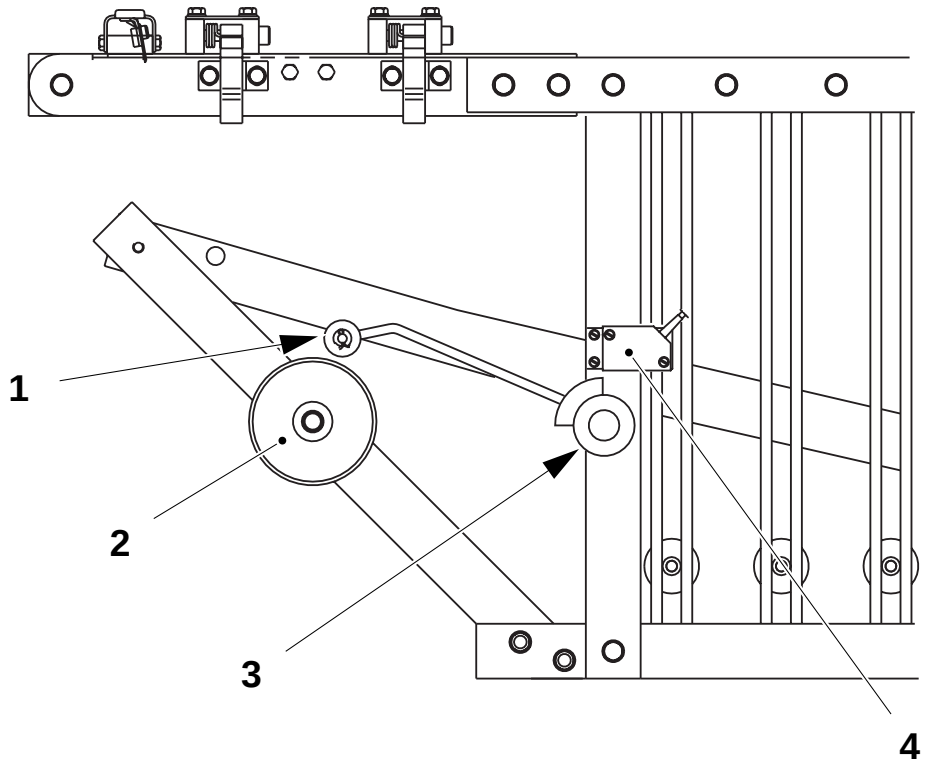

A = 12 mm

1 Wheel
2 Bobbin holder
3 Indicator curve
4 Proximity switch

TechPub_2614345_0103 - B5358C03en.fm

3.3-3 Magazine Patch - Set Strip Tension

Machine Status	Air **OFF** Mains power **OFF**
SPC Reference	1095894-0100

a) Check that the roller (2) operates at the **bottom** of its stroke and that the roller (3) operates at the **top** of its stroke.

b) If necessary, adjust patch strip tension by means of the nuts (1). Raise the spring to decrease tension or lower the spring to increase tension.

Note! Use a new bobbin (full) to verify the setting.

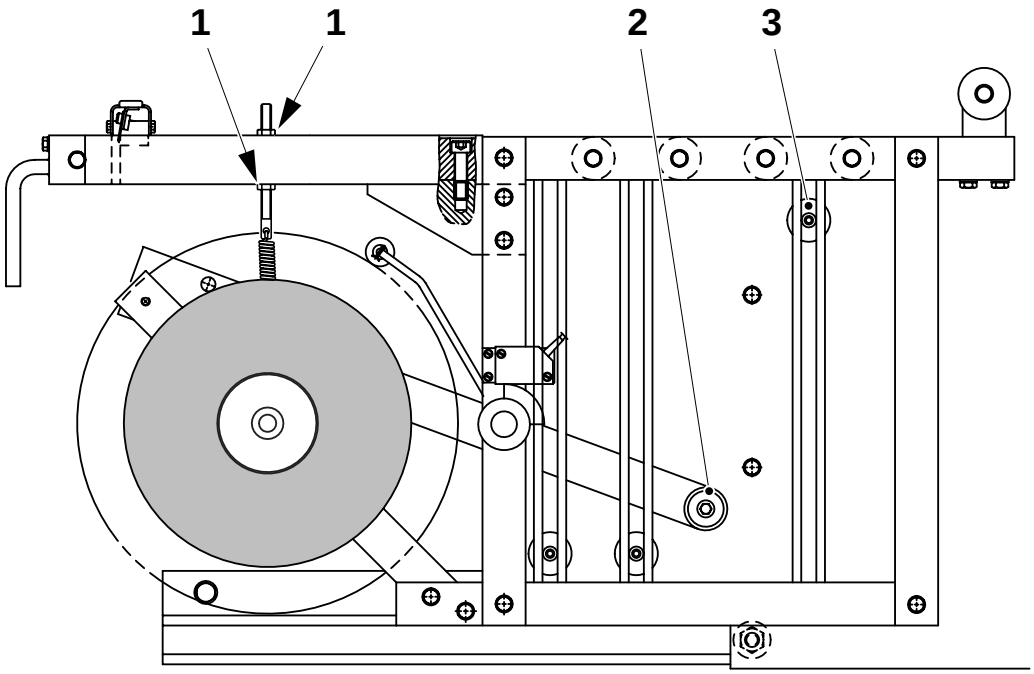

1 Nut
2 Roller
3 Roller

TechPub_2614345_0103 - B5358C03en.fm

3.3-4 Magazine Patch - Change Bobbin Holder Bearings

Machine Status	Air **OFF** Mains power **OFF**
SPC reference	1095894-0100

a) Unscrew the nut (1) and remove the washer (2).
b) Remove the bobbin holder (3) assembly.
c) Unscrew the cap nut (4) and remove the washer and the ball bearing (5).
d) Unscrew the screws (6) and remove the washer and the brake disc (7).
e) Pull out the shaft (8) and the washer (9).
f) Remove the circlip (10) and remove the ball bearing (11).
g) Change the ball bearings (5) and (11).
h) Assemble in the reverse order.

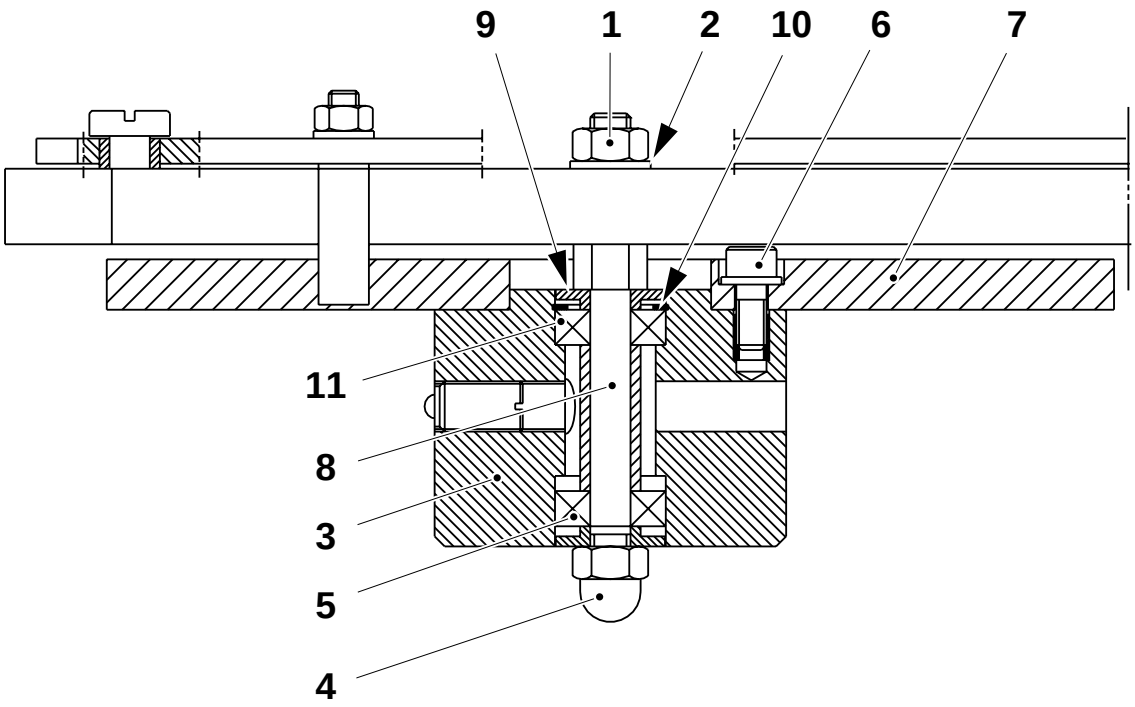

1 Nut
2 Washer
3 Bobbin holder
4 Cap nut
5 Ball bearing
6 Screw
7 Brake disc
8 Shaft
9 Washer
10 Circlip
11 Ball bearing

TechPub_2614345_0103 - B5358C03en.fm

3.3-5 Magazine Patch - Check Bobbin Holder

Machine Status	Air **OFF** Mains power **OFF**
SPC reference	1095894-0100

Check that the bobbin holder (1) rotates easily.

Check the distance **A** between the spring-loaded screw (2) and the bobbin holder (1).

Check that the strip bobbins are securely fixed to the bobbin holder (1).

A = 2.0 ±0.5 mm

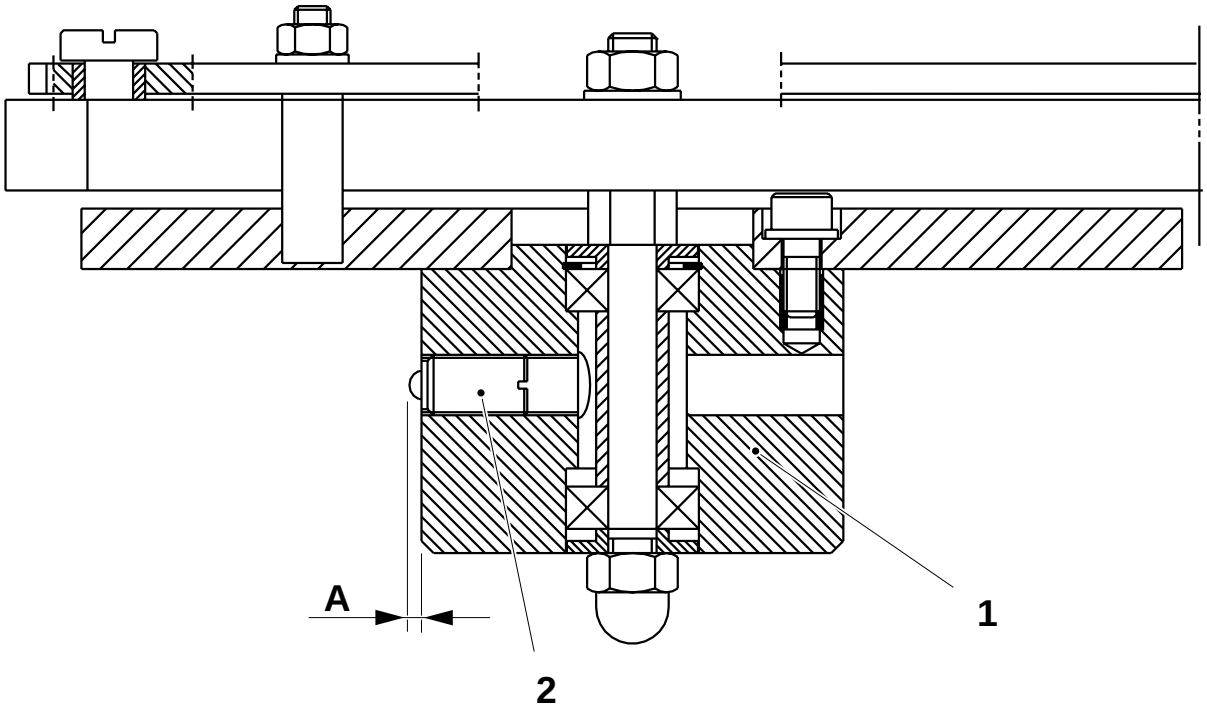

1 Bobbin holder
2 Spring-loaded screw

TechPub_2614345_0103 - B5358C03en.fm

3.3.1 Splicing Device

3.3.1-1 Splicing Device - Check Function

Machine Status	Air **OFF** Mains power **OFF**
SPC Reference	1095894-0100 1095895-0100

Check that the splicing device (1) slides smoothly and easily on the guide patch (2). If not, change the curve roller (3) on the guide patch (2), see 3.3.2-1 Guide Patch - Change Curve Rollers.

Check that the cutting action of the knife (4) is correct. If not, change the knife (4), see 3.3.1-2 Splicing Device - Change Knife.

Check that the lock grips (5) and the knife holder (6) spring to a position that does not interfere with the IS patch feeding.

Change as required.

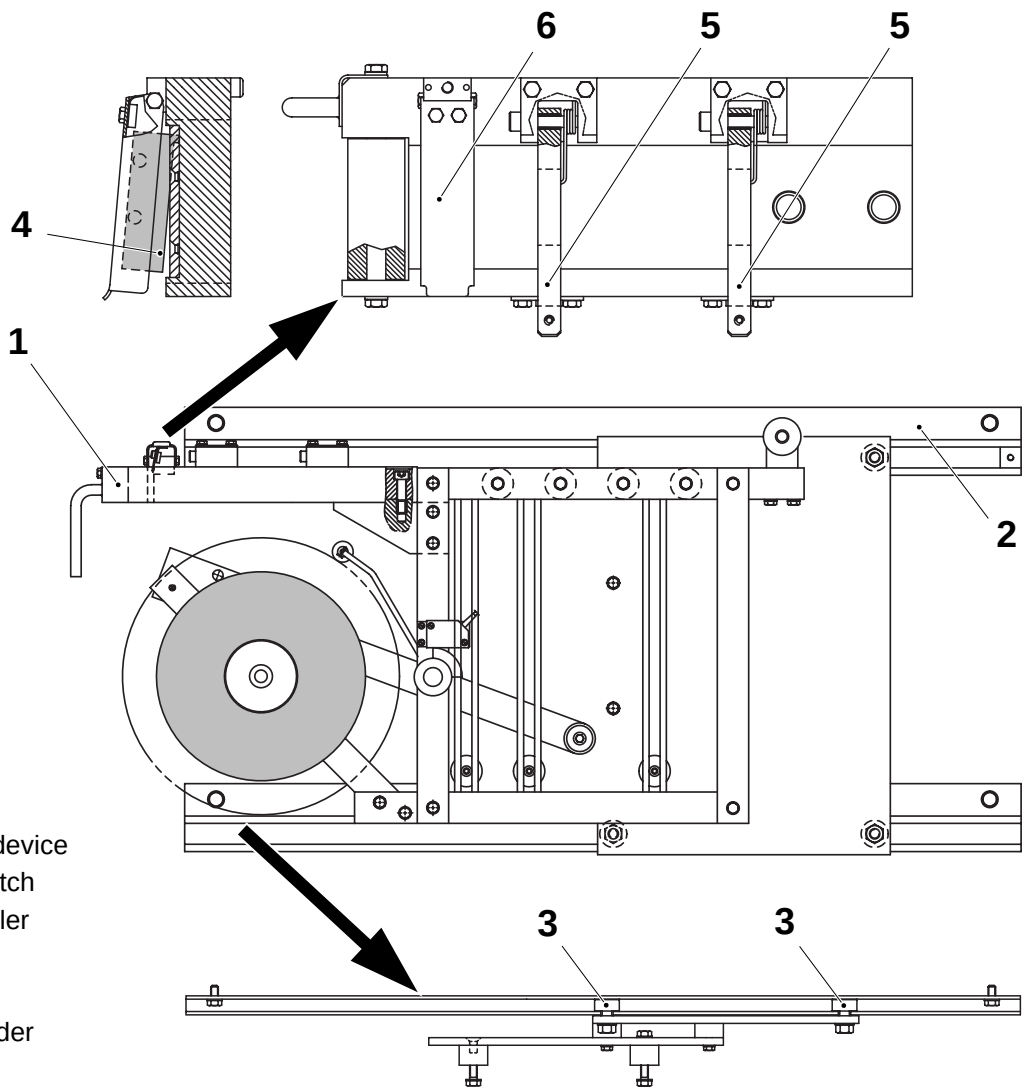

1 Splicing device
2 Guide patch
3 Curve roller
4 Knife
5 Lock grip
6 Knife holder

TechPub_2614345_0103 - B5358C03en.fm

3.3.1-2 Splicing Device - Change Knife

Machine Status	Air **OFF** Mains power **OFF**
SPC Reference	1095894-0100 1095895-0100

WARNING

Risk of cutting injury!

The knife (4) is sharp. Use gloves to avoid injuries.

a) On the side of the knife holder (1), unscrew the two screws (2) with the aid of an allen key.

b) Remove the washers (3).

c) Pull out the knife (4).

d) Change the knife (4).

e) Assemble in the reverse order.

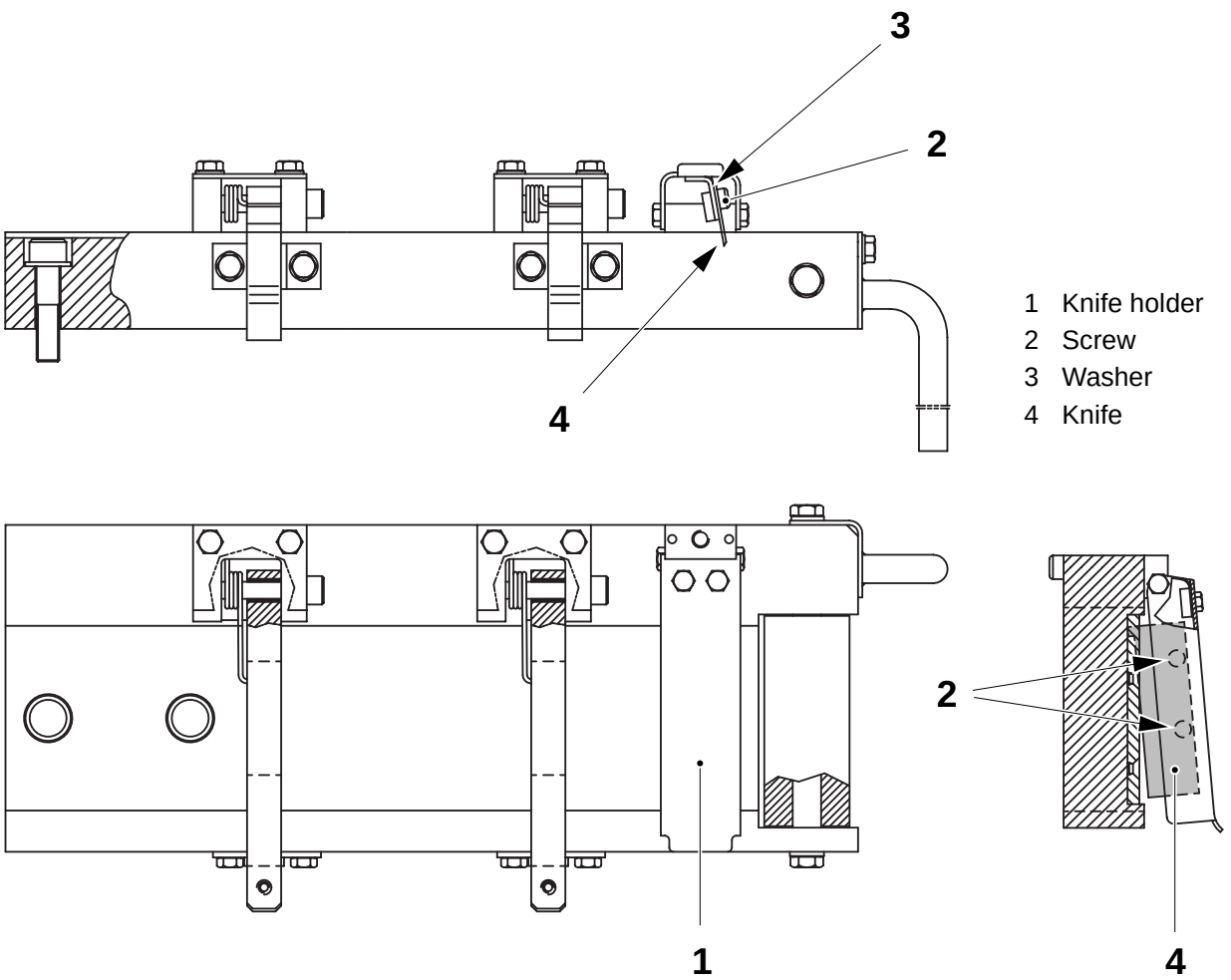

1 Knife holder
2 Screw
3 Washer
4 Knife

TechPub_2614345_0103 - B5358C03en.fm

3.3.1-3 Splicing Device - Set Lock Grip

Machine Status	Air **OFF** Mains power **OFF**
SPC Reference	1095894-0100 1095895-0100

a) Place a piece of strip under the lock grips (1).

b) Loosen the screws (2).

c) Adjust the plate (3) so that it is **“impossible”** to pull the patch strip backwards and/or forwards.

d) Tighten the screws (2).

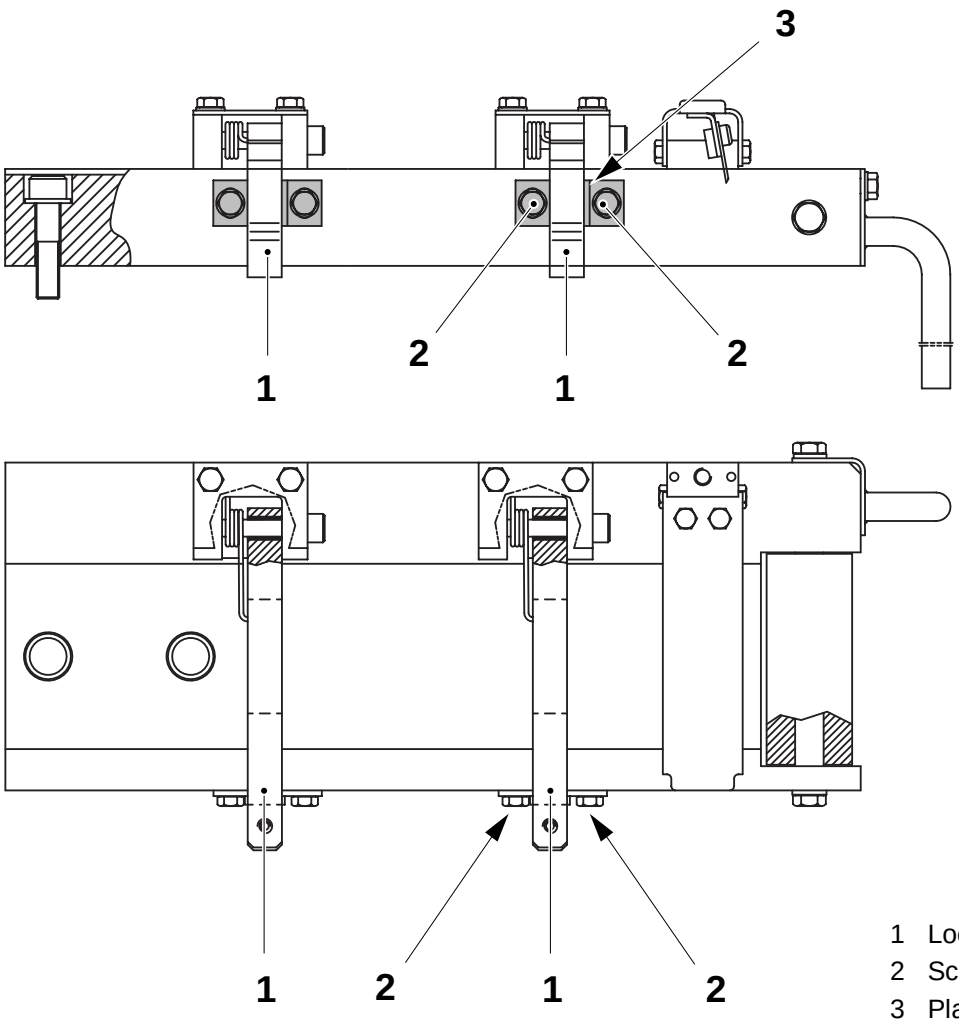

1 Lock grip
2 Screw
3 Plate

TechPub_2614345_0103 - B5358C03en.fm

3.3.2 Guide Patch

3.3.2-1 Guide Patch - Change Curve Rollers

Machine Status	Air **OFF** Mains power **OFF**
SPC Reference	1095924-0100

a) Remove the patch turning device assembly from the guide patch.
b) Unscrew the screws (1).
c) Remove the plate (2) and the strip magazine assembly together.
d) Remove the four nuts (3) and the plate (4).
e) Unscrew the screws (5) and remove the two steerings (6).
f) Remove the curve rollers (7) and change them if damaged or worn out.
g) Assemble in the reverse order.

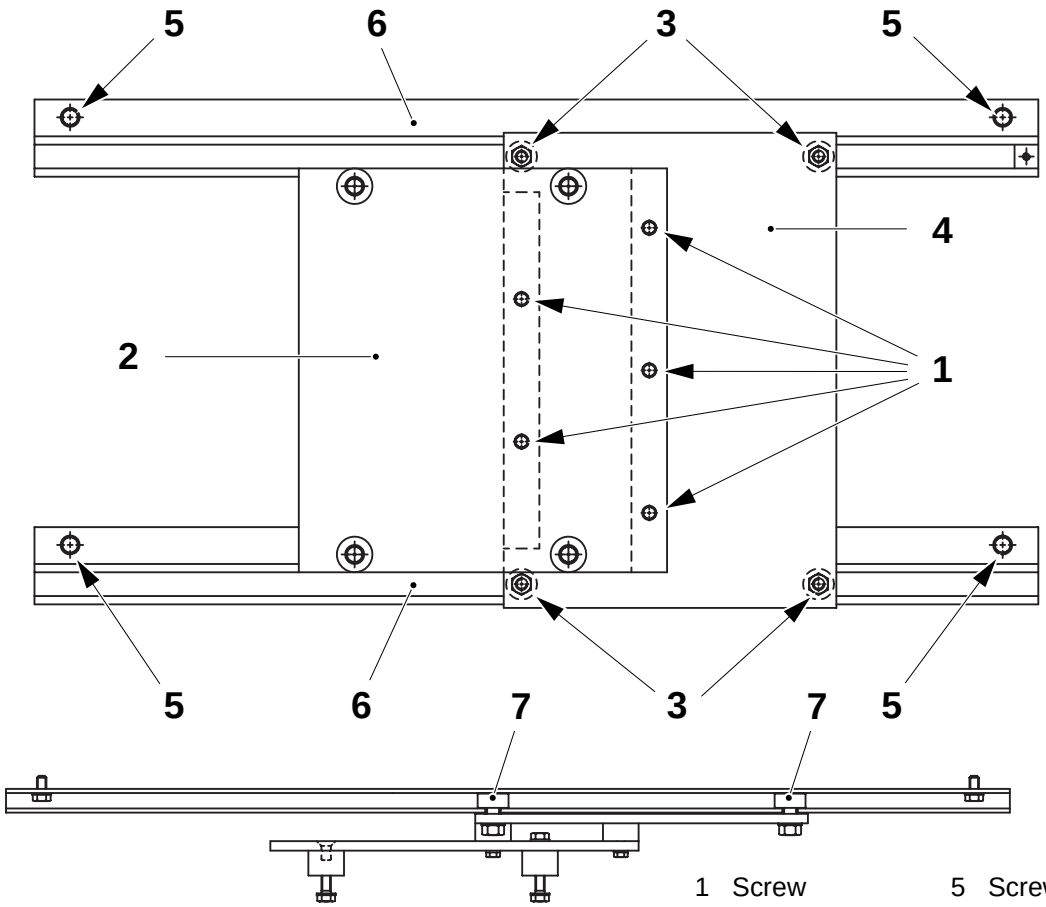

1 Screw
2 Plate
3 Nut
4 Plate
5 Screw
6 Steering
7 Curve roller

TechPub_2614345_0103 - B5358C03en.fm

3.3.3 Patch Turning Device

3.3.3-1 Patch Turning Device - Check

Machine Status	Air **OFF** Mains power **ON**
SPC Reference	1334065-0200

Check the following parts for wear and/or damage:

- the rollers (1)
  Check that they turn freely. If not, clean as required. If damaged or worn, change.
- the flag (2)
  Check that it turns freely simultaneously with the roller (1).
- the function of the rotation monitor proximity switch (3)
  Turn the flag (2) and check that the switch LED lights up when the flag covers the switch source. Set the flag (2) as required, see 3.3.3-2 Patch Turning Device - Set Rotation Monitor Proximity Switch.

Change as required.

TechPub_2614345_0103 - B5358C03en.fm

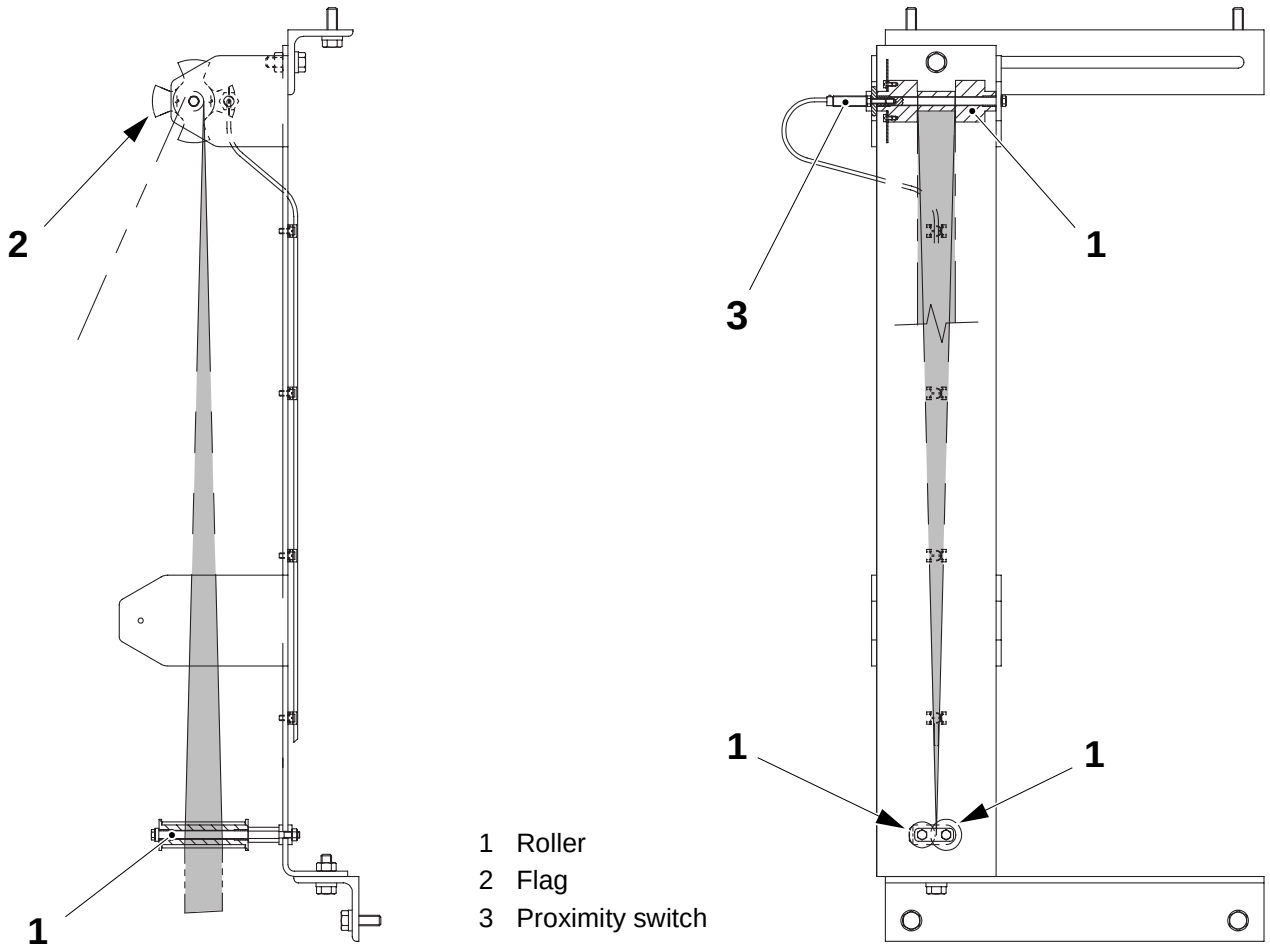

1 Roller
2 Flag
3 Proximity switch

3.3.3-2 Patch Turning Device - Set Rotation Monitor Proximity Switch

Machine Status	Air **OFF** Mains power **ON**
SPC Reference	1334065-0200

a) On the patch turning unit, pull the roller (1) towards the proximity switch (2).

b) Check the distance **A** between the proximity switch (2) and the flag (3).

c) Set as required by loosening the lock nuts (4) and shifting the proximity switch (2).

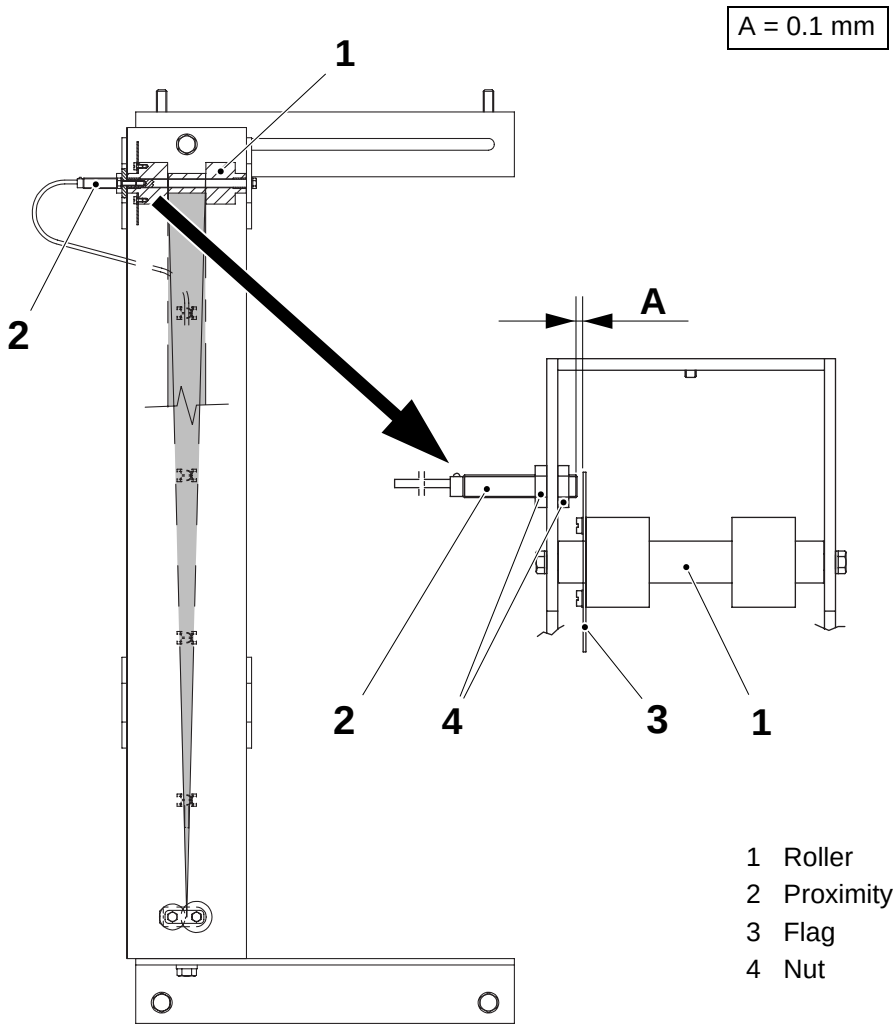

1 Roller
2 Proximity switch
3 Flag
4 Nut

TechPub_2614345_0103 - B5358C03en.fm

4 Applicator Tab

TechPub_2614345_0103 - B5358D00en.fm

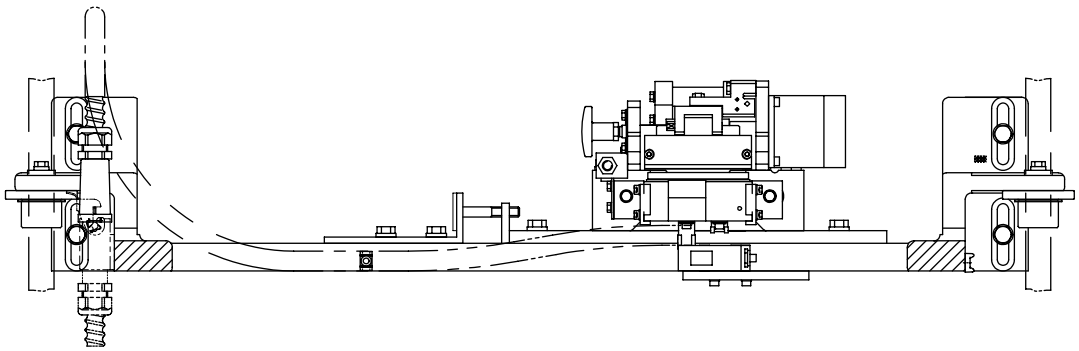

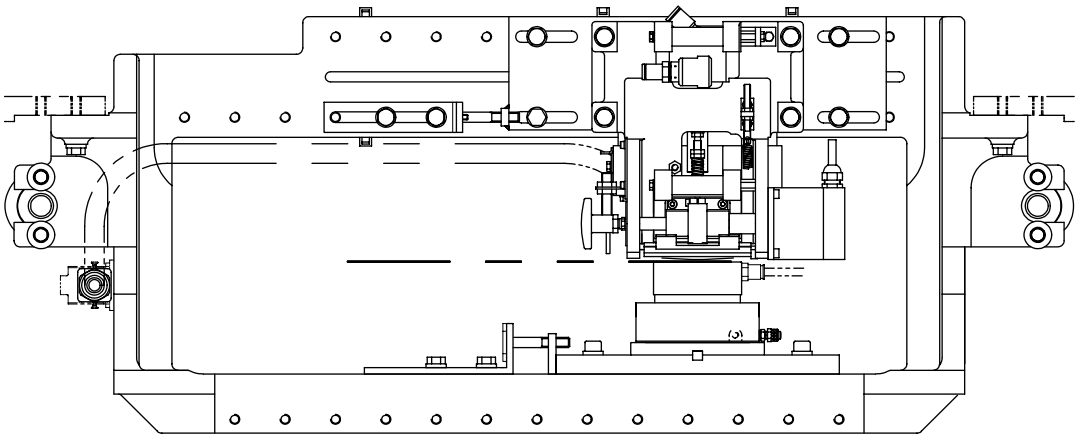

Applicator Tab - Description

SPC Reference	1260421-0200

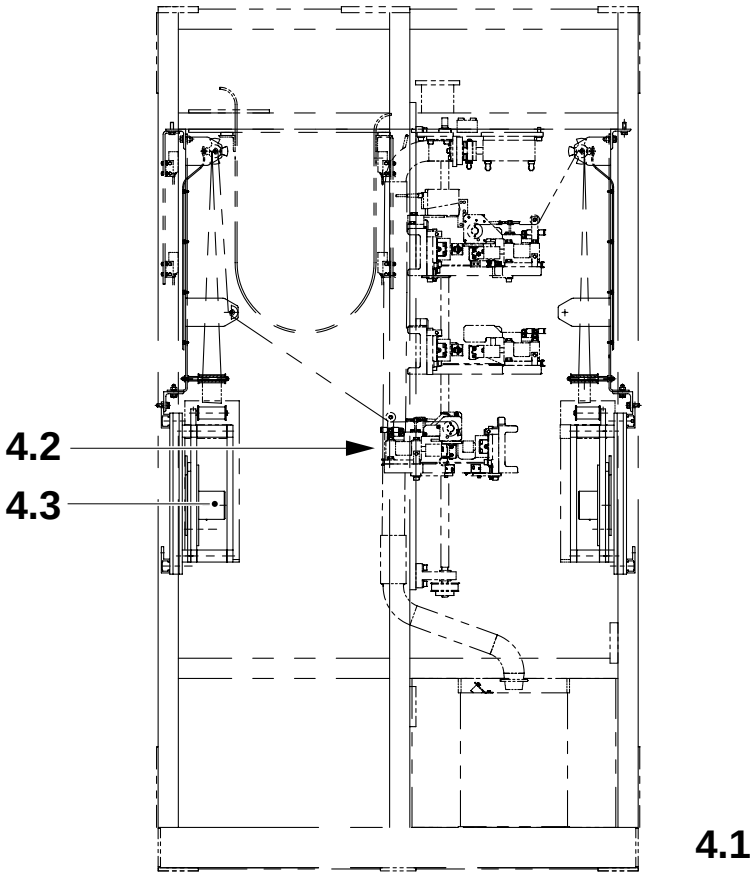

4.1 Setting Flow Chart
4.2 Applicator Tab
4.3 Magazine Pulltab

TechPub_2614345_0103 - B5358D00en.fm

4-1 Applicator Tab - Functional Description . . . . . 4 - 5

4.1 Setting Flow Chart . . . . . 4 - 9

4.2 Applicator Tab . . . . . 4 - 10

4.2-1 Applicator Tab - Check Tab Position . . . . . 4 - 10

4.2-2 Applicator Tab - Set Tab Counter Jaw Position . . . . . 4 - 15

4.2.1 Tab Feeder . . . . . 4 - 17

4.2.1-1 Tab Feeder - Check Knives . . . . . 4 - 17

4.2.1-2 Tab Feeder - Change Knives . . . . . 4 - 18

4.2.1-3 Tab Feeder - Remove . . . . . 4 - 20

4.2.1-4 Tab Feeder - Set Window Knife . . . . . 4 - 21

4.2.1-5 Tab Feeder - Set Sealing Plate . . . . . 4 - 22

4.2.1-6 Tab Feeder - Check Guides and Linear Bearings . . . . . 4 - 24

4.2.1-7 Tab Feeder - Change Linear Bearings . . . . . 4 - 25

4.2.1-8 Tab Feeder - Check Tab Position . . . . . 4 - 26

4.2.1-9 Tab Feeder - Change Bushings . . . . . 4 - 27

4.2.1-10 Tab Feeder - Change Cylinder . . . . . 4 - 29

4.2.1-11 Tab Feeder - Check Sealing Plate . . . . . 4 - 30

4.2.1-12 Tab Feeder - Check Function . . . . . 4 - 31

4.2.1-13 Tab Feeder - Set Tab Feed . . . . . 4 - 32

4.2.1-14 Tab Feeder - Set Proximity Switch . . . . . 4 - 33

4.2.1-15 Tab Feeder - Set Position . . . . . 4 - 34

4.2.1-16 Tab Feeder - Change Heater and Thermocouple . . . . . 4 - 35

4.2.2 Tab Counter Jaw . . . . . 4 - 37

4.2.2-1 Tab Counter Jaw - Remove . . . . . 4 - 37

4.2.2-2 Tab Counter Jaw - Change Counter Plate . . . . . 4 - 38

4.2.2-3 Tab Counter Jaw - Check Guide Bushing . . . . . 4 - 39

4.2.2-4 Tab Counter Jaw - Change Cushion Cylinder . . . . . 4 - 40

4.2.2-5 Tab Counter Jaw - Set Cushion Cylinder . . . . . 4 - 41

4.2.2-6 Tab Counter Jaw - Set Position . . . . . 4 - 42

TechPub_2614345_0103 - B5358D00en.fm

4.3 Magazine Pulltab . . . . . 4 - 43

4.3-1 Magazine PullTab - check . . . . . 4 - 43

4.3-2 Magazine Pulltab - Set Proximity Switch . . . . . 4 - 45

4.3-3 Magazine Pulltab - Set Strip Tension . . . . . 4 - 46

4.3-4 Magazine Pulltab - Change Bobbin Holder Bearings . . . . . 4 - 47

4.3-5 Magazine Pulltab - Check Bobbin Holder . . . . . 4 - 48

4.3.1 Splicing Device . . . . . 4 - 49

4.3.1-1 Splicing Device - Check Function . . . . . 4 - 49

4.3.1-2 Splicing Device - Change Knife . . . . . 4 - 50

4.3.1-3 Splicing Device - Set Lock Grip . . . . . 4 - 51

4.3.2 Guide Pulltab . . . . . 4 - 52

4.3.2-1 Guide Pulltab - Change Curve Rollers . . . . . 4 - 52

4.3.3 Tab Turning Device . . . . . 4 - 53

4.3.3-1 Tab Turning Device - Check . . . . . 4 - 53

4.3.3-2 Tab Turning Device - Set Rotation Monitor Proximity Switch . . . . . 4 - 54

TechPub_2614345_0103 - B5358D00en.fm

4-1 Applicator Tab - Functional Description

SPC Reference	1260421-0200

When the filling machine pulls packaging material:

- the PLC begins machine cycle
- the PLC sends a signal to the TMCC card to start indexing
- the TMCC card sends the pulses to the stepper drive card.

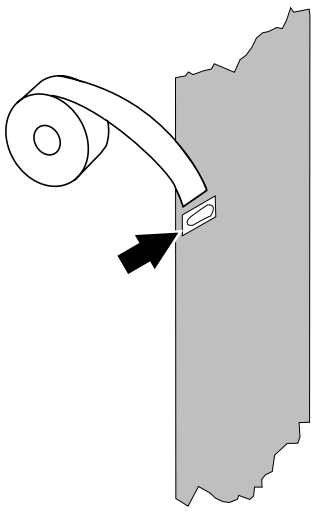

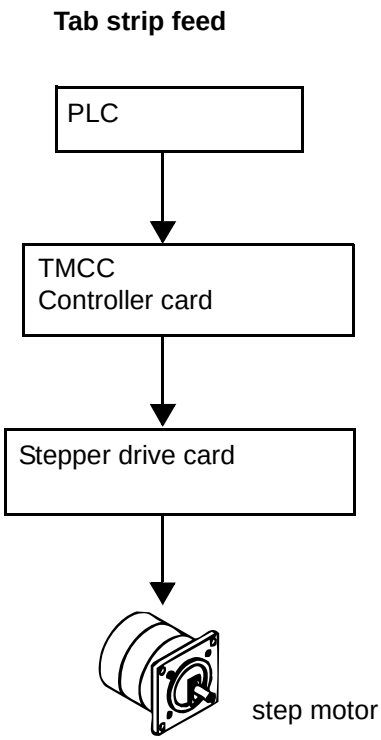

TechPub_2614345_0103 - B5358D00en.fm

(Cont'd)

(Cont'd)

As the jaws are closed, the PLC receives signals from the proximity switches and

- the PLC begins the sealing-cycle when the patch, reseal and tab jaws are all closed
- when the sealing cycle is timed out, the PLC opens (returns) the applicator stations.

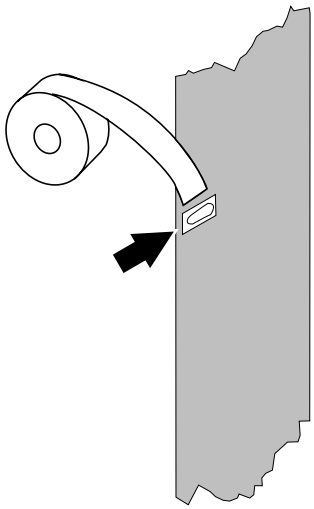

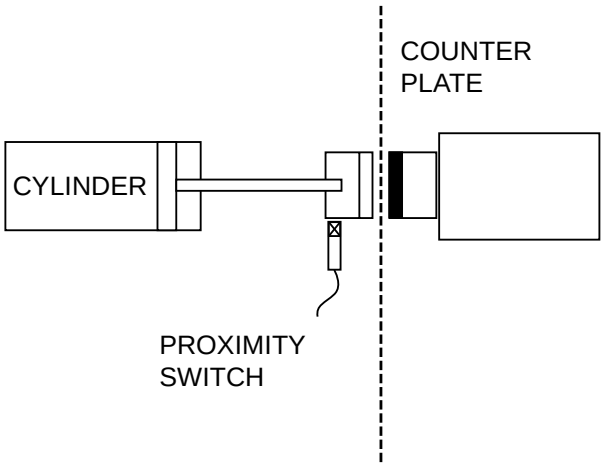

TechPub_2614345_0103 - B5358D00en.fm

(Cont'd)

(Cont'd)

During the PullTab machine cycle, the PLC signals the solenoid valve to extend the cylinder. This action cuts the tab strip and applies it to the packaging material.

Cutting and applying

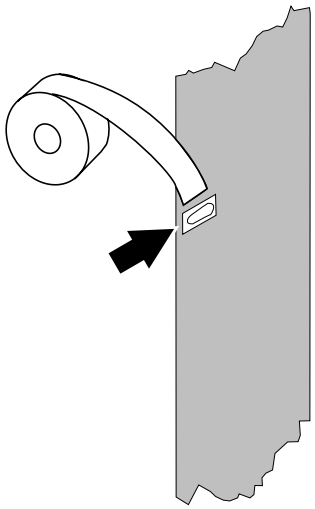

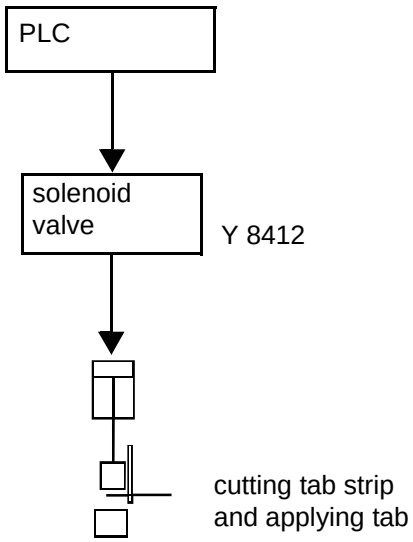

TechPub_2614345_0103 - B5358D00en.fm

(Cont'd)

(Cont'd)

During PRODUCTION:

- an alarm is activated when the tab strip supply is low
- if the alarm condition is not fixed within five minutes, the PullTab and the filling machines go into SHORT STOP mode
- an alarm is activated when the tab strip does not move (rotation monitor).

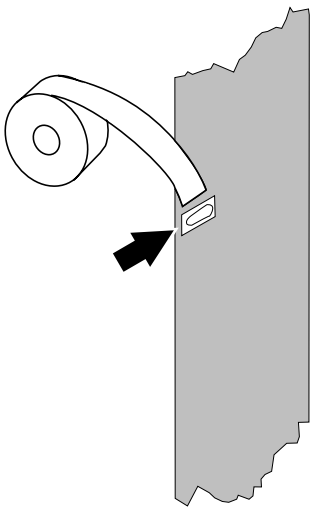

Tab strip supply

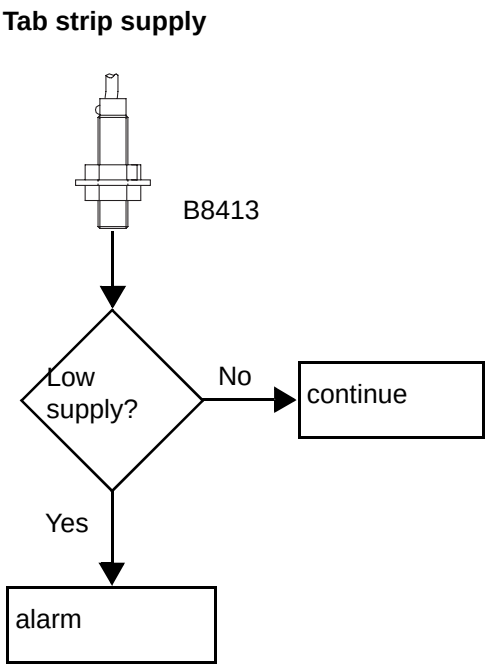

Rotation monitor

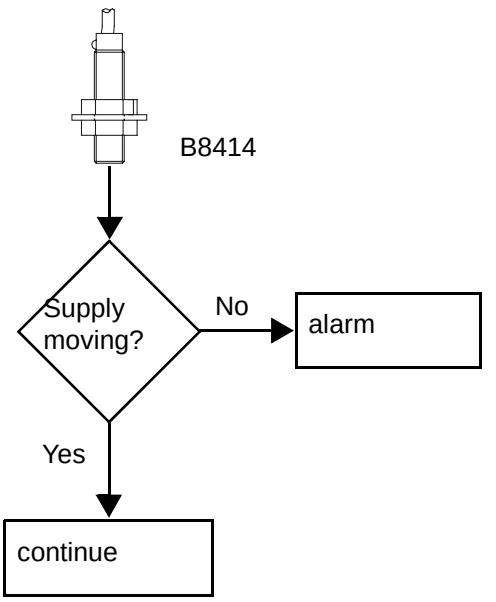

TechPub_2614345_0103 - B5358D00en.fm

4.1 Setting Flow Chart

The following flow chart shows the order in which the various components must be set up.

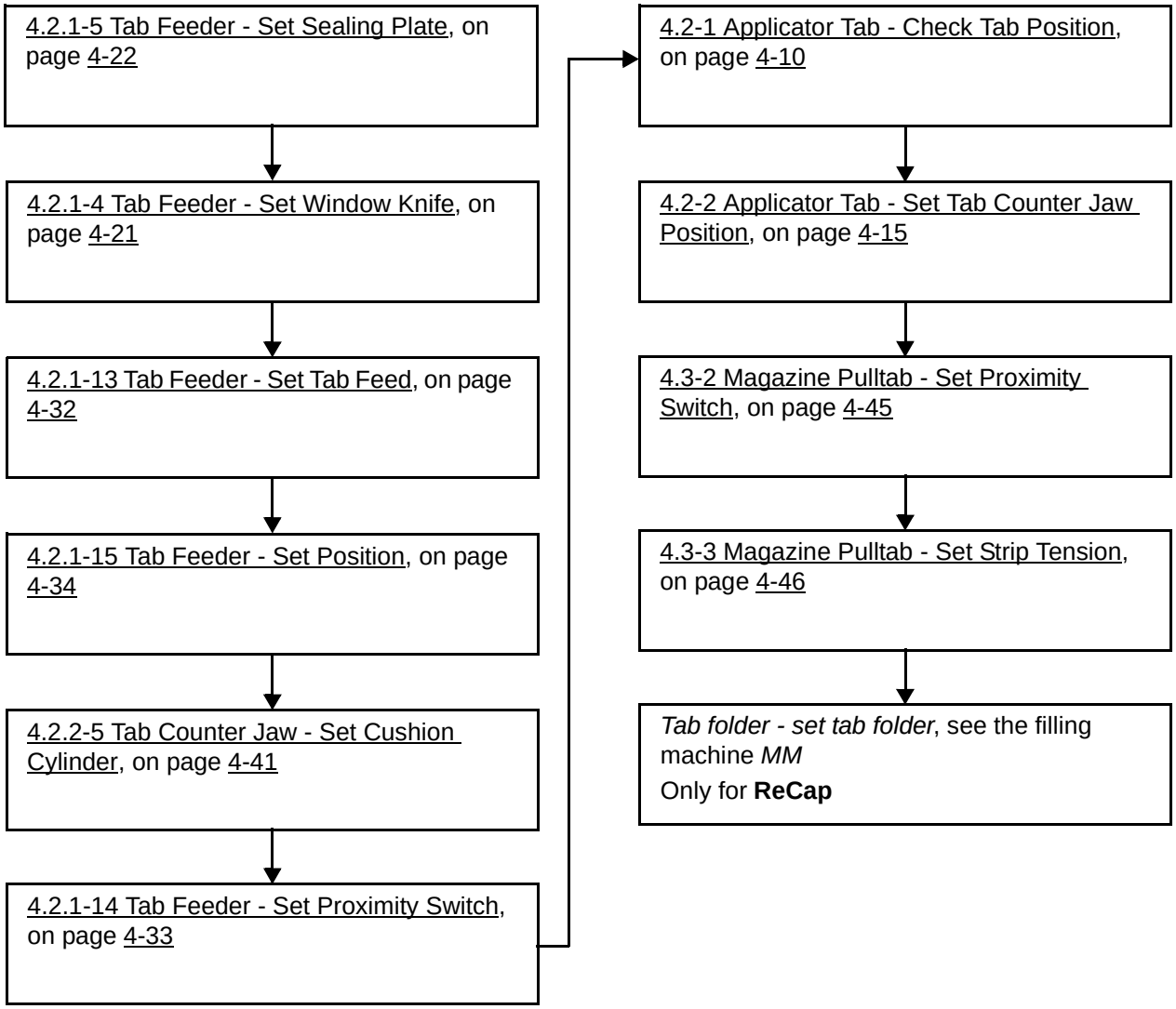

TechPub_2614345_0103 - B5358D01en.fm

4.2 Applicator Tab

SPC Reference	1260421-0200

4.2-1 Applicator Tab - Check Tab Position

Machine Status	Air **ON** Mains power **ON** Packaging material **threaded**
SPC Reference	1260421-0200

Preparation for Making Test Material with Hole, Patch, Reseal, Tab

a) Close all doors on the machine.

b) Make sure that the repeat length is correct according to 1.2.5-4 Paper Brake - Set Servo Tension Device.

c) On the TPOP, check that there are no active alarms and touch the MANOEUVRE button (1).

d) Touch the MAINTENANCE PT21 LEFT button (2).

e) Touch the TAB APPLICATOR button (3).

f) Touch the START button (4) to activate these stations: punch unit, applicator patch, reseal, and tab.

g) The **Service and Maintenance key** symbol (5) starts to flash at the top of the ladder step window.

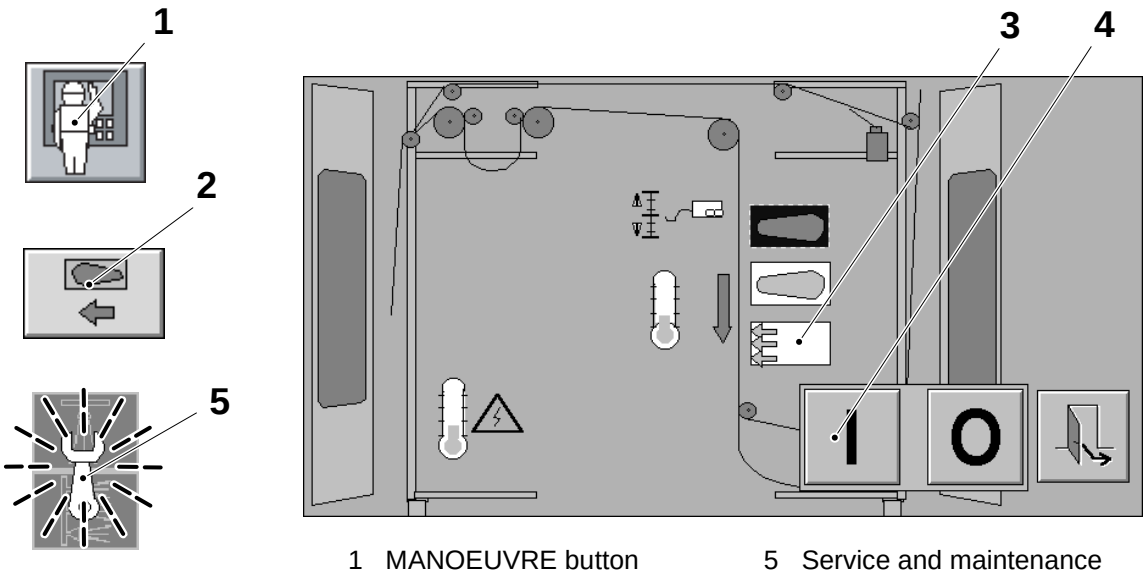

1 MANOEUVRE button
2 MAINTENANCE PT21 LEFT button
3 TAB APPLICATOR button
4 START button
5 Service and maintenance key symbol
6 PROGRAM UP button
7 SINGLE INDEX button

(Cont'd)

TechPub_2614345_0103 - B5358D02en.fm

(Cont'd)

h) Push the PROGRAM UP button (6) after it starts flashing.

Make Test Material

a) At the PullTab control panel, push the SINGLE INDEX button (7) six or seven times after it starts flashing.

Note! If the SINGLE INDEX button (7) does not flash, open and close one of the doors in the PullTab unit. Acknowledge the alarm on the TPOP.

b) Open the door and cut out the packaging material that has the test tab applications.

Check Position

Check the tab position on the packaging material. If required, adjust the position of the tab applicator (distances **A** and **B**) as described below.

Package	Hole type	A ±1.0 (mm)	B ±1.0 (mm)		Package	Hole type	A ±1.0 (mm)	B ±1.0 (mm)
TBA 250 B	21	4.75	3.25		TPA 1000 S	60	1.75	2.0
TBA 500 S	25	3.75	2		TPA 1000 Sq	60	1.75	2.0
TBA 1500 S	45	1.5	1.5		TBA 1500 S	85	2.0	1.5
TBA 1000 B	45	1.5	1.5		TBA 1000 Sq	85	2.0	1.5
TBA 1000 S	45	1.5	1.5		TBA 1000 B	85	2.0	1.5
TBA 1000 B	50	2.7	2.2		TBA 1000 S	85	2.0	1.5
TBA 1000 S	50	2.7	2.5		TBA 1000 S	90	2.0	1.5
TBA 500 S	55	4	4		TBA 1500 S	90	2.0	1.5

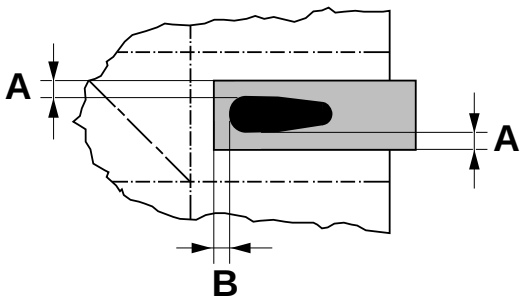

View from outside the package

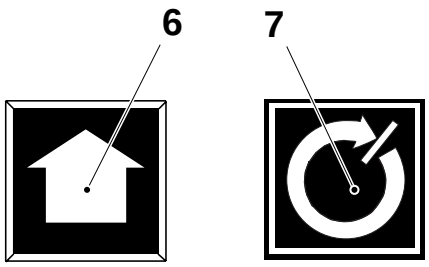

8 PROGRAM UP button
9 SINGLE INDEX button

(Cont'd)

TechPub_2614345_0103 - B5358D02en.fm

(Cont'd)

Adjust Tab Feeder Position

a) Loosen the screws (7) on the tab feeder.

b) Set the distance **B** by means of the setting screw (8).

c) Tighten the screws (7) after adjustment.

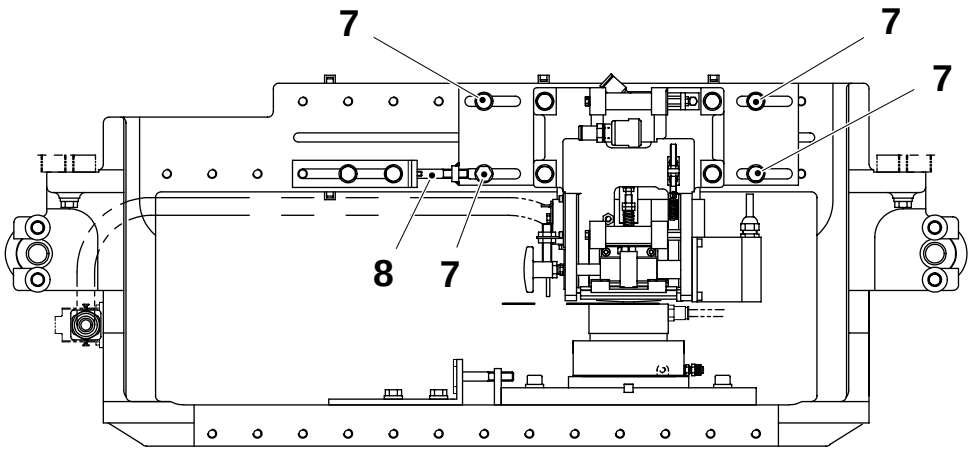

7 Screw
8 Setting screw

(Cont'd)

TechPub_2614345_0103 - B5358D002en.fm

(Cont'd)

d) Check once more the horizontal position of the tab counter jaw, see 4.2.2-6 Tab Counter Jaw - Set Position.

e) On both LH and RH sides of all three applicator stations (applicator patch, reseal, and tab) loosen the screws (11) to move the brass bushings (9) away from the bracket (10).

f) On both LH and RH sides of the applicator tab, tighten the brass bushings (9) until they touch the tab bracket (10).

g) Tighten the two screws (11).

h) Slightly loosen the screws (12) on the tab bracket (10).

i) Set the distance **A**, see table in the previous page, by adjusting the screw guides (13).

j) Tighten the screws (12).

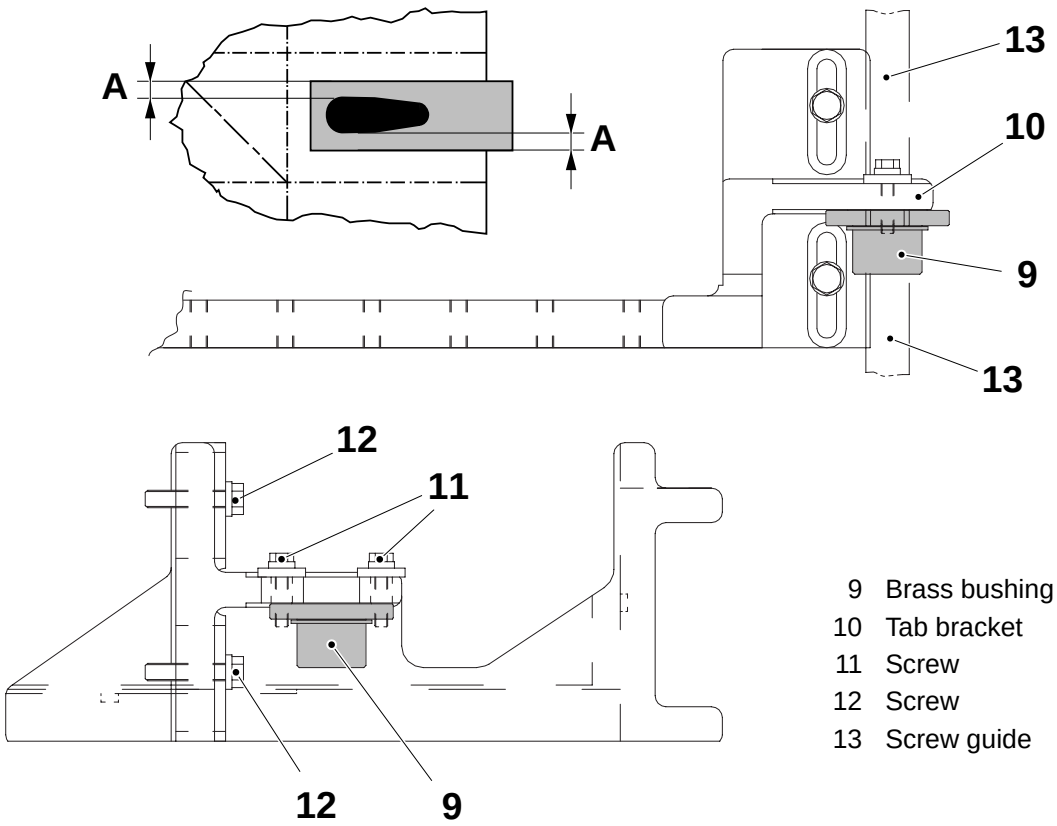

9 Brass bushing
10 Tab bracket
11 Screw
12 Screw
13 Screw guide

(Cont'd)

TechPub_2614345_0103 - B5358D02en.fm

(Cont'd)

Deactivate Pulltab Stations

a) Press the STOP button (14) to deactivate the punch unit, applicator patch, reseal, and tab stations.

b) Push the PROGRAM DOWN button (15) after it starts flashing.

c) Touch the EXIT button (16).

d) Touch the MANOEUVRE button (1) to end the sequence.

e) Step up to step PRODUCTION and run for at least 50 packages to verify all the station positions.

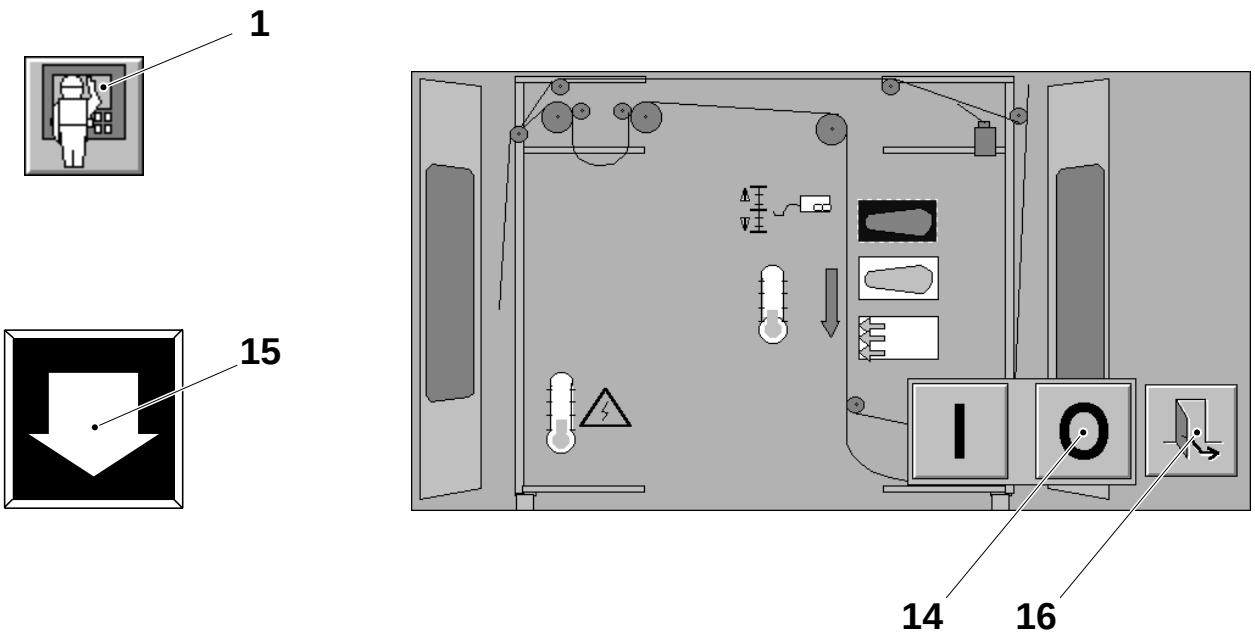

1 MANOEUVRE button
14 STOP button
15 PROGRAM DOWN button
16 EXIT button

TechPub_2614345_0103 - B5358D02en.fm

4.2-2 Applicator Tab - Set Tab Counter Jaw Position

Machine Status	PREPARATION
SPC Reference	1260421-0200

Set Tab Counter Jaw Vertical Position

a) Switch the selector key, located on the PT21 electrical panel, to position SERVICE.

b) Activate the valve **Y8412:1** for the cylinder (1) and make sure that the cushion cylinder (2) is fully extended.

c) Loosen the four screws (3).

d) Loosen the nut (4) and set the distance **A** between the edge of the counter plate (5) and the sealing plate (6) by means of the grub screw (7).

e) Tighten the nut (4) and the four screws (3).

f) Activate the valve **Y8412:2** and check that the cylinder (1) is fully in.

Package	Hole type	A ±1.0 (mm)		Package	Hole type	A ±1.0 (mm)		Package	Hole type	A ±1.0 (mm)
TBA 250 B	21	11.8		TBA 1000 S	50	11.9		TBA 1000 Sq	85	12.1
TBA 500 S	25	9.8		TBA 500 S	55	13.8		TBA 1000 B	85	12.2
TBA 1500 S	45	11.7		TPA 1000 S	60	12.3		TBA 1000 S	85	12.2
TBA 1000 B	45	11.7		TPA 1000 Sq	60	12.3		TBA 1000 S	90	12.0
TBA 1000 S	45	11.7		TBA 1500 S	85	12.1		TBA 1500 S	90	12.0
TBA 1000 B	50	11.9								

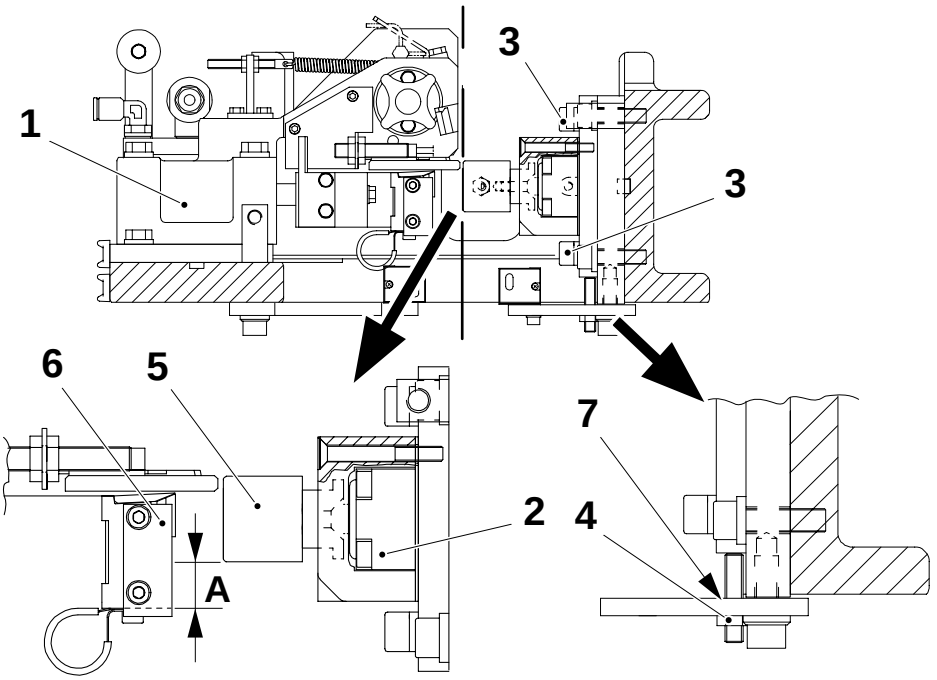

1 Cylinder
2 Cushion cylinder
3 Screw
4 Nut
5 Counter plate
6 Sealing plate
7 Grub screw

(Cont'd)

TechPub_2614345_0103 - B5358D02en.fm

(Cont'd)

Set Tab Counter Jaw Horizontal Position

a) Check the position of the tab according to 4.2-1 Applicator Tab - Check Tab Position.

b) Make sure that the cushion cylinder (2) is fully extended.

c) Loosen the screws (8), located on the tab counter jaw.

d) Set the distance **B** between the edge of the counter plate (5) and the tab feeder (9) head by means of the setting screw (10).

e) Tighten the screws (8).

Note! Use eventually the machined surface **C** to obtain the distance **B**.

Package	Hole type	B ±1.0 (mm)		Package	Hole type	B ±1.0 (mm)		Package	Hole type	B ±1.0 (mm)
TBA 250 B	21	36		TBA 1000 S	50	40.75		TBA 1000 Sq	85	40.0
TBA 500 S	25	32		TBA 500 S	55	38		TBA 1000 B	85	40.0
TBA 1500 S	45	40.0		TPA 1000 S	60	41.0		TBA 1000 S	85	40.0
TBA 1000 B	45	40.0		TPA 1000 Sq	60	41.0		TBA 1000 S	90	40.0
TBA 1000 S	45	40.0		TBA 1500 S	85	40.0		TBA 1500 S	90	40.0
TBA 1000 B	50	40.75								

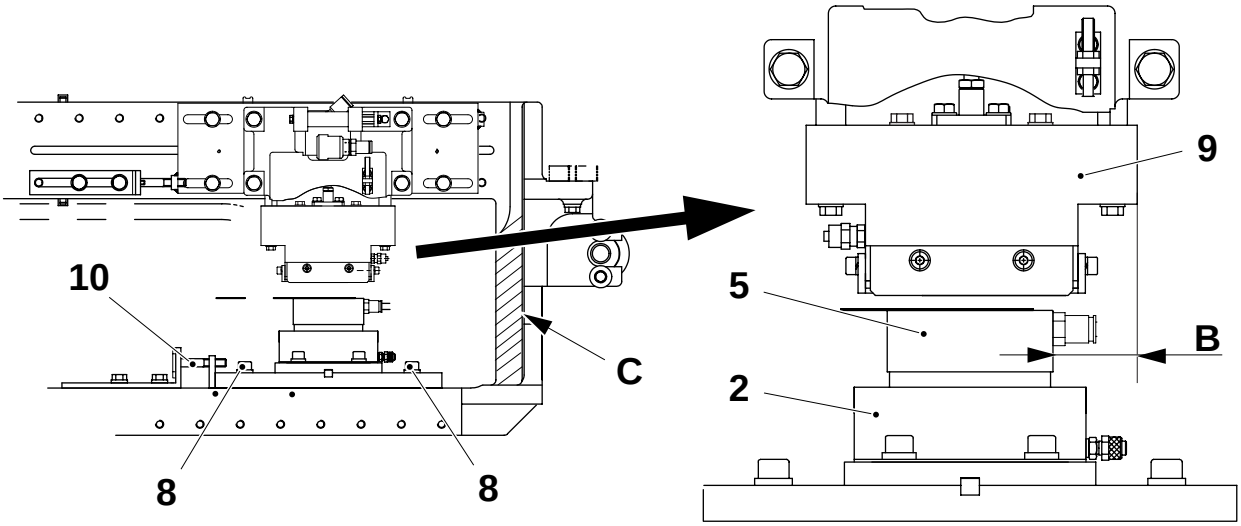

2 Cushion cylinder
5 Counter plate
8 Screw
9 Tab feeder
10 Setting screw

TechPub_2614345_0103 - B5358D02en.fm

4.2.1 Tab Feeder

4.2.1-1 Tab Feeder - Check Knives

Machine Status	Air **OFF** Mains power **OFF**
SPC Reference	1260415-0200

WARNING
Risk of burns!
The sealing jaw may be hot. Be careful.

Check the surface of the knives and the space between the flat knife (1) and the sealing plate (3) for any residue of polyethylene.

Check the flat knife (1) and the window knife (2) for wear and/or damage.

Check that the edges of the tab are clean-cut. If required, set the window knife (2), see 4.2.1-4 Tab Feeder - Set Window Knife.

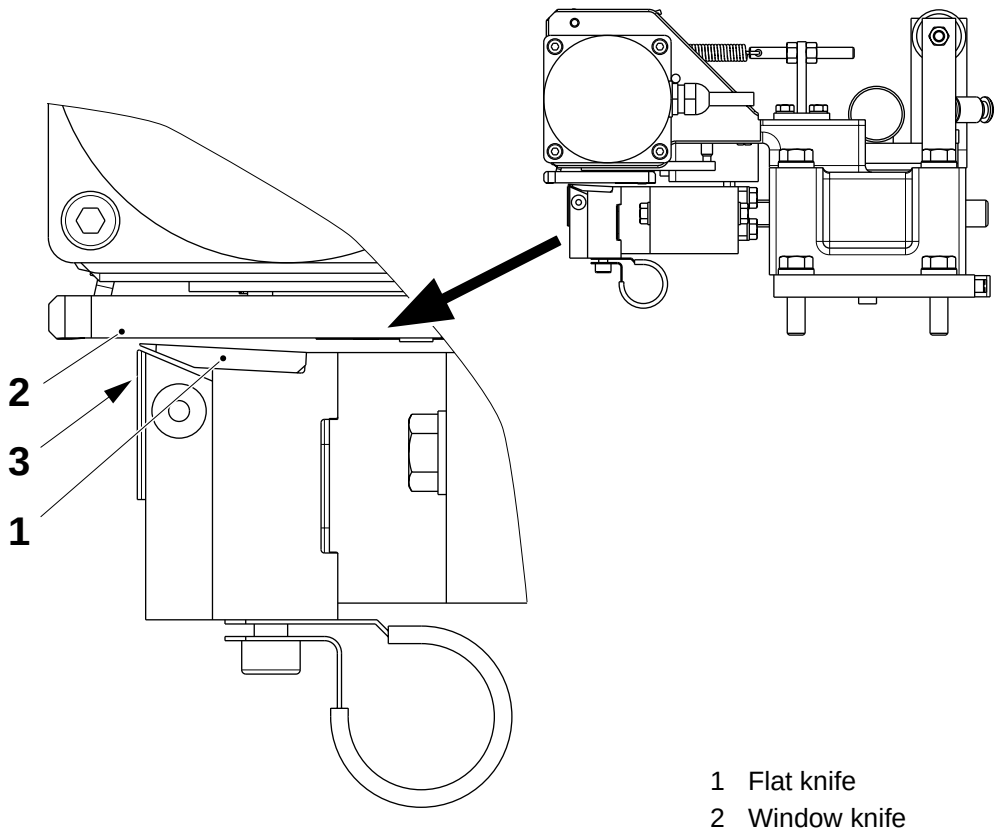

1 Flat knife
2 Window knife
3 Sealing plate

TechPub_2614345_0103 - B5358D02en.fm

4.2.1-2 Tab Feeder - Change Knives

Machine Status	Air **OFF** Mains power **OFF**
SPC Reference	1260415-0200

WARNING
Risk of burns!
The sealing jaw may be hot. Be careful.

a) Remove the feeder, see 4.2.1-3 Tab Feeder - Remove.
b) Remove the four screws (1) and the entire bracket (2).
c) Remove the flat knife (3) and change as required.
d) Unscrew the stop screw (4) and remove the two pins (5).

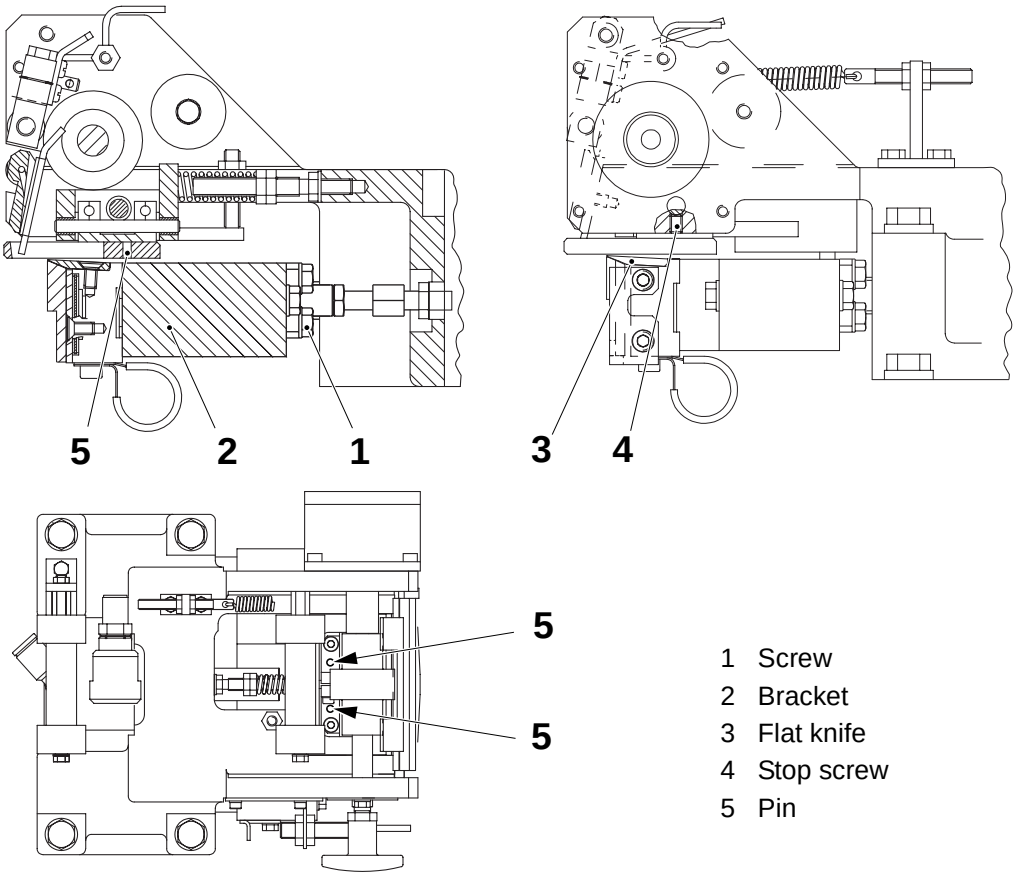

1 Screw
2 Bracket
3 Flat knife
4 Stop screw
5 Pin

TechPub_2614345_0103 - B5358D02en.fm

(Cont'd)

(Cont'd)

e) Remove the screws (6) and change the window knife (7).

CAUTION
Risk of damage to the equipment!
When changing the window knife (7), make sure that the bevelled side of the window knife (7) (side opposite etched part number) is the side that comes in contact with the flat knife (3).

Note! Do not tighten too much the flat knife (3) when assembling

f) Assemble in the reverse order.

g) Set the sealing jaw, see 4.2.1-5 Tab Feeder - Set Sealing Plate.

h) Set the window knife (7), see 4.2.1-4 Tab Feeder - Set Window Knife.

i) Check the tab position, see 4.2-1 Applicator Tab - Check Tab Position.

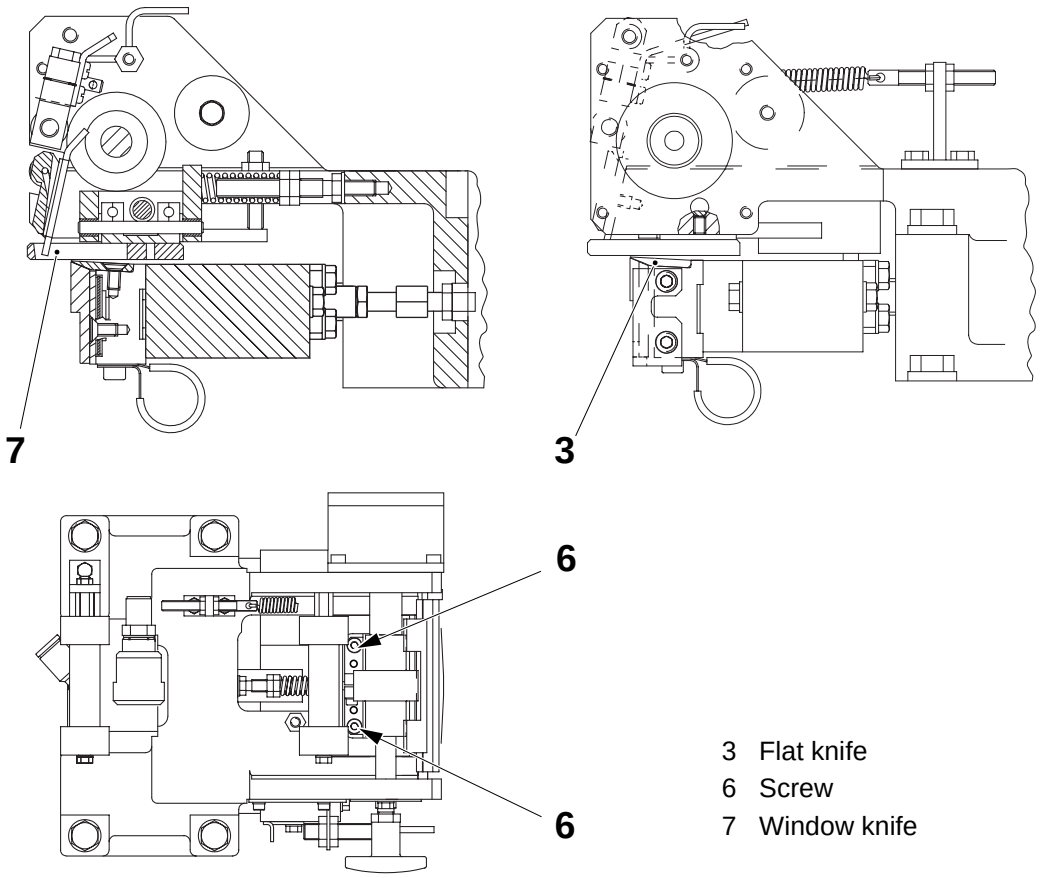

3 Flat knife
6 Screw
7 Window knife

TechPub_2614345_0103 - B5358D02en.fm

4.2.1-3 Tab Feeder - Remove

Machine Status	Air **OFF** Mains power **OFF**
SPC Reference	1260415-0200

a) On the electrical cabinet, disconnect the electrical connector (1) leading to the step motor (2).

b) Disconnect the electrical connector (3) leading to the heater.

c) Disconnect the air hoses (4) from the cylinder.

d) Loosen the screws (7) and remove the tab jaw monitor proximity switch (8).

e) Remove the screws (5) from the plate (6) and lift out the tab feeder unit.

f) Assemble in the reverse order.

g) Set the tab feeder, see <u>4.2.1-15 Tab Feeder - Set Position</u>.

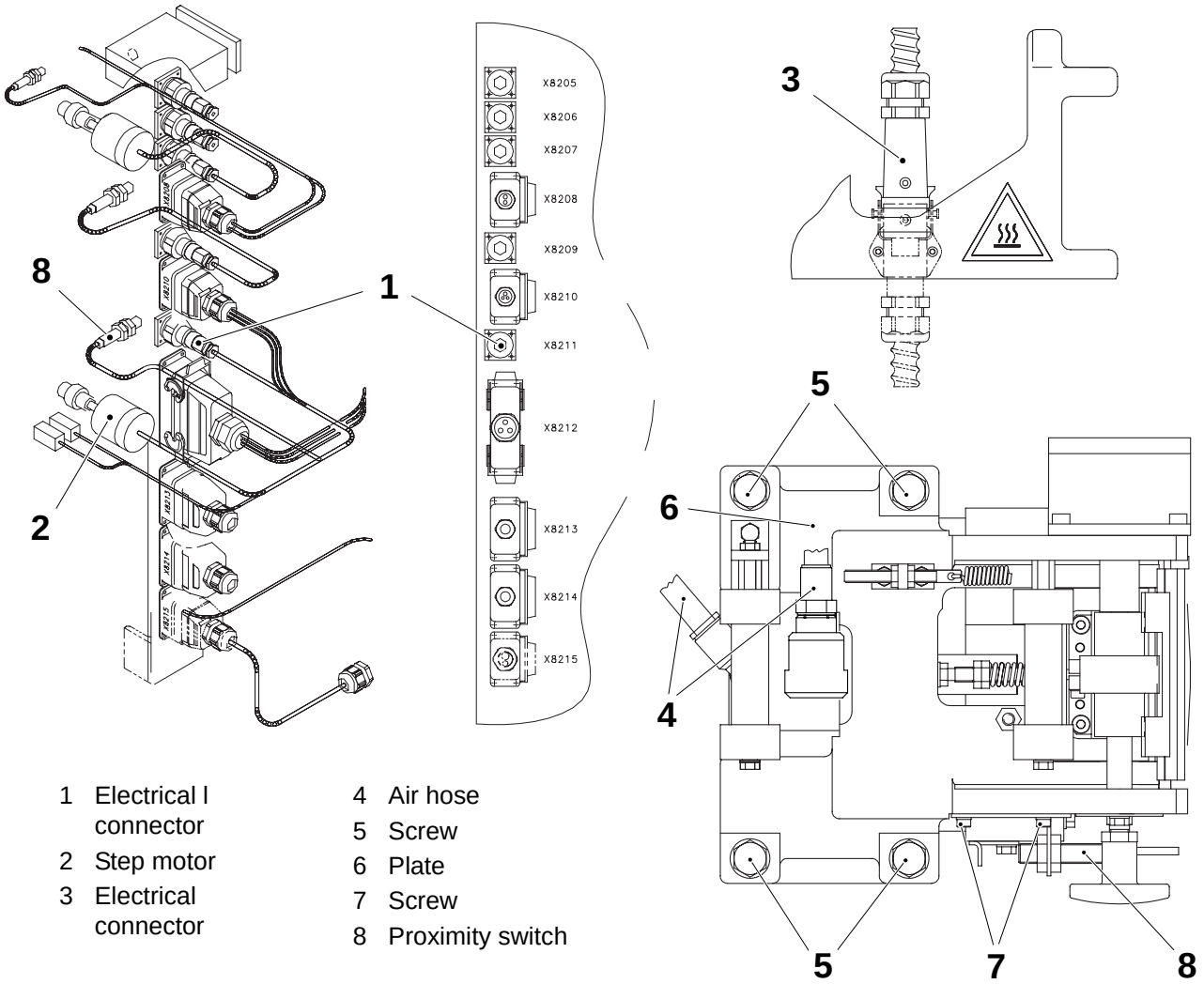

1 Electrical l connector
2 Step motor
3 Electrical connector
4 Air hose
5 Screw
6 Plate
7 Screw
8 Proximity switch

TechPub_2614345_0103 - B5358D02en.fm

4.2.1-4 Tab Feeder - Set Window Knife

Machine Status	Air **OFF** Mains power **OFF**
SPC Reference	1260415-0200

WARNING
Risk of burns!
The sealing jaw may be hot. Be careful.

This setup may be performed on a work bench.

a) Remove the feeder, see 4.2.1-3 Tab Feeder - Remove.
b) Adjust the nuts (1) until the spring (3) starts to compress.
c) Set the distance **A** between the surface of the sealing plate and the outside edge of the window knife (4).
d) Keep the distance **A** and adjust the screw (2) until the window knife (4) touches the top of the flat knife without any play.
e) Adjust the nuts (1) and set the distance **B**.
f) Check the cutting action after the setting.

TechPub_2614345_0103 - B5358D02en.fm

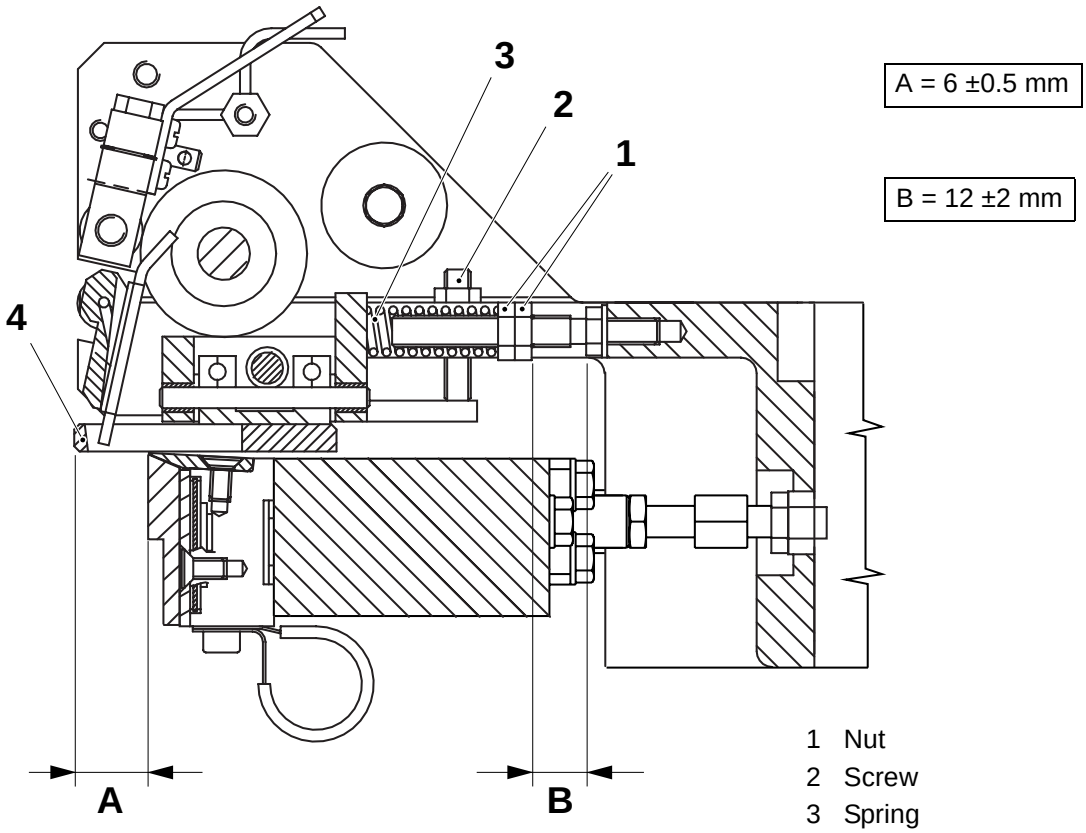

4.2.1-5 Tab Feeder - Set Sealing Plate

Machine Status	Air **OFF** Mains power **OFF**
SPC Reference	1260415-0200

WARNING
Risk of burns!
The sealing jaw may be hot. Be careful.

a) Remove the feeder, see 4.2.1-3 Tab Feeder - Remove.
b) Remove the four screws (1) and the entire bracket (2).
c) Loosen the two screws (3).

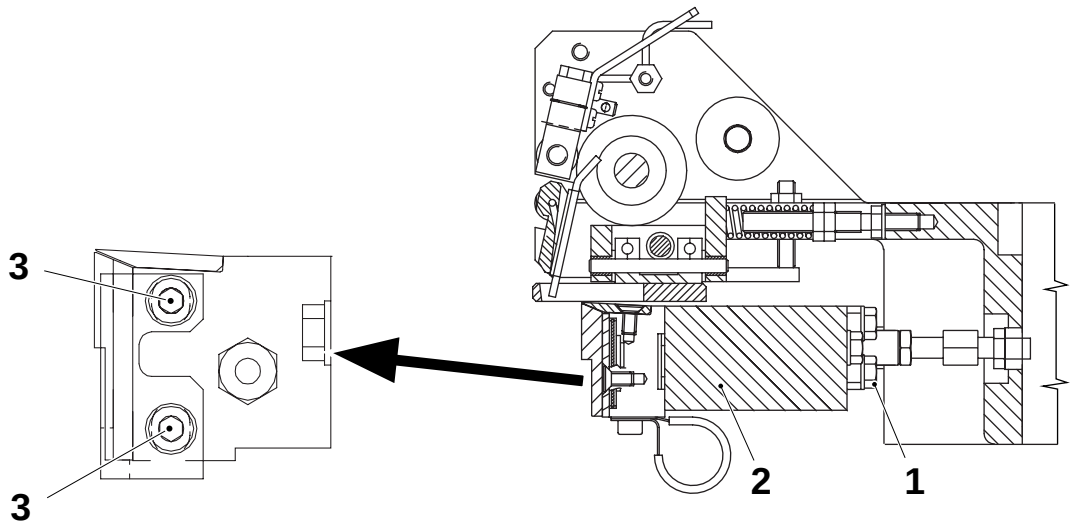

1 Screw
2 Bracket
3 Screw

TechPub_2614345_0103 - B5358D02en.fm

(Cont'd)

(Cont'd)

d) Set the distance **B** between the top of the flat knife (4) and the sealing plate (5). If required, adjust with shims (6).

e) Loosen the sealing plate (5) and set the distance **A** between the sealing plate (5) and the flat knife (4) with the aid of a feeler gauge.

f) Keep the two clamps (7) pressed aside as shown in the figure, and at the same time tighten the screws (3).

g) Make sure that the clamps (7) lean against the sealing plate (5).

h) Assemble in the reverse order.

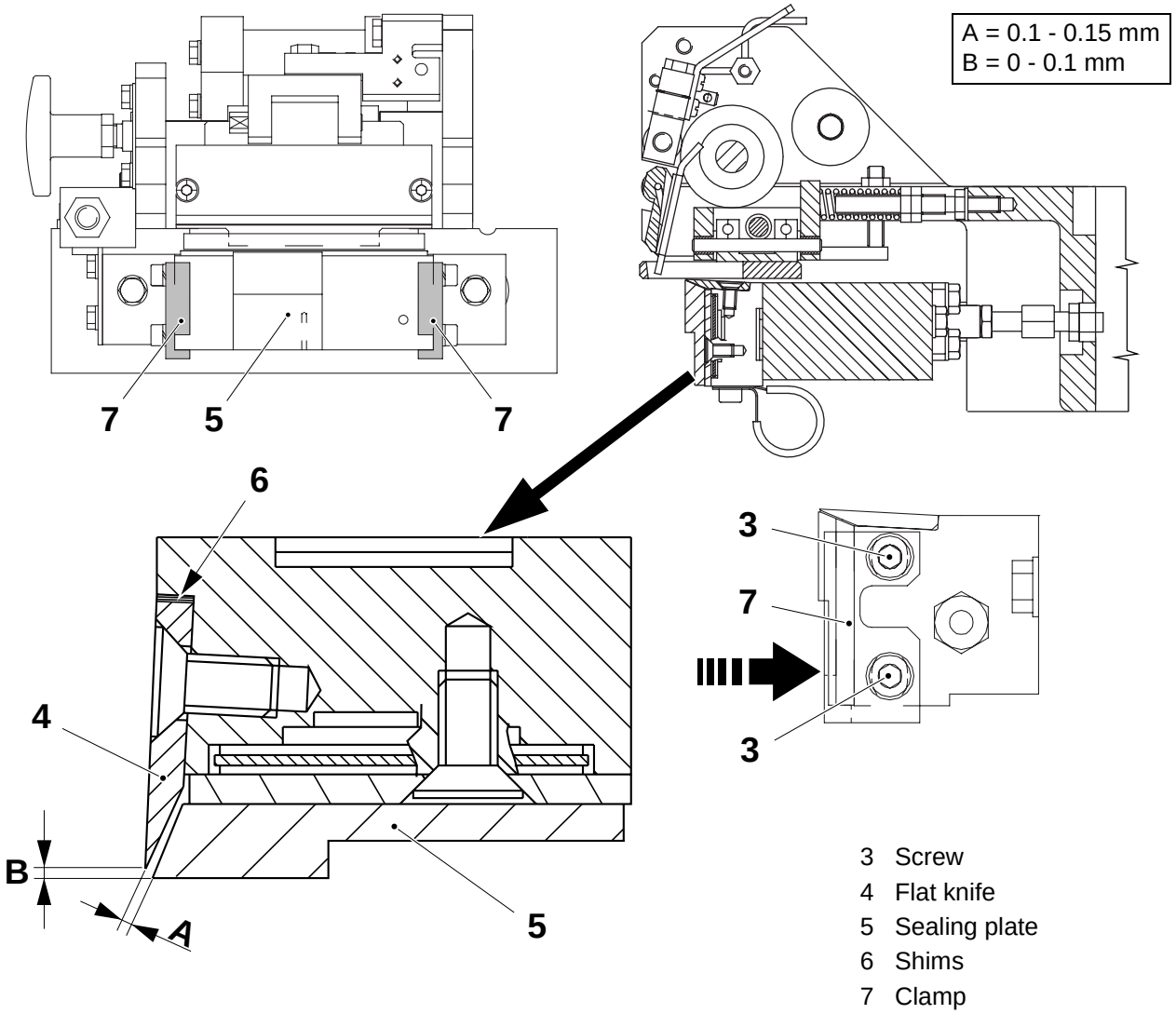

3 Screw
4 Flat knife
5 Sealing plate
6 Shims
7 Clamp

TechPub_2614345_0103 - B5358D02en.fm

4.2.1-6 Tab Feeder - Check Guides and Linear Bearings

Machine Status	Air **OFF** Mains power **OFF**
SPC Reference	1260415-0200

a) Disconnect the air hoses (6) from the cylinder.

b) By hand, move the cylinder to check that the piston (5) moves freely.

c) Remove the feeder, see 4.2.1-3 Tab Feeder - Remove.

d) Remove the four screws (1) and the entire bracket (2).

e) Check the guides (3) for wear and/or damage.

f) Check for wear in the linear bearings (4) by using the guide (3). Check the play in one bearing at a time.

g) Change as required, see 4.2.1-7 Tab Feeder - Change Linear Bearings.

h) Fit back the bracket (2) and the four screws (1) after checking.

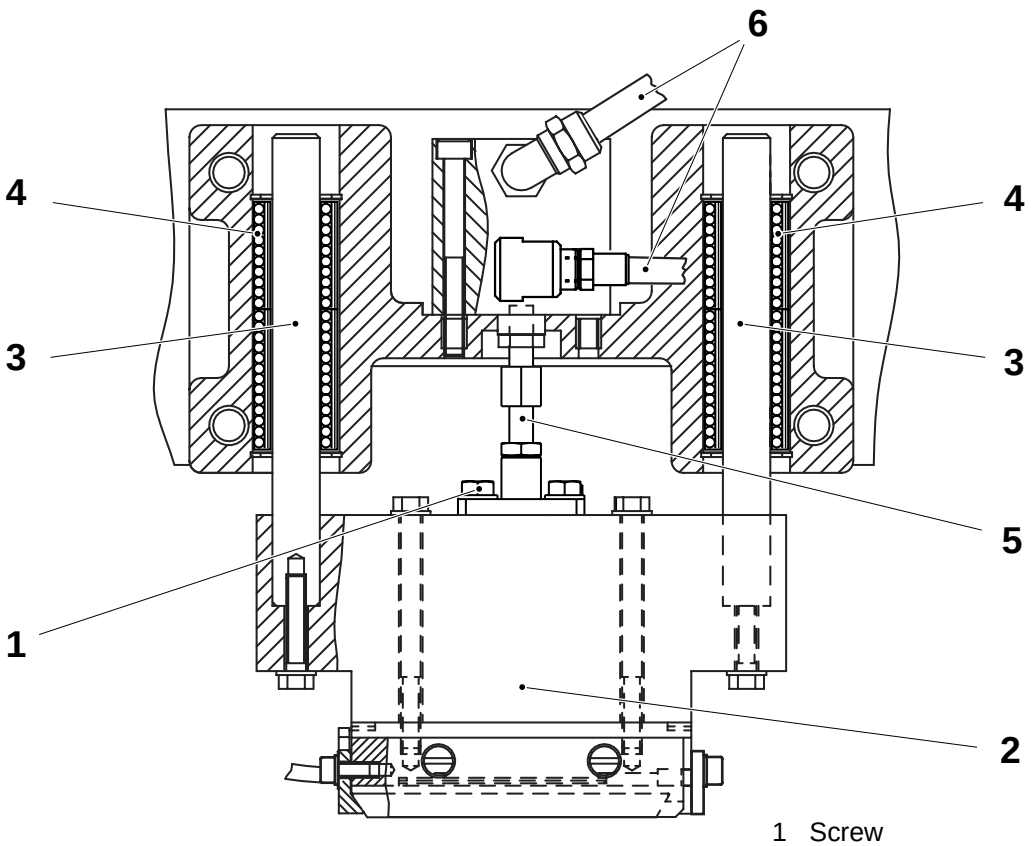

1 Screw
2 Bracket
3 Guide
4 Linear bearing
5 Piston
6 Air hose

TechPub_2614345_0103 - B5358D02en.fm

4.2.1-7 Tab Feeder - Change Linear Bearings

Machine Status	Air **OFF** Mains power **OFF**
SPC Reference	1260415-0200

a) Remove the feeder, see 4.2.1-3 Tab Feeder - Remove.

b) Remove the four screws (1) and the entire bracket (2).

c) Remove the seal rings (3) on each side of the linear bearing (4).

d) Pull out the linear bearings (4) and change them if damaged or worn out.

e) Assemble in the reverse order.

Note! Make sure that the seal rings (3) are, on both sides, distance **A** inward towards the surface of the applicator casting (5).

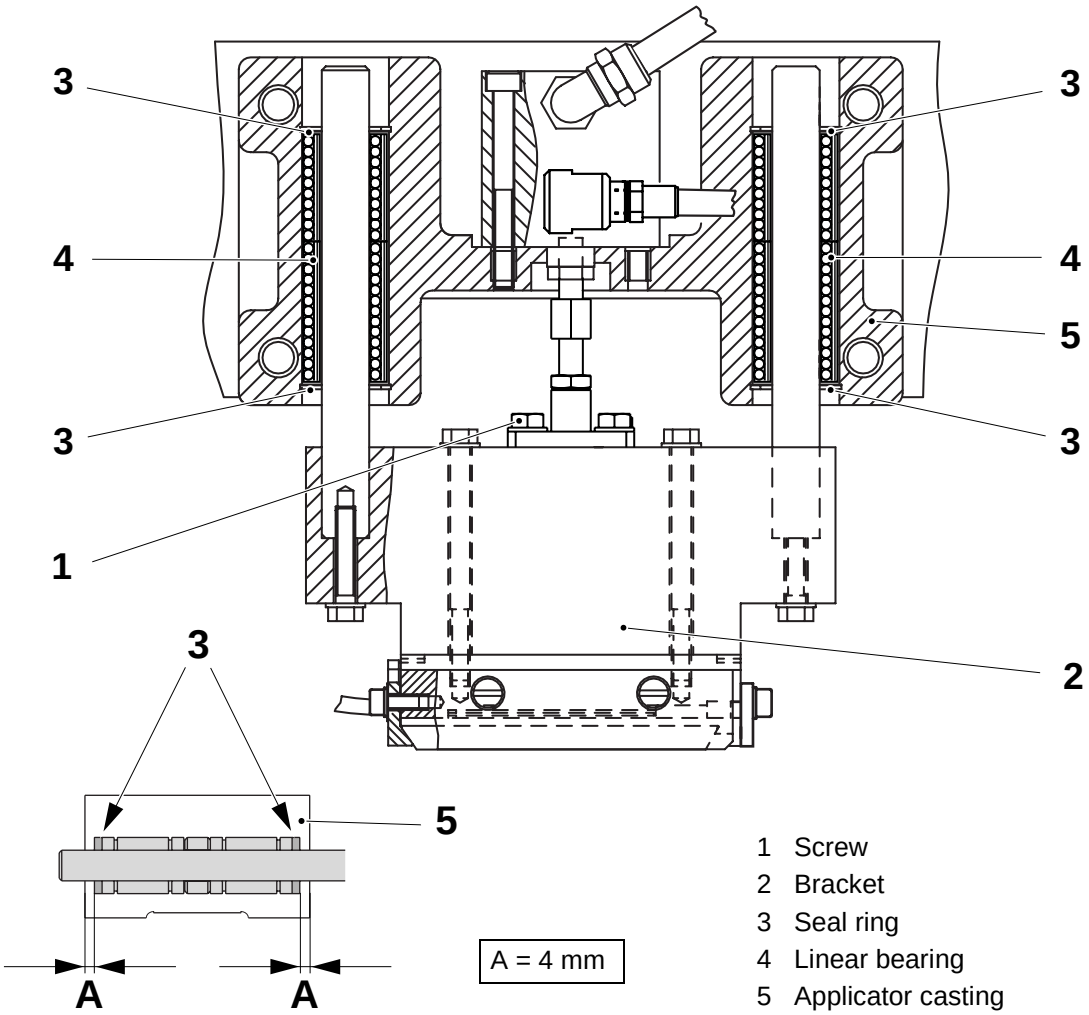

TechPub_2614345_0103 - B5358D02en.fm

4.2.1-8 Tab Feeder - Check Tab Position

Machine Status	Air **OFF** Mains power **OFF**
SPC Reference	1260415-0200

a) Feed the tab strip in the applicator and check the distance **A** between the edge of the tab (1) and the edge of the sealing plate (2).

b) Adjust as required by means of the shims (3) on the rollers (4).

c) Unscrew the shafts (5) and remove them together with the rollers (4).

d) Fit a number of shims (3) in order to reach the distance **A**.

e) Tighten the shafts (5) on the tab feeder bracket.

A = 0.2 - 0.5 mm

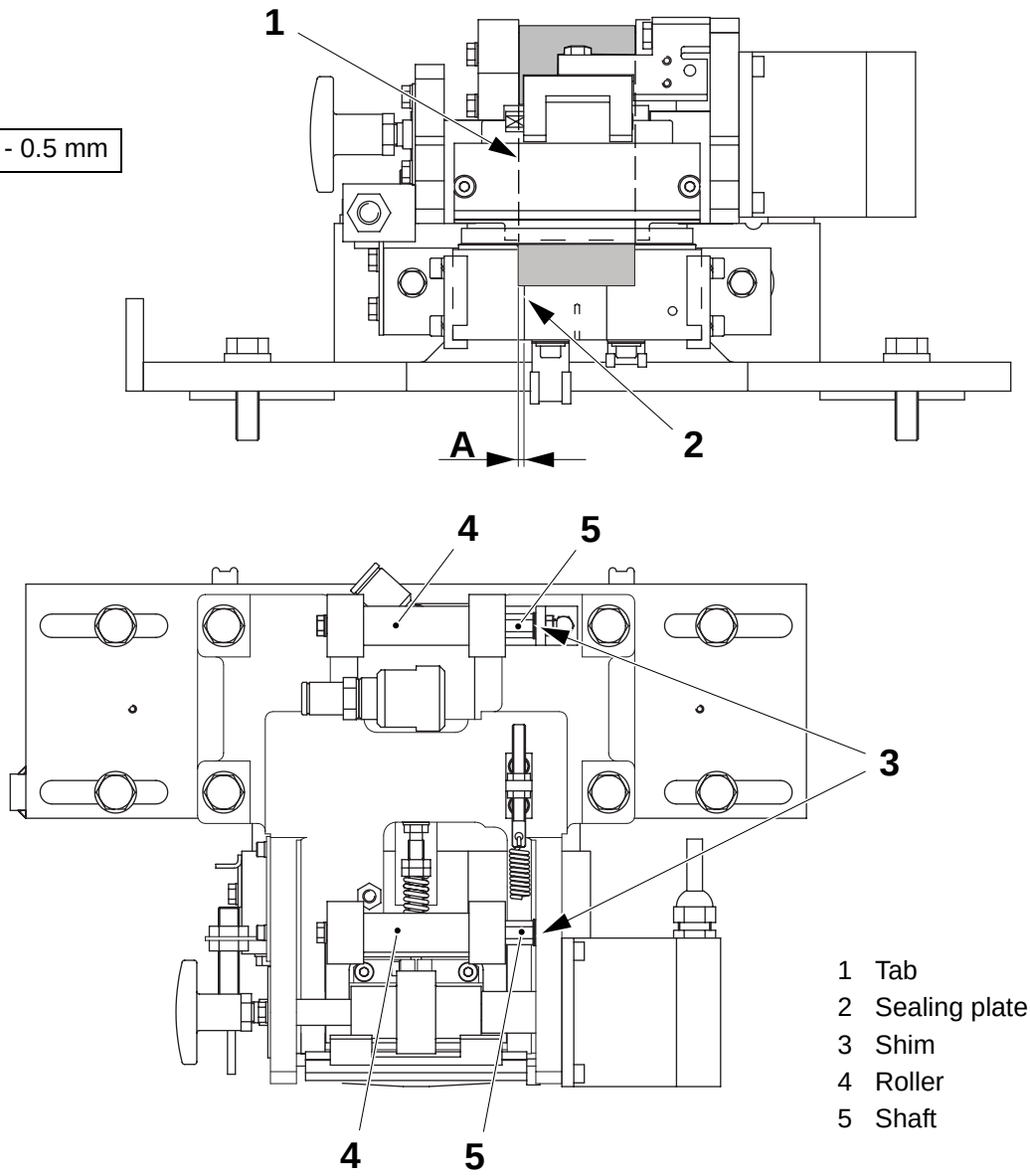

1 Tab
2 Sealing plate
3 Shim
4 Roller
5 Shaft

TechPub_2614345_0103 - B5358D02en.fm

4.2.1-9 Tab Feeder - Change Bushings

Machine Status	Air **OFF** Mains power **OFF**
SPC Reference	1260415-0200

a) Remove the feeder, see 4.2.1-3 Tab Feeder - Remove.
b) Remove the four screws (1) and the entire bracket (2).
c) Unscrew the two grub screw (3) in the coupling (4).
d) Unscrew the four screws (5) and remove the step motor (6).
e) Unscrew the two grub screws (7) in the feeder roller (9).
f) Remove the knob shaft (8), the coupling (4) and the feeder roller (9).

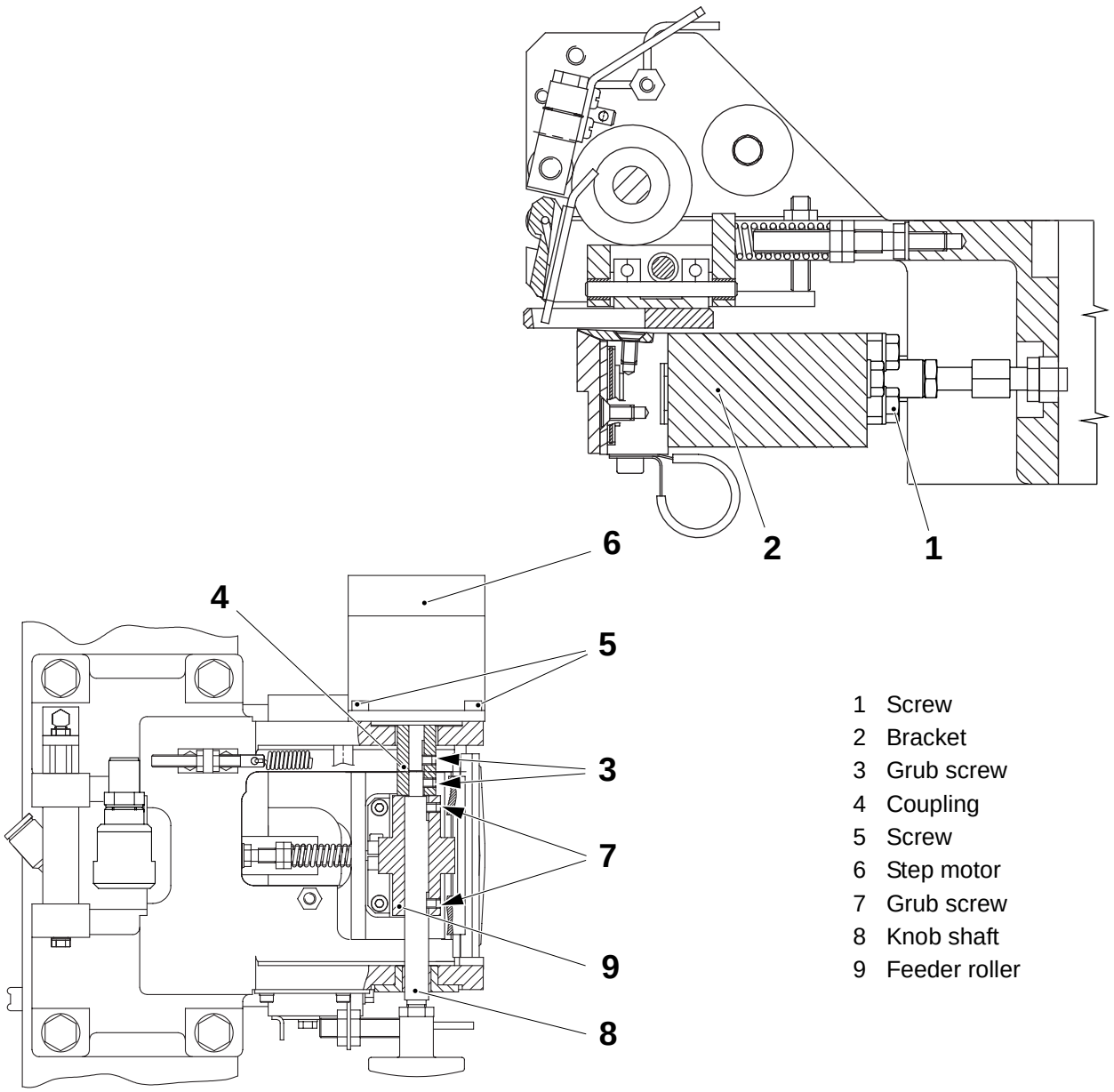

1 Screw
2 Bracket
3 Grub screw
4 Coupling
5 Screw
6 Step motor
7 Grub screw
8 Knob shaft
9 Feeder roller

(Cont'd)

TechPub_2614345_0103 - B5358D02en.fm

(Cont'd)

g) Remove the two screws (10) and change the bushing (11).
h) Loosen the spring (12) by means of the nut (13).
i) Loosen the grub screw (14) and remove the shaft (15).
j) Remove the two bushings (16) and change them.
k) Loosen the screws (17) and pull out the shaft (18).
l) Remove the two spring washers (19).
m) Remove the two bushings (20) and change them.
n) Assemble in the reverse order.

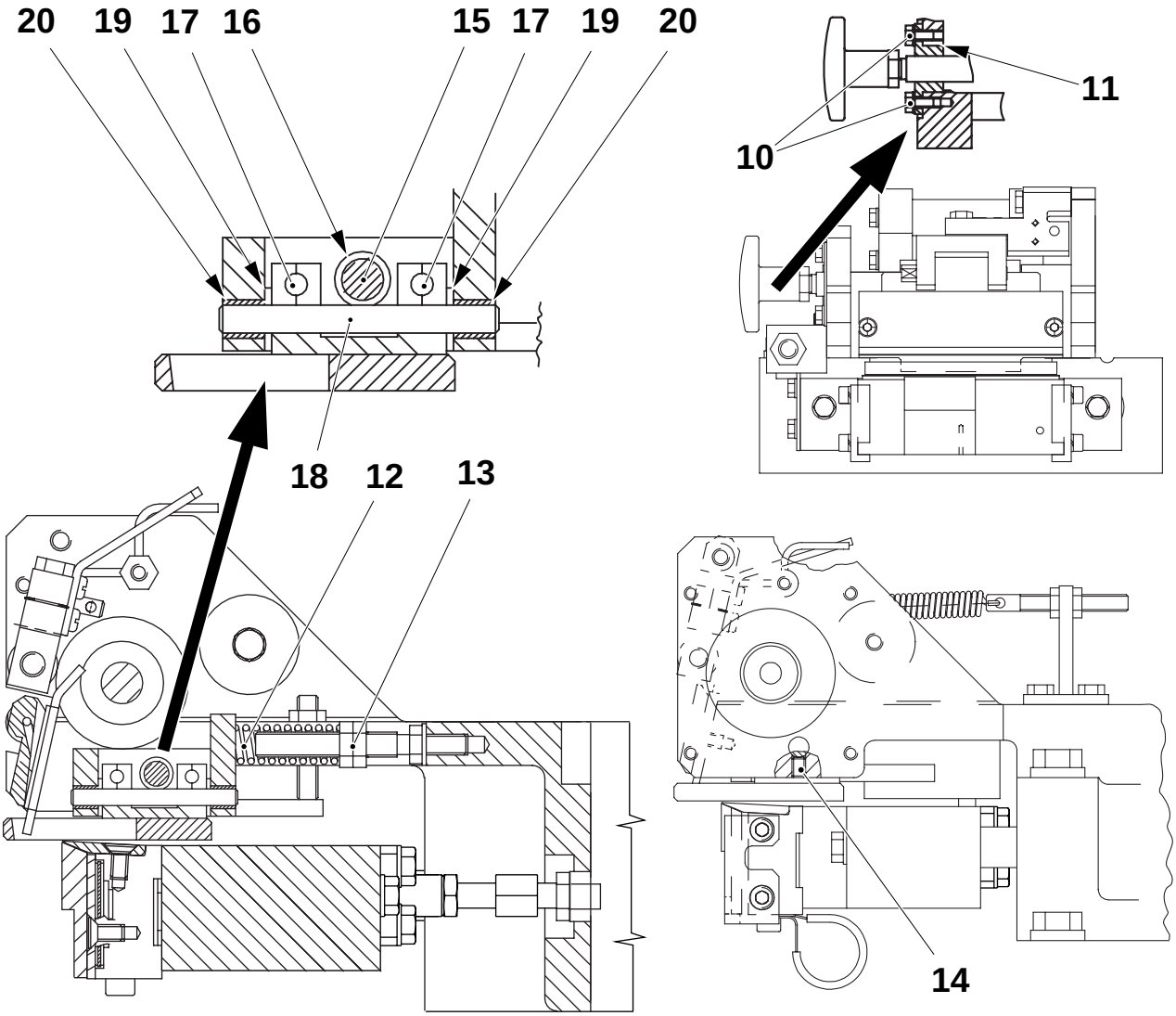

10	Screw	14	Grub screw	18	Shaft
11	Bushing	15	Shaft	19	Spring washer
12	Spring	16	Bushing	20	Bushing
13	Nut	17	Screw		

TechPub_2614345_0103 - B5358D02en.fm

4.2.1-10 Tab Feeder - Change Cylinder

Machine Status	Air **OFF** Mains power **OFF**
SPC Reference	1260415-0200

a) Remove the four screws (1).

b) Remove the air connections (2) and the screws (3).

c) Remove the cylinder (4) and change it.

d) Assemble in the reverse order.

e) Set the cushion cylinder, see 4.2.2-5 Tab Counter Jaw - Set Cushion Cylinder.

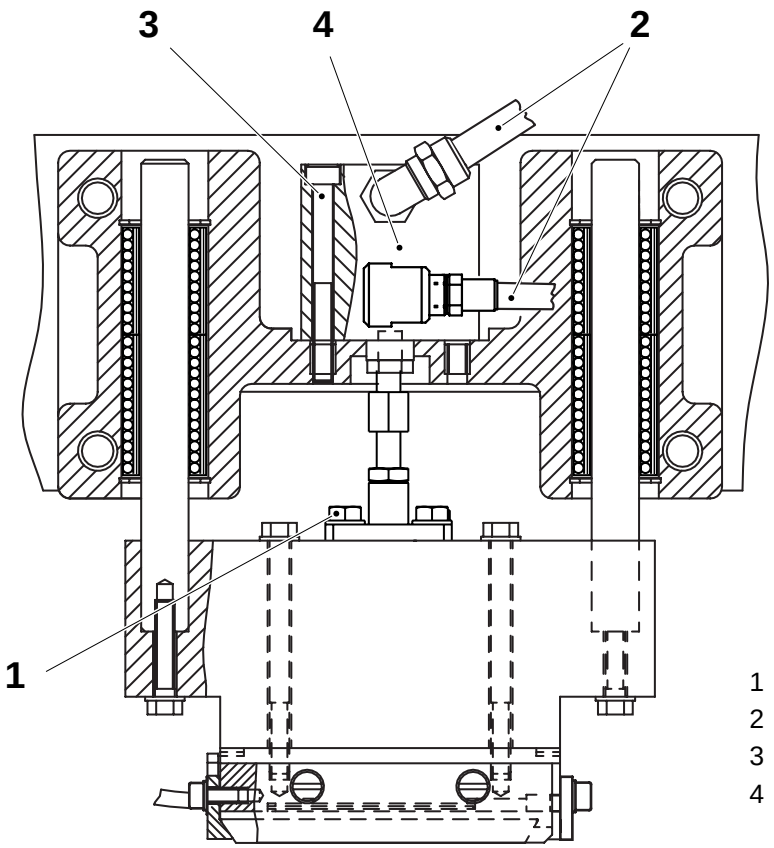

1 Screw
2 Air connection
3 Screw
4 Cylinder

TechPub_2614345_0103 - B5358D02en.fm

4.2.1-11 Tab Feeder - Check Sealing Plate

Machine Status	Air **OFF** Mains power **OFF**
SPC Reference	1260415-0200

WARNING
Risk of burns!
The sealing jaw may be hot. Be careful.

a) Pull out the thermocouple (3) tip from the sealing plate (1).

b) Loosen the screws (2) and remove the clamps (4), on both sides, and the sealing plate (1).

c) Check the surface of the sealing plate (1) for wear, scratches or other damage. Also check for any residue of polyethylene.

d) Assemble in the reverse order. Set the sealing plate (1), see 4.2.1-5 Tab Feeder - Set Sealing Plate.

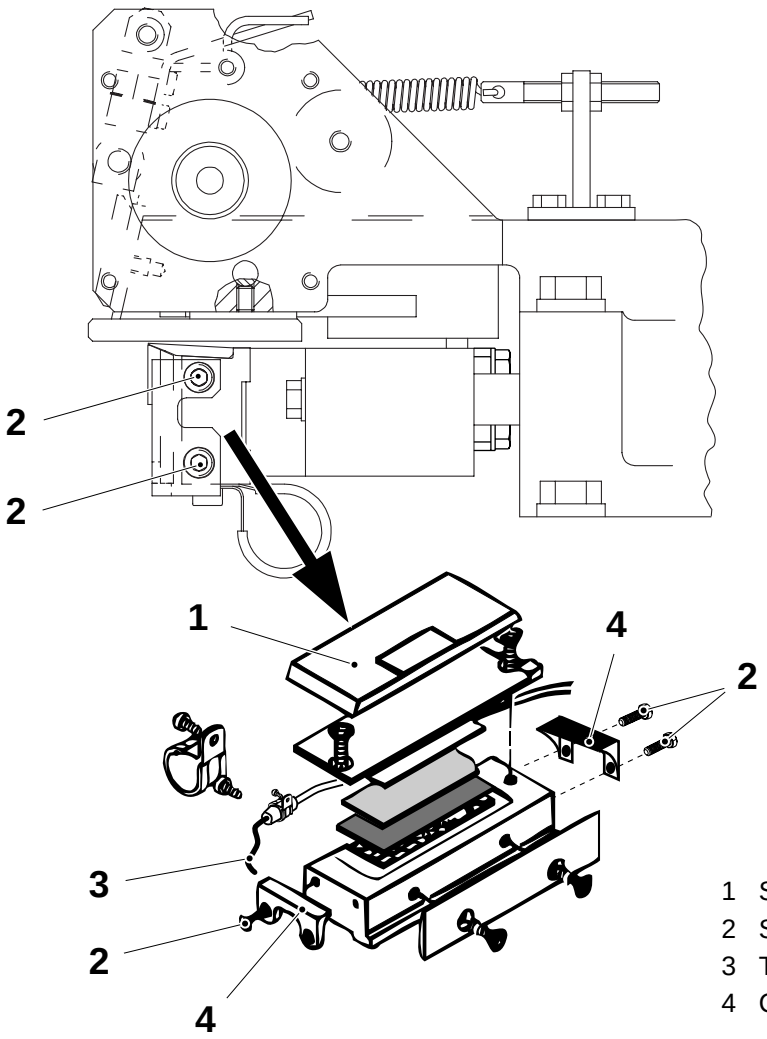

1 Sealing plate
2 Screw
3 Thermocouple
4 Clamp

TechPub_2614345_0103 - B5358D02en.fm

4.2.1-12 Tab Feeder - Check Function

Machine Status	Air **OFF** Mains power **OFF**
Consumables	Ethanol
SPC Reference	1260415-0200

Remove the feeder, see 4.2.1-3 Tab Feeder - Remove, and the screws (1).

Check the cutting and feeding functions then check the following parts on the tab feeder unit:

- the surfaces of the feeder roller (2) and the one way bearing (3) for wear and/or damage
- the one-way bearing (3) turns freely
- the steer plate (4) is not jammed with tab strip
  Clean any residue of polyethylene on the steer plate (4) with ethanol.

Note! When fitting back the steer plate (4), push it away from the feeder roller (2) while tightening the screws (1). Otherwise the steer plate (4) will touch the feeder roller (2).

- the feeding action by turning the feed knob (5) manually.
  If required, set the tab feed, see 4.2.1-13 Tab Feeder - Set Tab Feed. Step up to step PRODUCTION and check the feeding action again.

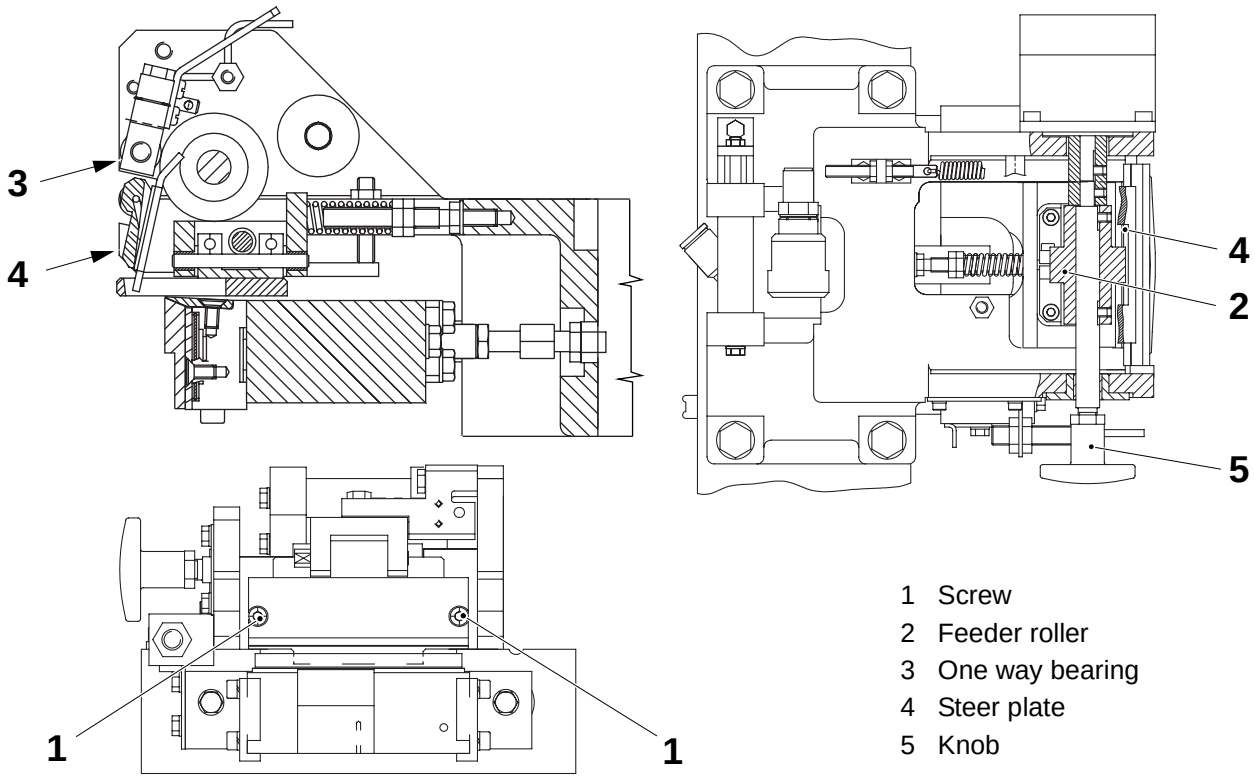

1 Screw
2 Feeder roller
3 One way bearing
4 Steer plate
5 Knob

TechPub_2614345_0103 - B5358D02en.fm

4.2.1-13 Tab Feeder - Set Tab Feed

Machine Status	Air **OFF** Mains power **OFF**
SPC Reference	1260415-0200

a) Place a piece of tab strip between the feeder roller (1) and the one way bearing (2).

b) Set the distance **A** between the bracket (3) and the screw (4) by means of the nut (5).

c) Adjust the nut (5) until it is "**impossible**" to pull the tab strip backwards.

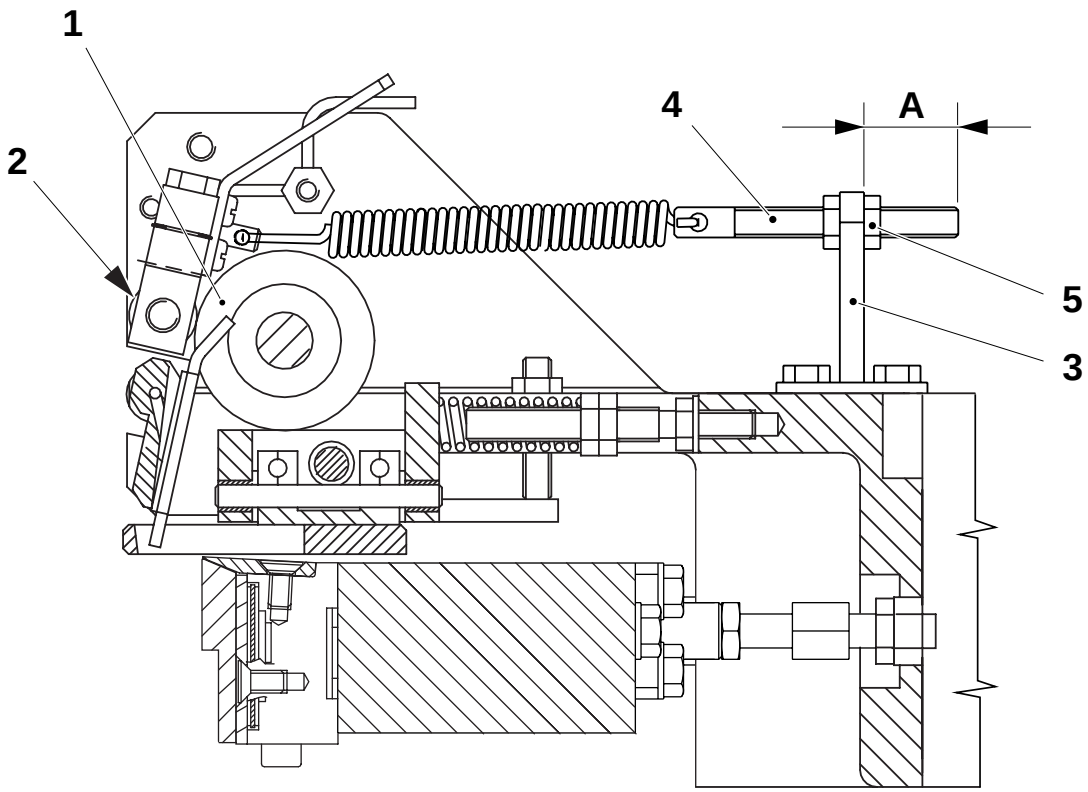

A = 16 ±1 mm

1 Feeder roller
2 One way bearing
3 Bracket
4 Screw
5 Nut

TechPub_2614345_0103 - B5358D02en.fm

4.2.1-14 Tab Feeder - Set Proximity Switch

Machine Status	Air **On** Mains Power **On**
SPC Reference	1260415-0200

WARNING
Risk of crushing!
The cylinder piston may move unexpectedly.

a) Switch the selector key, located on the PT21 electrical panel, to position SERVICE.

Note! For an accurate setting, the machine must be threaded. If not, place a piece of packaging material between the heating jaw and the counter jaw.

b) Loosen the nuts (1) and move backwards the proximity switch (2).
c) Activate the valve **Y8412:1** for the cylinder (3).
d) Check that the cylinder (3) is fully extended. If required, set the cushion cylinder, see 4.2.2-5 Tab Counter Jaw - Set Cushion Cylinder.
e) Set the distance **A** between the proximity switch (2) and the flag (4) by means of the nuts (1).
f) Check that the proximity switch (2) LED lights up.
g) Activate the valve **Y8412:2** and check that the cylinder (3) is fully in.

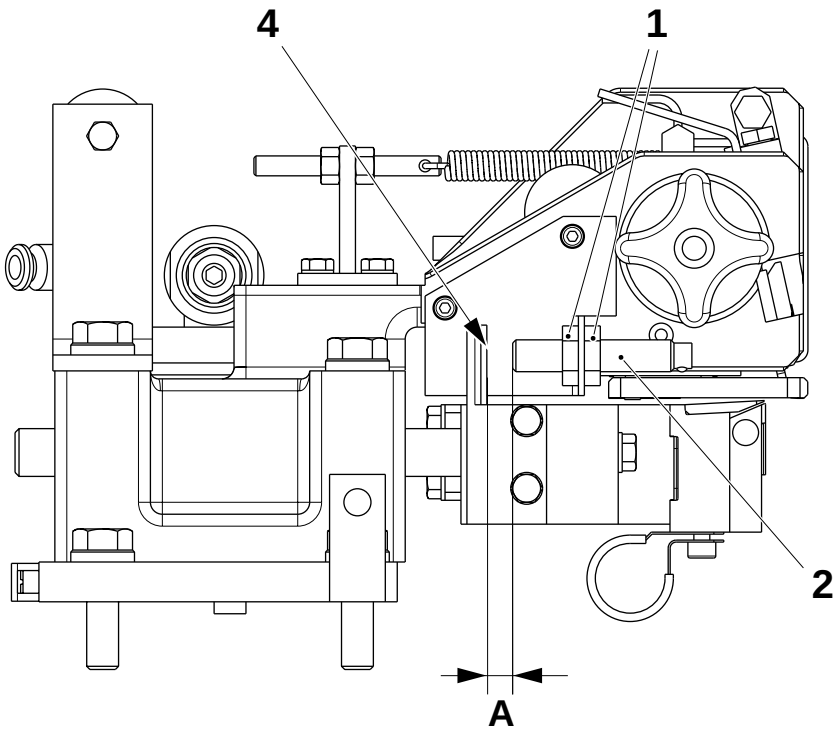

A = 0.1 mm

1 Nut
2 Proximity switch
3 Cylinder
4 Flag

TechPub_2614345_0103 - B5358D02en.fm

4.2.1-15 Tab Feeder - Set Position

Machine Status	PREPARATION
SPC Reference	1260415-0200

WARNING
Risk of burns!
The sealing jaw may be hot. Be careful.

Note! Before carrying out the instructions below make sure that the counter plate (2) is correctly positioned according to 7.2.1-1 Applicators - Set Brackets Position items e), f), g) and using the packaging material as a reference.

a) Switch the selector key, located on the PT21 electrical panel, to position SERVICE.

b) Check that the cushion cylinder (3) is fully extended.

c) Check the distance **A** between the counter plate (2) and the tip of the window knife (1).

d) Loosen the screws (4) and set the distance **A** by shifting the tab feeder assembly (5).

e) Set the tab counter jaw, see 4.2.2-5 Tab Counter Jaw - Set Cushion Cylinder.

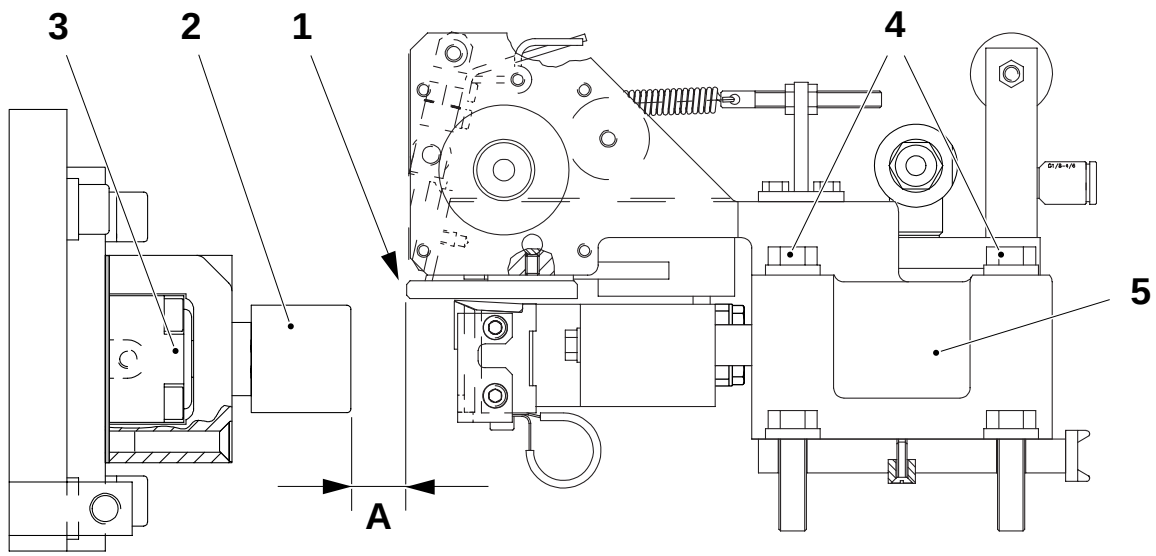

A = 1.5 ±0.2 mm

1 Window knife
2 Counter plate
3 Cushion cylinder
4 Screw
5 Tab feeder

TechPub_2614345_0103 - B5358D02en.fm

4.2.1-16 Tab Feeder - Change Heater and Thermocouple

Machine Status	Air **OFF** Mains power **OFF**
Consumables	Silicon paste TP No. 90296-51 Heat transfer liquid TP No. 90298-33
SPC Reference	1260415-0200

WARNING
Risk of burns!
The sealing jaw may be hot. Be careful.

a) Remove the feeder, see 4.2.1-3 Tab Feeder - Remove.
b) Remove the clamp (1) for the hose and the clamp (2) for the thermocouple (3).
c) Pull out the thermocouple (3) tip from the sealing jaw plate.
d) Remove the screws (4) and the clamps (5), on both sides.
e) Remove the sealing plate (6).

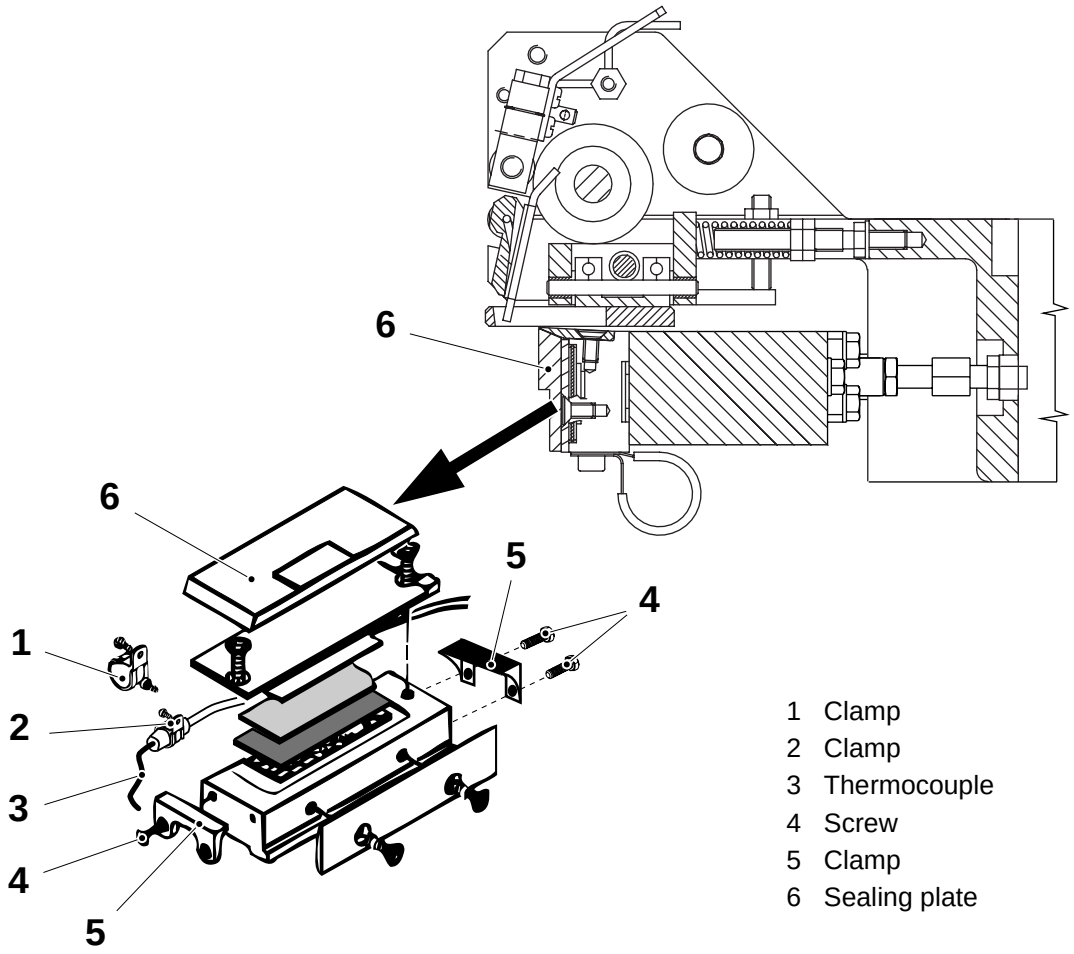

1 Clamp
2 Clamp
3 Thermocouple
4 Screw
5 Clamp
6 Sealing plate

(Cont'd)

TechPub_2614345_0103 - B5358D02en.fm

(Cont'd)

f) Remove the screws (7) and lift off the lock plate (8).

g) Disconnect the cable from the connector and remove the heater (9) and the thermocouple (3).

h) Change the heater (9) and the thermocouple (3).

Note! When reassembling the lock plate (8) check that the ceramic cloth (10) and the plate (11) are correctly mounted, see figure below.

Note! Apply the heat transfer liquid to the tip of the thermocouple (3) and into the sealing pad channel (12) before assembling in the reverse order.

i) Assemble in the reverse order.

j) Set the sealing plate, see 4.2.1-5 Tab Feeder - Set Sealing Plate.

CAUTION
Risk of damage to the equipment!
Check that the tip of the thermocouple (3) is firmly in place in the sealing plate before turning the mains power **On**.

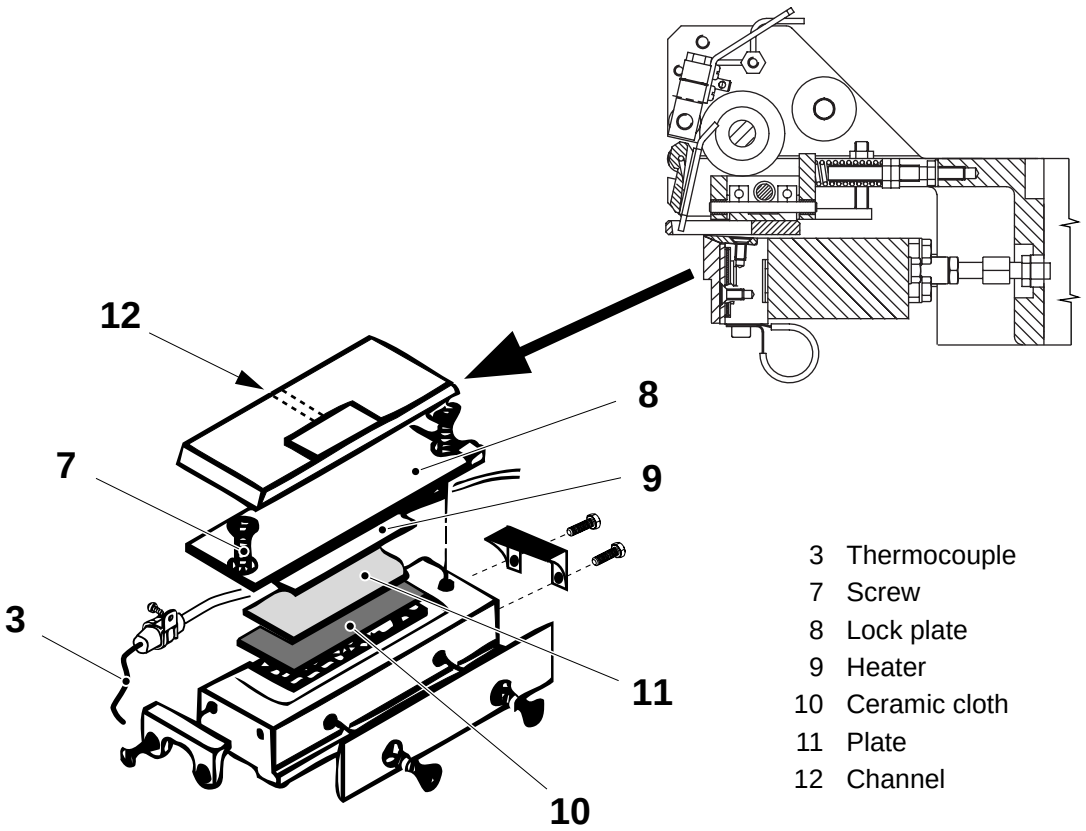

3 Thermocouple
7 Screw
8 Lock plate
9 Heater
10 Ceramic cloth
11 Plate
12 Channel

TechPub_2614345_0103 - B5358D02en.fm

4.2.2 Tab Counter Jaw

4.2.2-1 Tab Counter Jaw - Remove

Machine Status	Air **OFF** Mains power **OFF**
SPC Reference	1260416-0200

a) Disconnect the air hose (1) for the cushion cylinder and the air hose (2) for the cap blowing.

b) Unscrew the screws (3). Slide up the plate (4) to remove the plate (4) with the counter jaw unit attached to it.

c) Assemble in the reverse order.

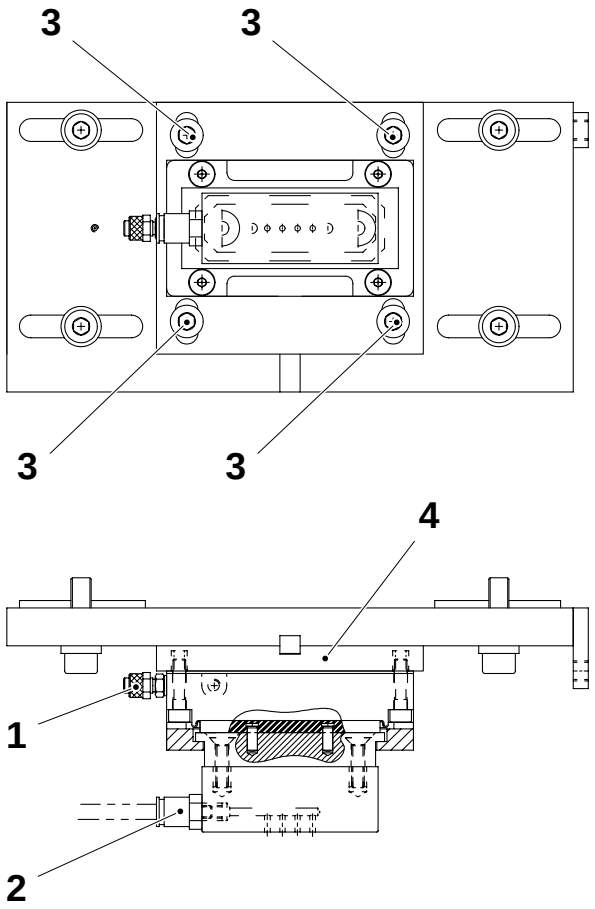

1 Air hose
2 Air hose
3 Screw
4 Side plate

TechPub_2614345_0103 - B5358D02en.fm

4.2.2-2 Tab Counter Jaw - Change Counter Plate

Machine Status	Air **OFF** Mains power **OFF**
Consumables	Teflon™ tape TP No. 90144-30
SPC Reference	1260416-0200

a) Disconnect the air hose (1) for the cushion cylinder (2) and the air hose (3) for the cap blowing.

b) Remove the screws (4). Slide up the plate (5) to remove the plate (5) together with the counter jaw unit.

c) Remove the screws (6).

d) Remove the guide bushing (9) from the counter plate (8) by means of the screws (7).

e) Remove the air hose (3) connection from the counter plate (8).

f) Change the counter plate (8) and assemble in the reverse order.

g) Set the counter plate (8) as required, see 4.2.2-6 Tab Counter Jaw - Set Position.

h) Check the position of the counter jaw, see 4.2-2 Applicator Tab - Set Tab Counter Jaw Position.

Note! Check the condition of the Teflon™ tape and change it as required.

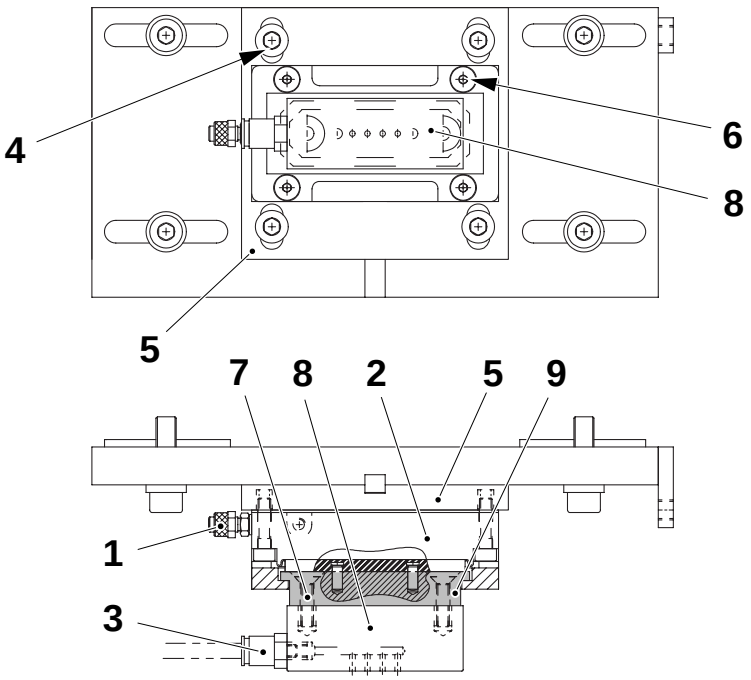

1 Air hose
2 Cushion cylinder
3 Air hose
4 Screw
5 Plate
6 Screw
7 Screw
8 Counter plate
9 Guide bushing

TechPub_2614345_0103 - B5358D02en.fm

4.2.2-3 Tab Counter Jaw - Check Guide Bushing

Machine Status	Air **OFF** Mains power **OFF**
SPC Reference	1260416-0200

a) Disconnect the air hose (1) for the cushion cylinder (2) and the air hose (3) for the cap blowing.

b) Remove the screws (4). Slide up the plate (5) to remove the plate together with the counter jaw unit.

c) Remove the screws (6).

d) Remove the guide bushing (9) from the counter plate (8) by means of the screws (7).

e) Check the guide bushing (9) for wear and change it as required.

Note! Remove the two pins (10) from the old guide bushing (9) and assemble them into the new one.

f) Assemble in the reverse order.

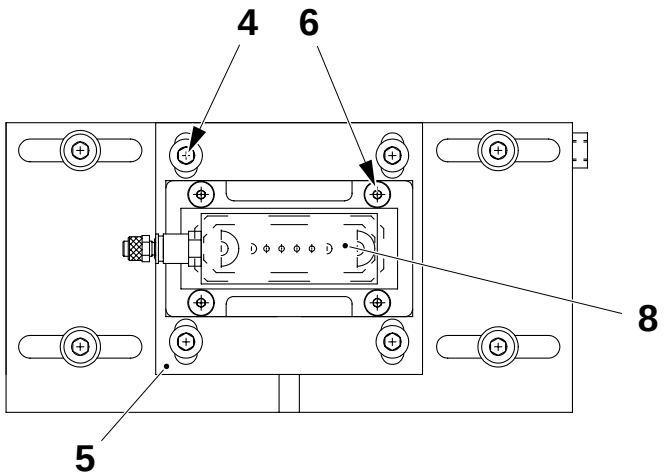

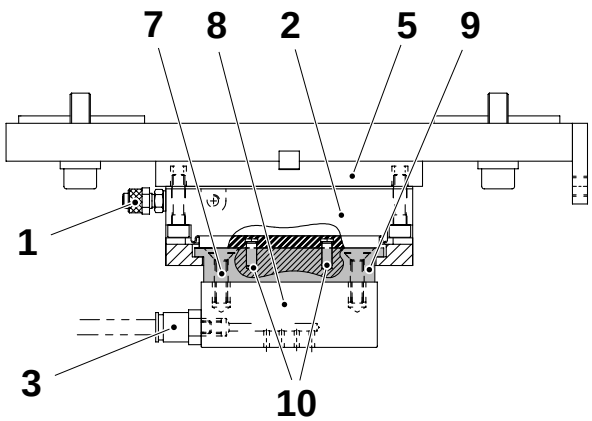

1 Air hose
2 Cushion cylinder
3 Air hose
4 Screw
5 Plate
6 Screw
7 Screw
8 Counter plate
9 Guide bushing
10 Pin

TechPub_2614345_0103 - B5358D02en.fm

4.2.2-4 Tab Counter Jaw - Change Cushion Cylinder

Machine Status	Air **OFF** Mains power **OFF**
SPC Reference	1260416-0200

a) Remove the tab counter jaw unit, see 4.2.2-1 Tab Counter Jaw - Remove.

b) Unscrew the screws (1) and separate the counter plate (2) from the cushion cylinder (3).

c) Unscrew the screws (4) and change the cushion cylinder (3).

d) Assemble in the reverse order.

e) Check that the cushion cylinder (3) reaches the end of its stroke.

f) Set the tab counter jaw, see 4.2.2-6 Tab Counter Jaw - Set Position.

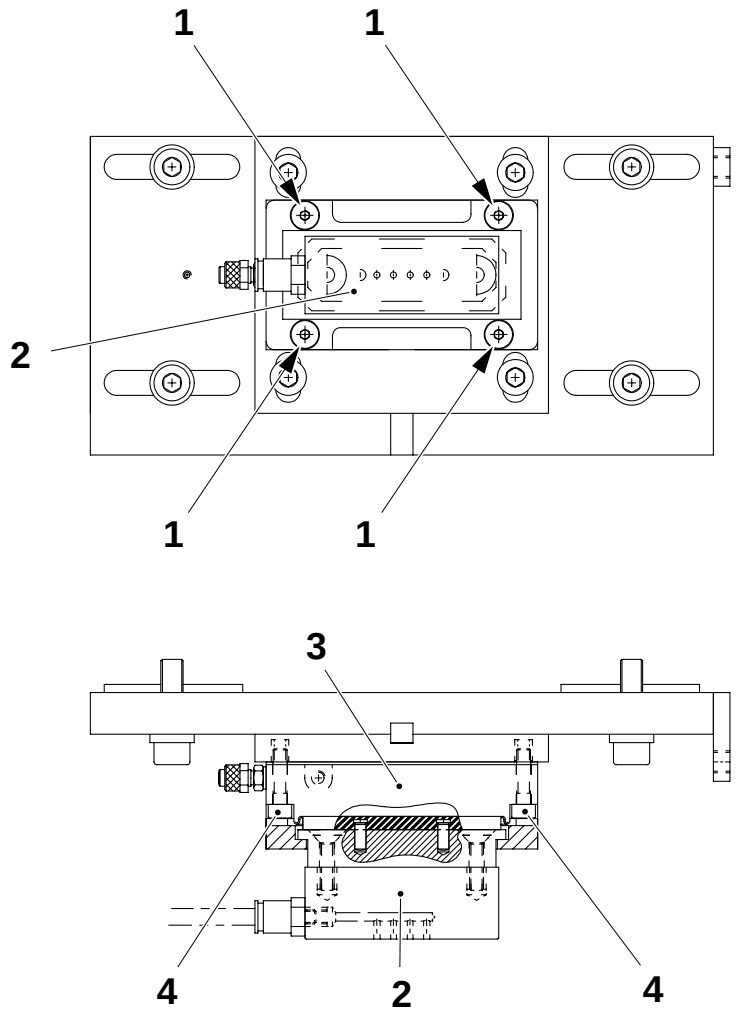

1 Screw
2 Counter plate
3 Cushion cylinder
4 Screw

TechPub_2614345_0103 - B5358D02en.fm

4.2.2-5 Tab Counter Jaw - Set Cushion Cylinder

Machine Status	PREPARATION
SPC Reference	1260416-0200

WARNING
Risk of burns!
The sealing jaw may be hot. Be careful.

a) Set the tab feeder unit, see 4.2.1-15 Tab Feeder - Set Position.
b) Switch the selector key, located on the PT21 electrical panel, to position SERVICE.
c) Check that the cushion cylinder (6) is fully extended.
d) With the aid of a feeler gauge measure and record the distance **A** on both sides of the counter plate (5).
e) Place a piece of packaging material between the sealing jaw plate (4) and the counter plate (5).
f) Activate the valve **Y8412:1** for the cylinder (1).
g) Loosen the locknut (3) and adjust the piston rod (2) until the distance **A** is reduced by **0.8 mm** on both sides of the counter plate (5).
h) Tighten the locknut (3).
i) Activate the valve **Y8412:2** and check that the cylinder (1) is fully in.
j) Set the tab feeder, see 4.2.1-14 Tab Feeder - Set Proximity Switch.

Note! If the difference between the distance **A** on one side and the distance **A** on the other side is more than **0.5 mm**, check the cushion cylinder (6), the counter plate (5) and the tab feeder.

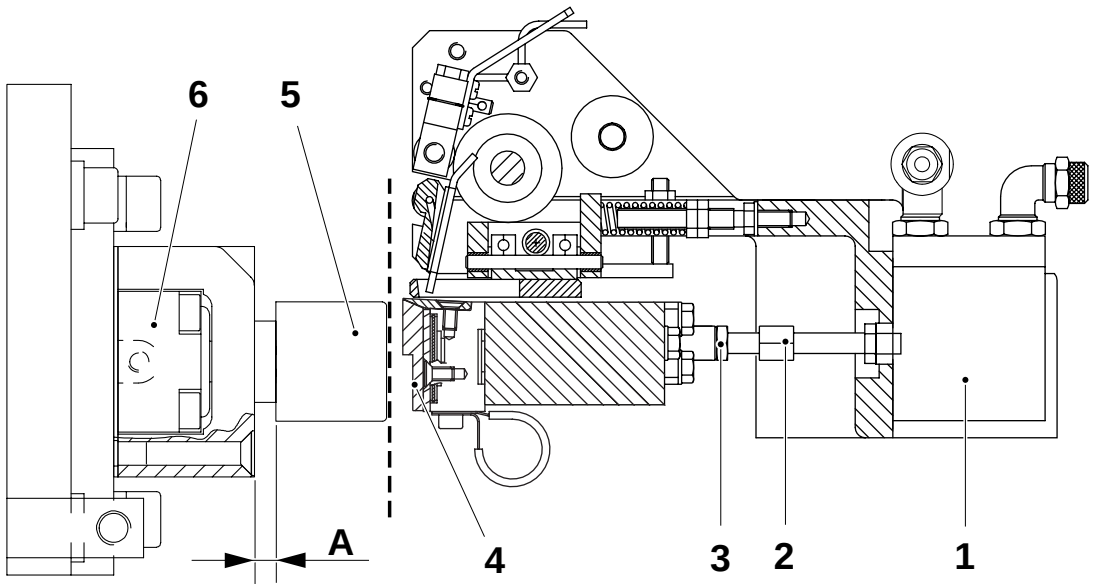

TechPub_2614345_0103 - B5358D02en.fm

4.2.2-6 Tab Counter Jaw - Set Position

Machine Status	PREPARATION
SPC Reference	1260416-0200

WARNING
Risk of burns!
The sealing jaw may be hot. Be careful.

Note! The below instructions must be executed **only** if one of the following sections have been performed: 4.2.2-2 Tab Counter Jaw - Change Counter Plate, 4.2.2-3 Tab Counter Jaw - Check Guide Bushing, 4.2.2-4 Tab Counter Jaw - Change Cushion Cylinder.
If not refer to the basic setting of the counter jaw see 7.2.1-1 Applicators - Set Brackets Position.

a) Switch the selector key, located on the PT21 electrical panel, to position SERVICE.
b) Check that the cushion cylinder (1) is fully extended.
c) Remove the packaging material.
d) Set the distance **A** between the counter plate (2) and the tip of the window knife (3) by adding or removing shims (4).
e) Set the cushion cylinder (1), see 4.2.2-5 Tab Counter Jaw - Set Cushion Cylinder.

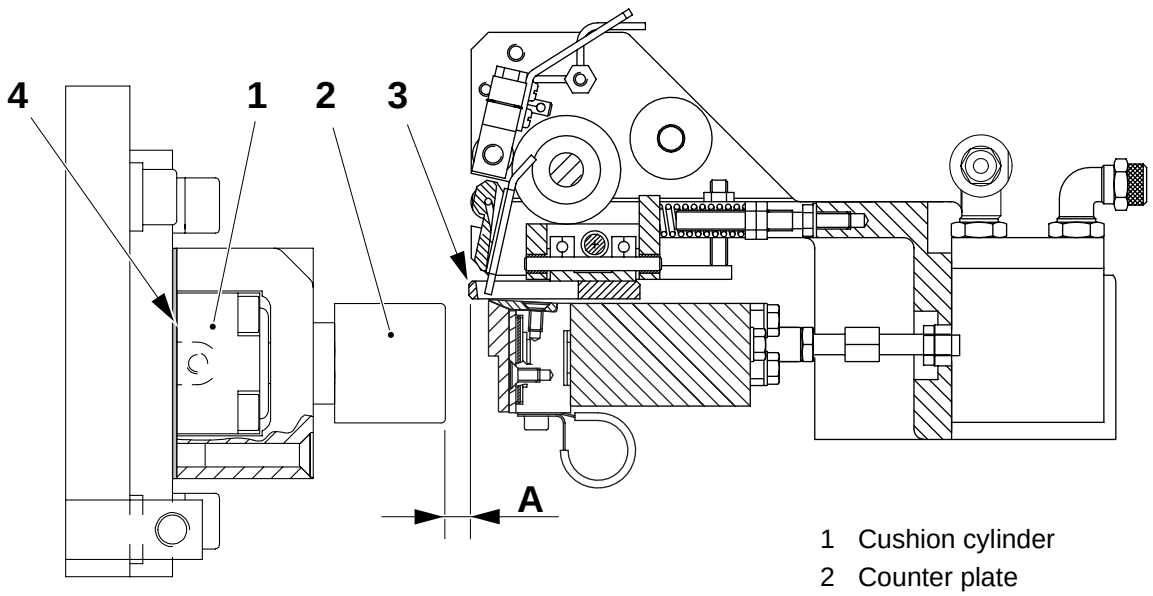

A = 1.5 ±0.2 mm

1 Cushion cylinder
2 Counter plate
3 Window knife
4 Shim

TechPub_2614345_0103 - B5358D02en.fm

4.3 Magazine Pulltab

SPC Reference	1095893-0100

4.3-1 Magazine PullTab - check

Machine Status	Air **OFF** Mains power **ON**
SPC Reference	1095893-0100

Check the following parts for wear and/or damage:

- the wheel (1) and the arm (2)
  Check also that they move freely.
- the brake pin (3)
  Check also the brake function by pulling the arm (4).
- the arm (4)
  Check also that it moves freely.
- the brake disc (5)
  Check also that it moves freely.

TechPub_2614345_0103 - B5358D03en.fm

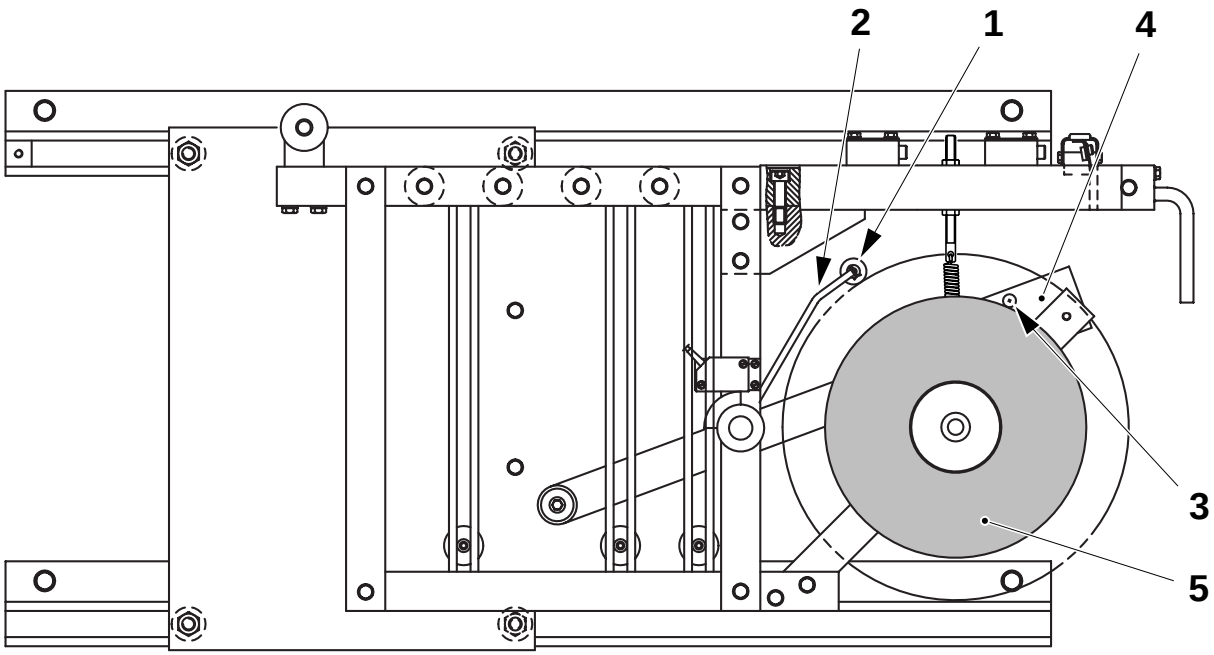

1 Wheel
2 Arm
3 Brake pin
4 Arm
5 Brake disc

(Cont'd)

(Cont'd)

- the rollers (6)
  Check that they turn freely. If not, clean as required. If damaged or worn, change.
- the tension rollers (7)
  Check that they turn freely and that they can slide easily along the guide (8). If not, clean as required. If damaged or worn, change.
- the low supply proximity switch (9)
  Check that the proximity switch LED lights up in working condition. Set the proximity switch as required, see 4.3-2 Magazine Pulltab - Set Proximity Switch.

Change as required.

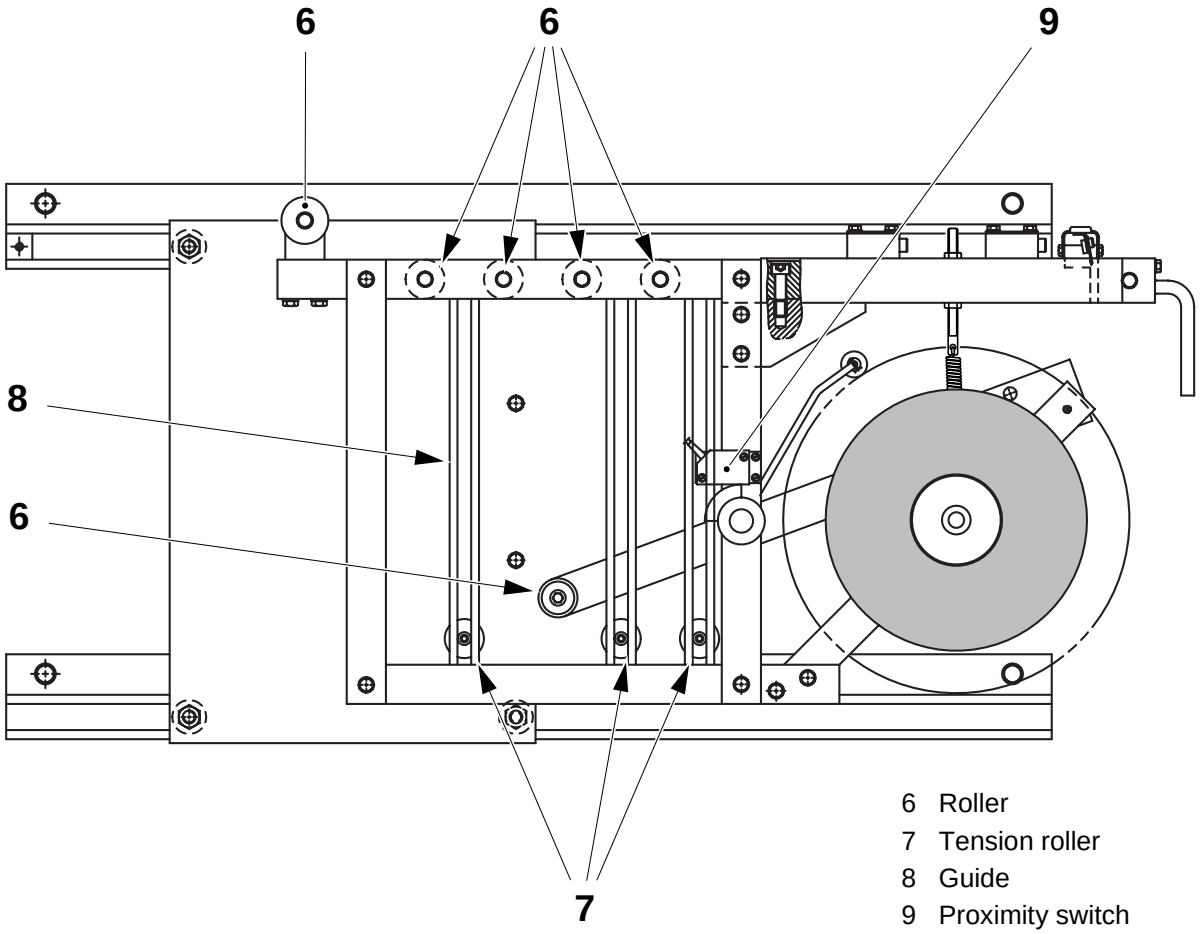

6 Roller
7 Tension roller
8 Guide
9 Proximity switch

TechPub_2614345_0103 - B5358D003en.fm

4.3-2 Magazine Pulltab - Set Proximity Switch

Machine Status	Air **OFF** Mains power **ON**
SPC Reference	1095893-0100

a) Place a feeler gauge, of **A** thickness, see table below, between the bobbin holder (2) and the wheel (1).

b) Loosen the stop screw on the indicator curve (3) and turn the indicator curve (3) until the LED on the proximity switch (4) goes off.

c) Tighten the stop screw on the indicator curve (3).

d) Remove the feeler gauge.

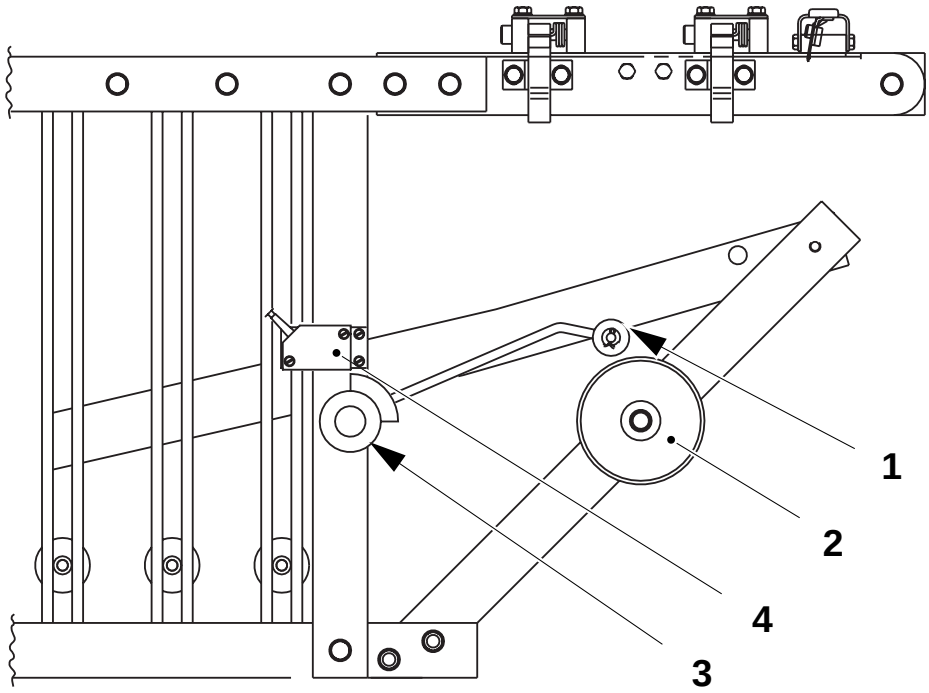

A = 8 mm

1 Wheel
2 Bobbin holder
3 Indicator curve
4 Proximity switch

TechPub_2614345_0103 - B5358D03en.fm

4.3-3 Magazine Pulltab - Set Strip Tension

Machine Status	Air **OFF** Mains power **OFF**
SPC Reference	1095893-0100

a) Check that the roller (2) operates at the **bottom** of its stroke and that the roller (3) operates at the **top** of its stroke.

b) If required, adjust patch strip tension by means of the nuts (1). Raise the spring to decrease tension or lower the spring to increase tension.

Note! Use a new bobbin (full) to verify the setting.

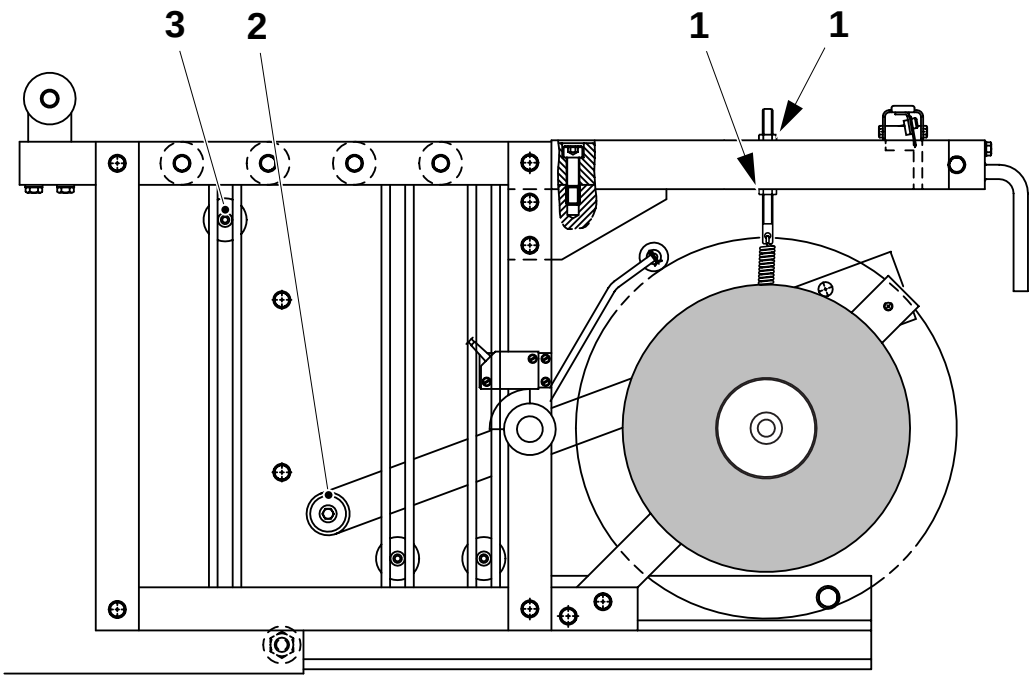

1 Nut
2 Roller
3 Roller

TechPub_2614345_0103 - B5358D003en.fm

4.3-4 Magazine Pulltab - Change Bobbin Holder Bearings

Machine Status	Air **OFF** Mains power **OFF**
SPC Reference	1095893-0100

a) Unscrew the nut (1) and remove the washer (2).
b) Remove the bobbin holder (3) assembly.
c) Unscrew the cap nut (4) and remove the washer and the ball bearing (5).
d) Unscrew the screws (6) and remove the washer and the brake disc (7).
e) Pull out the shaft (8) and the washer (9).
f) Remove the circlip (10) and remove the ball bearing (11).
g) Change the ball bearings (5) and (11).
h) Assemble in the reverse order.

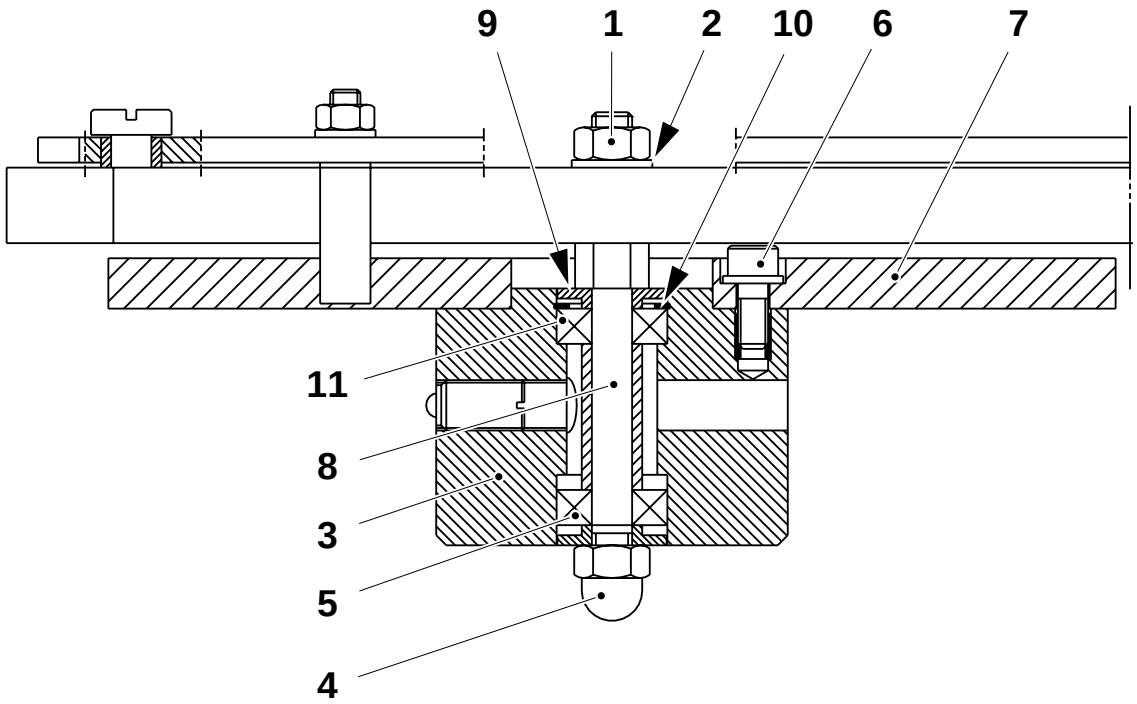

1 Nut
2 Washer
3 Bobbin holder
4 Cap nut
5 Ball bearing
6 Screw
7 Brake disc
8 Shaft
9 Washer
10 Circlip
11 Ball bearing

TechPub_2614345_0103 - B5358D03en.fm

4.3-5 Magazine Pulltab - Check Bobbin Holder

Machine Status	Air **OFF** Mains power **OFF**
SPC Reference	1095893-0100

Check that the bobbin holder (1) rotates easily.

Check the distance **A** between the spring loaded screw (2) and the bobbin holder (1).

Check that the strip bobbins are securely fixed to the bobbin holder (1).

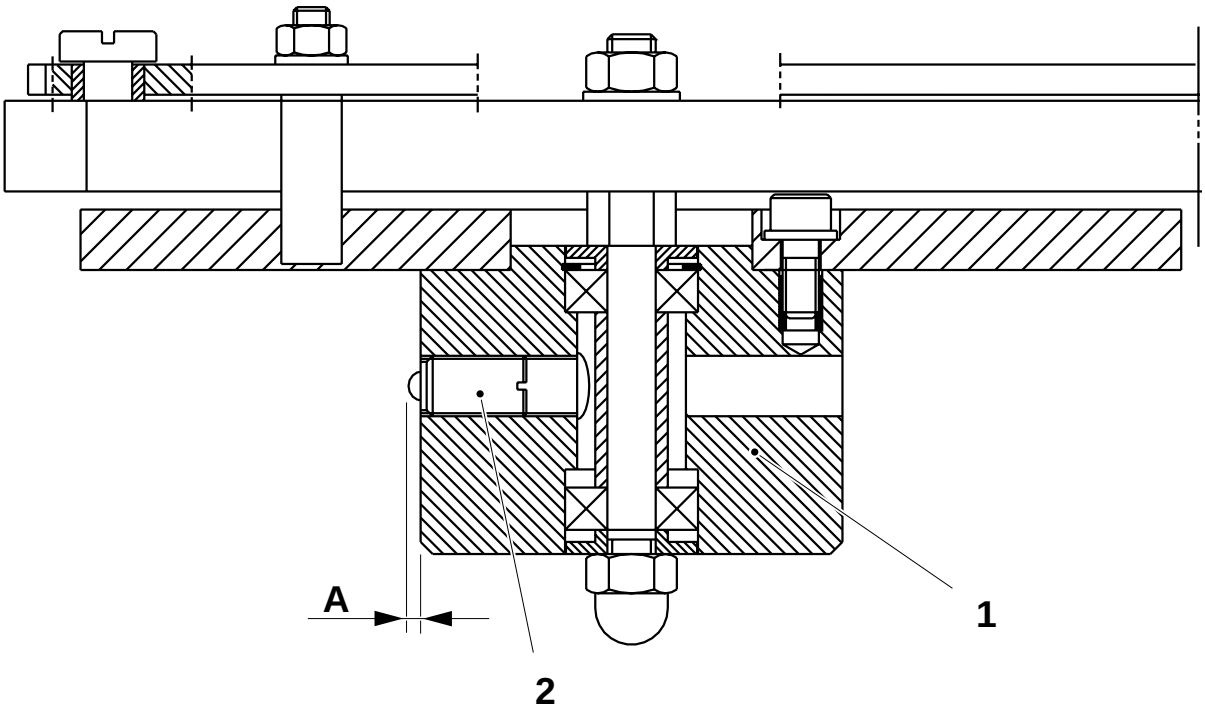

1 Bobbin holder
2 Spring loaded screw

A = 2.0 ±0.5 mm

TechPub_2614345_0103 - B5358D003en.fm

4.3.1 Splicing Device

4.3.1-1 Splicing Device - Check Function

Machine Status	Air **OFF** Mains power **OFF**
SPC Reference	1095893-0100 1095895-0100

Check that the splicing device (1) slides smoothly and easily on the guide tab (2). If not, change the curve roller (3) on the guide tab (2), see 4.3.2-1 Guide Pulltab - Change Curve Rollers.

Check that the cutting action of the knife (4) is correct. If not, change the knife (4), see on 4.3.1-2 Splicing Device - Change Knife.

Check that the lock grips (5) and the knife holder (6) spring to a position that does not interfere with the tab feeding.

Change as required.

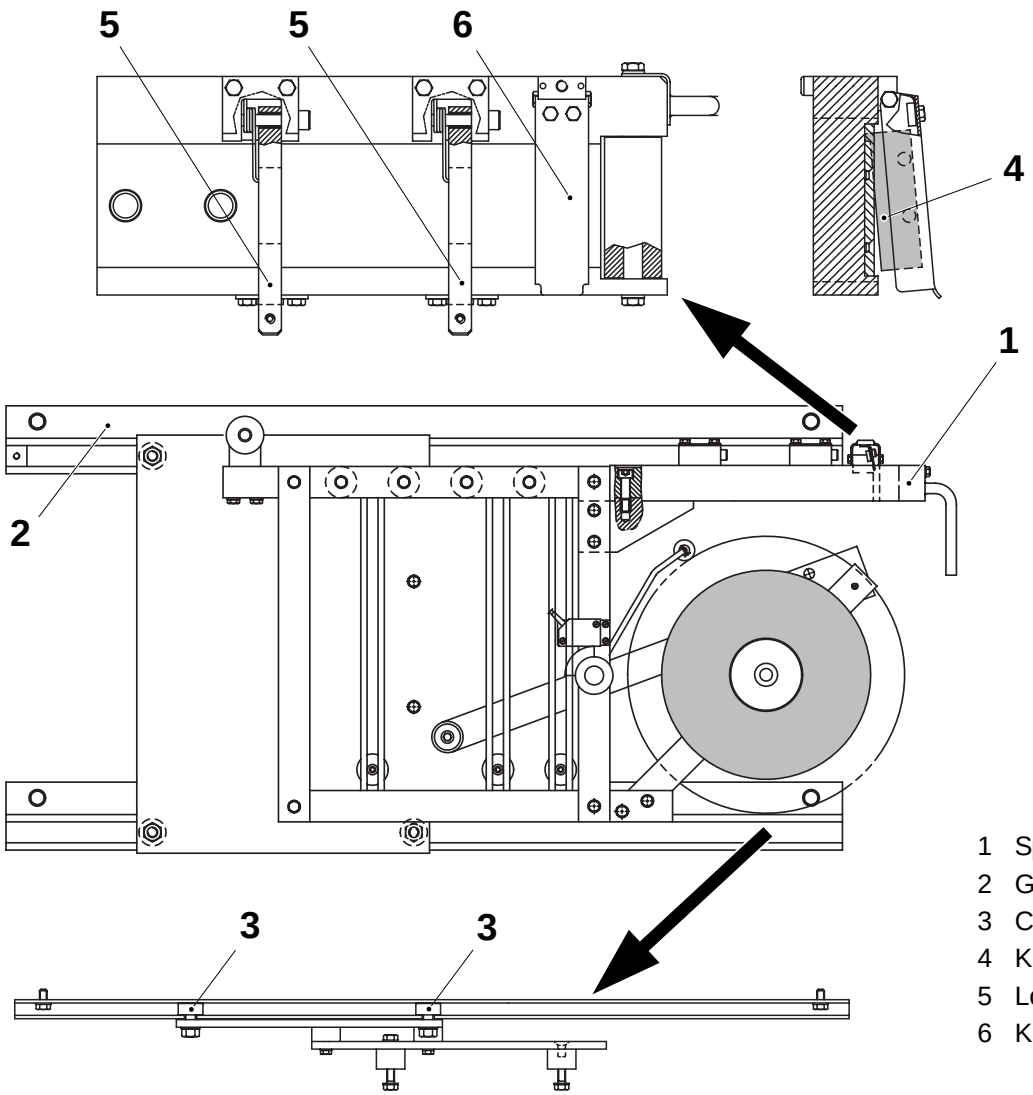

1 Splicing device
2 Guide tab
3 Curve roller
4 Knife
5 Lock grip
6 Knife holder

TechPub_2614345_0103 - B5358D03en.fm

4.3.1-2 Splicing Device - Change Knife

Machine Status	Air **OFF** Mains power **OFF**
SPC Reference	1095893-0100 1095895-0100

WARNING

Risk of cutting injury!

The knife (4) is sharp. Use gloves to avoid injuries.

a) On the side of the knife holder (1), unscrew the two screws (2) with the aid of an allen key.

b) Remove the washers (3).

c) Pull out the knife (4).

d) Change the knife (4).

e) Assemble in the reverse order.

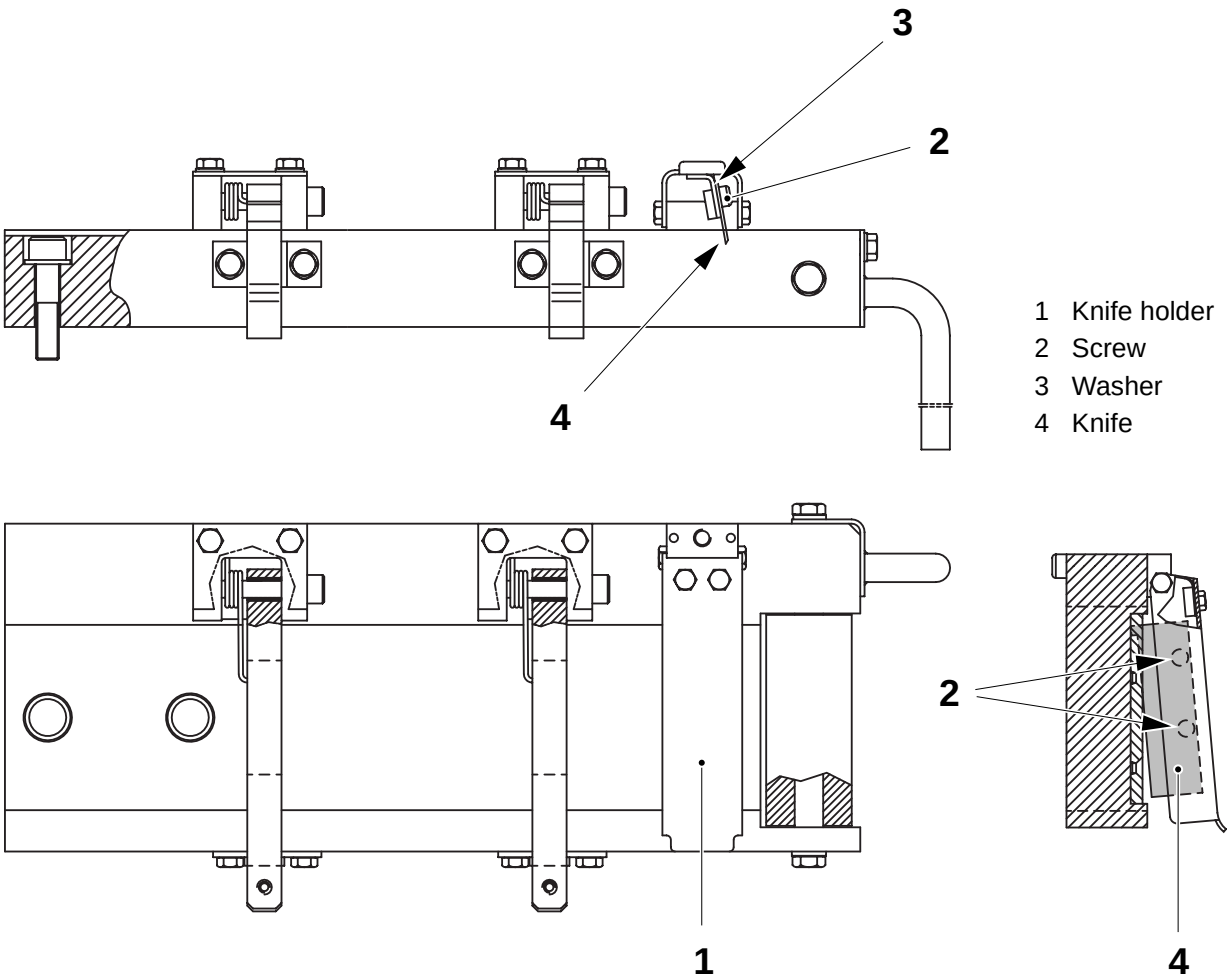

1 Knife holder
2 Screw
3 Washer
4 Knife

TechPub_2614345_0103 - B5358D003en.fm

4.3.1-3 Splicing Device - Set Lock Grip

Machine Status	Air **OFF** Mains power **OFF**
SPC Reference	1095893-0100 1095895-0100

a) Place a piece of tab strip under the lock grips (1).

b) Loosen the screws (2).

c) Adjust the plate (3) so that it is **"impossible"** to pull the tab strip backwards and/or forwards.

d) Tighten the screws (2).

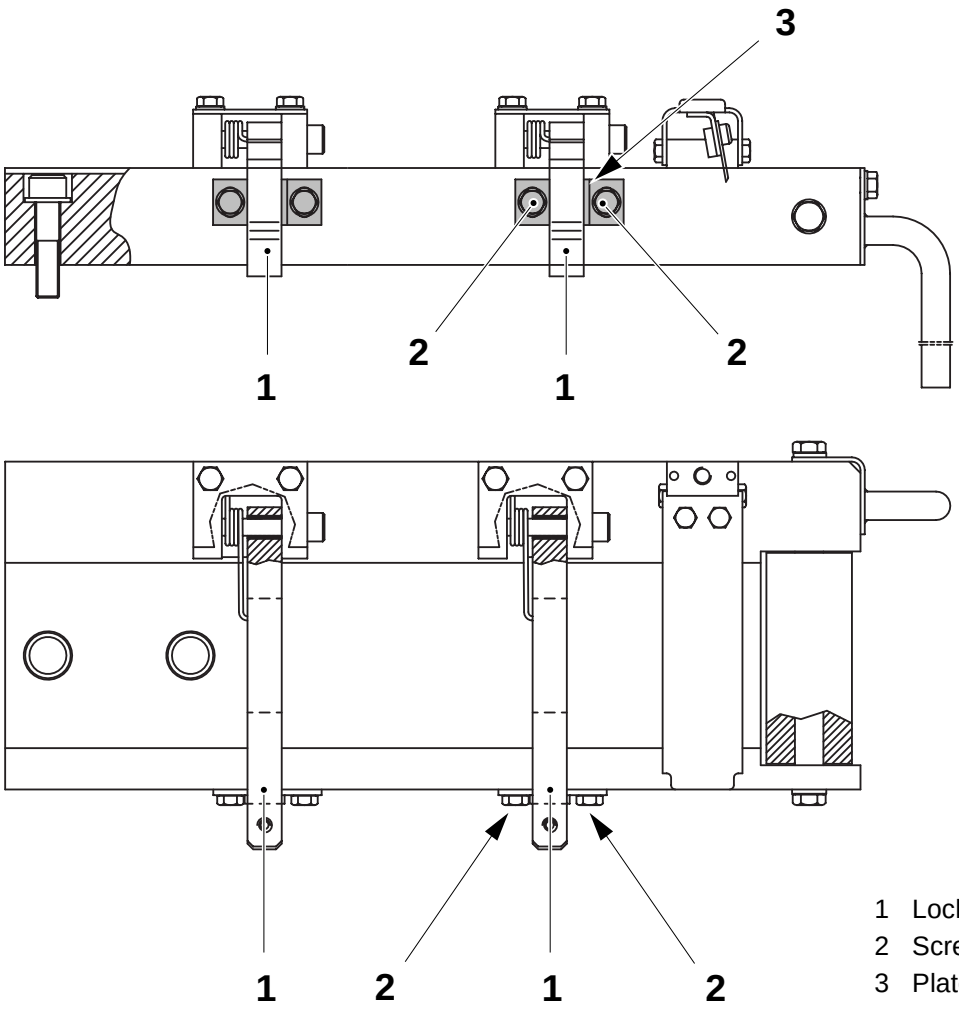

1 Lock grip
2 Screw
3 Plate

TechPub_2614345_0103 - B5358D03en.fm

4.3.2 Guide Pulltab

4.3.2-1 Guide Pulltab - Change Curve Rollers

Machine Status	Air **OFF** Mains power **OFF**
SPC Reference	1095923-0100

a) Remove the tab turning device assembly from the guide tab.
b) Unscrew the screws (1).
c) Remove the plate (2) and the PullTab magazine assembly together.
d) Remove the four nuts (3) and the plate (4).
e) Unscrew the screws (5) and remove the two steerings (6).
f) Remove the curve rollers (7) and change them if damaged or worn out.
g) Assemble in the reverse order.

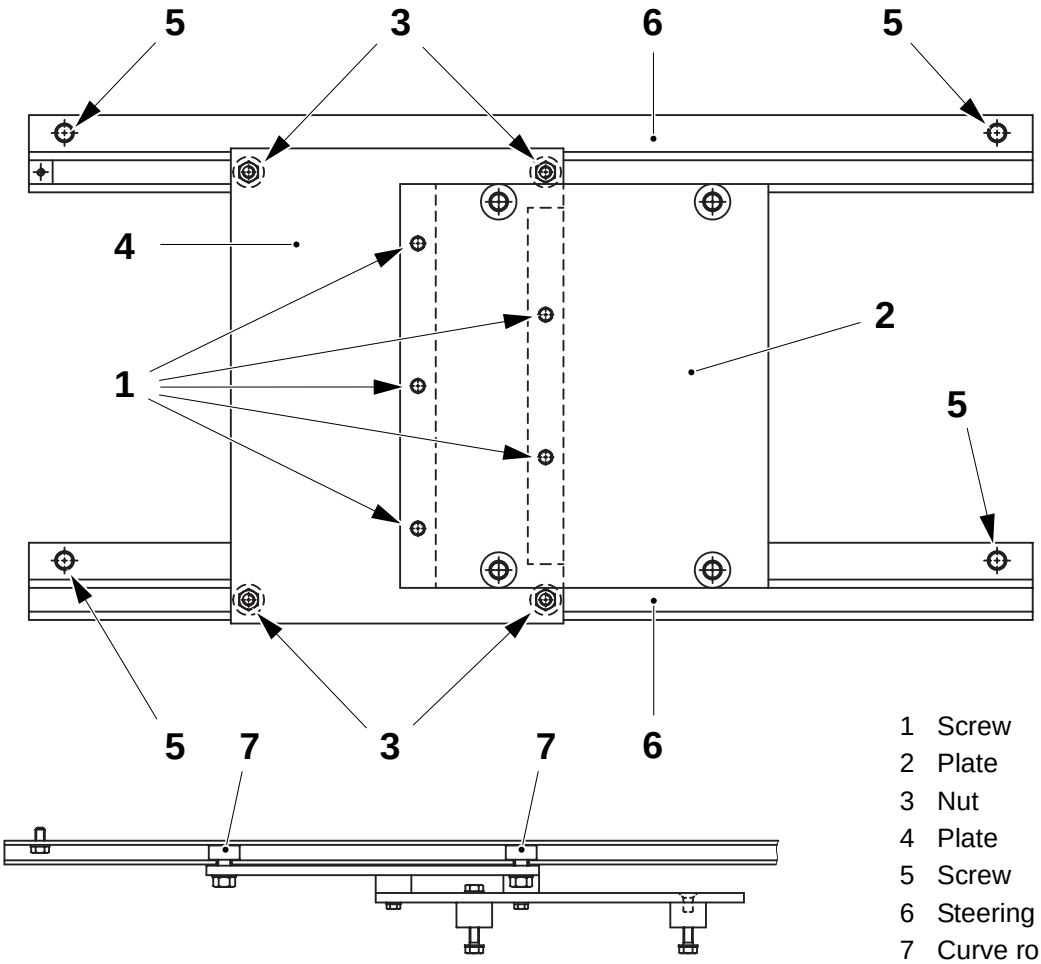

1 Screw
2 Plate
3 Nut
4 Plate
5 Screw
6 Steering
7 Curve roller

TechPub_2614345_0103 - B5358D03en.fm

4.3.3 Tab Turning Device

4.3.3-1 Tab Turning Device - Check

Machine Status	Air **OFF** Mains power **ON**
SPC Reference	1334066-0200

Check the following parts for wear and/or damage:

- the rollers (1)
  Check that they turn freely. If not, clean as required.
  If damaged or worn, change.
- the flag (2)
  Check that it turns freely simultaneously with the roller (1)
- the function of the rotation monitor proximity switch (3)
  Turn the flag (2) and check that the switch LED lights up when the flag (2) covers the switch source. Set the flag (2) as required, see 4.3.3-2 Tab Turning Device - Set Rotation Monitor Proximity Switch.

Change as required.

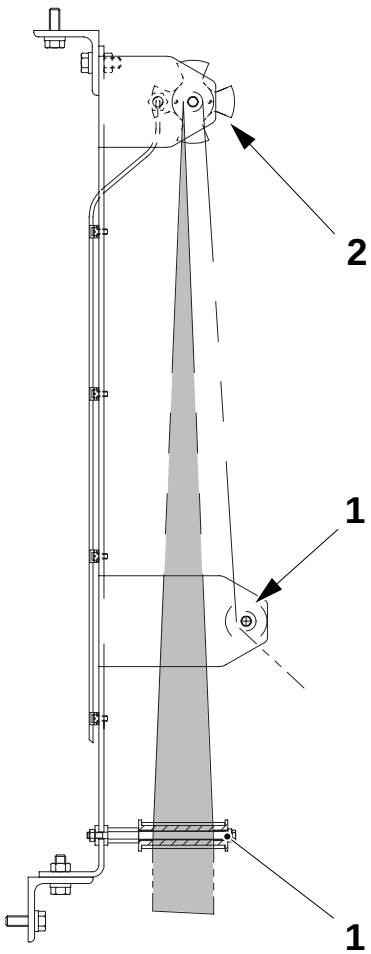

1 Roller
2 Flag
3 Proximity switch

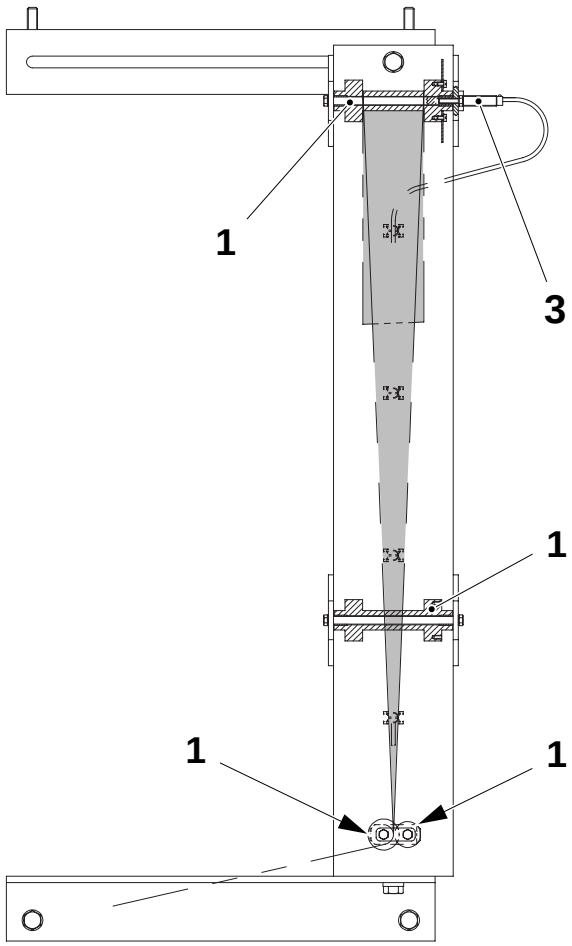

TechPub_2614345_0103 - B5358D03en.fm

4.3.3-2 Tab Turning Device - Set Rotation Monitor Proximity Switch

Machine Status	Air **OFF** Mains power **ON**
SPC Reference	1334066-0200

a) On the patch turning unit, pull the roller (1) towards the proximity switch (2).

b) Check the distance **A** between the proximity switch (2) and the flag (3).

c) Set as required by loosening the lock nuts (4) and shifting the proximity switch (2).

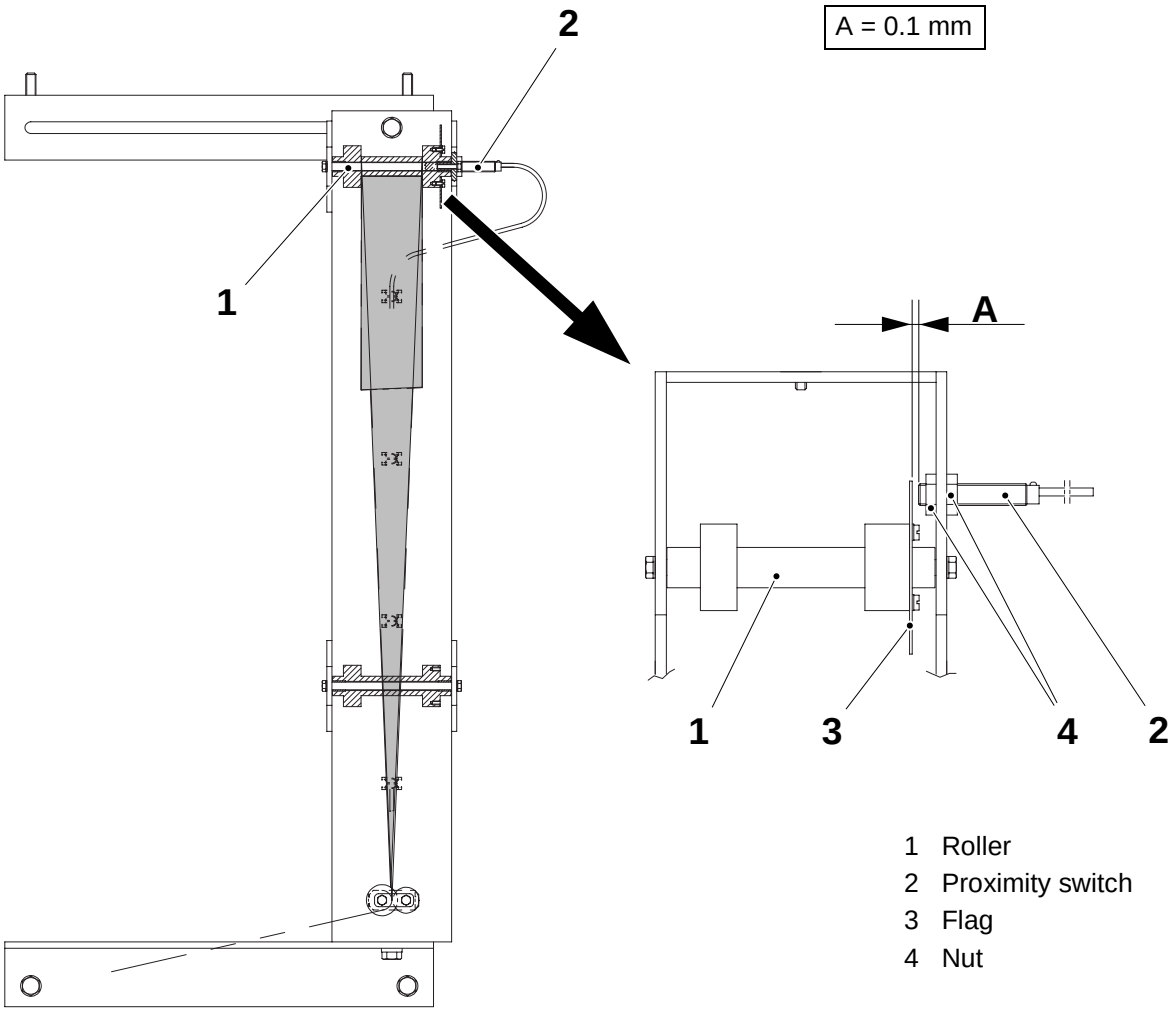

1 Roller
2 Proximity switch
3 Flag
4 Nut

TechPub_2614345_0103 - B5358D03en.fm

5 Applicator Reseal

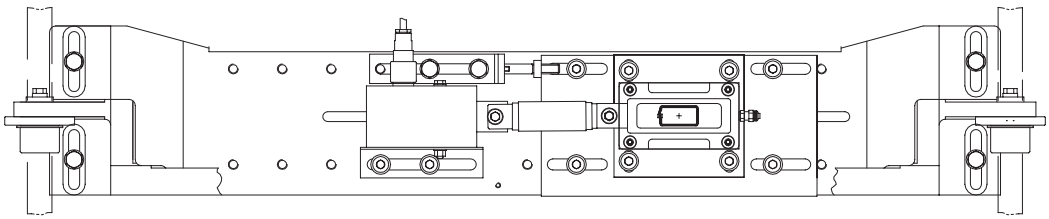

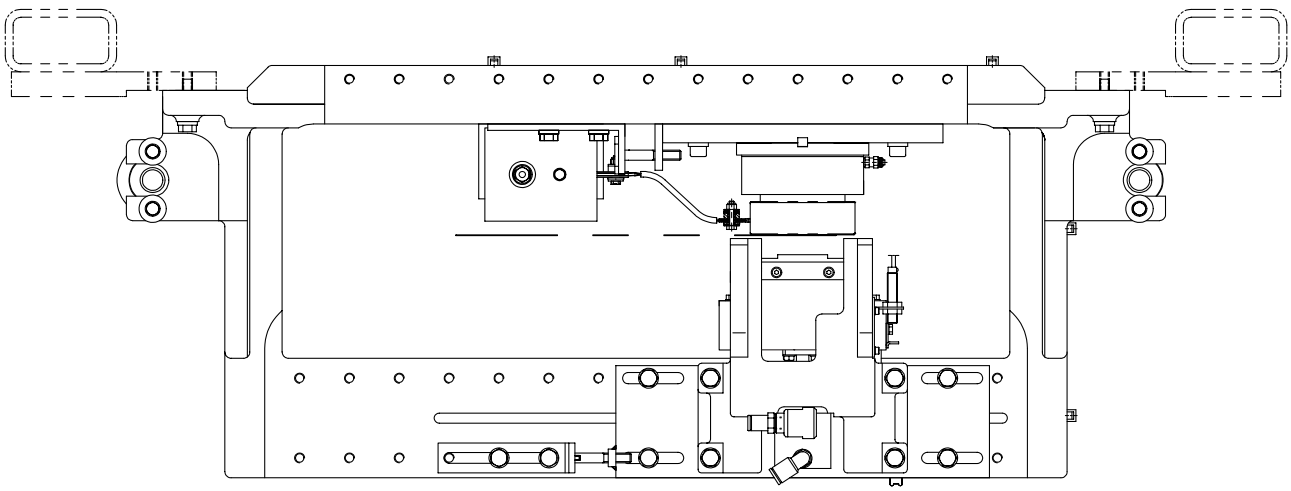

TechPub_2614345_0103 - B5358E00en.fm

Applicator Reseal - Description

SPC Reference	1260420-0200

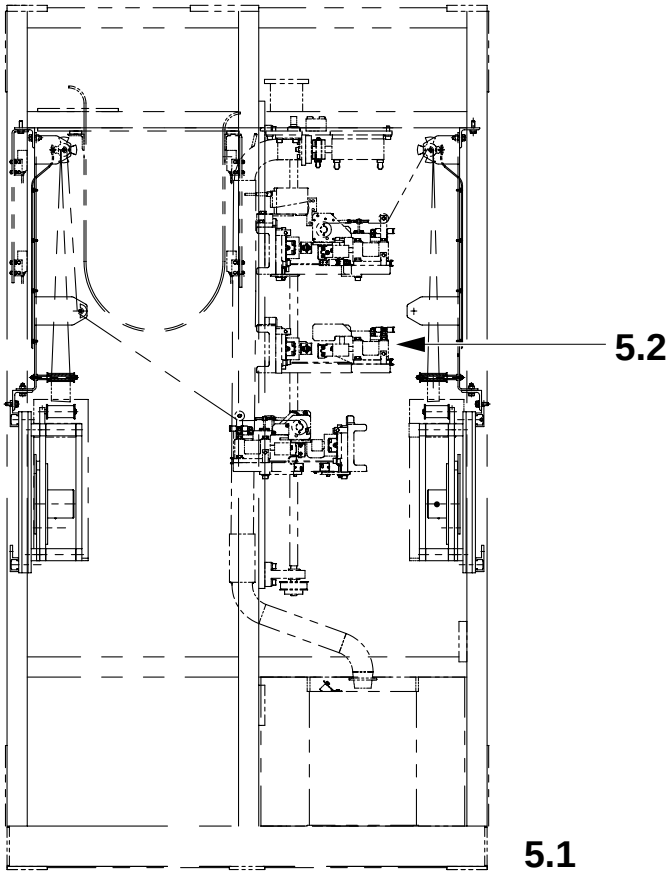

5.1 Setting Flow Chart
5.2 Applicator Reseal

TechPub_2614345_0103 - B5358E00en.fm

5-1 Applicator Reseal - Functional Description . . . . . 5 - 5

5.1 Setting Flow Chart . . . . . 5 - 7

5.2 Applicator Reseal . . . . . 5 - 8

5.2-1 Applicator Reseal - Check Reseal Position . . . . . 5 - 8

5.2-2 Applicator Reseal - Check Heat Pattern . . . . . 5 - 10

5.2.1 Reseal Heating Jaw . . . . . 5 - 15

5.2.1-1 Reseal Heating Jaw - Remove . . . . . 5 - 15

5.2.1-2 Reseal Heating Jaw - Set Sealing Plate . . . . . 5 - 16

5.2.1-3 Reseal Heating Jaw - Check Guides and Linear Bearings . . . . . 5 - 17

5.2.1-4 Reseal Heating Jaw - Change Linear Bearings . . . . . 5 - 18

5.2.1-5 Reseal Heating Jaw - Change Bushing . . . . . 5 - 19

5.2.1-6 Reseal Heating Jaw - Change Cylinder . . . . . 5 - 20

5.2.1-7 Reseal Heating Jaw - Check Sealing Plate . . . . . 5 - 21

5.2.1-8 Reseal Heating Jaw - Set Proximity Switch . . . . . 5 - 22

5.2.2 Reseal Counter Jaw . . . . . 5 - 23

5.2.2-1 Reseal Counter Jaw - Remove . . . . . 5 - 23

5.2.2-2 Reseal Counter Jaw - Check Inductor . . . . . 5 - 24

5.2.2-3 Reseal Counter Jaw - Change Inductor . . . . . 5 - 25

5.2.2-4 Reseal Counter Jaw - Check Guide Bushing . . . . . 5 - 26

5.2.2-5 Reseal Counter Jaw - Change Cushion Cylinder . . . . . 5 - 27

5.2.2-6 Reseal Counter Jaw - Set Cushion Cylinder . . . . . 5 - 28

TechPub_2614345_0103 - B5358E00en.fm

This page intentionally left blank

TechPub_2614345_0103 - B5358E00en.fm

5-1 Applicator Reseal - Functional Description

SPC Reference	1260420-0200

As the jaws are closed, the PLC receives signals from the proximity switches and

- the PLC begins the sealing-cycle when the patch, reseal and tab jaws are all closed
- the PLC begins a timer to sends the sealing pulses to the IH generator
- when the sealing cycle is timed out, the PLC opens (returns) the applicator stations

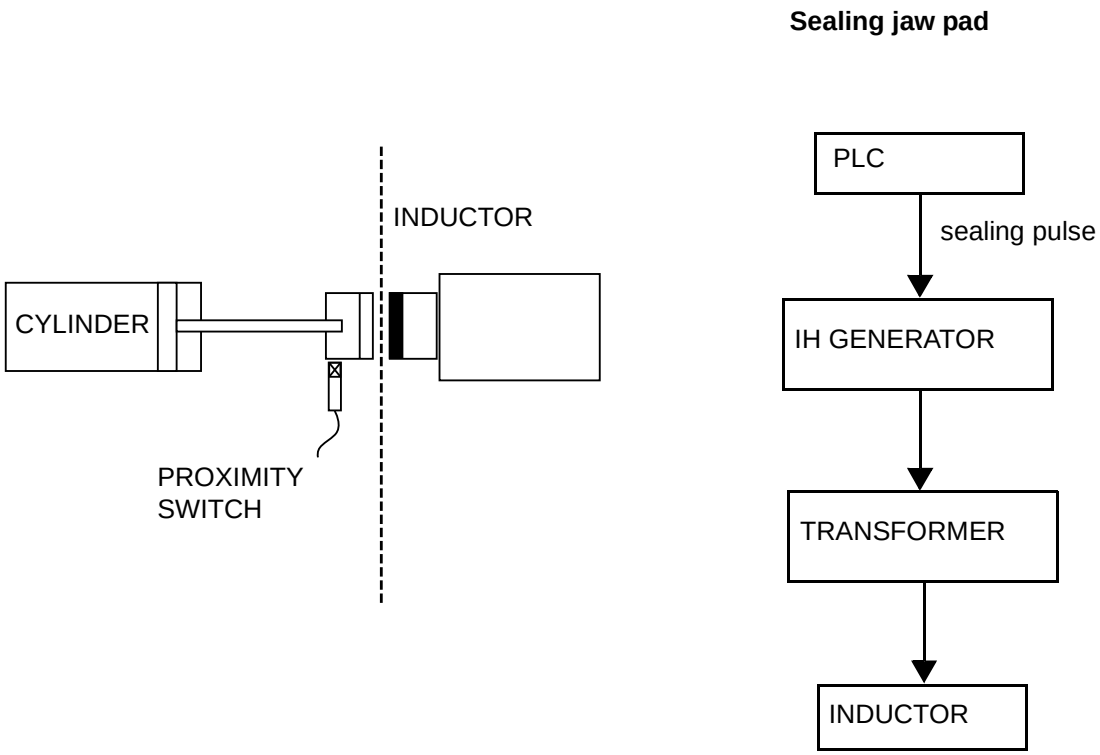

TechPub_2614345_0103 - B5358E00en.fm

(Cont'd)

(Cont'd)

During the PullTab unit machine cycle, the PLC signals the solenoid valve to extend the cylinder.

This action is done in order to seal the strip to the packaging material in the best way.

Resealing

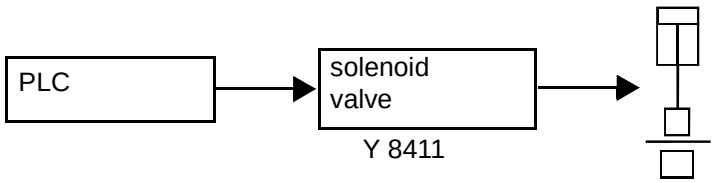

Note! The hole 90 has the same inductor used in PT21 060V. In order to make it function in the proper way an extra knife is needed. The knife is not for cutting but for balancing the inductor sealing (the knife affects the magnetic field from the inductor). A new Teflon™ tape, for hole 90, to put on the inductor is also supplied.

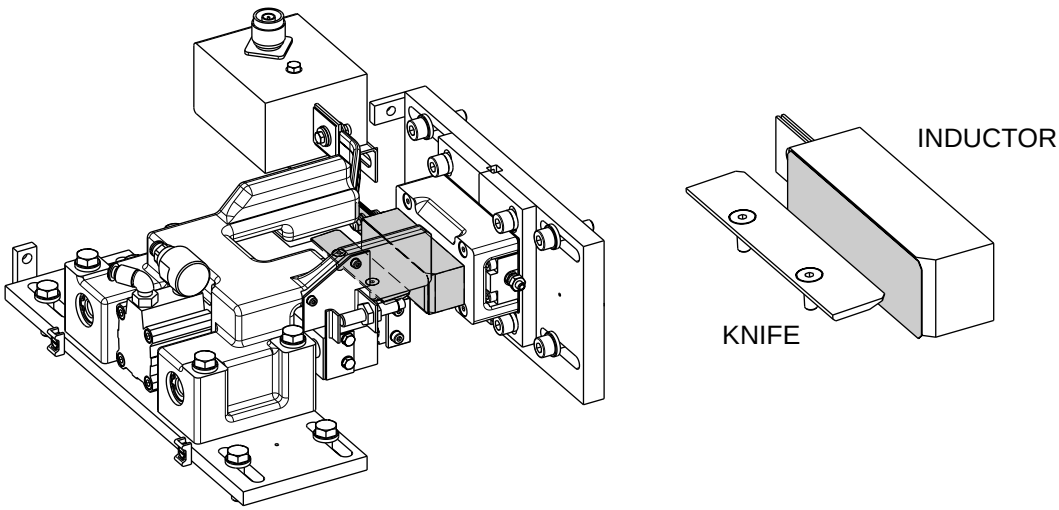

TechPub_2614345_0103 - B5358E00en.fm

5.1 Setting Flow Chart

The following flow chart shows the order in which the various components must be set up.

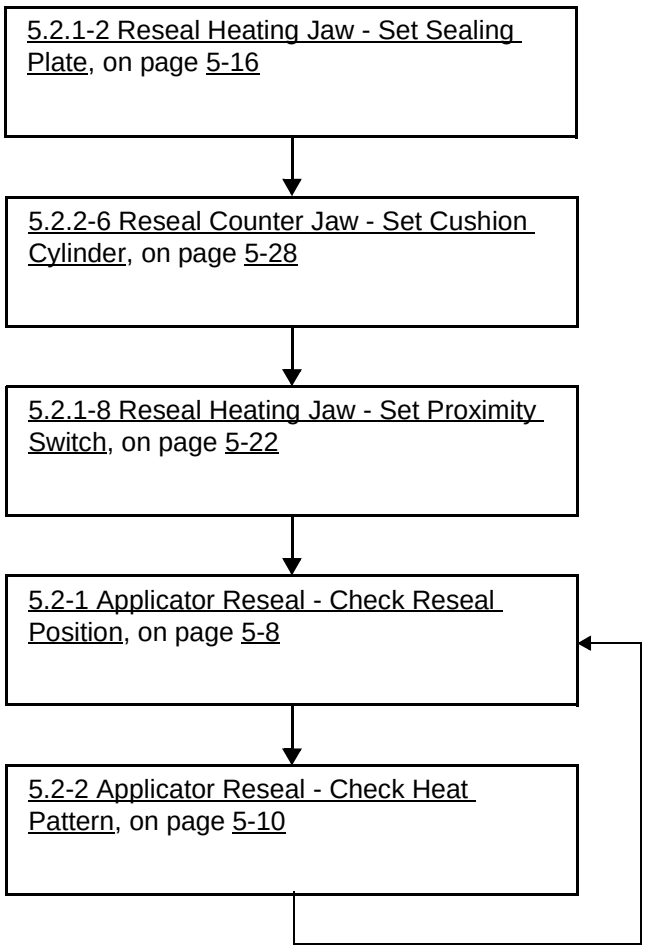

TechPub_2614345_0103 - B5358E01en.fm

5.2 Applicator Reseal

SPC Reference	1260420-0200

5.2-1 Applicator Reseal - Check Reseal Position

Machine Status	PREPARATION
SPC Reference	1260420-0200

Set Reseal Counter Jaw Vertical Position

a) Switch the selector key, located on the PT21 electrical panel, to position SERVICE.

b) Activate the valve **Y8411:1** for the cylinder (1) and make sure that the cushion cylinder (2) is fully extended.

c) Loosen the four screws (3).

d) Set the distance **A** between the edge of the inductor (4) and the sealing plate (5) by hand.

e) Tighten the four screws (3).

f) Activate the valve **Y8411:2** and check that the cylinder (1) is fully in.

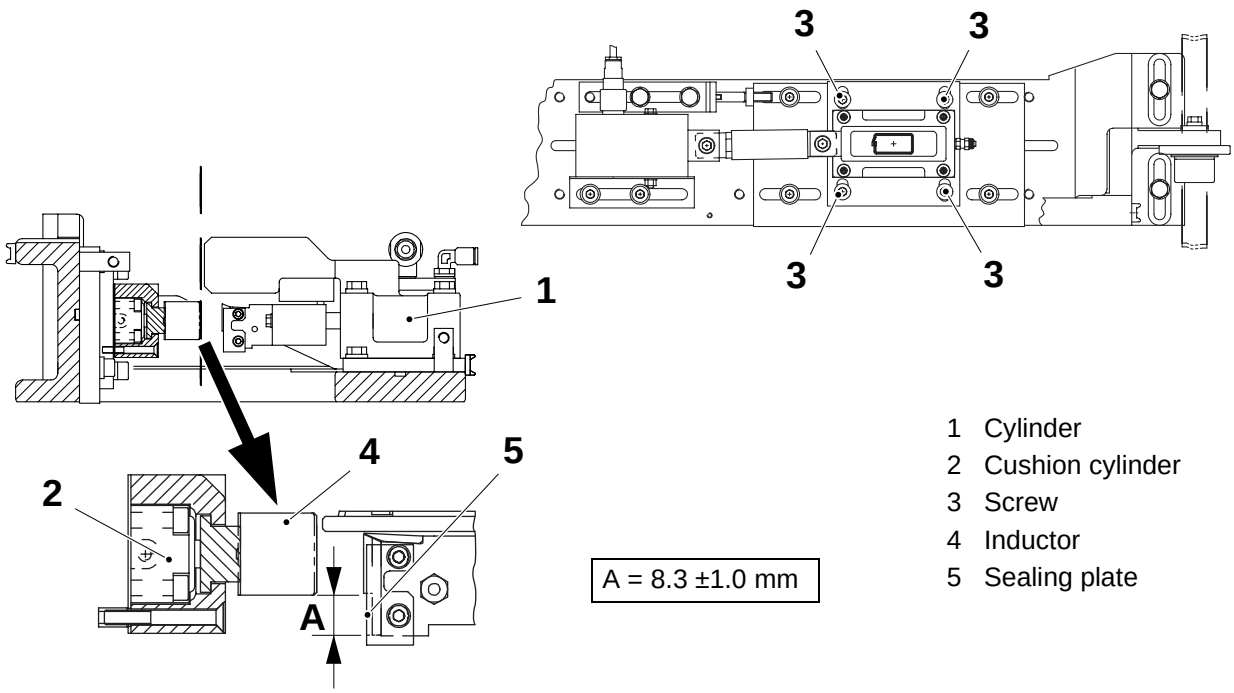

A = 8.3 ±1.0 mm

1 Cylinder
2 Cushion cylinder
3 Screw
4 Inductor
5 Sealing plate

TechPub_2614345_0103 - B5358E02en.fm

(Cont'd)

(Cont'd)

Set Reseal Heating Jaw Horizontal Position

a) Make sure that the cushion cylinder (2) is fully extended.

b) Loosen the screws (6), located on the reseal heating jaw (7).

c) Set the distance **B** between the edge of the inductor (4) and the reseal heating jaw (7) head by means of the setting screw (8).

d) Tighten the screws (6).

Note! Use eventually the machined surface **C** to obtain the distance **B**.

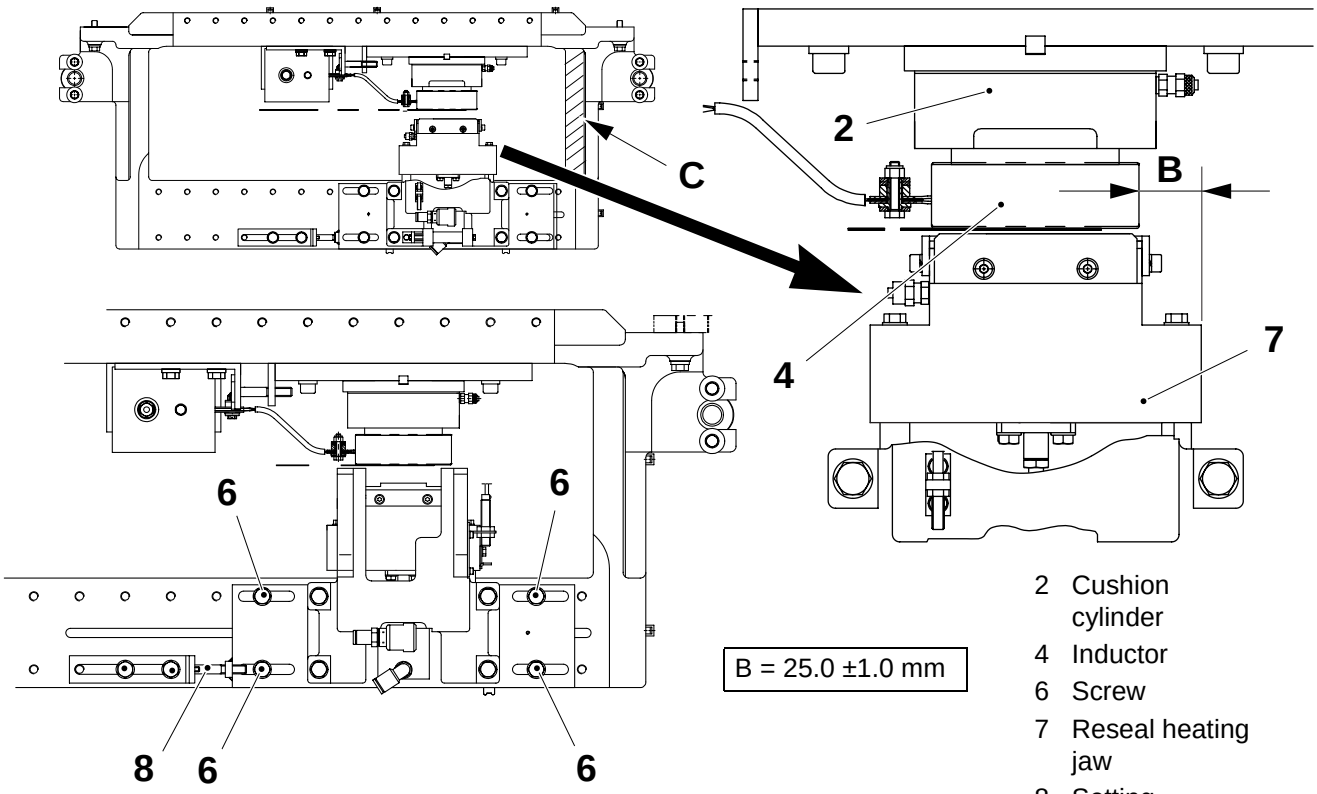

B = 25.0 ±1.0 mm

2 Cushion cylinder
4 Inductor
6 Screw
7 Reseal heating jaw
8 Setting screw

TechPub_2614345_0103 - B5358E02en.fm

5.2-2 Applicator Reseal - Check Heat Pattern

Machine Status	Air **ON** Mains power **ON** Packaging material **threaded**
Special Equipment	Zonoscope TP No. 90243-203
SPC Reference	1260420-0200

Preparation For Making Test Material With Hole, Patch And Reseal

a) Close all doors on the machine.

b) Make sure that the repeat length is correct according to 1.2.5-4 Paper Brake - Set Servo Tension Device.

c) On the TPOP, check that there are no active alarms and touch the MANOEUVRE button (1).

d) Touch the MAINTENANCE PT21 LEFT button (2).

e) Touch the RESEAL APPLICATOR button (3).

f) Touch the START button (4) to activate these stations: punch unit, applicator patch and reseal.

g) The **Service and Maintenance key** symbol (5) starts to flash at the top of the ladder step window.

h) Push the PROGRAM UP button (6) after it starts flashing.

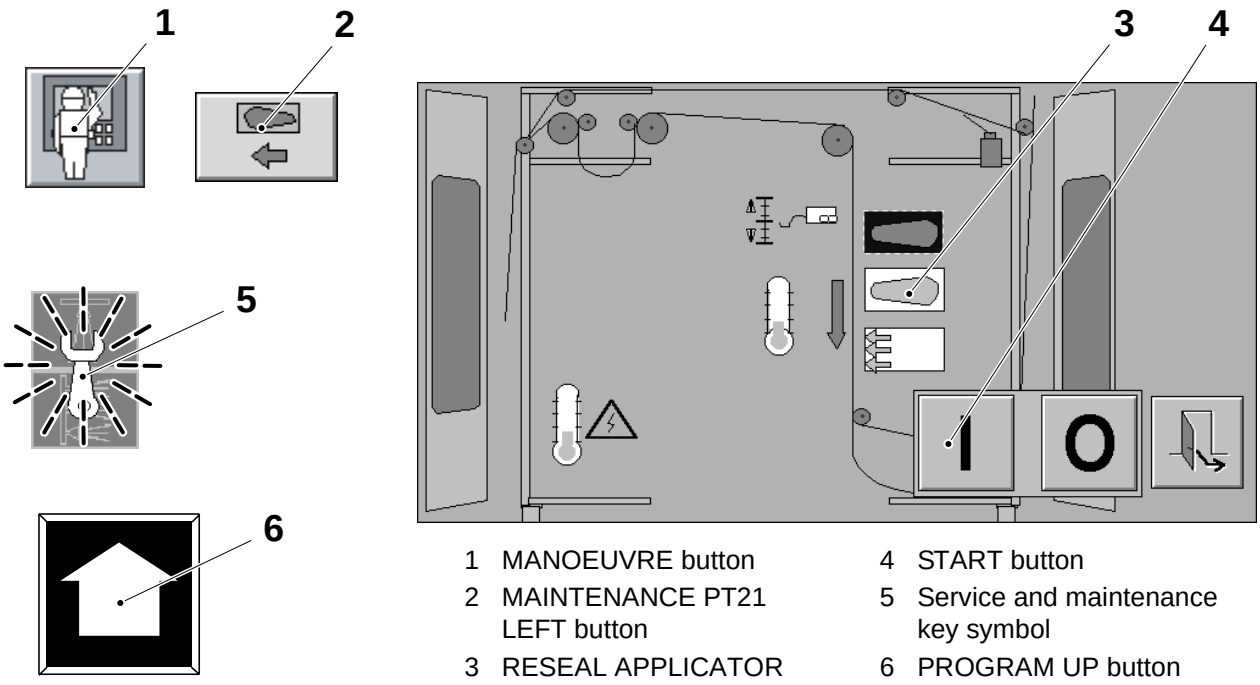

1 MANOEUVRE button
2 MAINTENANCE PT21 LEFT button
3 RESEAL APPLICATOR button
4 START button
5 Service and maintenance key symbol
6 PROGRAM UP button

(Cont'd)

TechPub_2614345_0103 - B5358E02en.fm

(Cont'd)

Make Test Material

a) At the PullTab control panel, push the SINGLE INDEX button (1) six or seven times after it starts flashing.

Note! If the SINGLE INDEX button (1) does not flash, open and close one of the doors in the PullTab unit. Acknowledge the alarm on the TPOP.

b) Open the door and cut out the packaging material that has the test tab applications.

Check position

a) Check, with the aid of a zonoscope (2), that the heat pattern (3) is centred with respect to the hole and the patch.

Note! To more easily see the heat pattern, increase the power of the reseal inductor (potentiometer value approximately **650 ±50**) and decrease the power of the applicator patch inductor (potentiometer value approximately **400 ±50**). Be sure to reset both potentiometers before starting production.

b) Check that all edges around the patch are sealed. Make a special check of the corners (4) and (5) and of the knife edge (6) between them (the edge where the knife cut the patch strip).

c) If required, adjust the vertical position of the heat pattern as described on the next page.

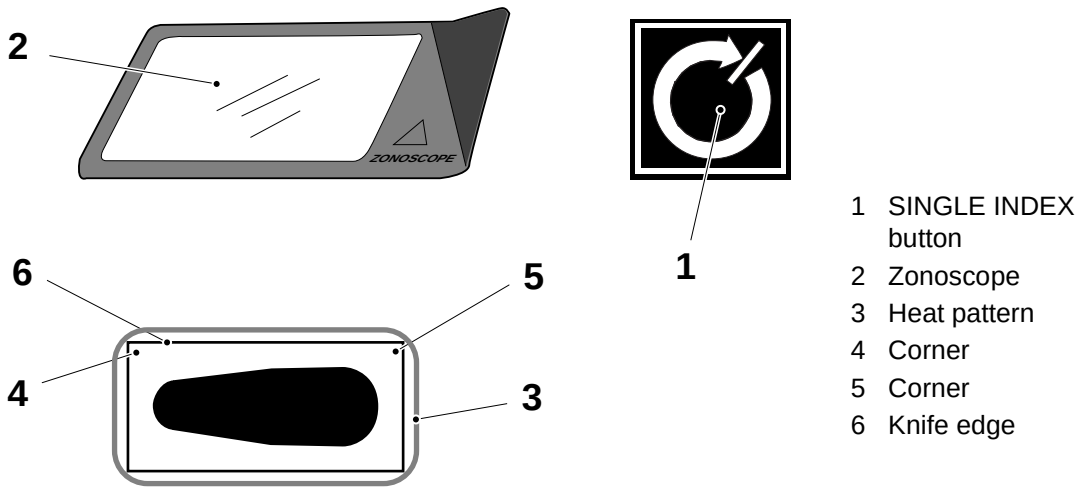

1 SINGLE INDEX button
2 Zonoscope
3 Heat pattern
4 Corner
5 Corner
6 Knife edge

(Cont'd)

TechPub_2614345_0103 - B5358E02en.fm

(Cont'd)

Adjust Vertical Position of the Heat Pattern

a) On both LH and RH sides of all three applicator stations (applicator patch, reseal, and tab) loosen the screws (1) to move the brass bushings (2) away from the reseal bracket (3).

b) On both LH and RH sides of the reseal applicator, tighten the brass bushings (2) until they touch the reseal bracket (3).

c) Tighten the two screws (1).

d) Slightly loosen the screws (4) on the reseal bracket (3).

e) Adjust the vertical position of the heat pattern by means of the screw guides (5).

f) Tighten the screws (4).

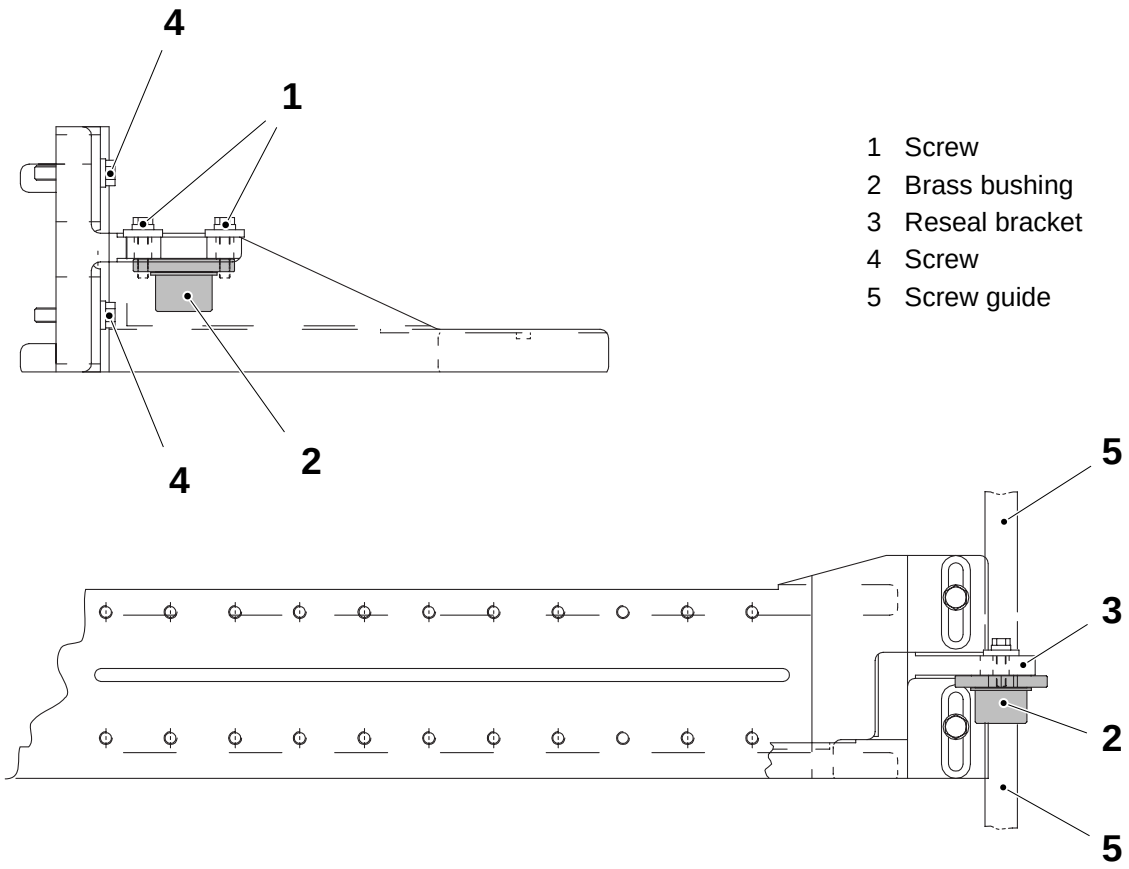

1 Screw
2 Brass bushing
3 Reseal bracket
4 Screw
5 Screw guide

TechPub_2614345_0103 - B5358E02en.fm

(Cont'd)

(Cont'd)

Adjust Horizontal Position of the Heat Pattern

a) Loosen the screws (1).

b) Adjust the horizontal position of the heat pattern by means of the setting screw (2).

c) Tighten the screws (1).

d) Check once more the horizontal position of the reseal heating jaw according to 5.2-1 Applicator Reseal - Check Reseal Position.

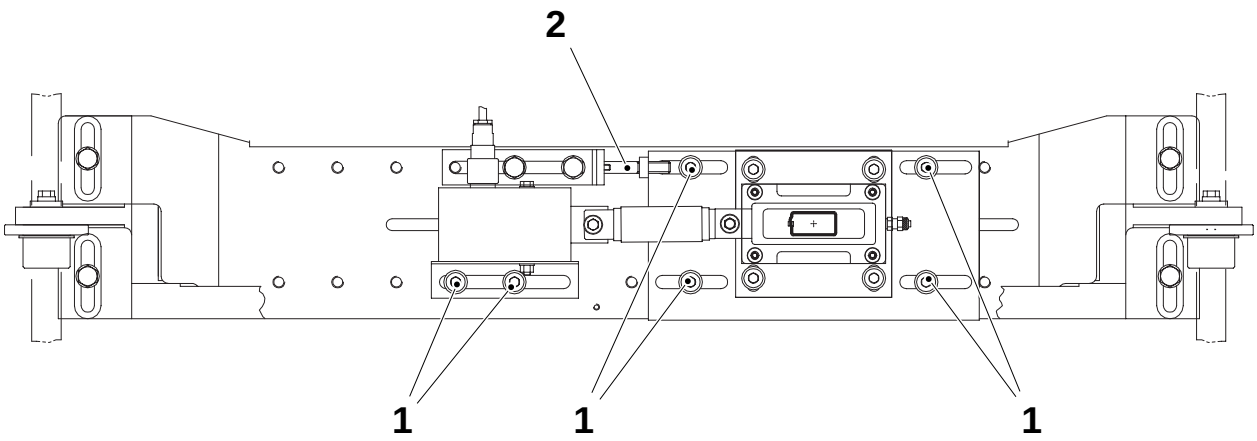

1 Screw
2 Setting screw

(Cont'd)

TechPub_2614345_0103 - B5358E02en.fm

(Cont'd)

Deactivate Pulltab Stations

a) Touch the STOP button (1) to deactivate the punch unit, applicator patch, and reseal stations.

b) Push the PROGRAM DOWN button (2) after it starts flashing.

c) Touch the EXIT button (3).

d) Touch the MANOEUVRE button (4) to end the sequence.

e) Check the tabs position, see 4.2-1 Applicator Tab - Check Tab Position.

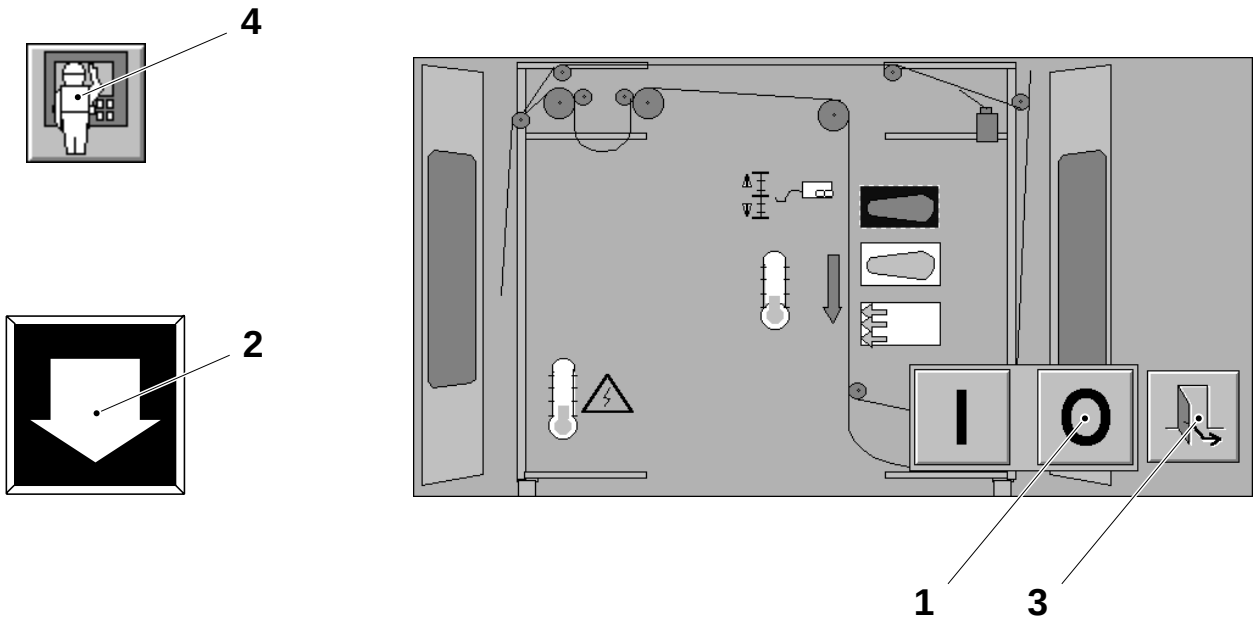

1 STOP button
2 PROGRAM DOWN button
3 EXIT button
4 MANOEUVRE button

TechPub_2614345_0103 - B5358E02en.fm

5.2.1 Reseal Heating Jaw

5.2.1-1 Reseal Heating Jaw - Remove

Machine Status	Air **OFF** Mains power **OFF**
SPC Reference	1260418-0100

a) Disconnect the air hoses (3) from the cylinder.

b) Loosen the screws (1) and remove the reseal jaw monitor proximity switch (2).

c) Remove the screws (4) from the plate (5) and lift out the reseal heating jaw unit.

d) Assemble in the reverse order.

e) Set the reseal heating jaw, see 5.2.2-6 Reseal Counter Jaw - Set Cushion Cylinder.

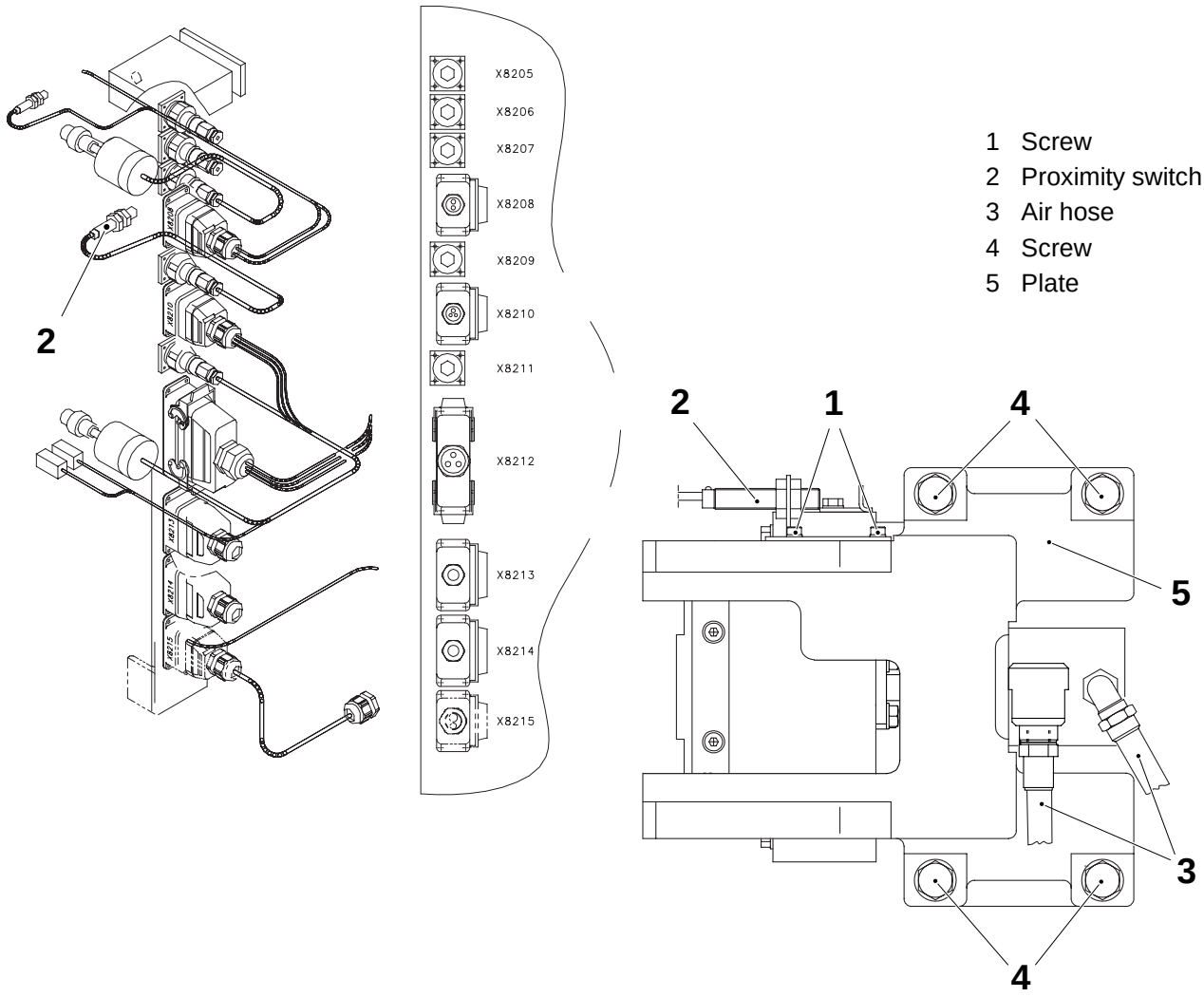

1 Screw
2 Proximity switch
3 Air hose
4 Screw
5 Plate

TechPub_2614345_0103 - B5358E02en.fm

5.2.1-2 Reseal Heating Jaw - Set Sealing Plate

Machine Status	Air **OFF** Mains power **OFF**
SPC Reference	1260418-0100

WARNING
Risk of burns!
The sealing jaw may be hot. Be careful.

a) Remove the reseal heating jaw, see 5.2.1-1 Reseal Heating Jaw - Remove.
b) Remove the four screws (1) and the entire bracket (2).
c) Loosen the four screws (3).
d) Keep pressed aside the sealing plate (4) until it is blocked in the clamps (5), see figure below.
e) Keep the two clamps (5) pressed aside as shown in the figure, and at the same time tighten the screws (3).
f) Make sure that the clamps (5) lean against the sealing plate (4).

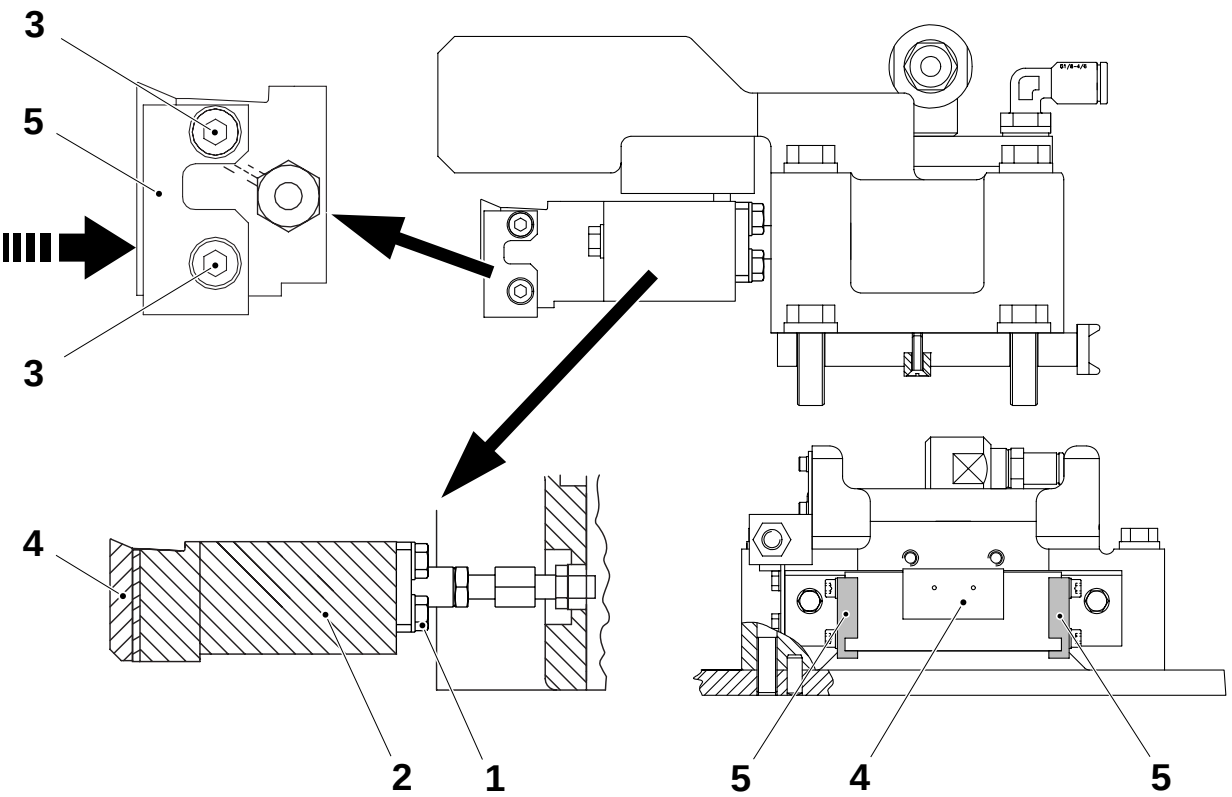

1 Screw
2 Bracket
3 Screw
4 Sealing plate
5 Clamp

TechPub_2614345_0103 - B5358E02en.fm

5.2.1-3 Reseal Heating Jaw - Check Guides and Linear Bearings

Machine Status	Air **OFF** Mains power **OFF**
SPC Reference	1260418-0100

a) Disconnect the air hoses (6) from the cylinder.

b) By hand, move the cylinder to check that the piston (5) moves freely.

c) Remove the reseal heating jaw, see 5.2.1-1 Reseal Heating Jaw - Remove.

d) Remove the four screws (1) and the entire bracket (2).

e) Check the guides (3) for wear and/or damage.

f) Check for wear in the linear bearings (4) by using the guides (3). Check the play on one bearing at a time.

g) Change as required, see 5.2.1-4 Reseal Heating Jaw - Change Linear Bearings.

h) Fit back the bracket (2) and the four screws (1) after checking.

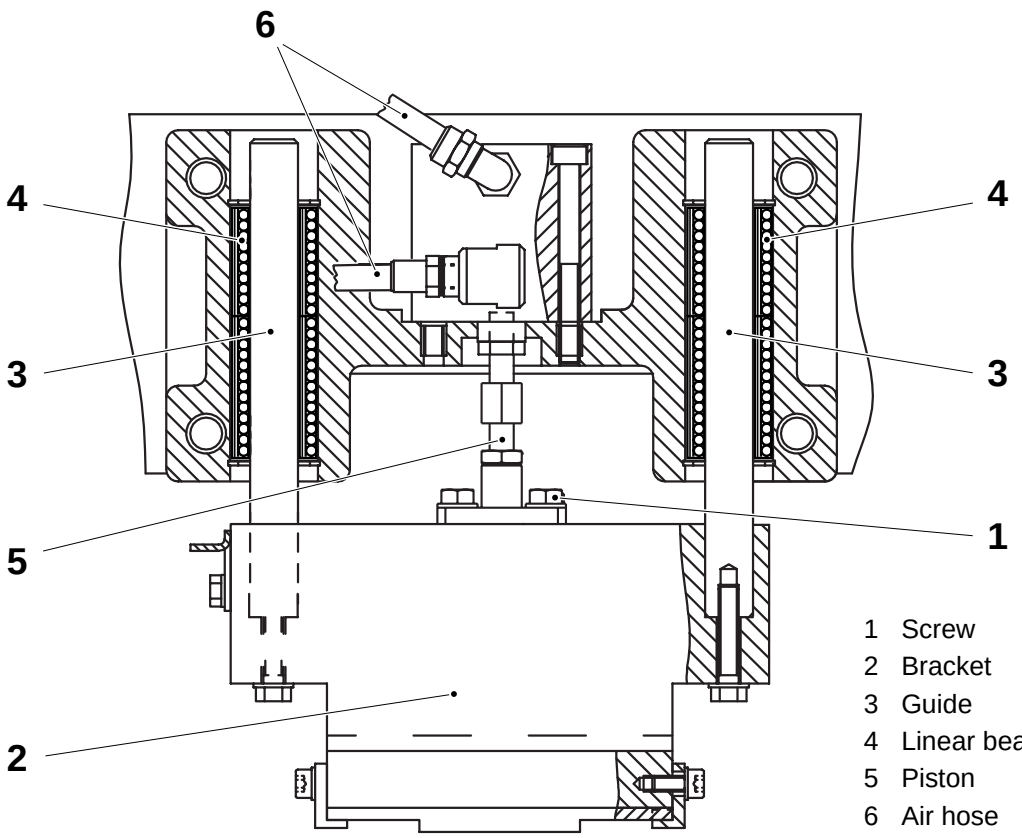

TechPub_2614345_0103 - B5358E02en.fm

5.2.1-4 Reseal Heating Jaw - Change Linear Bearings

Machine Status	Air **OFF** Mains power **OFF**
SPC Reference	1260418-0100

a) Remove the reseal heating jaw, see 5.2.1-1 Reseal Heating Jaw - Remove.

b) Remove the four screws (1) and the entire bracket (2).

c) Remove the seal rings (3) on each side of the linear bearings (4).

d) Pull out the linear bearings (4) and change them.

e) Assemble in the reverse order.

Note! Make sure that the seal rings (3) are, on both sides, distance **A** inward towards the surface of the casting applicator (5).

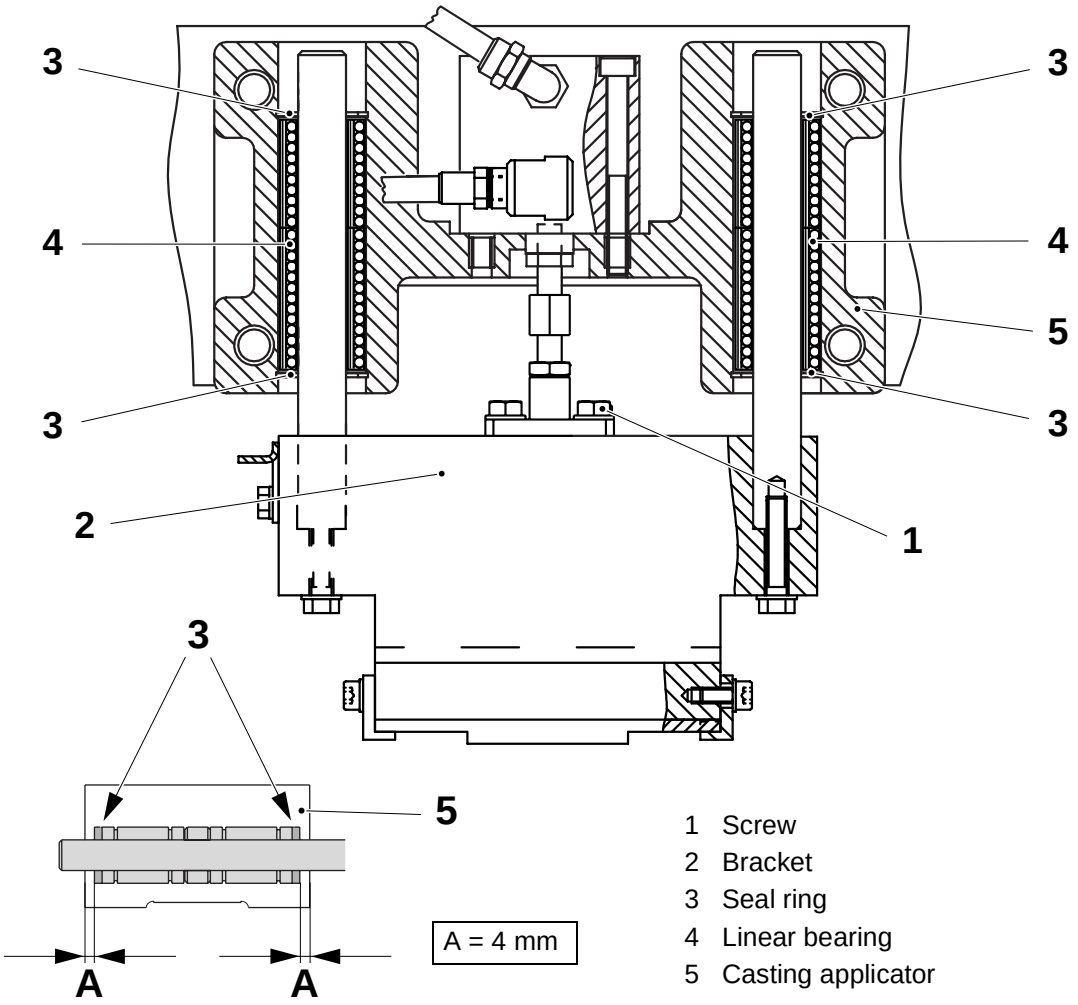

TechPub_2614345_0103 - B5358E02en.fm

5.2.1-5 Reseal Heating Jaw - Change Bushing

Machine Status	Air **OFF** Mains power **OFF**
SPC Reference	1260418-0100

a) Remove the reseal heating jaw, see on 5.2.1-1 Reseal Heating Jaw - Remove.

b) Remove the pin (1) and the entire bracket (2).

c) Remove the bushing (3) and change it.

d) Assemble in the reverse order.

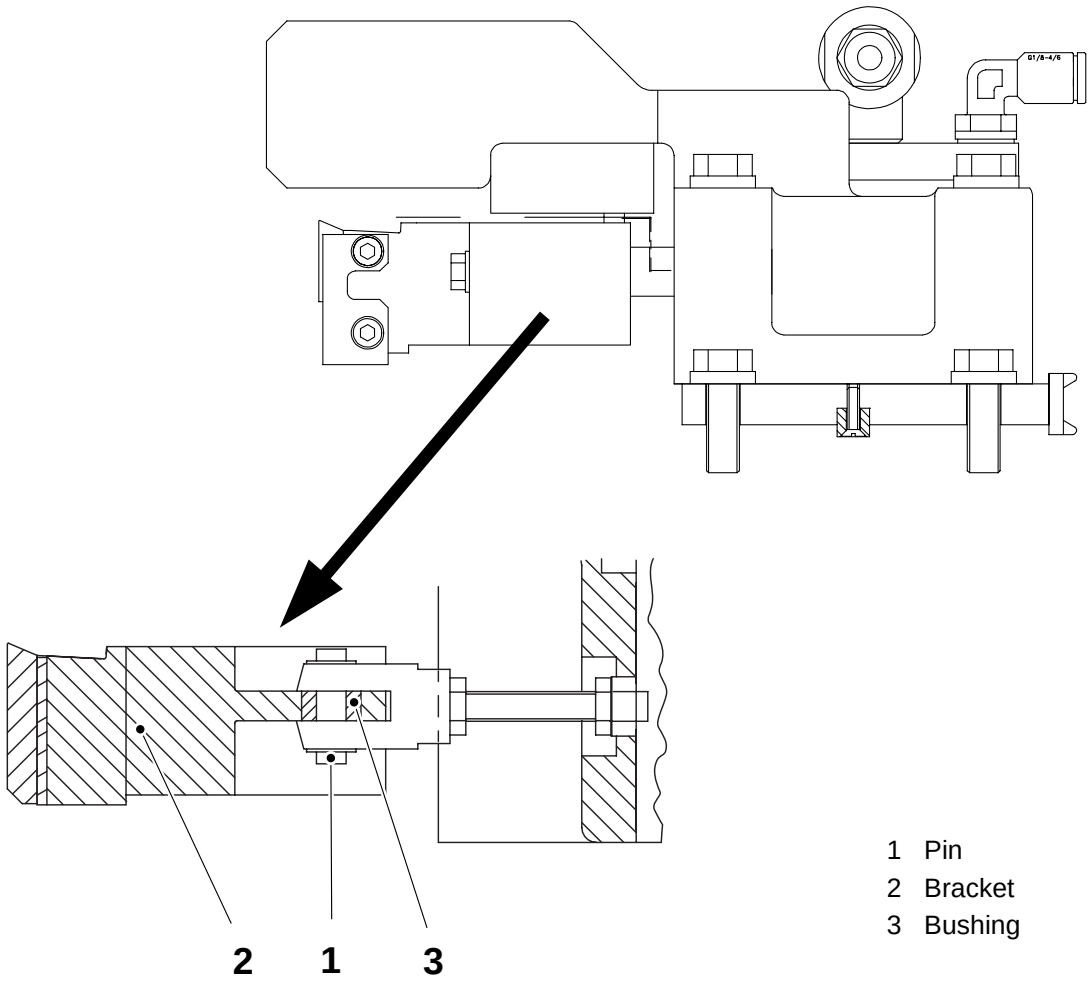

1 Pin
2 Bracket
3 Bushing

TechPub_2614345_0103 - B5358E02en.fm

5.2.1-6 Reseal Heating Jaw - Change Cylinder

Machine Status	Air **OFF** Mains power **OFF**
SPC Reference	1260418-0100

a) Remove the four screws (1).

b) Remove the air connections (2) and the four screws (3).

c) Remove the cylinder (4) and change it.

d) Assemble in the reverse order.

e) Set the cushion cylinder, see 5.2.2-6 Reseal Counter Jaw - Set Cushion Cylinder.

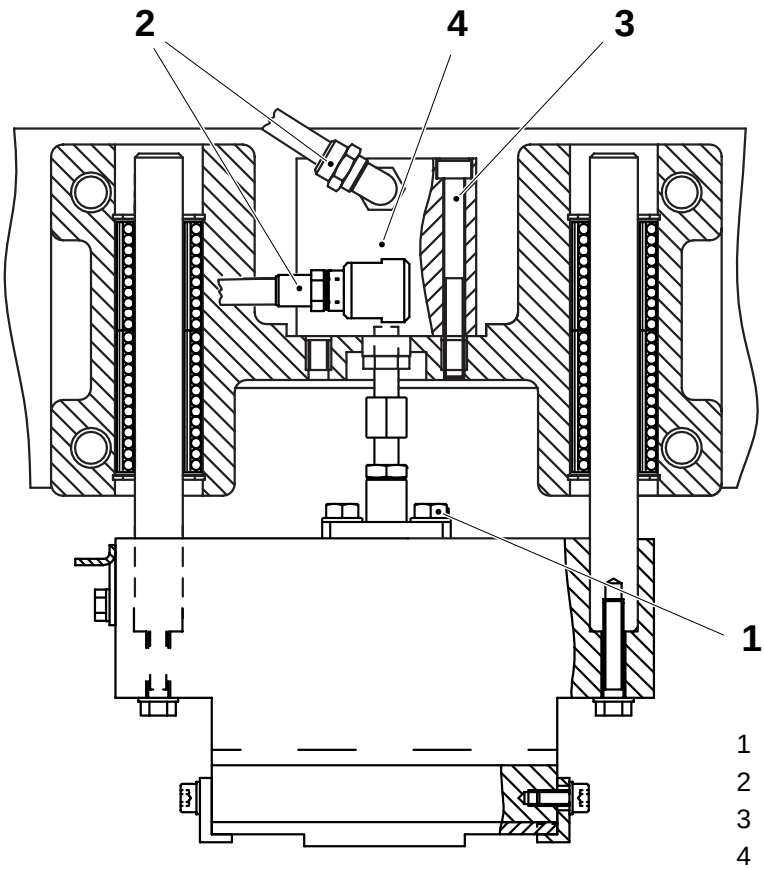

1 Screw
2 Air connection
3 Screw
4 Cylinder

TechPub_2614345_0103 - B5358E02en.fm

5.2.1-7 Reseal Heating Jaw - Check Sealing Plate

Machine Status	Air **OFF** Mains power **OFF**
SPC Reference	1260418-0100

WARNING

Risk of burns!

The sealing jaw may be hot. Be careful.

a) Loosen the two screws (2) and remove the sealing plate (1).

b) Check the sealing plate (1) surface for wear and scratches or other damage. Also check for any residue of polyethylene.

c) Assemble in the reverse order. Set the sealing plate, see 5.2.1-2 Reseal Heating Jaw - Set Sealing Plate.

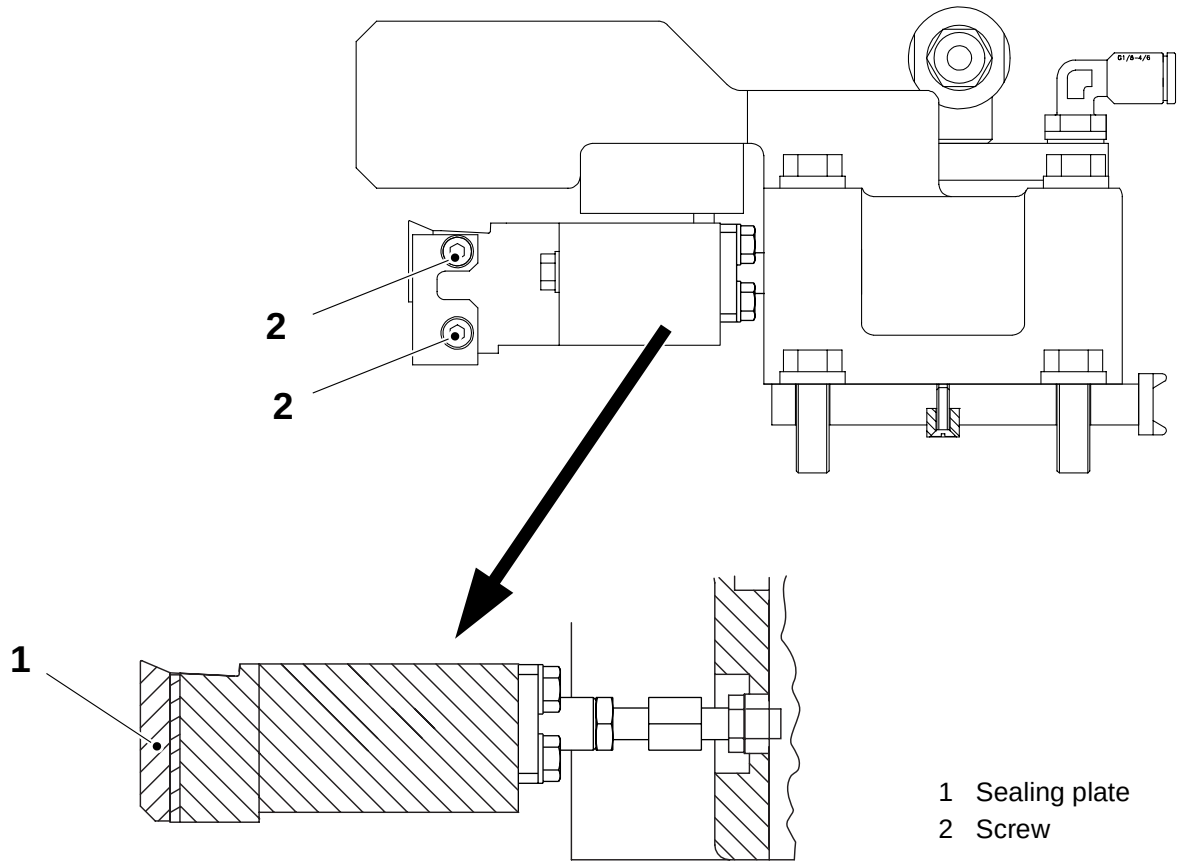

1 Sealing plate
2 Screw

TechPub_2614345_0103 - B5358E02en.fm

5.2.1-8 Reseal Heating Jaw - Set Proximity Switch

Machine Status	Air **ON** Mains Power **ON**
SPC Reference	1260418-0100

WARNING
Risk of crushing!
The cylinder piston may move unexpectedly.

a) Switch the selector key, located on the PT21 electrical panel, to position SERVICE.

Note! For an accurate setting, the machine must be threaded. If not, place a piece of packaging material between the heating jaw and the counter jaw.

b) Loosen the nuts (1) and move backwards the proximity switch (2).

c) Activate the valve **Y8411:1** for the cylinder (3).

d) Check that the cylinder (3) is fully extended. If required, set the cushion cylinder, see 5.2.2-6 Reseal Counter Jaw - Set Cushion Cylinder.

e) Set the distance **A** between the proximity switch (2) and the flag (4) by means of the nuts (1).

f) Check that the proximity switch (2) LED lights up.

g) Activate the valve **Y8411:2** and check that the cylinder (3) is fully in.

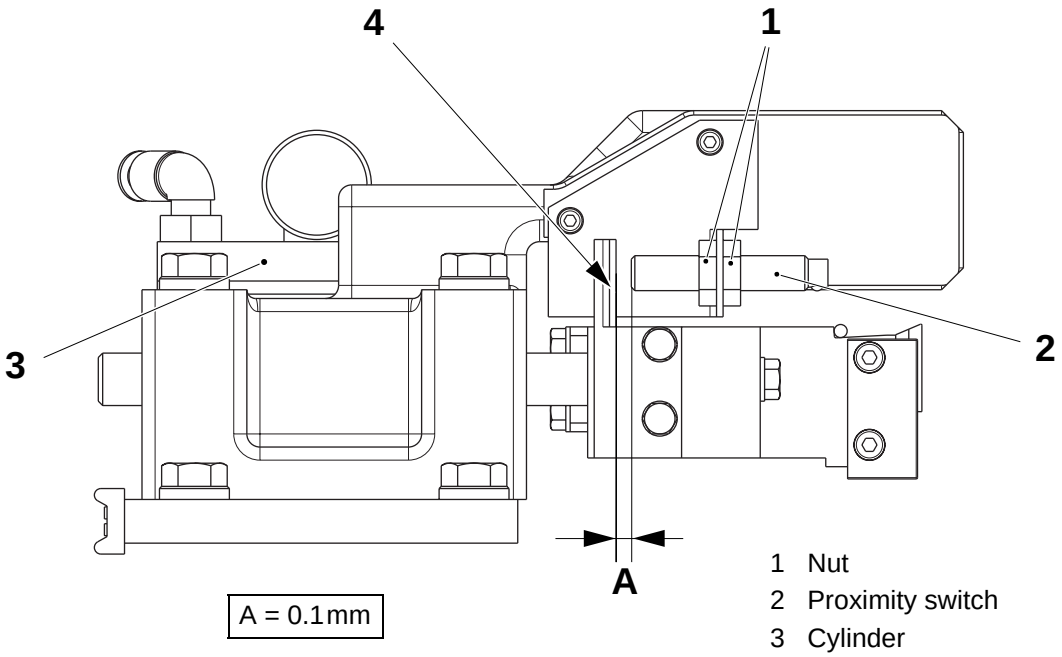

TechPub_2614345_0103 - B5358E02en.fm

5.2.2 Reseal Counter Jaw

5.2.2-1 Reseal Counter Jaw - Remove

Machine Status	Air **OFF** Mains power **OFF**
SPC Reference	1260417-0200

a) Loosen the screw (1).

b) Disconnect the cable (2) leading to the inductor transformer (3).

c) Disconnect the air hose (4) for the cushion cylinder (6).

d) Unscrew the screws (5). Slide up the plate (6) to remove the plate with the counter jaw unit attached to it.

e) Assemble in the reverse order.

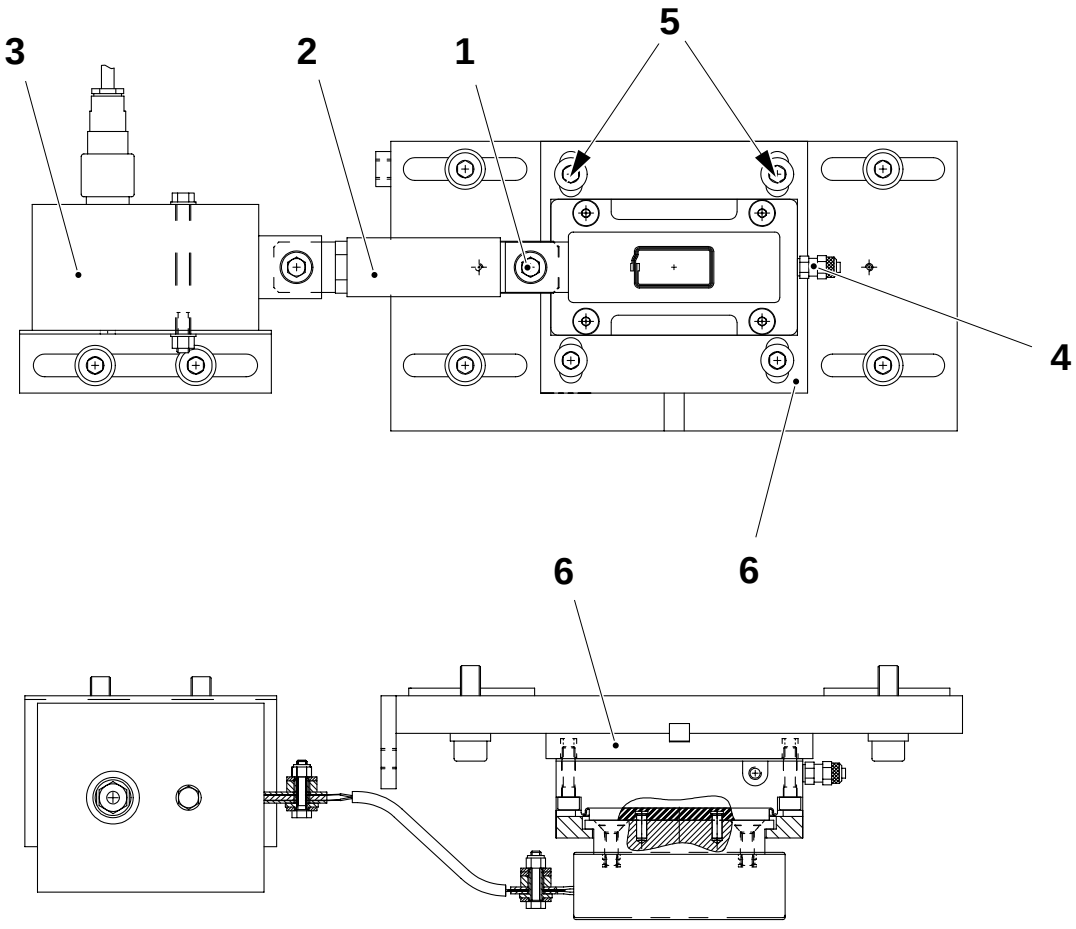

1 Screw
2 Cable
3 Transformer
4 Air hose
5 Screw
6 Plate

TechPub_2614345_0103 - B5358E02en.fm

5.2.2-2 Reseal Counter Jaw - Check Inductor

Machine Status	Air **OFF** Mains power **OFF**
Consumables	Teflon™ tape TP No. 2507111 (only for hole 90) Teflon™ tape TP No. 90144-30 (for all other holes)
SPC Reference	1260417-0200

Check the following parts for wear and damage:

- the Teflon™ tape (2) on the surface of the inductor (1)
- the surfaces of the inductor (1) for any scratches or other damage
- the surfaces of the inductor (1) for any residue of polyethylene.

Change as required.

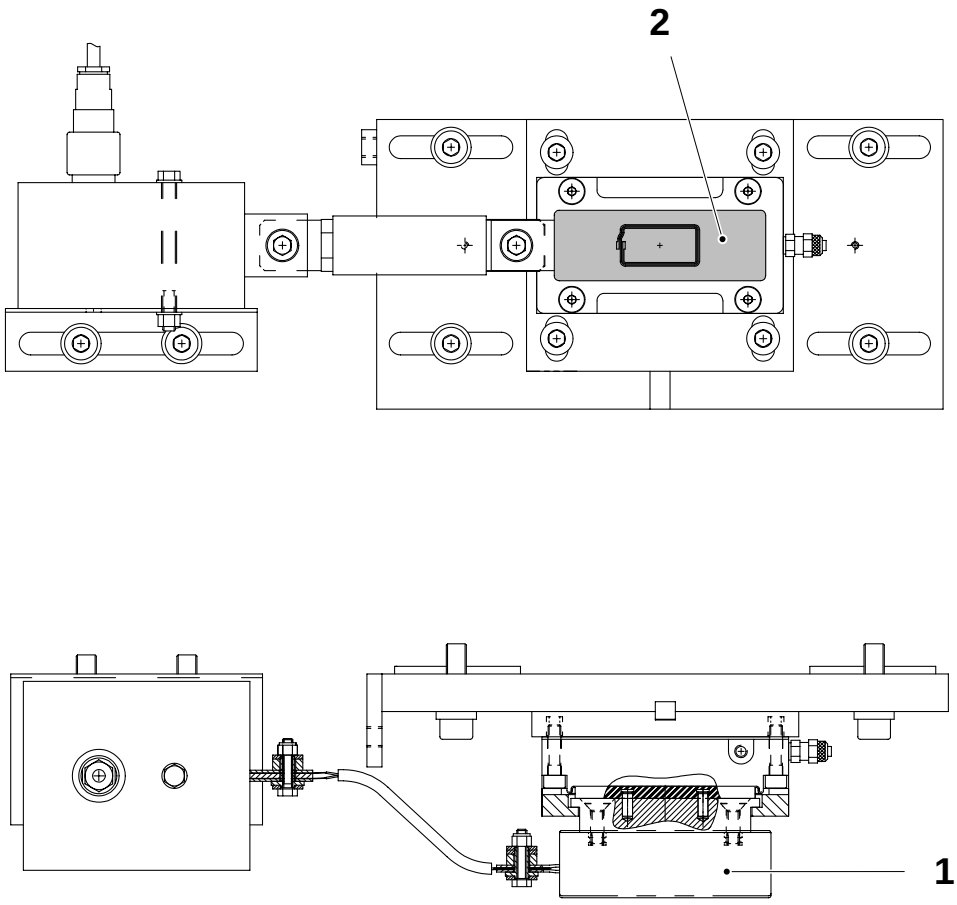

1 Inductor
2 Teflon™ tape

TechPub_2614345_0103 - B5358E02en.fm

5.2.2-3 Reseal Counter Jaw - Change Inductor

Machine Status	Air **OFF** Mains power **OFF**
Consumables	Teflon™ tape TP No. 2507111 (only for hole 90) Teflon™ tape TP No. 90144-30 (for all other holes)
SPC Reference	1260417-0200

a) Loosen the screw (1).

b) Disconnect the cable (2) leading to the inductor transformer (3).

c) Disconnect the air hose (4) for the cushion cylinder (5).

d) Remove the screws (8). Slide up the plate (9) to remove the plate (9) together with the counter jaw unit.

e) Remove the screws (6).

f) Remove the guide bushing (11) from the inductor (7) by means of the screws (10).

g) Change the inductor (7) and assemble in the reverse order

h) Check the position of the heat pattern, see 5.2-2 Applicator Reseal - Check Heat Pattern.

Note! Check the condition of the Teflon™ tape and change it as required.

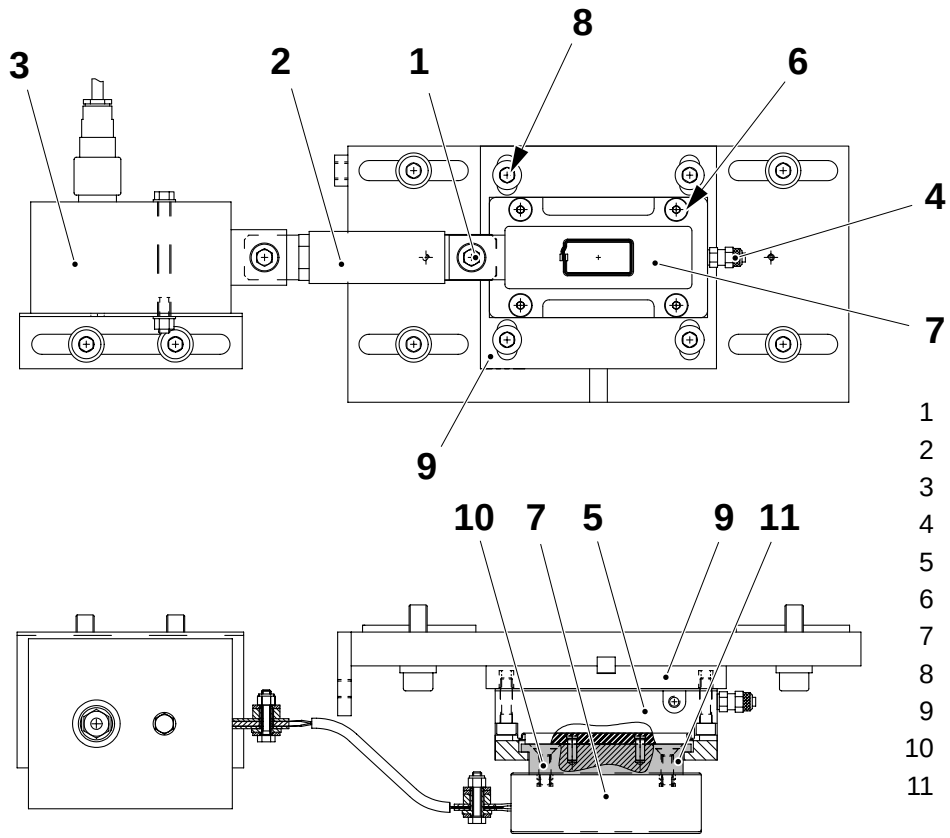

1 Screw
2 Cable
3 Transformer
4 Air hose
5 Cushion cylinder
6 Screw
7 Inductor
8 Screw
9 Plate
10 Screw
11 Guide bushing

TechPub_2614345_0103 - B5358E02en.fm

5.2.2-4 Reseal Counter Jaw - Check Guide Bushing

Machine Status	Air **OFF** Mains power **OFF**
SPC Reference	1260417-0200

a) Loosen the screw (1).

b) Disconnect the cable (2) leading to the inductor transformer (3).

c) Disconnect the air hose (4) for the cushion cylinder (5).

d) Remove the screws (8). Slide up the plate (9) to remove the plate (9) together with the counter jaw unit.

e) Remove the screws (6).

f) Remove the guide bushing (11) from the inductor (7) by means of the screws (10).

g) Check the guide bushing (11) for wear and change it as required.

Note! Remove the two pins (12) from the old guide bushing (11) and assemble them in the new one.

h) Assemble in the reverse order.

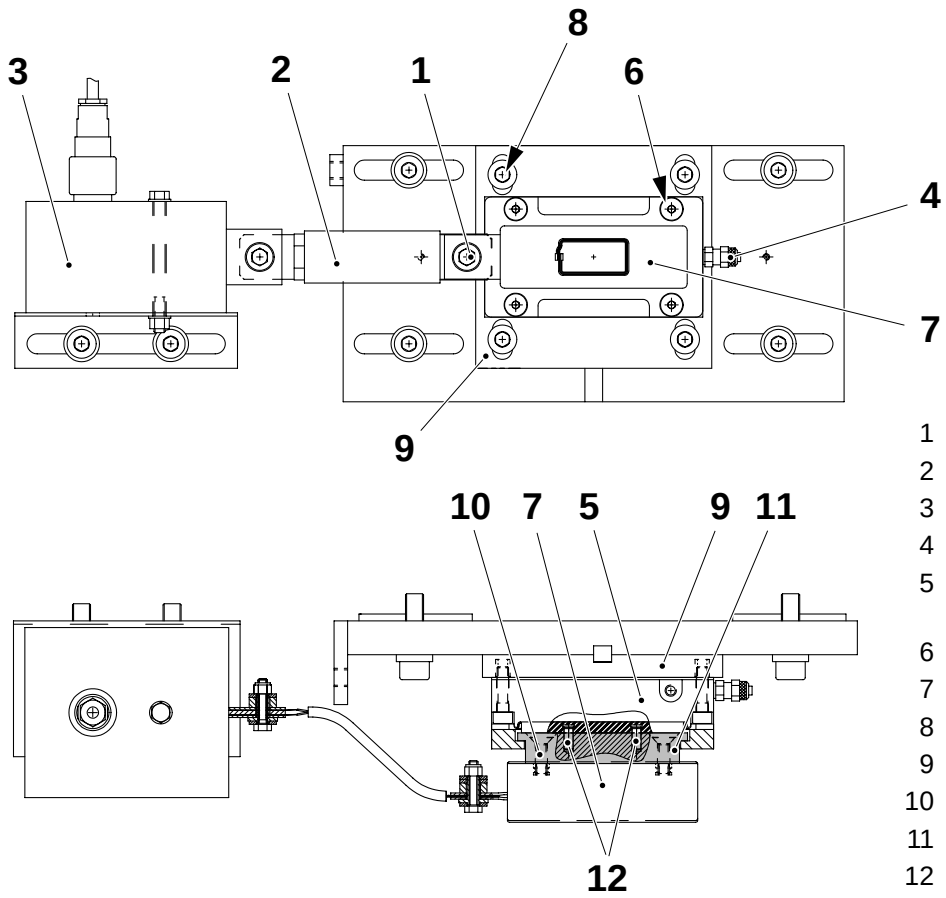

1 Screw
2 Cable
3 Transformer
4 Air hose
5 Cushion cylinder
6 Screw
7 Inductor
8 Screw
9 Plate
10 Screw
11 Guide bushing
12 Pin

TechPub_2614345_0103 - B5358E02en.fm

5.2.2-5 Reseal Counter Jaw - Change Cushion Cylinder

Machine Status	Air **OFF** Mains power **OFF**
SPC Reference	1260417-0200

a) Loosen the screw (1).

b) Disconnect the cable (2) leading to the inductor transformer (3).

c) Disconnect the air hose (4) for the cushion cylinder (5).

d) Unscrew the screws (8). Slide up the plate (9) to remove the plate (9) with the counter jaw unit attached to it.

e) Unscrew the screws (6) and separate the inductor (7) from the cushion cylinder (5).

f) Unscrew the screw (10) and change the cushion cylinder (5).

g) Assemble in the reverse order.

h) Check that the cylinder reaches the end of its stroke.

i) Set the cushion cylinder, see 5.2.2-6 Reseal Counter Jaw - Set Cushion Cylinder.

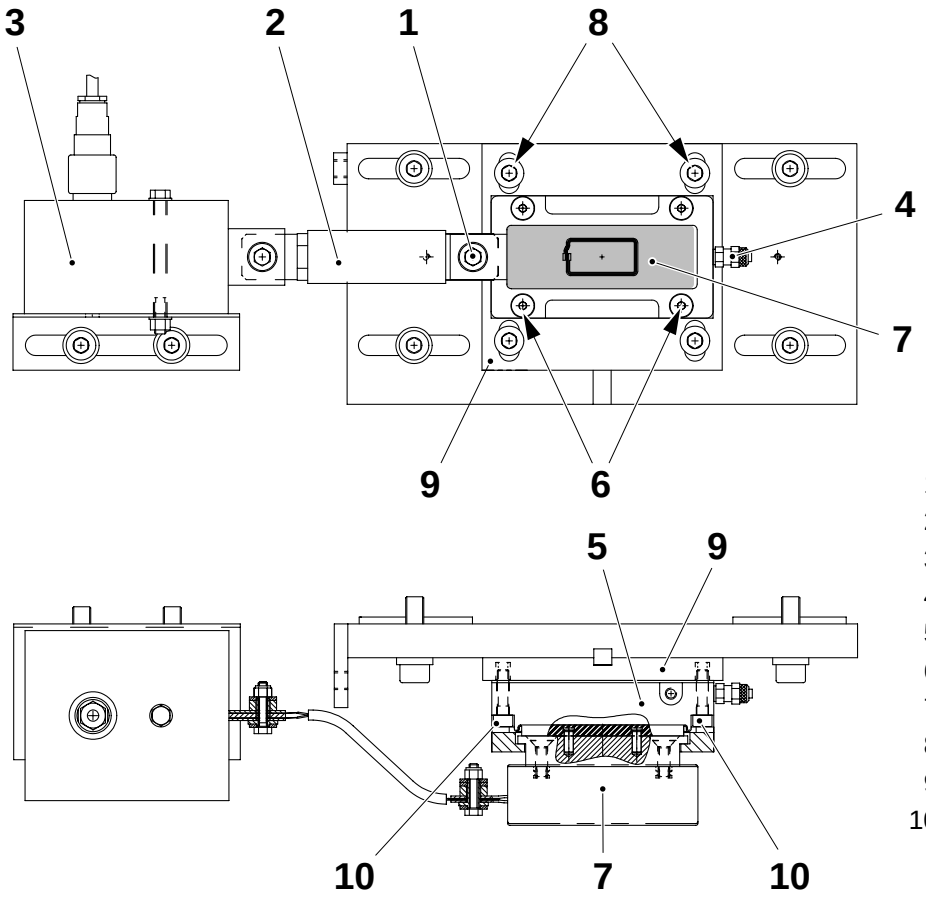

1 Screw
2 Cable
3 Transformer
4 Air hose
5 Cushion cylinder
6 Screw
7 Inductor
8 Screw
9 Plate
10 Screw

TechPub_2614345_0103 - B5358E02en.fm

5.2.2-6 Reseal Counter Jaw - Set Cushion Cylinder

Machine status	PREPARATION
SPC Reference	1260417-0200

WARNING
Risk of burns!
The sealing jaw may be hot. Be careful.

a) Set the reseal counter jaw position, see 5.2-1 Applicator Reseal - Check Reseal Position.
b) Switch the selector key, located on the PT21 electrical panel, to position SERVICE.
c) Check that the cushion cylinder (6) is fully extended.
d) With the aid of a feeler gauge measure and record the distance **A** on both sides of the inductor (5).
e) Place a piece of packaging material between the sealing plate (4) and the inductor (5).
f) Activate the valve **Y8411:1** for the cylinder (1).
g) Loosen the locknut (3) and adjust the piston rod (2) until the distance **A** is reduced by **0.8 mm**.
h) Tighten the locknut (3).
i) Activate the valve **Y8411:2** and check that the cylinder (1) is fully in.
j) Set the reseal heating jaw, see 5.2.1-8 Reseal Heating Jaw - Set Proximity Switch.

Note! If the difference between the distance **A** on one side and the distance **A** on the other side is more than **0.5 mm**, check the cushion cylinder (6), the inductor (5) and the reseal heating jaw.

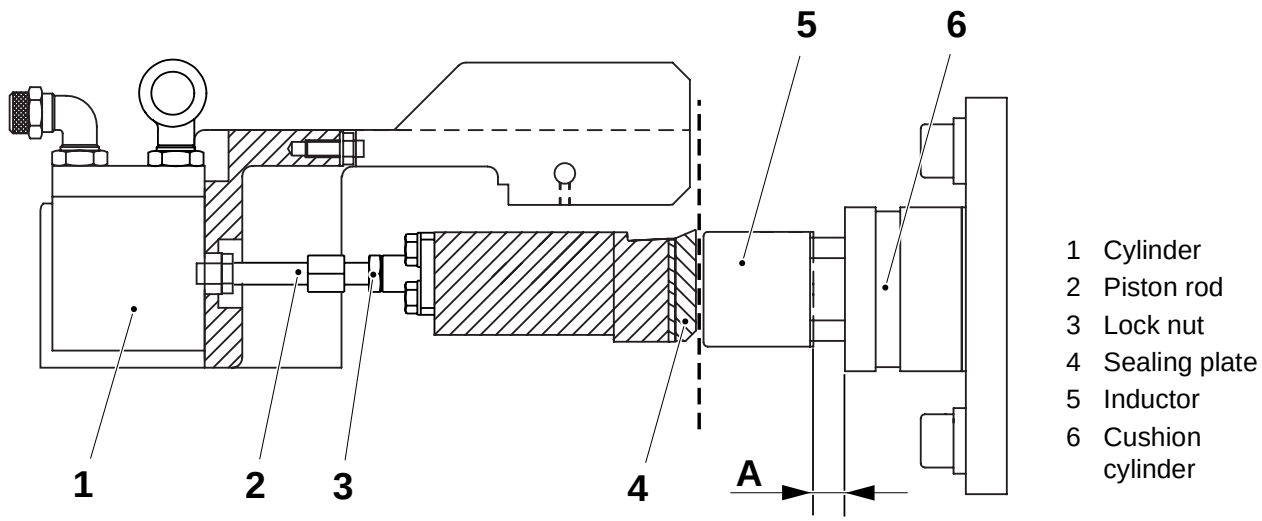

TechPub_2614345_0103 - B5358E02en.fm

6 Pulltab Detection

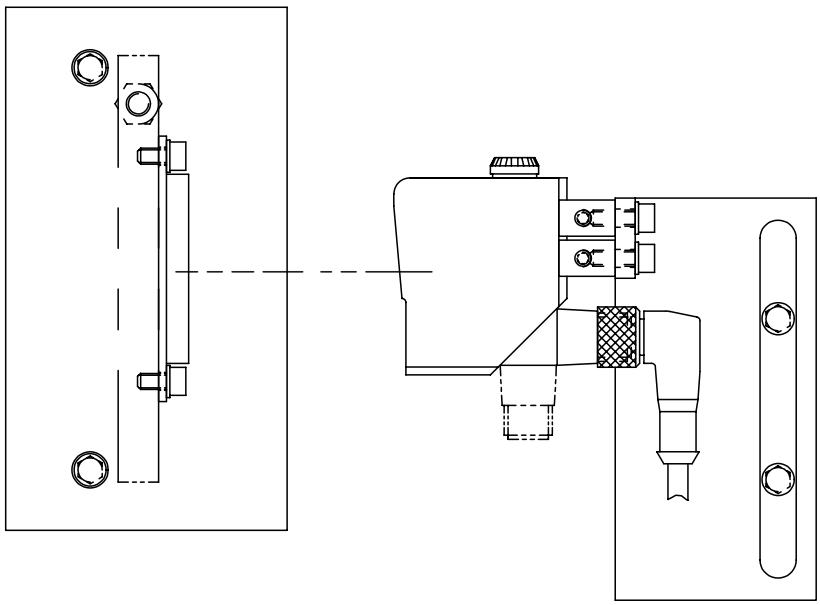

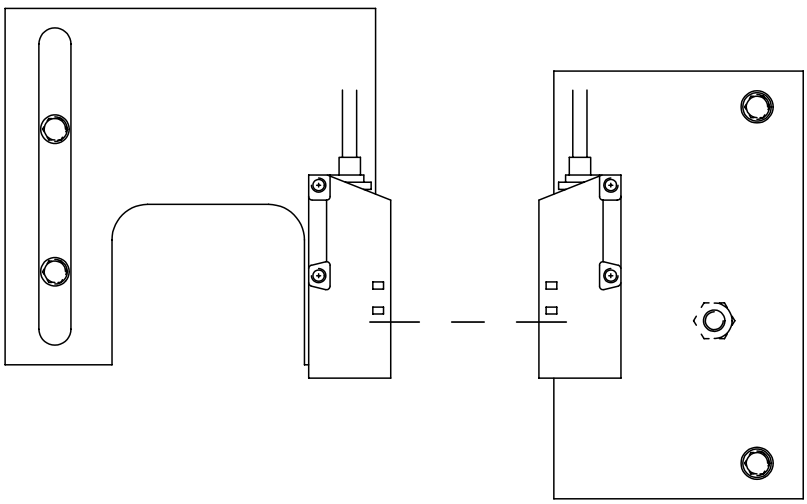

TechPub_2614345_0103 - B5358F00en.fm

Pulltab Detection - Description

SPC Reference	1260390-0200 1185029-0100 1260411-0100

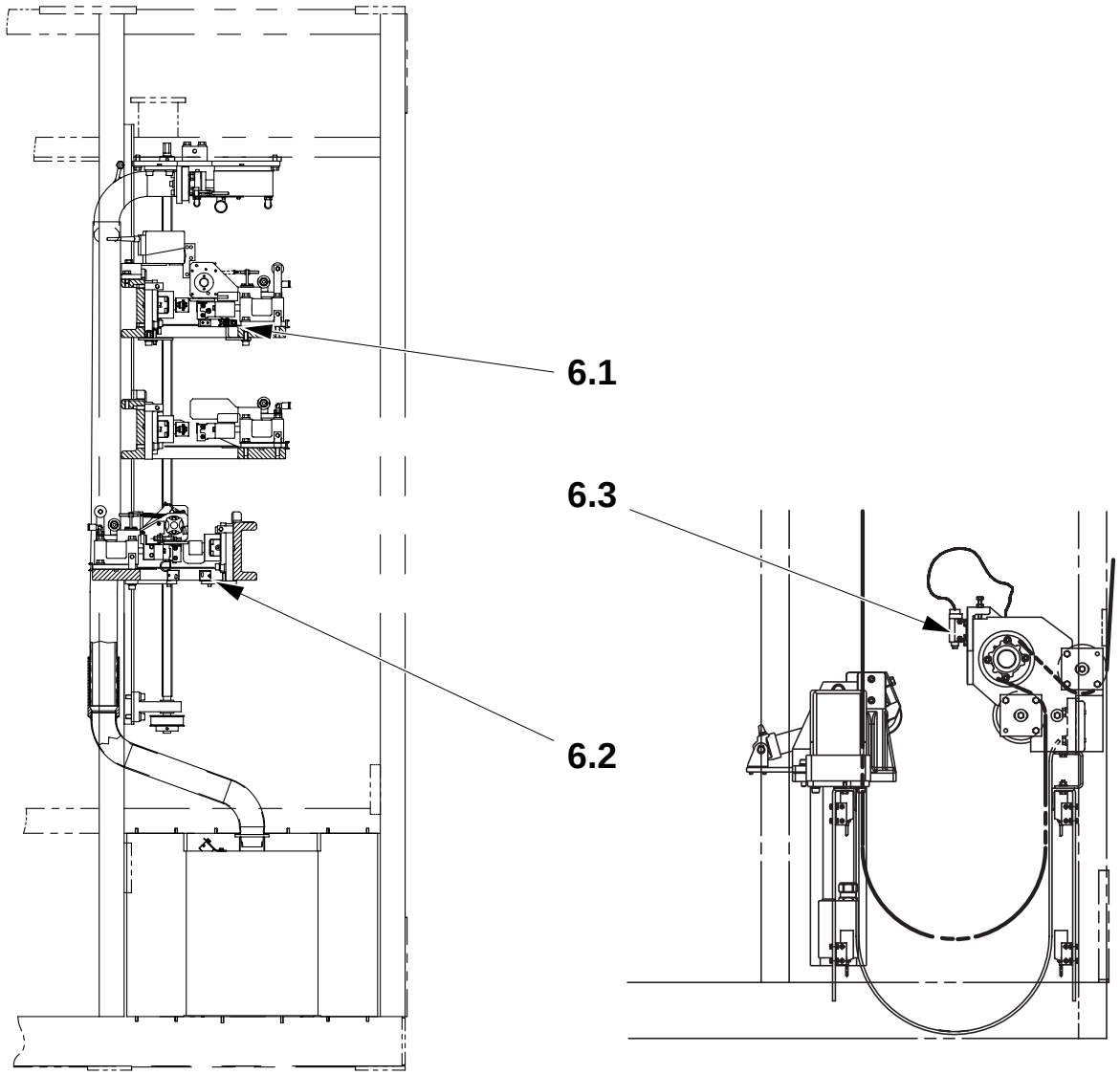

6.1 Missing Patch Detector
6.2 Missing Tab Detector
6.3 Splice Detector

TechPub_2614345_0103 - B5358F00en.fm

6-1 Pulltab Detection - Functional Description . . . . . 6 - 5

6.1 Missing Patch Detector . . . . . 6 - 6

6.1-1 Missing Patch Detector - Check . . . . . 6 - 6

6.1-2 Missing Patch Detector - Set . . . . . 6 - 7

6.2 Missing Tab Detector . . . . . 6 - 8

6.2-1 Missing Tab Detector - Check . . . . . 6 - 8

6.2-2 Missing Tab Detector - Set . . . . . 6 - 9

6.3 Splice Detector . . . . . 6 - 10

6.3-1 Splice Detector - Check (Black Tape) Detector . . . . . 6 - 10

6.3-2 Splice Detector - Set (Black Tape) Detector . . . . . 6 - 11

TechPub_2614345_0103 - B5358F00en.fm

This page intentionally left blank

TechPub_2614345_0103 - B5358F00en.fm

6-1 Pulltab Detection - Functional Description

SPC Reference	1260390-0200 1185029-0100 1260411-0100

This chapter deals with detection of the IS patch and tab on the packaging material.

The IS patch detector is an infrared photocell which detects the absence of an IS patch on the inside of the packaging material. The tab detector are two photocells (receiver and transmitter) which detect the absence of a tab on the outside of the packaging material. The black tape detector is a photoelectric sensor which detects black tape applied over the patch or tab hole.

After the IS patch and tab have been applied and the packaging material is indexed, the IS patch detector and tab detector detect their absence.

If an IS patch or tab is missing, the PLC allows the PullTab unit to complete the cycle and then it goes into a SHORT STOP mode.

The operator has to manually apply a piece of black tape over the PullTab hole with the missed IS patch or tab. The filling machine will automatically eject the package without IS patch or tab.

TechPub_2614345_0103 - B5358F00en.fm

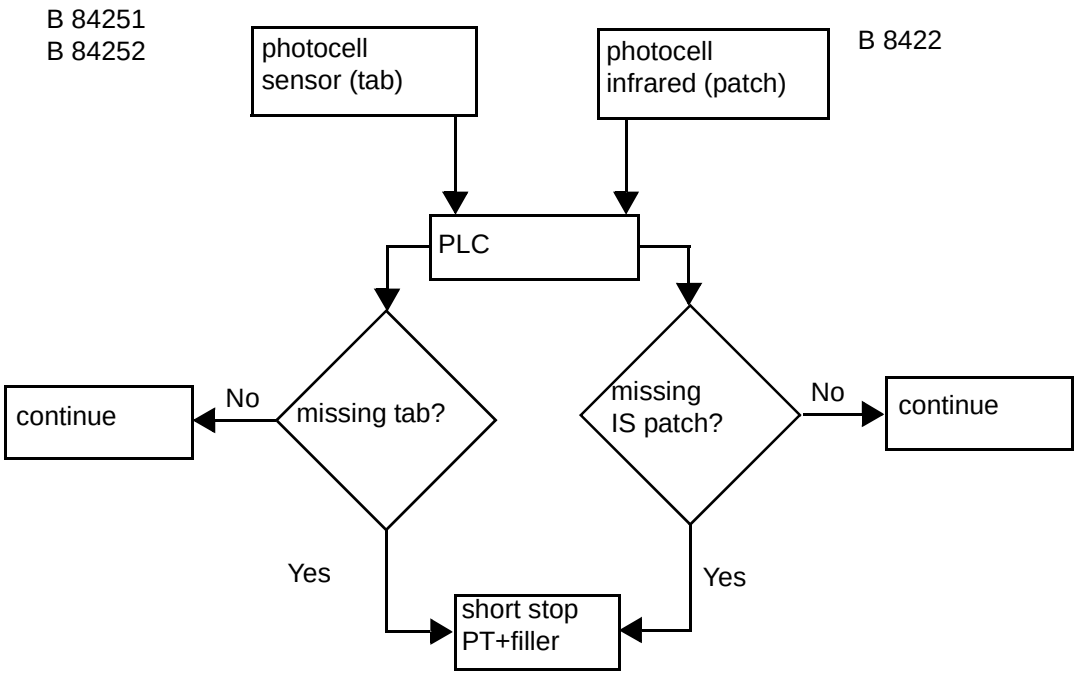

6.1 Missing Patch Detector

SPC Reference	1260390-0200

6.1-1 Missing Patch Detector - Check

Machine Status	Ready for PRODUCTION
SPC Reference	1260390-0200

Remove the IS patch supply from the IS patch applicator.

Check that the infrared photocell emitter (1) is aligned with the infrared photocell reflector (2).

Check that the infrared photocell detects the missing IS patches by controlling that its alarm is shown on the TPOP panel.

If required, set the infrared photocell, see 6.1-2 Missing Patch Detector - Set.

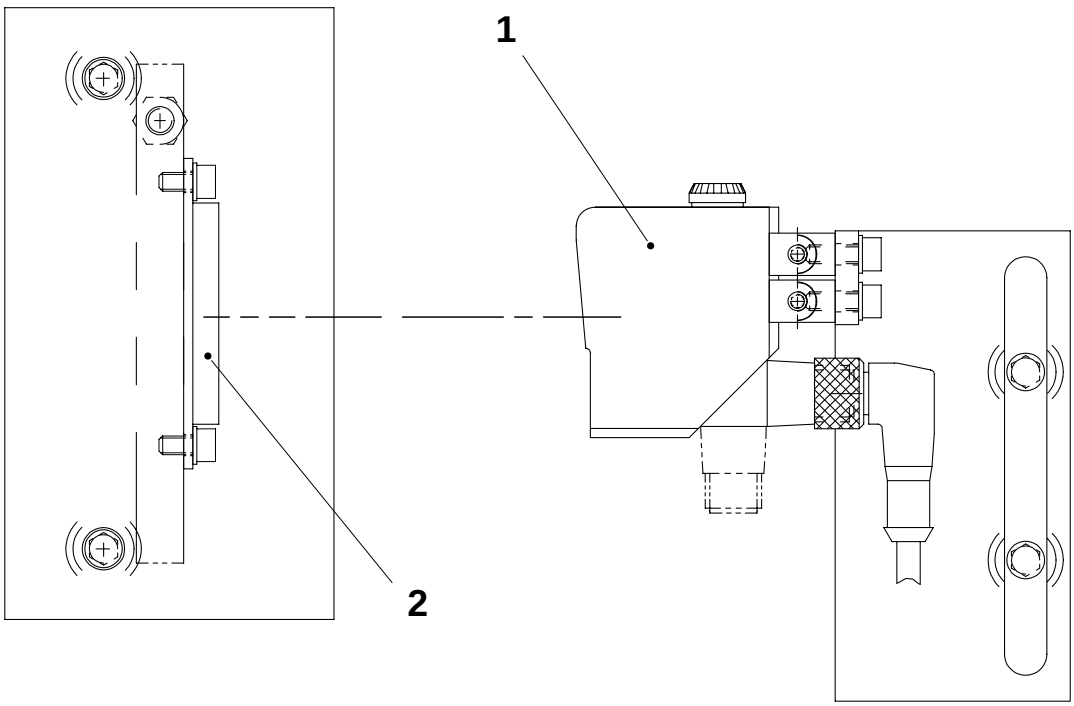

1 Infrared photocell emitter
2 Infrared photocell reflector

TechPub_2614345_0103 - B5358F01en.fm

6.1-2 Missing Patch Detector - Set

Machine Status	PREPARATION
SPC Reference	1260390-0200

a) Close all the doors and make sure that the PT21 finds the home position.

b) Check that there is a hole and a good sealed patch in front of the patch station.

c) Put a punched hole with patch in front of the sensor and place a piece of white paper between the sensor (1) and the reflector (2). The red light beam (5) coming from the sensor (1) must be seen on the white paper and in the middle of the largest part of the punched hole.

d) Remove the white paper.

e) Turn the sensitivity potentiometer (3) anti-clockwise (toward **min.**), on the sensor (1), until the red LED (4) goes out. Then turn the sensitivity potentiometer (3) clockwise (toward **max.**), on the sensor (1), until the red LED (4) lights up.

f) Turn the sensitivity potentiometer (3) half of a turn anti-clockwise (toward **min.**).

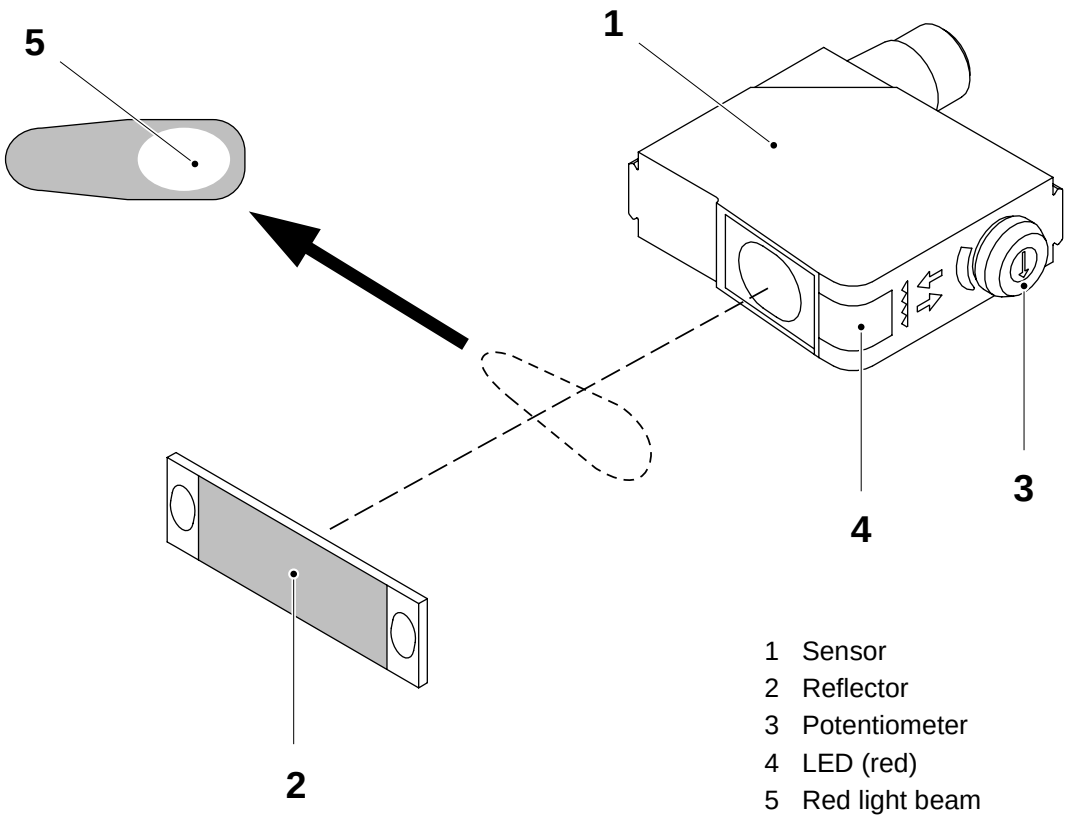

1 Sensor
2 Reflector
3 Potentiometer
4 LED (red)
5 Red light beam

TechPub_2614345_0103 - B5358F01en.fm

6.2 Missing Tab Detector

SPC Reference	1185029-0100

6.2-1 Missing Tab Detector - Check

Machine Status	Ready for PRODUCTION
SPC Reference	1185029-0100

Remove the tab supply from the tab applicator.

Check that the photocell emitter (1) is aligned with the photocell receiver (2).

Check that the photocells detects the missing tab by controlling that its alarm is shown on the TPOP panel.

If required set the photocell, see 6.2-2 Missing Tab Detector - Set.

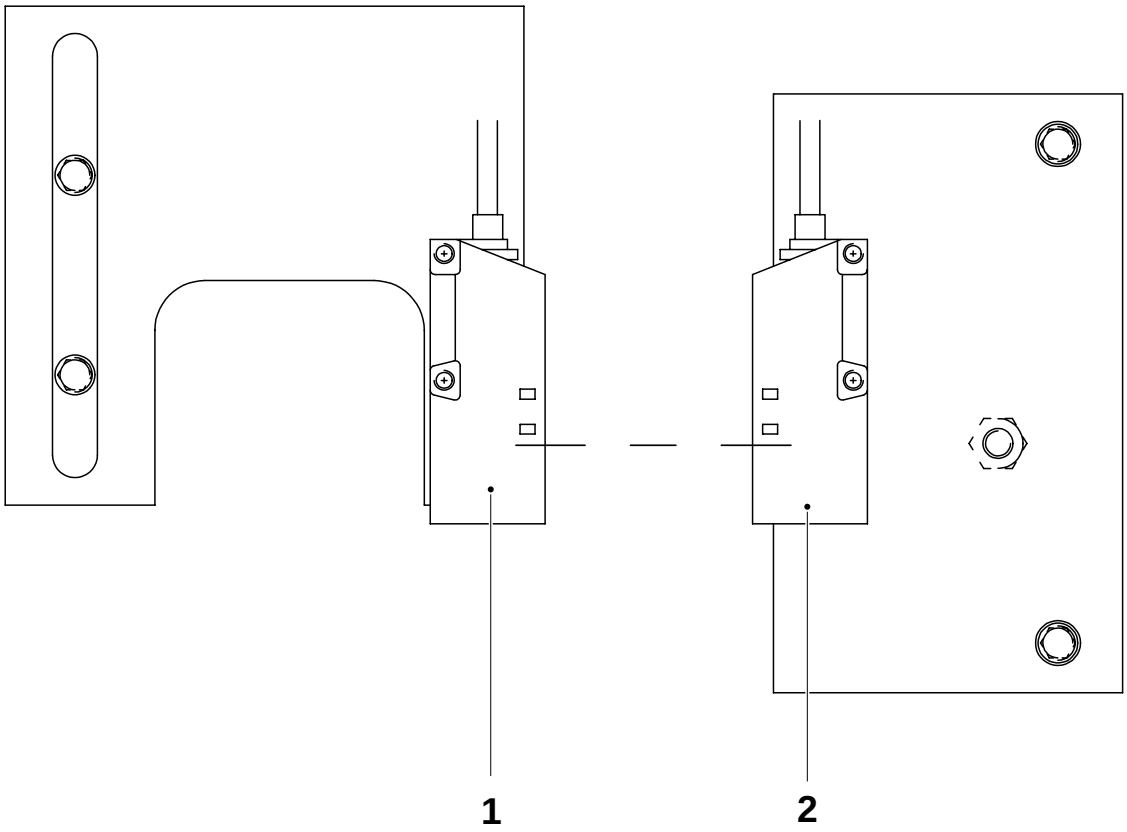

1 Photocell emitter
2 Photocell receiver

TechPub_2614345_0103 - B5358F02en.fm

6.2-2 Missing Tab Detector - Set

Machine Status	Ready for PRODUCTION
SPC Reference	1185029-0100

a) Open the cover of the receiver photocell (1).

b) Make sure that the receiver photocell (1) is set to **PNP** and **D-ON** and that the sensitivity potentiometer (2) is set to **max**, see figure.

c) Close the cover of the receiver photocell (1).

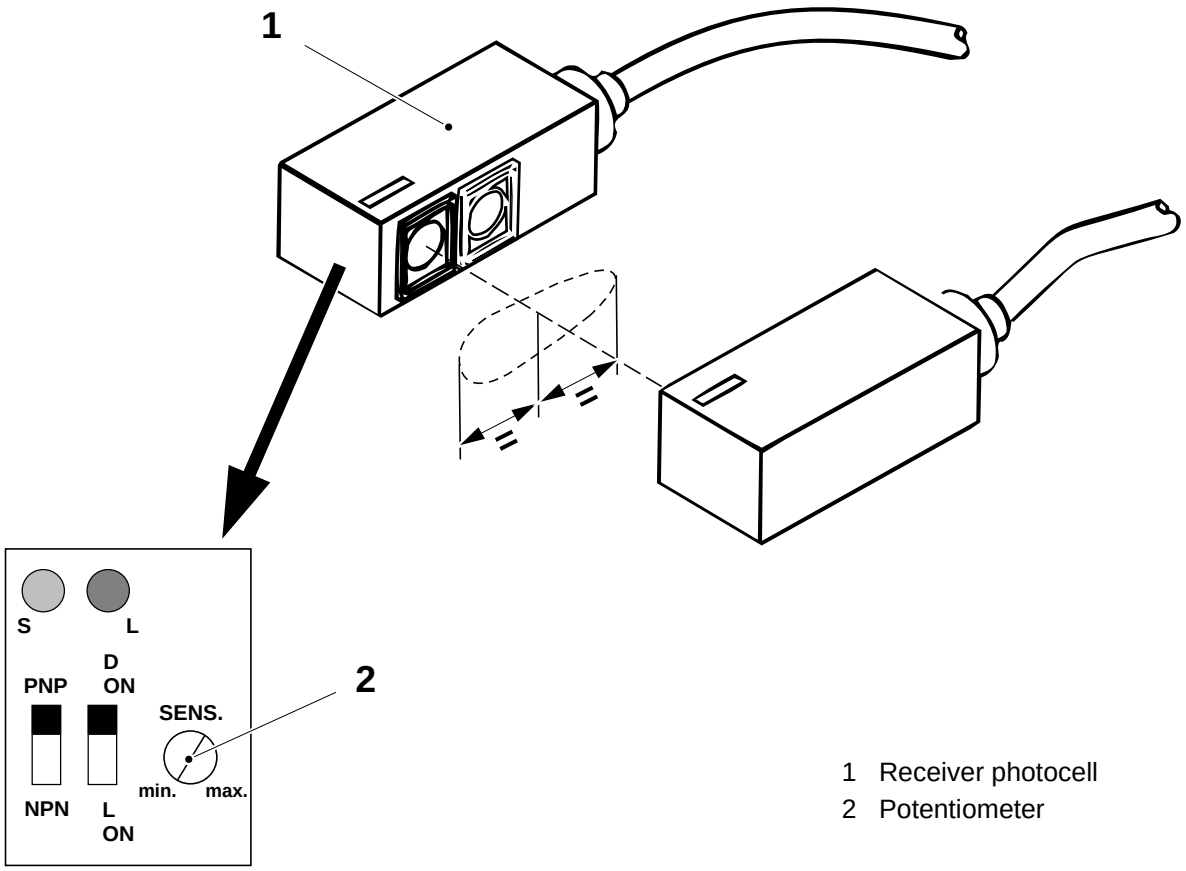

1 Receiver photocell
2 Potentiometer

TechPub_2614345_0103 - B5358F02en.fm

6.3 Splice Detector

SPC Reference	1260411-0100

6.3-1 Splice Detector - Check (Black Tape) Detector

Machine Status	Ready for PRODUCTION
Consumables	Black tape TP No. 90144-52
SPC Reference	1260411-0100

a) Place a piece of a black tape (1) on the IS patch (2).

b) Step up the machine to step PRODUCTION.

c) When the black tape (1) passes the reading head (3) of the photocell (4), the splice monitor will get an indication to eject packages. Check that the package with the black tape appears among the ejected packages.

d) If required set the photocell, see 6.3-2 Splice Detector - Set (Black Tape) Detector.

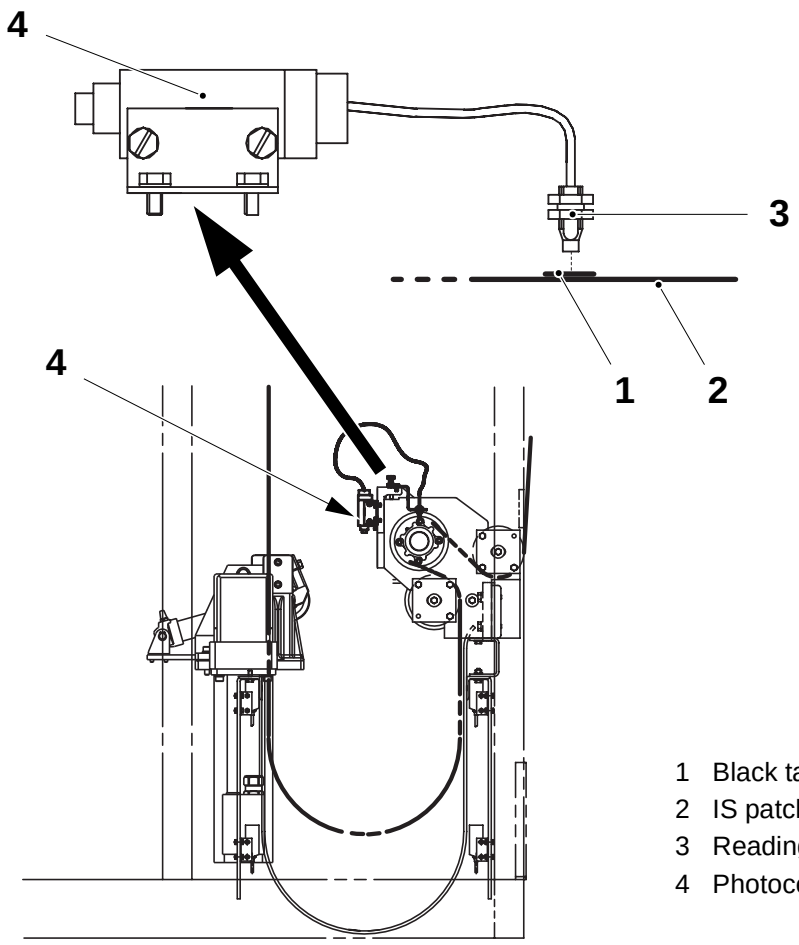

1 Black tape
2 IS patch
3 Reading head
4 Photocell

TechPub_2614345_0103 - B5358F03en.fm

6.3-2 Splice Detector - Set (Black Tape) Detector

Machine Status	Ready for PRODUCTION
Consumables	Black tape TP No. 90144-52
SPC Reference	1260411-0100

a) Set the distance **A** between the fibre optic head (1) and the packaging material (2).

b) Turn the sensitivity potentiometer (3) fully clockwise, (**towards +**).

c) Put a piece of black tape (4) on the packaging material and place it in front of the fibre optic head (1).

d) Turn the sensitivity potentiometer (3) anti-clockwise, (**towards -**), until the red LED (5) goes out.

e) Check, by moving the black tape (4) under the fibre optic head (1), that the red LED (5) goes on and off.

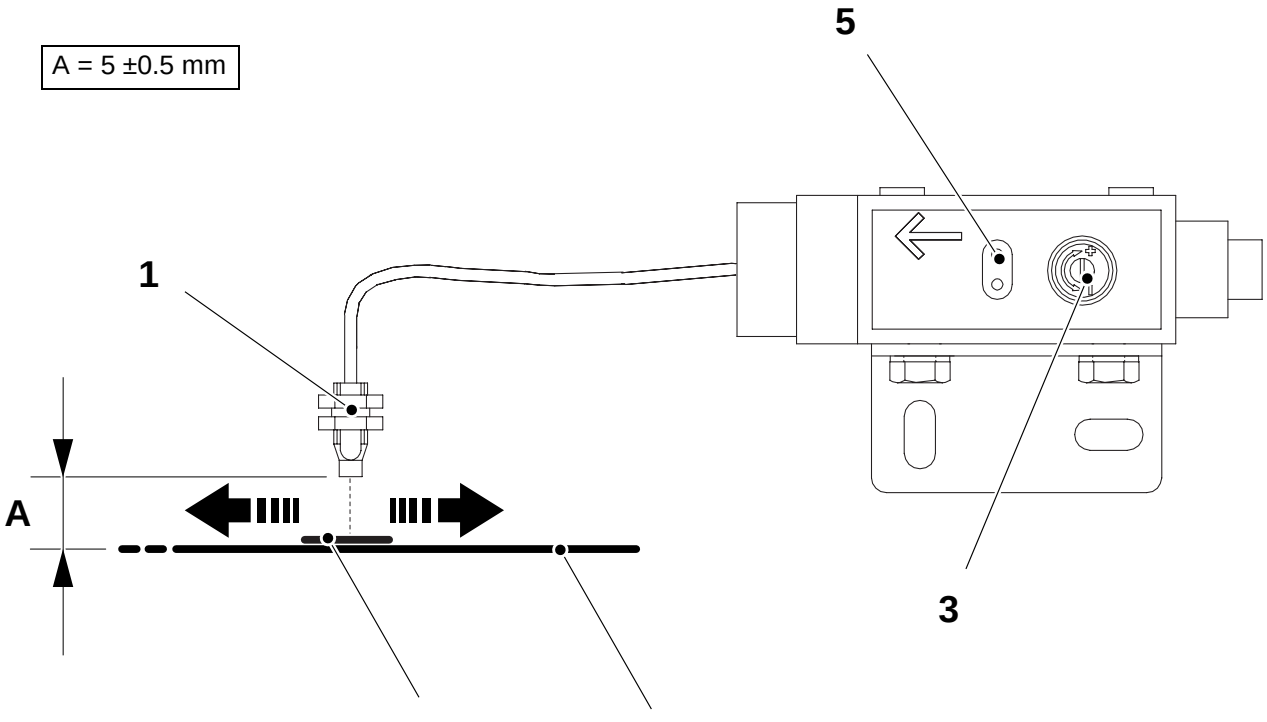

1 Optic head
2 Packaging material
3 Potentiometer
4 Black tape
5 LED (red)

TechPub_2614345_0103 - B5358F03en.fm

This page intentionally left blank

TechPub_2614345_0103 - B5358F03en.fm

7 Frame and Safety Function

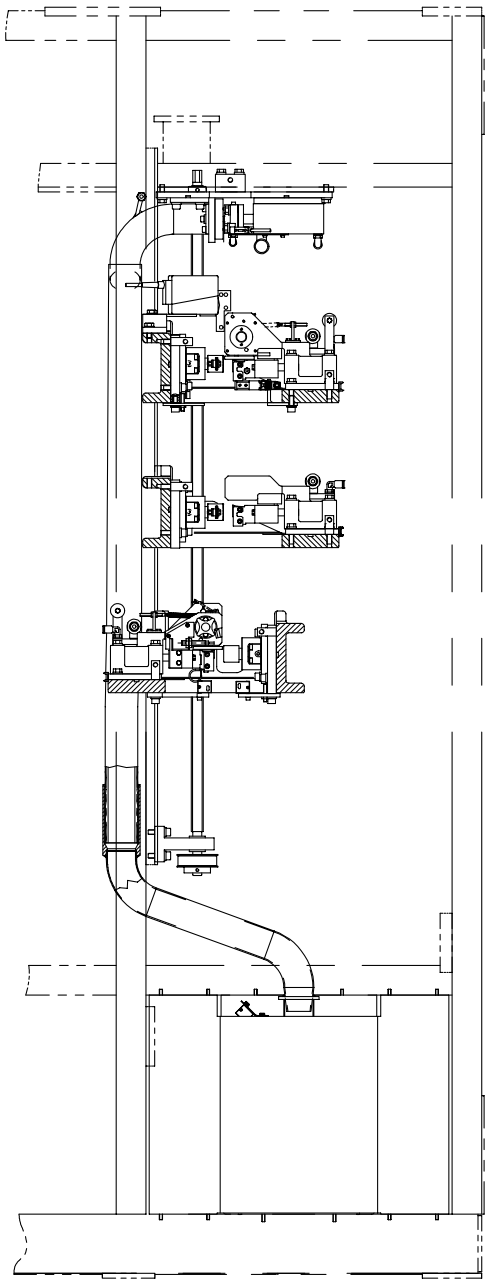

TechPub_2614345_0103 - B5358G00en.fm

Frame and Safety Function - Description

SPC Reference	1095951-0400 1185078-0100

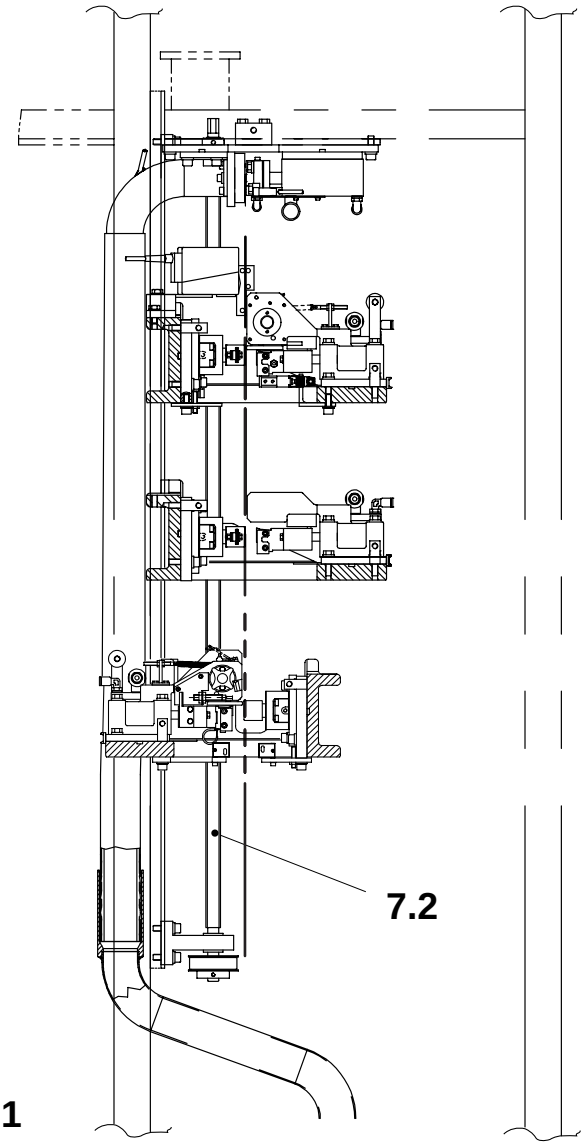

7.1 Doors and Covers
7.2 Applicators and Lifting Device

TechPub_2614345_0103 - B5358G00en.fm

7.1 Doors and Covers. . . . . 7 - 5

7.1-1 Doors and Covers - Check Safety Function . . . . . 7 - 5

7.2 Applicators and Lifting Device . . . . . 7 - 6

7.2.1 Applicators . . . . . 7 - 6

7.2.1-1 Applicators - Set Brackets Position . . . . . 7 - 6

7.2.2 Lifting Device . . . . . 7 - 16

7.2.2-1 Lifting Device - Check . . . . . 7 - 16

7.2.2-2 Lifting Device - Set Timing Belt . . . . . 7 - 17

TechPub_2614345_0103 - B5358G00en.fm

This page intentionally left blank

TechPub_2614345_0103 - B5358G00en.fm

7.1 Doors and Covers

7.1-1 Doors and Covers - Check Safety Function

Machine Status	PRODUCTION
SPC Reference	1095951-0400

a) Check that the filling machine and the PullTab unit stop in EMERGENCY STOP mode when any EMERGENCY STOP is pushed. To identify the correct location see the section Emergency Stop in the ii Safety Precautions.

b) Check that the filling machine and the PullTab unit stops in SHORT STOP when any of the PullTab doors (grey coloured) are opened. To identify the correct location see the Safeguards section in the ii Safety Precautions chapter.

c) Check that the warning sign labels are present and readable. Replace missing and/or illegible signs see the Locations of Safety Signs section in the ii Safety Precautions chapter

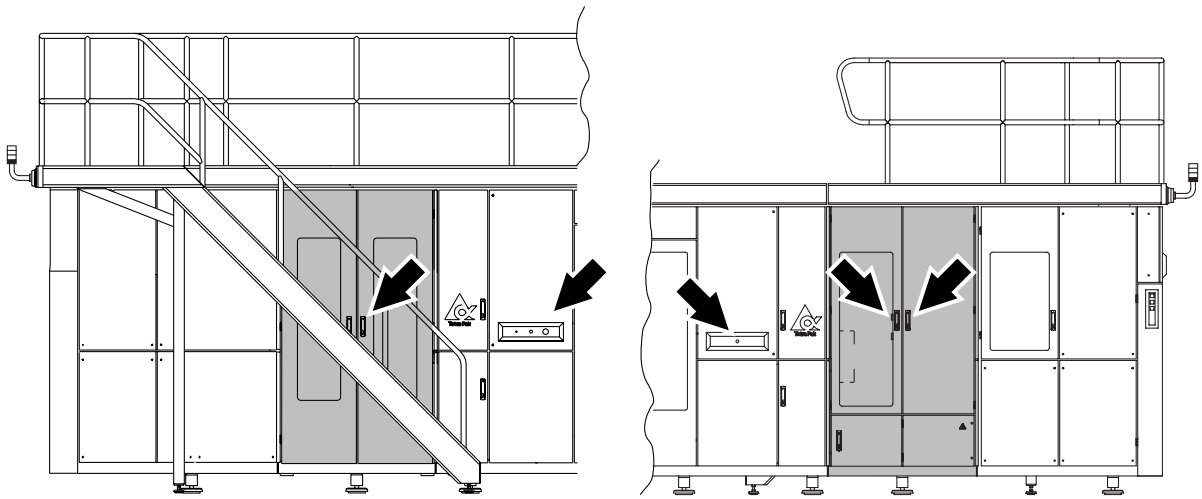

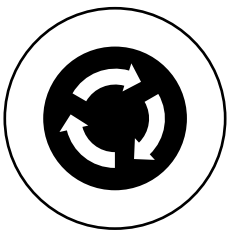

TechPub_2614345_0103 - B5358G01en.fm

7.2 Applicators and Lifting Device

SPC Reference	1260419-0100 1260420-0100 1260421-0100 1185078-0100

7.2.1 Applicators

7.2.1-1 Applicators - Set Brackets Position

Machine Status	Air **ON** Mains power **ON**
SPC Reference	1260419-0100 1260420-0100 1260421-0100

a) Set distances **A**, **B** and **C**, see table below, between the brackets (1) of the applicators by following the instructions below.

Package	Hole type	A ±0.5 (mm)	B ±0.5 (mm)	C ±0.5 (mm)		Package	Hole type	A ±0.5 (mm)	B ±0.5 (mm)	C ±0.5 (mm)
TBA 250 B	21	403.5	140.6	144.8		TPA 1000 S	60	347.8	246.3	251.9
TBA 500 S	25	286.8	187.3	189.4		TPA 1000 Sq	60	383	283	286
TBA 1500 S	45	407.8	306.3	311.2		TBA 1500 S	85	407.6	306.5	311.7
TBA 1000 B	45	322.8	221.3	226.2		TBA 1000 Sq	85	362.6	261.5	266.7
TBA 1000 S	45	347.8	246.3	251.2		TBA 1000 B	85	322.6	221.5	226.7
TBA 1000 B	50	323.6	220.5	226.4		TBA 1000 S	85	347.6	246.5	251.7
TBA 1000 S	50	348.6	245.5	251.4		TBA 1000 S	90	347.8	246.2	251.5
TBA 500 S	55	289.1	185	193.4		TBA 1500 S	90	407.5	306.3	308.0

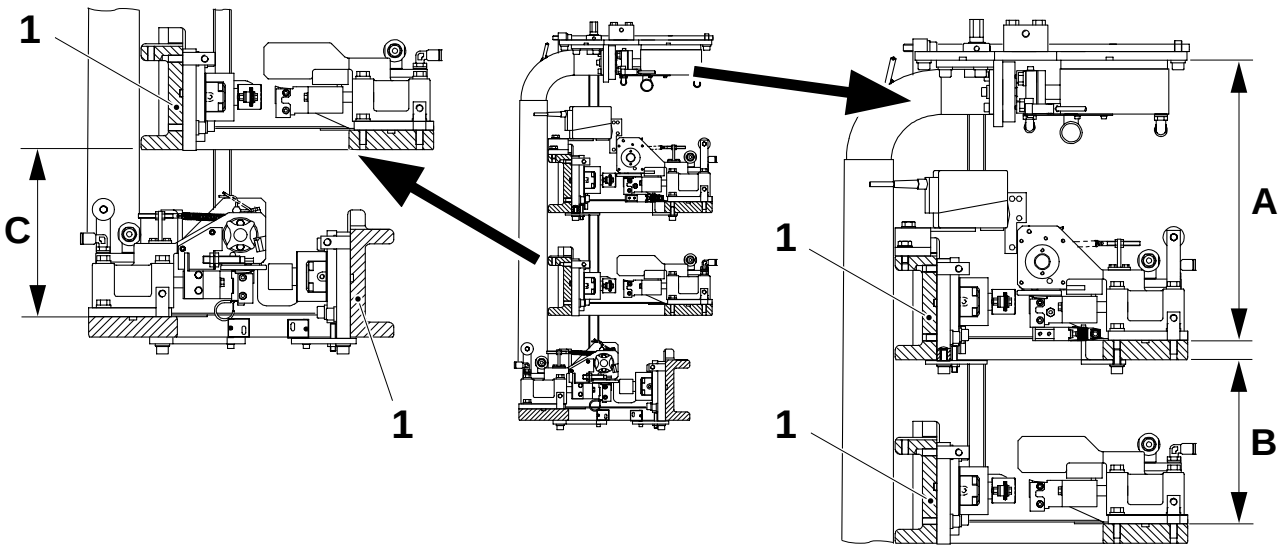

1 Bracket

(Cont'd)

TechPub_2614345_0103 - B5358G02en.fm

(Cont'd)

Note! Perform the following work on one applicator station at a time.

b) Tighten the brass bushings (2) until they match against the bracket (1).

c) Tighten the two screws (3).

d) Check that in the other two applicator stations the screws (3) are loosen and that the brass bushings (2) are far away from the bracket (1).

Note! Perform the items b), c) and d) on both sides of the PullTab.

e) Slightly loosen the screws (4) on the bracket (1), and adjust the screw guides (5) until the distances **A**, **B** and **C** are obtained, see previous page.

f) Tighten the screws (4) after adjustment.

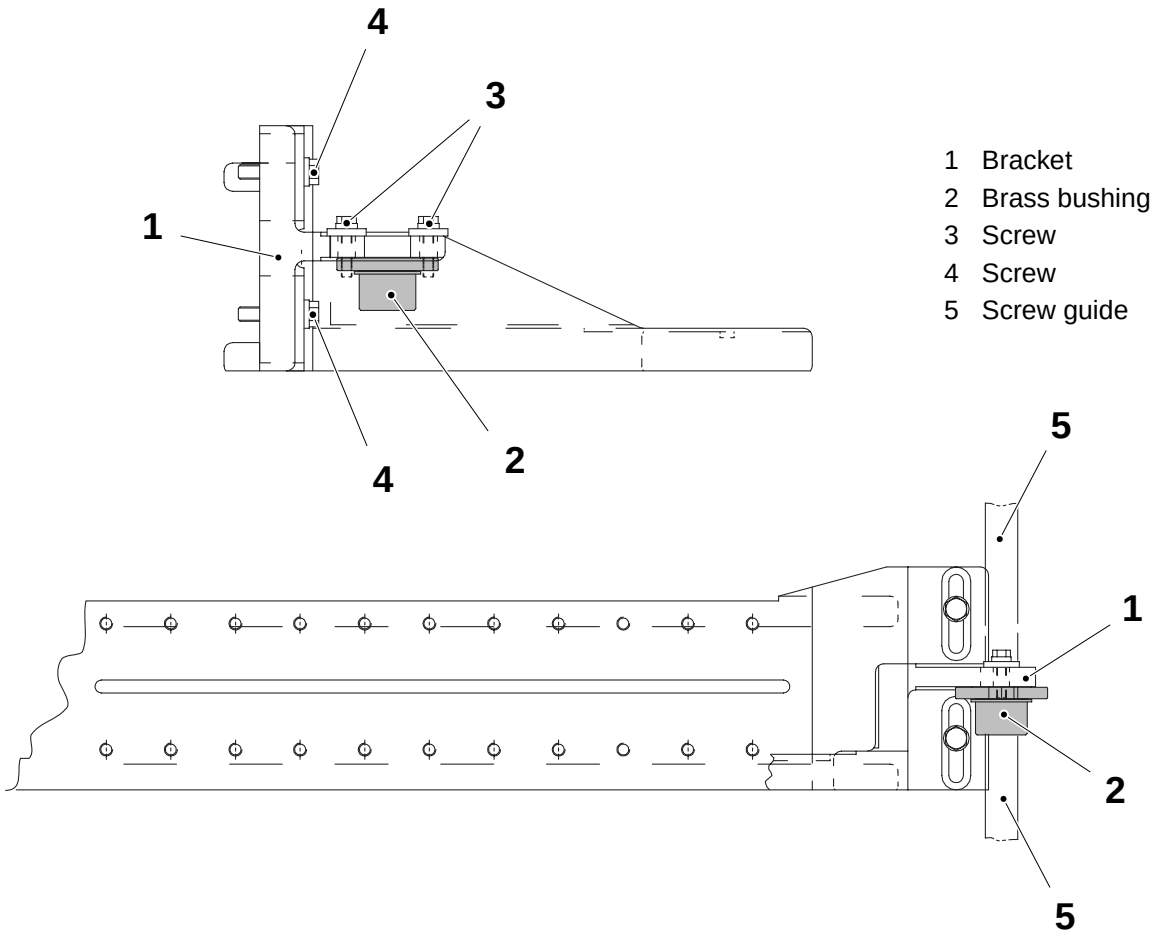

1 Bracket
2 Brass bushing
3 Screw
4 Screw
5 Screw guide

(Cont'd)

TechPub_2614345_0103 - B5358G02en.fm

(Cont'd)

Set Counter Jaw Vertical Position of Patch, Reseal and Tab

a) Step the machine to step PREPARATION.

b) Switch the selector key, located on the PT21 electrical panel, to position SERVICE.

Note! Perform the following work on one applicator station at a time.

c) Activate the valve for the cylinder (6) (**Y8410:1** for patch station, **Y8411:1** for reseal and **Y8412:1** for tab) and make sure that the cushion cylinder (7) is fully extended.

d) Loosen the screws (8) on the counter jaw.

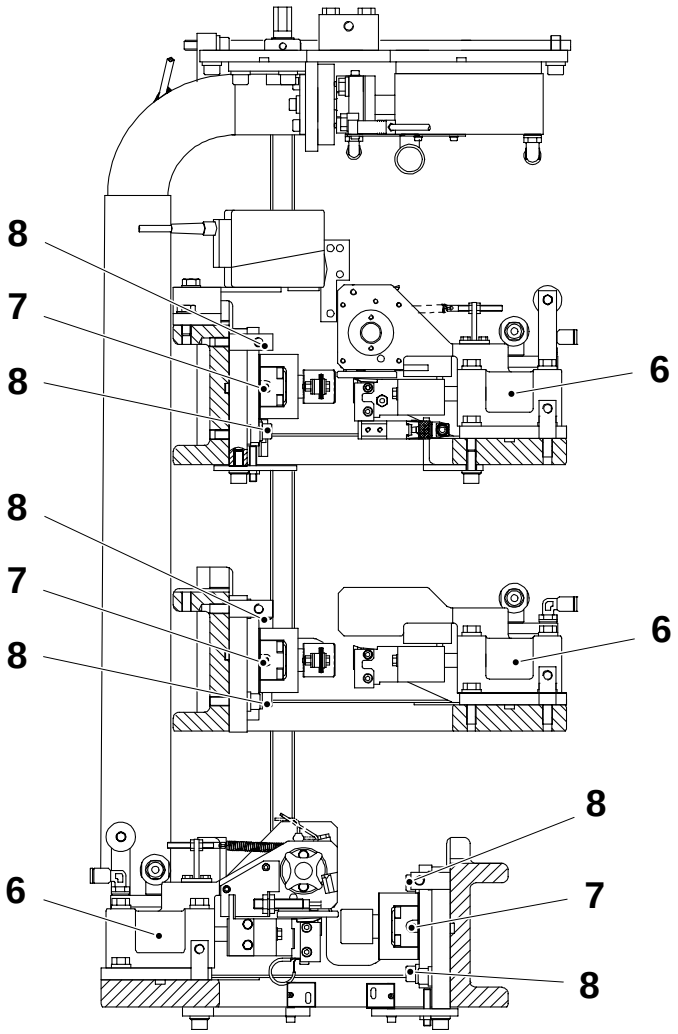

6 Cylinder
7 Cushion cylinder
8 Screw

(Cont'd)

TechPub_2614345_0103 - B5358G02en.fm

(Cont'd)

e) Loosen the nut (9) and set the distances **D**, **E** and **F**, between the edge of the inductor (10) and the sealing plate (11) by means of the grub screw (12); (by hand only for the reseal station).

f) Tighten the nut (9) and the screws (8).

g) Deactivate the valve for the cylinder (6).

Package	Hole type	D ±0.5 (mm)	E ±0.5 (mm)	F ±0.5 (mm)		Package	Hole type	D ±0.5 (mm)	E ±0.5 (mm)	F ±0.5 (mm)
TBA 250 B	21	9.1	8.3	11.8		TPA 1000 S	60	10.1	8.3	12.3
TBA 500 S	25	9.1	8.3	9.8		TPA 1000 Sq	60	10.1	8.3	12.3
TBA 1500 S	45	10.1	8.3	11.6		TBA 1500 S	85	9.9	8.3	12.1
TBA 1000 B	45	10.1	8.3	11.6		TBA 1000 Sq	85	9.9	8.3	12.1
TBA 1000 S	45	10.1	8.3	11.6		TBA 1000 B	85	9.9	8.3	12.1
TBA 1000 B	50	10.9	8.3	11.8		TBA 1000 S	85	9.9	8.3	12.1
TBA 1000 S	50	10.9	8.3	11.8		TBA 1000 S	90	10.1	8.3	12.0
TBA 500 S	55	11.4	8.3	13.8		TBA 1500 S	90	10.1	8.3	12.0

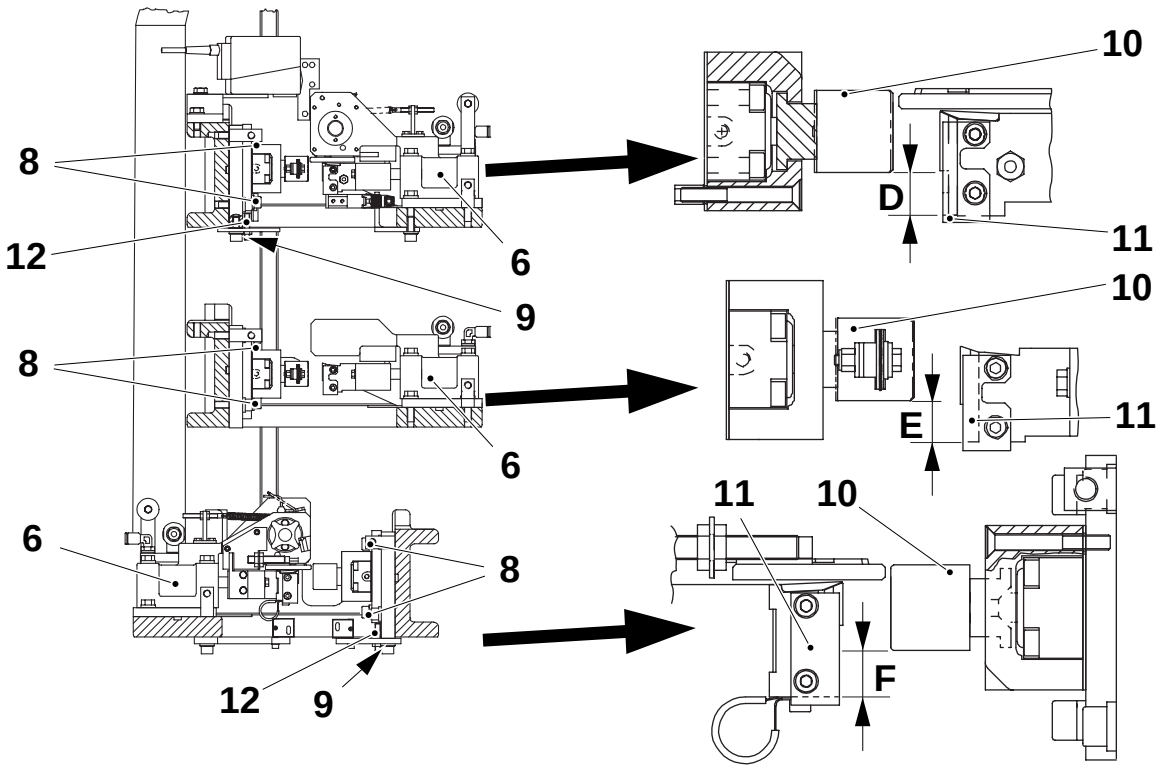

6 Cylinder
8 Screw
9 Nut
10 Inductor
11 Sealing plate
12 Grub screw

(Cont'd)

TechPub_2614345_0103 - B5358G02en.fm

(Cont'd)

Set Counter Jaws Position with Respect to the Paper Line

a) Attach a plumb line (13) on the paper brake wheel (14) and let it hang over the drive motor wheel (15).

b) By means of the pressure regulator (16), open the main air inlet for the PT21 and check that the counter roller of the paper brake wheel (14) and of the drive motor wheel (15) are engaged and that the plumb line (13) is in tension.

c) Move the IS patch, reseal and tab counter jaw, one by one, approximately to the centre of their own respective brackets.

d) Check also that the pressure regulators (17), (18) and (19) are correctly set, see 10.1 Technical Data.

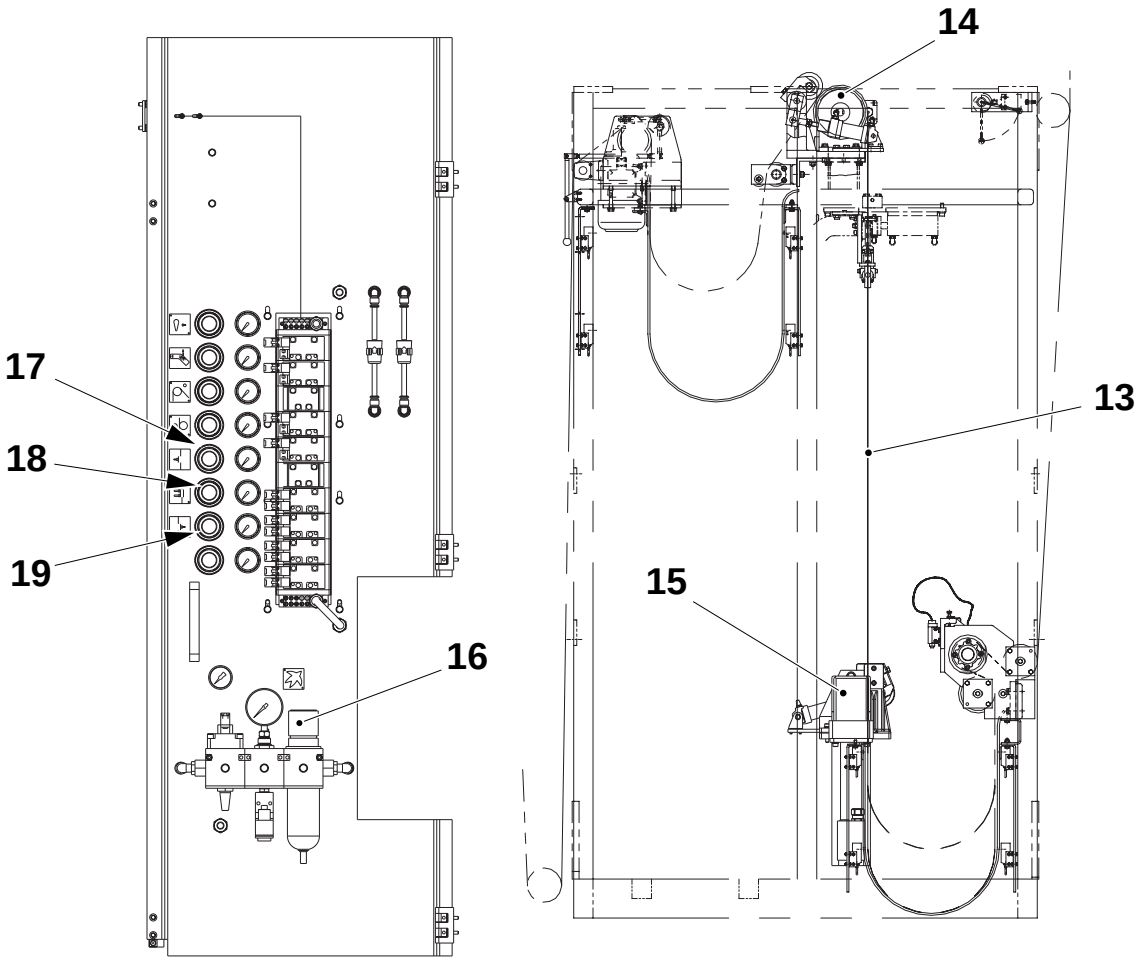

13 Plumb line
14 Wheel
15 Wheel
16 Pressure regulator
17 Pressure regulator
18 Pressure regulator
19 Pressure regulator

(Cont'd)

TechPub_2614345_0103 - B5358G02en.fm

(Cont'd)

e) Check that the plumb line (13) just clears, distance **G**, of the face of the three inductors (20).

f) If required, adjust with shims (21) under the cushion cylinders.

g) Remove the plumb line (13).

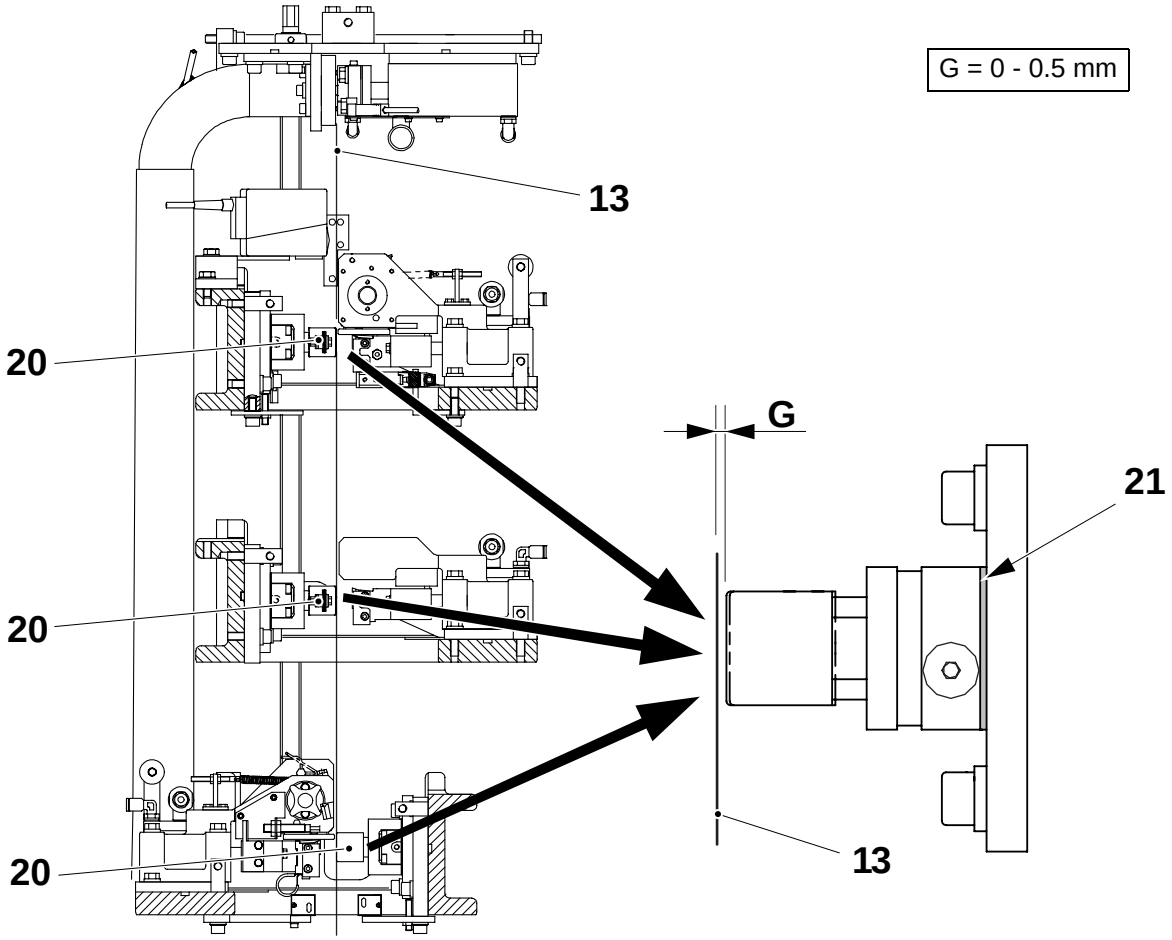

13 Plumb line
20 Inductor
21 Shim

(Cont'd)

TechPub_2614345_0103 - B5358G02en.fm

(Cont'd)

Set Punch and Die Unit Horizontal Position

a) Loosen the four screws (22).

b) Shift the plate (23) by means of the setting screws (24) until the distance **H** between the beam (25) and the side of the plate (23) is obtained.

c) Tighten the four screws (22).

d) Gently push the punch by hand so that it slides into the die.

e) Unscrew the screws (26) and the screws (27).

f) By hand, shift the punch unit and the die unit until the distance **I** between the side of the plate (23) and the punch plate (28) is obtained.

g) Tighten the screws (26) and the screws (27).

Package	Hole type	I ±0.5 (mm)		Package	Hole type	I ±0.5 (mm)		Package	Hole type	I ±0.5 (mm)
TBA 250 B	21	44.7		TBA 1000 S	50	4.5		TBA 1000 Sq	85	147
TBA 500 S	25	32.5		TBA 500 S	55	29.3		TBA 1000 B	85	1.0
TBA 1500 S	45	-2.2		TPA 1000 S	60	149.05		TBA 1000 S	85	7.5
TBA 1000 B	45	-0.2		TPA 1000 Sq	60	160.0		TBA 1000 S	90	10.0
TBA 1000 S	45	6.3		TBA 1500 S	85	-1.0		TBA 1500 S	90	4.5
TBA 1000 B	50	-1.7								

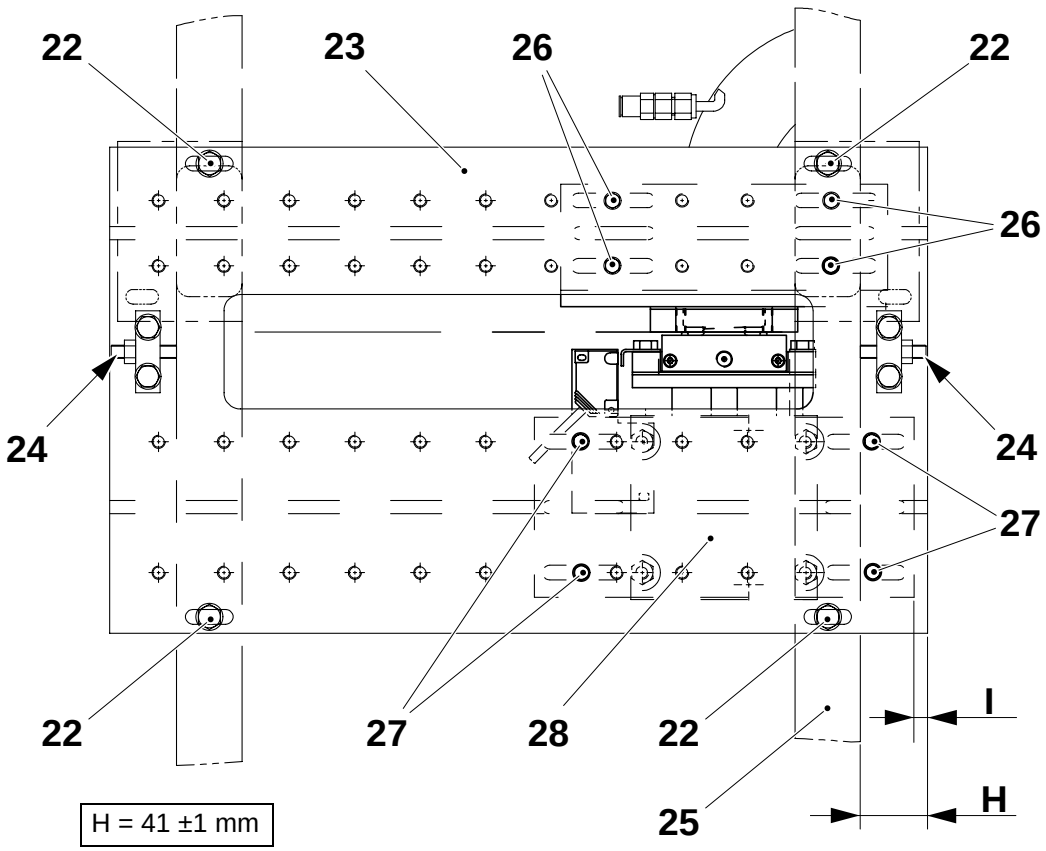

22 Screw
23 Plate
24 Setting screw
25 Beam
26 Screw
27 Screw
28 Punch plate

(Cont'd)

TechPub_2614345_0103 - B5358G02en.fm

(Cont'd)

Set Patch Feeder and Patch Counter Jaw Horizontal Position

a) Make sure that the cushion cylinder (29) is fully extended.

b) Loosen the screws (30), located on the patch counter jaw.

c) Set the distance **L** between the edge of the inductor (31) and the machined surface **N** by means of the setting screw (32). Tighten the screws (30).

d) Loosen the screws (33), located on the patch feeder.

e) Set the distance **M** between the patch feeder head (35) and the machined surface **N** by means of the setting screw (34). Tighten the screws (33).

Package	Hole type	L ±0.5 (mm)	M ±0.5 (mm)		Package	Hole type	L ±0.5 (mm)	M ±0.5 (mm)
TBA 250 B	21	193.7	168.7		TPA 1000 S	60	298.0	273.0
TBA 500 S	25	181.5	156.5		TPA 1000 Sq	60	289.0	264.0
TBA 1500 S	45	146.8	121.8		TBA 1500 S	85	148.0	123.0
TBA 1000 B	45	148.8	123.8		TBA 1000 Sq	85	296.0	271.0
TBA 1000 S	45	155.3	130.3		TBA 1000 B	85	150.0	125.0
TBA 1000 B	50	147.3	122.3		TBA 1000 S	85	156.5	131.5
TBA 1000 S	50	153.5	128.5		TBA 1000 S	90	159.0	134.0
TBA 500 S	55	178.3	153.3		TBA 1500 S	90	153.0	128.0

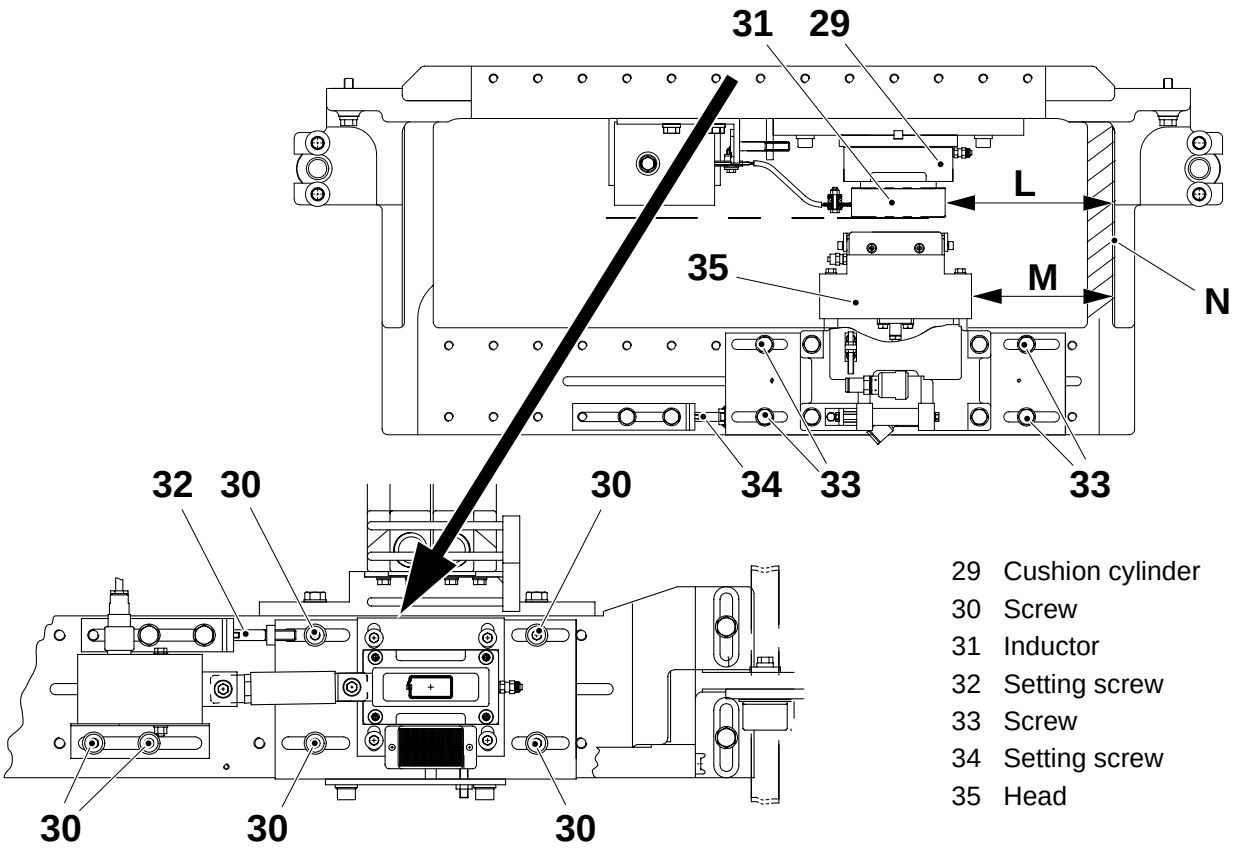

29 Cushion cylinder
30 Screw
31 Inductor
32 Setting screw
33 Screw
34 Setting screw
35 Head

(Cont'd)

TechPub_2614345_0103 - B5358G02en.fm

(Cont'd)

Set Reseal Jaw and Counter Jaw Horizontal Position

a) Make sure that the cushion cylinder (36) is fully extended.

b) Loosen the screws (37) and set the distance **O** between the edge of the inductor (38) and the machined surface **Q** by means of the setting screw (39). Tighten the screws (37).

c) Loosen the screws (40), located on the reseal heating jaw.

d) Set the distance **P** between the reseal heating jaw head (42) and the machined surface **Q** by means of the setting screw (41). Tighten the screws (40).

Package	Hole type	O ±0.5 (mm)	P ±0.5 (mm)		Package	Hole type	O ±0.5 (mm)	P ±0.5 (mm)
TBA 250 B	21	193.7	168.7		TPA 1000 S	60	298.0	273.0
TBA 500 S	25	181.5	156.5		TPA 1000 Sq	60	290	265
TBA 1500 S	45	146.8	121.8		TBA 1500 S	85	148.0	123.0
TBA 1000 B	45	148.8	123.8		TBA 1000 Sq	85	296.0	271.0
TBA 1000 S	45	155.3	130.3		TBA 1000 B	85	150.0	125.0
TBA 1000 B	50	147.3	122.3		TBA 1000 S	85	156.5	131.5
TBA 1000 S	50	153.5	128.5		TBA 1000 S	90	159.0	134.0
TBA 500 S	55	178.3	153.3		TBA 1500 S	90	153.0	128.0

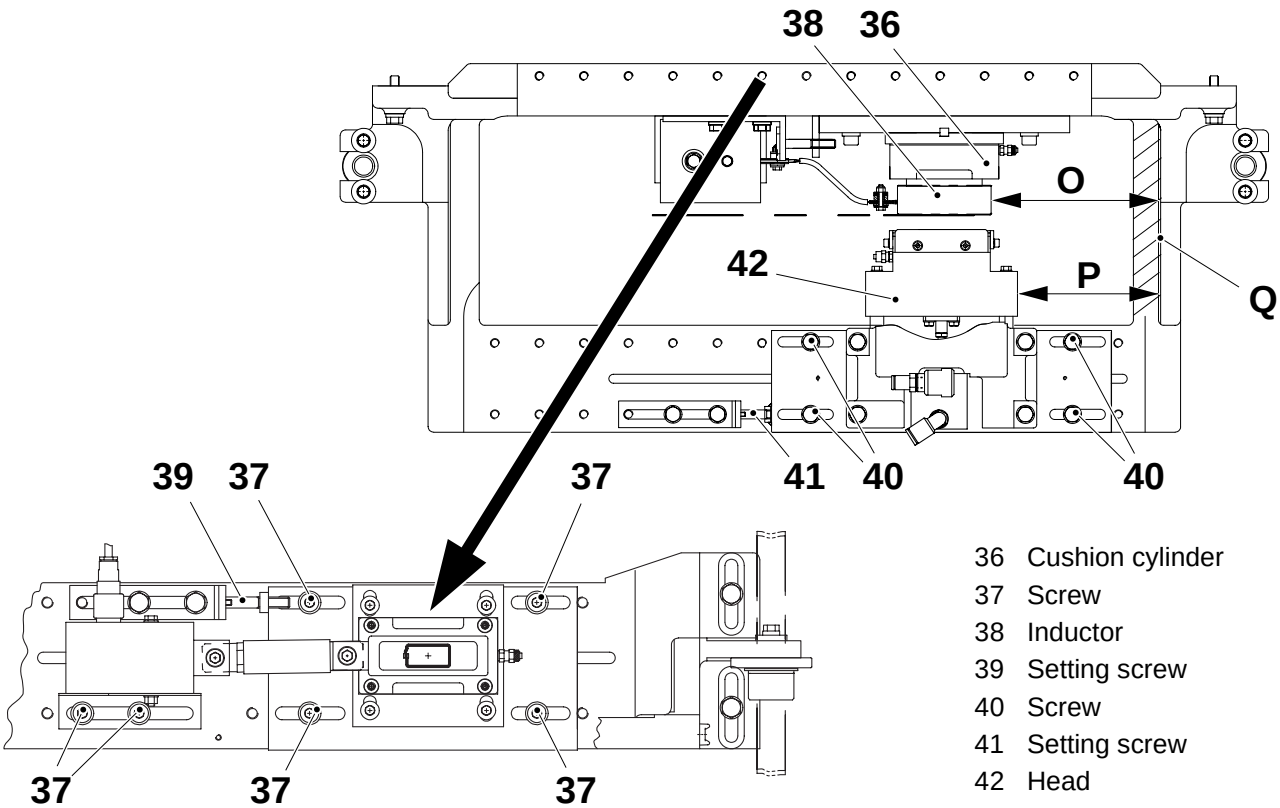

36 Cushion cylinder
37 Screw
38 Inductor
39 Setting screw
40 Screw
41 Setting screw
42 Head

(Cont'd)

TechPub_2614345_0103 - B5358G02en.fm

(Cont'd)

Set Tab Feeder and Tab Counter Jaw Horizontal Position

a) Make sure that the cushion cylinder (43) is fully extended.

b) Loosen the screws (44), located on the tab counter jaw.

c) Set the distance **R** between the edge of the inductor (45) and the machined surface **T** by means of the setting screw (46). Tighten the screws (44).

d) Loosen the screws (47), located on the tab feeder.

e) Set the distance **S** between the tab feeder head (49) and the machined surface **T** by means of the setting screw (48). Tighten the screws (47).

Package	Hole type	R ±0.5 (mm)	S ±0.5 (mm)		Package	Hole type	R ±0.5 (mm)	S ±0.5 (mm)
TBA 250 B	21	200.7	165.0		TPA 1000 S	60	305.5	264.3
TBA 500 S	25	188.5	156.2		TPA 1000 Sq	60	296	257
TBA 1500 S	45	153.8	113.8		TBA 1500 S	85	155.0	263.0
TBA 1000 B	45	155.8	115.8		TBA 1000 Sq	85	303.0	263.0
TBA 1000 S	45	162.3	122.3		TBA 1000 B	85	156.7	117.0
TBA 1000 B	50	154.3	113.5		TBA 1000 S	85	163.5	123.5
TBA 1000 S	50	160.5	119.7		TBA 1000 S	90	166.0	126.0
TBA 500 S	55	185.3	147.3		TBA 1500 S	90	161.0	119.5

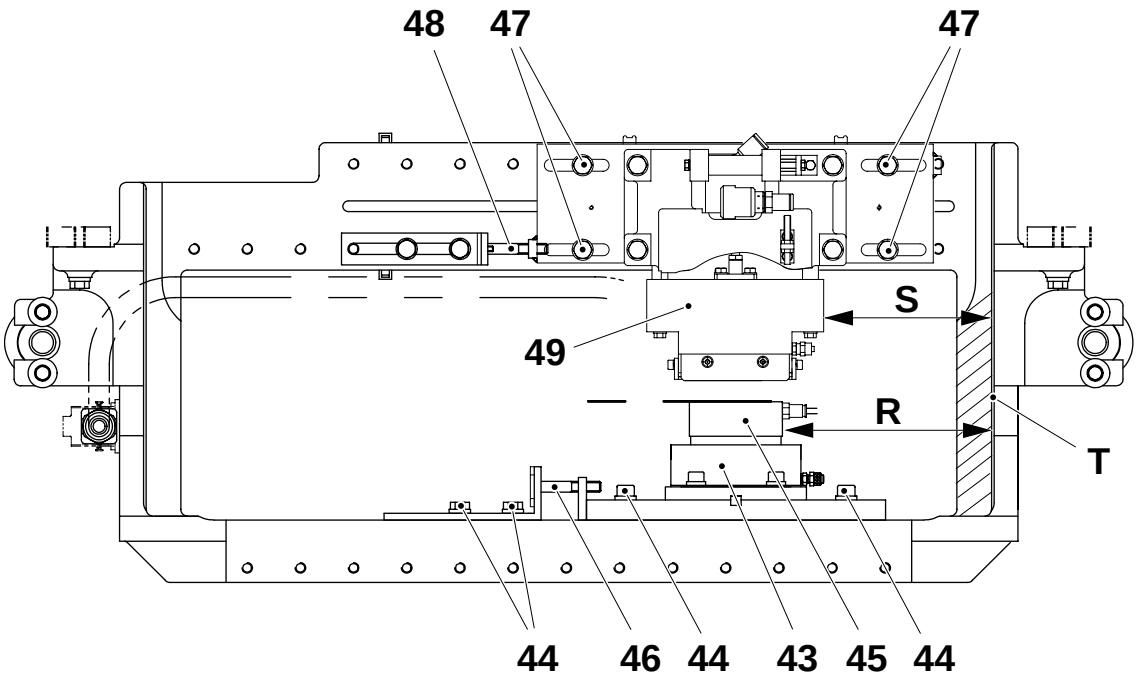

43 Cushion cylinder
44 Screw
45 Inductor
46 Setting screw
47 Screw
48 Setting screw
49 Head

TechPub_2614345_0103 - B5358G02en.fm

7.2.2 Lifting Device

7.2.2-1 Lifting Device - Check

Machine Status	Air **OFF** Mains power **OFF**
SPC Reference	1185078-0100

Check the following parts for visual wear and/or damage:

- the thread of the screw guides (1)
- the brass bushings (2) and (3)
- the toothed pulleys (4)
- the timing belt (5)
  Check also the belt tension and set as required, see 7.2.2-2 Lifting Device - Set Timing Belt.

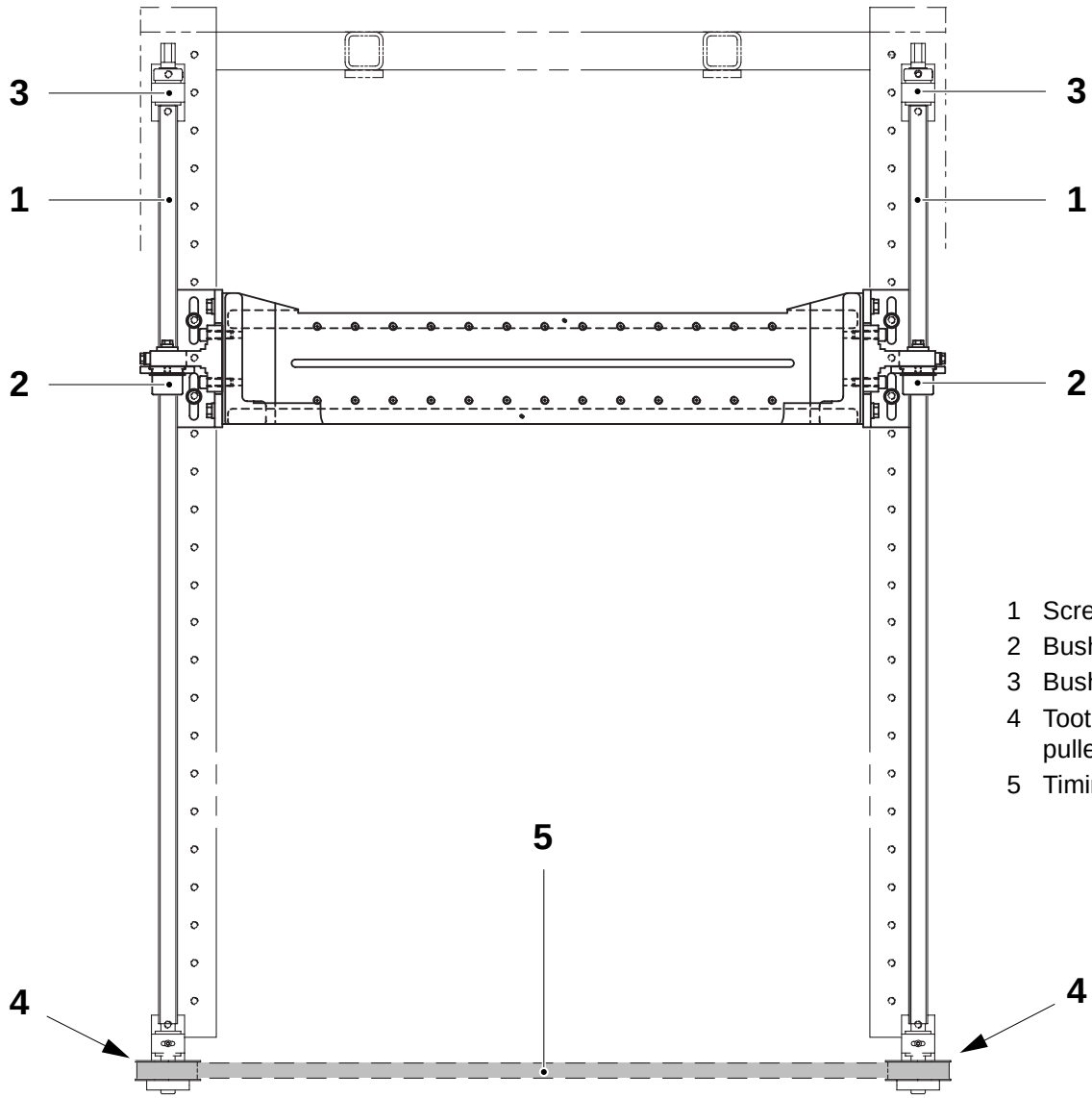

1 Screw guide
2 Bushing
3 Bushing
4 Toothed pulley
5 Timing belt

TechPub_2614345_0103 - B5358G02en.fm

7.2.2-2 Lifting Device - Set Timing Belt

Machine Status	Air **OFF** Mains power **OFF**
SPC Reference	1185078-0100

Set the tension of the timing belt (1) so that it can be flexed approximately **10 ±1 mm** with a load force of **15 ±1 N** at the point **A**.

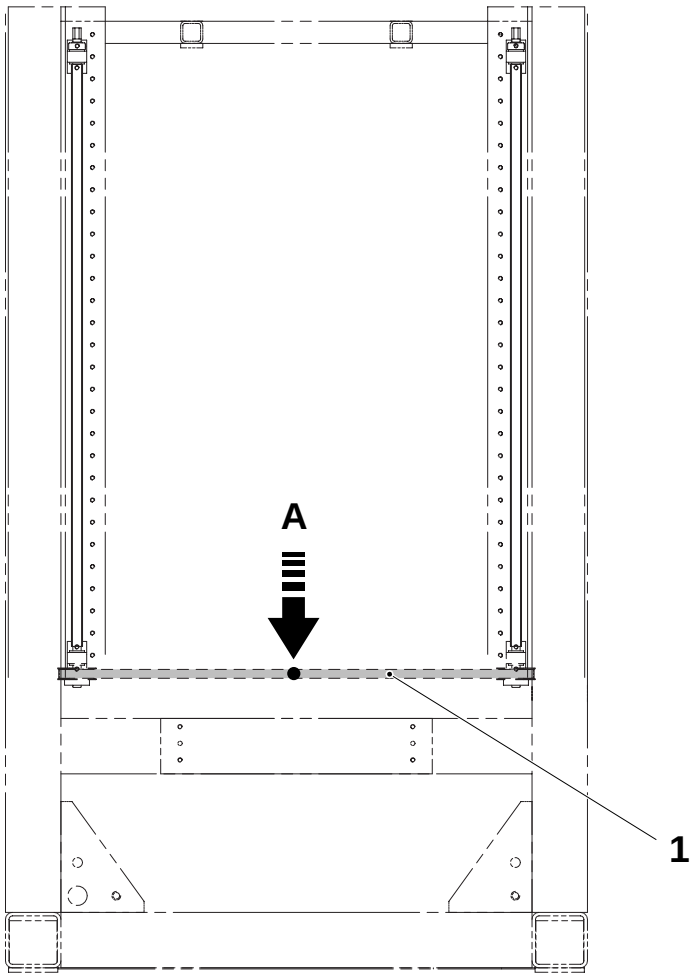

1 Timing belt

TechPub_2614345_0103 - B5358G02en.fm

This page intentionally left blank

TechPub_2614345_0103 - B5358G02en.fm

8 Electrical Cabinet

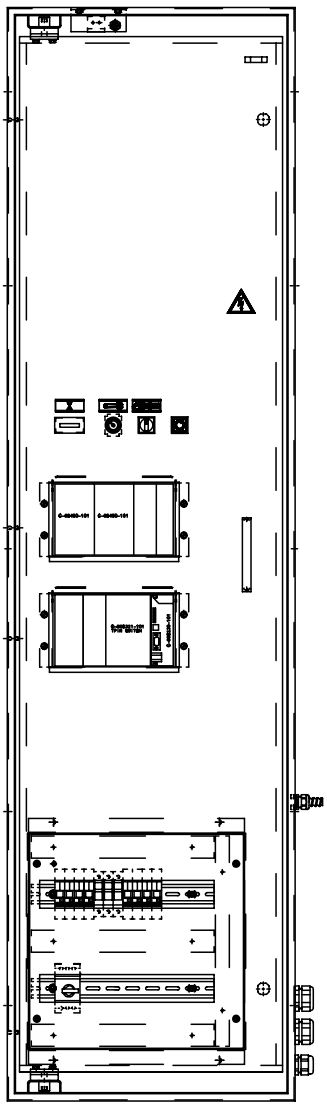

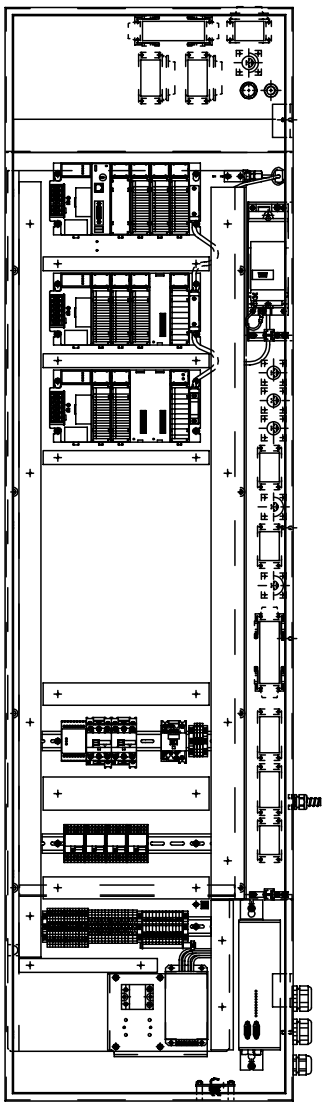

TechPub_2614345_0103 - B5358H00en.fm

Electrical Cabinet - Description

SPC Reference	1317254-0200

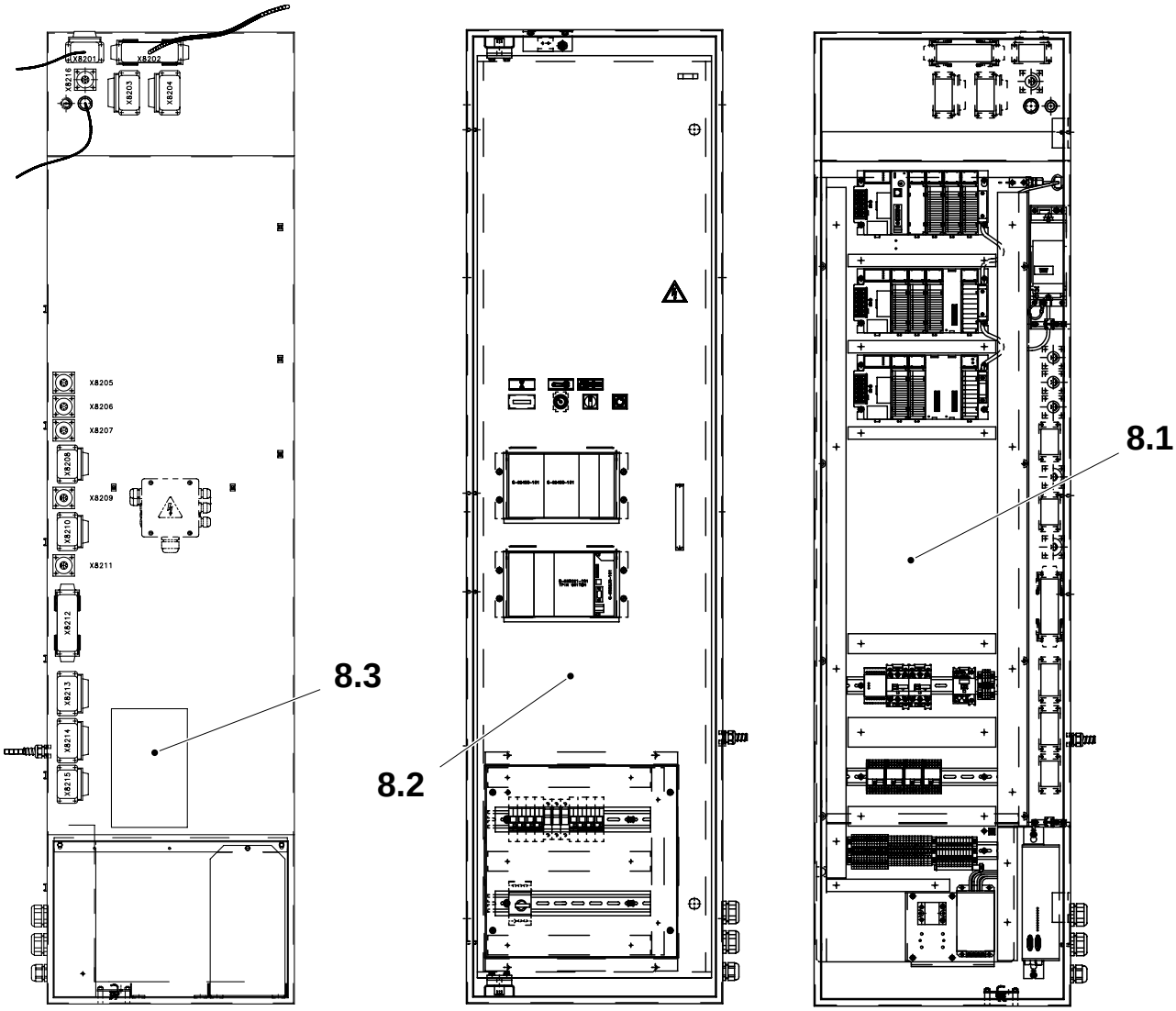

8.1 Mounting Plate
8.2 Swing Frame
8.3 Cooler

TechPub_2614345_0103 - B5358H00en.fm

8-1 Electrical Cabinet - Pulltab Controls . . . . . 8 - 5
8-2 Electrical Cabinet - Set Frequency Converter . . . . . 8 - 6
8-3 Electrical Cabinet - Function Description TPIH Generator . . . . . 8 - 14
8-4 Electrical Cabinet - Check Function TPIH Generator . . . . . 8 - 15
8-5 Electrical Cabinet - Check Cables TPIH Generator . . . . . 8 - 21
8-6 Electrical Cabinet - Change Transformer TPIH Generator . . . . . 8 - 22
8-7 Electrical Cabinet - Change TPIH Generator . . . . . 8 - 23
8-8 Electrical Cabinet - Set Sealings TPIH Generator . . . . . 8 - 24
8-9 Electrical Cabinet - Function Description Servo Drive DMC2 Card . . . . . 8 - 25
8-10 Electrical Cabinet - Function Description Std DMC2 Card . . . . . 8 - 29
8-11 Electrical Cabinet - Set DMC2 Card . . . . . 8 - 33
8-12 Electrical Cabinet - Load DMC2 Program . . . . . 8 - 36
8-13 Electrical Cabinet - Function Description Servo Drive DMC Card . . . . . 8 - 38
8-14 Electrical Cabinet - Function Description Std DMC Card . . . . . 8 - 42
8-15 Electrical Cabinet - Set DMC Card . . . . . 8 - 46

8.1 Mounting Plate . . . . . 8 - 48

8.1.1 PLC . . . . . 8 - 48

8.1.1-1 PLC - Change Battery . . . . . 8 - 48
8.1.1-2 PLC - Load Program . . . . . 8 - 51
8.1.1-3 PLC - Print Program . . . . . 8 - 55
8.1.1-4 PLC - Set Patch and Tab Length . . . . . 8 - 57
8.1.1-5 PLC - Set Tension Device Torque . . . . . 8 - 63

8.1.2 Safety Relays . . . . . 8 - 68

8.1.2-1 Safety Relays - Check Function . . . . . 8 - 68

8.2 Swing Frame . . . . . 8 - 69

TechPub_2614345_0103 - B5358H00en.fm

8.2.1 TMCC . . . . . 8 - 69

8.2.1-1 TMCC - Function Description . . . . . 8 - 69

8.2.1-2 TMCC - Set Communication . . . . . 8 - 74

8.2.1-3 TMCC - Change Cards . . . . . 8 - 75

8.2.1-4 TMCC - Set Control Card . . . . . 8 - 77

8.2.1-5 TMCC - Set Stepper Motor Cards . . . . . 8 - 78

8.2.1-6 TMCC - Set Photocells . . . . . 8 - 79

8.2.1-7 TMCC - Display Report . . . . . 8 - 83

8.2.2 Fuse Box . . . . . 8 - 85

8.2.2-1 Fuse Box - Set Overload Protection . . . . . 8 - 85

8.2.2-2 Fuse Box - Set Fuse . . . . . 8 - 86

8.3 Cooler . . . . . 8 - 87

8.3-1 Cooler - Check Air Flow . . . . . 8 - 87

8.3-2 Cooler - Clean Filter Insert . . . . . 8 - 88

TechPub_2614345_0103 - B5358H00en.fm

8-1 Electrical Cabinet - Pulltab Controls

The illustration shows a diagram of the components involved in the control of the PullTab unit.

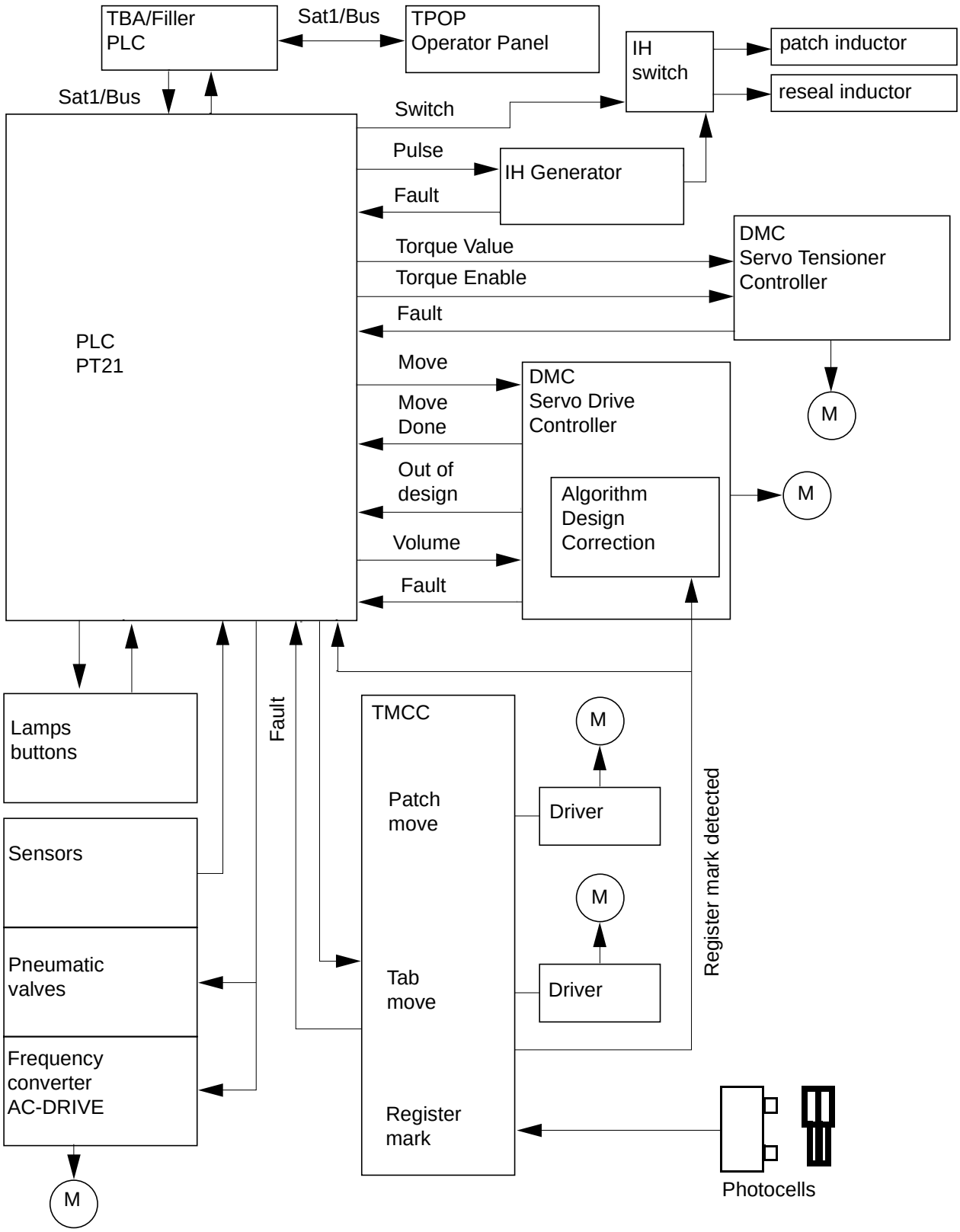

TechPub_2614345_0103 - B5358H00en.fm

8-2 Electrical Cabinet - Set Frequency Converter

Machine Status	Air **OFF** Mains power **ON**
SPC Reference	1317254-0200 90430-0070

a) Press the parameter button (3). The display (4) shows P000.

b) Select the parameter to set (see table below for both inverters) by means of the increase value button (1) and the decrease value button (2).

c) Press the parameter button (3) to view the value of the parameter currently selected.

d) Press the increase value button (1) or the decrease value button (2) to change the value of the parameter.

A8216
PT21

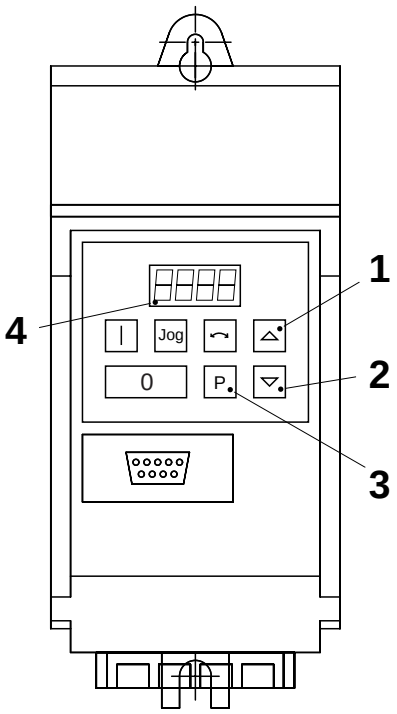

1 Increase value button
2 Decrease value button
3 Parameter button
4 Display

(Cont'd)

TechPub_2614345_0103 - B5358H00en.fm

(Cont'd)

e) Set the inverter values for all the parameters, see the table below.

f) When the setting is finished, go to P000 position and then press the parameter button (3).

Note! To increase the resolution to 0.01, keep the parameter button (3) pressed until the display changes to '**--.n0**' (n = the current tenths value, for example if the parameter value = 055.8 then n=8). Press the buttons (1) or (2) to change the value and then press the parameter button (3) twice to return to the parameter display.

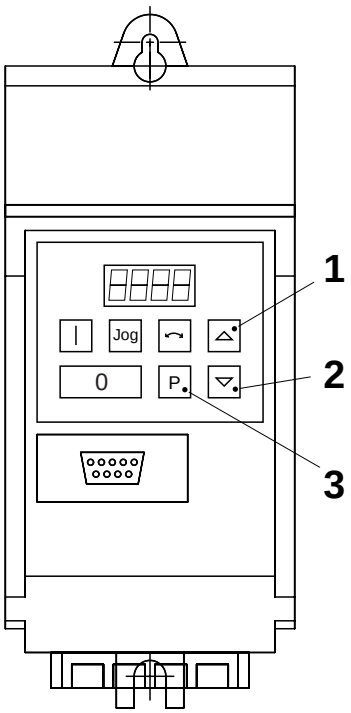

1 Increase value button
2 Decrease value button
3 Parameter button
4 Display

(Cont'd)

TechPub_2614345_0103 - B5358H00en.fm

(Cont'd)

Table For Customized Inverters Values

Note! For parameters not included in the table, choose the default value.

See chapter 5 of the enclosed “Siemens” manual for details.

Parameter	Description	Default	PT21
P001	Control display	0	0
P002	Ramp up seconds 0 - Max(P013)	10	**0.1**
P003	Ramp down seconds Max - 0	10	**0**
P004	Smoothing	0	0
P005	Digital setpoint (Hz)	5	5
P006	Speed source (1=analog)	0	**1**
P007	Keypad (0=disabled)	1	**0**
P008	NOT EXISTING	/	/
P009	Parameter protection (3-no protect)	0	**3**
P010	Display scaling	1	1
P011	Setpoint memory	0	0
P012	Minimum frequency	0	0
P013	Maximum frequency	50	**65**
P014	Skip frequency	0	0
P015	Auto start	0	0
P016	Start on the fly	0	0
P017	Smoothing type	1	1
P018	Auto restart after start	0	0
P019	Skip frequency bandwidth	2	2
P020	NOT EXISTING	/	/
P021	Min frequency, analog input	0	0
P022	Max frequency, analog input		**65**
P023	Analog input 1 - type	0	0
P024	Analog setpoint addition	0	0
P025	Analog output 1 scaling	0	0
P026	Analog output 2 scaling	0	0
P027	Skip frequency 2	0	0
P028	Skip frequency 3	0	0
P029	Skip frequency 4	0	0

(Cont'd)

TechPub_2614345_0103 - B5358H00en.fm

(Cont'd)

Parameter	Description	Default	PT21
P030	NOT EXISTING	/	/
P031	Jog frequency right	5	5
P032	Jog frequency left	5	5
P033	Jog ramp-up time	10	10
P034	Jog ramp-down time	10	10
P035	NOT EXISTING	/	/
P036	NOT EXISTING	/	/
P037	NOT EXISTING	/	/
P038	NOT EXISTING	/	/
P039	NOT EXISTING	/	/
P040	NOT EXISTING	/	/
P041	Fixed frequency 1	5	20
P042	Fixed frequency 2	10	10
P043	Fixed frequency 3	15	15
P044	Fixed frequency 4	20	20
P045	Directions for setpoints 1-4	0	0
P046	Fixed frequency 5	25	25
P047	Fixed frequency 6	30	30
P048	Fixed frequency 7	35	35
P049	Fixed frequency 8	40	40
P050	Directions for setpoints 5-8	0	0
P051	Selection control function DIN1	1	1
P052	Selection control function DIN2	2	2
P053	Selection control function DIN3	6	6
P054	Selection control function DIN4	6	6
P055	Selection control function DIN5	6	6
P056	Digital input debounce time	0	0
P057	Digital input watchdog trip	1	1
P058	NOT EXISTING	/	/
P059	NOT EXISTING	/	/
P060	NOT EXISTING	/	/

(Cont'd)

TechPub_2614345_0103 - B5358H00en.fm

(Cont'd)

Parameter	Description	Default	PT21
P061	Selection relay output 1 function	6	6
P062	Selection relay output 2 function	8	8
P063	External brake release delay	1	1
P064	External brake stopping time	1	1
P065	Current threshold for relay	1	1
P066	Compound braking	0	0
P067	NOT EXISTING	/	/
P068	NOT EXISTING	/	/
P069	NOT EXISTING	/	/
P070	Braking resistor duty cycle	0	0
P071	Slip compensation	0	0
P072	Slip limit (%)	250	250
P073	DC injection braking (%)	0	0
P074	I2T motor derating	1	**0**
P075	Braking chopper enable	0	0
P076	Pulse frequency	0	0
P077	Control mode	1	1
P078	Continous boost (%)	100	100
P079	Starting boost (%)	0	0
P080	Nom rating motor power factor (cos fi)		
P081	Nominal rating motor frequency	50	50
P082	Nominal rating motor speed		**2800**
P083	Nominal rating motor current		**1.2**
P084	Nominal rating motor voltage		**230**
P085	Nominal rating motor power (kW)		**0.25**

(Cont'd)

TechPub_2614345_0103 - B5358H00en.fm

(Cont'd)

Parameter	Description	Default	PT21
P086	Motor current limit (%)	150	150
P087	Motor PTC enable	0	0
P088*	Automatic calibration		
P089**	Stator resistance (about 25.0 in 0.25 and 17 in 0.55kW)		
P090	NOT EXISTING	/	/
P091	Serial link slave address	0	0
P092	Serial link baud rate	6	6
P093	Serial line time-out	0	0
P094	Serial link nominal system setpoint	50	50
P095	USS compatibility	0	0
P096	NOT EXISTING	/	/
P097	NOT EXISTING	/	/
P098	NOT EXISTING	/	/
P099	Option module type	0	0
P100	NOT EXISTING	/	/
P101	Operate in Europe or USA	0	0
P102	NOT EXISTING	/	/
P103	NOT EXISTING	/	/
P104	NOT EXISTING	/	/
P105	NOT EXISTING	/	/
P106	NOT EXISTING	/	/
P107	NOT EXISTING	/	/
P108	NOT EXISTING	/	/
P109	NOT EXISTING	/	/
P110	NOT EXISTING	/	/

* Set P088 to 1 and press the run button, then the stator resistance is automatically calculated and put in P089.

** P007 must be 1 when doing this.

(Cont'd)

TechPub_2614345_0103 - B5358H00en.fm

(Cont'd)

Parameter	Description	Default	PT21
P111	Inverter power rating	Read only	
P112	Inverter type	Read only	
P113	Drive model	Read only	
P114	NOT EXISTING	/	/
P115	NOT EXISTING	/	/
P116	NOT EXISTING	/	/
P117	NOT EXISTING	/	/
P118	NOT EXISTING	/	/
P119	NOT EXISTING	/	/
P120	NOT EXISTING	/	/
P121	Enable/disable RUN button	1	1
P122	Enable/disable FORW/REV button	1	1
P123	Enable/disable JOG button	1	1
P124	Enable/disable INC/DEC button	1	1
P125	Reverse direction inhibit	1	1
P126	NOT EXISTING	/	/
P127	NOT EXISTING	/	/
P128	Fan switch off delay time	120	120
P129	NOT EXISTING	/	/
P130	NOT EXISTING	/	/
P131	Frequency setpoint	Read only	
P132	Motor current	Read only	
P133	Motor torque (% of nominal)	Read only	
P134	DC link voltage	Read only	
P135	Motor rpm	Read only	

(Cont'd)

TechPub_2614345_0103 - B5358H00en.fm

(Cont'd)

Parameter	Description	Default	PT21
P136	NOT EXISTING	/	/
P137	Output voltage	Read only	
P138	Instantaneous rotor/shaft frequency	Read only	
P139	NOT EXISTING	/	/
P140	Most recent fault code	Read only	
P141	Most recent fault code -1	Read only	
P142	Most recent fault code -2	Read only	
P143	Most recent fault code -3	Read only	
P144	NOT EXISTING	/	/
P185	NOT EXISTING	/	/
P186	Motor instantaneous current limit (%)	200	200
P201-P220	PID LOOP		
P321-P323	Analog input 2		
P356	Selection control function DIN6	6	6
P386	Sensorless vector speed loop gain	1	1
P700-P971	Miscellaneous		
P721	Analog input 1 voltage	Read only	
P725	Analog input 2 voltage	Read only	
P922	Software version	Read only	
P931	Most recent warning type	Read only	
P944	Reset to factory default settings	Set to 1 and then press P to reset all parameters	

TechPub_2614345_0103 - B5358H00en.fm

8-3 Electrical Cabinet - Function Description TPIH Generator

SPC Reference	1317254-0200 67600-0501

TPIH-Generator is used for:

- patch station (A8205)
- reseal station (A8205).

A complete TPIH-system contains: potentiometer for power setting, generator, coaxial cable, impedance transformer, flexible cable, inductor and IH-Switch.

The pulse duration is controlled by the PLC program. The power level is set by means of the TPOP panel. Three phases 400/230V, single phase 230V, and 24V DC, are needed for the generator.

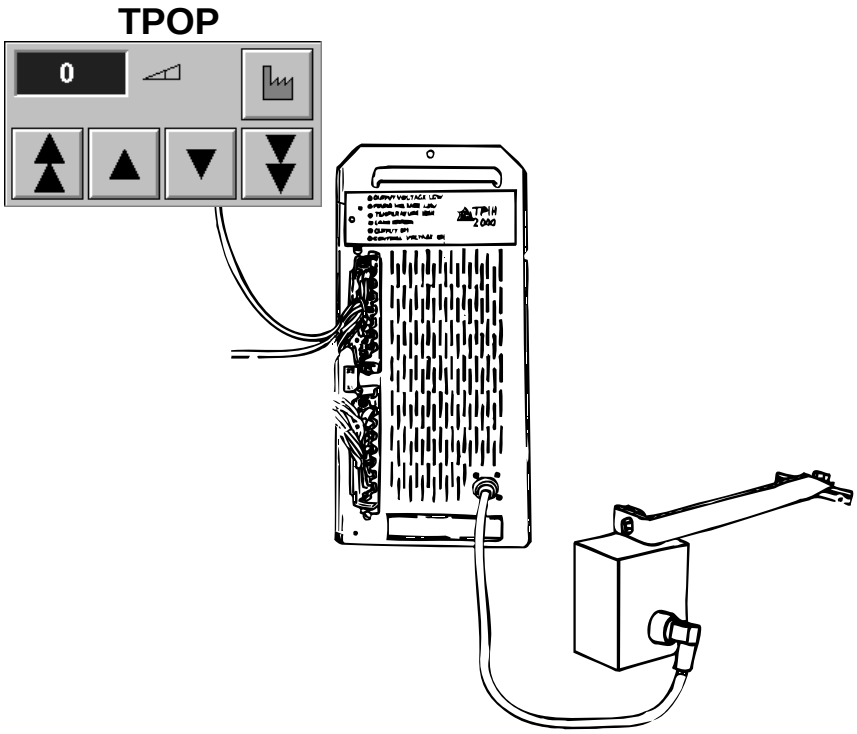

TechPub_2614345_0103 - B5358H00en.fm

8-4 Electrical Cabinet - Check Function TPIH Generator

Machine Status	Air **ON** Mains power **ON**
SPC Reference	1317254-0200 67600-0501

Output Voltage Low

If this is the only LED (1) that has lit up:

- the potentiometer setting is below the minimum value of 350, or
- the potentiometer is broken (the output voltage from the potentiometer does not follow the movement of the potentiometer slider), or
- the +10V DC to the potentiometer is missing, or
- the generator is faulty and must be replaced.

Mains Voltage Low

If the LED (2) has lit up, at least one of the three phases is below 85% of nominal value and, as a consequence, the generator is not able to deliver the proper output power.

Check the mains supply for a blown fuse. If all three fuses are intact, the problem will disappear when the voltage rises above 85% again.

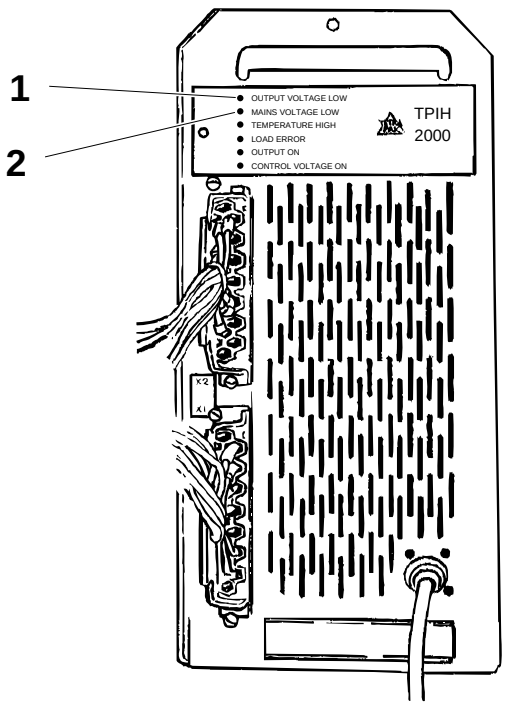

1 Output voltage low LED
2 Mains voltage low LED

(Cont'd)

TechPub_2614345_0103 - B5358H00en.fm

(Cont'd)

Temperature High

If the LED (3) has lit up, the temperature of the TPIH generator is too high due to:

- the cooling fan inside the generator not working
- the ambient temperature is above 50°C.

Change the generator if the fan does not operate, see 8-7 Electrical Cabinet - Change TPIH Generator.

Load Error

If the LED (4) has lit up, the generator is unable to transmit a pulse due to faulty load caused by:

- a short circuit in coaxial cable, flatcable, inductor or impedance transformer
- an open circuit in coaxial cable, flatcable, inductor or impedance transformer
- no pressure applied to the inductor
- the wrong type of impedance transformer installed
- the wrong type of inductor installed.

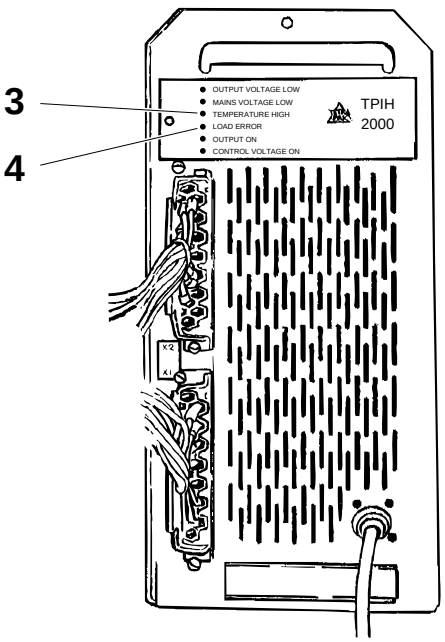

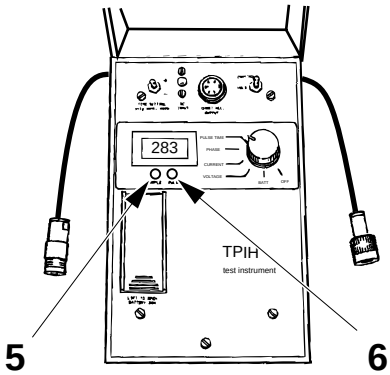

3 Temperature high LED
4 Load error LED
5 Pulse LED
6 Sample LED

The origin of the load error may be located with the aid of test instrument TP No. 68462-0101

With a load problem only very short pulses are delivered by the generator. During the entire pulse the sample LED (6) lights up, while the pulse LED (5) is off.

(Cont'd)

TechPub_2614345_0103 - B5358H00en.fm

(Cont'd)

Proceed as follows:

a) Perform a SHORT STOP.

b) Connect the test instrument between the coaxial cable (7) and the output coaxial connector (8) of the IH switch or IH generator.

c) Step up the machine to PRODUCTION.

d) Measure the values of voltage, current, phase angle, pulse time and compare these with the values in the table below.

Load examples	**Phase angle**	**Impedance**
Optimal load	0°	50 Ω
Normal load (ACCEPTANCE)	±15°	40 - 65 Ω
Short circuit in coaxial cable, contacts or primary of the IH transformer	pos (3)	1 - 10 Ω (1)
Open circuit in coaxial cable, contacts or primary of the IH transformer	neg (3)	200 - 2000 Ω (2)
Short circuit in inductor, current rail or secondary of the IH transformer	pos	10 - 20 Ω
Open circuit in inductor, current rail or secondary of the IH transformer	neg	2 - 5 Ω
No packaging material on the inductor	neg	5 - 15 Ω
No hole punched in packaging material		
No tab material at the inductor		

Note! 1) Greater value = greater distance between problem and instrument.

2) Greater value = shorter distance between problem and instrument.

3) Greater phase difference = greater distance between problem and instrument.

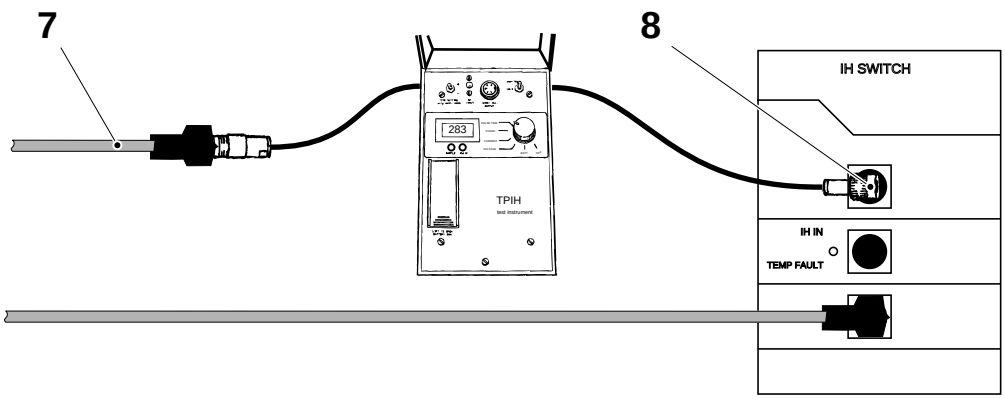

7 Coaxial cable
8 Output coaxial connector

(Cont'd)

TechPub_2614345_0103 - B5358H00en.fm

(Cont'd)

e) Make a SHORT STOP.

f) Connect the test instrument between the coaxial cable (9) and the right out coaxial connector (10) of the IH switch.

g) Step up the machine to step PRODUCTION and repeat item d).

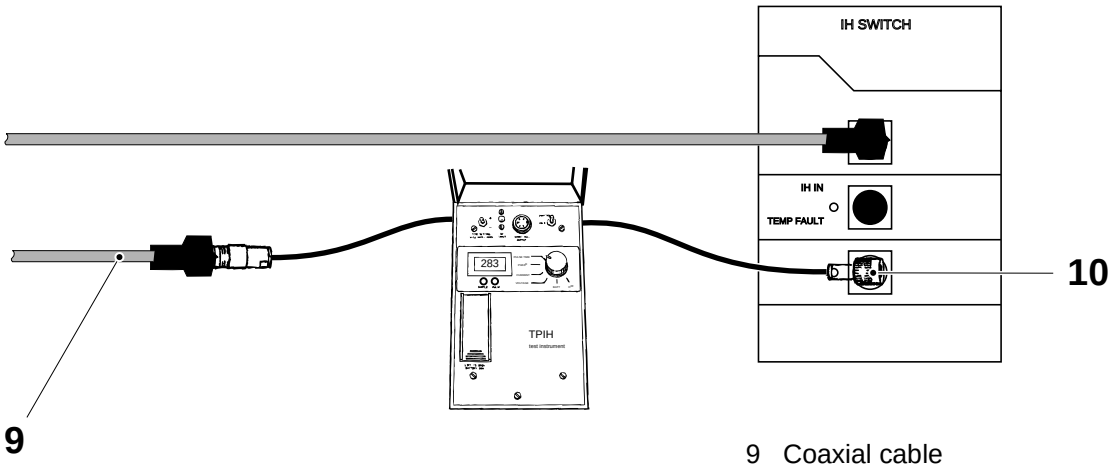

9 Coaxial cable
10 Right out coaxial connector

h) Make a SHORT STOP.

i) Connect the test instrument between the coaxial cable (11) and the coaxial connector (12) of the TPIH generator.

j) Step up the machine to step PRODUCTION and repeat item d).

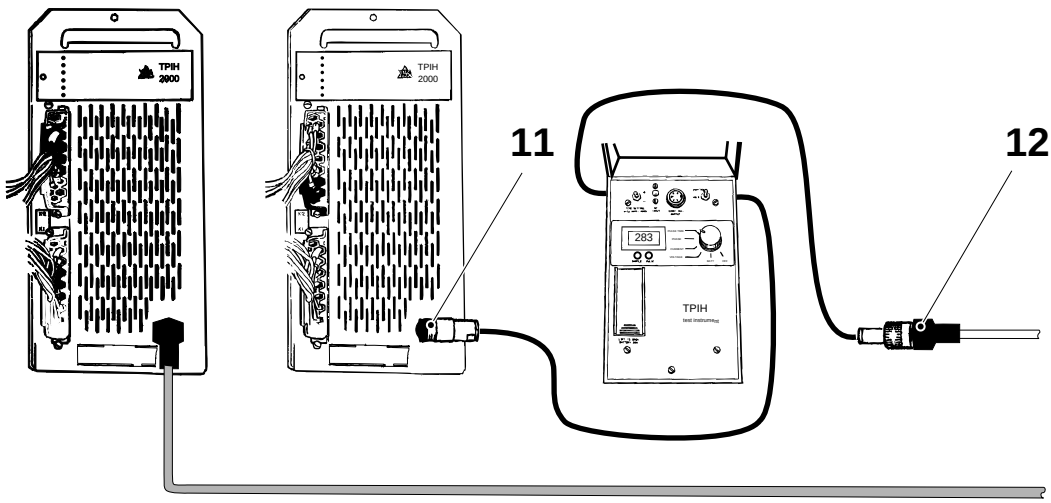

11 Coaxial cable
12 Coaxial connector

(Cont'd)

TechPub_2614345_0103 - B5358H00en.fm

(Cont'd)

Output On
When the LED (13) lights up, a pulse is transmitted from the generator into a correct load. The entire generator system is operating perfectly.

Control Voltage On
When the LED (14) lights up, 230V is connected to the generator. Alarms are enabled.

Note! This does not check the 400/230V three phase power supply.

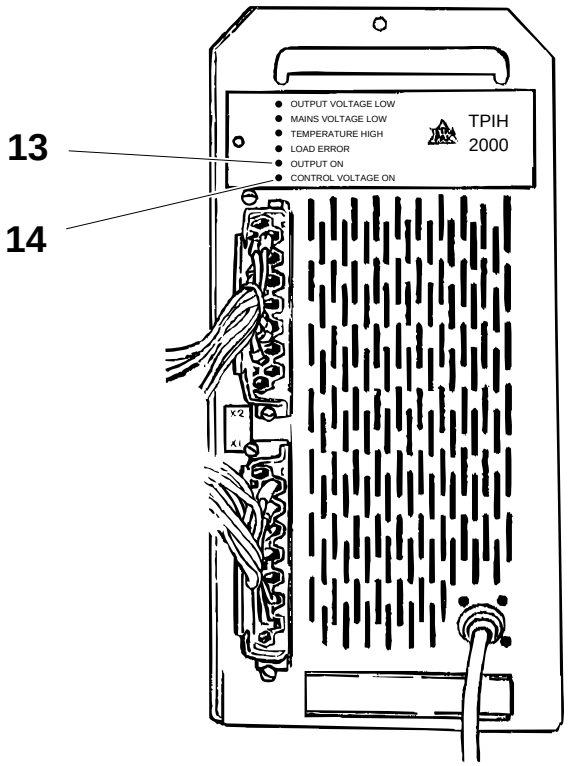

13 Output on LED
14 Control voltage on LED

(Cont'd)

TechPub_2614345_0103 - B5358H00en.fm

(Cont'd)

Test Instrument TP No. 68462

The TPIH test instrument is used to check the available output power from the IH generator as well as the condition of the coaxial cable, the impedance transformer, the current rail and the inductor. The test instrument is connected in series with the coaxial cable from the generator.

Note! Use the SHORT STOP procedure to prevent the generator from pulsing when the instrument has to be connected or disconnected.

The instrument can be used for the measurement of the following parameters:

- HF voltage
- HF current
- phase shift voltage/current
- pulse duration.

The results of these measurements can be used to calculate the available HF power. The instrument should simplify work when trying to locate the origin of a problem. One 9V battery is used for the instrument and an automatic power-off function is used to minimize battery consumption. A test outlet allows connection of a printer, such as a Gould recorder. Print-out of the HF voltage, HF current and the phase shift as a function of time are possible. The instrument kit contains complete operating instructions as well as a recorder cable and an AC/DC mains adapter.

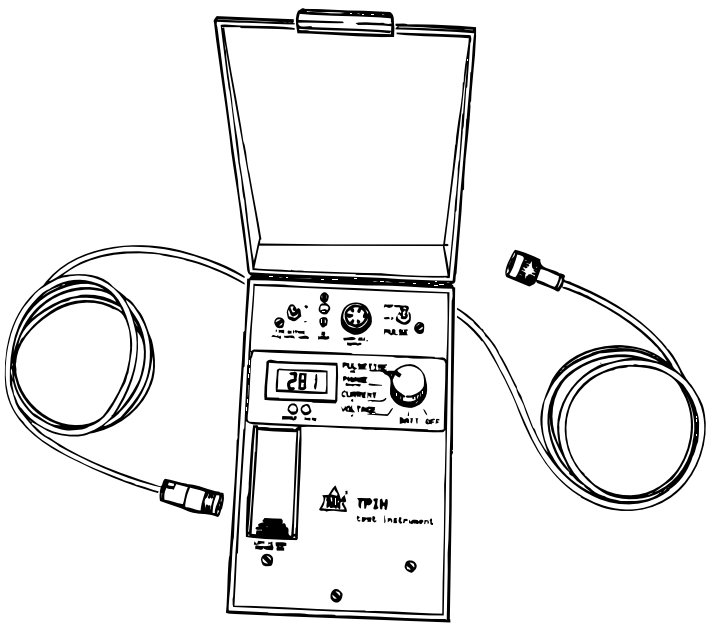

TechPub_2614345_0103 - B5358H00en.fm

8-5 Electrical Cabinet - Check Cables TPIH Generator

Machine Status	Air **OFF** Mains power **OFF**
SPC Reference	1317254-0200 67600-0501

Check the following parts for wear and/or damage:

- the coaxial connectors (2)
  Make sure that there is no moisture between the male connector and the female connector.
- the rubber gasket (4) in the male connectors
  Make sure that it seals properly (it should not be possible to turn the male connector easily).
- the coaxial cables (3)
  Make sure that the cables are flexible and that there are no cracks where they bend.
- the busbar (1)
  Check the rubber seal and the flat seal.
  Make sure that there are no signs of damage.
- Check for water/product residue inside the impedance transformer.

Clean or change as required.

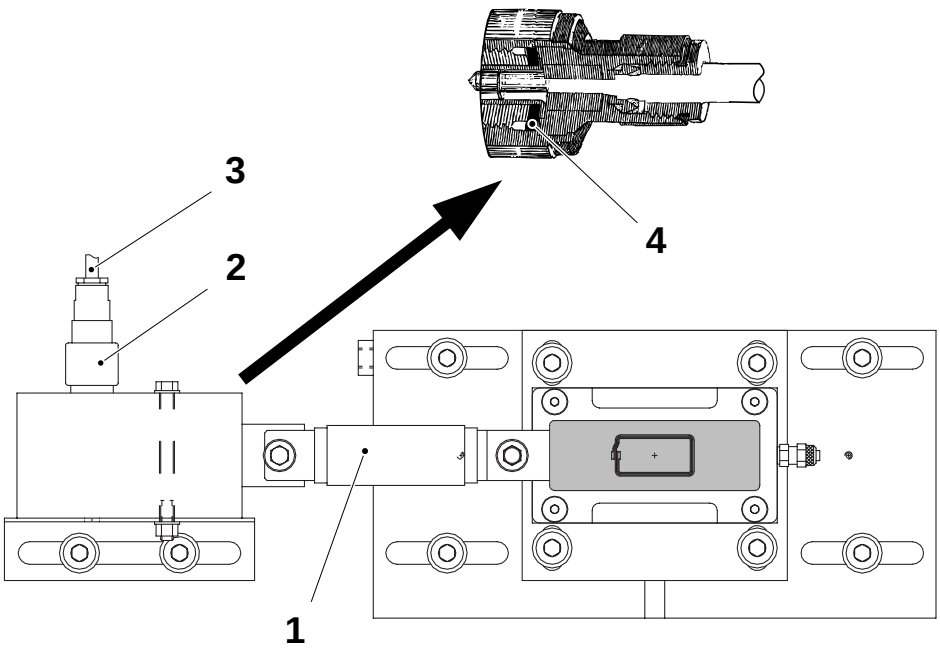

1 Busbar
2 Coaxial connector
3 Coaxial cable
4 Rubber gasket

TechPub_2614345_0103 - B5358H00en.fm

8-6 Electrical Cabinet - Change Transformer TPIH Generator

Machine Status	Air **OFF** Mains power **OFF**
SPC Reference	1317254-0200 67600-0501

a) Remove the coaxial cable (1) from the impedance transformer (2).

b) Remove the busbar (3) from the inductor (4).

c) Remove the screw (5) and the impedance transformer (2).

d) Check that the impedance transformer (2) is intact and clean. Pay particular attention to the coil (6) and to the coaxial connector (7) connections.

e) Clean or change the impedance transformer (2) as required.

f) Clean the connections as required.

g) Assemble in the reverse order.

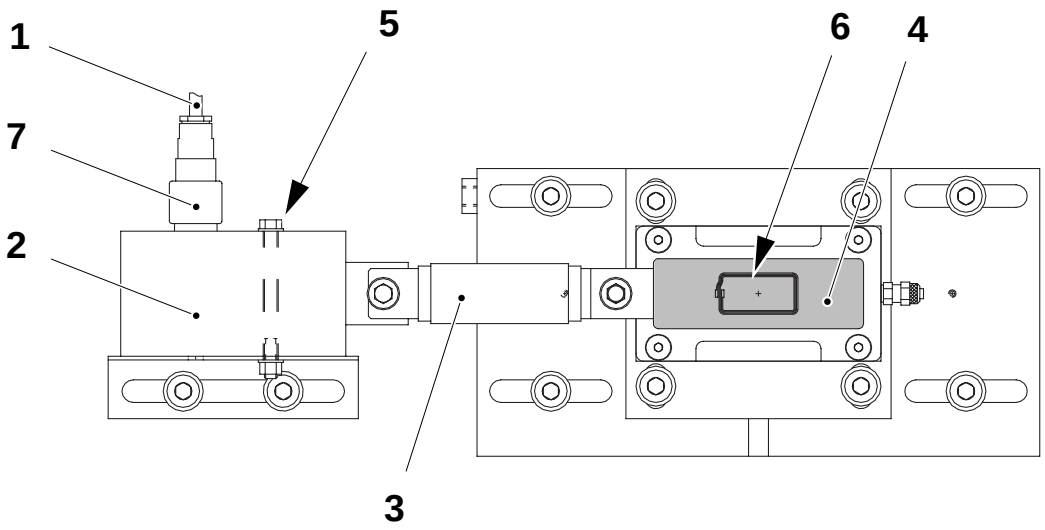

1 Coaxial cable
2 Transformer
3 Busbar
4 Inductor
5 Screw
6 Coil
7 Coaxial connector

TechPub_2614345_0103 - B5358H00en.fm

8-7 Electrical Cabinet - Change TPIH Generator

Machine Status	Air **OFF** Mains power **OFF**
SPC Reference	1317254-0200 67600-0501

WARNING
High voltage!
Do not open the generator.

a) Make sure that the main power switch is **Off** and that it has been padlocked.
b) Remove the connectors **X1** (1) and **X2** (2).
c) Remove the coaxial connector (3).
d) Unscrew the screw (4) and pull out the generator.
e) Change the generator and assemble in the reverse order.

Note! Send the generator to the nearest Tetra Pak service station for cleaning or service.

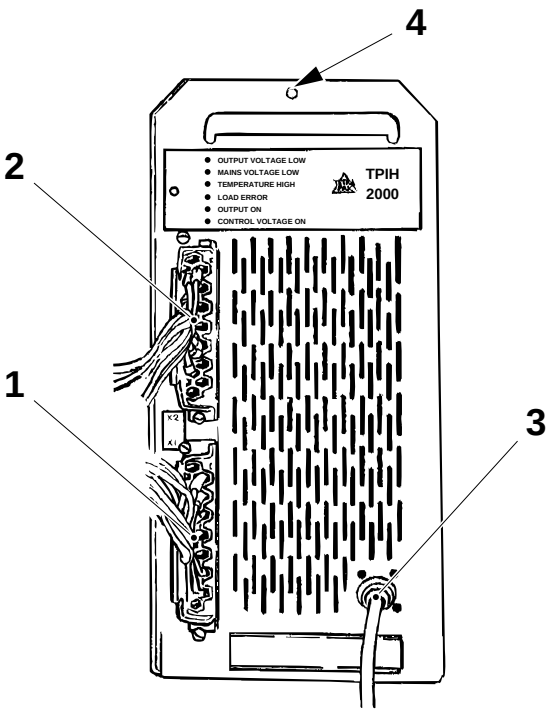

1 Connector X1
2 Connector X2
3 Coaxial connector
4 Screw

TechPub_2614345_0103 - B5358H00en.fm

8-8 Electrical Cabinet - Set Sealings TPIH Generator

Machine Status	Air **ON** Mains power **ON**
SPC Reference	1317254-0200 67600-0501

The sealing power values for the patch unit and for the reseal unit are stored in the TPOP and are already factory set.

In step PRODUCTION evaluate the reseal and the patch heat patterns, see the **OM**, section **Package checks**.

Note! If required, change the current values by means of the buttons (2) and (3), or reset to the factory values by means of the button (1).

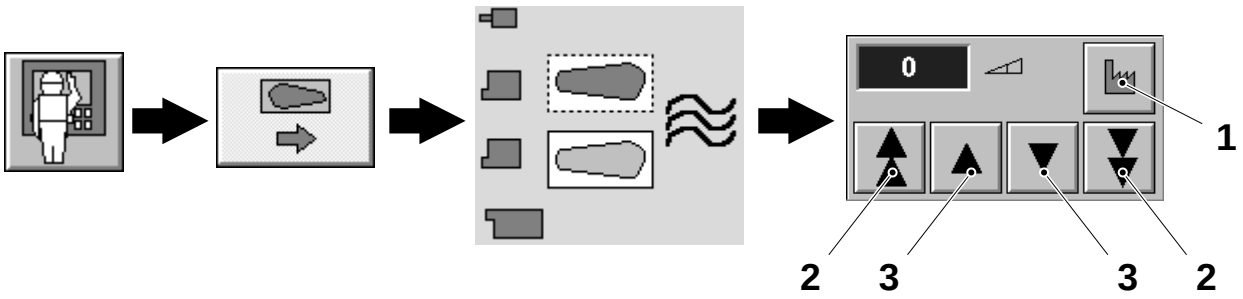

1 Button
2 Button
3 Button

TechPub_2614345_0103 - B5358H00en.fm

8-9 Electrical Cabinet - Function Description Servo Drive DMC2 Card

Machine Status	Air **OFF** Mains power **ON**
SPC Reference	1317254-0200

New DMC Cards

Note! For machines with the old DMC cards, see 8-13 Electrical Cabinet - Function Description Servo Drive DMC Card.

The DMC2 card A8204 is used for feeding the packaging material with volume dependent length.

The DMC2 receives the bar code pulse from the TMCC module and checks the packaging materials position.

The DMC2 keeps the packaging material in position by adjusting the package length.

Note! The setting range on the TPOP is **± 4 mm**.

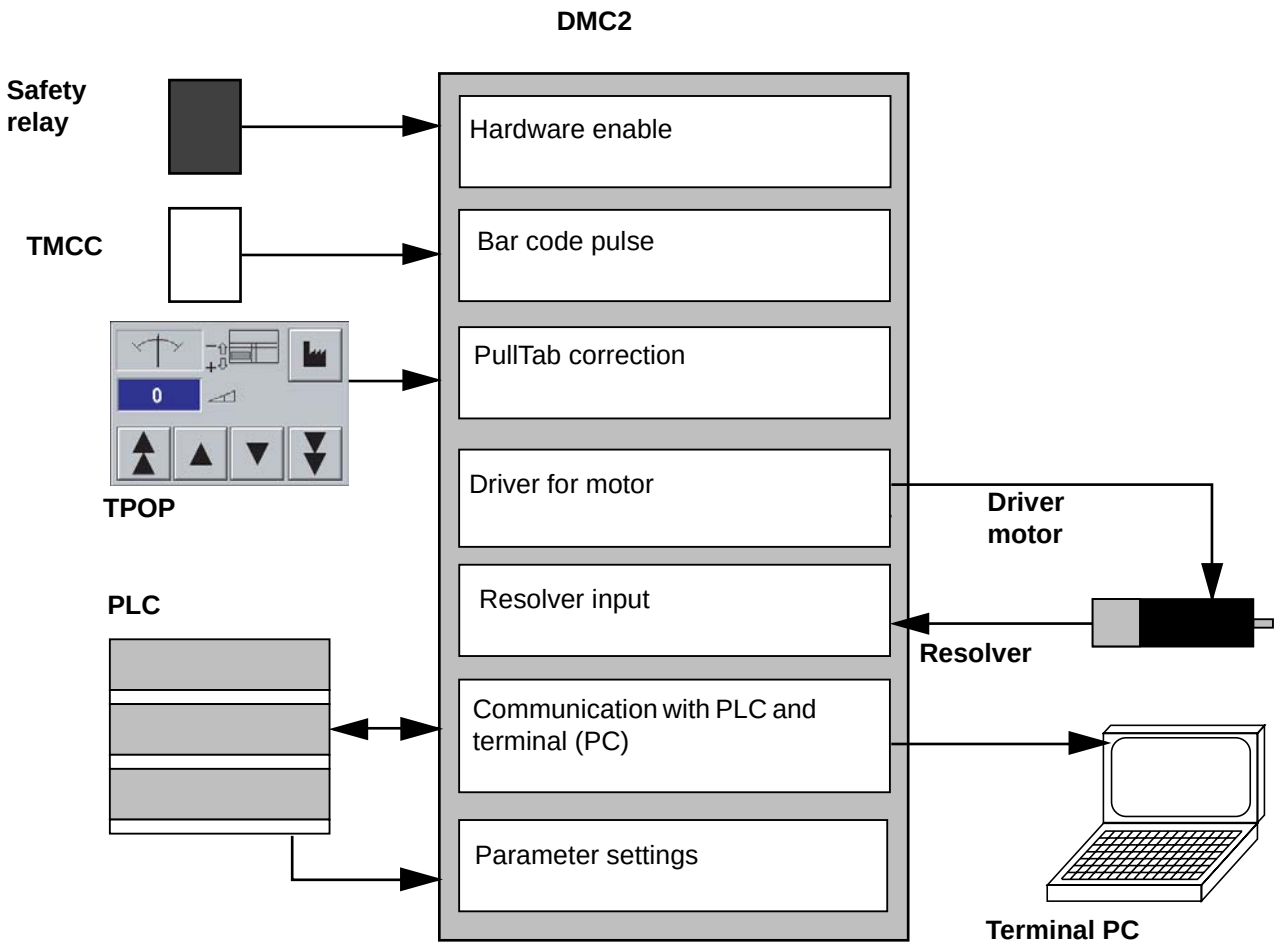

(Cont'd)

TechPub_2614345_0103 - B5358H00en.fm

(Cont'd)

DMC2 servo drive card A8204		
LED	**Colour**	**Function**
Ready	Green (Led 1)	The servo system hardware is ready (doors closed)
Home position found	Yellow (Led 2)	The servo system has found the home position
Move	Yellow (Led 3)	The servo motor is moving the paper
Move done	Yellow (Led 4)	The servo system has moved the paper
Fault bit 1	Red (Led 5)	See list next page
Fault bit 2	Red (Led 6)	See list next page
Fault bit 3	Red (Led 7)	See list next page
Fault bit 4	Red (Led 8)	See list next page

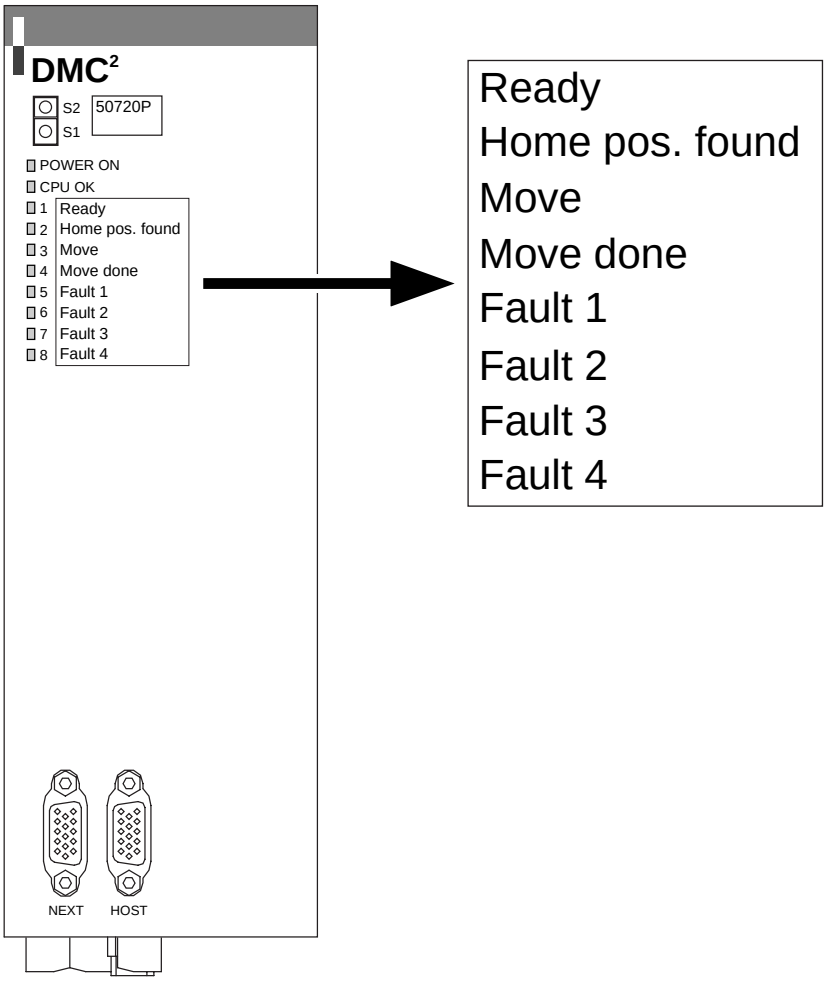

(Cont'd)

TechPub_2614345_0103 - B5358H00en.fm

(Cont'd)

DMC Servo Drive Card A8204 Fault List

	**Hardware disabled** The hardware enable signal from the PLC is low. This is normally not an alarm. But if it happens in an abnormal situation check the connection to the DMC's hardware enable input.
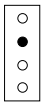	**System internal hardware fault** Try to restart, if the problem persists or comes back soon again change DMC driver.
	**Position error exceeded** The allowed error between the calculated position and the actual position of the axis of the motor is exceeded. Check for mechanical faults that can stop the motor from turning correctly such as bad bearings, lack of lubrication…
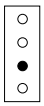	**Ctrl-C interrupt** Ctrl-C has been pressed on a terminal connected to the drive. 1. Restart.
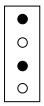	**System error** Try to restart, if problem persists or comes back soon again change DMC driver.
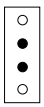	**High temperature in driver or motor** 1. In case of the motor check if the movement is too hard. 2. In case of the drive check the cooling system of the electrical cabinet
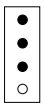	**Software disabled** The software enable signal from the PLC is low. This is normally not an alarm. But if it seems to be a problem check the connection between the PLC's ouput and the DMC's software enable input.
	**Current check torque limit exceed** The maximum current limit is exceeded. Check for mechanical faults that can stop the motor from turning correctly such as bad bearings, lack of lubrication…
	**Cyclical timer interrupt** This alarm is triggered by internal faults in the drive, and is not an alarm if software and hardware enable is low. 1. Close the doors. 2. Check connections to the DMC's hardware and software enable.

(Cont'd)

TechPub_2614345_0103 - B5358H00en.fm

(Cont'd)

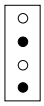	**Data transfer from PLC** The software enable signal from the PLC is low. This is normally not an alarm. But if it seems to be a problem check the connection between the PLC's ouput and the DMC's software enable input
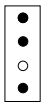	**Resolver fault** Problem with the resolver (the resolver sends information from the motor to the drive from where the drive can calculate the position of the axis). 1. Check the connections for the resolver cable. 2. Change drive or motor
	**Home position fault** Check the photocells positions, the photocells functions and the paper tracking.

TechPub_2614345_0103 - B5358H00en.fm

8-10 Electrical Cabinet - Function Description Std DMC2 Card

Machine Status	Air **OFF** Mains power **ON**
SPC Reference	1317254-0200

New DMC Cards

Note! For machines with the old DMC cards, see 8-14 Electrical Cabinet - Function Description Std DMC Card.

The DMC2 card A8233 is used for keeping the packaging material stretched in the punch, the patch applicator, the reseal and the applicator tab stations.

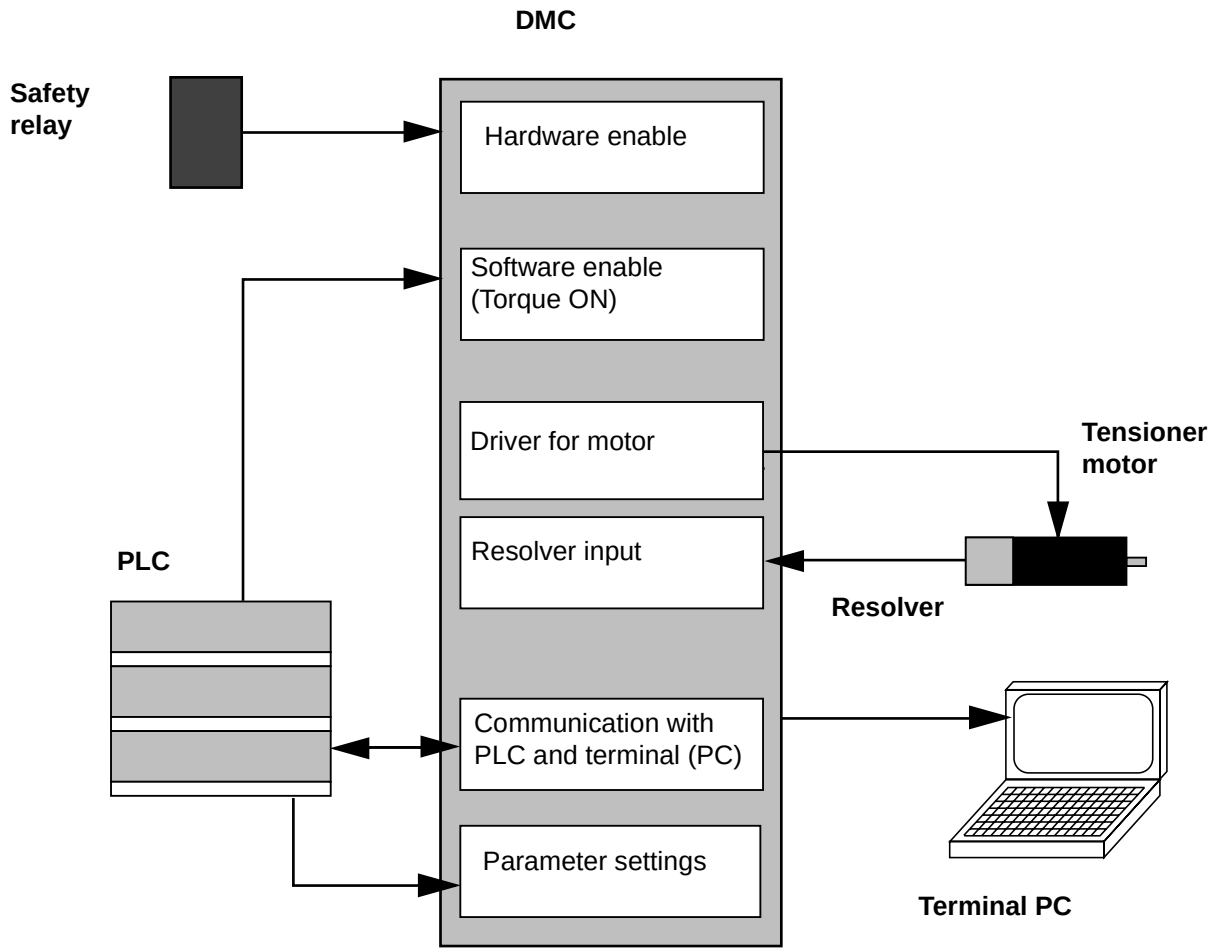

(Cont'd)

TechPub_2614345_0103 - B5358H00en.fm

(Cont'd)

STD DMC2 card A8233		
LED	**Colour**	**Function**
Ready	Green (Led 1)	The servo system hardware is ready (doors closed)
Torque enable	Yellow (Led 2)	The servo tensioner is ready
Not used	Yellow (Led 3)	-
Not used	Yellow (Led 4)	-
Fault bit 1	Red (Led 5)	See list next page
Fault bit 2	Red (Led 6)	See list next page
Fault bit 3	Red (Led 7)	See list next page
Fault bit 4	Red (Led 8)	See list next page

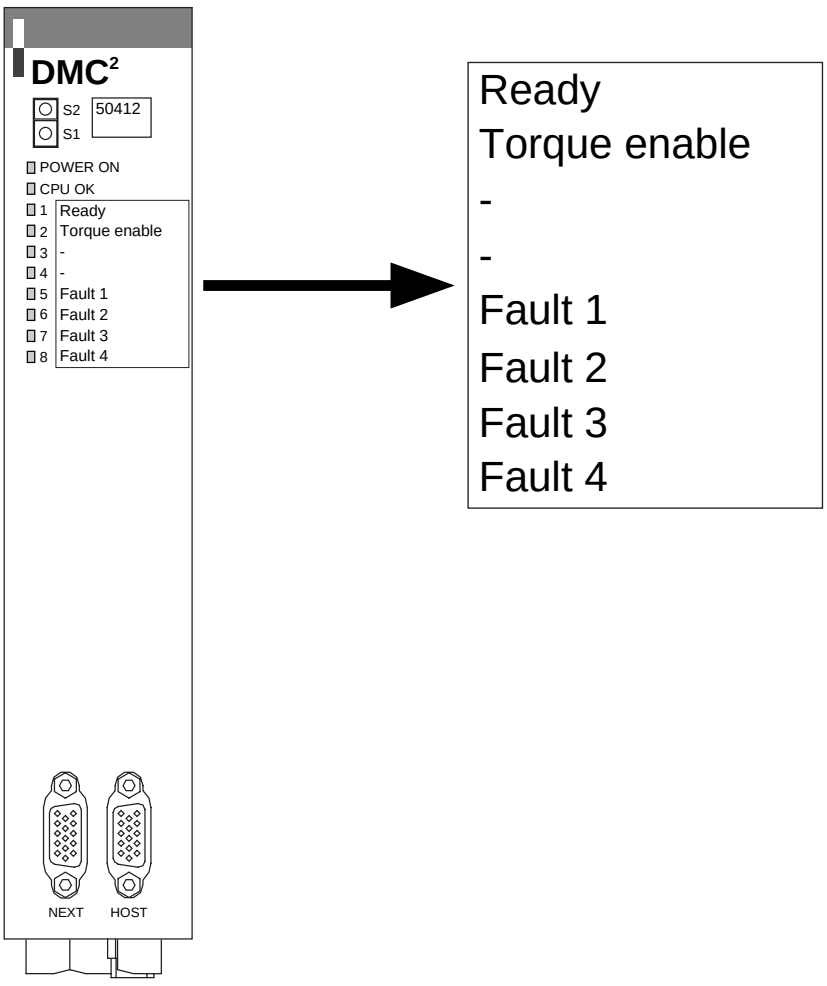

(Cont'd)

TechPub_2614345_0103 - B5358H00en.fm

(Cont'd)

Std Dmc Card A8233 Fault List

	**Hardware disabled** The hardware enable signal from the safety relay is low. This is normally not an alarm. But if it happens in an abnormal situation check the connection to the DMC's hardware enable line.
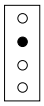	**System internal hardware fault** Try to restart, if the problem persists or comes back soon again change DMC driver.
	**Position error exceeded** The allowed error between the calculated position and the actual position of the axis of the motor is exceeded. Check for mechanical faults that can stop the motor from turning correctly such as bad bearings, lack of lubrication…
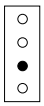	**Ctrl-C interrupt** Ctrl-C has been pressed on a terminal connected to the drive. 1. Restart.
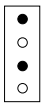	**System error** Try to restart, if problem persists or comes back soon again change DMC driver.
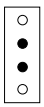	**High temperature in driver or motor** 1. In case of the motor check if the movement is too hard. 2. In case of the drive check the cooling system of the electrical cabinet
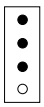	**Software disabled** The software enable signal from the PLC is low. This is normally not an alarm. But if it seems to be a problem check the connection between the PLC's ouput and the DMC's software enable input.
	**Current check torque limit exceed** The maximum current limit is exceeded. Check for mechanical faults that can stop the motor from turning correctly such as bad bearings, lack of lubrication…
	**Cyclical timer interrupt** This alarm is triggered by internal faults in the drive, and is not an alarm if software and hardware enable is low. 1. Close the doors. 2. Check connections to the DMC's hardware and software enable.

(Cont'd)

TechPub_2614345_0103 - B5358H00en.fm

(Cont'd)

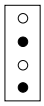	**Data transfer from PLC** The software enable signal from the PLC is low. This is normally not an alarm. But if it seems to be a problem check the connection between the PLC's ouput and the DMC's software enable input
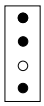	**Resolver fault** Problem with the resolver (the resolver sends information from the motor to the drive from where the drive can calculate the position of the axis). 1. Check the connections for the resolver cable. 2. Change drive or motor.
	**Tensioner motor speed fault** Maximum speed (positive or negative) exceeded. 1. Check if paper is broken.

TechPub_2614345_0103 - B5358H00en.fm

8-11 Electrical Cabinet - Set DMC2 Card

Machine Status	PRODUCTION
Special Equipment	DMC communication cable RS 232 (see below) AT compatible PC with diskette station
SPC Reference	1317254-0200

New DMC Cards

Note! For machines with the old DMC cards, see 8-15 Electrical Cabinet - Set DMC Card.

Connect the DMC to the PC terminal with the cable (1). Necessary connections are:

PC 9-pin female	DMC 15-pin high density male
2	3
3	2
5	7
	1 (*)

Note! (*) = shield connection

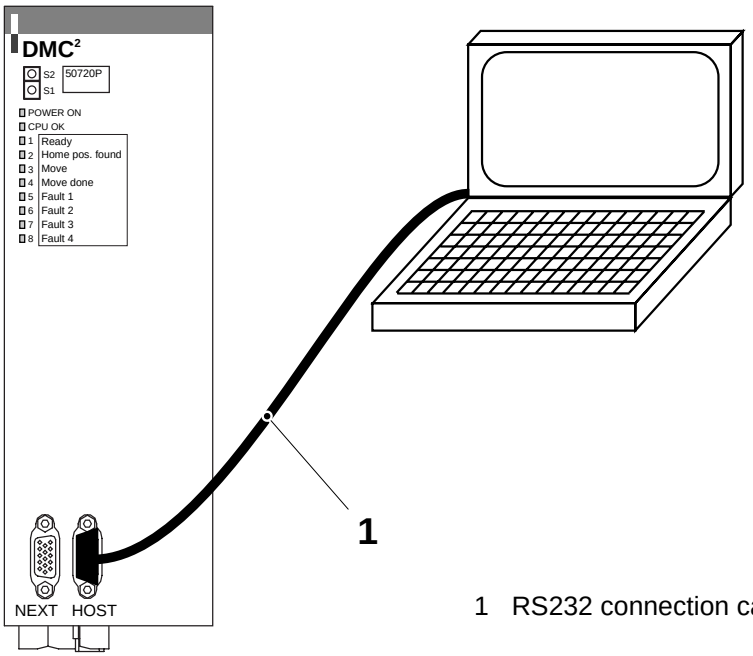

1 RS232 connection cable

(Cont'd)

TechPub_2614345_0103 - B5358H00en.fm

(Cont'd)

Configure the program to use, for example TIT or Windows terminal, as follows:

Baud rate	9600
Parity	None
Bits	8
Stopbits	1
Flow control	None

PC terminal communication

A PC with a terminal program can be used for test and service purposes. At start up through the serial interface it is possible to see the program version (R255).

Communication with Tension Device DMC2 card A8233

Each time that the data transfer from the PLC completes, the following values are sent out on the screen of the terminal:

R20	Range1Value
R21	Range2Value
R22	SpeedMaxPos
R23	SpeedMaxNeg

For positioning troubleshooting it is also possible to see different data by on line changing of the register **R120** value.

R120	Register number	Register name	Function
R120 = 0	No display	No display	Default state
R120 = 10	Ana.Out1 Ana.Out2	*Ana.Out1* *Ana.Out2*	Connect the *Ana.Out1* to speed Connect the *Ana.Out2* to torque, ±10V = ±32767 inc = 1.47 Nm/V

For better performance of the system, keep **R120 = 0** when there is no need of displaying data.

(Cont'd)

TechPub_2614345_0103 - B5358H00en.fm

(Cont'd)

Communication With Drive Motor DMC2 Card A8204

Each time that the data transfer from the PLC completes, the following values are sent out on the screen of the terminal:

R23	Packlength
R20	DfltFromRegMark
R97	Indextime
R98	AccRet
R65	HomeSpeed
R64	HomeAccRet
R63	ProdSpeed
R61	ProdAccRet

For positioning trouble- shooting it is also possible to see different data by on line changing of the register **R120** value.

R120	Register number	Register name	Function
R120 = 0	No display	No display	Default state
R120 = 1	RD 1.RPos R42 R30	 *NewPosOffset* *RegMarkPos*	Real position PullTab correction Register mark position
R120 = 2	R21 R22 R83	*FromRegMark* *AdjfromRegMark* *Error*	Measured value *RegMarkPos* to stop position *DfltFromRegMark+Newposoffset* relative error from Register Mark
R120 = 3	R89 R26 R25	*Movement* *MoveAverage* *MoveError*	Movement after PID calculation Average of the six last *Movement* *Movement - MoveAverage*
R120 = 4	R73 R23 R71	ActualLength PackLength DumpPackages	Measured Package length during *ErrorRoutine* Repeat length of package Number of dumped packages
R120 = 10	Ana.Out1 Ana.Out2	*Ana.Out1* *Ana.Out2*	Connect the *Ana.Out1* to torque Connect the *Ana.Out2* to PosErr

For better performance of the system, keep **R120 = 0** when there is no need of displaying data.

TechPub_2614345_0103 - B5358H00en.fm

8-12 Electrical Cabinet - Load DMC2 Program

Machine Status	Air **OFF** Mains Power **ON**
Special Equipment	DMC communication cable RS 232 AT compatible PC with diskette station ECT program (by Danaher Motion)
SPC Reference	1317254-0200

CAUTION
Risk of damage to the equipment!
Do not swap the DMC2 cards A8204 and A8233 because they are of a different model and contain different programs!

a) Locate the appropriate DMC2 card in the electrical cabinet.
   – The card A8204 is used for feeding the packaging material.
   – The card A8233 is used for keeping the packaging material stretched.

b) Connect the cable (1) between the PC and the DMC2 card **HOST** front panel connector.

c) For the card **A8204**, insert the MASTER diskette marked with the current revision number into the PC diskette station, **A:drive**.

d) For the card **A8233**, insert the MASTER diskette marked with the current revision number into the PC diskette station, **A:drive**.

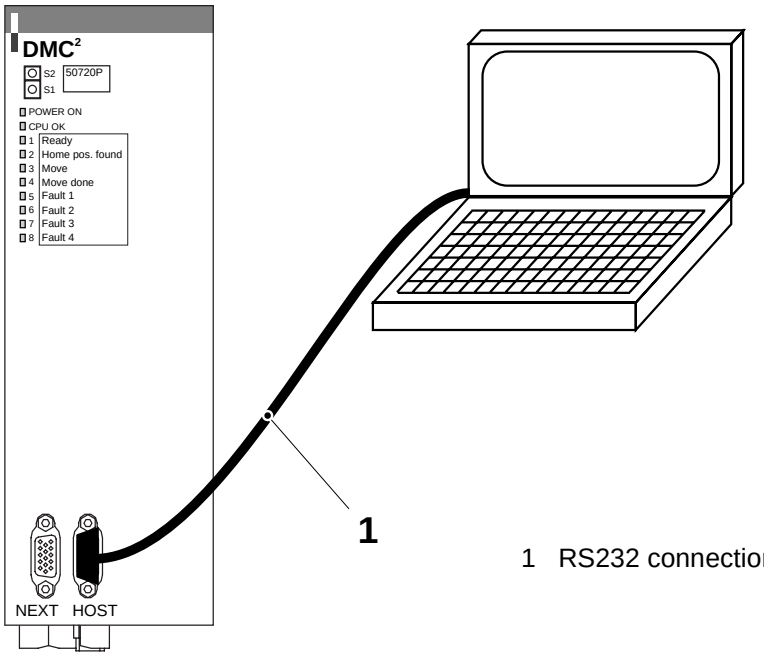

1 RS232 connection cable

(Cont'd)

TechPub_2614345_0103 - B5358H00en.fm

(Cont'd)

e) Make sure that the green LED “POWER ON” is lit on the DMC2 card.

f) Start the **SW: ECT** program.

g) Select **TERMINAL** program from the **WINDOW** menu.

h) Select **STOP** from the **CONTROLLER** menu.
If the program doesn’t stop, indicated by a warning message, then retry to stop the program until at the bottom of the **ECT** window it is written “Program has stopped”.

i) Write at the prompt: **> NEW** (to cancel the program) and press ENTER.

j) Write at the prompt: **> LIST** (to check the program list) and press ENTER.

k) Select **DOWNLOAD** from the **CONTROLLER** menu.

l) Select path and file name for the program file on the MASTER diskette in the **A:drive**. Press **OK** to start downloading.

m) Check at the bottom of the TERMINAL window that it is written “FILE IS DOWN LOADED”.

n) Write at the prompt: **> FSTORE** and press ENTER.

o) Write at the prompt: **> RUN** and press ENTER.

p) Close the **TERMINAL** and **ECT** programs.

q) Remove the communication cable (1) between the PC and the DMC2 card.

TechPub_2614345_0103 - B5358H00en.fm

8-13 Electrical Cabinet - Function Description Servo Drive DMC Card

Machine Status	Air **OFF** Mains Power **ON**
SPC Reference	1317254-0200

Old DMC cards

Note! For machines with the new DMC cards, see 8-9 Electrical Cabinet - Function Description Servo Drive DMC2 Card.

The DMC card A8204 is used for feeding the packaging material with volume dependent length.

The DMC receives the bar code pulse from the TMCC module and checks the packaging materials position.

The DMC keeps the packaging material in position by adjusting the package length.

Note! The setting range on the TPOP is **± 4 mm**.

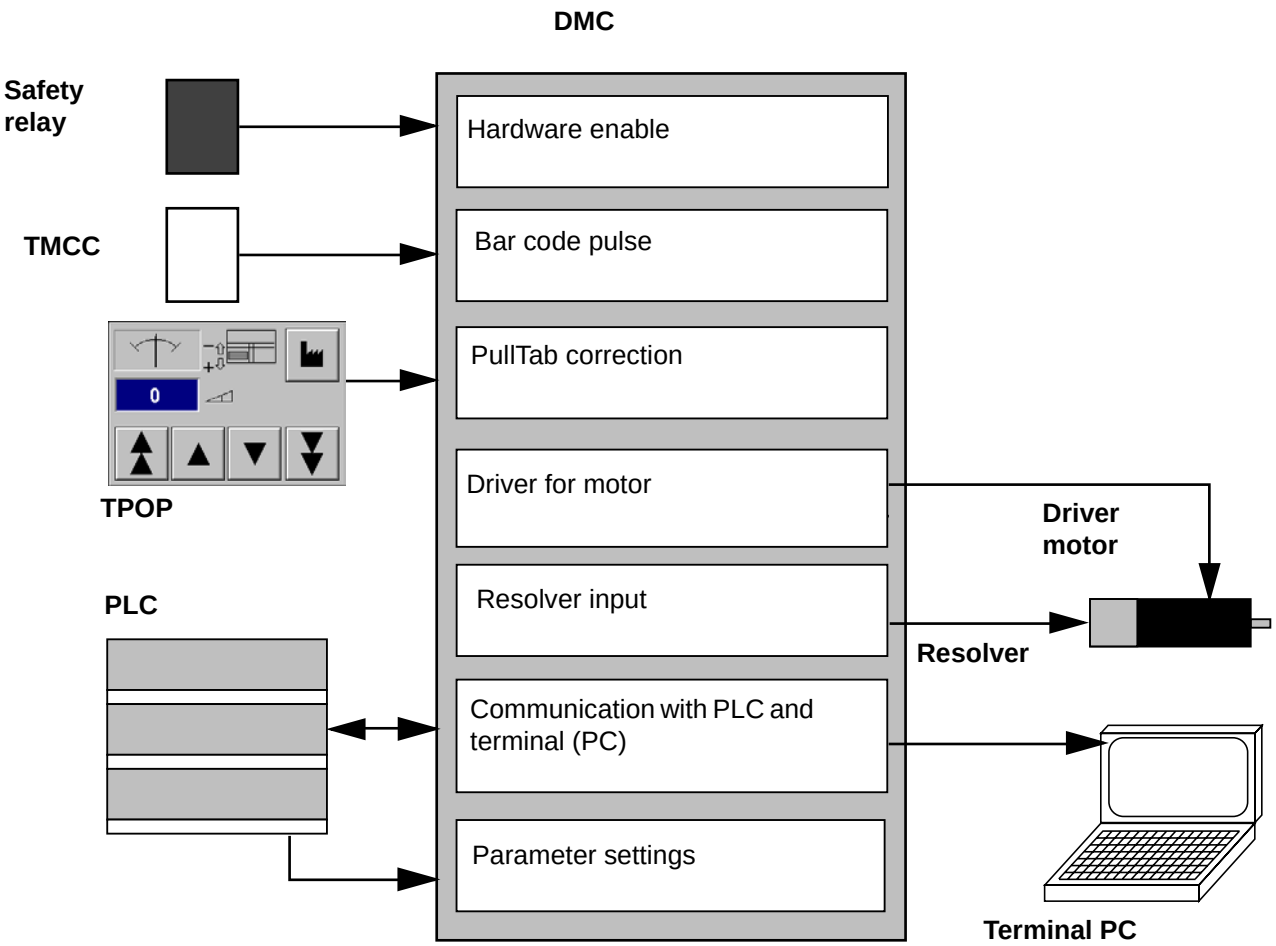

TechPub_2614345_0103 - B5358H00en.fm

(Cont'd)

(Cont'd)

DMC servo drive card A8204		
LED	**Colour**	**Function**
Ready	Green (Led 1)	The servo system hardware is ready (doors closed)
Home position found	Yellow (Led 2)	The servo system has found the home position
Move	Yellow (Led 3)	The servo motor is moving the paper
Move done	Yellow (Led 4)	The servo system has moved the paper
Fault bit 1	Red (Led 5)	See list next page
Fault bit 2	Red (Led 6)	See list next page
Fault bit 3	Red (Led 7)	See list next page
Fault bit 4	Red (Led 8)	See list next page

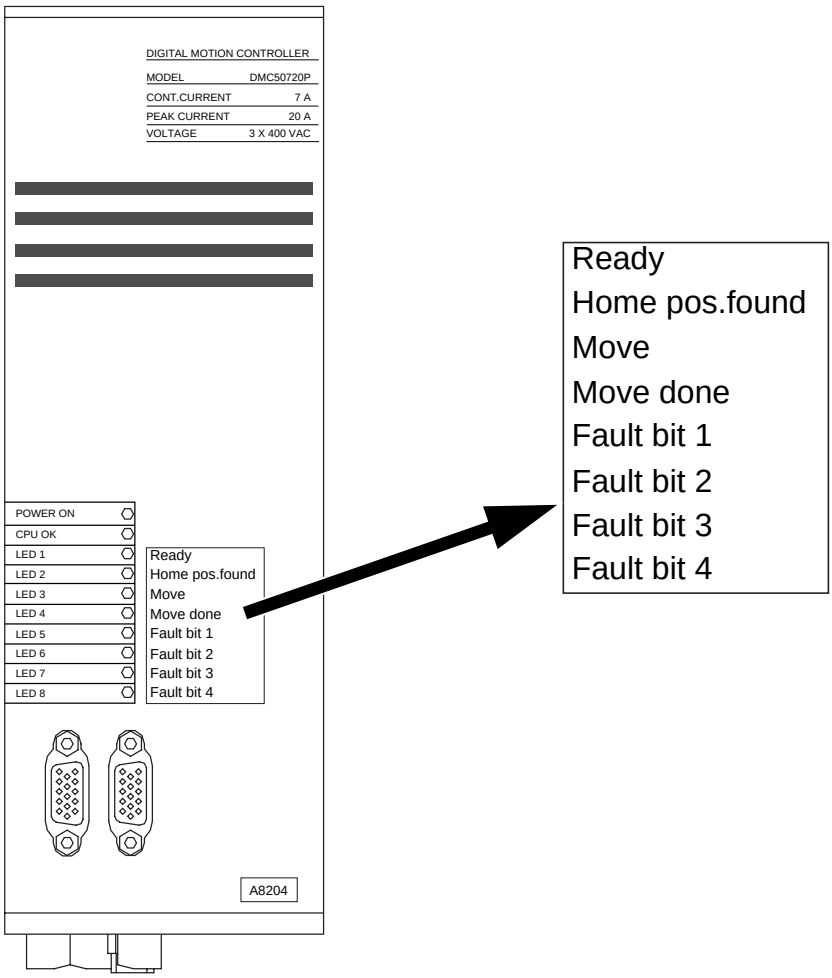

(Cont'd)

TechPub_2614345_0103 - B5358H00en.fm

(Cont'd)

Dmc Servo Drive Card A8204 Fault List

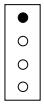	**Hardware disabled** The hardware enable signal from the PLC is low. This is normally not an alarm. But if it happens in an abnormal situation check the connection to the DMC's hardware enable input.
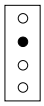	**System internal hardware fault** Try to restart, if the problem persists or comes back soon again change DMC driver.
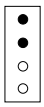	**Position error exceeded** The allowed error between the calculated position and the actual position of the axis of the motor is exceeded. Check for mechanical faults that can stop the motor from turning correctly such as bad bearings, lack of lubrication…
	**Ctrl-C interrupt** Ctrl-C has been pressed on a terminal connected to the drive. 1. Restart.
	**System error** Try to restart, if problem persists or comes back soon again change DMC driver.
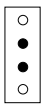	**High temperature in driver or motor** 1. In case of the motor check if the movement is too hard. 2. In case of the drive check the cooling system of the electrical cabinet
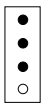	**Software disabled** The software enable signal from the PLC is low. This is normally not an alarm. But if it seems to be a problem check the connection between the PLC's ouput and the DMC's software enable input.
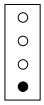	**Current check torque limit exceed** The maximum current limit is exceeded. Check for mechanical faults that can stop the motor from turning correctly such as bad bearings, lack of lubrication…
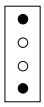	**Cyclical timer interrupt** This alarm is triggered by internal faults in the drive, and is not an alarm if software and hardware enable is low. 1. Close the doors. 2. Check connections to the DMC's hardware and software enable.

(Cont'd)

TechPub_2614345_0103 - B5358H00en.fm

(Cont'd)

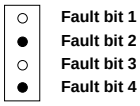	**Data transfer from PLC** The software enable signal from the PLC is low. This is normally not an alarm. But if it seems to be a problem check the connection between the PLC's ouput and the DMC's software enable input
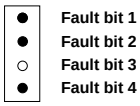	**Resolver fault** Problem with the resolver (the resolver sends information from the motor to the drive from where the drive can calculate the position of the axis). 1. Check the connections for the resolver cable. 2. Change drive or motor
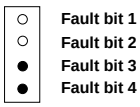	**Home position fault** Check the photocells positions, the photocells functions and the paper tracking.

TechPub_2614345_0103 - B5358H00en.fm

8-14 Electrical Cabinet - Function Description Std DMC Card

Machine Status	Air **OFF** Mains Power **ON**
SPC Reference	1317254-0200

Old DMC Cards

Note! For machines with the new DMC cards, see 8-10 Electrical Cabinet - Function Description Std DMC2 Card.

The DMC card A8233 is used for keeping the packaging material stretched in the punch, the patch applicator, the reseal and the applicator tab stations.

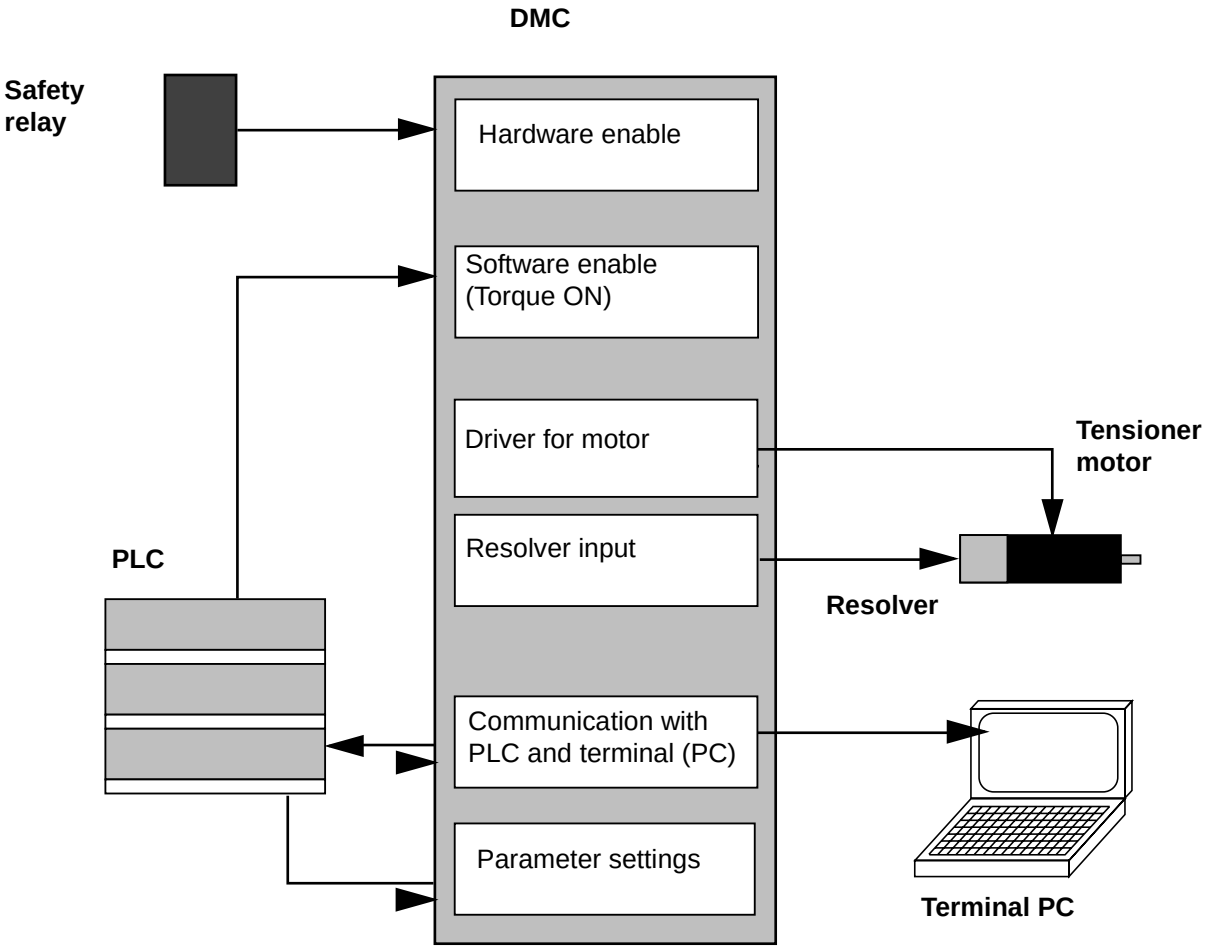

(Cont'd)

TechPub_2614345_0103 - B5358H00en.fm

(Cont'd)

STD DMC card A8233		
LED	**Colour**	**Function**
Ready	Green (Led 1)	The servo system hardware is ready (doors closed)
Torque enable	Yellow (Led 2)	The servo tensioner is ready
Not used	Yellow (Led 3)	-
Not used	Yellow (Led 4)	-
Fault bit 1	Red (Led 5)	See list next page
Fault bit 2	Red (Led 6)	See list next page
Fault bit 3	Red (Led 7)	See list next page
Fault bit 4	Red (Led 8)	See list next page

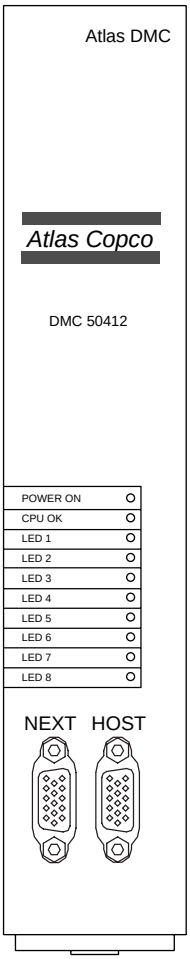

(Cont'd)

TechPub_2614345_0103 - B5358H00en.fm

(Cont'd)

Std Dmc Card A8233 Fault List

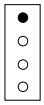	**Hardware disabled** The hardware enable signal from the safety relay is low. This is normally not an alarm. But if it happens in an abnormal situation check the connection to the DMC's hardware enable line.
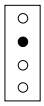	**System internal hardware fault** Try to restart, if the problem persists or comes back soon again change DMC driver.
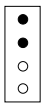	**Position error exceeded** The allowed error between the calculated position and the actual position of the axis of the motor is exceeded. Check for mechanical faults that can stop the motor from turning correctly such as bad bearings, lack of lubrication…
	**Ctrl-C interrupt** Ctrl-C has been pressed on a terminal connected to the drive. 1. Restart.
	**System error** Try to restart, if problem persists or comes back soon again change DMC driver.
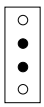	**High temperature in driver or motor** 1. In case of the motor check if the movement is too hard. 2. In case of the drive check the cooling system of the electrical cabinet
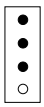	**Software disabled** The software enable signal from the PLC is low. This is normally not an alarm. But if it seems to be a problem check the connection between the PLC's ouput and the DMC's software enable input.
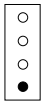	**Current check torque limit exceed** The maximum current limit is exceeded. Check for mechanical faults that can stop the motor from turning correctly such as bad bearings, lack of lubrication…
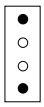	**Cyclical timer interrupt** This alarm is triggered by internal faults in the drive, and is not an alarm if software and hardware enable is low. 1. Close the doors. 2. Check connections to the DMC's hardware and software enable.

(Cont'd)

TechPub_2614345_0103 - B5358H00en.fm

(Cont'd)

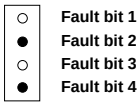	**Data transfer from PLC** The software enable signal from the PLC is low. This is normally not an alarm. But if it seems to be a problem check the connection between the PLC's ouput and the DMC's software enable input
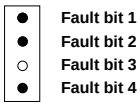	**Resolver fault** Problem with the resolver (the resolver sends information from the motor to the drive from where the drive can calculate the position of the axis). 1. Check the connections for the resolver cable. 2. Change drive or motor.
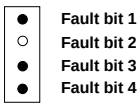	**Tensioner motor speed fault** Maximum speed (positive or negative) exceeded. 1. Check if paper is broken.

TechPub_2614345_0103 - B5358H00en.fm

8-15 Electrical Cabinet - Set DMC Card

Machine Status	Production
Special Equipment	Communication cable RS 232-C AT compatible PC with diskette station
SPC Reference	1317254-0200

Old DMC Cards

Note! For machines with the new DMC cards, see 8-11 Electrical Cabinet - Set DMC2 Card.

Connect the DMC to the PC terminal with the cable (1). Necessary connections are:

PC 9-pin female	DMC 15-pin high density male
2	3
3	2
5	7
	1 (*)

Note! (*) = shield connection

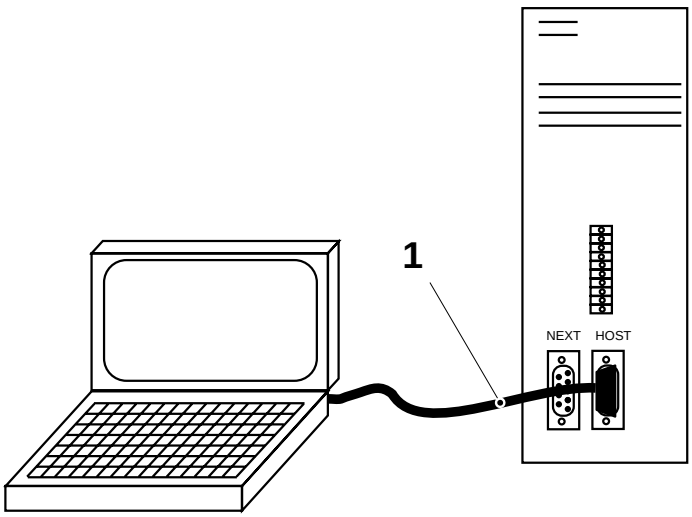

1 RS232 connection cable

Configure the program to use, for example TIT or Windows terminal, as follows:

Baud rate	9600
Parity	None
Bits	8
Stopbits	1
Flow control	None

(Cont'd)

TechPub_2614345_0103 - B5358H00en.fm

(Cont'd)

Pc Terminal Communication

A PC with a terminal program can be used for test and service purposes. At start up through the serial interface, it is possible to see the program number (R255). Each time that the volume parameter is required to the PLC, the received value (R52) is sent out onto the screen. For positioning trouble-shooting it is also possible to see different data by on line changing of the register **R120** value.

R120	Register number	Register name	Function
R120 = 0	No display	No display	Default state
R120 = 1	RD 1.RPos R42 R30	 *NewPosOffset* *RegMarkPos*	Real position PullTab correction Register mark position
R120 = 2	R21 R22 R83	*FromRegMark* *AdjfromRegMark* *Error*	Measured value *RegMarkPos* to stop position *DfltFromRegMark+Newposoffset* relative error from Register Mark
R120 = 3	R89 R26 R25	*Movement* *MoveAverage* *MoveError*	Movement after PID calculation Average of the six last *Movement* *Movement - MoveAverage*
R120 = 4	R73 R23 R71	ActualLength PackLength DumpPackages	Measured Package length during *ErrorRoutine* Repeat length of package Number of dumped packages
R120 = 10	Ana.Out1 Ana.Out2	*Ana.Out1* *Ana.Out2*	Connect the *Ana.Out1* to torque Connect the *Ana.Out2* to PosErr

For better performance of the system, keep **R120** = 0 when there is no need of displaying data.

The PT21MC program is resident on an EPROM (2). This should be programmed and assembled during machine production.

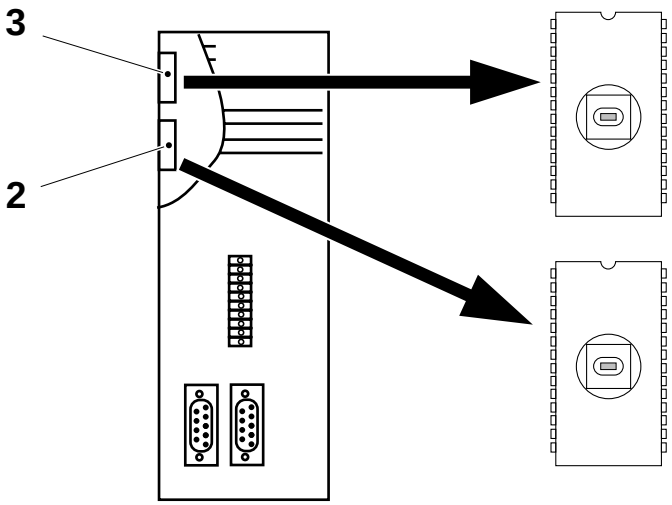

2 Eprom
3 Firmware Eprom

TechPub_2614345_0103 - B5358H00en.fm

8.1 Mounting Plate

SPC Reference	1317354-0200

8.1.1 PLC

8.1.1-1 PLC - Change Battery

Machine Status	Air **OFF** Mains Power **ON**
Special Equipment	Needle nose pliers
Consumables	Battery TP No.90031-0301
SPC Reference	1317354-0200

Alternative with One Cable Connector

Note! For an alternative with two cable connectors (1), see the Alternative with Two Cable Connectors section.

When the battery signal lamp (2) lights up, the battery (3) must be changed.

a) Remove the battery cover (4).

Note! The battery replacement must be completed within 20 minutes or else the RAM memory might be erased.

b) Remove the battery (3) from the mounting clips (5).

c) Firmly attach the clips to the new battery.

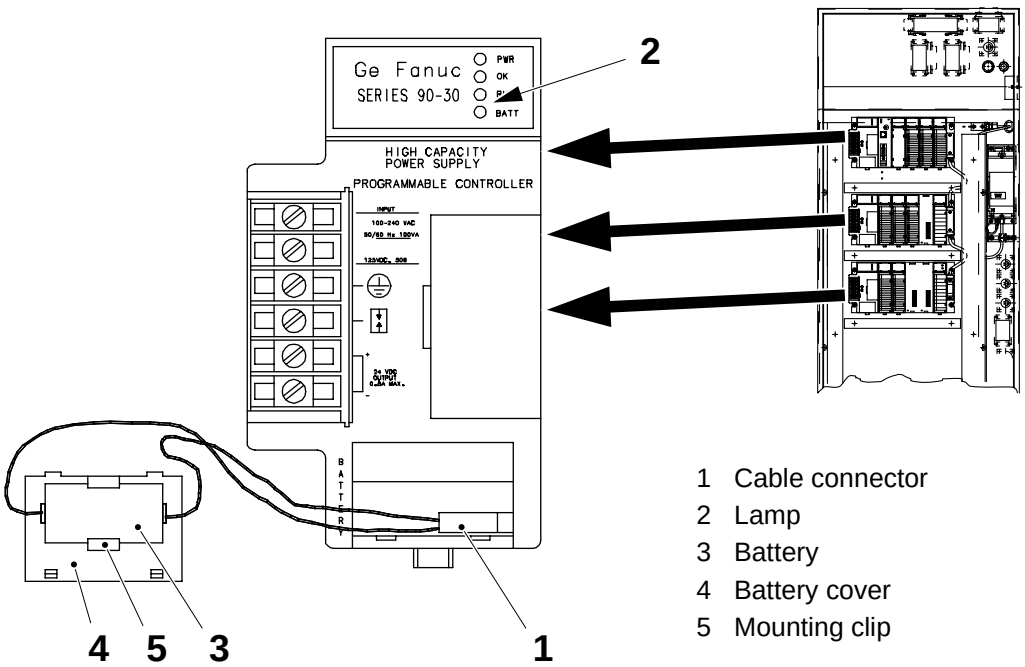

1 Cable connector
2 Lamp
3 Battery
4 Battery cover
5 Mounting clip

(Cont'd)

TechPub_2614345_0103 - B5358H01en.fm

(Cont'd)

CAUTION

Handle the old battery in a safe way!

The battery contains harmful substances and must not be discarded negligently. Hand it in to the nearest recycling centre. Do not burn lithium batteries. Do not try to recharge lithium batteries.

d) Disconnect the cable connector (1) of the old battery and discard the battery.

e) Carefully insert the cable connector (1) of the new battery (3) into the contact (6) with the aid of needle nose pliers.

f) Fit the battery cover (4).

g) Repeat items a) - f) for the other power supply units (7).

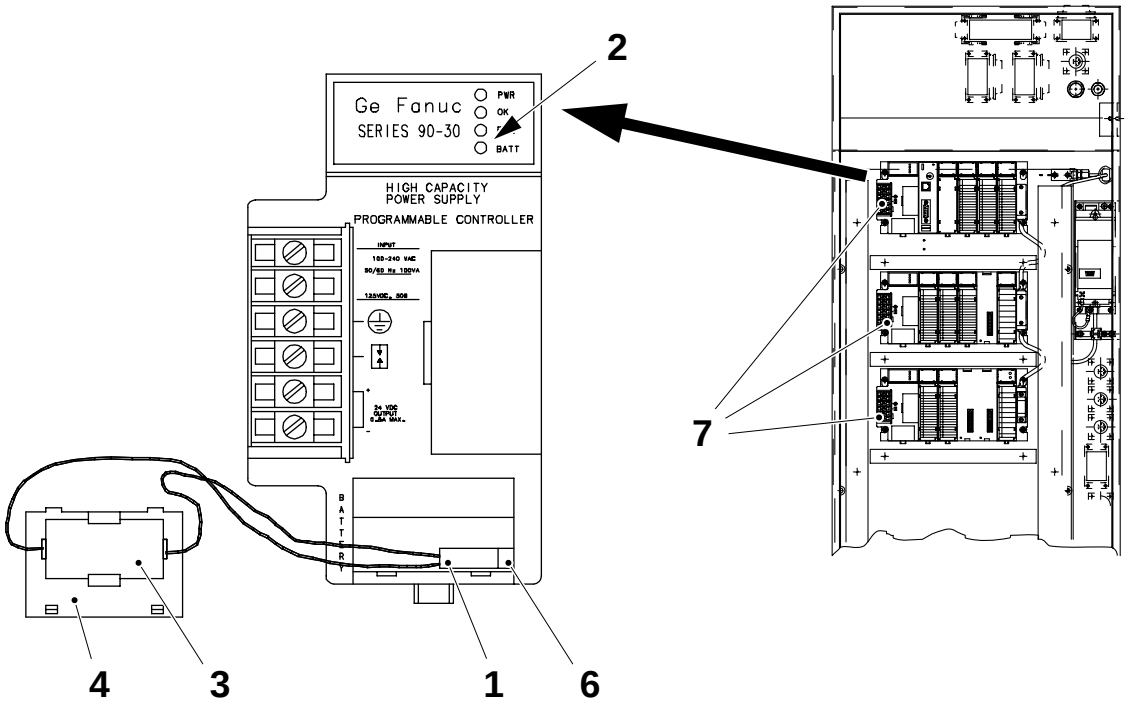

1 Cable connector
3 Battery
4 Battery cover
6 Contact
7 PLC power supply unit

(Cont'd)

TechPub_2614345_0103 - B5358H01en.fm

(Cont'd)

Alternative with Two Cable Connectors
Note! For alternative with one cable connector (1), see the Alternative with One Cable Connector section.

When the battery signal lamp (2) lights up, the battery (3) must be changed.

a) Remove the battery cover (4).

b) **First** fit the cable of the new battery onto the unused cable connector (1) with the aid of needle nose pliers.

CAUTION
Handle the old battery in a safe way!
The battery contains harmful substances and must not be discarded negligently. Hand it in to the nearest recycling centre. Do not burn lithium batteries. Do not try to recharge lithium batteries.

c) **Secondly** remove the old battery cable and remove the battery (3) from its mounting clip (5). Discard the old battery (3).

d) Firmly insert the new battery (3) into the mounting clip (5).

e) Fit the battery cover (4).

f) Repeat items a) - e) for the other PLC power supply units (6).

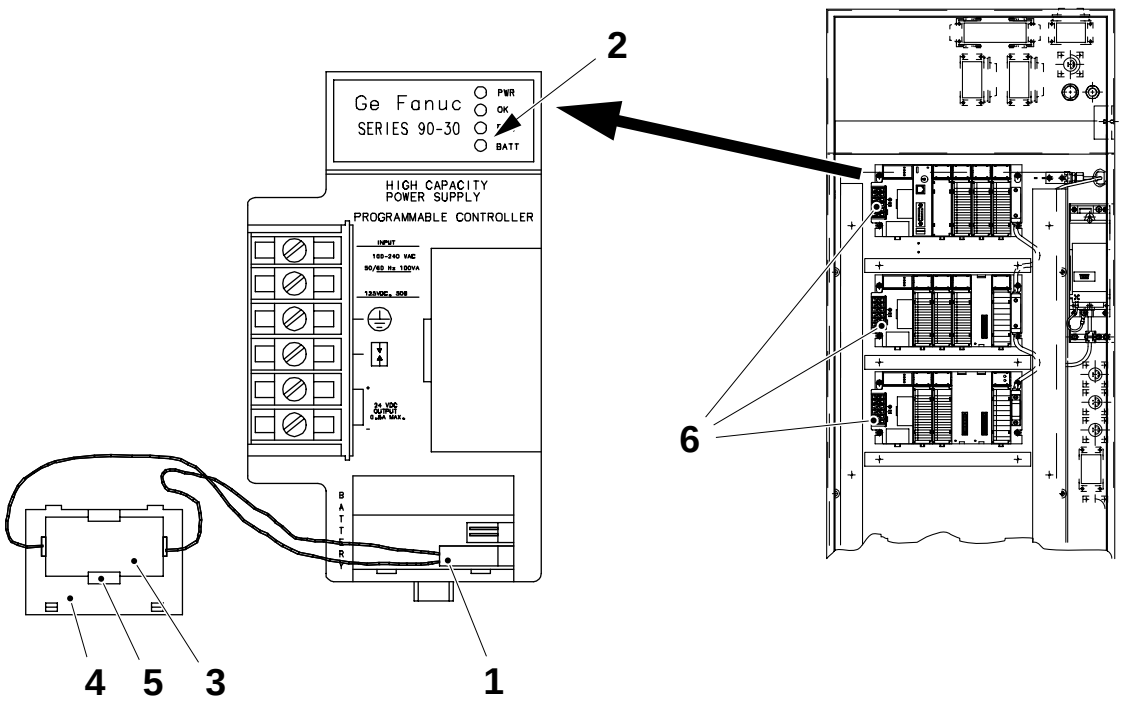

1 Cable connector
2 Lamp
3 Battery
4 Battery cover
5 Mounting clip
6 PLC power supply unit

TechPub_2614345_0103 - B5358H01en.fm

8.1.1-2 PLC - Load Program

Machine Status	Air **OFF** Mains Power **ON**
Special Equipment	Communication cable RS 232 C AT compatible PC with diskette station
SPC Reference	1317354-0200

Note! This instruction describes one way to load the PLC program from a diskette.

a) Connect the communication cable between the PC and the PLC.

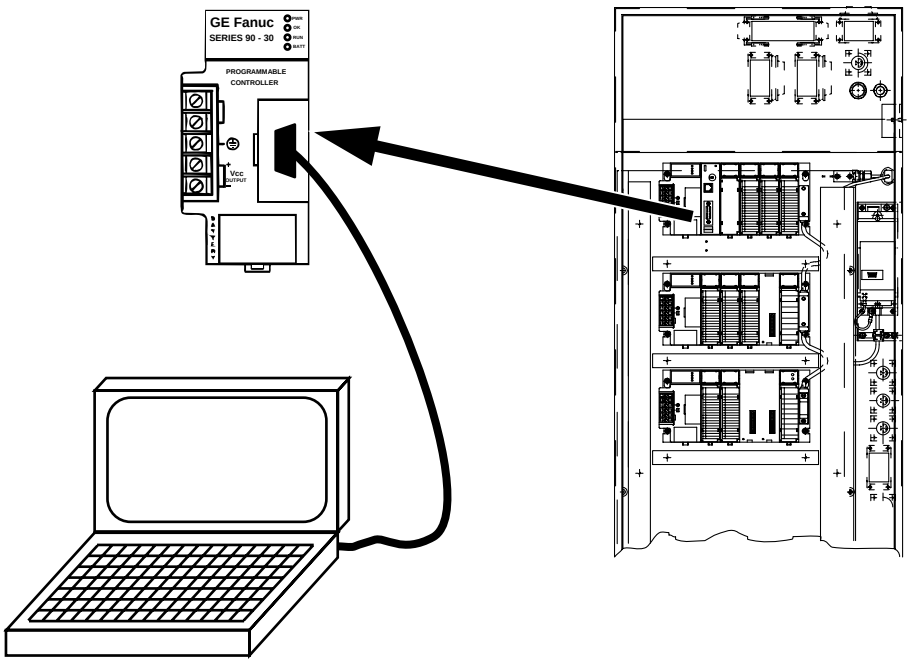

b) Start **LM90** to enter the GE Fanuc PLC (Logicmaster 90).

c) Insert the program diskette in drive **A**.

d) From the **Main menu**, press **F1... Logicmaster 90 Programmer Package**.

e) The **SELECT OR CREATE A PROGRAM FOLDER** menu will be displayed.

f) Type **A:** and press <**ENTER**>.

(Cont'd)

TechPub_2614345_0103 - B5358H01en.fm

(Cont'd)

g) With the **Arrow** keys, select the program to be loaded (1) into the PLC (YYY is an example).

h) Press **<ENTER>**.

Note! If a program has been installed previously, the program name will appear in the **PLC program name** field (3).

i) Type **N** to answer “Folder found: back up its contents? (Y/N)”.

j) The **SERIES 90-30/90-20 PROGRAMMING SOFTWARE** menu will now be displayed.

k) Press **F9... Utility: Load/Store/etc**.

l) The **PROGRAM UTILITY FUNCTIONS** menu is displayed.

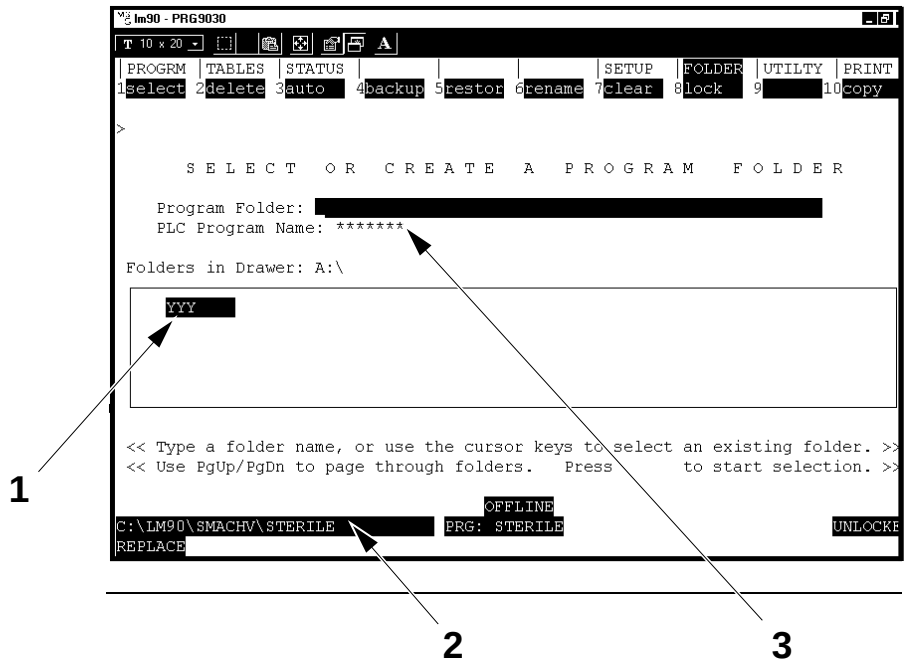

1 Program to be loaded (example)
2 Currently selected program folder (example)
3 PLC Program name field (example)

(Cont'd)

TechPub_2614345_0103 - B5358H01en.fm

(Cont'd)

m) Check that the status line (LM communication) shows **ONLINE** (8). If not, press **Alt + M** until the status line shows **ONLINE**.

n) Check that the status line (PLC status) shows **STOP** (7). If not, press **Alt + R** until the status line shows **STOP**.

o) Check that the status line shows **LOGIC NOT EQ** (9).

Note! If the status line shows **LOGIC EQUAL**, there is no need to load the program.

p) Press **F2... Store from Programmer to PLC**.

q) Select Y/N for the information to be stored (normal case).

r) Program logic (4), **Y**.

s) Configuration (5), **Y**.

t) Reference tables (6), **Y**.

u) Press **<ENTER>** to store.

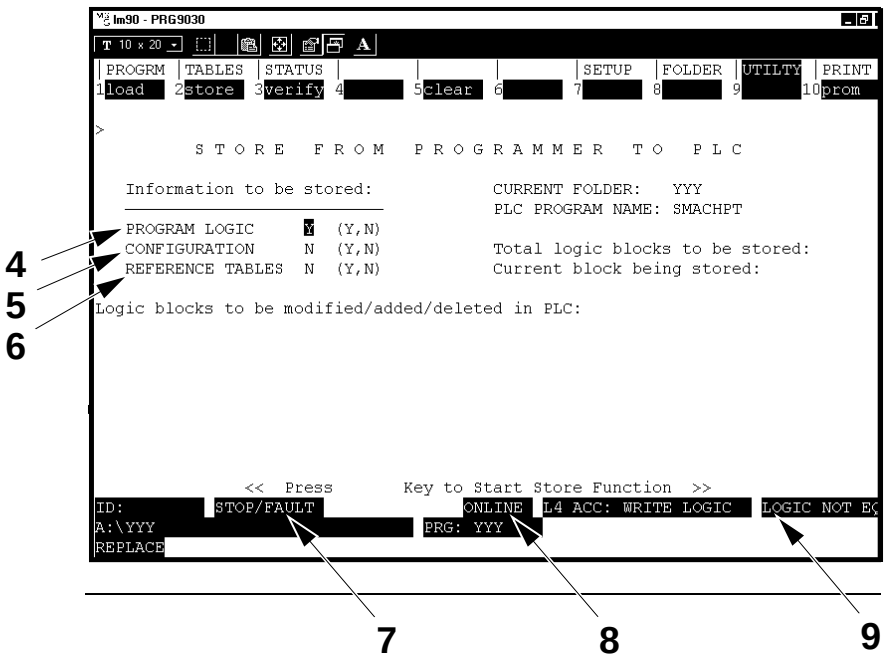

4 Program logic
5 Configuration
6 Reference tables
7 CPU status (STOP)
8 Connection mode status (ONLINE)
9 Program logic status (LOGIC NOT EQ)

(Cont'd)

TechPub_2614345_0103 - B5358H01en.fm

(Cont'd)

v) Type **Y** to answer “Program name in PLC does not match program name in folder; continue? (Y/N)”.

w) Type **Y** to answer “Selected items will be overwritten; continue to store in PLC? (Y/N)”. (Any other key will be taken as N).

x) When **Store complete** is displayed, the status line (9) should state **LOGIC EQUAL**.

y) Press **Alt + R** until the status line shows **RUN** (7).

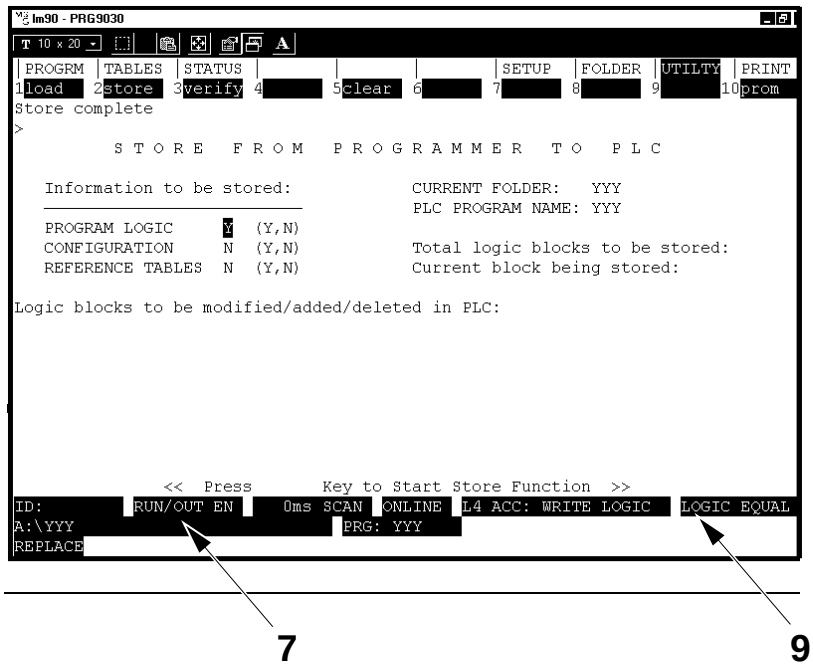

7 CPU status (RUN)
9 Program logic status (LOGIC EQ)

z) Press **<ESC>** and type **Y** to answer “Exit Logicmaster 90 Programmer Package? (Y/N)”.

aa) The program load is ready.

TechPub_2614345_0103 - B5358H01en.fm

8.1.1-3 PLC - Print Program

Machine Status	Air **OFF** Mains Power **ON**
SPC Reference	1317354-0200

The following setup will give a printout in portrait orientation using compressed text. Be very careful when you type in the leading and trailing statements. It is very important to use upper and lower case correctly.

The setting is valid for HP Laser Jet III but it might work on other printers. If it does not see your printer manual for the right printer codes.

a) Press **F1** for the Programming Package.

b) Press **F10** for the Print Functions.

c) Press **F1** for Setup Printer Parameters.

d) Select the parameters as follows.

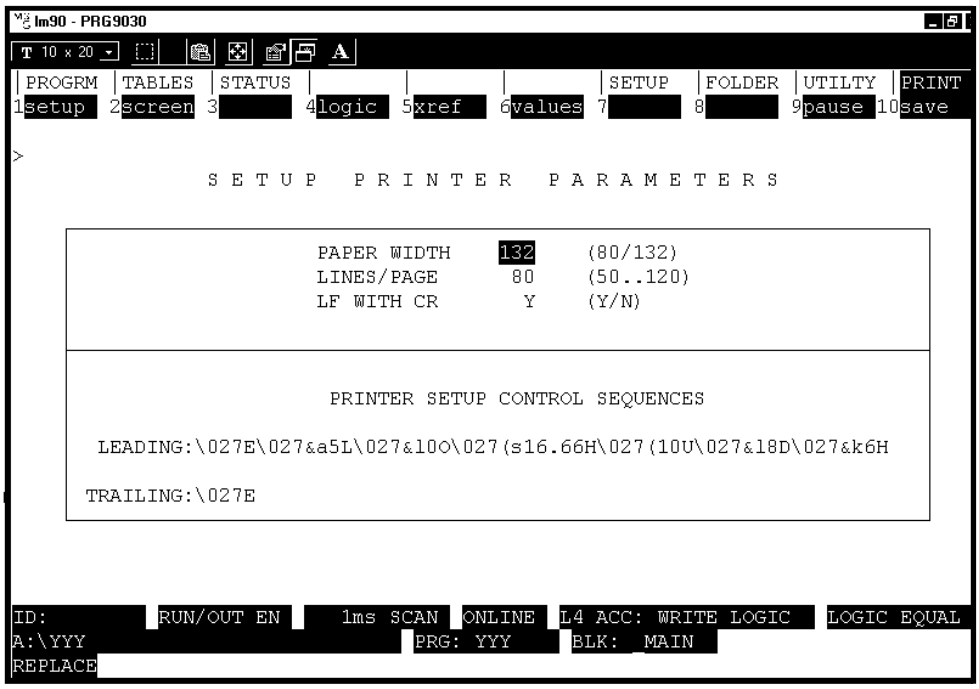

Description of printer codes	
\027E	Reset printer
\027&a5L	Left margin, # of columns (5)
\027&l5C	Vertical Motion Index, # of 1/48 Inch increments (5)
\027(10U	Primary Symbol Set, (PC-8)
\027(s20H	Primary Pitch, # of Characters / Inch (20)
\027(s4102T	Typelace Family, Letter Gothic

(Cont'd)

TechPub_2614345_0103 - B5358H01en.fm

(Cont'd)

e) Press **<ESC>** button to come back to LH90 main menu.

f) Press **F4** for Print Program Logic.

g) Select the options as follows.

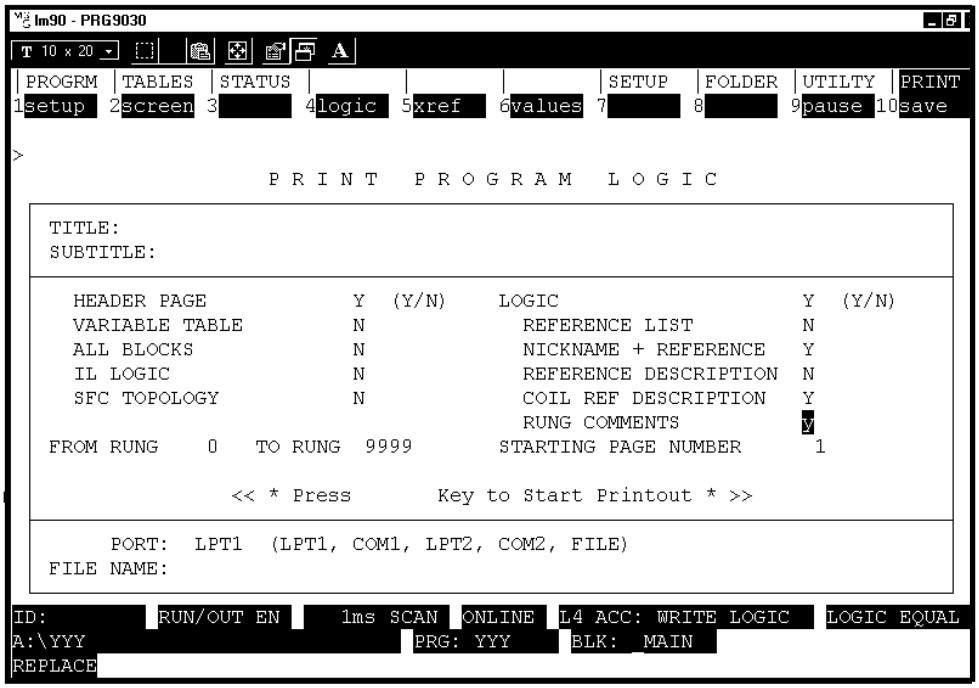

h) Press **<ENTER>** to start print out.

TechPub_2614345_0103 - B5358H01en.fm

8.1.1-4 PLC - Set Patch and Tab Length

Machine Status	Air **OFF** Mains Power **ON**
SPC Reference	1317354-0200

a) Connect the communication cable between the PC and the PLC.

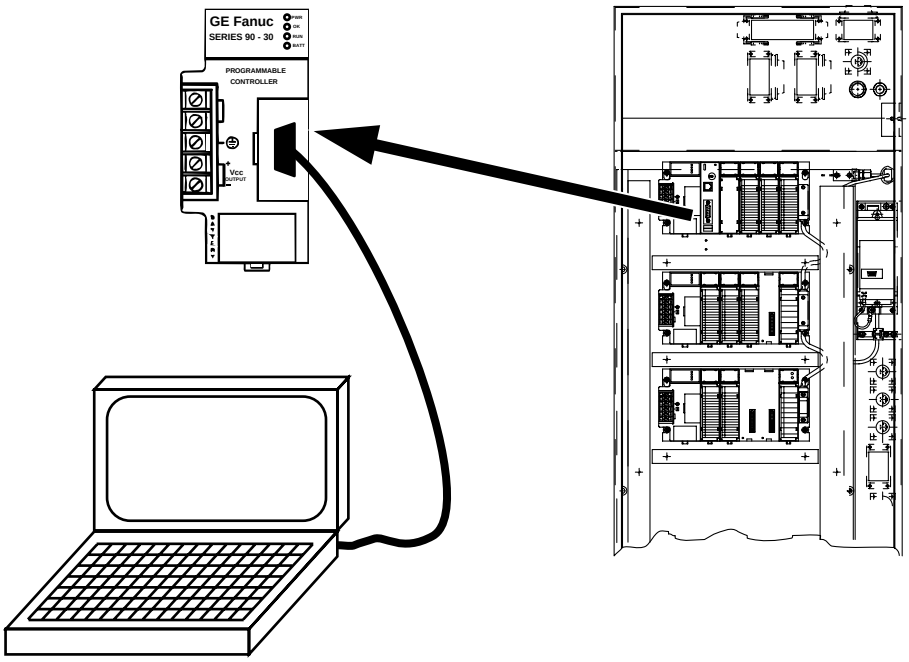

b) Start **LM90** to enter the GE Fanuc PLC (Logicmaster 90).

c) From the **Main menu**, press **F1... Logicmaster 90 Programmer Package**.

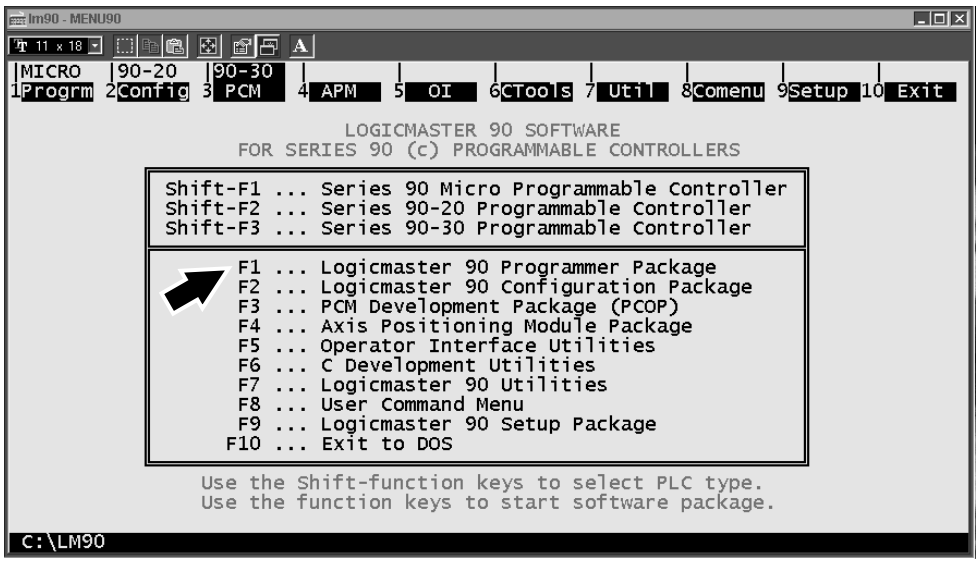

(Cont'd)

TechPub_2614345_0103 - B5358H01en.fm

(Cont'd)

d) The **SELECT OR CREATE A PROGRAM FOLDER** menu will be displayed.

e) With the **Arrow** keys, select the program (1) (YYY is an example).

f) Press **<ENTER>**.

Note! The program name will appear in the **PLC program name** field (3).

g) Type **N** to answer "Folder found: back up its contents? (Y/N)" (if displayed).

h) The **SERIES 90-30/90-20 PROGRAMMING SOFTWARE** menu will now be displayed.

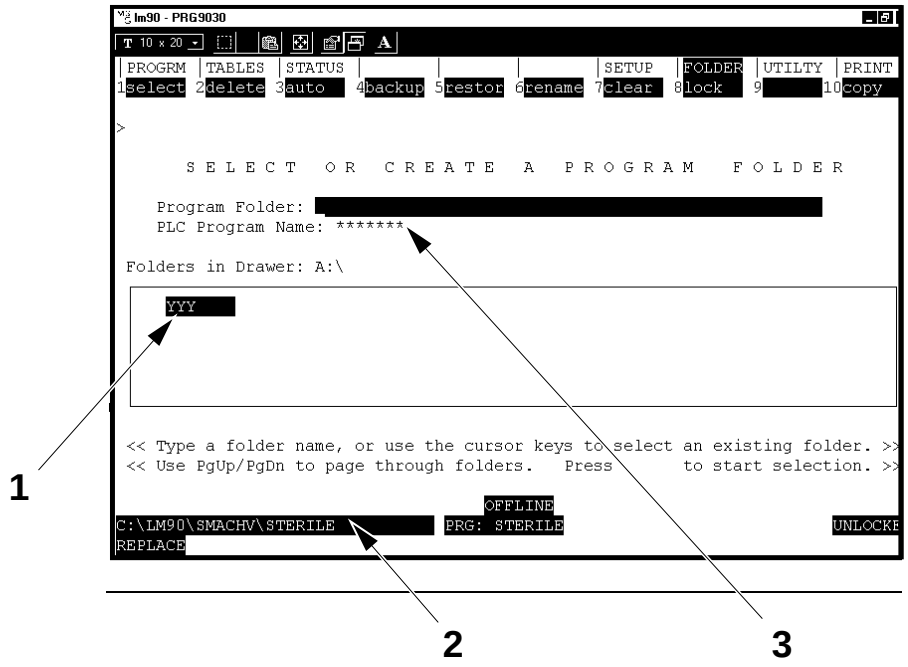

1 Program selected (example)
2 Currently selected program folder (example)
3 PLC Program name field

(Cont'd)

TechPub_2614345_0103 - B5358H01en.fm

(Cont'd)

i) Press **F1... PROGRAM DISPLAY EDIT**.

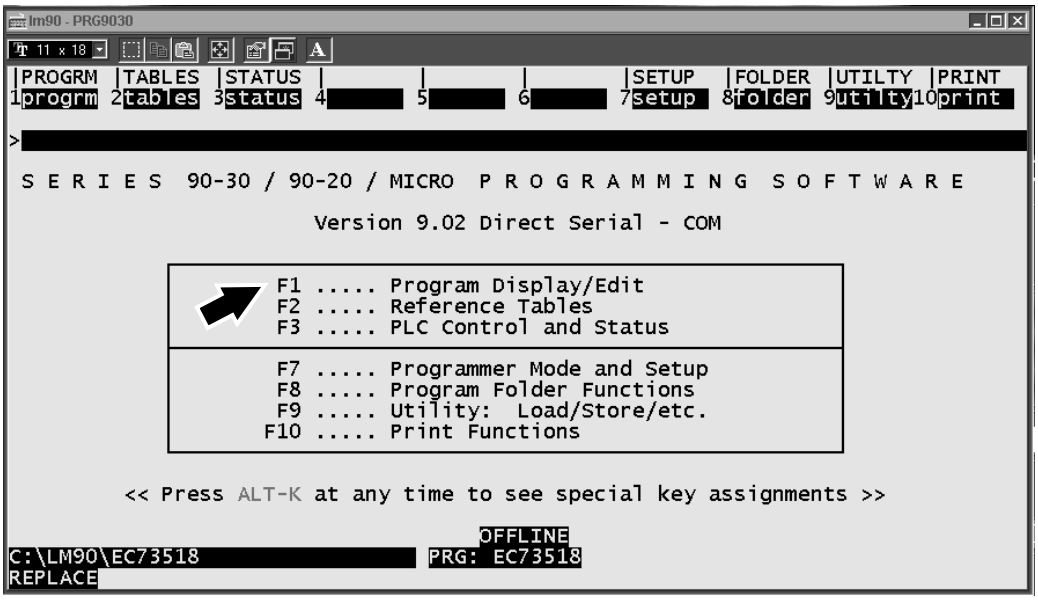

j) Check that the status line (LM communication) shows **ONLINE** (4). If not, press **Alt + M** until the status line shows **ONLINE**.

k) Check that the status line (PLC status) shows **RUN** (5). If not, press **Alt + R** until the status line shows **RUN**.

l) Check that the status line shows **LOGIC EQUAL** (6).

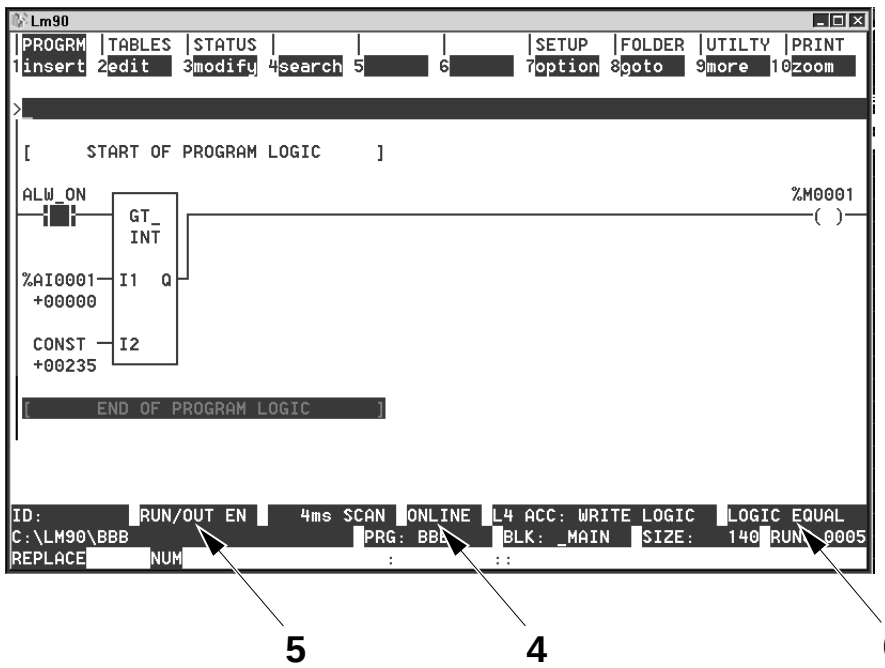

4 Connection mode status (ONLINE)

5 CPU status (RUN)

6 Program logic status (LOGIC EQUAL)

(Cont'd)

TechPub_2614345_0103 - B5358H01en.fm

(Cont'd)

m) With the **Arrow** keys, select "BLOCK DECLARATION" and press **F10**.

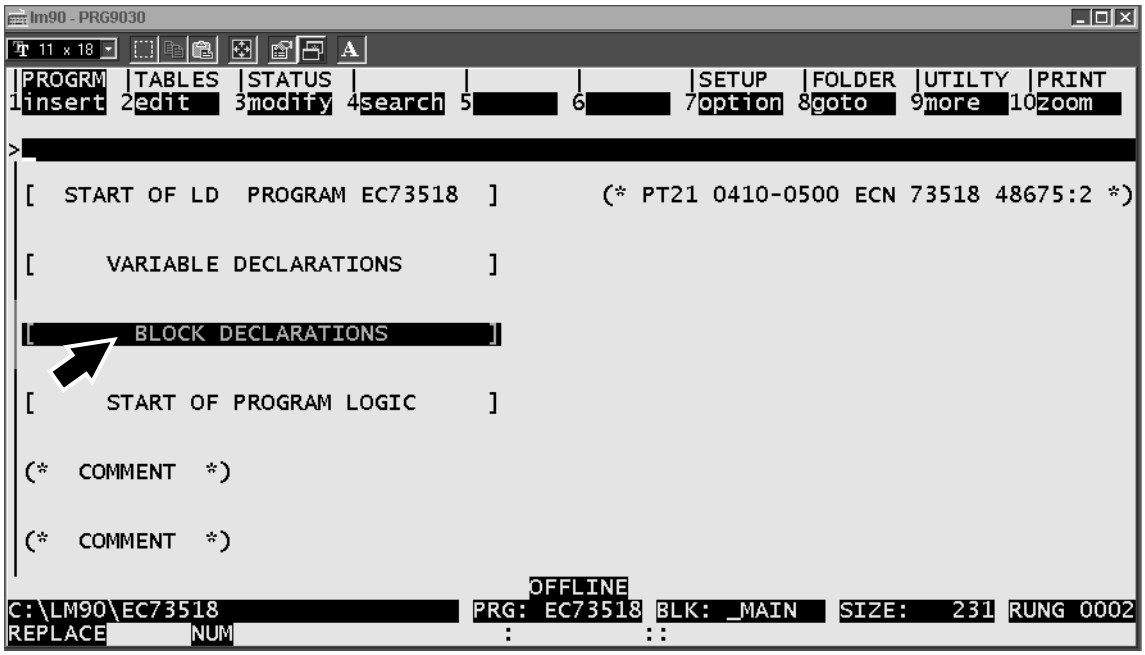

n) With the **Arrow** keys, select "SUBR 3", "BLK-501" if the running volume is >330 ml, or "BLK-502" if the running volume is < 330 ml.

o) Press **F10.**

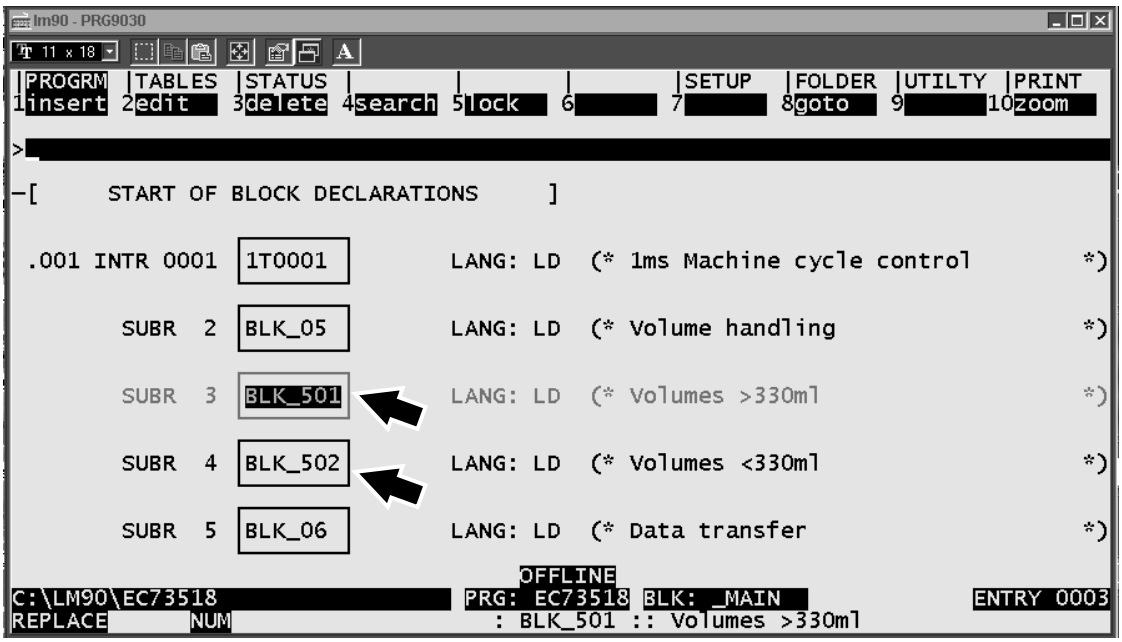

(Cont'd)

TechPub_2614345_0103 - B5358H01en.fm

(Cont'd)

p) With the **Arrow** keys, select the rung with the highlighted running volume (7).

Note! The values to be used for the constants (8), (9) and (10) can be found in the table on the next page (values in millimeters multiplied by one hundred for constants 8 and 9. For constant 10 values in increments resolver/10).

q) With the **Arrow** keys, select the constant (8) to modify the patch length.

r) With the **Arrow** keys, select the constant (9) to modify the tab length.

s) With the **Arrow** keys, select the constant (10) to modify the paper stop position.

t) Type the new value and press <**ENTER**>.

u) Press <**Y**> if the selection is correct.

v) Press <**ALT+S**> to update the program folder.

w) Press <**ESC**> and type <**Y**> to answer “Exit Logicmaster 90 Programmer Package? (Y/N)”.

x) Press **F10** to exit the **LM90** program.

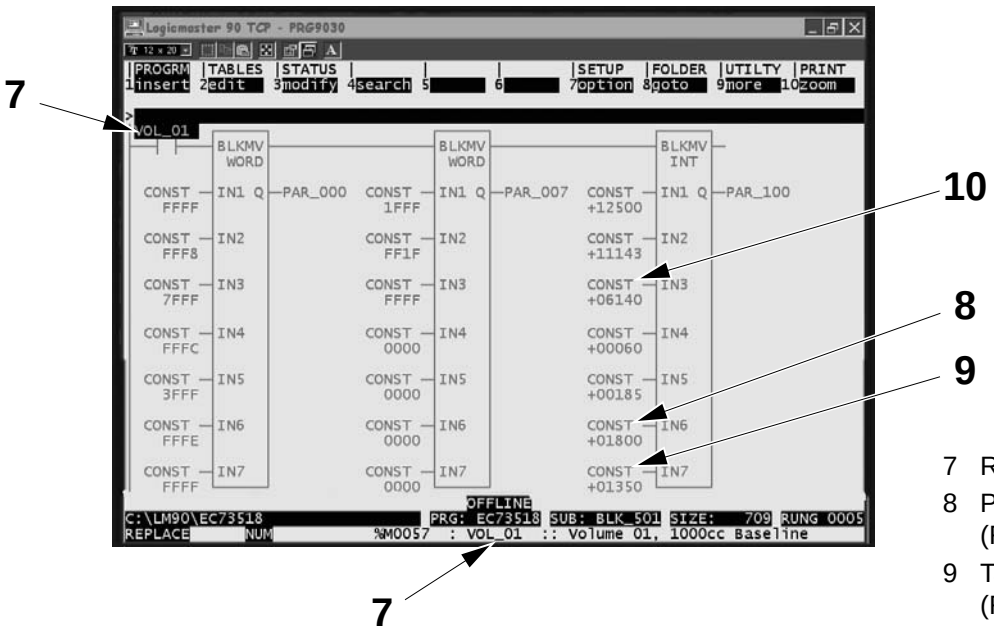

7 Running volume
8 Patch constant (R605)
9 Tab constant (R606)
10 Stop position constant (R602)

(Cont'd)

TechPub_2614345_0103 - B5358H01en.fm

(Cont'd)

Note! The changes described in this procedure above take effect only when a data transfer from the PLC to the DMC2 and from the PLC to the TMCC take place. To force the data transfer to take place then:

- open and close one of the Pulltab doors.
  - the value of all the four registers are loaded in the PLC memory
  - the data transfer from the PLC to the DMC2 occurs.
- pull out and fit back the TMCC card **A8210**
  - the data transfer from the PLC to the TMCC occurs.

Package	Hole	R 602	R 605	R 606
TBA 250 B	21	5900	1750	1400
TBA 500 S	25	5983	1950	1800
TBA 1500 S	45	6383	1750	1550
TBA 1000 B	45	6155	1750	1550
TBA 1000 S	45	6140	1750	1550
TBA 1000 B	50	6179	1600	1400
TBA 1000 S	50	6209	1600	1400
TBA 500 S	55	5881	1500	1000
TPA 1000 S	60	6089	1750	1300
TPA 1000 Sq	60	6100	1800	1350
TBA 1500 S	85	6348	1800	1350
TBA 1000 Sq	85	6445	1800	1350
TBA 1000 B	85	6222	1800	1350
TBA 1000 S	85	6255	1800	1350
TBA 1000 S	90	6245	1800	1400
TBA 1500 S	90	6445	1800	1400

TechPub_2614345_0103 - B5358H01en.fm

8.1.1-5 PLC - Set Tension Device Torque

Machine Status	Air **OFF** Mains Power **ON**
SPC Reference	1317354-0200

a) Connect the communication cable between the PC and the PLC.

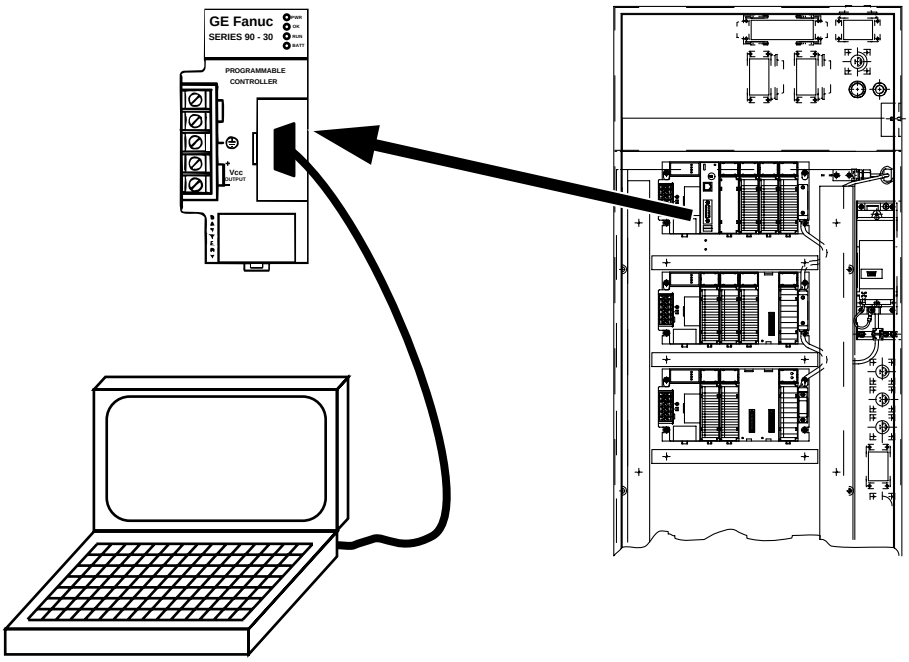

b) Start **LM90** to enter the GE Fanuc PLC (Logicmaster 90).

c) From the **Main menu**, press **F1... Logicmaster 90 Programmer Package**.

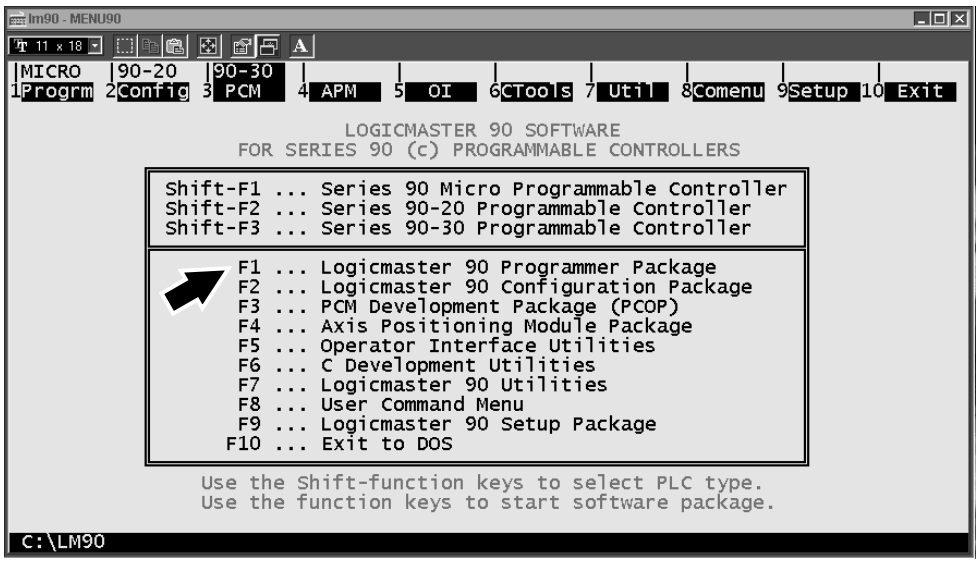

(Cont'd)

TechPub_2614345_0103 - B5358H01en.fm

(Cont'd)

d) The **SELECT OR CREATE A PROGRAM FOLDER** menu will be displayed.

e) With the **Arrow** keys, select the program (1) (YYY is an example).

f) Press ENTER.

Note! The program name will appear in the **PLC program name** field (3). The folder path will appear in the **Currently selected program folder** field (2).

g) Type N to answer “Folder found: back up its contents? (Y/N)” (if displayed).

h) The **SERIES 90-30/90-20 PROGRAMMING SOFTWARE** menu will now be displayed.

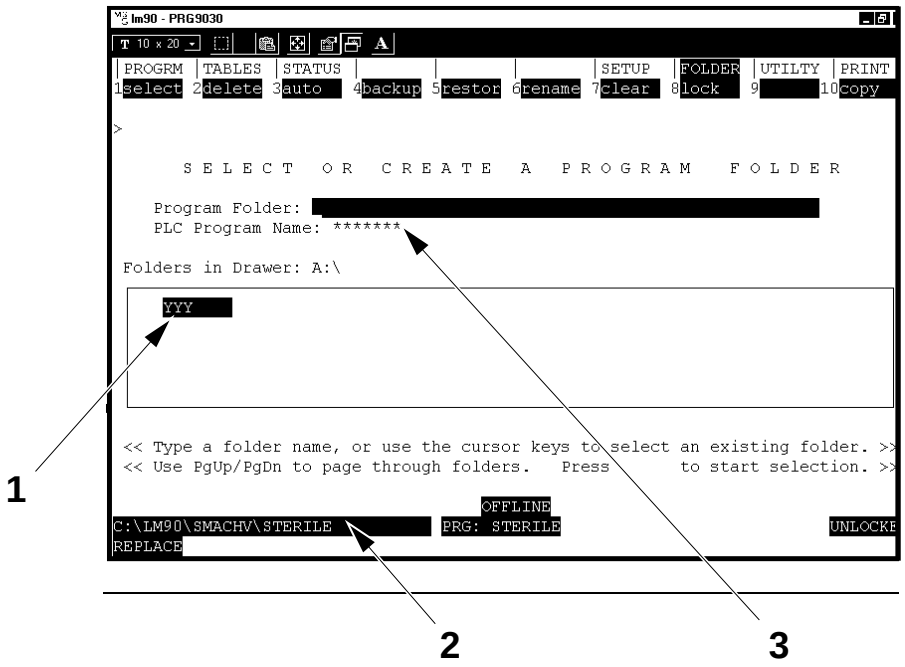

1 Program selected (example)
2 Currently selected program folder (example)
3 PLC Program selected

(Cont'd)

TechPub_2614345_0103 - B5358H01en.fm

(Cont'd)

i) Press **F1... PROGRAM DISPLAY/EDIT**.

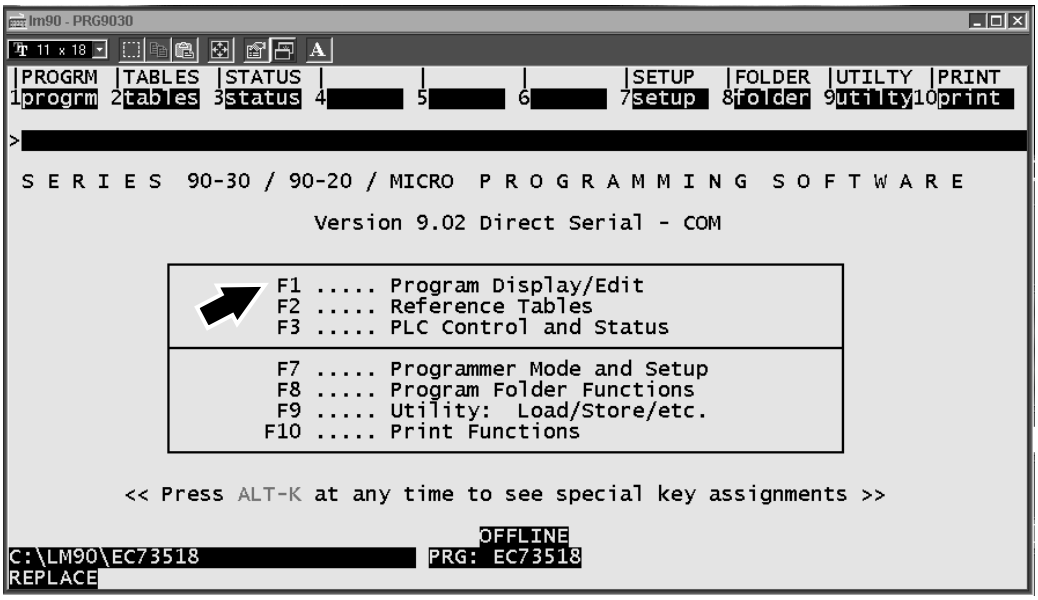

j) Check that the status line (LM communication) shows **ONLINE** (4). If not, press ALT + M until the status line shows **ONLINE**.

k) Check that the status line (PLC status) shows **RUN** (5). If not, press ALT + R until the status line shows **RUN**.

l) Check that the status line shows **LOGIC EQUAL** (6).

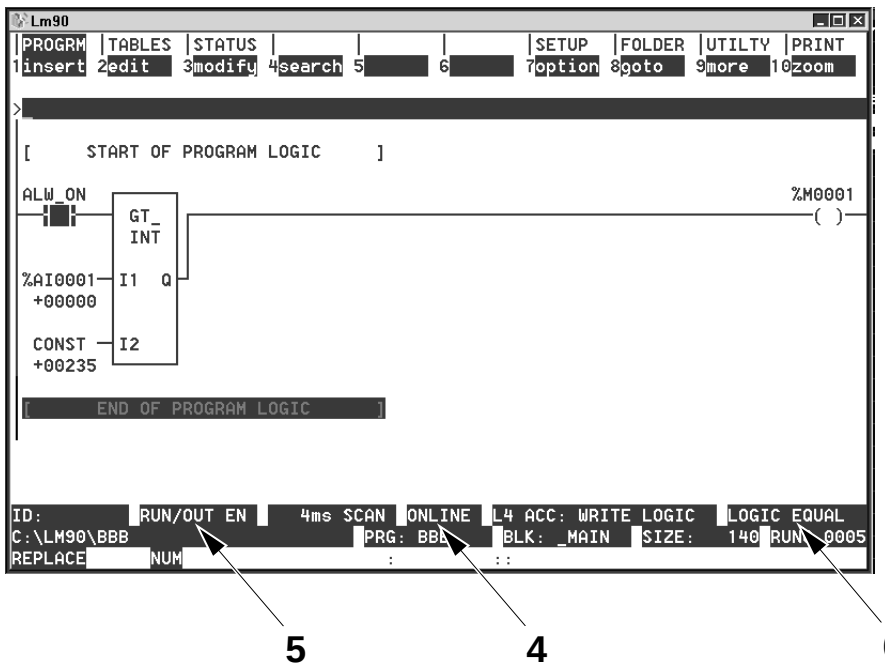

4 Connection mode status (ONLINE)
5 CPU status (RUN)
6 Program logic status (LOGIC EQUAL)

(Cont'd)

TechPub_2614345_0103 - B5358H01en.fm

(Cont'd)

m) With the **Arrow** keys, select "BLOCK DECLARATION" and press **F10**.

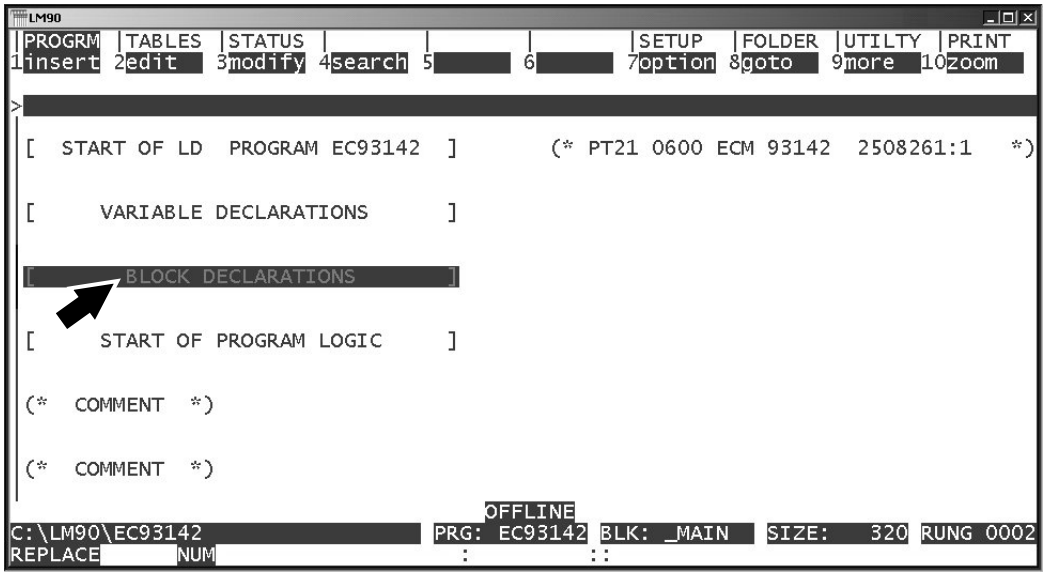

n) With the **Arrow** keys, select "SUBR 4", "BLK-502" if the running volume is >330 ml, or "SUBR 12", "BLK-503" if the running volume is ≤ 330 ml.

o) Press F10**.**

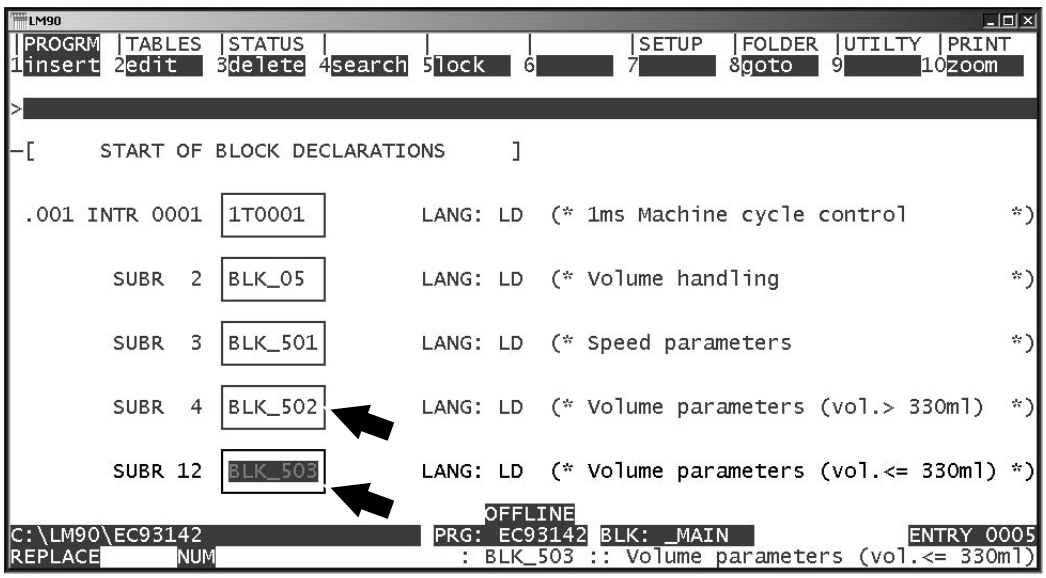

(Cont'd)

TechPub_2614345_0103 - B5358H01en.fm

(Cont'd)

p) With the **Arrow** keys, scroll down until a rung with a "BLKMV" instruction with the actual running volume (7) in the input and the register **%R1501 - STD_W1** (8) in the output Q is shown.

q) With the **Arrow** keys, select the constants (9) and (10) to modify the tension device torque. The procedure to find out the correct torque value is described in 1.2.5-4 Paper Brake - Set Servo Tension Device.

Note! Both the constants (9) and (10) must have the same value.

r) Type in the new value and press ENTER.

s) Press Y if the change is correct.

t) Press ALT + S to update the program folder.

u) Press ESC and type Y to answer “Exit Logicmaster 90 Programmer Package? (Y/N)”.

v) Press F10 to exit the **LM90** program.

Note! The changes described in this procedure take effect only when a data transfer from the PLC to the DMC takes place. To force the data transfer to take place, it is necessary to open and close one of the PullTab doors.

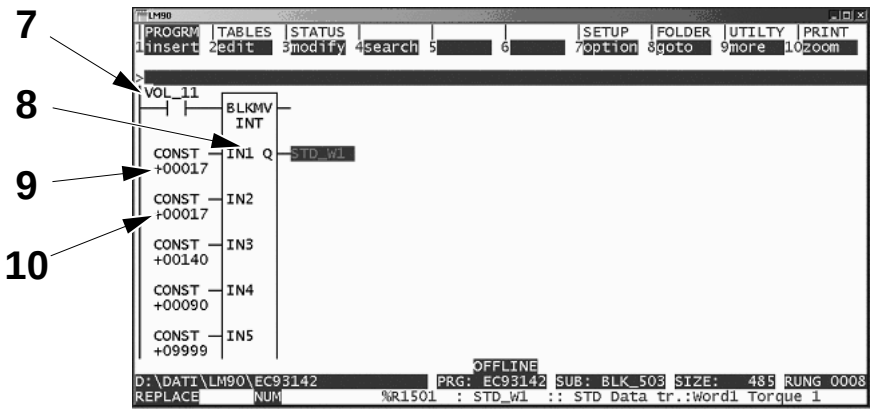

7 Running volume
8 Register %R1501 - STD_W
9 Tension device torque value 1
10 Tension device torque value 2

TechPub_2614345_0103 - B5358H01en.fm

8.1.2 Safety Relays

8.1.2-1 Safety Relays - Check Function

Machine Status	Air **OFF** Mains power **ON**
SPC Reference	1317354-0200

Note! Check the relays in case of a safety relay alarm on the TPOP panel.

Check that all the LEDs in the safety relays are activated.
If one or more LEDs of the following relays are not lit up:

Safety relay A8202
Make sure that the LH side door, the RH front side door and the RH rear side door in the PT21 unit are closed and that no emergency push buttons are pressed. Check that all the alarms are reset.

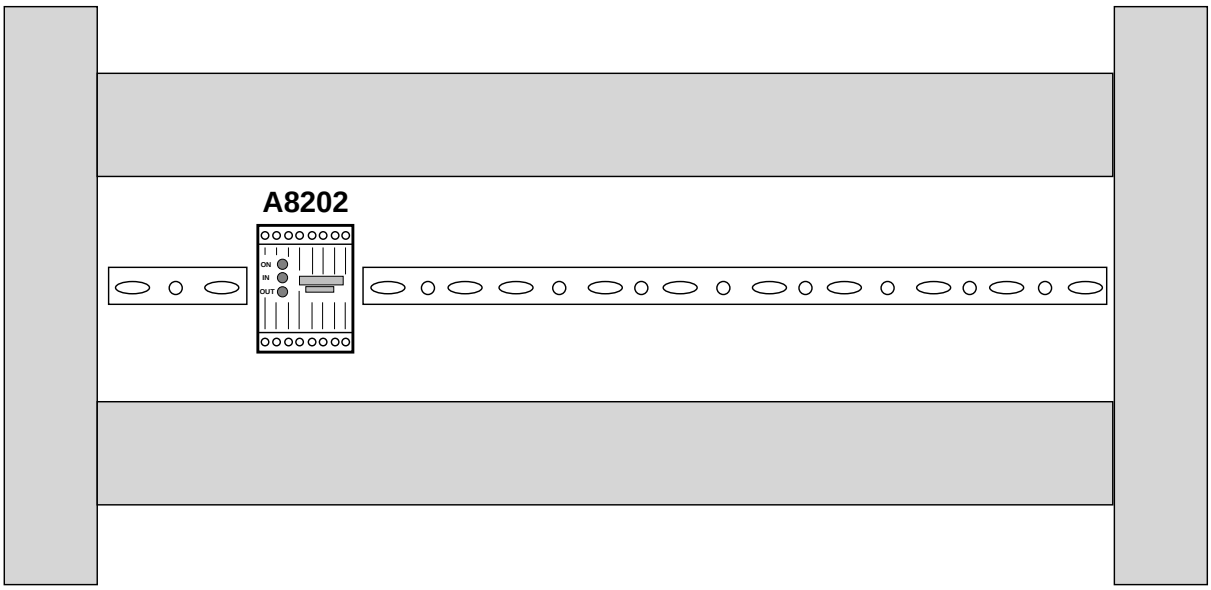

A 8202 : PT21 door chain safety monitors

TechPub_2614345_0103 - B5358H01en.fm

8.2 Swing Frame

SPC Reference	1317355-0200

8.2.1 TMCC

8.2.1-1 TMCC - Function Description

Machine Status	Air **OFF** Mains power **OFF**
SPC Reference	1317355-0200 558230-0101

TMCC Card A8210

The TMCC card A8210 is a microprocessor card that has the following functions:

- calculate the output of acceleration and deceleration for the stepper motors when the correct patch and tab length has been received from the PLC
- start the stepper motors when the pulse comes from the PLC

(Cont'd)

TechPub_2614345_0103 - B5358H02en.fm

(Cont'd)

- read and decode the register mark on the packaging material web, which is received by the photocells.

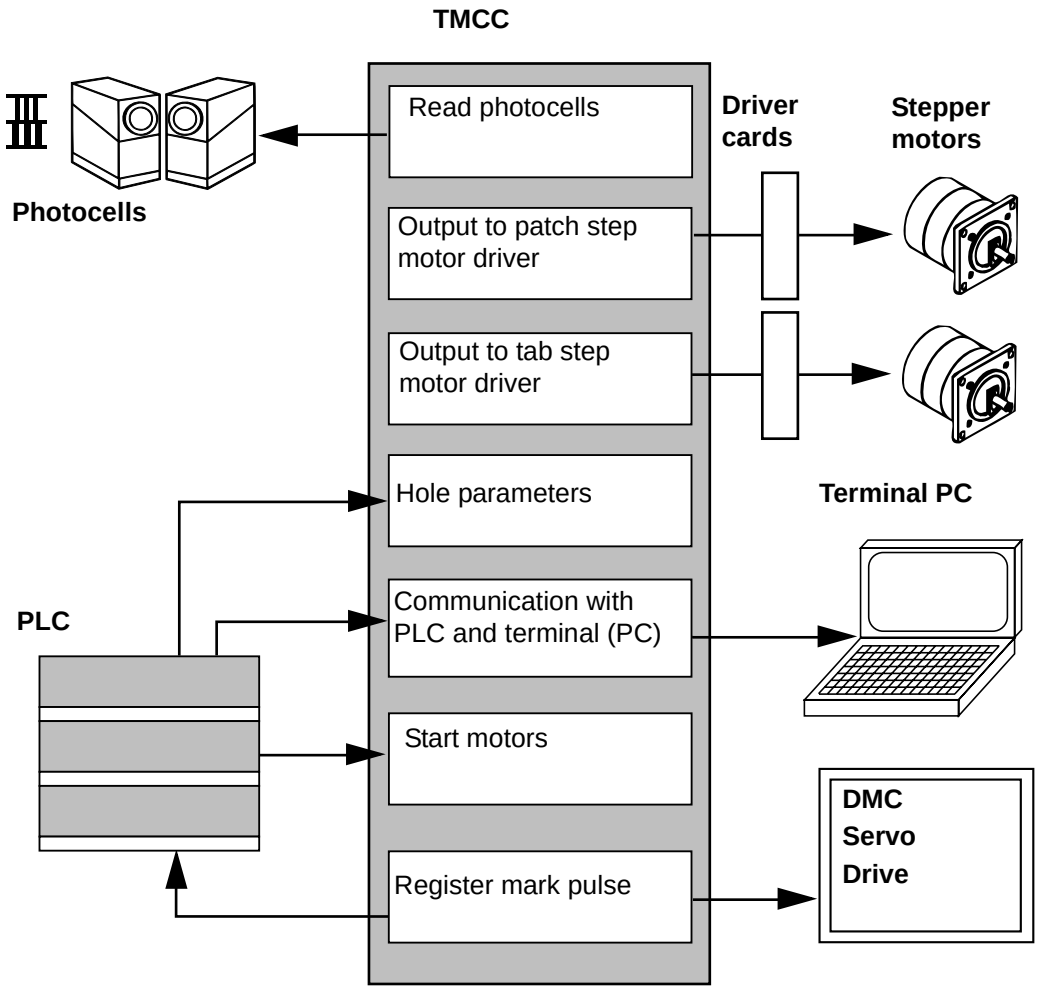

TechPub_2614345_0103 - B5358H02en.fm

(Cont'd)

(Cont'd)

TMCC Front Panel Switch 1

The switch **SW1** (2) located on the front panel of the TMCC (1) is used to select one of the variables so that it can be monitored for diagnostics.

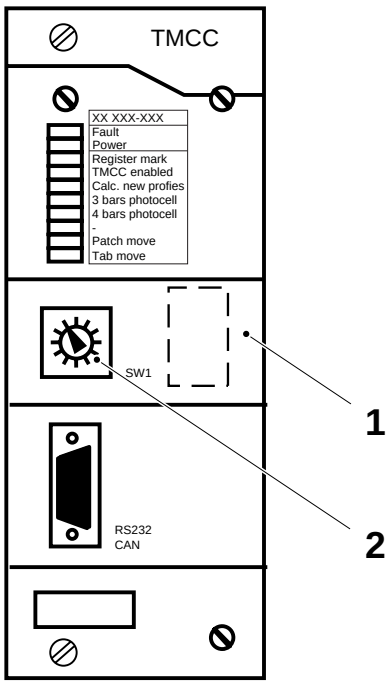

1 TMCC
2 Switch SW1

The following table shows the variables that can be monitored.

SW1 position	Function
0	Programming mode. With the switch in this position it is possible to download the program into the TMCC
1	Production mode. Normal position of the switch.
2 - 9	Not used
A - D	Not used
E - F	Used for teaching procedure

Note! In normal PRODUCTION mode, switch SW1 (2) should be set to position **1**.

(Cont'd)

TechPub_2614345_0103 - B5358H02en.fm

(Cont'd)

Also on the front panel of the TMCC (1) there are LEDs (3).

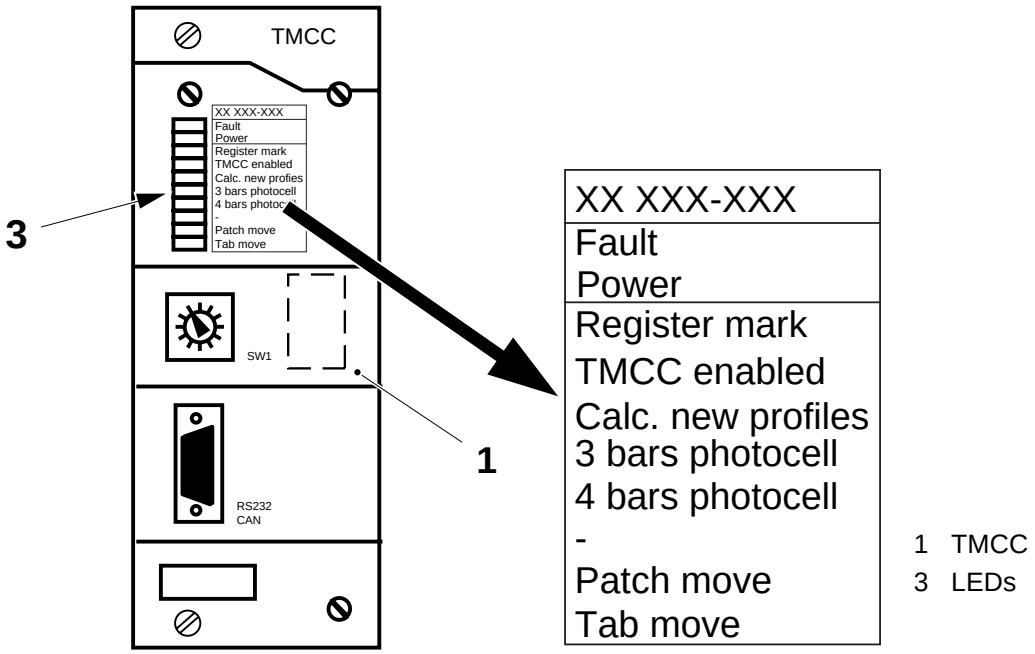

The LEDs provide the following information when the machine is in the normal PRODUCTION mode.

Card A8210		
LED	**Colour**	**Function**
Fault	Red	During the download of the program
Power	Green	Power supply OK
Register mark	Yellow (S1)	Correct register mark has been detected
TMCC enabled	Yellow (S2)	The TMCC module is ready for production
Calc. new profiles	Yellow (S3)	TMCC is calculating the new feeding profiles
3 bars photocell	Yellow (S4)	Failure of the ‘3 bars’ photocell
4 bars photocell	Yellow (S5)	Failure of the ‘4 bars’ photocell
-	Yellow (S6)	Not used
Patch move	Yellow (S7)	Patch material is moving
Tab move	Yellow (S8)	Tab material is moving

(Cont'd)

TechPub_2614345_0103 - B5358H02en.fm

(Cont'd)

TMCC Switch 2

The switch **SW2** (4) located at the bottom of the TMCC (1) is used to set the photocells so that they function with a particular bar code colour, see 8.2.1-6 TMCC - Set Photocells.

TMCC System Data

Commands and parameters are entered in the program and data can be read from the TMCC by using a PC, see 8.2.1-7 TMCC - Display Report.

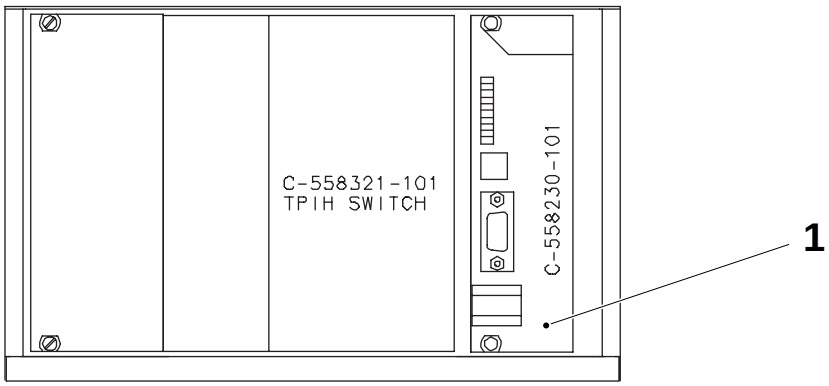

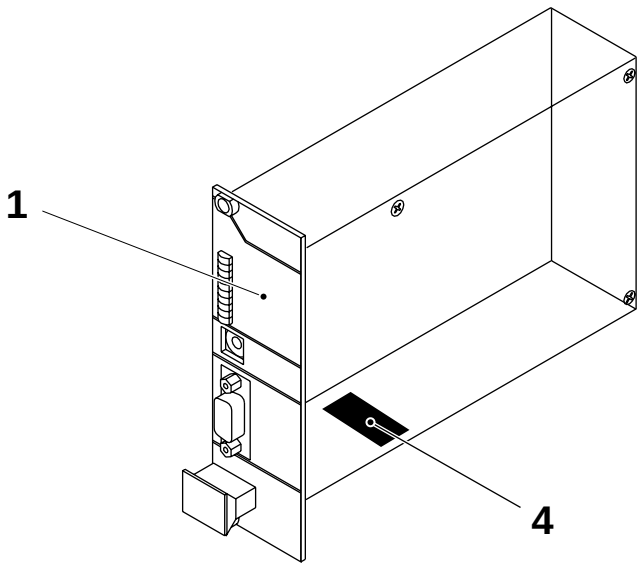

1 TMCC
4 Switch SW2

TechPub_2614345_0103 - B5358H02en.fm

8.2.1-2 TMCC - Set Communication

Machine Status	PRODUCTION
Special Equipment	Communication cable RS 232-C AT compatible PC with diskette station
SPC Reference	1317355-0200 558230-0101

Note! The following procedure should be used to communicate with a TMCC card.

a) Connect the TMCC to a PC with the connection cable (1).

b) The connections required are:

PC 9-pin female	TMCC 9-pin male
2	3
3	2
5	5

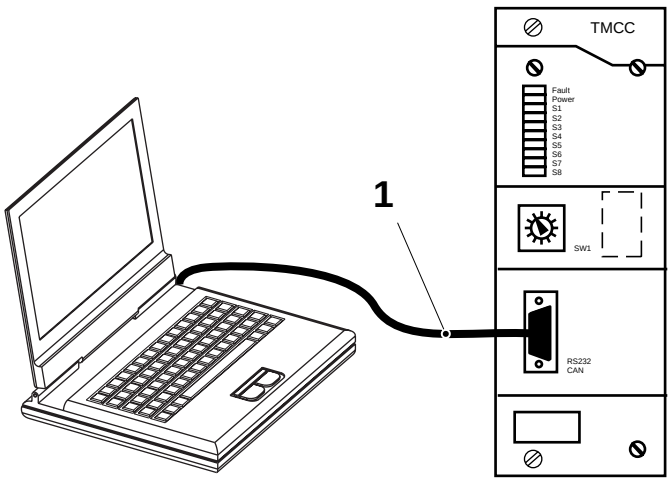

1 Connection cable

c) Set-up the program to use, e.g. TIT or Windows terminal, as follows:

Baud rate	9600
Parity	None
Bits	8
Stop bits	1
Flow control	None

TechPub_2614345_0103 - B5358H02en.fm

8.2.1-3 TMCC - Change Cards

Machine Status	PRODUCTION
Special Equipment	Communication cable RS 232-C AT compatible PC with diskette drive
SPC Reference	1317355-0200 558230-0101

a) Pull out the old TMCC card and fit the new one.

b) Connect the communication cable between the PC and the TMCC connector (1).

c) Set the front panel switch **SW1** (2) to position **0**.

d) Insert the MASTER diskette marked with the current revision number into the PC diskette station, **A:drive**.

e) Enter the command **A:TMCC11<ENTER>** to start the communications program **TMCC11.EXE.**

f) When the program menu appears, enter the communication port in use (normally this is the port number **one**).

g) A directory will appear.
Press **<HOME>** to select the **A: drive**.

h) A list of files on the diskette **A** will appear.

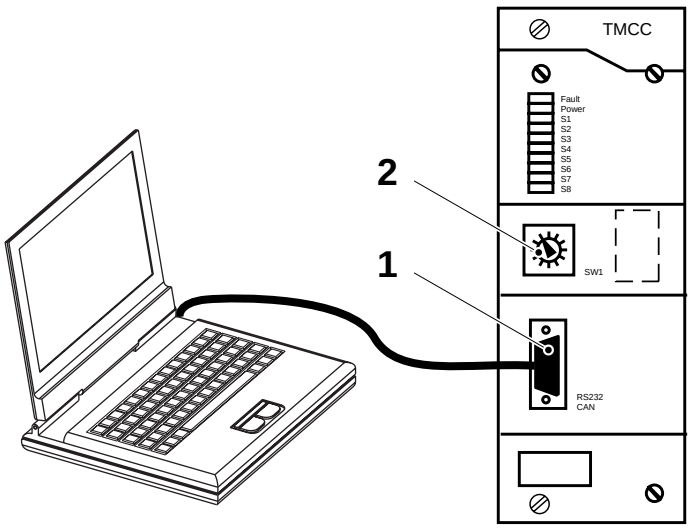

1 TMCC connector
2 Front panel switch SW1

(Cont'd)

TechPub_2614345_0103 - B5358H02en.fm

(Cont'd)

i) Press the RH **Arrow** key to select the **File** window.

j) Select the program file on the MASTER diskette in the **A:drive**.

k) When the file is selected, press **F2**. The automatic download program starts.

l) The downloading process may be monitored at the lower part of the screen.

m) When all “faces” are filled, the program has been downloaded without errors.

n) Set the TMCC front panel switch **SW1**, see 8.2.1-4 TMCC - Set Control Card.

o) When the LED **TMCC enabled** on the TMCC card is turned on make sure that the correct patch and tab length, for the specified hole type, has been transferred from the PLC.

p) Press **F10** to exit the **TMCC11.EXE** download program.

q) Fix the label (with the program number and LED functions) to the TMCC front panel, aligned with the row of LEDs.

TechPub_2614345_0103 - B5358H02en.fm

8.2.1-4 TMCC - Set Control Card

Machine Status	Air **OFF** Mains power **OFF**
SPC Reference	1317355-0200 558230-0101

Patch and tab feeding

Set the multi-switch **SW1** (1), located on the TMCC card (2), to position "**1**".

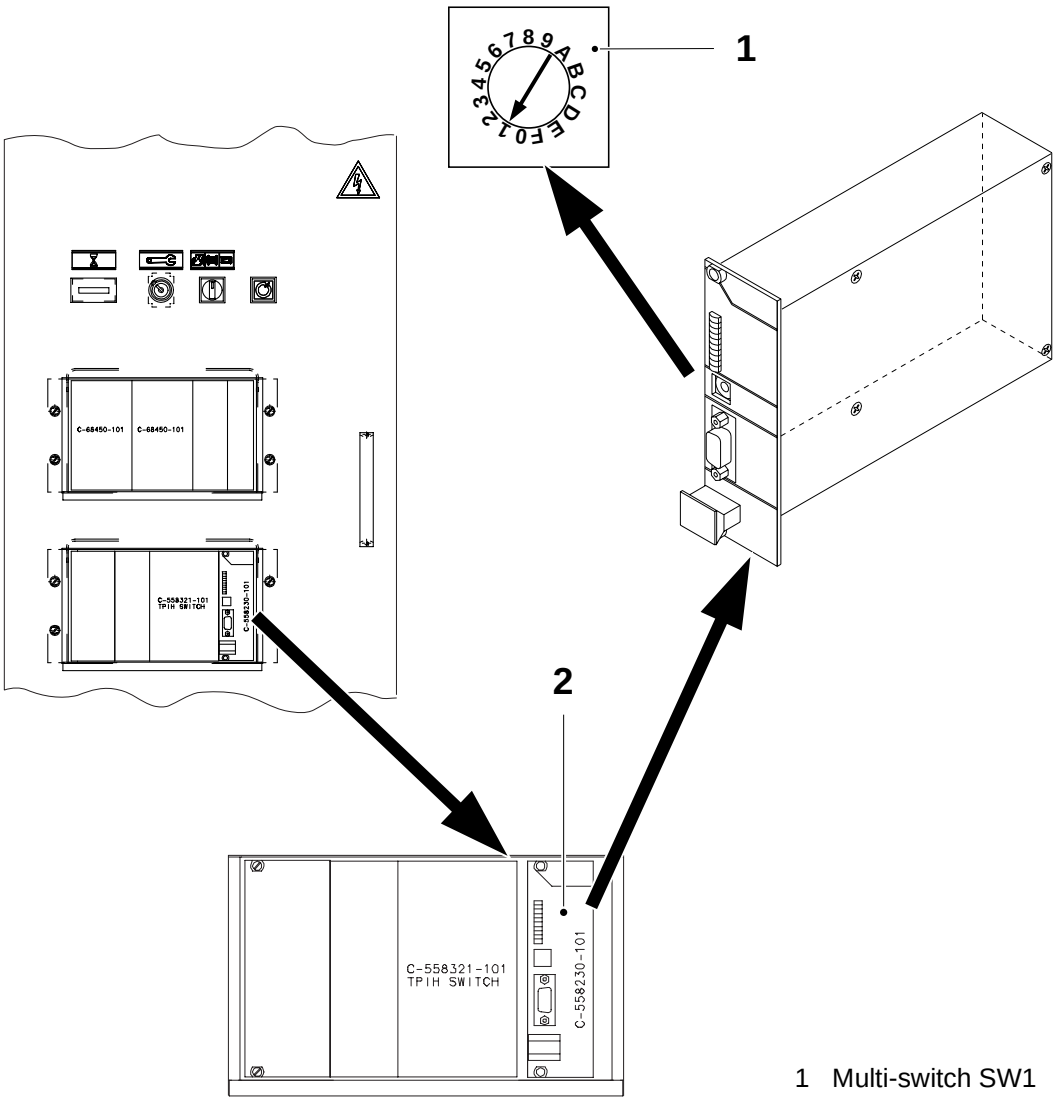

1 Multi-switch SW1
2 TMCC card

TechPub_2614345_0103 - B5358H02en.fm

8.2.1-5 TMCC - Set Stepper Motor Cards

Machine Status	Air **OFF** Mains power **OFF**
SPC Reference	1317355-0200 558230-0101

Set the multi-switches from **SW1** to **SW14**, located in the patch feed control motor card (1) and in the tab feed control motor card (2) as shown in the table and figure below.

Switch	Tab	Patch	Function
Sw1	F	F	100% gain analog control
Sw2	Right	Right	analog control in direct mode
Sw3	Right	Right	analog control in direct mode
Sw4	Open	Open	analog control in direct mode
Sw5	Right	Right	no analog control of internal clock
Sw6	Open	Open	no start/stop ramp speed 1
Sw7	Open	Open	no start/stop ramp speed 2
Sw8	Right	Right	external clock
Sw9	0	0	clock rate speed 1
Sw10	0	0	clock rate speed 2
Sw11	0	0	clock rate speed 3
Sw12	0	0	clock rate speed 4
Sw13	0	0	2.5 A current
Sw14	Closed	Closed	terminal 32 current input 0-20 mA

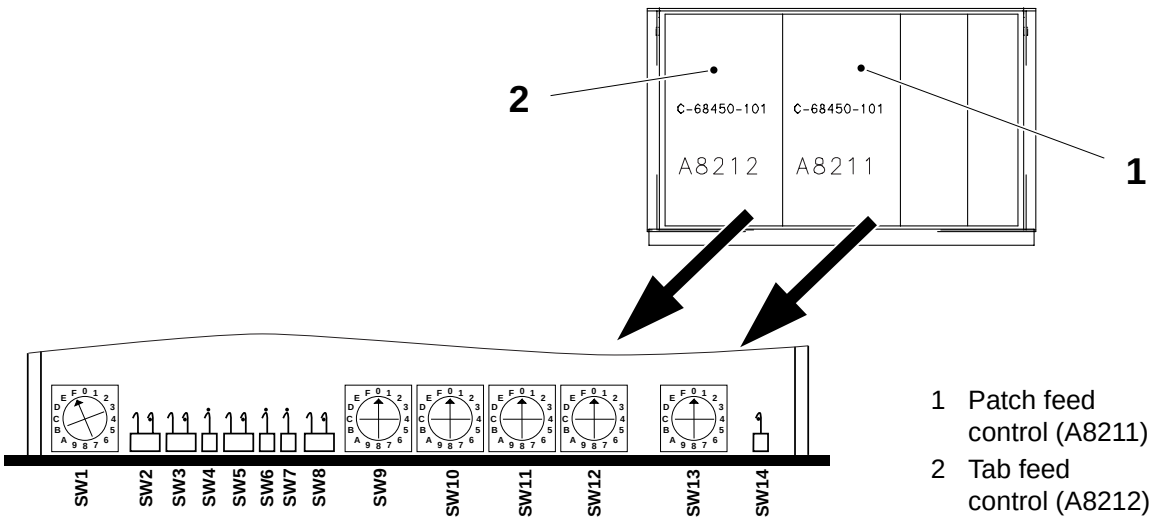

1 Patch feed control (A8211)
2 Tab feed control (A8212)

TechPub_2614345_0103 - B5358H02en.fm

8.2.1-6 TMCC - Set Photocells

Machine Status	Air **OFF** Mains power **ON**
SPC Reference	1317355-0200 558230-0101

Automatic Setting

By default, the switch **SW2** (1), located at the bottom of the TMCC (2), is set to position **0** so that the photocell produces a green light spot. For most packaging material this is the correct setting and no further adjustment will be required.

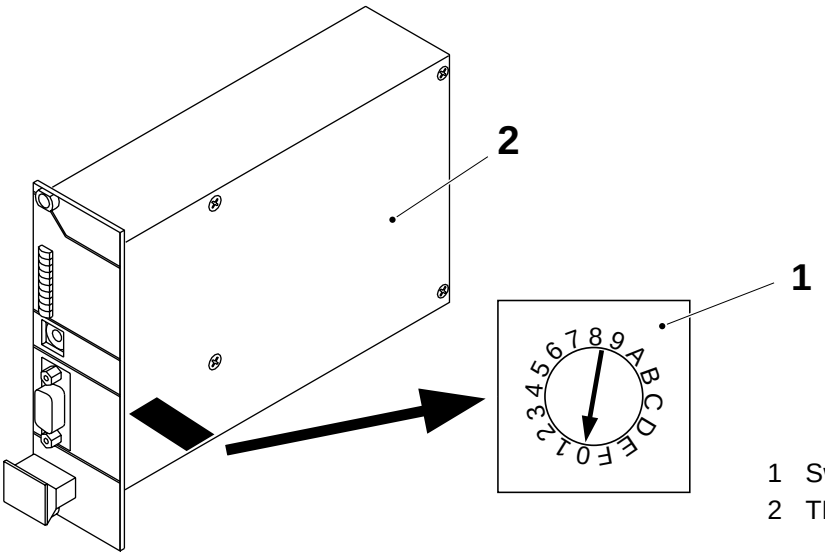

1 Switch SW2
2 TMCC

If a packaging material is used and bar code reading errors occur, the colour of the light spot can be changed to match the foreground colour of the bar code. This is done by changing the position of **SW2** (1) as shown in the following table.

Bar code foreground colour	**SW2 position**	**Light spot colour**
Black	0, 1, 2, 3, 4, 5, 6, 7, 8, 9, A or B	Green, Red or Blue
Blue	0, 1, 3, 4, 6, 7, 9 or A	Green or Red
Light blue/Cyan	1 or 4	Red
Green	1, 2, 4 or 5	Red or Blue
Yellow	2 or 5	Blue
Red	0, 2, 3 or 5	Green or Blue
Magenta	0 or 3	Green

(Cont'd)

TechPub_2614345_0103 - B5358H02en.fm

(Cont'd)

- The positions **0** to **B** for the **SW2** switch.
  Twelve basic settings are provided by means of three different light spot colours and four sensibility levels.
  - 40h is the highest sensibility level and is used for light coloured bar code on the paper.
  - 60h is used for light coloured bar code on the paper.
  - 80h is used for black bar code on white paper.
  - A0h is the lowest sensibility level.
- The positions **C** and **D** for the **SW2** switch.
  Used for manual setting of the photocells. For the manual setting procedure of the switch SW2 on a TMCC, see Manual Setting on page 8-81.
- The position **E** for the **SW2** switch.
  Used only for service purpose to force the photocell light spot to be **On** without any time limit.

SW2 Position	Photocell setting		SW2 Position	Photocell setting
0	Light spot = Green Dynamic threshold = 40h Teach button = Disabled		8	Light spot = Blue Dynamic threshold = 80h Teach button = Disabled
1	Light spot = Red Dynamic threshold = 40h Teach button = Disabled		9	Light spot = Green Dynamic threshold = A0h Teach button = Disabled
2	Light spot = Blue Dynamic threshold = 40h Teach button = Disabled		A	Light spot = Red Dynamic threshold = A0h Teach button = Disabled
3	Light spot = Green Dynamic threshold = 60h Teach button = Disabled		B	Light spot = Blue Dynamic threshold = A0h Teach button = Disabled
4	Light spot = Red Dynamic threshold = 60h Teach button = Disabled		C	Last setting acquired in Teaching mode Teach button = Disabled
5	Light spot = Blue Dynamic threshold = 60h Teach button = Disabled		D	Teaching mode Teach button = Enabled
6	Light spot = Green Dynamic threshold = 80h Teach button = Disabled		E	Service mode Light spot = Red Dynamic threshold = 20h
7	Light spot = Red Dynamic threshold = 80h Teach button = Disabled		F	Not used

(Cont'd)

TechPub_2614345_0103 - B5358H02en.fm

(Cont'd)

Manual Setting

By default, the switch **SW2** (1), located at the bottom of the TMCC (2), is set to position **0** so that the photocell produces a green light spot. If, with the switch set in this position, bar code reading errors occur, change the position of the switch **SW2** (1) so that the colour of the light spot matches the foreground colour of the bar code, see Automatic Setting on page 8-79.

If, after the automatic setting, errors continue to occur, set the photocells manually using the method on the following pages.

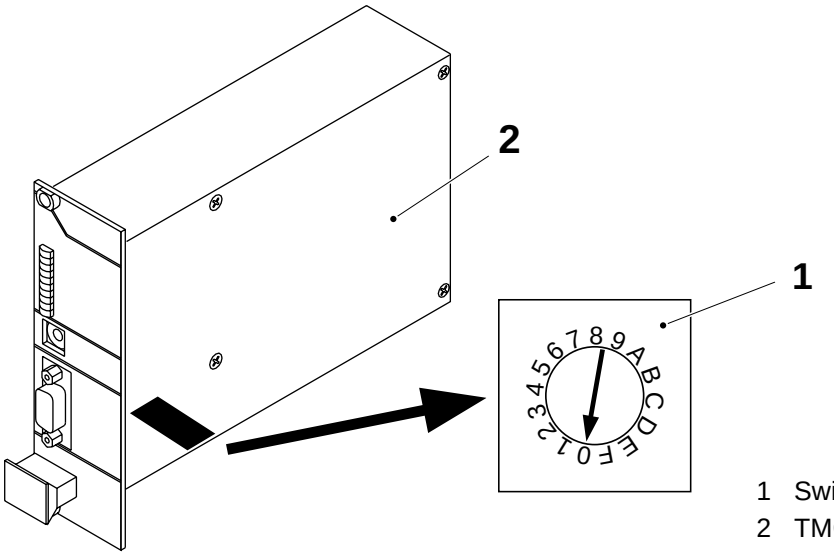

1 Switch SW2
2 TMCC

(Cont'd)

TechPub_2614345_0103 - B5358H02en.fm

(Cont'd)

Bar Code Reader Photocells

a) Set the switch **SW1** (1) to position **E** and the switch **SW2** (2) at the bottom of the TMCC (3) to position **D** with the machine stationary.

b) Make sure that the switch (4) is set to the position **Q1**.

c) Move the packaging material until the photocell light spot is focused on a white part of the packaging material. The light spot colours is a mix of red, green and blue, RGB.

Note! The **ON** LED (5) is lit when power is supplied to the photocell.

d) Push and hold the **Teach** button (6).

e) Move the packaging material until the complete bar code has passed in front of the photocell and then release the **Teach** button (6). The cell automatically calibrates itself.

Note! The the **Q/ok** LED (7) is lit when the photocell light spot is focused on a dark area of the packaging material.

f) Repeat the items from b) to e) for the other photocell.

g) Turn the switch **SW1** (1) to position **F** and wait at least 5 seconds (do not disconnect the TMCC card from the rack).

h) Turn the switch **SW1** (1) to position **1** and the switch **SW2** (2) at the bottom of the TMCC (3) to position **C**.

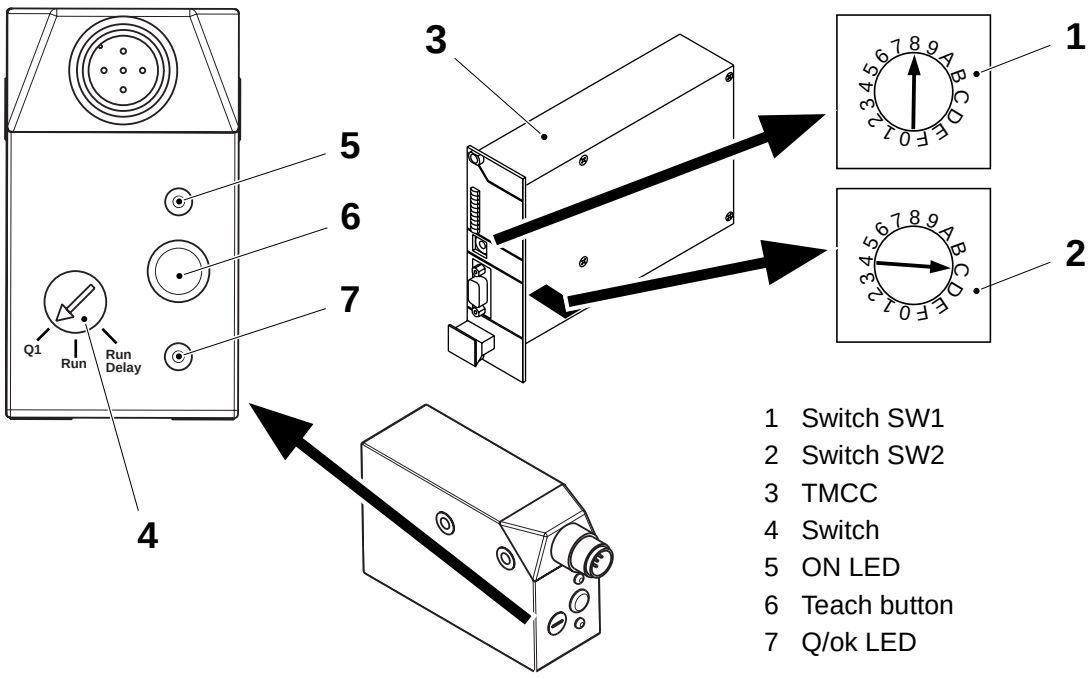

1 Switch SW1
2 Switch SW2
3 TMCC
4 Switch
5 ON LED
6 Teach button
7 Q/ok LED

TechPub_2614345_0103 - B5358H02en.fm

8.2.1-7 TMCC - Display Report

Machine Status	PRODUCTION
Special Equipment	TMCC connection cable RS 232-C AT compatible PC
SPC Reference	1350702-0200

a) Configure a PC to be used as a TIT or Windows terminal and connect it to the TMCC, see 8.2.1-2 TMCC - Set Communication.

b) Enter the commands and parameters into the TMCC program via the keyboard and execute them by pressing the **<RETURN>** key.
(The commands and parameters are not replicated on the terminal).
The functions described below are available:

B Activate the photocell alignment function. This function is useful to check that the photocells are well aligned. Once this function is activated while the filling machine is running, as soon as a bar code is decoded, a photocells misalignment degree is displayed. This function is deactivated as soon as the photocells misalignment degree is displayed.

The photocells are well aligned when the photocells misalignment is between **-10% and 10%**.

If the photocells misalignment is **less than -10%**, means that the clock signal is too high. Adjust by means of increasing the photocells data signal or decreasing the photocells clock signal.

If the photocells misalignment is **more than 10%**, means that the data signal is too high. Adjust by means of increasing the photocells clock signal or decreasing the photocells data signal.

S Displays a list of parameters that have been sent from the PLC.

(Cont'd)

TechPub_2614345_0103 - B5358H02en.fm

(Cont'd)

L Descriptions of the functions of the LEDs on the front panel.

X <Password> Formats the TMCC EEPROM:

– Restores to *default values* the photocell parameters (the values acquired during last teach procedure are lost!),

– Resets the values of:

- Commands Ok,
- Command Errors,
- Bar code decoded.

Y Displays detailed status of the photocells for test and service purposes:

Commands failed:	Total number of commands not executed by the photocells.
Commands OK:	Total number of commands executed by the photocells
Bar code decoded:	Total number of bar codes decoded by the TMCC
Dynamic Threshold:	Photocell threshold
Light spot:	Colour of the light spot used by the photocells
Output:	Logic of the photocell outputs (Light/Dark switching)
Photoswitch Working Hours	Number of hours that every LED of the photocell has been working
Photocell Software ver. / S.N.:	Software version of the photocell firmware and serial number

TechPub_2614345_0103 - B5358H02en.fm

8.2.2 Fuse Box

8.2.2-1 Fuse Box - Set Overload Protection

Machine Status	Air **OFF** Mains power **OFF**
SPC Reference	1317356-0200

Set the overload protection by following the table below:

Q8201
8.5 A

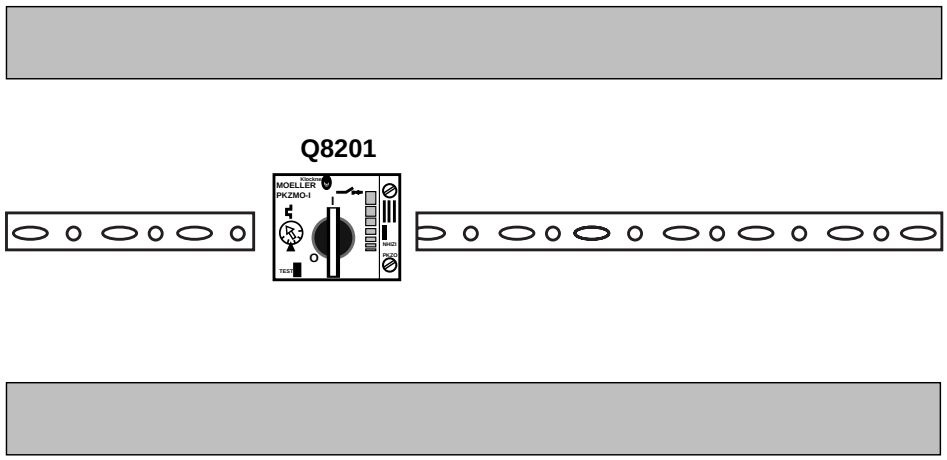

Q8201: Servo motor digital motion controller

TechPub_2614345_0103 - B5358H02en.fm

8.2.2-2 Fuse Box - Set Fuse

Machine Status	Air **OFF** Mains power **OFF**
SPC Reference	1317356-0200

Set the fuse protections by following the table below:

F8201	**F8202**	**F8203**	**F8206**	**F8207:1**	**F8207:2**	**F8207:3**	**F8210**
10 A	6 A	6 A	4 A	10 A	10 A	10 A	10 A
F8211	**F8213**						
4 A	6 A						

Note! F8201 is **10 A** for the new version of PT21 050V with an **AC** motor as an infeed motor.
F8201 is **4 A** for the old version of PT21 050V with a **DC** motor as an infeed motor.

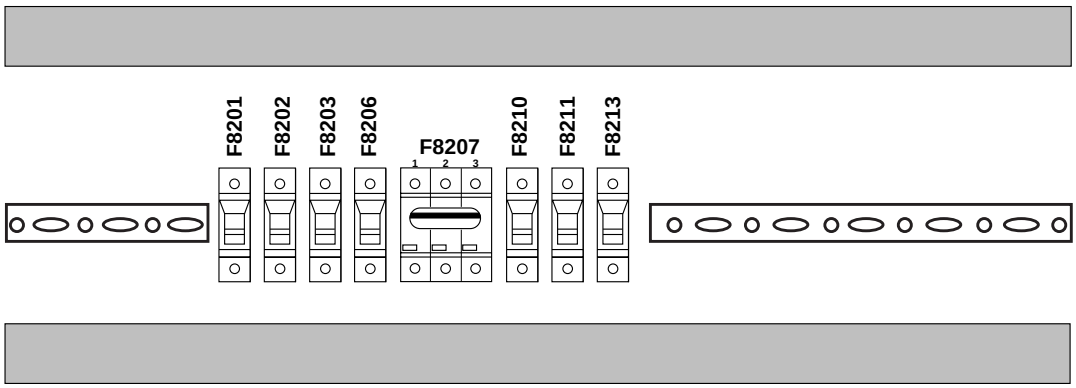

F8201: Infeed motor
F8202: Machine lightning
F8203: Cooler el. cabinet
F8206: Patch - Reseal IH control
F8207: Patch - Reseal IH power
F8210: Lines 24vdc
F8211: PLC pws
F8213: Tab sealing pad heater

TechPub_2614345_0103 - B5358H02en.fm

8.3 Cooler

SPC Reference	1095928-0100

8.3-1 Cooler - Check Air Flow

Machine Status	Air **OFF** Mains Power **ON**
SPC Reference	1095928-0100

a) Open the PT21 electrical cabinet doors and check that the cooler air flow is working.

b) Check also that the hose (1) for the discharging of the condensed water is in the correct position and not clogged. Clean as required.

c) In the TPOP panel, check the PT21 electrical cabinets temperature in order to have the right temperature inside the cabinet.

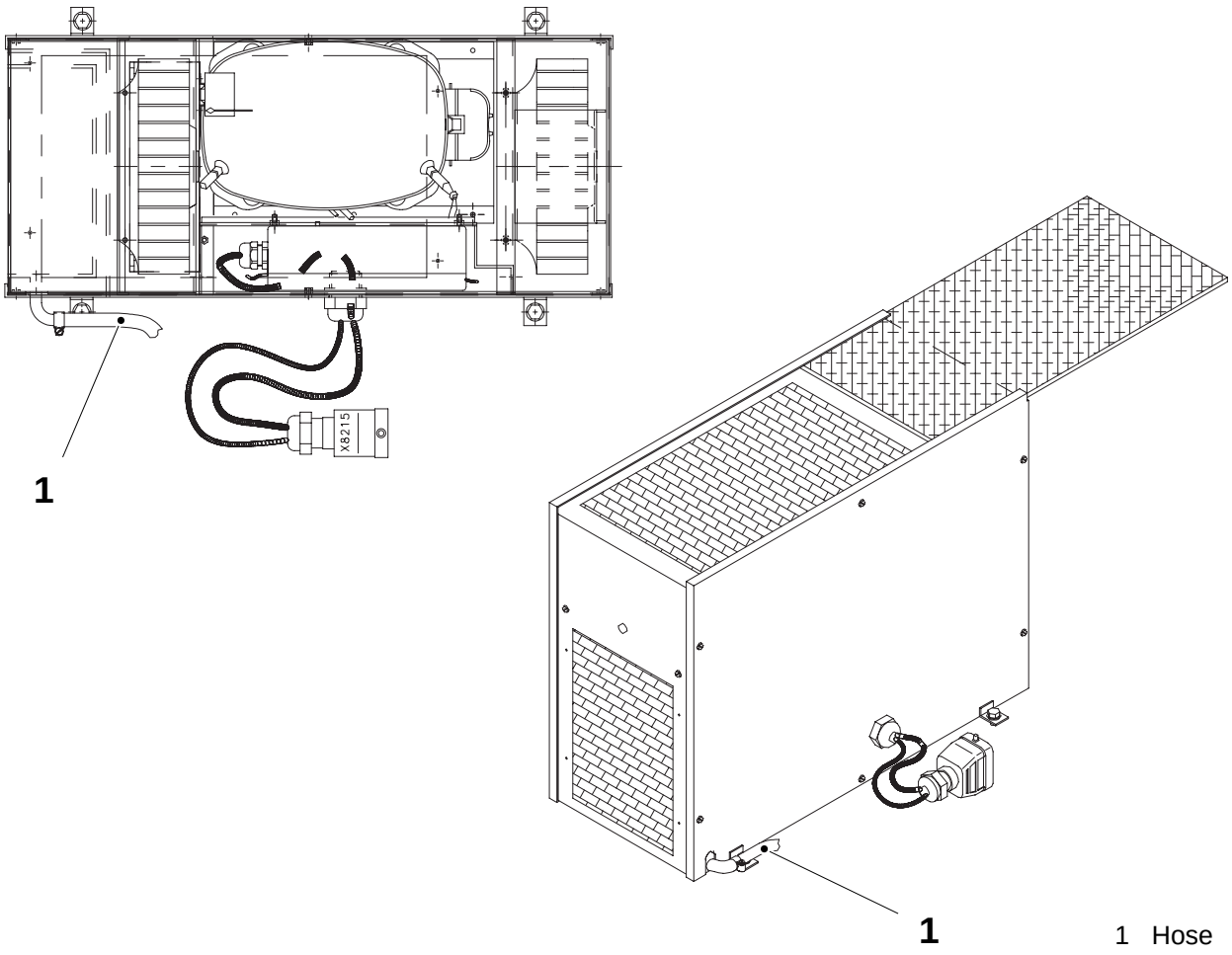

1 Hose

TechPub_2614345_0103 - B5358H03en.fm

8.3-2 Cooler - Clean Filter Insert

Machine Status	Air **OFF** Mains power **OFF**
SPC Reference	1095928-0100

WARNING
Cooling media R134A.
Follow the Safety precautions.

a) Open the PT21 electrical cabinets rear doors.

b) Remove the filter insert (1) from the cooler and clean it with compressed air. Change the filter insert (1) as required.

c) Fit back the filter insert (1).

d) Close the PT21 electrical cabinets rear doors.

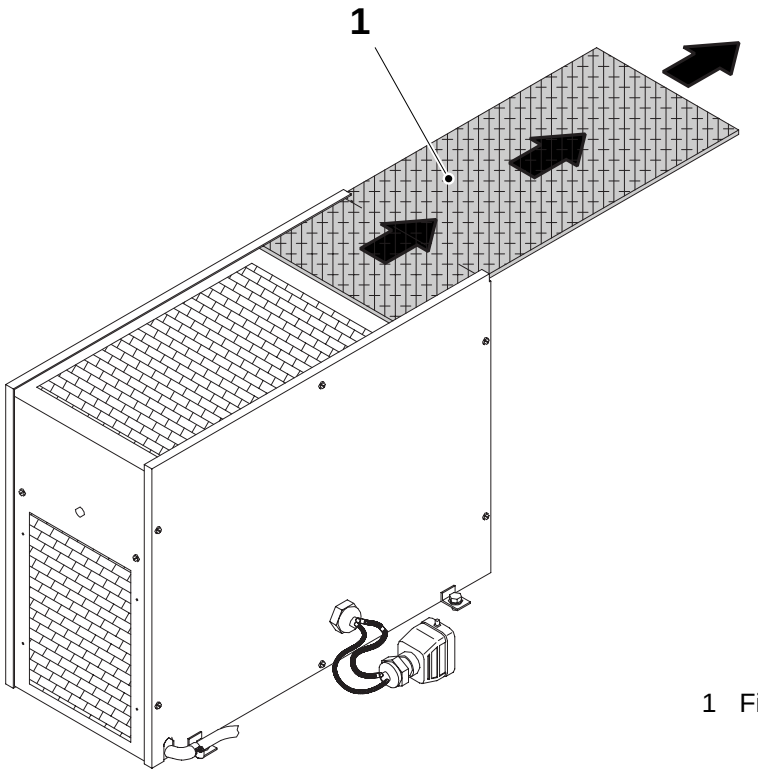

1 Filter insert

TechPub_2614345_0103 - B5358H03en.fm

9 Pneumatic Equipment

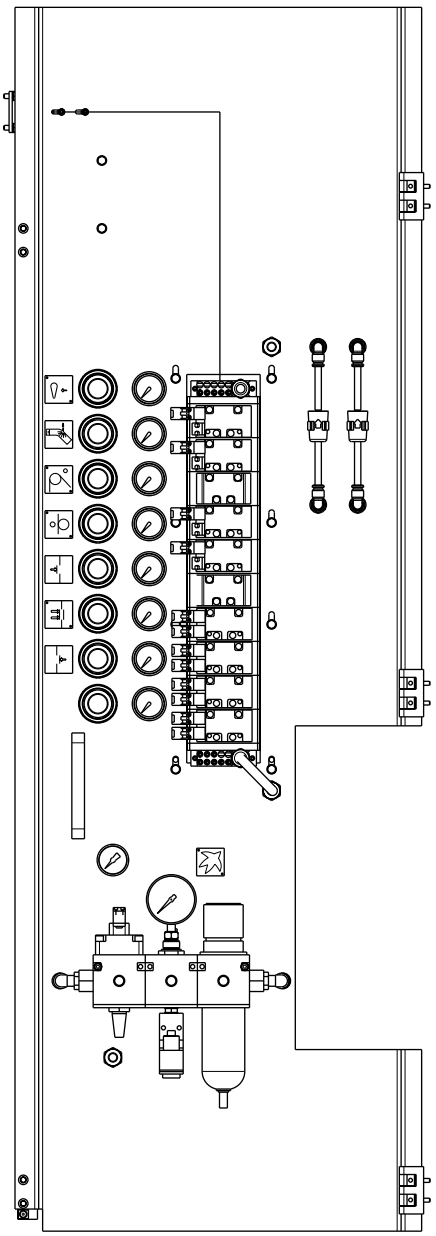

TechPub_2614345_0103 - B5358100en.fm

Valve Panel - Description

SPC Reference	1185049-0200

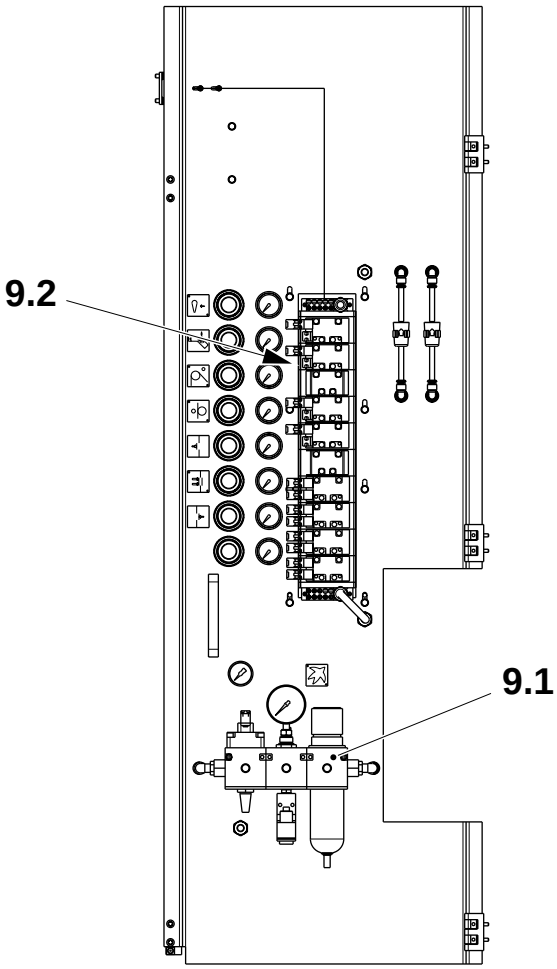

9.1 Air Inlet Group
9.2 Valve Panel

TechPub_2614345_0103 - B5358I00en.fm

9.1 Air Inlet Group . . . . . 9 - 5

9.1-1 Air Inlet Group - Set Pressure Switch . . . . . 9 - 5

9.1-2 Air Inlet Group - Clean Filter Insert . . . . . 9 - 6

9.2 Valve Panel . . . . . 9 - 7

9.2-1 Valve Panel - Change Air Filters . . . . . 9 - 7

TechPub_2614345_0103 - B5358I00en.fm

This page intentionally left blank

TechPub_2614345_0103 - B5358I00en.fm

9.1 Air Inlet Group

SPC Reference	1185047-0200

9.1-1 Air Inlet Group - Set Pressure Switch

Machine Status	Air **ON** Mains Power **ON**
SPC Reference	1185047-0200

a) On the PT21, set the main input air pressure to **4.5 bar (0.45 MPa)**, by means of the pressure regulator (1).

b) Check that the pressure gauge (2) shows the same pressure.

c) Turn the adjuster screw (3) on the top of the pressure switch (4) fully anti-clockwise.

d) Slowly turn the adjuster screw (3) clockwise until the PT21 main air supply alarm starts flashing on the TPOP panel.

e) On the PT21, reset the main air inlet pressure to **6.0 bar,** see 10.1 Technical Data.

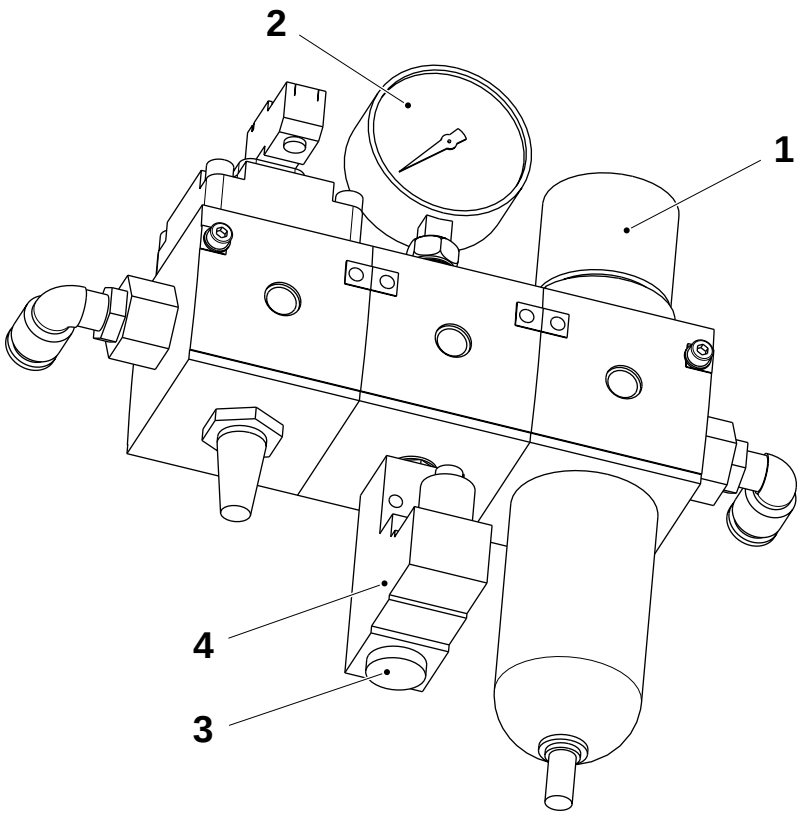

1 Pressure regulator
2 Pressure gauge
3 Adjuster screw
4 Pressure switch

TechPub_2614345_0103 - B5358I01en.fm

9.1-2 Air Inlet Group - Clean Filter Insert

Machine Status	Air **ON** Mains power **OFF**
Consumables	Soap
SPC Reference	1185047-0200

a) Remove the reservoir (1) and change the O-ring as required.

b) Clean the reservoir (1) with soapy water and rinse with plenty of water.

c) Remove and clean the filter insert inside the reservoir (1). Change as required.

d) Fit back the reservoir (1) and make sure that the O-ring is correctly fitted.

e) By means of the pressure regulator (2), open the PT21 main air inlet and check for leakages in the reservoir (1).

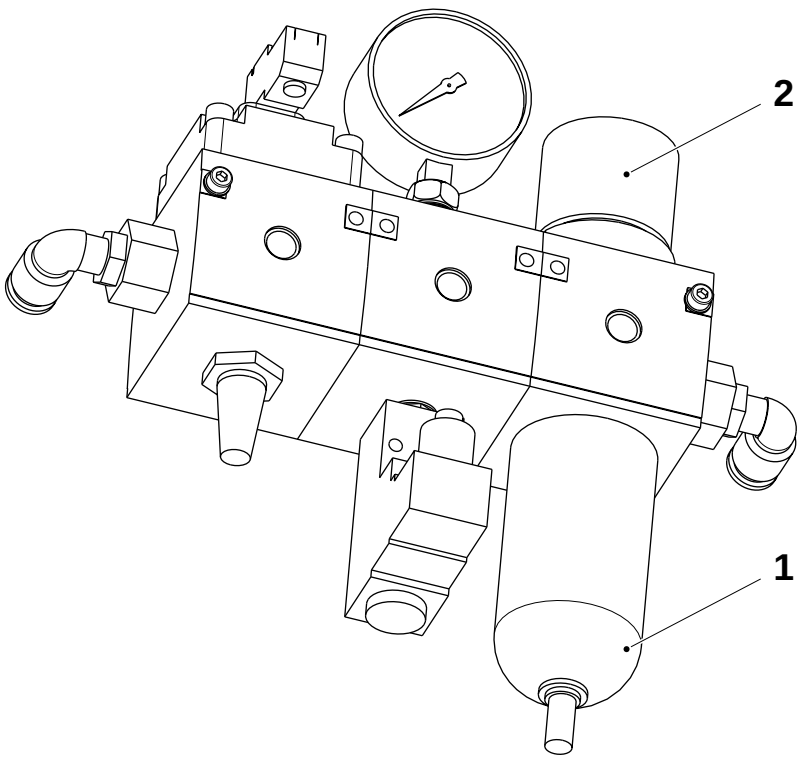

1 Reservoir
2 Pressure regulator

TechPub_2614345_0103 - B5358I01en.fm

9.2 Valve Panel

SPC Reference	1185049-0200

9.2-1 Valve Panel - Change Air Filters

Machine Status	Air **OFF** Mains power **OFF**
SPC Reference	1185049-0200

a) Open the RH side PullTab door.

b) Check the air filter (1) for punch blowing. If it is coloured **pink**, it must be removed and then changed.

c) Check the air filter (2) for cap blowing. If it is coloured **pink**, it must be removed and then changed.

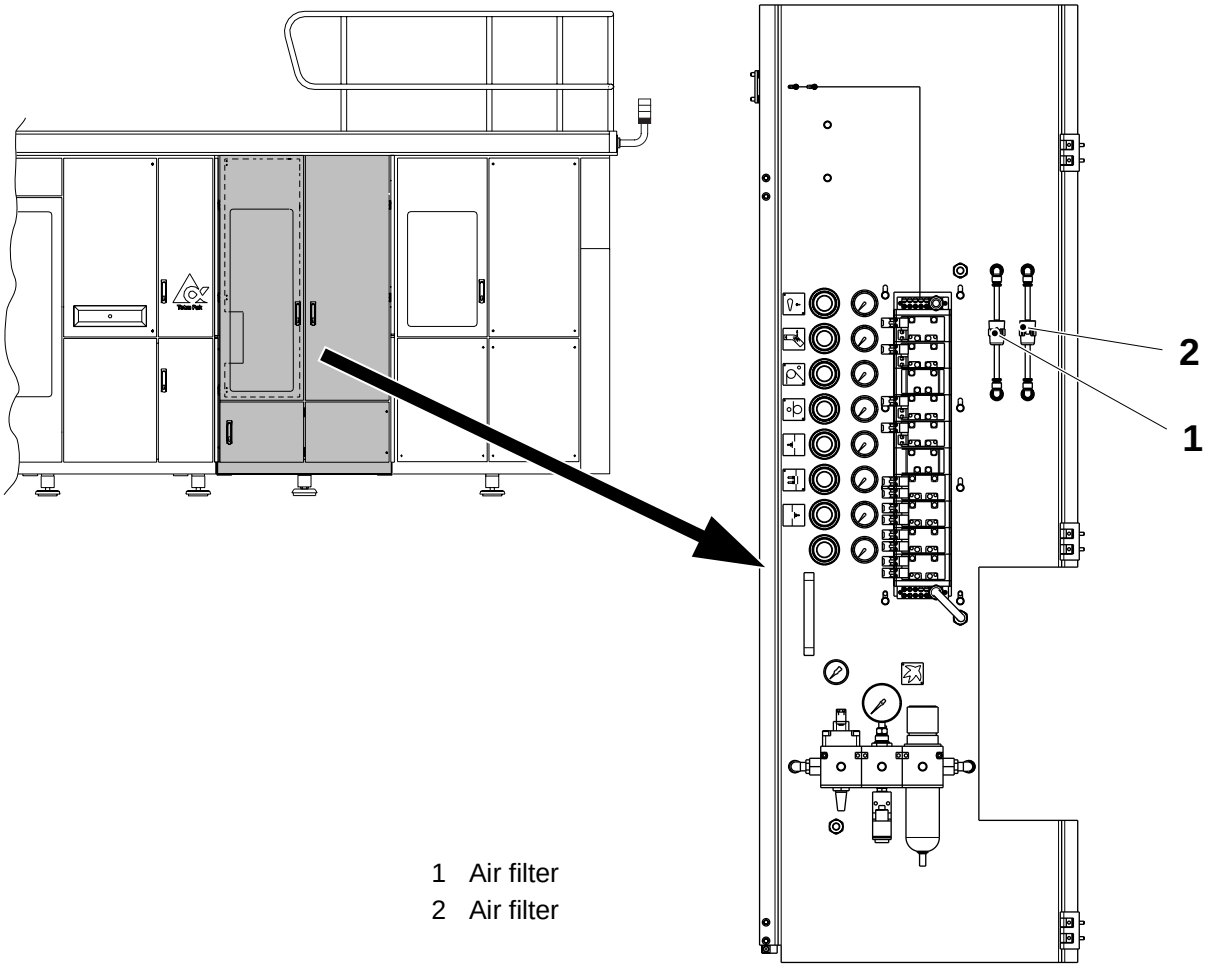

1 Air filter
2 Air filter

TechPub_2614345_0103 - B5358I02en.fm

This page intentionally left blank

TechPub_2614345_0103 - B5358I02en.fm

10 General

TechPub_2614345_0103 - B5358Y00en.fm

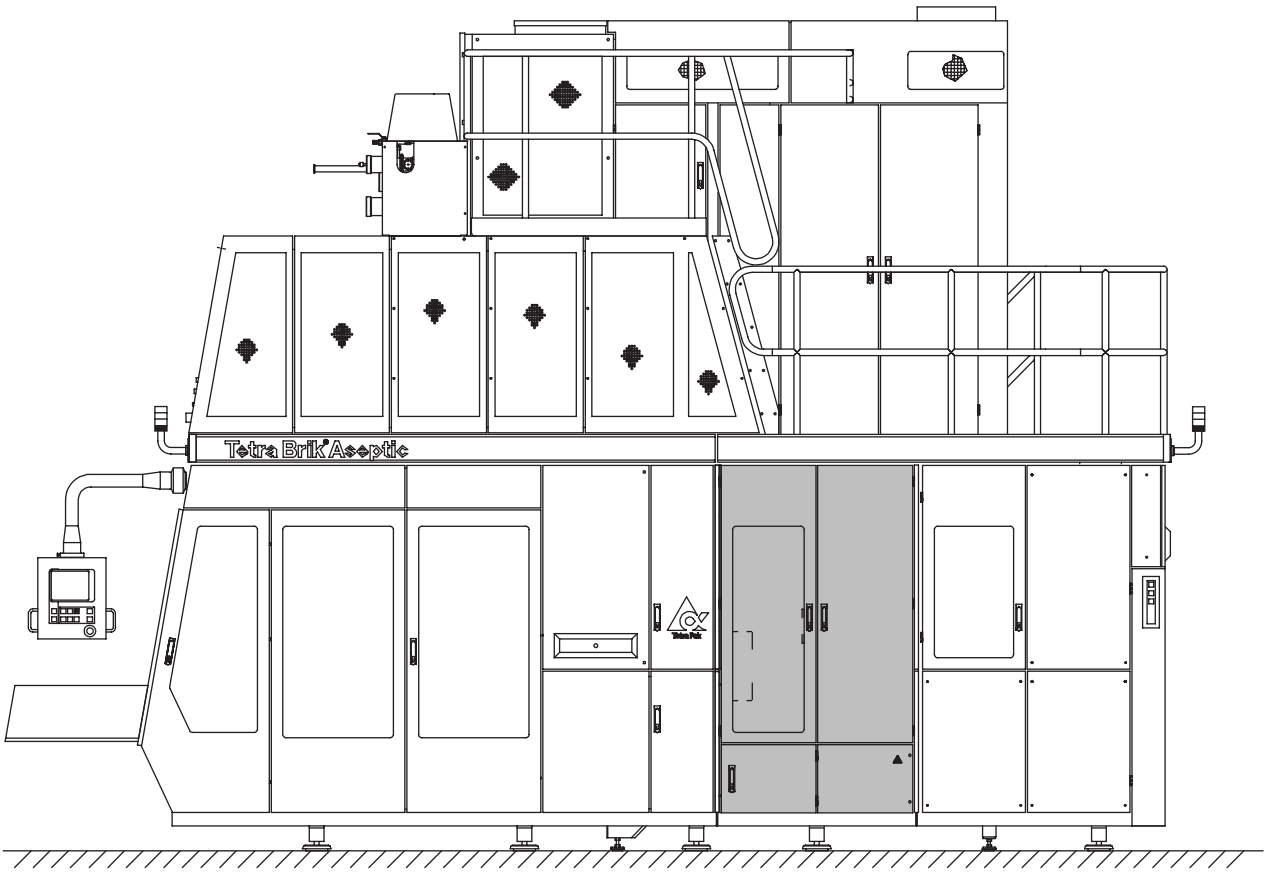

General - Description

SPC Reference	648508-0500

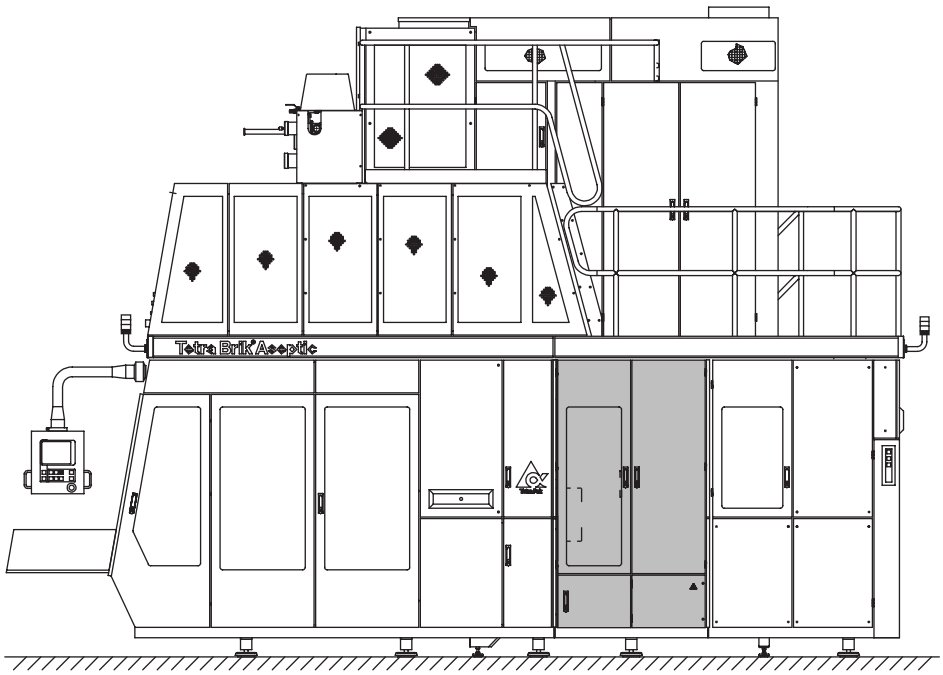

10.1

10.1 Technical Data

TechPub_2614345_0103 - B5358Y00en.fm

10.1 Technical Data . . . . . 10 - 5

TechPub_2614345_0103 - B5358Y00en.fm

This page intentionally left blank

TechPub_2614345_0103 - B5358Y00en.fm

10.1 Technical Data

SPC Reference	648508-0500

Pressures	Symbol	Unit	Value
Tab counter-jaw - CAP blowing		Bar	2.5
Waste blowing		Bar	3.0
Tension unit - pressure roller		Bar	2.0
Drive motor - pressure roller		Bar	4.5
IS patch counter-jaw - sealing pressure		Bar	2.5
Reseal counter-jaw - sealing pressure		Bar	2.5
Tab counter-jaw - sealing pressure		Bar	2.5
PT21 main air inlet		Bar	6.0

Pressure switches		Unit	Value
Low air pressure		Bar	4.5

Consumables (black tape)	TP No.	Note
Patch and tab strip splice	90144-52	for all holes
To cover holes	90144-070	for hole 60
	90144-071	for holes 21, 25, 45, 50, 55, 85 and 90

(Cont'd)

TechPub_2614345_0103 - B5358Y01en.fm

(Cont'd)

Temperatures	Unit	Value
Tab constant heat - (hole 21)	°C	185
Tab constant heat - (hole 25)	°C	190
Tab constant heat - (hole 45)	°C	200
Tab constant heat - (hole 50)	°C	170
Tab constant heat - (hole 55)	°C	185
Tab constant heat - (hole 60)	°C	170
Tab constant heat - (hole 85)	°C	190
Tab constant heat - (hole 90)	°C	180
Reseal sealing jaw - (hole 21)	S.U.	550
Reseal sealing jaw - (hole 25)	S.U.	600
Reseal sealing jaw - (hole 45)	S.U.	600
Reseal sealing jaw - (hole 50)	S.U.	550
Reseal sealing jaw - (hole 55)	S.U.	600
Reseal sealing jaw - (hole 60)	S.U.	600
Reseal sealing jaw - (hole 85)	S.U.	610
Reseal sealing jaw - (hole 90 for TBA 1000 S)	S.U.	560
Reseal sealing jaw - (hole 90 for TBA 1500 S)	S.U.	575
IS patch sealing jaw - (hole 21)	S.U.	550
IS patch sealing jaw - (hole 25)	S.U.	630
IS patch sealing jaw - (hole 45)	S.U.	600
IS patch sealing jaw - (hole 50)	S.U.	550
IS patch sealing jaw - (hole 55)	S.U.	580
IS patch sealing jaw - (hole 60)	S.U.	600
IS patch sealing jaw - (hole 85)	S.U.	610
IS patch sealing jaw - (hole 90 for TBA 1000 S)	S.U.	560
IS patch sealing jaw - (hole 90 for TBA 1500 S)	S.U.	575
Electrical cabinet	°C	30

(Cont'd)

TechPub_2614345_0103 - B5358Y01en.fm

(Cont'd)

Hole type	Patch strip (TPI)	Tab strip (TPI)
21	8865-967-01	8738-727-01
25	8865-967-01	8738-729-01
45	8865-967-01	8738-728-01
50	8865-967-01	8738-728-01
55	8865-963-01	8738-724-01
60	8865-964-01	8757-733-01
85	8865-967-01	8738-728-01
90	8865-963-01	8738-725-01

Noise declaration (according to ISO 3744)	**Unit**	**Value**
Equivalent sound pressure level (Leq) at 1 m of distance from machinery and at 1.6 m from the floor or access platform.	dB (A)	72.5
Equivalent sound pressure level (Leq), maximum value	dB (A)	---
Peak instantaneous sound pressure level (S.P.L. peak)	dB (C)	under 130
Surface sound pressure level, Log. average (Lpf)	dB (A)	71.5 ± 0.5

Other data PT/21	**Value**
Max. capacity	7240 ± 4% packages/hour
Air	300 - 450 l/min (norm. 80/l/min)
Power	max 0.6 kW, 400 V, 50-60 Hz, 3 ph

TechPub_2614345_0103 - B5358Y01en.fm

This page intentionally left blank

TechPub_2614345_0103 - B5358Y01en.fm

11 Checklist Overview

TechPub_2614345_0103 - B5358Z00en.fm

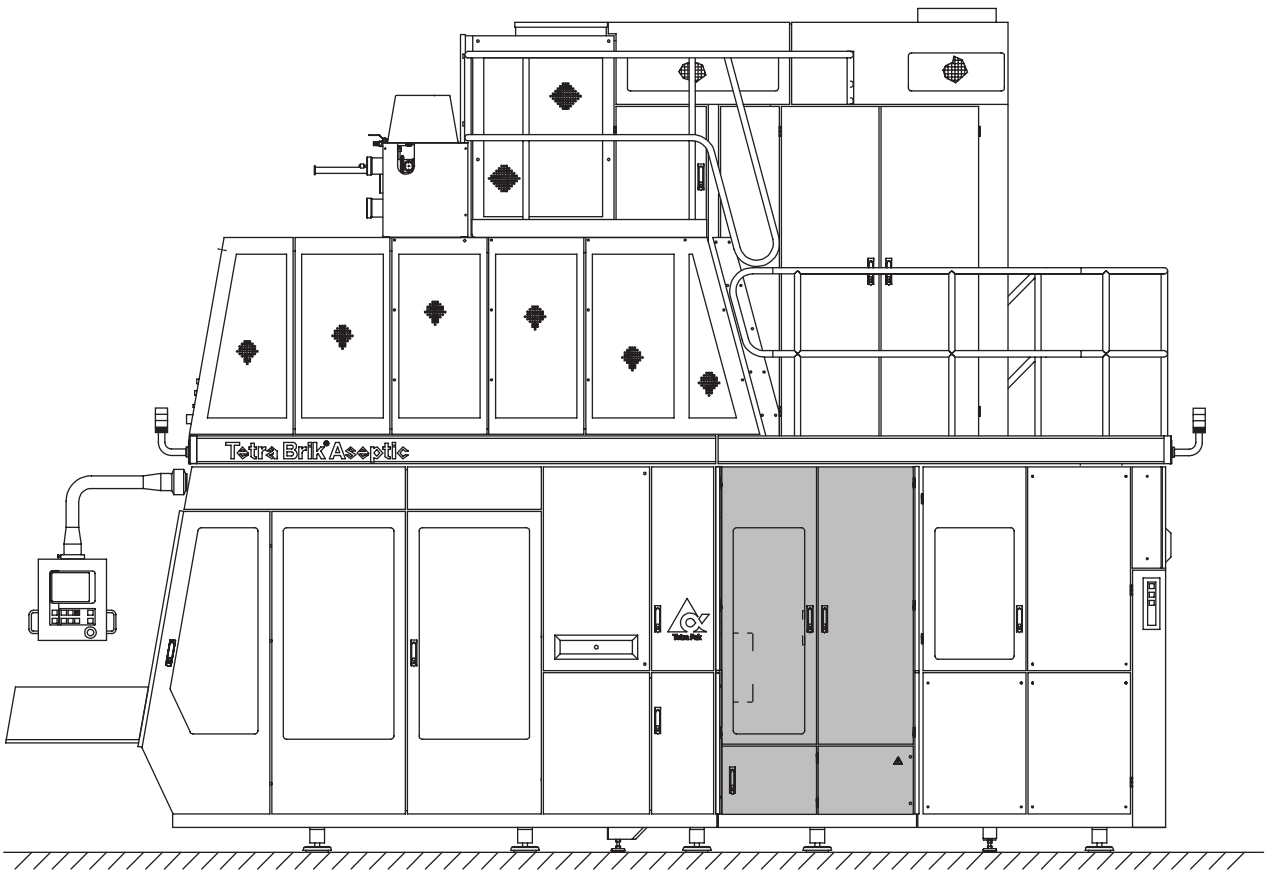

Checklist Overview - Description

This section of the MM, **is intended for customers who do NOT use the Tetra Pak Maintenance System (TPMS)**. The checklist overview contains all the check points for a specified machine type or equipment which are needed in order to keep the equipment in good condition. The following items can be found in the checklist:

- **MM code** – shows where you can find more information about the check point.
- **Text** – name of unit and group. For further information, see MM code.
- **Action** - Type of activity.
- **Interval** – how often the check item should be performed in production hours.

Note! The checklist overview in this manual **may differ from the TPMS checklists** delivered by your local service station, due to the fact that TPMS checklists are continuously updated and adapted to local demands.

TPMS - Description

The maintenance system used for equipment from Tetra Pak is called the **Tetra Pak Maintenance System (TPMS)**. If you are using TPMS, the checklists will be delivered directly from your local Tetra Pak service station.

The TPMS checklists are designed to match and keep pace with the ongoing development of new and existing equipment from Tetra Pak, and to meet the demands set by our customers for even higher efficiency and better economy.

Some of the advantages of TPMS are:

- TPMS maintains complete production lines.
- TPMS reduces down-time to a minimum each time maintenance is carried out.
- Updates of the maintenance schedule based on experience gained, improvements, modifications and specific customer requirements are issued.
- Recommendations regarding spare parts, rotation units, tools and templates, etc. are included.

The service life of each item in the equipment is predicted and all items are checked before they affect the efficiency of the equipment. This leads to different maintenance intervals for each item and the check list is unique for each maintenance occasion.

The results of the maintenance are sent back to the Tetra Pak service station. Statistics are evaluated regularly, giving a continuously updated maintenance system.

If you require further information regarding TPMS, please do not hesitate to contact your local Tetra Pak office.

TechPub_2614345_0103 - B5358Z00en.fm

Checklist Overview . . . . . 11 - 5

TechPub_2614345_0103 - B5358Z00en.fm

This page intentionally left blank

TechPub_2614345_0103 - B5358Z00en.fm

Checklist Overview

MM code	Text	Action	Interval (h)
	Pre-maintenance checks		
MM	WARNING! Before starting any service work, read the *Safety precaution* in the corresponding Maintenance Manual. Doc. No. MM-81535-0108	Check	250
MM	WARNING! Before starting any service work, read the *Safety precaution* in the corresponding Maintenance Manual. Doc. No. MM-81535-0108	Check	1000
10.1	Technical data; Pressures and temperatures.	Check & record	1000
1.2.4-2	Paper web path; Infeed unit, Function.	Check	1000
1.2-1	Paper web path; Packaging material tracking.	Check	1000
OM	Punch and die-Examine the edges of the PullTab hole in the packaging material for any irregularities.	Check	1000
3.2.1-11	Applicator patch; Patch feeder - Check function.	Check	1000
4.2.1-12	Applicator tab; Tab feeder - Check function.	Check	1000
1	**Paper web path**		
1.2.1-3	Paper web path; Drive motor; Roller and drive wheel - Check pressure.	Check	1000
1.2.1-5	Paper web path; Drive motor; Drive wheel.	Change	4000
1.2.3-1	Paper web path; Bending roller assembly - Check.	Check	1000
1.2.4-1	Paper web path; Infeed unit; Rollers.	Check	1000
1.2.5-1	Paper web path; Paper brake.	Check	1000
1.2.5-5	Paper web path; Paper brake; Wheel.	Change	4000
1.2.6-1	Paper web path; Edge guide; Bearings.	Check	500
2	**Punching unit**		
2.2-2	Punch unit; Stripper pins and springs.	Check	500
2.2-4	Punch unit; Cylinder.	Check	1000
2.2-6	Punch unit; Punch and Die.	Check	1500
2.3-1	Waste box; Box and waste tube.	Check	500
3	**IS patch**		
3.2.1-10	Applicator patch; Patch feeder; Sealing plate.	Check	250
3.2.1-1	Applicator patch; Patch feeder; Knives.	Check	500
3.2.1-6	Applicator patch; Patch feeder; Guides and linear bearings.	Check	1000
3.2.2-2	Applicator patch; Patch counter jaw; Inductor.	Check	500
3.2.2-5	Applicator patch; Patch counter jaw; Cushion cylinder.	Change	4000
3.3-1	Magazine patch.	Check	500
3.3.1-1	Magazine patch; Splicing device - Check function.	Check	1000
4	**Tab**		
4.2.1-1	Applicator tab; Tab feeder; Knives.	Check	1000
4.2.1-6	Applicator tab; Tab feeder; Guides and linear bearings.	Check	1000
4.2.1-11	Applicator tab; Tab feeder; Sealing plate.	Check	250
4.2.2-4	Applicator tab; Tab counter jaw; Cushion cylinder.	Change	4000
4.3-1	Magazine PullTab.	Check	500
4.3.1-1	Magazine PullTab; Splicing device - function.	Check	1000

TechPub_2614345_0103 - B53582Z00en.fm

MM code	Text	Action	Interval (h)
5	**Applicator reseal**		
5.2.1-3	Applicator reseal; Reseal heating jaw; Guides and linear bearings.	Check	1000
5.2.1-7	Applicator reseal; Reseal heating jaw; Sealing plate.	Check	250
5.2.2-2	Applicator reseal; Reseal counter jaw; Inductor.	Check	500
5.2.2-5	Applicator reseal; Reseal counter jaw; Cushion cylinder.	Change	4000
8	**Electrical equipment**		
8.1.1-1	Mounting plate; PLC; Battery.	Change	2000
8-5	Electrical cabinet; TPIH generator; Cables.	Check	1000
8.3-1	Cooler; Air flow.	Check	250
9	**Pneumatic equipment**		
9.2-1	Valve panel; Air filters.	Change	500
	Start-Up checks		
6.1-1	Missing patch detector.	Check	1000
6.2-1	Missing tab detector.	Check	1000
6.3-1	Splice detector; Black tape detector.	Check	1000
7.1-1	Doors and Covers; Safety functions.	Check	1000
1.2-1	Paper web path; Packaging material tracking.	Check	1000
	After-Maintenance checks		
OM	Package- check package according to OM.	Check	1000

TechPub_2614345_0103 - B5358Z00en.fm

A

Air Inlet Group - Clean Filter Insert . . . . . 9 - 6

Air Inlet Group - Set Pressure Switch . . . . . 9 - 5

Applicator Patch - Check Heat Pattern . . . . . 3 - 14

Applicator Patch - Check Patch Position . . . . 3 - 10

Applicator Patch - Description . . . . . 3 - 2

Applicator Patch - Functional Description . . . . . 3 - 5

Applicator Reseal - Check Heat Pattern . . . . 5 - 10

Applicator Reseal - Check Reseal Position . . . . . 5 - 8

Applicator Reseal - Description . . . . . 5 - 2

Applicator Reseal - Functional Description . . . . . 5 - 5

Applicator Tab - Check Tab Position . . . . . 4 - 10

Applicator Tab - Description . . . . . 4 - 2

Applicator Tab - Functional Description . . . . . 4 - 5

Applicator Tab - Set Tab Counter Jaw Position . . . . . 4 - 15

Applicators - Set Brackets Position . . . . . 7 - 6

B

Bar Code Reader - Change Photocells . . . . . 1 - 59

Bar Code Reader - Set Photocells . . . . . 1 - 58

Bending Roller Assembly - Change Bearings . . . . . 1 - 31

Bending Roller Assembly - Check . . . . . 1 - 31

By-pass Sensor - Check . . . . . 1 - 57

C

Checklist Overview . . . . . 11 - 5

Checklist Overview - Description . . . . . 11 - 2

Cooler - Check Air Flow . . . . . 8 - 87

Cooler - Clean Filter Insert . . . . . 8 - 88

D

Doors and Covers - Check Safety Function . . . . . 7 - 5

Drive Motor - Assemble Clamping Element . . . . . 1 - 16

Drive Motor - Change . . . . . 1 - 24

Drive Motor - Change Bearings . . . . . 1 - 18

Drive Motor - Change Drive Wheel . . . . . 1 - 19

Drive Motor - Check Pressure Roller and Drive Wheel . . . . . 1 - 17

Drive Motor - Remove Clamping Element . . . . 1 - 15

Drive Motor - Set Cylinder . . . . . 1 - 23

E

Edge Guide - Change Bearings . . . . . 1 - 48

Edge Guide - Check Bearings . . . . . 1 - 46

Edge Guide - Set . . . . . 1 - 49, 1 - 50

Electrical Cabinet - Change TPIH Generator . . . . . 8 - 23

Electrical Cabinet - Change Transformer TPIH Generator . . . . . 8 - 22

Electrical Cabinet - Check Cables TPIH Generator . . . . . 8 - 21

Electrical Cabinet - Check Function TPIH Generator . . . . . 8 - 15

Electrical Cabinet - Description . . . . . 8 - 2

Electrical Cabinet - Function Description Servo Drive DMC Card . . . . . 8 - 38

Electrical Cabinet - Function Description Servo Drive DMC2 Card . . . . . 8 - 25

Electrical Cabinet - Function Description Std DMC Card . . . . . 8 - 42

Electrical Cabinet - Function Description Std DMC2 Card . . . . . 8 - 29

Electrical Cabinet - Function Description TPIH Generator . . . . . 8 - 14

Electrical Cabinet - Load DMC2 Program . . . . . 8 - 36

Electrical Cabinet - Pulltab Controls . . . . . 8 - 5

Electrical Cabinet - Set DMC Card . . . . . 8 - 46

Electrical Cabinet - Set DMC2 Card . . . . . 8 - 33

Electrical Cabinet - Set Frequency Converter . . . . . 8 - 6

Electrical Cabinet - Set Sealings TPIH Generator . . . . . 8 - 24

TechPub_2614345_0103 - 81535018IOM.fm

F

Frame and Safety Function - Description . . . . . 7 - 2
Fuse Box - Set Fuse . . . . . 8 - 86
Fuse Box - Set Overload Protection . . . . . 8 - 85

G

General - Description . . . . . 10 - 2
Guide Patch - Change Curve Rollers . . . . . 3 - 52
Guide Pulltab - Change Curve Rollers . . . . . 4 - 52

I

Infeed Unit - Change Bearings . . . . . 1 - 35
Infeed Unit - Change Worm Gear Motor . . . . 1 - 34
Infeed Unit - Check Bending Roller Assembly . . . . . 1 - 37
Infeed Unit - Check Function . . . . . 1 - 33
Infeed Unit - Check Rollers . . . . . 1 - 32
Infeed Unit - Set Spring Bracket . . . . . 1 - 38

L

Lifting Device - Check . . . . . 7 - 16
Lifting Device - Set Timing Belt . . . . . 7 - 17

M

Magazine Patch - Change Bobbin Holder Bearings . . . . . 3 - 47
Magazine Patch - Check . . . . . 3 - 43
Magazine Patch - Check Bobbin Holder . . . . 3 - 48
Magazine Patch - Set Proximity Switch . . . . . 3 - 45
Magazine Patch - Set Strip Tension . . . . . 3 - 46
Magazine Pulltab - Change Bobbin Holder Bearings . . . . . 4 - 47
Magazine PullTab - check . . . . . 4 - 43
Magazine Pulltab - Check Bobbin Holder . . . 4 - 48
Magazine Pulltab - Set Proximity Switch . . . . 4 - 45
Magazine Pulltab - Set Strip Tension . . . . . 4 - 46
Missing Patch Detector - Check . . . . . 6 - 6
Missing Patch Detector - Set . . . . . 6 - 7
Missing Tab Detector - Check . . . . . 6 - 8
Missing Tab Detector - Set . . . . . 6 - 9

P

Paper Brake - Assemble Clamping Element . . . . . 1 - 45
Paper Brake - Change Wheel . . . . . 1 - 45
Paper Brake - Check . . . . . 1 - 39
Paper Brake - Check Bending Roller Flange . . . . . 1 - 40
Paper Brake - Remove Clamping Element . . . . . 1 - 45
Paper Brake - Set Cylinder . . . . . 1 - 41
Paper Brake - Set Servo Tension Device . . . . . 1 - 42
Paper Web Path - Check Packaging Material Tracking . . . . . 1 - 9
Paper Web Path - Description . . . . . 1 - 2
Paper Web Path - Functional Description . . . . . 1 - 5
Paper Web Path - Set Alignment Rollers . . . . . 1 - 10
Paper Web Path - Set Packaging Material Position . . . . . 1 - 13
Patch Counter Jaw - Change Cushion Cylinder . . . . . 3 - 40
Patch Counter Jaw - Change Inductor . . . . . 3 - 37
Patch Counter Jaw - Check Guide Bushing . . . . . 3 - 39
Patch Counter Jaw - Check Inductor . . . . . 3 - 36
Patch Counter Jaw - Remove . . . . . 3 - 35
Patch Counter Jaw - Set Cushion Cylinder . . . . . 3 - 41
Patch Counter Jaw - Set Position . . . . . 3 - 42
Patch Feeder - Change Bushings . . . . . 3 - 25
Patch Feeder - Change Cylinder . . . . . 3 - 27
Patch Feeder - Change Knives . . . . . 3 - 18
Patch Feeder - Change Linear Bearings . . . . . 3 - 24
Patch Feeder - Change Shims . . . . . 3 - 33
Patch Feeder - Check Function . . . . . 3 - 29
Patch Feeder - Check Guides and Linear Bearings . . . . . 3 - 23
Patch Feeder - Check Knives . . . . . 3 - 17
Patch Feeder - Check Sealing Plate . . . . . 3 - 28

TechPub_2614345_0103 - 81535018IOM.fm

Patch Feeder - Remove . . . . . 3 - 20
Patch Feeder - Set Position . . . . . 3 - 32
Patch Feeder - Set Proximity Switch . . . . . 3 - 31
Patch Feeder - Set Sealing Plate . . . . . 3 - 22
Patch Feeder - Set Strip Feed . . . . . 3 - 30
Patch Feeder - Set Window Knife . . . . . 3 - 21
Patch Turning Device - Check . . . . . 3 - 53
Patch Turning Device - Set Rotation Monitor Proximity Switch . . . . . 3 - 54
Photocell Unit Infeed - Check . . . . . 1 - 51
Photocell Unit Infeed - Set . . . . . 1 - 52
Photocell Unit Outfeed - Check . . . . . 1 - 54
Photocell Unit Outfeed - Set . . . . . 1 - 55
PLC - Change Battery . . . . . 8 - 48
PLC - Load Program . . . . . 8 - 51
PLC - Print Program . . . . . 8 - 55
PLC - Set Patch and Tab Length . . . . . 8 - 57
PLC - Set Tension Device Torque . . . . . 8 - 63
Pulltab Detection - Description . . . . . 6 - 2
Pulltab Detection - Functional Description . . . . . 6 - 5
Punch Unit - Change Cylinder . . . . . 2 - 13
Punch Unit - Change Punch and Die . . . . . 2 - 15
Punch Unit - Change Stripper Pins and Springs . . . . . 2 - 11
Punch Unit - Check Cylinder . . . . . 2 - 12
Punch Unit - Check Punch and Die . . . . . 2 - 14
Punch Unit - Check Stripper Pins and Springs . . . . . 2 - 10
Punch Unit - Set Hole Position . . . . . 2 - 7
Punch Unit - Set Proximity Switch . . . . . 2 - 18
Punch Unit - Set Punch and Die . . . . . 2 - 16
Punch/waste Unit - Description . . . . . 2 - 2
Punch/waste Unit - Functional Description . . . . . 2 - 5

R

Reseal Counter Jaw - Change Cushion Cylinder . . . . . 5 - 27
Reseal Counter Jaw - Change Inductor . . . . . 5 - 25
Reseal Counter Jaw - Check Guide Bushing . . . . . 5 - 26
Reseal Counter Jaw - Check Inductor . . . . . 5 - 24
Reseal Counter Jaw - Remove . . . . . 5 - 23
Reseal Counter Jaw - Set Cushion Cylinder . . . . . 5 - 28
Reseal Heating Jaw - Change Bushing . . . . . 5 - 19
Reseal Heating Jaw - Change Cylinder . . . . . 5 - 20
Reseal Heating Jaw - Change Linear Bearings . . . . . 5 - 18
Reseal Heating Jaw - Check Guides and Linear Bearings . . . . . 5 - 17
Reseal Heating Jaw - Check Sealing Plate . . . . . 5 - 21
Reseal Heating Jaw - Remove . . . . . 5 - 15
Reseal Heating Jaw - Set Proximity Switch . . . . . 5 - 22
Reseal Heating Jaw - Set Sealing Plate . . . . . 5 - 16
Roller Assembly - Change Damper . . . . . 1 - 29
Roller Assembly - Change Roller Bearings . . . . . 1 - 27
Roller Assembly - Check Rollers . . . . . 1 - 25
Roller Assembly - Set Tension Roller . . . . . 1 - 30

S

Safety Relays - Check Function . . . . . 8 - 68
Splice Detector - Check (Black Tape) Detector . . . . . 6 - 10
Splice Detector - Set (Black Tape) Detector . . . . . 6 - 11
Splicing Device - Change Knife . . . . . 3 - 50, 4 - 50
Splicing Device - Check Function . . . . 3 - 49, 4 - 49
Splicing Device - Set Lock Grip . . . . . 3 - 51, 4 - 51

T

Tab Counter Jaw - Change Counter Plate . . . . . 4 - 38
Tab Counter Jaw - Change Cushion Cylinder . . . . . 4 - 40
Tab Counter Jaw - Check Guide Bushing . . . . . 4 - 39
Tab Counter Jaw - Remove . . . . . 4 - 37
Tab Counter Jaw - Set Cushion Cylinder . . . . . 4 - 41

TechPub_2614345_0103 - 81535018IOM.fm

Tab Counter Jaw - Set Position . . . . . 4 - 42
Tab Feeder - Change Bushings . . . . . 4 - 27
Tab Feeder - Change Cylinder . . . . . 4 - 29
Tab Feeder - Change Heater and Thermocouple . . . . . 4 - 35
Tab Feeder - Change Knives . . . . . 4 - 18
Tab Feeder - Change Linear Bearings . . . . . 4 - 25
Tab Feeder - Check Function . . . . . 4 - 31
Tab Feeder - Check Guides and Linear Bearings . . . . . 4 - 24
Tab Feeder - Check Knives . . . . . 4 - 17
Tab Feeder - Check Sealing Plate . . . . . 4 - 30
Tab Feeder - Check Tab Position . . . . . 4 - 26
Tab Feeder - Remove . . . . . 4 - 20
Tab Feeder - Set Position . . . . . 4 - 34
Tab Feeder - Set Proximity Switch . . . . . 4 - 33
Tab Feeder - Set Sealing Plate . . . . . 4 - 22
Tab Feeder - Set Tab Feed . . . . . 4 - 32
Tab Feeder - Set Window Knife . . . . . 4 - 21
Tab Turning Device - Check . . . . . 4 - 53
Tab Turning Device - Set Rotation Monitor Proximity Switch . . . . . 4 - 54
TMCC - Change Cards . . . . . 8 - 75
TMCC - Display Report . . . . . 8 - 83
TMCC - Function Description . . . . . 8 - 69
TMCC - Set Communication . . . . . 8 - 74
TMCC - Set Control Card . . . . . 8 - 77
TMCC - Set Photocells . . . . . 8 - 79
TMCC - Set Stepper Motor Cards . . . . . 8 - 78
TPMS - Description . . . . . 11 - 2

V

Valve Panel - Change Air Filters . . . . . 9 - 7
Valve Panel - Description . . . . . 9 - 2

W

Waste Box - Check Box and Waste Pipe . . . . . 2 - 19
Waste Box - Set Photocell . . . . . 2 - 20

TechPub_2614345_0103 - 81535018IOM.fm

TechPub_2614345_0103 - 81535018IOM.fm

This page intentionally left blank

TechPub_2614345_0103 - 81535018IOM.fm

Tetra Pak

Note! *This page is generated* ***automatically****.*
using the ***variable definitions*** *made in the* ***front page*** *file!*

PT21 050V
648508-0500
Issue 2004-02 Doc. No. MM-81535-0108

PT21 050V 1(2)
648508-0500
Issue 2004-02 Doc. No. MM-81535-0108

PT21 050V
648508-0500
Issue 2004-02 Doc. No. MM-81535-0108

PT21 050V 1(2)
648508-0500
Issue 2004-02 Doc. No. MM-81535-0108

PT21 050V
648508-0500
Issue 2004-02 Doc. No. MM-81535-0108

PT21 050V 1(2)
648508-0500
Issue 2004-02 Doc. No. MM-81535-0108

PT21 050V
648508-0500
Issue 2004-02 Doc. No. MM-81535-0108

PT21 050V 1(2)
648508-0500
Issue 2004-02 Doc. No. MM-81535-0108

PT21 050V
648508-0500
Issue 2004-02 Doc. No. MM-81535-0108

PT21 050V 2(2)
648508-0500
Issue 2004-02 Doc. No. MM-81535-0108

PT21 050V
648508-0500
Issue 2004-02 Doc. No. MM-81535-0108

PT21 050V 2(2)
648508-0500
Issue 2004-02 Doc. No. MM-81535-0108

PT21 050V
648508-0500
Issue 2004-02 Doc. No. MM-81535-0108

PT21 050V 2(2)
648508-0500
Issue 2004-02 Doc. No. MM-81535-0108

40 mm Full width ***Note!*** *This page is generated* ***automatically****.*
using the ***variable definitions*** *made in the* ***front page*** *file!*

PT21 050V
648508-0500

Issue 2004-02 Doc. No. MM-81535-0108

PT21 050V 1(2)
648508-0500

Issue 2004-02 Doc. No. MM-81535-0108

PT21 050V
648508-0500

Issue 2004-02 Doc. No. MM-81535-0108

PT21 050V 1(2)
648508-0500

Issue 2004-02 Doc. No. MM-81535-0108

PT21 050V
648508-0500

Issue 2004-02 Doc. No. MM-81535-0108

PT21 050V 1(2)
648508-0500

Issue 2004-02 Doc. No. MM-81535-0108

PT21 050V
648508-0500

Issue 2004-02 Doc. No. MM-81535-0108

PT21 050V 2(2)
648508-0500

Issue 2004-02 Doc. No. MM-81535-0108

PT21 050V
648508-0500

Issue 2004-02 Doc. No. MM-81535-0108

PT21 050V 2(2)
648508-0500

Issue 2004-02 Doc. No. MM-81535-0108

PT21 050V
648508-0500

Issue 2004-02 Doc. No. MM-81535-0108

PT21 050V 2(2)
648508-0500

Issue 2004-02 Doc. No. MM-81535-0108