MM

Maintenance Manual

PT21 060V

648508-0600

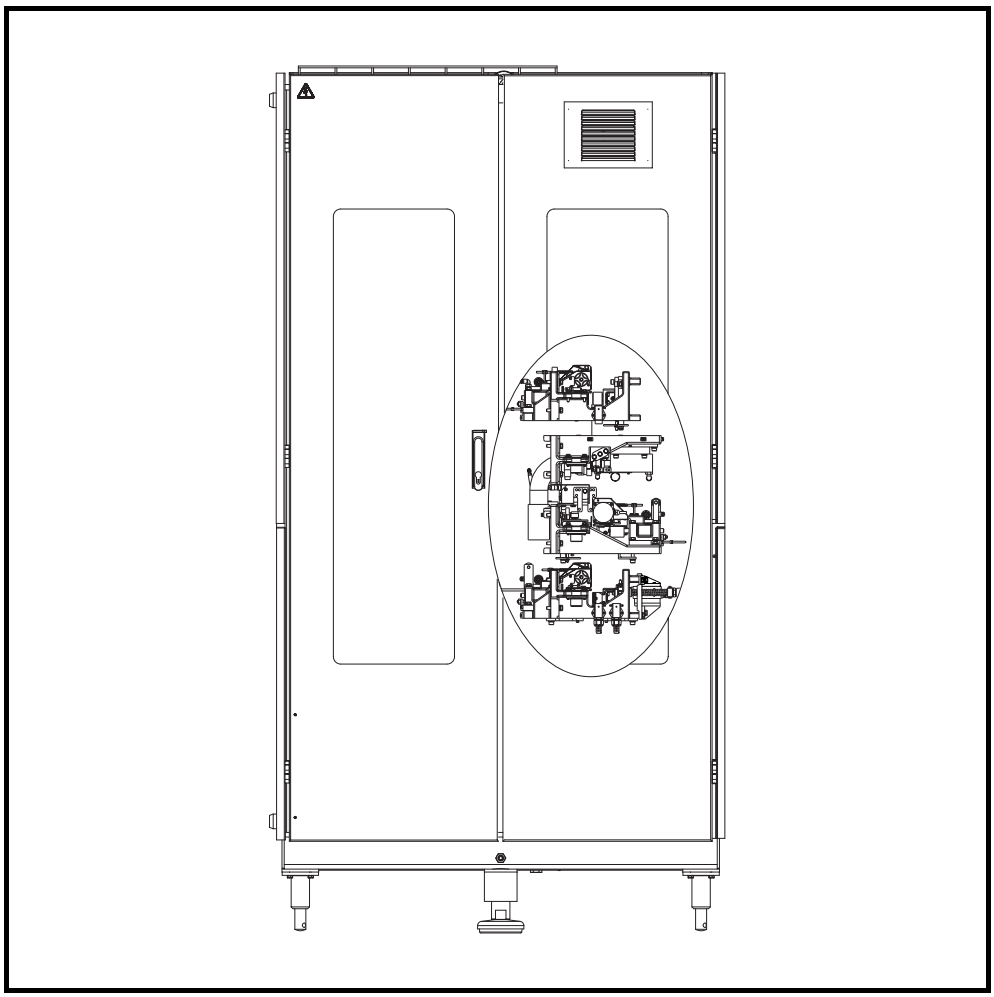

TechPub_2614345_0103 - 81611014fro.fm

WARNING

Read and follow all safety precautions before working on or near this equipment.

Read all safety precautions throughout this manual and on safety signs attached to this equipment. Failure to follow all safety precautions could result in death or serious injury.

Tetra Pak

Doc. No. MM-81611-0104

Copyright © 2004 Tetra Pak Group

All rights reserved. No part of this document may be reproduced or copied in any form or by any means without written permission from Tetra Pak Carton Ambinent

Tetra Pak and all Tetra Pak products are trademarks belonging to the Tetra Pak Group.

The content of this manual is in accordance with the design and construction of the machine or equipment at the time of publishing. Tetra Pak reserves the right to introduce design modifications without prior notice.

This document was produced by:

Tetra Pak Carton Ambinent S.p.A.
Via Delfini 1
41100 MODENA
Italy

Additional copies can be ordered from Tetra Pak Parts or the nearest Tetra Pak office. When ordering additional copies, always provide the document number. This can be found in the machine specification document. It is also printed on the front cover and in the footer on each page of the manual.

Doc. No. MM-81611-0104

Issue 2004-02

TechPub_2614345_0103 - 81611014fro.fm

This manual is valid for:

Series No./ Machine No. Sign.

MM
Maintenance Manual

PT21 060V
648508-0600
(TBA/21 050V)

Valid from machines series No.:
22316/00091 (Italy)

TechPub_2614345_0103 - 81611014fro.fm

A list of all optional equipment, optional kits, and rebuilding kits that this manual is valid for is found on the next page.

i Introduction

ii Safety Precautions

0 PullTab Unit Overview

1 Opening Setting

2 Paper Web Path

3 Punch Arrangement

4 Outer Patch Applicator

5 Patch Applicator

6 Tab Applicator

7 PullTab Detection

8 Safety Functions

9 Electrical Cabinet

10 Valve Panel

11 General

12 Checklist Overview

Doc. No. MM-81611-0104

Issue 2004-02

Tetra Pak

Tetra Pak Carton Ambinent

Valid for:

PT21 Safety improvements
2603693-0100

PT21 060V Holes
2526512-0100

PT21 060V templates
2563981-0100

PLC version 1 for PT21 060V
2587425-0100

PT21 060V installation
2507115-0100

New bending roller infeed unit
2555126-0100

PT21 Outer patch
2526523-0100

TechPub_2614345_0103 - 816110114fro.fm

Update Log for Doc. No. MM-81611-0104

This table shows all changes made to this manual, such as kits installed and pages added or removed.

Date	Installed Kit	Added Pages (Doc. No.)	Removed Pages	Signature

TechPub_2614345_0103 - 816110l4fro.fm

Date	Installed Kit	Added Pages (Doc. No.)	Removed Pages	Signature

TechPub_2614345_0103 - 816110l4fro.fm

i Introduction

TechPub_2614345_0103 - 81611014int.fm

About the Introduction Chapter

This chapter contains basic information about this manual and related Tetra Pak equipment.

TechPub_2614345_0103 - 81611014int.fm

Manual Information . . . . . i - 5
Delivered Manuals . . . . . i - 5
Page Layout . . . . . i - 6
Page Numbering. . . . . i - 7
Typographical Conventions . . . . . i - 7
Symbols . . . . . i - 7

Machine Introduction . . . . . i - 8
Intended Use of the Equipment . . . . . i - 8
Manufacturer . . . . . i - 8
Service . . . . . i - 8

Identification . . . . . i - 9
CE Classification . . . . . i - 9
Machine Plate . . . . . i - 9

Orientation . . . . . i - 10

Hygiene. . . . . i - 11

Abbreviations and Terminology . . . . . i - 12

How to Use This Maintenance Manual . . . . . i - 13
MM Procedure Codes . . . . . i - 13
Procedure Start Table . . . . . i - 14
Tetra Pak Maintenance System. . . . . i - 15
Planned Maintenance Program . . . . . i - 15
Checklists and Spare Parts Recommendations. . . . . i - 15

TechPub_2614345_0103 - 81611014int.fm

This page intentionally left blank

TechPub_2614345_0103 - 81611014int.fm

Manual Information

Tetra Pak recommends reading all delivered manuals carefully. Make sure that the delivered manuals are available to personnel who operate or maintain the equipment.

It is important to keep this manual for the lifetime of the equipment and to pass the manual on to any subsequent holder or user.

Tetra Pak will not be held responsible for any damage to the equipment caused by not following the instructions given in this manual.

Delivered Manuals

The manuals delivered with this equipment include

- Conversion Manual (CM)
  This manual provides technicians with information on converting the equipment between different production modes.
- Electrical Manual (EM)
  This manual provides technicians with information about the equipment's electrical system.
- Installation Manual (IM)
  This manual provides technicians with information required to safely install the equipment.
- Maintenance Manual (MM)
  This manual provides technicians with information on maintaining the equipment.
- Operation Manual (OM)
  This manual provides the operator with information on handling and operating the equipment before, during, and after production.
- Spare Parts Catalogue (SPC)
  This manual provides the information necessary to order spare parts from Tetra Pak

TechPub_2614345_0103 - 81611014int.fm

Page Layout

Every main page in a manual contains a header and a footer. The page header contains the section name (1) and the chapter name (2). The page footer contains the manual's document number (3), and the page number (4). See also the Page Numbering section.

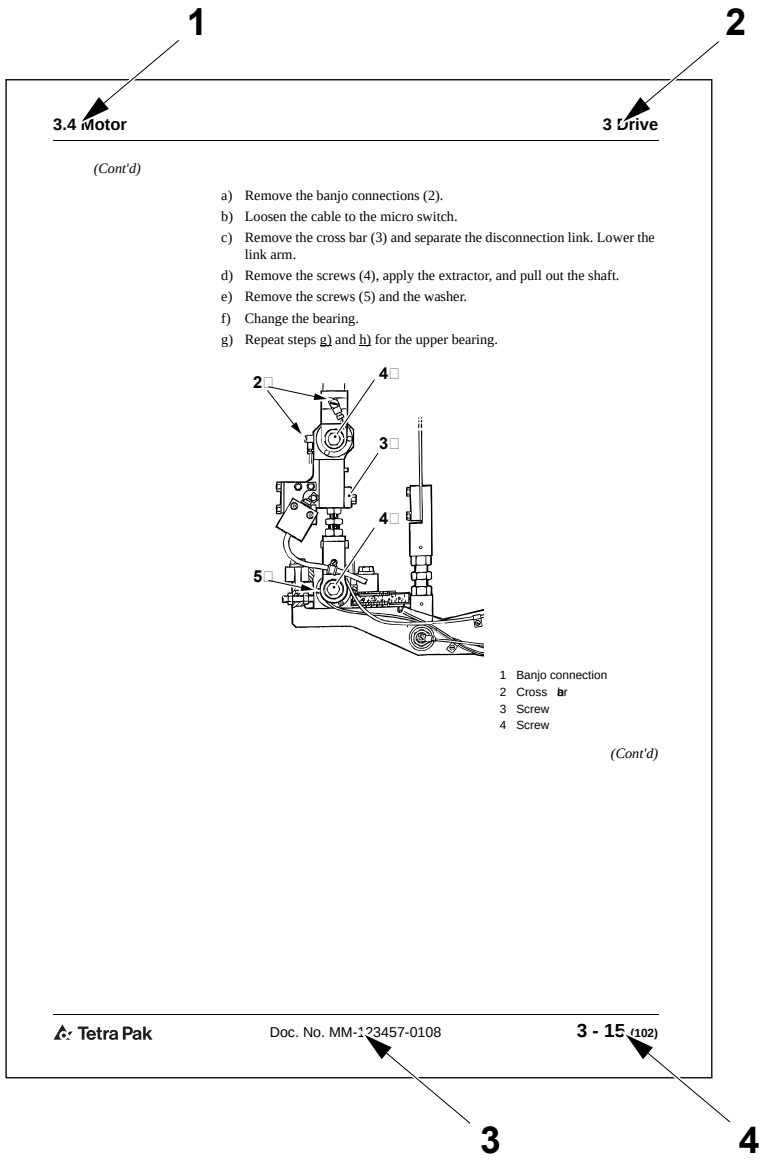

1 Section name
2 Chapter name
3 Document number
4 Page number

TechPub_2614345_0103 - 81611014int.fm

Page Numbering

A page number has three parts:

- chapter number (1)
- consecutive page number (2) within the chapter
- total number of pages (3) in the chapter.

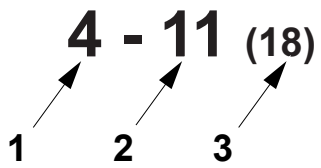

1 Chapter number
2 Consecutive page number
3 Total number of pages

Typographical Conventions

Controls on the operator panel, emergency stop devices, and program steps are printed in CAPITAL LETTERS.

Cross-references are underlined.

Symbols

The following symbols are used in illustrations:

- A pointer arrow (1) indicates the position of an object.
- A zoom arrow (2) indicates that an object view is enlarged. The arrow points towards the enlarged view of the object.
- A rotation movement arrow (3) indicates rotational movement of an object. The arrow points in the direction of rotation.
- A straight movement arrow (4) indicates movement of an object. The arrow points in the direction of movement.

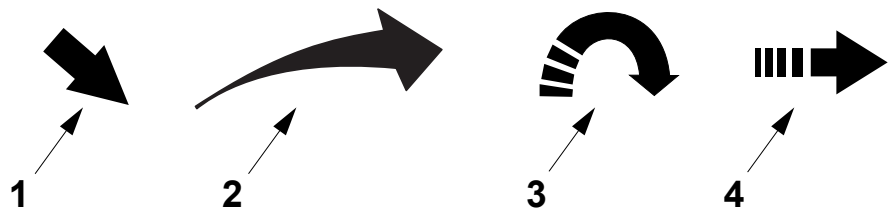

1 Pointer arrow
2 Zoom arrow
3 Rotation movement arrow
4 Straight movement arrow

TechPub_2614345_0103 - 81611014int.fm

Machine Introduction

Intended Use of the Equipment

The intended use of this Tetra Pak equipment is to...

All other use is prohibited. Tetra Pak will not be held responsible for injury or damage if the equipment is used for any other purpose.

Manufacturer

This Tetra Pak equipment has been manufactured by

Tetra Pak Carton Ambinent S.p.A.
Via Delfini 1
41100 MODENA
Italy

Service

If you encounter problems when operating this equipment, contact the nearest Tetra Pak office.

Contact the Liaison with other inquiries, comments, or suggestions for improvement regarding the equipment and its documentation.

TechPub_2614345_0103 - 81611014int.fm

Identification

CE Classification

This equipment complies with the basic health and safety regulations of the European Economic Area (EEA).

Machine Plate

The illustration below shows an example of the machine plate and its location on the equipment. The machine plate carries data needed when contacting Tetra Pak concerning this specific equipment.

Make sure that the equipment data in the front pages of this manual corresponds to the machine plate data and the machine specification.

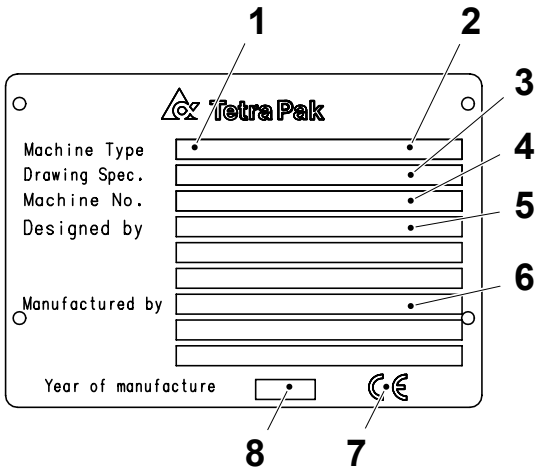

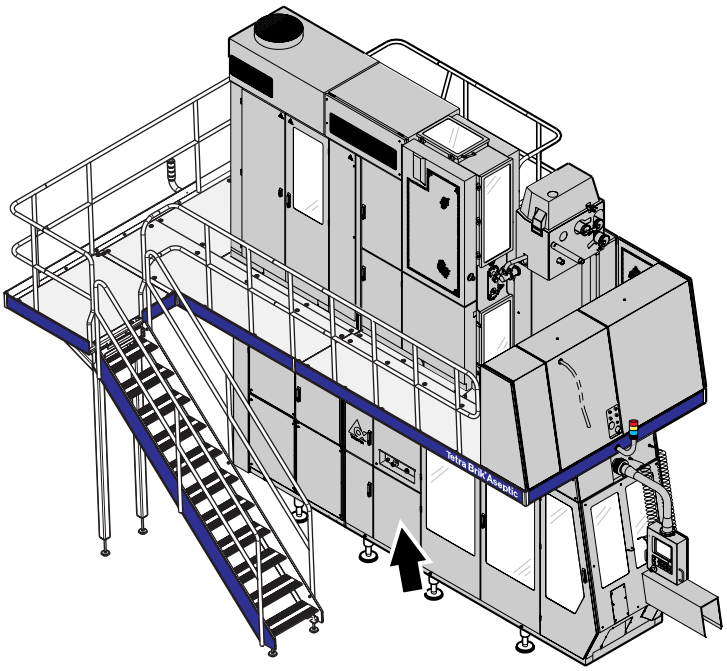

1 Machine type
2 Volume
3 Drawing specifications
4 Machine serial number
5 Designed by
6 Manufacturer
7 CE mark
8 Year of manufacture

TechPub_2614345_0103 - 81611014int.fm

Orientation

The illustration below shows the orientation of the equipment. This orientation information will be used throughout this manual.

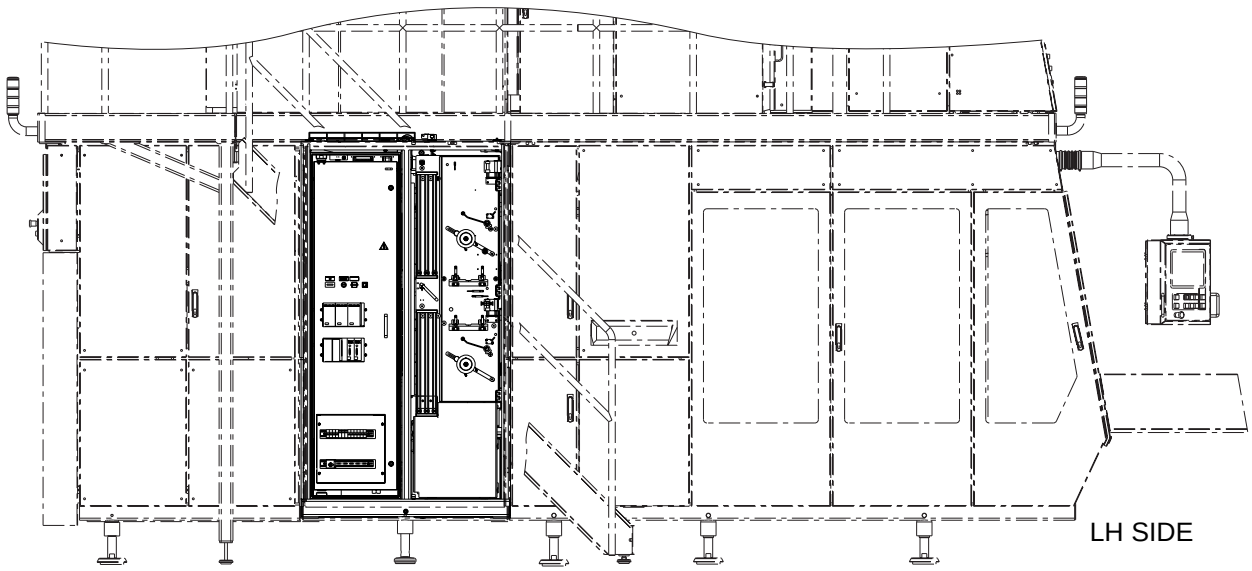

LH SIDE

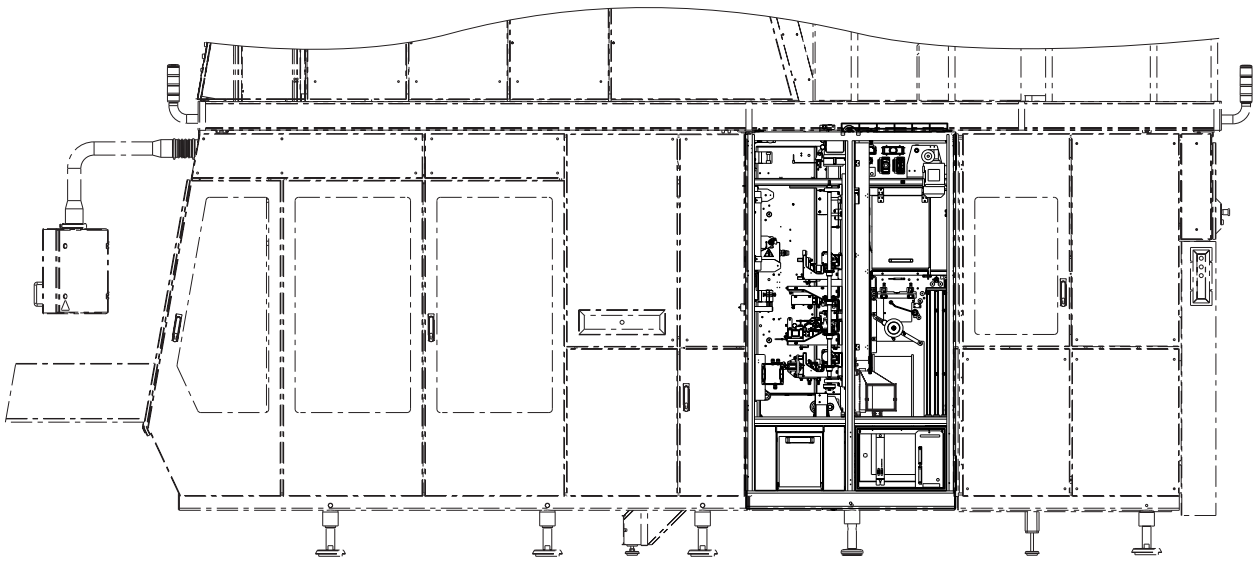

RH SIDE

TechPub_2614345_0103 - 81611014int.fm

Hygiene

Avoid microbiological pollution of the packaging material:

- Always keep the doors to the filling room (area) closed. To prevent contamination via air streams, never open a window when the equipment is in production.
- Never clean the floors or the equipment in the filling room (area) when the equipment is in production.
- Compressed air used for cleaning purposes is to be used only for cleaning filters and should only be used outside of the filling room (area) or in the final folder compartment of the filling machine.
- Prepare the splicing of the packaging material as late as possible.
- Disinfect your hands before touching anything that may come into contact with the product. Use disinfectant code H. See the Technical Data chapter.
- Keep your hands and gloves clean.
- Always wear some type of hair protection (cap or hairnet) and clean clothes (preferably white).
- Do not wear a watch, ring, necklace, earrings, or any other exposed jewellery.

TechPub_2614345_0103 - 81611014int.fm

Abbreviations and Terminology

Abbreviation/ Terminology	Meaning	Translation
Approx.	Approximately	
ASU	Automatic Splicing Unit	
DMC	Digital Motion Controller	
EM	Electrical Manual	
FFU	Final Folder Unit	
IM	Installation Manual	
IS	Inner Strip	
LED	Light Emitting Diode	
LH	Left hand side	
LSB	Last Significant Bit	
min.	Minimum	
max.	Maximum	
MM	Maintenance Manual	
MSB	Most Significant Bit	
OM	Operator Manual	
OE	Optional Equipment	
OK	Optional Kit	
PC	Position Control	
PLC	Programmable Logic Controller	
PT	PullTab	
RC	Reference Count	
RH	Right hand side	
SPC	Spare Parts Catalogue	
TMCC	Tetra Pak Multi-purpose Compact Controller	
TP	Tetra Pak	
TPMS	Tetra Pak Maintenance System	
TPIH	Tetra Pak Induction Heating	
TPOP	Tetra Pak Operator Panel	
TPMC	Tetra Pak Machine Control	

TechPub_2614345_0103 - 81611014int.fm

How to Use This Maintenance Manual

MM Procedure Codes

Maintenance procedures are designated as shown in the example.

1.2.3-1 Worm Gear - Change Oil

MM Chapter or main machine group

MM Section or machine group

MM Subsection or machine subgroup

Sequential procedure number

Subsection Name

Subject of activity

Types of Procedure

The following types of procedure are used:

- adjust
- assemble
- bleed
- calibrate
- change
- charge
- check
- clean
- count
- delime
- dismantle
- empty
- fill
- install
- lubricate
- measure
- overhaul
- record
- remove
- set
- synchronise
- tighten
- turn

(Cont'd)

TechPub_2614345_0103 - 81611014int.fm

(Cont'd)

Procedure Start Table

Each maintenance procedure described in this manual begins with a table containing information needed to begin the procedure. This information includes the following:

- **Machine Status** (1) shows actuator status, program step, and any other machine status necessary to begin the procedure
- **Special Equipment** (2) shows a list of personal protective equipment and special tools that are not normally carried by a service technician, but are needed in the procedure
- **Consumables** (3) shows items, such as lubricants, that are required to perform the procedure. Consumables do not include replacement parts.
- **SPC Reference** (4) shows the assembly number, found in the index of the Spare Parts Catalogue (SPC)

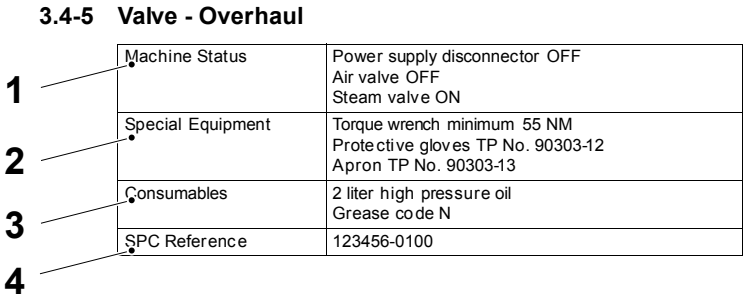

1 Machine Status
2 Special Equipment
3 Consumables
4 SPC Reference

TechPub_2614345_0103 - 81611014int.fm

Tetra Pak Maintenance System

To ensure uninterrupted production, all equipment must be maintained on a regular basis.

Tetra Pak has developed a planned maintenance system to keep pace with the ongoing development of new and existing equipment from Tetra Pak, and to meet the demands set by customers for higher efficiency and better economy.

Planned Maintenance Program

The Tetra Pak planned maintenance system reduces unplanned downtime and maintenance time for complete production lines, as well as for individual equipment.

With the Tetra Pak planned maintenance system, preventive maintenance can be performed before production is affected. The system is continually updated based on experience with Tetra Pak equipment worldwide.

The Tetra Pak planned maintenance system maintains records of when maintenance is performed, when parts are changed, whether alterations are made, and so on. These records, combined with usage statistics, enable reliable predictions of the service life of all equipment parts.

Checklists and Spare Parts Recommendations

Customers using the Tetra Pak planned maintenance system receive checklists from their local Tetra Pak office whenever planned maintenance is due. These checklists are individualised for each customer, according to the type of equipment, equipment usage, and maintenance occasion. In addition, the system recommends spare parts, rotation units, tools, and templates according to the statistics collected.

Tip! Contact the local Tetra Pak office for additional information about the Tetra Pak Maintenance System and its planned maintenance program.

TechPub_2614345_0103 - 81611014int.fm

This page intentionally left blank

TechPub_2614345_0103 - 81611014int.fm

ii Safety Precautions

TechPub_2614345_0103 - 816110l4sp.fm

Read the Safety Precautions

WARNING

Read and follow all safety precautions before working on or near this equipment.

Read all safety precautions throughout this manual and on safety signs attached to this equipment. Failure to follow all safety precautions could result in death or serious injury.

Definitions

Energy Isolating Device. A mechanical device that physically prevents transmission or release of energy.

Power Supply Disconnector. The energy isolating device for the electrical power supply to the equipment.

Lockout. The use of a device, such as a padlock, to make sure that an energy isolating device, such as a power supply disconnector, cannot be operated.

Lockout Procedure. A procedure to put each necessary energy isolating device in its safe position to prevent the energising of the equipment, such as when a maintenance procedure should be carried out.

TechPub_2614345_0103 - 81611014sp.fm

Safety Messages Description . . . . . ii - 5

Personnel Requirements . . . . . ii - 6

Skilled Person . . . . . ii - 6

Instructed Person. . . . . ii - 6

Safety Signs . . . . . ii - 7

Locations of Safety Signs . . . . . ii - 8

Safety Devices . . . . . ii - 10

Emergency Stop . . . . . ii - 10

Emergency Stop Push-Buttons . . . . . ii - 11

Safeguards . . . . . ii - 12

Warning Lamp . . . . . ii - 13

Audible Alarm . . . . . ii - 13

Personal Protection. . . . . ii - 14

Noise Hazard . . . . . ii - 14

Entanglement Hazard . . . . . ii - 14

Hazardous Materials . . . . . ii - 15

Cooling Media R134a . . . . . ii - 16

Emergency Procedures. . . . . ii - 16

Handling and Storage of Cooling Media R134a . . . . . ii - 16

Disposal of Cooling Media R134a . . . . . ii - 16

Supply Systems . . . . . ii - 17

Electrical Cabinet . . . . . ii - 17

Socket Outlet . . . . . ii - 18

Power Supply . . . . . ii - 19

Air Supply . . . . . ii - 20

Equipment for Lifting and Moving Loads . . . . ii - 21

TechPub_2614345_0103 - 81611014sp.fm

This page intentionally left blank

TechPub_2614345_0103 - 81611014sp.fm

Safety Messages Description

A safety message is always accompanied by a safety alert symbol and a signal word.



This is the **safety alert symbol**. It is used to alert about potential personal injury hazards. To avoid hazards, obey all safety messages that follow this symbol.

The following safety alert symbols and **signal words** are used in this manual to inform the user of hazards.



DANGER

Danger indicates an imminently hazardous situation which, if not avoided, will result in death or serious injury.



WARNING

Warning indicates a potentially hazardous situation which, if not avoided, **could** result in **death or serious injury**.



CAUTION

Caution indicates a potentially hazardous situation which, if not avoided, **may** result in **minor or moderate injury.** It may also be used to alert against unsafe practices.

CAUTION

Caution without the safety alert symbol indicates a potentially hazardous situation which, if not avoided, **may** result in **property damage**.

TechPub_2614345_0103 - 81611014sp.fm

Personnel Requirements

Note! Personnel includes all persons working on or near this equipment.

Only skilled or instructed persons are allowed to work with this equipment.

Skilled Person

A skilled person must have relevant education and experience to enable him or her to identify hazards, analyse risks, and avoid hazards which electricity, machinery, chemicals, other energies, and supply systems on this equipment can create.

Skilled persons must meet local regulations, such as certifications and qualifications for working with electricity, mechanical systems, and so on.

Instructed Person

An instructed person must be adequately advised or supervised by a skilled person. The skilled person enables the instructed person to identify hazards, analyse risks, and avoid hazards which electricity, machinery, chemicals, other energies, and supply systems on this equipment can create.

TechPub_2614345_0103 - 81611014sp.fm

Safety Signs

WARNING

Damaged or missing safety signs increase the risk of death or serious injury.

Replace all missing or damaged safety signs immediately.

There are two types of safety sign

- ISO signs are used worldwide
- ANSI signs are used in the United States only

The table shows all safety signs that are located on this equipment.

Note! The position numbers (Pos.) in the table refer to the positions in the illustration(s) in the Locations of Safety Signs section.

Pos.	ISO sign	ANSI sign
1		
	Hazardous voltage. Will shock, burn, or cause death. Follow lockout procedure before maintenance.	
2		
	Hot surface. Do not touch. Follow lockout procedure before maintenance.	

TechPub_2614345_0103 - 81611014sp.fm

Locations of Safety Signs

Note! Make sure that each safety sign is undamaged and in its correct position after installation and maintenance. Replace all missing or damaged safety signs immediately.

The illustration shows where the safety signs are located. The position numbers refer to the table in the Safety Signs section.

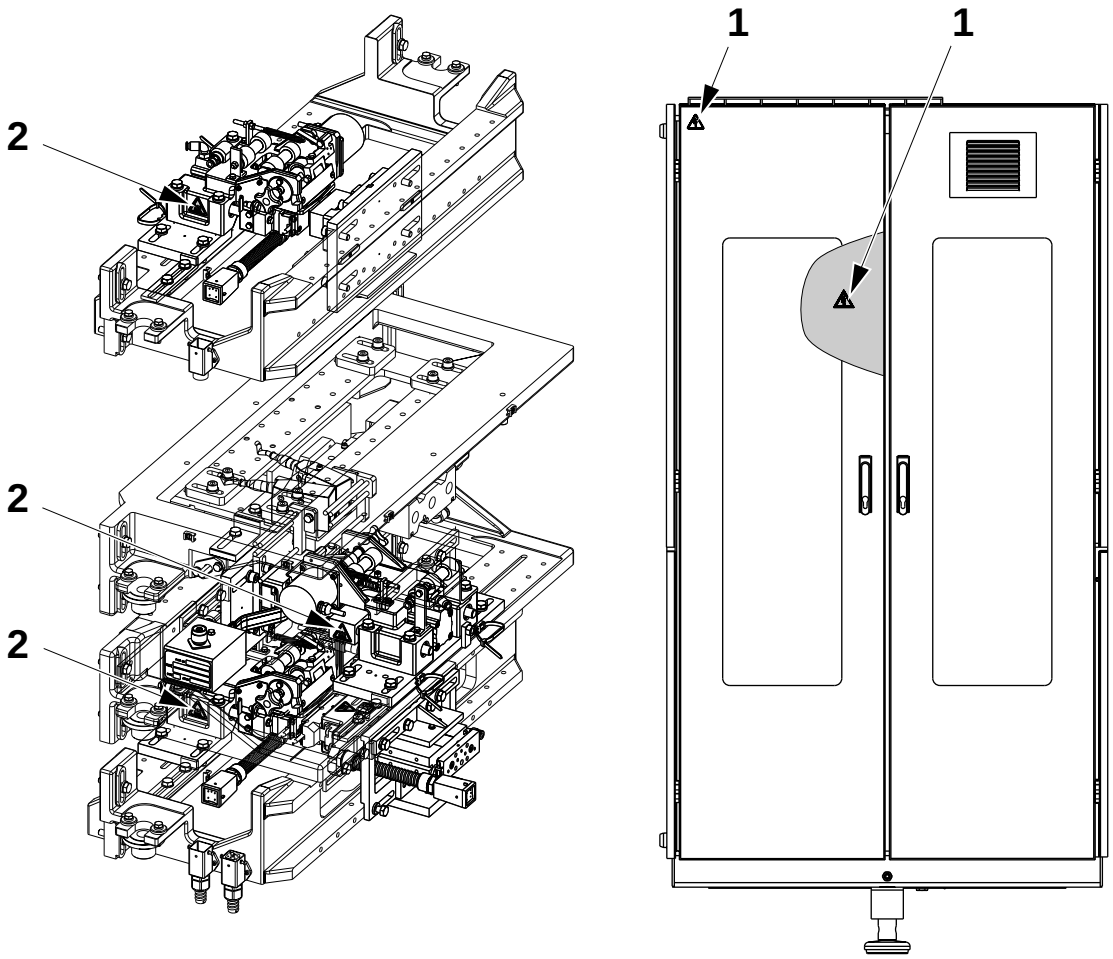

(Cont'd)

TechPub_2614345_0103 - 81611014sp.fm

(Cont'd)

The illustration shows where the safety signs are located. The position numbers refer to the table in the Safety Signs section.

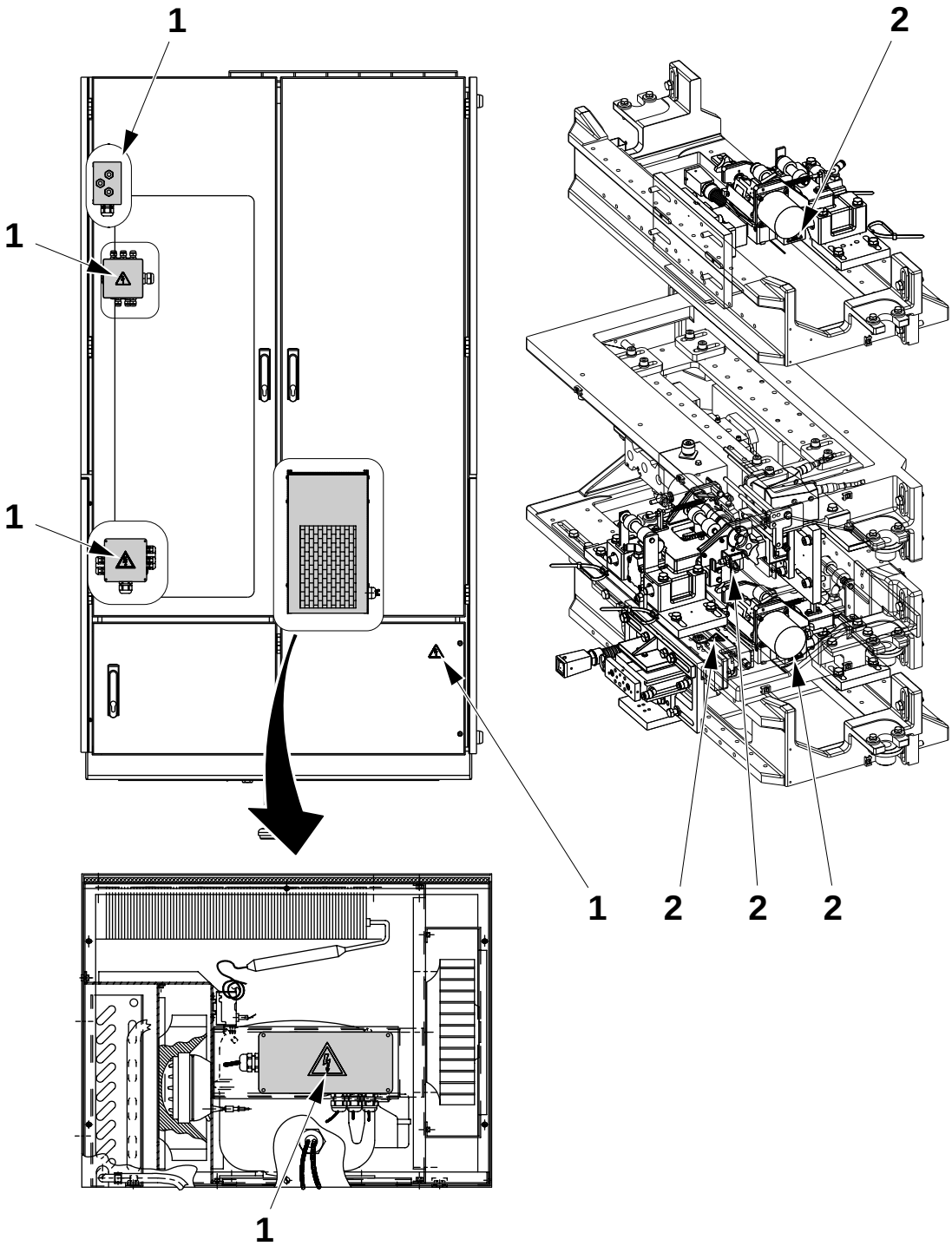

TechPub_2614345_0103 - 81611014sp.fm

Safety Devices

WARNING
Unshielded hazards.
Never inch or run this equipment if any safety device is inoperative.

Change inoperative components of the safety system immediately.

WARNING
Hazardous Voltage.
Activating a safety device, such as pressing an EMERGENCY STOP push-button or opening a door, does not disconnect the power supply from this equipment.

Emergency Stop

Emergency stop devices are used to stop this equipment immediately in an emergency. Learn the positions of all emergency stop devices and how to use them.

Instructions for a normal production stop are included in the Stop chapter of the Operation Manual.

TechPub_2614345_0103 - 81611014sp.fm

Emergency Stop Push-Buttons

Push one of the EMERGENCY STOP push-buttons to stop this equipment immediately.

The illustration shows an EMERGENCY STOP push-button. The location of each EMERGENCY STOP push-button is shown by an arrow.

Note! The EMERGENCY STOP push-buttons for the filling machine control also the PullTab unit.

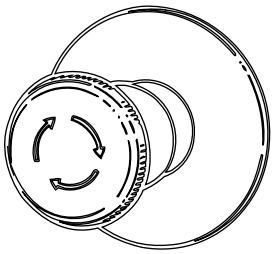

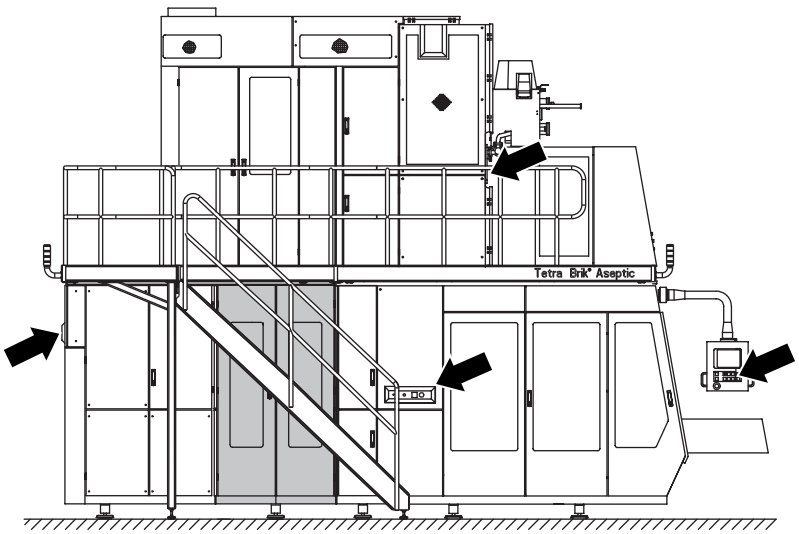

LH side

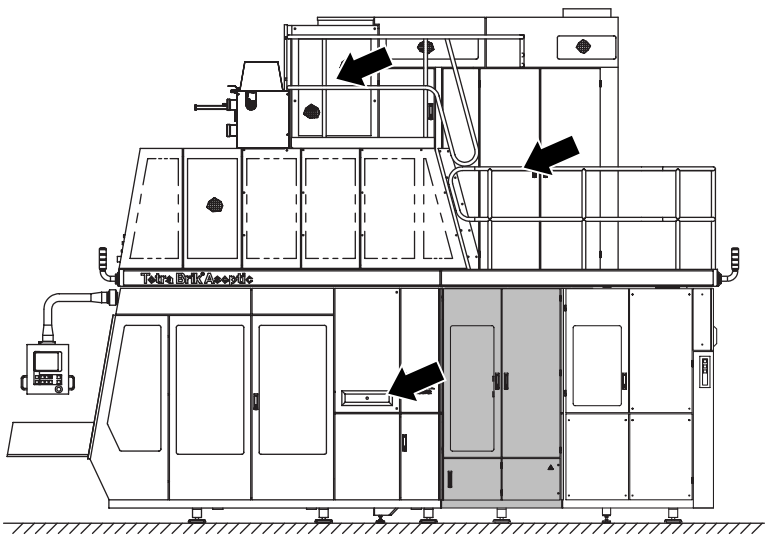

RH side

TechPub_2614345_0103 - 81611014sp.fm

Safeguards

WARNING
Moving machinery.
Never defeat or bypass the interlocking devices.

All movable guards, such as doors and covers, leading to hazardous areas are fitted with interlocking devices, usually electric safety switches. These devices are part of the safety system and must never be defeated, bypassed, or otherwise made inoperative.

CAUTION
Burn hazard.
Parts of this equipment protected by safeguards may be thermally hot after operation.

After installation and maintenance, and before this equipment is inched or run, check that all safeguards are in place and that they operate correctly.

CAUTION
Equipment damage.
Never stop this equipment by opening a movable guard.

The location of each movable guard is shown by an arrow.

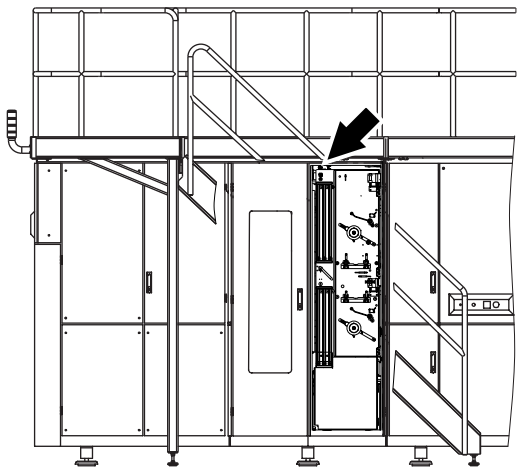

LH side

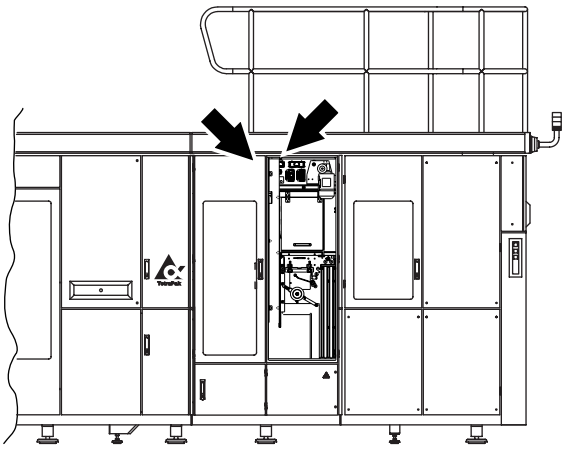

RH side

TechPub_2614345_0103 - 81611014sp.fm

Warning Lamp

A warning lamp is a column of warning lights:

- A red light (1) indicates a hazardous condition. This is an emergency situation that requires immediate action.
- A yellow light (2) indicates an abnormal condition. This is an impending critical condition calling for action by the operator.
- A blue light (3) indicates that operator action is required.

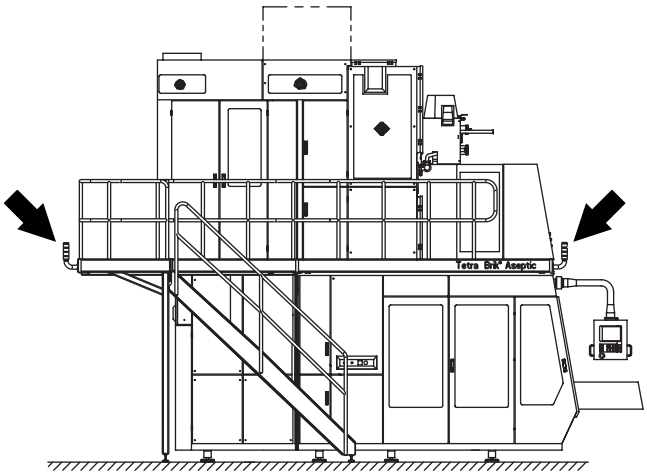

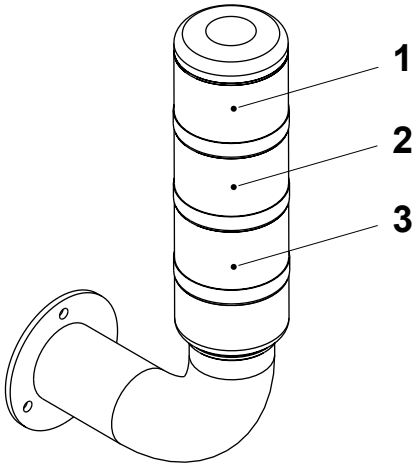

1 Red light
2 Yellow light
3 Blue light

A warning light flashes when operator action is required. The light stops flashing and remains lit when the alarm is acknowledged. After the fault is corrected or the operator takes the appropriate action, the warning light goes off.

Audible Alarm

The audible alarm produces a warning signal every time this equipment is about to start. The warning signal sounds for approximately three seconds prior to starting to alert personnel.

TechPub_2614345_0103 - 816110104sp.fm

Personal Protection

This section applies to all personnel at all times when this equipment is in operation. For special personal protection required when handling hazardous materials, see the Hazardous Materials section.

Noise Hazard

CAUTION
Hazardous noise.
Risk of impaired hearing.
Hearing protection is recommended whenever this equipment is in operation.

Entanglement Hazard

WARNING
Risk of entanglement.
Do not wear jewellery or loose clothing when working on or near this equipment. Long hair may not be loose.

TechPub_2614345_0103 - 81611014sp.fm

Hazardous Materials

WARNING

Contact with chemicals can cause death, serious injury, and illness.

Always follow the chemical manufacturer’s instructions when handling chemicals.

Make sure that

- the showers work
- an eyewash device, movable or wall-mounted, is available and operational
- additional washing facilities are nearby

Note! Learn the locations of all washing facilities in order to act immediately in case of an accident.





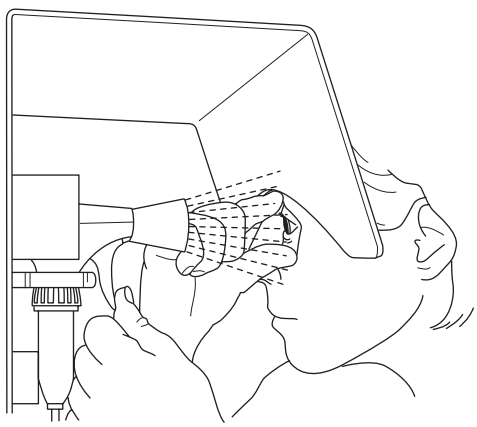

TechPub_2614345_0103 - 81611014sp.fm

Cooling Media R134a

WARNING

Refrigerant gas.

High concentration of cooling media R134a vapour can cause dizziness, headache, confusion and unconsciousness. In liquid form R134a can cause frostbite injuries on contact with skin. Always wear personal protective equipment.

Emergency Procedures

Inhaling large quantities of cooling media R134a vapour can cause dizziness, headache, confusion and unconsciousness. In liquid form cooling media R134a can cause frostbite injuries on contact with skin.

In the case of an accidental release of this refrigerant:

- leave the affected area immediately
- remove victims to fresh air and if necessary administer expired air resuscitation and/or cardiopulmonary resuscitation. Call for immediate medical attention
- in case of contact with eyes or skin, soak the exposed areas with luke warm water, not hot or cold. Call for immediate medical attention
- allow the vapour to dissipate, use auxiliary ventilation if available.

Handling and Storage of Cooling Media R134a

When handling cooling media R134a, make sure that:

- the cylinders are stored in a cool dry place away from direct sunlight or sources of heat
- the areas used for the storage and handling of this refrigerant are adequately ventilated
- the cylinders are transported carefully
- the cylinder valves are opened slowly.

Disposal of Cooling Media R134a

Cooling media R134a should whenever possible be reprocessed or recycled. Contact the manufacturer or supplier for information on authorised refrigerant reclamation and recycling programs.

TechPub_2614345_0103 - 81611014sp.fm

Supply Systems

Electrical Cabinet

DANGER

Hazardous voltage.
Will shock, burn, or cause death.
The power supply disconnector must be switched off and secured with a lock before maintenance inside the electrical cabinet.

Note! The key to the lock must be removed by the technician and retained in his/her possession until all work is completed.

Make sure that the electrical cabinet doors are closed after working inside the electrical cabinet. Doors with lock must be locked.

The location of each electrical cabinet is shown by an arrow.

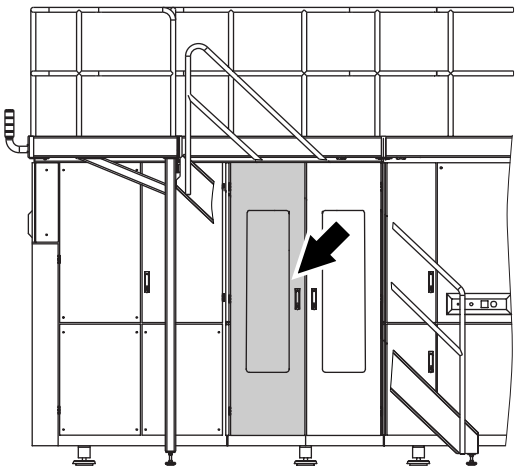

LH side

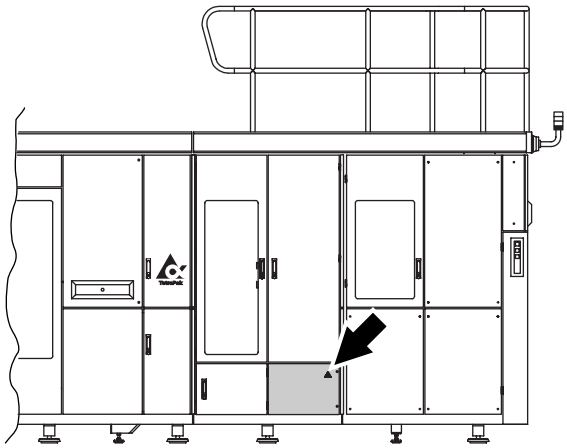

RH side

TechPub_2614345_0103 - 81611014sp.fm

Socket Outlet

WARNING
Hazardous voltage.
Can shock, burn, or cause death. Read the Maintenance Manual before using this socket outlet.

The illustrations show the socket outlet (1) and the residual current device (2). Their locations in the electrical cabinet (3) are shown by arrows.

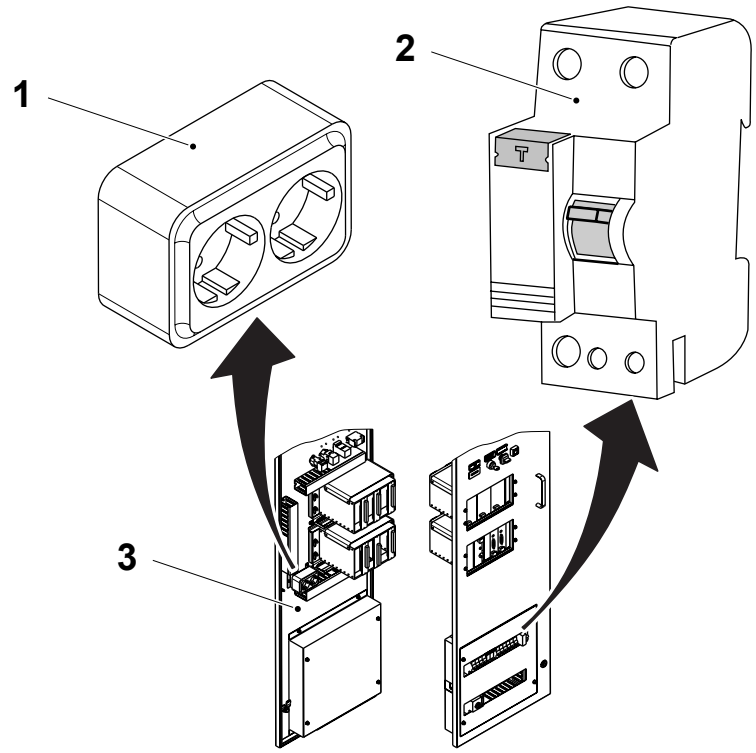

1 Socket outlet
2 Residual current device F029
3 Electrical cabinet

TechPub_2614345_0103 - 81611014sp.fm

Power Supply

DANGER

Hazardous voltage and moving machinery.
The power supply disconnector must be switched off and secured with a lock before any maintenance.

Note! The key to the lock must be removed by the technician and retained in his/her possession until all work is completed.

Certain maintenance procedures may require power supply systems to be on. These exceptions are clearly stated in the Maintenance Manual.

The illustration shows the power supply disconnector. The arrow shows its location on this equipment.

Note! The PullTab is supplied with power from the filling machines service unit.

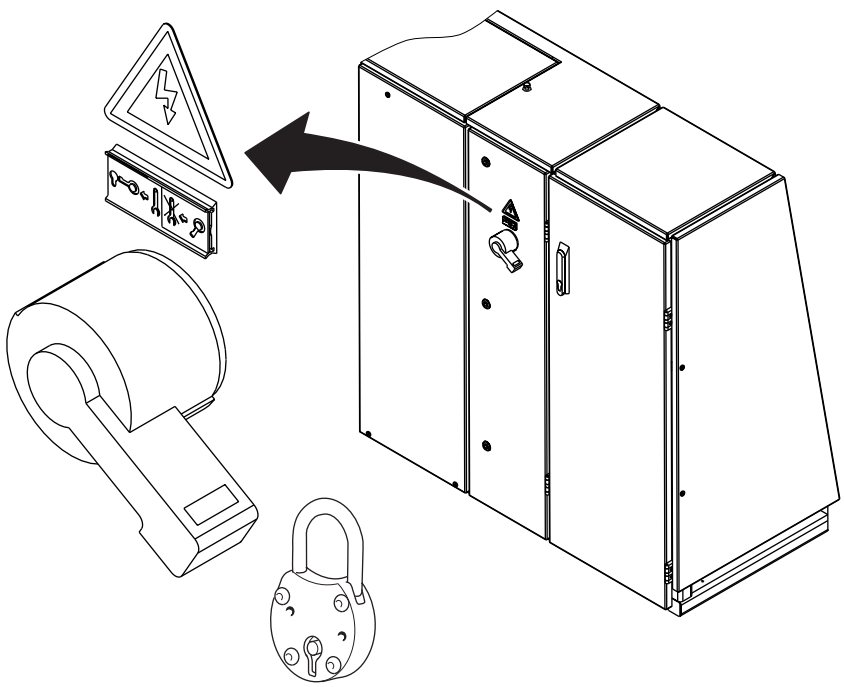

TechPub_2614345_0103 - 81611014sp.fm

Air Supply

WARNING

Compressed air and moving machinery.
Close the main air valve and secure it with a lock before any maintenance.

Note! The key to the lock must be removed by the technician and retained in his/her possession until all work is completed.

Certain maintenance procedures may require air supply systems to be on. These exceptions are clearly stated in the Maintenance Manual.

The illustrations show the main air valve (1) and the lock (2). Their locations are shown by arrows.

Note! The PullTab is supplied with air from the filling machines service unit.

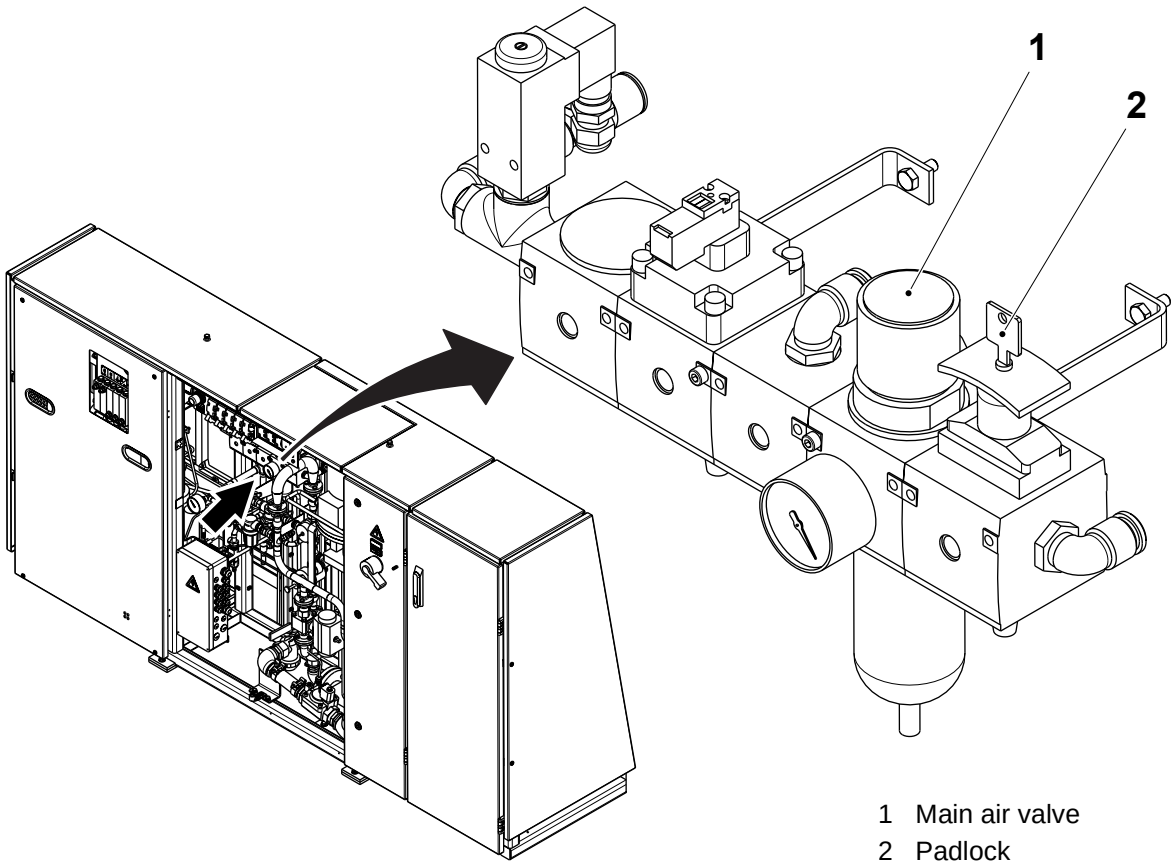

1 Main air valve
2 Padlock

TechPub_2614345_0103 - 81611014sp.fm

Equipment for Lifting and Moving Loads

WARNING

Risk of crushing injury.

Make sure that the capacity of the lifting equipment is adequate and that the equipment itself is in proper working order.

If lifting tackle must be joined to make up the necessary lengths, make sure that the joints are secure and have the same lifting capacity as the rest of the lifting tackle.

Always engage safety clips fitted to lifting hooks to prevent the lifting tackle from slipping off.

Use ropes or poles to steady and manoeuvre suspended loads. Do **not** use hands or feet.

Make sure that the route and destination are free from obstacles before moving a suspended load. It must always be possible to quickly and safely lower the load to the floor in an emergency.

When depositing loads, keep lifting tackle in place until the stability of the load has been substantiated.

TechPub_2614345_0103 - 81611014sp.fm

This page intentionally left blank

TechPub_2614345_0103 - 81611014sp.fm

0 PullTab Unit Overview

TechPub_2614345_0103 - B6114X00en.fm

PullTab Orientation

The following titles are used for the various parts within the PullTab unit.

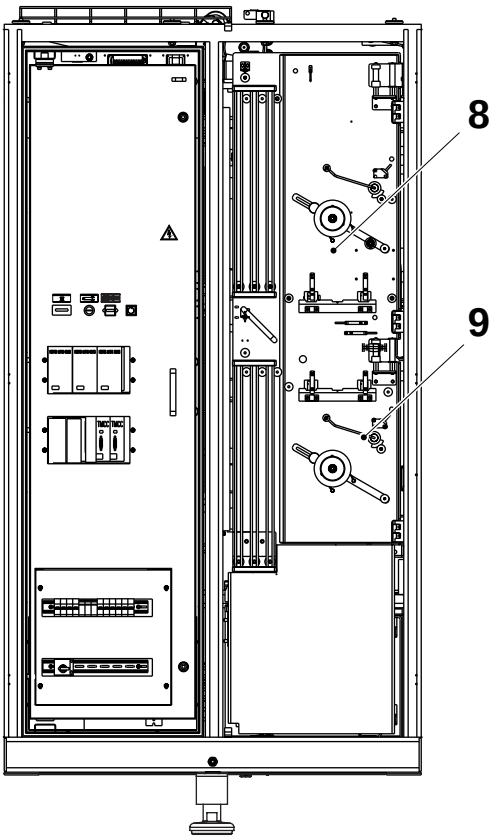

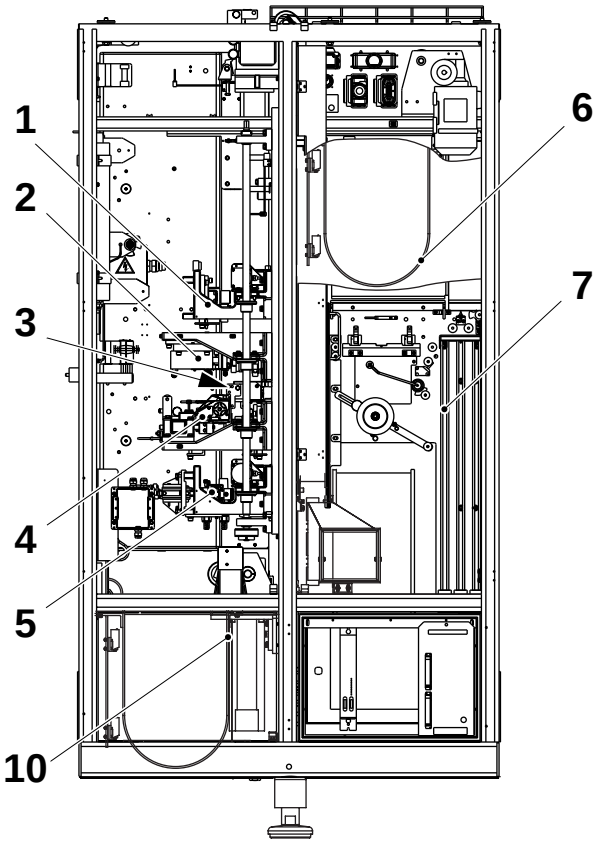

1 Outer patch applicator
2 Punch
3 Barcode reader
4 Patch applicator
5 Tab applicator & Reseal
6 Infeed loop
7 Tab magazine
8 Outer patch magazine
9 Patch magazine
10 Outfeed loop

TechPub_2614345_0103 - B6114X00en.fm

Functional Description . . . . . 0 - 5
Main Flowchart . . . . . 0 - 8

TechPub_2614345_0103 - B6114X00en.fm

This page intentionally left blank

TechPub_2614345_0103 - B6114X00en.fm

Functional Description

PullTab Cycle

The PullTab unit processes packaging material as required by the filling machine. When the filling machine pulls the packaging material, the lower photocell (7) in the outfeed photocell unit (5) is activated. This starts the PullTab cycle, and one length of packaging material is fed into position.

When the packaging material is in motion, the barcode reader (3) photocells read the position of the barcode. If the barcode is slightly behind or ahead of its ideal position, the servo motor compensates by feeding more or less packaging material.

When the packaging material has moved into position: an outer patch is applied at the applicator (1), a hole is punched at the punch arrangement (2), a patch is applied at the applicator (4) and a tab is applied at the tab applicator (6).

Each time the lower photocell (7) is activated the cycle is repeated.

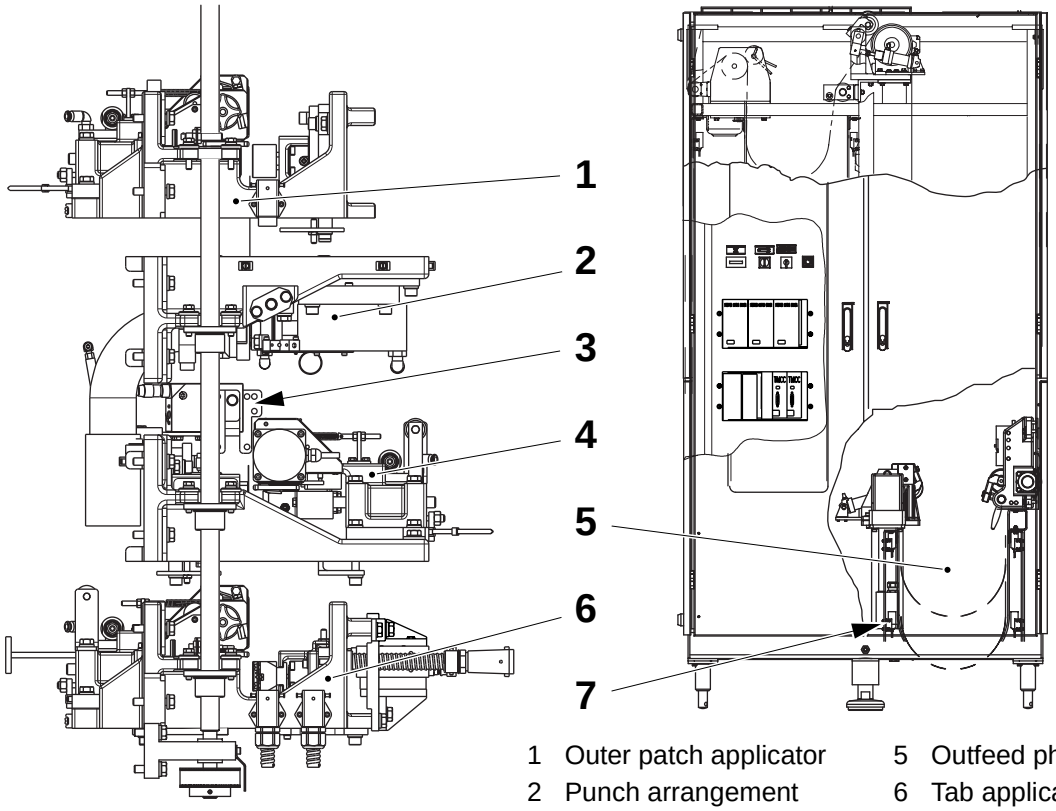

1 Outer patch applicator
2 Punch arrangement
3 Barcode reader
4 Patch applicator
5 Outfeed photocell unit
6 Tab applicator
7 Lower photocell

(Cont'd)

TechPub_2614345_0103 - B6114X00en.fm

(Cont'd)

Packaging Material Supply

When the supply of packaging material in the infeed photocell unit (9) is low (the lower photocell (11) is activated) the infeed motor (8) refills the magazine. The speed of the infeed motor (8) is variable and is set by the PLC in order to always keep the right amount of packaging material in the magazine. If the upper photocell (10) is deactivated, both the PullTab and the filling machine stop in SHORT STOP mode.

If the filling machine is running without the PT21, for more than 3 seconds, the filling machine will go into SHORT STOP mode and the alarm “PT21 outfeed rotation monitor” will be shown on the TPOP panel.

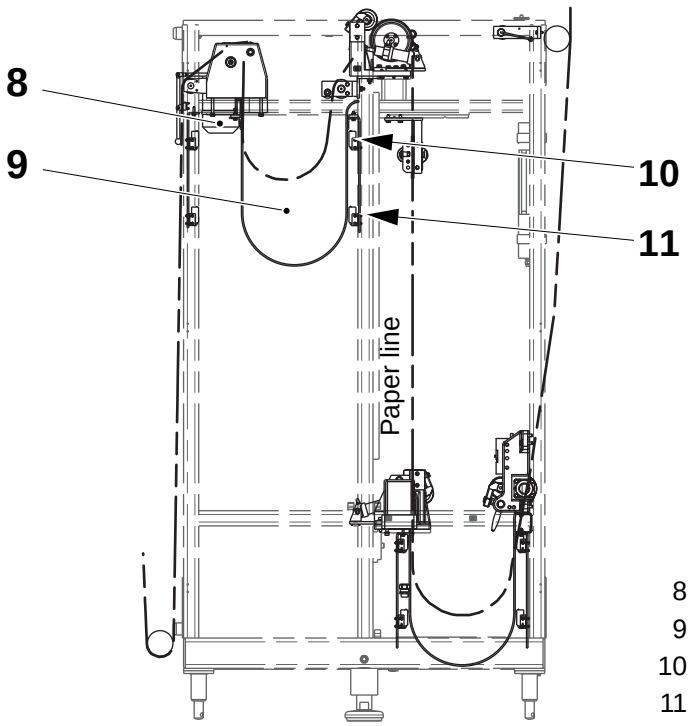

8 Infeed motor
9 Infeed photocell unit
10 Upper photocell
11 Lower photocell

(Cont'd)

TechPub_2614345_0103 - B6114X00en.fm

(Cont'd)

Strip Supply

The outer patch magazine (12), the patch magazine (14) and the tab magazine (17) supply strip to the PullTab unit. Sensors in the magazines monitor the strips supply level and activate the appropriate alarms when the level is low. If any of these alarms is left unattended for more than five minutes, the PullTab plus the filling machine stop in SHORT STOP mode.

The long path in the magazines allows the replacing of the strips supply without stopping the equipment. The old strip is joined to the new one on the splicing table (13) by means of a piece black tape. The black tape is detected by a fibre-optic sensor and a portion of the strip containing the black tape will be discarded automatically.

Rotation monitor sensors are installed on each magazine. Should a strip break, both the filling machine and the PT21 will stop in SHORT STOP mode and the appropriate alarms will be shown on the TPOP panel.

The patch detector (15) monitors the absence of a patch on the inside of the packaging material, and the tab detector (16) monitors the absence of a tab on the outside of the packaging material. When a tab or patch is missing, the PullTab plus the filling machine stop in SHORT STOP mode.

TechPub_2614345_0103 - B6114X00en.fm

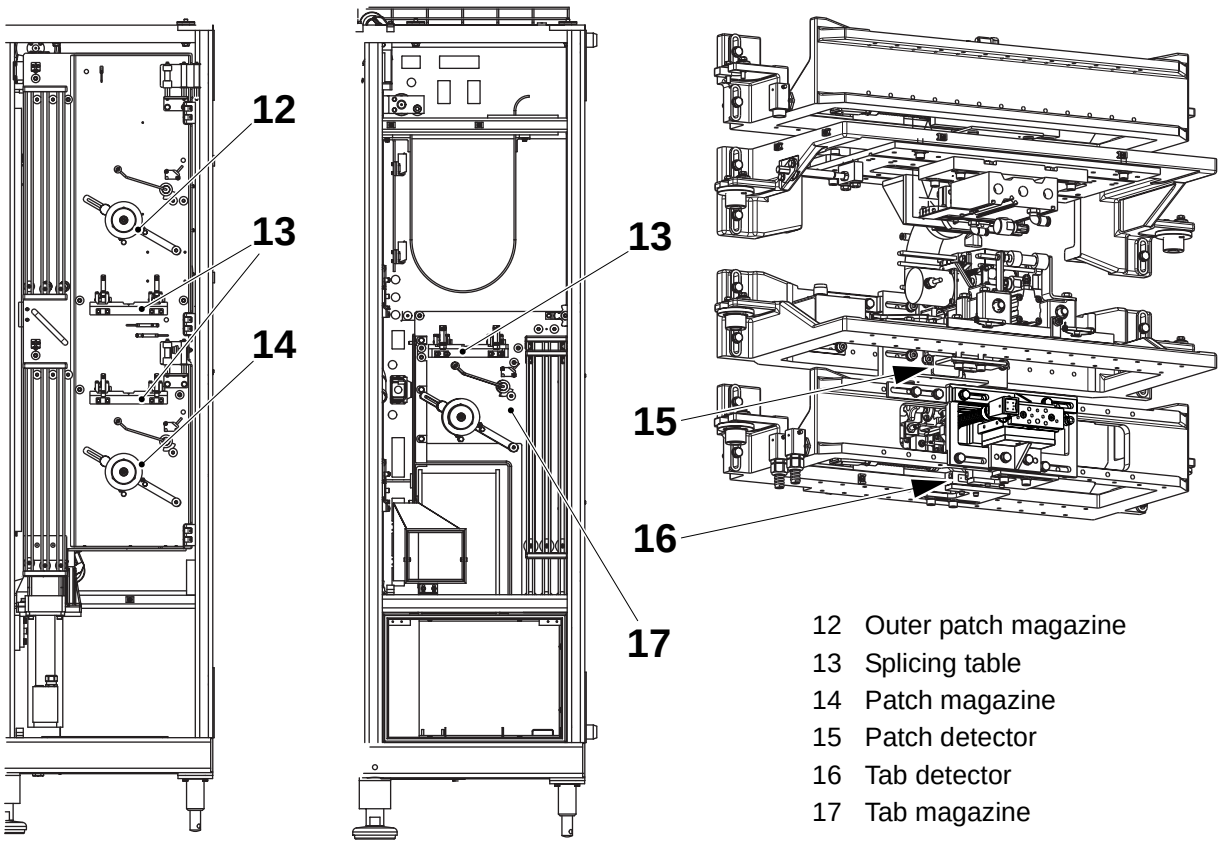

12 Outer patch magazine
13 Splicing table
14 Patch magazine
15 Patch detector
16 Tab detector
17 Tab magazine

Main Flowchart

The following flowchart shows the complete order in which the PullTab unit must be set up.

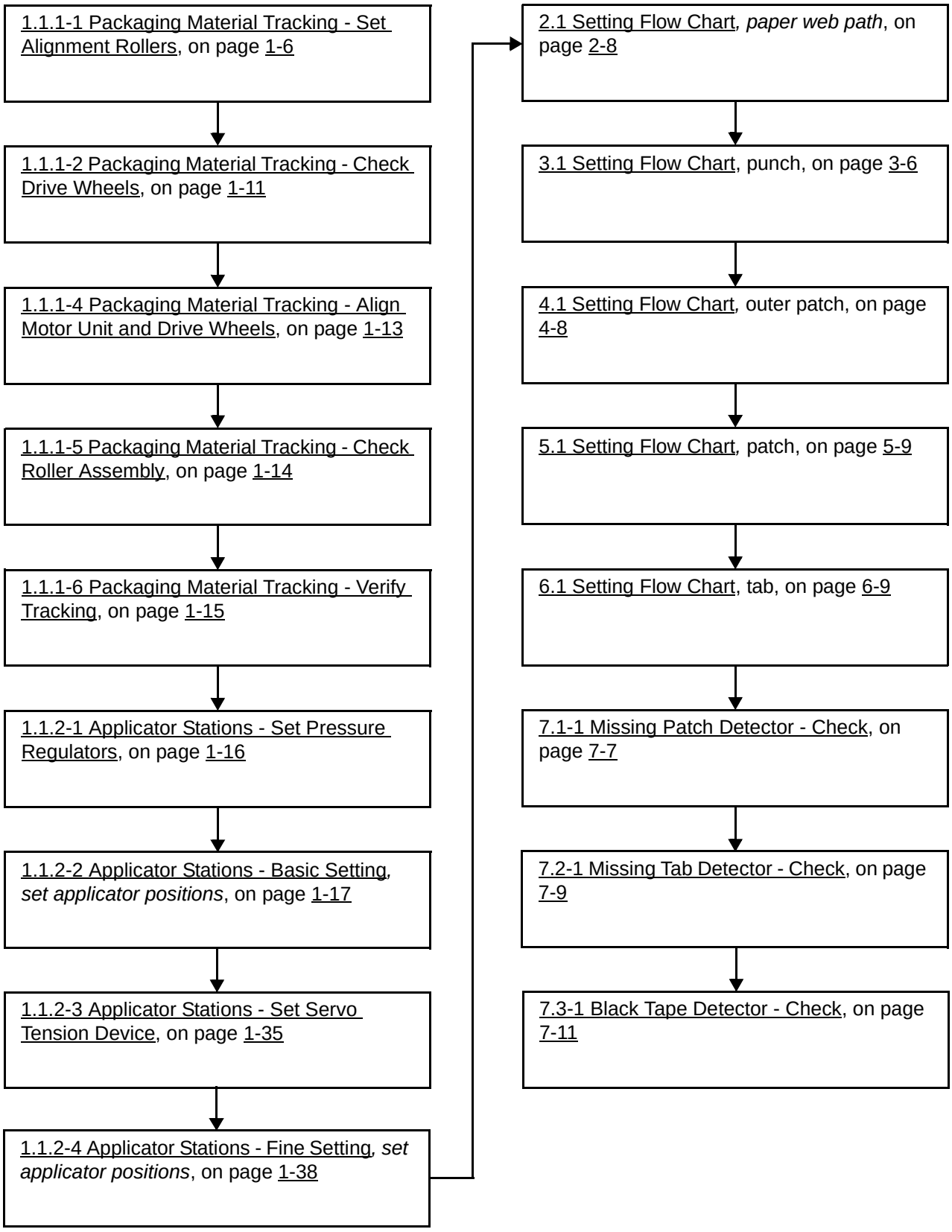

TechPub_2614345_0103 - B6114X00en.fm

1 Opening Setting

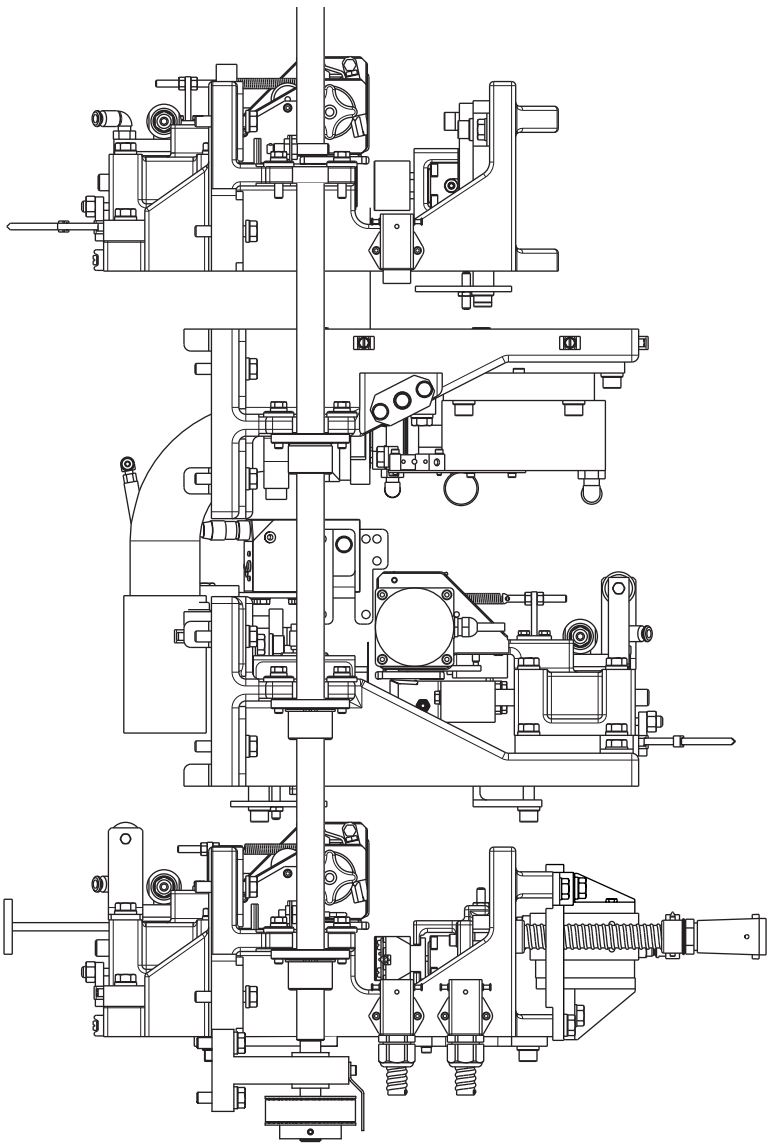

TechPub_2614345_0103 - B6114A00en.fm

Opening Setting - Description

This chapter describes the checks and settings that are required on the machine delivery. Perform the complete procedure only once, or when the PullTab undergoes a major overhaul.

The sequence in which the procedures are described is the **actual** sequence:

- packaging material tracking (1)
- applicator stations basic setting (2)
- applicator stations fine setting (3).

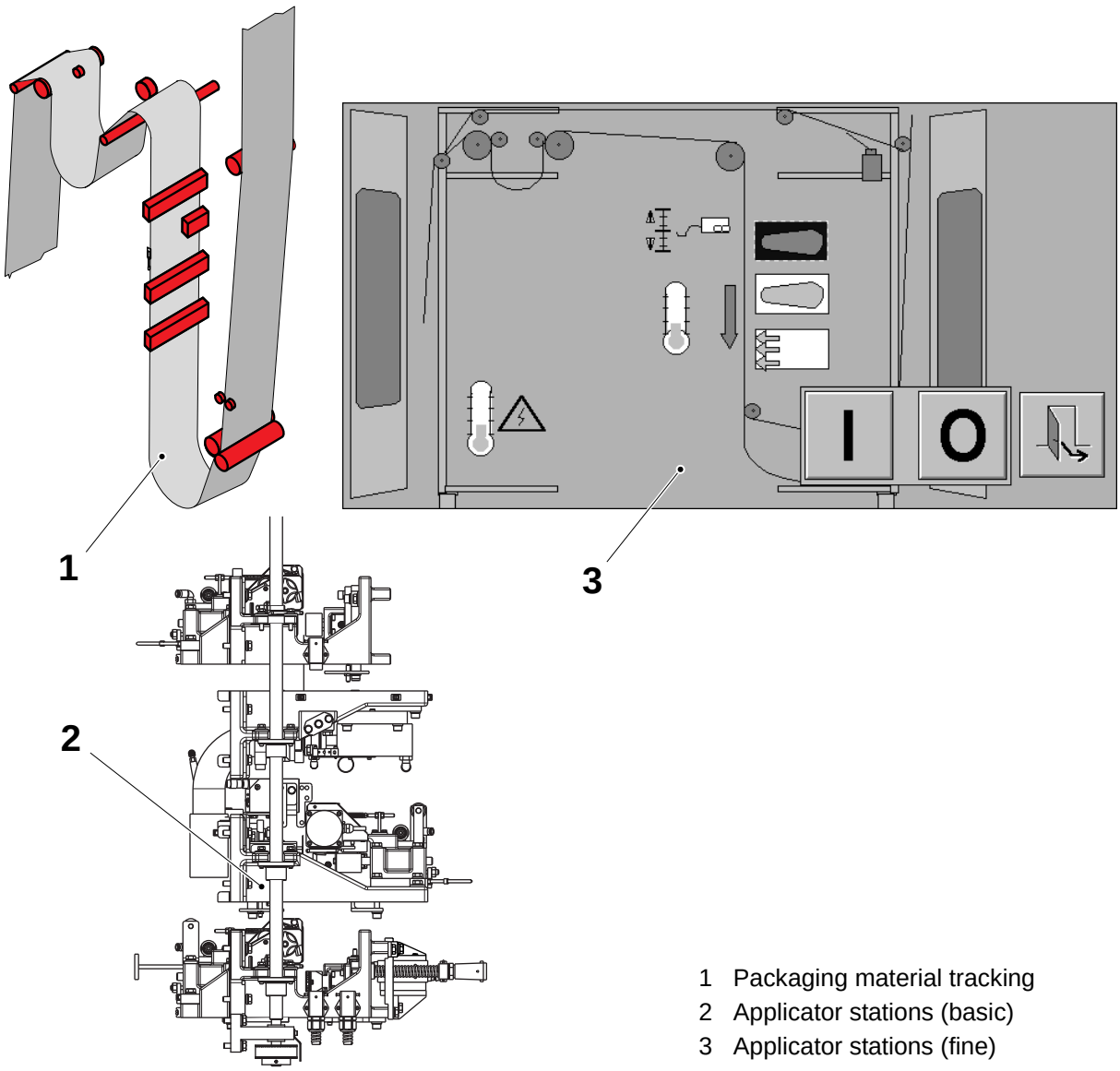

1 Packaging material tracking
2 Applicator stations (basic)
3 Applicator stations (fine)

TechPub_2614345_0103 - B6114A00en.fm

1-1 Opening Setting - Flowchart . . . . . 1 - 5

1.1 PullTab Unit . . . . . 1 - 6

1.1.1 Packaging Material Tracking . . . . . 1 - 6

1.1.1-1 Packaging Material Tracking - Set Alignment Rollers . . . . . 1 - 6

1.1.1-2 Packaging Material Tracking - Check Drive Wheels . . . . . 1 - 11

1.1.1-3 Packaging Material Tracking - Check Drive and Counter Roller Cylinders . . . . . 1 - 12

1.1.1-4 Packaging Material Tracking - Align Motor Unit and Drive Wheels . . . . . 1 - 13

1.1.1-5 Packaging Material Tracking - Check Roller Assembly . . . . . 1 - 14

1.1.1-6 Packaging Material Tracking - Verify Tracking . . . . . 1 - 15

1.1.2 Applicator Stations . . . . . 1 - 16

1.1.2-1 Applicator Stations - Set Pressure Regulators . . . . . 1 - 16

1.1.2-2 Applicator Stations - Basic Setting . . . . . 1 - 17

1.1.2-3 Applicator Stations - Set Servo Tension Device . . . . . 1 - 35

1.1.2-4 Applicator Stations - Fine Setting . . . . . 1 - 38

1.1.3 Lifting Device . . . . . 1 - 57

1.1.3-1 Lifting Device - Check . . . . . 1 - 57

1.1.3-2 Lifting Device - Set Timing Belt . . . . . 1 - 58

TechPub_2614345_0103 - B6114A00en.fm

This page intentionally left blank

TechPub_2614345_0103 - B6114A00en.fm

1-1 Opening Setting - Flowchart

The flowchart shows the setup sequence.

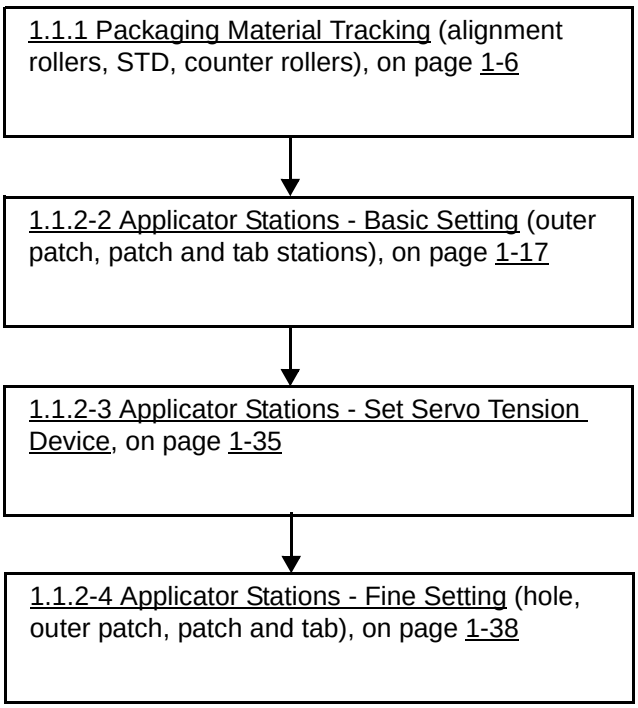

TechPub_2614345_0103 - B6114A00en.fm

1.1 PullTab Unit

SPC Reference	648508-0600

1.1.1 Packaging Material Tracking

1.1.1-1 Packaging Material Tracking - Set Alignment Rollers

Machine Status	Air **OFF** Mains Power **OFF**
SPC Reference	1095931-0400

Note! Make sure the filling machine and PullTab are level, see the IM for more information.

Thread the packaging material through the filling machine and the PullTab.

Motor unit wheel

Check the distance **A** between the wheel (1) and the bracket (2), see 2.2.5-4 Motor Unit - Change Wheel.

Make sure the counter roller (3) is aligned with the wheel (1).

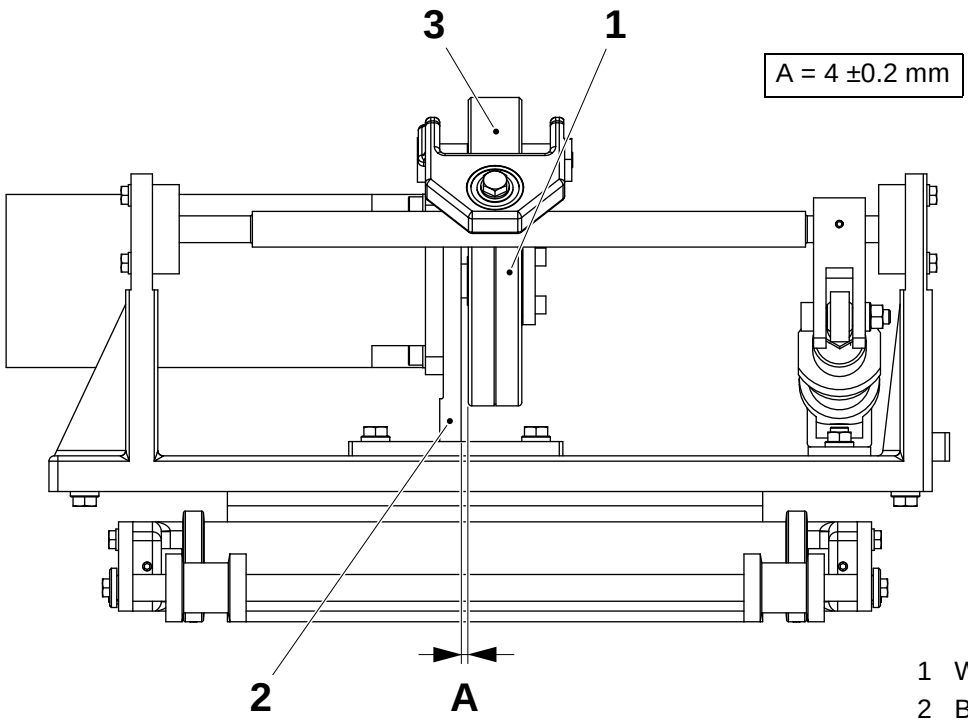

1 Wheel
2 Bracket
3 Counter roller

(Cont'd)

TechPub_2614345_0103 - B6114A01en.fm

(Cont'd)

Infeed Unit

a) Make sure the packaging material is centred on the ASU magazine roller (1).

b) Make sure the bending roller (2) is level. If required do as follows:
   - loosen the screws (3)
   - loosen the nut (4) and turn the eccentric (5) until the roller (2) is level
   - carefully tighten the nut (4) and the screws (3).

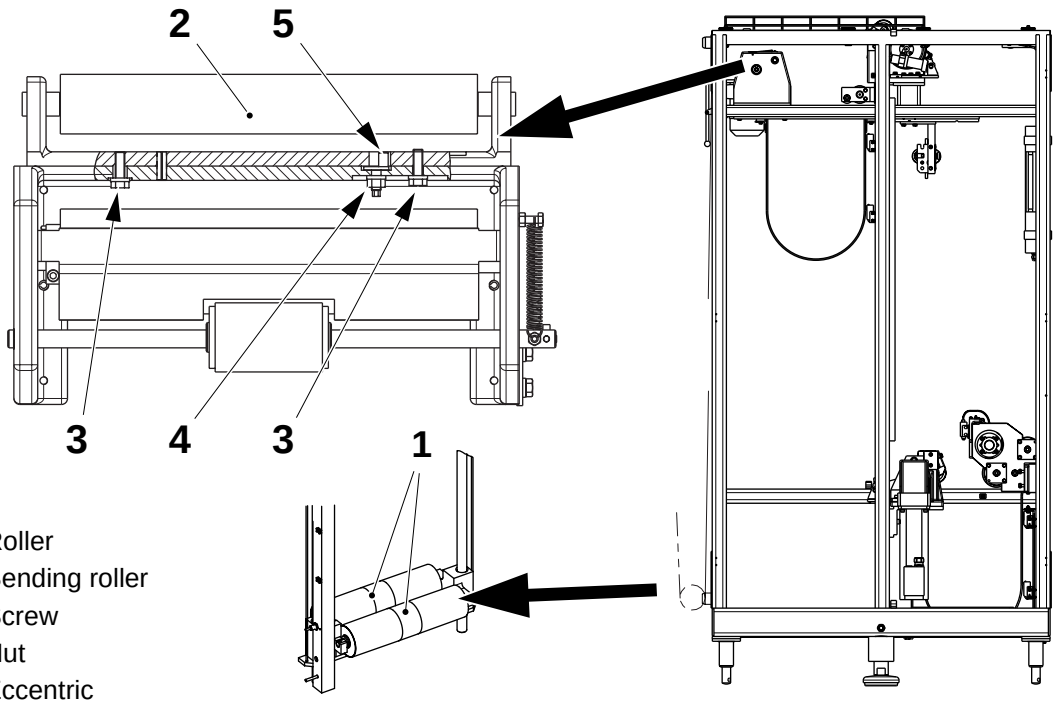

1 Roller
2 Bending roller
3 Screw
4 Nut
5 Eccentric

(Cont'd)

TechPub_2614345_0103 - B6114A01en.fm

(Cont'd)

Motor Unit and Drive Wheel

Check the distances **A** and **B** between the centre of the drive wheel (1) and the bending roller flanges (2) and (3).

If required, perform the following instructions:

a) Slightly loosen the grub screw (4). Move the flange (2) so that its edge is the distance **A** from the centre of the drive wheel (1). Tighten the grub screw (4).

b) Loosen the grub screw (5). Move the flange (3) so that its edge is the distance **B** from the edge of the flange (2). Tighten the grub screw (5).

Package	Nominal packaging material width (mm)	A ±0.5 (mm)	B ±0.5 (mm)
TPA 250 Sq	174	87	174.2
TPA 330 Sq	202	101	202.2
TBA 500 S	252	226	252.2
TPA 1000 Sq	260	130	260.2
TPA 1000 S	279	139.5	279.2
TBA 1000 S	305	152.5	305.2
TBA 1000 B	322	161	322.2
TBA 1000 Sq	292	146	292.2
TBA 1500 S	322	161	322.2

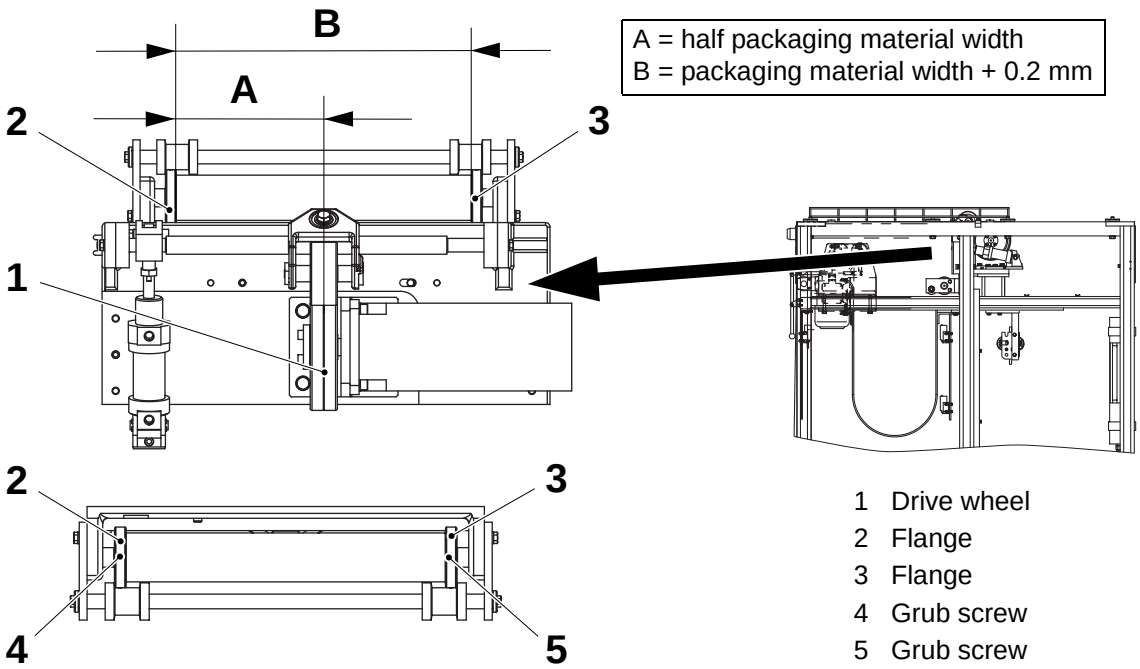

1 Drive wheel
2 Flange
3 Flange
4 Grub screw
5 Grub screw

(Cont'd)

TechPub_2614345_0103 - B6114A01en.fm

(Cont'd)

Upper Paper Guide

a) Roughly set the distance **A** by loosening the locking screws (1) and move the paper guide (2) along the shafts (3). Tighten the locking screws (1).

b) Set the distance **A** by loosening the locking screw (4) and turning the knob (5) so that the packaging material (6) just touches the flat guide edge (7) or the wheels (8) of the guide (9). Tighten the locking screw (4).

c) Adjust the gap between the rollers (10) and (11) by loosening the locking screw (12) and turning the knob (13). The two rollers must grip the packaging material firmly without marking it. Tighten the locking screw (12).

Package	A ±2.0 (mm)		Package	A ±2.0 (mm)
TPA 250 Sq	91		TBA 1000 Sq	32
TPA 330 Sq	77		TPA 1000 Sq	48
TBA 500 S	52		TPA 1000 S	38.5
TBA 1000 S	25.5		TBA 1500 S	17
TBA 1000 B	17			

TechPub_2614345_0103 - B6114A01en.fm

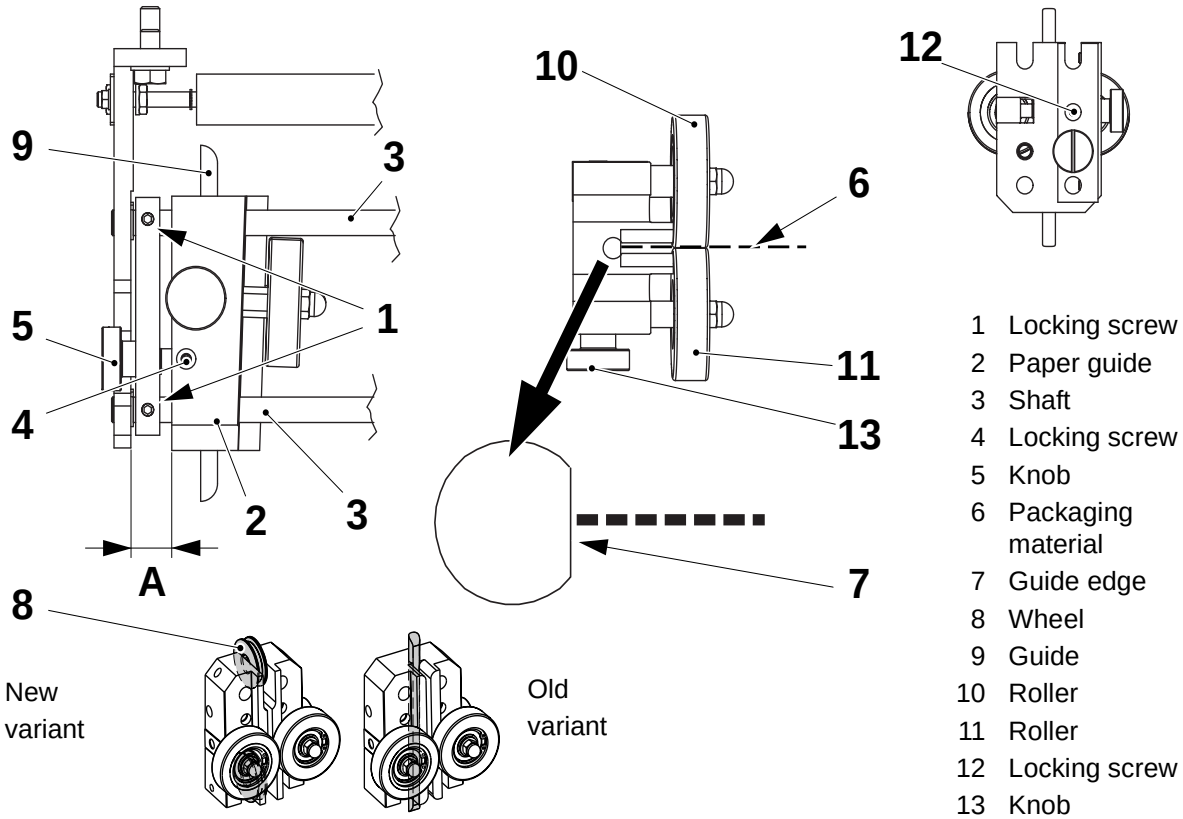

1 Locking screw
2 Paper guide
3 Shaft
4 Locking screw
5 Knob
6 Packaging material
7 Guide edge
8 Wheel
9 Guide
10 Roller
11 Roller
12 Locking screw
13 Knob

(Cont'd)

(Cont'd)

Outfeed Tension Device Paper Guide

a) Roughly set the distance **A** by loosening the locking screws (1) and move the paper guide (2) along the shafts (3). Tighten the locking screws (1).

b) Set the distance **A** by loosening the locking screw (4) and turning the knob (5) so that the packaging material (6) just touches the flat guide edge (7) or the wheels (8) of the guide (9). Tighten the locking screw (4).

c) Adjust the gap between the rollers (10) and (11) by loosening the locking screw (12) and turning the knob (13). The two rollers must grip the packaging material firmly without marking it. Tighten the locking screw (12).

Package	A ±2.0 (mm)		Package	A ±2.0 (mm)
TPA 250 Sq	164		TBA 1000 Sq	105
TPA 330 Sq	150		TPA 1000 Sq	121
TBA 500 S	125		TPA 1000 S	111.5
TBA 1000 S	98.5		TBA 1500 S	90
TBA 1000 B	90			

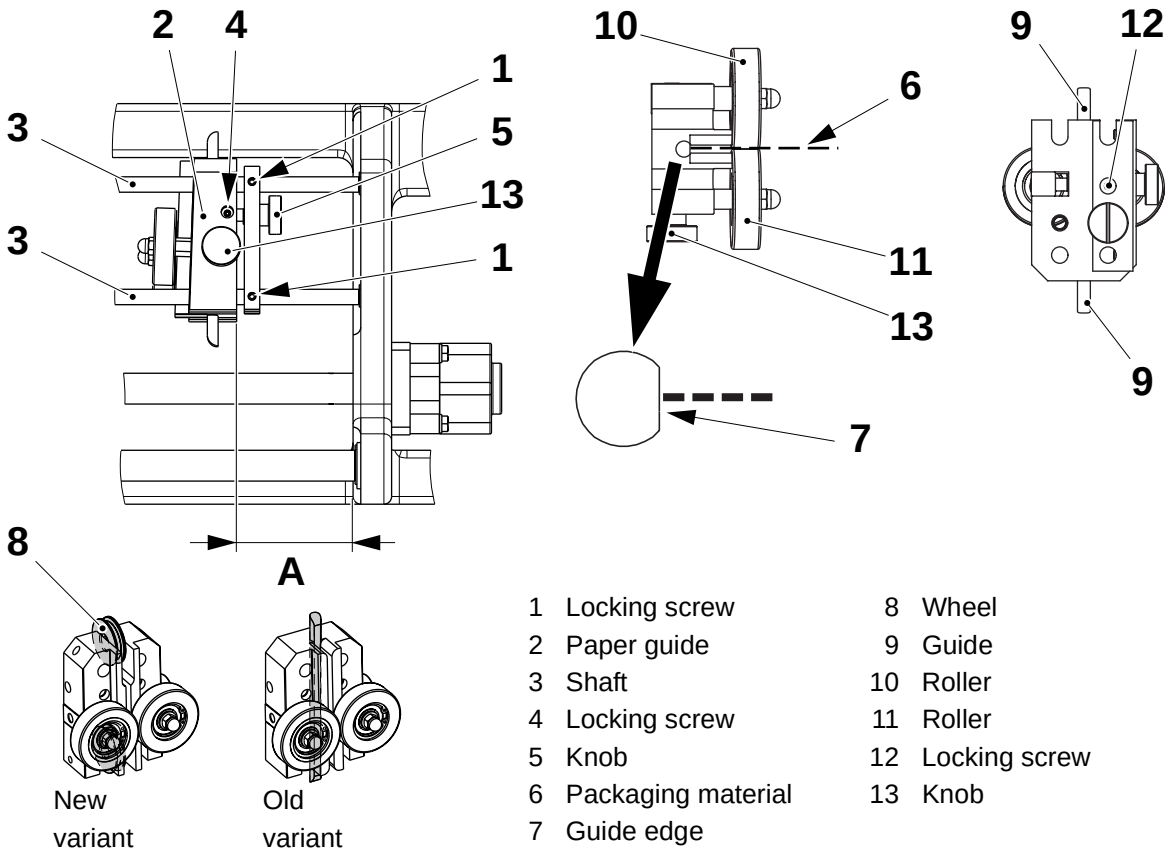

1 Locking screw
2 Paper guide
3 Shaft
4 Locking screw
5 Knob
6 Packaging material
7 Guide edge
8 Wheel
9 Guide
10 Roller
11 Roller
12 Locking screw
13 Knob

TechPub_2614345_0103 - B6114A01en.fm

1.1.1-2 Packaging Material Tracking - Check Drive Wheels

Machine Status	Air **OFF** Mains Power **OFF**
SPC Reference	2504611-0100

Check the distance **A** between the drive wheels (1) and the bracket (2) edges. Check the distance **B** between the bellow coupling (3) and the bracket (4). Make sure the counter rollers (5) are aligned with the drive wheels (1), see 2.2.1-5 Drive Motor - Change Drive Wheel.

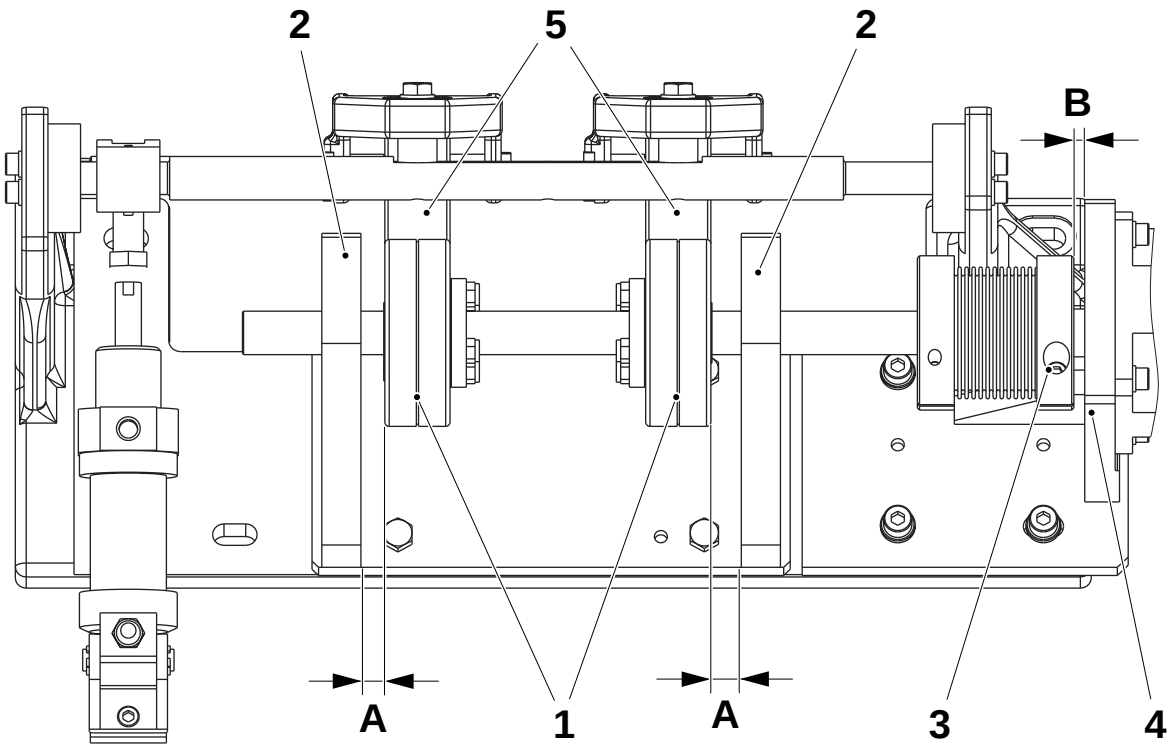

A = 7.5 ±1.0 mm
B = 5.0 ±2.0 mm

1 Drive wheel
2 Bracket
3 Bellow coupling
4 Bracket
5 Counter roller

TechPub_2614345_0103 - B6114A01en.fm

1.1.1-3 Packaging Material Tracking - Check Drive and Counter Roller Cylinders

Machine Status	Air **OFF** Mains Power **OFF**
SPC Reference	2526544-0100 2504611-0100

Check the distance **A** between the nut (1) and the cylinder (2) edge, see 2.2.1-6 Drive Motor - Set Cylinder.

Check the distance **B** between nut (1) and the cylinder (2) edge, see 2.2.5-3 Motor Unit - Set Cylinder.

A = 39 ±1.0 mm

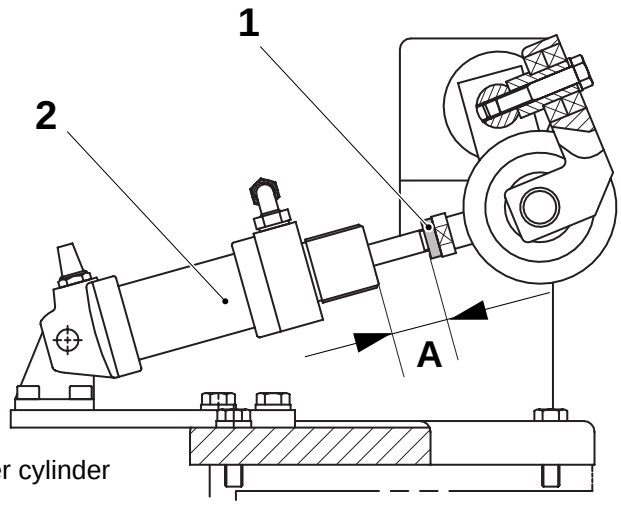

Drive motor - pressure roller cylinder

B = 12 ±1.0 mm

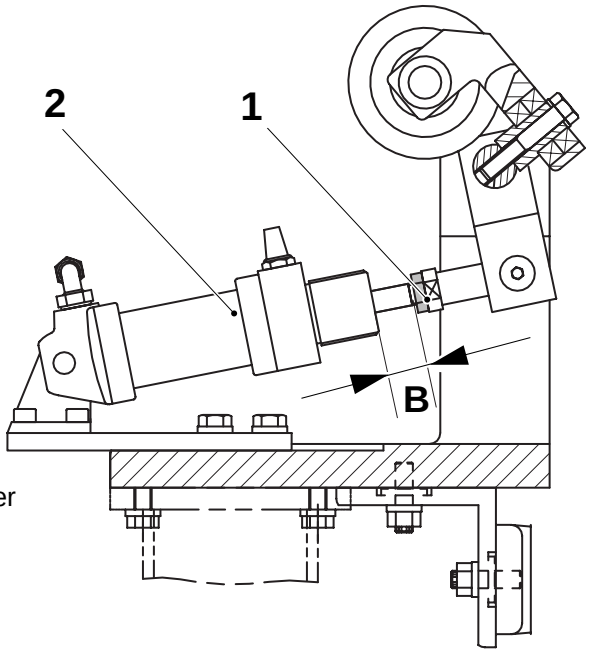

Motor unit - pressure roller cylinder

1 Nut
2 Cylinder

TechPub_2614345_0103 - B6114A01en.fm

1.1.1-4 Packaging Material Tracking - Align Motor Unit and Drive Wheels

Machine Status	Air **OFF** Mains Power **OFF**
SPC Reference	648508-0600 2504611-0100 2526544-0100

a) Fit a screw into the hole (1) within the drive wheel shaft.

b) Suspend a well tensioned lead wire (2) from the centre of the motor unit wheel (3).

c) Make sure the lead wire (2) is centred over the hole (1) with a screw.

d) When adjustments are necessary, loosen the four screws (4) and move the bracket (5) until the lead wire (2) is centred.

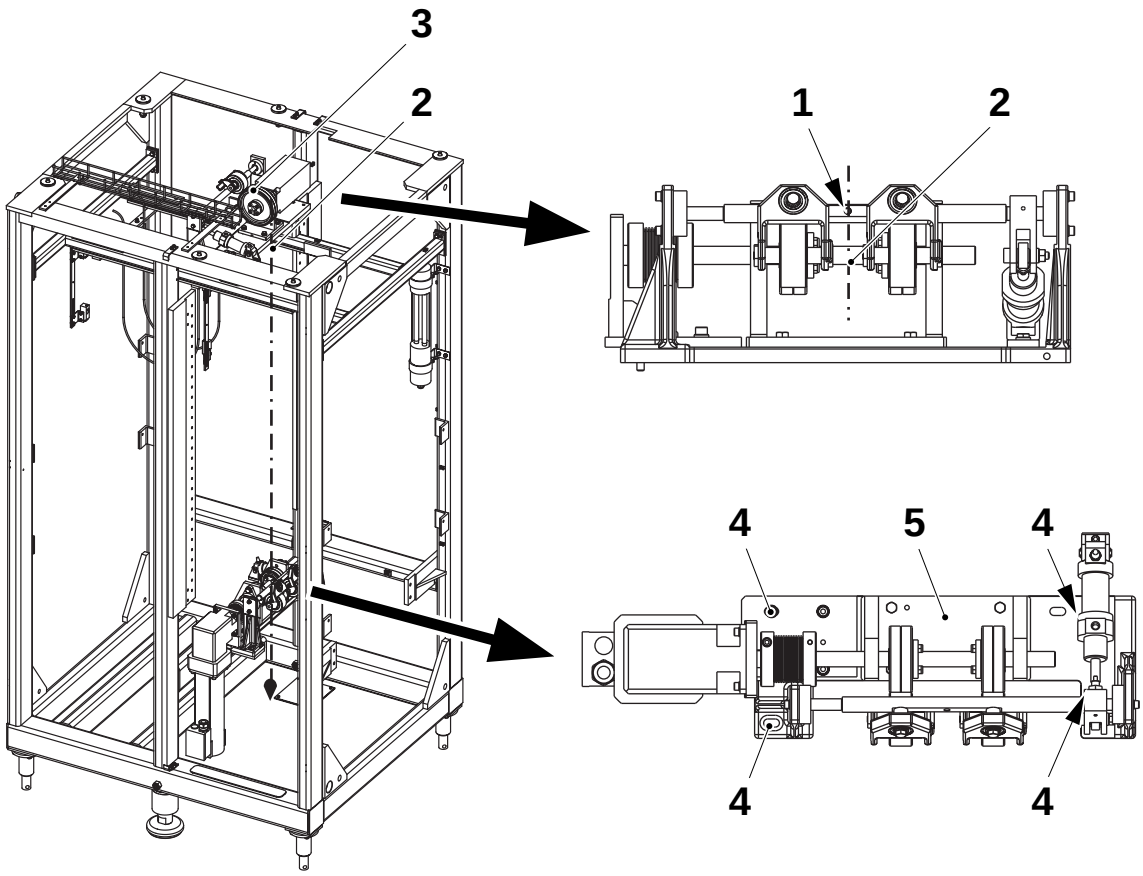

1 Hole
2 Lead wire
3 Wheel
4 Screw
5 Bracket

TechPub_2614345_0103 - B6114A01en.fm

1.1.1-5 Packaging Material Tracking - Check Roller Assembly

Machine Status	Air **OFF** Mains Power **OFF**
SPC Reference	2507782-0100

a) Make sure the knob (1) on the damper (2) is set to position **1**.

b) Make sure the counter roller (3) is fitted into positions **A** or **B**:
- position **A** if the hole is **not** in the centre of the packaging material
- position **B** if the hole is in the centre of the packaging material.

Package	Hole type	Pos.		Package	Hole type	Pos.
TPA 330 Sq	48	B		TPA 250 Sq	72	B
TBA 500 S	55	A		TBA 1000 S	85	A
TPA 1000 S	60	B		TBA 1000 B	85	A
TPA 1000 Sq	60	B		TBA 1000 Sq	85	B
TBA 1000 S	65	A		TBA 1500 S	85	A
TBA 1000 B	65	A		TBA 1000 S	90	A
TBA 1000 Sq	65	B		TBA 1500 S	90	A

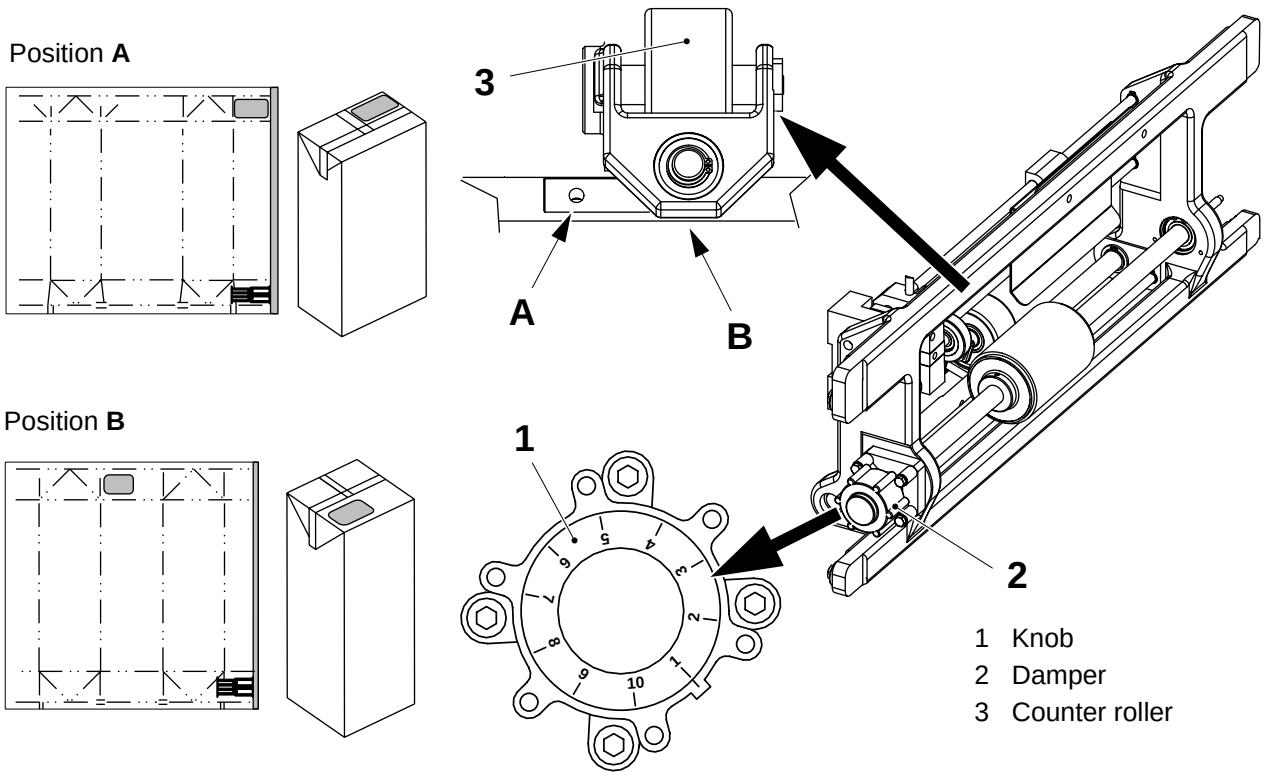

TechPub_2614345_0103 - B6114A01en.fm

1.1.1-6 Packaging Material Tracking - Verify Tracking

Machine Status	PRODUCTION
SPC Reference	1095931-0400

Make sure the packaging material tracks through the machine without moving from side to side.

Make sure the edge of the packaging material does not curl up against the side of the flanges (1) and the paper guide (2) on the machine rollers.

If required, align the rollers, see 1.1.1-1 Packaging Material Tracking - Set Alignment Rollers.

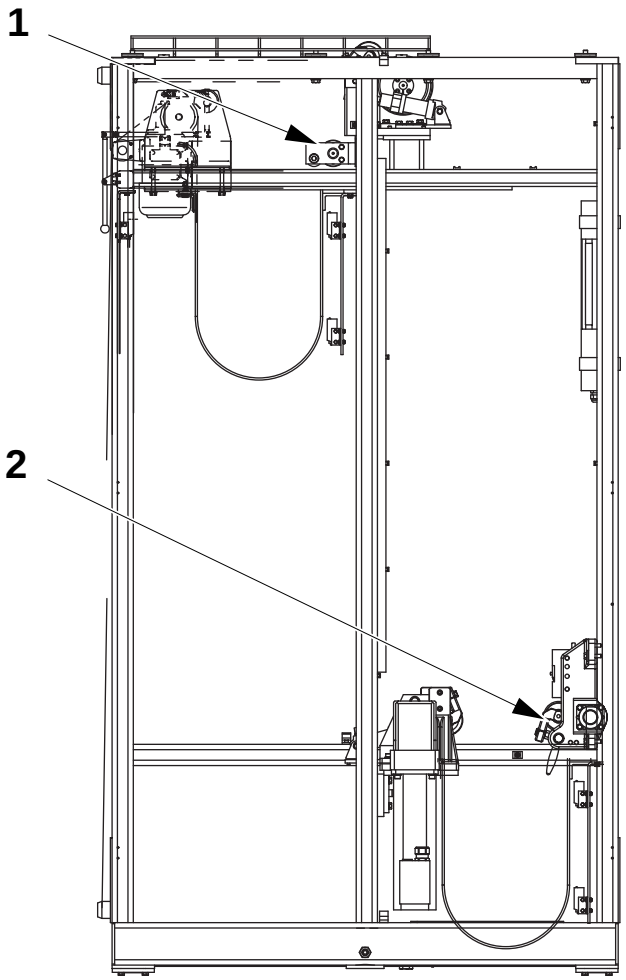

1 Flange
2 Paper guide

TechPub_2614345_0103 - B6114A01en.fm

1.1.2 Applicator Stations

1.1.2-1 Applicator Stations - Set Pressure Regulators

Machine Status	Ready for PRODUCTION

Make sure the values of the pressure regulator gauges are correct, see 11.1 Technical Data.

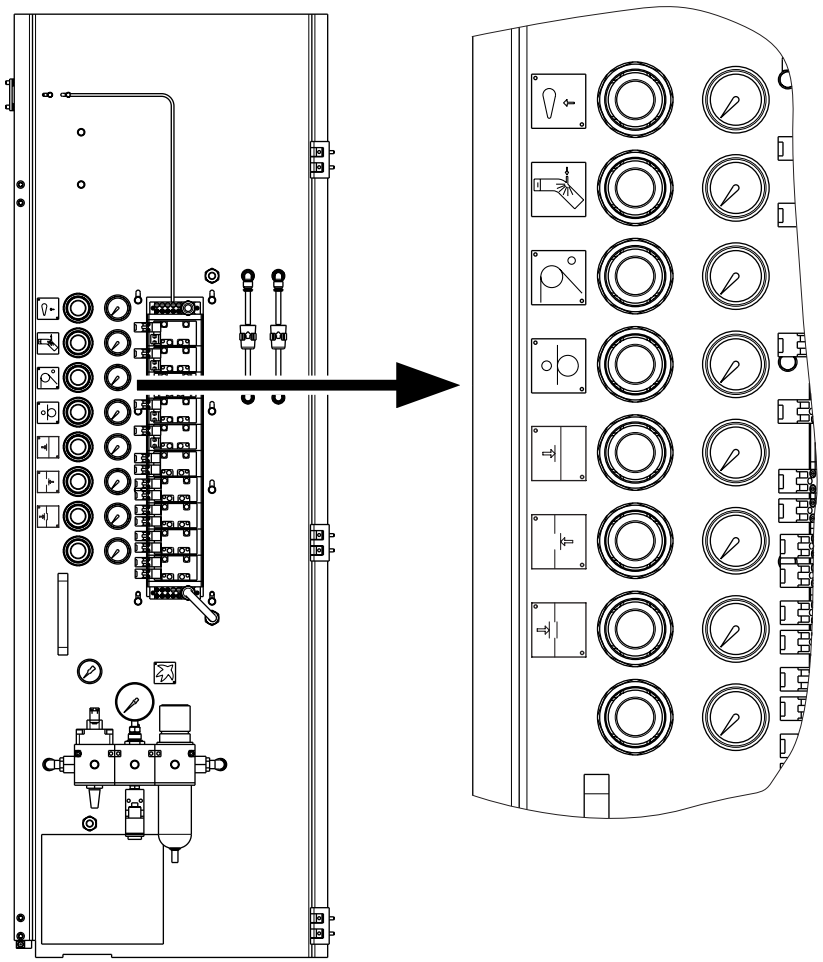

TechPub_2614345_0103 - B6114A01en.fm

1.1.2-2 Applicator Stations - Basic Setting

Machine Status	Air **ON** Mains Power **ON**
SPC Reference	1539202-0100 1539190-0100 2526518-0100 1539197-0100

Set Counter Jaw Positions with Respect to the Paper Line

a) Fit the reference line (1) to the two bars (2).

b) Switch the key selector located on the PT21 electrical panel to the SERVICE position. Make sure the reference line (1) is in tension.

c) Make sure the pressure regulators (3), (4) and (5) are correctly set, see 11.1 Technical Data.

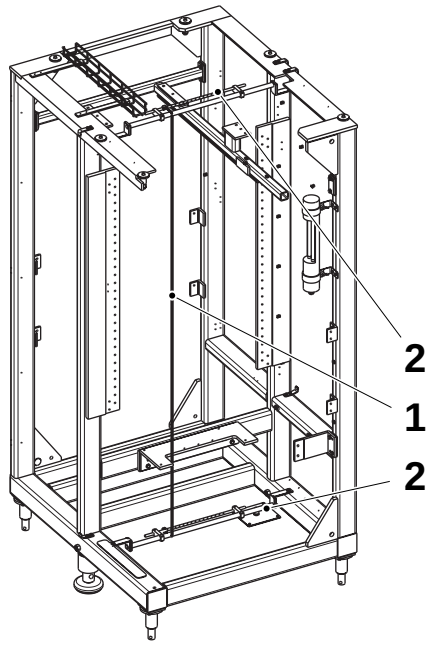

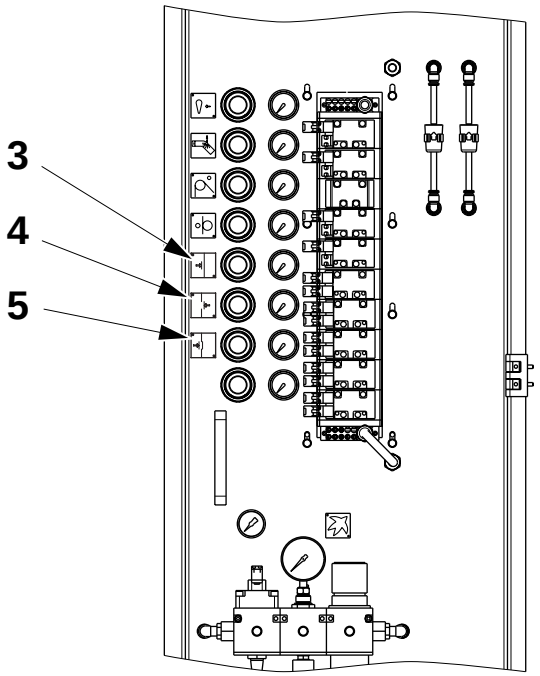

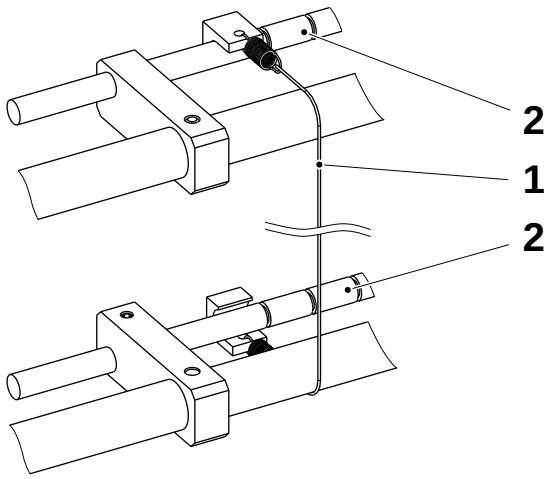

1 Reference line
2 Bar
3 Pressure regulator
4 Pressure regulator
5 Pressure regulator

(Cont'd)

TechPub_2614345_0103 - B61114A01en.fm

(Cont'd)

d) Manually activate the cylinder for the tab counter jaw cylinder.

e) Make sure the reference line (1) just clears the face of the three counter jaw sealing heads (6) (distance **A**).

f) Adjust as required, see 6.2.2-7 Tab Counter Jaw - Set Position, 4.2.2-5 Outer Patch Counter Jaw - Check Position and 5.2.2-7 Patch Counter Jaw - Check Position.

g) Remove the reference line (1).

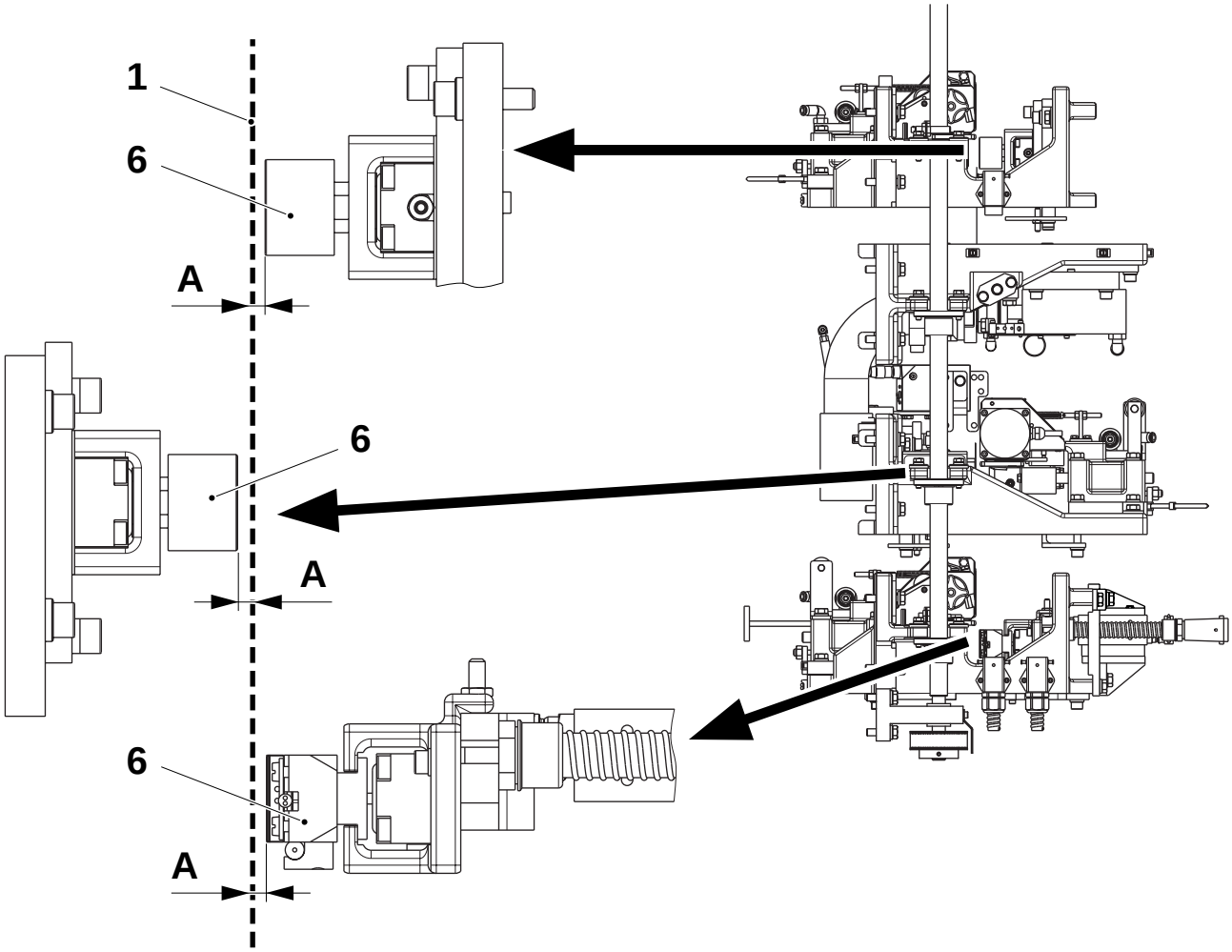

A = 0 - 0.5 mm

1 Reference line
6 Sealing head

TechPub_2614345_0103 - B6114A01en.fm

(Cont'd)

(Cont'd)

Set Applicator Stations in the Vertical Position with Templates

a) Fit the template (1) between the paper guide (2) bracket and the punch arrangement (3) as shown below. Set the distance by following the instructions on page 1-22.

Note! The following instruction is valid only for hole type 48 or 72.

b) Fit the template (4) between the punch arrangement (3) and the outer patch applicator (5) as shown below. Set the distance by following the instructions on page 1-22.

c) Fit the template (6) between the punch arrangement (3) and the patch applicator (7) as shown below. Set the distance by following the instructions on page 1-22.

d) Fit the template (8) between the patch applicator (7) and the tab applicator (9) as shown below. Set the distance by following the instructions on page 1-22.

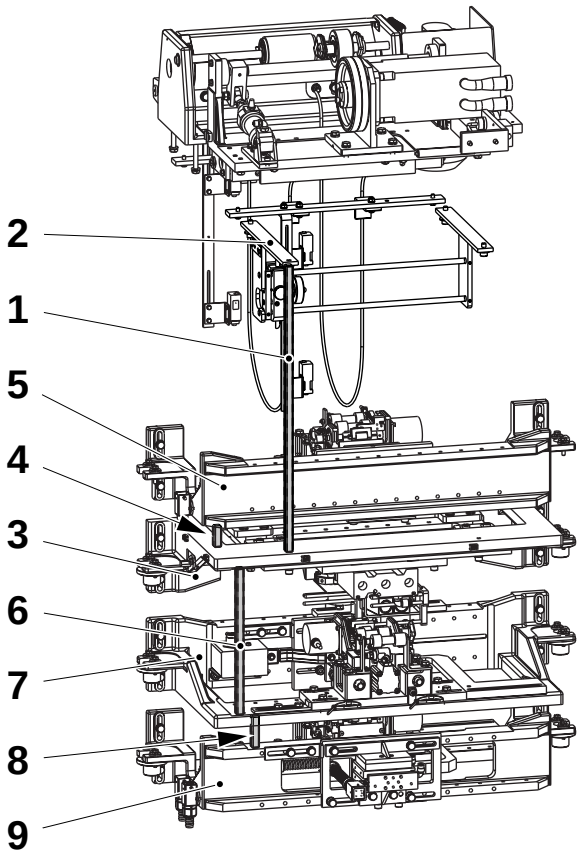

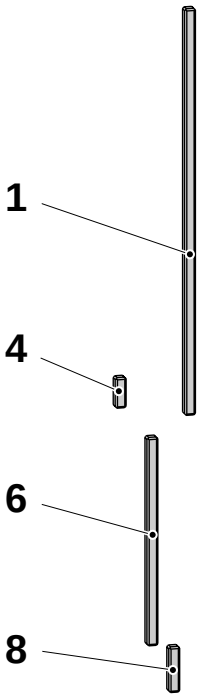

1 Template, TP No. 2563963-xx
2 Paper guide
3 Punch arrangement
4 Template, TP No. 2563960-xx
5 Outer patch applicator
6 Template, TP No. 2563961-xx
7 Patch applicator
8 Template, TP No. 2563962-xx
9 Tab applicator

(Cont'd)

TechPub_2614345_0103 - B6114A01en.fm

(Cont'd)

Set Applicator Stations in the Vertical Position without Templates

a) Set the distance **A** between the paper guide (1) and the punch arrangement bracket (2) by following the instructions on page 1-22.

Note! The following instruction is valid only for hole type 48 or 72.

b) Set the distance **B** between the outer patch bracket (3) and the punch arrangement bracket (2) by following the instructions on page 1-22.

Note! X > 10 mm means that the outer patch bracket (3) should have at least a **10 mm gap** to the punch arrangement bracket (2).

Package	Hole type	A ±1 (mm)	B ±1 (mm)		Package	Hole type	A ±1 (mm)	B ±1 (mm)
TPA 330 Sq	48	550.0	48.0		TPA 250 Sq	72	557.0	42.0
TBA 500 S	55	493.5	x > 10		TBA 1000 S	85	375.0	x > 10
TPA 1000 S	60	375.0	x > 10		TBA 1000 B	85	425.0	x > 10
TPA 1000 Sq	60	305.0	x > 10		TBA 1000 Sq	85	345.0	x > 10
TBA 1000 S	65	377.0	x > 10		TBA 1500 S	85	255.0	x > 10
TBA 1000 B	65	426.0	x > 10		TBA 1000 S	90	375.3	x > 10
TBA 1000 Sq	65	347.0	x > 10		TBA 1500 S	90	254	x > 10

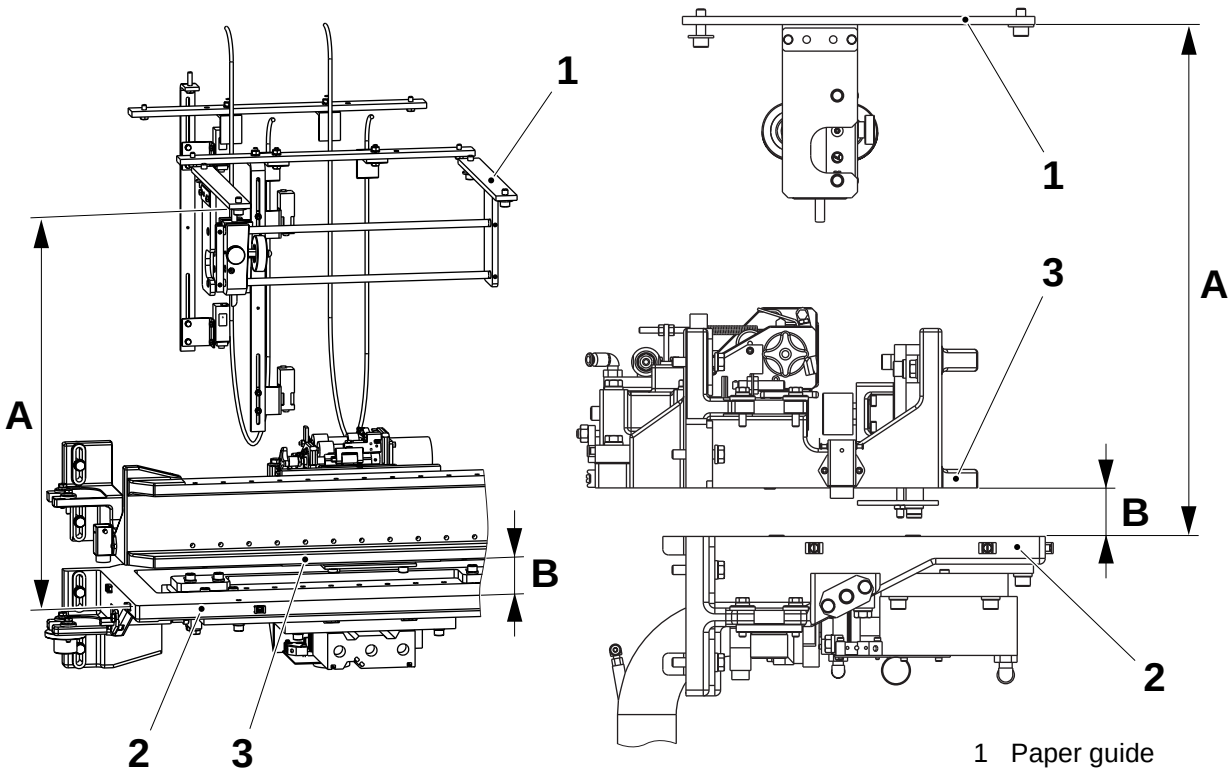

1 Paper guide
2 Bracket
3 Bracket

(Cont'd)

TechPub_2614345_0103 - B6114A01en.fm

(Cont'd)

c) Set the distances **C** between the punch arrangement bracket (2) and the patch bracket (4) by following the instructions on page 1-22.

d) Set the distances **D** between the patch bracket (4) and the tab bracket (5) by following the instructions on page 1-22.

Package	Hole type	C ±1 (mm)	D ±1 (mm)		Package	Hole type	C ±1 (mm)	D ±1 (mm)
TPA 330 Sq	48	288.8	65.3		TPA 250 Sq	72	285.5	62.7
TBA 500 S	55	315.0	95.4		TBA 1000 S	85	373.3	155.5
TPA 1000 S	60	373.75	155.3		TBA 1000 B	85	348.3	130.5
TPA 1000 Sq	60	408.8	190.3		TBA 1000 Sq	85	388.3	170.5
TBA 1000 S	65	373.3	154.5		TBA 1500 S	85	433.25	215.5
TBA 1000 B	65	348.3	129.5		TBA 1000 S	90	373.5	155.7
TBA 1000 Sq	65	388.3	169.5		TBA 1500 S	90	430	213.5

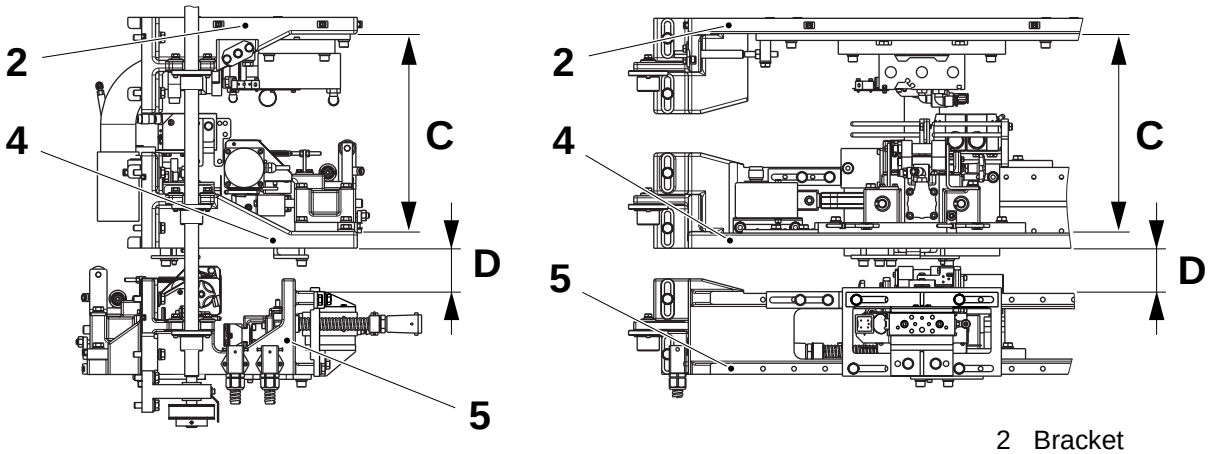

2 Bracket
4 Bracket
5 Bracket

(Cont'd)

TechPub_2614345_0103 - B6114A01en.fm

(Cont'd)

Set Distances between Stations

Note! Perform the following procedures on one applicator station at a time.

a) Screw in the brass bushings (2) until they are tight against the bracket (1).

b) Tighten the two screws (3).

c) Make sure the other applicator station screws (3) are loose and the brass bushings (2) are not tight against the bracket (1).

Note! Perform the items a), b) and c) on both sides of the PullTab.

d) Loosen the four screws (4) on the bracket (1), and adjust the guide screws (5) until the distances **A**, **B**, **C** and **D**, see previous pages, are obtained.

e) Tighten the four screws (4).

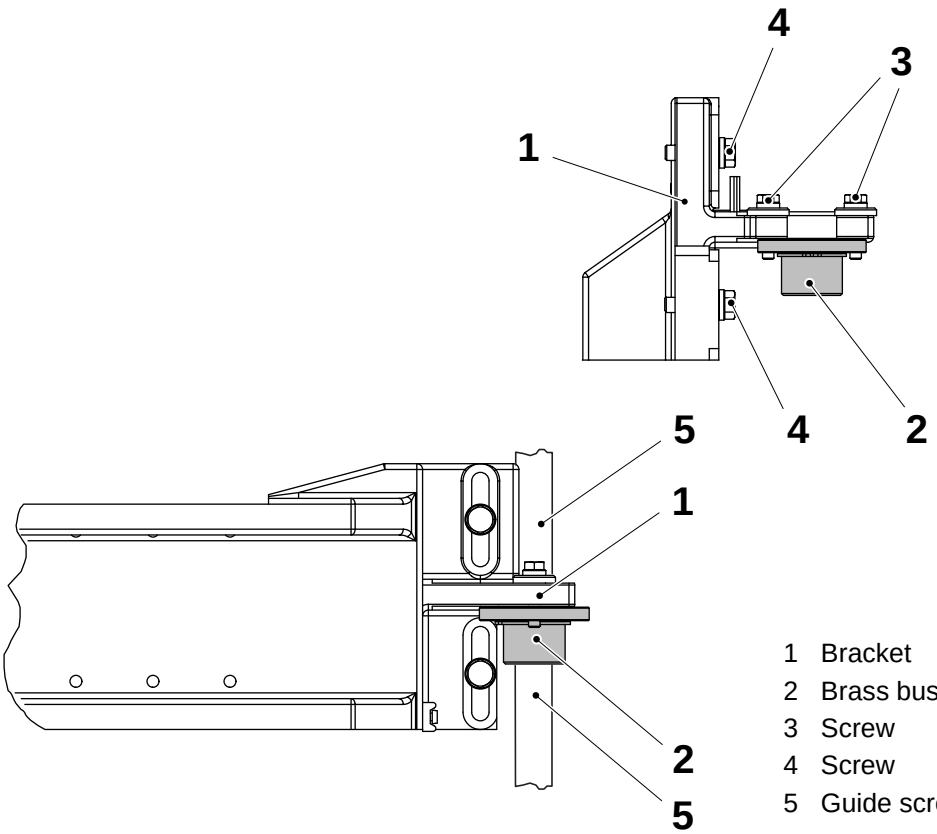

1 Bracket
2 Brass bushing
3 Screw
4 Screw
5 Guide screw

(Cont'd)

TechPub_2614345_0103 - B6114A01en.fm

(Cont'd)

Set Counter Jaws in the Vertical Position
Note! Perform the following procedures on one applicator station at a time.

a) Switch the key selector located on the PT21 electrical panel to the SERVICE position.

b) Make sure the cushion cylinder (1) is fully extended.

c) Loosen the screws (2) on the counter jaw.

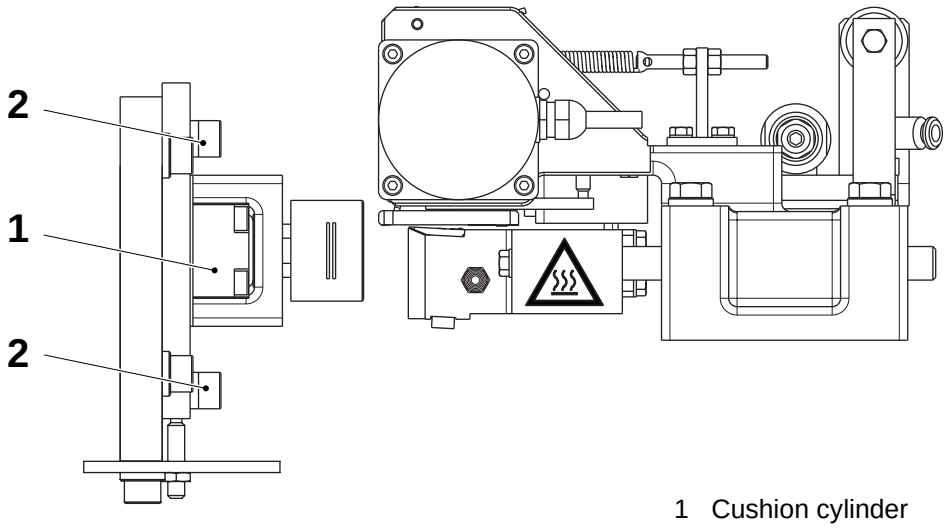

1 Cushion cylinder
2 Screw

(Cont'd)

TechPub_2614345_0103 - B6114A01en.fm

(Cont'd)

d) Loosen the nuts (6) and set the distances:
   – **A** between the edge of the sealing plate (3) and the counter jaw (4)
   – **B** between the edge of the sealing plate (3) and the inductor (7)
   – **C** between the edge of the sealing plate (3) and the sealing plate (8)
   by means of the grub screw (5).

e) Tighten the nuts (6) and the screws (2).

Hole type	A ±0.5 (mm)	B ±0.5 (mm)	C ±0.5 (mm)		Hole type	A ±0.5 (mm)	B ±0.5 (mm)	C ±0.5 (mm)
48	0.6	1.1	4.4		72	1.8	2.8	0.2
55	—	11.3	12.0		85	—	9.6	10.3
60	—	10.1	10.5		90	—	9.3	10.0
65	—	9.5	9.3					

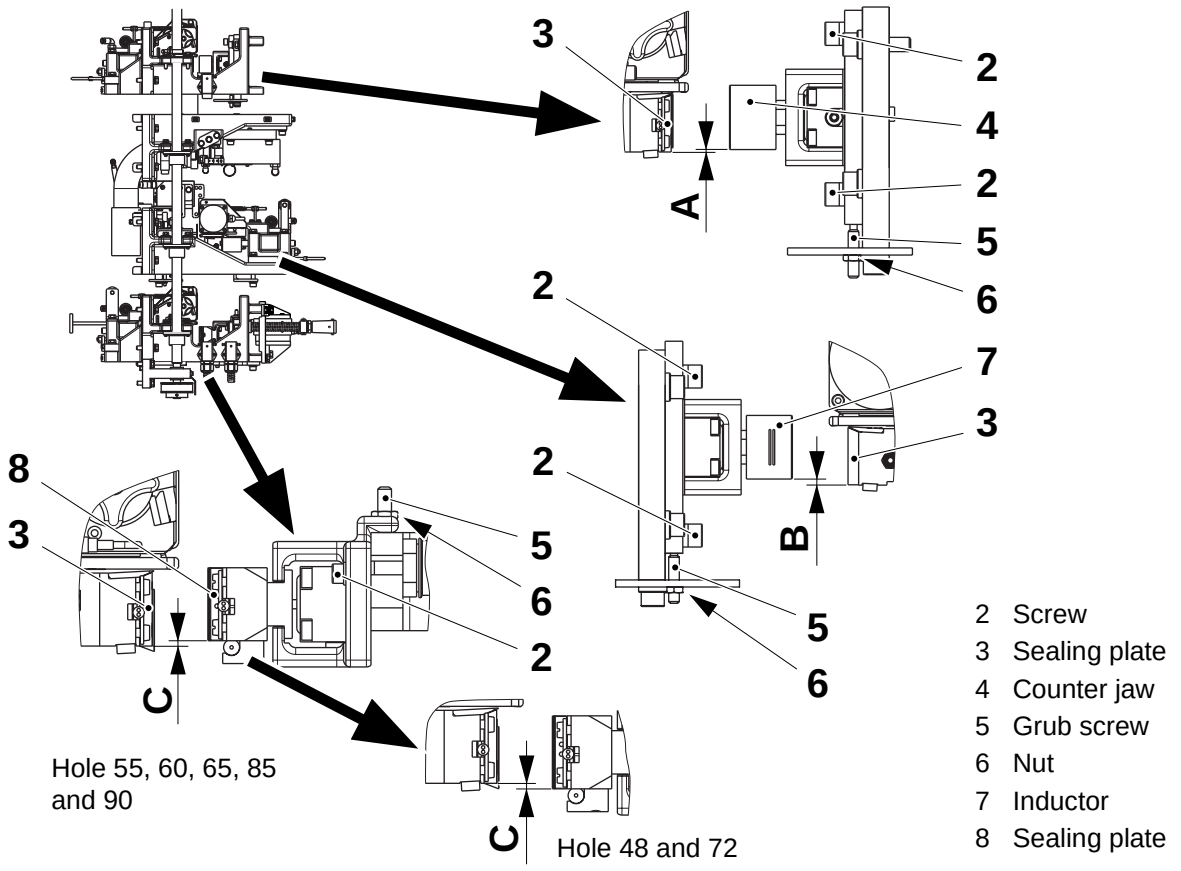

(Cont'd)

TechPub_2614345_0103 - B6114A01en.fm

(Cont'd)

Set Punch and Die in the Horizontal Position with Template

a) Gently push the punch (1) by hand so that it slides into the die (2).

b) Loosen the nut (3) and the screws (4), (5) and (6).

c) Shift the plate (7) by means of the setting screw (8) and fit the template (9).

d) Tighten the nut (3) and the four screws (4).

e) By hand, shift the punch arrangement plate (10) and the bracket (11) against the template (9).

f) Tighten the screws (5) and (6).

g) Remove the template (9).

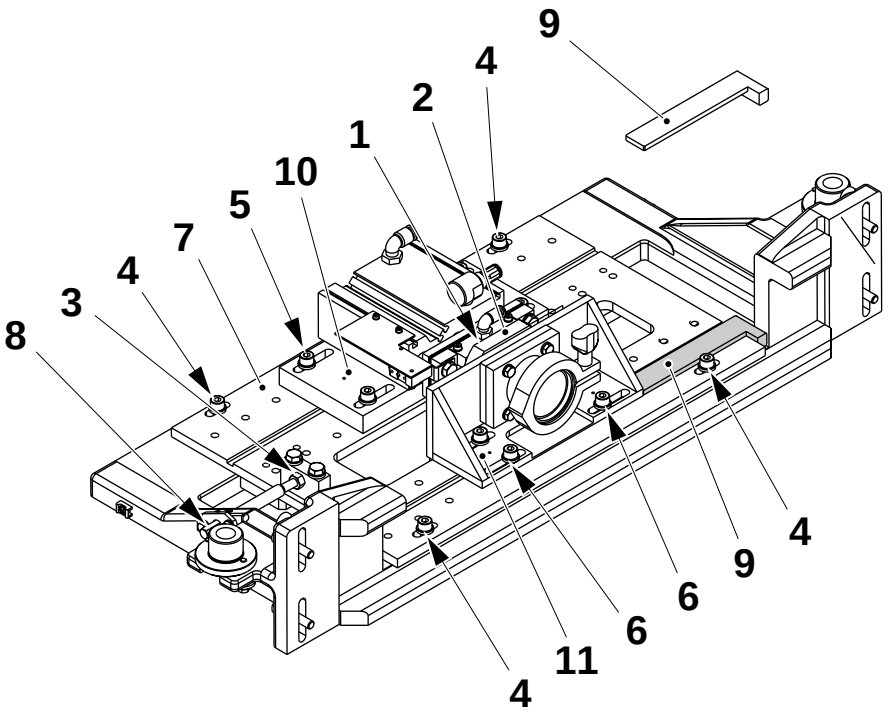

1 Punch
2 Die
3 Nut
4 Screw
5 Screw
6 Screw
7 Plate
8 Setting screw
9 Template
TP No. 2563958-xx
10 Plate
11 Bracket

(Cont'd)

TechPub_2614345_0103 - B6114A01en.fm

(Cont'd)

Set Punch and Die in the Horizontal Position without Template

a) Gently push the punch (1) by hand so that it slides into the die (2).

b) Loosen the nut (3) and the four screws (4).

c) Shift the plate (5) by means of the setting screw (6) and set the distance **A** between the bracket (7) and the plate (5) on both sides of the plate (5).

d) Tighten the nut (3) and the four screws (4).

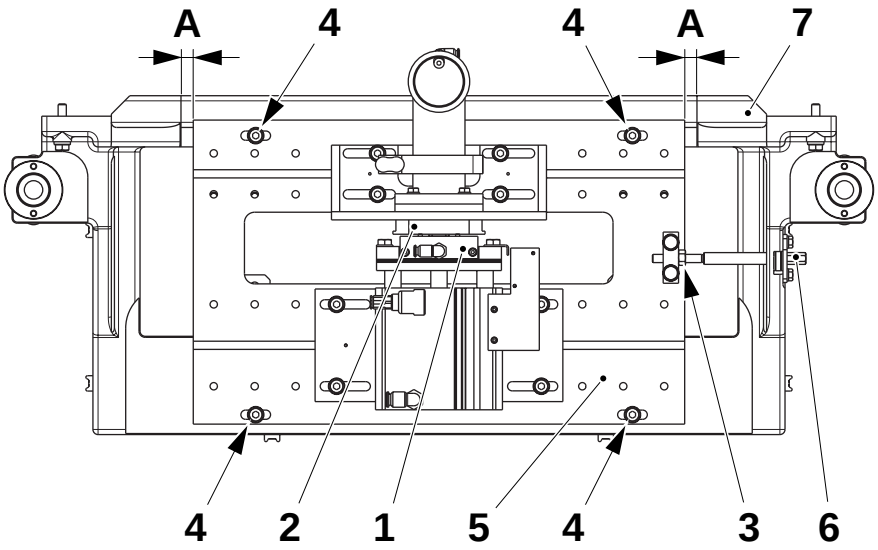

1 Punch
2 Die
3 Nut
4 Screw
5 Plate
6 Setting screw
7 Bracket

A = 12.0 ±1.0 mm

(Cont'd)

TechPub_2614345_0103 - B6114A01en.fm

(Cont'd)

e) Unscrew the screws (8) and the screws (9).

f) By hand, shift the punch (1) unit and the die (2) unit and set the distance **B** between the plate (5) and the die plate (10).

g) Tighten the screws (8) and the screws (9).

Package	Hole type	B ±1.0 (mm)		Package	Hole type	B ±1.0 (mm)
TPA 330 Sq	48	135.0		TPA 250 Sq	72	135.0
TBA 500 S	55	35.0		TBA 1000 S	85	13.5
TPA 1000 S	60	155.0		TBA 1000 B	85	7.0
TPA 1000 Sq	60	155.0		TBA 1000 Sq	85	153.0
TBA 1000 S	65	12.5		TBA 1500 S	85	5.0
TBA 1000 B	65	6.0		TBA 1000 S	90	16.0
TBA 1000 Sq	65	152.0		TBA 1500 S	90	4

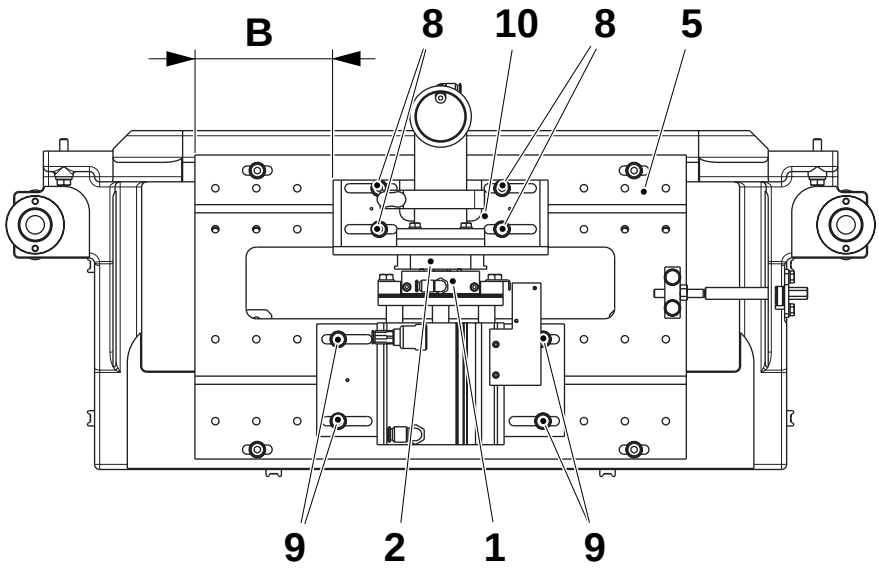

1 Punch
2 Die
5 Plate
8 Screw
9 Screw
10 Die plate

(Cont'd)

TechPub_2614345_0103 - B6114A01en.fm

(Cont'd)

Set Patch Applicator in the Horizontal Position with Template

a) Loosen the screws (1), (2) and (3).

b) Fit the template (4) by means of the knob (5).

c) Set the counter jaw plate (6) and the patch feeder plate (7) by means of the template (4).

d) Tighten the screws (1) and (3).

e) Remove the template (4) and fit the knob (5) in the template (4) hole.

f) Slide the setting tools (8) in contact with the plates (6) and (7).

g) Tighten the screws (2).

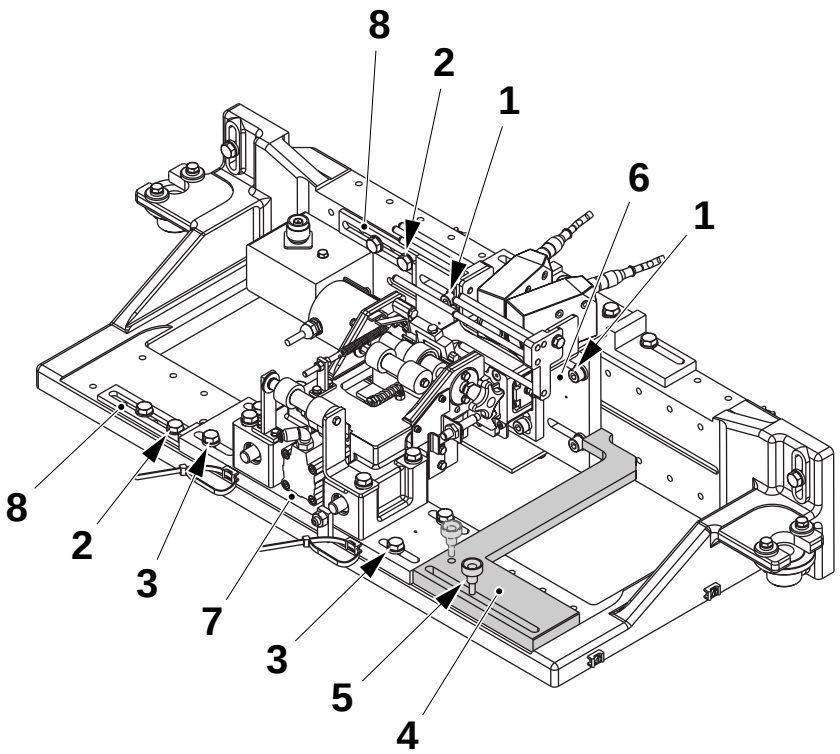

1 Screw
2 Screw
3 Screw
4 Template
TP No. 2563957-xx
5 Knob
6 Plate
7 Plate
8 Setting tool

(Cont'd)

TechPub_2614345_0103 - B6114A01en.fm

(Cont'd)

Set Patch Applicator in the Horizontal Position without Template

a) Switch the key selector located on the PT21 electrical panel to the SERVICE position. Make sure the cushion cylinder (1) is fully extended.

b) Loosen the screws (2) and set the distance **A** between the edge of the inductor (3) and the machined surface (4) on the patch applicator plate by means of the setting tool (5).

c) Tighten the screws (2).

d) Loosen the screws (6) and set the distance **B** between the edge of the patch feeder head (7) and the machined surface (4) on the patch applicator plate by means of the setting tool (8).

e) Tighten the screws (6).

Package	Hole type	A ±1 (mm)	B ±1 (mm)		Package	Hole type	A ±1 (mm)	B ±1 (mm)
TPA 330 Sq	48	278.0	253.0		TPA 250 Sq	72	278.0	253.0
TBA 500 S	55	178.3	153.3		TBA 1000 S	85	156.5	131.5
TPA 1000 S	60	298.0	273.0		TBA 1000 B	85	150.0	125.0
TPA 1000 Sq	60	289.0	264.0		TBA 1000 Sq	85	296.0	271.0
TBA 1000 S	65	155.5	130.5		TBA 1500 S	85	148.0	123.0
TBA 1000 B	65	149.0	124.0		TBA 1000 S	90	159.0	134.0
TBA 1000 Sq	65	295.0	270.0		TBA 1500 S	90	151	126

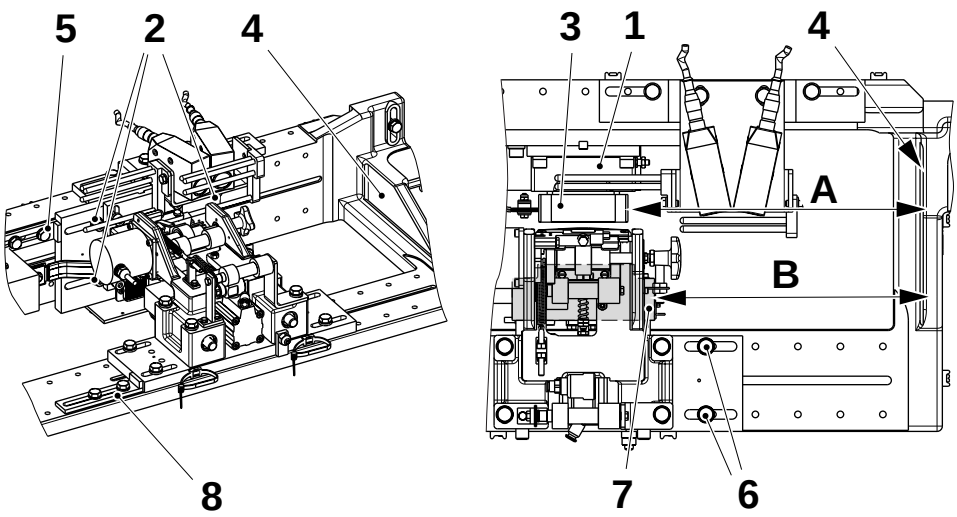

1 Cushion cylinder
2 Screw
3 Inductor
4 Machined surface
5 Setting tool
6 Screw
7 Head
8 Setting tool

(Cont'd)

TechPub_2614345_0103 - B6114A01en.fm

(Cont'd)

Set Outer Patch Applicator in the Horizontal Position with Template (hole 48 and 72)

a) Loosen the screws (1), (2) and (3).

b) Fit the template (4) by means of the knob (5).

c) Set the counter jaw plate (6) and the outer patch feeder plate (7) by means of the template (4).

d) Tighten the screws (1) and (3).

e) Remove the template (4) and fit the knob (5) in the template (4) hole.

f) Slide the setting tools (8) in contact with the plates (6) and (7).

g) Tighten the screws (2).

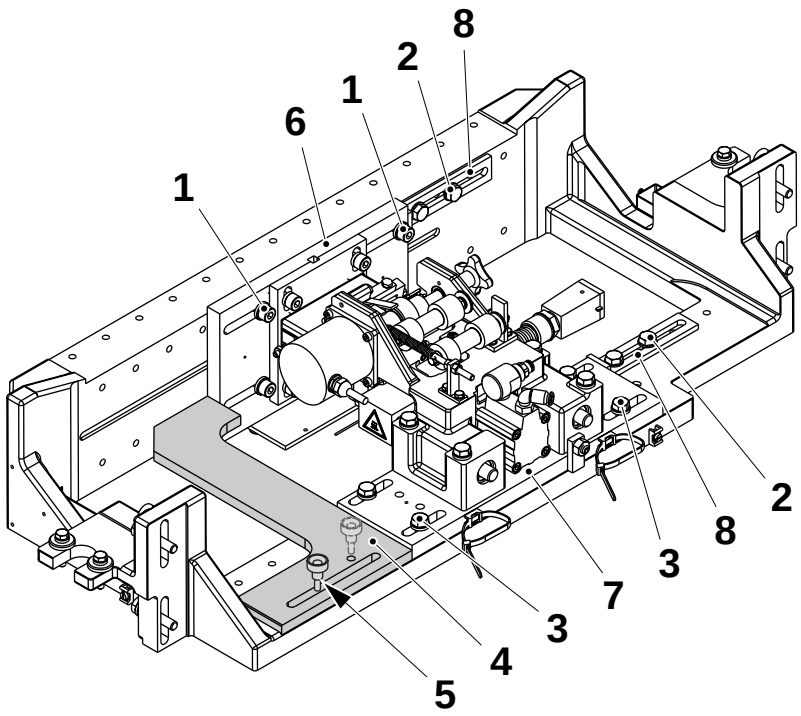

1 Screw
2 Screw
3 Screw
4 Template
TP No. 2555129-xx
5 Knob
6 Plate
7 Plate
8 Setting tool

(Cont'd)

TechPub_2614345_0103 - B6114A01en.fm

(Cont'd)

Set Outer Patch Applicator in the Horizontal Position without Template (hole 48 and 72)

a) Switch the key selector located on the PT21 electrical panel to the SERVICE position. Make sure the cushion cylinder (1) is fully extended.

b) Loosen the screws (2) and set the distance **A** between the edge of the counter jaw (3) and the machined surface (4) on the outer patch applicator plate by means of the setting tool (5).

c) Tighten the screws (2).

d) Loosen the screws (6) and set the distance **B** between the edge of the patch feeder head (7) and the machined surface (4) on the outer patch applicator plate by means of the setting tool (8).

e) Tighten the screws (6).

Package	Hole type	A ±1 (mm)	B ±1 (mm)
TPA 330 Sq	48	285.0	253.0
TPA 250 Sq	72	285.0	253.0

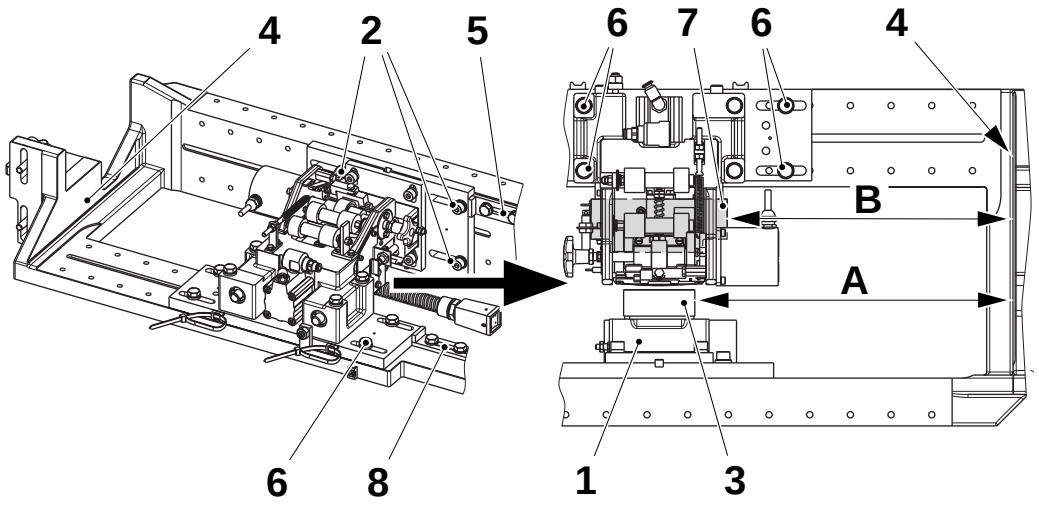

1 Cushion cylinder
2 Screw
3 Counter jaw
4 Machined surface
5 Setting tool
6 Screw
7 Head
8 Setting tool

(Cont'd)

TechPub_2614345_0103 - B6114A01en.fm

(Cont'd)

Set Tab Applicator and Counter Jaw in the Horizontal Position with Template

a) Loosen the screws (1), (2) and (3).

b) Fit the template (4) by means of the knob (5).

c) Set the counter jaw plate (6) and the tab feeder plate (7) by means of the template (4).

d) Tighten the screws (1) and (3).

e) Remove the template (4) and fit the knob (5) in the template (4) hole.

f) Slide the setting tools (8) in contact with the plates (6) and (7).

g) Tighten the screws (2).

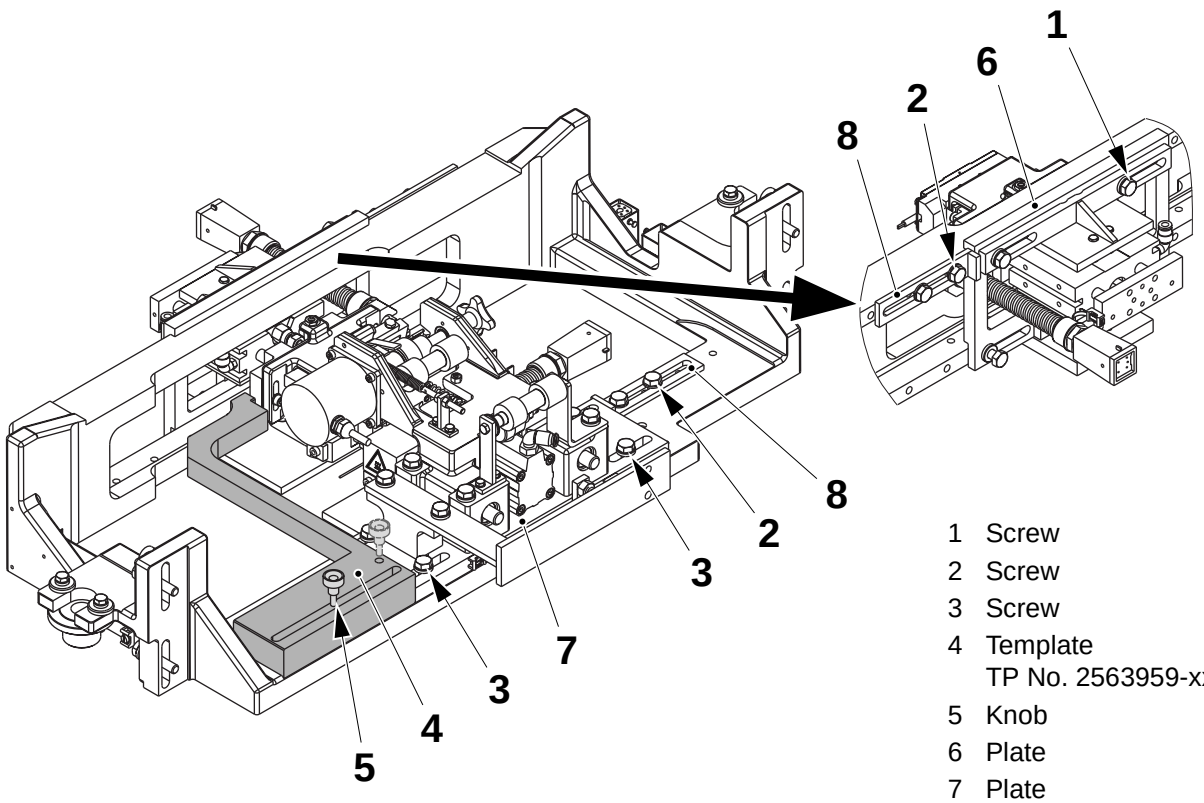

1 Screw
2 Screw
3 Screw
4 Template
TP No. 2563959-xx
5 Knob
6 Plate
7 Plate
8 Setting tool

TechPub_2614345_0103 - B6114A01en.fm

(Cont'd)

(Cont'd)

Set Tab Applicator and Counter Jaw in the Horizontal Position without Template

a) Switch the key selector located on the PT21 electrical panel to the SERVICE position. Make sure the cushion cylinder (1) is fully extended.

b) Loosen the screws (2) and set the distance **A** between the edge of the sealing head (3) and the machined surface (4) on the tab applicator plate by means of the setting tool (5).

c) Tighten the screws (2).

d) Loosen the screws (6) and set the distance **B** between the edge of the tab feeder head (7) and the machined surface (4) on the tab applicator plate by means of the setting tool (8).

e) Tighten the screws (6).

Package	Hole type	A ±1 (mm)	B ±1 (mm)		Package	Hole type	A ±1 (mm)	B ±1 (mm)
TPA 330 Sq	48	277.0	253.0		TPA 250 Sq	72	277.0	253.0
TBA 500 S	55	177.3	147.3		TBA 1000 S	85	155.5	123.5
TPA 1000 S	60	297.0	264.3		TBA 1000 B	85	149.0	117.0
TPA 1000 Sq	60	297.0	264.3		TBA 1000 Sq	85	295.0	263.0
TBA 1000 S	65	154.5	122.5		TBA 1500 S	85	147.0	115.0
TBA 1000 B	65	148.0	116.0		TBA 1000 S	90	158.0	126.0
TBA 1000 Sq	65	294.0	262.0		TBA 1500 S	90	152	118

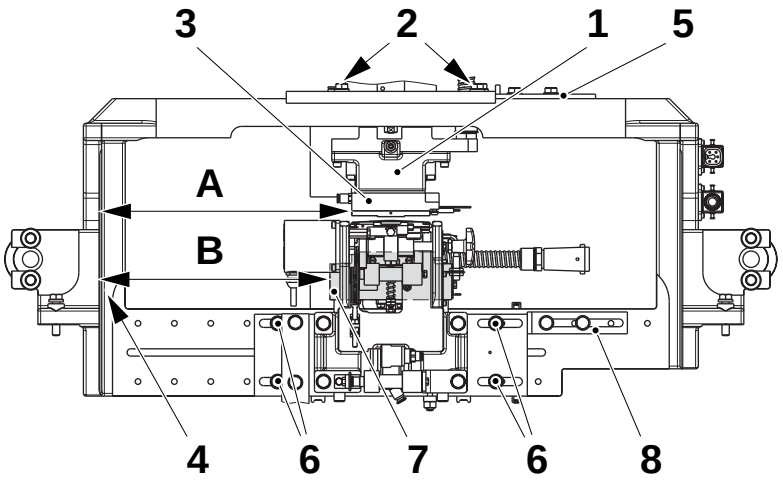

1 Cushion cylinder
2 Screw
3 Sealing head
4 Machined surface
5 Setting tool
6 Screw
7 Head
8 Setting tool

(Cont'd)

TechPub_2614345_0103 - B6114A01en.fm

(Cont'd)

Set Tab Folder (hole 55, 60, 65, 85 and 90)

Set the tab folder, see the *Tab folder setting* instructions in the *Superstructure* section of the filling machine MM.

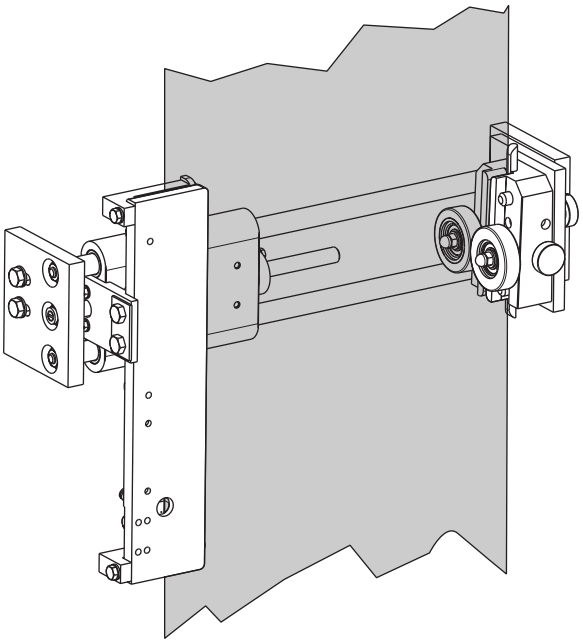

ReCap 2 for hole 55, 65 and 85
SlimCap for hole 90

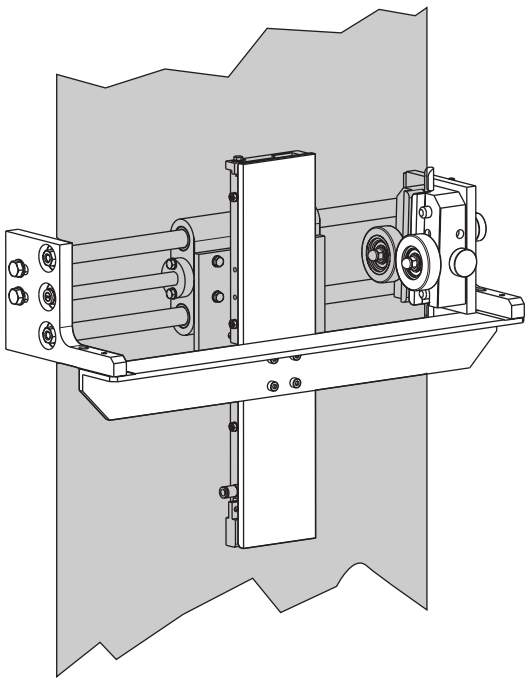

ReCap 3 and Recap 3P
for hole 60 and 85

TechPub_2614345_0103 - B6114A01en.fm

1.1.2-3 Applicator Stations - Set Servo Tension Device

Machine Status	Ready for PRODUCTION
Special Equipment	Cable TP No. 90220-78
SPC Reference	2526514-0100

a) Close all the doors on the machine.

b) On the TPOP, check that there are no active alarms and touch the MANOEUVRE button (1).

c) Touch the PULLTAB, LEFT button (2).

d) Touch the PUNCH UNIT AND PATCH APPLICATOR button (3).

Note! Not all PT21 units are equipped with the outer patch applicator.

e) Touch the START button (4) to activate the punch unit and patch applicator.

f) The SERVICE AND MAINTENANCE KEY icon (5) starts to flash at the top of the ladder step window.

g) Press the PROGRAM UP button (6) after it starts flashing.

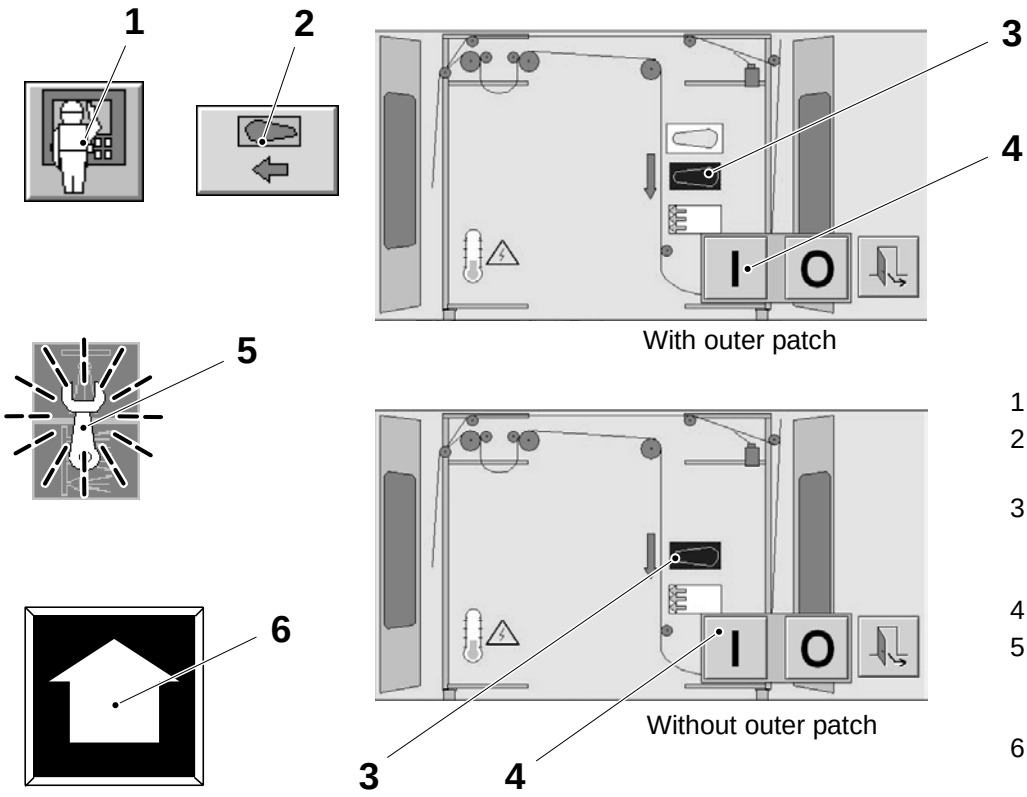

1 MANOEUVRE button
2 PULLTAB, LEFT button
3 PUNCH UNIT AND PATCH APPLICATOR button
4 START button
5 SERVICE AND MAINTENANCE KEY icon
6 PROGRAM UP button

(Cont'd)

TechPub_2614345_0103 - B6114A01en.fm

(Cont'd)

h) At the PullTab control panel, push the SINGLE INDEX button (7) at least **15 times** and make sure that the packaging material is not folded, but winded up in the outfeed loop.

Note! If the SINGLE INDEX button (7) does not flash, open and close one of the doors in the PullTab unit. Acknowledge the alarm on the TPOP.

i) Open the door and cut the packaging material that has the test holes and the patches.

j) Place the packaging material on a flat surface and make sure that it lies flat.

k) Measure the length between the first and the last hole. The length should be the packaging material repeat length **x 10** 0/-1 mm.

l) If the measured length is too long increase the current torque value by means of increasing **R1501** and **R1502** in steps of **1** in the GE Fanuc program.

Note! To modify the content of the registers **R1501** and **R1502** follow the procedure in 9.1.1-5 PLC - Set Tension Device Torque.

m) If the measured length is too short decrease the current torque value by means of decreasing **R1501** and **R1502** in steps of **1** in the GE Fanuc program.

Note! The default value of **R1501** and **R1502** is **17**.

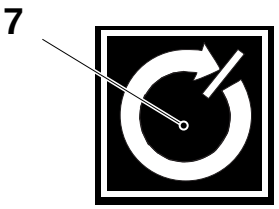

7 SINGLE INDEX button

(Cont'd)

TechPub_2614345_0103 - B6114A01en.fm

(Cont'd)

n) Close the door and reset the alarm on the TPOP. If required repeat steps h), i), j) and k) and make adjustments according to steps l) and m).

o) Touch the STOP button (8).

p) Press the PROGRAM DOWN button (9) after it starts flashing.

q) Touch the EXIT button (10).

r) Touch the MANOEUVRE button (1) to end the setting.

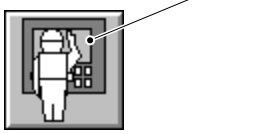

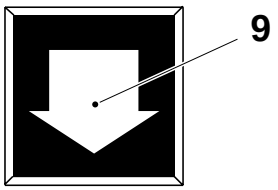

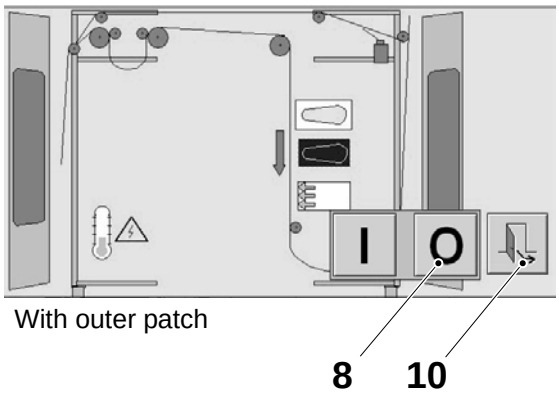

With outer patch

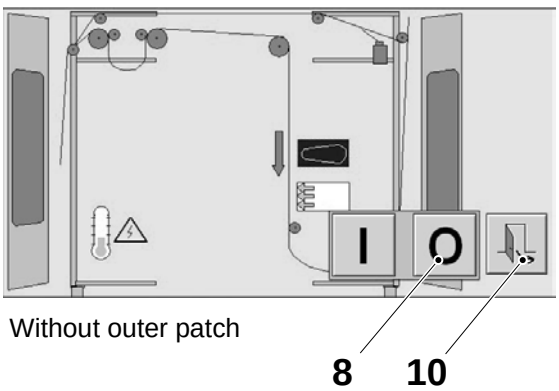

Without outer patch

1 MANOEUVRE button
8 STOP button
9 PROGRAM DOWN button
10 EXIT button

TechPub_2614345_0103 - B6114A01en.fm

1.1.2-4 Applicator Stations - Fine Setting

Machine Status	Ready for PRODUCTION
SPC Reference	2526514-0100

Set Hole Position

a) Close all doors on the machine.

b) Make sure there are no active alarms on the TPOP and touch the MANOEUVRE button (1).

c) Touch the PULLTAB, LEFT button (2).

d) Touch the PUNCH UNIT AND OUTER PATCH APPLICATOR button (3).

Note! Not all PT21 units are equipped with the outer patch applicator.

e) Touch the START button (4) to activate the punch unit and outer patch applicator.

f) The SERVICE AND MAINTENANCE KEY icon (5) starts to flash at the top of the ladder step window.

g) Press the PROGRAM UP button (6) after it starts flashing.

h) At the PullTab control panel, press the SINGLE INDEX button (7) six or seven times after it starts flashing.

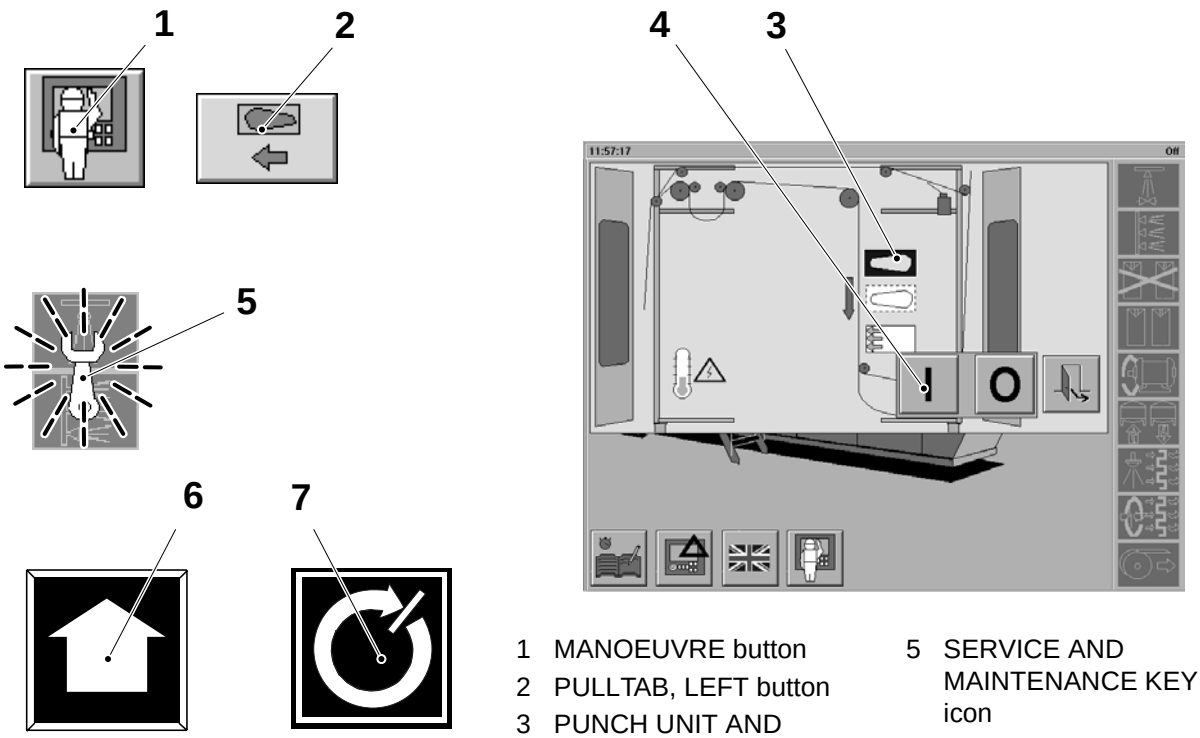

1 MANOEUVRE button
2 PULLTAB, LEFT button
3 PUNCH UNIT AND OUTER PATCH APPLICATOR button
4 START button
5 SERVICE AND MAINTENANCE KEY icon
6 PROGRAM UP button
7 SINGLE INDEX button

(Cont'd)

TechPub_2614345_0103 - B6114A01en.fm

(Cont'd)

Note! If the SINGLE INDEX button (7) does not flash, open and close one of the doors in the PullTab unit. Acknowledge the alarm on the TPOP.

i) Open the door and cut out a piece of packaging material.

j) Check the distance **A** between the hole and the longitudinal crease. If required adjust the position of the punch unit as described below.

k) Set the distance **A** by loosening the screws (8) and by means of the setting screw (9) move the punch unit horizontally.

Package	Hole type	A ±0.5 (mm)		Package	Hole type	A ±0.5 (mm)
TPA 330 Sq	48	15.4		TPA 250 Sq	72	13.0
TBA 500 S	55	5.4		TBA 1000 S	85	4.5
TPA 1000 S	60	5.2		TBA 1000 B	85	4.5
TPA 1000 Sq	60	5.2		TBA 1000 Sq	85	4.5
TBA 1000 S	65	5.5		TBA 1500 S	85	4.5
TBA 1000 B	65	5.5		TBA 1000 S	90	5.5
TBA 1000 Sq	65	5.5		TBA 1500 S	90	5.5

TechPub_2614345_0103 - B6114A01en.fm

View from inside the package

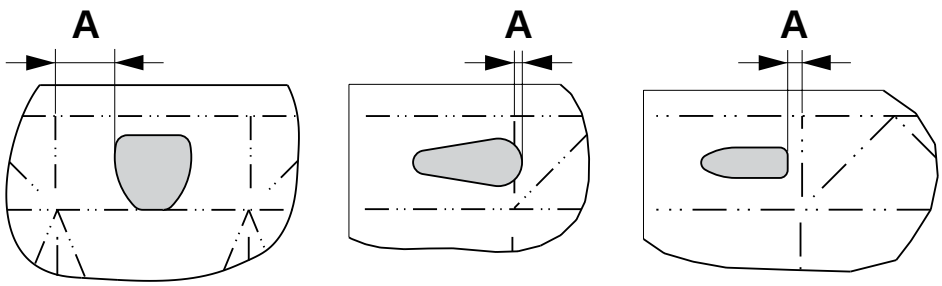

Hole 48 and 72

Hole 21 and 25
To be introduced later on

Hole 55, 60, 65, 85 and 90

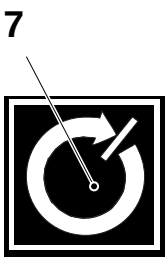

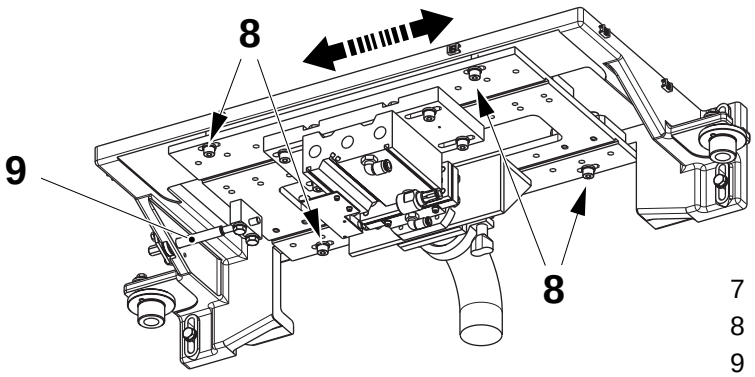

7 SINGLE INDEX button
8 Screw
9 Setting screw

(Cont'd)

(Cont'd)

Deactivate PullTab Stations

a) Touch the STOP button (1) to deactivate the punch unit and applicator patch stations.

b) Press the PROGRAM DOWN button (2) after it starts flashing.

c) Touch the EXIT button (3).

d) Touch the MANOEUVRE button (4) to end the sequence.

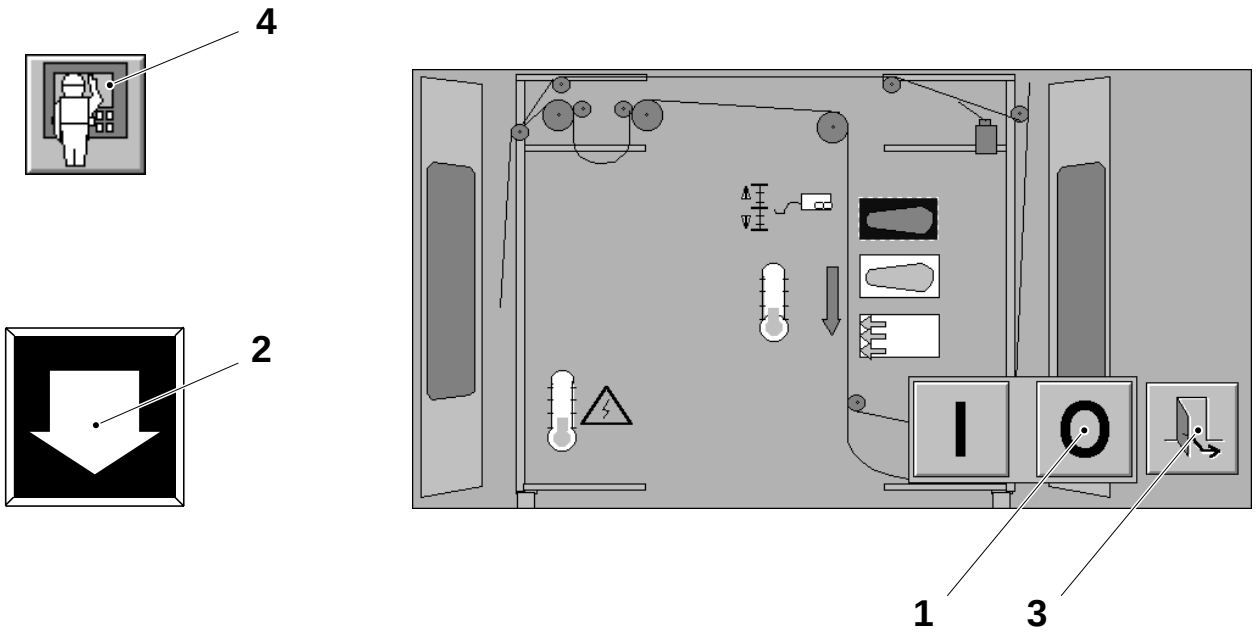

1 STOP button
2 PROGRAM DOWN button
3 EXIT button
4 MANOEUVRE button

(Cont'd)

TechPub_2614345_0103 - B6114A01en.fm

(Cont'd)

Set Outer Patch Position (hole 48 and 72)

a) Close all doors on the machine.

b) Make sure there are no active alarms on the TPOP and touch the MANOEUVRE button (1).

c) Touch the PULLTAB, LEFT button (2).

d) Touch the PUNCH UNIT AND OUTER PATCH APPLICATOR button (3).

e) Touch the START button (4) to activate the punch and outer patch applicator stations.

f) The SERVICE AND MAINTENANCE KEY symbol (5) starts to flash at the top of the ladder step window.

g) Press the PROGRAM UP button (6) after it starts flashing.

h) Press the SINGLE INDEX button (7) six or seven times after it starts flashing.

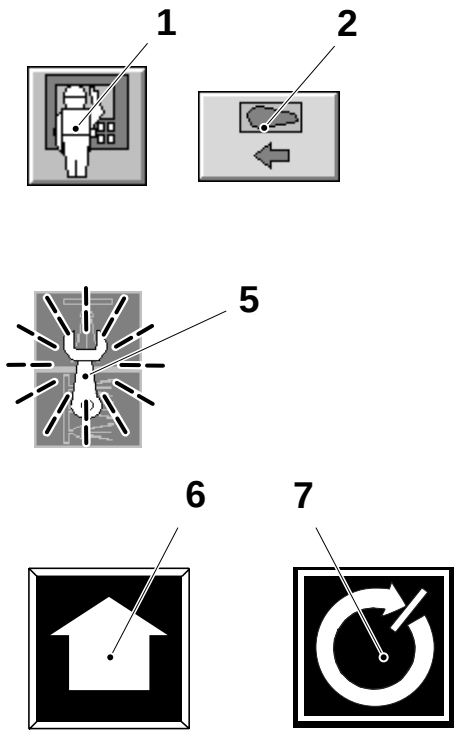

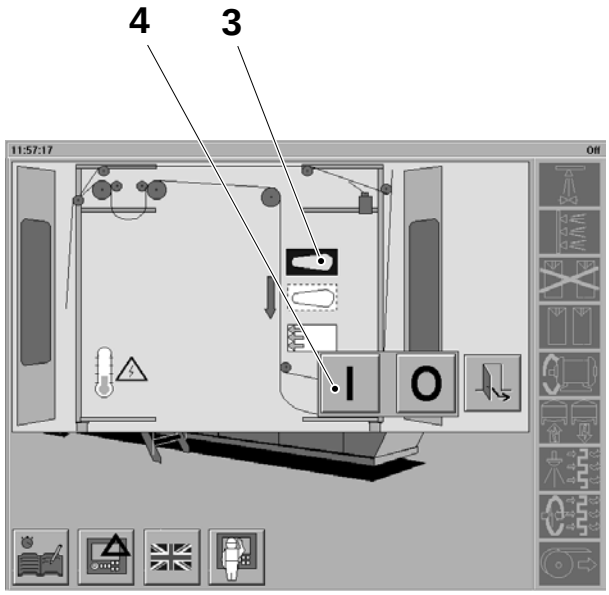

1 MANOEUVRE button
2 PULLTAB, LEFT button
3 PUNCH UNIT AND OUTER PATCH APPLICATOR button
4 START button
5 SERVICE AND MAINTENANCE KEY symbol
6 PROGRAM UP button
7 SINGLE INDEX button

(Cont'd)

TechPub_2614345_0103 - B6114A01en.fm

(Cont'd)

Note! If the SINGLE INDEX button (7) does not flash, open and close one of the doors in the PullTab unit. Acknowledge the alarm on the TPOP.

i) Open the door and cut out a piece of packaging material.

j) Make sure the outer patch is applied correctly.

k) Check the distances **A** and **B**.

l) If required, adjust the outer patch feeder, see section Adjust Outer Patch Position (hole 48 and 72) on page 1-43.

Package	Hole type	A ±0.5 (mm)	B ±0.5 (mm)
TPA 330 Sq	48	4.1	4.8
TPA 250 Sq	72	5.0	5.3

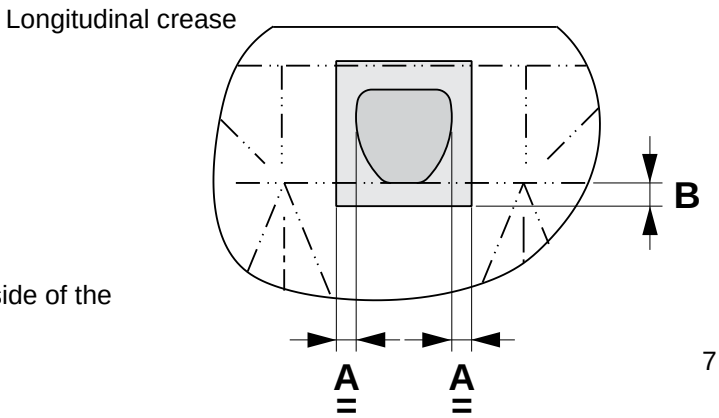

Hole 48 and 72

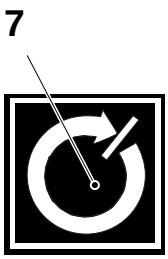

7 SINGLE INDEX button

TechPub_2614345_0103 - B6114A01en.fm

(Cont'd)

(Cont'd)

Adjust Outer Patch Position (hole 48 and 72)
Note! Perform this instruction only if required by the section Set Outer Patch Position (hole 48 and 72) on page 1-41.

a) Loosen the screws (1) on the outer patch feeder.
b) Set the distances **A**, by means of the setting tool (2).
c) Tighten the screws (1).

Package	Hole type	A ±0.5 (mm)
TPA 330 Sq	48	4.1
TPA 250 Sq	72	5.0

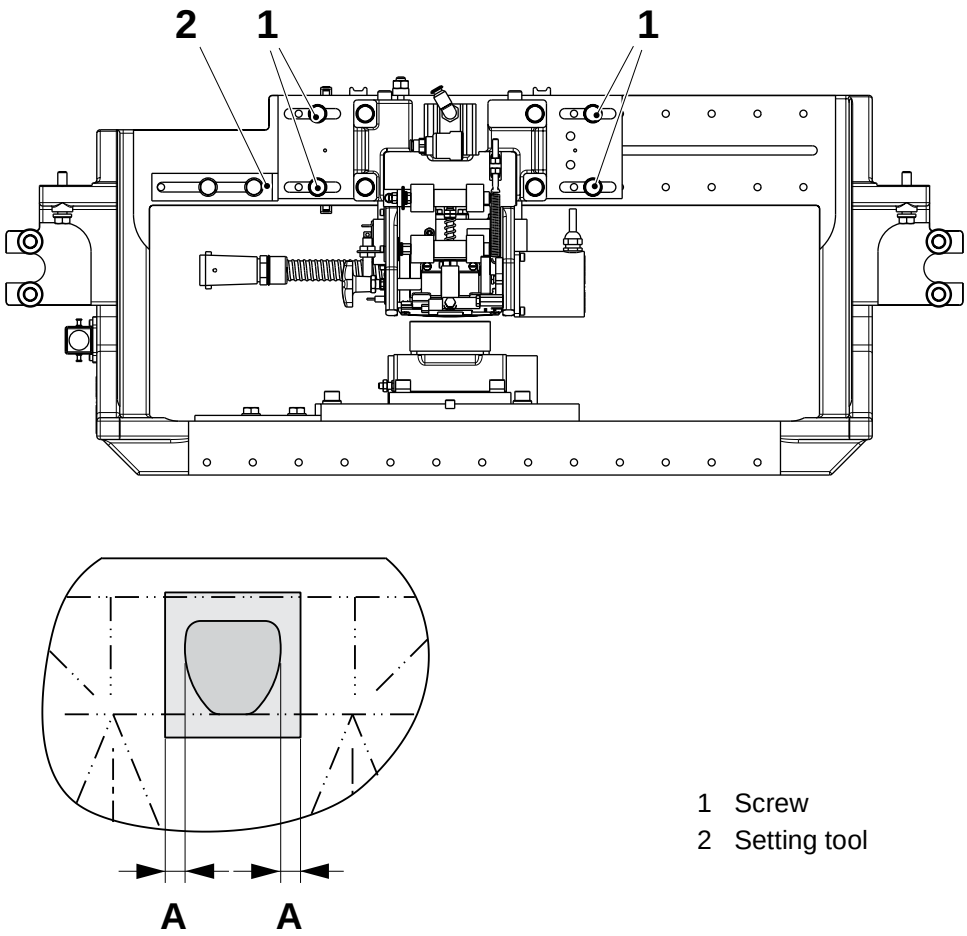

1 Screw
2 Setting tool

(Cont'd)

TechPub_2614345_0103 - B6114A01en.fm

(Cont'd)

d) On both LH and RH sides of all three applicator stations (outer patch, patch, and tab) loosen the screws (5) to move the brass bushings (3) away from the outer patch bracket (4).

e) On both LH and RH sides of the outer patch applicator, tighten the brass bushings (3) until they touch the outer patch bracket (4).

f) Tighten the two screws (5).

g) Slightly loosen the screws (6) on the outer patch bracket (4).

h) Set the distance **B**, by adjusting the guide screws (7).

i) Tighten the screws (6).

Package	Hole type	B ±0.5 (mm)
TPA 330 Sq	48	4.8
TPA 250 Sq	72	5.3

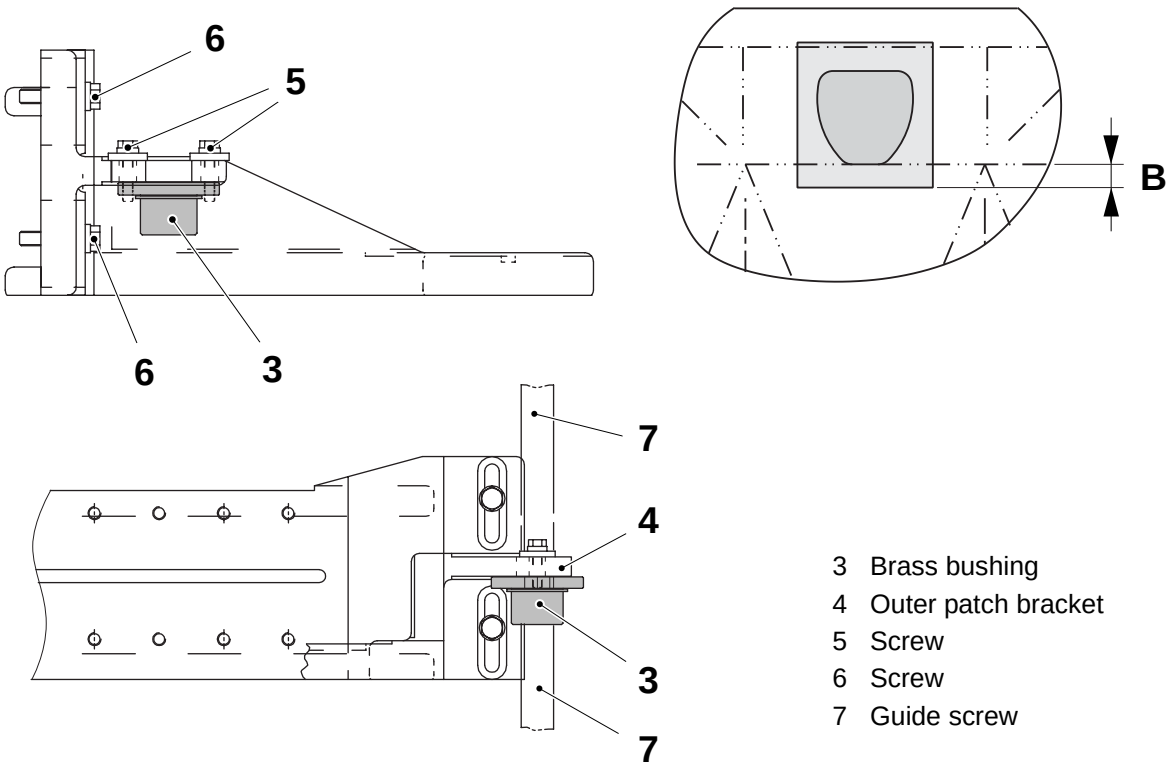

3 Brass bushing
4 Outer patch bracket
5 Screw
6 Screw
7 Guide screw

(Cont'd)

TechPub_2614345_0103 - B6114A01en.fm

(Cont'd)

Deactivate PullTab Stations

a) Touch the STOP button (1) to deactivate the punch unit and applicator patch stations.

b) Press the PROGRAM DOWN button (2) after it starts flashing.

c) Touch the EXIT button (3).

d) Touch the MANOEUVRE button (4) to end the sequence.

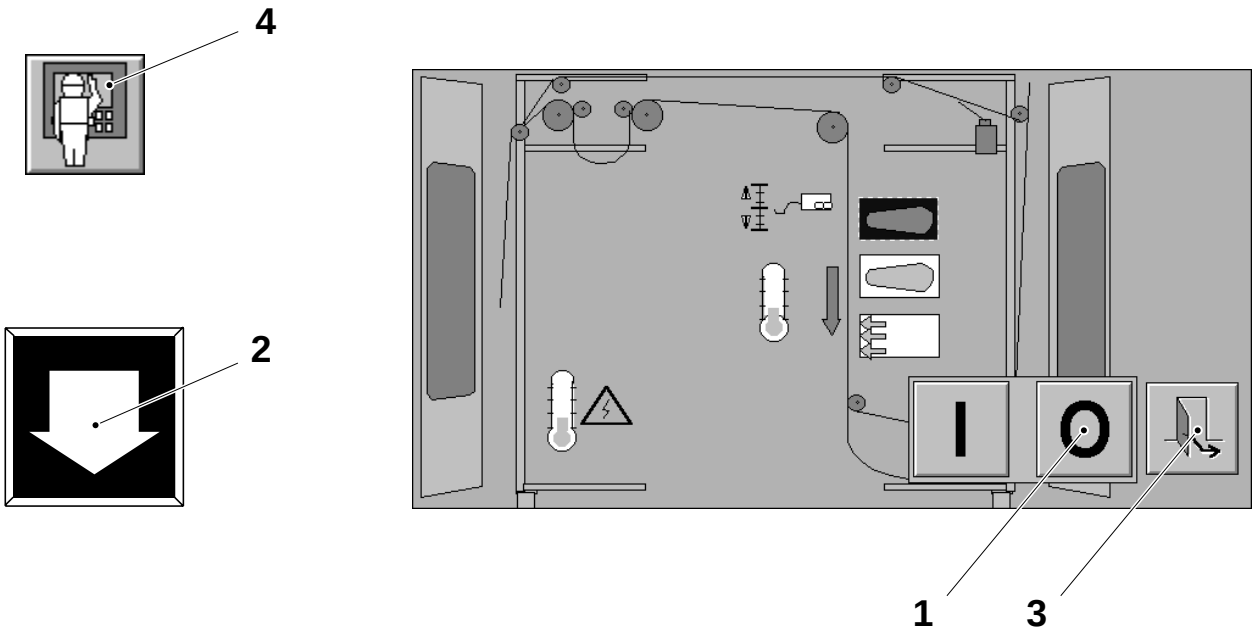

1 STOP button
2 PROGRAM DOWN button
3 EXIT button
4 MANOEUVRE button

(Cont'd)

TechPub_2614345_0103 - B6114A01en.fm

(Cont'd)

Set Patch Position

a) Close all doors on the machine.

b) Make sure there are no active alarms on the TPOP and touch the MANOEUVRE button (1).

c) Touch the PULLTAB, LEFT button (2).

d) Touch the PATCH APPLICATOR button (3).

e) Touch the START button (4) to activate the punch and patch applicator stations.

f) The SERVICE AND MAINTENANCE KEY symbol (5) starts to flash on the top of the ladder step window.

g) Press the PROGRAM UP button (6) after it starts flashing.

h) At the PullTab control panel, press the SINGLE INDEX button (7) six or seven times after it starts flashing.

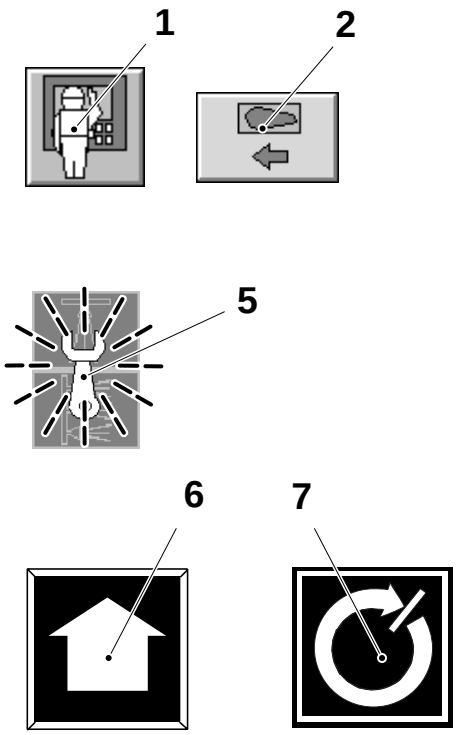

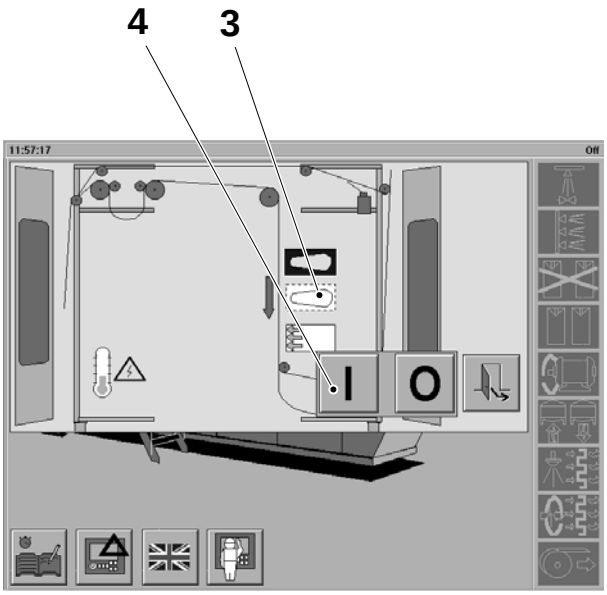

1 MANOEUVRE button
2 PULLTAB, LEFT button
3 PATCH APPLICATOR button
4 START button
5 SERVICE AND MAINTENANCE KEY symbol
6 PROGRAM UP button
7 SINGLE INDEX button

(Cont'd)

TechPub_2614345_0103 - B6114A01en.fm

(Cont'd)

Note! If the SINGLE INDEX button (7) does not flash, open and close one of the doors in the PullTab unit. Acknowledge the alarm on the TPOP.

i) Open the door and cut out a piece of packaging material.

j) Make sure the patch is applied correctly.

k) Check the distances **A** and **B**.

l) If required, adjust the patch feeder as described in the section Adjust Patch Position on page 1-48.

m) Check the heat pattern on the patch, see section Check Patch Applicator Heat Pattern on page 1-50.

Package	Hole type	A ±0.5 (mm)	B ±0.5 (mm)		Package	Hole type	A ±0.5 (mm)	B ±0.5 (mm)
TPA 330 Sq	48	4.1	4.1		TPA 250 Sq	72	3.8	4.0
TBA 500 S	55	4.0	4.0		TBA 1000 S	85	3.5	4.5
TPA 1000 S	60	4.0	4.0		TBA 1000 B	85	3.5	4.5
TPA 1000 Sq	60	4.0	4.0		TBA 1000 Sq	85	3.5	4.5
TBA 1000 S	65	3.5	4.0		TBA 1500 S	85	3.5	4.5
TBA 1000 B	65	3.5	4.0		TBA 1000 S	90	4.0	4.0
TBA 1000 Sq	65	3.5	4.0		TBA 1500 S	90	4.0	4.0

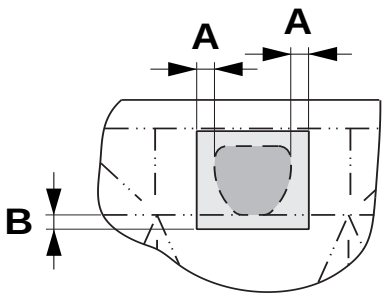

Hole 48 and 72

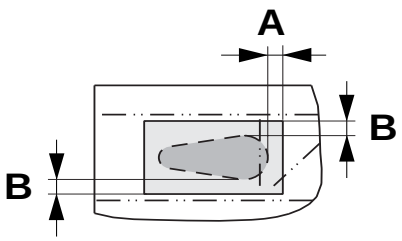

Hole 21 and 25
To be introduced later on

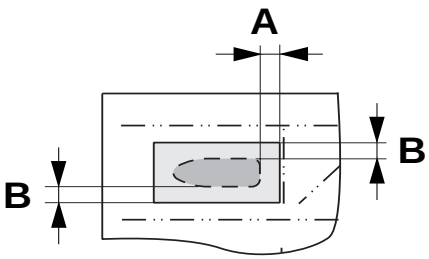

Hole 55, 60, 65, 85 and 90

View from inside the package

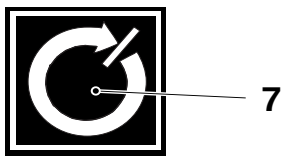

7 SINGLE INDEX button

(Cont'd)

TechPub_2614345_0103 - B6114A01en.fm

(Cont'd)

Adjust Patch Position

Note! Perform this instruction only if required by the section Set Patch Position on page 1-46.

a) Loosen the screws (1) on the patch feeder.

b) Set the distances **A** by means of the setting tool (2).

c) Tighten the screws (1).

Package	Hole type	A ±0.5 (mm)		Package	Hole type	A ±0.5 (mm)
TPA 330 Sq	48	4.1		TPA 250 Sq	72	3.8
TBA 500 S	55	4.0		TBA 1000 S	85	3.5
TPA 1000 S	60	4.0		TBA 1000 B	85	3.5
TPA 1000 Sq	60	4.0		TBA 1000 Sq	85	3.5
TBA 1000 S	65	3.5		TBA 1500 S	85	3.5
TBA 1000 B	65	3.5		TBA 1000 S	90	4.0
TBA 1000 Sq	65	3.5		TBA 1500 S	90	4.0

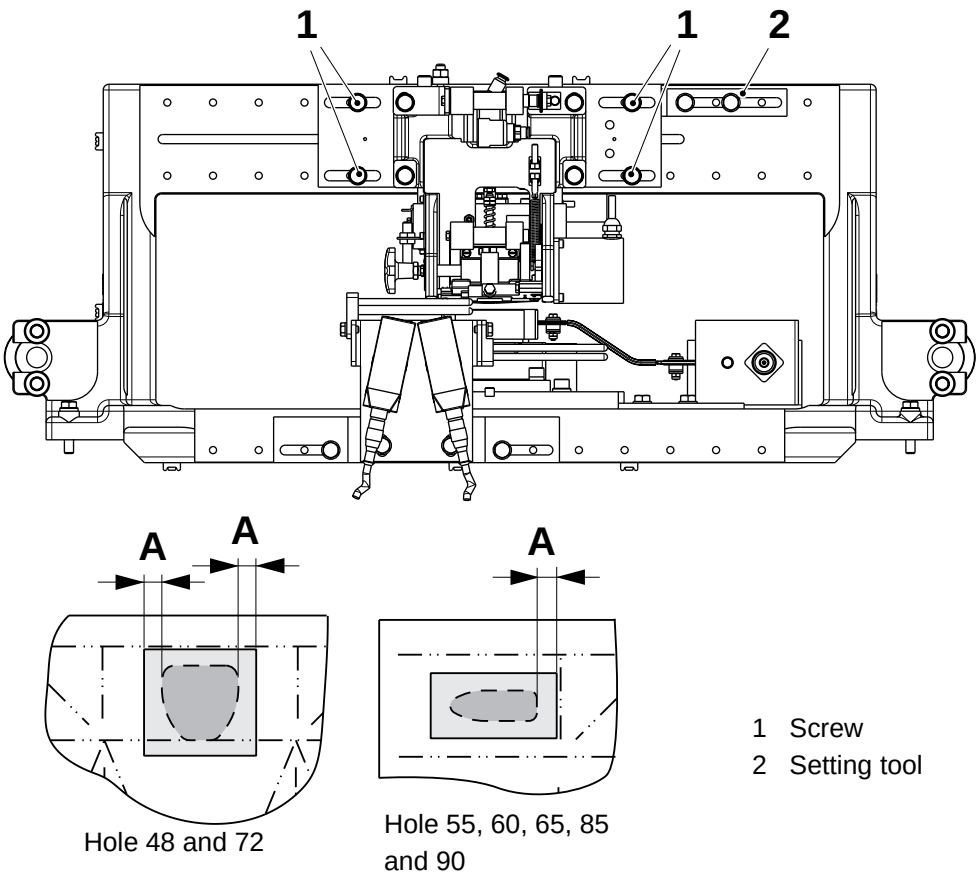

(Cont'd)

TechPub_2614345_0103 - B6114A01en.fm

(Cont'd)

d) On both LH and RH sides of all three applicator stations (outer patch, patch, and tab) loosen the screws (5) to move the brass bushings (3) away from the patch bracket (4).

e) On both LH and RH sides of the patch applicator, tighten the brass bushings (3) until they touch the patch bracket (4).

f) Tighten the two screws (5).

g) Slightly loosen the screws (6) on the patch bracket (4).

h) Set the distance **B** by adjusting the guide screws (7).

i) Tighten the screws (6).

Package	Hole type	B ±0.5 (mm)		Package	Hole type	B ±0.5 (mm)
TPA 330 Sq	48	4.1		TPA 250 Sq	72	4.0
TBA 500 S	55	4.0		TBA 1000 S	85	4.5
TPA 1000 S	60	4.0		TBA 1000 B	85	4.5
TPA 1000 Sq	60	4.0		TBA 1000 Sq	85	4.5
TBA 1000 S	65	4.0		TBA 1500 S	85	4.5
TBA 1000 B	65	4.0		TBA 1000 S	90	4.0
TBA 1000 Sq	65	4.0		TBA 1500 S	90	4.0

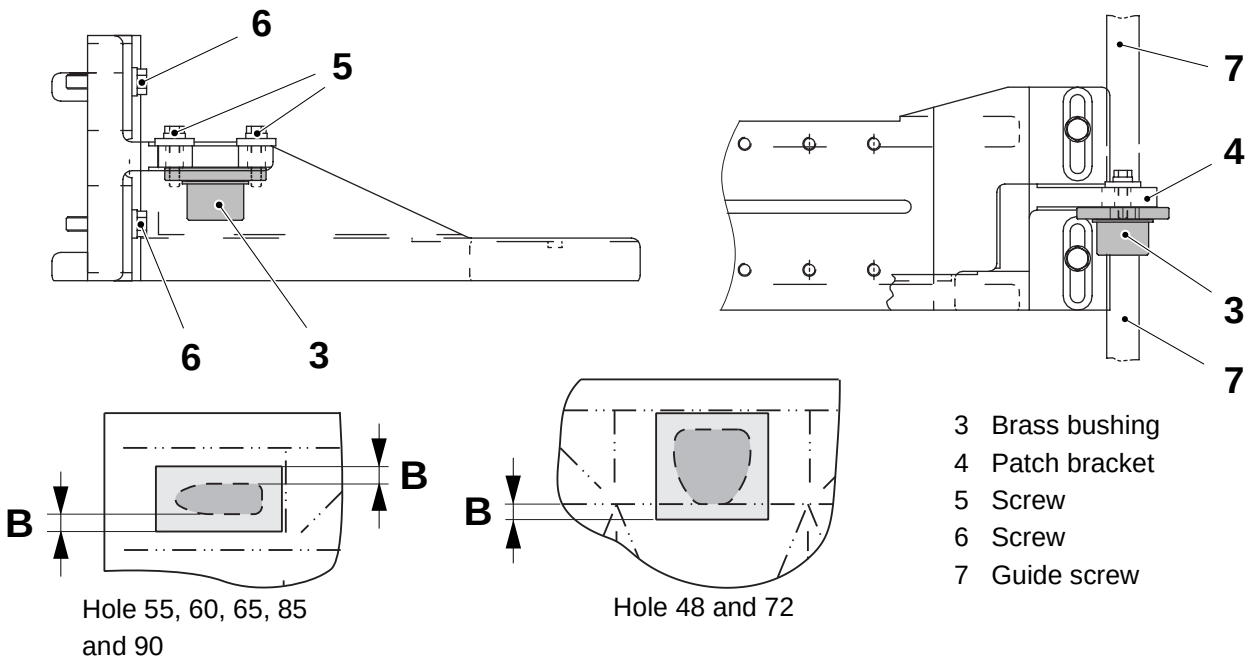

Hole 55, 60, 65, 85 and 90

Hole 48 and 72

3 Brass bushing
4 Patch bracket
5 Screw
6 Screw
7 Guide screw

(Cont'd)

TechPub_2614345_0103 - B6114A01en.fm

(Cont'd)

Check Patch Applicator Heat Pattern

a) At the PullTab control panel, press the SINGLE INDEX button (1) six or seven times after it starts flashing.

b) Open the door and cut out a piece of packaging material.

c) Make sure the position of the heat pattern on the packaging material is centred with respect to the patch using a zonoscope (2).

Note! Increasing the power of the applicator patch inductor will improve heat pattern legibility. Make sure to reset the potentiometer before starting production.

d) Make sure the edges are sealed correctly except the edge (3) where the knife cuts the patch strip. The edge (3) should be blocked.

e) If required, adjust the patch counter jaw as described below.

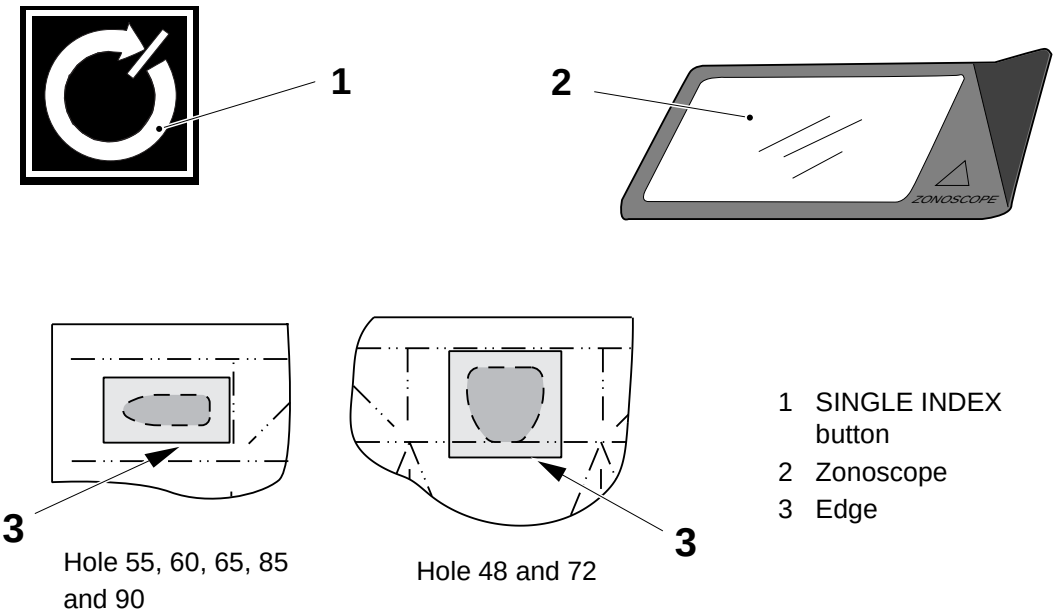

1 SINGLE INDEX button
2 Zonoscope
3 Edge

TechPub_2614345_0103 - B6114A01en.fm

(Cont'd)

(Cont'd)

Adjust Patch Applicator Heat Pattern

a) Loosen the screws (1) and adjust the horizontal position of the heat pattern by means of the setting tool (5).

b) Loosen the screws (2).

c) Loosen the nut (3) and adjust the vertical position of the heat pattern by means of the grub screw (4).

d) Tighten the nut (3), the screws (2) and the screws (1).

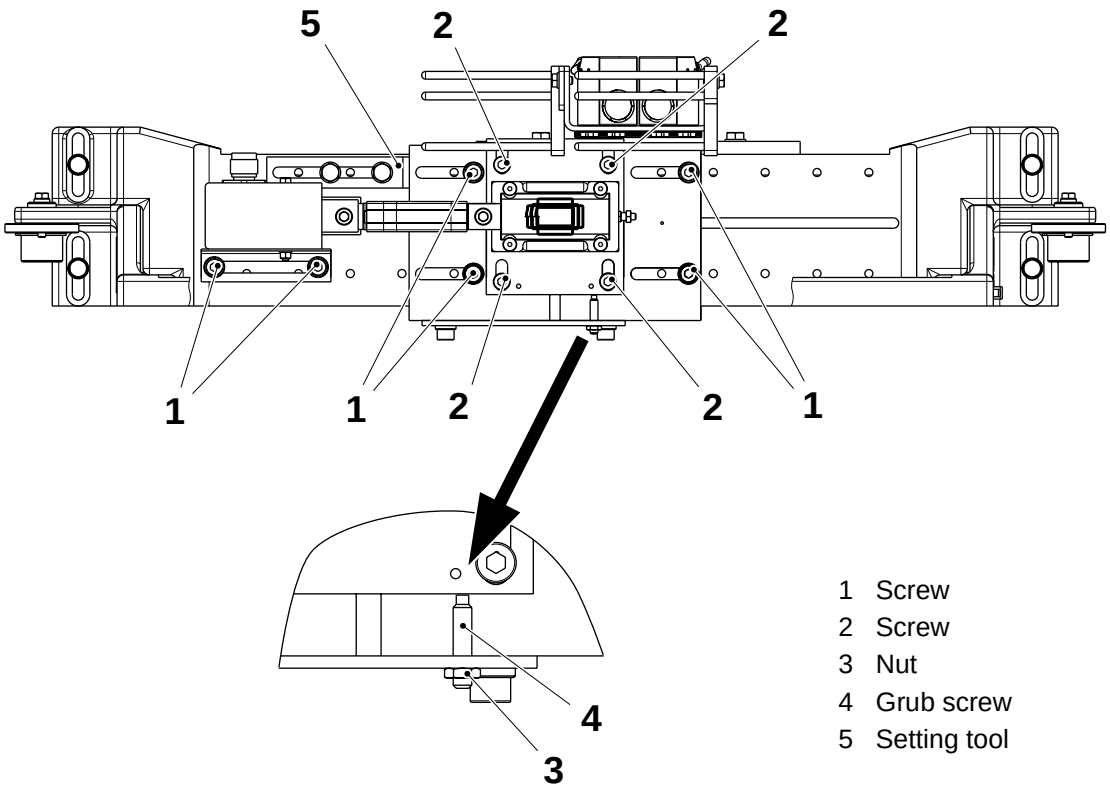

1 Screw
2 Screw
3 Nut
4 Grub screw
5 Setting tool

(Cont'd)

TechPub_2614345_0103 - B6114A01en.fm

(Cont'd)

Deactivate PullTab Stations

a) Touch the STOP button (1) to deactivate the punch unit and applicator patch stations.

b) Press the PROGRAM DOWN button (2) after it starts flashing.

c) Touch the EXIT button (3).

d) Touch the MANOEUVRE button (4) to end the sequence.

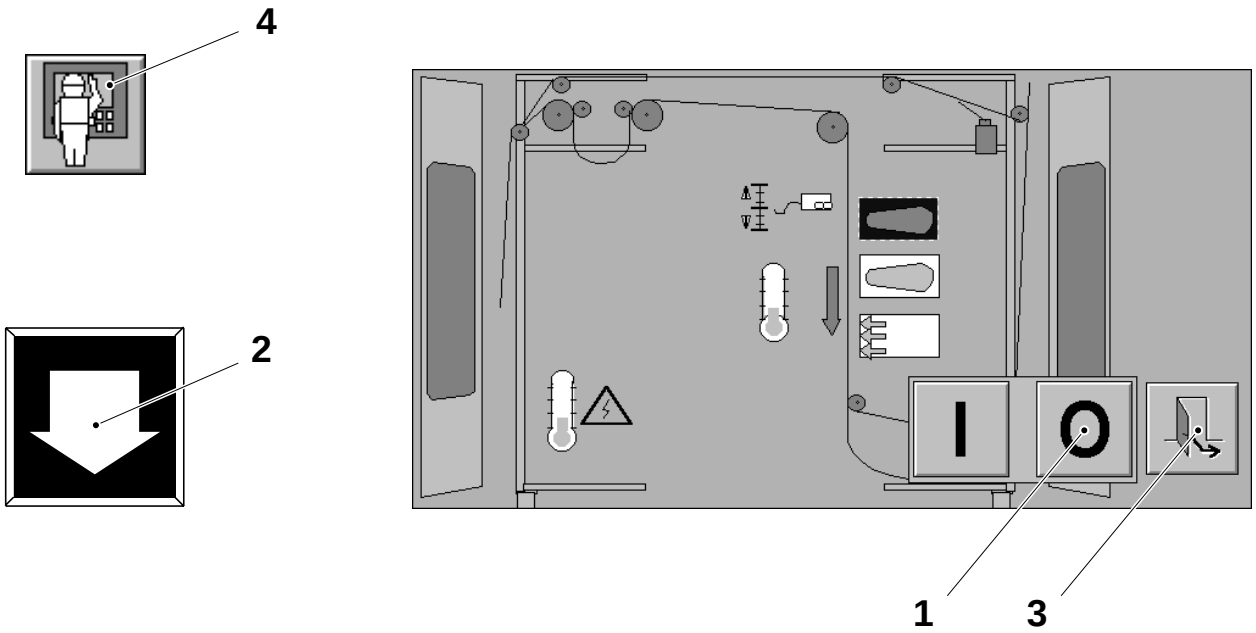

1 STOP button
2 PROGRAM DOWN button
3 EXIT button
4 MANOEUVRE button

(Cont'd)

TechPub_2614345_0103 - B6114A01en.fm

(Cont'd)

Set Tab Position

a) Close all doors on the machine.

b) On the TPOP, check that there are no active alarms and touch the MANOEUVRE button (1).

c) Touch the PULLTAB, LEFT button (2).

d) Touch the TAB APPLICATOR button (3).

e) Touch the START button (4) to activate these stations: punch, outer patch, patch and tab.

f) The SERVICE AND MAINTENANCE KEY symbol (5) starts to flash at the top of the ladder step window.

g) Press the PROGRAM UP button (6) after it starts flashing.

h) At the PullTab control panel, press the SINGLE INDEX button (7) six or seven times after it starts flashing.

Note! If the SINGLE INDEX button (7) does not flash, open and close one of the doors in the PullTab unit. Acknowledge the alarm on the TPOP.

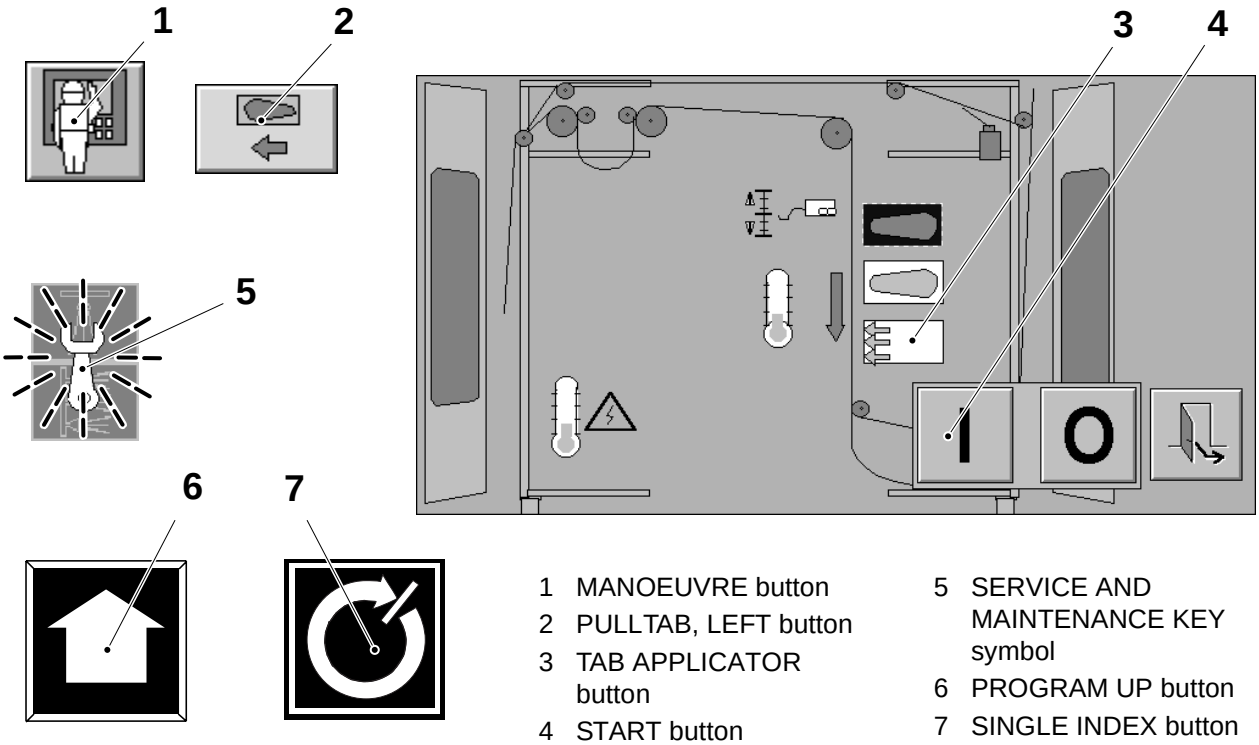

1 MANOEUVRE button
2 PULLTAB, LEFT button
3 TAB APPLICATOR button
4 START button
5 SERVICE AND MAINTENANCE KEY symbol
6 PROGRAM UP button
7 SINGLE INDEX button

(Cont'd)

TechPub_2614345_0103 - B6114A01en.fm

(Cont'd)

i) Open the door and cut out a piece of packaging material.

j) Check the tab position on the packaging material, distances **A** and **B**. If required, adjust the position of the tab applicator as described below in items k) to t).

k) Loosen the four screws (8) on the tab feeder.

l) Set the distance **A** by means of the setting tool (9).

m) Tighten the four screws (8) after adjustment.

Package	Hole type	A ±0.5 (mm)	B ±0.5 (mm)	Package	Hole type	A ±0.5 (mm)	B ±0.5 (mm)
TPA 330 Sq	48	2.6	4.0	TPA 250 Sq	72	3.5	4.8
TBA 500 S	55	1.5	1.5	TBA 1000 S	85	1.5	2.0
TPA 1000 S	60	2.0	1.8	TBA 1000 B	85	1.5	2.0
TPA 1000 Sq	60	2.0	1.8	TBA 1000 Sq	85	1.5	2.0
TBA 1000 S	65	1.5	2.5	TBA 1500 S	85	1.5	2.0
TBA 1000 B	65	1.5	2.5	TBA 1000 S	90	1.5	2.0
TBA 1000 Sq	65	1.5	2.5	TBA 1500 S	90	1.5	2.0

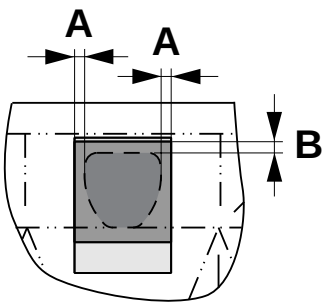

Hole 48 and 72

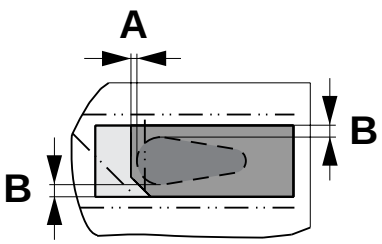

Hole 21 and 25
To be introduced later on

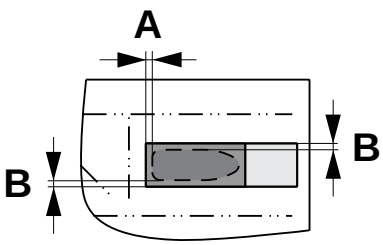

Hole 55, 60, 65, 85 and 90

View from outside the package

Sealed tab

Not sealed tab

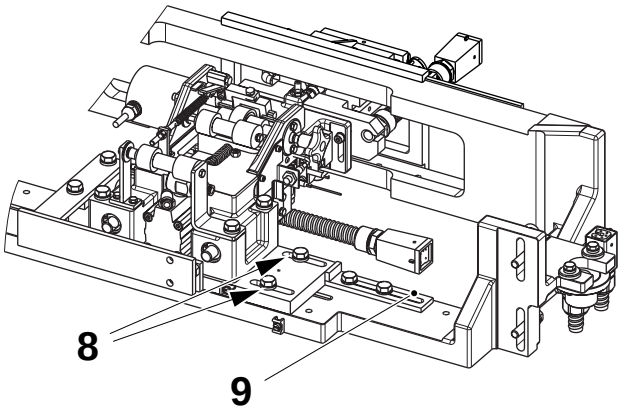

8 Screw
9 Setting tool

(Cont'd)

TechPub_2614345_0103 - B6114A01en.fm

(Cont'd)

n) Check the horizontal position of the tab counter jaw, see section Set Tab Applicator and Counter Jaw in the Horizontal Position without Template on page 1-33.

o) On both LH and RH sides of all three applicator stations (outer patch, patch and tab) loosen the screws (12) to move the brass bushings (10) away from the bracket (11).

p) On both LH and RH sides of the tab applicator, tighten the brass bushings (10) until they touch the tab bracket (11).

q) Tighten the two screws (12).

r) Slightly loosen the screws (13) on the tab bracket (11).

s) Set the distance **B** by adjusting the guide screws (14).

t) Tighten the screws (13).

Package	Hole type	B ±0.5 (mm)	Package	Hole type	B ±0.5 (mm)	Package	Hole type	B ±0.5 (mm)
TPA 330 Sq	48	4.0	TBA 1000 B	65	2.5	TBA 1000 Sq	85	2.0
TBA 500 S	55	1.5	TBA 1000 Sq	65	2.5	TBA 1500 S	85	2.0
TPA 1000 S	60	1.8	TPA 250 Sq	72	4.8	TBA 1000 S	90	2.0
TPA 1000 Sq	60	1.8	TBA 1000 S	85	2.0	TBA 1500 S	90	2.0
TBA 1000 S	65	2.5	TBA 1000 B	85	2.0			

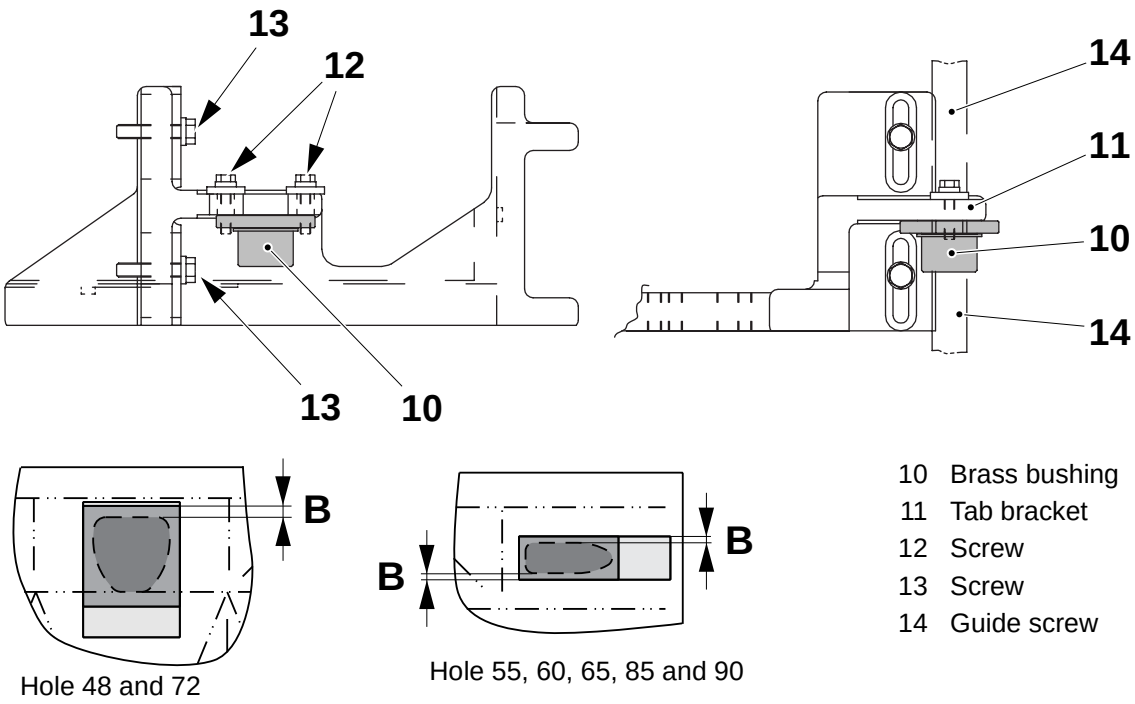

Hole 48 and 72

Hole 55, 60, 65, 85 and 90

10 Brass bushing
11 Tab bracket
12 Screw
13 Screw
14 Guide screw

(Cont'd)

TechPub_2614345_0103 - B6114A01en.fm

(Cont'd)

Deactivate PullTab Stations

a) Press the STOP button (2) to deactivate the punch, outer patch, patch and tab stations.

b) Press the PROGRAM DOWN button (3) after it starts flashing.

c) Touch the EXIT button (4).

d) Touch the MANOEUVRE button (1) to end the sequence.

e) Step up to step PRODUCTION and run the PT21 until there is at least 50 packages to verify all the station positions.

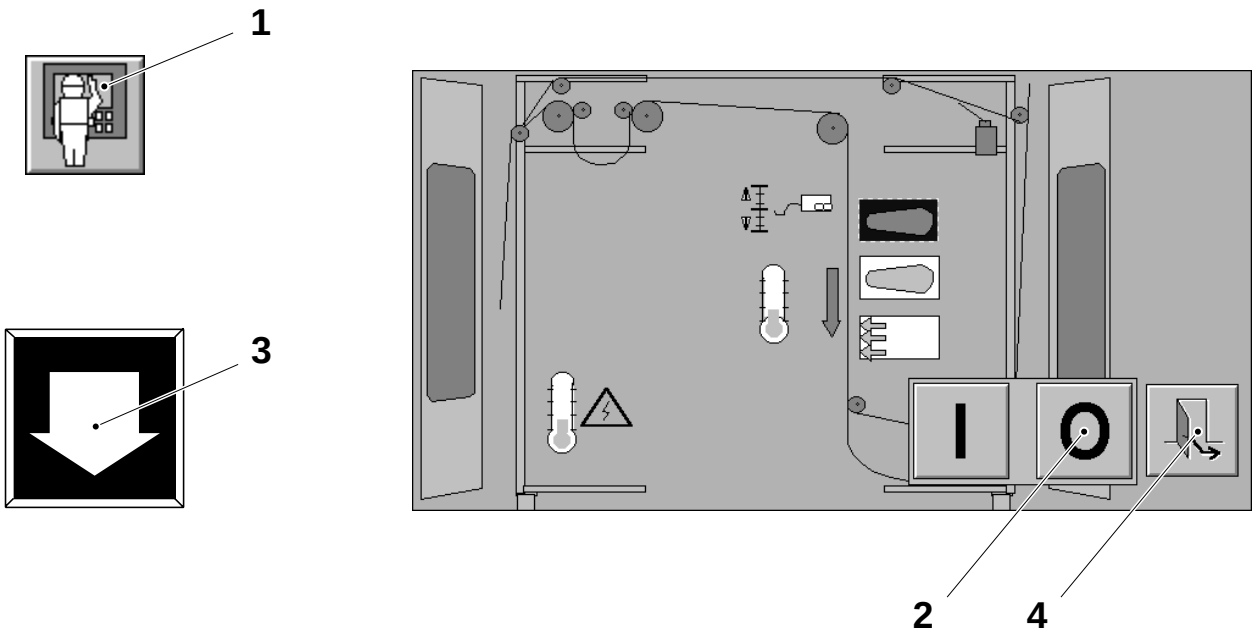

1 MANOEUVRE button
2 STOP button
3 PROGRAM DOWN button
4 EXIT button

TechPub_2614345_0103 - B6114A01en.fm

1.1.3 Lifting Device

1.1.3-1 Lifting Device - Check

Machine Status	Air **OFF** Mains Power **OFF**
SPC Reference	1185078-0100

Check the following parts for visual wear and/or damage:

- the thread of the screw guides (1)
- the brass bushings (2) and (3)
- the toothed pulleys (4)
- the timing belt (5)
  Check also the belt tension and set as required, see 1.1.3-2 Lifting Device - Set Timing Belt.

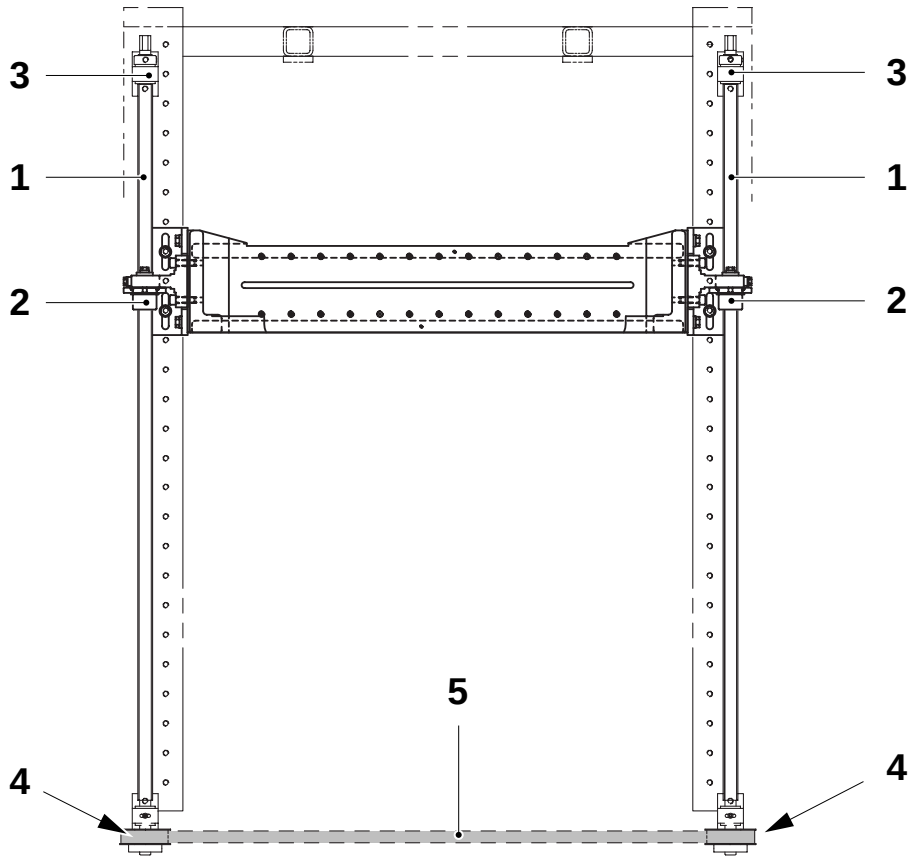

1 Screw guide
2 Bushing
3 Bushing
4 Toothed pulley
5 Timing belt

TechPub_2614345_0103 - B61114A01en.fm

1.1.3-2 Lifting Device - Set Timing Belt

Machine Status	Air **OFF** Mains Power **OFF**
SPC Reference	1185078-0100

Set the tension of the timing belt (1) so that it can be flexed approximately **10 ±1 mm** with a load force of **15 ±1 N** at the point **A**.

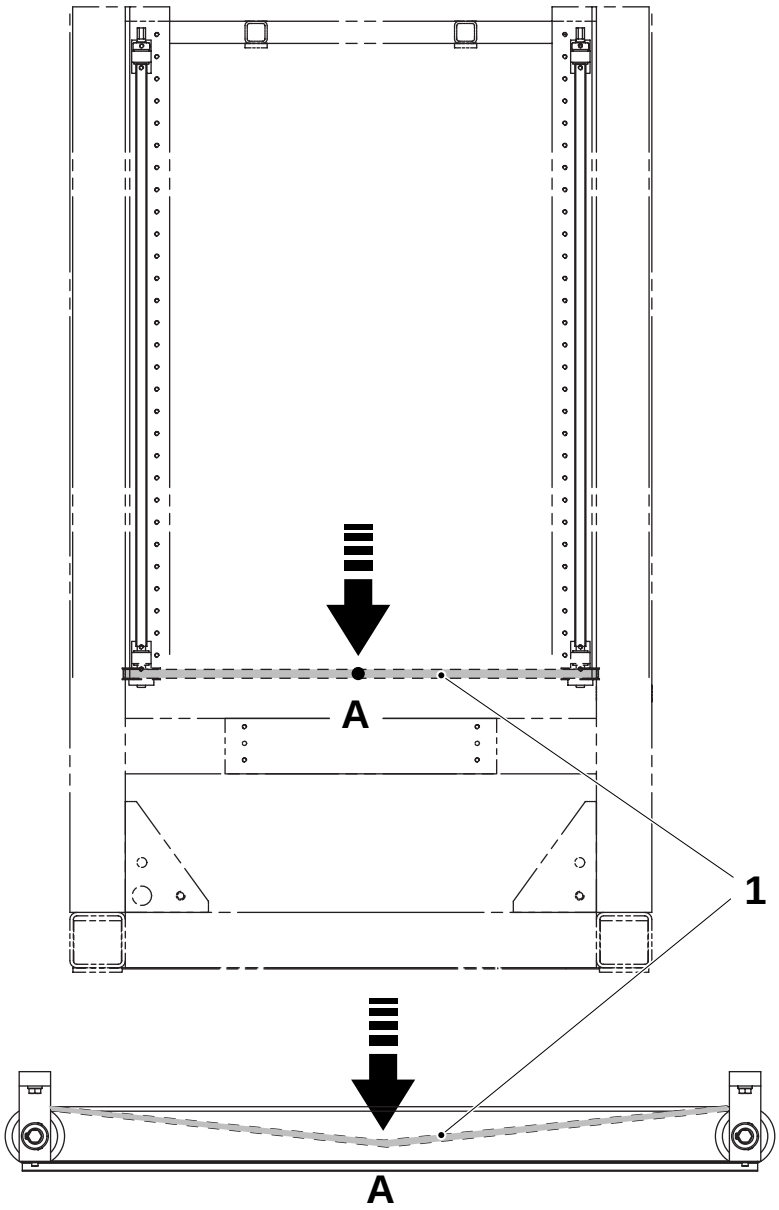

1 Timing belt

TechPub_2614345_0103 - B6114A01en.fm

2 Paper Web Path

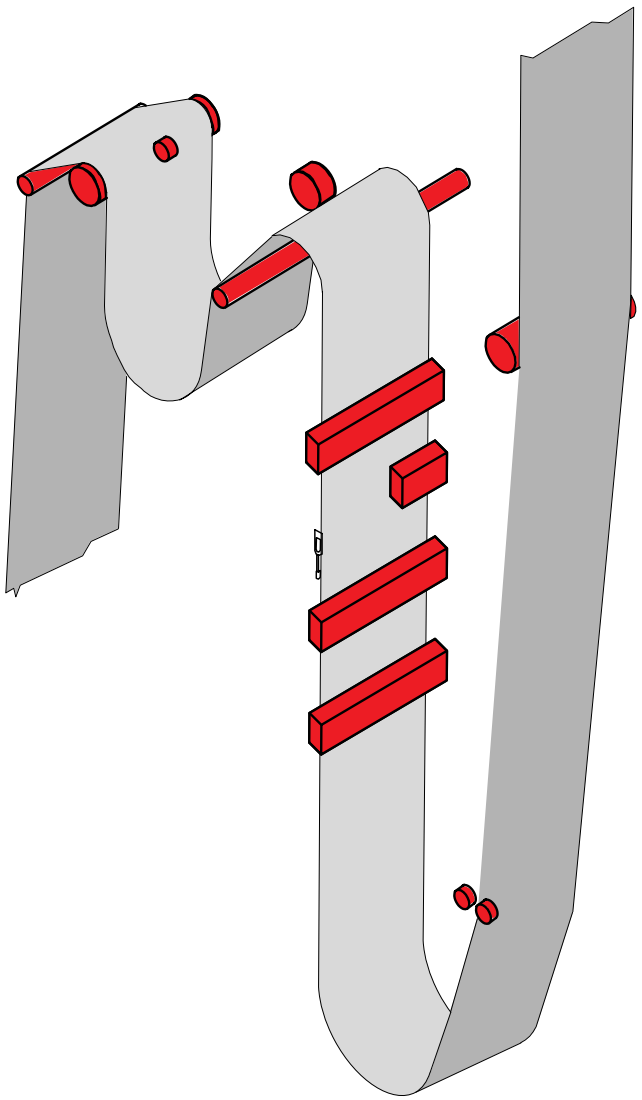

TechPub_2614345_0103 - B6114B00en.fm

Paper Web Path - Description

SPC Reference	1095931-0400

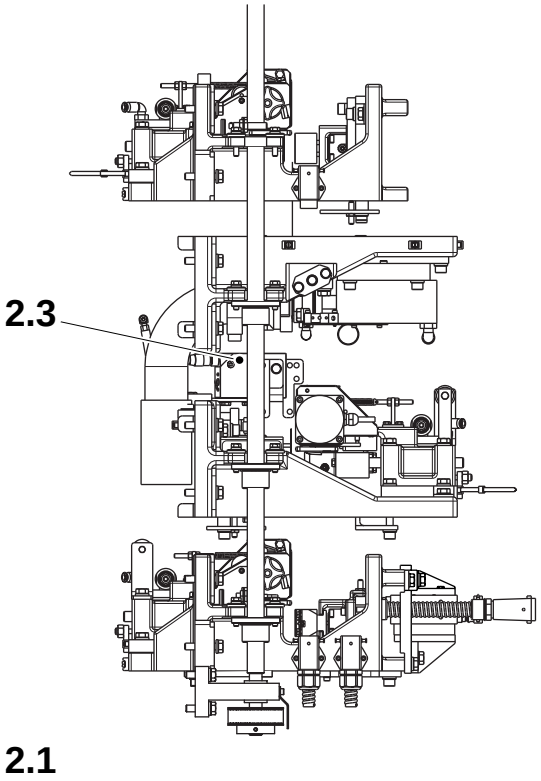

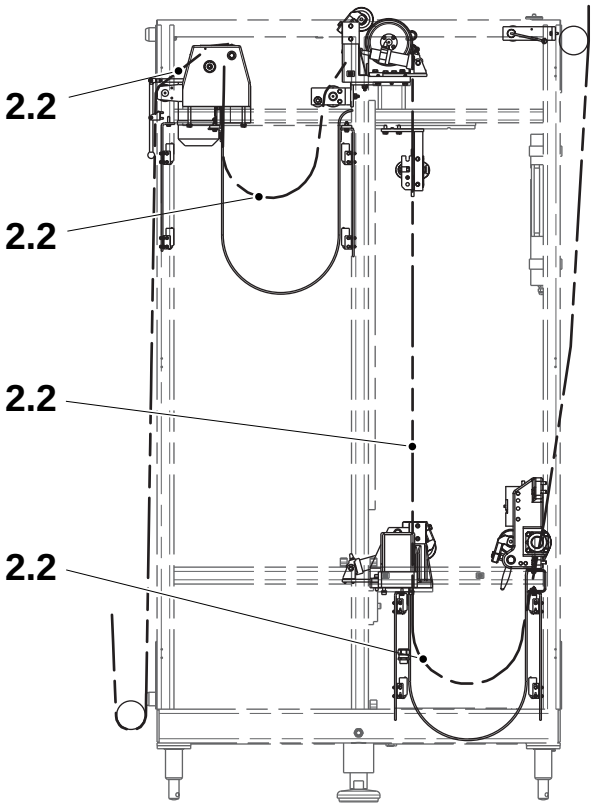

2.1 Setting Flow Chart
2.2 Paper Web Path
2.3 Bar Code Reader

TechPub_2614345_0103 - B6114B00en.fm

2-1 Paper Web Path - Functional Description . . . . . 2 - 5

2.1 Setting Flow Chart . . . . . 2 - 8

2.2 Paper Web Path . . . . . 2 - 9

2.2.1 Drive Motor . . . . . 2 - 9

2.2.1-1 Drive Motor - Remove Clamping Element . . . . . 2 - 9

2.2.1-2 Drive Motor - Assemble Clamping Element . . 2 - 10

2.2.1-3 Drive Motor - Check Pressure Roller and Drive Wheel . . . . . 2 - 11

2.2.1-4 Drive Motor - Change Bearings . . . . . 2 - 12

2.2.1-5 Drive Motor - Change Drive Wheel . . . . . 2 - 13

2.2.1-6 Drive Motor - Set Cylinder . . . . . 2 - 17

2.2.1-7 Drive Motor - Check Cylinders . . . . . 2 - 18

2.2.1-8 Drive Motor - Change . . . . . 2 - 19

2.2.2 Outfeed Tension Device. . . . . 2 - 20

2.2.2-1 Outfeed Tension Device - Check Rollers . . . . . 2 - 20

2.2.2-2 Outfeed Tension Device - Set Damper . . . . . 2 - 21

2.2.2-3 Outfeed Tension Device - Set Counter Roller Spring . . . . . 2 - 22

2.2.2-4 Outfeed Tension Device - Change Damper . . . . . 2 - 23

2.2.3 Bending Roller Assembly . . . . . 2 - 24

2.2.3-1 Bending Roller Assembly - Check . . . . . 2 - 24

2.2.3-2 Bending Roller Assembly - Change Bearings . . . . . 2 - 25

2.2.4 Infeed Unit. . . . . 2 - 26

2.2.4-1 Infeed Unit - Check Rollers . . . . . 2 - 26

2.2.4-2 Infeed Unit - Check Function . . . . . 2 - 27

2.2.4-3 Infeed Unit - Change Worm Gear Motor . . . . . 2 - 28

2.2.4-4 Infeed Unit - Change Bearings . . . . . 2 - 29

2.2.4-5 Infeed Unit - Check Bending Roller Assembly . . . . . 2 - 31

2.2.4-6 Infeed Unit - Set Spring Bracket . . . . . 2 - 32

2.2.5 Motor Unit . . . . . 2 - 33

TechPub_2614345_0103 - B6114B00en.fm

2.2.5-1 Motor Unit - Check . . . . . 2 - 33
2.2.5-2 Motor Unit - Check Bending Roller . . . . . 2 - 34
2.2.5-3 Motor Unit - Set Cylinder . . . . . 2 - 35
2.2.5-4 Motor Unit - Change Wheel . . . . . 2 - 36
2.2.5-5 Motor Unit - Remove Clamping Element . . . . . 2 - 36
2.2.5-6 Motor Unit - Assemble Clamping Element . . . . . 2 - 36

2.2.6 Paper Guide . . . . . 2 - 37

2.2.6-1 Paper Guide - Check Rollers and Bearings . . . . . 2 - 37

2.2.7 Photocell Unit Infeed. . . . . 2 - 39

2.2.7-1 Photocell Unit Infeed - Check Photocells . . . . . 2 - 39
2.2.7-2 Photocell Unit Infeed - Set Photocells . . . . . 2 - 40

2.2.8 Photocell Unit Outfeed . . . . . 2 - 42

2.2.8-1 Photocell Unit Outfeed - Check Photocells . . . . . 2 - 42
2.2.8-2 Photocell Unit Outfeed - Set Photocells . . . . . 2 - 43

2.2.9 By-Pass Sensor . . . . . 2 - 45

2.2.9-1 By-Pass Sensor - Check . . . . . 2 - 45

2.3 Bar Code Reader . . . . . 2 - 46

2.3-1 Bar Code Reader - Set . . . . . 2 - 46

TechPub_2614345_0103 - B6114B00en.fm

2-1 Paper Web Path - Functional Description

SPC Reference	1095931-0400

When the filling machine pulls packaging material the following occurs:

- the PLC receives a signal from the lower photocells in the outfeed paper magazine
- the PLC begins the machine cycle
- the PLC signals to the servo motor to start
- the DMC servo amplifier directs an output to the servo motor, which then makes one index and stops
- as the packaging material is fed through the PullTab, the barcode is detected and the DMC servo amplifier compensates for any variations in its relative position.

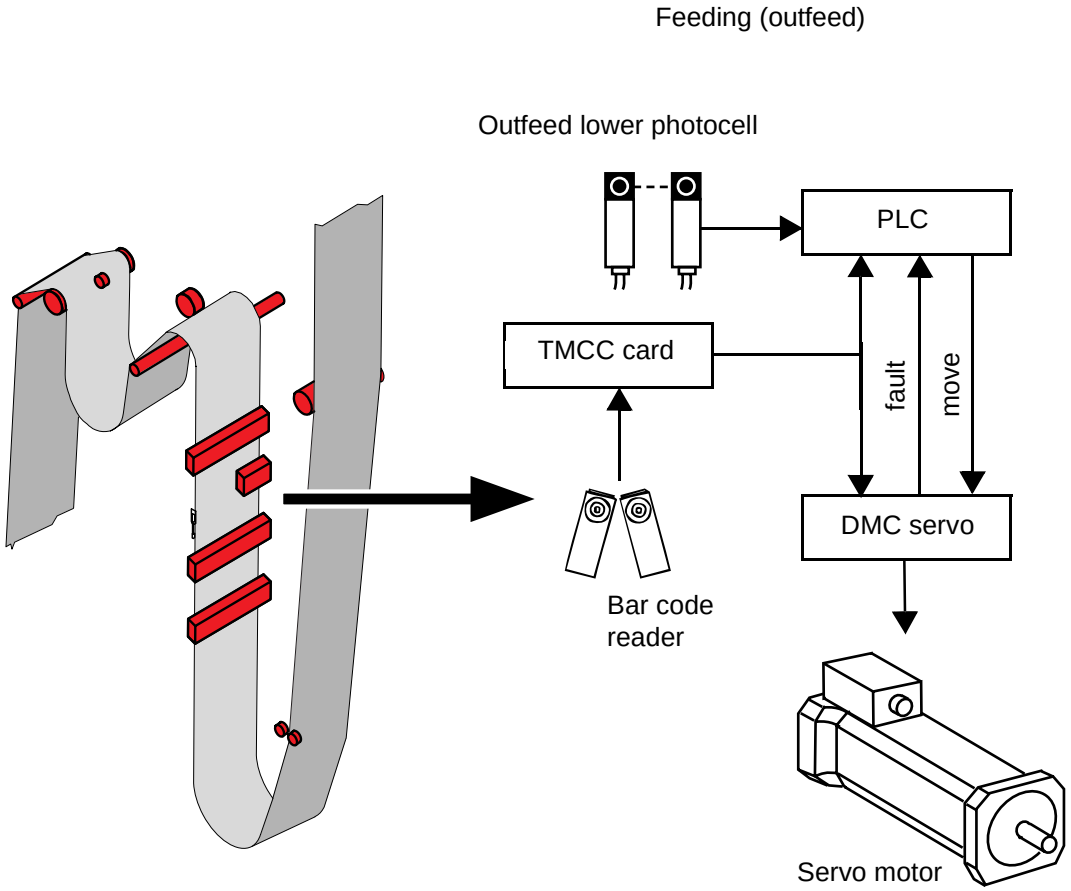

(Cont'd)

TechPub_2614345_0103 - B6114B00en.fm

(Cont'd)

As the packaging material in the infeed loop is used up the following occurs:

- the PLC receives a signal from the infeed lower photocell
- the PLC signals the infeed motor, via the frequency converter, to run.

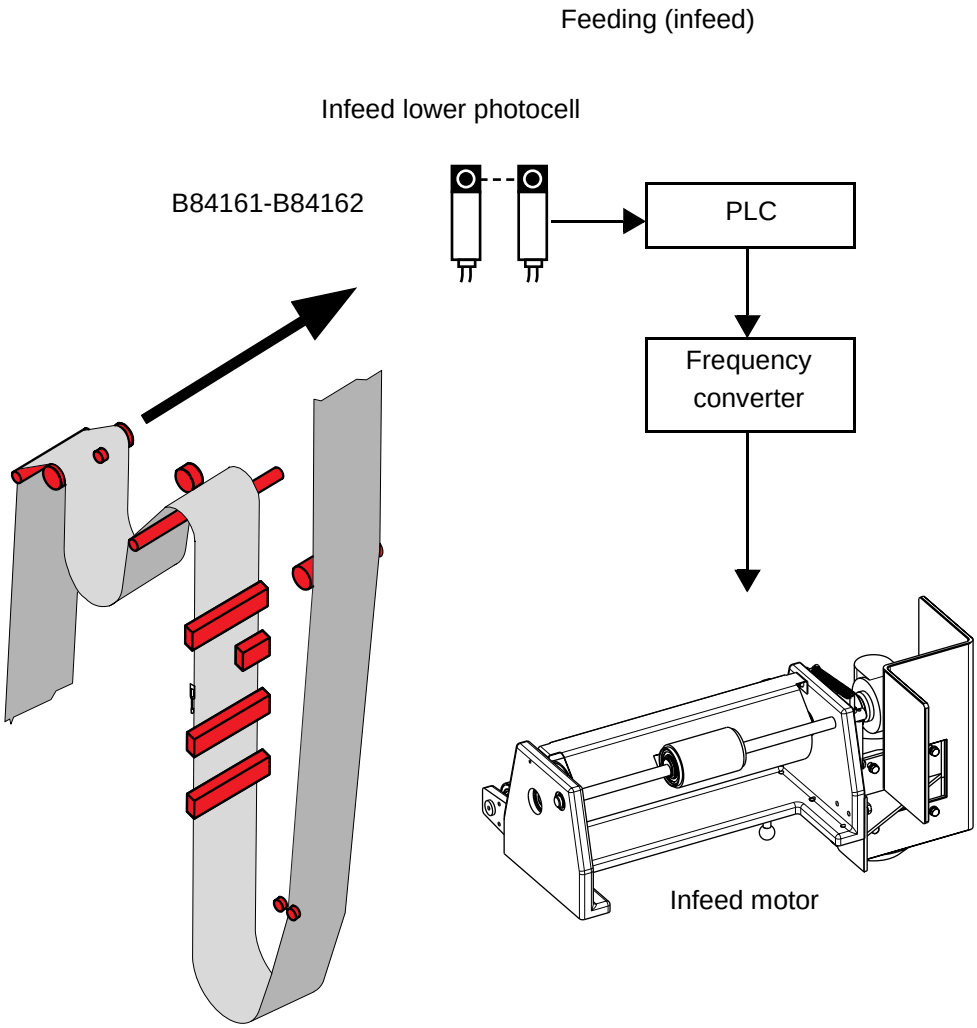

(Cont'd)

TechPub_2614345_0103 - B6114B00en.fm

(Cont'd)

During PRODUCTION:

- if the upper photocells in the infeed loop assembly and/or outfeed loop assembly are activated because of no paper both the PullTab and the filling machine stop in SHORT STOP mode
- if the filling machine is pulling the packaging material web, but this is broken after the outfeed loop assembly in the PullTab unit, then the lower photocells in the loop never deactivate (packaging material is not moving). Both the PT21 and the filling machine will then stop in SHORT STOP mode after three seconds and the alarm "PT21 OUTFEED ROTATION MONITOR" will be shown on the TPOP panel
- if the packaging material web is broken at the applicators level then the barcode will not be detected. Both the PT21 and the filling machine will then stop in SHORT STOP mode and the alarm "PT21 PHOTOCELLS MALFUNCTION" will be shown on the TPOP panel.

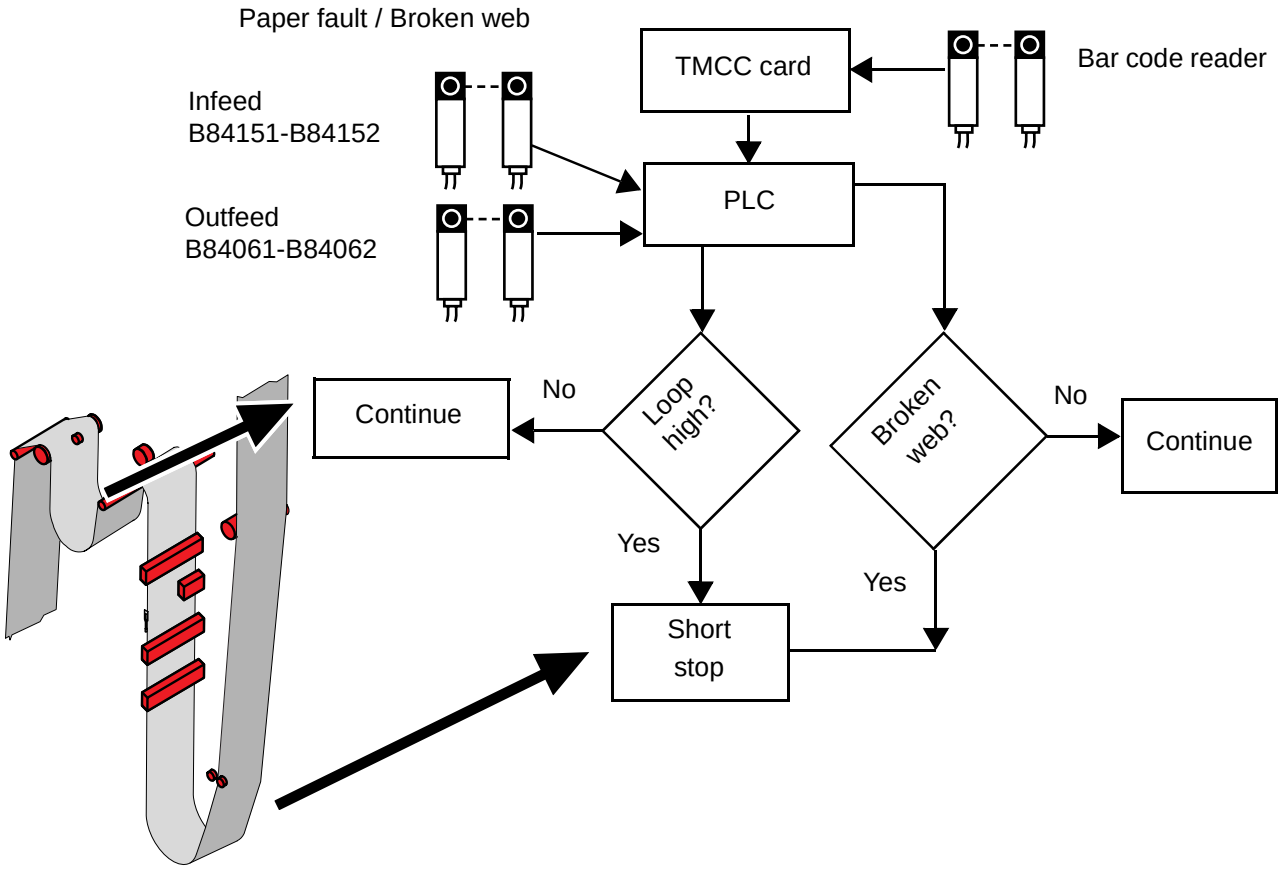

TechPub_2614345_0103 - B6114B00en.fm

2.1 Setting Flow Chart

The following flow chart shows the order in which the various components must be set up.

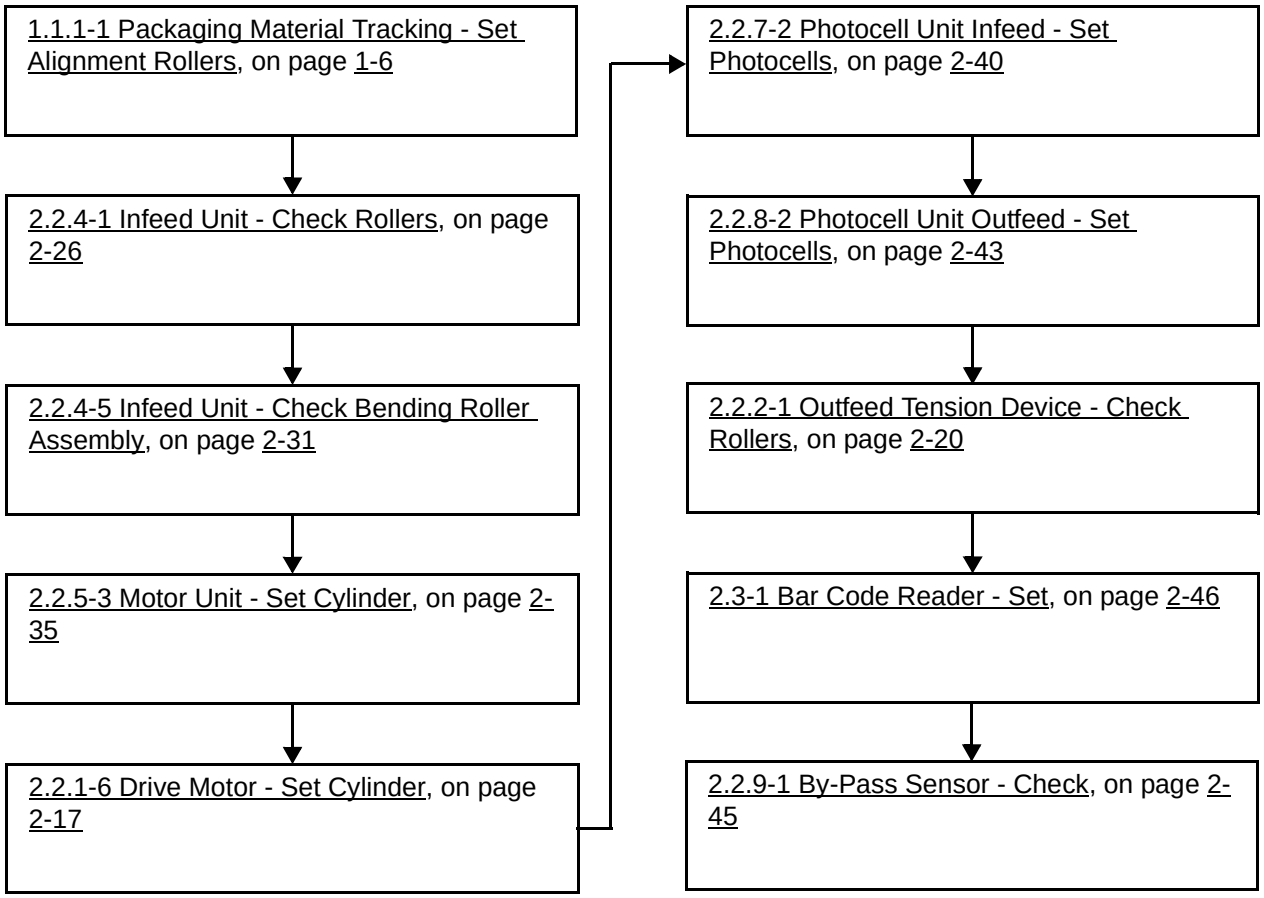

TechPub_2614345_0103 - B6114B01en.fm

2.2 Paper Web Path

SPC Reference	1095931-0400

2.2.1 Drive Motor

2.2.1-1 Drive Motor - Remove Clamping Element

Machine Status	Air **OFF** Mains Power **OFF**
SPC Reference	2526544-0100

a) Loosen the screws (1).

b) Fit two screws into the puller holes (2).

c) Tighten the puller hole (2) screws crosswise until the clamping element (3) comes off.

d) Remove the clamping element (3) and change it if damaged or worn.

e) Assemble in the reverse order, see 2.2.1-2 Drive Motor - Assemble Clamping Element.

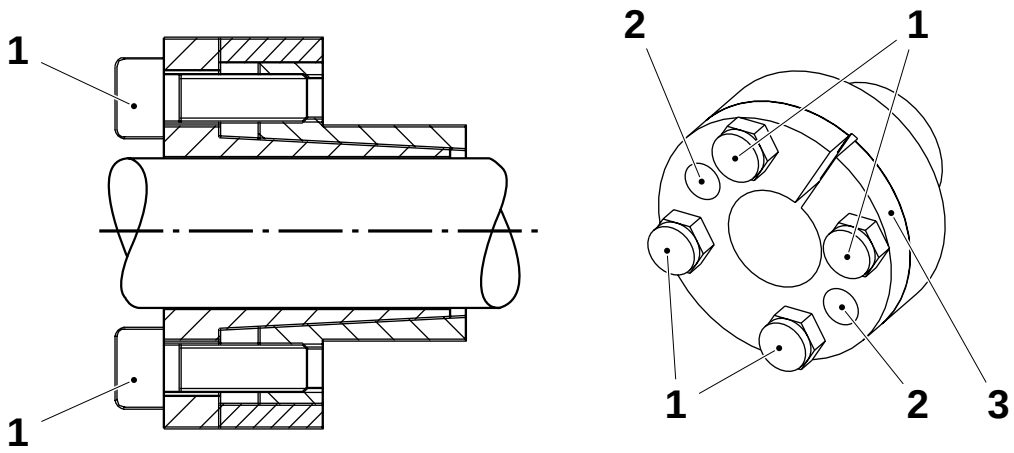

1 Screw
2 Puller hole
3 Clamping element

TechPub_2614345_0103 - B6114B02en.fm

2.2.1-2 Drive Motor - Assemble Clamping Element

Machine Status	Air **OFF** Mains Power **OFF**
Special Equipment	Torque wrench min. 17 Nm
Consumables	Silicon grease TP No. 92296-0002
SPC Reference	2526544-0100

CAUTION
Risk of major damage to the machine!
Always tighten the screws crosswise using the method described below.

Never adjust the tightening torque after locking by loosening the screws (1).The result may be that the screws (1) shake loose and result in serious damage to the machine.

Note! The inner surface **A** and the outer surface **B** of the clamping element must be cleaned before assembling.

Note! Lubricate the screws (1). Apply grease (TP No.92296-0002) **only** onto the clamp inner surface **C**. Grease accidently applied to other areas of the drive roller will cause packaging material slippage.

a) Put the clamping element (2) in place and tighten the screws (1) crosswise, first by hand and then to **9 ±2 Nm** with the aid of a torque wrench.

b) Continue to tighten the screws crosswise to **17 ±2 Nm** with the aid of a torque wrench.

c) Tighten the screws (1) several times, with full tightening torque, until it is not possible to tighten them further.

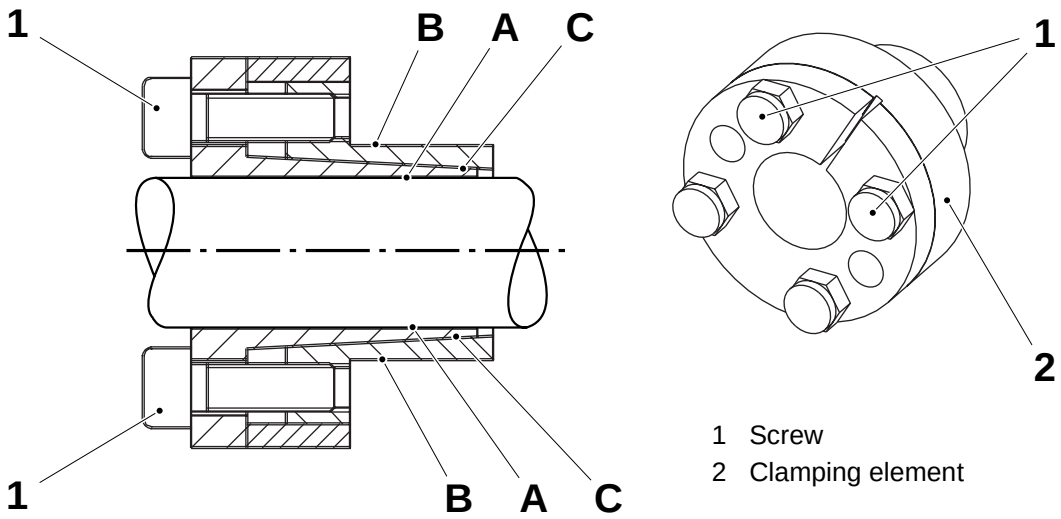

1 Screw
2 Clamping element

TechPub_2614345_0103 - B6114B02en.fm

2.2.1-3 Drive Motor - Check Pressure Roller and Drive Wheel

Machine Status	Air **OFF** Mains Power **OFF**
SPC Reference	2526544-0100

Check that the following parts turn freely and that there is no wear or damage:

- the pressure rollers (1)
- the drive wheels (2).

Change as required, see 2.2.1-5 Drive Motor - Change Drive Wheel.

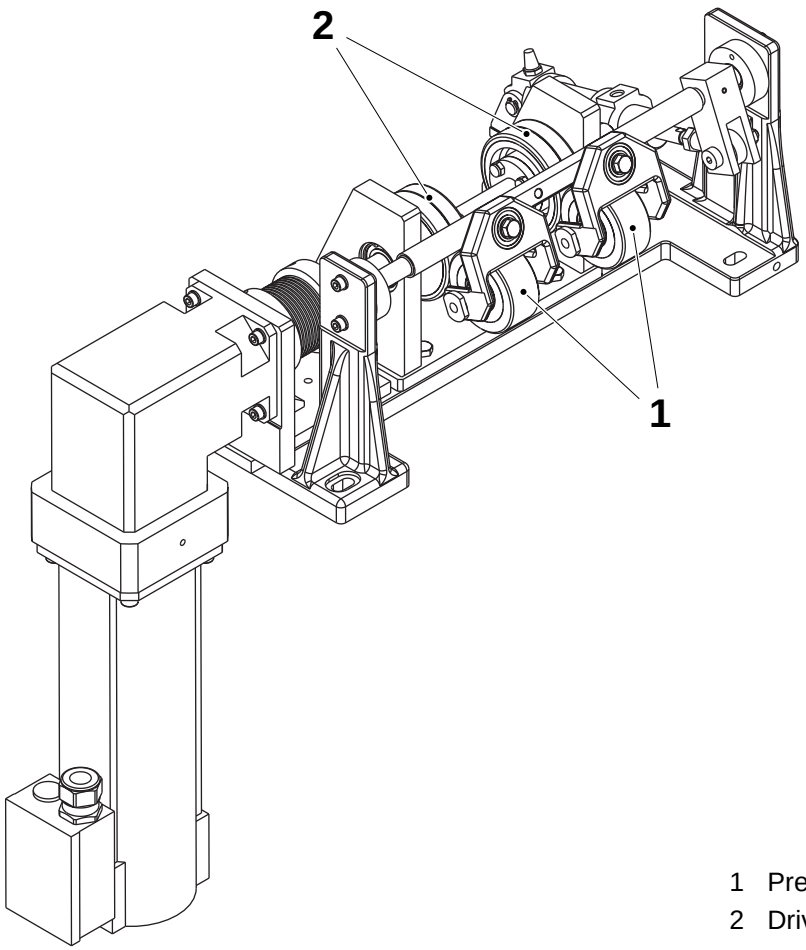

1 Pressure roller
2 Drive wheel

TechPub_2614345_0103 - B6114B02en.fm

2.2.1-4 Drive Motor - Change Bearings

Machine Status	Air **OFF** Mains Power **OFF**
SPC Reference	2526544-0100

a) Loosen the screws (1).

b) Remove the nut (2).

c) Pull out the pressure roller (3).

d) Remove the bearings (4) and change them if damaged or worn.

e) Assemble in the reverse order.

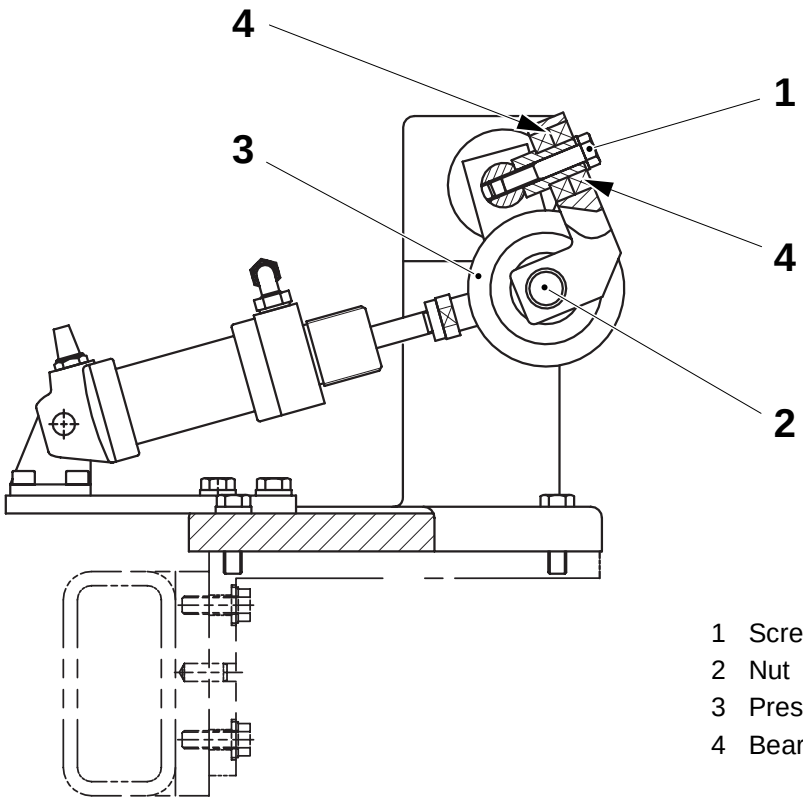

1 Screw
2 Nut
3 Pressure roller
4 Bearings

TechPub_2614345_0103 - B6114B02en.fm

2.2.1-5 Drive Motor - Change Drive Wheel

Machine Status	Air **OFF** Mains Power **OFF**
SPC Reference	2526544-0100

a) Remove the screw (1) and disconnect the pneumatic group (2).

b) Rotate the pressure roller shaft (3) and fix the pressure rollers to the frame.

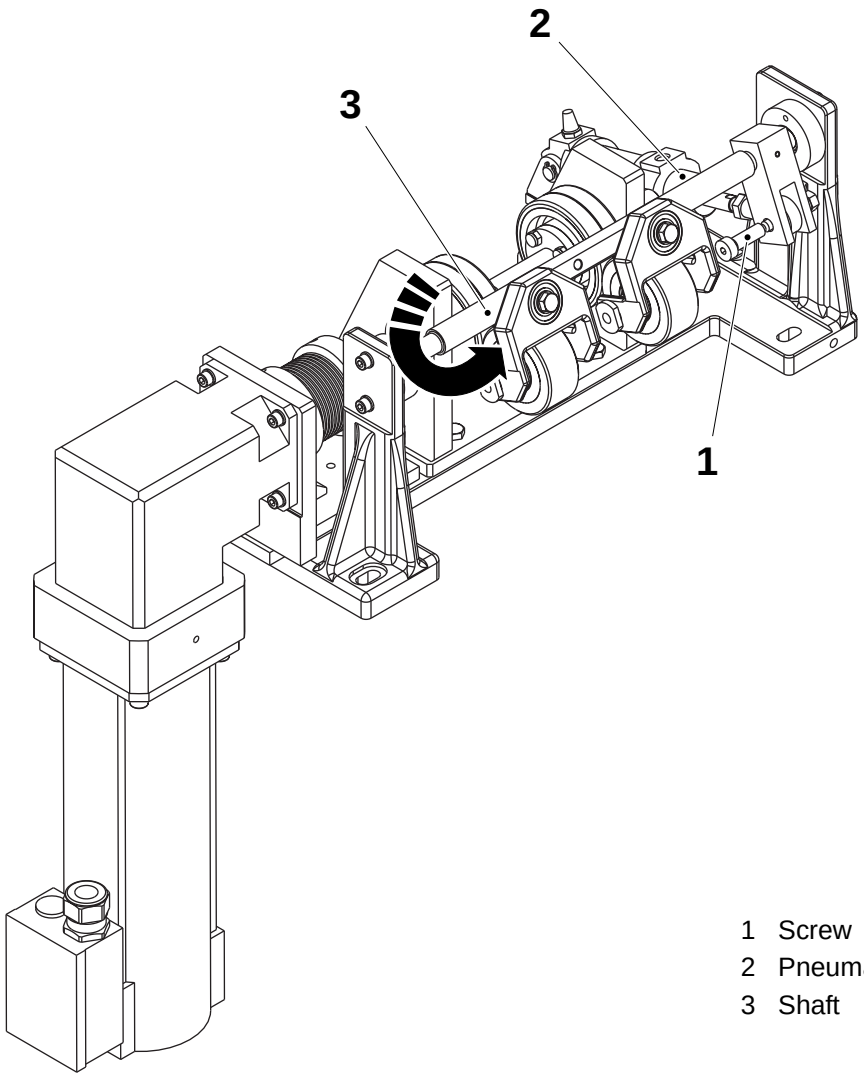

1 Screw
2 Pneumatic group
3 Shaft

(Cont'd)

TechPub_2614345_0103 - B6114B02en.fm

(Cont'd)

c) Loosen the socket-head screws (4).

d) Slide the bellow coupling (5) towards the support (6).

e) Remove the four screws (7) and the bracket (8) group.

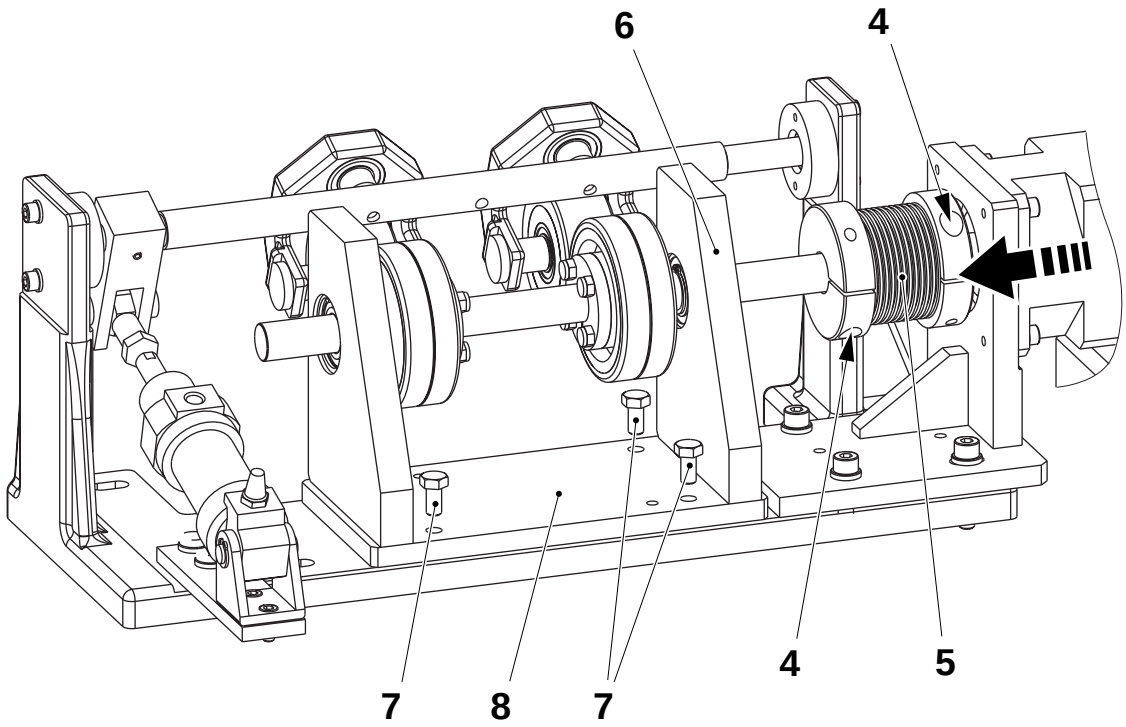

4 Socket-head screw
5 Bellow coupling
6 Support
7 Screw
8 Bracket

(Cont'd)

TechPub_2614345_0103 - B6114B02en.fm

(Cont'd)

f) Remove the retaining rings (9), the ball bearings (10) and the retaining rings (11).

g) Remove the clamping elements (12), see 2.2.1-1 Drive Motor - Remove Clamping Element.

h) Pull out the shaft (13).

i) Change the drive wheels (14).

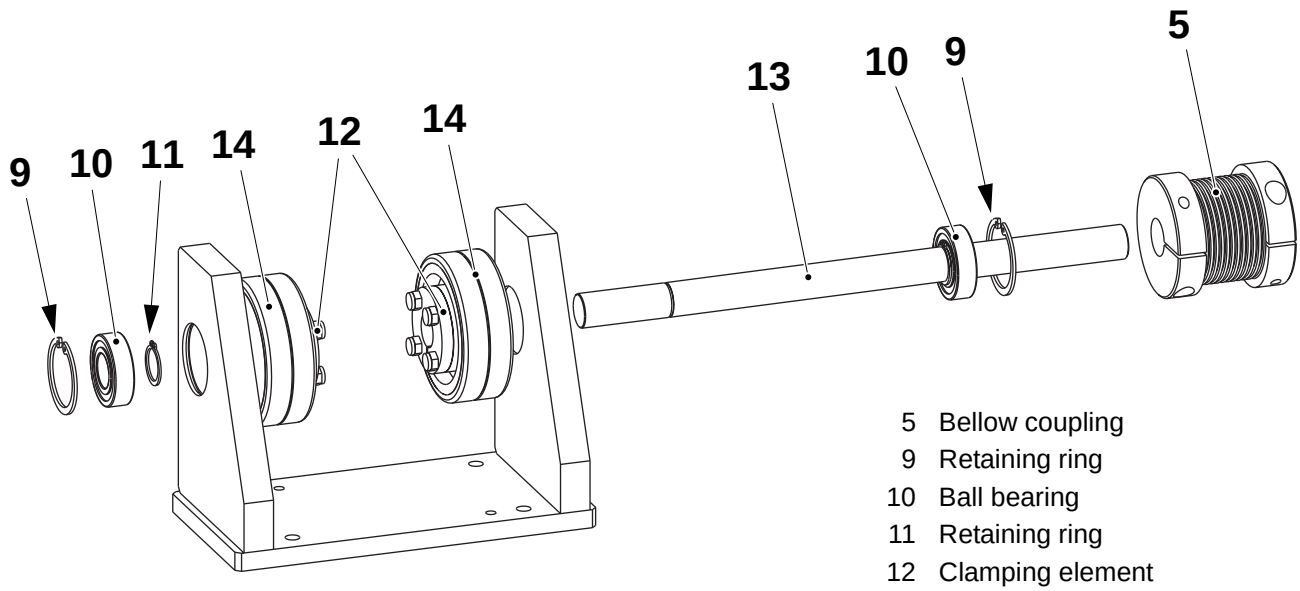

5 Bellow coupling
9 Retaining ring
10 Ball bearing
11 Retaining ring
12 Clamping element
13 Shaft
14 Drive wheel

(Cont'd)

TechPub_2614345_0103 - B6114B02en.fm

(Cont'd)

j) Assemble in the reverse order. While assembling, set the distance **A** between the support (6) and the drive wheels (14), and then the distance **B** between the bellow coupling (5) and the bracket (15).

Note! Make sure the drive wheels (14) are in front of the pressure rollers (16) and adjust as required.

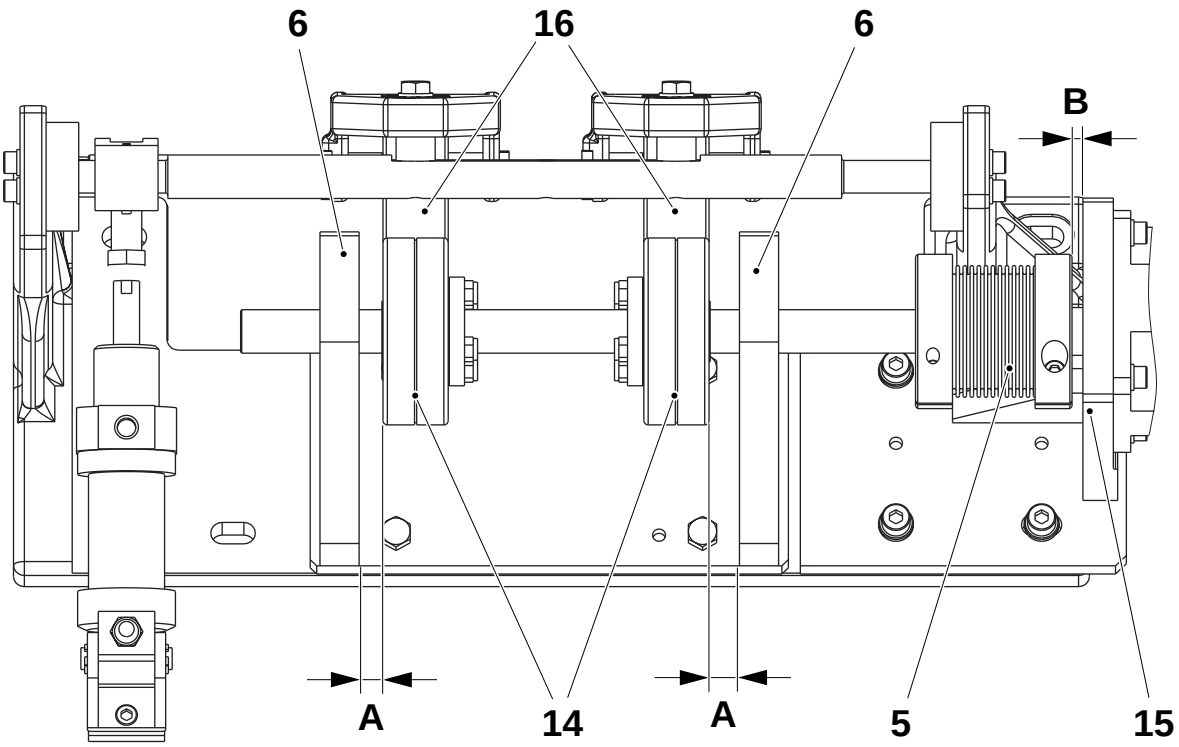

A = 7.5 ±1.0 mm
B = 5.0 ±2.0 mm

5 Bellow coupling
6 Support
14 Drive wheel
15 Bracket
16 Pressure roller

TechPub_2614345_0103 - B6114B02en.fm

2.2.1-6 Drive Motor - Set Cylinder

Machine Status	Air **OFF** Mains Power **OFF**
SPC Reference	2526544-0100

a) Lift the counter roller (1) as far as it can go.

b) Adjust the cylinder joint (2) and set the distance **A** between the nut (3) and the cylinder (4) edge, as shown in the figure.

c) Make sure the cylinder (4) functions correctly.

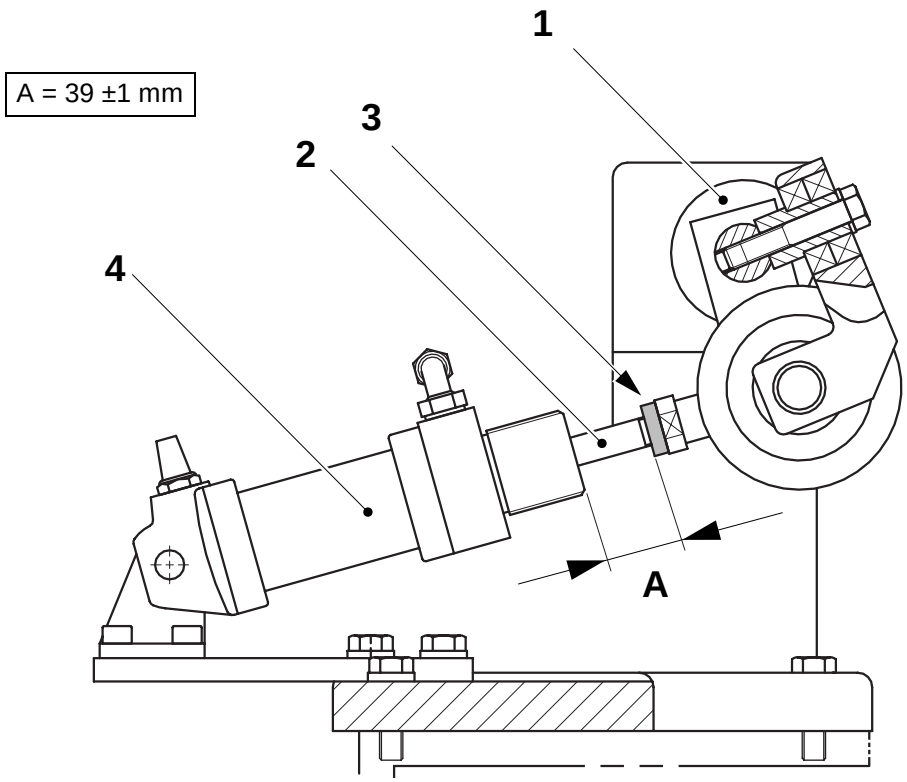

1 Counter roller
2 Joint
3 Nut
4 Cylinder

TechPub_2614345_0103 - B6114B02en.fm

2.2.1-7 Drive Motor - Check Cylinders

Machine Status	PRODUCTION
SPC Reference	2526544-0100

a) During PRODUCTION the packaging material must not slip when the drive roller (1) feeds the outfeed magazine. If necessary, set the cylinder, see 2.2.1-6 Drive Motor - Set Cylinder.

b) Stop the machine in SHORT STOP mode and check the cylinder connections (2) for leaks.

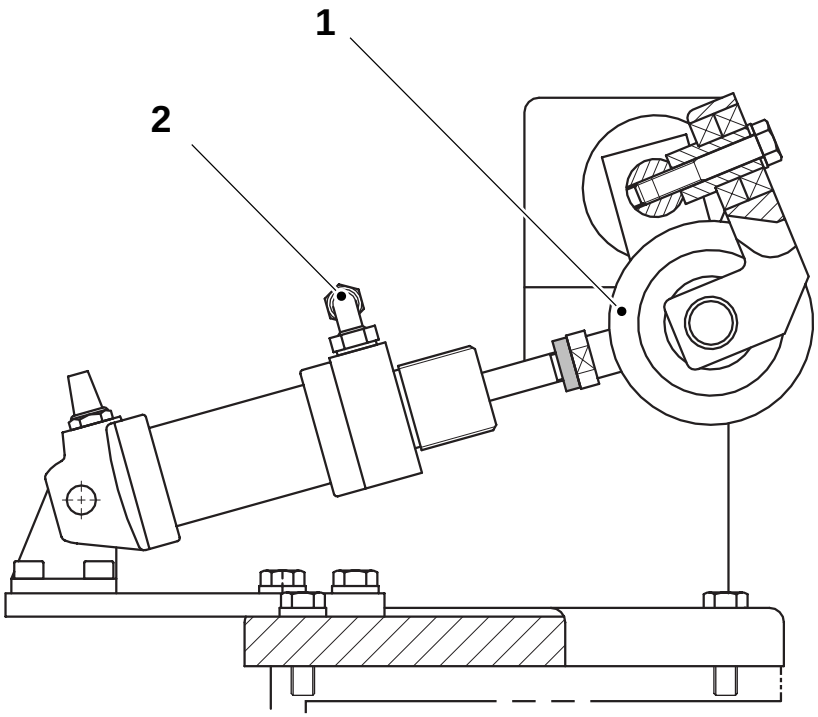

1 Drive roller
2 Cylinder connection

TechPub_2614345_0103 - B6114B02en.fm

2.2.1-8 Drive Motor - Change

Machine Status	Air **OFF** Mains Power **OFF**
SPC Reference	2526544-0100

a) Remove the grub-screw (1).

Note! Leave the allen key in the socket of the socket-head screw (3) when fitting back the servo motor (5).

b) Turn the flange (2) to access the socket-head screw (3) and loosen it with an allen key.

c) Disconnect the cables (4).

d) Remove the screws (6) and change the servo motor (5).

Note! Do not tighten the socket head screw (3) before tightening the screws (6).

e) Assemble in the reverse order.

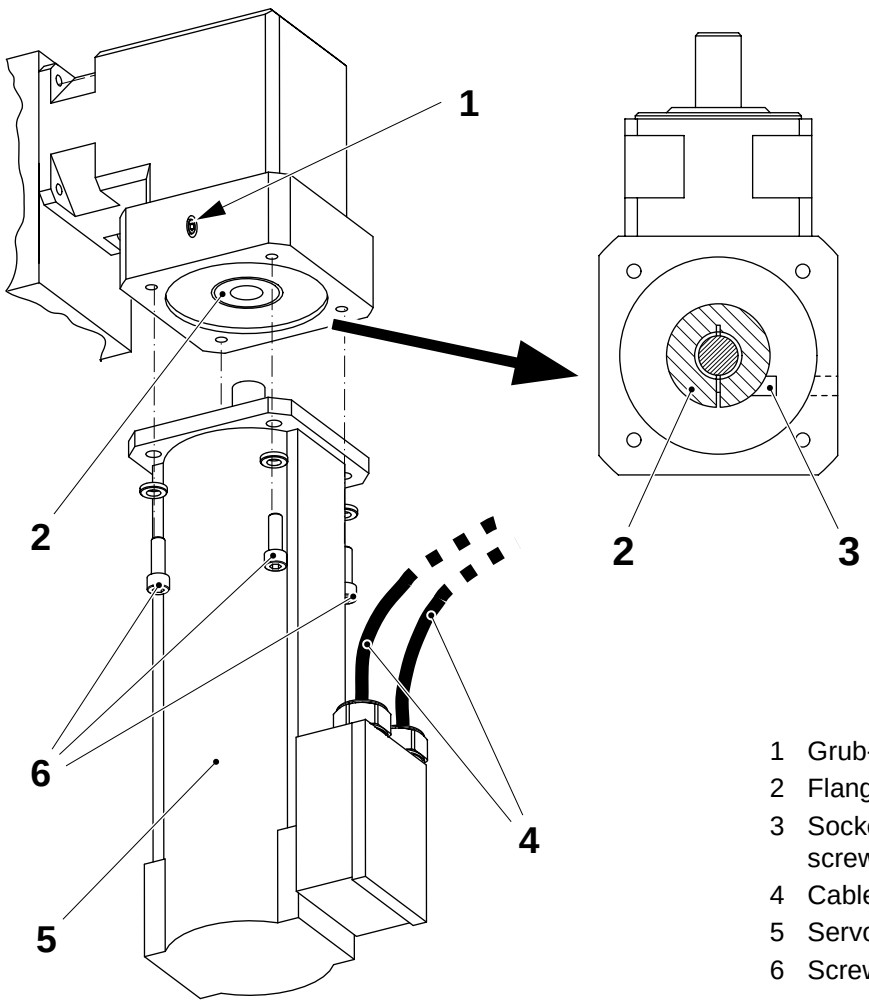

1 Grub-screw
2 Flange
3 Socket-head screw
4 Cable
5 Servo motor
6 Screw

TechPub_2614345_0103 - B6114B02en.fm

2.2.2 Outfeed Tension Device

2.2.2-1 Outfeed Tension Device - Check Rollers

Machine Status	Air **OFF** Mains Power **OFF**
SPC Reference	2501782-0100

Make sure the roller (1) and the counter roller (2) turn freely and their surfaces are not damaged or worn.

Change as required.

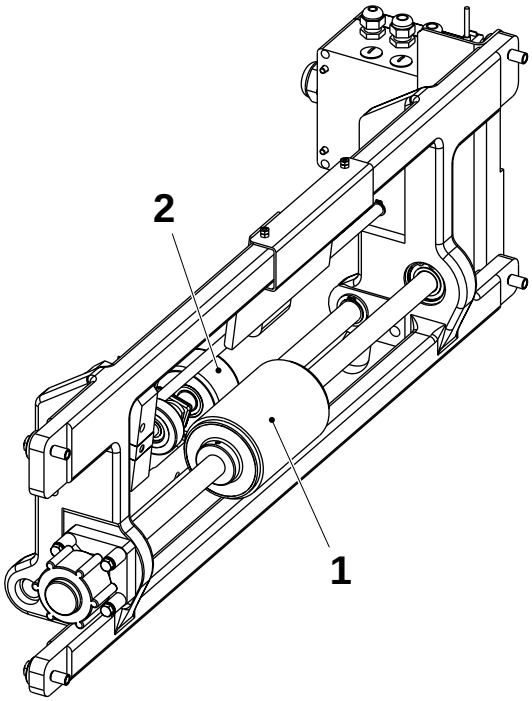

1 Roller
2 Counter roller

TechPub_2614345_0103 - B6114B02en.fm

2.2.2-2 Outfeed Tension Device - Set Damper

Machine Status	Air **OFF** Mains Power **OFF**
SPC Reference	2501782-0100

a) Set the damper knob (1) on the damper (2) to position **1**.

b) Check the tensioning function of the roller (3).

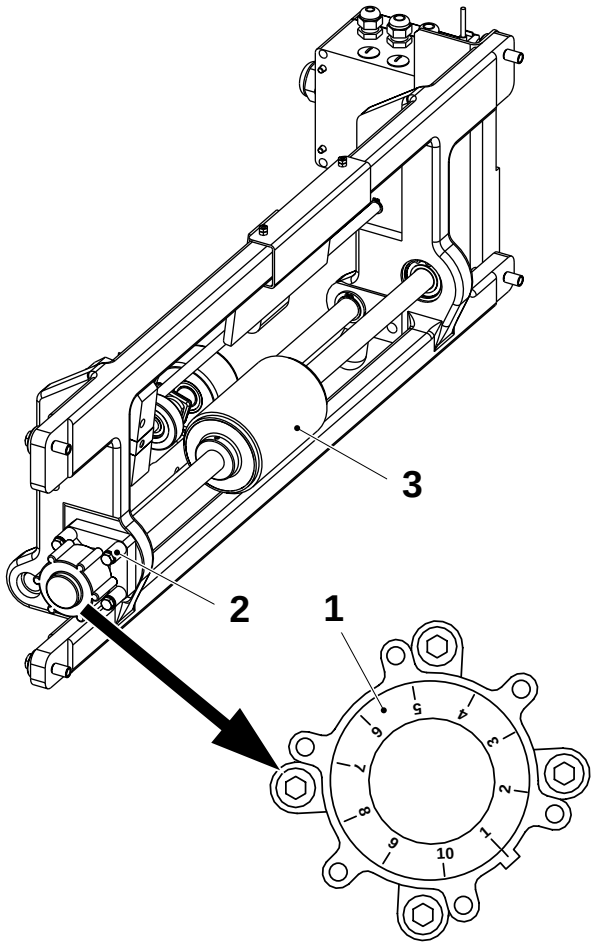

1 Damper knob
2 Damper
3 Roller

TechPub_2614345_0103 - B6114B02en.fm

2.2.2-3 Outfeed Tension Device - Set Counter Roller Spring

Machine Status	Air **OFF** Mains Power **OFF**
SPC Reference	2501782-0100

a) Turn the handle (2) and check that there is some resistance when turning. If required, adjust the nut (1) or change the spring (3).

b) Place a piece of packaging material between the rollers (4), and make sure that the two rollers (4) grip the packaging material firmly without marking it. If required, adjust the nut (1).

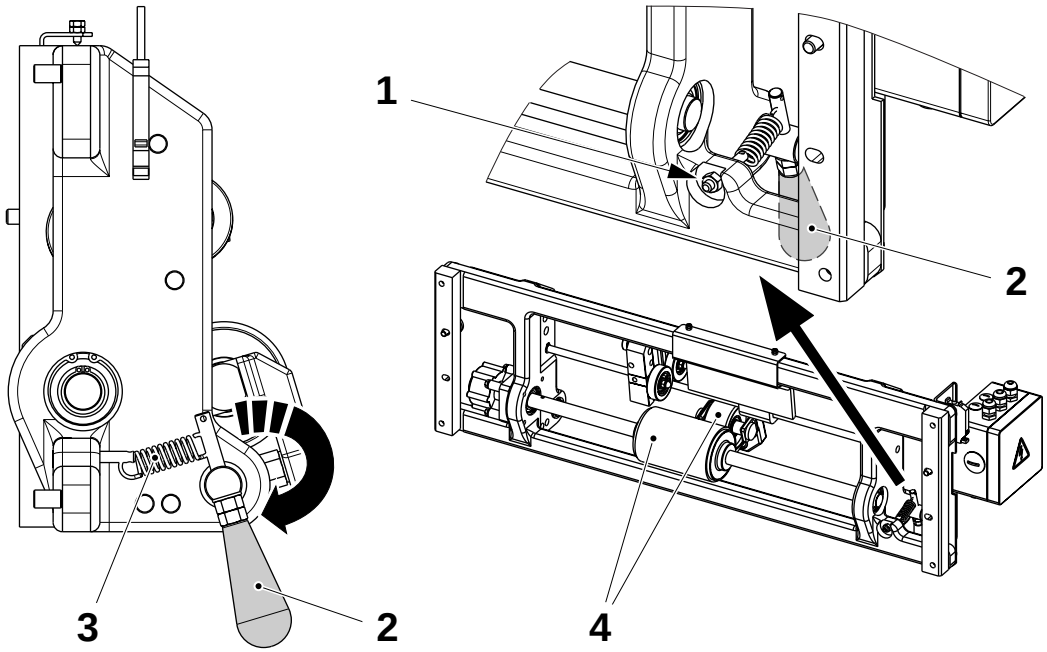

1 Nut
2 Handle
3 Spring
4 Roller

TechPub_2614345_0103 - B6114B02en.fm

2.2.2-4 Outfeed Tension Device - Change Damper

Machine Status	Air **OFF** Mains Power **OFF**
SPC Reference	2501782-0100

a) Remove the screws (1) and the damper (2).

b) Change the damper (2) if damaged or worn.

c) Assemble in the reverse order.

d) Set the damper knob (3), see 2.2.2-2 Outfeed Tension Device - Set Damper.

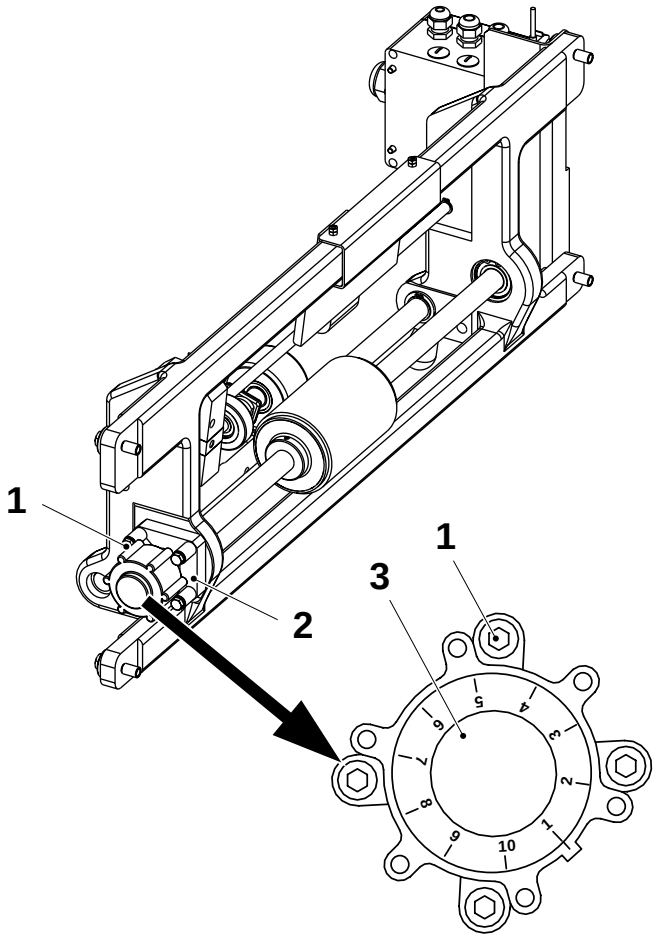

1 Screw
2 Damper
3 Damper knob

TechPub_2614345_0103 - B6114B02en.fm

2.2.3 Bending Roller Assembly

2.2.3-1 Bending Roller Assembly - Check

Machine Status	Air **OFF** Mains Power **OFF**
SPC Reference	1095952-0100

Check the surface of the bending roller (1) for wear and/or damage.

Make sure the bending roller (1) turns freely.

Change as required, see 2.2.3-2 Bending Roller Assembly - Change Bearings.

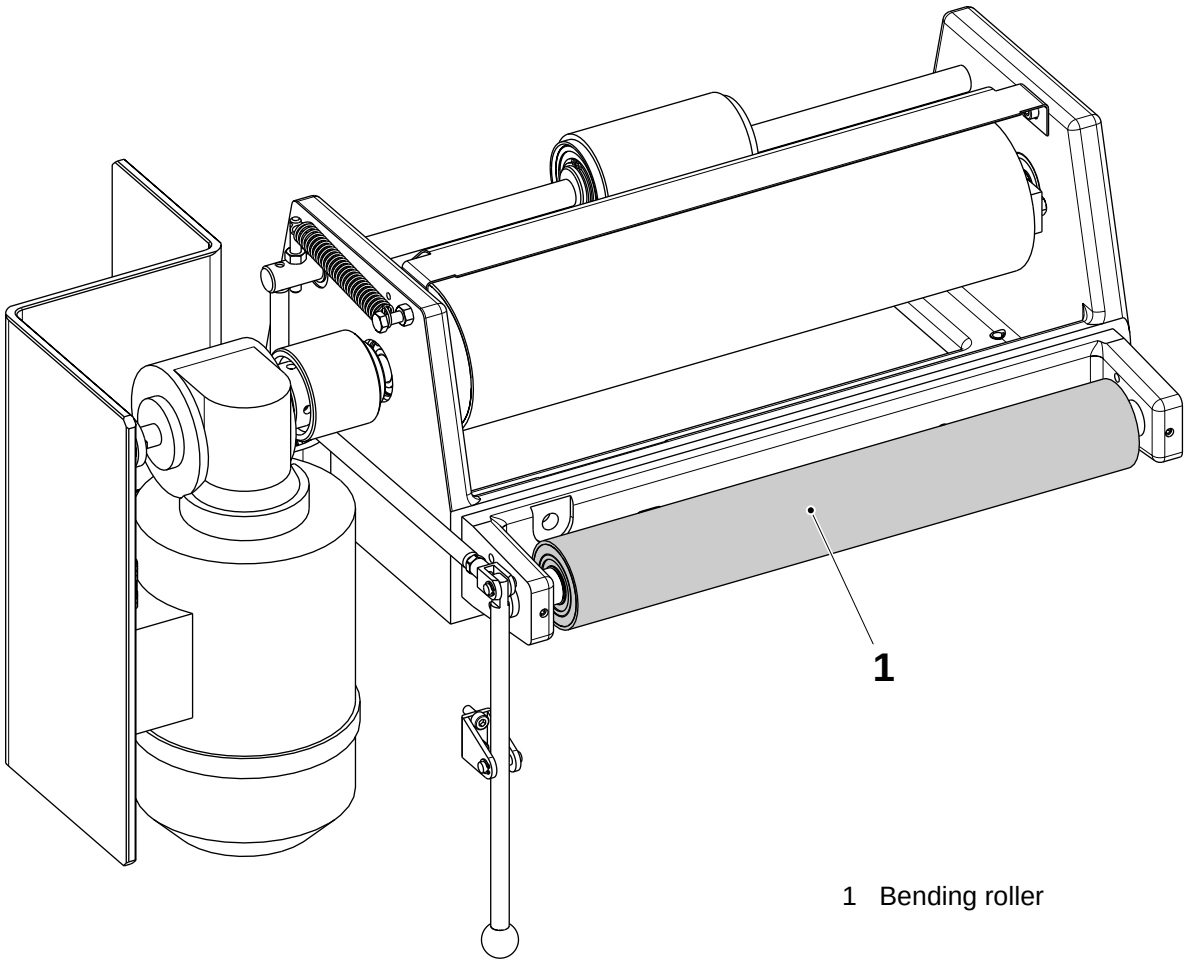

1 Bending roller

TechPub_2614345_0103 - B6114B02en.fm

2.2.3-2 Bending Roller Assembly - Change Bearings

Machine Status	Air **OFF** Mains Power **OFF**
SPC Reference	1095952-0100

a) Loosen the stop screws (1) on both sides of the bending roller (2).

b) Remove the axle pins (3) from both sides.

c) Pull out the bearings (4) from both sides and change them if damaged or worn.

d) Assemble in the reverse order.

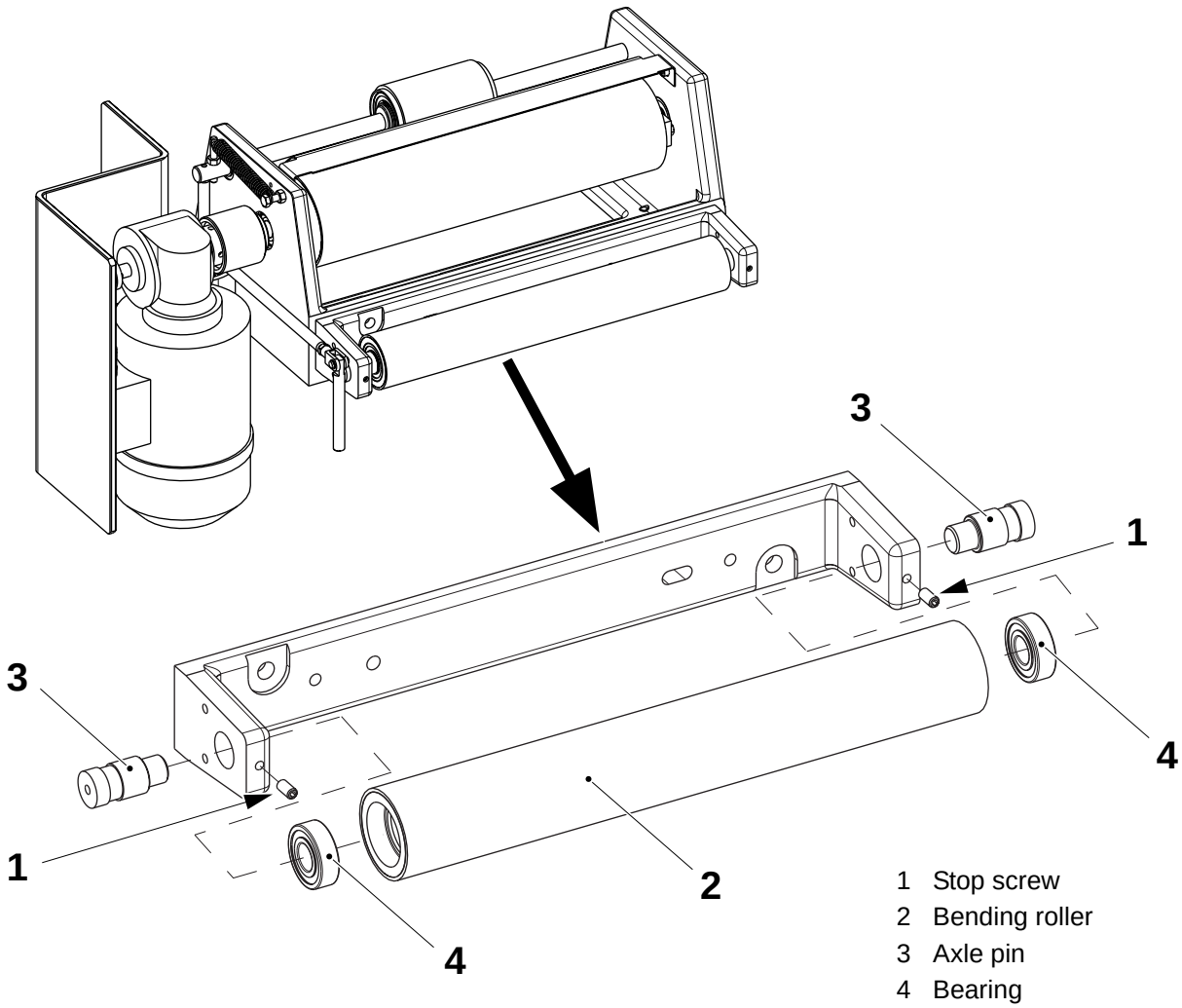

1 Stop screw
2 Bending roller
3 Axle pin
4 Bearing

TechPub_2614345_0103 - B6114B02en.fm

2.2.4 Infeed Unit

2.2.4-1 Infeed Unit - Check Rollers

Machine Status	Air **OFF** Mains Power **OFF**
SPC Reference	1095953-0200

Disconnect the motor connections (3).

Make sure the following rollers turn freely and their surfaces are not damaged or worn:

- the counter roller (1)
- the bending roller (2).

Note! The eccentric bushing (4) in the counter roller (1) must be mounted with the thicker part of the eccentric bushing (4) up, see figure.

Change as required.

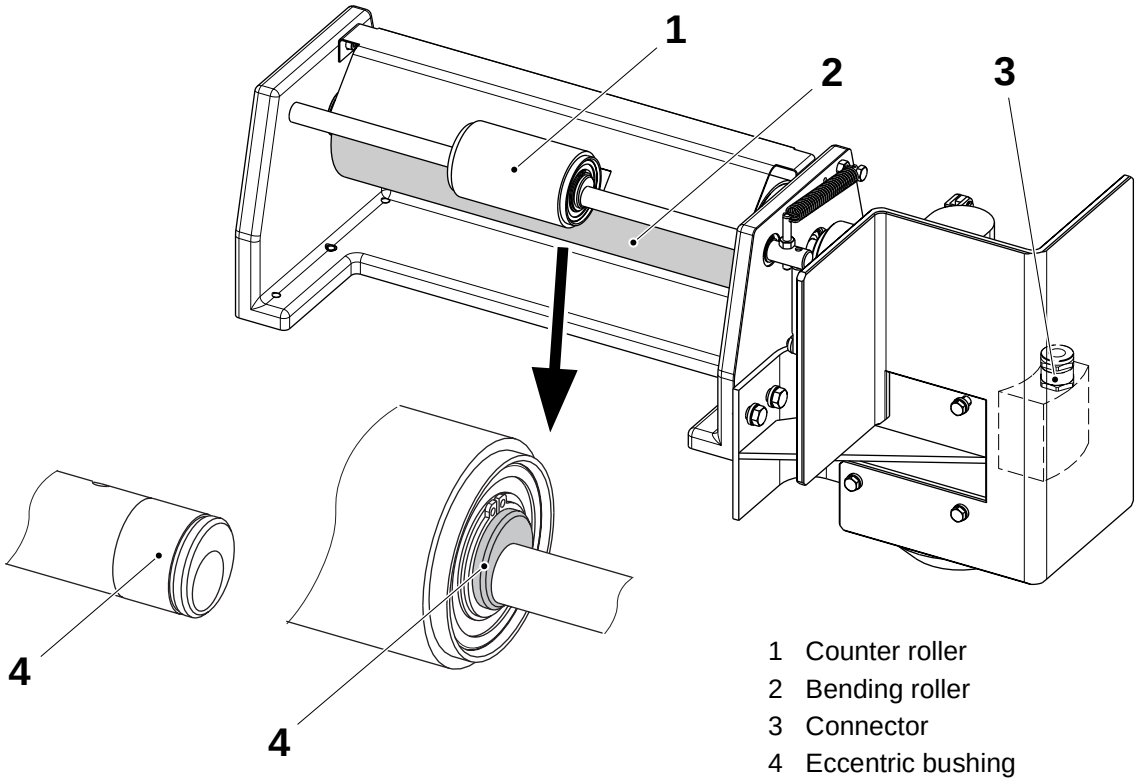

1 Counter roller
2 Bending roller
3 Connector
4 Eccentric bushing

TechPub_2614345_0103 - B6114B02en.fm

2.2.4-2 Infeed Unit - Check Function

Machine Status	PRODUCTION
SPC Reference	1095953-0200

a) Make sure the speed of the infeed motor (1) does not:
   - cause the packaging material (2) to activate the upper photocell (3)
   - overfill the loop magazine.

b) If required, set the infeed motor (1), see 9-2 Electrical Cabinet - Set Frequency Converter.

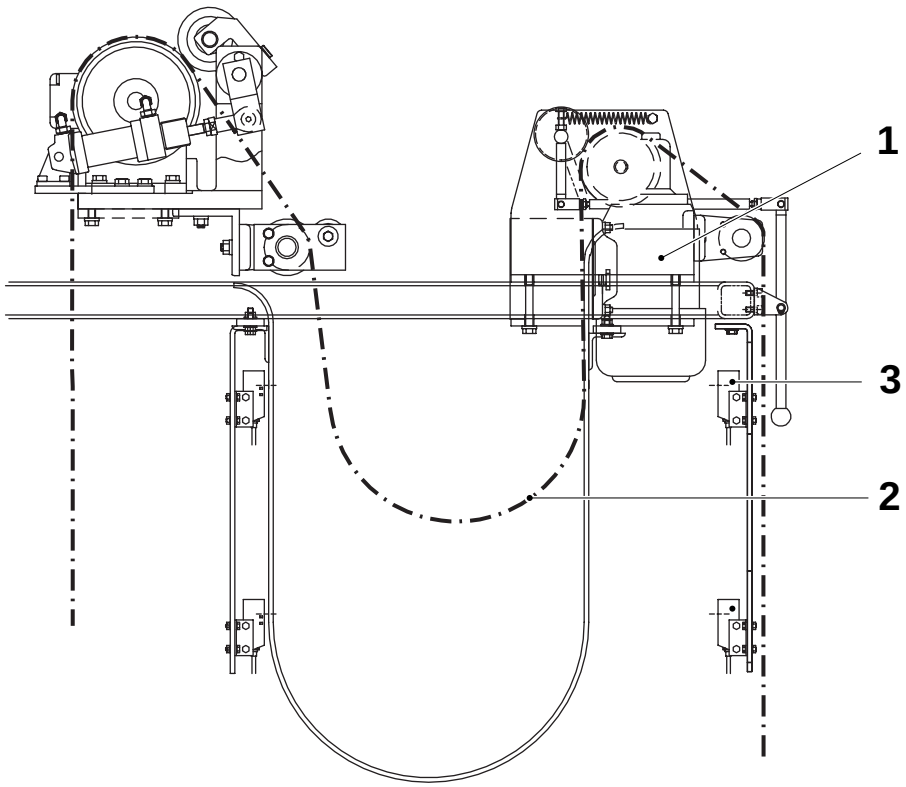

1 Infeed motor
2 Packaging material
3 Upper photocell

TechPub_2614345_0103 - B6114B02en.fm

2.2.4-3 Infeed Unit - Change Worm Gear Motor

Machine Status	Air **OFF** Mains Power **OFF**
SPC Reference	1095953-0200

a) Remove the cover (1) by means of the two screws (2).

b) Disconnect the motor connector (3).

c) Loosen the two nuts (4) and remove the two screws (5).

d) Remove the hub (6) and the coupling (7) from the worm gear motor (8) by loosening the grub screws (9).

e) Change the worm gear motor (8).

f) Assemble in the reverse order.

Set the worm gear motor (8), see 9-2 Electrical Cabinet - Set Frequency Converter.

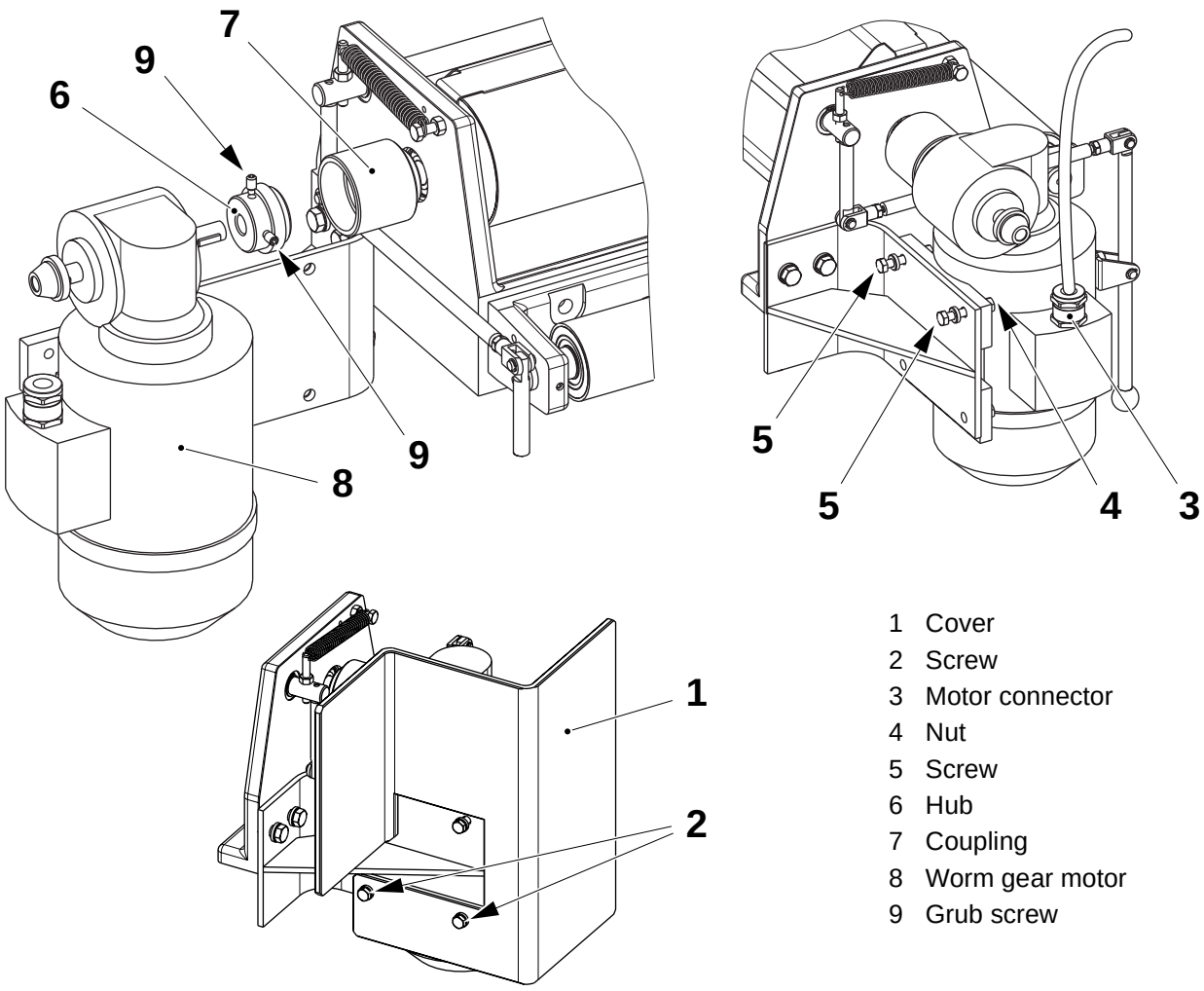

1 Cover
2 Screw
3 Motor connector
4 Nut
5 Screw
6 Hub
7 Coupling
8 Worm gear motor
9 Grub screw

TechPub_2614345_0103 - B6114B02en.fm

2.2.4-4 Infeed Unit - Change Bearings

Machine Status	Air **OFF** Mains Power **OFF**
SPC Reference	1095953-0200

a) Remove the cover (1) by means of the two screws (2).

b) Disconnect the motor connector (3).

c) Loosen the two nuts (4) and remove the two screws (5).

d) Remove the worm gear motor (6) and its hub (7) from the coupling (8).

e) Loosen the grub screws (9) and (10). Remove the hub (11) from the bending roller shaft (12).

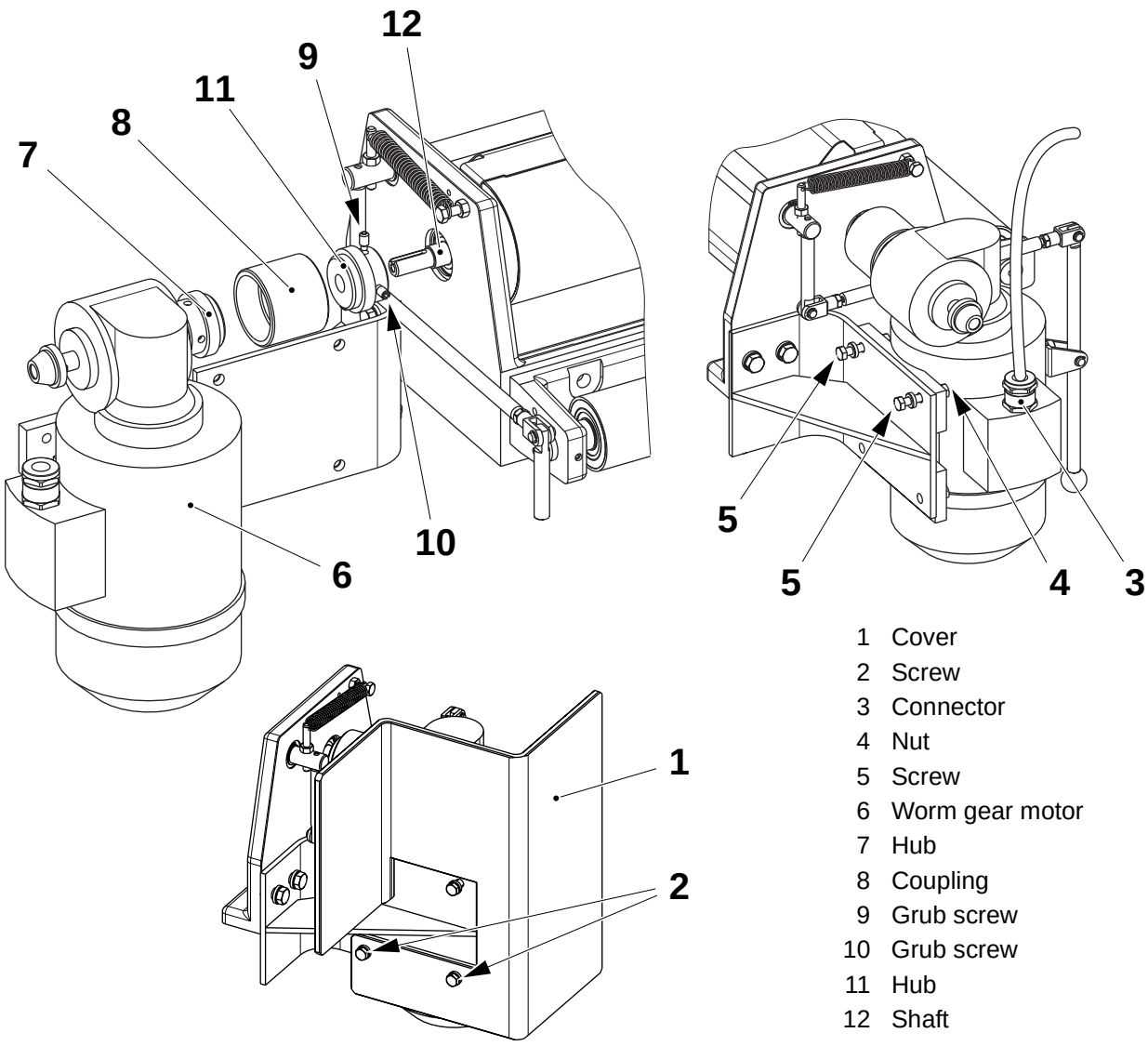

1 Cover
2 Screw
3 Connector
4 Nut
5 Screw
6 Worm gear motor
7 Hub
8 Coupling
9 Grub screw
10 Grub screw
11 Hub
12 Shaft

(Cont'd)

TechPub_2614345_0103 - B6114B02en.fm

(Cont'd)

f) Remove the circlip (13) from the bracket (14).

g) Push the bending roller (15) in the direction shown until the bearing (16) leaves the bracket (14) and the shaft (12) leaves the bearing (17).

h) Change the bearings (16) and (17) if damaged or worn.

i) Assemble in the reverse order.

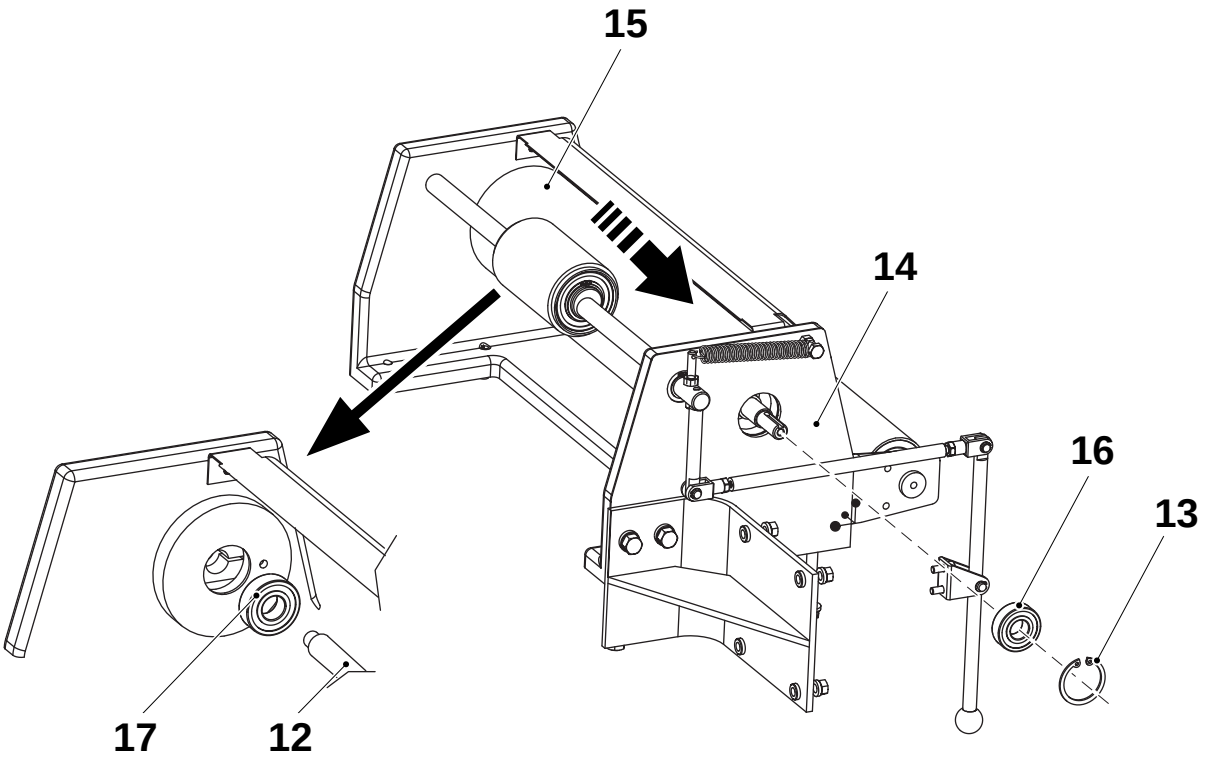

12 Shaft
13 Circlip
14 Bracket
15 Bending roller
16 Bearing
17 Bearing

TechPub_2614345_0103 - B6114B02en.fm

2.2.4-5 Infeed Unit - Check Bending Roller Assembly

Machine Status	Air **OFF** Mains Power **OFF**
SPC Reference	1095953-0200 1095952-0100

Check the position of the bending roller (1) on the infeed unit assembly to ensure good packaging material tracking.

If required set the bending roller (1), see 1.1.1-1 Packaging Material Tracking - Set Alignment Rollers.

Check the surface of the bending roller (1), see 2.2.3-1 Bending Roller Assembly - Check.

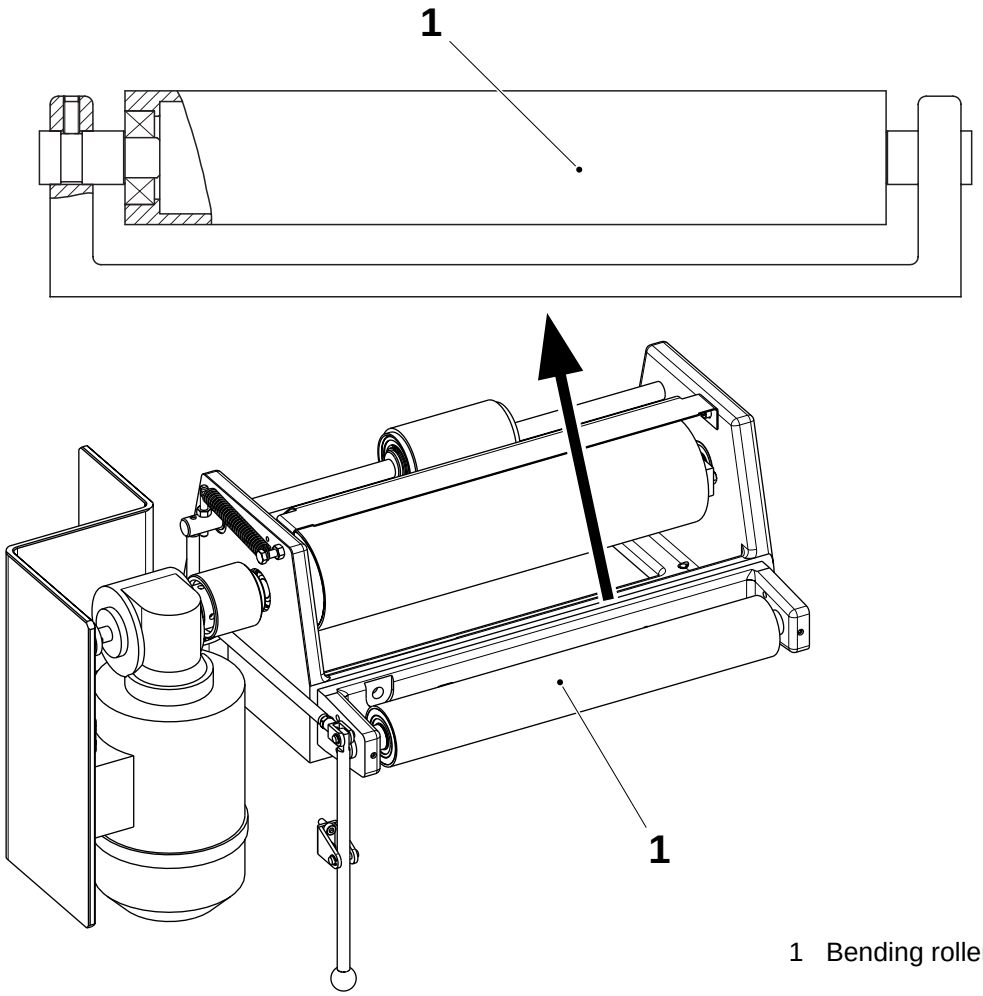

1 Bending roller

TechPub_2614345_0103 - B6114B02en.fm

2.2.4-6 Infeed Unit - Set Spring Bracket

Machine Status	Air **OFF** Mains Power **OFF**
SPC Reference	1095953-0200

Set the distance **A** between the spring bracket (1) and the shaft (2) by means of the nut (3).

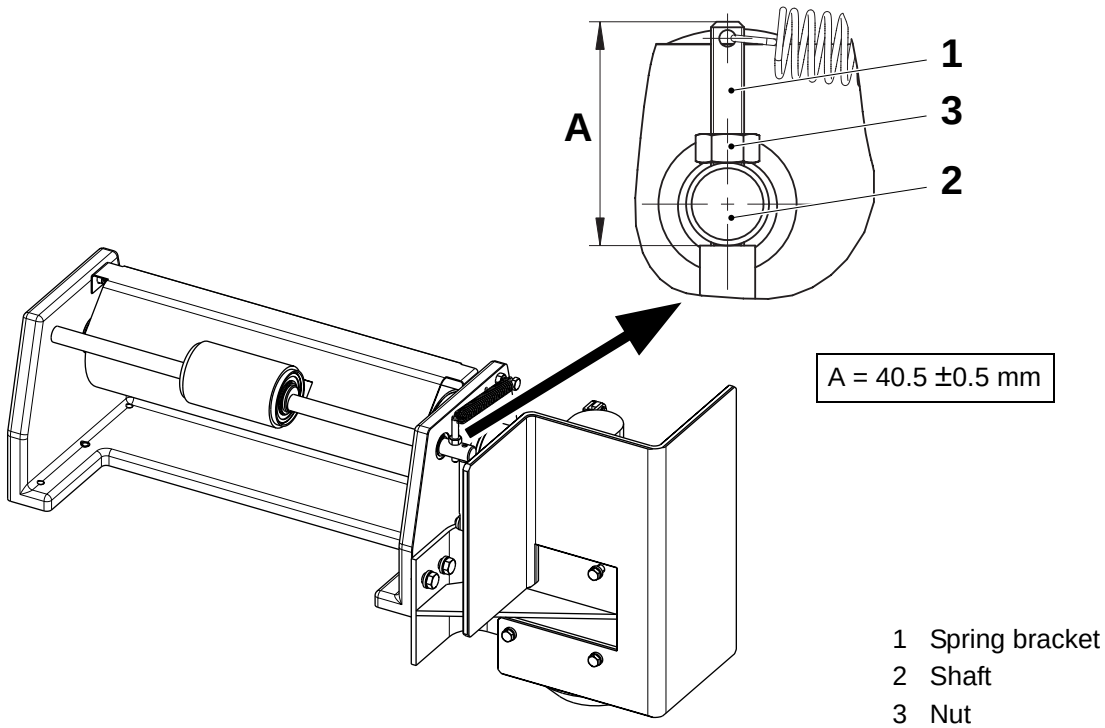

1 Spring bracket
2 Shaft
3 Nut

TechPub_2614345_0103 - B6114B02en.fm

2.2.5 Motor Unit

2.2.5-1 Motor Unit - Check

Machine Status	Air **OFF** Mains Power **OFF**
SPC Reference	2504611-0100

Check that the following parts turn freely and that there is no wear or damage:

- the wheel (1)
- the counter roller (2).

Change as required, see 2.2.5-4 Motor Unit - Change Wheel.

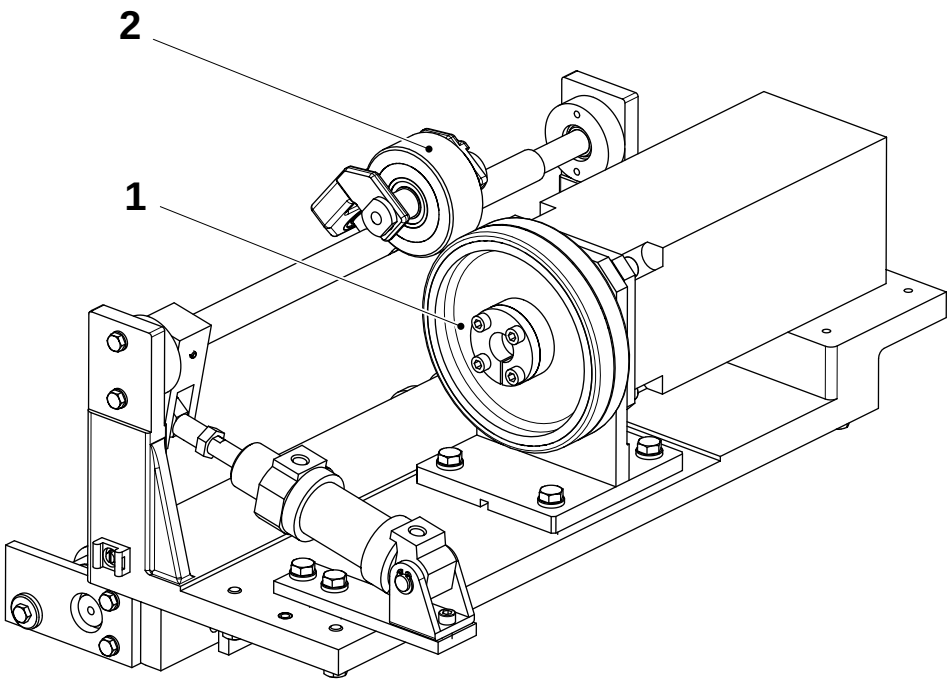

1 Wheel
2 Counter roller

TechPub_2614345_0103 - B6114B02en.fm

2.2.5-2 Motor Unit - Check Bending Roller

Machine Status	Air **OFF** Mains Power **OFF**
SPC Reference	1095969-0100 2504611-0100

a) Check the surface of the bending roller (1) for any marks.

b) Make sure the bending roller (1) turns freely.

c) Check the surfaces of the rollers (2) for any marks.

d) Make sure the rollers (2) turn freely.

e) Make sure the bending roller flanges (3) are positioned at an equal distance from the centre of the roller (1).

f) Make sure the position of the bending roller (1) allows for correct packaging material tracking.

g) If required, adjust the bending roller (1), see 1.1.1-1 Packaging Material Tracking - Set Alignment Rollers.

Change as required.

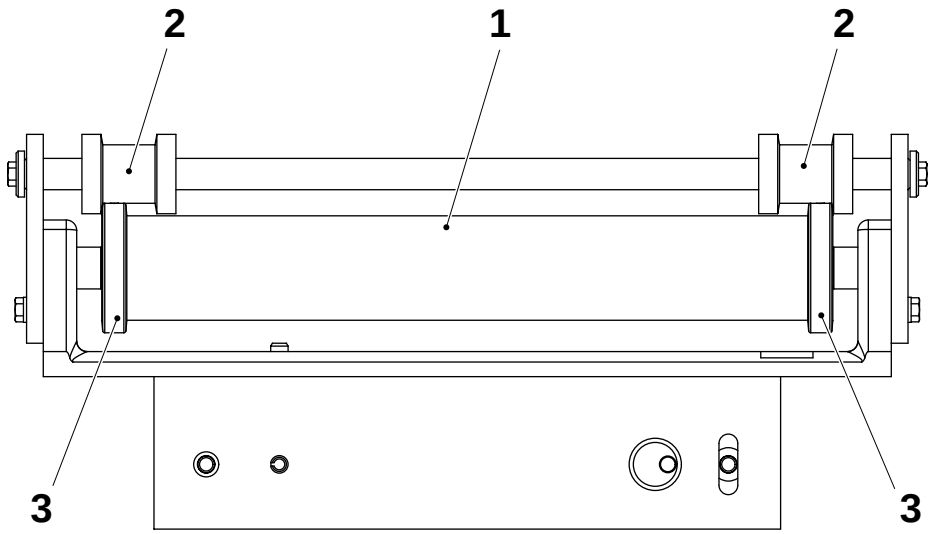

1 Bending roller
2 Roller
3 Flange

TechPub_2614345_0103 - B6114B02en.fm

2.2.5-3 Motor Unit - Set Cylinder

Machine Status	Air **OFF** Mains Power **OFF**
SPC Reference	2504611-0100

a) Lift the counter roller (1) as far as it can go.

b) Adjust the cylinder joint (2) to set the distance **A** between the nut (3) and the cylinder (4) edge.

c) Make sure the cylinder (4) moves freely and does not jerk or jam after the setting.

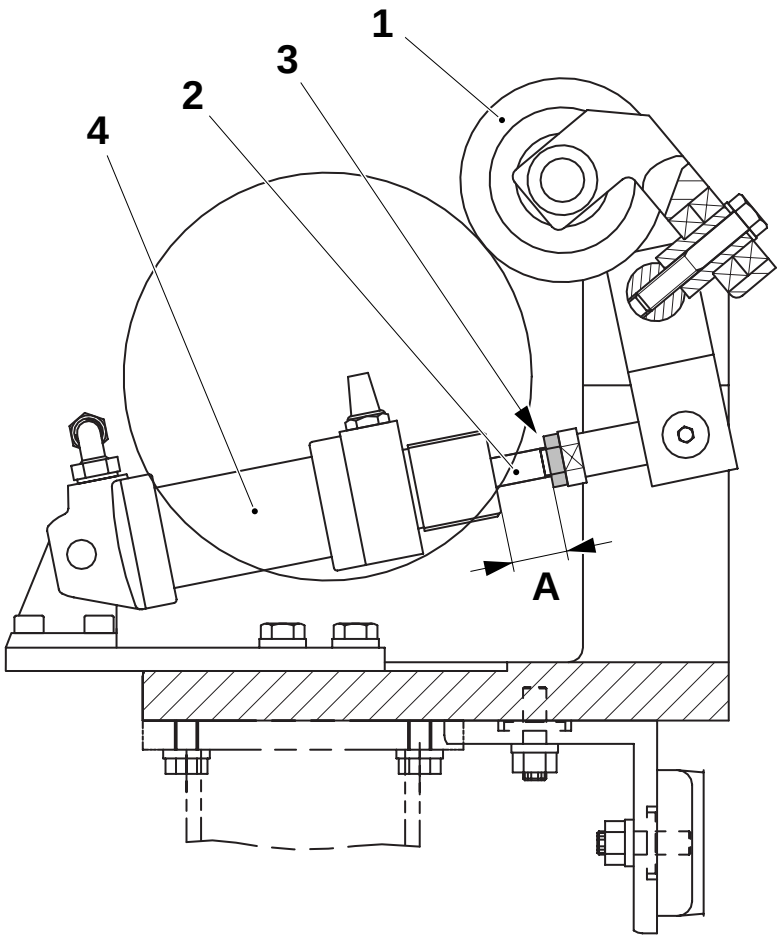

A = 12 ±1 mm

1 Counter roller
2 Joint
3 Nut
4 Cylinder

TechPub_2614345_0103 - B6114B02en.fm

2.2.5-4 Motor Unit - Change Wheel

Machine Status	Air **OFF** Mains Power **OFF**
SPC Reference	2504611-0100

a) Remove the clamping element (1), see 2.2.1-1 Drive Motor - Remove Clamping Element.

b) Pull out the wheel (2).

c) Change the wheel (2) if damaged or worn.

Note! After changing the drive wheel check the distance **A** between the wheel (2) and the bracket (3).

d) Assemble in the reverse order.

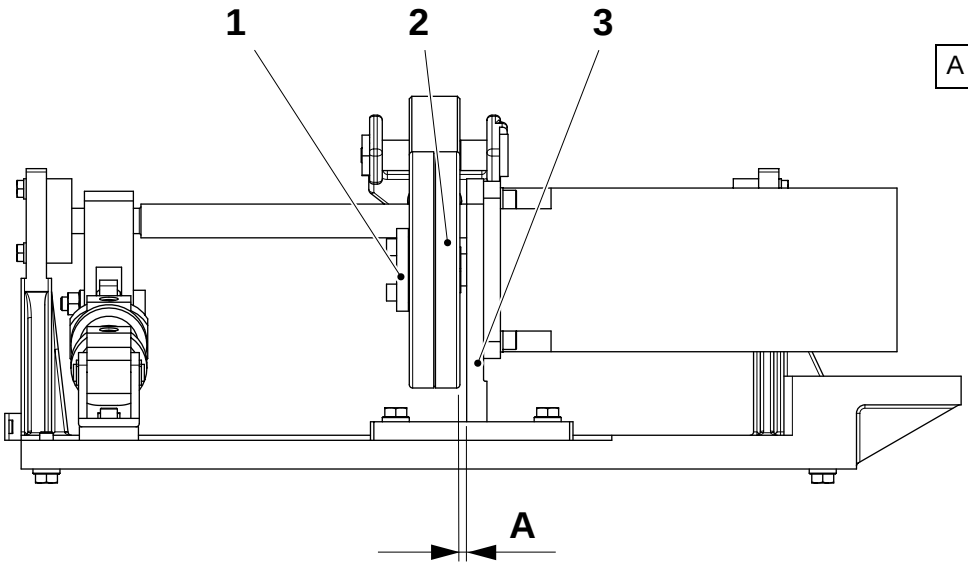

1 Clamping element
2 Wheel
3 Bracket

TechPub_2614345_0103 - B6114B02en.fm

2.2.5-5 Motor Unit - Remove Clamping Element

SPC Reference	2504611-0100

Follow the procedure described in 2.2.1-1 Drive Motor - Remove Clamping Element.

2.2.5-6 Motor Unit - Assemble Clamping Element

SPC Reference	2504611-0100

Follow the procedure described in 2.2.1-2 Drive Motor - Assemble Clamping Element.

2.2.6 Paper Guide

2.2.6-1 Paper Guide - Check Rollers and Bearings

Machine Status	Air **OFF** Mains Power **OFF**
SPC Reference	1558069-0100

Old Paper Guide (TP No. 1334620-0100)

Make sure the roller (1) surfaces are not damaged and that the rollers rotate freely. Make sure the rollers (2) rotate freely.

If required:

a) Remove the nuts (3) and the retaining rings (4).

b) Change the ball bearings (5) and the rollers (1) as required.

Note! The rubber roller (1) must be fitted on the printed side of the packaging material web.

c) Check that the steering (6) is clean, pull out and clean the guide as required.

d) Assemble in the reverse order.

TechPub_2614345_0103 - B6114B02en.fm

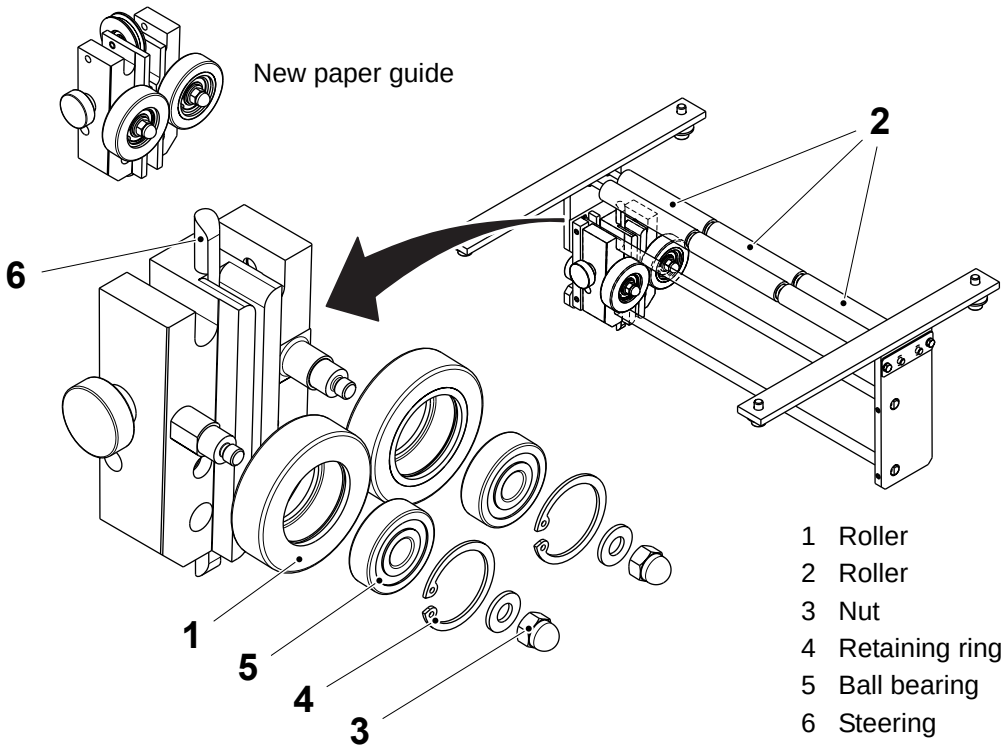

1 Roller
2 Roller
3 Nut
4 Retaining ring
5 Ball bearing
6 Steering

(Cont'd)

(Cont'd)

New Paper Guide (TP No. 2563964-0100)

Make sure the roller (1) surfaces are not damaged and that the rollers rotate freely. Make sure the rollers (2) and (3) rotate freely.

If required to change the rollers (1):

a) Remove the nuts (4) and the retaining rings (5).

b) Change the ball bearings (6) and the rollers (1) as required.

Note! The rubber roller (1) must be fitted on the printed side of the packaging material web.

c) Assemble in the reverse order.

If required to change the rollers (3):

a) Remove the pins (7).

b) Change the ball bearings (8) and the rollers (3) as required.

c) Assemble in the reverse order.

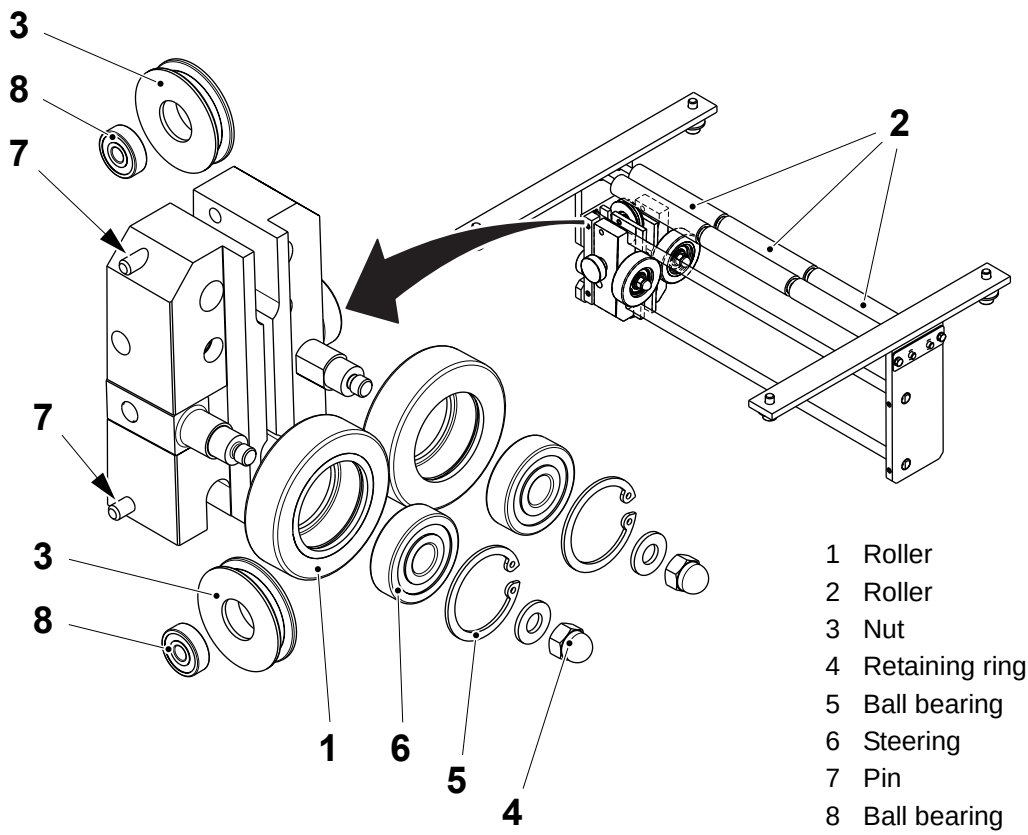

1 Roller
2 Roller
3 Nut
4 Retaining ring
5 Ball bearing
6 Steering
7 Pin
8 Ball bearing

TechPub_2614345_0103 - B6114B02en.fm

2.2.7 Photocell Unit Infeed

2.2.7-1 Photocell Unit Infeed - Check Photocells

Machine Status	Air **OFF** Mains Power **ON**
SPC Reference	1095980-0100

Make sure the photocell transmitter (2) and the photocell receiver (1) are aligned both vertically and horizontally.

Make sure the photocells function correctly by checking that the red LED (3) is **On** when the photocells are uncovered.

Set as required, see 2.2.7-2 Photocell Unit Infeed - Set Photocells.

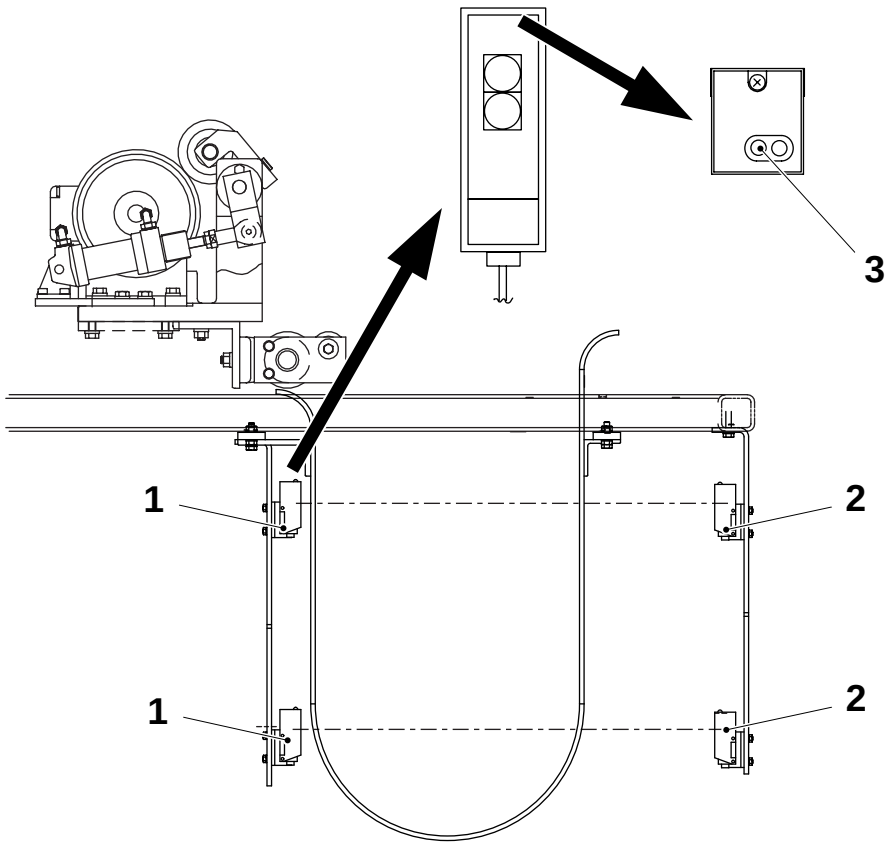

1 Photocell receiver
2 Photocell transmitter
3 Red LED

TechPub_2614345_0103 - B6114B02en.fm

2.2.7-2 Photocell Unit Infeed - Set Photocells

Machine Status	Air **OFF** Mains Power **ON**
SPC Reference	1095980-0100

The photocell unit has two transmitters and two receivers that work in pairs: receiver (1) with transmitter (3), and receiver (2) with transmitter (4).

Basic Setting

Loosen the screws (5) and set the distances **A**, **B**, **C** and **D**.

Fine Setting

a) Make sure there is no packaging material between the transmitters and the receivers.

b) Fine adjust the position of the transmitters. When the correct position is found the red LED (6) of the receiver photocells lights up.

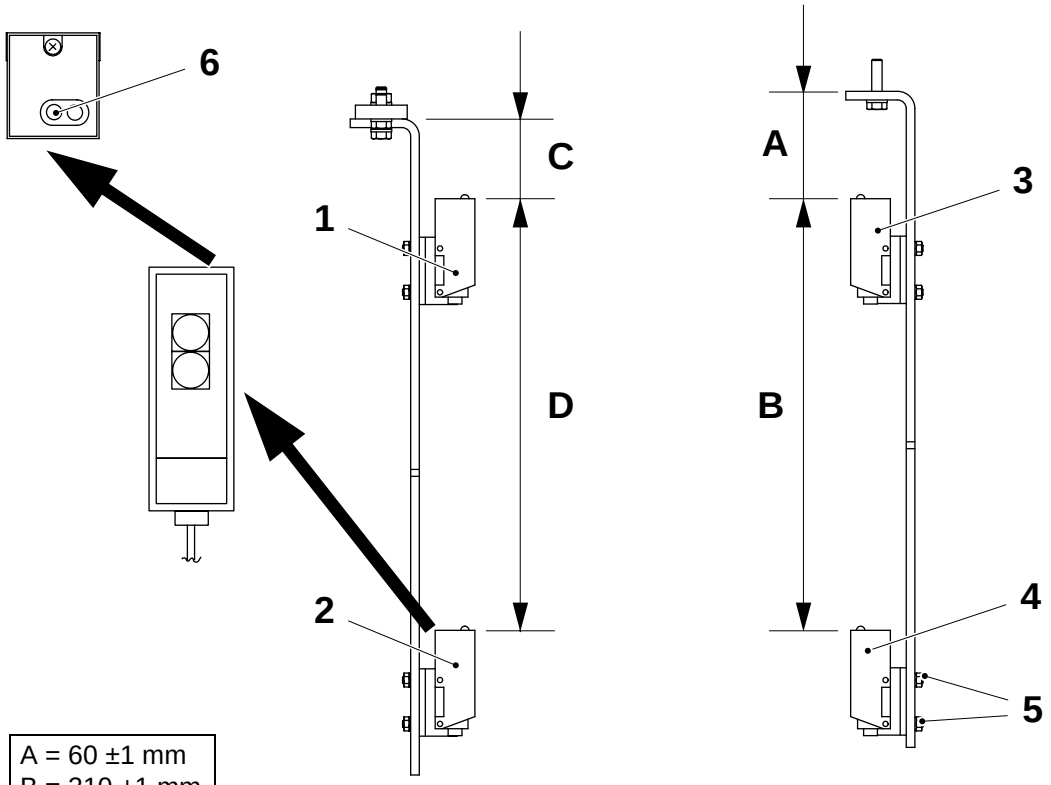

A = 60 ±1 mm
B = 210 ±1 mm
C = 60 ±1 mm
D = 210 ±1 mm

1 Receiver
2 Receiver
3 Transmitter
4 Transmitter
5 Screw
6 Red LED

(Cont'd)

TechPub_2614345_0103 - B6114B02en.fm

(Cont'd)

c) Open the cover on the receiver photocells (1) and (2).

d) Make sure the upper receiver photocell (1) is set to **PNP** and **D-ON**.

e) Make sure the lower receiver (2) is set to **PNP** and **L-ON**.

f) Turn the potentiometer (7) fully clockwise (towards **max.**), on the receiver photocells (1) and (2).

g) Close the cover on the receiver photocells (1) and (2).

h) Make sure the red LED (6), on the receiver photocell, goes out by placing a hand between the transmitter and receiver. Repeat with the other pair of photocells.

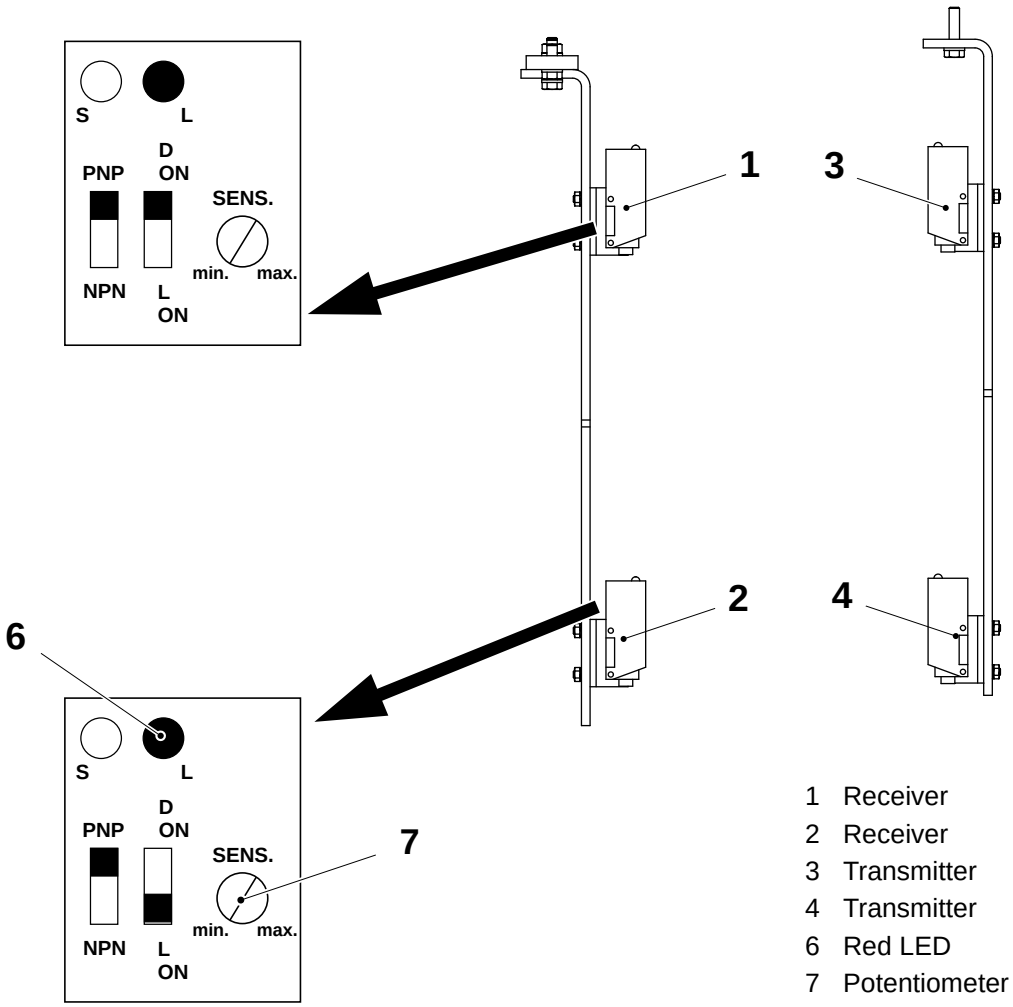

1 Receiver
2 Receiver
3 Transmitter
4 Transmitter
6 Red LED
7 Potentiometer

TechPub_2614345_0103 - B6114B02en.fm

2.2.8 Photocell Unit Outfeed

2.2.8-1 Photocell Unit Outfeed - Check Photocells

Machine Status	Air **OFF** Mains Power **ON**
SPC Reference	1095979-0100

Make sure the photocell transmitter (1) and receiver (2) are aligned.

Make sure the red LED (3) is **On** when the photocells are uncovered.

Set as required, 2.2.8-2 Photocell Unit Outfeed - Set Photocells.

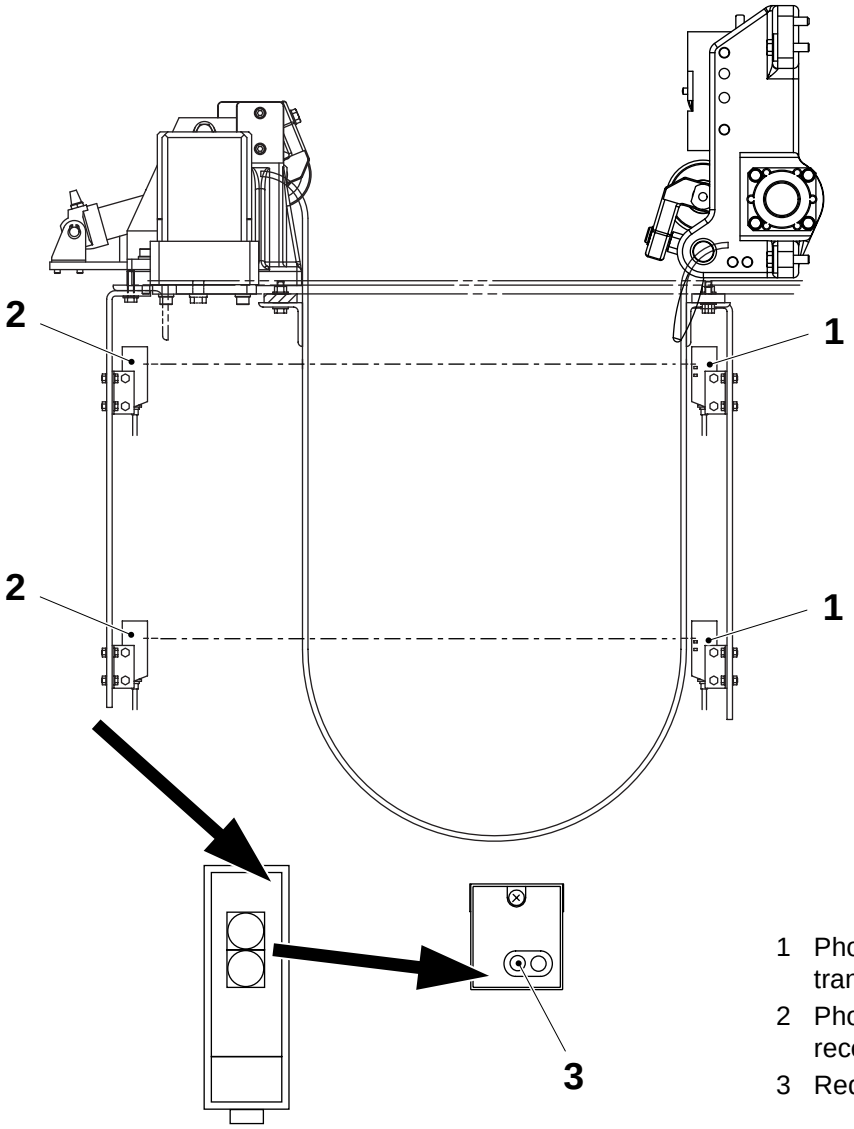

1 Photocell transmitter
2 Photocell receiver
3 Red LED

TechPub_2614345_0103 - B6114B02en.fm

2.2.8-2 Photocell Unit Outfeed - Set Photocells

Machine Status	Air **OFF** Mains Power **ON**
SPC Reference	1095979-0100

The photocell unit has two transmitters and two receivers that work in pairs: receiver (3) with transmitter (1), and receiver (4) with transmitter (2).

Basic Setting

Set the distances **A**, **B**, **C** and **D** by means of the screws (5).

Fine Setting

a) Make sure there is no packaging material between transmitters and receivers.

b) Fine adjust the position of the transmitters. When the correct position is found the red LED (6) of the receiver photocells lights up.

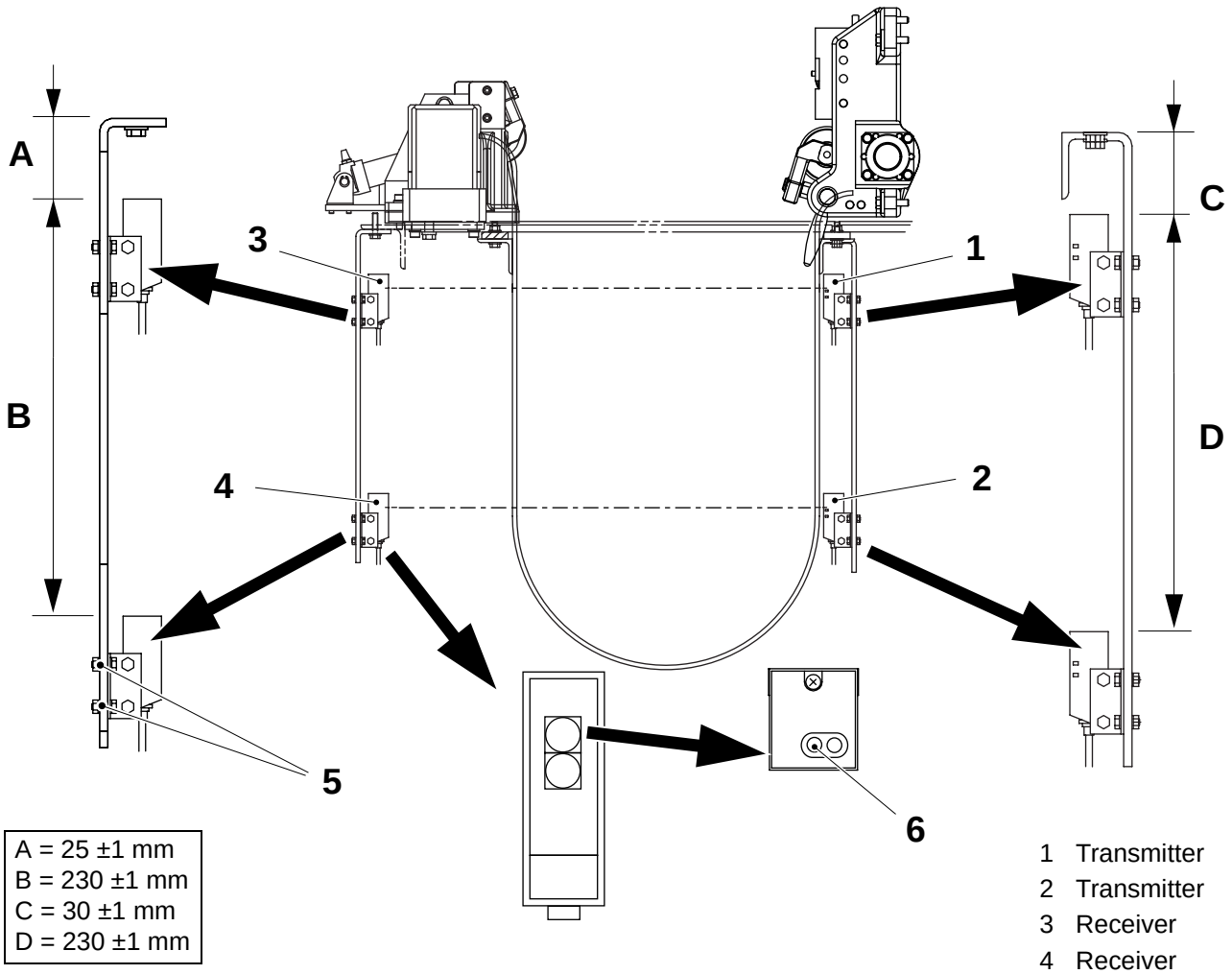

A = 25 ±1 mm
B = 230 ±1 mm
C = 30 ±1 mm
D = 230 ±1 mm

1 Transmitter
2 Transmitter
3 Receiver
4 Receiver
5 Screw
6 Red LED

(Cont'd)

TechPub_2614345_0103 - B6114B02en.fm

(Cont'd)

c) Open the cover on the receiver photocells (3) and (4).

d) Make sure the upper receiver photocell (3) is set to **PNP** and **D-ON**.

e) Make sure the lower receiver photocell (4) is set to **PNP** and **L-ON**.

f) Turn the potentiometer (7) fully clockwise (towards **max.**) on the receiver photocells (3) and (4).

g) Close the cover on the receiver photocells (3) and (4).

h) Make sure the red LED (6), on the receiver photocell, goes out, by placing a hand between the transmitter and receiver. Repeat with the other pair of photocells.

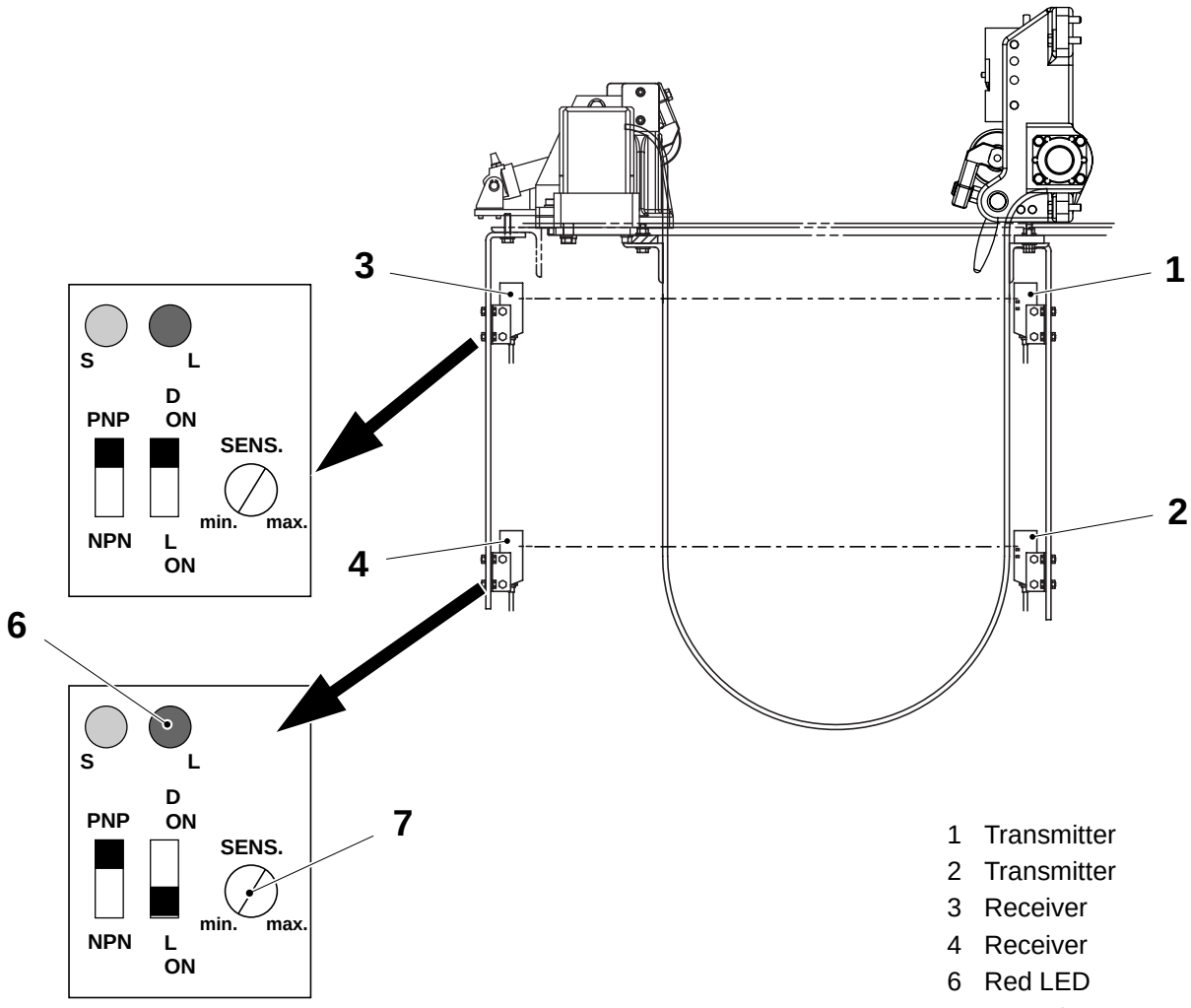

TechPub_2614345_0103 - B6114B02en.fm

2.2.9 By-Pass Sensor

2.2.9-1 By-Pass Sensor - Check

Machine Status	Air **OFF** Mains Power **OFF**
SPC Reference	514993-0200

a) Make sure the bypass sensor is installed in the holes (1) for large volumes and in the holes (2) for small volumes.

b) Make sure the limit switch (3) is working correctly by moving the arm (4) up and down.

c) Make sure the roller (5) rotates freely.

d) Make sure the arm (4) moves smoothly and even against the limit switch spring (6).

Change as required.

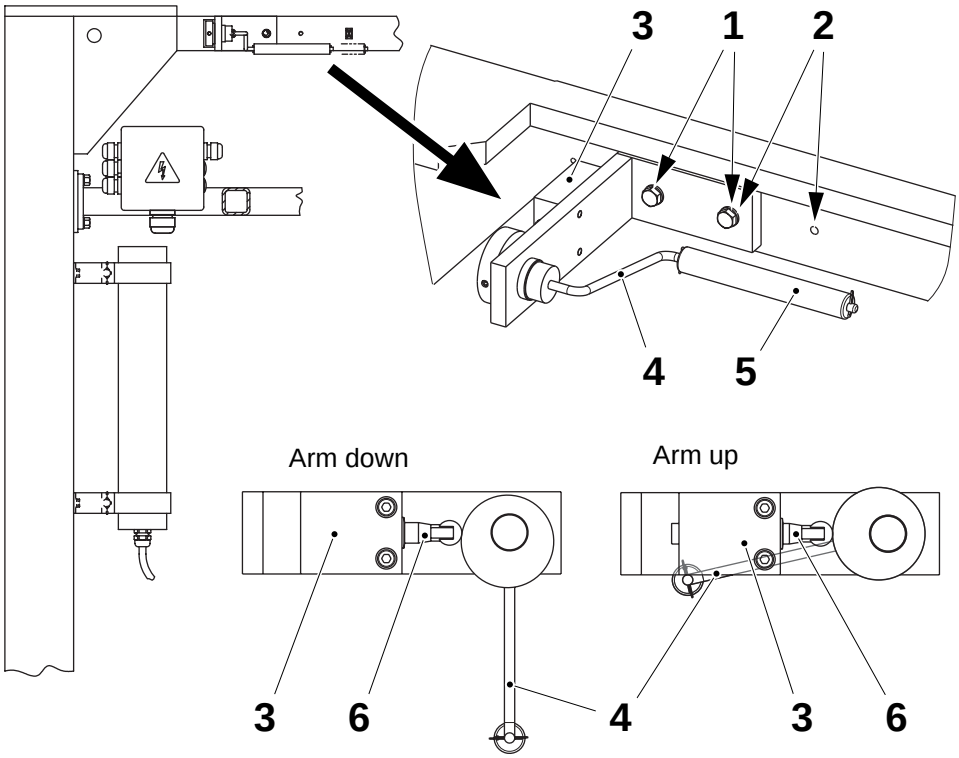

1 Holes for large volume
2 Holes for small volume
3 Limit switch
4 Arm
5 Roller
6 Spring

TechPub_2614345_0103 - B6114B02en.fm

2.3 Bar Code Reader

SPC Reference	2525309-0100

2.3-1 Bar Code Reader - Set

Machine Status	Air **OFF** Mains Power **ON**
SPC Reference	2525309-0100

a) Check that the bar code (1) passes in front of the photocell lenses (4). If not:
   - loosen the two screws (2)
   - adjust the bar code reader (3) sideways until the bar code (1) passes in front of the photocell lenses (4)
   - tighten the two screws (2).

b) Make sure that the switch (5) is set to the position **Q1**.

Note! For more detailed information, see 9.2.1-6 TMCC - Set Photocells.

c) Check that the packaging material (6) passes easily through the two fingers (7).

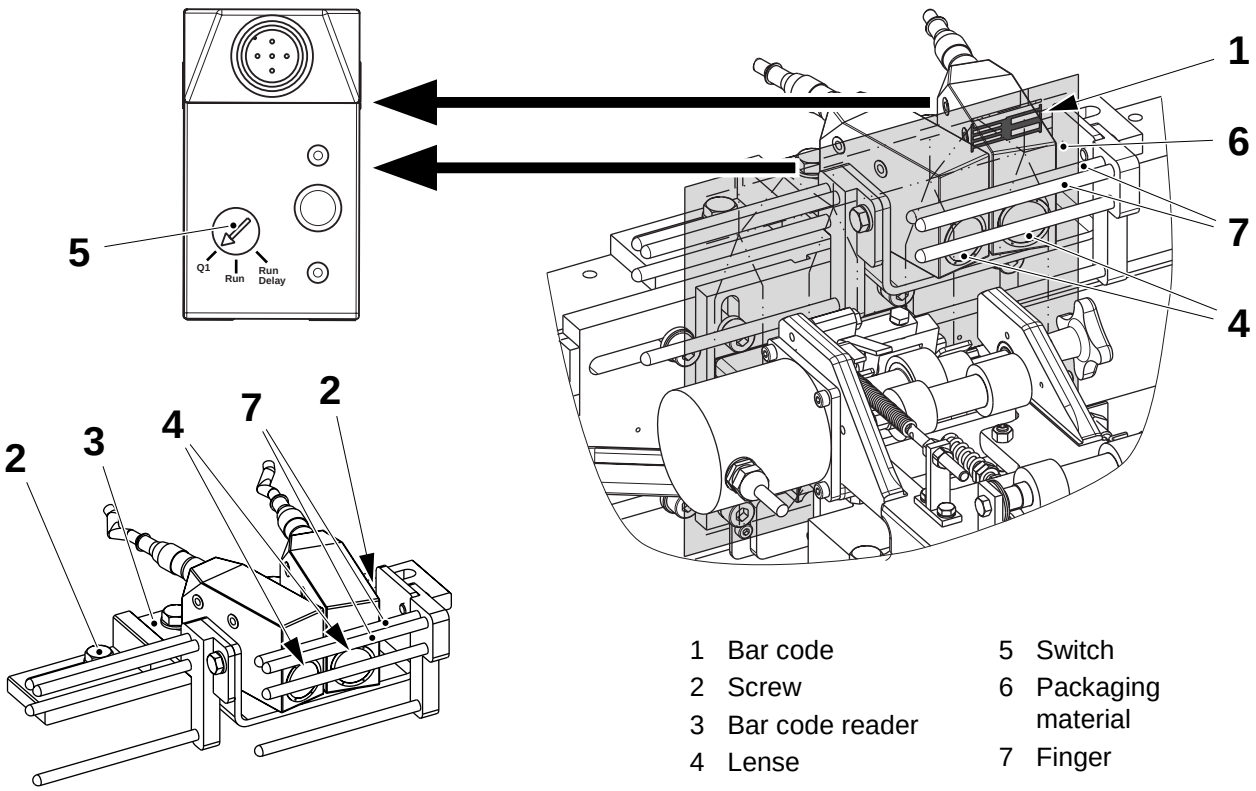

1 Bar code
2 Screw
3 Bar code reader
4 Lense
5 Switch
6 Packaging material
7 Finger

TechPub_2614345_0103 - B6114B03en.fm

3 Punch Arrangement

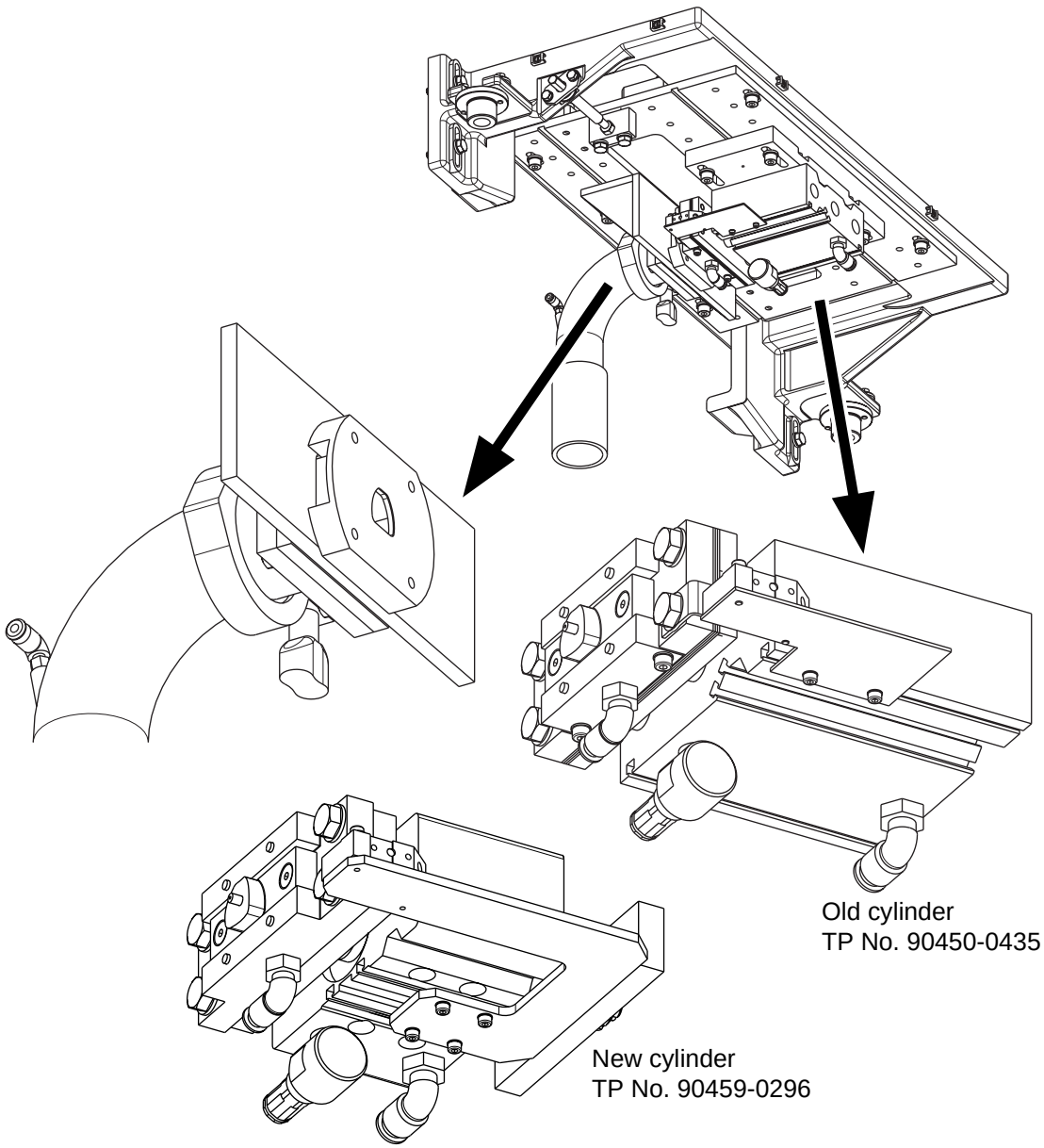

TechPub_2614345_0103 - B6114C00en.fm

Punch Arrangement - Description

SPC Reference	1539202-0100 1095955-0100

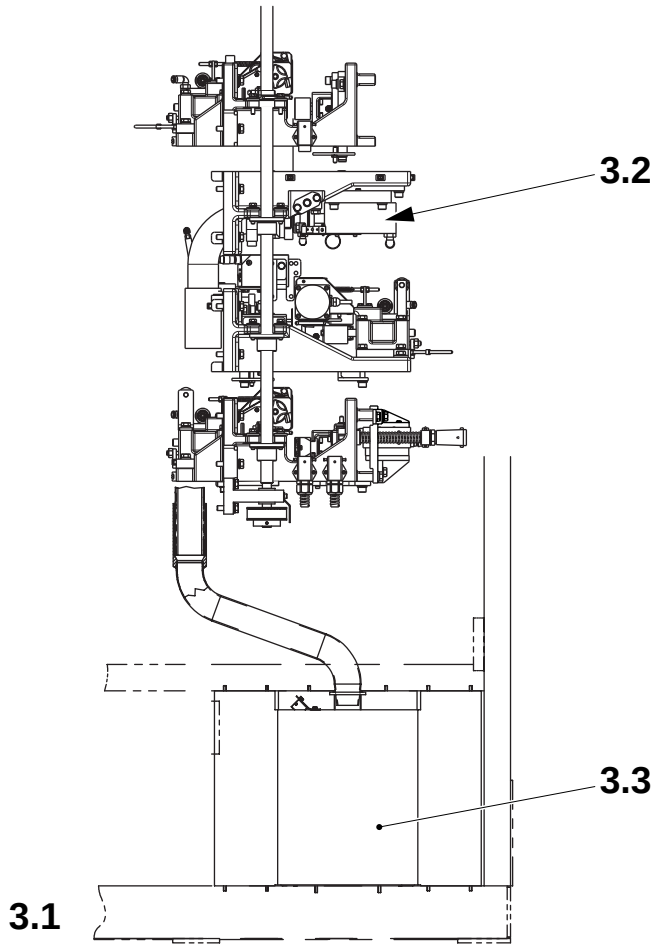

3.1 Setting Flow Chart
3.2 Punch Unit
3.3 Waste Box

TechPub_2614345_0103 - B6114C00en.fm

3-1 Punch Arrangement - Functional Description . . . . . 3 - 5

3.1 Setting Flow Chart . . . . . 3 - 6

3.2 Punch Unit . . . . . 3 - 7

3.2-1 Punch Unit - Set Packaging Material Position in Relation to Hole . . . . . 3 - 7

3.2-2 Punch Unit - Check Stripper Pins and Springs . . . . . 3 - 9

3.2-3 Punch Unit - Change Stripper Pins and Springs . . . . . 3 - 11

3.2-4 Punch Unit - Check Cylinder . . . . . 3 - 13

3.2-5 Punch Unit - Change Cylinder . . . . . 3 - 14

3.2-6 Punch Unit - Check Punch and Die . . . . . 3 - 18

3.2-7 Punch Unit - Change Punch and Die . . . . . 3 - 19

3.2-8 Punch Unit - Set Punch and Die . . . . . 3 - 21

3.2-9 Punch Unit - Set Proximity Switch . . . . . 3 - 25

3.2-10 Punch Unit - Set Damper . . . . . 3 - 26

3.3 Waste Box . . . . . 3 - 27

3.3-1 Waste Box - Check Box and Waste Pipe . . . . . 3 - 27

3.3-2 Waste Box - Set Photocell . . . . . 3 - 28

TechPub_2614345_0103 - B6114C00en.fm

This page intentionally left blank

TechPub_2614345_0103 - B6114C00en.fm

3-1 Punch Arrangement - Functional Description

SPC Reference	1539202-0100 1095955-0100

After the servo motor in the drive motor assembly stops, the following actions occur:

- the PLC signals the solenoid valve **Y84091** to extend the cylinder for punching the PullTab hole
- the PLC signals the solenoid valve **Y8407** to blow material from the punch

Punching PullTab hole / Punch blowing

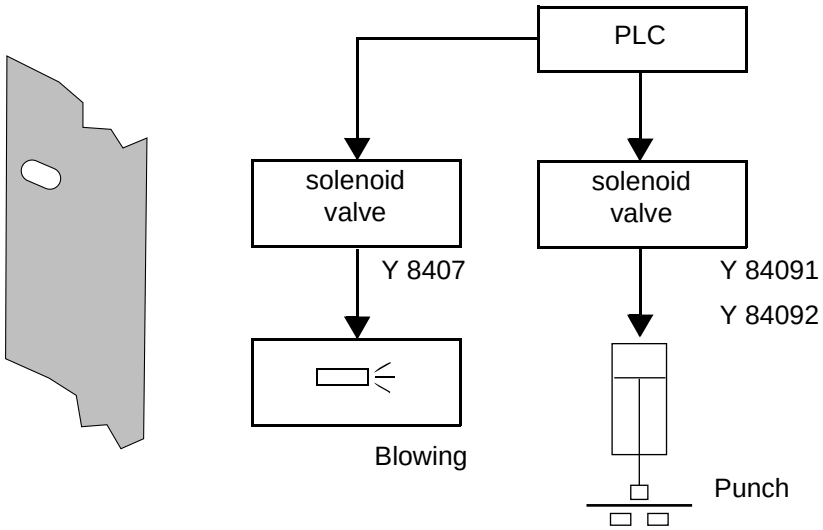

- during the succeeding index, the PLC signals the solenoid valve **Y8404** to suck the waste material from the waste tube into the waste box.

Waste blowing

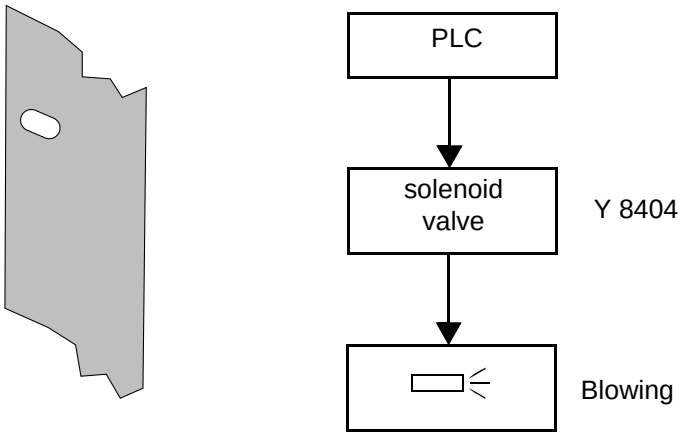

TechPub_2614345_0103 - B6114C00en.fm

3.1 Setting Flow Chart

The following flow chart shows the order in which the various components must be set up.

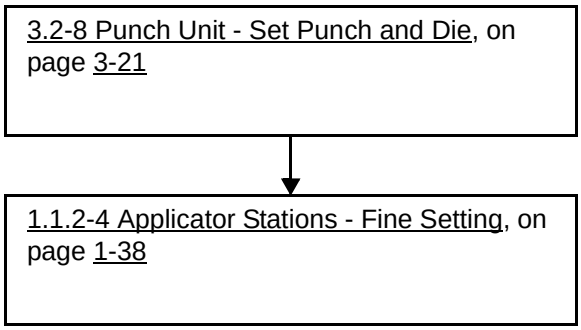

TechPub_2614345_0103 - B6114C01en.fm

3.2 Punch Unit

SPC Reference	1539202-0100 1539201-0100 1539201-0200

3.2-1 Punch Unit - Set Packaging Material Position in Relation to Hole

Machine Status	PRODUCTION
SPC Reference	1539201-0100 1539201-0200

CAUTION
Risk of damage to the equipment!
Do not perform this adjustment until all the other settings in the Main flowchart in the chapter 0 PullTab Unit Overview have been completed.

a) Run the PullTab unit and adjust the distance **A** (hole position) from the top fin crease (1) as follows:
- touch the MANOEUVRE button (2)
- touch the PULLTAB, RIGHT button (3)
- touch the HOLE POSITION PHOTOCELLS button (4).

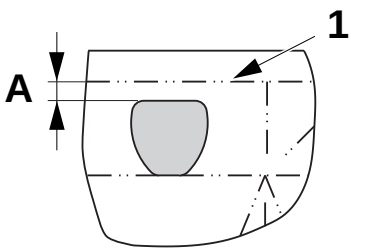

Hole 48 and 72

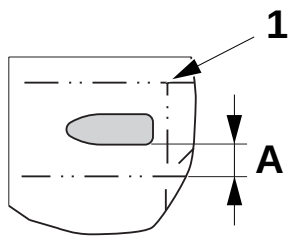

Hole 55, 60, 65 and 85

View from inside the package

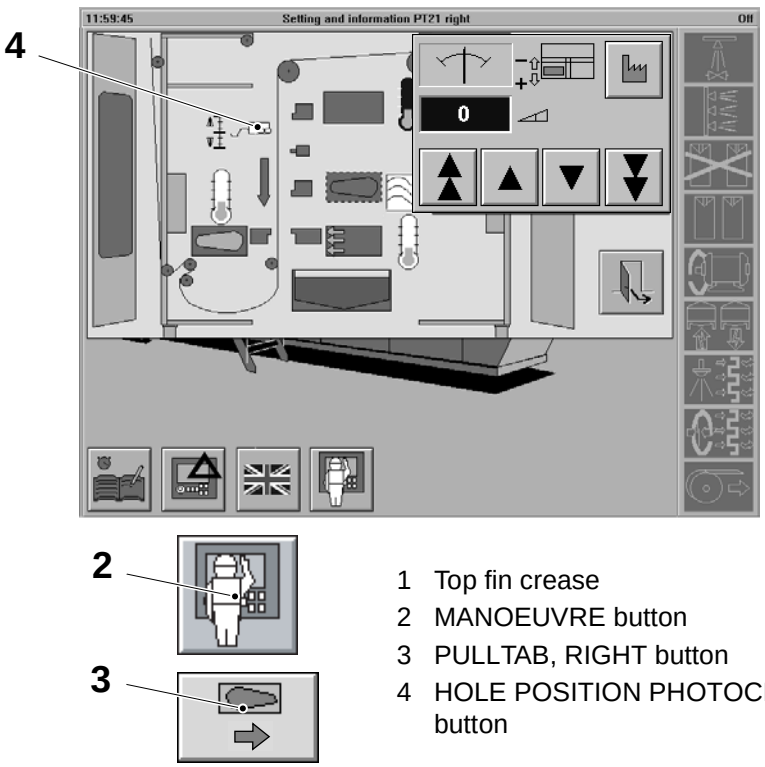

1 Top fin crease
2 MANOEUVRE button
3 PULLTAB, RIGHT button
4 HOLE POSITION PHOTOCELLS button

(Cont'd)

TechPub_2614345_0103 - B6114C02en.fm

(Cont'd)

b) Check the distance **A** between the hole and the top fin crease. If required, adjust the position of the punch unit as described below:

– use the buttons (6) or (7) to increase or decrease the **Photocells value** in the DISPLAY box (5)
Increasing the **Photocells value** increases the distance **A**.
Decreasing the **Photocells value** decreases the distance **A**.

– run at least 40 packages and verify the hole position once more.

Note! The adjustment range is **±400 units**, which permits the distance **A** to change by **±4 mm** from the PLC default value.

c) Touch the EXIT button (8) and the MANOEUVRE button (2) to end the sequence.

Package	Hole type	A ±0.5 (mm)		Package	Hole type	A ±0.5 (mm)		Package	Hole type	A -0.5 (mm)
TBA 500 S	55	8.3		TBA 1000 S	85	9.9		TPA 330 Sq	48	5.0
TPA 1000 S	60	8.4		TBA 1000 B	85	11.0		TPA 250 Sq	72	4.8
TPA 1000 Sq	60	10.4		TBA 1000 Sq	85	13.0				
TBA 1000 S	65	9.4		TBA 1500 S	85	12.0				
TBA 1000 B	65	10.5		TBA 1000 S	90	9.7				
TBA 1000 Sq	65	12.5		TBA 1500 S	90	9.7				

View from inside the package

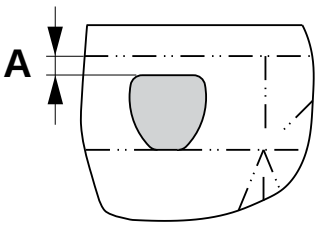

Hole 48 and 72

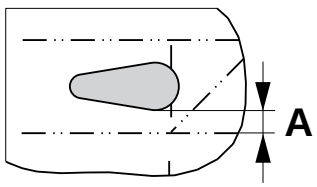

Hole 21 and 25
To be introduced later on

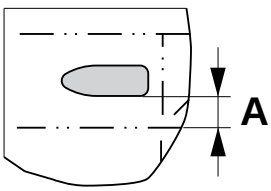

Hole 55, 60, 65, 85 and 90

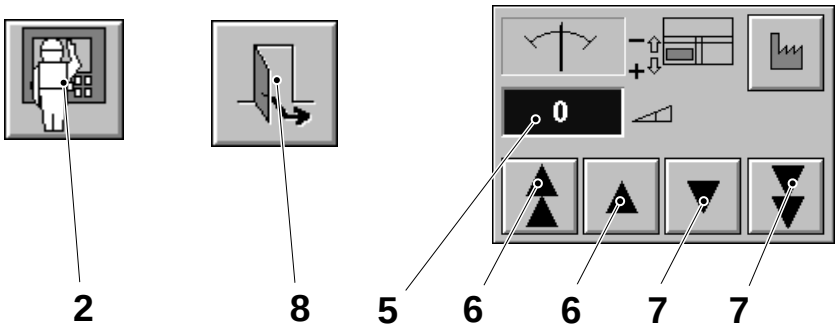

2 MANOEUVRE button
5 DISPLAY box
6 Button
7 Button
8 EXIT button

TechPub_2614345_0103 - B6114C02en.fm

3.2-2 Punch Unit - Check Stripper Pins and Springs

Machine Status	Air **OFF** Mains Power **OFF**
SPC Reference	1539201-0100 1539201-0200

New Cylinder TP No. 90459-0296

a) Check the four stripper pins (1) and the pin (2) for wear and/or damage.

Note! The pin (2) is fitted to hole 48 and 72 only.

b) Make sure the four stripper pins (1) and the pin (2) move freely.

c) Check the action of the springs (3) by pressing the pins (1).

d) Remove the screws (4) and (5).

e) Check the springs (3) for wear and/or damage.

f) Assemble in the reverse order.

Change as required, see 3.2-3 Punch Unit - Change Stripper Pins and Springs.

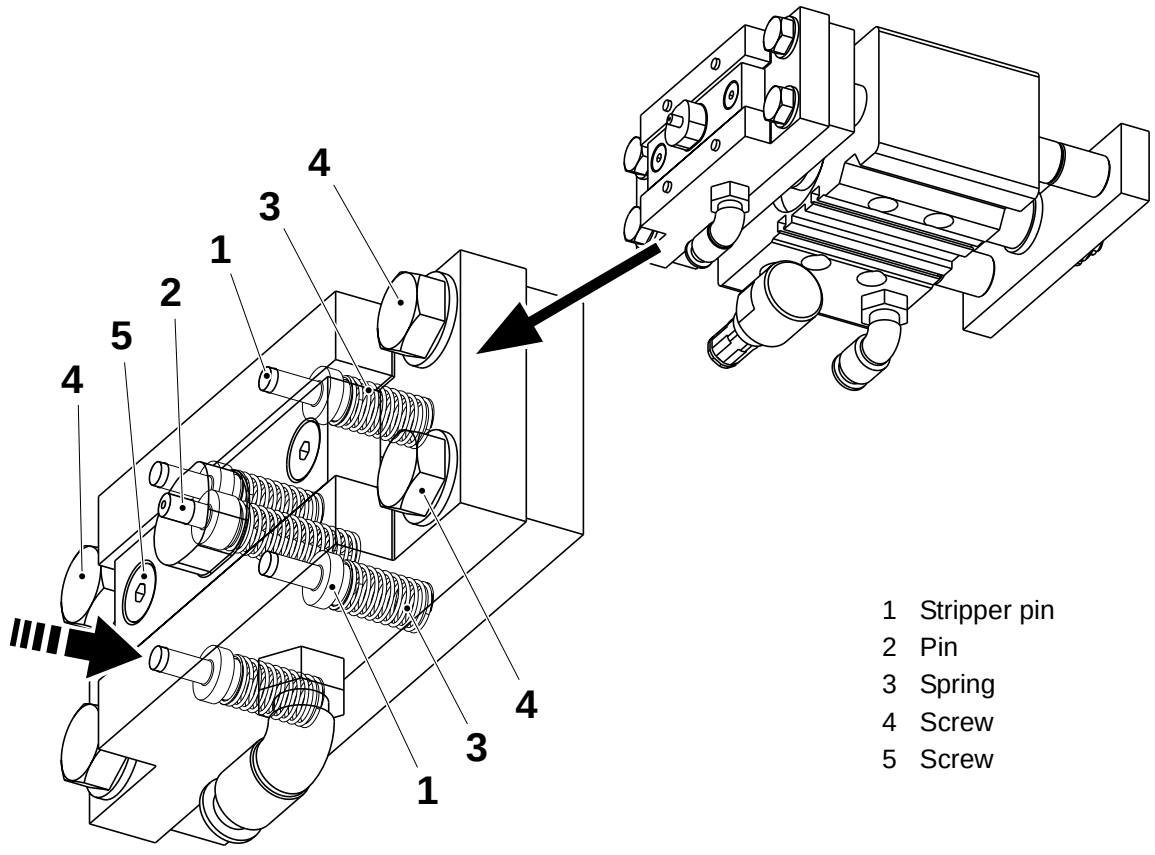

1 Stripper pin
2 Pin
3 Spring
4 Screw
5 Screw

(Cont'd)

TechPub_2614345_0103 - B6114C02en.fm

(Cont'd)

Old Cylinder TP No. 90450-0435
Note! Be careful not to lose the springs (2) during this procedure.

a) Check the stripper pins (1) for wear and/or damage.
b) Make sure the stripper pins (1) move freely.
c) Check the action of the springs (2) by pressing the pins (1).
d) Remove the screws (3) and the pin distances (4).
e) Check the springs (2) for wear and/or damage.

Note! Press the pin distances (4) against the punch when tightening the screws (3).

f) Assemble in the reverse order.

Change as required, see 3.2-3 Punch Unit - Change Stripper Pins and Springs.

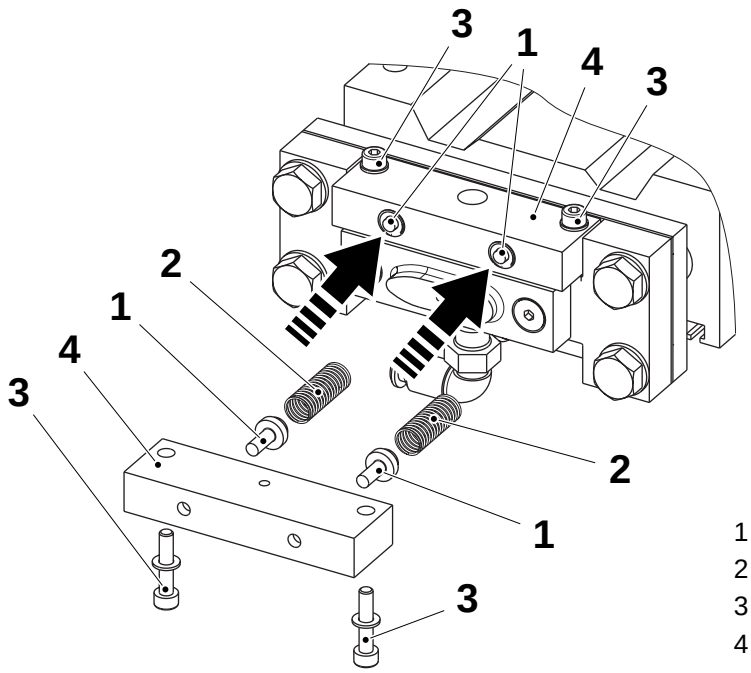

1 Stripper pin
2 Spring
3 Screw
4 Pin distance

TechPub_2614345_0103 - B6114C02en.fm

3.2-3 Punch Unit - Change Stripper Pins and Springs

Machine Status	Air **OFF** Mains Power **OFF**
SPC Reference	1539201-0100 1539201-0200

New Cylinder TP No. 90459-0296

a) Remove the two screws (1) and the punch assembly (2).

b) Remove the pin (3) and the spring (4).

Note! The pin (3) and the spring (4) are fitted to hole 48 and 72 only.

c) Change the spring (4) and/or the pin (3) as required.

d) Remove the four screws (5) and remove the spacer (6).

e) Remove the stripper pins (7) and the four springs (8) from the spacer (6).

f) Clean the four spacer holes (9) carefully.

g) Change the springs (8) and/or the stripper pins (7) as required.

h) Assemble in the reverse order and set the punch and the die, see 3.2-8 Punch Unit - Set Punch and Die.

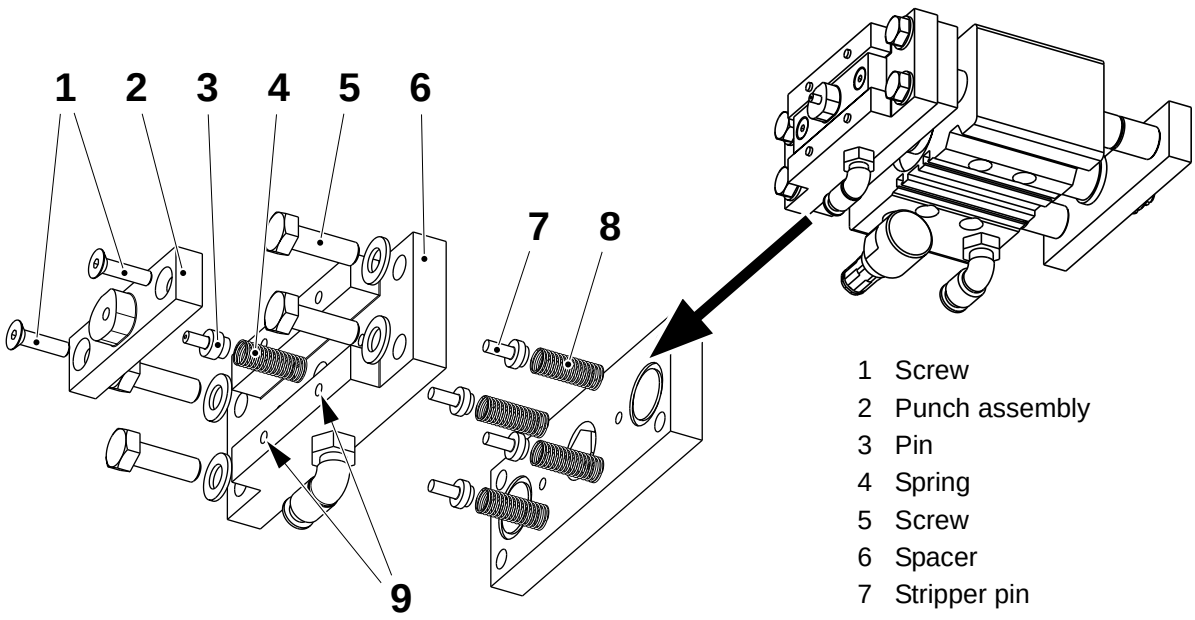

1 Screw
2 Punch assembly
3 Pin
4 Spring
5 Screw
6 Spacer
7 Stripper pin
8 Spring
9 Spacer holes

(Cont'd)

TechPub_2614345_0103 - B6114C02en.fm

(Cont'd)

Old Cylinder TP No. 90450-0435

a) Remove the two screws (1) and the punch assembly (2).

b) Remove the pin (3) and the spring (4).

Note! The pin (3) and the spring (4) are fitted to hole 48 and 72 only.

c) Change the spring (4) and/or the pin (3) as required.

d) Loosen the four screws (5).

e) Remove the four screws (6) and remove the two pin distances (7).

f) Remove the four springs (9) and the stripper pins (8) from the two pin distances (7).

g) Clean the four pin distance holes (10) carefully.

h) Change the springs (9) and/or the stripper pins (8).

Note! Press the pin distances (7) against the punch when tightening the screws (5).

i) Assemble in the reverse order and set the punch and the die, see 3.2-8 Punch Unit - Set Punch and Die.

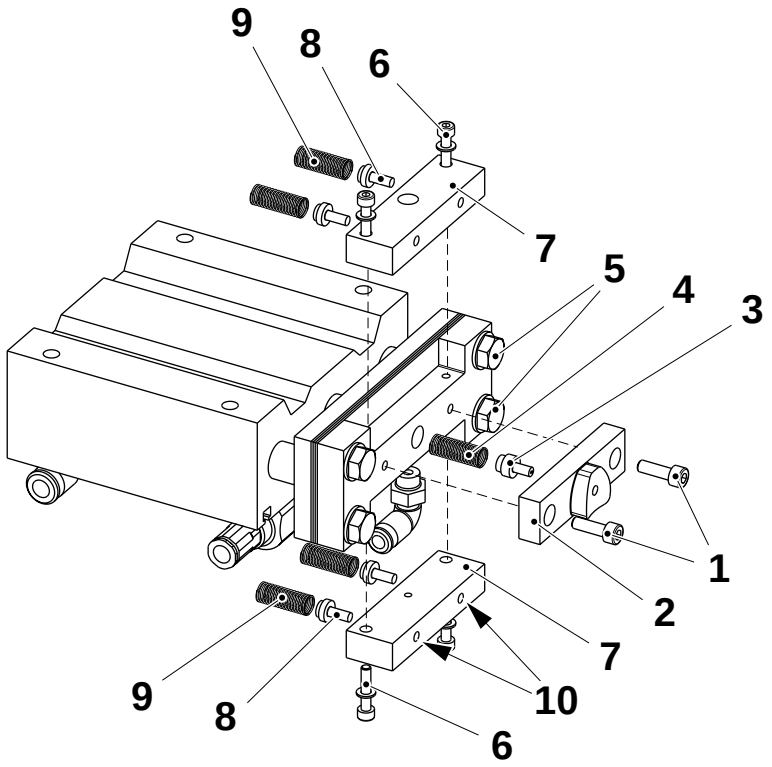

1 Screw
2 Punch assembly
3 Pin
4 Spring
5 Screw
6 Screw
7 Pin distance
8 Stripper pin
9 Spring
10 Pin distance holes

TechPub_2614345_0103 - B6114C02en.fm

3.2-4 Punch Unit - Check Cylinder

Machine Status	Air **OFF** Mains Power **OFF**
SPC Reference	1539201-0100 1539201-0200

Make sure the piston (1) of the cylinder (2) moves easily and correctly during its stroke.

Make sure there is no radial play on the guides (3).

Change as required, see 3.2-5 Punch Unit - Change Cylinder.

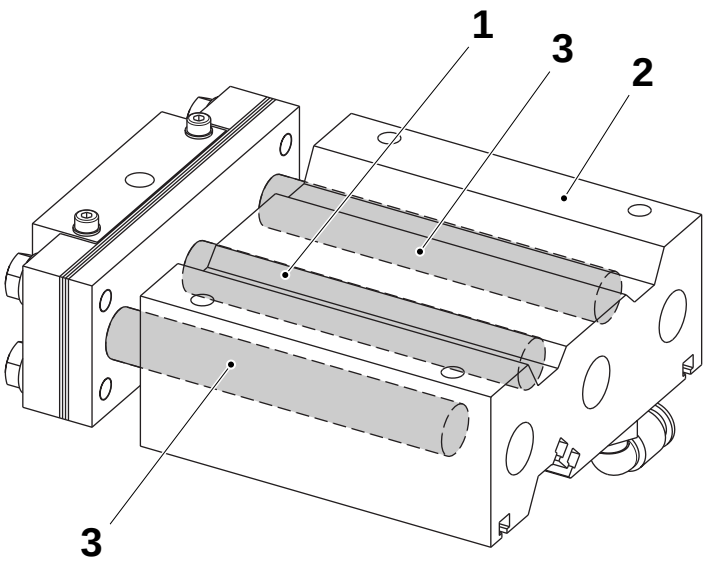

Old cylinder
TP No. 90450-0435

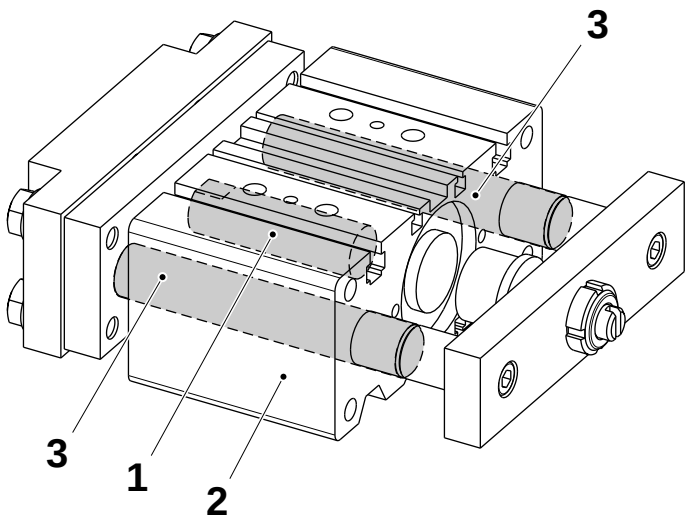

New cylinder
TP No. 90459-0296

1 Piston
2 Cylinder
3 Guide

TechPub_2614345_0103 - B6114C02en.fm

3.2-5 Punch Unit - Change Cylinder

Machine Status	Air **OFF** Mains Power **OFF**
SPC Reference	1539202-0100 1539201-0100 1539201-0200

New Cylinder TP No. 90459-0296

a) Disconnect the air hoses (1).

b) Loosen the four screws (2) and remove the sensor bracket (3).

c) Remove the four screws (4) and remove the punch unit (5) with the plate (6).

d) Remove the connectors (7).

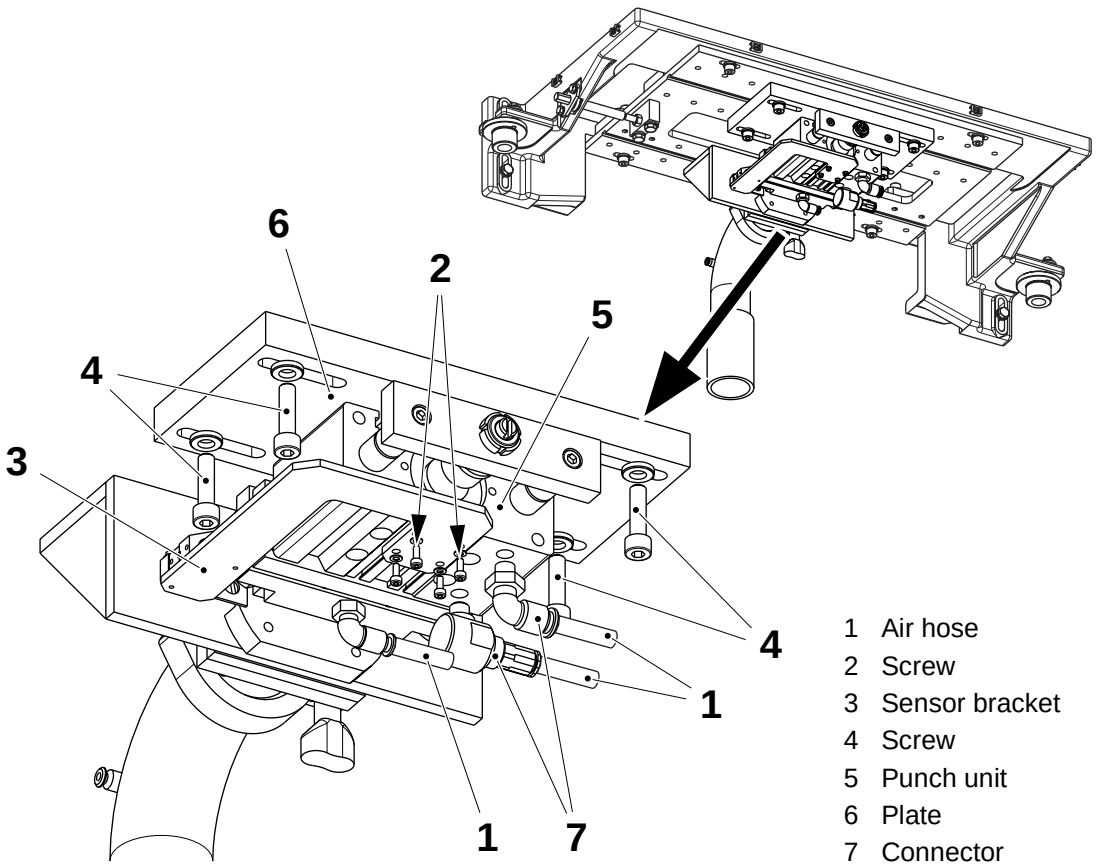

1 Air hose
2 Screw
3 Sensor bracket
4 Screw
5 Punch unit
6 Plate
7 Connector

(Cont'd)

TechPub_2614345_0103 - B6114C02en.fm

(Cont'd)

e) Remove the four screws (8), the two pins (9) and the plate (6) from the cylinder (10).

f) Remove the four screws (11) and the punch assembly (12) together with the springs (13) and the stripper pins (14).

g) Remove the two screws (15) and the plate (16) together with the two spacers (17).

h) Change the cylinder (10).

i) Assemble in the reverse order and set the punch and the die, see 3.2-8 Punch Unit - Set Punch and Die.

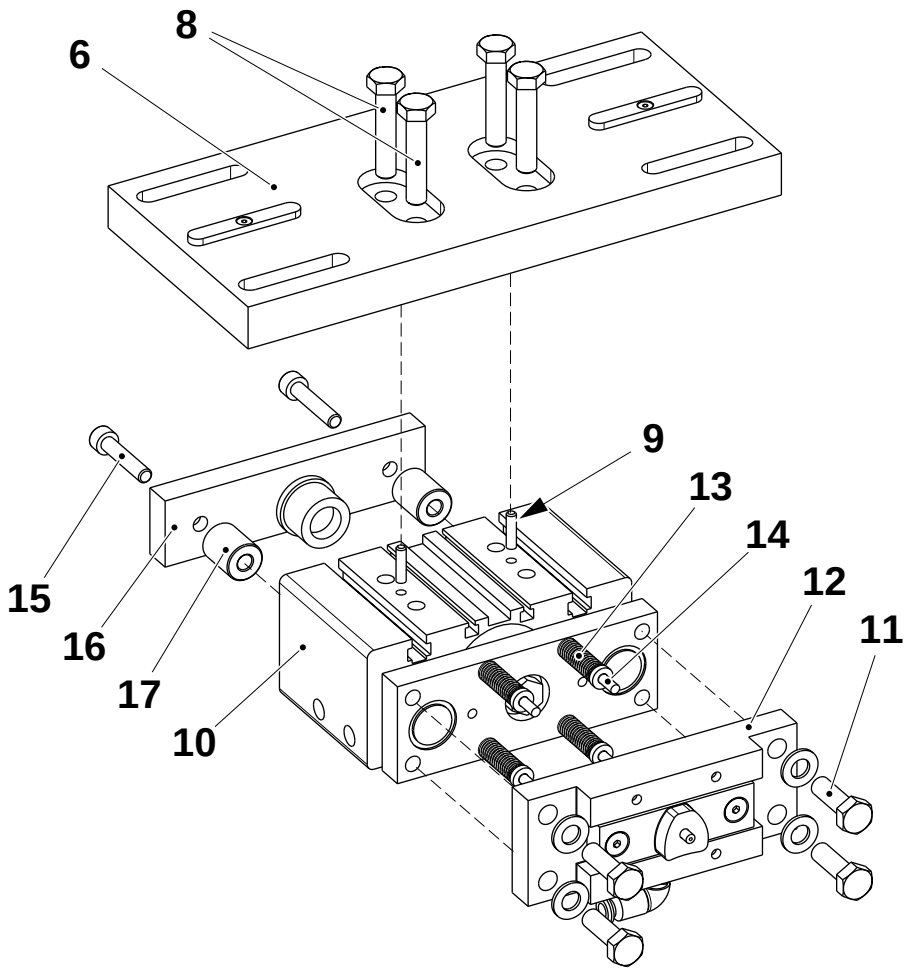

6 Plate
8 Screw
9 Pin
10 Cylinder
11 Screw
12 Punch assembly
13 Spring
14 Stripper pin
15 Screw
16 Plate
17 Spacer

(Cont'd)

TechPub_2614345_0103 - B6114C02en.fm

(Cont'd)

Old Cylinder TP No. 90450-0435

a) Disconnect the air hoses (1).

b) Remove the four screws (2) and remove the punch unit (3) with the plate (4).

c) Remove the connectors (5).

d) Loosen the two screws (6) and remove the sensor bracket (7).

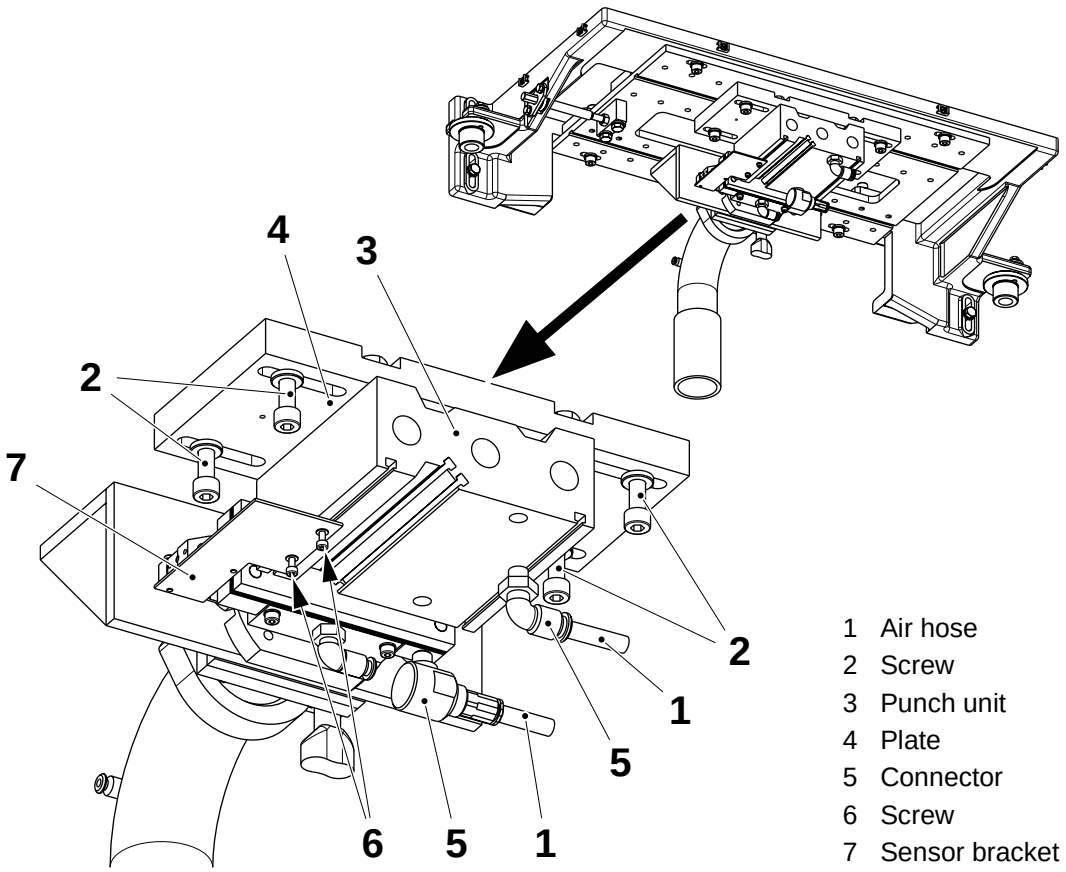

1 Air hose
2 Screw
3 Punch unit
4 Plate
5 Connector
6 Screw
7 Sensor bracket

(Cont'd)

TechPub_2614345_0103 - B6114C02en.fm

(Cont'd)

e) Remove the four screws (8) and the plate (4) from the cylinder (9).

f) Remove the four screws (10) and the punch assembly (11) together with the shims (12).

g) Change the cylinder (9).

h) Assemble in the reverse order and set the punch and the die, see 3.2-8 Punch Unit - Set Punch and Die.

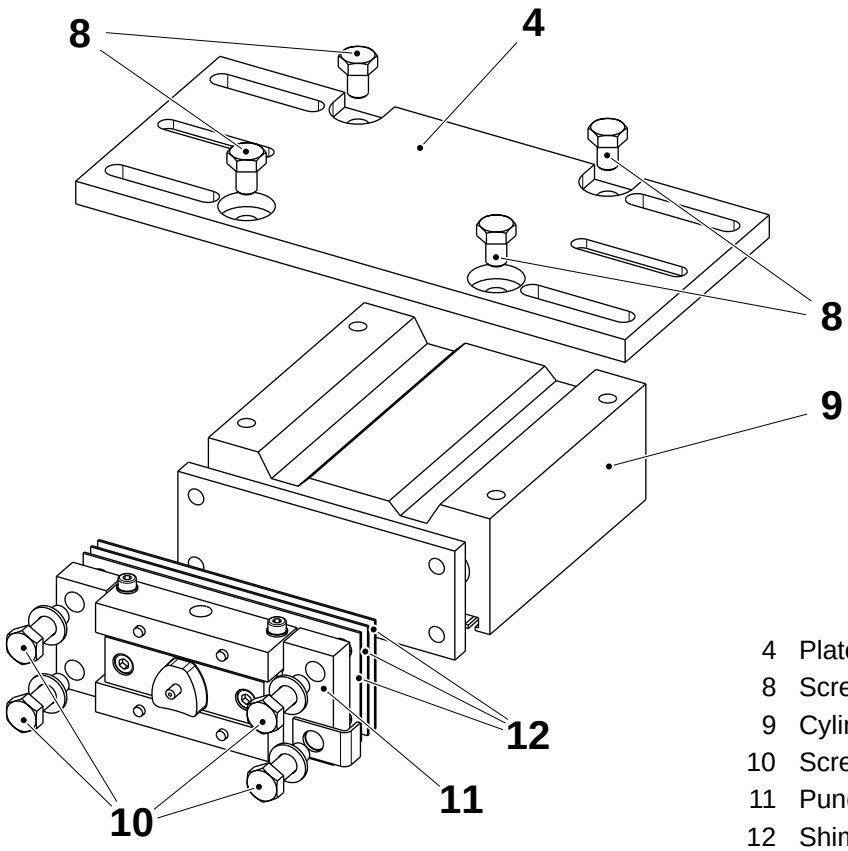

4 Plate
8 Screw
9 Cylinder
10 Screw
11 Punch assembly
12 Shim

TechPub_2614345_0103 - B6114C02en.fm

3.2-6 Punch Unit - Check Punch and Die

Machine Status	Air **ON** Mains Power **OFF** Packaging material **THREADED**
SPC Reference	1539201-0100 1539201-0200

WARNING
Risk of crushing!
The cylinder piston may move unexpectedly.

Check the edges of the hole in the packaging material for any irregularities, such as curled edges.

Check the action of the spring (1) by pressing the pin (2) in the punch (3). Check the pin (2) for wear and/or damage.

Note! The pin (2) and the spring (1) are fitted to hole 48 and 72 only.

Check that the air hole (4) in the punch (3) is not blocked. Clean as required.

If required set the punch (3) and the die (5), see 3.2-8 Punch Unit - Set Punch and Die.

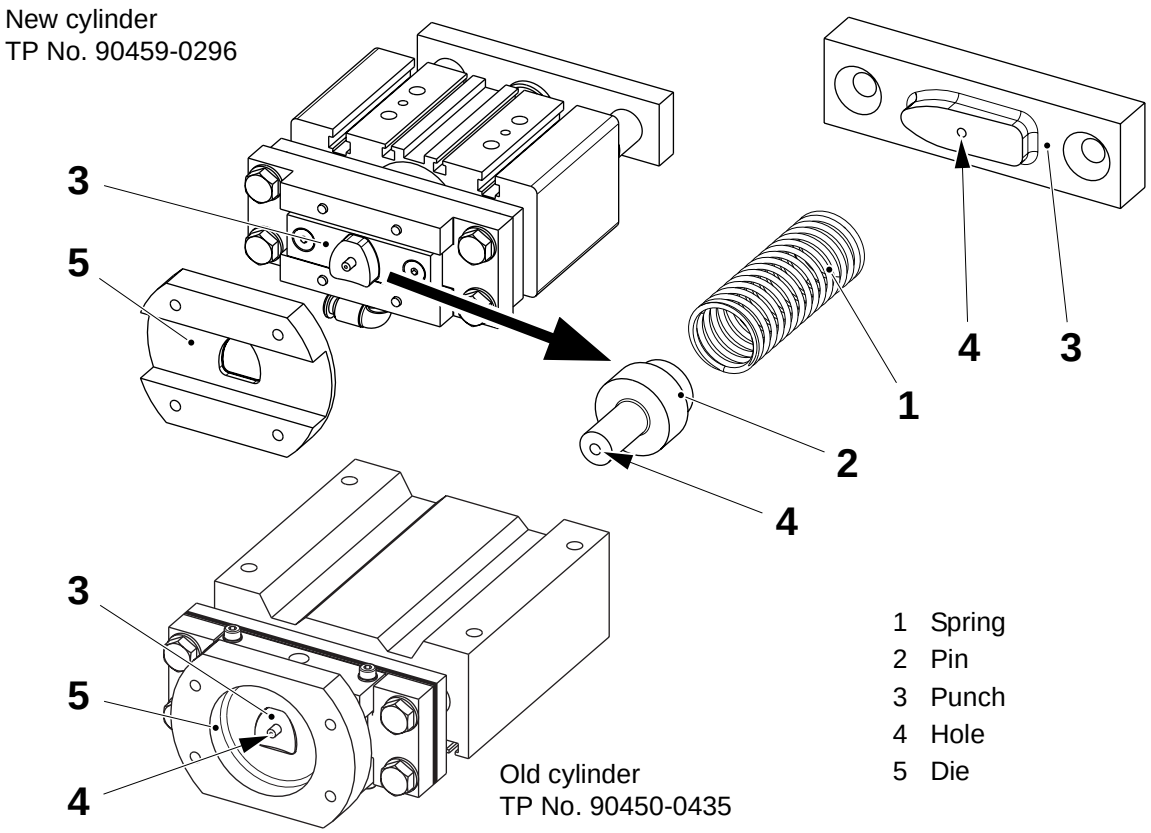

TechPub_2614345_0103 - B6114C02en.fm

3.2-7 Punch Unit - Change Punch and Die

Machine Status	Air **OFF** Mains Power **OFF**
SPC Reference	1539202-0100 1539201-0100 1539201-0200

New Cylinder TP No. 90459-0296

a) Remove the clamp (1) and the waste pipe (2).

b) Remove the four screws (3) and remove the die (4).

c) Remove the two screws (5) and the punch (6).

Note! The pin (7) and the spring (8) are fitted to hole 48 and 72 only.

d) Change the punch (6) and the die (4) when damaged or worn out.

e) Assemble in the reverse order and set the punch and the die, see 3.2-8 Punch Unit - Set Punch and Die.

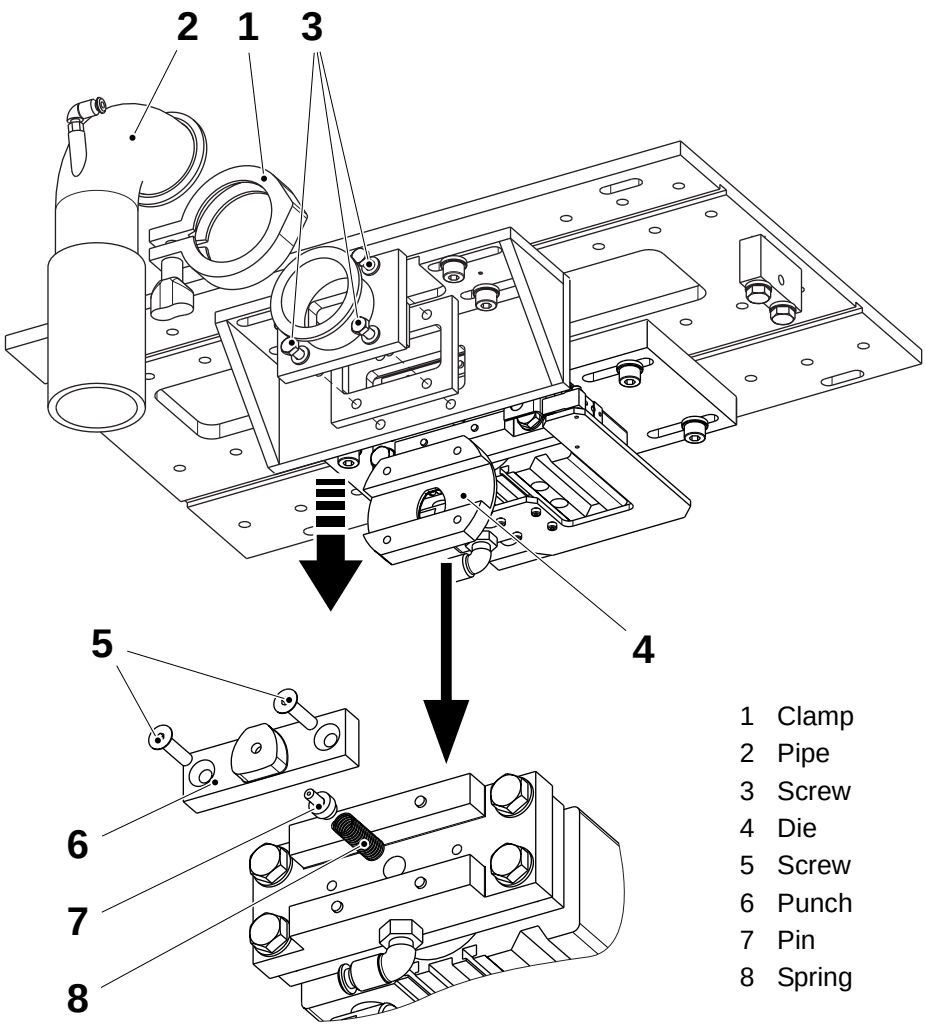

1 Clamp
2 Pipe
3 Screw
4 Die
5 Screw
6 Punch
7 Pin
8 Spring

(Cont'd)

TechPub_2614345_0103 - B6114C02en.fm

(Cont'd)

Old Cylinder TP No. 90450-0435

a) Remove the clamp (1) and the waste pipe (2).

b) Remove the four screws (3) and remove the die (4).

c) Remove the two screws (5) and the punch (6).

d) Change the punch (6) and the die (4) when damaged or worn out.

e) Assemble in the reverse order and set the punch and the die, see 3.2-8 Punch Unit - Set Punch and Die.

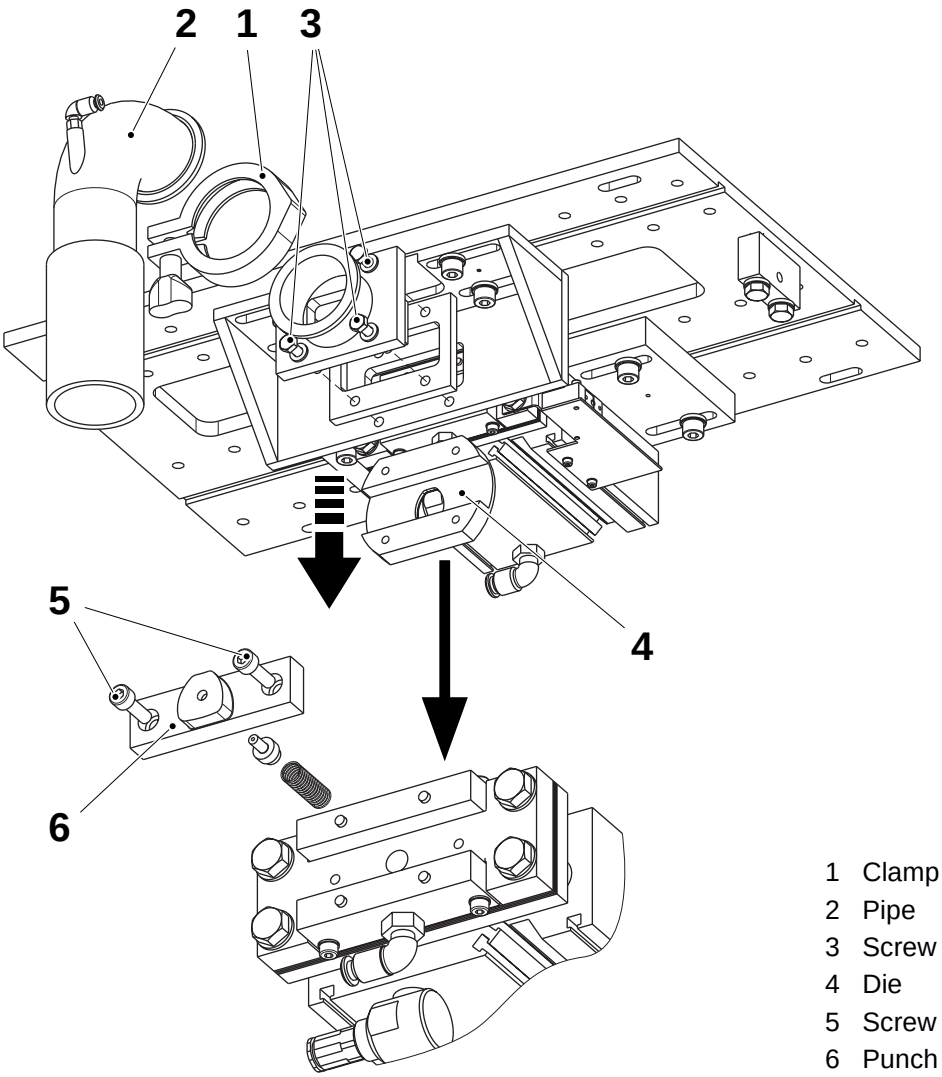

1 Clamp
2 Pipe
3 Screw
4 Die
5 Screw
6 Punch

TechPub_2614345_0103 - B6114C02en.fm

3.2-8 Punch Unit - Set Punch and Die

Machine Status	Air **ON** Mains Power **ON**
SPC Reference	1539202-0100 1539201-0100 1539201-0200

WARNING

Risk of crushing!

The cylinder piston may move unexpectedly.

New Cylinder TP No. 90459-0296

a) Remove the clamp (1) and the waste pipe (2).

b) Loosen the four screws (3) that hold the die (4).

c) Insert a piece of patch strip between the punch (5) and the die (4).

d) Gently push the punch (5) into the die (4) without cutting the patch strip. Centre the punch (5) using the patch strip as a spacer. Carefully tighten the four screws (3).

e) Check the cutting action.

TechPub_2614345_0103 - B6114C02en.fm

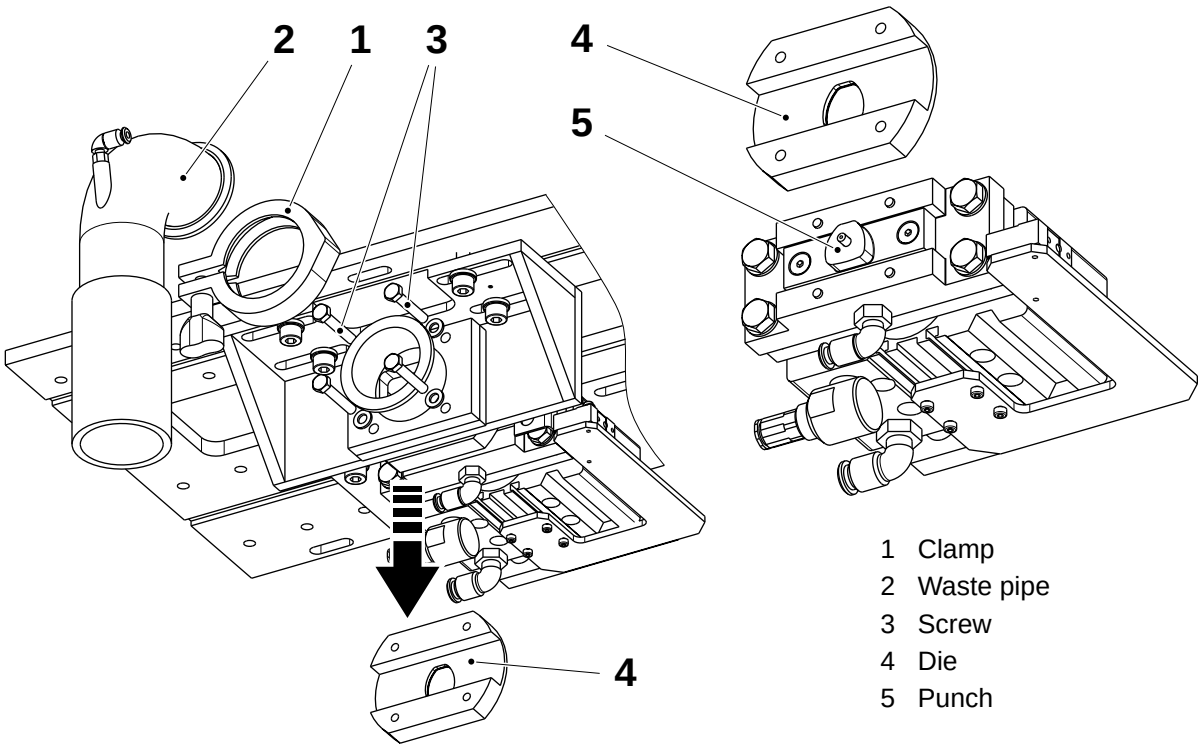

1 Clamp
2 Waste pipe
3 Screw
4 Die
5 Punch

(Cont'd)

(Cont'd)

f) Switch the key selector on the PT21 electrical panel to the SERVICE position.

g) Activate the cylinder (6) manual override for the valve **Y8409:1**.

h) Make sure the cylinder (6) is fully extended. If required, set the damper, see 3.2-10 Punch Unit - Set Damper.

i) Check the distance **A**. If required, remove the screws (7) and add/remove shims (8) until the distance **A** between the punch (5) and the die (4), is obtained.

j) Activate the cylinder (6) manual override for the valve **Y8409:2**.

k) Make sure the cylinder (6) is fully retracted.

l) Fit the waste pipe (2) and tighten the clamp (1).

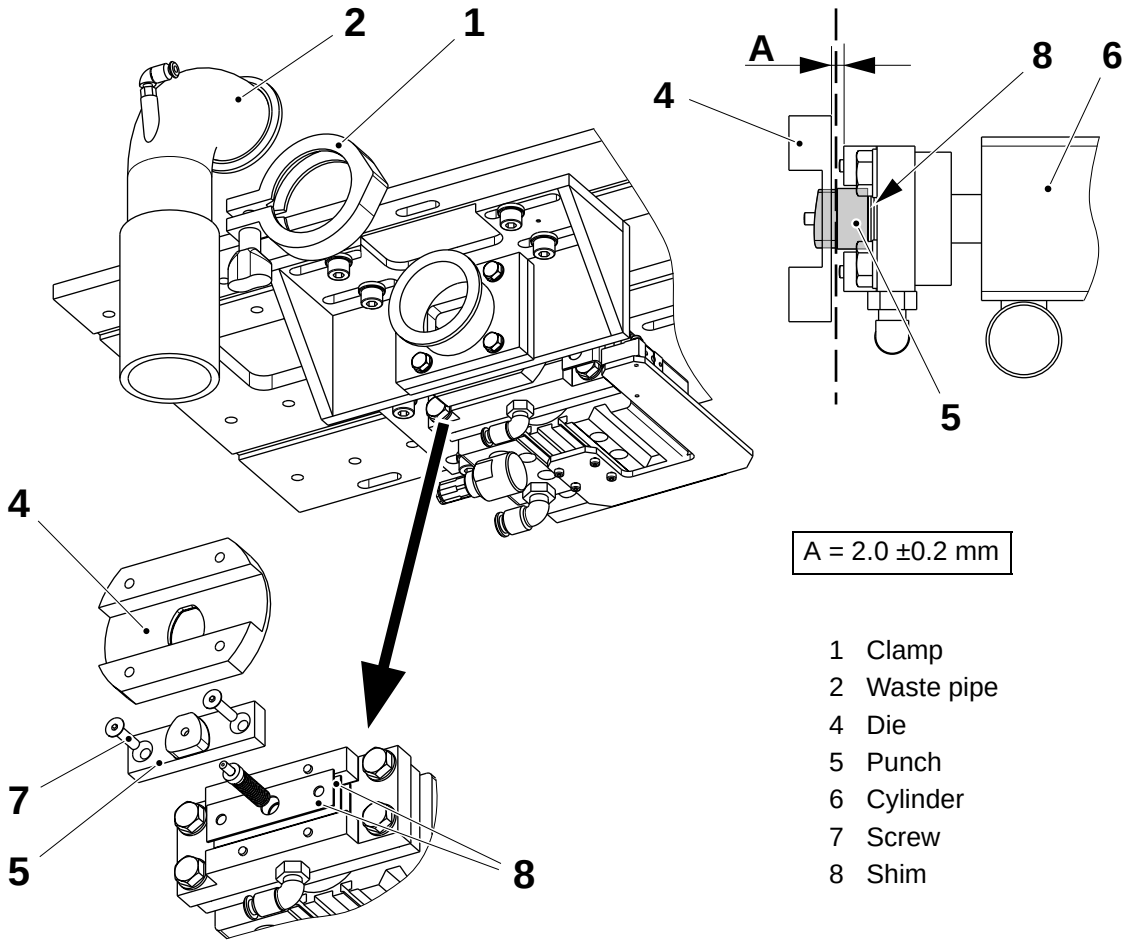

(Cont'd)

TechPub_2614345_0103 - B6114C02en.fm

(Cont'd)

WARNING
Risk of crushing!
The cylinder piston may move unexpectedly.

Old Cylinder TP No. 90450-0435

a) Loosen the two screws (1) on the punch (2).
b) Place a **1 mm** feeler gauge between the punch (2) and the lower pin distance (3).
c) Tighten the screws (1) and remove the feeler gauge.
d) Remove the clamp (4) and the waste pipe (5).
e) Loosen the four screws (6) that hold the die (7).
f) Remove the screws (8) and the two pin distances (3).
g) Insert a piece of patch strip between the punch (2) and the die (7).
h) Gently push the punch (2) into the die (7) without cutting the patch strip. Centre the punch (2) using the patch strip as a spacer. Carefully tighten the four screws (6).
i) Check the cutting action.
j) Fit the two pin distances (3) and tighten the screws (8).

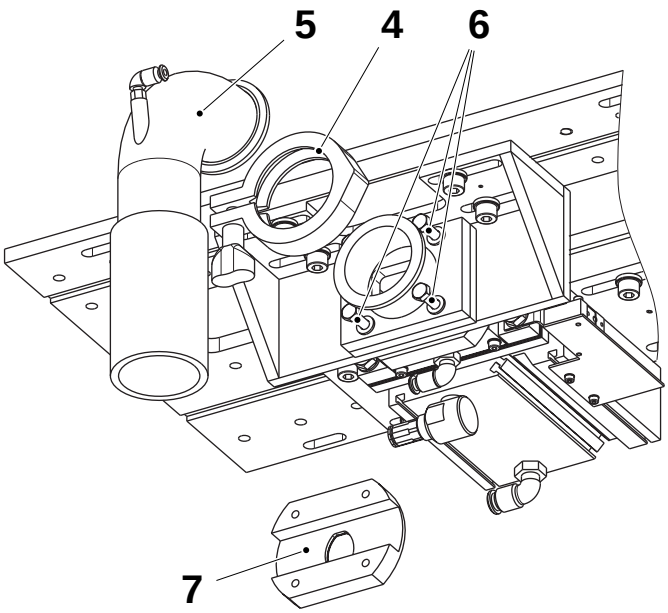

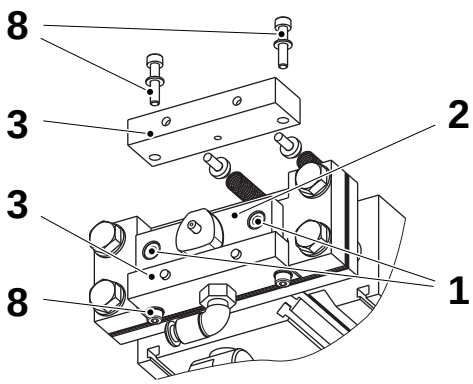

1	Screw	5	Waste pipe
2	Punch	6	Screw
3	Pin distance	7	Die
4	Clamp	8	Screw

(Cont'd)

TechPub_2614345_0103 - B6114C02en.fm

(Cont'd)

k) Switch the key selector on the PT21 electrical panel to the SERVICE position.

l) Activate the cylinder (9) manual override for the valve **Y8409:1**.

m) Make sure the cylinder (9) is fully extended.

n) Check the distance **A**. If required, remove the screws (10) and add/ remove shims (11) until the distance **A** between the punch (2) and the die (7), is obtained.

Note! Make sure the screws (1) do not damage the packaging material when the machine is operating.

o) Activate the cylinder (9) manual override for the valve **Y8409:2**.

p) Make sure the cylinder (9) is fully retracted.

q) Fit the waste pipe (5) and tighten the clamp (4).

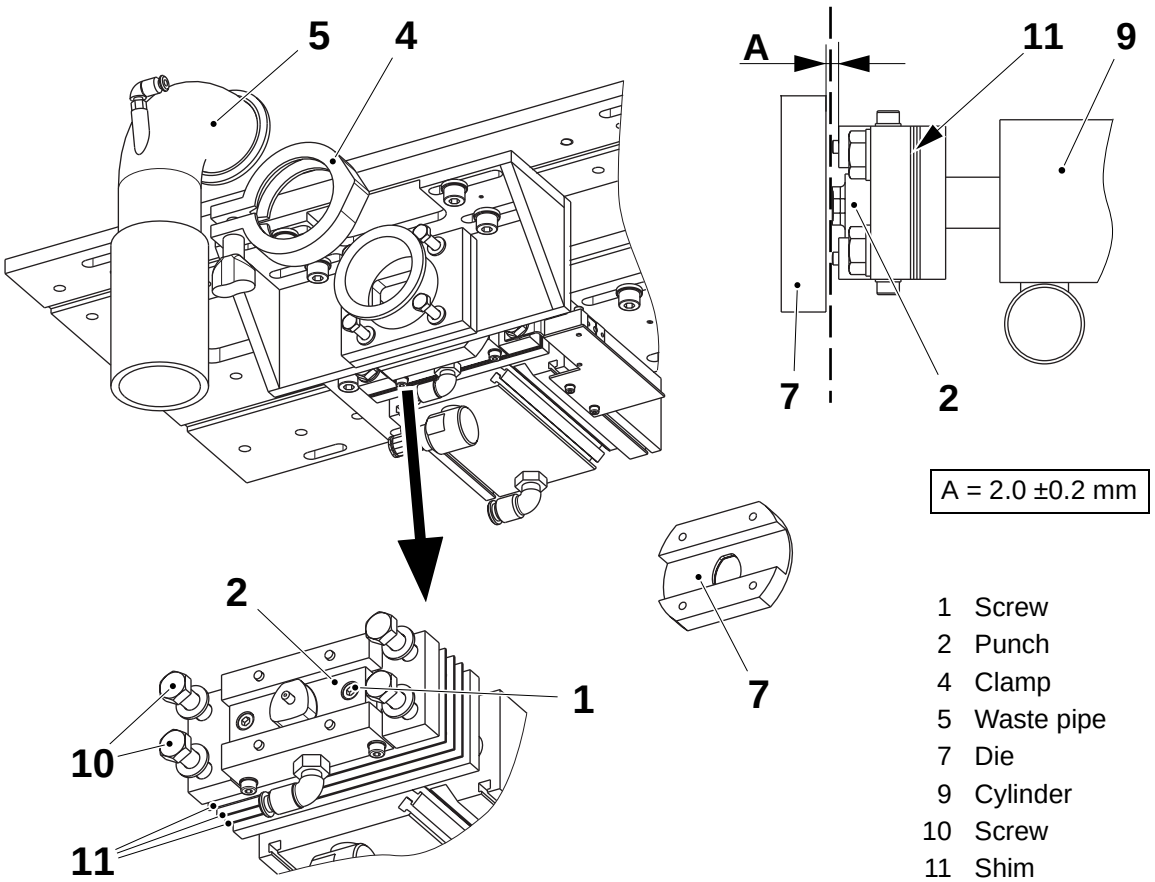

1 Screw
2 Punch
4 Clamp
5 Waste pipe
7 Die
9 Cylinder
10 Screw
11 Shim

TechPub_2614345_0103 - B6114C02en.fm

3.2-9 Punch Unit - Set Proximity Switch

Machine Status	Air **ON** Mains Power **ON**
SPC Reference	1539202-0100 1539202-0200

WARNING

Risk of crushing!

The cylinder piston may move unexpectedly.

a) Switch the key selector on the PT21 electrical panel, to the SERVICE position.

b) Activate the cylinder (1) manual override for the valve **Y8409:1**. Make sure the cylinder is fully extended.

c) Loosen the screws (2) and move the holder (3) against the packaging material (6).

d) Slowly move the proximity switch (4) away from the packaging material until the LED lights up.

e) Make sure the proximity switch (4) is not touching the flag (5).

f) Tighten the screws (2).

g) Activate the cylinder (1) manual override for the valve **Y8409:2**. Make sure the cylinder is fully retracted.

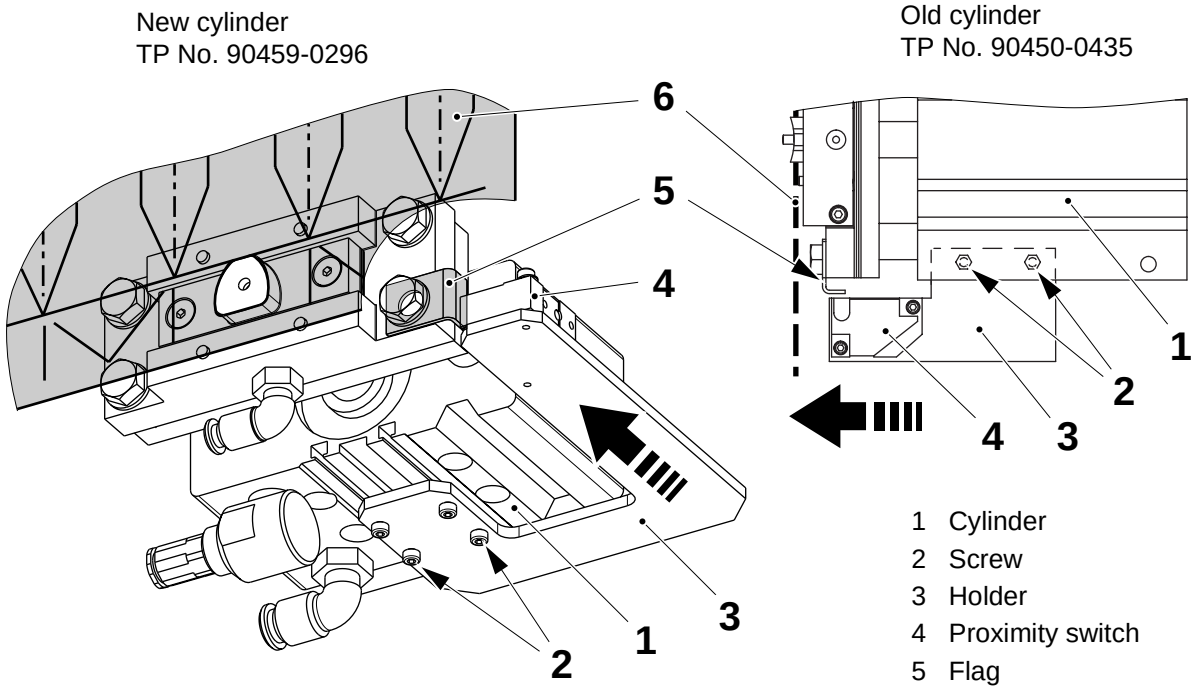

1 Cylinder
2 Screw
3 Holder
4 Proximity switch
5 Flag
6 Packaging material

TechPub_2614345_0103 - B6114C02en.fm

3.2-10 Punch Unit - Set Damper

Machine Status	Air **OFF** Mains Power **OFF**
SPC Reference	1539202-0200

WARNING

Risk of crushing!

The cylinder piston may move unexpectedly.

New Cylinder TP No. 90459-0296

a) Move the punch (1) towards the die (2) until the punch (1) is just in.

b) Adjust the screw (3) until the damper (4) just touches the cylinder (5).

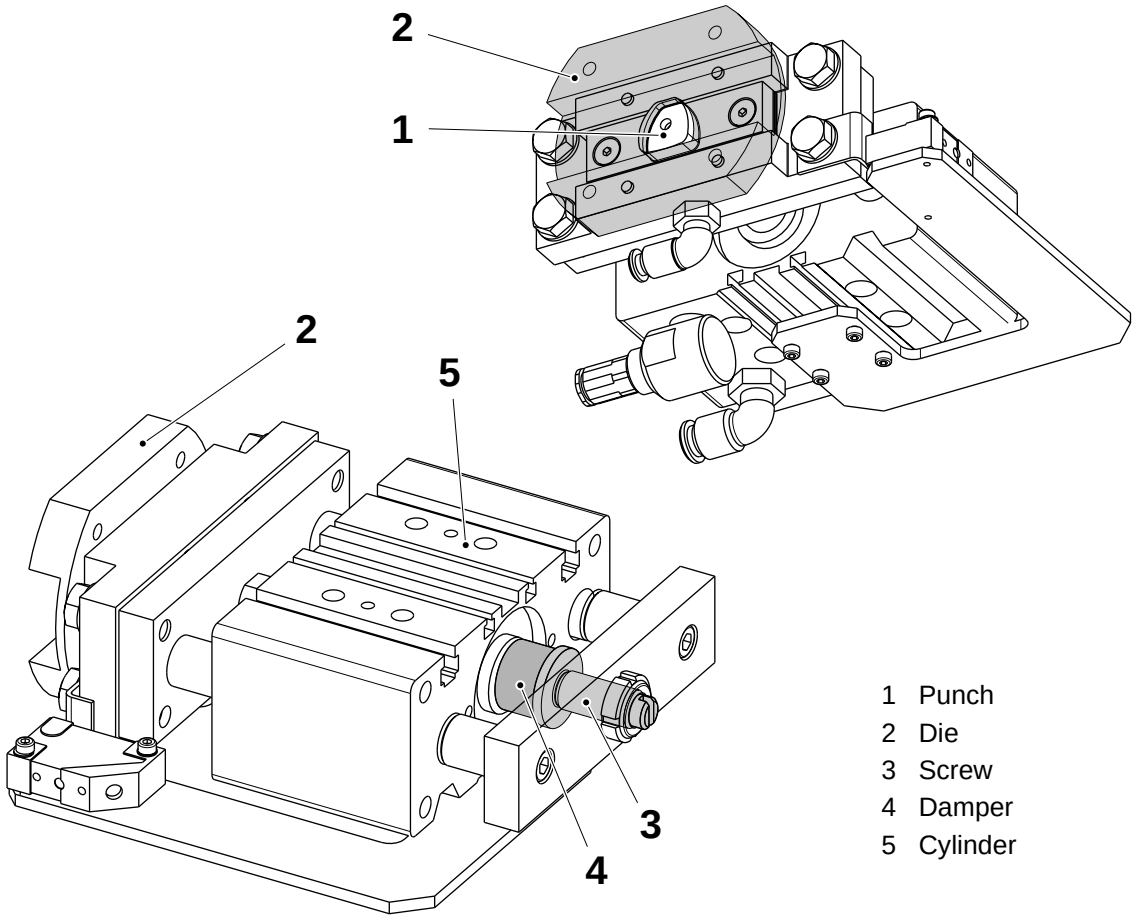

1 Punch
2 Die
3 Screw
4 Damper
5 Cylinder

TechPub_2614345_0103 - B6114C02en.fm

3.3 Waste Box

SPC Reference	1095955-0100 1095955-0200

3.3-1 Waste Box - Check Box and Waste Pipe

Machine Status	Air **OFF** Mains Power **ON**
SPC Reference	1095955-0100 1095955-0200

Make sure the full waste box photocell (1) is working by checking that the green LED is **On**, see 3.3-2 Waste Box - Set Photocell.

Make sure the waste pipe (2) is not blocked.

Make sure the waste flow from the punch is directed into the waste box (3).

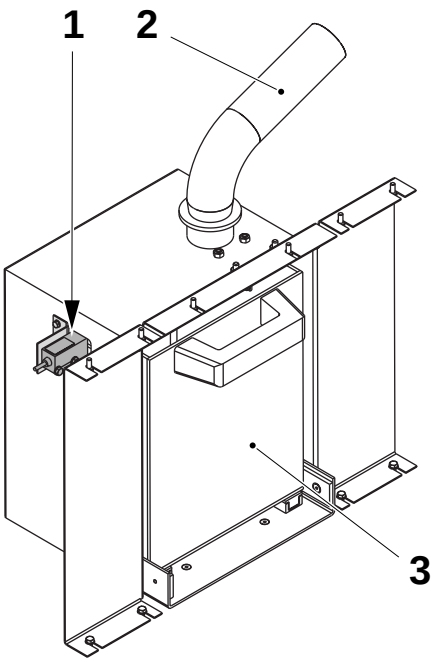

New variant of waste box

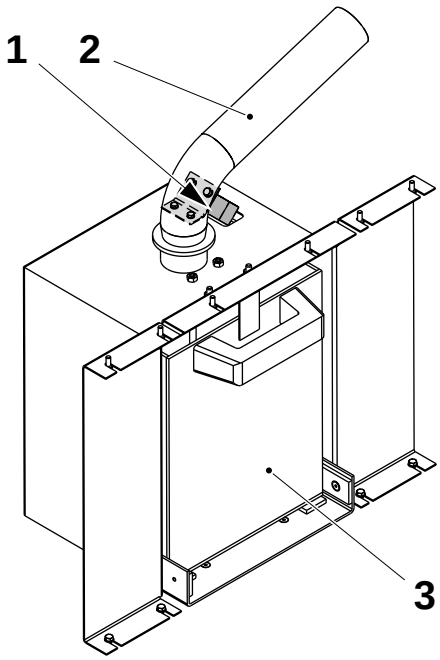

Old variant of waste box

1 Photocell
2 Waste pipe
3 Waste box

TechPub_2614345_0103 - B6114C03en.fm

3.3-2 Waste Box - Set Photocell

Machine Status	Air **OFF** Mains Power **ON**
SPC Reference	1095955-0100 1095955-0200

New Variant of Waste Box

a) Remove the waste box (1).

b) Remove the screw (2) and open the cover (3) on the photocell (4).

c) Make sure that the photocell (4) is set to **PNP** and **L-ON**.

d) Turn the sensitivity potentiometer (5) clockwise to **max** (all the way).

e) Close the cover (3) and tighten the screw (2).

f) Fit the waste box (1).

Note! Both the green LED (6) and the red LED (7) are lit when the photocell (4) beam hits the reflector (8). The red LED (7) goes out when the waste box (1) is full and after ten seconds the alarm pops up on the TPOP.

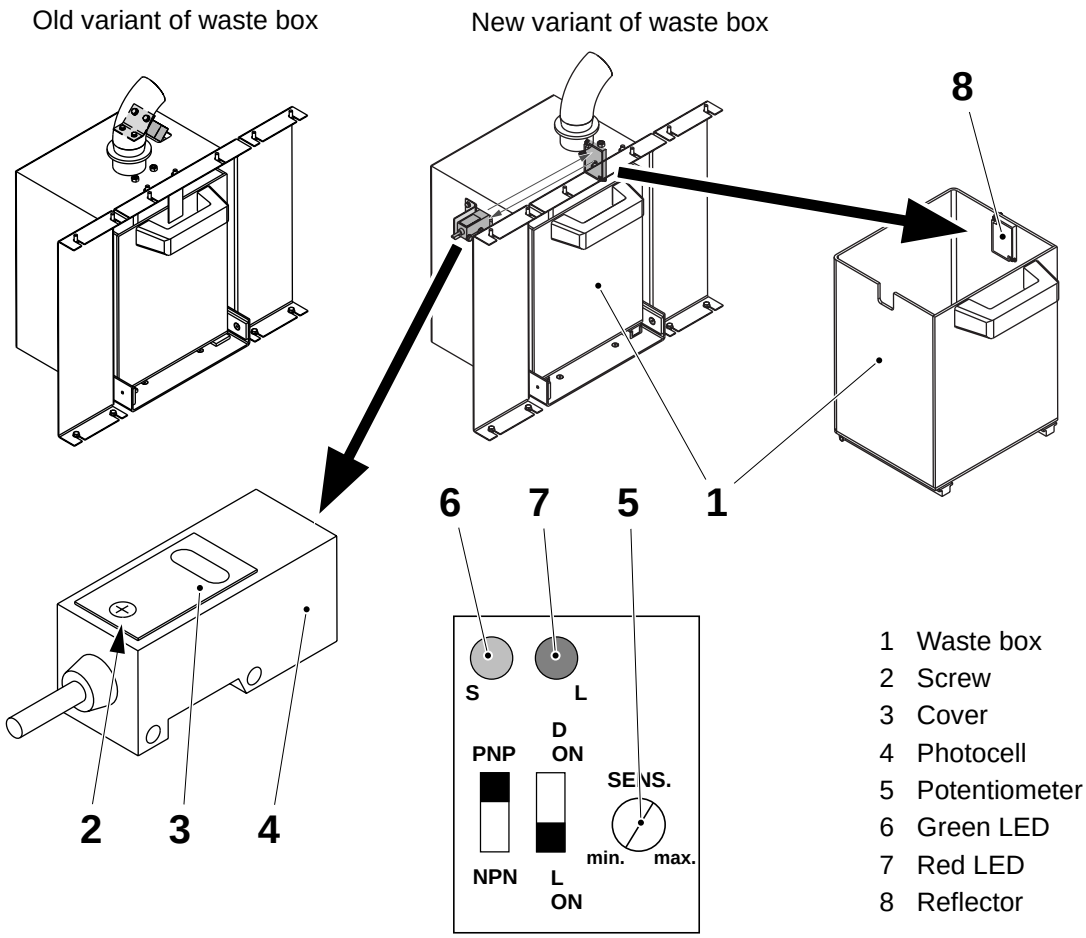

1 Waste box
2 Screw
3 Cover
4 Photocell
5 Potentiometer
6 Green LED
7 Red LED
8 Reflector

(Cont'd)

TechPub_2614345_0103 - B6114C03en.fm

(Cont'd)

Old Variant of Waste Box

a) Remove the waste box (1).

b) Remove the screw (2) and open the cover (3) on the photocell.

c) Make sure that the photocell is set to **PNP** and **D-ON**.

d) Turn the sensitivity potentiometer (4) anti-clockwise (toward **min.**), until the red LED (5) goes out and the green LED (6) lights up.

e) Place a piece of packaging material (7) at the distance **A** from the photocell source.

f) Slowly turn the sensitivity potentiometer (4) clockwise (toward **max.**), until the red LED (5) lights up and the green LED (6) lights up.

g) Close the cover (3) and tighten the screw (2).

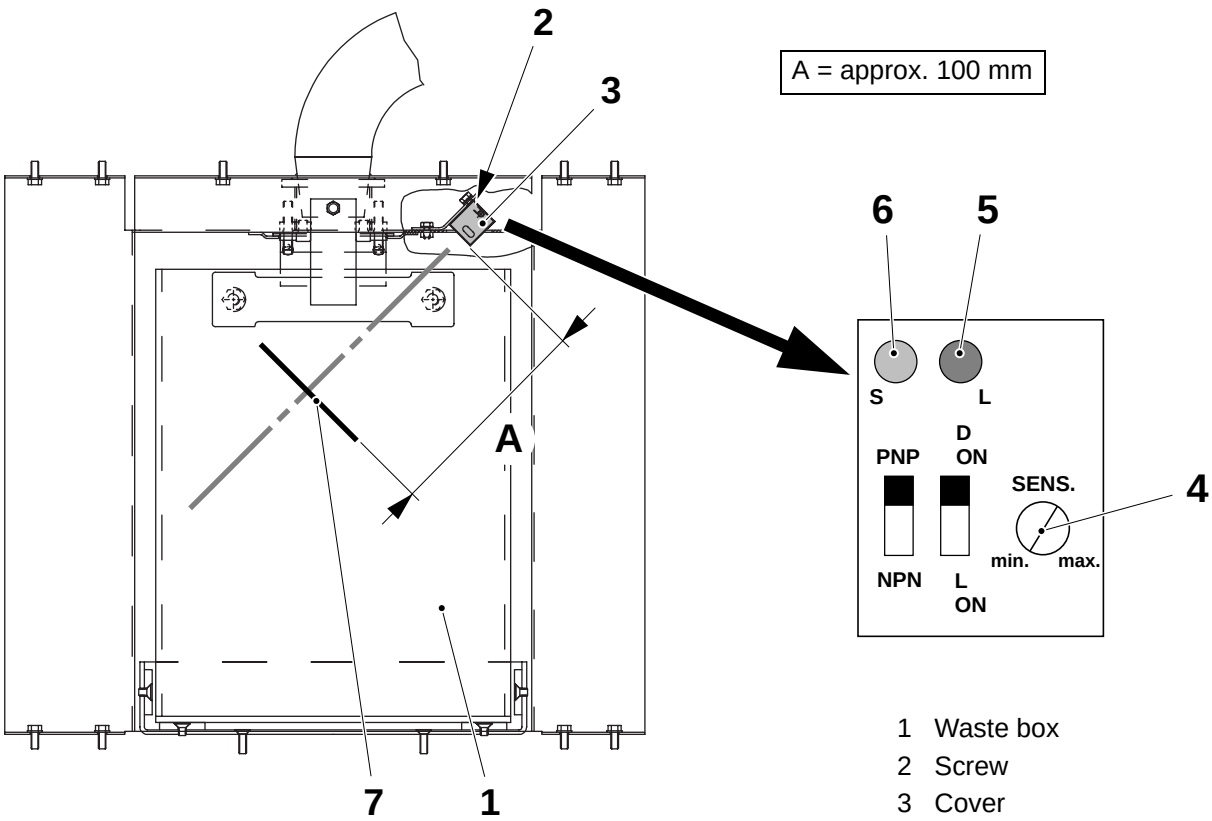

1 Waste box
2 Screw
3 Cover
4 Potentiometer
5 Red LED
6 Green LED
7 Packaging material

TechPub_2614345_0103 - B6114C03en.fm

This page intentionally left blank

TechPub_2614345_0103 - B6114C03en.fm

4 Outer Patch Applicator

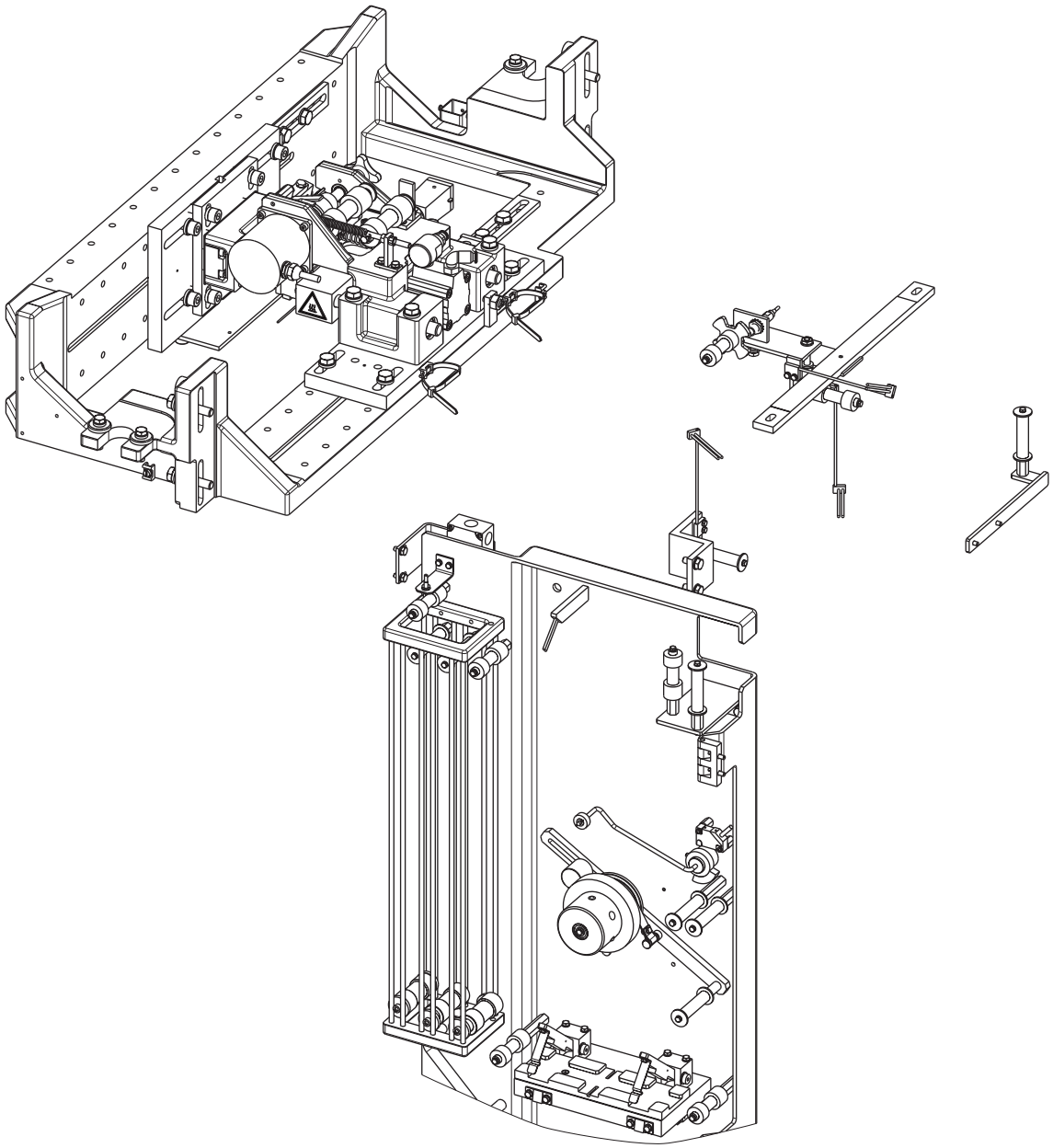

TechPub_2614345_0103 - B6114D00en.fm

Outer Patch Applicator - Description

SPC Reference	1539190-0100 1558112-0100 1549226-0100

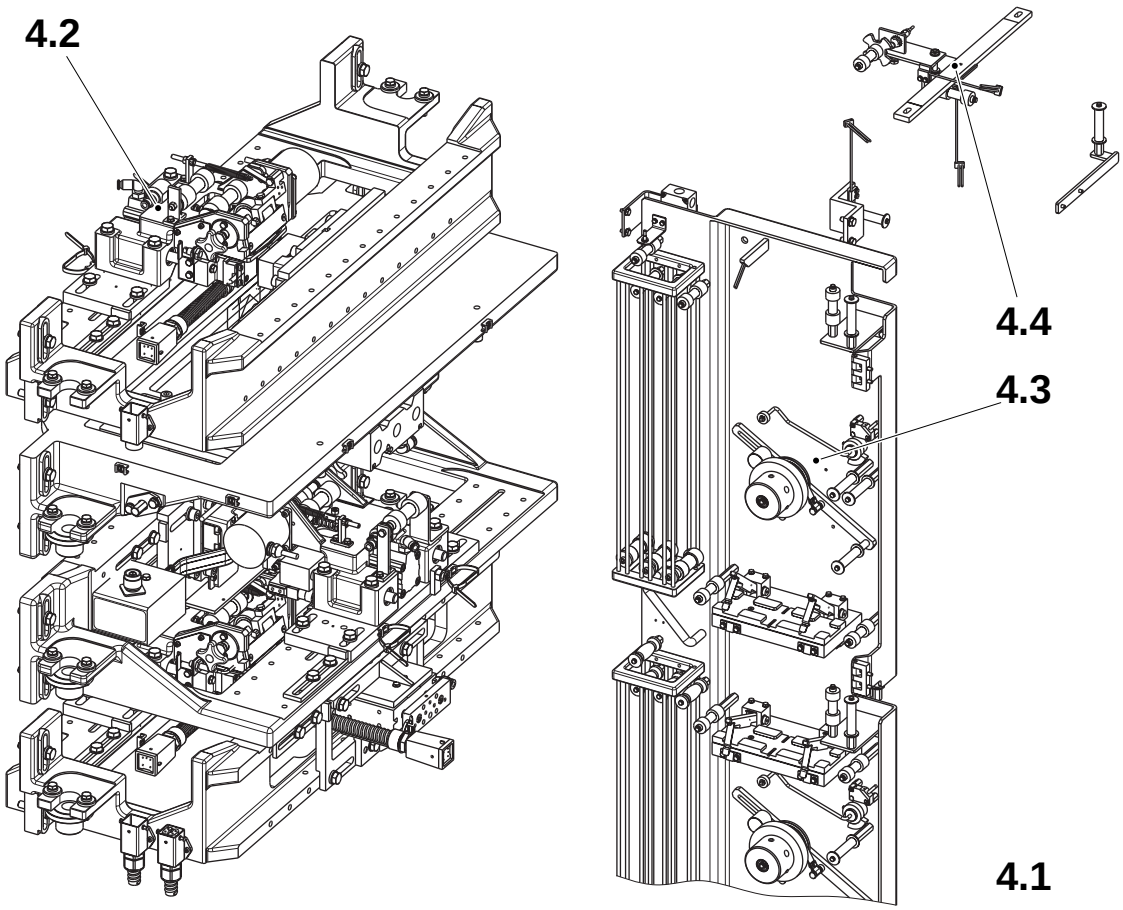

4.1 Setting Flow Chart
4.2 Outer Patch Applicator
4.3 Outer Patch Magazine
4.4 Outer Patch Turning Device

TechPub_2614345_0103 - B6114D00en.fm

4-1 Outer Patch Applicator - Functional Description . . . . . 4 - 5

4.1 Setting Flow Chart . . . . . 4 - 8

4.2 Outer Patch Applicator . . . . . 4 - 9

4.2.1 Outer Patch Feeder . . . . . 4 - 9

4.2.1-1 Outer Patch Feeder - Check Function . . . . . 4 - 9
4.2.1-2 Outer Patch Feeder - Change Flat Knife . . . . . 4 - 11
4.2.1-3 Outer Patch Feeder - Change Window Knife . . . . . 4 - 12
4.2.1-4 Outer Patch Feeder - Check Pivot Plate . . . . . 4 - 14
4.2.1-5 Outer Patch Feeder - Remove . . . . . 4 - 15
4.2.1-6 Outer Patch Feeder - Set Window Knife . . . . . 4 - 16
4.2.1-7 Outer Patch Feeder - Change One-way Bearing . . . . . 4 - 18
4.2.1-8 Outer Patch Feeder - Check Sealing Plate . . . . 4 - 19
4.2.1-9 Outer Patch Feeder - Set Sealing Plate . . . . . 4 - 20
4.2.1-10 Outer Patch Feeder - Check Guides and Linear Bearings . . . . . 4 - 22
4.2.1-11 Outer Patch Feeder - Change Linear Bearings . . . . . 4 - 23
4.2.1-12 Outer Patch Feeder - Change Bushings . . . . . 4 - 24
4.2.1-13 Outer Patch Feeder - Change Cylinder . . . . . 4 - 27
4.2.1-14 Outer Patch Feeder - Set Strip Feed . . . . . 4 - 28
4.2.1-15 Outer Patch Feeder - Set Position . . . . . 4 - 29
4.2.1-16 Outer Patch Feeder - Set Cushion Cylinder . . . . . 4 - 30
4.2.1-17 Outer Patch Feeder - Set Proximity Switch . . . . . 4 - 32
4.2.1-18 Outer Patch Feeder - Change Shims . . . . . 4 - 33
4.2.1-19 Outer Patch Feeder - Change Feed Roller . . . . . 4 - 35
4.2.1-20 Outer Patch Feeder - Change Heater and Thermocouple . . . . . 4 - 36
4.2.1-21 Outer Patch Feeder - Change Stepper Motor . . . . . 4 - 38

4.2.2 Outer Patch Counter Jaw . . . . . 4 - 39

4.2.2-1 Outer Patch Counter Jaw - Remove . . . . . 4 - 39

TechPub_2614345_0103 - B6114D00en.fm

4.2.2-2 Outer Patch Counter Jaw - Check Sealing Plate . . . . . 4 - 40
4.2.2-3 Outer Patch Counter Jaw - Change Sealing Plate . . . . . 4 - 41
4.2.2-4 Outer Patch Counter Jaw - Change Cushion Cylinder . . . . . 4 - 42
4.2.2-5 Outer Patch Counter Jaw - Check Position . . . . . 4 - 43

4.3 Outer Patch Magazine . . . . . 4 - 44

4.3-1 Outer Patch Magazine - Check . . . . . 4 - 44
4.3-2 Outer Patch Magazine - Set Proximity Switch . . . . . 4 - 46
4.3-3 Outer Patch Magazine - Set Strip Tension . . . . . 4 - 47
4.3-4 Outer Patch Magazine - Change Bobbin Holder Bearings . . . . . 4 - 48
4.3-5 Outer Patch Magazine - Set Bobbin Holder Spring Loaded Screw . . . . . 4 - 49
4.3-6 Outer Patch Magazine - Set Black Tape Sensor . . . . . 4 - 50

4.3.1 Splicing Table . . . . . 4 - 51

4.3.1-1 Splicing Table - Check Function . . . . . 4 - 51
4.3.1-2 Splicing Table - Set Lock . . . . . 4 - 52

4.4 Outer Patch Turning Device . . . . . 4 - 53

4.4-1 Outer Patch Turning Device - Check . . . . . 4 - 53
4.4-2 Outer Patch Turning Device - Set Rotation Monitor Proximity Switch . . . . . 4 - 54

TechPub_2614345_0103 - B6114D00en.fm

4-1 Outer Patch Applicator - Functional Description

SPC Reference	1539190-0100 1558112-0100 1549226-0100

Note! The outer patch applicator is only used for packages with the holes 48 or 72.

When the filling machine pulls packaging material the following action occurs:

- the PLC begins the machine cycle
- the PLC sends a signal to the TMCC card to start indexing
- the TMCC card sends the pulses to the stepper drive card.

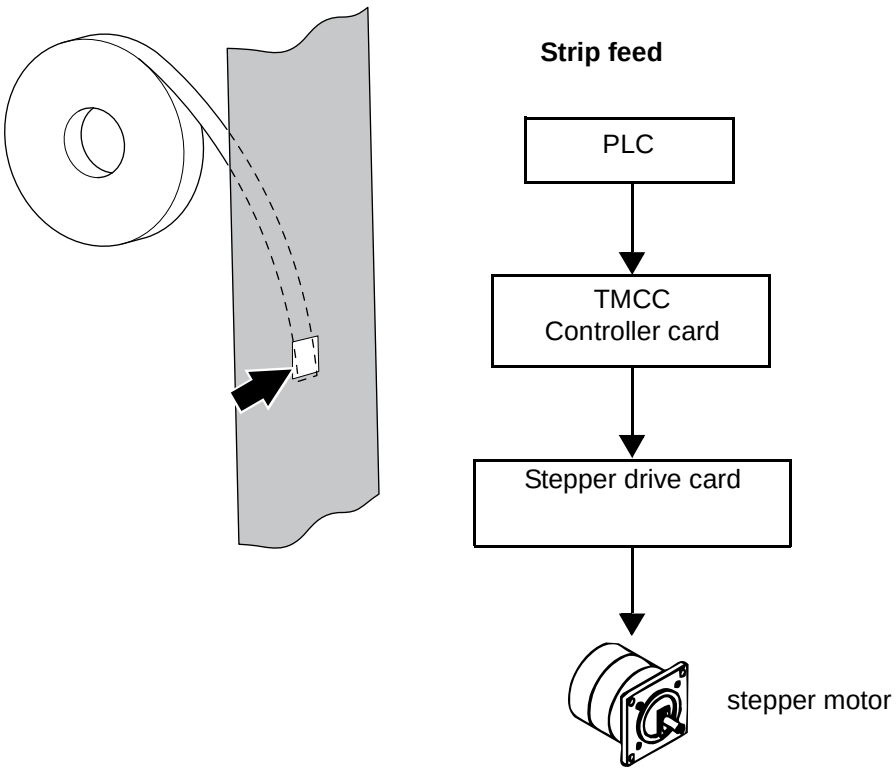

(Cont'd)

TechPub_2614345_0103 - B6114D00en.fm

(Cont'd)

During the PullTab machine cycle, the PLC signals the solenoid valve to extend the cylinder. This action cuts the strip and applies it to the packaging material.

When the proper strip sealing time is passed, the PLC signals the solenoid valve to pull back the cylinder.

Cutting and applying

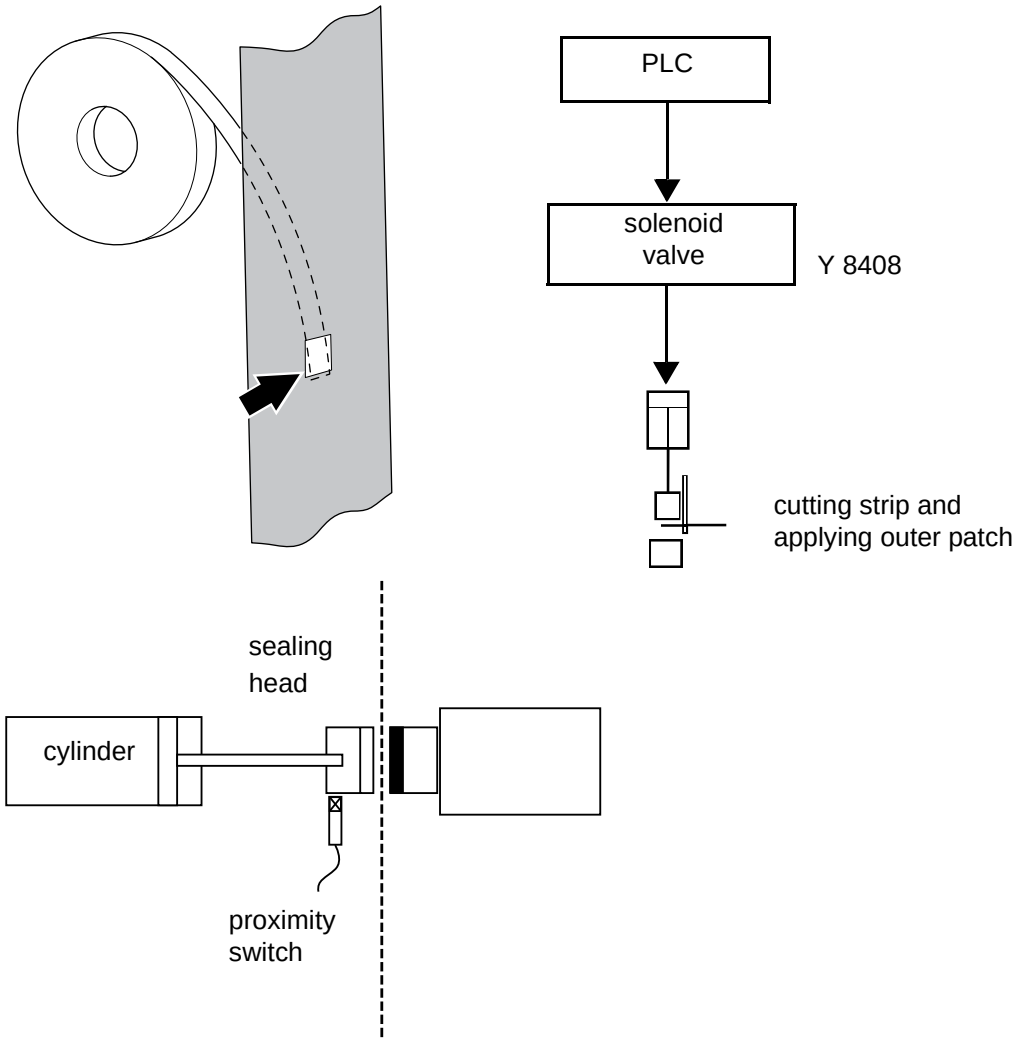

TechPub_2614345_0103 - B6114D00en.fm

(Cont'd)

(Cont'd)

During PRODUCTION:

- a warning, blue alarm, is activated when the strip supply is low. If the supply is not restored within five minutes then the warning becomes an alarm instead
- an alarm is activated when the strip does not move (rotation monitor)
- an alarm is activated if the proper proximity switch does not activate when the outer patch jaw cylinder extends.

If any of the above alarms activates, both the PullTab unit and the filling machine stop in SHORT STOP mode.

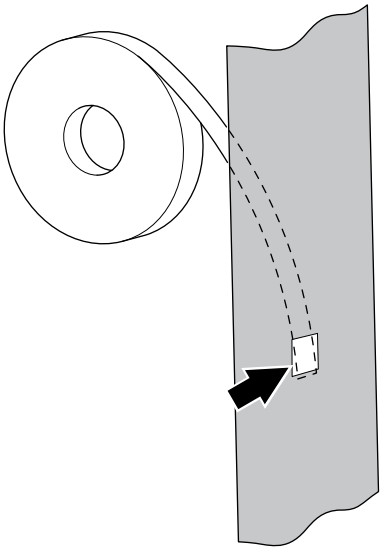

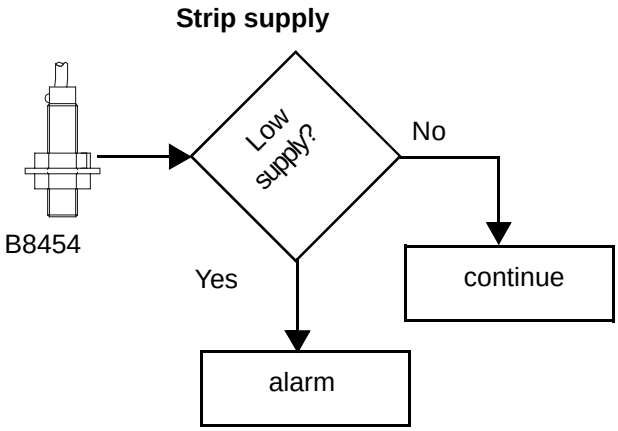

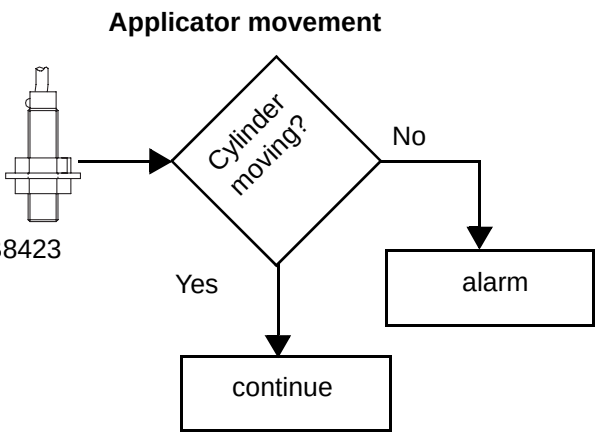

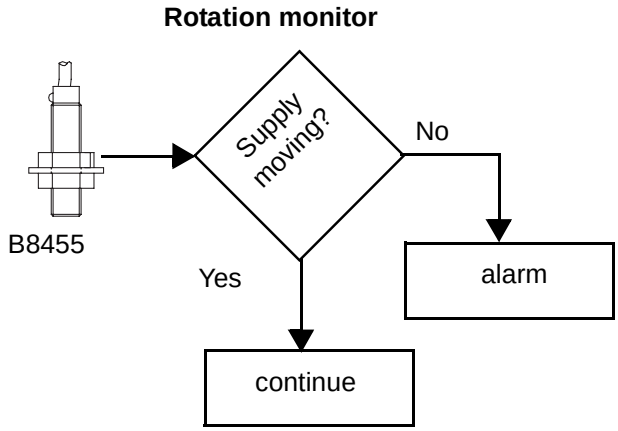

TechPub_2614345_0103 - B6114D00en.fm

4.1 Setting Flow Chart

The following flow chart shows the order in which the various components must be set up.

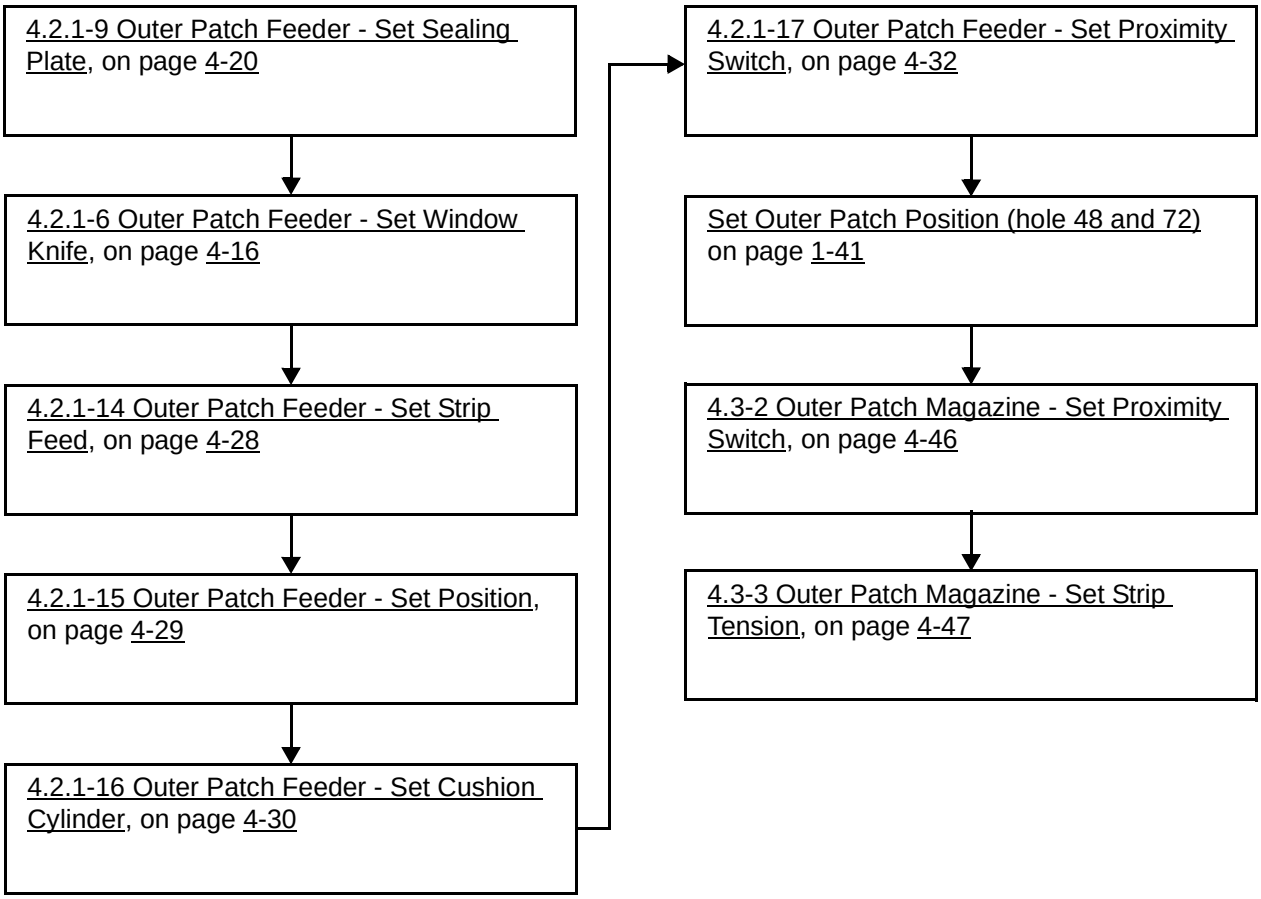

TechPub_2614345_0103 - B6114D01en.fm

4.2 Outer Patch Applicator

SPC Reference	1539190-0100

Note! The outer patch applicator is only used for packages with the holes 48 or 72.

4.2.1 Outer Patch Feeder

4.2.1-1 Outer Patch Feeder - Check Function

Machine Status	Air **OFF** Mains Power **OFF**
Consumables	Cleaning compound code G2
SPC Reference	1539193-0100

a) Check the surface of the one way bearing (1) for damage. Change as required, see 4.2.1-7 Outer Patch Feeder - Change One-way Bearing.

b) Make sure the one way bearing (1) and the roller (2) are working. It should only be possible to turn them in the outer patch feeding direction. Change as required, see 4.2.1-7 Outer Patch Feeder - Change One-way Bearing.

c) Make sure the steer plate (3) is not jammed with outer patch strip. Clean any build-up of polyethylene from the steer plate with cleaning compound, (code G2).

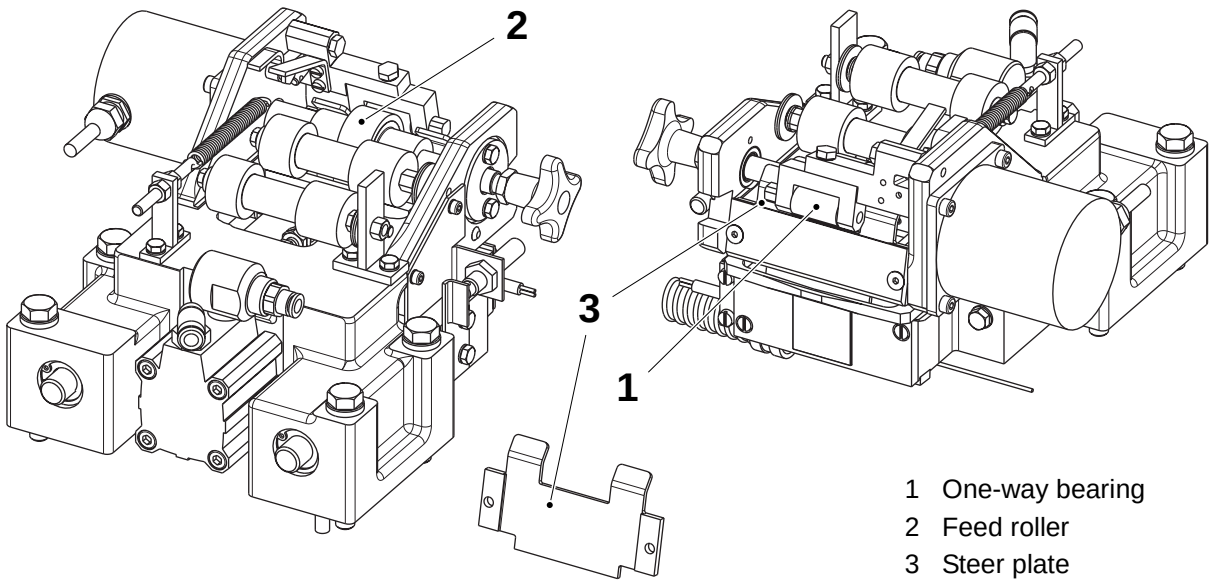

1 One-way bearing
2 Feed roller
3 Steer plate

(Cont'd)

TechPub_2614345_0103 - B6114D02en.fm

(Cont'd)

d) Check the feed roller (2) for damage and its feeding action by turning the feed knob (4) manually. If required, change the feed roller and set the strip feed, see 4.2.1-19 Outer Patch Feeder - Change Feed Roller and 4.2.1-14 Outer Patch Feeder - Set Strip Feed.

e) Check the strip feeding action during PRODUCTION.

f) Make sure there is no polyethylene residue on the surface of the knives and in the space between the flat knife (5) and the sealing plate (6).

g) Check the flat knife (5) and the window knife (7) for wear and/or damage, see 4.2.1-2 Outer Patch Feeder - Change Flat Knife.

h) Make sure the edges of the patch are cut cleanly. If required, set the window knife, see 4.2.1-6 Outer Patch Feeder - Set Window Knife.

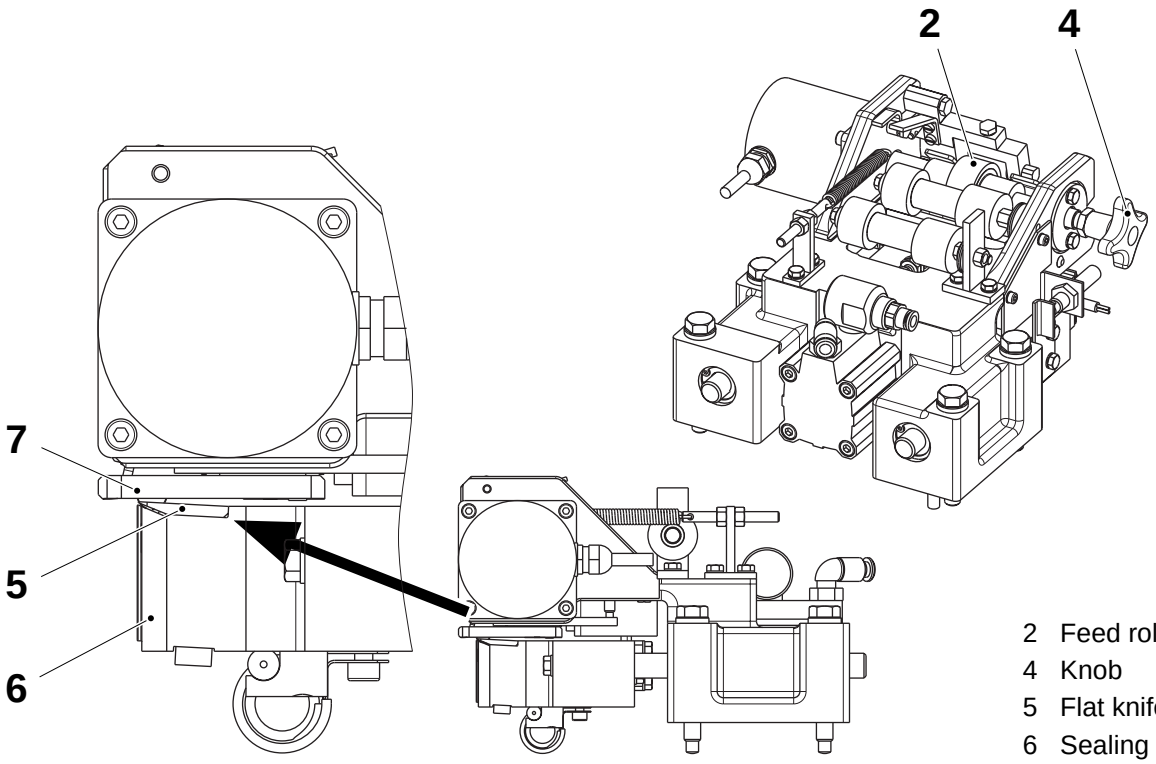

2 Feed roller
4 Knob
5 Flat knife
6 Sealing plate
7 Window knife

TechPub_2614345_0103 - B6114D02en.fm

4.2.1-2 Outer Patch Feeder - Change Flat Knife

Machine Status	Air **OFF** Mains Power **OFF**
SPC Reference	1539193-0100

WARNING
Risk of burns!
The sealing jaw may be hot.

a) Remove the three screws (1) and loosen the electrical connections.
b) Remove the two screws (2) and the Torlon block (3).
c) Remove the screws (4).
d) Change the flat knife (5).
e) Fit the screws (4).
f) Set the flat knife (5), see 4.2.1-9 Outer Patch Feeder - Set Sealing Plate.
g) Fit the two screws (2) and the Torlon block (3).
h) Fit the electrical connections by means of the three screws (1).

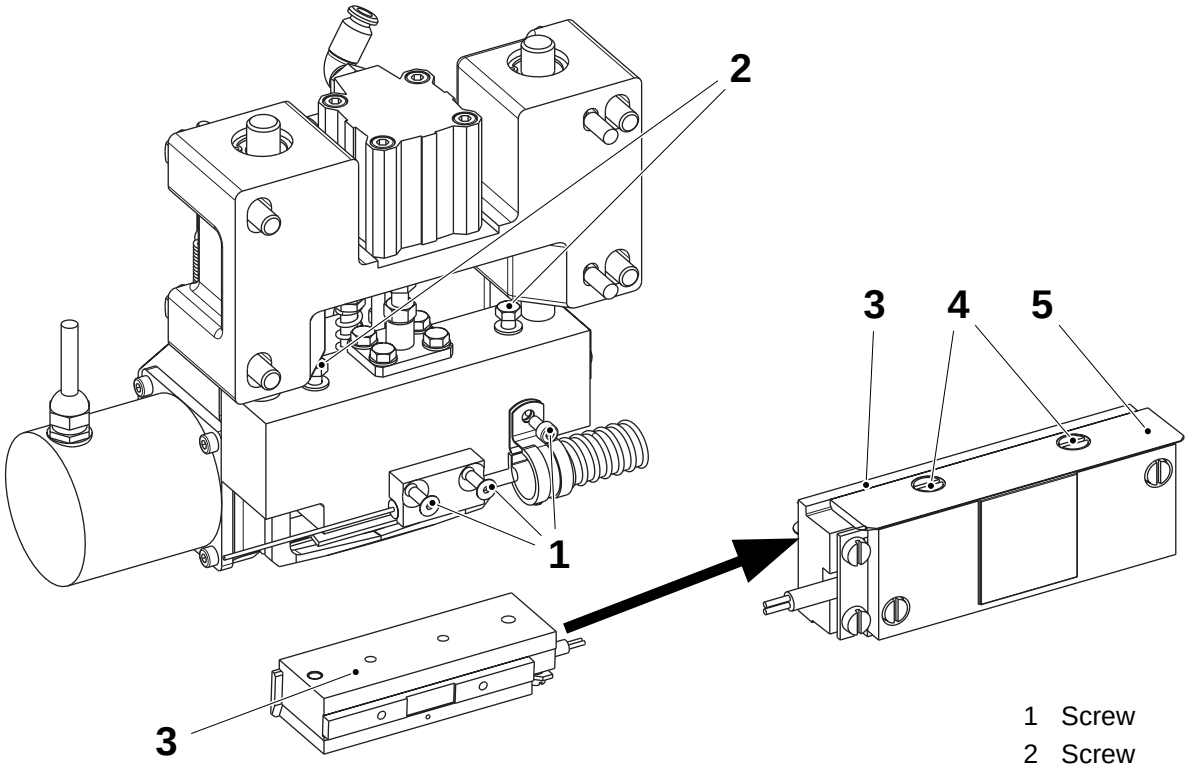

1 Screw
2 Screw
3 Torlon block
4 Screw
5 Flat knife

TechPub_2614345_0103 - B6114D02en.fm

4.2.1-3 Outer Patch Feeder - Change Window Knife

Machine Status	Air **OFF** Mains Power **OFF**
SPC Reference	1539193-0100

WARNING
Risk of burns!
The sealing jaw may be hot.

a) Remove the feeder, see 4.2.1-5 Outer Patch Feeder - Remove.
b) Remove the flag (1) by means of the screws (2).
c) Remove the four screws (3) and the bracket (4).
d) Release the springs (5) by loosening the nut (6)
e) Loosen the grub screw (7) and remove the shaft (8).

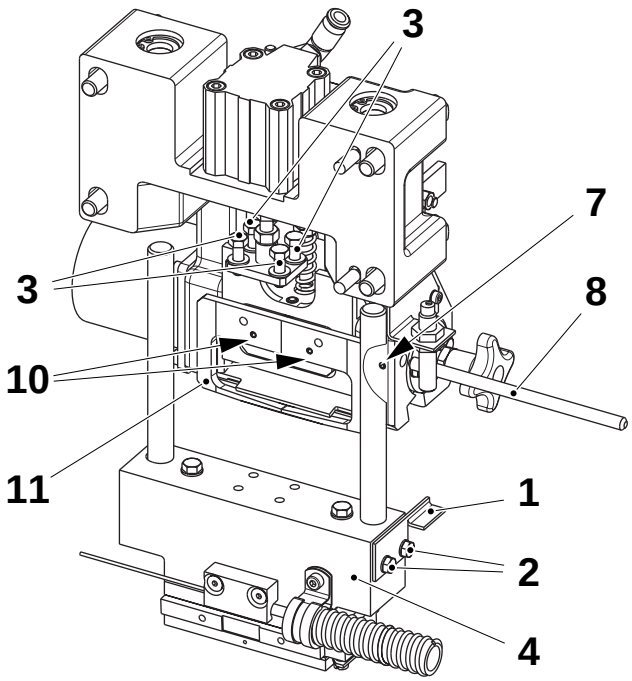

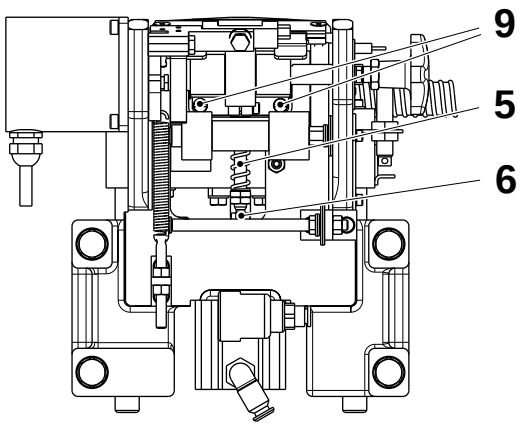

1	Flag	6	Nut
2	Screw	7	Grub screw
3	Screw	8	Shaft
4	Bracket	9	Screw
5	Spring	10	

(Cont'd)

TechPub_2614345_0103 - B6114D02en.fm

(Cont'd)

f) Remove the screws (9) and the two pins (10).

g) Change the window knife (11).

CAUTION
Risk of damage to the equipment!
When changing the window knife (11), make sure that the bevelled side is the side that comes into contact with the flat knife.

h) Assemble in the reverse order.

i) Set the window knife (11), see 4.2.1-6 Outer Patch Feeder - Set Window Knife.

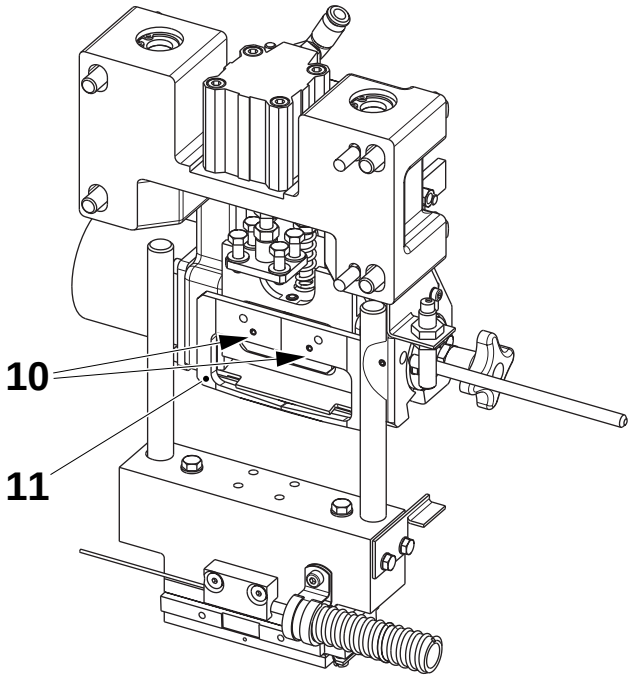

11 Pin
12 Window knife

TechPub_2614345_0103 - B6114D02en.fm

4.2.1-4 Outer Patch Feeder - Check Pivot Plate

Machine Status	Air **OFF** Mains Power **OFF**
SPC Reference	1539193-0100

WARNING
Risk of burns!
The sealing jaw may be hot.

a) Remove the feeder, see 4.2.1-5 Outer Patch Feeder - Remove.
b) Remove the screws (1) and the bracket (2).
c) Loosen the grub screw (3) and remove the shaft (4).
d) Make sure the pivot plate (5) is free to rotate without radial play.
e) If not, change the pivot plate shims, see 4.2.1-18 Outer Patch Feeder - Change Shims.
f) Assemble in the reverse order.

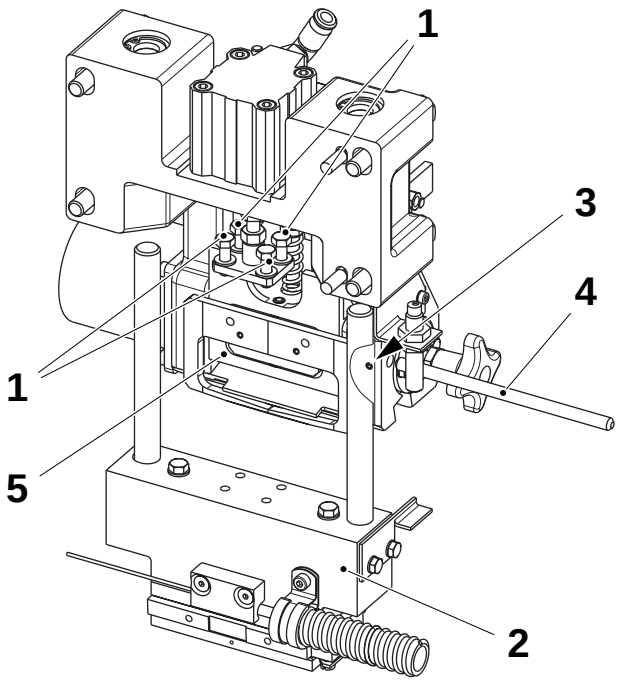

1 Screw
2 Bracket
3 Grub screw
4 Shaft
5 Pivot plate

TechPub_2614345_0103 - B6114D02en.fm

4.2.1-5 Outer Patch Feeder - Remove

Machine Status	Air **OFF** Mains Power **OFF**
SPC Reference	1539193-0100

a) Disconnect the stepper motor connector (1).

b) Disconnect the air hoses (2).

c) Remove the proximity switch (3).

d) Remove the screws (4) and the outer patch feeder (5).

e) Assemble in the reverse order.

f) Set the outer patch feeder (5), see 4.2.1-15 Outer Patch Feeder - Set Position.

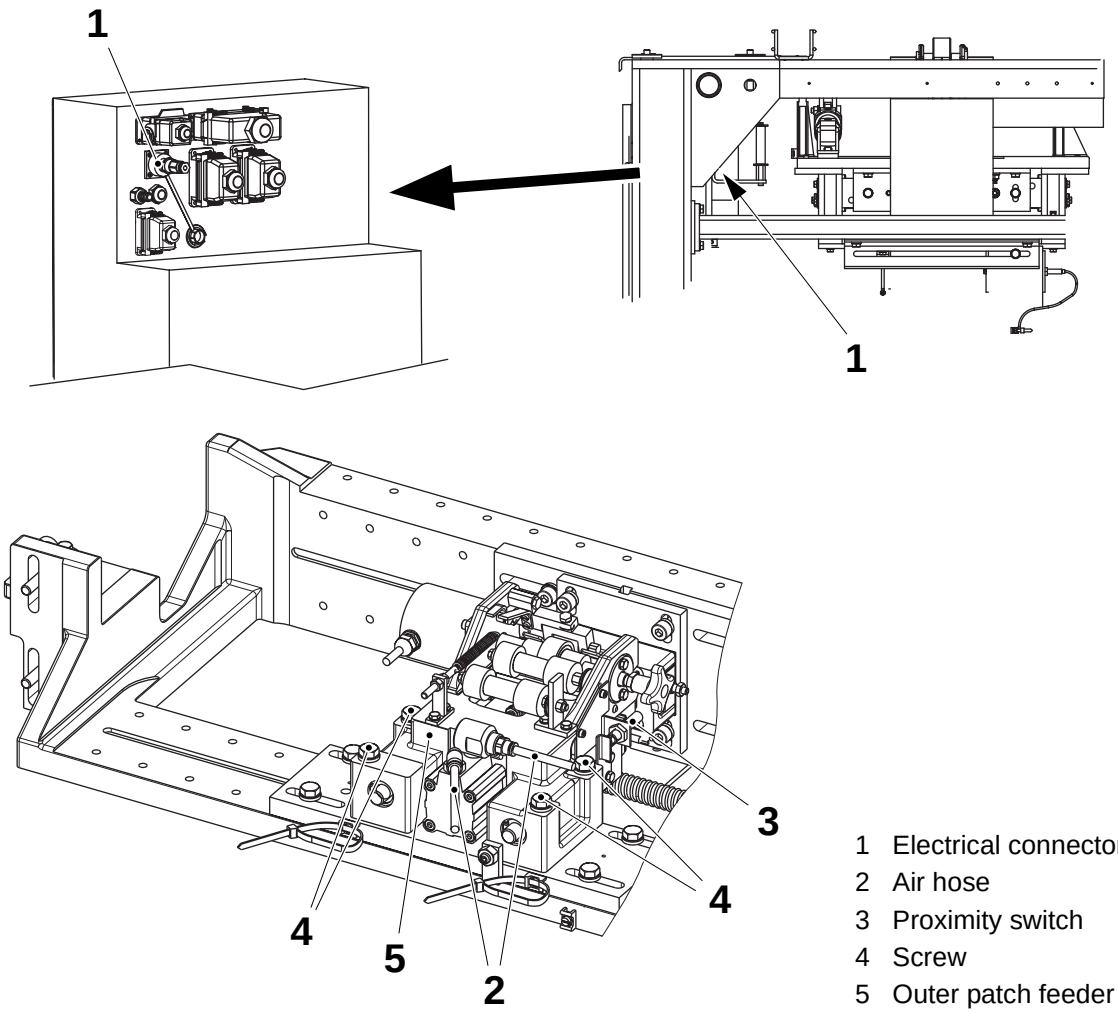

1 Electrical connector
2 Air hose
3 Proximity switch
4 Screw
5 Outer patch feeder

TechPub_2614345_0103 - B6114D02en.fm

4.2.1-6 Outer Patch Feeder - Set Window Knife

Machine Status	Air **OFF** Mains Power **OFF**
SPC Reference	1539193-0100

WARNING
Risk of burns!
The sealing jaw may be hot.

This setup may be performed on a work bench.

a) Remove the feeder, see 4.2.1-5 Outer Patch Feeder - Remove.

b) Adjust the nuts (1) until the spring (2) starts to compress.

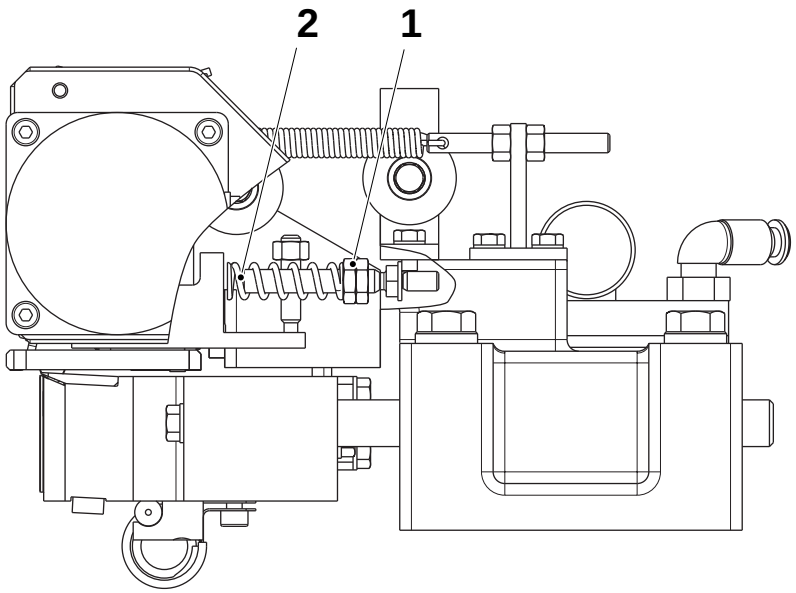

1 Nut
2 Spring

(Cont'd)

TechPub_2614345_0103 - B6114D02en.fm

(Cont'd)

c) Set the distance **A** between the surface of the sealing plate (3) and the outside edge of the window knife (4).

d) Keep the distance **A** and adjust the screw (5) until the window knife (4) touches the outside edge of the flat knife (6) without any play.

e) Adjust the nuts (1) to set the distance **B** between the nuts.

f) Check the cutting action after setting.

A = 6 ±0.5 mm

B = 12 ±2 mm

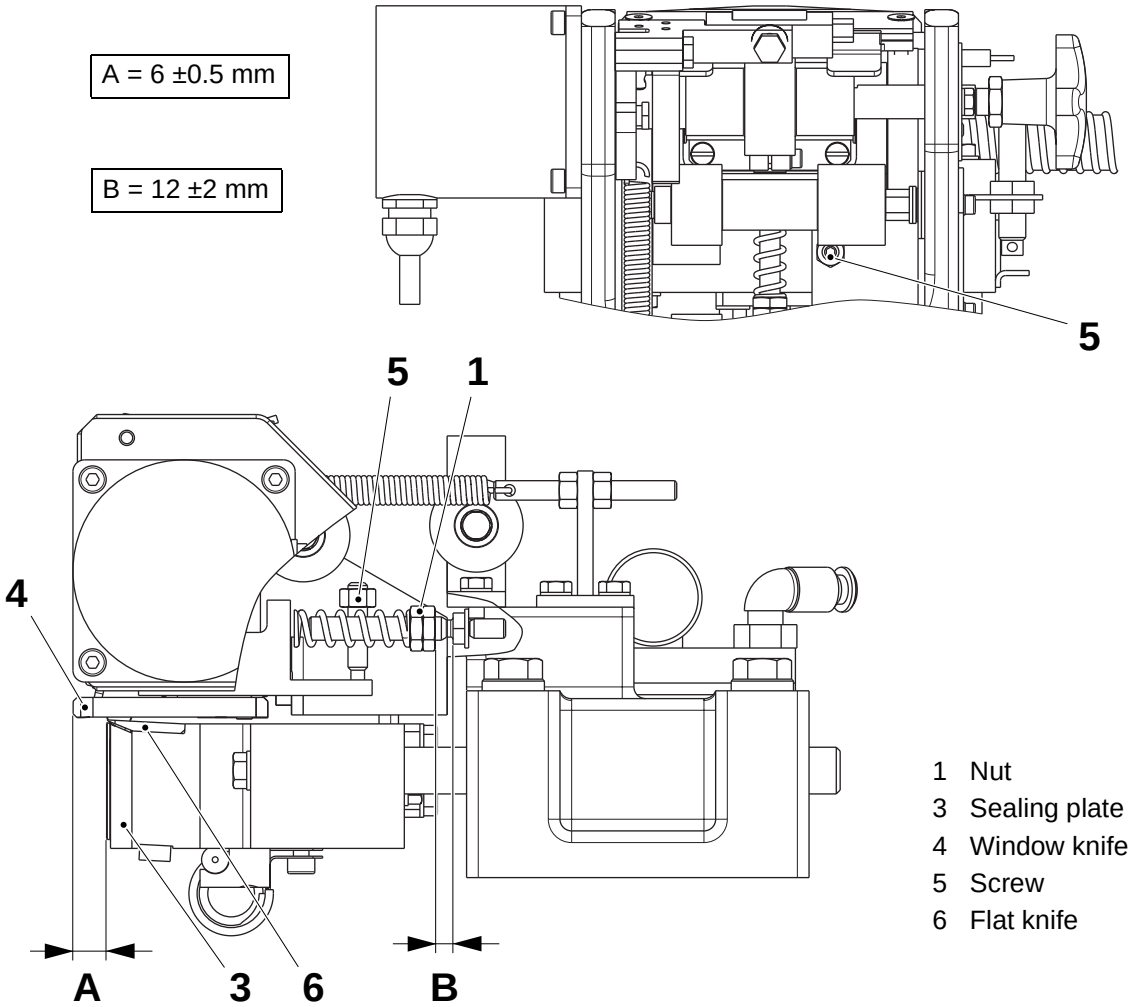

1 Nut
3 Sealing plate
4 Window knife
5 Screw
6 Flat knife

TechPub_2614345_0103 - B6114D02en.fm

4.2.1-7 Outer Patch Feeder - Change One-way Bearing

Machine Status	Air **OFF** Mains Power **OFF**
SPC Reference	1539193-0100

WARNING
Risk of burns!
The sealing jaw may be hot.

a) Loosen the shaft (1). Push the catches (2) to disengage the one-way bearing (3) and the feed roller (4).

b) Remove the shaft (1) and the one-way bearing (3).

c) Change the one-way bearing (3) and assemble in the reverse order.

Note! Make sure the one-way bearing (3) rotates in the patch (5) feeding direction.

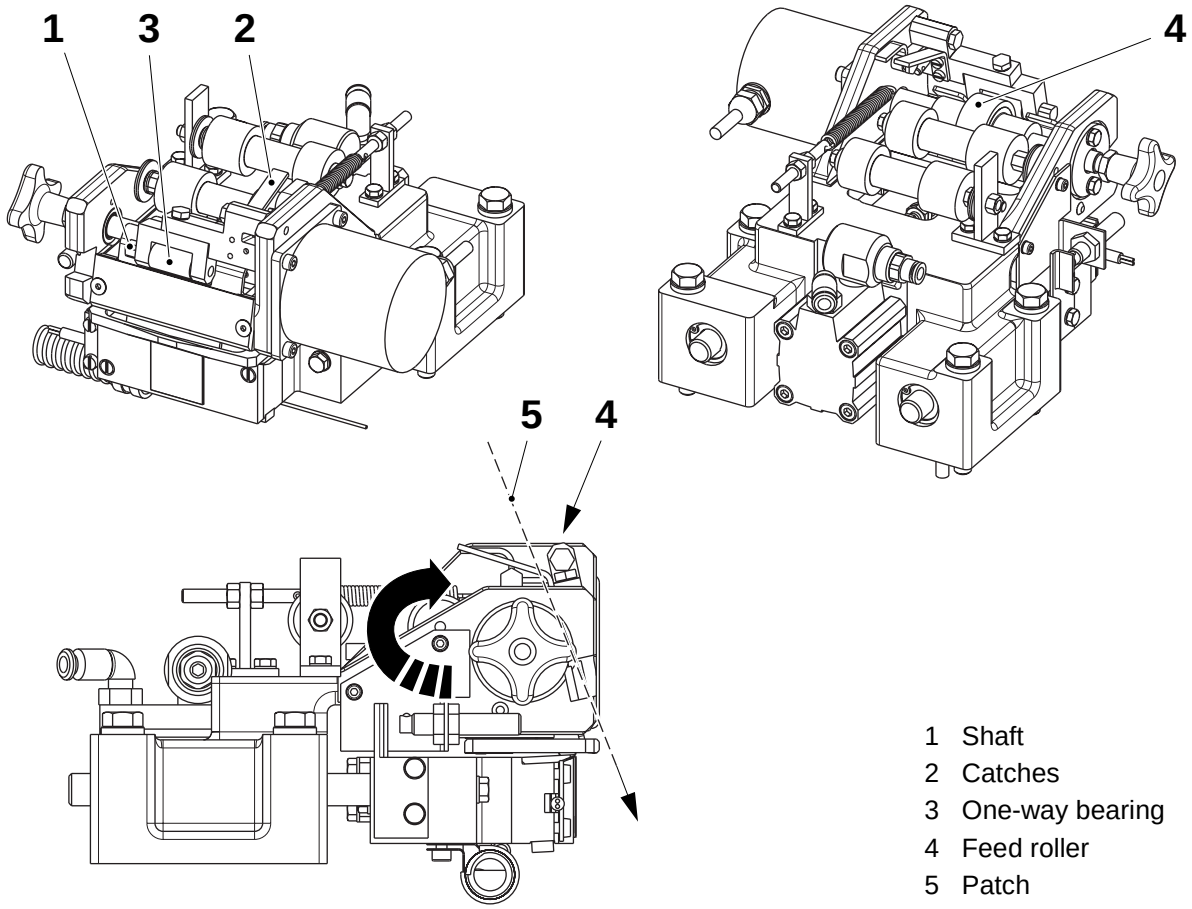

1 Shaft
2 Catches
3 One-way bearing
4 Feed roller
5 Patch

TechPub_2614345_0103 - B6114D02en.fm

4.2.1-8 Outer Patch Feeder - Check Sealing Plate

Machine Status	Air **OFF** Mains Power **OFF**
Consumables	Heat transfer TP No.90298-33
SPC Reference	1539193-0100

WARNING
Risk of burns!
The sealing jaw may be hot.

a) Remove the two screws (1).
b) Remove the sealing plate (2).
c) Check the surface of the sealing plate (2) for wear and/or scratches. Also check for any residue of polyethylene.
d) Change the sealing plate (2) if damaged or worn.

Note! Apply heat transfer paste to the tip (3) of the thermocouple when assembling.

e) Fit the sealing plate (2) by means of the two screws (1).
f) Set the sealing plate (2), see 4.2.1-9 Outer Patch Feeder - Set Sealing Plate.

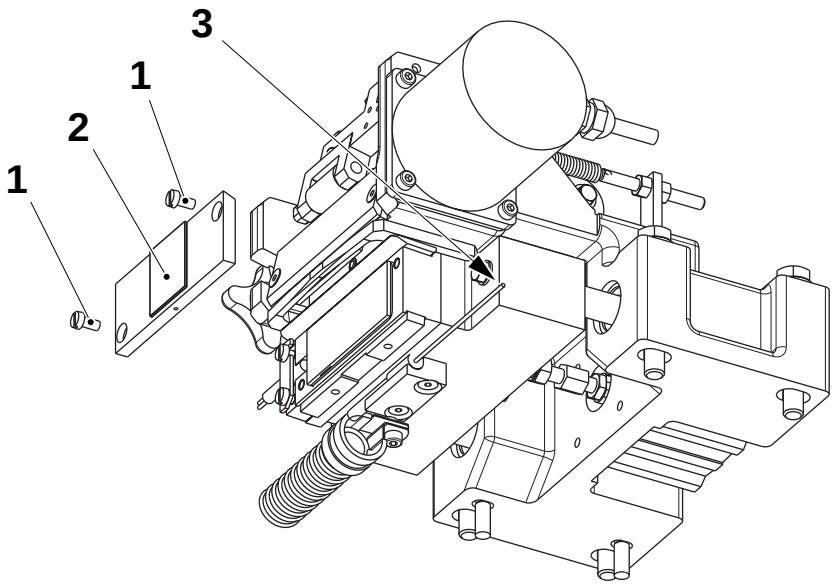

1 Screw
2 Sealing plate
3 Thermocouple tip

TechPub_2614345_0103 - B6114D02en.fm

4.2.1-9 Outer Patch Feeder - Set Sealing Plate

Machine Status	Air **OFF** Mains Power **OFF**
Consumables	Heat transfer TP No.90298-33
SPC Reference	1539193-0100

WARNING
Risk of burns!
The sealing jaw may be hot.

a) Remove the feeder, see 4.2.1-5 Outer Patch Feeder - Remove.
b) Remove the screws (1) and the sealing head electrical group (2).
c) Remove the two screws (3) and the sealing head (4).

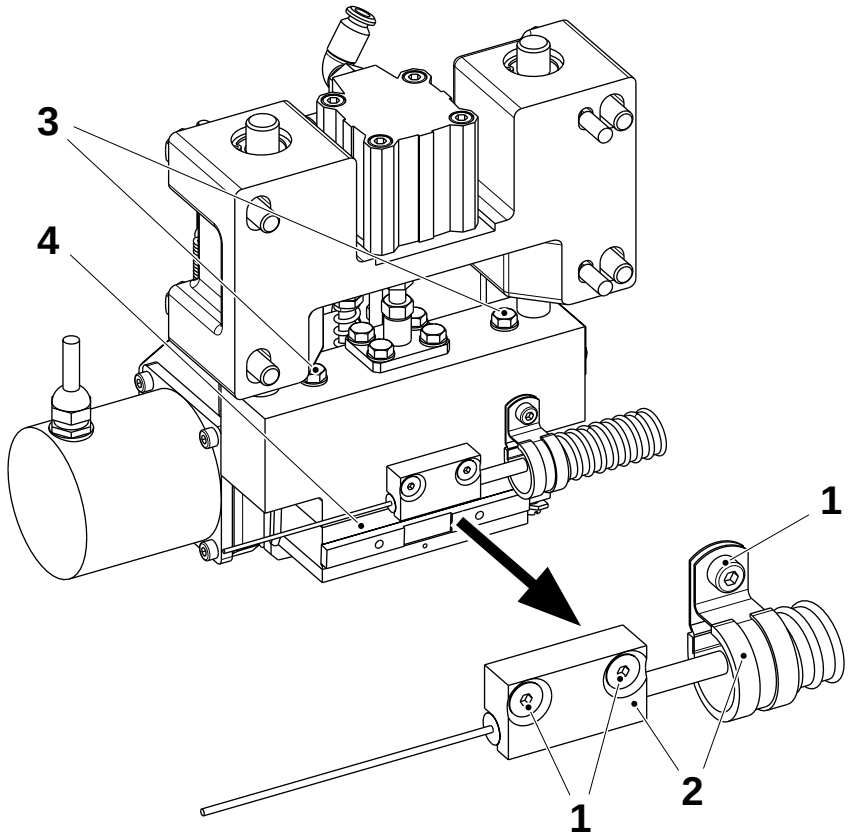

1 Screw
2 Electrical group
3 Screw
4 Sealing head

(Cont'd)

TechPub_2614345_0103 - B6114D02en.fm

(Cont'd)

d) Loosen the screws (5).

e) Set the distance **A** between the top of the flat knife (6) and the sealing plate (7). If required, adjust with shims (8).

f) Tighten the screws (5) and loosen the screws (9).

g) Set the distance **B** between the sealing plate (7) and the flat knife (6) with the aid of a feeler gauge.

h) Tighten the screws (9).

Note! Make sure the tip of the thermocouple (10) is firmly in place within the sealing plate (7) before turning the power supply **ON**.

i) Apply a heat transfer compound to the tip of the thermocouple (10).

j) Assemble in the reverse order.

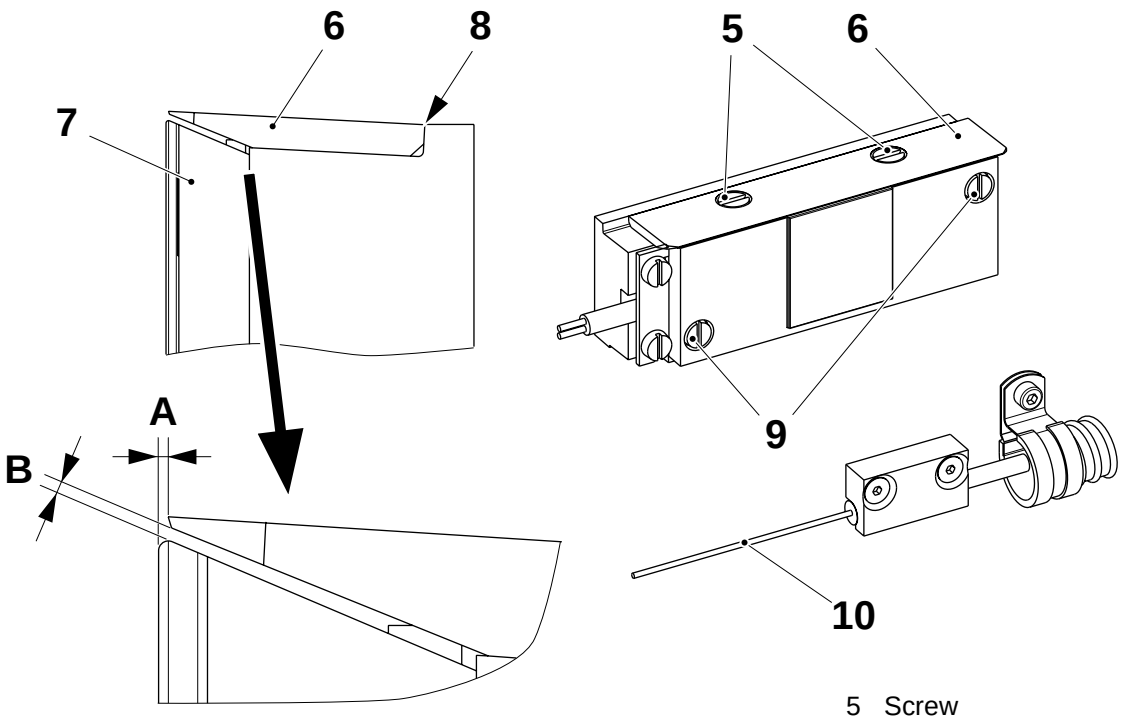

A = 0 - 0.1 mm
B = 0.1 - 0.15 mm

5 Screw
6 Flat knife
7 Sealing plate
8 Shim
9 Screw
10 Thermocouple

TechPub_2614345_0103 - B6114D02en.fm

4.2.1-10 Outer Patch Feeder - Check Guides and Linear Bearings

Machine Status	Air **OFF** Mains Power **OFF**
SPC Reference	1539193-0100

a) Make sure the bracket (4) moves freely.

b) Remove the feeder, see 4.2.1-5 Outer Patch Feeder - Remove.

c) Remove the flag (1) by means of the screws (2).

d) Remove the four screws (3) and the bracket (4) with the sealing head (5) group.

e) Check the guides (6) for wear and/or damage.

f) Check for wear in the linear bearings (7) by using the guide (6). Check the play with one bearing at a time.

g) Change as required, see 4.2.1-11 Outer Patch Feeder - Change Linear Bearings.

h) Assemble in the reverse order.

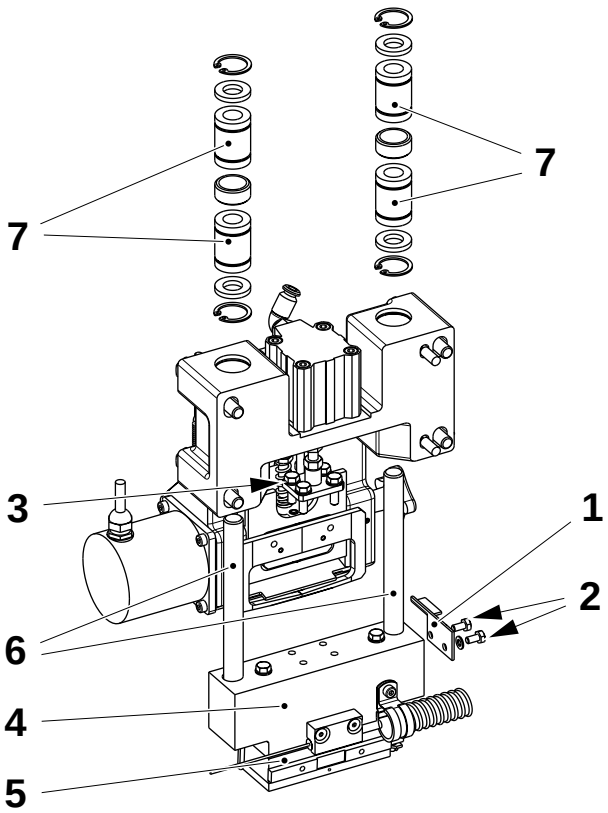

1 Flag
2 Screw
3 Screw
4 Bracket
5 Sealing head
6 Guide
7 Linear bearing

TechPub_2614345_0103 - B6114D02en.fm

4.2.1-11 Outer Patch Feeder - Change Linear Bearings

Machine Status	Air **OFF** Mains Power **OFF**
SPC Reference	1539193-0100

a) Remove the feeder, see 4.2.1-5 Outer Patch Feeder - Remove.

b) Remove the flag (1) by means of the screws (2).

c) Remove the four screws (3) and the bracket (4) with the sealing head (5).

d) Remove the circlips (6) and the seal rings (7) from each side of the linear bearing (8).

e) Pull out the linear bearings (8) and change them.

f) Assemble in the reverse order.

g) Make sure the cylinder (9) reaches the end of its stroke and moves freely.

Note! On both sides of the applicator casting (10), make sure that the distance **A** is obtained between the outer surface of the seal ring (7) and the surface of the applicator casting (10).

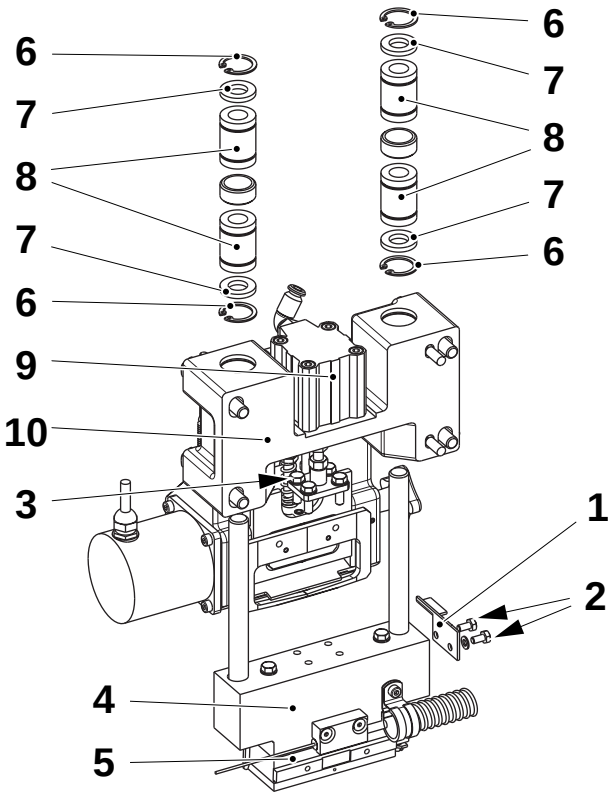

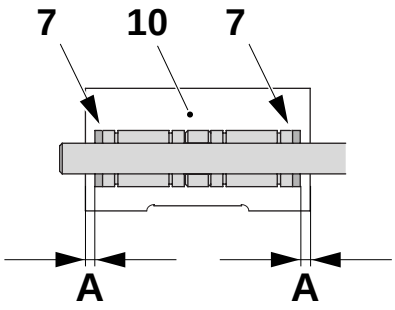

A = 4 mm

1 Flag
2 Screw
3 Screw
4 Bracket
5 Sealing head
6 Circlip
7 Seal ring
8 Linear bearing
9 Cylinder
10 Applicator casting

TechPub_2614345_0103 - B6114D02en.fm

4.2.1-12 Outer Patch Feeder - Change Bushings

Machine Status	Air **OFF** Mains Power **OFF**
SPC Reference	1539193-0100

a) Remove the feeder, see 4.2.1-5 Outer Patch Feeder - Remove.

b) Remove the window knife, see 4.2.1-6 Outer Patch Feeder - Set Window Knife

c) Remove the pivot plate, see 4.2.1-4 Outer Patch Feeder - Check Pivot Plate

d) Loosen the grub screw (1).

e) Remove the shaft (2).

f) Remove the two bushings (3) from the pivot plate (4) and change them if damaged or worn.

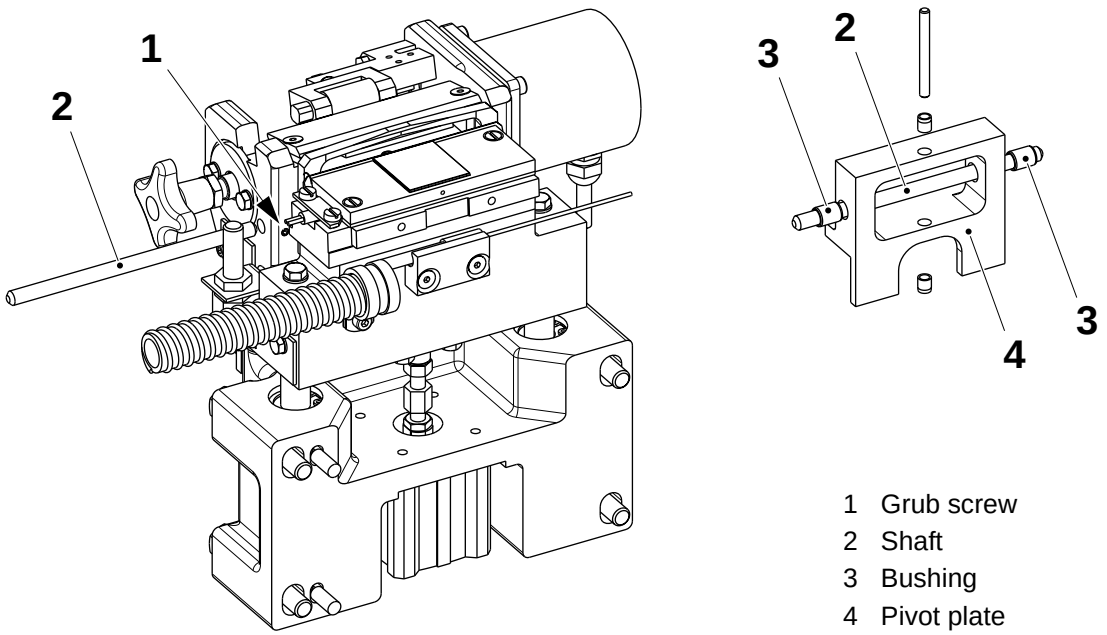

1 Grub screw
2 Shaft
3 Bushing
4 Pivot plate

(Cont'd)

TechPub_2614345_0103 - B6114D02en.fm

(Cont'd)

g) Remove the two screws (5) and the plates (6) and (7).

h) Loosen the clamp screws (8).

i) Remove the shaft (9) and the bushings (10) from the pivot plate (4).

Note! Take care of the shims on the shaft (9). Follow the procedure in 4.2.1-18 Outer Patch Feeder - Change Shims when assembling the shims.

j) Change the bushings (10) if damaged or worn.

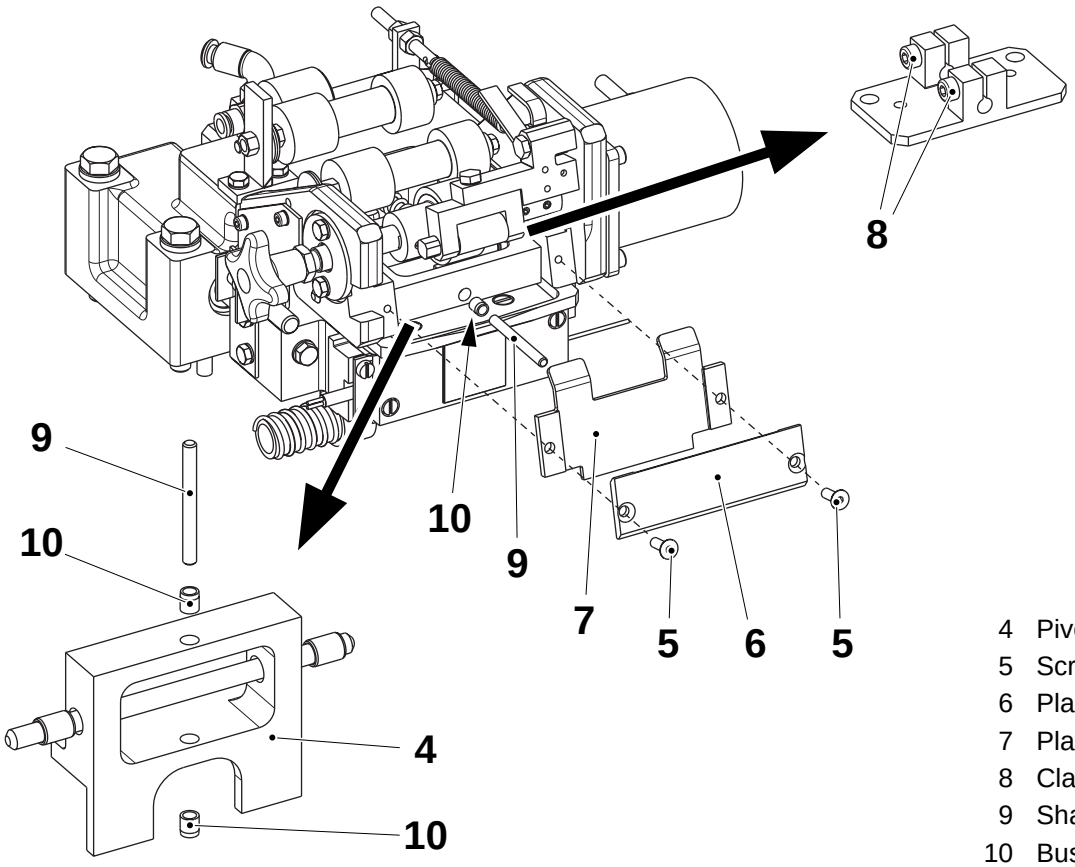

4 Pivot plate
5 Screw
6 Plate
7 Plate
8 Clamp screw
9 Shaft
10 Bushing

(Cont'd)

TechPub_2614345_0103 - B6114D02en.fm

(Cont'd)

k) Remove the knob (11) and the nut (12).
l) Remove the two screws (13) and the flange (14).
m) Remove the bushing (15) from the flange (14).
n) Change the bushing (15) if damaged or worn.
o) Assemble in the reverse order.

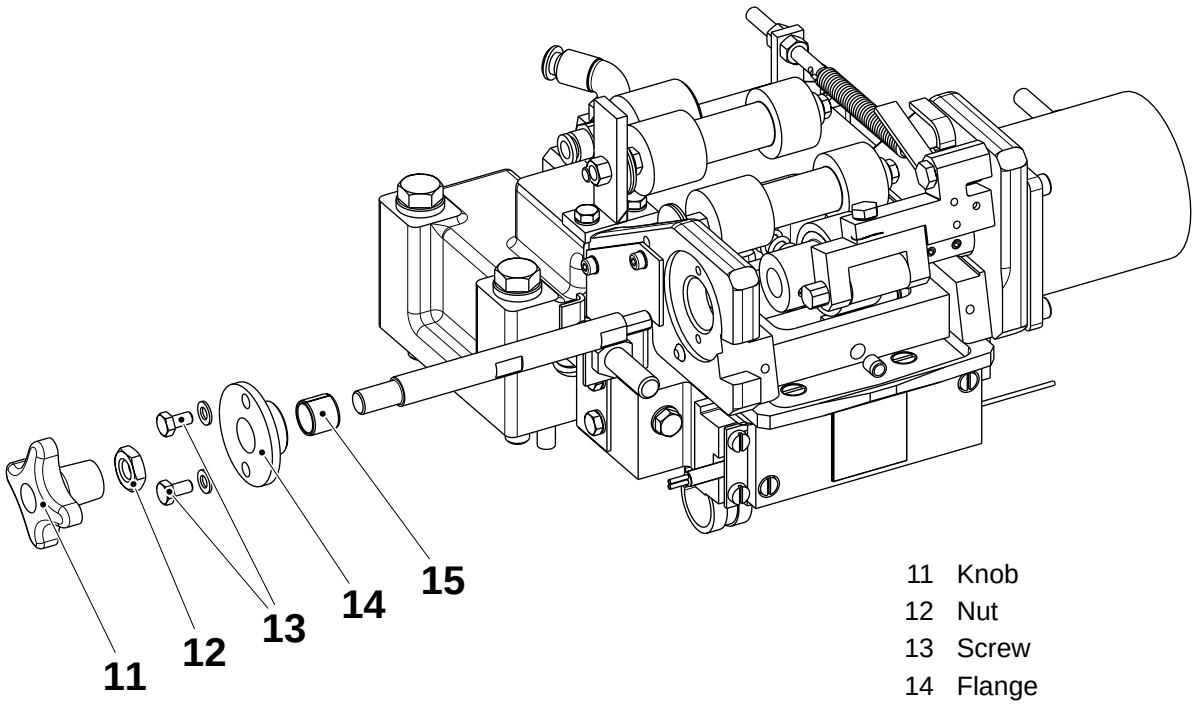

11 Knob
12 Nut
13 Screw
14 Flange
15 Bushing

TechPub_2614345_0103 - B6114D02en.fm

4.2.1-13 Outer Patch Feeder - Change Cylinder

Machine Status	Air **OFF** Mains Power **OFF**
SPC Reference	1539193-0100

a) Remove the air connections (1).

b) Loosen the screw (2).

c) Remove the four screws (3).

d) Remove the cylinder (4) and change it.

e) Assemble in the reverse order.

f) Set the cushion cylinder, see 4.2.1-16 Outer Patch Feeder - Set Cushion Cylinder.

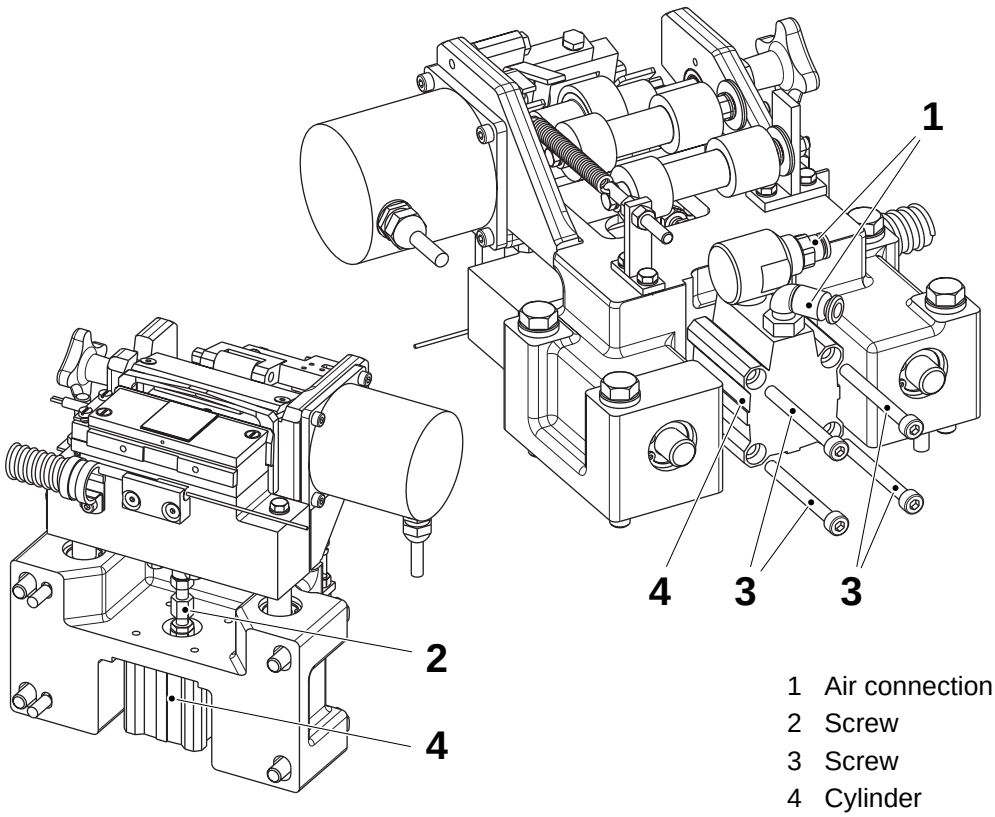

1 Air connection
2 Screw
3 Screw
4 Cylinder

TechPub_2614345_0103 - B6114D02en.fm

4.2.1-14 Outer Patch Feeder - Set Strip Feed

Machine Status	Air **OFF** Mains Power **OFF**
SPC Reference	1539193-0100

a) Place a piece of patch strip between the feed roller (1) and the one-way bearing (2).

b) Loosen the nut (3) and set the distance **A** between the bracket (4) and the screw (5).

c) Adjust the nut (3) until it is not possible to pull the strip backwards.

A = 16 ±1 mm

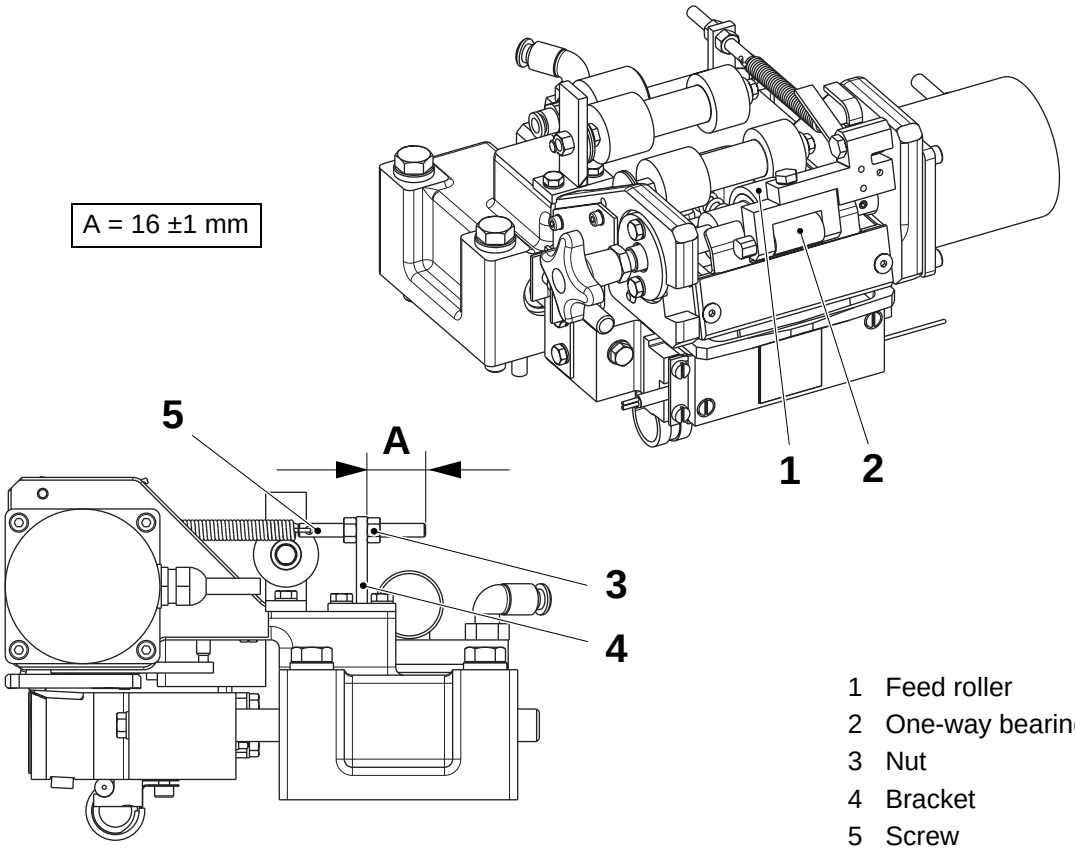

1 Feed roller
2 One-way bearing
3 Nut
4 Bracket
5 Screw

TechPub_2614345_0103 - B6114D02en.fm

4.2.1-15 Outer Patch Feeder - Set Position

Machine Status	PREPARATION
SPC Reference	1539193-0100 1549248-0100

WARNING
Risk of burns!
The sealing jaw may be hot.

Note! Before setting the outer patch feeders position, make sure the outer patch counter jaw position is set correctly, see 1.1.2-4 Applicator Stations - Fine Setting and 1.1.2-2 Applicator Stations - Basic Setting.

a) Switch the key selector on the PT21 electrical panel to the SERVICE position.

b) Make sure the cushion cylinder (1) is fully extended.

c) Check the distance **A** between the cushion cylinder sealing jaw (2) and the tip of the window knife (3).

Note! Do not set the distance **A** using shims. This will destroy the counter jaw alignment previously set.

d) Loosen the four screws (4) and set the distance **A** by moving the outer patch feeder assembly (5). Tighten the four screws (4).

e) Set the patch counter jaw, see 4.2.1-16 Outer Patch Feeder - Set Cushion Cylinder.

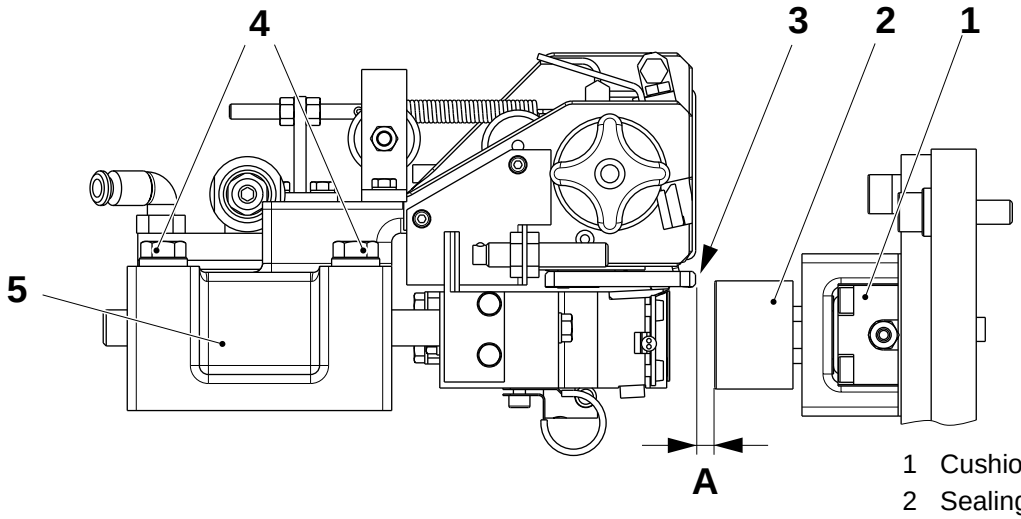

A = 1.5 ±0.2 mm

1 Cushion cylinder
2 Sealing jaw
3 Window knife
4 Screw
5 Outer patch feeder

TechPub_2614345_0103 - B6114D02en.fm

4.2.1-16 Outer Patch Feeder - Set Cushion Cylinder

Machine Status	PREPARATION
SPC Reference	1539193-0100 1549248-0100

WARNING
Risk of burns!
The sealing jaw may be hot.

a) Set the outer patch feeder unit, see 4.2.1-15 Outer Patch Feeder - Set Position.

b) Switch the key selector on the PT21 electrical panel to the SERVICE position.

c) Measure and record the distance **A** with the aid of a feeler gauge.

d) Place a piece of packaging material (1) between the sealing jaw plate (2) and the counter jaw plate (3).

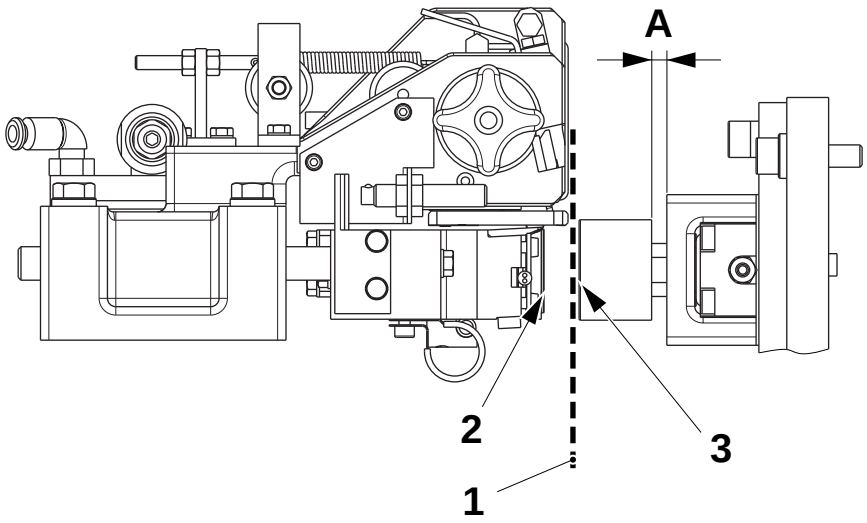

1 Packaging material
2 Plate
3 Plate

(Cont'd)

TechPub_2614345_0103 - B6114D02en.fm

(Cont'd)

e) Activate the valve for the cylinder (4).

f) Adjust the screw (5) of the cylinder (4) until the distance **A** is reduced by **0.8 mm**. Tighten the screw (5).

g) Activate the valve to retract the cylinder (4) and check that it is fully retracted.

h) Set the outer patch feeder, see 4.2.1-17 Outer Patch Feeder - Set Proximity Switch.

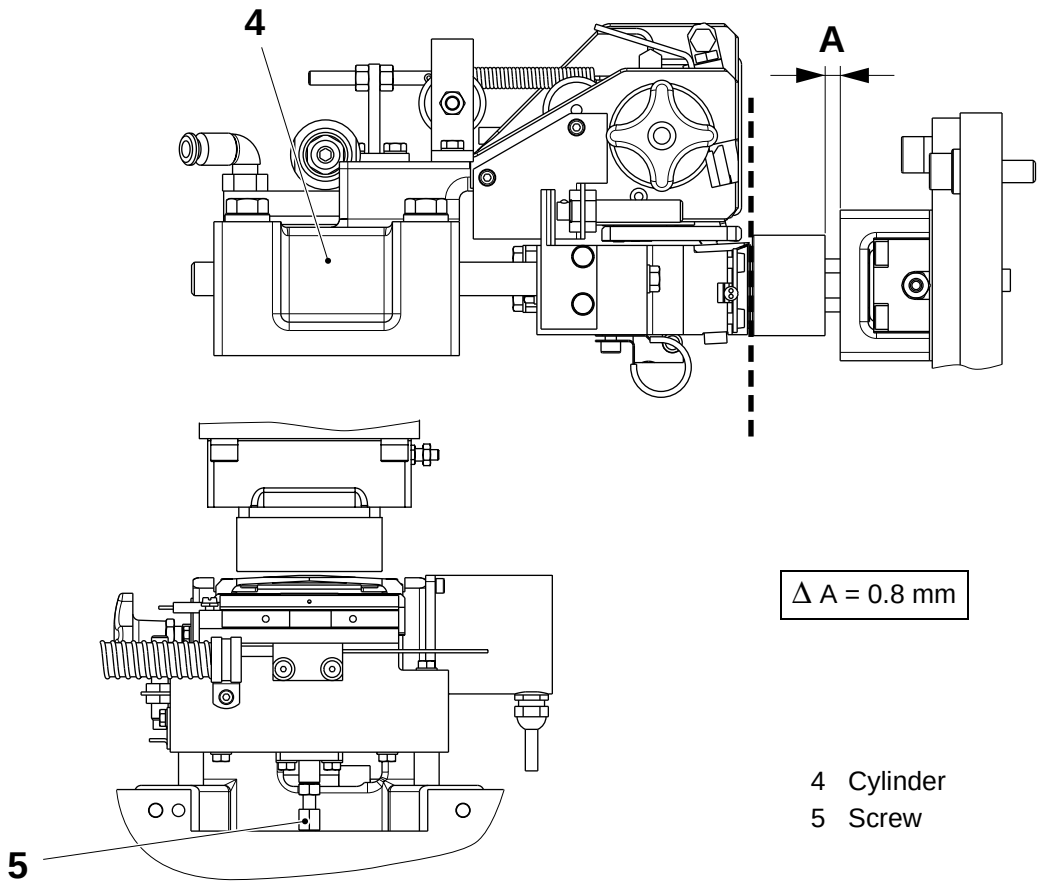

TechPub_2614345_0103 - B6114D02en.fm

4.2.1-17 Outer Patch Feeder - Set Proximity Switch

Machine Status	Air **ON** Mains power **ON**
SPC Reference	1539193-0100

WARNING
Risk of crushing!
The cylinder piston may move unexpectedly.

a) Switch the key selector on the PT21 electrical panel to the SERVICE position.

Note! For an accurate setting, the packaging material must be threaded through the machine. If not, place a piece of packaging material between the sealing head and the counter jaw.

b) Loosen the nuts (1) and move the proximity switch (2) backwards.

c) Manually activate the valve to extend the cylinder (3).

d) Make sure the cylinder (3) is fully extended. If required, set the cushion cylinder, see 4.2.1-16 Outer Patch Feeder - Set Cushion Cylinder.

e) Set the distance **A** between the proximity switch (2) and the flag (4) by means of the nuts (1).

f) Make sure the proximity switch (2) LED lights up.

g) Manually activate the valve to retract the cylinder (3).

h) Make sure the cylinder (3) is fully retracted.

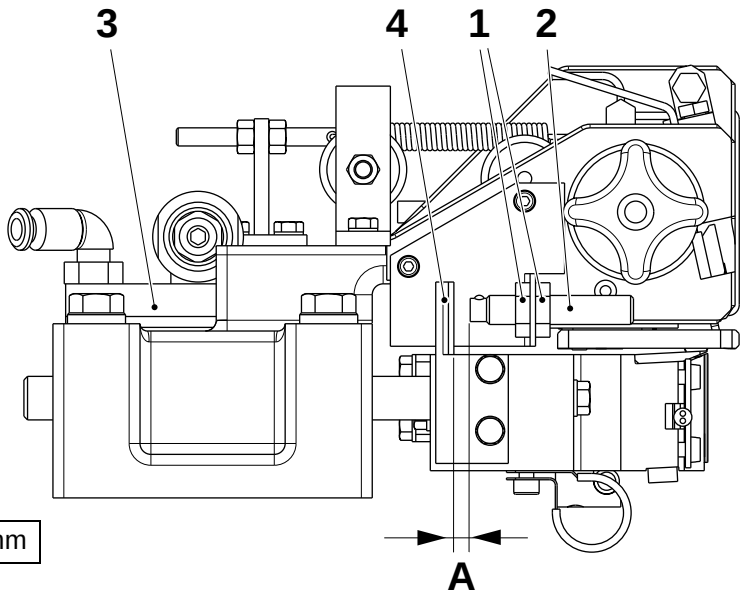

A = 0.1 mm

1 Nut
2 Proximity switch
3 Cylinder
4 Flag

TechPub_2614345_0103 - B6114D02en.fm

4.2.1-18 Outer Patch Feeder - Change Shims

Machine Status	Air **OFF** Mains Power **OFF**
SPC Reference	1539193-0100

WARNING
Risk of burns!
The sealing jaw may be hot.

a) Remove the feeder, see 4.2.1-5 Outer Patch Feeder - Remove.
b) Remove the screws (1) and the plates (2) and (3).
c) Loosen the grub screws (4) and remove the screws (5) and the stepper motor (6).
d) Release the spring (7) pressure.
e) Remove the flag (8) by means of the screws (9).
f) Remove the four screws (10) and the sealing head group (11).
g) Loosen the grub screw (12) and remove the shaft (13).

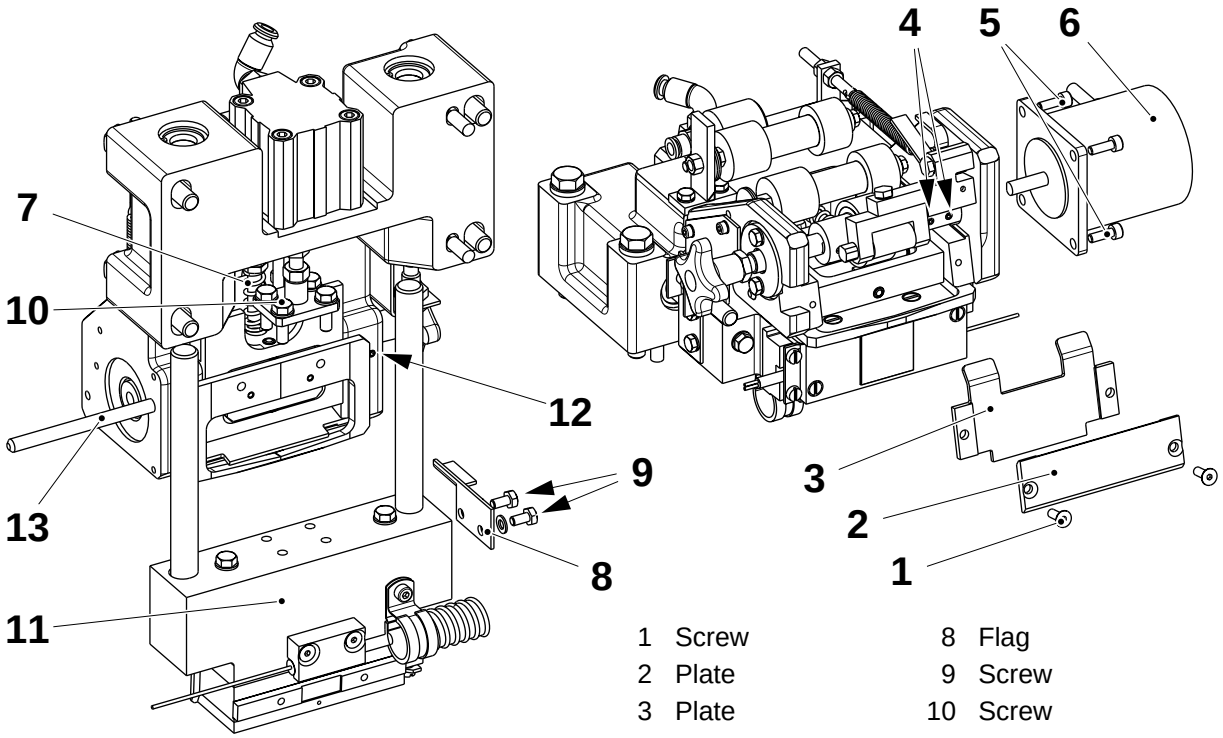

1 Screw
2 Plate
3 Plate
4 Grub screw
5 Screw
6 Stepper motor
7 Spring
8 Flag
9 Screw
10 Screw
11 Sealing head
12 Grub screw
13 Shaft

(Cont'd)

TechPub_2614345_0103 - B6114D02en.fm

(Cont'd)

h) Remove the screws (14) and the window knife (15).

i) Loosen the screws (16).

j) Remove the shaft (17) and the shims (18).

k) Measure and note the distance **A** between the pivot plate (19) and the plate (20).

l) Remove the pivot plate (19) and the plate (20).

m) Put the shims (18) at a thickness of **B** between the pivot plate (19) and the plate (20) and put back the shaft (17).

Note! The pivot plate (19) must be free to rotate but without any axial play.

n) Assemble in the reverse order.

o) Set the window knife, see 4.2.1-6 Outer Patch Feeder - Set Window Knife.

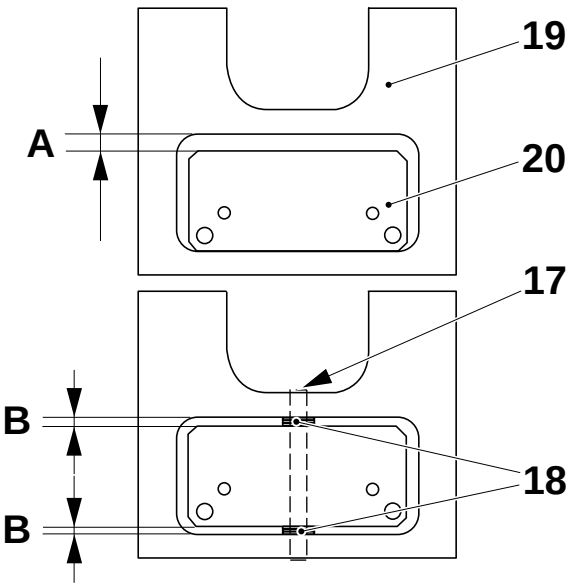

B = A/2 mm

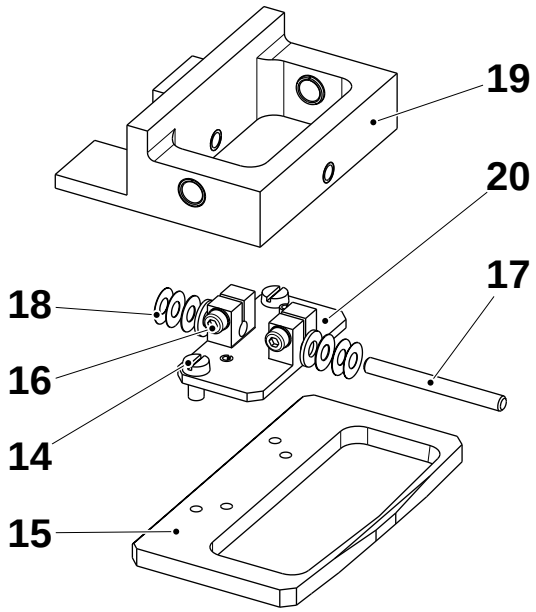

14	Screw	18	Shim
15	Window knife	19	Pivot plate
16	Screw	20	Plate
17	Shaft		

TechPub_2614345_0103 - B6114D02en.fm

4.2.1-19 Outer Patch Feeder - Change Feed Roller

Machine Status	Air **OFF** Mains Power **OFF**
SPC Reference	1539193-0100

WARNING

Risk of burns!

The sealing jaw may be hot.

a) Loosen the locking screws (1).

b) Remove the nut (2) and the knob (3).

c) Remove the four screws (4) and pull out the stepper motor (5) together with the shaft (6) until the feed roller (7) comes free.

d) Change the feed roller (7).

e) Assemble in the reverse order. Make sure to tighten the locking screws (1) against the flat parts of the shaft (6).

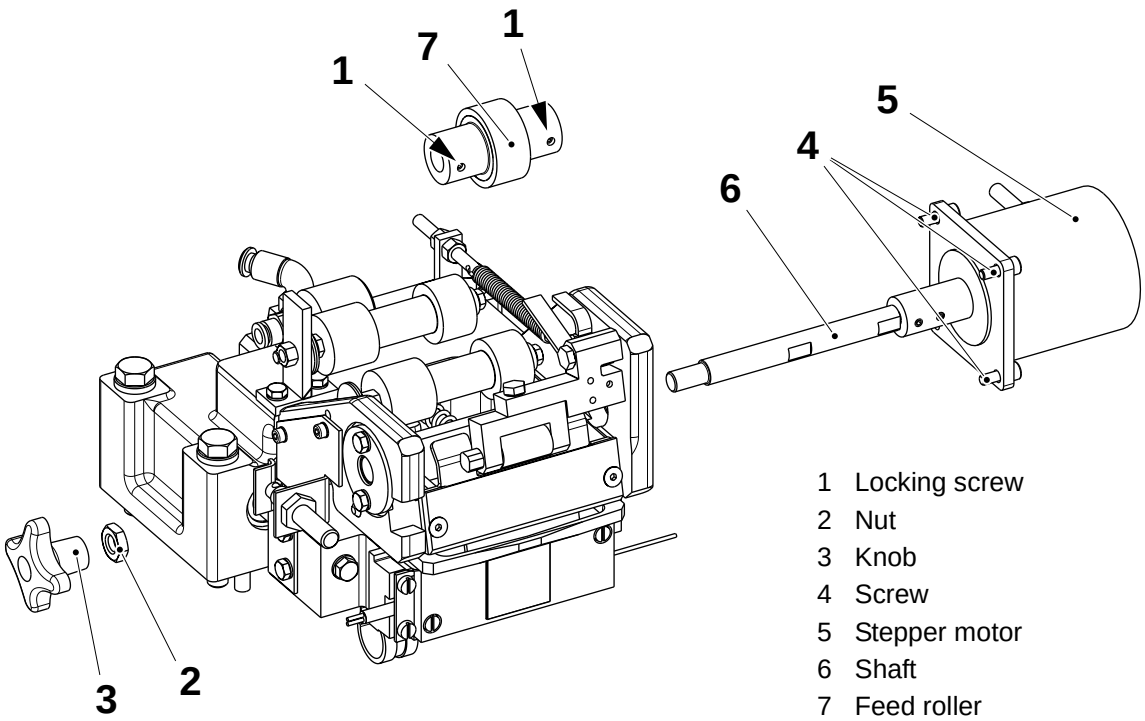

1 Locking screw
2 Nut
3 Knob
4 Screw
5 Stepper motor
6 Shaft
7 Feed roller

TechPub_2614345_0103 - B6114D02en.fm

4.2.1-20 Outer Patch Feeder - Change Heater and Thermocouple

Machine Status	Air **OFF** Mains Power **OFF**
Consumable	Heat transfer TP No.90298-33
SPC Reference	1539193-0100

WARNING
Risk of burns!
The sealing jaw may be hot.

a) Remove the screws (1) and the electrical connector (2) group.

b) Remove the screws (3) and the sealing head (4).

c) Gently pull the thermocouple tip (5) out of the sealing head hole (6) and change it if damaged or worn.

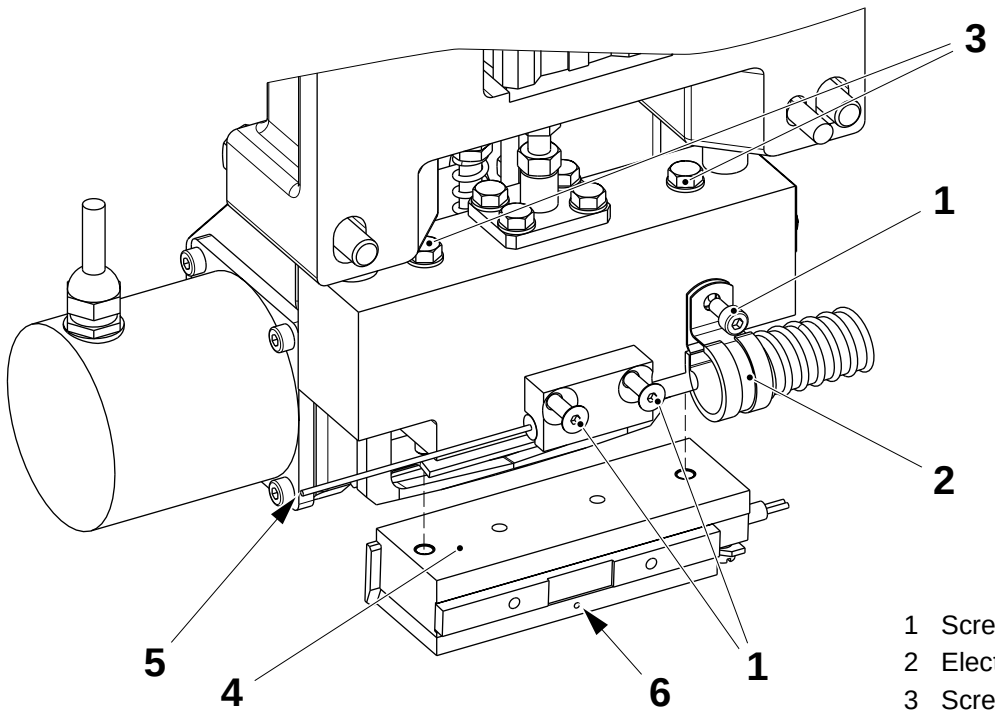

1 Screw
2 Electrical connector
3 Screw
4 Sealing head
5 Thermocouple tip
6 Hole

(Cont'd)

TechPub_2614345_0103 - B6114D02en.fm

(Cont'd)

d) Remove the screws (7) and the sealing plate (8).

e) Loosen the screws (9) and the clamp (10).

f) Remove the heater (11) and change if damaged or worn.

Note! Each time the heater (11) is changed, the ceramic cloth plates (12) must also be changed. The ceramic cloth plates (12) should have a thickness of 1.6 mm each.

g) Assemble in the reverse order.

h) Apply a heat transfer compound to the thermocouple tip (5).

i) Make sure the thermocouple tip (5) and the electrical connector (2) group are firmly in place before turning the power **ON**.

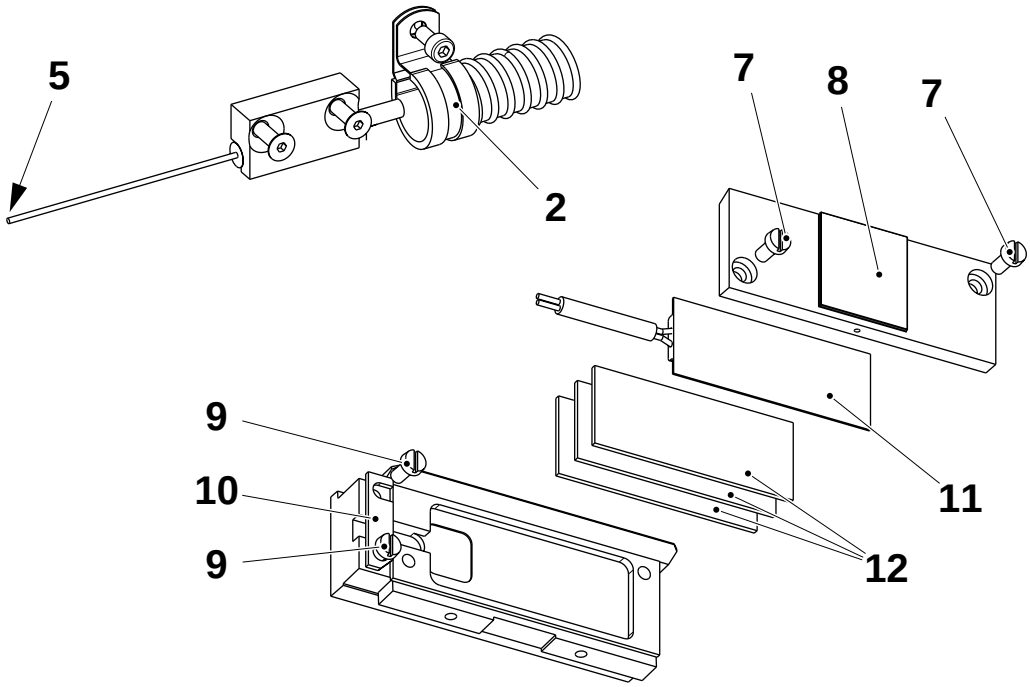

2	Electrical connector	9	Screw
5	Thermocouple tip	10	Clamp
7	Screw	11	Heater
8	Sealing plate	12	Plate

TechPub_2614345_0103 - B6114D02en.fm

4.2.1-21 Outer Patch Feeder - Change Stepper Motor

Machine Status	Air **OFF** Mains Power **OFF**
Consumable	Silicon paste TP No. 90296-51
SPC Reference	1539193-0100

WARNING
Risk of burns!
The sealing jaw may be hot.

a) Remove the stepper motor's electrical connector **X8251** (1).

Note! Remove all cable ties and straps from the cable routing.

b) Loosen the locking screws (2).
c) Remove the screws (3) and the stepper motor (4).
d) Change the stepper motor (4) if damaged or worn.
e) Assemble in the reverse order.

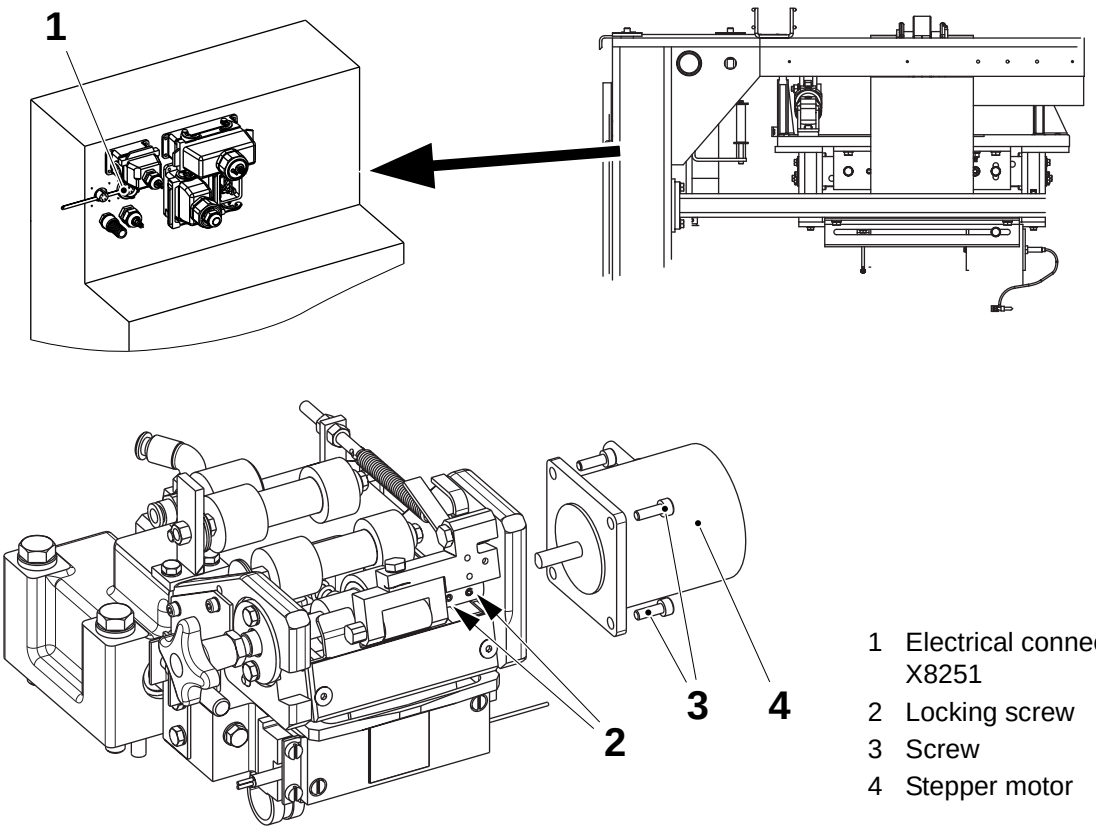

1 Electrical connector X8251
2 Locking screw
3 Screw
4 Stepper motor

TechPub_2614345_0103 - B6114D02en.fm

4.2.2 Outer Patch Counter Jaw

4.2.2-1 Outer Patch Counter Jaw - Remove

Machine Status	Air **OFF** Mains Power **OFF**
SPC Reference	1549248-0100

a) Disconnect the air hose (1) for the cushion cylinder.

b) Remove the screws (2). Remove the plate (3) together with the counter jaw (4).

c) Assemble in the reverse order.

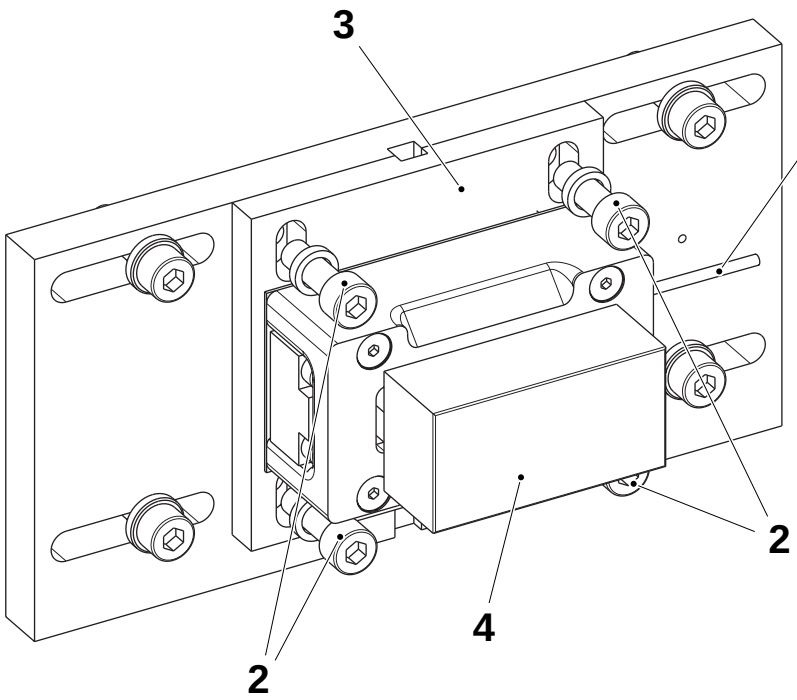

1 Air hose
2 Screw
3 Plate
4 Counter jaw

TechPub_2614345_0103 - B6114D02en.fm

4.2.2-2 Outer Patch Counter Jaw - Check Sealing Plate

Machine Status	Air **OFF** Mains Power **OFF**
SPC Reference	1549248-0100

a) Check the surface of the sealing plate, see arrow, for any scratches or other damage.

b) Check the surface of the sealing plate for any build-up of polyethylene.

c) Clean with a soft cloth.

Change as required, see 4.2.2-3 Outer Patch Counter Jaw - Change Sealing Plate.

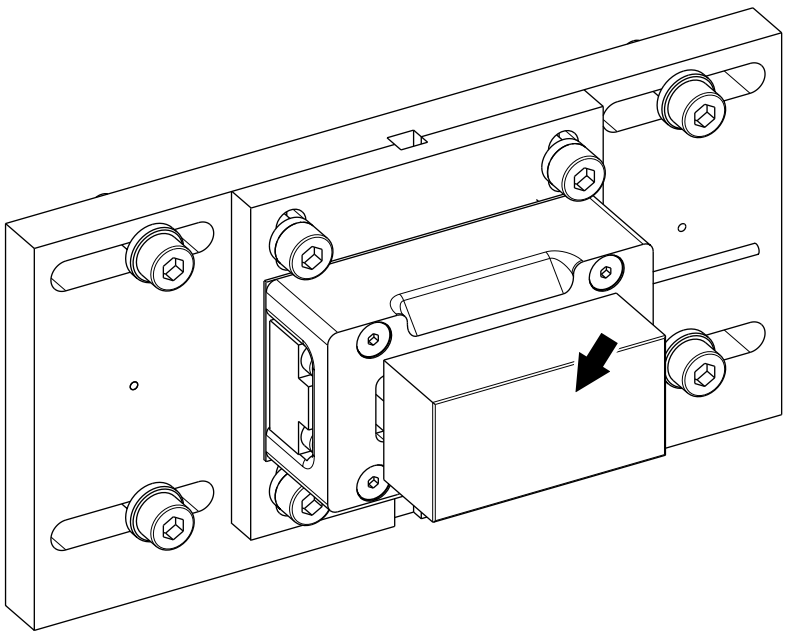

TechPub_2614345_0103 - B6114D02en.fm

4.2.2-3 Outer Patch Counter Jaw - Change Sealing Plate

Machine Status	Air **OFF** Mains Power **OFF**
SPC Reference	1549248-0100

a) Remove the outer patch counter jaw, see 4.2.2-1 Outer Patch Counter Jaw - Remove.

b) Remove the screws (1) and the outer patch counter jaw sealing head (2).

c) Remove the screws (3) and the sealing plate (4).

d) Change the sealing plate (4) if damaged or worn.

e) Assemble in the reverse order.

f) Set the cushion cylinder, see 4.2.1-16 Outer Patch Feeder - Set Cushion Cylinder.

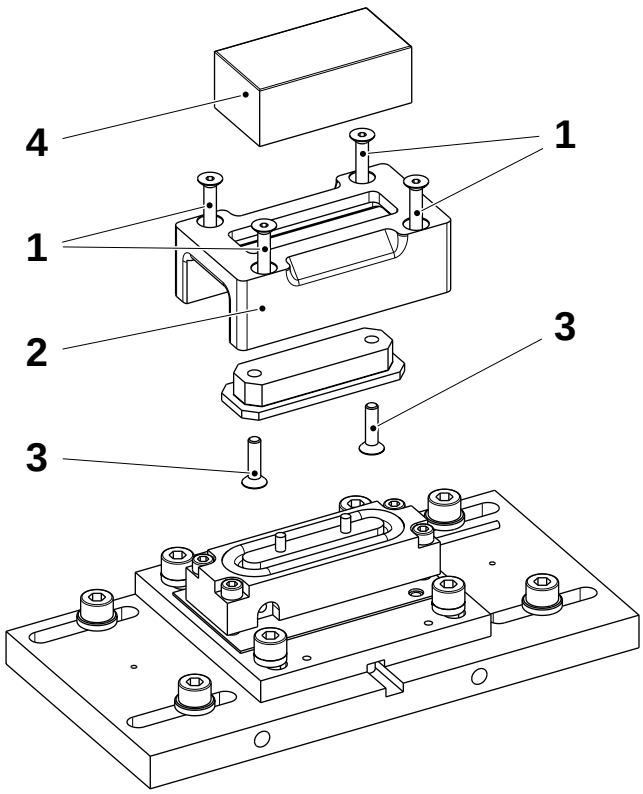

1 Screw
2 Sealing head
3 Screw
4 Sealing plate

TechPub_2614345_0103 - B6114D02en.fm

4.2.2-4 Outer Patch Counter Jaw - Change Cushion Cylinder

Machine Status	Air **OFF** Mains Power **OFF**
SPC Reference	1549248-0100

a) Remove the four screws (1).

b) Remove the sealing head (2).

c) Disconnect the air hose (3) from the cushion cylinder (5).

d) Remove the four screws (4) and change the cushion cylinder (5) if damaged or worn.

e) Assemble in the reverse order.

f) Set the patch counter jaw, see 4.2.2-5 Outer Patch Counter Jaw - Check Position.

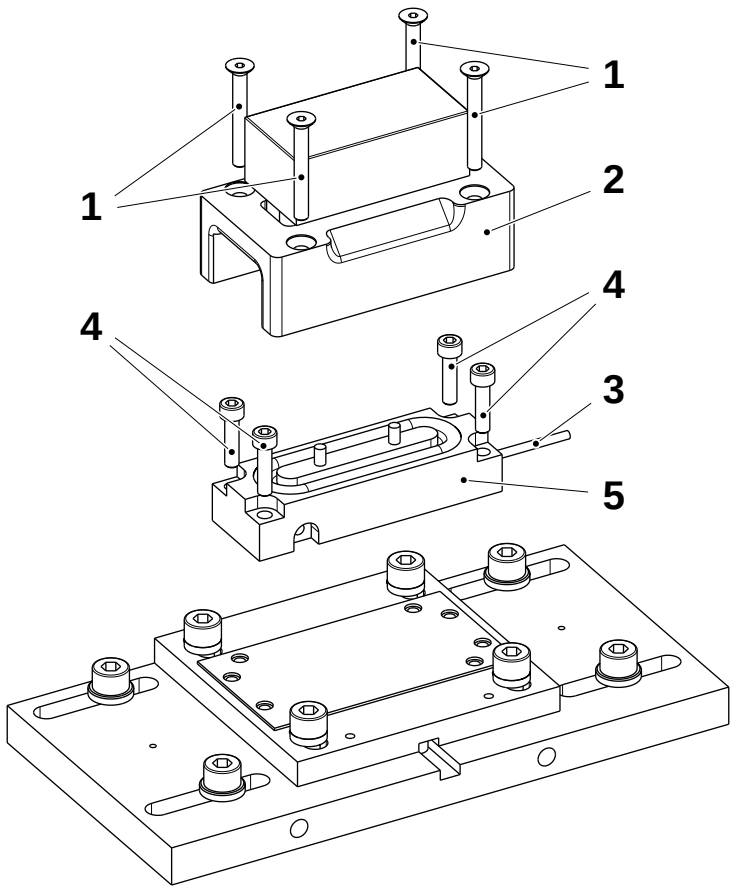

1 Screw
2 Sealing head
3 Air hose
4 Screw
5 Cushion cylinder

TechPub_2614345_0103 - B6114D02en.fm

4.2.2-5 Outer Patch Counter Jaw - Check Position

Machine Status	PREPARATION
SPC Reference	1549248-0100

WARNING
Risk of burns!
The sealing jaw may be hot.

Note! The outer patch counter jaw must be basically set before this procedure is followed, see Set Counter Jaws in the Vertical Position and Set Counter Jaw Positions with Respect to the Paper Line in 1.1.2 Applicator Stations.

Note! Do not set the distance **A** using shims. This will destroy the previously set counter jaw alignment.

a) Switch the key selector on the PT21 electrical panel to the SERVICE position.

b) Make sure the cushion cylinder (1) is fully extended.

c) Check the distance **A** between the sealing head (2) and the tip of the window knife (3). If required, see 4.2.1-15 Outer Patch Feeder - Set Position.

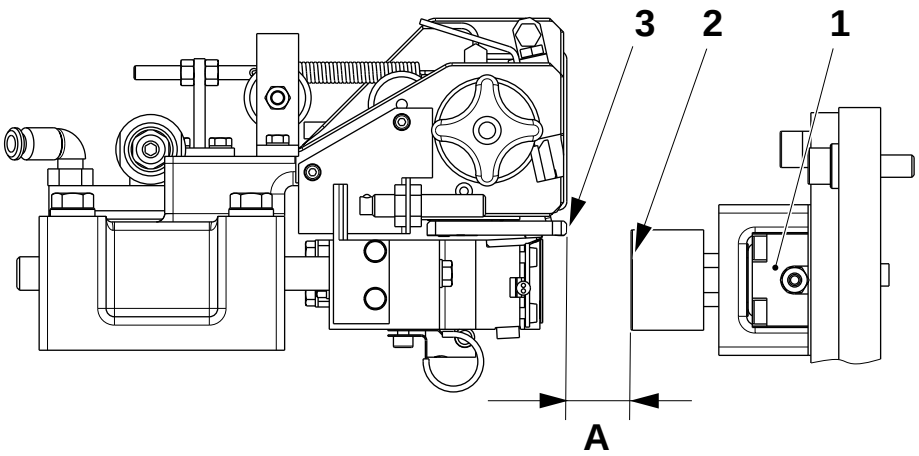

A = 1.5 ±0.2 mm

1 Cushion cylinder
2 Sealing head
3 Window knife

TechPub_2614345_0103 - B6114D02en.fm

4.3 Outer Patch Magazine

SPC Reference	1558112-0100

4.3-1 Outer Patch Magazine - Check

Machine Status	Air **OFF** Mains Power **ON**
SPC Reference	1558112-0100

a) Make sure the rollers (1) turn freely and the brake arm (2) moves freely.

b) Make sure the wheel (3) turns freely.

c) Make sure the bobbin holder (4) rotates freely.

d) Make sure the spring loaded screws (5) just clear the surface of the bobbin holder (4).

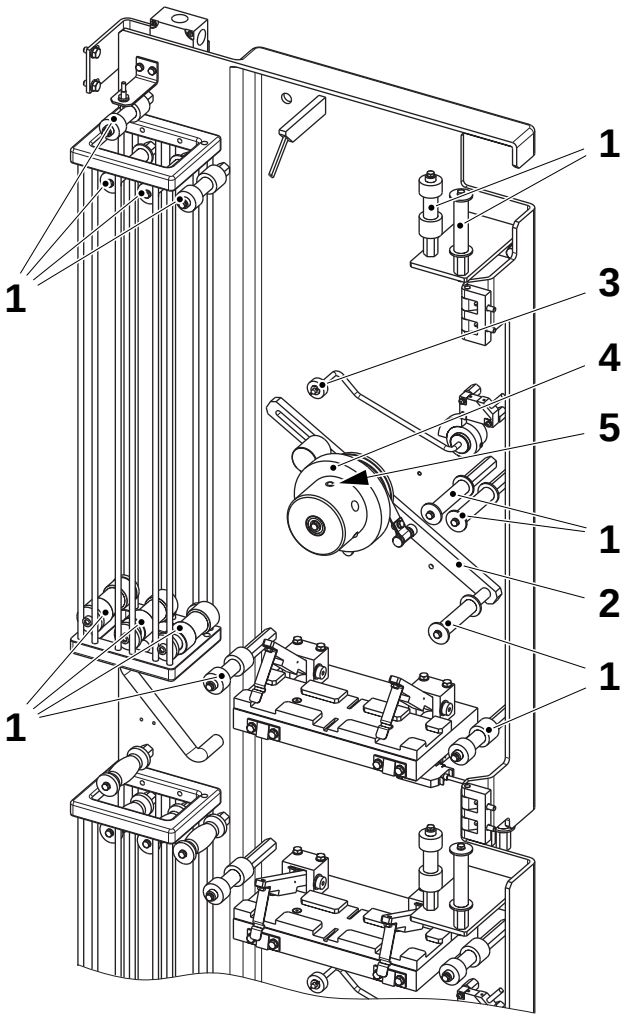

1 Roller
2 Brake arm
3 Wheel
4 Bobbin holder
5 Spring loaded screw

(Cont'd)

TechPub_2614345_0103 - B6114D003en.fm

(Cont'd)

e) Make sure the splice table locks and springs (6) function correctly.

f) Make sure the proximity switch (7) LED lights up correctly.

g) Make sure the green LED (8) of the black tape sensor (9) is lit and the red LED (10) lights up when the black tape passes the fibre optic lense (11).

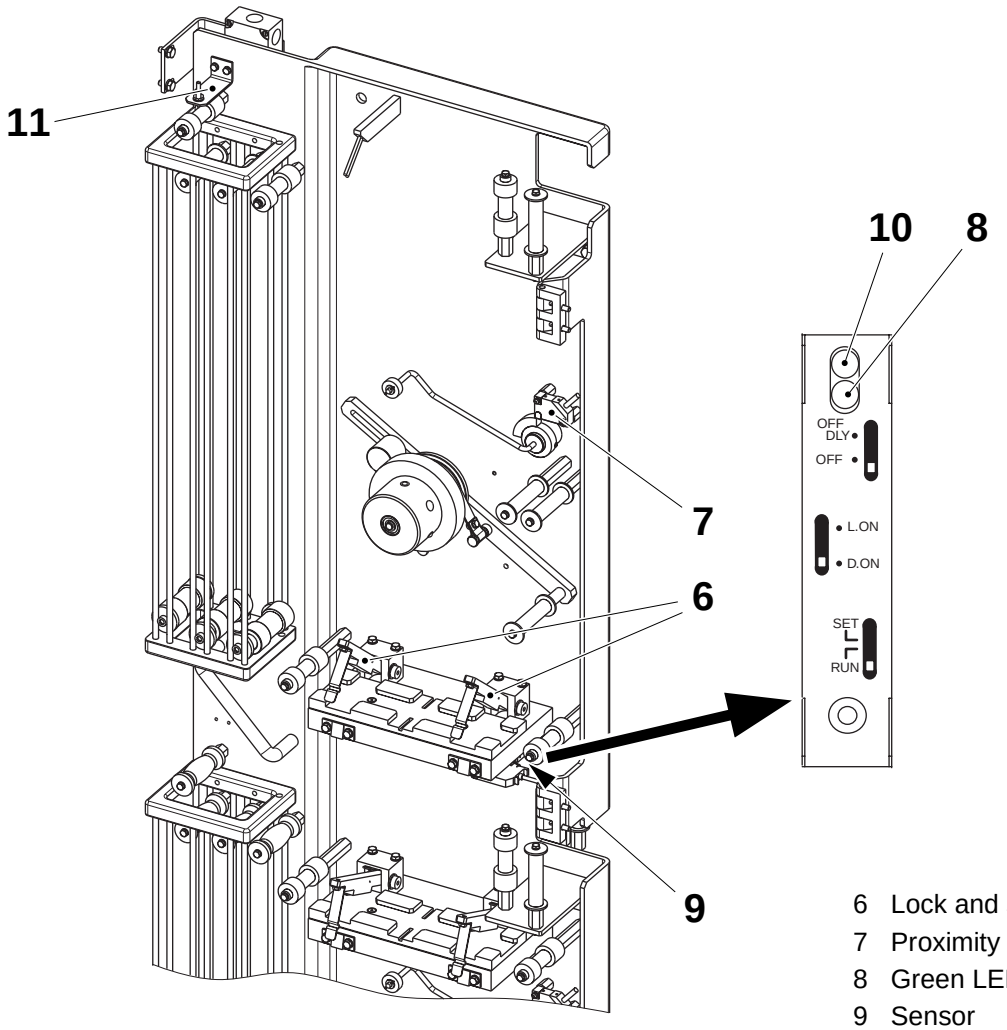

6 Lock and spring
7 Proximity switch
8 Green LED
9 Sensor
10 Red LED
11 Fibre optic lense

TechPub_2614345_0103 - B6114D03en.fm

4.3-2 Outer Patch Magazine - Set Proximity Switch

Machine Status	Air **OFF** Mains Power **ON**
SPC Reference	1558112-0100

a) Place a **15 mm** feeler gauge between the bobbin holder (1) and the wheel (2).

Note! Instead of a **15 mm** feeler gauge, a nearly empty outer patch bobbin can be used.

b) Loosen the stop screw (3) on the flag (4) and turn the flag (4) until the LED on the proximity switch (5) goes off.

c) Tighten the stop screw (3).

d) Remove the feeler gauge.

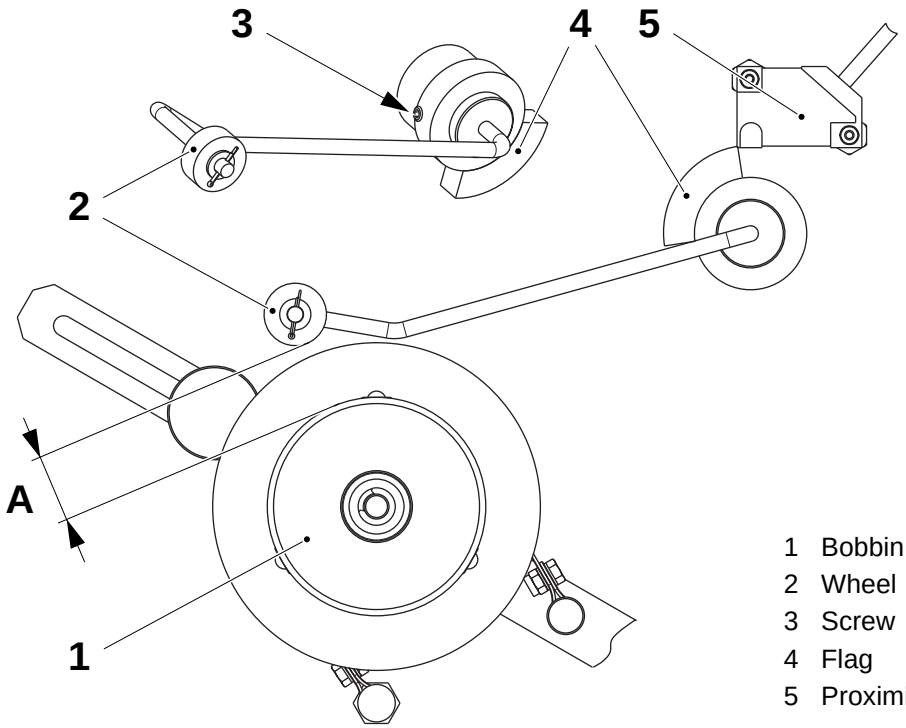

A = 15 mm

1 Bobbin holder
2 Wheel
3 Screw
4 Flag
5 Proximity switch

TechPub_2614345_0103 - B6114D003en.fm

4.3-3 Outer Patch Magazine - Set Strip Tension

Machine Status	Air **OFF** Mains Power **OFF**
SPC Reference	1558112-0100

a) Loosen the counter weight screw (1).

b) Move the counter weight (2) until the brake arm (3) tensions the strip (4) between the rollers (5) and (6).

c) Tighten the counter weight screw (1).

d) Check that the dancing rollers (7) move up and down smoothly with each outer patch application.

e) Check that the strip is in tension until the last roller (8).

Note! Use a full bobbin to verify the setting. This setting should be carried out with the PullTab running.

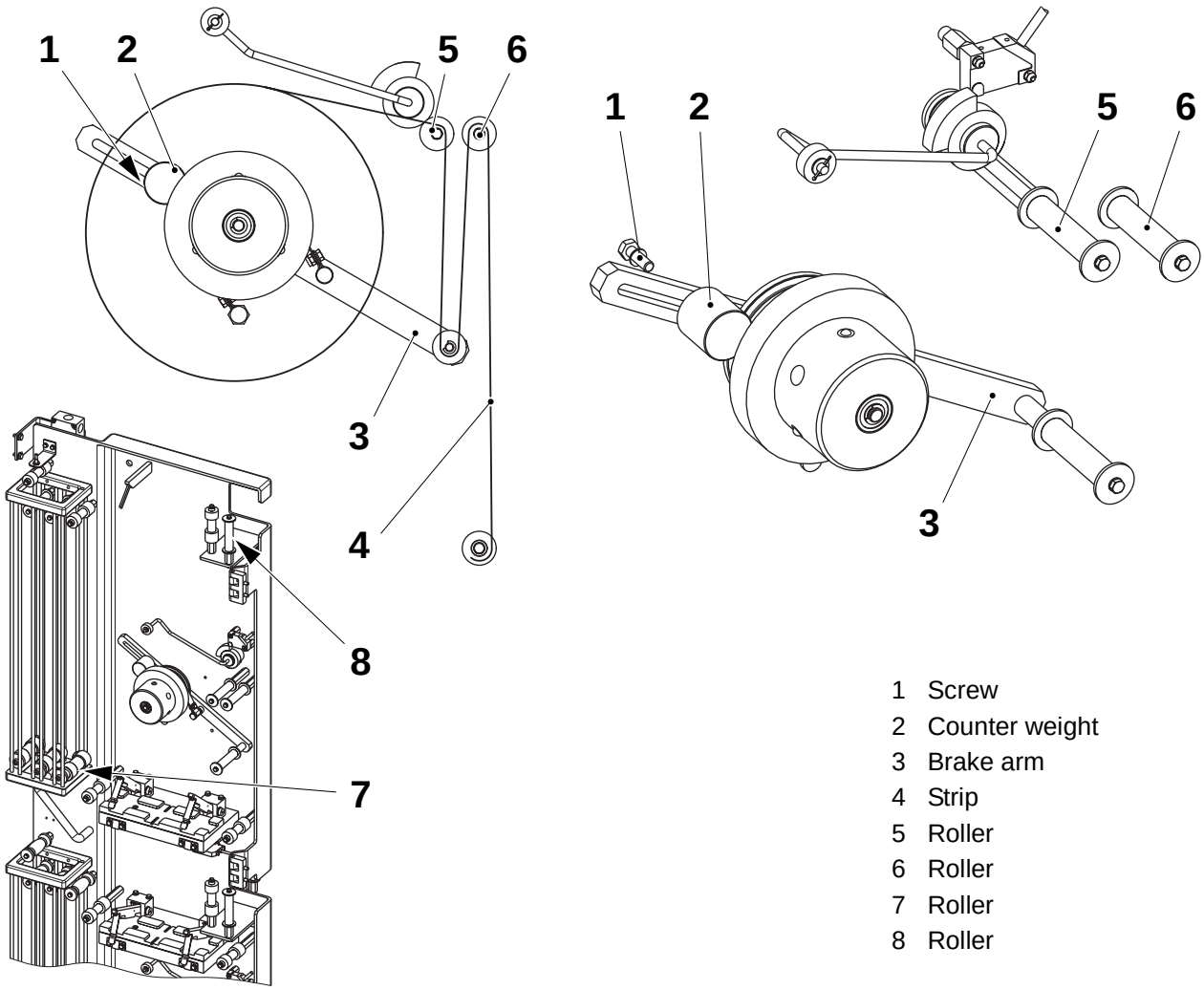

1 Screw
2 Counter weight
3 Brake arm
4 Strip
5 Roller
6 Roller
7 Roller
8 Roller

TechPub_2614345_0103 - B6114D03en.fm

4.3-4 Outer Patch Magazine - Change Bobbin Holder Bearings

Machine Status	Air **OFF** Mains Power **OFF**
SPC Reference	1558112-0100

a) Remove the locking washer (1).

b) Remove the bobbin holder (2)

c) Remove and change the bearings (3).

d) Assemble in the reverse order.

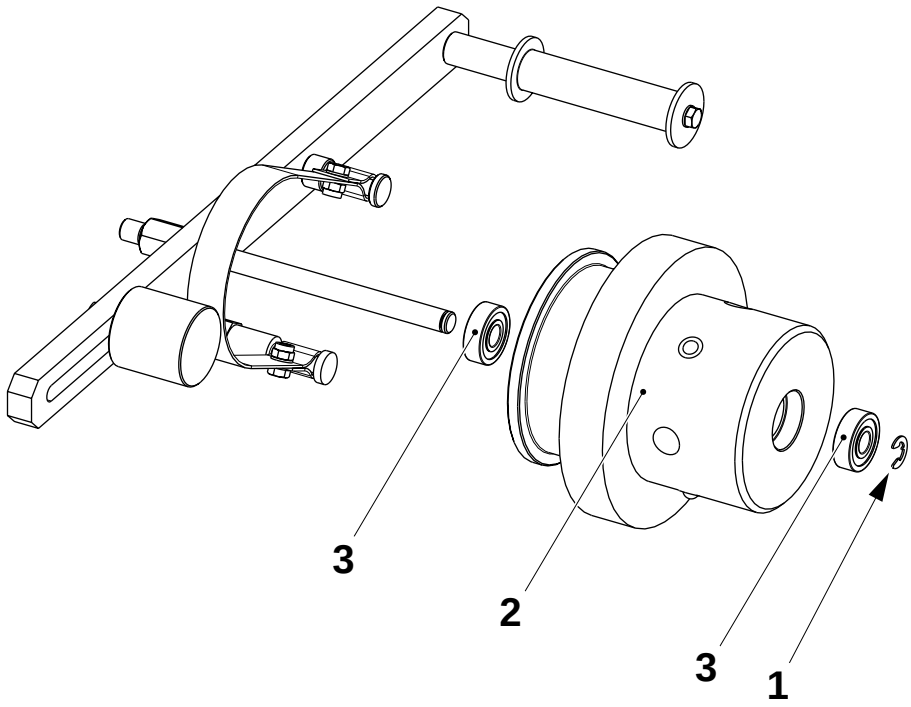

1 Locking washer
2 Bobbin holder
3 Bearing

TechPub_2614345_0103 - B6114D003en.fm

4.3-5 Outer Patch Magazine - Set Bobbin Holder Spring Loaded Screw

Machine Status	Air **OFF** Mains Power **OFF**
Consumables	Locking fluid TP No. 90157-16
SPC Reference	1558112-0100

a) Remove the locking washer (1).

b) Remove the bobbin holder assembly (2)

c) With the aid of a screw driver (3), set the spring loaded screw (4) so that the top of the screw cylinder (5) just clears the surface of the bobbin holder (6).

d) Repeat the setting for the other spring loaded screws and assemble in the reverse order.

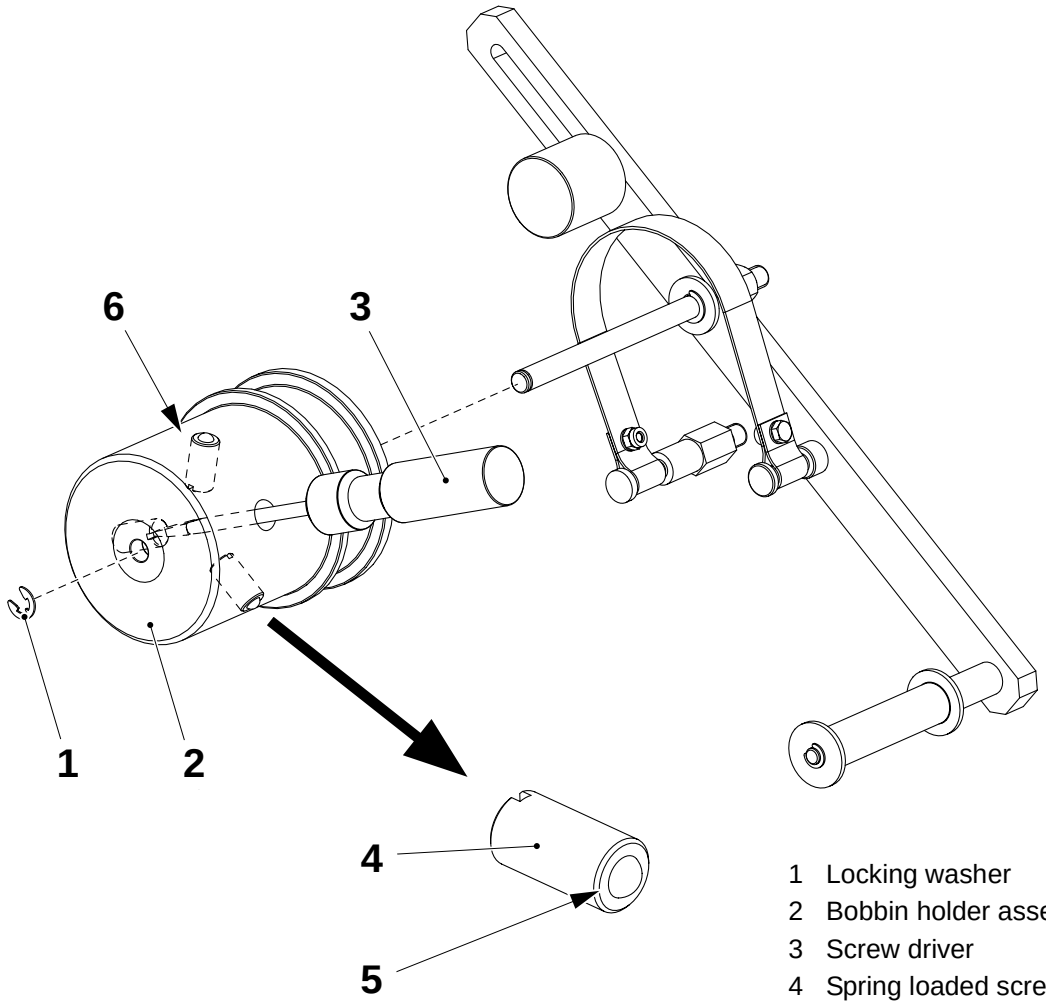

1 Locking washer
2 Bobbin holder assembly
3 Screw driver
4 Spring loaded screw
5 Screw cylinder
6 Bobbin holder

TechPub_2614345_0103 - B6114D03en.fm

4.3-6 Outer Patch Magazine - Set Black Tape Sensor

Machine Status	Air **OFF** Mains Power **ON**
SPC Reference	1558112-0100

a) Loosen the nuts (1) and set the sensor lense (2) at the distance **A** from the surface of the roller (3).

b) Set the switch (4) to **SET**.

Note! The black tape detector switch (5) must be set to **D. ON** and the switch (6) to **OFF**.

c) Apply a piece of black tape on a piece of strip. Place the strip under the sensor lense (2) so that the strip is between the sensor lense (2) and the black tape. Press the button (7) for 2 seconds.

d) Place a piece of strip under the sensor lense (2) and press the button (7) for 2 seconds.

e) Set the switch (6) to **RUN**.

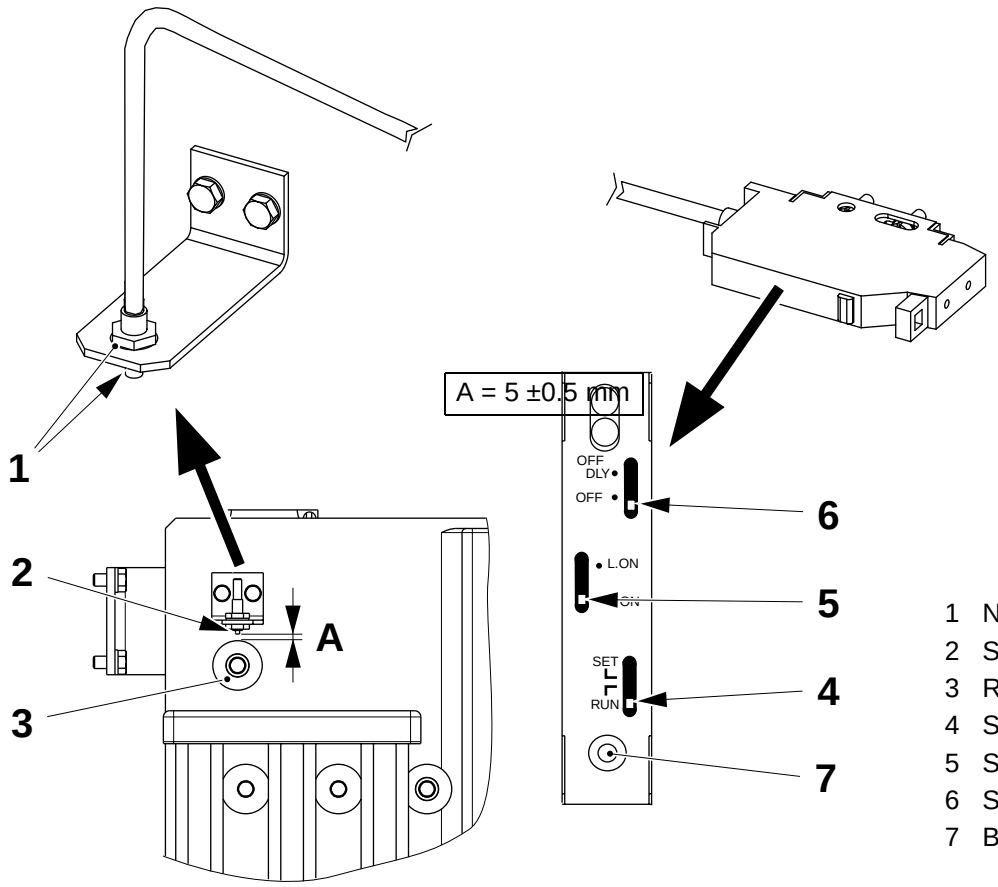

1 Nut
2 Sensor lense
3 Roller
4 Switch
5 Switch
6 Switch
7 Button

TechPub_2614345_0103 - B6114D003en.fm

4.3.1 Splicing Table

4.3.1-1 Splicing Table - Check Function

Machine Status	Air **OFF** Mains Power **OFF**
SPC Reference	1549222-0100

Make sure the locks (1) spring into a position that does not interfere with the outer patch feeding.

Set the lock grips, see 4.3.1-2 Splicing Table - Set Lock.

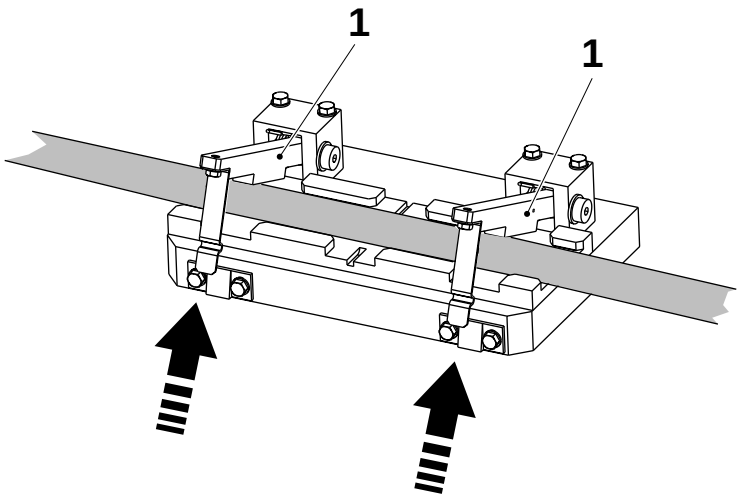

1 Lock

TechPub_2614345_0103 - B6114D03en.fm

4.3.1-2 Splicing Table - Set Lock

Machine Status	Air **OFF** Mains Power **OFF**
SPC Reference	1549222-0100

a) Place a piece of strip (1) under the lock (2).

b) Loosen the screws (3).

c) Adjust the plate (4) until it is not possible to pull the strip backwards or forwards.

d) Tighten the screws (3).

e) Repeat for the other lock (2).

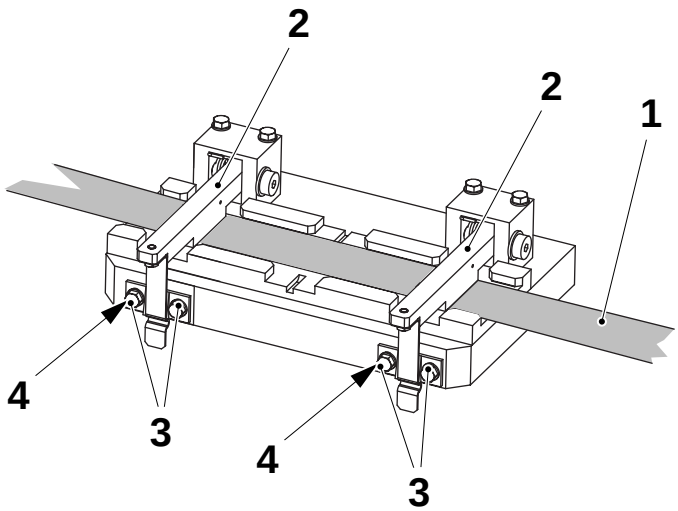

1 Strip
2 Lock
3 Screw
4 Plate

TechPub_2614345_0103 - B6114D003en.fm

4.4 Outer Patch Turning Device

4.4-1 Outer Patch Turning Device - Check

Machine Status	Air **OFF** Mains Power **ON**
SPC Reference	1549226-0100

Check the following parts for wear and/or damage:

- the rollers (1)
  Check that they turn freely. If not, clean as required.
  Change them if damaged or worn.
- the flag (2)
  Check that it turns freely simultaneously with the roller (1).
- the function of the rotation monitor proximity switch (3)
  Turn the flag (2) and check that the switch LED lights up when the plate covers the switch source. Set the flag (2) as required, see 4.4-2 Outer Patch Turning Device - Set Rotation Monitor Proximity Switch.

Change as required.

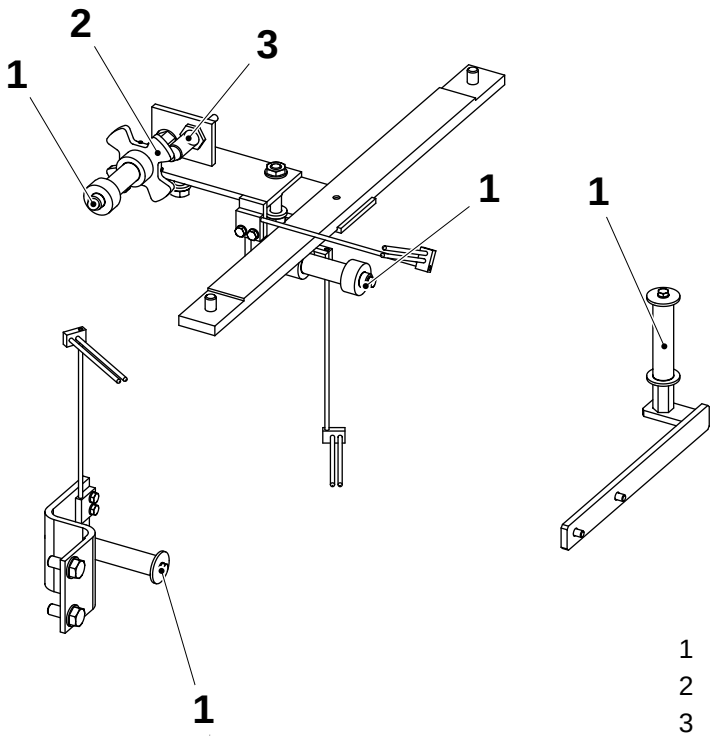

1 Roller
2 Flag
3 Proximity switch

TechPub_2614345_0103 - B6114D04en.fm

4.4-2 Outer Patch Turning Device - Set Rotation Monitor Proximity Switch

Machine Status	Air **OFF** Mains Power **ON**
SPC Reference	1549226-0100

a) Loosen the nuts (1).

b) Set the distance **A** between the proximity switch (2) and the plate (3).

c) Tighten the nuts (1).

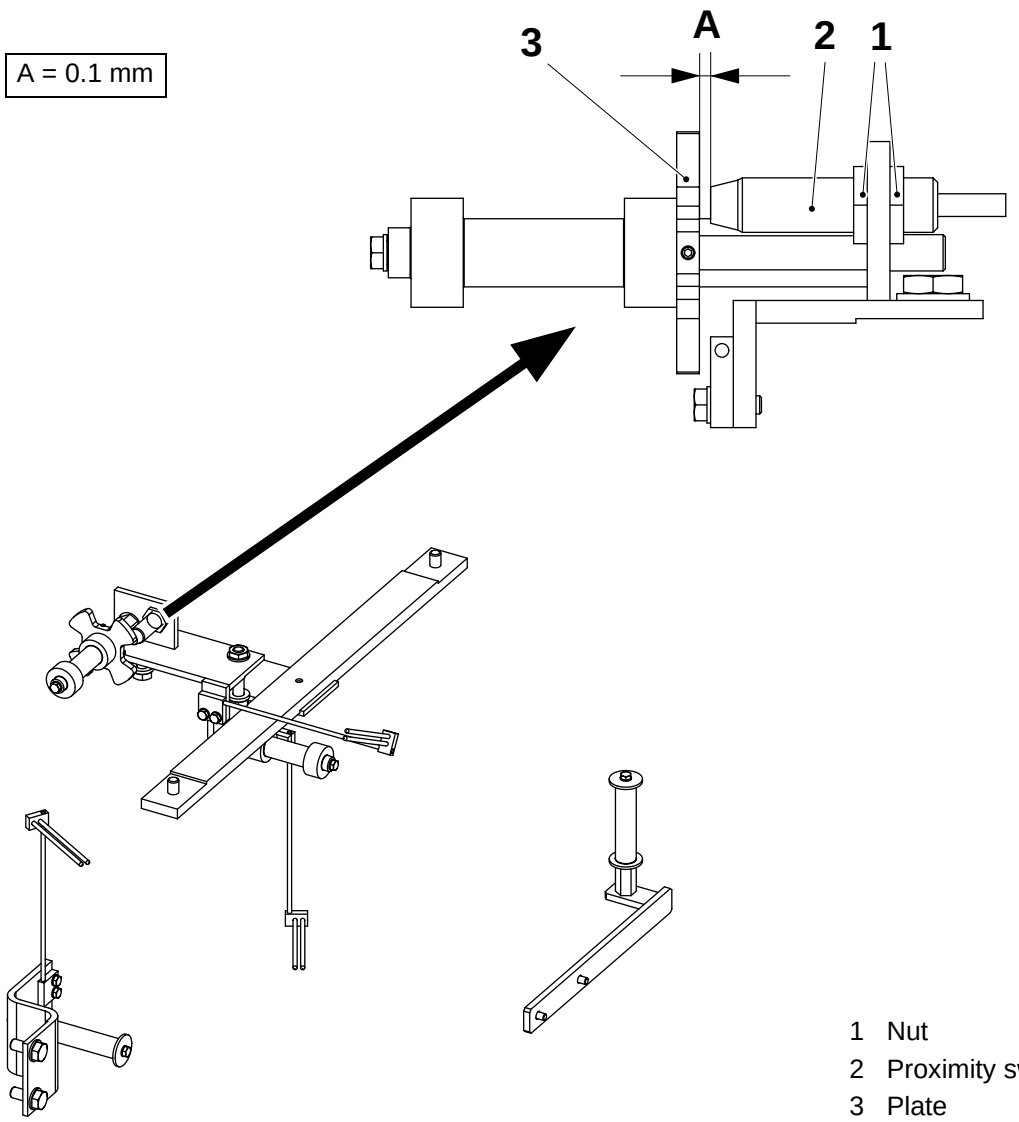

1 Nut
2 Proximity switch
3 Plate

TechPub_2614345_0103 - B6114D004en.fm

5 Patch Applicator

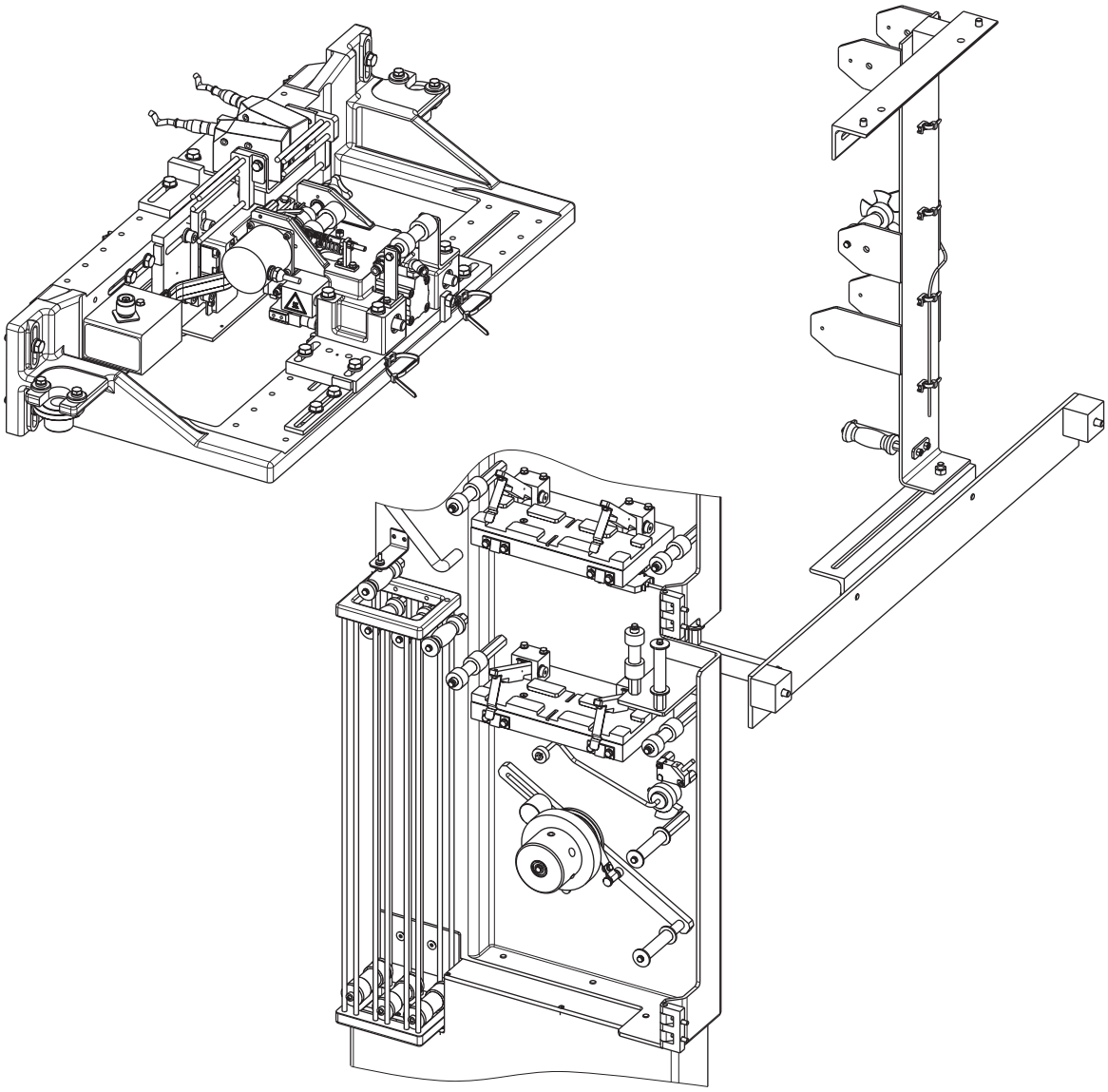

TechPub_2614345_0103 - B6114E00en.fm

Patch Applicator - Description

SPC Reference	2526518-0100 1558071-0100 2525321-0200

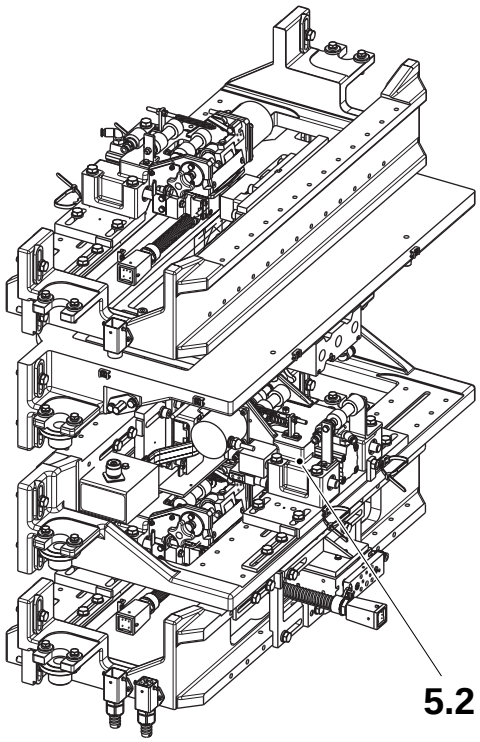

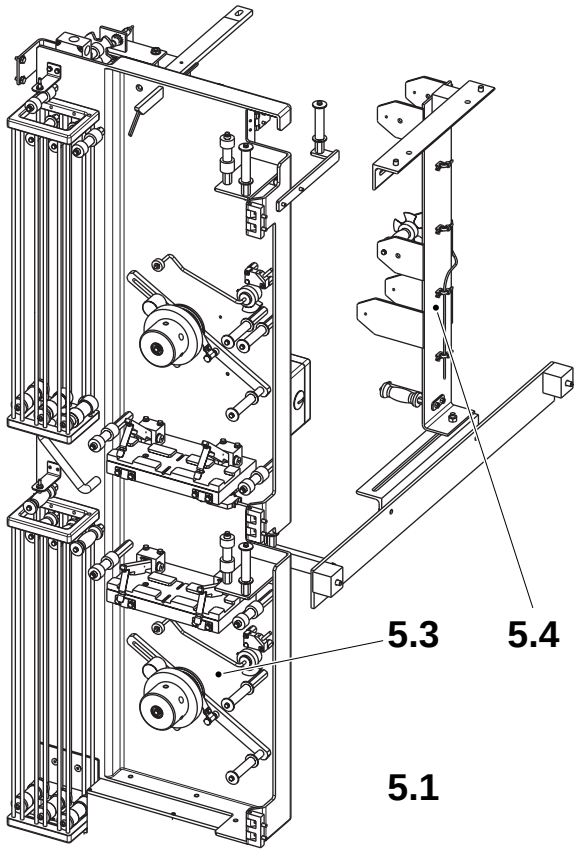

5.1 Setting Flow Chart
5.2 Patch Applicator
5.3 Patch Magazine
5.4 Patch Turning Device

TechPub_2614345_0103 - B6114E00en.fm

5-1 Patch Applicator - Functional Description . . . . . 5 - 5

5.1 Setting Flow Chart . . . . . 5 - 9

5.2 Patch Applicator . . . . . 5 - 10

5.2.1 Patch Feeder . . . . . 5 - 10

5.2.1-1 Patch Feeder - Check Function . . . . . 5 - 10
5.2.1-2 Patch Feeder - Change Flat Knife . . . . . 5 - 12
5.2.1-3 Patch Feeder - Change Window Knife . . . . . 5 - 13
5.2.1-4 Patch Feeder - Check Pivot Plate . . . . . 5 - 14
5.2.1-5 Patch Feeder - Remove . . . . . 5 - 15
5.2.1-6 Patch Feeder - Set Window Knife . . . . . 5 - 16
5.2.1-7 Patch Feeder - Change One-way Bearing . . . . . 5 - 17
5.2.1-8 Patch Feeder - Check Sealing Plate . . . . . 5 - 18
5.2.1-9 Patch Feeder - Set Sealing Plate . . . . . 5 - 19
5.2.1-10 Patch Feeder - Check Guides and Linear Bearings . . . . . 5 - 21
5.2.1-11 Patch Feeder - Change Linear Bearings . . . . . 5 - 22
5.2.1-12 Patch Feeder - Change Bushings . . . . . 5 - 23
5.2.1-13 Patch Feeder - Change Cylinder . . . . . 5 - 26
5.2.1-14 Patch Feeder - Set Strip Feed . . . . . 5 - 27
5.2.1-15 Patch Feeder - Set Position . . . . . 5 - 28
5.2.1-16 Patch Feeder - Set Cushion Cylinder . . . . . 5 - 29
5.2.1-17 Patch Feeder - Set Proximity Switch . . . . . 5 - 31
5.2.1-18 Patch Feeder - Change Shims . . . . . 5 - 32
5.2.1-19 Patch Feeder - Change Feed Roller . . . . . 5 - 34
5.2.1-20 Patch Feeder - Change Stepper Motor . . . . . 5 - 35

5.2.2 Patch Counter Jaw . . . . . 5 - 36

5.2.2-1 Patch Counter Jaw - Remove . . . . . 5 - 36
5.2.2-2 Patch Counter Jaw - Check Inductor . . . . . 5 - 37
5.2.2-3 Patch Counter Jaw - Change Inductor . . . . . 5 - 38
5.2.2-4 Patch Counter Jaw - Change Transformer . . . . 5 - 39
5.2.2-5 Patch Counter Jaw - Check Guide Bushing . . . . . 5 - 40
5.2.2-6 Patch Counter Jaw - Change Cushion Cylinder . . . . . 5 - 41

TechPub_2614345_0103 - B6114E00en.fm

5.2.2-7 Patch Counter Jaw - Check Position . . . . . 5 - 42

5.3 Patch Magazine . . . . . 5 - 43

5.3-1 Patch Magazine - Check . . . . . 5 - 43

5.3-2 Patch Magazine - Set Proximity Switch . . . . . 5 - 45

5.3-3 Patch Magazine - Set Strip Tension . . . . . 5 - 46

5.3-4 Patch Magazine - Change Bobbin Holder Bearings . . . . . 5 - 47

5.3-5 Patch Magazine - Set Bobbin Holder Spring Loaded Screw . . . . . 5 - 48

5.3-6 Patch Magazine - Set Black Tape Sensor . . . . . 5 - 49

5.3.1 Splicing Table . . . . . 5 - 50

5.3.1-1 Splicing Table - Check Function . . . . . 5 - 50

5.3.1-2 Splicing Table - Set Lock . . . . . 5 - 51

5.4 Patch Turning Device . . . . . 5 - 52

5.4-1 Patch Turning Device - Check . . . . . 5 - 52

5.4-2 Patch Turning Device - Set Rotation Monitor Proximity Switch . . . . . 5 - 53

TechPub_2614345_0103 - B6114E00en.fm

5-1 Patch Applicator - Functional Description

SPC Reference	2526518-0100 1558071-0100 2525321-0200

When the filling machine pulls the packaging material the following occurs:

- the PLC begins the machine cycle
- the PLC sends a signal to the TMCC card to start indexing
- the TMCC card sends the pulses to the stepper drive card.

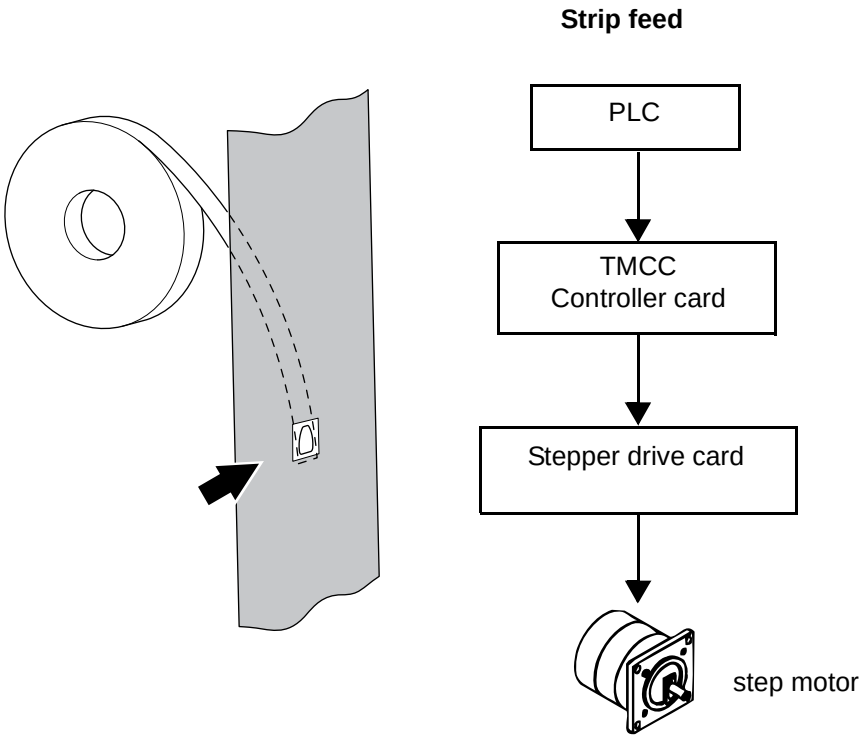

TechPub_2614345_0103 - B6114E00en.fm

(Cont'd)

(Cont'd)

During the PullTab machine cycle, the PLC signals the solenoid valve to extend the cylinder. This action cuts the strip and applies it to the packaging material.

Cutting and applying

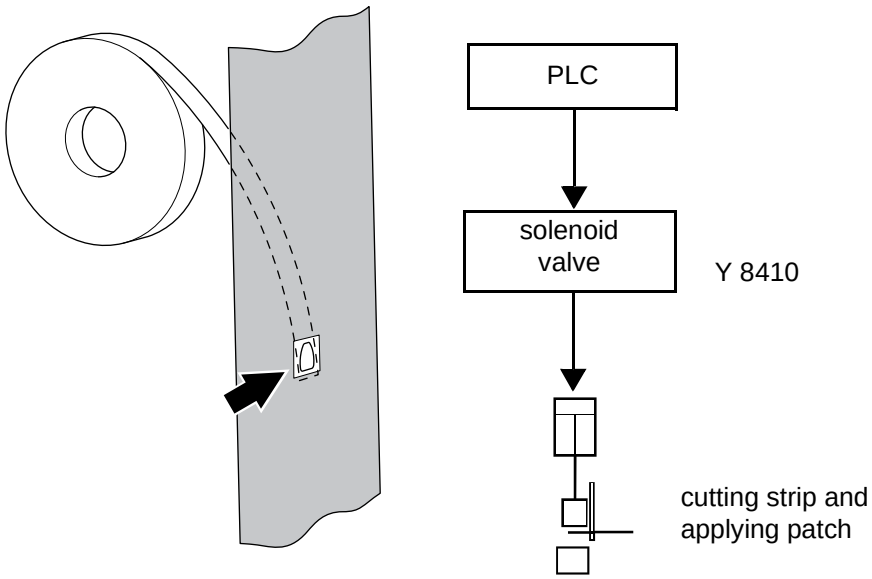

While the patch jaw is extending, the PLC signals the solenoid valve to provide vacuum to the sealing jaw pad. The vacuum prevents the strip to fall down when cut and keeps it in position to be sealed.

Sealing jaw pad suction

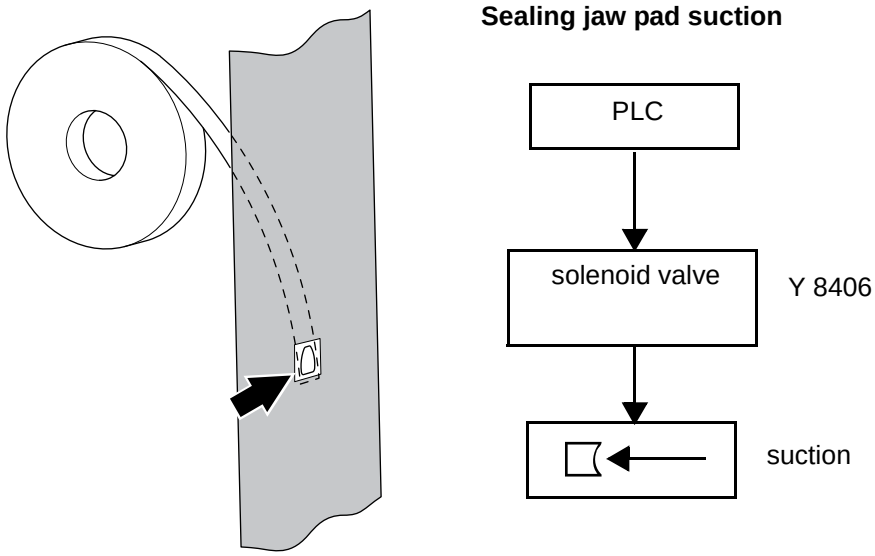

(Cont'd)

TechPub_2614345_0103 - B6114E00en.fm

(Cont'd)

As the jaw is closed, the PLC receives signals from the proximity switch and:

- the PLC begins the sealing cycle when the patch jaw is closed
- the PLC begins a timer to send the sealing pulses to the IH generator.

When the sealing-cycle is timed out, the PLC signals the solenoid valve to pull back the cylinder.

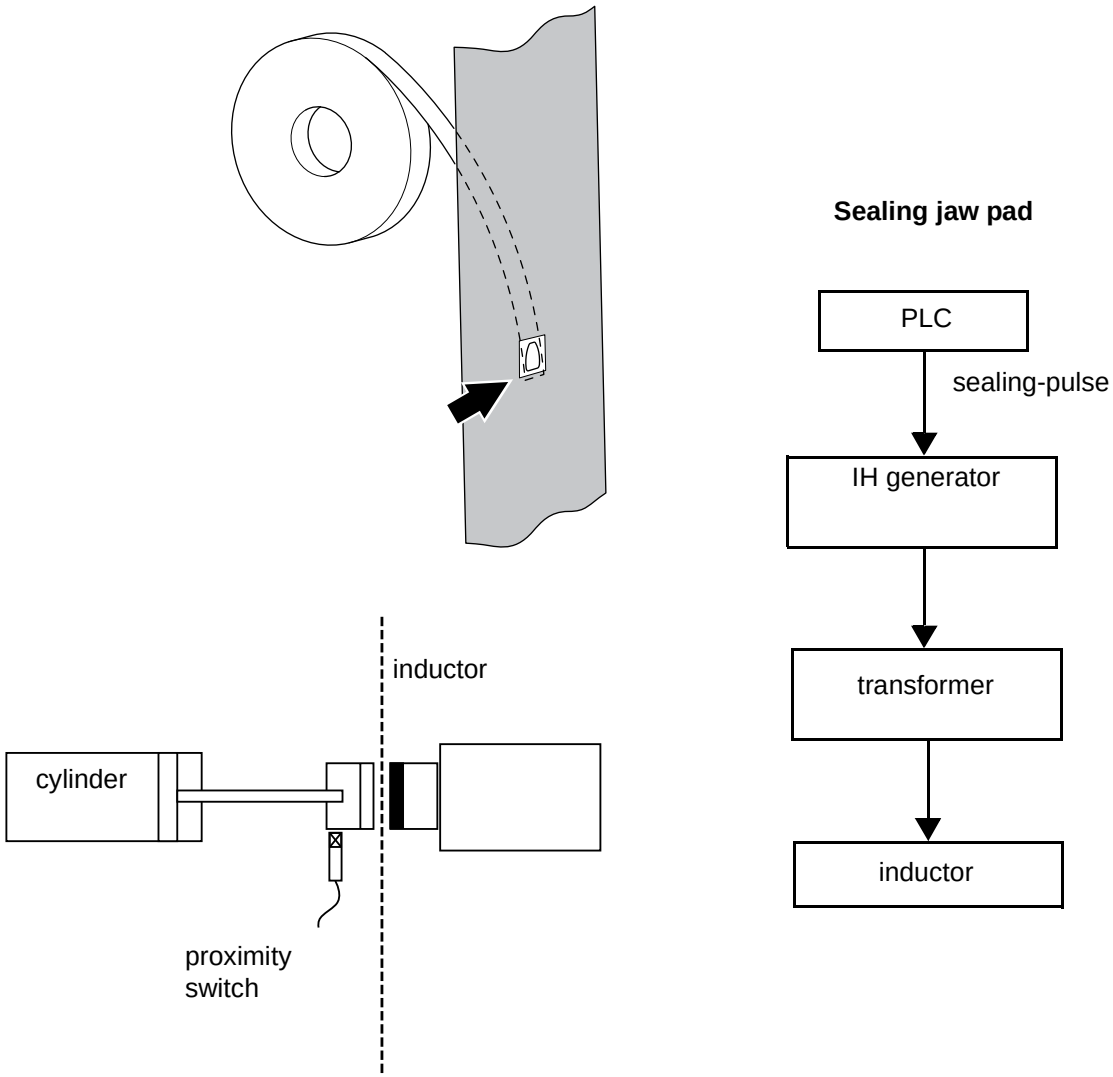

(Cont'd)

TechPub_2614345_0103 - B6114E00en.fm

(Cont'd)

During PRODUCTION:

- a warning, blue alarm, is activated when the strip supply is low. If the supply is not restored within five minutes then the warning becomes an alarm instead
- an alarm is activated when the strip does not move (rotation monitor)
- an alarm is activated if the proper proximity switch does not activate when the patch jaw cylinder extends.

If any of the above alarms activates, both the PullTab unit and the filling machine stop in SHORT STOP mode.

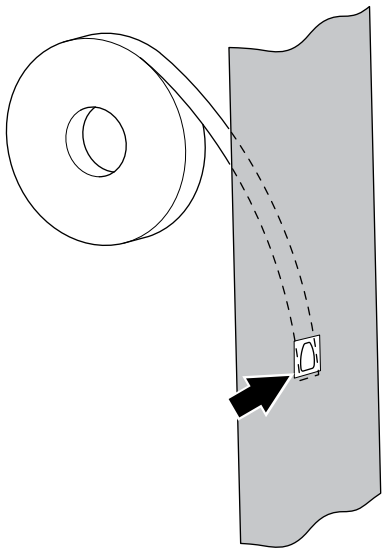

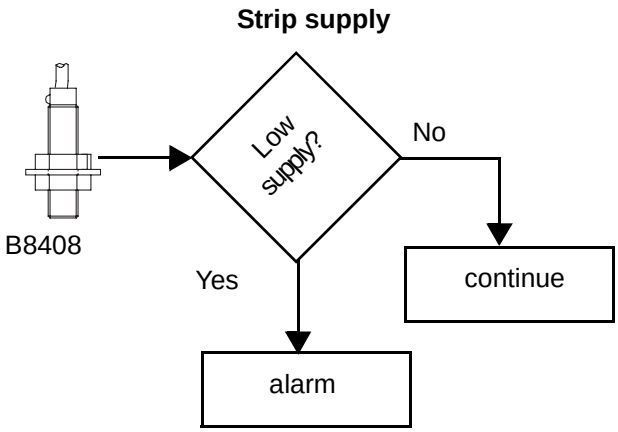

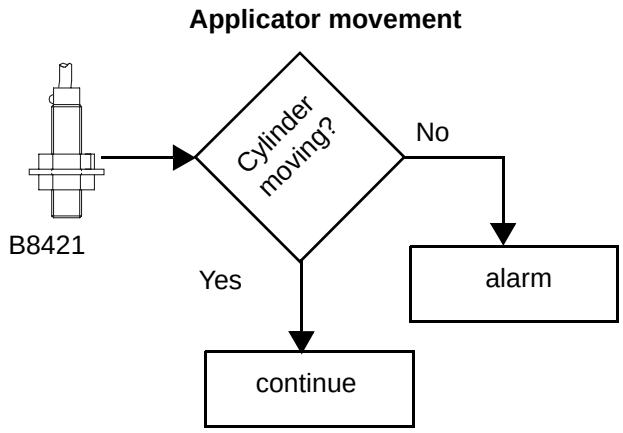

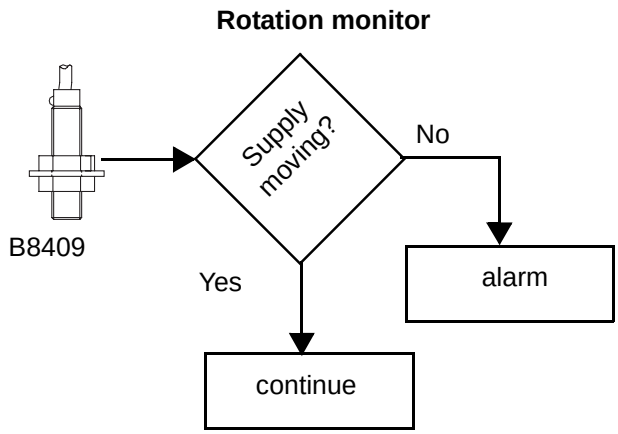

TechPub_2614345_0103 - B6114E00en.fm

5.1 Setting Flow Chart

The following flow chart shows the order in which the various components must be set up.

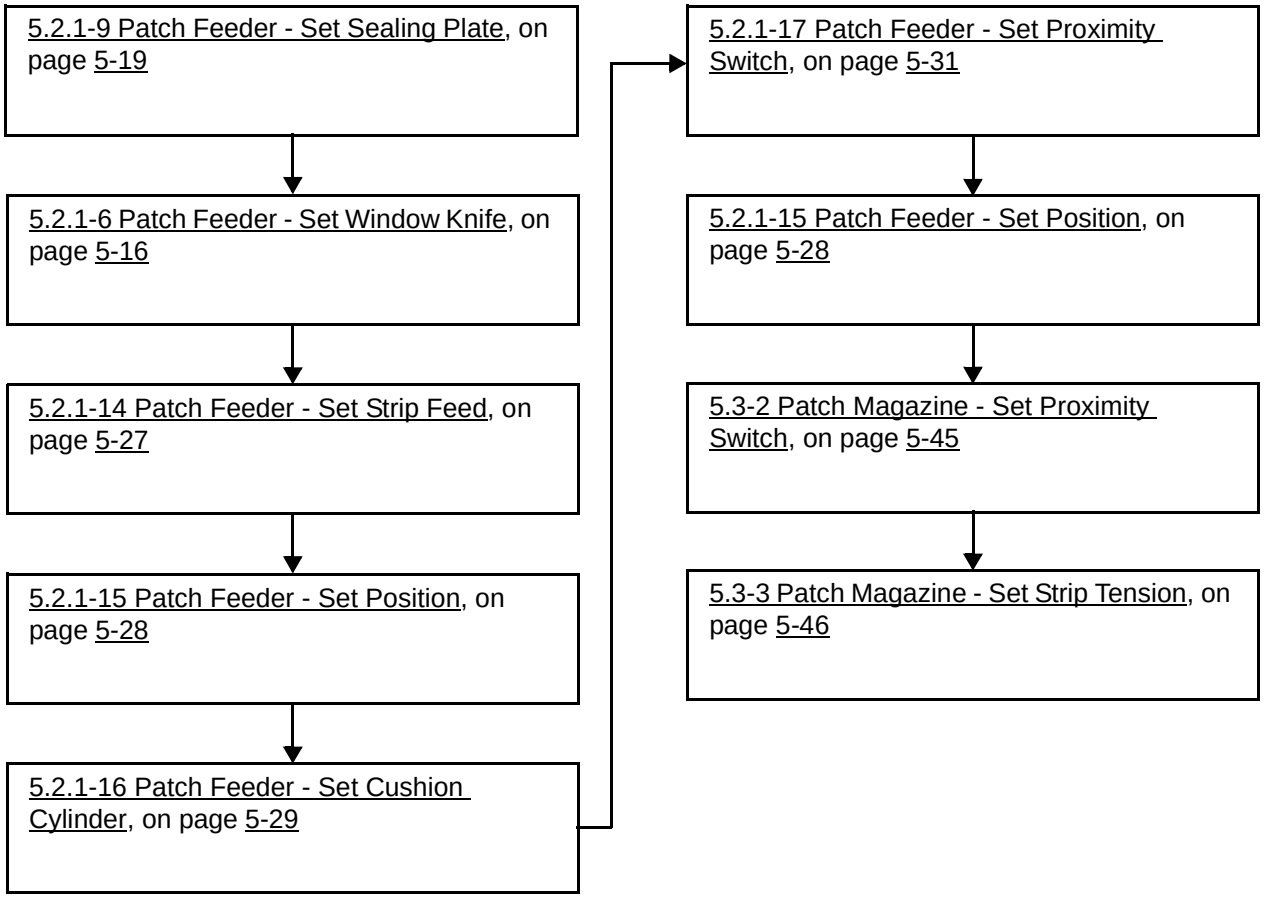

TechPub_2614345_0103 - B6114E01en.fm

5.2 Patch Applicator

SPC Reference	2526518-0100

5.2.1 Patch Feeder

5.2.1-1 Patch Feeder - Check Function

Machine Status	Air **OFF** Mains Power **OFF**
Consumables	Cleaning compound code G2
SPC Reference	2526521-0100

WARNING
Risk of burns!
The sealing jaw may be hot.

a) Check the surface of the one way bearing (1) for damage. Change as required, see 5.2.1-7 Patch Feeder - Change One-way Bearing.

b) Make sure the one way bearing (1) and the roller (2) are working. It should only be possible to turn them in the patch feeding direction. Change as required, see 5.2.1-7 Patch Feeder - Change One-way Bearing.

c) Make sure the steer plate (3) is not jammed with patch strip. Clean any build-up of polyethylene from the steer plate with cleaning compound, (code G2).

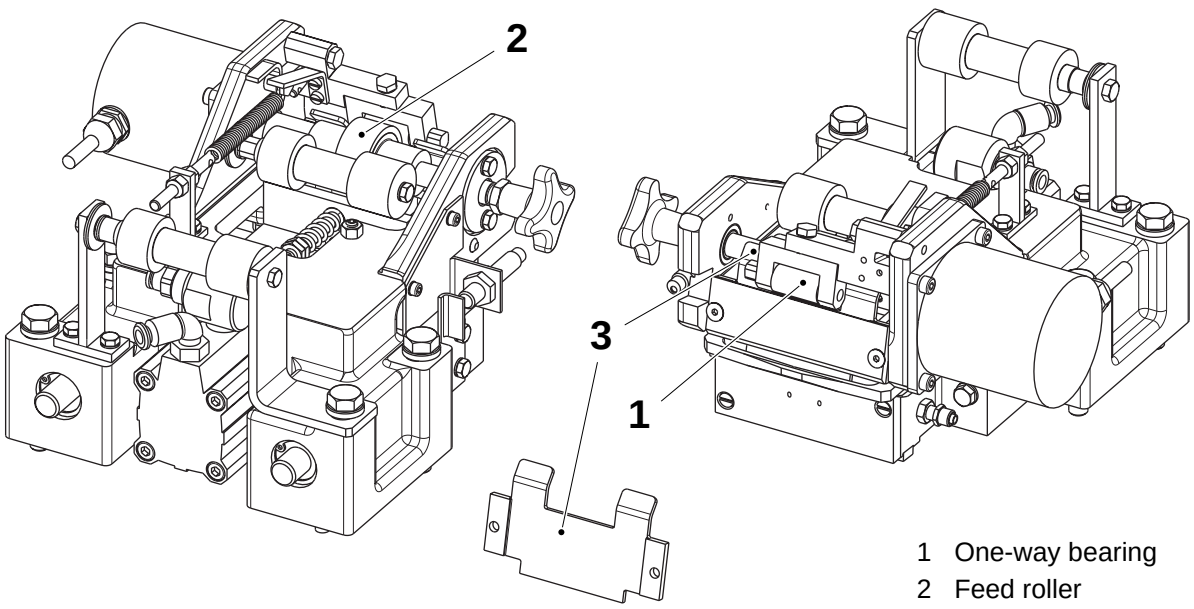

1 One-way bearing
2 Feed roller
3 Steer plate

(Cont'd)

TechPub_2614345_0103 - B6114E02en.fm

(Cont'd)

d) Check the feed roller (2) for damage and its feeding action by turning the feed knob (4) manually. If required change the feed roller and set the strip feed, see 5.2.1-19 Patch Feeder - Change Feed Roller and 5.2.1-14 Patch Feeder - Set Strip Feed.

e) Check the strip feeding action during PRODUCTION.

f) Make sure there is no polyethylene residue on the surface of the knives (5) and (6) and in the space between the flat knife (6) and the sealing plate (7).

g) Check the flat knife (6) and the window knife (5) for wear and/or damage, see 5.2.1-2 Patch Feeder - Change Flat Knife.

h) Make sure the edges of the patch are cut cleanly. If required, set the window knife, see 5.2.1-6 Patch Feeder - Set Window Knife.

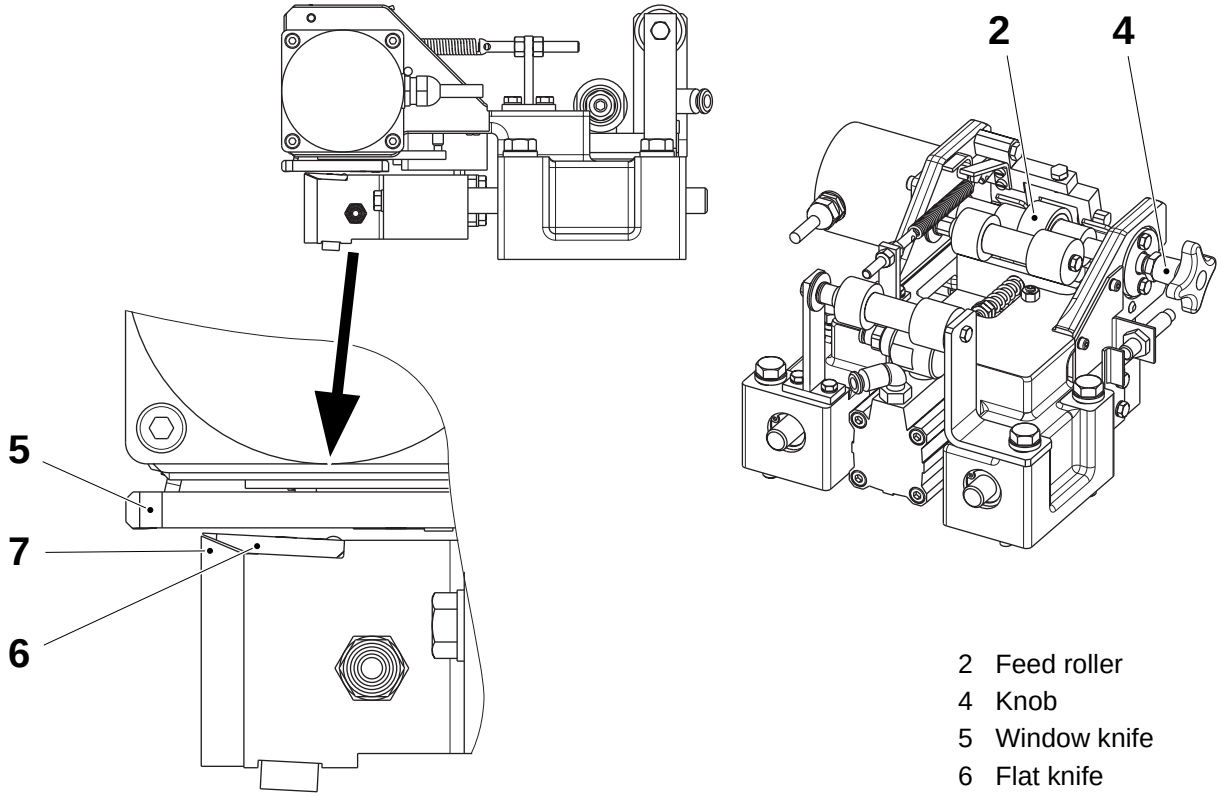

2 Feed roller
4 Knob
5 Window knife
6 Flat knife
7 Sealing plate

TechPub_2614345_0103 - B6114E02en.fm

5.2.1-2 Patch Feeder - Change Flat Knife

Machine Status	Air **OFF** Mains Power **OFF**
SPC Reference	2526521-0100

WARNING
Risk of burns!
The sealing jaw may be hot.

a) Remove the feeder, see 5.2.1-5 Patch Feeder - Remove.
b) Remove the flag (1) by means of the screws (2).
c) Remove the four screws (3) and the block (4).
d) Remove the screws (5).
e) Remove and change the flat knife (6).
f) Set the flat knife, see 5.2.1-9 Patch Feeder - Set Sealing Plate.

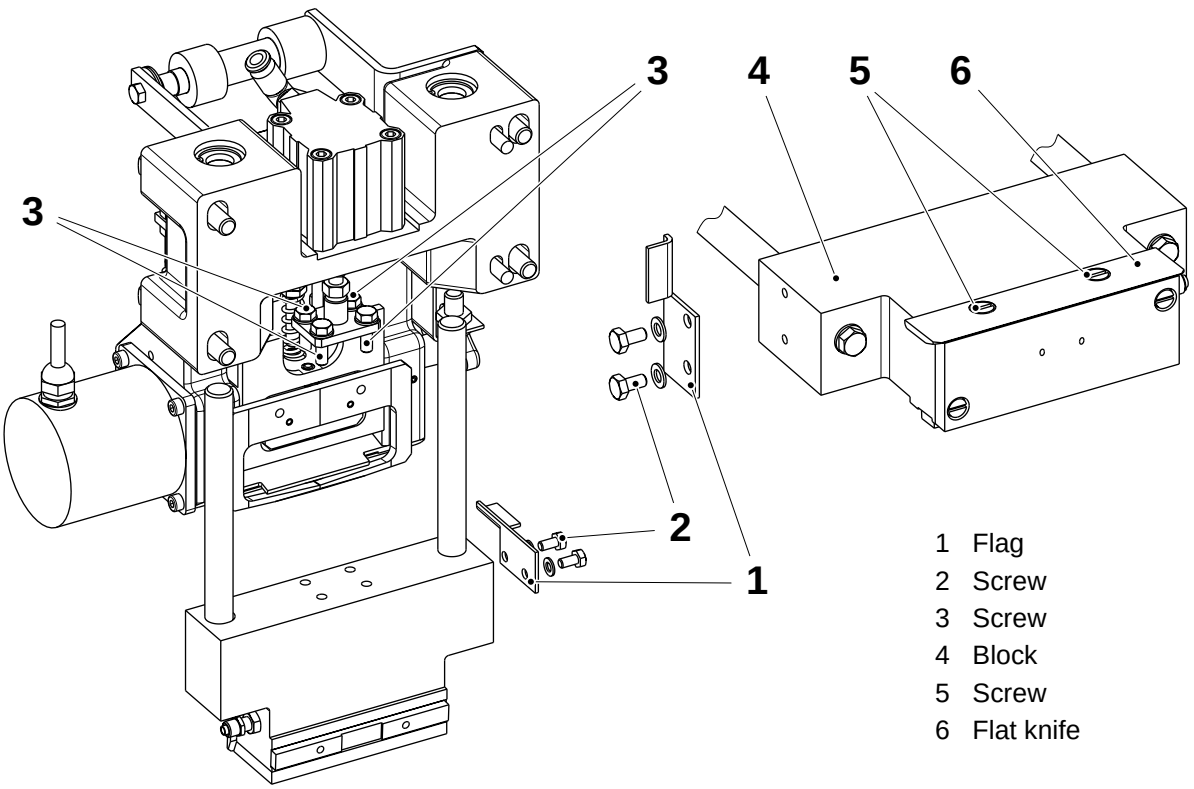

1 Flag
2 Screw
3 Screw
4 Block
5 Screw
6 Flat knife

TechPub_2614345_0103 - B6114E02en.fm

5.2.1-3 Patch Feeder - Change Window Knife

Machine Status	Air **OFF** Mains Power **OFF**
SPC Reference	2526521-0100

WARNING
Risk of burns!
The sealing jaw may be hot.

a) Remove the feeder, see 5.2.1-5 Patch Feeder - Remove.
b) Remove the flag (1) by means of the screws (2).
c) Remove the four screws (3) and the bracket (4).
d) Release the springs (5) by loosening the nut (6)
e) Loosen the grub screw (7) and remove the shaft (8).
f) Remove the screws (9) and the two pins (10).
g) Change the window knife (11).

CAUTION
Risk of damage to the equipment!
When changing the window knife (11), make sure that the bevelled side is the side that comes into contact with the flat knife.

h) Assemble in the reverse order.
i) Set the window knife (11), see 5.2.1-6 Patch Feeder - Set Window Knife.

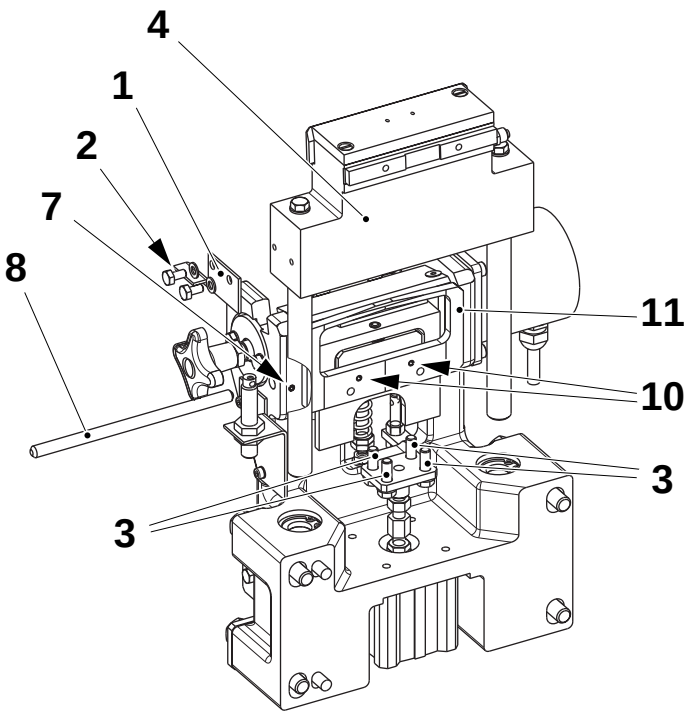

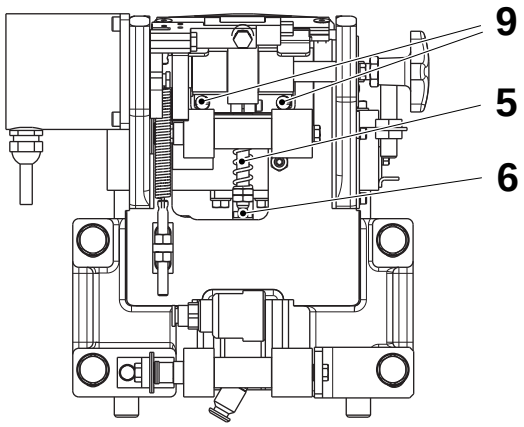

1	Flag	7	Grub screw
2	Screw	8	Shaft
3	Screw	9	Screw
4	Bracket	10	Pin
5	Spring	11	Window knife
6	Nut		

TechPub_2614345_0103 - B6114E02en.fm

5.2.1-4 Patch Feeder - Check Pivot Plate

Machine Status	Air **OFF** Mains Power **OFF**
SPC Reference	2526521-0100

WARNING
Risk of burns!
The sealing jaw may be hot.

a) Remove the feeder, see 5.2.1-5 Patch Feeder - Remove.
b) Remove the screws (1) and the bracket (2).
c) Loosen the grub screw (3) and remove the shaft (4).
d) Make sure the pivot plate (5) is free to rotate without radial play.
e) If not, change the pivot plate (5) shims, see 5.2.1-18 Patch Feeder - Change Shims.
f) Assemble in the reverse order.

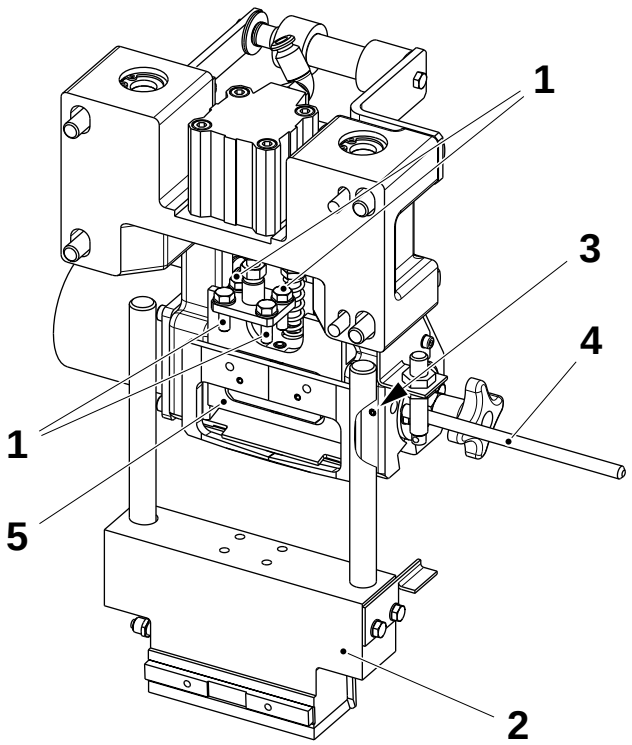

1 Screw
2 Bracket
3 Grub screw
4 Shaft
5 Pivot plate

TechPub_2614345_0103 - B6114E02en.fm

5.2.1-5 Patch Feeder - Remove

Machine Status	Air **OFF** Mains Power **OFF**
SPC Reference	2526521-0100

a) Disconnect the stepper motor electrical connector (1) from the electrical cabinet.

b) Disconnect the air hoses (2).

c) Disconnect the strip vacuum hose (3).

d) Remove the proximity switch (4).

e) Remove the screws (5) and the patch feeder (6).

f) Assemble in the reverse order.

g) Set the patch feeder, see 5.2.1-15 Patch Feeder - Set Position.

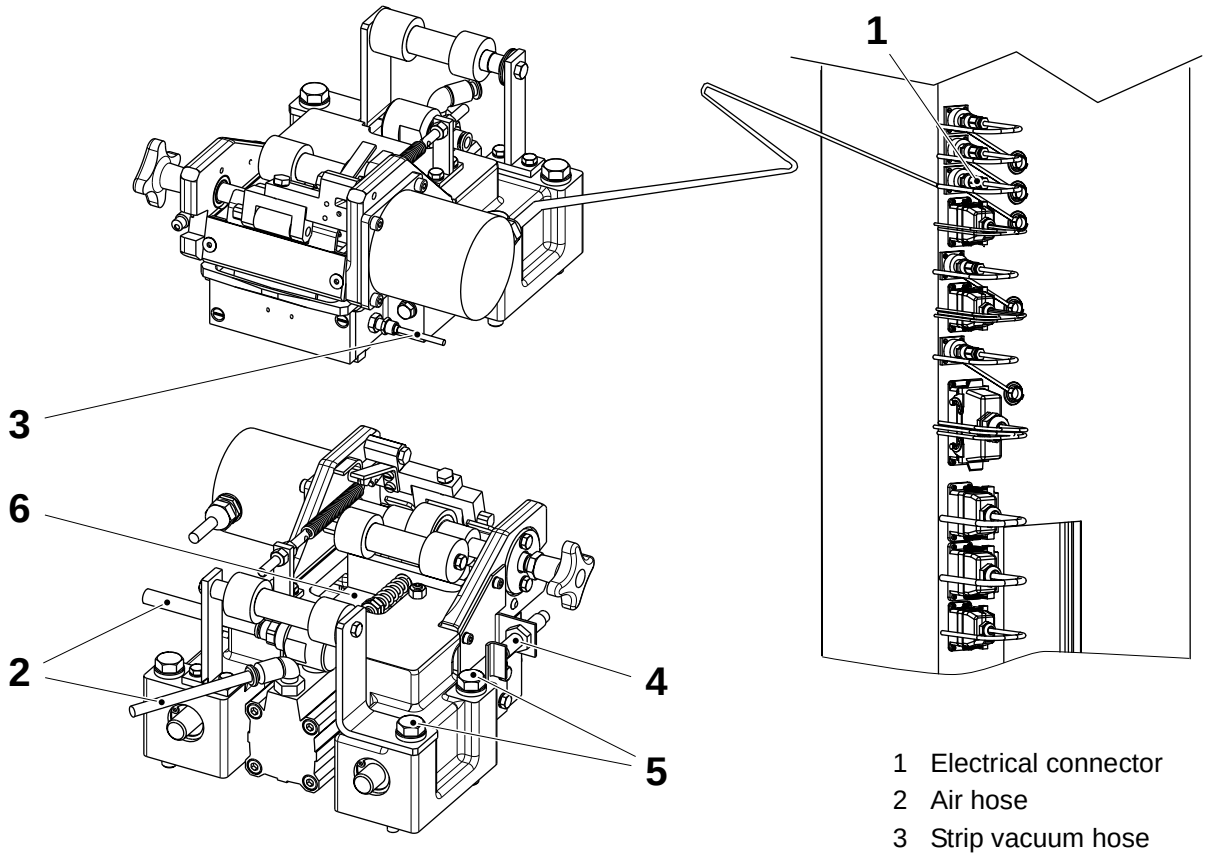

1 Electrical connector
2 Air hose
3 Strip vacuum hose
4 Proximity switch
5 Screw
6 Patch feeder

TechPub_2614345_0103 - B6114E02en.fm

5.2.1-6 Patch Feeder - Set Window Knife

Machine Status	Air **OFF** Mains Power **OFF**
SPC Reference	2526521-0100

WARNING
Risk of burns!
The sealing jaw may be hot.

This setup may be performed on a work bench.

a) Remove the feeder, see 5.2.1-5 Patch Feeder - Remove.
b) Adjust the nuts (1) until the spring (2) starts to compress.
c) Set the distance **A** between the surface of the sealing plate (3) and the outside edge of the window knife (4).
d) Keep the distance **A** and adjust the screw (5) until the window knife (4) touches the outside edge of the flat knife (6) without any play.
e) Adjust the nuts (1) to set the distance **B** between the nuts.
f) Check the cutting action after the setting.

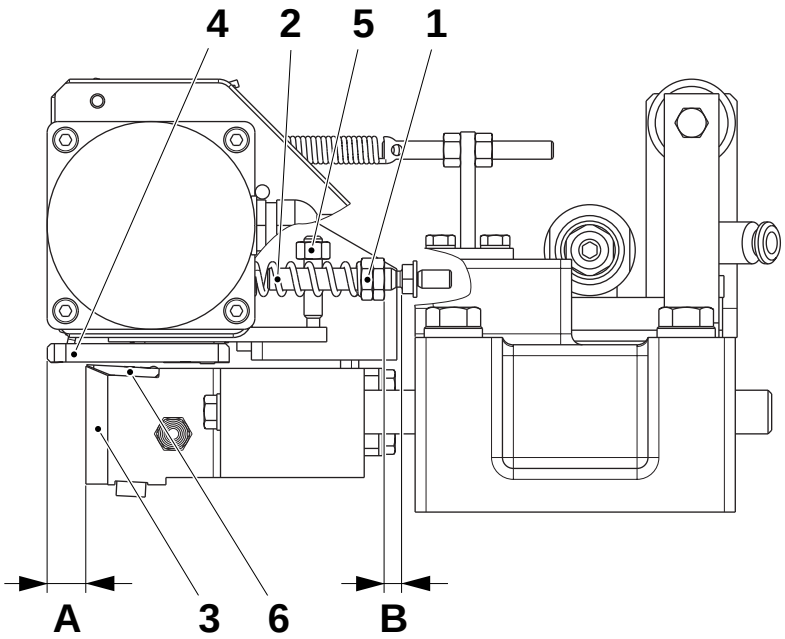

A = 6 ±0.5 mm

B = 12 ±2 mm

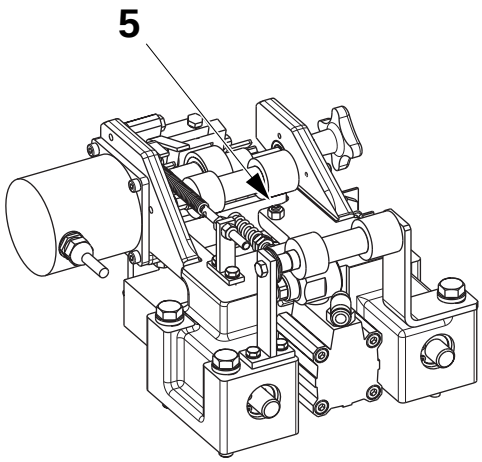

1 Nut
2 Spring
3 Sealing plate
4 Window knife
5 Screw
6 Flat knife

TechPub_2614345_0103 - B6114E02en.fm

5.2.1-7 Patch Feeder - Change One-way Bearing

Machine Status	Air **OFF** Mains Power **OFF**
SPC Reference	2526521-0100

WARNING
Risk of burns!
The sealing jaw may be hot.

a) Loosen the shaft (1). Push the catches (2) to disengage the one-way bearing (3) and the feed roller (4).

b) Remove the shaft (1) and the one-way bearing (3).

c) Change the one-way (3) bearing and assemble in the reverse order.

Note! Make sure the one-way bearing (3) rotates in the patch (5) feeding direction.

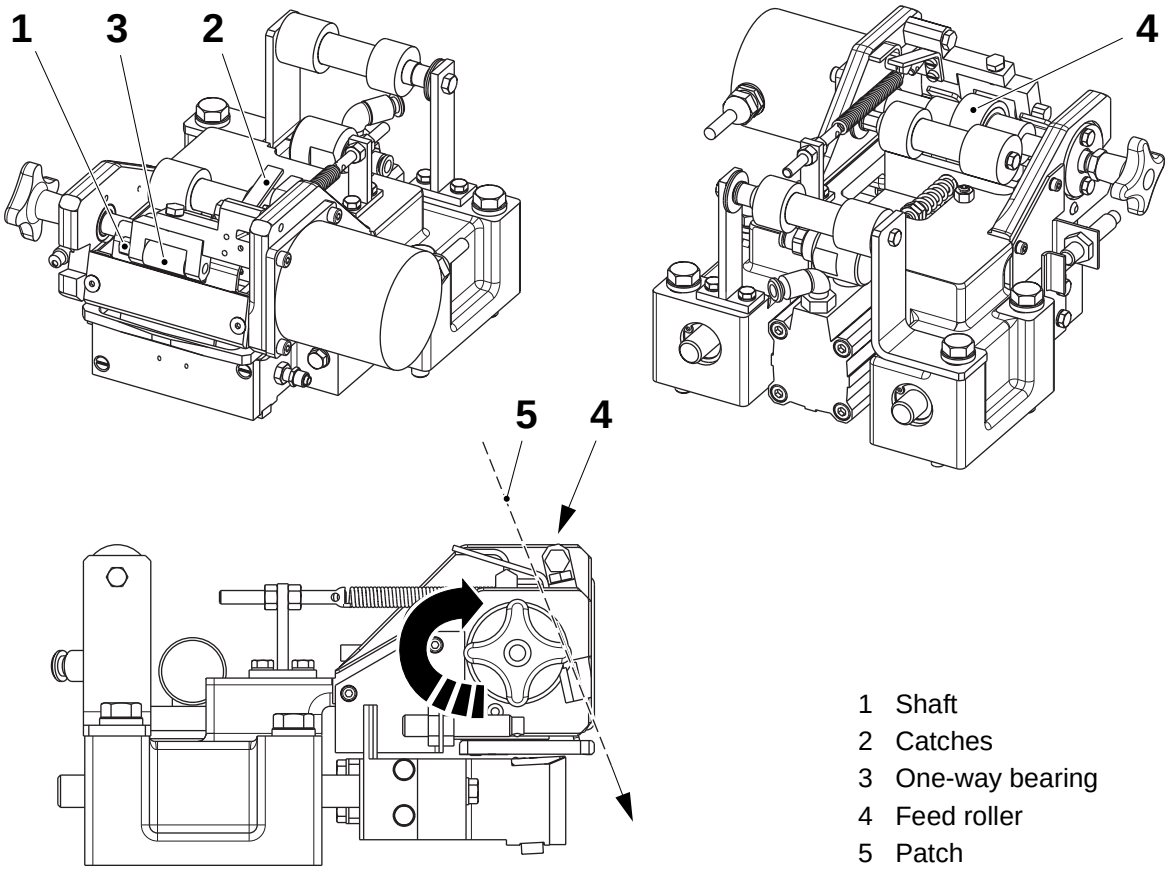

1 Shaft
2 Catches
3 One-way bearing
4 Feed roller
5 Patch

TechPub_2614345_0103 - B6114E02en.fm

5.2.1-8 Patch Feeder - Check Sealing Plate

Machine Status	Air **OFF** Mains Power **OFF**
SPC Reference	2526521-0100

WARNING
Risk of burns!
The sealing jaw may be hot.

a) Remove the feeder, see 5.2.1-5 Patch Feeder - Remove.
b) Remove the screws (1) and the sealing plate (2).
c) Check the surface of the sealing plate (2) for wear and/or scratches. Also check for any residue of polyethylene.
d) Change the sealing plate (2) if damaged or worn.
e) Fit the sealing plate (2) by means of the screws (1).
f) Set the sealing plate (2), see 5.2.1-9 Patch Feeder - Set Sealing Plate.

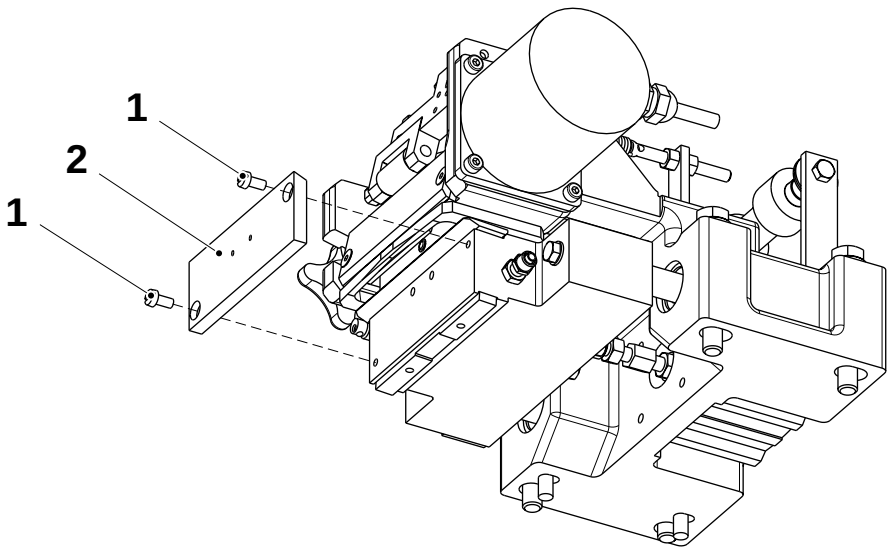

1 Screw
2 Sealing plate

TechPub_2614345_0103 - B6114E02en.fm

5.2.1-9 Patch Feeder - Set Sealing Plate

Machine Status	Air **OFF** Mains Power **OFF**
SPC Reference	2526521-0100

WARNING
Risk of burns!
The sealing jaw may be hot.

a) Remove the feeder, see 5.2.1-5 Patch Feeder - Remove.
b) Remove the flag (1) by means of the screws (2).
c) Remove the four screws (3) and the bracket (4).

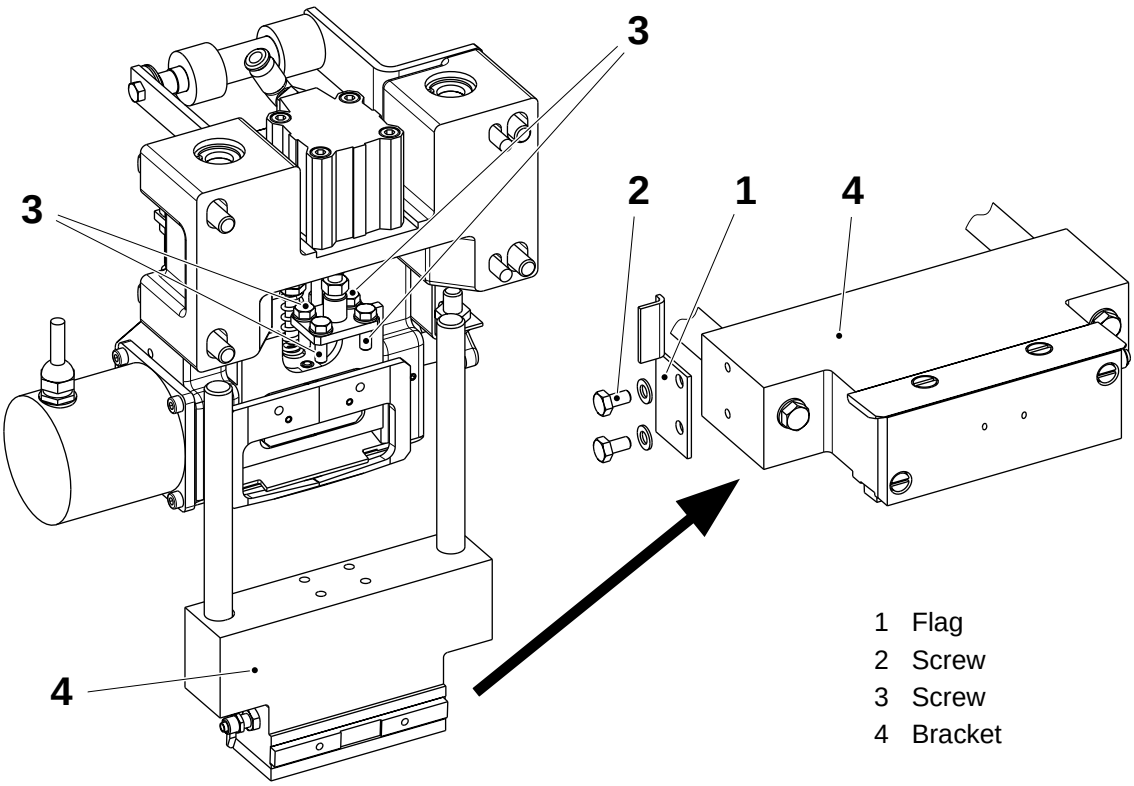

1 Flag
2 Screw
3 Screw
4 Bracket

(Cont'd)

TechPub_2614345_0103 - B6114E02en.fm

(Cont'd)

d) Loosen the screws (5).

e) Set the distance **A** between the top of the flat knife (6) and the sealing plate (7). If required, adjust with shims (8).

f) Tighten the screws (5) and loosen the screws (9).

g) Set the distance **B** between the sealing plate (7) and the flat knife (6).

h) Tighten the screws (9).

i) Assemble in the reverse order.

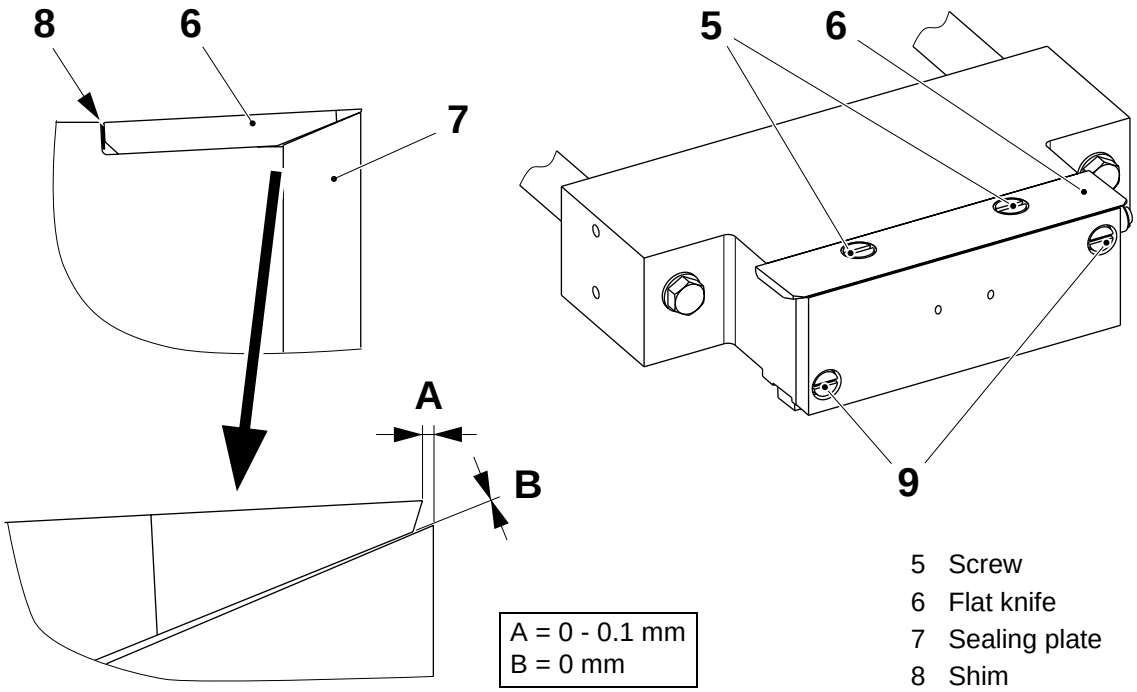

A = 0 - 0.1 mm
B = 0 mm

5 Screw
6 Flat knife
7 Sealing plate
8 Shim
9 Screw

TechPub_2614345_0103 - B6114E02en.fm

5.2.1-10 Patch Feeder - Check Guides and Linear Bearings

Machine Status	Air **OFF** Mains Power **OFF**
SPC Reference	2526521-0100

WARNING
Risk of burns!
The sealing jaw may be hot.

This setup may be performed on a work bench.

a) Make sure the bracket (1) moves freely.
b) Remove the feeder, see 5.2.1-5 Patch Feeder - Remove.
c) Remove the flag (2) by means of the screws (3).
d) Remove the four screws (4) and the bracket (1).
e) Check the guides (5) for wear and/or damage.
f) Check for wear in the linear bearings (6) by using the guide (5). Check the play with one bearing at a time.
g) Change as required, see 5.2.1-11 Patch Feeder - Change Linear Bearings.
h) Assemble in the reverse order.

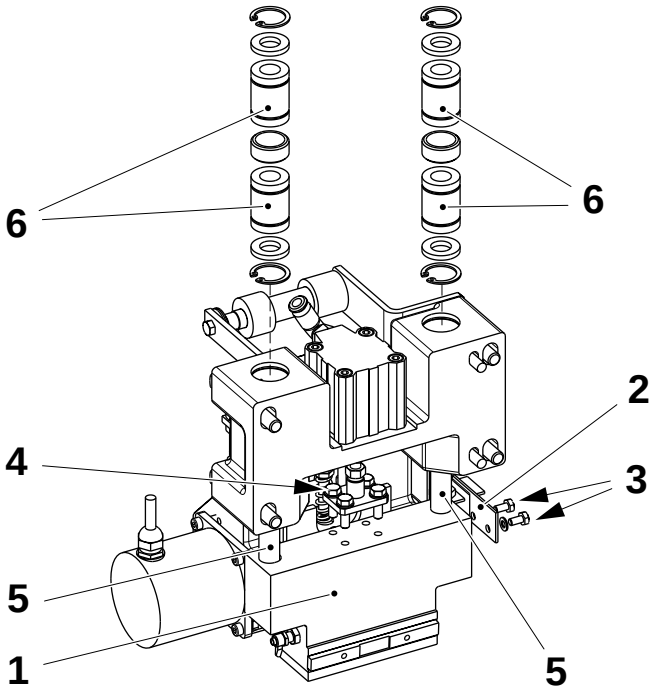

1 Bracket
2 Flag
3 Screw
4 Screw
5 Guide
6 Linear bearing

TechPub_2614345_0103 - B6114E02en.fm

5.2.1-11 Patch Feeder - Change Linear Bearings

Machine Status	Air **OFF** Mains Power **OFF**
SPC Reference	2526521-0100

WARNING
Risk of burns!
The sealing jaw may be hot.

a) Remove the feeder, see 5.2.1-5 Patch Feeder - Remove.
b) Remove the flag (1) by means of the screws (2).
c) Remove the four screws (3) and the bracket (4).
d) Remove the circlips (5) and the seal rings (6) from each side of the linear bearing (7).
e) Pull out the linear bearings (7) and change them.
f) Assemble in the reverse order.
g) Make sure the cylinder (8) reaches the end of its stroke and moves freely.

Note! On both sides of the applicator casting (9), make sure that the distance **A** is obtained between the outer surface of the seal ring (6) and the surface of the applicator casting (9).

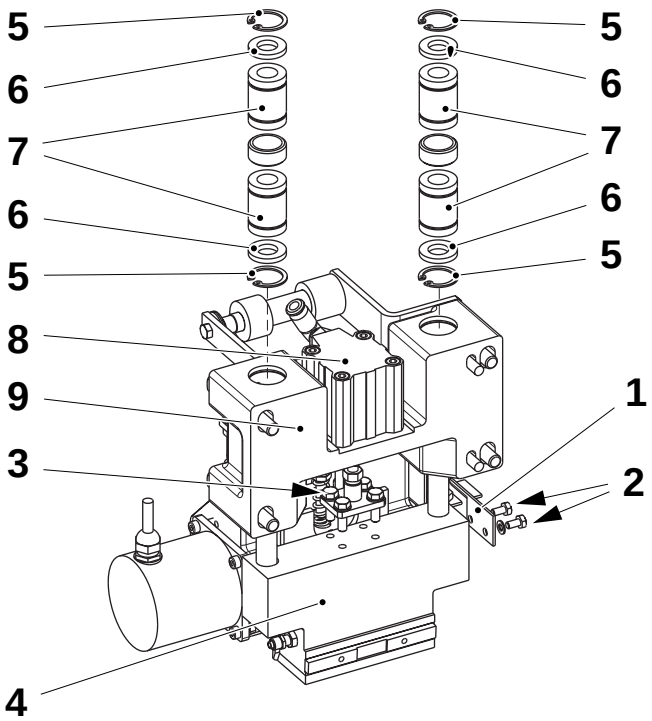

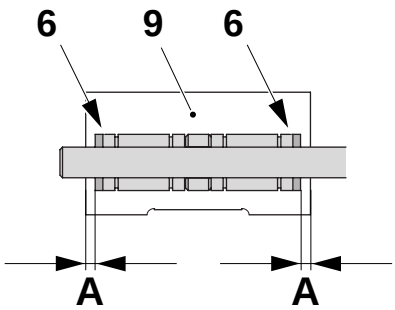

A = 4 mm

1 Flag
2 Screw
3 Screw
4 Bracket
5 Circlip
6 Seal ring
7 Linear bearing
8 Cylinder
9 Applicator casting

TechPub_2614345_0103 - B6114E02en.fm

5.2.1-12 Patch Feeder - Change Bushings

Machine Status	Air **OFF** Mains Power **OFF**
SPC Reference	2526521-0100

WARNING
Risk of burns!
The sealing jaw may be hot.

a) Remove the feeder, see 5.2.1-5 Patch Feeder - Remove.
b) Remove the window knife, see 5.2.1-6 Patch Feeder - Set Window Knife
c) Remove the pivot plate, see 5.2.1-4 Patch Feeder - Check Pivot Plate
d) Loosen the grub screw (1).
e) Remove the shaft (2).
f) Remove the two bushings (3) from the pivot plate (4) and change them if damaged or worn.

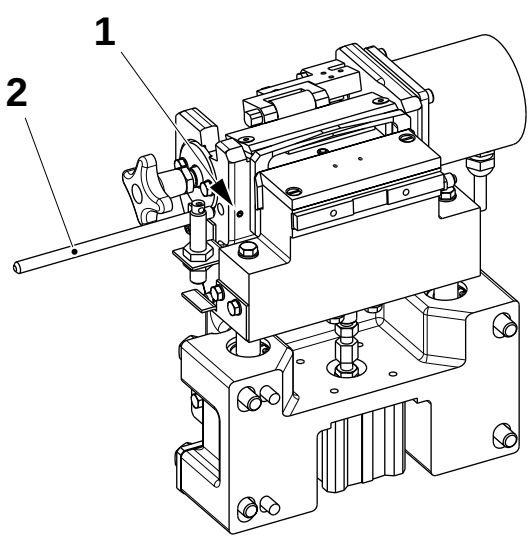

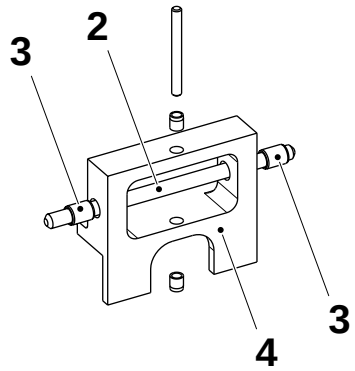

1 Grub screw
2 Shaft
3 Bushing
4 Pivot plate

(Cont'd)

TechPub_2614345_0103 - B6114E02en.fm

(Cont'd)

g) Remove the two screws (5) and the plates (6) and (7).

h) Loosen the clamp screws (8).

i) Remove the shaft (9) and the bushings (10) from the pivot plate (4).

Note! Take care of the shims on the shaft (9). Follow the procedure in 5.2.1-18 Patch Feeder - Change Shims when assembling the shims.

j) Change the bushings (10) if damaged or worn.

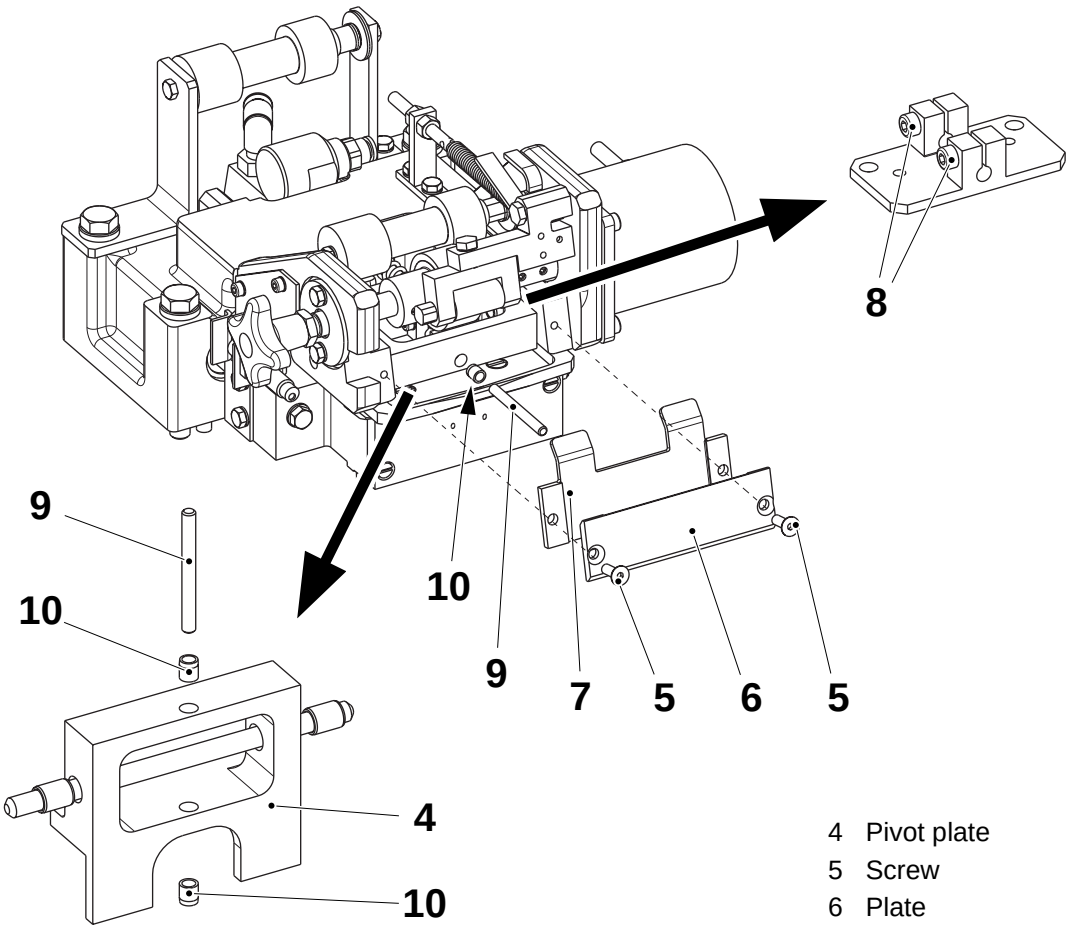

4 Pivot plate
5 Screw
6 Plate
7 Plate
8 Screw
9 Shaft
10 Bushing

(Cont'd)

TechPub_2614345_0103 - B6114E02en.fm

(Cont'd)

k) Remove the knob (11) and the nut (12).
l) Remove the two screws (13) and the flange (14).
m) Remove the bushing (15) from the flange (14).
n) Change the bushing if damaged or worn.
o) Assemble in the reverse order.

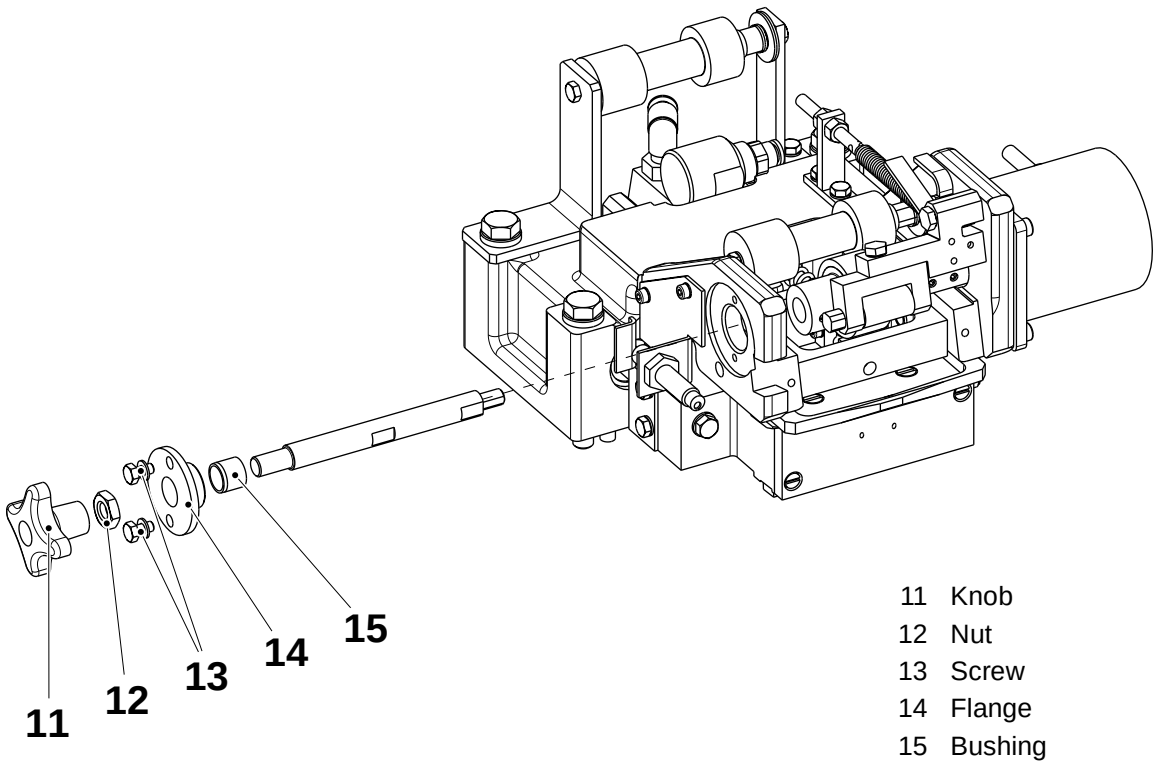

11 Knob
12 Nut
13 Screw
14 Flange
15 Bushing

TechPub_2614345_0103 - B6114E02en.fm

5.2.1-13 Patch Feeder - Change Cylinder

Machine Status	Air **OFF** Mains Power **OFF**
SPC Reference	2526521-0100

WARNING
Risk of burns!
The sealing jaw may be hot.

a) Remove the air connections (1).
b) Loosen the screw (2).
c) Remove the four screws (3).
d) Remove the cylinder (4) and change it.
e) Assemble in the reverse order.
f) Set the cushion cylinder, see 5.2.1-16 Patch Feeder - Set Cushion Cylinder.

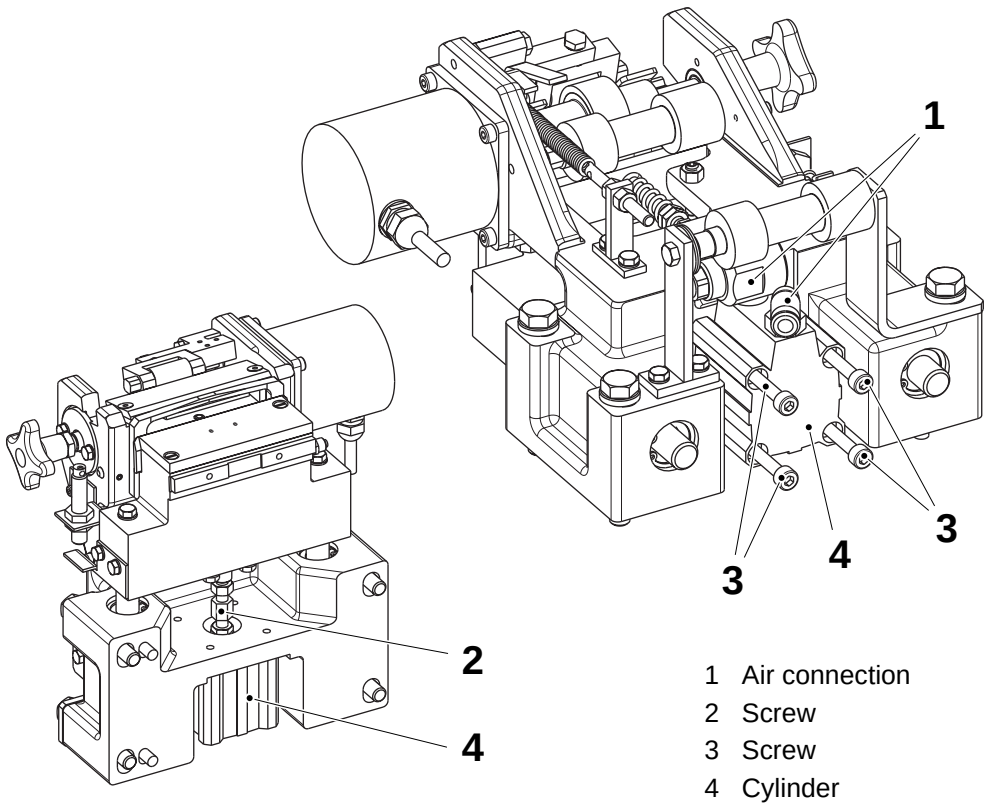

1 Air connection
2 Screw
3 Screw
4 Cylinder

TechPub_2614345_0103 - B6114E02en.fm

5.2.1-14 Patch Feeder - Set Strip Feed

Machine Status	Air **OFF** Mains Power **OFF**
SPC Reference	2526521-0100

WARNING

Risk of burns!

The sealing jaw may be hot.

a) Place a piece of patch strip between the feed roller (1) and the one-way bearing (2).

b) Loosen the nut (3) and set the distance **A** between the bracket (4) and the screw (5).

c) Adjust the nut (3) until it is not possible to pull the strip backwards.

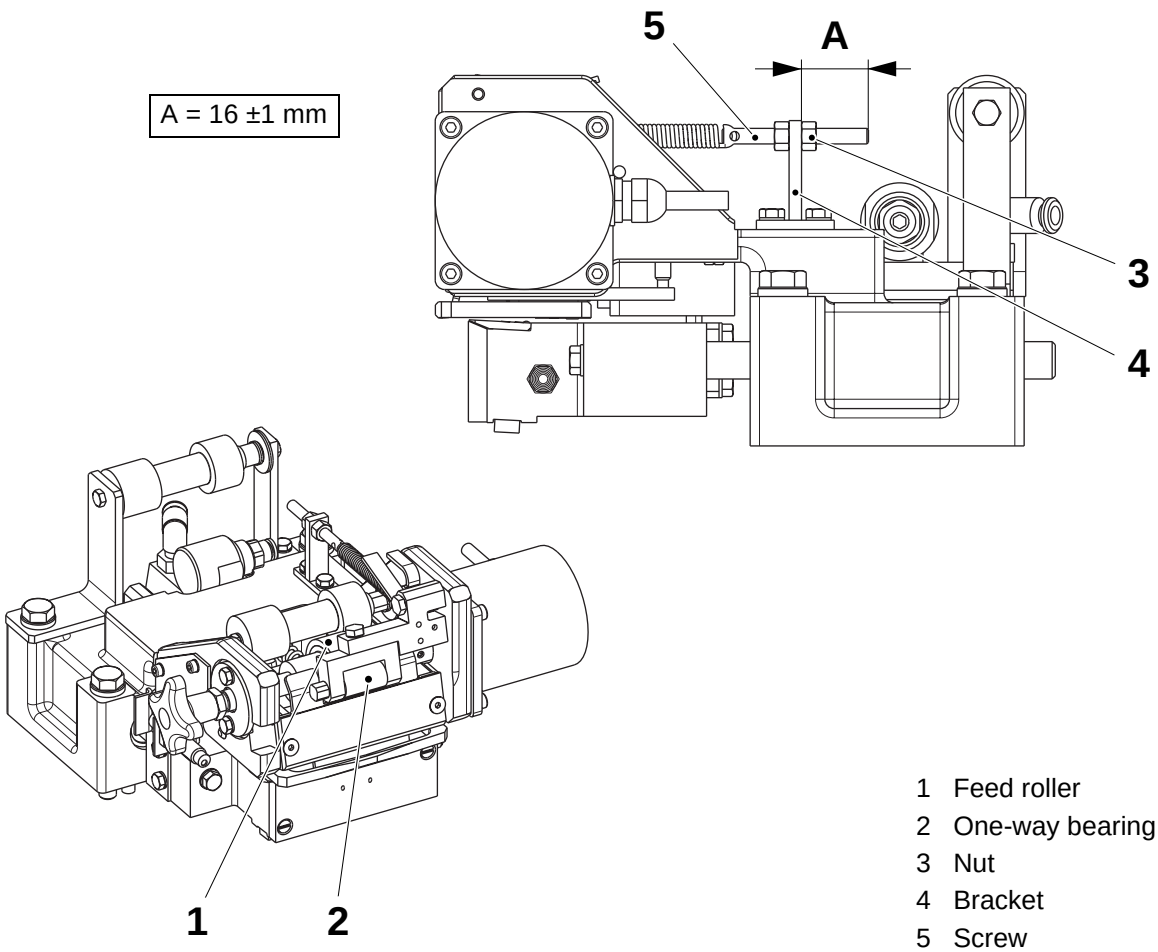

1 Feed roller
2 One-way bearing
3 Nut
4 Bracket
5 Screw

TechPub_2614345_0103 - B6114E02en.fm

5.2.1-15 Patch Feeder - Set Position

Machine Status	PREPARATION
SPC Reference	2526521-0100 2526519-0100

WARNING
Risk of burns!
The sealing jaw may be hot.

Note! Before setting the patch feeders position, make sure the patch counter jaw position is set correctly, see 1.1.2-4 Applicator Stations - Fine Setting and 1.1.2-2 Applicator Stations - Basic Setting.

a) Switch the key selector located on the PT21 electrical panel to the SERVICE position.

b) Make sure the cushion cylinder (1) is fully extended.

c) Check the distance **A** between the inductor (2) and the tip of the window knife (3).

Note! Do not set the distance **A** using shims (4). This will destroy the alignment previously set.

d) Loosen the screws (5) and set the distance **A** by shifting the patch feeder assembly (6).

e) Set the patch counter jaw, see 5.2.1-16 Patch Feeder - Set Cushion Cylinder.

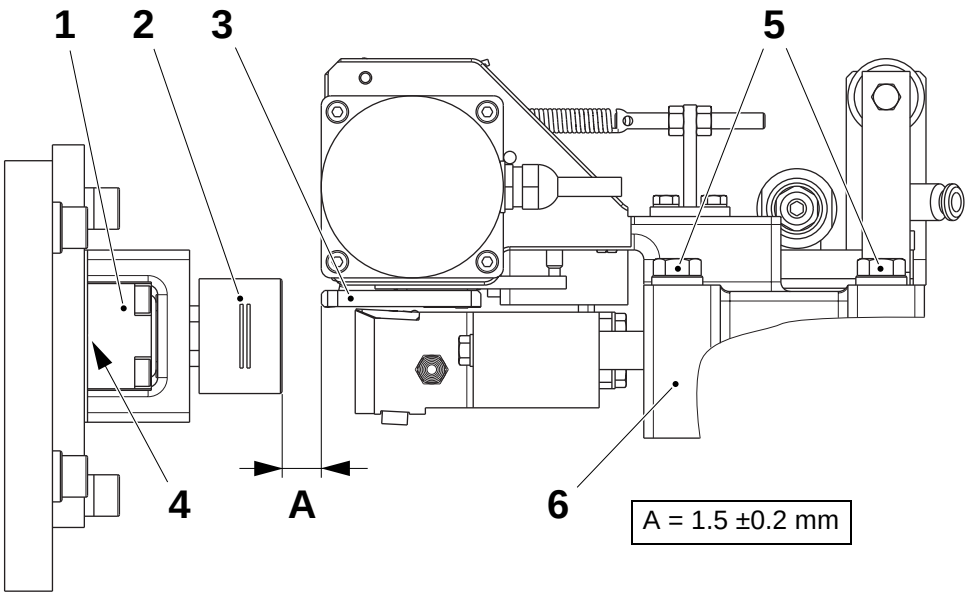

1 Cushion cylinder
2 Inductor
3 Window knife
4 Shim
5 Screw
6 Patch feeder

TechPub_2614345_0103 - B6114E02en.fm

5.2.1-16 Patch Feeder - Set Cushion Cylinder

Machine Status	PREPARATION
SPC Reference	2526521-0100 2526519-0100

WARNING
Risk of burns!
The sealing jaw may be hot.

a) Set the patch feeder unit, see 5.2.1-15 Patch Feeder - Set Position.
b) Switch the key selector on the PT21 electrical panel to the SERVICE position.
c) Measure and record the distance **A** with the aid of a feeler gauge.
d) Place a piece of packaging material (1) between the sealing jaw plate (2) and the counter jaw plate (3).

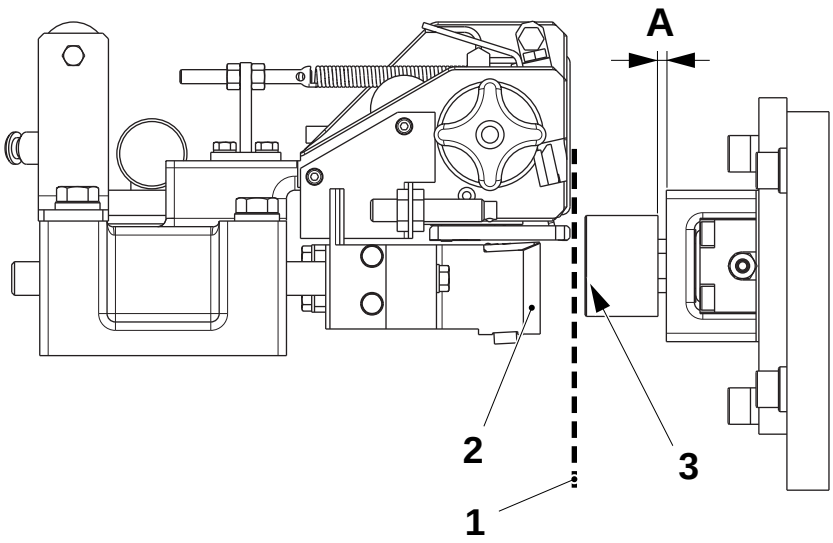

1 Packaging material
2 Plate
3 Plate

(Cont'd)

TechPub_2614345_0103 - B6114E02en.fm

(Cont'd)

e) Activate the valve for the cylinder (4).

f) Adjust the screw (5) of the cylinder (4) until the distance **A** is reduced by **0.8 mm**. Tighten the screw (5).

g) Activate the valve to retract the cylinder (4) and check that it is fully retracted.

h) Set the patch feeder, see 5.2.1-17 Patch Feeder - Set Proximity Switch.

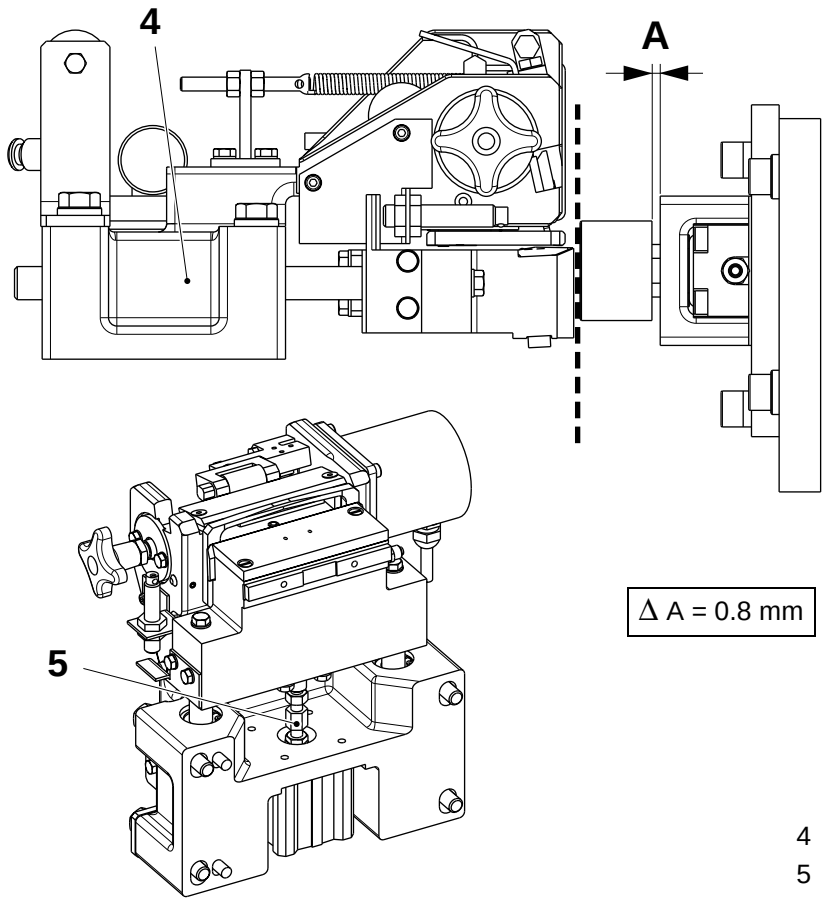

4 Cylinder
5 Screw

TechPub_2614345_0103 - B6114E02en.fm

5.2.1-17 Patch Feeder - Set Proximity Switch

Machine Status	Air **ON** Mains power **ON**
SPC Reference	2526521-0100

WARNING
Risk of crushing!
The cylinder piston may move unexpectedly.

a) Switch the key selector on the PT21 electrical panel to the SERVICE position.

Note! For an accurate setting, the packaging material must be threaded through the machine. If not, place a piece of packaging material between the sealing head and the counter jaw.

b) Loosen the nuts (1) and move the proximity switch (2) backwards.

c) Manually activate the valve to extend the cylinder (3).

d) Make sure the cylinder (3) is fully extended. If required, set the cushion cylinder, see 5.2.1-16 Patch Feeder - Set Cushion Cylinder.

e) Set the distance **A** between the proximity switch (2) and the flag (4) by means of the nuts (1).

f) Make sure the proximity switch (2) LED lights up.

g) Manually activate the valve to retract the cylinder (3).

h) Make sure the cylinder (3) is fully retracted.

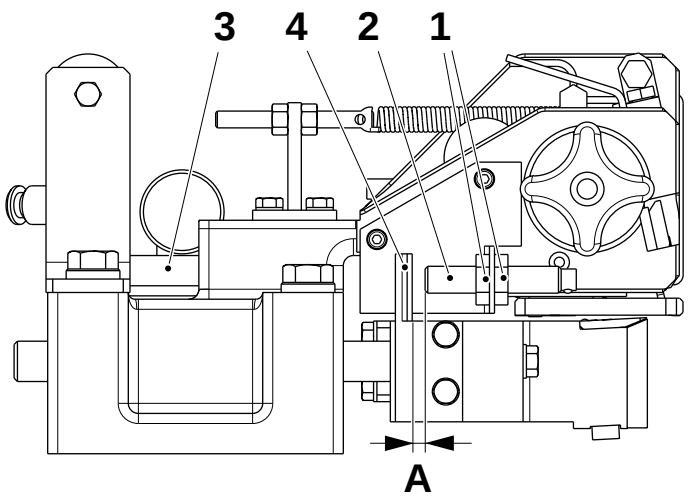

A = 0.1 mm

1 Nut
2 Proximity switch
3 Cylinder
4 Flag

TechPub_2614345_0103 - B6114E02en.fm

5.2.1-18 Patch Feeder - Change Shims

Machine Status	Air **OFF** Mains Power **OFF**
SPC Reference	2526521-0100

WARNING
Risk of burns!
The sealing jaw may be hot.

a) Remove the feeder, see 5.2.1-5 Patch Feeder - Remove.
b) Remove the screws (1) and the plates (2) and (3).
c) Loosen the grub screws (4) and remove the screws (5) and the stepper motor (6).
d) Release the spring (7) pressure.
e) Remove the flag (8) by means of the screws (9).
f) Remove the four screws (10) and the sealing head group (11).
g) Loosen the grub screw (12) and remove the shaft (13).

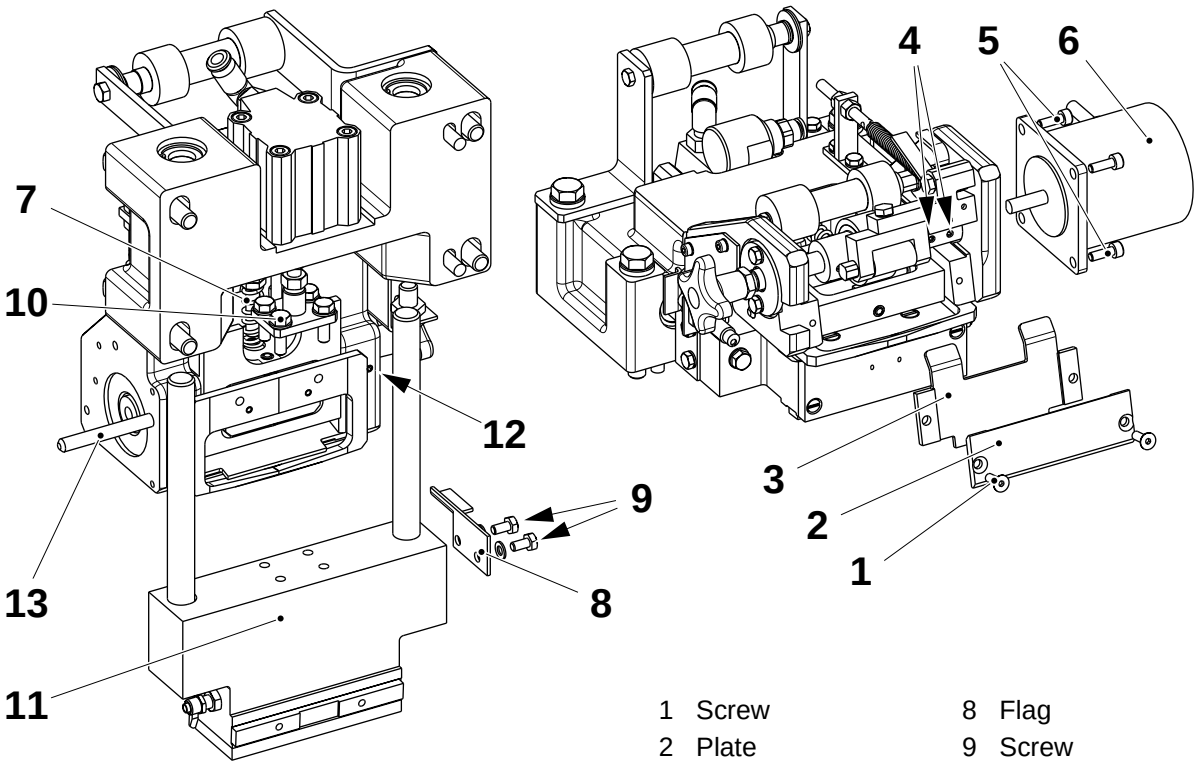

1 Screw
2 Plate
3 Plate
4 Grub screw
5 Screw
6 Stepper motor
7 Spring
8 Flag
9 Screw
10 Screw
11 Sealing head
12 Grub screw
13 Shaft

(Cont'd)

TechPub_2614345_0103 - B6114E02en.fm

(Cont'd)

h) Remove the screws (14) and the window knife (15).

i) Loosen the screws (16).

j) Remove the shaft (17) and the shims (18).

k) Measure and note the distance **A** between the pivot plate (19) and the plate (20).

l) Remove the pivot plate (19) and the plate (20).

m) Put the shims (18) at a thickness of **B** between the pivot plate (19) and the plate (20) and put back the shaft (17).

Note! The pivot plate (19) must be free to rotate but without any axial play.

n) Assemble in the reverse order.

o) Set the window knife, see 5.2.1-6 Patch Feeder - Set Window Knife.

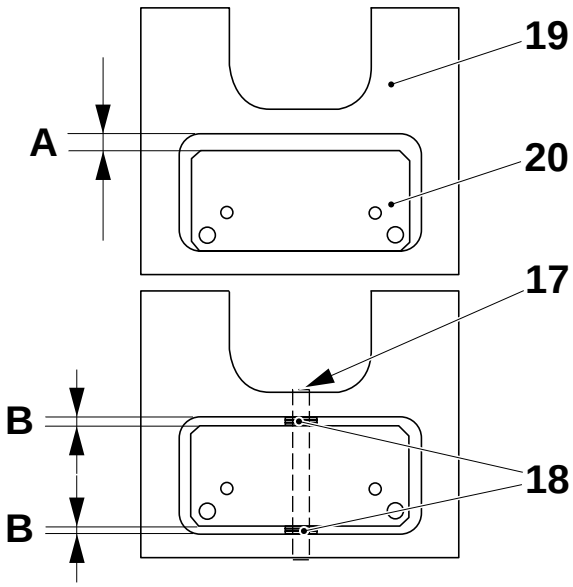

B = A/2 mm

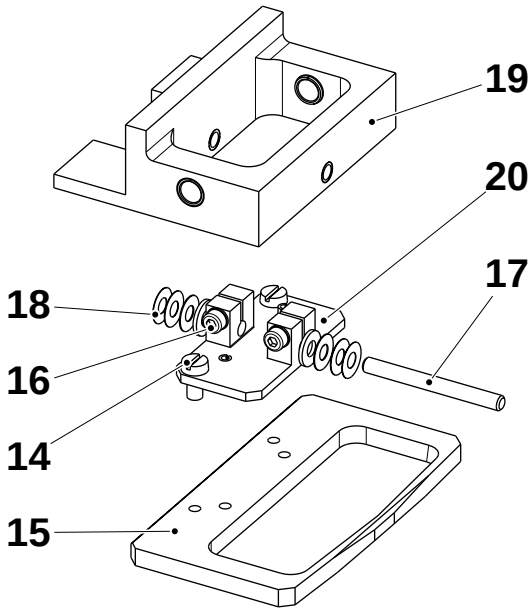

14	Screw	18	Shim
15	Window knife	19	Pivot plate
16	Screw	20	Plate
17	Shaft		

TechPub_2614345_0103 - B6114E02en.fm

5.2.1-19 Patch Feeder - Change Feed Roller

Machine Status	Air **OFF** Mains Power **OFF**
SPC Reference	2526521-0100

WARNING
Risk of burns!
The sealing jaw may be hot.

a) Loosen the locking screws (1).

b) Remove the nut (2) and the knob (3).

c) Remove the four screws (4) and pull out the stepper motor (5) together with the shaft (6) until the feed roller (7) comes free.

d) Change the feed roller (7).

e) Assemble in the reverse order. Make sure to tighten the locking screws (1) against the flat parts of the shaft (6).

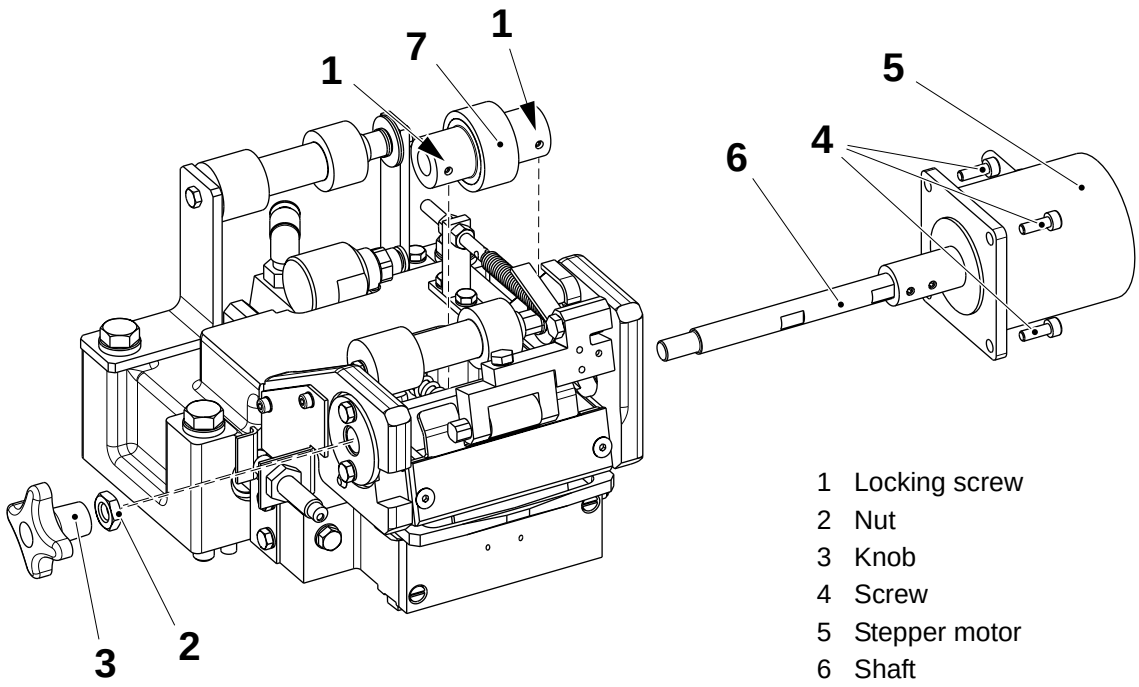

1 Locking screw
2 Nut
3 Knob
4 Screw
5 Stepper motor
6 Shaft
7 Feed roller

TechPub_2614345_0103 - B6114E02en.fm

5.2.1-20 Patch Feeder - Change Stepper Motor

Machine Status	Air **OFF** Mains Power **OFF**
Consumable	Silicon paste TP No. 90296-51
SPC Reference	2526521-0100

WARNING
Risk of burns!
The sealing jaw may be hot.

a) Remove the stepper motor electrical connector **X8207** (1).

Note! Remove all cable ties and straps from the cable routing.

b) Loosen the locking screws (2).
c) Remove the screws (3) and the stepper motor (4).
d) Change the stepper motor (4) if damaged or worn.
e) Assemble in the reverse order.

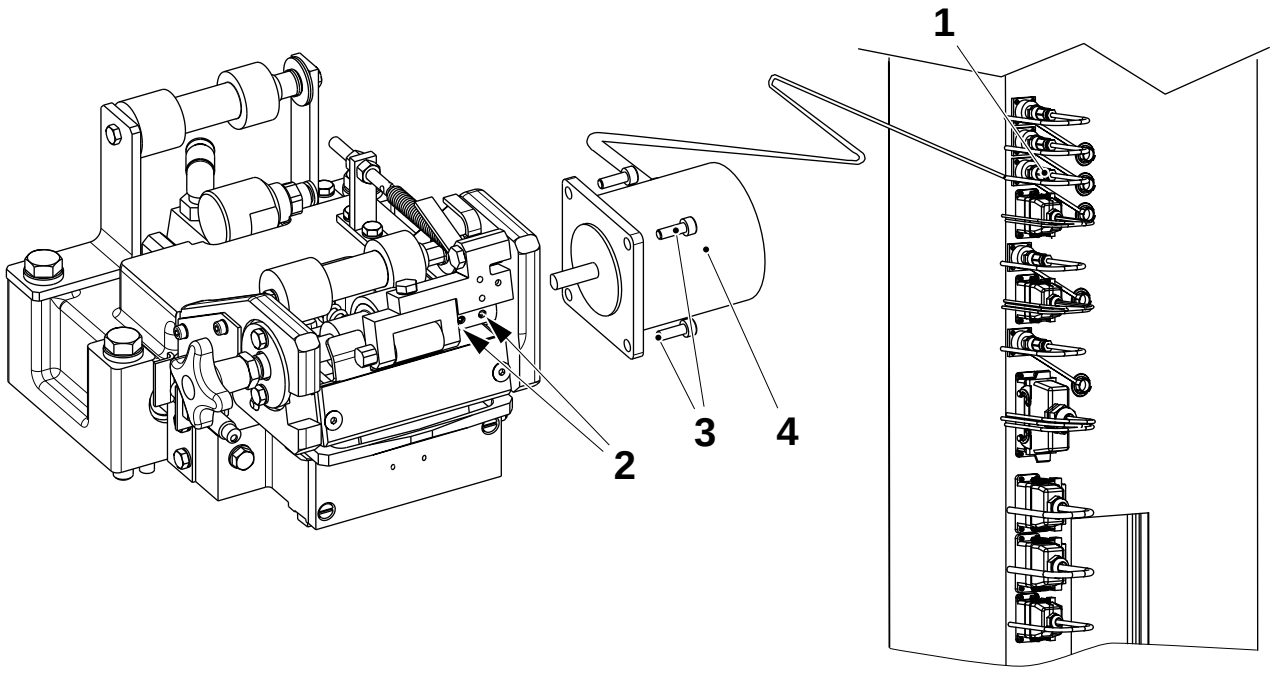

1 Electrical connector X8207
2 Locking screw
3 Screw
4 Stepper motor

TechPub_2614345_0103 - B6114E02en.fm

5.2.2 Patch Counter Jaw

5.2.2-1 Patch Counter Jaw - Remove

Machine Status	Air **OFF** Mains Power **OFF**
SPC Reference	2526519-0100

a) Loosen the screw (1).

b) Disconnect the cushion cylinder air hose (2).

c) Remove the screws (3).

d) Remove the plate (4) together with the counter jaw.

e) Assemble in the reverse order.

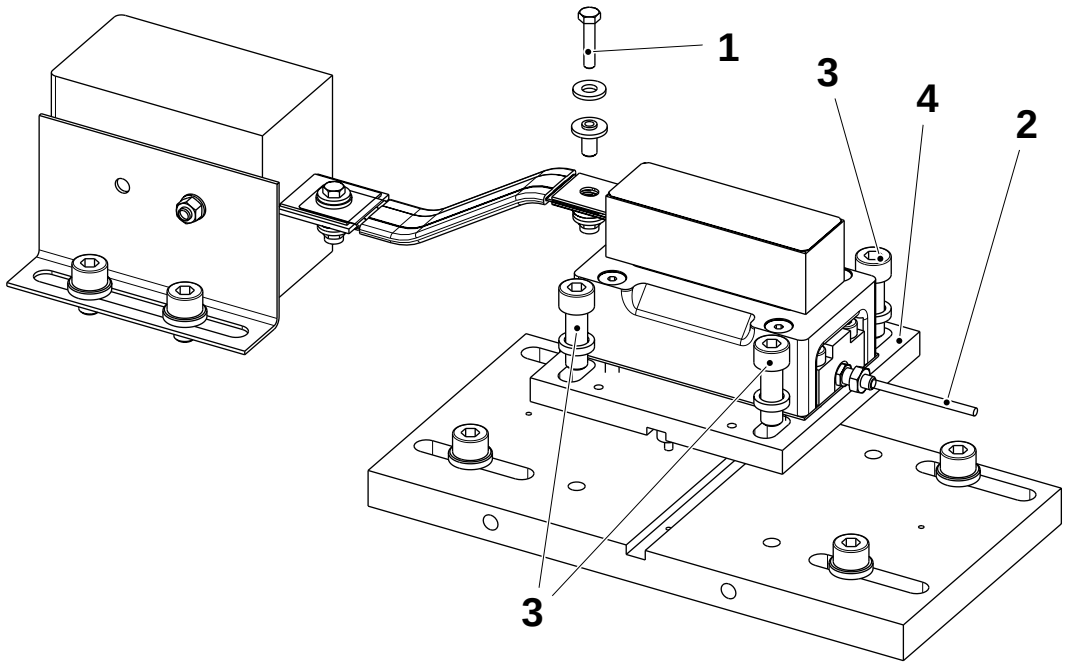

1 Screw
2 Air hose
3 Screw
4 Plate

TechPub_2614345_0103 - B6114E02en.fm

5.2.2-2 Patch Counter Jaw - Check Inductor

Machine Status	Air **OFF** Mains Power **OFF**
Consumables	Teflon™ tape TP No. 2507111
SPC Reference	2526519-0100

Check the following parts for wear or damage:

- the Teflon™ tape (2) on the surface of the inductor (1)
- the surfaces of the inductor (1) for any scratches or other damage
- the surfaces of the inductor (1) for any residue of polyethylene.

Change as required, see 5.2.2-3 Patch Counter Jaw - Change Inductor.

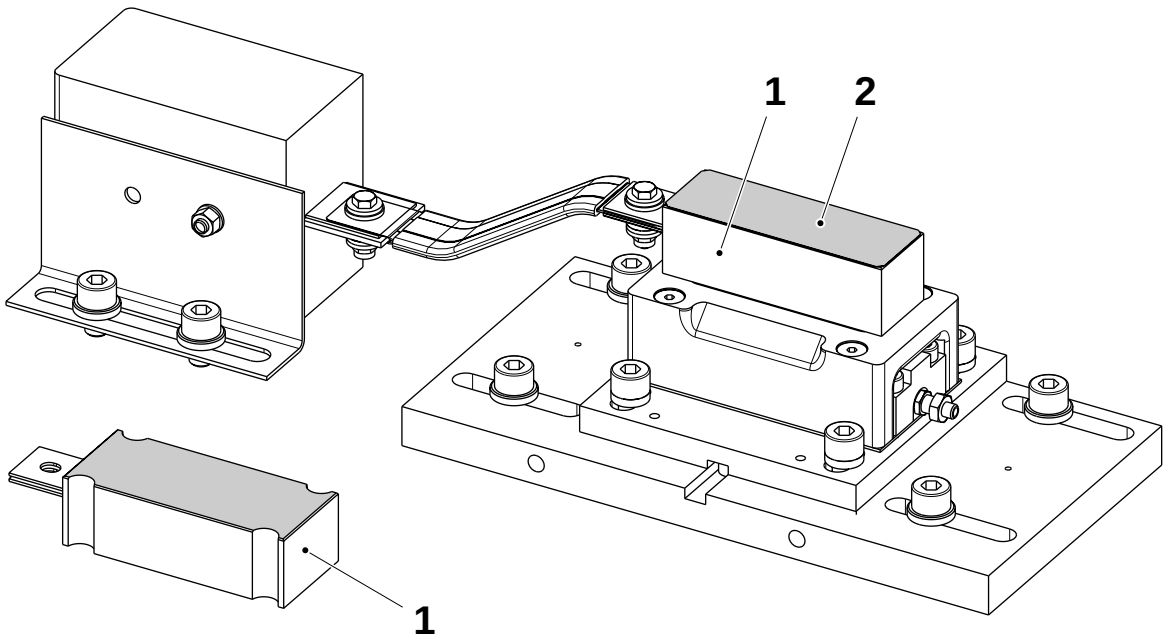

Inductor shape for TPA packages.

1 Inductor
2 Teflon™ tape

TechPub_2614345_0103 - B6114E02en.fm

5.2.2-3 Patch Counter Jaw - Change Inductor

Machine Status	Air **OFF** Mains Power **OFF**
Consumables	Teflon™ tape TP No. 2507111
SPC Reference	2526519-0100

a) Loosen the screw (1) and disconnect the cable (2).

b) Disconnect the cushion cylinder air hose (3).

c) Remove the screws (4) and the plate (5) together with the counter jaw.

d) Remove the screws (6) and the inductor group (7).

e) Remove the screws (8) and the inductor (9).

f) Change the inductor (9) and assemble in the reverse order.

g) Set the inductor (9), see 5.2.2-7 Patch Counter Jaw - Check Position.

h) Check the position of the heat pattern, see Check Patch Applicator Heat Pattern on page 1-50 in 1.1.2-4 Applicator Stations - Fine Setting.

Note! Check the condition of the Teflon™ tape on the inductor (9) and change the tape as required.

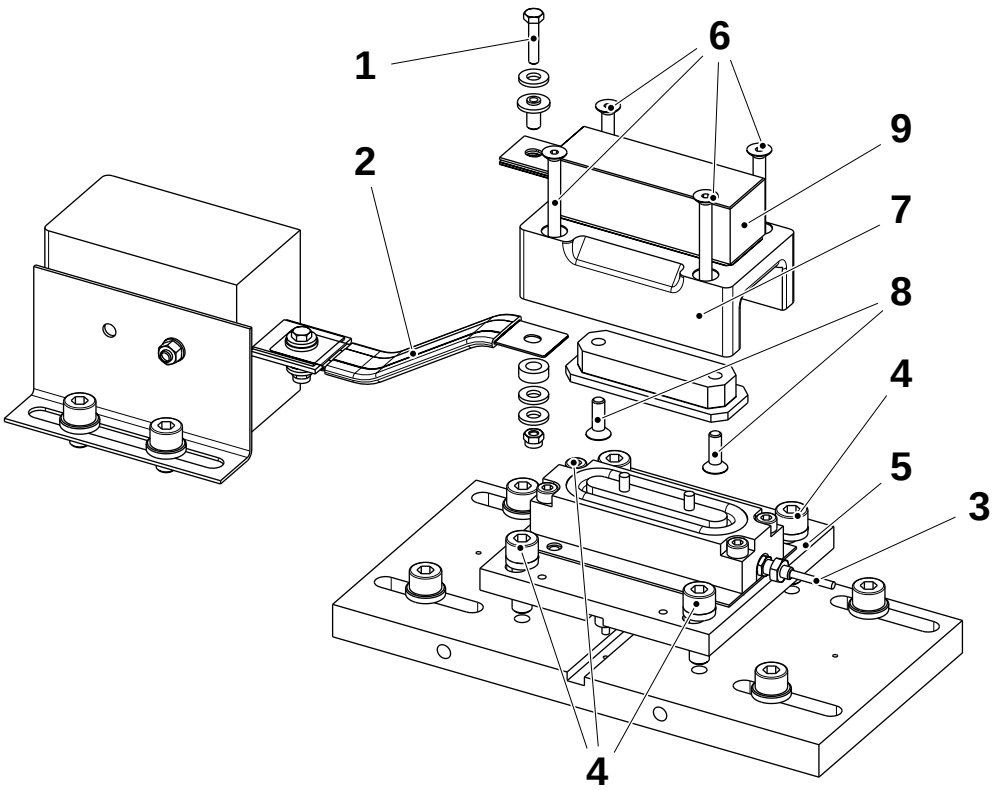

1 Screw
2 Cable
3 Air hose
4 Screw
5 Plate
6 Screw
7 Inductor group
8 Screw
9 Inductor

TechPub_2614345_0103 - B6114E02en.fm

5.2.2-4 Patch Counter Jaw - Change Transformer

Machine Status	Air **OFF** Mains Power **OFF**
SPC Reference	1317254-0300 2526519-0100 67600-0501

a) Remove the coaxial cable (1) from the impedance transformer (2).

b) Loosen the screw (3) and disconnect the cable (4).

c) Remove the screw (5) and the impedance transformer (2).

d) Check that the impedance transformer (2) is intact and clean. Pay particular attention to the coil (6) and to the coaxial connector (7) connections.

e) Clean or change the impedance transformer as required.

f) Clean the connections as required.

g) Assemble in the reverse order.

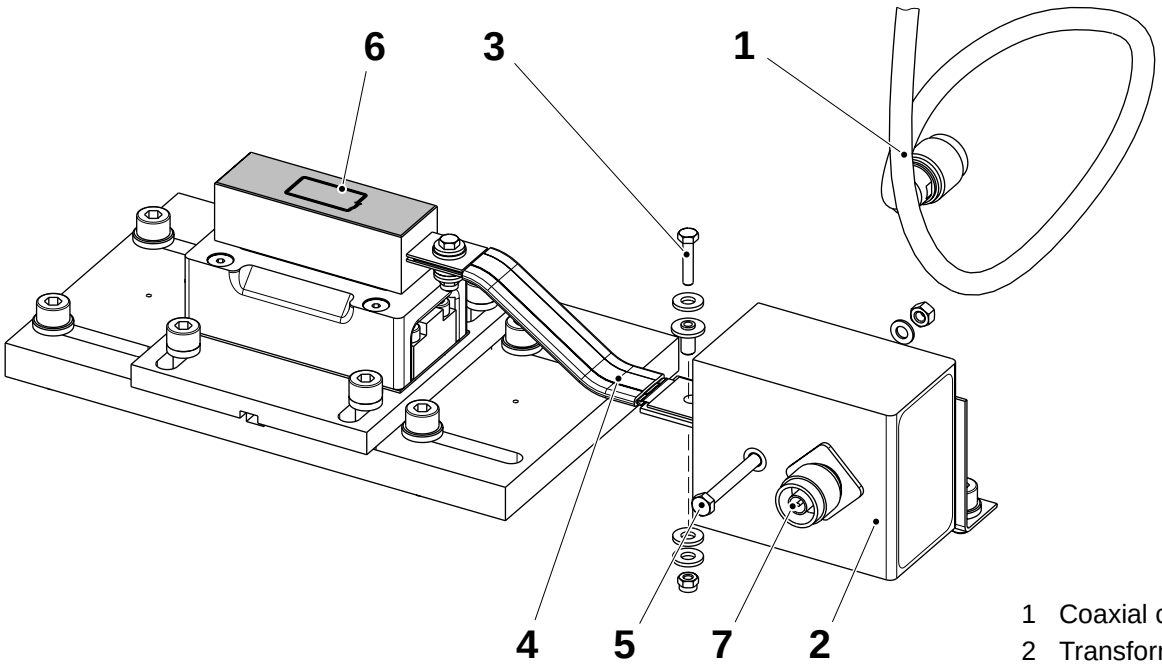

1 Coaxial cable
2 Transformer
3 Screw
4 Cable
5 Screw
6 Coil
7 Coaxial connector

TechPub_2614345_0103 - B6114E02en.fm

5.2.2-5 Patch Counter Jaw - Check Guide Bushing

Machine Status	Air **OFF** Mains Power **OFF**
SPC Reference	2526519-0100

a) Loosen the screw (1) and disconnect the cable (2).

b) Disconnect the air hose (3).

c) Remove the screws (4) and the plate (5) together with the counter jaw unit.

d) Remove the four screws (6) and the inductor group (7).

e) Remove the screws (8) and check the guide bushing (9) for wear and/or damage. Change it as required.

Note! Remove the two pins (10) from the old guide bushing (9) and assemble them within the new one.

f) Assemble in the reverse order.

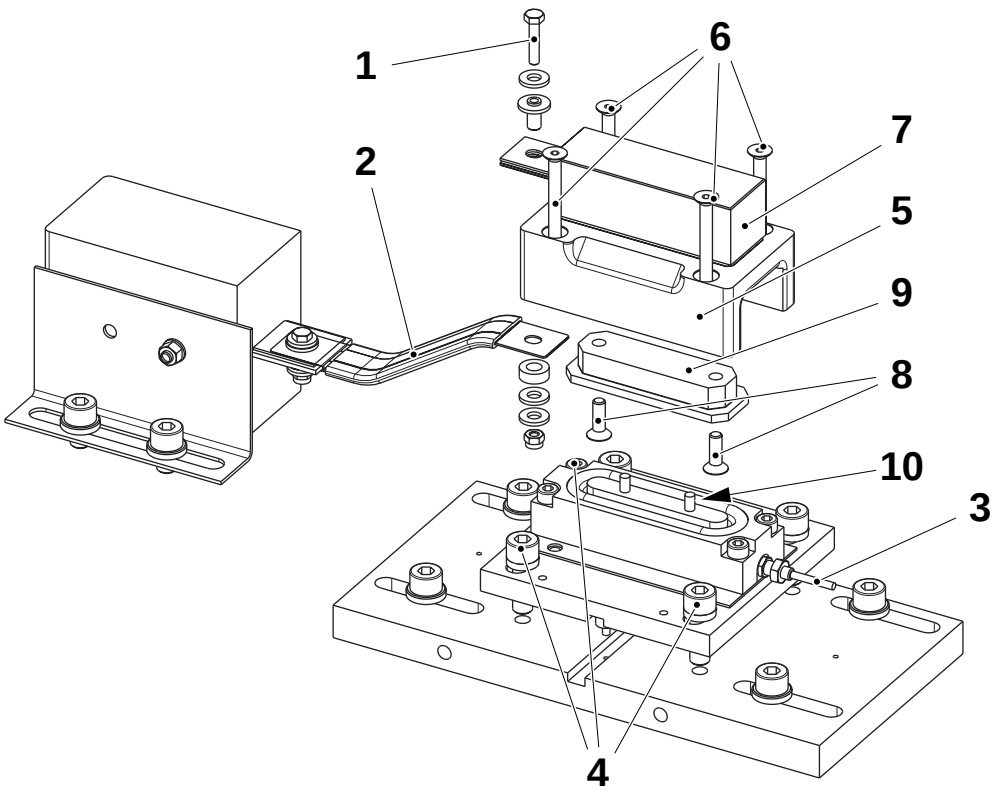

1 Screw
2 Cable
3 Air hose
4 Screw
5 Plate
6 Screw
7 Inductor group
8 Screw
9 Guide bushing
10 Pin

TechPub_2614345_0103 - B6114E02en.fm

5.2.2-6 Patch Counter Jaw - Change Cushion Cylinder

Machine Status	Air **OFF** Mains Power **OFF**
SPC Reference	2526519-0100

a) Loosen the screw (1) and disconnect the cable (2).

b) Disconnect the air hose (3).

c) Remove the screws (4) and the plate (5) together with the counter jaw.

d) Remove the screws (6) and the inductor group (7).

e) Remove the four screws (8) and change the cushion cylinder (9).

f) Assemble in the reverse order.

g) Make sure the cushion cylinder (9) reaches the end of its stroke.

h) Set the patch counter jaw, see 5.2.2-7 Patch Counter Jaw - Check Position.

i) Check the position of the heat pattern, see Check Patch Applicator Heat Pattern on page 1-50 in 1.1.2 Applicator Stations.

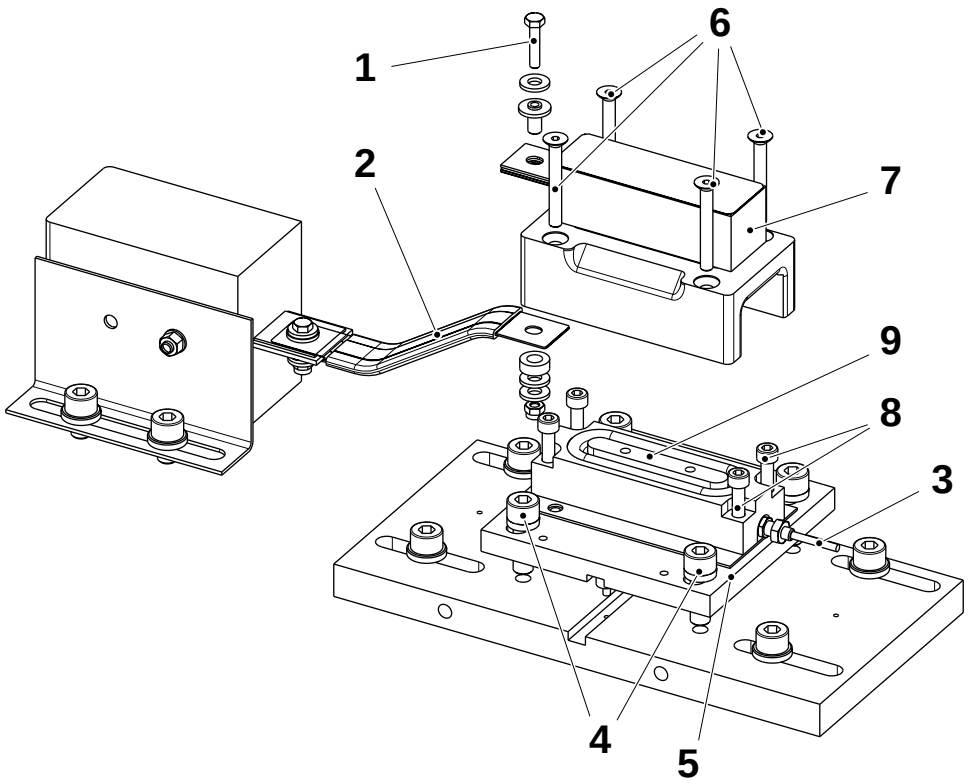

1 Screw
2 Cable
3 Air hose
4 Screw
5 Plate
6 Screw
7 Inductor group
8 Screw
9 Cushion cylinder

TechPub_2614345_0103 - B6114E02en.fm

5.2.2-7 Patch Counter Jaw - Check Position

Machine Status	PREPARATION
SPC Reference	2526519-0100

WARNING
Risk of burns!
The sealing jaw may be hot.

Note! The patch counter jaw must be basically set before this procedure is followed, see Set Counter Jaws in the Vertical Position and Set Counter Jaw Positions with Respect to the Paper Line in 1.1.2 Applicator Stations.

Note! Do not set the distance **A** using shims. This will destroy the previously set counter jaw alignment.

a) Switch the key selector on the PT21 electrical panel to the SERVICE position.

b) Make sure the cushion cylinder (1) is fully extended.

c) Check the distance **A** between the sealing head (2) and the tip of the window knife (3). If required, see 5.2.1-15 Patch Feeder - Set Position.

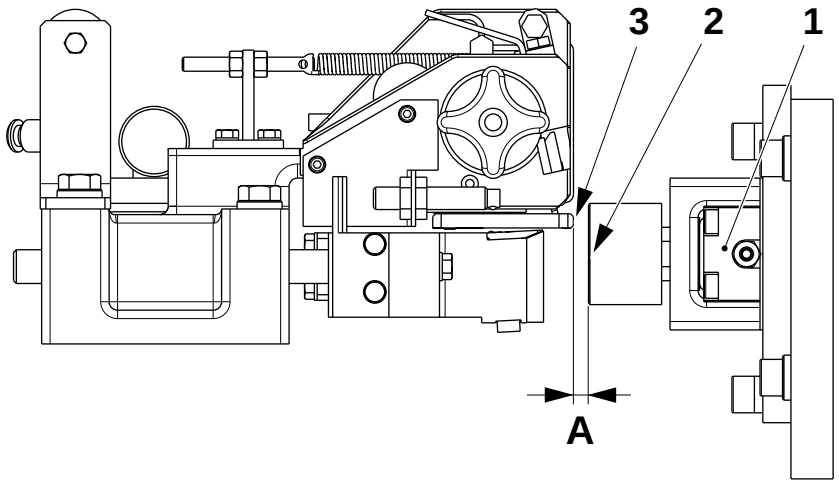

A = 1.5 ±0.2 mm

1 Cushion cylinder
2 Sealing head
3 Window knife

TechPub_2614345_0103 - B6114E02en.fm

5.3 Patch Magazine

SPC Reference	1558071-0100

5.3-1 Patch Magazine - Check

Machine Status	Air **OFF** Mains Power **ON**
SPC Reference	1558071-0100

a) Make sure the rollers (1) turn freely and the brake arm (2) moves freely.

b) Make sure the wheel (3) turns freely.

c) Make sure the bobbin holder (4) rotates freely.

d) Make sure the spring loaded screws (5) just clear the surface of the bobbin holder (4).

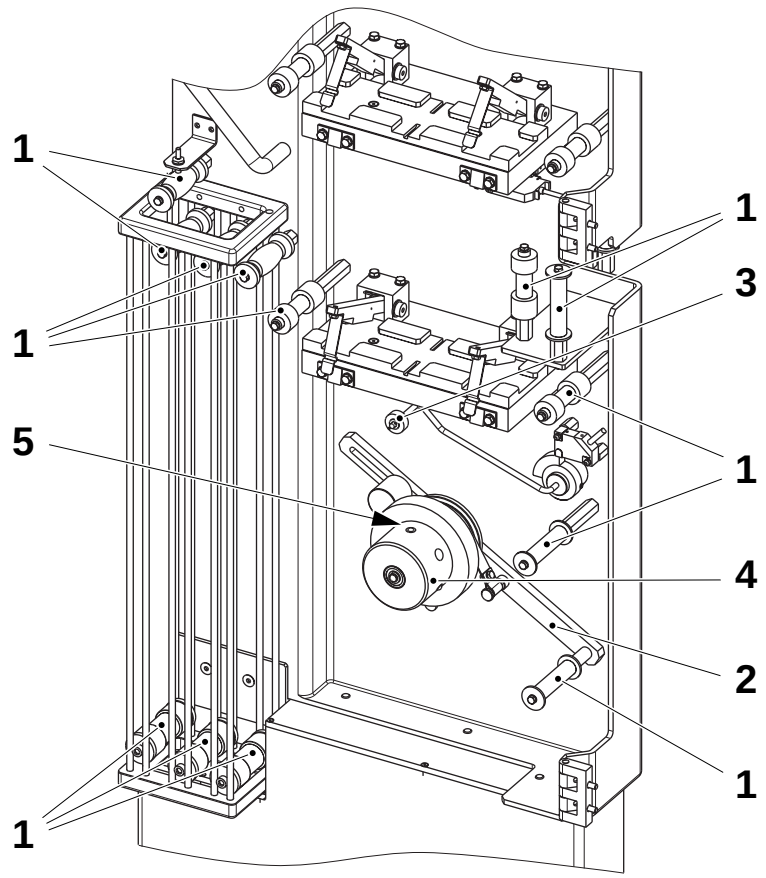

1 Roller
2 Brake arm
3 Wheel
4 Bobbin holder
5 Spring loaded screw

(Cont'd)

TechPub_2614345_0103 - B6114E03en.fm

(Cont'd)

e) Make sure the splice table locks and springs (6) function correctly.

f) Make sure the proximity switch (7) LED lights correctly.

g) Make sure the green LED (8) of the black tape sensor (9) is lit and the red LED (10) lights up when the black tape passes the fibre optic lense (11).

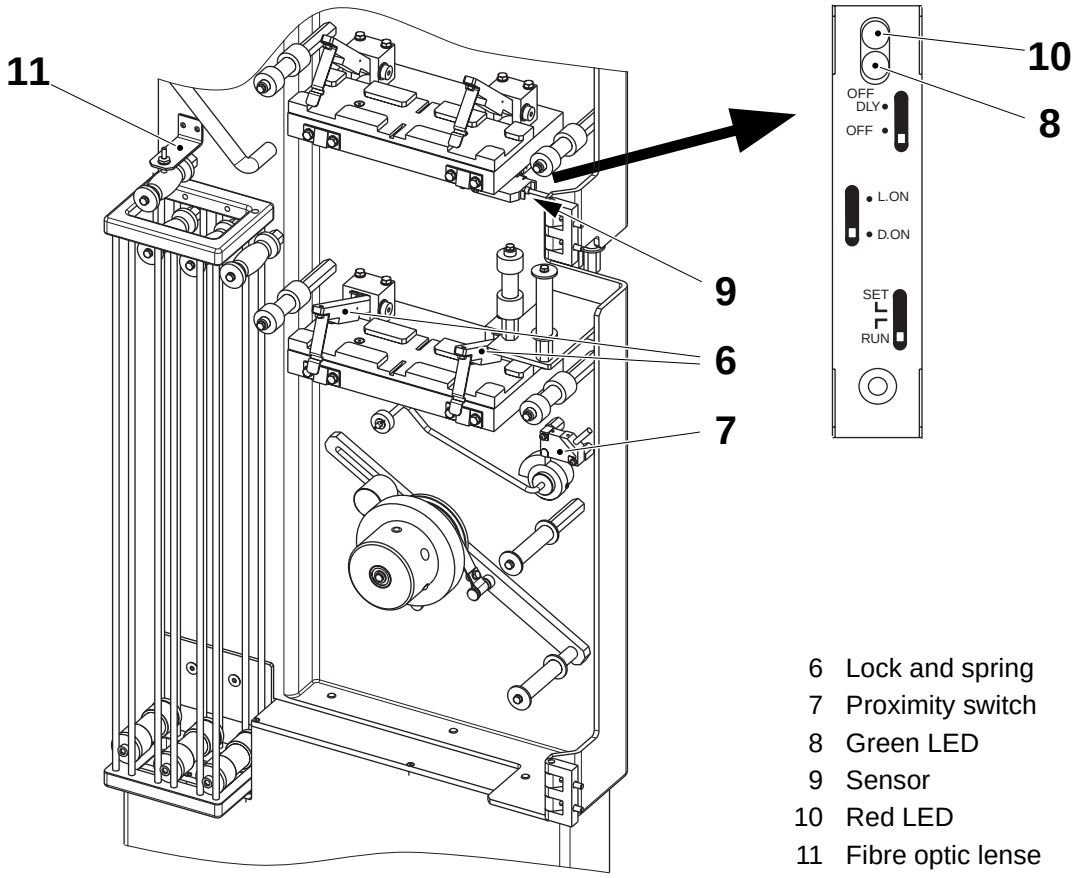

6 Lock and spring
7 Proximity switch
8 Green LED
9 Sensor
10 Red LED
11 Fibre optic lense

TechPub_2614345_0103 - B6114E03en.fm

5.3-2 Patch Magazine - Set Proximity Switch

Machine Status	Air **OFF** Mains Power **ON**
SPC Reference	1558071-0100

a) Place a **15 mm** feeler gauge between the bobbin holder (1) and the wheel (2).

Note! Instead of a **15 mm** feeler gauge, a nearly empty patch bobbin can be used.

b) Loosen the stop screw (3) on the flag (4) and turn the flag until the LED on the proximity switch (5) goes off.

c) Tighten the stop screw (3).

d) Remove the feeler gauge.

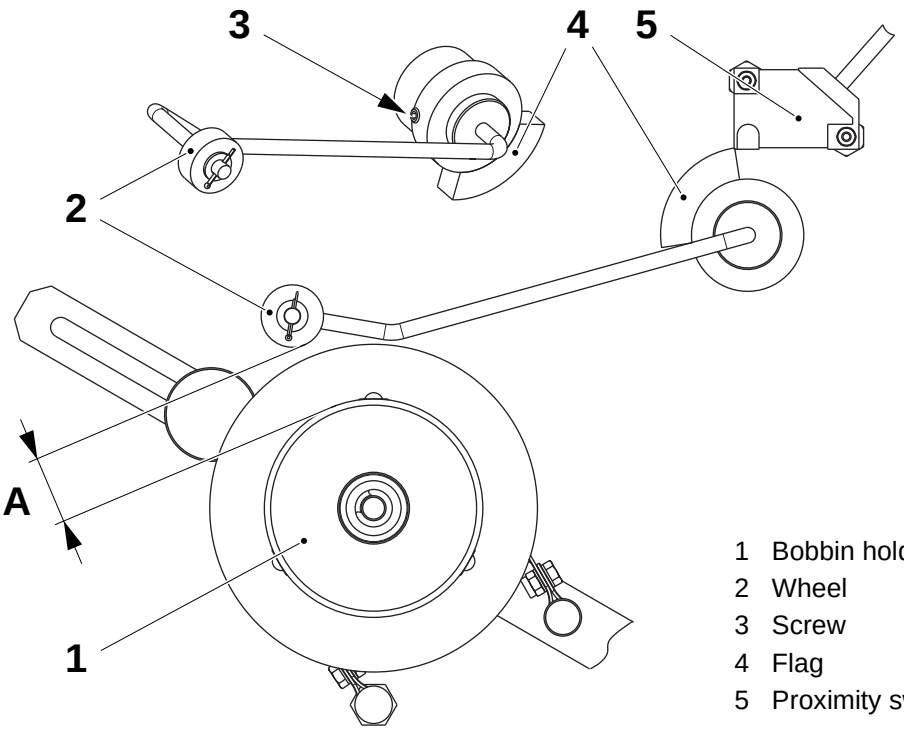

A = 15 mm

1 Bobbin holder
2 Wheel
3 Screw
4 Flag
5 Proximity switch

TechPub_2614345_0103 - B6114E03en.fm

5.3-3 Patch Magazine - Set Strip Tension

Machine Status	Air **OFF** Mains Power **OFF**
SPC Reference	1558071-0100

a) Loosen the counter weight screw (1).

b) Move the counter weight (2) until the brake arm (3) tensions the strip (4) between the rollers (5) and (6).

c) Tighten the counter weight screw (2).

d) Check that the dancing rollers (7) move up and down smoothly with each patch application.

e) Check that the strip is in tension until the last roller (8).

Note! Use a full bobbin to verify the setting. This setting should be carried out with the PullTab running.

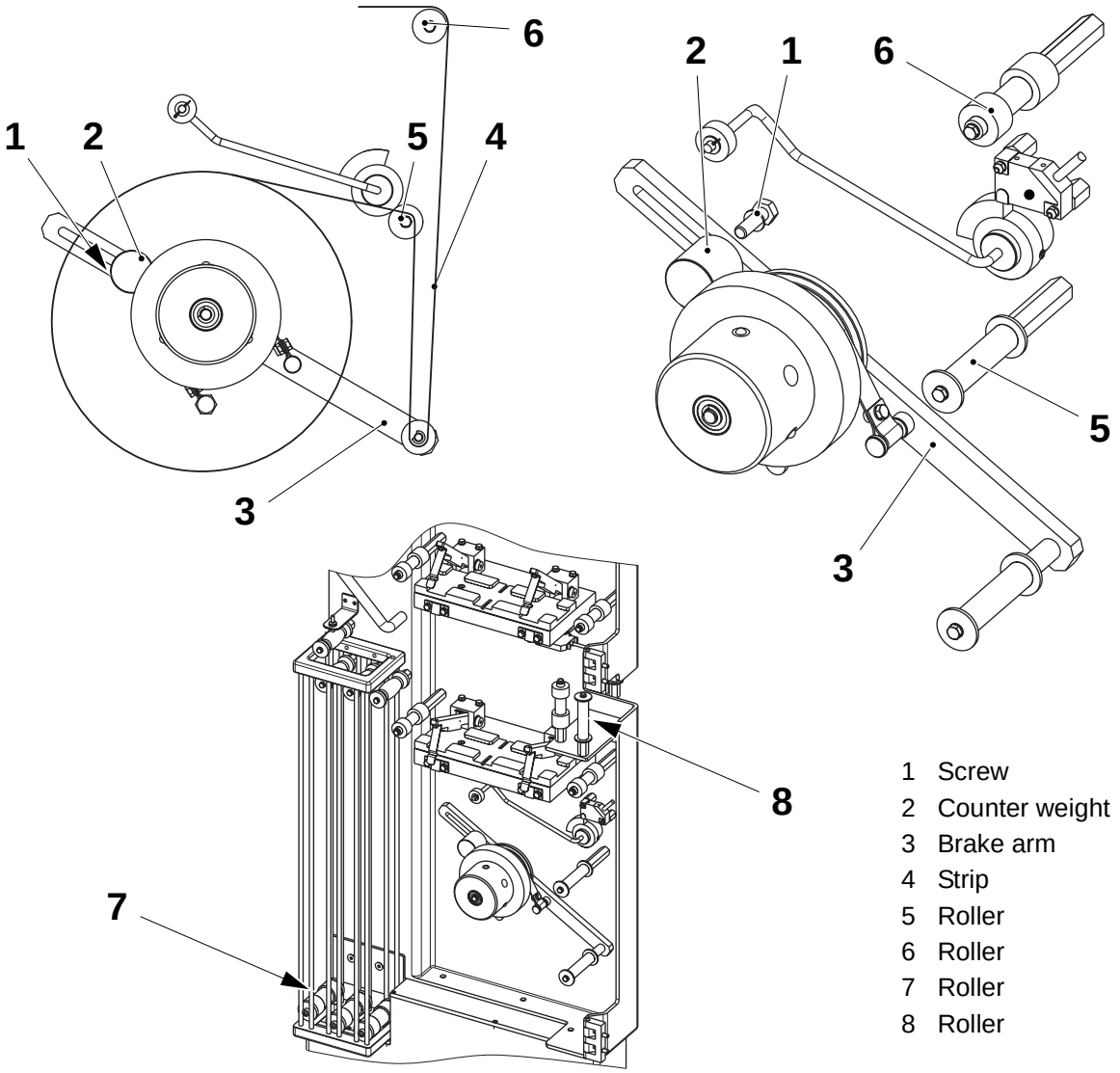

1 Screw
2 Counter weight
3 Brake arm
4 Strip
5 Roller
6 Roller
7 Roller
8 Roller

TechPub_2614345_0103 - B6114E03en.fm

5.3-4 Patch Magazine - Change Bobbin Holder Bearings

Machine Status	Air **OFF** Mains Power **OFF**
SPC Reference	1558071-0100

a) Remove the locking washer (1).

b) Remove the bobbin holder (2).

c) Remove and change the bearings (3).

d) Assemble in the reverse order.

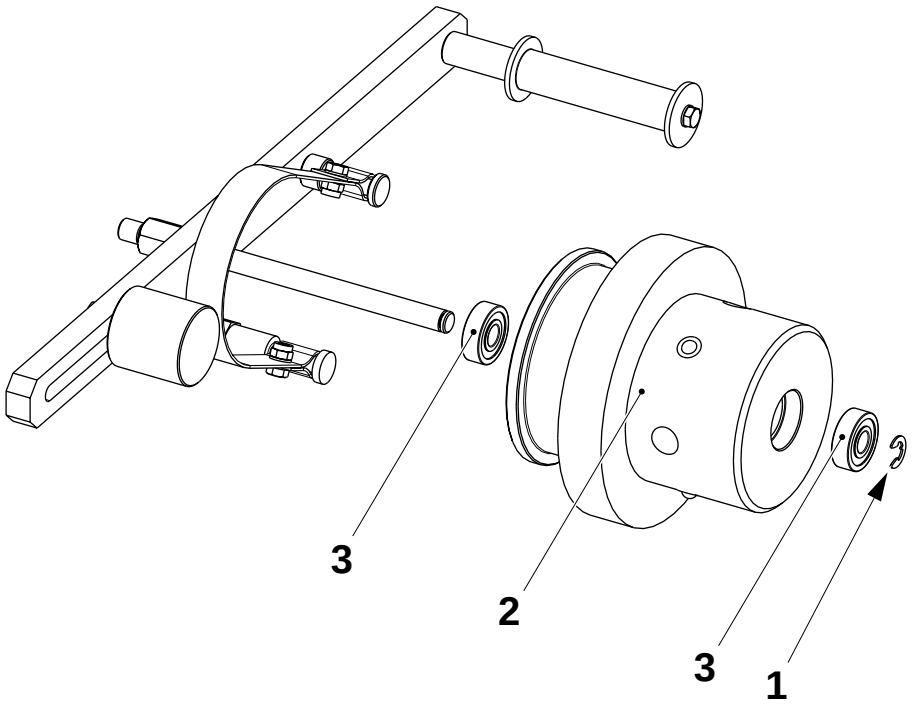

1 Locking washer
2 Bobbin holder
3 Bearing

TechPub_2614345_0103 - B6114E03en.fm

5.3-5 Patch Magazine - Set Bobbin Holder Spring Loaded Screw

Machine Status	Air **OFF** Mains Power **OFF**
Consumables	Locking fluid TP No. 90157-16
SPC Reference	1558071-0100

a) Remove the locking washer (1).

b) Remove the bobbin holder assembly (2).

c) With the aid of a screw driver (3), set the spring loaded screw (4) so that the top of the screw cylinder (5) just clears the surface of the bobbin holder (6).

d) Repeat the setting for the other spring loaded screws and assemble in the reverse order.

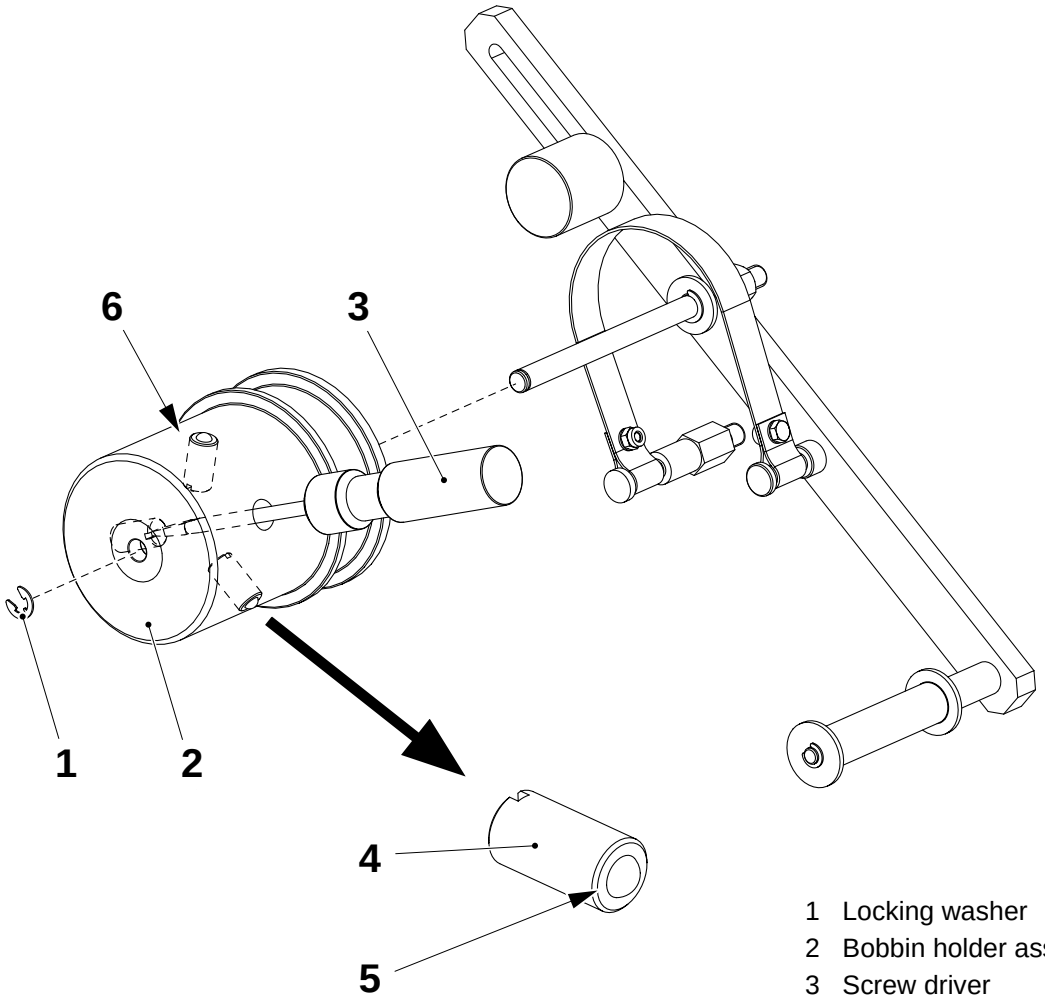

1 Locking washer
2 Bobbin holder assembly
3 Screw driver
4 Spring loaded screw
5 Screw cylinder
6 Bobbin holder

TechPub_2614345_0103 - B6114E03en.fm

5.3-6 Patch Magazine - Set Black Tape Sensor

Machine Status	Air **OFF** Mains Power **ON**
SPC Reference	1558071-0100

a) Loosen the nuts (1) and set the sensor lense (2) at the distance **A** from the surface of the roller (3).

b) Set the switch (4) to **SET**.

Note! The black tape detector switch (5) must be set to **D. ON** and the switch (6) to **OFF**.

c) Apply a piece of black tape on a piece of strip. Place the strip under the sensor lense (2) so that the strip is between the sensor lense (2) and the black tape. Press the button (7) for 2 seconds.

d) Place a piece of strip under the sensor lense (2) and press the button (7) for 2 seconds.

e) Set the switch (6) to **RUN**.

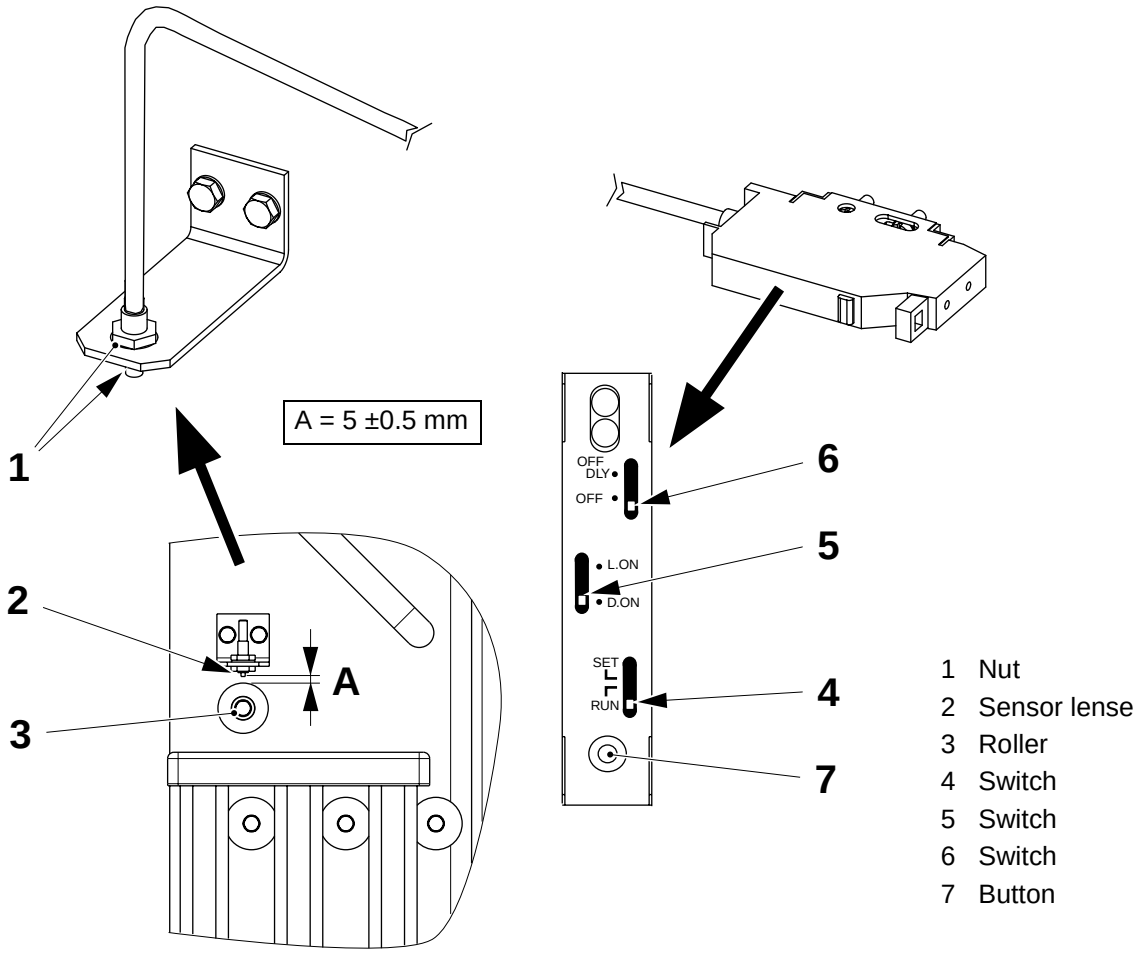

1 Nut
2 Sensor lense
3 Roller
4 Switch
5 Switch
6 Switch
7 Button

TechPub_2614345_0103 - B6114E03en.fm

5.3.1 Splicing Table

5.3.1-1 Splicing Table - Check Function

Machine Status	Air **OFF** Mains Power **OFF**
SPC Reference	1499290-0100

Make sure the locks (1) spring into a position that does not interfere with the outer patch feeding.

Set the lock grips, see 5.3.1-2 Splicing Table - Set Lock.

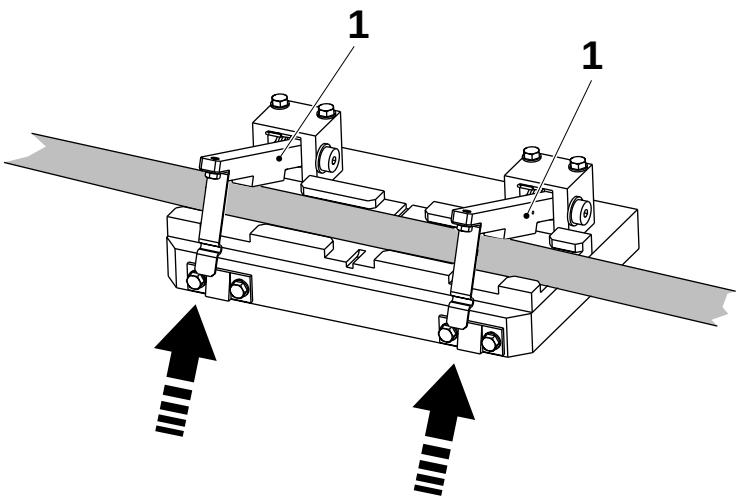

1 Lock

TechPub_2614345_0103 - B6114E03en.fm

5.3.1-2 Splicing Table - Set Lock

Machine Status	Air **OFF** Mains Power **OFF**
SPC Reference	1499290-0100

a) Place a piece of strip (1) under the lock (2).

b) Loosen the screws (3).

c) Adjust the plate (4) until it is not possible to pull the strip backwards or forwards.

d) Tighten the screws (3).

e) Repeat for the other lock (2).

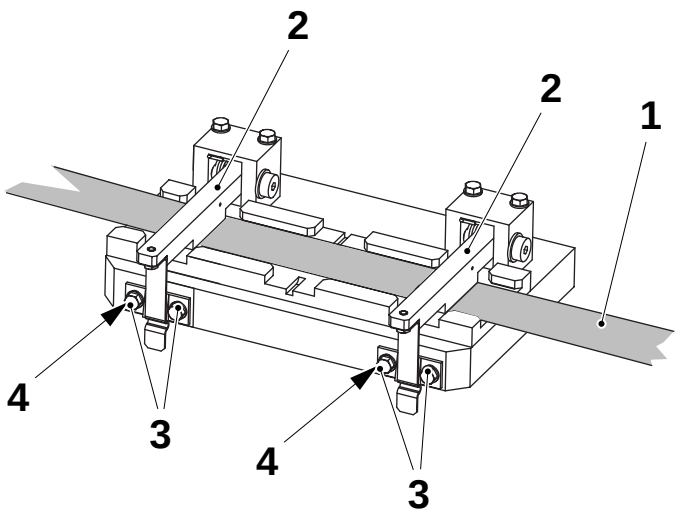

1 Strip
2 Lock
3 Screw
4 Plate

TechPub_2614345_0103 - B6114E03en.fm

5.4 Patch Turning Device

5.4-1 Patch Turning Device - Check

Machine Status	Air **OFF** Mains Power **ON**
SPC Reference	2525321-0200

a) Make sure the rollers (3) turn freely. If not, clean as required. Change them if damaged or worn.

b) Make sure the plate (2) turns freely simultaneously with the roller (3).

c) Turn the plate (2) and make sure the proximity switch (1) LED lights up when the plate covers the source. Set the plate (2) as required, see 5.4-2 Patch Turning Device - Set Rotation Monitor Proximity Switch.

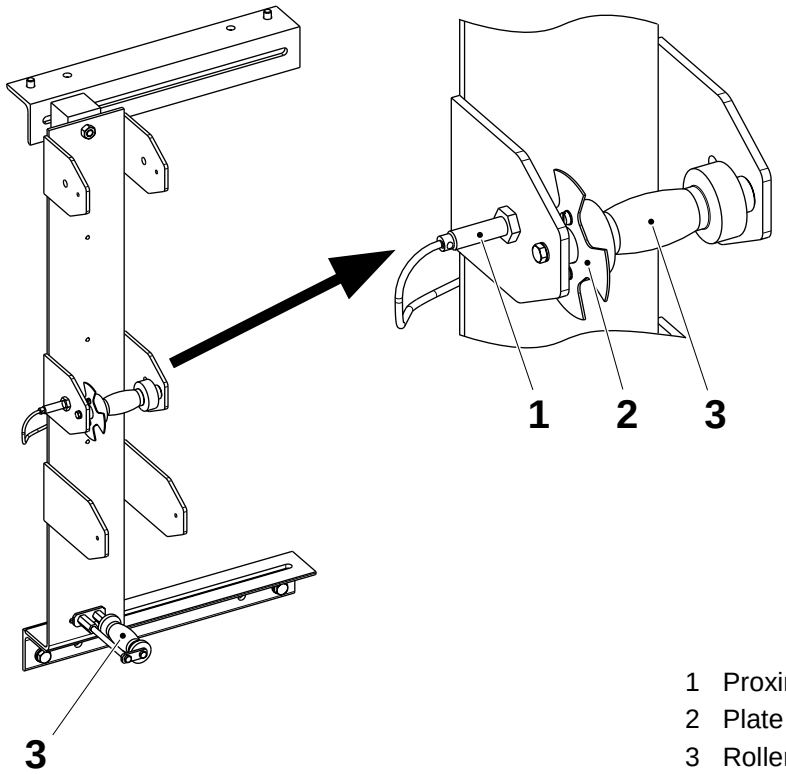

1 Proximity switch
2 Plate
3 Roller

TechPub_2614345_0103 - B6114E04en.fm

5.4-2 Patch Turning Device - Set Rotation Monitor Proximity Switch

Machine Status	Air **OFF** Mains Power **ON**
SPC Reference	2525321-0200

a) Loosen the nuts (1).

b) Set the distance **A** between the proximity switch (2) and the plate (3).

c) Tighten the nuts (1).

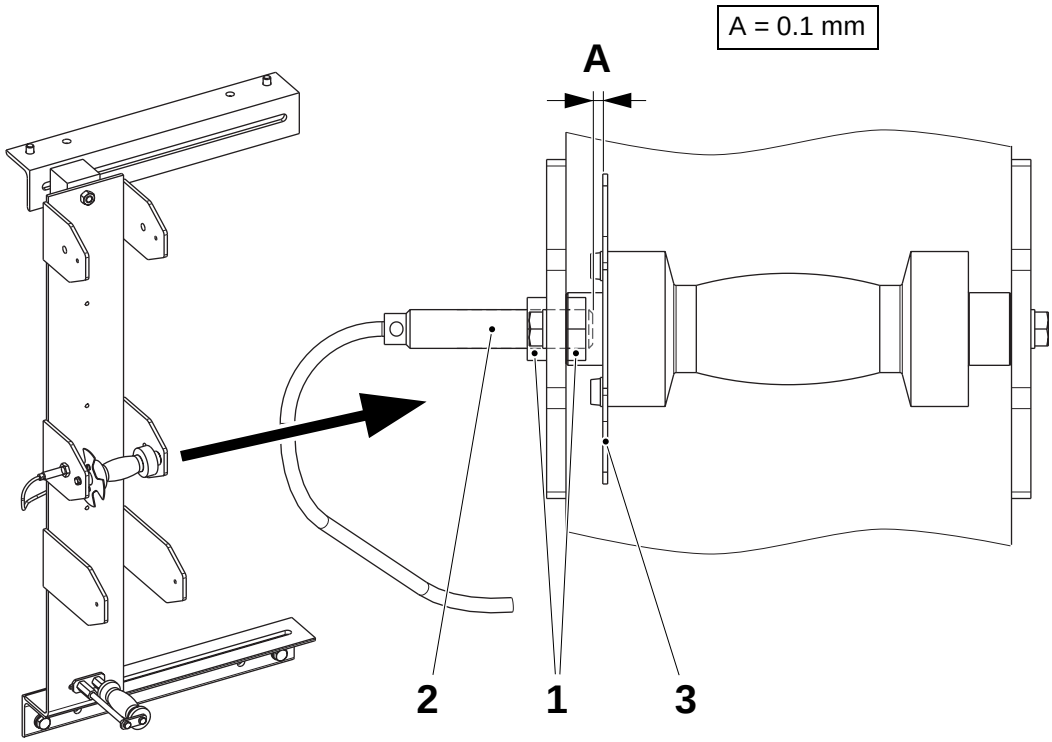

1 Nut
2 Proximity switch
3 Plate

TechPub_2614345_0103 - B6114E04en.fm

This page intentionally left blank

TechPub_2614345_0103 - B6114E04en.fm

6 Tab Applicator

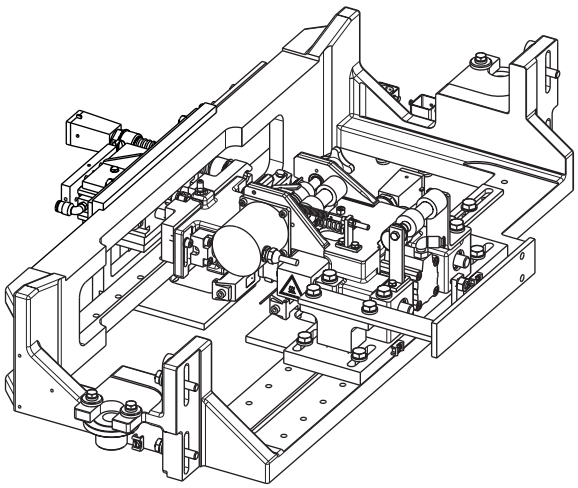

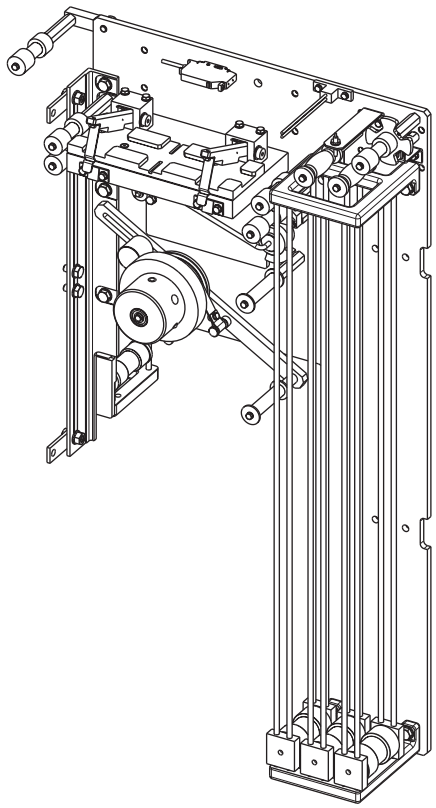

TechPub_2614345_0103 - B6114F00en.fm

Tab Applicator - Description

SPC Reference	1539197-0100 2517081-0100

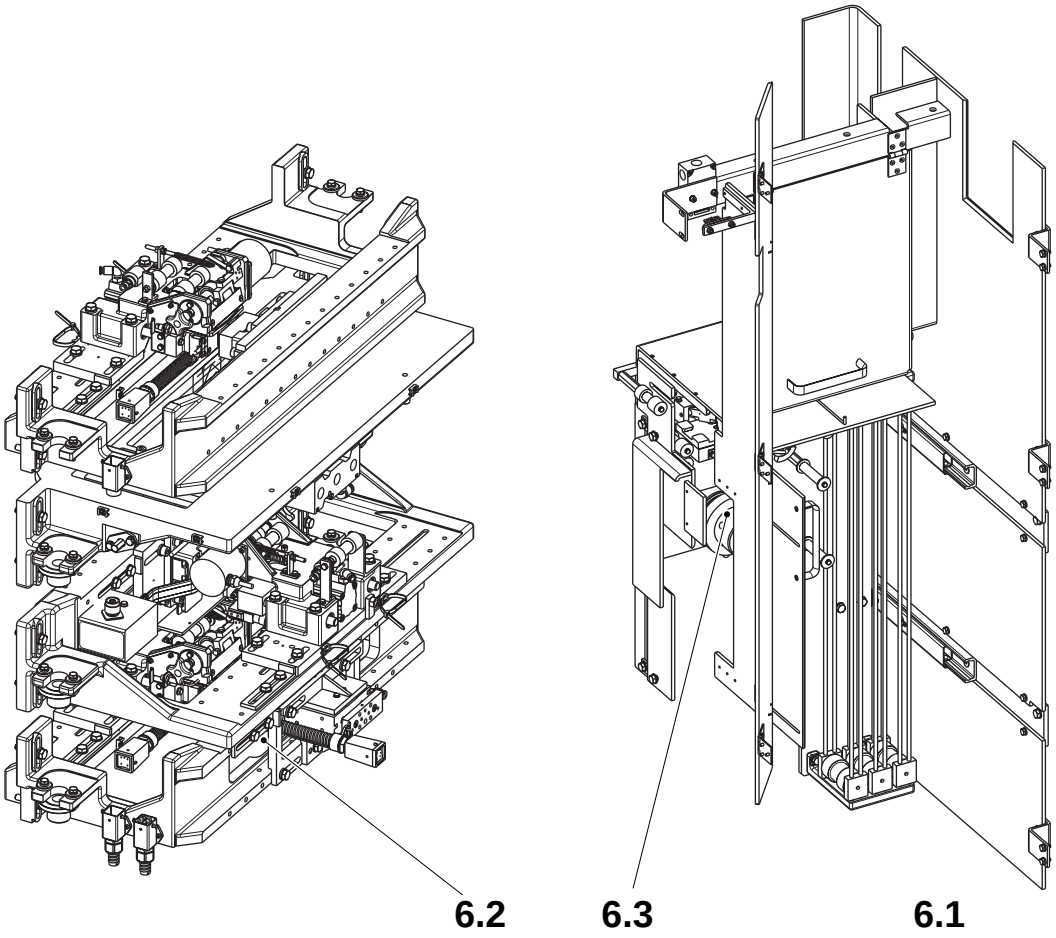

6.1 Setting Flow Chart
6.2 Tab Applicator
6.3 Tab Magazine

TechPub_2614345_0103 - B6114F00en.fm

6-1 Tab Applicator - Functional Description . . . . . 6 - 5

6.1 Setting Flow Chart . . . . . 6 - 9

6.2 Tab Applicator . . . . . 6 - 10

6.2.1 Tab Feeder . . . . . 6 - 10

6.2.1-1 Tab Feeder - Check Function . . . . . 6 - 10
6.2.1-2 Tab Feeder - Change Flat Knife . . . . . 6 - 12
6.2.1-3 Tab Feeder - Change Window Knife . . . . . 6 - 13
6.2.1-4 Tab Feeder - Check Pivot Plate . . . . . 6 - 15
6.2.1-5 Tab Feeder - Remove . . . . . 6 - 16
6.2.1-6 Tab Feeder - Set Window Knife . . . . . 6 - 17
6.2.1-7 Tab Feeder - Change One-way Bearing . . . . . 6 - 18
6.2.1-8 Tab Feeder - Check Sealing Plate . . . . . 6 - 19
6.2.1-9 Tab Feeder - Set Sealing Plate . . . . . 6 - 20
6.2.1-10 Tab Feeder - Check Guides and Linear Bearings . . . . . 6 - 22
6.2.1-11 Tab Feeder - Change Linear Bearings . . . . . 6 - 23
6.2.1-12 Tab Feeder - Check Tab Feed . . . . . 6 - 24
6.2.1-13 Tab Feeder - Change Bushings . . . . . 6 - 25
6.2.1-14 Tab Feeder - Change Cylinder . . . . . 6 - 28
6.2.1-15 Tab Feeder - Set Tab Feed . . . . . 6 - 29
6.2.1-16 Tab Feeder - Set Position . . . . . 6 - 30
6.2.1-17 Tab Feeder - Set Cushion Cylinder . . . . . 6 - 31
6.2.1-18 Tab Feeder - Set Proximity Switch . . . . . 6 - 32
6.2.1-19 Tab Feeder - Change Shims . . . . . 6 - 33
6.2.1-20 Tab Feeder - Change Feed Roller . . . . . 6 - 35
6.2.1-21 Tab Feeder - Change Heater and Thermocouple . . . . . 6 - 36
6.2.1-22 Tab Feeder - Change Stepper Motor . . . . . 6 - 38

6.2.2 Tab Counter Jaw . . . . . 6 - 39

6.2.2-1 Tab Counter Jaw - Remove . . . . . 6 - 39
6.2.2-2 Tab Counter Jaw - Change Heater and Thermocouple . . . . . 6 - 40
6.2.2-3 Tab Counter Jaw - Check Sealing Plate . . . . . 6 - 42
6.2.2-4 Tab Counter Jaw - Change Cylinder . . . . . 6 - 43

TechPub_2614345_0103 - B6114F00en.fm

6.2.2-5 Tab Counter Jaw - Change Cushion Cylinder . . . . . 6 - 44
6.2.2-6 Tab Counter Jaw - Check Distance . . . . . 6 - 45
6.2.2-7 Tab Counter Jaw - Set Position . . . . . 6 - 46

6.3 Tab Magazine . . . . . 6 - 47

6.3-1 Tab Magazine - Check . . . . . 6 - 47
6.3-2 Tab Magazine - Set Proximity Switch . . . . . 6 - 49
6.3-3 Tab Magazine - Set Strip Tension . . . . . 6 - 50
6.3-4 Tab Magazine - Change Bobbin Holder Bearings . . . . . 6 - 51
6.3-5 Tab Magazine - Set Rotation Monitor Proximity Switch . . . . . 6 - 52
6.3-6 Tab Magazine - Set Black Tape Sensor . . . . . 6 - 53
6.3-7 Tab Magazine - Set Bobbin Holder Spring Loaded Screw . . . . . 6 - 54

6.3.1 Splicing Device . . . . . 6 - 55

6.3.1-1 Splicing Device - Check Function . . . . . 6 - 55
6.3.1-2 Splicing Device - Set Lock . . . . . 6 - 56

TechPub_2614345_0103 - B6114F00en.fm

6-1 Tab Applicator - Functional Description

SPC Reference	1539197-0100 2517081-0100

When the filling machine pulls packaging material the following occurs:

- the PLC begins machine cycle
- the PLC sends a signal to the TMCC card to start indexing
- the TMCC card sends the pulses to the stepper drive card.

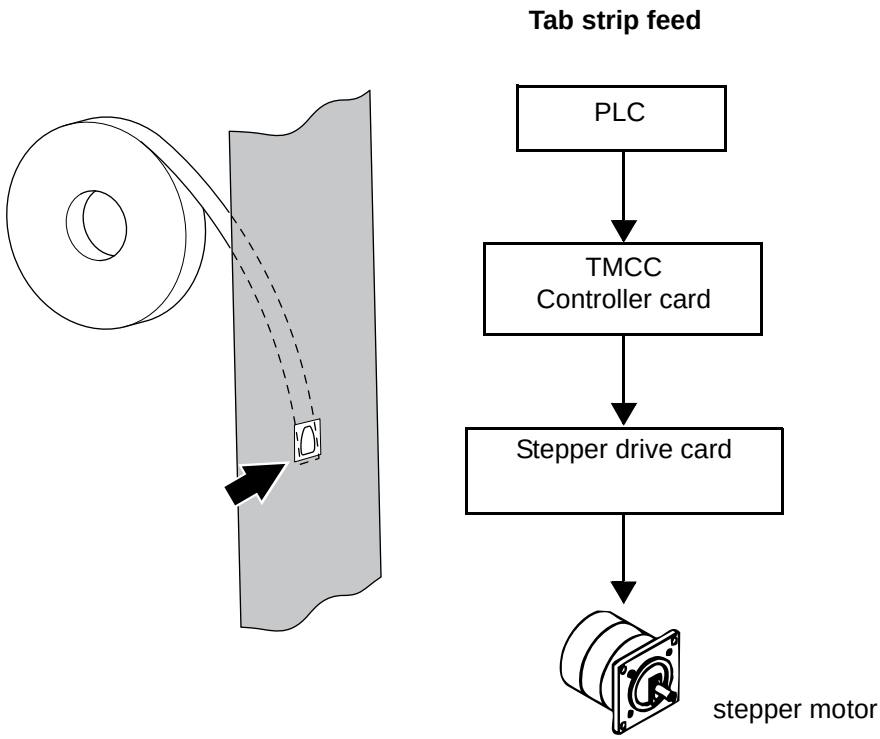

TechPub_2614345_0103 - B6114F00en.fm

(Cont'd)

(Cont'd)

During the PullTab machine cycle, the PLC signals the solenoid valves to extend the cylinders. This action cuts the tab strip and applies it to the packaging material. At the same time, the patch strip is resealed by the counter jaw sealing plate.

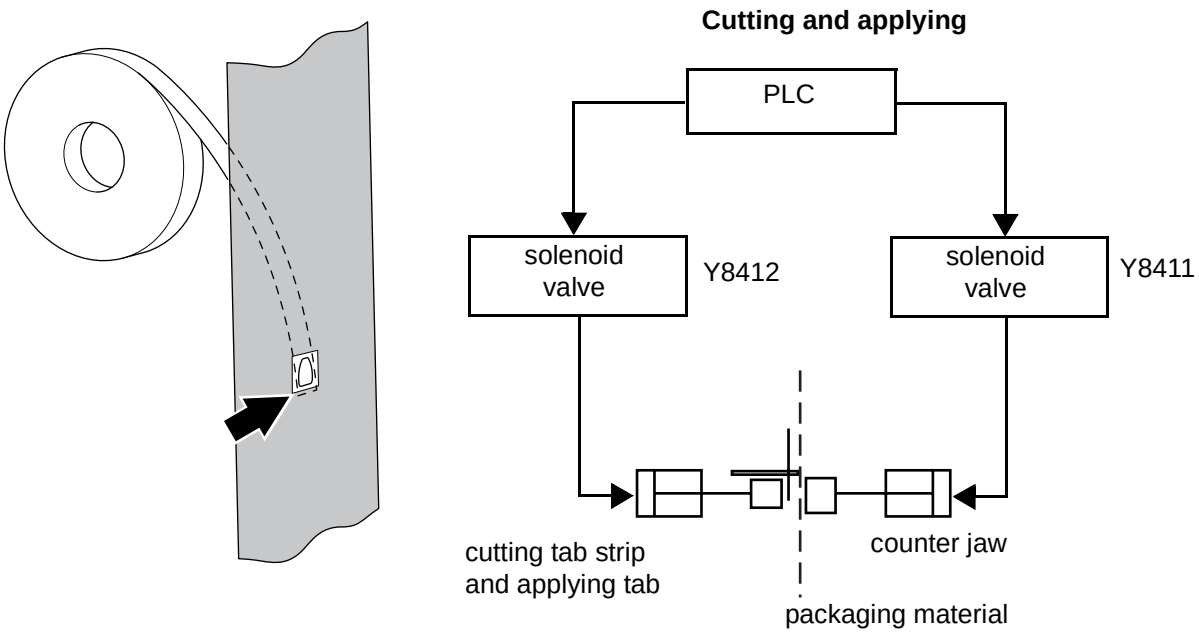

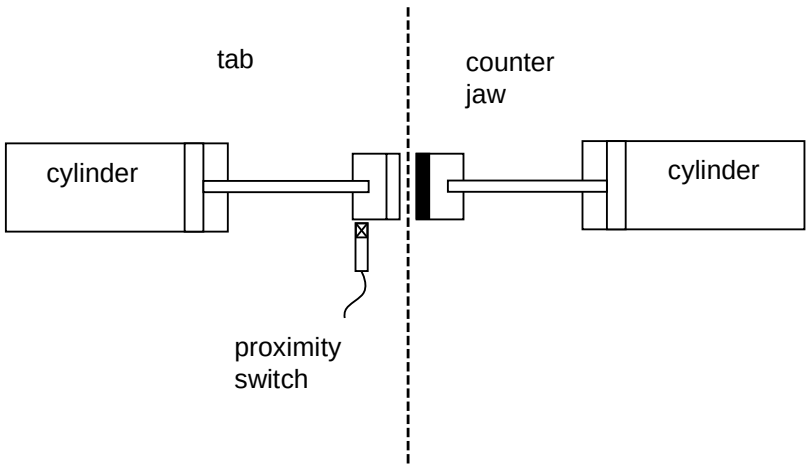

TechPub_2614345_0103 - B6114F00en.fm

(Cont'd)

(Cont'd)

When the tab jaw and the counter jaw are extending, and during the sealing cycle, the PLC signals the solenoid valve to blow air onto the patch strip (1). The air helps to achieve a contact between the strips and a subsequent sealing between the patch strip (1) and the tab strip (2).

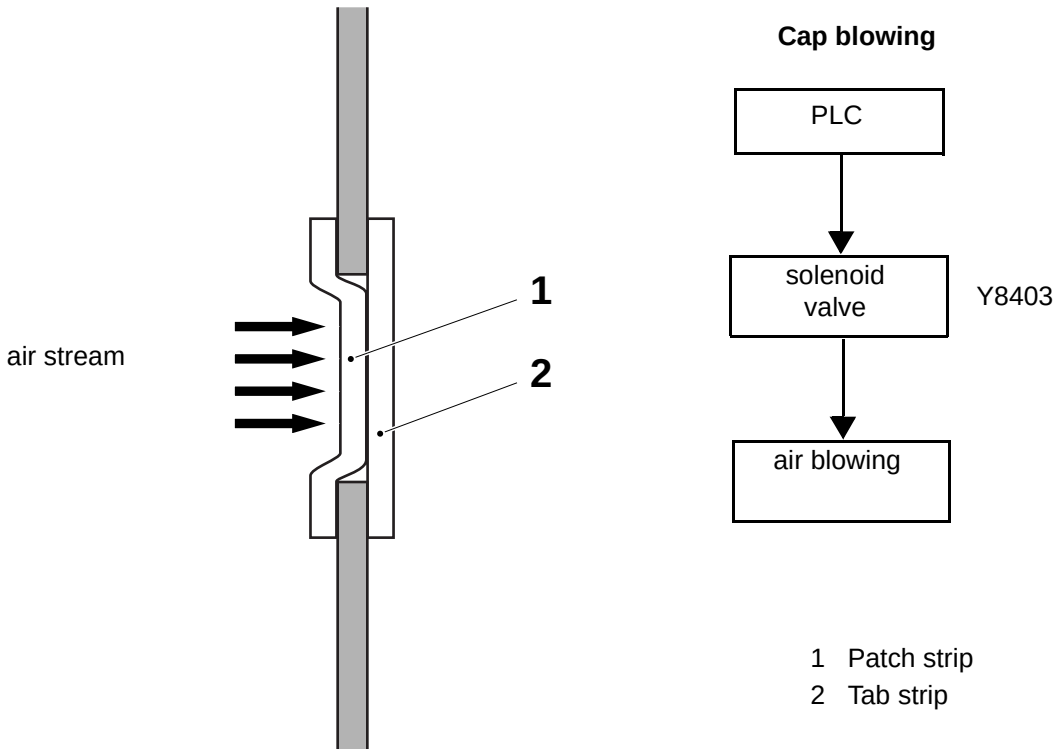

1 Patch strip
2 Tab strip

(Cont'd)

TechPub_2614345_0103 - B6114F00en.fm

(Cont'd)

During PRODUCTION:

- a warning, blue alarm, is activated when the strip supply is low. If the supply is not restored within five minutes then the warning becomes an alarm instead
- an alarm is activated when the tab strip does not move (rotation monitor)
- an alarm is activated if the proper proximity switch does not activate when the tab jaw cylinder extends.

If any of the above alarms activates, both the PullTab unit and the filling machine stop in SHORT STOP mode.

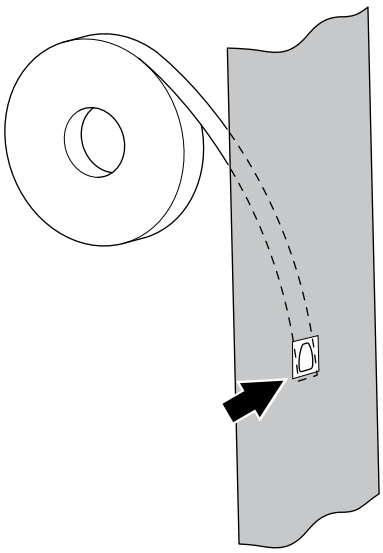

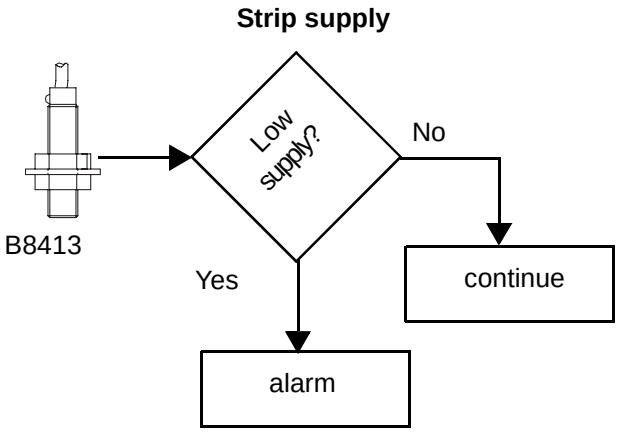

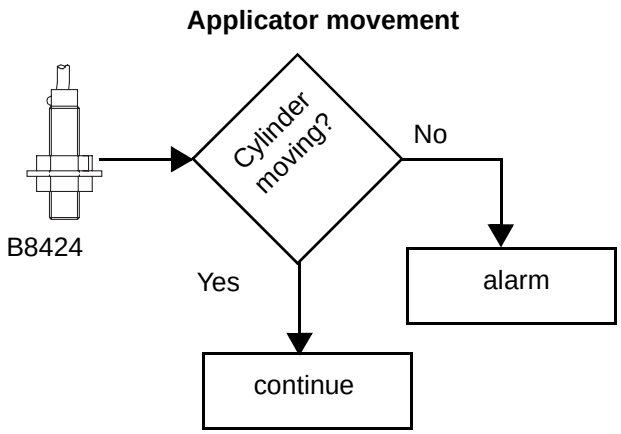

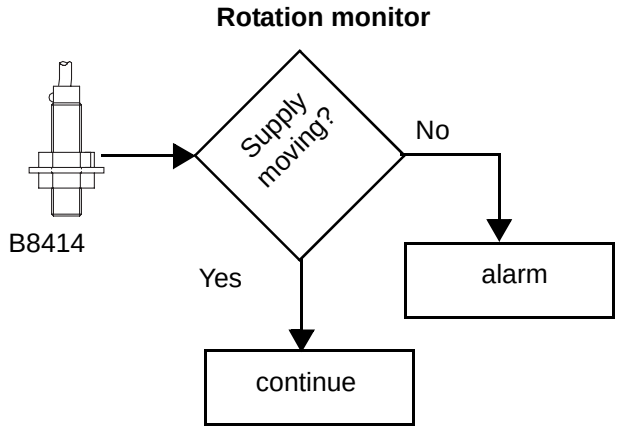

TechPub_2614345_0103 - B6114F00en.fm

6.1 Setting Flow Chart

The following flow chart shows the order in which the various components must be set up.

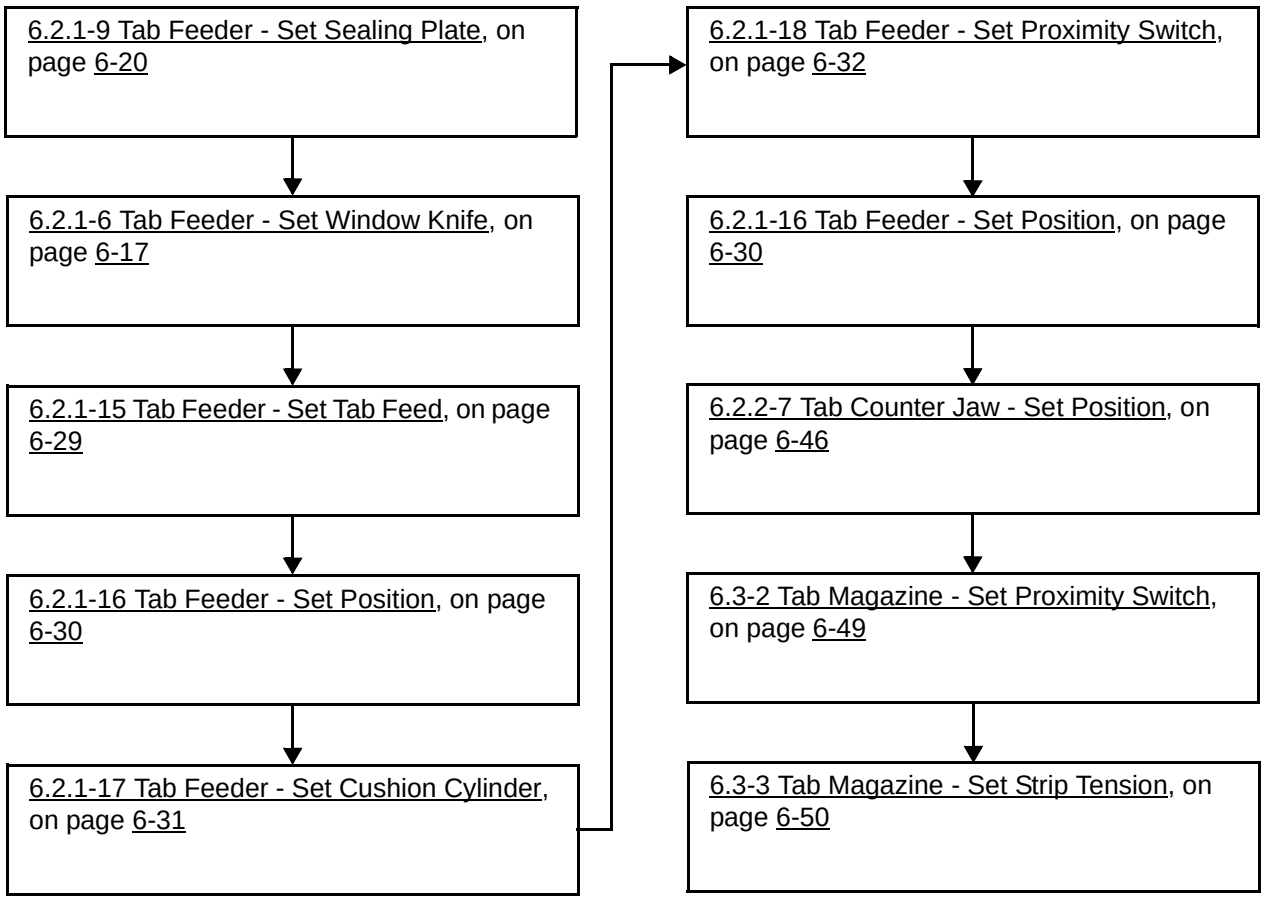

TechPub_2614345_0103 - B6114F01en.fm

6.2 Tab Applicator

SPC Reference	1539197-0100

6.2.1 Tab Feeder

6.2.1-1 Tab Feeder - Check Function

Machine Status	Air **OFF** Mains Power **OFF**
Consumables	Cleaning compound code G2
SPC Reference	2501801-0100

WARNING
Risk of burns!
The sealing jaw may be hot.

a) Check the surface of the one way bearing (1) for damage. Change as required, see 6.2.1-7 Tab Feeder - Change One-way Bearing.

b) Make sure the one way bearing (1) and the roller (2) are working. It should only be possible to turn them in the outer patch feeding direction. Change as required, see 6.2.1-7 Tab Feeder - Change One-way Bearing.

c) Make sure the steer plate (3) is not jammed with strip. Clean any build-up of polyethylene from the steer plate with cleaning compound, (code G2).

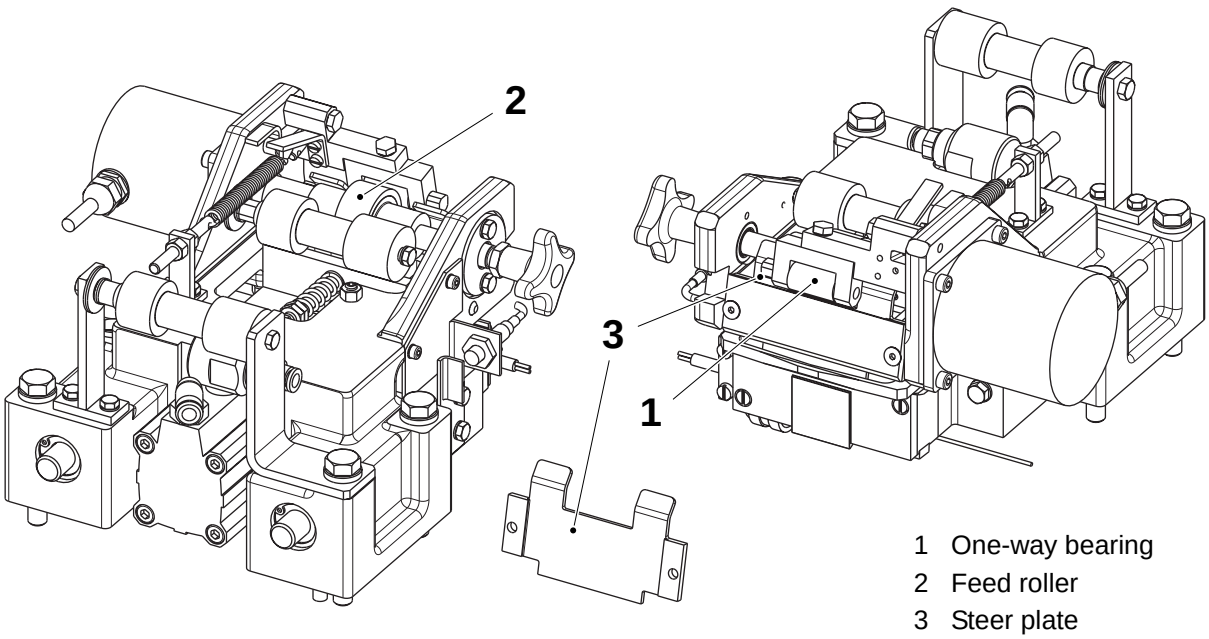

1 One-way bearing
2 Feed roller
3 Steer plate

(Cont'd)

TechPub_2614345_0103 - B6114F02en.fm

(Cont'd)

d) Check the feed roller (2) for damage and its feeding action by turning the feed knob (4) manually. If required change the feed roller and set the strip feed, see 6.2.1-20 Tab Feeder - Change Feed Roller and 6.2.1-15 Tab Feeder - Set Tab Feed.

e) Check the strip feeding action during PRODUCTION.

f) Make sure there is no polyethylene residue on the surface of the knives (5) and (6) and in the space between the flat knife (6) and the sealing plate (7).

g) Check the flat knife (6) and the window knife (5) for wear and/or damage, see 6.2.1-2 Tab Feeder - Change Flat Knife.

h) Make sure the edges of the tab are cut cleanly. If required, set the window knife, see 6.2.1-6 Tab Feeder - Set Window Knife.

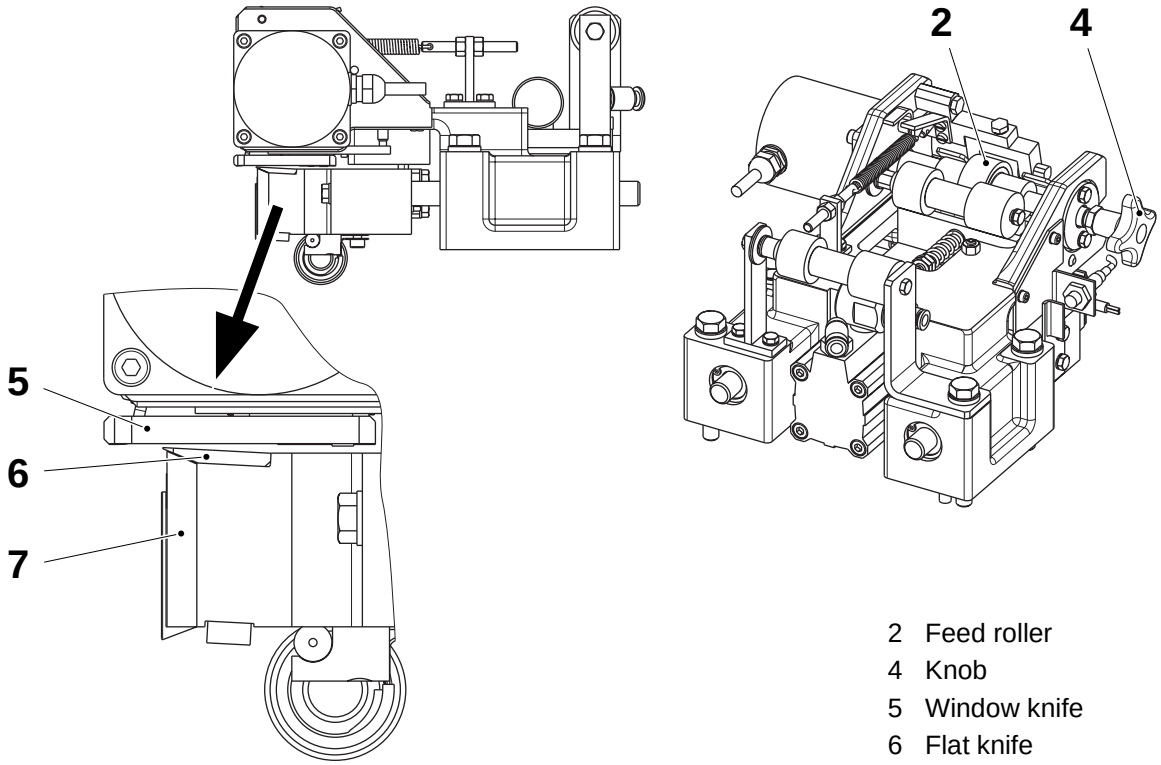

2 Feed roller
4 Knob
5 Window knife
6 Flat knife
7 Sealing plate

TechPub_2614345_0103 - B6114F02en.fm

6.2.1-2 Tab Feeder - Change Flat Knife

Machine Status	Air **OFF** Mains Power **OFF**
SPC Reference	2501801-0100

WARNING
Risk of burns!
The sealing jaw may be hot.

a) Remove the feeder, see 6.2.1-5 Tab Feeder - Remove.
b) Remove the three screws (1) to loosen the electrical connections.
c) Remove the two screws (2) and the tab heater head (3).
d) Remove the screws (4).
e) Change the flat knife (5).
f) Fit the screws (4).
g) Set the flat knife (5), see 6.2.1-9 Tab Feeder - Set Sealing Plate.
h) Fit the two screws (2) and the tab heater head (3).
i) Fit the electrical connections by means of the three screws (1).

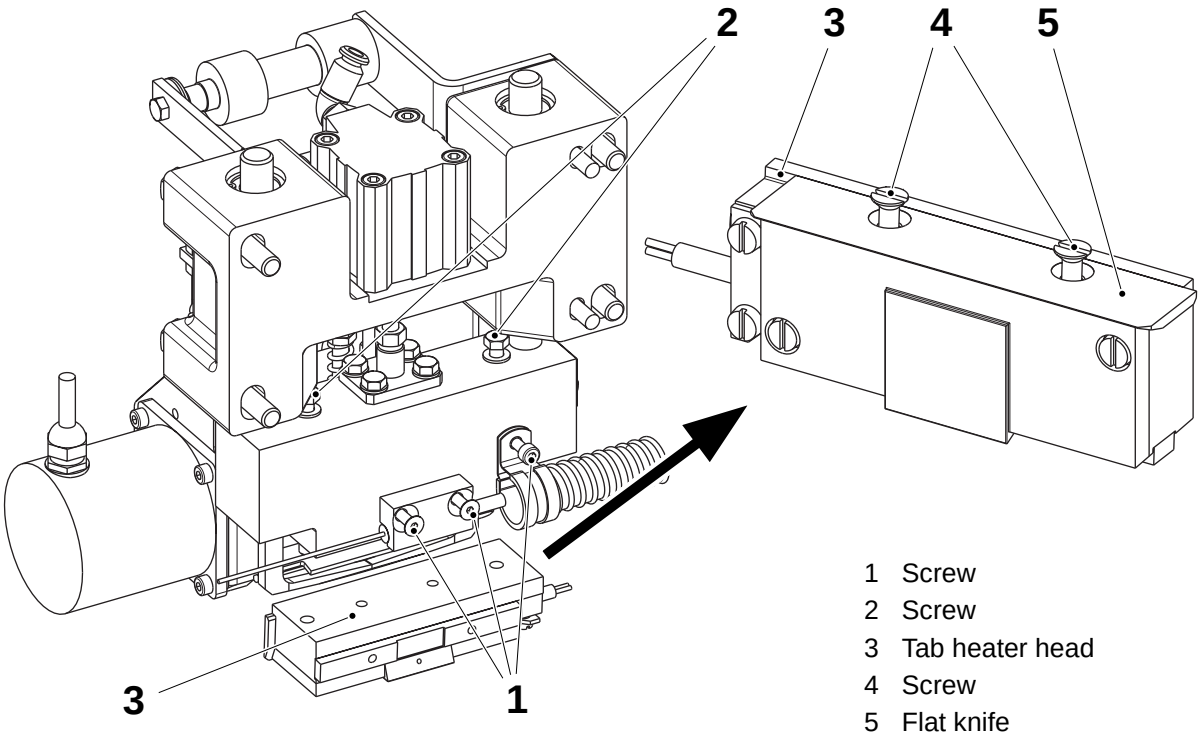

1 Screw
2 Screw
3 Tab heater head
4 Screw
5 Flat knife

TechPub_2614345_0103 - B6114F02en.fm

6.2.1-3 Tab Feeder - Change Window Knife

Machine Status	Air **OFF** Mains Power **OFF**
SPC Reference	2501801-0100

WARNING
Risk of burns!
The sealing jaw may be hot.

a) Remove the feeder, see 6.2.1-5 Tab Feeder - Remove.
b) Remove the flag (1) by means of the screws (2).
c) Remove the four screws (3) and the bracket (4).
d) Release the springs (5) by loosening the nut (6)

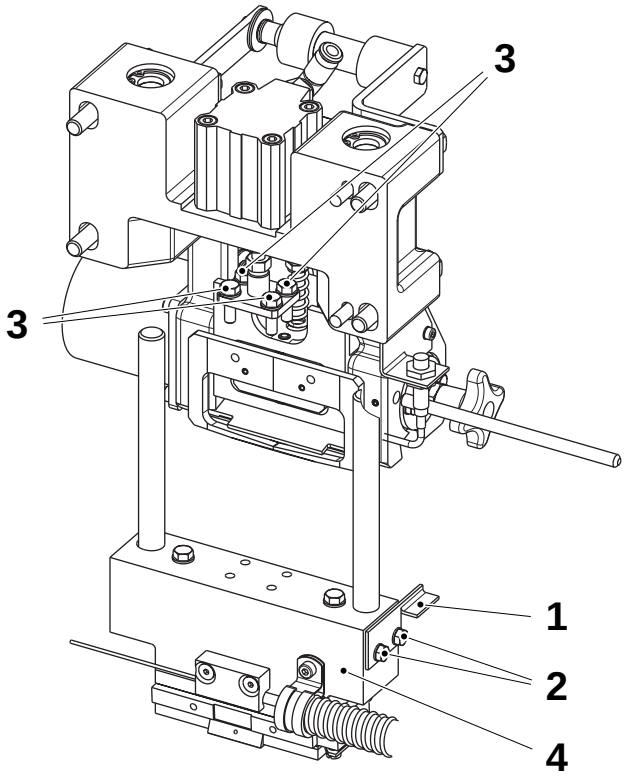

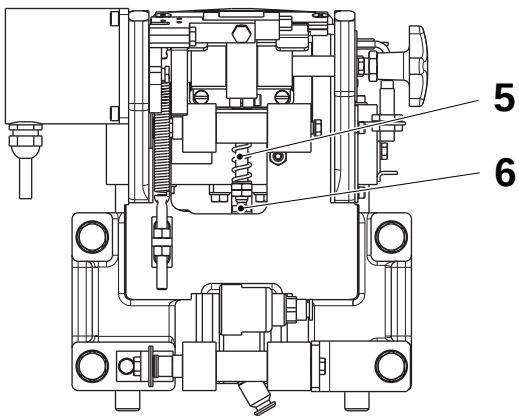

1 Flag
2 Screw
3 Screw
4 Bracket
5 Spring
6 Nut

(Cont'd)

TechPub_2614345_0103 - B6114F02en.fm

(Cont'd)

e) Loosen the grub screw (7) and remove the shaft (8).

f) Remove the screws (9) and the two pins (10).

g) Change the window knife (11).

CAUTION
Risk of damage to the equipment!
When changing the window knife (11), make sure that the bevelled side is the side that comes into contact with the flat knife.

h) Assemble in the reverse order.

i) Set the window knife (11), see 6.2.1-6 Tab Feeder - Set Window Knife.

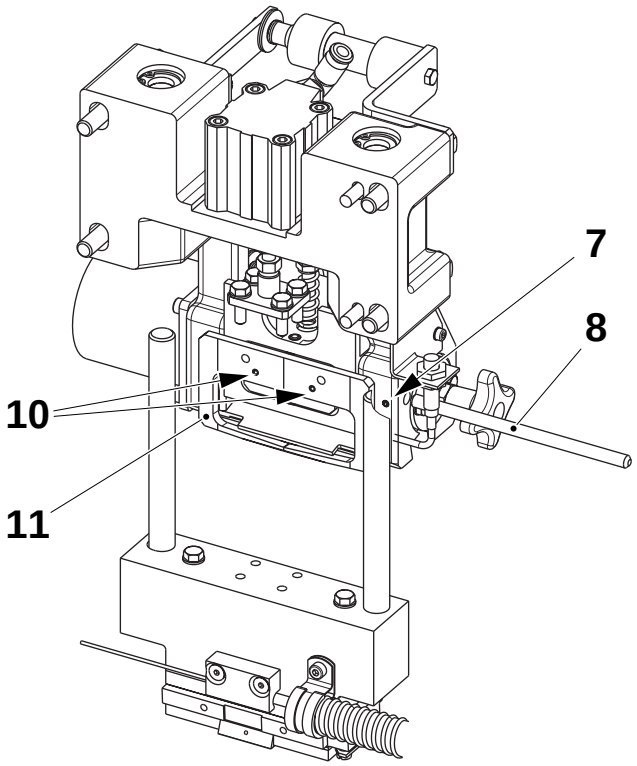

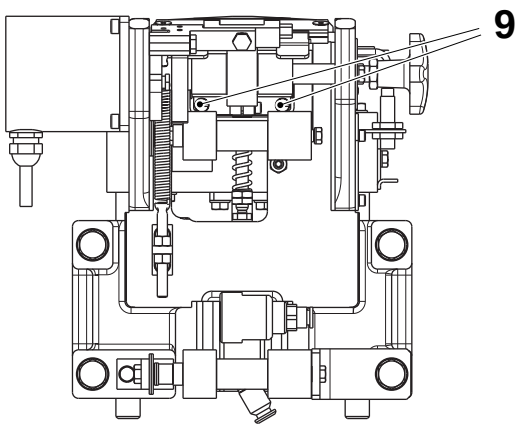

7 Grub screw
8 Shaft
9 Screw
10 Pin
11 Window knife

TechPub_2614345_0103 - B6114F02en.fm

6.2.1-4 Tab Feeder - Check Pivot Plate

Machine Status	Air **OFF** Mains Power **OFF**
SPC Reference	2501801-0100

WARNING
Risk of burns!
The sealing jaw may be hot.

a) Remove the feeder, see 6.2.1-5 Tab Feeder - Remove.
b) Remove the screws (1) and the bracket (2).
c) Loosen the grub screw (3) and remove the shaft (4).
d) Make sure the pivot plate (5) is free to rotate without radial play.
e) If not, change the pivot plate shims, see 6.2.1-19 Tab Feeder - Change Shims.
f) Assemble in the reverse order.

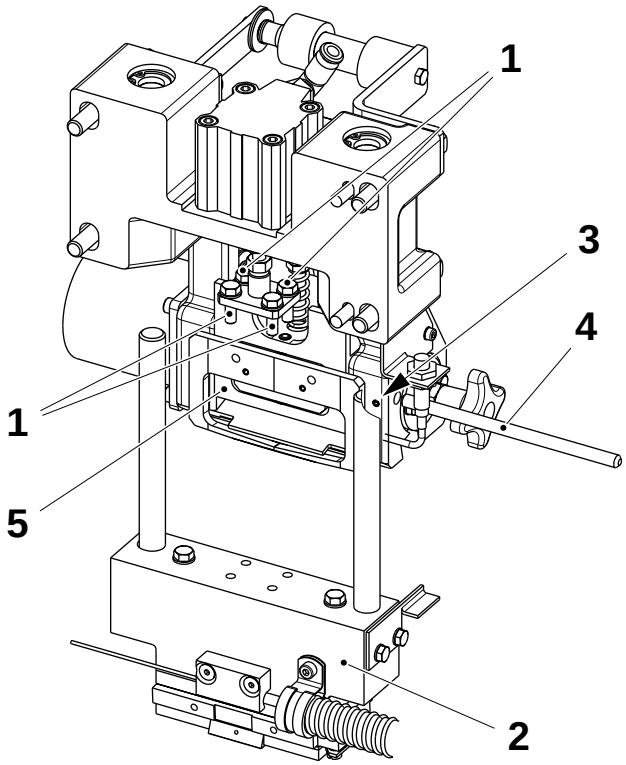

1 Screw
2 Bracket
3 Grub screw
4 Shaft
5 Pivot plate

TechPub_2614345_0103 - B6114F02en.fm

6.2.1-5 Tab Feeder - Remove

Machine Status	Air **OFF** Mains Power **OFF**
SPC Reference	2501801-0100

a) Disconnect the stepper motor electrical connector (1) from the electrical cabinet.

b) Disconnect the air hoses (2).

c) Remove the proximity switch (3).

d) Remove the screws (4) and the tab feeder (5).

e) Assemble in the reverse order.

f) Set the tab feeder, see 6.2.1-16 Tab Feeder - Set Position.

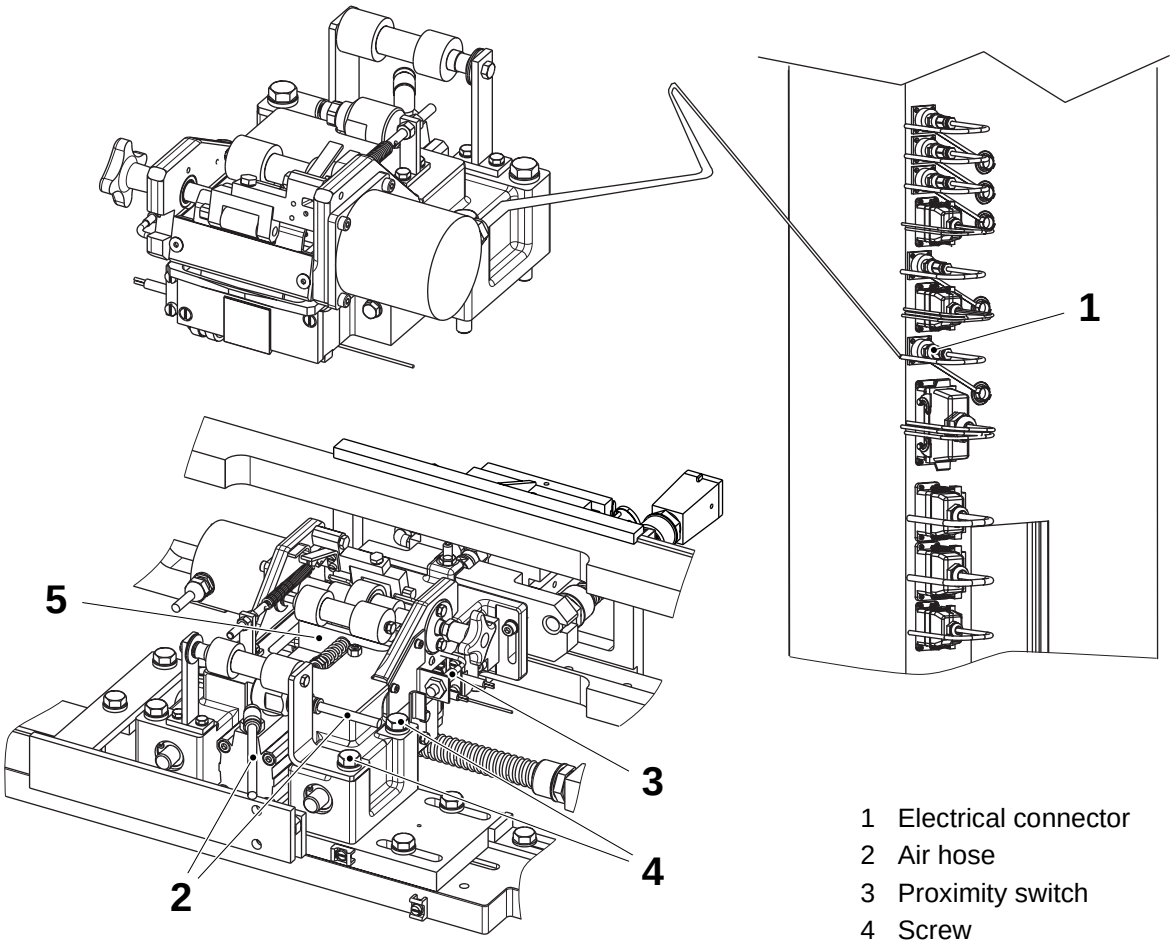

1 Electrical connector
2 Air hose
3 Proximity switch
4 Screw
5 Tab feeder

TechPub_2614345_0103 - B6114F02en.fm

6.2.1-6 Tab Feeder - Set Window Knife

Machine Status	Air **OFF** Mains Power **OFF**
SPC Reference	2501801-0100

WARNING
Risk of burns!
The sealing jaw may be hot.

This setup may be performed on a work bench.

a) Remove the feeder, see 6.2.1-5 Tab Feeder - Remove.
b) Adjust the nuts (1) until the spring (2) starts to compress.
c) Set the distance **A** between the surface of the sealing plate (3) and the outside edge of the window knife (4).
d) Keep the distance **A** and adjust the screw (5) until the window knife (4) touches the outside edge of the flat knife (6) without any play.
e) Adjust the nuts (1) to set the distance **B** between the nuts.
f) Check the cutting action after the setting.

TechPub_2614345_0103 - B6114F02en.fm

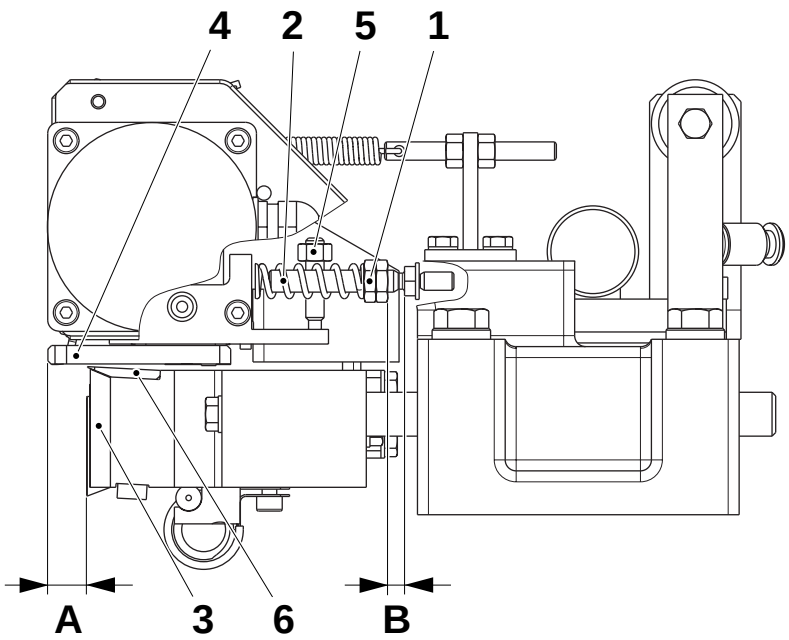

A = 6 ±0.5 mm

B = 12 ±2 mm

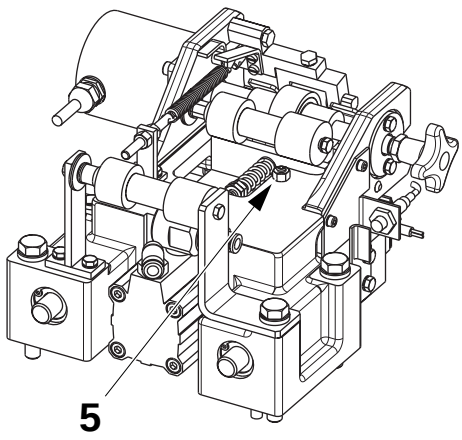

1 Nut
2 Spring
3 Sealing plate
4 Window knife
5 Screw
6 Flat knife

6.2.1-7 Tab Feeder - Change One-way Bearing

Machine Status	Air **OFF** Mains Power **OFF**
SPC Reference	2501801-0100

WARNING
Risk of burns!
The sealing jaw may be hot.

a) Loosen the shaft (1). Push the catches (2) to disengage the one-way bearing (3) and the feed roller (4).

b) Remove the shaft (1) and the one-way bearing (3).

c) Change the one-way bearing (3) and assemble in the reverse order.

Note! Make sure the one-way bearing (3) rotates in the patch (5) feeding direction.

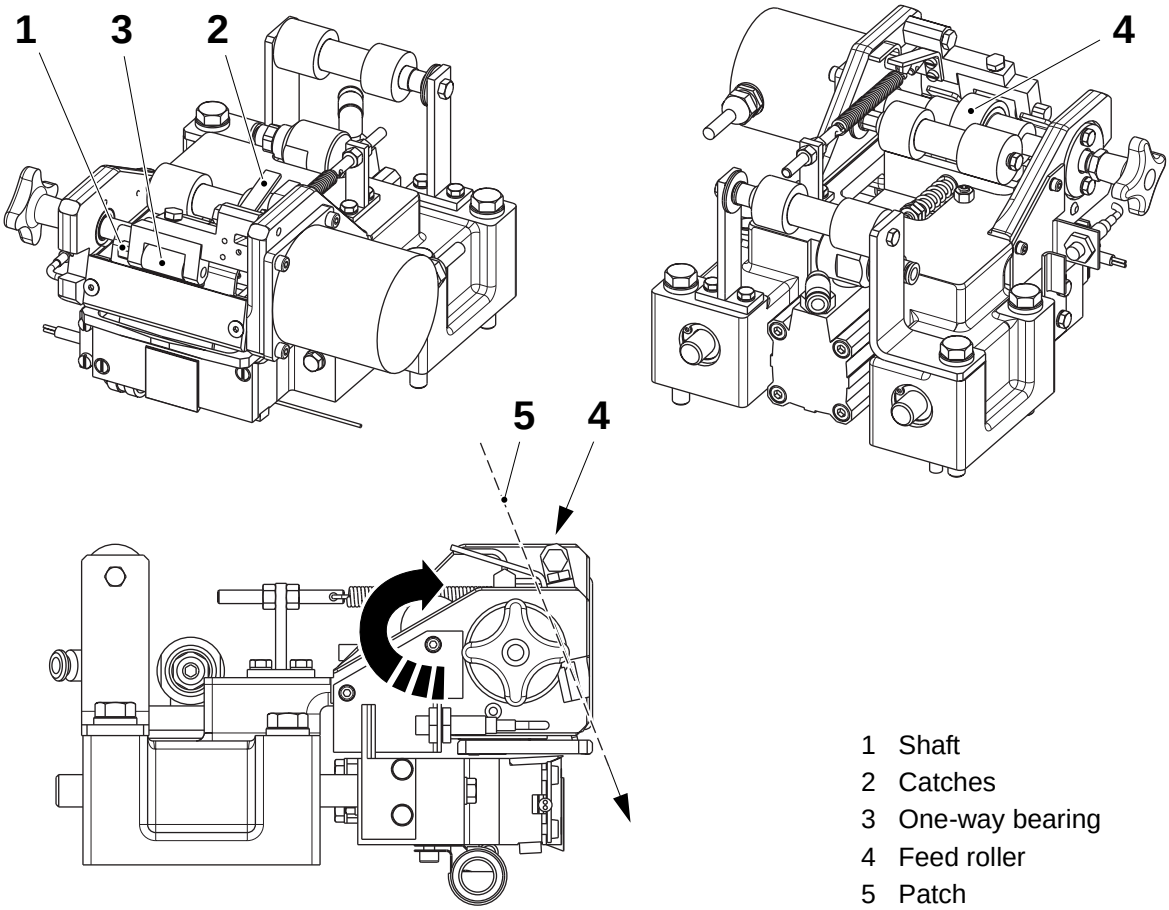

1 Shaft
2 Catches
3 One-way bearing
4 Feed roller
5 Patch

TechPub_2614345_0103 - B6114F02en.fm

6.2.1-8 Tab Feeder - Check Sealing Plate

Machine Status	Air **OFF** Mains Power **OFF**
Consumables	Heat transfer TP No. 90298-33
SPC Reference	2501801-0100

WARNING
Risk of burns!
The sealing jaw may be hot.

a) Remove the two screws (1).
b) Remove the sealing plate (2).
c) Check the surface of the sealing plate (2) for wear and/or scratches. Also check for any residue of polyethylene.
d) Change the sealing plate (2) if damaged or worn.

Note! Apply heat transfer paste to the tip (3) of the thermocouple when assembling.

e) Fit the sealing plate (2) by means of the two screws (1).
f) Set the sealing plate (2), see 6.2.1-9 Tab Feeder - Set Sealing Plate.

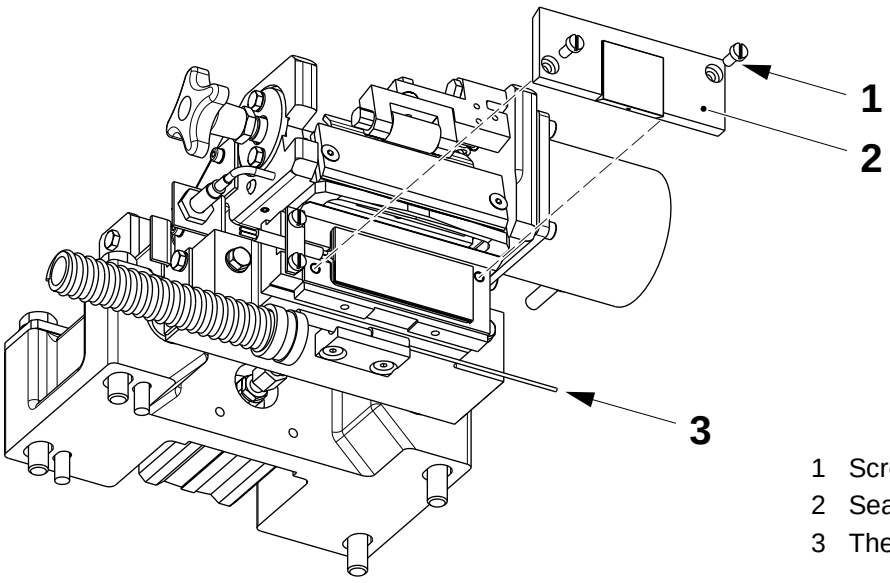

1 Screw
2 Sealing plate
3 Thermocouple tip

TechPub_2614345_0103 - B6114F02en.fm

6.2.1-9 Tab Feeder - Set Sealing Plate

Machine Status	Air **OFF** Mains Power **OFF**
Consumables	Heat transfer TP No. 90298-33
SPC Reference	2501801-0100

WARNING
Risk of burns!
The sealing jaw may be hot.

a) Remove the feeder, see 6.2.1-5 Tab Feeder - Remove.
b) Remove the two screws (1) and the tab heater head (2).
c) Remove the screws (3) and the sealing head electrical group (4).

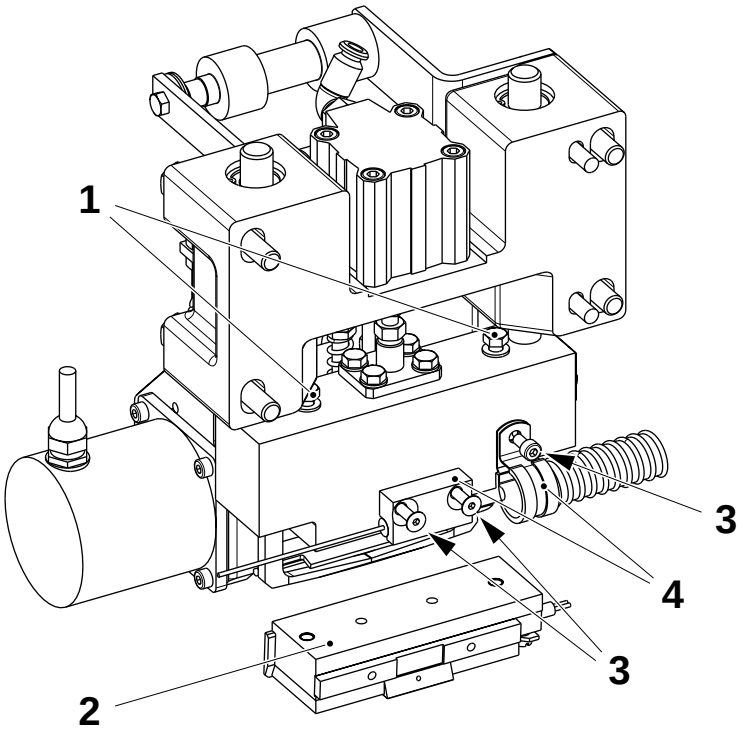

1 Screw
2 Tab heater head
3 Screw
4 Electrical group

(Cont'd)

TechPub_2614345_0103 - B6114F02en.fm

(Cont'd)

d) Loosen the screws (5).

e) Set the distance **A** between the top of the flat knife (6) and the sealing plate (7). If required, adjust with shims (8).

f) Tighten the screws (5) and loosen the screws (9).

g) Set the distance **B** between the sealing plate (7) and the flat knife (6) with the aid of a feeler gauge.

h) Tighten the screws (9).

Note! Make sure the tip of the thermocouple (10) is firmly in place within the sealing plate before turning the power supply **On**.

i) Apply heat transfer compound to the tip of the thermocouple (10).

j) Assemble in the reverse order.

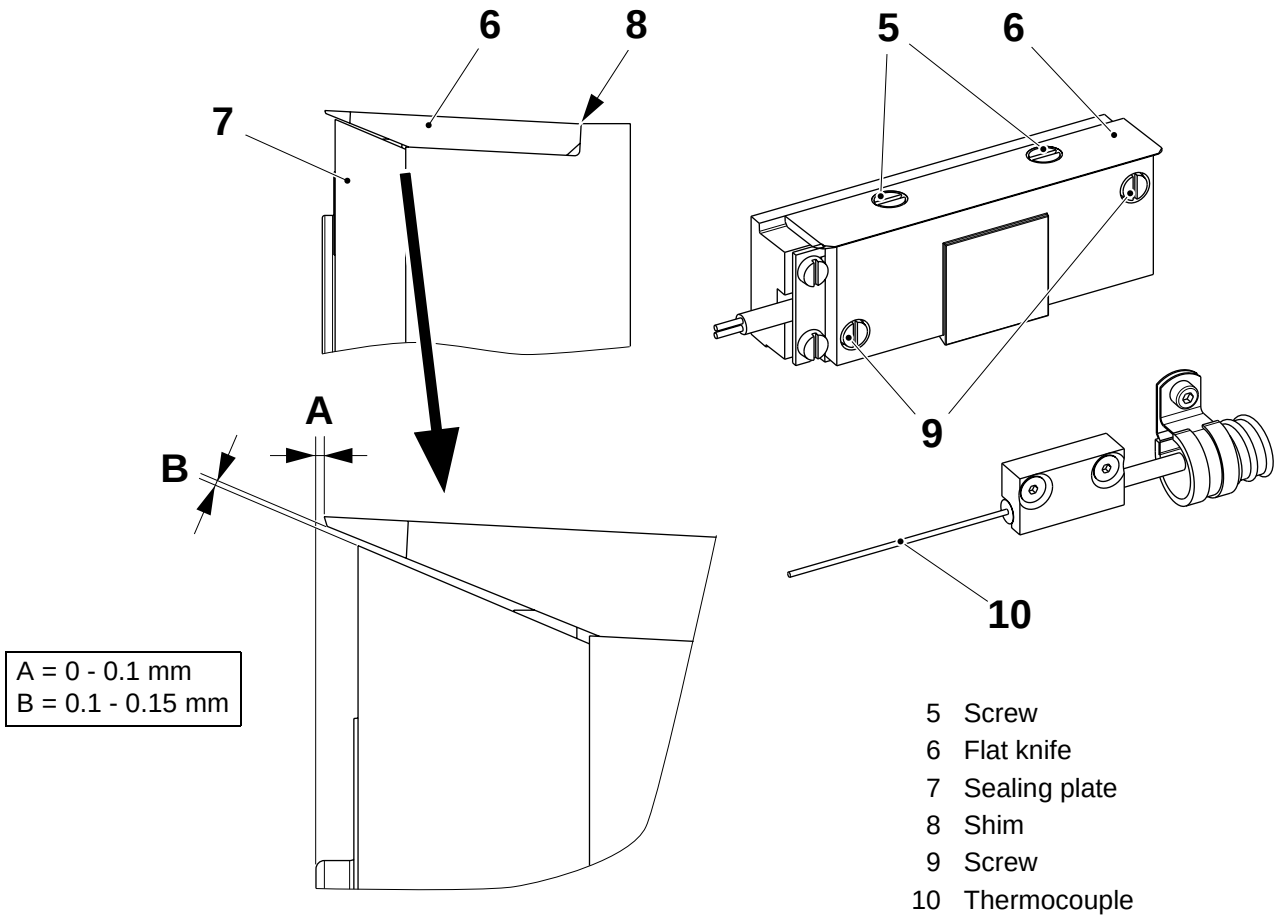

TechPub_2614345_0103 - B6114F02en.fm

6.2.1-10 Tab Feeder - Check Guides and Linear Bearings

Machine Status	Air **OFF** Mains Power **OFF**
SPC Reference	2501801-0100

a) Make sure the flag (1) moves freely.

b) Remove the feeder, see 6.2.1-5 Tab Feeder - Remove.

c) Remove the flag (1) by means of the screws (2).

d) Remove the four screws (3) and the bracket (4) with the sealing head group (5).

e) Check the guides (6) for wear and/or damage.

f) Check for wear in the linear bearings (7) by using the guide (6). Check the play with bearing at a time.

g) Change as required, see 6.2.1-11 Tab Feeder - Change Linear Bearings.

h) Assemble in the reverse order.

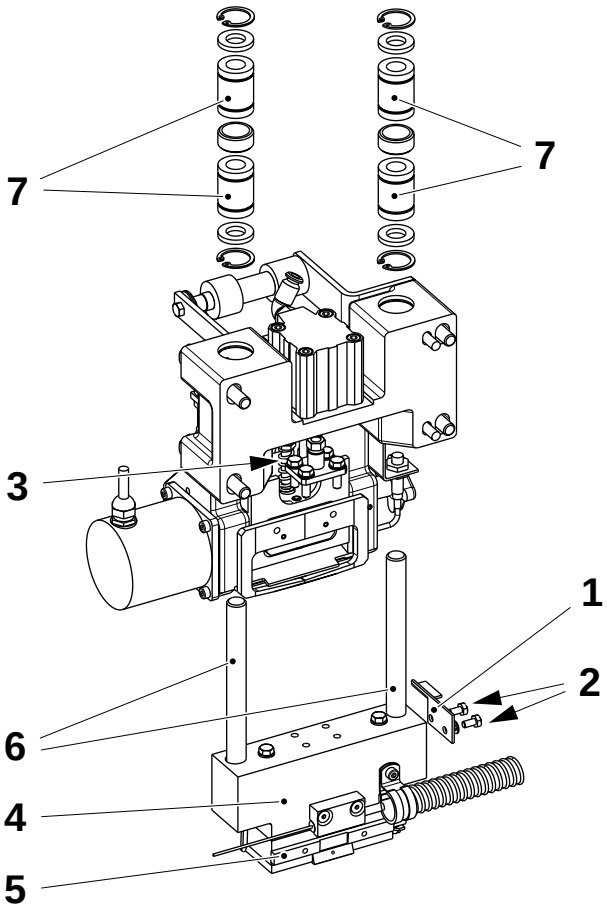

1 Flag
2 Screw
3 Screw
4 Bracket
5 Sealing head
6 Guide
7 Linear bearing

TechPub_2614345_0103 - B6114F02en.fm

6.2.1-11 Tab Feeder - Change Linear Bearings

Machine Status	Air **OFF** Mains Power **OFF**
SPC Reference	2501801-0100

a) Remove the feeder, see 6.2.1-5 Tab Feeder - Remove.

b) Remove the flag (1) by means of the screws (2).

c) Remove the four screws (3) and the bracket (4) with the sealing head (5).

d) Remove the circlips (6) and the seal rings (7) from each side of the linear bearing (8).

e) Pull out the linear bearings (8) and change them.

f) Assemble in the reverse order.

g) Make sure the cylinder (9) reaches the end of its stroke and moves freely.

Note! On both sides of the applicator casting (10), make sure that the distance **A** is obtained between the outer surface of the seal ring (7) and the surface of the applicator casting (10).

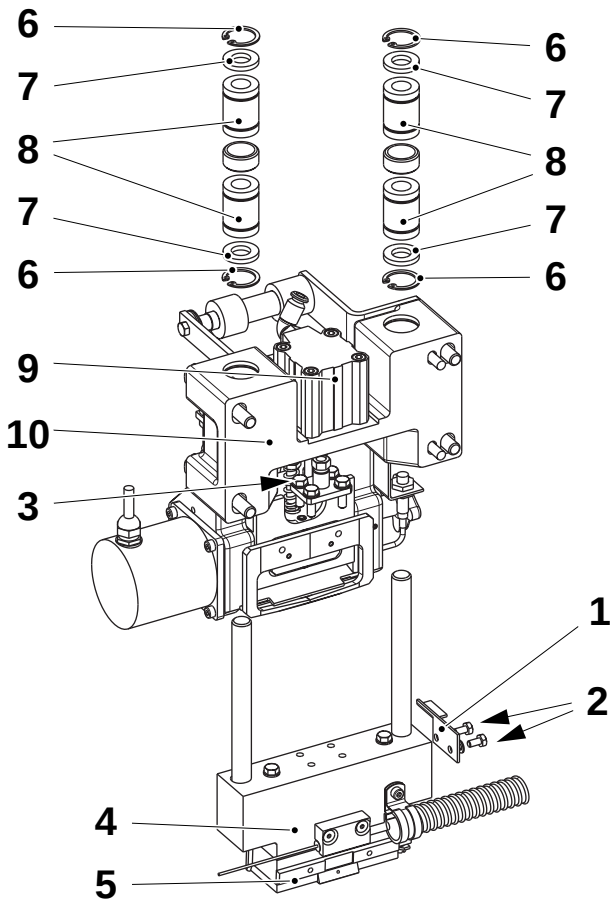

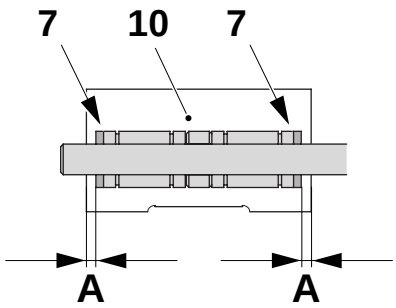

A = 4 mm

1 Flag
2 Screw
3 Screw
4 Bracket
5 Sealing head
6 Circlip
7 Seal ring
8 Linear bearing
9 Cylinder
10 Applicator casting

TechPub_2614345_0103 - B6114F02en.fm

6.2.1-12 Tab Feeder - Check Tab Feed

Machine Status	Air **OFF** Mains Power **OFF**
SPC Reference	2501801-0100

Make sure the rollers (1), (2) and (3) are aligned.

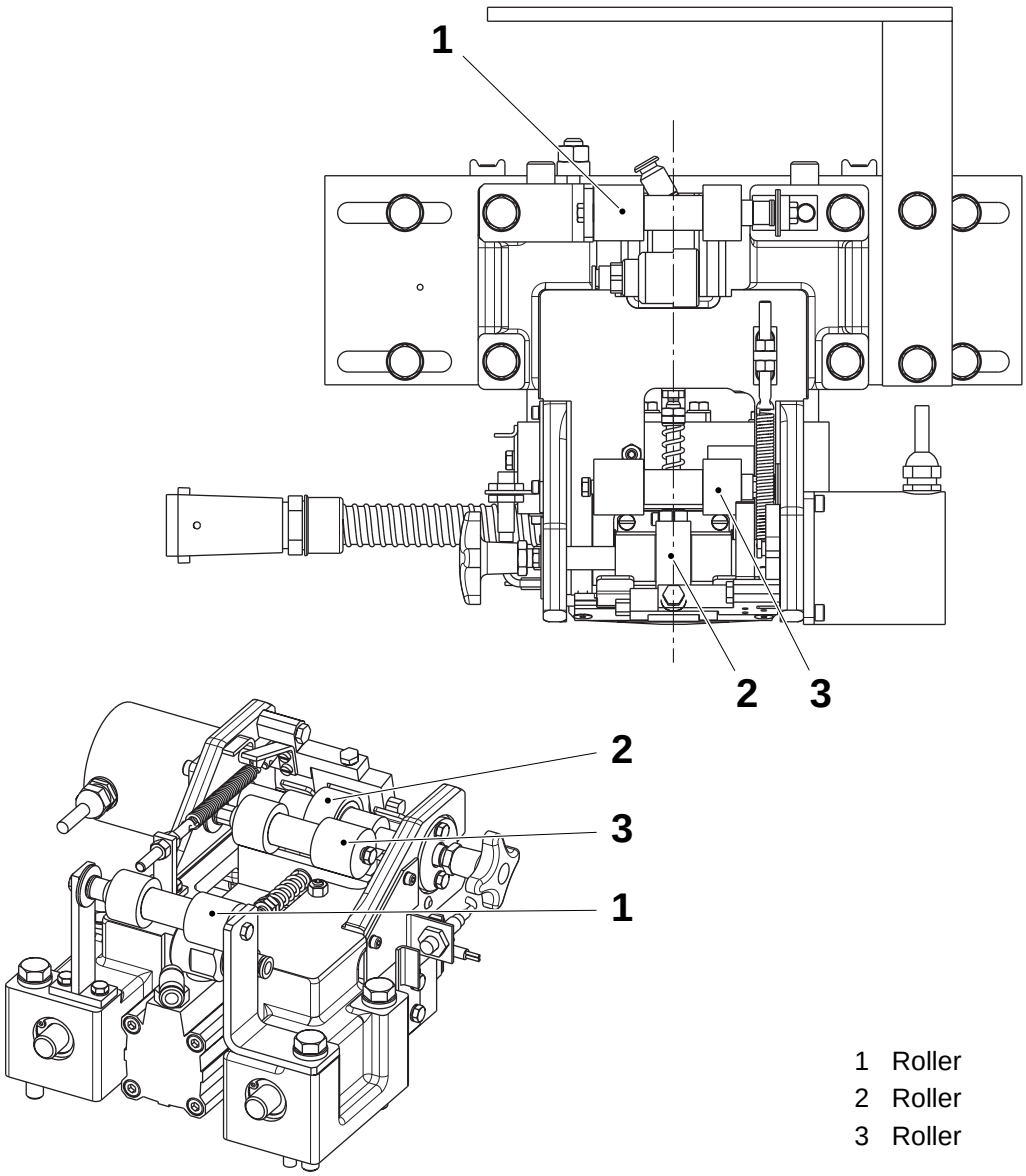

1 Roller
2 Roller
3 Roller

TechPub_2614345_0103 - B6114F02en.fm

6.2.1-13 Tab Feeder - Change Bushings

Machine Status	Air **OFF** Mains Power **OFF**
SPC Reference	2501801-0100

a) Remove the feeder, see 6.2.1-5 Tab Feeder - Remove.

b) Remove the window knife, see 6.2.1-6 Tab Feeder - Set Window Knife.

c) Remove the pivot plate, see 6.2.1-4 Tab Feeder - Check Pivot Plate.

d) Loosen the grub screw (1).

e) Remove the shaft (2).

f) Remove the two bushings (3) from the pivot plate (4) and change them if damaged or worn.

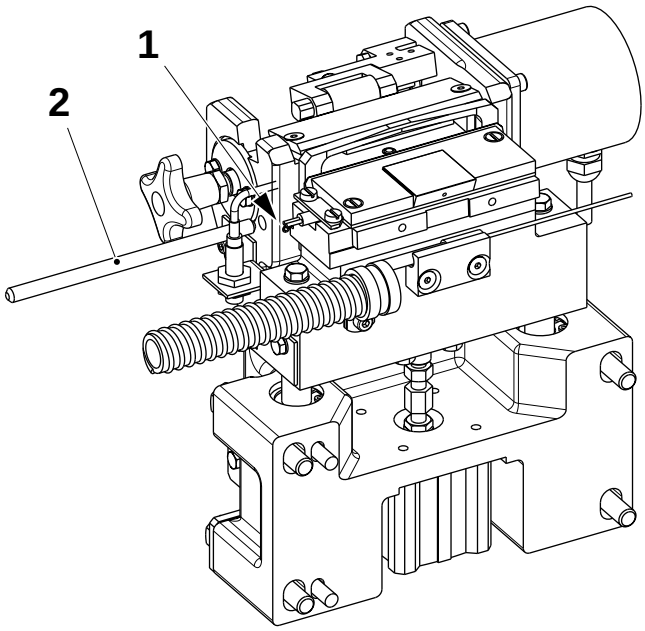

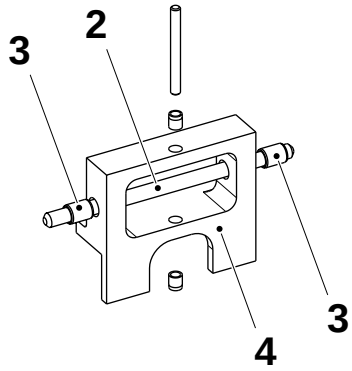

1 Grub screw
2 Shaft
3 Bushing
4 Pivot plate

(Cont'd)

TechPub_2614345_0103 - B6114F02en.fm

(Cont'd)

g) Remove the two screws (5) and the plates (6) and (7).

h) Loosen the clamp screws (8).

i) Remove the shaft (9) and the bushings (10) from the pivot plate (4).

Note! Take care of the shims on the shaft (9). Follow the procedure in 6.2.1-19 Tab Feeder - Change Shims when assembling the shims.

j) Change the bushings (10) if damaged or worn.

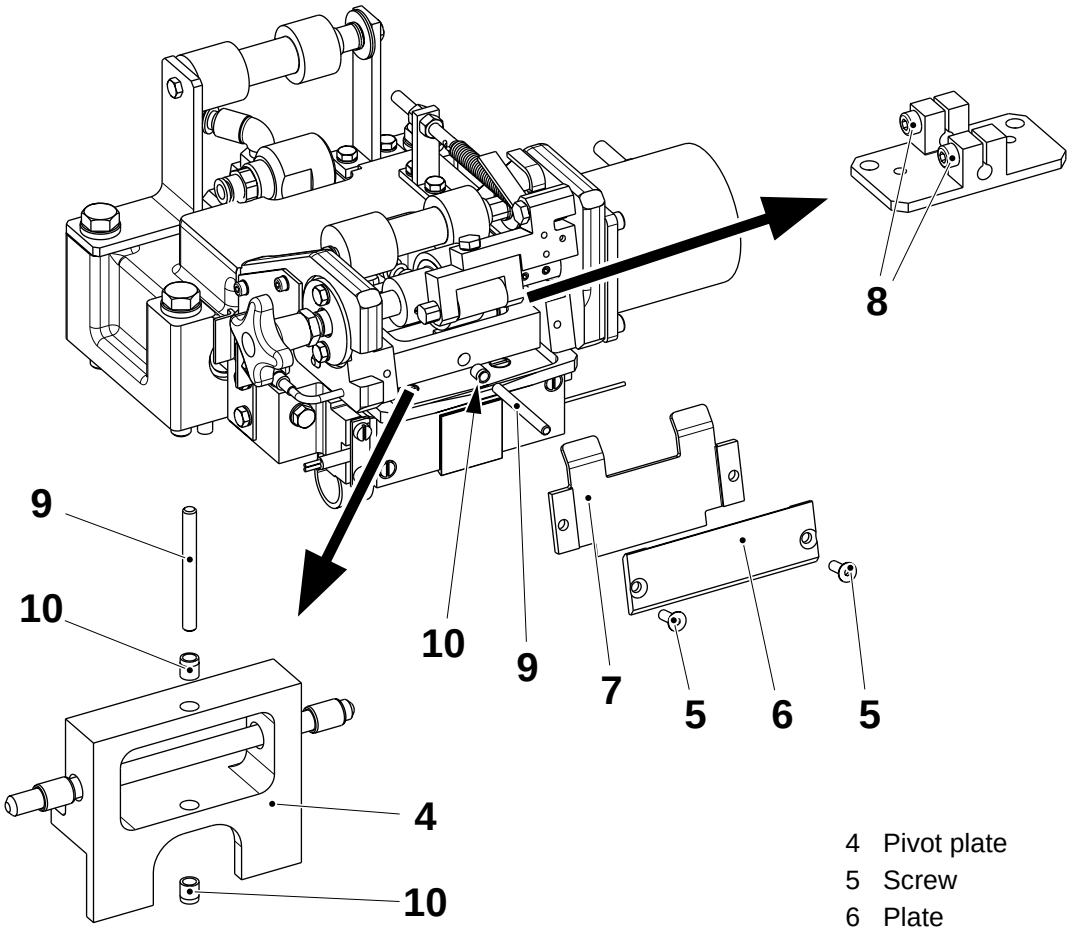

4 Pivot plate
5 Screw
6 Plate
7 Plate
8 Screw
9 Shaft
10 Bushing

(Cont'd)

TechPub_2614345_0103 - B6114F02en.fm

(Cont'd)

k) Remove the knob (11) and the nut (12).
l) Remove the two screws (13) and the flange (14).
m) Remove the bushing (15) from the flange (14).
n) Change the bushing (15).
o) if damaged or worn.
p) Assemble in the reverse order.

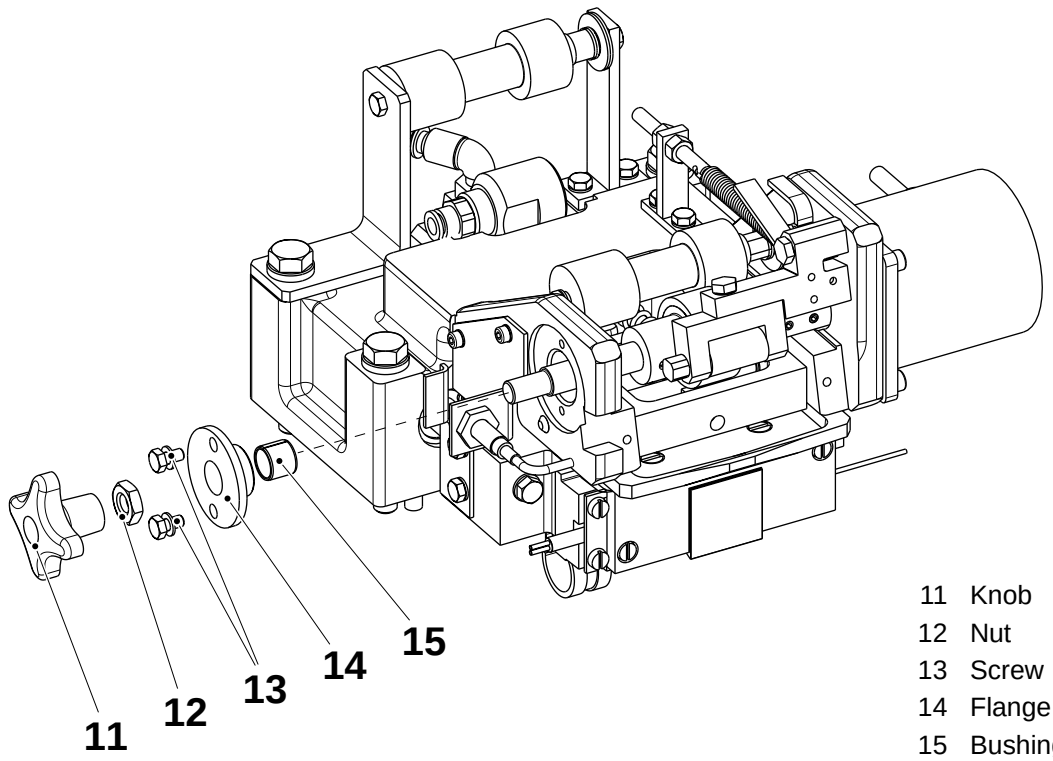

11 Knob
12 Nut
13 Screw
14 Flange
15 Bushing

TechPub_2614345_0103 - B6114F02en.fm

6.2.1-14 Tab Feeder - Change Cylinder

Machine Status	Air **OFF** Mains Power **OFF**
SPC Reference	2501801-0100

a) Remove the air connections (1).

b) Loosen the screw (2).

c) Remove the four screws (3).

d) Remove the cylinder (4) and change it.

e) Assemble in the reverse order.

f) Set the cushion cylinder, see 6.2.1-17 Tab Feeder - Set Cushion Cylinder.

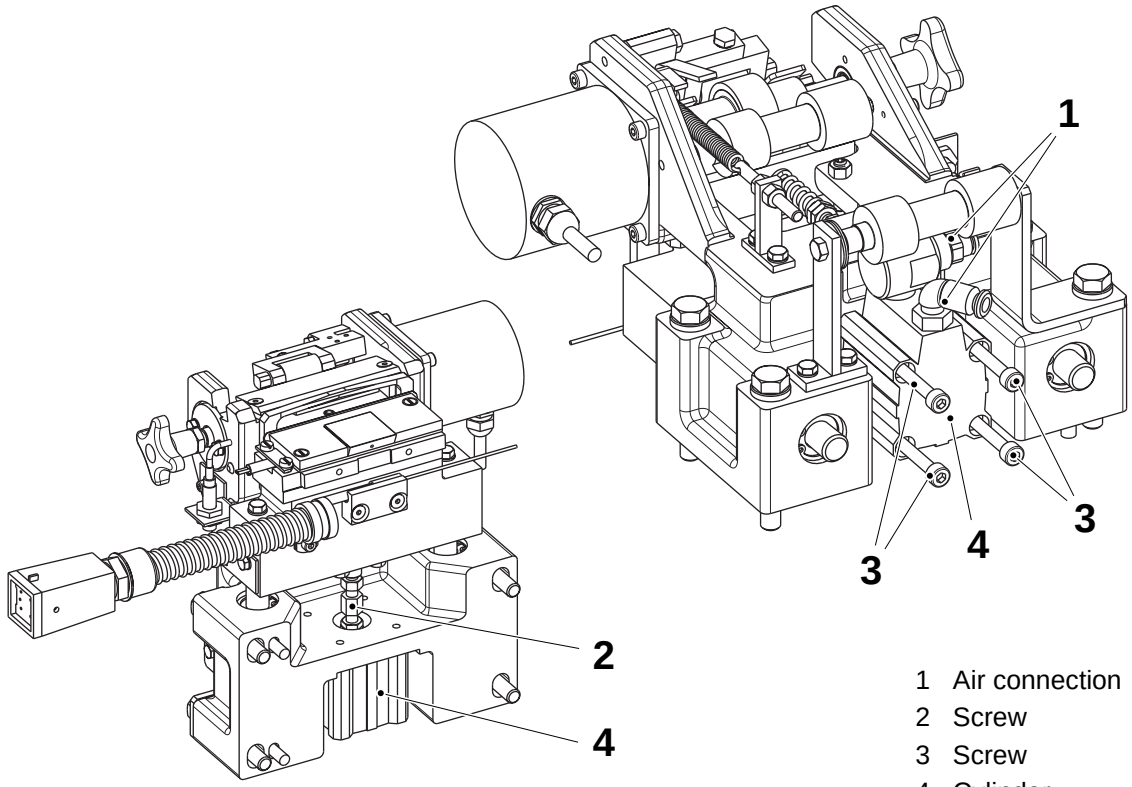

1 Air connection
2 Screw
3 Screw
4 Cylinder

TechPub_2614345_0103 - B6114F02en.fm

6.2.1-15 Tab Feeder - Set Tab Feed

Machine Status	Air **OFF** Mains Power **OFF**
SPC Reference	2501801-0100

a) Place a piece of patch strip between the feed roller (1) and the one-way bearing (2).

b) Loosen the nut (3) and set the distance **A** between the bracket (4) and the screw (5).

c) Adjust the nut (3) until it is not possible to pull the strip backwards.

A = 16 ±1 mm

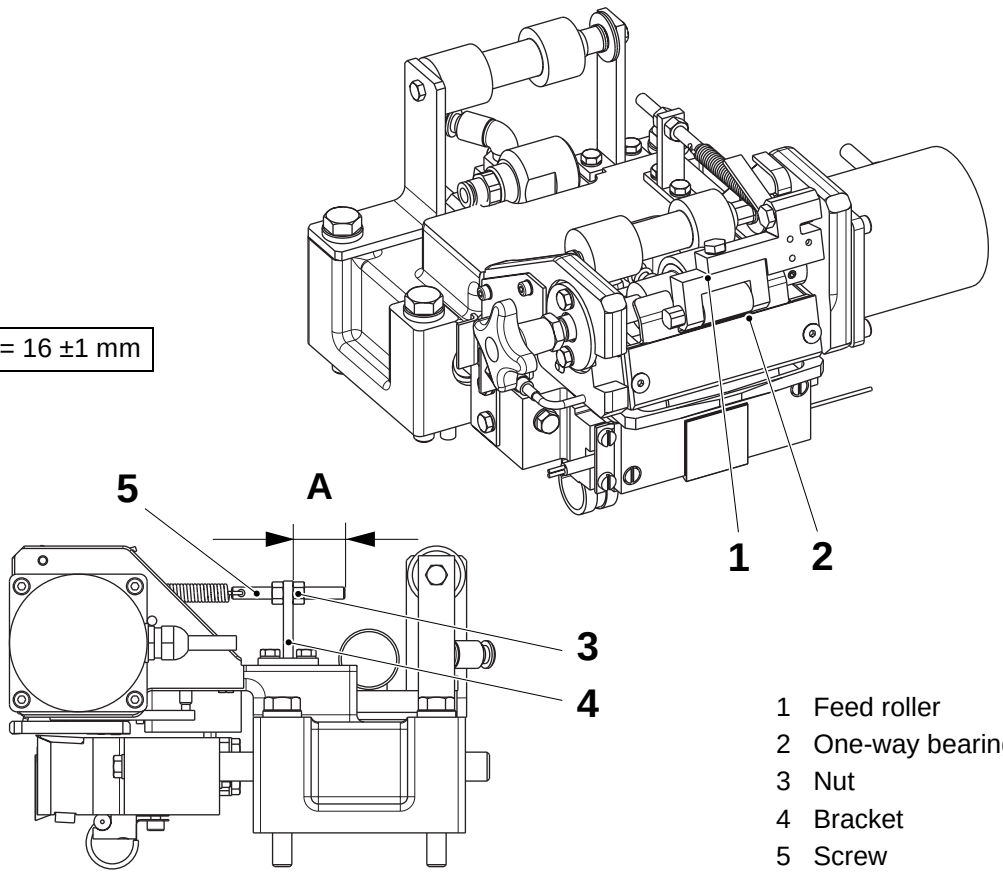

1 Feed roller
2 One-way bearing
3 Nut
4 Bracket
5 Screw

TechPub_2614345_0103 - B6114F02en.fm

6.2.1-16 Tab Feeder - Set Position

Machine Status	PREPARATION
SPC Reference	2501801-0100 1549256-0100

WARNING
Risk of burns!
The sealing jaw may be hot.

Note! Before setting the tab feeders position, make sure the tab counter jaw position is set correctly, see 1.1.2-4 Applicator Stations - Fine Setting and 1.1.2-2 Applicator Stations - Basic Setting.

a) Switch the key selector located on the PT21 electrical panel to the SERVICE position.

b) Make sure the cylinder (1) is fully extended.

c) Check the distance **A** between the sealing plate (2) and the tip of the window knife (3).

d) Loosen the screws (4) and set the distance **A** by shifting the tab feeder assembly (5).

e) Set the tab counter jaw, see 6.2.1-17 Tab Feeder - Set Cushion Cylinder.

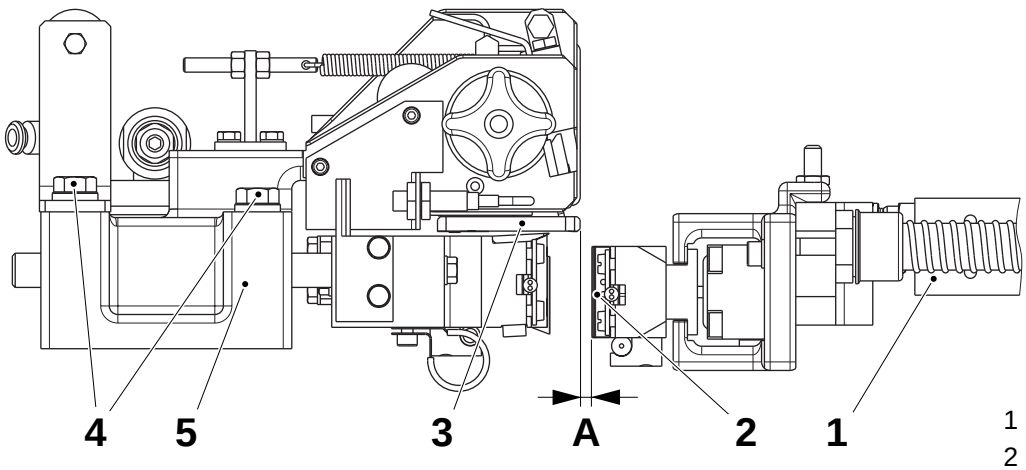

A = 1.5 ±0.2 mm

1 Cylinder
2 Sealing plate
3 Window knife
4 Screw
5 Tab feeder

TechPub_2614345_0103 - B6114F02en.fm

6.2.1-17 Tab Feeder - Set Cushion Cylinder

Machine Status	Air **ON** Mains Power **ON**
SPC Reference	2501801-0100 1549256-0100

WARNING
Risk of burns!
The sealing jaw may be hot.

Note! Do not adjust the counter jaws assembly position when setting the cushion cylinder.

a) Set the tab counter jaw distance, see 6.2.1-16 Tab Feeder - Set Position.
b) Switch the key selector located on the PT21 electrical panel to the SERVICE position.
c) Place a piece of packaging material (1) and tab strip between the plates.
d) Activate the manual overrides for the cylinders (2) and (3).
e) Loosen the locknuts (4) and adjust the screw (5) to set the distance **A** between the guide (6) and the block (7).
f) Deactivate the manual override for the cylinders (2) and (3).
g) Set the tab feeder, see 6.2.1-18 Tab Feeder - Set Proximity Switch.

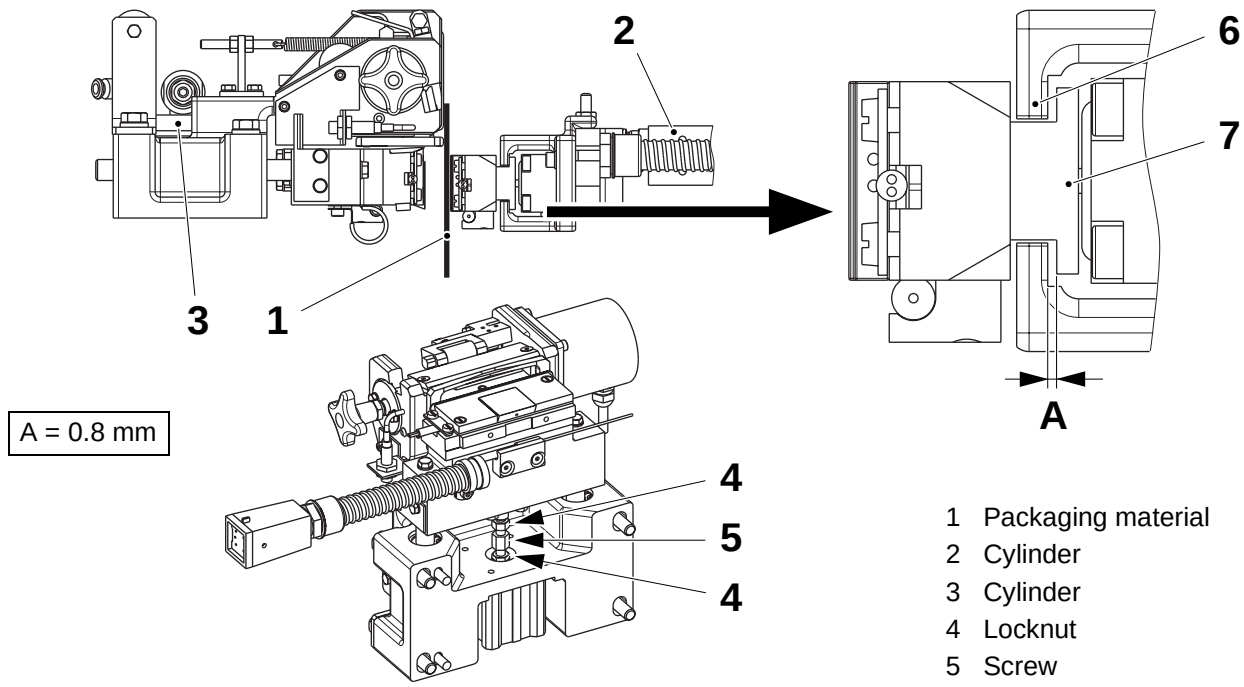

1 Packaging material
2 Cylinder
3 Cylinder
4 Locknut
5 Screw
6 Guide
7 Block

TechPub_2614345_0103 - B6114F02en.fm

6.2.1-18 Tab Feeder - Set Proximity Switch

Machine Status	Air **ON** Mains Power **ON**
SPC Reference	2501801-0100

WARNING
Risk of crushing!
The cylinder piston may move unexpectedly.

a) Switch the key selector on the PT21 electrical panel to the SERVICE position.

Note! For an accurate setting, the packaging material must be threaded through the machine. If not, place a piece of packaging material between the sealing head and the counter jaw.

b) Loosen the nuts (1) and move the proximity switch (2) backwards.
c) Manually activate the valve to extend the cylinder (3).
d) Make sure the cylinder (3) is fully extended. If required, set the cushion cylinder, see 6.2.1-17 Tab Feeder - Set Cushion Cylinder.
e) Set the distance **A** between the proximity switch (2) and the flag (4) by means of the nuts (1).
f) Make sure the proximity switch (2) LED lights up.
g) Manually activate the valve to retract the cylinder (3).
h) Make sure the cylinder (3) is fully retracted.

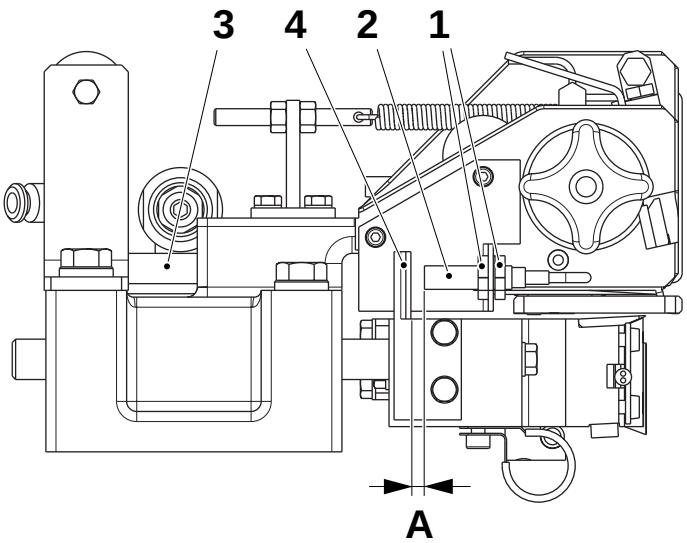

A = 0.1 mm

1 Nut
2 Proximity switch
3 Cylinder
4 Flag

TechPub_2614345_0103 - B6114F02en.fm

6.2.1-19 Tab Feeder - Change Shims

Machine Status	Air **OFF** Mains Power **OFF**
SPC Reference	2501801-0100

WARNING
Risk of burns!
The sealing jaw may be hot.

a) Remove the feeder, see 6.2.1-5 Tab Feeder - Remove.
b) Remove the screws (1) and the plates (2) and (3).
c) Loosen the grub screws (4) and remove the screws (5) and the stepper motor (6).
d) Release the spring (7) pressure.
e) Remove the flag (8) by means of the screws (9).
f) Remove the four screws (10) and the sealing head (11) group.
g) Loosen the grub screw (12) and remove the shaft (13).

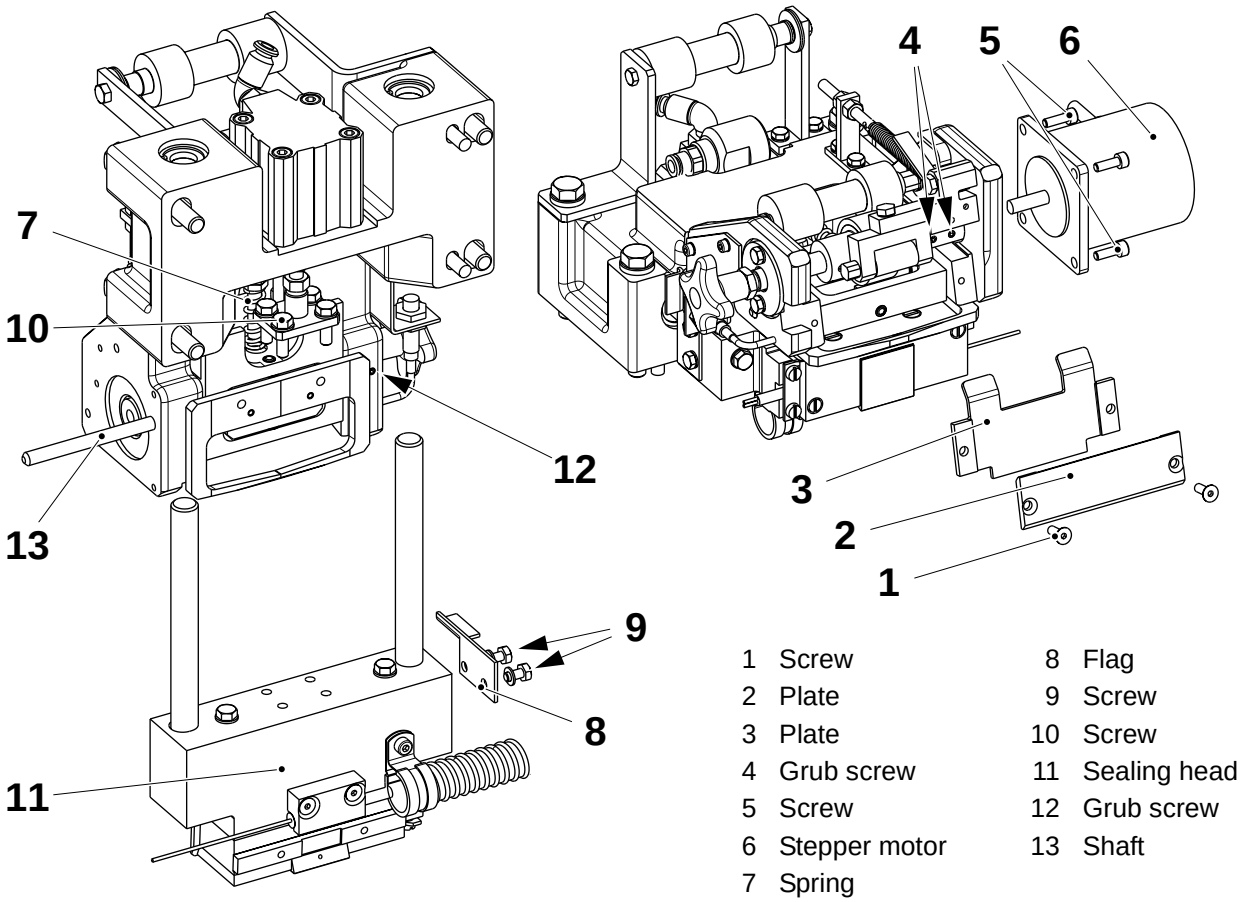

1	Screw	8	Flag
2	Plate	9	Screw
3	Plate	10	Screw
4	Grub screw	11	Sealing head
5	Screw	12	Grub screw
6	Stepper motor	13	Shaft
7	Spring		

(Cont'd)

TechPub_2614345_0103 - B6114F02en.fm

(Cont'd)

h) Remove the screws (14) and the window knife (15).

i) Loosen the screws (16).

j) Remove the shaft (17) and the shims (18).

k) Measure and note the distance **A** between the pivot plate (19) and the plate (20).

l) Remove the pivot plate (19) and the plate (20).

m) Put the shims (18) at a thickness of **B** between the pivot plate (19) and the plate (20) and put back the shaft (17).

Note! The pivot plate (19) must be free to rotate but without axial play.

n) Assemble in the reverse order.

o) Set the window knife, see <u>6.2.1-6 Tab Feeder - Set Window Knife</u>.

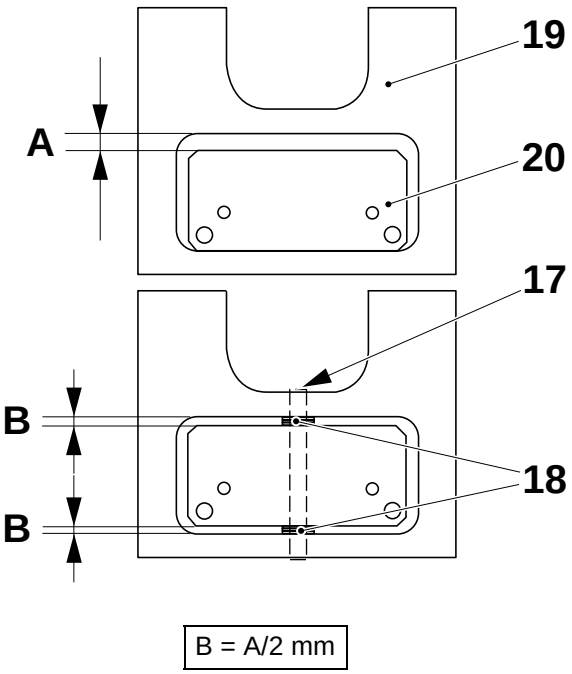

B = A/2 mm

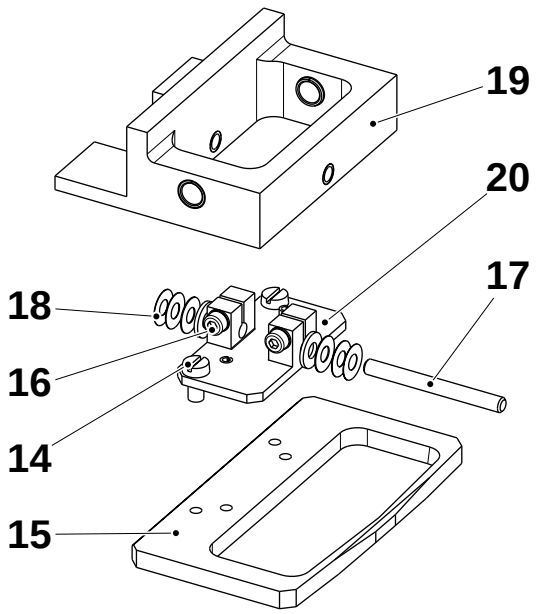

14	Screw	18	Shim
15	Window knife	19	Pivot plate
16	Screw	20	Plate
17	Shaft		

TechPub_2614345_0103 - B6114F02en.fm

6.2.1-20 Tab Feeder - Change Feed Roller

Machine Status	Air **OFF** Mains Power **OFF**
SPC Reference	2501801-0100

WARNING

Risk of burns!

The sealing jaw may be hot.

a) Loosen the locking screws (1).

b) Remove the nut (2) and the knob (3).

c) Remove the four screws (4) and pull out the stepper motor (5) together with the shaft (6) until the feed roller (7) comes free.

d) Change the feed roller (7).

e) Assemble in the reverse order. Make sure to tighten the locking screws (1) against the flat parts of the shaft (6).

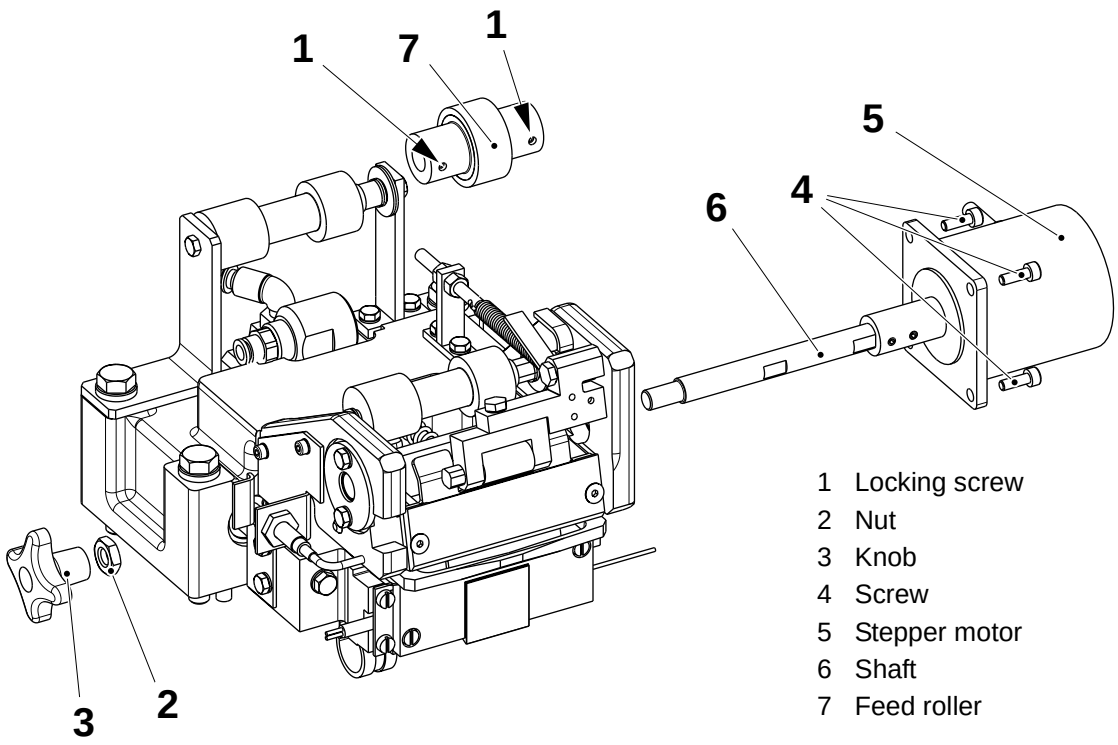

1 Locking screw
2 Nut
3 Knob
4 Screw
5 Stepper motor
6 Shaft
7 Feed roller

TechPub_2614345_0103 - B6114F02en.fm

6.2.1-21 Tab Feeder - Change Heater and Thermocouple

Machine Status	Air **OFF** Mains Power **OFF**
Consumables	Heat transfer TP No. 90298-33
SPC Reference	2501801-0100

WARNING
Risk of burns!
The sealing jaw may be hot.

a) Remove the screws (1) and the electrical connector group (2).

b) Remove the screws (3) and the sealing head (4).

c) Gently pull the thermocouple tip (5) out of the sealing head hole (6) and change it if damaged or worn.

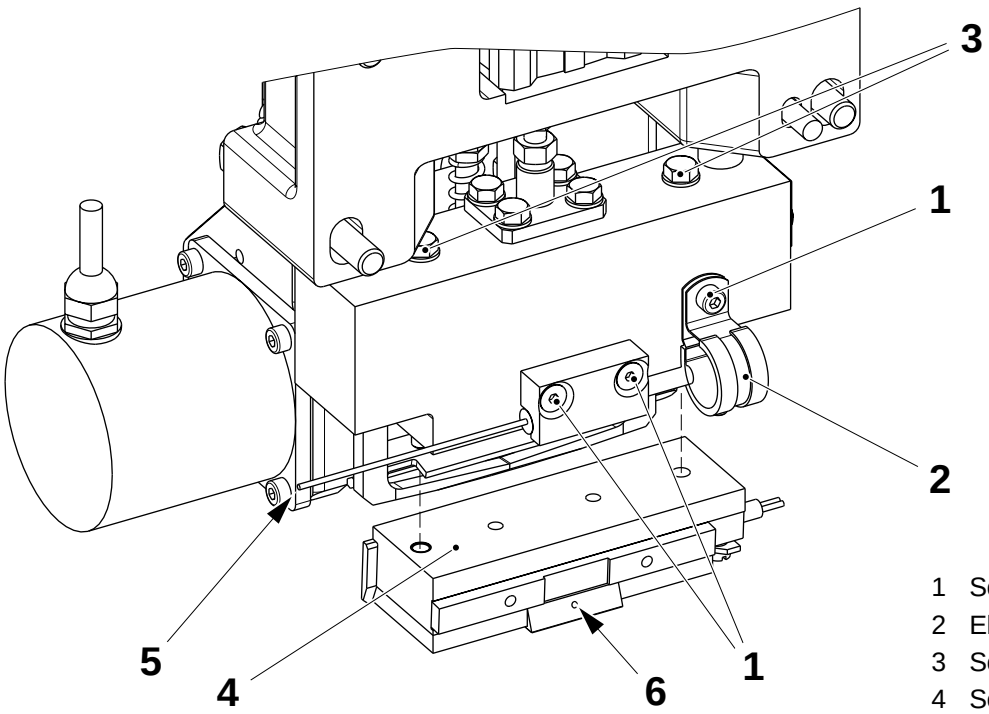

1 Screw
2 Electrical connector
3 Screw
4 Sealing head
5 Thermocouple tip
6 Hole

(Cont'd)

TechPub_2614345_0103 - B6114F02en.fm

(Cont'd)

d) Remove the screws (7) and the sealing plate (8).

e) Loosen the screws (9) and the clamp (10).

f) Remove the heater (11) and change if damaged or worn.

Note! Each time the heater (11) is changed, the ceramic cloth plates (12) must also be changed. The ceramic cloth plates (12) should have a thickness of **1.6 mm** each.

g) Assemble in the reverse order.

h) Apply heat transfer compound to the thermocouple tip (5).

i) Make sure the thermocouple tip (5) and the electrical connector group (2) are firmly in place before turning the power **On**.

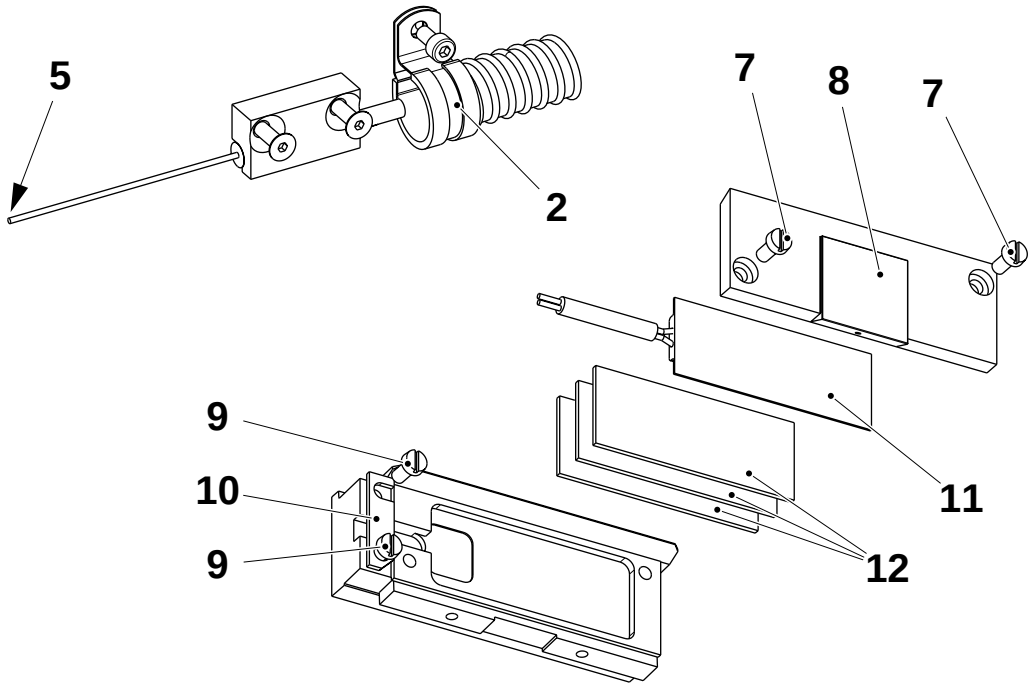

2	Electrical connector	9	Screw
5	Thermocouple tip	10	Clamp
7	Screw	11	Heater
8	Sealing plate	12	Plate

TechPub_2614345_0103 - B6114F02en.fm

6.2.1-22 Tab Feeder - Change Stepper Motor

Machine Status	Air **OFF** Mains Power **OFF**
SPC Reference	2501801-0100

WARNING
Risk of burns!
The sealing jaw may be hot.

a) Remove the stepper motors electrical connector **X8211** (1).

Note! Remove all cable ties and straps from the cable routing.

b) Loosen the locking screws (2).
c) Remove the screws (3) and the stepper motor (4).
d) Change the stepper motor (4) if damaged or worn.
e) Assemble in the reverse order.

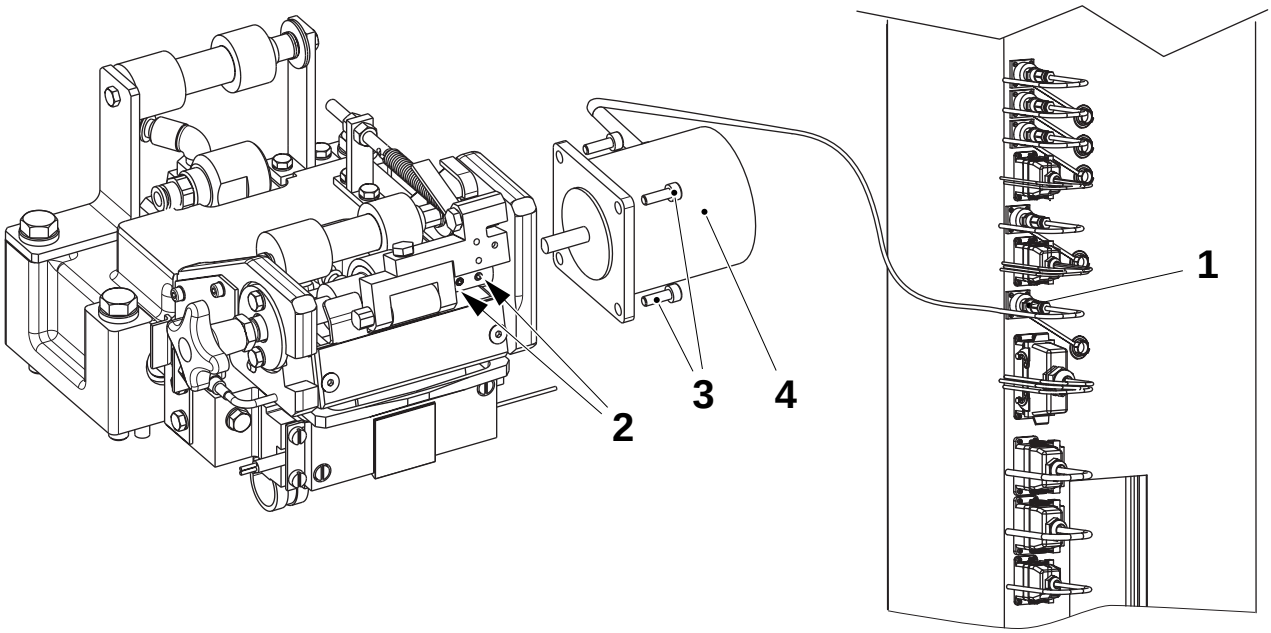

1 Electrical connector X8211
2 Locking screw
3 Screw
4 Stepper motor

TechPub_2614345_0103 - B6114F02en.fm

6.2.2 Tab Counter Jaw

6.2.2-1 Tab Counter Jaw - Remove

Machine Status	Air **OFF** Mains Power **OFF**
SPC Reference	1549256-0100

WARNING
Risk of burns!
The sealing jaw may be hot.

a) Remove the four screws (1).
b) Disconnect the four air hoses (2).
c) Disconnect the cable (3).
d) Remove the counter jaw group (4) together with the two brackets (5).

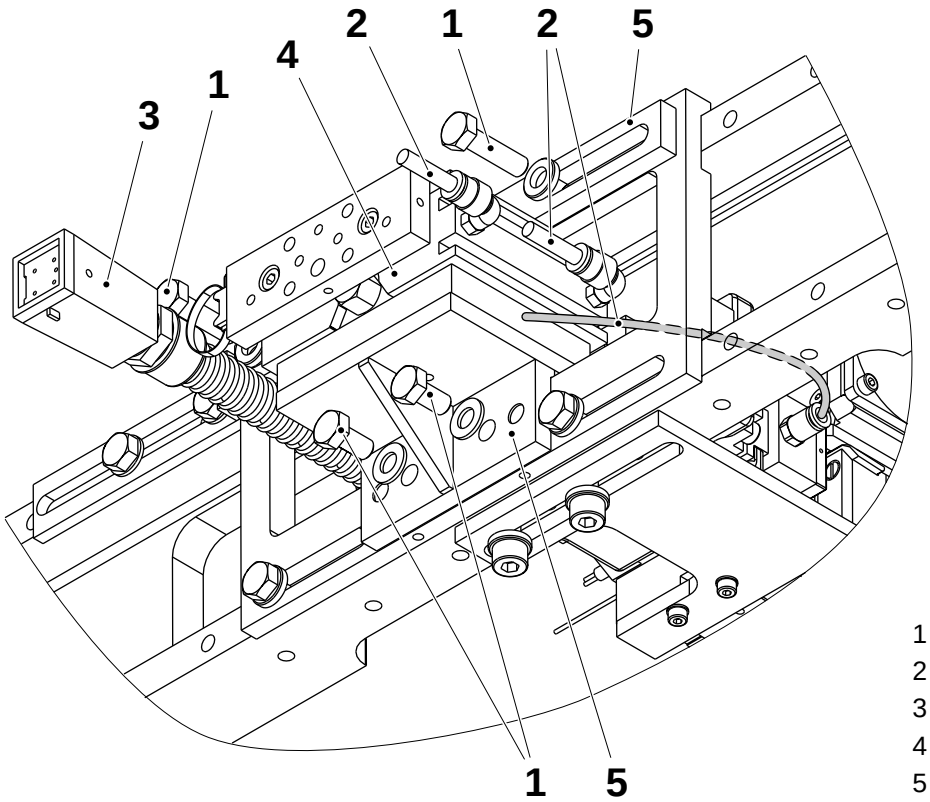

1 Screw
2 Hose
3 Cable
4 Counter jaw group
5 Bracket

TechPub_2614345_0103 - B6114F02en.fm

6.2.2-2 Tab Counter Jaw - Change Heater and Thermocouple

Machine Status	Air **OFF** Mains Power **OFF**
Consumables	Heat transfer TP No. 90298-33
SPC Reference	1549256-0100

WARNING
Risk of burns!
The sealing jaw may be hot.

a) Remove the screws (1), the clamp (2) and the thermocouple (3).
b) Pull out the thermocouple tip (4) from the hole (5).
c) Remove the screws (6) and the sealing plate (7).
d) Loosen the screws (8) and swing the clamp (9) away from the heater (10). Change the heater (10).

Note! Each time the heater (10) is changed, the ceramic cloth plates (11) must also be changed. The ceramic cloth plates (11) should have a thickness of **1.6 mm** each.

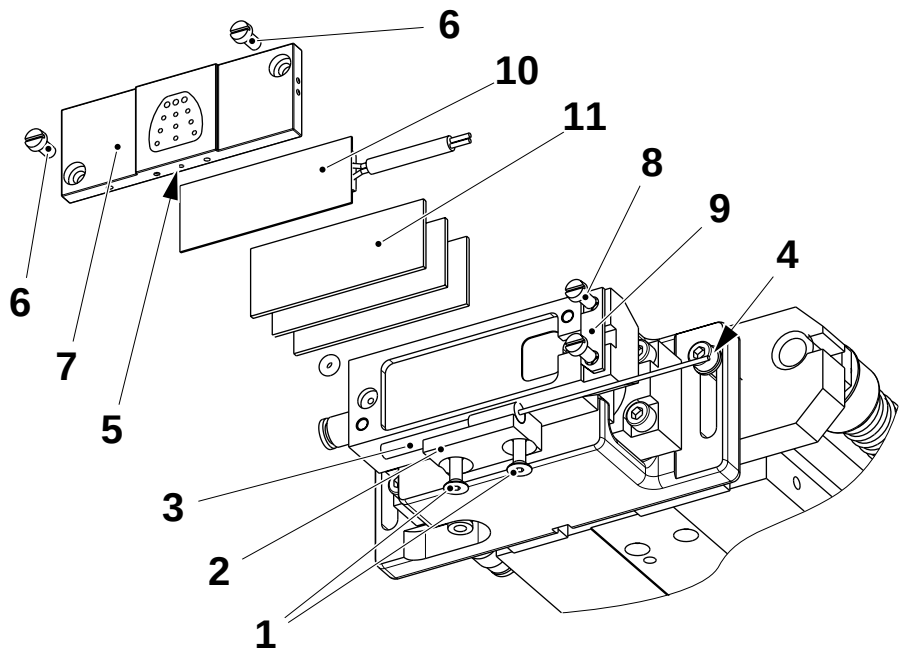

1 Screw
2 Clamp
3 Thermocouple
4 Thermocouple tip
5 Hole
6 Screw
7 Sealing plate
8 Screw
9 Clamp
10 Heater
11 Plate

(Cont'd)

TechPub_2614345_0103 - B6114F02en.fm

(Cont'd)

CAUTION
Risk of damage to the equipment!
When assembling make sure the O-ring (12) is correctly positioned, to avoid air leakage through the cap blow that will cause overheating.

CAUTION
Risk of damage to the equipment!
Make sure the tip of the thermocouple (4) is firmly in place, in the hole (5), before turning the power supply **On**.

Note! Apply a heat transfer compound before installing the thermocouple (3).

e) Assemble in the reverse order.

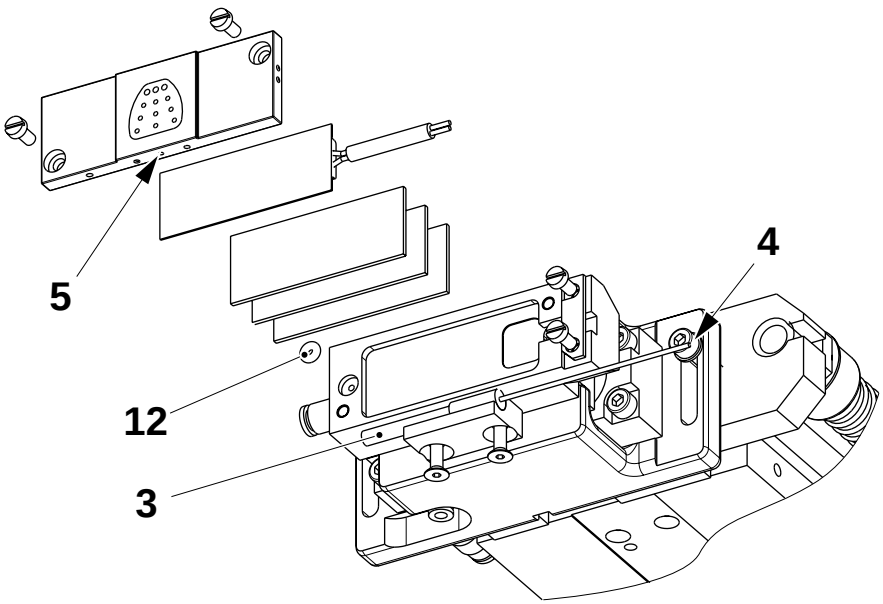

3 Thermocouple
4 Thermocouple tip
5 Hole
12 O-ring

TechPub_2614345_0103 - B6114F02en.fm

6.2.2-3 Tab Counter Jaw - Check Sealing Plate

Machine Status	Air **OFF** Mains Power **OFF**
Consumables	Heat transfer TP No.90298-33 Cleaning compound code G2
SPC Reference	1549256-0100

WARNING
Risk of burns!
The sealing jaw may be hot.

a) Check the sealing plate (1) surface for any scratches or other damage. Also check for any build-up of polyethylene. Clean any build up of polyethylene using cleaning compound code G2.

b) Pull out the thermocouple tip (2) from the sealing plate (1).

c) Loosen the screws (3) and remove the sealing plate (1). Make sure the vent holes (4) in the sealing plate are not clogged. Change the sealing plate as required.

d) Assemble in the reverse order.

Note! Apply a heat transfer compound before installing the thermocouple.

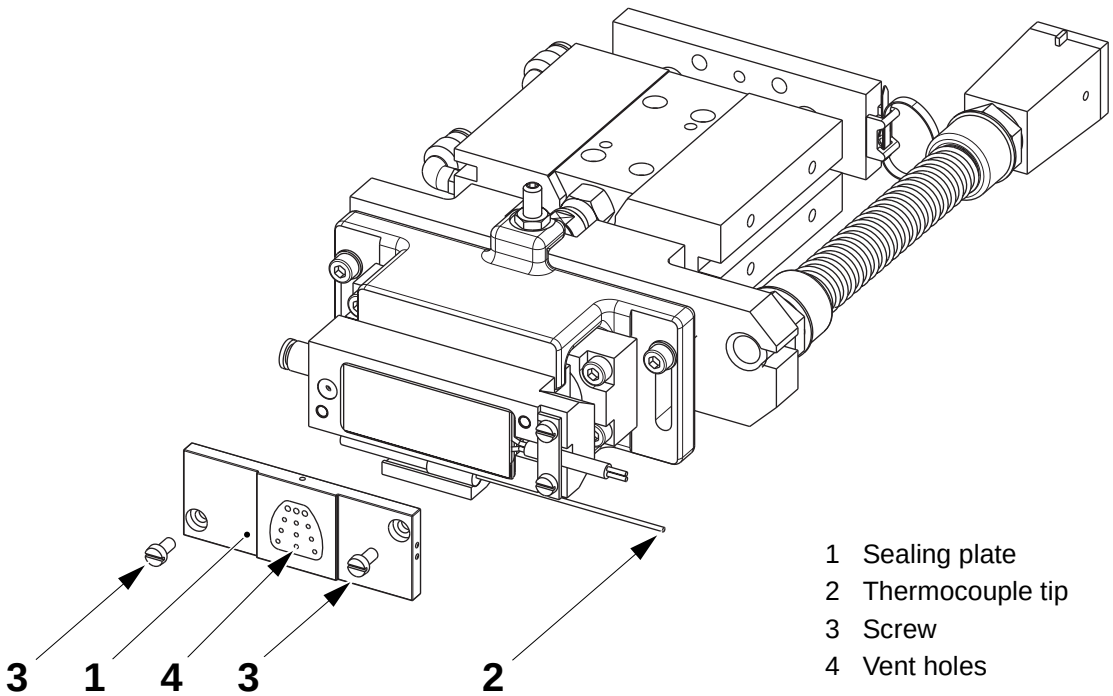

1 Sealing plate
2 Thermocouple tip
3 Screw
4 Vent holes

TechPub_2614345_0103 - B6114F02en.fm

6.2.2-4 Tab Counter Jaw - Change Cylinder

Machine Status	Air **OFF** Mains Power **OFF**
SPC Reference	1549256-0100

WARNING
Risk of burns!
The sealing jaw may be hot.

a) Remove the tab counter jaw, 6.2.2-1 Tab Counter Jaw - Remove.
b) Remove the four screws (1) and the brackets (2) and (3).
c) Remove the two screws (4) and the cushion cylinder assembly (5).
d) Remove the two screws (6) and the cylinder assembly (7).
e) Remove the air connectors (8) and the stops (9).
f) Change the cylinder (7).
g) Assemble in the reverse order.

Note! For hole 48 and 72 the spacer (10) is placed between the cylinder assembly (7) and the bracket (2).

h) Set the tab counter jaw cylinder, see 6.2.1-17 Tab Feeder - Set Cushion Cylinder and 6.2.2-7 Tab Counter Jaw - Set Position.

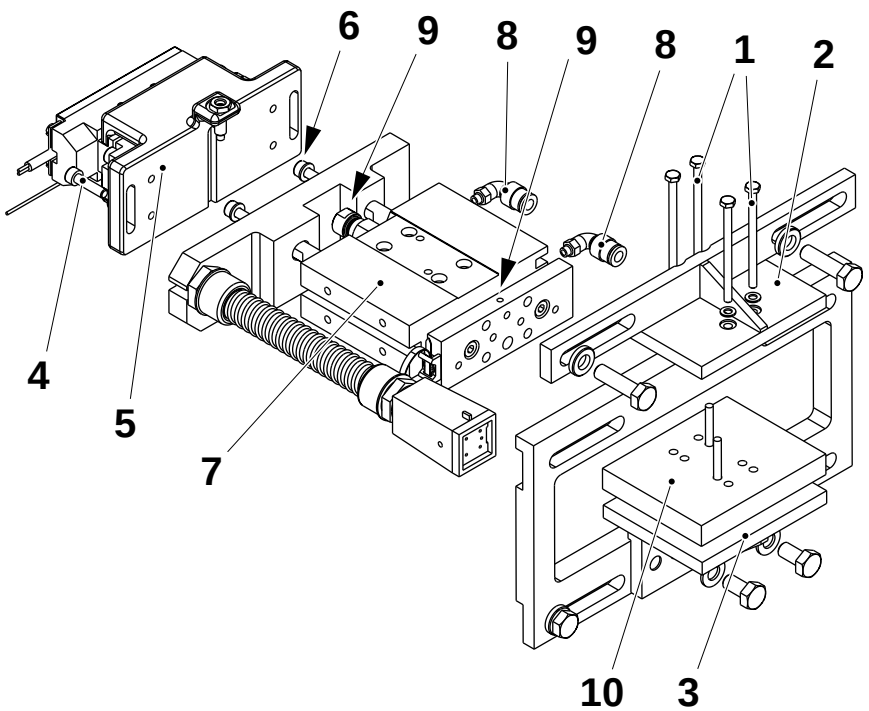

1 Screw
2 Bracket
3 Bracket
4 Screw
5 Cushion cylinder
6 Screw
7 Cylinder
8 Air connector
9 Stop
10 Spacer

TechPub_2614345_0103 - B6114F02en.fm

6.2.2-5 Tab Counter Jaw - Change Cushion Cylinder

Machine Status	Air **OFF** Mains Power **OFF**
SPC Reference	1549256-0100

WARNING
Risk of burns!
The sealing jaw may be hot.

a) Remove the air hose (1).
b) Remove the two screws (2) and the four screws (3).
c) Slide the sealing head (4) away from the counter jaw (5) assembly.
d) Change the cushion cylinder (6).
e) Assemble in the reverse order.
f) Set the cushion cylinder and check the distance, see 6.2.1-17 Tab Feeder - Set Cushion Cylinder and 6.2.2-6 Tab Counter Jaw - Check Distance.

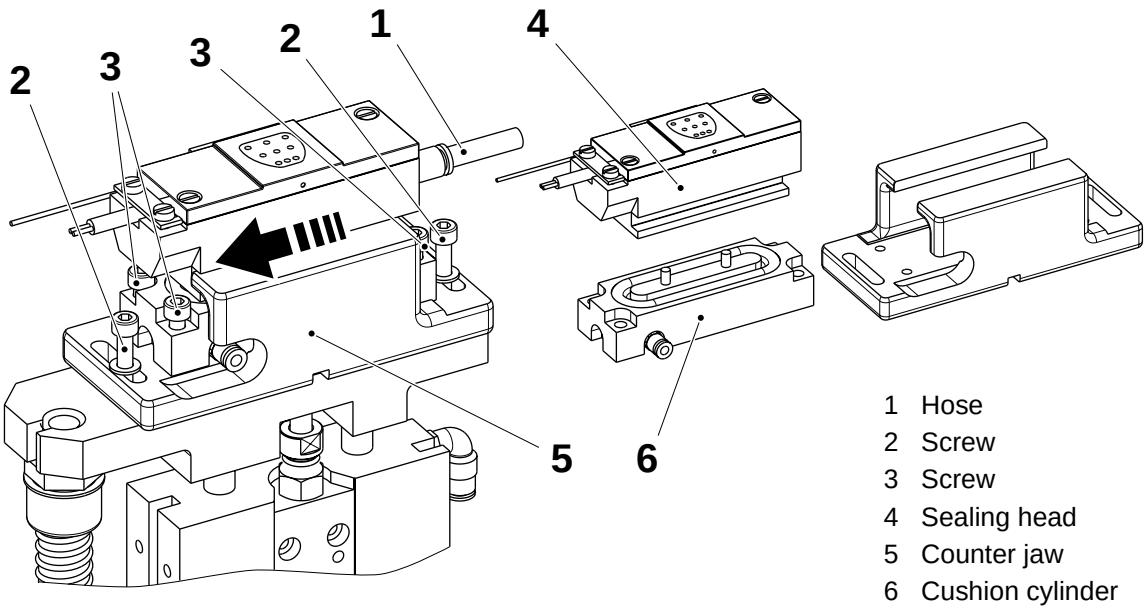

1 Hose
2 Screw
3 Screw
4 Sealing head
5 Counter jaw
6 Cushion cylinder

TechPub_2614345_0103 - B6114F02en.fm

6.2.2-6 Tab Counter Jaw - Check Distance

Machine Status	Air **ON** Mains Power **OFF**
SPC Reference	1549256-0100

WARNING

Risk of burns!

The sealing jaw may be hot.

a) Activate the valve to extend the cylinder (1)

b) Check the distance **A** between the counter jaw sealing plate (2) and the tip of the window knife (3). If required, see 6.2.1-16 Tab Feeder - Set Position.

c) Deactivate the valve to retract the cylinder (1).

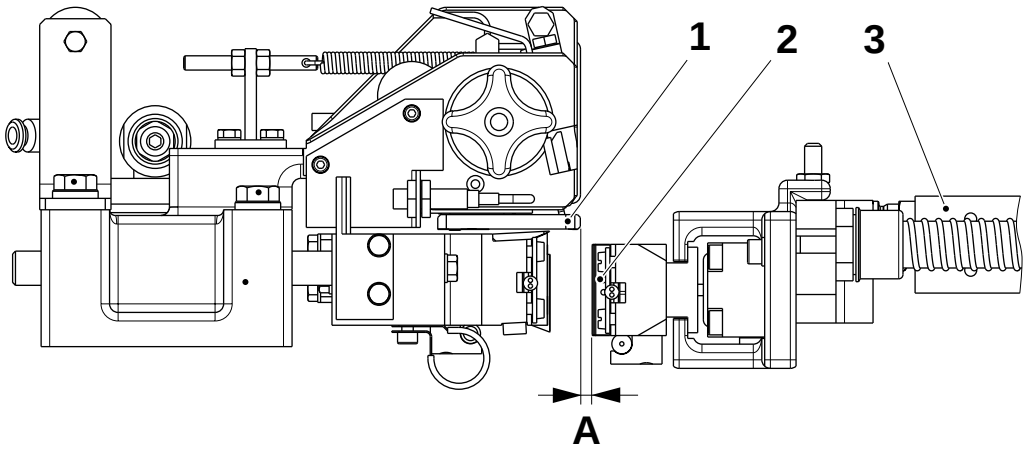

A = 1.5 ±0.2 mm

1 Cylinder
2 Sealing plate
3 Window knife

TechPub_2614345_0103 - B6114F02en.fm

6.2.2-7 Tab Counter Jaw - Set Position

Machine Status	Air **ON** Mains Power **ON**
SPC Reference	1549256-0100

Note! The sealing head must be cold when performing this procedure.

a) Switch the key selector located on the PT21 electrical panel to the SERVICE position.

b) Fit the reference line (1) to the two bars (2).

c) Activate the manual override on the valve to extend the cylinder (3).

d) Loosen the locknuts (4) and adjust the stop (5) to set the distance **A** between the counter jaws sealing plate (6) and the reference line (1).

e) Deactivate the manual override on the valve to retract the cylinder (3).

f) Remove the reference line (1).

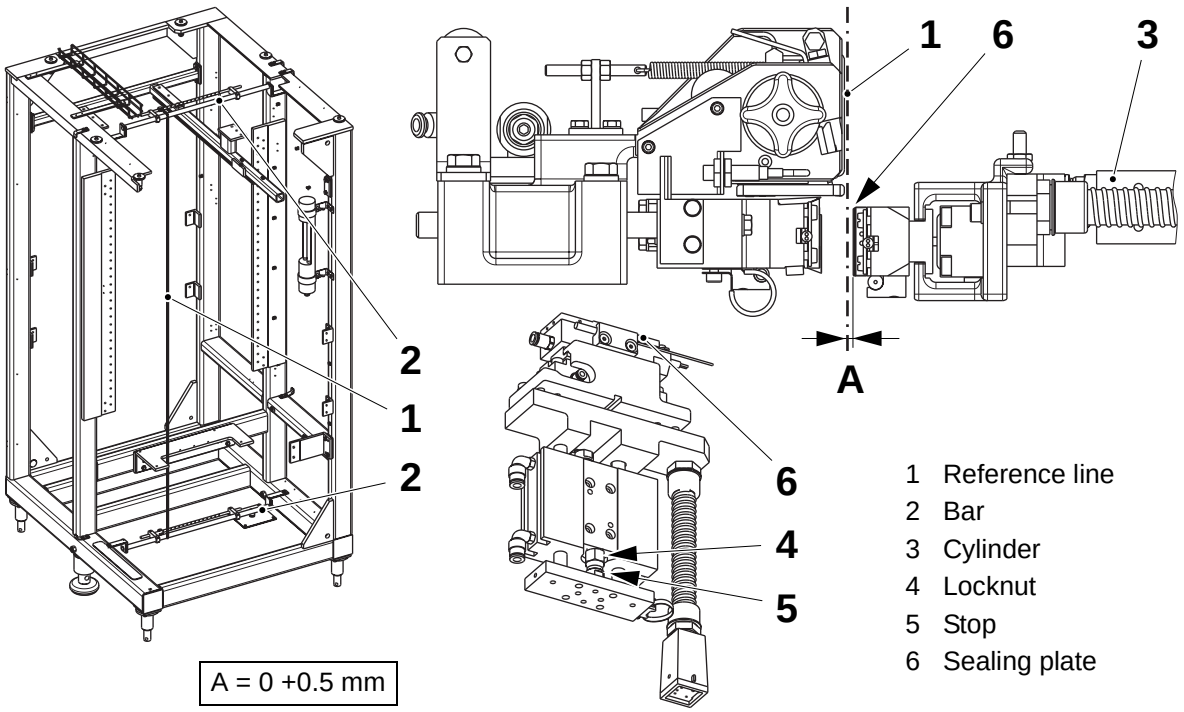

TechPub_2614345_0103 - B6114F02en.fm

6.3 Tab Magazine

SPC Reference	2517081-0100

6.3-1 Tab Magazine - Check

Machine Status	Air **OFF** Mains Power **ON**
SPC Reference	2517081-0100 2501781-0100

a) Make sure the rollers (1) turn freely and the brake arm (2) moves freely.

b) Make sure the splice table locks and springs (3) function correctly.

c) Make sure the rotation monitor flag (4) turns freely.

d) Make sure the green LED (5) of the black tape sensor (6) is lit and the red LED (7) lights up when the black tape passes the fibre optic lense (8).

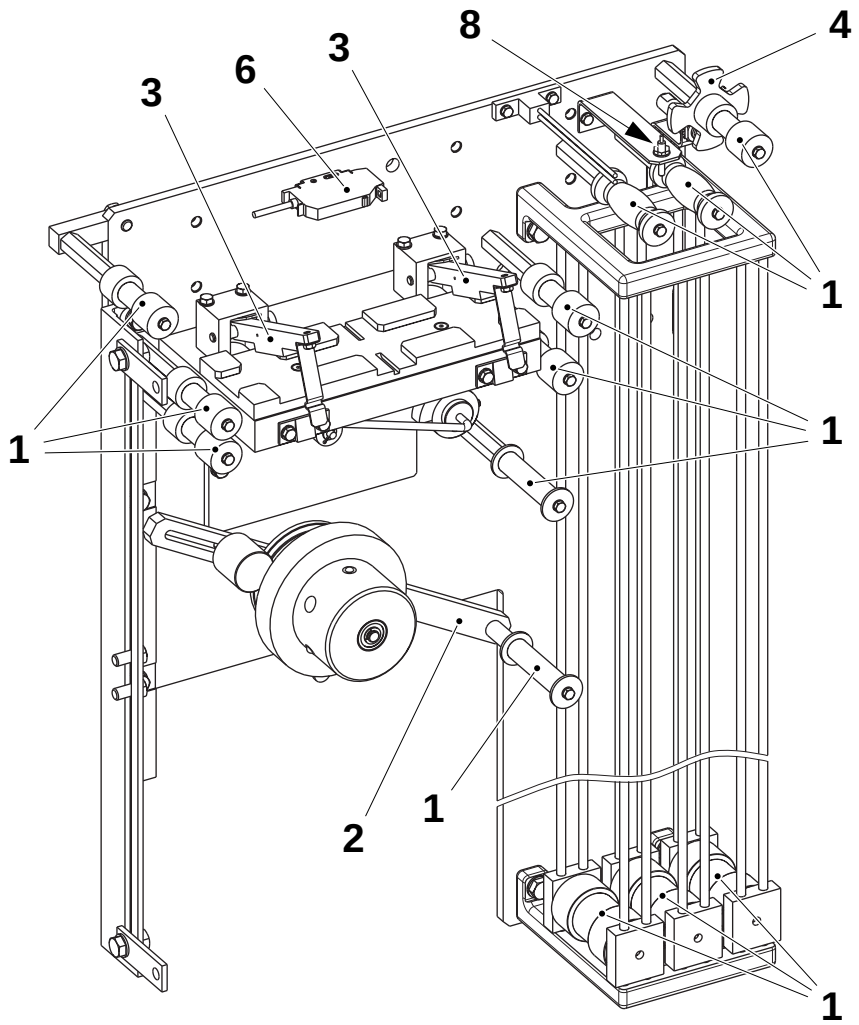

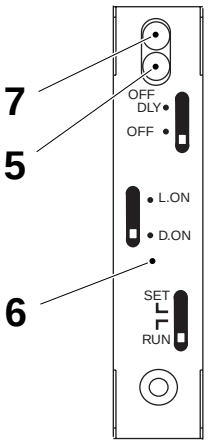

1 Roller
2 Brake arm
3 Lock and spring
4 Flag
5 Green LED
6 Sensor
7 Red LED
8 Fibre optic lense

(Cont'd)

TechPub_2614345_0103 - B6114F03en.fm

(Cont'd)

e) Make sure the proximity switch (9) LED lights up correctly.

f) Make sure the wheel (10) turns freely.

g) Make sure the bobbin holder (11) rotates freely.

h) Make sure the spring loaded screws (12) just clear the surface of the bobbin holder (11).

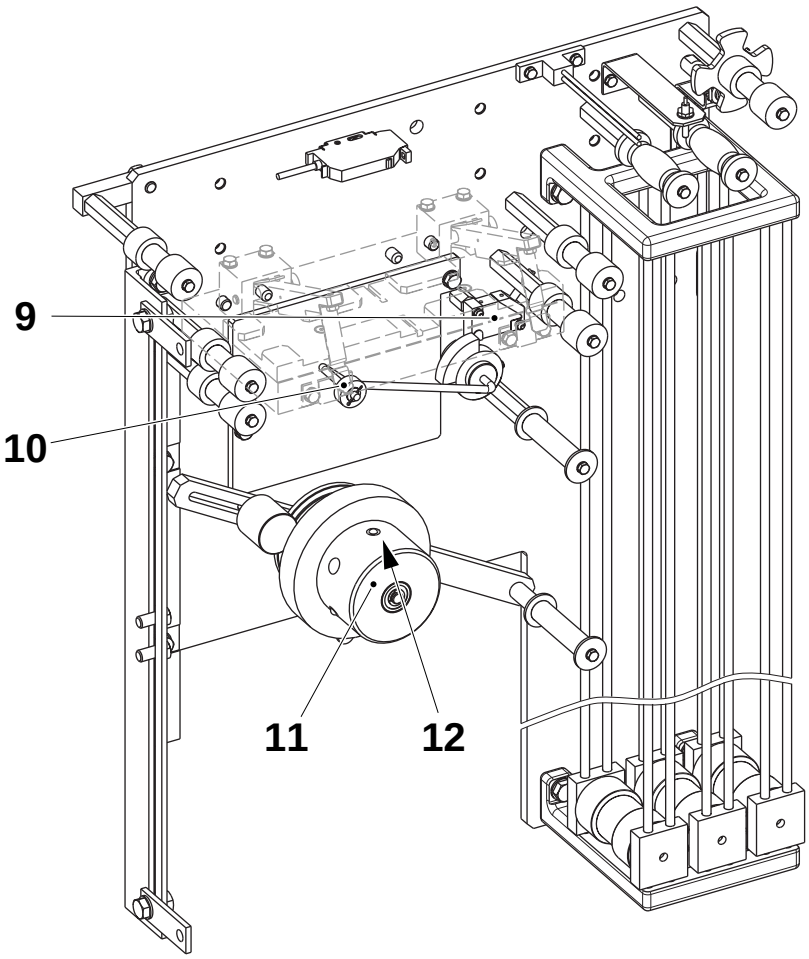

9 Proximity switch
10 Wheel
11 Bobbin holder
12 Spring loaded screw

TechPub_2614345_0103 - B6114F03en.fm

6.3-2 Tab Magazine - Set Proximity Switch

Machine Status	Air **OFF** Mains Power **ON**
SPC Reference	2517081-0100

a) Place a **15 mm** feeler gauge between the bobbin holder (1) and the wheel (2).

Note! Instead of a **15 mm** feeler gauge, a nearly empty tab bobbin can be used.

b) Loosen the stop screw (3) on the flag (4) and turn the flag (4) until the LED on the proximity switch (5) goes off.

c) Tighten the stop screw (3).

d) Remove the feeler gauge.

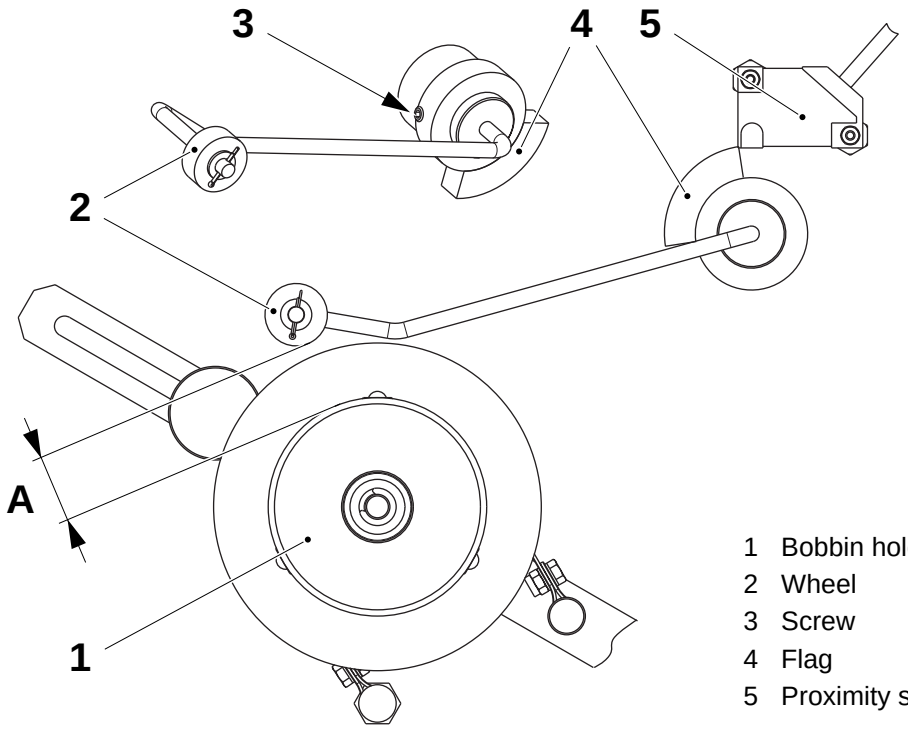

A = 15 mm

1 Bobbin holder
2 Wheel
3 Screw
4 Flag
5 Proximity switch

TechPub_2614345_0103 - B6114F03en.fm

6.3-3 Tab Magazine - Set Strip Tension

Machine Status	Air **OFF** Mains Power **OFF**
SPC Reference	2517081-0100

a) Loosen the counter weight screw (1).

b) Move the counter weight (2) until the brake arm (3) tensions the strip (4) between the rollers (5) and (6).

c) Tighten the counter weight screw (1).

d) Check that the dancing rollers (7) move up and down smoothly with each tab application.

e) Check that the strip is in tension until the last roller (8).

Note! Use a full bobbin to verify the setting. This setting should be carried out with the PullTab running.

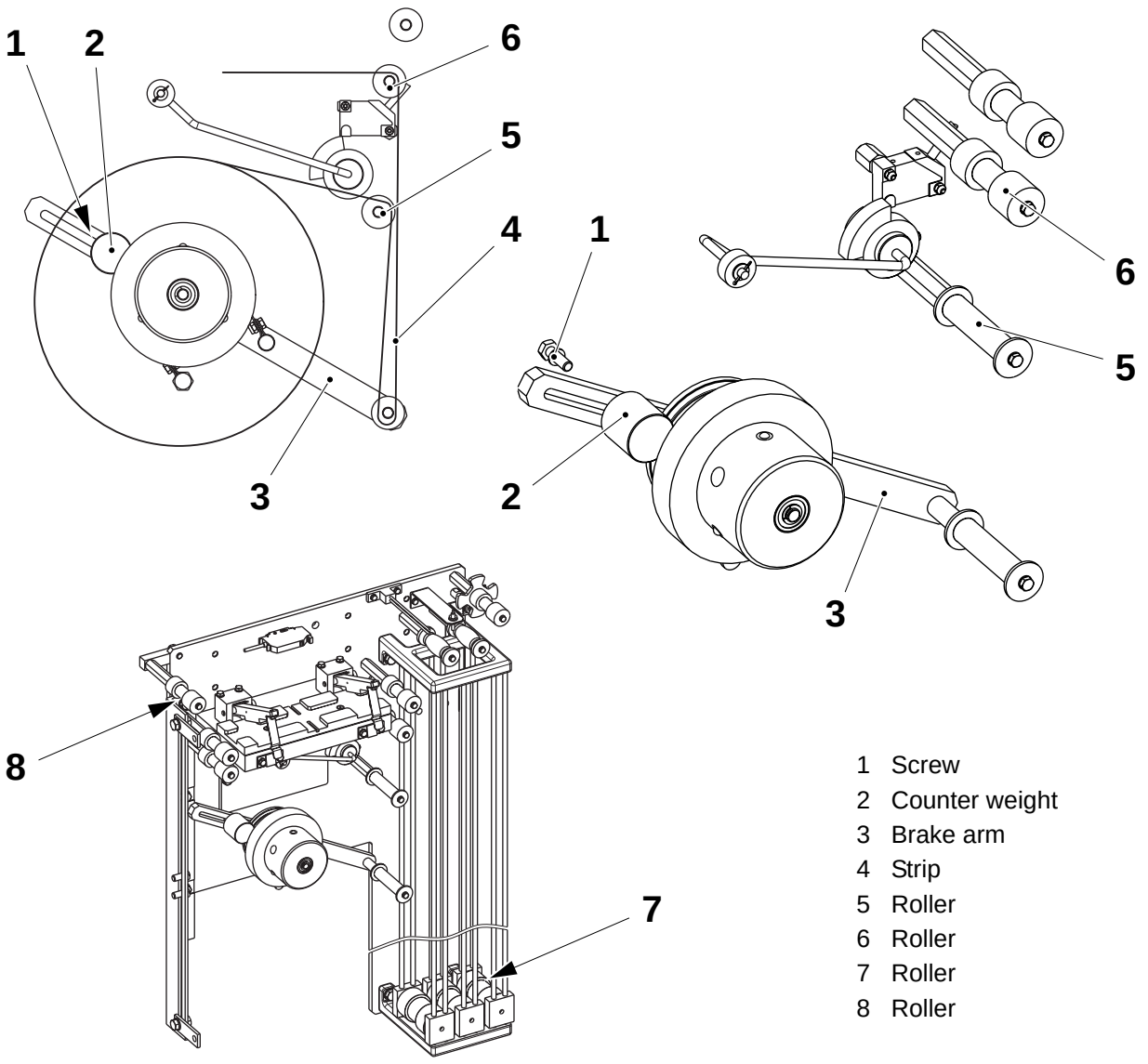

1 Screw
2 Counter weight
3 Brake arm
4 Strip
5 Roller
6 Roller
7 Roller
8 Roller

TechPub_2614345_0103 - B6114F03en.fm

6.3-4 Tab Magazine - Change Bobbin Holder Bearings

Machine Status	Air **OFF** Mains Power **OFF**
SPC Reference	2517081-0100

a) Remove the locking washer (1).

b) Remove the bobbin holder (2)

c) Remove and change the bearings (3).

d) Assemble in the reverse order.

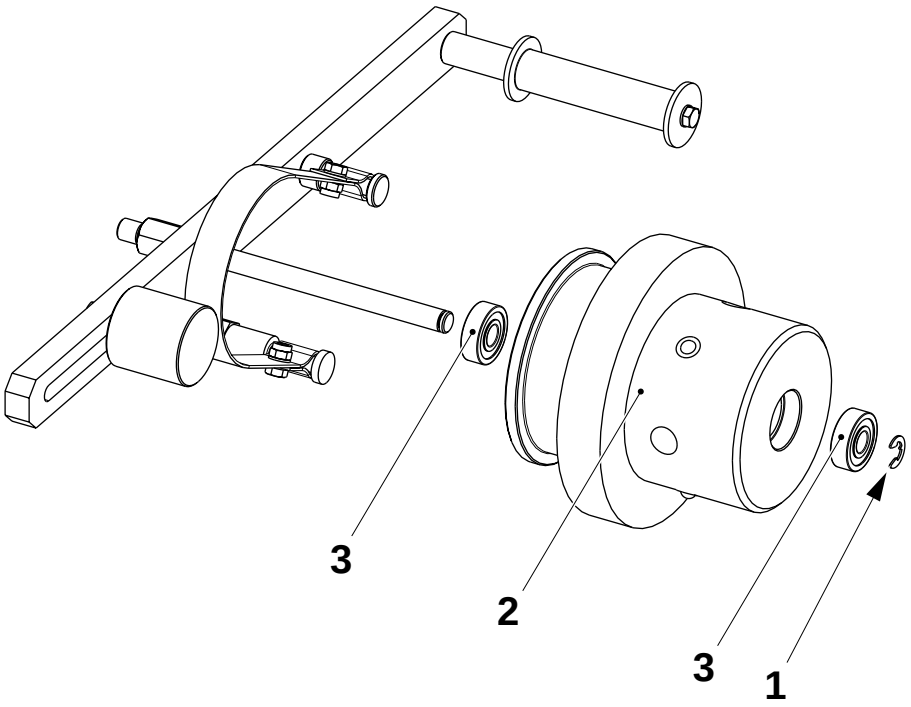

1 Locking washer
2 Bobbin holder
3 Bearing

TechPub_2614345_0103 - B6114F03en.fm

6.3-5 Tab Magazine - Set Rotation Monitor Proximity Switch

Machine Status	Air **OFF** Mains Power **ON**
SPC Reference	2517081-0100

a) Loosen the nuts (1).

b) Set the distance **A** between the proximity switch (2) and the flag (3).

c) Tighten the nuts (1).

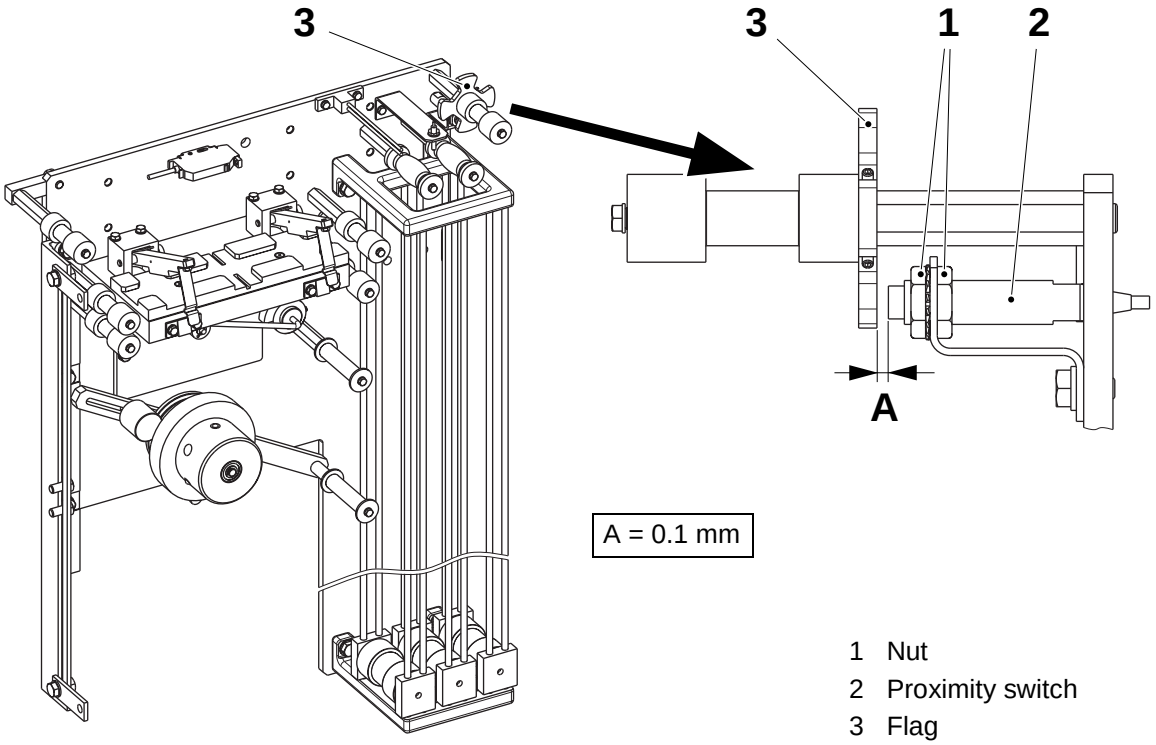

A = 0.1 mm

1 Nut
2 Proximity switch
3 Flag

TechPub_2614345_0103 - B6114F03en.fm

6.3-6 Tab Magazine - Set Black Tape Sensor

Machine Status	Air **OFF** Mains Power **ON**
SPC Reference	2517081-0100 2501781-0100

a) Fit a piece of strip (1) between the rollers (2) and (3).

b) Loosen the nuts (4) and set the sensor lense (5) at the distance **A** from the surface of the strip (1).

c) Set the switch (6) to position **SET**.

Note! The black tape detector switch (7) must be set to **D. ON** and the switch (8) to **OFF**.

d) Place a piece of black tape in front of the sensor lense (5) and press the button (9) for two seconds.

e) Place a piece of strip in front of the sensor lense (5) and press the button (9) for two seconds.

f) Set the switch (6) to position **RUN**.

g) Remove the strip (1).

TechPub_2614345_0103 - B6114F03en.fm

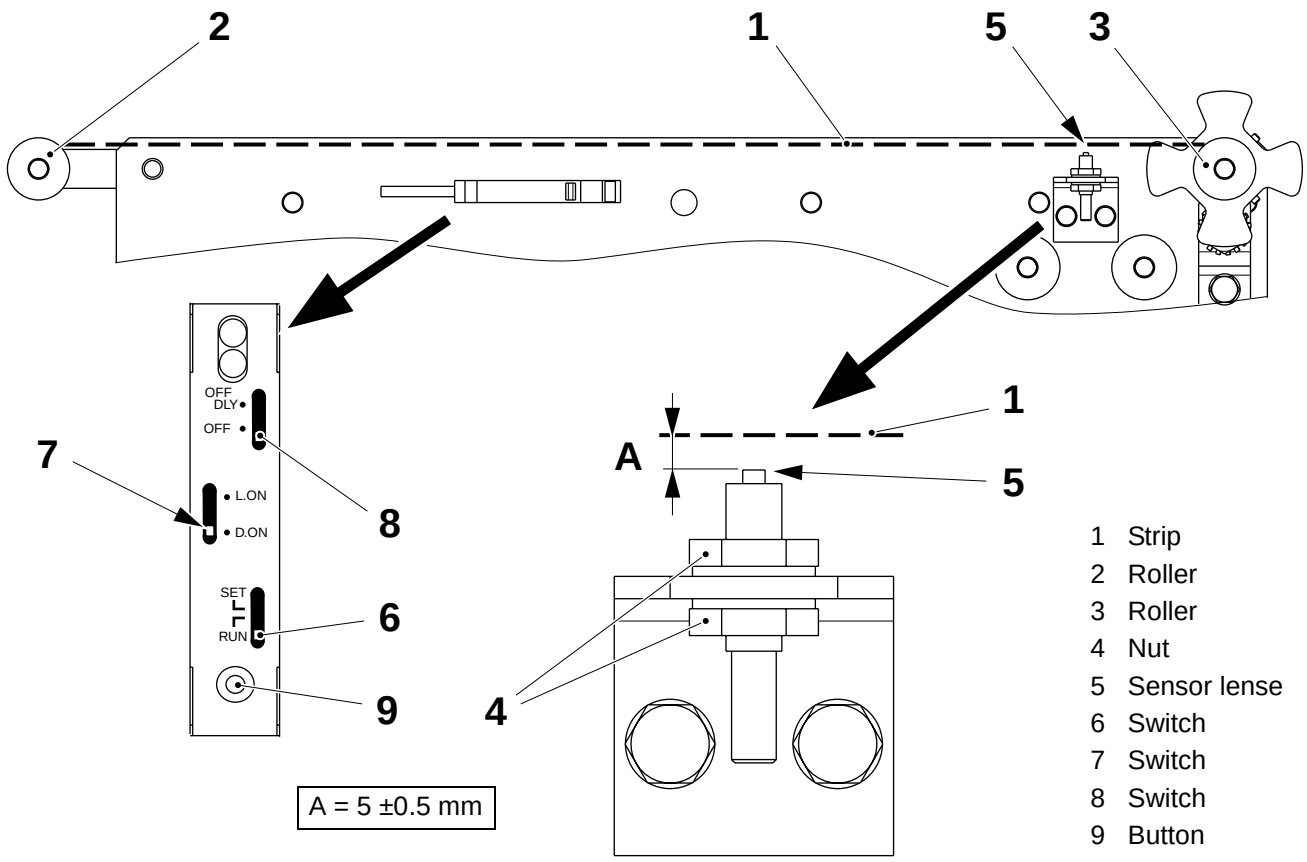

1 Strip
2 Roller
3 Roller
4 Nut
5 Sensor lense
6 Switch
7 Switch
8 Switch
9 Button

6.3-7 Tab Magazine - Set Bobbin Holder Spring Loaded Screw

Machine Status	Air **OFF** Mains Power **OFF**
Consumables	Locking fluid TP No. 90157-16
SPC Reference	2517081-0100

a) Remove the locking washer (1).

b) Remove the bobbin holder assembly (2).

c) With the aid of a screw driver (3), set the spring loaded screw (4) so that the top of the screw cylinder (5) just clears the surface of the bobbin holder (6).

d) Repeat the setting for the other spring loaded screws and assemble in the reverse order.

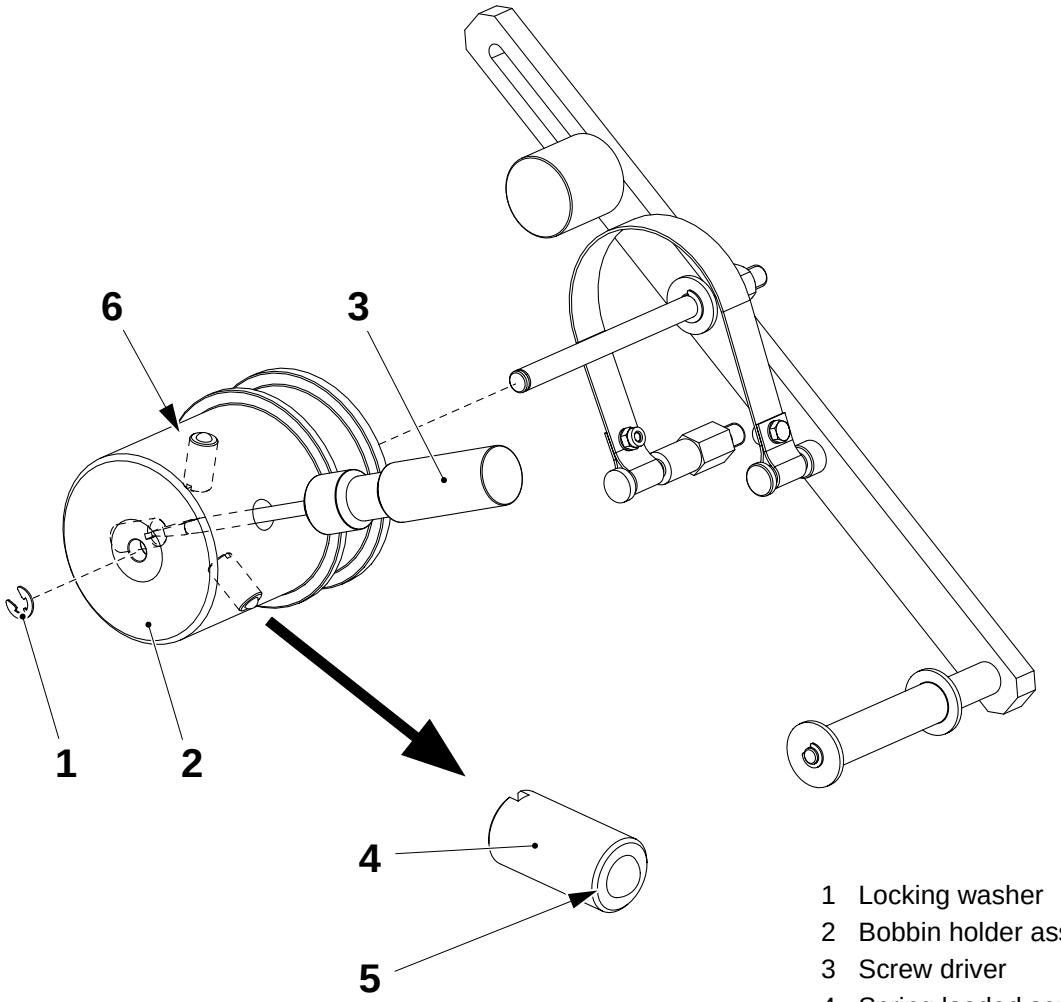

1 Locking washer
2 Bobbin holder assembly
3 Screw driver
4 Spring loaded screw
5 Screw cylinder
6 Bobbin holder

TechPub_2614345_0103 - B6114F03en.fm

6.3.1 Splicing Device

6.3.1-1 Splicing Device - Check Function

Machine Status	Air **OFF** Mains Power **OFF**
SPC Reference	1538689-0100

Make sure the locks (1) spring into a position that does not interfere with the outer patch feeding.

Set the lock grips, see 6.3.1-2 Splicing Device - Set Lock.

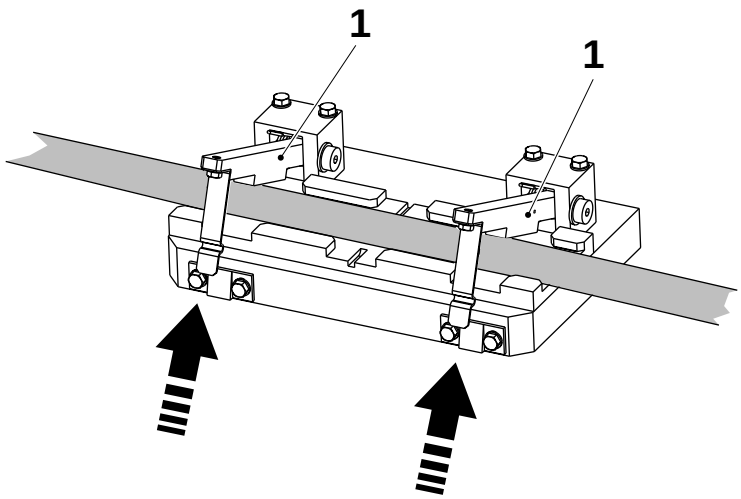

1 Lock

TechPub_2614345_0103 - B6114F03en.fm

6.3.1-2 Splicing Device - Set Lock

Machine Status	Air **OFF** Mains Power **OFF**
SPC Reference	1538689-0100

a) Place a piece of strip (1) under the lock (2).

b) Loosen the screws (3).

c) Adjust the plate (4) until it is not possible to pull the strip backwards or forwards.

d) Tighten the screws (3).

e) Repeat for the other lock (2).

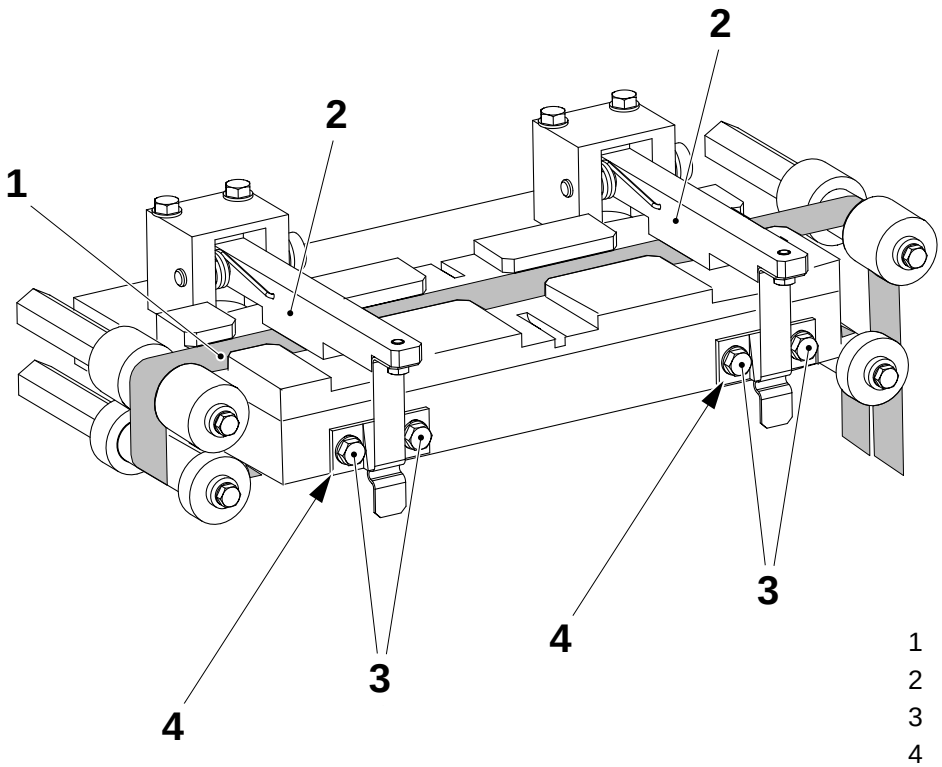

1 Strip
2 Lock
3 Screw
4 Plate

TechPub_2614345_0103 - B6114F03en.fm

7 PullTab Detection

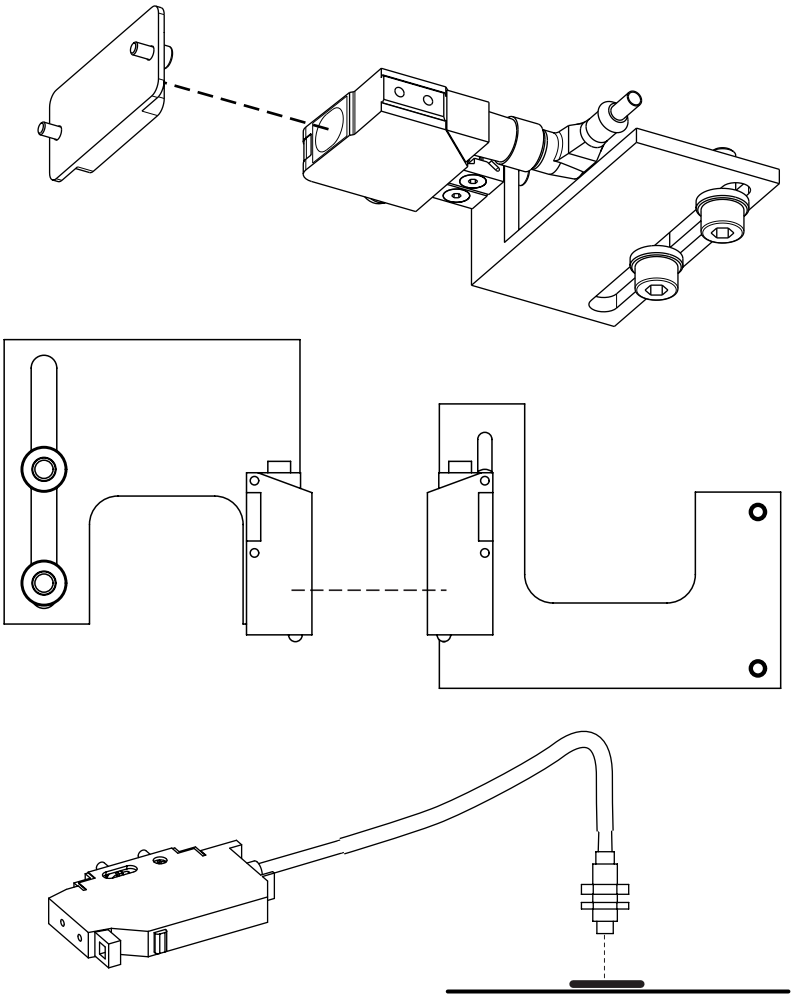

TechPub_2614345_0103 - B6114G00en.fm

PullTab Detection - Description

SPC Reference	1260390-0200 1558100-0100 2501782-0100

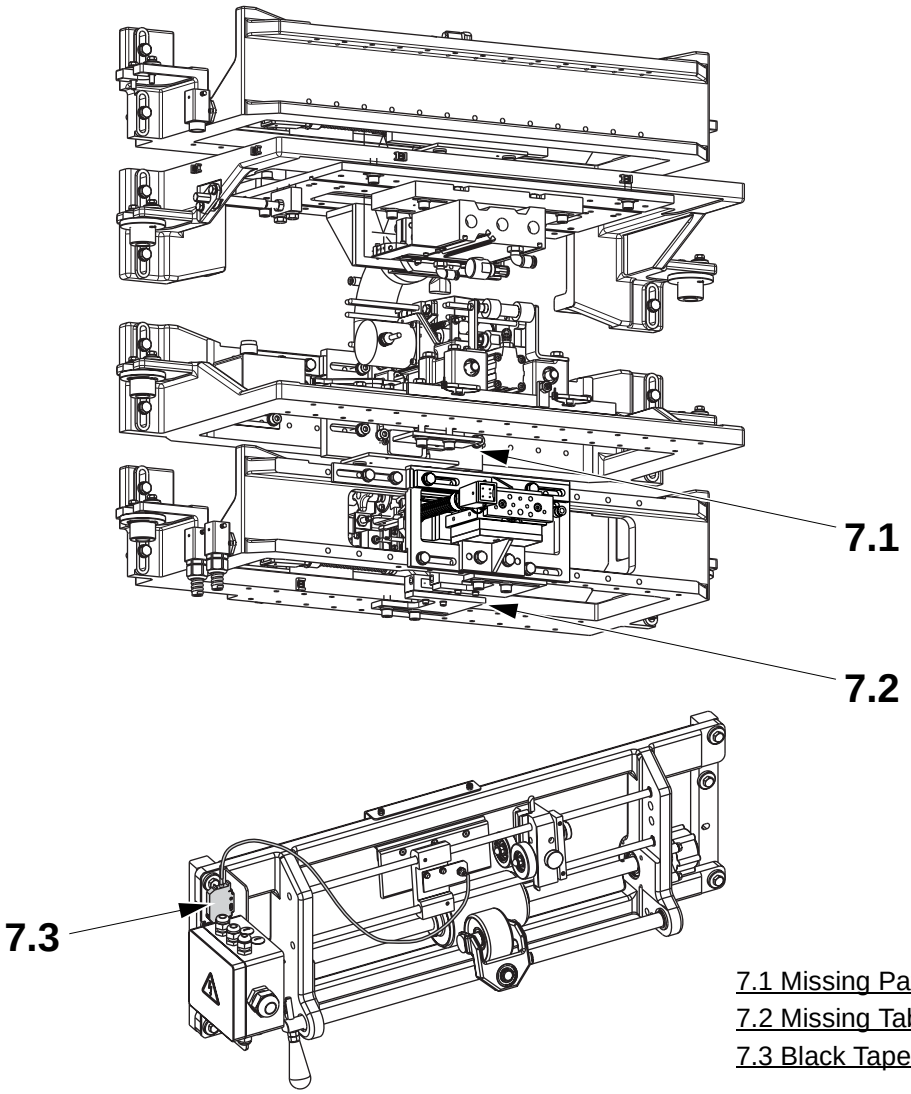

7.1 Missing Patch Detector
7.2 Missing Tab Detector
7.3 Black Tape Detector

TechPub_2614345_0103 - B6114G00en.fm

7-1 PullTab Detection - Functional Description . . . . . 7 - 5

7.1 Missing Patch Detector . . . . . 7 - 7

7.1-1 Missing Patch Detector - Check . . . . . 7 - 7

7.1-2 Missing Patch Detector - Set . . . . . 7 - 8

7.2 Missing Tab Detector . . . . . 7 - 9

7.2-1 Missing Tab Detector - Check . . . . . 7 - 9

7.2-2 Missing Tab Detector - Set . . . . . 7 - 10

7.3 Black Tape Detector . . . . . 7 - 11

7.3-1 Black Tape Detector - Check . . . . . 7 - 11

7.3-2 Black Tape Detector - Set . . . . . 7 - 12

TechPub_2614345_0103 - B6114G00en.fm

This page intentionally left blank

TechPub_2614345_0103 - B6114G00en.fm

7-1 PullTab Detection - Functional Description

SPC Reference	1260390-0200 1558100-0100 2501782-0100

This chapter deals with the patch and tab method of detection on the packaging material.

The patch detector consists of an infrared photocell which detects the absence of a patch on the inside of the packaging material.
The tab detector is composed by a pair of photocells (receiver and transmitter) which detect the absence of a tab on the outside of the packaging material.

The detection occurs either when the patch or the tab application is completely missing or when it is placed wrong over the hole.

Note! The placement of the patch or the tab application is wrong if the patch or the tab application does not cover the hole completely, in the packaging material, so that the infrared beam of the photocell can pass through the hole.

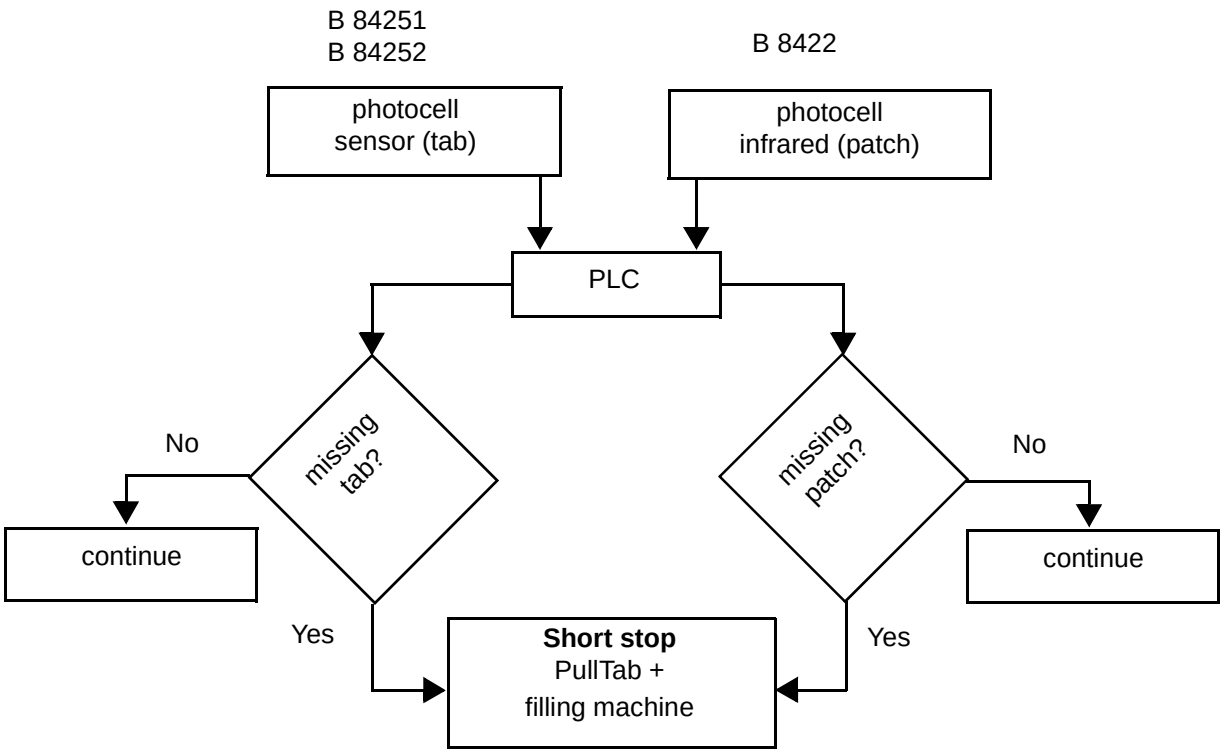

(Cont'd)

TechPub_2614345_0103 - B6114G00en.fm

(Cont'd)

The detection of a missing patch and/or a missing tab occurs during the indexing of packaging material, when the hole with the patch/tab application passes in front of the respective detector.

If a patch or tab is missing, the PLC allows the PullTab unit to complete the actual cycle and then stops in SHORT STOP mode together with the filling machine.

The operator has to manually apply a piece of black tape over the PullTab hole with the missed patch or tab. The filling machine will eject packages without patch or tab.

Since the detectors are placed after the respective applicators, the indexing of packaging material during which a detection occurs, will bring the wrong application from the applicator to one position after. Therefore the package with the missing patch will be found below the tab applicator and the missing tab will be found at the entry of the outfeed loop, after the tab applicator.

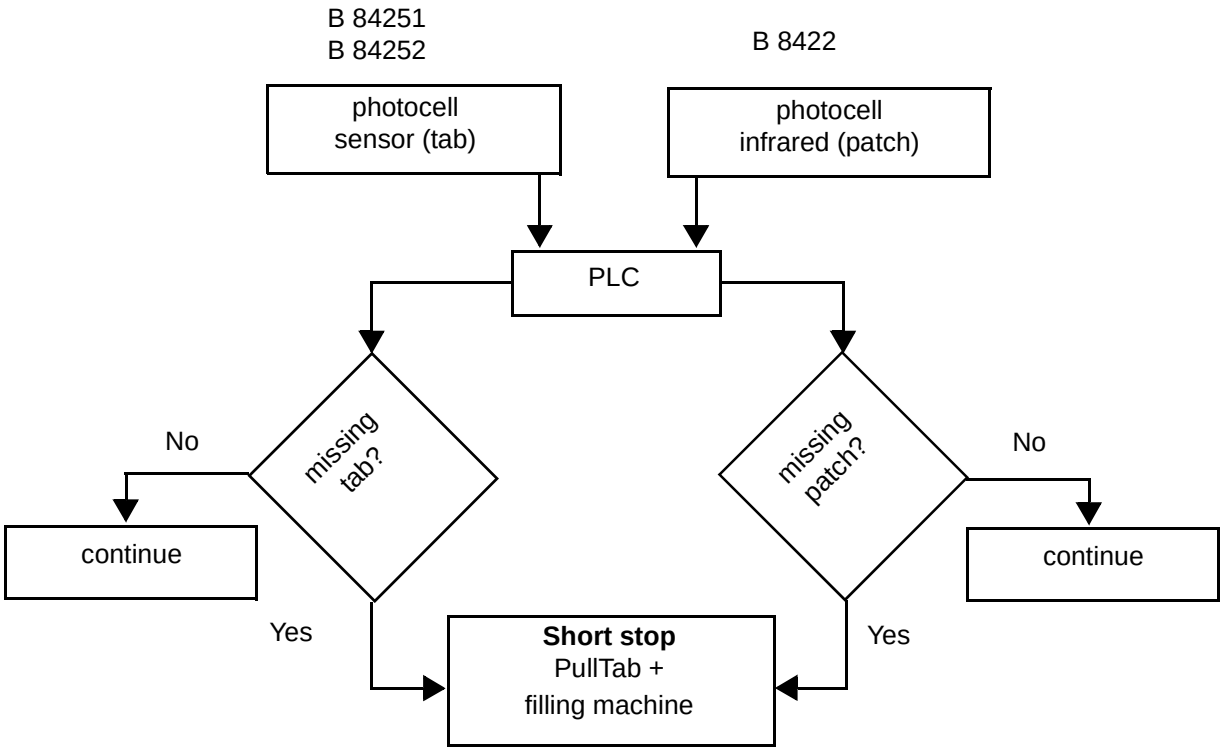

TechPub_2614345_0103 - B6114G00en.fm

7.1 Missing Patch Detector

SPC Reference	1260390-0200

7.1-1 Missing Patch Detector - Check

Machine Status	PREPARATION
SPC Reference	1260390-0200

Remove the patch supply from the patch applicator.

Check that the infrared photocell emitter (1) is aligned with the infrared photocell reflector (2).

Inch some packaging material and check that the infrared photocell detects the missing patch and the right alarm is shown at the TPOP panel.

If required, set the infrared photocell, see 7.1-2 Missing Patch Detector - Set.

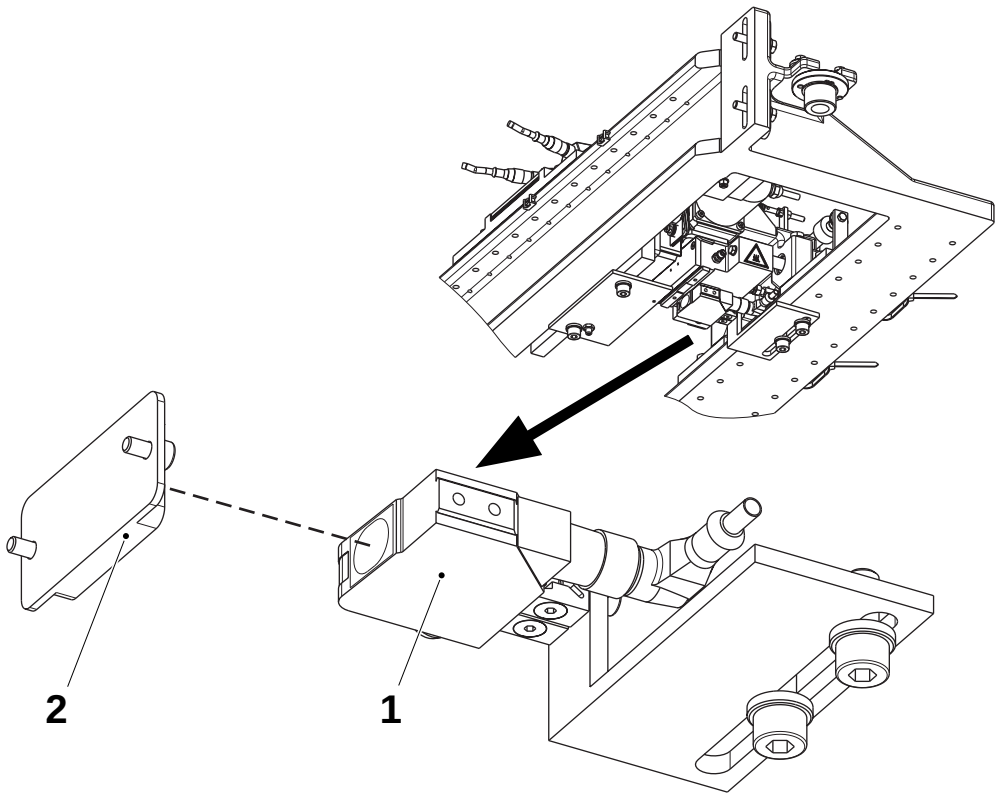

1 Infrared photocell emitter
2 Infrared photocell reflector

TechPub_2614345_0103 - B6114G01en.fm

7.1-2 Missing Patch Detector - Set

Machine Status	PREPARATION
SPC Reference	1260390-0200

a) Close all the doors and make sure that the PT21 finds the home position.

b) Check that there is a hole and a good sealed patch in front of the patch station.

c) Put a punched hole with a patch application in front of the sensor (1) and place a piece of white paper between the sensor (1) and the reflector (2). The red light beam (3) coming from the sensor (1) must be seen on the white paper and in the middle of the largest part of the punched hole.

d) Remove the white paper.

e) Turn the sensitivity potentiometer (4) anti-clockwise (toward **min.**), on the sensor (1), until the red LED (5) goes out. Then turn the sensitivity potentiometer (4) clockwise (toward **max.**), on the sensor (1), until the red LED (5) lights up.

f) Turn the sensitivity potentiometer (4) half of a turn anti-clockwise (toward **min.**).

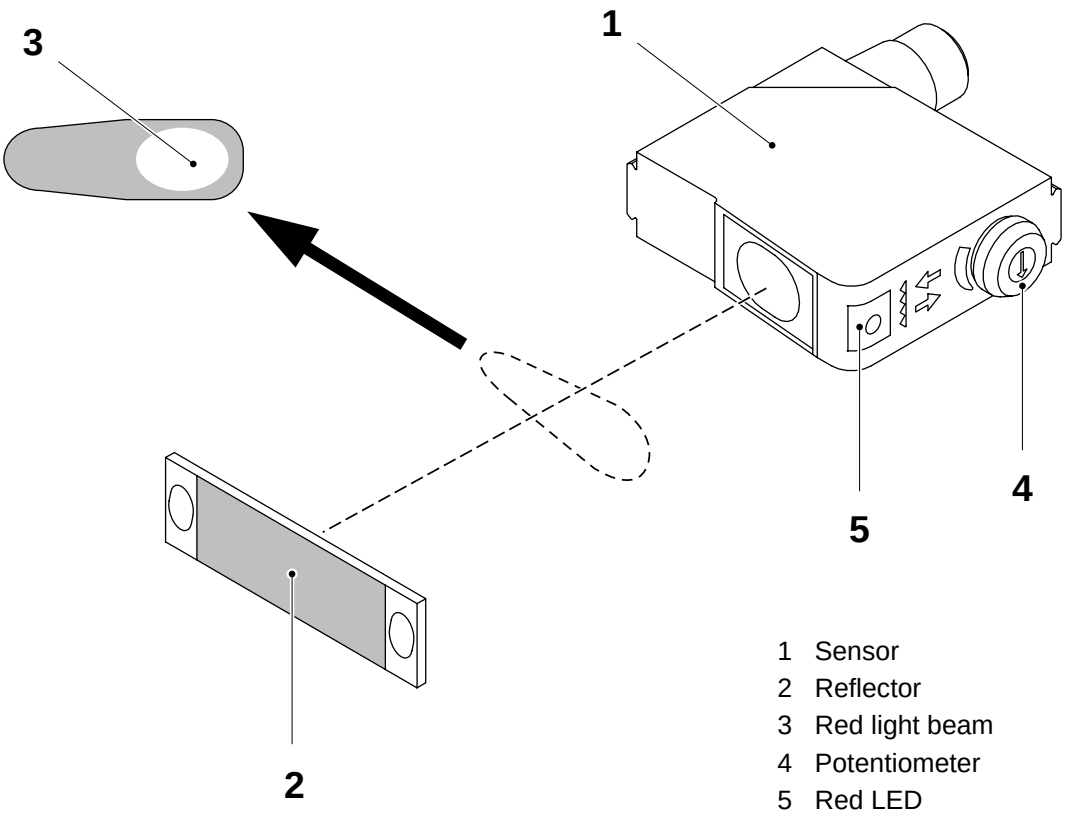

1 Sensor
2 Reflector
3 Red light beam
4 Potentiometer
5 Red LED

TechPub_2614345_0103 - B6114G01en.fm

7.2 Missing Tab Detector

SPC Reference	1558100-0100

7.2-1 Missing Tab Detector - Check

Machine Status	PREPARATION
SPC Reference	1558100-0100

Remove the tab supply from the tab applicator.

Make sure the photocell emitter (1) is aligned with the photocell receiver (2).

Inch some packaging material and check that the photocells detect the missing tab and the right alarm is shown at the TPOP panel.

If required, set the photocell, see 7.2-2 Missing Tab Detector - Set.

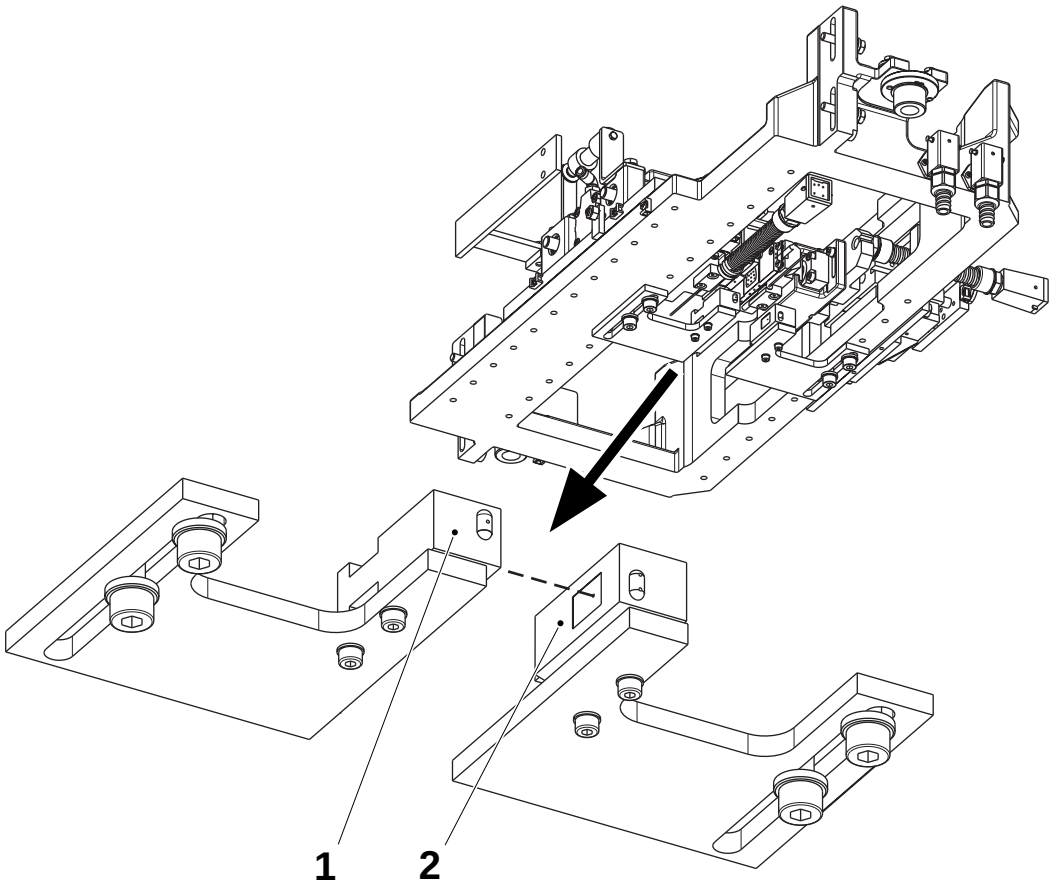

1 Photocell emitter
2 Photocell receiver

TechPub_2614345_0103 - B6114G02en.fm

7.2-2 Missing Tab Detector - Set

Machine Status	PREPARATION
SPC Reference	1558100-0100

a) Open the cover of the receiver photocell (1).

b) Make sure that the receiver photocell (1) is set to **PNP** and **D-ON** and that the sensitivity potentiometer (2) is set to **max**, see figure.

c) Close the cover of the receiver photocell (1).

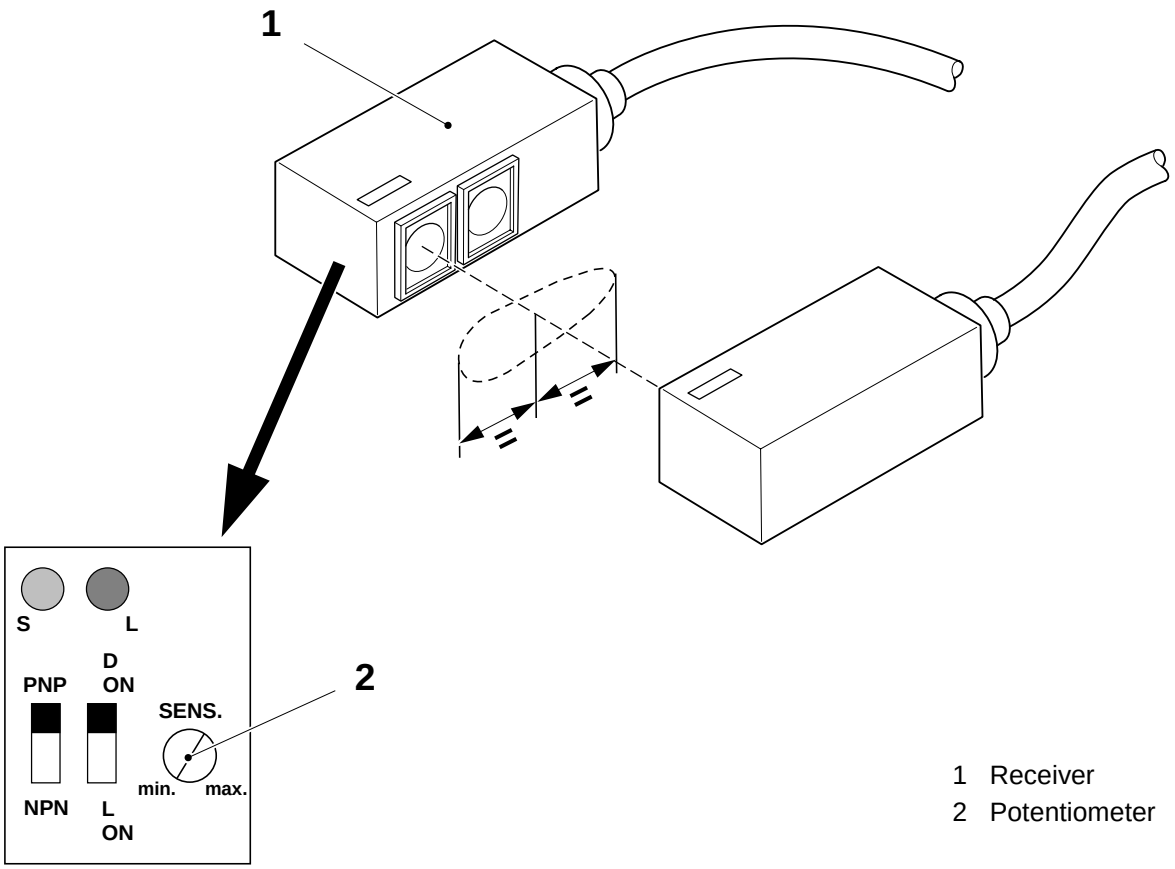

1 Receiver
2 Potentiometer

TechPub_2614345_0103 - B6114G02en.fm

7.3 Black Tape Detector

SPC Reference	2501782-0100

7.3-1 Black Tape Detector - Check

Machine Status	Ready for PRODUCTION
Consumables	Black tape TP No. 90144-52
SPC Reference	2501782-0100

a) Place a piece of a black tape (1) on the packaging material (2).

b) Step up the machine to step PRODUCTION.

c) When the black tape (1) passes the sensor lense (3) of the photocell (4), the splice monitor will get an indication to eject packages. Check that the package with the black tape appears among the ejected packages.

d) If required, set the photocell (4), see 7.3-2 Black Tape Detector - Set.

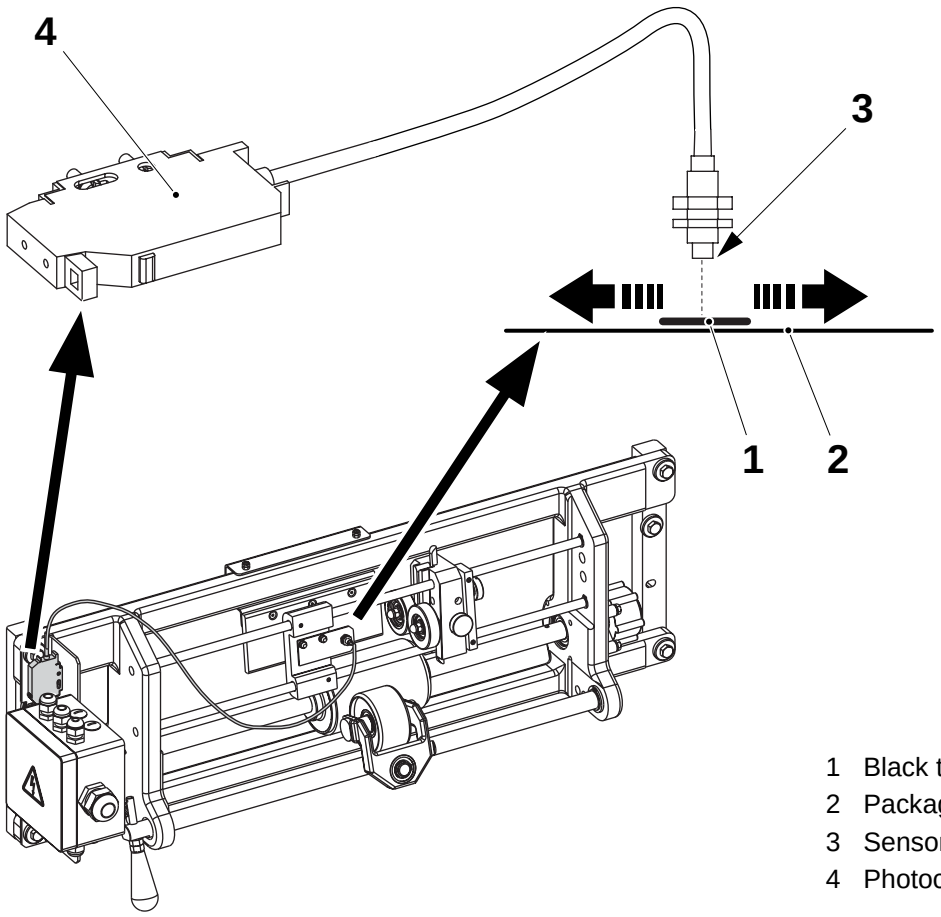

1 Black tape
2 Packaging material
3 Sensor lense
4 Photocell

TechPub_2614345_0103 - B6114G03en.fm

7.3-2 Black Tape Detector - Set

Machine Status	Air **OFF** Mains Power **ON**
Consumables	Black tape TP No. 90144-52
SPC Reference	2501782-0100

a) Loosen the nuts (1) and set the sensor lense (2) at the distance **A** from the surface of the packaging material (3).

b) Set the switch (4) to position **SET**.

Note! The black tape detector switch (5) must be set to **L. ON** and the switch (6) to **OFF**.

c) Place a piece of black tape (7) under the sensor lense (2) and press the button (8) for two seconds.

d) Place a piece of the packaging material (3) under the sensor lense (2) and press the button (8) for two seconds.

e) Set the switch (4) to position **RUN**.

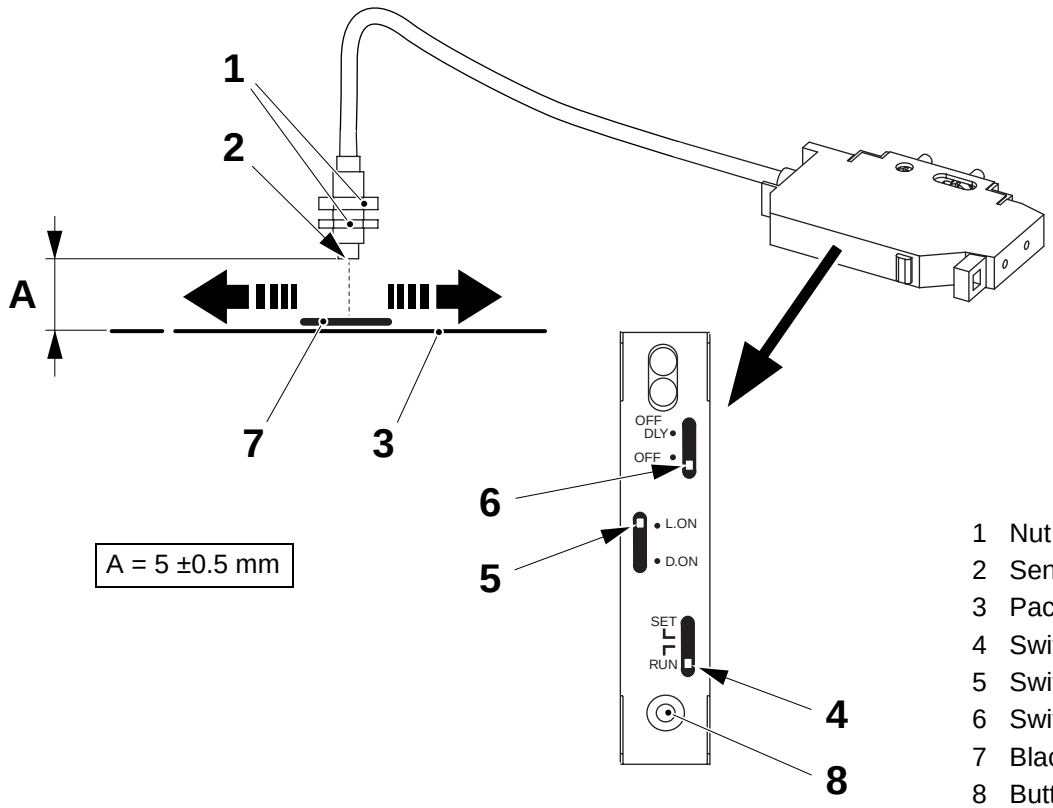

1 Nut
2 Sensor lense
3 Packaging material
4 Switch
5 Switch
6 Switch
7 Black tape
8 Button

TechPub_2614345_0103 - B6114G03en.fm

8 Safety Functions

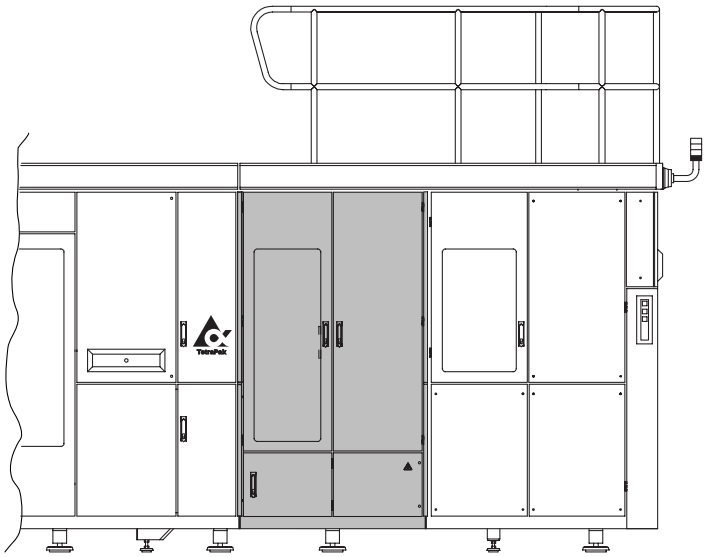

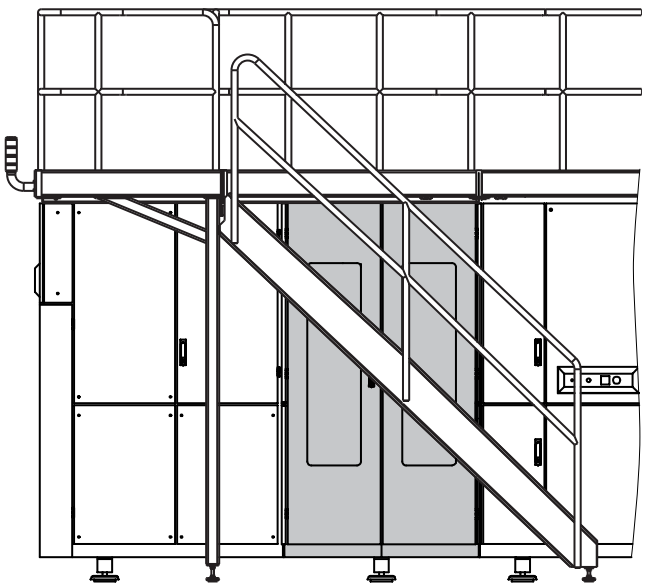

TechPub_2614345_0103 - B6114H00en.fm

Safety Functions - Description

SPC Reference	1095951-0500

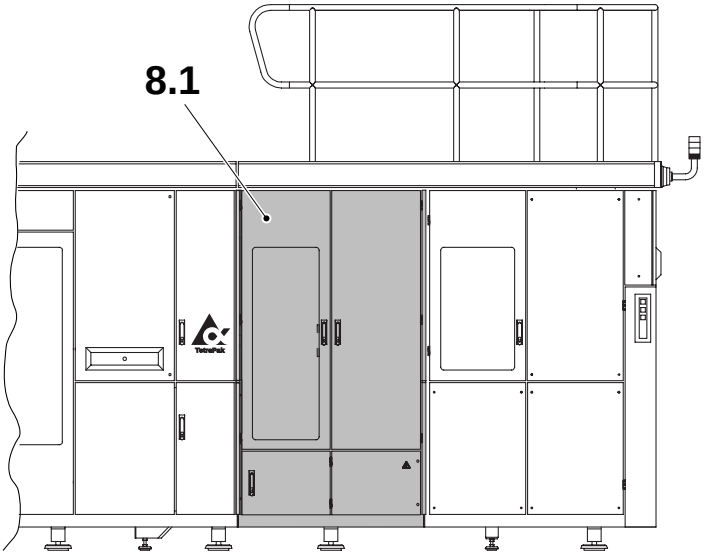

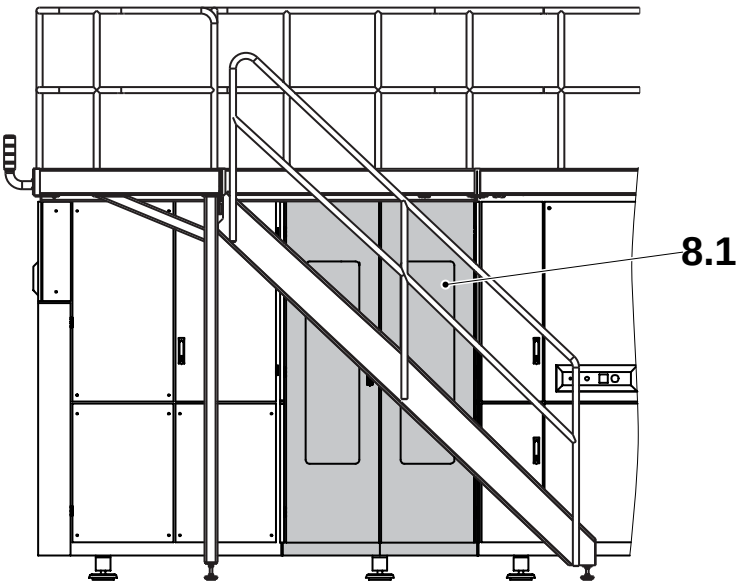

8.1 Doors and Covers

TechPub_2614345_0103 - B6114H00en.fm

8.1 Doors and Covers . . . . . 8 - 5

8.1-1 Doors and Covers - Check Safety Function . . . . . 8 - 5

TechPub_2614345_0103 - B6114H00en.fm

This page intentionally left blank

TechPub_2614345_0103 - B6114H00en.fm

8.1 Doors and Covers

SPC Reference	1095951-0500

8.1-1 Doors and Covers - Check Safety Function

Machine Status	PRODUCTION
SPC Reference	648508-0600 1095951-0500

a) Check that the filling machine and the PullTab unit stop in EMERGENCY STOP mode when any EMERGENCY STOP is pushed. To identify the correct location see the Emergency Stop section in the ii Safety Precautions.

b) Check that the filling machine and the PullTab unit stops in SHORT STOP when the door (1) and any of the magazine doors behind the PullTab doors (2) are opened. To identify the correct location see the Safeguards section in the ii Safety Precautions chapter.

c) Check that the warning sign labels are present and readable. Replace missing and/or illegible signs see the Locations of Safety Signs section in the ii Safety Precautions chapter.

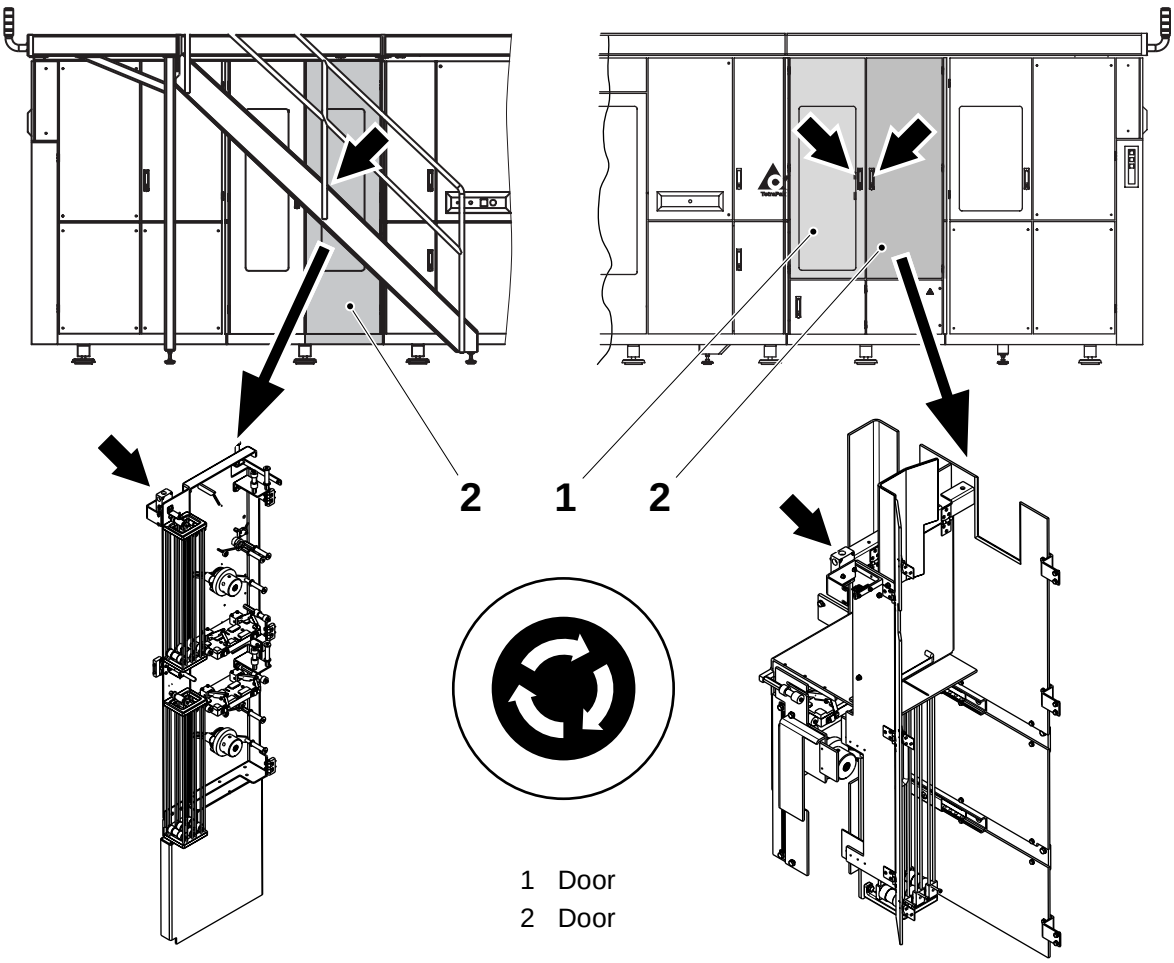

1 Door
2 Door

TechPub_2614345_0103 - B6114H01en.fm

This page intentionally left blank

TechPub_2614345_0103 - B6114H01en.fm

9 Electrical Cabinet

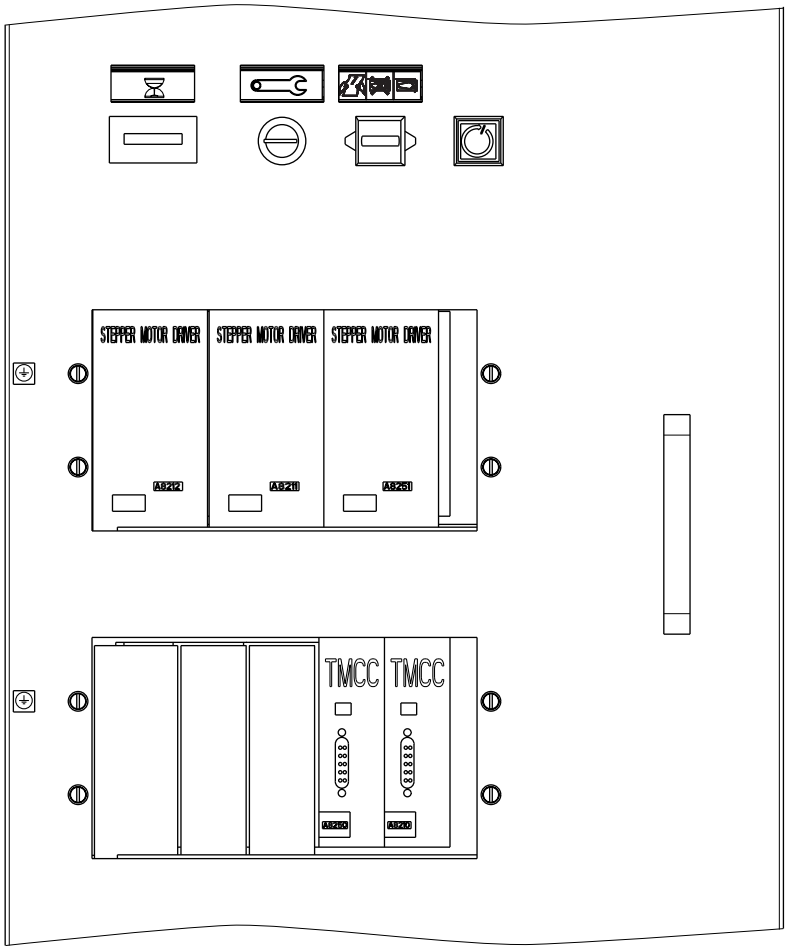

TechPub_2614345_0103 - B6114I00en.fm

Electrical Cabinet - Description

SPC Reference	1317254-0300

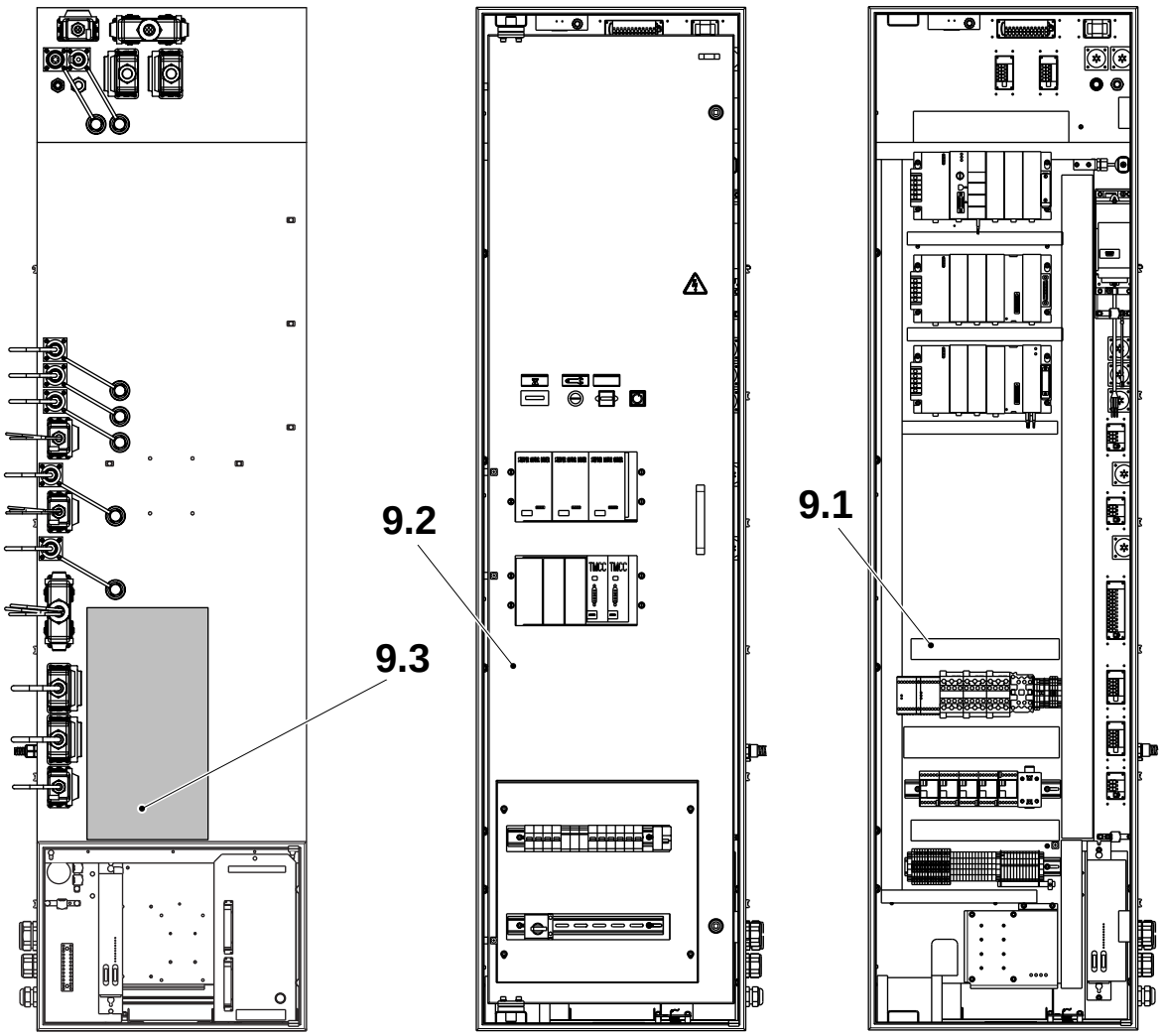

9.1 Mounting Plate
9.2 Swing Frame
9.3 Cooler

TechPub_2614345_0103 - B6114I00en.fm

9-1 Electrical Cabinet - PullTab Controls . . . . . 9 - 5
9-2 Electrical Cabinet - Set Frequency Converter . . . . . 9 - 6
9-3 Electrical Cabinet - Function Description TPIH Generator . . . . . 9 - 14
9-4 Electrical Cabinet - Check Function TPIH Generator . . . . . 9 - 15
9-5 Electrical Cabinet - Check TPIH Generator Cables . . . . . 9 - 20
9-6 Electrical Cabinet - Change TPIH Generator . . . . . 9 - 21
9-7 Electrical Cabinet - Set TPIH Generator Sealings . . . . . 9 - 22
9-8 Electrical Cabinet - Function Description Drive Motor DMC2 Card . . . . . 9 - 23
9-10 Electrical Cabinet - Function Description Tension Device DMC2 Card . . . . . 9 - 27
9-11 Electrical Cabinet - Set DMC2 Card . . . . . 9 - 31
9-12 Electrical Cabinet - Load DMC2 Program . . . . 9 - 34

9.1 Mounting Plate . . . . . 9 - 36

9.1.1 PLC . . . . . 9 - 36

9.1.1-1 PLC - Change Battery . . . . . 9 - 36
9.1.1-2 PLC - Load Program . . . . . 9 - 39
9.1.1-3 PLC - Print Program . . . . . 9 - 43
9.1.1-4 PLC - Set Outer Patch, Patch and Tab Length . . . . . 9 - 45
9.1.1-5 PLC - Set Tension Device Torque . . . . . 9 - 51

9.1.2 Safety Relays . . . . . 9 - 56

9.1.2-1 Safety Relays - Check Function . . . . . 9 - 56

9.1.3 Temperature Regulator . . . . . 9 - 57

9.1.3-1 Temperature Regulator- Calibrate . . . . . 9 - 57

9.1.4 Calibrator (Micromite II). . . . . 9 - 65

9.1.4-1 Calibrator (Micromite II) - Set . . . . . 9 - 65

9.2 Swing Frame . . . . . 9 - 66

9.2.1 TMCC. . . . . 9 - 66

TechPub_2614345_0103 - B6114I00en.fm

9.2.1-1 TMCC - Function Description . . . . . 9 - 66
9.2.1-2 TMCC - Set Communication . . . . . 9 - 73
9.2.1-3 TMCC - Change Cards / Load Programs . . . . . 9 - 74
9.2.1-4 TMCC - Set Control Card . . . . . 9 - 76
9.2.1-5 TMCC - Set Stepper Motor Cards . . . . . 9 - 77
9.2.1-6 TMCC - Set Photocells . . . . . 9 - 78
9.2.1-7 TMCC - Display Report . . . . . 9 - 82

9.2.2 Fuse Box . . . . . 9 - 86

9.2.2-1 Fuse Box - Set Overload Protection . . . . . 9 - 86
9.2.2-2 Fuse Box - Set Fuse . . . . . 9 - 87
9.2.2-3 Fuse Box - Check Earth Fault Breaker . . . . . 9 - 88

9.3 Cooler . . . . . 9 - 89

9.3-1 Cooler - Check Air Flow . . . . . 9 - 89
9.3-2 Cooler - Clean Filter Insert . . . . . 9 - 90

TechPub_2614345_0103 - B6114I00en.fm

9-1 Electrical Cabinet - PullTab Controls

The illustration shows a diagram of the components involved in the control of the PullTab unit.

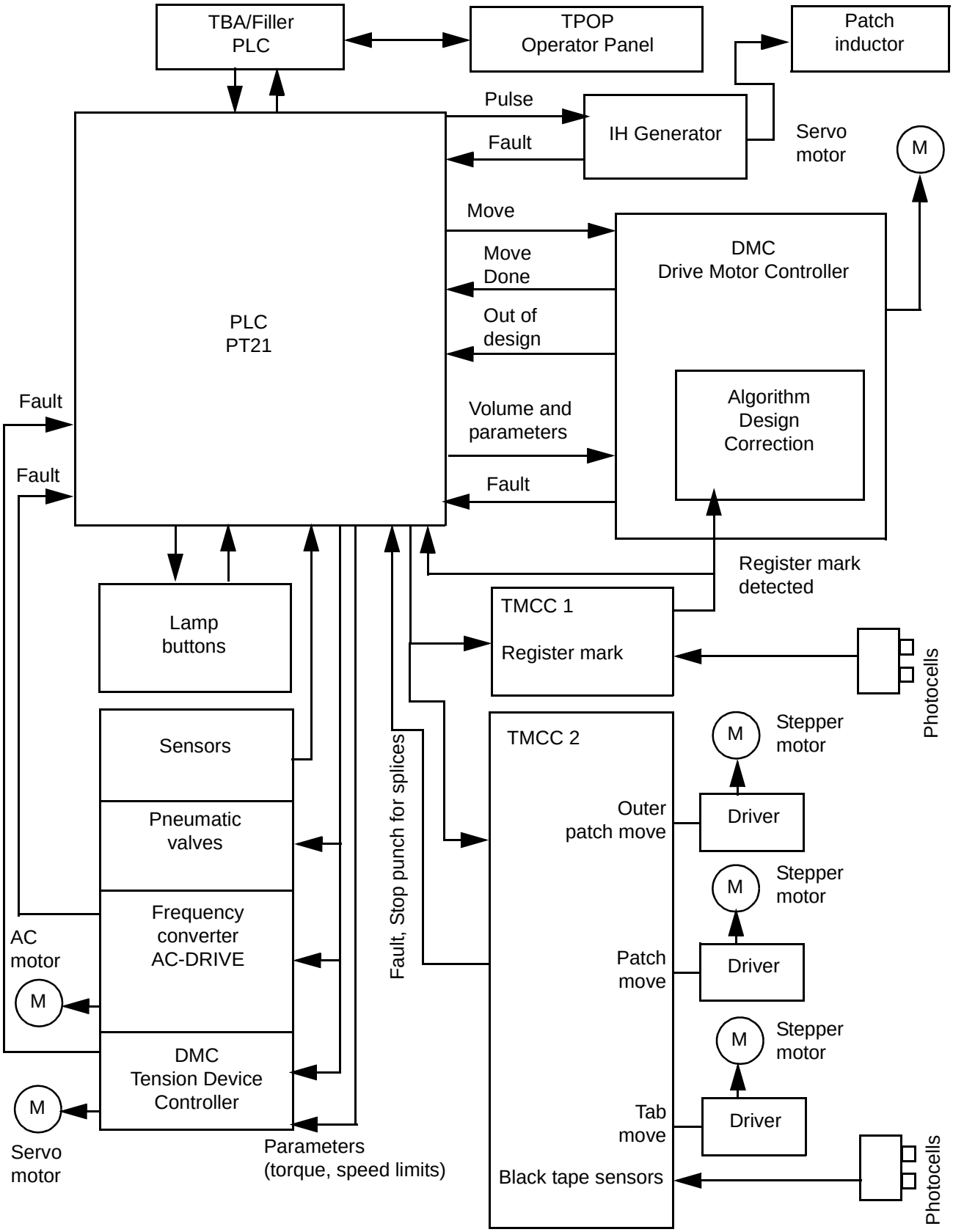

TechPub_2614345_0103 - B6114I00en.fm

9-2 Electrical Cabinet - Set Frequency Converter

Machine Status	Air **OFF** Mains Power **ON**
SPC Reference	1317254-0300 90430-0070

a) Press the parameter button (1). The display (2) shows **P000**.

b) Select the parameter (see table below for both inverters) using buttons (3) and (4).

c) Press the parameter button (1) to view the value of the parameter.

d) Change the parameter value using the buttons (3) or (4).

A8216 PT21

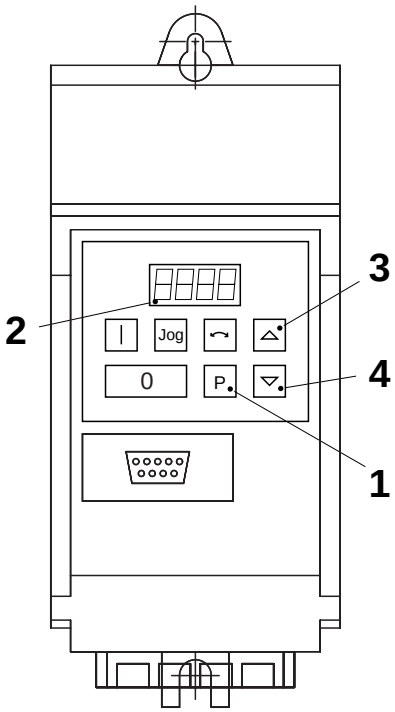

1 Parameter button
2 Display
3 Up button
4 Down button

(Cont'd)

TechPub_2614345_0103 - B6114I00en.fm

(Cont'd)

e) Set the inverter values for all the parameters, see the table on next page.

f) When the setting is finished, go to the **P000** position and then press the parameter button (1).

Note! To increase the resolution to 0.01, keep the parameter button (1) pressed until the display changes to '**--.n0**' (n = the current tenths value, for example if the parameter value = 055.8 then n=8). Press buttons (3) or (4) to change the value and then press (1) twice to return to the parameter display.

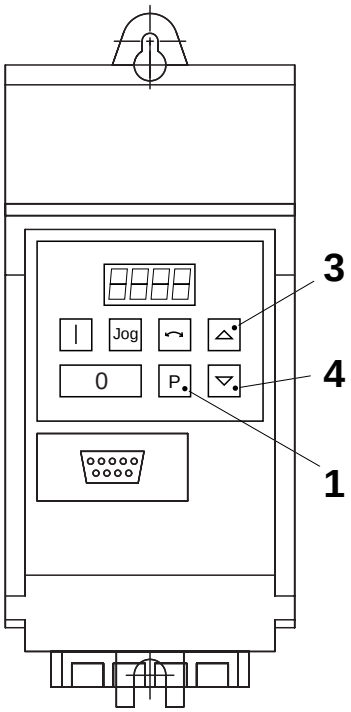

1 Parameter button
3 Up button
4 Down button

(Cont'd)

TechPub_2614345_0103 - B6114I00en.fm

(Cont'd)

Table for Customized Inverters Values

Note! For parameters not included in the table, choose the default value, see chapter 5 of the enclosed “Siemens” manual for details.

Parameter	Description	Default	PT21
P001	Control display	0	0
P002	Ramp up seconds 0 - Max(P013)	10	**0.1**
P003	Ramp down seconds Max. - 0	10	**0**
P004	Smoothing	0	0
P005	Digital setpoint (Hz)	5	5
P006	Speed source (1=analog)	0	**1**
P007	Keypad (0=disabled)	1	**0**
P008	NOT EXISTING	/	/
P009	Parameter protection (3-no protect)	0	**3**
P010	Display scaling	1	1
P011	Setpoint memory	0	0
P012	Minimum frequency	0	0
P013	Maximum frequency	50	**65**
P014	Skip frequency	0	0
P015	Auto start	0	0
P016	Start on the fly	0	0
P017	Smoothing type	1	1
P018	Auto restart after start	0	0
P019	Skip frequency bandwidth	2	2
P020	NOT EXISTING	/	/
P021	Min. frequency, analog input	0	0
P022	Max. frequency, analog input		**65**
P023	Analog input 1 - type	0	0
P024	Analog setpoint addition	0	0
P025	Analog output 1 scaling	0	0
P026	Analog output 2 scaling	0	0
P027	Skip frequency 2	0	0
P028	Skip frequency 3	0	0
P029	Skip frequency 4	0	0

(Cont'd)

TechPub_2614345_0103 - B6114I00en.fm

(Cont'd)

Parameter	Description	Default	PT21
P030	NOT EXISTING	/	/
P031	Jog frequency right	5	5
P032	Jog frequency left	5	5
P033	Jog ramp-up time	10	10
P034	Jog ramp-down time	10	10
P035	NOT EXISTING	/	/
P036	NOT EXISTING	/	/
P037	NOT EXISTING	/	/
P038	NOT EXISTING	/	/
P039	NOT EXISTING	/	/
P040	NOT EXISTING	/	/
P041	Fixed frequency 1	5	20
P042	Fixed frequency 2	10	10
P043	Fixed frequency 3	15	15
P044	Fixed frequency 4	20	20
P045	Directions for setpoints 1-4	0	0
P046	Fixed frequency 5	25	25
P047	Fixed frequency 6	30	30
P048	Fixed frequency 7	35	35
P049	Fixed frequency 8	40	40
P050	Directions for setpoints 5-8	0	0
P051	Selection control function DIN1	1	1
P052	Selection control function DIN2	2	2
P053	Selection control function DIN3	6	6
P054	Selection control function DIN4	6	6
P055	Selection control function DIN5	6	6
P056	Digital input debounce time	0	0
P057	Digital input watchdog trip	1	1
P058	NOT EXISTING	/	/
P059	NOT EXISTING	/	/
P060	NOT EXISTING	/	/

(Cont'd)

TechPub_2614345_0103 - B6114I00en.fm

(Cont'd)

Parameter	Description	Default	PT21
P061	Selection relay output 1 function	6	6
P062	Selection relay output 2 function	8	8
P063	External brake release delay	1	1
P064	External brake stopping time	1	1
P065	Current threshold for relay	1	1
P066	Compound braking	0	0
P067	NOT EXISTING	/	/
P068	NOT EXISTING	/	/
P069	NOT EXISTING	/	/
P070	Braking resistor duty cycle	0	0
P071	Slip compensation	0	0
P072	Slip limit (%)	250	250
P073	DC injection braking (%)	0	0
P074	I2T motor derating	1	**0**
P075	Braking chopper enable	0	0
P076	Pulse frequency	0	0
P077	Control mode	1	1
P078	Continuous boost (%)	100	100
P079	Starting boost (%)	0	0
P080	Nom. rating motor power factor (cos fi)		
P081	Nominal rating motor frequency	50	50
P082	Nominal rating motor speed		**2800**
P083	Nominal rating motor current		**1.2**
P084	Nominal rating motor voltage		**230**
P085	Nominal rating motor power (kW)		**0.25**

(Cont'd)

TechPub_2614345_0103 - B6114I00en.fm

(Cont'd)

Parameter	Description	Default	PT21
P086	Motor current limit (%)	150	150
P087	Motor PTC enable	0	0
P088*	Automatic calibration		
P089**	Stator resistance (about 25.0 in 0.25 and 17 in 0.55kW)		
P090	NOT EXISTING	/	/
P091	Serial link slave address	0	0
P092	Serial link baud rate	6	6
P093	Serial line time-out	0	0
P094	Serial link nominal system setpoint	50	50
P095	USS compatibility	0	0
P096	NOT EXISTING	/	/
P097	NOT EXISTING	/	/
P098	NOT EXISTING	/	/
P099	Option module type	0	0
P100	NOT EXISTING	/	/
P101	Operate in Europe or USA	0	0
P102	NOT EXISTING	/	/
P103	NOT EXISTING	/	/
P104	NOT EXISTING	/	/
P105	NOT EXISTING	/	/
P106	NOT EXISTING	/	/
P107	NOT EXISTING	/	/
P108	NOT EXISTING	/	/
P109	NOT EXISTING	/	/
P110	NOT EXISTING	/	/

* Set P088 to **1** and press the run button, then the stator resistance is automatically calculated and putted in P089.

** P007 must be **1** when doing this.

(Cont'd)

TechPub_2614345_0103 - B6114I00en.fm

(Cont'd)

Parameter	Description	Default	PT21
P111	Inverter power rating	Read only	
P112	Inverter type	Read only	
P113	Drive model	Read only	
P114	NOT EXISTING	/	/
P115	NOT EXISTING	/	/
P116	NOT EXISTING	/	/
P117	NOT EXISTING	/	/
P118	NOT EXISTING	/	/
P119	NOT EXISTING	/	/
P120	NOT EXISTING	/	/
P121	Enable/disable RUN button	1	1
P122	Enable/disable FORW/REV button	1	1
P123	Enable/disable JOG button	1	1
P124	Enable/disable INC/DEC button	1	1
P125	Reverse direction inhibit	1	1
P126	NOT EXISTING	/	/
P127	NOT EXISTING	/	/
P128	Fan switch off delay time	120	120
P129	NOT EXISTING	/	/
P130	NOT EXISTING	/	/
P131	Frequency setpoint	Read only	
P132	Motor current	Read only	
P133	Motor torque (% of nominal)	Read only	
P134	DC link voltage	Read only	
P135	Motor rpm	Read only	

(Cont'd)

TechPub_2614345_0103 - B6114I00en.fm

(Cont'd)

Parameter	Description	Default	PT21
P136	NOT EXISTING	/	/
P137	Output voltage	Read only	
P138	Instantaneous rotor/shaft frequency	Read only	
P139	NOT EXISTING	/	/
P140	Most recent fault code	Read only	
P141	Most recent fault code -1	Read only	
P142	Most recent fault code -2	Read only	
P143	Most recent fault code -3	Read only	
P144	NOT EXISTING	/	/
P185	NOT EXISTING	/	/
P186	Motor instantaneous current limit (%)	200	200
P201-P220	PID LOOP		
P321-P323	Analog input 2		
P356	Selection control function DIN6	6	6
P386	Sensorless vector speed loop gain	1	1
P700-P971	Miscellaneous		
P721	Analog input 1 voltage	Read only	
P725	Analog input 2 voltage	Read only	
P922	Software version	Read only	
P931	Most recent warning type	Read only	
P944	Reset to factory default settings	Set to 1 and then press Pto reset all parameters	

TechPub_2614345_0103 - B6114I00en.fm

9-3 Electrical Cabinet - Function Description TPIH Generator

Machine Status	Air **OFF** Mains Power **OFF**
SPC Reference	1317254-0300 67600-0501

TPIH-Generator is used for:

- patch station (A8205).

The TPIH-system contains: generator, coaxial cable, impedance transformer, flexible cable and inductor.

The pulse duration is controlled by the PLC program. The power level is set by means of the TPOP panel. Three phase 400/230V, single phase 230V, and 24V DC, are needed for the generator.

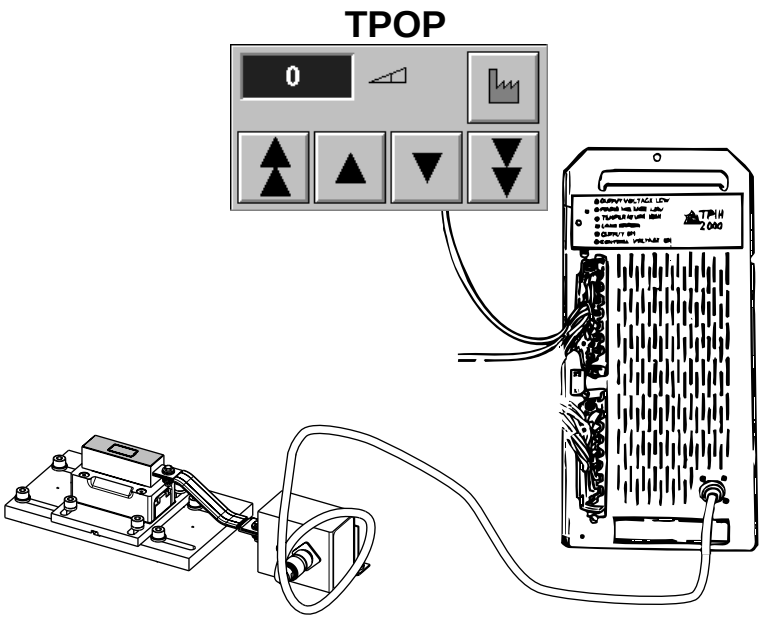

TechPub_2614345_0103 - B6114I00en.fm

9-4 Electrical Cabinet - Check Function TPIH Generator

Machine Status	Air **OFF** Mains Power **OFF**
SPC Reference	1317254-0300 67600-0501

Output Voltage Low

The LED (1) lits up when:

- the power setting on TPOP is below the minimum value of 350, or
- the output voltage from the PLC analogue output is interrupted or
- the generator is faulty and must be replaced.

Mains Voltage Low

If the LED (2) has lit up, at least one of the following three phases is below 85% of nominal value and, as a consequence, the generator is not able to deliver the proper output power.

Check the mains supply for a blown fuse. If all three fuses are intact, the problem will disappear when the voltage rises above 85% again.

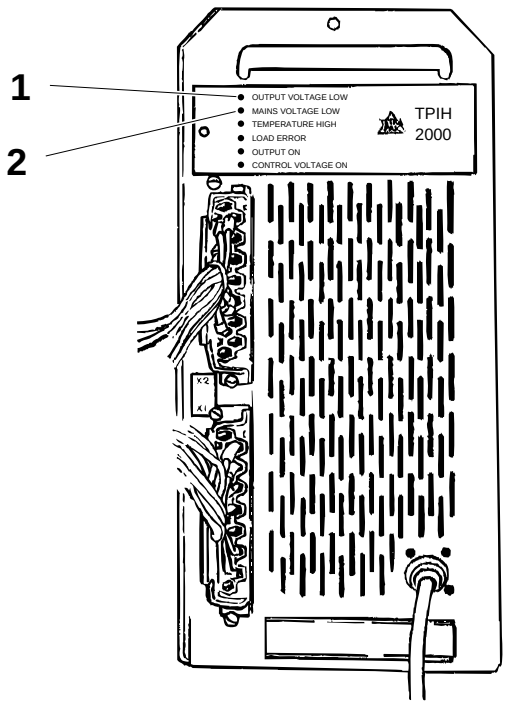

1 Output voltage low LED
2 Mains voltage low LED

(Cont'd)

TechPub_2614345_0103 - B6114I00en.fm

(Cont'd)

Temperature High

If the LED (3) has lit up, the temperature of the TPIH generator is too high due to:

- the cooling fan inside the generator is not working
- the ambient temperature is above 50°C.

Change the generator if the fan does not operate, see 9-6 Electrical Cabinet - Change TPIH Generator.

Load Error

If the LED (4) has lit up, the generator is unable to transmit a pulse due to faulty load caused by:

- short circuit in coaxial cable, flatcable, inductor or impedance transformer
- open circuit in coaxial cable, flatcable, inductor or impedance transformer
- no pressure applied to the inductor
- wrong type of impedance transformer installed
- wrong type of inductor installed.

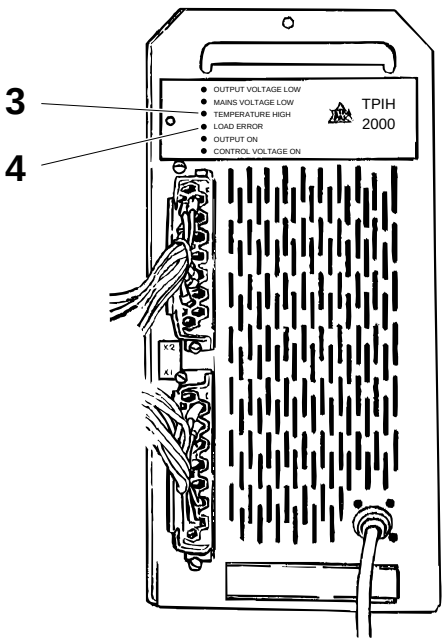

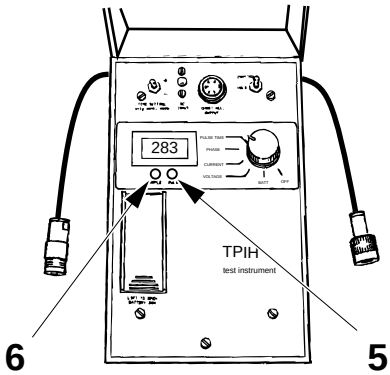

3 Temperature high LED
4 Load error LED
5 Sample LED
6 Pulse LED

The origin of the load error may be located with the aid of test instrument TP No. 68462-0101

With a load problem only very short pulses are delivered by the generator. During the entire pulse the sample LED (5) lights up, while the pulse LED (6) is off.

(Cont'd)

TechPub_2614345_0103 - B6114I00en.fm

(Cont'd)

Proceed as follows:

a) Perform a SHORT STOP.

b) Connect the test instrument between the coaxial cable (7) and the output coaxial connector (8) of the TPIH generator.

c) Step up the machine to PRODUCTION.

d) Measure the values of voltage, current, phase angle, pulse time and compare them with the values in the table below.

Load examples	**Phase angle**	**Impedance**
Optimal load	0°	50 Ω
Normal load (ACCEPTANCE)	±15°	40 - 65 Ω
Short circuit in coaxial cable, contacts or primary of the IH transformer	pos (3)	1 - 10 Ω (1)
Open circuit in coaxial cable, contacts or primary of the IH transformer	neg (3)	200 - 2000 Ω (2)
Short circuit in inductor, current rail or secondary of the IH transformer	pos	10 - 20 Ω
Open circuit in inductor, current rail or secondary of the IH transformer	neg	2 - 5 Ω
No packaging material on the inductor	neg	5 - 15 Ω
No hole punched in packaging material		
No tab material at the inductor		

Note! 1) Greater value = greater distance between problem and instrument.

2) Greater value = shorter distance between problem and instrument.

3) Greater phase difference = greater distance between problem and instrument.

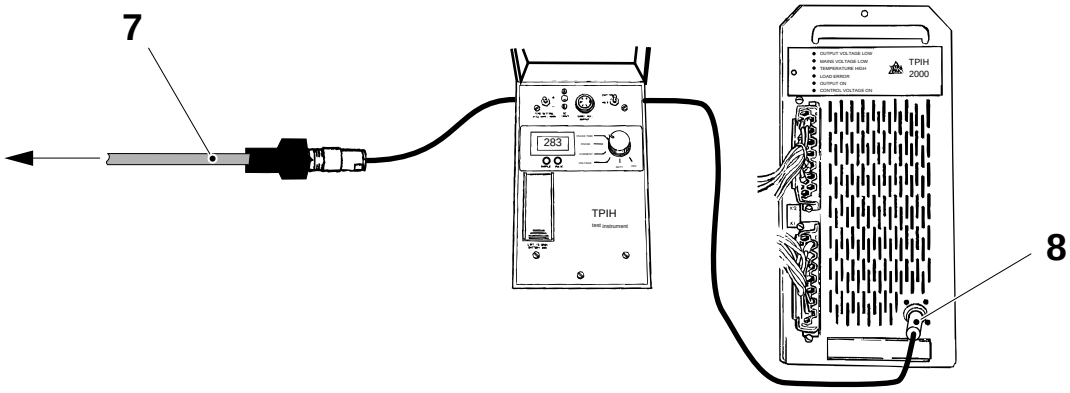

7 Coaxial cable
8 Coaxial connector

(Cont'd)

TechPub_2614345_0103 - B6114I00en.fm

(Cont'd)

Output On
When the LED (9) lights up, a pulse is transmitted from the generator into a correct load. The entire generator system is operating perfectly.

Control Voltage On
When the LED (10) lights up, 230V is connected to the generator. Alarms are enabled.

Note! This does not check the 400/230V three phase power supply.

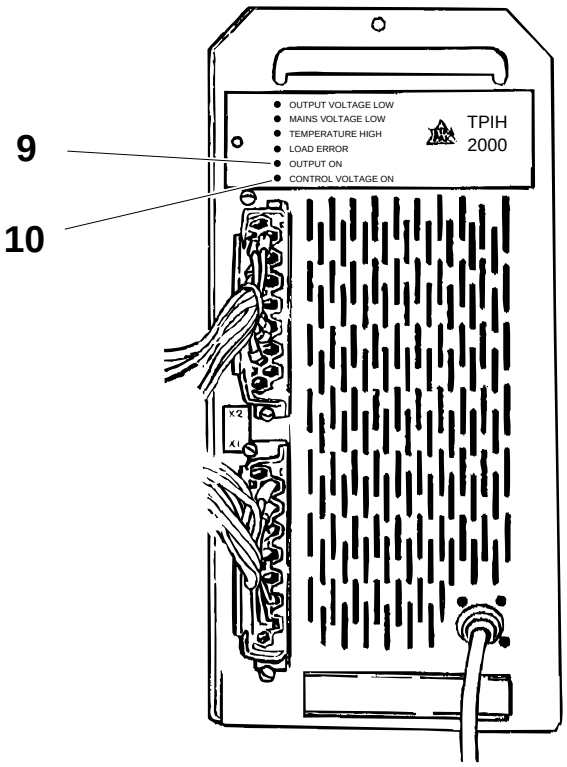

9 Output on LED
10 Control voltage on LED

TechPub_2614345_0103 - B6114I00en.fm

(Cont'd)

(Cont'd)

Test Instrument TP No. 68462

The TPIH test instrument is used to check the available output power from the IH generator as well as the condition of the coaxial cable, the impedance transformer, the current rail and the inductor. The test instrument is connected in series with the coaxial cable from the generator.

Note! Use the SHORT STOP procedure to prevent the generator from pulsing when the instrument must be connected or disconnected.

The instrument can be used for the measurement of the following parameters:

- HF voltage
- HF current
- phase shift voltage/current
- pulse duration.

The results of these measurements can be used to calculate the available HF power. The instrument should simplify work when trying to locate the origin of a problem. One 9V battery is used for the instrument and an automatic power-off function is used to minimize battery consumption. A test outlet allows connection of a printer, such as a Gould recorder. Print-out of the HF voltage, HF current and the phase shift as a function of time are possible. The instrument kit contains complete operating instructions as well as a recorder cable and an AC/DC mains adapter.

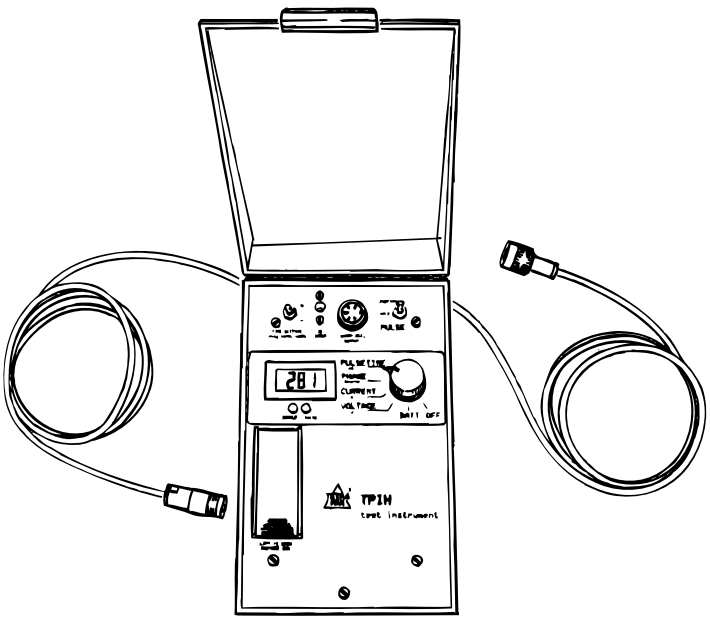

TechPub_2614345_0103 - B6114I00en.fm

9-5 Electrical Cabinet - Check TPIH Generator Cables

Machine Status	Air **OFF** Mains Power **OFF**
SPC Reference	1317254-0300 67600-0501

Check the following parts for wear and/or damage:

- the coaxial connectors (1)
  Make sure that there is no moisture between the male connector and the female connector.
- the rubber gasket (2) in the male connectors
  Make sure that it seals properly (it should not be possible to turn the male connector easily).
- the coaxial cables (3)
  Make sure that the cables are flexible and that there are no cracks where they bend.
- the busbar (4)
  Check the rubber seal and the flat seal. Make sure that there are no signs of damage.
- Check for water/product residue inside the impedance transformer.

Clean or change as required.

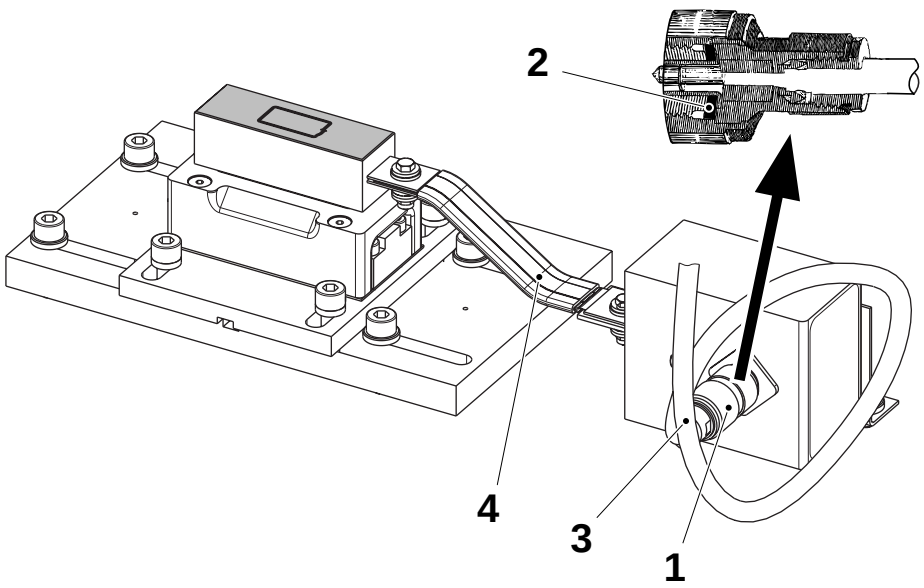

1 Coaxial connector
2 Rubber gasket
3 Coaxial cable
4 Busbar

TechPub_2614345_0103 - B6114I00en.fm

9-6 Electrical Cabinet - Change TPIH Generator

Machine Status	Air **OFF** Mains Power **OFF**
SPC Reference	1317254-0300 67600-0501

WARNING
High voltage!
Do not open the generator.

a) Make sure that the main power switch is **Off** and that it has been padlocked.
b) Remove the connectors **X1** (1) and **X2** (2).
c) Remove the coaxial connector (3).
d) Unscrew the screw (4) and pull out the generator.
e) Change the generator and assemble in the reverse order.

Note! Send the generator to the nearest Tetra Pak service station for cleaning or service.

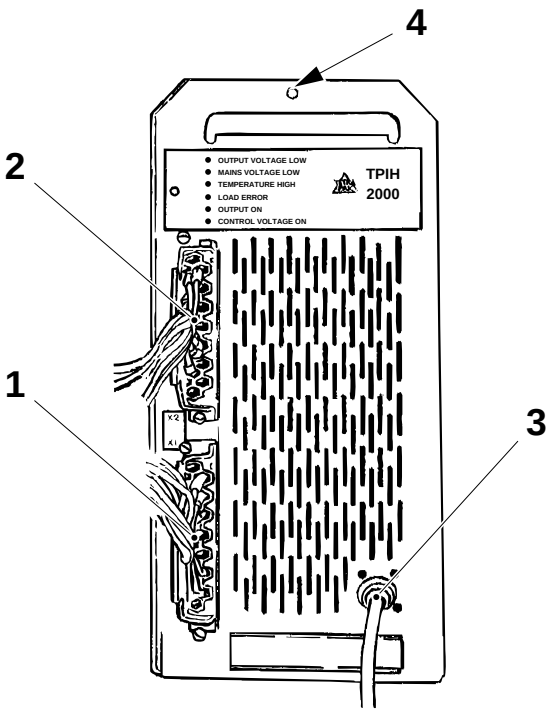

1 Connector X1
2 Connector X2
3 Coaxial connector
4 Screw

TechPub_2614345_0103 - B6114I00en.fm

9-7 Electrical Cabinet - Set TPIH Generator Sealings

Machine Status	Air **OFF** Mains Power **ON**
SPC Reference	1317254-0300 67600-0501

The sealing power value for the patch unit can be set in the TPOP.

By pressing the button (1), a default value of 600 SU is loaded, but this is not applicable here, see table in 11.1 Technical Data on page 11-6. In the table it is stated the correct power value to be set for the present combination of:

- the package/volume shape
- the hole
- the packaging material.

In step PRODUCTION evaluate the patch heat patterns, see the *OM*, section *Package checks*.

Note! If required, change the current value by means of the buttons (2) and (3).

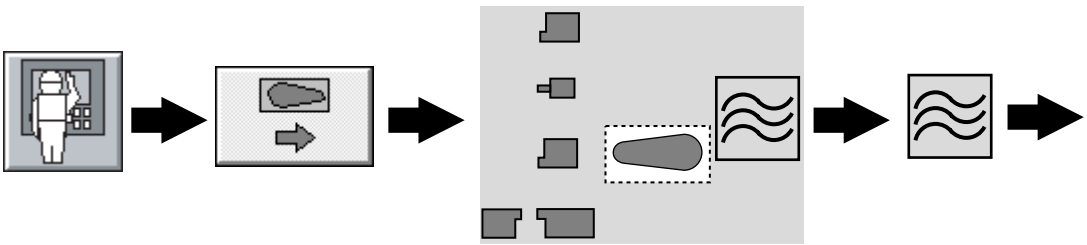

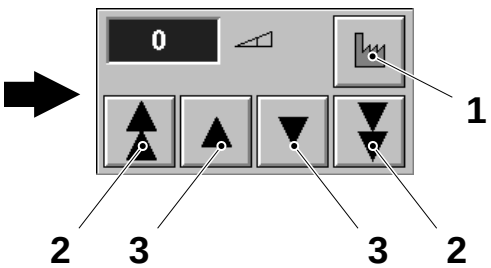

1 Button
2 Button
3 Button

TechPub_2614345_0103 - B6114I00en.fm

9-8 Electrical Cabinet - Function Description Drive Motor DMC2 Card

Machine Status	Air **OFF** Mains Power **ON**
SPC Reference	1317254-0300

The DMC2 card A8204 is used for feeding the packaging material with volume dependent length.

The DMC2 receives the bar code pulse from the TMCC module and checks the packaging material position.

The DMC2 keeps the packaging material in position by adjusting the package length.

The DMC2 allows, by means of the TPOP, to change the position of the hole from the top fin crease, see 3.2-1 Punch Unit - Set Packaging Material Position in Relation to Hole.

Note! The setting range on the TPOP is **±4 mm**.

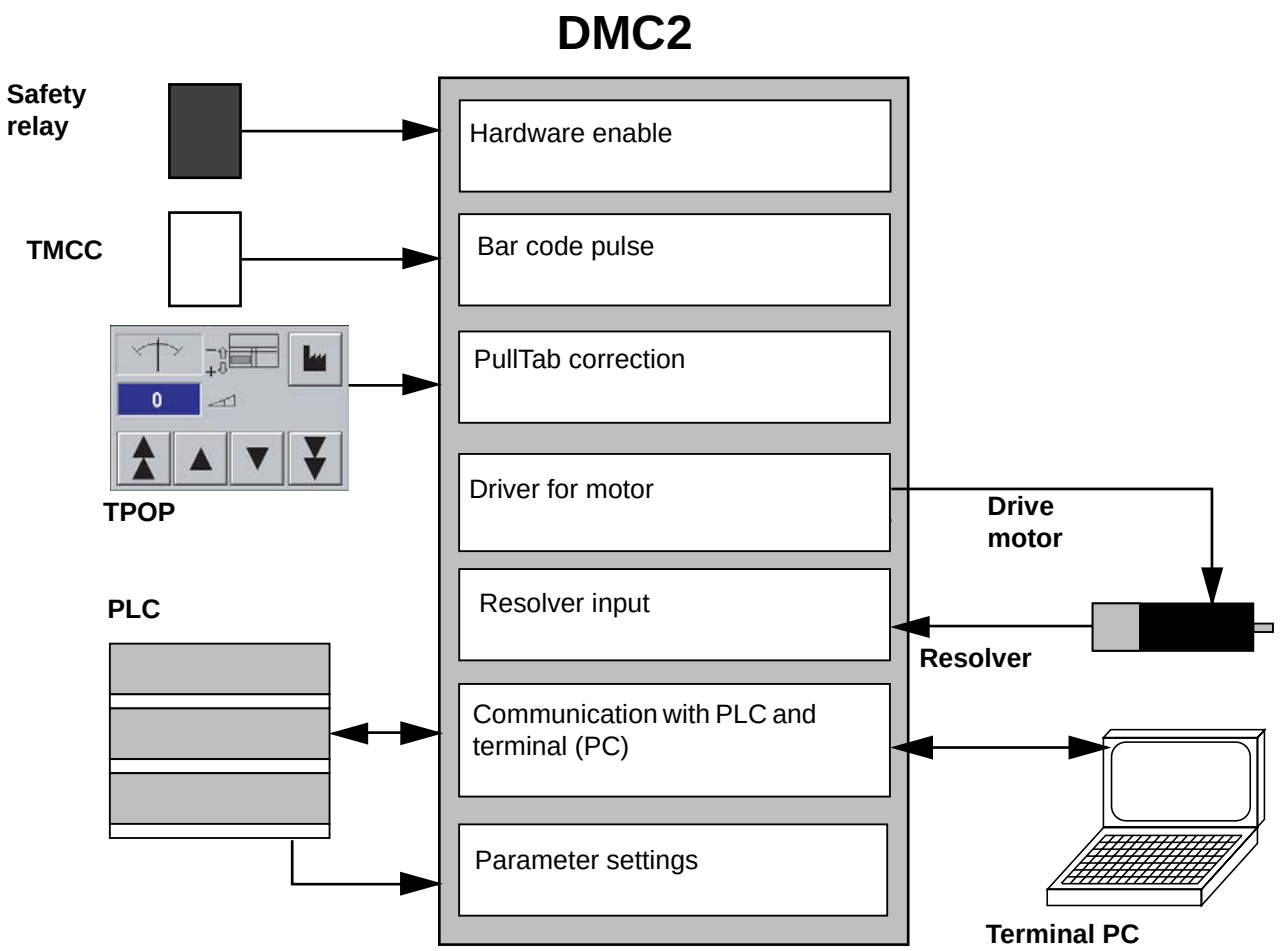

TechPub_2614345_0103 - B6114I00en.fm

(Cont'd)

(Cont'd)

DMC servo drive card A8204		
LED	**Colour**	**Function**
Ready	Green (Led 1)	The servo system hardware is ready (doors closed)
Home position found	Yellow (Led 2)	The servo system has found the home position
Move	Yellow (Led 3)	The servo motor is moving the paper
Move done	Yellow (Led 4)	The servo system has moved the paper
Fault bit 1	Red (Led 5)	See list next page
Fault bit 2	Red (Led 6)	See list next page
Fault bit 3	Red (Led 7)	See list next page
Fault bit 4	Red (Led 8)	See list next page

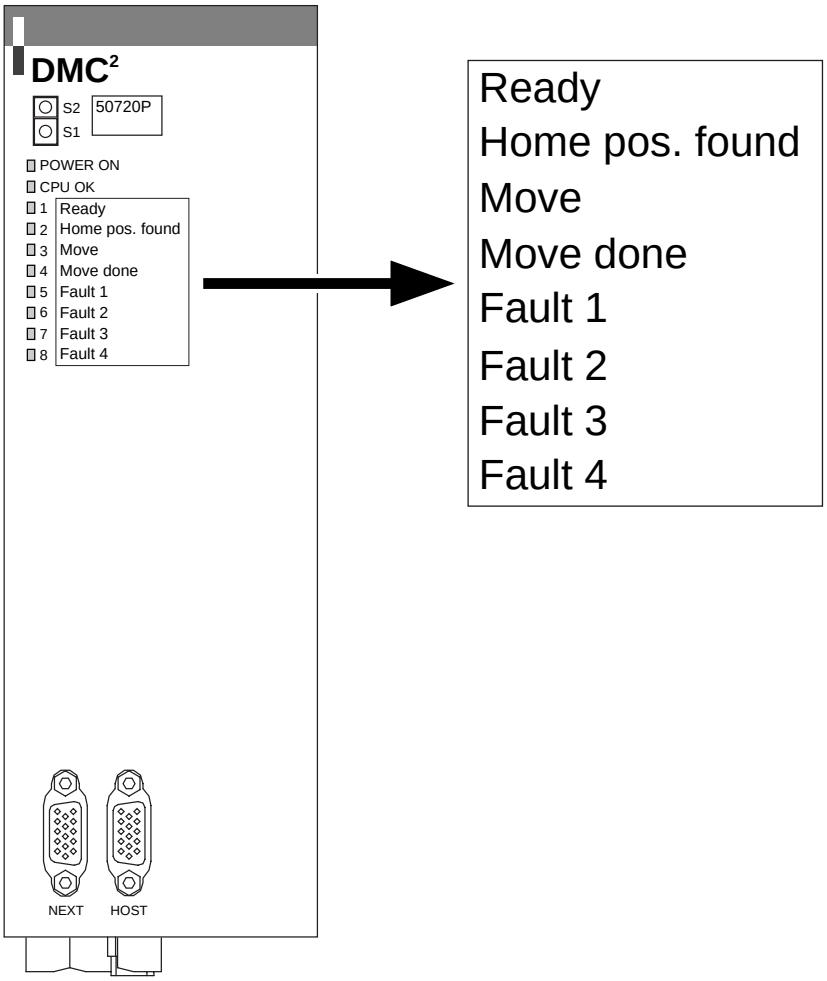

TechPub_2614345_0103 - B6114I00en.fm

(Cont'd)

(Cont'd)

DMC Servo Drive Card A8204 Fault List

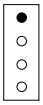	**Hardware disabled** The hardware enable signal from the PLC is low. This is normally not an alarm. But if it happens in an abnormal situation check the connections to the DMC's hardware enable input.
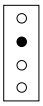	**System internal hardware fault** Try to restart, if the problem persists or comes back again soon change DMC driver.
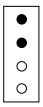	**Position error exceeded** The allowed error between the calculated position and the actual position of the axis of the motor is exceeded. Check for mechanical faults that can stop the motor from turning correctly such as bad bearings, lack of lubrication etc.
	**Ctrl-C interrupted** Ctrl-C has been pressed on a terminal connected to the drive. 1. Restart.
	**System error** Try to restart, if the problem persists or comes back again soon change DMC driver.
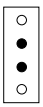	**High temperature in driver or motor** 1. In the case of the motor, check if the movement is too hard. 2. In the case of the drive, check the cooling system of the electrical cabinet
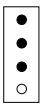	**Software disabled** The software enable signal from the PLC is low. This is normally not an alarm. But if it seems to be a problem check the connection between the PLC's output and the DMC's software enable input.
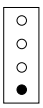	**Current check torque limit exceeded** The maximum current limit is exceeded. Check for mechanical faults that can stop the motor from turning correctly such as bad bearings, lack of lubrication…
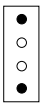	**Cyclical timer interrupted** This alarm is triggered by internal faults in the drive, and is not an alarm if software and hardware enable is low. 1. Close the doors. 2. Check connections to the DMC's hardware and software enable.

(Cont'd)

TechPub_2614345_0103 - B6114I00en.fm

(Cont'd)

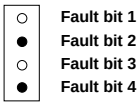	**Data transfer from PLC** The software enable signal from the PLC is low. This is normally not an alarm. But if it seems to be a problem check the connections between the PLC's output and the DMC's software enable input
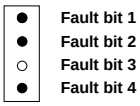	**Resolver fault** Problem with the resolver (the resolver sends information from the motor to the drive from where the drive can calculate the position of the axis). 1. Check the connections for the resolver cable. 2. Change drive or motor
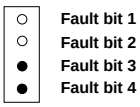	**Home position fault** Check the photocells position, the photocells function and the paper tracking.

TechPub_2614345_0103 - B6114I00en.fm

9-10 Electrical Cabinet - Function Description Tension Device DMC2 Card

Machine Status	Air **OFF** Mains Power **ON**
SPC Reference	1317254-0300

The DMC2 card A8233 is used for keeping the packaging material stretched in the punch, the patch applicator, the outer patch applicator and the tab applicator stations.

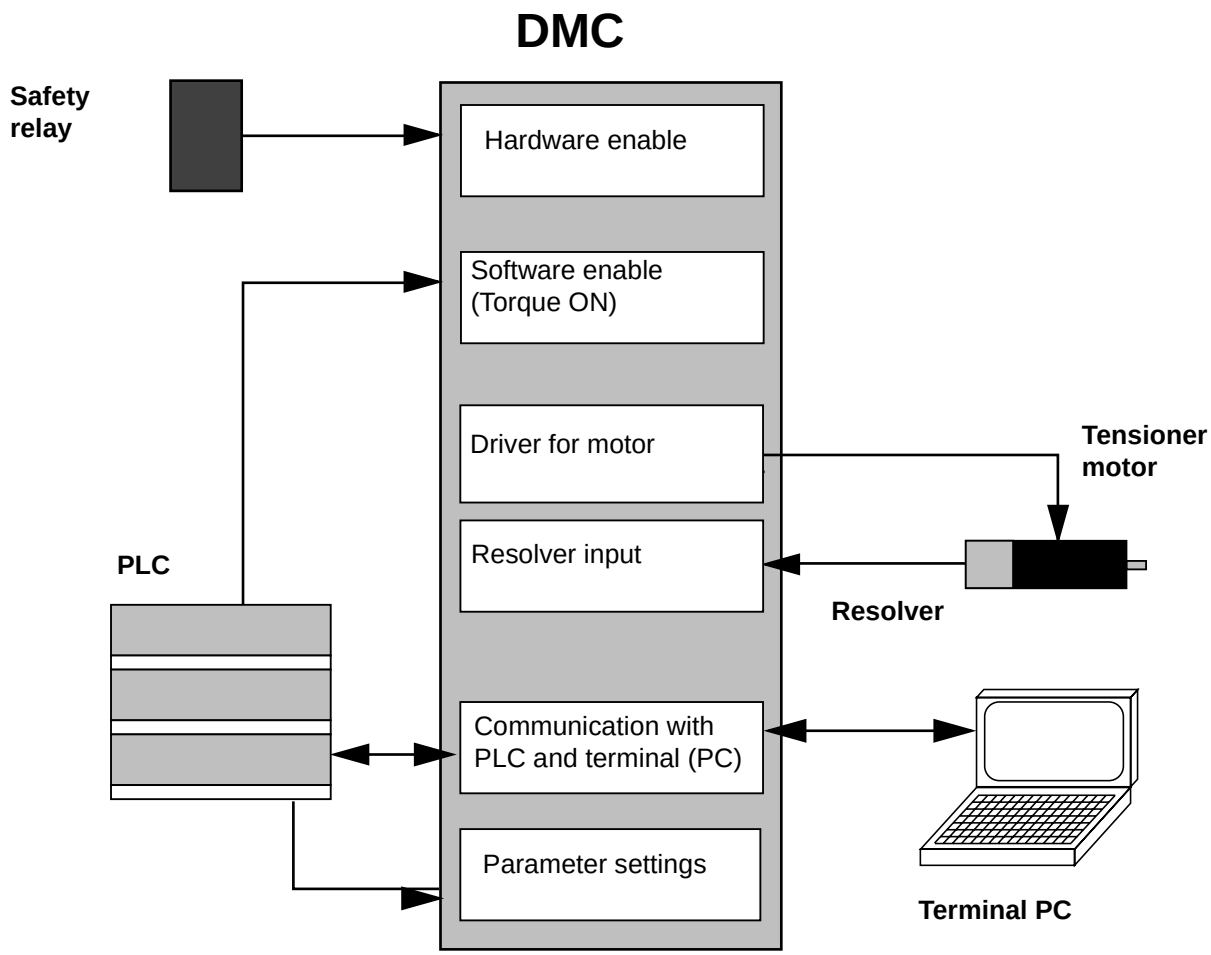

TechPub_2614345_0103 - B6114I00en.fm

(Cont'd)

(Cont'd)

STD DMC card A8233		
LED	**Colour**	**Function**
Ready	Green (Led 1)	The servo system hardware is ready (doors closed)
Torque enable	Yellow (Led 2)	The servo tensioner is ready
Not used	Yellow (Led 3)	-
Not used	Yellow (Led 4)	-
Fault bit 1	Red (Led 5)	See list next page
Fault bit 2	Red (Led 6)	See list next page
Fault bit 3	Red (Led 7)	See list next page
Fault bit 4	Red (Led 8)	See list next page

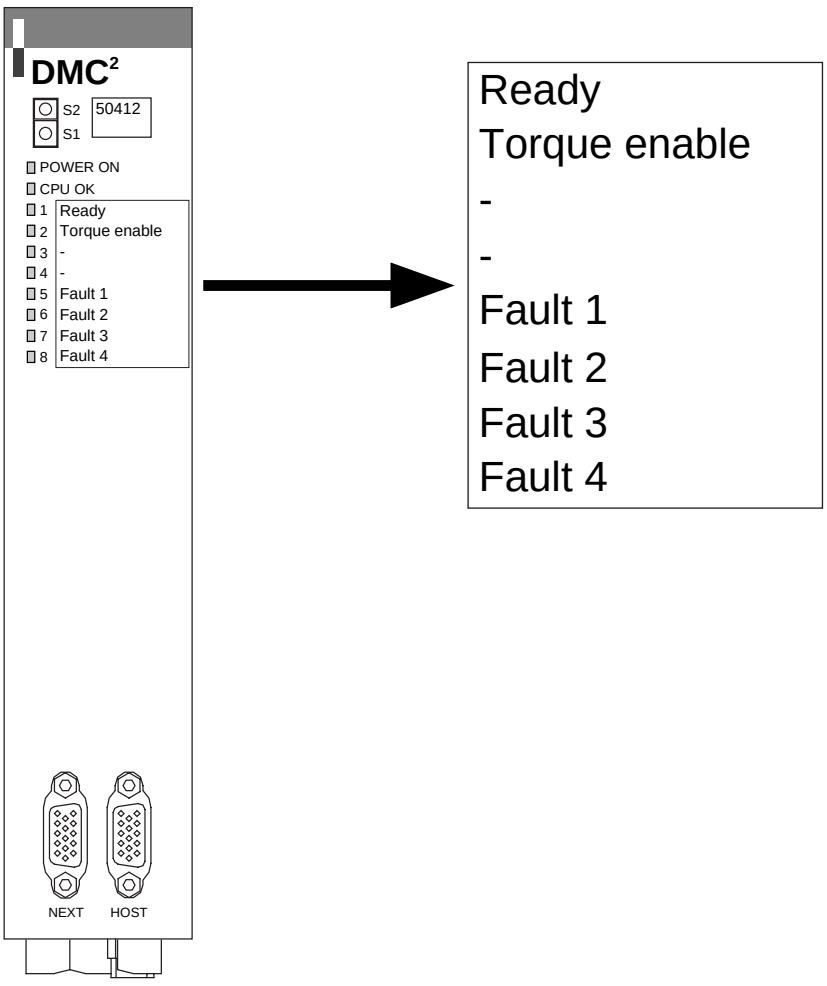

(Cont'd)

TechPub_2614345_0103 - B6114I00en.fm

(Cont'd)

STD DMC Card A8233 Fault List

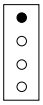	**Hardware disabled** The hardware enable signal from the safety relay is low. This is normally not an alarm. But if it happens in an abnormal situation check the connections to the DMC's hardware enable line.
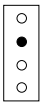	**System internal hardware fault** Try to restart, if the problem persists or comes back again soon change DMC driver.
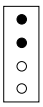	**Position error exceeded** The allowed error between the calculated position and the actual position of the axis of the motor is exceeded. Check for mechanical faults that can stop the motor from turning correctly such as bad bearings, lack of lubrication etc.
	**Ctrl-C interrupt** Ctrl-C has been pressed on a terminal connected to the drive. 1. Restart.
	**System error** Try to restart, if problem persists or comes back again soon change DMC driver.
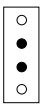	**High temperature in driver or motor** 1. In the case of the motor, check if the movement is too hard. 2. In the case of the drive, check the cooling system of the electrical cabinet
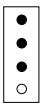	**Software disabled** The software enable signal from the PLC is low. This is normally not an alarm. But if it seems to be a problem check the connection between the PLC's output and the DMC's software enable input.
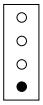	**Current check torque limit exceeded** The maximum current limit is exceeded. Check for mechanical faults that can stop the motor from turning correctly such as bad bearings, lack of lubrication…
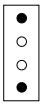	**Cyclical timer interrupted** This alarm is triggered by internal faults in the drive, and is not an alarm if software and hardware enable is low. 1. Close the doors. 2. Check connections to the DMC's hardware and software enable.

(Cont'd)

TechPub_2614345_0103 - B6114I00en.fm

(Cont'd)

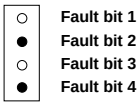	**Data transfer from PLC** The software enable signal from the PLC is low. This is normally not an alarm. But if it seems to be a problem check the connections between the PLC's output and the DMC's software enable input
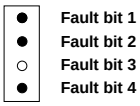	**Resolver fault** Problem with the resolver (the resolver sends information from the motor to the drive from where the drive can calculate the position of the axis). 1. Check the connections for the resolver cable. 2. Change drive or motor.
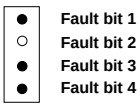	**Tensioner motor speed fault** Maximum speed (positive or negative) exceeded. 1. Check if paper is broken.

TechPub_2614345_0103 - B6114I00en.fm

9-11 Electrical Cabinet - Set DMC2 Card

Machine Status	PRODUCTION
Special Equipment	DMC communication cable RS 232 (see below) AT compatible PC with diskette station
SPC Reference	1317254-0300

Connect the DMC to the PC terminal with the cable (1). The necessary connections are:

PC 9-pin female	DMC 15-pin high density male
2	3
3	2
5	7
	1 (*)

Note! (*) = shield connection

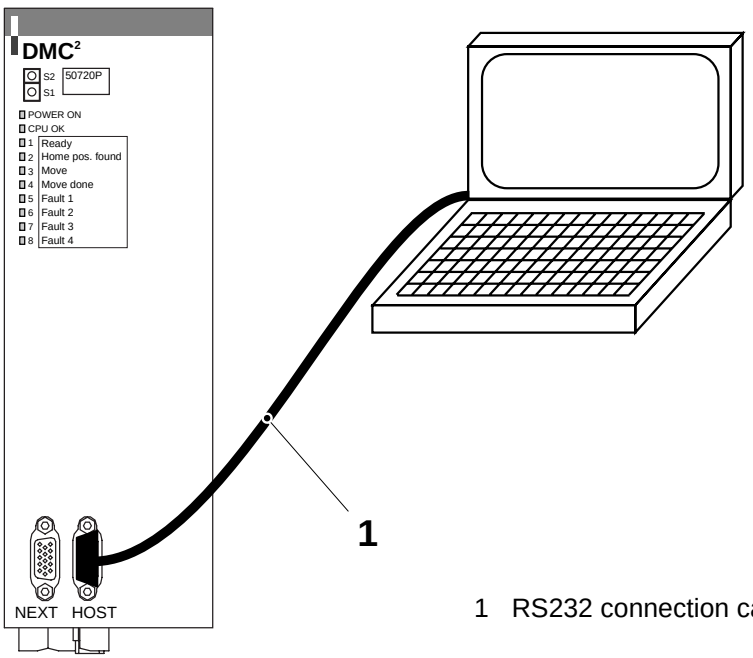

1 RS232 connection cable

(Cont'd)

TechPub_2614345_0103 - B6114I00en.fm

(Cont'd)

Configure the program to use, for example a TIT or a Windows terminal, as follows:

Baud rate	9600
Parity	None
Bits	8
Stop bits	1
Flow control	None

PC Terminal Communication

A PC with a terminal program can be used for test and service purposes. At start up through the serial interface it is possible to see the program version (R255).

Communication With Tension Device DMC2 Card A8233

Each time that the data transfer from the PLC completes, the following values are sent out on the screen of the terminal:

R20	Range1Value
R21	Range2Value
R22	SpeedMaxPos
R23	SpeedMaxNeg

For positioning troubleshooting it is also possible to see different data on line by changing of the register value **R120**.

R120	**Register number**	**Register name**	**Function**
R120 = 0	No display	No display	Default state
R120 = 10	Ana.Out1 Ana.Out2	*Ana.Out1* *Ana.Out2*	Connect the *Ana.Out1* to speed Connect the *Ana.Out2* to torque, ±10V = ±32767 inc = 1.47 Nm/V

For better performance of the system, keep **R120 = 0** when there is no need of displaying data.

(Cont'd)

TechPub_2614345_0103 - B6114I00en.fm

(Cont'd)

Communication With Drive Motor DMC2 Card A8204

Each time that the data transfer from the PLC completes, the following values are sent out on the screen of the terminal:

R23	Packlength
R20	DfltFromRegMark
R97	Indextime
R98	AccRet
R65	HomeSpeed
R64	HomeAccRet
R63	ProdSpeed
R61	ProdAccRet

For positioning troubleshooting it is also possible to see different data on line by changing of the register value **R120**.

R120	**Register number**	**Register name**	**Function**
R120 = 0	No display	No display	Default state
R120 = 1	RD 1.RPos R42 R30	 *NewPosOffset* *RegMarkPos*	Real position PullTab correction Register mark position
R120 = 2	R21 R22 R83	*FromRegMark* *AdjfromRegMark* *Error*	Measured value *RegMarkPos* to stop position *DfltFromRegMark+Newposoffset* relative error from Register Mark
R120 = 3	R89 R26 R25	*Movement* *MoveAverage* *MoveError*	Movement after PID calculation Average of the six last *Movement* *Movement - MoveAverage*
R120 = 4	R73 R23 R71	ActualLength PackLength DumpPackages	Measured Package length during *ErrorRoutine* Repeat length of package Number of dumped packages
R120 = 10	Ana.Out1 Ana.Out2	*Ana.Out1* *Ana.Out2*	Connect the *Ana.Out1* to torque Connect the *Ana.Out2* to PosErr

For better performance of the system, keep **R120 = 0** when there is no need of displaying data.

TechPub_2614345_0103 - B6114I00en.fm

9-12 Electrical Cabinet - Load DMC2 Program

Machine Status	Air **ON** Mains Power **ON**
Special Equipment	DMC communication cable RS 232 (see 9-11 Electrical Cabinet - Set DMC2 Card) AT compatible PC with diskette station ECT program (by Danaher Motion)
SPC Reference	1317254-0300

CAUTION
Risk of damage to the equipment!
Do not swap the DMC2 cards A8204 and A8233 because they are of a different model and contain different programs!

a) Locate the appropriate DMC2 card in the electrical cabinet.
   – The card A8204 is used for feeding the packaging material.
   – The card A8233 is used for keeping the packaging material stretched.

b) Connect the connection cable (1) between the PC and the DMC2 card **HOST** front panel connector.

c) For the card **A8204**, insert the MASTER diskette marked with the current revision number into the PC diskette station, **A:drive**.

d) For the card **A8233**, insert the MASTER diskette marked with the current revision number into the PC diskette station, **A:drive**.

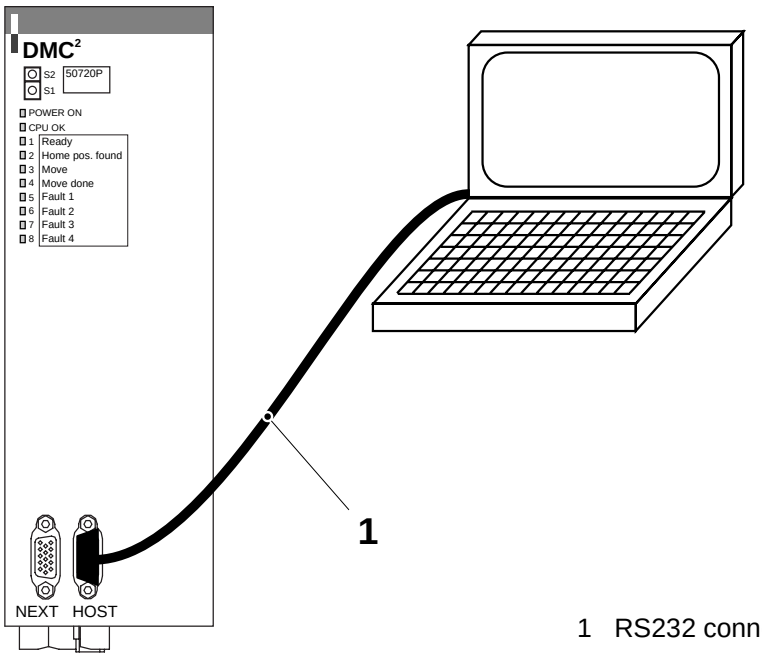

1 RS232 connection cable

(Cont'd)

TechPub_2614345_0103 - B6114I00en.fm

(Cont'd)

e) Make sure that the green LED “POWER ON” is lit on the DMC2 card.

f) Start the **ECT** program.

g) Select **TERMINAL** program from the **WINDOW** menu.

h) Stop the program execution by pressing CTRL and C keys simultaneously two times. If the program does not stop, when indicated by a warning message, then retry to stop the program until at the bottom of the **ECT** window it is displayed the message “**PROGRAM HAS STOPPED**”.

i) Write at the prompt: **NEW** (to cancel the program) and press ENTER key.

j) Write at the prompt: **LIST** (to check the program list) and press ENTER key.

k) Select **DOWNLOAD** from the **CONTROLLER** menu.

l) Select the path and the file name for the program file on the MASTER diskette in the **A:drive**. Press **OK** to start downloading.

m) Check at the bottom of the TERMINAL window if there is written “**FILE IS DOWNLOADED**”.

n) Write at the prompt: **FSTORE** and press ENTER key.

o) Write at the prompt: **RUN** and press ENTER key.

p) Close the **TERMINAL** and **ECT** programs.

q) Disconnect the communication cable (1) between the PC and the DMC2 card.

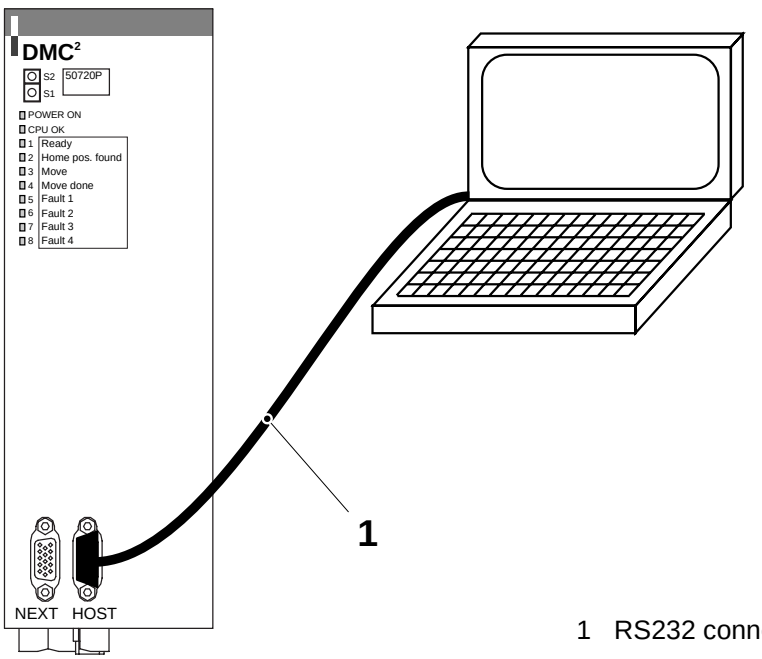

1 RS232 connection cable

TechPub_2614345_0103 - B6114I00en.fm

9.1 Mounting Plate

SPC Reference	1317354-0300

9.1.1 PLC

9.1.1-1 PLC - Change Battery

Machine Status	Air **OFF** Mains Power **ON**
Special Equipment	Needle nose pliers
Consumables	Battery TP No.90031-0301
SPC Reference	1317354-0300

Alternative With One Cable Connector

Note! For alternative with two cable connectors (1), see the Alternative With Two Cable Connectors section.

When the battery signal lamp (2) lights up, the battery (3) must be changed.

a) Remove the battery cover (4).

Note! The battery replacement must be completed within 20 minutes or else the RAM memory might be erased.

b) Remove the battery (3) from the mounting clips (5).

c) Firmly attach the clips (5) to the new battery.

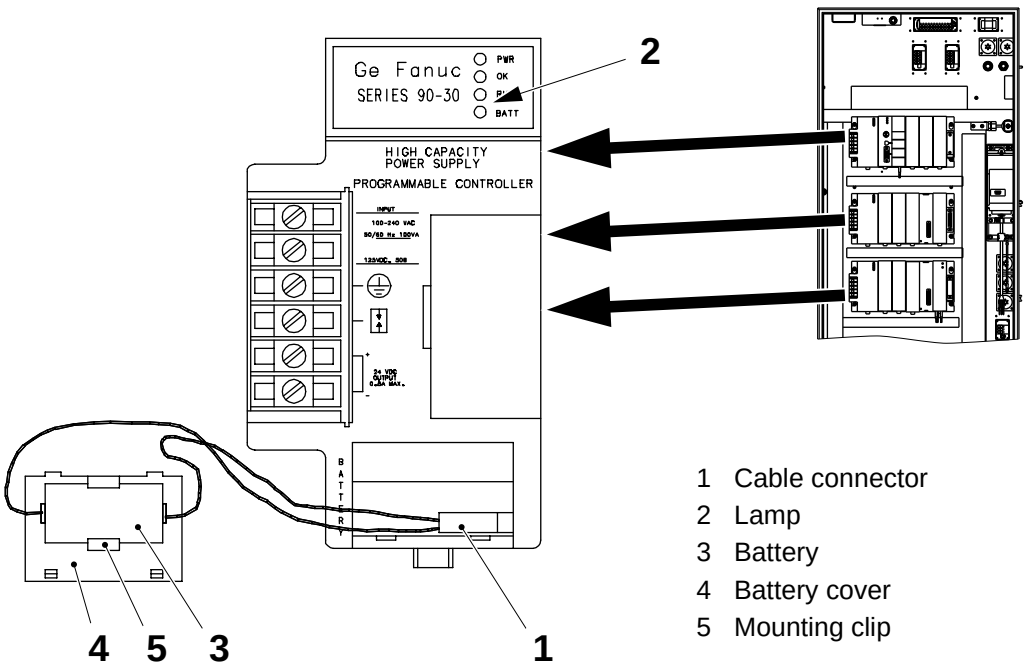

1 Cable connector
2 Lamp
3 Battery
4 Battery cover
5 Mounting clip

(Cont'd)

TechPub_2614345_0103 - B6114I01en.fm

(Cont'd)

CAUTION

Handle the old battery in a safe way!

The battery contains harmful substances and must not be thrown away in a careless way. Hand it in to the nearest recycle centre. Do not burn lithium batteries. Do not try to recharge lithium batteries.

d) Disconnect the cable connector (1) of the old battery and discard the battery (3).

e) Carefully insert the cable connector (1) of the new battery (3) into the contact (6) with the aid of a needle nose pliers.

f) Fit the battery cover (4).

g) Repeat items a) to f) for the other power supply units (7).

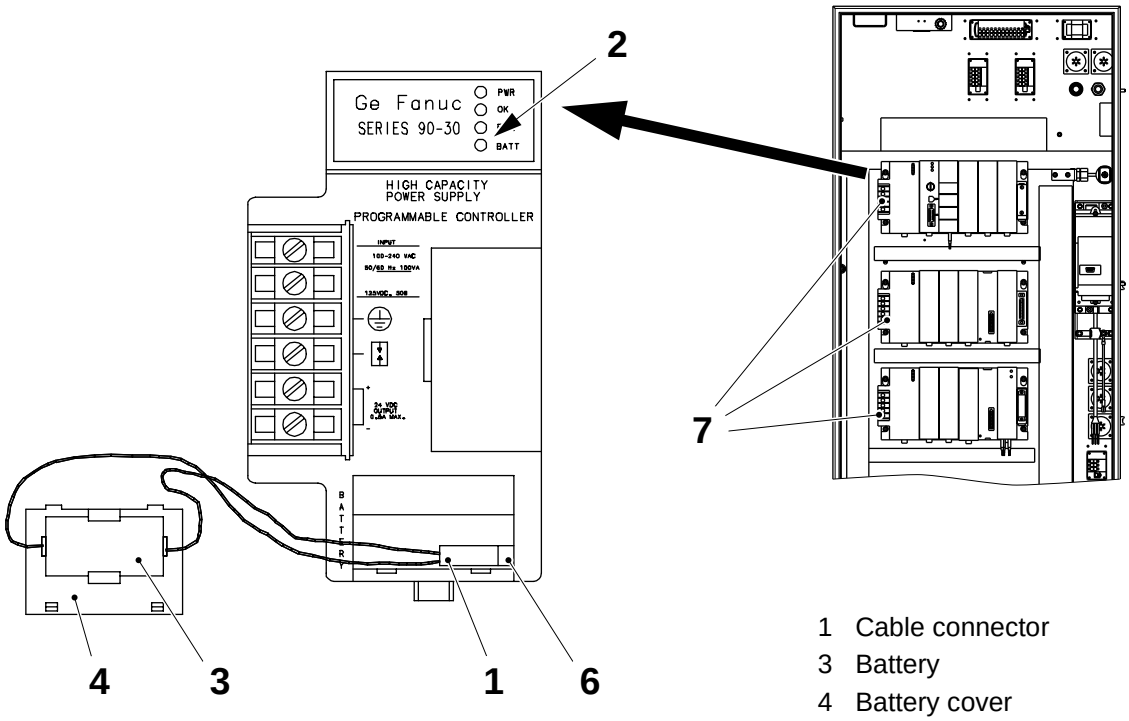

1 Cable connector
3 Battery
4 Battery cover
6 Contact
7 PLC power supply unit

(Cont'd)

TechPub_2614345_0103 - B6114I01en.fm

(Cont'd)

Alternative With Two Cable Connectors
Note! For alternative with one cable connector (1), see the Alternative With One Cable Connector section.

When the battery signal lamp (2) lights up, the battery (3) must be changed.

a) Remove the battery cover (4).

b) **First** fit the cable of the new battery on the unused cable connector (1) with the aid of a needle nose pliers.

CAUTION
Handle the old battery in a safe way!
The battery contains harmful substances and must not be thrown away in nature. Hand it into the nearest recycle centre. Do not burn lithium batteries. Do not try to recharge lithium batteries.

c) **Secondly** remove the old battery cable and remove the battery from its mounting clip (5). Discard the old battery.

d) Firmly insert the new battery into the mounting clip.

e) Fit the battery cover.

f) Repeat items from a) to e) for the other PLC power supply units (6).

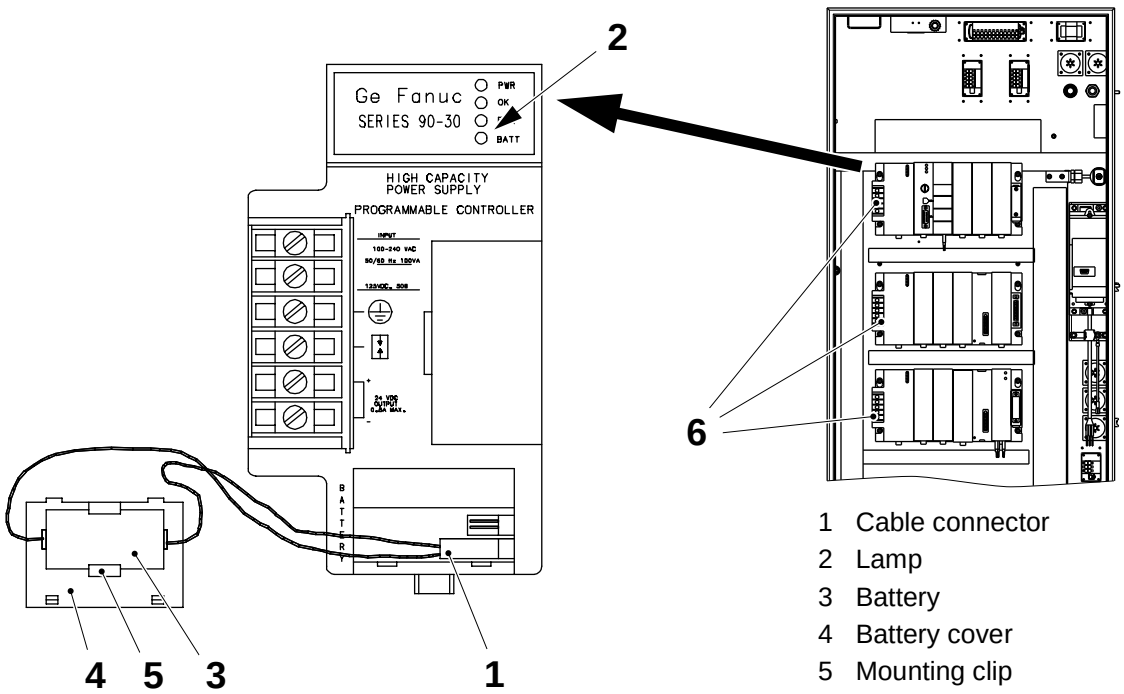

1 Cable connector
2 Lamp
3 Battery
4 Battery cover
5 Mounting clip
6 PLC power supply unit

TechPub_2614345_0103 - B6114I01en.fm

9.1.1-2 PLC - Load Program

Machine Status	Air **OFF** Mains Power **ON**
Special Equipment	Communication cable RS 232 C AT compatible PC with diskette station
SPC Reference	1317354-0300

Note! This instruction describes one way to load the PLC program from a diskette.

a) Connect the communication cable between the PC and the PLC.

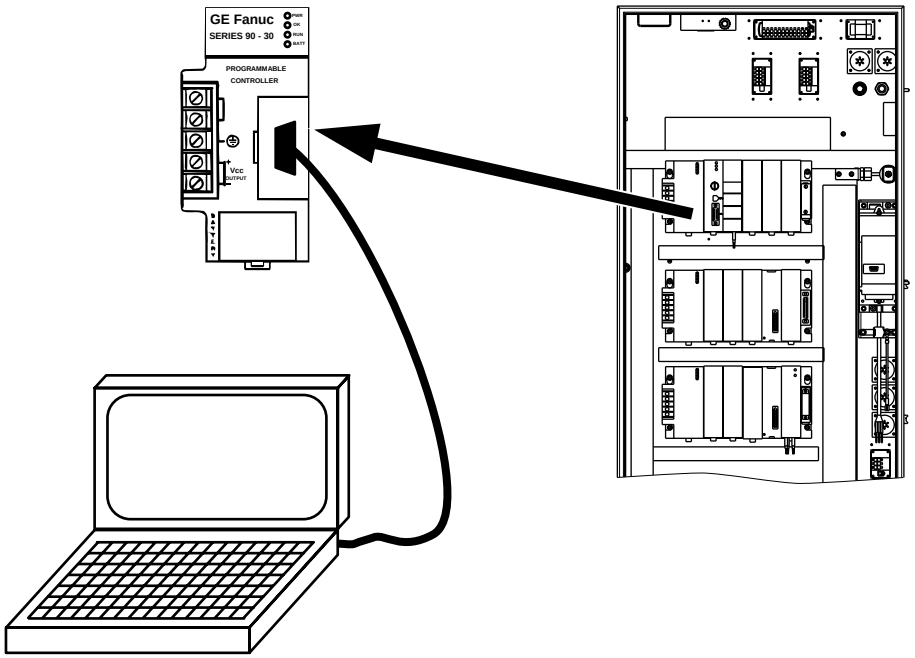

b) Start **LM90** to enter the GE Fanuc PLC (Logicmaster 90).

c) Insert the program diskette into the drive **A**.

d) From the **Main menu**, press **F1... Logicmaster 90 Programmer Package**.

e) The **SELECT OR CREATE A PROGRAM FOLDER** menu will be displayed.

f) Type **A:** and press <**ENTER**>.

(Cont'd)

TechPub_2614345_0103 - B6114I01en.fm

(Cont'd)

g) With the **Arrow** keys, select the program to be loaded (1) into the PLC (YYY is an example).

h) Press **<ENTER>**.

Note! If a program has been installed previously, the program name will appear in the **PLC program name** field (2).

i) Type **N** to answer "**Folder found: back up its contents? (Y/N)**".

j) The **SERIES 90-30/90-20 PROGRAMMING SOFTWARE** menu will now be displayed.

k) Press **F9... Utility: Load/Store/etc**.

l) The **PROGRAM UTILITY FUNCTIONS** menu is displayed.

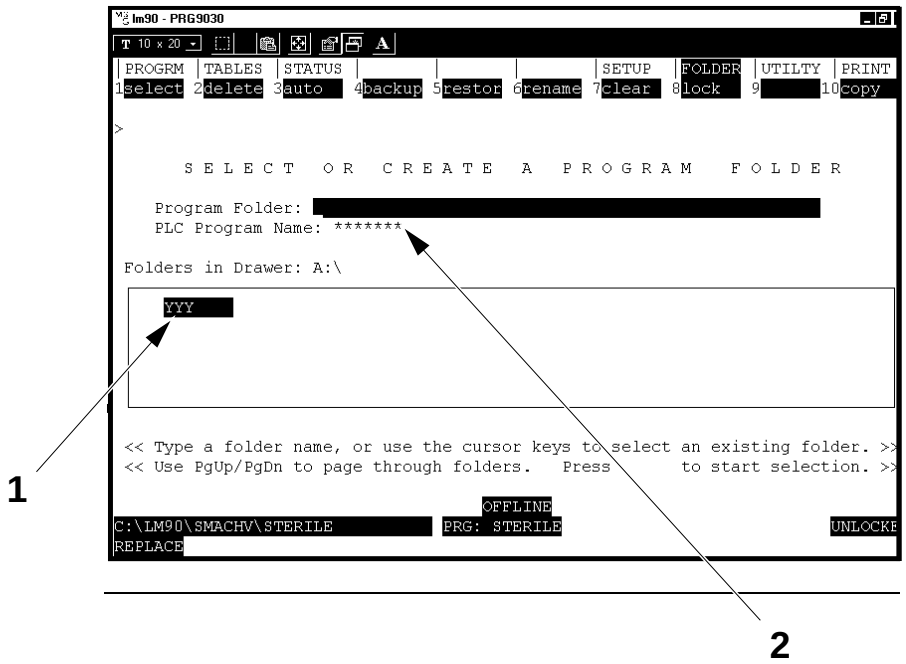

1 Program to be loaded (example)
2 PLC Program name field

(Cont'd)

TechPub_2614345_0103 - B6114I01en.fm

(Cont'd)

m) Check that the status line (LM communication) shows **ONLINE** (3). If not, press **Alt + M** until the status line shows **ONLINE**.

n) Check that the status line (PLC status) shows **STOP** (4). If not, press **Alt + R** until the status line shows **STOP**.

o) Check that the status line shows **LOGIC NOT EQ** (5).

Note! If the status line shows **LOGIC EQUAL**, there is no need to load the program.

p) Press **F2... Store from Programmer to PLC**.

q) Select Y/N for the information to be stored (normal case).

r) Program logic (6), **Y**.

s) Configuration (7), **Y**.

t) Reference tables (8), **Y**.

u) Press **<ENTER>** to store.

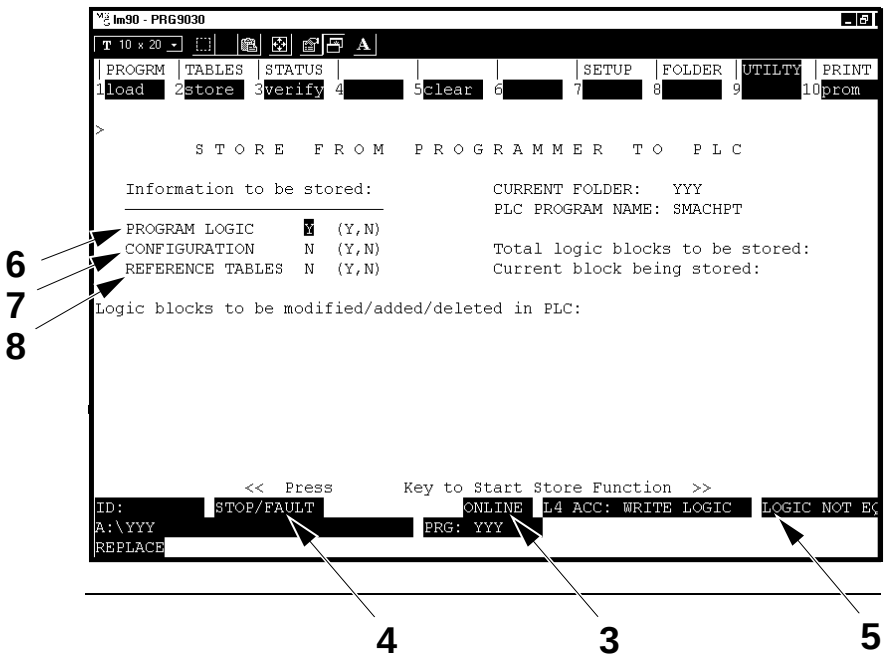

3 Connection mode status (ONLINE)
4 CPU status (STOP)
5 Program logic status (LOGIC NOT EQ)
6 Program logic
7 Configuration
8 Reference tables

(Cont'd)

TechPub_2614345_0103 - B6114I01en.fm

(Cont'd)

v) Type **Y** to answer **"Program name in PLC does not match program name in folder; continue? (Y/N)"**.

w) Type **Y** to answer **"Selected items will be overwritten; continue store in PLC? (Y/N)"**. (Any other key will be taken as N).

x) When **Store complete** is displayed, the status line (5) should state **LOGIC EQUAL**.

y) Press **Alt + R** until the status line shows **RUN** (4).

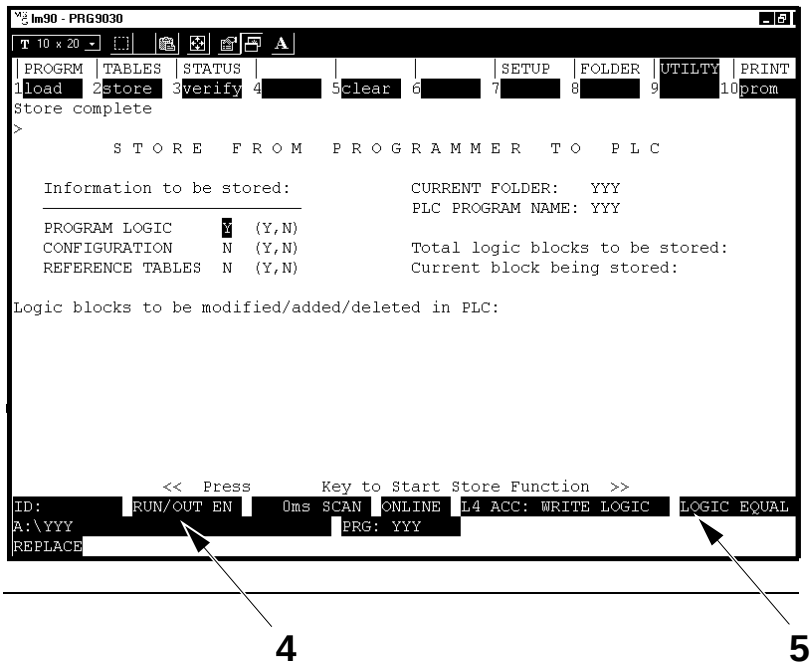

4 CPU status (RUN)

5 Program logic status (LOGIC EQ)

z) Press **<ESC>** and type **Y** to answer **"Exit Logicmaster 90 Programmer Package? (Y/N)"**.

aa) The program load is ready.

TechPub_2614345_0103 - B6114I01en.fm

9.1.1-3 PLC - Print Program

Machine Status	Air **OFF** Mains Power **ON**
SPC Reference	1317354-0300

The following setup will give a printout in portrait orientation using compressed text. Be very careful when you type in the leading and trailing statements. It is very important to use upper and lower case correctly.

The setting is valid for HP Laser Jet III but it might work on other printers. If it does not see your printer manual for the right printer codes.

a) Press **F1** for the **Programming Package**.

b) Press **F10** for the **Print Functions**.

c) Press **F1** for **Setup Printer Parameters**.

d) Select the parameters as follows.

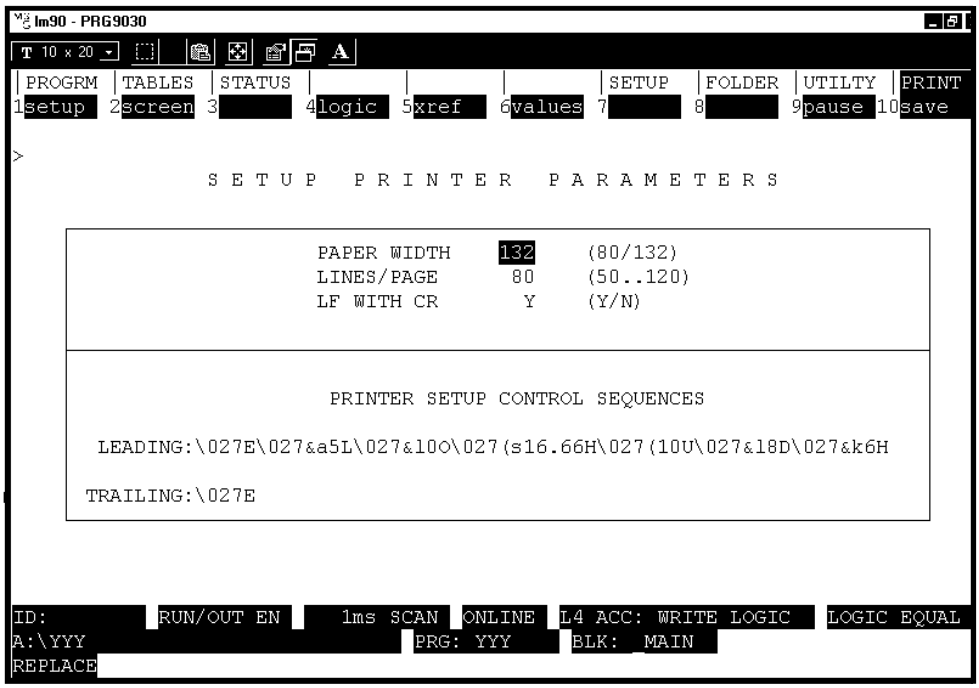

Description of printer codes	
\027E	Reset printer
\027&a5L	Left margin, # of columns (5)
\027&l5C	Vertical Motion Index, # of 1/48 Inch increments (5)
\027(10U	Primary Symbol Set, (PC-8)
\027(s20H	Primary Pitch, # of Characters / Inch (20)
\027(s4102T	Typelace Family, Letter Gothic

(Cont'd)

TechPub_2614345_0103 - B6114I01en.fm

(Cont'd)

e) Press **<ESC>** button to come back to **LM90 main menu**.

f) Press **F4** for **Print Program Logic**.

g) Select the options as follows.

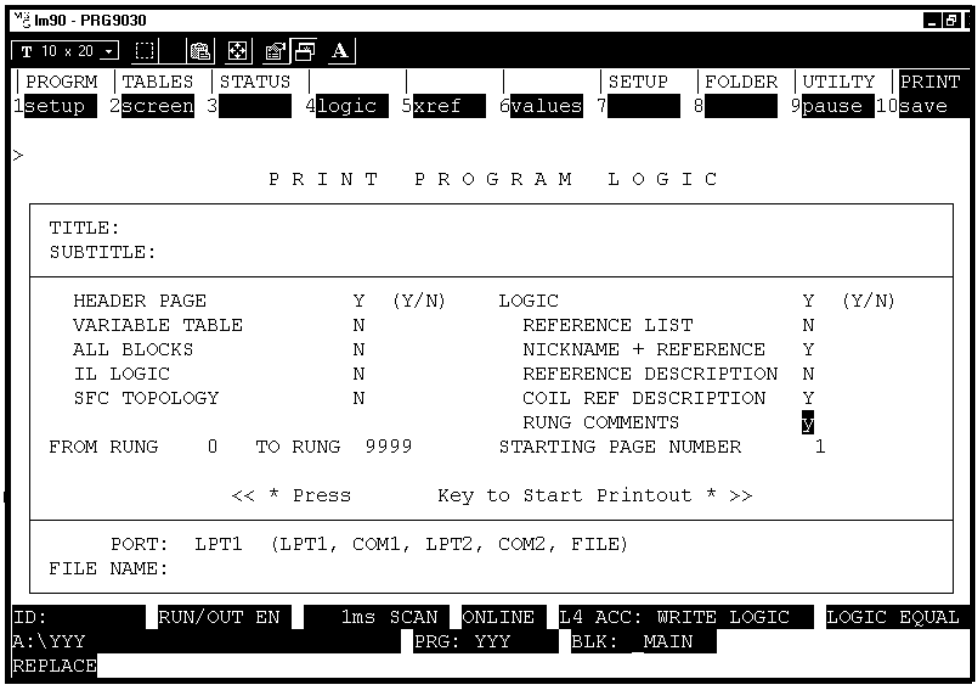

h) Press **<ENTER>** to start print out.

TechPub_2614345_0103 - B6114I01en.fm

9.1.1-4 PLC - Set Outer Patch, Patch and Tab Length

Machine Status	Air **OFF** Mains Power **ON**
Special Equipment	Communication cable RS 232 C AT compatible PC with diskette station
SPC Reference	1317354-0300

a) Connect the communication cable between the PC and the PLC.

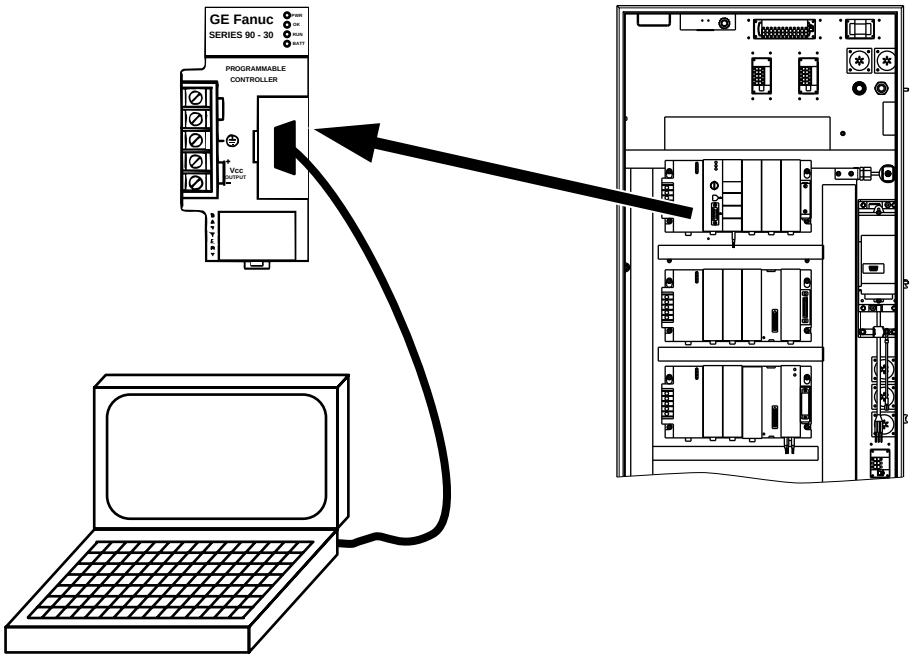

b) Start **LM90** to enter the GE Fanuc PLC (Logicmaster 90).

c) From the **Main menu**, press **F1... Logicmaster 90 Programmer Package**.

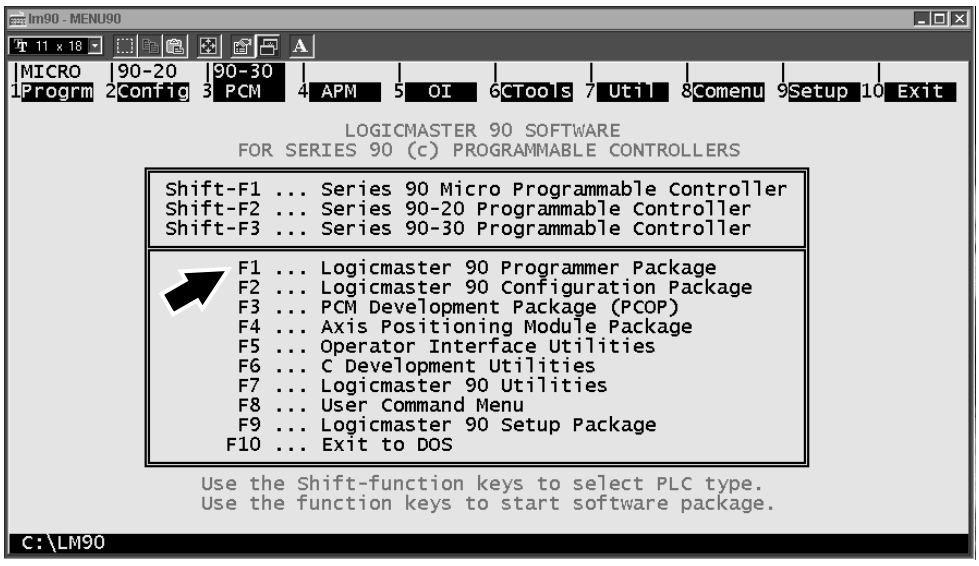

(Cont'd)

TechPub_2614345_0103 - B6114I01en.fm

(Cont'd)

d) The **SELECT OR CREATE A PROGRAM FOLDER** menu will be displayed.

e) With the **Arrow** keys, select the program (1) (YYY is an example).

f) Press ENTER.

Note! The program name will appear in the **PLC program name** field (2). The folder path will appear in the **Currently selected program folder** field (3).

g) Type N to answer **"Folder found: back up its contents? (Y/N)"** (if displayed).

h) The **SERIES 90-30/90-20 PROGRAMMING SOFTWARE** menu will now be displayed.

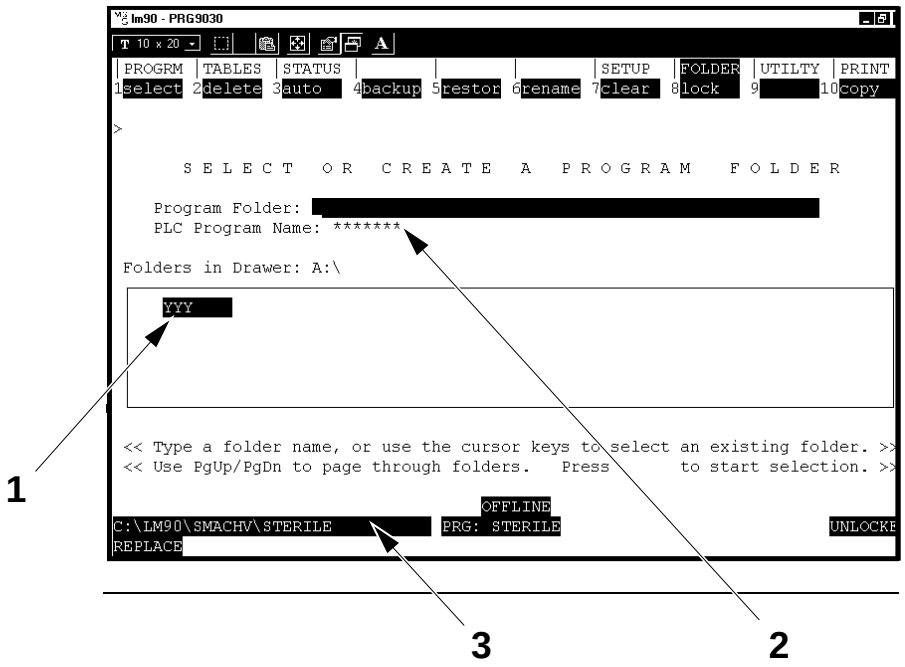

1 Program selected (example)
2 PLC Program selected
3 Currently selected program folder (example)

(Cont'd)

TechPub_2614345_0103 - B6114I01en.fm

(Cont'd)

i) Press **F1... PROGRAM DISPLAY/EDIT**.

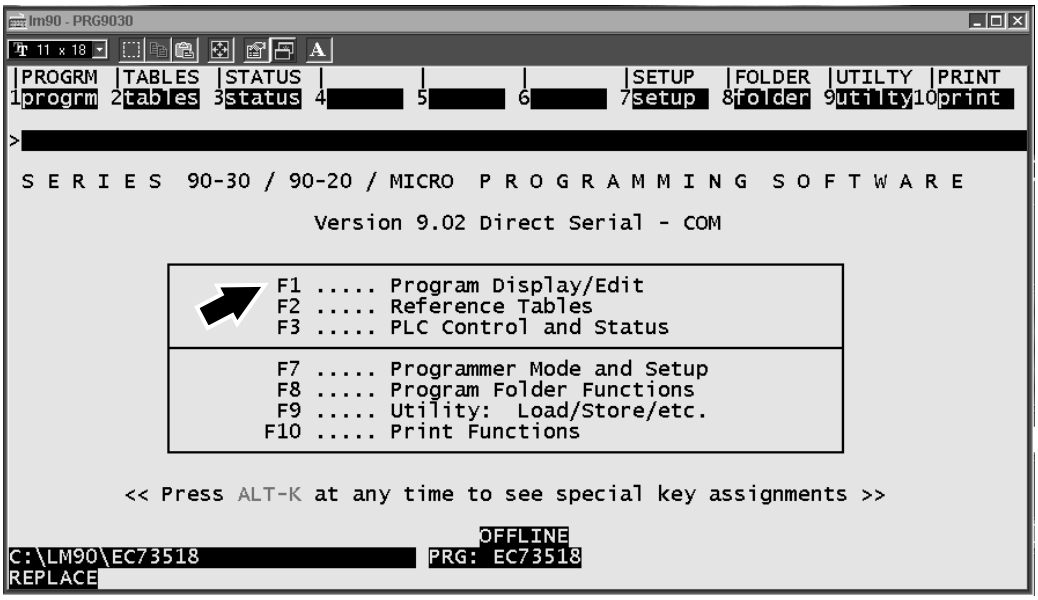

j) Check that the status line (LM communication) shows **ONLINE** (4). If not, press ALT + M until the status line shows **ONLINE** (4).

k) Check that the status line (CPU status) shows **RUN** (5). If not, press ALT + R until the status line shows **RUN** (5).

l) Check that the status line shows **LOGIC EQUAL** (6).

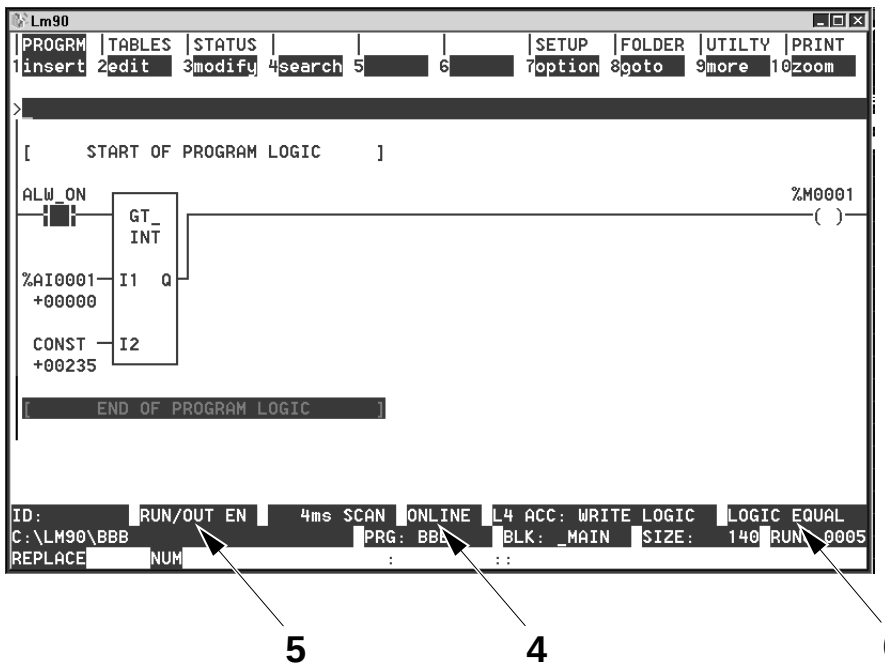

4 Connection mode status (ONLINE)
5 CPU status (RUN)
6 Program logic status (LOGIC EQUAL)

(Cont'd)

TechPub_2614345_0103 - B61140101en.fm

(Cont'd)

m) With the **Arrow** keys, select **"BLOCK DECLARATION"** and press F10.

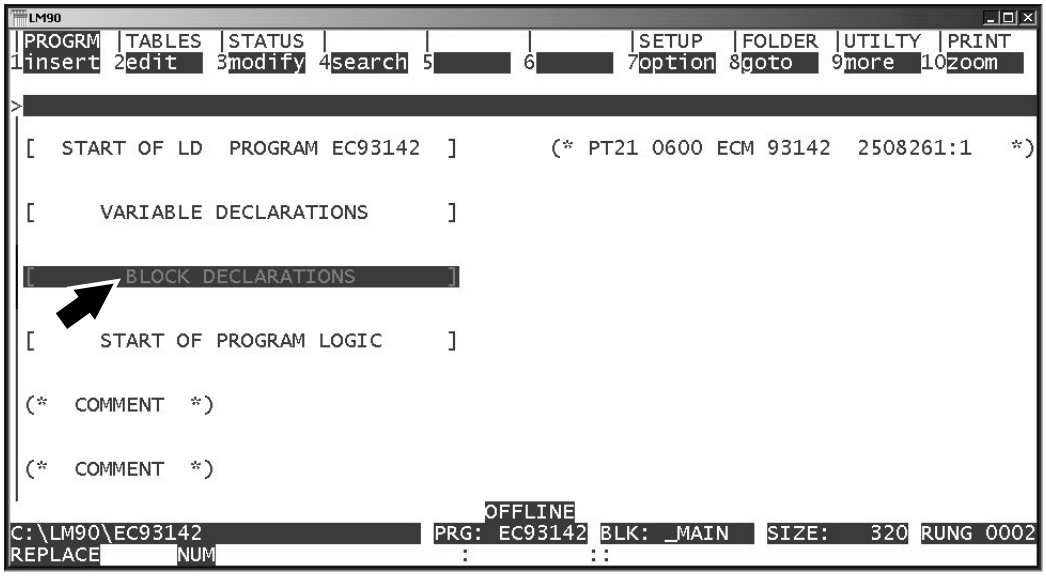

n) With the **Arrow** keys, select **"SUBR 4"**, **"BLK-502"** if the running volume is >330 ml, or **"SUBR 12"**, **"BLK-503"** if the running volume is ≤ 330 ml.

o) Press F10**.**

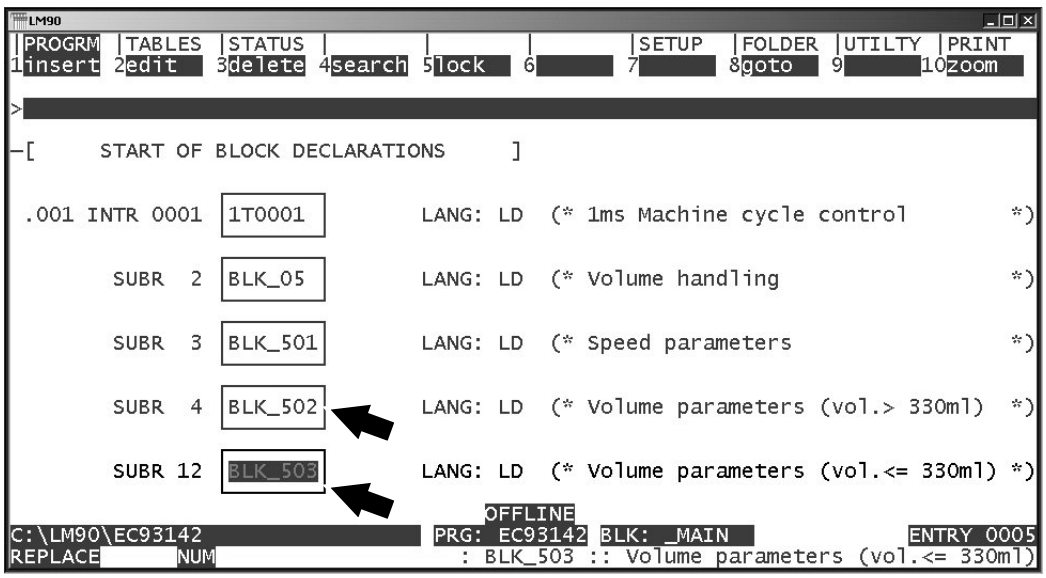

(Cont'd)

TechPub_2614345_0103 - B6114I01en.fm

(Cont'd)

p) With the **Arrow** keys, select the rung with the highlighted running volume (7).

Note! The values to be used for the constants (8), (9), (10) and (11) can be found in the table on the next page (values in millimeters multiplied by one hundred for constants (9), (10) and (11). For constant (8) values in resolver increments/10).

q) With the **Arrow** keys, select the constant (8) to modify the paper stop position, see page 9-50.

Note! Only for the holes 48 and 72, set the outer patch length.

r) With the **Arrow** keys, select the constant (9) to modify the outer patch length, see page 9-50.

s) With the **Arrow** keys, select the constant (10) to modify the patch length, see page 9-50.

t) With the **Arrow** keys, select the constant (11) to modify the tab length, see page 9-50.

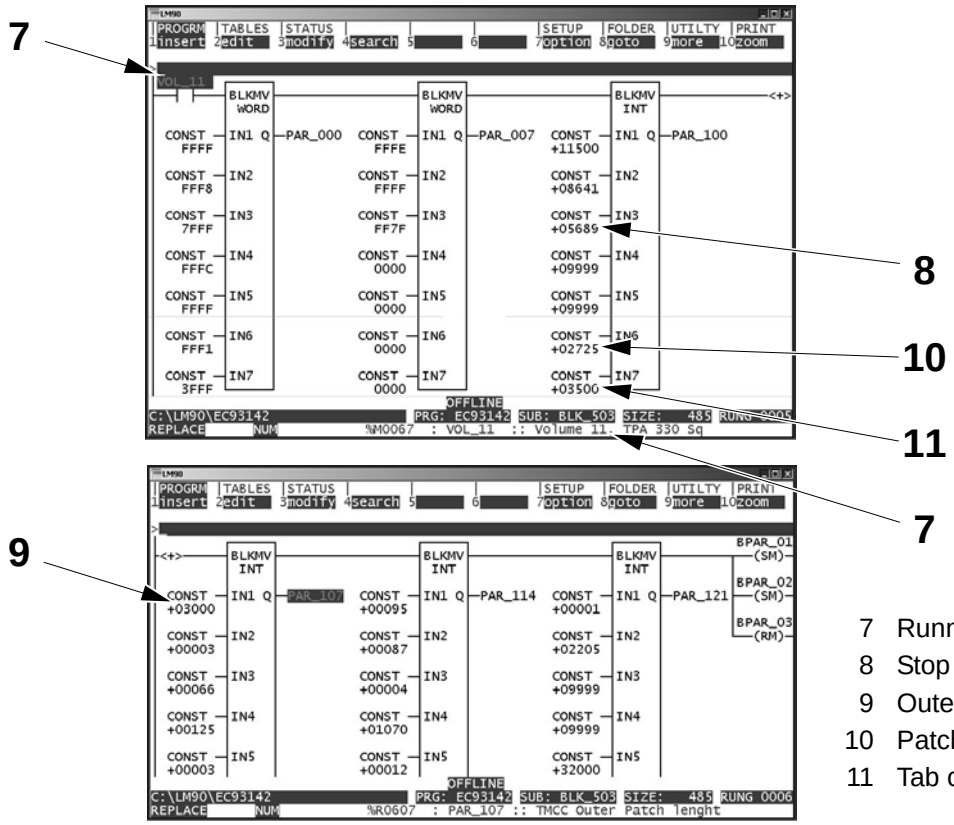

7 Running volume
8 Stop position constant (R602)
9 Outer patch constant (R607)
10 Patch constant (R605)
11 Tab constant (R606)

(Cont'd)

TechPub_2614345_0103 - B6114I01en.fm

(Cont'd)

u) Type in the new value and press ENTER.

v) Press Y if the change is correct.

w) Press ALT + S to update the program folder.

x) Press ESC and type Y to answer **"Exit Logicmaster 90 Programmer Package? (Y/N)"**.

y) Press F10 to exit the **LM90** program.

Package	Hole type	R 602 Stop position	R 605 Patch length	R 606 Tab length	R 607 Outer patch length
TPA 330 Sq	48	5689	2725	3500	3000
TBA 500 S	55	5290	1500	1000	—
TPA 1000 S	60	5519	1750	1300	—
TPA 1000 Sq	60	5583	1750	1300	—
TBA 1000 S	65	5664	1850	1550	—
TBA 1000 B	65	5588	1850	1550	—
TBA 1000 Sq	65	5780	1850	1550	—
TPA 250 Sq	72	5596	2400	3000	2700
TBA 1000 S	85	5664	1850	1350	—
TBA 1000 B	85	5588	1850	1350	—
TBA 1000 Sq	85	5780	1850	1350	—
TBA 1500 S	85	5761	1850	1350	—
TBA 1000 S	90	5664	1800	1400	—
TBA 1500 S	90	5850	1800	1400	—

Note! The changes described in this procedure above take effect only when a data transfer from the PLC to the DMC2 and from the PLC to the TMCC take place. To force the data transfer to take place:

- open and close one of the Pulltab doors
  - the value of all the four registers are loaded in the PLC memory
  - the data transfer from the PLC to the DMC2 occurs.
- pull out and fit back the TMCC card A8250.
  - the data transfer from the PLC to the TMCC occurs.

TechPub_2614345_0103 - B6114I01en.fm

9.1.1-5 PLC - Set Tension Device Torque

Machine Status	Air **OFF** Mains Power **ON**
Special Equipment	Communication cable RS 232 C AT compatible PC with diskette station
SPC Reference	1317354-0300

a) Connect the communication cable between the PC and the PLC.

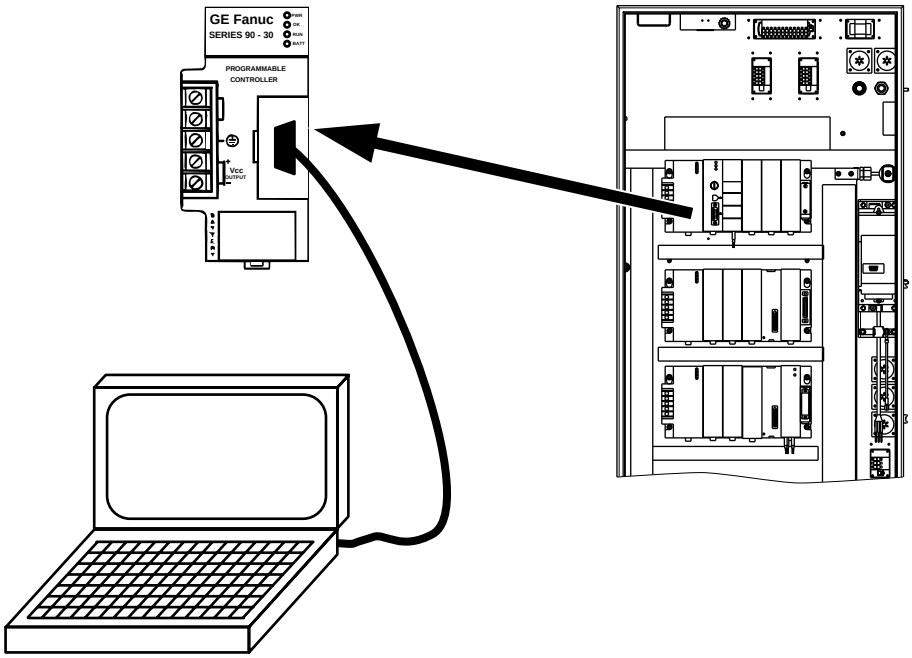

b) Start **LM90** to enter the GE Fanuc PLC (Logicmaster 90).

c) From the **Main menu,** press **F1... Logicmaster 90 Programmer Package**.

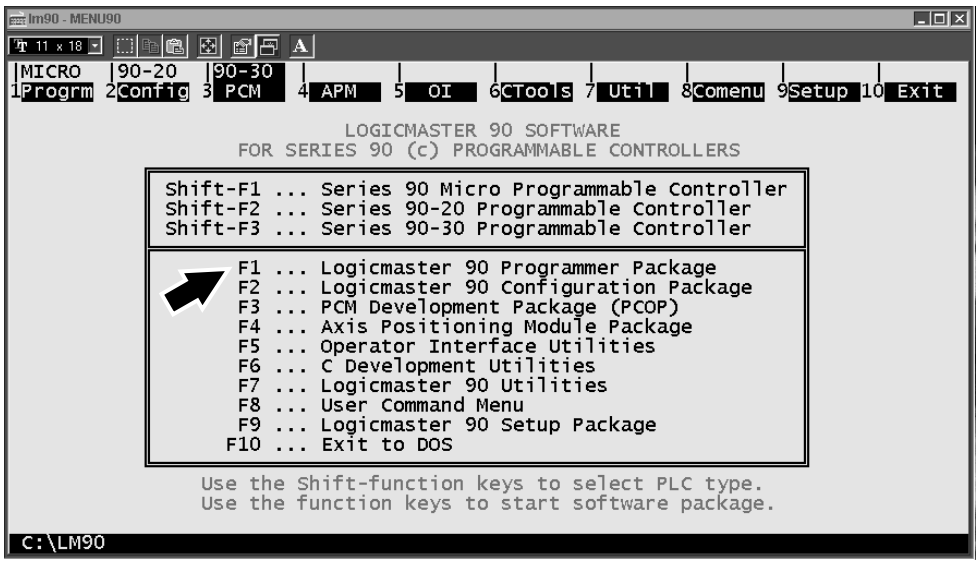

(Cont'd)

TechPub_2614345_0103 - B6114I01en.fm

(Cont'd)

d) The **SELECT OR CREATE A PROGRAM FOLDER** menu will be displayed.

e) With the **Arrow** keys, select the program (1) (YYY is an example).

f) Press ENTER.

Note! The program name will appear in the **PLC program name** field (2). The folder path will appear in the **Currently selected program folder** field (3).

g) Type N to answer **"Folder found: back up its contents? (Y/N)"** (if displayed).

h) The **SERIES 90-30/90-20 PROGRAMMING SOFTWARE** menu will now be displayed.

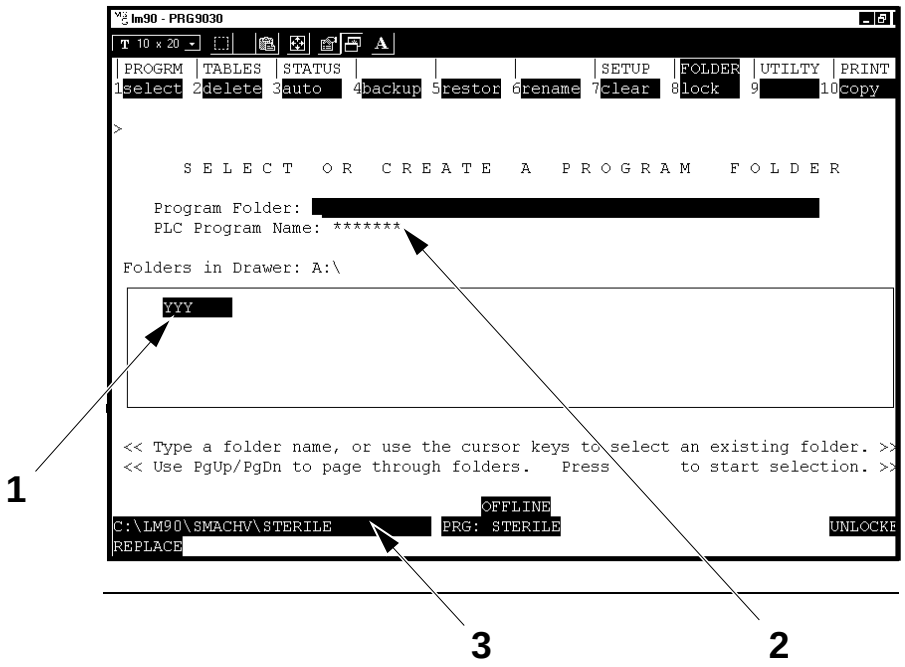

1 Program selected (example)
2 PLC Program selected
3 Currently selected program folder (example)

(Cont'd)

TechPub_2614345_0103 - B6114I01en.fm

(Cont'd)

i) Press **F1... PROGRAM DISPLAY/EDIT**.

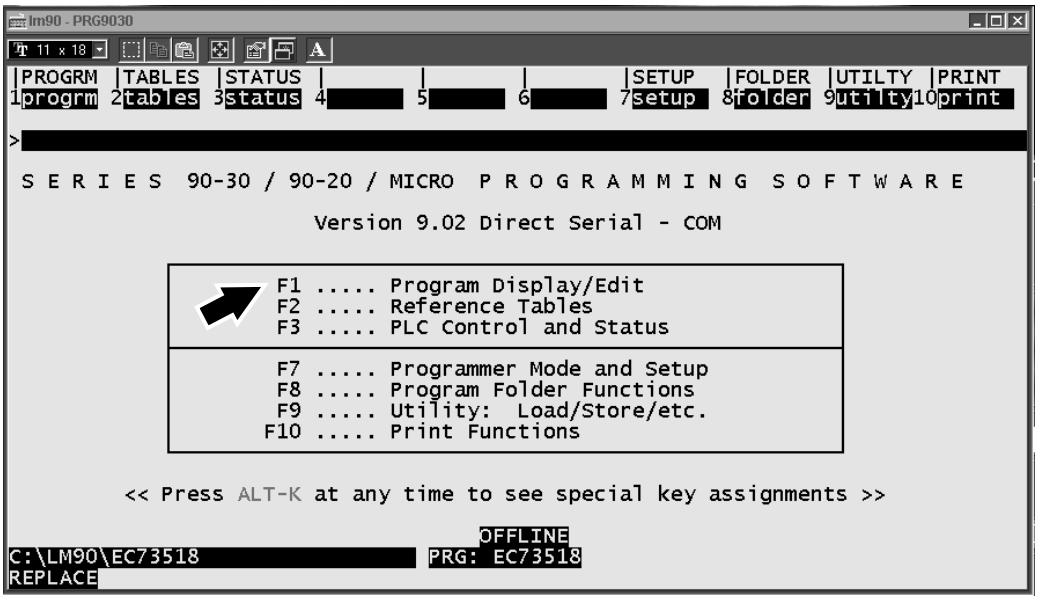

j) Check that the status line (LM communication) shows **ONLINE** (4). If not, press ALT + M until the status line shows **ONLINE** (4).

k) Check that the status line (CPU status) shows **RUN** (5). If not, press ALT + R until the status line shows **RUN** (5).

l) Check that the status line shows **LOGIC EQUAL** (6).

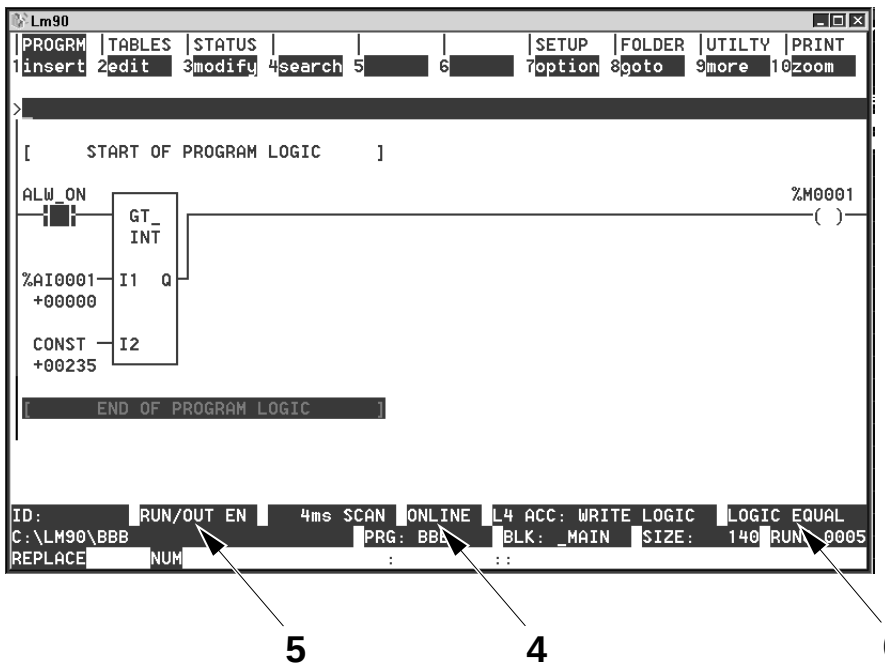

4 Connection mode status (ONLINE)
5 CPU status (RUN)
6 Program logic status (LOGIC EQUAL)

(Cont'd)

TechPub_2614345_0103 - B6114I01en.fm

(Cont'd)

m) With the **Arrow** keys, select **"BLOCK DECLARATION"** and press F10.

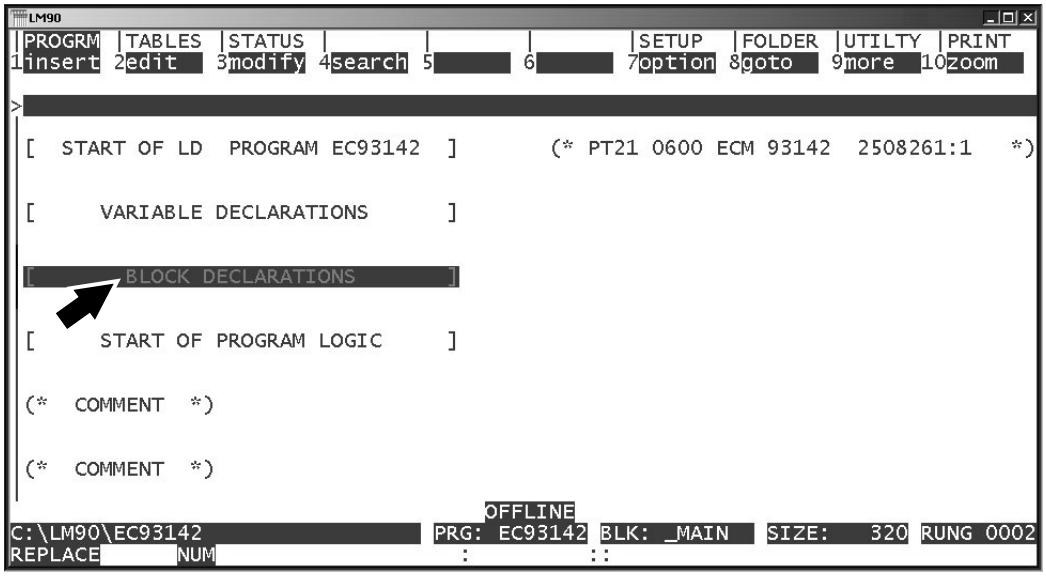

n) With the **Arrow** keys, select **"SUBR 4"**, **"BLK-502"** if the running volume is >330 ml, or **"SUBR 12"**, **"BLK-503"** if the running volume is ≤ 330 ml.

o) Press F10.

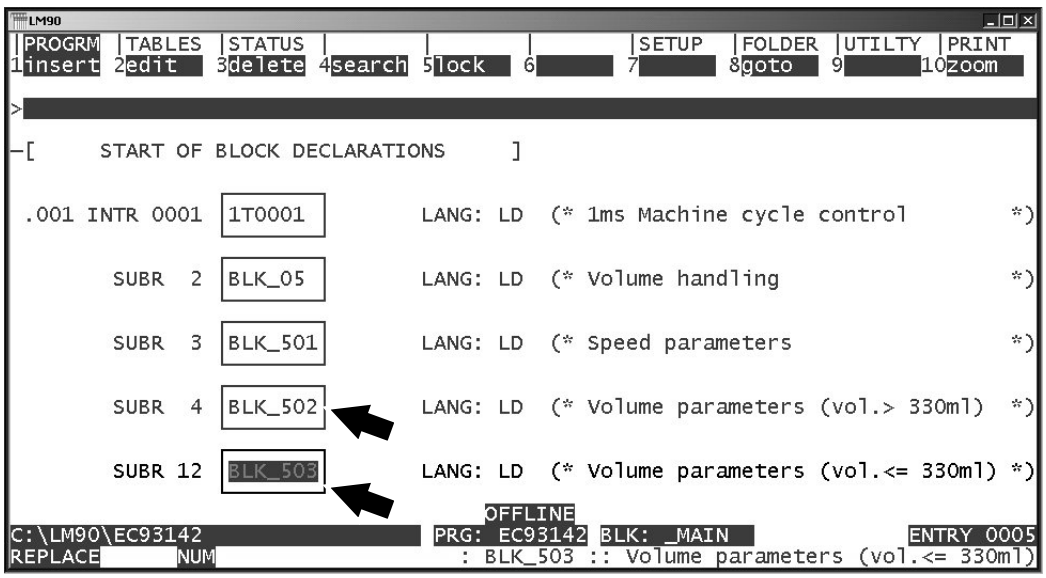

(Cont'd)

TechPub_2614345_0103 - B6114I01en.fm

(Cont'd)

p) With the **Arrow** keys, scroll down until a rung with a "BLKMV" instruction with the actual running volume (7) in the input and the register **%R1501 - STD_W1** (8) in the output Q is shown.

q) With the **Arrow** keys, select the constants (9) and (10) to modify the tension device torque. The procedure to find out the correct torque value is described in 1.1.2-3 Applicator Stations - Set Servo Tension Device.

Note! Both the constants (9) and (10) must have the same value.

r) Type in the new value and press ENTER.

s) Press Y if the change is correct.

t) Press ALT + S to update the program folder.

u) Press ESC and type Y to answer **"Exit Logicmaster 90 Programmer Package? (Y/N)"**.

v) Press F10 to exit the **LM90** program.

Note! The changes described in this procedure take effect only when a data transfer from the PLC to the DMC takes place. To force the data transfer to take place, it is necessary to open and close one of the PullTab doors.

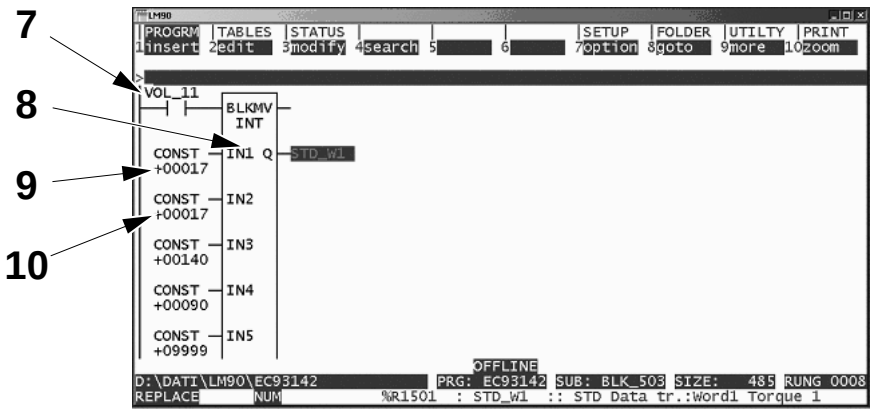

7 Running volume
8 Register %R1501 - STD_W
9 Tension device torque value 1
10 Tension device torque value 2

TechPub_2614345_0103 - B6114I01en.fm

9.1.2 Safety Relays

9.1.2-1 Safety Relays - Check Function

Machine Status	Air **OFF** Mains Power **ON**
SPC Reference	1317354-0300

Note! Check the relays in case of a safety relay alarm in the TPOP panel.

Check that all the LEDs in the safety relays are activated. If one or more LEDs of the following relays are not lit up:

Safety Relay A8202
Make sure that the LH side door, the RH front side door and the RH rear side door in the PT21 unit are closed and that no emergency push buttons are pressed. Check that all the alarms are reset.

Safety Relay A8252
Check that all the alarms are reset and that the three LEDs of the relay A8202 are lit up.

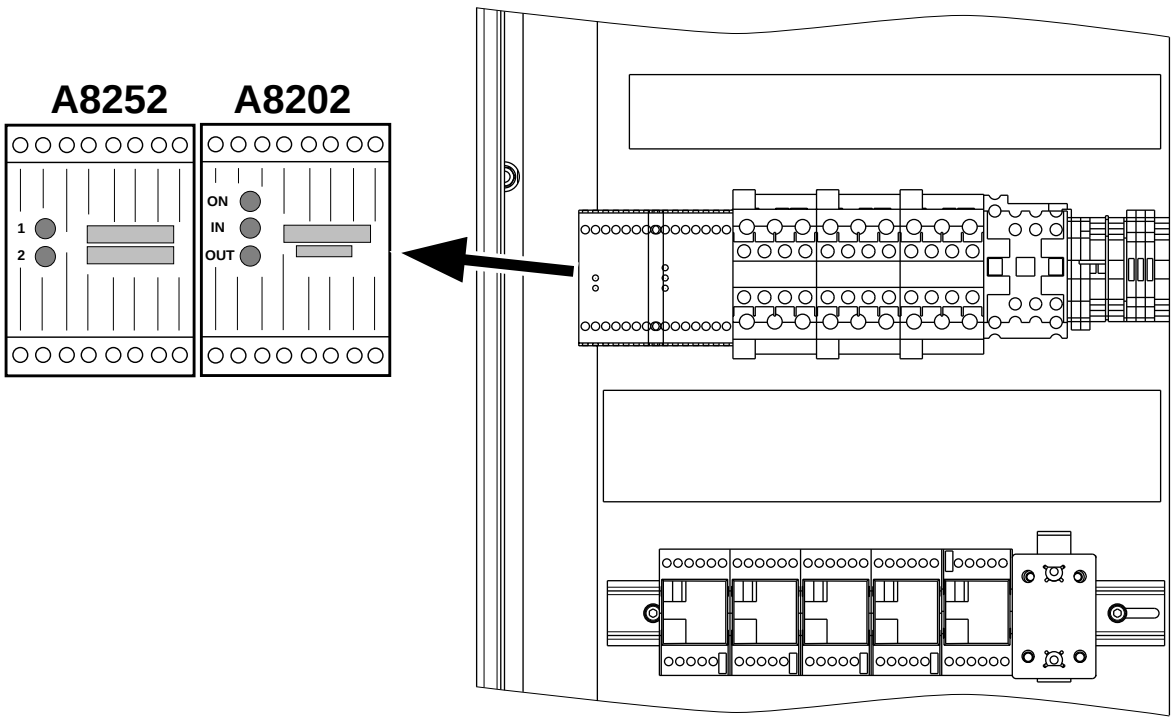

A 8202: PT21 door chain safety monitors
A 8252: PT21 door chain safety monitors (delayed)

TechPub_2614345_0103 - B6114I01en.fm

9.1.3 Temperature Regulator

9.1.3-1 Temperature Regulator- Calibrate

Machine Status	Air **OFF** Mains Power **ON**
Special Equipment	Calibrator (Micromite II) TP No. 90410-338 Extension wire TP No. 90410-308 Adhesive label TP No. 90194-131 Calibration kit TP No. 90031-312
SPC Reference	90031-0065

Note! Before calibration, make sure that the calibrator has already been set, see 9.1.4-1 Calibrator (Micromite II) - Set.

Calibration must be performed when a thermocouple PLC module is changed or at least once a year.

a) Connect the micromite instrument as a replacement of a temperature sensor by means of the extension wire.

b) Open the cover of the temperature control input modules (1) named “thermocouple input”.

c) Connect the serial communication cable from the PC to the temperature control input module (1).

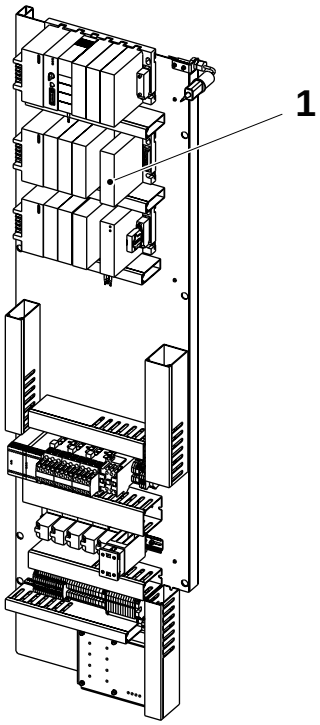

1 Temperature control input module

(Cont'd)

TechPub_2614345_0103 - B6114I01en.fm

(Cont'd)

Perform the following instructions from the PC.

Note! Energize the module at least 30 minutes before calibration.

d) Run the program: **THM 884_K.bat**. The window shown below will appear.

e) Press F7 to deactivate NVRAM, see arrow.

f) Press F6 to initialize the module, see arrow.

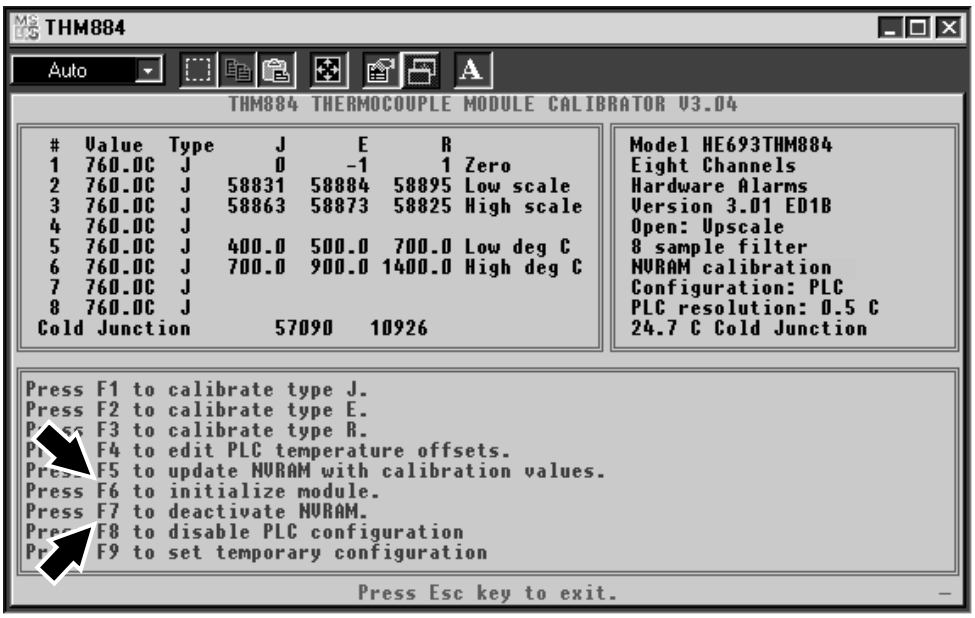

(Cont'd)

TechPub_2614345_0103 - B6114I01en.fm

(Cont'd)

g) Press F8 to disable PLC configuration, see arrow.

h) Press F1 to perform calibration and perform the following steps according to the software indications, see arrow.

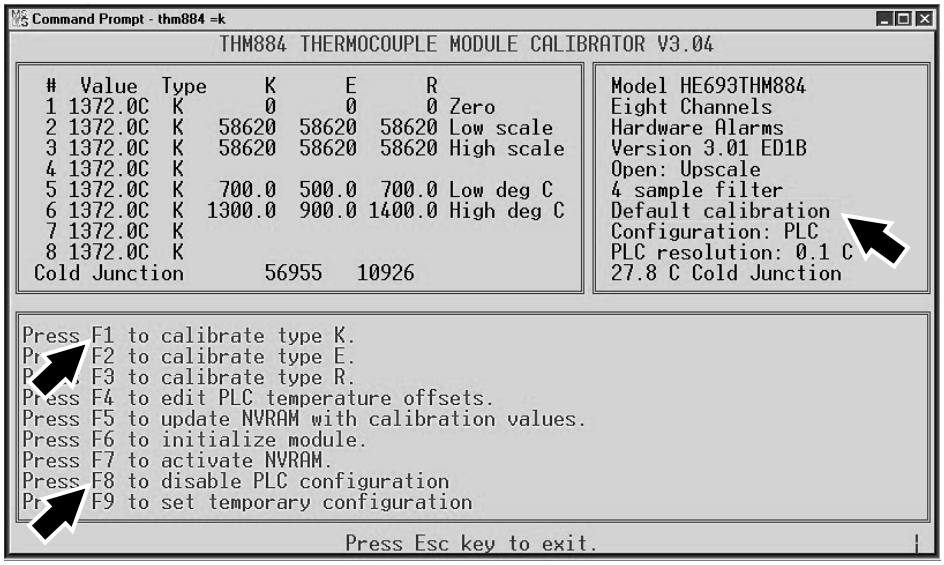

(Cont'd)

TechPub_2614345_0103 - B6114I01en.fm

(Cont'd)

i) The first indication shown by the software is to place a bridge in channel 8 between 16^- and 18^+.

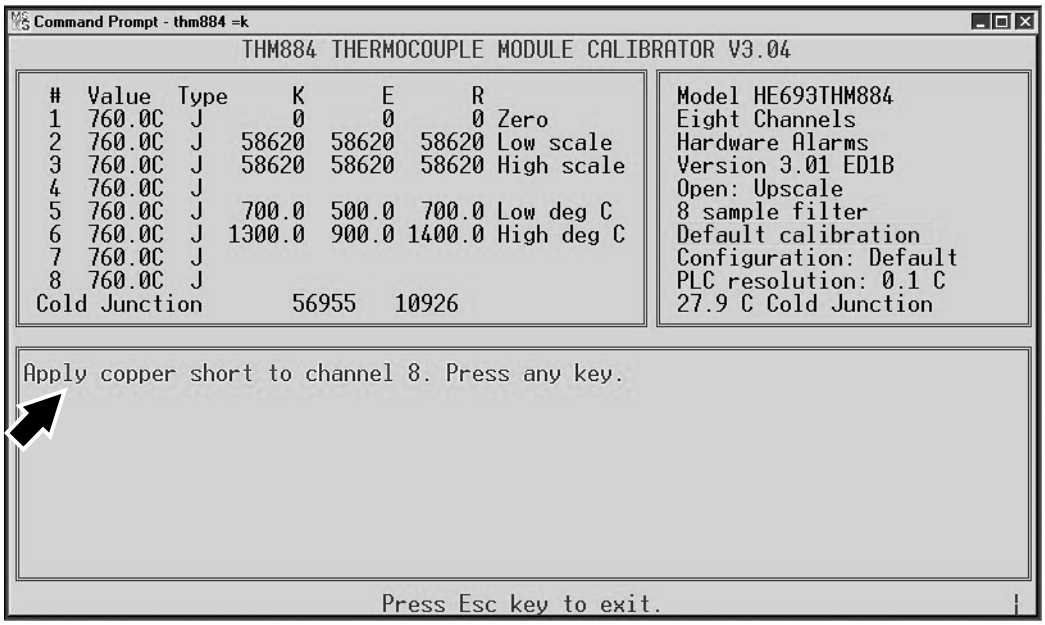

j) After having followed all the indications from the software press F5 to update NVRAM and chose YES, see arrow.

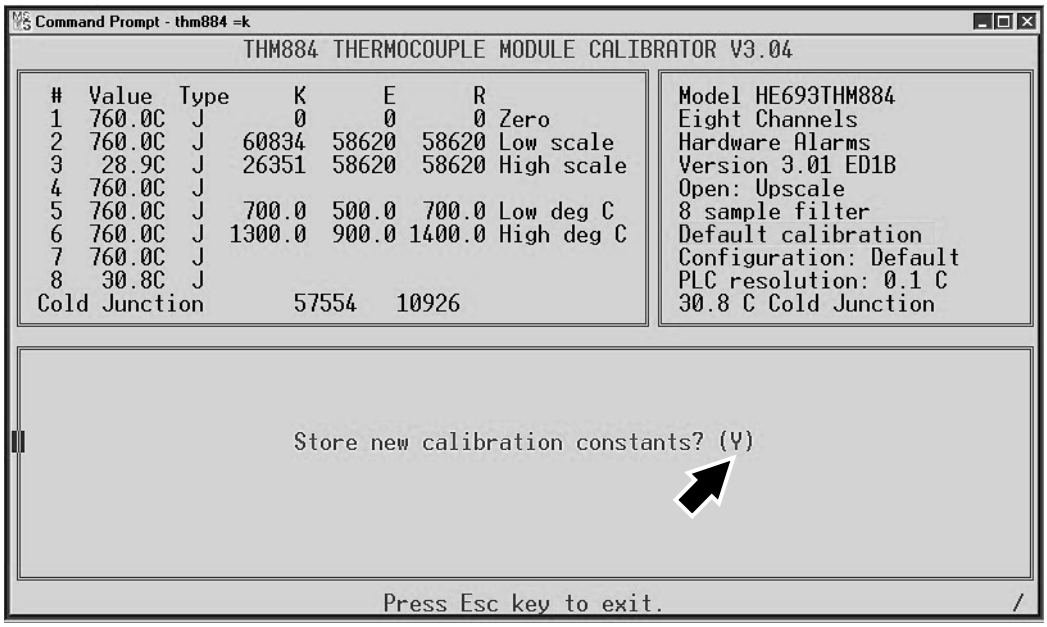

TechPub_2614345_0103 - B6114I01en.fm

(Cont'd)

k) Press F7 to activate NVRAM, see arrow.

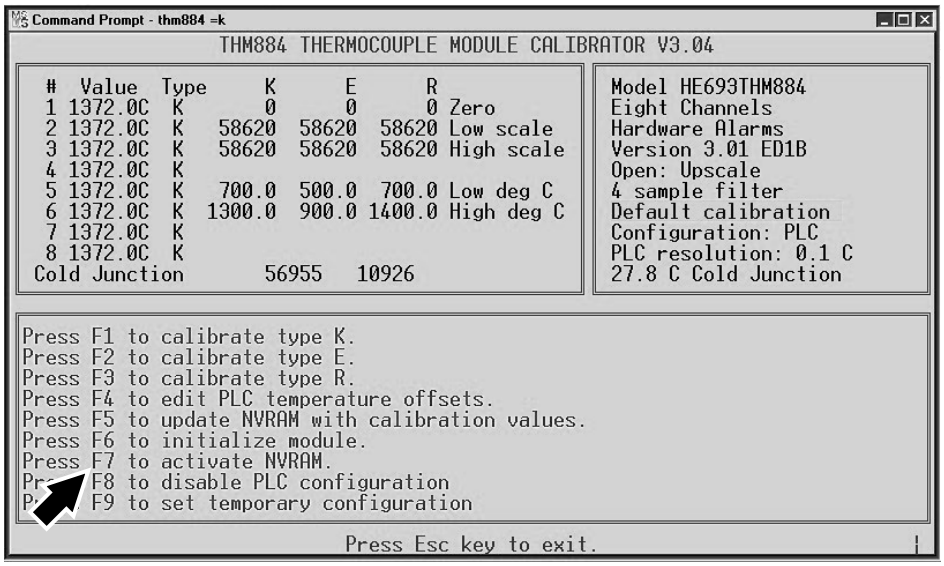

l) Press F6 to initialize the module, see arrow.

m) Press F8 to enable PLC configuration, see arrow.

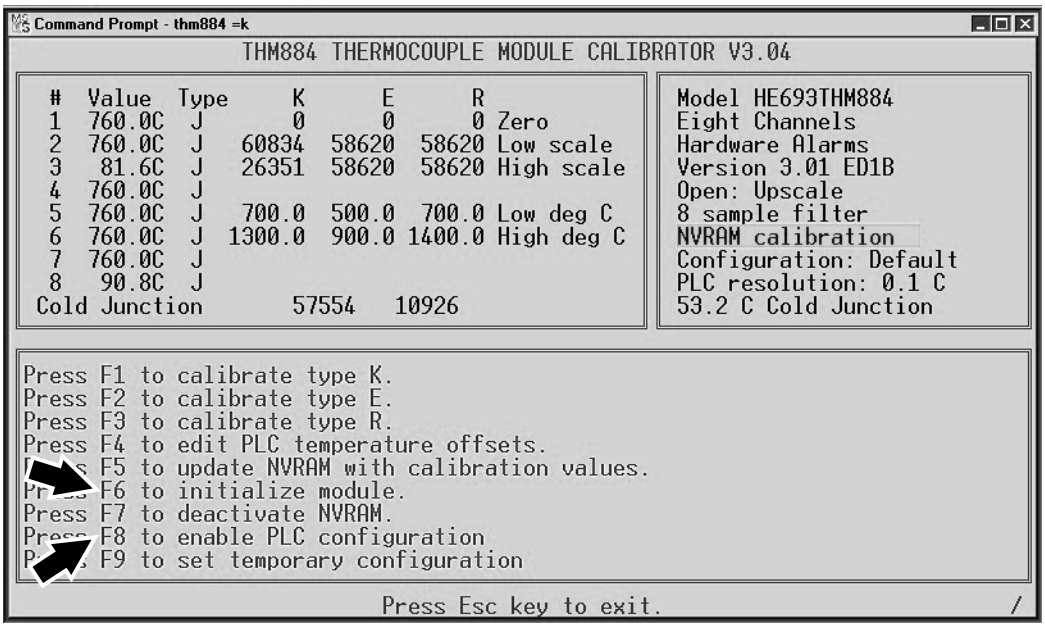

(Cont'd)

TechPub_2614345_0103 - B6114I01en.fm

(Cont'd)

n) Check that the temperature is stable and equal to “Cold Junction”.

Note! The tolerance is **0.3**° **C**. If the difference is more repeat the sequence from item e). In case the difference is still too much change the module.

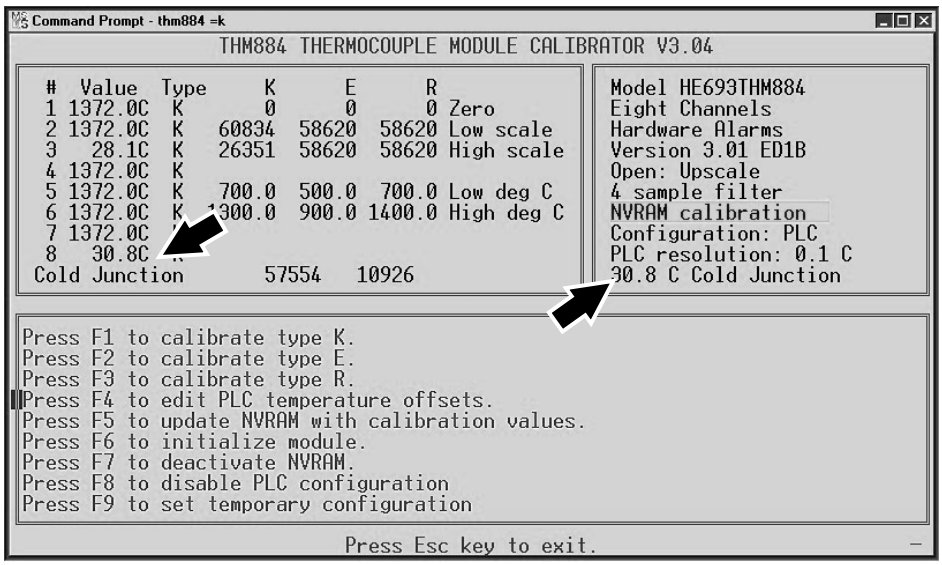

o) Remove the bridge in channel 8.

p) Press F4. The window shown below will appear.

q) Compare the preset temperature with the one shown on the screen then type the right offsets correction value and press ENTER (e.g. channel 1 offset: 3° C of difference), see arrow.

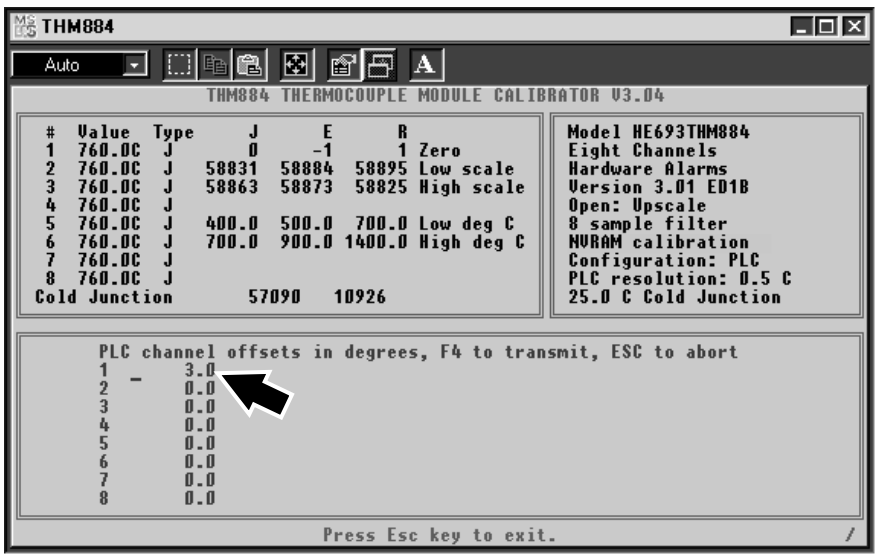

(Cont'd)

TechPub_2614345_0103 - B6114I01en.fm

(Cont'd)

r) Press F4. The window shown below will appear, see arrow.

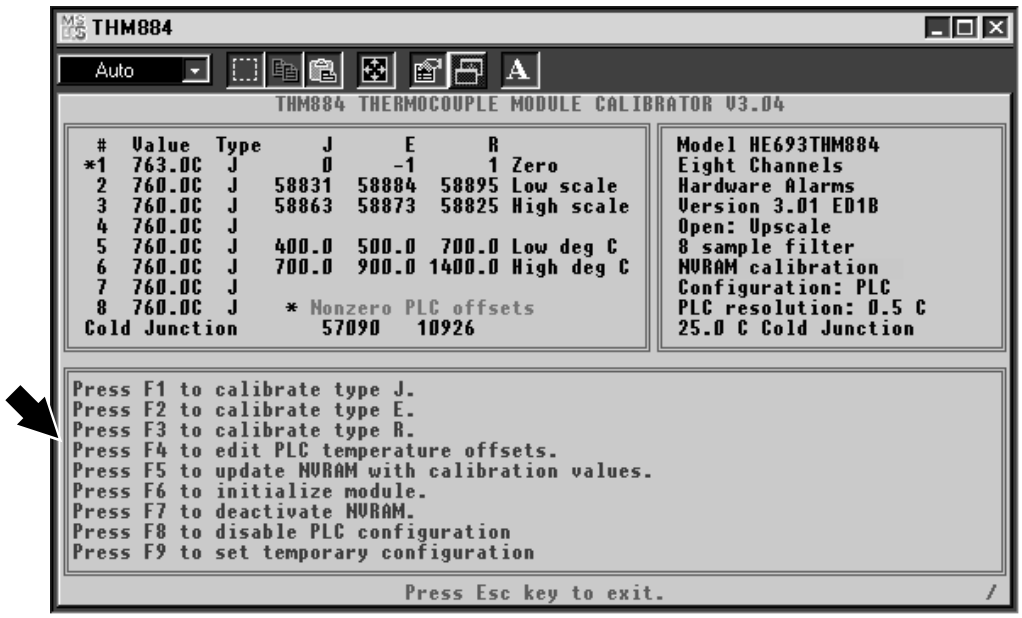

s) Press F5. The window shown below will appear.



(Cont'd)

TechPub_2614345_0103 - B6114I01en.fm

(Cont'd)

t) Press Y to confirm the value introduced.

u) Press ENTER and then press ESC to exit from the program.

v) Repeat the procedure for the other thermocouple channels.

w) Apply the new label on the cover of the temperature control input module (1) named “thermocouple input”.

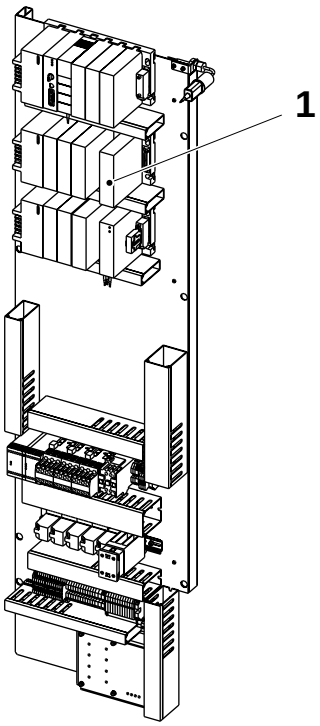

1 Temperature control input module

TechPub_2614345_0103 - B6114I01en.fm

9.1.4 Calibrator (Micromite II)

9.1.4-1 Calibrator (Micromite II) - Set

Machine Status	Air **OFF** Mains Power **ON**
Special Equipment	Calibrator (Micromite II) TP No. 90410-338

Thermocouple Type and Measuring Unit

a) Turn **On** the mains power (at least 15 minute before setting).

b) Connect the type K thermocouple to the + input (1) (yellow lead) and the - input (2) (red lead).

c) Push the **On/Off** key (3) to switch **On** the instrument.

Note! Make sure that the instrument is switched **Off** in case the AC-adapter must be disconnected or the batteries removed. Failure to do so will cause the instrument to lose the set-up information.

d) Push the **F/C** key (4) to select **"centigrade"**.

e) Push the **Select** key (5) and the **Sensor** key (6).

f) Select the thermocouple type. Move the flashing cursor to the right or to the left by pushing the **Up** (7) or **Down** (8) keys.

g) Push the **Enter** key (9) when the cursor is indicating **type K**.

Temperature Output Value

h) Push the **Select** key (5) and the **Output 1** key (10) to set the output temperature. Use the numeric keys to type in the temperature value and push the **Enter** key (9). To clear an output value, simultaneously push the **Input** key (11) and the **Sensor** key (6).

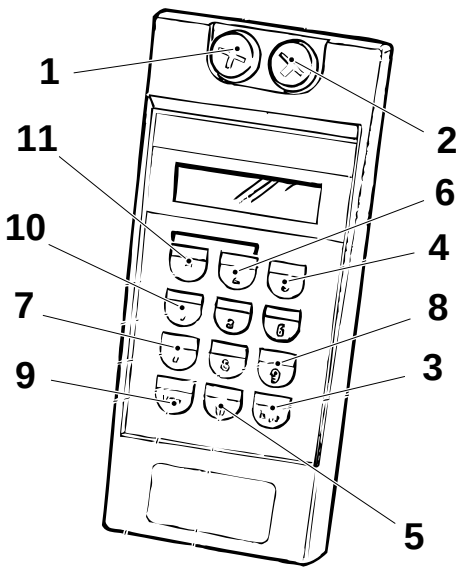

1 Input (+)
2 Input (-)
3 On/Off key
4 F/C key
5 Select key
6 Sensor key
7 Up key
8 Down key
9 Enter key
10 Output 1 key
11 Input key

TechPub_2614345_0103 - B6114I01en.fm

9.2 Swing Frame

SPC Reference	1317355-0300

9.2.1 TMCC

9.2.1-1 TMCC - Function Description

Machine Status	Air **OFF** Mains Power **OFF**
SPC Reference	1317355-0300 558230-0101

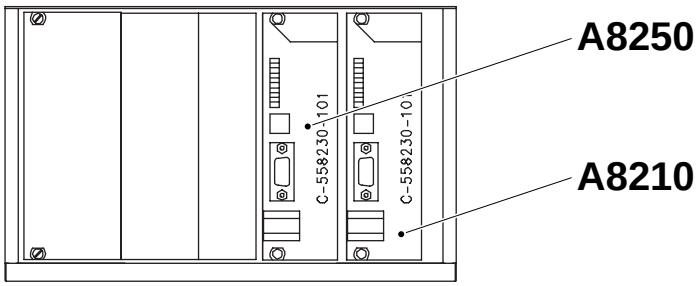

TMCC Card A8210

The TMCC card A8210 is a microprocessor card that has the following functions:

- read and decode the register mark on the packaging material web, which is detected by the photocells.

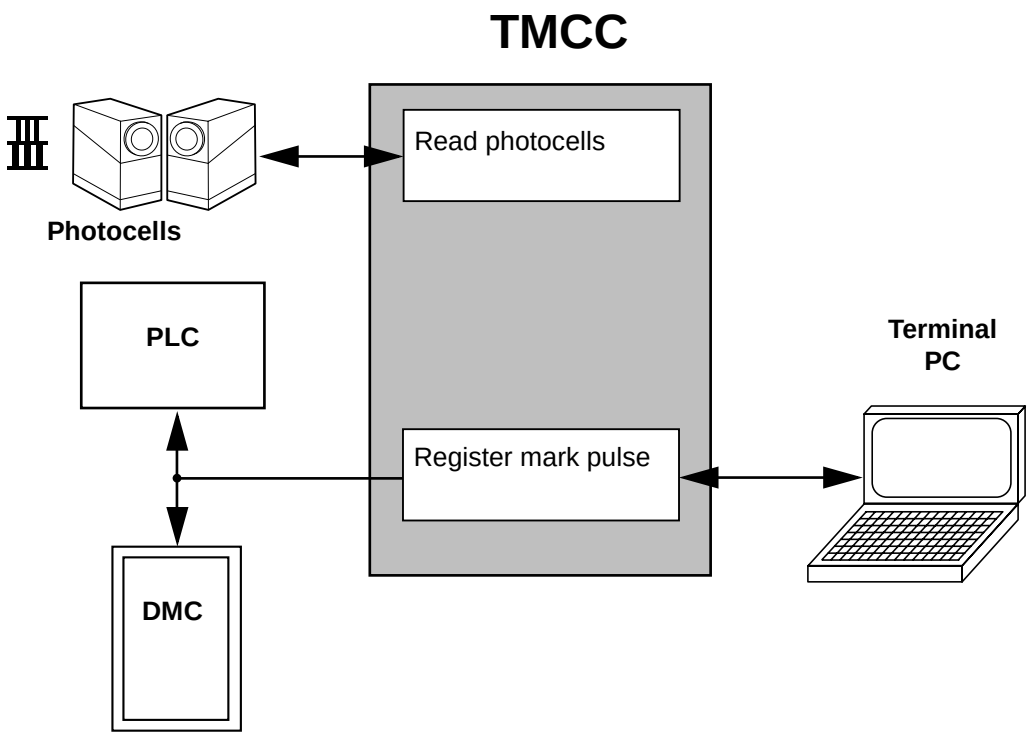

(Cont'd)

TechPub_2614345_0103 - B6114I02en.fm

(Cont'd)

TMCC Front Panel Switch 1

The switch **SW1** (1) located on the front panel of the TMCC card A8210 (2) is used to select one of the variables so that it can be monitored for diagnostics.

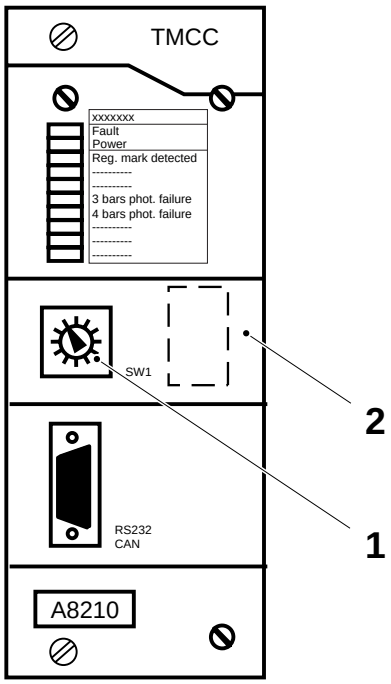

1 Switch SW1
2 TMCC card A8210

The following table shows the variables that can be monitored.

SW1 position	Function
0	Programming mode. With the switch in this position it is possible to download the program into the TMCC
1	Production mode. Normal position of the switch.
2 - 9	Not used.
A - D	Not used.
E - F	Used for teaching procedure

Note! In normal PRODUCTION mode, switch SW1 (1) should be set to position **1**.

(Cont'd)

TechPub_2614345_0103 - B6114I02en.fm

(Cont'd)

Also on the front panel of the TMCC card A8210 (2) there are LEDs (3).

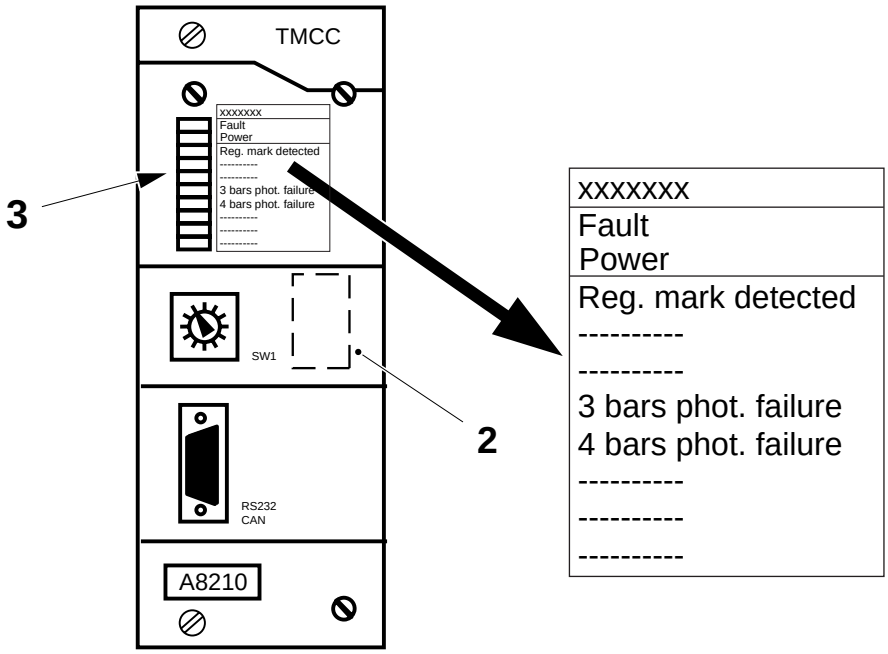

2 TMCC card A8210
3 LEDs

The LEDs provide the following information when the machine is in the normal PRODUCTION mode.

Card A8210		
LED	**Colour**	**Function**
Fault	Red	Not used
Power	Green	Power supply OK
Reg. mark detected	Yellow (S1)	Correct register mark has been detected
-	Yellow (S2)	Not used
-	Yellow (S3)	Not used
3 bars phot. failure	Yellow (S4)	Failure of the ‘3 bars’ photocell
4 bars phot. failure	Yellow (S5)	Failure of the ‘4 bars’ photocell
-	Yellow (S6)	Not used
-	Yellow (S7)	Not used
-	Yellow (S8)	Not used

(Cont'd)

TechPub_2614345_0103 - B6114I02en.fm

(Cont'd)

TMCC Switch 2

The switch **SW2** (4) located at the bottom of the TMCC card A8210 (2) is used to set the photocells so that they function with a particular bar code colour, see 9.2.1-6 TMCC - Set Photocells.

TMCC System Data

Commands and parameters are entered in the program and data can be read from the TMCC by using a PC, see 9.2.1-7 TMCC - Display Report.

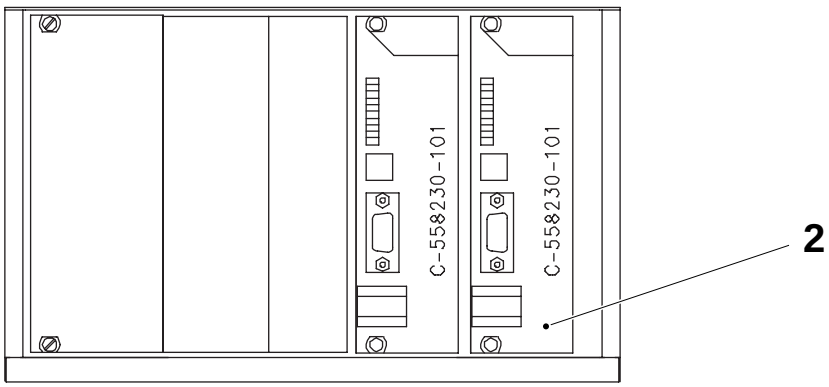

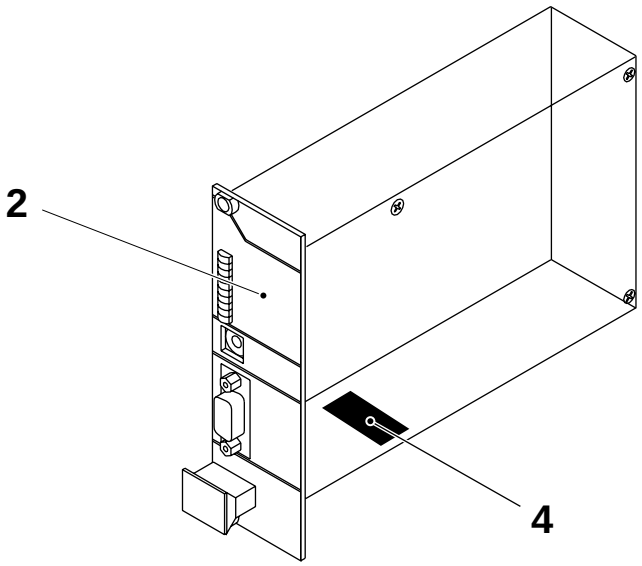

2 TMCC card A8210
4 Switch SW2

(Cont'd)

TechPub_2614345_0103 - B6114I02en.fm

(Cont'd)

TMCC Card A8250

The TMCC card A8250 is a microprocessor card that has the following functions:

- starts the stepper motors when the pulse comes from the PLC
- controls strip splice in the magazines using black tape sensors
- calculates the motion profile for the stepper motors when the correct patch, tab and outer patch length has been received from the PLC.

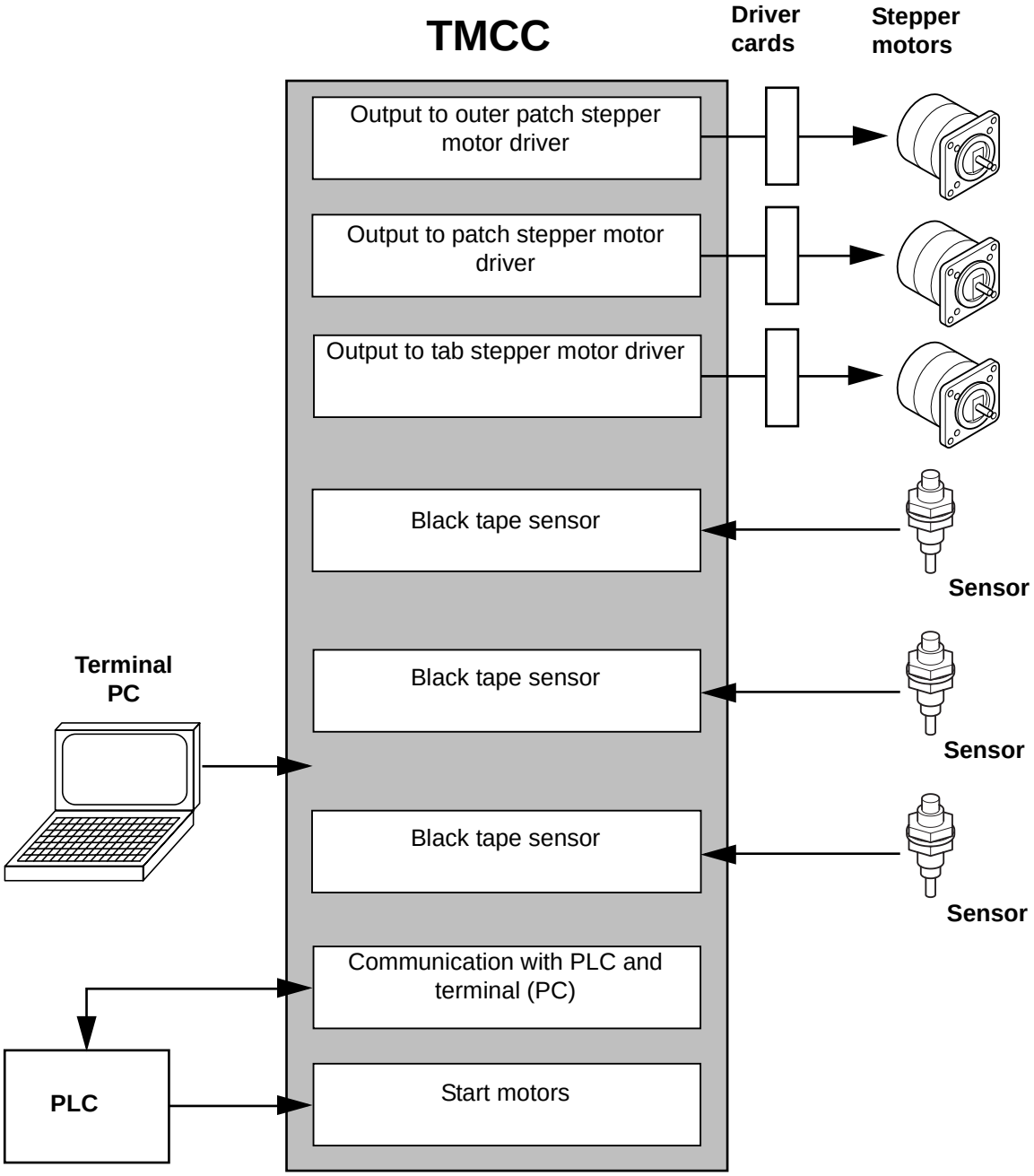

(Cont'd)

TechPub_2614345_0103 - B6114I02en.fm

(Cont'd)

TMCC Front Panel Switch 1

The switch **SW1** (1) located on the front panel of the TMCC card A8250 (2) is used to select one of the variables so that it can be monitored for diagnostics.

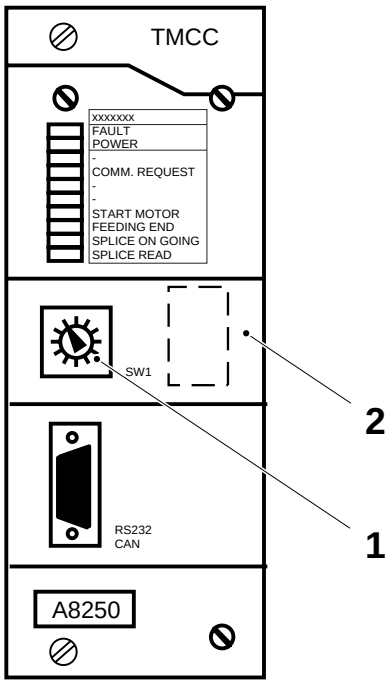

1 Switch SW1
2 TMCC card A8250

The following table shows the variables that can be monitored.

SW1 position	Function
0	Programming mode. With the switch in this position it is possible to download the PT21SMMC program into the TMCC, see 9.2.1-3 TMCC - Change Cards / Load Programs.
1	Working mode. Normal position of the switch. The PT21SMMC program is executed.
2 - 9	Working mode. The PT21SMMC program is executed.
A	Working mode. The PT21SMMC program is executed. (LEDs used for Patch monitoring)
B	Working mode. The PT21SMMC program is executed. (LEDs used for Tab monitoring)
C	Working mode. The PT21SMMC program is executed. (LEDs used for Outer patch monitoring)
D - F	Working mode. The PT21SMMC program is executed.

Note! In normal PRODUCTION mode, switch SW1 (1) should be set to position **1**.

(Cont'd)

TechPub_2614345_0103 - B6114I02en.fm

(Cont'd)

Also on the front panel of the TMCC card A8250 (2) there are LEDs (3).

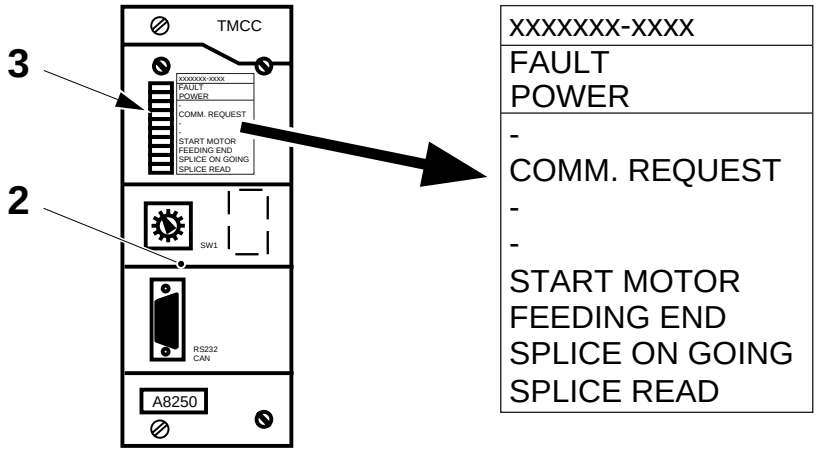

2 TMCC card A8250
3 LEDs

The LEDs provide the following information when the machine is in the normal PRODUCTION mode.

Card A8250		
LED	**Colour**	**Function**
FAULT	Red	Not used
POWER	Green	Power supply OK
	Yellow (S1)	Not used
COMM. REQUEST	Yellow (S2)	Light **On** indicates that communication is required for the parameters downloading.
	Yellow (S3)	Not used
	Yellow (S4)	Not used
START MOTOR	Yellow (S5)	Light **On** when a signal “Outer patch or Patch or Tab motor start” is present
FEEDING END	Yellow (S6)	Light flashes when the stepper movement is completed (SW1 A = Patch B = Tab C = Outer patch)
SPLICE ONGONIG	Yellow (S7)	Light flashes when the splice is “on going” (SW1 A = Patch B = Tab C = Outer patch)
SPLICE READ	Yellow (S8)	Light flashes when the sensor splice reads a splice (SW1 A = Patch B = Tab C = Outer patch)

TMCC System Data

Commands and parameters are entered in the program and data can be read from the TMCC by using a PC, see 9.2.1-7 TMCC - Display Report.

TechPub_2614345_0103 - B6114I02en.fm

9.2.1-2 TMCC - Set Communication

Machine Status	PRODUCTION
Special Equipment	Communication cable RS 232-C AT compatible PC with diskette station
SPC Reference	1317355-0300 558230-0101

Note! The following procedure should be used to communicate with a TMCC card.

a) Connect the TMCC to a PC with the connection cable (1).

b) The connections required are:

PC 9-pin female	**TMCC 9-pin male**
2	3
3	2
5	5

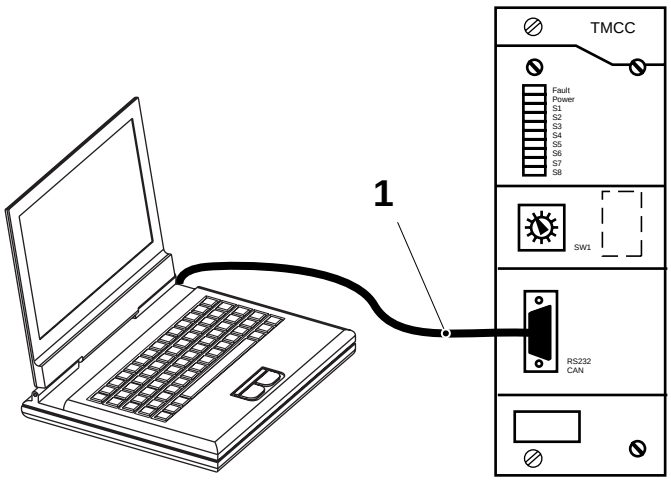

1 Connection cable

c) Set-up the program to use, e.g. TIT or Windows terminal, as follows:

Baud rate	9600
Parity	None
Bits	8
Stop bits	1
Flow control	None

TechPub_2614345_0103 - B6114I02en.fm

9.2.1-3 TMCC - Change Cards / Load Programs

Machine Status	PRODUCTION
Special Equipment	Communication cable RS 232-C AT compatible PC with diskette station
SPC Reference	1317355-0300 558230-0101

a) Pull out the old TMCC card and fit the new one.

b) Connect the communication cable between the PC and the TMCC connector (1).

c) Set the front panel switch **SW1** (2) to position **0**.

d) For the card **A8210**, insert the program diskette marked **"PT21RM"** into the PC diskette station, **A:drive**.

e) For the card **A8250**, insert the program diskette marked "PT21SMMC" into the PC diskette station, **A:drive**.

f) Enter the command **A:TMCC11<ENTER>** to start the communications program **TMCC11.EXE**.

g) When the program menu appears, enter the communication port in use (normally this is the port number **one**).

h) A directory will appear. Press **<HOME>** to select the **A: drive**.

i) A list of files on the diskette **A** will appear.

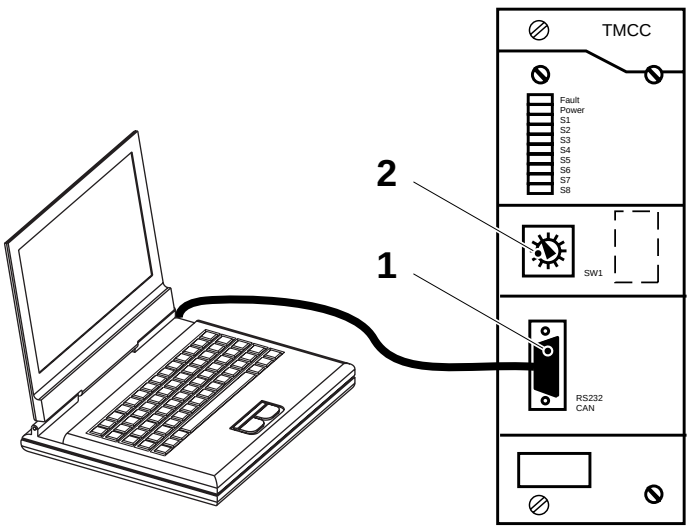

1 TMCC connector
2 Front panel switch SW1

(Cont'd)

TechPub_2614345_0103 - B6114I02en.fm

(Cont'd)

j) Press the **RH Arrow** key to select the **File** window.

k) Select the proper file with the ARROW keys. When the proper file is selected, press the function key < **F2** >. The automatic download program starts.

l) When all “faces” are filled, the program has been downloaded without errors.

m) Pull out the TMCC card.

n) Set the TMCC front panel switch **SW1**, see 9.2.1-4 TMCC - Set Control Card.

o) Fit the TMCC card.

Note! The reason to pull out and fit the TMCC card is to ensure a “error free” start of the new program.

p) Only for **TMCC card A8250**
When the LED S2, COMM. REQUEST, on the TMCC card is turned **Off**, make sure that the correct patch, tab and outer patch length, for the specified hole type, have been transferred from the PLC, see 9.2.1-7 TMCC - Display Report.

q) Press **F10** to exit the **TMCC11.EXE** download program.

r) Fix the label (with the program number and LED functions) to the TMCC front panel, aligned with the row of LEDs.

TMCC card A8210 label

xxxxxxx
Fault Power
Reg. mark detected ---------- ---------- 3 bars phot. failure 4 bars phot. failure ---------- ---------- ----------

TMCC card A8250 label

xxxxxxx
FAULT POWER
- COMM. REQUEST - - START MOTOR FEEDING END SPLICE ON GOING SPLICE READ

TechPub_2614345_0103 - B6114I02en.fm

9.2.1-4 TMCC - Set Control Card

Machine Status	Air **OFF** Mains Power **OFF**
SPC Reference	1317355-0300 558230-0101

Outer Patch, Patch and Tab Feeding

Set the multi-switch **SW1** (1), located on the TMCC cards (2), to position **"1"**.

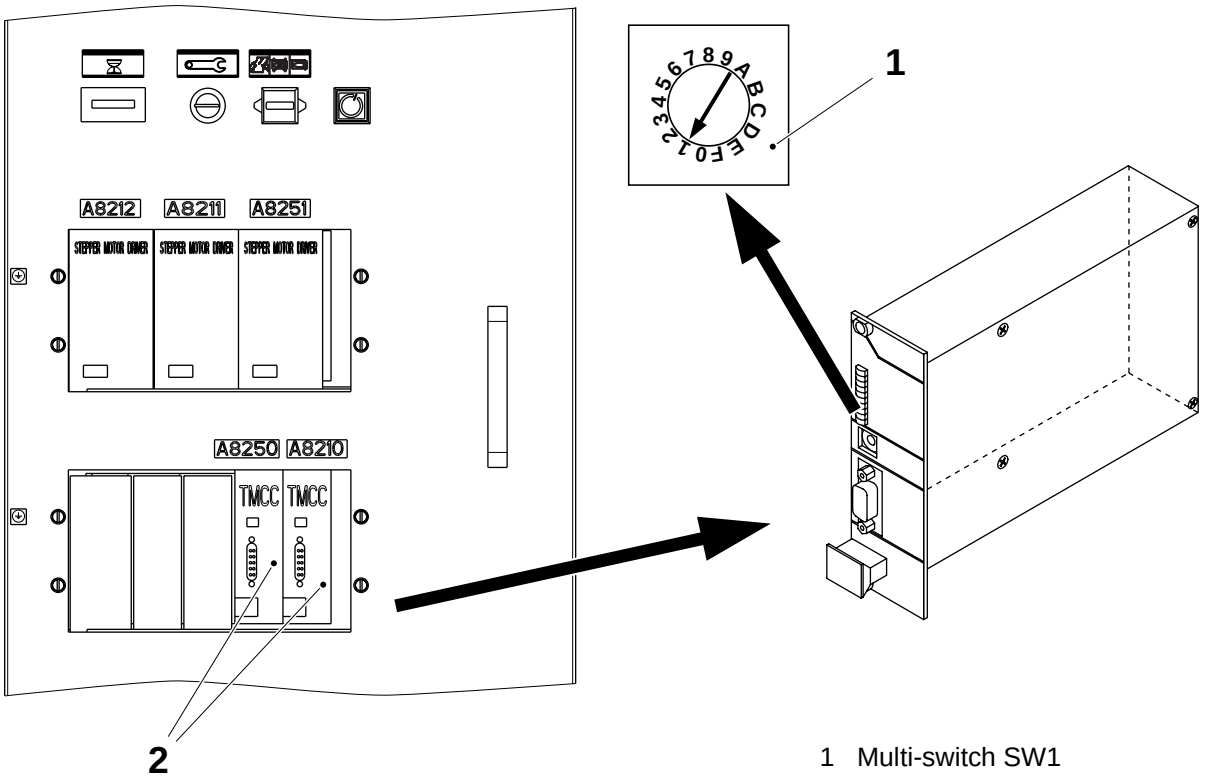

1 Multi-switch SW1
2 TMCC card

TechPub_2614345_0103 - B6114I02en.fm

9.2.1-5 TMCC - Set Stepper Motor Cards

Machine Status	Air **OFF** Mains Power **OFF**
SPC Reference	1317355-0300 558230-0101

Set the stepper motor multi-switches **SW1** to **SW14** in the motor control cards (1), (2) and (3).

Switch	Tab	Patch	Outer patch	Function
Sw1	F	F	F	100% gain analog control
Sw2	Right	Right	Right	analog control in direct mode
Sw3	Right	Right	Right	analog control in direct mode
Sw4	Open	Open	Open	analog control in direct mode
Sw5	Right	Right	Right	no analog control of internal clock
Sw6	Open	Open	Open	no start/stop ramp speed 1
Sw7	Open	Open	Open	no start/stop ramp speed 2
Sw8	Right	Right	Right	external clock
Sw9	0	0	0	clock rate speed 1
Sw10	0	0	0	clock rate speed 2
Sw11	0	0	0	clock rate speed 3
Sw12	0	0	0	clock rate speed 4
Sw13	0	0	0	2.5 A current
Sw14	Closed	Closed	Closed	terminal 32 current input 0-20 mA

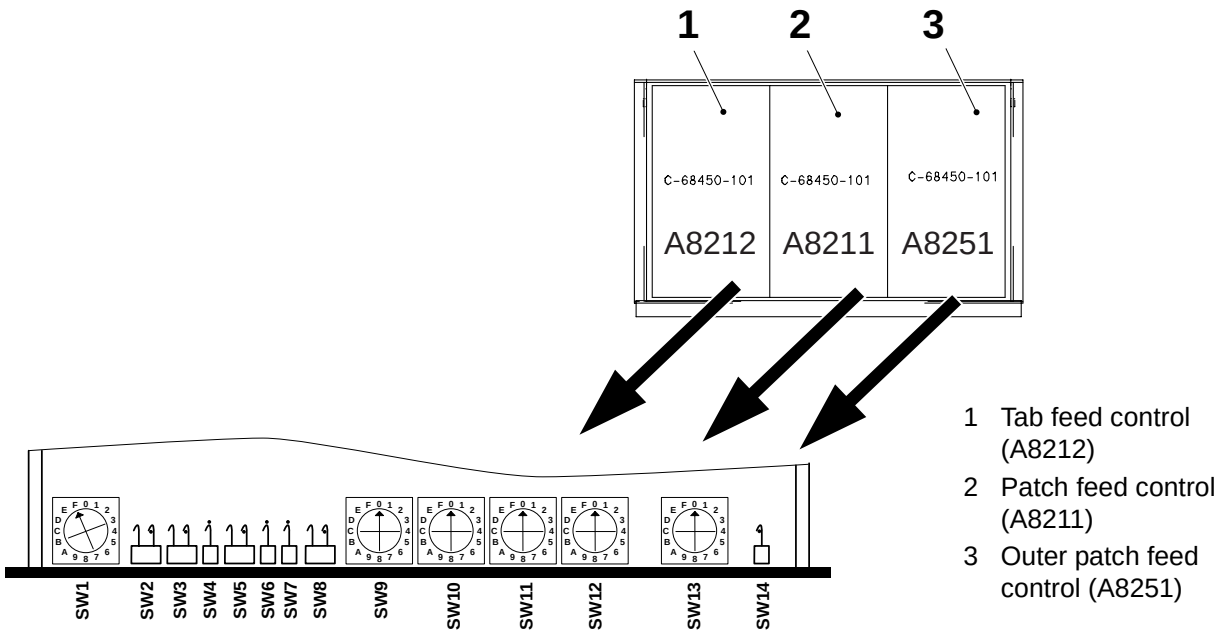

1 Tab feed control (A8212)
2 Patch feed control (A8211)
3 Outer patch feed control (A8251)

TechPub_2614345_0103 - B6114I02en.fm

9.2.1-6 TMCC - Set Photocells

Machine Status	Air **OFF** Mains Power **ON**
SPC Reference	1317355-0300 558230-0101

Automatic Setting

By default, the switch **SW2** (1), located at the bottom of the TMCC card (2), is set to position **0** so that the photocell produces a green light spot.. For most packaging material this is the correct setting and no further adjustment will be required.

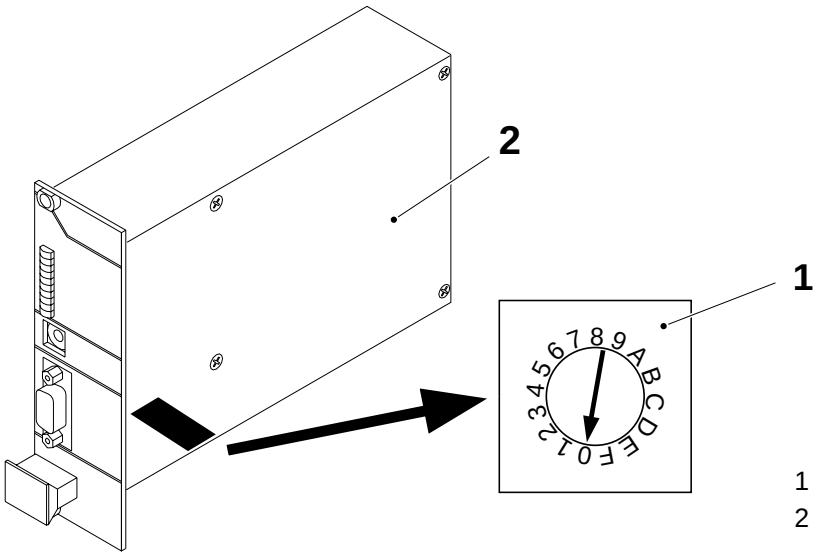

1 Switch SW2
2 TMCC card

If a packaging material is used and bar code reading errors occur, the colour of the light spot can be changed to match the foreground colour of the bar code. This is done by changing the position of **SW2** (1) as shown in the following table.

Bar code foreground colour	**SW2 position**	**Light spot colour**
Black	0, 1, 2, 3, 4, 5, 6, 7, 8, 9, A or B	Green, Red or Blue
Blue	0, 1, 3, 4, 6, 7, 9 or A	Green or Red
Light blue/Cyan	1 or 4	Red
Green	1, 2, 4 or 5	Red or Blue
Yellow	2 or 5	Blue
Red	0, 2, 3 or 5	Green or Blue
Magenta	0 or 3	Green

(Cont'd)

TechPub_2614345_0103 - B6114I02en.fm

(Cont'd)

- The positions **0** to **B** for the **SW2** switch.
  Twelve basic settings are provided by means of three different light spot colours and four sensibility levels.
  - 40h is the highest sensibility level and is used for light coloured bar code on the paper.
  - 60h is used for light coloured bar code on the paper.
  - 80h is used for black bar code on white paper.
  - A0h is the lowest sensibility level.
- The positions **C** and **D** for the **SW2** switch.
  Used for manual setting of the photocells. For the manual setting procedure of the switch SW2 on a TMCC, see Manual Setting on page 9-80.
- The position **E** for the **SW2** switch.
  Used only for service purpose to force the photocell light spot to be **On** without any time limit.

SW2 Position	Photocell setting		SW2 Position	Photocell setting
0	Light spot = Green Dynamic threshold = 40h Teach button = Disabled		8	Light spot = Blue Dynamic threshold = 80h Teach button = Disabled
1	Light spot = Red Dynamic threshold = 40h Teach button = Disabled		9	Light spot = Green Dynamic threshold = A0h Teach button = Disabled
2	Light spot = Blue Dynamic threshold = 40h Teach button = Disabled		A	Light spot = Red Dynamic threshold = A0h Teach button = Disabled
3	Light spot = Green Dynamic threshold = 60h Teach button = Disabled		B	Light spot = Blue Dynamic threshold = A0h Teach button = Disabled
4	Light spot = Red Dynamic threshold = 60h Teach button = Disabled		C	Last setting acquired in Teaching mode Teach button = Disabled
5	Light spot = Blue Dynamic threshold = 60h Teach button = Disabled		D	Teaching mode Teach button = Enabled
6	Light spot = Green Dynamic threshold = 80h Teach button = Disabled		E	Service mode Light spot = Red Dynamic threshold = 20h
7	Light spot = Red Dynamic threshold = 80h Teach button = Disabled		F	Not used

(Cont'd)

TechPub_2614345_0103 - B6114I02en.fm

(Cont'd)

Manual Setting

By default, the switch **SW2** (1), located at the bottom of the TMCC card (2), is set to position **0** so that the photocell produces a green light spot. If, with the switch set in this position, bar code reading errors occur, change the position of the switch **SW2** (1) so that the colour of the light spot matches the foreground colour of the bar code, see Automatic Setting on page 9-78.

If, after the automatic setting, errors continue to occur, set the photocells manually using the method on the following pages.

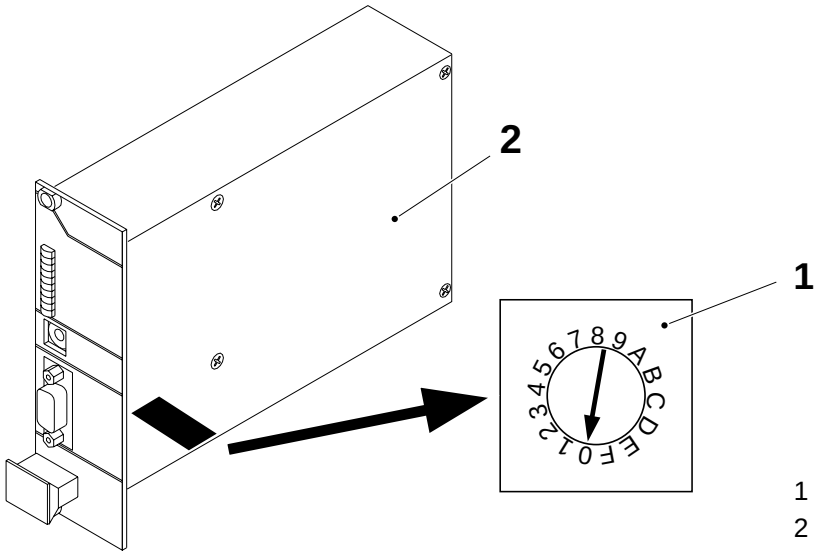

1 Switch SW2
2 TMCC card

TechPub_2614345_0103 - B6114I02en.fm

(Cont'd)

(Cont'd)

Bar Code Reader Photocells

a) Set the switch **SW1** (1) to position **E** and the switch **SW2** (2) at the bottom of the TMCC (3) to position **D** with the machine stationary.

b) Make sure that the switch (4) is set to the position **Q1**.

c) Move the packaging material until the photocell light spot is focused on a white part of the packaging material. The light spot colours is a mix of red, green and blue, RGB.

Note! The **ON** LED (5) is lit when power is supplied to the photocell.

d) Push and hold the **Teach** button (6).

e) Move the packaging material until the complete bar code has passed in front of the photocell and then release the **Teach** button (6). The cell automatically calibrates itself.

Note! The the **Q/ok** LED (7) is lit when the photocell light spot is focused on a dark area of the packaging material.

f) Repeat the items from b) to e) for the other photocell.

g) Turn the switch **SW1** (1) to position **F** and wait at least 5 seconds (do not disconnect the TMCC card from the rack).

h) Turn the switch **SW1** (1) to position **1** and the switch **SW2** (2) at the bottom of the TMCC (3) to position **C**.

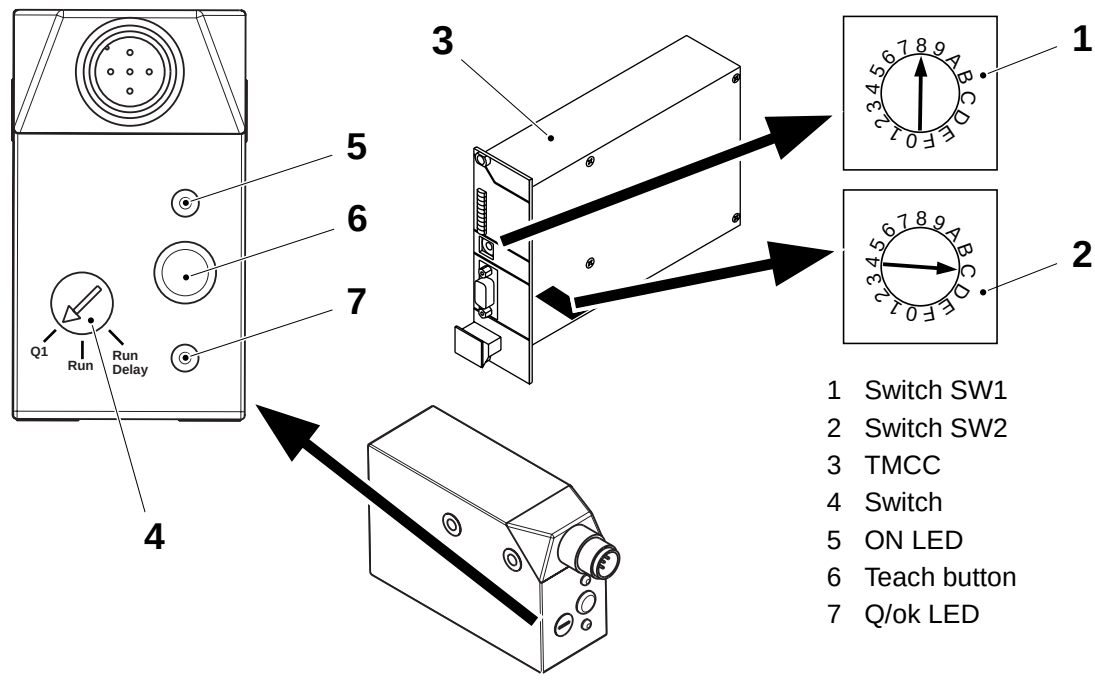

1 Switch SW1
2 Switch SW2
3 TMCC
4 Switch
5 ON LED
6 Teach button
7 Q/ok LED

TechPub_2614345_0103 - B6114I02en.fm

9.2.1-7 TMCC - Display Report

Machine Status	PRODUCTION
Special Equipment	Communication cable RS 232-C AT compatible PC
SPC Reference	1317355-0300 558230-0101

TMCC Card A8210

a) Configure a PC to be used as a TIT or a Windows terminal and connect it to the TMCC, see 9.2.1-2 TMCC - Set Communication.

b) Enter the commands and parameters into the TMCC program via the keyboard and execute them by pressing the **<RETURN>** key.
(The commands and parameters are not replicated on the terminal).
The functions described below are available:

B Activate the photocell alignment function. This function is useful to check that the photocells are well aligned. Once this function is activated while the filling machine is running, as soon as a bar code is decoded, a photocells misalignment degree is displayed. This function is deactivated as soon as the photocells misalignment degree is displayed.

The photocells are well aligned when the photocells misalignment is between **-10% and 10%**.

If the photocells misalignment is **less than -10%**, means that the clock signal is too high. Adjust by means of increasing the photocells data signal or decreasing the photocells clock signal.

If the photocells misalignment is **more than 10%**, means that the data signal is too high. Adjust by means of increasing the photocells clock signal or decreasing the photocells data signal.

H Help Menu: displays the commands available.

S Show the program version and if there is a failure of the photocells.

(Cont'd)

TechPub_2614345_0103 - B6114I02en.fm

(Cont'd)

L Description of the function of the LEDs on the front panel.

X <Password> Formats the TMCC EEPROM:

– Restores to default the values of the photocell parameters (the values acquired during last teach procedure are lost!),

– Resets the values of:

- Commands OK
- Command Errors
- Bar code decoded.

Y Displays a detailed status of the photocells for test and service purposes:

Commands failed:	Total number of commands not executed by the photocells.
Commands OK:	Total number of commands executed by the photocells
Bar code decoded:	Total number of bar codes decoded by the TMCC
Dynamic Threshold:	Photocell threshold
Light Spot:	Colour of the light spot used by the photocells
Output:	Logic of the photocell output (Light/Dark switching)
Photoswitch Working Hours	Number of hours that every LED of the photocell has been working
Photocell Software ver. / S.N.:	Software version of the photocell firmware and serial number

(Cont'd)

TechPub_2614345_0103 - B6114I02en.fm

(Cont'd)

TMCC Card A8250

a) Configure a PC to be used as a TIT or a Windows terminal and connect it to the TMCC, see 9.2.1-2 TMCC - Set Communication.

b) Enter the commands and parameters into the TMCC program via the keyboard and execute them by pressing the **<RETURN>** key.
(The commands and parameters are not echoed on the terminal).
The functions described below are available:

O Open the **outer patch menu**: displays the commands available

- **S** Outer patch status.
- **L** Outer patch feeding length change.
- **A** Outer patch acceleration/deceleration change.
- **V** Outer patch speed change.
- **E** Outer patch extra feeding speed change.
- **C** Outer patch profile calculation.
- **P** Outer patch number for “Stop punch” change.
- **X** Return to the main menu level.
- **H** Outer patch help menu.

P Open the **patch menu**: displays the commands available.

- **S** Patch status.
- **L** Patch feeding length change.
- **A** Patch acceleration/deceleration change.
- **V** Patch speed change.
- **E** Patch extra feeding speed change.
- **C** Patch profile calculation.
- **P** Patch number for “Stop punch” change.
- **X** Return to the main menu level.
- **H** Patch help menu.

Note! Changing of parameters in the outer patch, patch and tab menu may result in unexpected behaviour of the system and due to this any changes should be made only when strictly necessary.

(Cont'd)

TechPub_2614345_0103 - B6114I02en.fm

(Cont'd)

T Open the **tab menu**: displays the commands available.

- **S** Tab status.
- **L** Tab feeding length change.
- **A** Tab acceleration/deceleration change.
- **V** Tab speed change.
- **E** Tab extra feeding speed change.
- **C** Tab profile calculation.
- **P** Tab number for “Stop punch” change.
- **X** Return to the main menu level.
- **H** Tab help menu.

S STMC program status.

H Help menu.

Note! Changing of parameters in the outer patch, patch and tab menu may result in unexpected behaviour of the system and due to this any changes should be made only when strictly necessary.

Note! Parameters in the outer patch, patch and tab menu are overwritten with PLC values when switching **Off/On** the TMCC card. To change the outer patch, patch and tab length, see 9.1.1-4 PLC - Set Outer Patch, Patch and Tab Length. On-line changes should be made for test purpose only.

TechPub_2614345_0103 - B6114I02en.fm

9.2.2 Fuse Box

9.2.2-1 Fuse Box - Set Overload Protection

Machine Status	Air **OFF** Mains Power **OFF**
SPC Reference	1317356-0300

Set the overload protections as shown in the following table:

Q8201
8.5 A

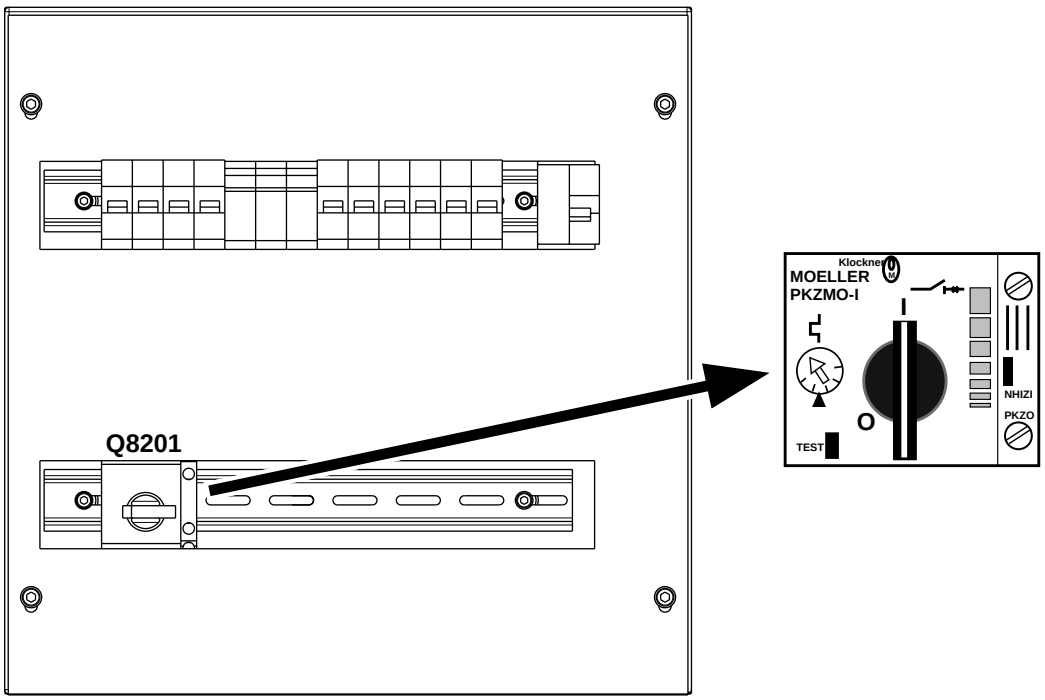

Q8201: Servomotor digital motion controller

TechPub_2614345_0103 - B6114I02en.fm

9.2.2-2 Fuse Box - Set Fuse

Machine Status	Air **OFF** Mains Power **OFF**
SPC Reference	1317356-0300

Set the fuse protections as shown in the following table:

F8201	**F8202**	**F8203**	**F8206**	**F8207:1**	**F8207:2**	**F8207:3**	**F8210**
10 A	6 A	6 A	4 A	10 A	10 A	10 A	10 A
F8211	**F8250**	**F8213**	**F8252**	**F8253**			
4 A	4 A	4 A	4 A	4 A			

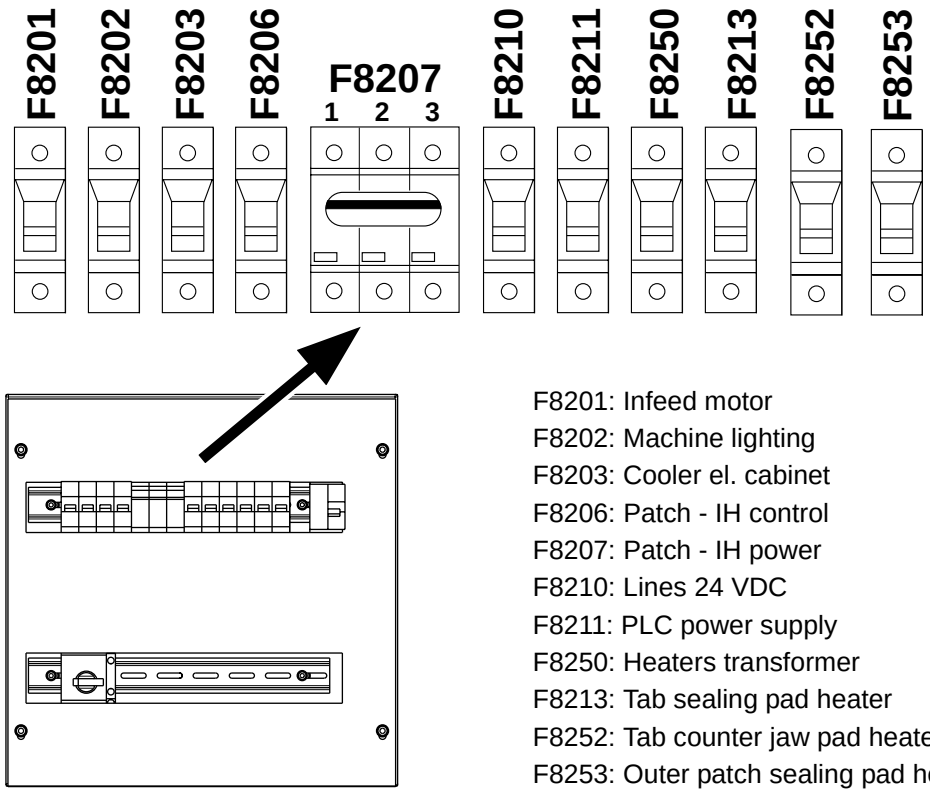

F8201: Infeed motor
F8202: Machine lighting
F8203: Cooler el. cabinet
F8206: Patch - IH control
F8207: Patch - IH power
F8210: Lines 24 VDC
F8211: PLC power supply
F8250: Heaters transformer
F8213: Tab sealing pad heater
F8252: Tab counter jaw pad heater
F8253: Outer patch sealing pad heater

TechPub_2614345_0103 - B6114I02en.fm

9.2.2-3 Fuse Box - Check Earth Fault Breaker

Machine Status	Air **OFF** Mains Power **ON**
SPC Reference	1317356-0300

WARNING

Electric shock will cause death or serious injury!

Change the earth fault breaker (2) if it does not trip immediately.

Note! F8260 is the earth fault breaker (2), also called RCD (Residual Current Device). The earth fault breaker (2) must always be tested before using the socket outlet (1).

The earth fault breaker (2), **F8260**, must always be tested before using the socket outlet (1).

a) Make sure that the switch is in the **On** position (3).

b) Press the test button (4).

c) The earth fault breaker must trip immediately and the switch jumps to the **Off** position (5). If the circuit breaker does not trip immediately then change it.

d) Set the switch to the **On** position (3).

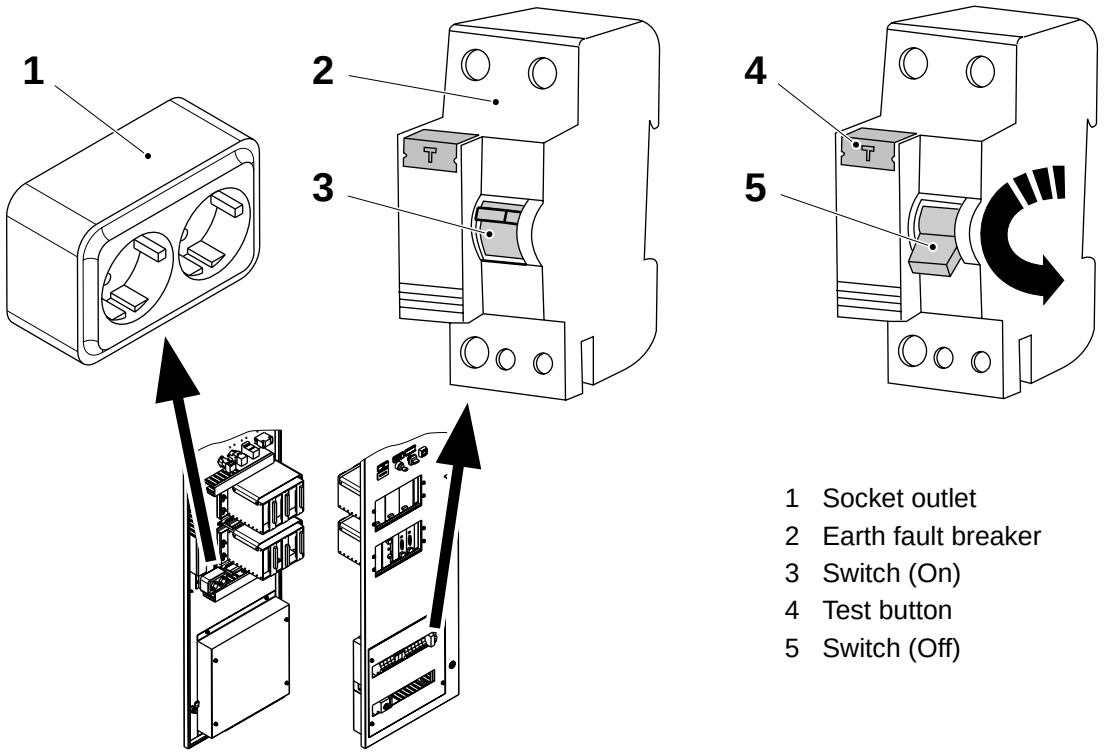

1 Socket outlet
2 Earth fault breaker
3 Switch (On)
4 Test button
5 Switch (Off)

TechPub_2614345_0103 - B6114I02en.fm

9.3 Cooler

SPC Reference	1095928-0100

9.3-1 Cooler - Check Air Flow

Machine Status	Air **OFF** Mains Power **ON**
SPC Reference	1095928-0100

a) Open the PT21 electrical cabinet doors and check that the cooler air flow is working.

b) Check also that the hose (1) for the discharging of the condensed water is in the correct position and not clogged. Clean as required.

c) In the TPOP panel, check the PT21 electrical cabinets temperature in order to have the right temperature inside the cabinet.

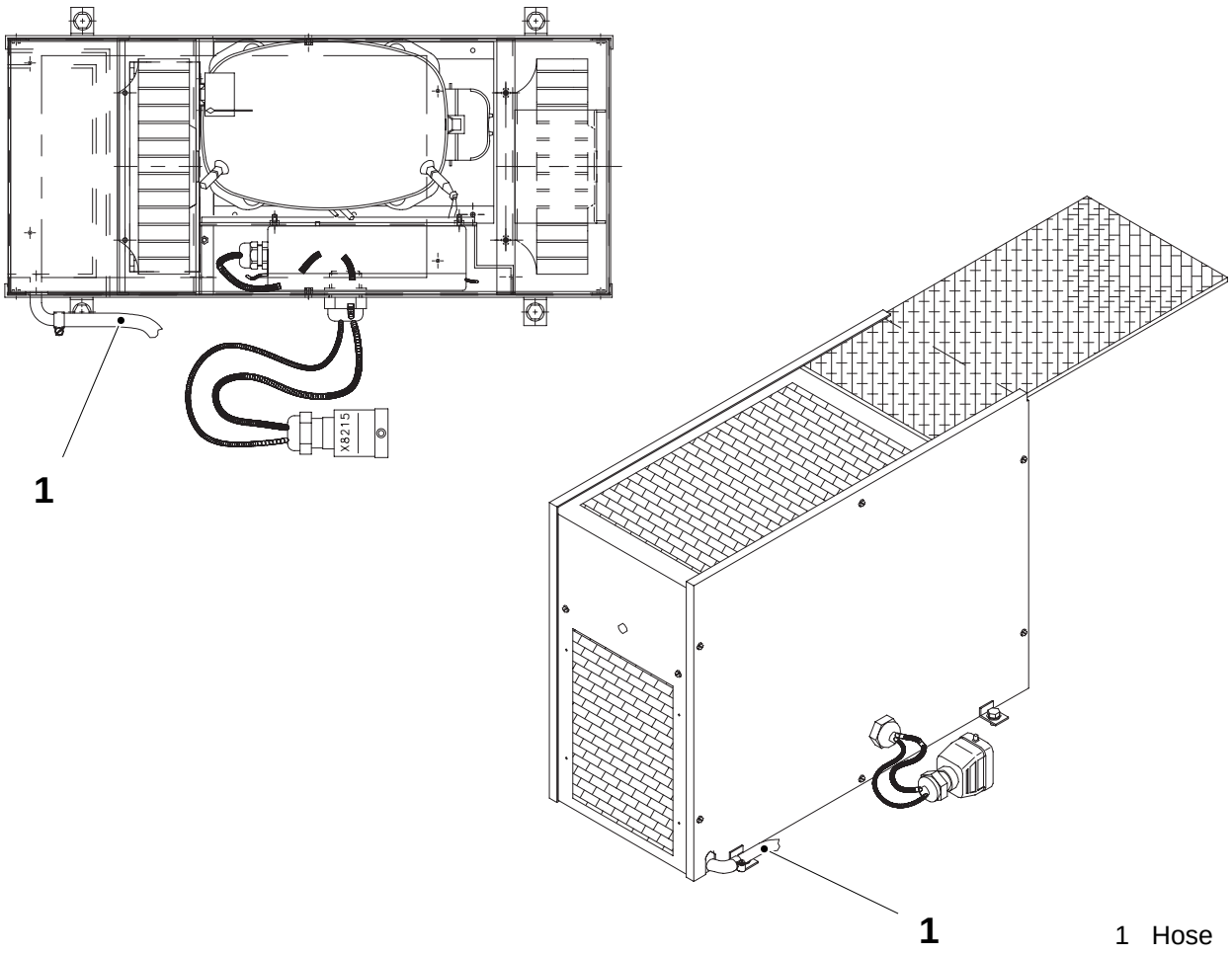

1 Hose

TechPub_2614345_0103 - B6114I03en.fm

9.3-2 Cooler - Clean Filter Insert

Machine Status	Air **OFF** Mains Power **OFF**
SPC Reference	1095928-0100

WARNING
Cooling media R134A.
Follow the Safety precautions.

a) Open the PT21 electrical cabinet rear doors.

b) Remove the filter insert (1) from the cooler and clean it with compressed air. Change the filter insert (1) as required.

c) Fit back the filter insert (1).

d) Close the PT21 electrical cabinet rear doors.

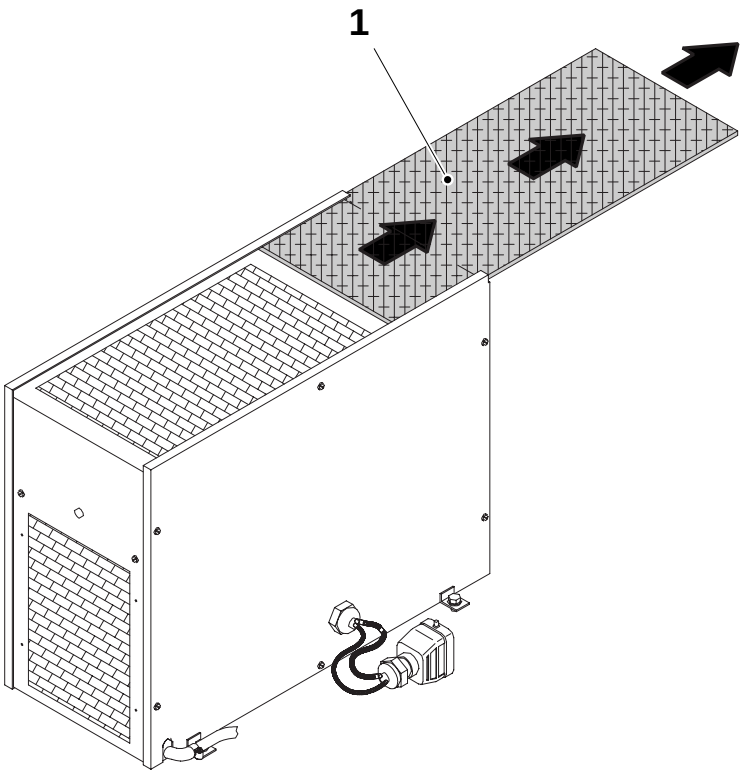

1 Filter insert

TechPub_2614345_0103 - B6114I03en.fm

10 Valve Panel

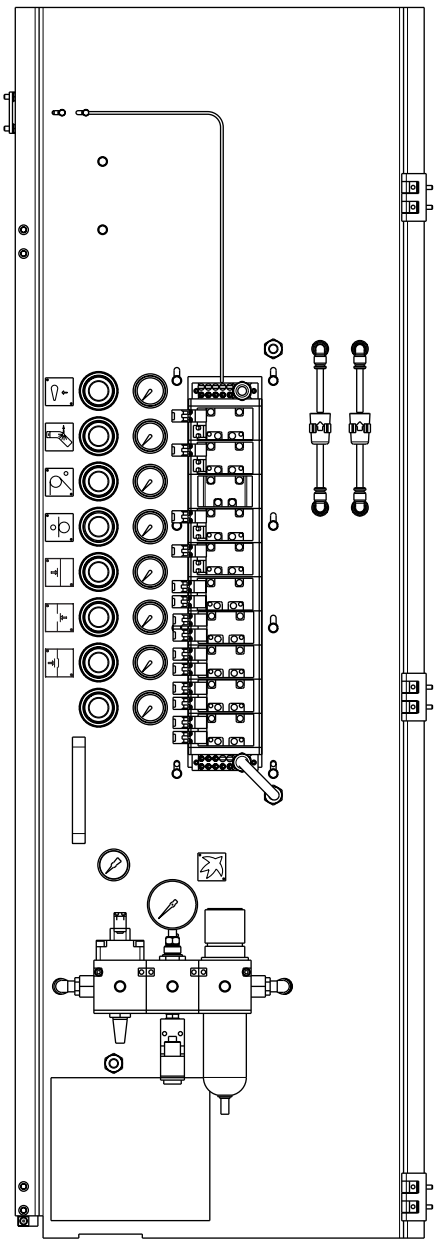

TechPub_2614345_0103 - B6114J00en.fm

Valve Panel - Description

SPC Reference	1185049-0300

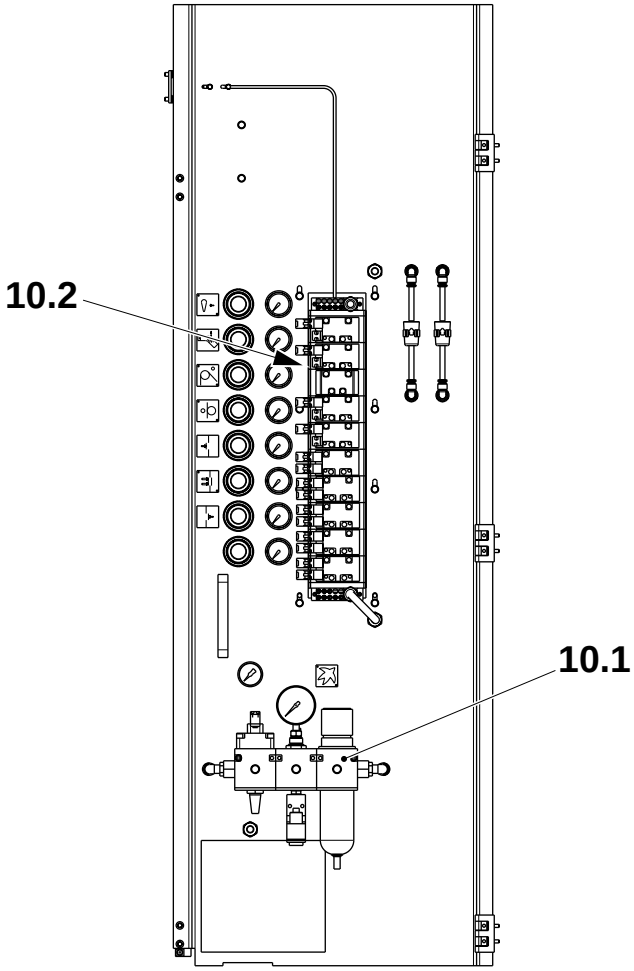

10.1 Air Inlet Group
10.2 Valve Panel

TechPub_2614345_0103 - B6114J00en.fm

10.1 Air Inlet Group . . . . . 10 - 5

10.1-1 Air Inlet Group - Set Pressure Switch . . . . . 10 - 5

10.1-2 Air Inlet Group - Clean Filter Insert . . . . . 10 - 6

10.2 Valve Panel . . . . . 10 - 7

10.2-1 Valve Panel - Change Air Filters . . . . . 10 - 7

TechPub_2614345_0103 - B6114J00en.fm

This page intentionally left blank

TechPub_2614345_0103 - B6114J00en.fm

10.1 Air Inlet Group

SPC Reference	1185047-0100

10.1-1 Air Inlet Group - Set Pressure Switch

Machine Status	Air **ON** Mains Power **ON**
SPC Reference	1185047-0100

a) On the PT21, set the main input air pressure to **4.5 bar** (**0.45 MPa**), by means of the pressure regulator (1).

b) Check that the pressure gauge (2) shows the same pressure.

c) Turn the adjuster screw (3) at the top of the pressure switch (4) fully anti-clockwise.

d) Slowly turn the adjuster screw (3) clockwise until the PT21 main air supply alarm starts flashing on the TPOP panel.

e) On the PT21, reset the main air inlet pressure to **6.0 bar**, see 11.1 Technical Data.

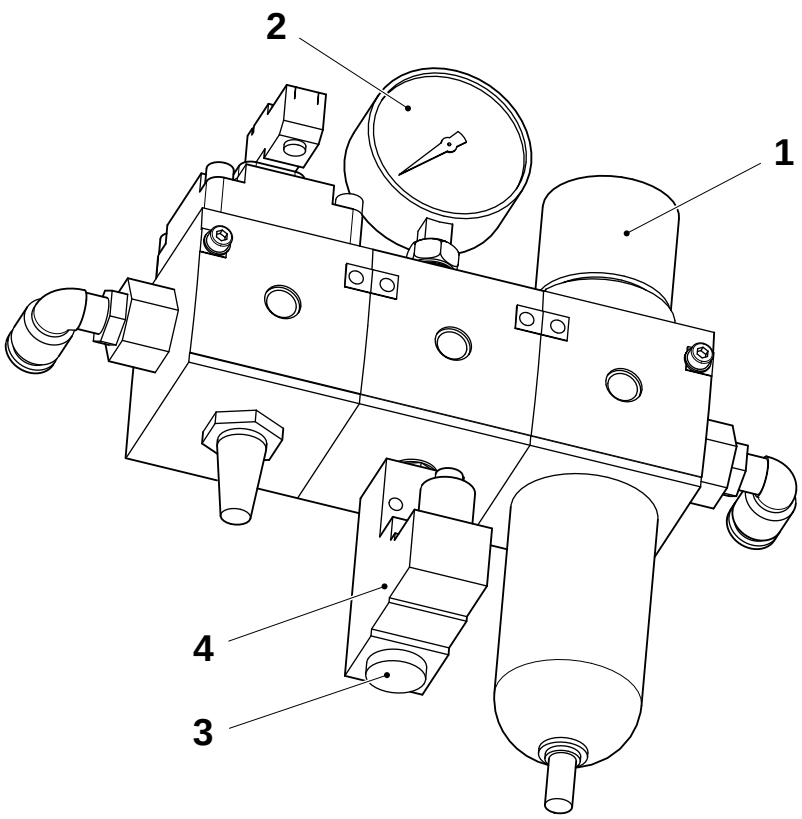

1 Pressure regulator
2 Pressure gauge
3 Adjuster screw
4 Pressure switch

TechPub_2614345_0103 - B6114J01en.fm

10.1-2 Air Inlet Group - Clean Filter Insert

Machine Status	Air **ON** Mains Power **OFF**
Consumables	Soap
SPC Reference	1185047-0100

a) Remove the reservoir (1) and change the O-ring as required.

b) Clean the reservoir (1) with soapy water and rinse with plenty of water.

c) Remove and clean the filter insert inside the reservoir (1). Change as required.

d) Fit back the reservoir (1) and make sure that the O-ring is correctly fitted.

e) By means of the pressure regulator (2), open the PT21 main air inlet and check for leakages in the reservoir (1).

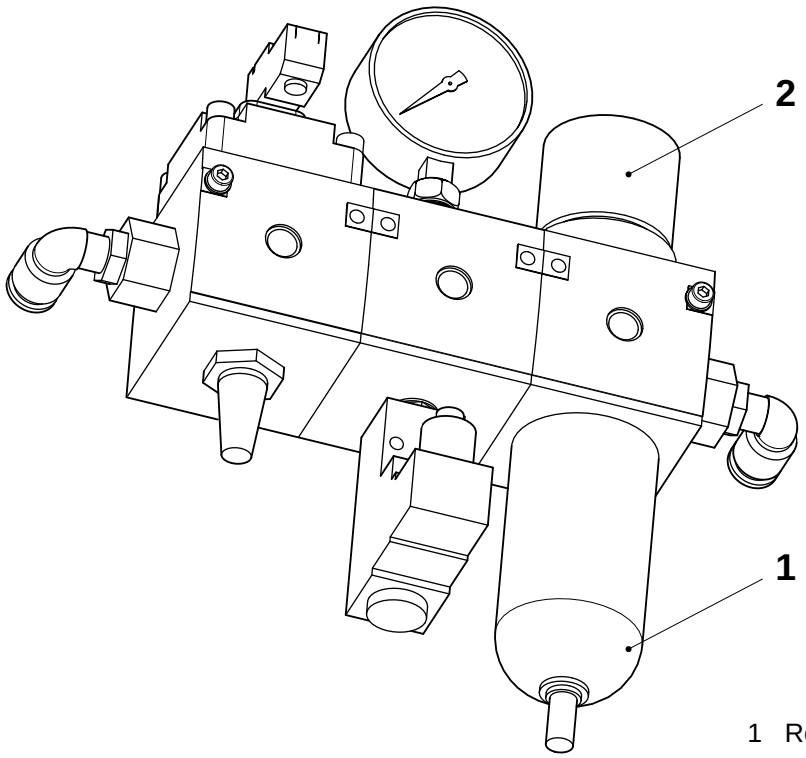

1 Reservoir
2 Pressure regulator

TechPub_2614345_0103 - B6114J01en.fm

10.2 Valve Panel

SPC Reference	1185049-0300

10.2-1 Valve Panel - Change Air Filters

Machine Status	Air **OFF** Mains Power **OFF**
SPC Reference	1185049-0300

a) Open the RH side PullTab door.

b) Check the air filter (1) for punch blowing. If it is coloured **pink**, it must be changed.

c) Check the air filter (2) for cap blowing. If it is coloured **pink**, it must be changed.

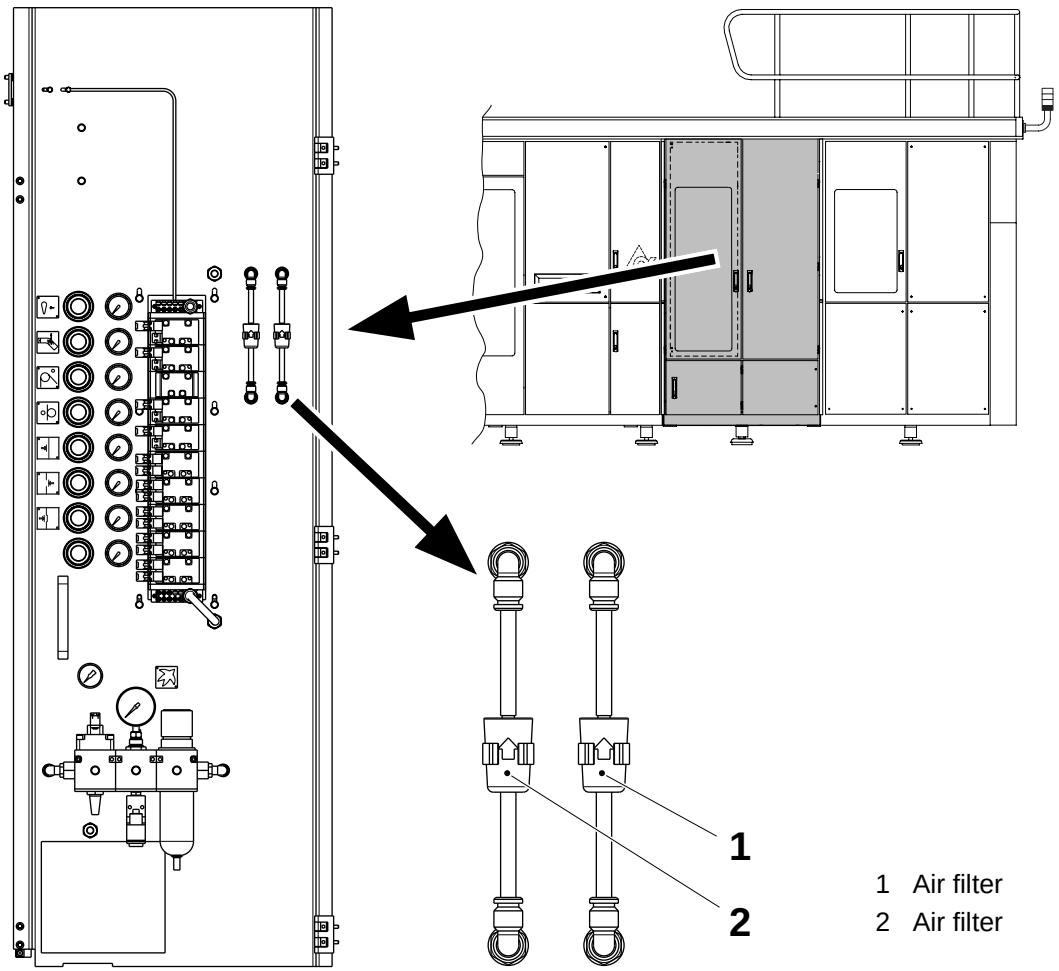

1 Air filter
2 Air filter

TechPub_2614345_0103 - B6114J02en.fm

This page intentionally left blank

TechPub_2614345_0103 - B6114J02en.fm

11 General

TechPub_2614345_0103 - B6114Y00en.fm

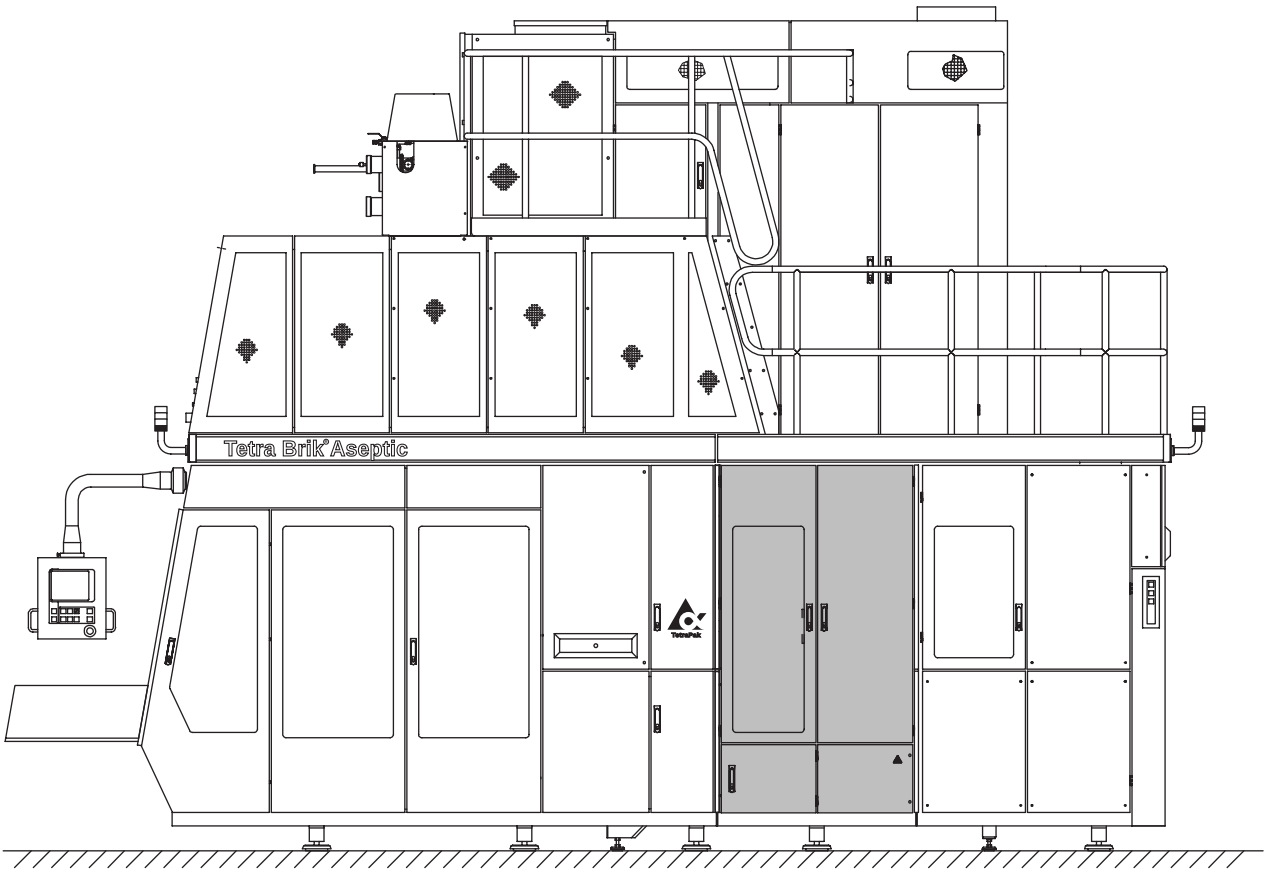

General - Description

SPC Reference	648508-0600

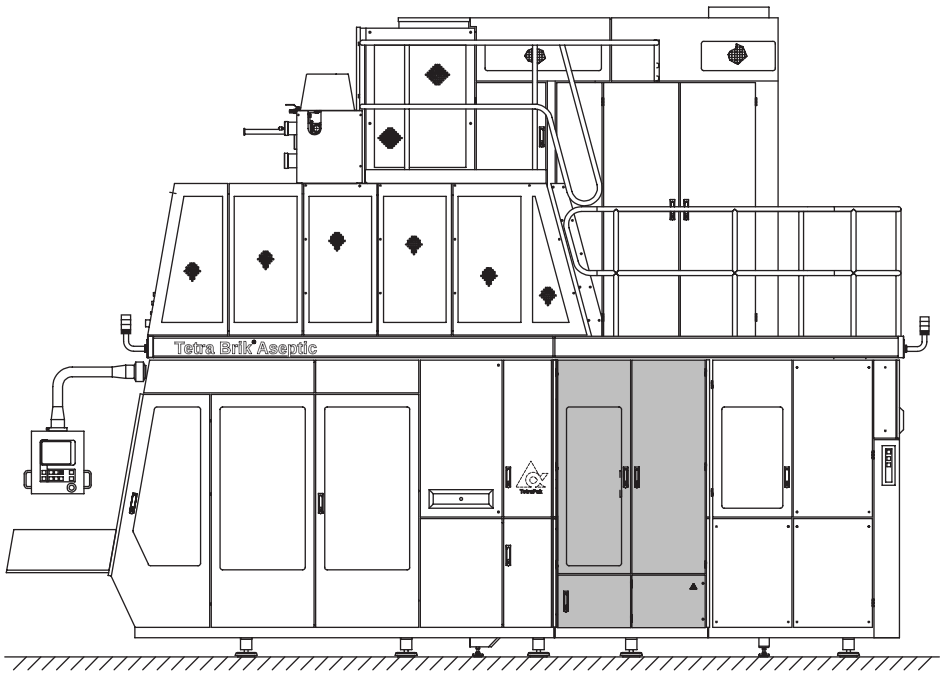

11.1
11.2
11.3

11.1 Technical Data
11.2 Troubleshooting
11.3 Opening Specification

TechPub_2614345_0103 - B6114Y00en.fm

11.1 Technical Data . . . . . 11 - 5

11.2 Troubleshooting . . . . . 11 - 8

11.2-1 Badly Positioned Patch . . . . . 11 - 9

11.2-2 Badly Positioned Tab . . . . . 11 - 11

11.2-3 Badly Positioned Outer Patch . . . . . 11 - 13

11.3 Opening Specification. . . . . 11 - 15

11.3-1 Opening Specification - Description of Hole Types . . . . . 11 - 15

11.3-2 Opening Specification - Description . . . . . 11 - 20

TechPub_2614345_0103 - B6114Y00en.fm

This page intentionally left blank

TechPub_2614345_0103 - B6114Y00en.fm

11.1 Technical Data

SPC Reference	648508-0600

Pressures	Symbol	Unit	Value
Tab counter-jaw - CAP blowing		Bar	2.5
Waste blowing		Bar	3.0
Tension unit - pressure roller		Bar	2.0
Drive motor - pressure roller		Bar	4.5
Patch counter-jaw - sealing pressure		Bar	2.5
Outer patch counter-jaw - sealing pressure		Bar	2.5
Tab counter-jaw - sealing pressure		Bar	2.5
PT21 main air inlet		Bar	6.0

Pressure switches		Unit	Value
Low air pressure		Bar	4.5

Consumables (black tape)	TP No.	Note
Patch and tab strip splice	90144-52	for all holes
To cover holes	90144-069	for holes 48 and 72
	90144-070	for hole 60
	90144-071	for holes 55, 65, 85 and 90

(Cont'd)

TechPub_2614345_0103 - B6114Y01en.fm

(Cont'd)

Package	Hole type	Packaging material	Outer patch, ±5 °C	Patch, ±10 SU	Tab, ±5 °C	Tab counter jaw, ±5 °C
TPA 330 Sq	48	TBA/j	160	460	180	120
		Westvaco	160	460	165	115
TBA 500 S	55	TBA/j	Not applicable	420	175	125
		Westvaco	Not applicable	—	—	—
TPA 1000 S	60	TBA/j	Not applicable	490	175	130
		Westvaco	Not applicable	—	—	—
TPA 1000 Sq	60	TBA/j	Not applicable	520	150	125
		Westvaco	Not applicable	—	—	—
TBA 1000 S	65	TBA/j	Not applicable	470	180	120
		Westvaco	Not applicable	470	180	120
TBA 1000 B	65	TBA/j	Not applicable	470	180	120
		Westvaco	Not applicable	—	—	—
TBA 1000 Sq	65	TBA/j	Not applicable	470	180	120
		Westvaco	Not applicable	—	—	—
TPA 250 Sq	72	TBA/j	160	400	170	160
		Westvaco	—	—	—	—
TBA 1000 S	85	TBA/j	Not applicable	470	180	130
		Westvaco	Not applicable	470	180	130
TBA 1000 B	85	TBA/j	Not applicable	470	180	130
		Westvaco	Not applicable	—	—	—
TBA 1000 Sq	85	TBA/j	Not applicable	470	180	130
		Westvaco	Not applicable	—	—	—
TBA 1500 S	85	LK	Not applicable	490	170	140
		Westvaco	Not applicable	—	—	—
TBA 1000 S	90	TBA/j	Not applicable	450	170	140
		Westvaco	Not applicable	—	—	—
TBA 1500 S	90	LK	Not applicable	405	170	140
		Westvaco	Not applicable	—	—	—

(Cont'd)

TechPub_2614345_0103 - B6114Y01en.fm

(Cont'd)

Hole type	Outer patch strip (TPI)	Patch strip (TPI)	Tab strip (TPI)
48	8871-149-01	8865-146-01	8738-722-01
55	Not applicable	8865-963-01	8738-724-01
60	Not applicable	8865-964-01	8757-733-01
65	Not applicable	8865-967-01	8738-728-01
72	8871-149-01	8865-957-01	8738-722-01
85	Not applicable	8865-967-01	8738-728-01
90	Not applicable	8865-963-01	8738-725-01

Noise declaration (according to ISO 3744)	Unit	Value
Equivalent sound pressure level (Leq) at 1 m of a distance from machinery and at 1.6 m from the floor or access platform.	dB (A)	72.5
Equivalent sound pressure level (Leq), maximum value	dB (A)	---
Peak instantaneous sound pressure level (S.P.L. peak)	dB (C)	under 130
Surface sound pressure level, Log. average (Lpf)	dB (A)	71.5 ± 0.5

Other data PT21	Value
Max. capacity	5500 ± 4% packages/hour (x = 1500 ml)
	7000 ± 4% packages/hour (1500 ml > x > 330 ml)
	8000 ± 4% packages/hour (x ≤ 330 ml)
Air	300 - 450 l/min. (norm. 80 l/min.)
Power	max 0.6 kW, 400 V, 50-60 Hz, 3 ph

TechPub_2614345_0103 - B61114Y01en.fm

11.2 Troubleshooting

This trouble shooting section is divided into three distinct categories:

- badly positioned patch
- badly positioned tab
- badly positioned outer patch.

Information about correcting the problems can be found within the body of this manual.

TechPub_2614345_0103 - B6114Y02en.fm

11.2-1 Badly Positioned Patch

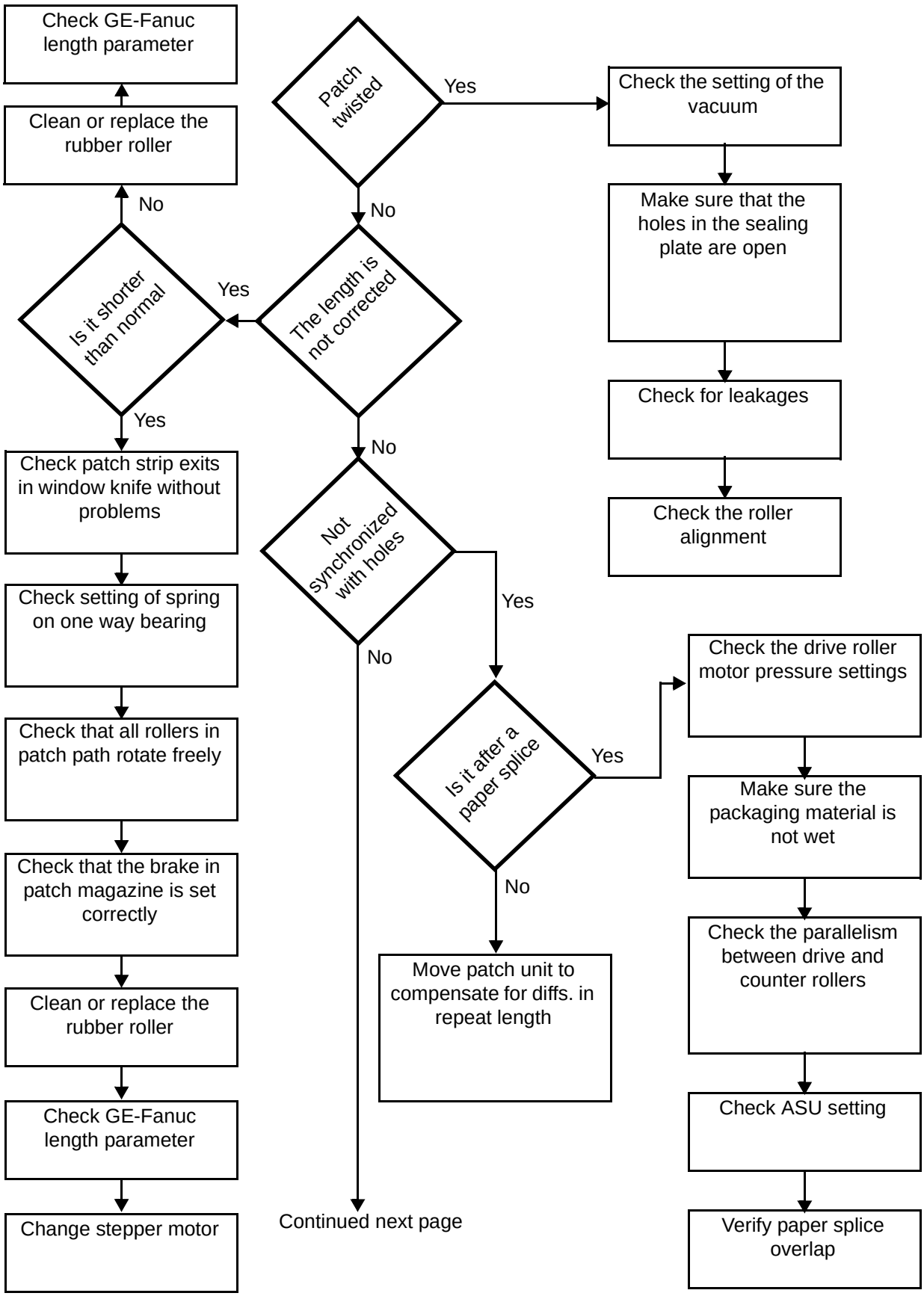

(Cont'd)

TechPub_2614345_0103 - B6114Y02en.fm

(Cont'd)

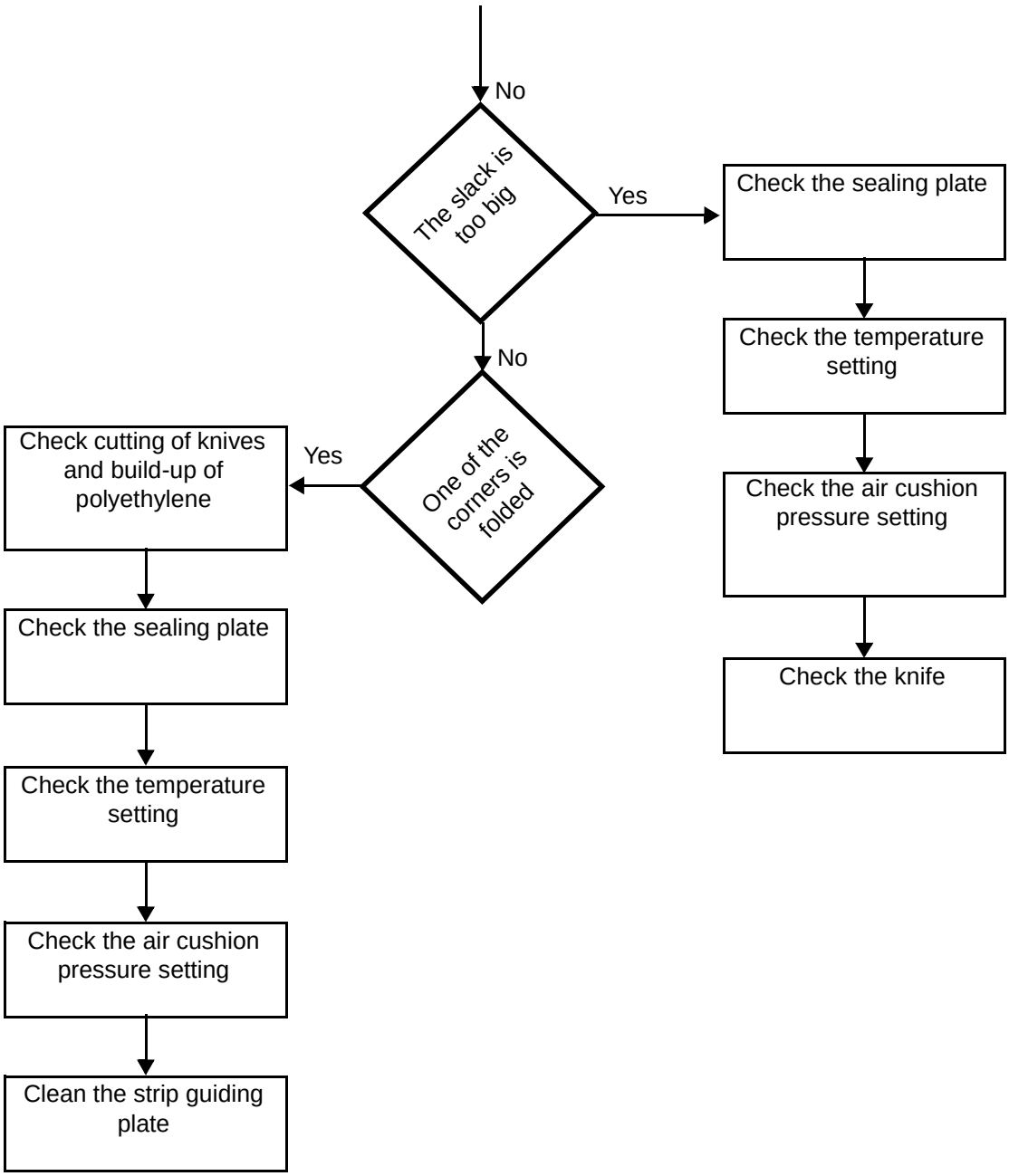

TechPub_2614345_0103 - B6114Y02en.fm

11.2-2 Badly Positioned Tab

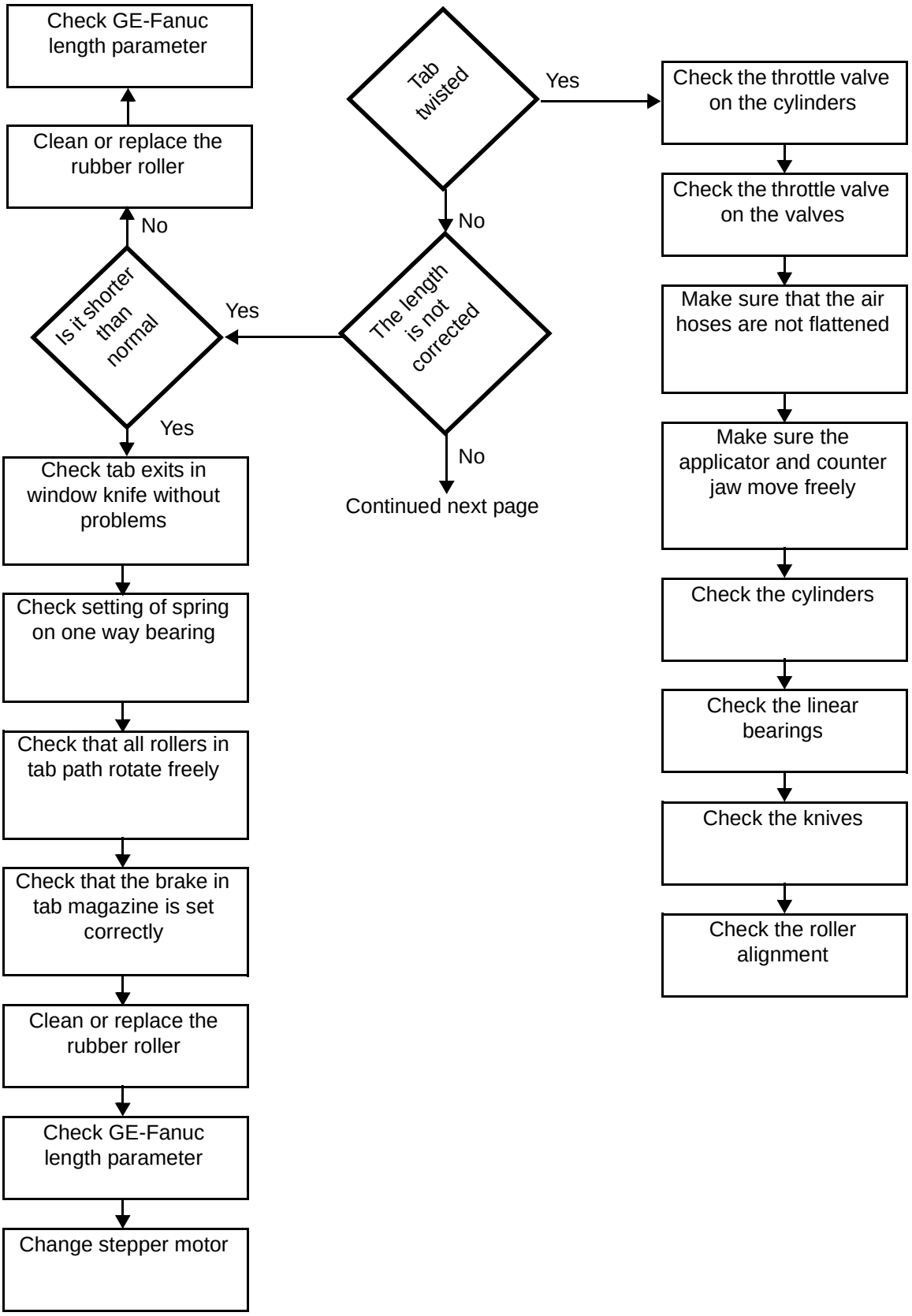

(Cont'd)

TechPub_2614345_0103 - B6114Y02en.fm

(Cont'd)

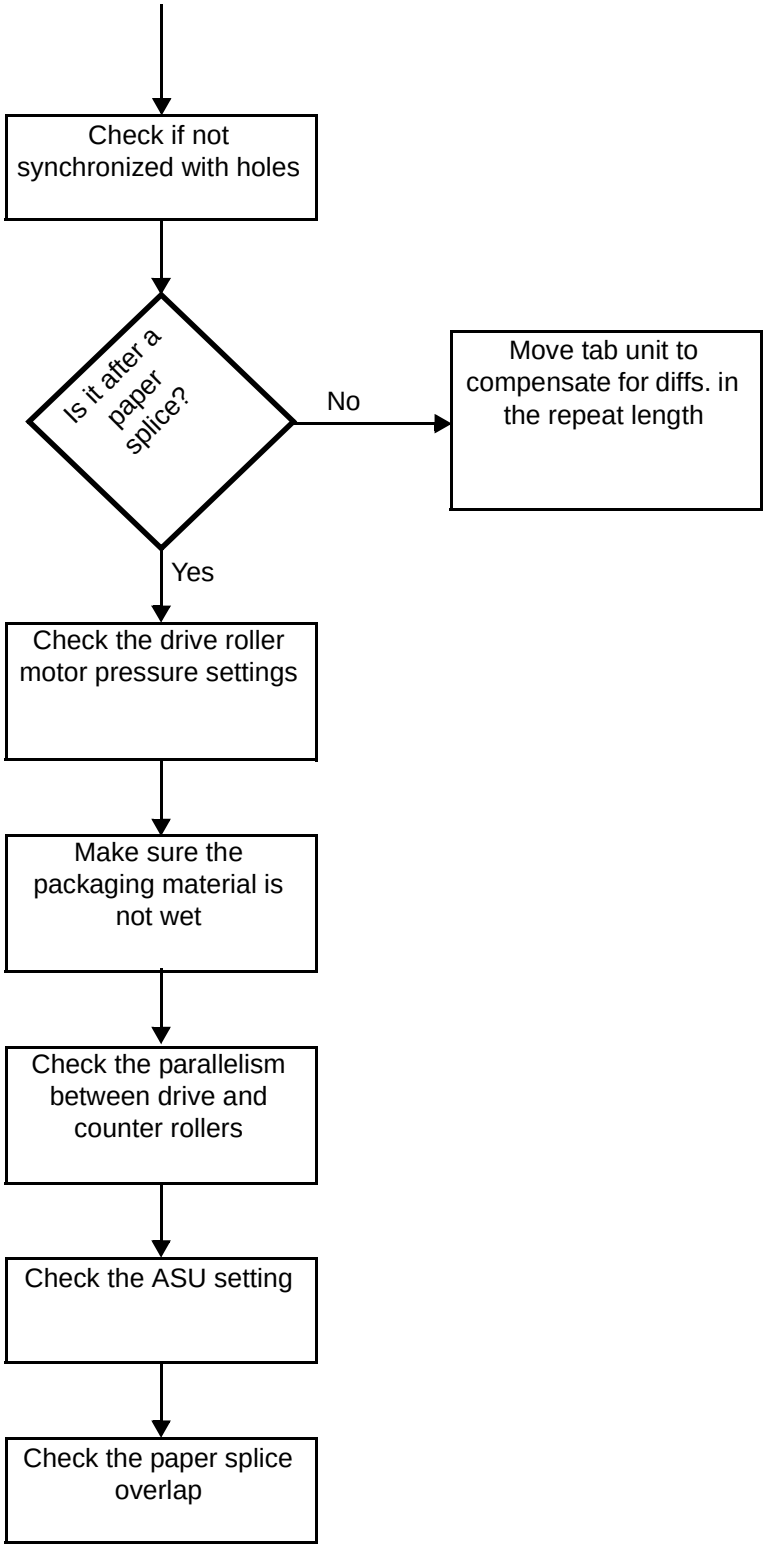

TechPub_2614345_0103 - B6114Y02en.fm

11.2-3 Badly Positioned Outer Patch

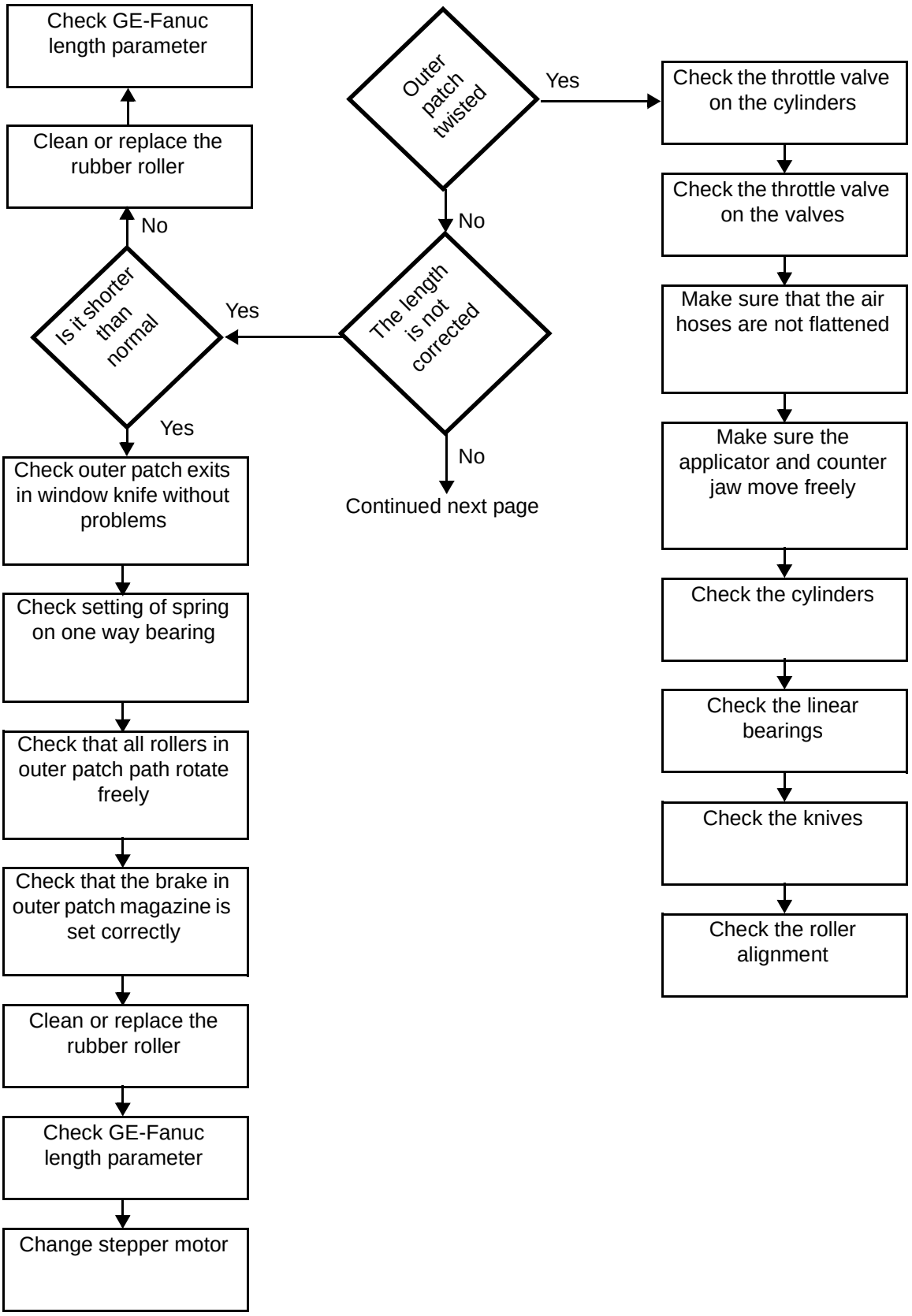

(Cont'd)

TechPub_2614345_0103 - B6114Y02en.fm

(Cont'd)

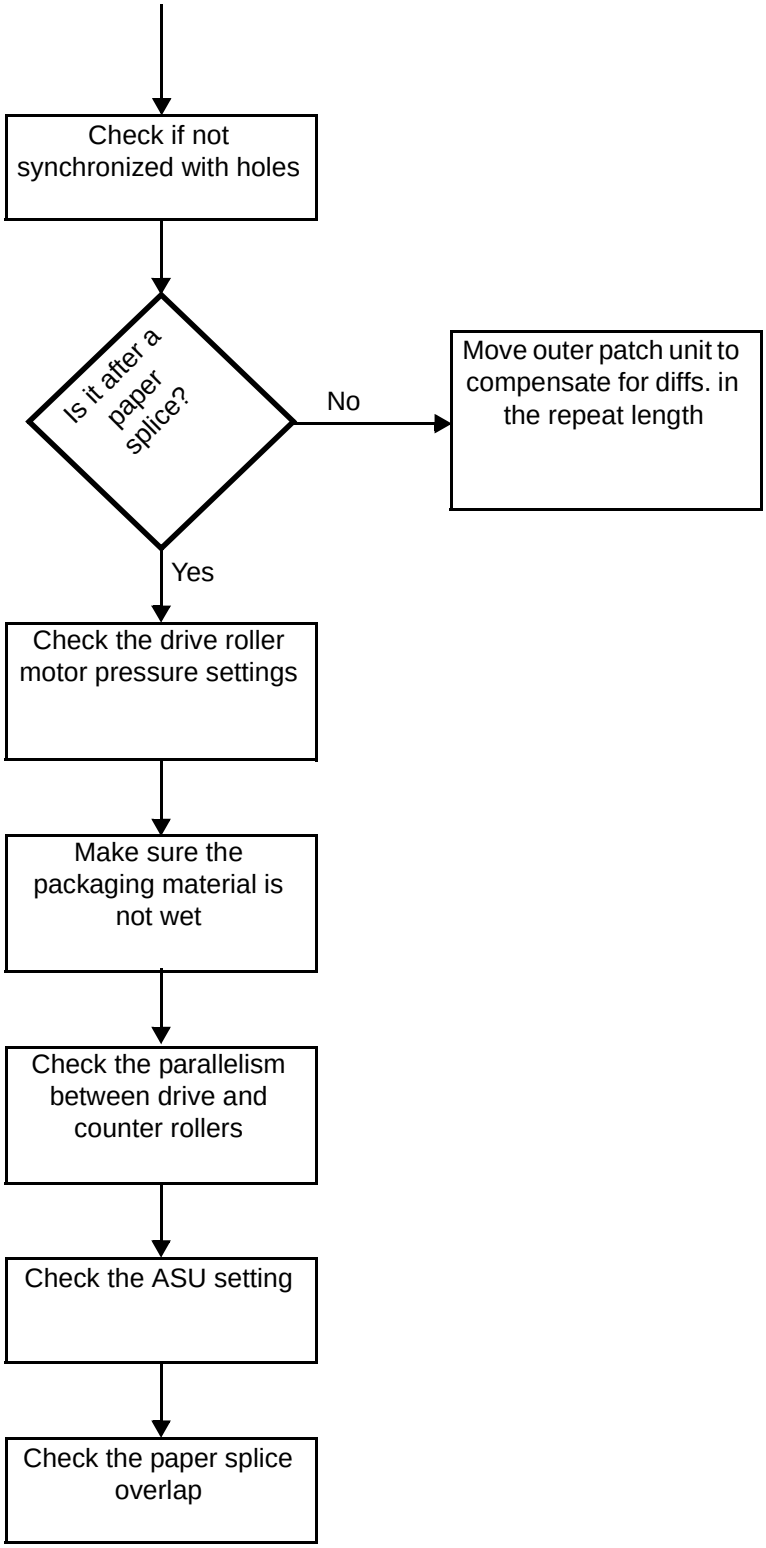

TechPub_2614345_0103 - B6114Y02en.fm

11.3 Opening Specification

11.3-1 Opening Specification - Description of Hole Types

HOT - Hole On Top

- HOT is used for packages with ReCap
- the hole is placed at a specific distance to the edge of the package in order to leave a space for the plastic ReCap
- the aluminium tab is always folded.

HOE - Hole On Edge

- HOE is used for packages with PullTab and there is no additional ReCap on the package
- the hole is placed on one edge of the package in order to improve the pouring from the package
- the aluminium tab is not folded.

HIC - Hole In Centre

- HIC is used for packages with PullTab with the hole placed exactly in the middle and there is no additional ReCap on the package
- the hole is placed on one edge of the package in order to improve the pouring from the package
- HIC is typically used for small prisma packages like TPA 330 Sq and TPA 250 Sq
- the aluminium tab is not folded.

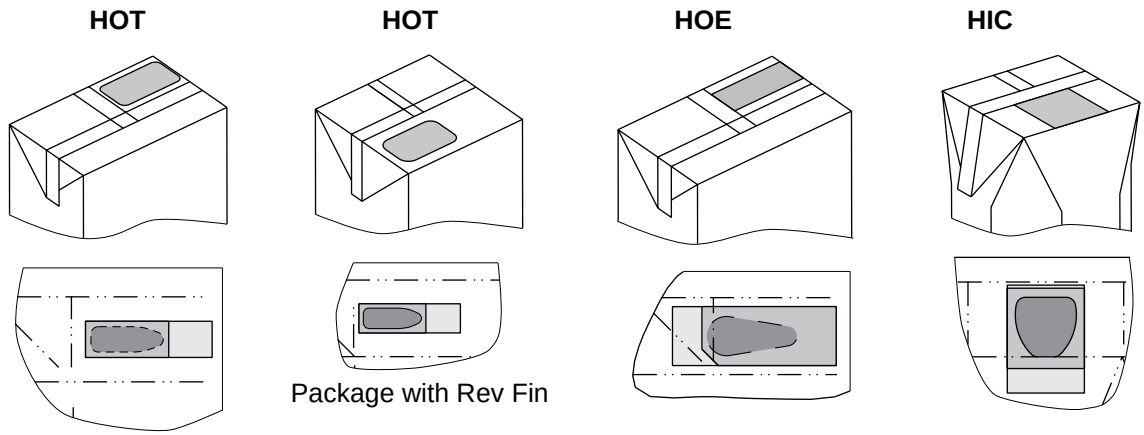

Hole 55, 60, 65 and 85

Package with Rev Fin

Hole 21 and 25

To be introduced later on

Hole 48 and 72

(Cont'd)

TechPub_2614345_0103 - B6114Y03en.fm

(Cont'd)

HOT Example with TBA 500 S, Hole 55

The packaging materials have five panels numbered from one to five and each panel is separated into A, B and C parts with the crease lines (8).

In a normal case the hole (10) and the tab location (6) are positioned on the panel 5A close to the sealing zone (7).

Note! Use the bar code (9) on the panel 5C to find the flow direction of paper in the machine and the holes (10) position.

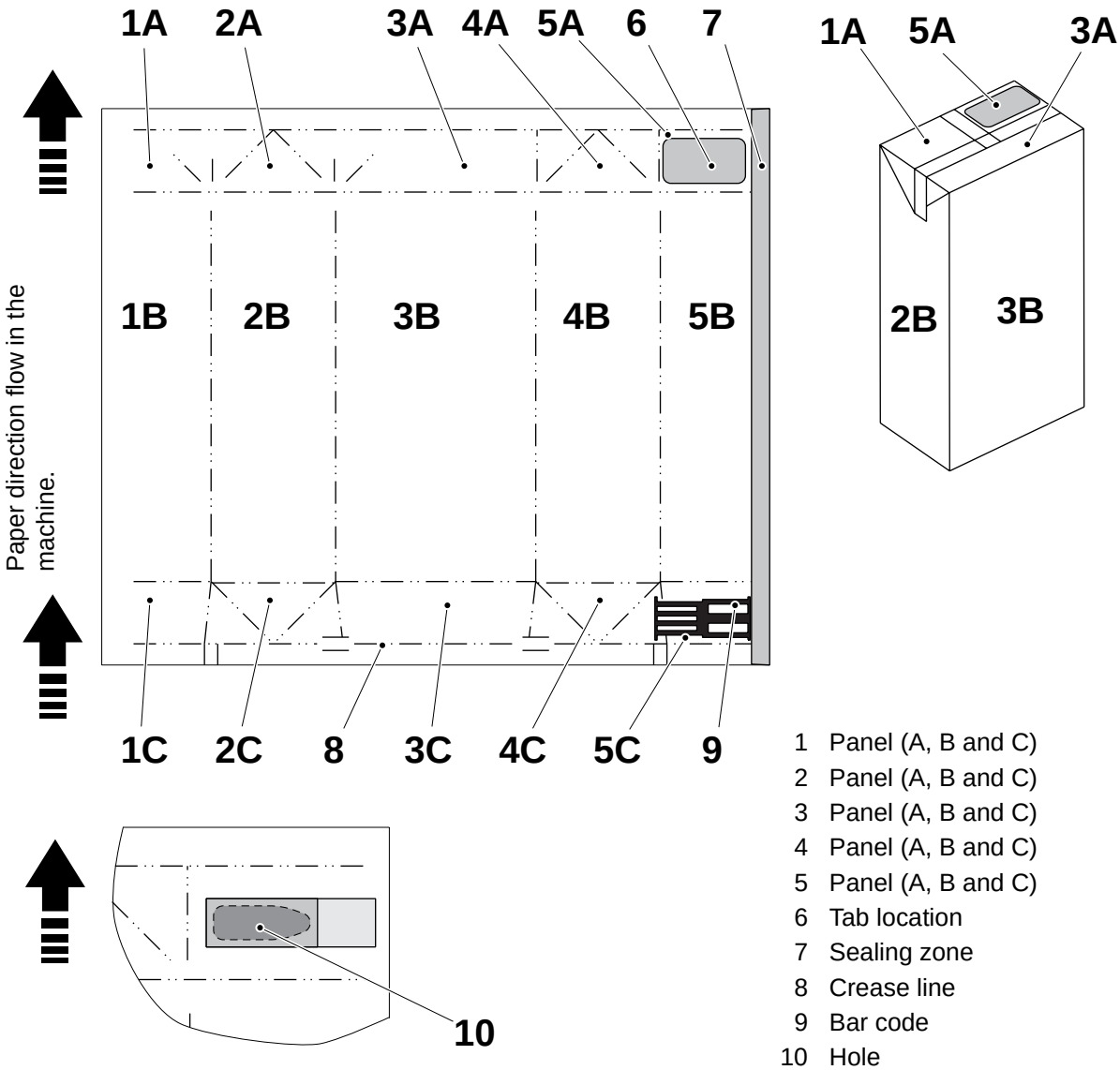

1 Panel (A, B and C)
2 Panel (A, B and C)
3 Panel (A, B and C)
4 Panel (A, B and C)
5 Panel (A, B and C)
6 Tab location
7 Sealing zone
8 Crease line
9 Bar code
10 Hole

(Cont'd)

TechPub_2614345_0103 - B6114Y03en.fm

(Cont'd)

HOT Example with TBA 1000 Sq, Hole 65, with RevFin

The packaging materials have five panels numbered from one to five and each panel is separated into A, B and C parts with the crease lines (8).

In the case of RevFin the hole (10) and the tab location (6) are positioned on the panel 3A and not close to the sealing zone (7) as in a normal case.

Note! Use the bar code (9) on the panel 5C to find the flow direction of paper in the machine and the holes (10) position.

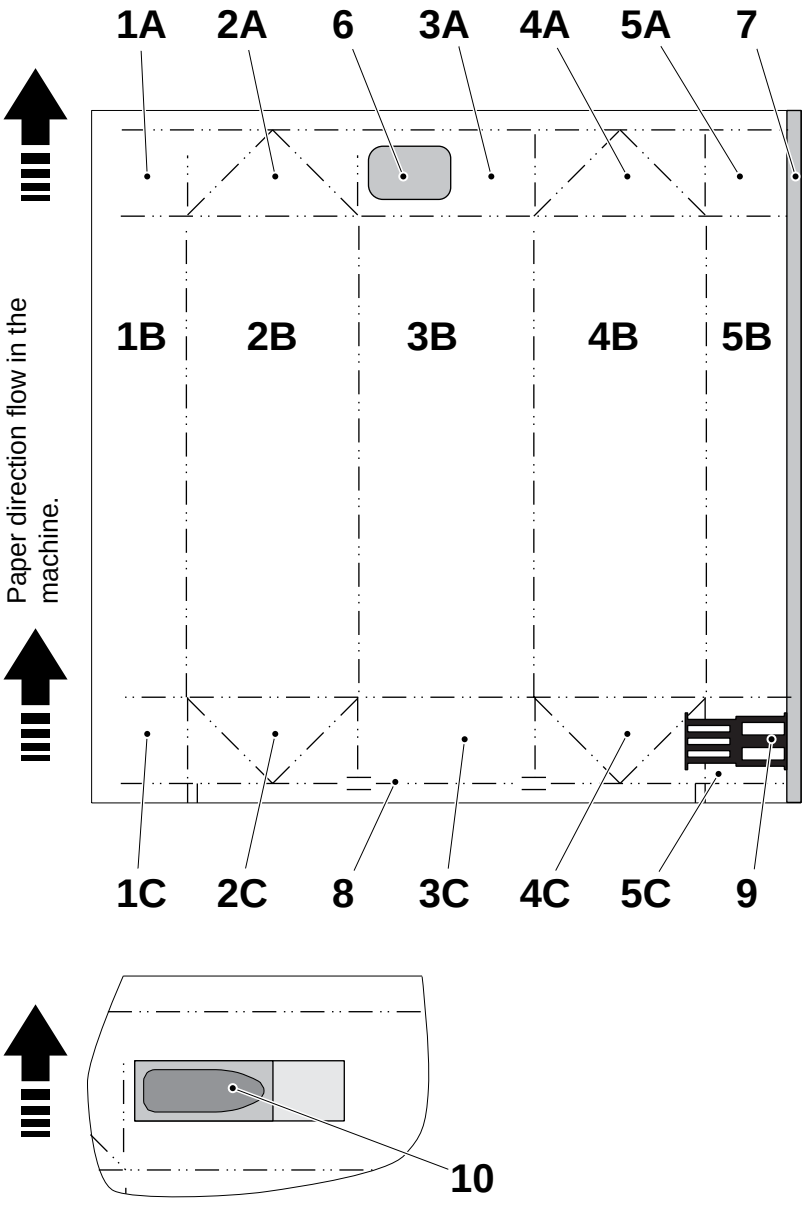

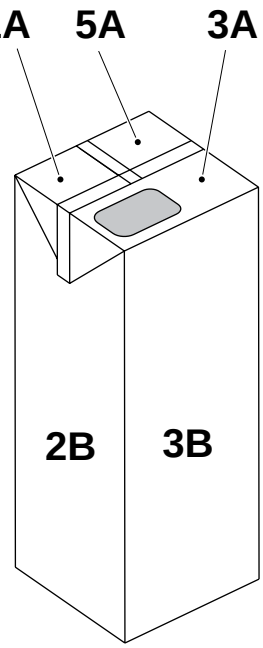

1 Panel (A, B and C)
2 Panel (A, B and C)
3 Panel (A, B and C)
4 Panel (A, B and C)
5 Panel (A, B and C)
6 Tab location
7 Sealing zone
8 Crease line
9 Bar code
10 Hole

(Cont'd)

TechPub_2614345_0103 - B6114Y03en.fm

(Cont'd)

HOE Example with TBA 500 S, Hole 25

The packaging materials have five panels numbered from one to five and each panel is separated into A, B and C parts with the crease lines (8).

The hole (10) and the tab location (6) are positioned on the panel 5A close to the sealing zone (7).

Note! Use the bar code (9) on the panel 5C to find the flow direction of paper in the machine and the holes (10) position.

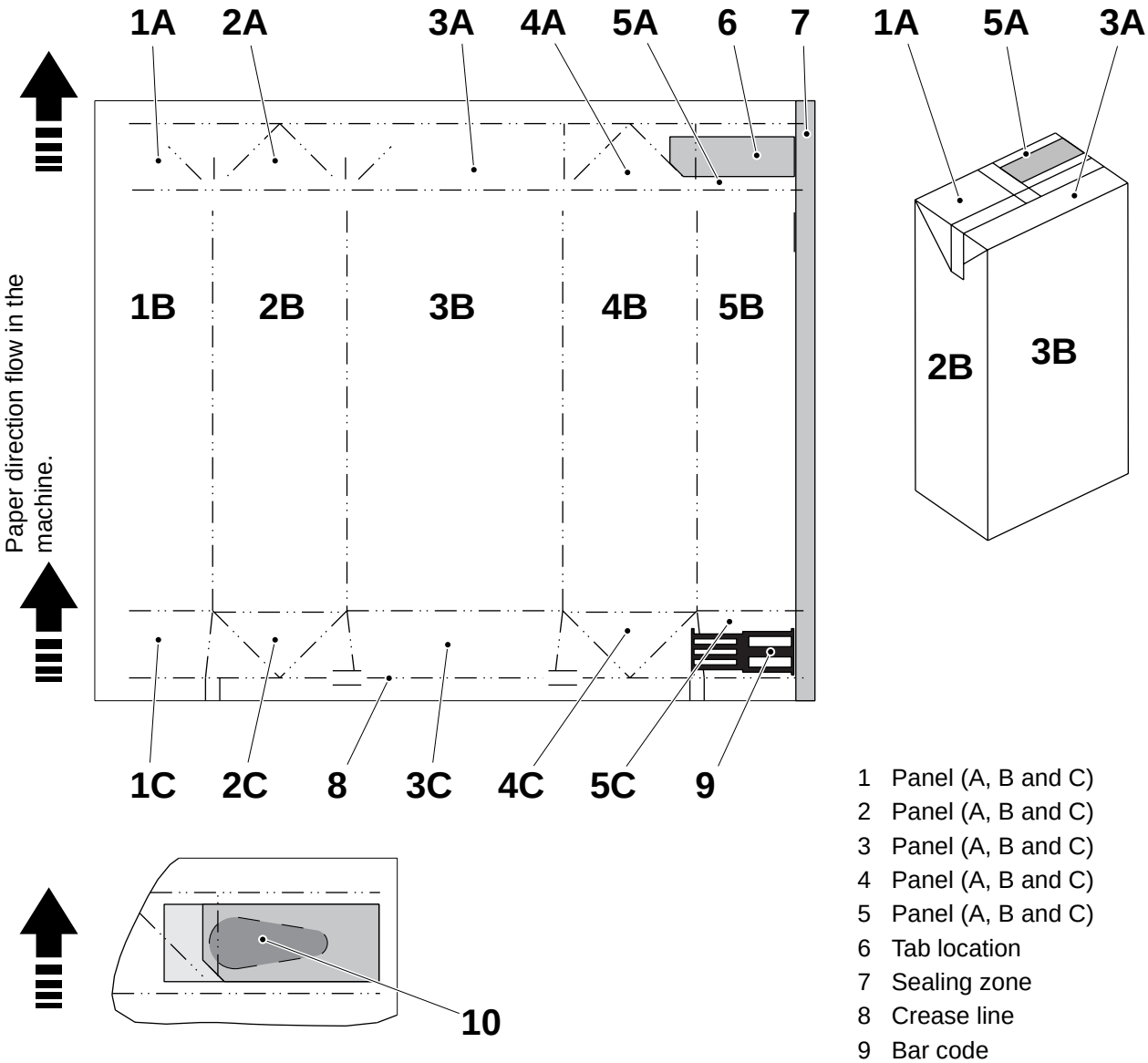

1 Panel (A, B and C)
2 Panel (A, B and C)
3 Panel (A, B and C)
4 Panel (A, B and C)
5 Panel (A, B and C)
6 Tab location
7 Sealing zone
8 Crease line
9 Bar code
10 Hole

(Cont'd)

TechPub_2614345_0103 - B6114Y03en.fm

(Cont'd)

HIC Example with TPA 330 Sq, Hole 48

The packaging materials have five panels numbered from one to five and each panel is separated into A, B and C parts with the crease lines (8). The prisma package has an extra four side panels (1/2B, 2/3B, 3/4B and 4/5B).

The hole (10) and the tab location (6) are positioned on the panel 3A to the left of the sealing zone (7).

Note! Use the bar code (9) on the panel 5C to find the flow direction of paper in the machine and the holes (10) position.

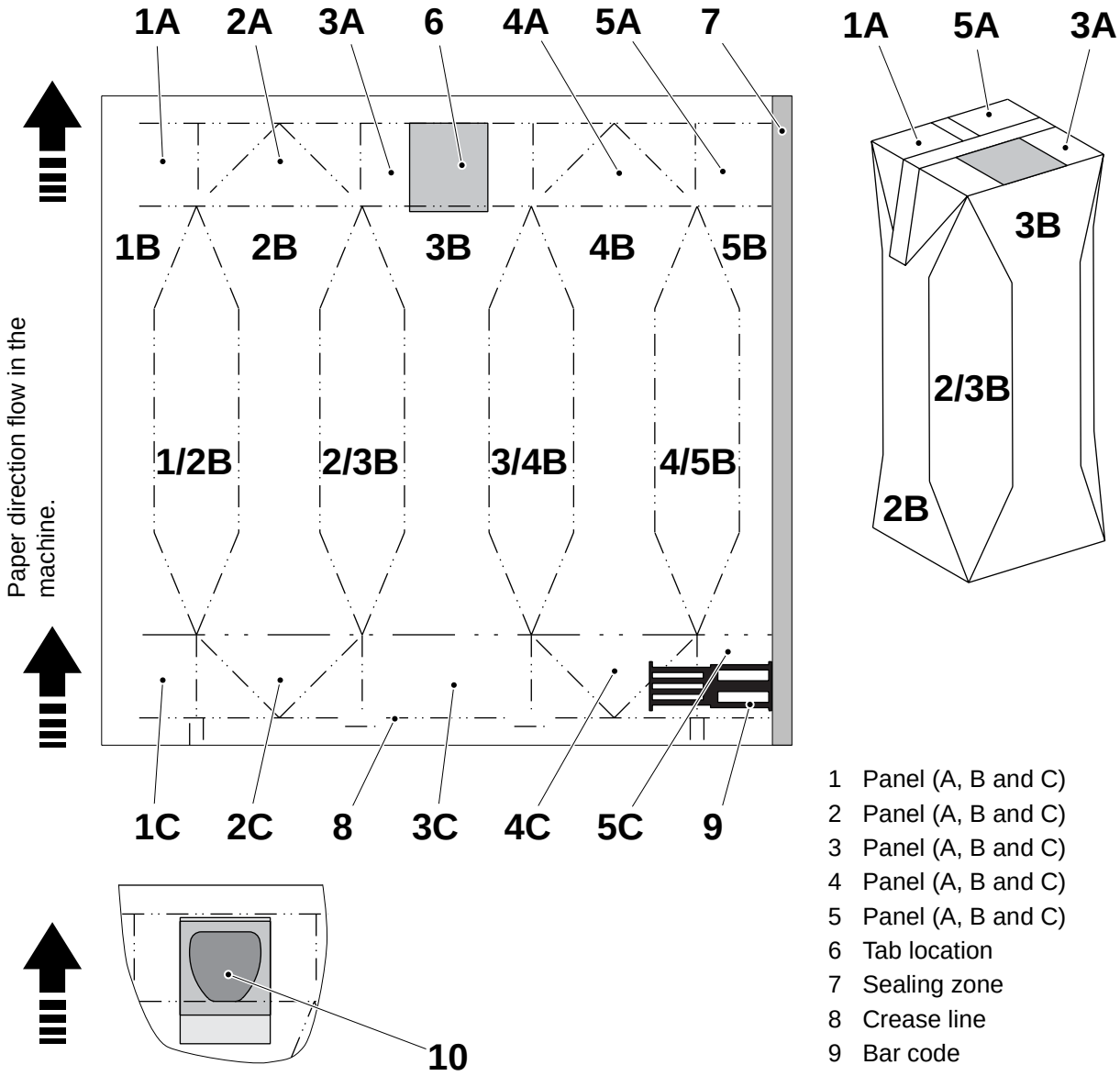

1 Panel (A, B and C)
2 Panel (A, B and C)
3 Panel (A, B and C)
4 Panel (A, B and C)
5 Panel (A, B and C)
6 Tab location
7 Sealing zone
8 Crease line
9 Bar code
10 Hole

TechPub_2614345_0103 - B6114Y03en.fm

11.3-2 Opening Specification - Description

Package	Hole type	On page		Package	Hole type	On page
TPA 330 Sq	48	11-21		TPA 250 Sq	72	11-28
TBA 500 S	55	11-22		TBA 1000 S	85	11-29
TPA 1000 S	60	11-23		TBA 1000 B	85	11-30
TPA 1000 Sq	60	11-24		TBA 1000 Sq	85	11-31
TBA 1000 S	65	11-25		TBA 1500 S	85	11-32
TBA 1000 B	65	11-26		TBA 1000 S	90	11-33
TBA 1000 Sq	65	11-27		TBA 1500 S	90	11-34

Note! All the dimensions referring to the creases have to be measured from the centreline of the same crease.

(Cont'd)

TechPub_2614345_0103 - B6114Y03en.fm

(Cont'd)

Package TPA 330 Sq with Hole 48, PullTab

HOLE
View from inside the package.

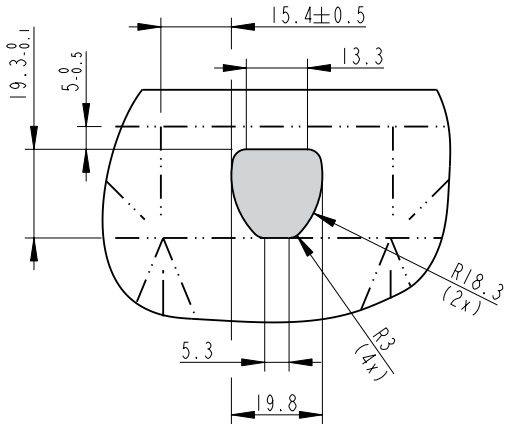

PATCH
View from inside the package.

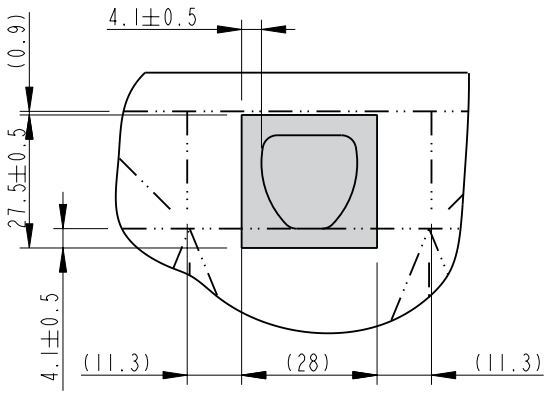

The flow direction of paper in the machine.

TAB
View from outside the package.

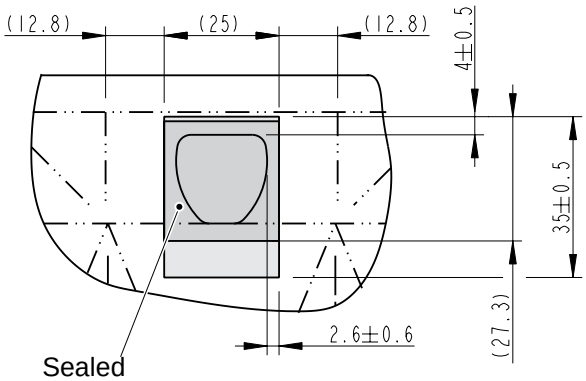

OUTER PROTECTION PATCH
View from outside the package.

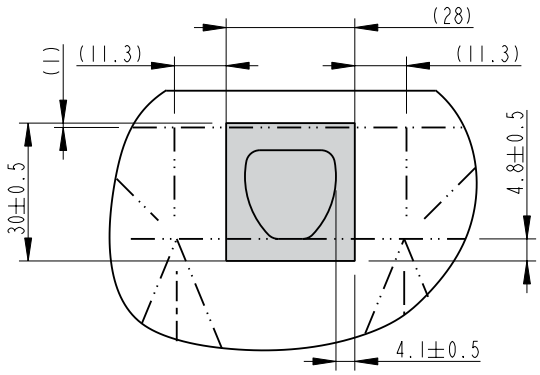

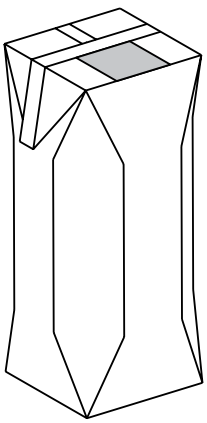

Last changed 2002-05-20.

(Cont'd)

TechPub_2614345_0103 - B6114Y03en.fm

(Cont'd)

Package TBA 500 S with Hole 55, ReCap2

HOLE
View from inside the package.

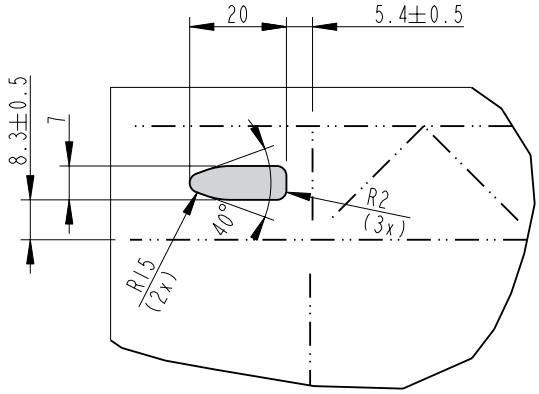

PATCH
View from inside the package.

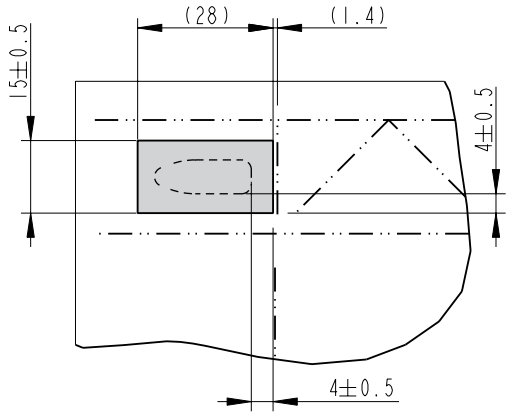

The flow direction of paper in the machine.

TAB
View from outside the package.

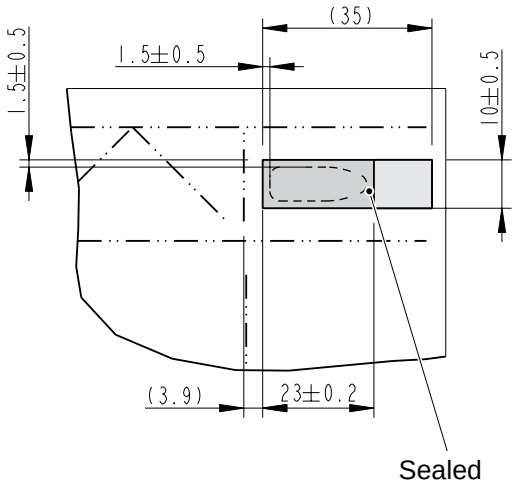

FOLDED TAB
View from outside the package.

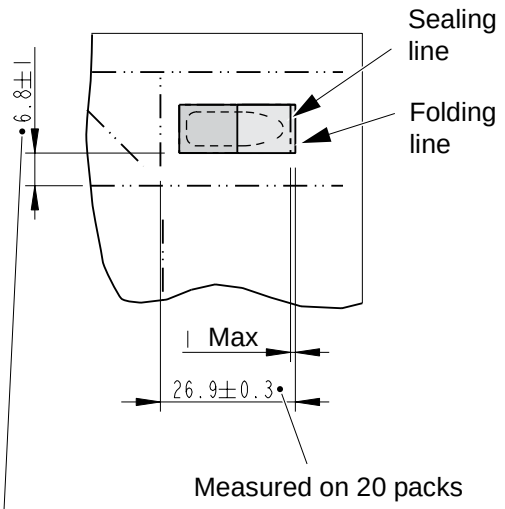

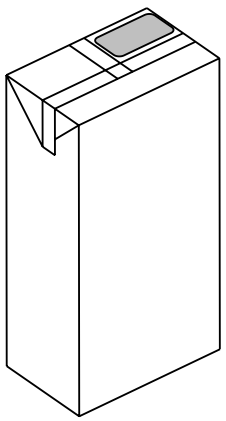

Last changed 2002-05-20.

(Cont'd)

TechPub_2614345_0103 - B6114Y03en.fm

(Cont'd)

Package TPA 1000 S with Hole 60, ReCap3P

HOLE
View from inside the package.

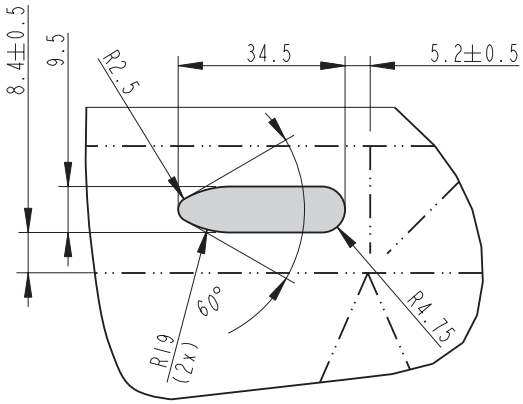

PATCH
View from inside the package.

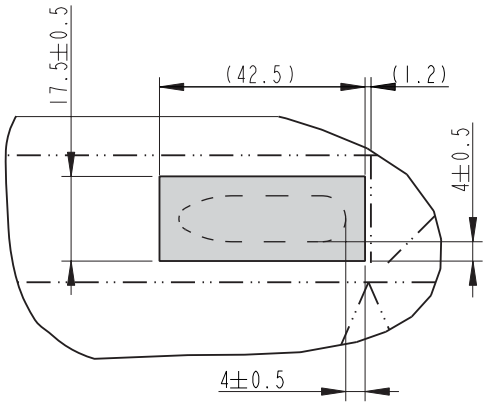

The flow direction of paper in the machine.

TAB
View from outside the package.

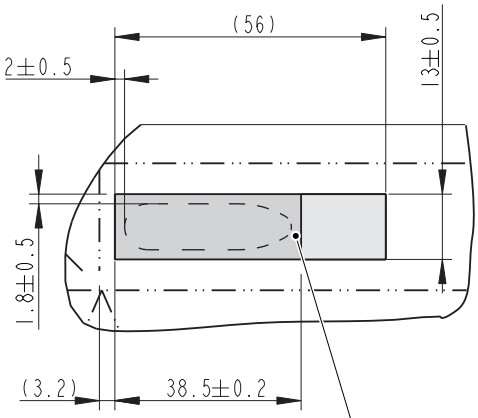

FOLDED TAB
View from outside the package.

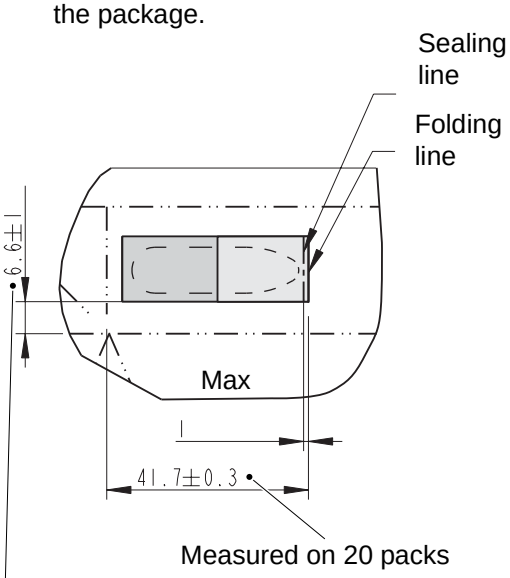

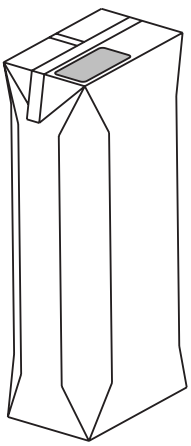

Last changed 2003-06-20.

(Cont'd)

TechPub_2614345_0103 - B6114Y03en.fm

(Cont'd)

Package TPA 1000 Sq with Hole 60, ReCap3P

HOLE
View from inside the package.

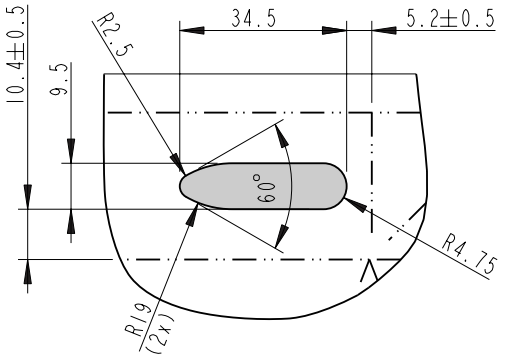

PATCH
View from inside the package.

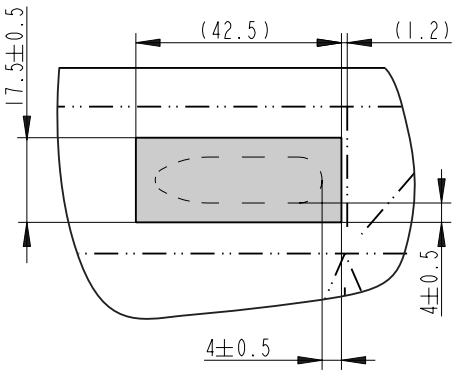

The flow direction of paper in the machine.

TAB
View from outside the package.

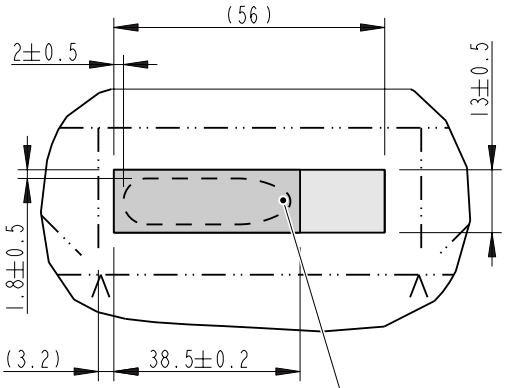

FOLDED TAB
View from outside the package.

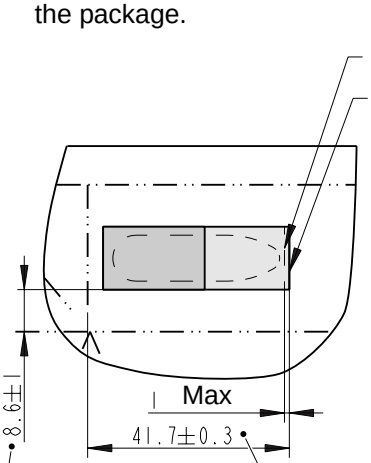

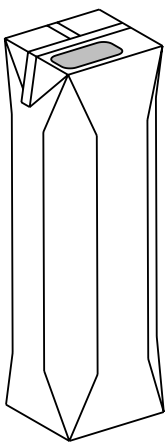

Sealed

Measured on 20 packs

8.6 ±0.5 measured on 20 packs

Last changed 2003-05-08.

(Cont'd)

TechPub_2614345_0103 - B6114Y03en.fm

(Cont'd)

Package TBA 1000 S with Hole 65, ReCap2

HOLE
View from inside the package.

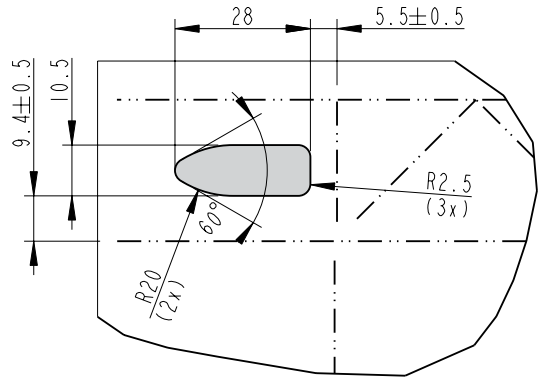

PATCH
View from inside the package.

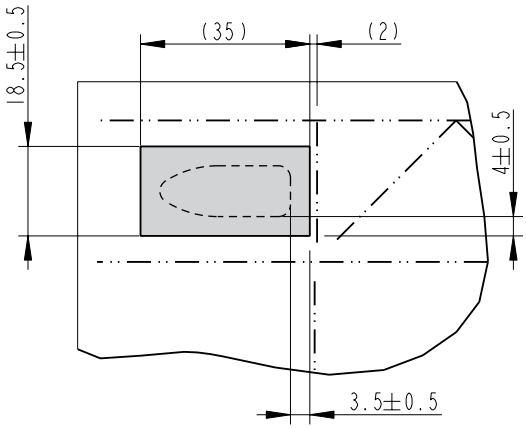

The flow direction of paper in the machine.

TAB
View from outside the package.

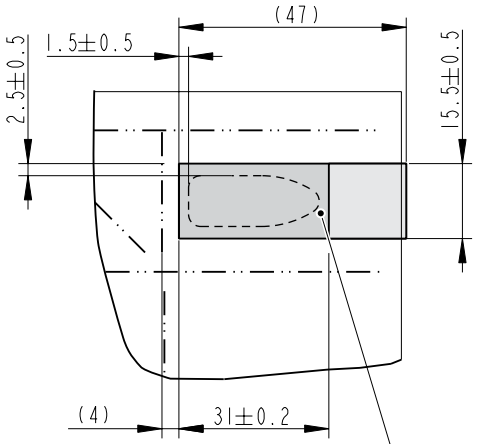

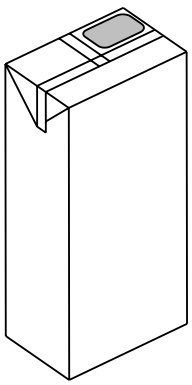

FOLDED TAB
View from outside the package.

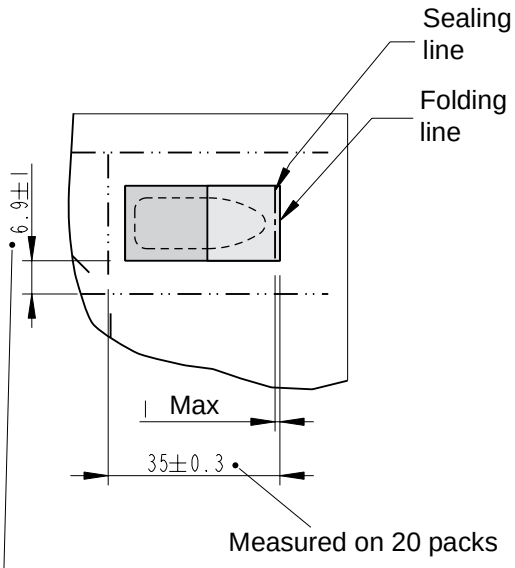

Last changed 2002-05-20.

(Cont'd)

TechPub_2614345_0103 - B6114Y03en.fm

(Cont'd)

Package TBA 1000 B with Hole 65, ReCap2

HOLE
View from inside the package.

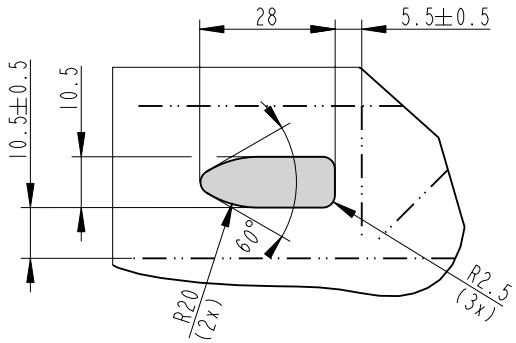

PATCH
View from inside the package.

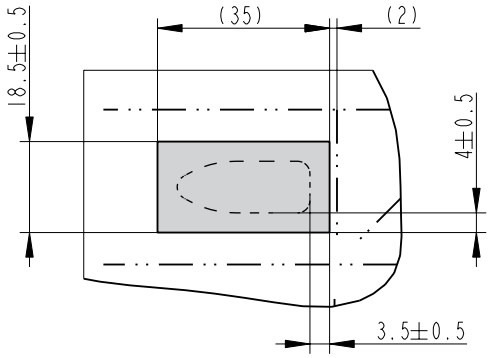

The flow direction of paper in the machine.

TAB
View from outside the package.

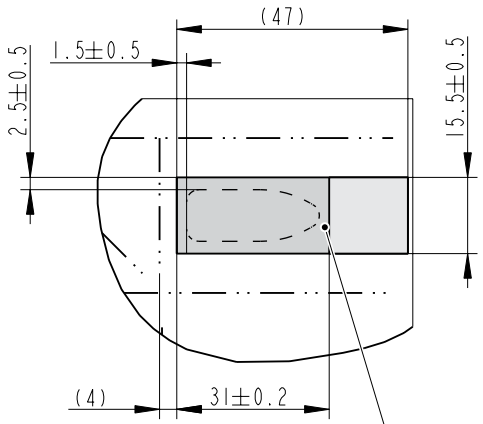

FOLDED TAB
View from outside the package.

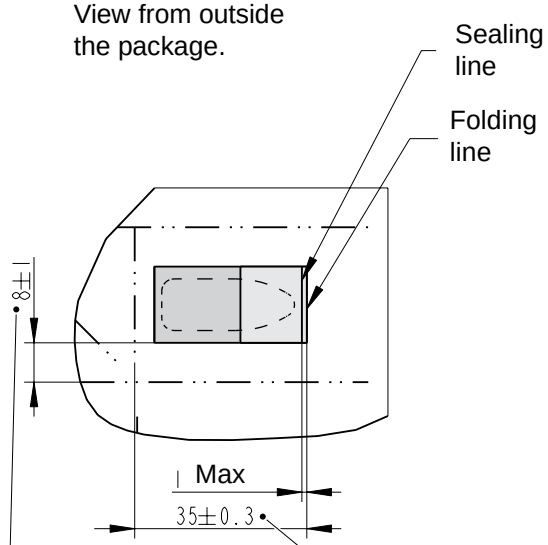

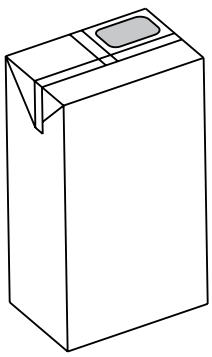

Last changed 2002-05-20.

(Cont'd)

TechPub_2614345_0103 - B6114Y03en.fm

(Cont'd)

Package TBA 1000 Sq with Hole 65, ReCap2

HOLE
View from inside the package.

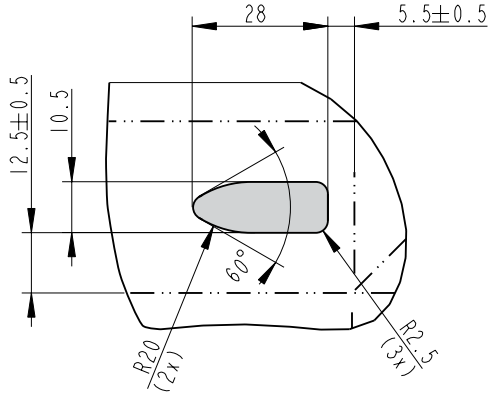

PATCH
View from inside the package.

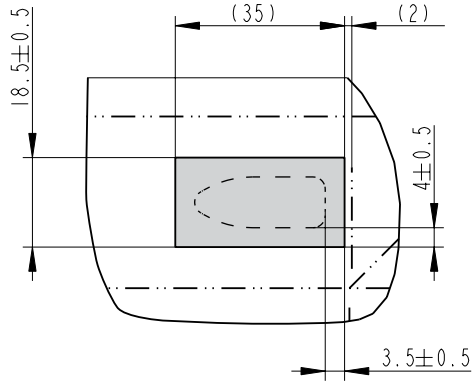

The flow direction of paper in the machine.

TAB
View from outside the package.

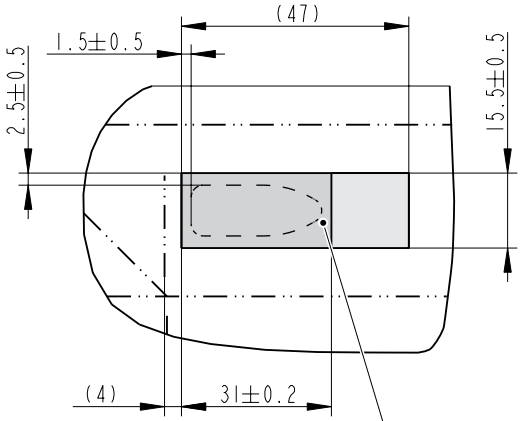

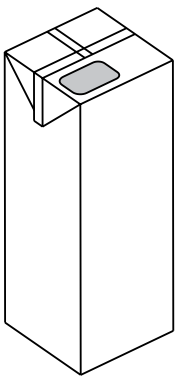

FOLDED TAB
View from outside the package.

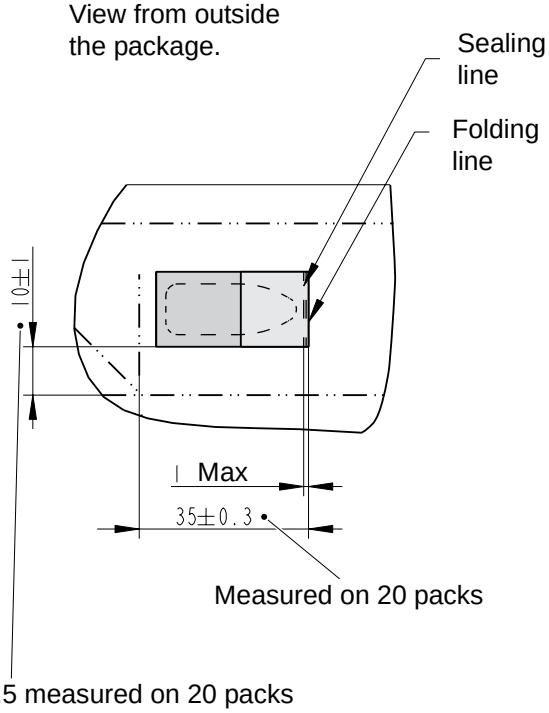

Last changed 2002-05-20.

(Cont'd)

TechPub_2614345_0103 - B6114Y03en.fm

(Cont'd)

Package TPA 250 Sq with Hole 72, PullTab

HOLE

View from inside the package.

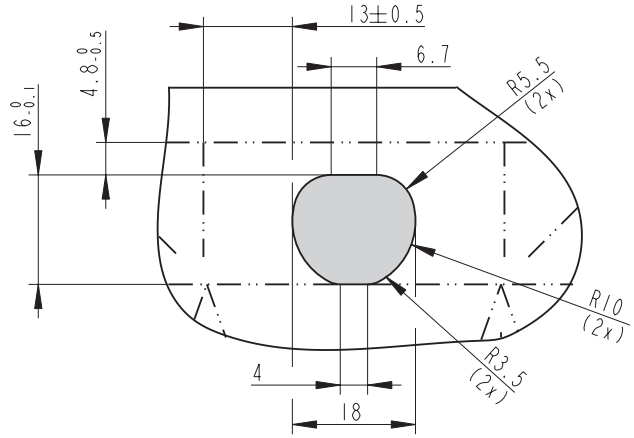

PATCH

View from inside the package.

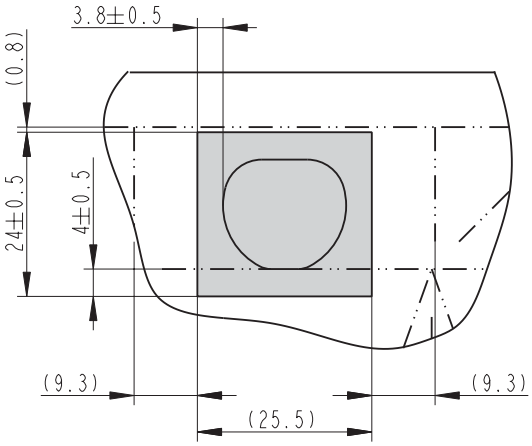

The flow direction of paper in the machine.

TAB

View from outside the package.

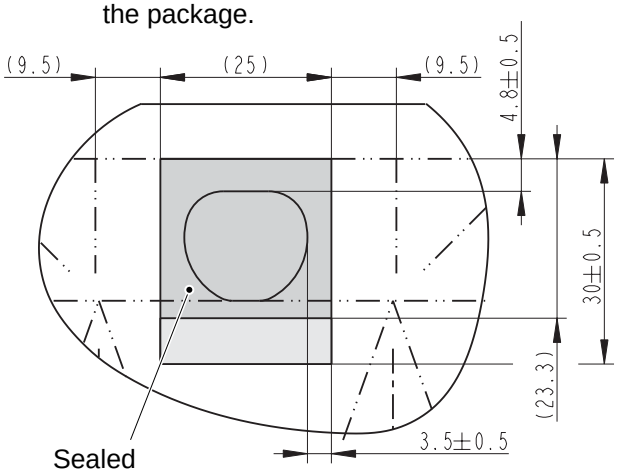

OUTER PROTECTION PATCH

View from outside the package.

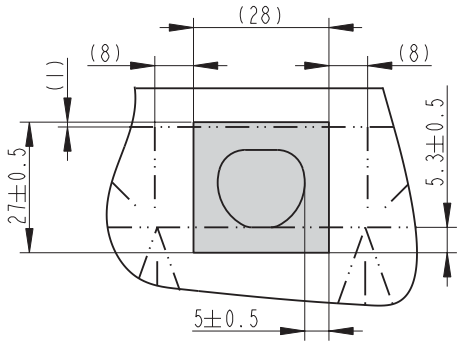

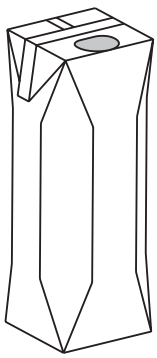

Last changed 2003-06-20.

(Cont'd)

TechPub_2614345_0103 - B6114Y03en.fm

(Cont'd)

Package TBA 1000 S with Hole 85, ReCap3

HOLE
View from inside the package.

PATCH
View from inside the package.

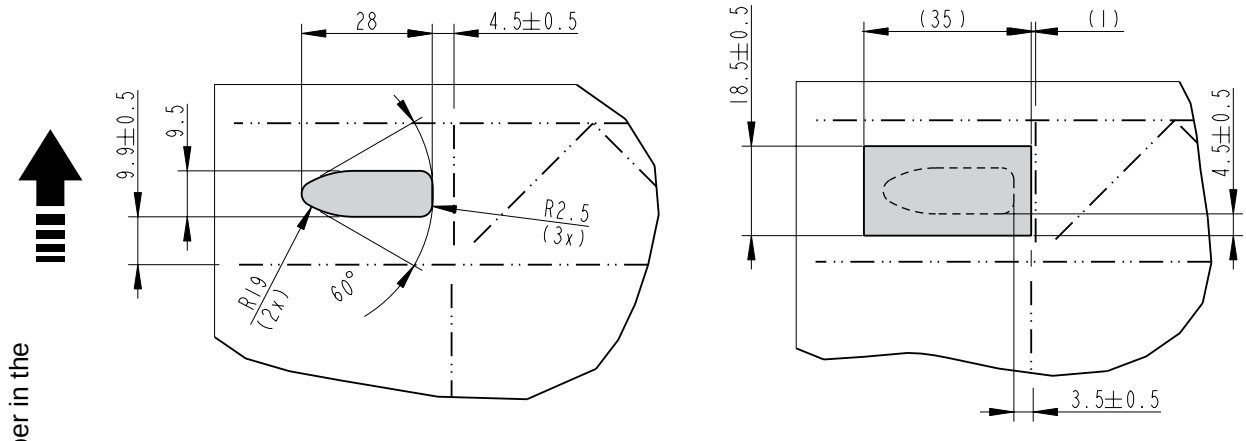

The flow direction of paper in the machine.

TAB
View from outside the package.

FOLDED TAB
View from outside the package.

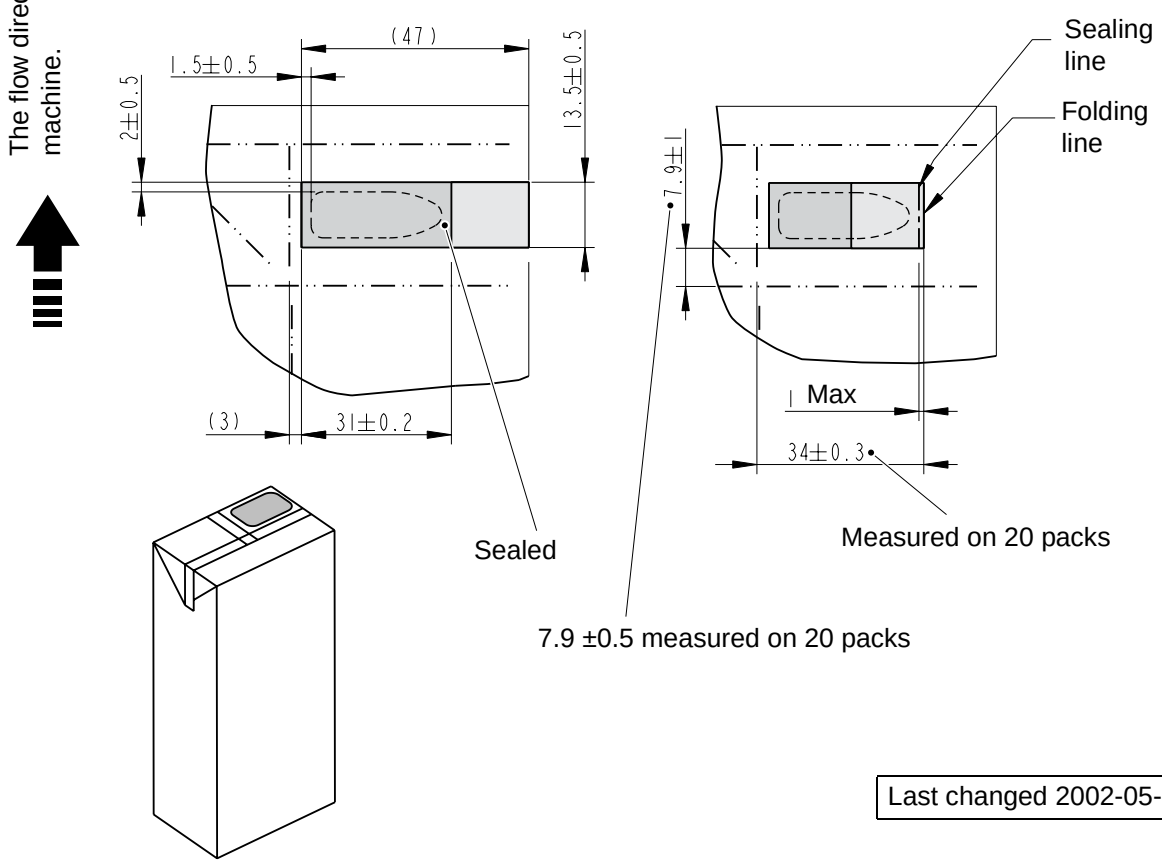

Last changed 2002-05-20.

(Cont'd)

TechPub_2614345_0103 - B6114Y03en.fm

(Cont'd)

Package TBA 1000 B with Hole 85, ReCap3

HOLE
View from inside the package.

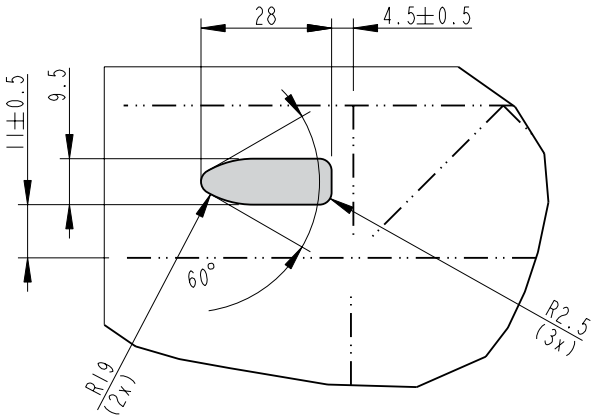

PATCH
View from inside the package.

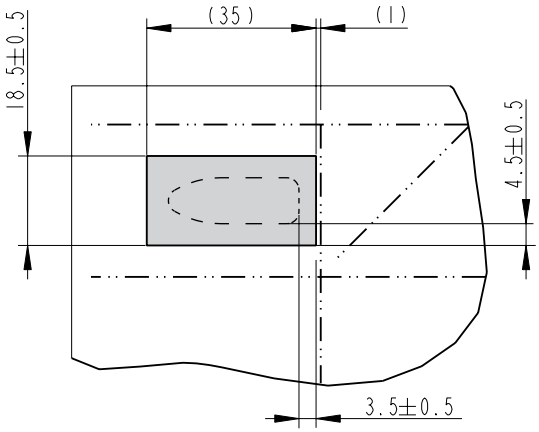

The flow direction of paper in the machine.

TAB
View from outside the package.

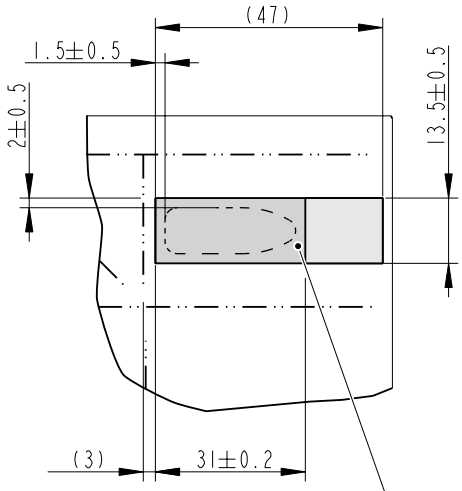

FOLDED TAB
View from outside the package.

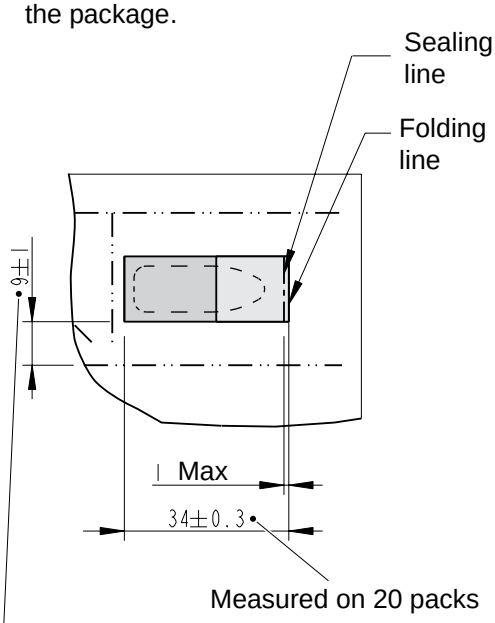

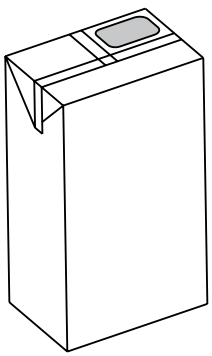

Last changed 2002-05-20.

(Cont'd)

TechPub_2614345_0103 - B6114Y03en.fm

(Cont'd)

Package TBA 1000 Sq with Hole 85, ReCap3

HOLE
View from inside the package.

PATCH
View from inside the package.

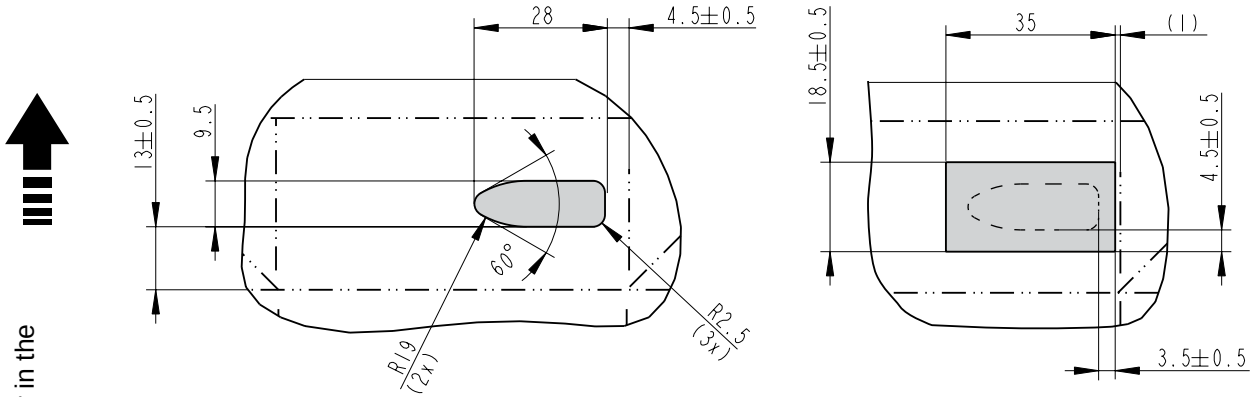

The flow direction of paper in the machine.

TAB
View from outside the package.

FOLDED TAB
View from outside the package.

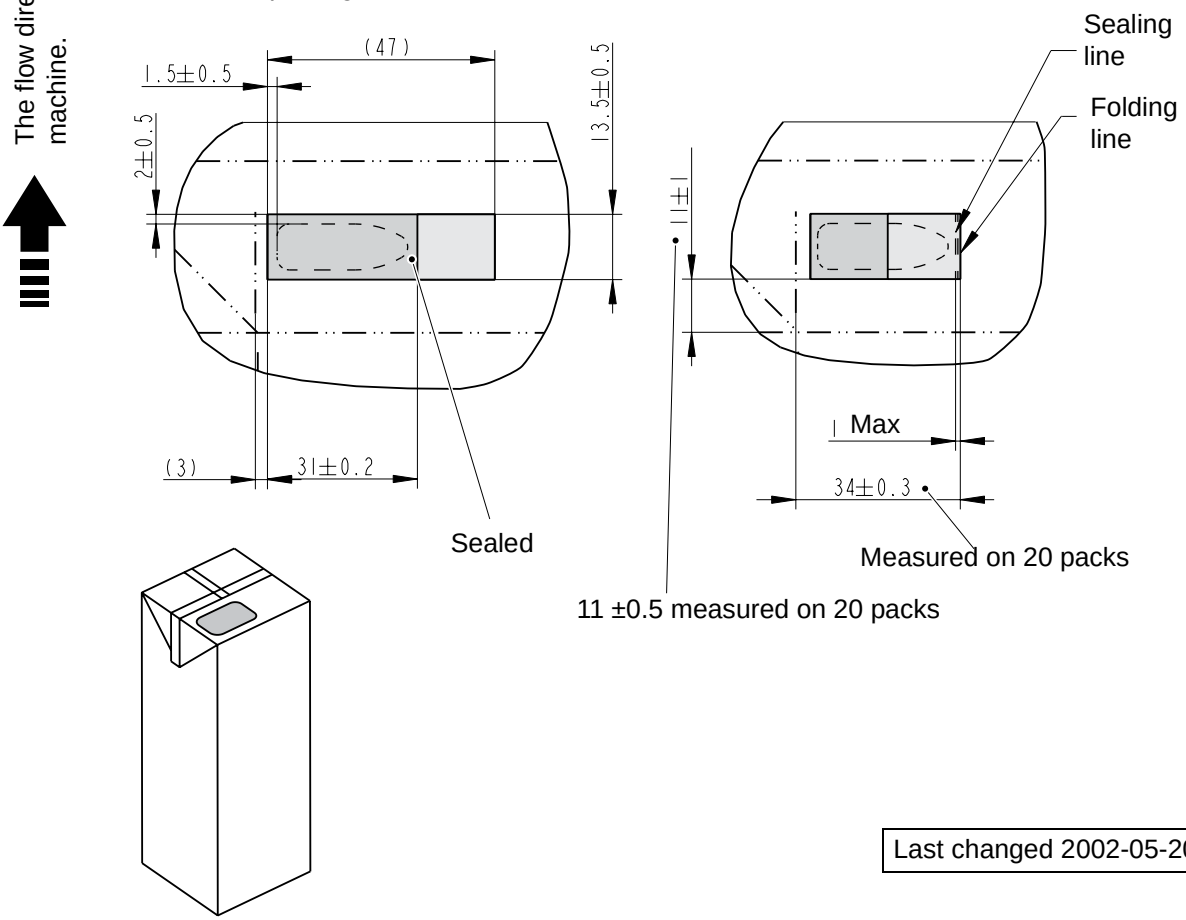

Last changed 2002-05-20.

(Cont'd)

TechPub_2614345_0103 - B6114Y03en.fm

(Cont'd)

Package TBA 1500 S with Hole 85, ReCap3

HOLE
View from inside the package.

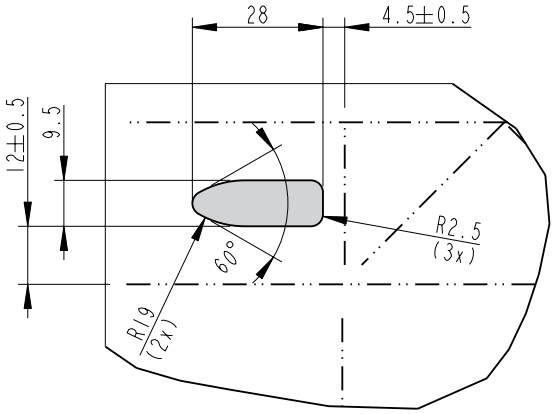

PATCH
View from inside the package.

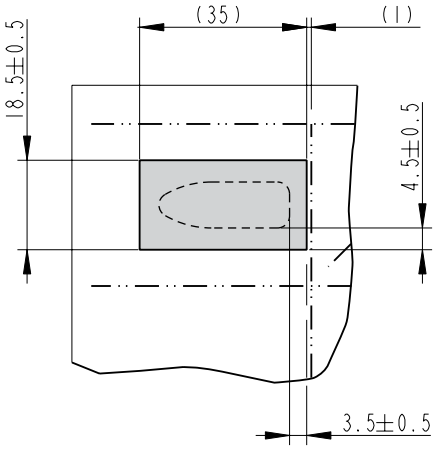

The flow direction of paper in the machine.

TAB
View from outside the package.

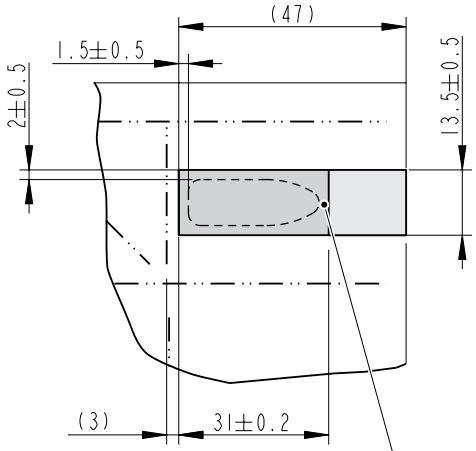

FOLDED TAB
View from outside the package.

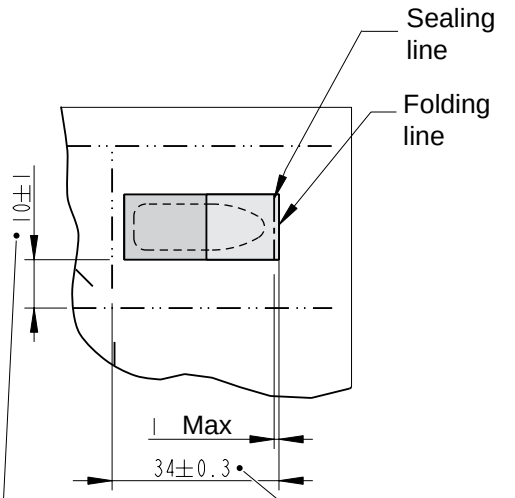

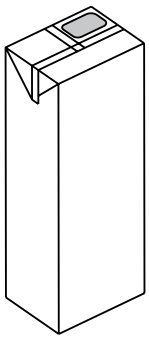

Sealed

Measured on 20 packs

10 ±0.5 measured on 20 packs

Last changed 2002-05-20.

(Cont'd)

TechPub_2614345_0103 - B6114Y03en.fm

(Cont'd)

Package TBA 1000 S with Hole 90, SlimCap

HOLE
View from inside the package.

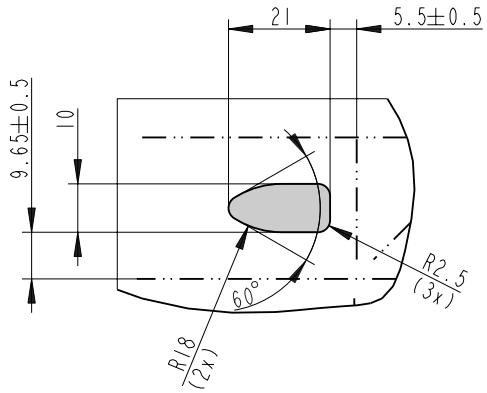

PATCH
View from inside the package.

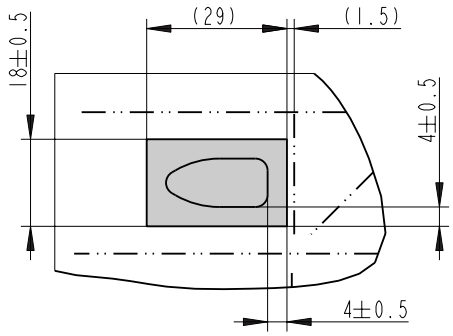

The flow direction of paper in the machine.

TAB
View from outside the package.

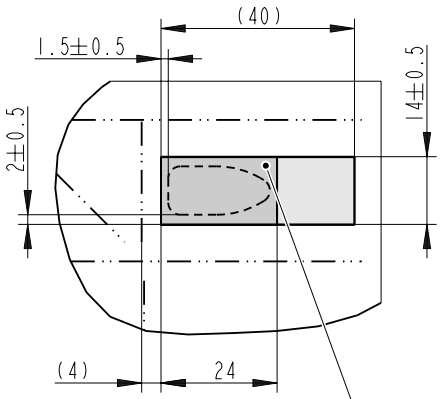

FOLDED TAB
View from outside the package.

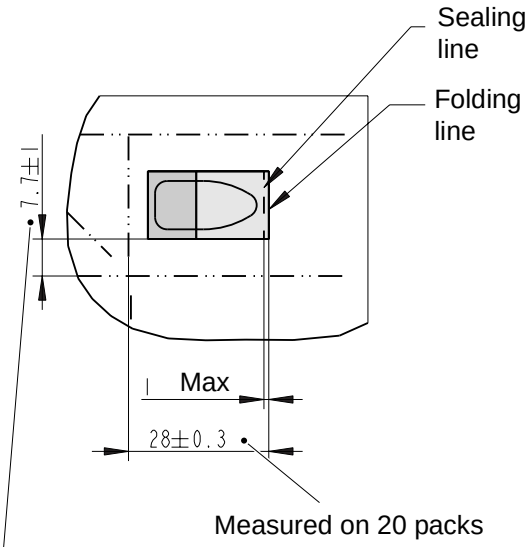

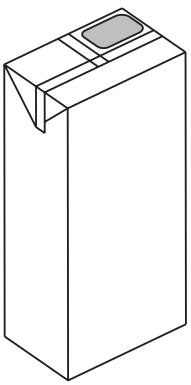

Sealed

Measured on 20 packs

7.7 ±0.5 measured on 20 packs

Last changed 2003-10-01.

(Cont'd)

TechPub_2614345_0103 - B6114Y03en.fm

(Cont'd)

Package TBA 1500 S with Hole 90, SlimCap

HOLE
View from inside the package.

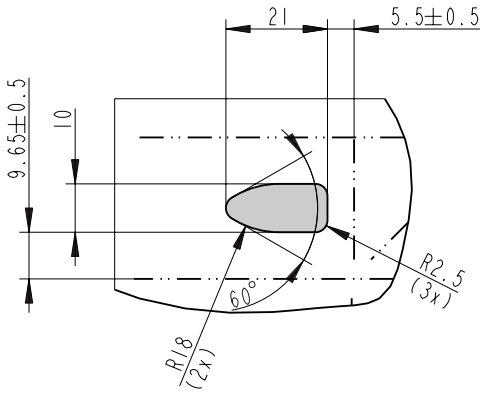

PATCH
View from inside the package.

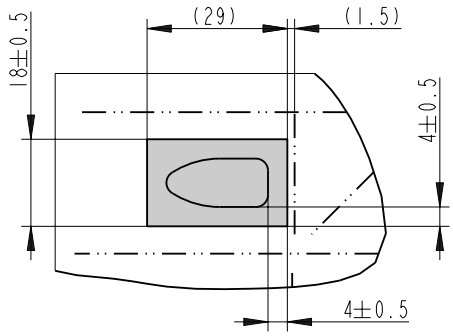

The flow direction of paper in the machine.

TAB
View from outside the package.

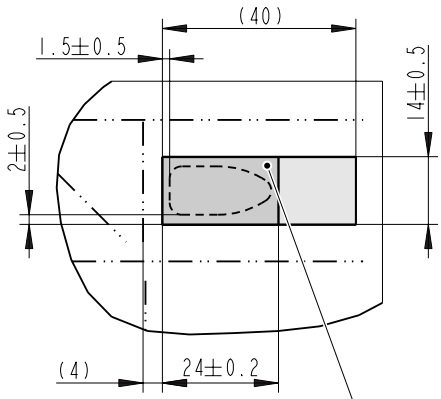

FOLDED TAB
View from outside the package.

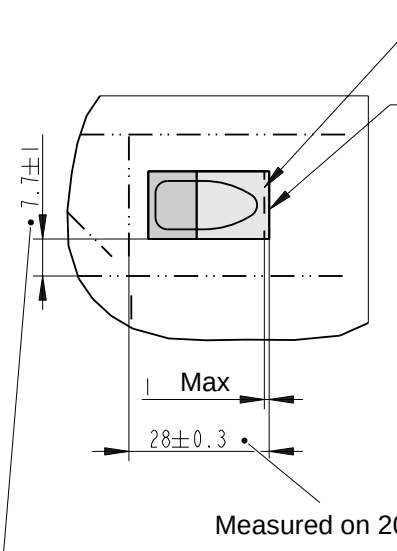

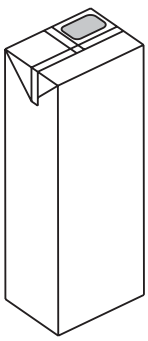

7.7 ±0.5 measured on 20 packs

Last changed 2003-12-04.

TechPub_2614345_0103 - B6114Y03en.fm

12 Checklist Overview

TechPub_2614345_0103 - B61114Z00en.fm

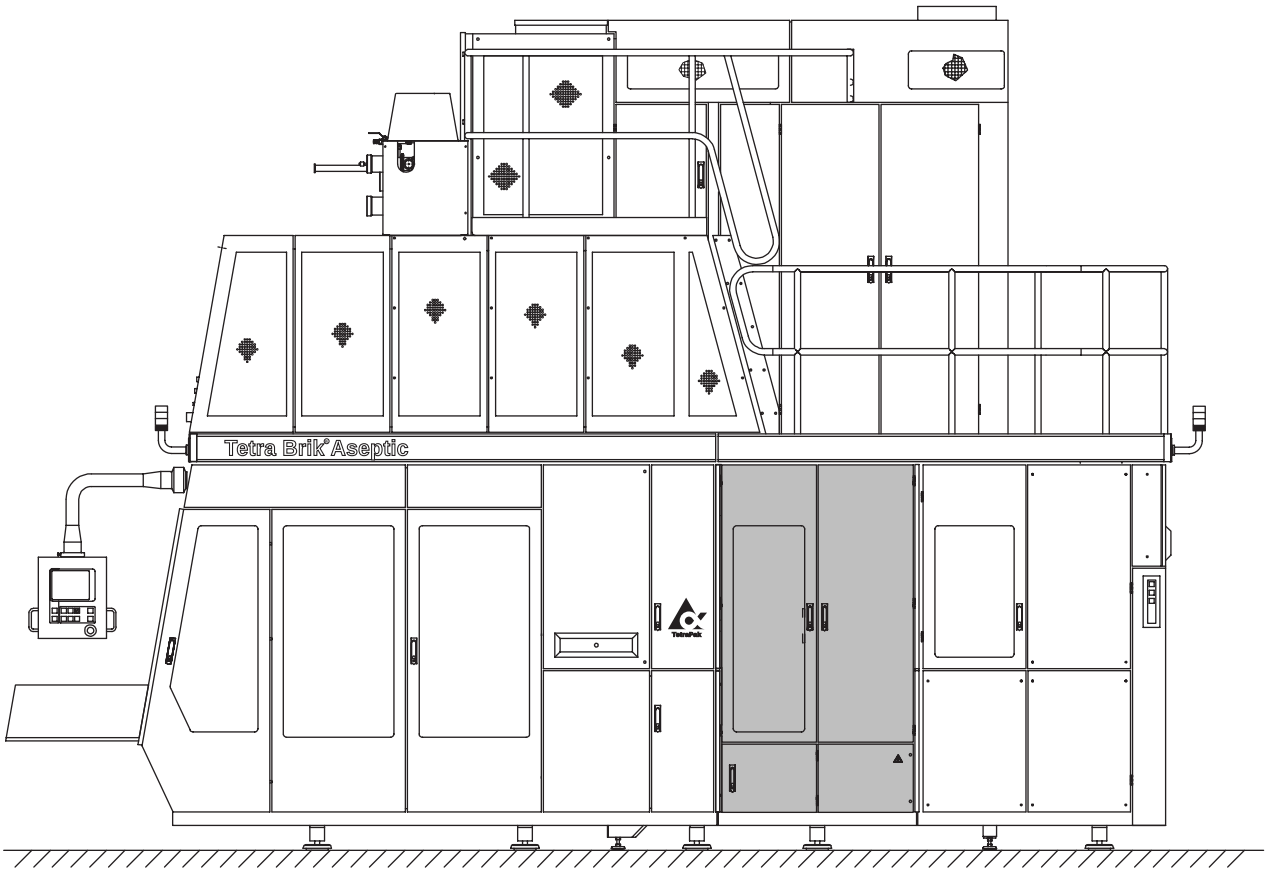

Checklist Overview - Description

This section of the MM, **is intended for customers who do NOT use the Tetra Pak Maintenance System (TPMS)**. The checklist overview contains all the check points for a specified machine type or equipment which are needed in order to keep the equipment in good condition. The following items can be found in the checklist:

- **MM code** – shows where you can find more information about the check point
- **Text** – name of unit and group. For further information, see MM code
- **Action** - Type of activity
- **Interval** – how often the check item should be performed in production hours

Note! The checklist overview in this manual **may differ from the TPMS checklists** delivered by your local service station, due to the fact that TPMS checklists are continuously updated and adapted to local demands.

TPMS - Description

The maintenance system used for equipment from Tetra Pak is called the **Tetra Pak Maintenance System (TPMS)**. If you are using TPMS, the checklists will be delivered directly from your local Tetra Pak service station.

The TPMS checklists are designed to match and keep pace with the ongoing development of new and existing equipment from Tetra Pak, and to meet the demands set by our customers for even higher efficiency and better economy.

Some of the advantages of TPMS are:

- TPMS maintains complete production lines
- TPMS reduces down-time to a minimum each time maintenance is carried out
- updates of the maintenance schedule based on experience gained, improvements, modifications and specific customer requirements are issued
- Recommendations regarding spare parts, rotation units, tools and templates, etc. are included.

The service life of each item in the equipment is predicted and all items are checked before they affect the efficiency of the equipment. This leads to different maintenance intervals for each item and the check list is unique for each maintenance occasion.

The results of the maintenance are sent back to the Tetra Pak service station. Statistics are evaluated regularly, giving a continuously updated maintenance system.

If you require further information regarding TPMS, please do not hesitate to contact your local Tetra Pak office.

TechPub_2614345_0103 - B6114200en.fm

Checklist Overview . . . . . 12 - 5

TechPub_2614345_0103 - B61114Z00en.fm

This page intentionally left blank

TechPub_2614345_0103 - B6114Z00en.fm

Checklist Overview

MM code	Text	Action	Interval (h)
	Pre-maintenance checks		
MM	WARNING! Before starting any service work, read the *Safety precaution* in the corresponding Maintenance Manual. Doc. No. MM-81611-0104	Check	250
MM	WARNING! Before starting any service work, read the *Safety precaution* in the corresponding Maintenance Manual. Doc. No. MM-81611-0104	Check	1000
11.1	Technical data; Pressures and temperatures.	Check & record	1000
2.2.4-2	Paper web path; Infeed unit, Function.	Check	1000
1.1.1-6	PullTab unit; Packaging material tracking.	Check	1000
OM	Punch and die-Examine the edges of the PullTab hole in the packaging material for any irregularities.	Check	1000
4.2.1-1	Outer patch applicator; Outer patch feeder - Check functionality.	Check	1000
5.2.1-1	Patch applicator; Patch feeder - Check functionality.	Check	1000
6.2.1-1	Tab applicator; Tab feeder - Check functionality.	Check	1000
2	**Paper Web Path**		
2.2.1-3	Paper web path; Drive motor; Roller and drive wheel - Check pressure.	Check	1000
2.2.1-5	Paper web path; Drive motor; Drive wheel.	Change	4000
2.2.3-1	Paper web path; Bending roller assembly - Check.	Check	1000
2.2.4-1	Paper web path; Infeed unit; Rollers.	Check	1000
2.2.5-1	Paper web path; Motor unit - Check.	Check	1000
2.2.5-4	Paper web path; Motor unit; Wheel.	Change	4000
2.2.6-1	Paper web path; Paper guide; Bearings and rollers.	Check	500
3	**Punch/waste Unit**		
3.2-2	Punch unit; Stripper pins and springs.	Check	500
3.2-4	Punch unit; Cylinder.	Check	1000
3.2-6	Punch unit; Punch and Die.	Check	1500
3.3-1	Waste box; Box and waste tube.	Check	500
4	**Outer Patch Applicator**		
4.2.1-8	Outer patch applicator; Outer patch feeder; Sealing plate.	Check	250
4.2.1-1	Outer patch applicator; Outer patch feeder; Knives.	Check	500
4.2.1-10	Outer patch applicator; Outer patch feeder; Guides and linear bearings.	Check	1000
4.2.2-2	Outer patch applicator; Outer patch counter jaw; Sealing plate.	Check	500
4.2.2-4	Outer patch applicator; Outer patch counter jaw; Cushion cylinder.	Change	4000
4.3-1	Outer patch magazine.	Check	500
4.3.1-1	Outer patch magazine; Splicing device - Check function.	Check	1000
5	**Patch Applicator**		
5.2.1-8	Patch applicator; Patch feeder; Sealing plate.	Check	250
5.2.1-1	Patch applicator; Patch feeder; Knives.	Check	500
5.2.1-10	Patch applicator; Patch feeder; Guides and linear bearings.	Check	1000
5.2.2-2	Patch applicator; Patch counter jaw; Inductor.	Check	500
5.2.2-6	Patch applicator; Patch counter jaw; Cushion cylinder.	Change	4000

TechPub_2614345_0103 - B61142Z00en.fm

MM code	Text	Action	Interval (h)
5.3-1	Magazine patch.	Check	500
5.3.1-1	Magazine patch; Splicing device - Check function.	Check	1000
6	**Tab Applicator**		
6.2.1-1	Tab applicator; Tab feeder; Knives.	Check	1000
6.2.1-10	Tab applicator; Tab feeder; Guides and linear bearings.	Check	1000
6.2.1-8	Tab applicator; Tab feeder; Sealing plate.	Check	250
6.2.2-5	Tab applicator; Tab counter jaw; Cushion cylinder.	Change	4000
6.3-1	Tab magazine.	Check	500
6.3.1-1	Tab magazine; Splicing device - function.	Check	1000
9	**Electrical Cabinet**		
9.1.1-1	Mounting plate; PLC; Battery.	Change	2000
9-5	Electrical cabinet; TPIH generator; Cables.	Check	1000
9.3-1	Cooler; Air flow.	Check	250
10	**Valve panel**		
10.2-1	Valve panel; Air filters.	Change	500
	Start-Up Checks		
7.1-1	Missing patch detector.	Check	1000
7.2-1	Missing tab detector.	Check	1000
7.3-1	Splice detector; Black tape detector.	Check	1000
8.1-1	Doors and Covers; Safety functions.	Check	1000
1.1.1-6	PullTab unit; Packaging material tracking.	Check	1000
	After-Maintenance Checks		
OM	Package- check package according to OM.	Check	1000

TechPub_2614345_0103 - B6114200en.fm

A

Air Inlet Group - Clean Filter Insert . . . . . 10 - 6

Air Inlet Group - Set Pressure Switch . . . . . 10 - 5

Applicator Stations - Basic Setting . . . . . 1 - 17

Applicator Stations - Fine Setting . . . . . 1 - 38

Applicator Stations - Set Pressure Regulators . . . . . 1 - 16

Applicator Stations - Set Servo Tension Device . . . . . 1 - 35

B

Badly Positioned Outer Patch . . . . . 11 - 13

Badly Positioned Patch . . . . . 11 - 9

Badly Positioned Tab . . . . . 11 - 11

Bar Code Reader - Set . . . . . 2 - 46

Bending Roller Assembly - Change Bearings . . . . . 2 - 25

Bending Roller Assembly - Check . . . . . 2 - 24

Black Tape Detector - Check . . . . . 7 - 11

Black Tape Detector - Set . . . . . 7 - 12

By-Pass Sensor - Check . . . . . 2 - 45

C

Calibrator (Micromite II) - Set . . . . . 9 - 65

Checklist Overview . . . . . 12 - 5

Checklist Overview - Description . . . . . 12 - 2

Cooler - Check Air Flow . . . . . 9 - 89

Cooler - Clean Filter Insert . . . . . 9 - 90

D

Doors and Covers - Check Safety Function . . . . . 8 - 5

Drive Motor - Assemble Clamping Element . . . . . 2 - 10

Drive Motor - Change . . . . . 2 - 19

Drive Motor - Change Bearings . . . . . 2 - 12

Drive Motor - Change Drive Wheel . . . . . 2 - 13

Drive Motor - Check Cylinders . . . . . 2 - 18

Drive Motor - Check Pressure Roller and Drive Wheel . . . . . 2 - 11

Drive Motor - Remove Clamping Element . . . . . 2 - 9

Drive Motor - Set Cylinder . . . . . 2 - 17

E

Electrical Cabinet - Change TPIH Generator . . . . . 9 - 21

Electrical Cabinet - Check Function TPIH Generator . . . . . 9 - 15

Electrical Cabinet - Check TPIH Generator Cables . . . . . 9 - 20

Electrical Cabinet - Function Description Drive Motor DMC2 Card . . . . . 9 - 23

Electrical Cabinet - Function Description Tension Device DMC2 Card . . . . . 9 - 27

Electrical Cabinet - Function Description TPIH Generator . . . . . 9 - 14

Electrical Cabinet - Load DMC2 Program . . . . 9 - 34

Electrical Cabinet - PullTab Controls . . . . . 9 - 5

Electrical Cabinet - Set DMC2 Card . . . . . 9 - 31

Electrical Cabinet - Set Frequency Converter . . . . . 9 - 6

Electrical Cabinet - Set TPIH Generator Sealings . . . . . 9 - 22

F

Functional Description . . . . . 0 - 5

Fuse Box - Check Earth Fault Breaker . . . . . 9 - 88

Fuse Box - Set Fuse . . . . . 9 - 87

Fuse Box - Set Overload Protection . . . . . 9 - 86

I

Infeed Unit - Change Bearings . . . . . 2 - 29

Infeed Unit - Change Worm Gear Motor . . . . . 2 - 28

Infeed Unit - Check Bending Roller Assembly . . . . . 2 - 31

Infeed Unit - Check Function . . . . . 2 - 27

Infeed Unit - Check Rollers . . . . . 2 - 26

Infeed Unit - Set Spring Bracket . . . . . 2 - 32

TechPub_2614345_0103 - 81611014IOM.fm

L

Lifting Device - Check . . . . . 1 - 57
Lifting Device - Set Timing Belt . . . . . 1 - 58

M

Main Flowchart . . . . . 0 - 8
Missing Patch Detector - Check . . . . . 7 - 7
Missing Patch Detector - Set . . . . . 7 - 8
Missing Tab Detector - Check . . . . . 7 - 9
Missing Tab Detector - Set . . . . . 7 - 10
Motor Unit - Assemble Clamping Element . . . 2 - 36
Motor Unit - Change Wheel . . . . . 2 - 36
Motor Unit - Check . . . . . 2 - 33
Motor Unit - Check Bending Roller . . . . . 2 - 34
Motor Unit - Remove Clamping Element . . . . 2 - 36
Motor Unit - Set Cylinder . . . . . 2 - 35

O

Opening Setting - Flowchart . . . . . 1 - 5
Opening Specification - Description . . . . . 11 - 20
Opening Specification - Description of Hole Types . . . . . 11 - 15
Outer Patch Applicator - Functional Description . . . . . 4 - 5
Outer Patch Counter Jaw - Change Cushion Cylinder . . . . . 4 - 42
Outer Patch Counter Jaw - Change Sealing Plate . . . . . 4 - 41
Outer Patch Counter Jaw - Check Position . . . . . 4 - 43
Outer Patch Counter Jaw - Check Sealing Plate . . . . . 4 - 40
Outer Patch Counter Jaw - Remove . . . . . 4 - 39
Outer Patch Feeder - Change Bushings . . . . 4 - 24
Outer Patch Feeder - Change Cylinder . . . . . 4 - 27
Outer Patch Feeder - Change Feed Roller . . . . . 4 - 35
Outer Patch Feeder - Change Flat Knife . . . . 4 - 11
Outer Patch Feeder - Change Heater and Thermocouple . . . . . 4 - 36
Outer Patch Feeder - Change Linear Bearings 4 - 23
Outer Patch Feeder - Change One-way Bearing . . . . . 4 - 18
Outer Patch Feeder - Change Shims . . . . . 4 - 33
Outer Patch Feeder - Change Stepper Motor . . . . . 4 - 38
Outer Patch Feeder - Change Window Knife . . . . . 4 - 12
Outer Patch Feeder - Check Function . . . . . 4 - 9
Outer Patch Feeder - Check Guides and Linear Bearings . . . . . 4 - 22
Outer Patch Feeder - Check Pivot Plate . . . . . 4 - 14
Outer Patch Feeder - Check Sealing Plate . . . . . 4 - 19
Outer Patch Feeder - Remove . . . . . 4 - 15
Outer Patch Feeder - Set Cushion Cylinder . . . . . 4 - 30
Outer Patch Feeder - Set Position . . . . . 4 - 29
Outer Patch Feeder - Set Proximity Switch . . . . . 4 - 32
Outer Patch Feeder - Set Sealing Plate . . . . . 4 - 20
Outer Patch Feeder - Set Strip Feed . . . . . 4 - 28
Outer Patch Feeder - Set Window Knife . . . . . 4 - 16
Outer Patch Magazine - Change Bobbin Holder Bearings . . . . . 4 - 48
Outer Patch Magazine - Check . . . . . 4 - 44
Outer Patch Magazine - Set Black Tape Sensor . . . . . 4 - 50
Outer Patch Magazine - Set Bobbin Holder Spring Loaded Screw . . . . . 4 - 49
Outer Patch Magazine - Set Proximity Switch . . . . . 4 - 46
Outer Patch Magazine - Set Strip Tension . . . . . 4 - 47
Outer Patch Turning Device - Check . . . . . 4 - 53
Outer Patch Turning Device - Set Rotation Monitor Proximity Switch . . . . . 4 - 54
Outfeed Tension Device - Change Damper . . 2 - 23
Outfeed Tension Device - Check Rollers . . . . 2 - 20
Outfeed Tension Device - Set Counter Roller Spring . . . . . 2 - 22
Outfeed Tension Device - Set Damper . . . . . 2 - 21

P

Packaging Material Tracking - Align Motor Unit and Drive Wheels . . . . . 1 - 13

TechPub_2614345_0103 - 81611014IOM.fm

Packaging Material Tracking - Check Drive and Counter Roller Cylinders . . . . . 1 - 12
Packaging Material Tracking - Check Drive Wheels . . . . . 1 - 11
Packaging Material Tracking - Check Roller Assembly . . . . . 1 - 14
Packaging Material Tracking - Set Alignment Rollers . . . . . 1 - 6
Packaging Material Tracking - Verify Tracking . . . . . 1 - 15
Paper Guide - Check Rollers and Bearings . . . . . 2 - 37
Paper Web Path - Functional Description . . . . . 2 - 5
Patch Applicator - Functional Description . . . . . 5 - 5
Patch Counter Jaw - Change Cushion Cylinder . . . . . 5 - 41
Patch Counter Jaw - Change Inductor . . . . . 5 - 38
Patch Counter Jaw - Change Transformer . . . . . 5 - 39
Patch Counter Jaw - Check Guide Bushing . . . . . 5 - 40
Patch Counter Jaw - Check Inductor . . . . . 5 - 37
Patch Counter Jaw - Check Position . . . . . 5 - 42
Patch Counter Jaw - Remove . . . . . 5 - 36
Patch Feeder - Change Bushings . . . . . 5 - 23
Patch Feeder - Change Cylinder . . . . . 5 - 26
Patch Feeder - Change Feed Roller . . . . . 5 - 34
Patch Feeder - Change Flat Knife . . . . . 5 - 12
Patch Feeder - Change Linear Bearings . . . . 5 - 22
Patch Feeder - Change One-way Bearing . . . . . 5 - 17
Patch Feeder - Change Shims . . . . . 5 - 32
Patch Feeder - Change Stepper Motor . . . . . 5 - 35
Patch Feeder - Change Window Knife . . . . . 5 - 13
Patch Feeder - Check Function . . . . . 5 - 10
Patch Feeder - Check Guides and Linear Bearings . . . . . 5 - 21
Patch Feeder - Check Pivot Plate . . . . . 5 - 14
Patch Feeder - Check Sealing Plate . . . . . 5 - 18
Patch Feeder - Remove . . . . . 5 - 15
Patch Feeder - Set Cushion Cylinder . . . . . 5 - 29
Patch Feeder - Set Position . . . . . 5 - 28
Patch Feeder - Set Proximity Switch . . . . . 5 - 31
Patch Feeder - Set Sealing Plate . . . . . 5 - 19
Patch Feeder - Set Strip Feed . . . . . 5 - 27
Patch Feeder - Set Window Knife . . . . . 5 - 16
Patch Magazine - Change Bobbin Holder Bearings . . . . . 5 - 47
Patch Magazine - Check . . . . . 5 - 43
Patch Magazine - Set Black Tape Sensor . . . . . 5 - 49
Patch Magazine - Set Bobbin Holder Spring Loaded Screw . . . . . 5 - 48
Patch Magazine - Set Proximity Switch . . . . . 5 - 45
Patch Magazine - Set Strip Tension . . . . . 5 - 46
Patch Turning Device - Check . . . . . 5 - 52
Patch Turning Device - Set Rotation Monitor Proximity Switch . . . . . 5 - 53
Photocell Unit Infeed - Check Photocells . . . . 2 - 39
Photocell Unit Infeed - Set Photocells . . . . . 2 - 40
Photocell Unit Outfeed - Check Photocells . . . . . 2 - 42
Photocell Unit Outfeed - Set Photocells . . . . . 2 - 43
PLC - Change Battery . . . . . 9 - 36
PLC - Load Program . . . . . 9 - 39
PLC - Print Program . . . . . 9 - 43
PLC - Set Outer Patch, Patch and Tab Length . . . . . 9 - 45
PLC - Set Tension Device Torque . . . . . 9 - 51
PullTab Detection - Functional Description . . . . . 7 - 5
Punch Arrangement - Functional Description . . . . . 3 - 5
Punch Unit - Change Cylinder . . . . . 3 - 14
Punch Unit - Change Punch and Die . . . . . 3 - 19
Punch Unit - Change Stripper Pins and Springs . . . . . 3 - 11
Punch Unit - Check Cylinder . . . . . 3 - 13
Punch Unit - Check Punch and Die . . . . . 3 - 18
Punch Unit - Check Stripper Pins and Springs . . . . . 3 - 9
Punch Unit - Set Damper . . . . . 3 - 26
Punch Unit - Set Packaging Material Position in Relation to Hole . . . . . 3 - 7
Punch Unit - Set Proximity Switch . . . . . 3 - 25
Punch Unit - Set Punch and Die . . . . . 3 - 21

TechPub_2614345_0103 - 81611014IOM.fm

S

Safety Relays - Check Function . . . . . 9 - 56
Splicing Device - Check Function . . . . . 6 - 55
Splicing Device - Set Lock . . . . . 6 - 56
Splicing Table - Check Function . . . . .4 - 51, 5 - 50
Splicing Table - Set Lock . . . . . .4 - 52, 5 - 51

T

Tab Applicator - Functional Description . . . . . 6 - 5
Tab Counter Jaw - Change Cushion Cylinder . . . . . 6 - 44
Tab Counter Jaw - Change Cylinder . . . . . 6 - 43
Tab Counter Jaw - Change Heater and Thermocouple . . . . . 6 - 40
Tab Counter Jaw - Check Distance . . . . . 6 - 45
Tab Counter Jaw - Check Sealing Plate . . . . 6 - 42
Tab Counter Jaw - Remove . . . . . 6 - 39
Tab Counter Jaw - Set Position . . . . . 6 - 46
Tab Feeder - Change Bushings . . . . . 6 - 25
Tab Feeder - Change Cylinder . . . . . 6 - 28
Tab Feeder - Change Feed Roller . . . . . 6 - 35
Tab Feeder - Change Flat Knife . . . . . 6 - 12
Tab Feeder - Change Heater and Thermocouple . . . . . 6 - 36
Tab Feeder - Change Linear Bearings . . . . . 6 - 23
Tab Feeder - Change One-way Bearing . . . . 6 - 18
Tab Feeder - Change Shims . . . . . 6 - 33
Tab Feeder - Change Stepper Motor . . . . . 6 - 38
Tab Feeder - Change Window Knife . . . . . 6 - 13
Tab Feeder - Check Function . . . . . 6 - 10
Tab Feeder - Check Guides and Linear Bearings . . . . . 6 - 22
Tab Feeder - Check Pivot Plate . . . . . 6 - 15
Tab Feeder - Check Sealing Plate . . . . . 6 - 19
Tab Feeder - Check Tab Feed . . . . . 6 - 24
Tab Feeder - Remove . . . . . 6 - 16
Tab Feeder - Set Cushion Cylinder . . . . . 6 - 31
Tab Feeder - Set Position . . . . . 6 - 30
Tab Feeder - Set Proximity Switch . . . . . 6 - 32
Tab Feeder - Set Sealing Plate . . . . . 6 - 20
Tab Feeder - Set Tab Feed . . . . . 6 - 29
Tab Feeder - Set Window Knife . . . . . .6 - 17
Tab Magazine - Change Bobbin Holder Bearings . . . . . .6 - 51
Tab Magazine - Check . . . . . .6 - 47
Tab Magazine - Set Black Tape Sensor . . . . .6 - 53
Tab Magazine - Set Bobbin Holder Spring Loaded Screw . . . . . .6 - 54
Tab Magazine - Set Proximity Switch . . . . . .6 - 49
Tab Magazine - Set Rotation Monitor Proximity Switch . . . . . .6 - 52
Tab Magazine - Set Strip Tension . . . . . .6 - 50
Temperature Regulator- Calibrate . . . . . .9 - 57
TMCC - Change Cards / Load Programs . . . .9 - 74
TMCC - Display Report . . . . . .9 - 82
TMCC - Function Description . . . . . .9 - 66
TMCC - Set Communication . . . . . .9 - 73
TMCC - Set Control Card . . . . . .9 - 76
TMCC - Set Photocells . . . . . .9 - 78
TMCC - Set Stepper Motor Cards . . . . . .9 - 77
TPMS - Description . . . . . .12 - 2

V

Valve Panel - Change Air Filters . . . . . .10 - 7

W

Waste Box - Check Box and Waste Pipe . . . .3 - 27
Waste Box - Set Photocell . . . . . .3 - 28

TechPub_2614345_0103 - 81611014IOM.fm

Tetra Pak

Note! *This page is generated* ***automatically****.*
using the ***variable definitions*** *made in the* ***front page*** *file!*

PT21 060V
648508-0600
Issue 2004-02 Doc. No. MM-81611-0104

PT21 060V 1(2)
648508-0600
Issue 2004-02 Doc. No. MM-81611-0104

PT21 060V
648508-0600
Issue 2004-02 Doc. No. MM-81611-0104

PT21 060V 1(2)
648508-0600
Issue 2004-02 Doc. No. MM-81611-0104

PT21 060V
648508-0600
Issue 2004-02 Doc. No. MM-81611-0104

PT21 060V 1(2)
648508-0600
Issue 2004-02 Doc. No. MM-81611-0104

PT21 060V
648508-0600
Issue 2004-02 Doc. No. MM-81611-0104

PT21 060V 1(2)
648508-0600
Issue 2004-02 Doc. No. MM-81611-0104

PT21 060V
648508-0600
Issue 2004-02 Doc. No. MM-81611-0104

PT21 060V 2(2)
648508-0600
Issue 2004-02 Doc. No. MM-81611-0104

PT21 060V
648508-0600
Issue 2004-02 Doc. No. MM-81611-0104

PT21 060V 2(2)
648508-0600
Issue 2004-02 Doc. No. MM-81611-0104

PT21 060V
648508-0600
Issue 2004-02 Doc. No. MM-81611-0104

PT21 060V 2(2)
648508-0600
Issue 2004-02 Doc. No. MM-81611-0104

PT21 060V
648508-0600
Issue 2004-02 Doc. No. MM-81611-0104

PT21 060V 2(2)
648508-0600
Issue 2004-02 Doc. No. MM-81611-0104

40 mm Full width ***Note!*** *This page is generated* ***automatically****.*
using the ***variable definitions*** *made in the* ***front page*** *file!*

PT21 060V
648508-0600

Issue 2004-02 Doc. No. MM-81611-0104

PT21 060V 1(2)
648508-0600

Issue 2004-02 Doc. No. MM-81611-0104

PT21 060V
648508-0600

Issue 2004-02 Doc. No. MM-81611-0104

PT21 060V 1(2)
648508-0600

Issue 2004-02 Doc. No. MM-81611-0104

PT21 060V
648508-0600

Issue 2004-02 Doc. No. MM-81611-0104

PT21 060V 1(2)
648508-0600

Issue 2004-02 Doc. No. MM-81611-0104

PT21 060V
648508-0600

Issue 2004-02 Doc. No. MM-81611-0104

PT21 060V 2(2)
648508-0600

Issue 2004-02 Doc. No. MM-81611-0104

PT21 060V
648508-0600

Issue 2004-02 Doc. No. MM-81611-0104

PT21 060V 2(2)
648508-0600

Issue 2004-02 Doc. No. MM-81611-0104

PT21 060V
648508-0600

Issue 2004-02 Doc. No. MM-81611-0104

PT21 060V 2(2)
648508-0600

Issue 2004-02 Doc. No. MM-81611-0104