SPC binder labels. 40 mm Full width *Note! This page is generated **automaticall***
*using the **variable definitions** made in the **front page** file!!*

PT21 050V
648508-0500
Issue: 2000-07 Doc No: SPC-81546-0102

PT21 050V
648508-0500
Issue: 2000-07 Doc No: SPC-81546-0102

PT21 050V
648508-0500
Issue: 2000-07 Doc No: SPC-81546-0102

PT21 050V
648508-0500
Issue: 2000-07 Doc No: SPC-81546-0102

PT21 050V
648508-0500
Issue: 2000-07 Doc No: SPC-81546-0102

PT21 050V
648508-0500
Issue: 2000-07 Doc No: SPC-81546-0102

PT21 050V
648508-0500
Issue: 2000-07 Doc No: SPC-81546-0102

PT21 050V
648508-0500
Issue: 2000-07 Doc No: SPC-81546-0102

PT21 050V
648508-0500
Issue: 2000-07 Doc No: SPC-81546-0102

PT21 050V
648508-0500
Issue: 2000-07 Doc No: SPC-81546-0102

PT21 050V
648508-0500
Issue: 2000-07 Doc No: SPC-81546-0102

SPC binder labels. 30 mm Full width *Note! This page is generated **automaticall***
*using the **variable definitions** made in the **front page** file!!*

PT21 050V
648508-0500
Issue: 2000-07 Doc No: SPC-81546-0102

PT21 050V
648508-0500
Issue: 2000-07 Doc No: SPC-81546-0102

PT21 050V
648508-0500
Issue: 2000-07 Doc No: SPC-81546-0102

PT21 050V
648508-0500
Issue: 2000-07 Doc No: SPC-81546-0102

PT21 050V
648508-0500
Issue: 2000-07 Doc No: SPC-81546-0102

PT21 050V
648508-0500
Issue: 2000-07 Doc No: SPC-81546-0102

PT21 050V
648508-0500
Issue: 2000-07 Doc No: SPC-81546-0102

PT21 050V
648508-0500
Issue: 2000-07 Doc No: SPC-81546-0102

PT21 050V
648508-0500
Issue: 2000-07 Doc No: SPC-81546-0102

PT21 050V
648508-0500
Issue: 2000-07 Doc No: SPC-81546-0102

PT21 050V
648508-0500
Issue: 2000-07 Doc No: SPC-81546-0102

PT21 050V
648508-0500
Issue: 2000-07 Doc No: SPC-81546-0102

PT21 050V
648508-0500
Issue: 2000-07 Doc No: SPC-81546-0102

PT21 050V
648508-0500
Issue: 2000-07 Doc No: SPC-81546-0102

PT21 050V
648508-0500
Issue: 2000-07 Doc No: SPC-81546-0102

SPC
Spare Parts Catalogue

PT21 050V

648508-0500

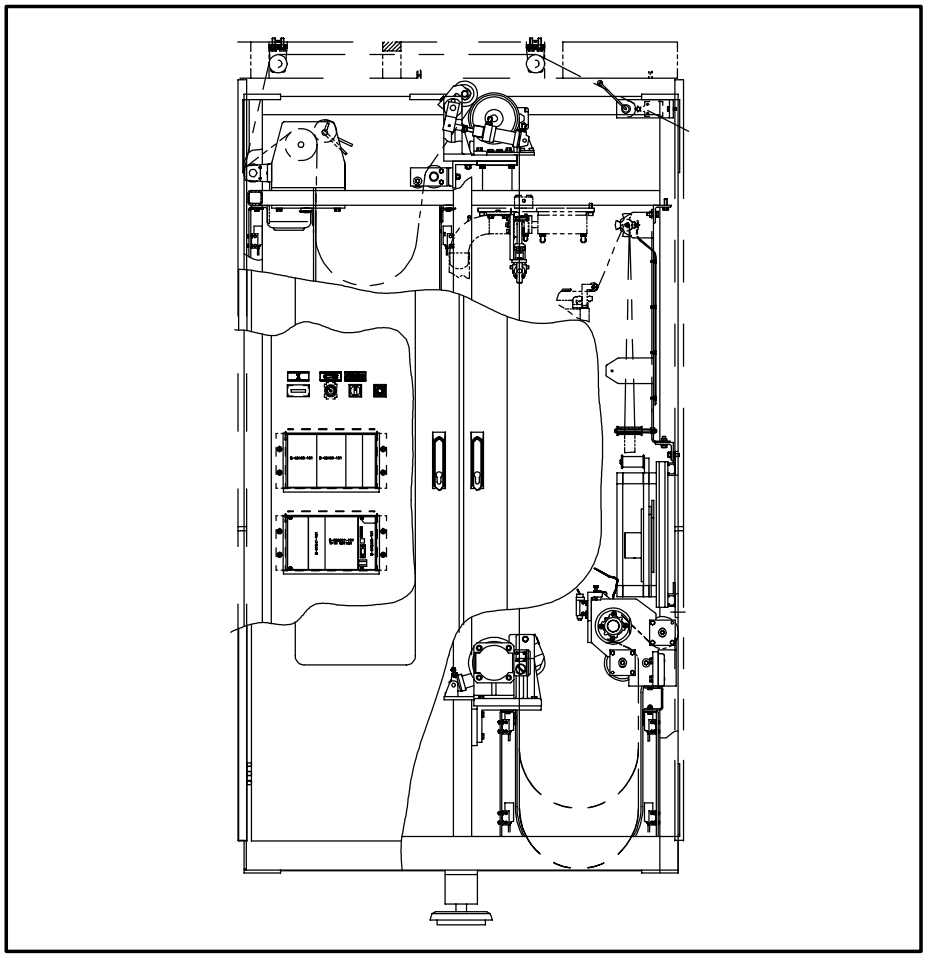

Tetra Pak

Doc. No: SPC-81546-0102

Main Groups of the Machine

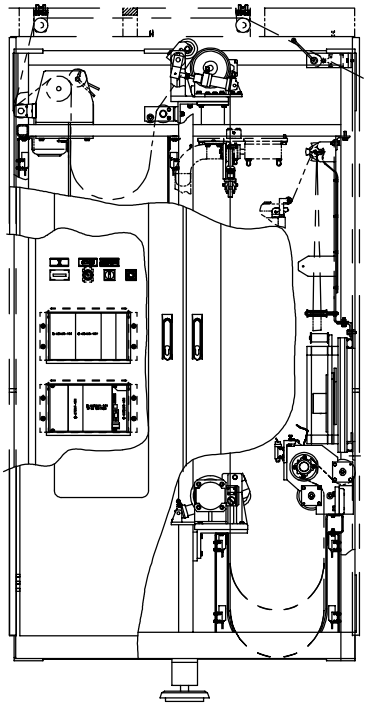

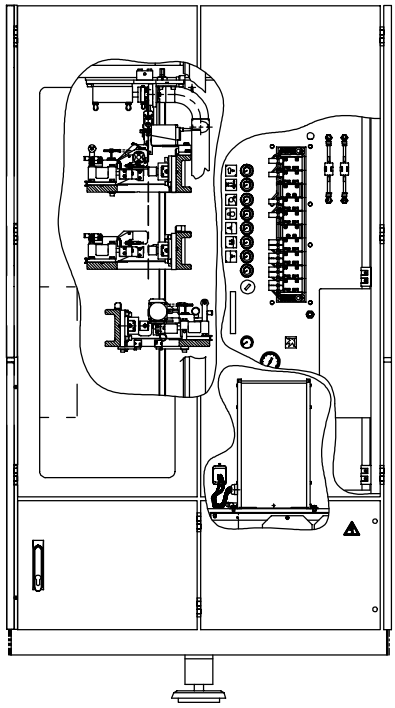

PT21 050V

For the correct machine data, check your machine specification, supplied with the machine!

This document is valid for:

Series No/Machine No Sign.

SPC
Spare Parts Catalogue

Opening Device PullTab PT21 648508-0500

for TBA/21
648570-0500

Table of Content:

Introduction ..... , **5**

Pulltab 21
B- 648508-0500 ..... , **9**

Part Number Index ..... , **185**

Doc. No: SPC-81546-0102

Issue 2000-07

Tetra Pak

Tetra Brik Packaging Systems S.p.A.

General information

Manufacturer

This machine is produced by:
Tetra Brik Packaging Systems S.p.A.
Via Delfini 1
41100 Modena /Italy

Document producer

This document has been produced by:
Tetra Brik Packaging Systems S.p.A.
Technical Publications
Via Delfini 1
41100 Modena /Italy

Number of pages

This document contains totally **198 pages**, including the first **8** introduction pages.

Copyright © 2000 Tetra Brik Packaging Systems S.p.A.

All rights reserved. No parts of this document may be reproduced or copied in any forms or by any means, without written permission from Tetra Brik Packaging Systems S.p.A..

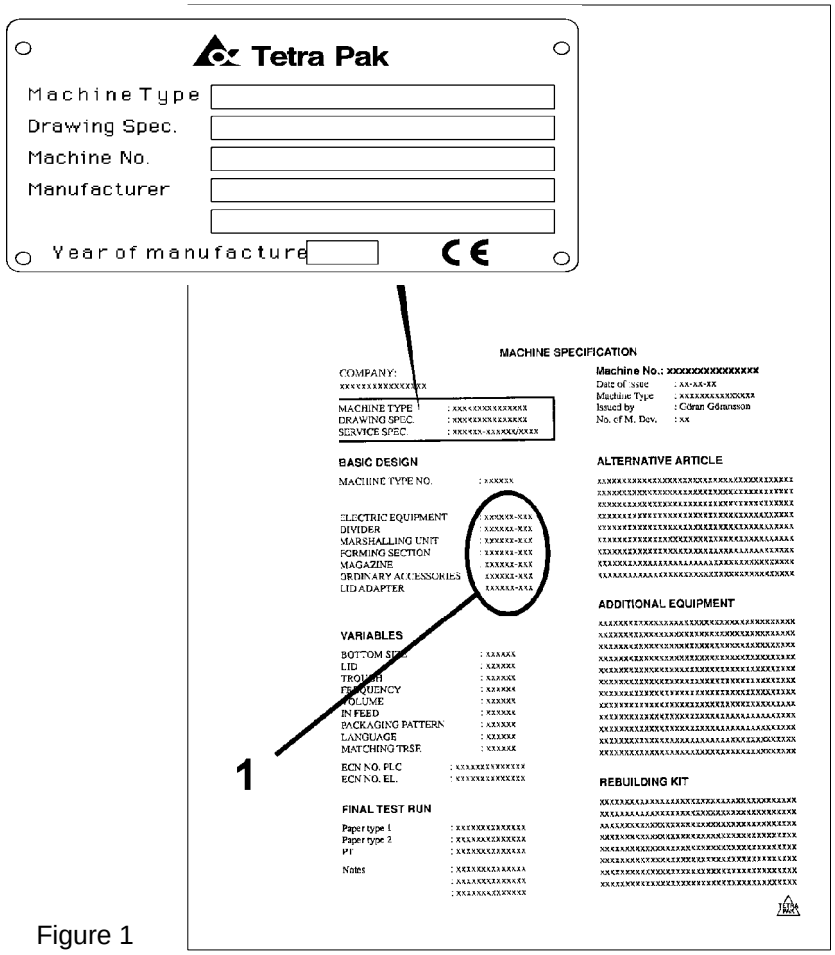

Figure 1

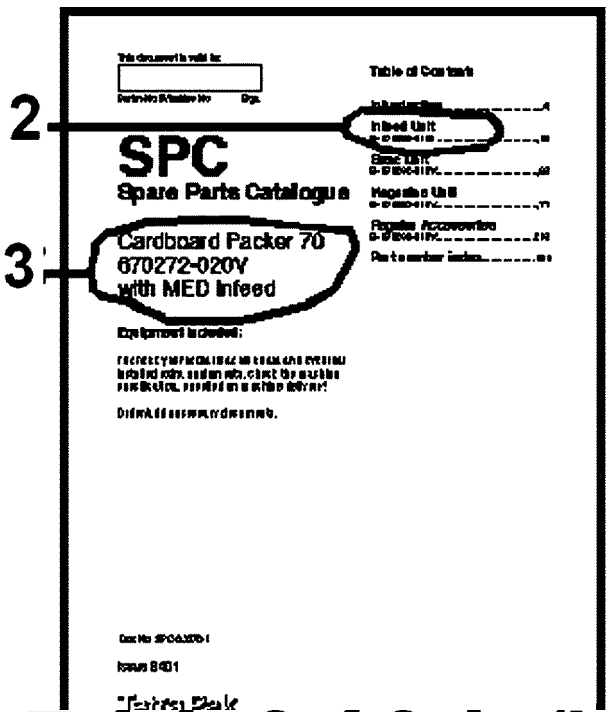

Figure 2

Figure 3

A-678544-0401 (V)

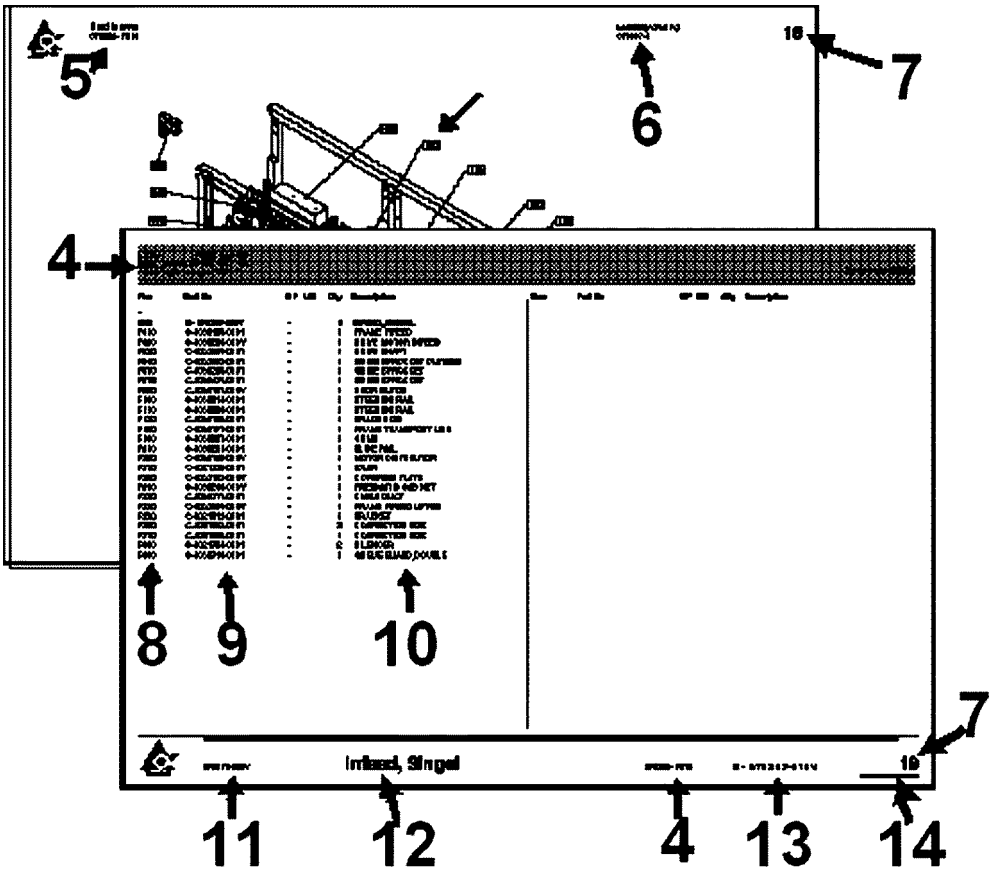

Figure 4

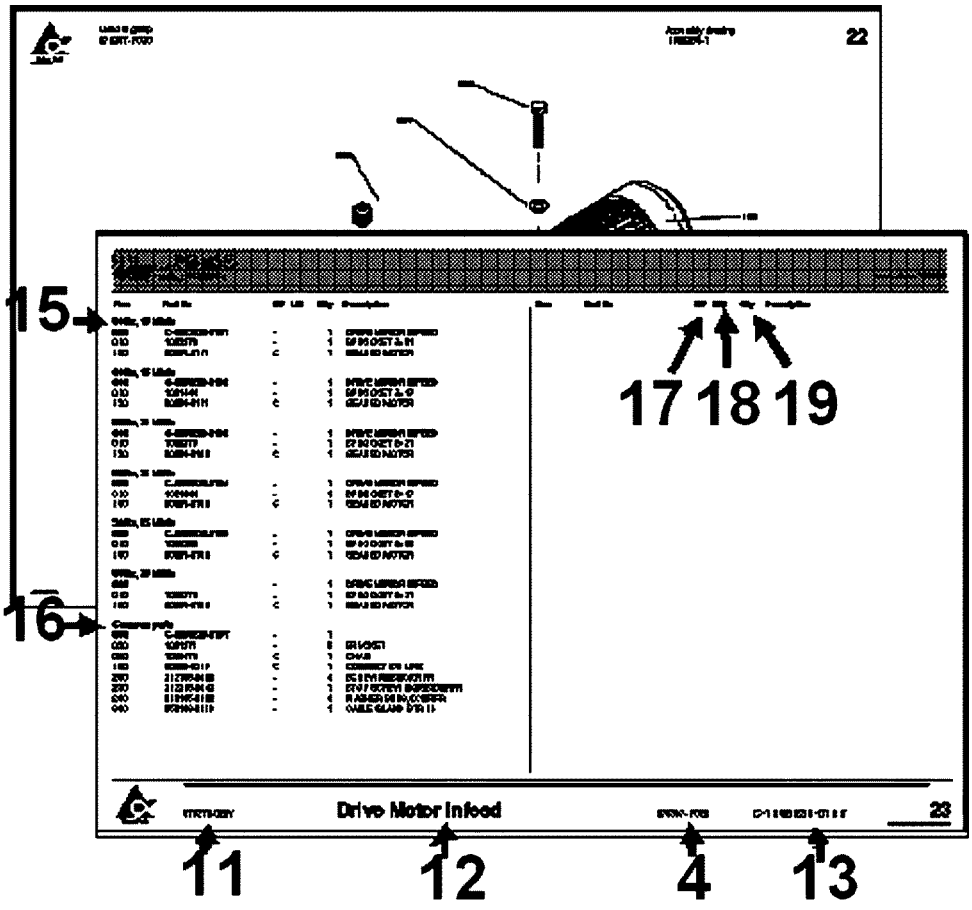

Figure 5

General information

Service

When ordering spare parts for your machine, contact the nearest Tetra Pak service station.

Machine identification

This machine plate is an example of the type of machine plate, attached to the machine frame. The plate carries data needed when contacting Tetra Pak concerning this particular machine.
The location of the different machine plates is shown on the page "Location of machine number plates", **see page 2**

Purpose of the Spare Parts Catalogue.

The purpose of the Spare Parts Catalogue (SPC) is to provide the technicians and contact personnel with information on how to find and order spare parts for maintenance and service of the machine.
For instructions of how to replace parts and adjust machine setup, see the Maintenance Manual (MM).

Delivered documentation

The technical documentation delivered with this machine is stated in the Machine Specification.
Note! If any of these documents is missing, it must be reported in the document **Start Up Machine Quality Report**. For more information, see chapter 8 Preparation for Commissioning in the Installation Manual.
It is important that you keep these documents for the life of the equipment, and pass the documents on to any subsequent holder or user of the equipment.

Design modification

The content of this document is in accordance with the design and construction of the machine at the time it was delivered from the Tetra Pak machine production facility.

Copyright © 2000 Tetra Brik Packaging Systems S.p.A.

All rights reserved. No parts of this document may be reproduced or copied in any forms or by any means, without written permission from Tetra Brik Packaging Systems S.p.A..

Further copies

Additional copies can be ordered from the nearest Tetra Pak service station. When ordering technical publications, always quote the document number printed on the front cover of the document concerned.

Tetra Pak Part numbering system

The third and forth digits in the subnumber, specify one unique group which can be ordered. If the forth digit is replaced by a "V", the number combination only points to a bill-of-material document.
The first and second digits in the sub-number, specify the development step (model) of the machine or group. **(see fig. 3)**
Main number of machine /group /article, depending on level.
Prefix, giving information about level, eg.
A = Machine
B = Main section (*)
C = Groups and subgroups
*) Customized distribution machines are registered as B-level as well.

How to find the correct Spare Part Number

A. Check that the data on your machine sign, and /or machine specification, corresponds with the catalogue. **(see fig.1)**

1) Main groups of the machine

B. The second catalogue sheet contains a table of content for the main groups, included in the catalogue. The information regarding machine and main group status MUST correspond with your machine specification.
Locate and choose the main groups page number (1), in which you want to search for spare parts.
(see fig. 2)

2) Main group

3) Machine type

C. Search in the main group illustration, the item number, which may hold your wanted spare part. Go to the text page below and find the page number for the actual group. **(see fig. 4)**

4) Internal information, such as latest Engineering Change, bill-of-material included in the catalogue page.

5) Used-In reference to next higher level in the machine structure

6) Assembly drawing number

7) Continuous page numbering through the document

8) Pos number corresponding to illustration

9) Group or article number.

10) Group or article description. The letter "B" in front of some article numbers indicates that this article contains other parts, shown in an additional page at the end the section. Letter "A" indicates a subgroup number with an own page directly after the actual page.

11) Machine type including development status

12) Group description

13) Group number (bill-of-material) including development status

14) Document number

D. Continue to the found page number, and search in the illustration for your spare part. Go to the text row for the found item number, and read the part number. Take eventual variant headings in consideration; if you are unsure, read your machine specification. **(see fig. 5)**

15) Variant heading, eg volume, left /right etc.

16) Heading for common parts

17) SP = Code for articles, which are included into various spare part kits.

A = Stop function, no rep/available/bypassed
B = Stop function, rep/available/bypassed
C = Don’t stop function, can bypassed
D = Seldom break, long time production
E = 100 operating hours
F = 250 operating hours
G = 500 operating hours
H = 750 operating hours
I = 1000 operating hours
J = 2000 operating hours
K = 3000 operating hours
L = 4000 operating hours
M = 5000 operating hours
N = 6000 operating hours
O = 7000 operating hours
P = 8000 operating hours
Q = 9000 operating hours
R = 10000 operating hours
S = 11000 operating hours
T = 12000 operating hours
U = 13000 operating hours
V = 14000 operating hours
W = 15000 operating hours
X = 20000 operating hours
Y = 25000 operating hours
Z = 30000 operating hours

18) UN = Short code for measure units, eg mm, kg etc.

19) Qty = Number of items needed in the complete assembly.

SPC

Spare Parts Catalogue

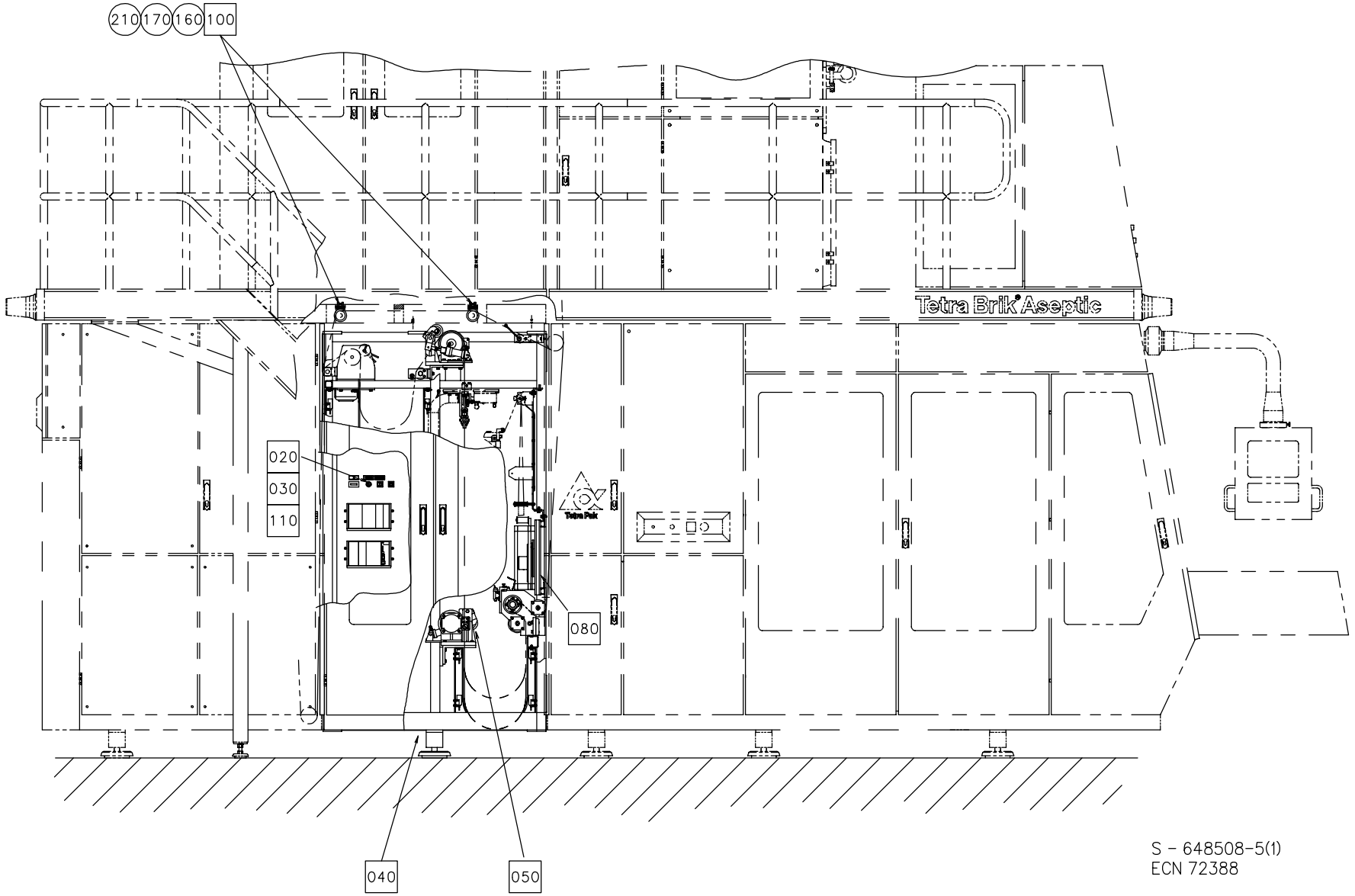
210
170
160
100
Tetra Brik Aseptic
020
030
110
080
040
050
S - 648508-5(1)
ECN 72388

Pos	Part No	SP	UN	Qty	Description	Page No
Common parts						
010	A577135-0100	-		1	PIPE-LINE	**17**
020	A1317254-0200	-		1	ELECTRICAL CABINET	**19, 21**
030	A1317751-0100	-		1	CABLE HARNESS	**29**
040	A1260428-0100	-		1	FRAME ASSEMBLY	**37, 39**
045	A1095928-0100	-		1	COOLER	**45**
050	A1095931-0300	-		1	PAPER WEB PATH	**49**
060	A1095932-0400	-		1	APPLICATORS	**83**
070	A1095951-0400	-		1	DOORS AND COVER	**135**
080	A1185008-0200	-		1	MAGAZINES	**151**
090	A1185049-0200	-		1	VALVE PANEL	**175**
100	A1334322-0100	-		2	BENDING ROLLER WITH FLANGES	**75**
110	A649060-0500	-		1	ELECTRICAL EQUIPMENT	**181**
150	1038865-0000	-		4	SPACER DISC	
160	311112-0377	-		4	PINS,SLOTTED TUBULAR SPRING PIN 8X24	
170	312105-0451	-		4	SCREW M6S ISO 4017 8X20 A280	
200	312105-0640	-		4	SCREW M6S ISO 4014 M16X100 A280	
210	315115-0165	-		4	WASHER TBRB 8,4X16 STAINLESS	

Pos	Part No	SP	UN	Qty	Description	Page No

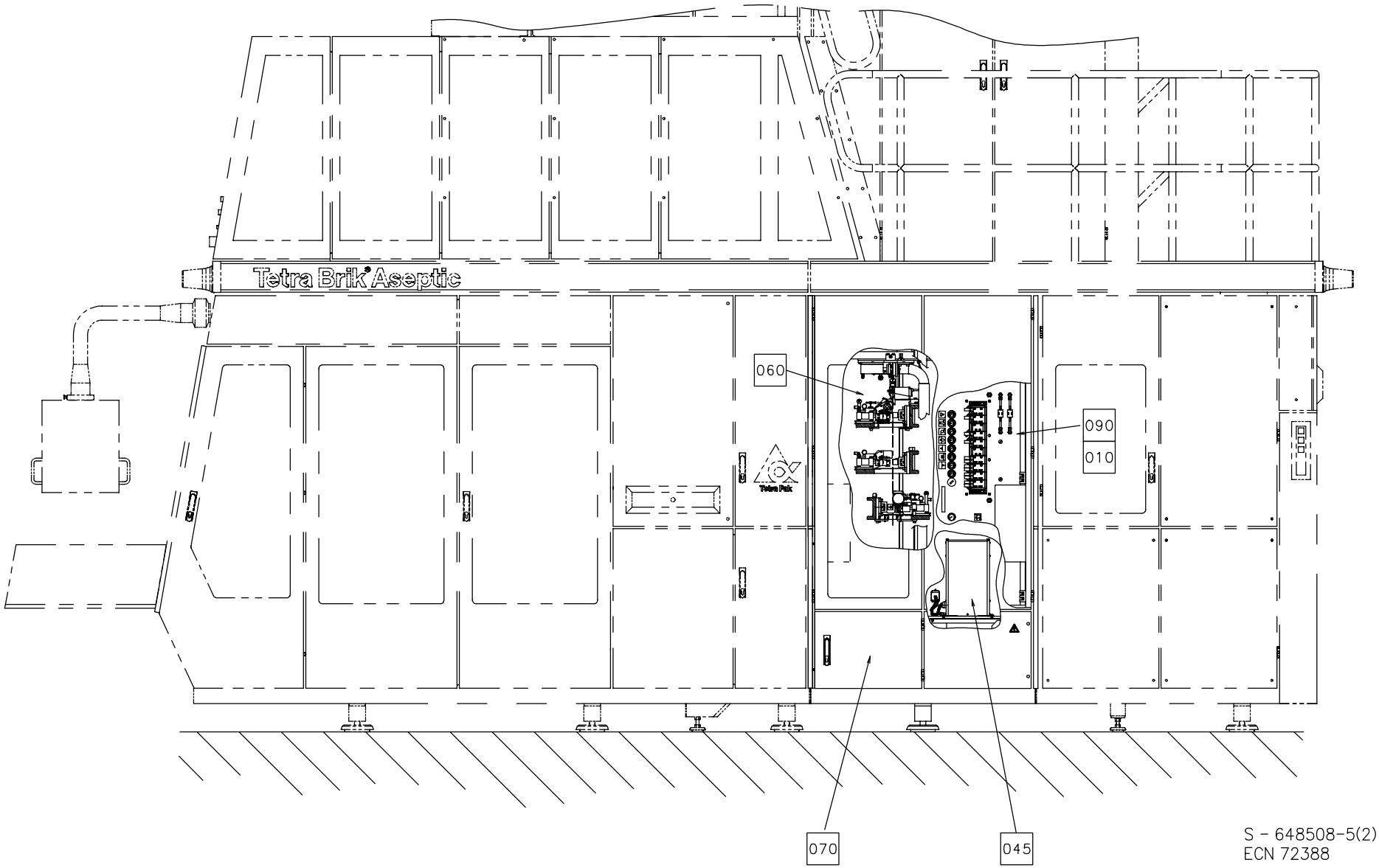
Tetra Brik Aseptic
060
090
010
070
045
S - 648508-5(2)
ECN 72388

Pos	Part No	SP	UN	Qty	Description	Page No
Common parts						
010	A577135-0100	-		1	PIPE-LINE	**17**
020	A1317254-0200	-		1	ELECTRICAL CABINET	**19, 21**
030	A1317751-0100	-		1	CABLE HARNESS	**29**
040	A1260428-0100	-		1	FRAME ASSEMBLY	**37, 39**
045	A1095928-0100	-		1	COOLER	**45**
050	A1095931-0300	-		1	PAPER WEB PATH	**49**
060	A1095932-0400	-		1	APPLICATORS	**83**
070	A1095951-0400	-		1	DOORS AND COVER	**135**
080	A1185008-0200	-		1	MAGAZINES	**151**
090	A1185049-0200	-		1	VALVE PANEL	**175**
100	A1334322-0100	-		2	BENDING ROLLER WITH FLANGES	**75**
110	A649060-0500	-		1	ELECTRICAL EQUIPMENT	**181**
150	1038865-0000	-		4	SPACER DISC	
160	311112-0377	-		4	PINS,SLOTTED TUBULAR SPRING PIN 8X24	
170	312105-0451	-		4	SCREW M6S ISO 4017 8X20 A280	
200	312105-0640	-		4	SCREW M6S ISO 4014 M16X100 A280	
210	315115-0165	-		4	WASHER TBRB 8,4X16 STAINLESS	

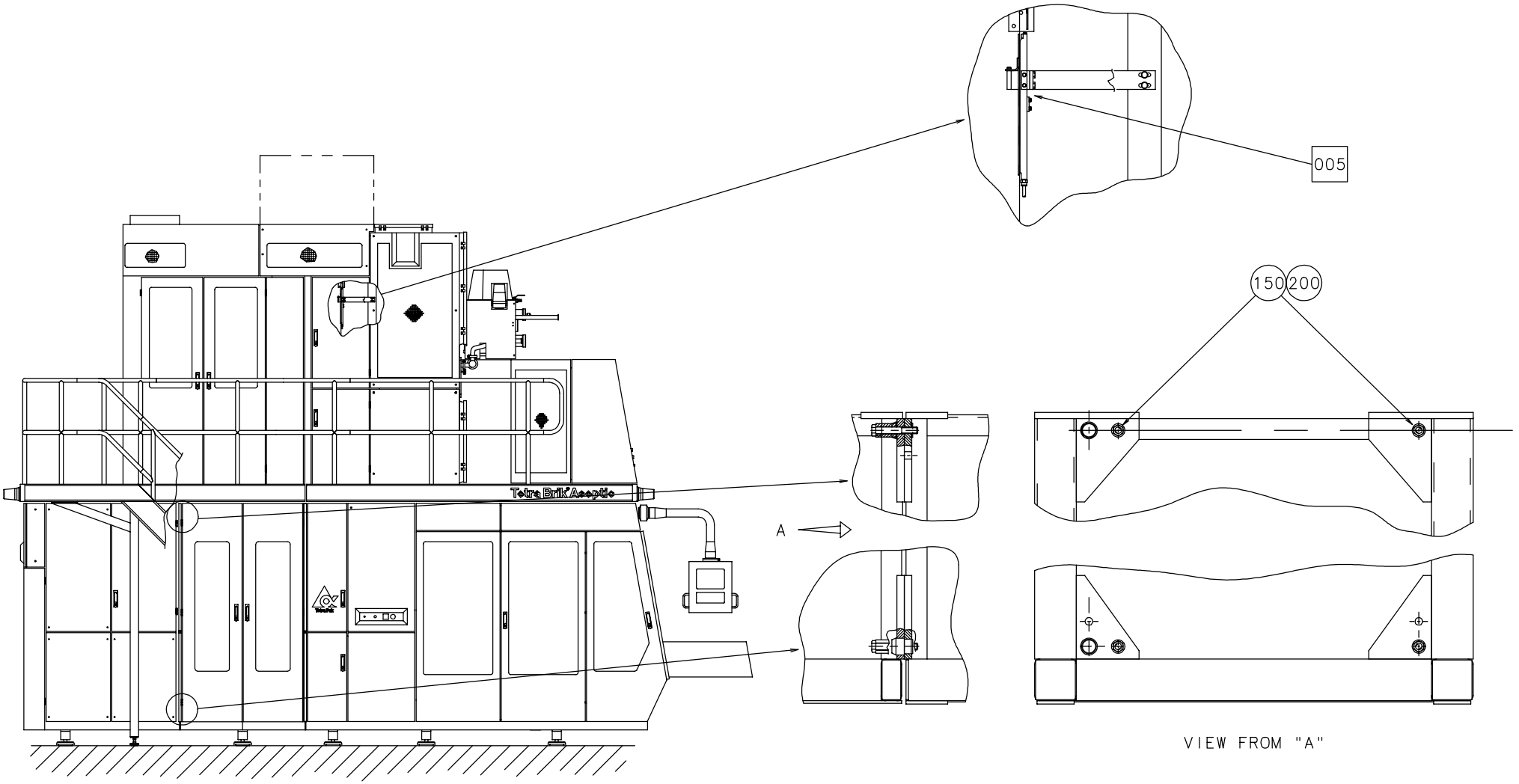

S - 648508-5(3)
ECN 72388

Pos	Part No	SP	UN	Qty	Description	Page No
Common parts						
010	A577135-0100	-		1	PIPE-LINE	**17**
020	A1317254-0200	-		1	ELECTRICAL CABINET	**19, 21**
030	A1317751-0100	-		1	CABLE HARNESS	**29**
040	A1260428-0100	-		1	FRAME ASSEMBLY	**37, 39**
045	A1095928-0100	-		1	COOLER	**45**
050	A1095931-0300	-		1	PAPER WEB PATH	**49**
060	A1095932-0400	-		1	APPLICATORS	**83**
070	A1095951-0400	-		1	DOORS AND COVER	**135**
080	A1185008-0200	-		1	MAGAZINES	**151**
090	A1185049-0200	-		1	VALVE PANEL	**175**
100	A1334322-0100	-		2	BENDING ROLLER WITH FLANGES	**75**
110	A649060-0500	-		1	ELECTRICAL EQUIPMENT	**181**
150	1038865-0000	-		4	SPACER DISC	
160	311112-0377	-		4	PINS,SLOTTED TUBULAR SPRING PIN 8X24	
170	312105-0451	-		4	SCREW M6S ISO 4017 8X20 A280	
200	312105-0640	-		4	SCREW M6S ISO 4014 M16X100 A280	
210	315115-0165	-		4	WASHER TBRB 8,4X16 STAINLESS	

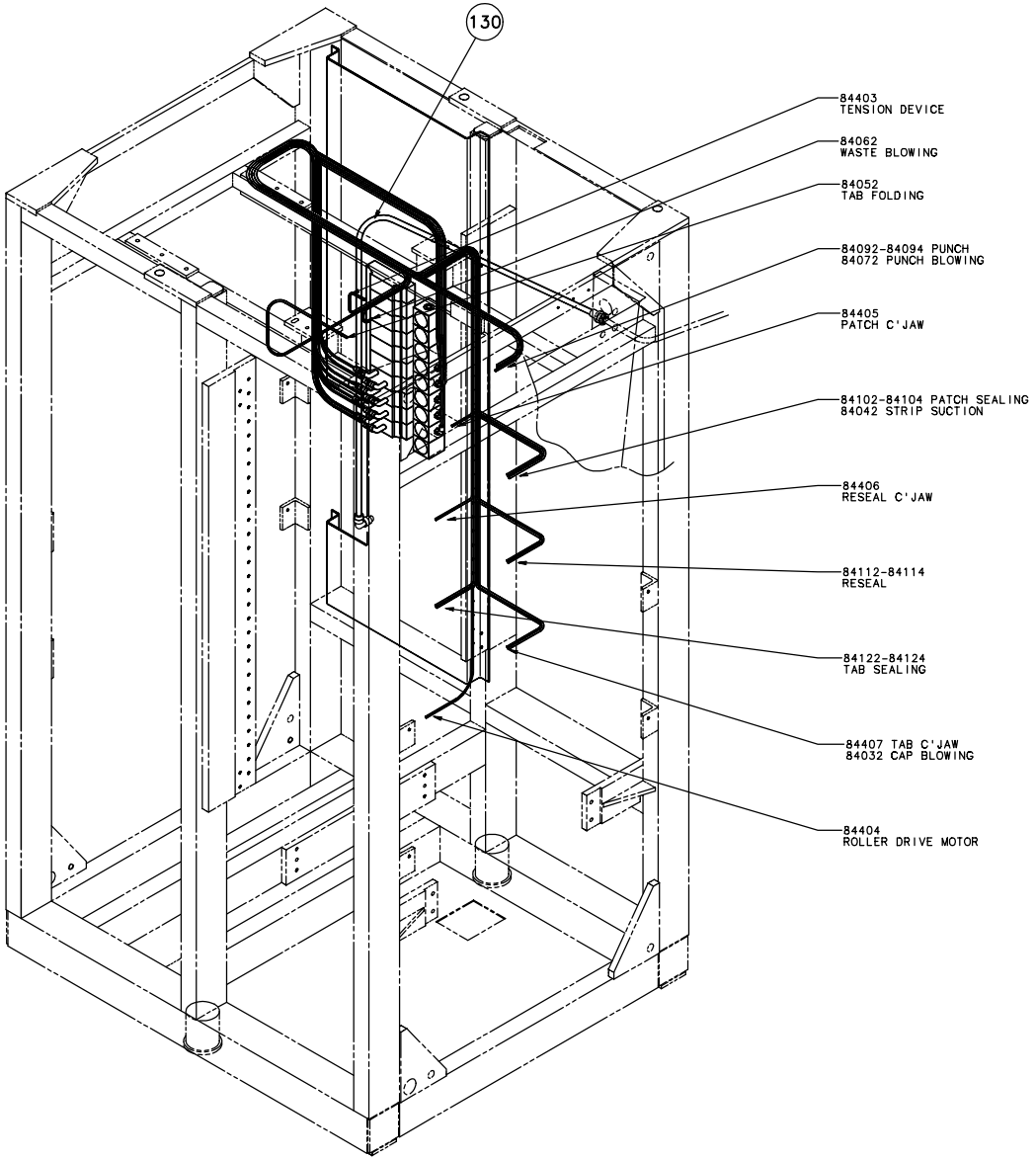

S - 577135-1
ECN 71157

Pos	Part No	SP	UN	Qty	Description	Page No
Common parts						
130	90166-0068	-	MM	3000	TUBE 12 MM PA BLUE	

Pos	Part No	SP	UN	Qty	Description	Page No

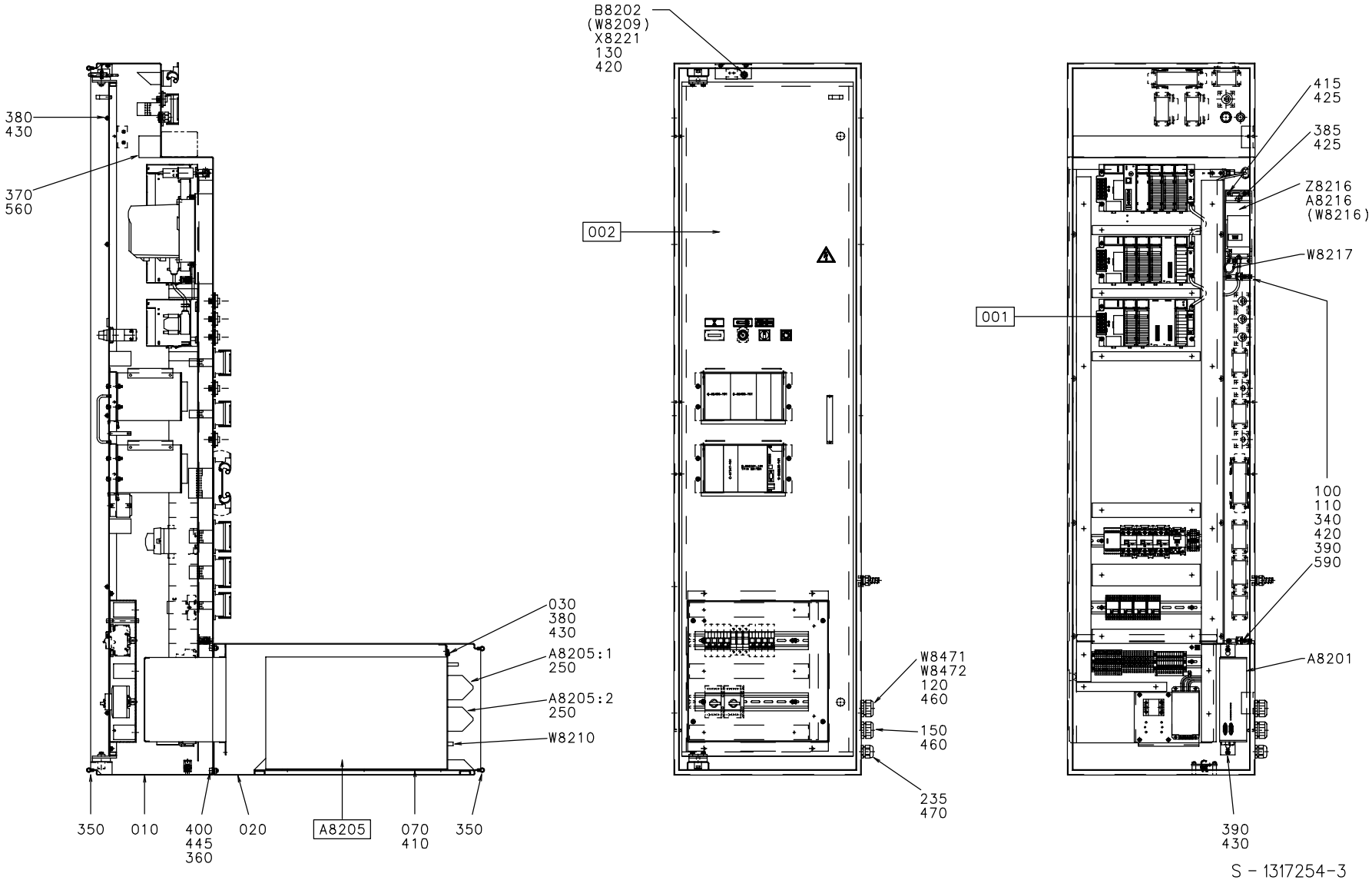

S - 1317254-3
ECN 72388

Pos	Part No	SP	UN	Qty	Description	Page No
Common parts						
001	A1317354-0200	-		1	MOUNTING PLATE	**23**
002	A1317355-0200	-		1	SWING FRAME	**25**
010	1317750-0000	-		1	CABINET	
020	1255952-0000	-		1	BOX FOR TPIH	
030	1129867-0000	-		1	SHEET	
040	1140314-0000	-		2	STOP LUG	
070	731049-0000	-		4	SLIDING STRIP TPIH	
100	1140053-0000	-		6	SPACER	
110	929607-0000	-		3	EARTH BAR	
120	B1346824-0000	-		1	INSERT	**183**
130	1260561-0000	-		1	HOLDER	
140	1317657-0000	-		2	INSERT	
150	979974-0000	-		1	INSERT	
190	90002-0009	-		1	BLANK-OFF PLUG 18.6	
200	90002-0013	-		1	BLANK-OFF PLUG 15,2(PG 9)	
235	90099-0119	-		1	NUT PR 28,3 (PG21)	
250	90110-0122	-		2	COVER HARTING	
256	90110-0152	-		2	CABLE HOOD 24-P	
260	90110-0153	-		2	CHASSI HOUSING 24-P	
265	90110-0157	-		2	COVER	
290	90110-0166	-		4	CONTACT HOUSE	
310	90110-0218	-		4	CONTACT HOUSING	
330	90110-0349	-		6	COVER/TOOL PX0733	
340	90135-0039	-		3	SHIELD CLIP KLBU 4-13.5	
350	90143-0057	-	MM	7000	STRIP EMKA 1011-05 21X11MM	
360	90143-0073	-	MM	1800	RUBBER STRIP	
370	90181-0046	-	MM	490	CABEL DUCT 60X60MM	
380	312105-0327	-		13	SCREW M6S ISO 4017 M5X12 A280	
385	312115-0291	-		2	SCREW MC6S ISO 4762 M4X12 A280	
390	312115-0323	-		4	SCREW MC6S ISO 4762 M5X8 A280	
400	312115-0449	-		8	SCREW MC6S ISO 4762 M8X16 A280	
410	312155-0291	-		12	SCREW MF6S DIN 7991 M4X12 A480	
415	312605-0312	-		4	NUT,HEXAGON,M4 RFR	
420	312605-0316	-		20	NUT,HEXAGON A280 M6M6	
425	315105-0136	-		6	WASHER,PLAIN ROUND 4,3X8 STAINLESS	
430	315105-0146	-		15	WASHER,PLAIN ROUND 5,3X10 STAINLESS	
440	315105-0153	-		12	WASHER,PLAIN ROUND 6,4X12 STAINLESS	
445	315105-0165	-		8	WASHER,PLAIN ROUND 8,4X16 STAINLESS	
450	352103-0108	-		2	CABLE GLAND ST 13	
460	353240-0006	-		4	GLANDS,NORMAL WITHOUT INSERT PG 29	
470	352103-0116	-		1	CABLE GLAND ST 21	
480	352103-0111	-		1	CABLE GLAND ST 16	
490	359005-0050	-		1	MARKING SEATS "X"	
500	359005-0010	-		4	MARKING SESATS 0-9	
510	312125-0287	-		11	SLOTTED CHEESE HEAD ISO 1207 M4X8 RFR	
515	90099-0104	-		1	NUT PR 15,2 (PG9)	
520	352113-0205	-		11	ANCHOR TM2S8-C100	
530	90099-0117	-		2	NUT PR 18,6 (PG11)	
540	353243-0002	-		2	GLAND,HOSE,EXTENDED,WITHOUT INSERT PG11	
550	90152-0059	-	MM	650	HOSE 18X12	
560	90099-0191	-		2	NYLON NUT M4X0.7 HEXAGON	
580	90110-0370	-		1	BASE HOUSING	
590	90062-0021	-		3	LOCKING WASHER A 5,3	
A8201	90045-0395	R		1	SERVO AMPLIFIER 5A RMS	
A8205	67600-0501	D		1	TPIH 2000 GENERATOR	
A8205.1	90110-0121	-		1	FEMALECONT.15POLE HARTING	
A8205.2	90110-0121	-		1	FEMALECONT.15POLE HARTING	
A8216	90430-0070	D		1	FREQ.CONV.SIEMENS 6SE3213-6CA40 750W	
B8202	90044-0124	R		1	PROX.SW. 922AB2XM-A9P-050-LZ-876	
W8201	351150-0419	-	MM	3500	CABLE OLFLEX 5X2,5MM2	
W8202	351150-0416	-	MM	3500	CABLE OILFLEX 12X1,5MM2	
W8203	90220-0183	-	MM	3500	CABLE,MULTI-CONDUCTOR SCREENED 2X0,34MM2	
W8210	548770-0007	D		1	COAXIAL CABLE L=3000 MM	
W8217	1143884-0000	-		1	COPPER BRAID	
W8411	351172-0104	-	M	3	CABLE AWM DARKBLUE 1,5MM2	
W8412	351172-0104	-	M	3	CABLE AWM DARKBLUE 1,5MM2	
W8445	90220-0104	-	M	5	CABLE,SCREENED 4X1,5MM2	
W8460	90220-0034	-	M	3	THERMO-CABLE	
W8471	548770-0001	D		1	COAXIAL CABLE L=5000 MM	
W8472	548770-0001	-		1	COAXIAL CABLE L=5000 MM	
X106	90110-0159	-		1	CONTACT	
X206	90110-0150	-		1	MALE INSERT 24-P, CABLE	
X8201.1	90110-0159	-		1	CONTACT	
X8201.2	90110-0163	-		1	FEMALE INSERT 6-POLE	
X8202.1	90110-0150	-		1	MALE INSERT 24-P, CABLE	
X8202.2	90110-0164	-		1	FEMALE CONTACT 24-POLES	
X8203	90110-0215	-		1	SOCKET	
X8204	90110-0215	-		1	SOCKET	
X8205	90110-0236	-		1	CHASSIE CONTACT PX0767/S	
X8206	90110-0236	-		1	CHASSIE CONTACT PX0767/S	
X8207	90110-0236	-		1	CHASSIE CONTACT PX0767/S	
X8208	90110-0161	-		1	FEMALE CONTACT 6-POLES	
X8209	90110-0236	-		1	CHASSIE CONTACT PX0767/S	

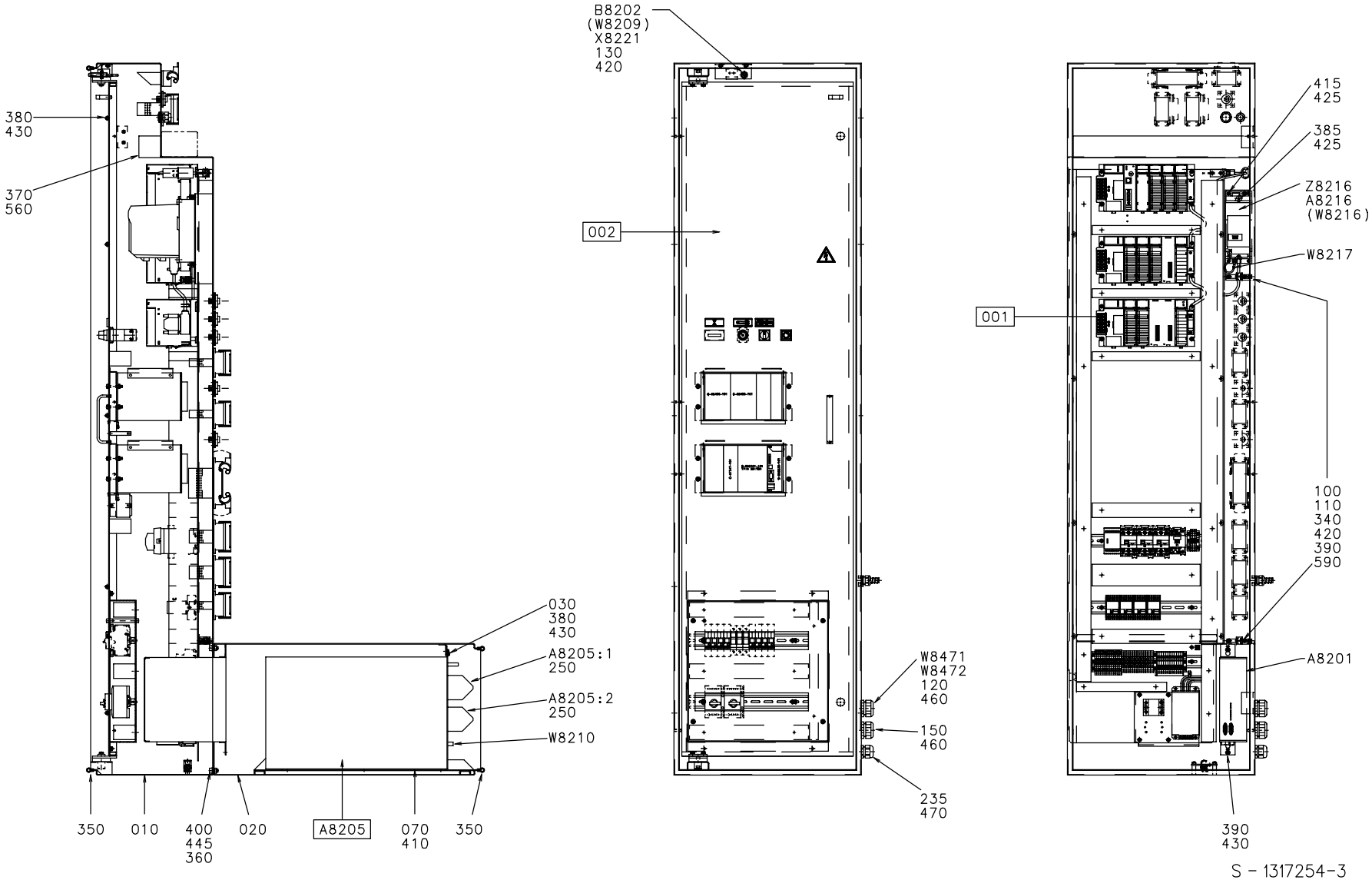

S - 1317254-3
ECN 72388

Pos	Part No	SP	UN	Qty	Description	Page No
Common parts						
X8210	90110-0161	-		1	FEMALE CONTACT 6-POLES	
X8211	90110-0236	-		1	CHASSIE CONTACT PX0767/S	
X8212	90110-0164	-		1	FEMALE CONTACT 24-POLES	
X8213	90110-0215	-		1	SOCKET	
X8214	90110-0215	-		1	SOCKET	
X8215	90110-0161	-		1	FEMALE CONTACT 6-POLES	
X8216	90110-0236	-		1	CHASSIE CONTACT PX0767/S	
X8221	90195-0019	-		1	TERMINAL BK3 KRG 3-POLE	
X8410	90110-0296	-		1	CONTACT SCREW	
Z8216	90430-0326	D		1	FILTER 6SE3290-0BA87-0FB2 SIEMENS	

Pos	Part No	SP	UN	Qty	Description	Page No

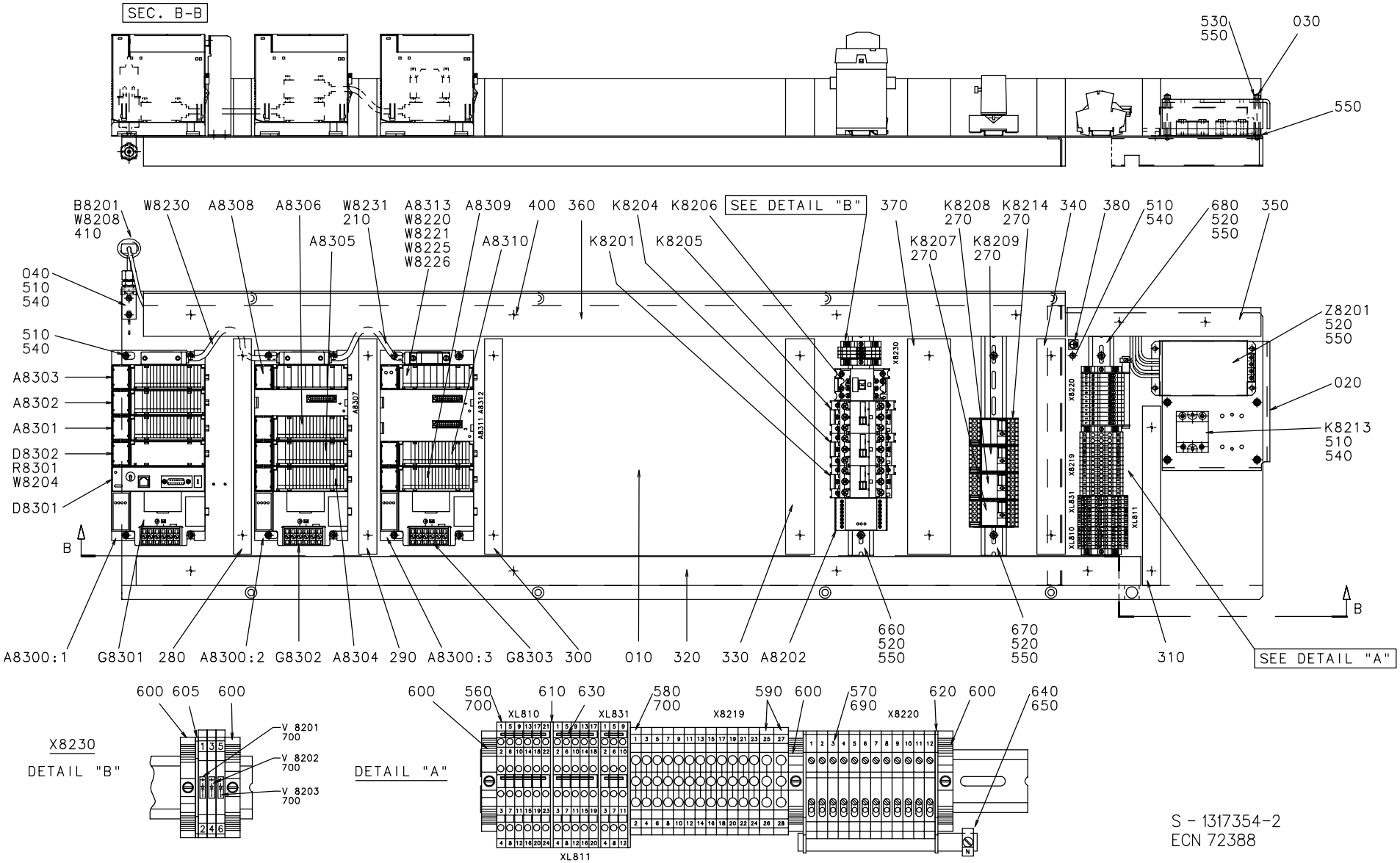
SEC. B-B
530
550
030
550
B8201
W8208
410
W8230
A8308
A8306
W8231
210
A8313
W8220
W8221
W8225
W8226
A8309
400
360
K8204
K8206
SEE DETAIL "B"
370
K8208
270
K8214
270
340
380
510
540
680
520
550
350
A8305
A8310
K8201
K8205
K8207
270
K8209
270
040
510
540
510
540
A8303
A8302
A8301
D8302
R8301
W8204
D8301
Z8201
520
550
020
K8213
510
540
A8307
A8311 A8312
X8230
X8220
X8219
XL831
XL810
XL811
B
B
A8300:1
G8301
280
A8300:2
G8302
A8304
290
A8300:3
G8303
300
010
320
330
A8202
660
520
550
670
520
550
310
SEE DETAIL "A"
600 605 600
X8230
DETAIL "B"
V 8201
700
V 8202
700
V 8203
700
600
560
700
610 630
580
700
590 600
570
690
620 600
640
650
XL810
XL831
X8219
X8220
DETAIL "A"
XL811
S - 1317354-2
ECN 72388

EC No: - - 20000423
Group number: 1317354-0200
Assembly Drawing: 1317354-2

Issue: 20000706

Pos	Part No	SP	UN	Qty	Description	Page No
Common parts						
010	1317357-0000	-		1	MOUNTING PLATE	
020	1317483-0000	-		1	TOUCH GUARD	
030	1317484-0000	-		4	STUD SCREW	
040	1317485-0000	-		1	ANGLE BRACKET	
210	90031-0302	D		1	PLC, I/O BUS TERMINATION PLUG	
270	90129-0006	-		4	BASE 11 POLE	
280	90181-0052	-	MM	300	CABLE DUCT 25X80MM	
290	90181-0052	-	MM	300	CABLE DUCT 25X80MM	
300	90181-0052	-	MM	300	CABLE DUCT 25X80MM	
310	90181-0052	-	MM	250	CABLE DUCT 25X80MM	
320	90181-0053	-	MM	1400	CABLE DUCT 40X80MM	
330	90181-0053	-	MM	300	CABLE DUCT 40X80MM	
340	90181-0053	-	MM	300	CABLE DUCT 40X80MM	
350	90181-0053	-	MM	270	CABLE DUCT 40X80MM	
360	90181-0054	-	MM	1285	CABLE DUCT 60X80MM	
370	90181-0054	-	MM	300	CABLE DUCT 60X80MM	
380	90194-0152	-		1	SIGN "EARTH"	
400	90287-0124	-		24	SCREW,CHEESE HEAD,MSCS DIN84, M4X12	
410	90326-0012	-		1	PROTECTIVE COVER	
510	312115-0287	-		17	SCREW MC6S ISO 4762 M4X8 A280	
520	312115-0323	-		10	SCREW MC6S ISO 4762 M5X8 A280	
530	312605-0314	-		4	NUT,HEXAGON,M6M5 STAINLESS	
540	315105-0136	-		17	WASHER,PLAIN ROUND 4,3X8 STAINLESS	
550	315105-0146	-		18	WASHER,PLAIN ROUND 5,3X10 STAINLESS	
560	353021-0120	-		14	FEED THROUGH TERMINAL WDK 2,5	
570	353022-0002	-		12	NEUTRAL TERMINAL WNT 4	
580	353024-0205	-		12	EARTH TERMINAL WPE 4	
590	353024-0206	-		2	EARTH TERMINAL WPE 6	
600	353031-0203	-		5	END BRACKET WEW 35/2	
605	353032-0004	-		1	END PLATE WAP 2,5-10 BEIGE	
610	353032-0010	-		3	END PLATE WAP	
620	353033-0104	-		2	END PLATE WHP 2,5-10 BLUE	
630	353034-0030	-		3	BRIDGE CONLECK WQV 2,5/10	
640	353041-0001	-	MM	100	RAIL 10X3MM SSCH	
650	353041-0104	-		1	CLAMPING YOKE PZB 4 K	
660	353042-0004	-	MM	305	RAIL TS 35/7,5	
670	353042-0004	-	MM	305	RAIL TS 35/7,5	
680	353042-0004	-	MM	305	RAIL TS 35/7,5	
690	359011-0821	-		1	SET OF SIGNS 6-FW 1-50	
700	359011-0807	-		5	MARKING PLATES 5-FW 1-50	
A8202	90119-0089	-		1	SAFETY RELAY JSBT4 24VDC	
A8300.1	90031-0050	D		1	PLC BASEPLATE, 5-SLOT	
A8300.2	90031-0052	D		1	PLC EXPANSION BASEPLATE, 5-SLOT	
A8300.3	90031-0052	-		1	PLC EXPANSION BASEPLATE, 5-SLOT	
A8301	90031-0058	D		1	PLC, DIGITAL INPUT MODULE 16 PT/24 VDC	
A8302	90031-0059	D		1	PLC, DIGITAL OUTPUT MODULE 16 PT/24 VDC	
A8303	90031-0059	-		1	PLC, DIGITAL OUTPUT MODULE 16 PT/24 VDC	
A8304	90031-0057	D		1	PLC, DIGITAL INPUT MODULE 16 PT/24 VDC	
A8305	90031-0057	-		1	PLC, DIGITAL INPUT MODULE 16 PT/24 VDC	
A8306	90031-0057	-		1	PLC, DIGITAL INPUT MODULE 16 PT/24 VDC	
A8308	90031-0065	D		1	PLC, TERMOCOUPLE INPUT MODULE 8 PT	
A8309	90031-0059	-		1	PLC, DIGITAL OUTPUT MODULE 16 PT/24 VDC	
A8310	90031-0059	-		1	PLC, DIGITAL OUTPUT MODULE 16 PT/24 VDC	
A8313	90031-0062	D		1	PLC, ANALOG OUTPUT MODULE 8PT/CURR/VOLT	
B8201	90326-0053	-		1	THERMO ELEMENT	
D8301	90031-0075	D		1	CPU363, SERIAL COMMUNICATION	
D8302	90031-0031	D		1	ENHANCES GENIUS	
G8301	90031-0068	D		1	PLC POWERSUPPLY 120/230 VAC/50 W	
G8302	90031-0068	-		1	PLC POWERSUPPLY 120/230 VAC/50 W	
G8303	90031-0068	-		1	PLC POWERSUPPLY 120/230 VAC/50 W	
K8201	B90075-0125	-		1	CONTACTOR 7,5KW COIL 24VDC	**183**
K8204	B90075-0125	-		1	CONTACTOR 7,5KW COIL 24VDC	**183**
K8205	B90075-0125	-		1	CONTACTOR 7,5KW COIL 24VDC	**183**
K8206	90075-0127	-		1	CONTACTOR 4KW COIL 24VDC	
K8207	90119-0056	-		1	PLUG-IN RELAY 24VDC	
K8208	90119-0056	-		1	PLUG-IN RELAY 24VDC	
K8209	90119-0056	-		1	PLUG-IN RELAY 24VDC	
K8213	90119-0043	-		1	OPTO RELAY 22DC 60S-3	
K8214	90119-0056	-		1	PLUG-IN RELAY 24VDC	
R8301	90121-0116	-		1	RESISTANCE FIXED, 0,15 KOHM, 0,25 W	
V8201	353021-0122	-		1	DIODE-TERMINAL WTRD 2,5	
V8202	353021-0122	-		1	DIODE-TERMINAL WTRD 2,5	
V8203	353021-0122	-		1	DIODE-TERMINAL WTRD 2,5	
W8204	90220-0183	-	M	1	CABLE,MULTI-CONDUCTOR SCREENED 2X0,34MM2	
W8208	90220-0034	-	MM	1000	THERMO-CABLE	
W8220	90220-0183	-	MM	1500	CABLE,MULTI-CONDUCTOR SCREENED 2X0,34MM2	
W8221	90220-0183	-	MM	600	CABLE,MULTI-CONDUCTOR SCREENED 2X0,34MM2	
W8225	90220-0183	-	M	1	CABLE,MULTI-CONDUCTOR SCREENED 2X0,34MM2	
W8226	90220-0183	-	M	1	CABLE,MULTI-CONDUCTOR SCREENED 2X0,34MM2	
W8230	90031-0305	D		1	PLC, BACKPLANE EXPANSION CABLE 0,3 M	
W8231	90031-0305	-		1	PLC, BACKPLANE EXPANSION CABLE 0,3 M	
Z8201	90024-0037	-		1	VARISTOR FILTER, 150 V RMS/200 VDC, 13 J	

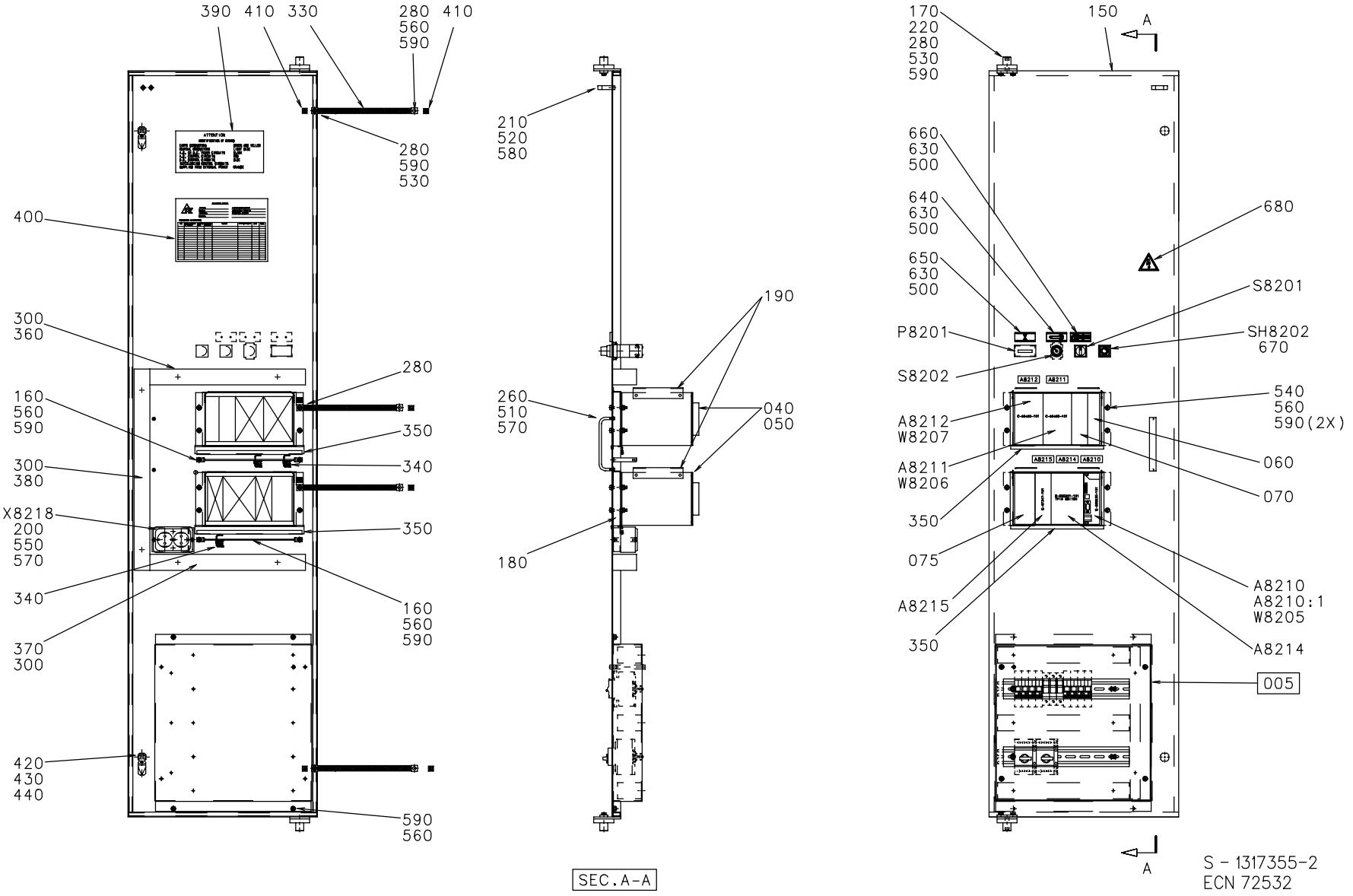
390 410 330
280 560 590
280 590 530
400
300 360
280
160 560 590
350
300 380
340
X8218 200 550 570
350
340
160 560 590
370 300
420 430 440
590 560
210 520 580
190
260 510 570
040 050
180
SEC.A-A
170 220 280 530 590
150
A
660 630 500
640 630 500
650 630 500
680
S8201
P8201
SH8202 670
S8202
A8212 W8207
A8211 W8206
350
075
A8215
350
540 560 590(2X)
060
070
A8210 A8210:1 W8205
A8214
005
A
S - 1317355-2
ECN 72532

Pos	Part No	SP	UN	Qty	Description	Page No
Common parts						
005	A1317356-0200	-		1	FUSE BOX	**27**
040	67388-0101	-		2	FRONT MOUNTED RACK 42TE	
050	68262-0101	-		6	BACKPLANE FRONT RACK 8TE	
060	68445-0103	-		1	FRONT PLATE 6TE	
070	68445-0104	-		1	FRONT PLATE 8 TE	
075	68445-0105	-		1	FRONT PLATE 10TE	
150	1317358-0000	-		1	SWING FRAME	
160	1260440-0000	-		2	BRACKET	
170	495377-0000	-		2	BUSH	
180	1255955-0000	-		2	FRAME	
190	1279831-0000	-		2	COVER	
200	1317359-0000	-		1	BRACKET	
210	970215-0000	-		1	STOP BLOCK	
220	971346-0000	-		2	GUIDE PIN	
260	90017-0017	-		1	HANDLE,BRASS	
280	90062-0022	-		12	LOCKING WASHER D=6,4/11	
300	90099-0191	-		6	NYLON NUT M4X0.7 HEXAGON	
330	90135-0035	-		4	LOW IMPEDANCELITZ L=250MM	
340	90135-0039	-		3	SHIELD CLIP KLBU 4-13.5	
350	90143-0060	-	MM	1000	EDGE STRIP 9,5X6,3MM BLACK PVC	
360	90181-0045	-	MM	390	CABLE DUCT 40X60MM	
370	90181-0045	-	MM	390	CABLE DUCT 40X60MM	
380	90181-0045	-	MM	505	CABLE DUCT 40X60MM	
390	90194-0080	-		1	SIGN "IDENTIF. OF WIRING"	
400	90194-0133	-		1	SIGN "DELIVERED DESIGN"	
410	90194-0152	-		8	SIGN "EARTH"	
420	90237-0157	-		2	LOCKING CATCH EMKA 1000-230	
430	90237-0319	-		2	LOCK HOUSING EMKA U134	
440	90237-0320	-		2	LOCK COMPONENT EMKA U136	
500	311520-0329	-		6	BLANK RIVET 2,4X8MM	
510	312115-0287	-		2	SCREW MC6S ISO 4762 M4X8 A280	
520	312115-0323	-		2	SCREW MC6S ISO 4762 M5X8 A280	
530	312115-0366	-		6	SCREW MC6S ISO 4762 M6X12 A280	
540	312125-0378	-		8	SLOTTED CHEESE HEAD ISO 1207 M6X40 RFR	
550	312605-0312	-		2	NUT,HEXAGON,M4 RFR	
560	312605-0316	-		20	NUT,HEXAGON A280 M6M6	
570	315105-0136	-		4	WASHER,PLAIN ROUND 4,3X8 STAINLESS	
580	315105-0146	-		2	WASHER,PLAIN ROUND 5,3X10 STAINLESS	
590	315105-0153	-		34	WASHER,PLAIN ROUND 6,4X12 STAINLESS	
630	359240-0100	-		3	SIGN HOLDER	
640	359241-0133	-		1	SIGN "SERVICE SWITCH"	
650	359241-0201	-		1	SIGN "HOUR GLASS"	
660	359241-0471	-		1	SIGN" PULL TAB FUNCTION"	
670	359301-0512	-		1	SIGN "INDEX TO POSITION"	
680	359705-0015	-		1	WARNING SIGN "ELECTRIC SHOCK"	
A8210	558230-0101	D		1	TMCC CONTROLLER	
A8210.1	B48142-0201	-		1	PT21AF-PULLTAB 21 AUXILIARY FUNCTIONS	**183**
A8211	68450-0101	-		1	STEPPER MOTOR DRIVER	
A8212	68450-0101	D		1	STEPPER MOTOR DRIVER	
A8214	558321-0101	D		1	TPIH-SWITCH	
A8215	67347-0101	D		1	CARD BRAKEREG.MAGN.POWDER BRAKE	
P8201	90053-0031	-		1	HOUR COUNTER BOWER B906.10	
S8201	90111-0193	-		1	ROTARY SWITCH	
S8202	90111-0197	-		1	SERVICE KEY	
SH8202	B90064-0082	-		1	PUSH BUTTON WHITE	**183**
W8205	90220-0165	-	MM	2000	CABLE,MULTI-CONDUCTOR SCREENED 5X0,34	
W8206	90220-0165	-	MM	2000	CABLE,MULTI-CONDUCTOR SCREENED 5X0,34	
W8207	90220-0165	-	MM	2000	CABLE,MULTI-CONDUCTOR SCREENED 5X0,34	
X8218	90001-0033	-		1	WALL SOCKET OUTLET	

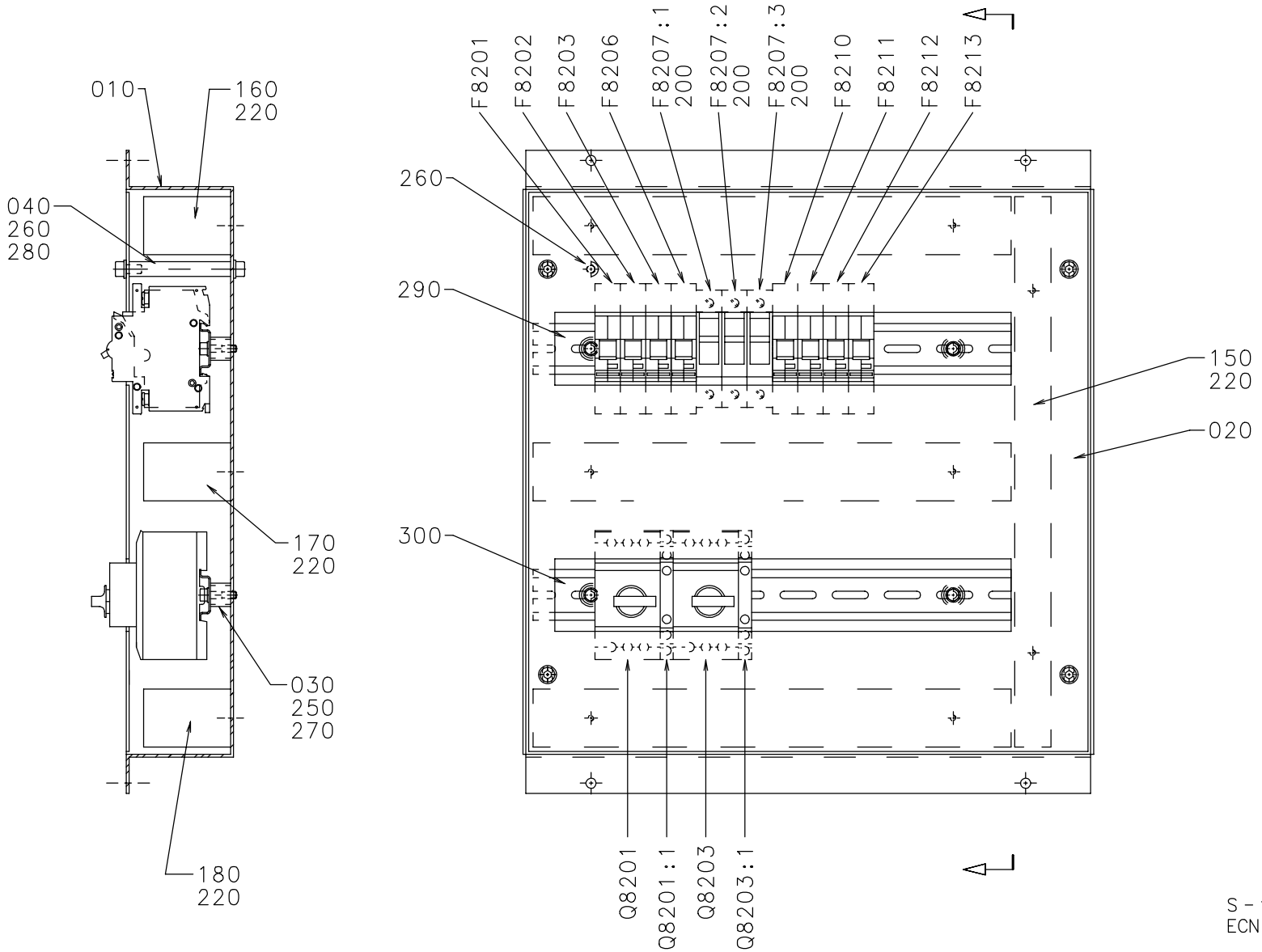

S - 1317356-2
ECN 72388

Pos	Part No	SP	UN	Qty	Description	Page No
Common parts						
010	1317360-0000	-		1	FUSE BOX	
020	1317361-0000	-		1	COVER PLATE	
030	495118-0014	-		4	DISTANCE PIPE L=14 MM	
040	495130-0070	-		4	SPACER TUBE L=70MM	
150	90181-0044	-	MM	380	CABEL DUCT 25X60MM	
160	90181-0045	-	MM	330	CABLE DUCT 40X60MM	
170	90181-0045	-	MM	330	CABLE DUCT 40X60MM	
180	90181-0045	-	MM	330	CABLE DUCT 40X60MM	
200	90233-0303	-		3	FUSEHOLDER FERRAZ ST10	
220	90287-0124	-		8	SCREW,CHEESE HEAD,MSCS DIN84, M4X12	
250	312115-0331	-		4	SCREW MC6S ISO 4762 M5X20 A280	
260	312115-0366	-		9	SCREW MC6S ISO 4762 M6X12 A280	
270	315105-0146	-		4	WASHER,PLAIN ROUND 5,3X10 STAINLESS	
280	315105-0153	-		8	WASHER,PLAIN ROUND 6,4X12 STAINLESS	
290	353042-0004	-	MM	330	RAIL TS 35/7,5	
300	353042-0004	-	MM	330	RAIL TS 35/7,5	
F8201	90007-0129	-		1	FUSE 1P 10A K	
F8202	90007-0128	-		1	FUSE 1P 6A K	
F8203	90007-0128	-		1	FUSE 1P 6A K	
F8206	90007-0156	-		1	FUSE 1P 4A K	
F8207.1	90233-0028	-		1	FUSE 10A FERRAZ	
F8207.2	90233-0028	-		1	FUSE 10A FERRAZ	
F8207.3	90233-0028	-		1	FUSE 10A FERRAZ	
F8210	90007-0129	-		1	FUSE 1P 10A K	
F8211	90007-0156	-		1	FUSE 1P 4A K	
F8212	90007-0156	-		1	FUSE 1P 4A K	
F8213	90007-0128	-		1	FUSE 1P 6A K	
Q8201	90095-0077	-		1	OVERLOAD PROTECTION PKZM 6-10A	
Q8201.1	90259-0313	-		1	AUX. CONTACT KM NHI21-PKZM0	
Q8203	90095-0072	-		1	OVERLOAD PROTECTION PKZM 1,0A	
Q8203.1	90259-0313	-		1	AUX. CONTACT KM NHI21-PKZM0	

Pos	Part No	SP	UN	Qty	Description	Page No

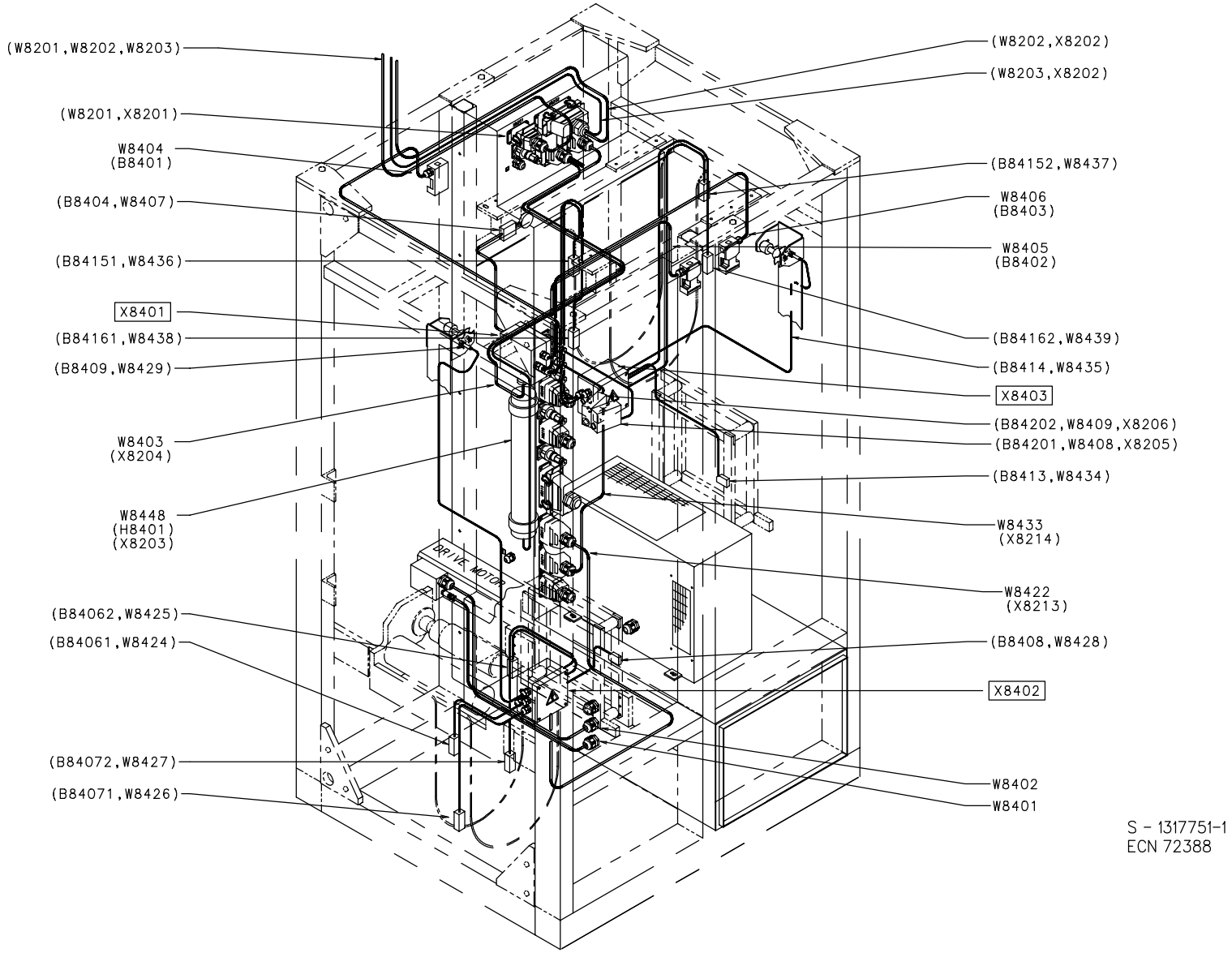

S - 1317751-1
ECN 72388

Pos	Part No	SP	UN	Qty	Description	Page No
Common parts						
050	B1282599-0000	-		1	INSERT	**183**
060	B1282600-0000	-		1	INSERT	**183**
070	B1282787-0000	-		1	INSERT	**183**
090	B1260902-0000	-		1	INSERT	**183**
110	90110-0152	-		1	CABLE HOOD 24-P	
120	90110-0157	-		2	COVER	
150	90110-0217	-		4	COVER	
180	352103-0111	-		3	CABLE GLAND ST 16	
190	353240-0003	-		2	GLANDS,NORMAL WITHOUT INSERT PG 13,5	
200	353240-0005	-		1	GLANDS,NORMAL WITHOUT INSERT PG 21	
210	353240-0006	-		1	GLANDS,NORMAL WITHOUT INSERT PG 29	
240	359005-0010	-		8	MARKING SESATS 0-9	
250	359005-0050	-		1	MARKING SEATS "X"	
260	90089-0008	-		1	SLEEVE PR22,5/28,3;PG16/21	
W8401	90220-0084	-	MM	1000	SERVOCABLE 4X2,5+2(2X0.75)	
W8402	B1255692-0010	D		1	CABLE	**183**
W8403	351150-0407	-	MM	1200	CABLE OLFLEX 12X0,75 MM2	
W8404	351150-0405	-	MM	1000	CABLE,OLFLEX 5X0,75 MM2	
W8405	351150-0405	-	MM	1000	CABLE,OLFLEX 5X0,75 MM2	
W8406	351150-0405	-	MM	1000	CABLE,OLFLEX 5X0,75 MM2	
W8421	351150-0403	-	MM	2000	CABLE OLFLEX 3X0,75 MM2	
W8422	351150-0407	-	MM	2500	CABLE OLFLEX 12X0,75 MM2	
W8433	351150-0407	-	MM	2500	CABLE OLFLEX 12X0,75 MM2	
W8446	351150-0413	-	MM	2000	CABLE OLFLEX 4X1,5MM2	
W8448	351150-0412	-	MM	2500	CABLE OLFLEX 3X1,5MM2	
X8203	90110-0216	-		1	MALE PLUG	
X8204	90110-0216	-		1	MALE PLUG	
X8205	90110-0235	-		1	CABLE CONTACT	
X8206	90110-0235	-		1	CABLE CONTACT	
X8207	90110-0235	-		1	CABLE CONTACT	
X8208	90110-0159	-		1	CONTACT	
X8209	90110-0235	-		1	CABLE CONTACT	
X8210	90110-0159	-		1	CONTACT	
X8211	90110-0235	-		1	CABLE CONTACT	
X8212	90110-0150	-		1	MALE INSERT 24-P, CABLE	
X8213	90110-0216	-		1	MALE PLUG	
X8214	90110-0216	-		1	MALE PLUG	
X8216	90110-0235	-		1	CABLE CONTACT	
X8401	A1260813-0100	-		1	CONNECTION BOX	**31**
X8402	A1260812-0100	-		1	CONNECTION BOX	**33**
X8403	A1260811-0100	-		1	CONNECTION BOX	**35**

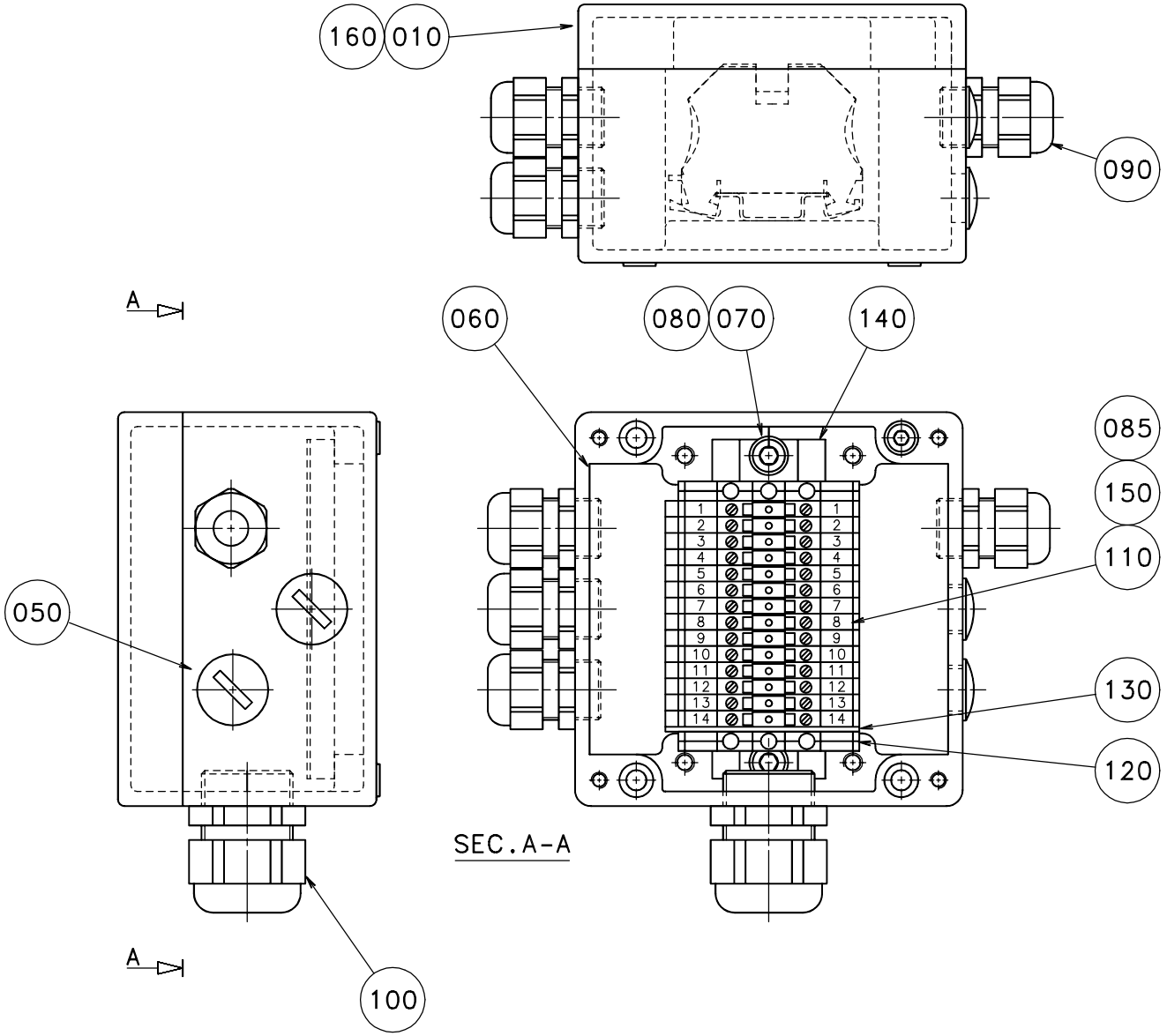

S - 1260813-1
ECN 22912

Pos	Part No	SP	UN	Qty	Description	Page No
Common parts						
010	B1260815-0000	-		1	CONNECTION BOX	**183**
050	90002-0009	-		2	BLANK-OFF PLUG 18.6	
060	312115-0331	-		4	SCREW MC6S ISO 4762 M5X20 A280	
070	312115-0362	-		2	SCREW MC6S ISO 4762 M6X8 A280	
080	315105-0153	-		2	WASHER,PLAIN ROUND 6,4X12 STAINLESS	
085	351172-0102	-	MM	300	CABLE AWM D.BLUE 0,75MM2	
090	352103-0106	-		4	CABLE GLAND ST 11	
100	352103-0115	-		1	CABLE GLAND STR 21	
110	353021-0216	-		14	BY PASS TERMINAL WDU 2,5 BLUE	
120	353024-0205	-		2	EARTH TERMINAL WPE 4	
130	353032-0005	-		1	END PLATE WAP 2,5-10 BLUE	
140	353042-0005	-	MM	105	RAIL TS 35/7.5	
150	359011-0807	-		14	MARKING PLATES 5-FW 1-50	
160	359705-0015	-		1	WARNING SIGN "ELECTRIC SHOCK"	

Pos	Part No	SP	UN	Qty	Description	Page No

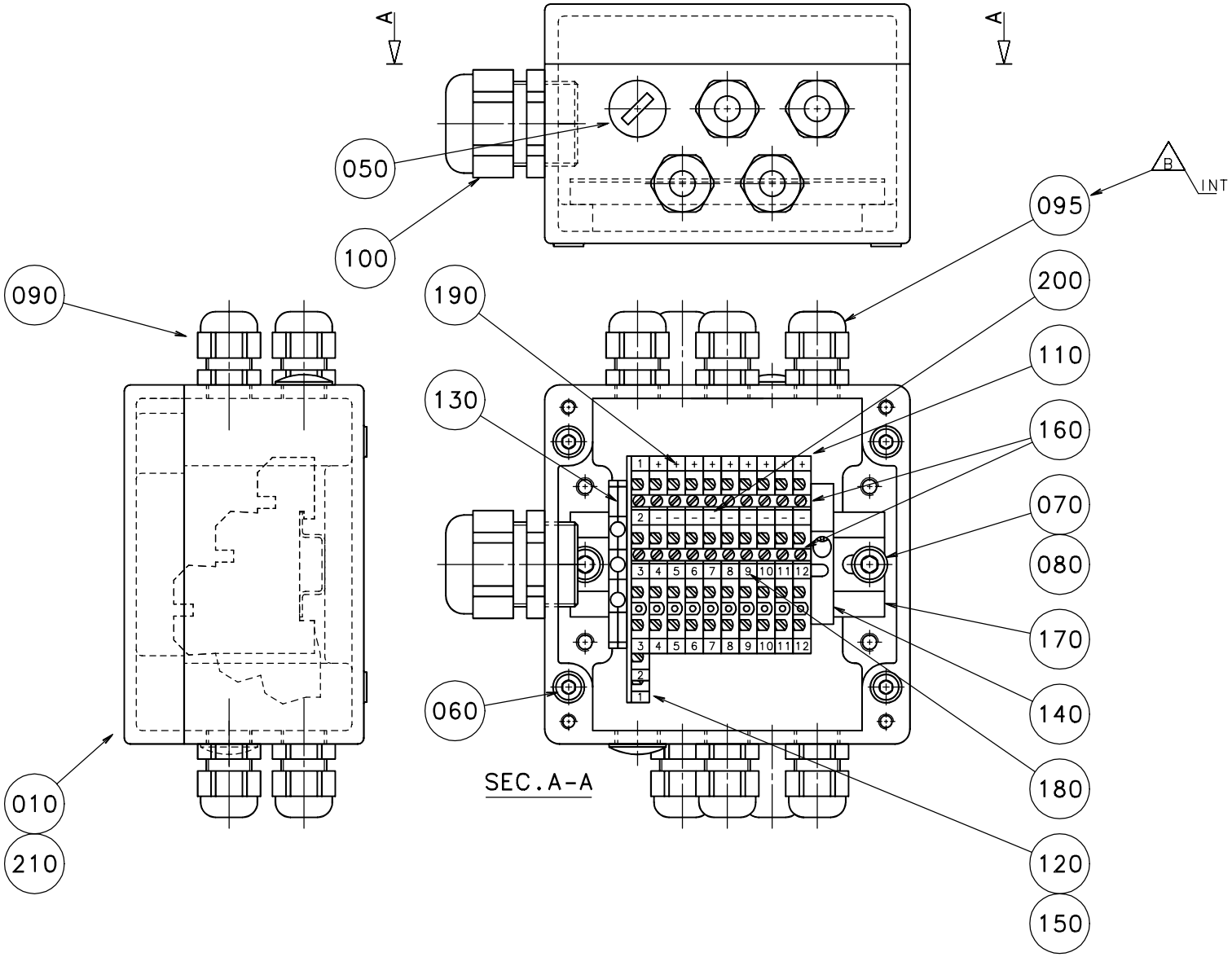

S - 1260812-1
ECN 71157

Pos	Part No	SP	UN	Qty	Description	Page No
Common parts						
010	B1260814-0000	-		1	CONNECTION BOX	**183**
050	90002-0013	-		2	BLANK-OFF PLUG 15,2(PG 9)	
060	312115-0331	-		4	SCREW MC6S ISO 4762 M5X20 A280	
070	312115-0362	-		2	SCREW MC6S ISO 4762 M6X8 A280	
080	315105-0153	-		2	WASHER,PLAIN ROUND 6,4X12 STAINLESS	
090	352103-0101	-		8	CABLE GLAND ST 9;PR15,2/PG9	
095	352103-0100	-		1	CABLE GLAND STR 9;PR15,2	
100	352103-0115	-		1	CABLE GLAND STR 21	
110	353021-0301	-		8	TERMINAL,TRIPLE-LEVEL, DLI 2,5/35 PA	
120	353021-0302	-		1	TERMINAL,TRIPLE-LEVEL, DLD 2,5/35 PA	
130	353024-0205	-		1	EARTH TERMINAL WPE 4	
140	353031-0201	-		1	END BRACKET EW35	
150	353032-0302	-		1	END PLATE WAP	
160	353034-0404	-		2	BRIDGE CONLECK Q10	
170	353042-0005	-	MM	105	RAIL TS 35/7.5	
180	359011-0807	-		2	MARKING PLATES 5-FW 1-50	
190	359011-0817	-		1	SYMBOL 5-GW (+) 50PC	
200	359011-0818	-		1	SYMBOL 5-GW (-) 50PC	
210	359705-0015	-		1	WARNING SIGN "ELECTRIC SHOCK"	

Pos	Part No	SP	UN	Qty	Description	Page No

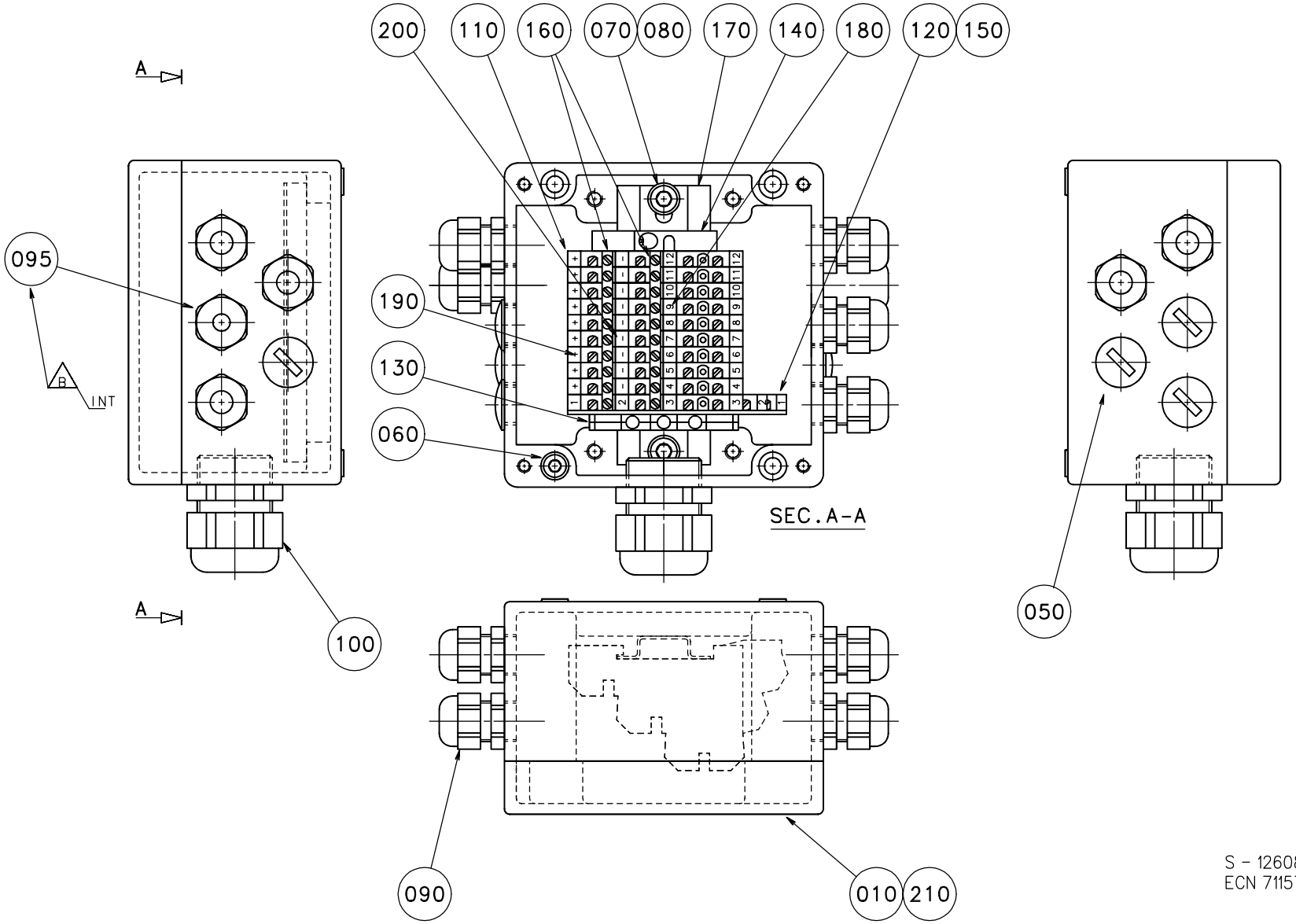
200
110
160
070
080
170
140
180
120
150
A
095
B
INT
190
130
060
SEC.A-A
050
100
090
010
210
S - 1260811-1
ECN 71157

Pos	Part No	SP	UN	Qty	Description	Page No
Common parts						
010	B1260814-0000	-		1	CONNECTION BOX	**183**
050	90002-0013	-		4	BLANK-OFF PLUG 15,2(PG 9)	
060	312115-0331	-		4	SCREW MC6S ISO 4762 M5X20 A280	
070	312115-0362	-		2	SCREW MC6S ISO 4762 M6X8 A280	
080	315105-0153	-		2	WASHER,PLAIN ROUND 6,4X12 STAINLESS	
090	352103-0101	-		5	CABLE GLAND ST 9;PR15,2/PG9	
095	352103-0100	-		1	CABLE GLAND STR 9;PR15,2	
100	352103-0115	-		1	CABLE GLAND STR 21	
110	353021-0301	-		9	TERMINAL,TRIPLE-LEVEL, DLI 2,5/35 PA	
120	353021-0302	-		1	TERMINAL,TRIPLE-LEVEL, DLD 2,5/35 PA	
130	353024-0205	-		1	EARTH TERMINAL WPE 4	
140	353031-0201	-		1	END BRACKET EW35	
150	353032-0302	-		1	END PLATE WAP	
160	353034-0404	-		2	BRIDGE CONLECK Q10	
170	353042-0005	-	MM	105	RAIL TS 35/7.5	
180	359011-0807	-		6	MARKING PLATES 5-FW 1-50	
190	359011-0817	-		1	SYMBOL 5-GW (+) 50PC	
200	359011-0818	-		1	SYMBOL 5-GW (-) 50PC	
210	359705-0015	-		1	WARNING SIGN "ELECTRIC SHOCK"	

Pos	Part No	SP	UN	Qty	Description	Page No

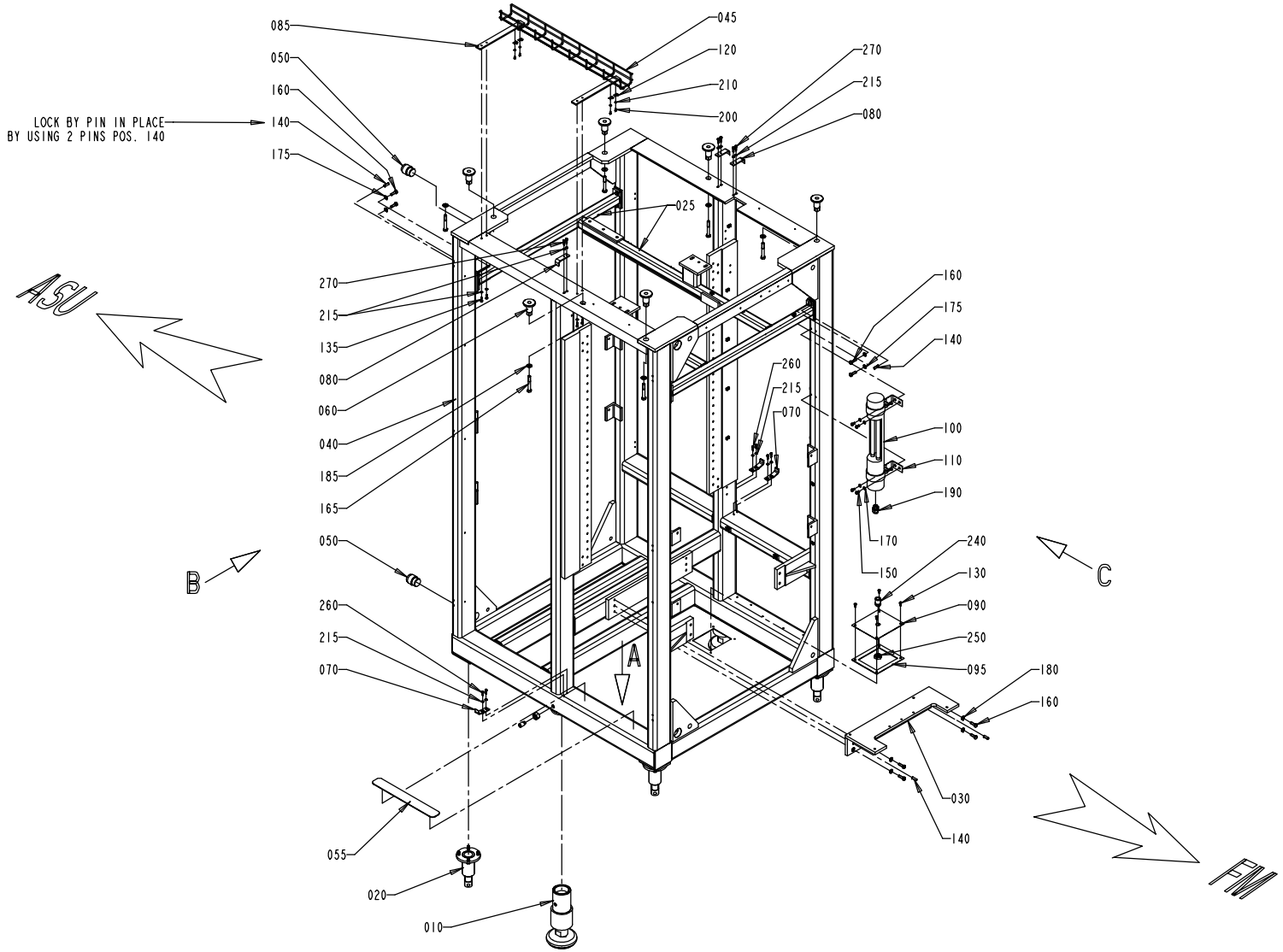

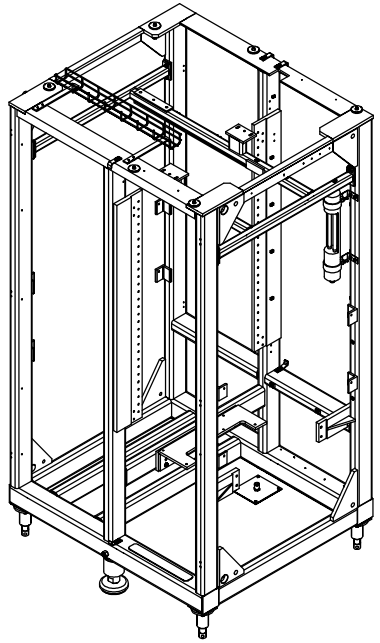

S - 1260428-1(1)
ECN 71457

Pos	Part No	SP	UN	Qty	Description	Page No
Common parts						
010	A1035076-0200	-		2	LEG	**41**
020	A1035471-0100	-		4	LEG	**43**
025	985866-0000	-		1	TOP FRAME	
030	1140427-0000	-		1	BRACKET	
040	1255311-0000	-		1	FRAME	
045	1348058-0000	-		1	CABLE DUCT	
050	1037762-0000	-		2	PIN	
055	1103299-0000	-		1	NON-SKID	
060	1116048-0000	-		6	SPACER	
070	1036227-0000	-		3	BRACKET	
080	1296856-0000	-		3	BRACKET	
085	1348057-0000	-		2	BRACKET	
090	1279832-0000	-		1	PLATE	
095	1279833-0000	-		1	RUBBER STRIP	
100	B90164-0009	-		1	LIGHT FIXTURE	**183**
110	90164-0302	-		2	BRACKET	
120	90165-0060	-		4	PIPE-CLIPS,FOR SINGLE PIPE,ONE SIDE 5	
130	312105-0323	-		4	SCREW M6S ISO 4017 M5X8 A280	
135	312105-0329	-		4	SCREW M6S ISO 4017 M5X16 A280	
140	311112-0377	-		4	PINS,SLOTTED TUBULAR SPRING PIN 8X24	
150	312105-0366	-		4	SCREW M6S ISO 4017 M6X12 A280	
160	312105-0453	-		12	SCREW M6S ISO 4017 M8X25 A280	
165	312105-0505	-		6	SCREW M6S ISO 4014 M10X70 A280	
170	315105-0153	-		4	WASHER,PLAIN ROUND 6,4X12 STAINLESS	
175	315105-0165	-		8	WASHER,PLAIN ROUND 8,4X16 STAINLESS	
180	315115-0165	-		4	WASHER TBRB 8,4X16 STAINLESS	
185	315105-0173	-		6	WASHER,PLAIN ROUND 10,5X22 STAINLESS	
190	352103-0106	-		1	CABLE GLAND ST 11	
200	312125-0287	-		35	SLOTTED CHEESE HEAD ISO 1207 M4X8 RFR	
210	315105-0136	-		13	WASHER,PLAIN ROUND 4,3X8 STAINLESS	
215	315105-0146	-		16	WASHER,PLAIN ROUND 5,3X10 STAINLESS	
220	352113-0204	-		9	ANCHOR TM3S25-M	
230	352113-0205	-		22	ANCHOR TM2S8-C100	
240	90055-0096	-		1	STRAIGHT COUPLING, D=14 MM - G3/8"	
250	90330-0038	-		1	NUT,HEXAGON G3/8"	
260	312115-0327	-		6	SCREW MC6S ISO 4762 M5X12 A280	
270	312115-0329	-		6	SCREW MC6S ISO 4762 M5X16 A280	

Pos	Part No	SP	UN	Qty	Description	Page No

FRAME ASSEMBLY

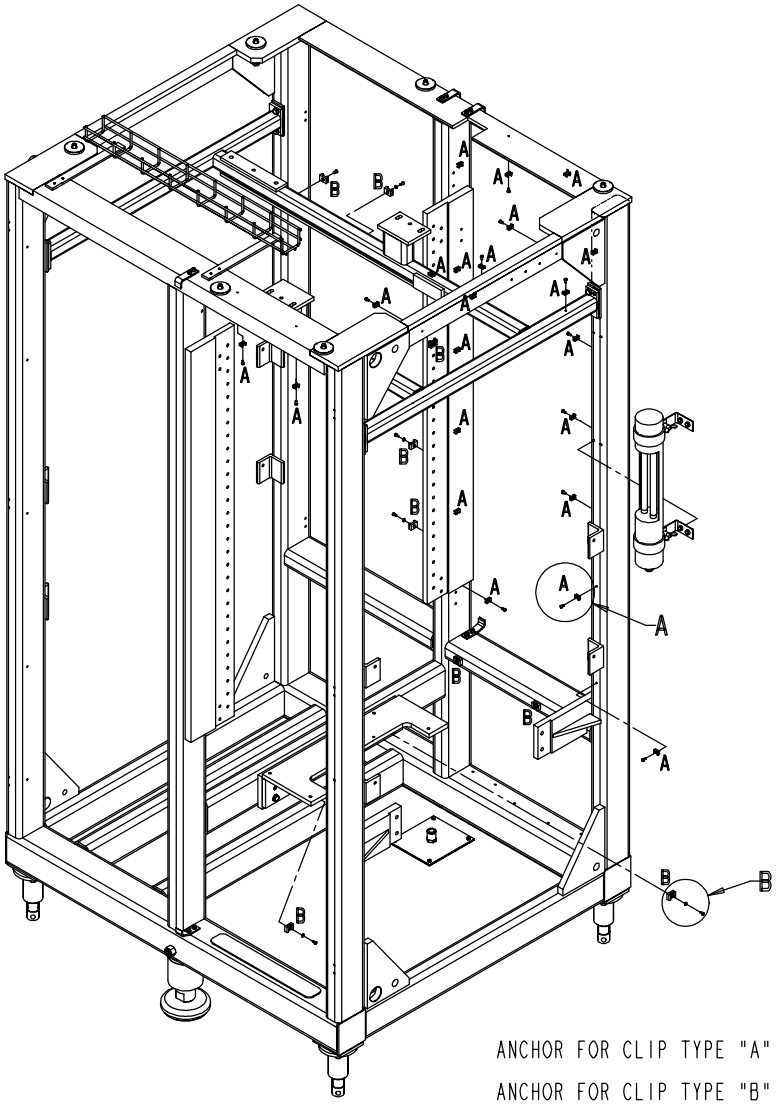

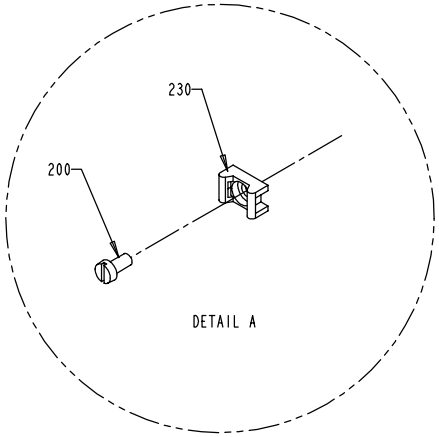

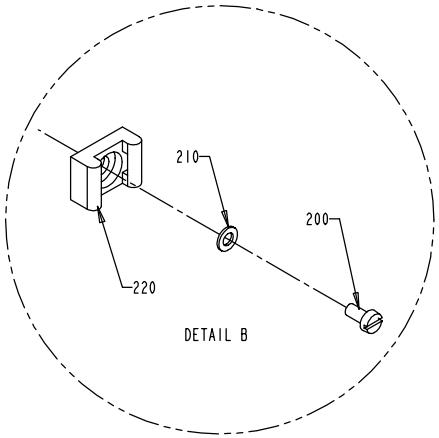

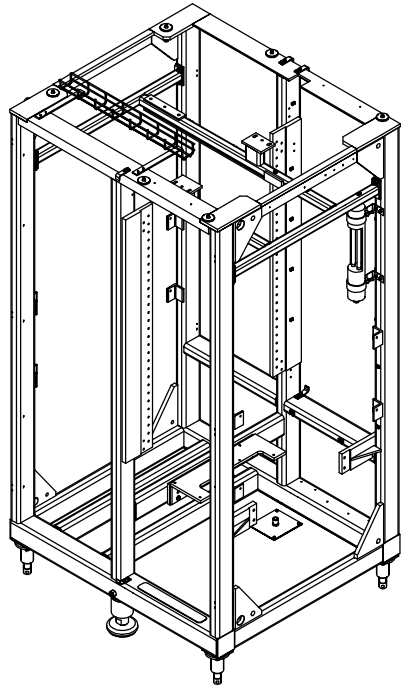

ANCHOR FOR CLIP TYPE "A" : SEE POS. 230 AND 200 (22x)

ANCHOR FOR CLIP TYPE "B" : SEE POS. 220 , 200 AND 210 (9x)

S - 1260428-1(2)
ECN 71457

Pos	Part No	SP	UN	Qty	Description	Page No
Common parts						
010	A1035076-0200	-		2	LEG	**41**
020	A1035471-0100	-		4	LEG	**43**
025	985866-0000	-		1	TOP FRAME	
030	1140427-0000	-		1	BRACKET	
040	1255311-0000	-		1	FRAME	
045	1348058-0000	-		1	CABLE DUCT	
050	1037762-0000	-		2	PIN	
055	1103299-0000	-		1	NON-SKID	
060	1116048-0000	-		6	SPACER	
070	1036227-0000	-		3	BRACKET	
080	1296856-0000	-		3	BRACKET	
085	1348057-0000	-		2	BRACKET	
090	1279832-0000	-		1	PLATE	
095	1279833-0000	-		1	RUBBER STRIP	
100	B90164-0009	-		1	LIGHT FIXTURE	**183**
110	90164-0302	-		2	BRACKET	
120	90165-0060	-		4	PIPE-CLIPS,FOR SINGLE PIPE,ONE SIDE 5	
130	312105-0323	-		4	SCREW M6S ISO 4017 M5X8 A280	
135	312105-0329	-		4	SCREW M6S ISO 4017 M5X16 A280	
140	311112-0377	-		4	PINS,SLOTTED TUBULAR SPRING PIN 8X24	
150	312105-0366	-		4	SCREW M6S ISO 4017 M6X12 A280	
160	312105-0453	-		12	SCREW M6S ISO 4017 M8X25 A280	
165	312105-0505	-		6	SCREW M6S ISO 4014 M10X70 A280	
170	315105-0153	-		4	WASHER,PLAIN ROUND 6,4X12 STAINLESS	
175	315105-0165	-		8	WASHER,PLAIN ROUND 8,4X16 STAINLESS	
180	315115-0165	-		4	WASHER TBRB 8,4X16 STAINLESS	
185	315105-0173	-		6	WASHER,PLAIN ROUND 10,5X22 STAINLESS	
190	352103-0106	-		1	CABLE GLAND ST 11	
200	312125-0287	-		35	SLOTTED CHEESE HEAD ISO 1207 M4X8 RFR	
210	315105-0136	-		13	WASHER,PLAIN ROUND 4,3X8 STAINLESS	
215	315105-0146	-		16	WASHER,PLAIN ROUND 5,3X10 STAINLESS	
220	352113-0204	-		9	ANCHOR TM3S25-M	
230	352113-0205	-		22	ANCHOR TM2S8-C100	
240	90055-0096	-		1	STRAIGHT COUPLING, D=14 MM - G3/8"	
250	90330-0038	-		1	NUT,HEXAGON G3/8"	
260	312115-0327	-		6	SCREW MC6S ISO 4762 M5X12 A280	
270	312115-0329	-		6	SCREW MC6S ISO 4762 M5X16 A280	

Pos	Part No	SP	UN	Qty	Description	Page No

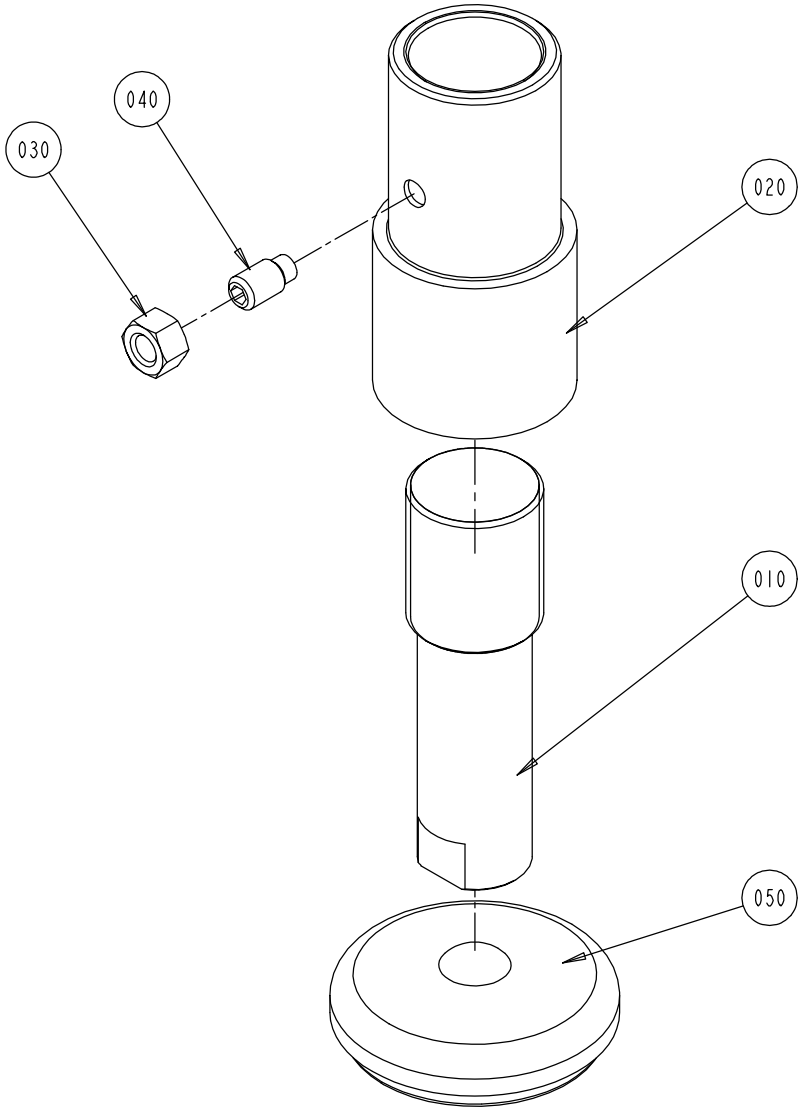

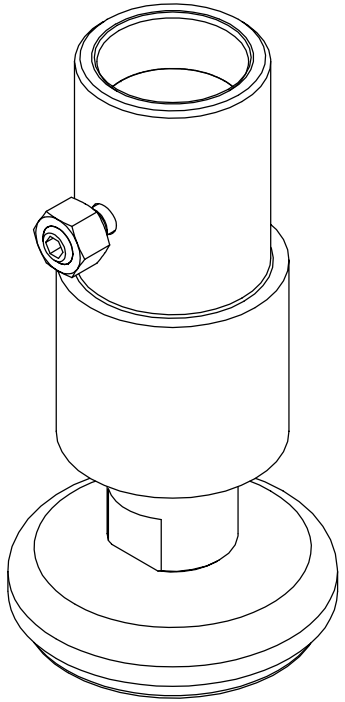

S - 1035076-2
ECN 71457

Pos	Part No	SP	UN	Qty	Description	Page No
Common parts						
010	1487712-0000	-		1	LEG	
020	1036120-0000	-		1	SLEEVE	
030	312605-0324	-		1	NUT,HEXAGON,M16 A280	
040	312311-0624	-		1	STOP SCREW T6SS16X30FZB	
050	90347-0175	-		1	MACHINE SHOE	

Pos	Part No	SP	UN	Qty	Description	Page No

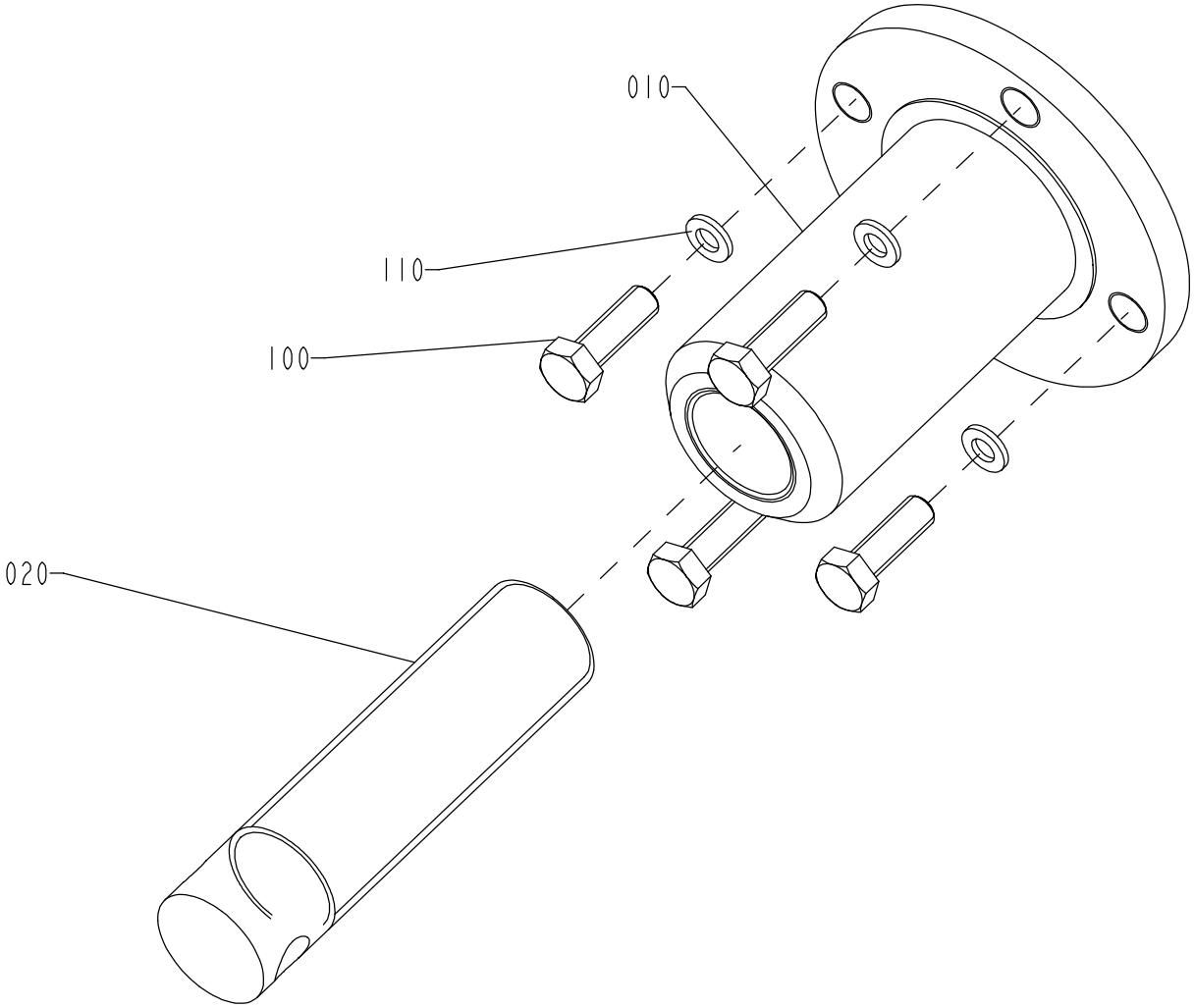

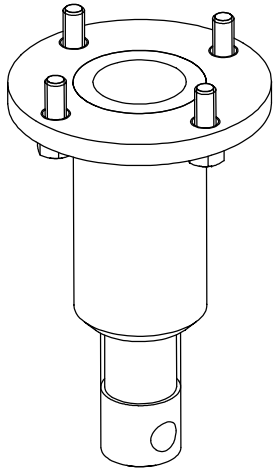

S - 1035471-1
ECN 71019

Pos	Part No	SP	UN	Qty	Description	Page No
Common parts						
010	469095-0000	-		1	HOLDER	
020	469096-0000	-		1	LEG	
100	312105-0453	-		4	SCREW M6S ISO 4017 M8X25 A280	
110	315125-0165	-		4	WASHERS,PLAIN ROUND,CHAMFERED 8,4X26X5	

Pos	Part No	SP	UN	Qty	Description	Page No

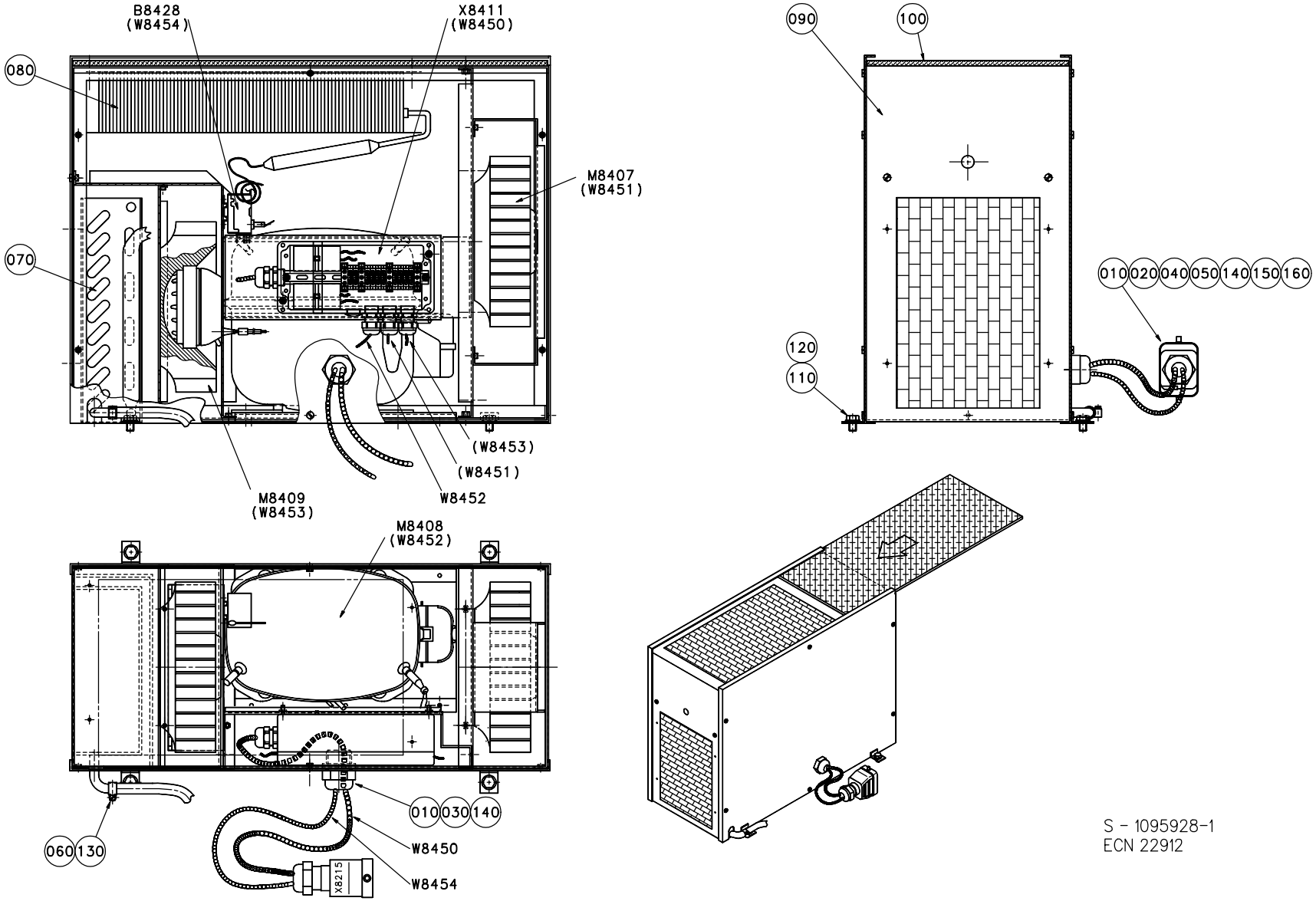

S - 1095928-1
ECN 22912

Pos	Part No	SP	UN	Qty	Description	Page No
Common parts						
010	B1282788-0000	D		2	INSERT	**183**
020	90089-0031	-		1	ENLARGING SLEEVE	
030	90099-0019	-		1	NUTS,HEXAGON, M12X1, DIN439	
040	90110-0157	-		1	COVER	
050	90110-0159	-		1	CONTACT	
060	90166-0126	-	M	2	TUBE 12 MM PA,TRANSP.	
070	90422-0041	-		1	EVAPORATOR	
080	90422-0042	-		1	CAPACITOR	
090	90422-0316	-		1	HOOD	
100	90422-0317	R		1	FILTER	
110	312105-0447	-		4	SCREW M6S ISO 4017 M8X12 A280	
120	315105-0165	-		4	WASHER,PLAIN ROUND 8,4X16 STAINLESS	
130	342991-0100	-		1	HOSE CLIP,WORM DRIVE TYPE 10-13	
140	353240-0005	-		2	GLANDS,NORMAL WITHOUT INSERT PG 21	
150	359005-0010	-		1	MARKING SESATS 0-9	
160	359005-0050	-		1	MARKING SEATS "X"	
B8428	90059-0029	R		1	THERMOSTAT	
M8407	90264-0069	R		1	FAN	
M8408	90270-0018	-		1	COMPRESSOR DANFOSS SC 12G	
M8409	90264-0069	R		1	FAN	
W8450	351150-0414	-	MM	1000	CABLE OILFLEX 5X1,5MM2	
W8452	351150-0412	-	MM	300	CABLE OLFLEX 3X1,5MM2	
W8454	351150-0404	-	MM	1200	CABLE OLFLEX 4X0,75 MM2	
X8411	A1285054-0100	-		1	CONNECTION BOX	**47**

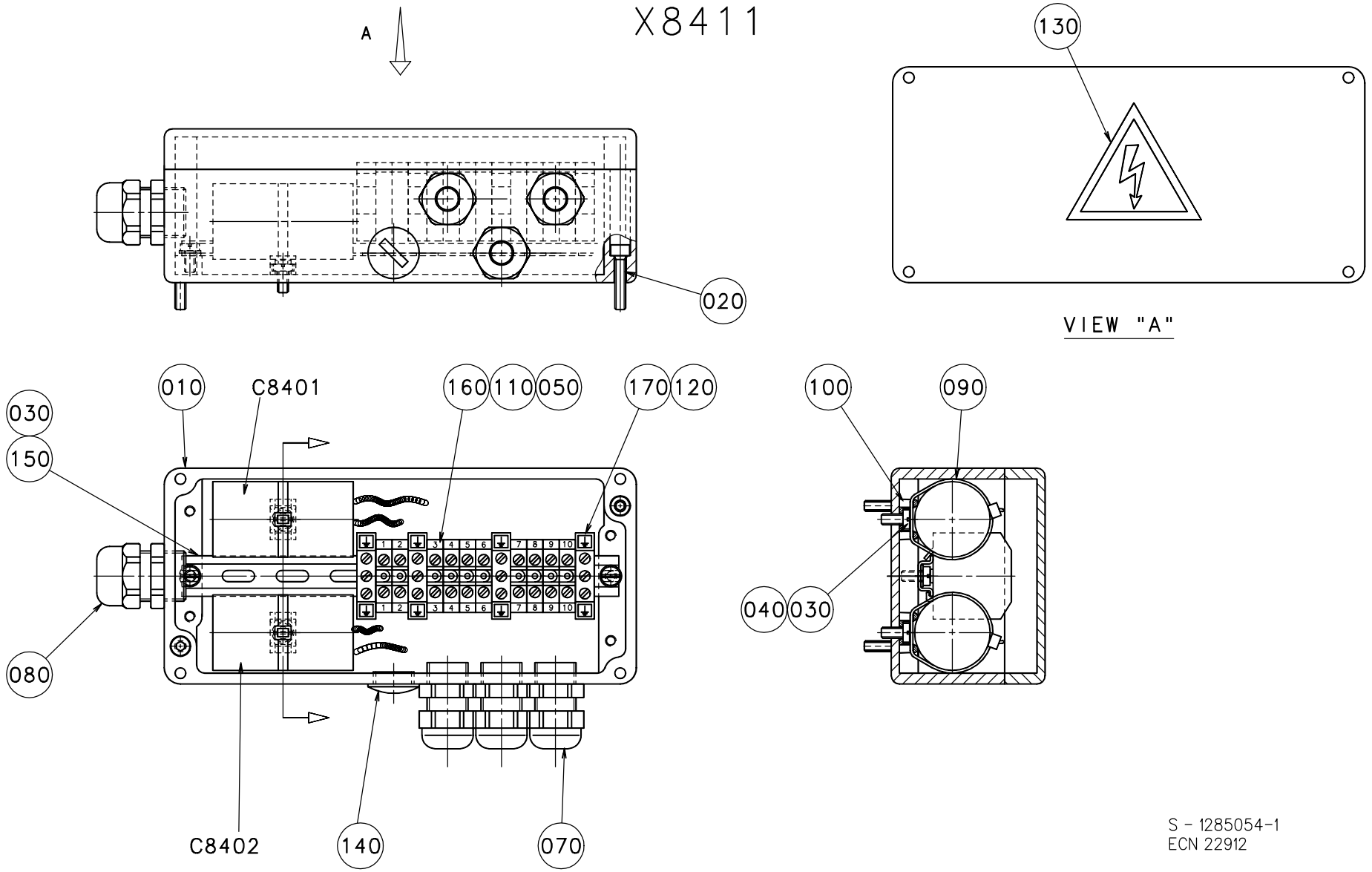

S - 1285054-1
ECN 22912

Pos	Part No	SP	UN	Qty	Description	Page No
Common parts						
010	B1350146-0000	-		1	CONNECTION BOX	**183**
020	312115-0295	-		2	SCREW MC6S ISO 4762 M4X20 A280	
030	312125-0287	-		4	SLOTTED CHEESE HEAD ISO 1207 M4X8 RFR	
040	315105-0136	-		2	WASHER,PLAIN ROUND 4,3X8 STAINLESS	
050	351172-0104	-	M	2	CABLE AWM DARKBLUE 1,5MM2	
070	352103-0101	-		3	CABLE GLAND ST 9;PR15,2/PG9	
080	352103-0106	-		1	CABLE GLAND ST 11	
090	352113-0102	-		2	CLIP-STRIP,BLACK 188X4,8MM	
100	352113-0205	-		2	ANCHOR TM2S8-C100	
110	359011-0807	-		2	MARKING PLATES 5-FW 1-50	
120	359011-0834	-		1	SET OF SIGNS 6-GW(EARTH)	
130	359705-0015	-		1	WARNING SIGN "ELECTRIC SHOCK"	
140	90002-0013	-		1	BLANK-OFF PLUG 15,2(PG 9)	
150	90077-0328	-	MM	162	RAIL TS15/5	
160	90077-0079	-		10	FEED THROUGH TERMINAL AKZ 4PA FOR TS15	
170	90135-0026	-		4	EARTH TERMINAL AKE 4PA	
C8401	90159-0097	R		1	CAPACITOR 2 UF 450VAC	
C8402	90159-0097	R		1	CAPACITOR 2 UF 450VAC	

Pos	Part No	SP	UN	Qty	Description	Page No

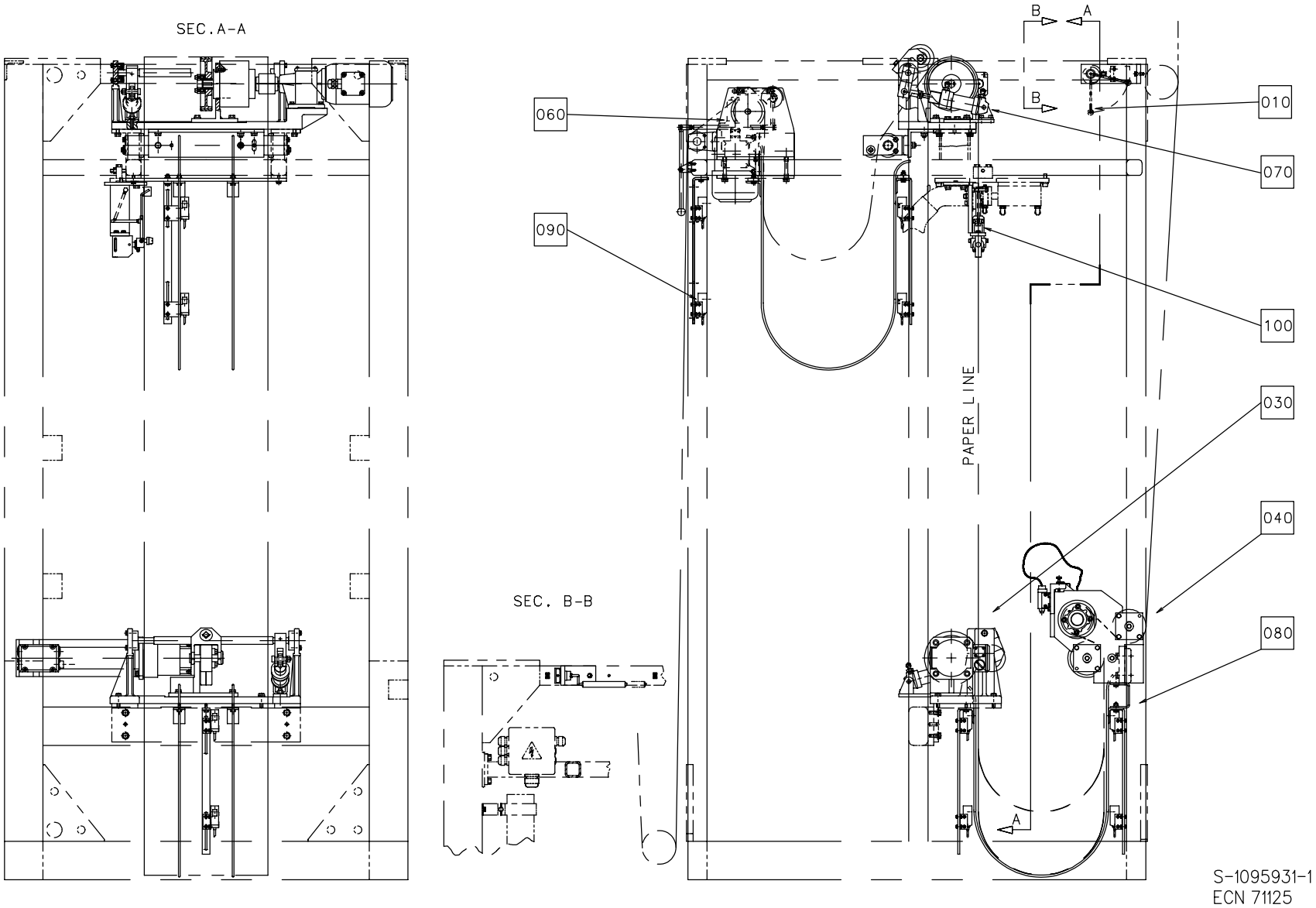
SEC. A-A
SEC. B-B
B
A
B
060
010
070
090
100
030
040
080
PAPER LINE
A
S-1095931-1
ECN 71125

Pos	Part No	SP	UN	Qty	Description	Page No
Common parts						
010	A514993-0200	-		1	BY-PASS SENSOR	**51**
030	A1498049-0100	-		1	DRIVE MOTOR	**53**
040	A1095942-0100	-		1	ROLLER ASSEMBLY	**55**
060	A1095953-0200	-		1	INFEED UNIT	**67**
070	A1095970-0100	-		1	PAPER BRAKE	**71**
080	A1095979-0100	-		1	PHOTOCELL UNIT	**77**
090	A1095980-0100	-		1	PHOTOCELL UNIT	**79**
100	A1255601-0100	-		1	EDGE GUIDE	**81**

Pos	Part No	SP	UN	Qty	Description	Page No

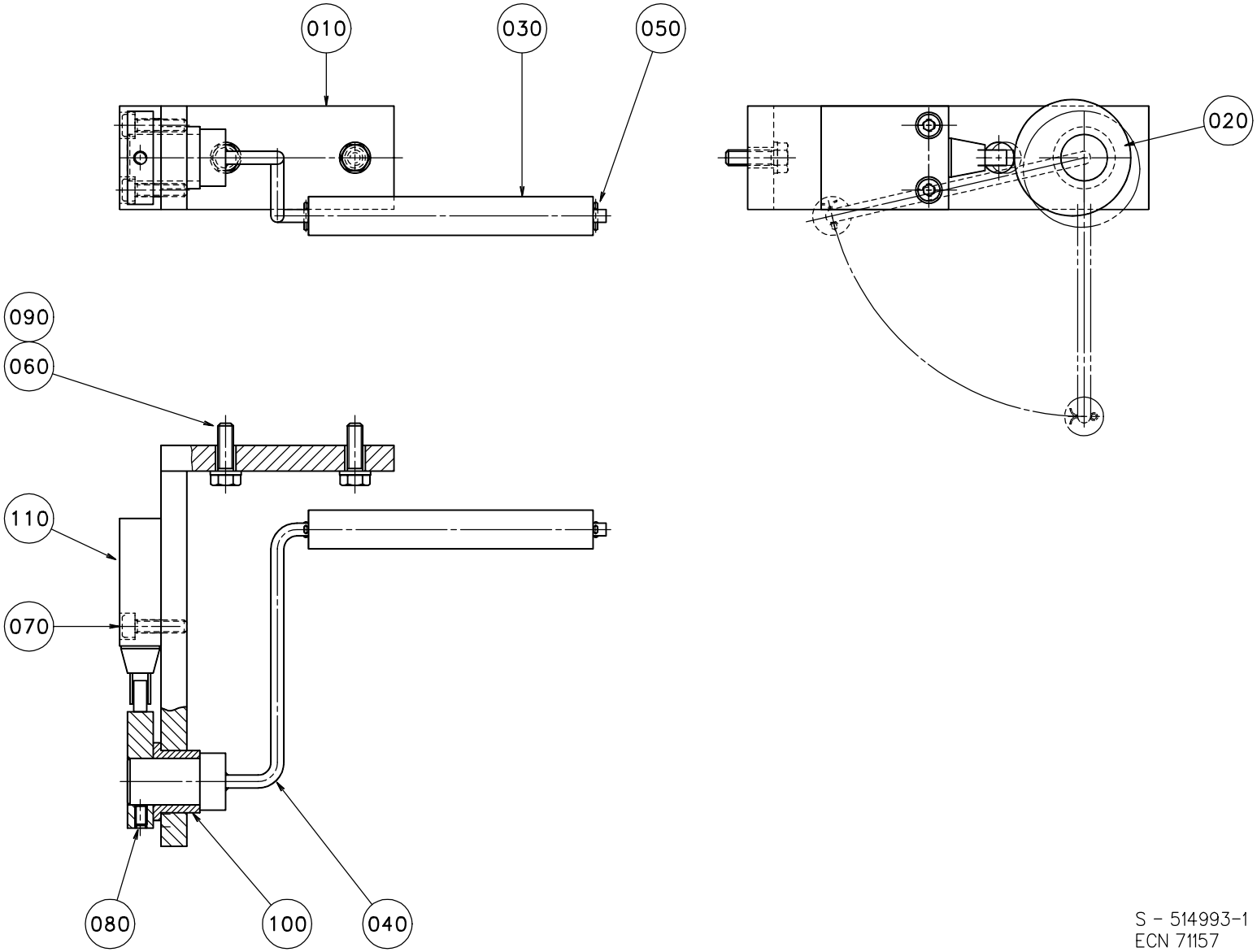

S - 514993-1
ECN 71157

Pos	Part No	SP	UN	Qty	Description	Page No
Common parts						
010	1260329-0000	-		1	BRACKET	
020	1255035-0000	D		1	ECCENTRIC	
030	1010814-0000	-		1	ROLLER	
040	1082861-0000	-		1	ARM	
050	311411-0138	-		2	SPLIT PIN SP1,6X12RFR	
060	312105-0370	-		2	SCREW M6S ISO 4017 M6X20 A280	
070	312115-0331	-		2	SCREW MC6S ISO 4762 M5X20 A280	
080	312318-0323	-		1	SET SCREW CUP POINT ISO 4029 M5X8 RFR	
090	315105-0153	-		2	WASHER,PLAIN ROUND 6,4X12 STAINLESS	
100	321111-0274	-		1	FLANGE BUSHING, 18X24X18	
110	90044-0094	R		1	LIMIT SW. 924 CE31-Y20-X5	

Pos	Part No	SP	UN	Qty	Description	Page No

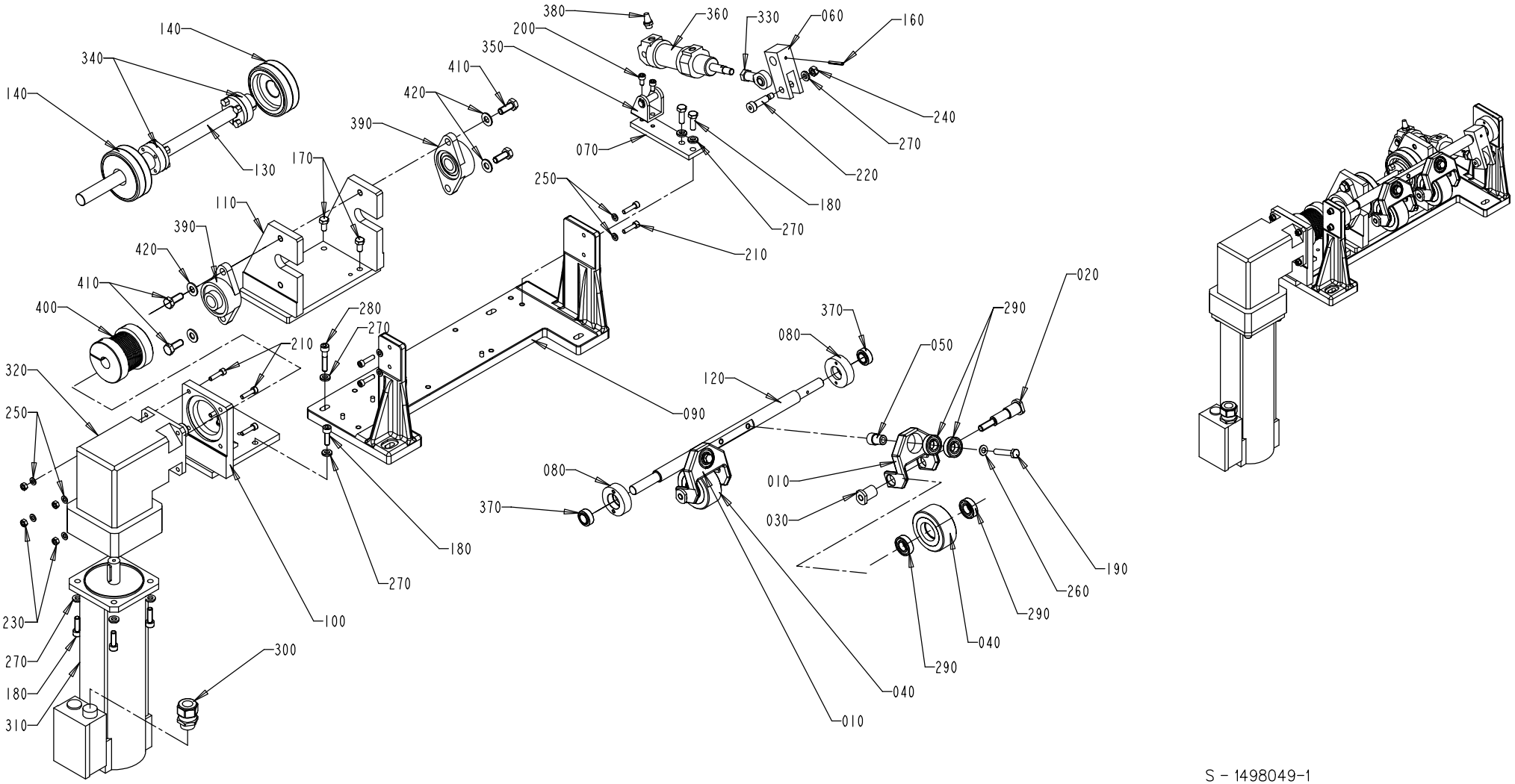

S - 1498049-1
ECN 72818

EC No: - - 20000423
Group number: 1498049-0100
Assembly Drawing: 1498049-1

Issue: 20000706

Pos	Part No	SP	UN	Qty	Description	Page No
Common parts						
010	263150-0000	-		2	BRACKET	
020	263152-0000	D		2	SHAFT	
030	263153-0000	D		2	NUT	
040	266710-0000	M		2	WHEEL	
050	1129906-0000	D		2	PIN	
060	1129907-0000	-		1	LEVER	
070	1140016-0000	-		1	PLATE	
080	1140174-0000	-		2	BEARING HOUSING	
090	1490995-0000	-		1	BRACKET	
100	1490996-0000	-		1	BRACKET	
110	1490997-0000	-		1	BRACKET	
120	1490998-0000	-		1	SHAFT	
130	1490999-0000	-		1	SHAFT	
140	1498046-0000	M		2	WHEEL	
160	311112-0262	-		1	PINS,SLOTTED TUBULAR SPRING PIN 4X32	
170	312101-0449	-		4	SCREW M6S 8X16 FZB	
180	312105-0453	-		9	SCREW M6S ISO 4017 M8X25 A280	
190	312109-0460	-		2	SCREW M6S ISO 4017 M8X45 A280	
200	312115-0366	-		2	SCREW MC6S ISO 4762 M6X12 A280	
210	312115-0372	-		8	SCREW MC6S ISO 4762 M6X25 A280	
220	312180-0495	-		1	HEX. SOCKET HEAD SHOULD. ISO 7379 M8X30	
230	312605-0316	-		4	NUT,HEXAGON A280 M6M6	
240	312605-0318	-		1	NUT,HEXAGON,M8 RFR	
250	315105-0153	-		8	WASHER,PLAIN ROUND 6,4X12 STAINLESS	
260	315105-0165	-		2	WASHER,PLAIN ROUND 8,4X16 STAINLESS	
270	315115-0165	-		11	WASHER TBRB 8,4X16 STAINLESS	
280	312115-0459	-		1	SCREW MC6S ISO 4762 M8X40 A280	
290	321308-0202	M		8	BALL BEARING 15X32X9	
300	353245-0005	-		1	GLAND,EMC,EXTENDED WITH INSERT PR 22,5	
310	90045-0194	D		1	SERVO MOTOR ELMO	
320	90056-0179	D		1	PLANETARY GEAR BOX	
330	90115-0134	M		1	ROD ENDS,MAINTENANCE FREE,10-M10X1.25RH	
340	90208-0078	R		2	CLAMPING ELEMENT WITH SLEEVE 20X28	
350	90239-0488	-		1	BRACKET,REAR,CLEVIS FLANGE,MINI-ISO,32	
360	90239-0834	D		1	DOUBLE ACTING, MINI-ISO, CYL. 32-25	
370	90240-0026	D		2	SPHERICAL BEARING, 15X26X12	
380	90328-0003	-		1	SILENCER	
390	90345-0011	-		2	FLANGE BEARING 20	
400	90457-0066	-		1	COUPLING	
410	312105-0493	-		4	SCREW M6S ISO 4017 M10X25 A280	
420	315105-0173	-		4	WASHER,PLAIN ROUND 10,5X22 STAINLESS	

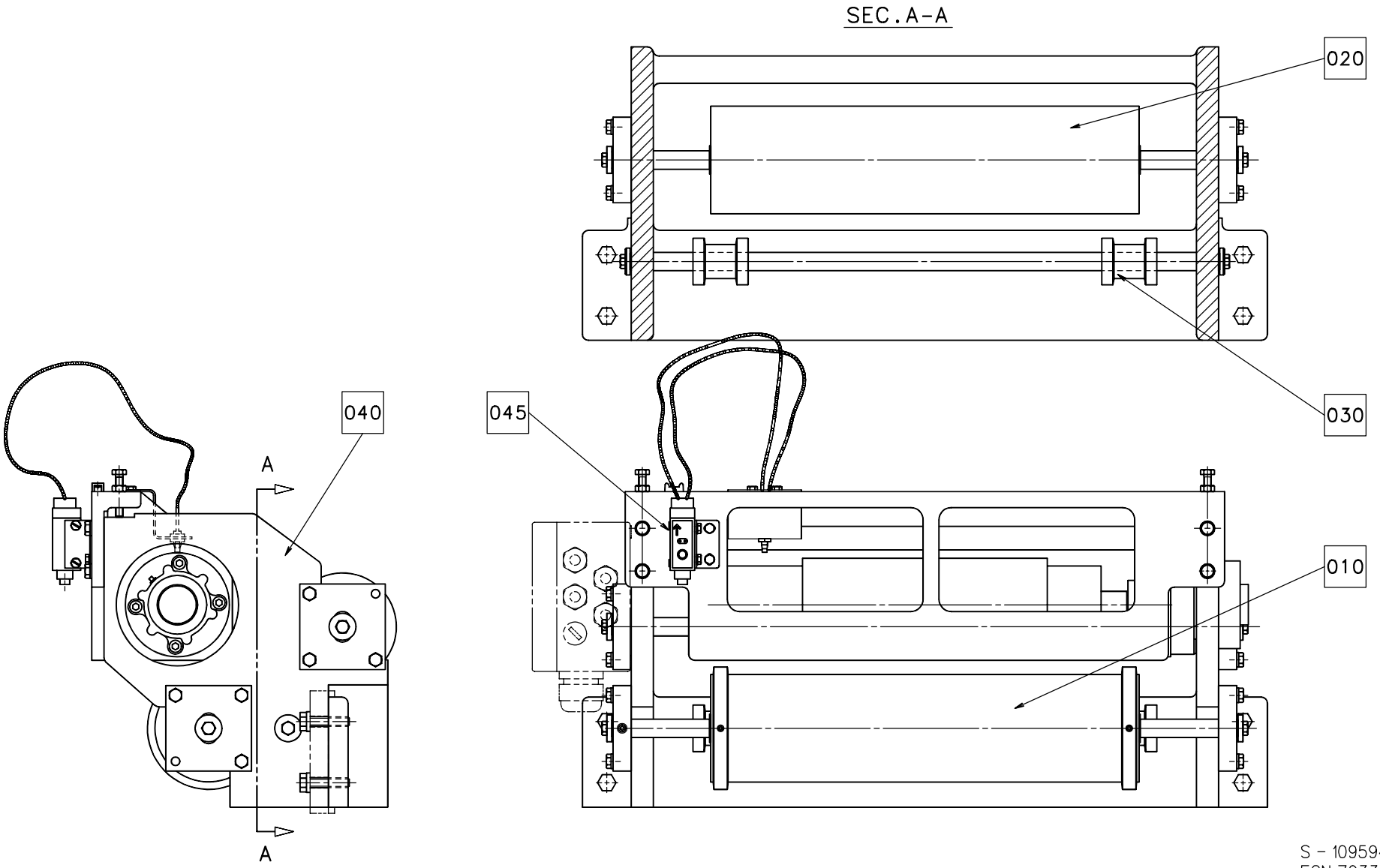
SEC.A-A
020
030
045
040
010
A
A
S - 1095942-1
ECN 70336

Pos	Part No	SP	UN	Qty	Description	Page No
Common parts						
010	A1095937-0100	-		1	GUIDE ROLLER WITH FLANGE	**57**
020	A1095938-0100	-		1	GUIDE ROLLER	**59**
030	A1095940-0100	-		1	GUIDE ROLLER	**61**
040	A1095941-0100	-		1	TENSION ROLLER	**63**
045	A1260411-0100	-		1	PATCH/TAB SPLICE DETECTOR	**65**

Pos	Part No	SP	UN	Qty	Description	Page No

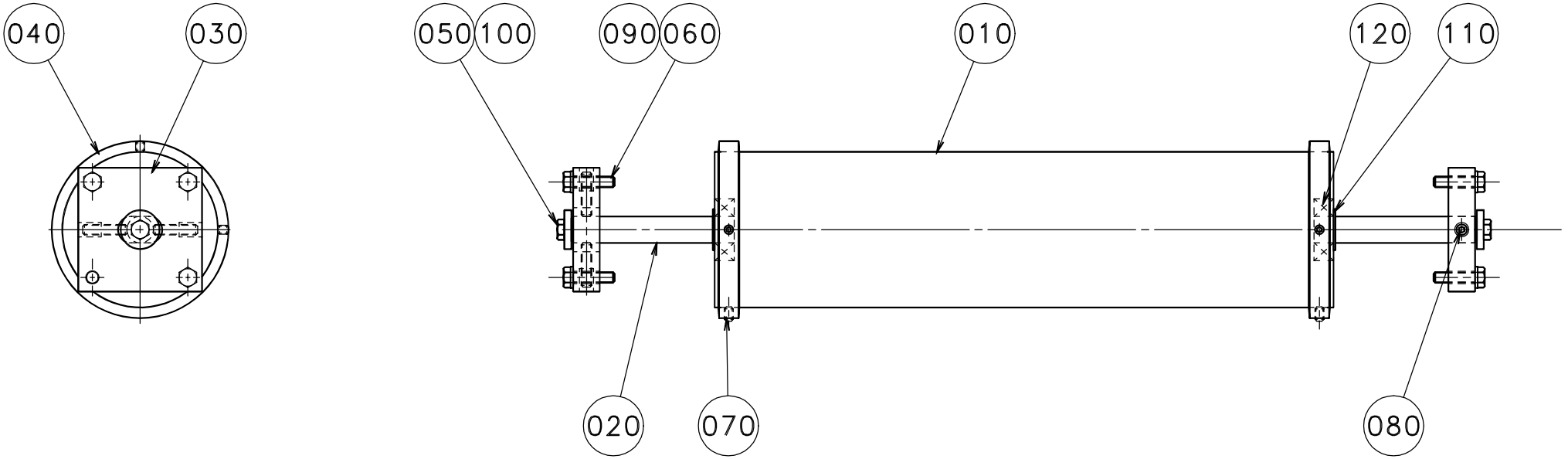

S – 1095937-1
ECN 70336

Pos	Part No	SP	UN	Qty	Description	Page No
Common parts						
010	1035882-0000	D		1	BENDING ROLLER	
020	1129624-0000	D		1	AXLE SUPPORT	
030	1129630-0000	-		2	BEARING SEAT	
040	1140055-0000	-		2	RING	
050	312105-0368	-		2	SCREW M6S ISO 4017 M6X16 A280	
060	312105-0372	-		6	SCREW M6S ISO 4017 M6X25 A280	
070	312311-0321	-		4	SET SCREW FULL DOGPOINT ISO 4028 M5X6	
080	312318-0372	-		4	SET SCREW CUP POINT ISO 4029 M6X25 RFR	
090	315105-0153	-		6	WASHER,PLAIN ROUND 6,4X12 STAINLESS	
100	315125-0153	-		2	WASHERS,PLAIN ROUND,CHAMFERED 6,4X22X4	
110	315751-0112	-		2	RETAINING RINGS FOR SHAFT 15	
120	321313-0102	M		2	BALL BEARING 15X35X11	

Pos	Part No	SP	UN	Qty	Description	Page No

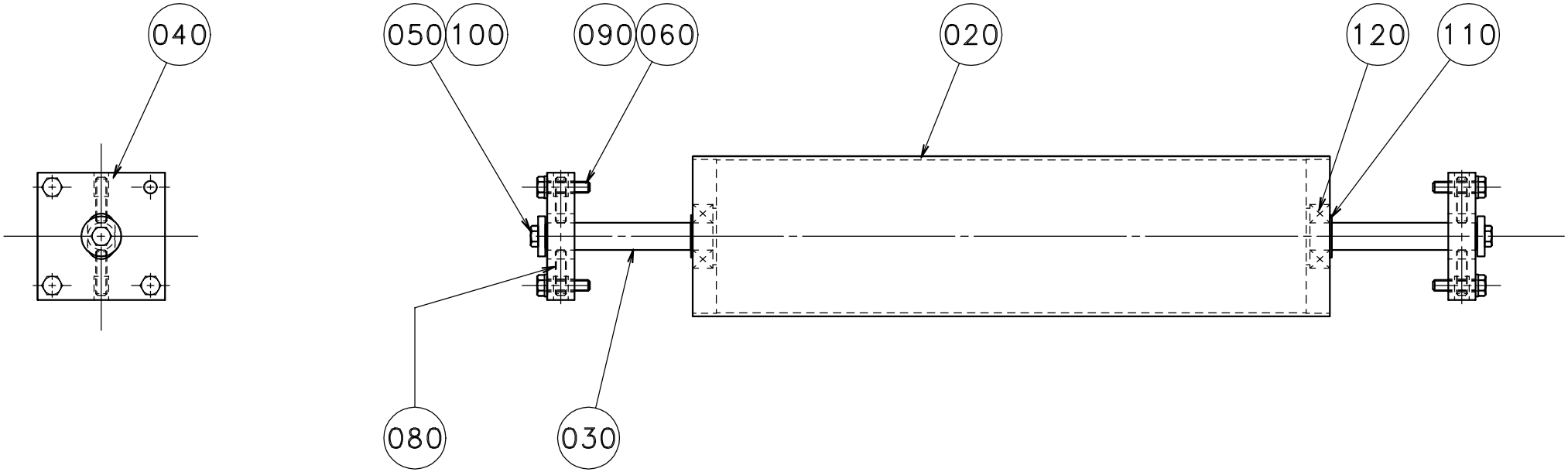

S - 1095938-1
ECN 70336

Pos	Part No	SP	UN	Qty	Description	Page No
Common parts						
020	1035882-0000	D		1	BENDING ROLLER	
030	1129624-0000	D		1	AXLE SUPPORT	
040	1129630-0000	-		2	BEARING SEAT	
050	312105-0368	-		2	SCREW M6S ISO 4017 M6X16 A280	
060	312105-0372	-		6	SCREW M6S ISO 4017 M6X25 A280	
080	312318-0372	-		4	SET SCREW CUP POINT ISO 4029 M6X25 RFR	
090	315105-0153	-		6	WASHER,PLAIN ROUND 6,4X12 STAINLESS	
100	315125-0153	-		2	WASHERS,PLAIN ROUND,CHAMFERED 6,4X22X4	
110	315751-0112	-		2	RETAINING RINGS FOR SHAFT 15	
120	321313-0102	M		2	BALL BEARING 15X35X11	

Pos	Part No	SP	UN	Qty	Description	Page No

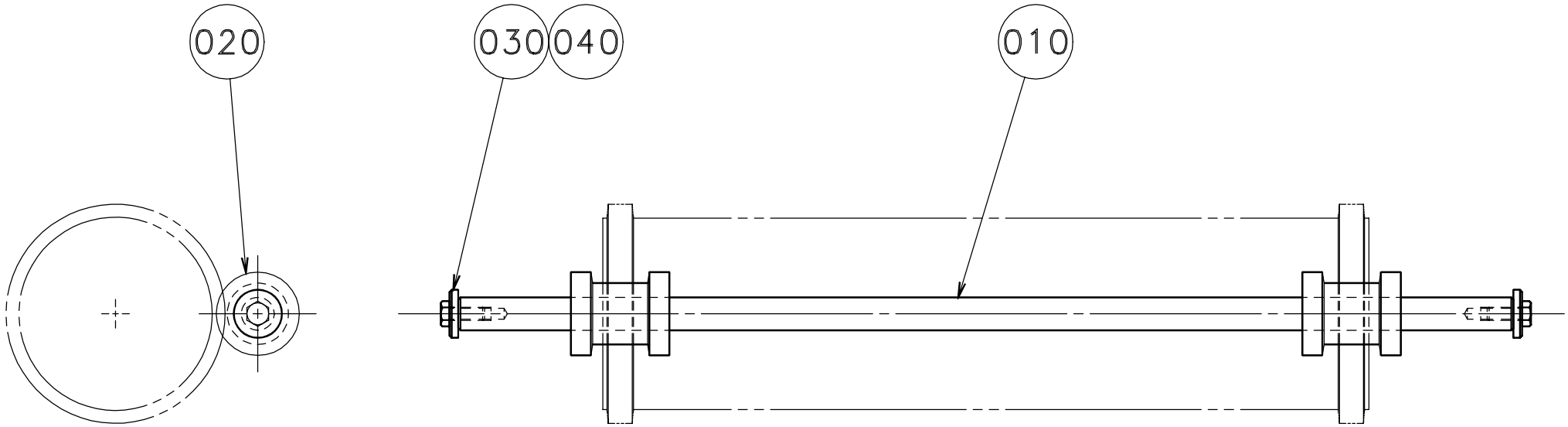

S - 1095940-1
ECN 70336

Pos	Part No	SP	UN	Qty	Description	Page No
Common parts						
010	1129626-0000	-		1	AXLE SUPPORT	
020	1140135-0000	D		2	ROLLER	
030	312105-0368	-		2	SCREW M6S ISO 4017 M6X16 A280	
040	315125-0153	-		2	WASHERS,PLAIN ROUND,CHAMFERED 6,4X22X4	

Pos	Part No	SP	UN	Qty	Description	Page No

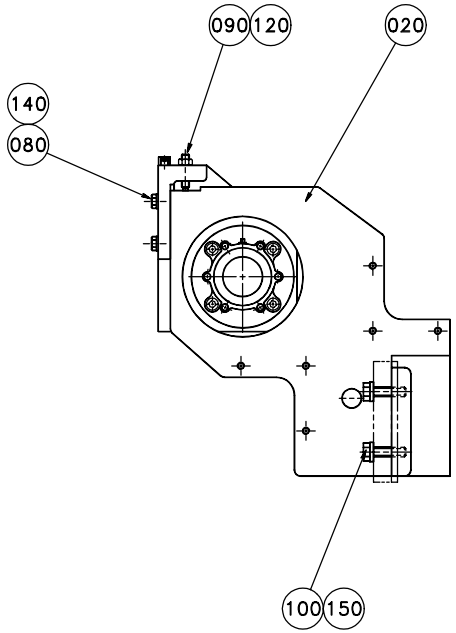

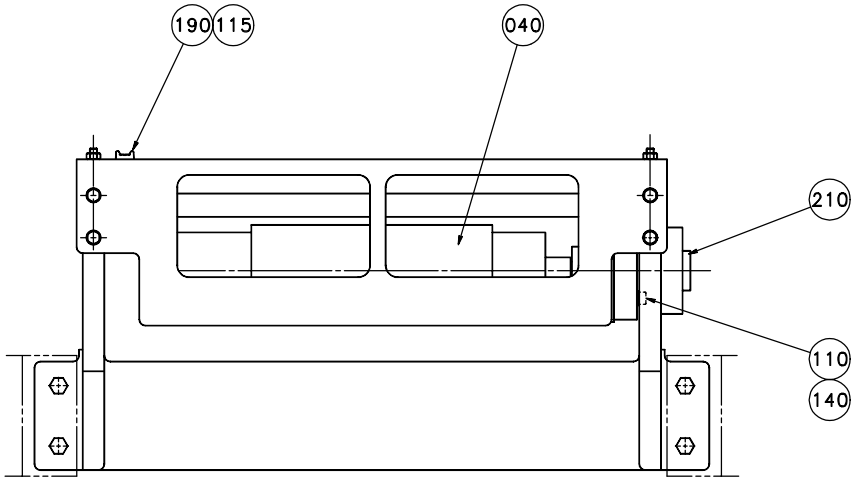

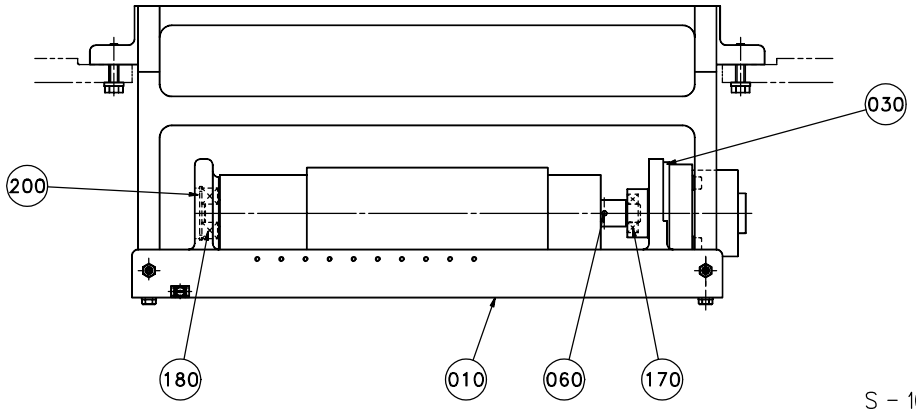

S - 1095941-1
ECN 70336

Pos	Part No	SP	UN	Qty	Description	Page No
Common parts						
010	1129628-0000	-		1	BRACKET	
020	1129629-0000	-		1	BRACKET	
030	522408-0000	-		1	BEARING HOUSING	
040	532719-0001	D		1	FEEDING ROLLER	
060	311112-0256	-		1	PIN,SLOTTED TUBULAR SPRING PIN 4X20	
080	312105-0370	-		4	SCREW M6S ISO 4017 M6X20 A280	
090	312311-0374	-		2	SET SCREW FULL DOGPOINT ISO 4028 M6X30	
100	312105-0455	-		4	SCREW M6S ISO 4017 M8X30 A280	
110	312115-0376	-		4	SCREW MC6S ISO 4762 M6X35 A280	
115	312125-0289	-		1	SLOTTED HEMCS4X10RFR	
120	312605-0316	-		2	NUT,HEXAGON A280 M6M6	
140	315105-0153	-		8	WASHER,PLAIN ROUND 6,4X12 STAINLESS	
150	315115-0165	-		4	WASHER TBRB 8,4X16 STAINLESS	
170	321308-0202	M		1	BALL BEARING 15X32X9	
180	321316-0202	M		1	BEARINGS,BALL BEARING SKF6302-2RS	
190	352113-0205	-		1	ANCHOR TM2S8-C100	
200	90141-0020	-		1	RETAINING RINGS FOR HOLE 42	
210	90347-0054	R		1	DAMPER	

Pos	Part No	SP	UN	Qty	Description	Page No

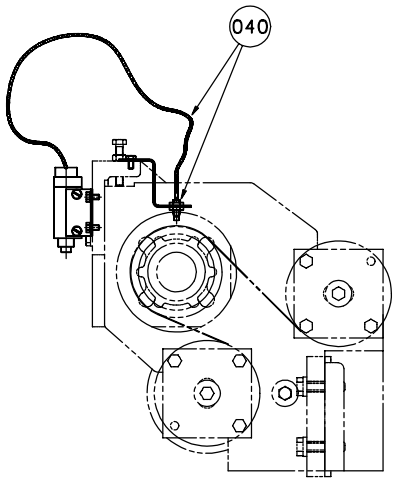

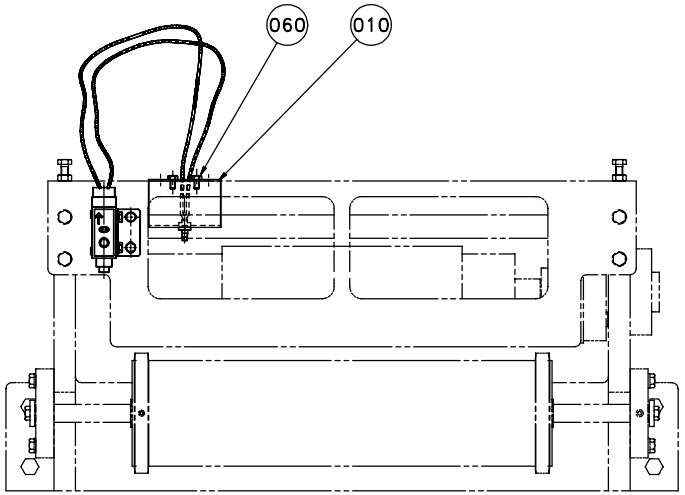

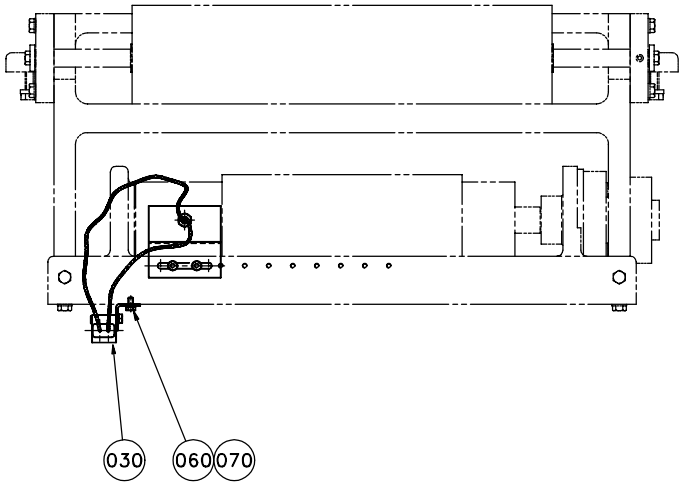

S - 1260411-1
ECN 70336

Pos	Part No	SP	UN	Qty	Description	Page No
Common parts						
010	1260413-0000	-		1	BRACKET	
030	90232-0067	R		1	PHOTOCELL	
040	90232-0325	R		1	FIBRE E32-DC200	
060	312105-0287	-		4	SCREW M6S ISO 4017 M4X8 A280	
070	315105-0136	-		2	WASHER,PLAIN ROUND 4,3X8 STAINLESS	

Pos	Part No	SP	UN	Qty	Description	Page No

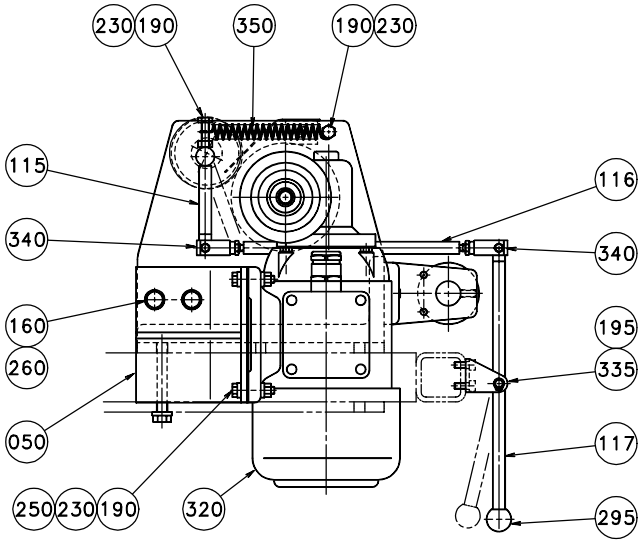

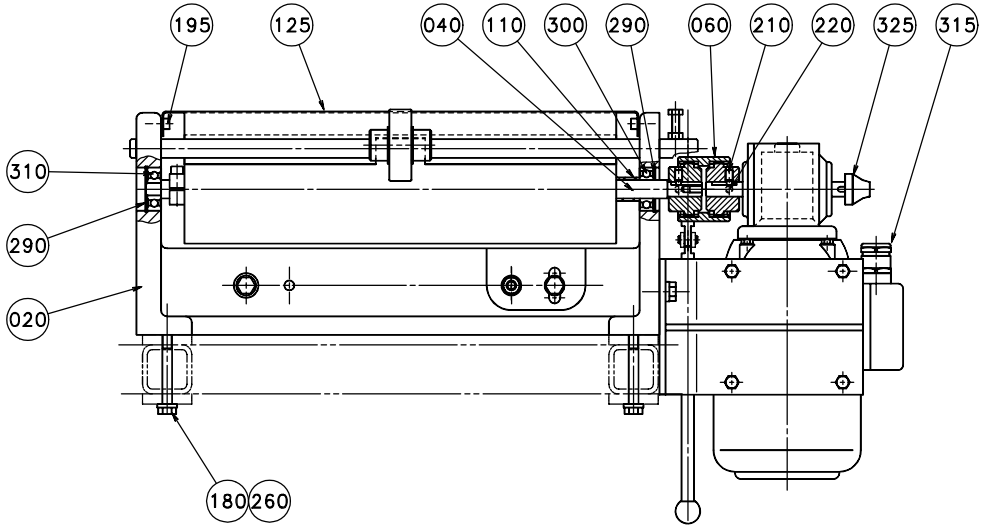

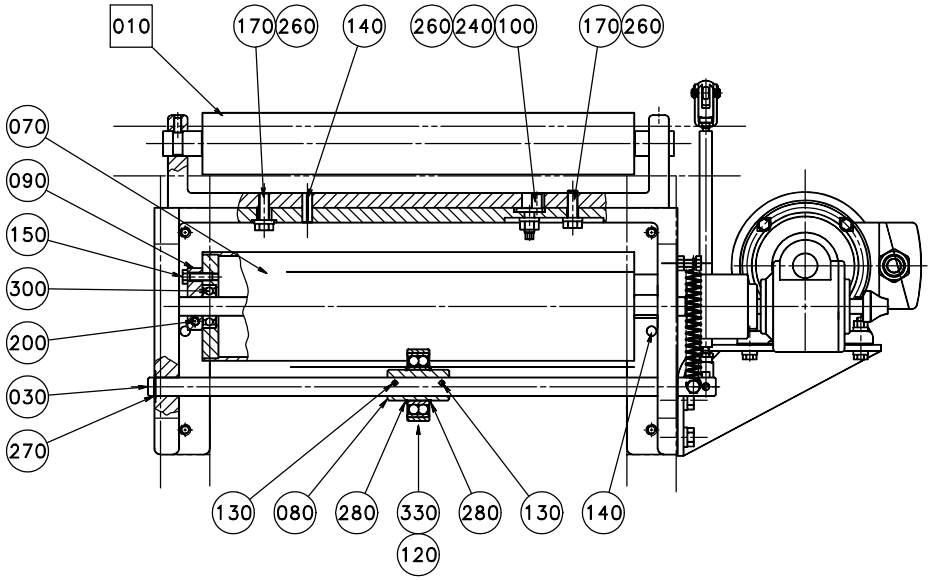

S – 1095953-1
ECN 70336

Pos	Part No	SP	UN	Qty	Description	Page No
Common parts						
010	A1095952-0100	-		1	BENDING ROLLER ASSEMBLY	**69**
020	985865-0000	-		1	BRACKET	
030	985856-0000	-		1	SHAFT	
040	1036220-0000	D		1	SHAFT	
050	985854-0000	-		1	BRACKET	
060	B985899-0000	D		1	COUPLING	**183**
070	1035882-0000	D		1	BENDING ROLLER	
080	1255631-0000	D		1	ECCENTRIC BUSHING	
090	1036232-0000	-		1	BRACKET	
100	1140132-0000	D		1	ECCENTRIC	
110	985855-0000	-		1	SPACER BUSHING	
115	1260642-0000	-		1	LEVER	
116	1260643-0000	-		1	LEVER	
117	1260644-0000	-		1	LEVER	
120	1260648-0000	M		1	BUSHING	
125	1260649-0000	-		1	PAPER GUIDE	
130	311112-0260	-		2	SLOTTED TURP 4X28 RFR	
140	311112-0377	-		3	PINS,SLOTTED TUBULAR SPRING PIN 8X24	
150	312105-0370	-		1	SCREW M6S ISO 4017 M6X20 A280	
160	312105-0451	-		2	SCREW M6S ISO 4017 8X20 A280	
170	312105-0453	-		2	SCREW M6S ISO 4017 M8X25 A280	
180	312105-0465	-		4	SCREW M6S ISO 4014 M8X70 A280	
190	312109-0374	-		6	SCREW M6S ISO 4017 M6X30 A280	
195	312115-0327	-		4	SCREW MC6S ISO 4762 M5X12 A280	
200	312115-0372	-		1	SCREW MC6S ISO 4762 M6X25 A280	
210	312311-0366	-		2	SET SCREW FULL DOGPOINT ISO 4028 M6X12	
220	312318-0362	-		2	SET SCREW CUP POINT ISO 4029 M6X8 RFR	
230	312605-0316	-		6	NUT,HEXAGON A280 M6M6	
240	312605-0318	-		1	NUT,HEXAGON,M8 RFR	
250	315115-0153	-		8	WASHER TBRB 6,4X12 STAINLESS	
260	315115-0165	-		9	WASHER TBRB 8,4X16 STAINLESS	
270	315751-0112	-		2	RETAINING RINGS FOR SHAFT 15	
280	315751-0122	-		2	RETAINING RINGS FOR SHAFT 30	
290	315753-0124	-		2	RETAINING RINGS FOR HOLE 35	
295	318800-0102	-		1	HANDLES,SPHERICAL KNOB,INT.THRE.,D.20-M5	
300	321313-0102	M		3	BALL BEARING 15X35X11	
310	321316-0200	M		1	BEARINGS,BALL BEARING SKF6300-2RS	
315	90012-0137	-		1	GLAND,EMC,EXTENDED WITH INSERT	
320	90069-0271	D		1	WORM GEAR MOTOR	
325	90015-0021	-		1	GLAND,LEAD-IN,IP67	
330	90214-0144	M		1	BEARINGS,BALL BEARING,SPHERICAL,SELF-ALI	
335	90239-0486	-		1	BRACKET,REAR,CLEVIS FLANGE,MINI-ISO,16	
340	90239-0489	-		2	ROD END,CLEVIS WITH AXLE,M6	
350	90335-0091	R		1	SPRING	

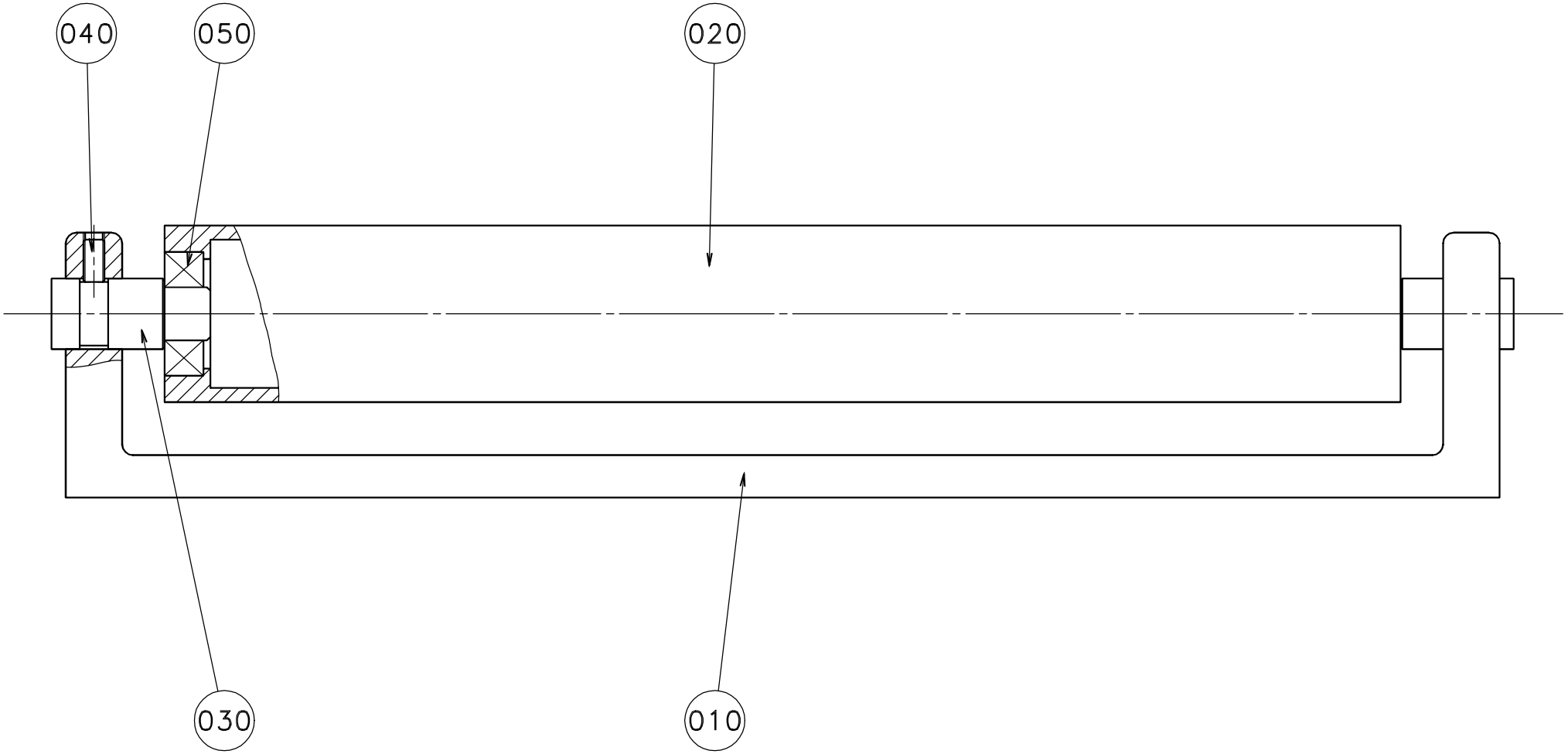

S - 1095952-1
ECN 70336

Pos	Part No	SP	UN	Qty	Description	Page No
Common parts						
010	1129952-0000	-		1	BRACKET	
020	1129951-0000	D		1	BENDING ROLLER	
030	1140133-0000	-		2	AXLE PIN	
040	312318-0366	-		2	SET SCREW CUP POINT ISO 4029 M6X12 RFR	
050	321313-0102	M		2	BALL BEARING 15X35X11	

Pos	Part No	SP	UN	Qty	Description	Page No

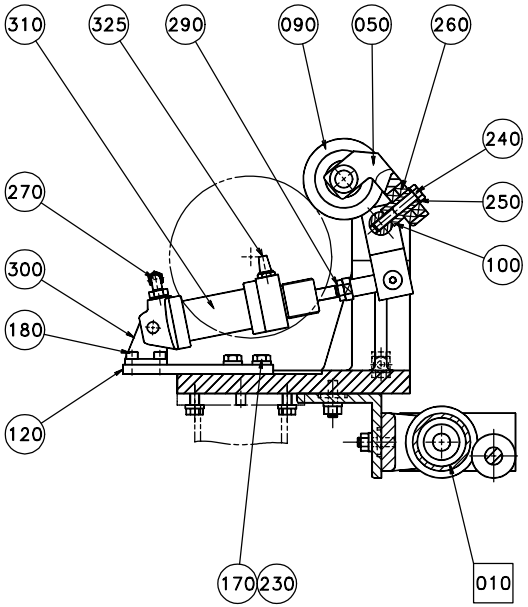

SEC. A-A

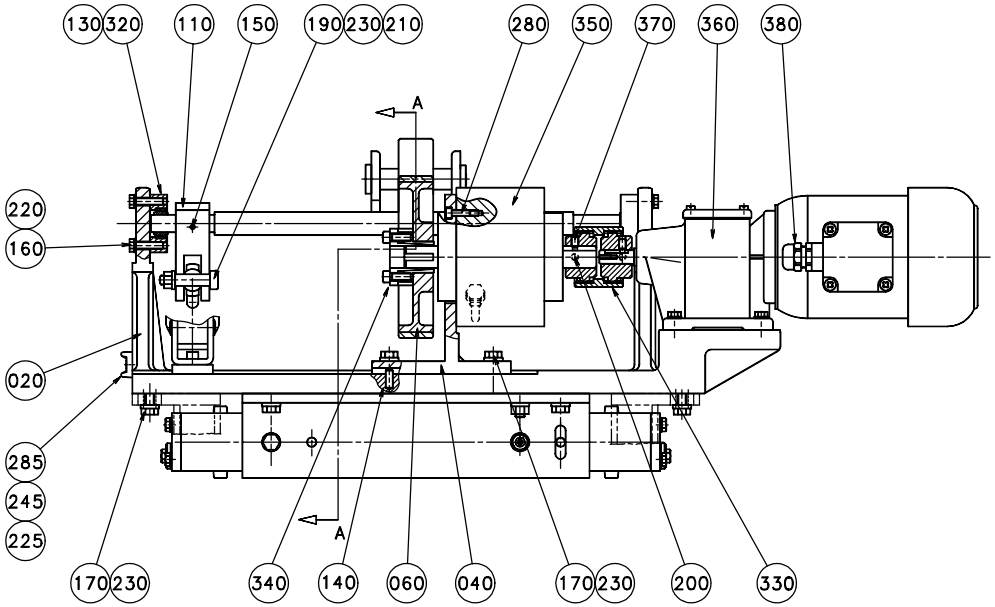

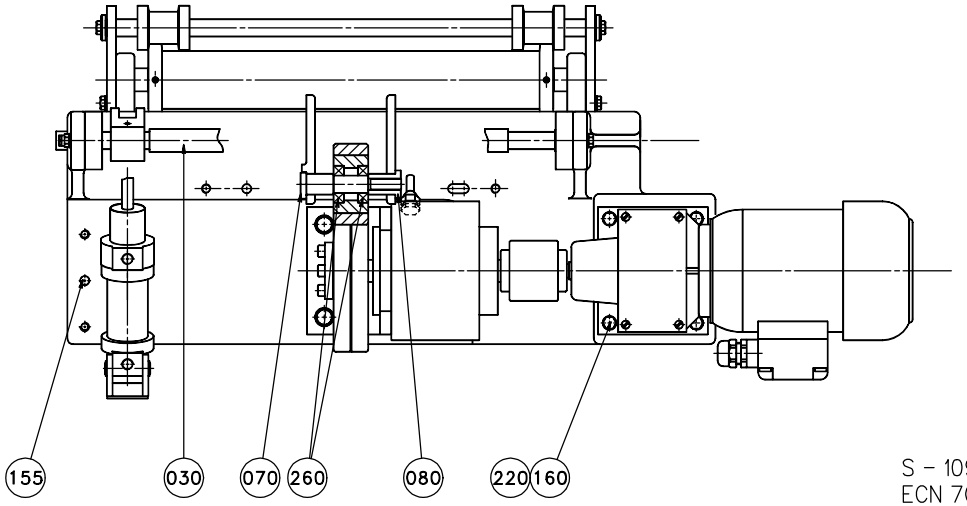

S - 1095970-1
ECN 70336

Pos	Part No	SP	UN	Qty	Description	Page No
Common parts						
010	A1095969-0100	-		1	BENDING ROLLER WITH FLANGES	**73**
020	1140184-0000	-		1	BRACKET	
030	1140185-0000	-		1	SHAFT	
040	1140186-0000	-		1	BRACKET	
050	263150-0000	-		1	BRACKET	
060	1140187-0000	M		1	WHEEL	
070	263152-0000	D		1	SHAFT	
080	263153-0000	D		1	NUT	
090	266710-0000	M		1	WHEEL	
100	1129906-0000	D		1	PIN	
110	1129907-0000	-		1	LEVER	
120	1140016-0000	-		1	PLATE	
130	1140174-0000	-		2	BEARING HOUSING	
140	311103-0351	-		2	PINS,STRAIGHT 6X16	
150	311112-0262	-		1	PINS,SLOTTED TUBULAR SPRING PIN 4X32	
155	311112-0377	-		2	PINS,SLOTTED TUBULAR SPRING PIN 8X24	
160	312105-0372	-		8	SCREW M6S ISO 4017 M6X25 A280	
170	312105-0453	-		10	SCREW M6S ISO 4017 M8X25 A280	
180	312115-0366	-		2	SCREW MC6S ISO 4762 M6X12 A280	
190	312180-0495	-		1	HEX. SOCKET HEAD SHOULD. ISO 7379 M8X30	
200	312318-0362	-		2	SET SCREW CUP POINT ISO 4029 M6X8 RFR	
210	312605-0318	-		1	NUT,HEXAGON,M8 RFR	
220	315105-0153	-		8	WASHER,PLAIN ROUND 6,4X12 STAINLESS	
225	315105-0136	-		1	WASHER,PLAIN ROUND 4,3X8 STAINLESS	
230	315115-0165	-		11	WASHER TBRB 8,4X16 STAINLESS	
240	312109-0460	-		1	SCREW M6S ISO 4017 M8X45 A280	
245	312125-0289	-		1	SLOTTED HEMCS4X10RFR	
250	315105-0165	-		1	WASHER,PLAIN ROUND 8,4X16 STAINLESS	
260	321308-0202	M		4	BALL BEARING 15X32X9	
270	342931-0113	-		1	ELBOW 90 COUPL.,EXT.THREAD 6/4-G1/8"	
280	312115-0329	-		4	SCREW MC6S ISO 4762 M5X16 A280	
285	352113-0204	-		1	ANCHOR TM3S25-M	
290	90115-0134	M		1	ROD ENDS,MAINTENANCE FREE,10-M10X1.25RH	
300	90239-0488	-		1	BRACKET,REAR,CLEVIS FLANGE,MINI-ISO,32	
310	90239-0834	D		1	DOUBLE ACTING, MINI-ISO, CYL. 32-25	
320	90240-0026	D		2	SPHERICAL BEARING, 15X26X12	
325	90328-0003	-		1	SILENCER	
330	B985900-0000	R		1	COUPLING	**183**
340	90208-0118	D		1	CLAMPING ELEMENT	
350	90355-0158	R		1	ELECTROMAGNETIC CLUTCH	
360	90069-0258	D		1	GEAR MOTOR	
370	312311-0366	-		2	SET SCREW FULL DOGPOINT ISO 4028 M6X12	
380	352103-0106	-		1	CABLE GLAND ST 11	

BENDING ROLLER WITH FLANGES

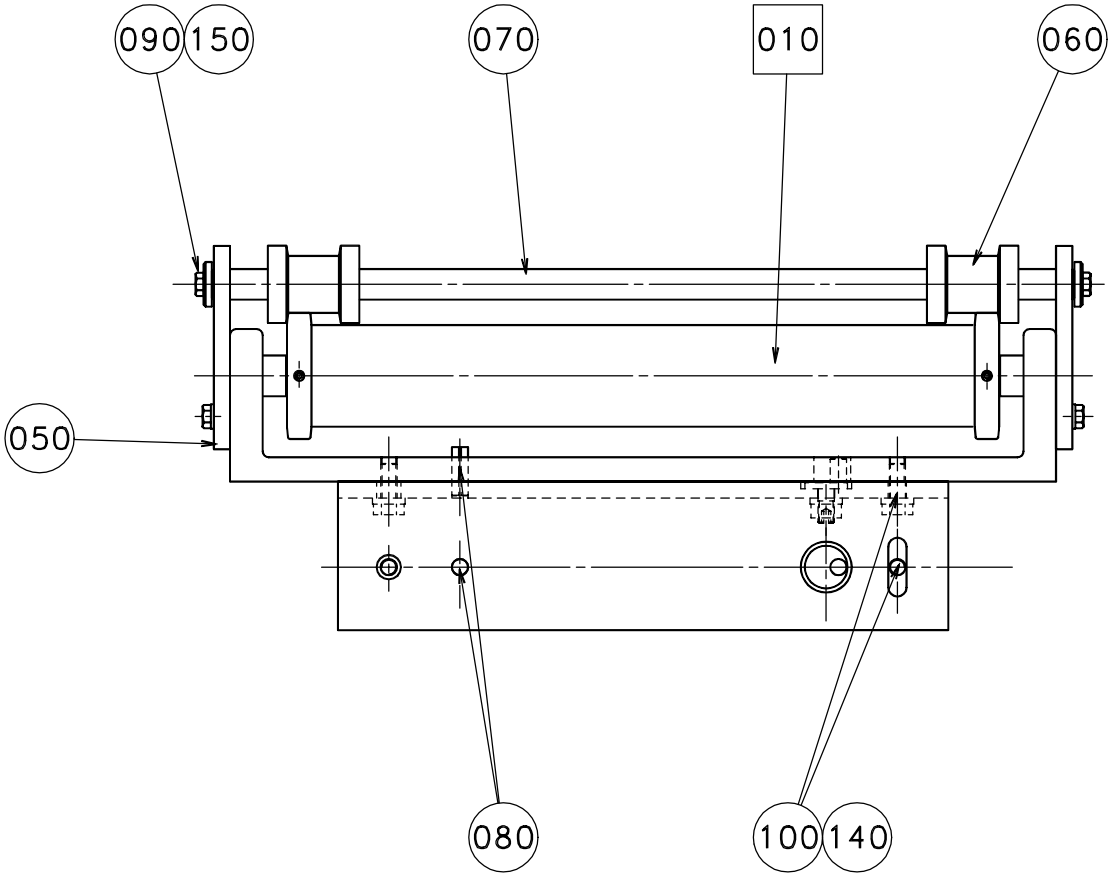

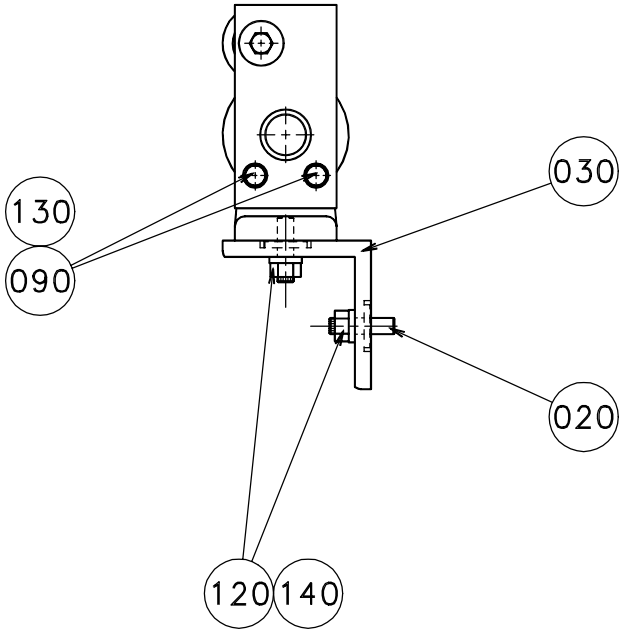

S - 1095969-1
ECN 71157

Pos	Part No	SP	UN	Qty	Description	Page No
Common parts						
010	A1334322-0100	-		1	BENDING ROLLER WITH FLANGES	**75**
020	1140132-0000	D		2	ECCENTRIC	
030	1140136-0000	-		1	BRACKET	
050	1140134-0000	-		2	PLATE	
060	1140135-0000	D		2	ROLLER	
070	1140137-0000	-		1	SHAFT	
080	311112-0377	-		2	PINS,SLOTTED TUBULAR SPRING PIN 8X24	
090	312105-0368	-		6	SCREW M6S ISO 4017 M6X16 A280	
100	312105-0451	-		4	SCREW M6S ISO 4017 8X20 A280	
120	312605-0318	-		2	NUT,HEXAGON,M8 RFR	
130	315105-0153	-		4	WASHER,PLAIN ROUND 6,4X12 STAINLESS	
140	315115-0165	-		6	WASHER TBRB 8,4X16 STAINLESS	
150	315125-0153	-		2	WASHERS,PLAIN ROUND,CHAMFERED 6,4X22X4	

BENDING ROLLER WITH FLANGES

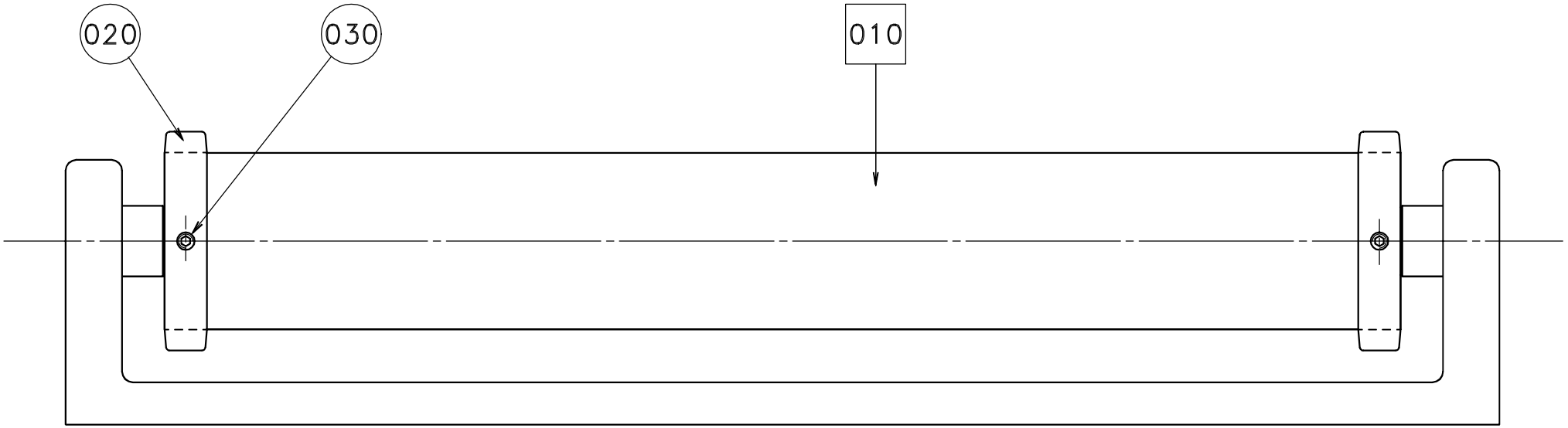

S - 1334322-1
ECN 71157

Pos	Part No	SP	UN	Qty	Description	Page No
Common parts						
010	A1095952-0100	-		1	BENDING ROLLER ASSEMBLY	**69**
020	1140131-0000	-		2	FLANGE	
030	312311-0321	-		4	SET SCREW FULL DOGPOINT ISO 4028 M5X6	

Pos	Part No	SP	UN	Qty	Description	Page No

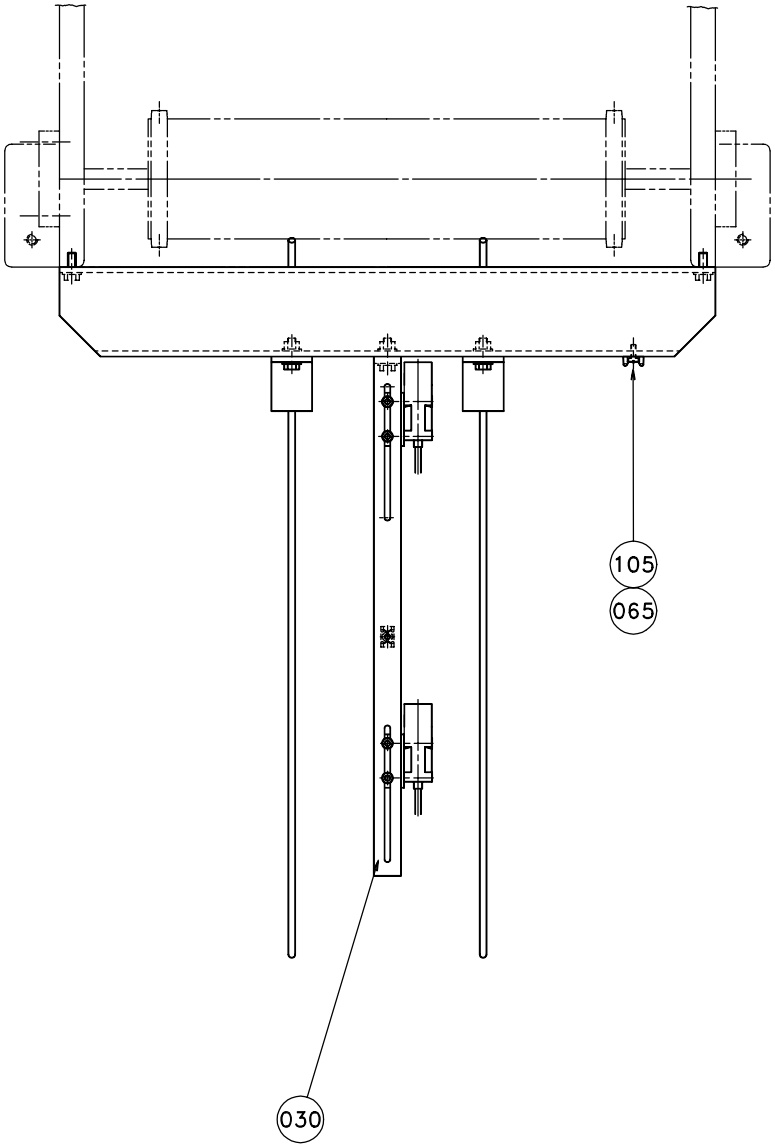
105
065
030

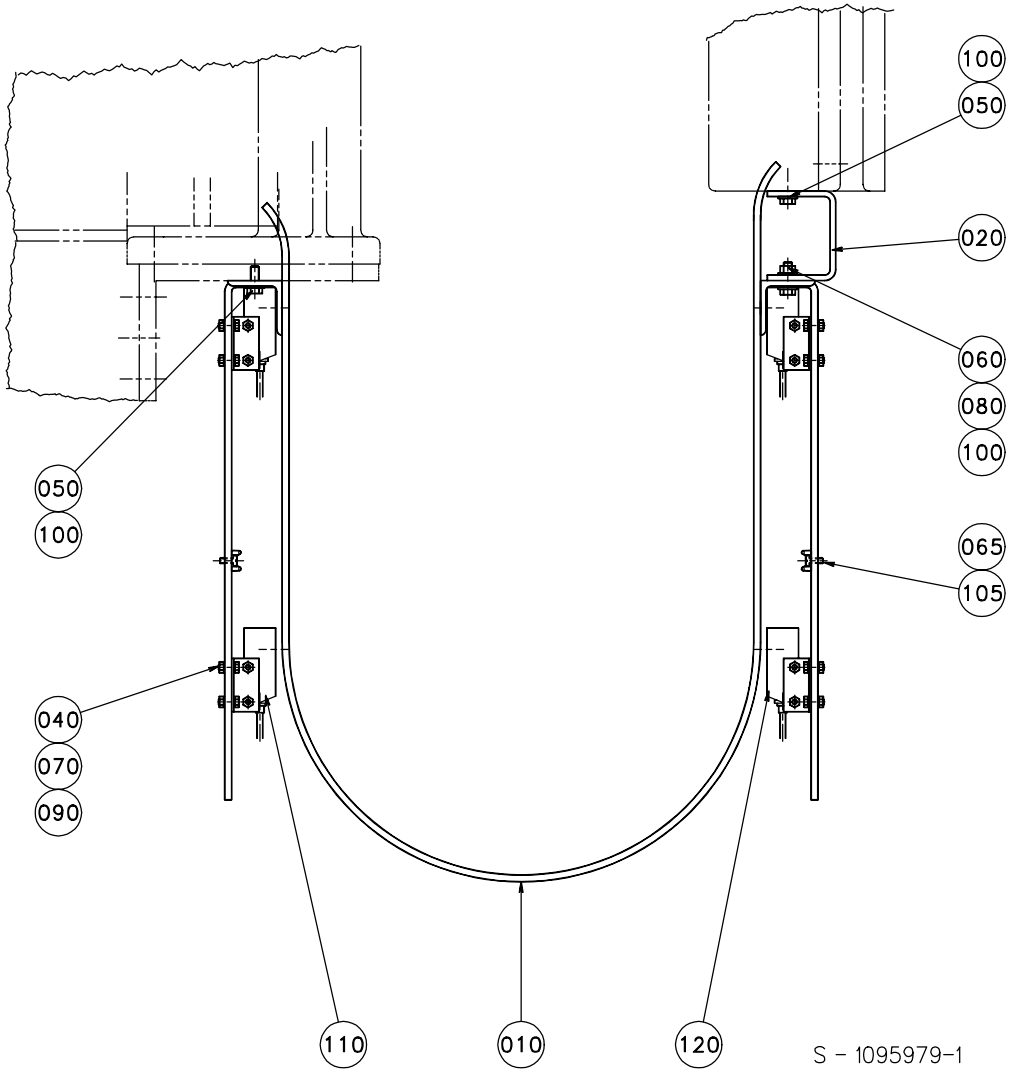
100
050
020
060
080
100
065
105
050
100
040
070
090
110
010
120
S - 1095979-1
ECN 70336

Pos	Part No	SP	UN	Qty	Description	Page No
Common parts						
010	1140209-0000	-		2	GUIDE	
020	1140210-0000	-		1	BRACKET	
030	1140211-0000	-		2	PHOTOCELL BRACKET	
040	312105-0291	-		8	SCREW M6S ISO 4017 M4X12 A280	
050	312105-0368	-		5	SCREW M6S ISO 4017 M6X16 A280	
060	312105-0370	-		3	SCREW M6S ISO 4017 M6X20 A280	
065	312125-0289	-		3	SLOTTED HEMCS4X10RFR	
070	312605-0312	-		8	NUT,HEXAGON,M4 RFR	
080	312605-0316	-		3	NUT,HEXAGON A280 M6M6	
090	315105-0136	-		16	WASHER,PLAIN ROUND 4,3X8 STAINLESS	
100	315105-0153	-		11	WASHER,PLAIN ROUND 6,4X12 STAINLESS	
105	352113-0205	-		3	ANCHOR TM2S8-C100	
110	90232-0103	R		2	PH.CELL E3S-CT61-L-5M	
120	90232-0104	R		2	PH.CELL E3S-CT61-D-5M	

Pos	Part No	SP	UN	Qty	Description	Page No

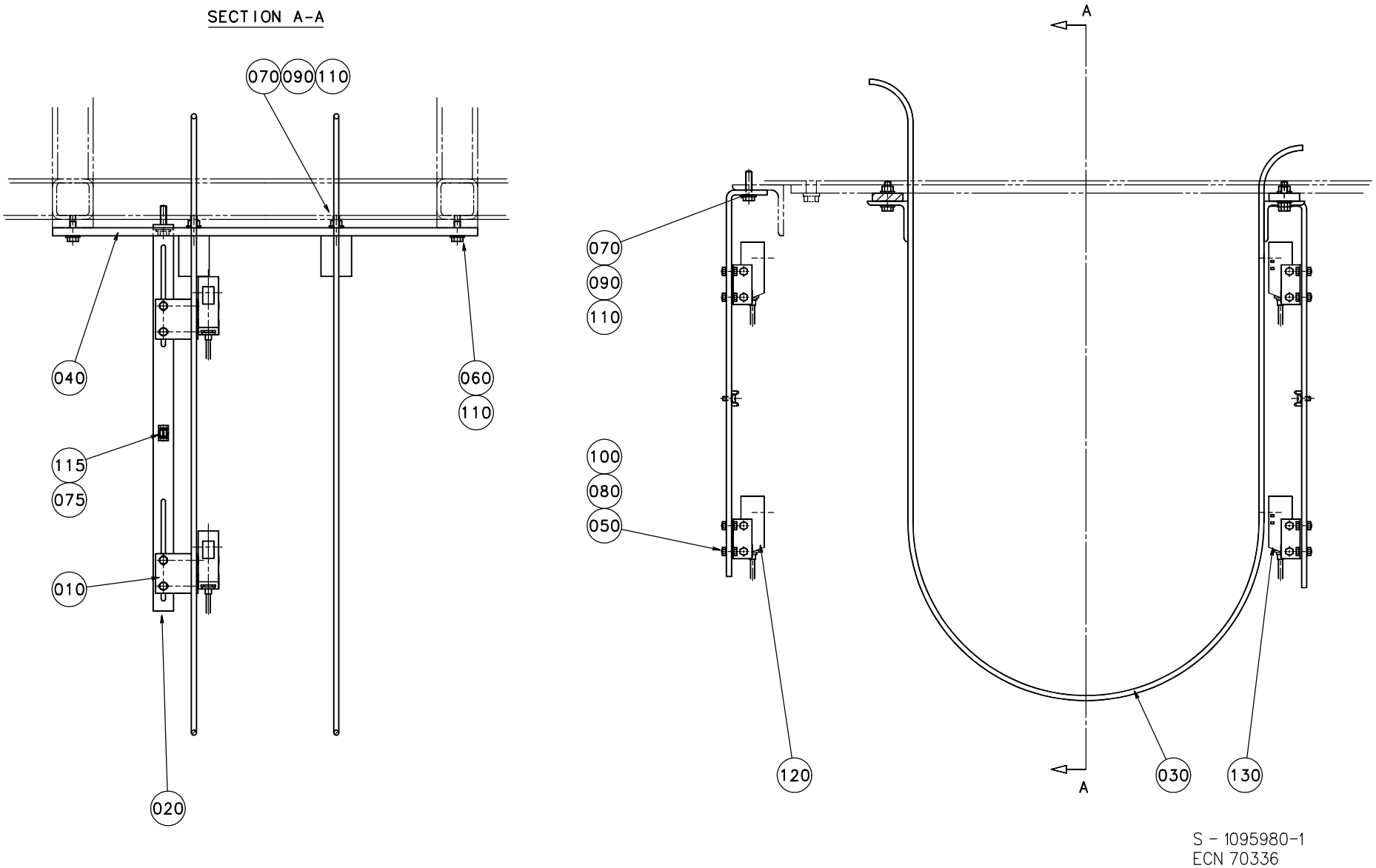
SECTION A-A
070
090
110
040
060
110
115
075
010
020
A
070
090
110
100
080
050
120
030
130
A
S - 1095980-1
ECN 70336

Pos	Part No	SP	UN	Qty	Description	Page No
Common parts						
010	1082765-0000	-		4	PHOTOCELL BRACKET	
020	1140211-0000	-		2	PHOTOCELL BRACKET	
030	1140212-0000	-		2	GUIDE	
040	1140213-0000	-		2	BRACKET	
050	312105-0291	-		8	SCREW M6S ISO 4017 M4X12 A280	
060	312105-0368	-		4	SCREW M6S ISO 4017 M6X16 A280	
070	312105-0372	-		6	SCREW M6S ISO 4017 M6X25 A280	
075	312125-0289	-		2	SLOTTED HEMCS4X10RFR	
080	312605-0312	-		8	NUT,HEXAGON,M4 RFR	
090	312605-0316	-		6	NUT,HEXAGON A280 M6M6	
100	315105-0136	-		16	WASHER,PLAIN ROUND 4,3X8 STAINLESS	
110	315105-0153	-		16	WASHER,PLAIN ROUND 6,4X12 STAINLESS	
115	352113-0205	-		2	ANCHOR TM2S8-C100	
120	90232-0103	R		2	PH.CELL E3S-CT61-L-5M	
130	90232-0104	R		2	PH.CELL E3S-CT61-D-5M	

Pos	Part No	SP	UN	Qty	Description	Page No

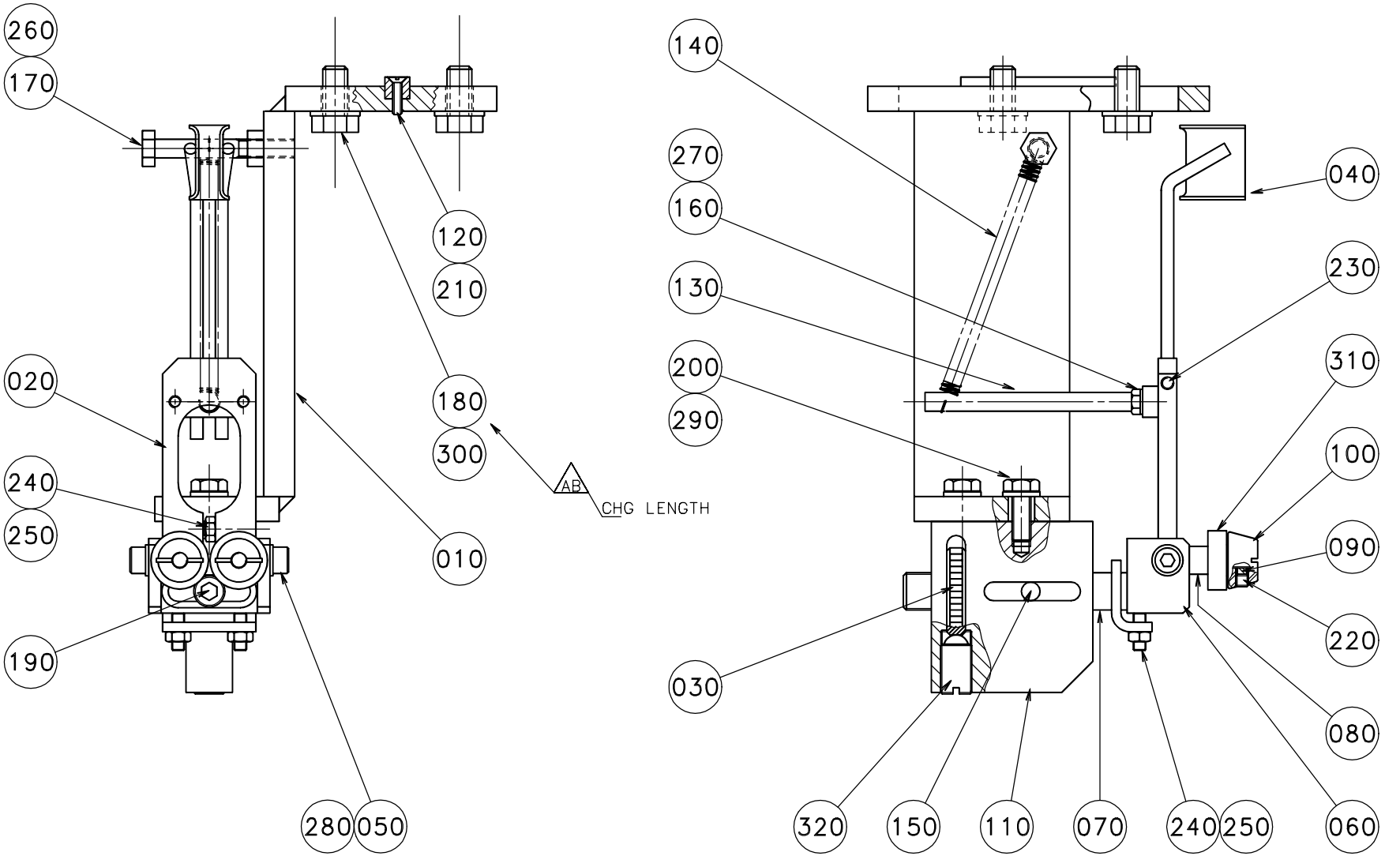

S - 1255601-1
ECN 71370

Pos	Part No	SP	UN	Qty	Description	Page No
Common parts						
010	1255579-0000	-		1	BRACKET	
020	905937-0000	-		1	SPRING	
030	23580-0000	-		1	SHIFTER HANDLE	
040	23583-0000	-		1	GUIDE FINGER	
050	23584-0000	-		2	SCREW	
060	24351-0000	-		1	BOW CLAMP	
070	24352-0000	-		1	SHAFT	
080	24355-0000	-		2	DOWEL	
090	24356-0000	-		4	PIECE	
100	111543-0000	-		2	GUIDE CONE	
110	245210-0000	-		1	BODY	
120	905244-0000	-		1	WEDGE	
130	905938-0000	-		1	BRACKET	
140	90335-0222	R		1	SPRING	
150	311103-0350	-		1	PIN,STRAIGHT M6 6X14 RFR	
160	312105-0291	-		2	SCREW M6S ISO 4017 M4X12 A280	
170	312105-0379	-		1	SCREW M6S ISO 4014 M6X45 A280	
180	312105-0449	-		4	SCREW M6S ISO 4017 M8X16 A280	
190	312115-0366	-		1	SCREW MC6S ISO 4762 M6X12 A280	
200	312105-0368	-		2	SCREW M6S ISO 4017 M6X16 A280	
210	312145-0224	-		1	SLOTTED HEMFS3X10RFR	
220	312318-0283	-		4	SET SCREW CUP POINT ISO 4029 M4X4 RFR	
230	312318-0285	-		2	STOP SCREW ISO 4029 M4X6 A4	
240	312318-0291	-		3	SET SCREW CUP POINT ISO 4029 M4X12 RFR	
250	312605-0312	-		3	NUT,HEXAGON,M4 RFR	
260	312605-0316	-		1	NUT,HEXAGON A280 M6M6	
270	315105-0136	-		2	WASHER,PLAIN ROUND 4,3X8 STAINLESS	
280	315105-0146	-		2	WASHER,PLAIN ROUND 5,3X10 STAINLESS	
290	315105-0153	-		2	WASHER,PLAIN ROUND 6,4X12 STAINLESS	
300	315105-0165	-		4	WASHER,PLAIN ROUND 8,4X16 STAINLESS	
310	90214-0138	M		2	BALL BEARING,STAINLESS	
320	90287-0009	-		1	SPRINGLOADED SCREW M10X19	

Pos	Part No	SP	UN	Qty	Description	Page No

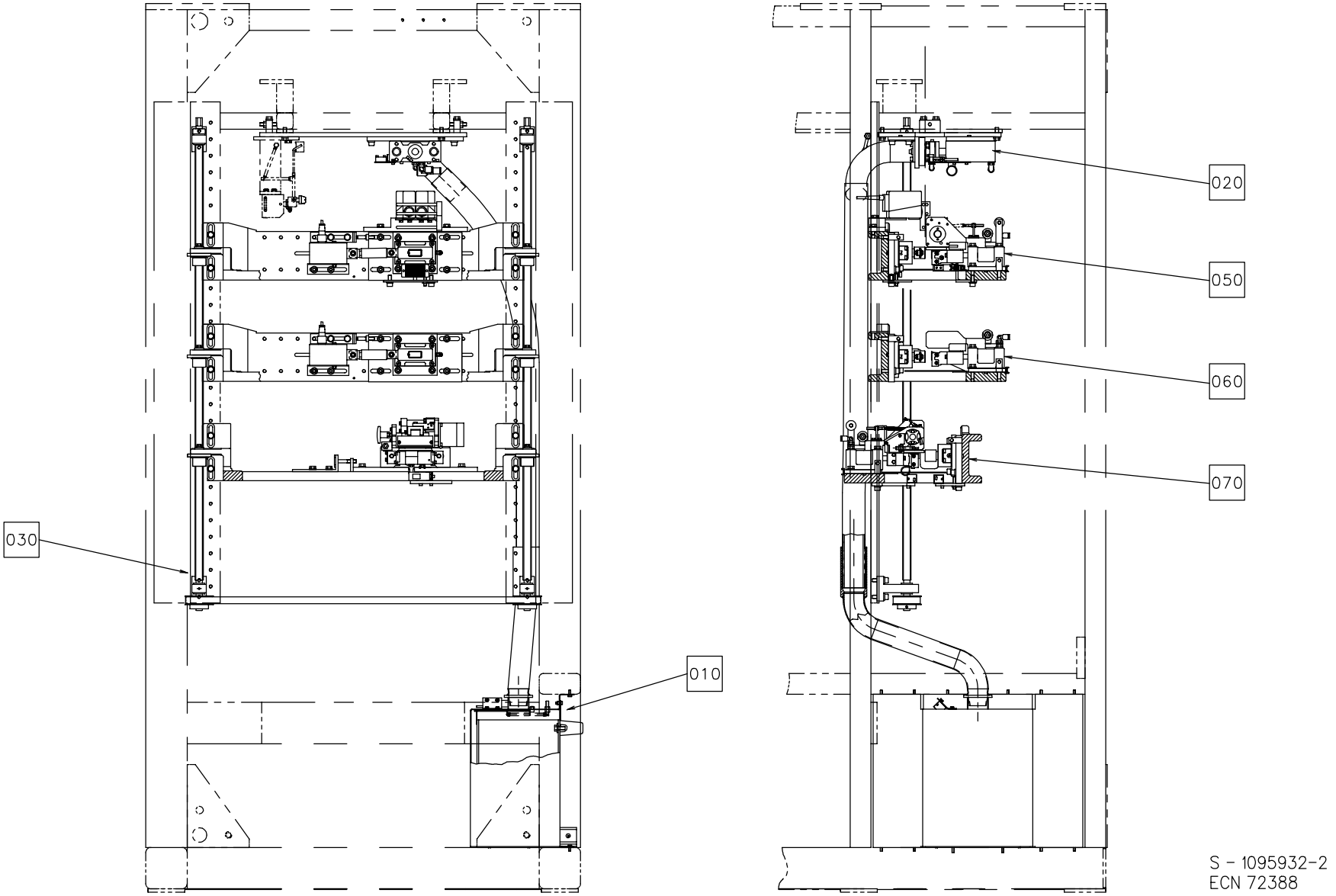
030
010
020
050
060
070
S - 1095932-2
ECN 72388

Pos	Part No	SP	UN	Qty	Description	Page No
Common parts						
010	A1095955-0100	-		1	WASTE BOX	**85**
020	A1095992-0300	-		1	PUNCH BRACKET	**87**
030	A1185078-0100	-		1	LIFTING DEVICE	**93**
050	A1260419-0200	-		1	APPLICATOR PATCH	**95**
060	A1260420-0200	-		1	APPLICATOR RESEAL	**115**
070	A1260421-0200	-		1	APPLICATOR TAB	**119**
090	A1296882-0100	-		1	OPENING SPECIFICATION	**133**

Pos	Part No	SP	UN	Qty	Description	Page No

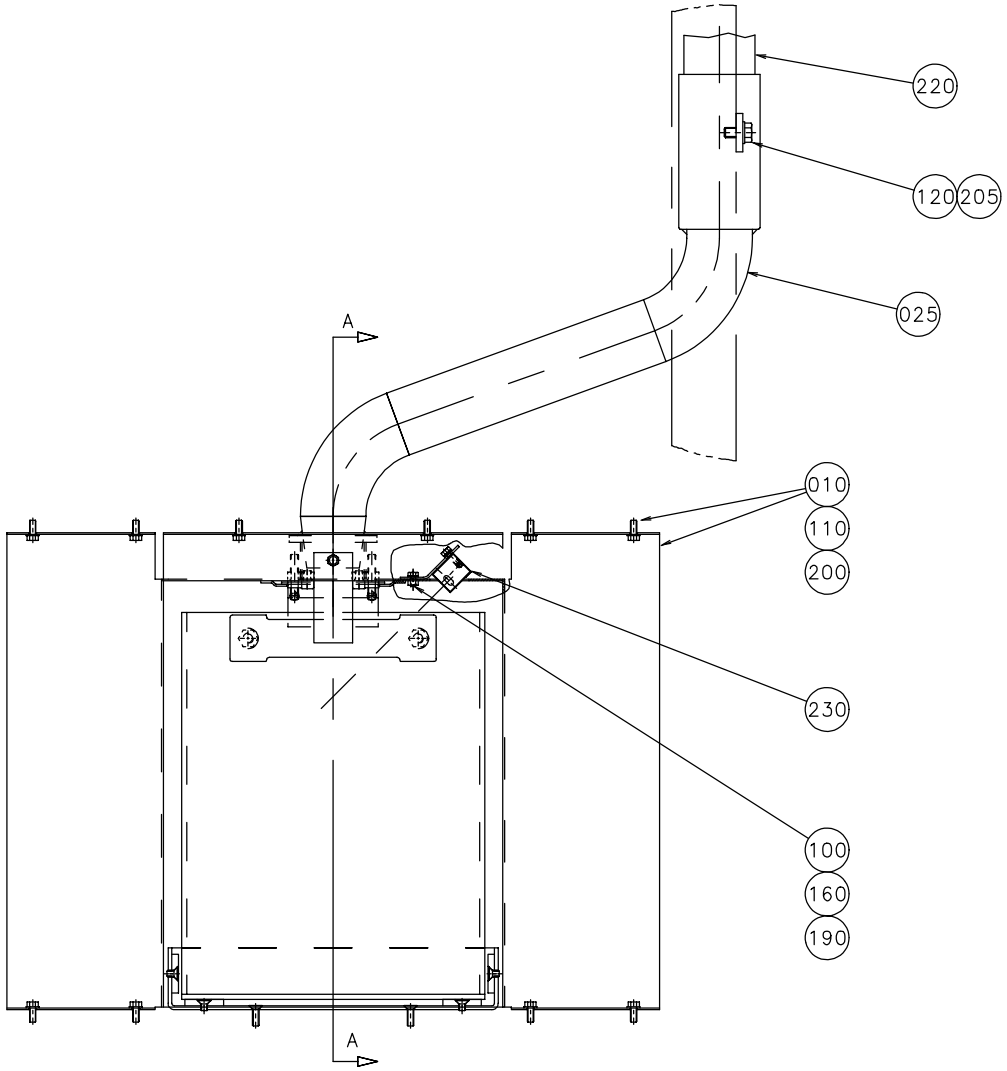

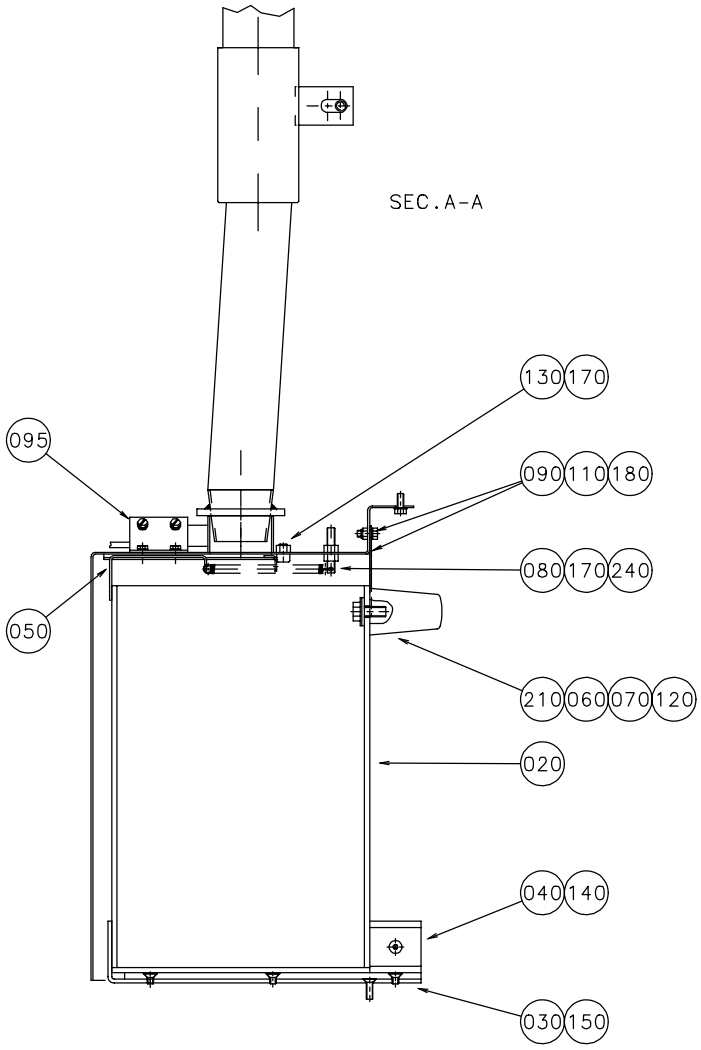

S - 1095955-1
ECN 71370

Pos	Part No	SP	UN	Qty	Description	Page No
Common parts						
010	1140049-0000	-		1	COVER	
020	1140047-0000	-		1	WASTE BOX	
025	1334535-0000	-		1	WASTE PIPE	
030	1140045-0000	-		1	FRAME	
040	1140046-0000	-		4	RAIL	
050	1140048-0000	-		1	LOCK PLATE	
060	28036-0000	-		2	WASHER	
070	294734-0000	-		2	WASHER	
080	578684-0000	-		2	SPRING BRACKET	
090	1103295-0000	-		1	LOCK PLATE	
095	1255697-0000	-		1	BRACKET	
100	312105-0287	-		2	SCREW M6S ISO 4017 M4X8 A280	
110	312105-0327	-		9	SCREW M6S ISO 4017 M5X12 A280	
120	312105-0451	-		3	SCREW M6S ISO 4017 8X20 A280	
130	312115-0362	-		2	SCREW MC6S ISO 4762 M6X8 A280	
140	312155-0323	-		12	SCREW MF6S DIN 7991 M5X8 A280	
150	312155-0329	-		2	SCREW MF6S DIN 7991 M5X16 A280	
160	312605-0312	-		2	NUT,HEXAGON,M4 RFR	
170	312605-0316	-		6	NUT,HEXAGON A280 M6M6	
180	312812-0314	-		1	NUT,HEXAGON,LOCK,WITH NYLON,M5	
190	315105-0136	-		2	WASHER,PLAIN ROUND 4,3X8 STAINLESS	
200	315105-0146	-		8	WASHER,PLAIN ROUND 5,3X10 STAINLESS	
205	315105-0165	-		1	WASHER,PLAIN ROUND 8,4X16 STAINLESS	
210	90017-0014	-		1	HANDLE 8305-2259	
220	90152-0026	D	MM	1800	FLEXIBLE CONDUIT	
230	90232-0105	R		1	PH.CELL E3S-CD61-5M	
240	90335-0081	D		2	SPRING	

Pos	Part No	SP	UN	Qty	Description	Page No

PUNCH BRACKET

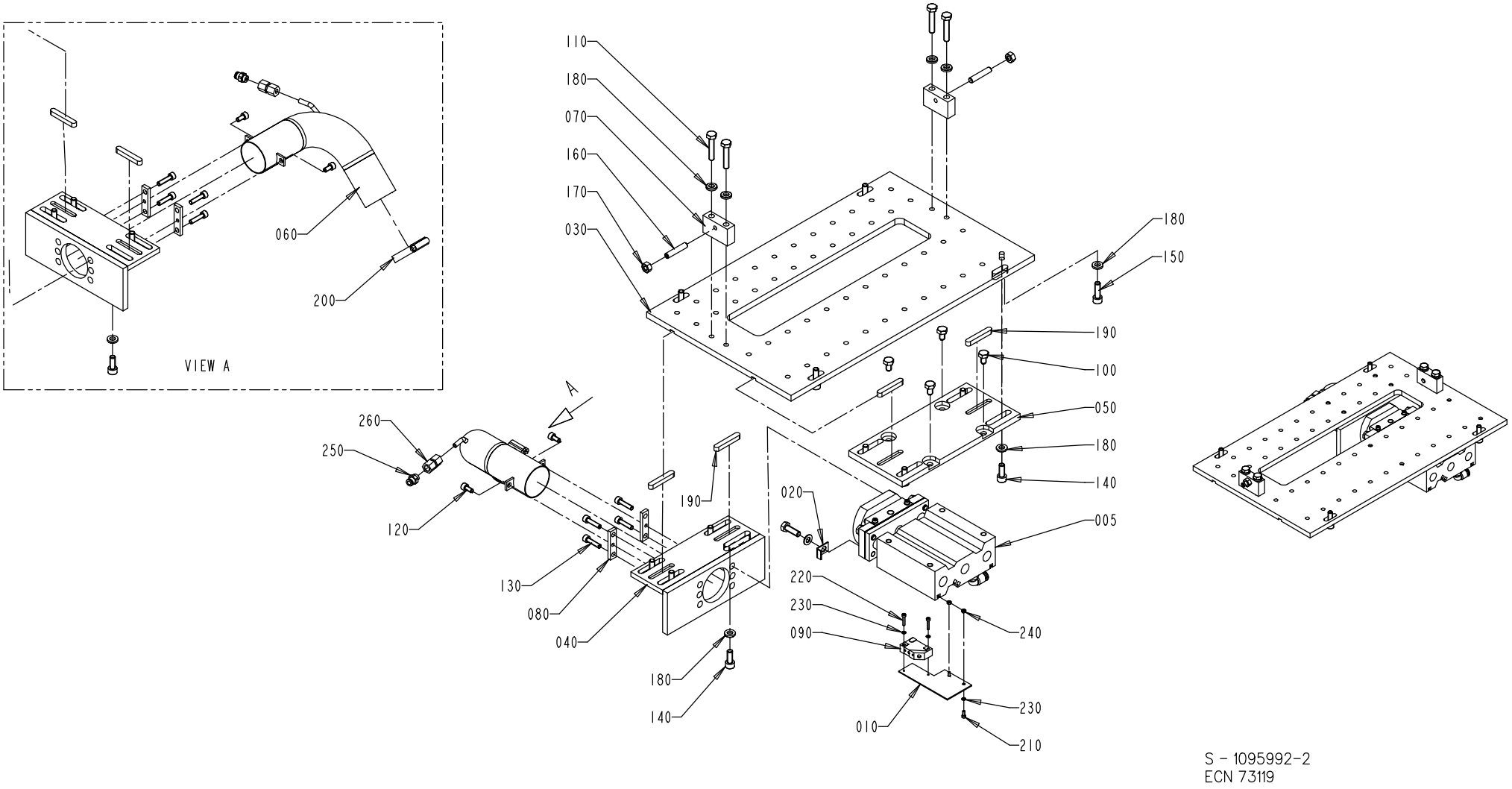

S - 1095992-2
ECN 73119

EC No: - - 20000423
Group number: 1095992-0300
Assembly Drawing: 1095992-2

Issue: 20000706

Pos	Part No	SP	UN	Qty	Description	Page No
Common parts						
005	A1095991-0300	-		1	PUNCH UNIT	**89**
010	1260387-0000	-		1	PHOTOCELL BRACKET	
020	1260239-0000	-		1	ANGLE BRACKET	
030	1140499-0000	-		1	PLATE	
040	1140500-0000	-		1	ANGLE BRACKET	
050	1487477-0000	-		1	PLATE	
060	1334534-0000	D		1	WASTE PIPE	
070	1140503-0000	-		2	ADJUSTMENT BRACKET	
080	1140504-0000	-		2	CONNECTION PLATE	
090	90044-0104	R		1	PROX.SWITCH IFM IN 3002 48VDC	
100	312105-0447	-		4	SCREW M6S ISO 4017 M8X12 A280	
110	312109-0459	-		4	SCREW M6S ISO 4017 M8X40 A280	
120	312115-0366	-		2	SCREW MC6S ISO 4762 M6X12 A280	
130	312115-0372	-		4	SCREW MC6S ISO 4762 M6X25 A280	
140	312115-0451	-		8	SCREW MC6S ISO 4762 M8X20 A280	
150	312105-0453	-		4	SCREW M6S ISO 4017 M8X25 A280	
160	312318-0459	-		2	SET SCREW CUP POINT ISO 4029 M8X40 RFR	
170	312605-0318	-		2	NUT,HEXAGON,M8 RFR	
180	315115-0165	-		16	WASHER TBRB 8,4X16 STAINLESS	
190	315705-0272	-		4	KEYS,PARALLEL WITH ROUND ENDS 8X7X50	
200	342991-0109	-		1	HOSE CLIP,WORM DRIVE TYPE (48)-50	
210	312115-0222	-		2	SCREW MC6S ISO 4762 M3X8 A280	
220	312115-0228	-		2	SCREW MC6S ISO 4762 M3X16 A280	
230	315105-0124	-		4	WASHER,PLAIN ROUND 3,2X6	
240	312605-0310	-		2	NUT,HEXAGON M6M 3 A2 80	
250	342722-0202	-		1	STRAIGHT COUPLING, D=6MM - G1/8"	
260	342723-0102	-		1	STRAIGHT PIPE CONNECTION GAI-6-G1/8"	

Pos	Part No	SP	UN	Qty	Description	Page No

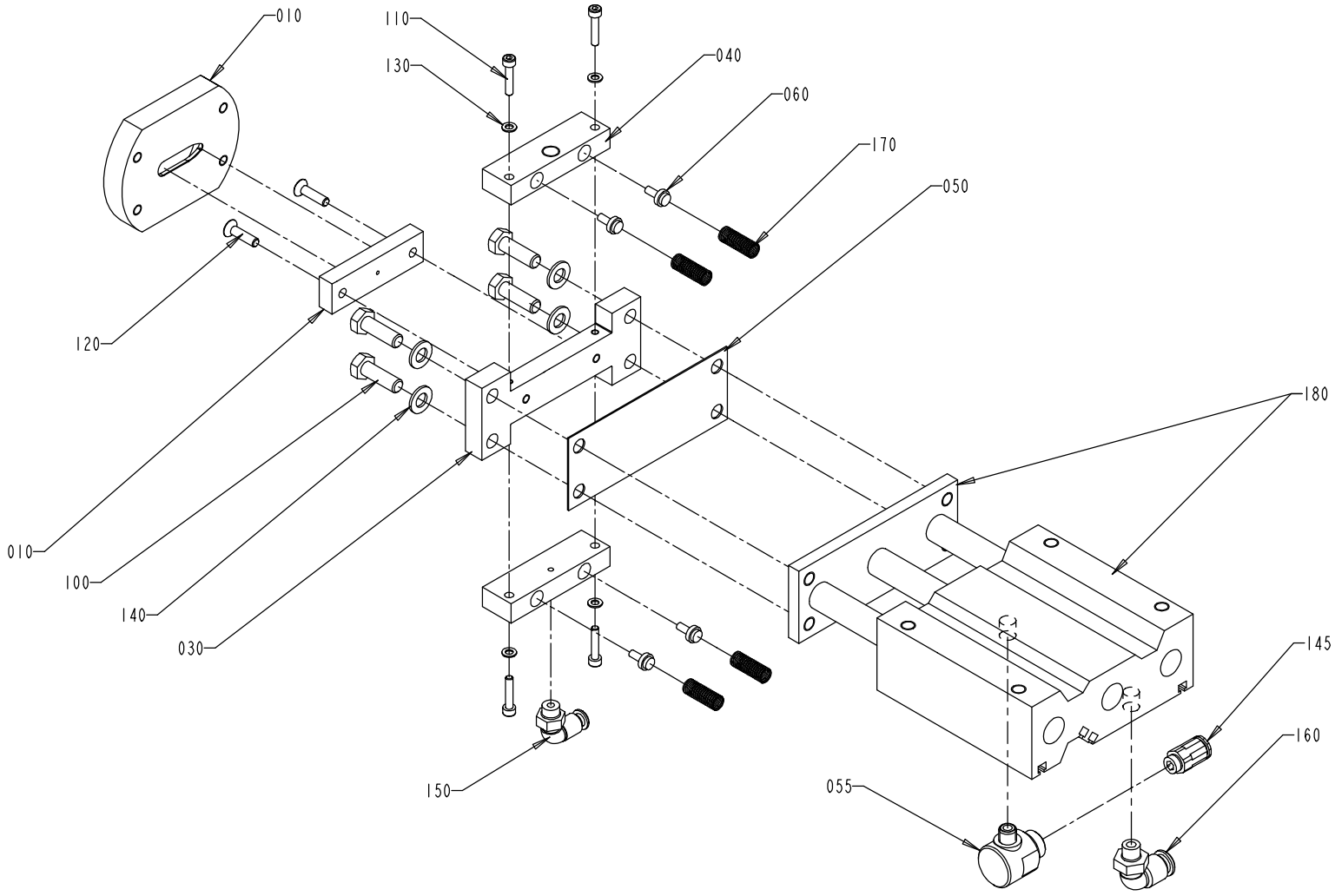

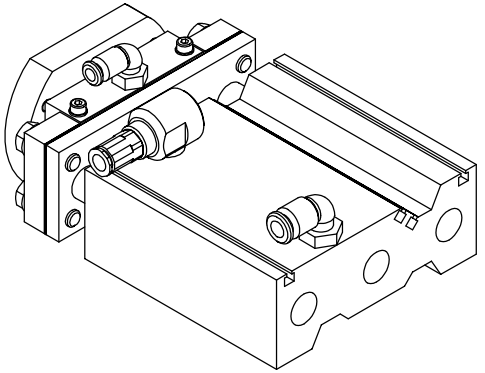

S - 1095991-3
ECN 73119

Pos	Part No	SP	UN	Qty	Description	Page No
Common parts						
010	A1519823-0100	-		1	PUNCH UNIT	**91**
030	1285819-0000	-		1	SPACER	
040	1140294-0002	D		2	PIN DISTANCE 36.5	
050	1285818-0000	R		3	SHIM	
055	90235-0206	-		1	VALVE FESTO SEU-1/8	
060	905285-0000	R		4	STRIPPER PIN	
100	312105-0453	-		4	SCREW M6S ISO 4017 M8X25 A280	
110	312115-0295	-		4	SCREW MC6S ISO 4762 M4X20 A280	
120	312155-0331	-		2	SCREW MF6S DIN 7991 M5X20 A280	
130	315105-0136	-		4	WASHER,PLAIN ROUND 4,3X8 STAINLESS	
140	315105-0165	-		4	WASHER,PLAIN ROUND 8,4X16 STAINLESS	
145	342722-0204	-		1	STRAIGHT COUPLING, D=8 MM - G1/8"	
150	342732-0102	-		1	ELBOW PIPE JOINT,EXT.THREAD,D=6 MM G1/8	
160	342732-0801	-		1	ELBOW PIPE JOINT,EXT.THREAD,D=8 MM G1/8	
170	90335-0005	R		4	SPRING	
180	90450-0435	R		1	CYLINDER	

Pos	Part No	SP	UN	Qty	Description	Page No

PUNCH UNIT

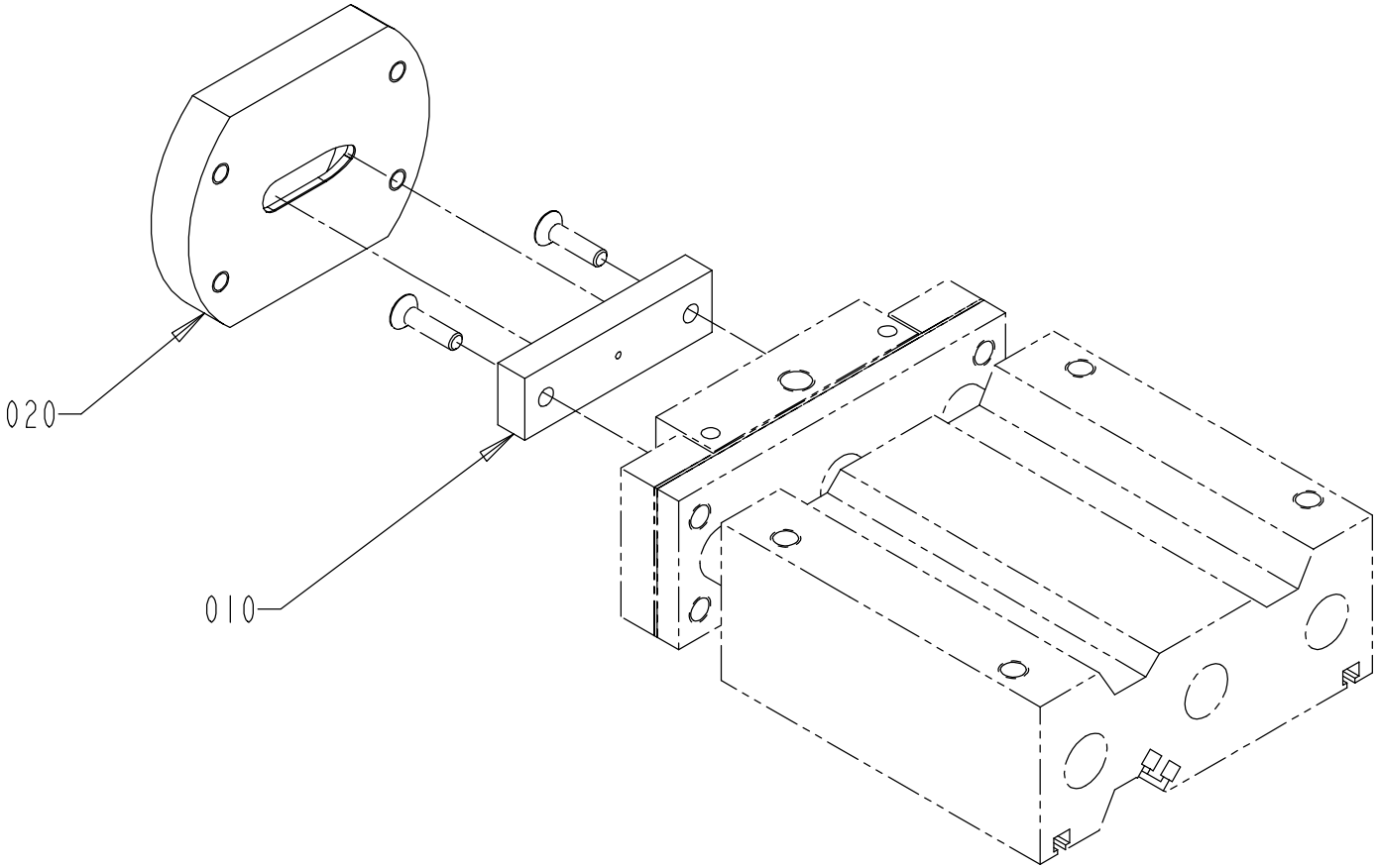

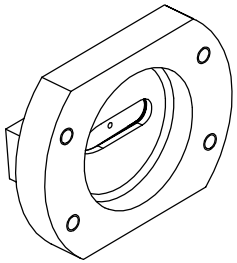

S - 1519823-1
ECN 73119

Pos	Part No	SP	UN	Qty	Description	Page No
HOLE50						
010	1140291-0000	K		1	PUNCH HOLE 50	
020	1140292-0000	K		1	DIE HOLE 50	
HOLE45						
010	1145233-0000	K		1	PUNCH HOLE 45	
020	985860-0000	K		1	DIE HOLE 45	
HOLE85						
010	1317233-0000	K		1	PUNCH HOLE85	
020	1348240-0000	K		1	DIE HOLE 85	
HOLE60						
010	1484230-0000	K		1	PUNCH	
020	1490132-0000	K		1	DIE HOLE 60	

Pos	Part No	SP	UN	Qty	Description	Page No

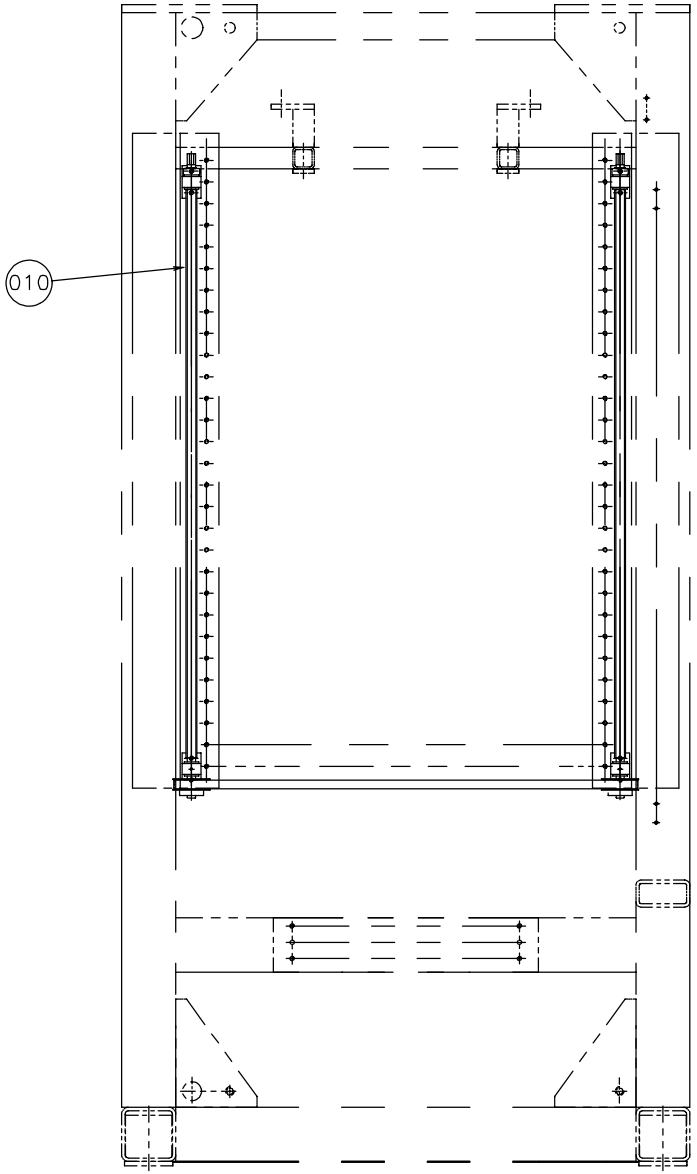

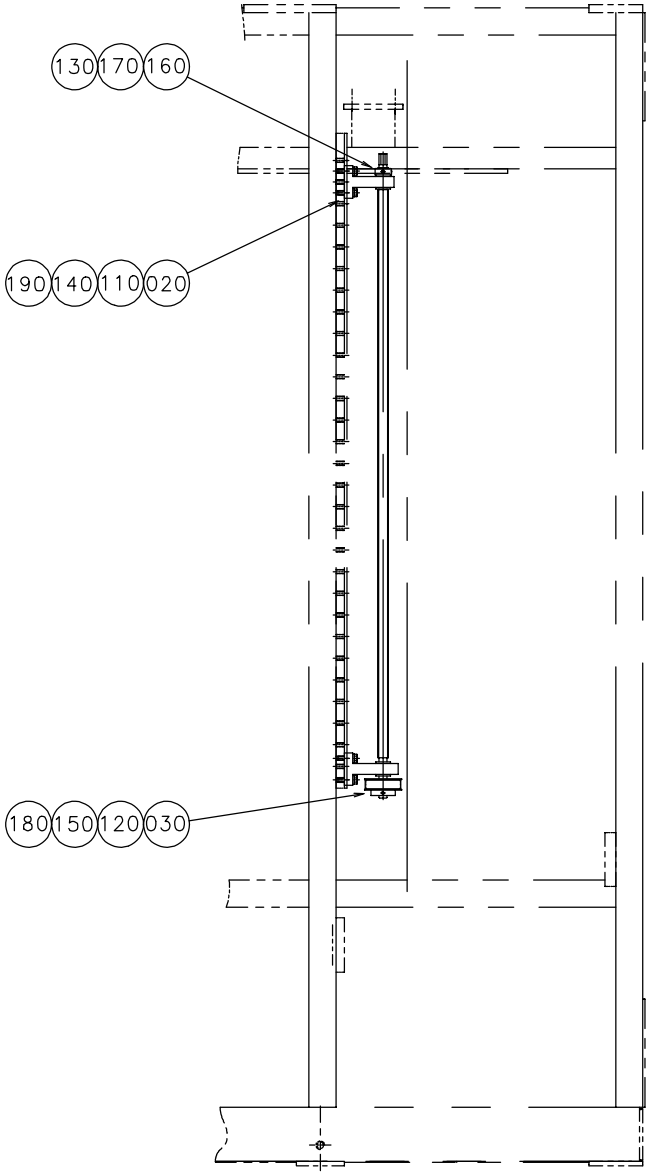

S - 1185078-1
ECN 72388

Pos	Part No	SP	UN	Qty	Description	Page No
Common parts						
010	1147050-0000	-		2	SCREW	
020	1147049-0000	-		4	BRACKET	
030	1147051-0000	-		2	TOOTHED PULLEY	
110	312105-0455	-		8	SCREW M6S ISO 4017 M8X30 A280	
120	312311-0327	-		2	SET SCREW FULL DOGPOINT ISO 4028 M5X12	
130	312318-0362	-		4	SET SCREW CUP POINT ISO 4029 M6X8 RFR	
140	315115-0165	-		8	WASHER TBRB 8,4X16 STAINLESS	
150	315705-0202	-		2	KEYS,PARALLEL WITH ROUND ENDS 5X5X25	
160	315742-0111	-		2	RETAINING RINGS 15	
170	315751-0112	D		2	RETAINING RINGS FOR SHAFT 15	
180	318172-0179	D		1	TIMING BELT T10X1780X16	
190	321111-0211	-		8	FLANGE BUSHING, 15X21X10	

Pos	Part No	SP	UN	Qty	Description	Page No

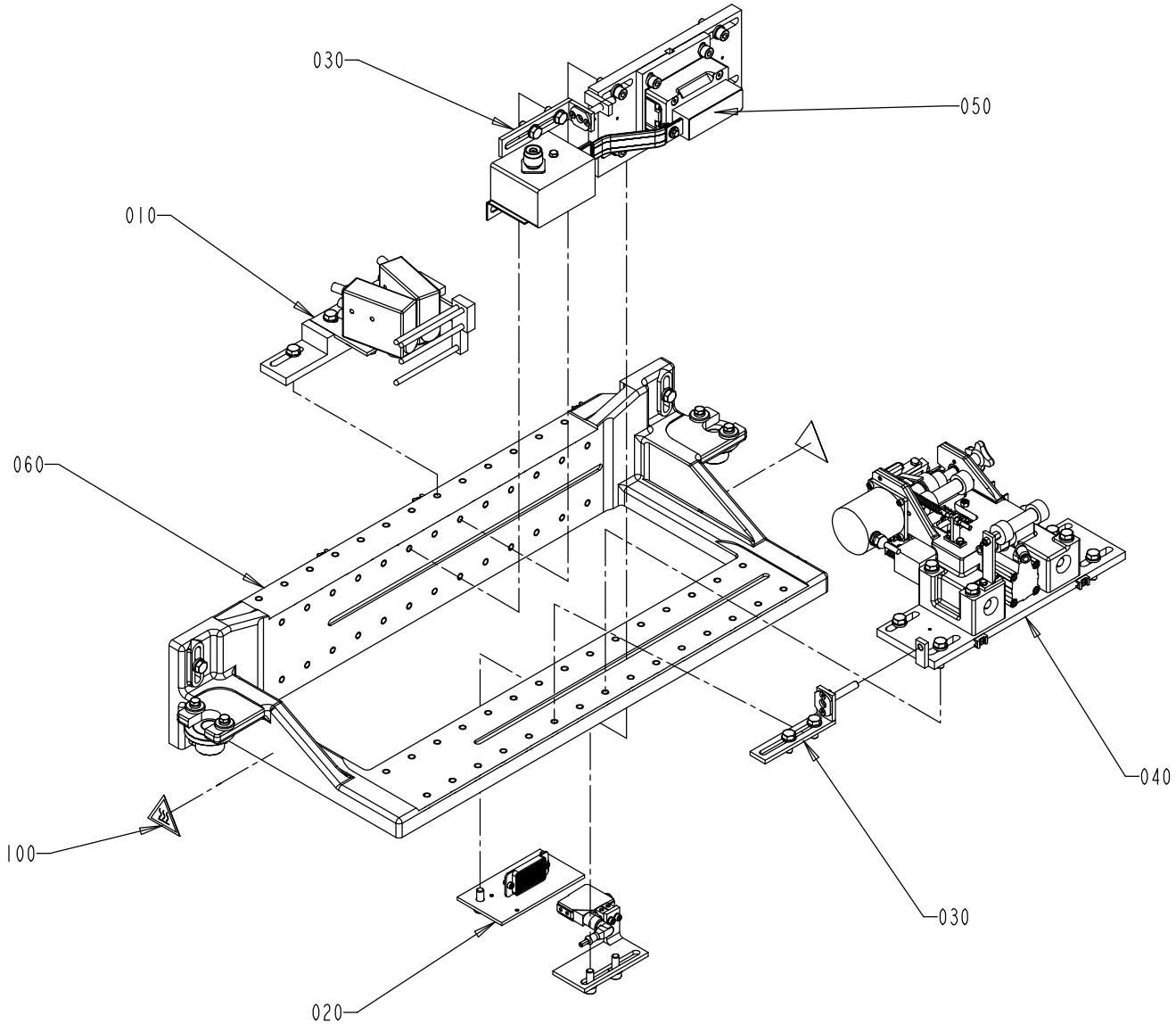

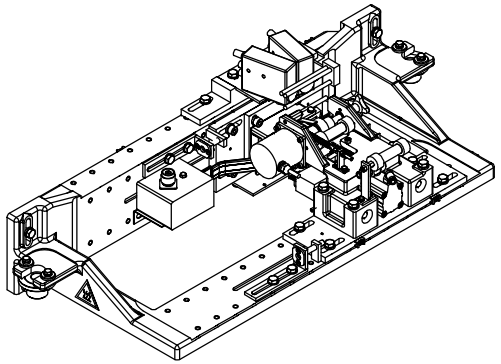

S - 1260419-2
ECN 73119

Pos	Part No	SP	UN	Qty	Description	Page No
Common parts						
010	A1185031-0200	-		1	BAR CODE READER	**97**
020	A1260390-0200	-		1	MISSING PATCH DETECTOR	**99**
030	A1260401-0100	-		2	SETTING TOOL	**101**
040	A1260414-0200	-		1	PATCH FEEDER	**103, 105**
050	A1260417-0200	-		1	PATCH RESEAL C'JAW UNIT	**109**
060	A1260426-0100	-		1	PATCH RESEAL BRACKET	**113**
100	359705-0007	-		2	WARNING SIGN "HOT SURFACE"	

Pos	Part No	SP	UN	Qty	Description	Page No

BAR CODE READER

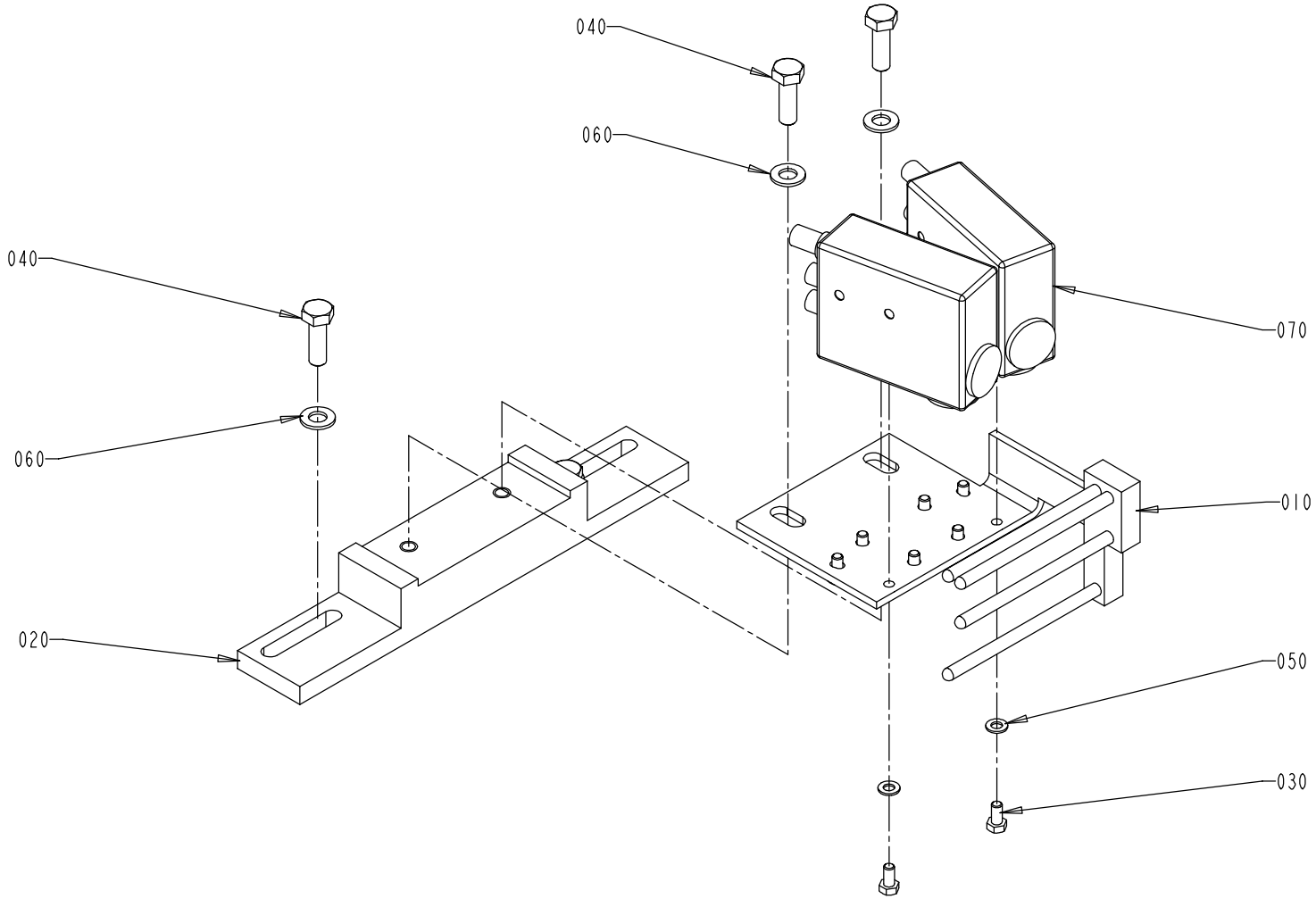

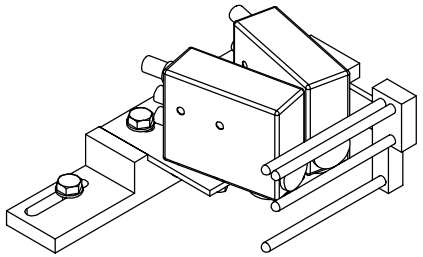

S - 1185031-2
ECN 73119

Pos	Part No	SP	UN	Qty	Description	Page No
Common parts						
010	1147012-0000	D		1	PHOTOCELL BRACKET	
020	1147013-0000	-		1	BRACKET	
030	312105-0325	-		8	SCREW M6S 5X10 A2 80	
040	312105-0453	-		4	SCREW M6S ISO 4017 M8X25 A280	
050	315105-0146	-		8	WASHER,PLAIN ROUND 5,3X10 STAINLESS	
060	315105-0165	-		4	WASHER,PLAIN ROUND 8,4X16 STAINLESS	
070	90232-0112	R		2	PH.CELL NT6-14920E01	

Pos	Part No	SP	UN	Qty	Description	Page No

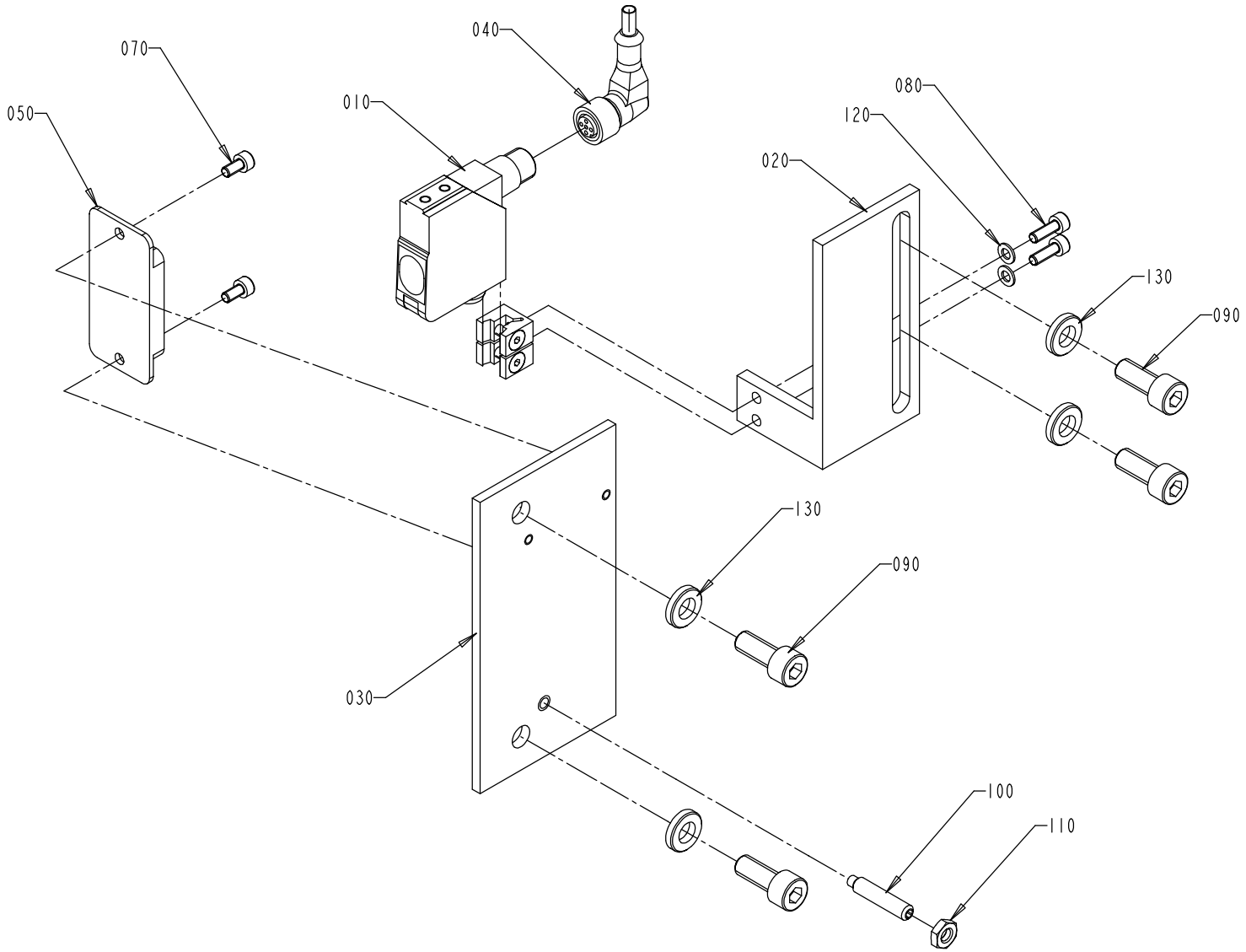

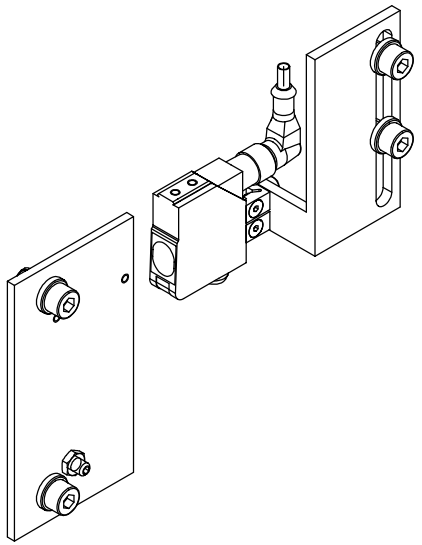

S - 1260390-2
ECN 73275

Pos	Part No	SP	UN	Qty	Description	Page No
Common parts						
010	1260522-0000	R		1	PHOTOCELL	
020	1346162-0000	-		1	PHOTOCELL BRACKET	
030	1255687-0000	-		1	BRACKET	
040	1260523-0000	R		1	CABLE	
050	1346219-0000	R		1	REFLECTOR	
070	312115-0287	-		2	SCREW MC6S ISO 4762 M4X8 A280	
080	312115-0291	-		2	SCREW MC6S ISO 4762 M4X12 A280	
090	312115-0451	-		4	SCREW MC6S ISO 4762 M8X20 A280	
100	312311-0374	-		1	SET SCREW FULL DOGPOINT ISO 4028 M6X30	
110	312625-0316	-		1	NUTS,HEXAGON,M6	
120	315105-0136	-		2	WASHER,PLAIN ROUND 4,3X8 STAINLESS	
130	315115-0165	-		4	WASHER TBRB 8,4X16 STAINLESS	

Pos	Part No	SP	UN	Qty	Description	Page No

SETTING TOOL

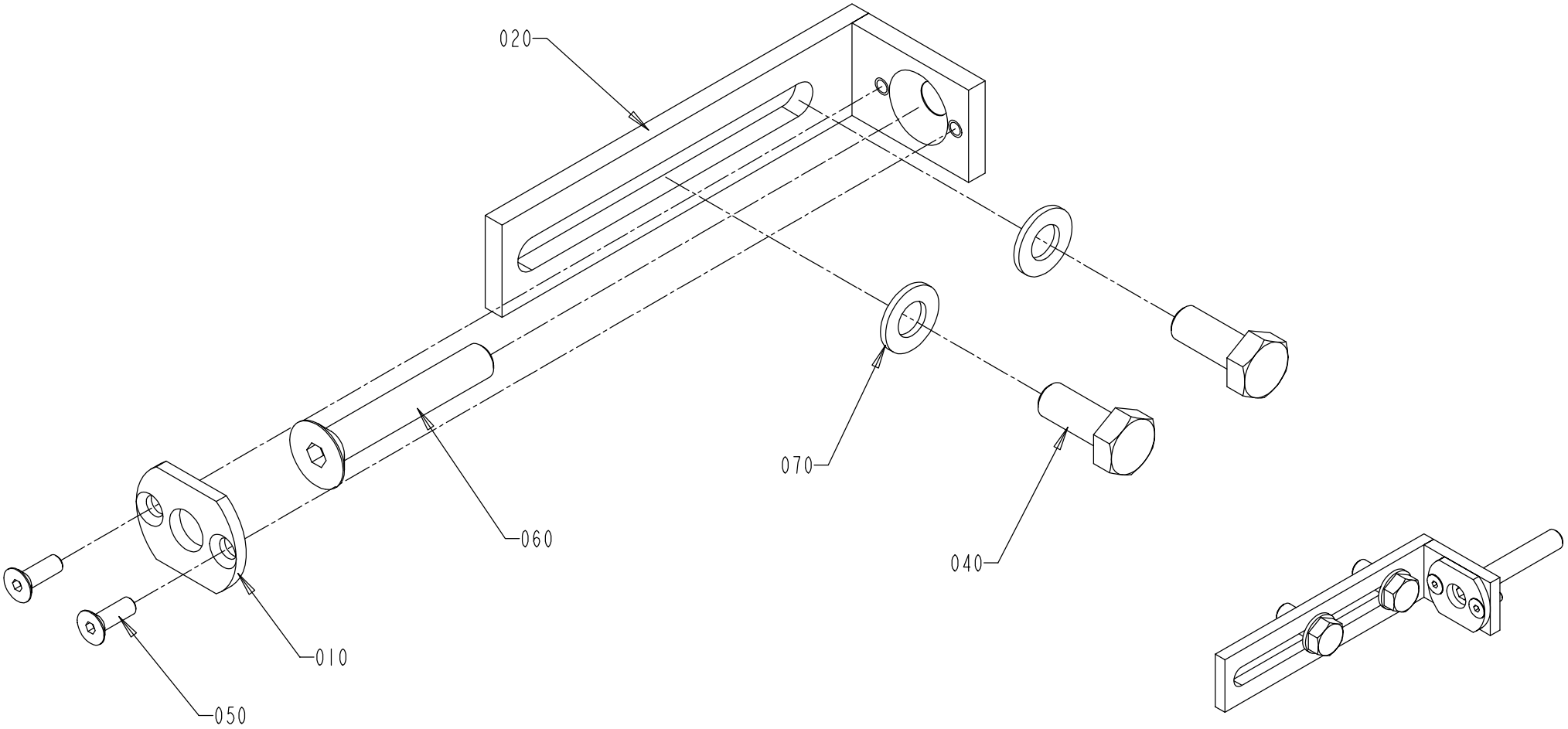

S - 1260401-1
ECN 72779

EC No: - - 20000423
Group number: 1260401-0100
Assembly Drawing: 1260401-1

Issue: 20000706

Pos	Part No	SP	UN	Qty	Description	Page No
Common parts						
010	1260400-0000	-		1	COVER	
020	1260402-0000	-		1	BRACKET	
040	312105-0451	-		2	SCREW M6S ISO 4017 8X20 A280	
050	312155-0291	-		3	SCREW MF6S DIN 7991 M4X12 A480	
060	312155-0461	-		1	SCREW MF6S DIN 7991 M8X50 A280	
070	315103-0165	-		2	WASHERS,PLAIN ROUND 8,4X16	

Pos	Part No	SP	UN	Qty	Description	Page No

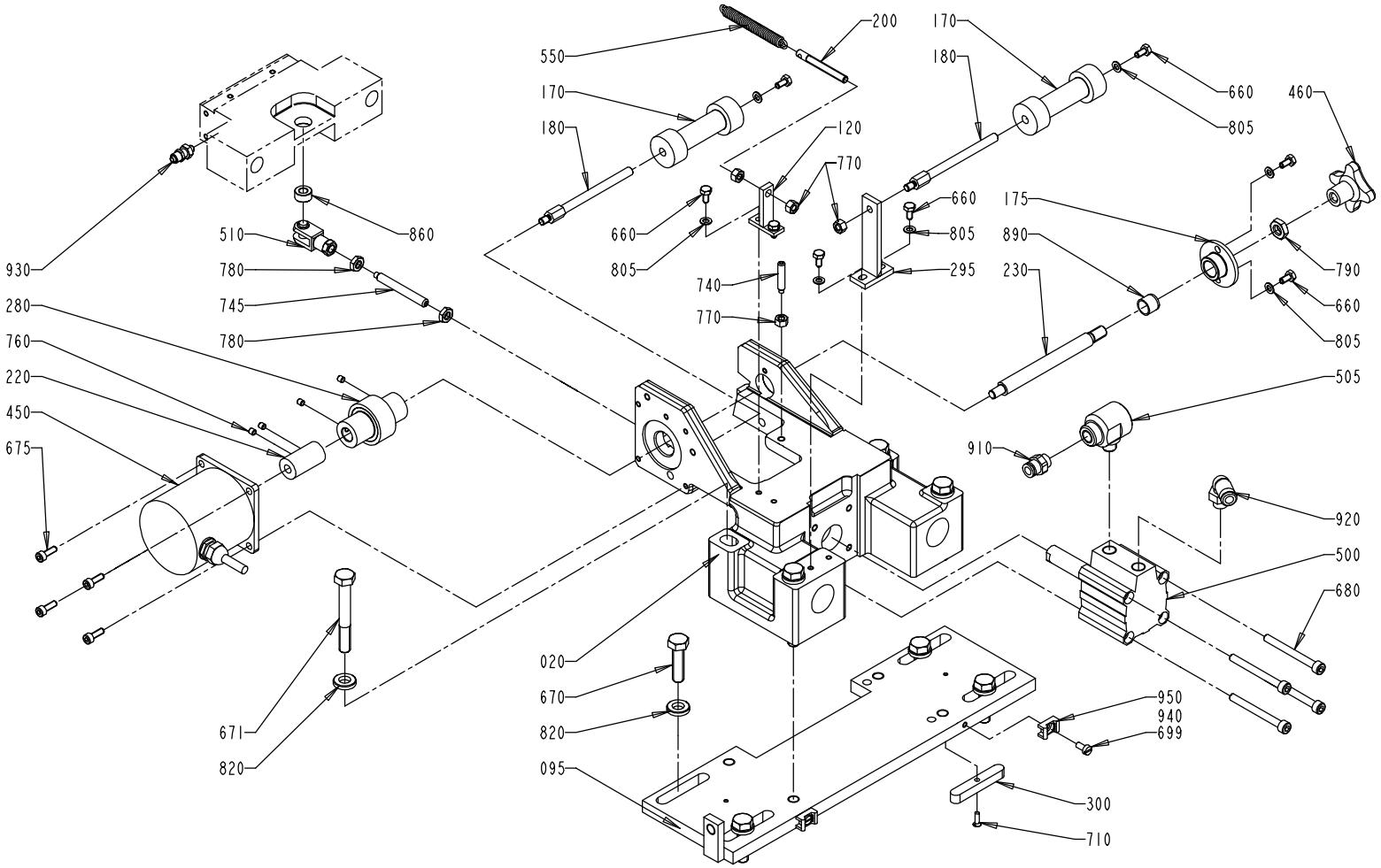

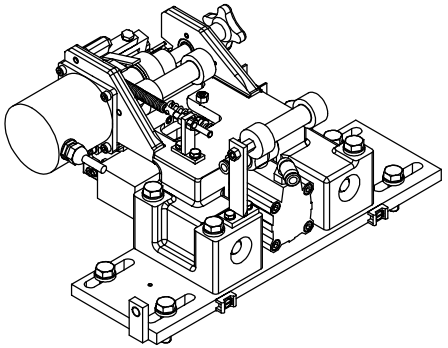

S - 1260414-3(1)
ECN 73119

Pos	Part No	SP	UN	Qty	Description	Page No
Common parts						
020	1260389-0000	-		1	CASTING APPLICATOR	
030	1498488-0000	M		1	SEALING PLATE	
050	1260391-0000	D		1	BRACKET	
060	1260395-0000	D		1	PLATE	
070	1145333-0000	J		1	KNIFE-WINDOW	
080	907712-0000	R		1	PIVOT PLATE	
095	1260404-0000	-		1	PLATE	
100	1145332-0000	J		1	KNIFE-FLAT	
110	905174-0000	D		1	STEER PLATE	
120	1140545-0000	-		1	TEE BRACKET	
150	905194-0000	R		1	SHAFT	
160	1140547-0000	R		2	SHAFT	
170	A1519824-0100	-		1	PATCH FEEDER	**107**
175	1140548-0000	M		1	FLANGED BEARING BUSHING	
180	1140551-0000	M		2	SHAFT	
190	1260399-0000	D		1	CLAMP	
195	1260422-0000	D		1	CLAMP	
200	905215-0000	D		1	BOLT	
220	905241-0000	D		1	COUPLING	
230	905243-0000	M		1	SHAFT	
250	905413-0000	M		1	SHAFT	
260	905416-0000	D		1	PIVOT BRACKET-SWIVEL	
270	905419-0000	D		1	PIVOT ARM-SWIVEL	
280	905471-0000	J		1	ROLLER-DRIVE	
293	907710-0000	D		1	PIVOT PLATE	
295	1140546-0000	-		1	BRACKET	
300	905244-0000	-		2	WEDGE	
310	905246-0000	-		1	BRACKET	
320	905415-0000	D		1	SHAFT	
330	905417-0000	D		1	SHAFT	
340	905607-0000	-		1	SCREW	
350	905608-0000	-		1	SCREW	
360	905609-0000	-		1	LOCK BAR	
370	905613-0000	D		1	SHAFT	
415	907711-0000	R		1	SHAFT	
430	1296753-0000	-		1	FLAG	
440	1296752-0000	-		1	BRACKET	
450	90045-0192	R		1	STEPPING MOTOR PACIFIC SCIENTIFIC	
455	90044-0145	R		1	PROX.SW. 922 AAIY-A9P-050-LZ876	
460	90051-0007	-		1	HANDLES, KNOB, INTERNAL THREAD M8-40X25	
480	90189-0003	M		4	BALL BUSHING 12X22X32	
500	90450-0409	M		1	DOUBLE ACTING, COMPACT, CYL 32-15	
505	90235-0206	-		1	VALVE FESTO SEU-1/8	
510	90239-0489	M		1	ROD END,CLEVIS WITH AXLE,M6	
540	90335-0067	J		1	SPRING	
550	907719-0000	M		1	SPRING	
560	90348-0031	J		1	FREE-WHEEL COUPLING	
580	1350785-0001	J		2	SHIM	
581	1350785-0002	J		2	SHIM	
582	1350785-0003	J		2	SHIM	
583	1350785-0004	J		2	SHIM	
640	311103-0351	-		2	PINS,STRAIGHT 6X16	
645	311112-0205	-		2	PINS,SLOTTED TUBULAR SPRING PIN 3X10	
660	312105-0287	-		10	SCREW M6S ISO 4017 M4X8 A280	
665	312105-0333	-		2	SCREW M6S ISO 4017 M5X25 A280	
670	312105-0455	-		4	SCREW M6S ISO 4017 M8X30 A280	
671	312105-0463	-		4	SCREW M6S ISO 4014 M8X60 A280	
672	312115-0226	-		4	SCREW MC6S ISO 4762 M3X12 A280	
675	312115-0291	-		8	SCREW MC6S ISO 4762 M4X12 A280	
680	312115-0341	-		4	SCREW MC6S 5X50 A4 80	
690	312125-0224	-		2	SLOTTED HEMCS3X10RFR	
699	312125-0287	-		4	SLOTTED CHEESE HEAD ISO 1207 M4X8 RFR	
710	312145-0224	-		2	SLOTTED HEMFS3X10RFR	
720	312155-0291	-		4	SCREW MF6S DIN 7991 M4X12 A480	
740	312311-0333	-		1	SET SCREW FULL DOGPOINT ISO 4028 M5X25	
745	312311-0380	-		1	STOP SCREW T6SS6X50FZB	
750	312318-0285	-		1	STOP SCREW ISO 4029 M4X6 A4	
760	312318-0283	-		4	SET SCREW CUP POINT ISO 4029 M4X4 RFR	
770	312605-0314	-		4	NUT,HEXAGON,M6M5 STAINLESS	
780	312621-0316	-		4	ROD END,NUT M6	
790	312621-0318	-		1	ROD END,NUT M8	
803	315105-0124	-		4	WASHER,PLAIN ROUND 3,2X6	
805	315105-0136	-		10	WASHER,PLAIN ROUND 4,3X8 STAINLESS	
810	315105-0146	-		3	WASHER,PLAIN ROUND 5,3X10 STAINLESS	
820	315115-0165	-		8	WASHER TBRB 8,4X16 STAINLESS	
830	315753-0117	-		4	RETAINING RINGS FOR HOLE 22	
850	907487-0000	D		2	WASHER-CURVED	
860	321105-0125	J		1	BUSHING 6F7X12X6	
865	321120-0092	M		2	BUSHING, 4X5,5X6	
870	321120-0101	D		1	BUSHING, 6X8X6	
880	321120-0102	M		2	BUSHING, 6X8X10	
890	321120-0104	M		1	BUSHING, 10X12X10	
910	342722-0202	-		1	STRAIGHT COUPLING, D=6MM - G1/8"	

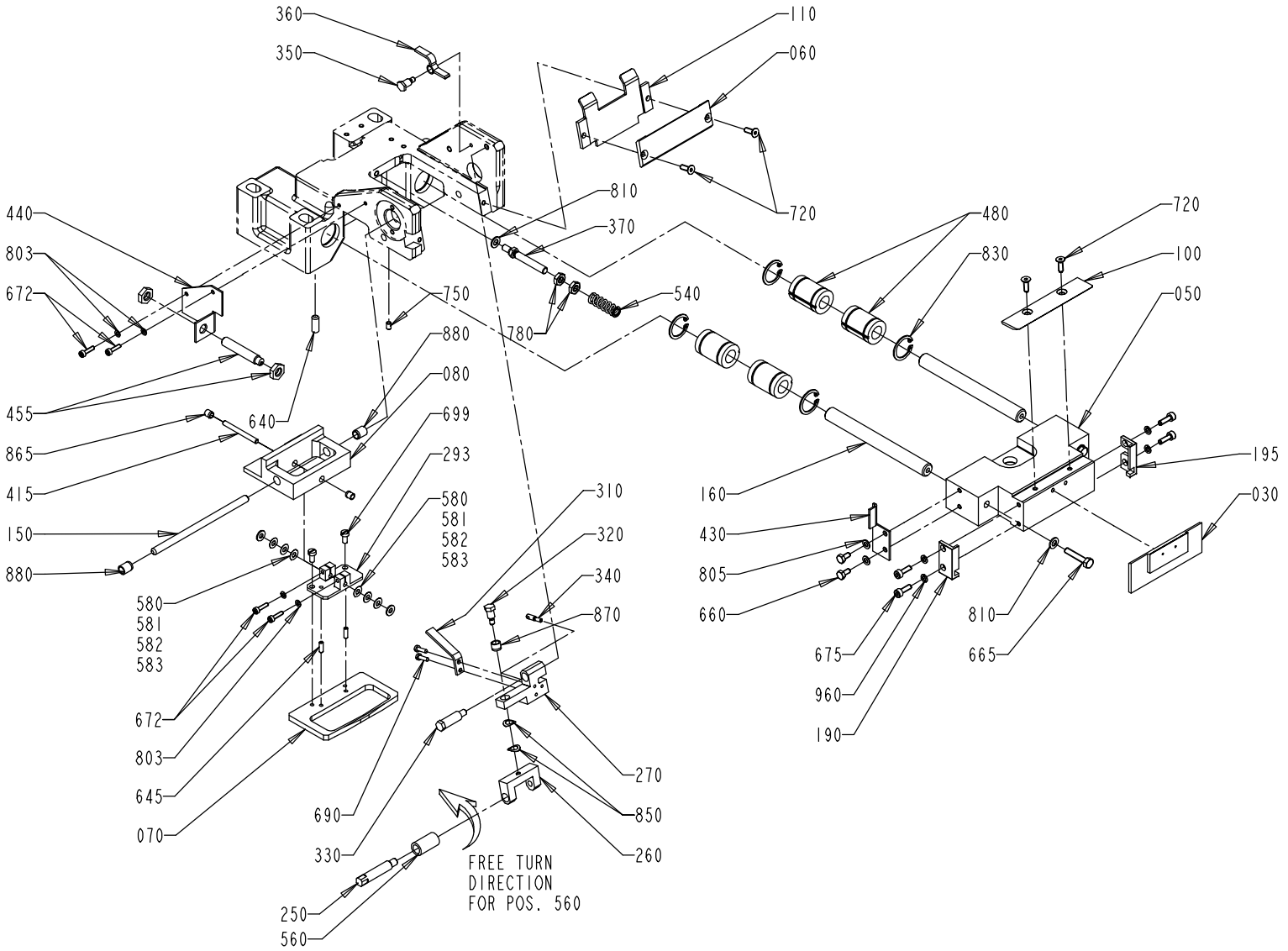

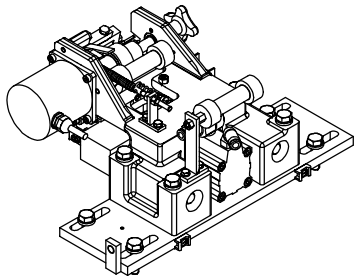

S - 1260414-3(2)
ECN 73119

Pos	Part No	SP	UN	Qty	Description	Page No
Common parts						
920	342732-0102	-		1	ELBOW PIPE JOINT,EXT.THREAD,D=6 MM G1/8	
930	342921-0111	-		1	STRAIGHT COUPLING,EXT.THREADED 6/4-M5	
940	352113-0102	-		2	CLIP-STRIP,BLACK 188X4,8MM	
950	352113-0205	-		2	ANCHOR TM2S8-C100	
960	315402-0136	-		4	WASHER FBB4,1RFR	

Pos	Part No	SP	UN	Qty	Description	Page No

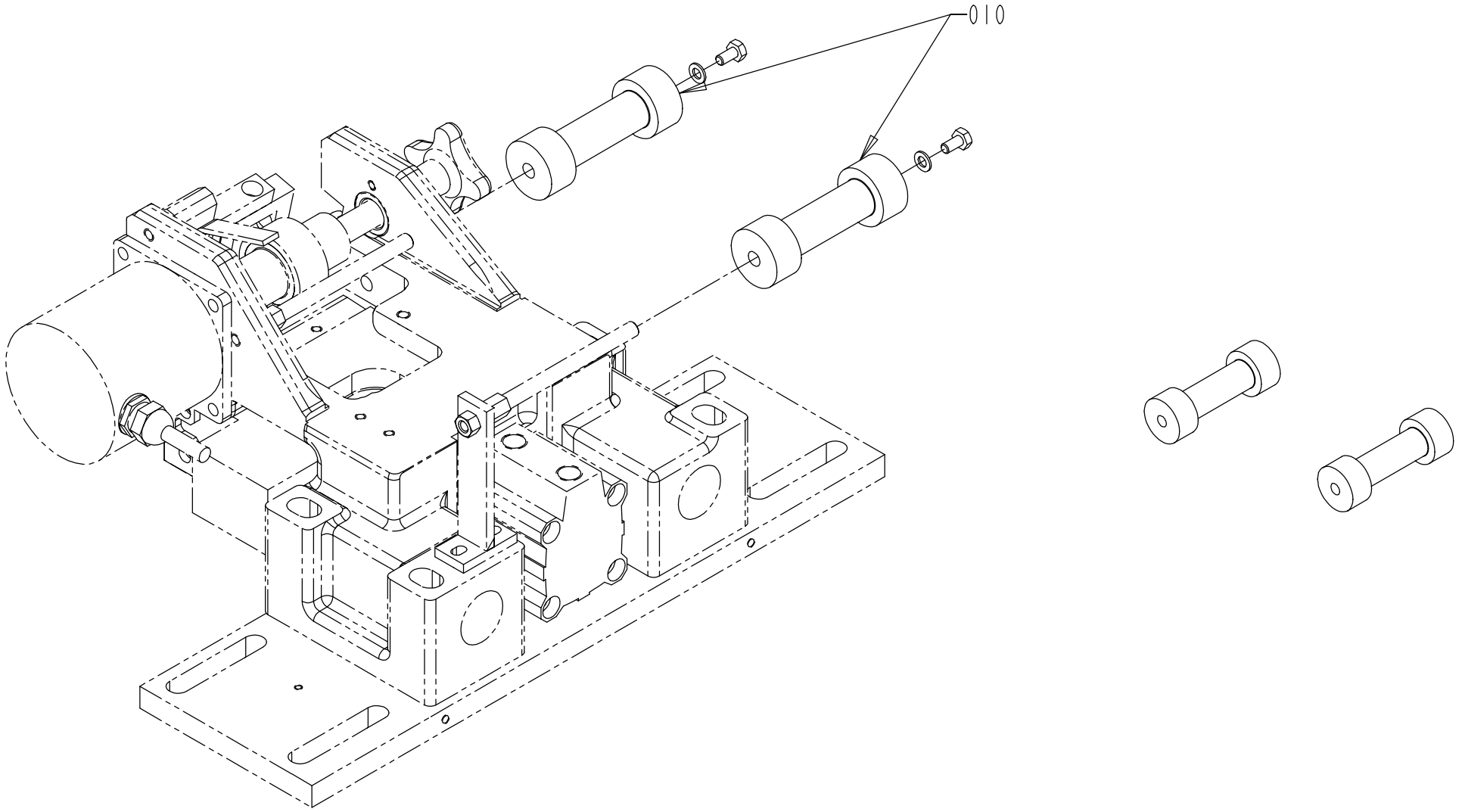

S - 1519824-1
ECN 73119

Pos	Part No	SP	UN	Qty	Description	Page No
HOLE50						
010	907358-0006	D		2	ROLLER - 29	
HOLE45 or HOLE85						
010	905210-0000	D		2	ROLLER-35	
HOLE60						
010	907358-0010	D		2	ROLLER - 43	

Pos	Part No	SP	UN	Qty	Description	Page No

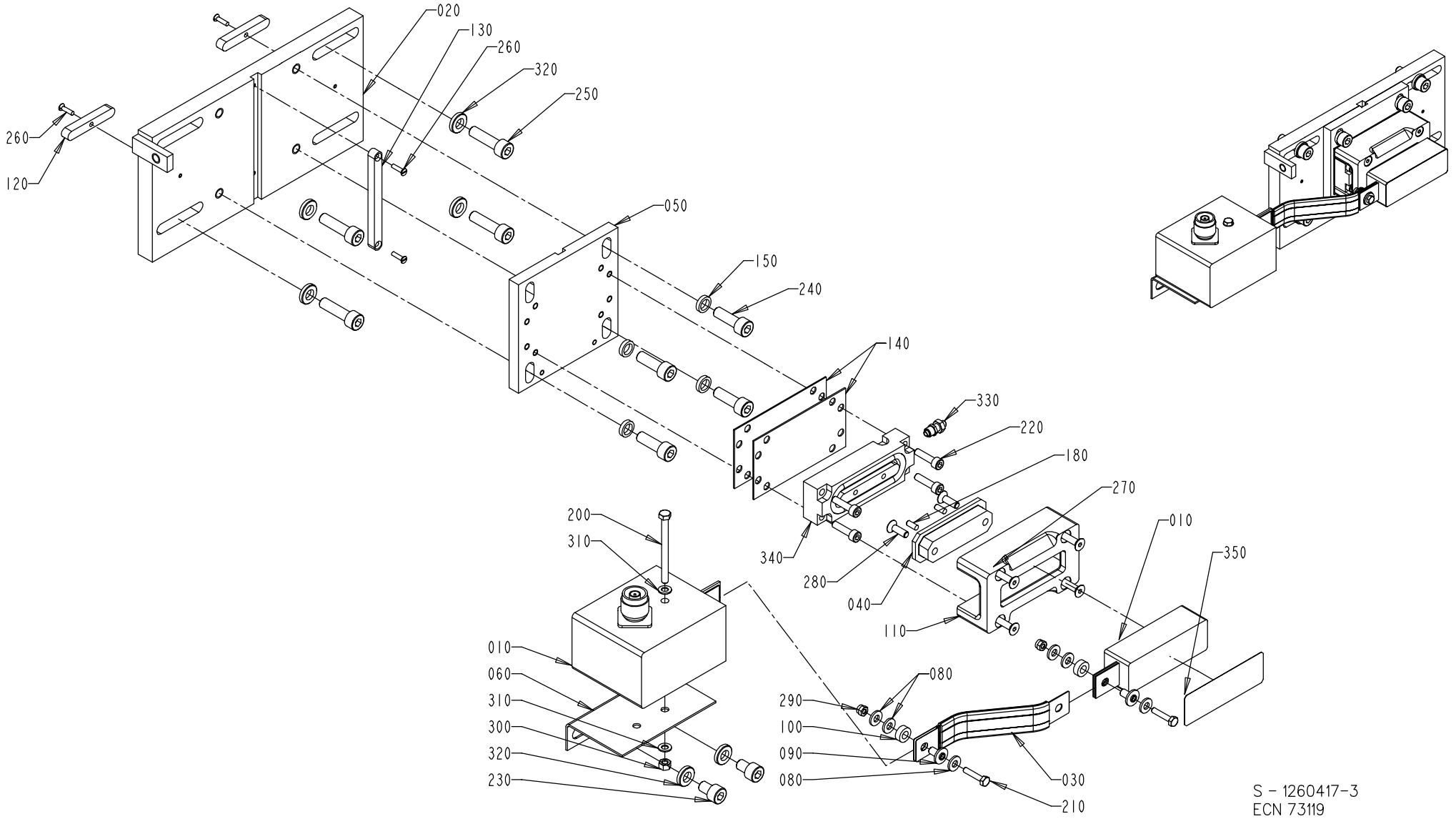
020
130
260
320
250
260
120
050
150
240
140
330
220
180
270
010
350
200
310
340
280
040
110
010
060
310
300
320
230
080
290
100
090
080
030
210
S - 1260417-3
ECN 73119

Pos	Part No	SP	UN	Qty	Description	Page No
Common parts						
010	A1519825-0100	-		1	PATCH RESEAL C'JAW UNIT	**111**
020	1260405-0000	-		1	PLATE	
030	1140889-0000	J		1	CABLE	
040	1296298-0000	J		1	BUSHING	
050	1279485-0000	-		1	PLATE	
060	1140890-0000	-		1	TRANSFORMER BRACKET	
080	28509-0000	J		6	WASHER	
090	32544-0000	J		2	INSULATION NUT	
100	32644-0000	J		2	WASHER	
110	928919-0000	-		1	FASTENING PLATE	
120	905244-0000	-		2	WEDGE	
130	905463-0000	-		1	KEY	
140	1279484-0000	J		2	SHIM	
150	1296300-0000	D		4	WASHER	
180	311103-0267	-		2	PIN,STRAIGHT 4X10	
200	312101-0343	-		1	SCREW M6S5X60FZB	
210	312105-0295	-		2	SCREW M6S ISO 4017 M4X20 A280	
220	312115-0331	-		4	SCREW MC6S ISO 4762 M5X20 A280	
230	312115-0447	-		2	SCREW MC6S ISO 4762 M8X12 A280	
240	312115-0453	-		4	SCREW MC6S ISO 4762 M8X25 A280	
250	312115-0455	-		4	SCREW MC6S ISO 4762 M8X30 A280	
260	312145-0226	-		4	SLOTTED HEMFS3X12RFR	
270	312155-0339	-		4	SCREW MF6S DIN 7991 5X40 A280	
280	312155-0329	-		2	SCREW MF6S DIN 7991 M5X16 A280	
290	312812-0312	-		2	LOCK-NUT,HEXAGON,WITH NYLONINSERT,M4	
300	312605-0314	-		1	NUT,HEXAGON,M6M5 STAINLESS	
310	315105-0146	-		2	WASHER,PLAIN ROUND 5,3X10 STAINLESS	
320	315115-0165	-		6	WASHER TBRB 8,4X16 STAINLESS	
330	342921-0111	-		1	STRAIGHT COUPLING,EXT.THREADED 6/4-M5	
340	90450-0380	M		1	SINGLE ACTING, SHORT STROKE	
350	90144-0030	-			TAPE	

PATCH RESEAL C'JAW UNIT

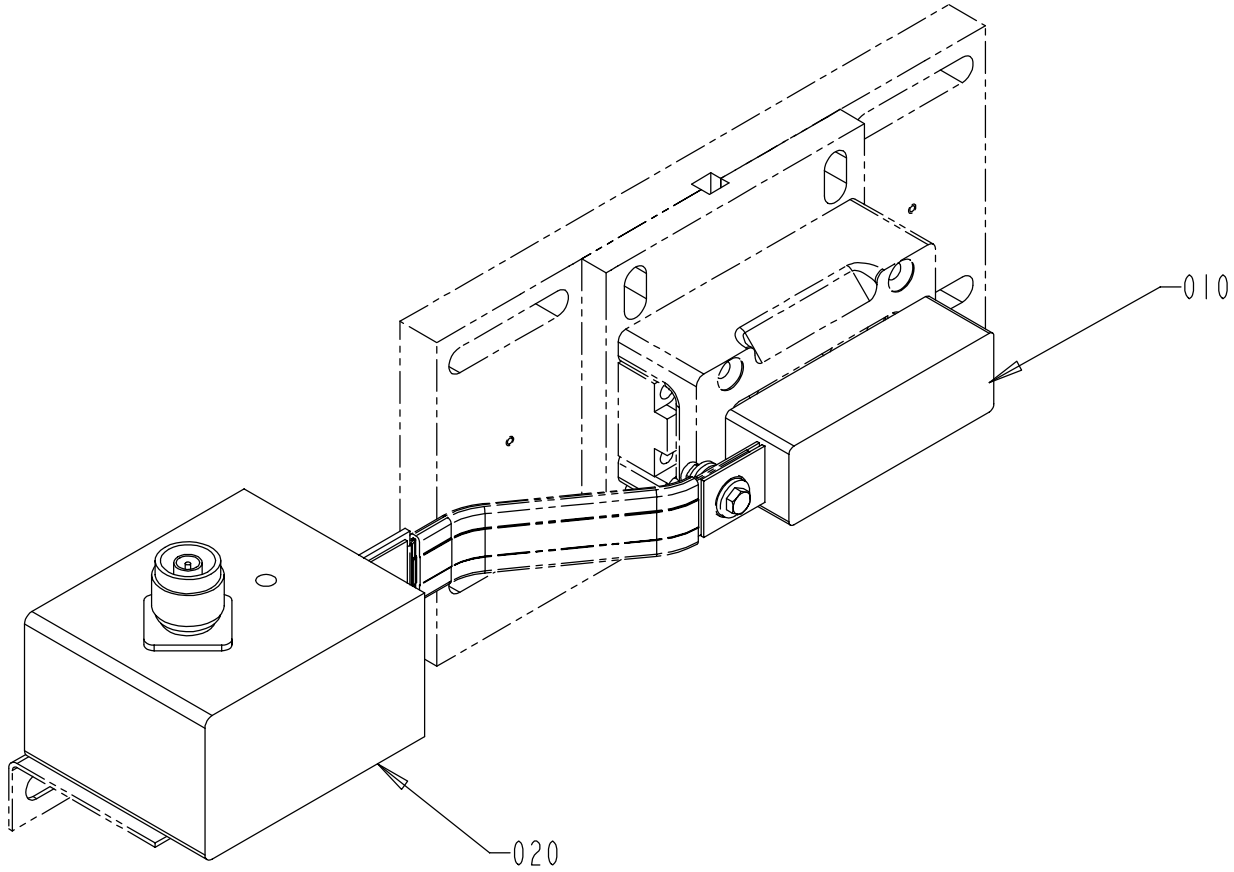

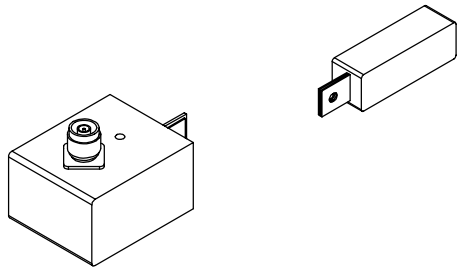

S - 1519825-1
ECN 73119

Pos	Part No	SP	UN	Qty	Description	Page No
HOLE50						
010	1140667-0000	J		1	INDUCTOR	
020	67379-0218	M		1	IH TRANSF.1.PRIM.5TURNS;C=19,3NF	
HOLE45 or HOLE85						
010	1260651-0000	J		1	INDUCTOR	
020	67379-0224	M		1	IH TRANSF.1.PRIM.4TURNS;C=24,4NF	
HOLE60						
010	1110290-0000	J		1	INDUCTOR	
020	67379-0216	M		1	IH TRANSF.1.PRIM.4TURNS;C=21,0NF	

Pos	Part No	SP	UN	Qty	Description	Page No

PATCH RESEAL BRACKET

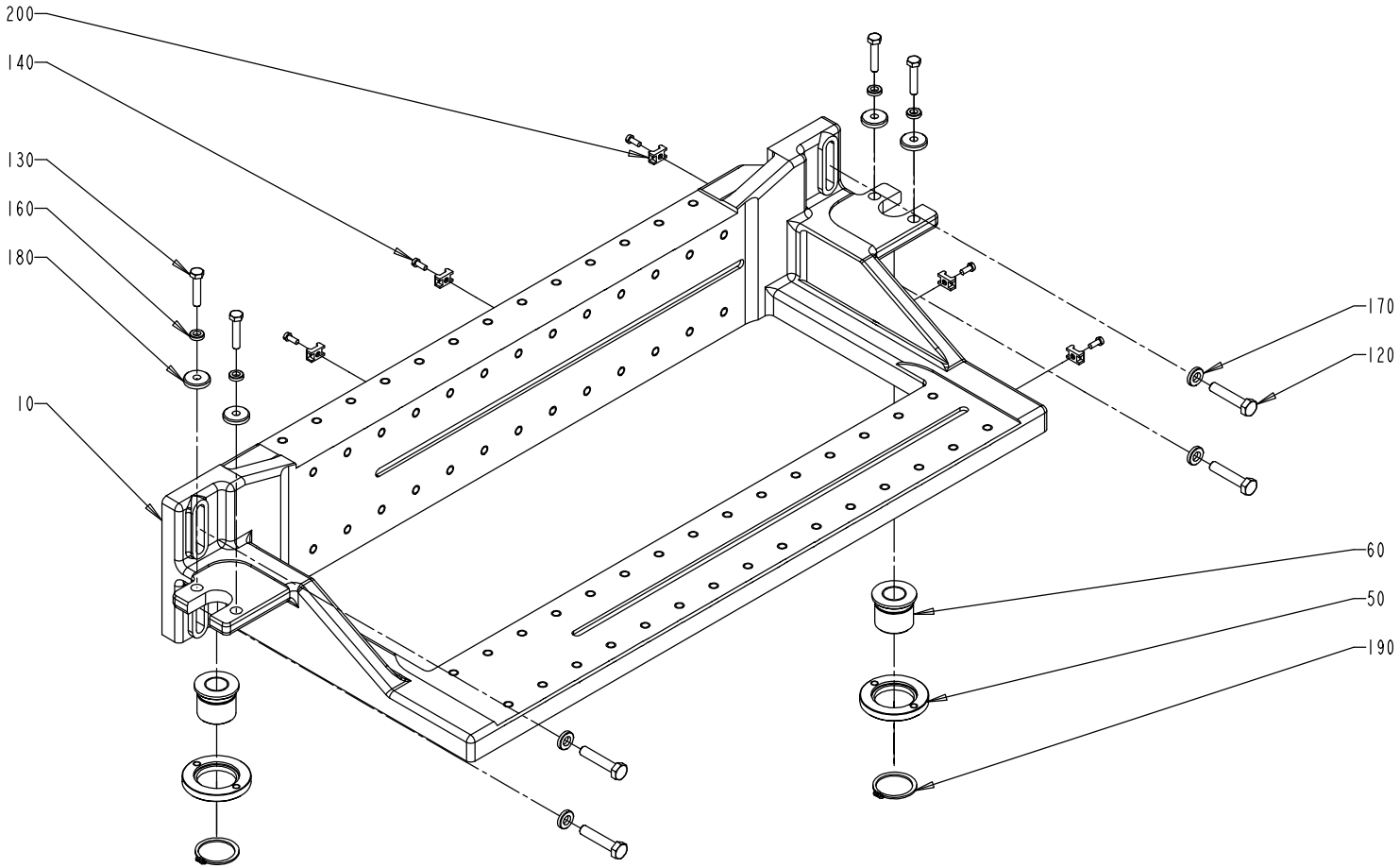

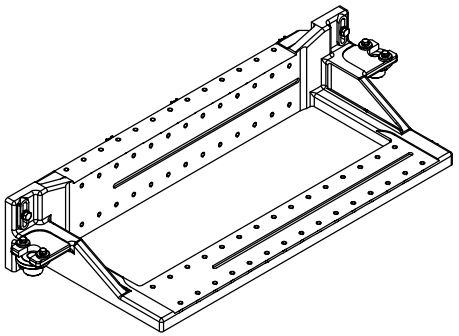

S - 1260426-1
ECN 73275

EC No: - - 20000423
Group number: 1260426-0100
Assembly Drawing: 1260426-1

Issue: 20000706

Pos	Part No	SP	UN	Qty	Description	Page No
Common parts						
010	1260397-0000	-		1	BRACKET	
050	1147009-0000	-		2	SPECIAL WASHER	
060	1147010-0000	-		2	BUSHING	
120	312109-0459	-		4	SCREW M6S ISO 4017 M8X40 A280	
130	312109-0374	-		4	SCREW M6S ISO 4017 M6X30 A280	
140	312125-0289	-		5	SLOTTED HEMCS4X10RFR	
160	315115-0153	-		4	WASHER TBRB 6,4X12 STAINLESS	
170	315115-0165	-		4	WASHER TBRB 8,4X16 STAINLESS	
180	315125-0153	-		4	WASHERS,PLAIN ROUND,CHAMFERED 6,4X22X4	
190	315751-0123	-		2	RETAINING RINGS FOR SHAFT 32	
200	352113-0205	-		5	ANCHOR TM2S8-C100	

Pos	Part No	SP	UN	Qty	Description	Page No

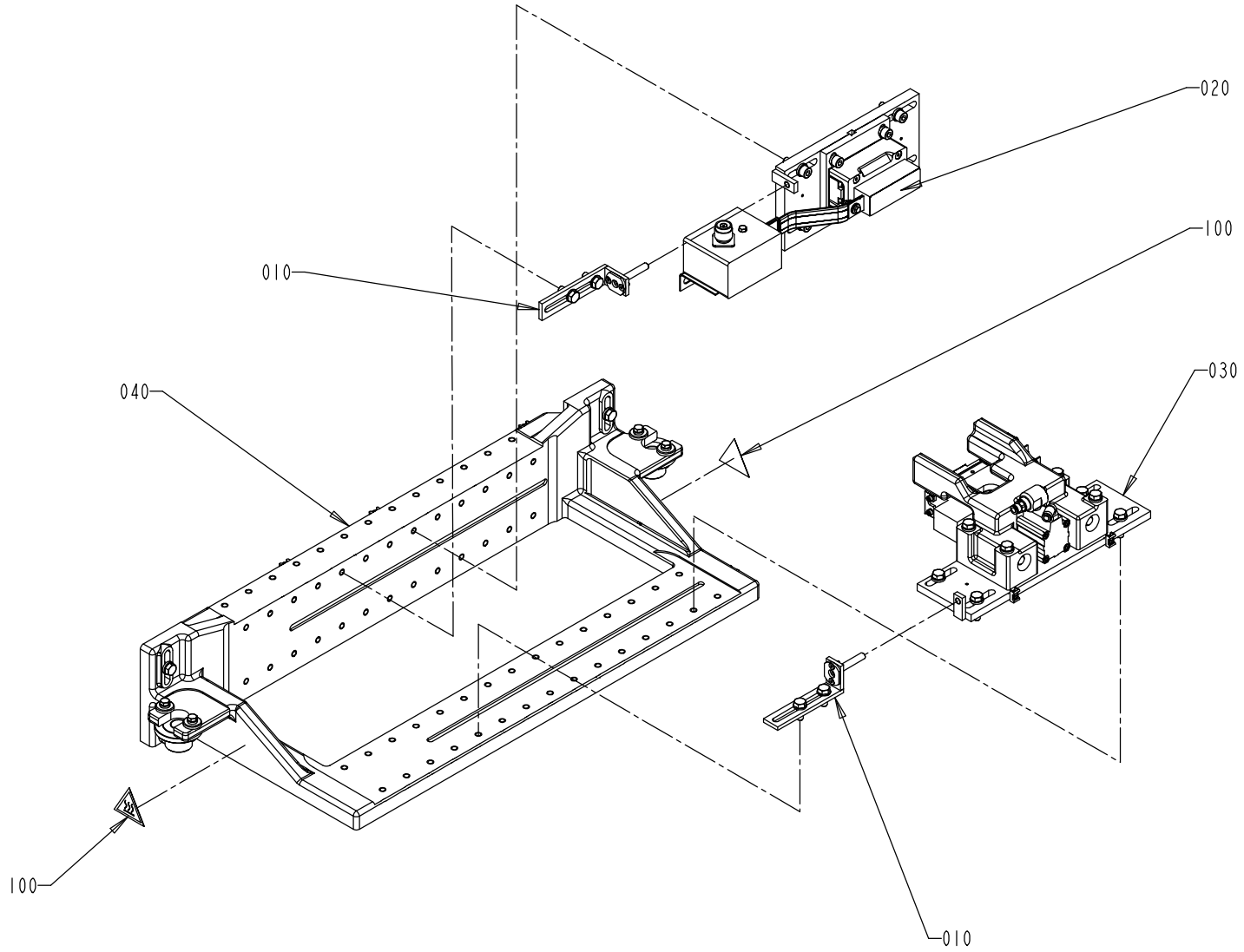

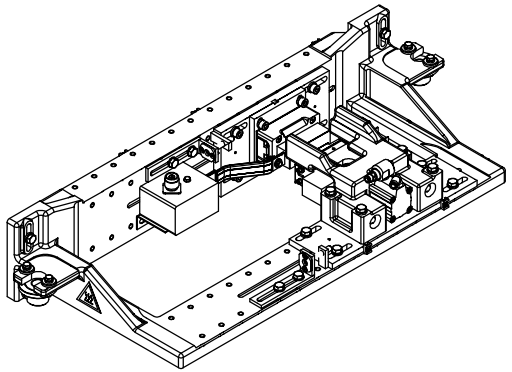

S - 1260420-2
ECN 73119

Pos	Part No	SP	UN	Qty	Description	Page No
Common parts						
010	A1260401-0100	-		2	SETTING TOOL	**101**
020	A1260417-0200	-		1	PATCH RESEAL C'JAW UNIT	**109**
030	A1260418-0100	-		1	HEATING JAW - RESEAL	**117**
040	A1260426-0100	-		1	PATCH RESEAL BRACKET	**113**
100	359705-0007	-		2	WARNING SIGN "HOT SURFACE"	

Pos	Part No	SP	UN	Qty	Description	Page No

HEATING JAW - RESEAL

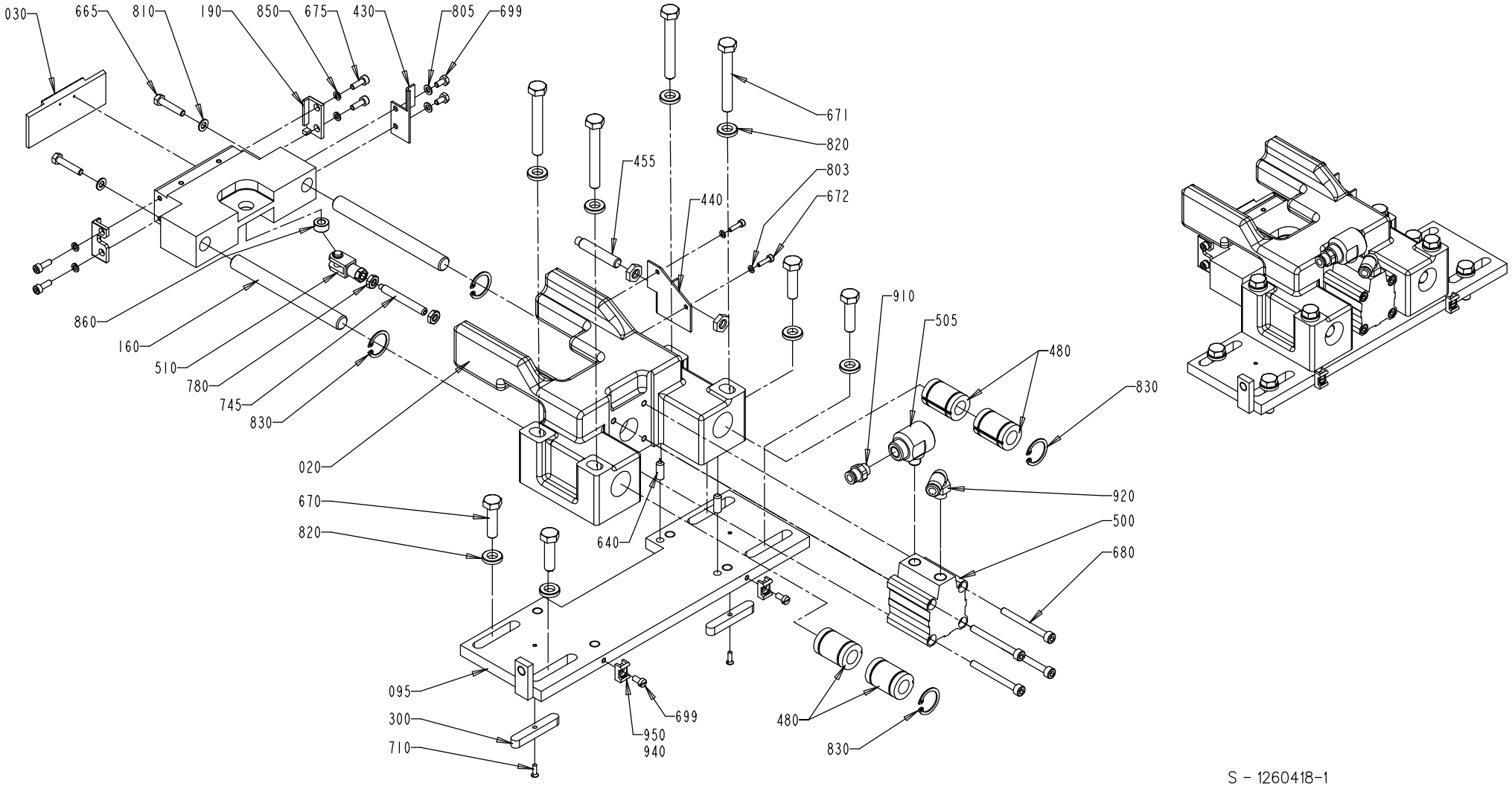

S - 1260418-1
ECN 73275

EC No: - - 20000423
Group number: 1260418-0100
Assembly Drawing: 1260418-1

Issue: 20000706

Pos	Part No	SP	UN	Qty	Description	Page No
Common parts						
020	1260392-0000	-		1	CASTING APPLICATOR	
030	1498488-0000	M		1	SEALING PLATE	
050	1260391-0000	D		1	BRACKET	
095	1260404-0000	-		1	PLATE	
160	1140547-0000	R		2	SHAFT	
190	1260399-0000	D		1	CLAMP	
195	1260422-0000	D		1	CLAMP	
300	905244-0000	-		2	WEDGE	
430	1296753-0000	-		1	FLAG	
440	1296752-0000	-		1	BRACKET	
455	90044-0145	R		1	PROX.SW. 922 AAIY-A9P-050-LZ876	
480	90189-0003	M		4	BALL BUSHING 12X22X32	
500	90450-0409	M		1	DOUBLE ACTING, COMPACT, CYL 32-15	
505	90235-0206	-		1	VALVE FESTO SEU-1/8	
510	90239-0489	M		1	ROD END,CLEVIS WITH AXLE,M6	
640	311103-0351	-		2	PINS,STRAIGHT 6X16	
660	312105-0287	-		2	SCREW M6S ISO 4017 M4X8 A280	
665	312105-0333	-		2	SCREW M6S ISO 4017 M5X25 A280	
670	312105-0455	-		4	SCREW M6S ISO 4017 M8X30 A280	
671	312105-0463	-		4	SCREW M6S ISO 4014 M8X60 A280	
672	312115-0226	-		2	SCREW MC6S ISO 4762 M3X12 A280	
675	312115-0291	-		4	SCREW MC6S ISO 4762 M4X12 A280	
680	312115-0341	-		4	SCREW MC6S 5X50 A4 80	
699	312125-0287	-		2	SLOTTED CHEESE HEAD ISO 1207 M4X8 RFR	
710	312145-0224	-		2	SLOTTED HEMFS3X10RFR	
745	312311-0380	-		1	STOP SCREW T6SS6X50FZB	
780	312621-0316	-		2	ROD END,NUT M6	
803	315105-0124	-		2	WASHER,PLAIN ROUND 3,2X6	
805	315105-0136	-		2	WASHER,PLAIN ROUND 4,3X8 STAINLESS	
810	315105-0146	-		2	WASHER,PLAIN ROUND 5,3X10 STAINLESS	
820	315115-0165	-		8	WASHER TBRB 8,4X16 STAINLESS	
830	315753-0117	-		4	RETAINING RINGS FOR HOLE 22	
850	315402-0136	-		4	WASHER FBB4,1RFR	
860	321105-0125	J		1	BUSHING 6F7X12X6	
910	342722-0202	-		1	STRAIGHT COUPLING, D=6MM - G1/8"	
920	342732-0102	-		1	ELBOW PIPE JOINT,EXT.THREAD,D=6 MM G1/8	
940	352113-0102	-		2	CLIP-STRIP,BLACK 188X4,8MM	
950	352113-0205	-		2	ANCHOR TM2S8-C100	

Pos	Part No	SP	UN	Qty	Description	Page No

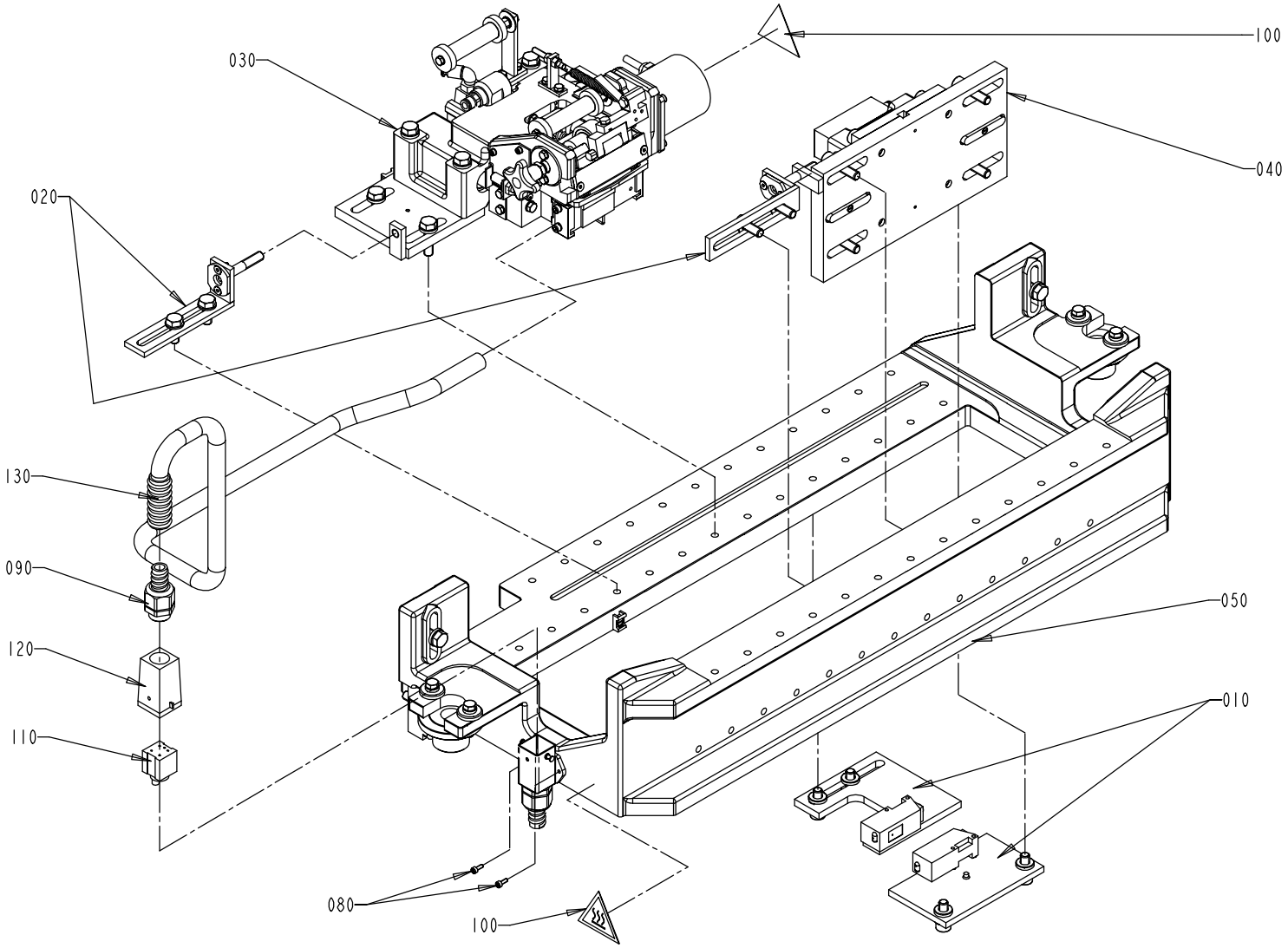

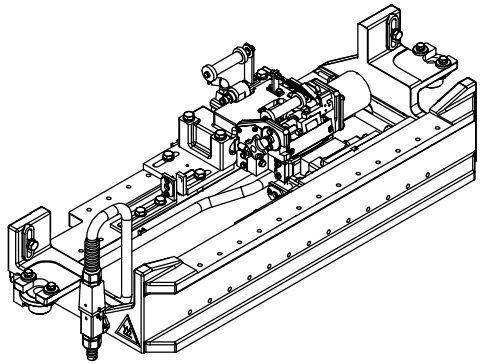

S - 1260421-2
ECN 73119

Pos	Part No	SP	UN	Qty	Description	Page No
Common parts						
010	A1185029-0100	-		1	MISSING TAB DETECTOR	**121**
020	A1260401-0100	-		2	SETTING TOOL	**101**
030	A1260415-0200	-		1	TAB FEEDER	**123, 125**
040	A1260416-0200	-		1	TAB C'JAW UNIT	**129**
050	A1260427-0100	-		1	TAB BRACKET	**131**
080	312115-0222	-		2	SCREW MC6S ISO 4762 M3X8 A280	
090	353243-0002	-		1	GLAND,HOSE,EXTENDED,WITHOUT INSERT PG11	
100	359705-0007	-		2	WARNING SIGN "HOT SURFACE"	
110	90110-0295	-		1	CONTACT SCREW	
120	90110-0371	-		1	PLUG HOOD	
130	90152-0059	-	M	1	HOSE 18X12	

Pos	Part No	SP	UN	Qty	Description	Page No

MISSING TAB DETECTOR

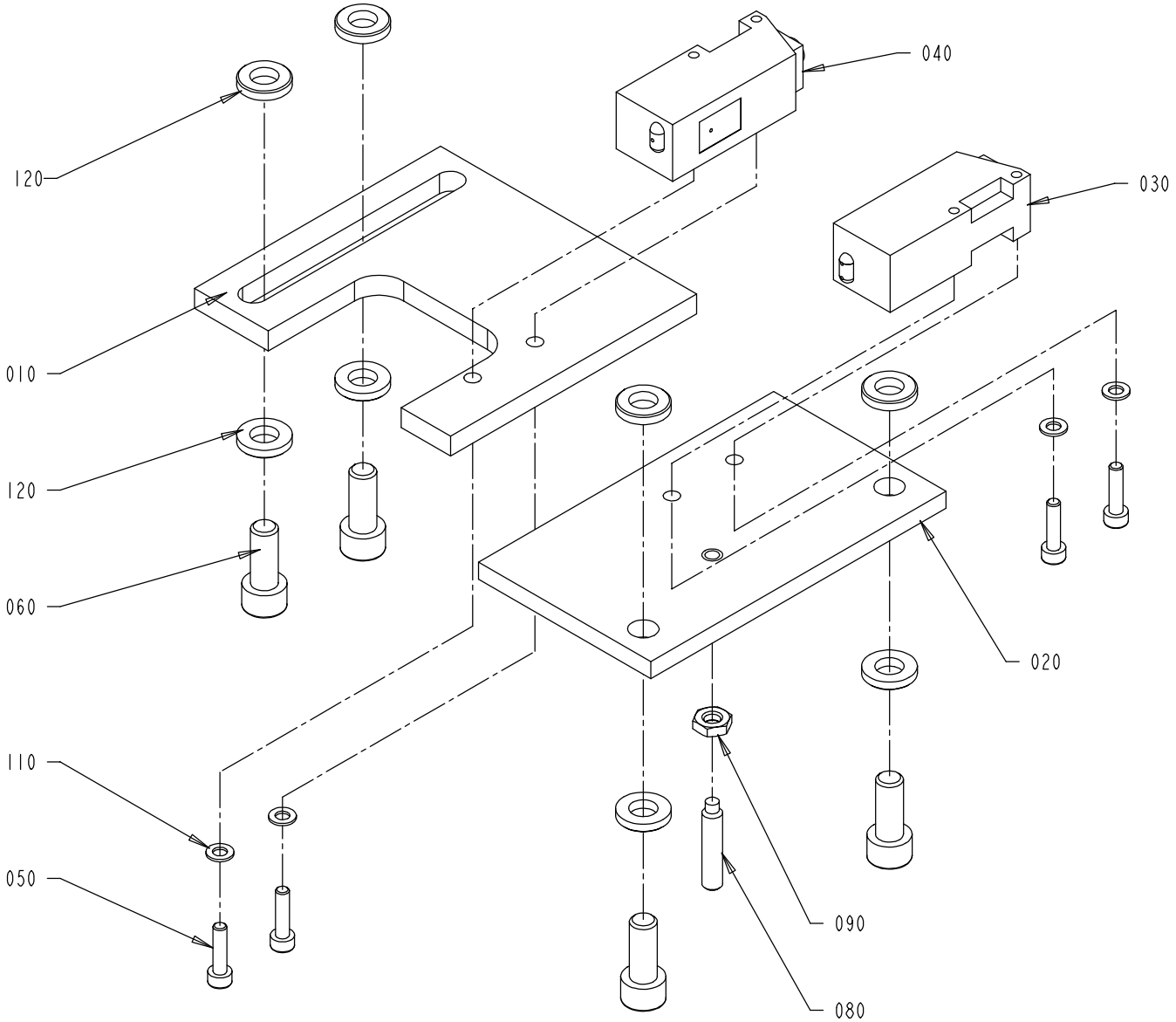

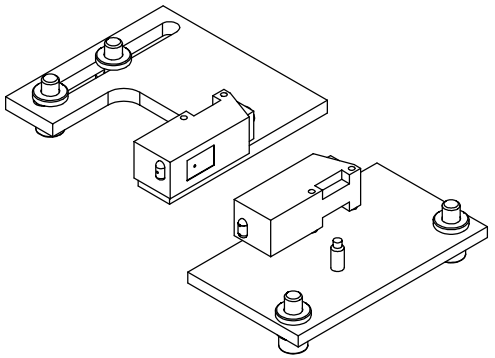

S - 1185029-2
ECN 72779

Pos	Part No	SP	UN	Qty	Description	Page No
Common parts						
010	1140738-0000	-		1	BRACKET	
020	1140739-0000	-		1	BRACKET	
030	90232-0104	R		1	PH.CELL E3S-CT61-D-5M	
040	90232-0103	R		1	PH.CELL E3S-CT61-L-5M	
050	312115-0293	-		4	SCREW MC6S ISO 4762 M4X16 A280	
060	312115-0451	-		4	SCREW MC6S ISO 4762 M8X20 A280	
080	312311-0374	-		1	SET SCREW FULL DOGPOINT ISO 4028 M6X30	
090	312625-0316	-		1	NUTS,HEXAGON,M6	
100	315105-0136	-		4	WASHER,PLAIN ROUND 4,3X8 STAINLESS	
110	315105-0136	-		4	WASHER,PLAIN ROUND 4,3X8 STAINLESS	
120	315115-0165	-		4	WASHER TBRB 8,4X16 STAINLESS	

Pos	Part No	SP	UN	Qty	Description	Page No

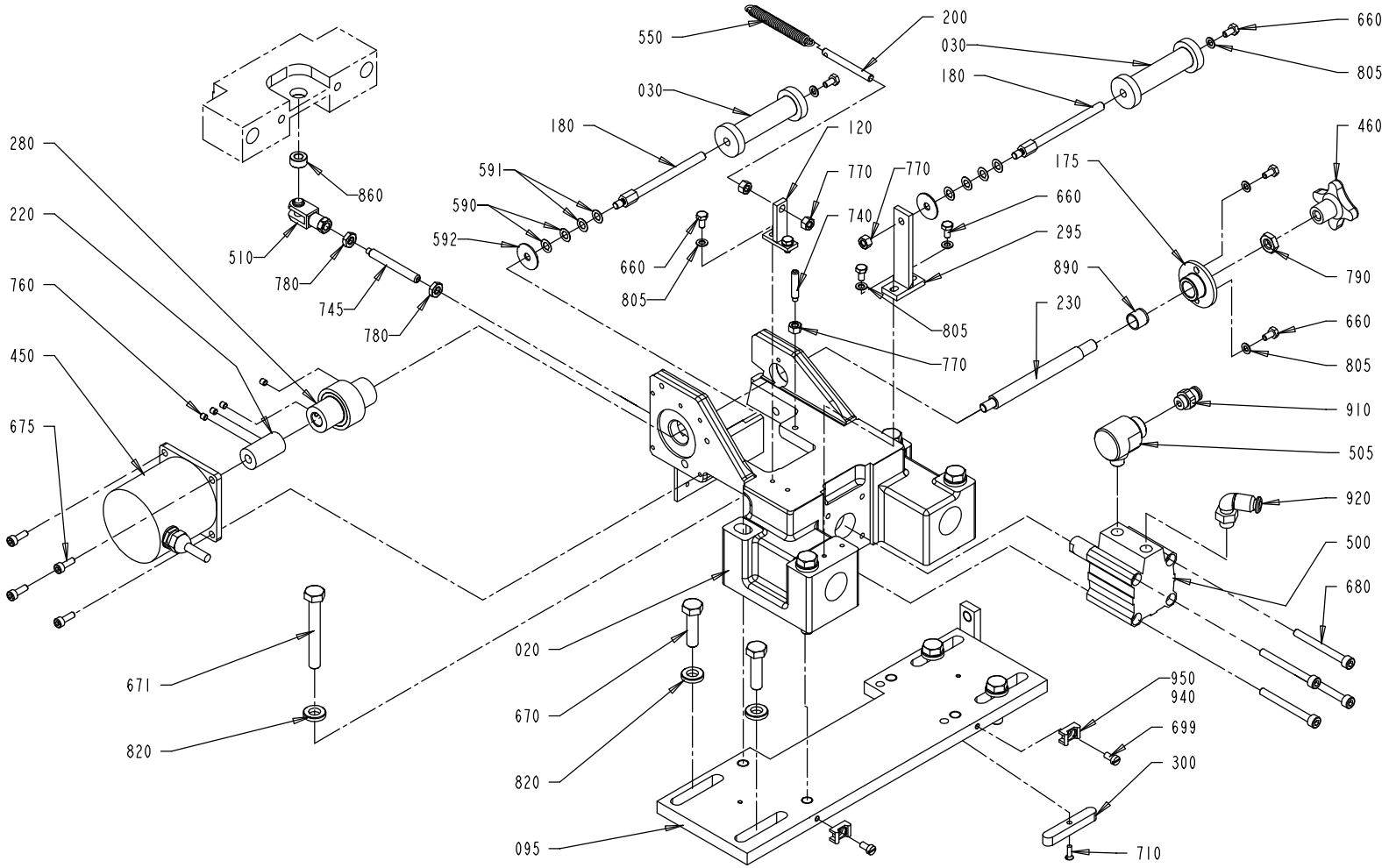

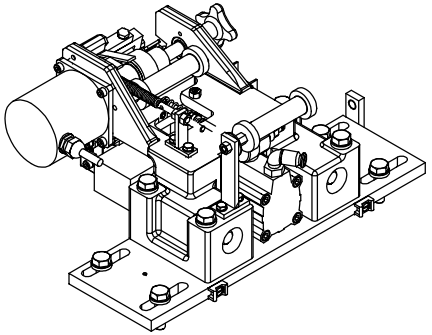

S - 1260415-3(1)
ECN 73119

EC No: - - 20000423
Group number: 1260415-0200
Assembly Drawing: 1260415-3(1)

Issue: 20000706

Pos	Part No	SP	UN	Qty	Description	Page No
Common parts						
010	1260551-0000	J		1	TAB HEATER HEAD	
020	1260389-0000	-		1	CASTING APPLICATOR	
030	A1519827-0100	-		1	TAB FEEDER	**127**
050	1140912-0000	D		1	BRACKET	
060	1260395-0000	D		1	PLATE	
070	1145333-0000	J		1	KNIFE-WINDOW	
080	907712-0000	R		1	PIVOT PLATE	
090	1260388-0000	-		1	PLATE	
095	1260406-0000	-		1	PLATE	
100	1145332-0000	J		1	KNIFE-FLAT	
110	905174-0000	D		1	STEER PLATE	
120	1140545-0000	-		1	TEE BRACKET	
150	905194-0000	R		1	SHAFT	
160	1140547-0000	R		2	SHAFT	
175	1140548-0000	M		1	FLANGED BEARING BUSHING	
180	905212-0000	M		2	SHAFT	
190	1260399-0000	D		1	CLAMP	
195	1260422-0000	D		1	CLAMP	
200	905215-0000	D		1	BOLT	
220	905241-0000	D		1	COUPLING	
230	905243-0000	M		1	SHAFT	
250	905413-0000	M		1	SHAFT	
260	905416-0000	D		1	PIVOT BRACKET-SWIVEL	
270	905419-0000	D		1	PIVOT ARM-SWIVEL	
280	905471-0000	J		1	ROLLER-DRIVE	
293	907710-0000	-		1	PIVOT PLATE	
295	1140546-0000	-		1	BRACKET	
300	905244-0000	-		2	WEDGE	
310	905246-0000	-		1	BRACKET	
320	905415-0000	D		1	SHAFT	
330	905417-0000	D		1	SHAFT	
335	905484-0000	J		1	SHIM	
340	905607-0000	-		1	SCREW	
350	905608-0000	-		1	SCREW	
360	905609-0000	-		1	LOCK BAR	
370	905613-0000	D		1	SHAFT	
415	907711-0000	R		1	SHAFT	
430	1296753-0000	-		1	FLAG	
440	1296752-0000	-		1	BRACKET	
450	90045-0192	R		1	STEPPING MOTOR PACIFIC SCIENTIFIC	
455	90044-0145	R		1	PROX.SW. 922 AAIY-A9P-050-LZ876	
460	90051-0007	-		1	HANDLES, KNOB, INTERNAL THREAD M8-40X25	
470	907138-0000	-		1	CLAMP	
471	907249-0000	-		1	CLAMP	
480	90189-0003	M		4	BALL BUSHING 12X22X32	
490	1346521-0000	J		1	HEATER	
495	90411-0018	J		2	INSULATOR	
500	90450-0409	M		1	DOUBLE ACTING, COMPACT, CYL 32-15	
505	90235-0206	-		1	VALVE FESTO SEU-1/8	
510	90239-0489	M		1	ROD END,CLEVIS WITH AXLE,M6	
520	90298-0033	-			WATLUBE HEAT LIQUID	
530	90326-0060	R		1	THERMOCOUPLE CR-AL	
540	90335-0067	J		1	SPRING	
550	907719-0000	M		1	SPRING	
560	90348-0031	J		1	FREE-WHEEL COUPLING	
580	1350785-0001	J		2	SHIM	
581	1350785-0002	J		2	SHIM	
582	1350785-0003	J		2	SHIM	
583	1350785-0004	J		2	SHIM	
590	2033-0002	-		8	WASHER	
591	2033-0003	-		8	WASHER	
592	2033-0006	-		4	WASHER	
640	311103-0351	-		2	PINS,STRAIGHT 6X16	
645	311112-0205	-		2	PINS,SLOTTED TUBULAR SPRING PIN 3X10	
650	312101-0343	-		2	SCREW M6S5X60FZB	
660	312105-0287	-		10	SCREW M6S ISO 4017 M4X8 A280	
665	312105-0333	-		2	SCREW M6S ISO 4017 M5X25 A280	
670	312105-0455	-		4	SCREW M6S ISO 4017 M8X30 A280	
671	312105-0463	-		4	SCREW M6S ISO 4014 M8X60 A280	
672	312115-0226	-		4	SCREW MC6S ISO 4762 M3X12 A280	
674	312115-0287	-		2	SCREW MC6S ISO 4762 M4X8 A280	
675	312115-0291	-		8	SCREW MC6S ISO 4762 M4X12 A280	
680	312115-0341	-		4	SCREW MC6S 5X50 A4 80	
690	312125-0224	-		2	SLOTTED HEMCS3X10RFR	
699	312125-0287	-		4	SLOTTED CHEESE HEAD ISO 1207 M4X8 RFR	
710	312145-0224	-		2	SLOTTED HEMFS3X10RFR	
720	312155-0291	-		6	SCREW MF6S DIN 7991 M4X12 A480	
740	312311-0333	-		1	SET SCREW FULL DOGPOINT ISO 4028 M5X25	
745	312311-0380	-		1	STOP SCREW T6SS6X50FZB	
750	312318-0285	-		1	STOP SCREW ISO 4029 M4X6 A4	
760	312318-0283	-		4	SET SCREW CUP POINT ISO 4029 M4X4 RFR	
770	312605-0314	-		4	NUT,HEXAGON,M6M5 STAINLESS	
780	312621-0316	-		4	ROD END,NUT M6	

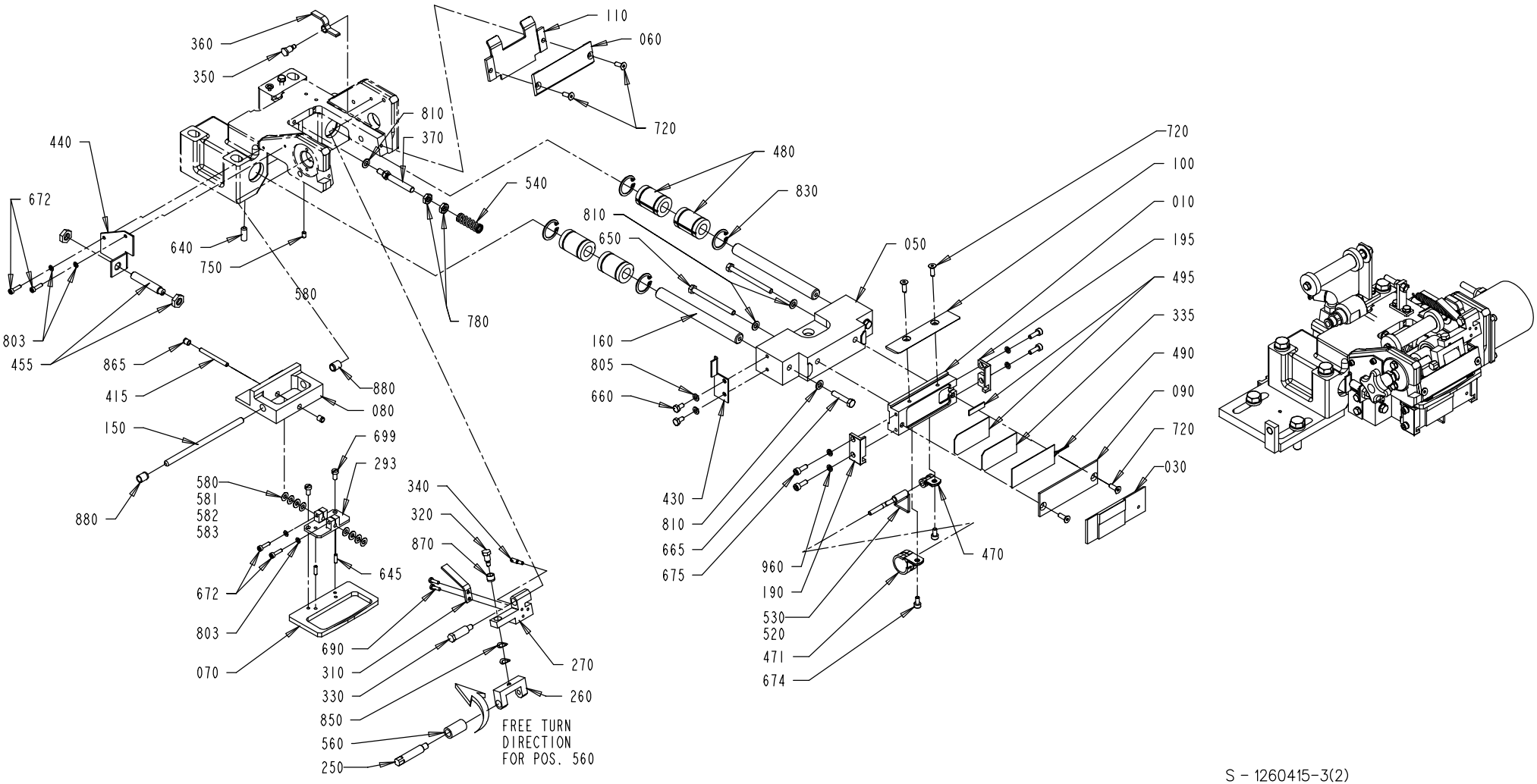

S - 1260415-3(2)
ECN 73119

Pos	Part No	SP	UN	Qty	Description	Page No
Common parts						
790	312621-0318	-		1	ROD END,NUT M8	
803	315105-0124	-		4	WASHER,PLAIN ROUND 3,2X6	
805	315105-0136	-		10	WASHER,PLAIN ROUND 4,3X8 STAINLESS	
810	315105-0146	-		5	WASHER,PLAIN ROUND 5,3X10 STAINLESS	
820	315115-0165	-		8	WASHER TBRB 8,4X16 STAINLESS	
830	315753-0117	-		4	RETAINING RINGS FOR HOLE 22	
850	907487-0000	D		2	WASHER-CURVED	
860	321105-0125	J		1	BUSHING 6F7X12X6	
865	321120-0092	M		2	BUSHING, 4X5,5X6	
870	321120-0101	D		1	BUSHING, 6X8X6	
880	321120-0102	M		2	BUSHING, 6X8X10	
890	321120-0104	M		1	BUSHING, 10X12X10	
910	342722-0202	-		1	STRAIGHT COUPLING, D=6MM - G1/8"	
920	342732-0102	-		1	ELBOW PIPE JOINT,EXT.THREAD,D=6 MM G1/8	
940	352113-0102	-		2	CLIP-STRIP,BLACK 188X4,8MM	
950	352113-0205	-		2	ANCHOR TM2S8-C100	
960	315402-0136	-		4	WASHER FBB4,1RFR	

Pos	Part No	SP	UN	Qty	Description	Page No

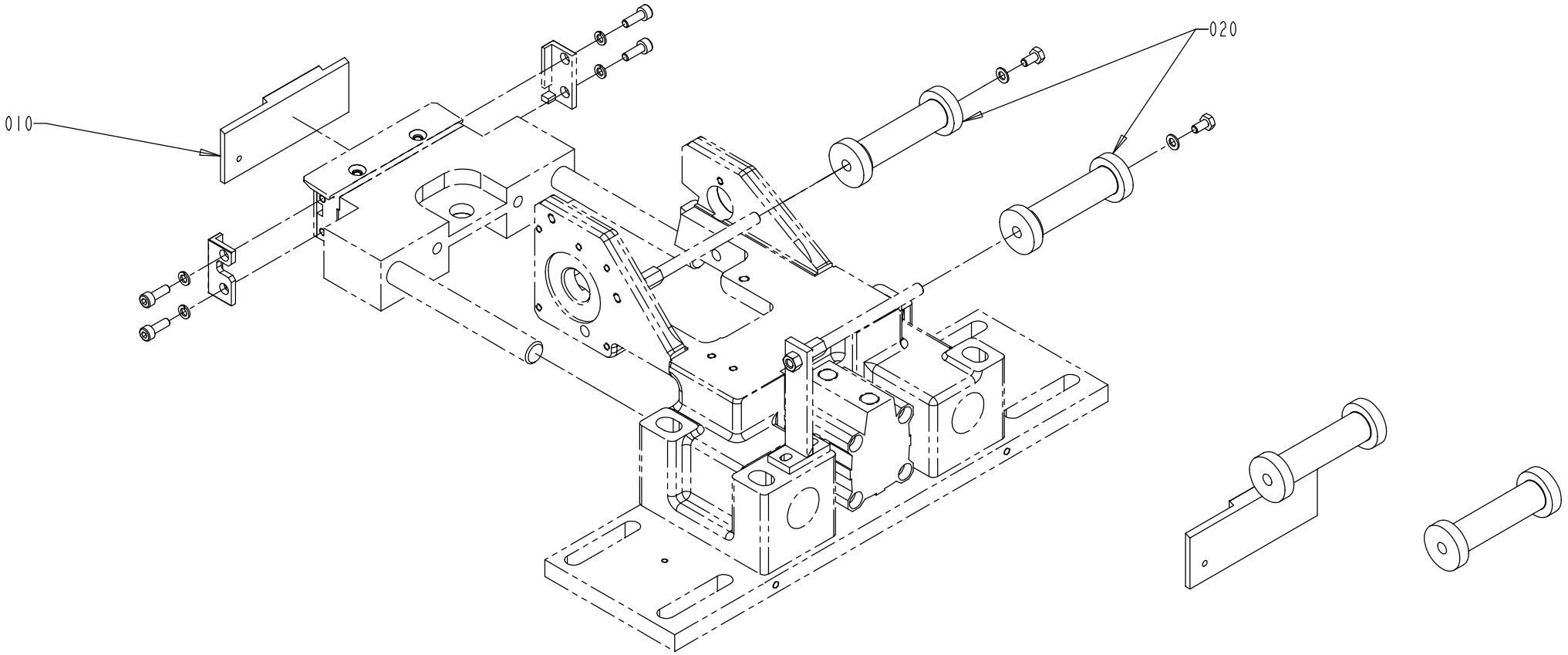

S - 1519827-1
ECN 73119

Pos	Part No	SP	UN	Qty	Description	Page No
HOLE50						
010	1350541-0000	J		1	SEALING PLATE	
020	908309-0000	N		2	ROLLER - 47	
HOLE45						
010	1350525-0000	J		1	SEALING PLATE	
020	908309-0000	N		2	ROLLER - 47	
HOLE85						
010	1490292-0000	J		1	SEALING PLATE	
020	908309-0000	N		2	ROLLER - 47	
HOLE60						
010	1350527-0000	J		1	SEALING PLATE	
020	907358-0009	N		2	ROLLER - 56.5	

Pos	Part No	SP	UN	Qty	Description	Page No

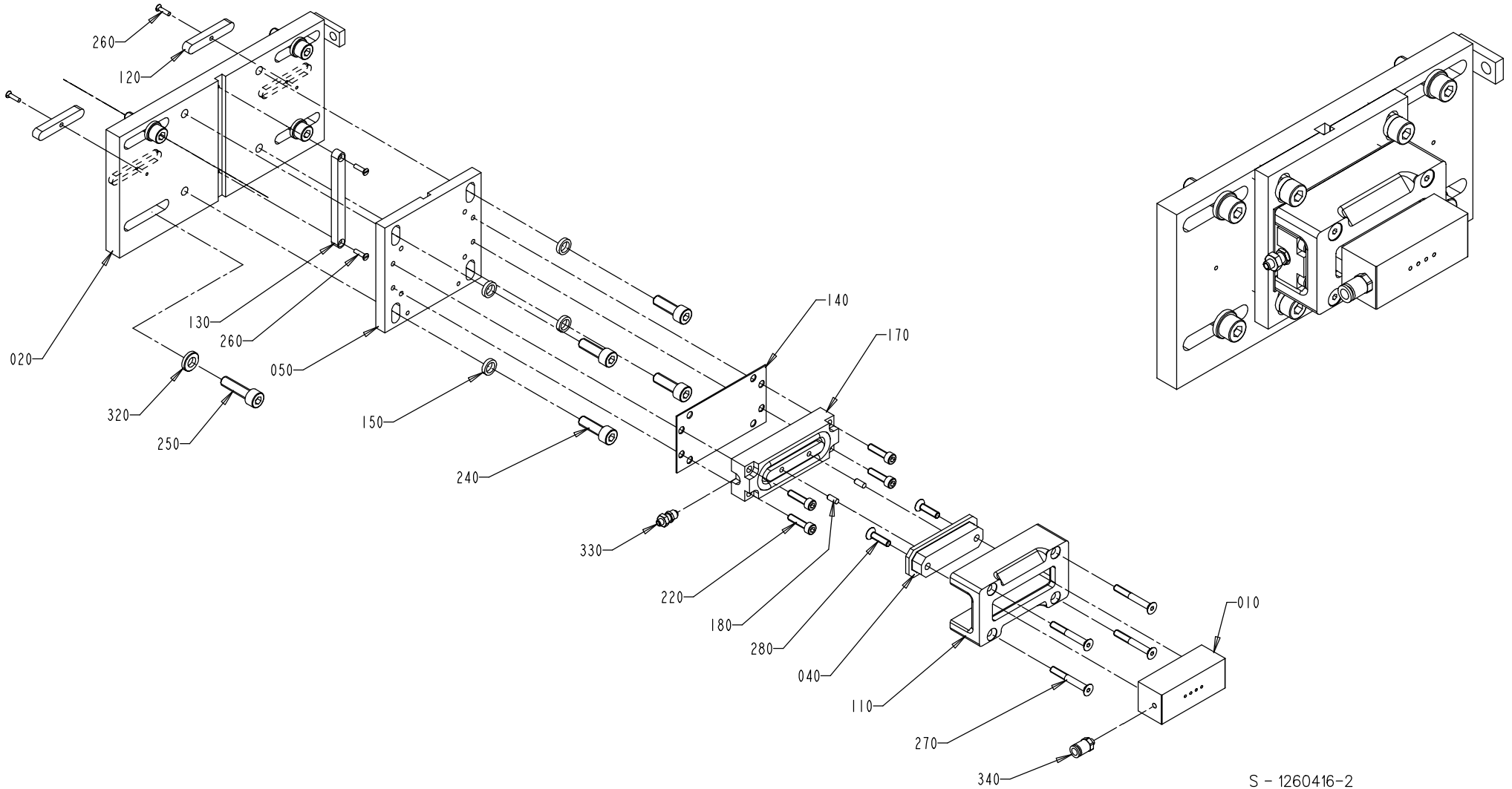
260
120
020
130
260
050
320
250
150
240
140
170
330
220
180
280
040
110
270
340
010
S - 1260416-2
ECN 72779

Pos	Part No	SP	UN	Qty	Description	Page No
Common parts						
010	1346283-0000	J		1	COUNTER PLATE	
020	1260407-0000	-		1	PLATE	
040	1296298-0000	M		1	BUSHING	
050	1279485-0000	-		1	PLATE	
110	928919-0000	-		1	FASTENING PLATE	
120	905244-0000	-		2	WEDGE	
130	905463-0000	-		1	KEY	
140	1279484-0000	J		2	SHIM	
150	1296300-0000	D		4	WASHER	
170	90450-0380	M		1	SINGLE ACTING, SHORT STROKE	
180	311103-0267	-		2	PIN,STRAIGHT 4X10	
220	312115-0331	-		4	SCREW MC6S ISO 4762 M5X20 A280	
240	312115-0453	-		4	SCREW MC6S ISO 4762 M8X25 A280	
250	312115-0455	-		4	SCREW MC6S ISO 4762 M8X30 A280	
260	312145-0226	-		4	SLOTTED HEMFS3X12RFR	
270	312155-0339	-		4	SCREW MF6S DIN 7991 5X40 A280	
280	312155-0331	-		2	SCREW MF6S DIN 7991 M5X20 A280	
320	315115-0165	-		4	WASHER TBRB 8,4X16 STAINLESS	
330	342921-0111	-		1	STRAIGHT COUPLING,EXT.THREADED 6/4-M5	
340	342722-0197	-		1	STRAIGHT COUPLING, D=6 MM - M5	

Pos	Part No	SP	UN	Qty	Description	Page No

TAB BRACKET

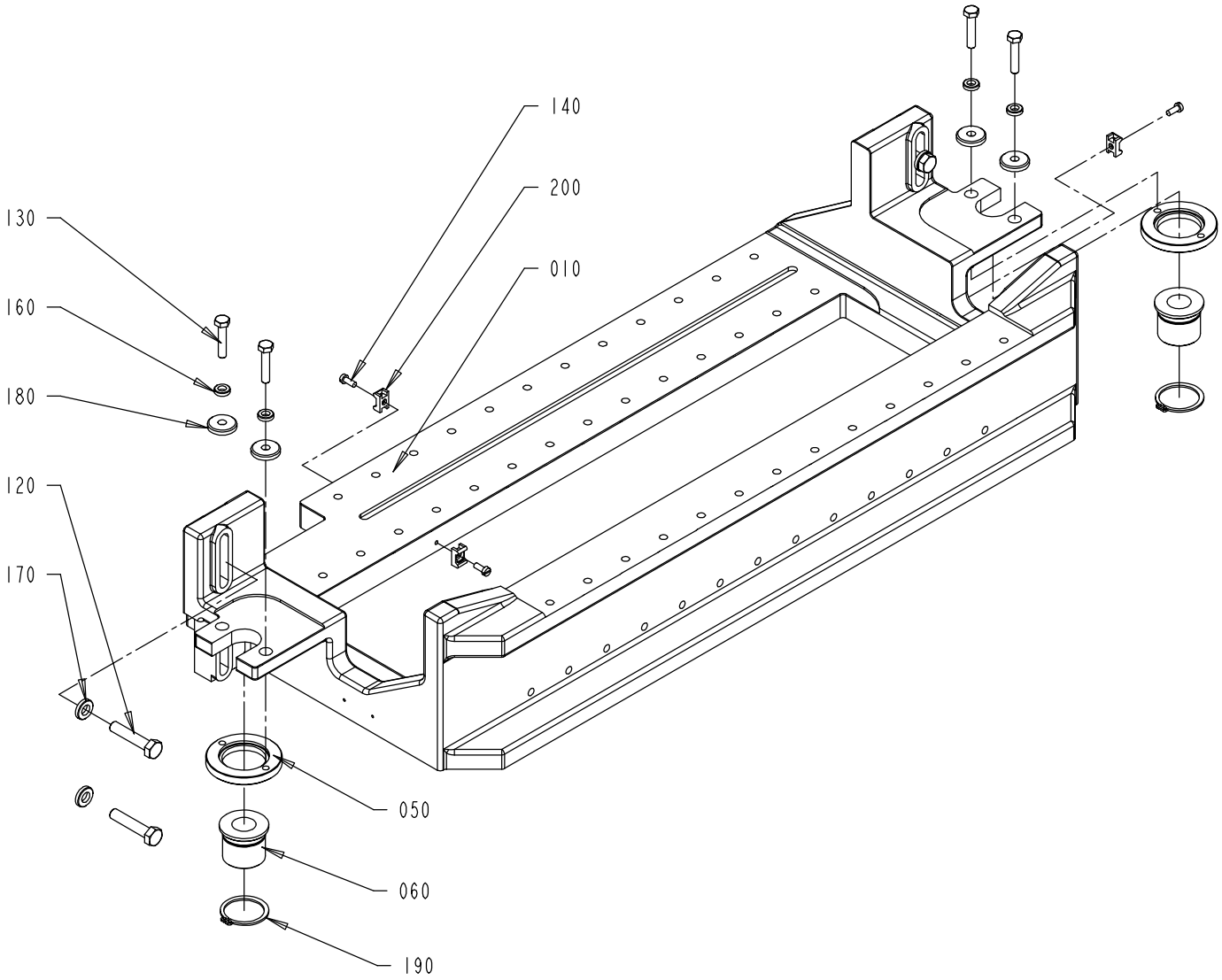

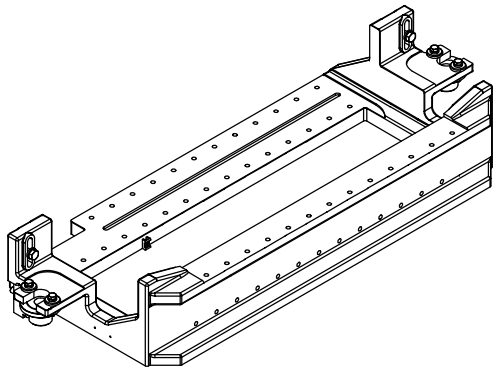

S - 1260427-1
ECN 72779

Pos	Part No	SP	UN	Qty	Description	Page No
Common parts						
010	1260398-0000	-		1	BRACKET	
050	1147009-0000	-		2	SPECIAL WASHER	
060	1147010-0000	-		2	BUSHING	
120	312109-0459	-		4	SCREW M6S ISO 4017 M8X40 A280	
130	312109-0374	-		4	SCREW M6S ISO 4017 M6X30 A280	
140	312125-0289	-		3	SLOTTED HEMCS4X10RFR	
160	315115-0153	-		4	WASHER TBRB 6,4X12 STAINLESS	
170	315115-0165	-		4	WASHER TBRB 8,4X16 STAINLESS	
180	315125-0153	-		4	WASHERS,PLAIN ROUND,CHAMFERED 6,4X22X4	
190	315751-0123	-		2	RETAINING RINGS FOR SHAFT 32	
200	352113-0205	-		3	ANCHOR TM2S8-C100	

Pos	Part No	SP	UN	Qty	Description	Page No

This page is intentionally left blank.

Pos	Part No	SP	UN	Qty	Description	Page No
TBA 1000B HOLE50						
010	1296875-0000	-		1	OPENING SPECIFICATION	
TBA 1000S HOLE50						
010	1296876-0000	-		1	OPENING SPECIFICATION	
TBA 1000B HOLE45						
010	1143421-0000	-		1	OPENING SPECIFICATION	
TBA 1000S HOLE45						
010	929771-0000	-		1	OPENING SPECIFICATION	
TBA 1000B HOLE85						
010	1484136-0000	-		1	OPENING SPECIFICATION	
TBA 1000S HOLE85						
010	1484135-0000	-		1	OPENING SPECIFICATION	
TPA 1000S HOLE60						
010	1498747-0000	-		1	OPENING SPECIFICATION	
TBA 1500S HOLE45						
010	1143632-0000	-		1	OPENING SPECIFICATION	
TBA 1000SQ HOLE85						
010	1499596-0000	-		1	OPENING SPECIFICATION	
TBA 1500S HOLE85						
010	1499597-0000	-		1	OPENING SPECIFICATION	
TBA 1000SQ HOLE45						
010	1143702-0000	-		1	OPENING SPECIFICATION	

Pos	Part No	SP	UN	Qty	Description	Page No

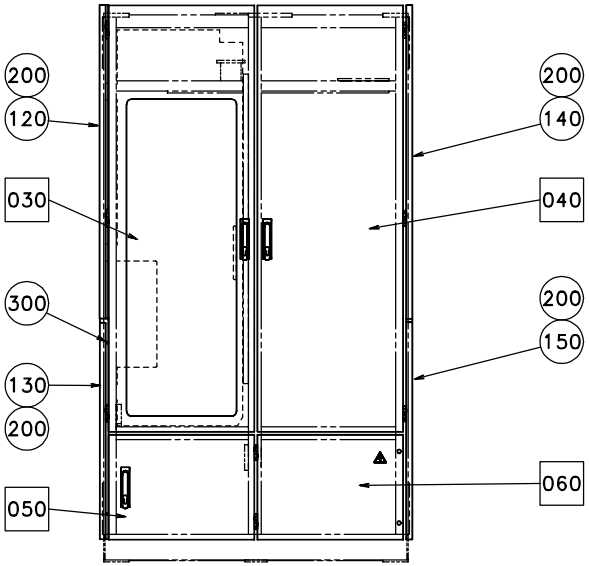

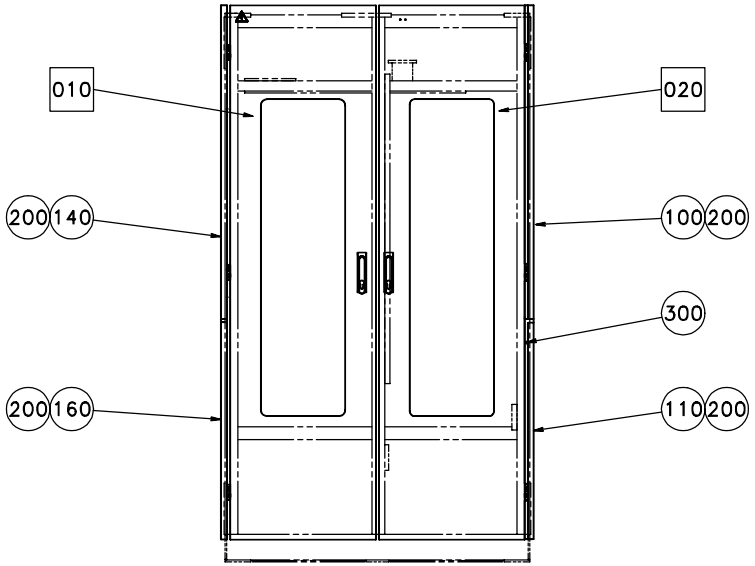

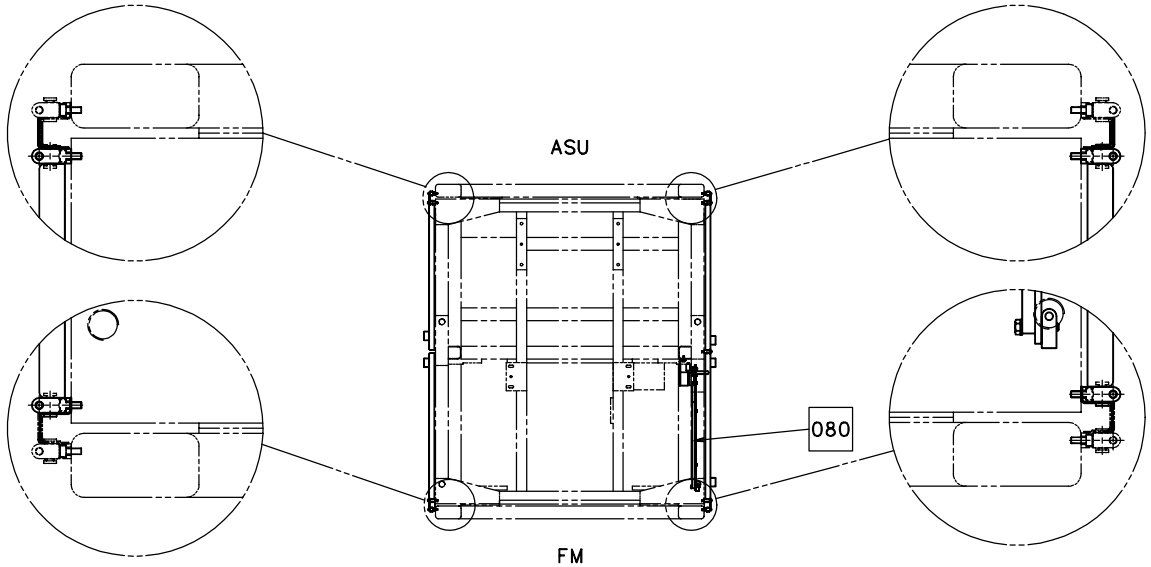

S – 1095951-1
ECN 70335

Pos	Part No	SP	UN	Qty	Description	Page No
Common parts						
010	A1095944-0300	-		1	DOOR EL-CABINET	**137**
020	A1095945-0200	-		1	DOOR	**139**
030	A1095946-0200	-		1	DOOR	**141**
040	A1095947-0200	-		1	DOOR	**143**
050	A1095948-0100	-		1	DOOR FOR WASTE BOX	**145**
060	A1095949-0100	-		1	DOOR FOR TPIH	**147**
080	A1185000-0100	-		1	DOOR,INNER	**149**
100	1140771-0000	-		1	COVERING PLATE	
110	1140772-0000	-		1	COVERING PLATE	
120	1140773-0000	-		1	COVERING PLATE	
130	1140774-0000	-		1	COVERING PLATE	
140	1140775-0000	-		2	COVERING PLATE	
150	1140776-0000	-		1	COVERING PLATE	
160	1140777-0000	-		1	COVERING PLATE	
200	1129767-0000	-		12	SCREW	
300	312115-0362	-		3	SCREW MC6S ISO 4762 M6X8 A280	

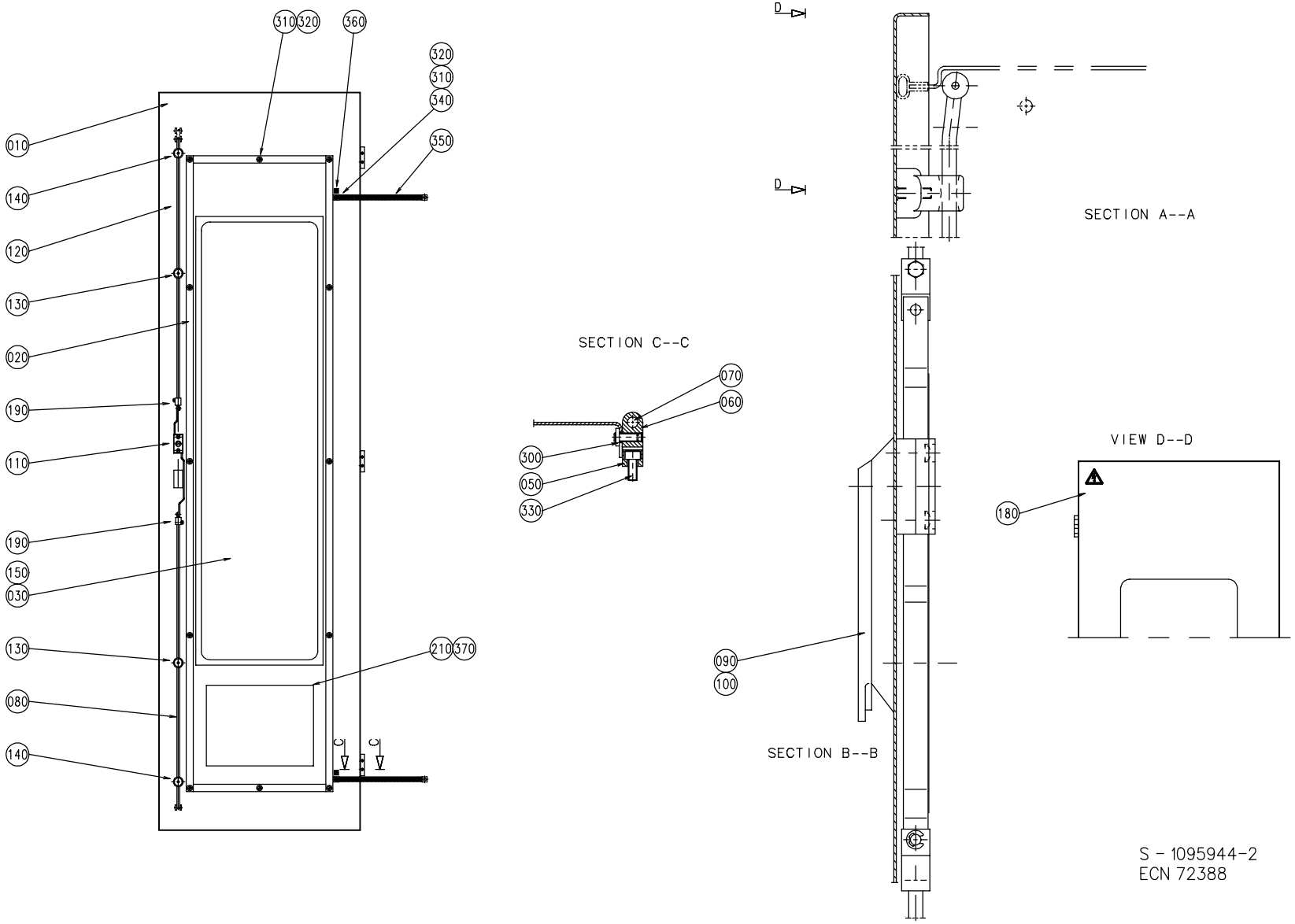
310
320
360
320
310
340
350
010
140
120
130
020
190
110
190
150
030
130
080
140
210
370
C
C
SECTION C--C
070
060
300
050
330
D
D
SECTION A--A
VIEW D--D
180
090
100
SECTION B--B
S - 1095944-2
ECN 72388

Pos	Part No	SP	UN	Qty	Description	Page No
Common parts						
010	1129931-0000	-		1	DOOR	
020	1129932-0000	-		1	FRAME	
030	1140415-0000	-		1	GLASS PANE	
050	1035792-0000	-		3	E-HINGE	
060	1129770-0000	-		6	BLOCKING PIECE	
070	988685-0000	-		3	PIN	
080	1260552-0000	-		1	ROD	
090	90237-0150	-		1	TURNING HANDLE, BLACK PA	
100	90237-0128	-		1	LOCK CYLINDER	
110	90237-0153	-		1	LOCK HOUSING	
120	B1260403-0000	-		1	ROD	**183**
130	90237-0151	-		2	STEERING GUIDE,BLACK PA	
140	90237-0152	-		2	STEERING	
150	90157-0041	-			SEALING COMPOUND	
180	359705-0015	-		1	WARNING SIGN "ELECTRIC SHOCK"	
190	90237-0169	-		2	LOCK-ADAPTER	
210	1487757-0000	-		1	FUSE BOARD	
300	1129767-0000	-		3	SCREW	
310	315105-0153	-		14	WASHER,PLAIN ROUND 6,4X12 STAINLESS	
320	312605-0316	-		14	NUT,HEXAGON A280 M6M6	
330	312115-0327	-		6	SCREW MC6S ISO 4762 M5X12 A280	
340	90062-0022	-		2	LOCKING WASHER D=6,4/11	
350	90135-0035	-		2	LOW IMPEDANCELITZ L=250MM	
360	90194-0152	-		2	SIGN "EARTH"	
370	90153-0023	-			ADHESIVE	

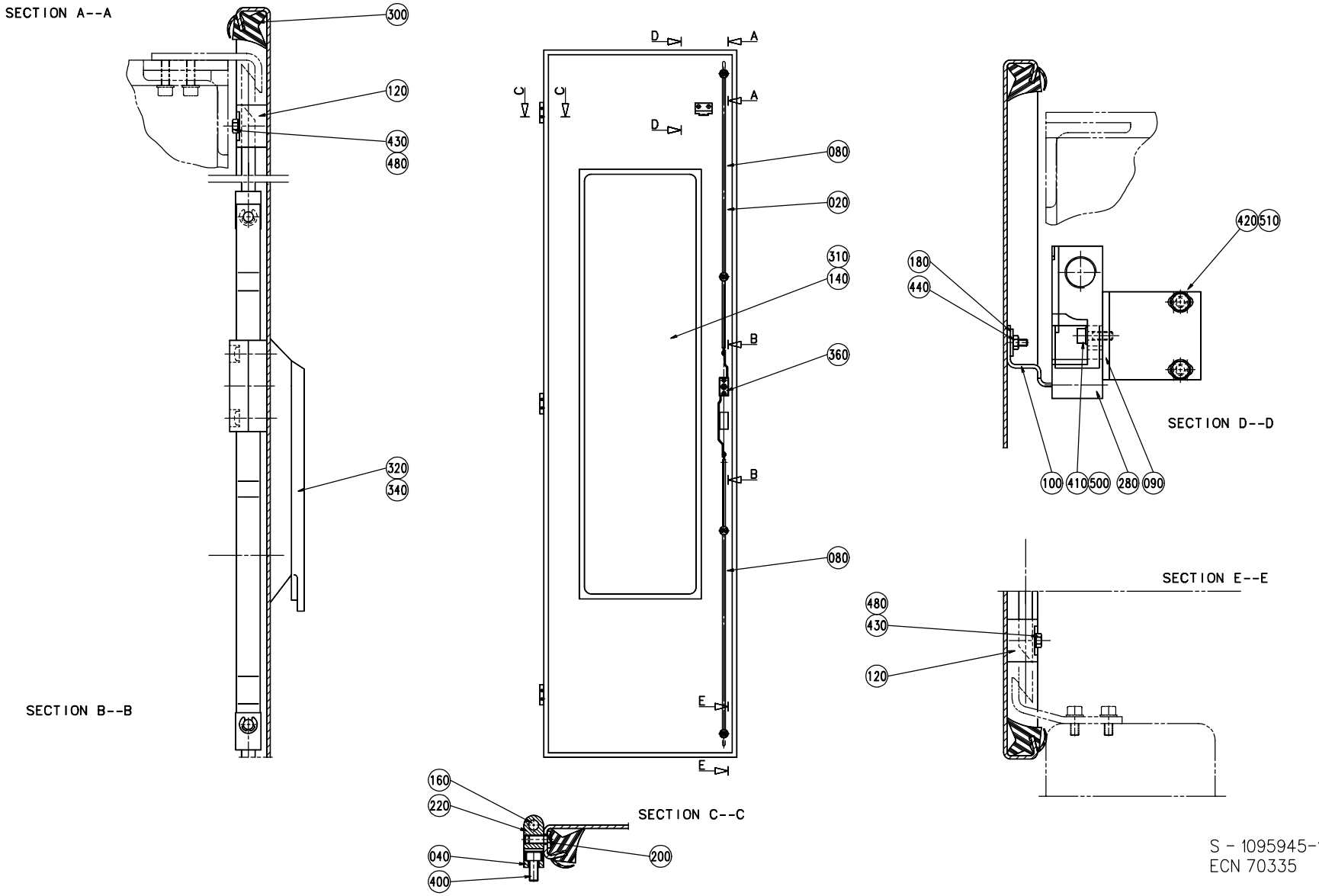

S - 1095945-1
ECN 70335

Pos	Part No	SP	UN	Qty	Description	Page No
Common parts						
020	1255682-0000	-		1	DOOR	
040	1035792-0000	-		3	E-HINGE	
080	1036304-0020	-		2	LOCKING ARM	
090	1255684-0000	-		1	HOLDER	
100	1129042-0000	-		1	KEY	
120	1129274-0000	-		4	GUIDE LUG	
140	1140415-0000	-		1	GLASS PANE	
160	988685-0000	-		3	PIN	
180	1036563-0000	-		1	WASHER	
200	1129767-0000	-		3	SCREW	
220	1129770-0000	-		6	BLOCKING PIECE	
280	90044-0139	N		1	KEY SAF.SW. AZ16-02 ZVR K-2254	
300	1279828-0000	-		1	SEALING STRIP	
310	90157-0041	-			SEALING COMPOUND	
320	90237-0128	-		1	LOCK CYLINDER	
340	90237-0150	-		1	TURNING HANDLE, BLACK PA	
360	90237-0153	-		1	LOCK HOUSING	
400	312115-0327	-		6	SCREW MC6S ISO 4762 M5X12 A280	
410	312115-0329	-		2	SCREW MC6S ISO 4762 M5X16 A280	
420	312105-0366	-		2	SCREW M6S ISO 4017 M6X12 A280	
430	312605-0312	-		8	NUT,HEXAGON,M4 RFR	
440	312812-0312	-		2	LOCK-NUT,HEXAGON,WITH NYLONINSERT,M4	
480	315105-0136	-		8	WASHER,PLAIN ROUND 4,3X8 STAINLESS	
500	315105-0146	-		2	WASHER,PLAIN ROUND 5,3X10 STAINLESS	
510	315105-0153	-		2	WASHER,PLAIN ROUND 6,4X12 STAINLESS	

Pos	Part No	SP	UN	Qty	Description	Page No

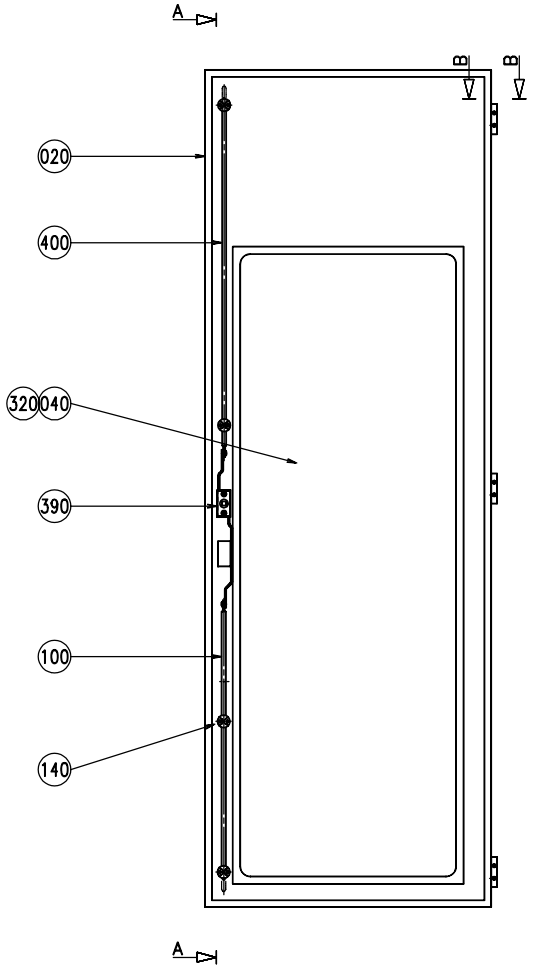

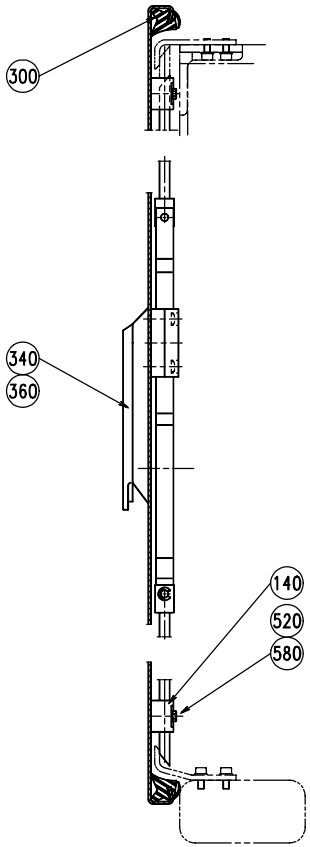

SECTION A--A

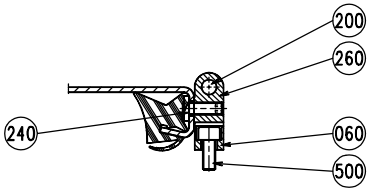

SECTION B--B

S - 1095946-1
ECN 70335

Pos	Part No	SP	UN	Qty	Description	Page No
Common parts						
020	1255685-0000	-		1	DOOR	
040	1140416-0000	-		1	GLASS PANE	
060	1035792-0000	-		3	E-HINGE	
100	1036304-0019	-		1	LOCKING ARM	
140	1129274-0000	-		4	GUIDE LUG	
200	988685-0000	-		3	PIN	
240	1129767-0000	-		3	SCREW	
260	1129770-0000	-		6	BLOCKING PIECE	
300	1279829-0000	-		1	SEALING STRIP	
320	90157-0041	-			SEALING COMPOUND	
340	90237-0128	-		1	LOCK CYLINDER	
360	90237-0150	-		1	TURNING HANDLE, BLACK PA	
390	90237-0153	-		1	LOCK HOUSING	
400	1036304-0005	-		1	LOCKING ARM	
500	312115-0327	-		6	SCREW MC6S ISO 4762 M5X12 A280	
520	312605-0312	-		8	NUT,HEXAGON,M4 RFR	
580	315105-0136	-		4	WASHER,PLAIN ROUND 4,3X8 STAINLESS	

Pos	Part No	SP	UN	Qty	Description	Page No

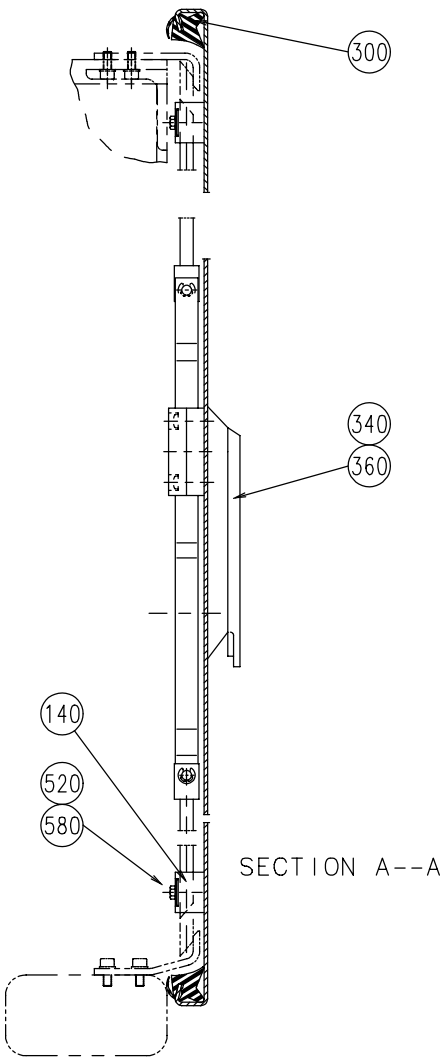

SECTION A--A

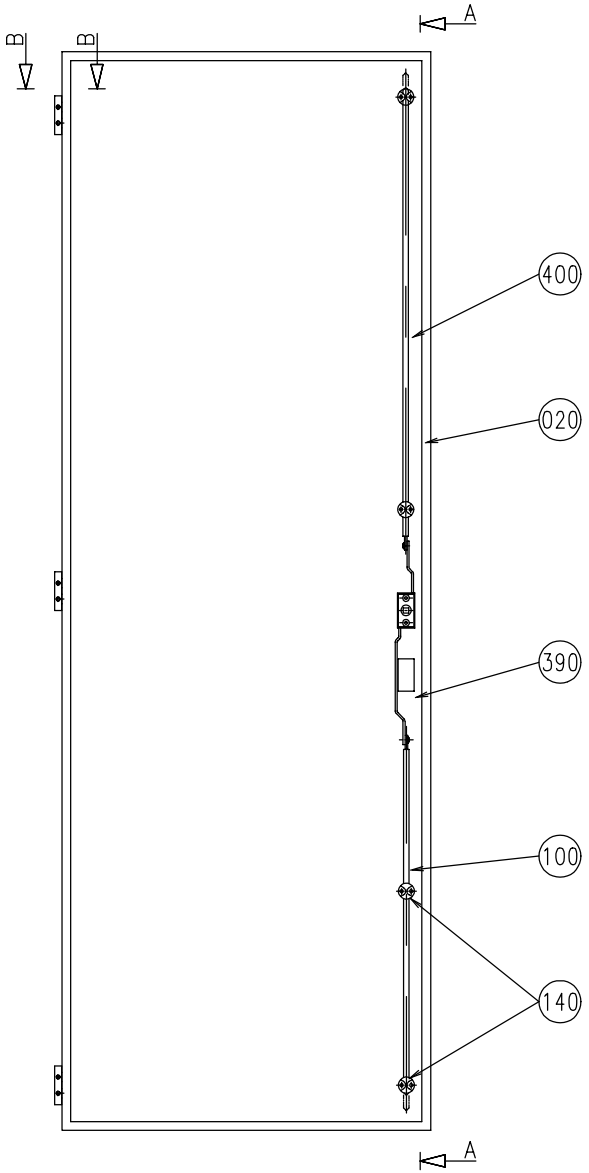

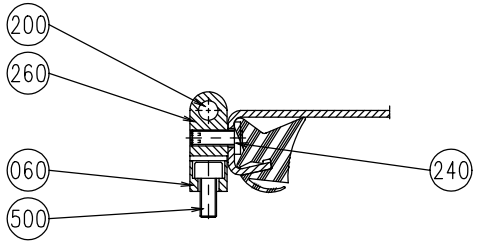

SECTION B--B

S-1095947-1
ECN 70335

Pos	Part No	SP	UN	Qty	Description	Page No
Common parts						
020	1255686-0000	-		1	DOOR	
060	1035792-0000	-		3	E-HINGE	
100	1036304-0019	-		1	LOCKING ARM	
140	1129274-0000	-		4	GUIDE LUG	
200	988685-0000	-		3	PIN	
240	1129767-0000	-		3	SCREW	
260	1129770-0000	-		6	BLOCKING PIECE	
300	1279829-0000	-		1	SEALING STRIP	
340	90237-0128	-		1	LOCK CYLINDER	
360	90237-0150	-		1	TURNING HANDLE, BLACK PA	
390	90237-0153	-		1	LOCK HOUSING	
400	1036304-0005	-		1	LOCKING ARM	
500	312115-0327	-		6	SCREW MC6S ISO 4762 M5X12 A280	
520	312605-0312	-		4	NUT,HEXAGON,M4 RFR	
580	315105-0136	-		4	WASHER,PLAIN ROUND 4,3X8 STAINLESS	

Pos	Part No	SP	UN	Qty	Description	Page No

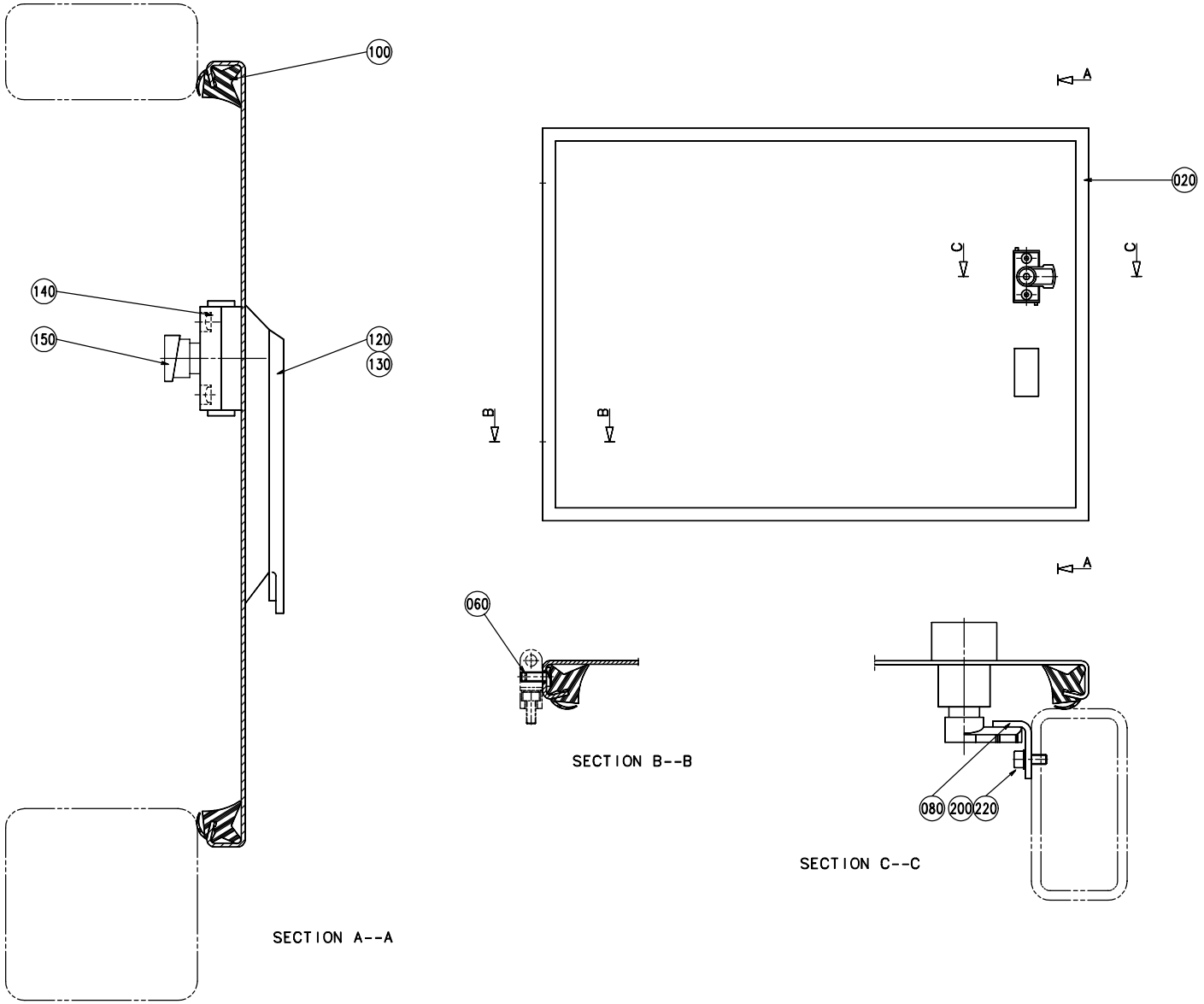

S - 1095948-1
ECN 70335

Pos	Part No	SP	UN	Qty	Description	Page No
Common parts						
020	1255683-0000	-		1	DOOR	
060	1129767-0000	-		2	SCREW	
080	1129971-0000	-		1	BRACKET	
100	1279830-0000	-		1	SEALING STRIP	
120	90237-0128	-		1	LOCK CYLINDER	
130	90237-0150	-		1	TURNING HANDLE, BLACK PA	
140	90237-0154	-		1	LOCK HOUSING,BLACK PA	
150	90237-0165	-		1	LATCH	
200	312115-0327	-		2	SCREW MC6S ISO 4762 M5X12 A280	
220	315105-0146	-		2	WASHER,PLAIN ROUND 5,3X10 STAINLESS	

Pos	Part No	SP	UN	Qty	Description	Page No

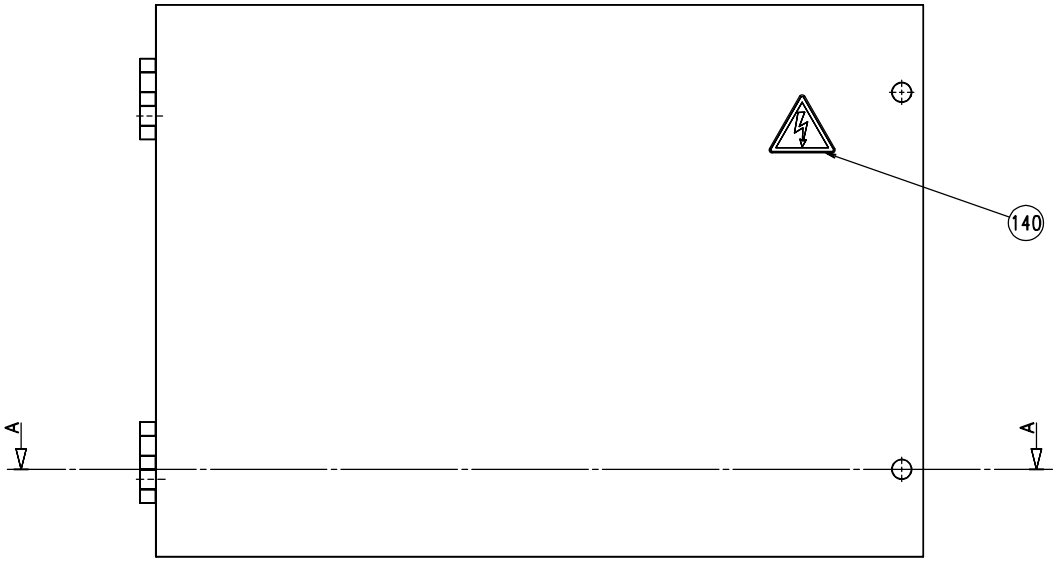

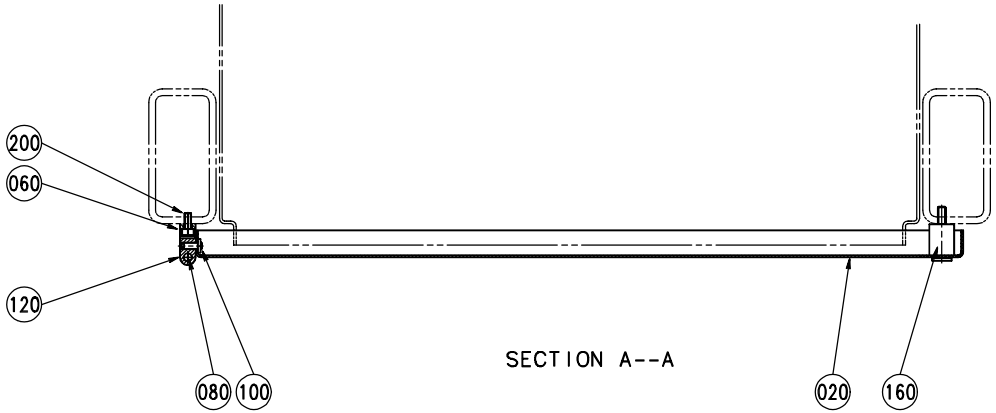

SECTION A--A

S - 1095949-1
ECN 70335

Pos	Part No	SP	UN	Qty	Description	Page No
Common parts						
020	1129930-0000	-		1	DOOR	
060	1035792-0000	-		2	E-HINGE	
080	988685-0000	-		2	PIN	
100	1129767-0000	-		2	SCREW	
120	1129770-0000	-		4	BLOCKING PIECE	
140	359705-0015	-		1	WARNING SIGN "ELECTRIC SHOCK"	
160	90226-0458	-		2	MOUNTING SCREW	
200	312115-0327	-		4	SCREW MC6S ISO 4762 M5X12 A280	

Pos	Part No	SP	UN	Qty	Description	Page No

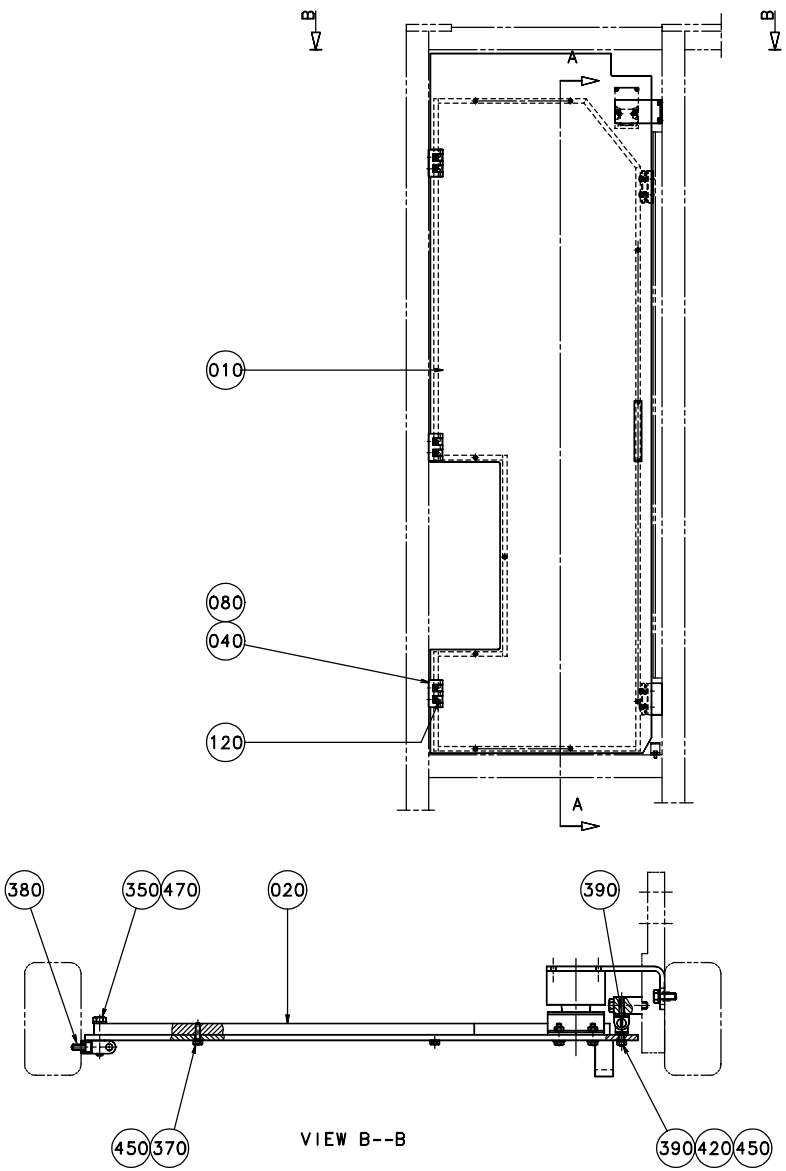

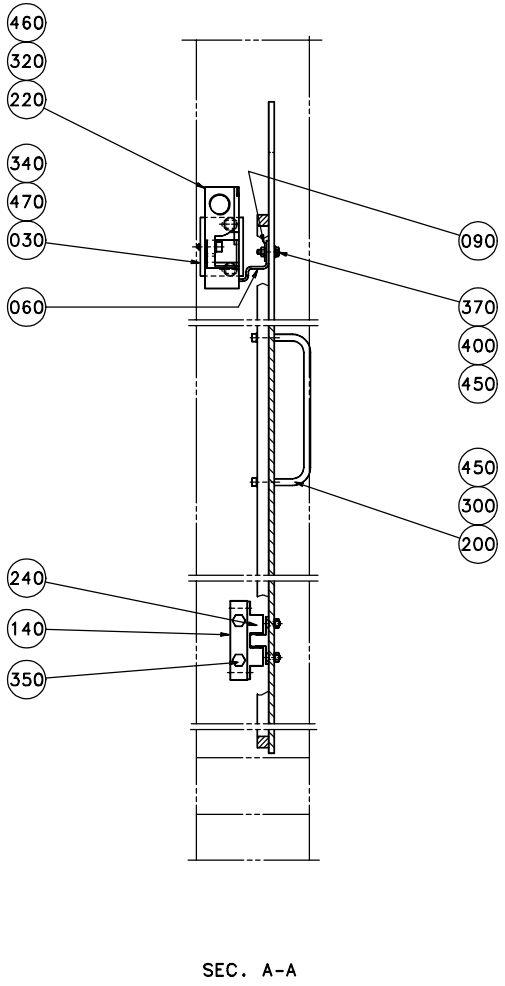

S - 1185000-1
ECN 70335

EC No: - - 20000423
Group number: 1185000-0100
Assembly Drawing: 1185000-1

Issue: 20000706

Pos	Part No	SP	UN	Qty	Description	Page No
Common parts						
010	1140509-0000	-		1	DOOR	
020	1260201-0000	-		1	FRAME	
030	1140537-0000	-		1	HOLDER	
040	1035792-0000	-		3	E-HINGE	
060	1129042-0000	-		1	KEY	
080	988685-0000	-		3	PIN	
090	1036563-0000	-		1	WASHER	
120	1129770-0000	-		6	BLOCKING PIECE	
140	1140538-0000	-		2	BLOCKING PIECE	
200	90017-0017	-		1	HANDLE,BRASS	
220	90044-0139	R		1	KEY SAF.SW. AZ16-02 ZVR K-2254	
240	90237-0070	-		2	SNAP-IN-LOCK	
300	312115-0295	-		2	SCREW MC6S ISO 4762 M4X20 A280	
320	312115-0329	-		2	SCREW MC6S ISO 4762 M5X16 A280	
340	312105-0368	-		2	SCREW M6S ISO 4017 M6X16 A280	
350	312105-0374	-		10	SCREW M6S ISO 4017 M6X30 A280	
370	312105-0295	-		11	SCREW M6S ISO 4017 M4X20 A280	
380	312115-0327	-		6	SCREW MC6S ISO 4762 M5X12 A280	
390	312155-0291	-		8	SCREW MF6S DIN 7991 M4X12 A480	
400	312605-0312	-		6	NUT,HEXAGON,M4 RFR	
450	315105-0136	-		19	WASHER,PLAIN ROUND 4,3X8 STAINLESS	
460	315105-0146	-		2	WASHER,PLAIN ROUND 5,3X10 STAINLESS	
470	315105-0153	-		8	WASHER,PLAIN ROUND 6,4X12 STAINLESS	

Pos	Part No	SP	UN	Qty	Description	Page No

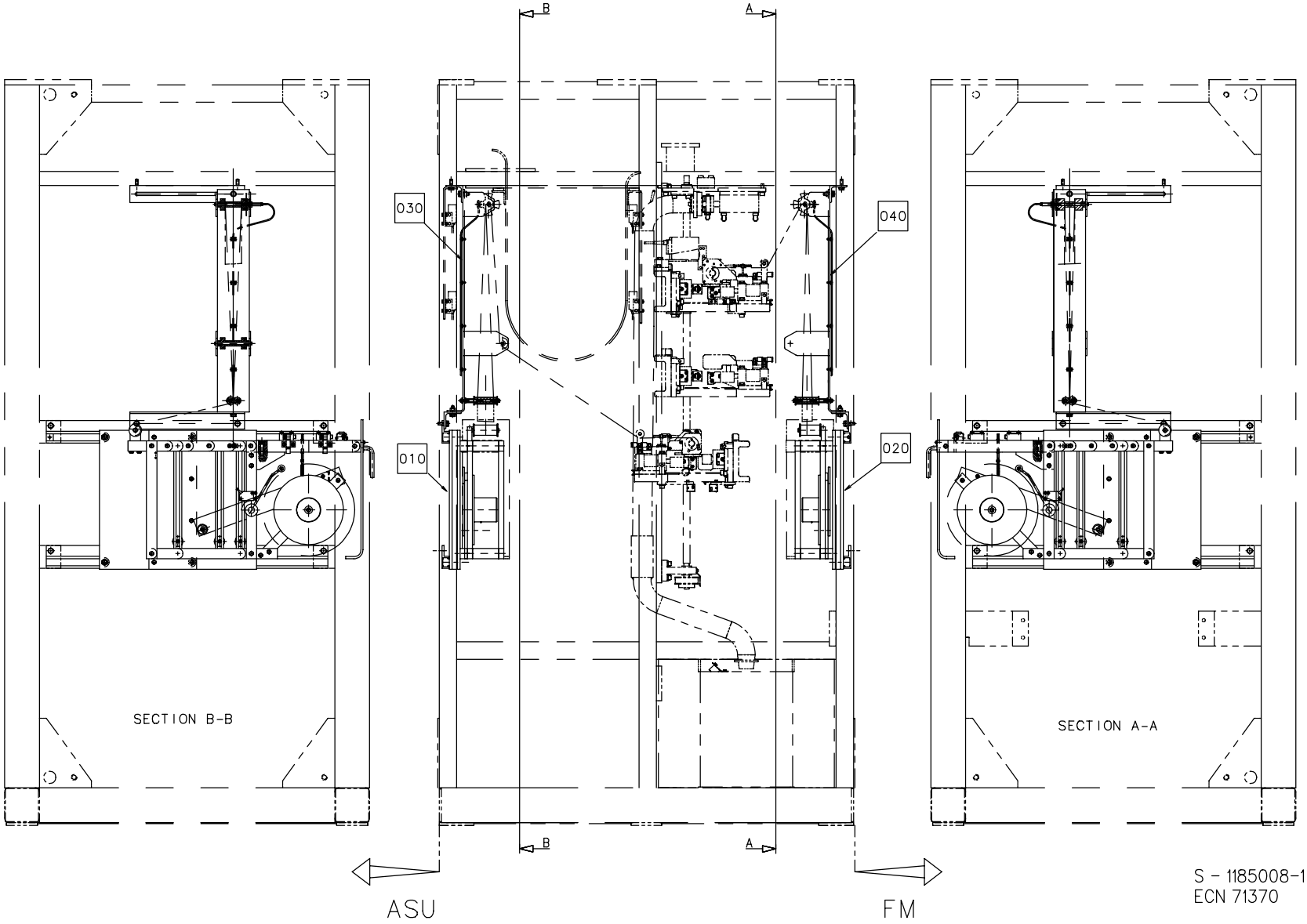
B
A
030
040
010
020
SECTION B-B
SECTION A-A
B
A
ASU
FM
S - 1185008-1
ECN 71370

Pos	Part No	SP	UN	Qty	Description	Page No
Common parts						
010	A1095893-0100	-		1	MAGAZINE PULLTAB	**153, 155**
020	A1095894-0100	-		1	MAGAZINE PATCH	**161, 163**
030	A1334066-0200	-		1	TAB TURNING DEVICE	**167**
040	A1334065-0200	-		1	PATCH TURNING DEVICE	**171**

Pos	Part No	SP	UN	Qty	Description	Page No

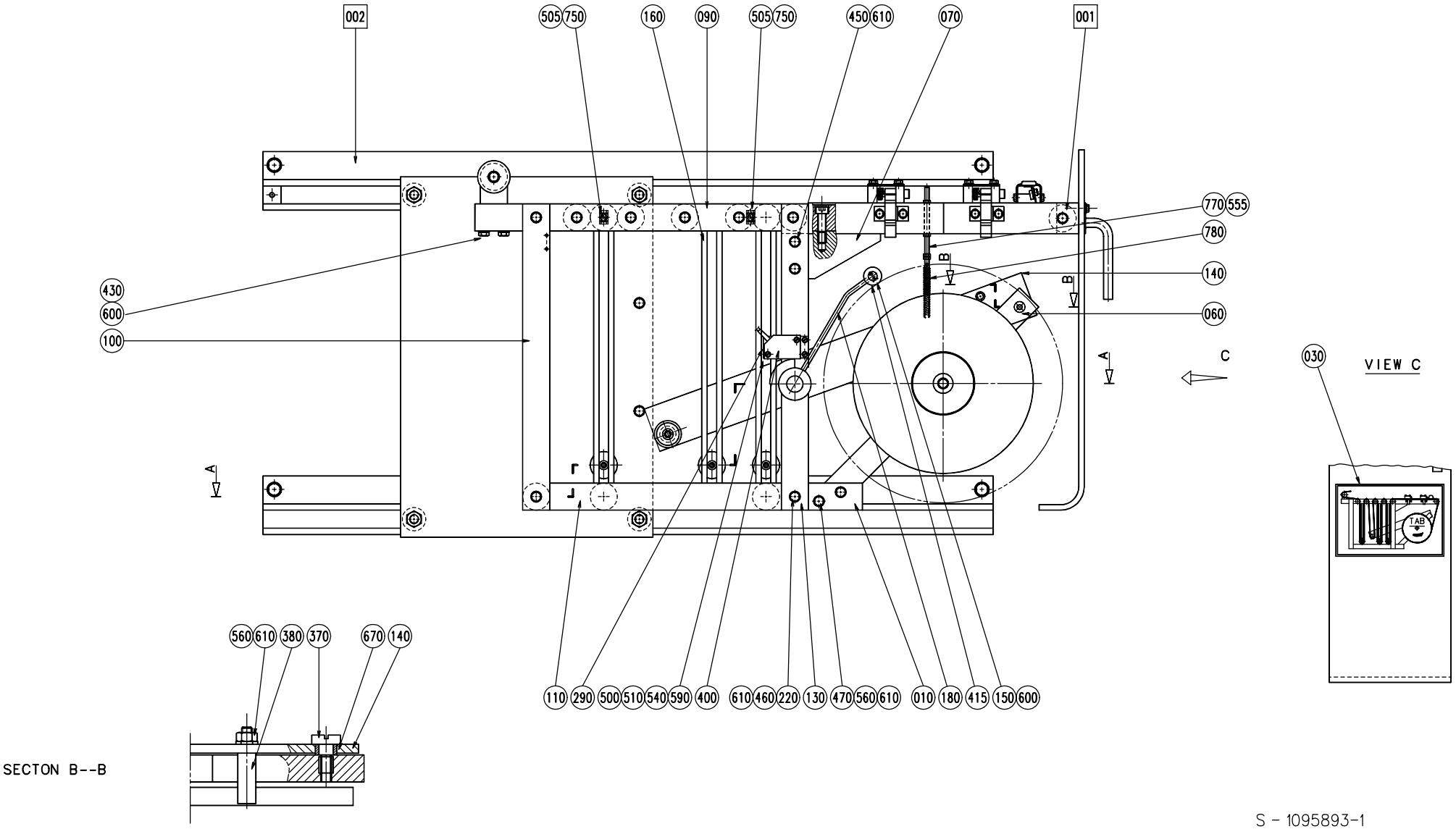

S - 1095893-1
ECN 70338

Pos	Part No	SP	UN	Qty	Description	Page No
Common parts						
001	A1095895-0100	-		1	SPLICING DEVICE	**157**
002	A1095923-0100	-		1	GUIDE PULLTAB	**159**
010	1129230-0000	-		1	BEAM	
020	1129223-0000	-		1	BEAM	
030	1285482-0000	-		1	LABEL	
040	1129222-0000	-		1	BOBBIN HOLDER	
050	556539-0000	-		1	BRAKE DISC	
060	546290-0000	-		1	BEAM	
070	1129231-0000	-		1	CANTILEVER	
090	1129224-0000	-		1	BEAM	
100	546294-0000	-		2	BEAM	
110	1129226-0000	-		1	BEAM	
120	546296-0000	-		1	BEAM	
130	546297-0000	-		1	BEAM	
140	1129450-0000	-		1	ARM	
145	2033-0013	-		1	WASHER	
150	234844-0000	J		1	WHEEL	
160	1140632-0000	-		12	POST	
170	533972-0000	-		1	INDICATOR CURVE	
180	1129510-0000	-		1	ARM	
190	534497-0000	-		6	SPACER	
200	538726-0000	-		2	WASHER	
210	538740-0003	-		1	SPACER	
220	1129235-0000	-		8	SHAFT	
230	1129233-0000	-		3	SHAFT	
240	1129780-0000	D		1	ROLL	
250	1129234-0000	D		6	ROLL	
260	1129495-0000	-		1	BLOCKING PIECE	
270	546303-0000	-		1	SHAFT	
290	546305-0000	-		1	SHEET	
300	546306-0000	-		1	SHAFT	
310	1129232-0000	D		3	ROLL	
330	1129237-0000	D		1	ROLL	
340	1129246-0000	D		1	ROLL	
370	556541-0000	-		1	SCREW	
380	556542-0000	-		1	PIN	
390	1129452-0000	-		1	SHAFT	
395	556544-0000	-		1	SPACER	
400	90044-0104	R		1	PROX.SWITCH IFM IN 3002 48VDC	
410	90287-0009	-		1	SPRINGLOADED SCREW M10X19	
415	311411-0138	-		2	SPLIT PIN SP1,6X12RFR	
420	312105-0327	-		1	SCREW M6S ISO 4017 M5X12 A280	
430	312105-0339	-		2	SCREW M6S ISO 4014 M5X40 A280	
440	312105-0287	-		1	SCREW M6S ISO 4017 M4X8 A280	
445	312105-0295	-		1	SCREW M6S ISO 4017 M4X20 A280	
450	312105-0370	-		8	SCREW M6S ISO 4017 M6X20 A280	
460	312105-0372	-		20	SCREW M6S ISO 4017 M6X25 A280	
470	312105-0376	-		2	SCREW M6S ISO 4017 M6X35 A280	
480	312115-0368	-		2	SCREW MC6S ISO 4762 M6X16 A280	
500	312125-0230	-		3	SLOTTED CHEESE HEAD ISO 1207 M3X20 RFR	
505	312125-0289	-		2	SLOTTED HEMCS4X10RFR	
510	90287-0069	-		1	SCREW, CHEESE HEAD,MCS M3X35 A4	
520	312318-0323	-		2	SET SCREW CUP POINT ISO 4029 M5X8 RFR	
530	312318-0364	-		5	STOP SCREW SK6SS6X10RFR	
540	312605-0310	-		4	NUT,HEXAGON M6M 3 A2 80	
550	312605-0312	-		1	NUT,HEXAGON,M4 RFR	
555	312605-0314	-		4	NUT,HEXAGON,M6M5 STAINLESS	
560	312605-0316	-		4	NUT,HEXAGON A280 M6M6	
570	312605-0318	-		3	NUT,HEXAGON,M8 RFR	
580	312705-0318	-		1	NUT,DOMED CAP,HEXAGON,M8	
590	315105-0124	-		4	WASHER,PLAIN ROUND 3,2X6	
595	315105-0136	-		1	WASHER,PLAIN ROUND 4,3X8 STAINLESS	
600	315105-0146	-		5	WASHER,PLAIN ROUND 5,3X10 STAINLESS	
610	315105-0153	-		30	WASHER,PLAIN ROUND 6,4X12 STAINLESS	
620	315105-0165	-		5	WASHER,PLAIN ROUND 8,4X16 STAINLESS	
640	315750-0107	-		1	CIRCLIP SGA10	
650	315753-0117	-		1	RETAINING RINGS FOR HOLE 22	
660	321111-0274	D		1	FLANGE BUSHING, 18X24X18	
670	321116-0095	-		1	BEARING BUSHING WITHOUT FLANGE, 8X12X6	
700	321300-0098	M		2	BALL BEARING 8X22X7	
750	352113-0205	-		2	ANCHOR TM2S8-C100	
770	1279834-0000	D		1	BOLT	
780	90335-0081	D		1	SPRING	

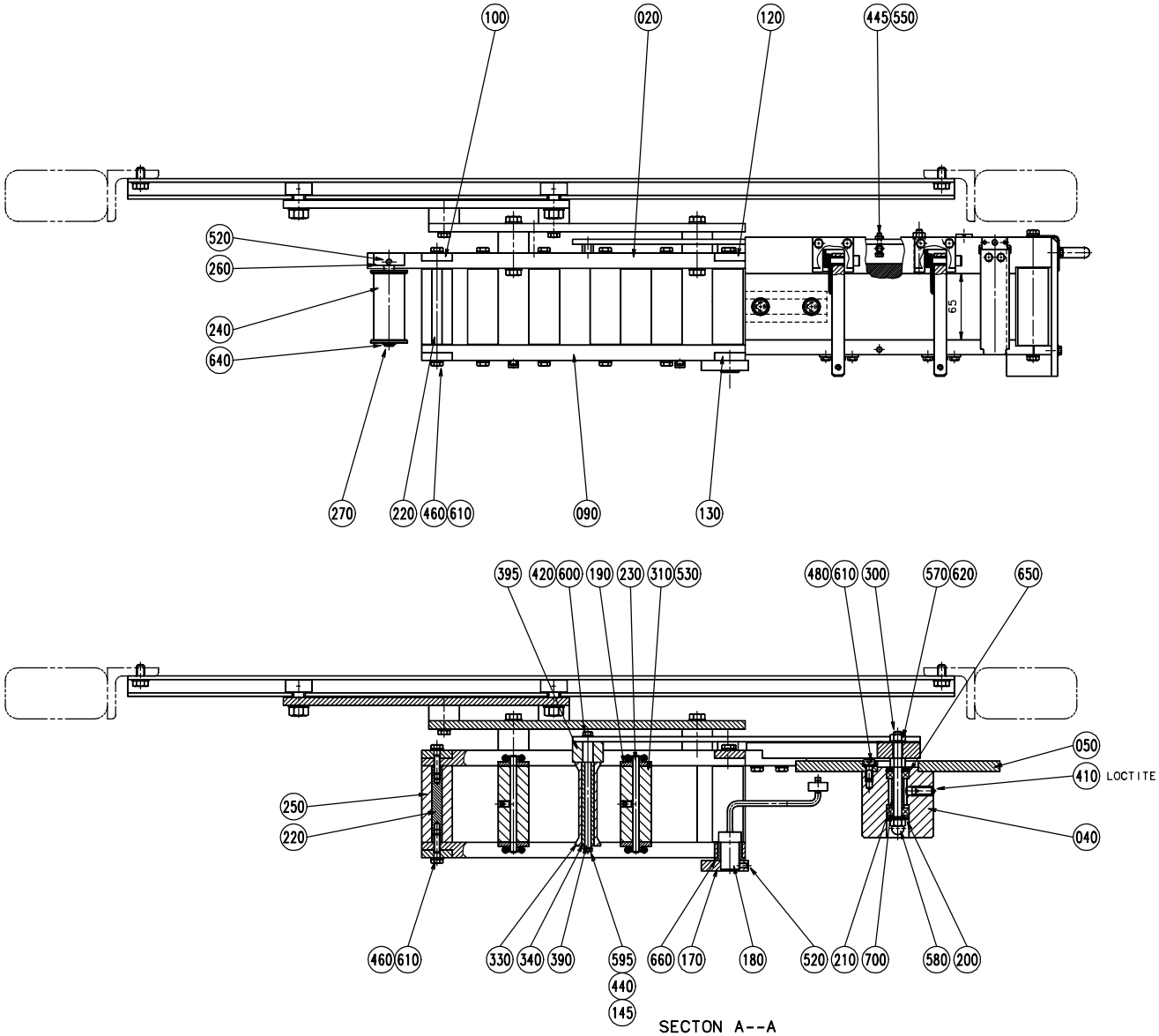

S - 1095893-2
ECN 70338

Pos	Part No	SP	UN	Qty	Description	Page No
Common parts						
001	A1095895-0100	-		1	SPLICING DEVICE	**157**
002	A1095923-0100	-		1	GUIDE PULLTAB	**159**
010	1129230-0000	-		1	BEAM	
020	1129223-0000	-		1	BEAM	
030	1285482-0000	-		1	LABEL	
040	1129222-0000	-		1	BOBBIN HOLDER	
050	556539-0000	-		1	BRAKE DISC	
060	546290-0000	-		1	BEAM	
070	1129231-0000	-		1	CANTILEVER	
090	1129224-0000	-		1	BEAM	
100	546294-0000	-		2	BEAM	
110	1129226-0000	-		1	BEAM	
120	546296-0000	-		1	BEAM	
130	546297-0000	-		1	BEAM	
140	1129450-0000	-		1	ARM	
145	2033-0013	-		1	WASHER	
150	234844-0000	J		1	WHEEL	
160	1140632-0000	-		12	POST	
170	533972-0000	-		1	INDICATOR CURVE	
180	1129510-0000	-		1	ARM	
190	534497-0000	-		6	SPACER	
200	538726-0000	-		2	WASHER	
210	538740-0003	-		1	SPACER	
220	1129235-0000	-		8	SHAFT	
230	1129233-0000	-		3	SHAFT	
240	1129780-0000	D		1	ROLL	
250	1129234-0000	D		6	ROLL	
260	1129495-0000	-		1	BLOCKING PIECE	
270	546303-0000	-		1	SHAFT	
290	546305-0000	-		1	SHEET	
300	546306-0000	-		1	SHAFT	
310	1129232-0000	D		3	ROLL	
330	1129237-0000	D		1	ROLL	
340	1129246-0000	D		1	ROLL	
370	556541-0000	-		1	SCREW	
380	556542-0000	-		1	PIN	
390	1129452-0000	-		1	SHAFT	
395	556544-0000	-		1	SPACER	
400	90044-0104	R		1	PROX.SWITCH IFM IN 3002 48VDC	
410	90287-0009	-		1	SPRINGLOADED SCREW M10X19	
415	311411-0138	-		2	SPLIT PIN SP1,6X12RFR	
420	312105-0327	-		1	SCREW M6S ISO 4017 M5X12 A280	
430	312105-0339	-		2	SCREW M6S ISO 4014 M5X40 A280	
440	312105-0287	-		1	SCREW M6S ISO 4017 M4X8 A280	
445	312105-0295	-		1	SCREW M6S ISO 4017 M4X20 A280	
450	312105-0370	-		8	SCREW M6S ISO 4017 M6X20 A280	
460	312105-0372	-		20	SCREW M6S ISO 4017 M6X25 A280	
470	312105-0376	-		2	SCREW M6S ISO 4017 M6X35 A280	
480	312115-0368	-		2	SCREW MC6S ISO 4762 M6X16 A280	
500	312125-0230	-		3	SLOTTED CHEESE HEAD ISO 1207 M3X20 RFR	
505	312125-0289	-		2	SLOTTED HEMCS4X10RFR	
510	90287-0069	-		1	SCREW, CHEESE HEAD,MCS M3X35 A4	
520	312318-0323	-		2	SET SCREW CUP POINT ISO 4029 M5X8 RFR	
530	312318-0364	-		5	STOP SCREW SK6SS6X10RFR	
540	312605-0310	-		4	NUT,HEXAGON M6M 3 A2 80	
550	312605-0312	-		1	NUT,HEXAGON,M4 RFR	
555	312605-0314	-		4	NUT,HEXAGON,M6M5 STAINLESS	
560	312605-0316	-		4	NUT,HEXAGON A280 M6M6	
570	312605-0318	-		3	NUT,HEXAGON,M8 RFR	
580	312705-0318	-		1	NUT,DOMED CAP,HEXAGON,M8	
590	315105-0124	-		4	WASHER,PLAIN ROUND 3,2X6	
595	315105-0136	-		1	WASHER,PLAIN ROUND 4,3X8 STAINLESS	
600	315105-0146	-		5	WASHER,PLAIN ROUND 5,3X10 STAINLESS	
610	315105-0153	-		30	WASHER,PLAIN ROUND 6,4X12 STAINLESS	
620	315105-0165	-		5	WASHER,PLAIN ROUND 8,4X16 STAINLESS	
640	315750-0107	-		1	CIRCLIP SGA10	
650	315753-0117	-		1	RETAINING RINGS FOR HOLE 22	
660	321111-0274	D		1	FLANGE BUSHING, 18X24X18	
670	321116-0095	-		1	BEARING BUSHING WITHOUT FLANGE, 8X12X6	
700	321300-0098	M		2	BALL BEARING 8X22X7	
750	352113-0205	-		2	ANCHOR TM2S8-C100	
770	1279834-0000	D		1	BOLT	
780	90335-0081	D		1	SPRING	

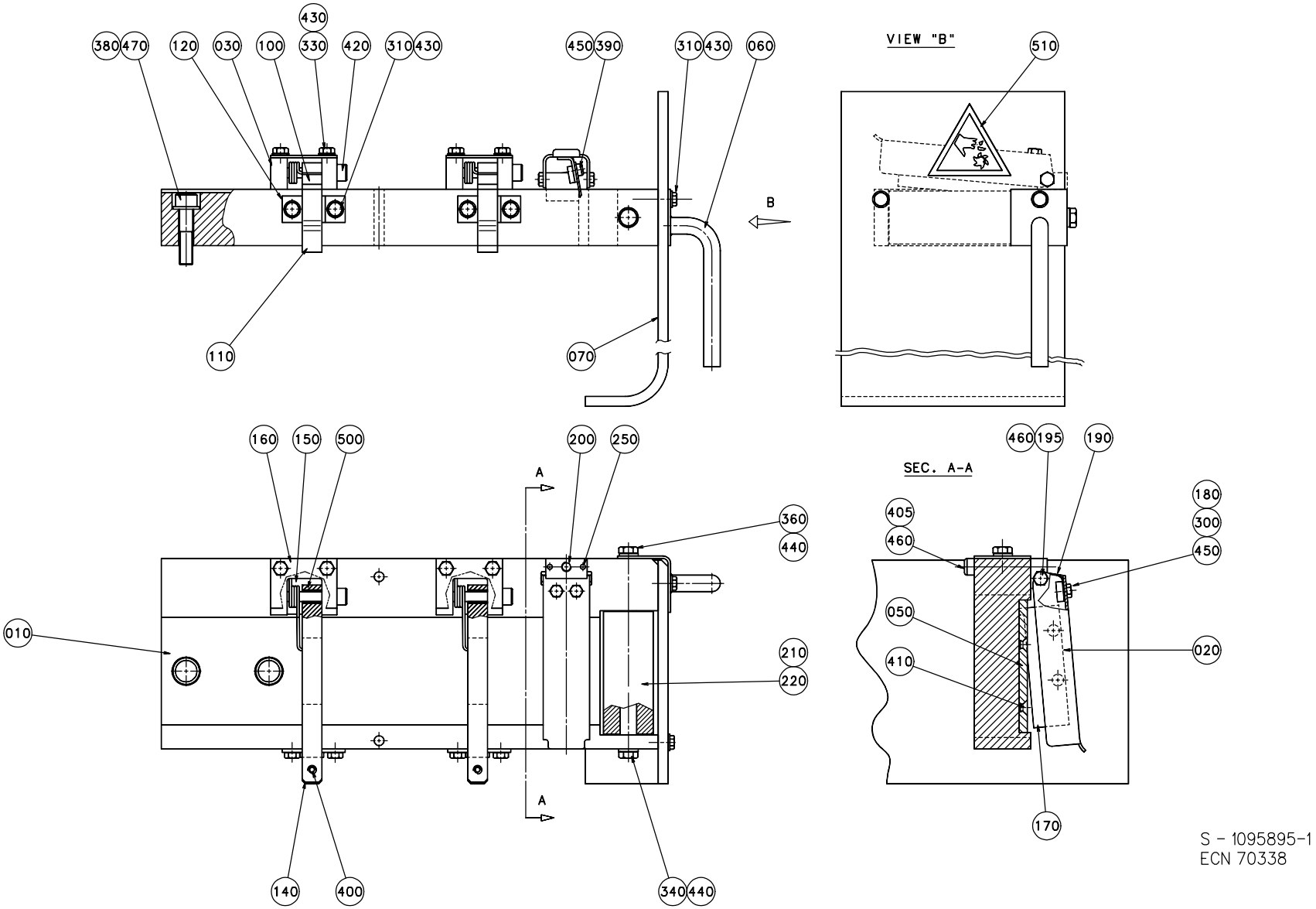

S - 1095895-1
ECN 70338

EC No: - - 20000423
Group number: 1095895-0100
Assembly Drawing: 1095895-1

Issue: 20000706

Pos	Part No	SP	UN	Qty	Description	Page No
Common parts						
010	1129221-0000	-		1	SPLICING TABLE	
020	1129239-0000	-		1	KNIFE HOLDER	
030	532017-0000	-		2	MOUNTING LUG	
050	544422-0000	D		1	KNIFE	
060	1255834-0000	-		1	HANDLE	
070	1255835-0000	-		1	PROTECTION	
100	532020-0000	-		2	LOCK WASHER	
110	532021-0000	-		2	LOCKING LOOP	
120	532022-0000	-		2	LOCK BAR	
140	1129252-0000	-		2	LOCK GRIP	
150	544427-0000	D		2	TURN SPRING	
160	544428-0000	-		2	SHEET	
170	1129238-0000	D		1	KNIFE	
180	522393-0000	-		1	NUT	
190	522394-0000	D		1	SPRING	
195	522395-0000	-		2	SCREW	
200	552049-0000	-		1	LUG	
210	1129235-0000	-		1	SHAFT	
220	1129234-0000	-		1	ROLL	
250	90258-0031	-		2	PINS,SLOTTED TUBULAR, 3X 20, DIN1481	
300	312105-0287	-		2	SCREW M6S ISO 4017 M4X8 A280	
310	312105-0327	-		6	SCREW M6S ISO 4017 M5X12 A280	
330	312105-0335	-		4	SCREW M6S ISO 4017 M5X30 A280	
340	312105-0370	-		1	SCREW M6S ISO 4017 M6X20 A280	
360	312105-0379	-		1	SCREW M6S ISO 4014 M6X45 A280	
380	312115-0457	-		2	SCREW MC6S ISO 4762 M8X35 A280	
390	312115-0287	-		2	SCREW MC6S ISO 4762 M4X8 A280	
400	312155-0291	-		2	SCREW MF6S DIN 7991 M4X12 A480	
405	312115-0379	-		1	SCREW MC6S ISO 4762 M6X45 A280	
410	312155-0325	-		2	SCREW MF6S5X10RFR	
420	312180-0374	-		2	HEX. SOCKET HEAD SHOULD. ISO 7379 M5X30	
430	315105-0146	-		10	WASHER,PLAIN ROUND 5,3X10 STAINLESS	
440	315105-0153	-		2	WASHER,PLAIN ROUND 6,4X12 STAINLESS	
450	315402-0136	-		4	WASHER FBB4,1RFR	
460	315402-0156	-		3	WASHER FBB6,5RFR	
470	315105-0165	-		2	WASHER,PLAIN ROUND 8,4X16 STAINLESS	
500	321120-0102	-		2	BUSHING, 6X8X10	
510	359705-0009	-		1	WARNING SIGN "SHARP PART"	

Pos	Part No	SP	UN	Qty	Description	Page No

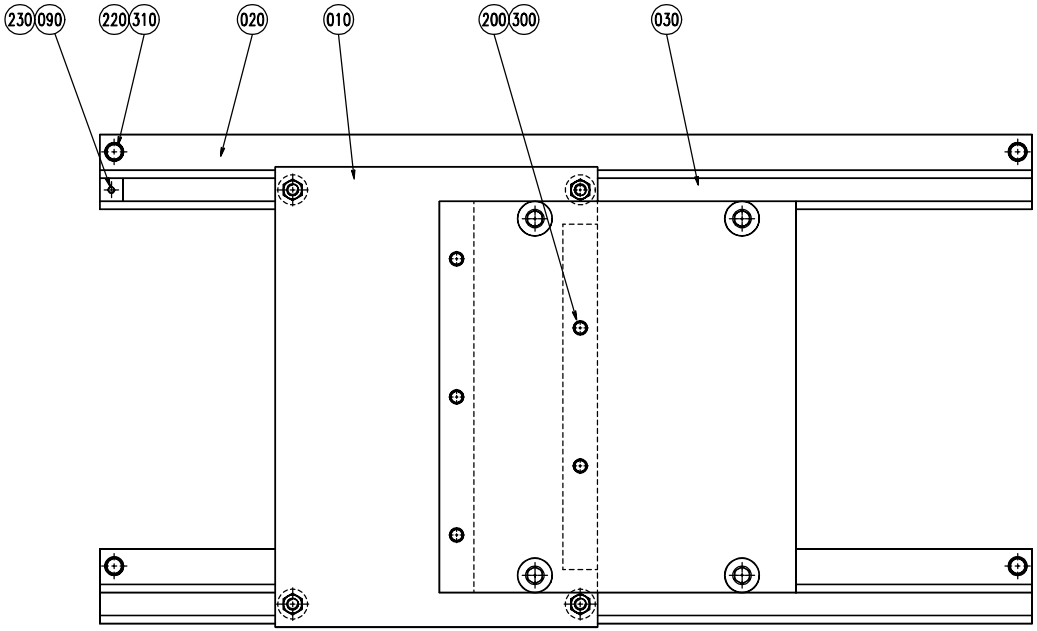

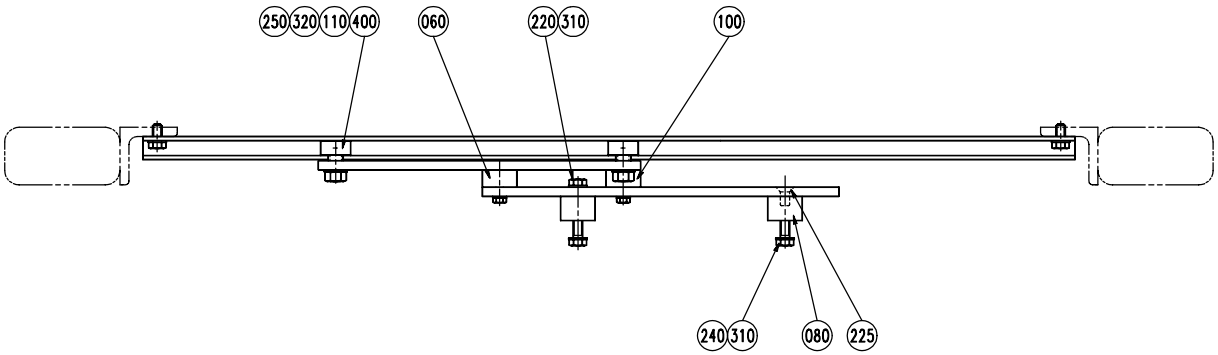

S - 1095923-1
ECN 70338

Pos	Part No	SP	UN	Qty	Description	Page No
Common parts						
010	1129240-0000	-		1	SHEET	
020	1129241-0000	-		2	STEERING	
030	1129454-0000	-		1	SHEET	
060	1129462-0000	-		1	SPACER	
080	1129242-0000	-		4	SPACER	
090	1129245-0000	-		2	STOP	
100	1129461-0000	-		1	SPACER	
110	1140626-0000	-		4	SPACER	
200	312105-0374	-		6	SCREW M6S ISO 4017 M6X30 A280	
220	312105-0449	-		6	SCREW M6S ISO 4017 M8X16 A280	
225	312155-0449	-		2	SCREW MF6S DIN 7991 M8X16 A280	
230	312318-0366	-		2	SET SCREW CUP POINT ISO 4029 M6X12 RFR	
240	312105-0453	-		4	SCREW M6S ISO 4017 M8X25 A280	
245	312125-0289	-		2	SLOTTED HEMCS4X10RFR	
250	312630-0320	-		4	NUTS,HEXAGON,M10X1	
300	315105-0153	-		6	WASHER,PLAIN ROUND 6,4X12 STAINLESS	
310	315105-0165	-		10	WASHER,PLAIN ROUND 8,4X16 STAINLESS	
320	315105-0173	-		4	WASHER,PLAIN ROUND 10,5X22 STAINLESS	
400	321582-0150	D		4	BEARINGS,CAM ROLLER KR26PP	
410	352113-0205	-		2	ANCHOR TM2S8-C100	

Pos	Part No	SP	UN	Qty	Description	Page No

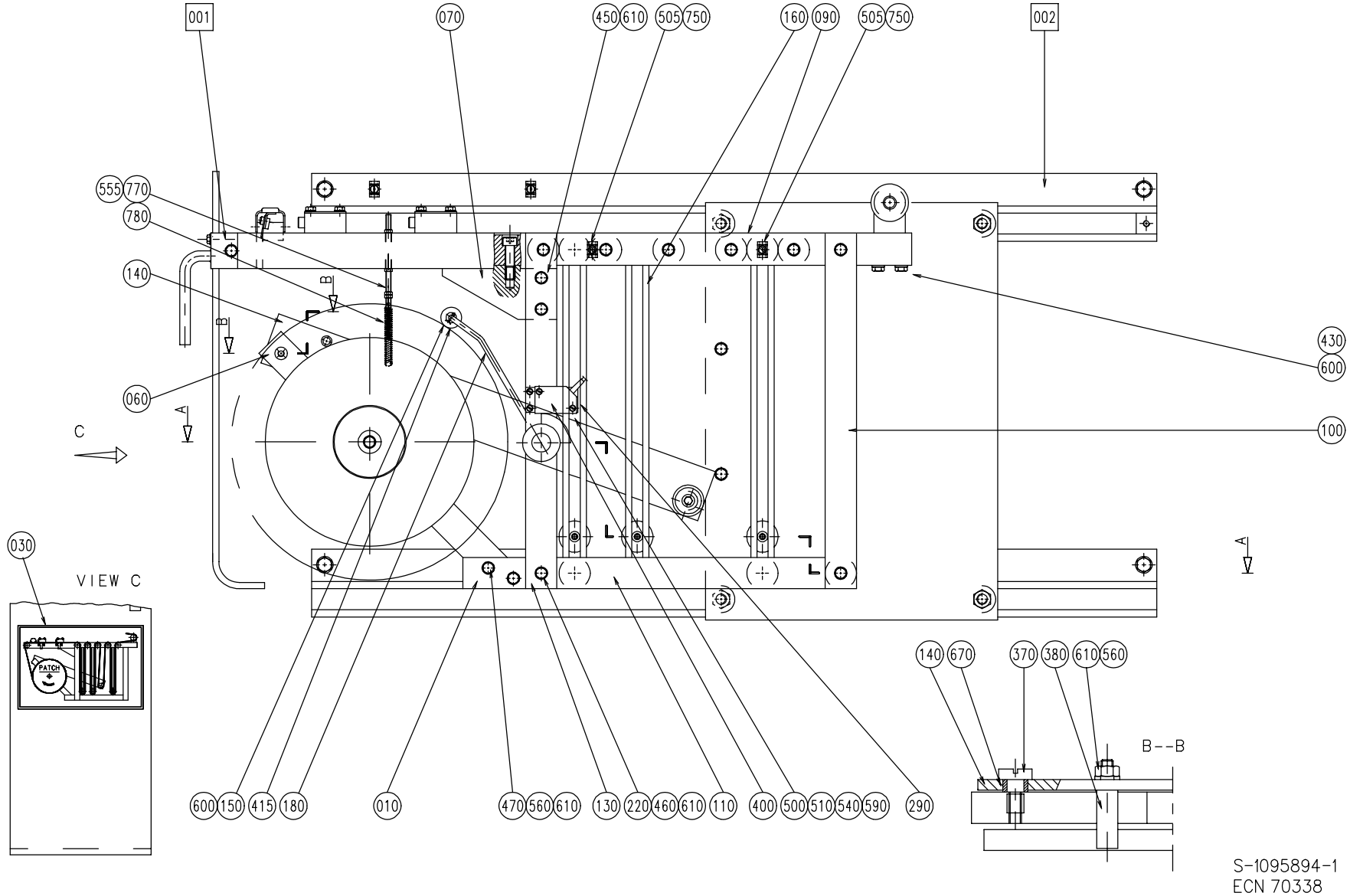
001
070
450 610
505 750
160 090
505 750
002
555 770
780
140
060
430
600
100
030
VIEW C
PATCH
600 150
415 180
010
470 560 610
130 220 460 610 110
400 500 510 540 590
290
140 670
370 380 610 560
B--B
S-1095894-1
ECN 70338

Pos	Part No	SP	UN	Qty	Description	Page No
Common parts						
001	A1095895-0100	-		1	SPLICING DEVICE	**157**
002	A1095924-0100	-		1	GUIDE PATCH	**165**
010	1129225-0000	-		1	BEAM	
020	1129223-0000	-		1	BEAM	
030	1285481-0000	-		1	LABEL	
040	546256-0000	-		1	BOBBIN HOLDER	
050	556539-0000	-		1	BRAKE DISC	
060	546290-0000	-		1	BEAM	
070	546291-0000	-		1	BRACKET	
090	1129224-0000	-		1	BEAM	
100	546294-0000	-		2	BEAM	
110	1129226-0000	-		1	BEAM	
120	1260379-0000	-		1	BEAM	
130	1129227-0000	-		1	POST	
140	1129450-0000	-		1	ARM	
145	2033-0013	-		1	WASHER	
150	234844-0000	J		1	WHEEL	
160	1140632-0000	-		12	POST	
170	533972-0000	-		1	INDICATOR CURVE	
180	1103845-0000	-		1	ARM	
190	534497-0000	-		6	SPACER	
200	538726-0000	-		2	WASHER	
210	538740-0003	-		1	SPACER	
220	546298-0000	-		8	SHAFT	
230	546299-0000	-		3	SHAFT	
240	546300-0000	D		1	ROLL	
250	546301-0000	D		6	ROLL	
260	1129495-0000	-		1	BLOCKING PIECE	
270	546303-0000	-		1	SHAFT	
290	546305-0000	-		1	SHEET	
300	546306-0000	-		1	SHAFT	
310	546307-0000	D		3	ROLL	
330	547745-0000	D		1	ROLL	
340	547746-0000	D		1	ROLL	
370	556541-0000	-		1	SCREW	
380	556542-0000	-		1	PIN	
390	1129451-0000	-		1	SHAFT	
395	556544-0000	-		1	SPACER	
400	90044-0104	R		1	PROX.SWITCH IFM IN 3002 48VDC	
410	90287-0009	-		1	SPRINGLOADED SCREW M10X19	
415	311411-0138	-		2	SPLIT PIN SP1,6X12RFR	
420	312105-0327	-		1	SCREW M6S ISO 4017 M5X12 A280	
430	312105-0339	-		2	SCREW M6S ISO 4014 M5X40 A280	
440	312105-0287	-		1	SCREW M6S ISO 4017 M4X8 A280	
445	312105-0295	-		1	SCREW M6S ISO 4017 M4X20 A280	
450	312105-0370	-		8	SCREW M6S ISO 4017 M6X20 A280	
460	312105-0372	-		20	SCREW M6S ISO 4017 M6X25 A280	
470	312105-0376	-		2	SCREW M6S ISO 4017 M6X35 A280	
480	312115-0368	-		2	SCREW MC6S ISO 4762 M6X16 A280	
500	312125-0230	-		3	SLOTTED CHEESE HEAD ISO 1207 M3X20 RFR	
505	312125-0289	-		2	SLOTTED HEMCS4X10RFR	
510	90287-0069	-		1	SCREW, CHEESE HEAD,MCS M3X35 A4	
520	312318-0323	-		2	SET SCREW CUP POINT ISO 4029 M5X8 RFR	
530	312318-0364	-		5	STOP SCREW SK6SS6X10RFR	
540	312605-0310	-		4	NUT,HEXAGON M6M 3 A2 80	
550	312605-0312	-		1	NUT,HEXAGON,M4 RFR	
555	312605-0314	-		4	NUT,HEXAGON,M6M5 STAINLESS	
560	312605-0316	-		4	NUT,HEXAGON A280 M6M6	
570	312605-0318	-		3	NUT,HEXAGON,M8 RFR	
580	312705-0318	-		1	NUT,DOMED CAP,HEXAGON,M8	
590	315105-0124	-		4	WASHER,PLAIN ROUND 3,2X6	
595	315105-0136	-		1	WASHER,PLAIN ROUND 4,3X8 STAINLESS	
600	315105-0146	-		5	WASHER,PLAIN ROUND 5,3X10 STAINLESS	
610	315105-0153	-		30	WASHER,PLAIN ROUND 6,4X12 STAINLESS	
620	315105-0165	-		5	WASHER,PLAIN ROUND 8,4X16 STAINLESS	
640	315750-0107	-		1	CIRCLIP SGA10	
650	315753-0117	-		1	RETAINING RINGS FOR HOLE 22	
660	321111-0274	D		1	FLANGE BUSHING, 18X24X18	
670	321116-0095	-		1	BEARING BUSHING WITHOUT FLANGE, 8X12X6	
700	321300-0098	M		2	BALL BEARING 8X22X7	
750	352113-0205	-		2	ANCHOR TM2S8-C100	
770	1279834-0000	D		1	BOLT	
780	90335-0081	D		1	SPRING	

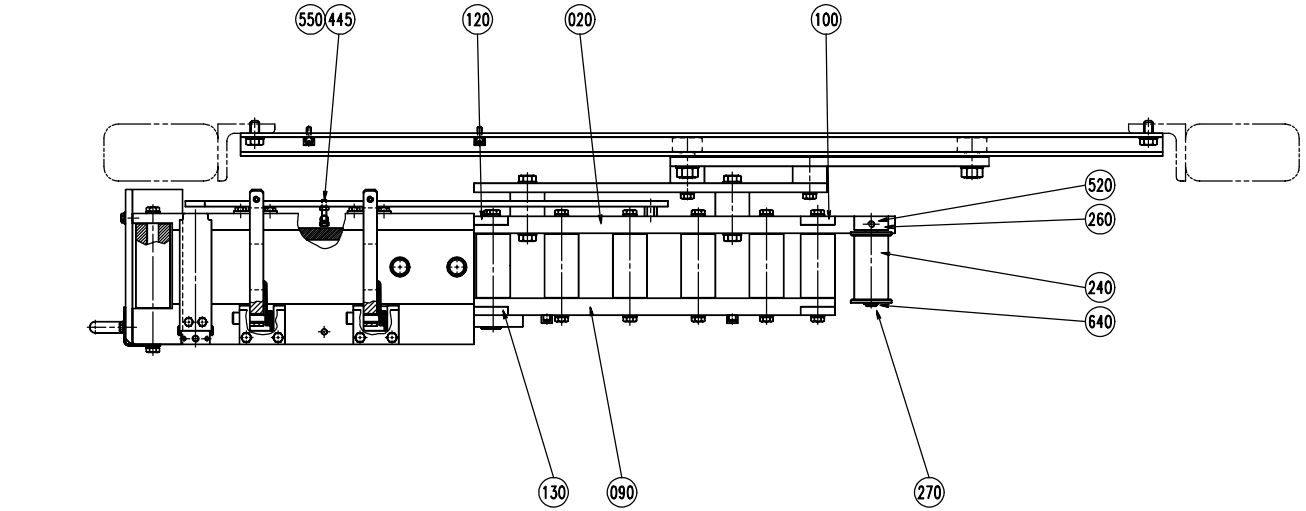

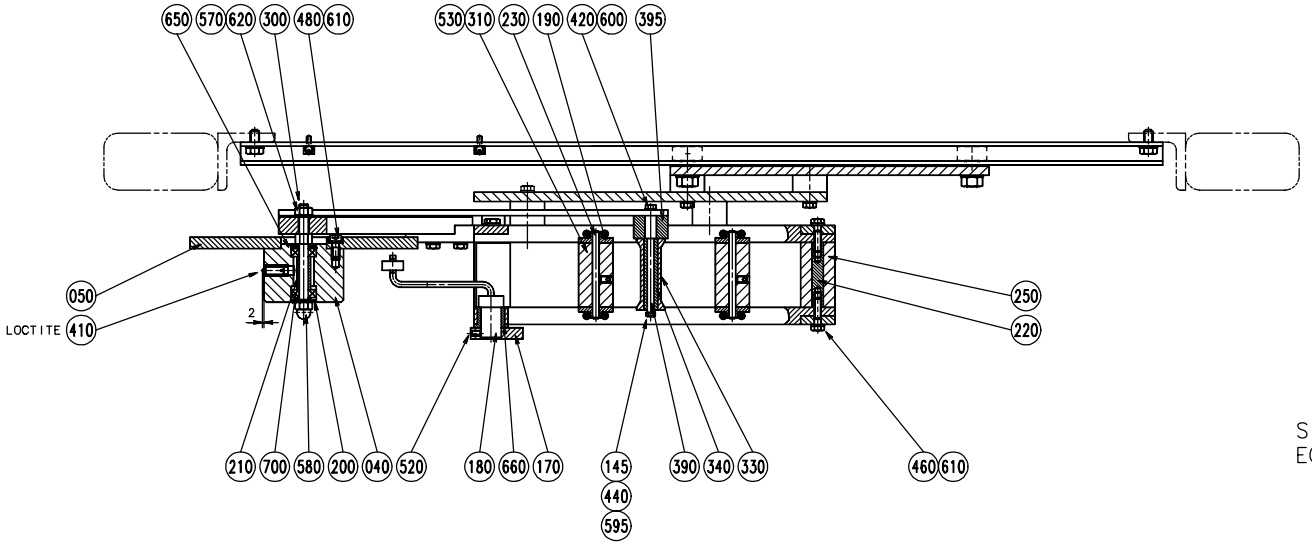

S - 1095894-2
ECN 70338

Pos	Part No	SP	UN	Qty	Description	Page No
Common parts						
001	A1095895-0100	-		1	SPLICING DEVICE	**157**
002	A1095924-0100	-		1	GUIDE PATCH	**165**
010	1129225-0000	-		1	BEAM	
020	1129223-0000	-		1	BEAM	
030	1285481-0000	-		1	LABEL	
040	546256-0000	-		1	BOBBIN HOLDER	
050	556539-0000	-		1	BRAKE DISC	
060	546290-0000	-		1	BEAM	
070	546291-0000	-		1	BRACKET	
090	1129224-0000	-		1	BEAM	
100	546294-0000	-		2	BEAM	
110	1129226-0000	-		1	BEAM	
120	1260379-0000	-		1	BEAM	
130	1129227-0000	-		1	POST	
140	1129450-0000	-		1	ARM	
145	2033-0013	-		1	WASHER	
150	234844-0000	J		1	WHEEL	
160	1140632-0000	-		12	POST	
170	533972-0000	-		1	INDICATOR CURVE	
180	1103845-0000	-		1	ARM	
190	534497-0000	-		6	SPACER	
200	538726-0000	-		2	WASHER	
210	538740-0003	-		1	SPACER	
220	546298-0000	-		8	SHAFT	
230	546299-0000	-		3	SHAFT	
240	546300-0000	D		1	ROLL	
250	546301-0000	D		6	ROLL	
260	1129495-0000	-		1	BLOCKING PIECE	
270	546303-0000	-		1	SHAFT	
290	546305-0000	-		1	SHEET	
300	546306-0000	-		1	SHAFT	
310	546307-0000	D		3	ROLL	
330	547745-0000	D		1	ROLL	
340	547746-0000	D		1	ROLL	
370	556541-0000	-		1	SCREW	
380	556542-0000	-		1	PIN	
390	1129451-0000	-		1	SHAFT	
395	556544-0000	-		1	SPACER	
400	90044-0104	R		1	PROX.SWITCH IFM IN 3002 48VDC	
410	90287-0009	-		1	SPRINGLOADED SCREW M10X19	
415	311411-0138	-		2	SPLIT PIN SP1,6X12RFR	
420	312105-0327	-		1	SCREW M6S ISO 4017 M5X12 A280	
430	312105-0339	-		2	SCREW M6S ISO 4014 M5X40 A280	
440	312105-0287	-		1	SCREW M6S ISO 4017 M4X8 A280	
445	312105-0295	-		1	SCREW M6S ISO 4017 M4X20 A280	
450	312105-0370	-		8	SCREW M6S ISO 4017 M6X20 A280	
460	312105-0372	-		20	SCREW M6S ISO 4017 M6X25 A280	
470	312105-0376	-		2	SCREW M6S ISO 4017 M6X35 A280	
480	312115-0368	-		2	SCREW MC6S ISO 4762 M6X16 A280	
500	312125-0230	-		3	SLOTTED CHEESE HEAD ISO 1207 M3X20 RFR	
505	312125-0289	-		2	SLOTTED HEMCS4X10RFR	
510	90287-0069	-		1	SCREW, CHEESE HEAD,MCS M3X35 A4	
520	312318-0323	-		2	SET SCREW CUP POINT ISO 4029 M5X8 RFR	
530	312318-0364	-		5	STOP SCREW SK6SS6X10RFR	
540	312605-0310	-		4	NUT,HEXAGON M6M 3 A2 80	
550	312605-0312	-		1	NUT,HEXAGON,M4 RFR	
555	312605-0314	-		4	NUT,HEXAGON,M6M5 STAINLESS	
560	312605-0316	-		4	NUT,HEXAGON A280 M6M6	
570	312605-0318	-		3	NUT,HEXAGON,M8 RFR	
580	312705-0318	-		1	NUT,DOMED CAP,HEXAGON,M8	
590	315105-0124	-		4	WASHER,PLAIN ROUND 3,2X6	
595	315105-0136	-		1	WASHER,PLAIN ROUND 4,3X8 STAINLESS	
600	315105-0146	-		5	WASHER,PLAIN ROUND 5,3X10 STAINLESS	
610	315105-0153	-		30	WASHER,PLAIN ROUND 6,4X12 STAINLESS	
620	315105-0165	-		5	WASHER,PLAIN ROUND 8,4X16 STAINLESS	
640	315750-0107	-		1	CIRCLIP SGA10	
650	315753-0117	-		1	RETAINING RINGS FOR HOLE 22	
660	321111-0274	D		1	FLANGE BUSHING, 18X24X18	
670	321116-0095	-		1	BEARING BUSHING WITHOUT FLANGE, 8X12X6	
700	321300-0098	M		2	BALL BEARING 8X22X7	
750	352113-0205	-		2	ANCHOR TM2S8-C100	
770	1279834-0000	D		1	BOLT	
780	90335-0081	D		1	SPRING	

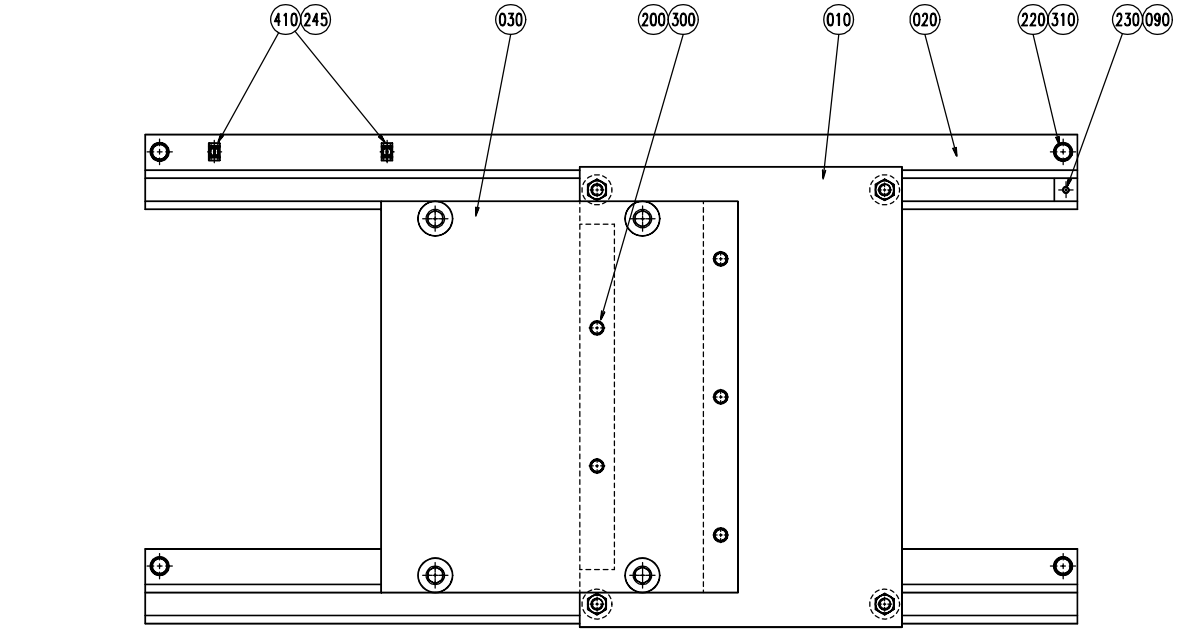

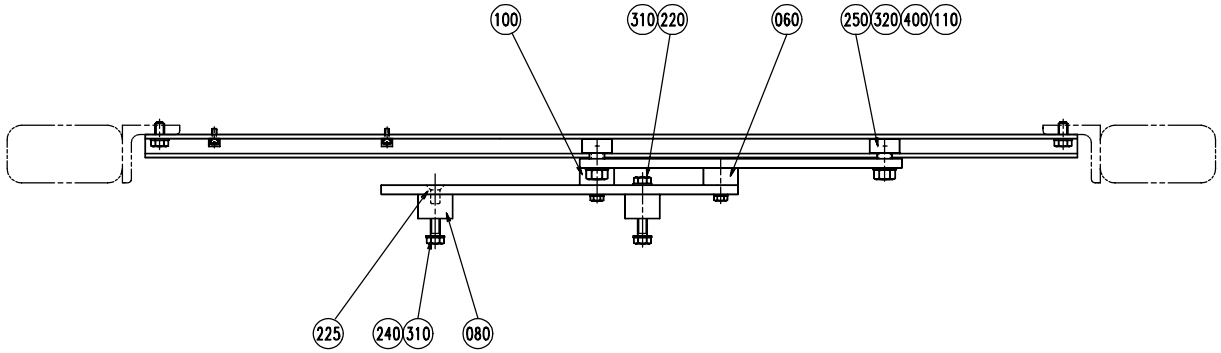

S - 1095924-1
ECN 70338

Pos	Part No	SP	UN	Qty	Description	Page No
Common parts						
010	1129240-0000	-		1	SHEET	
020	1129241-0000	-		2	STEERING	
030	1129454-0000	-		1	SHEET	
060	1129462-0000	-		1	SPACER	
080	1129242-0000	-		4	SPACER	
090	1129245-0000	-		2	STOP	
100	1129461-0000	-		1	SPACER	
110	1140626-0000	-		4	SPACER	
200	312105-0374	-		6	SCREW M6S ISO 4017 M6X30 A280	
220	312105-0449	-		6	SCREW M6S ISO 4017 M8X16 A280	
225	312155-0449	-		2	SCREW MF6S DIN 7991 M8X16 A280	
230	312318-0366	-		2	SET SCREW CUP POINT ISO 4029 M6X12 RFR	
240	312105-0453	-		4	SCREW M6S ISO 4017 M8X25 A280	
245	312125-0289	-		2	SLOTTED HEMCS4X10RFR	
250	312630-0320	-		4	NUTS,HEXAGON,M10X1	
300	315105-0153	-		6	WASHER,PLAIN ROUND 6,4X12 STAINLESS	
310	315105-0165	-		10	WASHER,PLAIN ROUND 8,4X16 STAINLESS	
320	315105-0173	-		4	WASHER,PLAIN ROUND 10,5X22 STAINLESS	
400	321582-0150	D		4	BEARINGS,CAM ROLLER KR26PP	
410	352113-0205	-		2	ANCHOR TM2S8-C100	

Pos	Part No	SP	UN	Qty	Description	Page No

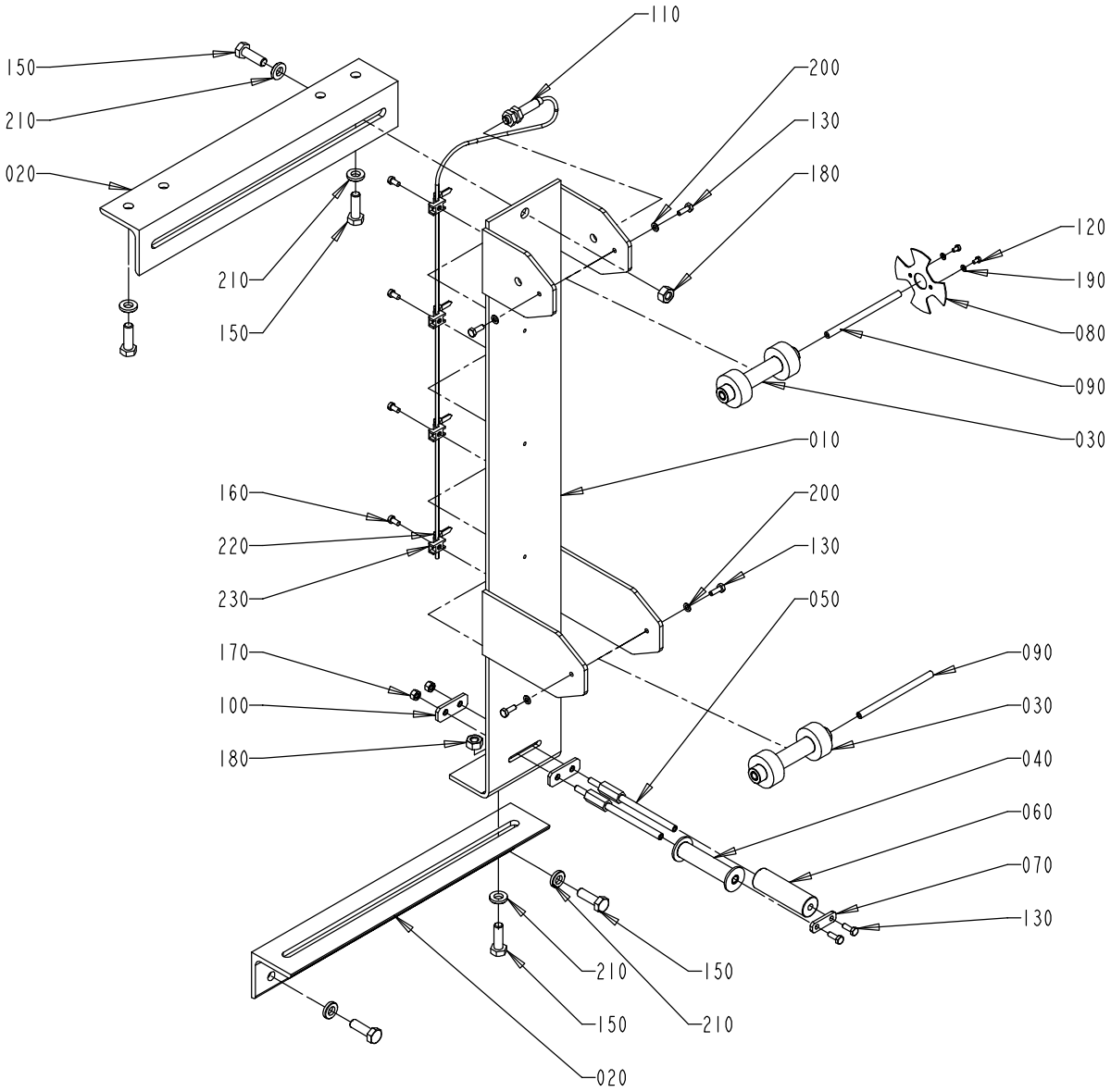

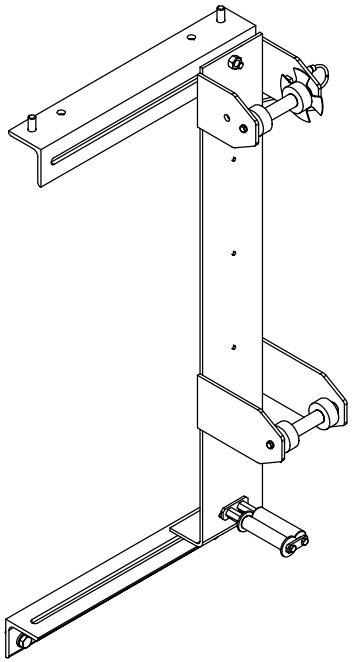

S - 1334066-2
ECN 73119

Pos	Part No	SP	UN	Qty	Description	Page No
Common parts						
010	1317670-0000	-		1	BRACKET	
020	1140817-0000	-		2	BRACKET	
030	A1519829-0100	-		1	TAB TURNING DEVICE	**169**
040	1317671-0000	D		1	ROLLER	
050	1317672-0000	M		2	AXLE PIN	
060	1140727-0000	D		1	ROLLER	
070	1317673-0000	-		1	PLATE	
080	1317674-0000	D		1	FLAG	
090	1317675-0000	M		2	AXLE PIN	
100	1317676-0000	-		2	PLATE	
110	90044-0145	R		1	PROX.SW. 922 AAIY-A9P-050-LZ876	
120	90287-0151	-		2	SCREW,CHEESE HEAD,MSCS DIN85, M3X5	
130	312105-0291	-		6	SCREW M6S ISO 4017 M4X12 A280	
150	312105-0453	-		6	SCREW M6S ISO 4017 M8X25 A280	
160	312125-0287	-		4	SLOTTED CHEESE HEAD ISO 1207 M4X8 RFR	
170	312605-0314	-		2	NUT,HEXAGON,M6M5 STAINLESS	
180	312605-0318	-		2	NUT,HEXAGON,M8 RFR	
190	315105-0124	-		2	WASHER,PLAIN ROUND 3,2X6	
200	315105-0136	-		4	WASHER,PLAIN ROUND 4,3X8 STAINLESS	
210	315115-0165	-		6	WASHER TBRB 8,4X16 STAINLESS	
220	352113-0102	-		4	CLIP-STRIP,BLACK 188X4,8MM	
230	352113-0205	-		4	ANCHOR TM2S8-C100	

Pos	Part No	SP	UN	Qty	Description	Page No

TAB TURNING DEVICE

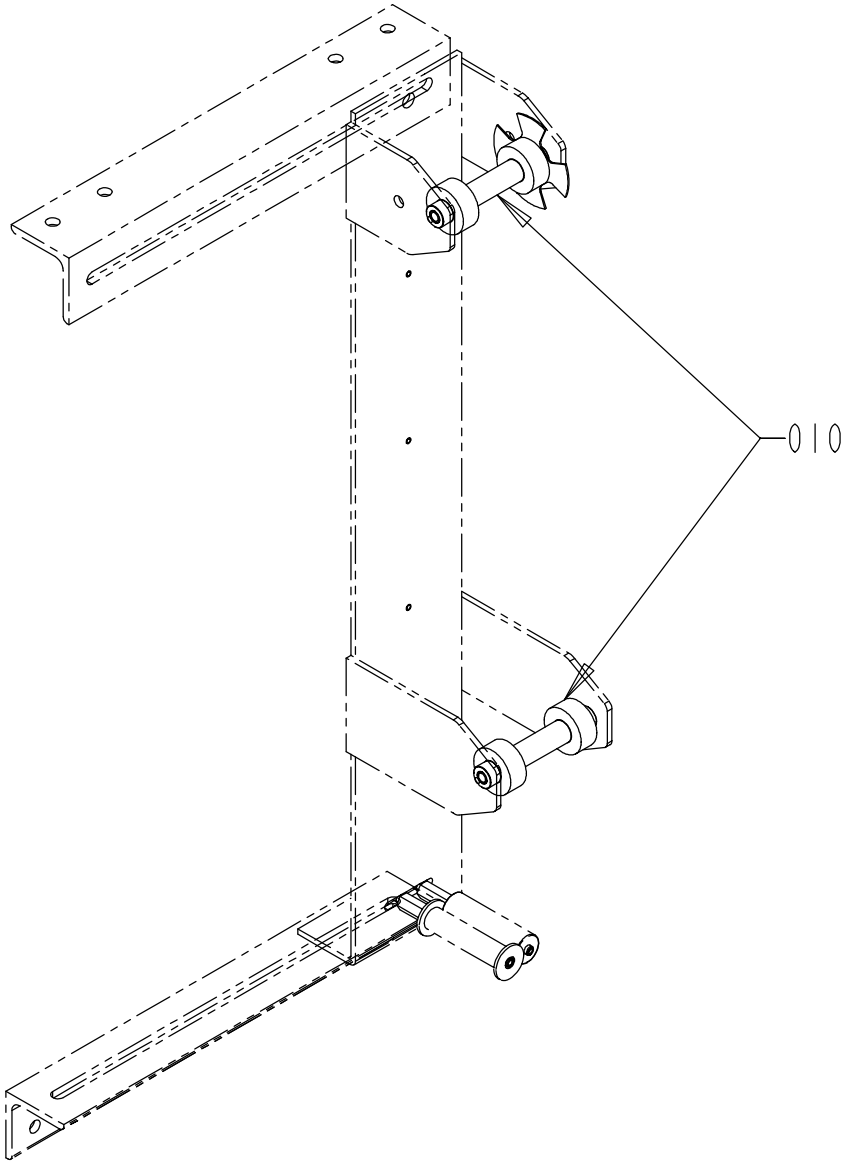

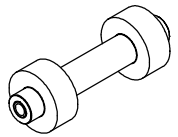

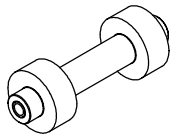

S - 1519829-1
ECN 73119

Pos	Part No	SP	UN	Qty	Description	Page No
HOLE45 or HOLE50 or HOLE85						
010	1317669-0005	M		2	ROLLER	
HOLE60						
010	1317669-0006	M		2	ROLLER	

Pos	Part No	SP	UN	Qty	Description	Page No

PATCH TURNING DEVICE

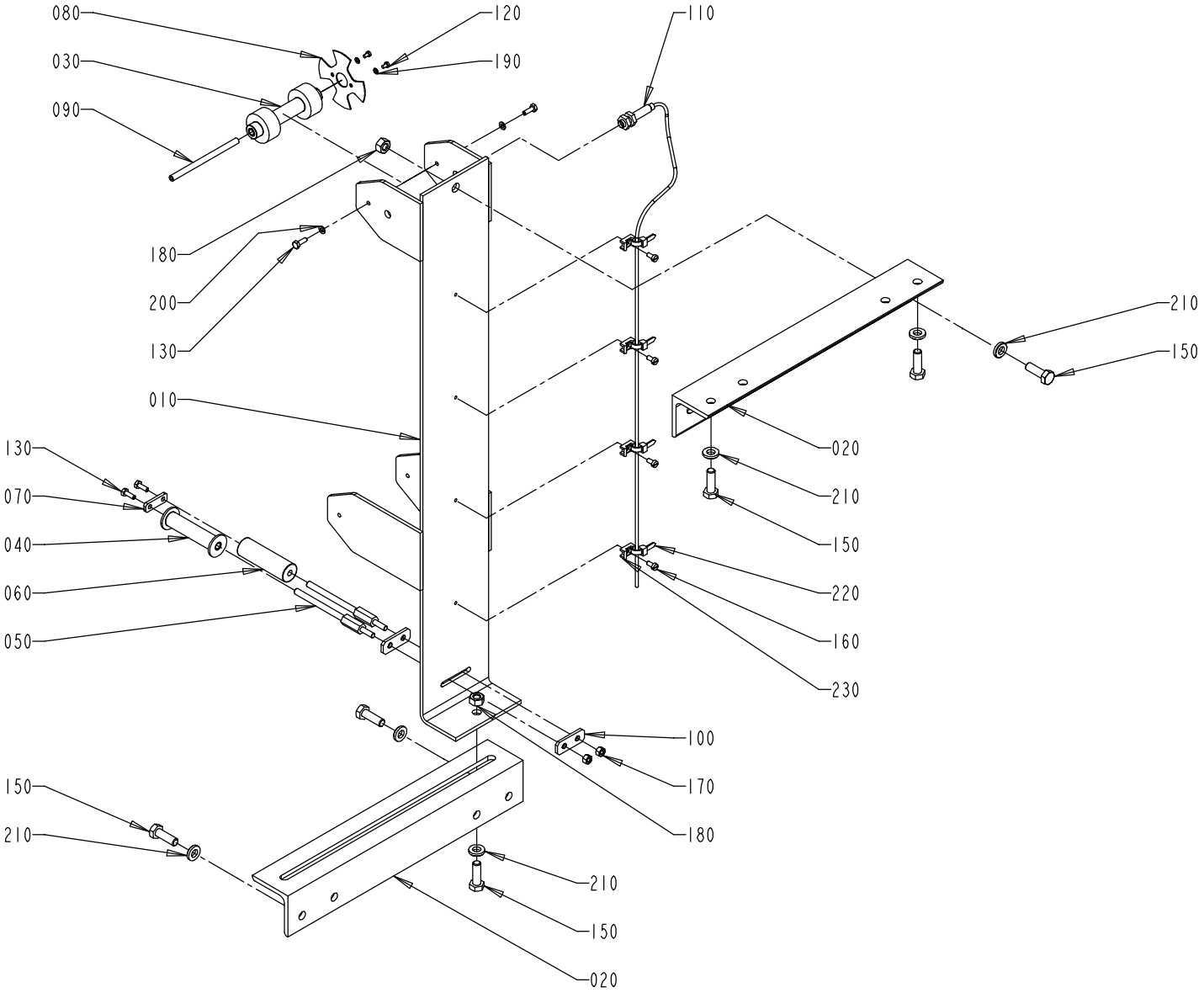

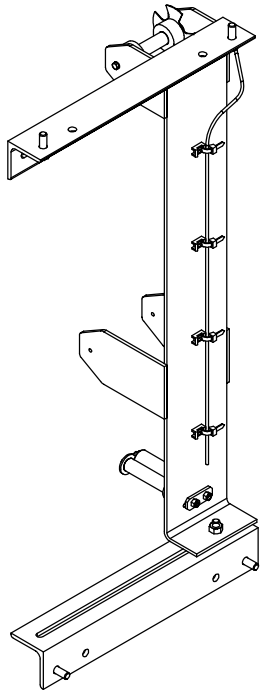

S - 1334065-2
ECN 73119

Pos	Part No	SP	UN	Qty	Description	Page No
Common parts						
010	1317670-0000	-		1	BRACKET	
020	1140817-0000	-		2	BRACKET	
030	A1519828-0100	-		1	PATCH TURNING DEVICE	**173**
040	1317671-0000	D		1	ROLLER	
050	1317672-0000	M		2	AXLE PIN	
060	1140727-0000	D		1	ROLLER	
070	1317673-0000	-		1	PLATE	
080	1317674-0000	D		1	FLAG	
090	1317675-0000	M		1	AXLE PIN	
100	1317676-0000	-		2	PLATE	
110	90044-0145	R		1	PROX.SW. 922 AAIY-A9P-050-LZ876	
120	90287-0151	-		2	SCREW,CHEESE HEAD,MSCS DIN85, M3X5	
130	312105-0291	-		4	SCREW M6S ISO 4017 M4X12 A280	
150	312105-0453	-		6	SCREW M6S ISO 4017 M8X25 A280	
160	312125-0287	-		4	SLOTTED CHEESE HEAD ISO 1207 M4X8 RFR	
170	312605-0314	-		2	NUT,HEXAGON,M6M5 STAINLESS	
180	312605-0318	-		2	NUT,HEXAGON,M8 RFR	
190	315105-0124	-		2	WASHER,PLAIN ROUND 3,2X6	
200	315105-0136	-		2	WASHER,PLAIN ROUND 4,3X8 STAINLESS	
210	315115-0165	-		6	WASHER TBRB 8,4X16 STAINLESS	
220	352113-0102	-		4	CLIP-STRIP,BLACK 188X4,8MM	
230	352113-0205	-		4	ANCHOR TM2S8-C100	

Pos	Part No	SP	UN	Qty	Description	Page No

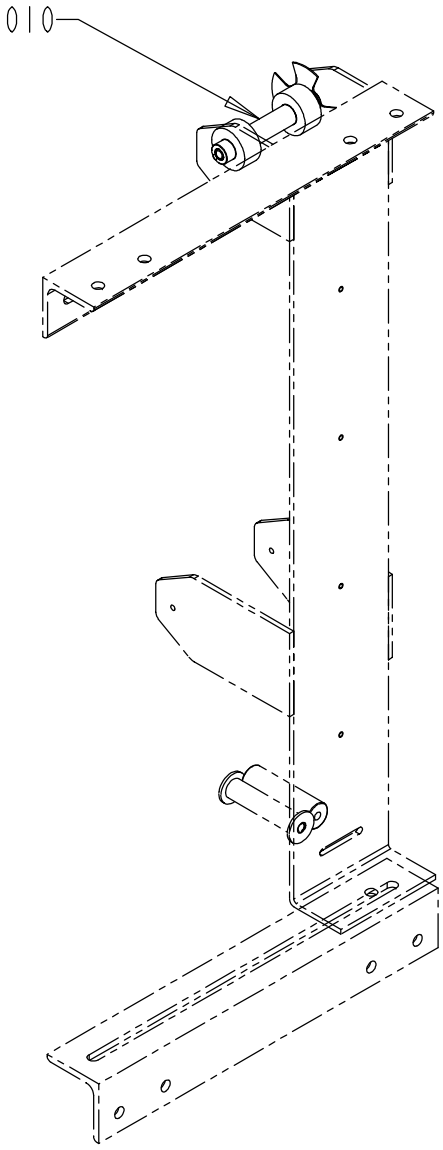

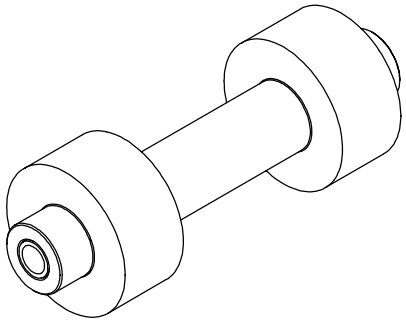

S - 1519828-1
ECN 73119

Pos	Part No	SP	UN	Qty	Description	Page No
HOLE50						
010	1317669-0001	M		1	ROLLER	
HOLE45 or HOLE85						
010	1317669-0002	M		1	ROLLER	
HOLE60						
010	1317669-0007	M		1	ROLLER	

Pos	Part No	SP	UN	Qty	Description	Page No

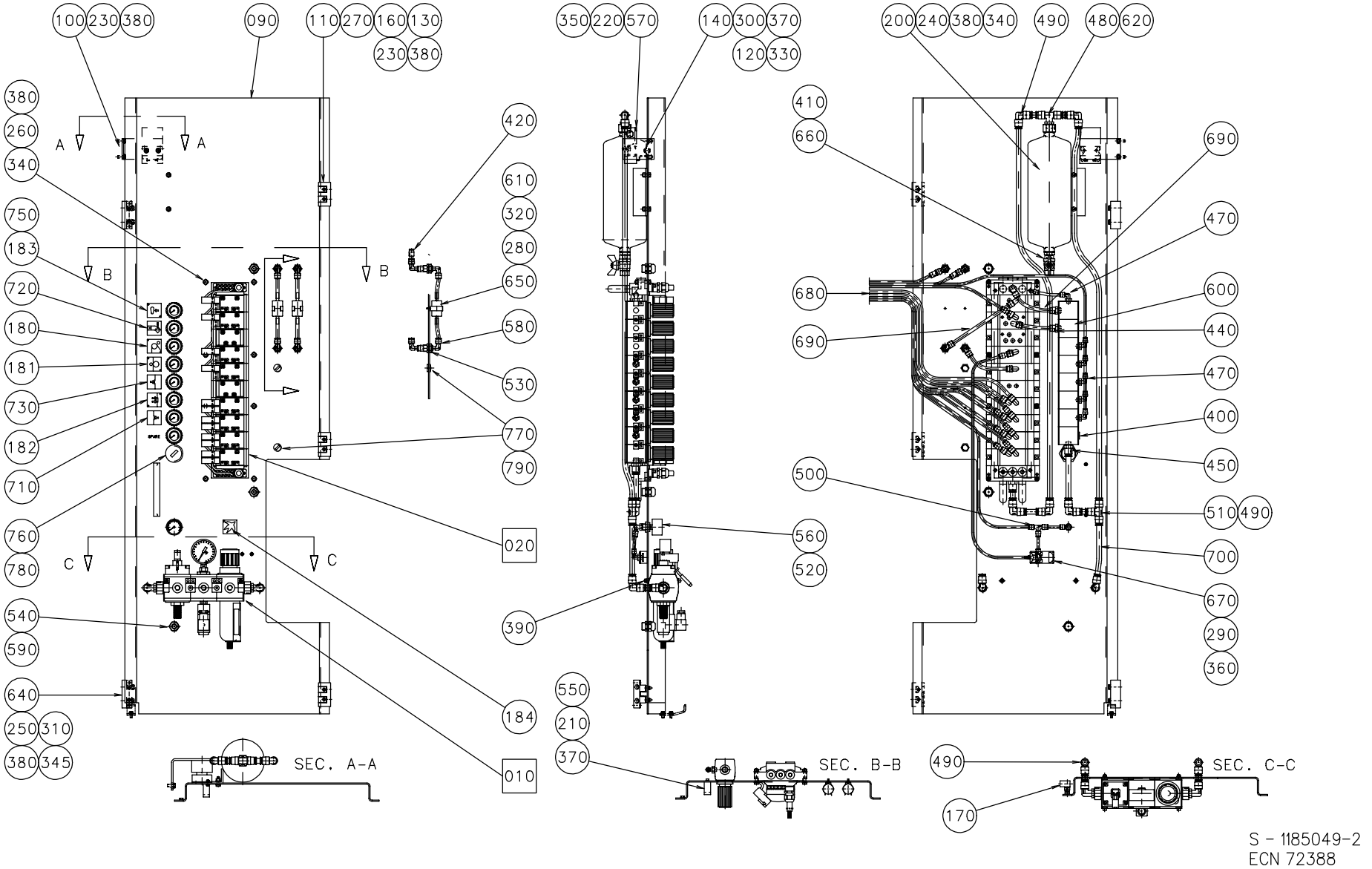
100 230 380
090
110 270 160 130
230 380
350 220 570
140 300 370
120 330
200 240 380 340
490
480 620
380
260
340
750
183
720
180
181
730
182
710
760
780
540
590
640
250 310
380 345
420
610
320
280
650
580
530
770
790
020
184
010
410
660
680
690
500
560
520
390
550
210
370
690
470
600
440
470
400
450
510 490
700
670
290
360
170
A
B
C
SEC. A-A
SEC. B-B
SEC. C-C
S - 1185049-2
ECN 72388

EC No: - - 20000423
Group number: 1185049-0200
Assembly Drawing: 1185049-2

Issue: 20000706

Pos	Part No	SP	UN	Qty	Description	Page No
Common parts						
010	A1185047-0100	-		1	AIR INLET GROUP	**177**
020	A1185048-0200	-		1	VALVE GROUP	**179**
050	1490074-0000	-		1	PNEUMATIC DIAGRAM	
090	984082-0000	-		1	PLATE	
100	1082741-0000	-		1	HOLDER	
110	1035792-0000	-		3	E-HINGE	
120	1129042-0000	-		1	KEY	
130	988685-0000	-		3	PIN	
140	1036563-0000	-		1	WASHER	
160	1129770-0000	-		6	BLOCKING PIECE	
170	1140538-0000	-		2	BLOCKING PIECE	
180	359307-0012	-		1	SIGN" PRESSURE ROLLER TENSION DEVICE"	
181	359307-0011	-		1	SIGN" PRESSURE ROLLER DRIVE MOTOR"	
182	1145219-0000	-		1	SIGN	
183	979426-0000	-		1	SIGN	
184	273458-0000	-		1	LABEL (AIR)	
200	90457-0100	-		1	RESERVOIR 2L	
210	312115-0287	-		2	SCREW MC6S ISO 4762 M4X8 A280	
220	312115-0329	-		2	SCREW MC6S ISO 4762 M5X16 A280	
230	312105-0366	-		8	SCREW M6S ISO 4017 M6X12 A280	
240	312105-0368	-		2	SCREW M6S ISO 4017 M6X16 A280	
250	90043-0065	-		8	PRESSURE GAUGE	
260	312109-0376	-		8	SCREW M6S ISO 4017 M6X35 A280	
270	312115-0327	-		6	SCREW MC6S ISO 4762 M5X12 A280	
280	312125-0222	-		2	SLOTTED CHEESE HEAD ISO 1207 M3X8 RFR	
290	312125-0230	-		2	SLOTTED CHEESE HEAD ISO 1207 M3X20 RFR	
300	312105-0291	-		2	SCREW M6S ISO 4017 M4X12 A280	
310	312155-0289	-		8	SCREW MF6S 4X10 A480	
320	312605-0310	-		2	NUT,HEXAGON M6M 3 A2 80	
330	312605-0312	-		2	NUT,HEXAGON,M4 RFR	
340	312605-0316	-		10	NUT,HEXAGON A280 M6M6	
345	312705-0312	-		4	NUT,DOMED CAP,HEXAGON,M4	
350	315105-0146	-		2	WASHER,PLAIN ROUND 5,3X10 STAINLESS	
360	315105-0124	-		2	WASHER,PLAIN ROUND 3,2X6	
370	315105-0136	-		6	WASHER,PLAIN ROUND 4,3X8 STAINLESS	
380	315105-0153	-		32	WASHER,PLAIN ROUND 6,4X12 STAINLESS	
390	90113-0470	-		8	MANIFOLD REGULATOR 10 BAR	
400	90457-0078	-		8	PANEL NUT	
410	342700-0205	-		1	NIPPLES,HEXAGON,EXT.G-THREAD G1/2"-G1/4"	
420	342716-0203	-		2	REDUCER 6-8	
440	342732-0100	-		8	ELBOW PIPE JOINT,EXT.THREAD,D=4 MM G1/8	
450	342722-0209	-		1	STRAIGHT COUPLING, D=12 MM - R1/4"	
470	342732-0103	-		8	ELBOW PIPE JOINT,EXT.THREAD,D=6 MM G1/4	
480	342742-0110	-		1	T-COUPLING,ADJUST,F.PLAST.TUBE 12-G3/8"	
490	342735-0109	-		7	ELBOW PIPE JOINT 12X12 MM	
500	342748-0102	-		1	T-CONNECTION 6 MM	
510	342748-0109	-		1	T-CONNECTION 12 MM	
520	342767-0100	-		1	BULKHEAD CONNECTOR G1/8"	
530	342768-0103	-		4	BULKHEAD CONNECTOR, 8 MM	
540	352103-0106	-		3	CABLE GLAND ST 11	
550	90017-0017	-		1	HANDLE,BRASS	
560	90043-0080	-		1	PRESSURE GAUGE	
570	90044-0139	R		1	KEY SAF.SW. AZ16-02 ZVR K-2254	
580	90055-0118	-		8	ELBOW WITH TAILPIECE	
590	90099-0117	-		3	NUT PR 18,6 (PG11)	
600	342770-0101	-		8	STRAIGHT COUPLING INT, D=4 MM - G1/8	
610	90165-0019	-		2	CLIP	
620	90224-0229	-		1	SLEEVE	
640	90237-0070	-		2	SNAP-IN-LOCK	
650	90277-0035	J		2	AIR-PRESSURE FILTER	
660	90187-0088	-		1	BALL VALVE	
670	90364-0020	K		1	VACUUMPUMP X10	
680	90166-0081	-	M	42	TUBE 6/4 PA BLUE	
690	90166-0013	-	M	60	TUBE 8/6 PA BLUE	
700	90166-0068	-	M	3	TUBE 12 MM PA BLUE	
710	359307-0002	-		1	SYMBOL SIGN "TAB C'JAW"	
720	359307-0010	-		1	SIGN "WASTE BLOWING"	
730	359307-0004	-		1	SYMBOL SIGN "PATCH C'JAW"	
750	342735-0100	-			ELBOW PIPE JOINT 4X4 MM	
760	342732-0102	-		1	ELBOW PIPE JOINT,EXT.THREAD,D=6 MM G1/8	
770	90055-0117	-		1	ELBOW WITH TAILPIECE	
780	342732-0801	-		1	ELBOW PIPE JOINT,EXT.THREAD,D=8 MM G1/8	
790	90113-0140	-		8	QUICK CLAMP	

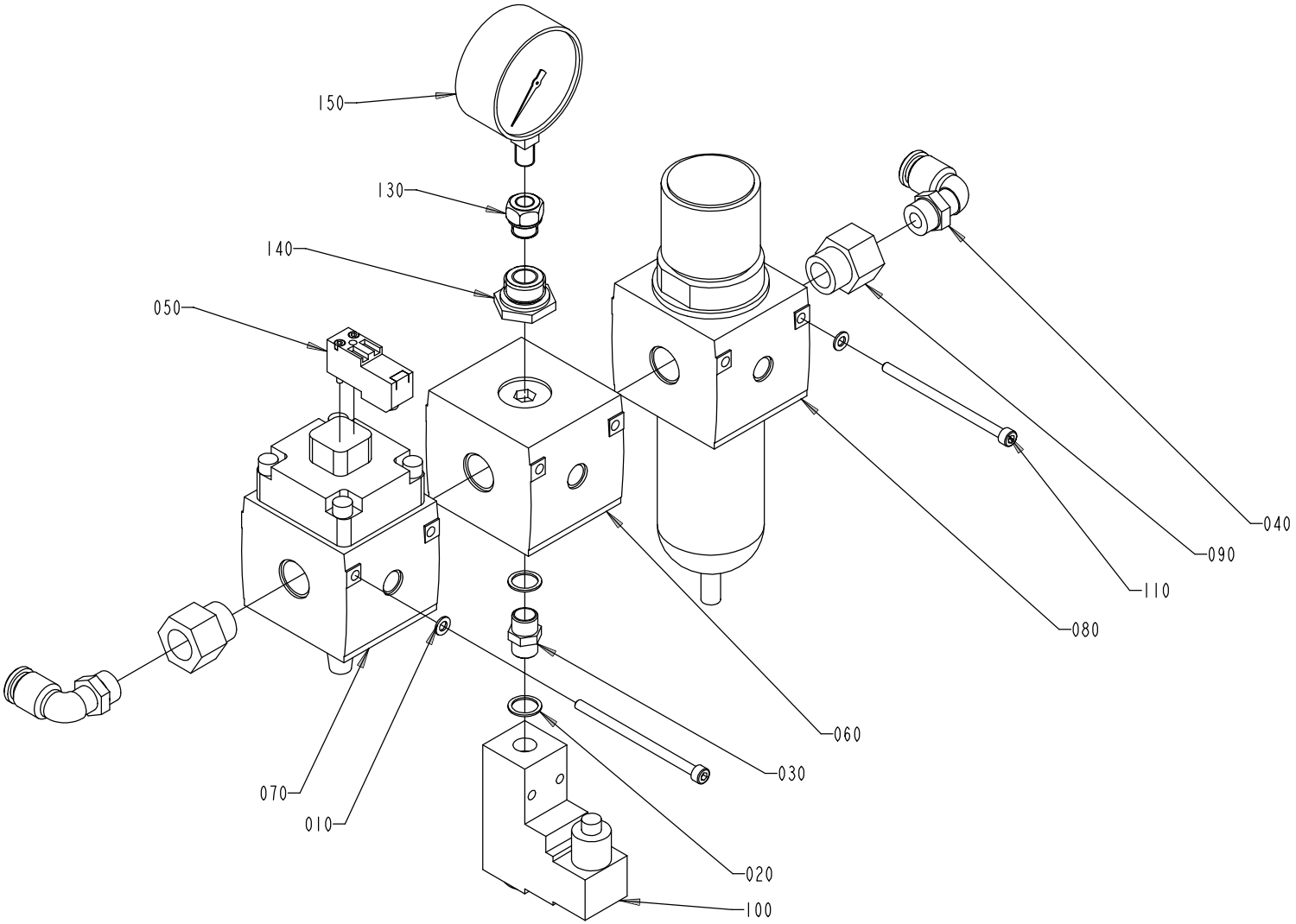

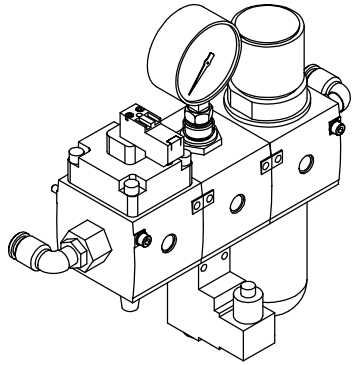

S - 1185047-1
ECN 73193

Pos	Part No	SP	UN	Qty	Description	Page No
Common parts						
010	315101-0146	-		2	WASHER BRB 5,3X10 FZB	
020	315233-0110	-		2	PLAIN ROUND,NYLON R1/4"	
030	342700-0110	-		1	NIPPLES,HEXAGON,EXT.G-THREAD G1/4"-G1/4"	
040	342732-0110	-		2	ELBOW PIPE JOINT,EXT.THREAD,D=12 MM G3/8	
050	90042-0538	-		1	PILOT VALVE, L=500MM	
060	90113-0375	-		1	PRESSURE DISTRIBUTION	
070	90113-0423	-		1	HIGH SPEED VENT VALVE	
080	B90113-0072	D		1	PRESSURE REGULATOR	**183**
090	90224-0229	-		2	SLEEVE	
100	90274-0056	R		1	PRESSURE SWITCH	
110	90287-0212	-		2	SCREW, MC6S DIN912, M5X85 12,9	
130	90224-0090	-		1	MUFF	
140	90224-0122	-		1	SLEEVE	
150	90043-0020	-		1	PRESSURE GAUGE 0-10 BAR	

Pos	Part No	SP	UN	Qty	Description	Page No

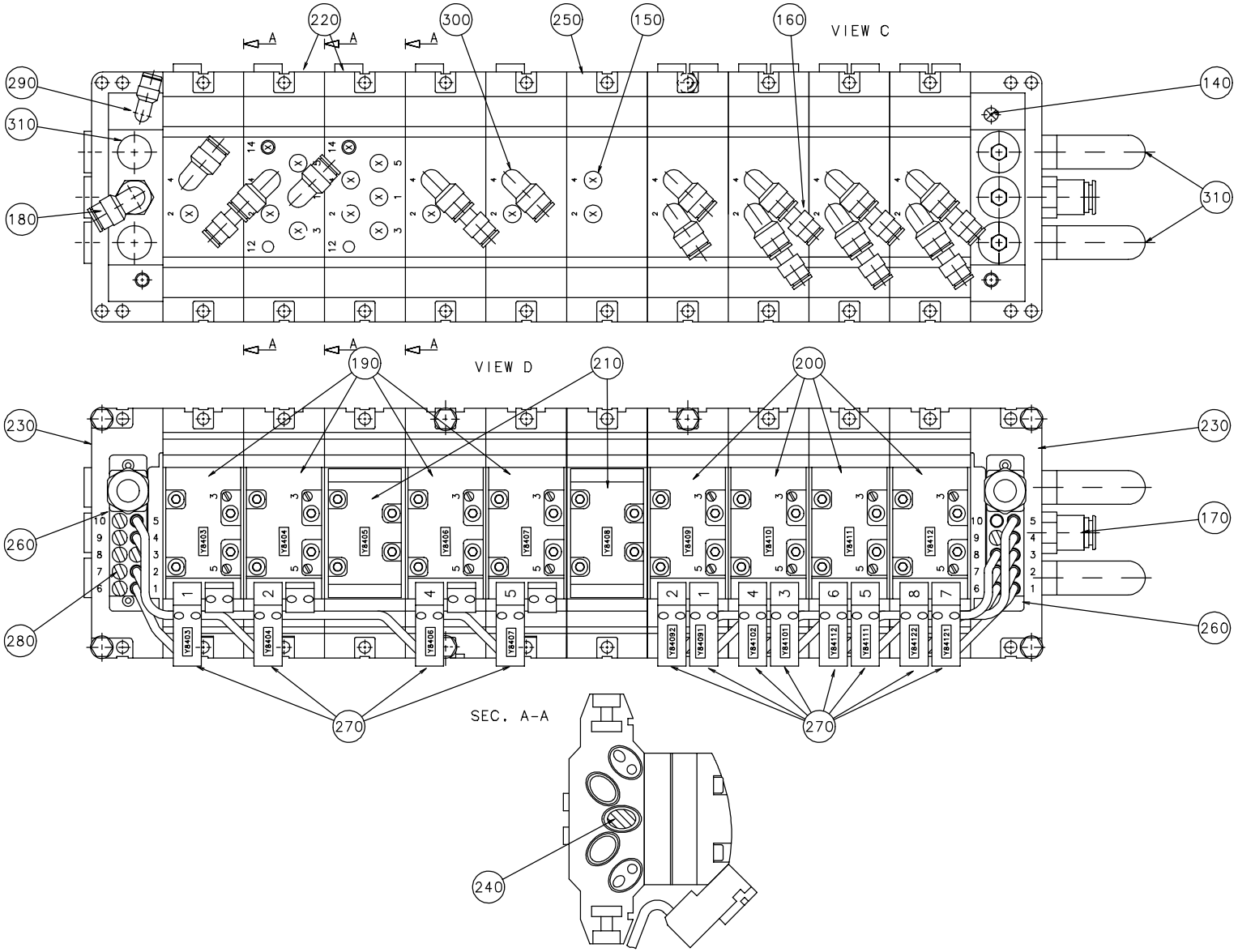

S - 1185048-2
ECN 72388

Pos	Part No	SP	UN	Qty	Description	Page No
Common parts						
140	342715-0102	-		2	BLIND PLUG 6 MM	
150	342715-0103	-		13	BLIND PLUG 8 MM	
160	342716-0203	-		10	REDUCER 6-8	
170	342722-0210	-		1	STRAIGHT COUPLING, D=12 MM - R3/8"	
180	342732-0105	-		1	ELBOW PIPE D8-R3/8"	
190	90042-0215	-		4	PNEUMATIC VALVE ISO 1, 5/2 UNISTABLE	
200	90042-0221	-		4	PNEUMATIC VALVE ISO 1, 5/2 BISTABLE	
210	90042-0519	-		2	BLANKING PLATE ISO 1	
220	90042-0520	-		2	BASE PLATE ISO 1	
230	90042-0522	-		2	PORTED END PIECE ISO 1	
240	90042-0528	-		3	BLANKING KIT SEALS ISO 1	
250	90042-0532	-		8	BASE PLATE ISO 1	
260	90042-0535	-		2	TERMINAL MODULE 19 CORDS	
270	90042-0539	-		12	PILOT VALVE, L=350MM	
280	90042-0550	-		7	PROTECTION PLUG	
290	90055-0217	-		1	ELBOW WITH TAILPIECE 6/6 MM	
300	90055-0118	-		13	ELBOW WITH TAILPIECE	
310	90328-0024	-		4	SILENCER G3/8	
320	342715-0100	-		4	BLIND PLUG 4 MM	

This page is intentionally left blank.

Pos	Part No	SP	UN	Qty	Description	Page No
Common parts						
0010	A42841-0500	-		1	ELECTRICAL DOCUMENT	
0020	A42843-0500	-		1	STANDARD EQUIPMENT	

Pos	Part No	SP	UN	Qty	Description	Page No

This page is intentionally left blank.

Pos	Part No	SP	UN	Qty	Description	Page No
90064-0082						
	90036-0057	F		1	LIGHT BULB BA9S 28V	
90075-0125						
	90075-0313	K		1	AUXILIARY CONTACT KM 22 DILM.2NO;2NC	
90113-0072						
	90113-0459	-		1	O-RING	
	90113-0387	-		1	FILTER	
90164-0009						
	90297-0009	F		2	FLUORESCENT TUBE 6W	
985899-0000						
	90355-0157	-		1	COUPLING	
985900-0000						
	90355-0157	-		1	COUPLING	
1255692-0010						
	90220-0131	-	M	1	CABLE,MULTI-COND.SCREENED PAIR TWIST	
	90110-0209	-		6	CONTACT PIN	
	90110-0208	-		1	CABLE CONTACT	
	90110-0145	-		1	COVER 8630-5169014-15-01	
	90110-0142	-		1	PLUG DA15P064TX	
	90012-0117	-		1	GLAND,EMC,EXTENDED WITH INSERT	
1260403-0000						
	90237-0168	-		1	ROUND BAR WITH END WHEEL	
1260814-0000						
	90265-0051	-		1	ACCESSORY BOX ROSE 1121208	
1260815-0000						
	90265-0051	-		1	ACCESSORY BOX ROSE 1121208	
1260902-0000						
	353249-0044	-		1	GLAND,INSERT,SOLID,NORMAL E155G	
1282599-0000						
	353249-0042	-		1	GLAND,INSERT,SOLID,NORMAL E152G	
1282600-0000						
	353249-0042	-		1	GLAND,INSERT,SOLID,NORMAL E152G	
1282787-0000						
	353249-0048	-		1	GLAND,INSERT,SOLID,EXTENDED EK154G	
1282788-0000						
010	353249-0048	-		1	GLAND,INSERT,SOLID,EXTENDED EK154G	
1346824-0000						
	353249-0044	-		1	GLAND,INSERT,SOLID,NORMAL E155G	
1350146-0000						
010	90265-0046	-		1	ACCESSORY BOX ROSE	

Pos	Part No	SP	UN	Qty	Description	Page No

Tetra Pak

SPC

Spare Parts Catalogue

Part No	Description	Page No
2033-0002	WASHER	123, 125
2033-0003	WASHER	123, 125
2033-0006	WASHER	123, 125
2033-0013	WASHER	153, 155, 161, 163
23580-0000	SHIFTER HANDLE	81
23583-0000	GUIDE FINGER	81
23584-0000	SCREW	81
24351-0000	BOW CLAMP	81
24352-0000	SHAFT	81
24355-0000	DOWEL	81
24356-0000	PIECE	81
28036-0000	WASHER	85
28509-0000	WASHER	109
32544-0000	INSULATION NUT	109
32644-0000	WASHER	109
42841-0500	ELECTRICAL DOCUMENT	181
42843-0500	STANDARD EQUIPMENT	181
48142-0201	PT21AF-PULLTAB 21 AUXILIARY FUNCTIONS	25
67347-0101	CARD BRAKEREG.MAGN.POWDER BRAKE	25
67379-0216	IH TRANSF.1.PRIM.4TURNS;C=21,0NF	111
67379-0218	IH TRANSF.1.PRIM.5TURNS;C=19,3NF	111
67379-0224	IH TRANSF.1.PRIM.4TURNS;C=24,4NF	111
67388-0101	FRONT MOUNTED RACK 42TE	25
67600-0501	TPIH 2000 GENERATOR	19, 21
68262-0101	BACKPLANE FRONT RACK 8TE	25
68445-0103	FRONT PLATE 6TE	25
68445-0104	FRONT PLATE 8 TE	25
68445-0105	FRONT PLATE 10TE	25
68450-0101	STEPPER MOTOR DRIVER	25
90001-0033	WALL SOCKET OUTLET	25
90002-0009	BLANK-OFF PLUG 18.6	19, 21, 31
90002-0013	BLANK-OFF PLUG 15,2(PG 9)	19, 21, 33, 35, 47
90007-0128	FUSE 1P 6A K	27
90007-0129	FUSE 1P 10A K	27
90007-0156	FUSE 1P 4A K	27
90012-0137	GLAND,EMC,EXTENDED WITH INSERT	67
90015-0021	GLAND,LEAD-IN,IP67	67
90017-0014	HANDLE 8305-2259	85
90017-0017	HANDLE,BRASS	25, 149, 175
90024-0037	VARISTOR FILTER, 150 V RMS/200 VDC, 13 J	23
90031-0031	ENHANCES GENIUS	23
90031-0050	PLC BASEPLATE, 5-SLOT	23
90031-0052	PLC EXPANSION BASEPLATE, 5-SLOT	23
90031-0057	PLC, DIGITAL INPUT MODULE 16 PT/24 VDC	23
90031-0058	PLC, DIGITAL INPUT MODULE 16 PT/24 VDC	23
90031-0059	PLC, DIGITAL OUTPUT MODULE 16 PT/24 VDC	23
90031-0062	PLC, ANALOG OUTPUT MODULE 8PT/CURR/VOLT	23
90031-0065	PLC, TERMOCOUPLE INPUT MODULE 8 PT	23
90031-0068	PLC POWERSUPPLY 120/230 VAC/50 W	23
90031-0075	CPU363, SERIAL COMMUNICATION	23
90031-0302	PLC, I/O BUS TERMINATION PLUG	23
90031-0305	PLC, BACKPLANE EXPANSION CABLE 0,3 M	23
90042-0215	PNEUMATIC VALVE ISO 1, 5/2 UNISTABLE	179
90042-0221	PNEUMATIC VALVE ISO 1, 5/2 BISTABLE	179
90042-0519	BLANKING PLATE ISO 1	179
90042-0520	BASE PLATE ISO 1	179
90042-0522	PORTED END PIECE ISO 1	179
90042-0528	BLANKING KIT SEALS ISO 1	179
90042-0532	BASE PLATE ISO 1	179
90042-0535	TERMINAL MODULE 19 CORDS	179
90042-0538	PILOT VALVE, L=500MM	177
90042-0539	PILOT VALVE, L=350MM	179
90042-0550	PROTECTION PLUG	179
90043-0020	PRESSURE GAUGE 0-10 BAR	177
90043-0065	PRESSURE GAUGE	175
90043-0080	PRESSURE GAUGE	175
90044-0094	LIMIT SW. 924 CE31-Y20-X5	51
90044-0104	PROX.SWITCH IFM IN 3002 48VDC	87, 153, 155, 161, 163
90044-0124	PROX.SW. 922AB2XM-A9P-050-LZ-876	19, 21
90044-0139	KEY SAF.SW. AZ16-02 ZVR K-2254	139, 149, 175
90044-0145	PROX.SW. 922 AAIY-A9P-050-LZ876	103, 105, 117, 123, 125, 167, 171
90045-0192	STEPPING MOTOR PACIFIC SCIENTIFIC	103, 105, 123, 125
90045-0194	SERVO MOTOR ELMO	53
90045-0395	SERVO AMPLIFIER 5A RMS	19, 21
90051-0007	HANDLES, KNOB, INTERNAL THREAD M8-40X25	103, 105, 123, 125
90053-0031	HOUR COUNTER BOWER B906.10	25
90055-0096	STRAIGHT COUPLING, D=14 MM - G3/8"	37, 39
90055-0117	ELBOW WITH TAILPIECE	175
90055-0118	ELBOW WITH TAILPIECE	175, 179
90055-0217	ELBOW WITH TAILPIECE 6/6 MM	179
90056-0179	PLANETARY GEAR BOX	53
90059-0029	THERMOSTAT	45
90062-0021	LOCKING WASHER A 5,3	19, 21
90062-0022	LOCKING WASHER D=6,4/11	25, 137

Part No	Description	Page No
90064-0082	PUSH BUTTON WHITE	25
90069-0258	GEAR MOTOR	71
90069-0271	WORM GEAR MOTOR	67
90075-0125	CONTACTOR 7,5KW COIL 24VDC	23
90075-0127	CONTACTOR 4KW COIL 24VDC	23
90077-0079	FEED THROUGH TERMINAL AKZ 4PA FOR TS15	47
90077-0328	RAIL TS15/5	47
90089-0008	SLEEVE PR22,5/28,3;PG16/21	29
90089-0031	ENLARGING SLEEVE	45
90095-0072	OVERLOAD PROTECTION PKZM 1,0A	27
90095-0077	OVERLOAD PROTECTION PKZM 6-10A	27
90099-0019	NUTS,HEXAGON, M12X1, DIN439	45
90099-0104	NUT PR 15,2 (PG9)	19, 21
90099-0117	NUT PR 18,6 (PG11)	19, 21, 175
90099-0119	NUT PR 28,3 (PG21)	19, 21
90099-0191	NYLON NUT M4X0.7 HEXAGON	19, 21, 25
90110-0121	FEMALECONT.15POLE HARTING	19, 21
90110-0122	COVER HARTING	19, 21
90110-0150	MALE INSERT 24-P, CABLE	19, 21, 29
90110-0152	CABLE HOOD 24-P	19, 21, 29
90110-0153	CHASSI HOUSING 24-P	19, 21
90110-0157	COVER	19, 21, 29, 45
90110-0159	CONTACT	19, 21, 29, 45
90110-0161	FEMALE CONTACT 6-POLES	19, 21
90110-0163	FEMALE INSERT 6-POLE	19, 21
90110-0164	FEMALE CONTACT 24-POLES	19, 21
90110-0166	CONTACT HOUSE	19, 21
90110-0215	SOCKET	19, 21
90110-0216	MALE PLUG	29
90110-0217	COVER	29
90110-0218	CONTACT HOUSING	19, 21
90110-0235	CABLE CONTACT	29
90110-0236	CHASSIE CONTACT PX0767/S	19, 21
90110-0295	CONTACT SCREW	119
90110-0296	CONTACT SCREW	19, 21
90110-0349	COVER/TOOL PX0733	19, 21
90110-0370	BASE HOUSING	19, 21
90110-0371	PLUG HOOD	119
90111-0193	ROTARY SWITCH	25
90111-0197	SERVICE KEY	25
90113-0072	PRESSURE REGULATOR	177
90113-0140	QUICK CLAMP	175
90113-0375	PRESSURE DISTRIBUTION	177
90113-0423	HIGH SPEED VENT VALVE	177
90113-0470	MANIFOLD REGULATOR 10 BAR	175
90115-0134	ROD ENDS,MAINTENANCE FREE,10-M10X1.25RH	53, 71
90119-0043	OPTO RELAY 22DC 60S-3	23
90119-0056	PLUG-IN RELAY 24VDC	23
90119-0089	SAFETY RELAY JSBT4 24VDC	23
90121-0116	RESISTANCE FIXED, 0,15 KOHM, 0,25 W	23
90129-0006	BASE 11 POLE	23
90135-0026	EARTH TERMINAL AKE 4PA	47
90135-0035	LOW IMPEDANCELITZ L=250MM	25, 137
90135-0039	SHIELD CLIP KLBU 4-13.5	19, 21, 25
90141-0020	RETAINING RINGS FOR HOLE 42	63
90143-0057	STRIP EMKA 1011-05 21X11MM	19, 21
90143-0060	EDGE STRIP 9,5X6,3MM BLACK PVC	25
90143-0073	RUBBER STRIP	19, 21
90144-0030	TAPE	109
90152-0026	FLEXIBLE CONDUIT	85
90152-0059	HOSE 18X12	19, 21, 119
90153-0023	ADHESIVE	137
90157-0041	SEALING COMPOUND	137, 139, 141
90159-0097	CAPACITOR 2 UF 450VAC	47
90164-0009	LIGHT FIXTURE	37, 39
90164-0302	BRACKET	37, 39
90165-0019	CLIP	175
90165-0060	PIPE-CLIPS,FOR SINGLE PIPE,ONE SIDE 5	37, 39
90166-0013	TUBE 8/6 PA BLUE	175
90166-0068	TUBE 12 MM PA BLUE	17, 175
90166-0081	TUBE 6/4 PA BLUE	175
90166-0126	TUBE 12 MM PA,TRANSP.	45
90181-0044	CABEL DUCT 25X60MM	27
90181-0045	CABLE DUCT 40X60MM	25, 27
90181-0046	CABEL DUCT 60X60MM	19, 21
90181-0052	CABLE DUCT 25X80MM	23
90181-0053	CABLE DUCT 40X80MM	23
90181-0054	CABLE DUCT 60X80MM	23
90187-0088	BALL VALVE	175
90189-0003	BALL BUSHING 12X22X32	103, 105, 117, 123, 125
90194-0080	SIGN "IDENTIF. OF WIRING"	25
90194-0133	SIGN "DELIVERED DESIGN"	25
90194-0152	SIGN "EARTH"	23, 25, 137
90195-0019	TERMINAL BK3 KRG 3-POLE	19, 21

Part No	Description	Page No
90208-0078	CLAMPING ELEMENT WITH SLEEVE 20X28	53
90208-0118	CLAMPING ELEMENT	71
90214-0138	BALL BEARING,STAINLESS	81
90214-0144	BEARINGS,BALL BEARING,SPHERICAL,SELF-ALI	67
90220-0034	THERMO-CABLE	19, 21, 23
90220-0084	SERVOCABLE 4X2,5+2(2X0.75)	29
90220-0104	CABLE,SCREENED 4X1,5MM2	19, 21
90220-0165	CABLE,MULTI-CONDUCTOR SCREENED 5X0,34	25
90220-0183	CABLE,MULTI-CONDUCTOR SCREENED 2X0,34MM2	19, 21, 23
90224-0090	MUFF	177
90224-0122	SLEEVE	177
90224-0229	SLEEVE	175, 177
90226-0458	MOUNTING SCREW	147
90232-0067	PHOTOCELL	65
90232-0103	PH.CELL E3S-CT61-L-5M	77, 79, 121
90232-0104	PH.CELL E3S-CT61-D-5M	77, 79, 121
90232-0105	PH.CELL E3S-CD61-5M	85
90232-0112	PH.CELL NT6-14920E01	97
90232-0325	FIBRE E32-DC200	65
90233-0028	FUSE 10A FERRAZ	27
90233-0303	FUSEHOLDER FERRAZ ST10	27
90235-0206	VALVE FESTO SEU-1/8	89, 103, 105, 117, 123, 125
90237-0070	SNAP-IN-LOCK	149, 175
90237-0128	LOCK CYLINDER	137, 139, 141, 143, 145
90237-0150	TURNING HANDLE, BLACK PA	137, 139, 141, 143, 145
90237-0151	STEERING GUIDE,BLACK PA	137
90237-0152	STEERING	137
90237-0153	LOCK HOUSING	137, 139, 141, 143
90237-0154	LOCK HOUSING,BLACK PA	145
90237-0157	LOCKING CATCH EMKA 1000-230	25
90237-0165	LATCH	145
90237-0169	LOCK-ADAPTER	137
90237-0319	LOCK HOUSING EMKA U134	25
90237-0320	LOCK COMPONENT EMKA U136	25
90239-0486	BRACKET,REAR,CLEVIS FLANGE,MINI-ISO,16	67
90239-0488	BRACKET,REAR,CLEVIS FLANGE,MINI-ISO,32	53, 71
90239-0489	ROD END,CLEVIS WITH AXLE,M6	67, 103, 105, 117, 123, 125
90239-0834	DOUBLE ACTING, MINI-ISO, CYL. 32-25	53, 71
90240-0026	SPHERICAL BEARING, 15X26X12	53, 71
90258-0031	PINS,SLOTTED TUBULAR, 3X 20, DIN1481	157
90259-0313	AUX. CONTACT K&M NHI21-PKZM0	27
90264-0069	FAN	45
90270-0018	COMPRESSOR DANFOSS SC 12G	45
90274-0056	PRESSURE SWITCH	177
90277-0035	AIR-PRESSURE FILTER	175
90287-0009	SPRINGLOADED SCREW M10X19	81, 153, 155, 161, 163
90287-0069	SCREW, CHEESE HEAD,MCS M3X35 A4	153, 155, 161, 163
90287-0124	SCREW,CHEESE HEAD,MSCS DIN84, M4X12	23, 27
90287-0151	SCREW,CHEESE HEAD,MSCS DIN85, M3X5	167, 171
90287-0212	SCREW, MC6S DIN912, M5X85 12,9	177
90298-0033	WATLUBE HEAT LIQUID	123, 125
90326-0012	PROTECTIVE COVER	23
90326-0053	THERMO ELEMENT	23
90326-0060	THERMOCOUPLE CR-AL	123, 125
90328-0003	SILENCER	53, 71
90328-0024	SILENCER G3/8	179
90330-0038	NUT,HEXAGON G3/8"	37, 39
90335-0005	SPRING	89
90335-0067	SPRING	103, 105, 123, 125
90335-0081	SPRING	85, 153, 155, 161, 163
90335-0091	SPRING	67
90335-0222	SPRING	81
90345-0011	FLANGE BEARING 20	53
90347-0054	DAMPER	63
90347-0175	MACHINE SHOE	41
90348-0031	FREE-WHEEL COUPLING	103, 105, 123, 125
90355-0158	ELECTROMAGNETIC CLUTCH	71
90364-0020	VACUUMPUMP X10	175
90411-0018	INSULATOR	123, 125
90422-0041	EVAPORATOR	45
90422-0042	CAPACITOR	45
90422-0316	HOOD	45
90422-0317	FILTER	45
90430-0070	FREQ.CONV.SIEMENS 6SE3213-6CA40 750W	19, 21
90430-0326	FILTER 6SE3290-0BA87-0FB2 SIEMENS	19, 21
90450-0380	SINGLE ACTING, SHORT STROKE	109, 129
90450-0409	DOUBLE ACTING, COMPACT, CYL 32-15	103, 105, 117, 123, 125
90450-0435	CYLINDER	89
90457-0066	COUPLING	53
90457-0078	PANEL NUT	175
90457-0100	RESERVOIR 2L	175
111543-0000	GUIDE CONE	81
234844-0000	WHEEL	153, 155, 161, 163
245210-0000	BODY	81

Part No	Description	Page No
263150-0000	BRACKET	53, 71
263152-0000	SHAFT	53, 71
263153-0000	NUT	53, 71
266710-0000	WHEEL	53, 71
273458-0000	LABEL (AIR)	175
294734-0000	WASHER	85
311103-0267	PIN,STRAIGHT 4X10	109, 129
311103-0350	PIN,STRAIGHT M6 6X14 RFR	81
311103-0351	PINS,STRAIGHT 6X16	71, 103, 105, 117, 123, 125
311112-0205	PINS,SLOTTED TUBULAR SPRING PIN 3X10	103, 105, 123, 125
311112-0256	PIN,SLOTTED TUBULAR SPRING PIN 4X20	63
311112-0260	SLOTTED TURP 4X28 RFR	67
311112-0262	PINS,SLOTTED TUBULAR SPRING PIN 4X32	53, 71
311112-0377	PINS,SLOTTED TUBULAR SPRING PIN 8X24	11, 13, 15, 37, 39, 67, 71, 73
311411-0138	SPLIT PIN SP1,6X12RFR	51, 153, 155, 161, 163
311520-0329	BLANK RIVET 2,4X8MM	25
312101-0343	SCREW M6S5X60FZB	109, 123, 125
312101-0449	SCREW M6S 8X16 FZB	53
312105-0287	SCREW M6S ISO 4017 M4X8 A280	65, 85, 103, 105, 117, 123, 125, 153, 155, 157, 161, 163
312105-0291	SCREW M6S ISO 4017 M4X12 A280	77, 79, 81, 167, 171, 175
312105-0295	SCREW M6S ISO 4017 M4X20 A280	109, 149, 153, 155, 161, 163
312105-0323	SCREW M6S ISO 4017 M5X8 A280	37, 39
312105-0325	SCREW M6S 5X10 A2 80	97
312105-0327	SCREW M6S ISO 4017 M5X12 A280	19, 21, 85, 153, 155, 157, 161, 163
312105-0329	SCREW M6S ISO 4017 M5X16 A280	37, 39
312105-0333	SCREW M6S ISO 4017 M5X25 A280	103, 105, 117, 123, 125
312105-0335	SCREW M6S ISO 4017 M5X30 A280	157
312105-0339	SCREW M6S ISO 4014 M5X40 A280	153, 155, 161, 163
312105-0366	SCREW M6S ISO 4017 M6X12 A280	37, 39, 139, 175
312105-0368	SCREW M6S ISO 4017 M6X16 A280	57, 59, 61, 73, 77, 79, 81, 149, 175
312105-0370	SCREW M6S ISO 4017 M6X20 A280	51, 63, 67, 77, 153, 155, 157, 161, 163
312105-0372	SCREW M6S ISO 4017 M6X25 A280	57, 59, 71, 79, 153, 155, 161, 163
312105-0374	SCREW M6S ISO 4017 M6X30 A280	149, 159, 165
312105-0376	SCREW M6S ISO 4017 M6X35 A280	153, 155, 161, 163
312105-0379	SCREW M6S ISO 4014 M6X45 A280	81, 157
312105-0447	SCREW M6S ISO 4017 M8X12 A280	45, 87
312105-0449	SCREW M6S ISO 4017 M8X16 A280	81, 159, 165
312105-0451	SCREW M6S ISO 4017 8X20 A280	11, 13, 15, 67, 73, 85, 101
312105-0453	SCREW M6S ISO 4017 M8X25 A280	37, 39, 43, 53, 67, 71, 87, 89, 97, 159, 165, 167, 171
312105-0455	SCREW M6S ISO 4017 M8X30 A280	63, 93, 103, 105, 117, 123, 125
312105-0463	SCREW M6S ISO 4014 M8X60 A280	103, 105, 117, 123, 125
312105-0465	SCREW M6S ISO 4014 M8X70 A280	67
312105-0493	SCREW M6S ISO 4017 M10X25 A280	53
312105-0505	SCREW M6S ISO 4014 M10X70 A280	37, 39
312105-0640	SCREW M6S ISO 4014 M16X100 A280	11, 13, 15
312109-0374	SCREW M6S ISO 4017 M6X30 A280	67, 113, 131
312109-0376	SCREW M6S ISO 4017 M6X35 A280	175
312109-0459	SCREW M6S ISO 4017 M8X40 A280	87, 113, 131
312109-0460	SCREW M6S ISO 4017 M8X45 A280	53, 71
312115-0222	SCREW MC6S ISO 4762 M3X8 A280	87, 119
312115-0226	SCREW MC6S ISO 4762 M3X12 A280	103, 105, 117, 123, 125
312115-0228	SCREW MC6S ISO 4762 M3X16 A280	87
312115-0287	SCREW MC6S ISO 4762 M4X8 A280	23, 25, 99, 123, 125, 157, 175
312115-0291	SCREW MC6S ISO 4762 M4X12 A280	19, 21, 99, 103, 105, 117, 123, 125
312115-0293	SCREW MC6S ISO 4762 M4X16 A280	121
312115-0295	SCREW MC6S ISO 4762 M4X20 A280	47, 89, 149
312115-0323	SCREW MC6S ISO 4762 M5X8 A280	19, 21, 23, 25
312115-0327	SCREW MC6S ISO 4762 M5X12 A280	37, 39, 67, 137, 139, 141, 143, 145, 147, 149, 175
312115-0329	SCREW MC6S ISO 4762 M5X16 A280	37, 39, 71, 139, 149, 175
312115-0331	SCREW MC6S ISO 4762 M5X20 A280	27, 31, 33, 35, 51, 109, 129
312115-0341	SCREW MC6S 5X50 A4 80	103, 105, 117, 123, 125
312115-0362	SCREW MC6S ISO 4762 M6X8 A280	31, 33, 35, 85, 135
312115-0366	SCREW MC6S ISO 4762 M6X12 A280	25, 27, 53, 71, 81, 87
312115-0368	SCREW MC6S ISO 4762 M6X16 A280	153, 155, 161, 163
312115-0372	SCREW MC6S ISO 4762 M6X25 A280	53, 67, 87
312115-0376	SCREW MC6S ISO 4762 M6X35 A280	63
312115-0379	SCREW MC6S ISO 4762 M6X45 A280	157
312115-0447	SCREW MC6S ISO 4762 M8X12 A280	109
312115-0449	SCREW MC6S ISO 4762 M8X16 A280	19, 21
312115-0451	SCREW MC6S ISO 4762 M8X20 A280	87, 99, 121
312115-0453	SCREW MC6S ISO 4762 M8X25 A280	109, 129
312115-0455	SCREW MC6S ISO 4762 M8X30 A280	109, 129
312115-0457	SCREW MC6S ISO 4762 M8X35 A280	157
312115-0459	SCREW MC6S ISO 4762 M8X40 A280	53
312125-0222	SLOTTED CHEESE HEAD ISO 1207 M3X8 RFR	175
312125-0224	SLOTTED HEMCS3X10RFR	103, 105, 123, 125
312125-0230	SLOTTED CHEESE HEAD ISO 1207 M3X20 RFR	153, 155, 161, 163, 175
312125-0287	SLOTTED CHEESE HEAD ISO 1207 M4X8 RFR	19, 21, 37, 39, 47, 103, 105, 117, 123, 125, 167, 171
312125-0289	SLOTTED HEMCS4X10RFR	63, 71, 77, 79, 113, 131, 153, 155, 159, 161, 163, 165
312125-0378	SLOTTED CHEESE HEAD ISO 1207 M6X40 RFR	25
312145-0224	SLOTTED HEMFS3X10RFR	81, 103, 105, 117, 123, 125
312145-0226	SLOTTED HEMFS3X12RFR	109, 129
312155-0289	SCREW MF6S 4X10 A480	175

Part No	Description	Page No
312155-0323	SCREW MF6S DIN 7991 M5X8 A280	85
312155-0325	SCREW MF6S5X10RFR	157
312155-0329	SCREW MF6S DIN 7991 M5X16 A280	85, 109
312155-0331	SCREW MF6S DIN 7991 M5X20 A280	89, 129
312155-0339	SCREW MF6S DIN 7991 5X40 A280	109, 129
312155-0449	SCREW MF6S DIN 7991 M8X16 A280	159, 165
312155-0461	SCREW MF6S DIN 7991 M8X50 A280	101
312180-0374	HEX. SOCKET HEAD SHOULD. ISO 7379 M5X30	157
312180-0495	HEX. SOCKET HEAD SHOULD. ISO 7379 M8X30	53, 71
312311-0321	SET SCREW FULL DOGPOINT ISO 4028 M5X6	57, 75
312311-0327	SET SCREW FULL DOGPOINT ISO 4028 M5X12	93
312311-0333	SET SCREW FULL DOGPOINT ISO 4028 M5X25	103, 105, 123, 125
312311-0366	SET SCREW FULL DOGPOINT ISO 4028 M6X12	67, 71
312311-0374	SET SCREW FULL DOGPOINT ISO 4028 M6X30	63, 99, 121
312311-0380	STOP SCREW T6SS6X50FZB	103, 105, 117, 123, 125
312311-0624	STOP SCREW T6SS16X30FZB	41
312318-0283	SET SCREW CUP POINT ISO 4029 M4X4 RFR	81, 103, 105, 123, 125
312318-0285	STOP SCREW ISO 4029 M4X6 A4	81, 103, 105, 123, 125
312318-0291	SET SCREW CUP POINT ISO 4029 M4X12 RFR	81
312318-0323	SET SCREW CUP POINT ISO 4029 M5X8 RFR	51, 153, 155, 161, 163
312318-0362	SET SCREW CUP POINT ISO 4029 M6X8 RFR	67, 71, 93
312318-0364	STOP SCREW SK6SS6X10RFR	153, 155, 161, 163
312318-0366	SET SCREW CUP POINT ISO 4029 M6X12 RFR	69, 159, 165
312318-0372	SET SCREW CUP POINT ISO 4029 M6X25 RFR	57, 59
312318-0459	SET SCREW CUP POINT ISO 4029 M8X40 RFR	87
312605-0310	NUT,HEXAGON M6M 3 A2 80	87, 153, 155, 161, 163, 175
312605-0312	NUT,HEXAGON,M4 RFR	19, 21, 25, 77, 79, 81, 85, 139, 141, 143, 149, 153, 155, 161, 163, 175
312605-0314	NUT,HEXAGON,M6M5 STAINLESS	23, 103, 105, 109, 123, 125, 153, 155, 161, 163, 167, 171
312605-0316	NUT,HEXAGON A280 M6M6	19, 21, 25, 53, 63, 67, 77, 79, 81, 85, 137, 153, 155, 161, 163, 175
312605-0318	NUT,HEXAGON,M8 RFR	53, 67, 71, 73, 87, 153, 155, 161, 163, 167, 171
312605-0324	NUT,HEXAGON,M16 A280	41
312621-0316	ROD END,NUT M6	103, 105, 117, 123, 125
312621-0318	ROD END,NUT M8	103, 105, 123, 125
312625-0316	NUTS,HEXAGON,M6	99, 121
312630-0320	NUTS,HEXAGON,M10X1	159, 165
312705-0312	NUT,DOMED CAP,HEXAGON,M4	175
312705-0318	NUT,DOMED CAP,HEXAGON,M8	153, 155, 161, 163
312812-0312	LOCK-NUT,HEXAGON,WITH NYLONINSERT,M4	109, 139
312812-0314	NUT,HEXAGON,LOCK,WITH NYLON,M5	85
315101-0146	WASHER BRB 5,3X10 FZB	177
315103-0165	WASHERS,PLAIN ROUND 8,4X16	101
315105-0124	WASHER,PLAIN ROUND 3,2X6	87, 103, 105, 117, 123, 125, 153, 155, 161, 163, 167, 171, 175
315105-0136	WASHER,PLAIN ROUND 4,3X8 STAINLESS	19, 21, 23, 25, 37, 39, 47, 65, 71, 77, 79, 81, 85 89, 99, 103, 105, 117, 121, 123, 125, 139, 141, 143, 149, 153, 155, 161, 163, 167, 171, 175
315105-0146	WASHER,PLAIN ROUND 5,3X10 STAINLESS	19, 21, 23, 25, 27, 37, 39, 81, 85, 97, 103, 105 109, 117, 123, 125, 139, 145, 149, 153, 155, 157, 161, 163, 175
315105-0153	WASHER,PLAIN ROUND 6,4X12 STAINLESS	19, 21, 25, 27, 31, 33, 35, 37, 39, 51, 53, 57, 59 63, 71, 73, 77, 79, 81, 137, 139, 149, 153, 155, 157, 159, 161, 163, 165, 175
315105-0165	WASHER,PLAIN ROUND 8,4X16 STAINLESS	19, 21, 37, 39, 45, 53, 71, 81, 85, 89, 97, 153 155, 157, 159, 161, 163, 165
315105-0173	WASHER,PLAIN ROUND 10,5X22 STAINLESS	37, 39, 53, 159, 165
315115-0153	WASHER TBRB 6,4X12 STAINLESS	67, 113, 131
315115-0165	WASHER TBRB 8,4X16 STAINLESS	11, 13, 15, 37, 39, 53, 63, 67, 71, 73, 87, 93, 99, 103 105, 109, 113, 117, 121, 123, 125, 129, 131, 167, 171
315125-0153	WASHERS,PLAIN ROUND,CHAMFERED 6,4X22X4	57, 59, 61, 73, 113, 131
315125-0165	WASHERS,PLAIN ROUND,CHAMFERED 8,4X26X5	43
315233-0110	PLAIN ROUND,NYLON R1/4"	177
315402-0136	WASHER FBB4,1RFR	103, 105, 117, 123, 125, 157
315402-0156	WASHER FBB6,5RFR	157
315705-0202	KEYS,PARALLEL WITH ROUND ENDS 5X5X25	93
315705-0272	KEYS,PARALLEL WITH ROUND ENDS 8X7X50	87
315742-0111	RETAINING RINGS 15	93
315750-0107	CIRCLIP SGA10	153, 155, 161, 163
315751-0112	RETAINING RINGS FOR SHAFT 15	57, 59, 67, 93
315751-0122	RETAINING RINGS FOR SHAFT 30	67
315751-0123	RETAINING RINGS FOR SHAFT 32	113, 131
315753-0117	RETAINING RINGS FOR HOLE 22	103, 105, 117, 123, 125, 153, 155, 161, 163
315753-0124	RETAINING RINGS FOR HOLE 35	67
318172-0179	TIMING BELT T10X1780X16	93
318800-0102	HANDLES,SPHERICAL KNOB,INT.THRE.,D.20-M5	67
321105-0125	BUSHING 6F7X12X6	103, 105, 117, 123, 125
321111-0211	FLANGE BUSHING, 15X21X10	93
321111-0274	FLANGE BUSHING, 18X24X18	51, 153, 155, 161, 163
321116-0095	BEARING BUSHING WITHOUT FLANGE, 8X12X6	153, 155, 161, 163
321120-0092	BUSHING, 4X5,5X6	103, 105, 123, 125
321120-0101	BUSHING, 6X8X6	103, 105, 123, 125
321120-0102	BUSHING, 6X8X10	103, 105, 123, 125, 157
321120-0104	BUSHING, 10X12X10	103, 105, 123, 125
321300-0098	BALL BEARING 8X22X7	153, 155, 161, 163
321308-0202	BALL BEARING 15X32X9	53, 63, 71
321313-0102	BALL BEARING 15X35X11	57, 59, 67, 69
321316-0200	BEARINGS,BALL BEARING SKF6300-2RS	67
321316-0202	BEARINGS,BALL BEARING SKF6302-2RS	63
321582-0150	BEARINGS,CAM ROLLER KR26PP	159, 165

Part No	Description	Page No
342716-0203	REDUCER 6-8	175, 179
342722-0197	STRAIGHT COUPLING, D=6 MM - M5	129
342722-0202	STRAIGHT COUPLING, D=6MM - G1/8"	87, 103, 105, 117, 123, 125
342722-0204	STRAIGHT COUPLING, D=8 MM - G1/8"	89
342722-0209	STRAIGHT COUPLING, D=12 MM - R1/4"	175
342722-0210	STRAIGHT COUPLING, D=12 MM - R3/8"	179
342723-0102	STRAIGHT PIPE CONNECTION GAI-6-G1/8"	87
342732-0100	ELBOW PIPE JOINT,EXT.THREAD,D=4 MM G1/8	175
342732-0102	ELBOW PIPE JOINT,EXT.THREAD,D=6 MM G1/8	89, 103, 105, 117, 123, 125, 175
342732-0103	ELBOW PIPE JOINT,EXT.THREAD,D=6 MM G1/4	175
342732-0105	ELBOW PIPE D8-R3/8"	179
342732-0110	ELBOW PIPE JOINT,EXT.THREAD,D=12 MM G3/8	177
342732-0801	ELBOW PIPE JOINT,EXT.THREAD,D=8 MM G1/8	89, 175
342735-0100	ELBOW PIPE JOINT 4X4 MM	175
342735-0109	ELBOW PIPE JOINT 12X12 MM	175
342742-0110	T-COUPLING,ADJUST,F.PLAST.TUBE 12-G3/8"	175
342748-0102	T-CONNECTION 6 MM	175
342748-0109	T-CONNECTION 12 MM	175
342767-0100	BULKHEAD CONNECTOR G1/8"	175
342768-0103	BULKHEAD CONNECTOR, 8 MM	175
342770-0101	STRAIGHT COUPLING INT, D=4 MM - G1/8	175
342921-0111	STRAIGHT COUPLING,EXT.THREADED 6/4-M5	103, 105, 109, 129
342931-0113	ELBOW 90 COUPL.,EXT.THREAD 6/4-G1/8"	71
342991-0100	HOSE CLIP,WORM DRIVE TYPE 10-13	45
342991-0109	HOSE CLIP,WORM DRIVE TYPE (48)-50	87
351150-0403	CABLE OLFLEX 3X0,75 MM2	29
351150-0404	CABLE OLFLEX 4X0,75 MM2	45
351150-0405	CABLE,OLFLEX 5X0,75 MM2	29
351150-0407	CABLE OLFLEX 12X0,75 MM2	29
351150-0412	CABLE OLFLEX 3X1,5MM2	29, 45
351150-0413	CABLE OLFLEX 4X1,5MM2	29
351150-0414	CABLE OILFLEX 5X1,5MM2	45
351150-0416	CABLE OILFLEX 12X1,5MM2	19, 21
351150-0419	CABLE OLFLEX 5X2,5MM2	19, 21
351172-0102	CABLE AWM D.BLUE 0,75MM2	31
351172-0104	CABLE AWM DARKBLUE 1,5MM2	19, 21, 47
352103-0100	CABLE GLAND STR 9;PR15,2	33, 35
352103-0101	CABLE GLAND ST 9;PR15,2/PG9	33, 35, 47
352103-0106	CABLE GLAND ST 11	31, 37, 39, 47, 71, 175
352103-0108	CABLE GLAND ST 13	19, 21
352103-0111	CABLE GLAND ST 16	19, 21, 29
352103-0115	CABLE GLAND STR 21	31, 33, 35
352103-0116	CABLE GLAND ST 21	19, 21
352113-0102	CLIP-STRIP,BLACK 188X4,8MM	47, 103, 105, 117, 123, 125, 167, 171
352113-0204	ANCHOR TM3S25-M	37, 39, 71
352113-0205	ANCHOR TM2S8-C100	19, 21, 37, 39, 47, 63, 77, 79, 103, 105, 113, 117, 123, 125, 131, 153, 155, 159, 161, 163, 165, 167, 171
353021-0120	FEED THROUGH TERMINAL WDK 2,5	23
353021-0122	DIODE-TERMINAL WTRD 2,5	23
353021-0216	BY PASS TERMINAL WDU 2,5 BLUE	31
353021-0301	TERMINAL,TRIPLE-LEVEL, DLI 2,5/35 PA	33, 35
353021-0302	TERMINAL,TRIPLE-LEVEL, DLD 2,5/35 PA	33, 35
353022-0002	NEUTRAL TERMINAL WNT 4	23
353024-0205	EARTH TERMINAL WPE 4	23, 31, 33, 35
353024-0206	EARTH TERMINAL WPE 6	23
353031-0201	END BRACKET EW35	33, 35
353031-0203	END BRACKET WEW 35/2	23
353032-0004	END PLATE WAP 2,5-10 BEIGE	23
353032-0005	END PLATE WAP 2,5-10 BLUE	31
353032-0010	END PLATE WAP	23
353032-0302	END PLATE WAP	33, 35
353033-0104	END PLATE WHP 2,5-10 BLUE	23
353034-0030	BRIDGE CONLECK WQV 2,5/10	23
353034-0404	BRIDGE CONLECK Q10	33, 35
353041-0001	RAIL 10X3MM SSCH	23
353041-0104	CLAMPING YOKE PZB 4 K	23
353042-0004	RAIL TS 35/7,5	23, 27
353042-0005	RAIL TS 35/7.5	31, 33, 35
353240-0003	GLANDS,NORMAL WITHOUT INSERT PG 13,5	29
353240-0005	GLANDS,NORMAL WITHOUT INSERT PG 21	29, 45
353240-0006	GLANDS,NORMAL WITHOUT INSERT PG 29	19, 21, 29
353243-0002	GLAND,HOSE,EXTENDED,WITHOUT INSERT PG11	19, 21, 119
353245-0005	GLAND,EMC,EXTENDED WITH INSERT PR 22,5	53
359005-0010	MARKING SESATS 0-9	19, 21, 29, 45
359005-0050	MARKING SEATS "X"	19, 21, 29, 45
359011-0807	MARKING PLATES 5-FW 1-50	23, 31, 33, 35, 47
359011-0817	SYMBOL 5-GW (+) 50PC	33, 35
359011-0818	SYMBOL 5-GW (-) 50PC	33, 35
359011-0821	SET OF SIGNS 6-FW 1-50	23
359011-0834	SET OF SIGNS 6-GW(EARTH)	47
359240-0100	SIGN HOLDER	25
359241-0133	SIGN "SERVICE SWITCH"	25
359241-0201	SIGN "HOUR GLASS"	25
359241-0471	SIGN" PULL TAB FUNCTION"	25

Part No	Description	Page No
359307-0002	SYMBOL SIGN "TAB C'JAW"	175
359307-0004	SYMBOL SIGN "PATCH C'JAW"	175
359307-0010	SIGN "WASTE BLOWING"	175
359307-0011	SIGN" PRESSURE ROLLER DRIVE MOTOR"	175
359307-0012	SIGN" PRESSURE ROLLER TENSION DEVICE"	175
359705-0007	WARNING SIGN "HOT SURFACE"	95, 115, 119
359705-0009	WARNING SIGN "SHARP PART"	157
359705-0015	WARNING SIGN "ELECTRIC SHOCK"	25, 31, 33, 35, 47, 137, 147
469095-0000	HOLDER	43
469096-0000	LEG	43
495118-0014	DISTANCE PIPE L=14 MM	27
495130-0070	SPACER TUBE L=70MM	27
495377-0000	BUSH	25
514993-0200	BY-PASS SENSOR	49
522393-0000	NUT	157
522394-0000	SPRING	157
522395-0000	SCREW	157
522408-0000	BEARING HOUSING	63
532017-0000	MOUNTING LUG	157
532020-0000	LOCK WASHER	157
532021-0000	LOCKING LOOP	157
532022-0000	LOCK BAR	157
532719-0001	FEEDING ROLLER	63
533972-0000	INDICATOR CURVE	153, 155, 161, 163
534497-0000	SPACER	153, 155, 161, 163
538726-0000	WASHER	153, 155, 161, 163
538740-0003	SPACER	153, 155, 161, 163
544422-0000	KNIFE	157
544427-0000	TURN SPRING	157
544428-0000	SHEET	157
546256-0000	BOBBIN HOLDER	161, 163
546290-0000	BEAM	153, 155, 161, 163
546291-0000	BRACKET	161, 163
546294-0000	BEAM	153, 155, 161, 163
546296-0000	BEAM	153, 155
546297-0000	BEAM	153, 155
546298-0000	SHAFT	161, 163
546299-0000	SHAFT	161, 163
546300-0000	ROLL	161, 163
546301-0000	ROLL	161, 163
546303-0000	SHAFT	153, 155, 161, 163
546305-0000	SHEET	153, 155, 161, 163
546306-0000	SHAFT	153, 155, 161, 163
546307-0000	ROLL	161, 163
547745-0000	ROLL	161, 163
547746-0000	ROLL	161, 163
548770-0001	COAXIAL CABLE L=5000 MM	19, 21
548770-0007	COAXIAL CABLE L=3000 MM	19, 21
552049-0000	LUG	157
556539-0000	BRAKE DISC	153, 155, 161, 163
556541-0000	SCREW	153, 155, 161, 163
556542-0000	PIN	153, 155, 161, 163
556544-0000	SPACER	153, 155, 161, 163
558230-0101	TMCC CONTROLLER	25
558321-0101	TPIH-SWITCH	25
577135-0100	PIPE-LINE	11, 13, 15
578684-0000	SPRING BRACKET	85
649060-0500	ELECTRICAL EQUIPMENT	11, 13, 15
731049-0000	SLIDING STRIP TPIH	19, 21
905174-0000	STEER PLATE	103, 105, 123, 125
905194-0000	SHAFT	103, 105, 123, 125
905210-0000	ROLLER-35	107
905212-0000	SHAFT	123, 125
905215-0000	BOLT	103, 105, 123, 125
905241-0000	COUPLING	103, 105, 123, 125
905243-0000	SHAFT	103, 105, 123, 125
905244-0000	WEDGE	81, 103, 105, 109, 117, 123, 125, 129
905246-0000	BRACKET	103, 105, 123, 125
905285-0000	STRIPPER PIN	89
905413-0000	SHAFT	103, 105, 123, 125
905415-0000	SHAFT	103, 105, 123, 125
905416-0000	PIVOT BRACKET-SWIVEL	103, 105, 123, 125
905417-0000	SHAFT	103, 105, 123, 125
905419-0000	PIVOT ARM-SWIVEL	103, 105, 123, 125
905463-0000	KEY	109, 129
905471-0000	ROLLER-DRIVE	103, 105, 123, 125
905484-0000	SHIM	123, 125
905607-0000	SCREW	103, 105, 123, 125
905608-0000	SCREW	103, 105, 123, 125
905609-0000	LOCK BAR	103, 105, 123, 125
905613-0000	SHAFT	103, 105, 123, 125
905937-0000	SPRING	81
905938-0000	BRACKET	81
907138-0000	CLAMP	123, 125

Part No	Description	Page No
907249-0000	CLAMP	123, 125
907358-0006	ROLLER - 29	107
907358-0009	ROLLER - 56.5	127
907358-0010	ROLLER - 43	107
907487-0000	WASHER-CURVED	103, 105, 123, 125
907710-0000	PIVOT PLATE	103, 105, 123, 125
907711-0000	SHAFT	103, 105, 123, 125
907712-0000	PIVOT PLATE	103, 105, 123, 125
907719-0000	SPRING	103, 105, 123, 125
908309-0000	ROLLER - 47	127
928919-0000	FASTENING PLATE	109, 129
929607-0000	EARTH BAR	19, 21
929771-0000	OPENING SPECIFICATION	133
970215-0000	STOP BLOCK	25
971346-0000	GUIDE PIN	25
979426-0000	SIGN	175
979974-0000	INSERT	19, 21
984082-0000	PLATE	175
985854-0000	BRACKET	67
985855-0000	SPACER BUSHING	67
985856-0000	SHAFT	67
985860-0000	DIE HOLE 45	91
985865-0000	BRACKET	67
985866-0000	TOP FRAME	37, 39
985899-0000	COUPLING	67
985900-0000	COUPLING	71
988685-0000	PIN	137, 139, 141, 143, 147, 149, 175
1010814-0000	ROLLER	51
1035076-0200	LEG	37, 39
1035471-0100	LEG	37, 39
1035792-0000	E-HINGE	137, 139, 141, 143, 147, 149, 175
1035882-0000	BENDING ROLLER	57, 59, 67
1036120-0000	SLEEVE	41
1036220-0000	SHAFT	67
1036227-0000	BRACKET	37, 39
1036232-0000	BRACKET	67
1036304-0005	LOCKING ARM	141, 143
1036304-0019	LOCKING ARM	141, 143
1036304-0020	LOCKING ARM	139
1036563-0000	WASHER	139, 149, 175
1037762-0000	PIN	37, 39
1038865-0000	SPACER DISC	11, 13, 15
1082741-0000	HOLDER	175
1082765-0000	PHOTOCELL BRACKET	79
1082861-0000	ARM	51
1095893-0100	MAGAZINE PULLTAB	151
1095894-0100	MAGAZINE PATCH	151
1095895-0100	SPLICING DEVICE	153, 155, 161, 163
1095923-0100	GUIDE PULLTAB	153, 155
1095924-0100	GUIDE PATCH	161, 163
1095928-0100	COOLER	11, 13, 15
1095931-0300	PAPER WEB PATH	11, 13, 15
1095932-0400	APPLICATORS	11, 13, 15
1095937-0100	GUIDE ROLLER WITH FLANGE	55
1095938-0100	GUIDE ROLLER	55
1095940-0100	GUIDE ROLLER	55
1095941-0100	TENSION ROLLER	55
1095942-0100	ROLLER ASSEMBLY	49
1095944-0300	DOOR EL-CABINET	135
1095945-0200	DOOR	135
1095946-0200	DOOR	135
1095947-0200	DOOR	135
1095948-0100	DOOR FOR WASTE BOX	135
1095949-0100	DOOR FOR TPIH	135
1095951-0400	DOORS AND COVER	11, 13, 15
1095952-0100	BENDING ROLLER ASSEMBLY	67, 75
1095953-0200	INFEED UNIT	49
1095955-0100	WASTE BOX	83
1095969-0100	BENDING ROLLER WITH FLANGES	71
1095970-0100	PAPER BRAKE	49
1095979-0100	PHOTOCELL UNIT	49
1095980-0100	PHOTOCELL UNIT	49
1095991-0300	PUNCH UNIT	87
1095992-0300	PUNCH BRACKET	83
1103295-0000	LOCK PLATE	85
1103299-0000	NON-SKID	37, 39
1103845-0000	ARM	161, 163
1110290-0000	INDUCTOR	111
1116048-0000	SPACER	37, 39
1129042-0000	KEY	139, 149, 175
1129221-0000	SPLICING TABLE	157
1129222-0000	BOBBIN HOLDER	153, 155
1129223-0000	BEAM	153, 155, 161, 163
1129224-0000	BEAM	153, 155, 161, 163

Part No	Description	Page No
1129225-0000	..BEAM	161, 163
1129226-0000	..BEAM	153, 155, 161, 163
1129227-0000	..POST	161, 163
1129230-0000	..BEAM	153, 155
1129231-0000	..CANTILEVER	153, 155
1129232-0000	..ROLL	153, 155
1129233-0000	..SHAFT	153, 155
1129234-0000	..ROLL	153, 155, 157
1129235-0000	..SHAFT	153, 155, 157
1129237-0000	..ROLL	153, 155
1129238-0000	..KNIFE	157
1129239-0000	..KNIFE HOLDER	157
1129240-0000	..SHEET	159, 165
1129241-0000	..STEERING	159, 165
1129242-0000	..SPACER	159, 165
1129245-0000	..STOP	159, 165
1129246-0000	..ROLL	153, 155
1129252-0000	..LOCK GRIP	157
1129274-0000	..GUIDE LUG	139, 141, 143
1129450-0000	..ARM	153, 155, 161, 163
1129451-0000	..SHAFT	161, 163
1129452-0000	..SHAFT	153, 155
1129454-0000	..SHEET	159, 165
1129461-0000	..SPACER	159, 165
1129462-0000	..SPACER	159, 165
1129495-0000	..BLOCKING PIECE	153, 155, 161, 163
1129510-0000	..ARM	153, 155
1129624-0000	..AXLE SUPPORT	57, 59
1129626-0000	..AXLE SUPPORT	61
1129628-0000	..BRACKET	63
1129629-0000	..BRACKET	63
1129630-0000	..BEARING SEAT	57, 59
1129767-0000	..SCREW	135, 137, 139, 141, 143, 145, 147
1129770-0000	..BLOCKING PIECE	137, 139, 141, 143, 147, 149, 175
1129780-0000	..ROLL	153, 155
1129867-0000	..SHEET	19, 21
1129906-0000	..PIN	53, 71
1129907-0000	..LEVER	53, 71
1129930-0000	..DOOR	147
1129931-0000	..DOOR	137
1129932-0000	..FRAME	137
1129951-0000	..BENDING ROLLER	69
1129952-0000	..BRACKET	69
1129971-0000	..BRACKET	145
1140016-0000	..PLATE	53, 71
1140045-0000	..FRAME	85
1140046-0000	..RAIL	85
1140047-0000	..WASTE BOX	85
1140048-0000	..LOCK PLATE	85
1140049-0000	..COVER	85
1140053-0000	..SPACER	19, 21
1140055-0000	..RING	57
1140131-0000	..FLANGE	75
1140132-0000	..ECCENTRIC	67, 73
1140133-0000	..AXLE PIN	69
1140134-0000	..PLATE	73
1140135-0000	..ROLLER	61, 73
1140136-0000	..BRACKET	73
1140137-0000	..SHAFT	73
1140174-0000	..BEARING HOUSING	53, 71
1140184-0000	..BRACKET	71
1140185-0000	..SHAFT	71
1140186-0000	..BRACKET	71
1140187-0000	..WHEEL	71
1140209-0000	..GUIDE	77
1140210-0000	..BRACKET	77
1140211-0000	..PHOTOCELL BRACKET	77, 79
1140212-0000	..GUIDE	79
1140213-0000	..BRACKET	79
1140291-0000	..PUNCH HOLE 50	91
1140292-0000	..DIE HOLE 50	91
1140294-0002	..PIN DISTANCE 36.5	89
1140314-0000	..STOP LUG	19, 21
1140415-0000	..GLASS PANE	137, 139
1140416-0000	..GLASS PANE	141
1140427-0000	..BRACKET	37, 39
1140499-0000	..PLATE	87
1140500-0000	..ANGLE BRACKET	87
1140503-0000	..ADJUSTMENT BRACKET	87
1140504-0000	..CONNECTION PLATE	87
1140509-0000	..DOOR	149
1140537-0000	..HOLDER	149
1140538-0000	..BLOCKING PIECE	149, 175
1140545-0000	..TEE BRACKET	103, 105, 123, 125

Part No	Description	Page No
1140546-0000	BRACKET	103, 105, 123, 125
1140547-0000	SHAFT	103, 105, 117, 123, 125
1140548-0000	FLANGED BEARING BUSHING	103, 105, 123, 125
1140551-0000	SHAFT	103, 105
1140626-0000	SPACER	159, 165
1140632-0000	POST	153, 155, 161, 163
1140667-0000	INDUCTOR	111
1140727-0000	ROLLER	167, 171
1140738-0000	BRACKET	121
1140739-0000	BRACKET	121
1140771-0000	COVERING PLATE	135
1140772-0000	COVERING PLATE	135
1140773-0000	COVERING PLATE	135
1140774-0000	COVERING PLATE	135
1140775-0000	COVERING PLATE	135
1140776-0000	COVERING PLATE	135
1140777-0000	COVERING PLATE	135
1140817-0000	BRACKET	167, 171
1140889-0000	CABLE	109
1140890-0000	TRANSFORMER BRACKET	109
1140912-0000	BRACKET	123, 125
1143421-0000	OPENING SPECIFICATION	133
1143632-0000	OPENING SPECIFICATION	133
1143702-0000	OPENING SPECIFICATION	133
1143884-0000	COPPER BRAID	19, 21
1145219-0000	SIGN	175
1145233-0000	PUNCH HOLE 45	91
1145332-0000	KNIFE-FLAT	103, 105, 123, 125
1145333-0000	KNIFE-WINDOW	103, 105, 123, 125
1147009-0000	SPECIAL WASHER	113, 131
1147010-0000	BUSHING	113, 131
1147012-0000	PHOTOCELL BRACKET	97
1147013-0000	BRACKET	97
1147049-0000	BRACKET	93
1147050-0000	SCREW	93
1147051-0000	TOOTHED PULLEY	93
1185000-0100	DOOR,INNER	135
1185008-0200	MAGAZINES	11, 13, 15
1185029-0100	MISSING TAB DETECTOR	119
1185031-0200	BAR CODE READER	95
1185047-0100	AIR INLET GROUP	175
1185048-0200	VALVE GROUP	175
1185049-0200	VALVE PANEL	11, 13, 15
1185078-0100	LIFTING DEVICE	83
1255035-0000	ECCENTRIC	51
1255311-0000	FRAME	37, 39
1255579-0000	BRACKET	81
1255601-0100	EDGE GUIDE	49
1255631-0000	ECCENTRIC BUSHING	67
1255682-0000	DOOR	139
1255683-0000	DOOR	145
1255684-0000	HOLDER	139
1255685-0000	DOOR	141
1255686-0000	DOOR	143
1255687-0000	BRACKET	99
1255692-0010	CABLE	29
1255697-0000	BRACKET	85
1255834-0000	HANDLE	157
1255835-0000	PROTECTION	157
1255952-0000	BOX FOR TPIH	19, 21
1255955-0000	FRAME	25
1260201-0000	FRAME	149
1260239-0000	ANGLE BRACKET	87
1260329-0000	BRACKET	51
1260379-0000	BEAM	161, 163
1260387-0000	PHOTOCELL BRACKET	87
1260388-0000	PLATE	123, 125
1260389-0000	CASTING APPLICATOR	103, 105, 123, 125
1260390-0200	MISSING PATCH DETECTOR	95
1260391-0000	BRACKET	103, 105, 117
1260392-0000	CASTING APPLICATOR	117
1260395-0000	PLATE	103, 105, 123, 125
1260397-0000	BRACKET	113
1260398-0000	BRACKET	131
1260399-0000	CLAMP	103, 105, 117, 123, 125
1260400-0000	COVER	101
1260401-0100	SETTING TOOL	95, 115, 119
1260402-0000	BRACKET	101
1260403-0000	ROD	137
1260404-0000	PLATE	103, 105, 117
1260405-0000	PLATE	109
1260406-0000	PLATE	123, 125
1260407-0000	PLATE	129
1260411-0100	PATCH/TAB SPLICE DETECTOR	55

Part No	Description	Page No
1260413-0000	BRACKET	65
1260414-0200	PATCH FEEDER	95
1260415-0200	TAB FEEDER	119
1260416-0200	TAB C'JAW UNIT	119
1260417-0200	PATCH RESEAL C'JAW UNIT	95, 115
1260418-0100	HEATING JAW - RESEAL	115
1260419-0200	APPLICATOR PATCH	83
1260420-0200	APPLICATOR RESEAL	83
1260421-0200	APPLICATOR TAB	83
1260422-0000	CLAMP	103, 105, 117, 123, 125
1260426-0100	PATCH RESEAL BRACKET	95, 115
1260427-0100	TAB BRACKET	119
1260428-0100	FRAME ASSEMBLY	11, 13, 15
1260440-0000	BRACKET	25
1260522-0000	PHOTOCELL	99
1260523-0000	CABLE	99
1260551-0000	TAB HEATER HEAD	123, 125
1260552-0000	ROD	137
1260561-0000	HOLDER	19, 21
1260642-0000	LEVER	67
1260643-0000	LEVER	67
1260644-0000	LEVER	67
1260648-0000	BUSHING	67
1260649-0000	PAPER GUIDE	67
1260651-0000	INDUCTOR	111
1260811-0100	CONNECTION BOX	29
1260812-0100	CONNECTION BOX	29
1260813-0100	CONNECTION BOX	29
1260814-0000	CONNECTION BOX	33, 35
1260815-0000	CONNECTION BOX	31
1260902-0000	INSERT	29
1279484-0000	SHIM	109, 129
1279485-0000	PLATE	109, 129
1279828-0000	SEALING STRIP	139
1279829-0000	SEALING STRIP	141, 143
1279830-0000	SEALING STRIP	145
1279831-0000	COVER	25
1279832-0000	PLATE	37, 39
1279833-0000	RUBBER STRIP	37, 39
1279834-0000	BOLT	153, 155, 161, 163
1282599-0000	INSERT	29
1282600-0000	INSERT	29
1282787-0000	INSERT	29
1282788-0000	INSERT	45
1285054-0100	CONNECTION BOX	45
1285481-0000	LABEL	161, 163
1285482-0000	LABEL	153, 155
1285818-0000	SHIM	89
1285819-0000	SPACER	89
1296298-0000	BUSHING	109, 129
1296300-0000	WASHER	109, 129
1296752-0000	BRACKET	103, 105, 117, 123, 125
1296753-0000	FLAG	103, 105, 117, 123, 125
1296856-0000	BRACKET	37, 39
1296875-0000	OPENING SPECIFICATION	133
1296876-0000	OPENING SPECIFICATION	133
1296882-0100	OPENING SPECIFICATION	83
1317233-0000	PUNCH HOLE85	91
1317254-0200	ELECTRICAL CABINET	11, 13, 15
1317354-0200	MOUNTING PLATE	19, 21
1317355-0200	SWING FRAME	19, 21
1317356-0200	FUSE BOX	25
1317357-0000	MOUNTING PLATE	23
1317358-0000	SWING FRAME	25
1317359-0000	BRACKET	25
1317360-0000	FUSE BOX	27
1317361-0000	COVER PLATE	27
1317483-0000	TOUCH GUARD	23
1317484-0000	STUD SCREW	23
1317485-0000	ANGLE BRACKET	23
1317657-0000	INSERT	19, 21
1317669-0001	ROLLER	173
1317669-0002	ROLLER	173
1317669-0005	ROLLER	169
1317669-0006	ROLLER	169
1317669-0007	ROLLER	173
1317670-0000	BRACKET	167, 171
1317671-0000	ROLLER	167, 171
1317672-0000	AXLE PIN	167, 171
1317673-0000	PLATE	167, 171
1317674-0000	FLAG	167, 171
1317675-0000	AXLE PIN	167, 171
1317676-0000	PLATE	167, 171
1317750-0000	CABINET	19, 21

Part No	Description	Page No
1317751-0100	CABLE HARNESS	11, 13, 15
1334065-0200	PATCH TURNING DEVICE	151
1334066-0200	TAB TURNING DEVICE	151
1334322-0100	BENDING ROLLER WITH FLANGES	11, 13, 15, 73
1334534-0000	WASTE PIPE	87
1334535-0000	WASTE PIPE	85
1346162-0000	PHOTOCELL BRACKET	99
1346219-0000	REFLECTOR	99
1346283-0000	COUNTER PLATE	129
1346521-0000	HEATER	123, 125
1346824-0000	INSERT	19, 21
1348057-0000	BRACKET	37, 39
1348058-0000	CABLE DUCT	37, 39
1348240-0000	DIE HOLE 85	91
1350146-0000	CONNECTION BOX	47
1350525-0000	SEALING PLATE	127
1350527-0000	SEALING PLATE	127
1350541-0000	SEALING PLATE	127
1350785-0001	SHIM	103, 105, 123, 125
1350785-0002	SHIM	103, 105, 123, 125
1350785-0003	SHIM	103, 105, 123, 125
1350785-0004	SHIM	103, 105, 123, 125
1484135-0000	OPENING SPECIFICATION	133
1484136-0000	OPENING SPECIFICATION	133
1484230-0000	PUNCH	91
1487477-0000	PLATE	87
1487712-0000	LEG	41
1487757-0000	FUSE BOARD	137
1490074-0000	PNEUMATIC DIAGRAM	175
1490132-0000	DIE HOLE 60	91
1490292-0000	SEALING PLATE	127
1490995-0000	BRACKET	53
1490996-0000	BRACKET	53
1490997-0000	BRACKET	53
1490998-0000	SHAFT	53
1490999-0000	SHAFT	53
1498046-0000	WHEEL	53
1498049-0100	DRIVE MOTOR	49
1498488-0000	SEALING PLATE	103, 105, 117
1498747-0000	OPENING SPECIFICATION	133
1499596-0000	OPENING SPECIFICATION	133
1499597-0000	OPENING SPECIFICATION	133
1519823-0100	PUNCH UNIT	89
1519824-0100	PATCH FEEDER	103, 105
1519825-0100	PATCH RESEAL C'JAW UNIT	109
1519827-0100	TAB FEEDER	123, 125
1519828-0100	PATCH TURNING DEVICE	171
1519829-0100	TAB TURNING DEVICE	167

Tetra Pak