SPC
Spare Parts Catalogue

PT21 060V

648508-0600

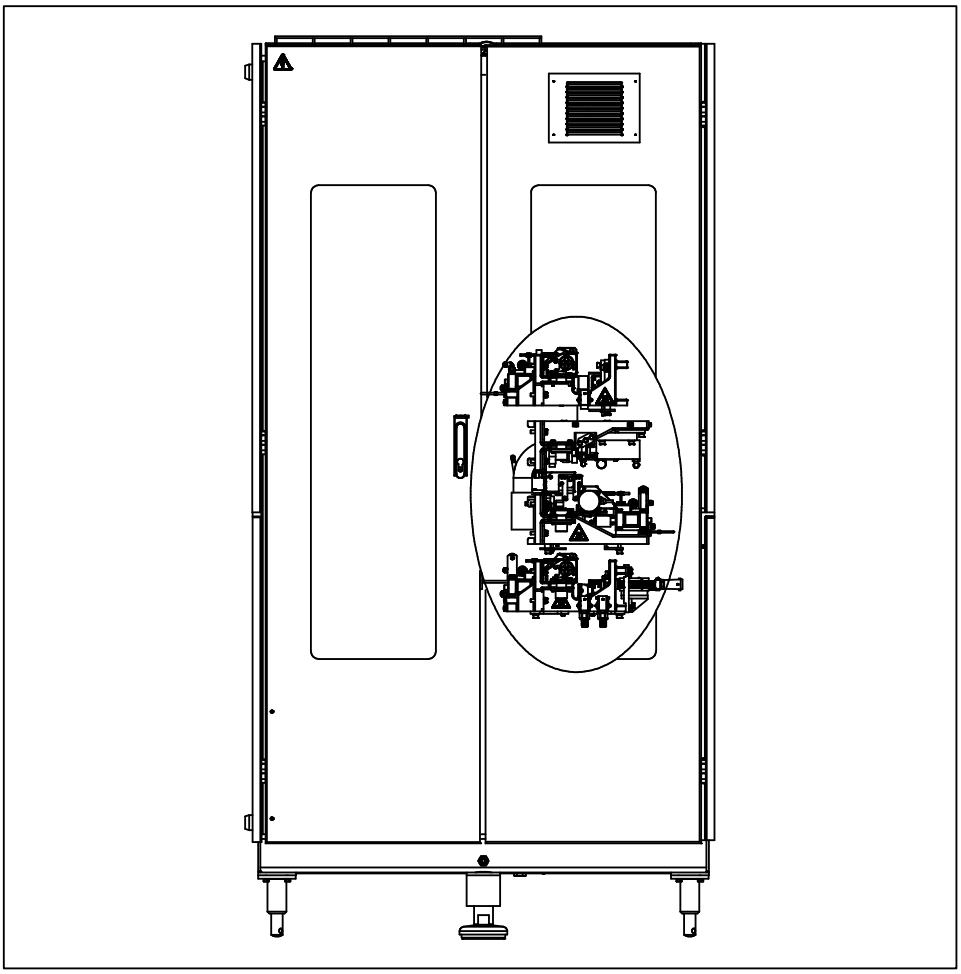

Tetra Pak

Doc. No: SPC-81759-0105

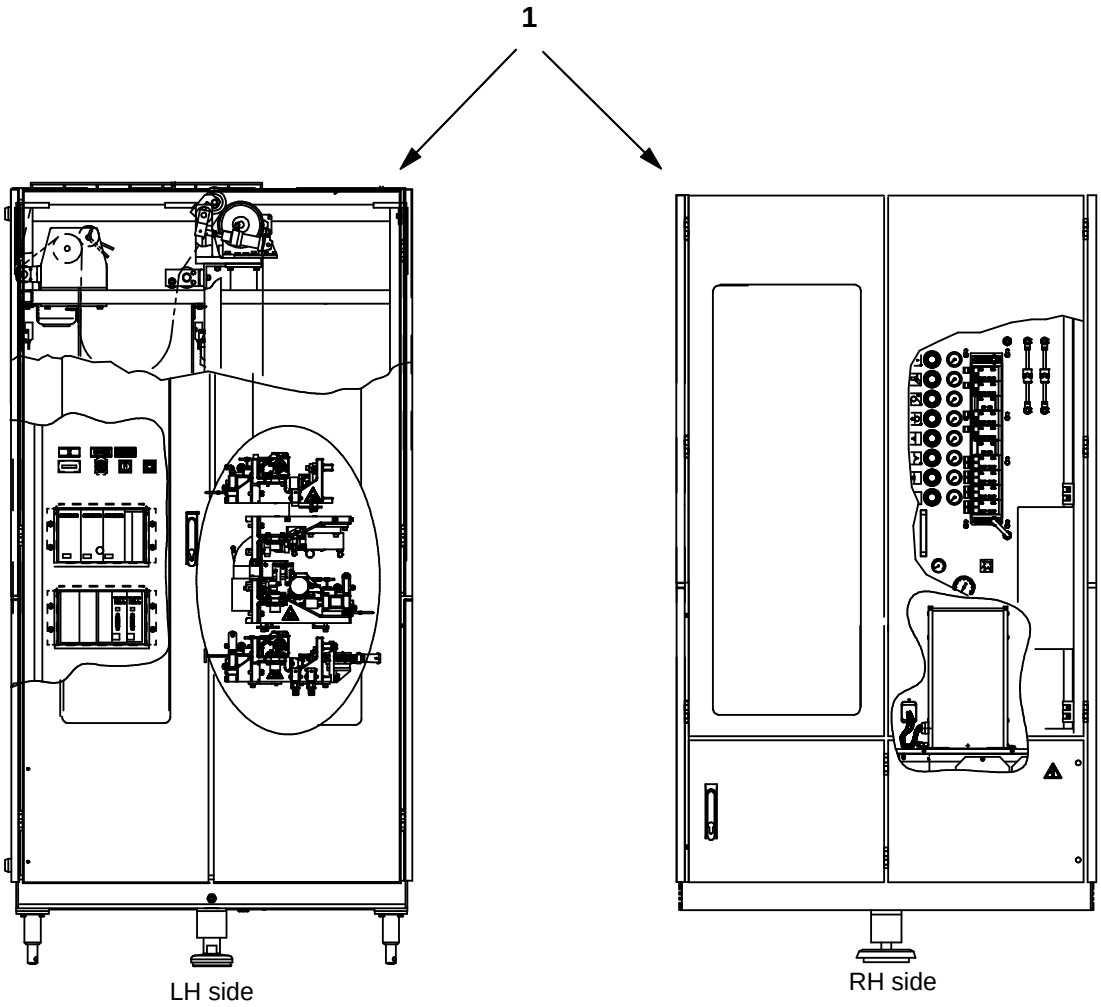

The position numbers in the illustration correspond with the chapter numbers listed on the next page.

Copyright © 2004 Tetra Pak Group

All rights reserved. No part of this document may be reproduced or copied in any form or by any means without written permission from Tetra Pak Carton Ambient AB.

Tetra Pak and all Tetra Pak products are trademarks belonging to the Tetra Pak Group.

The content of this manual is in accordance with the design and construction of the machine or equipment at the time of publishing. Tetra Pak reserves the right to introduce design modifications without prior notice.

This document was produced by:

Tetra Pak Carton Ambient S.p.A.
Technical Publications
Via Delfini 1
41100 Modena /Italy

This Tetra Pak equipment was manufactured by:

Tetra Pak Carton Ambient S.p.A.
Via Delfini 1
41100 Modena /Italy

Additional copies can be ordered from Tetra Pak Parts or the nearest Tetra Pak office. When ordering additional copies, always provide the document number. This can be found in the machine specification document. It is also printed on the front cover and in the footer on each page of the manual.

Doc. No. SPC-81759-0105

Issue 2004-03

This document is valid from:

22316/00228

Series No/Machine No Sign.

i Introduction

1 Pulltab 21
B-648508-0600

ii Part Number Index

iii Electrical Parts Index

SPC

Spare Parts Catalogue

PT21 060V
648508-0600

A list of all optional equipment, optional kits, and rebuilding kits that this catalogue is valid for is found on the next page.

Doc. No: SPC-81759-0105

Issue 2004-03

Tetra Pak

Tetra Pak Carton Ambient S.p.A.

Valid for:

New bending roller infeed unit
2555126-0100

PLC version 1 for PT21 060V
2587425-0100

PT21 060V Holes
2526512-0100

PT21 060V installation
2507115-0100

PT21 060V templates
2563981-0100

PT21 Outer patch
2526523-0100

PT21 Safety improvements
2603693-0100

Update Log for Doc. No. SPC-81759-0105

This table shows all changes made to this catalogue, such as kits installed and pages added or removed.

Date	Installed Kit	Added Pages (Doc. No.)	Removed Pages	Signature

Date	Installed Kit	Added Pages (Doc. No.)	Removed Pages	Signature

i Introduction

TechPub-2660371-0101

en About the Introduction Chapter
This chapter contains basic information about this catalogue and related Tetra Pak equipment.

da Om indledningen
Kapitlet indeholder grundlæggende oplysninger om dette katalog og tilhørende Tetra Pak-udstyr.

de Zur Einleitung
Dieses Kapitel enthält grundlegende Informationen zu diesem Handbuch und der entsprechenden Tetra Pak Ausrüstung.

el Σχετικά με το Κεφάλαιο 'Εισαγωγή'
Αυτό το κεφάλαιο περιέχει βασικές πληροφορίες για τον παρόντα κατάλογο και τον σχετικό εξοπλισμό της Tetra Pak.

es Sobre el Capítulo de Introducción
Este capítulo contiene información básica sobre este manual y el equipo Tetra Pak relacionado.

fi Tietoja Johdanto-luvusta
Tässä luvussa on perustietoja tästä luettelosta ja Tetra Pak -laitteesta.

fr Concernant le chapitre d'Introduction
Le présent chapitre contient les renseignements de base concernant ce manuel et l'équipement Tetra Pak concerné.

it Informazioni sulla sezione Introduzione
Questa sezione contiene informazioni generali sul presente catalogo e la relativa macchina Tetra Pak.

nl Omtrent het hoofdstuk Inleiding
Dit hoofdstuk bevat basisinformatie betreffende dit handboek en daarmee verband houdende apparatuur van Tetra Pak.

no Om kapitlet Introduksjon
Dette kapitlet inneholder grunnleggende informasjon om denne katalogen og relatert Tetra Pak-ustyr.

po Sobre o capítulo Introdução
Este capítulo contém informações básicas sobre este catálogo e ao equipamento Tetra Pak relacionado.

sv Om inledningskapitlet
Det här kapitlet innehåller grundläggande information om katalogen och Tetra Pak-utrustningen.

TechPub-2660371-0101

Introduction

Illustrations . . . . . i - 5
English Text . . . . . i - 7

Indledning

Illustrationer . . . . . i - 5
Dansk tekst . . . . . i - 11

Einleitung

Abbildungen . . . . . i - 5
Deutscher Text . . . . . i - 15

Εισαγωγή

Εικόνες . . . . . i - 5
Ελληνικό Κείμενο . . . . . i- 19

Introducción

Ilustraciones . . . . . i - 5
Texto español . . . . . i - 23

Johdanto

Kuvat . . . . . i - 5
Suomenkielinen teksti . . . . . i - 27

Introduction

Figures . . . . . i - 5
Texte français . . . . . i - 31

Introduzione

Figure . . . . . i - 5
Testo in italiano . . . . . i - 35

Inleiding

Illustraties . . . . . i - 5
Nederlands tekst . . . . . i - 39

Introduksjon

Illustrasjoner . . . . . i - 5
Norsk tekst . . . . . i - 43

Introdução

Ilustrações . . . . . i - 5
Texto em portugese . . . . . i - 47

TechPub-2660371-0101

Inledning

Bilder . . . . . i - 5
Svensk text . . . . . i - 51

TechPub-2660371-0101

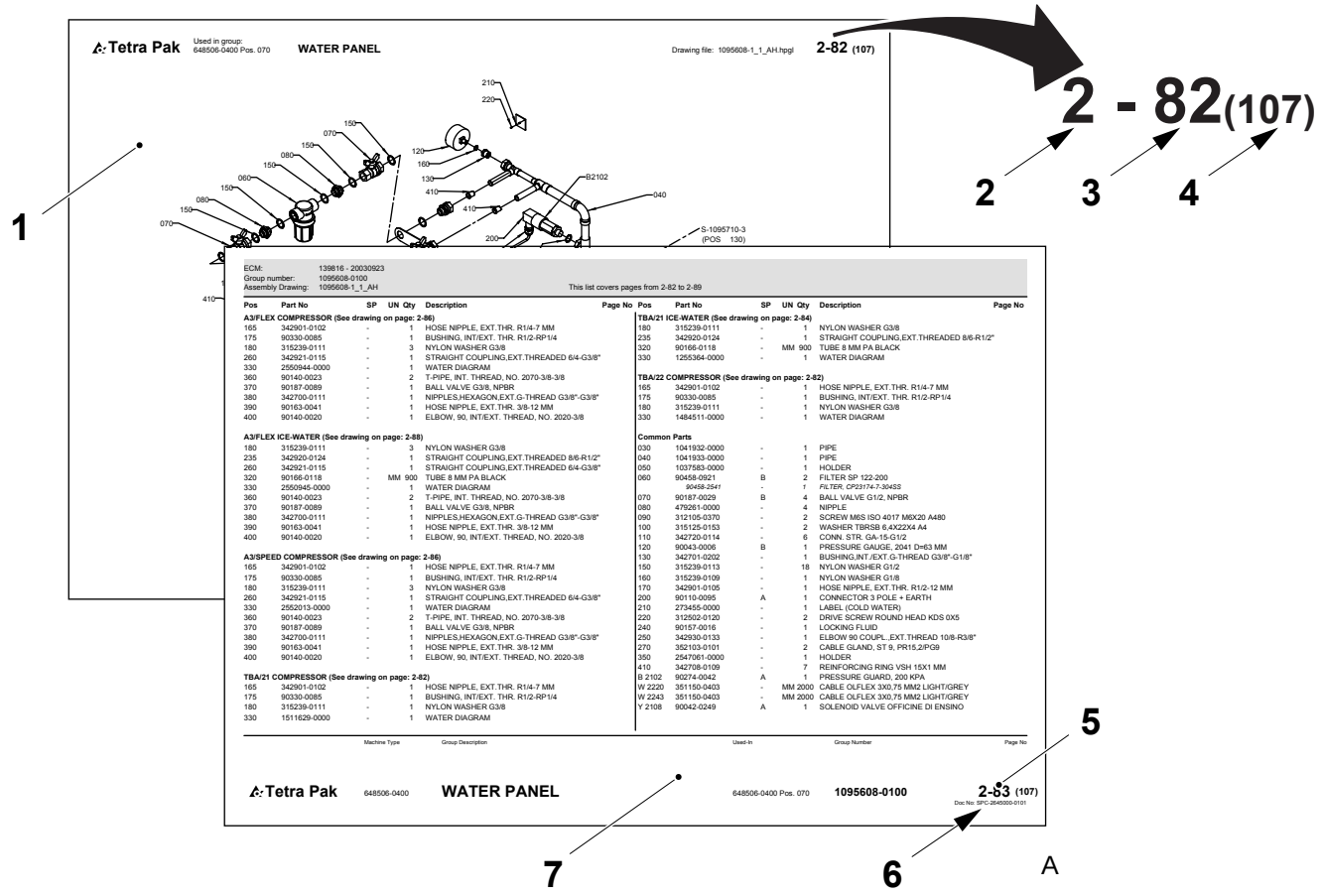

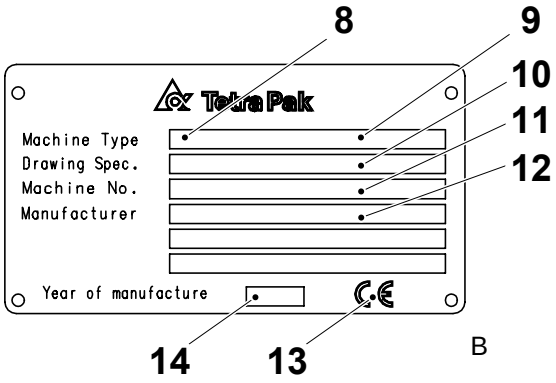

MACHINE SPECIFICATION

Machine Sign Data

Machine Type	: TBA/22 - 200 B
Drawing Spec.	: 648571-0400
Machine No.	: 21070 /83816
Designed by	: Tetra Brik Packaging Systems S.p.A. Via A. Delfini 41100 Modena Italy
Manufacturer	: Tetra Brik Packaging Systems S.p.A. Via A. Delfini 41100 Modena Italy
Year of Manufacture	: 2000

Machine No. : 21070 / 83816

Date of Issue	: 10/23/2000
Machine Type	: **TBA/22 - 200 Baseline**
Issued by	: Tetra Brik
No. of Sheets	: 1/1
No of M. Dev.	: 1

Basic Design

Machine Body	B-648522 0400
Drive Unit	B-648523 - 0500
Jaw System	B-648524 - 0400
Final Folder	B-648525 - 0400
Service Unit	B-648506 - 0300
Strip Applicator	B-648507 - 0400
Regular Accessories	B-648547 - 0100
Superstructure	B-648521 - 0300
Aut. Splicing Unit	B-648513 - 0400
Electrical Cabinet	BE-648538 - 0200

Equipment Included

1282762-0101 Trolley

527898-0101 Container H2O2

Variables

ECN No. EL	71390
Frequency	Hz - 50
Voltage	400/230
Machine Speed	20000/H

Documentation Included

SPC 81511-102 MM 82302-104
MM 82302-604 OM 82346-104
OM 82346-604 IM 82358-103
IM 82358-603 UM 82351-103
UM 82351-603 UM 82197-102
TEM 27080-102 TEM 27085-602
EM 82318-104 EM 82318-604

C

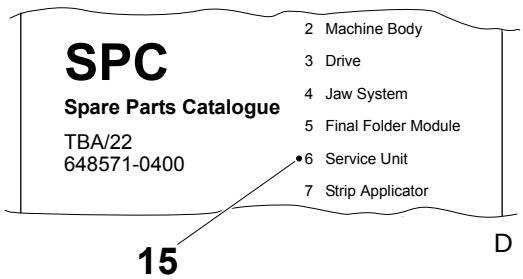

TechPub-2660371-0101

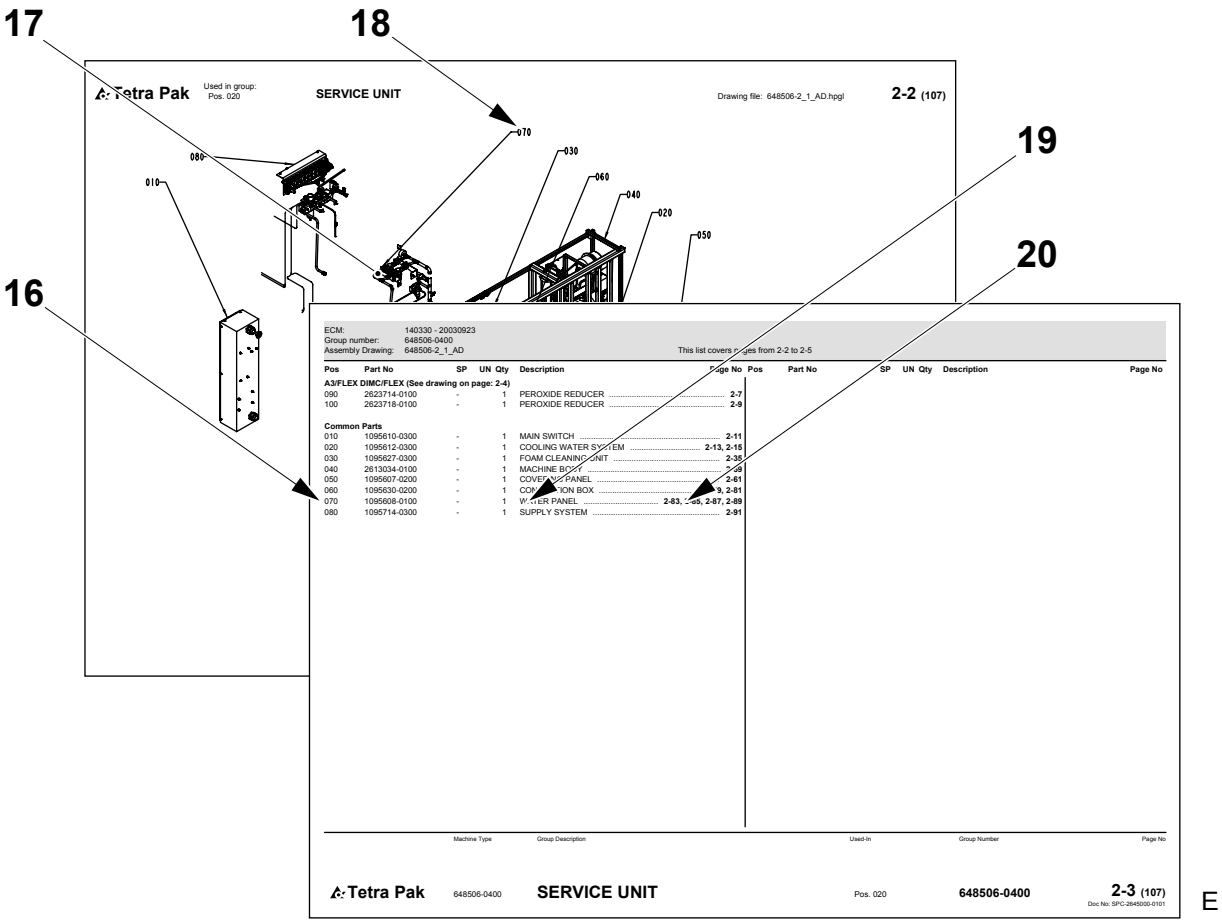

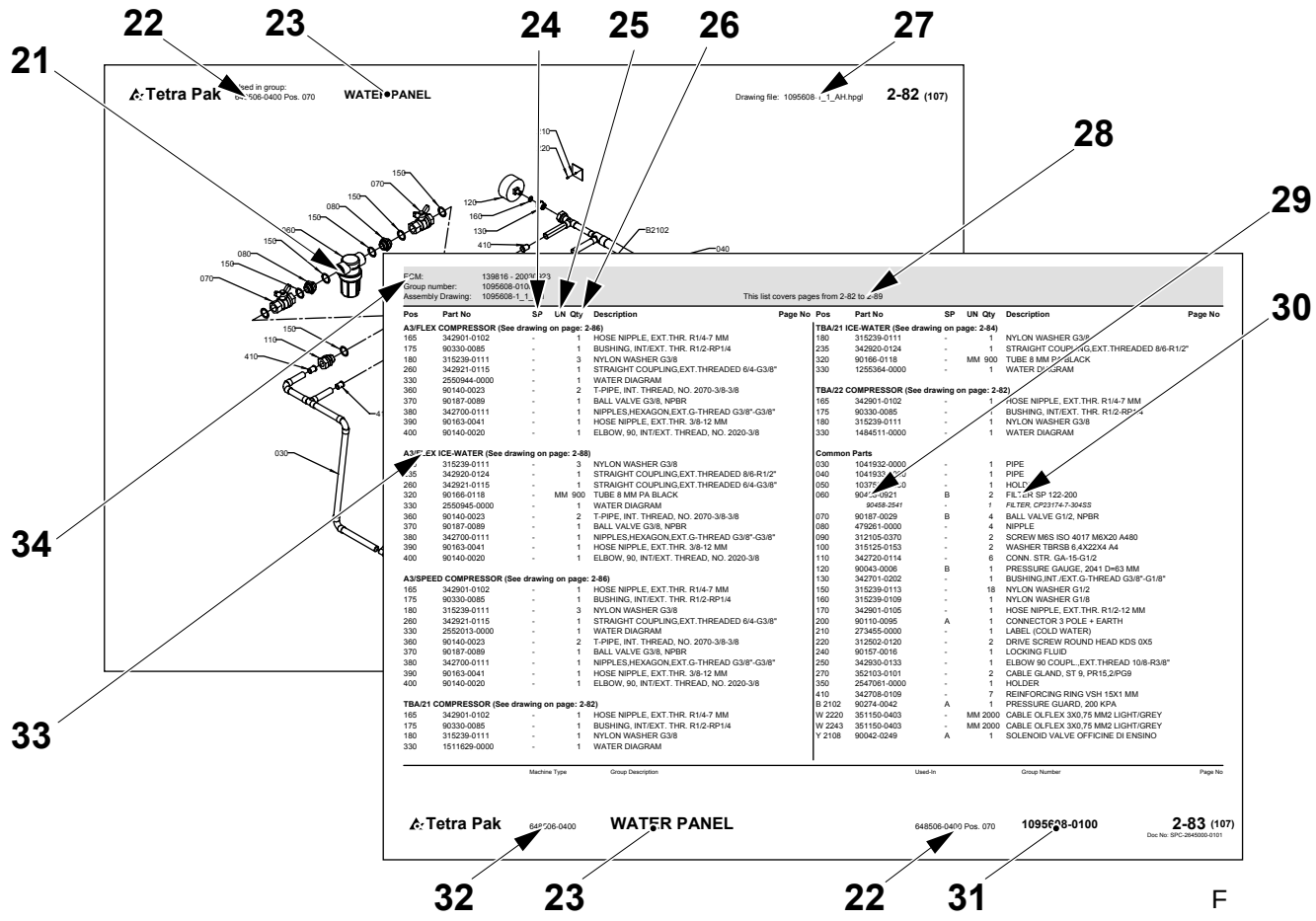

TechPub-2660371-0101

Introduction

Manual Information

Tetra Pak recommends reading all delivered manuals carefully. Make sure that the delivered manuals are available to personnel who operate or maintain the equipment.

It is important to keep this catalogue for the lifetime of the equipment and to pass the catalogue on to any subsequent holder or user.

Tetra Pak will not be held responsible for any damage to the equipment caused by not following the instructions given in the manuals that accompany this equipment.

Delivered Manuals

The manuals delivered with this equipment may include

- Conversion Manual (CM)
  This manual provides technicians with information on converting the equipment between different production modes.
- Electrical Manual (EM)
  This manual provides technicians with information about the equipment's electrical system.
- Installation Manual (IM)
  This manual provides technicians with information required to safely install the equipment.
- Maintenance Manual (MM)
  This manual provides technicians with information on maintaining the equipment.
- Operation Manual (OM)
  This manual provides the operator with information on handling and operating the equipment before, during, and after production.
- Spare Parts Catalogue (SPC)
  This manual provides the information necessary to order spare parts from Tetra Pak
- Technical Manual (TeM)
  - provides technicians with information required to safely install the equipment
  - provides technicians with information on maintaining the equipment
  - provides technicians with information about the equipment's electrical system
  - provides the information necessary to order spare parts from Tetra Pak

TechPub-2660371-0101

Page Layout

Refer to the illustration (A) on page i-5: The main pages in a Spare Parts Catalogue consist of an illustration page (1) and a corresponding list page (7). The page number (5) is shown in the header of an illustration page and in the footer of a list page. The document number (6) is shown in the footer of a list page.

Page Numbering

Refer to the illustration (A) on page i-5: A page number (5) has three parts:

- chapter number (2)
- consecutive page number within the chapter (3)
- total number of pages in the chapter (4)

Machine Introduction

Manufacturer

For the manufacturer’s name and address, see the second page of this catalogue.

Service

To order spare parts for this machine, or to report problems associated with operating this machine, contact the nearest Tetra Pak office.

Contact the Liaison with other inquiries, comments, or suggestions for improvement regarding the equipment and its documentation.

Identification

CE Classification

This equipment complies with the basic health and safety regulations of the European Economic Area (EEA).

TechPub-2660371-0101

Machine Plate

The illustration (B) on page i-5 shows an example of a machine plate. An illustration of the valid machine plate and its location on the equipment is shown in the Introduction chapter of the manuals delivered with this equipment. The machine plate contains the data listed below, needed when contacting Tetra Pak concerning this specific equipment.

- Machine type (8)
- Volume (9)
- Drawing specifications (10)
- Machine serial number (11)
- Manufacturer (12)
- CE mark (13)
- Year of manufacture (14)

The illustration (C) on page i-5 shows an example of a machine specification. Make sure that the equipment data listed in the front pages of this manual corresponds to the machine plate data and the machine specification.

TechPub-2660371-0101

How to Use This Spare Parts Catalogue

Locate a Spare Part Number

a) Refer to the illustration (D) on page i-5: Go to the chapter number (15) indicated beside the main group that contains the part you want to locate.

Items b) and c) refer to the illustration (E) on page i-6.

b) On the main group illustration, look for the machine subgroup (17) that contains the part or subgroup you are looking for. Note the position number (18) and go to the list page that follows the illustration.

c) Look for the position number (16) or the subgroup name (19). Go to the corresponding page number (20) listed in the right-hand column.

Items d) and e) refer to the illustration (F) on page i-6.

d) Locate the part (21) that you are looking for on the subgroup illustration and note the part's position number.

e) The part number (29) and part description (30) are listed beside the position number on the list page.

Information Listed in a Spare Parts Catalogue

The list below refers to the illustration (F) on page i-6. A Spare Parts Catalogue contains the following information about groups, subgroups, and spare parts for the equipment:

- Group structure reference (22). Indicates the next higher group in the equipment list structure.
- Group name (23)
- Spare part code (24). See the Spare Part Codes section.
- Unit of measure (25)
- Quantity (26)
- Assembly drawing number (27)
- List page range (28). Included if there are multiple pages in the group illustration or list.
- Part or subgroup number (29)
- Subgroup name or part description (30)
- Group number (31)
- Equipment number (32)
- Group information heading (33). Indicates if the section below the heading is for a specific machine variant or if it is a list of common parts. If a list has more than one variant and each variant has its own assembly drawing, a page reference to the variant's assembly drawing is shown.
- Internal information (34)

TechPub-2660371-0101

Spare Part Codes

The tables below show the two possible types of Spare Part (SP) Code that may be listed in the SP column of a Spare Parts Catalogue list page.

SP Code	Meaning
A	Critical part
B	Non-critical part

SP Code	Meaning
U	Start-up kit supplied with machine delivery
P	Production kit to be held at production site
S	Service kit to be held at service stations store
C	Central depot kit to be available at the central store

Indledning

Information om manualen

Tetra Pak anbefaler, at alle leverede manualer læses omhyggeligt. Sørg for, at de leverede manualer er tilgængelige for medarbejdere, der betjener eller vedligeholder udstyret.

Det er vigtigt at opbevare dette katalog hele udstyrets levetid og give kataloget videre til eventuelt kommende ejere eller brugere.

Tetra Pak kan ikke holdes ansvarlig for eventuel beskadigelse af udstyr, der opstår, fordi instruktionerne i manualerne til dette udstyr ikke følges.

Leverede manualer

De manualer, der leveres sammen med dette udstyr, kan omfatte:

- Konverteringsmanual (CM)
  Denne manual forsyner teknikere med informationer om konvertering af udstyret mellem forskellige produktionstilstande.
- Elektrisk manual (EM)
  Denne manual forsyner teknikere med informationer om udstyrets elektriske system.
- Installationsmanual (IM)
  Denne manual forsyner teknikere med informationer, der er nødvendige for en sikker installation af udstyret.
- Vedligeholdelsesmanual (MM)
  Denne manual forsyner teknikere med informationer om vedligeholdelse af udstyret.
- Betjeningsmanual (OM)
  Denne manual forsyner operatøren med informationer om håndtering og betjening af udstyret før, under og efter produktion.
- Reservedelskatalog (SPC)
  Denne manual indeholder de informationer, der er nødvendige for at kunne bestille reservedele fra Tetra Pak.
- Teknisk manual (TeM)
  - forsyner teknikere med informationer, der er nødvendige for en sikker installation af udstyret.
  - forsyner teknikere med informationer om vedligeholdelse af udstyret.
  - forsyner teknikere med informationer om udstyrets elektriske system.
  - indeholder de informationer, der er nødvendige for at kunne bestille reservedele fra Tetra Pak.

TechPub-2660371-0101

Sidelayout

Se illustrationen (A) på side i-5: Hovedsiderne i et reservedelskatalog består af en illustrationsside (1) og en tilsvarende listeside (7). Sidenummeret (5) vises i sidehovedet på en illlustrationsside og i sidefoden på en listeside. Dokumentnummeret (6) vises i sidefoden på en listeside.

Sidenummerering

Se illustrationen (A) på side i-5: Et sidenummer (5) har tre dele:

- kapitelnummer (2)
- fortløbende sidenummer i kapitlet (3)
- samlet sideantal i kapitlet (4)

Præsentation af maskinen

Producent

Producentens navn og adresse findes på side to i dette katalog.

Service

Kontakt nærmeste Tetra Pak-kontor for at bestille reservedele eller rapportere problemer i forbindelse med betjening af denne maskine.

Kontakt kontaktpersonen med andre forespørgsler, kommentarer eller forslag til forbedringer af udstyret og dets dokumentation.

Identifikation

CE-klassificering

Dette udstyr overholder de grundlæggende sundheds- og sikkerheds-bestemmelser for Det Europæiske Økonomiske Samarbejdsområde (EØS).

TechPub-2660371-0101

Maskinskilt

Illustrationen (B) på side i-5 viser et eksempel på et maskinskilt. En illustration af et gyldigt maskinskilt og dets placering på udstyret er vist i indledningskapitlet i de manualer, der leveres med dette udstyr. Maskinskiltet indeholder nedennævnte data. Disse er nødvendige ved kontakt med Tetra Pak vedrørende dette specifikke udstyr.

- Maskintype (8)
- Volumen (9)
- Tegningsspecifikationer (10)
- Maskinens serienummer (11)
- Producent (12)
- CE-mærke (13)
- Produktionsår (14)

Illustrationen (C) på side i-5 viser et eksempel på en maskinspecifikation. Kontroller, at de udstyrsdata, der er anført på de første sider i denne manual, svarer til maskinskiltsdataene og maskinspecifikationen.

TechPub-2660371-0101

Sådan bruges dette reservedelskatalog

Find et reservedelsnummer

a) Se illustrationen (D) på side i-5: Gå til kapitelnummeret (15), der er angivet ved siden af hovedgruppen, der indeholder den del, der ønskes fundet.

Punkterne b) og c) refererer til illustrationen (E) på side i-6.

b) I hovedgruppeillustrationen skal man se efter maskinundergruppen (17), som indeholder den del eller undergruppe, der søges. Bemærk placeringsnummeret (18), og gå til listesiden, som følger illustrationen.

c) Se efter placeringsnummeret (16) eller undergruppens navn (19). Gå til det tilsvarende sidenummer (20) angivet i den højre kolonne.

Punkterne d) og e) refererer til illustrationen (F) på side i-6.

d) Find den del (21), du søger i undergruppeillustrationen, og notér delens placeringsnummer.

e) Reservedelsnummeret (29) og -beskrivelsen (30) er angivet ved siden af placeringsnummeret på listesiden.

Informationer der er angivet i et reservedelskatalog

Listen nedenfor refererer til illustrationen (F) på side i-6. Et reservedelskatalog indeholder følgende informationer om grupper, undergrupper og reservedele til udstyret:

- Gruppestrukturreference (22). Angiver næste overordnede gruppe i udstyrslistestrukturen.
- Gruppenavn (23)
- Reservedelskode (24). Se afsnit Reservedelskoder.
- Måleenhed (25)
- Antal (26)
- Samletegningsnummer (27)
- Listens sideområde (28). Er angivet, hvis gruppeillustrationen eller -listen inkluderer mange sider.
- Del- eller undergruppenummer (29)
- Undergruppens navn eller delsbeskrivelse (30)
- Gruppenummer (31)
- Udstyrsnummer (32)
- Overskrift for gruppeinformation (33). Angiver om afsnittet under overskriften er for en specifik maskinvariant, eller om det er en liste over fælles dele. Hvis en liste har mere end én variant, og hver variant har sin egen samletegning, vises en sidereference til variantens samletegning.
- Intern information (34)

Reservedelskoder

Tabellerne nedenfor viser de to mulige typer reservedelskoder (SP), som kan være anført i SP-kolonnen på listesiden i et reservedelskatalog.

SP-kode	Betydning
A	Kritisk del
B	Ikke-kritisk del

SP-kode	Betydning
U	Startsæt der leveres med maskinen
P	Produktionssæt til opbevaring på produktionsstedet
S	Servicesæt til opbevaring på servicestationslager
C	Centraldepotsæt der skal være til rådighed på centrallageret

TechPub-2660371-0101

Einleitung

Handbuch-Informationen

Tetra Pak empfiehlt, alle gelieferten Handbücher sorgfältig zu lesen. Es muss sichergestellt werden, dass die gelieferten Handbücher dem Bediener- oder Wartungspersonal der Ausrüstung verfügbar sind.

Es ist wichtig, dieses Handbuch während der Lebensdauer der Ausrüstung vorzuhalten und es an nachfolgende Halter oder Benutzer weiterzugeben.

Tetra Pak ist nicht verantwortlich für Schäden an der Ausrüstung, die durch die Nichtbefolgung der Anweisungen dieses Handbuchs verursacht werden.

Gelieferte Handbücher

Die mit dieser Ausrüstung gelieferten Handbücher umfassen

- Umbauhandbuch (CM)
  Dieses Handbuch liefert den Technikern Informationen über den Umbau der Ausrüstung zwischen den verschiedenen Produktionsweisen.
- Elektrohandbuch (EM)
  Dieses Handbuch liefert den Technikern Informationen zum Elektrosystem der Ausrüstung.
- Installationshandbuch (IM)
  Dieses Handbuch liefert den Technikern Informationen für die sichere Installation der Ausrüstung.
- Wartungshandbuch (MM)
  Dieses Handbuch liefert den Technikern Informationen über die Wartung der Ausrüstung.
- Betriebshandbuch (OM)
  Dieses Handbuch liefert dem Bediener Informationen über die Handhabung und den Betrieb der Ausrüstung vor, während und nach der Produktion.
- Ersatzteilkatalog (SPC)
  Dieses Handbuch liefert Informationen, wie sie für die Bestellung von Ersatzteilen bei Tetra Pak erforderlich sind.
- Technisches Handbuch (TeM)
  - liefert den Technikern Informationen für die sichere Installation der Ausrüstung
  - liefert den Technikern Informationen über die Wartung der Ausrüstung
  - liefert den Technikern Informationen über das Elektrosystem der Ausrüstung
  - liefert die erforderlichen Informationen für die Bestellung von Ersatzteilen bei Tetra Pak.

TechPub-2660371-0101

Seitenlayout

Bezugnahme Abbildung (A) auf Seite i-5: Die Hauptseiten in einem Ersatzteilkatalog bestehen aus einer Abbildungsseite (1) und einer entsprechenden Listenseite (7). Die Seitennummer (5) ist im Kopf einer Abbilldungsseite und im Fuß einer Listenseite aufgeführt. Die Dokumentennummer (6) ist ist im Fuß einer Listenseite angegeben.

Seitennummerierung

Bezugnahme Abbildung (A) auf Seite i-5: Eine Seitennummer (5) besteht aus drei Teilen:

- Kapitelnummer (2)
- Fortlaufende Seitennummer innerhalb des Kapitels (3)
- Gesamtanzahl der Seiten im Kapitel (4)

Einführung in die Maschine

Hersteller

Für Name und Anschrift des Herstellers, siehe die zweite Seite dieses Kataloges.

Service

Um Ersatzteile für diese Maschine zu bestellen oder um über Probleme beim Betrieb dieser Maschine zu berichten, ist das nächstgelegene Büro von Tetra Pak anzusprechen.

Mit anderen Anfragen. Kommentaren oder Vorschlägen zur Ausrüstung und der Dokumentation ist die Verbindungsstelle anzusprechen.

Identifizierung

CE-Klassifizierung

Diese Ausrüstung entspricht den grundlegenden Gesundheits- und Sicherheitsvorschriften des Europäischen Wirtschaftsraumes (EEA).

TechPub-2660371-0101

Maschinenschild

Die Abbildung (B) auf Seite i-5 zeigt das Beispiel eines Maschinenschildes. Die Abbildung eines gültigen Maschinenschildes und die Lage desselben auf der Ausrüstung befindet sich im Einleitungskapitel der mit der Ausrüstung gelieferten Handbücher. Das Maschinenschild enthält die nachstehend aufgeführten Daten, wie sie erforderlich sind, wenn Tetra Pak wegen dieser spezifischen Ausrüstung anzusprechen ist.

- Maschinentyp (8)
- Volumen (9)
- Zeichnungs-Spezifikationen (10)
- Serien-Nummer der Maschine (11)
- Hersteller (12)
- CE-Markierung (13)
- Baujahr (14)

Die Abbildung (C) auf Seite i-5 zeigt das Beispiel einer Maschinenspezifikation. Es muss sichergestellt sein, dass die in den Frontseiten dieses Handbuchs aufgeführten Ausrüstungsdaten mit den Daten des Maschinenschildes und der Maschinenspezifikation übereinstimmen.

TechPub-2660371-0101

Verwendung dieses Ersatzteilkatalogs

Anordnung einer Ersatzteilnummer

a) Bezugnahme auf Abbildung (D) auf Seite i-5: Weiter zur Kapitelnummer (15), die neben der Hauptgruppe angegeben ist, die das entsprechende Teil enthält.

Die Pos. b) und c) beziehen sich auf die Abbildung (E) auf Seite i-6.

b) Auf der Hauptgruppenabbildung die Maschinen-Untergruppe (17) suchen, die das gesuchte Teil oder die gesuchte Untergruppe enthält. Die Positionsnummer (18) notieren und weiter zur Listenseite gehen, die der Abbildung folgt.

c) Die Positionsnummer (16) oder den Namen der Untergruppe (19) suchen. Dann zur entsprechenden Seitennummer (20) in der rechten Spalte gehen.

Pos. d) und e) beziehen sich auf die Abbildung (F) auf Seite i-6.

d) Suchen Sie Teil (21) auf der Untergruppen-Abbildung und notieren Sie die Positionsnummer des Teils.

e) Die Teilnummer (29) und die Teilebeschreibung (30) finden Sie neben der Positionsnummer auf der Listenseite.

In einem Ersatzteilkatalog enthaltene Information

Die nachstehende Liste bezieht sich auf die Abbildung (F) auf Seite i-6.
Ein Ersatzteilkatalog enthält folgende Informationen über Gruppen, Untergruppen und Ersatzteile für die Ausrüstung:

- Gruppenstrukturreferenz (22). Sie gibt die nächst höhere Gruppe in der Ausrüstungslistenstruktur an
- Gruppenname (23)
- Ersatzteilcode (24). Siehe Kapitel Spare Part Codes
- Maßeinheit (25)
- Menge (26)
- Nummer der Zusammenbauzeichnung (27)
- Listenseite, Bereich (28). Eingeschlossen, wenn Mehrfachseiten in der Gruppenabbildung oder Liste enthalten sind
- Teile- oder Untergruppennummer (29)
- Untergruppenname oder Teilebeschreibung (30)
- Gruppennummer (31)
- Ausrüstungsnummer (32)
- Gruppeninformationsüberschrift (33). Gibt an, ob der Abschnitt unter der Überschrift sich auf eine spezifische Maschinenvariante bezieht oder eine Liste der allgemeinen Teile ist. Wenn eine Liste sich auf mehr als eine Variante bezieht und jede Variante eine eigene Zusammenbauzeichnung hat, wird eine Seitenreferenz zur Zusammenbauzeichnung der Variante vorgestellt.
- Interne Information (34)

TechPub-2660371-0101

Ersatzteilcode

Die nachstehenden Tabellen zeigen die beiden möglichen Typen von Ersatzteilcode (SP), die in der SP-Spalte einer Listenseite des Ersatzteilkatalogs enthalten sein können.

SP Code	Bedeutung
A	Kritisches Teil
B	Unkritisches Teil

SP Code	Bedeutung
U	Mit der Maschine gelieferterAnfahr-Kit
P	Vor Ort vorzuhaltender Produktions-Kit
S	Im Lager der Servicestation vorzuhaltender Service-Kit
C	Im Zentrallager vorzuhaltender Zentraldepot-Kit

Εισαγωγή

Πληροφορίες για τα Εγχειρίδια

Η Tetra Pak σάς συνιστά να διαβάζετε προσεκτικά όλα τα παρεχόμενα εγχειρίδια. Εξασφαλίζετε ότι όλα τα παρεχόμενα εγχειρίδια διατίθενται στο προσωπικό που χειρίζεται ή συντηρεί τον εξοπλισμό.

Είναι σημαντικό να διατηρείτε αυτό τον κατάλογο καθ' όλη τη διάρκεια ζωής του εξοπλισμού καθώς και να παραδίδετε τον κατάλογο στον τυχόν επόμενο ιδιοκτήτη ή χρήστη του εξοπλισμού.

Η Tetra Pak δεν πρόκειται να αναλάβει καμία ευθύνη για οποιαδήποτε ζημιά που μπορεί να προκληθεί στον εξοπλισμό εξαιτίας της μη τήρησης των οδηγιών οι οποίες παρέχονται στα εγχειρίδια που συνοδεύουν αυτό τον εξοπλισμό.

Παρεχόμενα Εγχειρίδια

Στα εγχειρίδια που παρέχονται μαζί μ' αυτό τον εξοπλισμό, μπορεί να περιλαμβάνονται τα εξής:

- Εγχειρίδιο Μετατροπής (CM)
  Αυτό το εγχειρίδιο παρέχει στους τεχνικούς πληροφορίες για τη μετατροπή του εξοπλισμού μεταξύ των διάφορων λειτουργιών παραγωγής.
- Ηλεκτρικό Εγχειρίδιο (EM)
  Αυτό το εγχειρίδιο παρέχει στους τεχνικούς πληροφορίες για το ηλεκτρικό σύστημα του εξοπλισμού.
- Εγχειρίδιο Εγκατάστασης (IM)
  Αυτό το εγχειρίδιο παρέχει στους τεχνικούς τις απαιτούμενες πληροφορίες για την ασφαλή εγκατάσταση του εξοπλισμού.
- Εγχειρίδιο Συντήρησης (MM)
  Αυτό το εγχειρίδιο παρέχει στους τεχνικούς πληροφορίες για τη συντήρηση του εξοπλισμού.
- Εγχειρίδιο Χειρισμού (OM)
  Αυτό το εγχειρίδιο παρέχει στο χειριστή πληροφορίες για το χειρισμό και τη λειτουργία του εξοπλισμού πριν, κατά τη διάρκεια και μετά την παραγωγή.
- Κατάλογος Ανταλλακτικών (SPC)
  Αυτό το εγχειρίδιο παρέχει τις απαραίτητες πληροφορίες για την παραγγελία ανταλλακτικών από την Tetra Pak.
- Τεχνικό Εγχειρίδιο (TeM)
  - παρέχει στους τεχνικούς τις απαιτούμενες πληροφορίες για την ασφαλή εγκατάσταση του εξοπλισμού
  - παρέχει στους τεχνικούς πληροφορίες για τη συντήρηση του εξοπλισμού
  - παρέχει στους τεχνικούς πληροφορίες για το ηλεκτρικό σύστημα του εξοπλισμού
  - παρέχει τις απαραίτητες πληροφορίες για την παραγγελία ανταλλακτικών από την Tetra Pak

TechPub-2660371-0101

ιάταξη Σελίδων

Ανατρέξτε στην εικόνα (A) της σελίδας i-5: Οι κύριες σελίδες ενός Καταλόγου Ανταλλακτικών αποτελούνται από μία εικονογραφημένη σελίδα (1) και από μία αντίστοιχη σελίδα λίστας (7). Ο αριθμός σελίδας (5) εμφανίζεται στην κεφαλίδα μιας εικονογραφημένης σελίδας και στο υποσέλιδο μιας σελίδας λίστας. Ο αριθμός εγγράφου (6) εμφανίζεται στο υποσέλιδο μιας σελίδας λίστας.

Αρίθμηση Σελίδων

Ανατρέξτε στην εικόνα (A) της σελίδας i-5: Ένας αριθμός σελίδας (5) αποτελείται από τα εξής τρία μέρη:

- αριθμός κεφαλαίου (2)
- αύξων αριθμός σελίδας του κεφαλαίου (3)
- συνολικός αριθμός σελίδων του κεφαλαίου (4)

Παρουσίαση Μηχανής

Κατασκευαστής

Για το όνομα και τη διεύθυνση του κατασκευαστή, ανατρέξτε στη δεύτερη σελίδα αυτού του καταλόγου.

Τεχνική εξυπηρέτηση

Για να παραγγείλετε ανταλλακτικά για τη συγκεκριμένη μηχανή ή για να αναφέρετε προβλήματα που σχετίζονται με τη λειτουργία αυτής της μηχανής, επικοινωνήστε με το πλησιέστερο γραφείο της Tetra Pak.

Εάν έχετε άλλου είδους ερωτήσεις, σχόλια ή προτάσεις βελτίωσης σχετικά με τον εξοπλισμό και την έγγραφη τεκμηρίωσή του, επικοινωνήστε με το Τμήμα Σχέσεων.

Στοιχεία ταυτότητας

Σήμανση CE

Αυτός ο εξοπλισμός συμμορφώνεται με τους βασικούς κανονισμούς υγείας και ασφάλειας του Ευρωπαϊκού Οικονομικού Χώρου (ΕΟΧ).

TechPub-2660371-0101

Πινακίδα Αναγνώρισης Μηχανής

Η εικόνα (B) της σελίδας i-5 δείχνει ένα παράδειγμα μιας πινακίδας αναγνώρισης μηχανής. Μια εικόνα που δείχνει την ενδεδειγμένη μορφή και θέση της πινακίδας αναγνώρισης μηχανής στον εξοπλισμό, παρουσιάζεται στο κεφάλαιο 'Εισαγωγή' των εγχειριδίων που παρέχονται μ' αυτόν τον εξοπλισμό. Η πινακίδα αναγνώρισης μηχανής αναγράφει τα δεδομένα που παρατίθενται στη συνέχεια, τα οποία είναι απαραίτητα όταν επικοινωνείτε με την Tetra Pak για θέματα που αφορούν αυτό το συγκεκριμένο εξοπλισμό.

- Τύπος μηχανής (8)
- Χωρητικότητα (9)
- Στοιχεία σχεδίου (10)
- Αριθμός σειράς μηχανής (11)
- Κατασκευαστής (12)
- Σήμανση CE (13)
- Έτος κατασκευής (14)

Η εικόνα (C) της σελίδας i-5 δείχνει ένα παράδειγμα τεχνικών χαρακτηριστικών μηχανής. Βεβαιωθείτε ότι τα δεδομένα εξοπλισμού που παρατίθενται στις πρώτες σελίδες αυτού του εγχειριδίου συμφωνούν με τα δεδομένα της πινακίδας αναγνώρισης μηχανής και των τεχνικών χαρακτηριστικών μηχανής.

TechPub-2660371-0101

Πώς Χρησιμοποιείται Αυτός ο Κατάλογος Ανταλλακτικών

Εύρεση ενός Αριθμού Ανταλλακτικού

a) Ανατρέξτε στην εικόνα (D) της σελίδας i-5: Πηγαίνετε στον αριθμό κεφαλαίου (15) που υποδεικνύεται δίπλα από την κύρια ομάδα της μηχανής η οποία περιλαμβάνει το εξάρτημα που θέλετε να βρείτε.

Τα βήματα b) και c) αναφέρονται στην εικόνα (E) της σελίδας i-6.

b) Στην εικόνα της κύριας ομάδας μηχανής, αναζητήστε την υποομάδα μηχανής (17) η οποία περιλαμβάνει το εξάρτημα ή την υποομάδα που αναζητάτε. Σημειώστε τον αριθμό θέσης (18) και πηγαίνετε στη σελίδα λίστας που ακολουθεί την εικόνα.

c) Αναζητήστε τον αριθμό θέσης (16) ή το όνομα υποομάδας (19). Πηγαίνετε στον αντίστοιχο αριθμό σελίδας (20) που αναγράφεται στη δεξιά στήλη.

Τα βήματα d) και e) αναφέρονται στην εικόνα (F) της σελίδας i-6.

d) Βρείτε το εξάρτημα (21) που αναζητάτε στην εικόνα υποομάδας μηχανής και σημειώστε τον αριθμό θέσης του εξαρτήματος.

e) Ο αριθμός του εξαρτήματος (29) και η περιγραφή του εξαρτήματος (30) παρατίθενται δίπλα στον αριθμό θέσης στη σελίδα λίστας.

Πληροφορίες που Περιέχονται σε έναν Κατάλογο Ανταλλακτικών

Η λίστα που ακολουθεί αναφέρεται στην εικόνα (F) της σελίδας i-6. Ένας Κατάλογος Ανταλλακτικών περιέχει τις παρακάτω πληροφορίες σχετικά με τις ομάδες, τις υποομάδες και τα ανταλλακτικά του εξοπλισμού:

- Αναφορά δομής ομάδας (22). Υποδηλώνει την επόμενη μεγαλύτερη ομάδα στη δομή λίστας του εξοπλισμού.
- Όνομα ομάδας (23)
- Κωδικός ανταλλακτικού (24). είτε την ενότητα Κωδικοί Ανταλλακτικών.
- Μονάδα μέτρησης (25)
- Ποσότητα (26)
- Αριθμός σχεδίου συγκροτήματος (27)
- Περιοχή σελίδων λίστας (28). Περιλαμβάνεται εφόσον η εικόνα ή η λίστα μιας ομάδας εκτίθεται σε περισσότερες από μία σελίδες.
- Αριθμός εξαρτήματος ή υποομάδας (29)
- Αριθμός υποομάδας ή περιγραφή εξαρτήματος (30)
- Αριθμός ομάδας (31)
- Αριθμός εξοπλισμού (32)
- Επικεφαλίδα πληροφοριών ομάδας (33). Υποδεικνύει εάν η ενότητα κάτω από την επικεφαλίδα αφορά μια συγκεκριμένη παραλλαγή μηχανής ή αποτελεί μια λίστα κοινών εξαρτημάτων. Σε περίπτωση που μια λίστα περιέχει περισσότερες από μία παραλλαγές και κάθε παραλλαγή έχει ξεχωριστό σχέδιο συγκροτήματος, εμφανίζεται μια παραπομπή προς τη σελίδα όπου βρίσκεται το σχέδιο συγκροτήματος της παραλλαγής.
- Εσωτερικές πληροφορίες (34)

Κωδικοί Ανταλλακτικών

Οι πίνακες που ακολουθούν δείχνουν τους δύο δυνατούς τύπους Κωδικών Ανταλλακτικών που μπορεί να αναγράφονται στη στήλη Κωδικών Ανταλλακτικών (SP) σε μία σελίδα λίστας ενός Καταλόγου Ανταλλακτικών.

Κωδικός Ανταλλακτικού	**Σημασία**
A	Βασικό εξάρτημα
B	Μη βασικό εξάρτημα

Κωδικός Ανταλλακτικού	**Σημασία**
U	Κιτ εκκίνησης που παραδίδεται μαζί με τη μηχανή
P	Κιτ παραγωγής που διατηρείται στο χώρο παραγωγής
S	Κιτ συντήρησης που διατηρείται στις αποθήκες των κέντρων εξυπηρέτησης
C	Κιτ κεντρικής αποθήκης που διατίθεται στην κεντρική αποθήκη

TechPub-2660371-0101

Introducción

Información del manual

Tetra Pak recomienda que se lean cuidadosamente todos los manuales entregados. Comprobar que todos los manuales entregados estén disponibles para el personal que efectúe la operación o el mantenimiento del equipo.

Es importante conservar este manual durante la vida útil del equipo, así como facilitárselo a cualquier propietario o usuario posterior.

Tetra Pak no se responsabilizará de daños en la máquina o equipo debidos a la inobservancia de las instrucciones dadas en los manuales que acompañan este equipo.

Manuales entregados

Los manuales entregados con este equipo pueden incluir

- Manual de conversión (CM)
  Este manual proporciona a los técnicos información sobre cómo convertir el equipo entre diferentes modos de producción.
- Manual eléctrico (EM)
  Este manual proporciona a los técnicos información acerca del sistema eléctrico del sistema.
- Manual de instalación (IM)
  Este manual proporciona a los técnicos la información necesaria para la instalación segura del equipo.
- Manual de mantenimiento (MM)
  Este manual proporciona a los técnicos la información acerca del mantenimiento del equipo.
- Manual de servicio (OM)
  Este manual proporciona al operador información acerca de la manipulación y operación de la máquina antes, durante y después de la producción.
- Catálogo de piezas de recambio (SPC)
  Este manual proporciona la información necesaria para pedir piezas de recambio a Tetra Pak.
- Manual técnico (TeM)
  - proporciona a los técnicos la información necesaria para la instalación segura del equipo
  - proporciona a los técnicos la información acerca del mantenimiento del equipo
  - proporciona a los técnicos información acerca del sistema eléctrico del sistema
  - proporciona la información necesaria para pedir piezas de recambio a Tetra Pak

TechPub-2660371-0101

Organización de las páginas

Remitirse a la ilustración (A) en la página i-5: Las páginas principales en un Catálogo de piezas de recambio se componen de una página de ilustración (1) y una página de lista correspondiente (7). El número de la página (5) se muestra en el encabezado de una página de ilustración y en el pie de página de una página de lista. El número del documento (6) se muestra en el pie de página de una página de lista.

Numeración de las páginas

Remitirse a la ilustración (A) en la página i-5: Un número de página (5) se compone de tres partes:

- Número de capítulo (2)
- número de página consecutivo (2) dentro del capítulo (3)
- número total de páginas del capítulo (4)

Introducción a la máquina

Fabricante

Para el nombre y la dirección del fabricante, ver la segunda página de este catálogo.

Servicio

Para pedir piezas de recambio para esta máquina o informar problemas asociados con la operación de esta máquina, contactar con la oficina de Tetra Pak más cercana.

Ponerse en contacto con el responsable correspondiente para otras preguntas, comentarios o sugerencias sobre mejoras de la máquina o equipo y su documentación.

Identificación

Clasificación de la CE

Este equipo cumple los requisitos esenciales relativos a la salud y la seguridad del Área Económica Europea (EEA).

TechPub-2660371-0101

Placa de la máquina

La ilustración (B) en la página i-5 muestra un ejemplo de placa de máquina. En la Introducción del capítulo de los manuales entregados con este equipo se muestra una ilustración de la placa de máquina válida y su ubicación en el equipo La placa de máquina contiene los datos listados a continuación requeridos al contactar con Tetra Pak en relaciôn a este equipo específico.

- Tipo de máquina (8)
- Volumen (9)
- Especificaciones de plano (10)
- Número de serie de la máquina (11)
- Fabricante (12)
- Marca de la CE (13)
- Año de fabricación (14)

La ilustración (C) en la página i-5 muestra un ejemplo de especificación máquina. Asegúrese que los datos de equipo listados en las páginas de cubierta de este manual corresponden a los datos de la placa de máquina y la especificación máquinav.

TechPub-2660371-0101

Cómo utilizar este Catálogo de piezas de recambio

Localizar un número de pieza de recambio

a) Remitirse a la ilustración (D) en la página i-5: Ir al número de capítulo (15) indicado detrás el grupo principal que contiene la parte que usted desea localizar.

Los items b) y c) se refieren a la ilustracióni (E) en la página i-6.

b) En la ilustración del grupo principal, buscar el subgrupo máquina (17) que contiene la pieza o subgrupo que usted busca. Anote el número de posición (18) y vaya a la página de lista que sigue la ilustración.

c) Busque el número de posición (16) o el nombre del subgrupo (19). Vaya al número de página correspondiente (20) listado en la columna de la derecha.

Los items d) y e) se refieren a la ilustración (F) en la página i-6.

d) Localizar la pieza (21) que busca en la ilustración del subgrupo y anotar el número de posición de la pieza.

e) El número de pieza (29) y la descripción de pieza (30) están listadas detrás del número de posición en la página de lista.

Información listada en un Catálogo de piezas de recambio

La lista a continuación remite a la ilustración (F) en la página i-6.
Un Catálogo de piezas de recambio contiene la siguiente información sobre grupos, subgrupos y piezas de recambio para el equipo:

- Referencia de estructura de grupo (22). Indica el siguiente grupo más alto en la estructura de lista del equipo.
- Nombre del grupo (23)
- Código de pieza de recambio (24). Consultar la sección Spare Part Codes.
- Unidad de medida (25)
- Cantidad (26)
- Número de plano de conjunto (27)
- Gama de página lista (28). Incluida si hay páginas múltiples en la ilustración o lista de grupo.
- Número de pieza o subgrupo (29)
- Nombre, subgrupo o descripción de pieza (30)
- Número de grupo (31)
- Número de equipo (32)
- Encabezado de información grupo (33). Indica si la sección debajo del encabezado es para una variante máquina específica o si es una lista de piezas comunes. Si la lista tiene más de una variante y cada variante tiene su propio plano de conjunto, se muestra una referencia página para el plano de conjunto de la variante.
- Información interna (34)

TechPub-2660371-0101

Códigos de piezas de recambio

Las tablas a continuación muestran los dos tipos posibles de códigos de Piezas de recambio (PR) que se pueden listar en la columna PR o en una página de lista de Catálogo de piezas de recambio.

Código PR	Significado
A	Pieza crítica
B	Pieza no crítica

Código PR	Significado
U	Kit de inicio suministrado con la entrega de la máquina.
P	Kit de producción debe guardarse en el sitio de producción.
S	Kit de servicio; debe guardarse en el almacén de las estaciones de servicio.
C	Kit de almacén central; debe guardarse en el almacén central.

Johdanto

Tietoja käsikirjasta

Tetra Pak suosittelee kaikkien toimitettavien oppaiden lukemista huolellisesti. Varmista, että toimitetut oppaat ovat laitetta käyttävän tai huoltavan henkilökunnan saatavilla.

Tämä luettelo on säilytettävä laitteen käyttöiän ajan ja toimitettava edelleen mahdolliselle seuraavalle omistajalle tai käyttäjälle.

Tetra Pak ei vastaa laitevaurioista, jotka aiheutuvat laitteen mukana tulevissa oppaissa annettujen ohjeiden noudattamatta jättämisestä.

Toimitettavat ohjeet

Tämän laitteen mukana toimitettaviin ohjeisiin kuuluvat:

- Muutoskirja (CM)
  Tässä oppaassa on teknikoille tarkoitettuja ohjeita laitteiston muuttamisesta eti tuotantotiloihin.
- Sähkökirja (EM)
  Tässä oppaassa on teknikoille tarkoitettuja tietoja laitteen sähköjärjestelmästä.
- Asennuskäsikirja (IM)
  Tässä oppaassa on teknikoille tarkoitettuja tietoja, jotka tarvitaan laitteen turvallista asentamista varten.
- Huoltokäsikirja (MM)
  Tässä oppaassa on teknikoille tarkoitettuja tietoja tämän laitteen huoltamisesta.
- Käyttäjän käsikirja (OM)
  Tässä oppaassa on käyttäjälle tarkoitettuja tietoja laitteiston käsittelystä ja käyttämisestä ennen tuotantoa, tuotannon aikana ja sen jälkeen.
- Varaosakuvasto (SPC)
  Tässä oppaassa on tietoja, joita tarvitaan varaosien tilaamiseen Tetra Pakilta.
- Tekninen käsikirja (TeM)
  - sisältää teknikoille tarkoitettuja tietoja, joita tarvitaan laitteen turvallista asentamista varten
  - sisältää teknikoille tarkoitettuja tietoja laitteen huoltamisesta
  - sisältää teknikoille tarkoitettuja tietoja laitteen sähköjärjestelmästä
  - sisältää tietoja, joita tarvitaan varaosien tilaamiseen Tetra Pakilta.

TechPub-2660371-0101

Sivujen asettelu

Katso kuva (A) sivulla i-5: Varaosaluettelon pääsivut koostuvat kuvasivusta (1) ja sitä vastaavasta luettelosivusta (7). Sivunumero (5) näytetään kuvasivun ylätunnisteessa ja luettelosivun alatunnisteessa. Asiakirjan numero (6) näytetään luettelosivun alatunnisteessa.

Sivunumerointi

Katso kuva (A) sivulla i-5: Sivunumerossa (5) on kolme osaa:

- luvun numero (2)
- perättäinen sivunumero (3) luvun sisällä
- luvun kokonaissivumäärä (4).

Koneen esittely

Valmistaja

Valmistajan nimi ja osoite on ilmoitettu tämän luettelon toisella sivulla.

Huolto

Jos haluat tilata tähän koneeseen varaosia tai jos tämän koneen käytössä ilmenee ongelmia, jotka haluat raportoida, ota yhteyttä lähimpään Tetra Pakin toimistoon.

Jos sinulla on muuta kysyttävää, huomautettavaa tai ehdotuksia laitteistoa ja sen asiakirjoja koskevista parannuksista, ota yhteys yhteyshenkilöön.

Tunnistetiedot

CE-luokitus

Tämä laite vastaa Euroopan talousalueen (EEA) perustason terveys- ja turvallisuusvaatimuksia.

TechPub-2660371-0101

Koneen tyyppikilpi

Kuvassa (B) sivulla i-5 on esimerkki koneen tyyppikilvestä. Voimassa olevan tyyppikilven kuva ja sen sijainti koneessa käy ilmi laitteiston mukana tulleiden ohjeiden Johdanto-luvusta. Tyyppikilvessä on tarvitsemasi Tetra Pakin voimassa olevat yhteystiedot, kun on kyseessä tämä nimenomainen laite.

- Konetyyppi (8)
- Tilavuus (9)
- Piirustuserittelyt (10)
- Koneen sarjanumero (11)
- Valmistaja (12)
- CE-merkki (13)
- Valmistusvuosi (14)

Kuvassa (C) sivulla i-5 on esimerkki koneen erittelystä. Varmista, että tämän ohjeen etusivuilla ilmoitetut laitetiedot vastaavat tyyppikilven ja kone-erittelyn tietoja.

Tämän varaosaluettelon käyttäminen

Etsi varaosan numero

a) Katso kuva (D) sivulla i-5: Siirry lukuun (15), joka on ilmoitettu etsittävän osan pääryhmän vieressä.

Kohdat b) ja c) viittaavat kuvaan (E) sivulla i-6.

b) Etsi pääryhmän kuvasta koneen alaryhmä (17), joka sisältää etsimäsi osan tai alaryhmän. Merkitse muistiin paikkanumero (18) ja siirry luettelosivulle, joka seuraa kuvaa.

c) Etsi paikkanumero (16) tai alaryhmän nimi (19). Siirry vastaavalle sivunumerolle (20), joka on ilmoitettu oikeassa sarakkeessa.

Kohdat d) ja e) viittaavat kuvaan (F) sivulla i-6.

d) Hae etsittävä osa (21) alaryhmän kuvasta ja merkitse osan paikkanumero muistiin.

e) Osanumero (29) ja osan kuvaus (30) on annettu paikkanumeron vieressä luettelosivulla.

TechPub-2660371-0101

Varaosaluettelossa olevat tiedot

Alla oleva luettelo viittaa kuvaan (F) sivulla i-6. Varaosaluettelo sisältää seuraavat tiedot ryhmistä, alaryhmistä ja laitteen varaosista:

- Ryhmärakenneviite (22). Osoittaa seuraavaksi ylemmän ryhmän laiteluettelorakenteessa.
- Ryhmän nimi (23)
- Varaosan koodi (24). Katso osio Varaosakoodit.
- Mittayksikkö (25)
- Määrä (26)
- Kokoonpanopiirustuksen numero (27)
- Luettelosivun väli (28). Tämä on mukana, jos ryhmäkuvassa tai luettelossa on useita sivuja.
- Osan tai alaryhmän numero (29)
- Alaryhmän nimi tai osan kuvaus (30)
- Ryhmän numero (31)
- Laitteen numero (32)
- Ryhmätietojen otsikko (33). Osoittaa, koskeeko alla oleva osio tiettyä koneversiota vai onko kyseessä yleisten osien luettelo. Jos luettelolla on useampi kuin yksi versio ja kullakin versiolla on oma kokoonpanopiirustuksensa, näytetään version kokoonpanopiirustuksen sivuviittaus.
- Sisäiset tiedot (34)

Varaosakoodit

Alla oleva taulukko osoittaa kaksi mahdollista varaosan (SP) koodin tyyppiä, jotka voidaan luetella varaosaluettelon luettelosivun SP-sarakkeessa.

SP-koodi	Merkitys
A	Kriittinen osa
B	Ei-kriittinen osa

SP-koodi	Merkitys
U	Aloituspaketti, joka toimitetaan koneen mukana
P	Tuotantopaketti, joka pidetään tuotantopaikassa
S	Huoltosarja, joka pidetään huoltokorjaamon varastossa
C	Keskusvarastosarja, jonka saa keskusvarastolta

TechPub-2660371-0101

Introduction

Information sur le manuel

Tetra Pak recommande de lire attentivement tous les manuels fournis. S'assurer que les manuels fournis soient accessibles au personnel qui s'occupe du fonctionnement ou de la maintenance de l'équipement.

Il est important de conserver ce manuel pendant toute la durée d'utilisation de la machine et de le transmettre à tout détenteur ou utilisateur ultérieur.

Tetra Pak ne sera pas tenu responsable d’un dommage causé à la machine ou à l’équipement par le fait de ne pas avoir respecté les instructions figurant dans le présent manuel.

Manuels fournis

Les manuels fournis avec cette machine comprennent

- Le Manuel de Conversion (CM)
  Ce manuel fournit aux techniciens les informations nécessaires pour convertir la machine en vue des différents modes de production.
- Manuel Electrique (EM)
  Ce manuel fournit aux techniciens les informations sur le système électrique de la machine.
- Manuel de Mise en Place (IM)
  Ce manuel fournit aux techniciens les informations nécessaires pour l'installation de la machine en toute sécurité.
- Manuel de Maintenance (MM)
  Ce manuel fournit aux techniciens les informations pour la maintenance.
- Manuel d'Opérateur (OM)
  Ce manuel fournit aux opérateurs les informations nécessaires pour la manutention et le fonctionnement de la machine avant, pendant et après la production.
- Catalogue de Pièces de Rechange (SPC)
  Ce manuel fournit l'information nécessaire à la commande de pièces de rechange auprès de Tetra Pak
- Manuel Technique (TeM)
  - fournit aux techniciens les informations nécessaires pour l'installation de la machine en toute sécurité
  - fournit aux techniciens les informations pour la maintenance
  - fournit aux techniciens les informations sur le système électrique de la machine
  - fournit l' information nécessaire à la commande de pièces de rechange auprès de Tetra Pak

TechPub-2660371-0101

Présentation d’une page

Se référer à la figure (A) à la page i-5: Les pages principales du Catalogue des Pièces de Rechange sont composées d'une page de figure (1) et d'une page de liste correspondante (7). Le numéro de page (5) est indiqué dans le titre de la page de figure et dans le bas de page d'une page de liste.
Le numéro de document (6) est indiqué dans le bas de page de la page de liste.

Numérotation de page

Se référer (A) à la page i-5: Un numéro de page (5) possède trois parties:

- Numéro de chapitre (2)
- numéro de page consécutif (2) à l'intérieur du chapitre (3)
- nombre total de pages dans le chapitre (4)

Présentation de la machine

Fabricant

Pour le nom et l'adresse du fabricant, voir la deuxième page de ce catalogue.

Assistance technique

Pour commander les pièces de rechange de cette machine ou pour rapporter les problèmes associés au fonctionnement de celle-ci, prendre contact avec le bureau Tetra Pak le plus proche.

Prendre contact avec le responsable de liaison pour les renseignements, commentaires ou suggestions concernant la machine ou l’équipement et sa documentation.

Identification

Certification CE

Cet équipement est conforme aux réglementations essentielles d'hygiène et de sécurité de la Communauté Economique Européenne (CEE).

TechPub-2660371-0101

Plaque signalétique de machine

La figure (B) à la page i-5 montre un exemple d'une plaque signalétique de machine.
Une représentation de la plaque de machine valable et son emplacement sur l'équipement est indiquée au Chapitre Introduction des manuels fournis avec l'équipement. La plaque de machine contient les caractéristiques figurant dans la liste ci-dessous, nécessaires pour prendre contact avec Tetra Pak au sujet de cet équipement spécifique.

- Type de machine (8)
- Volume (9)
- Spécifications du plan (10)
- Numéro de série de la machine (11)
- Fabricant (12)
- Marquage CE (13)
- Année de fabrication (14)

La figure (C) à la page i-5 montre un exemple d'une spécification de machine. S'assurer que les caractéristiques de l'équipement figurant dans la liste des pages de garde de ce manuel correspondent aux caractéristiques de la plaque signalétique de la machine et à ses spécifications.

TechPub-2660371-0101

Comment utiliser ce Catalogue de Pièces de Rechange

Localiser un numéro de pièce de rechange

a) Se référer à la figure (D) à la page i-5: Aller au numéro de chapitre (15) indiqué à côté du groupe principal qui contient la pièce que vous souhaitez localiser.

Les articles b) et c) se réfèrent à la figure (E) à la page i-6.

b) Sur la figure du groupe principal, chercher la sous-groupe de machine (17) qui contient la pièce ou le sous-groupe que vous recherchez. Noter le numéro de repère (18) et aller à la page de liste qui suit la figure.

c) Rechercher le numéro de repère (16) ou le nom de sous-groupe (19). Aller au numéro de page correspondant (20) figurant dans la liste de la colonne de droite.

Les articles d) et e) se réfèrent à la figure (F) à la page i-6.

d) Localiser la pièce (21) que vous recherchez sur la figure de sous-groupe et noter le numéro de repère de la pièce.

e) Le numéro de pièce (29) et la description de la pièce (30) figurent dans la liste à côté du numéro de repère sur la page de liste.

Informations figurant dans la liste dans un Catalogue de Pièces de Rechange

La liste ci-dessous se réfère à la figure (F) à la page i-6. Un Catalogue de Pièces de Rechange contient les renseignements suivants relatifs aux groupes, sous-groupes et pièces de rechange de l'équipement:

- Référence de structure de groupe (22). Indique le groupe supérieur suivant dans la structure de liste d'équipement.
- Nom du groupe (23).
- Code de pièce de rechange (24). Voir la section Spare Part Codes.
- Unité de mesure (25).
- Quantité (26).
- Numéro de plan de montage (27).
- Gamme de la page de liste (28). Incluse s'il y a des pages multiples dans la figure de groupe ou dans la liste.
- Numéro de pièce ou de sous-groupe (29).
- Nom de sous-groupe ou description de la pièce (30).
- Numéro de groupe (31).
- Numéro de l'équipement (32).
- Titre des informations de groupe (33). Indique si la section sous le titre est pour une variante de machine spécifique ou s'il y a une liste de pièces communes. Si une liste comporte plus d'une variante et que chaque variante possède son propre plan de montage, une référence de page au plan de montage de la variante est alors indiqué.
- Renseignements internes (34).

TechPub-2660371-0101

Codes des pièces de rechange

Les tableaux ci-dessous montrent les deux types possibles de Code de Pièces de rechange (SP) qui peuvent figurer dans la liste dans la colonne de pièces de rechange d'une page de liste de Catalogue de Pièces de Rechange.

Code SP	Signification
A	Pièce critique
B	Pièce non critique

Code SP	Signification
U	Kit de mise en route avec livraison de la machine
P	Kit de production à conserver sur le site de production
S	Kit d'assistance à conserver au magasin des postes d'assistance
C	Kit de dépôt central disponible au magasin central

Introduzione

Informazioni sul manuale

Tetra Pak consiglia di leggere con attenzione tutti i manuali forniti in dotazione. Assicurarsi che tutti i manuali in dotazione siano disponibili per il personale addetto al funzionamento e alla manutenzione della macchina.

È importante conservare il presente catalogo per tutta la durata della macchina e consegnarlo al successivo proprietario o utilizzatore.

Tetra Pak non sarà da ritenersi responsabile per eventuali danni alla macchina causati dal mancato rispetto delle istruzioni fornite nei manuali che accompagnano le macchine.

Manuali in dotazione

I manuali consegnati con la presente macchina possono comprendere:

- Manuale di Conversione (CM)
  Questo manuale fornisce ai tecnici le informazioni necessarie per la conversione della macchina da una modalità di produzione a un'altra.
- Manuale Elettrico (EM)
  Questo manuale fornisce ai tecnici informazioni sull'impianto elettrico della macchina.
- Manuale di Installazione (IM)
  Questo manuale fornisce ai tecnici le informazioni necessarie per installare in sicurezza la macchina.
- Manuale di Manutenzione (MM)
  Questo manuale fornisce ai tecnici le informazioni necessarie per la manutenzione della macchina.
- Manuale Operativo (OM)
  Questo manuale fornisce all'operatore le informazioni sull'utilizzo e il funzionamento della macchina prima, durante e dopo la produzione.
- Catalogo Pezzi di Ricambio (SPC)
  Questo manuale fornisce le informazioni necessarie per ordinare a Tetra Pak i pezzi di ricambio.
- Manuale Tecnico (TeM)
  - fornisce ai tecnici le informazioni necessarie per installare in sicurezza la macchina
  - fornisce ai tecnici le informazioni necessarie per la manutenzione della macchina
  - fornisce ai tecnici informazioni sull'impianto elettrico della macchina
  - fornisce le informazioni necessarie per ordinare a Tetra Pak i pezzi di ricambio.

TechPub-2660371-0101

Schema della pagina

Consultare la figura (A) a pagina i-5. Le pagine principali del Catalogo Pezzi di Ricambio consistono in una pagina con la figura (1) e una pagina elenco corrispondente (7). Il numero di pagina (5) è indicato nell'intestazione delle pagine con le figure e nel piè di pagina delle pagine elenco. Il codice del documento (6) è indicato nel piè di pagina delle pagine elenco.

Numerazione delle pagine

Consultare la figura (A) a pagina i-5. Il numero di pagina (5) è suddiviso in tre parti:

- numero della sezione (2)
- numero progressivo di pagina all'interno della sezione (3)
- numero totale di pagine della sezione (4)

Introduzione alla macchina

Fabbricante

Il nome e l'indirizzo del fabbricante sono riportati sulla seconda pagina del presente catalogo.

Assistenza

Per ordinare i pezzi di ricambio per questa macchina oppure per riferire problemi associati con il funzionamento della macchina, contattare il più vicino ufficio Tetra Pak.

Per tutte le altre richieste, commenti o suggerimenti per eventuali miglioramenti da apportare alla macchina e alla relativa documentazione, contattare il responsabile di collegamento.

Identificazione

Marchio CE

La macchina è conforme alle principali norme sanitarie e di sicurezza dell'Area Economica Europea (EEA).

TechPub-2660371-0101

Targhetta della macchina

La figura (B) a pagina i-5 illustra un esempio di targhetta della macchina. La sezione Introduzione di tutti i manuali consegnati con la presente macchina contiene invece la figura della targhetta della macchina valida e l'illustrazione della sua posizione sulla macchina. La targhetta riporta i dati elencati sotto che sono necessari per contattare Tetra Pak in relazione a questa macchina specifica.

- Tipo di macchina (8)
- Volume (9)
- Specifiche disegno (10)
- Numero di matricola della macchina (11)
- Fabbricante (12)
- Marchio CE (13)
- Anno di fabbricazione (14)

La figura (C) a pagina i-5 mostra un esempio delle specifiche di una macchina. Verificare che i dati relativi alla macchina elencati nelle pagine iniziali del manuale corrispondano ai dati riportati sulla targhetta della macchina e nelle specifiche della macchina.

TechPub-2660371-0101

Come usare questo Catalogo Pezzi di Ricambio

Individuare il numero del pezzo di ricambio

f) Vedere la figura (D) a pagina i-5. Andare al numero della sezione (15) indicato accanto al gruppo principale che contiene il pezzo che si desidera individuare.

I punti b) e c) fanno riferimento alla figura (E) a pagina i-6.

g) Nella figura del gruppo principale, identificare il sottogruppo della macchina (17) che contiene il pezzo o il sottogruppo cercato. Annotare il numero di posizione (18) e andare alla pagina elenco che segue la figura.

h) Identificare il numero di posizione (16) o il nome del sottogruppo (19). Andare al numero di pagina corrispondente (20) indicato nella colonna di destra.

I punti d) e e) fanno riferimento alla figura (F) a pagina i-6.

i) Individuare il pezzo (21) cercato sulla figura del sottogruppo e annotare il numero di posizione del pezzo.

j) Il numero del pezzo (29) e la descrizione del pezzo (30) sono indicati accanto al numero di posizione sulla pagina elenco.

Informazioni contenute nel Catalogo Pezzi di Ricambio

L'elenco seguente fa riferimento alla figura (F) a pagina i-6. Il Catalogo Pezzi di Ricambio contiene le seguenti informazioni sui gruppi, i sottogruppi e i pezzi di ricambio della macchina:

- Riferimento struttura gruppo (22). Indica il gruppo superiore più prossimo nella struttura elenco della macchina.
- Nome gruppo (23)
- Codice pezzo di ricambio (24). Vedere la sezione Codici pezzi di ricambio.
- Unità di misura (25)
- Quantità (26)
- Numero disegno di assemblaggio (27)
- Pagine dell'elenco (28). Questa informazione è presente se la figura o l'elenco relativi al gruppo occupano più di una pagina del manuale.
- Numero pezzo o sottogruppo (29)
- Nome sottogruppo o descrizione pezzo (30)
- Numero gruppo (31)
- Numero macchina (32)
- Titolo informazioni gruppo (33). Indica se la sezione che segue il titolo si riferisce a una variante di macchina specifica oppure se si tratta di un elenco di parti comuni. Se un elenco contiene più di una variante ed esiste un disegno di assemblaggio specifico per ogni variante, viene fornito il riferimento alla pagina in cui è riportato il disegno di assemblaggio relativo alla variante.
- Informazioni interne (34)

Codici pezzi di ricambio

Le tabelle seguenti mostrano le due tipologie di codici dei pezzi di ricambio (SP) che è possibile trovare nella colonna SP di una pagina elenco del Catalogo Pezzi di Ricambio.

Codice SP	Spiegazione
A	Pezzo critico
B	Pezzo non critico

Codice SP	Spiegazione
U	Kit d'avviamento fornito insieme alla macchina
P	Kit di produzione da conservare nei locali di produzione
S	Kit d'assistenza da conservare presso il magazzino del centro di assistenza
C	Kit magazzino centrale che deve essere disponibile presso il magazzino centrale

TechPub-2660371-0101

Inleiding

Informatie betreffende dit handboek

Tetra Pak raadt aan alle geleverde documentatie zorgvuldig te lezen. Ga na of de geleverde documentatie ter beschikking is van het personeel dat de machine moet bedienen of servicewerkzaamheden moet uitvoeren.

Het is belangrijk deze catalogus voor de duur van de machine te bewaren en de catalogus door te geven aan elke volgende eigenaar of gebruiker.

Tetra Pak aanvaardt geen verantwoordelijkheid voor om het even welke soort beschadiging aan de machine als gevolg van het niet opvolgen van de in dit handboek gegeven instructies.

Bijgeleverde handboeken

De met deze apparatuur geleverde handboeken omvatten

- Conversiehandboek (CM)
  Dit handboek geeft technici informatie over het ombouwen van de apparatuur tussen verschillende productiemodi.
- Handboek Elektriciteit (EM)
  Dit handboek geeft elektriciens en servicetechnici informatie betreffende het elektrisch systeem van de apparatuur.
- Installatiehandboek (IM)
  Dit handboek geeft installatiepersoneel informatie om op veilige wijze de apparatuur te installeren.
- Onderhoudshandboek (MM)
  Dit handboek geeft technici informatie over het onderhoud van de apparatuur.
- Bedieningshandboek (OM)
  Dit handboek geeft de operator informatie betreffende het omgaan met en bedienen van de apparatuur, voor, tijdens en na productie.
- Catalogus reservedelen (SPC).
  Dit handboek geeft de nodige informatie om reserveonderdelen bij Tetra Pak te bestellen.
- Technisch Handboek (TeM)
  - Dit handboek geeft technici informatie, nodig om op veilige wijze de apparatuur te installeren
  - Dit handboek geeft technici informatie over het onderhoud van de apparatuur
  - Dit handboek geeft technici informatie betreffende het elektrisch systeem van de apparatuur
  - geeft de nodige informatie, nodig om reserveonderdelen bij Tetra Pak te bestellen

TechPub-2660371-0101

Pagina lay-out

Refereer naar de illustratie (A) op bladzijde i-5: De belangrijkste bladzijden van een Catalogus Reserveonderdelen bestaan uit een bladzijde met een illustratie (1) en een corresponderende bladzijde met een lijst (7).
Het bladzijdenummer (5) is te vinden in de kop van een illustratiebladzijde en in de voetnoot van de lijstbladzijde. Het documentnummer (6) is te vinden in de voetnoot van een lijstbladzijde.

Bladzijdenummering

Refereer naar de illustratie (A) op bladzijde i-5: een bladzijdenummer (5) bestaat uit drie delen:

- hoofdstuknummer (2)
- opeenvolgende bladzijdenummer in het hoofdstuk (3)
- totaal aantal bladzijden in het hoofdstuk (4)

Introductie van de machine

Fabrikant

Voor naam en adres van de fabrikant, zie de tweede bladzijde van deze catalogus.

Service

Voor het bestellen van reserveonderdelen of om bedieningsproblemen van deze machine te melden, contacteer de dichtst bijzijnde vestiging van Tetra Pak.

Neem contact op met de contactpersoon voor andere informatie, opmerkingen of suggesties ter verbetering van de machine en de bijbehorende documentatie.

Identificatie

CE-classificatie

Deze apparatuur voldoet aan de basiseisen voor gezondheid en veiligheid voor het Europese Economische Gebied (EEA).

TechPub-2660371-0101

Machineplaatje

De illustratie (B) op bladzijde i-5 toont een voorbeeld van een machineplaatje.
Een illustratie van het wettige machineplaatje en de plaatsing ervan wordt getoond in het hoofdstuk Introductie van de handboeken, meegeleverd met deze apparatuur. Het machineplaatje bevat onderstaande gegevens die nodig zijn wanneer Tetra Pak moet worden gecontacteerd betreffende deze apparatuur.

- Machinetype (8)
- Volume (9)
- Tekeningspecificaties (10)
- Serienummer machine (11)
- Fabrikant (12)
- CE-markering (13)
- Fabricagejaar (14)

De illustratie (C) op bladzijde i-5 toont een voorbeeld van een machineplaatje. Controleer of de gegevens betreffende de apparatuur in de voorste bladzijden van dit handboek overeenkomen met de gegevens op het machineplaatje en de machinespecificaties.

TechPub-2660371-0101

Hoe dient deze catalogus reserveonderdelen te worden gebruikt

Lokaliseren van een nummer van een reserveonderdeel

a) Refereer naar de illustratie (D) op bladzijde i-5: ga naar het hoofdstuknummer (15), naast de hoofdgroep die het gewenste deel bevat.

Items b) en c) refereer naar de illustratie (E) op bladzijde i-6.

b) Op de illustratie van de hoofdgroep, zoek de machinesub-groep (17) op die het deel van de gewenste sub-groep bevat. Noteer het positienummer (18) en ga naar de lijstbladzijde die op de illustratie volgt.

c) Op de illustratie van de hoofdgroep, zoek de machinesub-groep (17) op die het deel van de gewenste sub-groep bevat. Noteer het positienummer (18) en ga naar de lijstbladzijde die op de illustratie volgt.

Items d) en e) refereren naar de illustratie (F) op bladzijde i-6.

d) Lokaliseer het gewenste onderdeel (21) in de illustratie van de sub-groep en noteer het positienummer van het onderdeel.

e) Het onderdeelnummer (29) en de beschrijving ervan (30) worden naast het positienummer op de lijstbladzijde weergegeven.

Informatie die in een Catalogus reserveonderdelen wordt gegeven

Onderstaande lijst verwijst naar de illustratie (F) op bladzijde i-6.
Een Catalogus reserveonderdelen bevat de volgende informatie betreffende groepen, sub-groepen en reserveonderdelen voor de apparatuur:

- Referentie groepsstructuur (22). Geeft de volgende hoogste groep in de structuur van de apparatuur aan.
- Groepsnaam(23)
- Code reserveonderdeel (24). Zie deel Spare Part Codes.
- Meeteenheid (25)
- Hoeveelheid (26)
- Tekeningnummer montage (27)
- Lijst met bladzijdenreeks (28). Inclusief indien er meerdere bladzijden in de groepsillustratie of lijst voorkomen.
- Onderdeel of sub-groepsnummer (29)
- Naam sub-groep of beschrijving onderdeel (30)
- Groepsnummer (31)
- Apparatuurnummer (32)
- Titel groepsinformatie (33). Geeft aan of het deel onder de titel voor een specifieke machine is, voor een variant of een lijst is met algemene onderdelen. Indien een lijst meer dan één variant bevat en elke variant heeft zijn eigen montagetekening, wordt een bladzijdenreferentie naar de montagetekening van de variant gegeven.
- Interne informatie (34)

Codes reserveonderdelen

Onderstaande tabellen tonen de twee mogelijke codetypes van reserveonderdelen (SP) die vermeld kunnen worden in de SP-kolom van een bladzijde van de Catalogus reserveonderdelen.

SP-code	Omschrijving
A	Essentieel onderdeel
B	Niet essentieel onderdeel

SP-code	Omschrijving
U	Start-up kit, met de machine meegeleverd
P	Productiekit, op te slaan op productielocatie
S	Servicekit, op te slaan op servicelocatie
C	Kit centrale depot, beschikbaar te zijn in centraal magazijn

TechPub-2660371-0101

Introduksjon

Informasjon om håndboken

Tetra Pak anbefaler at du leser nøye gjennom alle leverte håndbøker. Sørg for at håndbøkene er tilgjengelige for alle som betjener eller vedlikeholder utstyret.

Det er viktig at du tar vare på denne katalogen under hele levetiden til utstyret og at du gir den videre til eventuelle nye eiere eller brukere.

Tetra Pak vil ikke være ansvarlig for skader på utstyret som oppstår fordi brukeren ikke følger instruksjonene i håndbøkene som følger med utstyret.

Leverte håndbøker

Håndbøkene som leveres med dette utstyret, kan inkludere

- Konverteringsmanual (CM)
  Denne håndboken gir teknikere informasjon om hvordan de konverterer utstyret mellom ulike produksjonsmodi.
- Electrisk manual (EM)
  Denne håndboken gir teknikere informasjon om utstyrets elektriske system.
- Installasjonsmanual (IM)
  Denne håndboken gir teknikere informasjon som kreves for å kunne installere utstyret på en sikker måte.
- Vedlikeholdsmanual (MM)
  Denne håndboken gir teknikere informasjon om vedlikehold av utstyret.
- Driftsmanual (OM)
  Denne håndboken gir operatøren informasjon om hvordan han håndterer og bruker utstyret før, under og etter produksjon.
- Reservedelskatalog (SPC)
  Denne håndboken inneholder informasjon som du trenger for å bestille reservedeler fra Tetra Pak.
- Teknisk manual (TeM)
  - gir teknikere informasjon om sikker installasjon av utstyret
  - gir teknikere informasjon om vedlikehold av utstyret
  - gir teknikere informasjon om utstyrets elektriske system
  - inneholder informasjon som du trenger for å bestille reservedeler fra Tetra Pak

TechPub-2660371-0101

Sideoppsett

Se illustrasjonen (A) på side i-5: Hovedsidene i reservedelskatalogen består av en illustrasjonsside (1) og en korresponderende listeside (7). Sidenummeret (5) vises i topptekstenpå illustrasjonssiden og i bunnteksten listesiden. Dokumentnummeret (6) vises i bunnteksten på listesiden.

Sidenummerering

Se illustrasjonen (A) på side i-5: Et sidenummer (5) består av tre deler:

- kapittelnummer (2)
- etterfølgende sidenummer i kapitlet (3)
- det totale antall sider i kapitlet (4)

Introduksjon av maskinen

Produsent

Hvis du ønsker produsentens navn og adresse, kan du se side to i denne katalogen.

Service

Når du skal bestille reservedeler til denne maskinen eller rapportere problemer forbundet med driften av denne maskinen, må du kontakte ditt nærmeste Tetra Pak-kontor.

Når det gjelder andre forespørsler, kommentarer eller forslag til forbedringer av utstyret og dets dokumentasjon, kan du ta kontakt med din kontaktperson.

Identifisering

CE-klassifisering

Dette utstyret er i overensstemmelse med de grunnleggende helse- og sikkerhetsforskriftene i Det europeiske økonomiske samarbeidsområdet (EØS).

TechPub-2660371-0101

Maskinplate

Illustrasjonen (B) på side i-5 viser et eksempel på en maskinplate. En illustrasjon av en gyldig maskinplate og hvor denne er plassert på utstyret, er vist i introduksjonskapitlet i håndbøkene som følger med dette utstyret. Maskinplaten inneholder nedenstående data, som du trenger når du skal kontakte Tetra Pak angående dette bestemte utstyret.

- Maskintype (8)
- Volum (9)
- Tegningsspesifikasjoner (10)
- Maskin-serienummer (11)
- Produsent (12)
- CE-merke (13)
- Produksjonsår (14)

Illustrasjonen (C) på side i-5 viser et eksempel på en maskinspesifikasjon. Sørg for at utstyrsdataene som står oppført foran i denne håndboken samsvarer med dataene på maskinplaten og maskinspesifikasjonen.

TechPub-2660371-0101

Hvordan bruke denne reservedelskatalogen

Finn et reservedelsnummer

a) Se illustrasjonen (D) på side i-5: Gå til kapittelnummeret (15) som er angitt ved siden av hovedgruppen som inneholder delen du vil finne.

Punkt b) og c) viser til illustrasjonen (E) på side i-6.

b) På hovedgruppeillustrasjonen ser du etter maskinundergruppen (17) som inneholder delen eller undergruppen du ser etter. Merk deg posisjonsnummeret (18), og gå til listesiden som kommer etter illustrasjonen.

c) Se etter posisjonsnummeret (16) eller undergruppenavnet (19). Gå til det korresponderende sidenummeret (20) som står oppført i høyre kolonne.

Punkt d) og e) viser til illustrasjonen (F) på side i-6.

d) Finn delen (21) du ser etter på undergruppeillustrasjonen, og merk deg delens posisjonsnummer.

e) Delenummeret (29) og delebeskrivelsen (30) finner du ved siden av posisjonsnummeret på listesiden.

Informasjon i en reservedelskatalog

Listen nedenfor viser til illustrasjonen (F) på side i-6. En reservedelskatalog inneholder følgende informasjon om grupper, undergrupper og reservedeler for utstyret:

- Gruppeinndelingsreferanse (22). Angir den neste gruppen opp i inndelingen av utstyrslisten.
- Gruppenavn (23)
- Reservedelskode (24). Se avsnittet Reservedelskoder.
- Målenhet (25)
- Antall (26)
- Tegningsnummer (27)
- Listesideområde (28). Inkludert hvis det er flere sider i gruppeillustrasjonen eller listen.
- Dele- eller undergruppenummer (29)
- Undergruppenavn eller delebeskrivelse (30)
- Gruppenummer (31)
- Utstyrsnummer (32)
- Gruppeinformasjonsoverskrift (33). Angir om avsnittet under overskriften er for en bestemt maskinvariant eller om det er en liste over vanlige deler. Hvis en liste har flere varianter og hver variant har sin egen sammenstillingstegning, vises det en sidereferanse til variantens sammenstillingstegning.
- Intern informasjon (34)

Reservedelskoder

Tabellene nedenfor viser de to mulige typene av reservedelskode (SP) som kan stå oppført i SP-kolonnen på en listeside i en reservedelskatalog.

SP-kode	Betydning
A	Kritisk del
B	Ikke-kritisk del

SP-kode	Betydning
U	Oppstartsett som følger med maskinleveransen
P	Produksjonssett som skal være på produksjonsstedet
S	Servicesett som skal være på servicestasjonen
C	Sentrallagersett som skal være tilgjengelig på sentrallageret

TechPub-2660371-0101

Introdução

Informação do Manual

A Tetra Pak recomenda ler cuidadosamente todos os manuais fornecidos. Verificar se os manuais fornecidos estão ao dispor do pessoal que trabalha com o equipamento ou que faz a manutenção do mesmo.

É importante guardar este catálogo durante o tempo útil de vida da máquina ou do equipamento e de entregar o catálogo a qualquer proprietário ou utilizador subsequente.

A Tetra Pak não toma a responsabilidade por quaisquer danos no equipamento causados devido ao facto de que as instruções dadas nos manuais que acompanham este equipamento não foram seguidas.

Manuais fornecidos

Os manuais fornecidos com este equipamento incluem

- Manual de Conversão (CM)
  Este manual fornece aos técnicos as informações sobre a conversão do equipamento entre os diferentes modos de produção.
- Manual Eléctrico (EM)
  Este manual fornece aos técnicos as informações sobre o sistema eléctrico do equipamento.
- Manual de Instalação (IM)
  Este manual fornece aos técnicos as informações necessárias para instalar seguramente o equipamento.
- Manual de Manutenção (MM)
  Este manual fornece aos técnicos as informações para a manutenção do equipamento.
- Manual de Operação (OM)
  Este manual fornece ao operador as informações que ele necessita para manejar e accionar o equipamento antes, durante e depois da produção.
- Catálogo de Peças Sobressalentes (SPC)
  Este manual fornece as informações necessárias para encomendar peças sobressalentes à Tetra Pak.
- Manual Técnico (TeM)
  - fornece aos técnicos as informações necessárias para instalar seguramente o equipamento
  - fornece aos técnicos as informações para a manutenção do equipamento
  - fornece aos técnicos as informações sobre o sistema eléctrico do equipamento
  - fornece as informações necessárias para encomendar peças sobressalentes à Tetra Pak

TechPub-2660371-0101

Disposição da página

Referência à ilustração (A) na página i-5: As páginas principais num Catálogo de Peças Sobressalentes consistem numa página ilustrada (1) e numa página com a lista correspondente (7). O número da página (5) é mostrado no cabeçalho de uma página ilustrada e no rodapé de uma página com lista. O número do documento (6) é mostrado no rodapé de uma página com lista.

Numeração da página

Referência à ilustração (A) na página i-5: Um número de página (5) tem três partes:

- Número do capítulo (2)
- número consecutivo da página dentro do capítulo (3)
- número total de páginas no capítulo (4)

Introdução da máquina

Fabricante

Para o nome e morada do fabricante, ver a segunda página deste catálogo.

Assistência técnica

Para encomendar peças sobressalentes para esta máquina, ou para relatar problemas associados com a operação desta máquina, contactar a companhia Tetra Pak mais próxima.

Contactar a Liaison se tiver quaisquer questões, comentários ou sugestões para o desenvolvimento relacionado com o equipamento e a sua documentação.

Identificação

Classificação CE

Este equipamento está de acordo com os regulamentos de segurança e saúde da Área Económica Europeia (EEA).

TechPub-2660371-0101

Placa da máquina

A ilustração (B) na página i-5 mostra um exemplo de uma placa da máquina. Uma ilustração da placa da máquina válida e a sua localização no equipamento é mostrada no capítulo Introdução dos manuais fornecidos com este equipamento. A placa da máquina contem os dados alistados em baixo, necessários quando se contactar a Tetra Pak relacionando-se a este equipamento em específico.

- Tipo da máquina (8)
- Volume (9)
- Especificações dos desenhos (10)
- Número de série da máquina (11)
- Fabricante (12)
- Marca CE (13)
- Ano de construção (14)

A ilustração (C) na página i-5 mostra um exemplo de uma especificação da máquina. Verificar se os dados do equipamento alistados nas páginas da frente deste manual correspondem aos dados na placa da máquina e à especificação da máquina.

TechPub-2660371-0101

Como usar este Catálogo de Peças Sobressalentes

Localizar um Número da peça sobressalente

f) Referência à ilustração (D) na página i-5: Para o número do capítulo (15) indicado ao lado do grupo principal que contem a peça que quer localizar.

Pos. b) e c) referem-se à ilustração (E) na página i-6.

g) Na ilustração do grupo principal, procurar o subgrupo da máquina (17) que contem a peça ou subgrupo que está à procura. Anotar o número da posição (18) e passar para a página da lista que segue a ilustração.

h) Procurar o número da posição (16) ou o nome do subgrupo (19). Passar para o número da página correspondente (20) alistado na coluna do lado direito.

Pos. d) e e) referem-se à ilustração (F) na página i-6.

i) Localizar a peça (21) que está à procura na ilustração do subgrupo e anotar o número da posição da peça.

j) O número da peça (29) e a descrição da peça (30) estão alistados ao lado do número da posição na página da lista.

Informações indicadas num Catálogo de Peças Sobressalentes

A lista em baixo refere-se à ilustração (F) na página i-6. Um Catálogo de Peças Sobressalentes contem as seguintes informações sobre grupos, subgrupos e peças sobressalentes para o equipamento:

- Referência da estrutura do grupo (22). Indica o grupo a seguir mais elevado na estrutura da lista do equipamento.
- Nome do grupo (23)
- Código da peça sobressalente (24). Ver o capítulo Spare Part Codes.
- Unidade de medição (25)
- Quantidade (26)
- Número do desenho de montagem (27)
- Gama da página de lista (28). Incluída se houver páginas múltiplas na ilustração do grupo ou lista.
- Número da peça ou do subgrupo (29)
- Nome do subgrupo ou descrição da peça (30)
- Número do grupo (31)
- Número do equipamento (32)
- Título da informação do grupo (33). Indica se a secção abaixo do título é para uma variante de máquina específica ou se é uma lista de peças comuns. Se uma lista tiver mais do que uma variante e cada variante tiver o seu próprio desenho de montagem, é mostrada uma referência para a página do desenho de montagem da variante.
- Informação interna (34)

Códigos de peças sobressalentes

As tabelas em baixo mostram os dois tipos possíveis do código de Peça Sobressalente (SP) que podem estar alistadas na coluna SP de uma página de lista do Catálogo de Peças Sobressalentes.

Código SP	Significado
A	Peça crítica
B	Peça não crítica

Código SP	Significado
U	Kit de colocação ao serviço fornecido com a máquina
P	Kit de produção que deve estar presente no local de produção
S	Conjunto de serviço de assistência para ser mantido no armazém das estações de serviço.
C	Conjunto do depósito geral para estar disponível no armazém central.

TechPub-2660371-0101

Inledning

Information om manualerna

Tetra Pak rekommenderar att alla manualer läses noggrant. Se till att manualerna är tillgängliga för personalen som använder eller underhåller utrustningen.

Det är viktigt att denna katalog behålls under utrustningens livslängd, och att den överlämnas till varje efterföljande innehavare eller användare av utrustningen.

Tetra Pak tar inte ansvar för någon skada på utrustningen som orsakats av att instruktionerna i medföljande manualer inte har följts.

Medföljande manualer

Följande manualer levereras tillsammans med utrustningen:

- Konverteringsmanual (CM)
  Manualen innehåller information för tekniker om hur utrustningen ska konverteras mellan olika produktionslägen.
- Elektrisk manual (EM)
  Manualen innehåller information för tekniker om utrustningens elektriska system.
- Installationsmanual (IM)
  Manualen innehåller information för tekniker om hur utrustningen installeras på ett säkert sätt.
- Underhållsmanual (MM)
  Manualen innehåller information för tekniker om hur utrustningen ska underhållas.
- Driftsmanual (OM)
  Manualen innehåller information för operatören om hur utrustningen ska hanteras före, under och efter produktion.
- Reservdelskatalog (SPC)
  Manualen innehåller information som behövs för beställning av reservdelar från Tetra Pak.
- Teknisk manual (TeM)
  - innehåller information för tekniker om hur utrustningen installeras på ett säkert sätt.
  - innehåller information för tekniker om hur utrustningen ska underhållas.
  - innehåller information för tekniker om utrustningens elektriska system.
  - innehåller information som behövs för beställning av reservdelar från Tetra Pak.

TechPub-2660371-0101

Sidlayout

Se bilden (A) på sidan i-5: Huvudsidorna i reservdelskatalogen består av en bildsida (1) och en motsvarande listsida (7). Sidnumret (5) visas i sidhuvudet på bildsidan och i sidfoten på listsidan. Dokumentnumret (6) visas i sidfoten på listsidan.

Sidnumrering

Se bilden (A) på sidan i-5: Ett sidnummer (5) består av tre delar:

- kapitelnummer (2)
- löpande sidnummer inom kapitlet (3)
- totalt sidantal i kapitlet (4)

Introduktion till maskinen

Tillverkare

Tillverkarens namn och adress finns på sidan 2 i katalogen.

Service

För att beställa reservdelar till denna maskin eller för att rapportera problem som uppstått i samband med driften kontaktar du närmaste Tetra Pak-kontor.

Har du andra frågor, kommentarer eller förslag som gäller förbättring av maskinen eller utrustningen och dokumentationen vänder du dig till din kontaktperson på Tetra Pak.

Identifiering

CE-klassificering

Denna utrustning överensstämmer med de grundläggande hälso- och säkerhetsbestämmelserna inom den europeiska ekonomiska unionen (EEA).

TechPub-2660371-0101

Maskinskylt

Bilden (B) på sidan i-5 visar ett exempel på en maskinskylt. En bild på giltig maskinskylt och dess placering på utrustningen visas i inledningskapitlet som medföljer utrustningen. Skylten innehåller de uppgifter som listas nedan och som behövs vid kontakt med Tetra Pak angående utrustningen.

- Maskintyp (8)
- Volym (9)
- Ritningsspecifikationer (10)
- Maskinnummer (11)
- Tillverkare (12)
- CE-märkning (13)
- Tillverkningsår (14)

Bilden (C) på sidan i-5 visar ett exempel på en maskinspecifikation. Kontrollera att informationen om utrustningen som listas på manualens framsida motsvarar informationen på maskinskylten och i maskinspecifikationen.

Använda reservdelskatalogen

Hitta ett reservdelsnummer

a) Se bilden (D) på sidan i-5: Gå till kapitelnumret (15) som står vid sidan om huvudgruppen som innehåller den del du vill leta reda på.

Punkt b) och c) hänvisar till bilden (E) på sidan i-6.

b) På huvudgruppsbilden letar du efter den maskinundergrupp (17) som innehåller delen eller undergruppen du letar efter. Notera positionsnumret (18) och gå till listsidan som följer efter bilden.

c) Leta efter positionsnumret (16) eller undergruppsnamnet (19). Gå till motsvarande sidnummer (20) som listas i den högra kolumnen.

Punkt d) och e) hänvisar till bilden (F) på sidan i-6.

d) Leta reda på delen (21) i undergruppsbilden och notera delens positionsnummer.

e) Reservdelsnumret (29) och reservdelsbeskrivningen (30) står bredvid positionsnumret på listsidan.

TechPub-2660371-0101

Information i reservdelskatalogen

Listan nedan hänvisar till bilden (F) på sidan i-6. Reservdelskatalogen innehåller följande information om grupper, undergrupper och reservdelar för utrustningen:

- Gruppstrukturreferens (22). Anger nästa högre grupp i utrustningslistans struktur.
- Gruppnamn (23)
- Reservdelskod (24). Se avsnittet Reservdelskoder.
- Måttenhet (25)
- Kvantitet (26)
- Monteringsritningsnummer (27)
- Listsidesintervall (28). Står med om det finns flera sidor i gruppbilden eller listan.
- Reservdels- eller undergruppsnummer (29)
- Undergruppsnamn eller reservdelsbeskrivning (30)
- Gruppnummer (31)
- Utrustningsnummer (32)
- Gruppinformationsrubrik (33). Anger om avsnittet under rubriken gäller en viss maskinvariant eller om det är en lista över allmänna delar. Om en lista har fler än en variant och varje variant har sin egen monteringsritning, visas en sidhänvisning till variantens monteringsritning.
- Intern information (34)

Reservdelskoder

Tabellerna nedan visar de två typerna av reservdelskoder (SP) som kan finnas i SP-kolumnen på en listsida i reservdelskatalogen.

SP-kod	Betydelse
A	Primär reservdel
B	Sekundär reservdel

SP-kod	Betydelse
U	Startsats som ingår i maskinleveransen
P	Produktionssats som bör finnas på produktionsplatsen
S	Servicesats som bör finnas på servicestationen
C	Central lagringssats tillgänglig vid centrallagret

TechPub-2660371-0101

SPC
Spare Parts Catalogue

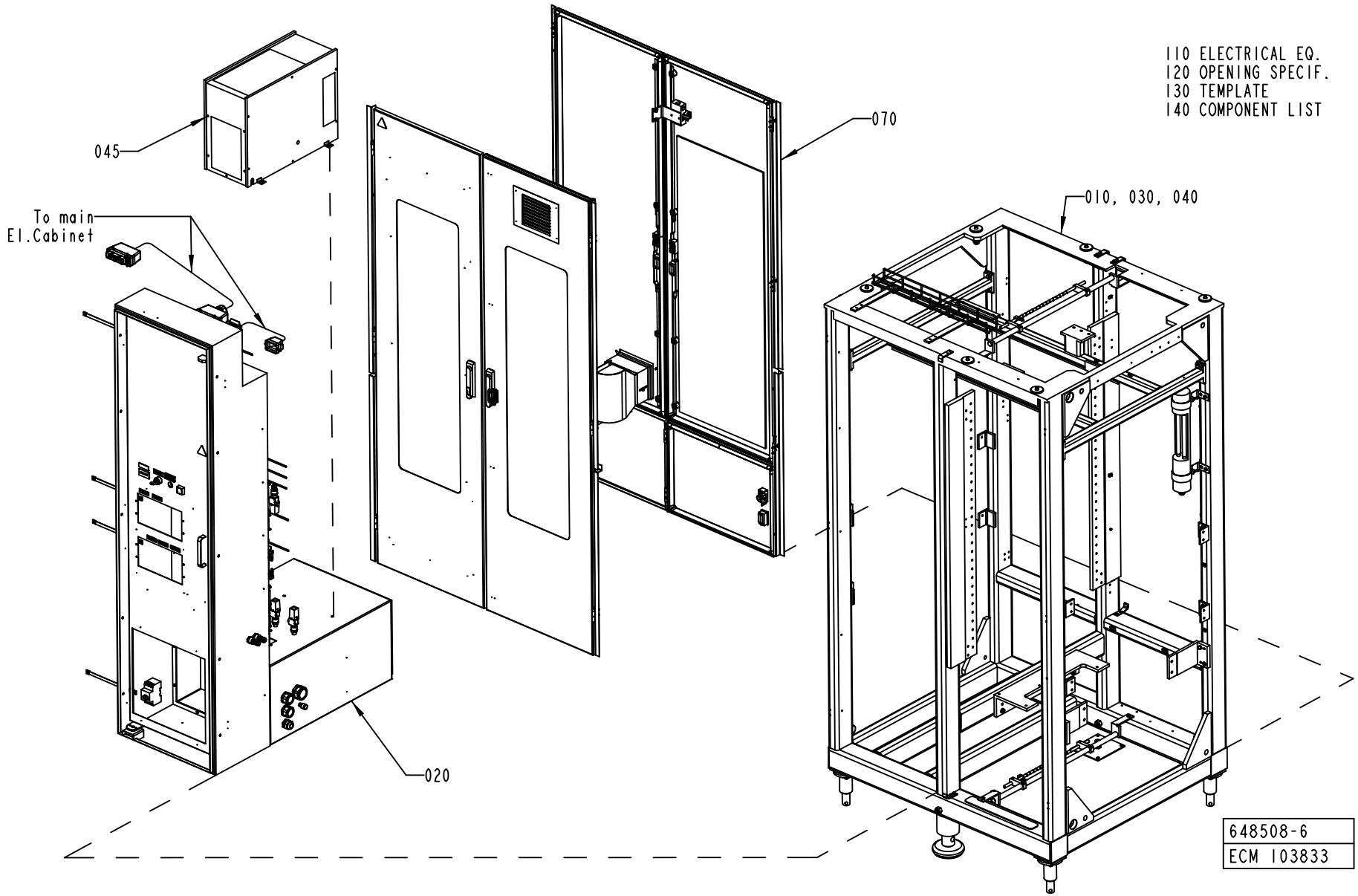
110 ELECTRICAL EQ.
120 OPENING SPECIF.
130 TEMPLATE
140 COMPONENT LIST
045
070
010, 030, 040
To main
El.Cabinet
020
648508-6
ECM 103833

ECM: 103833 - 20020910
Group number: 648508-0600
Assembly Drawing: 648508-6_1_AA

This list covers pages from 1-2 to 1-9

Pos	Part No	SP	UN	Qty	Description	Page No
-						
	577135-0100	-		1	PIPE-LINE	**1-11**
020	1317254-0300	-		1	ELECTRICAL CABINET	**1-13, 1-15, 1-17**
030	1317751-0100	-		1	CABLE HARNESS	**1-39**
040	1260428-0200	-		1	FRAME	**1-47, 1-49**
045	1095928-0100	-		1	COOLER	**1-61**
050	1095931-0400	-		1	PAPER WEB PATH	**1-65**
060	2526514-0100	-		1	APPLICATORS	**1-99**
070	1095951-0500	-		1	DOORS AND COVERS	**1-161, 1-163**
080	1185008-0300	-		1	MAGAZINE	**1-181**
090	1185049-0300	-		1	VALVE PANEL	**1-241, 1-243**
100	1334322-0100	-		2	BENDING ROLLER WITH FLANGES	**1-89**
110	649060-0600	-		1	ELECTRIC EQUIPMENT	**1-251**
120	2526515-0100	-		1	OPENING SPECIFICATION	**1-253**
130	1538982-0100	-		1	TEMPLATE	**1-255**
140	2526555-0100	-		1	COMPONENT LIST	**1-257**

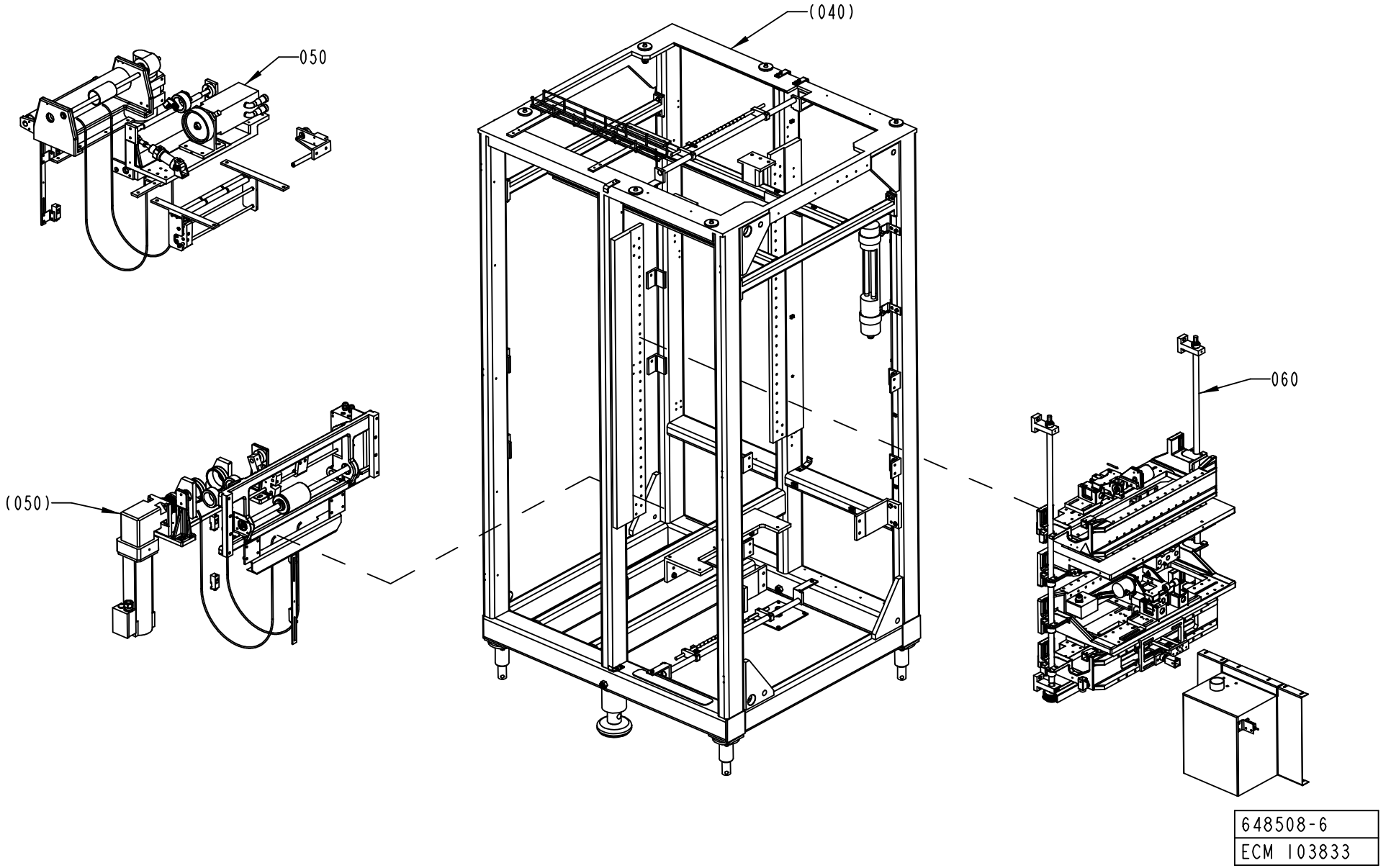
050
040
(050)
060
648508-6
ECM 103833

ECM: 103833 - 20020910
Group number: 648508-0600
Assembly Drawing: 648508-6_2_AA

This list covers pages from 1-2 to 1-9

Pos	Part No	SP	UN	Qty	Description	Page No
-						
	577135-0100	-		1	PIPE-LINE	**1-11**
020	1317254-0300	-		1	ELECTRICAL CABINET	**1-13, 1-15, 1-17**
030	1317751-0100	-		1	CABLE HARNESS	**1-39**
040	1260428-0200	-		1	FRAME	**1-47, 1-49**
045	1095928-0100	-		1	COOLER	**1-61**
050	1095931-0400	-		1	PAPER WEB PATH	**1-65**
060	2526514-0100	-		1	APPLICATORS	**1-99**
070	1095951-0500	-		1	DOORS AND COVERS	**1-161, 1-163**
080	1185008-0300	-		1	MAGAZINE	**1-181**
090	1185049-0300	-		1	VALVE PANEL	**1-241, 1-243**
100	1334322-0100	-		2	BENDING ROLLER WITH FLANGES	**1-89**
110	649060-0600	-		1	ELECTRIC EQUIPMENT	**1-251**
120	2526515-0100	-		1	OPENING SPECIFICATION	**1-253**
130	1538982-0100	-		1	TEMPLATE	**1-255**
140	2526555-0100	-		1	COMPONENT LIST	**1-257**

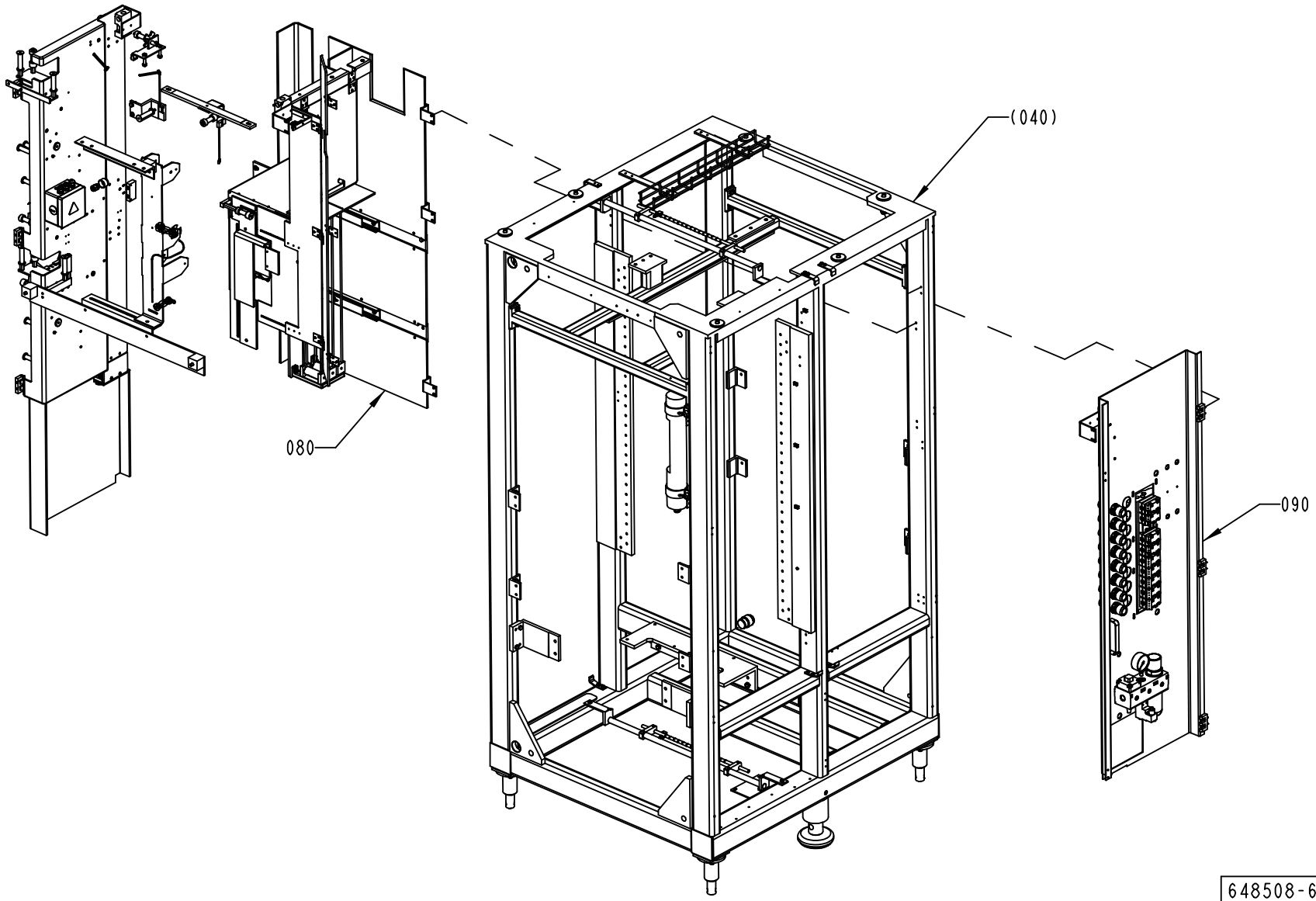

648508-6
ECM 103833

ECM: 103833 - 20020910
Group number: 648508-0600
Assembly Drawing: 648508-6_3_AA

This list covers pages from 1-2 to 1-9

Pos	Part No	SP	UN	Qty	Description	Page No
-						
	577135-0100	-		1	PIPE-LINE	**1-11**
020	1317254-0300	-		1	ELECTRICAL CABINET	**1-13, 1-15, 1-17**
030	1317751-0100	-		1	CABLE HARNESS	**1-39**
040	1260428-0200	-		1	FRAME	**1-47, 1-49**
045	1095928-0100	-		1	COOLER	**1-61**
050	1095931-0400	-		1	PAPER WEB PATH	**1-65**
060	2526514-0100	-		1	APPLICATORS	**1-99**
070	1095951-0500	-		1	DOORS AND COVERS	**1-161, 1-163**
080	1185008-0300	-		1	MAGAZINE	**1-181**
090	1185049-0300	-		1	VALVE PANEL	**1-241, 1-243**
100	1334322-0100	-		2	BENDING ROLLER WITH FLANGES	**1-89**
110	649060-0600	-		1	ELECTRIC EQUIPMENT	**1-251**
120	2526515-0100	-		1	OPENING SPECIFICATION	**1-253**
130	1538982-0100	-		1	TEMPLATE	**1-255**
140	2526555-0100	-		1	COMPONENT LIST	**1-257**

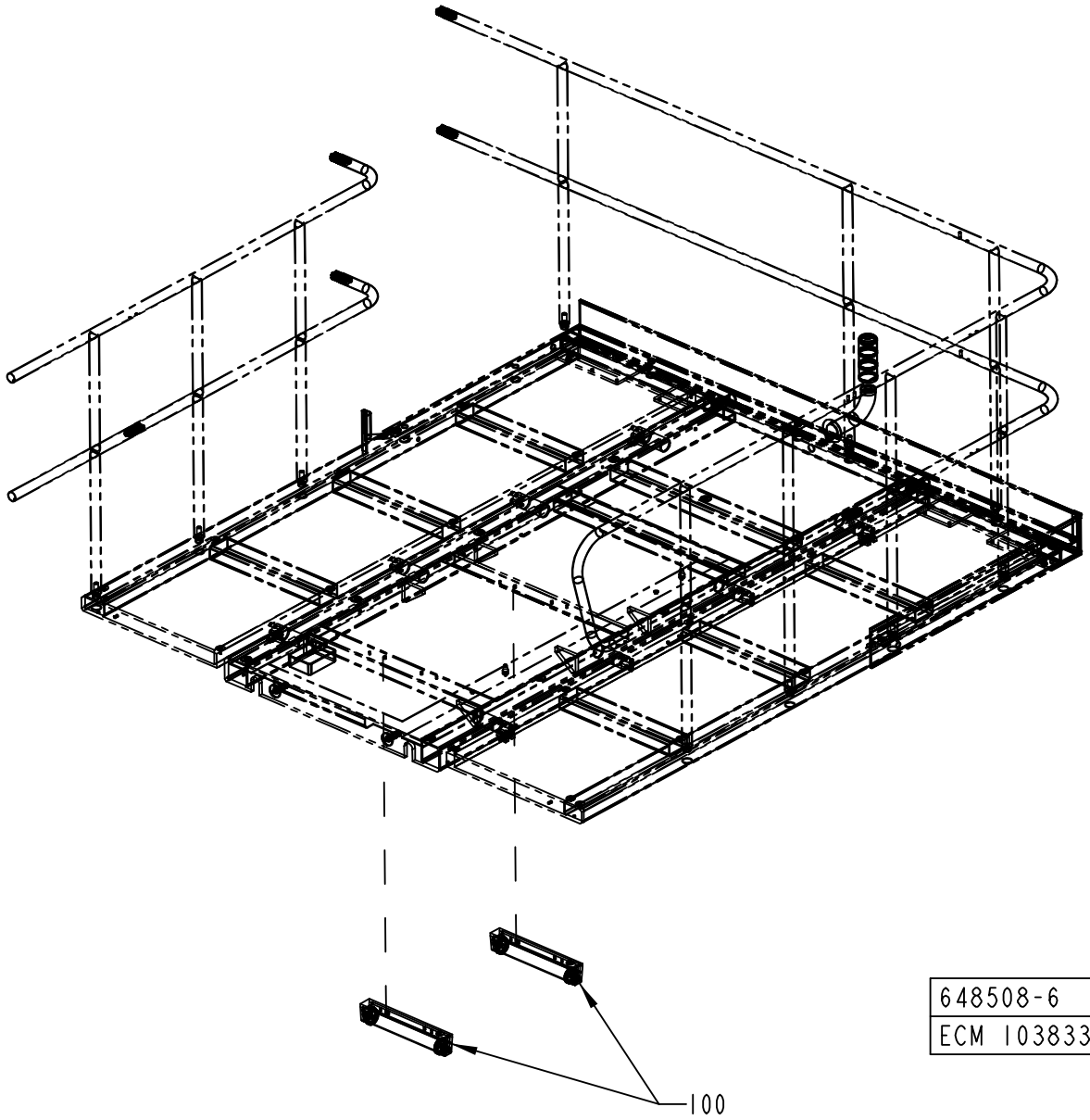

648508-6
ECM 103833

ECM: 103833 - 20020910
Group number: 648508-0600
Assembly Drawing: 648508-6_4_AA

This list covers pages from 1-2 to 1-9

Pos	Part No	SP	UN	Qty	Description	Page No
-						
	577135-0100	-		1	PIPE-LINE	**1-11**
020	1317254-0300	-		1	ELECTRICAL CABINET	**1-13, 1-15, 1-17**
030	1317751-0100	-		1	CABLE HARNESS	**1-39**
040	1260428-0200	-		1	FRAME	**1-47, 1-49**
045	1095928-0100	-		1	COOLER	**1-61**
050	1095931-0400	-		1	PAPER WEB PATH	**1-65**
060	2526514-0100	-		1	APPLICATORS	**1-99**
070	1095951-0500	-		1	DOORS AND COVERS	**1-161, 1-163**
080	1185008-0300	-		1	MAGAZINE	**1-181**
090	1185049-0300	-		1	VALVE PANEL	**1-241, 1-243**
100	1334322-0100	-		2	BENDING ROLLER WITH FLANGES	**1-89**
110	649060-0600	-		1	ELECTRIC EQUIPMENT	**1-251**
120	2526515-0100	-		1	OPENING SPECIFICATION	**1-253**
130	1538982-0100	-		1	TEMPLATE	**1-255**
140	2526555-0100	-		1	COMPONENT LIST	**1-257**

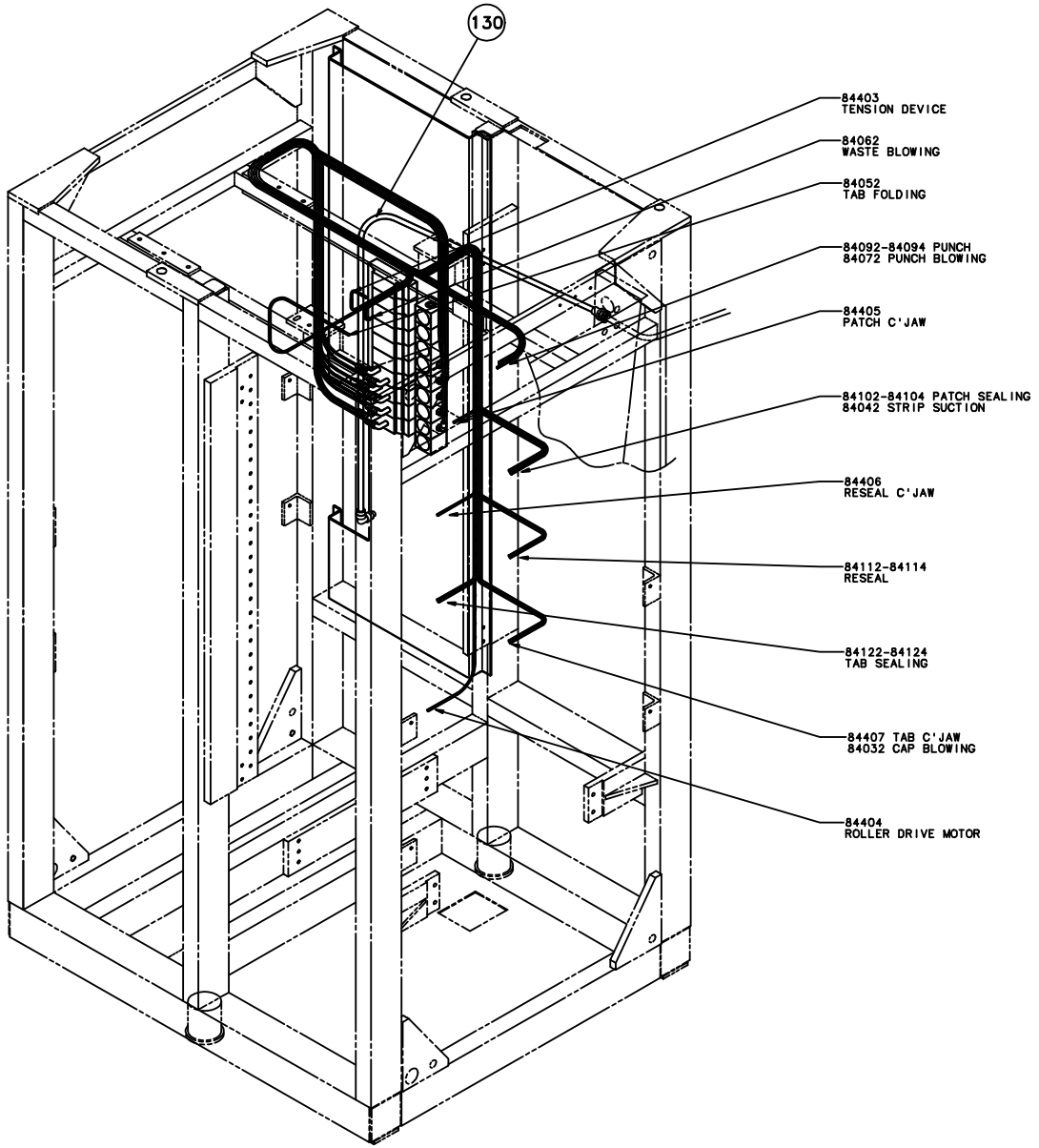
130
84403
TENSION DEVICE
84062
WASTE BLOWING
84052
TAB FOLDING
84092-84094 PUNCH
84072 PUNCH BLOWING
84405
PATCH C'JAW
84102-84104 PATCH SEALING
84042 STRIP SUCTION
84406
RESEAL C'JAW
84112-84114
RESEAL
84122-84124
TAB SEALING
84407 TAB C'JAW
84032 CAP BLOWING
84404
ROLLER DRIVE MOTOR

ECM: 71157 - 19971223
Group number: 577135-0100
Assembly Drawing: 577135-1_1_AC

Pos	Part No	SP	UN	Qty	Description	Page No
-						
130	90166-0068	-	MM	3000	TUBE 12 MM PA BLUE	

Pos	Part No	SP	UN	Qty	Description	Page No

ELECTRICAL CABINET

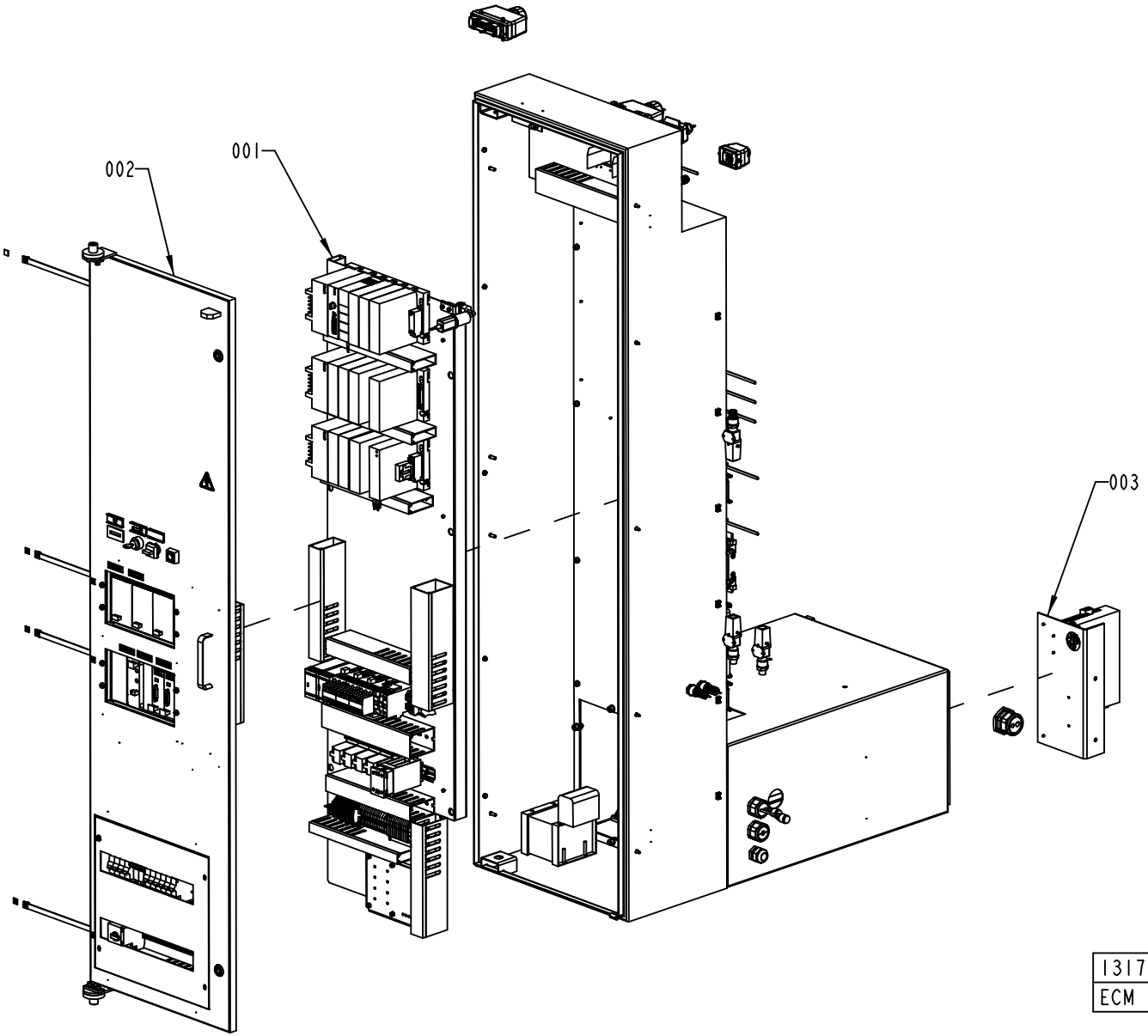

ECM: 141872 - 20040119
Group number: 1317254-0300
Assembly Drawing: 1317254-4_1_AB

This list covers pages from 1-12 to 1-17

Pos	Part No	SP	UN	Qty	Description	Page No
-						
001	1317354-0300	-		1	MOUNTING PLATE	**1-19, 1-21, 1-23**
002	1317355-0300	-		1	SWING FRAME	**1-25, 1-27**
003	1524707-0200	-		1	ELECTRIC EQUIPMENT	**1-31**
004	2641419-0100	-		1	SOFTWARE	**1-33**
010	1317750-0000	-		1	CABINET	
020	1255952-0000	-		1	BOX FOR TPIH	
030	1129867-0000	-		1	SHEET	
040	1140314-0000	-		2	STOP LUG	
070	731049-0000	-		4	SLIDING STRIP TPIH	
100	1140053-0000	-		6	SPACER	
110	929607-0000	-		3	EARTH BAR	
120	1346824-0000	-		1	INSERT	
130	1260561-0000	-		1	HOLDER	
140	1317657-0000	-		2	INSERT	
150	979974-0000	-		1	INSERT	
230	90002-0009	-		1	BLANK-OFF PLUG, PR 18.6 SKINDICHT-BLK11	
235	90099-0119	-		1	NUT, PR 28,3 (PG21)	
250	90110-0122	-		2	COVER, 09 06 000 9957	
256	90110-0152	-		2	CABLE HOOD 24-POL 70.352.2428.1	
260	90110-0153	-		2	CHASSIS HOUSING 24-P CHI 24, 121240 0000	
265	90110-0157	-		2	CABLE HOOD 6-POL 70.352.0628.1	
280	353241-0008	-		1	EXTENDED WITHOUT INSERT, PG 16/29	
285	2517080-0000	-		1	INSERT	
290	90110-0166	-		4	CHASSIS HOUSING 310144-33	
310	90110-0218	-		4	CHASSIS HOUSING 310145-33	
320	90110-0217	-		1	CABLE HOOD 10-POL 71.352.1028.1	
330	90110-0349	-		6	COOVER/TOOL PX 0733	
340	90135-0039	-		3	SHIELD CLIP KLBU 4-13.5	
350	90143-0057	-	MM	7000	STRIP EMKA 1011-05 21X11MM	
360	90143-0073	-	MM	1800	RUBBER STRIP	
370	90181-0046	-	MM	490	CABLE DUCT, 60X60MM	
380	312105-0327	-		13	SCREW M6S ISO 4017 M5X12 A480	
385	312115-0291	-		2	SCREW ISO4762 M4X12 A4	
390	312115-0323	-		4	SCREW ISO4762 M5X8 A4	
400	312115-0449	-		8	SCREW ISO4762 M8X16 A4	
410	312155-0291	-		12	SCREW EN 10642 MF6S M4X12 A480	
415	312605-0312	-		4	HEXAGON NUT, M6M M4 A280	
420	312605-0316	-		20	HEXAGON NUT, M6M M6 A280	
425	315105-0136	-		6	WASHER BRB4,3XRFR	
430	315105-0146	-		15	WASHER BRB5,3X10RFR	
440	315105-0153	-		12	WASHER BRB6,4X12RFR	
445	315105-0165	-		8	WASHER BRB8,4X16RFR	
450	352103-0108	-		3	CABLE GLAND, ST 13,5 , PR20,4/PG13,5	
460	353240-0006	-		4	SCREW CAP PG 29	
470	352103-0116	-		1	CABLE GLAND, ST 21, PR28,3/PG21	
480	352103-0111	-		1	CABLE GLAND, ST 16, PR22,5/PG16	
490	359005-0050	-		1	MARKING LABEL KIT X, 04.841.4550.0	
500	359005-0010	-		5	MARKING LABEL KIT 0 - 9, 04.841.2150.0	
510	312125-0287	-		11	SCREW ISO 1207 M4X8 A4	
515	90099-0104	-		1	NUT, PR 15,2 (PG9)	
520	352113-0205	-		11	ANCHOR PLATES FOR STRIPS, TYPE TM2S8-C10	
530	90099-0117	-		2	NUT, PR 18,6 (PG11)	
540	90012-0063	-		6	CABLE GLAND PR 15,2	
545	353249-0010	-		6	INSERT, SINGEL HOLE, EK 152/11	
550	90152-0033	-	MM	2650	SPIRAL CONDUIT FOR PR 15,2(PG 9)	
555	90110-0372	-		3	PLUG HOOD	
560	90099-0191	-		2	HEXAGON NYLON NUT, M4X0,7	
580	90110-0370	-		3	BASE HOUSING	
590	90062-0021	-		3	LOCK WASHER DIN 6797 TYPE A 5,3	
A8201	90458-0397	A		1	SERVO DRIVE DMC2 50720 P	
A8205	67600-0501	A		1	TPIH 2000 GENERATOR	
10	*542036-0000*	-			*LABEL "PART NO" 84X140MM*	
500	*565140-0001*	-			*COMPONENTS WITHOUT TP-NO*	
510	*565144-0000*	-			*LABEL LED*	
520	*565145-0000*	-			*LABEL X1/X2*	
530	*565146-0000*	-			*INSERT*	
540	*565147-0000*	-			*RAIL L*	
550	*565148-0000*	-			*RAIL R*	
560	*565149-0000*	-			*RAIL*	
570	*565150-0000*	-			*FRONT HANDLE*	
580	*565151-0000*	-			*BOX BOTTOM*	
590	*565152-0000*	-			*FRAME*	
600	*565153-0000*	-			*COMPLETE BOX*	
610	*565154-0000*	-			*BOX UPPER PART*	
F100	*67577-0501*	-			*POWER CARD*	
F200	*67578-0101*	-			*TPIH FAN HOLDER*	
F300	*67579-0501*	-			*CONTROL CARD*	
F400	*67580-0201*	-			*FRONT PANEL*	
A8205:1	90110-0121	-		1	FEMALE INSERT GDS A-H 09 06 215 2811	
A8205:2	90110-0121	-		1	FEMALE INSERT GDS A-H 09 06 215 2811	
A8216	90430-0070	A		1	FREQ.CONV. 6SE3213-6CA40	
B8202	90458-0672	A		1	PROXIMITY SENSOR E2E2-X5MB1-5M	
T8250	90245-0045	A		1	TRANSFORMER, 1-PHASE 220V/48V 500VA	

Machine Type Group Description Used-In Group Number Page No

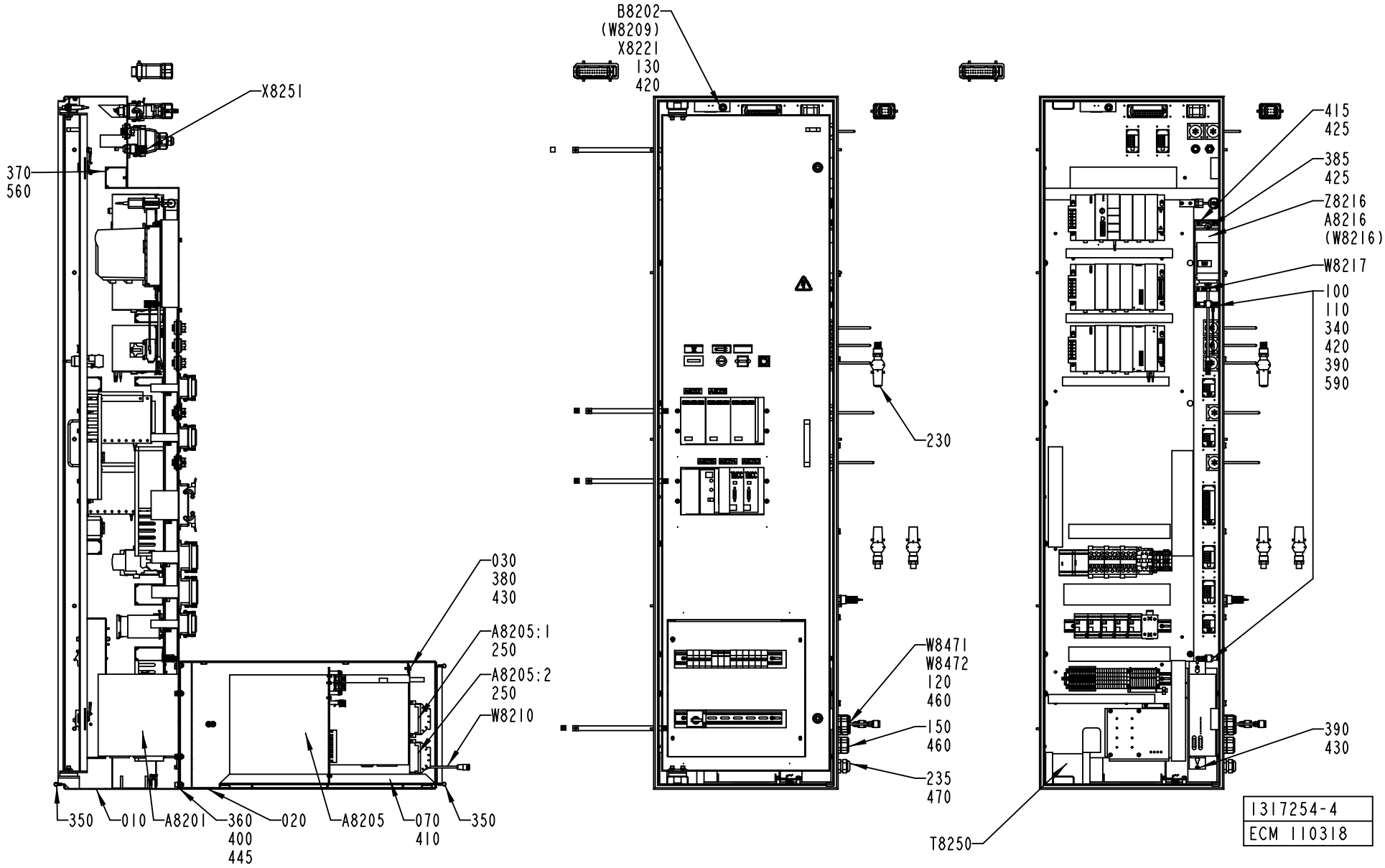
B8202
(W8209)
X8221
130
420
X8251
370
560
030
380
430
A8205:1
250
A8205:2
250
W8210
350
010
A8201
360
400
445
020
A8205
070
410
350
230
W8471
W8472
120
460
150
460
235
470
T8250
415
425
385
425
Z8216
A8216
(W8216)
W8217
100
110
340
420
390
590
390
430
1317254-4
ECM 110318

Pos	Part No	SP	UN	Qty	Description	Page No
- (Cont'd)						
W8201	351150-0419	-	MM	3500	CABLE OLFLEX 5X2,5 MM2 LIGHT/GREY	
W8202	351150-0416	-	MM	3500	CABLE OLFLEX 12X1,5 MM2 LIGHT/GREY	
W8203	90220-0183	-	MM	3500	SCR. CABLE 2X0,34MM2	
W8210	548770-0007	A		1	COAXIAL CABLE L=3000 MM	
W8217	1143884-0000	-		1	COPPER BRAID	
W8411	351160-0104	-	M	4	CABLE AWM 1X1,5 MM2 DARKBLUE	
W8412	351160-0104	-	M	4	CABLE AWM 1X1,5 MM2 DARKBLUE	
W8445	90220-0104	-	M	5	SCR. CABLE 4X1,5MM2	
W8460	90220-0034	-	M	3	THERMOCOUPLE CABLE K/ 2X0,5MM2	
W8471	548770-0001	A		1	COAXIAL CABLE L=5000MM	
W8472	548770-0001	A		1	COAXIAL CABLE L=5000MM	
X106	90110-0159	-		1	MALE INSERT 70.310.0640.0	
X206	90110-0150	-		1	MALE INSERT 121110 0000	
X8201:1	90110-0159	-		1	MALE INSERT 70.310.0640.0	
X8201:2	90110-0163	-		1	FEMALE INSERT 70 300 0640 0	
X8202:1	90110-0150	-		1	MALE INSERT 121110 0000	
X8202:2	90110-0164	-		1	FEMALE INSERT 70 105 2453 3	
X8203:1	90110-0216	-		1	MALE INSERT 70 310 1040 0	
X8203:2	90110-0215	-		1	SOCKET	
X8204	90110-0215	-		1	SOCKET	
X8205	90110-0236	-		1	CHASSIS CONTACT PX0767/S	
X8206	90110-0236	-		1	CHASSIS CONTACT PX0767/S	
X8207	90110-0236	-		1	CHASSIS CONTACT PX0767/S	
X8208	90110-0161	-		1	FEMALE INSERT 70 105 0653 0	
X8209	90110-0236	-		1	CHASSIS CONTACT PX0767/S	
X8210	90110-0161	-		1	FEMALE INSERT 70 105 0653 0	
X8211	90110-0236	-		1	CHASSIS CONTACT PX0767/S	
X8212	90110-0164	-		1	FEMALE INSERT 70 105 2453 3	
X8213	90110-0215	-		1	SOCKET	
X8214	90110-0215	-		1	SOCKET	
X8215	90110-0161	-		1	FEMALE INSERT 70 105 0653 0	
X8216	90110-0236	-		1	CHASSIS CONTACT PX0767/S	
X8221	90195-0019	-		1	TERMINAL BLOCK, 1978.2	
X8251	90110-0236	-		1	CHASSIS CONTACT PX0767/S	
X8410	90110-0296	-		3	CONTACT SCREW	
Z8216	90430-0326	A		1	FILTER 6SE3290-0BA87-0FB2	

Pos	Part No	SP	UN	Qty	Description	Page No

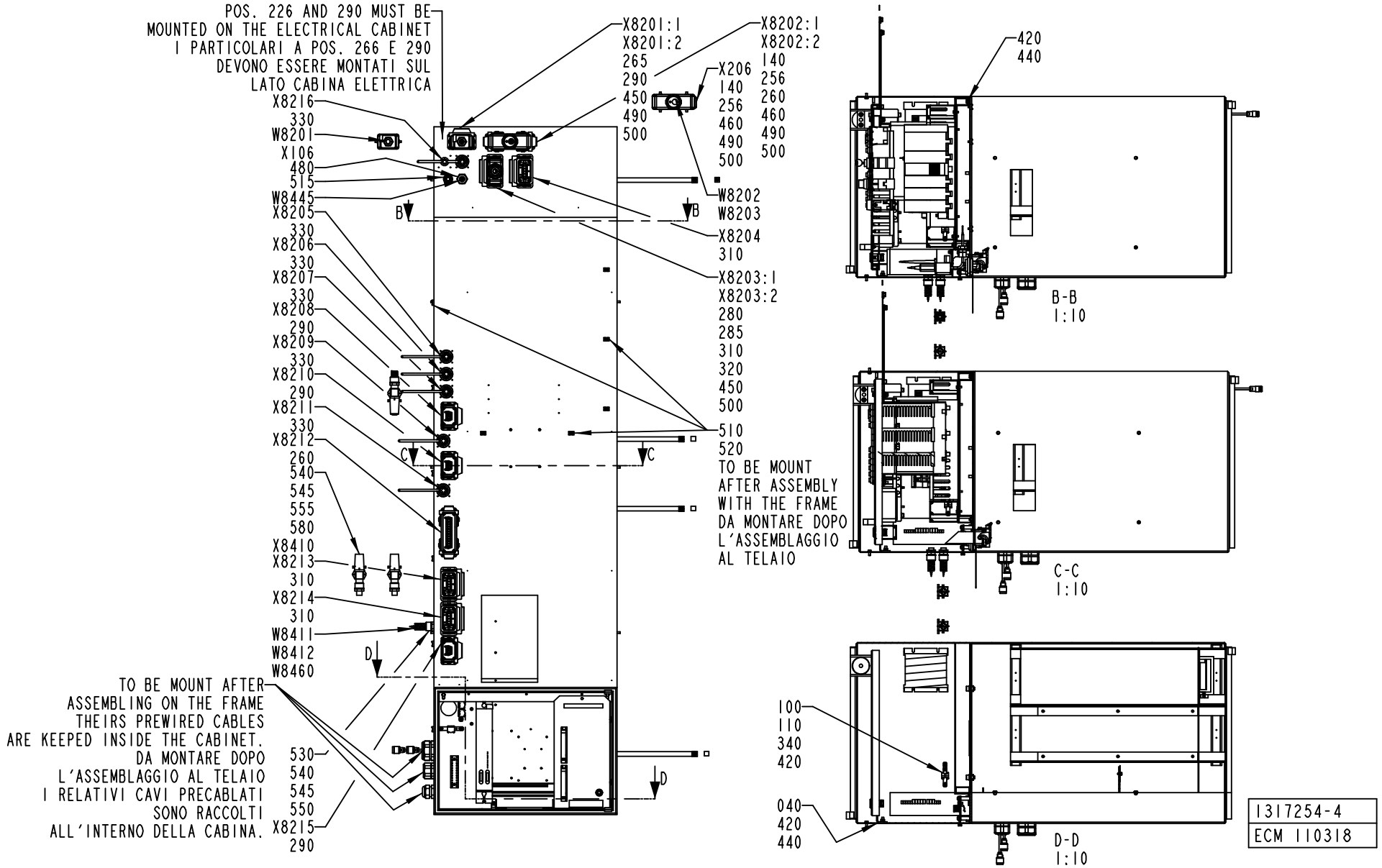
POS. 226 AND 290 MUST BE MOUNTED ON THE ELECTRICAL CABINET
I PARTICOLARI A POS. 266 E 290 DEVONO ESSERE MONTATI SUL LATO CABINA ELETTRICA
X8216
330
W8201
X106
480
515
W8445
X8205
330
X8206
330
X8207
330
X8208
290
X8209
330
X8210
290
X8211
330
X8212
260
540
545
555
580
X8410
X8213
310
X8214
310
W8411
W8412
W8460
X8201:1
X8201:2
265
290
450
490
500
X206
140
256
460
490
500
X8202:1
X8202:2
140
256
260
460
490
500
W8202
W8203
X8204
310
X8203:1
X8203:2
280
285
310
320
450
500
510
520
TO BE MOUNT AFTER ASSEMBLY WITH THE FRAME
DA MONTARE DOPO L'ASSEMBLAGGIO AL TELAIO
B
C
D
TO BE MOUNT AFTER ASSEMBLING ON THE FRAME THEIRS PREWIRED CABLES ARE KEEPED INSIDE THE CABINET.
DA MONTARE DOPO L'ASSEMBLAGGIO AL TELAIO I RELATIVI CAVI PRECABLATI SONO RACCOLTI ALL'INTERNO DELLA CABINA.
530
540
545
550
X8215
290
420
440
B-B
1:10
C-C
1:10
100
110
340
420
040
420
440
D-D
1:10
1317254-4
ECM 110318

Pos	Part No	SP	UN	Qty	Description	Page No	Pos	Part No	SP	UN	Qty	Description	Page No

SEE PREVIOUS LISTS PAGES: 1-13, 1-15.

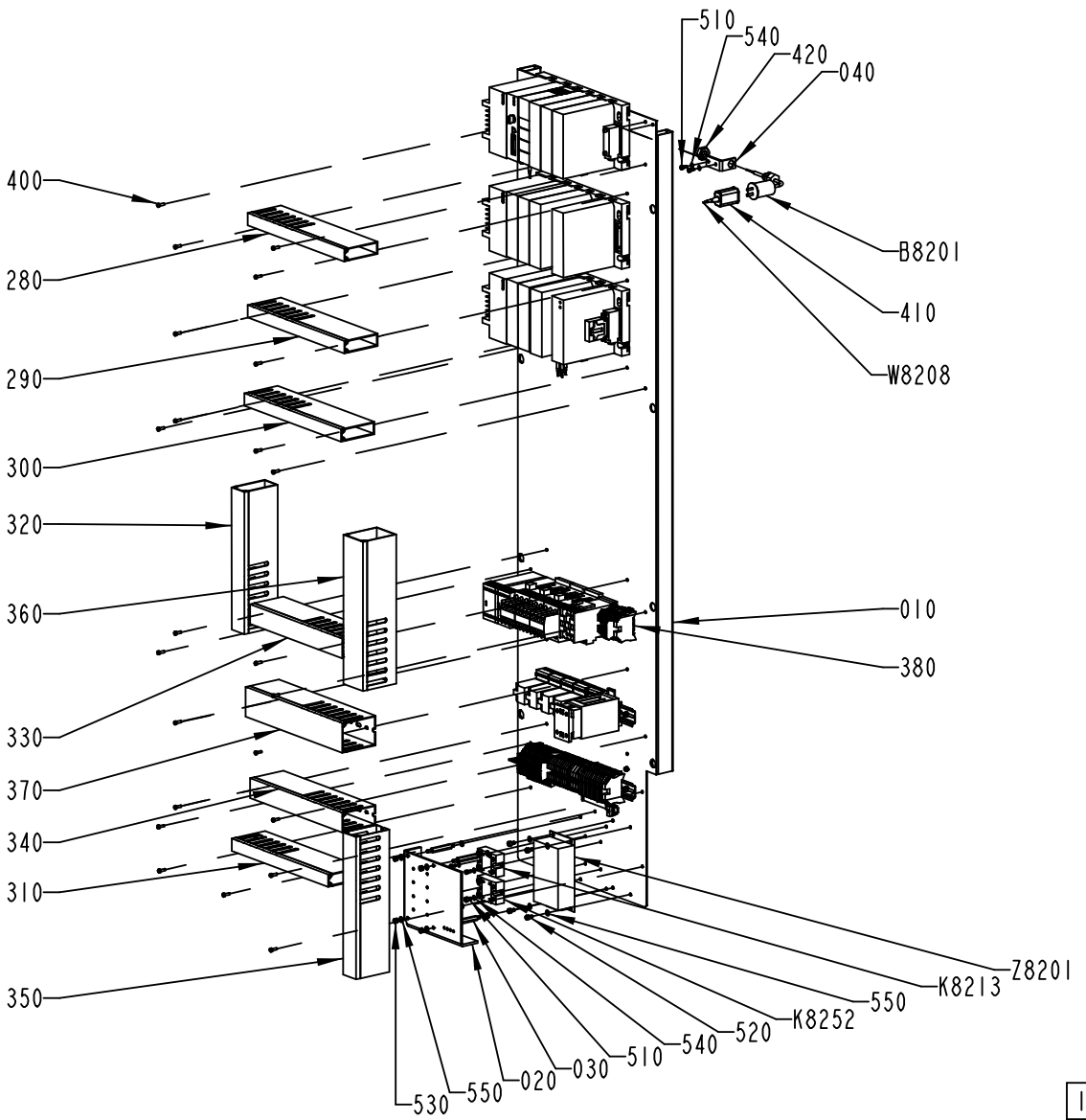

1317354-3
ECM 103831

ECM: 106186 - 20020214
Group number: 1317354-0300
Assembly Drawing: 1317354-3_1_AA

This list covers pages from 1-18 to 1-23

Pos	Part No	SP	UN	Qty	Description	Page No
-						
010	1317357-0000	-		1	MOUNTING PLATE	
020	1317483-0000	-		1	TOUCH GUARD	
030	1317484-0000	-		4	STUD SCREW	
040	1317485-0000	-		1	ANGLE BRACKET	
210	90031-0302	A		1	I/O BUS TERMINATION PLUG	
270	90129-0006	-		5	BASE, S3-B	
280	90181-0052	-	MM	300	CABLE DUCT, 25X80MM	
290	90181-0052	-	MM	300	CABLE DUCT, 25X80MM	
300	90181-0052	-	MM	300	CABLE DUCT, 25X80MM	
310	90181-0052	-	MM	250	CABLE DUCT, 25X80MM	
320	90181-0053	-	MM	1400	CABLE DUCT, 40X80MM	
330	90181-0053	-	MM	300	CABLE DUCT, 40X80MM	
340	90181-0053	-	MM	300	CABLE DUCT, 40X80MM	
350	90181-0053	-	MM	270	CABLE DUCT, 40X80MM	
360	90181-0054	-	MM	1285	CABLE DUCT, 60X80MM	
370	90181-0054	-	MM	300	CABLE DUCT, 60X80MM	
380	90194-0152	-		1	SIGN, EARTH	
400	90287-0124	-		24	SCREW PAN HEAD MSCS M4X12 NYLON	
410	90326-0012	-		1	PROTECTIVE COVER, T31A4618	
420	90330-0034	-		1	NUT, HEXAGON, G1/4	
510	312115-0287	-		17	SCREW ISO4762 M4X8 A4	
520	312115-0323	-		12	SCREW ISO4762 M5X8 A4	
530	312605-0314	-		4	HEXAGON NUT, M6M M5 A280	
540	315105-0136	-		19	WASHER BRB4,3XRFR	
550	315105-0146	-		18	WASHER BRB5,3X10RFR	
560	353021-0120	-		14	FEED THROUGH TERMINAL, 10215.8	
570	353022-0002	-		12	NEUTRAL TERMINAL, 10107.8	
580	353024-0205	-		12	EARTH TERMINAL, 1010.1	
590	353024-0206	-		2	EARTH TERMINAL, 1010.2	
600	353031-0203	-		5	END SUPPORT, WEW 35/2	
605	353032-0004	-		1	END PLATE WAP 2,5-10 BEIGE	
610	353032-0010	-		3	END PLATE WAP	
620	353033-0104	-		2	END PLATE, 10502.8	
630	353034-0030	-		3	BRIDGE CONNECTOR WQV 2,5/10, 10544.6	
640	353041-0001	-	MM	100	RAIL 10X3MM SSCH	
650	353041-0104	-		1	CLAMPING YOKE PZB 4 K	
660	353042-0004	-	MM	305	RAIL TS 35/7,5	
670	353042-0004	-	MM	305	RAIL TS 35/7,5	
680	353042-0004	-	MM	305	RAIL TS 35/7,5	
690	359011-0821	-		1	SET OF SIGNS 6-FW 1-50	
700	359011-0807	-		5	MARKING PLATES 5-FW 1-50	
A8202	90119-0089	-		1	SAFETY RELAY, JSBT4 24VDC	
A8252	90119-0084	-		1	EXPANSION RELAY, JSR1T-500MS	
A8300:1	90031-0050	A		1	BASEPLATE, 5-SLOT	
A8300:2	90031-0052	A		1	BASEPLATE, 5-SLOT	
	90031-0302	*-*		*1*	*I/O BUS TERMINATION PLUG*	
A8300:3	90031-0052	A		1	BASEPLATE, 5-SLOT	
	90031-0302	*-*		*1*	*I/O BUS TERMINATION PLUG*	
A8301	90031-0058	A		1	PLC, DIGITAL INPUT MODULE	
A8302	90031-0059	A		1	PLC, DIGITAL OUTPUT MODULE	
A8303	90031-0059	A		1	PLC, DIGITAL OUTPUT MODULE	
A8304	90031-0057	A		1	PLC, DIGITAL INPUT MODULE	
A8305	90031-0057	A		1	PLC, DIGITAL INPUT MODULE	
A8306	90031-0057	A		1	PLC, DIGITAL INPUT MODULE	
A8308	90031-0065	A		1	PLC,TEMPERATUR CONTROL,INPUT MODULE 8 PT	
A8309	90031-0059	A		1	PLC, DIGITAL OUTPUT MODULE	
A8310	90031-0059	A		1	PLC, DIGITAL OUTPUT MODULE	
A8311	90031-0059	A		1	PLC, DIGITAL OUTPUT MODULE	
A8313	90031-0062	A		1	PLC, ANALOG OUTPUT MODULE 8PT/CURR/VOLT	
B8201	90326-0053	A		1	THERMOCOUPLE, 12826-35	
D8301	90031-0075	A		1	CPU363, SERIAL COMMUNICATION	
D8302	90031-0031	A		1	ENHANCED GENIUS COMMUNICATION MODULE	
G8301	90031-0068	A		1	PLC, POWER SUPPLY	
	90031-0301	*A*		*1*	*SPARE BATTERY CPU,PCM,2PCS*	
	352551-0134	*A*		*1*	*FINE-WIRE FUSE 2 A SLOW;5X20MM*	
G8302	90031-0068	A		1	PLC, POWER SUPPLY	
	90031-0301	*A*		*1*	*SPARE BATTERY CPU,PCM,2PCS*	
	352551-0134	*A*		*1*	*FINE-WIRE FUSE 2 A SLOW;5X20MM*	
G8303	90031-0068	A		1	PLC, POWER SUPPLY	
	90031-0301	*A*		*1*	*SPARE BATTERY CPU,PCM,2PCS*	
	352551-0134	*A*		*1*	*FINE-WIRE FUSE 2 A SLOW;5X20MM*	
K8201	90075-0125	-		1	CONTACTOR, 7,5KW 24VDC	
	90075-0313	*A*		*1*	*AUXILIARY CONTACT K&M 22 DILM.2NO;2NC*	
K8204	90075-0125	-		1	CONTACTOR, 7,5KW 24VDC	
	90075-0313	*A*		*1*	*AUXILIARY CONTACT K&M 22 DILM.2NO;2NC*	
K8205	90075-0125	-		1	CONTACTOR, 7,5KW 24VDC	
	90075-0313	*A*		*1*	*AUXILIARY CONTACT K&M 22 DILM.2NO;2NC*	
K8206	90075-0127	-		1	NTACTOR, 4KW 24VDC	
K8207	90119-0056	-		1	RELAY, AUXILIARY MK3P5-S 24VDC	
K8207	90119-0056	-		1	RELAY, AUXILIARY MK3P5-S 24VDC	
K8208	90119-0056	-		1	RELAY, AUXILIARY MK3P5-S 24VDC	
K8208	90119-0056	-		1	RELAY, AUXILIARY MK3P5-S 24VDC	
K8209	90119-0056	-		1	RELAY, AUXILIARY MK3P5-S 24VDC	

Machine Type | Group Description | Used-In | Group Number | Page No

MOUNTING PLATE

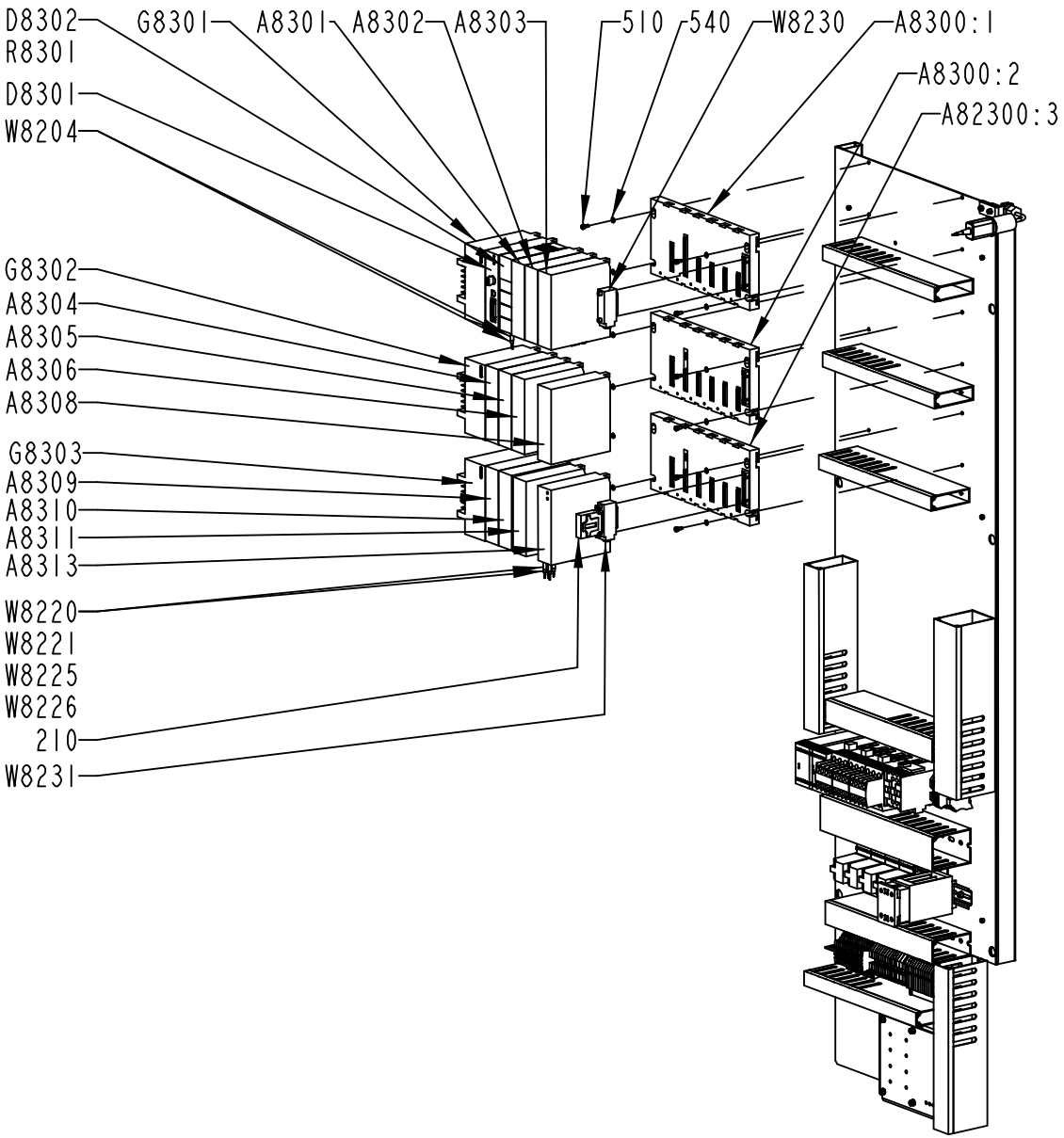

1317354-3
ECM 103831

Pos	Part No	SP	UN	Qty	Description	Page No
- (Cont'd)						
K8209	90119-0056	-		1	RELAY, AUXILIARY MK3P5-S 24VDC	
K8213	90119-0067	-		1	SOLID-STATE RELAY, H12WD4850	
K8214	90119-0056	-		1	RELAY, AUXILIARY MK3P5-S 24VDC	
K8214	90119-0056	-		1	RELAY, AUXILIARY MK3P5-S 24VDC	
K8250	90119-0056	-		1	RELAY, AUXILIARY MK3P5-S 24VDC	
K8250	90119-0056	-		1	RELAY, AUXILIARY MK3P5-S 24VDC	
K8252	90119-0067	-		1	SOLID-STATE RELAY, H12WD4850	
K8253	90119-0082	-		1	SSR 90119-67 + HEAT SINK	
R8301	90121-0116	-		1	RESISTANCE FIXED, 0,15 KOHM, 0,25 W	
V8201	353021-0122	-		1	TERMINAL DISCONNECTBLE, WTR 2,5 D	
V8202	353021-0122	-		1	TERMINAL DISCONNECTBLE, WTR 2,5 D	
V8203	353021-0122	-		1	TERMINAL DISCONNECTBLE, WTR 2,5 D	
W8204	90220-0183	-	M	1	SCR. CABLE 2X0,34MM2	
W8208	90220-0034	-	MM	1000	THERMOCOUPLE CABLE K/ 2X0,5MM2	
W8220	90220-0183	-	MM	1500	SCR. CABLE 2X0,34MM2	
W8221	90220-0183	-	MM	600	SCR. CABLE 2X0,34MM2	
W8225	90220-0183	-	M	1	SCR. CABLE 2X0,34MM2	
W8226	90220-0183	-	M	1	SCR. CABLE 2X0,34MM2	
W8230	90031-0305	A		1	I/O EXPANSION CABLE	
W8231	90031-0305	A		1	I/O EXPANSION CABLE	
X8250.1	353021-0212	-		3	FEED THROUGH TERMINAL, 10200.0	
X8250.2	353032-0004	-		1	END PLATE WAP 2,5-10 BEIGE	
X8250.3	353034-0030	-		1	BRIDGE CONNECTOR WQV 2,5/10, 10544.6	
X8250.4	353031-0203	-		1	END SUPPORT, WEW 35/2	
X8250.5	359011-0807	-		1	MARKING PLATES 5-FW 1-50	
Z8201	90024-0037	-		1	INPUT FILTER, 8 A	

Pos	Part No	SP	UN	Qty	Description	Page No

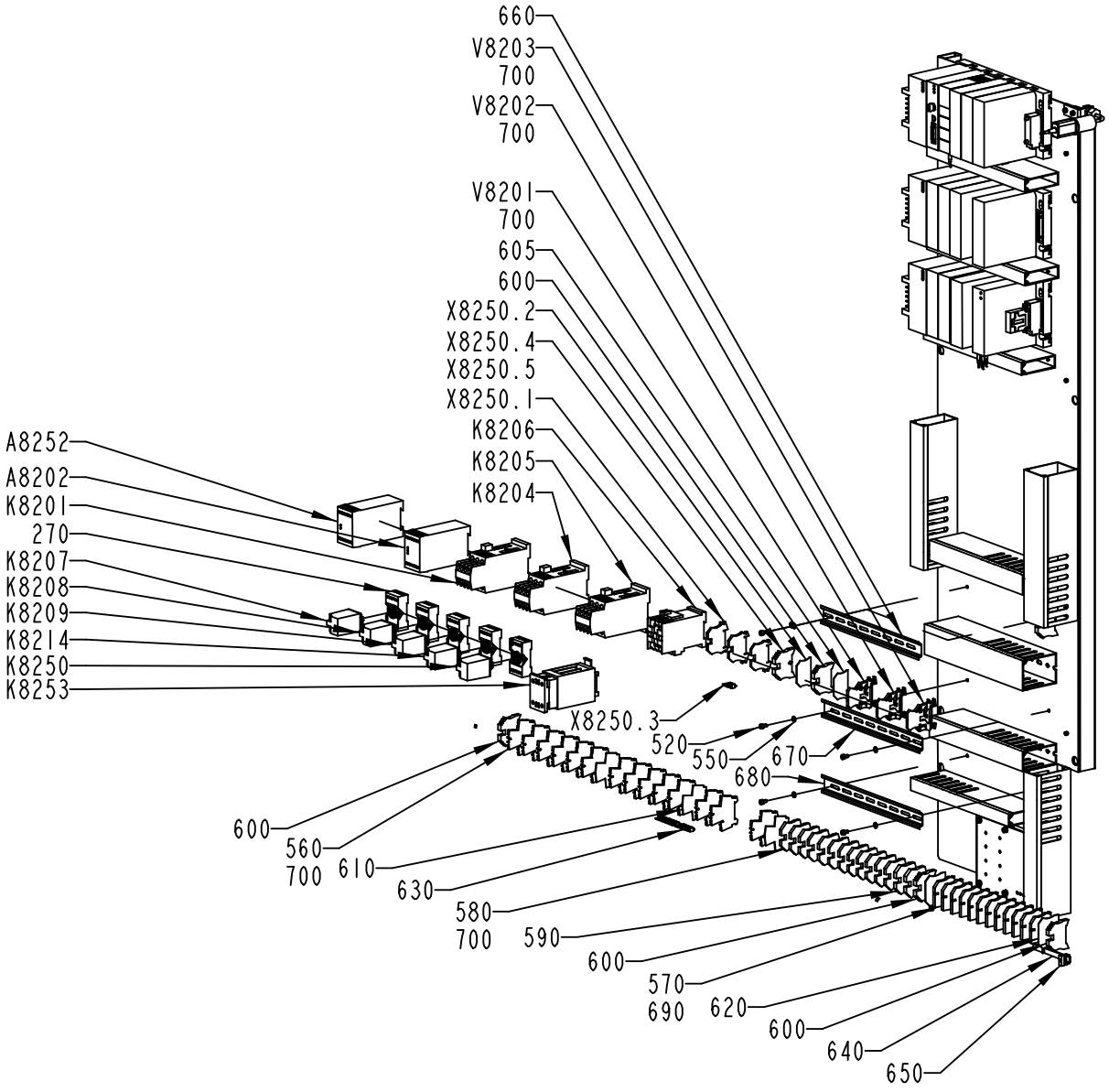

1317354-3
ECM 103831

ECM: 106186 - 20020214
Group number: 1317354-0300
Assembly Drawing: 1317354-3_3_AA

This list covers pages from 1-18 to 1-23

Pos	Part No	SP	UN	Qty	Description	Page No
SEE PREVIOUS LISTS PAGES: 1-19, 1-21.						

Pos	Part No	SP	UN	Qty	Description	Page No

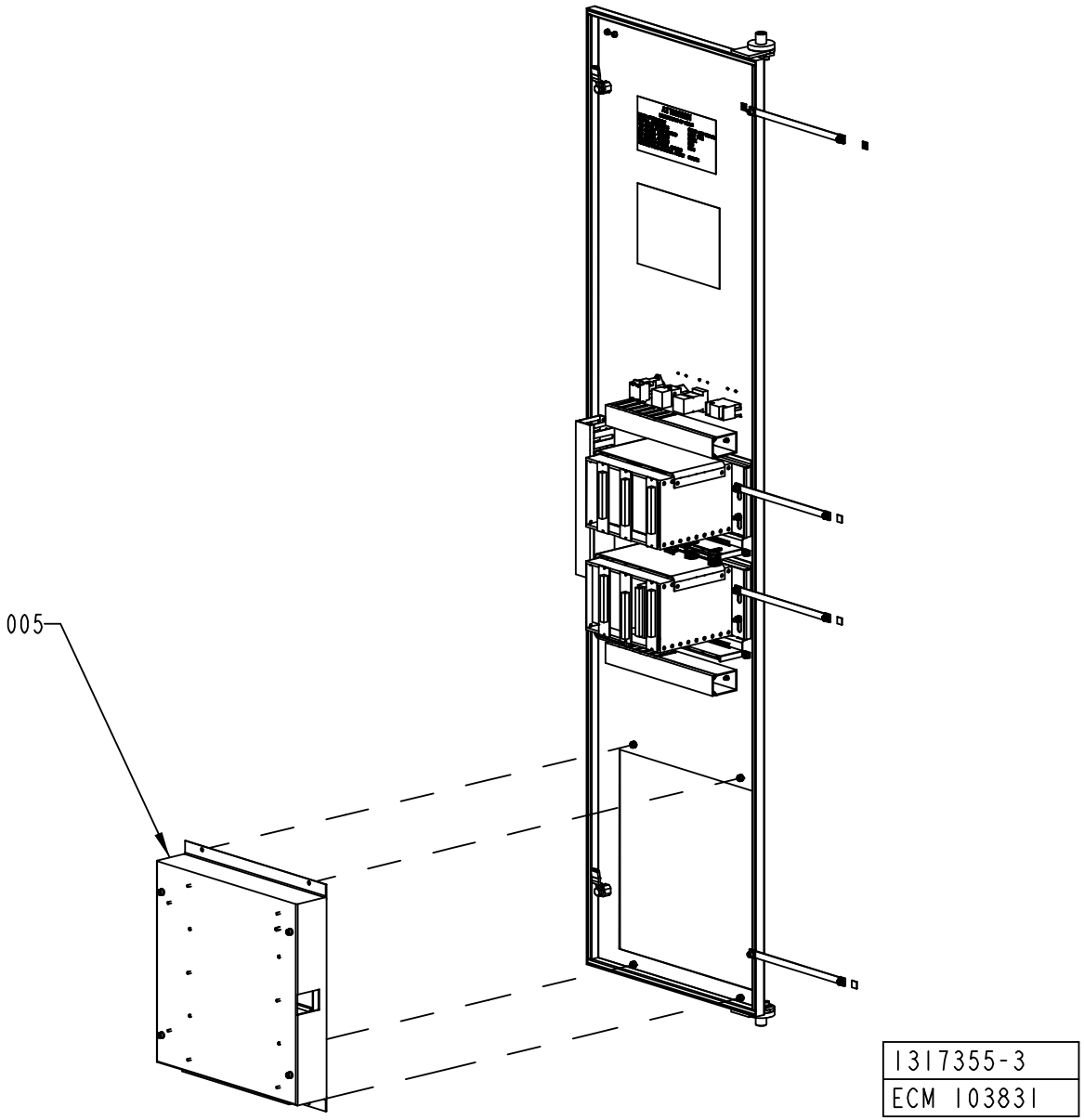
005
1317355-3
ECM 103831

ECM: 141871 - 20040119
Group number: 1317355-0300
Assembly Drawing: 1317355-3_1_AA

This list covers pages from 1-24 to 1-27

Pos	Part No	SP	UN	Qty	Description	Page No
-						
005	1317356-0300	-		1	FUSE BOX	**1-29**
040	67388-0101	-		2	FRONT MOUNTED RACK 42TE	
020 1	*542038-0001*	*-*		*1*	*COMPONENTS WITHOUT TP-NO*	
050	68262-0101	-		5	BACKPLANE FRONT RACK 8TE	
100	*543371-0000*	*-*		*1*	*CIRCUIT BOARD 8TE*	
110	*551927-0001*	*-*		*1*	*COMPONENTS WITHOUT TP-NO*	
120	*551928-0000*	*-*		*1*	*TERMINAL LABELS 8TE*	
060	68445-0103	-		1	FRONT PLATE 6TE	
010 3	*543921-0003*	*-*		*1*	*COMPONENTS WITHOUT TP-NO*	
075	68445-0105	-		1	FRONT PLATE 10TE	
010 5	*543921-0005*	*-*		*1*	*COMPONENTS WITHOUT TP-NO*	
150	1317358-0000	-		1	SWING FRAME	
160	1260440-0000	-		2	BRACKET	
170	495377-0000	-		2	BUSH	
180	1255955-0000	-		2	FRAME	
190	1279831-0000	-		2	COVER	
200	1317359-0000	-		1	BRACKET	
210	970215-0000	-		1	STOP BLOCK	
220	971346-0000	-		2	GUIDE PIN	
260	90017-0017	-		1	HANDLE, NO. 547-128	
280	90062-0022	-		12	LOCKING WASHER D=6,4/11	
300	90099-0191	-		6	HEXAGON NYLON NUT, M4X0,7	
330	90135-0035	-		4	EARTH WIRE, L=250 MM 16 MM2	
340	90135-0039	-		4	SHIELD CLIP KLBU 4-13.5	
350	90143-0060	-	MM	1000	EDGE STRIP 9,5X6,3MM BLACK PVC	
360	90181-0045	-	MM	390	CABLE DUCT, 40X60MM	
370	90181-0045	-	MM	390	CABLE DUCT, 40X60MM	
380	90181-0045	-	MM	505	CABLE DUCT, 40X60MM	
390	90194-0080	-		1	SIGN, IDENTIFICATION OF WIRING	
400	90194-0133	-		1	SIGN "DELIVERED DESIGN"	
410	90194-0152	-		8	SIGN, EARTH	
420	90237-0157	-		2	LOCK BOLT, 1000-230	
430	90237-0319	-		2	LOCK HOUSING, 1000-U134	
440	90237-0320	-		2	LOCK HOUSING, 1000-U136	
500	311520-0329	-		6	RIVET, BLANK 2,4X8	
510	312115-0287	-		2	SCREW ISO4762 M4X8 A4	
520	312115-0323	-		2	SCREW ISO4762 M5X8 A4	
530	312115-0366	-		6	SCREW ISO4762 M6X12 A4	
540	312125-0378	-		8	SCREW ISO 1207 M6X40 A4	
550	312605-0312	-		2	HEXAGON NUT, M6M M4 A280	
560	312605-0316	-		20	HEXAGON NUT, M6M M6 A280	
570	315105-0136	-		4	WASHER BRB4,3XRFR	
580	315105-0146	-		2	WASHER BRB5,3X10RFR	
590	315105-0153	-		34	WASHER BRB6,4X12RFR	
630	359240-0100	-		3	SIGN HOLDER FOR 359240-0001	
640	359241-0133	-		1	SIGN, SERVICE SWITCH	
650	359241-0201	-		1	SIGN "HOUR GLASS"	
660	359241-0471	-		1	SIGN" PULL TAB FUNCTION"	
670	359301-0512	-		1	BUTTON SIGN, INDEX TO POSITION	
680	359705-0015	-		1	WARNING SIGN ISO, RISK OF ELECTRIC SHOCK	
A8210	558230-0101	A		1	TMCC CONTROLLER	
100	*558370-0101*	*-*		*1*	*TMCC, MAIN PCB*	
110	*576102-0000*	*-*		*1*	*COMPONENTS WITHOUT TP-NO*	
120	*576103-0000*	*-*		*1*	*CASING*	
130	*576104-0000*	*-*		*1*	*FRONT PLATE*	
140	*542036-0000*	*-*		*1*	*LABEL "PART NO" 84X140MM*	
A8211	68450-0101	A		1	STEPPER MOTOR DRIVER	
040	*543326-0000*	*-*		*1*	*COVERPLATE HANDLE 5TE*	
700	*543897-0001*	*-*		*1*	*COMPONENTS WITHOUT TP-NO*	
710	*543898-0000*	*-*		*1*	*FRONT PANEL 14TE*	
720	*543899-0000*	*-*		*1*	*COOLING FLANGE*	
730	*543900-0000*	*-*		*1*	*COOLING FLANGE DISTANCE*	
740	*543901-0000*	*-*		*1*	*COOLING BLOCK*	
750	*543902-0000*	*-*		*1*	*SIGN BOARD*	
760	*556502-0000*	*-*		*1*	*LAYOUTS FOR PLATES,LABLES*	
F100	*68451-0101*	*-*		*1*	*STEP. MOT. DR. MAIN CARD*	
F110	*68452-0101*	*-*		*1*	*STEP. MOT. DR. AUX. CARD*	
A8212	68450-0101	A		1	STEPPER MOTOR DRIVER	
040	*543326-0000*	*-*		*1*	*COVERPLATE HANDLE 5TE*	
700	*543897-0001*	*-*		*1*	*COMPONENTS WITHOUT TP-NO*	
710	*543898-0000*	*-*		*1*	*FRONT PANEL 14TE*	
720	*543899-0000*	*-*		*1*	*COOLING FLANGE*	
730	*543900-0000*	*-*		*1*	*COOLING FLANGE DISTANCE*	
740	*543901-0000*	*-*		*1*	*COOLING BLOCK*	
750	*543902-0000*	*-*		*1*	*SIGN BOARD*	
760	*556502-0000*	*-*		*1*	*LAYOUTS FOR PLATES,LABLES*	
F100	*68451-0101*	*-*		*1*	*STEP. MOT. DR. MAIN CARD*	
F110	*68452-0101*	*-*		*1*	*STEP. MOT. DR. AUX. CARD*	
A8250	558230-0101	-		1	TMCC CONTROLLER	
100	*558370-0101*	*-*		*1*	*TMCC, MAIN PCB*	
110	*576102-0000*	*-*		*1*	*COMPONENTS WITHOUT TP-NO*	
120	*576103-0000*	*-*		*1*	*CASING*	
130	*576104-0000*	*-*		*1*	*FRONT PLATE*	

Machine Type | Group Description | Used-In | Group Number | Page No

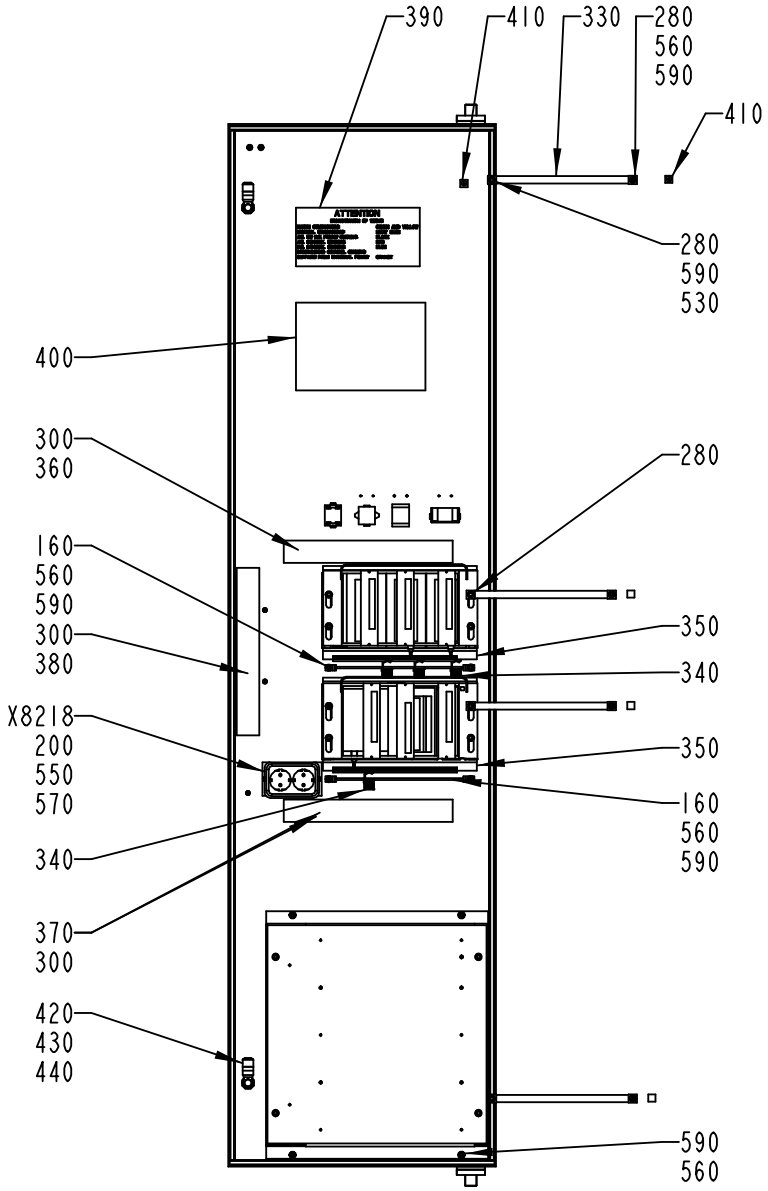

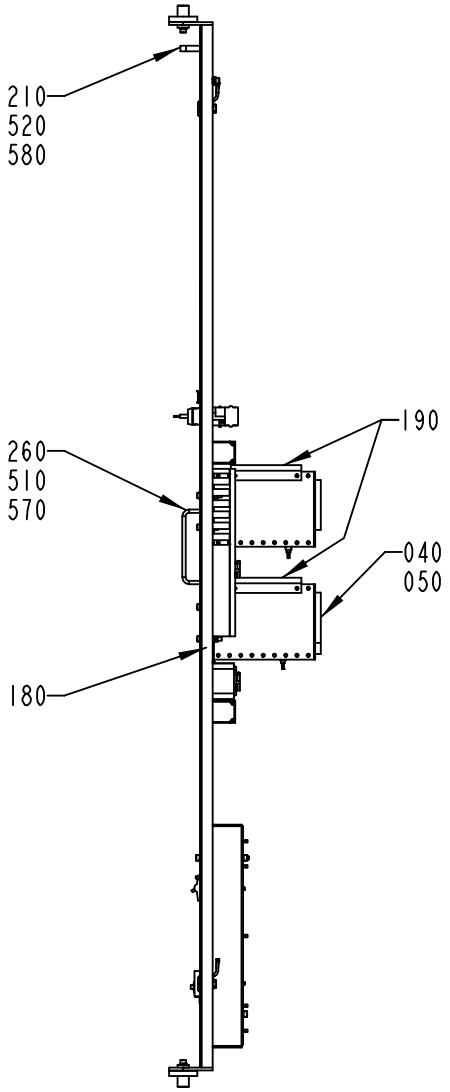

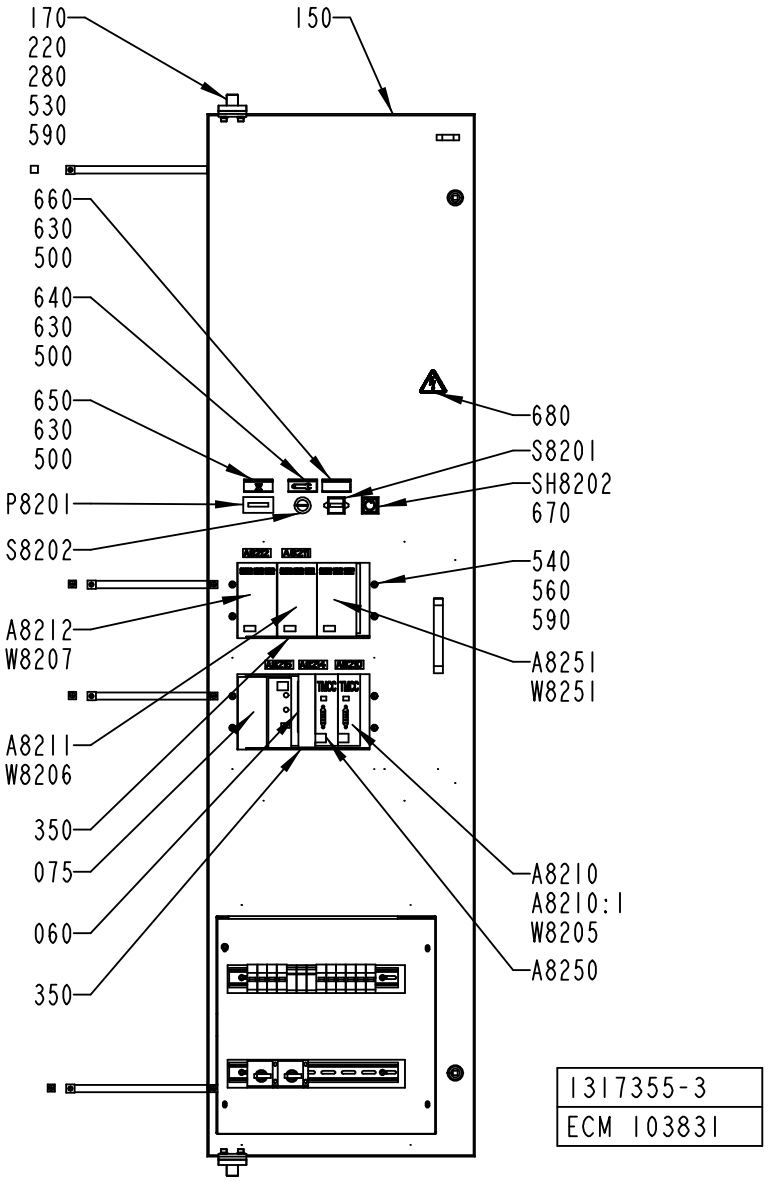

1317355-3
ECM 103831

Pos	Part No	SP	UN	Qty	Description	Page No
- (Cont'd)						
A8251	68450-0101	-		1	STEPPER MOTOR DRIVER	
040	*543326-0000*	-		*1*	*COVERPLATE HANDLE 5TE*	
700	*543897-0001*	-		*1*	*COMPONENTS WITHOUT TP-NO*	
710	*543898-0000*	-		*1*	*FRONT PANEL 14TE*	
720	*543899-0000*	-		*1*	*COOLING FLANGE*	
730	*543900-0000*	-		*1*	*COOLING FLANGE DISTANCE*	
740	*543901-0000*	-		*1*	*COOLING BLOCK*	
750	*543902-0000*	-		*1*	*SIGN BOARD*	
760	*556502-0000*	-		*1*	*LAYOUTS FOR PLATES,LABLES*	
F100	*68451-0101*	-		*1*	*STEP. MOT. DR. MAIN CARD*	
F110	*68452-0101*	-		*1*	*STEP. MOT. DR. AUX. CARD*	
P8201	90053-0031	-		1	HOUR COUNTER, B 609.10 10-50VDC	
S8201	90111-0193	-		1	ROTARY SWITCH	
S8202	90111-0197	-		1	SERVICE KEY, 2 CLOSED + 2 OPEN	
SH8202	90064-0082	-		1	PUSH BUTTON, WHITE	
	90036-0057	*B*		*1*	*LIGHT BULB, BA9S 28V*	
W8205	90220-0165	-	MM	2000	SCR. CABLE 5X0,34MM2	
W8206	90220-0165	-	MM	2000	SCR. CABLE 5X0,34MM2	
W8207	90220-0165	-	MM	2000	SCR. CABLE 5X0,34MM2	
W8251	90220-0165	-	M	1	SCR. CABLE 5X0,34MM2	
X8218	90001-0033	-		1	WALL SOCKET OUTLET	

Pos	Part No	SP	UN	Qty	Description	Page No

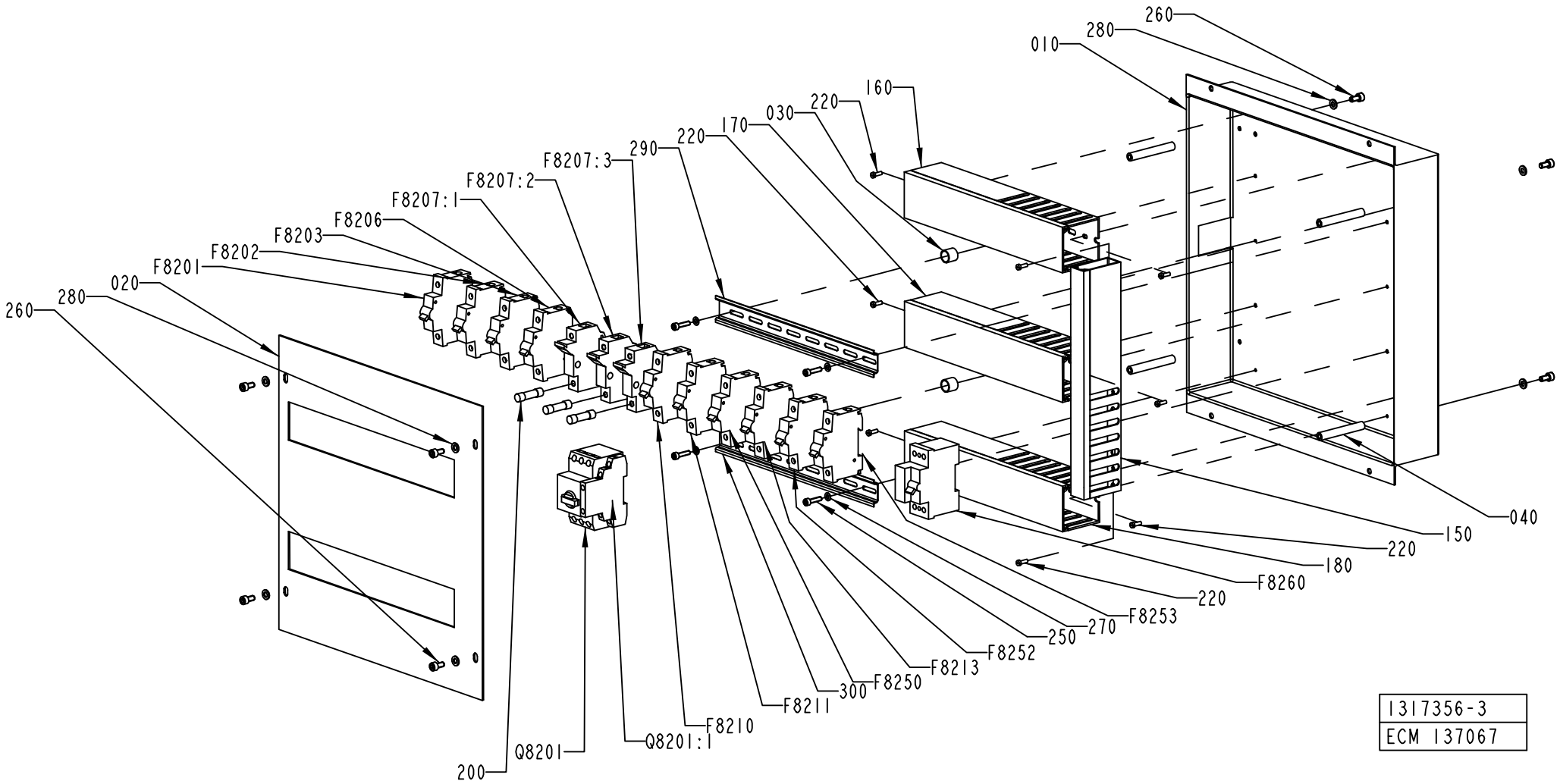
260
280
010
160
220
030
170
220
290
F8207:3
F8207:2
F8207:1
F8206
F8203
F8202
F8201
020
280
260
040
150
220
180
F8260
220
F8253
270
250
F8252
F8213
300
F8250
F8211
F8210
Q8201:1
Q8201
200
1317356-3
ECM 137067

ECM: 137856 - 20040119
Group number: 1317356-0300
Assembly Drawing: 1317356-3_1_AC

Pos	Part No	SP	UN	Qty	Description	Page No
-						
010	1317360-0000	-		1	FUSE BOX	
020	1317361-0000	-		1	COVER PLATE	
030	495118-0014	-		4	DISTANCE PIPE L=14 MM	
040	495130-0070	-		4	SPACER TUBE L=70MM	
150	90181-0044	-	MM	380	CABLE DUCT, 25X60MM	
160	90181-0045	-	MM	330	CABLE DUCT, 40X60MM	
170	90181-0045	-	MM	330	CABLE DUCT, 40X60MM	
180	90181-0045	-	MM	330	CABLE DUCT, 40X60MM	
200	90233-0303	A		3	FUSE HOLDER, ST 10 1-POLE	
220	90287-0124	-		8	SCREW PAN HEAD MSCS M4X12 NYLON	
250	312115-0331	-		4	SCREW ISO4762 M5X20 A4	
260	312115-0366	-		9	SCREW ISO4762 M6X12 A4	
270	315105-0146	-		4	WASHER BRB5,3X10RFR	
280	315105-0153	-		8	WASHER BRB6,4X12RFR	
290	353042-0004	-	MM	330	RAIL TS 35/7,5	
300	353042-0004	-	MM	330	RAIL TS 35/7,5	
F8201	90007-0129	A		1	CIRCUIT BREAKER, 1P 10 A K	
F8202	90007-0128	A		1	CIRCUIT BREAKER, 1P 6 A K	
F8203	90007-0128	A		1	CIRCUIT BREAKER, 1P 6 A K	
F8206	90007-0156	A		1	CIRCUIT BREAKER, 1P 4 A K	
F8207:1	90233-0028	A		1	TUBE FUSE, 10A	
F8207:2	90233-0028	A		1	TUBE FUSE, 10A	
F8207:3	90233-0028	A		1	TUBE FUSE, 10A	
F8210	90007-0129	A		1	CIRCUIT BREAKER, 1P 10 A K	
F8211	90007-0156	A		1	CIRCUIT BREAKER, 1P 4 A K	
F8213	90007-0156	A		1	CIRCUIT BREAKER, 1P 4 A K	
F8250	90007-0156	A		1	CIRCUIT BREAKER, 1P 4 A K	
F8252	90007-0156	A		1	CIRCUIT BREAKER, 1P 4 A K	
F8253	90007-0156	A		1	CIRCUIT BREAKER, 1P 4 A K	
F8260	90111-0172	A		1	EARTH FAULT BREAKER, F 362-25/0.03	
Q8201	90095-0077	A		1	OVERLOAD PROTECTION, PKZM 6-10 A	
Q8201:1	90259-0313	A		1	AUX. CONTACT K&M NHI21-PKZM0	

Pos	Part No	SP	UN	Qty	Description	Page No

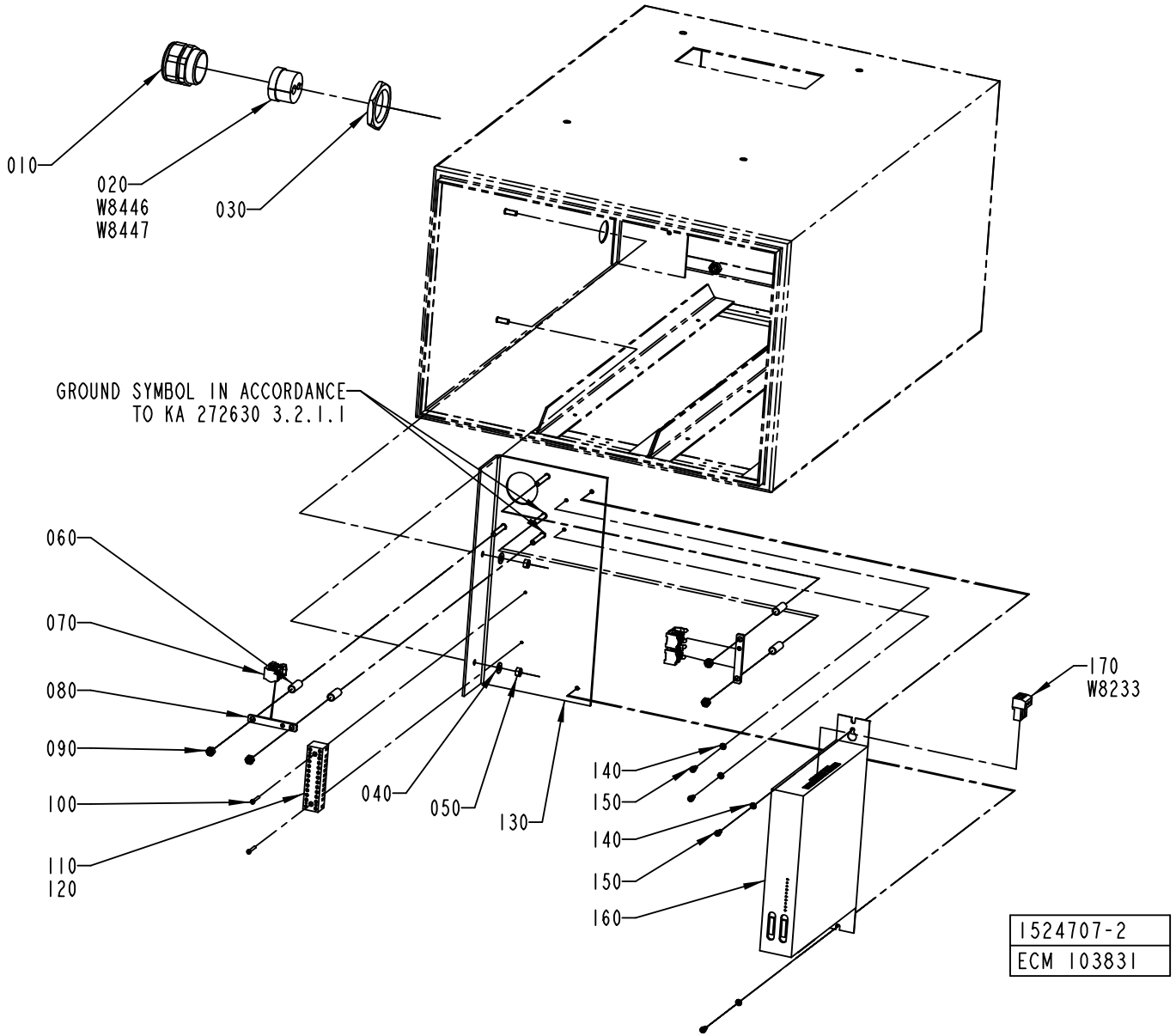
010
020
W8446
W8447
030
GROUND SYMBOL IN ACCORDANCE
TO KA 272630 3.2.1.1
060
070
080
090
100
110
120
040
050
130
140
150
140
150
160
170
W8233
1524707-2
ECM 103831

ECM: 141870 - 20040119
Group number: 1524707-0200
Assembly Drawing: 1524707-2_1_AA

Pos	Part No	SP	UN	Qty	Description	Page No
TBA/21-0400, TBA/21-0300						
120	1549216-0000	-		1	CABLE	
TBA/21-0410, TBA/21-0500						
120	1549217-0000	-		1	CABLE	
Common Parts						
010	353240-0007	-		1	NORMAL WITHOUT INSERT, PG 36	
020	1558863-0000	-		1	INSERT	
030	90099-0103	-		1	NUT, PR 47 (PG36)	
040	315105-0156	-		2	WASHER BRB 6.7X14 RFR	
050	312605-0316	-		2	HEXAGON NUT, M6M M6 A280	
060	1140053-0000	-		4	SPACER	
070	90135-0039	-		3	SHIELD CLIP KLBU 4-13.5	
080	929607-0000	-		2	EARTH BAR	
090	312605-0316	-		4	HEXAGON NUT, M6M M6 A280	
100	312125-0230	-		2	SCREW ISO 1207 M3X20 A4	
110	90077-0030	-		1	TERMINAL STRIP 12 POLE	
130	2525319-0000	-		1	PLATE	
140	315105-0136	-		4	WASHER BRB4,3XRFR	
150	312115-0287	-		4	SCREW ISO4762 M4X8 A4	
170	90458-0031	-		1	CONNECTOR KIT 9032 010 353	
A8233	90458-0401	A		1	SERVO DRIVE DMC2 50412	
W8233	1558888-0000	A		1	CABLE	
W8446	1558890-0000	A		1	CABLE	
W8447	1558902-0000	A		1	CABLE	

Pos	Part No	SP	UN	Qty	Description	Page No

Machine Type | Group Description | Used-In | Group Number | Page No

This page is intentionally left blank.

ECM: 140901 - 20040119
Group number: 2641419-0100
Assembly Drawing:

Pos	Part No	SP	UN	Qty	Description	Page No
-						
	2641420-0100	-		1	SOFTWARE PLC	
	2641421-0100	-		1	SOFTWARE DMC	**1-35**
	2641422-0100	-		1	SOFTWARE TMCC	**1-37**

Pos	Part No	SP	UN	Qty	Description	Page No

This page is intentionally left blank.

ECM: 140903 - 20040119
Group number: 2641421-0100
Assembly Drawing:

Pos	Part No	SP	UN	Qty	Description	Page No
-						
A8201:1	2523784-0101	-		1	DMC PROGRAMME	
A8233:1	2523791-0101	-		1	DMC PROGRAMME	

Pos	Part No	SP	UN	Qty	Description	Page No

This page is intentionally left blank.

ECM: 150805 - 20040124
Group number: 2641422-0100
Assembly Drawing:

Pos	Part No	SP	UN	Qty	Description	Page No
-						
A8210:1	2656096-0001	-		1	TMCC PROGRAMME	
A8250:1	2506351-0101	-		1	TMCC PROGRAMME	

Pos	Part No	SP	UN	Qty	Description	Page No

CABLE HARNESS

Drawing file: 1317751-1_1_AB.tif

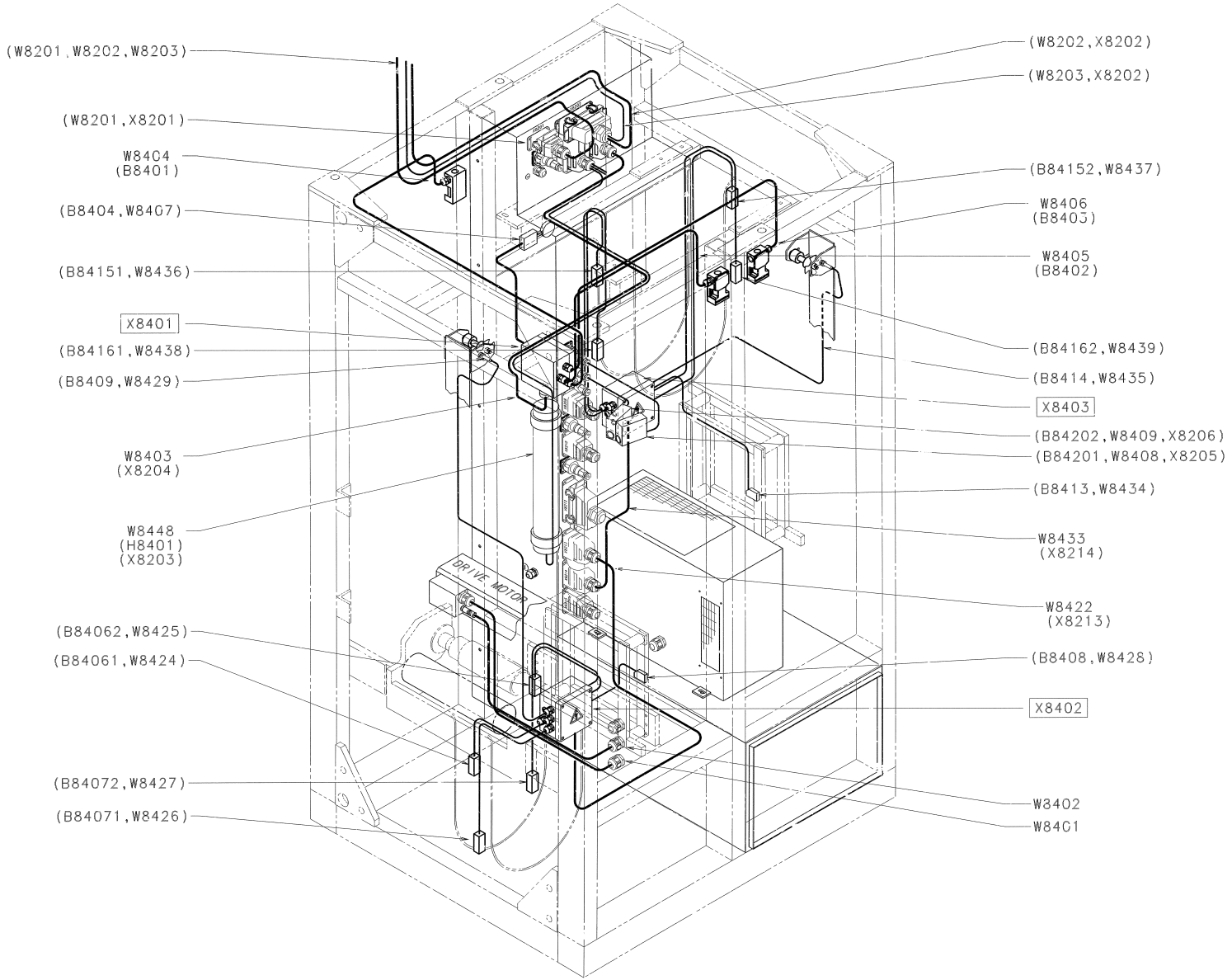

ECM: 114873 - 20021125
Group number: 1317751-0100
Assembly Drawing: 1317751-1_1_AB

Pos	Part No	SP	UN	Qty	Description	Page No
-						
050	1282599-0000	-		1	INSERT	
060	1282600-0000	-		1	INSERT	
070	1282787-0000	-		1	INSERT	
090	1260902-0000	-		1	INSERT	
110	90110-0152	-		1	CABLE HOOD 24-POL 70.352.2428.1	
120	90110-0157	-		2	CABLE HOOD 6-POL 70.352.0628.1	
150	90110-0217	-		4	CABLE HOOD 10-POL 71.352.1028.1	
180	352103-0111	-		3	CABLE GLAND, ST 16, PR22,5/PG16	
190	353240-0003	-		2	NORMAL WITHOUT INSERT, PG 13,5	
200	353240-0005	-		1	NORMAL WITHOUT INSERT, PG 21	
210	353240-0006	-		1	SCREW CAP PG 29	
240	359005-0010	-		8	MARKING LABEL KIT 0 - 9, 04.841.2150.0	
250	359005-0050	-		1	MARKING LABEL KIT X, 04.841.4550.0	
260	90089-0008	-		1	REDUCING SLEEVE, PR22,5/PR28,3	
W8401	90220-0084	-	MM	1000	MOTOR CABLE 4X2,5+2(2X0.75)+SHIELD	
W8402	1255692-0010	A		1	CABLE	
	90220-0131	*-*	*M*	*1*	*PAIR TWISTED CABLE 3X2X0,25MM2*	
	90110-0209	*-*		*6*	*CONTACT PIN, RC20M13K*	
	90110-0208	*-*		*1*	*CABLE CONTACT*	
	90110-0145	*-*		*1*	*COVER 8630-5169014-15-01*	
	90110-0142	*-*		*1*	*PLUG DA15P064TX*	
	90012-0117	*-*		*1*	*GLAND, EXTENDED WITH INSERT, PG11*	
W8403	351150-0407	-	MM	1200	CABLE OLFLEX 12X0,75 MM2 LIGHT/GREY	
W8404	351150-0405	-	MM	1000	CABLE OLFLEX 5X0,75 MM2 LIGHT/GREY	
W8405	351150-0405	-	MM	1000	CABLE OLFLEX 5X0,75 MM2 LIGHT/GREY	
W8406	351150-0405	-	MM	1000	CABLE OLFLEX 5X0,75 MM2 LIGHT/GREY	
W8421	351150-0403	-	MM	2000	CABLE OLFLEX 3X0,75 MM2 LIGHT/GREY	
W8422	351150-0407	-	MM	2500	CABLE OLFLEX 12X0,75 MM2 LIGHT/GREY	
W8433	351150-0407	-	MM	2500	CABLE OLFLEX 12X0,75 MM2 LIGHT/GREY	
W8446	351150-0413	-	MM	2000	CABLE OLFLEX 4X1,5 MM2 LIGHT/GREY	
W8448	351150-0412	-	MM	2500	CABLE OLFLEX 3X1,5 MM2 LIGHT/GREY	
X8203	90110-0216	-		1	MALE INSERT 70 310 1040 0	
X8204	90110-0216	-		1	MALE INSERT 70 310 1040 0	
X8205	90110-0235	-		1	CABLE CONTACT, PX0739/S	
X8206	90110-0235	-		1	CABLE CONTACT, PX0739/S	
X8207	90110-0235	-		1	CABLE CONTACT, PX0739/S	
X8208	90110-0159	-		1	MALE INSERT 70.310.0640.0	
X8209	90110-0235	-		1	CABLE CONTACT, PX0739/S	
X8210	90110-0159	-		1	MALE INSERT 70.310.0640.0	
X8211	90110-0235	-		1	CABLE CONTACT, PX0739/S	
X8212	90110-0150	-		1	MALE INSERT 121110 0000	
X8213	90110-0216	-		1	MALE INSERT 70 310 1040 0	
X8214	90110-0216	-		1	MALE INSERT 70 310 1040 0	
X8216	90110-0235	-		1	CABLE CONTACT, PX0739/S	
X8401	1260813-0100	-		1	CONNECTION BOX	**1-41**
X8402	1260812-0100	-		1	CONNECTION BOX	**1-43**
X8403	1260811-0100	-		1	CONNECTION BOX	**1-45**

Machine Type | Group Description | Used-In | Group Number | Page No

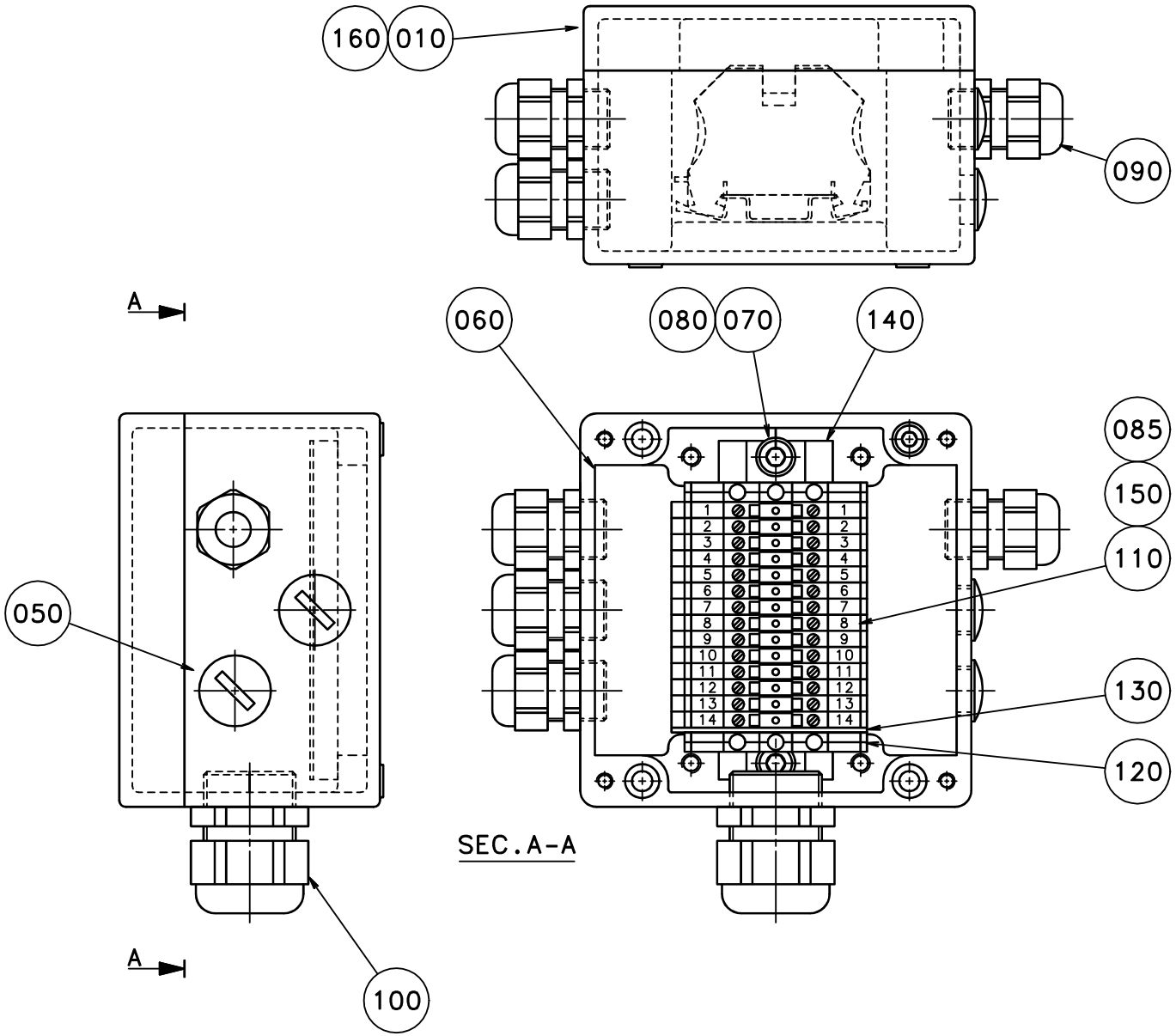
160
010
090
A
060
080
070
140
085
150
110
050
130
120
SEC.A-A
A
100

ECM: 22912 - 19970613
Group number: 1260813-0100
Assembly Drawing: 1260813-1_1_AA

Pos	Part No	SP	UN	Qty	Description	Page No
-						
010	1260815-0000	-		1	CONNECTION BOX	
050	90002-0009	-		2	BLANK-OFF PLUG, PR 18.6 SKINDICHT-BLK11	
060	312115-0331	-		4	SCREW ISO4762 M5X20 A4	
070	312115-0362	-		2	SCREW ISO4762 M6X8 A4	
080	315105-0153	-		2	WASHER BRB6,4X12RFR	
085	351172-0102	-	MM	300	CABLE AWM 1X 0,75 MM2 DARK-BLUE	
090	352103-0106	-		4	CABLE GLAND, ST 11, PR18,6/PG11	
100	352103-0115	-		1	CABLE GLAND, STR 21, PR28,3/PG21	
110	353021-0216	-		14	FEED THROUGH TERMINAL, 10200.8	
120	353024-0205	-		2	EARTH TERMINAL, 1010.1	
130	353032-0005	-		1	END PLATE WAP 2,5-10 BLUE	
140	353042-0005	-	MM	105	RAIL TS 35/7.5	
150	359011-0807	-		14	MARKING PLATES 5-FW 1-50	
160	359705-0015	-		1	WARNING SIGN ISO, RISK OF ELECTRIC SHOCK	

Pos	Part No	SP	UN	Qty	Description	Page No

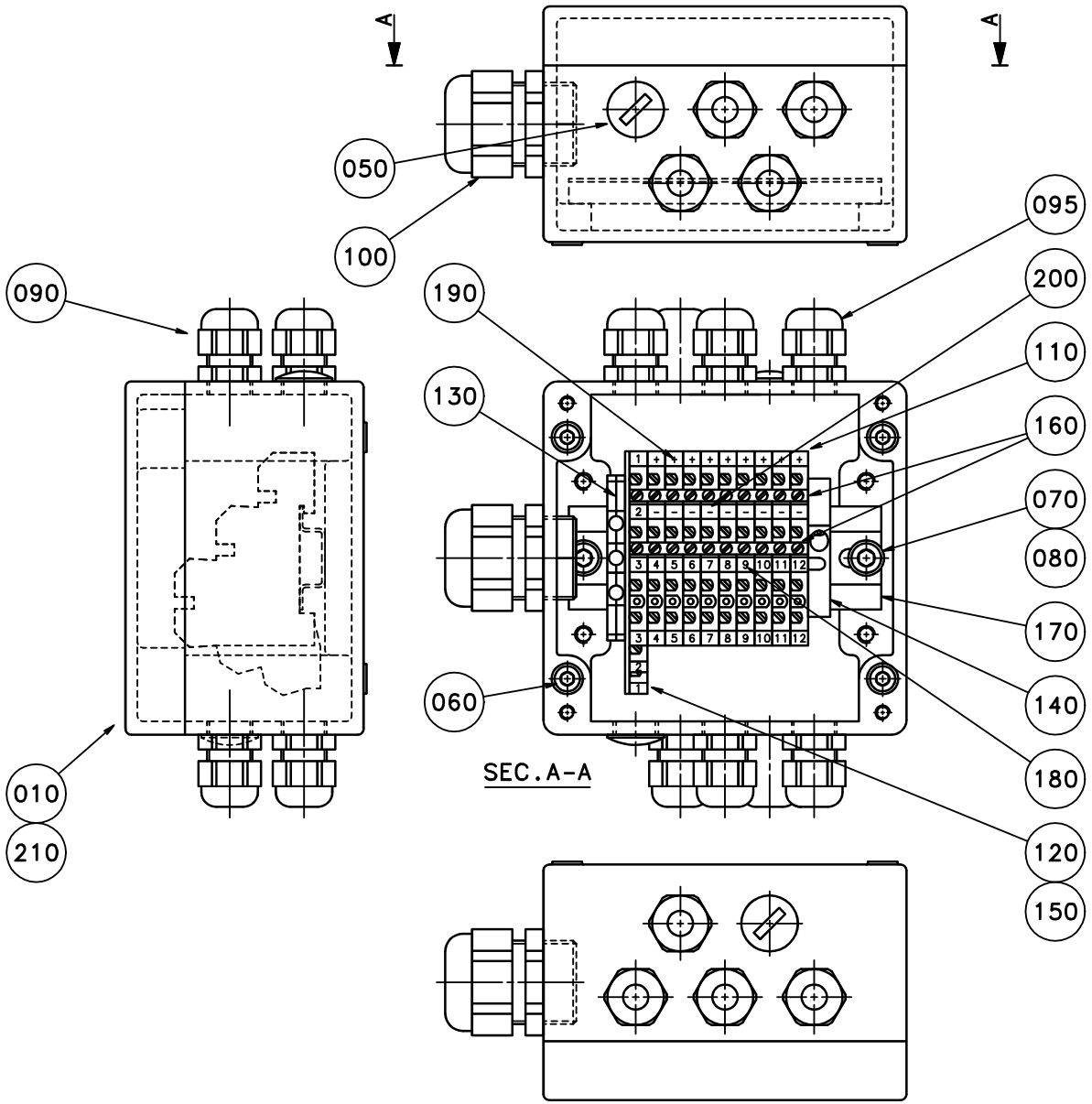
A
A
050
100
090
190
130
095
200
110
160
070
080
170
140
180
120
150
060
010
210
SEC.A-A

ECM: 71157 - 19971223
Group number: 1260812-0100
Assembly Drawing: 1260812-1_1_AB

Pos	Part No	SP	UN	Qty	Description	Page No
-						
010	1260814-0000	-		1	CONNECTION BOX	
050	90002-0013	-		2	BLANK-OFF PLUG, PR 15,2 SKINDICHT-BLK9	
060	312115-0331	-		4	SCREW ISO4762 M5X20 A4	
070	312115-0362	-		2	SCREW ISO4762 M6X8 A4	
080	315105-0153	-		2	WASHER BRB6,4X12RFR	
090	352103-0101	-		8	CABLE GLAND, ST 9, PR15,2/PG9	
095	352103-0100	-		1	CABLE GLAND, STR 9, PR15,2/PG9	
100	352103-0115	-		1	CABLE GLAND, STR 21, PR28,3/PG21	
110	353021-0301	-		8	TERMINALS,TRIPLE-LEVEL, DLI 2,5/35 PA	
120	353021-0302	-		1	TERMINALS,TRIPLE-LEVEL, DLD 2,5/35 PA	
130	353024-0205	-		1	EARTH TERMINAL, 1010.1	
140	353031-0201	-		1	END BRACKET EW35	
150	353032-0302	-		1	END PLATE WAP	
160	353034-0404	-		2	BRIDGE CONNECTOR Q10, 13131.0	
170	353042-0005	-	MM	105	RAIL TS 35/7.5	
180	359011-0807	-		2	MARKING PLATES 5-FW 1-50	
190	359011-0817	-		1	SYMBOL 5-GW (+) 50PC	
200	359011-0818	-		1	SYMBOL 5-GW (-) 50PC	
210	359705-0015	-		1	WARNING SIGN ISO, RISK OF ELECTRIC SHOCK	

Pos	Part No	SP	UN	Qty	Description	Page No

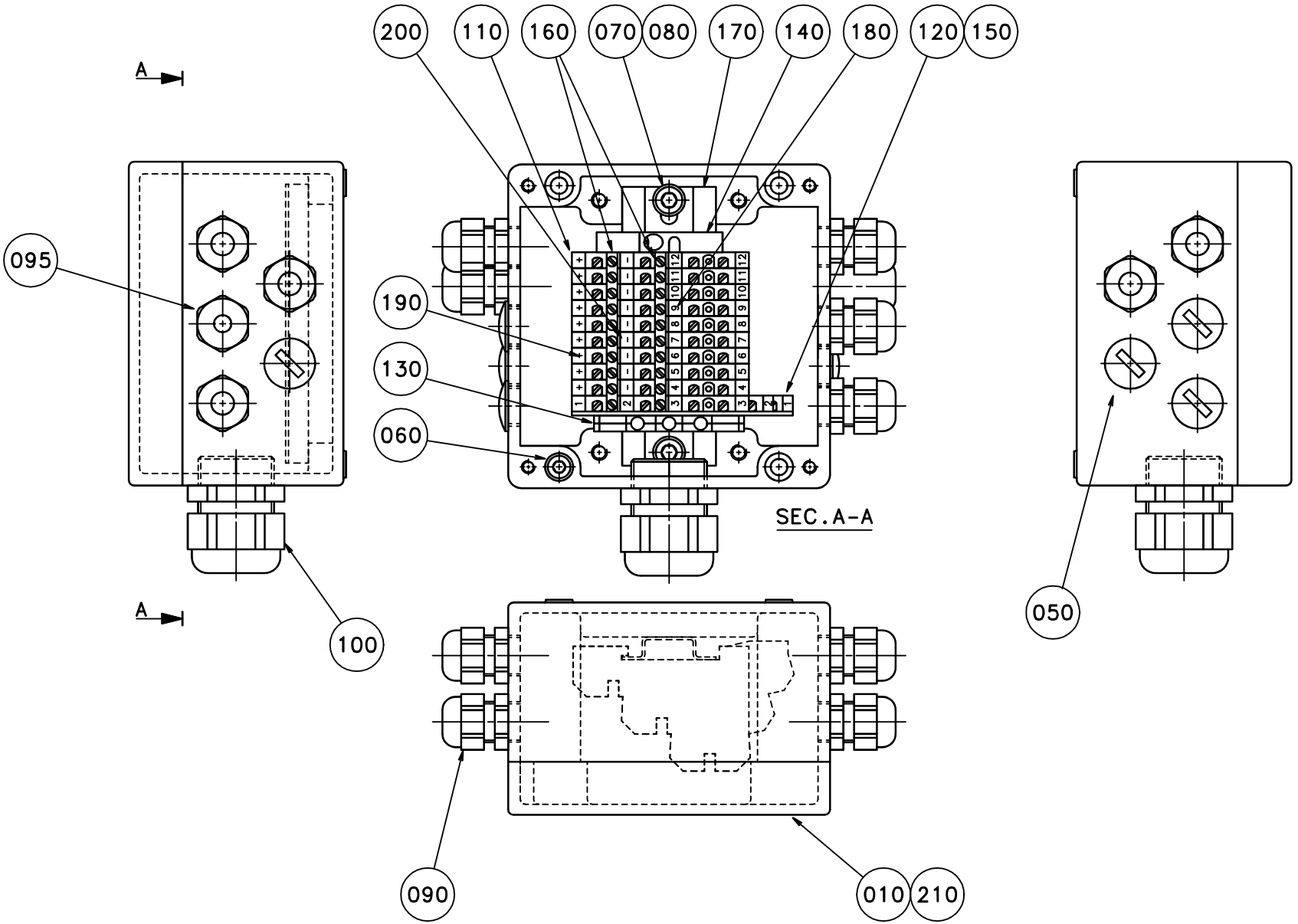
200
110
160
070
080
170
140
180
120
150
A
095
190
130
060
SEC.A-A
050
A
100
090
010
210

ECM: 71157 - 19971223
Group number: 1260811-0100
Assembly Drawing: 1260811-1_1_AB

Pos	Part No	SP	UN	Qty	Description	Page No
-						
010	1260814-0000	-		1	CONNECTION BOX	
050	90002-0013	-		4	BLANK-OFF PLUG, PR 15,2 SKINDICHT-BLK9	
060	312115-0331	-		4	SCREW ISO4762 M5X20 A4	
070	312115-0362	-		2	SCREW ISO4762 M6X8 A4	
080	315105-0153	-		2	WASHER BRB6,4X12RFR	
090	352103-0101	-		5	CABLE GLAND, ST 9, PR15,2/PG9	
095	352103-0100	-		1	CABLE GLAND, STR 9, PR15,2/PG9	
100	352103-0115	-		1	CABLE GLAND, STR 21, PR28,3/PG21	
110	353021-0301	-		9	TERMINALS,TRIPLE-LEVEL, DLI 2,5/35 PA	
120	353021-0302	-		1	TERMINALS,TRIPLE-LEVEL, DLD 2,5/35 PA	
130	353024-0205	-		1	EARTH TERMINAL, 1010.1	
140	353031-0201	-		1	END BRACKET EW35	
150	353032-0302	-		1	END PLATE WAP	
160	353034-0404	-		2	BRIDGE CONNECTOR Q10, 13131.0	
170	353042-0005	-	MM	105	RAIL TS 35/7.5	
180	359011-0807	-		6	MARKING PLATES 5-FW 1-50	
190	359011-0817	-		1	SYMBOL 5-GW (+) 50PC	
200	359011-0818	-		1	SYMBOL 5-GW (-) 50PC	
210	359705-0015	-		1	WARNING SIGN ISO, RISK OF ELECTRIC SHOCK	

Pos	Part No	SP	UN	Qty	Description	Page No

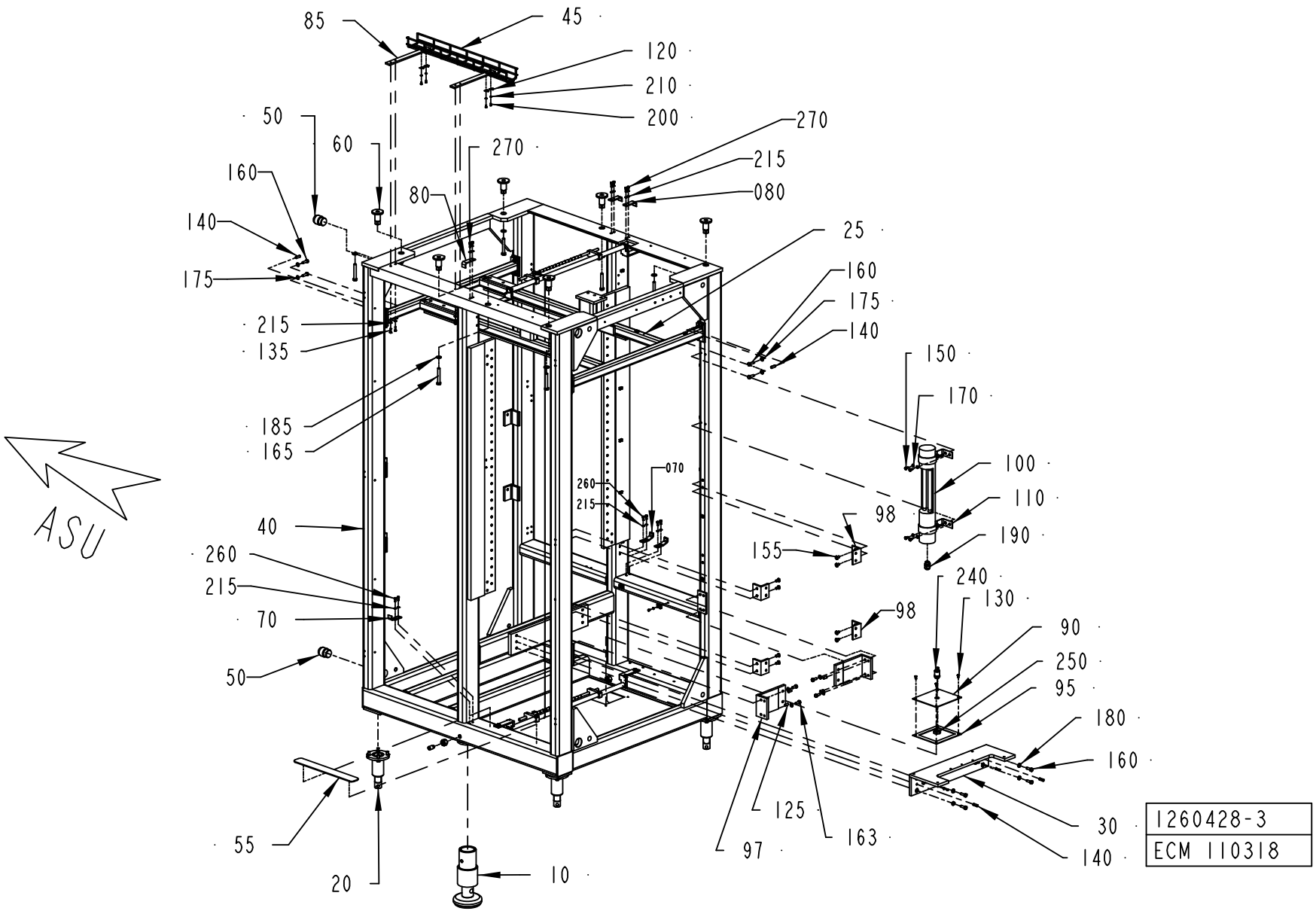
85
45
120
210
200
270
50
60
270
215
080
160
80
140
25
175
160
175
140
215
135
150
170
185
165
070
260
215
100
110
98
190
40
155
240
260
130
215
98
90
70
250
50
95
180
160
125
55
30
97
163
140
20
10
ASU
1260428-3
ECM 110318

ECM: 111872 - 20021125
Group number: 1260428-0200
Assembly Drawing: 1260428-3_1_AB

This list covers pages from 1-46 to 1-49

Pos	Part No	SP	UN	Qty	Description	Page No
-						
010	1035076-0200	-		2	LEG	**1-51**
020	1035471-0100	-		4	LEG	**1-53**
025	985866-0000	-		1	TOP FRAME	
030	1140427-0000	-		1	BRACKET	
035	2526510-0100	-		1	SETTING TOOL	**1-55**
040	1255311-0000	-		1	FRAME	
045	1348058-0000	-		1	CABLE DUCT	
050	1037762-0000	-		2	PIN	
055	1103299-0000	-		1	NON-SKID	
060	1116048-0000	-		6	SPACER	
070	1036227-0000	-		3	BRACKET	
080	1296856-0000	-		3	BRACKET	
085	1348057-0000	-		2	BRACKET	
090	1279832-0000	-		1	PLATE	
095	1279833-0000	-		1	RUBBER STRIP	
097	1558102-0000	-		2	BRACKET	
098	1558103-0000	-		4	BRACKET	
100	90164-0015	B		1	LIGHT FIXTURE, DWDCV111B/230V 50HZ	
	90297-0007	*B*		*1*	*FLUORESCENT TUBE, PLS 11*	
110	90164-0302	-		2	BRACKET	
120	90165-0060	-		4	PIPE CLIP FOR TUBE D=5 MM	
125	311103-0401	-		4	PARALLEL PIN ISO 2338 8M6X20 A1	
130	312105-0323	-		4	SCREW M6S ISO 4017 M5X8 A480	
135	312105-0329	-		4	SCREW M6S ISO 4017 M5X16 A480	
140	311112-0377	-		4	SPRING PIN, ISO 8752 8X24-C	
150	312105-0366	-		4	SCREW M6S ISO 4017 M6X12 A480	
155	312145-0449	-		8	SCREW ISO 2009 MFS M8X16 A4	
160	312105-0453	-		12	SCREW M6S ISO 4017 M8X25 A480	
163	312105-0451	-		4	SCREW M6S ISO 4017 M8X20 A480	
165	312105-0505	-		6	SCREW M6S ISO 4014 M10X70 A480	
170	315105-0153	-		4	WASHER BRB6,4X12RFR	
175	315105-0165	-		12	WASHER BRB8,4X16RFR	
180	315115-0165	-		4	WASHER PLAIN, TBRB 8,4/16 H=3	
185	315105-0173	-		6	WASHER BRB10,5X22RFR	
190	352103-0106	-		1	CABLE GLAND, ST 11, PR18,6/PG11	
200	312125-0287	-		35	SCREW ISO 1207 M4X8 A4	
210	315105-0136	-		13	WASHER BRB4,3XRFR	
215	315105-0146	-		16	WASHER BRB5,3X10RFR	
220	352113-0204	-		9	ANCHOR PLATES FOR STRIPS, TYPE TM3S25-M	
230	352113-0205	-		22	ANCHOR PLATES FOR STRIPS, TYPE TM2S8-C10	
240	90055-0096	-		1	STRAIGHT COUPLING	
250	90330-0038	-		1	NUT, HEXAGON, G3/8	
260	312115-0327	-		6	SCREW ISO4762 M5X12 A4	
270	312115-0329	-		6	SCREW ISO4762 M5X16 A4	

Machine Type	Group Description	Used-In	Group Number	Page No

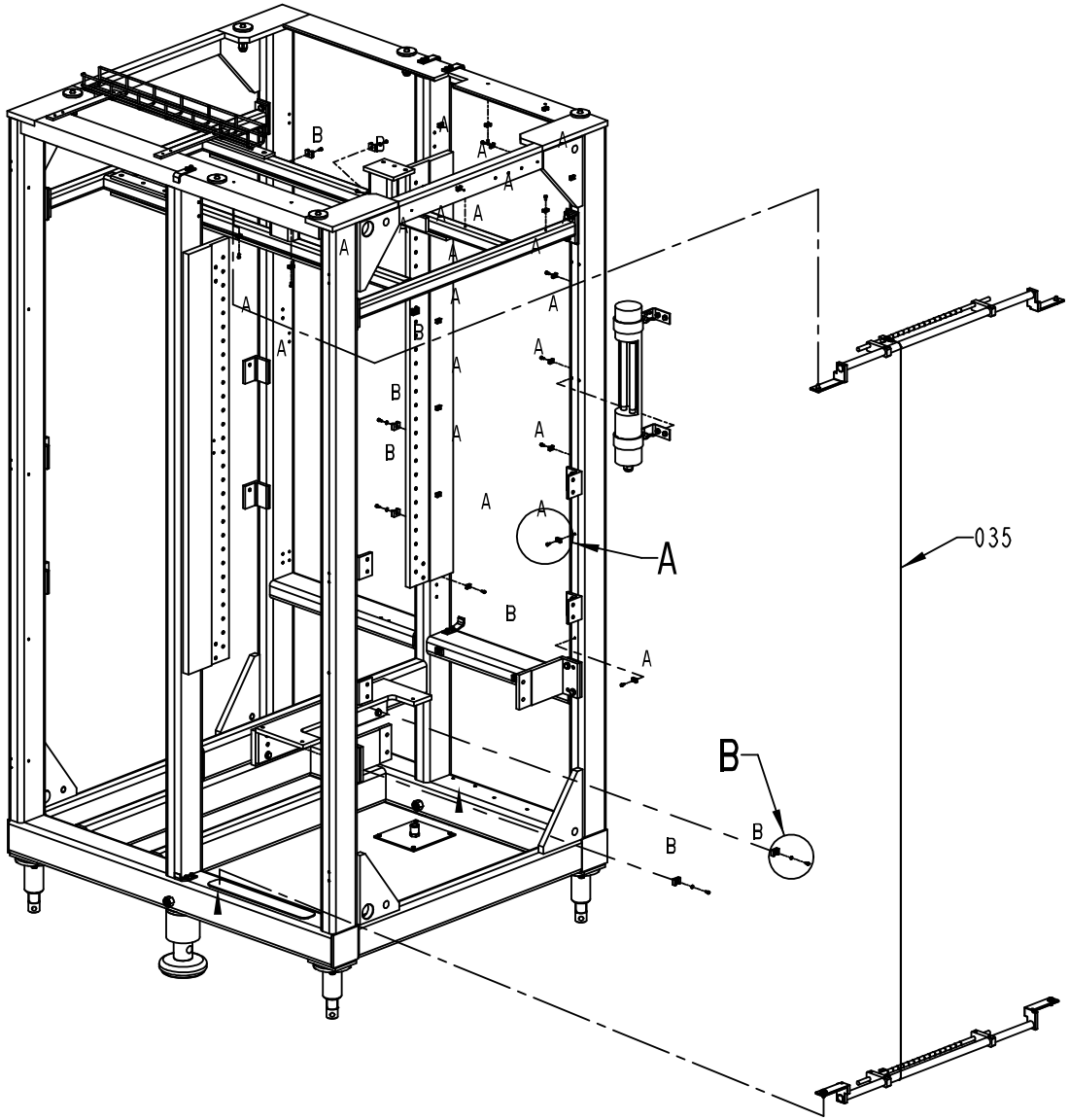

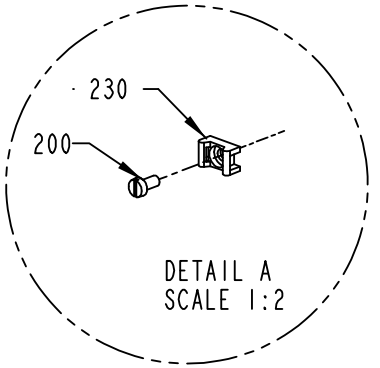

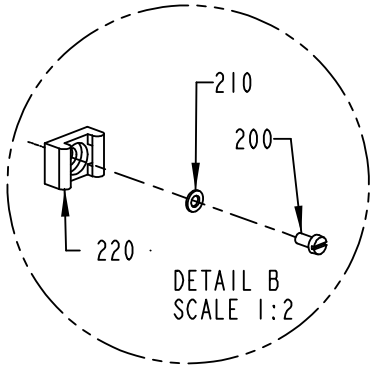

ANCHOR FOR CLIP TYPE "A" : SEE POS. 230 AND 200 (22x)

ANCHOR FOR CLIP TYPE "B" : SEE POS. 220 , 200 AND 210 (9x)

ECM: 111872 - 20021125
Group number: 1260428-0200
Assembly Drawing: 1260428-3_2_AB

This list covers pages from 1-46 to 1-49

Pos	Part No	SP	UN	Qty	Description	Page No
-						
010	1035076-0200	-		2	LEG	**1-51**
020	1035471-0100	-		4	LEG	**1-53**
025	985866-0000	-		1	TOP FRAME	
030	1140427-0000	-		1	BRACKET	
035	2526510-0100	-		1	SETTING TOOL	**1-55**
040	1255311-0000	-		1	FRAME	
045	1348058-0000	-		1	CABLE DUCT	
050	1037762-0000	-		2	PIN	
055	1103299-0000	-		1	NON-SKID	
060	1116048-0000	-		6	SPACER	
070	1036227-0000	-		3	BRACKET	
080	1296856-0000	-		3	BRACKET	
085	1348057-0000	-		2	BRACKET	
090	1279832-0000	-		1	PLATE	
095	1279833-0000	-		1	RUBBER STRIP	
097	1558102-0000	-		2	BRACKET	
098	1558103-0000	-		4	BRACKET	
100	90164-0015	B		1	LIGHT FIXTURE, DWDCV111B/230V 50HZ	
	90297-0007	*B*		*1*	*FLUORESCENT TUBE, PLS 11*	
110	90164-0302	-		2	BRACKET	
120	90165-0060	-		4	PIPE CLIP FOR TUBE D=5 MM	
125	311103-0401	-		4	PARALLEL PIN ISO 2338 8M6X20 A1	
130	312105-0323	-		4	SCREW M6S ISO 4017 M5X8 A480	
135	312105-0329	-		4	SCREW M6S ISO 4017 M5X16 A480	
140	311112-0377	-		4	SPRING PIN, ISO 8752 8X24-C	
150	312105-0366	-		4	SCREW M6S ISO 4017 M6X12 A480	
155	312145-0449	-		8	SCREW ISO 2009 MFS M8X16 A4	
160	312105-0453	-		12	SCREW M6S ISO 4017 M8X25 A480	
163	312105-0451	-		4	SCREW M6S ISO 4017 M8X20 A480	
165	312105-0505	-		6	SCREW M6S ISO 4014 M10X70 A480	
170	315105-0153	-		4	WASHER BRB6,4X12RFR	
175	315105-0165	-		12	WASHER BRB8,4X16RFR	
180	315115-0165	-		4	WASHER PLAIN, TBRB 8,4/16 H=3	
185	315105-0173	-		6	WASHER BRB10,5X22RFR	
190	352103-0106	-		1	CABLE GLAND, ST 11, PR18,6/PG11	
200	312125-0287	-		35	SCREW ISO 1207 M4X8 A4	
210	315105-0136	-		13	WASHER BRB4,3XRFR	
215	315105-0146	-		16	WASHER BRB5,3X10RFR	
220	352113-0204	-		9	ANCHOR PLATES FOR STRIPS, TYPE TM3S25-M	
230	352113-0205	-		22	ANCHOR PLATES FOR STRIPS, TYPE TM2S8-C10	
240	90055-0096	-		1	STRAIGHT COUPLING	
250	90330-0038	-		1	NUT, HEXAGON, G3/8	
260	312115-0327	-		6	SCREW ISO4762 M5X12 A4	
270	312115-0329	-		6	SCREW ISO4762 M5X16 A4	

Machine Type | Group Description | Used-In | Group Number | Page No

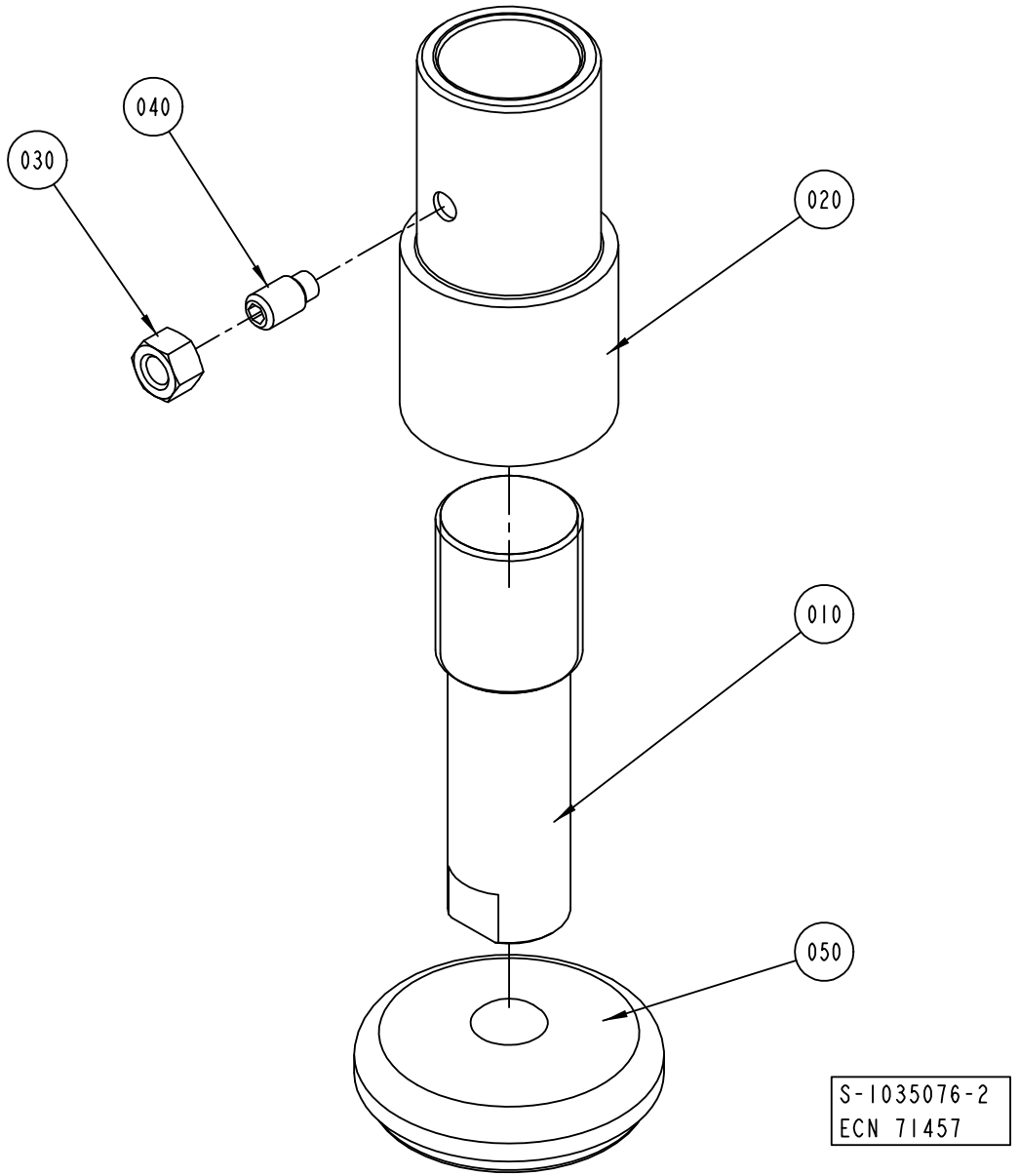
040
030
020
010
050
S-1035076-2
ECN 71457

ECM: 71457 - 20000215
Group number: 1035076-0200
Assembly Drawing: 1035076-2_1_AB

Pos	Part No	SP	UN	Qty	Description	Page No
-						
010	1487712-0000	-		1	LEG	
020	1036120-0000	-		1	SLEEVE	
030	312605-0324	-		1	HEXAGON NUT, M6M M16 A280	
040	312311-0624	-		1	SCREW ISO4028 M16X30 FZB	
050	90347-0175	-		1	MACHINE SHOE BRIK T 125	

Pos	Part No	SP	UN	Qty	Description	Page No

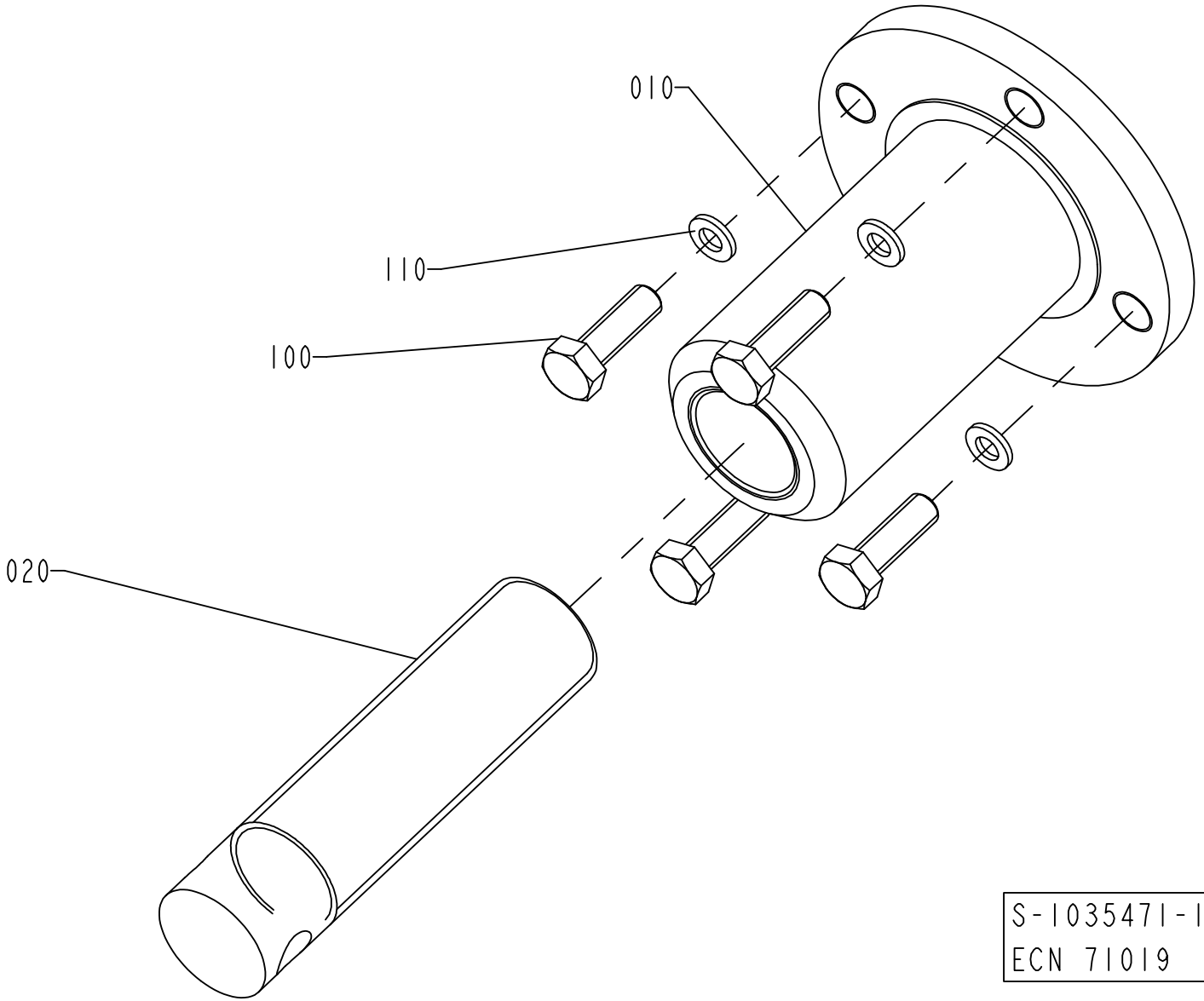
010
110
100
020
S-1035471-1
ECN 71019

ECM: 71870 - 19981029
Group number: 1035471-0100
Assembly Drawing: 1035471-1_1_AB

Pos	Part No	SP	UN	Qty	Description	Page No
-						
010	469095-0000	-		1	HOLDER	
020	469096-0000	-		1	LEG	
100	312105-0453	-		4	SCREW M6S ISO 4017 M8X25 A480	
110	315125-0165	-		4	WASHER TBRSB 8,4X26X5 A4	

Pos	Part No	SP	UN	Qty	Description	Page No

SETTING TOOL



2526510-1
ECM 103834

ECM: 104339 - 20020214
Group number: 2526510-0100
Assembly Drawing: 2526510-1_1_AA

Pos	Part No	SP	UN	Qty	Description	Page No
-						
010	2506493-0100	-		2	BAR	**1-57**
020	2506492-0100	-		1	SETTING TEMPLATE	**1-59**

Pos	Part No	SP	UN	Qty	Description	Page No

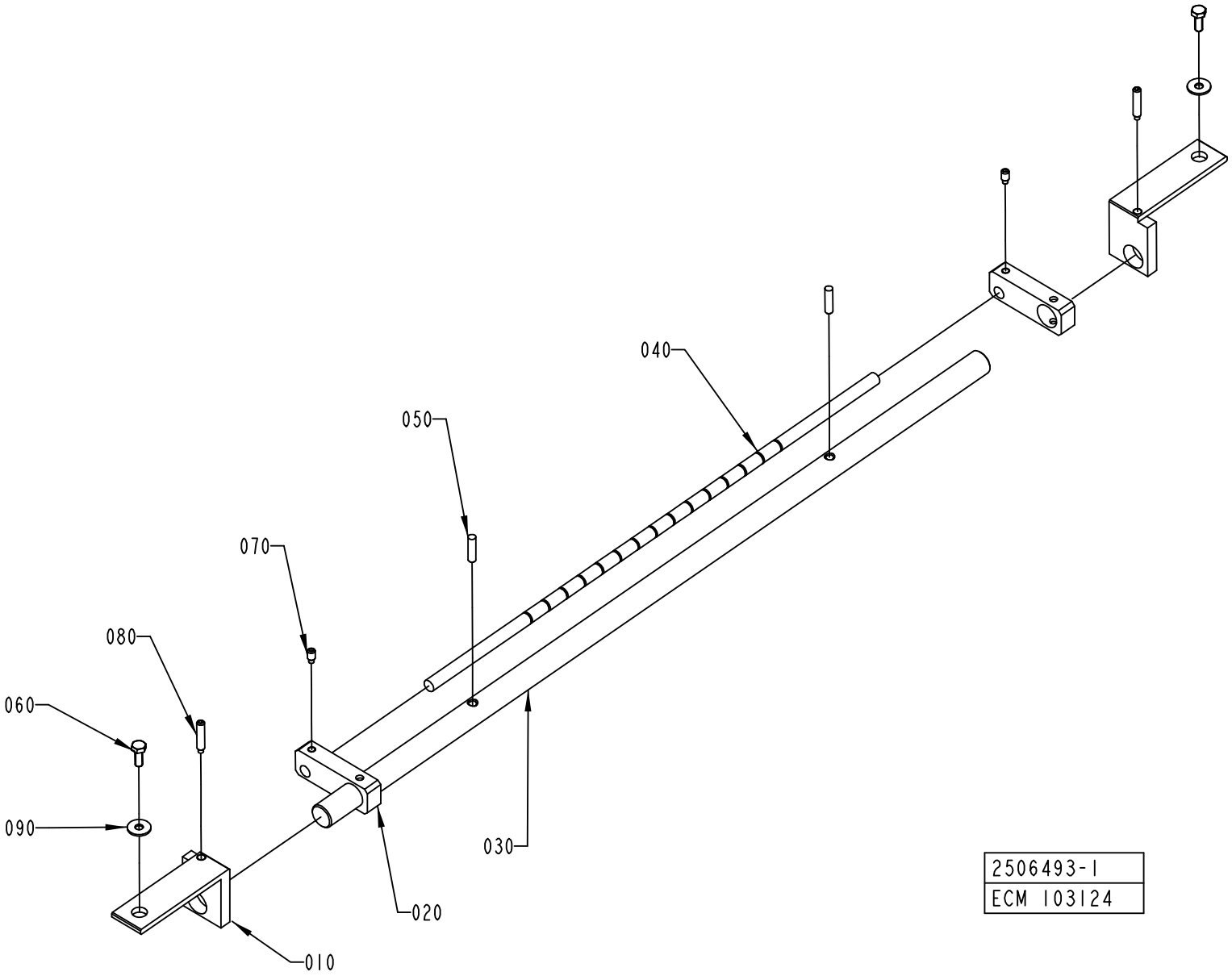
040
050
070
080
060
090
030
020
010
2506493-1
ECM 103124

ECM: 103124 - 20020215
Group number: 2506493-0100
Assembly Drawing: 2506493-1_1_AA

Pos	Part No	SP	UN	Qty	Description	Page No
-						
010	2506488-0000	-		2	SUPPORT	
020	2506489-0000	-		2	SUPPORT	
030	2506490-0000	-		1	BAR	
040	2506491-0000	-		1	BAR	
050	311103-0355	-		2	PARALLELL PIN, M6, 6X25 MM	
060	312105-0368	-		2	SCREW M6S ISO 4017 M6X16 A480	
070	312311-0366	-		2	SCREW ISO4028 M6X12 FZB	
080	312311-0374	-		2	SCREW ISO4028 M6X30 FZB	
090	90005-0060	-		2	WASHER PLAIN, RBS 6,4/M6)/18,H=1,5	

Pos	Part No	SP	UN	Qty	Description	Page No

SETTING TEMPLATE

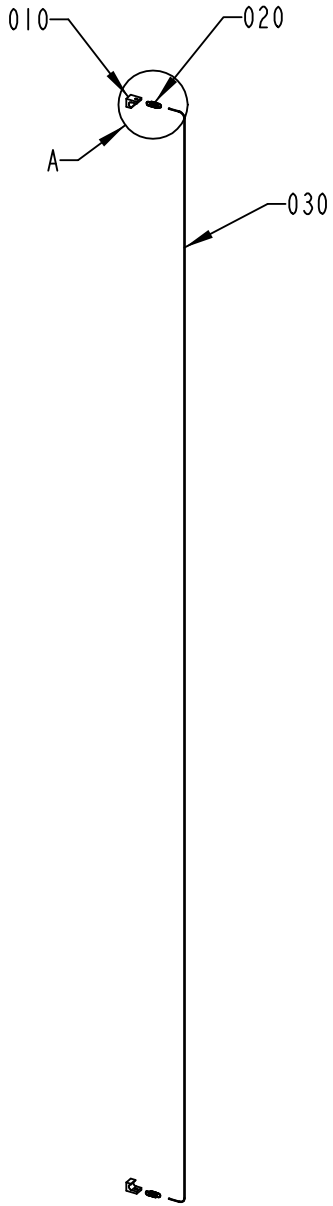

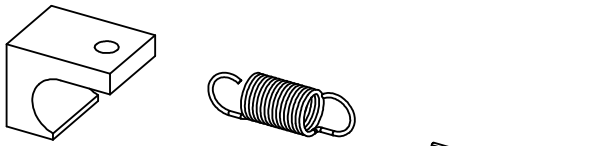

VIEW A
SCALE: 1:1

2506492-1
ECM 103124

ECM: 103124 - 20020215
Group number: 2506492-0100
Assembly Drawing: 2506492-1_1_AA

Pos	Part No	SP	UN	Qty	Description	Page No
-						
010	90458-0597	-		2	TENSION SPRING 3753	
020	2526517-0000	-		2	CATCH	
030	90319-0010	-	M	2	ROPE	

Pos	Part No	SP	UN	Qty	Description	Page No

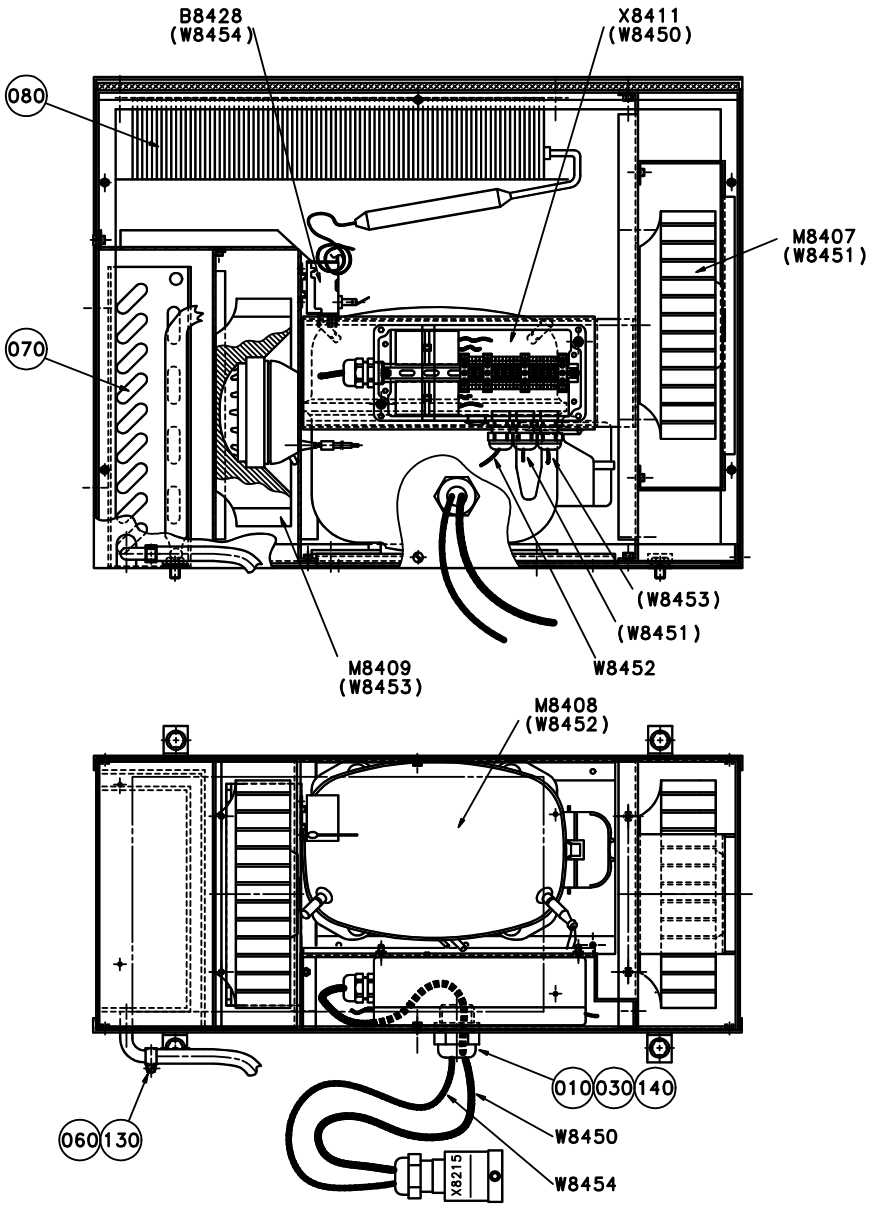
B8428
(W8454)
X8411
(W8450)
080
M8407
(W8451)
070
(W8453)
(W8451)
M8409
(W8453)
W8452
M8408
(W8452)
010 030 140
060 130
W8450
W8454
X8215

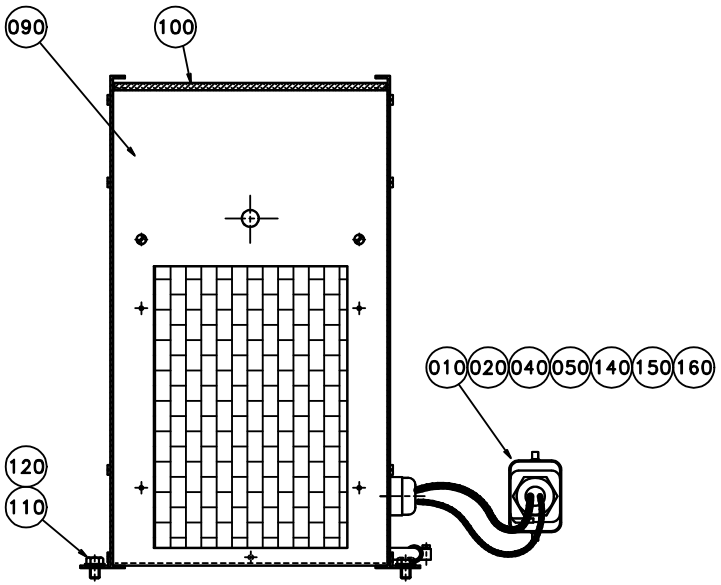
090
100
010 020 040 050 140 150 160
120
110

ECM: 114868 - 20021125
Group number: 1095928-0100
Assembly Drawing: 1095928-1_1_AA

Pos	Part No	SP	UN	Qty	Description	Page No
-						
010	1282788-0000	-		2	INSERT	
020	90089-0031	-		1	ENLARGING SLEEVE	
030	90099-0019	-		1	HEXAGON NUT, M12X1, DIN439	
040	90110-0157	-		1	CABLE HOOD 6-POL 70.352.0628.1	
050	90110-0159	-		1	MALE INSERT 70.310.0640.0	
060	90166-0126	-	M	2	TUBE 12 MM PA,TRANSP.	
070	90422-0041	-		1	HEAT EXCHANGER / 3R 10T 170L 2.5P 1C	
080	90422-0042	-		1	HEAT EXCHANGER / 3R 8T 340L 1.6P 1C	
090	90422-0316	-		1	HOOD	
100	90422-0317	A		1	FILTER	
110	312105-0447	-		4	SCREW M6S ISO 4017 M8X12 A480	
120	315105-0165	-		4	WASHER BRB8,4X16RFR	
130	342991-0100	-		1	HOSE CLIP,WORM DRIVE TYPE 10-13	
140	353240-0005	-		2	NORMAL WITHOUT INSERT, PG 21	
150	359005-0010	-		1	MARKING LABEL KIT 0 - 9, 04.841.2150.0	
160	359005-0050	-		1	MARKING LABEL KIT X, 04.841.4550.0	
B8428	90059-0029	A		1	THERMOSTAT	
M8407	90264-0069	A		1	FAN / R2E 190 AE 7705/M15 190 12	
M8408	90270-0018	-		1	COMPRESSOR DANFOSS SC 12G	
M8409	90264-0069	A		1	FAN / R2E 190 AE 7705/M15 190 12	
W8450	351150-0414	-	MM	1000	CABLE OLFLEX 5X1,5 MM2 LIGHT/GREY	
W8452	351150-0412	-	MM	300	CABLE OLFLEX 3X1,5 MM2 LIGHT/GREY	
W8454	351150-0404	-	MM	1200	CABLE OLFLEX 4X0,75 MM2 LIGHT/GREY	
X8411	1285054-0100	-		1	CONNECTION BOX	**1-63**

Pos	Part No	SP	UN	Qty	Description	Page No

Machine Type | Group Description | Used-In | Group Number | Page No

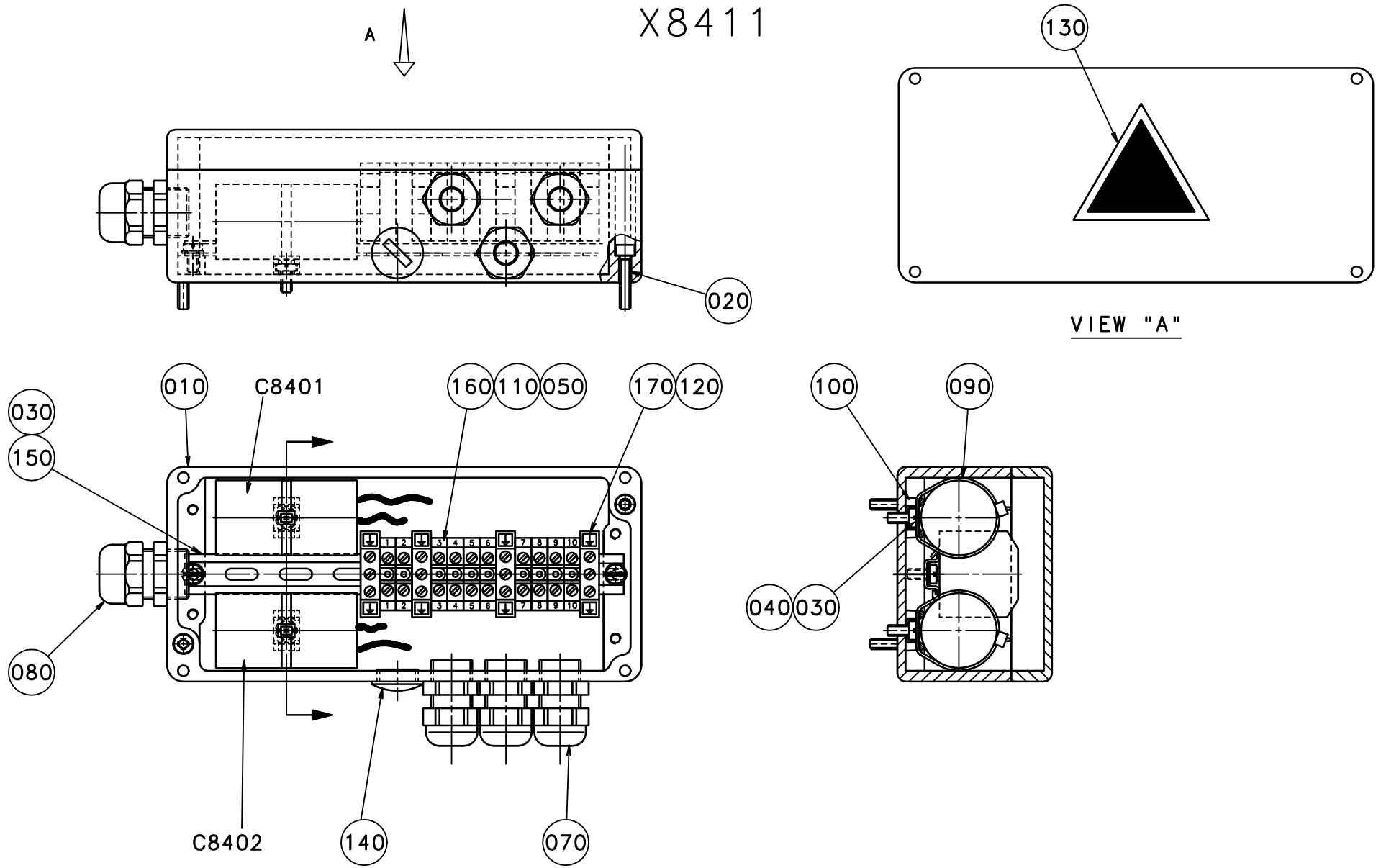
A
X8411
020
130
VIEW "A"
010
C8401
160
110
050
170
120
030
150
080
C8402
140
070
100
090
040
030

ECM: 114872 - 20021125
Group number: 1285054-0100
Assembly Drawing: 1285054-1_1_AA

Pos	Part No	SP	UN	Qty	Description	Page No
-						
010	1350146-0000	-		1	CONNECTION BOX	
020	312115-0295	-		2	SCREW ISO4762 M4X20 A4	
030	312125-0287	-		4	SCREW ISO 1207 M4X8 A4	
040	315105-0136	-		2	WASHER BRB4,3XRFR	
050	351172-0104	-	M	2	CABLE AWM 1X15 MM2 DARK-BLUE	
070	352103-0101	-		3	CABLE GLAND, ST 9, PR15,2/PG9	
080	352103-0106	-		1	CABLE GLAND, ST 11, PR18,6/PG11	
090	352113-0102	-		2	CLIP-STRIP, BLACK 188X4,8 MM	
100	352113-0205	-		2	ANCHOR PLATES FOR STRIPS, TYPE TM2S8-C10	
110	359011-0807	-		2	MARKING PLATES 5-FW 1-50	
120	359011-0834	-		1	SET OF SIGNS 6-GW(EARTH)	
130	359705-0015	-		1	WARNING SIGN ISO, RISK OF ELECTRIC SHOCK	
140	90002-0013	-		1	BLANK-OFF PLUG, PR 15,2 SKINDICHT-BLK9	
150	90077-0328	-	MM	162	RAIL TS15/5	
160	90077-0079	-		10	FEED THROUGH TERMINAL, 02943.6	
170	90135-0026	-		4	EARTH TERMINAL, 3802.6	
C8401	90159-0097	A		1	CAPACITOR, 2 æF 450 V	
C8402	90159-0097	A		1	CAPACITOR, 2 æF 450 V	

Pos	Part No	SP	UN	Qty	Description	Page No

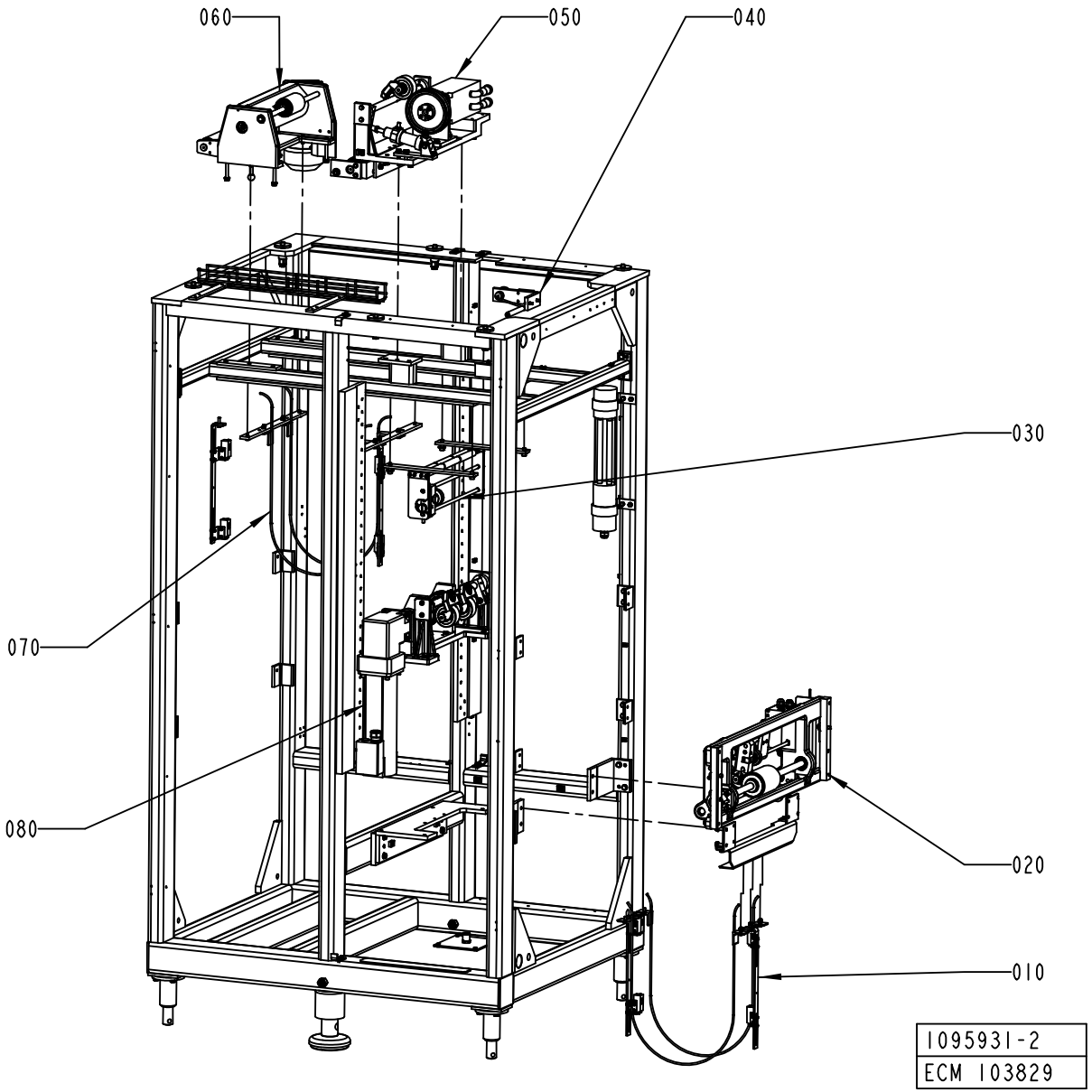
060
050
040
030
070
080
020
010
1095931-2
ECM 103829

ECM: 107805 - 20020214
Group number: 1095931-0400
Assembly Drawing: 1095931-2_1_AA

Pos	Part No	SP	UN	Qty	Description	Page No
-						
010	1095979-0100	-		1	PHOTOCELL UNIT	**1-67**
020	2501782-0100	-		1	OUTFEED TENSION DEVICE	**1-69**
030	1558069-0100	-		1	PAPER GUIDE	**1-79**
040	514993-0200	-		1	BY-PASS SENSOR	**1-83**
050	2504611-0100	-		1	MOTOR UNIT	**1-85**
060	1095953-0200	-		1	INFEED UNIT	**1-93**
070	1095980-0100	-		1	PHOTOCELL UNIT	**1-95**
080	2526544-0100	-		1	DRIVE MOTOR	**1-97**

Pos	Part No	SP	UN	Qty	Description	Page No

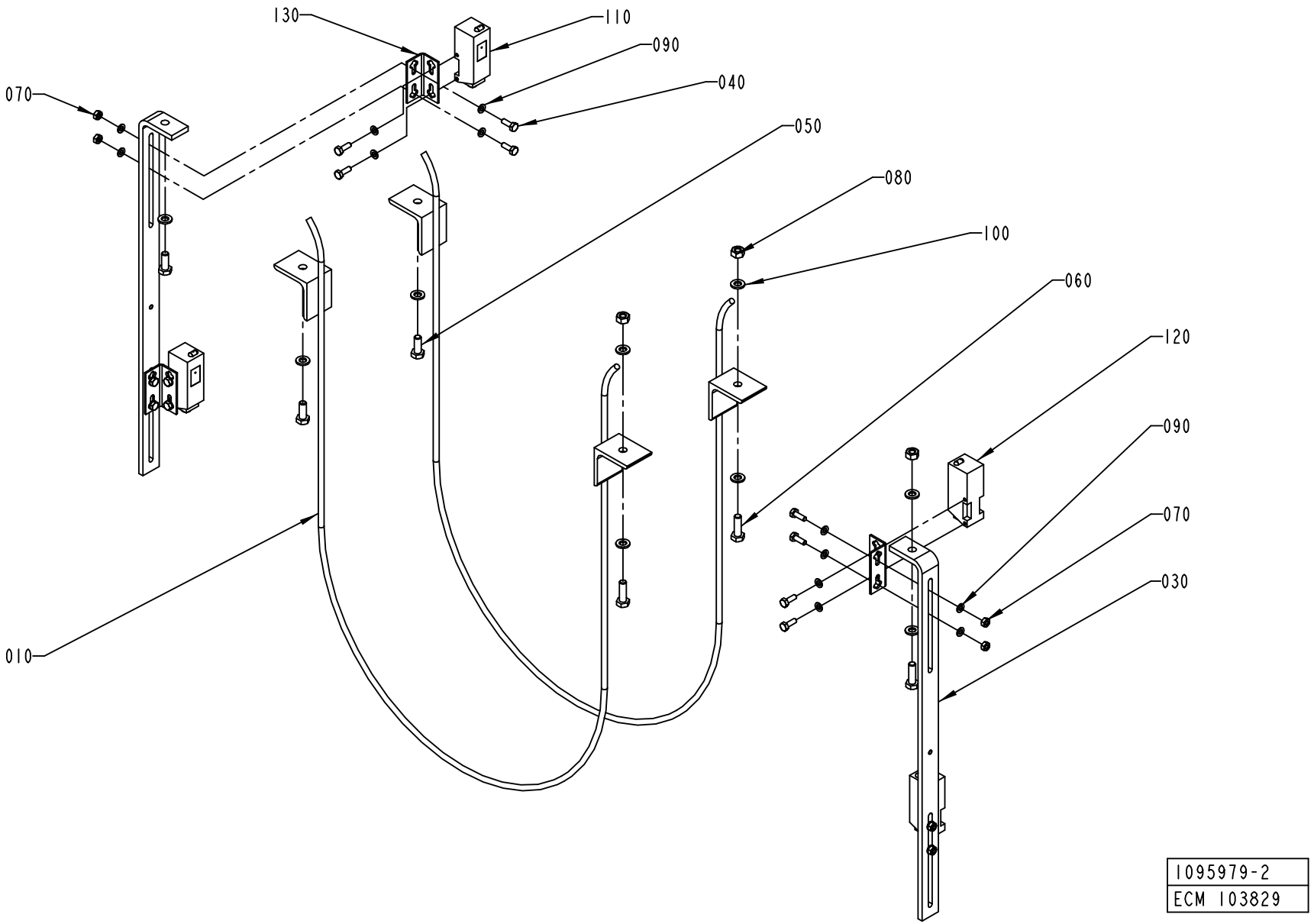
130
110
090
040
070
050
080
100
060
120
090
070
030
010
1095979-2
ECM 103829

ECM: 107811 - 20020214
Group number: 1095979-0100
Assembly Drawing: 1095979-2_1_AA

Pos	Part No	SP	UN	Qty	Description	Page No
-						
010	1140209-0000	-		2	GUIDE	
030	1140211-0000	-		2	PHOTOCELL BRACKET	
040	312105-0291	-		16	SCREW M6S ISO 4017 M4X12 A470	
050	312105-0368	-		3	SCREW M6S ISO 4017 M6X16 A480	
060	312105-0370	-		3	SCREW M6S ISO 4017 M6X20 A480	
070	312605-0312	-		8	HEXAGON NUT, M6M M4 A280	
080	312605-0316	-		3	HEXAGON NUT, M6M M6 A280	
090	315105-0136	-		24	WASHER BRB4,3XRFR	
100	315105-0153	-		9	WASHER BRB6,4X12RFR	
110	90232-0103	A		2	PH.CELL E3S-CT61-L-5M	
120	90232-0104	A		2	PH.CELL E3S-CT61-D-5M	

Pos	Part No	SP	UN	Qty	Description	Page No

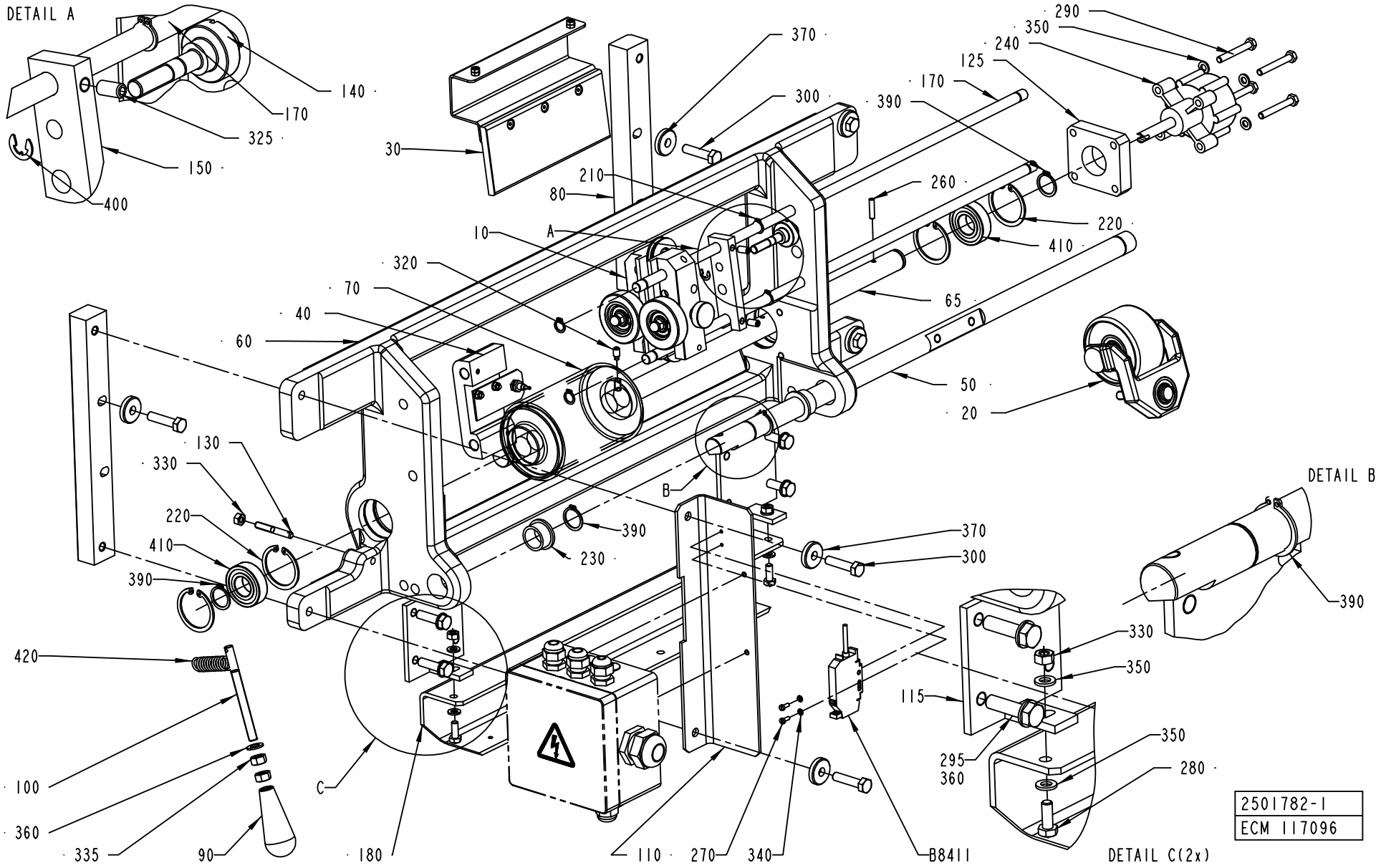
DETAIL A
140
170
325
150
400
370
300
30
210
80
10
A
320
70
40
60
290
350
240
125
170
390
260
220
410
65
50
20
130
330
220
410
390
B
390
230
370
300
DETAIL B
390
330
350
115
295
360
350
280
420
100
360
335
90
C
180
110
270
340
B8411
DETAIL C(2x)
2501782-1
ECM 117096

ECM: 120386 - 20031124
Group number: 2501782-0100
Assembly Drawing: 2501782-1_1_AE

Pos	Part No	SP	UN	Qty	Description	Page No
-						
010	2563964-0100	-		1	PAPER GUIDE	**1-71**
020	1499297-0100	-		1	COUNTER ROLLER	**1-73**
030	2525330-0100	-		1	GUIDE	**1-75**
040	2501784-0100	-		1	DETECTOR	**1-77**
050	2501793-0000	-		1	AXLE SUPPORT	
060	2501783-0000	-		1	CANTILEVER	
065	2501794-0000	-		1	SHAFT	
070	1498335-0000	A		1	ROLLER	
080	1558073-0000	-		2	BAR	
090	90458-2163	-		1	HANDLE, OVAL, THREADED BUSH, M8 29X69 MM	
100	2503473-0000	-		1	PIN	
110	2501786-0000	-		1	BRACKET	
115	1558077-0000	-		2	BRACKET	
125	2501795-0000	-		1	SPACER	
130	583713-0000	-		1	SPRING BRACKET	
140	1317713-0000	-		1	SHAFT	
150	1317715-0000	-		1	HOLDER	
170	2501796-0000	-		4	ROD	
180	2501811-0000	-		1	BRACKET	
210	90141-0016	-		4	RETAINING RING FOR SHAFT DIN 471 10 A2	
220	90141-0020	-		4	RETAINING RING FOR BORE DIN 472 42 A2	
230	90240-0221	B		2	FLANGE BUSHING,20X25X14 MM	
240	90347-0054	A		1	DAMPER	
260	311112-0256	-		1	SPRING PIN, ISO 8752 4X20-C	
270	312125-0222	-		2	SCREW ISO 1207 M3X8 A4	
280	312105-0368	-		2	SCREW M6S ISO 4017 M6X16 A480	
290	312105-0379	-		4	SCREW M6S ISO 4014 M6X45 A480	
295	312105-0455	-		4	SCREW M6S ISO 4017 M8X30 A480	
300	312109-0457	-		6	SCREW M6S ISO 4017 M8X35 A480	
320	312311-0366	-		1	SCREW ISO4028 M6X12 FZB	
325	312318-0366	-		2	SCREW ISO4029 M6X12 A4	
330	312605-0316	-		3	HEXAGON NUT, M6M M6 A280	
335	312605-0318	-		2	HEXAGON NUT, M6M M8 A280	
340	315105-0124	-		2	WASHER BRB3,2X6RFR	
350	315105-0153	-		8	WASHER BRB6,4X12RFR	
360	315105-0165	-		5	WASHER BRB8,4X16RFR	
370	315125-0165	-		6	WASHER TBRSB 8,4X26X5 A4	
390	315751-0116	-		4	RETAINING RING FOR SHAFT DIN 471 20 A2	
400	315755-0108	-		1	RETAINING RING SHAFT DIN 6799 6 A2	
410	321308-0204	A		2	BALL BEARING, 20X42X12 MM	
420	2501818-0000	A		1	SPRING	

Pos	Part No	SP	UN	Qty	Description	Page No
B8411	90232-0123	A		1	PH.CELL WLL170-P135-6011723	

Machine Type	Group Description	Used-In	Group Number	Page No

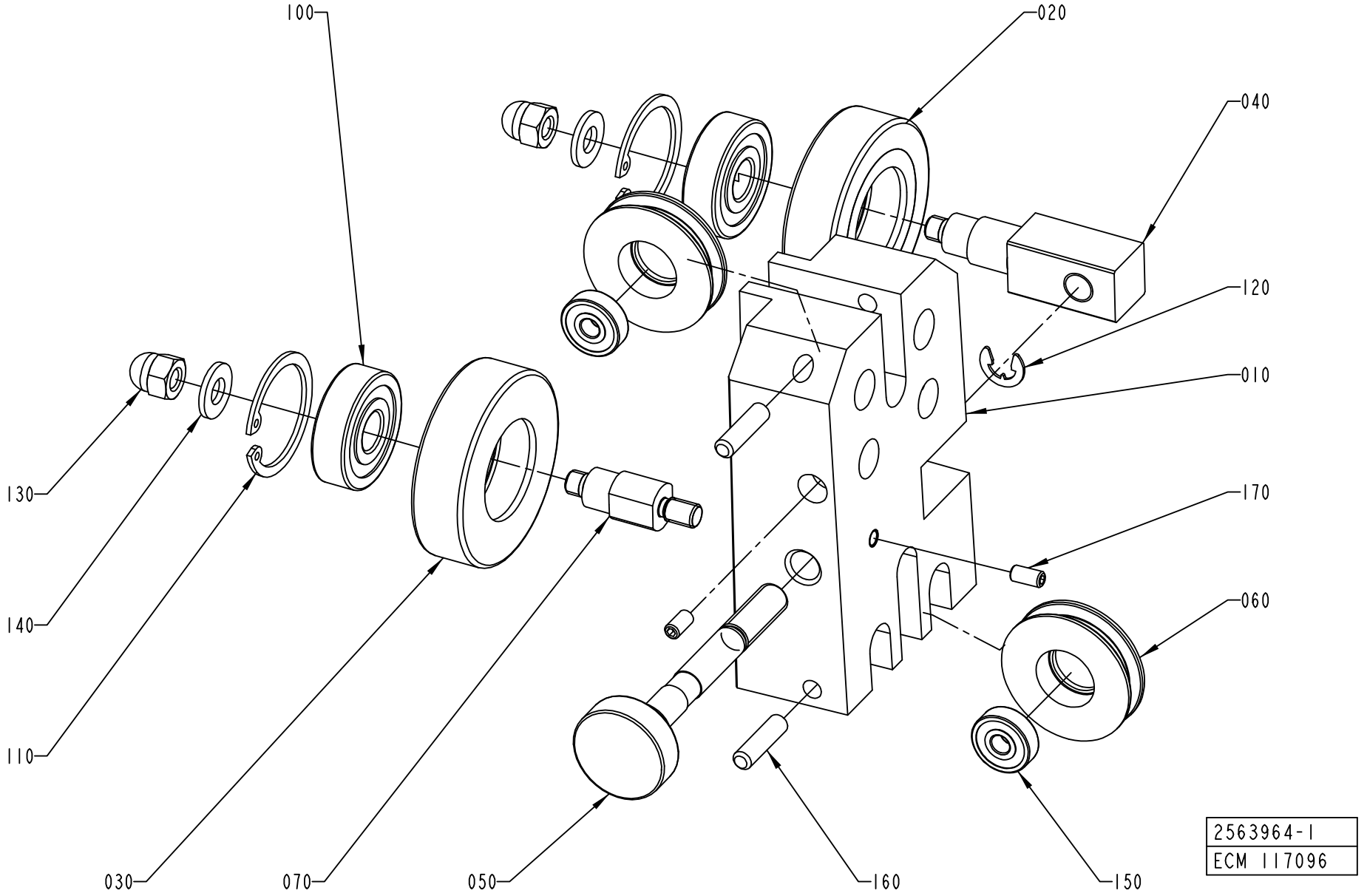
100
020
040
120
010
170
060
130
140
110
030
070
050
160
150
2563964-1
ECM 117096

ECM: 117114 - 20031124
Group number: 2563964-0100
Assembly Drawing: 2563964-1_1_AA

Pos	Part No	SP	UN	Qty	Description	Page No
-						
010	2563965-0000	-		1	BRACKET	
020	1036623-0000	A		1	GUIDE ROLLER	
030	1036622-0000	A		1	GUIDE ROLLER	
040	1317711-0000	A		1	SHAFT	
050	1317712-0000	-		1	SHAFT	
060	1558253-0000	A		2	ROLLER	
070	583727-0000	A		1	SHAFT	
100	321313-0100	A		2	BALL BEARING, 10X30X9 MM	
110	315753-0122	-		2	RETAINING RING FOR BORE DIN 472 30 A2	
120	315755-0108	-		1	RETAINING RING SHAFT DIN 6799 6 A2	
130	312705-0316	-		2	NUT HEX. DOMED CAP MHM-6 M6 A280	
140	315105-0156	-		2	WASHER BRB 6.7X14 RFR	
150	90458-2950	A		2	BALL BEARING, 5X16X5 MM	
160	2578450-0000	-		2	PIN	
170	312318-0287	-		2	SCREW ISO4029 M4X8 A4	

Pos	Part No	SP	UN	Qty	Description	Page No

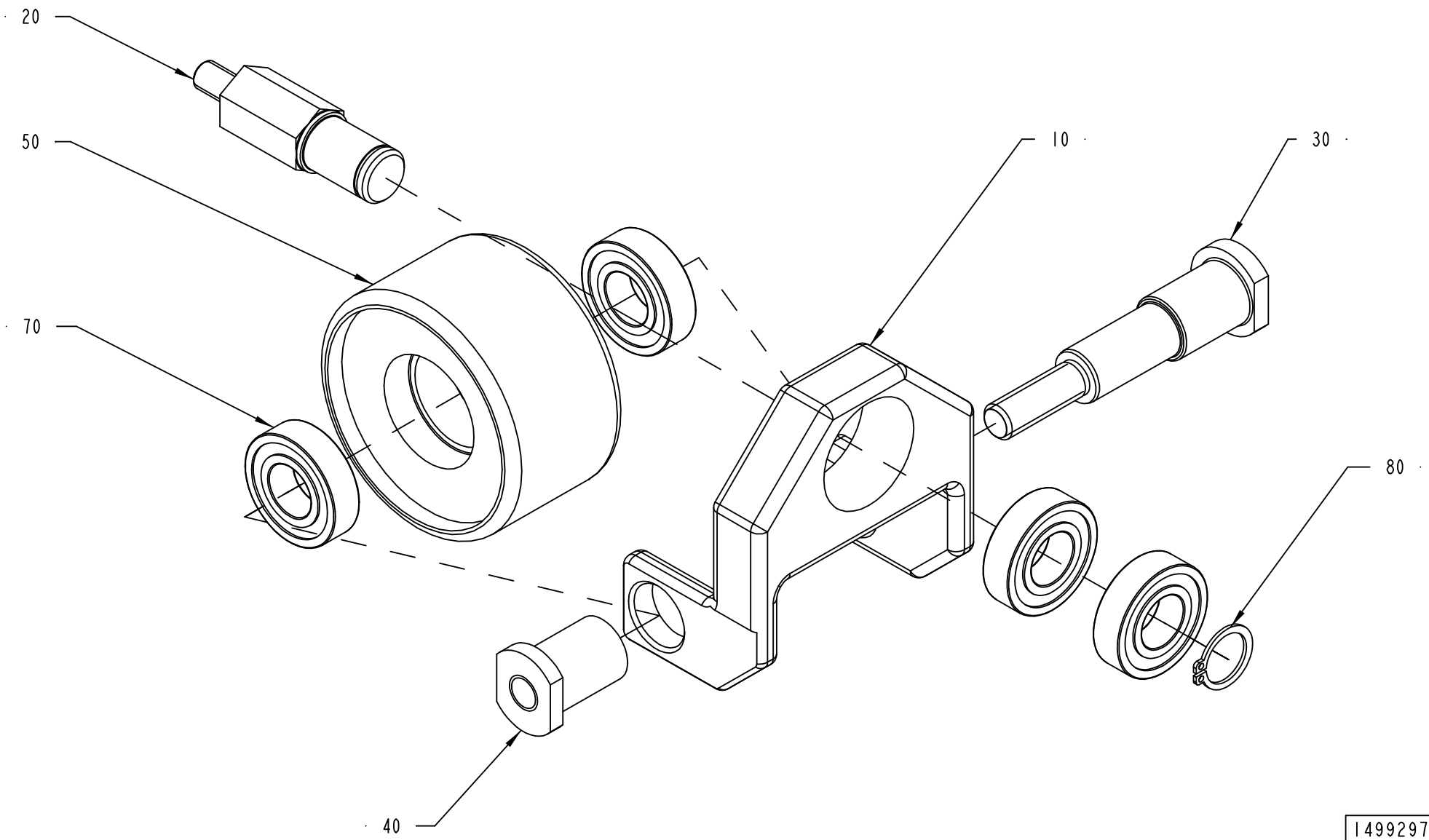

1499297-1
ECN 92856

ECM: 92856 - 20010809
Group number: 1499297-0100
Assembly Drawing: 1499297-1_1_AA

Pos	Part No	SP	UN	Qty	Description	Page No
-						
010	263150-0000	B		1	BRACKET	
020	1499298-0000	B		1	PIN	
030	263152-0000	A		1	SHAFT	
040	263153-0000	B		1	NUT	
050	1145079-0000	A		1	WHEEL	
070	321308-0202	A		4	BALL BEARING, 15X32X9 MM	
080	315751-0112	-		1	RETAINING RING FOR SHAFT DIN 471 15 A2	

Pos	Part No	SP	UN	Qty	Description	Page No

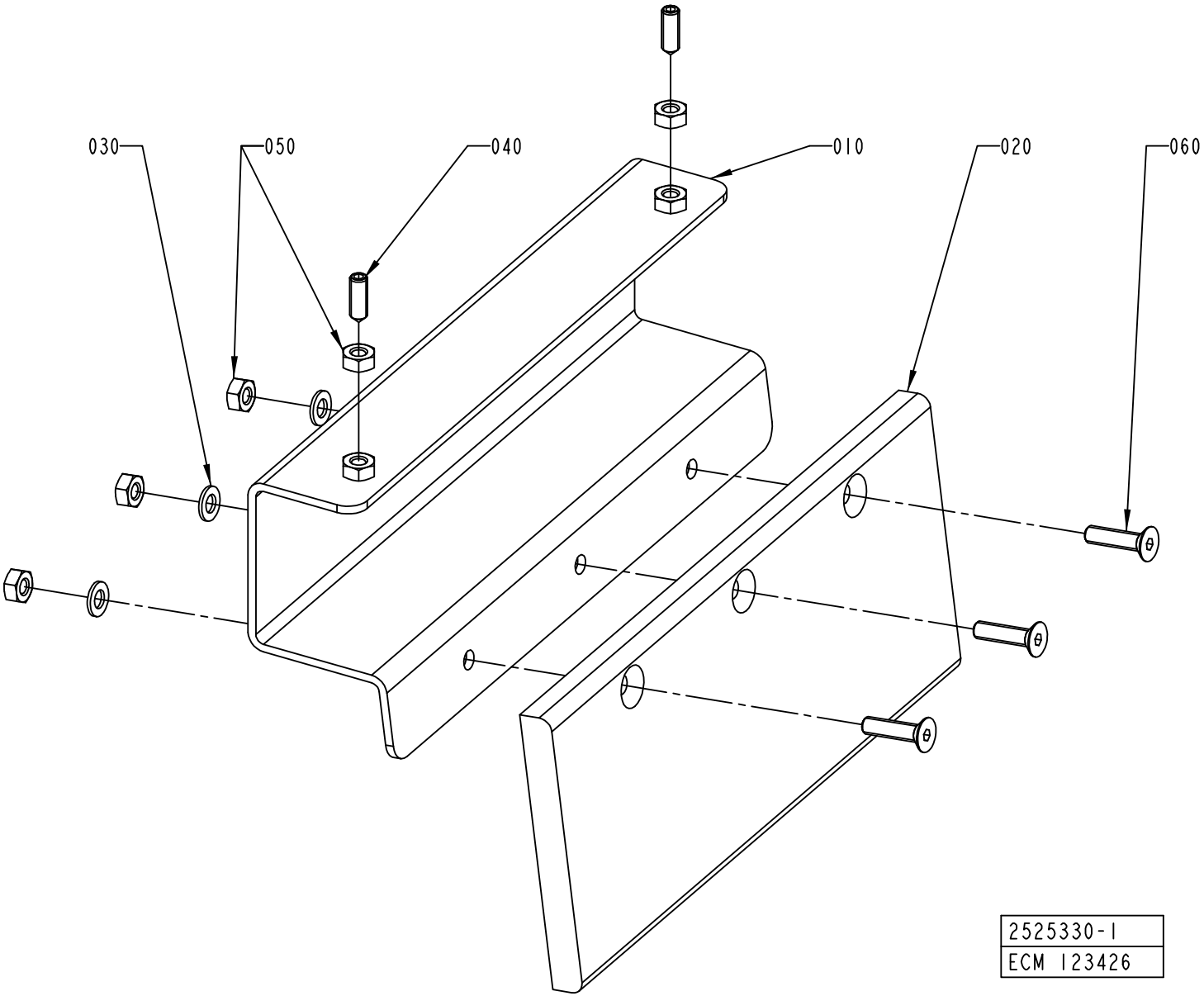
030
050
040
010
020
060
2525330-1
ECM 123426

ECM: 123426 - 20030331
Group number: 2525330-0100
Assembly Drawing: 2525330-1_1_AA

Pos	Part No	SP	UN	Qty	Description	Page No
-						
010	2525331-0000	-		1	SUPPORT	
020	2525332-0000	-		1	PLATE	
030	90005-0082	-		3	WASHER PLAIN ROUND 4,3(M4)/12,H=1	
040	90459-1681	-		2	SCREW HEX.SOCK.SET CONEPT.MS6SS M4X12 A2	
050	312605-0312	-		5	HEXAGON NUT, M6M M4 A280	
060	312155-0293	-		3	SCREW EN 10642 MF6S M4X16 A480	

Pos	Part No	SP	UN	Qty	Description	Page No

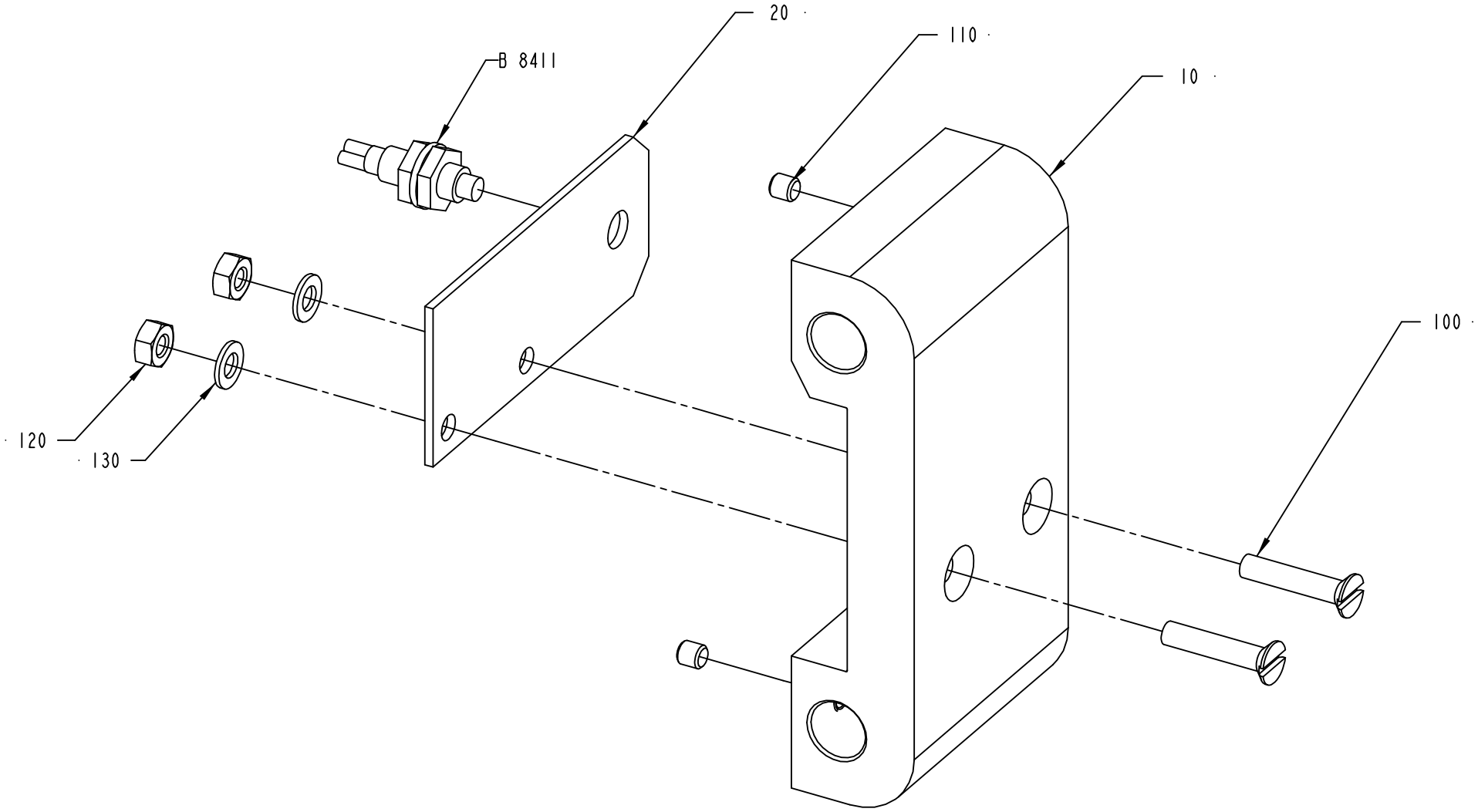

2501784-1
ECN 92856

ECM: 92856 - 20010809
Group number: 2501784-0100
Assembly Drawing: 2501784-1_1_AA

Pos	Part No	SP	UN	Qty	Description	Page No
-						
010	1532461-0000	-		1	BRACKET	
020	2501785-0000	-		1	PLATE	
100	312145-0295	-		2	SCREW ISO 2009 MFS M4X20 A4	
110	312318-0283	-		2	SCREW ISO4029 M4X4 A4	
120	312605-0312	-		2	HEXAGON NUT, M6M M4 A280	
130	315105-0136	-		2	WASHER BRB4,3XRFR	
B8411	90232-0325	A		1	FIBRE E32-DC200	

Pos	Part No	SP	UN	Qty	Description	Page No

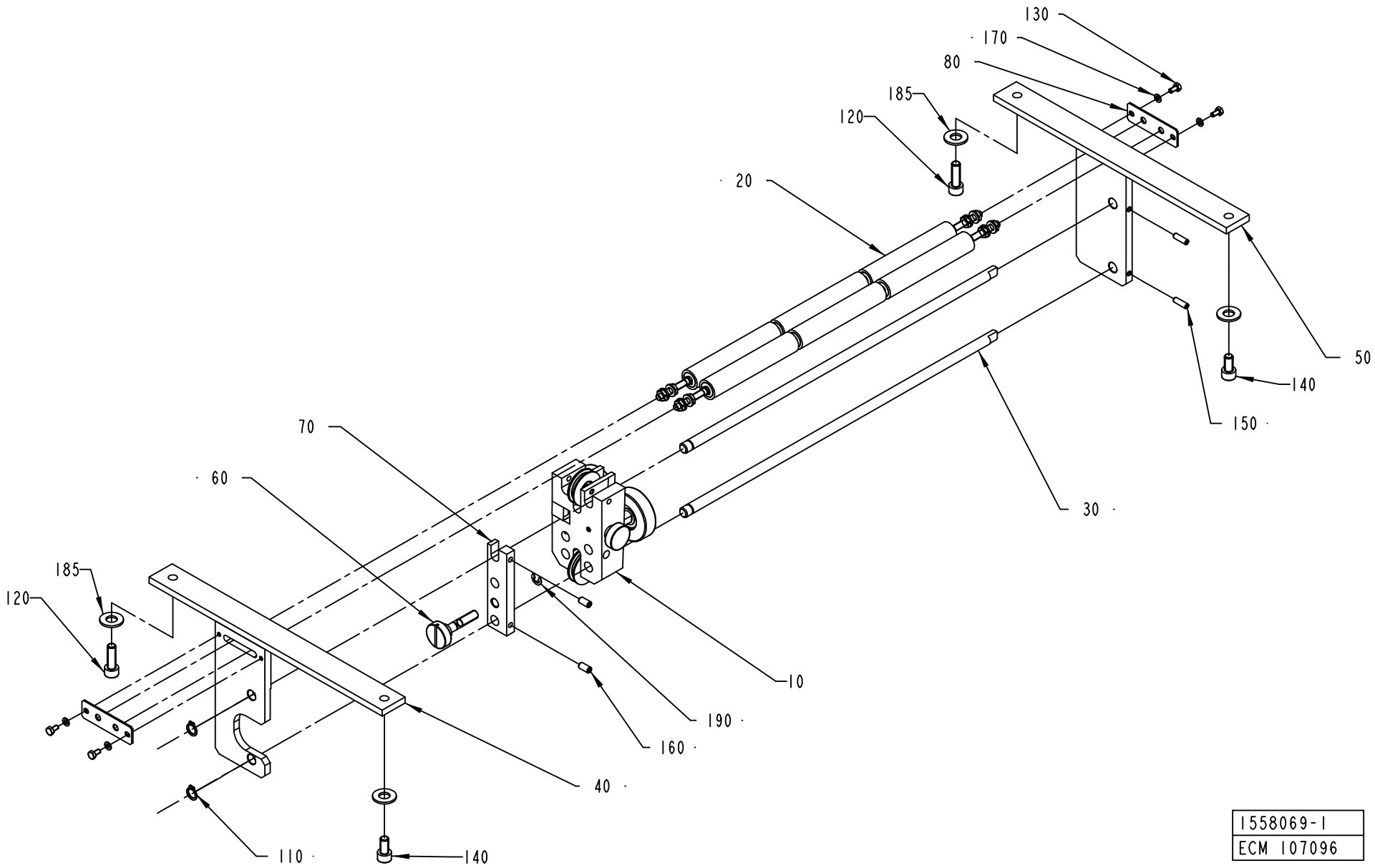

1558069-1
ECM 107096

ECM: 120385 - 20031124
Group number: 1558069-0100
Assembly Drawing: 1558069-1_1_AC

Pos	Part No	SP	UN	Qty	Description	Page No
-						
010	2563964-0100	-		1	PAPER GUIDE	**1-71**
020	1498323-0100	A		1	PAPER GUIDE	**1-81**
030	1558066-0000	-		2	SHAFT	
040	1558067-0000	-		1	BRACKET	
050	1558068-0000	-		1	BRACKET	
060	1317713-0000	-		1	SHAFT	
070	1317715-0000	-		1	HOLDER	
080	1558065-0000	-		2	PLATE	
110	90141-0016	-		2	RETAINING RING FOR SHAFT DIN 471 10 A2	
120	312115-0453	-		2	SCREW ISO4762 M8X25 A4	
130	312105-0287	-		4	SCREW M6S ISO4017 M4X8 A470	
140	312115-0449	-		2	SCREW ISO4762 M8X16 A4	
150	312318-0329	-		2	SCREW ISO4029 M5X16 A4	
160	312318-0366	-		2	SCREW ISO4029 M6X12 A4	
170	315105-0136	-		4	WASHER BRB4,3XRFR	
185	315105-0173	-		4	WASHER BRB10,5X22RFR	
190	315755-0108	-		1	RETAINING RING SHAFT DIN 6799 6 A2	

Pos	Part No	SP	UN	Qty	Description	Page No

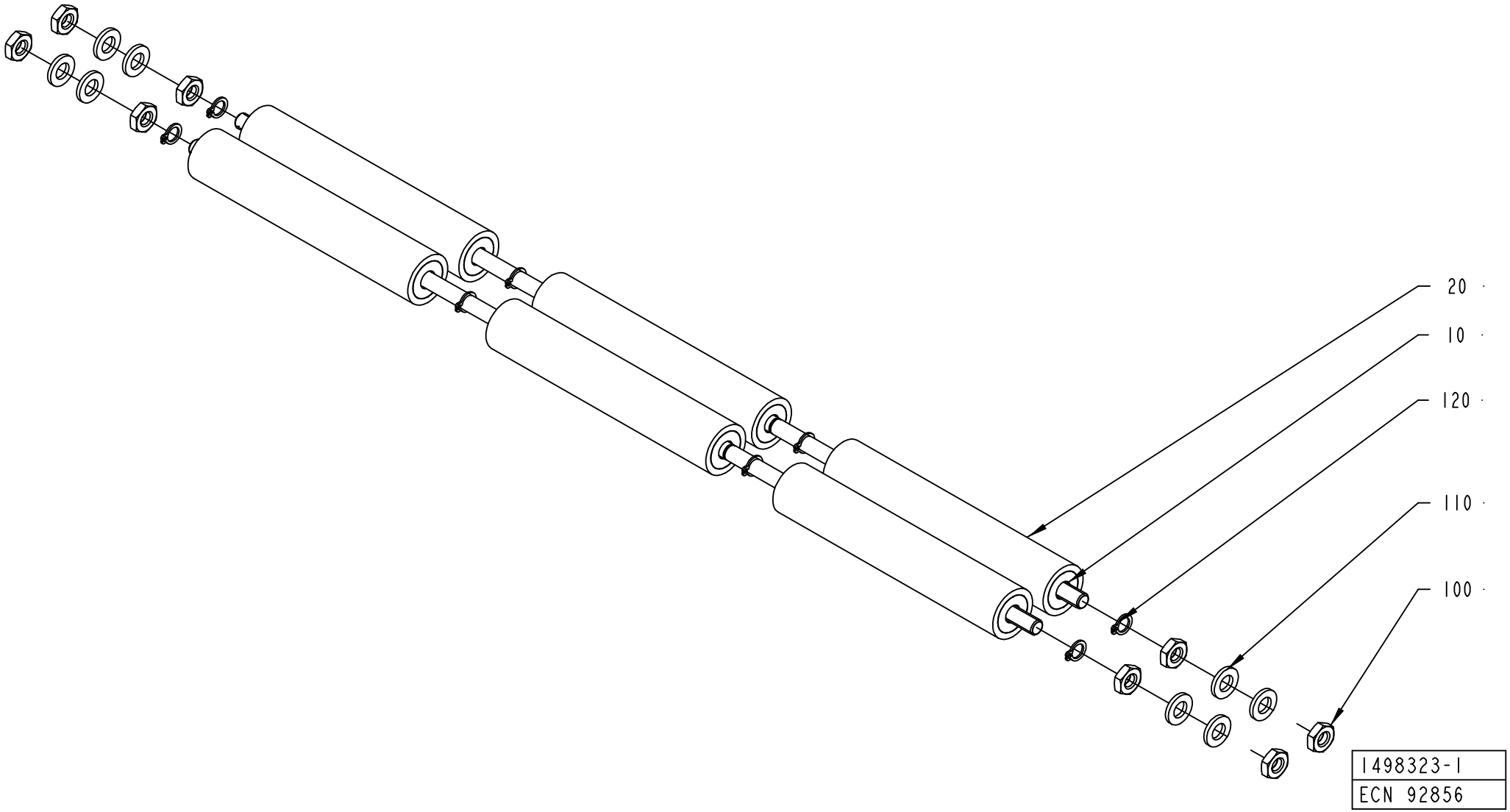
20
10
120
110
100
1498323-1
ECN 92856

ECM: 92856 - 20010809
Group number: 1498323-0100
Assembly Drawing: 1498323-1_1_AA

Pos	Part No	SP	UN	Qty	Description	Page No
-						
010	1499283-0000	-		2	SHAFT	
020	1145391-0000	A		6	ROLLER	
100	312625-0316	-		8	HEXAGON THIN NUT, EN 24035 ML6M M6 A4	
110	315105-0153	-		8	WASHER BRB6,4X12RFR	
120	315751-0103	-		8	RETAINING RING FOR SHAFT DIN 471 6 A2	

Pos	Part No	SP	UN	Qty	Description	Page No

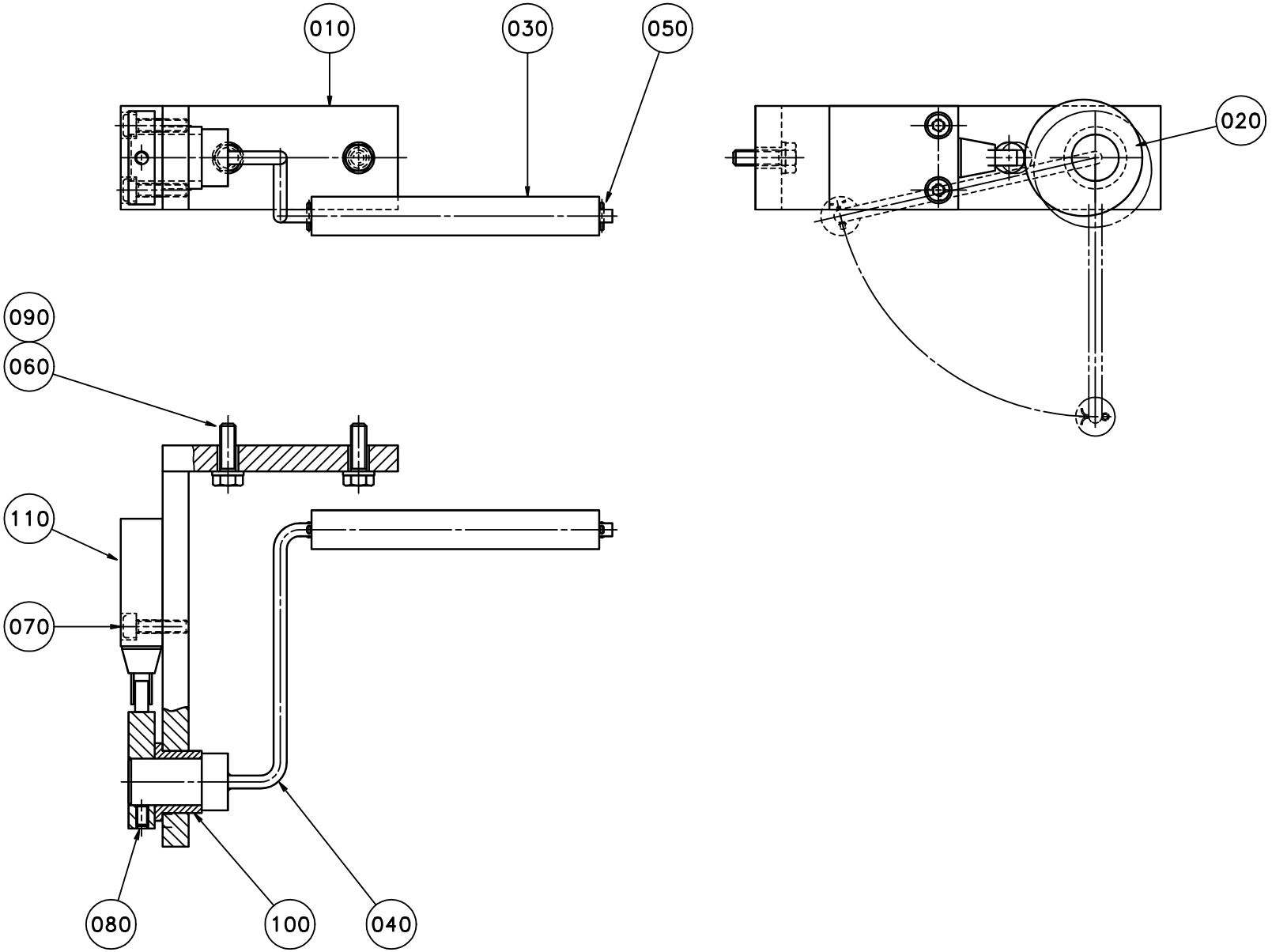
010
030
050
020
090
060
110
070
080
100
040

ECM: 114867 - 20021125
Group number: 514993-0200
Assembly Drawing: 514993-1_1_AC

Pos	Part No	SP	UN	Qty	Description	Page No
-						
010	1260329-0000	-		1	BRACKET	
020	1255035-0000	-		1	ECCENTRIC	
030	1010814-0000	-		1	ROLLER	
040	1082861-0000	-		1	ARM	
050	311411-0138	-		2	SPLIT PIN SP1,6X12RFR	
060	312105-0370	-		2	SCREW M6S ISO 4017 M6X20 A480	
070	312115-0331	-		2	SCREW ISO4762 M5X20 A4	
080	312318-0323	-		1	SCREW ISO4029 M5X8 A4	
090	315105-0153	-		2	WASHER BRB6,4X12RFR	
100	321111-0274	-		1	FLANGE BUSHING, 18X24X18 MM	
110	90044-0094	A		1	LIMIT SW. 924 CE31-Y20-X5	

Pos	Part No	SP	UN	Qty	Description	Page No

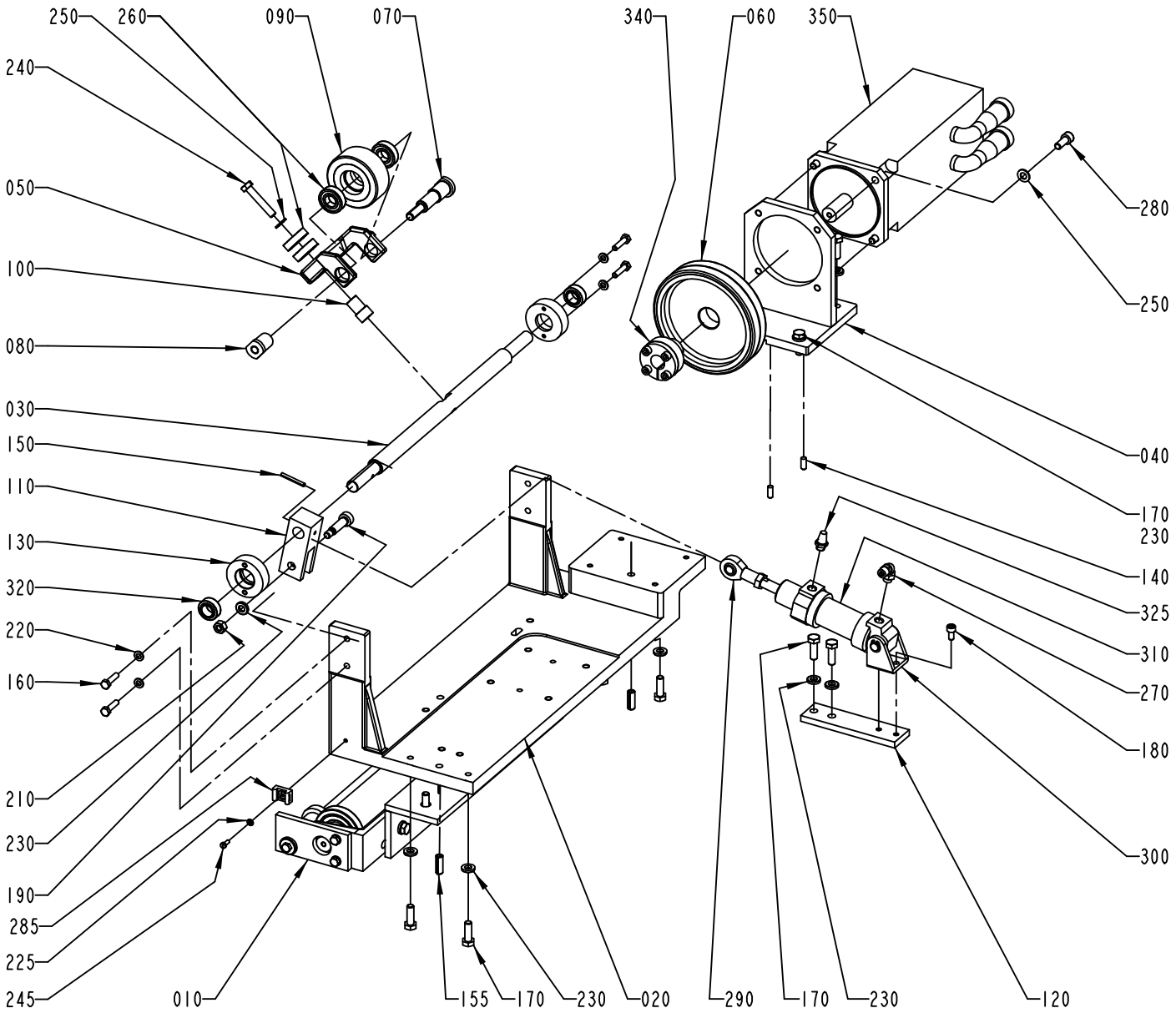

2504611-1
ECN 94635

ECM: 118232 - 20020910
Group number: 2504611-0100
Assembly Drawing: 2504611-1_1_AA

Pos	Part No	SP	UN	Qty	Description	Page No
-						
010	1095969-0100	-		1	BENDING ROLLER WITH FLANGES	**1-87**
020	1140184-0000	-		1	BRACKET	
030	1140185-0000	-		1	SHAFT	
040	1512174-0000	-		1	BRACKET	
050	263150-0000	-		1	BRACKET	
060	1140187-0000	A		1	WHEEL	
070	263152-0000	-		1	SHAFT	
080	263153-0000	-		1	NUT	
090	2555116-0000	A		1	WHEEL	
100	1129906-0000	-		1	PIN	
110	1129907-0000	-		1	LEVER	
120	1140016-0000	-		1	PLATE	
130	1140174-0000	-		2	BEARING HOUSING	
140	311103-0351	-		2	PARALLEL PIN ISO 2338 6M6X16 A1	
150	311112-0262	-		1	SPRING PIN, ISO 8752 4X32-C	
155	311112-0377	-		2	SPRING PIN, ISO 8752 8X24-C	
160	312105-0372	-		4	SCREW M6S ISO 4017 M6X25 A480	
170	312105-0453	-		10	SCREW M6S ISO 4017 M8X25 A480	
180	312115-0366	-		2	SCREW ISO4762 M6X12 A4	
190	312180-0495	-		1	SCREW ISO7379 H10X30	
210	312605-0318	-		1	HEXAGON NUT, M6M M8 A280	
220	315105-0153	-		4	WASHER BRB6,4X12RFR	
225	315105-0136	-		1	WASHER BRB4,3XRFR	
230	315115-0165	-		11	WASHER PLAIN, TBRB 8,4/16 H=3	
240	312109-0460	-		1	SCREW M6S ISO 4017 M8X45 A480	
245	312125-0289	-		1	SCREW ISO 1207 M4X10 A4	
250	315105-0165	-		5	WASHER BRB8,4X16RFR	
260	321308-0202	A		4	BALL BEARING, 15X32X9 MM	
270	342931-0113	-		1	ELBOW 90 COUPL.,EXT.THREAD 6/4-G1/8"	
280	312115-0329	-		4	SCREW ISO4762 M5X16 A4	
285	352113-0204	-		1	ANCHOR PLATES FOR STRIPS, TYPE TM3S25-M	
290	90115-0134	A		1	ROD END, ID=10 MM, M10X1,25	
300	90239-0488	-		1	REAR,CLEVIS,MINI-ISO 32	
310	90239-0834	A		1	DOUBLE ACTING, MINI-ISO, CYL.32-25	
320	90240-0026	A		2	PLAIN BEAR,SELF ADJ.SPHER. 15X26X12 MM	
325	90328-0003	-		1	SILENCER	
340	90208-0118	A		1	CLAMPING ELEMENT	
350	1558903-0000	A		1	SERVO MOTOR	

Pos	Part No	SP	UN	Qty	Description	Page No

Machine Type | Group Description | Used-In | Group Number | Page No

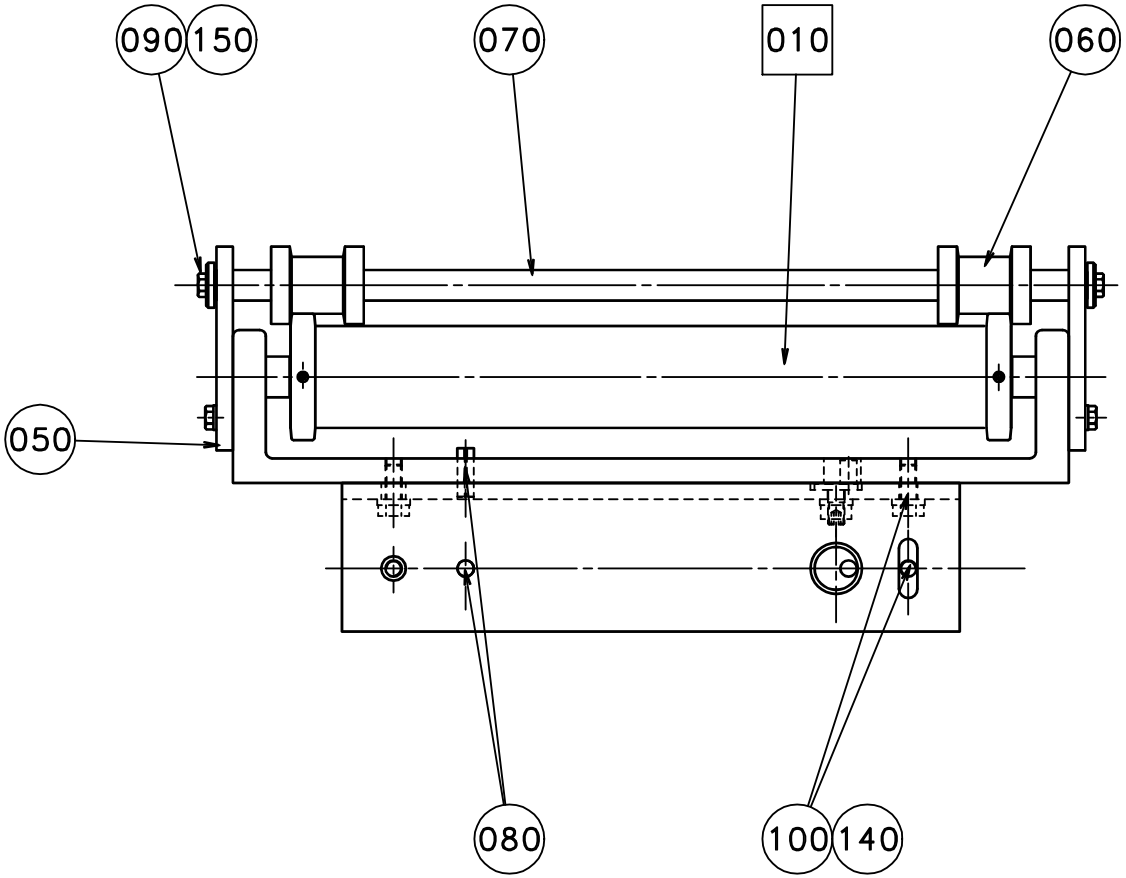
090
150
070
010
060
050
080
100
140

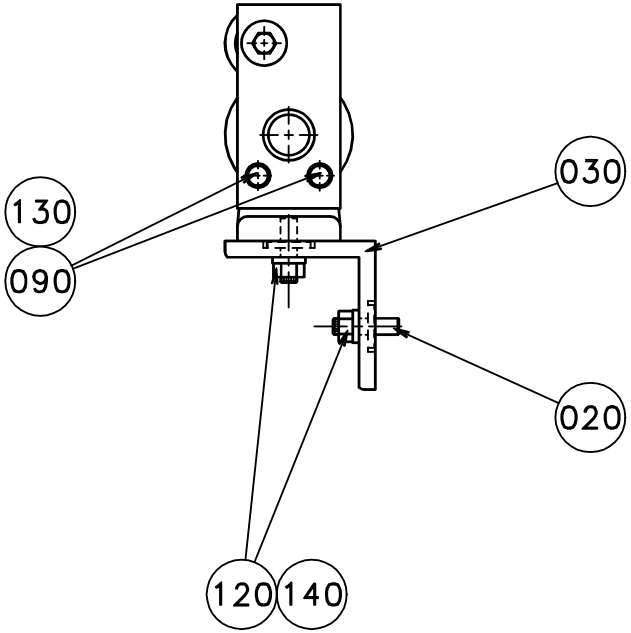
030
130
090
020
120
140

ECM: 114874 - 20021125
Group number: 1095969-0100
Assembly Drawing: 1095969-1_1_AC

Pos	Part No	SP	UN	Qty	Description	Page No
-						
010	1334322-0100	-		1	BENDING ROLLER WITH FLANGES	**1-89**
020	1140132-0000	-		2	ECCENTRIC	
030	1140136-0000	-		1	BRACKET	
050	1140134-0000	-		2	PLATE	
060	1140135-0000	A		2	ROLLER	
070	1140137-0000	-		1	SHAFT	
080	311112-0377	-		2	SPRING PIN, ISO 8752 8X24-C	
090	312105-0368	-		6	SCREW M6S ISO 4017 M6X16 A480	
100	312105-0451	-		4	SCREW M6S ISO 4017 M8X20 A480	
120	312605-0318	-		2	HEXAGON NUT, M6M M8 A280	
130	315105-0153	-		4	WASHER BRB6,4X12RFR	
140	315115-0165	-		6	WASHER PLAIN, TBRB 8,4/16 H=3	
150	315125-0153	-		2	WASHER TBRSB 6,4X22X4 A4	

Pos	Part No	SP	UN	Qty	Description	Page No

BENDING ROLLER WITH FLANGES

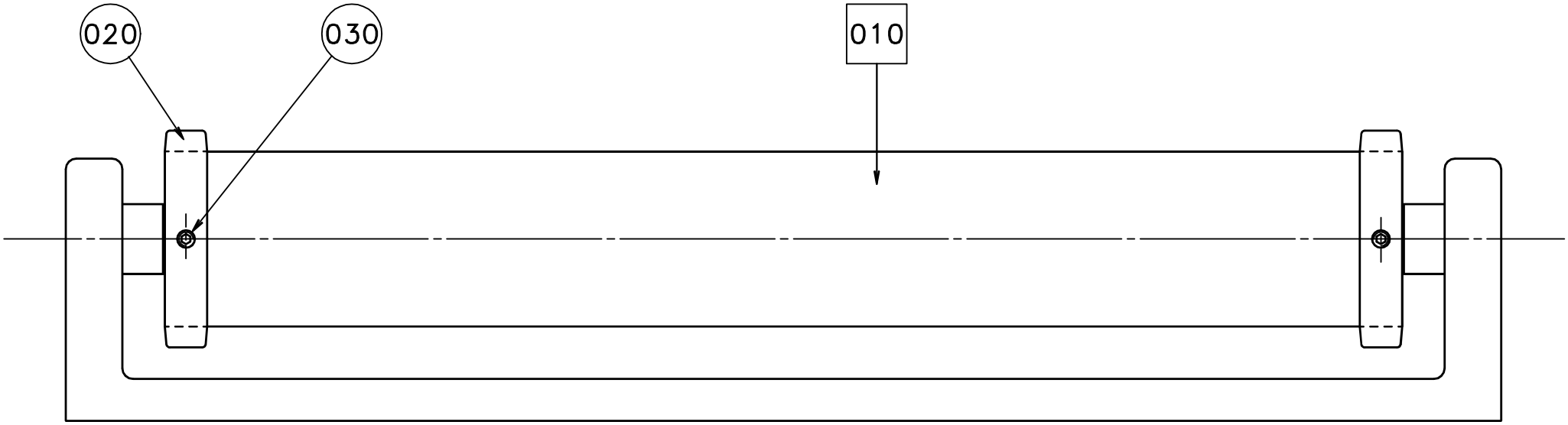

ECM: 71157 - 19971223
Group number: 1334322-0100
Assembly Drawing: 1334322-1_1_AA

Pos	Part No	SP	UN	Qty	Description	Page No
-						
010	1095952-0100	-		1	BENDING ROLLER ASSEMBLY	**1-91**
020	1140131-0000	-		2	FLANGE	
030	312311-0321	-		4	SCREW ISO4028 M5X6 FZB	

Pos	Part No	SP	UN	Qty	Description	Page No

Machine Type | Group Description | Used-In | Group Number | Page No

BENDING ROLLER ASSEMBLY

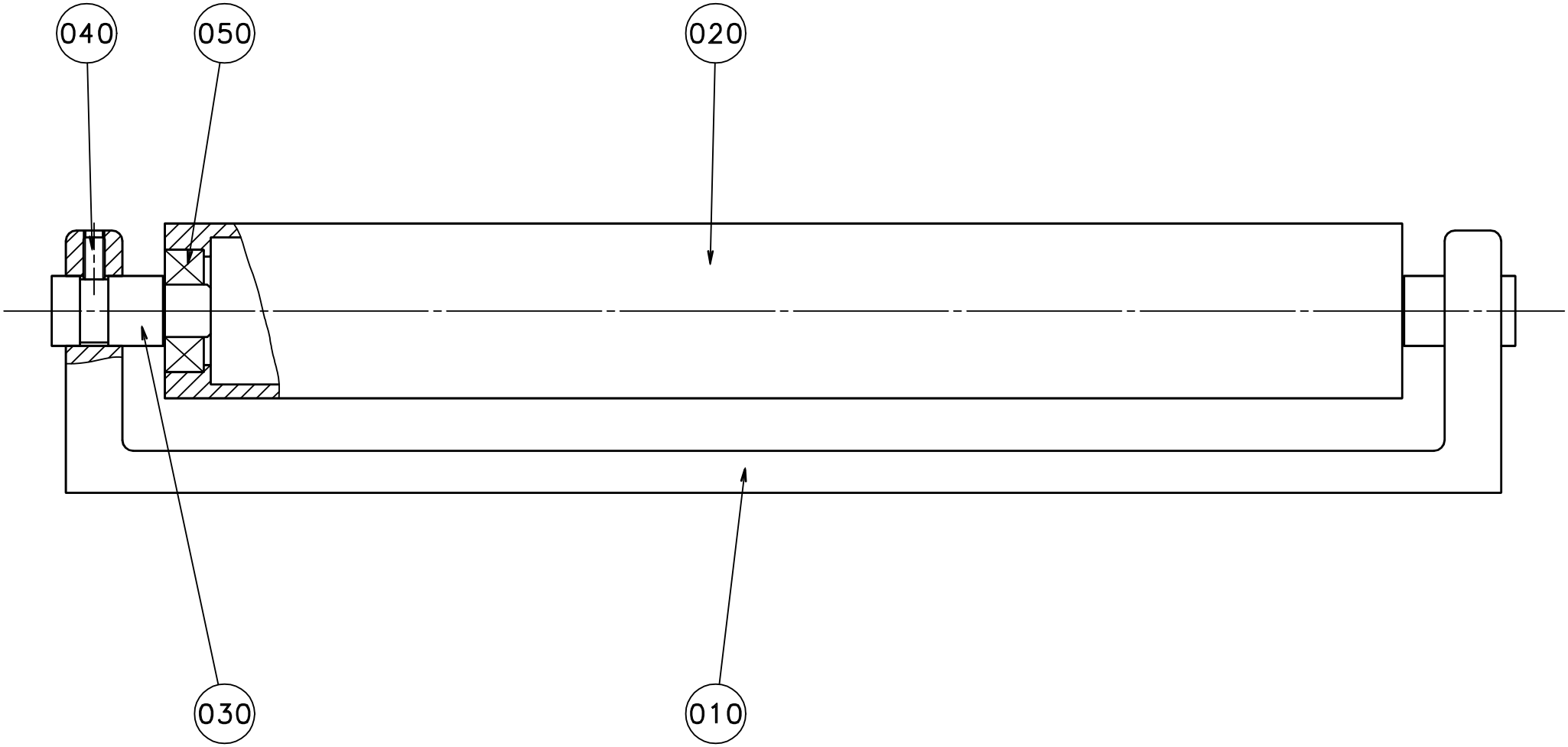

ECM: 114869 - 20021125
Group number: 1095952-0100
Assembly Drawing: 1095952-1_1_AB

Pos	Part No	SP	UN	Qty	Description	Page No
-						
010	1129952-0000	-		1	BRACKET	
020	1129951-0000	A		1	BENDING ROLLER	
030	1140133-0000	-		2	AXLE PIN	
040	312318-0366	-		2	SCREW ISO4029 M6X12 A4	
050	321313-0102	A		2	BALL BEARING, 15X35X11 MM	

Pos	Part No	SP	UN	Qty	Description	Page No

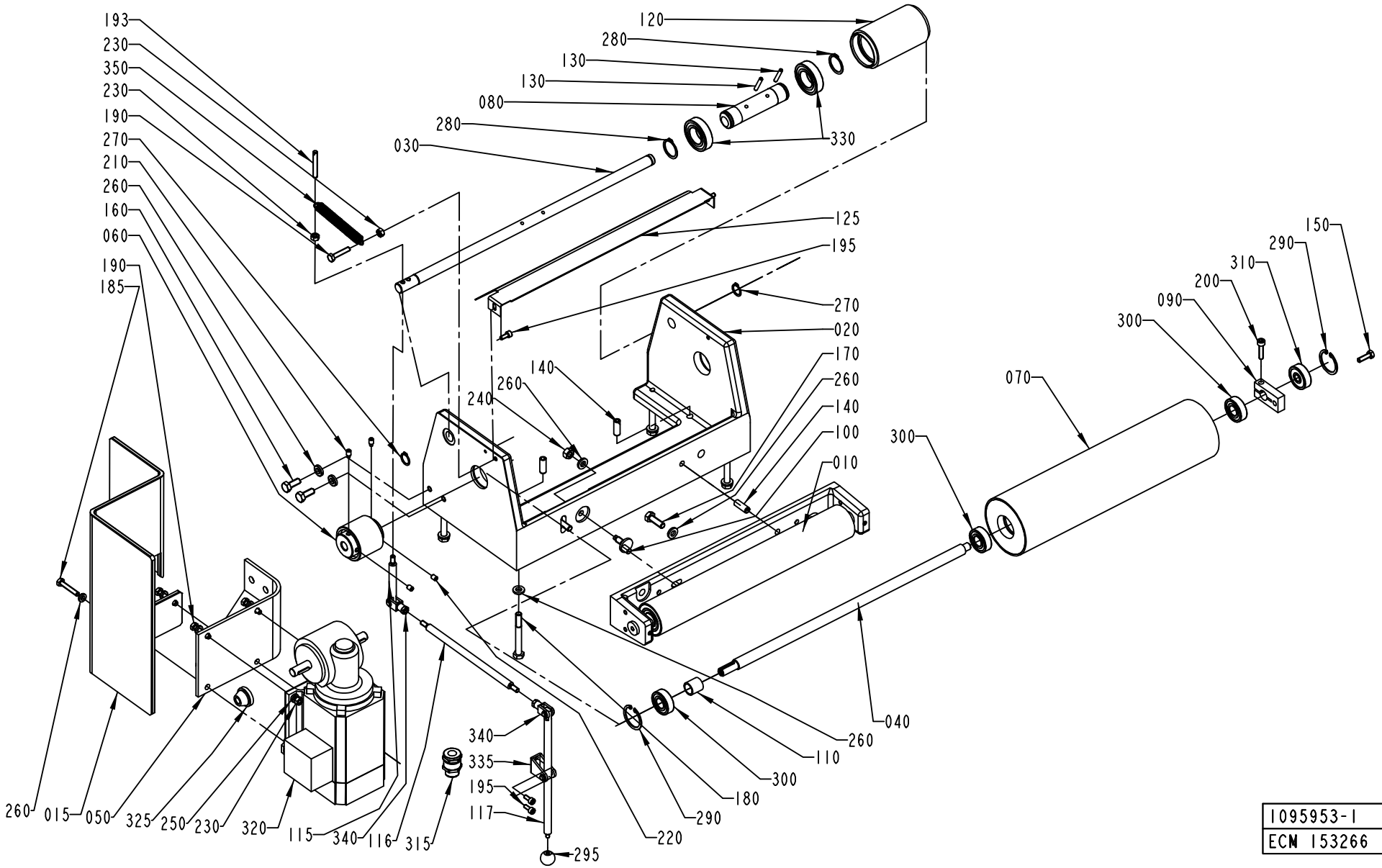
193
230
350
230
190
270
210
260
160
060
190
185
120
280
130
130
080
280
030
330
125
195
270
020
170
260
140
100
010
140
260
240
150
290
310
200
090
300
070
300
260
015
050
325
250
230
320
115
340
116
315
340
335
195
117
295
220
290
180
300
110
260
040
1095953-1
ECN 153266

ECM: 153266 - 20040222
Group number: 1095953-0200
Assembly Drawing: 1095953-1_1_AF

Pos	Part No	SP	UN	Qty	Description	Page No
-						
010	1095952-0100	-		1	BENDING ROLLER ASSEMBLY	**1-91**
015	2603690-0000	-		1	COVER	
020	985865-0000	-		1	BRACKET	
030	985856-0000	-		1	SHAFT	
040	1036220-0000	-		1	SHAFT	
050	985854-0000	-		1	BRACKET	
060	985899-0000	A		1	COUPLING	
070	2555123-0000	-		1	BENDING ROLLER	
080	1512267-0000	A		1	ECCENTRIC BUSHING	
090	1036232-0000	-		1	BRACKET	
100	1140132-0000	-		1	ECCENTRIC	
110	985855-0000	-		1	SPACER BUSHING	
115	1260642-0000	-		1	LEVER	
116	1260643-0000	-		1	LEVER	
117	1260644-0000	-		1	LEVER	
120	906254-0000	A		1	ROLLER	
125	1260649-0000	-		1	PAPER GUIDE	
130	311112-0260	-		2	SPRING PIN, ISO 8752 4X28-C	
140	311112-0377	-		3	SPRING PIN, ISO 8752 8X24-C	
150	312105-0370	-		1	SCREW M6S ISO 4017 M6X20 A480	
160	312105-0451	-		2	SCREW M6S ISO 4017 M8X20 A480	
170	312105-0453	-		2	SCREW M6S ISO 4017 M8X25 A480	
180	312105-0465	-		4	SCREW M6S ISO 4014 M8X70 A480	
185	312109-0376	-		2	SCREW M6S ISO 4017 M6X35 A480	
190	312109-0374	-		3	SCREW M6S ISO 4017 M6X30 A480	
193	1523149-0000	-		1	SPRING BRACKET	
195	312115-0327	-		4	SCREW ISO4762 M5X12 A4	
200	312115-0372	-		1	SCREW ISO4762 M6X25 A4	
210	312311-0366	-		2	SCREW ISO4028 M6X12 FZB	
220	312318-0362	-		2	SCREW ISO4029 M6X8 A4	
230	312605-0316	-		6	HEXAGON NUT, M6M M6 A280	
240	312605-0318	-		1	HEXAGON NUT, M6M M8 A280	
250	315115-0153	-		8	WASHER PLAIN, TBRB 6,4/12 H=3	
260	315115-0165	-		9	WASHER PLAIN, TBRB 8,4/16 H=3	
270	315751-0112	-		2	RETAINING RING FOR SHAFT DIN 471 15 A2	
280	315751-0119	-		2	RETAINING RING FOR SHAFT DIN 471 25 A2	
290	315753-0124	-		2	RETAINING RING FOR BORE DIN 472 35 A2	
295	318800-0102	-		1	HANDLES,SPHERICAL KNOB,INT.THRE.,D.20-M5	
300	321313-0102	A		3	BALL BEARING, 15X35X11 MM	
310	321316-0200	A		1	BALL BEARING, 10X35X11 MM	
315	90012-0137	-		1	GLAND, EXTENDED WITH INSERT, PG11	
320	90458-1492	A		1	GEARS, WORM MOTOR IGL 80-60 + E3	
325	90015-0021	-		1	LEAD-IN, TET10-14, E-1458023	
330	321308-0205	A		2	BALL BEARING, 25X47X12MM	
335	90239-0486	-		1	REAR,CLEVIS,MINI-ISO 16	
340	90239-0489	-		2	ROD END, CLEVIS WITH AXLE M6X1,25	
350	90335-0091	A		1	TENSION SPRING 41890, 1,2X13X48,2	

Machine Type | Group Description | Used-In | Group Number | Page No

PHOTOCELL UNIT

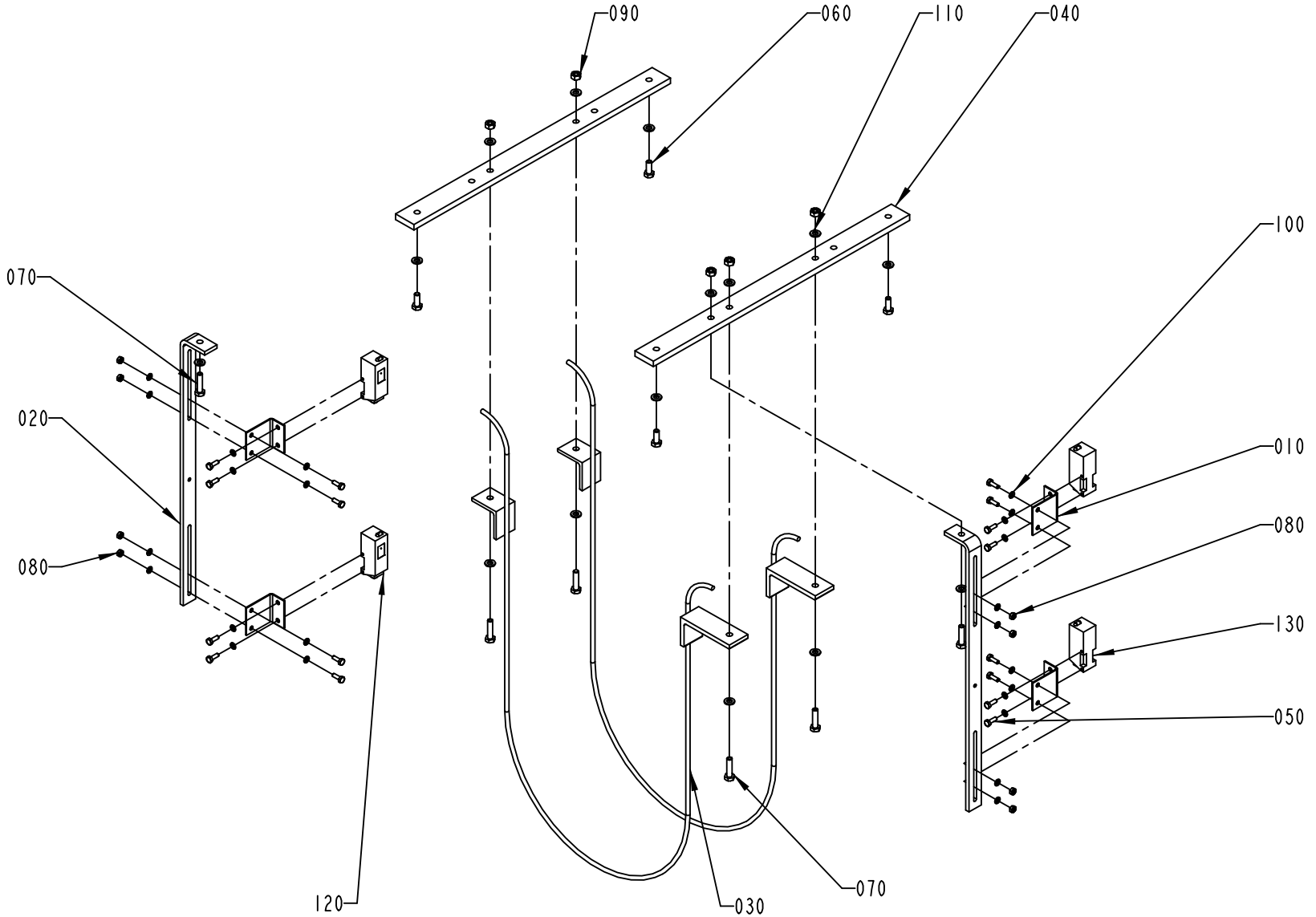

1095980-2
ECM 103829

ECM: 107806 - 20020214
Group number: 1095980-0100
Assembly Drawing: 1095980-2_1_AA

Pos	Part No	SP	UN	Qty	Description	Page No
-						
010	1082765-0000	-		4	PHOTOCELL BRACKET	
020	1140211-0000	-		2	PHOTOCELL BRACKET	
030	1539213-0000	-		2	GUIDE	
040	1140213-0000	-		2	BRACKET	
050	312105-0291	-		16	SCREW M6S ISO 4017 M4X12 A470	
060	312105-0368	-		4	SCREW M6S ISO 4017 M6X16 A480	
070	312105-0372	-		6	SCREW M6S ISO 4017 M6X25 A480	
080	312605-0312	-		8	HEXAGON NUT, M6M M4 A280	
090	312605-0316	-		5	HEXAGON NUT, M6M M6 A280	
100	315105-0136	-		24	WASHER BRB4,3XRFR	
110	315105-0153	-		15	WASHER BRB6,4X12RFR	
120	90232-0103	A		2	PH.CELL E3S-CT61-L-5M	
130	90232-0104	A		2	PH.CELL E3S-CT61-D-5M	

Pos	Part No	SP	UN	Qty	Description	Page No

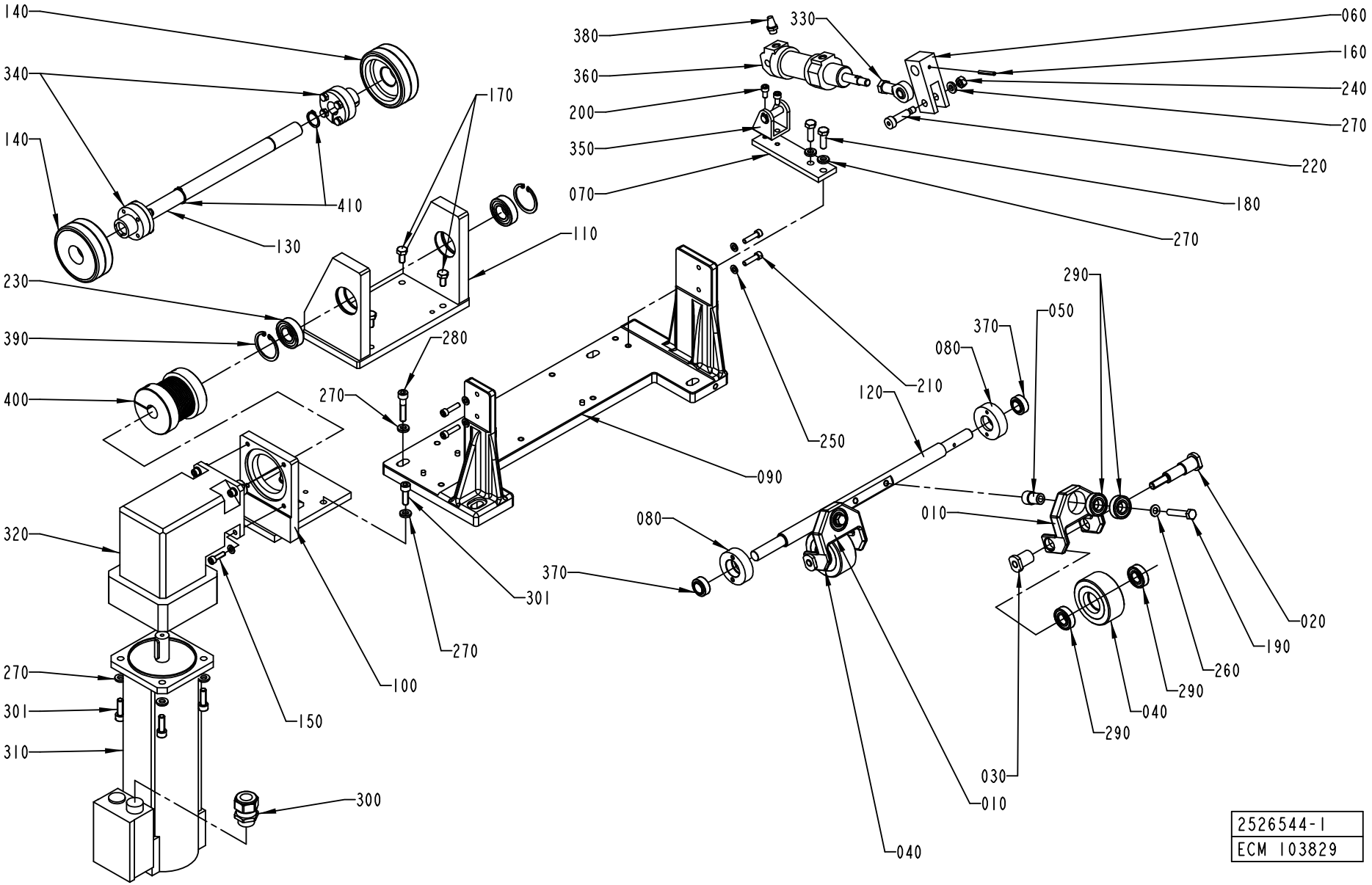
140
340
140
410
130
170
110
230
390
400
280
270
320
270
301
310
150
100
270
300
380
360
200
350
070
330
060
160
240
270
220
180
270
290
050
370
080
120
210
250
090
080
370
301
010
040
030
010
020
190
260
290
040
290
2526544-1
ECM 103829

ECM: 111662 - 20021125
Group number: 2526544-0100
Assembly Drawing: 2526544-1_1_AA

Pos	Part No	SP	UN	Qty	Description	Page No
-						
010	263150-0000	-		2	BRACKET	
020	263152-0000	-		2	SHAFT	
030	263153-0000	-		2	NUT	
040	2555116-0000	A		2	WHEEL	
050	1129906-0000	-		2	PIN	
060	1129907-0000	-		1	LEVER	
070	1140016-0000	-		1	PLATE	
080	1140174-0000	-		2	BEARING HOUSING	
090	1490995-0000	-		1	BRACKET	
100	1490996-0000	-		1	BRACKET	
110	2526543-0000	-		1	BRACKET	
120	1490998-0000	-		1	SHAFT	
130	1490999-0000	-		1	SHAFT	
140	1498046-0000	A		2	WHEEL	
150	312115-0370	-		4	SCREW ISO4762 M6X20 A4	
160	311112-0262	-		1	SPRING PIN, ISO 8752 4X32-C	
170	312105-0449	-		4	SCREW M6S ISO 4017 M8X16 A480	
180	312105-0453	-		2	SCREW M6S ISO 4017 M8X25 A480	
190	312109-0460	-		2	SCREW M6S ISO 4017 M8X45 A480	
200	312115-0366	-		2	SCREW ISO4762 M6X12 A4	
210	312115-0372	-		4	SCREW ISO4762 M6X25 A4	
220	312180-0495	-		1	SCREW ISO7379 H10X30	
230	321308-0204	A		2	BALL BEARING, 20X42X12 MM	
240	312605-0318	-		1	HEXAGON NUT, M6M M8 A280	
250	315105-0153	-		8	WASHER BRB6,4X12RFR	
260	315105-0165	-		2	WASHER BRB8,4X16RFR	
270	315115-0165	-		11	WASHER PLAIN, TBRB 8,4/16 H=3	
280	312115-0459	-		1	SCREW ISO4762 M8X40 A4	
290	321308-0202	A		8	BALL BEARING, 15X32X9 MM	
300	353245-0005	-		1	GLAND, EXTENDED WITH INSERT, PG16/PR 22,	
301	312115-0453	-		7	SCREW ISO4762 M8X25 A4	
310	90045-0194	A		1	SERVO MOTOR EP 115-131-66T3B	
320	90056-0179	A		1	GEARS, PLANETARY ANGLE WPLS 90	
330	90115-0134	A		1	ROD END, ID=10 MM, M10X1,25	
340	90208-0078	A		2	CLAMPING ELEMENT WITH SLEEVE, 20X28 MM	
350	90239-0488	-		1	REAR,CLEVIS,MINI-ISO 32	
360	90239-0834	A		1	DOUBLE ACTING, MINI-ISO, CYL.32-25	
370	90240-0026	-		2	PLAIN BEAR,SELF ADJ.SPHER. 15X26X12 MM	
380	90328-0003	-		1	SILENCER	
390	90141-0020	-		2	RETAINING RING FOR BORE DIN 472 42 A2	
400	90457-0066	A		1	BELLOW COUPLING, 20X22 MM	
410	315751-0116	-		2	RETAINING RING FOR SHAFT DIN 471 20 A2	

Machine Type	Group Description	Used-In	Group Number	Page No

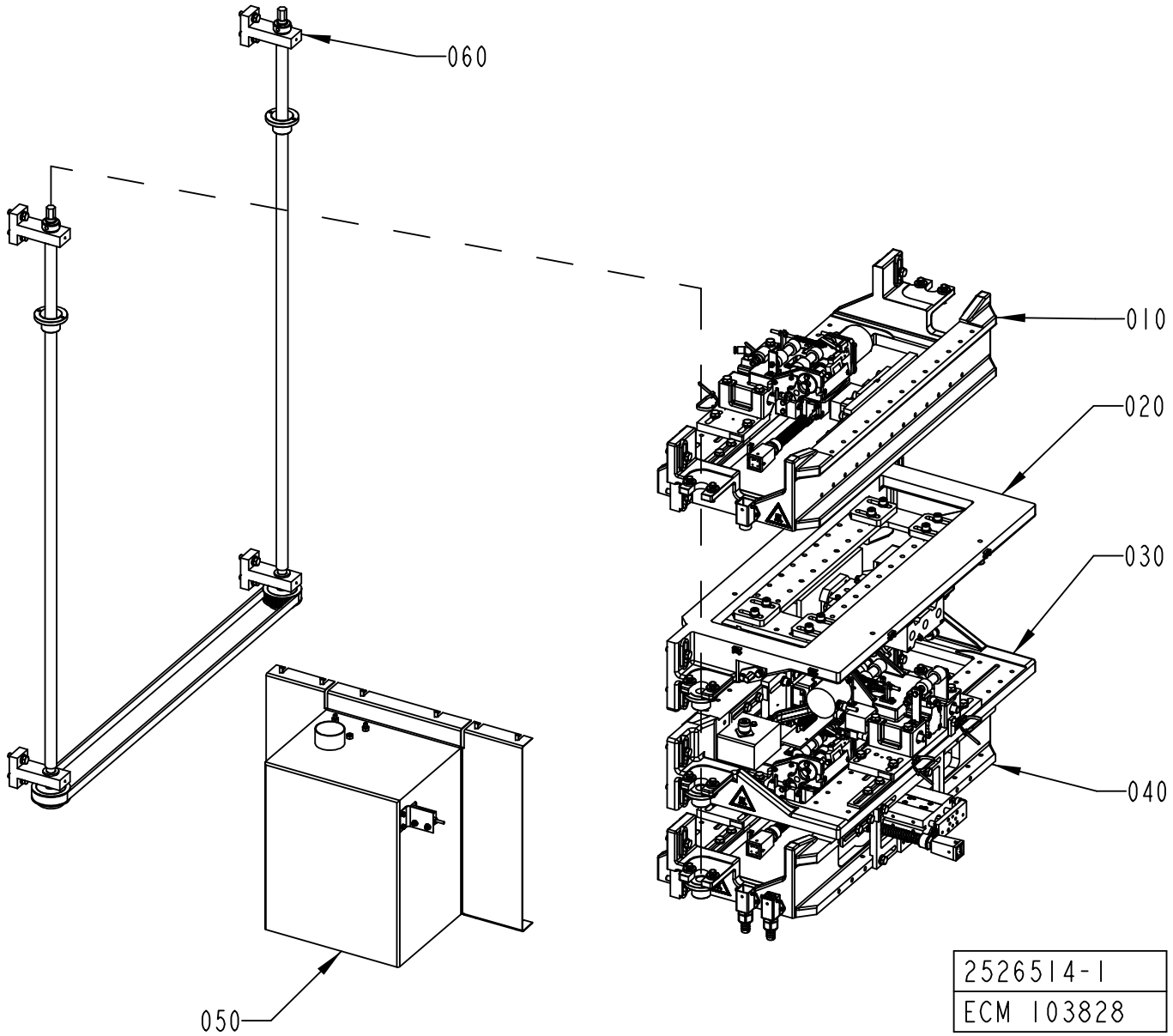
060
010
020
030
040
050
2526514-1
ECM 103828

ECM: 143143 - 20040222
Group number: 2526514-0100
Assembly Drawing: 2526514-1_1_AA

Pos	Part No	SP	UN	Qty	Description	Page No
HOLE48, HOLE72						
010	1539190-0100	-		1	OUTER PATCH APPLICATOR	**1-101**
Common Parts						
020	1539202-0100	-		1	PUNCH ARRANGEMENT	**1-115**
030	2526518-0100	-		1	PATCH APPLICATOR	**1-123**
040	1539197-0100	-		1	TAB APPLICATOR	**1-141**
050	1095955-0200	-		1	WASTE BOX	**1-157**
060	1185078-0100	-		1	LIFTING DEVICE	**1-159**

Pos	Part No	SP	UN	Qty	Description	Page No

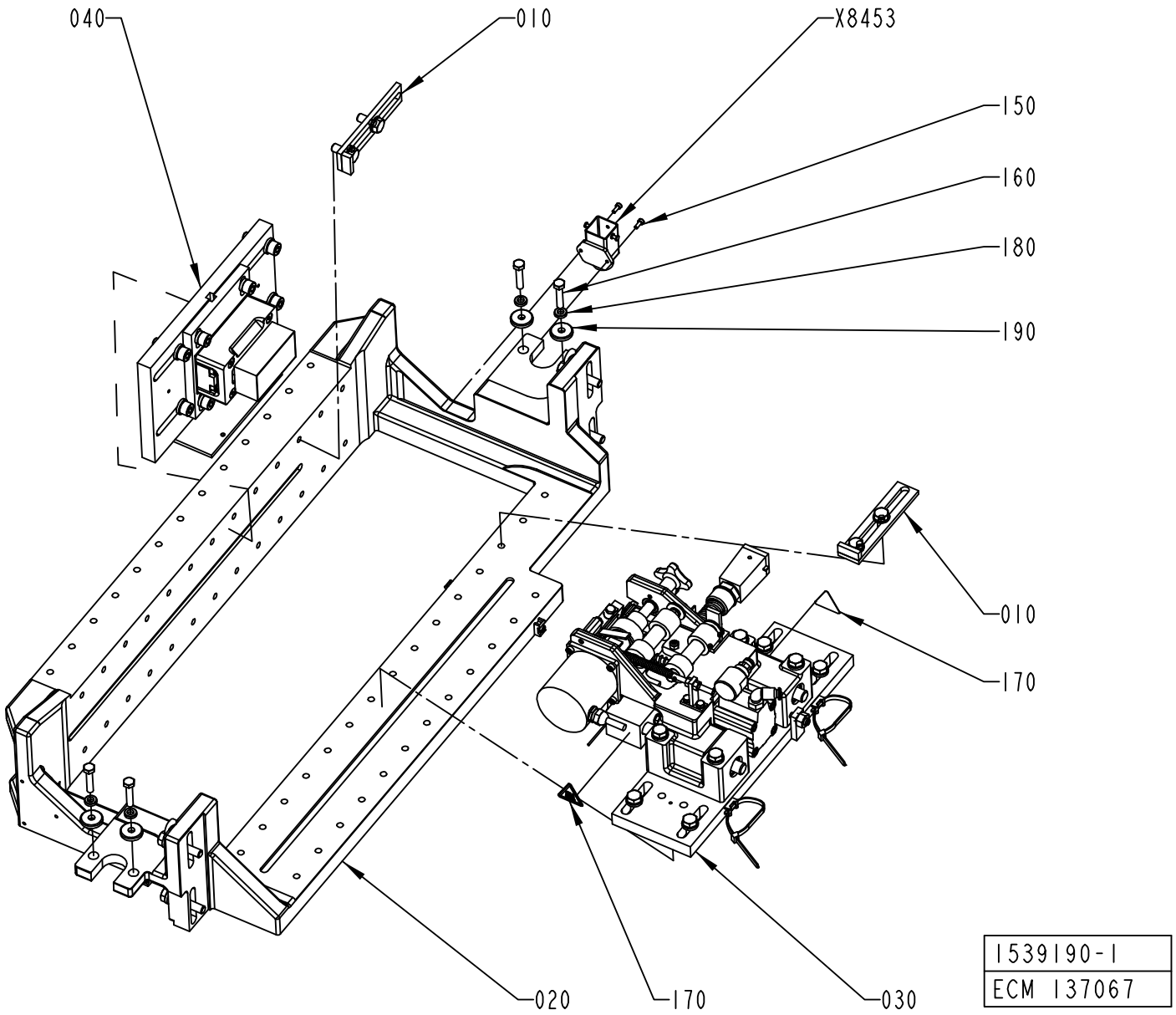
040
010
X8453
150
160
180
190
010
170
020
170
030
1539190-1
ECM 137067

ECM: 139514 - 20040119
Group number: 1539190-0100
Assembly Drawing: 1539190-1_1_AC

Pos	Part No	SP	UN	Qty	Description	Page No
-						
010	1260401-0200	-		2	SETTING TOOL	**1-103**
020	1260427-0200	-		1	OUTER PATCH BRACKET	**1-105**
030	1539193-0100	-		1	OUTER PATCH FEEDER	**1-107, 1-109**
040	1549248-0100	-		1	OUTER PATCH C'JAW	**1-113**
150	312115-0222	-		2	SCREW ISO4762 M3X8 A4	
160	312109-0374	-		4	SCREW M6S ISO 4017 M6X30 A480	
170	90194-0143	-		2	WARNING SIGN ISO, HOT SURFACE	
180	315115-0153	-		4	WASHER PLAIN, TBRB 6,4/12 H=3	
190	315125-0153	-		4	WASHER TBRSB 6,4X22X4 A4	
X8453	90110-0370	-		1	BASE HOUSING	

Pos	Part No	SP	UN	Qty	Description	Page No

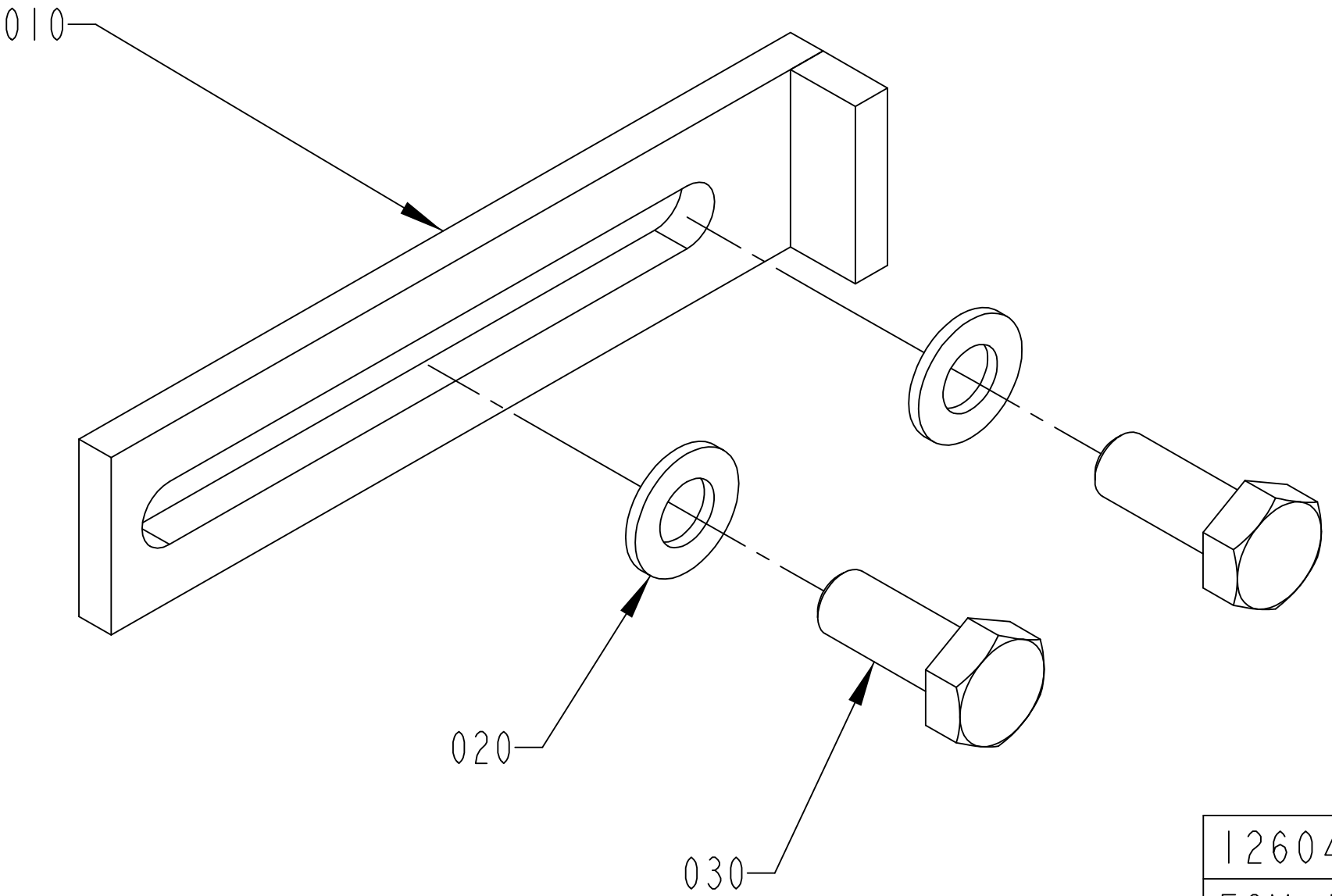

1260401-2
ECM 103826

ECM: 105452 - 20020214
Group number: 1260401-0200
Assembly Drawing: 1260401-2_1_AA

Pos	Part No	SP	UN	Qty	Description	Page No
-						
010	2526520-0000	-		1	BRACKET	
020	315103-0165	-		2	WASHER PLAIN, BRB, 8,4/16,H=1,5 NIPL BR	
030	312105-0451	-		2	SCREW M6S ISO 4017 M8X20 A480	

Pos	Part No	SP	UN	Qty	Description	Page No

OUTER PATCH BRACKET

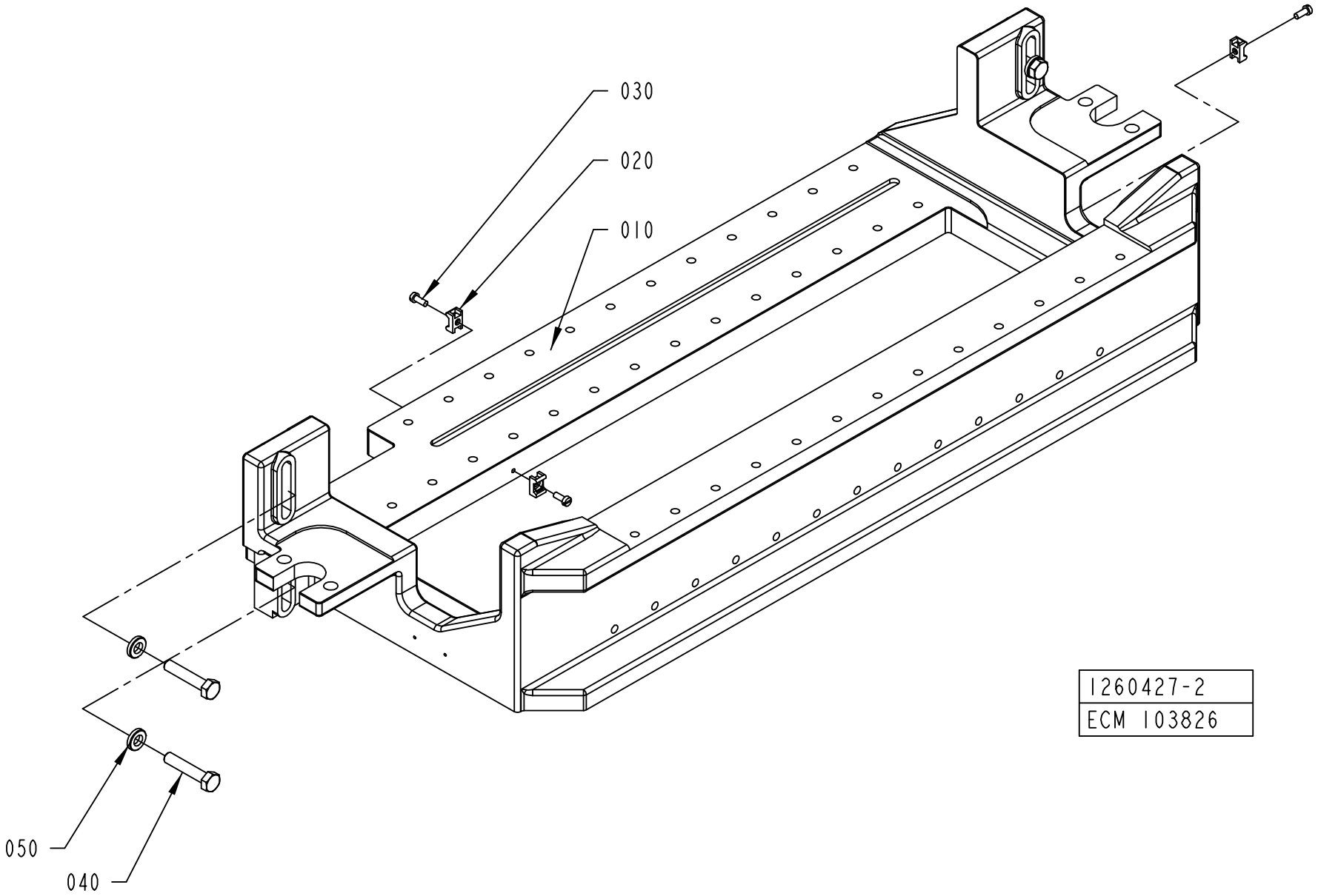

ECM: 105453 - 20020214
Group number: 1260427-0200
Assembly Drawing: 1260427-2_1_AA

Pos	Part No	SP	UN	Qty	Description	Page No
-						
010	1260398-0000	-		1	BRACKET	
020	352113-0205	-		3	ANCHOR PLATES FOR STRIPS, TYPE TM2S8-C10	
030	312125-0289	-		3	SCREW ISO 1207 M4X10 A4	
040	312109-0459	-		4	SCREW M6S ISO 4017 M8X40 A480	
050	315115-0165	-		4	WASHER PLAIN, TBRB 8,4/16 H=3	

Pos	Part No	SP	UN	Qty	Description	Page No

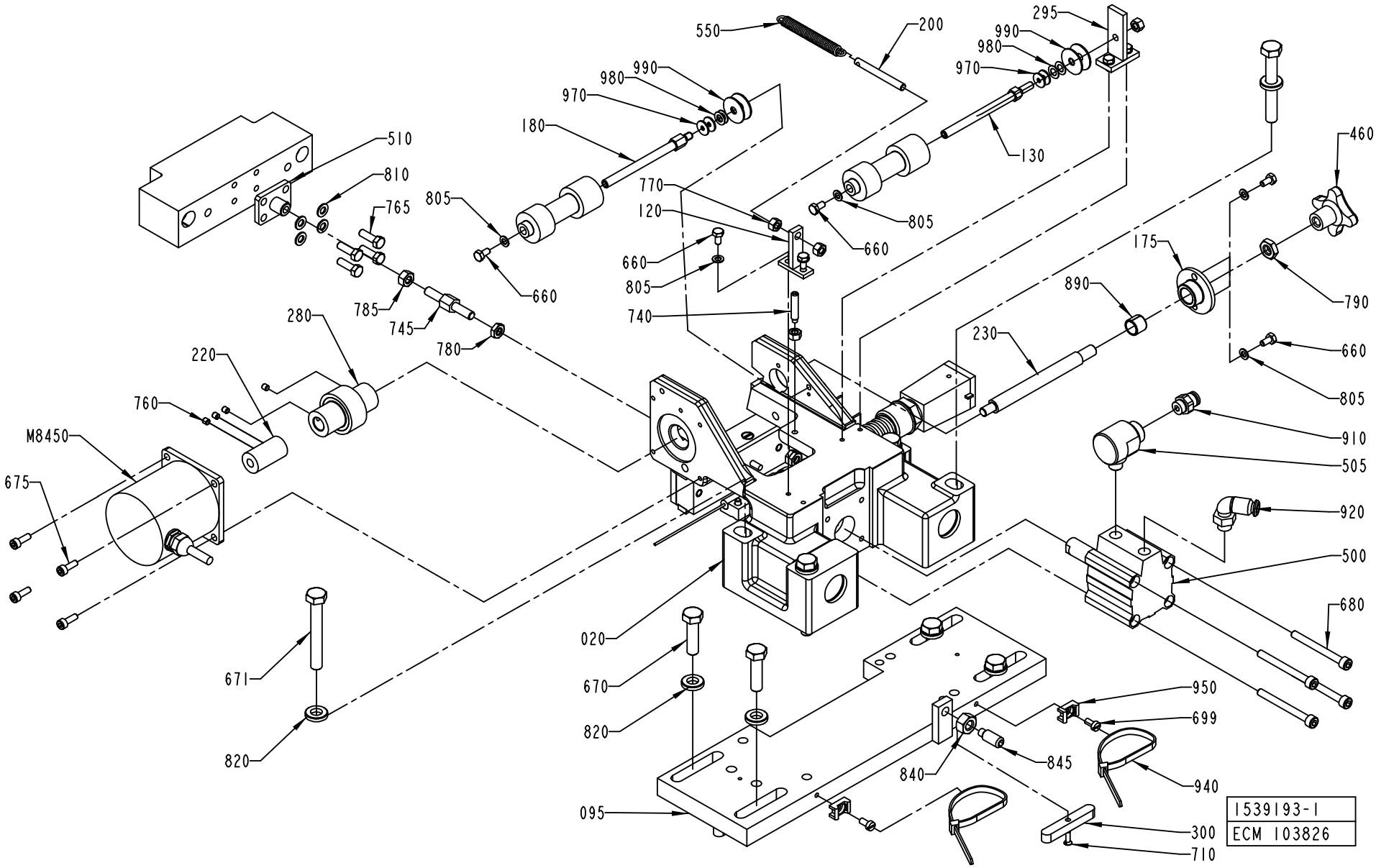
550
200
295
990
980
970
180
130
460
510
810
765
805
770
120
660
175
890
790
785
745
780
740
230
280
220
760
M8450
675
910
505
920
500
680
671
820
020
670
820
950
699
845
840
940
095
300
710
1539193-1
ECM 103826

ECM: 141622 - 20040301
Group number: 1539193-0100
Assembly Drawing: 1539193-1_1_AC

This list covers pages from 1-106 to 1-109

Pos	Part No	SP	UN	Qty	Description	Page No
-						
020	1549239-0000	-		1	BRACKET	
030	2517079-0100	-		1	SEALING UNIT	1-111
050	2504598-0000	-		1	APPLICATOR HEAD	
060	1260395-0000	A		1	PLATE	
070	2500097-0000	A		1	KNIFE	
080	907712-0000	A		1	PIVOT PLATE	
095	1549247-0000	-		1	PLATE	
110	905174-0000	A		1	STEER PLATE	
120	1140545-0000	-		1	TEE BRACKET	
130	1549236-0000	-		1	SHAFT	
150	905194-0000	-		1	SHAFT	
160	1140547-0000	A		2	SHAFT	
175	1140548-0000	A		1	FLANGED BEARING BUSHING	
180	1140551-0000	A		1	SHAFT	
200	905215-0000	-		1	BOLT	
220	905241-0000	A		1	COUPLING	
230	905243-0000	A		1	SHAFT	
250	905413-0000	A		1	SHAFT	
260	905416-0000	A		1	PIVOT BRACKET-SWIVEL	
270	905419-0000	A		1	PIVOT ARM-SWIVEL	
280	905471-0000	A		1	ROLLER-DRIVE	
293	907710-0000	A		1	PIVOT PLATE	
295	1549235-0000	-		1	BRACKET	
300	905244-0000	-		2	WEDGE	
310	905246-0000	-		1	BRACKET	
320	905415-0000	-		1	SHAFT	
330	905417-0000	-		1	SHAFT	
340	905607-0000	-		1	SCREW	
350	905608-0000	-		1	SCREW	
360	905609-0000	-		1	LOCK BAR	
370	905613-0000	-		1	SHAFT	
415	907711-0000	-		1	SHAFT	
430	1296753-0000	-		1	FLAG	
440	1296752-0000	-		1	BRACKET	
460	90051-0007	-		1	STELLAR KNOB, INT. THREAD, NO. 40	
475	1524301-0000	-		2	SPACER	
479	90189-0024	A		4	BALL BUSHING, 12X22X32 MM	
480	90189-0021	A		4	BALL BUSHING, 12X22X32 MM	
500	90450-0409	A		1	DOUBLE ACTING, COMPACT, CYL 32-15	
505	90235-0206	A		1	QUICK EXHAUST VALVE, SEU-1/8	
510	1524305-0000	A		1	ROD	
540	90335-0067	A		1	COMP. SPRING 22370, 1,6X9,6X31,75	
550	907719-0000	A		1	SPRING	
560	90348-0031	A		1	FREE WHEEL COUPLING	
580	1350785-0001	A		2	SHIM	
581	1350785-0002	A		2	SHIM	
582	1350785-0003	A		2	SHIM	
583	1350785-0004	A		2	SHIM	
640	311103-0351	-		2	PARALLEL PIN ISO 2338 6M6X16 A1	
645	311112-0205	-		2	SPRING PIN, ISO 8752 3X10-C	
650	312101-0343	-		2	SCREW M6S M5X60 FZB	
660	312105-0287	-		12	SCREW M6S ISO4017 M4X8 A470	
665	312105-0339	-		2	SCREW M6S ISO 4014 M5X40 A480	
670	312105-0455	-		4	SCREW M6S ISO 4017 M8X30 A480	
671	312105-0463	-		4	SCREW M6S ISO 4014 M8X60 A480	
672	312115-0226	-		4	SCREW ISO4762 M3X12 A4	
675	312115-0291	-		4	SCREW ISO4762 M4X12 A4	
680	312115-0341	-		4	SCREW ISO4762 M5X50 A4	
690	312125-0224	-		2	SCREW ISO 1207 M3X10 A4	
699	312125-0287	-		4	SCREW ISO 1207 M4X8 A4	
710	312145-0224	-		2	SCREW ISO 2009 MFS M3X10 A4	
720	312155-0291	-		2	SCREW EN 10642 MF6S M4X12 A480	
740	312311-0333	-		1	SCREW ISO4028 M5X25 FZB	
745	1524302-0000	-		1	SCREW	
750	312318-0285	-		1	SCREW ISO4029 M4X6 A4	
760	312318-0283	-		4	SCREW ISO4029 M4X4 A4	
765	312105-0329	-		4	SCREW M6S ISO 4017 M5X16 A480	
770	312605-0314	-		4	HEXAGON NUT, M6M M5 A280	
780	312625-0316	-		3	HEXAGON THIN NUT, EN 24035 ML6M M6 A4	
785	312902-0316	-		1	NUT HEX. LEFT THREAD, M6 A280	
790	312621-0318	-		1	ROD END,NUT M8	
803	315105-0124	-		4	WASHER BRB3,2X6RFR	
805	315105-0136	-		10	WASHER BRB4,3XRFR	
810	315105-0146	-		9	WASHER BRB5,3X10RFR	
820	315115-0165	-		8	WASHER PLAIN, TBRB 8,4/16 H=3	
830	315753-0117	-		4	RETAINING RING FOR BORE DIN 472 22 A2	
840	312605-0318	-		1	HEXAGON NUT, M6M M8 A280	
845	312311-0451	-		1	SCREW ISO4028 M8X20 FZB	
850	907487-0000	-		2	WASHER-CURVED	
865	321120-0092	-		2	BEARING BUSHING W/O FL, 4X5,5X6 MM	
870	321141-0060	A		1	BEARING BUSHING W/O FL, 6X8X6 MM	
880	321141-0064	A		2	BEARING BUSHING W/O FL, 6X8X10 MM	
890	321141-0140	A		1	BEARING BUSHING W/O FL, 10X12X10 MM	

Machine Type | Group Description | Used-In | Group Number | Page No

OUTER PATCH FEEDER

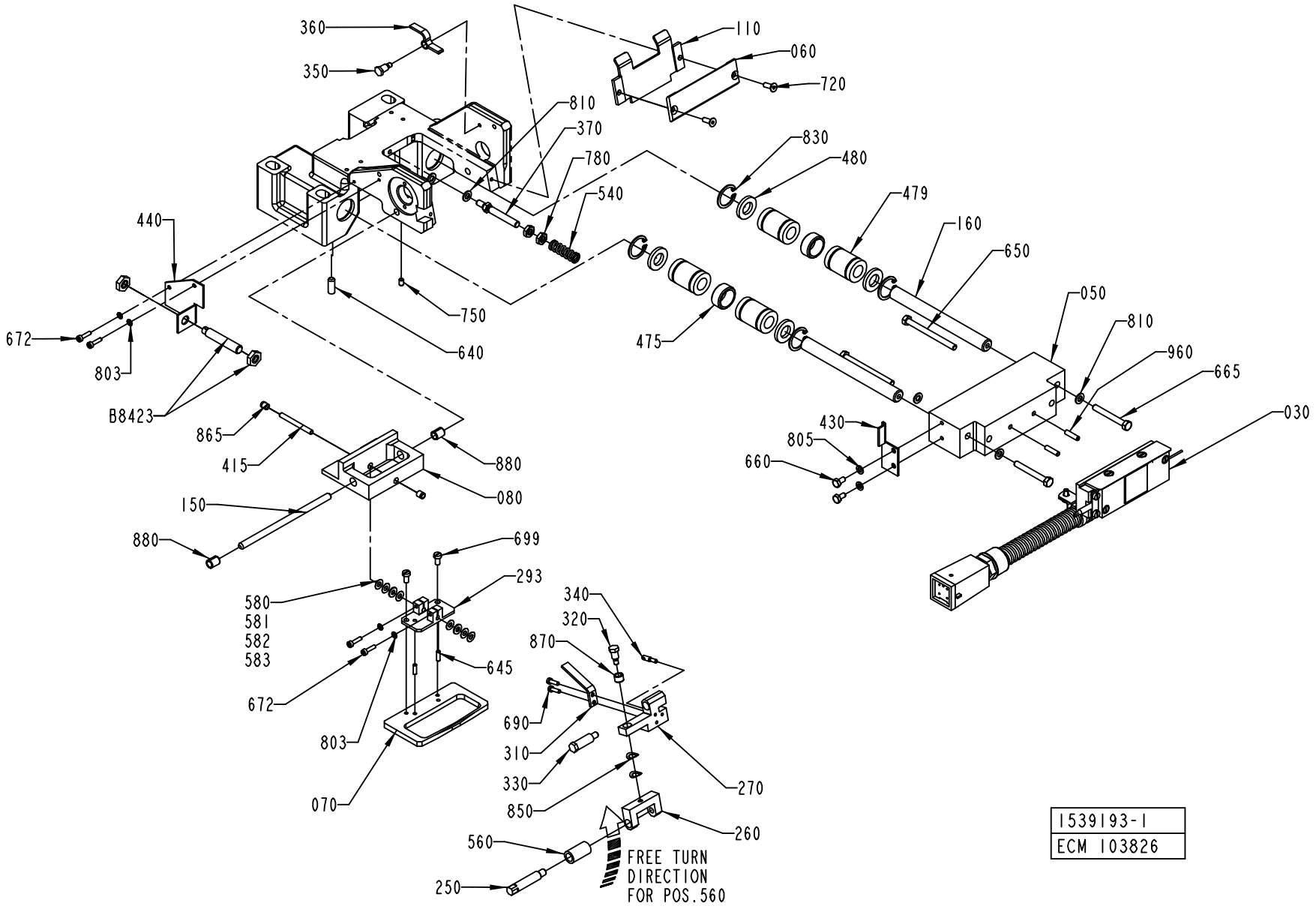

1539193-1
ECM 103826

Pos	Part No	SP	UN	Qty	Description	Page No
- (Cont'd)						
910	342722-0202	-		1	PIPE COUPLING 1/8" D=6MM	
920	90458-2956	-		1	ELBOW PIPE JOINT, EXT.THREAD, D=6MM-G1/8	
940	352113-0102	-		2	CLIP-STRIP, BLACK 188X4,8 MM	
950	352113-0205	-		2	ANCHOR PLATES FOR STRIPS, TYPE TM2S8-C10	
960	311103-0270	-		2	PARALLEL PIN ISO 2338 4M6X16 A1	
970	2033-0001	-		4	WASHER	
980	2033-0003	-		4	WASHER	
990	2033-0006	-		4	WASHER	
B8423	90458-0138	A		1	PROX.SW. E2EG-X1R5B1-5M	
M8450	90045-0192	A		1	STEP MOTORE21NSHT-LNF-NS-04	

Pos	Part No	SP	UN	Qty	Description	Page No

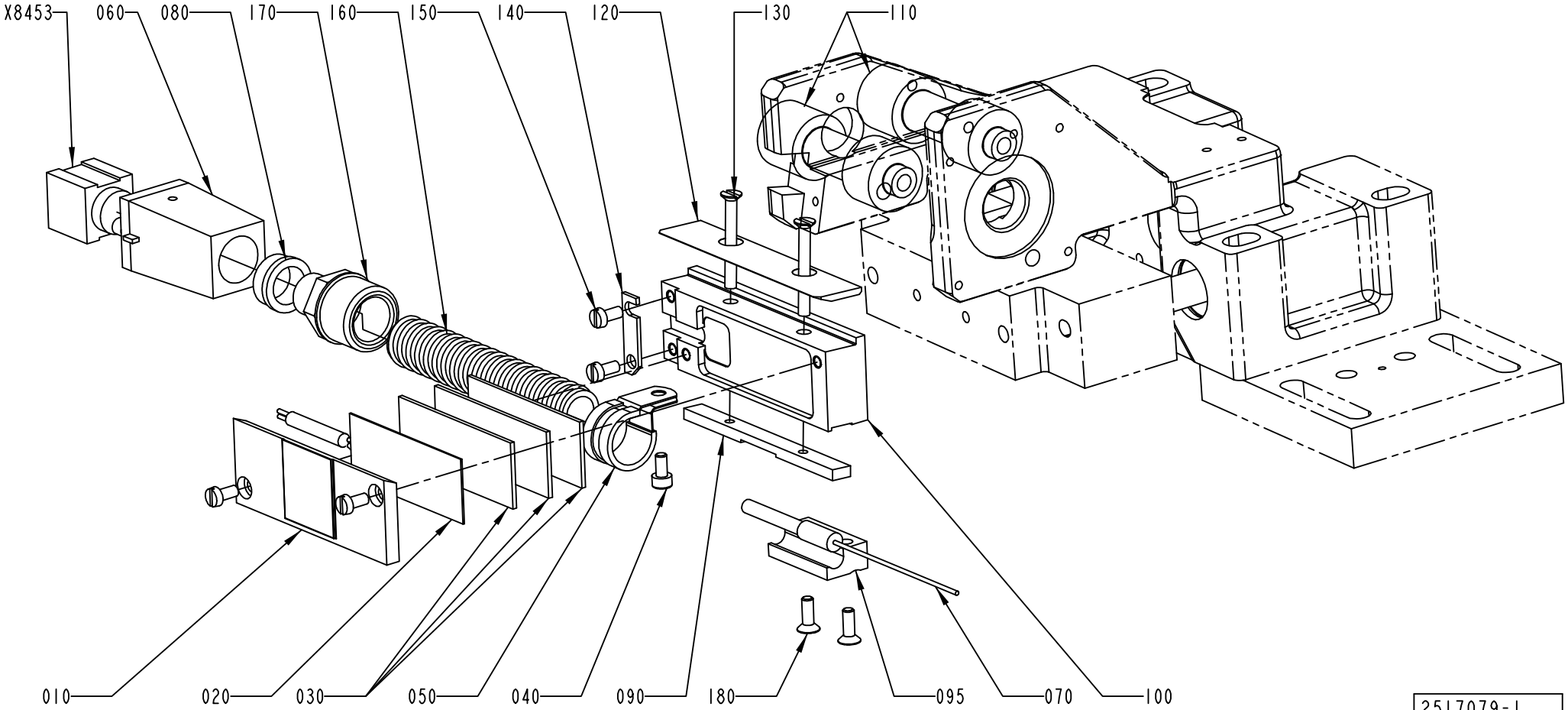

2517079-1
ECM 123426

ECM: 141619 - 20040301
Group number: 2517079-0100
Assembly Drawing: 2517079-1_1_AC

Pos	Part No	SP	UN	Qty	Description	Page No
HOLE48						
010	2511643-0000	A		1	SEALING PLATE	
HOLE72						
010	2504616-0000	A		1	SEALING PLATE	
Common Parts						
020	907136-0000	-		1	HEATER	
	90411-0018	*A*		*1*	*INSULATOR, ALU-SILICATE HM 15643*	
030	90411-0018	-		3	INSULATOR, ALU-SILICATE HM 15643	
040	312115-0287	-		1	SCREW ISO4762 M4X8 A4	
050	907249-0000	-		1	CLAMP	
060	90110-0372	-		1	PLUG HOOD	
070	90326-0060	A		1	THERMOCOUPLE, CR-AL	
080	90089-0001	-		1	REDUCING SLEEVE, PR18,6/PR15,2	
090	1487264-0000	-		1	PLATE	
095	1478479-0000	-		1	HOLDER	
100	1519364-0000	-		1	INSULATING RAIL	
110	907358-0003	A		2	ROLLER	
120	1519379-0000	A		1	FLAT KNIFE	
130	312145-0301	-		2	SCREW ISO 2009 MFS M4X35 A4	
140	1349916-0000	-		1	CLAMP	
150	312125-0287	-		4	SCREW ISO 1207 M4X8 A4	
160	90152-0033	-	M	1	SPIRAL CONDUIT FOR PR 15,2(PG 9)	
170	90012-0063	-		1	CABLE GLAND PR 15,2	
180	312155-0291	-		2	SCREW EN 10642 MF6S M4X12 A480	
X8453	90110-0295	A		1	CONNECTOR 4 POLE + EARTH	

Pos	Part No	SP	UN	Qty	Description	Page No

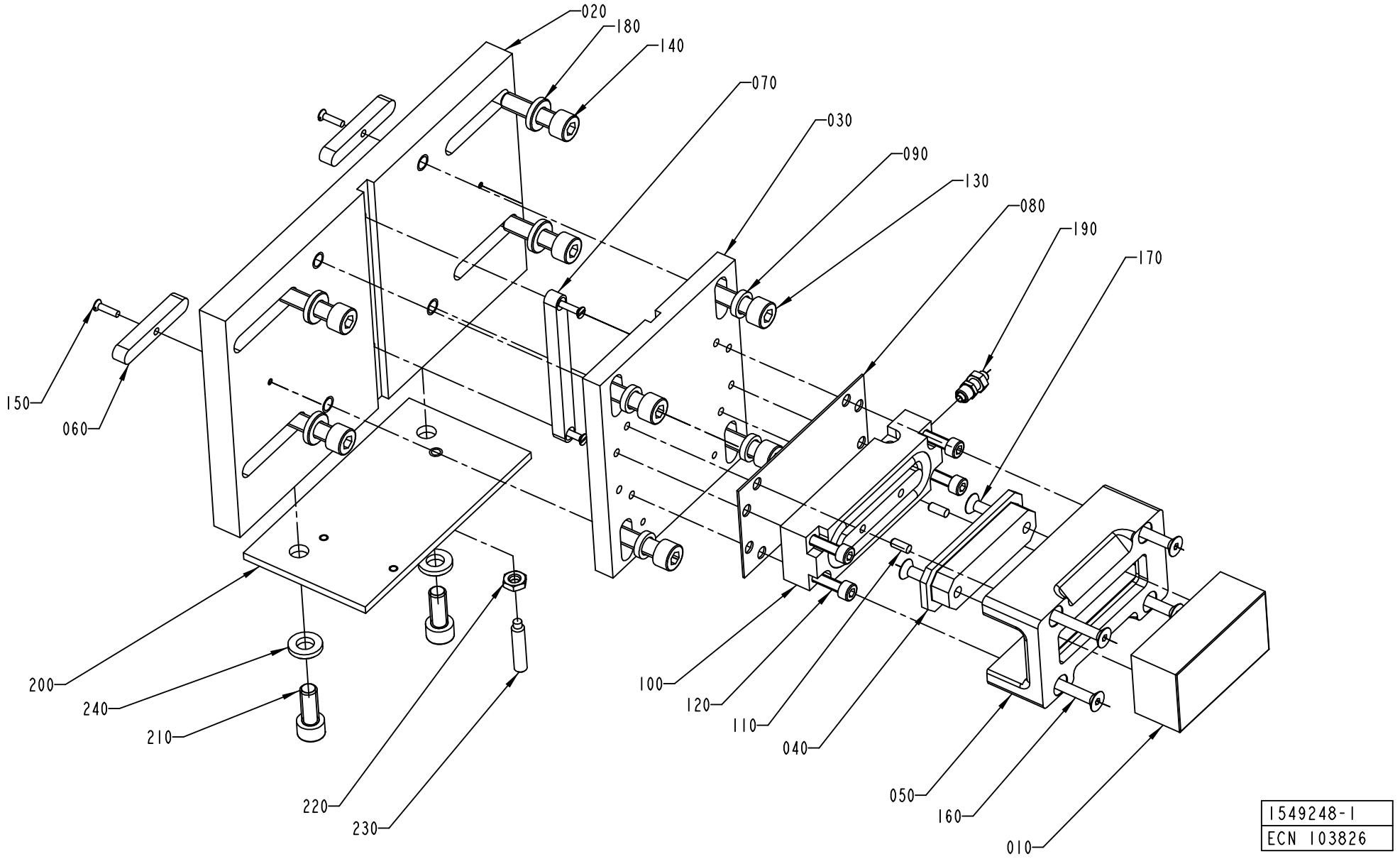
020
180
140
070
030
090
130
080
190
170
150
060
200
240
210
220
230
100
120
110
040
050
160
010
1549248-1
ECN 103826

ECM: 105456 - 20020214
Group number: 1549248-0100
Assembly Drawing: 1549248-1_1_AB

Pos	Part No	SP	UN	Qty	Description	Page No
-						
010	1549244-0000	A		1	COUNTER PLATE	
020	2525291-0000	-		1	PLATE	
030	2525294-0000	-		1	PLATE	
040	1296298-0000	-		1	BUSHING	
050	928919-0000	-		1	FASTENING PLATE	
060	905244-0000	-		2	WEDGE	
070	905463-0000	-		1	KEY	
080	1279484-0000	-		2	SHIM	
090	1296300-0000	-		4	WASHER	
100	90450-0380	A		1	SINGLE ACTING, PANCAKE EV-20/75-5	
110	311103-0267	-		2	PARALLEL PIN ISO 2338 4M6X10 A1	
120	312115-0331	-		4	SCREW ISO4762 M5X20 A4	
130	312115-0453	-		4	SCREW ISO4762 M8X25 A4	
140	312115-0455	-		4	SCREW ISO4762 M8X30 A4	
150	312145-0226	-		4	SCREW ISO 2009 MFS M3X12 A4	
160	312155-0339	-		4	SCREW EN 10642 MF6S M5X40 A480	
170	312155-0331	-		2	SCREW EN 10642 MF6S M5X20 A480	
180	315115-0165	-		4	WASHER PLAIN, TBRB 8,4/16 H=3	
190	342921-0111	-		1	STRAIGHT COUPL,EXT.THREAD.6/4-M5	
200	1255687-0000	-		1	BRACKET	
210	312115-0451	-		2	SCREW ISO4762 M8X20 A4	
220	312625-0316	-		1	HEXAGON THIN NUT, EN 24035 ML6M M6 A4	
230	312311-0374	-		1	SCREW ISO4028 M6X30 FZB	
240	315115-0165	-		2	WASHER PLAIN, TBRB 8,4/16 H=3	

Pos	Part No	SP	UN	Qty	Description	Page No

PUNCH ARRANGEMENT

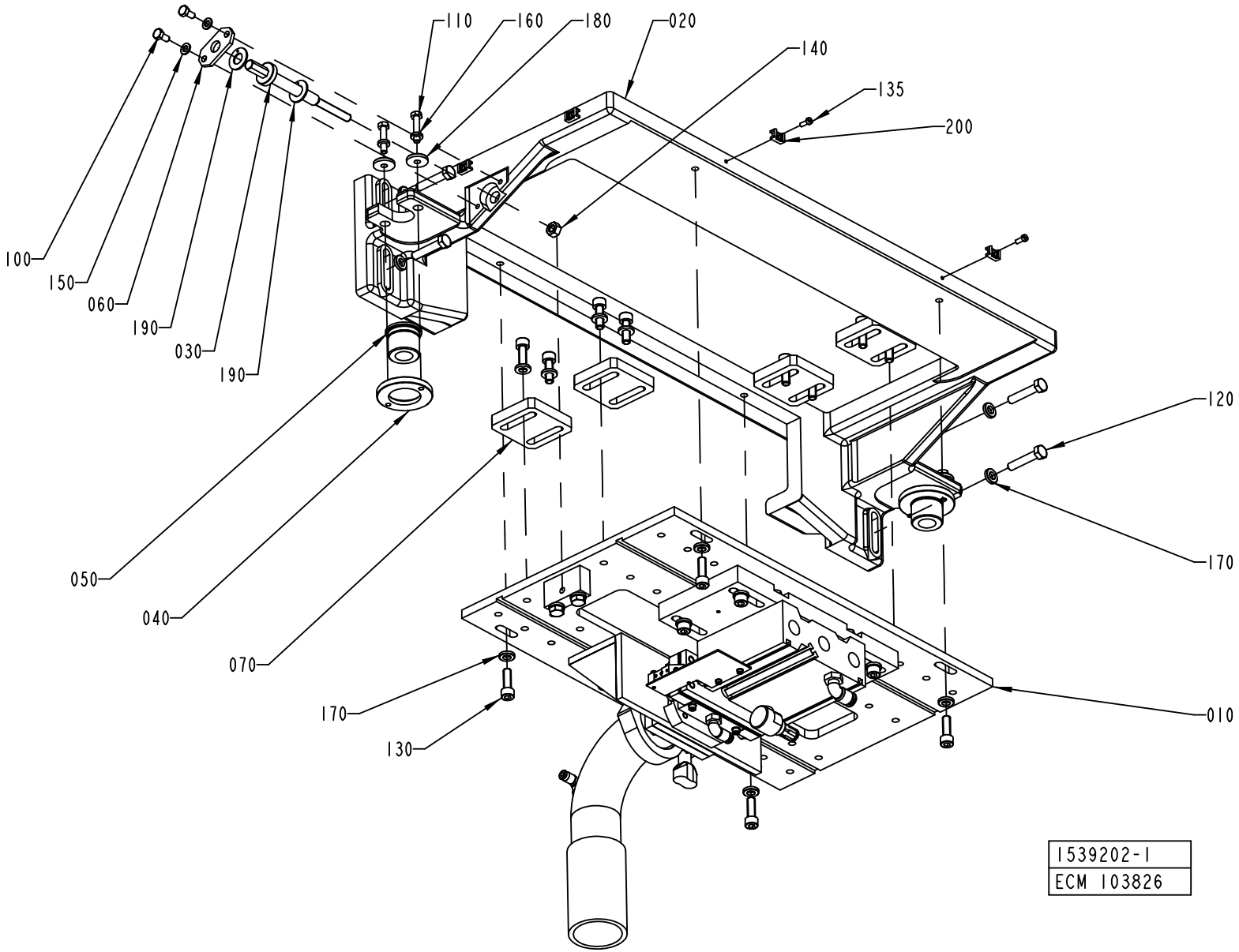

ECM: 103826 - 20021125
Group number: 1539202-0100
Assembly Drawing: 1539202-1_1_AB

Pos	Part No	SP	UN	Qty	Description	Page No
-						
010	1558064-0100	-		1	PUNCH BRACKET	**1-117**
020	1539203-0000	-		1	BRACKET	
030	1539222-0000	-		1	SCREW	
040	1147009-0000	-		2	SPECIAL WASHER	
050	1147010-0000	-		2	BUSHING	
060	1539221-0000	-		1	COVER	
070	2526559-0000	-		4	GUIDE	
100	312105-0366	-		2	SCREW M6S ISO 4017 M6X12 A480	
110	312109-0374	-		4	SCREW M6S ISO 4017 M6X30 A480	
120	312109-0459	-		4	SCREW M6S ISO 4017 M8X40 A480	
130	312115-0453	-		14	SCREW ISO4762 M8X25 A4	
135	312125-0289	-		2	SCREW ISO 1207 M4X10 A4	
140	312605-0318	-		1	HEXAGON NUT, M6M M8 A280	
150	315105-0153	-		2	WASHER BRB6,4X12RFR	
160	315115-0153	-		4	WASHER PLAIN, TBRB 6,4/12 H=3	
170	315115-0165	-		18	WASHER PLAIN, TBRB 8,4/16 H=3	
180	315125-0153	-		4	WASHER TBRSB 6,4X22X4 A4	
190	321130-0180	-		2	THRUST WASHER, 12X24X1,5 MM	
200	352113-0205	-		2	ANCHOR PLATES FOR STRIPS, TYPE TM2S8-C10	

Pos	Part No	SP	UN	Qty	Description	Page No

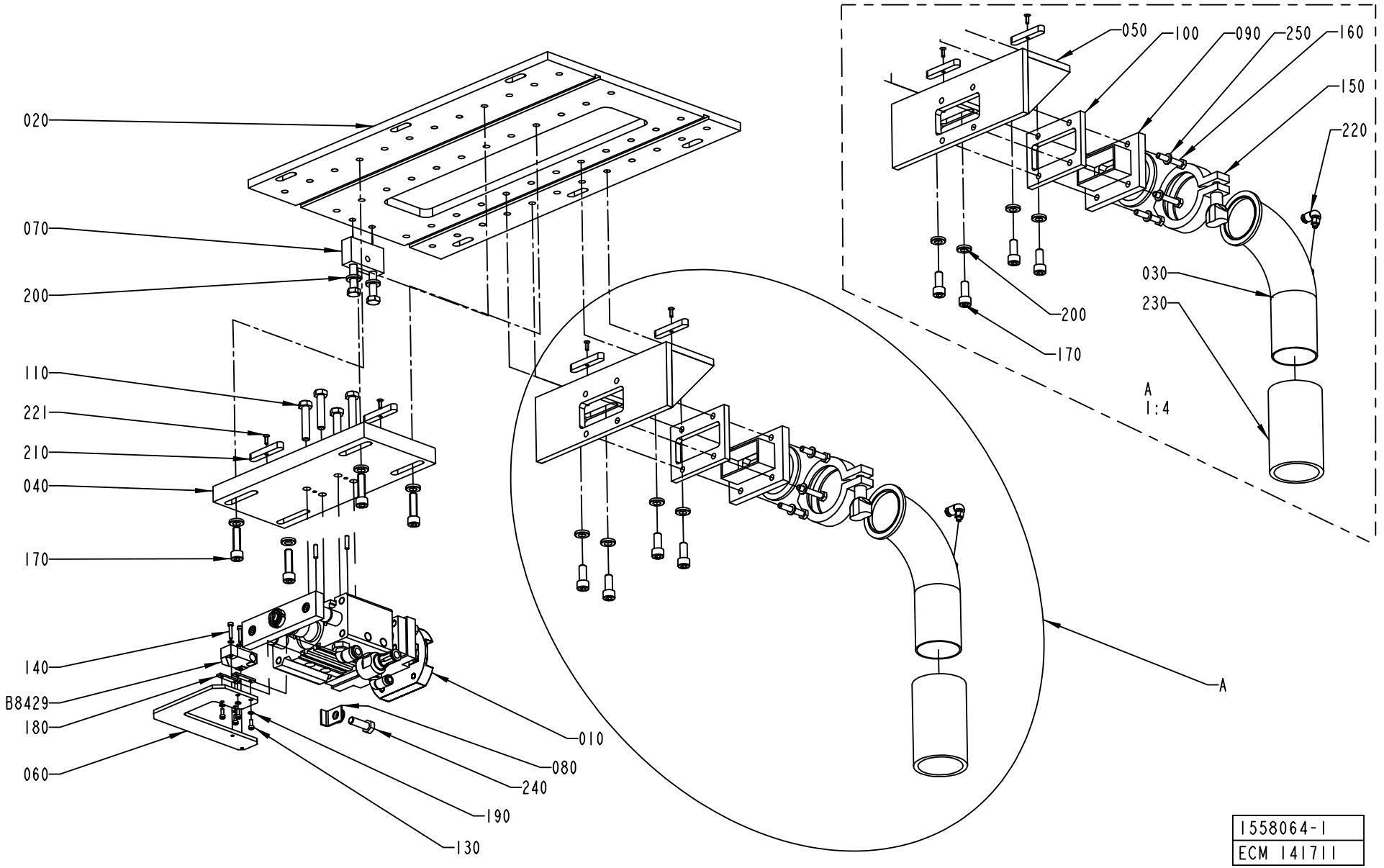
020
070
200
110
221
210
040
170
140
B8429
180
060
010
080
240
190
130
050
100
090
250
160
150
220
030
230
200
170
A
1:4
A
1558064-1
ECM 141711

ECM: 141862 - 20040301
Group number: 1558064-0100
Assembly Drawing: 1558064-1_1_AD

Pos	Part No	SP	UN	Qty	Description	Page No
-						
010	1539201-0200	-		1	PUNCH UNIT	**1-119**
020	1539200-0000	-		1	PLATE	
030	1539142-0000	-		1	WASTE PIPE	
040	2525295-0000	-		1	PLATE	
050	2504615-0000	-		1	ANGLE BRACKET	
060	2525327-0000	-		1	BRACKET	
070	1140503-0000	-		1	ADJUSTMENT BRACKET	
080	1260239-0000	-		1	ANGLE BRACKET	
090	1498322-0000	-		1	WASTE HANDLING	
100	2517073-0000	-		1	SPACER	
110	312109-0459	-		6	SCREW M6S ISO 4017 M8X40 A480	
130	312115-0222	-		4	SCREW ISO4762 M3X8 A4	
140	312115-0228	-		2	SCREW ISO4762 M3X16 A4	
150	342840-0105	-		1	CLAMPING PIECE	
160	312109-0376	-		4	SCREW M6S ISO 4017 M6X35 A480	
170	312111-0455	-		4	SCREW HEX.SOCK.HD.MC6S-TT 8X30 88 FZB	
180	2525326-0000	-		2	PLATE	
190	315105-0124	-		6	WASHER BRB3,2X6RFR	
200	315115-0165	-		10	WASHER PLAIN, TBRB 8,4/16 H=3	
210	905244-0000	-		4	WEDGE	
220	90458-2954	-		1	ELBOW PIPE JOINT, EXT.THREAD, D=4MM M5	
221	312155-0224	-		4	SCREW EN 10642 MF6S M3X10 A480	
230	90458-2171	-	M	2	FLEXIBLE CONDUIT, 50/60MM PVC	
240	312105-0453	-		2	SCREW M6S ISO 4017 M8X25 A480	
250	315105-0153	-		4	WASHER BRB6,4X12RFR	
B8429	90044-0194	A		1	PROX.SW. IN5329/IN3002-BPKG	

Pos	Part No	SP	UN	Qty	Description	Page No

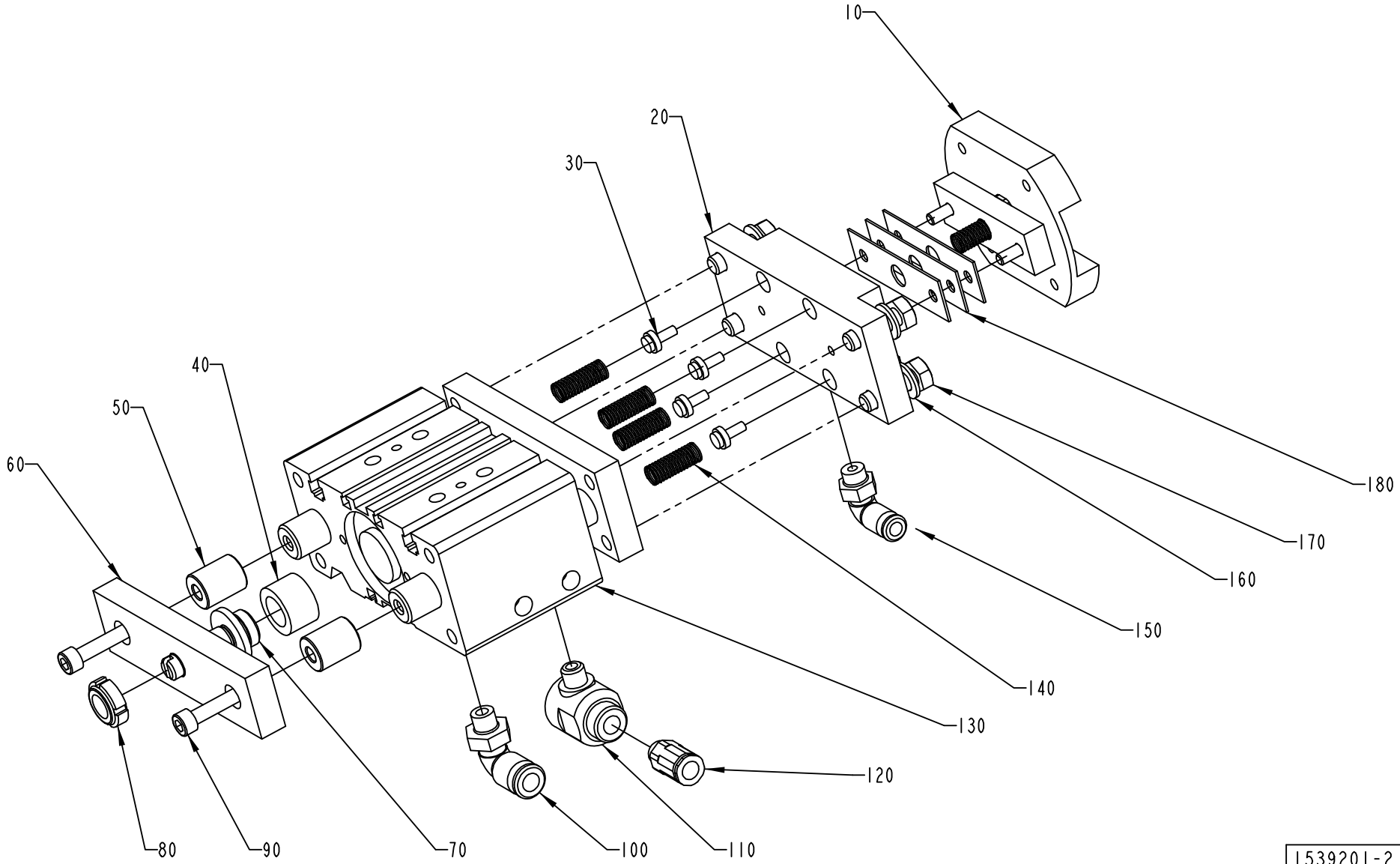

1539201-2
ECM 141711

ECM: 141861 - 20040301
Group number: 1539201-0200
Assembly Drawing: 1539201-2_1_AA

Pos	Part No	SP	UN	Qty	Description	Page No
-						
010	2501809-0100	-		1	PUNCH UNIT	**1-121**
020	2525296-0000	-		1	SPACER	
030	905285-0000	-		4	STRIPPER PIN	
040	2529125-0000	-		2	SPRING	
050	2537105-0000	-		2	SPACER	
060	2529121-0000	-		1	PLATE	
070	2529123-0000	-		1	SCREW	
080	90459-0975	-		1	LOCK NUT ROUND WITH SLOTS GUK M12X1	
090	312115-0374	-		2	SCREW ISO4762 M6X30 A4	
100	90458-2964	-		1	ELBOW PIPE JOINT, EXT.THREAD, D=8MM-G1/8	
110	90235-0206	-		1	QUICK EXHAUST VALVE, SEU-1/8	
120	342722-0204	-		1	PIPE COUPLING	
130	90459-0296	-		1	CYLINDER WITH INT. GUIDING BORE 40	
140	90335-0005	-		4	SPRING	
150	90458-2956	-		1	ELBOW PIPE JOINT, EXT.THREAD, D=6MM-G1/8	
160	315105-0165	-		4	WASHER BRB8,4X16RFR	
170	312105-0453	-		4	SCREW M6S ISO 4017 M8X25 A480	
180	1498298-0000	-		3	SHIM	

Pos	Part No	SP	UN	Qty	Description	Page No

Machine Type | Group Description | Used-In | Group Number | Page No

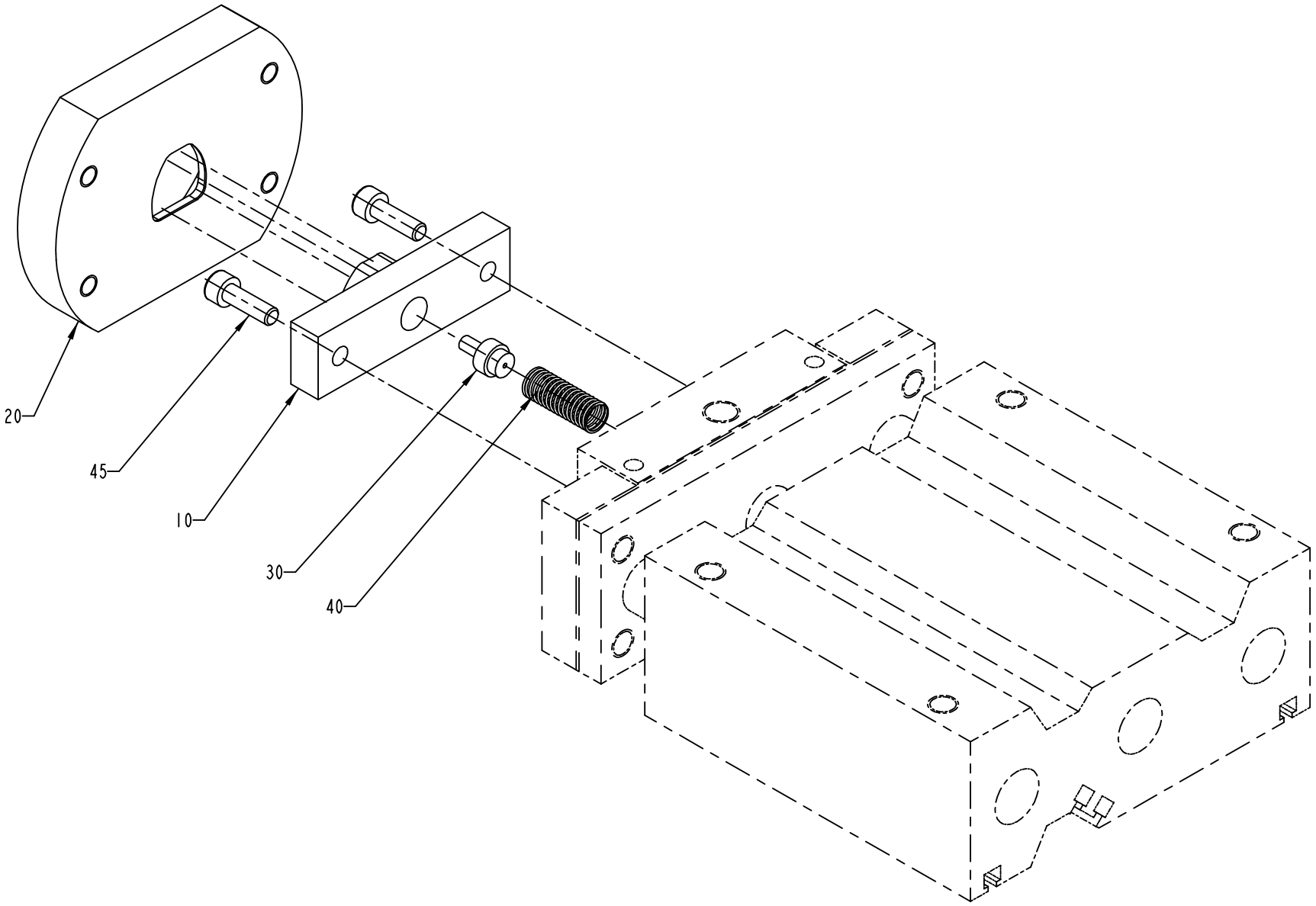

2501809-1
ECN 92746

ECM: 135935 - 20030624
Group number: 2501809-0100
Assembly Drawing: 2501809-1_1_AA

Pos	Part No	SP	UN	Qty	Description	Page No
HOLE48						
010	2525290-0000	A		1	PUNCH	
020	2525289-0000	A		1	DIE	
030	2501815-0000	A		1	PIN	
040	90335-0005	A		1	SPRING	
HOLE55						
010	1145416-0000	A		1	PUNCH HOLE 55	
020	1145417-0000	A		1	DIE HOLE 55	
HOLE60						
010	1484230-0000	A		1	PUNCH	
020	1484231-0000	A		1	DIE	
HOLE65						
010	1145496-0000	A		1	PUNCH HOLE 65	
020	1145497-0000	A		1	DIE HOLE 65	
HOLE72						
010	2511644-0000	A		1	PUNCH	
020	2511639-0000	A		1	DIE	
030	2501815-0000	A		1	PIN	
040	90335-0005	A		1	SPRING	
HOLE85						
010	1317233-0000	A		1	PUNCH HOLE85	
020	1317234-0000	A		1	DIE HOLE85	
HOLE90						
010	2603683-0000	A		1	PUNCH	
020	2603682-0000	A		1	DIE	
Common Parts						
045	312155-0331	-		2	SCREW EN 10642 MF6S M5X20 A480	

Pos	Part No	SP	UN	Qty	Description	Page No

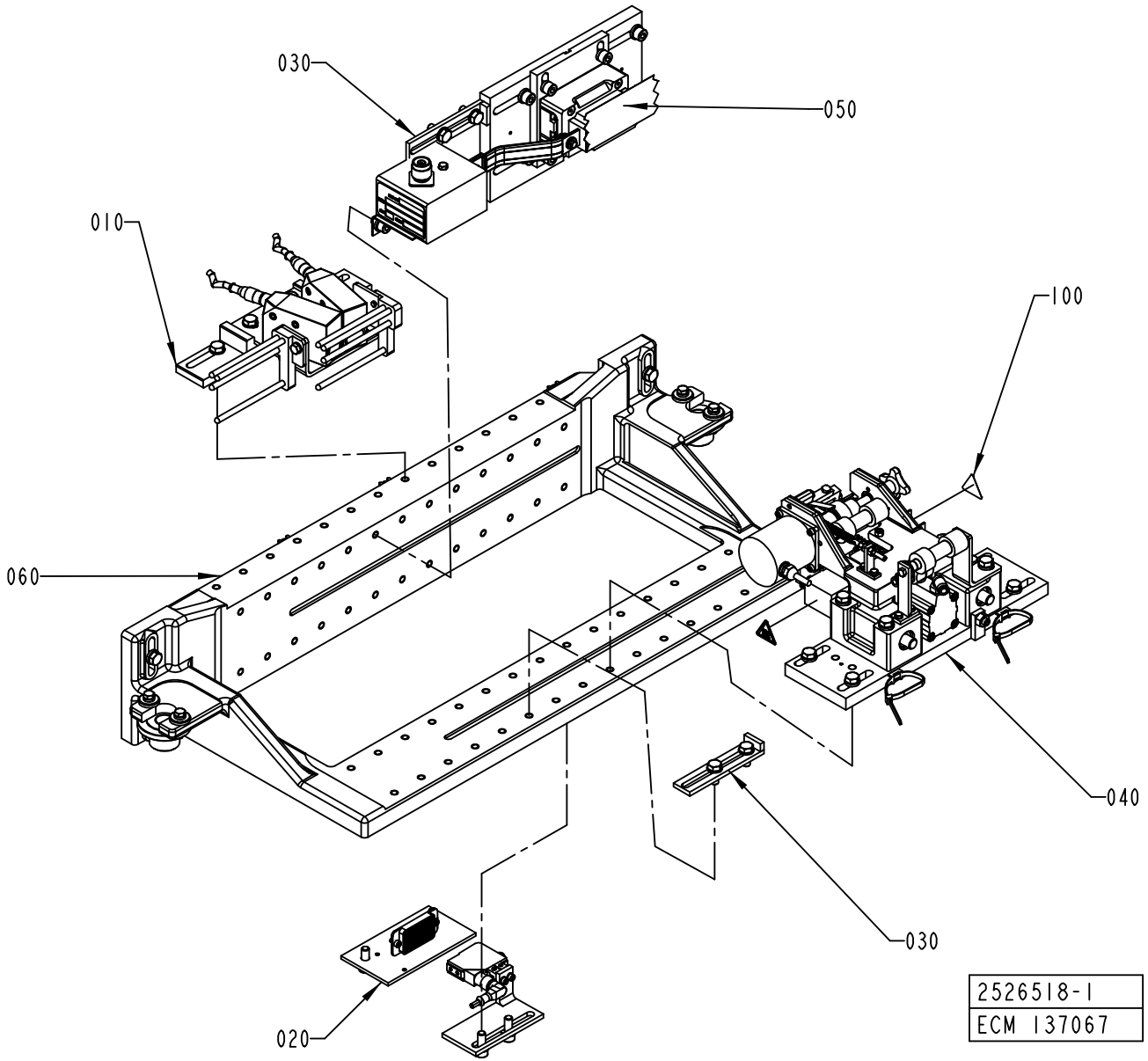
030
050
010
100
060
040
030
020
2526518-1
ECM 137067

ECM: 139515 - 20040119
Group number: 2526518-0100
Assembly Drawing: 2526518-1_1_AB

Pos	Part No	SP	UN	Qty	Description	Page No
-						
010	2525309-0100	-		1	BAR CODE READER	**1-125**
020	1260390-0200	-		1	MISSING PATCH DETECTOR	**1-127**
030	1260401-0200	-		2	SETTING TOOL	**1-103**
040	2526521-0100	-		1	PATCH FEEDER	**1-129, 1-131**
050	2526519-0100	-		1	RESEAL PATCH C'JAW UNIT	**1-135**
060	1260426-0100	-		1	PATCH RESEAL BRACKET	**1-139**
100	90194-0143	-		2	WARNING SIGN ISO, HOT SURFACE	

Pos	Part No	SP	UN	Qty	Description	Page No

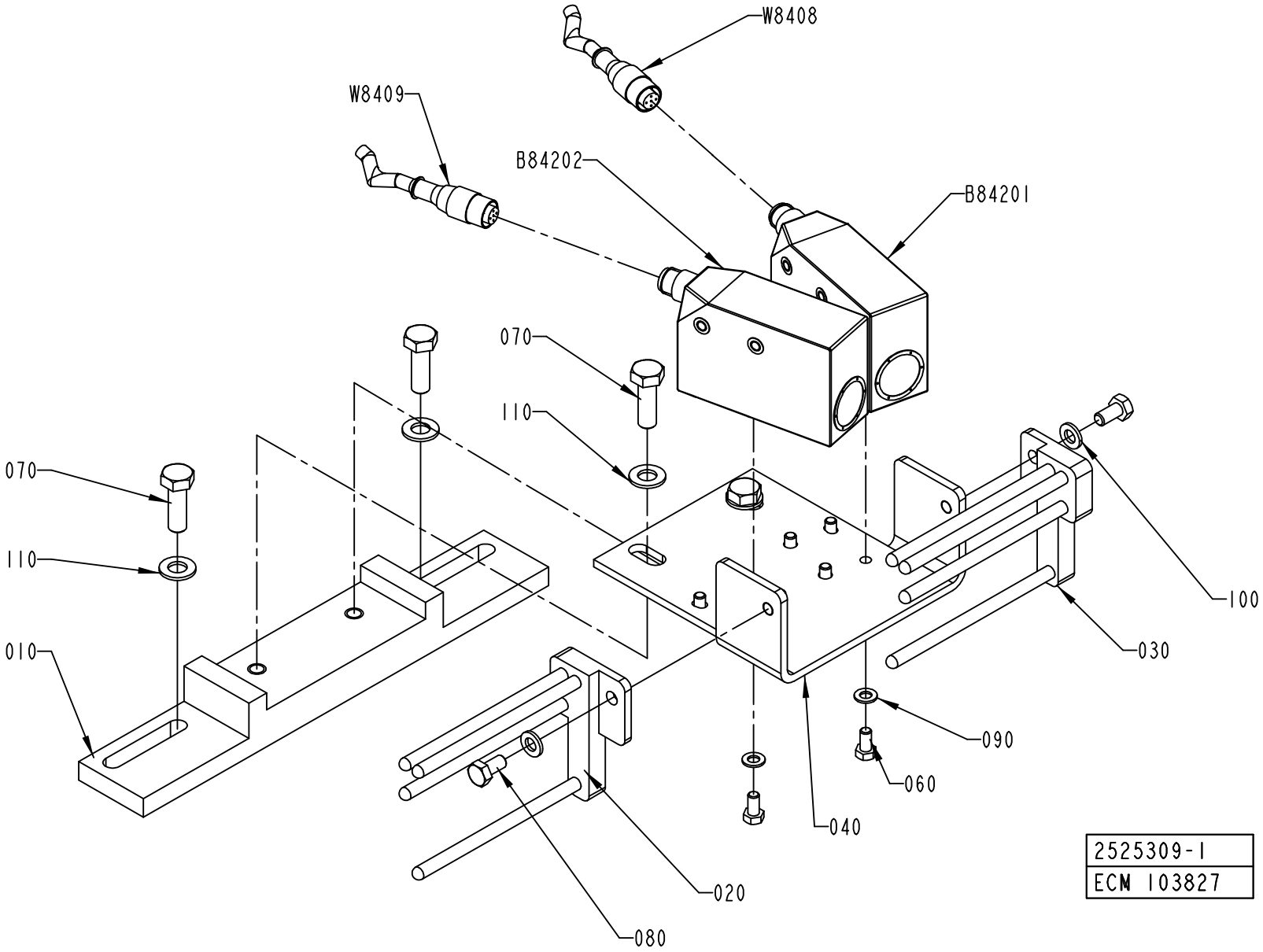
W8408
W8409
B84202
B84201
070
110
070
110
010
100
030
090
060
040
020
080
2525309-1
ECM 103827

ECM: 104566 - 20020214
Group number: 2525309-0100
Assembly Drawing: 2525309-1_1_AA

Pos	Part No	SP	UN	Qty	Description	Page No
-						
010	2525302-0000	-		1	GUIDE BRACKET	
020	2525303-0000	-		1	PAPER GUIDE	
030	2525304-0000	-		1	PAPER GUIDE	
040	2525305-0000	-		1	PHOTOCELL BRACKET	
060	312105-0325	-		8	SCREW M6S ISO 4017 M5X10 A480	
070	312105-0453	-		4	SCREW M6S ISO 4017 M8X25 A480	
080	312105-0366	-		2	SCREW M6S ISO 4017 M6X12 A480	
090	315105-0146	-		8	WASHER BRB5,3X10RFR	
100	315105-0153	-		2	WASHER BRB6,4X12RFR	
110	315105-0165	-		4	WASHER BRB8,4X16RFR	
B84201	90458-0602	A		1	PHOTOCELL,	
B84202	90458-0602	A		1	PHOTOCELL,	
W8408	90458-0603	A		1	CONNECTOR FEMALE 5 PINS	
W8409	90458-0603	A		1	CONNECTOR FEMALE 5 PINS	

Pos	Part No	SP	UN	Qty	Description	Page No

MISSING PATCH DETECTOR

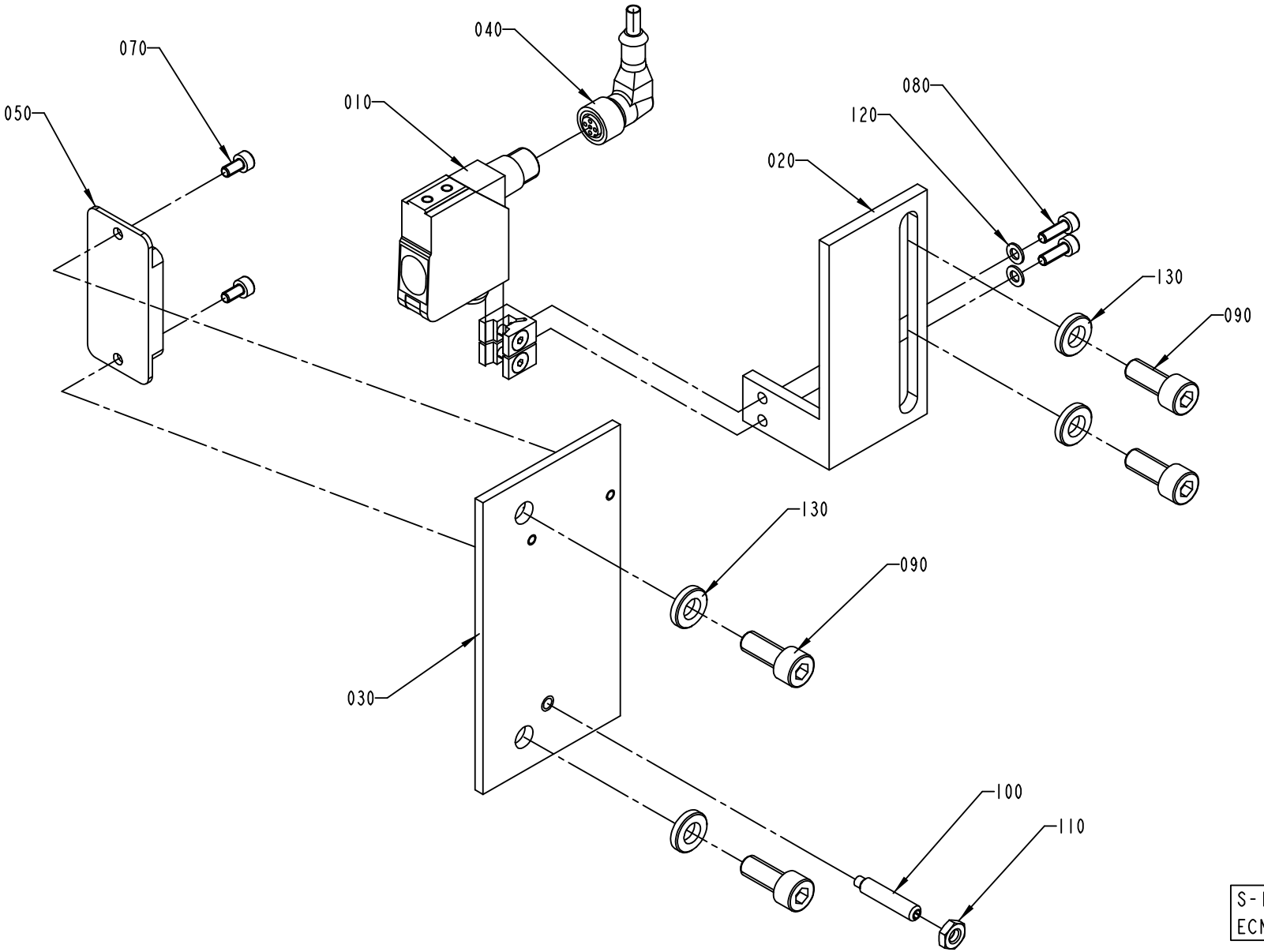

ECM: 114871 - 20021125
Group number: 1260390-0200
Assembly Drawing: 1260390-2_1_AB

Pos	Part No	SP	UN	Qty	Description	Page No
-						
010	1260522-0000	A		1	PHOTOCELL	
020	1346162-0000	-		1	PHOTOCELL BRACKET	
030	1255687-0000	-		1	BRACKET	
040	1260523-0000	-		1	CABLE	
050	1346219-0000	-		1	REFLECTOR	
070	312115-0287	-		2	SCREW ISO4762 M4X8 A4	
080	312115-0291	-		2	SCREW ISO4762 M4X12 A4	
090	312115-0451	-		4	SCREW ISO4762 M8X20 A4	
100	312311-0374	-		1	SCREW ISO4028 M6X30 FZB	
110	312625-0316	-		1	HEXAGON THIN NUT, EN 24035 ML6M M6 A4	
120	315105-0136	-		2	WASHER BRB4,3XRFR	
130	315115-0165	-		4	WASHER PLAIN, TBRB 8,4/16 H=3	

Pos	Part No	SP	UN	Qty	Description	Page No

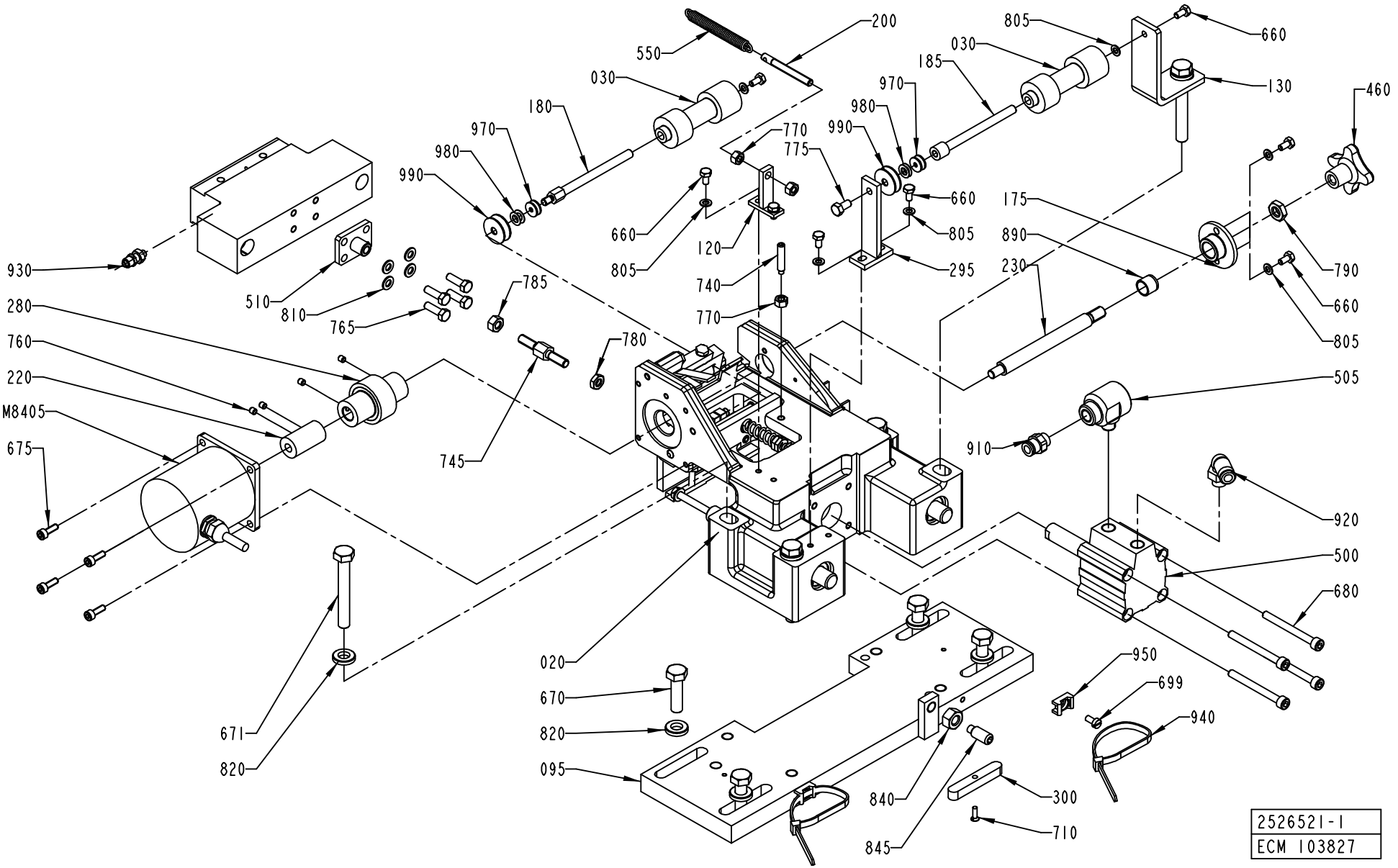
200
550
030
180
970
980
990
770
775
660
805
120
740
770
785
780
745
930
280
760
220
M8405
675
510
810
765
805
660
030
185
970
980
990
130
460
175
890
230
790
660
805
505
910
920
500
680
950
699
940
020
670
820
095
671
820
840
845
300
710
2526521-1
ECM 103827

ECM: 141618 - 20040301
Group number: 2526521-0100
Assembly Drawing: 2526521-1_1_AA

This list covers pages from 1-128 to 1-131

Pos	Part No	SP	UN	Qty	Description	Page No
-						
020	1260389-0000	-		1	CASTING APPLICATOR	
030	2501808-0100	-		1	PATCH FEEDER	**1-133**
040	1487264-0000	-		1	PLATE	
050	2504608-0000	A		1	BRACKET	
060	1260395-0000	A		1	PLATE	
070	2500097-0000	A		1	KNIFE	
080	907712-0000	A		1	PIVOT PLATE	
095	1549247-0000	-		1	PLATE	
100	1519379-0000	A		1	FLAT KNIFE	
110	905174-0000	A		1	STEER PLATE	
120	1140545-0000	-		1	TEE BRACKET	
130	1524306-0000	-		1	HOLDER	
150	905194-0000	-		1	SHAFT	
160	1140547-0000	A		2	SHAFT	
175	1140548-0000	A		1	FLANGED BEARING BUSHING	
180	1140551-0000	A		1	SHAFT	
185	1519723-0000	A		1	SHAFT	
200	905215-0000	-		1	BOLT	
220	905241-0000	A		1	COUPLING	
230	905243-0000	A		1	SHAFT	
250	905413-0000	A		1	SHAFT	
260	905416-0000	A		1	PIVOT BRACKET-SWIVEL	
270	905419-0000	A		1	PIVOT ARM-SWIVEL	
280	905471-0000	A		1	ROLLER-DRIVE	
293	907710-0000	A		1	PIVOT PLATE	
295	1140546-0000	-		1	BRACKET	
300	905244-0000	-		2	WEDGE	
310	905246-0000	-		1	BRACKET	
320	905415-0000	-		1	SHAFT	
330	905417-0000	-		1	SHAFT	
340	905607-0000	-		1	SCREW	
350	905608-0000	-		1	SCREW	
360	905609-0000	-		1	LOCK BAR	
370	905613-0000	-		1	SHAFT	
415	907711-0000	-		1	SHAFT	
430	1296753-0000	-		1	FLAG	
440	1296752-0000	-		1	BRACKET	
460	90051-0007	-		1	STELLAR KNOB, INT. THREAD, NO. 40	
470	1524301-0000	-		2	SPACER	
475	90189-0024	A		4	BALL BUSHING, 12X22X32 MM	
480	90189-0021	A		4	BALL BUSHING, 12X22X32 MM	
500	90450-0409	A		1	DOUBLE ACTING, COMPACT, CYL 32-15	
505	90235-0206	A		1	QUICK EXHAUST VALVE, SEU-1/8	
510	1524305-0000	A		1	ROD	
540	90335-0067	A		1	COMP. SPRING 22370, 1,6X9,6X31,75	
550	907719-0000	A		1	SPRING	
560	90348-0031	A		1	FREE WHEEL COUPLING	
580	1350785-0001	A		2	SHIM	
581	1350785-0002	A		2	SHIM	
582	1350785-0003	A		2	SHIM	
583	1350785-0004	A		2	SHIM	
640	311103-0351	-		2	PARALLEL PIN ISO 2338 6M6X16 A1	
645	311112-0205	-		2	SPRING PIN, ISO 8752 3X10-C	
660	312105-0287	-		10	SCREW M6S ISO4017 M4X8 A470	
665	312105-0339	-		2	SCREW M6S ISO 4014 M5X40 A480	
670	312105-0455	-		4	SCREW M6S ISO 4017 M8X30 A480	
671	312105-0463	-		4	SCREW M6S ISO 4014 M8X60 A480	
672	312115-0226	-		4	SCREW ISO4762 M3X12 A4	
675	312115-0291	-		4	SCREW ISO4762 M4X12 A4	
680	312115-0341	-		4	SCREW ISO4762 M5X50 A4	
690	312125-0224	-		2	SCREW ISO 1207 M3X10 A4	
699	312125-0287	-		6	SCREW ISO 1207 M4X8 A4	
710	312145-0224	-		2	SCREW ISO 2009 MFS M3X10 A4	
720	312145-0301	-		2	SCREW ISO 2009 MFS M4X35 A4	
730	312145-0301	-		2	SCREW ISO 2009 MFS M4X35 A4	
740	312311-0333	-		1	SCREW ISO4028 M5X25 FZB	
745	1524302-0000	-		1	SCREW	
750	312318-0285	-		1	SCREW ISO4029 M4X6 A4	
760	312318-0283	-		4	SCREW ISO4029 M4X4 A4	
765	312105-0329	-		4	SCREW M6S ISO 4017 M5X16 A480	
770	312605-0314	-		3	HEXAGON NUT, M6M M5 A280	
775	312105-0325	-		1	SCREW M6S ISO 4017 M5X10 A480	
780	312625-0316	-		3	HEXAGON THIN NUT, EN 24035 ML6M M6 A4	
785	312902-0316	-		1	NUT HEX. LEFT THREAD, M6 A280	
790	312621-0318	-		1	ROD END,NUT M8	
803	315105-0124	-		4	WASHER BRB3,2X6RFR	
805	315105-0136	-		10	WASHER BRB4,3XRFR	
810	315105-0146	-		7	WASHER BRB5,3X10RFR	
820	315115-0165	-		8	WASHER PLAIN, TBRB 8,4/16 H=3	
830	315753-0117	-		4	RETAINING RING FOR BORE DIN 472 22 A2	
840	312605-0318	-		1	HEXAGON NUT, M6M M8 A280	
845	312311-0451	-		1	SCREW ISO4028 M8X20 FZB	
850	907487-0000	-		2	WASHER-CURVED	

Machine Type | Group Description | Used-In | Group Number | Page No

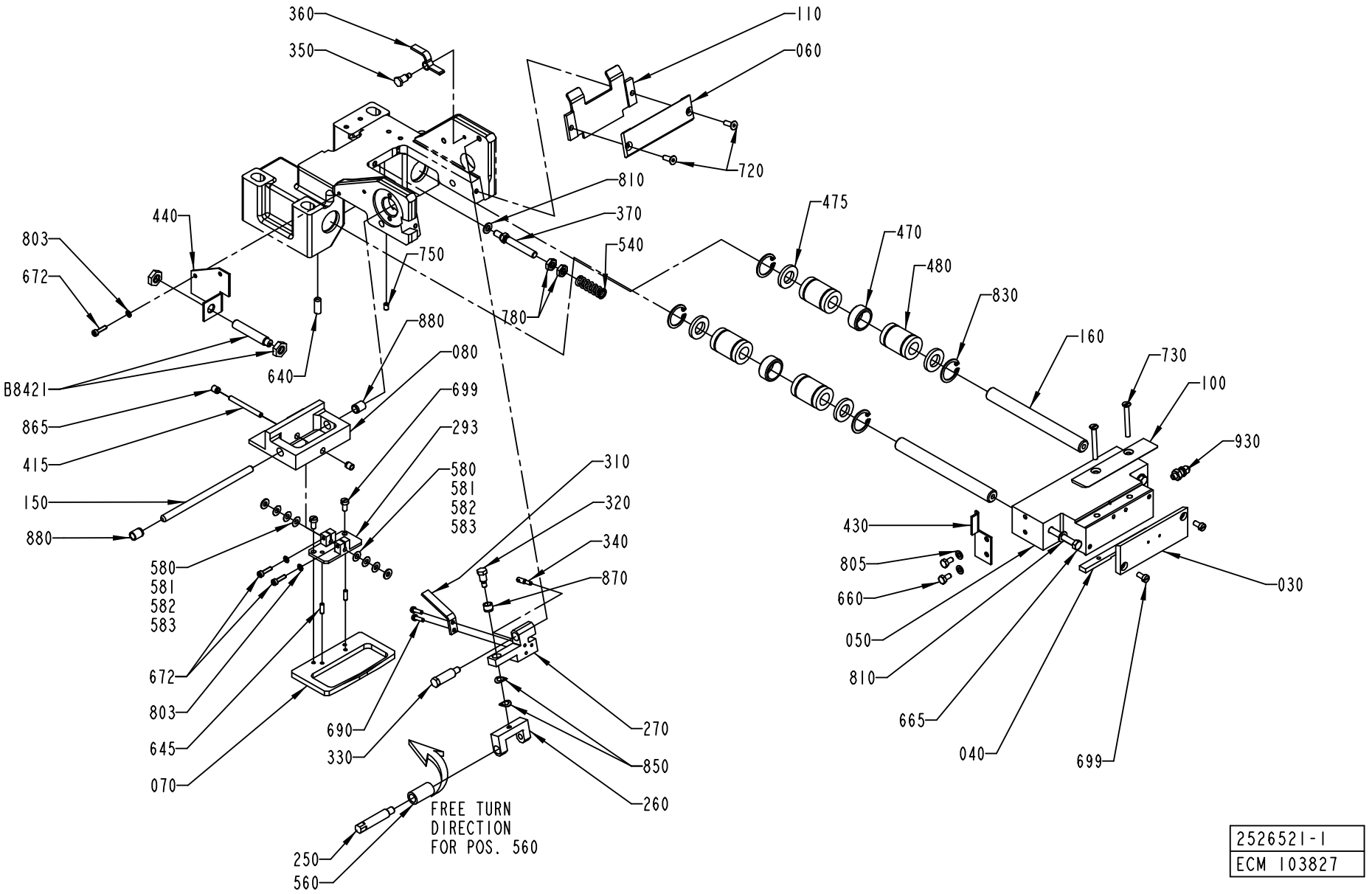
360
350
110
060
720
810
370
540
780
475
470
480
830
160
730
100
930
030
440
803
672
750
640
880
080
699
293
580
581
582
583
B8421
865
415
150
880
580
581
582
583
672
803
645
070
310
320
340
870
690
330
270
850
260
250
560
FREE TURN
DIRECTION
FOR POS. 560
430
805
660
050
810
665
040
699
2526521-1
ECM 103827

ECM: 141618 - 20040301
Group number: 2526521-0100
Assembly Drawing: 2526521-1_2_AA

This list covers pages from 1-128 to 1-131

Pos	Part No	SP	UN	Qty	Description	Page No
- (Cont'd)						
865	321120-0092	-		2	BEARING BUSHING W/O FL, 4X5,5X6 MM	
870	321141-0060	-		1	BEARING BUSHING W/O FL, 6X8X6 MM	
880	321141-0064	-		2	BEARING BUSHING W/O FL, 6X8X10 MM	
890	321141-0140	-		1	BEARING BUSHING W/O FL, 10X12X10 MM	
910	342722-0202	-		1	PIPE COUPLING 1/8" D=6MM	
920	90458-2956	-		1	ELBOW PIPE JOINT, EXT.THREAD, D=6MM-G1/8	
930	342921-0111	-		1	STRAIGHT COUPL,EXT.THREAD.6/4-M5	
940	352113-0102	-		2	CLIP-STRIP, BLACK 188X4,8 MM	
950	352113-0205	-		2	ANCHOR PLATES FOR STRIPS, TYPE TM2S8-C10	
970	2033-0001	-		4	WASHER	
980	2033-0003	-		4	WASHER	
990	2033-0006	-		4	WASHER	
B8421	90458-0138	A		1	PROX.SW. E2EG-X1R5B1-5M	
M8405	90045-0192	A		1	STEP MOTORE21NSHT-LNF-NS-04	

Pos	Part No	SP	UN	Qty	Description	Page No

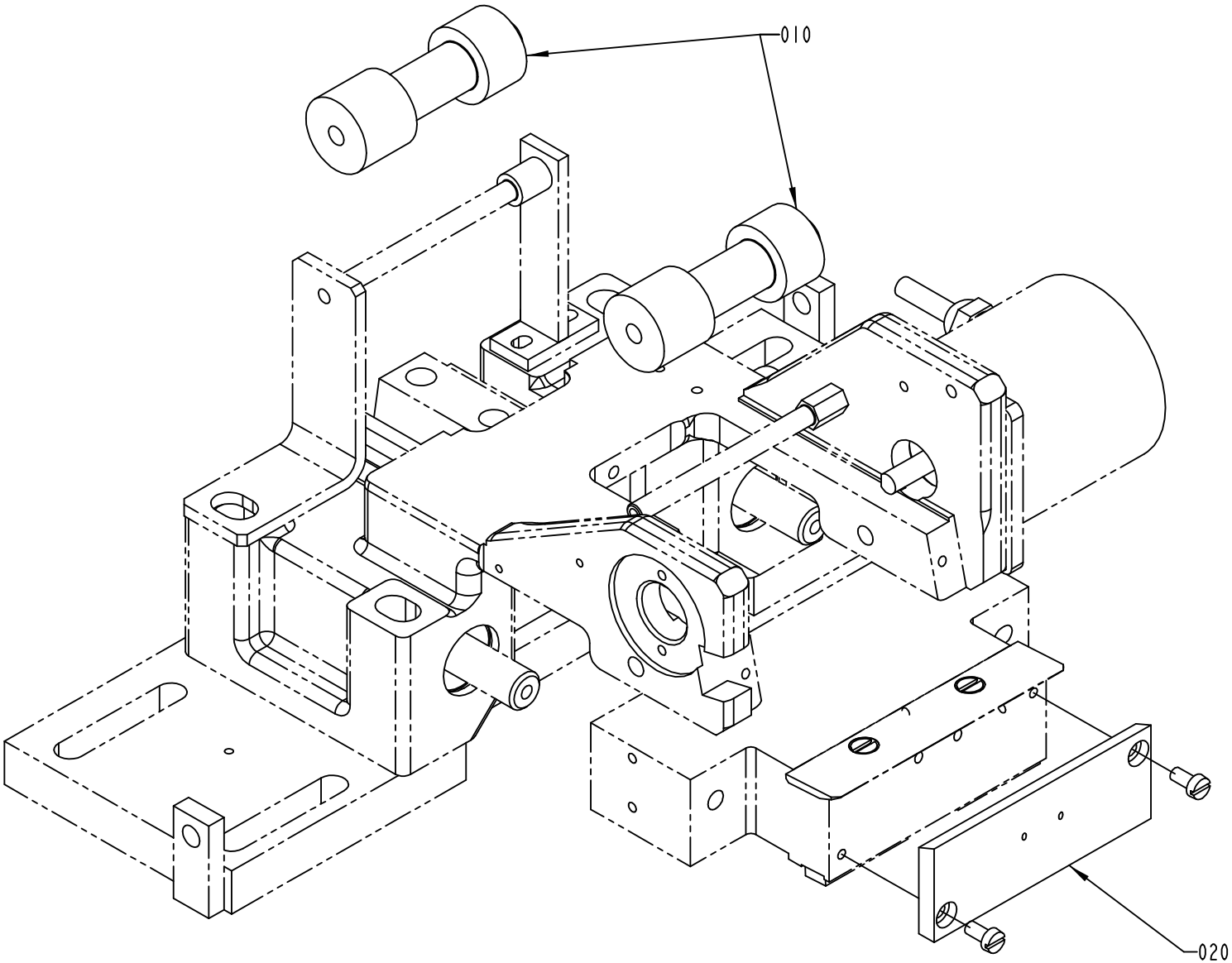

2501808-1
ECN 98647

ECM: 135934 - 20030624
Group number: 2501808-0100
Assembly Drawing: 2501808-1_1_AB

Pos	Part No	SP	UN	Qty	Description	Page No
HOLE48						
010	907358-0003	A		2	ROLLER	
020	2517072-0000	A		1	SEALING PLATE	
HOLE55						
010	907358-0003	A		2	ROLLER	
020	2525300-0000	A		1	SEALING PLATE	
HOLE60						
010	907358-0010	A		2	ROLLER - 43	
020	2526529-0000	A		1	SEALING PLATE	
HOLE65, HOLE85						
010	907358-0012	A		2	ROLLER	
020	2504606-0000	A		1	SEALING PLATE	
HOLE72						
010	907358-0001	A		2	ROLLER - 25.5	
020	2517072-0000	A		1	SEALING PLATE	
HOLE90						
010	907358-0006	A		2	ROLLER	
020	2504606-0000	A		1	SEALING PLATE	

Pos	Part No	SP	UN	Qty	Description	Page No

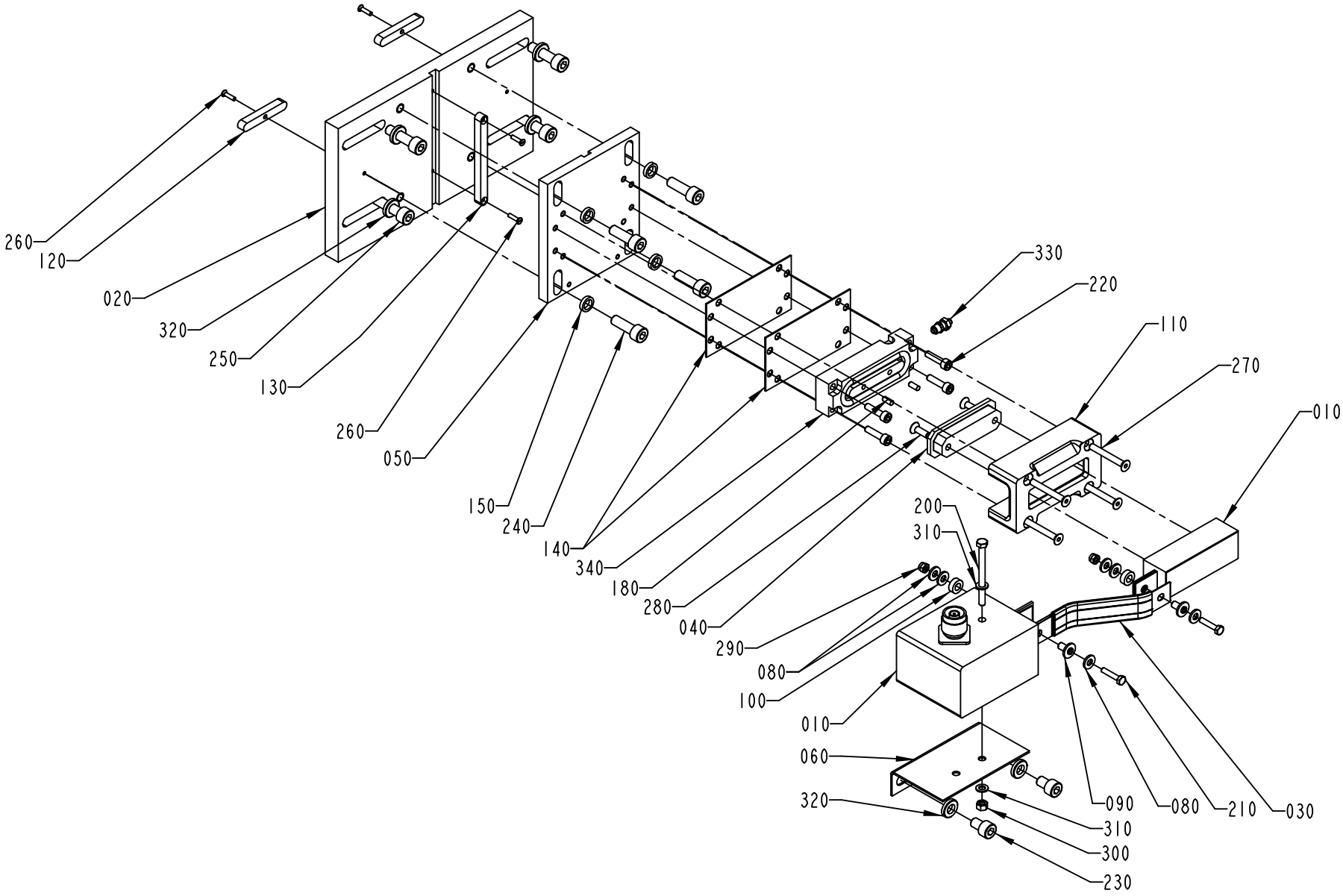

2526519-1
ECM 103827

ECM: 106116 - 20020214
Group number: 2526519-0100
Assembly Drawing: 2526519-1_1_AA

Pos	Part No	SP	UN	Qty	Description	Page No
-						
010	2501810-0100	-		1	PATCH C'JAW	**1-137**
020	2525291-0000	-		1	PLATE	
030	1140889-0000	A		1	BUSBAR	
040	1296298-0000	-		1	BUSHING	
050	2525294-0000	-		1	PLATE	
060	1140890-0000	-		1	TRANSFORMER BRACKET	
080	28509-0000	A		6	WASHER	
090	32544-0000	A		2	INSULATION NUT	
100	32644-0000	A		2	WASHER	
110	928919-0000	-		1	FASTENING PLATE	
120	905244-0000	-		2	WEDGE	
130	905463-0000	-		1	KEY	
140	1279484-0000	-		2	SHIM	
150	1296300-0000	-		4	WASHER	
180	311103-0267	-		2	PARALLEL PIN ISO 2338 4M6X10 A1	
200	312101-0343	-		1	SCREW M6S M5X60 FZB	
210	312105-0295	-		2	SCREW M6S ISO4017 M4X20 A470	
220	312115-0331	-		4	SCREW ISO4762 M5X20 A4	
230	312115-0447	-		2	SCREW ISO4762 M8X12 A4	
240	312115-0453	-		4	SCREW ISO4762 M8X25 A4	
250	312115-0455	-		4	SCREW ISO4762 M8X30 A4	
260	312145-0226	-		4	SCREW ISO 2009 MFS M3X12 A4	
270	312155-0339	-		4	SCREW EN 10642 MF6S M5X40 A480	
280	312155-0329	-		2	SCREW EN 10642 MF6S M5X16 A480	
290	312812-0312	-		2	HEXAGON NUT, NY-LOCK M4 A480	
300	312605-0314	-		1	HEXAGON NUT, M6M M5 A280	
310	315105-0146	-		2	WASHER BRB5,3X10RFR	
320	315115-0165	-		6	WASHER PLAIN, TBRB 8,4/16 H=3	
330	342921-0111	-		1	STRAIGHT COUPL,EXT.THREAD.6/4-M5	
340	90450-0380	A		1	SINGLE ACTING, PANCAKE EV-20/75-5	

Pos	Part No	SP	UN	Qty	Description	Page No

Machine Type | Group Description | Used-In | Group Number | Page No

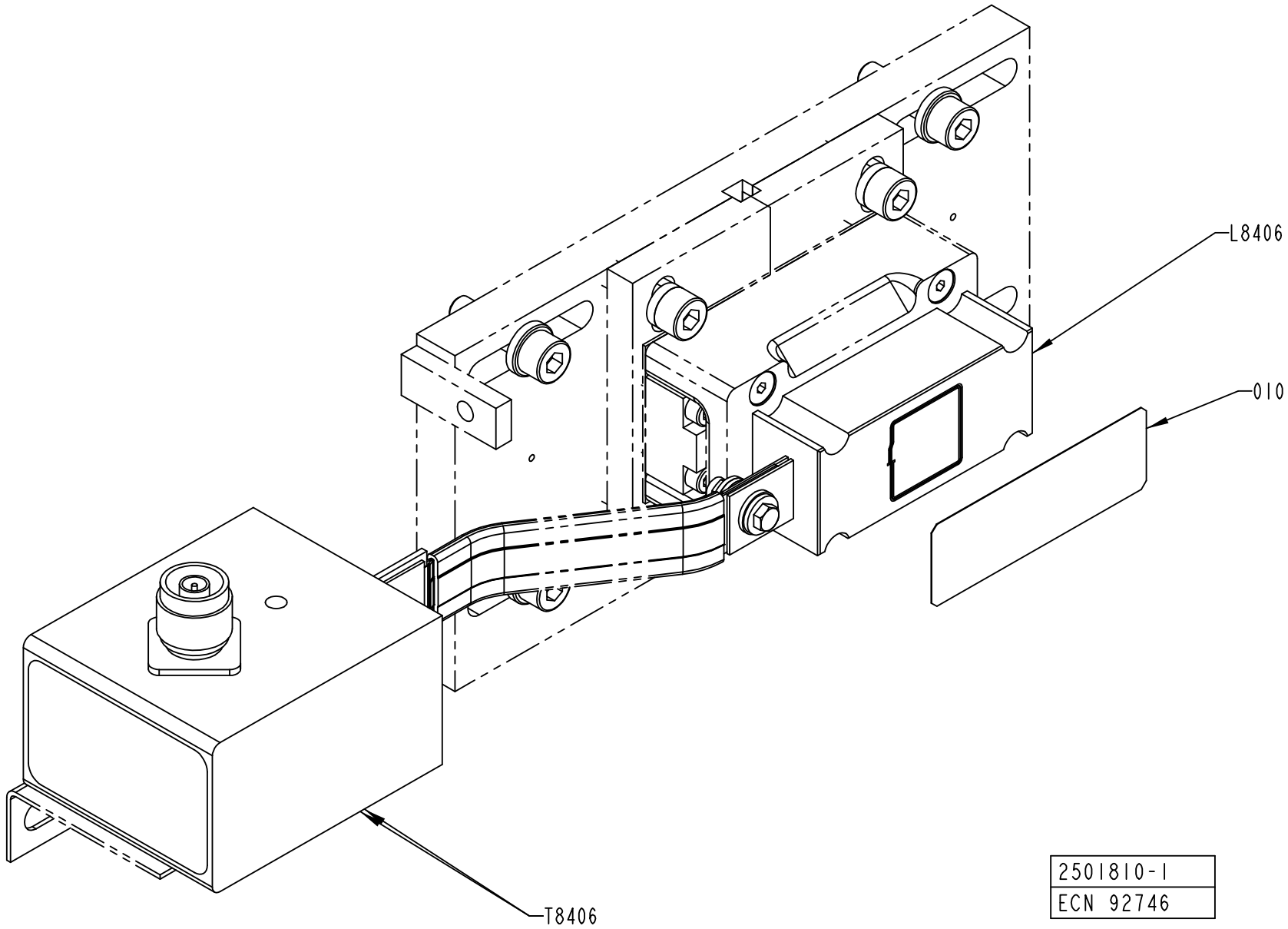
L8406
010
T8406
2501810-1
ECN 92746

ECM: 135936 - 20030624
Group number: 2501810-0100
Assembly Drawing: 2501810-1_1_AA

Pos	Part No	SP	UN	Qty	Description	Page No
HOLE48						
L8406	1520196-0000	A		1	INDUCTOR	
L8406	1520196-0000	A		1	INDUCTOR	
T8406	67379-0215	A		1	TRANSFORMER	
T8406	67379-0215	A		1	TRANSFORMER	
HOLE60						
L8406	1533366-0000	A		1	INDUCTOR	
L8406	1533366-0000	A		1	INDUCTOR	
T8406	67379-0216	A		1	TRANSFORMER	
T8406	67379-0216	A		1	TRANSFORMER	
HOLE65, HOLE85						
L8406	1520450-0000	A		1	INDUCTOR	
L8406	1520450-0000	A		1	INDUCTOR	
T8406	67379-0215	A		1	TRANSFORMER	
T8406	67379-0215	A		1	TRANSFORMER	
HOLE72						
L8406	1566708-0000	A		1	INDUCTOR	
L8406	1566708-0000	A		1	INDUCTOR	
T8406	67379-0215	A		1	TRANSFORMER	
T8406	67379-0215	A		1	TRANSFORMER	
HOLE90						
L8406	1533367-0000	A		1	INDUCTOR	
L8406	1533367-0000	A		1	INDUCTOR	
T8406	67379-0215	A		1	TRANSFORMER	
T8406	67379-0215	A		1	TRANSFORMER	
Common Parts						
010	2507111-0000	A		1	TAPE	

Pos	Part No	SP	UN	Qty	Description	Page No

PATCH RESEAL BRACKET

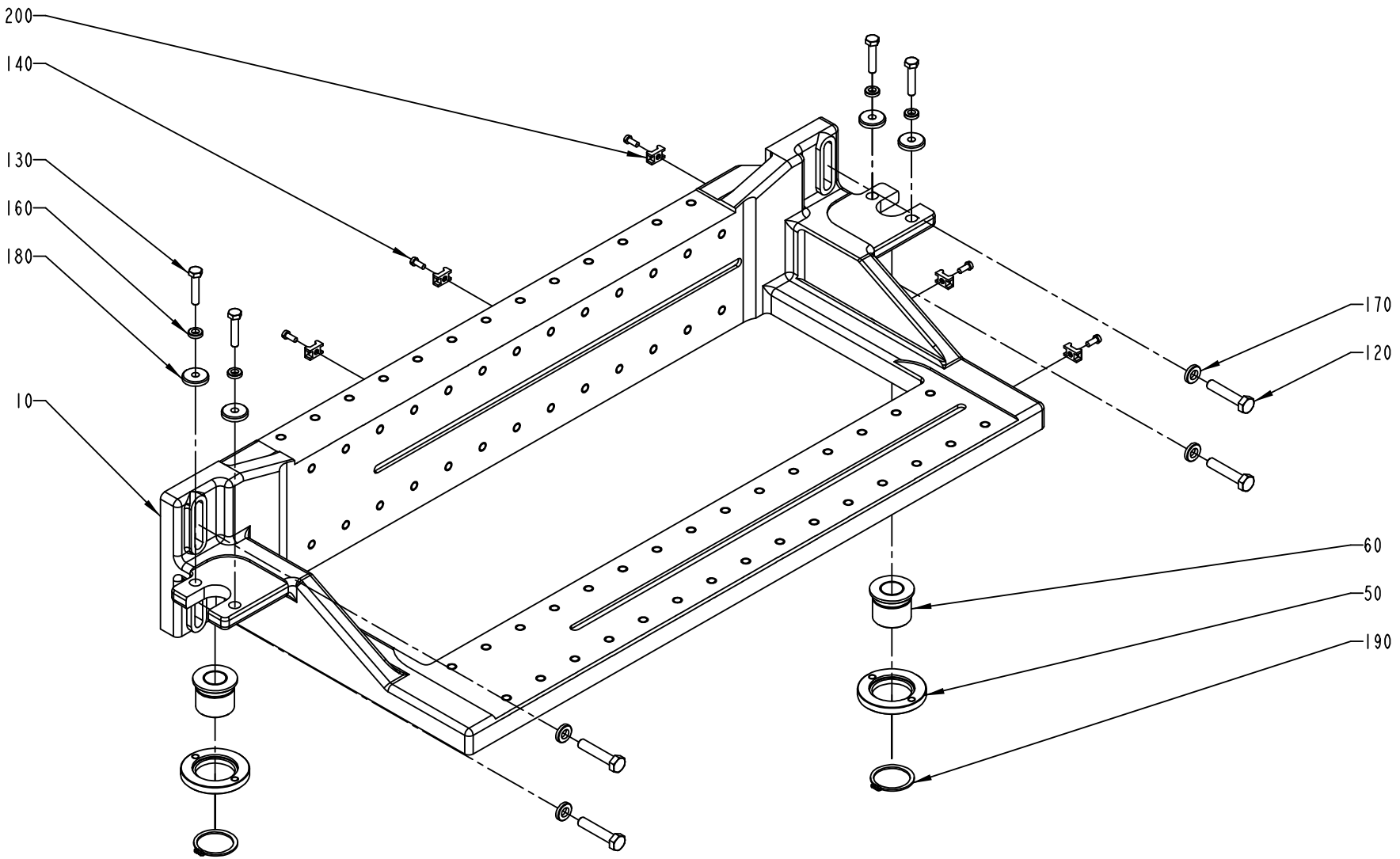

S-1260426-1
ECN 73275

ECM: 73275 - 20000421
Group number: 1260426-0100
Assembly Drawing: 1260426-1_1_AB

Pos	Part No	SP	UN	Qty	Description	Page No
-						
010	1260397-0000	-		1	BRACKET	
050	1147009-0000	-		2	SPECIAL WASHER	
060	1147010-0000	-		2	BUSHING	
120	312109-0459	-		4	SCREW M6S ISO 4017 M8X40 A480	
130	312109-0374	-		4	SCREW M6S ISO 4017 M6X30 A480	
140	312125-0289	-		5	SCREW ISO 1207 M4X10 A4	
160	315115-0153	-		4	WASHER PLAIN, TBRB 6,4/12 H=3	
170	315115-0165	-		4	WASHER PLAIN, TBRB 8,4/16 H=3	
180	315125-0153	-		4	WASHER TBRSB 6,4X22X4 A4	
190	315751-0123	-		2	RETAINING RING FOR SHAFT DIN 471 32 A2	
200	352113-0205	-		5	ANCHOR PLATES FOR STRIPS, TYPE TM2S8-C10	

Pos	Part No	SP	UN	Qty	Description	Page No

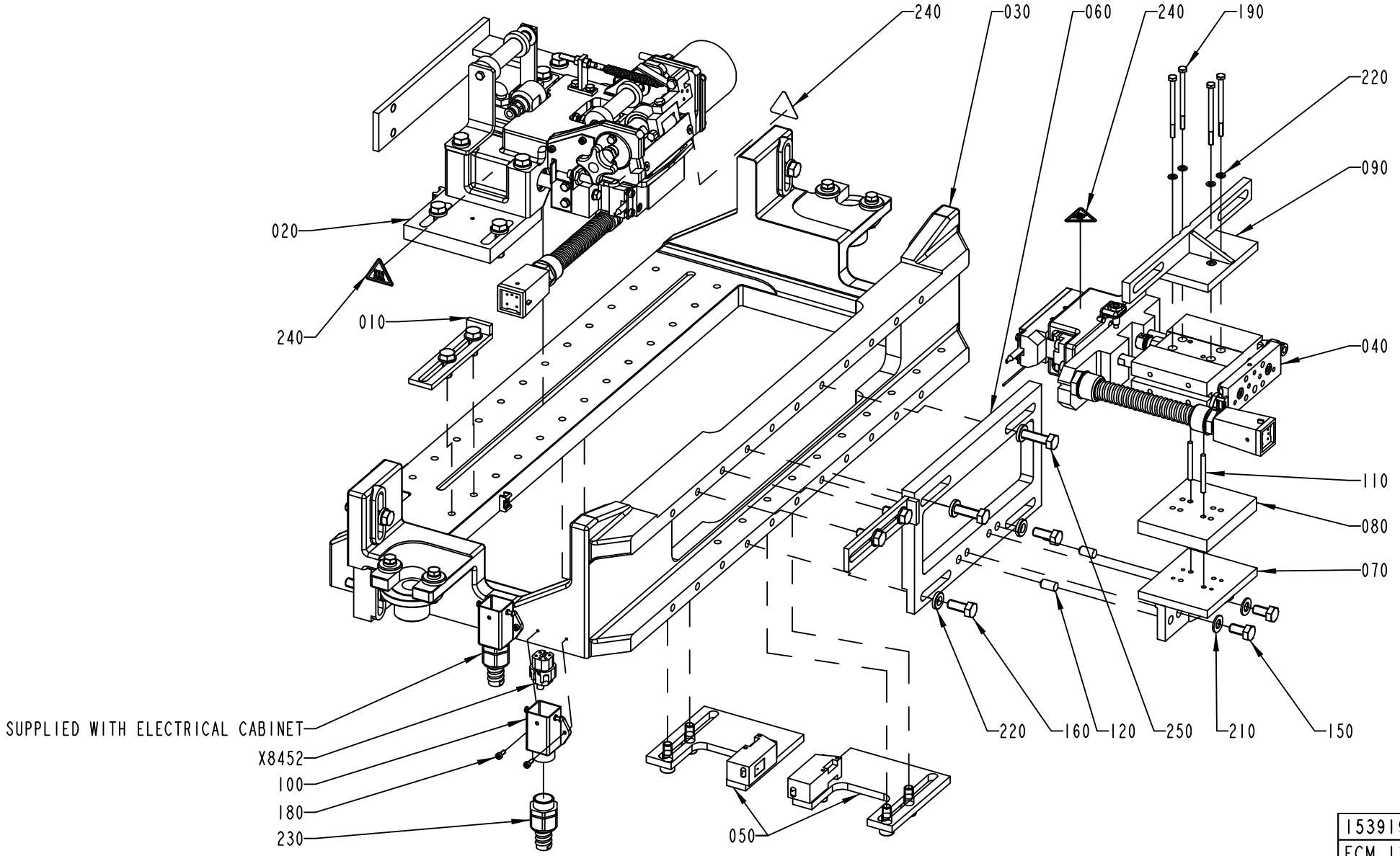

1539197-1
ECM 137067

ECM: 139516 - 20040119
Group number: 1539197-0100
Assembly Drawing: 1539197-1_1_AE

Pos	Part No	SP	UN	Qty	Description	Page No
-						
010	1260401-0200	-		2	SETTING TOOL	**1-103**
020	2501801-0100	-		1	TAB FEEDER	**1-143, 1-145**
030	1539196-0100	-		1	STATION BRACKET	**1-149**
040	1549256-0100	-		1	TAB C'JAW	**1-151**
050	1558100-0100	-		1	DETECTOR	**1-155**
060	1558107-0000	-		1	PLATE	
070	1558108-0000	-		1	BRACKET	
080	2504612-0000	-		1	SPACER	
090	2555124-0000	-		1	BRACKET	
100	90110-0370	-		2	BASE HOUSING	
110	311103-0280	-		2	PARALLEL PIN ISO 2338 4M6X40 A1	
120	311103-0399	-		2	PARALLEL PIN ISO 2338 8M6X16 A1	
150	312105-0449	-		2	SCREW M6S ISO 4017 M8X16 A480	
160	312105-0451	-		2	SCREW M6S ISO 4017 M8X20 A480	
180	312115-0222	-		4	SCREW ISO4762 M3X8 A4	
190	2563966-0000	-		4	SCREW	
200	315105-0136	-		4	WASHER BRB4,3XRFR	
210	315105-0165	-		2	WASHER BRB8,4X16RFR	
220	315115-0165	-		4	WASHER PLAIN, TBRB 8,4/16 H=3	
230	353243-0002	-		2	EXTENDED WITHOUT INSERT, PG11	
240	90194-0143	-		3	WARNING SIGN ISO, HOT SURFACE	
250	312105-0455	-		2	SCREW M6S ISO 4017 M8X30 A480	
X8452	90110-0296	A		2	CONTACT SCREW	

Pos	Part No	SP	UN	Qty	Description	Page No

Machine Type | Group Description | Used-In | Group Number | Page No

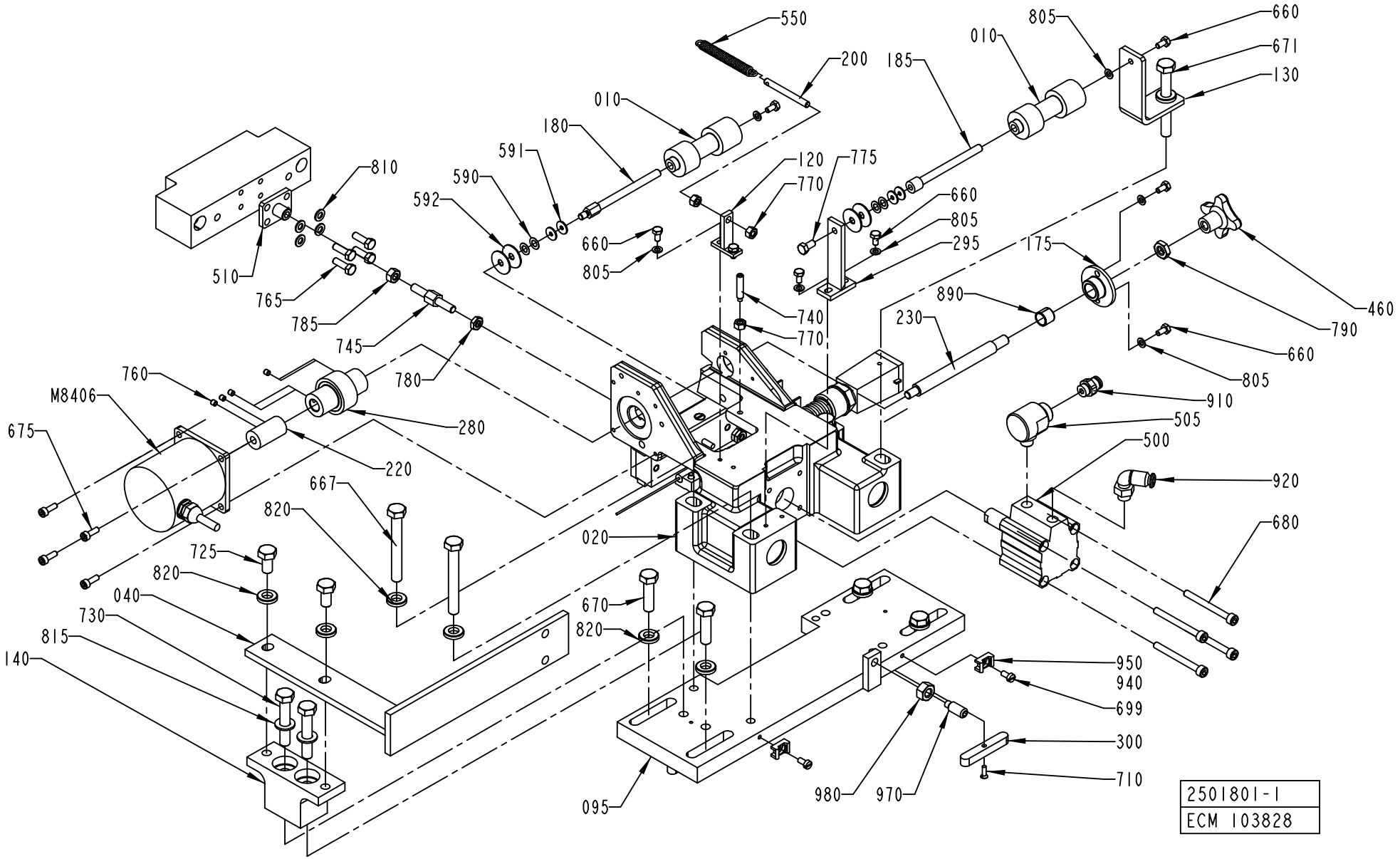
550
200
185
010
805
660
671
130
010
180
591
590
592
120
775
770
660
805
295
660
805
810
510
765
785
745
780
740
770
890
230
175
460
790
660
805
760
M8406
675
280
220
667
820
725
820
040
730
815
140
020
670
820
095
910
505
500
920
680
950
940
699
300
710
980
970
2501801-1
ECM 103828

ECM: 141621 - 20040301
Group number: 2501801-0100
Assembly Drawing: 2501801-1_1_AC

This list covers pages from 1-142 to 1-145

Pos	Part No	SP	UN	Qty	Description	Page No
-						
010	2504597-0100	-		1	TAB FEEDER	**1-147**
020	1260389-0000	-		1	CASTING APPLICATOR	
040	2514040-0000	-		1	CONNECTION	
050	2504598-0000	-		1	APPLICATOR HEAD	
060	1260395-0000	A		1	PLATE	
070	2500097-0000	A		1	KNIFE	
080	907712-0000	A		1	PIVOT PLATE	
095	1549247-0000	-		1	PLATE	
110	905174-0000	A		1	STEER PLATE	
120	1140545-0000	-		1	TEE BRACKET	
130	1524306-0000	-		1	HOLDER	
140	2517068-0000	-		1	SUPPORT	
150	905194-0000	-		1	SHAFT	
160	1140547-0000	A		2	SHAFT	
175	1140548-0000	A		1	FLANGED BEARING BUSHING	
180	905212-0000	A		1	SHAFT	
185	1519723-0000	A		1	SHAFT	
200	905215-0000	-		1	BOLT	
220	905241-0000	A		1	COUPLING	
230	905243-0000	A		1	SHAFT	
250	905413-0000	A		1	SHAFT	
260	905416-0000	A		1	PIVOT BRACKET-SWIVEL	
270	905419-0000	A		1	PIVOT ARM-SWIVEL	
280	905471-0000	A		1	ROLLER-DRIVE	
293	907710-0000	A		1	PIVOT PLATE	
295	1140546-0000	-		1	BRACKET	
300	905244-0000	-		2	WEDGE	
310	905246-0000	-		1	BRACKET	
320	905415-0000	-		1	SHAFT	
330	905417-0000	-		1	SHAFT	
340	905607-0000	-		1	SCREW	
350	905608-0000	-		1	SCREW	
360	905609-0000	-		1	LOCK BAR	
370	905613-0000	-		1	SHAFT	
415	907711-0000	-		1	SHAFT	
430	1296753-0000	-		1	FLAG	
440	1296752-0000	-		1	BRACKET	
460	90051-0007	-		1	STELLAR KNOB, INT. THREAD, NO. 40	
475	1524301-0000	-		2	SPACER	
479	90189-0024	A		4	BALL BUSHING, 12X22X32 MM	
480	90189-0021	A		4	BALL BUSHING, 12X22X32 MM	
500	90450-0409	A		1	DOUBLE ACTING, COMPACT, CYL 32-15	
505	90235-0206	A		1	QUICK EXHAUST VALVE, SEU-1/8	
510	1524305-0000	A		1	ROD	
540	90335-0067	A		1	COMP. SPRING 22370, 1,6X9,6X31,75	
550	907719-0000	A		1	SPRING	
560	90348-0031	A		1	FREE WHEEL COUPLING	
580	1350785-0001	A		2	SHIM	
581	1350785-0002	A		2	SHIM	
582	1350785-0003	A		2	SHIM	
583	1350785-0004	A		2	SHIM	
590	2033-0003	-		4	WASHER	
591	2033-0001	-		4	WASHER	
592	2033-0006	-		4	WASHER	
640	311103-0351	-		2	PARALLEL PIN ISO 2338 6M6X16 A1	
645	311112-0205	-		2	SPRING PIN, ISO 8752 3X10-C	
650	312101-0343	-		2	SCREW M6S M5X60 FZB	
660	312105-0287	-		10	SCREW M6S ISO4017 M4X8 A470	
665	312105-0339	-		2	SCREW M6S ISO 4014 M5X40 A480	
667	312105-0464	-		3	SCREW M6S ISO 4014 M8X65 A480	
670	312105-0455	-		4	SCREW M6S ISO 4017 M8X30 A480	
671	312105-0463	-		1	SCREW M6S ISO 4014 M8X60 A480	
672	312115-0226	-		4	SCREW ISO4762 M3X12 A4	
675	312115-0291	-		4	SCREW ISO4762 M4X12 A4	
680	312115-0341	-		4	SCREW ISO4762 M5X50 A4	
690	312125-0224	-		2	SCREW ISO 1207 M3X10 A4	
699	312125-0287	-		4	SCREW ISO 1207 M4X8 A4	
710	312145-0224	-		2	SCREW ISO 2009 MFS M3X10 A4	
720	312155-0291	-		2	SCREW EN 10642 MF6S M4X12 A480	
725	312105-0449	-		2	SCREW M6S ISO 4017 M8X16 A480	
730	312109-0460	-		2	SCREW M6S ISO 4017 M8X45 A480	
740	312311-0333	-		1	SCREW ISO4028 M5X25 FZB	
745	1524302-0000	-		1	SCREW	
750	312318-0285	-		1	SCREW ISO4029 M4X6 A4	
760	312318-0283	-		4	SCREW ISO4029 M4X4 A4	
765	312105-0329	-		4	SCREW M6S ISO 4017 M5X16 A480	
770	312605-0314	-		3	HEXAGON NUT, M6M M5 A280	
775	312105-0325	-		1	SCREW M6S ISO 4017 M5X10 A480	
780	312625-0316	-		3	HEXAGON THIN NUT, EN 24035 ML6M M6 A4	
785	312902-0316	-		1	NUT HEX. LEFT THREAD, M6 A280	
790	312621-0318	-		1	ROD END,NUT M8	
803	315105-0124	-		4	WASHER BRB3,2X6RFR	
805	315105-0136	-		10	WASHER BRB4,3XRFR	

Machine Type | Group Description | Used-In | Group Number | Page No

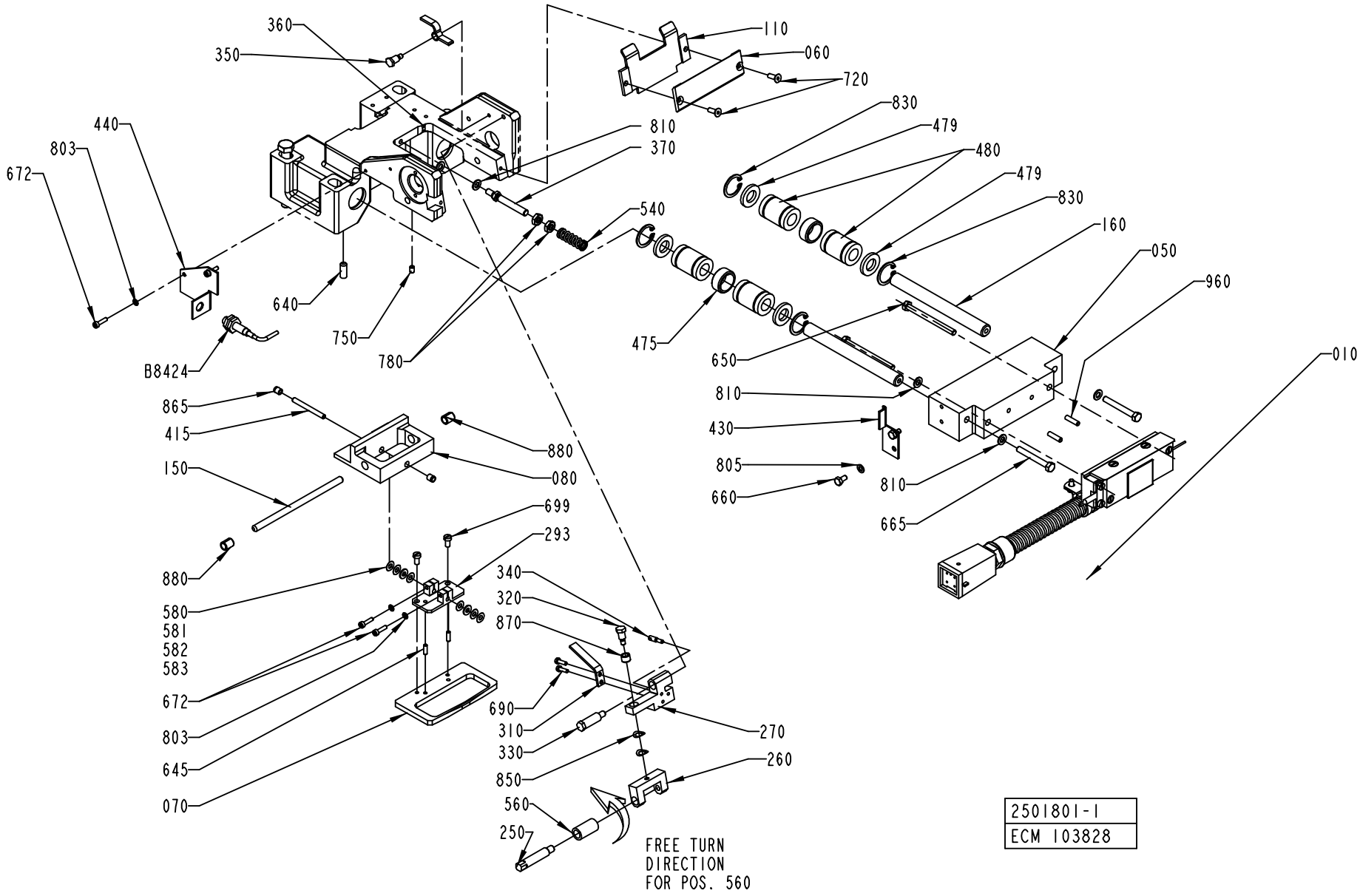
360
350
440
803
672
640
750
780
B8424
810
370
540
110
060
720
830
479
480
479
830
160
050
960
010
475
650
810
430
805
660
810
665
865
415
150
880
080
880
580
581
582
583
672
803
645
070
699
293
340
320
870
690
310
330
850
560
250
270
260
FREE TURN
DIRECTION
FOR POS. 560
2501801-1
ECM 103828

Pos	Part No	SP	UN	Qty	Description	Page No
- (Cont'd)						
810	315105-0146	-		9	WASHER BRB5,3X10RFR	
815	315105-0165	-		2	WASHER BRB8,4X16RFR	
820	315115-0165	-		8	WASHER PLAIN, TBRB 8,4/16 H=3	
830	315753-0117	-		4	RETAINING RING FOR BORE DIN 472 22 A2	
850	907487-0000	-		2	WASHER-CURVED	
865	321120-0092	-		2	BEARING BUSHING W/O FL, 4X5,5X6 MM	
870	321141-0060	-		1	BEARING BUSHING W/O FL, 6X8X6 MM	
880	321141-0064	-		2	BEARING BUSHING W/O FL, 6X8X10 MM	
890	321141-0140	-		1	BEARING BUSHING W/O FL, 10X12X10 MM	
910	342722-0202	-		1	PIPE COUPLING 1/8" D=6MM	
920	90458-2956	-		1	ELBOW PIPE JOINT, EXT.THREAD, D=6MM-G1/8	
940	352113-0102	-		2	CLIP-STRIP, BLACK 188X4,8 MM	
950	352113-0205	-		2	ANCHOR PLATES FOR STRIPS, TYPE TM2S8-C10	
960	311103-0270	-		2	PARALLEL PIN ISO 2338 4M6X16 A1	
970	312311-0451	-		1	SCREW ISO4028 M8X20 FZB	
980	312605-0318	-		1	HEXAGON NUT, M6M M8 A280	
B8424	90458-0138	A		1	PROX.SW. E2EG-X1R5B1-5M	
M8406	90045-0192	A		1	STEP MOTORE21NSHT-LNF-NS-04	

Pos	Part No	SP	UN	Qty	Description	Page No

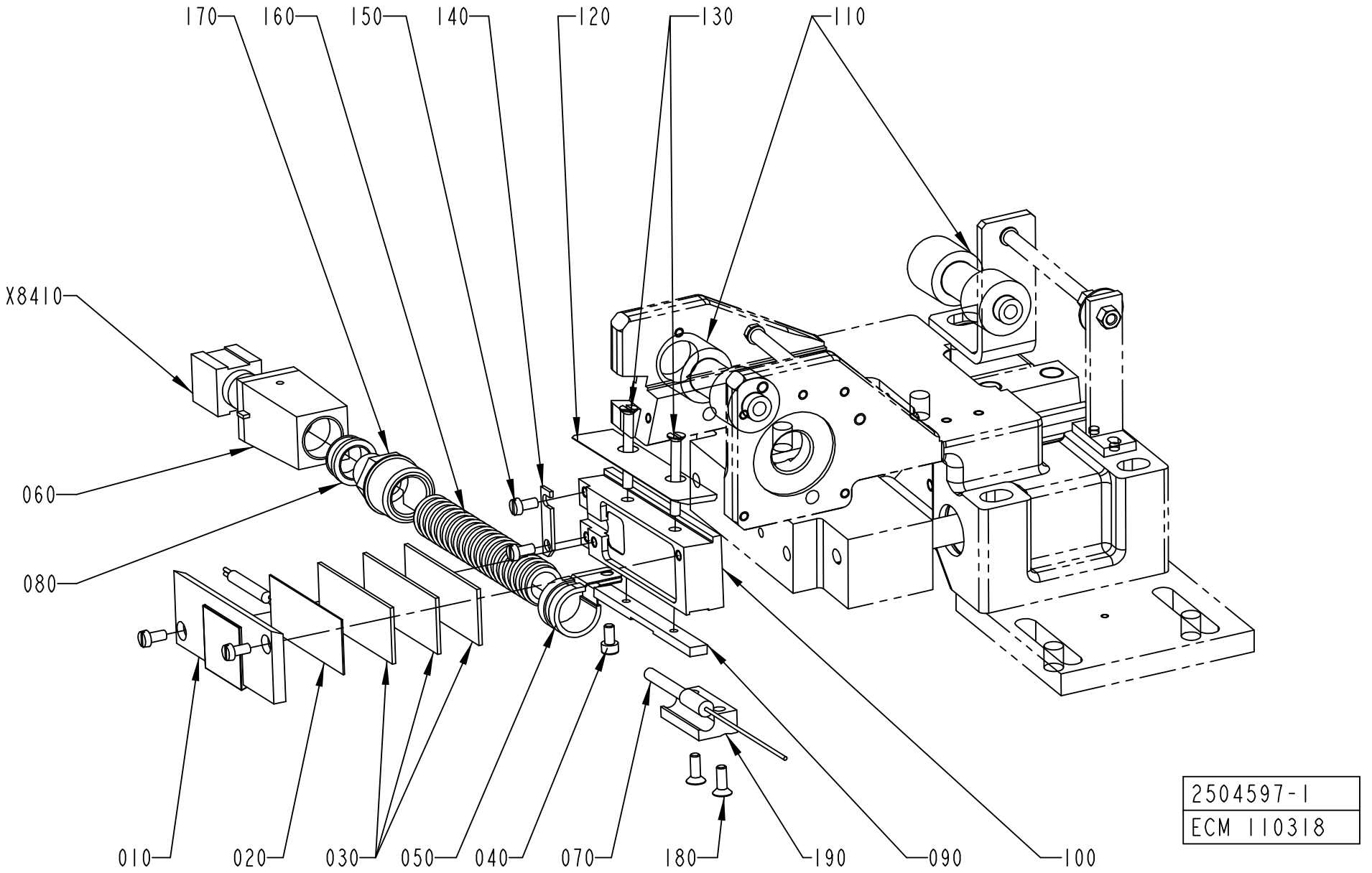
170
160
150
140
120
130
110
X8410
060
080
010
020
030
050
040
070
180
190
090
100
2504597-1
ECM 110318

ECM: 141620 - 20040301
Group number: 2504597-0100
Assembly Drawing: 2504597-1_1_AC

Pos	Part No	SP	UN	Qty	Description	Page No
HOLE48						
010	2511642-0000	A		1	SEALING PLATE	
110	907358-0011	A		2	ROLLER	
HOLE55						
010	2525324-0000	A		1	SEALING PLATE	
110	907358-0012	A		2	ROLLER	
HOLE60						
010	2526548-0000	A		1	SEALING PLATE	
110	907358-0009	A		1	ROLLER	
HOLE65						
010	2525323-0000	A		1	SEALING PLATE	
110	907358-0013	A		2	ROLLER	
HOLE72						
010	2511640-0000	A		1	SEALING PLATE	
110	907358-0011	A		2	ROLLER	
HOLE85						
010	2504599-0000	A		1	SEALING PLATE	
110	907358-0013	A		2	ROLLER	
HOLE90						
010	2603681-0000	A		1	SEALING PLATE	
110	907358-0004	A		2	ROLLER	
Common Parts						
020	907136-0000	A		1	HEATER	
	90411-0018	*A*		*1*	*INSULATOR, ALU-SILICATE HM 15643*	
030	90411-0018	A		3	INSULATOR, ALU-SILICATE HM 15643	
040	312115-0287	-		1	SCREW ISO4762 M4X8 A4	
050	907249-0000	-		1	CLAMP	
060	90110-0372	-		1	PLUG HOOD	
070	90326-0060	A		1	THERMOCOUPLE, CR-AL	
080	90089-0001	-		1	REDUCING SLEEVE, PR18,6/PR15,2	
090	1487264-0000	-		1	PLATE	
100	1519364-0000	A		1	INSULATING RAIL	
120	1519379-0000	A		1	FLAT KNIFE	
130	312145-0301	-		2	SCREW ISO 2009 MFS M4X35 A4	
140	1349916-0000	-		1	CLAMP	
150	312125-0287	-		4	SCREW ISO 1207 M4X8 A4	
160	90152-0033	-	M	1	SPIRAL CONDUIT FOR PR 15,2(PG 9)	
170	90012-0063	-		1	CABLE GLAND PR 15,2	
180	312155-0291	-		2	SCREW EN 10642 MF6S M4X12 A480	
190	1478479-0000	-		1	HOLDER	
X8410	90110-0295	-		1	CONNECTOR 4 POLE + EARTH	

Pos	Part No	SP	UN	Qty	Description	Page No

Machine Type | Group Description | Used-In | Group Number | Page No

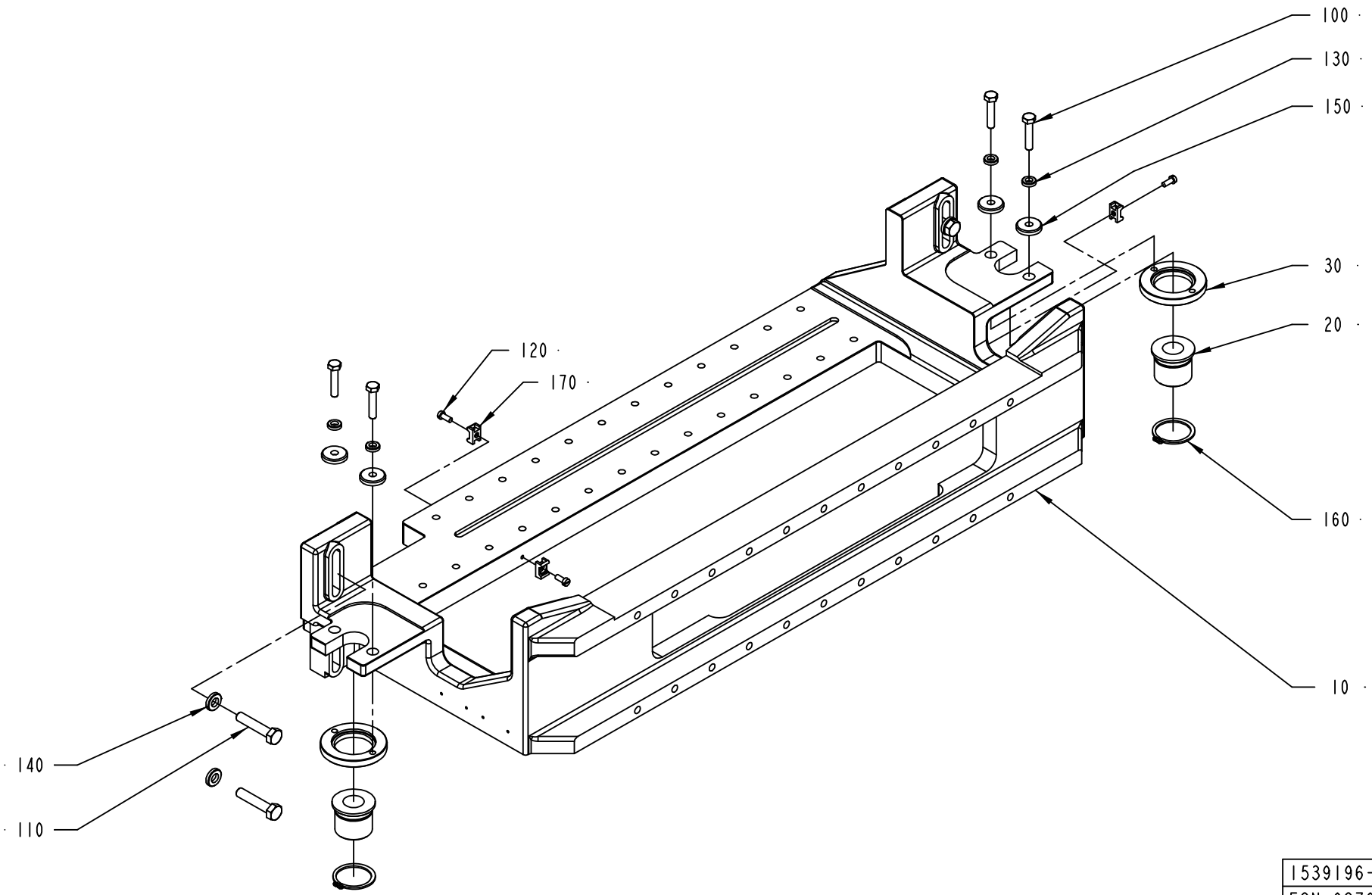

1539196-1
ECN 92761

ECM: 92801 - 20010809
Group number: 1539196-0100
Assembly Drawing: 1539196-1_1_AA

Pos	Part No	SP	UN	Qty	Description	Page No
-						
010	1539195-0000	-		1	BRACKET	
020	1147010-0000	A		2	BUSHING	
030	1147009-0000	-		2	SPECIAL WASHER	
100	312109-0374	-		4	SCREW M6S ISO 4017 M6X30 A480	
110	312109-0459	-		4	SCREW M6S ISO 4017 M8X40 A480	
120	312125-0289	-		3	SCREW ISO 1207 M4X10 A4	
130	315115-0153	-		4	WASHER PLAIN, TBRB 6,4/12 H=3	
140	315115-0165	-		4	WASHER PLAIN, TBRB 8,4/16 H=3	
150	315125-0153	-		4	WASHER TBRSB 6,4X22X4 A4	
160	315751-0123	-		2	RETAINING RING FOR SHAFT DIN 471 32 A2	
170	352113-0205	-		3	ANCHOR PLATES FOR STRIPS, TYPE TM2S8-C10	

Pos	Part No	SP	UN	Qty	Description	Page No

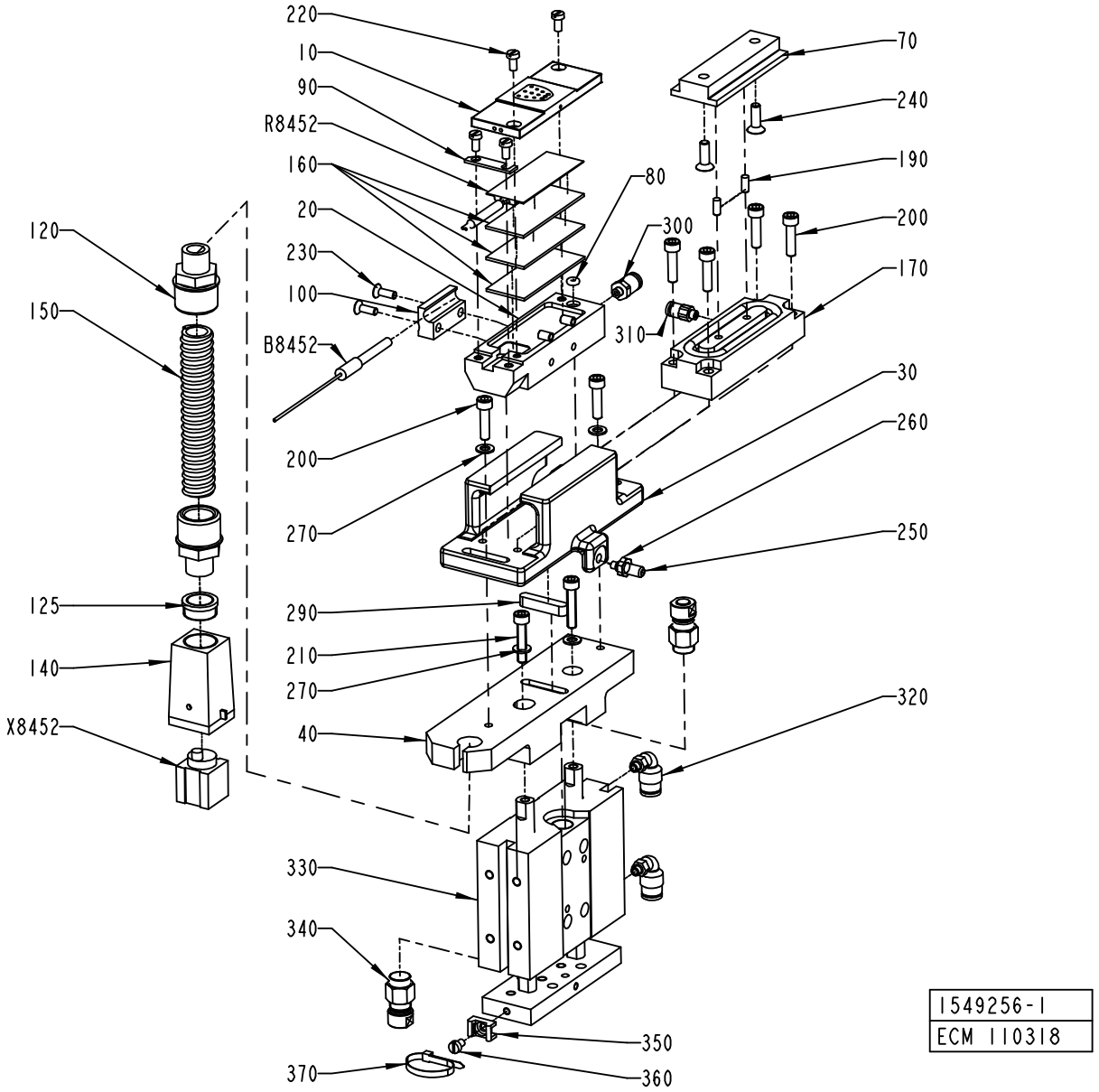
220
10
90
R8452
160
20
230
100
B8452
120
150
125
140
X8452
200
270
290
210
270
40
330
340
370
350
360
80
300
310
70
240
190
200
170
30
260
250
320
1549256-1
ECM 110318

ECM: 123192 - 20030331
Group number: 1549256-0100
Assembly Drawing: 1549256-1_1_AD

Pos	Part No	SP	UN	Qty	Description	Page No
-						
010	2501800-0100	-		1	TAB C'JAW	**1-153**
020	1348236-0000	A		1	INSULATING RAIL	
030	1498496-0000	-		1	GUIDE	
040	1519000-0000	A		1	BRACKET	
070	1523164-0000	A		1	BLOCK	
080	907731-0000	-		1	O-RING	
090	1349916-0000	-		1	CLAMP	
100	1478479-0000	-		1	HOLDER	
120	90012-0063	-		2	CABLE GLAND PR 15,2	
125	90089-0001	-		1	REDUCING SLEEVE, PR18,6/PR15,2	
140	90110-0372	-		1	PLUG HOOD	
150	90152-0033	-	M	1	SPIRAL CONDUIT FOR PR 15,2(PG 9)	
160	90411-0018	A		3	INSULATOR, ALU-SILICATE HM 15643	
170	90450-0380	A		1	SINGLE ACTING, PANCAKE EV-20/75-5	
190	311103-0267	-		2	PARALLEL PIN ISO 2338 4M6X10 A1	
200	312115-0331	-		6	SCREW ISO4762 M5X20 A4	
210	312115-0333	-		2	SCREW ISO4762 M5X25 A4	
220	312125-0287	-		4	SCREW ISO 1207 M4X8 A4	
230	312155-0291	-		2	SCREW EN 10642 MF6S M4X12 A480	
240	312155-0329	-		2	SCREW EN 10642 MF6S M5X16 A480	
250	312311-0376	-		1	SCREW ISO4028 M6X35 FZB	
260	312625-0316	-		1	HEXAGON THIN NUT, EN 24035 ML6M M6 A4	
270	315105-0146	-		4	WASHER BRB5,3X10RFR	
290	315705-0236	-		1	PARALLEL KEY W. ROUND ENDS 6X6X30 MM	
300	342722-0197	-		1	STRAIGHT COUPLING	
310	342722-0198	-		1	STRAIGHT COUPLING	
320	90458-2164	-		2	ELBOW PIPE JOINT, EXT.THREAD,D=6MM M5	
330	90457-0197	A		1	CYLINDER WITH INT. GUIDING BORE 25	
340	90458-2460	A		2	ADJUSTABLE MECH. STOP, FOR CYL. 2711	
350	352113-0205	-		1	ANCHOR PLATES FOR STRIPS, TYPE TM2S8-C10	
360	312125-0285	-		1	SCREW ISO 1207 M4X6 A4	
370	352113-0101	-		1	CLIP STRIP, 92X2,5 MM	
B8452	90326-0060	A		1	THERMOCOUPLE, CR-AL	
R8452	907136-0000	A		1	HEATER	
	90411-0018	*A*		*1*	*INSULATOR, ALU-SILICATE HM 15643*	
X8452	90110-0295	A		1	CONNECTOR 4 POLE + EARTH	

Machine Type	Group Description	Used-In	Group Number	Page No

TAB C'JAW

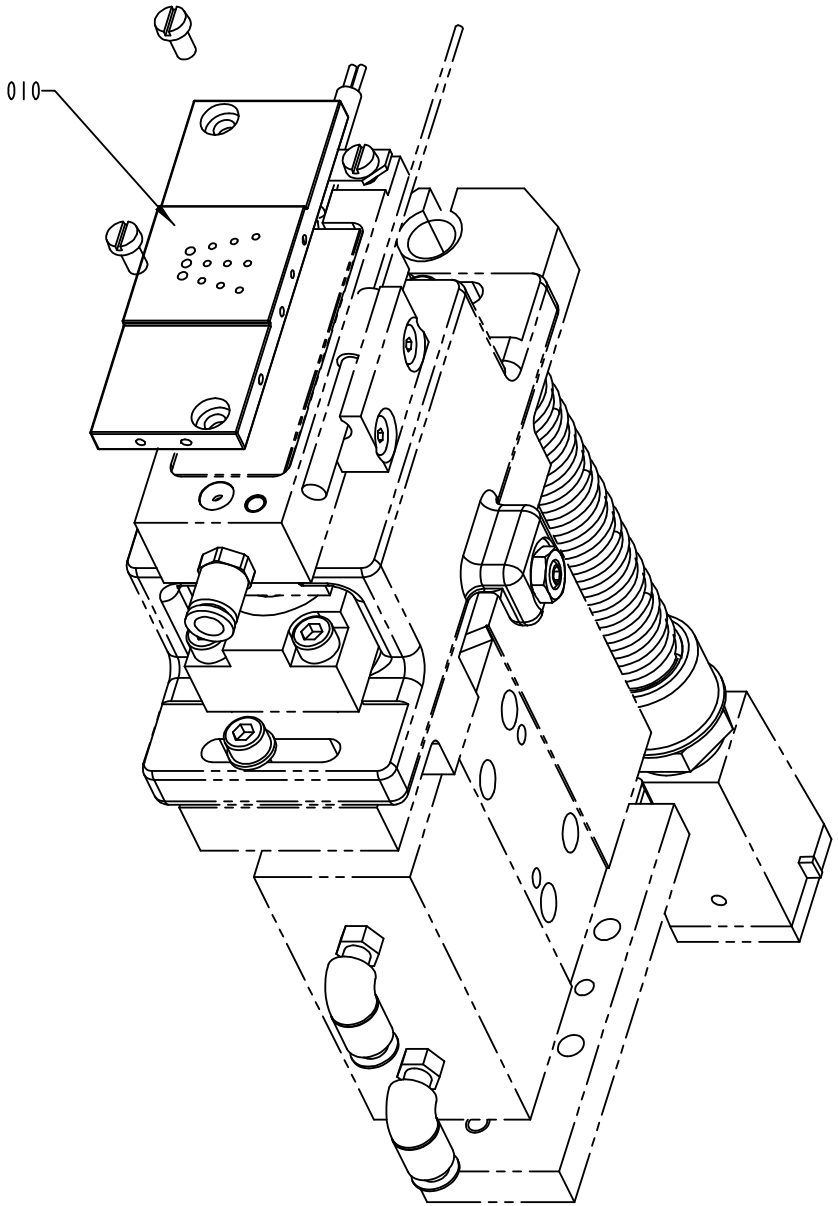

2501800-1
ECM 98647

ECM: 123862 - 20040220
Group number: 2501800-0100
Assembly Drawing: 2501800-1_1_AB

Pos	Part No	SP	UN	Qty	Description	Page No
HOLE48						
010	2511651-0000	A		1	SEALING PLATE	
HOLE55						
010	2525328-0000	A		1	SEALING PLATE	
HOLE60						
010	2526531-0000	A		1	SEALING PLATE	
HOLE65, HOLE85						
010	2563974-0000	A		1	SEALING PLATE	
HOLE72						
010	2525292-0000	A		1	SEALING PLATE	
HOLE90						
010	2579886-0000	A		1	SEALING PLATE	

Pos	Part No	SP	UN	Qty	Description	Page No

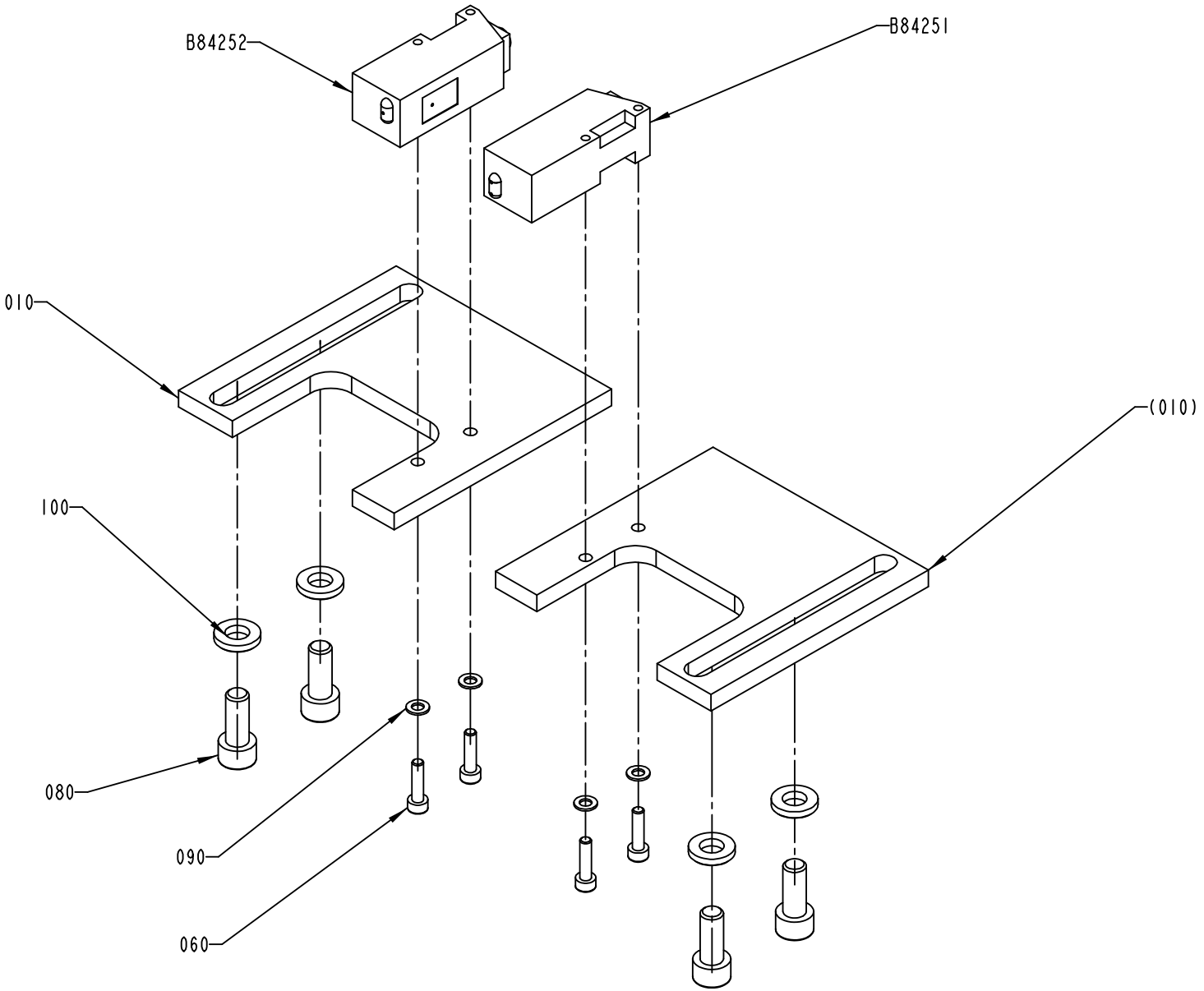

1558100-1
ECN 92761

ECM: 92804 - 20010809
Group number: 1558100-0100
Assembly Drawing: 1558100-1_1_AA

Pos	Part No	SP	UN	Qty	Description	Page No
-						
010	1558101-0000	-		2	BRACKET	
060	312115-0293	-		4	SCREW ISO4762 M4X16 A4	
080	312115-0451	-		4	SCREW ISO4762 M8X20 A4	
090	315105-0136	-		4	WASHER BRB4,3XRFR	
100	315115-0165	-		4	WASHER PLAIN, TBRB 8,4/16 H=3	
B84251	90232-0104	A		1	PH.CELL E3S-CT61-D-5M	
B84252	90232-0103	A		1	PH.CELL E3S-CT61-L-5M	

Pos	Part No	SP	UN	Qty	Description	Page No

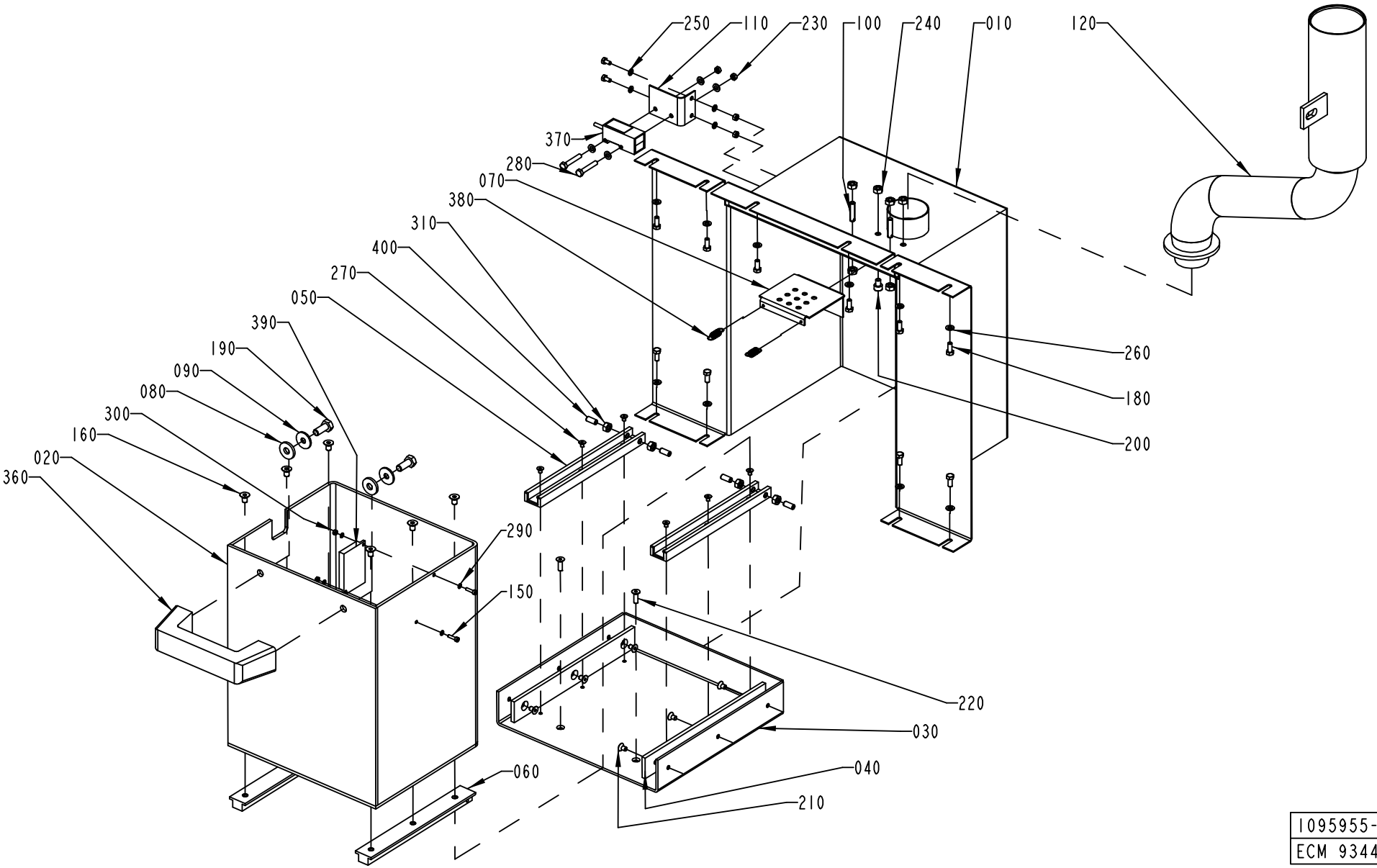

1095955-2
ECM 93446

ECM: 93817 - 20020910
Group number: 1095955-0200
Assembly Drawing: 1095955-2_1_AB

Pos	Part No	SP	UN	Qty	Description	Page No
-						
010	2525313-0000	-		1	COVER	
020	2525314-0000	-		1	WASTE BOX	
030	1140045-0000	-		1	FRAME	
040	1140046-0000	-		2	RAIL	
050	2525310-0000	-		2	RAIL	
060	2525311-0000	-		2	RAIL	
070	1140048-0000	-		1	LOCK PLATE	
080	28036-0000	-		2	WASHER	
090	294734-0000	-		2	WASHER	
100	578684-0000	-		2	SPRING BRACKET	
110	2525312-0000	-		1	BRACKET	
120	2555125-0000	-		1	WASTE PIPE	
150	312115-0226	-		2	SCREW ISO4762 M3X12 A4	
160	312155-0364	-		6	SCREW EN 10642 MF6S M6X10 A480	
180	312105-0327	-		10	SCREW M6S ISO 4017 M5X12 A480	
190	312105-0451	-		2	SCREW M6S ISO 4017 M8X20 A480	
200	312115-0362	-		2	SCREW ISO4762 M6X8 A4	
210	312155-0323	-		6	SCREW EN 10642 MF6S M5X8 A480	
220	312155-0329	-		2	SCREW EN 10642 MF6S M5X16 A480	
230	312605-0312	-		4	HEXAGON NUT, M6M M4 A280	
240	312605-0316	-		6	HEXAGON NUT, M6M M6 A280	
250	315105-0136	-		4	WASHER BRB4,3XRFR	
260	315105-0146	-		10	WASHER BRB5,3X10RFR	
270	312155-0285	-		6	SCREW HEX.SOCK.COUNT.MF6S M4X6 A480	
280	312109-0335	-		2	SCREW M6S ISO 4017 M5X30 A480	
290	315105-0124	-		4	WASHER BRB3,2X6RFR	
300	312605-0310	-		2	HEXAGON NUT, M6M M3 A280	
310	312601-0316	-		4	NUT M6M 6-8 FZB	
360	90017-0014	-		1	HANDLE, NO 8305-2259	
370	90232-0106	A		1	PH.CELL E3S-CR11-5M	
380	90458-0597	-		2	TENSION SPRING 3753	
390	90232-0333	-		1	REFLECTOR E39-R1	
400	90287-0163	-		4	SCREW SPRINGLOAD. SLOTTED HEAD M6X14	

Pos	Part No	SP	UN	Qty	Description	Page No

Machine Type | Group Description | Used-In | Group Number | Page No

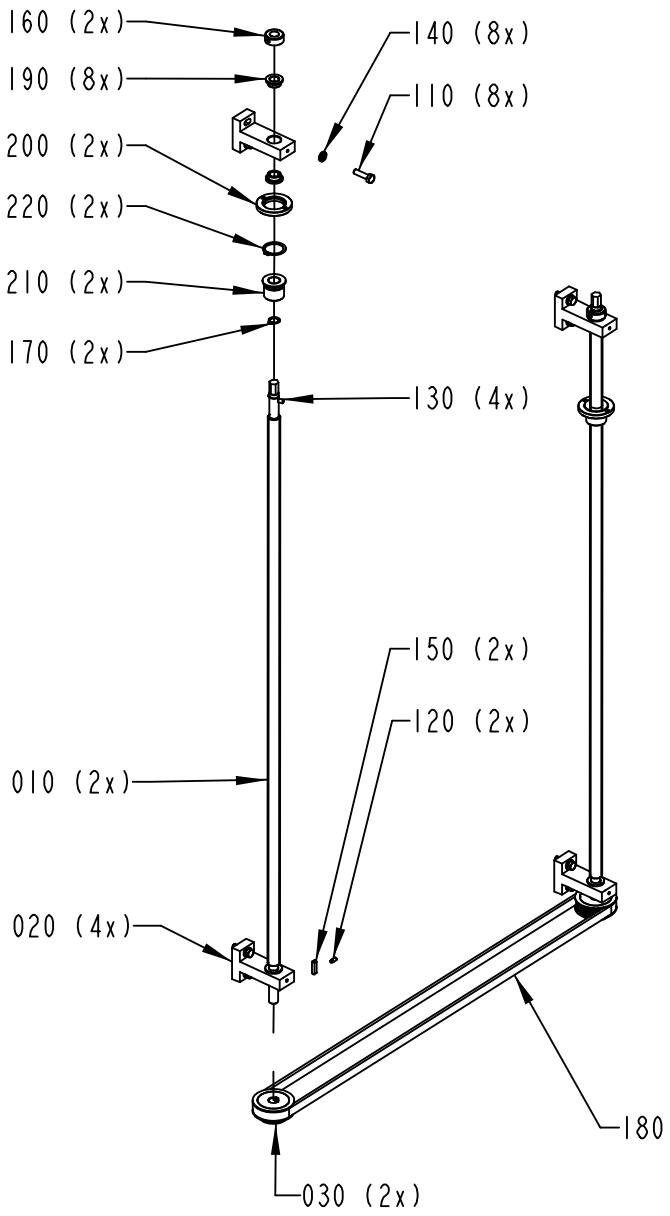

1185078-1
ECM 103830

ECM: 107176 - 20020214
Group number: 1185078-0100
Assembly Drawing: 1185078-1_1_AD

Pos	Part No	SP	UN	Qty	Description	Page No
-						
010	1147050-0000	-		2	SCREW	
020	1147049-0000	-		4	BRACKET	
030	1147051-0000	-		2	TOOTHED PULLEY	
110	312105-0455	-		8	SCREW M6S ISO 4017 M8X30 A480	
120	312311-0327	-		2	SCREW ISO4028 M5X12 FZB	
130	312318-0362	-		4	SCREW ISO4029 M6X8 A4	
140	315115-0165	-		8	WASHER PLAIN, TBRB 8,4/16 H=3	
150	315705-0202	-		2	PARALLEL KEY W ROUND ENDS 5X5X25MM	
160	315742-0111	-		2	RETAINING RING 15 SMS 199	
170	315751-0112	B		2	RETAINING RING FOR SHAFT DIN 471 15 A2	
180	318172-0179	B		1	TIMING BELT T10X1780X16 POLYURETHANE	
190	321111-0211	-		8	FLANGE BUSHING, 15X21X10 MM	
200	1147009-0000	-		2	SPECIAL WASHER	
210	1147010-0000	-		2	BUSHING	
220	315751-0123	-		2	RETAINING RING FOR SHAFT DIN 471 32 A2	

Pos	Part No	SP	UN	Qty	Description	Page No

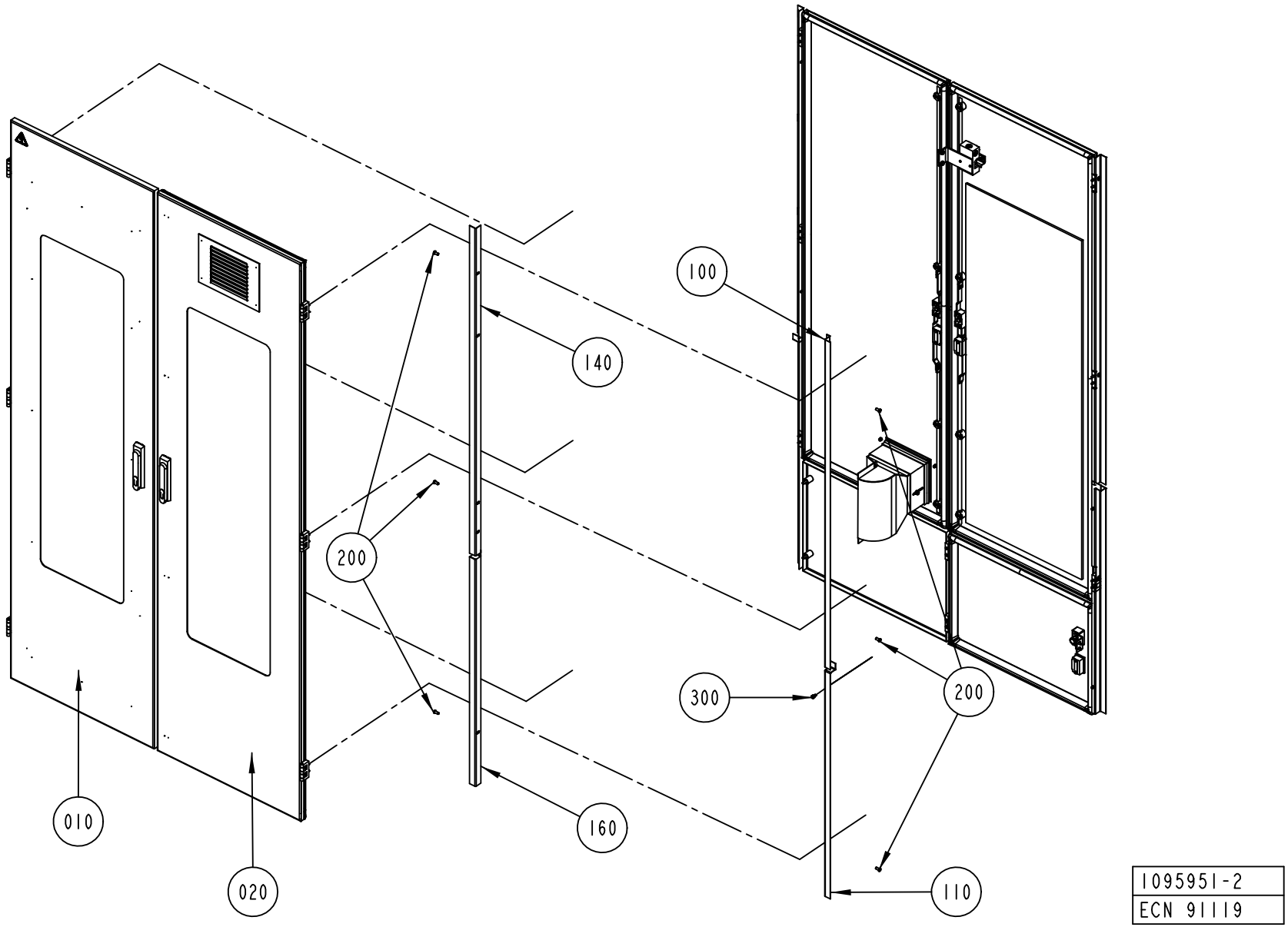

1095951-2
ECN 91119

ECM: 91128 - 20010910
Group number: 1095951-0500
Assembly Drawing: 1095951-2_1_AA

This list covers pages from 1-160 to 1-163

Pos	Part No	SP	UN	Qty	Description	Page No
-						
010	1095944-0300	-		1	DOOR EL-CABINET	**1-165**
020	1095945-0200	-		1	DOOR	**1-167**
030	1095946-0200	-		1	DOOR	**1-171**
040	1095947-0200	-		1	DOOR	**1-173**
050	1095948-0100	-		1	DOOR FOR WASTE BOX	**1-177**
060	1095949-0100	-		1	DOOR FOR TPIH	**1-179**
100	1140771-0000	-		1	COVERING PLATE	
110	1140772-0000	-		1	COVERING PLATE	
120	1140773-0000	-		1	COVERING PLATE	
130	1140774-0000	-		1	COVERING PLATE	
140	1140775-0000	-		2	COVERING PLATE	
150	1140776-0000	-		1	COVERING PLATE	
160	1140777-0000	-		1	COVERING PLATE	
200	1129767-0000	-		12	SCREW	
300	312115-0362	-		3	SCREW ISO4762 M6X8 A4	

Pos	Part No	SP	UN	Qty	Description	Page No

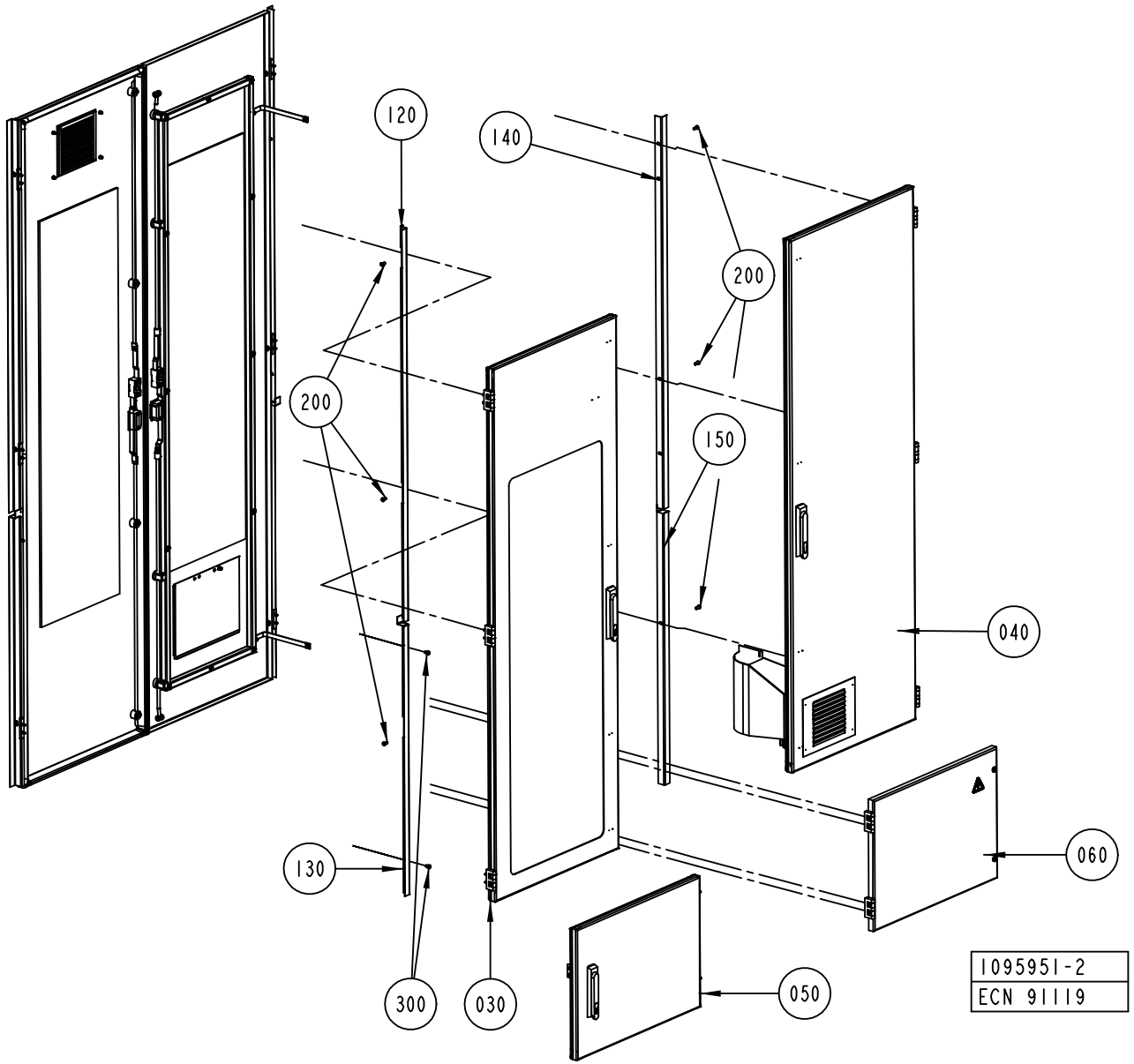
120
140
200
200
150
040
060
130
300
030
050
1095951-2
ECN 91119

ECM: 91128 - 20010910
Group number: 1095951-0500
Assembly Drawing: 1095951-2_2_AA

This list covers pages from 1-160 to 1-163

Pos	Part No	SP	UN	Qty	Description	Page No
-						
010	1095944-0300	-		1	DOOR EL-CABINET	**1-165**
020	1095945-0200	-		1	DOOR	**1-167**
030	1095946-0200	-		1	DOOR	**1-171**
040	1095947-0200	-		1	DOOR	**1-173**
050	1095948-0100	-		1	DOOR FOR WASTE BOX	**1-177**
060	1095949-0100	-		1	DOOR FOR TPIH	**1-179**
100	1140771-0000	-		1	COVERING PLATE	
110	1140772-0000	-		1	COVERING PLATE	
120	1140773-0000	-		1	COVERING PLATE	
130	1140774-0000	-		1	COVERING PLATE	
140	1140775-0000	-		2	COVERING PLATE	
150	1140776-0000	-		1	COVERING PLATE	
160	1140777-0000	-		1	COVERING PLATE	
200	1129767-0000	-		12	SCREW	
300	312115-0362	-		3	SCREW ISO4762 M6X8 A4	

Pos	Part No	SP	UN	Qty	Description	Page No

DOOR EL-CABINET

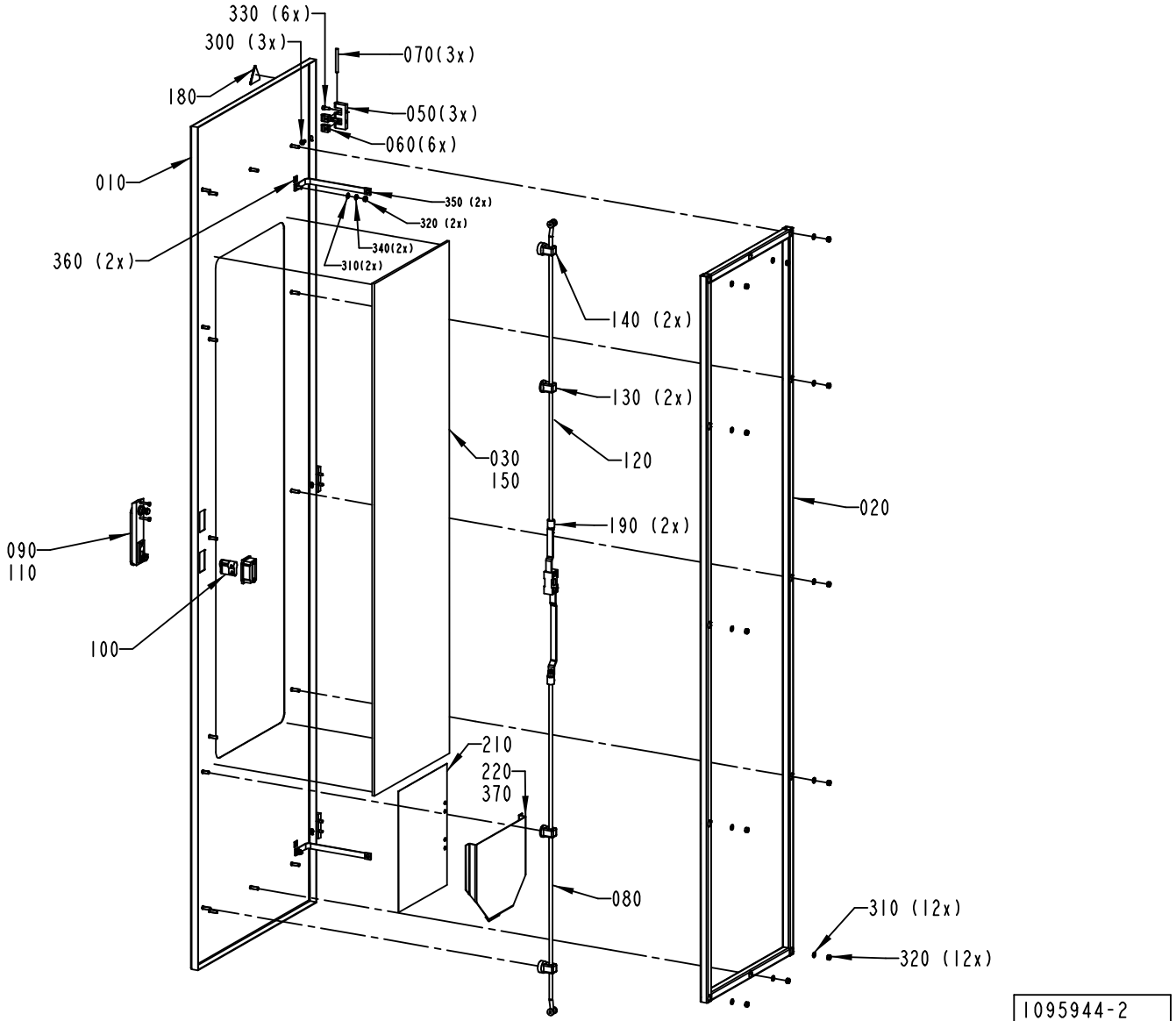

1095944-2
ECM 103834

ECM: 153541 - 20040119
Group number: 1095944-0300
Assembly Drawing: 1095944-2_1_AB

Pos	Part No	SP	UN	Qty	Description	Page No
PT21-0500						
210	1487757-0000	-		1	FUSE BOARD	
PT21-0600						
210	2525335-0000	-		1	FUSE BOARD	
Common Parts						
010	1129931-0000	-		1	DOOR	
020	1129932-0000	-		1	FRAME	
030	2533631-0000	-		1	GLASS PANE	
050	1035792-0000	-		3	E-HINGE	
060	1129770-0000	-		6	BLOCKING PIECE	
070	988685-0000	-		3	PIN	
080	1260552-0000	-		1	ROD	
090	90237-0150	-		1	TURNING HANDLE, NO. 1125-U190-0A	
100	90237-0128	-		1	LOCK CYLINDER, 1109-U3	
110	90237-0153	-		1	LOCK HOUSING, 1121-U26-0B	
120	1260403-0000	-		1	ROD	
130	90237-0151	-		2	GUIDE, 1001-U11	
140	90237-0152	-		2	GUIDE, 1001-U12	
150	90157-0041	-		1	SEALING COMPOUND	
180	359705-0015	-		1	WARNING SIGN ISO, RISK OF ELECTRIC SHOCK	
190	90237-0169	-		2	LOCK ADAPTER, 1000-U49	
220	1129275-0000	-		1	BOX FOR DIAGRAM	
300	1129767-0000	-		3	SCREW	
310	315105-0153	-		14	WASHER BRB6,4X12RFR	
320	312605-0316	-		14	HEXAGON NUT, M6M M6 A280	
330	312115-0327	-		6	SCREW ISO4762 M5X12 A4	
340	90062-0022	-		2	LOCKING WASHER D=6,4/11	
350	90135-0035	-		2	EARTH WIRE, L=250 MM 16 MM2	
360	90194-0152	-		2	SIGN, EARTH	
370	90157-0041	-		1	SEALING COMPOUND	

Pos	Part No	SP	UN	Qty	Description	Page No

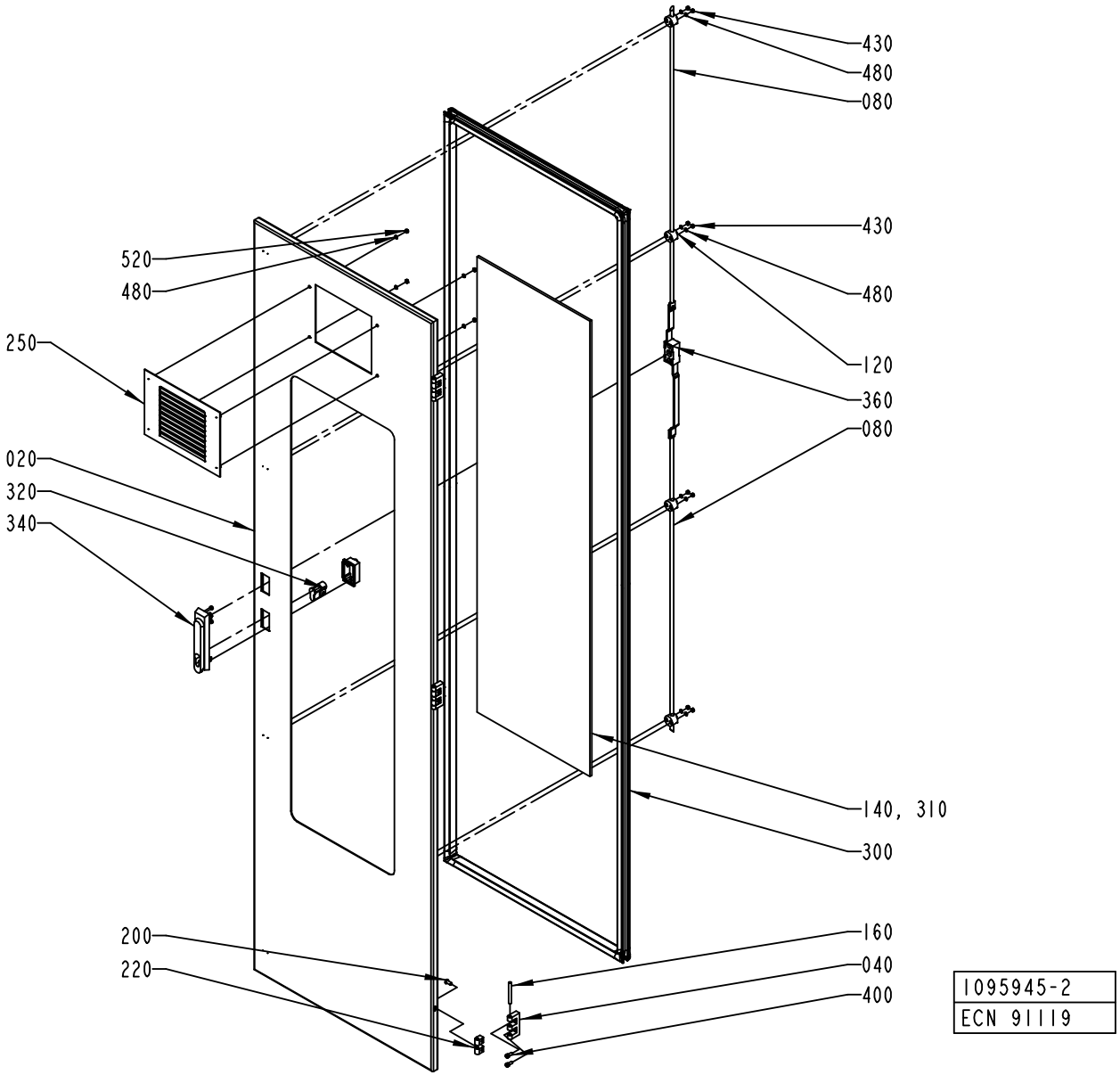
430
480
080
430
480
120
360
080
520
480
250
020
320
340
140, 310
300
200
220
160
040
400
1095945-2
ECN 91119

ECM: 106163 - 20020214
Group number: 1095945-0200
Assembly Drawing: 1095945-2_1_AB

Pos	Part No	SP	UN	Qty	Description	Page No
-						
020	1255682-0000	-		1	DOOR	
040	1035792-0000	-		3	E-HINGE	
080	1036304-0020	-		2	LOCKING ARM	
120	1129274-0000	-		4	GUIDE LUG	
140	2533631-0000	-		1	GLASS PANE	
160	988685-0000	-		3	PIN	
200	1129767-0000	-		3	SCREW	
220	1129770-0000	-		6	BLOCKING PIECE	
250	1524713-0100	-		1	GRID ELEMENT	**1-169**
300	1279828-0000	-		1	SEALING STRIP	
310	90157-0041	-		1	SEALING COMPOUND	
320	90237-0128	-		1	LOCK CYLINDER, 1109-U3	
340	90237-0150	-		1	TURNING HANDLE, NO. 1125-U190-0A	
360	90237-0153	-		1	LOCK HOUSING, 1121-U26-0B	
400	312115-0327	-		6	SCREW ISO4762 M5X12 A4	
430	312605-0312	-		8	HEXAGON NUT, M6M M4 A280	
480	315105-0136	-		12	WASHER BRB4,3XRFR	
520	312602-0312	-		4	HEXAGON NUT, EN 24032 M6M M4 NIPLBR	

Pos	Part No	SP	UN	Qty	Description	Page No

GRID ELEMENT

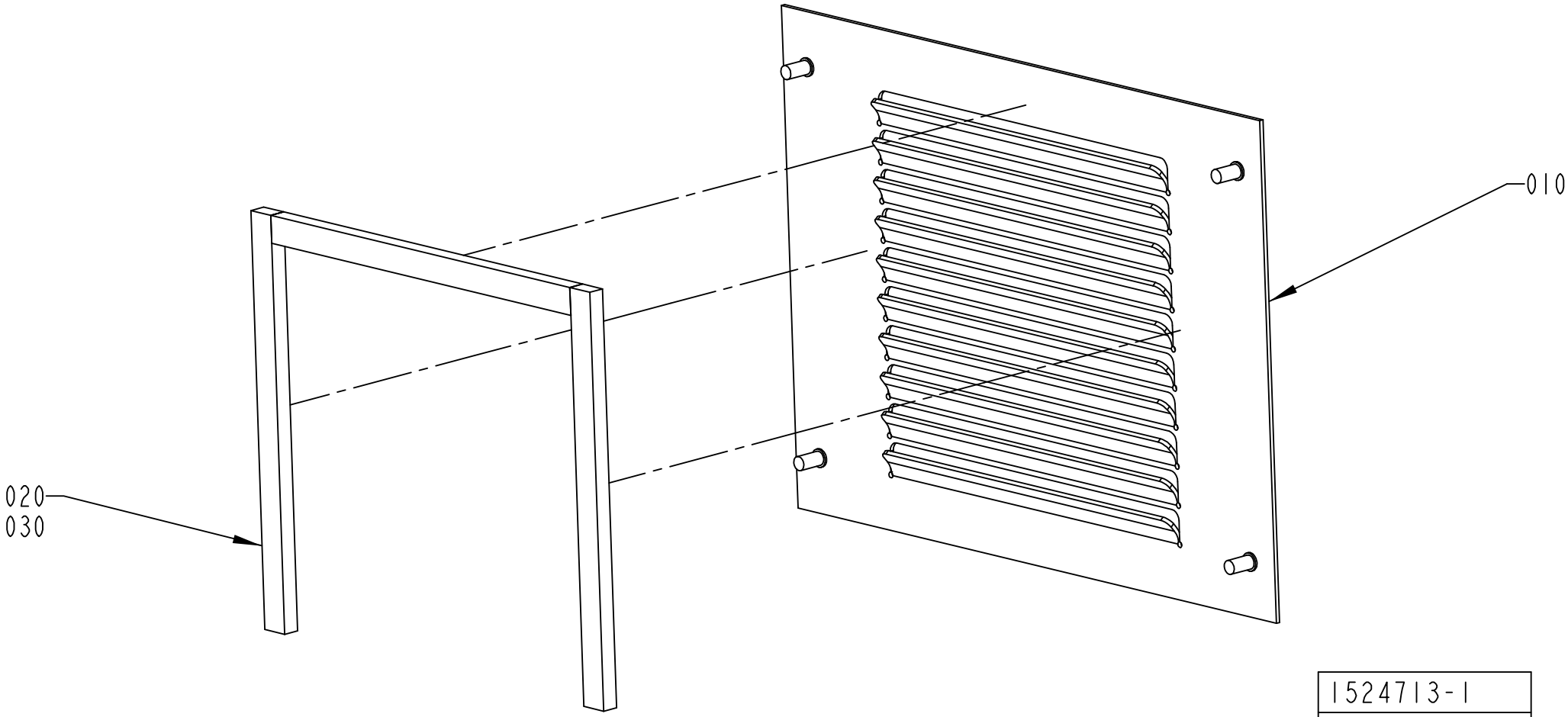

1524713-1
ECN 80647

ECM: 80714 - 20010212
Group number: 1524713-0100
Assembly Drawing: 1524713-1_1_AA

Pos	Part No	SP	UN	Qty	Description	Page No
-						
010	1512669-0000	-		1	GRID	
020	1524708-0000	-		3	GASKET	
030	90153-0043	-	KG	1	ADHESIVE, LOCTITE 495 20G	

Pos	Part No	SP	UN	Qty	Description	Page No

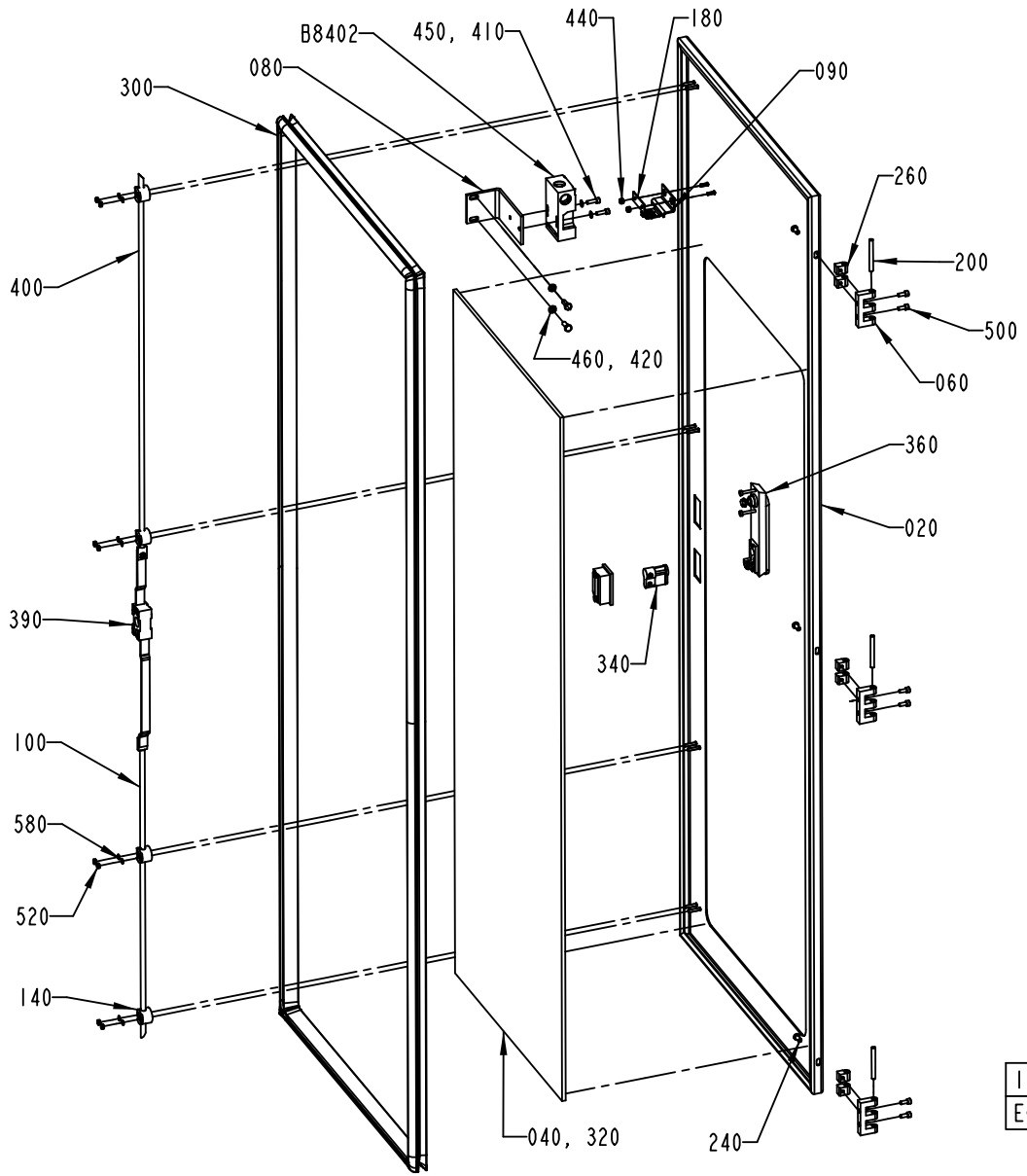
B8402
450, 410
440
180
080
090
300
260
200
400
500
460, 420
060
360
020
390
340
100
580
520
140
040, 320
240
1095946-1
ECM 103834

ECM: 105374 - 20020214
Group number: 1095946-0200
Assembly Drawing: 1095946-1_1_AD

Pos	Part No	SP	UN	Qty	Description	Page No
-						
020	1255685-0000	-		1	DOOR	
040	2533632-0000	-		1	GLASS PANE	
060	1035792-0000	-		3	E-HINGE	
080	1255684-0000	-		1	HOLDER	
090	1129042-0000	-		1	KEY	
100	1036304-0019	-		1	LOCKING ARM	
140	1129274-0000	-		4	GUIDE LUG	
180	1036563-0000	-		1	WASHER	
200	988685-0000	-		3	PIN	
240	1129767-0000	-		3	SCREW	
260	1129770-0000	-		6	BLOCKING PIECE	
300	1279829-0000	-		1	SEALING STRIP	
320	90157-0041	-		1	SEALING COMPOUND	
340	90237-0128	-		1	LOCK CYLINDER, 1109-U3	
360	90237-0150	-		1	TURNING HANDLE, NO. 1125-U190-0A	
390	90237-0153	-		1	LOCK HOUSING, 1121-U26-0B	
400	1036304-0005	-		1	LOCKING ARM	
410	312115-0329	-		2	SCREW ISO4762 M5X16 A4	
420	312105-0368	-		2	SCREW M6S ISO 4017 M6X16 A480	
440	312812-0312	-		2	HEXAGON NUT, NY-LOCK M4 A480	
450	315105-0146	-		2	WASHER BRB5,3X10RFR	
460	315105-0153	-		2	WASHER BRB6,4X12RFR	
500	312115-0327	-		6	SCREW ISO4762 M5X12 A4	
520	312605-0312	-		8	HEXAGON NUT, M6M M4 A280	
580	315105-0136	-		4	WASHER BRB4,3XRFR	
B8402	90044-0139	A		1	KEY SAF.SW. AZ16-02 ZVR K-2254	

Pos	Part No	SP	UN	Qty	Description	Page No

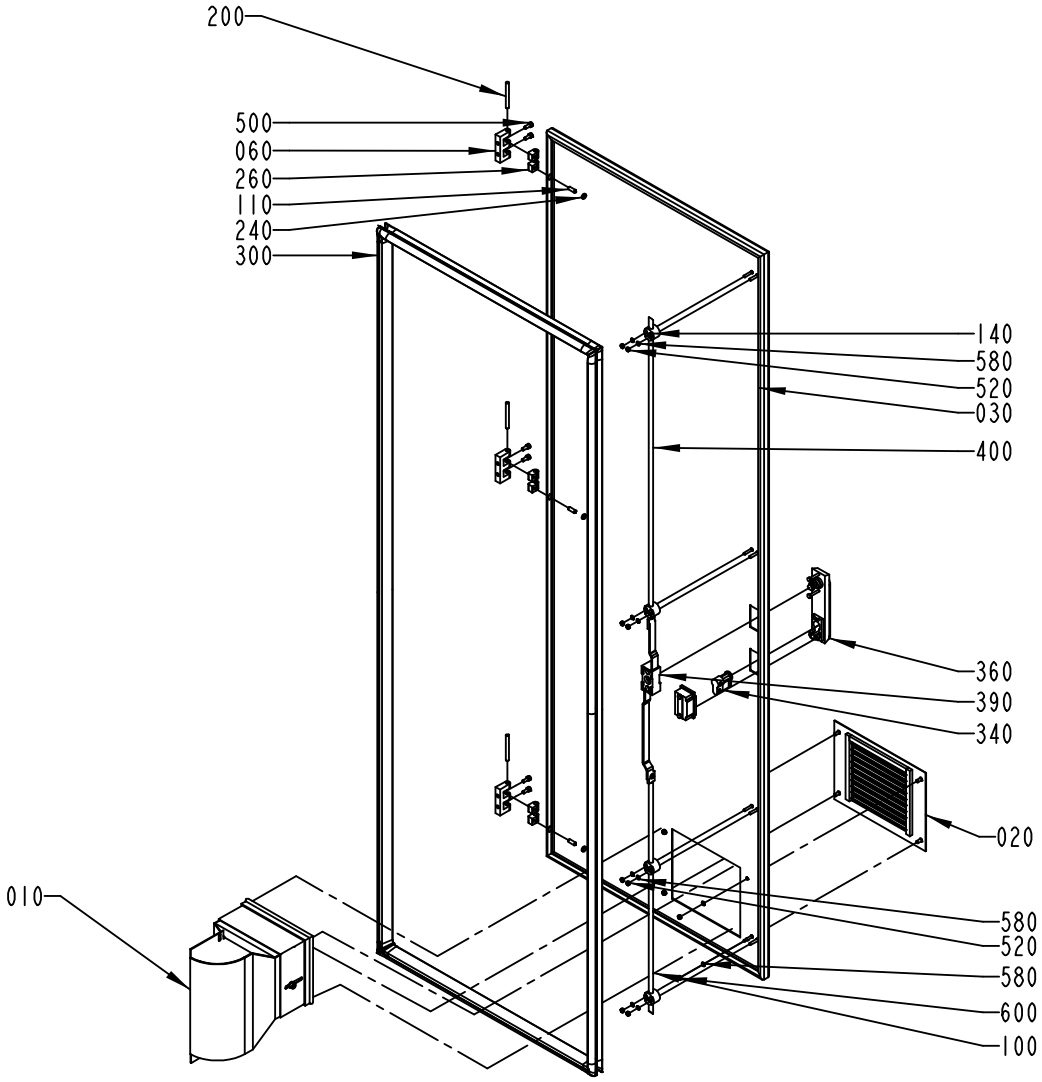

1095947-2
ECN 80543

ECM: 108345 - 20021125
Group number: 1095947-0200
Assembly Drawing: 1095947-2_1_AA

Pos	Part No	SP	UN	Qty	Description	Page No
-						
010	1548168-0100	-		1	AIR DUCT	**1-175**
020	1524713-0100	-		1	GRID ELEMENT	**1-169**
030	1255686-0000	-		1	DOOR	
060	1035792-0000	-		3	E-HINGE	
100	1036304-0019	-		1	LOCKING ARM	
140	1129274-0000	-		4	GUIDE LUG	
200	988685-0000	-		3	PIN	
240	1129767-0000	-		3	SCREW	
260	1129770-0000	-		6	BLOCKING PIECE	
300	1279829-0000	-		1	SEALING STRIP	
340	90237-0128	-		1	LOCK CYLINDER, 1109-U3	
360	90237-0150	-		1	TURNING HANDLE, NO. 1125-U190-0A	
390	90237-0153	-		1	LOCK HOUSING, 1121-U26-0B	
400	1036304-0005	-		1	LOCKING ARM	
500	312115-0327	-		6	SCREW ISO4762 M5X12 A4	
520	312605-0312	-		4	HEXAGON NUT, M6M M4 A280	
580	315402-0136	-		8	LOCK WASHER FBB 4,1	
600	312602-0312	-		4	HEXAGON NUT, EN 24032 M6M M4 NIPLBR	

Pos	Part No	SP	UN	Qty	Description	Page No

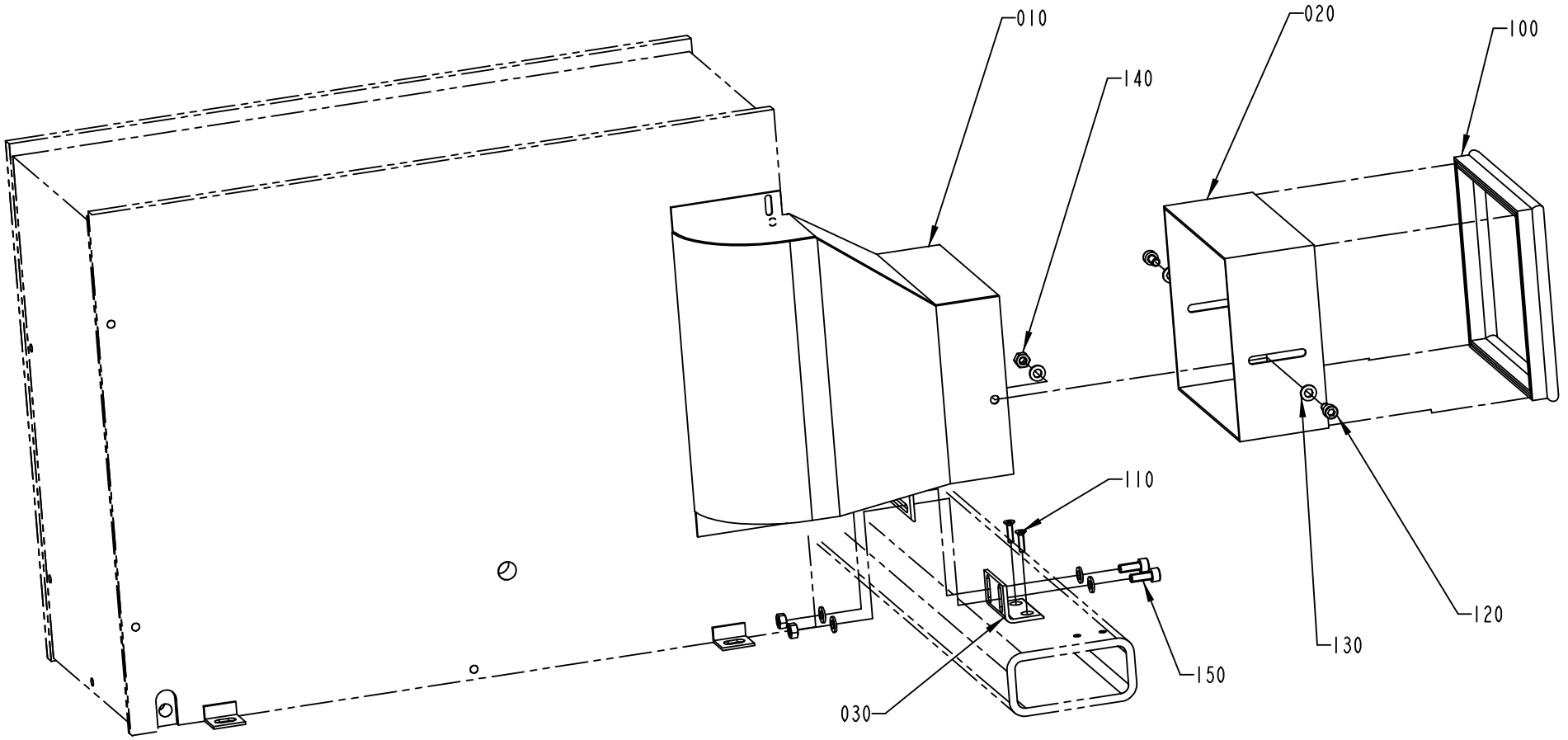

1548168-1
ECN 80647

ECM: 80651 - 20010212
Group number: 1548168-0100
Assembly Drawing: 1548168-1_1_AA

Pos	Part No	SP	UN	Qty	Description	Page No
-						
010	1511035-0000	-		1	AIR DUCT	
020	1512668-0000	-		1	CONNECTION PLATE	
030	1538462-0000	-		1	PLATE	
100	90143-0057	-	MM	620	STRIP EMKA 1011-05 21X11MM	
110	312155-0293	-		2	SCREW EN 10642 MF6S M4X16 A480	
120	312115-0366	-		2	SCREW ISO4762 M6X12 A4	
130	315105-0153	-		8	WASHER BRB6,4X12RFR	
140	312605-0316	-		4	HEXAGON NUT, M6M M6 A280	
150	312115-0368	-		2	SCREW ISO4762 M6X16 A4	

Pos	Part No	SP	UN	Qty	Description	Page No

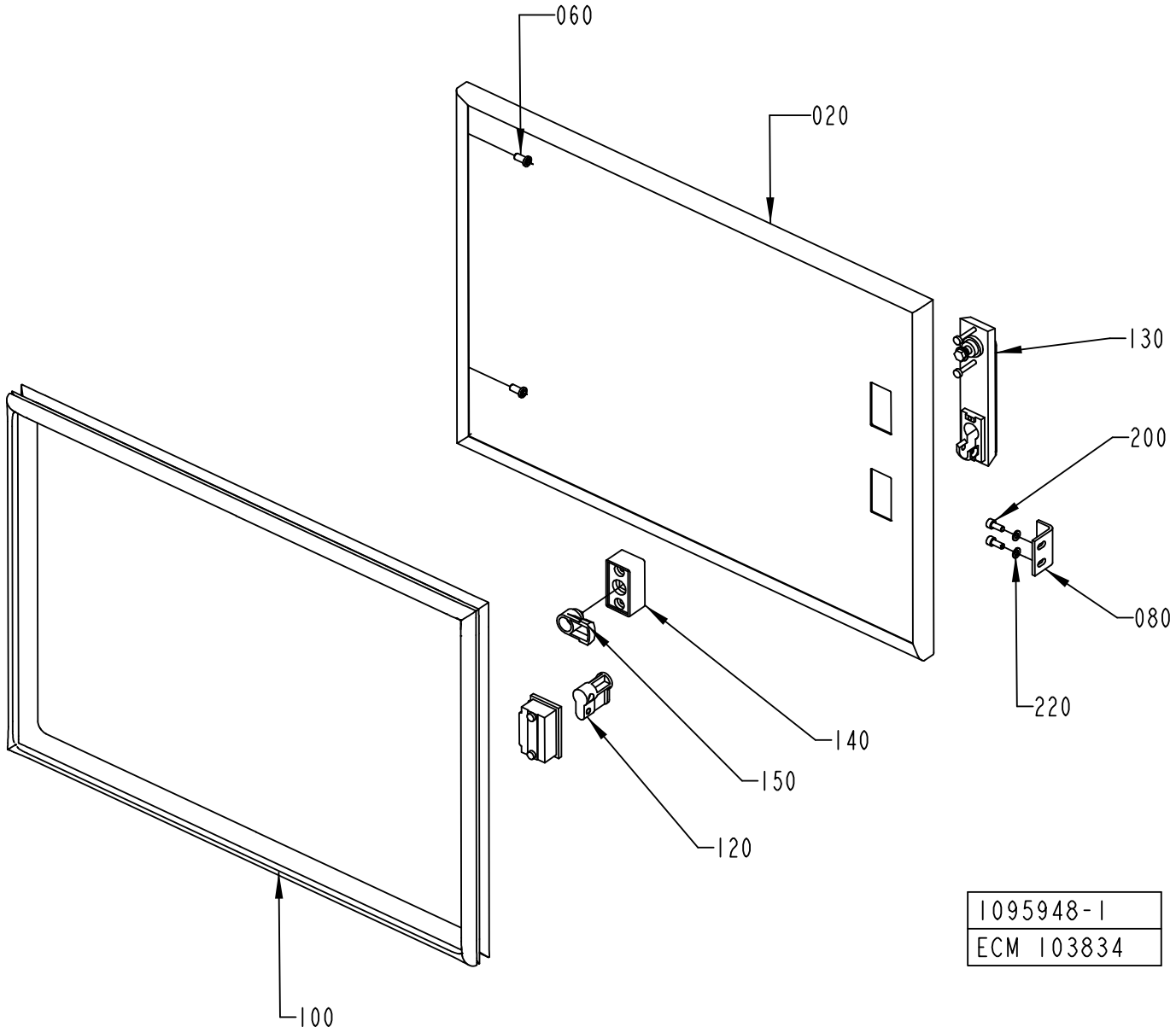
060
020
130
200
080
220
140
150
120
100
1095948-1
ECM 103834

ECM: 105375 - 20020214
Group number: 1095948-0100
Assembly Drawing: 1095948-1_1_AC

Pos	Part No	SP	UN	Qty	Description	Page No
-						
020	1255683-0000	-		1	DOOR	
060	1129767-0000	-		2	SCREW	
080	1129971-0000	-		1	BRACKET	
100	1279830-0000	-		1	SEALING STRIP	
120	90237-0128	-		1	LOCK CYLINDER, 1109-U3	
130	90237-0150	-		1	TURNING HANDLE, NO. 1125-U190-0A	
140	90237-0154	-		1	LOCK HOUSING, 1121-U60-0C	
150	90237-0165	-		1	LATCH	
200	312115-0327	-		2	SCREW ISO4762 M5X12 A4	
220	315105-0146	-		2	WASHER BRB5,3X10RFR	

Pos	Part No	SP	UN	Qty	Description	Page No

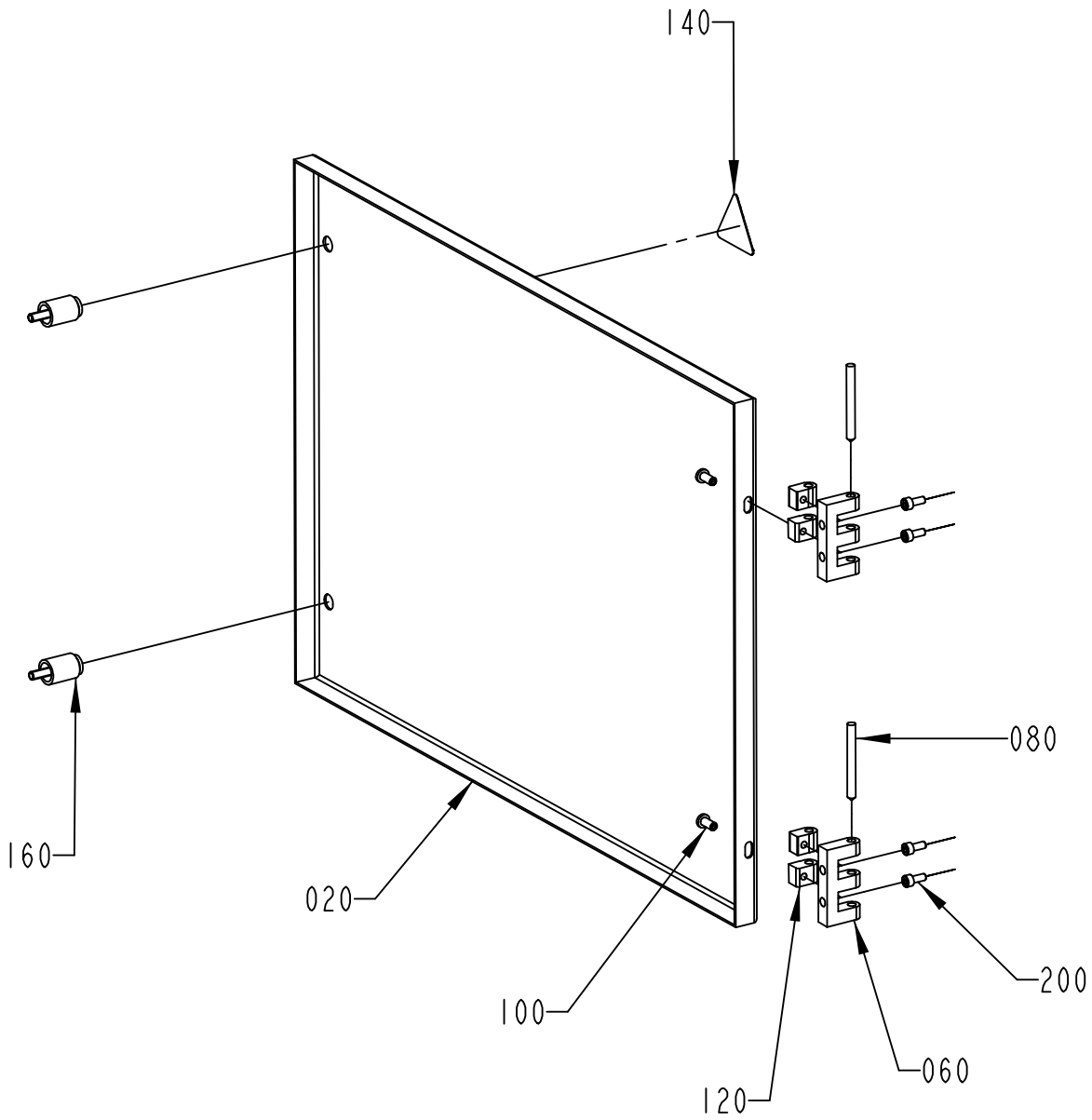

1095949-1
ECM 103834

ECM: 105376 - 20020214
Group number: 1095949-0100
Assembly Drawing: 1095949-1_1_AC

Pos	Part No	SP	UN	Qty	Description	Page No
-						
020	1129930-0000	-		1	DOOR	
060	1035792-0000	-		2	E-HINGE	
080	988685-0000	-		2	PIN	
100	1129767-0000	-		2	SCREW	
120	1129770-0000	-		4	BLOCKING PIECE	
140	359705-0015	-		1	WARNING SIGN ISO, RISK OF ELECTRIC SHOCK	
160	90226-0458	-		2	MOUNTING SCREW	
200	312115-0327	-		4	SCREW ISO4762 M5X12 A4	

Pos	Part No	SP	UN	Qty	Description	Page No

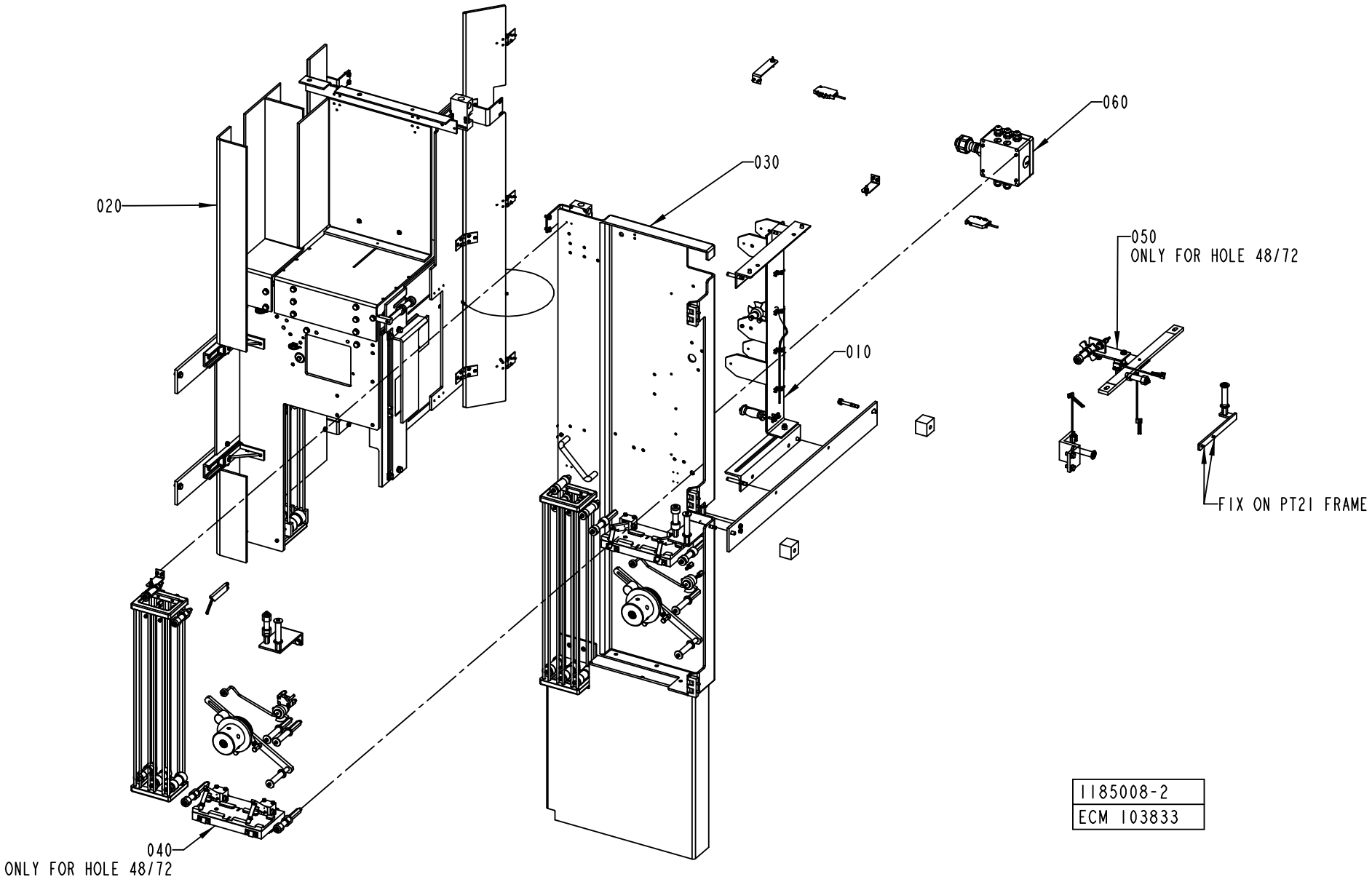
020
030
060
050
ONLY FOR HOLE 48/72
010
FIX ON PT21 FRAME
040
ONLY FOR HOLE 48/72
1185008-2
ECM 103833

ECM: 143144 - 20040222
Group number: 1185008-0300
Assembly Drawing: 1185008-2_1_AC

Pos	Part No	SP	UN	Qty	Description	Page No
HOLE48, HOLE72						
040	1558112-0100	-		1	OUTHER PATCH MAGAZINE	**1-183**
050	1549226-0100	-		1	OUTER PATCH TURNING	**1-199**
Common Parts						
010	2525321-0100	-		1	PATCH TURNING DEVICE	**1-203**
020	2517081-0100	-		1	TAB MAGAZINE	**1-205**
030	1558071-0100	-		1	PATCH MAGAZINE	**1-225**
060	2501781-0100	-		1	BLACK TAPE SENSOR	**1-237**

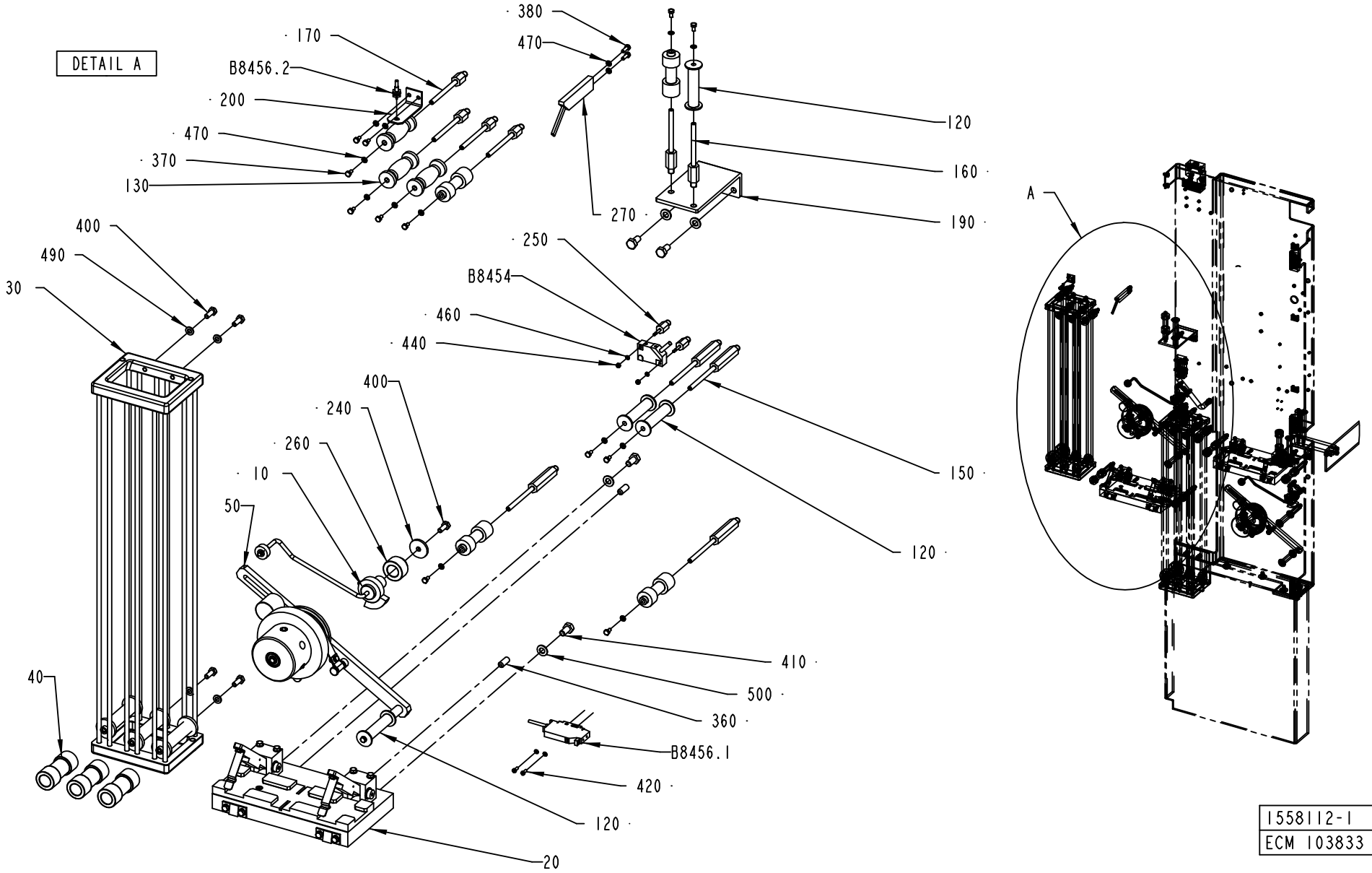
DETAIL A
380
470
170
B8456.2
200
470
370
130
120
160
190
270
400
490
30
250
B8454
460
440
400
240
260
10
50
150
120
40
410
500
360
B8456.1
420
120
20
A
1558112-1
ECM 103833

ECM: 109368 - 20020214
Group number: 1558112-0100
Assembly Drawing: 1558112-1_1_AB

Pos	Part No	SP	UN	Qty	Description	Page No
-						
010	1499255-0100	-		1	DETECTOR	**1-185**
020	1549222-0100	-		1	SPLICING TABLE	**1-187**
030	1519708-0100	-		1	MAGAZINE	**1-191**
040	1549261-0100	-		1	OUTHER PATCH MAGAZINE	**1-193**
050	1549220-0100	-		1	BOBBIN HOLDER	**1-195**
120	905211-0000	A		8	ROLLER	
130	2507105-0000	-		3	ROLLER	
150	1499251-0002	-		4	AXLE PIN	
160	1499251-0003	-		2	AXLE PIN	
170	1499251-0005	-		4	AXLE PIN	
190	1539225-0000	-		1	BRACKET	
200	1558079-0002	-		1	SUPPORT	
240	1498347-0000	-		1	WASHER	
250	1499250-0000	-		2	AXLE PIN	
260	1499253-0000	-		1	BUSHING	
270	1549231-0000	-		1	GUIDE	
360	311103-0401	-		2	PARALLEL PIN ISO 2338 8M6X20 A1	
370	312105-0287	-		10	SCREW M6S ISO4017 M4X8 A470	
380	312105-0291	-		2	SCREW M6S ISO 4017 M4X12 A470	
400	312105-0368	-		5	SCREW M6S ISO 4017 M6X16 A480	
410	312105-0449	-		4	SCREW M6S ISO 4017 M8X16 A480	
420	312125-0222	-		2	SCREW ISO 1207 M3X8 A4	
440	312605-0310	-		2	HEXAGON NUT, M6M M3 A280	
460	315105-0124	-		2	WASHER BRB3,2X6RFR	
470	315105-0136	-		12	WASHER BRB4,3XRFR	
490	315105-0153	-		4	WASHER BRB6,4X12RFR	
500	315105-0165	-		4	WASHER BRB8,4X16RFR	
B8454	90044-0194	A		1	PROX.SW. IN5329/IN3002-BPKG	
B8456.1	90232-0123	A		1	PH.CELL WLL170-P135-6011723	
B8456.2	90232-0346	A		1	FIBRE LL3-DB01 5 308074	

Pos	Part No	SP	UN	Qty	Description	Page No

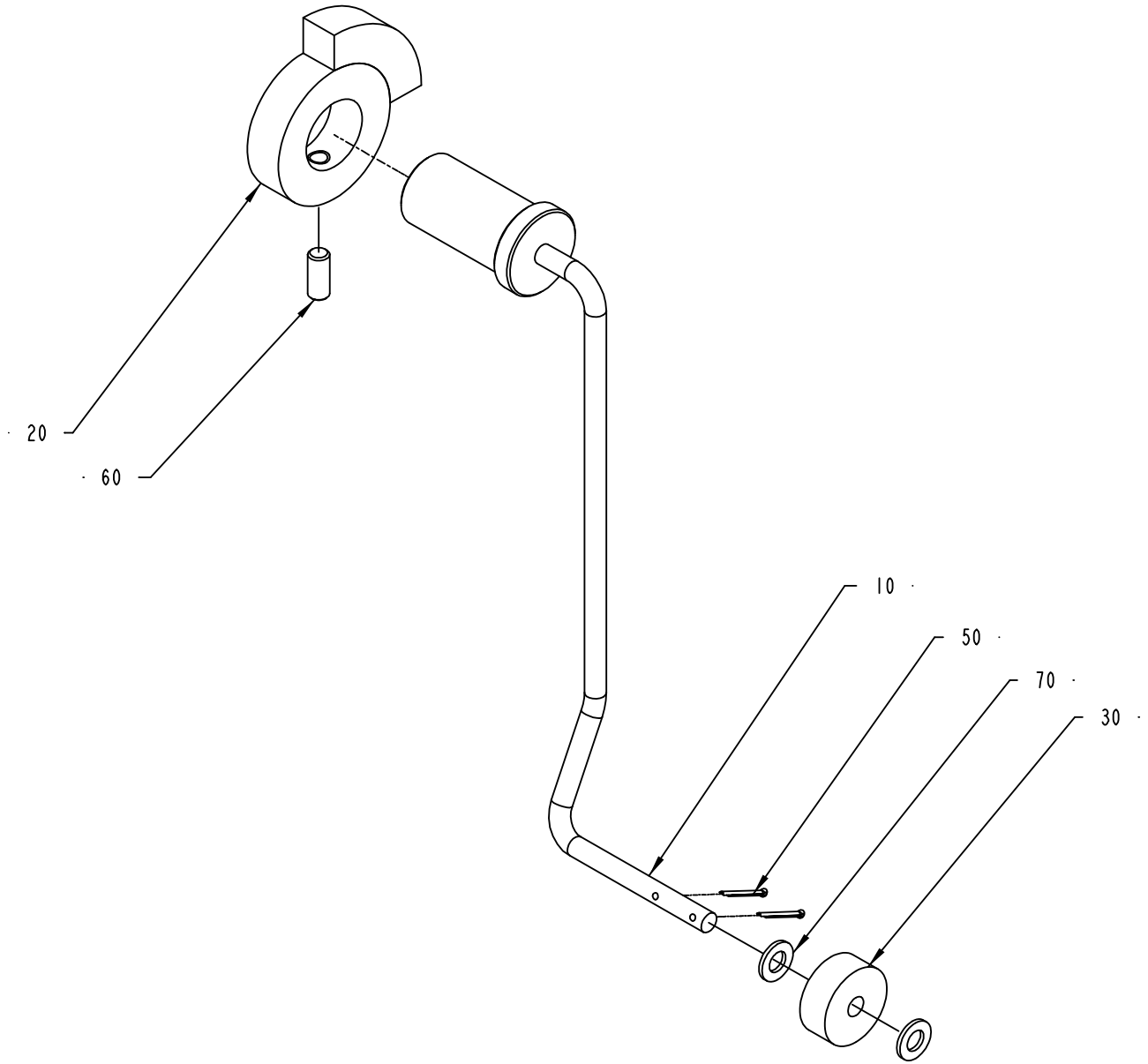

1499255-1
ECN 90366

ECM: 90366 - 20010809
Group number: 1499255-0100
Assembly Drawing: 1499255-1_1_AA

Pos	Part No	SP	UN	Qty	Description	Page No
-						
010	1499252-0000	-		1	ARM	
020	533972-0000	-		1	INDICATOR CURVE	
030	234844-0000	A		1	WHEEL	
050	311411-0138	-		2	SPLIT PIN SP1,6X12RFR	
060	312318-0327	-		1	SCREW ISO4029 M5X12 A4	
070	315105-0146	-		2	WASHER BRB5,3X10RFR	

Pos	Part No	SP	UN	Qty	Description	Page No

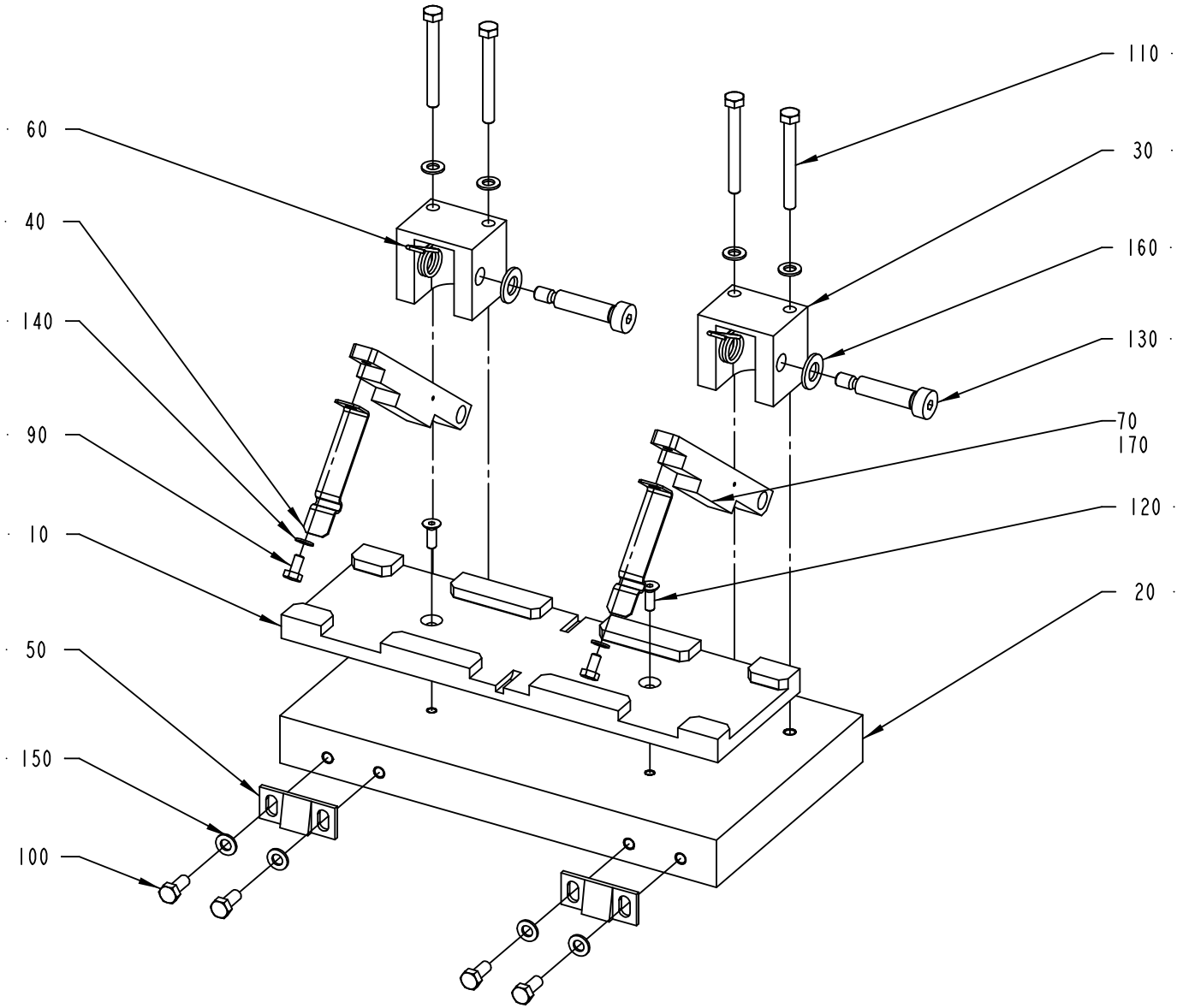

1549222-1
ECN 92761

ECM: 92794 - 20010809
Group number: 1549222-0100
Assembly Drawing: 1549222-1_1_AA

Pos	Part No	SP	UN	Qty	Description	Page No
-						
010	1549223-0100	-		1	SPLICING TABLE	**1-189**
020	1517044-0000	-		1	PLATE	
030	1499288-0000	-		2	AXLE SUPPORT	
040	1519463-0000	A		2	LOCKING CLAMP	
050	532022-0000	-		2	LOCK BAR	
060	544427-0000	B		2	TURN SPRING	
070	1558070-0000	-		2	LOCKING FINGER	
090	312105-0287	-		2	SCREW M6S ISO4017 M4X8 A470	
100	312105-0327	-		4	SCREW M6S ISO 4017 M5X12 A480	
110	312105-0340	-		4	SCREW M6S ISO 4014 M5X45 A480	
120	312155-0291	-		2	SCREW EN 10642 MF6S M4X12 A480	
130	312180-0455	-		2	SCREW ISO7379 H8X30	
140	315105-0136	-		2	WASHER BRB4,3XRFR	
150	315105-0146	-		8	WASHER BRB5,3X10RFR	
160	315105-0165	-		2	WASHER BRB8,4X16RFR	
170	90143-0071	-	MM	100	RUBBER STRIP 4X20MM	

Pos	Part No	SP	UN	Qty	Description	Page No

SPLICING TABLE

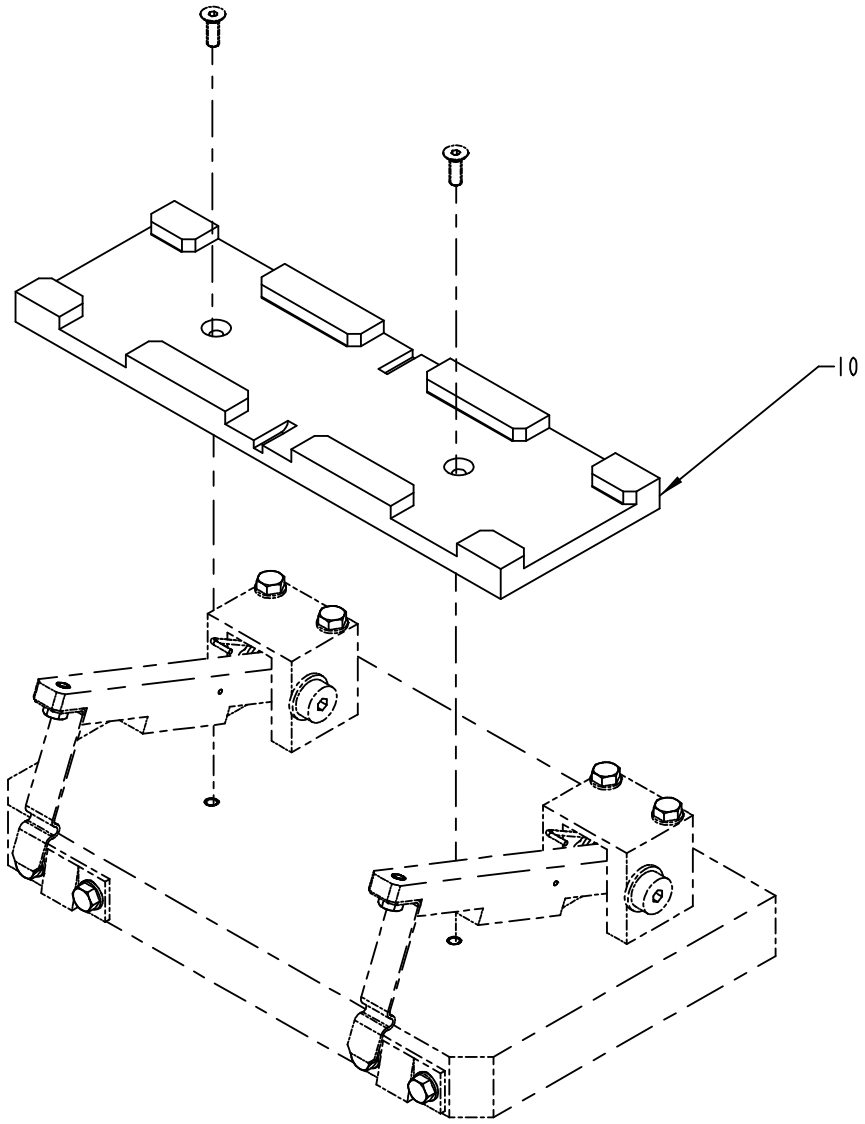

1549223-1
ECN 92761

ECM: 110110 - 20020214
Group number: 1549223-0100
Assembly Drawing: 1549223-1_1_AA

Pos	Part No	SP	UN	Qty	Description	Page No
HOLE48, HOLE72						
010	1499296-0002	-		1	GUIDE	

Pos	Part No	SP	UN	Qty	Description	Page No

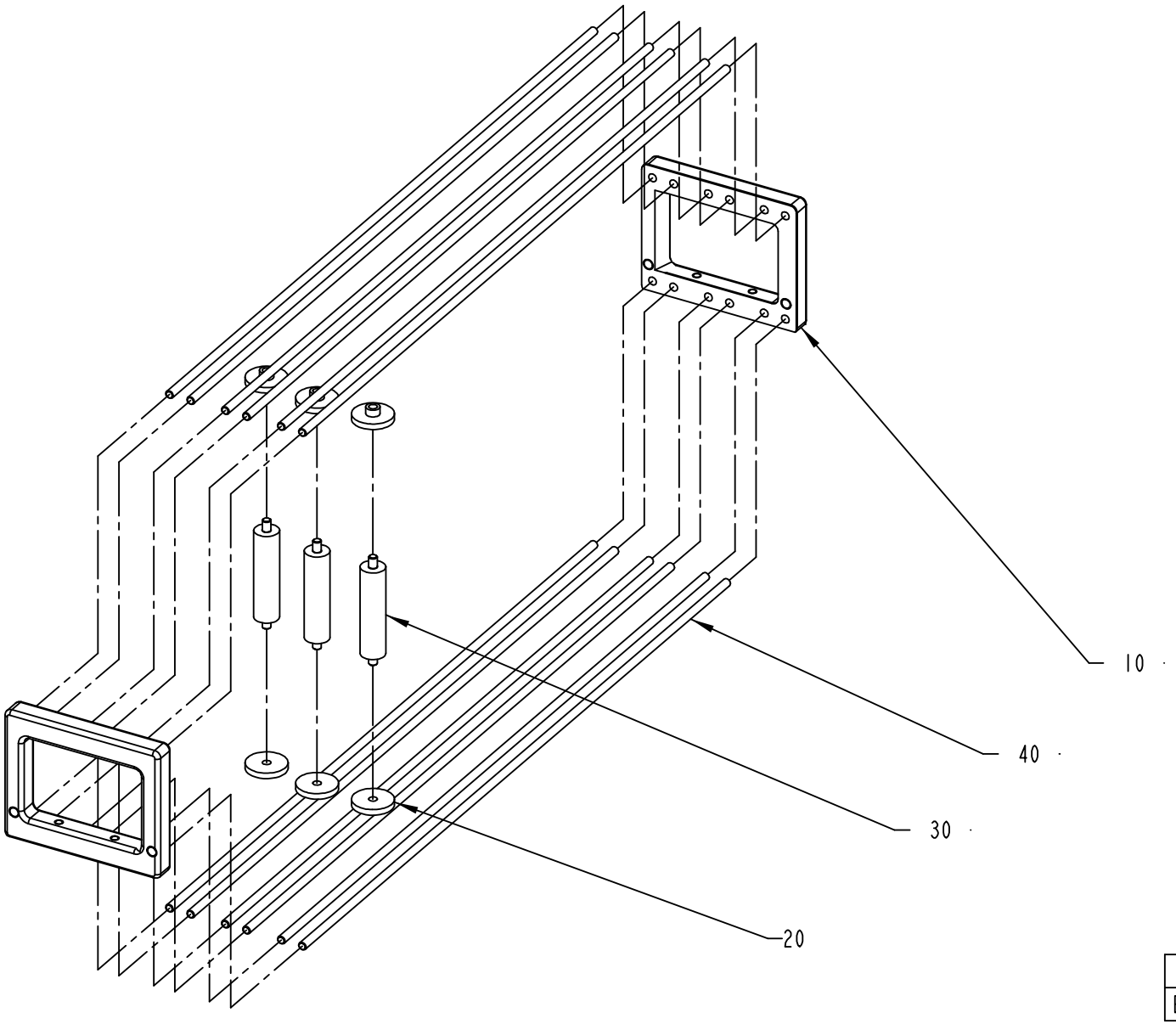

1519708-1
ECN 91120

ECM: 91133 - 20010709
Group number: 1519708-0100
Assembly Drawing: 1519708-1_1_AA

Pos	Part No	SP	UN	Qty	Description	Page No
-						
010	1519704-0000	-		2	BRACKET	
020	534497-0000	A		6	SPACER	
030	1517037-0000	A		3	ROLLER	
040	1539211-0002	-		12	ROD	

Pos	Part No	SP	UN	Qty	Description	Page No

OUTHER PATCH MAGAZINE

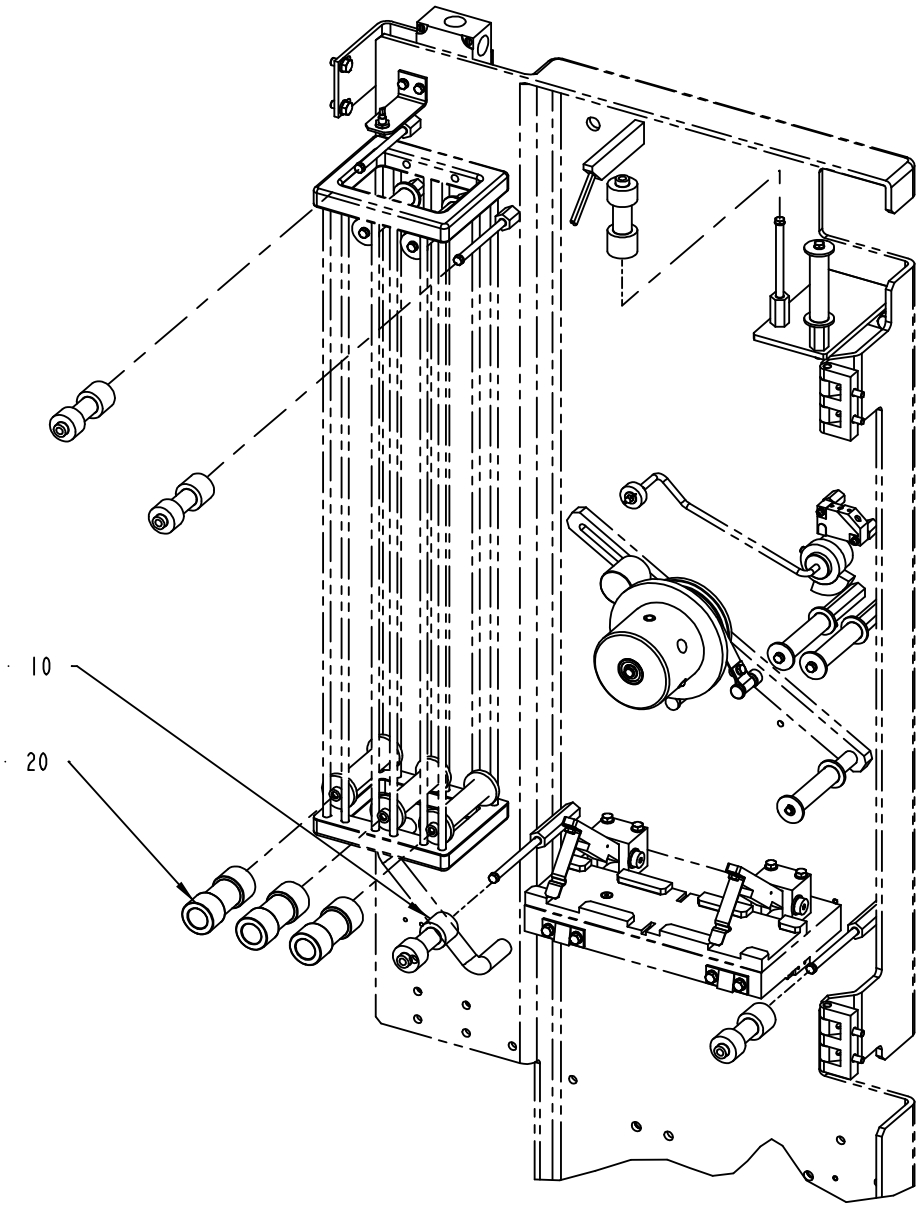

1549261-1
ECN 98647

ECM: 110109 - 20020214
Group number: 1549261-0100
Assembly Drawing: 1549261-1_1_AB

Pos	Part No	SP	UN	Qty	Description	Page No
HOLE48, HOLE72						
010	907358-0003	A		5	ROLLER	
020	2501790-0001	A		3	GUIDE ROLLER	

Pos	Part No	SP	UN	Qty	Description	Page No

BOBBIN HOLDER

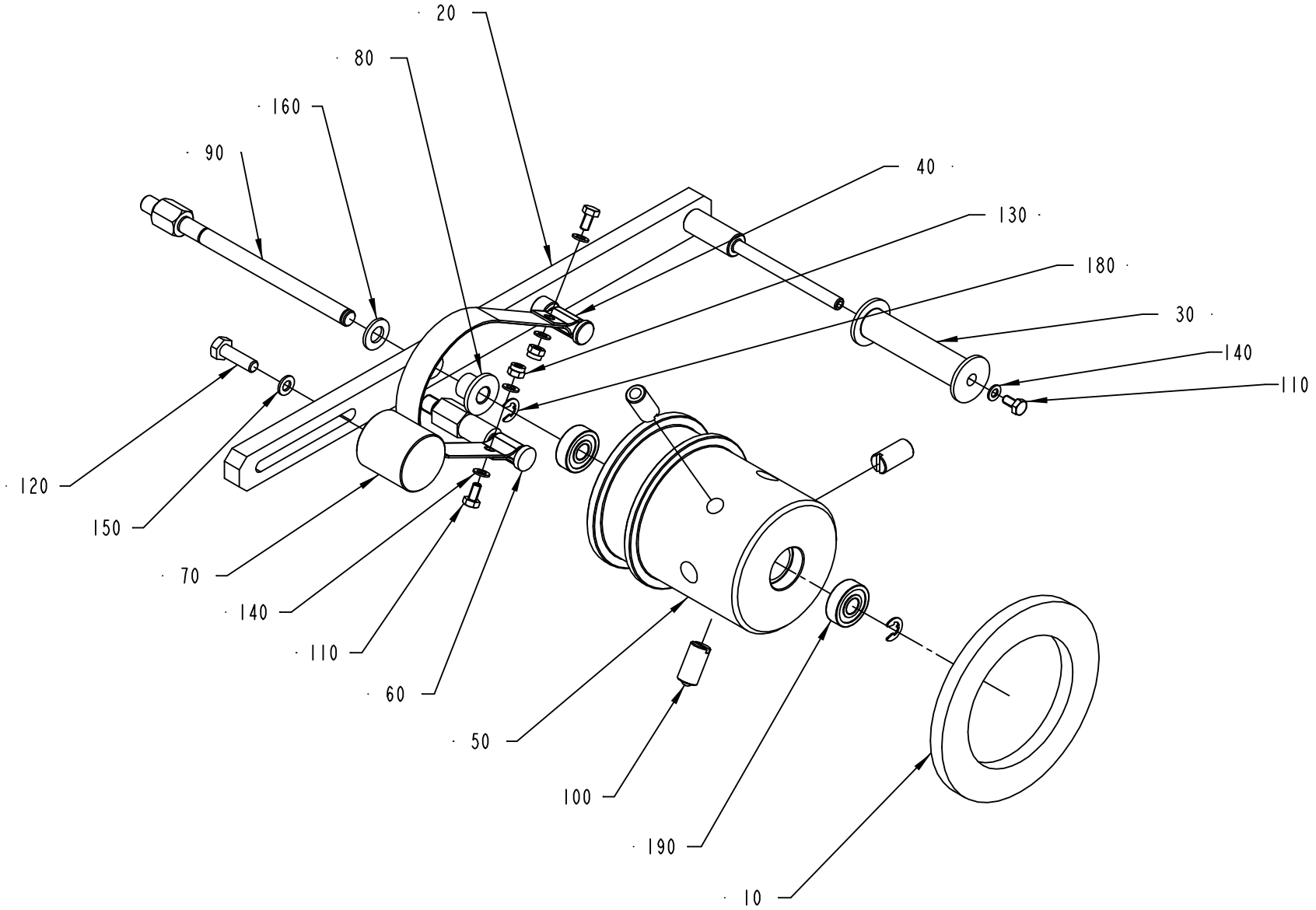

1549220-1
ECN 92761

ECM: 92796 - 20010809
Group number: 1549220-0100
Assembly Drawing: 1549220-1_1_AA

Pos	Part No	SP	UN	Qty	Description	Page No
-						
010	1549221-0100	-		1	BOBBIN HOLDER	**1-197**
020	1498357-0000	-		1	LEVER	
030	905211-0000	A		1	ROLLER	
040	1498303-0000	A		1	BELT	
050	1498360-0000	-		1	HUB	
060	1347969-0000	-		1	PIN	
070	1498302-0000	-		1	COUNTERWEIGHT	
080	1498358-0000	A		1	BUSHING	
090	1498359-0000	-		1	SHAFT	
100	90287-0106	A		3	SCREW SPRINGLOAD. SLOTTED HEAD M10X21	
110	312105-0287	-		3	SCREW M6S ISO4017 M4X8 A470	
120	312105-0370	-		1	SCREW M6S ISO 4017 M6X20 A480	
130	312812-0312	-		2	HEXAGON NUT, NY-LOCK M4 A480	
140	315105-0136	-		5	WASHER BRB4,3XRFR	
150	315105-0146	-		1	WASHER BRB5,3X10RFR	
160	315105-0165	-		1	WASHER BRB8,4X16RFR	
180	315755-0108	-		2	RETAINING RING SHAFT DIN 6799 6 A2	
190	321302-0298	A		2	BALL BEARING, 8X22X7 MM	

Pos	Part No	SP	UN	Qty	Description	Page No

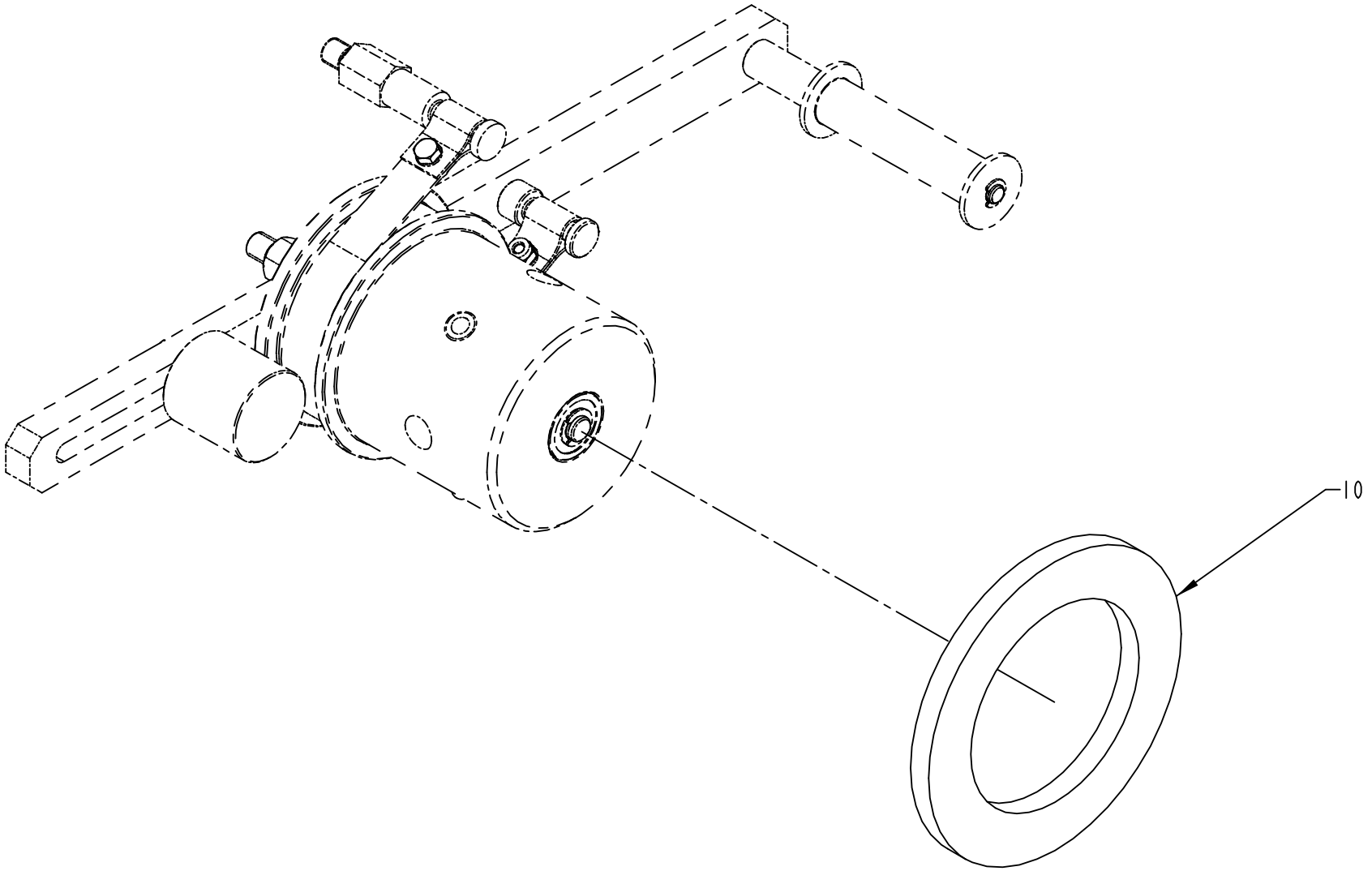

1549221-1
ECN 92761

ECM: 110111 - 20020214
Group number: 1549221-0100
Assembly Drawing: 1549221-1_1_AA

Pos	Part No	SP	UN	Qty	Description	Page No
HOLE48, HOLE72						
010	1347952-0003	-		1	SPACER	

Pos	Part No	SP	UN	Qty	Description	Page No

OUTER PATCH TURNING

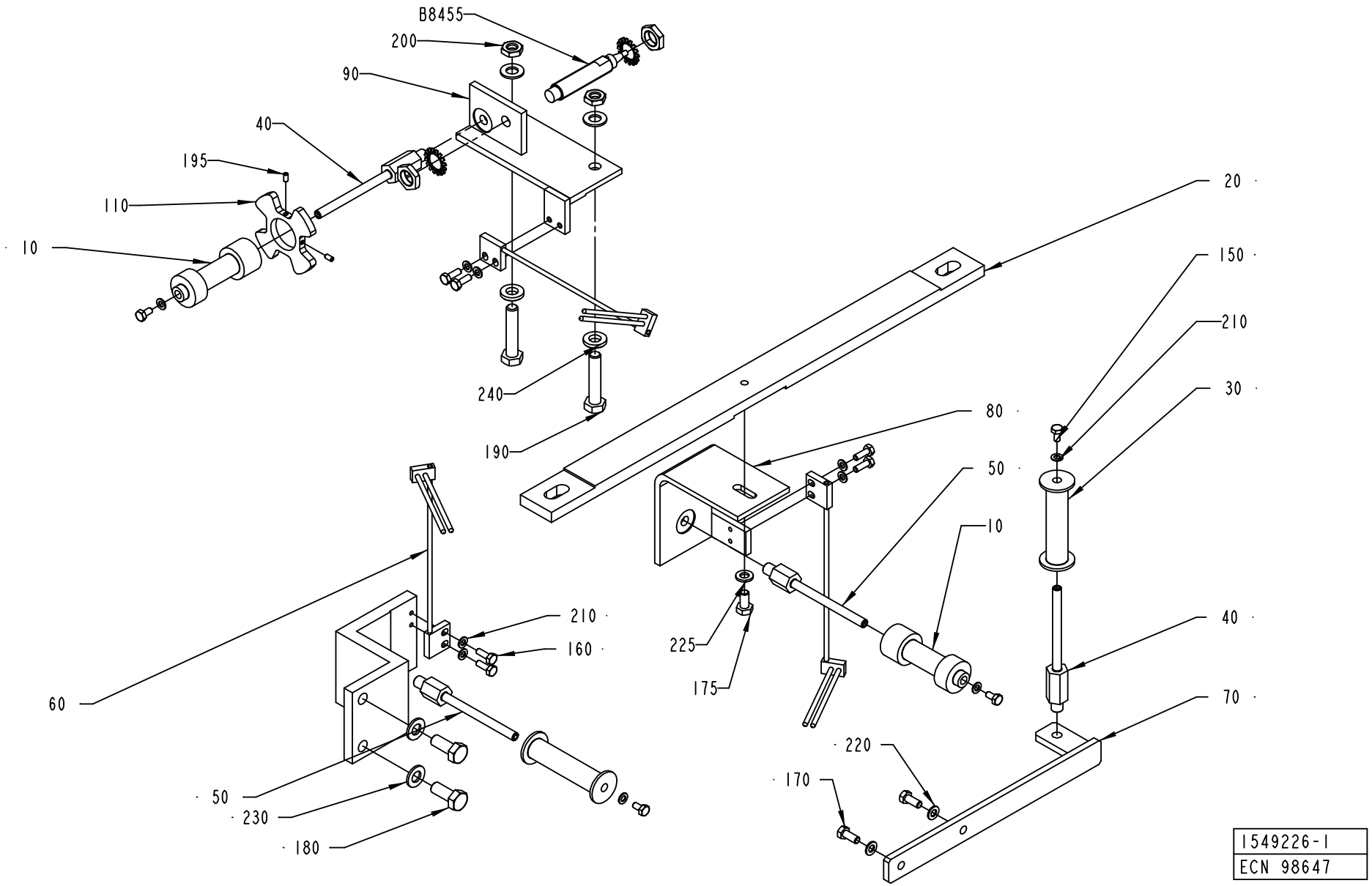

1549226-1
ECN 98647

ECM: 98769 - 20020207
Group number: 1549226-0100
Assembly Drawing: 1549226-1_1_AB

Pos	Part No	SP	UN	Qty	Description	Page No
-						
010	1549225-0100	-		1	OUTER PATCH TURNING	**1-201**
020	1549233-0000	-		1	PLATE	
030	905211-0000	A		2	ROLLER	
040	1499251-0003	-		2	AXLE PIN	
050	1499251-0005	-		2	AXLE PIN	
060	1549228-0000	-		3	GUIDE	
070	1549229-0000	-		1	BRACKET	
080	1549234-0000	-		1	BRACKET	
090	1549237-0000	-		1	BRACKET	
100	1549238-0000	-		1	BRACKET	
110	1523262-0000	-		1	FLAG	
150	312105-0287	-		4	SCREW M6S ISO4017 M4X8 A470	
160	312105-0291	-		6	SCREW M6S ISO 4017 M4X12 A470	
170	312105-0327	-		2	SCREW M6S ISO 4017 M5X12 A480	
175	312105-0366	-		1	SCREW M6S ISO 4017 M6X12 A480	
180	312105-0451	-		2	SCREW M6S ISO 4017 M8X20 A480	
190	312109-0459	-		2	SCREW M6S ISO 4017 M8X40 A480	
195	312318-0220	-		2	SCREW ISO4029 M3X6 A4	
200	312625-0318	-		2	HEXAGON THIN NUT, EN 24035 ML6M M8 A4	
210	315105-0136	-		10	WASHER BRB4,3XRFR	
220	315105-0146	-		2	WASHER BRB5,3X10RFR	
225	315105-0153	-		1	WASHER BRB6,4X12RFR	
230	315105-0165	-		4	WASHER BRB8,4X16RFR	
240	315115-0165	-		2	WASHER PLAIN, TBRB 8,4/16 H=3	
B8455	90458-0672	A		1	PROXIMITY SENSOR E2E2-X5MB1-5M	

Pos	Part No	SP	UN	Qty	Description	Page No

OUTER PATCH TURNING

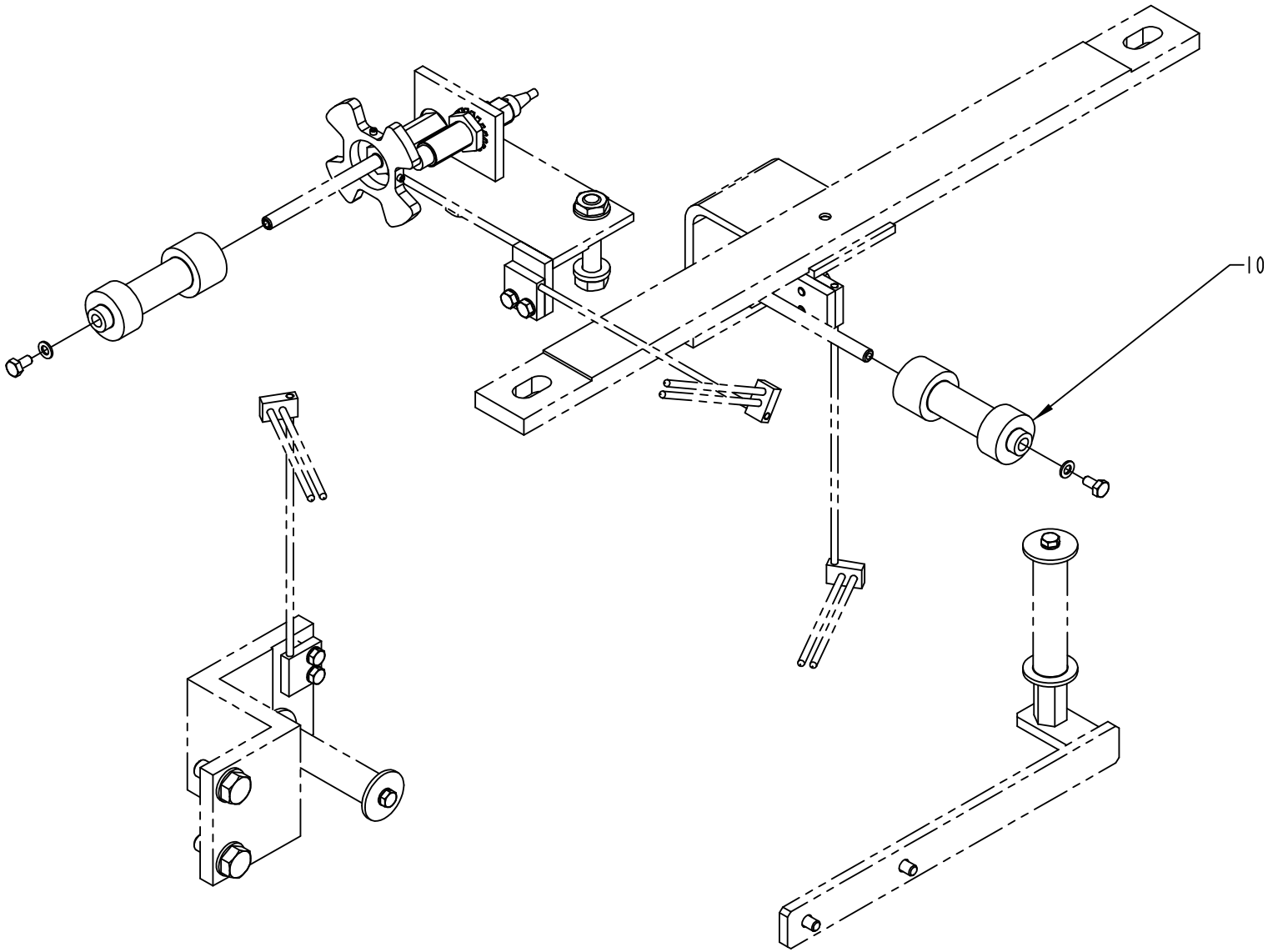

1549225-1
ECN 92761

ECM: 110112 - 20020214
Group number: 1549225-0100
Assembly Drawing: 1549225-1_1_AA

Pos	Part No	SP	UN	Qty	Description	Page No
HOLE48, HOLE72						
010	907358-0003	A		2	ROLLER	

Pos	Part No	SP	UN	Qty	Description	Page No

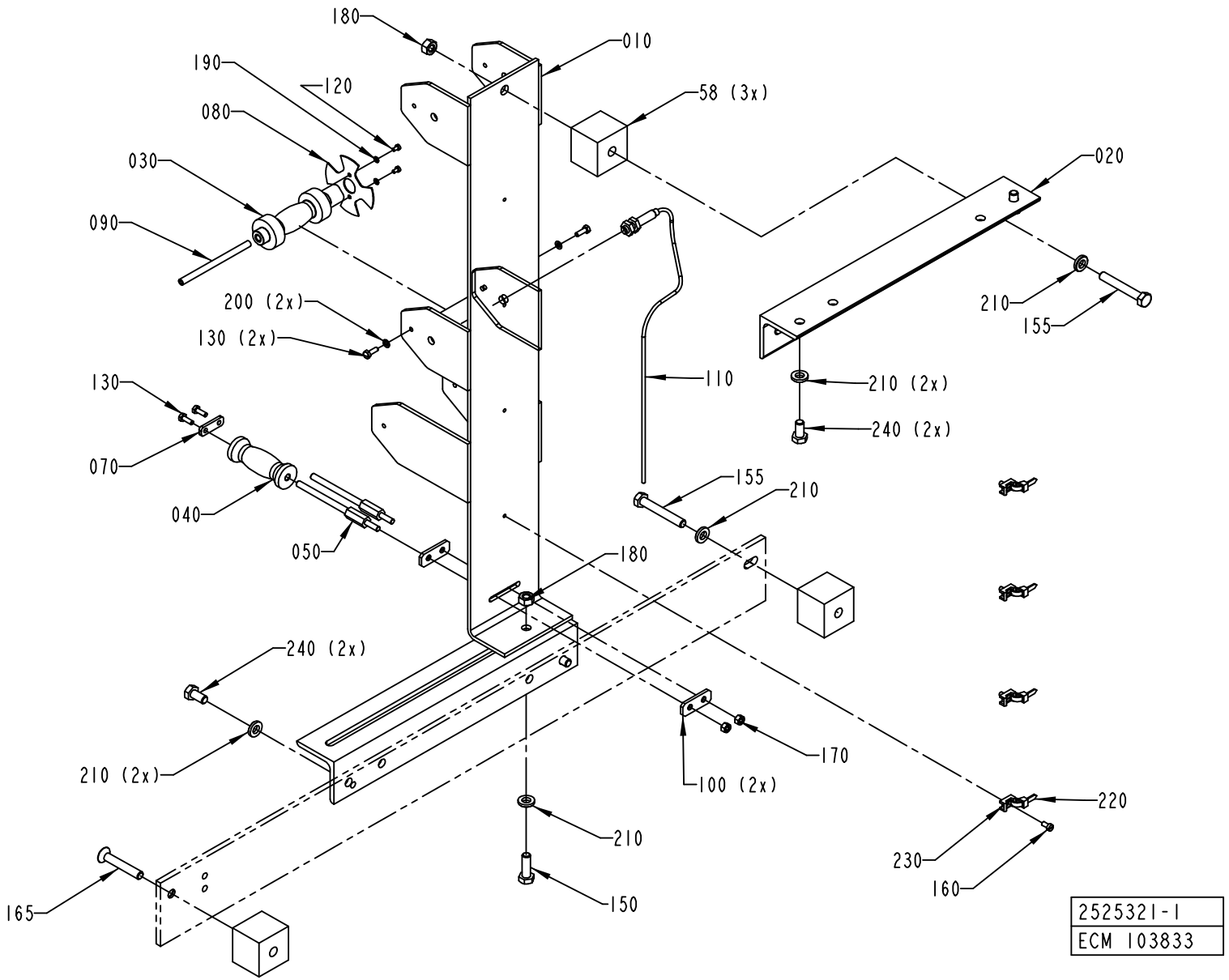
180
010
190
120
58 (3x)
080
020
030
090
210
155
200 (2x)
130 (2x)
110
210 (2x)
240 (2x)
130
070
155
210
040
050
180
240 (2x)
210 (2x)
170
100 (2x)
220
210
230
160
150
165
2525321-1
ECM 103833

ECM: 106492 - 20020214
Group number: 2525321-0100
Assembly Drawing: 2525321-1_1_AA

Pos	Part No	SP	UN	Qty	Description	Page No
-						
010	2507109-0000	-		1	BRACKET	
020	1140817-0000	-		2	BRACKET	
030	2507110-0000	-		1	ROLLER	
040	2507105-0000	-		1	ROLLER	
050	1317672-0000	-		2	AXLE PIN	
058	1558078-0000	-		3	SPACER	
070	1317673-0000	-		1	PLATE	
080	1317674-0000	A		1	FLAG	
090	1317675-0000	-		1	AXLE PIN	
100	1317676-0000	-		2	PLATE	
110	90458-0138	A		1	PROX.SW. E2EG-X1R5B1-5M	
120	90287-0151	-		2	SCREW CAP HEAD MSCS M3X5	
130	312105-0291	-		4	SCREW M6S ISO 4017 M4X12 A470	
150	312105-0453	-		2	SCREW M6S ISO 4017 M8X25 A480	
155	312105-0462	-		2	SCREW M6S ISO 4014 M8X55 A480	
160	312125-0287	-		4	SCREW ISO 1207 M4X8 A4	
165	312155-0461	-		1	SCREW EN 10642 MF6S M8X50 A480	
170	312605-0314	-		2	HEXAGON NUT, M6M M5 A280	
180	312605-0318	-		2	HEXAGON NUT, M6M M8 A280	
190	315105-0124	-		2	WASHER BRB3,2X6RFR	
200	315105-0136	-		2	WASHER BRB4,3XRFR	
210	315115-0165	-		7	WASHER PLAIN, TBRB 8,4/16 H=3	
220	352113-0102	-		4	CLIP-STRIP, BLACK 188X4,8 MM	
230	352113-0205	-		4	ANCHOR PLATES FOR STRIPS, TYPE TM2S8-C10	
240	312105-0449	-		4	SCREW M6S ISO 4017 M8X16 A480	

Pos	Part No	SP	UN	Qty	Description	Page No

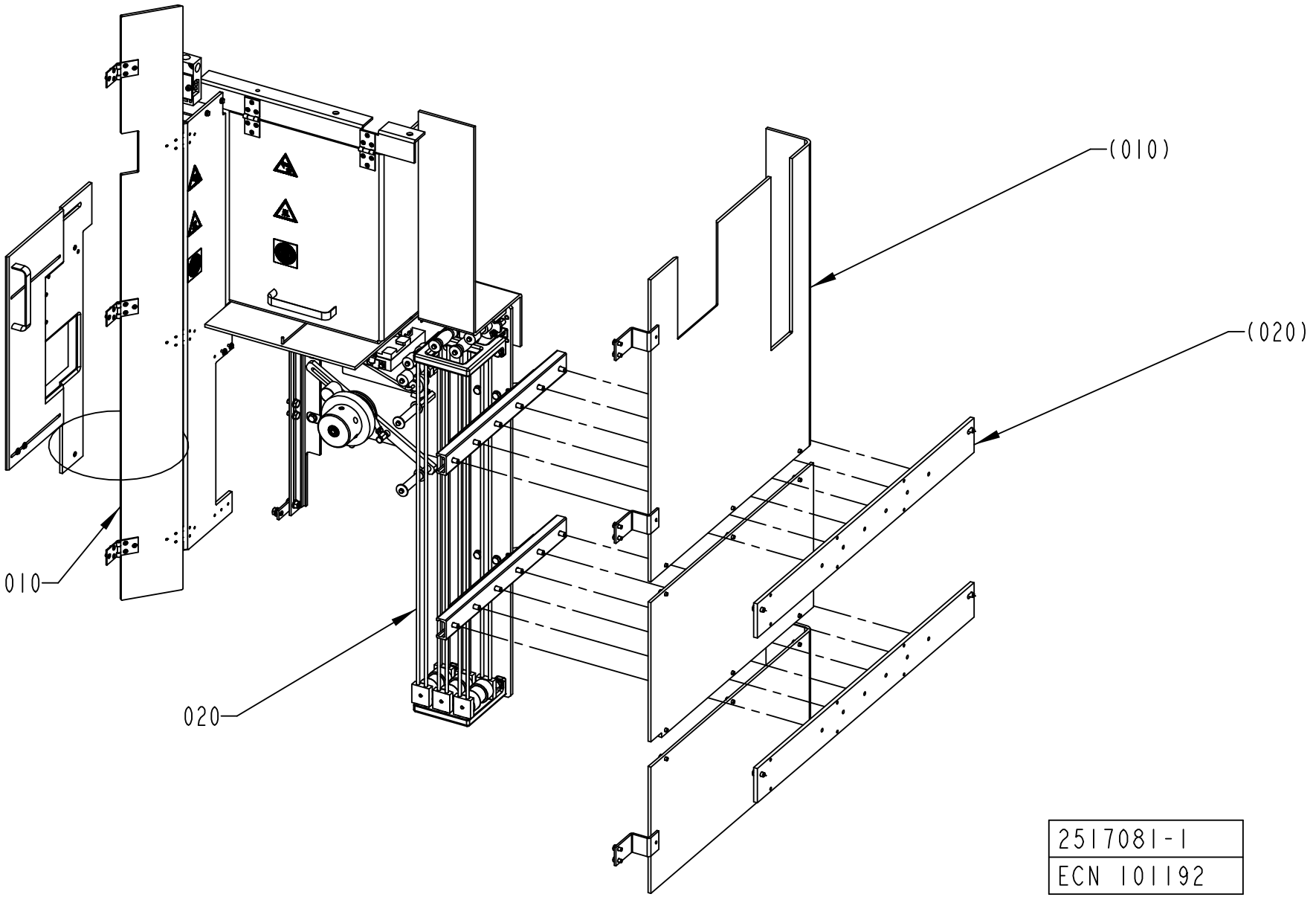
(010)
(020)
010
020
2517081-1
ECN 101192

ECM: 101192 - 20020208
Group number: 2517081-0100
Assembly Drawing: 2517081-1_1_AA

Pos	Part No	SP	UN	Qty	Description	Page No
-						
010	2517082-0100	-		1	PROTECTIVE COVER	**1-207**
020	2501788-0100	-		1	TAB MAGAZINE	**1-209**

Pos	Part No	SP	UN	Qty	Description	Page No

PROTECTIVE COVER

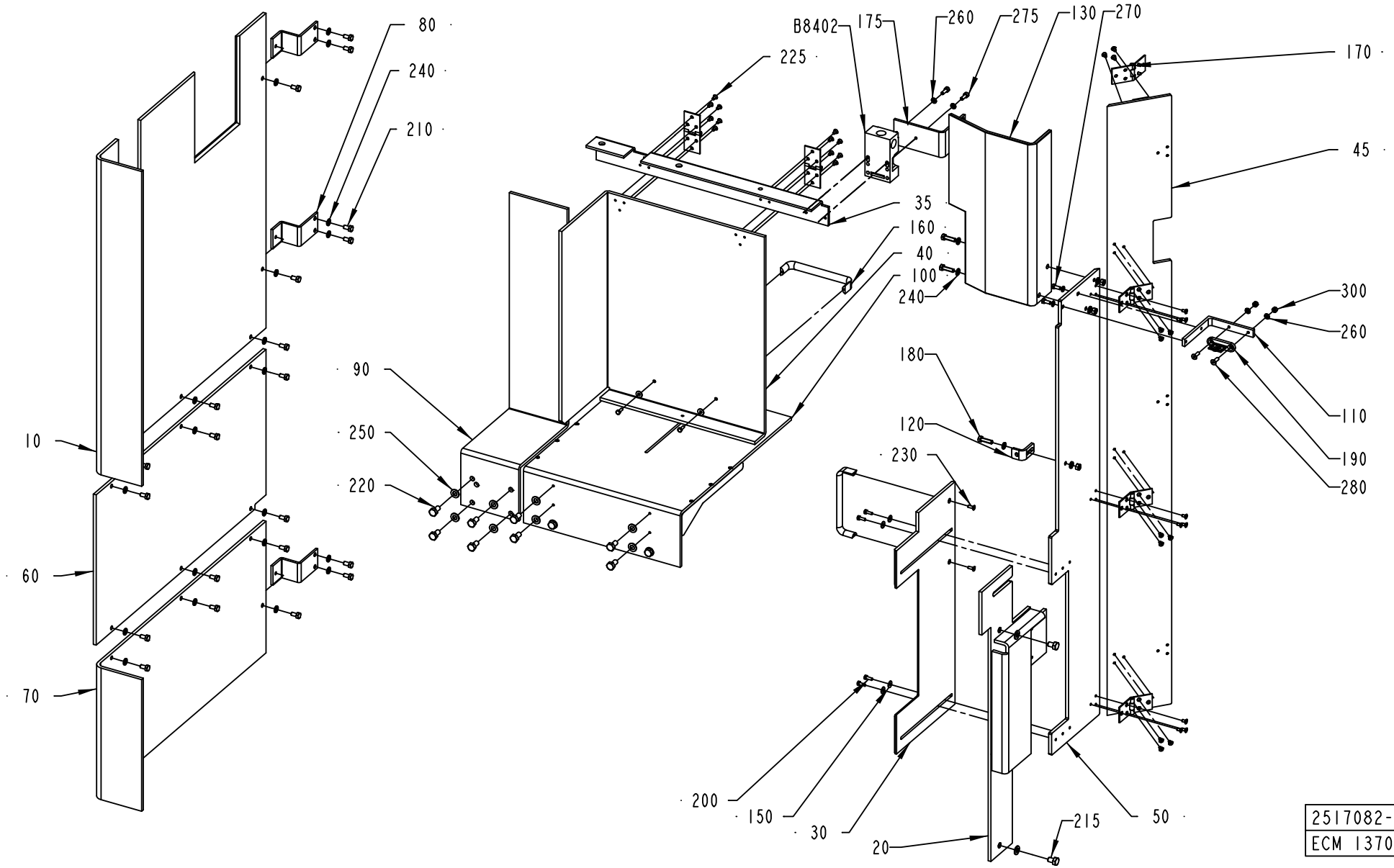

ECM: 137838 - 20040119
Group number: 2517082-0100
Assembly Drawing: 2517082-1_1_AC

Pos	Part No	SP	UN	Qty	Description	Page No
-						
010	1558093-0000	-		1	COVER	
020	2517084-0000	-		1	COVER	
030	1558098-0000	-		1	COVER	
035	2501802-0000	-		1	COVER	
040	2501803-0000	-		1	COVER	
045	2501804-0000	-		1	COVER	
050	2501805-0000	-		1	COVER	
060	1558094-0000	-		1	COVER	
070	1558095-0000	-		1	COVER	
080	1558099-0000	-		3	COVER	
090	2501778-0000	-		1	COVER	
100	2501779-0000	-		1	COVER	
110	2510381-0000	-		1	SUPPORT	
120	529990-0000	-		1	SUPPORT	
130	2603689-0000	-		1	COVER	
150	90005-0082	-		8	WASHER PLAIN ROUND 4,3(M4)/12,H=1	
160	90017-0017	-		2	HANDLE, NO. 547-128	
170	90248-0026	-		8	HINGE, 1703-80X32	
175	1082741-0000	-		1	HOLDER	
180	312105-0371	-		3	SCREW M6S ISO 4017 M6X22 A480	
200	312105-0291	-		8	SCREW M6S ISO 4017 M4X12 A470	
210	312105-0366	-		21	SCREW M6S ISO 4017 M6X12 A480	
215	312105-0447	-		2	SCREW M6S ISO 4017 M8X12 A480	
220	312105-0449	-		11	SCREW M6S ISO 4017 M8X16 A480	
225	312155-0287	-		48	SCREW EN 10642 MF6S M4X8 A480	
230	312155-0291	-		2	SCREW EN 10642 MF6S M4X12 A480	
240	315105-0153	-		27	WASHER BRB6,4X12RFR	
250	315105-0165	-		13	WASHER BRB8,4X16RFR	
260	315105-0146	-		4	WASHER BRB5,3X10RFR	
270	312105-0327	-		2	SCREW M6S ISO 4017 M5X12 A480	
280	312155-0329	-		2	SCREW EN 10642 MF6S M5X16 A480	
300	312605-0314	-		5	HEXAGON NUT, M6M M5 A280	
B8402	90044-0310	A		1	KEY FOR SAFETY SWITCH, AZ 15/16 B1	

Pos	Part No	SP	UN	Qty	Description	Page No

Machine Type | Group Description | Used-In | Group Number | Page No

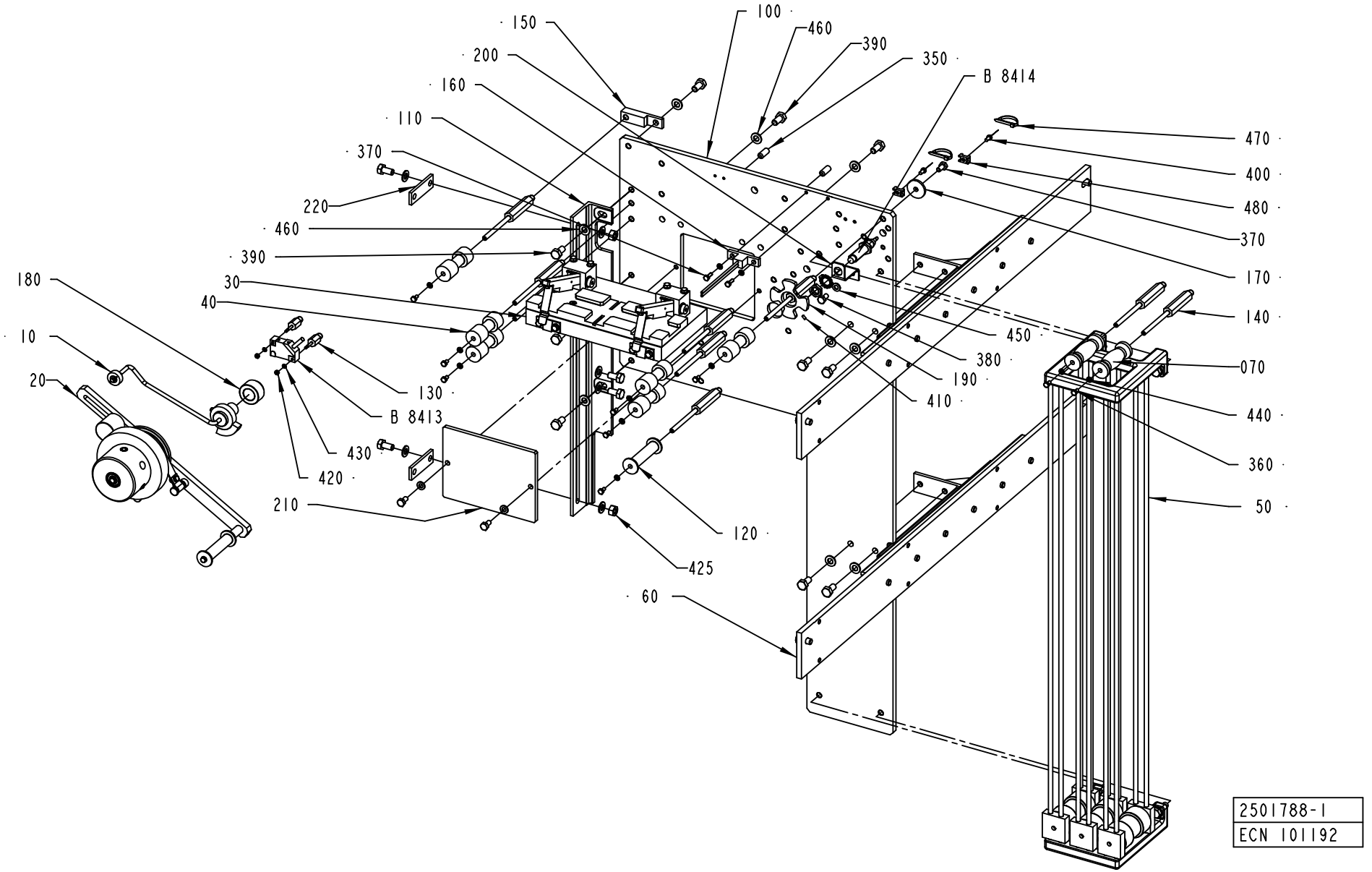
150
100
460
390
350
B 8414
200
160
110
370
220
460
390
30
40
180
10
20
130
B 8413
430
420
210
120
425
60
470
400
480
370
170
140
450
380
190
410
070
440
360
50
2501788-1
ECN 101192

ECM: 109352 - 20020214
Group number: 2501788-0100
Assembly Drawing: 2501788-1_1_AB

Pos	Part No	SP	UN	Qty	Description	Page No
-						
010	1499255-0100	-		1	DETECTOR	**1-185**
020	1517039-0100	-		1	BOBBIN HOLDER	**1-211**
030	1538689-0100	-		1	SPLICING TABLE	**1-215**
040	1539210-0100	-		1	TAB MAGAZINE	**1-219**
050	1539212-0100	-		1	STRIP MAGAZINE	**1-221**
060	1549224-0100	-		1	FRAME	**1-223**
070	2507105-0000	-		2	ROLLER	
100	1539217-0000	-		1	FRAME	
110	1539215-0000	-		1	BRACKET	
120	905211-0000	-		1	ROLLER	
130	1499250-0000	-		2	AXLE PIN	
140	1499251-0002	-		9	AXLE PIN	
150	1558091-0000	-		1	CONNECTION	
160	2501792-0000	-		1	GUIDE FORK	
170	1498347-0000	-		1	WASHER	
180	1499253-0000	-		1	BUSHING	
190	1523262-0000	-		1	FLAG	
200	1523263-0001	-		1	BRACKET	
210	2525325-0000	-		1	COVER	
220	2517086-0000	-		2	PLATE	
350	311103-0401	-		2	PARALLEL PIN ISO 2338 8M6X20 A1	
360	312105-0287	-		9	SCREW M6S ISO4017 M4X8 A470	
370	312105-0291	-		2	SCREW M6S ISO 4017 M4X12 A470	
380	312105-0366	-		4	SCREW M6S ISO 4017 M6X12 A480	
390	312105-0449	-		10	SCREW M6S ISO 4017 M8X16 A480	
400	312125-0287	-		2	SCREW ISO 1207 M4X8 A4	
410	312318-0220	-		2	SCREW ISO4029 M3X6 A4	
420	312605-0310	-		2	HEXAGON NUT, M6M M3 A280	
425	312605-0318	-		2	HEXAGON NUT, M6M M8 A280	
430	315105-0124	-		2	WASHER BRB3,2X6RFR	
440	315105-0136	-		11	WASHER BRB4,3XRFR	
450	315105-0153	-		3	WASHER BRB6,4X12RFR	
460	315105-0165	-		12	WASHER BRB8,4X16RFR	
470	352113-0102	-		2	CLIP-STRIP, BLACK 188X4,8 MM	
480	352113-0205	-		2	ANCHOR PLATES FOR STRIPS, TYPE TM2S8-C10	
B8413	90044-0194	A		1	PROX.SW. IN5329/IN3002-BPKG	
B8414	90458-0672	A		1	PROXIMITY SENSOR E2E2-X5MB1-5M	

Pos	Part No	SP	UN	Qty	Description	Page No

BOBBIN HOLDER

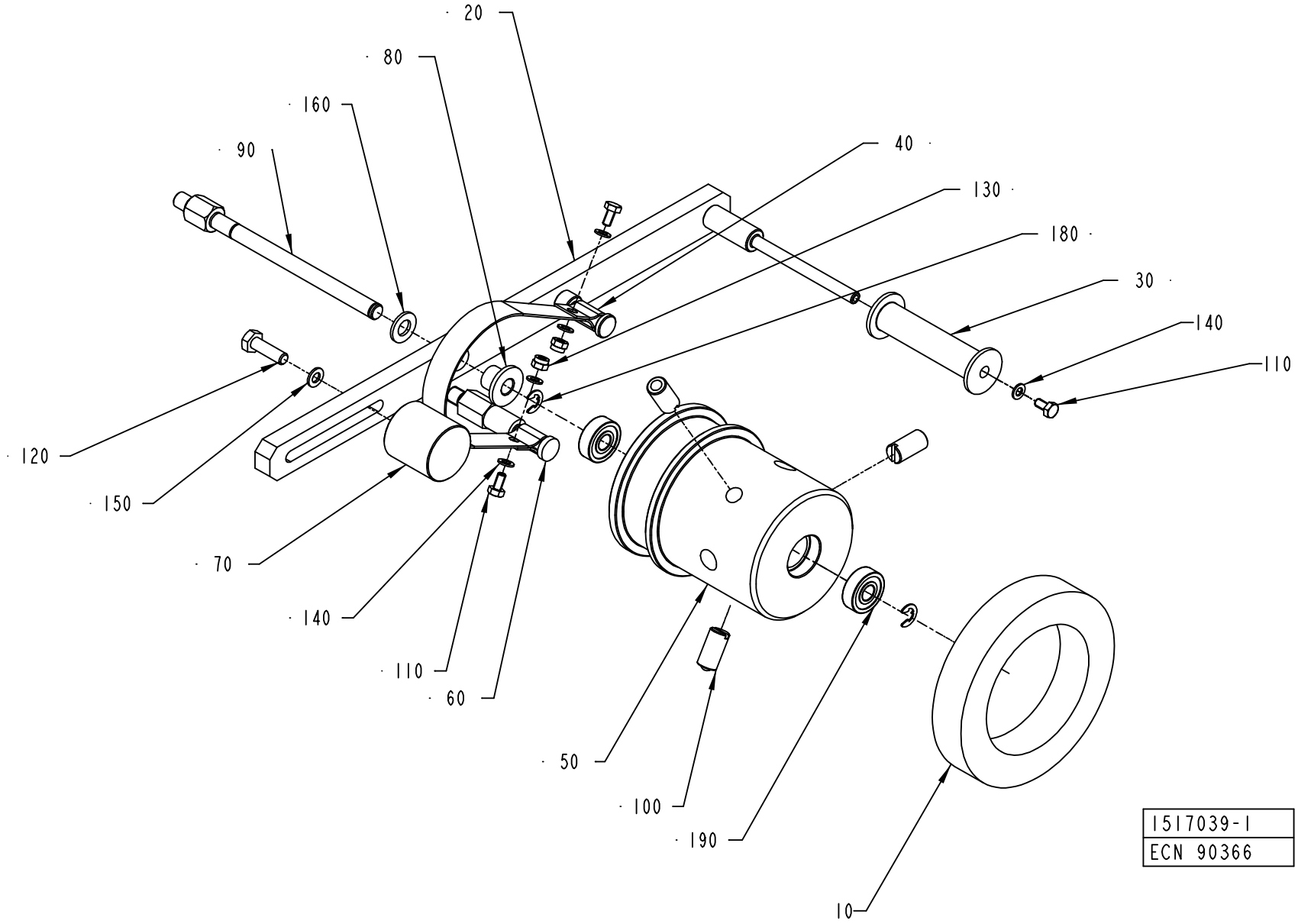

ECM: 90372 - 20010809
Group number: 1517039-0100
Assembly Drawing: 1517039-1_1_AA

Pos	Part No	SP	UN	Qty	Description	Page No
-						
010	1538692-0100	-		1	BOBBIN HOLDER	**1-213**
020	1498357-0000	-		1	LEVER	
030	905211-0000	A		1	ROLLER	
040	1498303-0000	A		1	BELT	
050	1498360-0000	-		1	HUB	
060	1347969-0000	-		1	PIN	
070	1498302-0000	-		1	COUNTERWEIGHT	
080	1498358-0000	A		1	BUSHING	
090	1498359-0000	-		1	SHAFT	
100	90287-0106	A		3	SCREW SPRINGLOAD. SLOTTED HEAD M10X21	
110	312105-0287	-		3	SCREW M6S ISO4017 M4X8 A470	
120	312105-0370	-		1	SCREW M6S ISO 4017 M6X20 A480	
130	312812-0312	-		2	HEXAGON NUT, NY-LOCK M4 A480	
140	315105-0136	-		5	WASHER BRB4,3XRFR	
150	315105-0146	-		1	WASHER BRB5,3X10RFR	
160	315105-0165	-		1	WASHER BRB8,4X16RFR	
180	315755-0108	-		2	RETAINING RING SHAFT DIN 6799 6 A2	
190	321302-0298	A		2	BALL BEARING, 8X22X7 MM	

Pos	Part No	SP	UN	Qty	Description	Page No

BOBBIN HOLDER

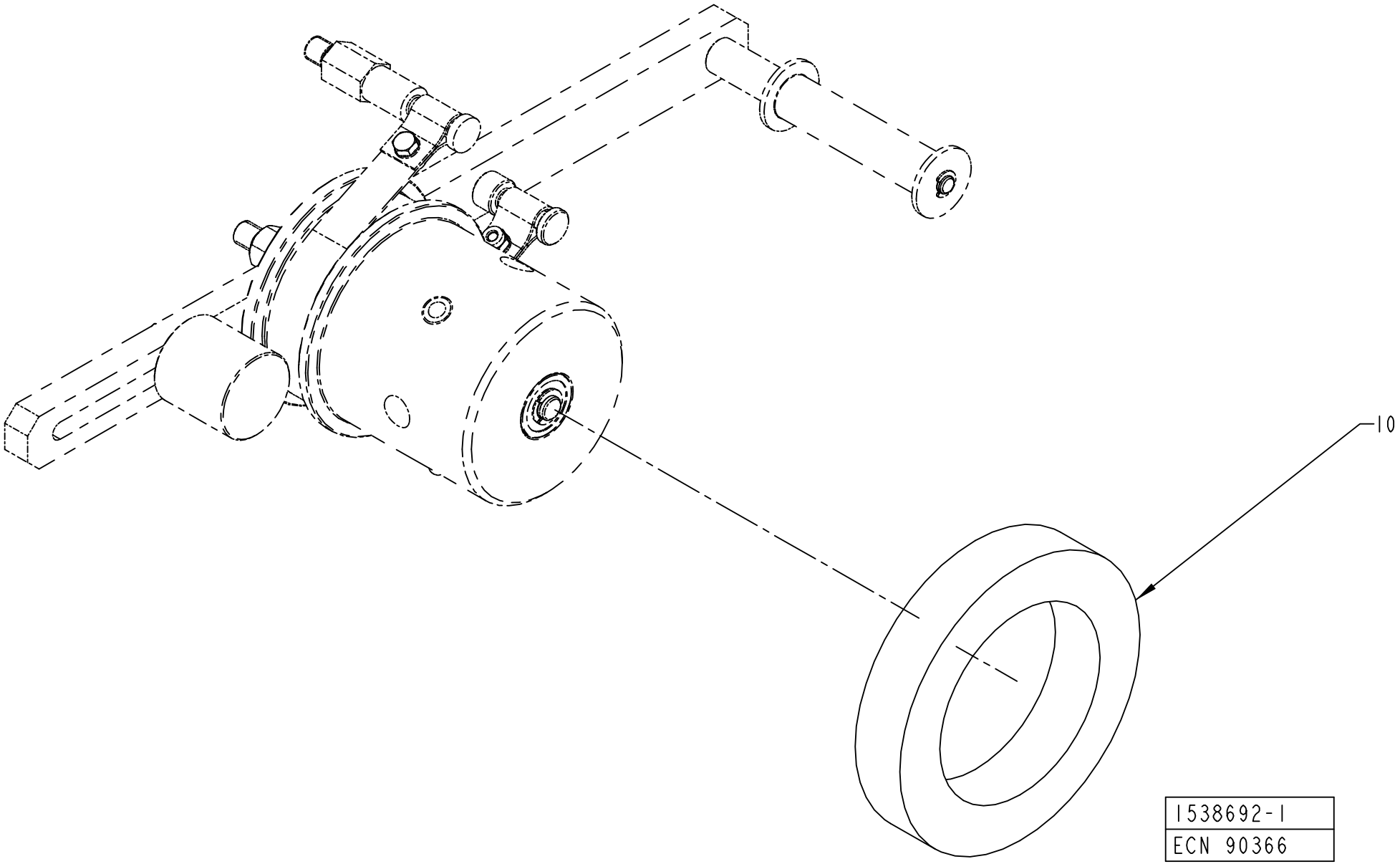

ECM: 135930 - 20030624
Group number: 1538692-0100
Assembly Drawing: 1538692-1_1_AA

Pos	Part No	SP	UN	Qty	Description	Page No
TBA 0500S HOLE25						
010	1347952-0012	-		1	SPACER	
TBA 0500S HOLE55						
010	1347952-0006	-		1	SPACER	
TBA 1000S HOLE45, TBA 1000S HOLE50, TBA 1000S HOLE65, TBA 1000S HOLE85, TBA 1000SQ HOLE45, TBA 1000SQ HOLE65, TBA 1000SQ HOLE85, TBA 1000B HOLE50, TBA 1000B HOLE65, TBA 1000B HOLE85, TBA 1000B HOLE45, TBA 1500S HOLE45, TBA 1500S HOLE65, TBA 1500S HOLE85						
010	1347952-0011	-		1	SPACER	
TBA 1000S HOLE90						
010	1347952-0008	-		1	SPACER	
TBA 1000SQ HOLE43						
010	1347952-0015	-		1	SPACER	
TPA 0330SQ HOLE48, TPA 0250SQ HOLE72						
010	1347952-0016	-		1	SPACER	
TPA 1000S HOLE60, TPA 1000SQ HOLE60						
010	1347952-0015	-		1	SPACER	

Pos	Part No	SP	UN	Qty	Description	Page No

SPLICING TABLE

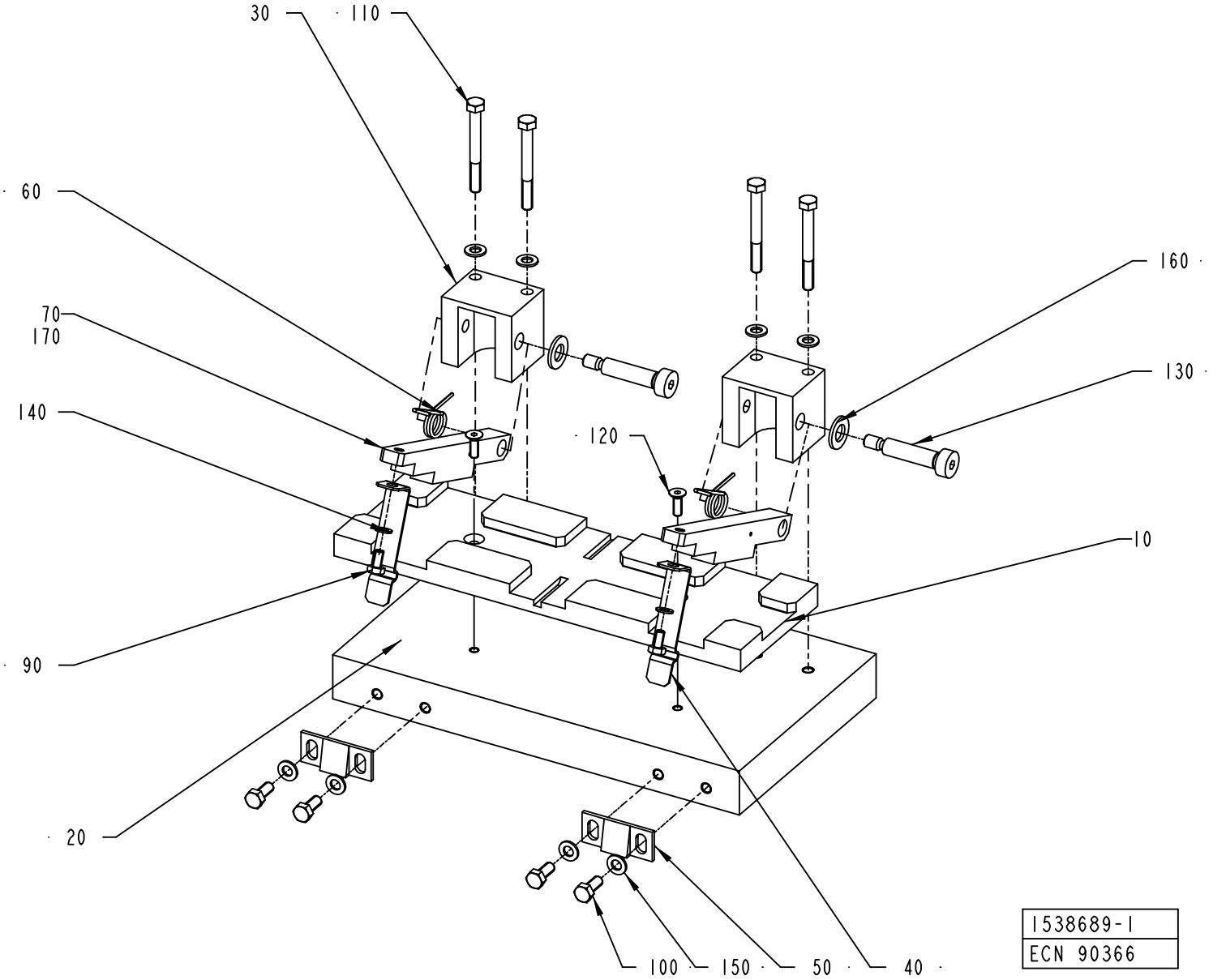

ECM: 90366 - 20010809
Group number: 1538689-0100
Assembly Drawing: 1538689-1_1_AA

Pos	Part No	SP	UN	Qty	Description	Page No
-						
010	1538691-0100	-		1	SPLICING TABLE	**1-217**
020	1517044-0000	-		1	PLATE	
030	1499288-0000	-		2	AXLE SUPPORT	
040	1519463-0000	A		2	LOCKING CLAMP	
050	532022-0000	-		2	LOCK BAR	
060	544427-0000	A		2	TURN SPRING	
070	1558070-0000	-		2	LOCKING FINGER	
090	312105-0287	-		2	SCREW M6S ISO4017 M4X8 A470	
100	312105-0327	-		4	SCREW M6S ISO 4017 M5X12 A480	
110	312105-0340	-		4	SCREW M6S ISO 4014 M5X45 A480	
120	312155-0291	-		2	SCREW EN 10642 MF6S M4X12 A480	
130	312180-0455	-		2	SCREW ISO7379 H8X30	
140	315105-0136	-		2	WASHER BRB4,3XRFR	
150	315105-0146	-		8	WASHER BRB5,3X10RFR	
160	315105-0165	-		2	WASHER BRB8,4X16RFR	
170	90143-0071	-	MM	100	RUBBER STRIP 4X20MM	

Pos	Part No	SP	UN	Qty	Description	Page No

SPLICING TABLE

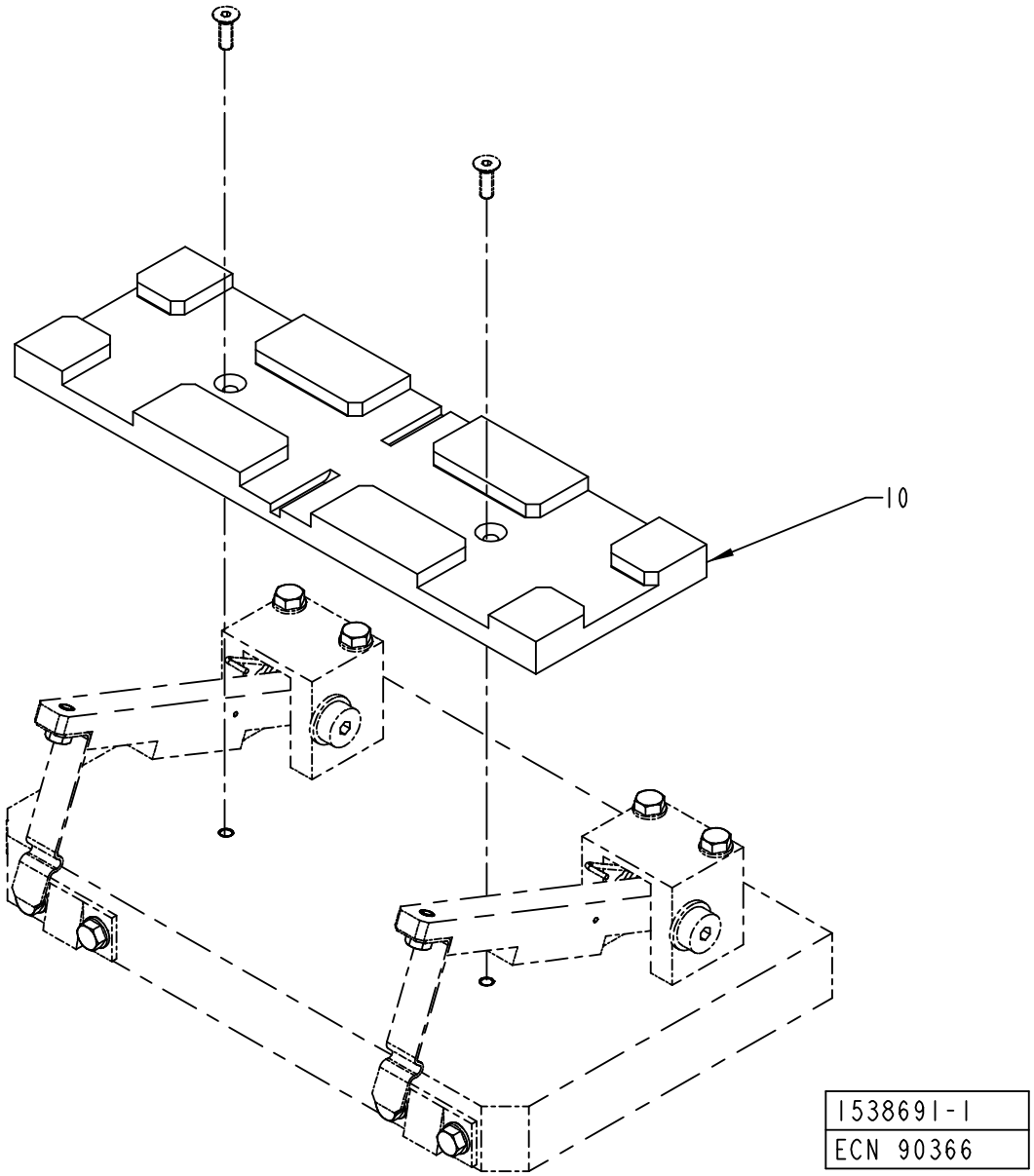

ECM: 135929 - 20030624
Group number: 1538691-0100
Assembly Drawing: 1538691-1_1_AA

Pos	Part No	SP	UN	Qty	Description	Page No
TBA 0500B HOLE32, TBA 1000S HOLE31, TBA 1000B HOLE32						
010	1499296-0012	B		1	GUIDE	
TBA 0500S HOLE25						
010	1499296-0009	B		1	GUIDE	
TBA 0500S HOLE55						
010	1499296-0004	B		1	GUIDE	
TBA 1000S HOLE45, TBA 1000S HOLE50, TBA 1000S HOLE65, TBA 1000S HOLE85, TBA 1000SQ HOLE45, TBA 1000SQ HOLE65, TBA 1000SQ HOLE85, TBA 1000B HOLE50, TBA 1000B HOLE65, TBA 1000B HOLE85, TBA 1000B HOLE45, TBA 1500S HOLE45, TBA 1500S HOLE65, TBA 1500S HOLE85						
010	1499296-0008	B		1	GUIDE	
TBA 1000S HOLE90						
010	1499296-0015	-		1	GUIDE	
TBA 1000SQ HOLE43						
010	1499296-0011	B		1	GUIDE	
TPA 0330SQ HOLE48, TPA 0250SQ HOLE72						
010	1499296-0013	B		1	GUIDE	
TPA 1000S HOLE60, TPA 1000SQ HOLE60						
010	1499296-0011	B		1	GUIDE	

Pos	Part No	SP	UN	Qty	Description	Page No

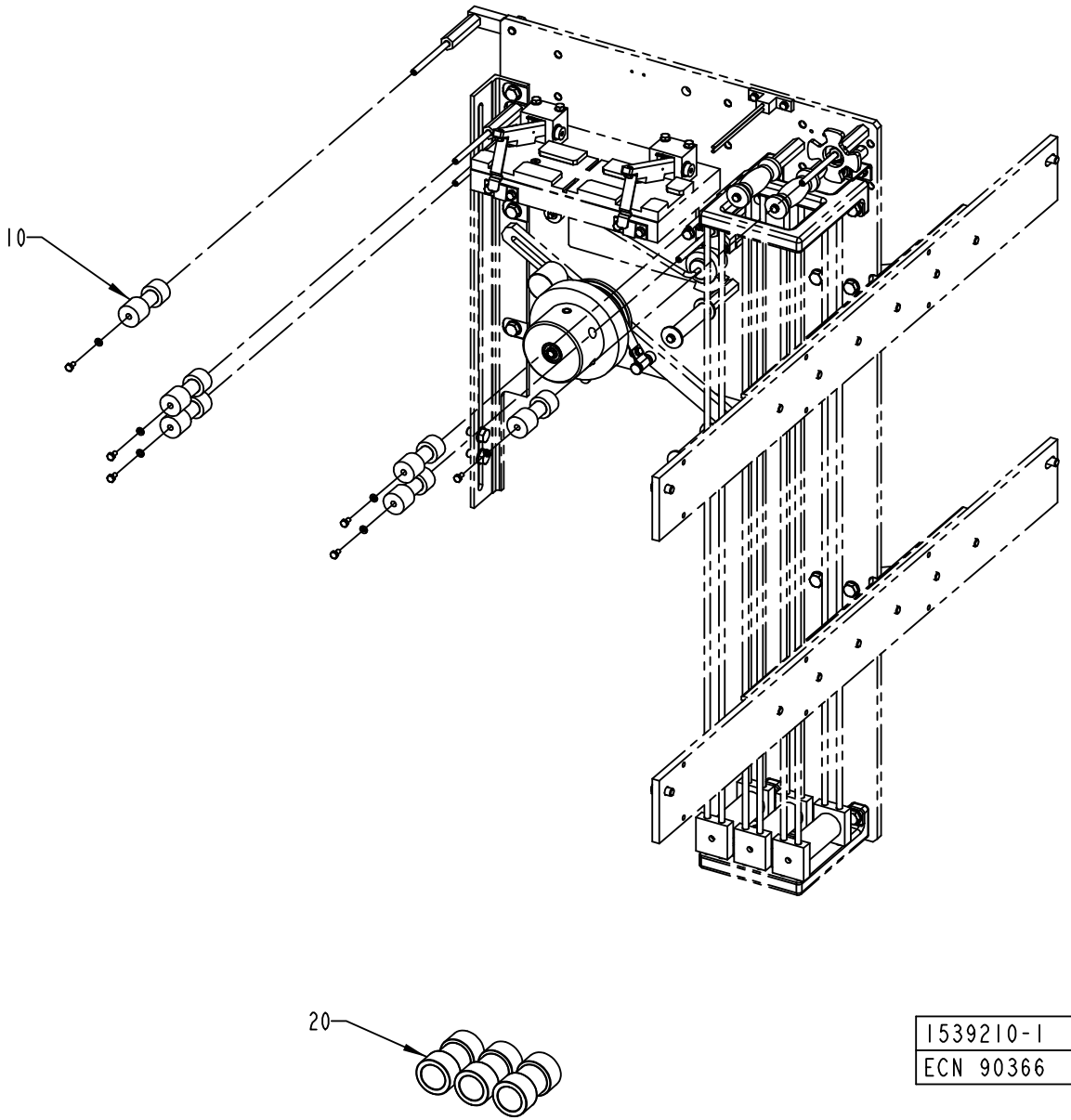
10
20
1539210-1
ECN 90366

ECM: 135931 - 20030624
Group number: 1539210-0100
Assembly Drawing: 1539210-1_1_AA

Pos	Part No	SP	UN	Qty	Description	Page No
TBA 0500S HOLE25						
010	907358-0007	A		6	ROLLER - 50.5	
020	2501790-0008	-		3	GUIDE ROLLER	
TBA 0500S HOLE55						
010	907358-0012	A		6	ROLLER	
020	2501790-0006	-		3	GUIDE ROLLER	
TBA 1000S HOLE45, TBA 1000S HOLE50, TBA 1000S HOLE65, TBA 1000S HOLE85, TBA 1000SQ HOLE45, TBA 1000SQ HOLE65, TBA 1000SQ HOLE85, TBA 1000B HOLE50, TBA 1000B HOLE65, TBA 1000B HOLE85, TBA 1000B HOLE45, TBA 1500S HOLE45, TBA 1500S HOLE65, TBA 1500S HOLE85						
010	907358-0013	A		6	ROLLER	
020	2501790-0007	-		3	GUIDE ROLLER	
TBA 1000S HOLE90						
010	907358-0004	A		6	ROLLER	
020	2501790-0014	A		3	GUIDE ROLLER	
TPA 0330SQ HOLE48, TPA 0250SQ HOLE72						
010	907358-0011	A		6	ROLLER	
020	2501790-0005	-		3	GUIDE ROLLER	
TPA 1000S HOLE60						
010	907358-0009	A		6	ROLLER	
020	2501790-0009	-		3	GUIDE ROLLER	
TPA 1000SQ HOLE60						
020	2501790-0009	-		3	GUIDE ROLLER	

Pos	Part No	SP	UN	Qty	Description	Page No

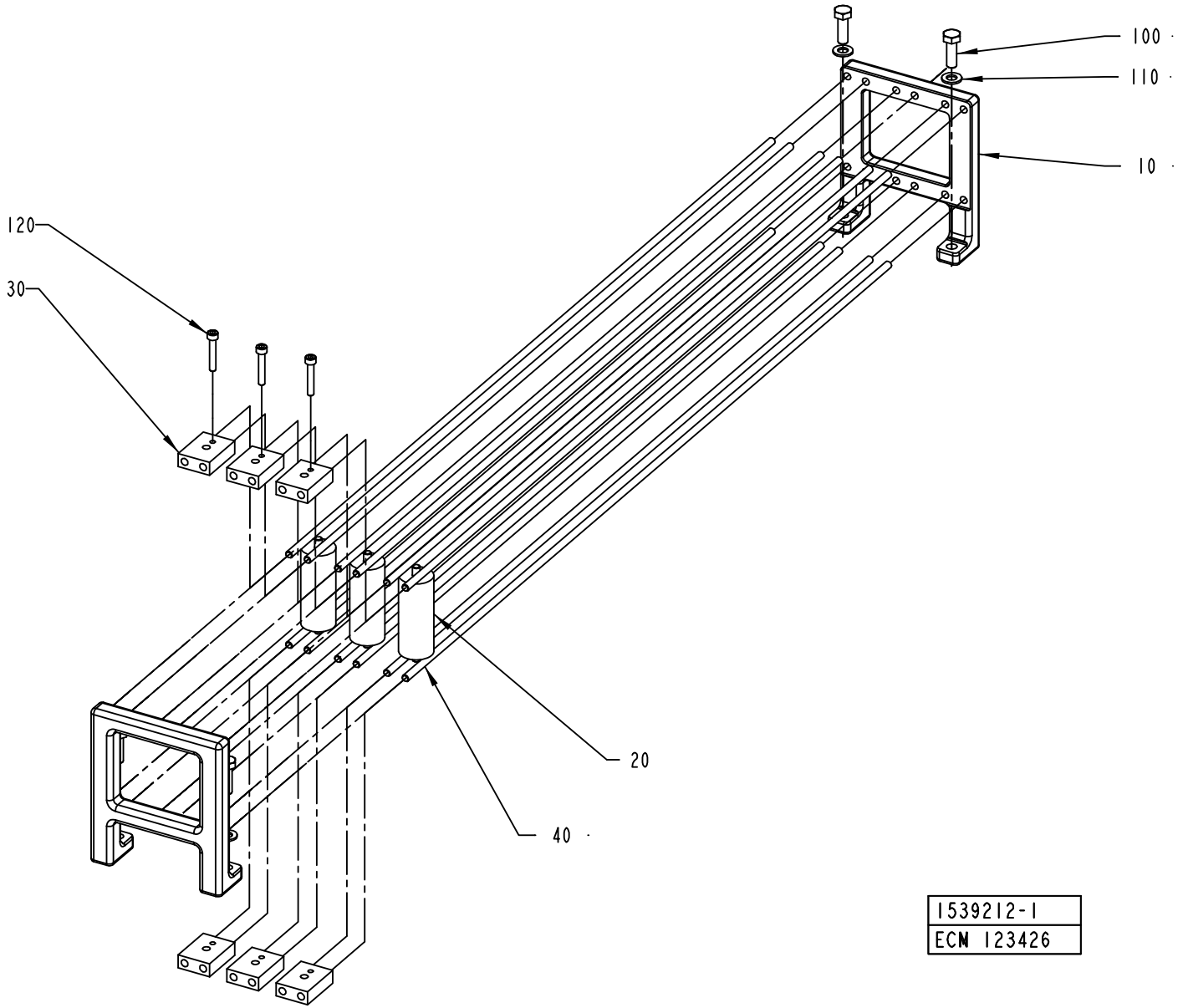
100
110
10
120
30
20
40
1539212-1
ECN 123426

ECM: 123427 - 20030331
Group number: 1539212-0100
Assembly Drawing: 1539212-1_1_AB

Pos	Part No	SP	UN	Qty	Description	Page No
-						
010	1517036-0000	-		2	BRACKET	
020	2507104-0000	A		3	ROLLER	
030	2507106-0000	A		6	GUIDE	
040	1539211-0001	-		12	ROD	
100	312105-0453	-		4	SCREW M6S ISO 4017 M8X25 A480	
110	315105-0165	-		4	WASHER BRB8,4X16RFR	
120	312115-0335	-		3	SCREW ISO4762 M5X30 A4	

Pos	Part No	SP	UN	Qty	Description	Page No

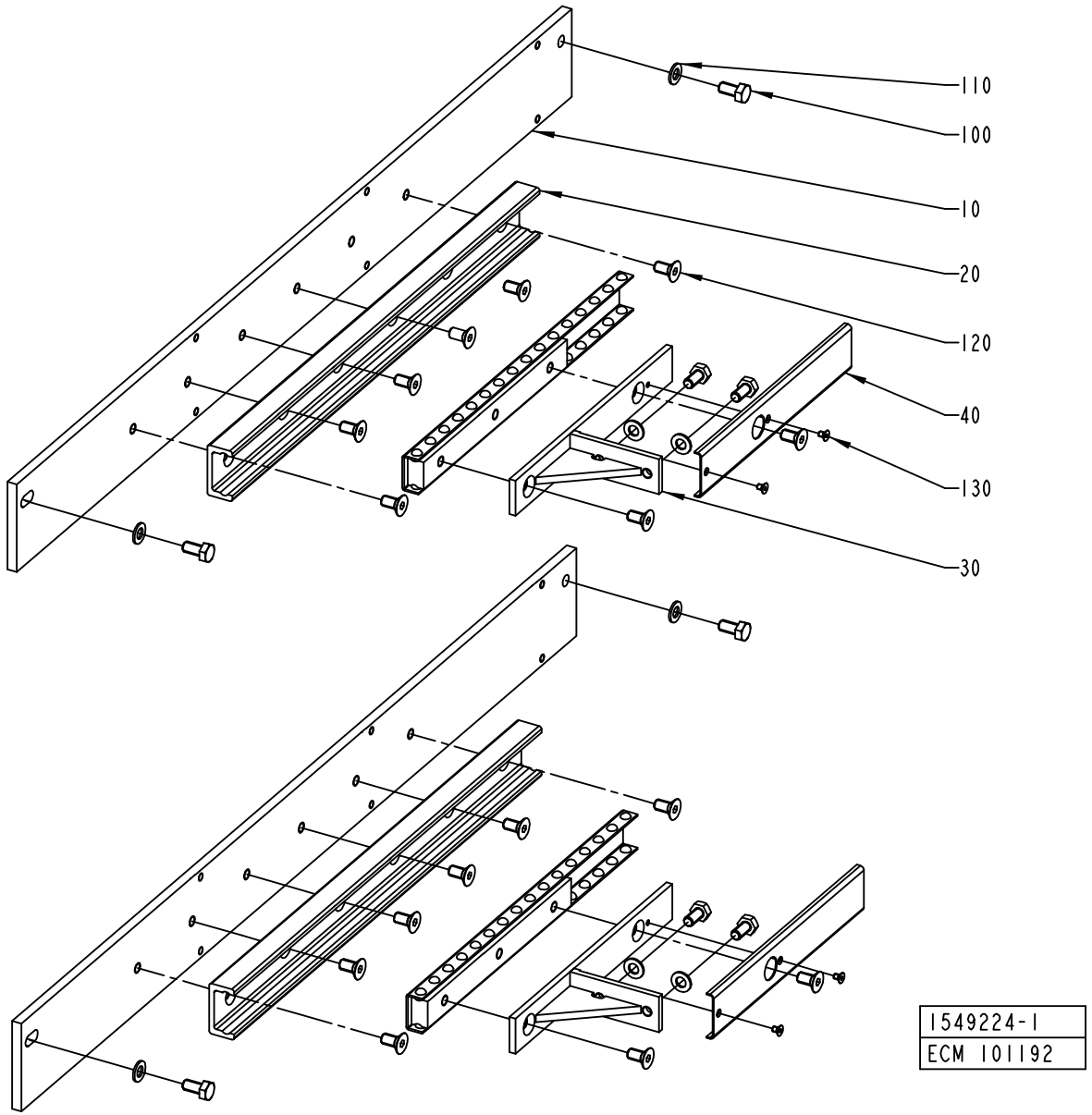
110
100
10
20
120
40
130
30
1549224-1
ECM 101192

ECM: 101192 - 20020208
Group number: 1549224-0100
Assembly Drawing: 1549224-1_1_AB

Pos	Part No	SP	UN	Qty	Description	Page No
-						
010	1539218-0000	-		2	SUPPORT	
020	1539219-0000	B		2	RAIL	
030	1539216-0000	-		2	BRACKET	
040	2517087-0000	-		2	PROTECTION	
100	312105-0449	-		8	SCREW M6S ISO 4017 M8X16 A480	
110	315105-0165	-		8	WASHER BRB8,4X16RFR	
120	312155-0449	-		16	SCREW EN 10642 MF6S M8X16 A480	
130	312155-0285	-		4	SCREW HEX.SOCK.COUNT.MF6S M4X6 A480	

Pos	Part No	SP	UN	Qty	Description	Page No

PATCH MAGAZINE

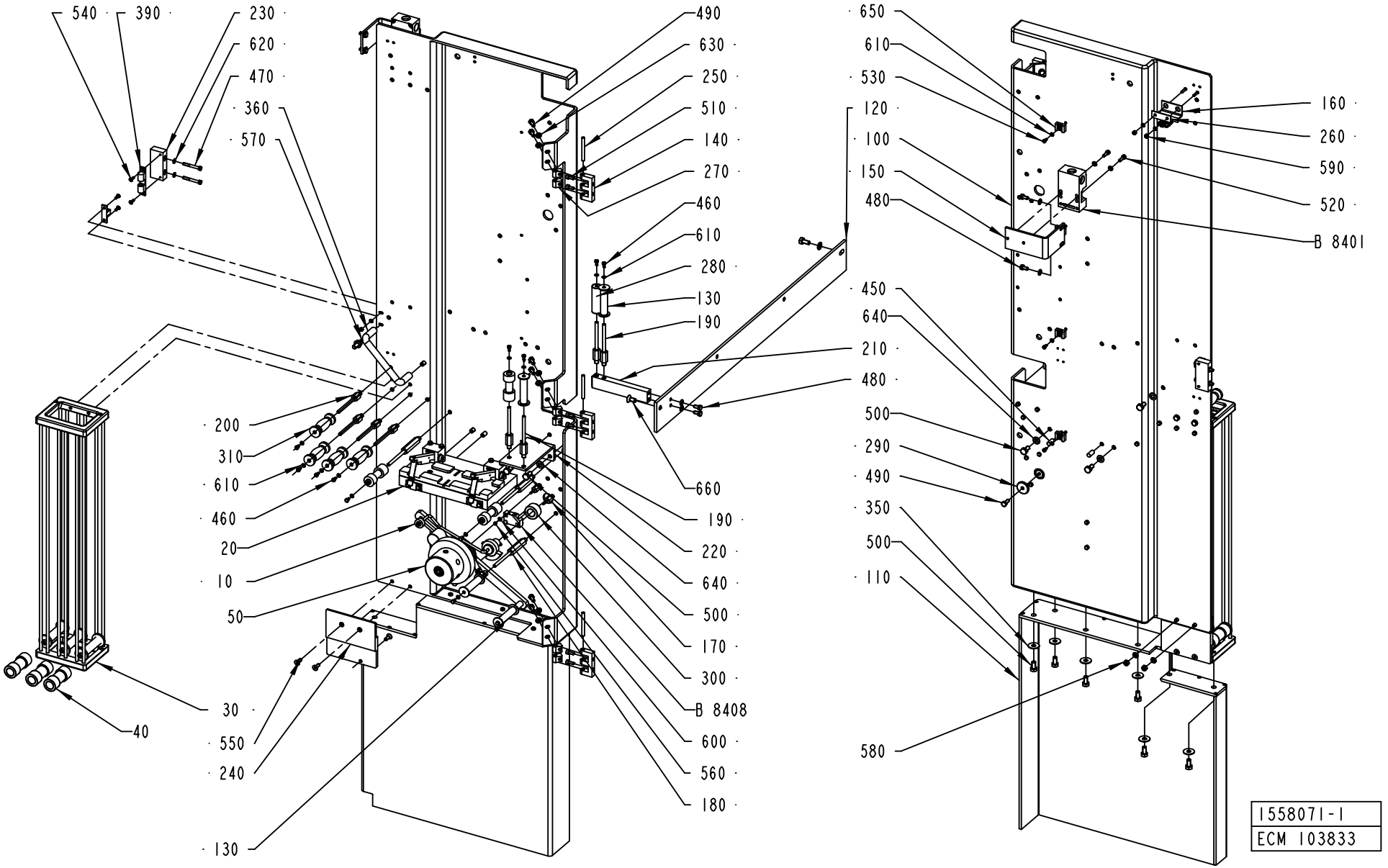

ECM: 110107 - 20020214
Group number: 1558071-0100
Assembly Drawing: 1558071-1_1_AB

Pos	Part No	SP	UN	Qty	Description	Page No
-						
010	1499255-0100	-		1	DETECTOR	**1-185**
020	1499290-0100	-		1	SPLICING TABLE	**1-227**
030	1519708-0100	-		1	MAGAZINE	**1-191**
040	1549260-0100	-		1	PATCH MAGAZINE	**1-231**
050	1558113-0100	-		1	BOBBIN HOLDER	**1-233**
100	1539209-0000	-		1	PLATE	
110	1558111-0000	-		1	PROTECTION	
120	1519714-0000	-		1	SUPPORT	
130	905211-0000	A		3	ROLLER	
140	1035792-0000	-		3	E-HINGE	
150	1082741-0000	-		1	HOLDER	
160	1129042-0000	-		1	KEY	
170	1499250-0000	-		2	AXLE PIN	
180	1499251-0002	-		3	AXLE PIN	
190	1499251-0003	-		4	AXLE PIN	
200	1499251-0005	-		4	AXLE PIN	
210	1519716-0000	-		1	SUPPORT	
220	1539225-0000	-		1	BRACKET	
230	1549232-0000	-		1	BLOCK	
240	2501791-0000	-		1	PLATE	
250	988685-0000	-		3	PIN	
260	1036563-0000	-		1	WASHER	
270	1129770-0000	-		6	BLOCKING PIECE	
280	1140727-0000	A		1	ROLLER	
290	1498347-0000	-		1	WASHER	
300	1499253-0000	-		1	BUSHING	
310	2507105-0000	A		4	ROLLER	
350	90005-0105	-		6	WASHER PLAIN ROUND 8,4(M8)/24, H=1,5	
360	90017-0016	-		1	HANDLE, NO. 14.4012.02.120	
390	90237-0070	-		1	SNAP-IN BALL LOCK, 69X19 MM	
450	311103-0401	-		2	PARALLEL PIN ISO 2338 8M6X20 A1	
460	312105-0287	-		11	SCREW M6S ISO4017 M4X8 A470	
470	312105-0339	-		2	SCREW M6S ISO 4014 M5X40 A480	
480	312105-0366	-		4	SCREW M6S ISO 4017 M6X12 A480	
490	312105-0368	-		9	SCREW M6S ISO 4017 M6X16 A480	
500	312105-0449	-		13	SCREW M6S ISO 4017 M8X16 A480	
510	312115-0327	-		6	SCREW ISO4762 M5X12 A4	
520	312115-0329	-		2	SCREW ISO4762 M5X16 A4	
530	312125-0287	-		4	SCREW ISO 1207 M4X8 A4	
540	312155-0291	-		4	SCREW EN 10642 MF6S M4X12 A480	
550	312155-0368	-		4	SCREW EN 10642 MF6S M6X16 A480	
560	312605-0310	-		2	HEXAGON NUT, M6M M3 A280	
570	312812-0312	-		2	HEXAGON NUT, NY-LOCK M4 A480	
580	312605-0316	-		2	HEXAGON NUT, M6M M6 A280	
590	312812-0312	-		2	HEXAGON NUT, NY-LOCK M4 A480	
600	315105-0124	-		2	WASHER BRB3,2X6RFR	
610	315105-0136	-		19	WASHER BRB4,3XRFR	
620	315105-0146	-		4	WASHER BRB5,3X10RFR	
630	315105-0153	-		14	WASHER BRB6,4X12RFR	
640	315105-0165	-		7	WASHER BRB8,4X16RFR	
650	352113-0204	-		4	ANCHOR PLATES FOR STRIPS, TYPE TM3S25-M	
660	312155-0449	-		1	SCREW EN 10642 MF6S M8X16 A480	
B8401	90044-0139	A		1	KEY SAF.SW. AZ16-02 ZVR K-2254	
B8408	90044-0194	A		1	PROX.SW. IN5329/IN3002-BPKG	

Machine Type	Group Description	Used-In	Group Number	Page No

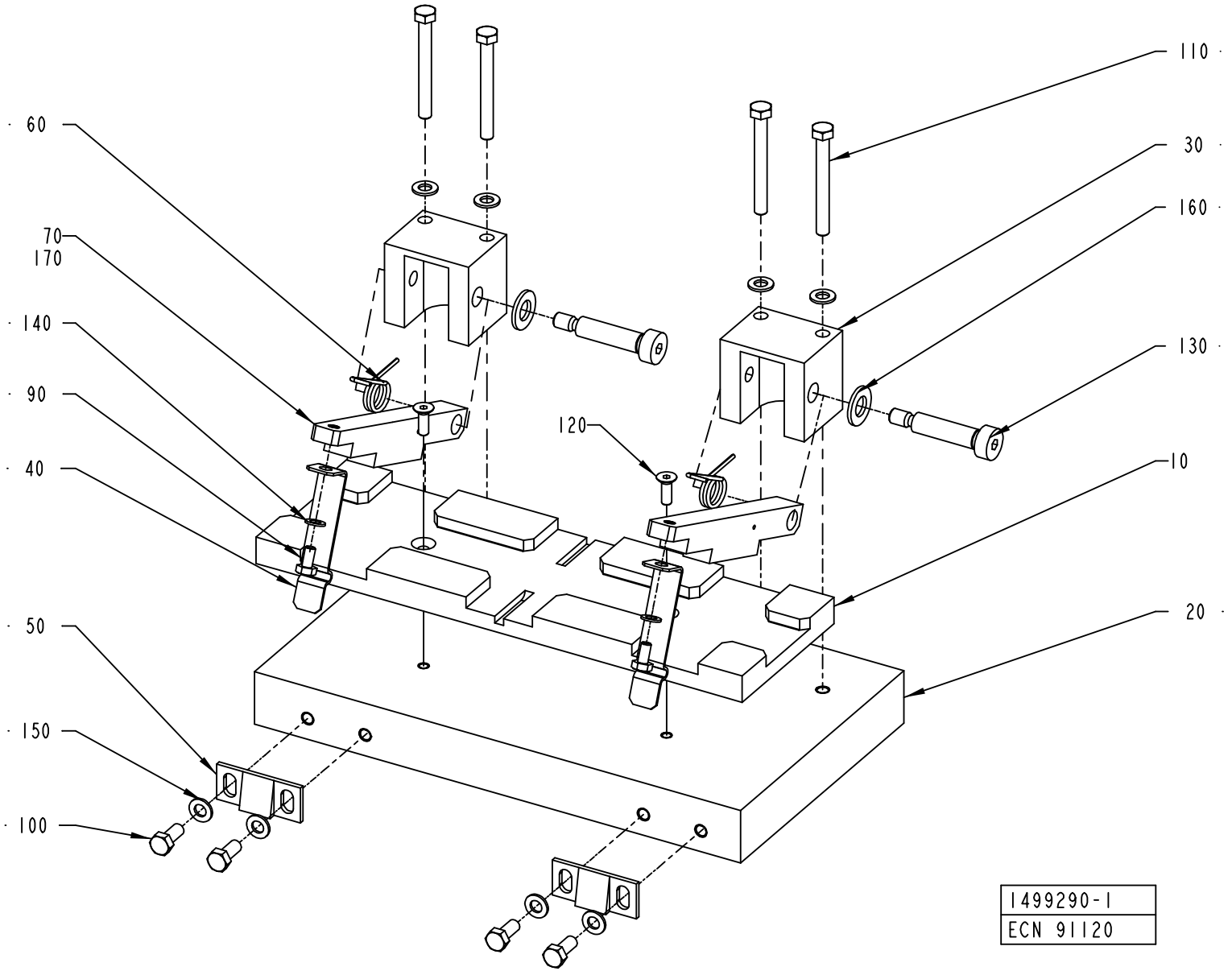
110
60
30
160
70
170
140
130
90
120
10
40
20
50
150
100
1499290-1
ECN 91120

ECM: 91120 - 20010709
Group number: 1499290-0100
Assembly Drawing: 1499290-1_1_AA

Pos	Part No	SP	UN	Qty	Description	Page No
-						
010	1538685-0100	-		1	SPLICING TABLE	**1-229**
020	1517044-0000	-		1	PLATE	
030	1499288-0000	-		2	AXLE SUPPORT	
040	1519463-0000	B		2	LOCKING CLAMP	
050	532022-0000	-		2	LOCK BAR	
060	544427-0000	A		2	TURN SPRING	
070	1558070-0000	-		2	LOCKING FINGER	
090	312105-0287	-		2	SCREW M6S ISO4017 M4X8 A470	
100	312105-0327	-		4	SCREW M6S ISO 4017 M5X12 A480	
110	312105-0340	-		4	SCREW M6S ISO 4014 M5X45 A480	
120	312155-0291	-		2	SCREW EN 10642 MF6S M4X12 A480	
130	312180-0455	-		2	SCREW ISO7379 H8X30	
140	315105-0136	-		2	WASHER BRB4,3XRFR	
150	315105-0146	-		8	WASHER BRB5,3X10RFR	
160	315105-0165	-		2	WASHER BRB8,4X16RFR	
170	90143-0071	-	MM	100	RUBBER STRIP 4X20MM	

Pos	Part No	SP	UN	Qty	Description	Page No

Machine Type | Group Description | Used-In | Group Number | Page No

SPLICING TABLE

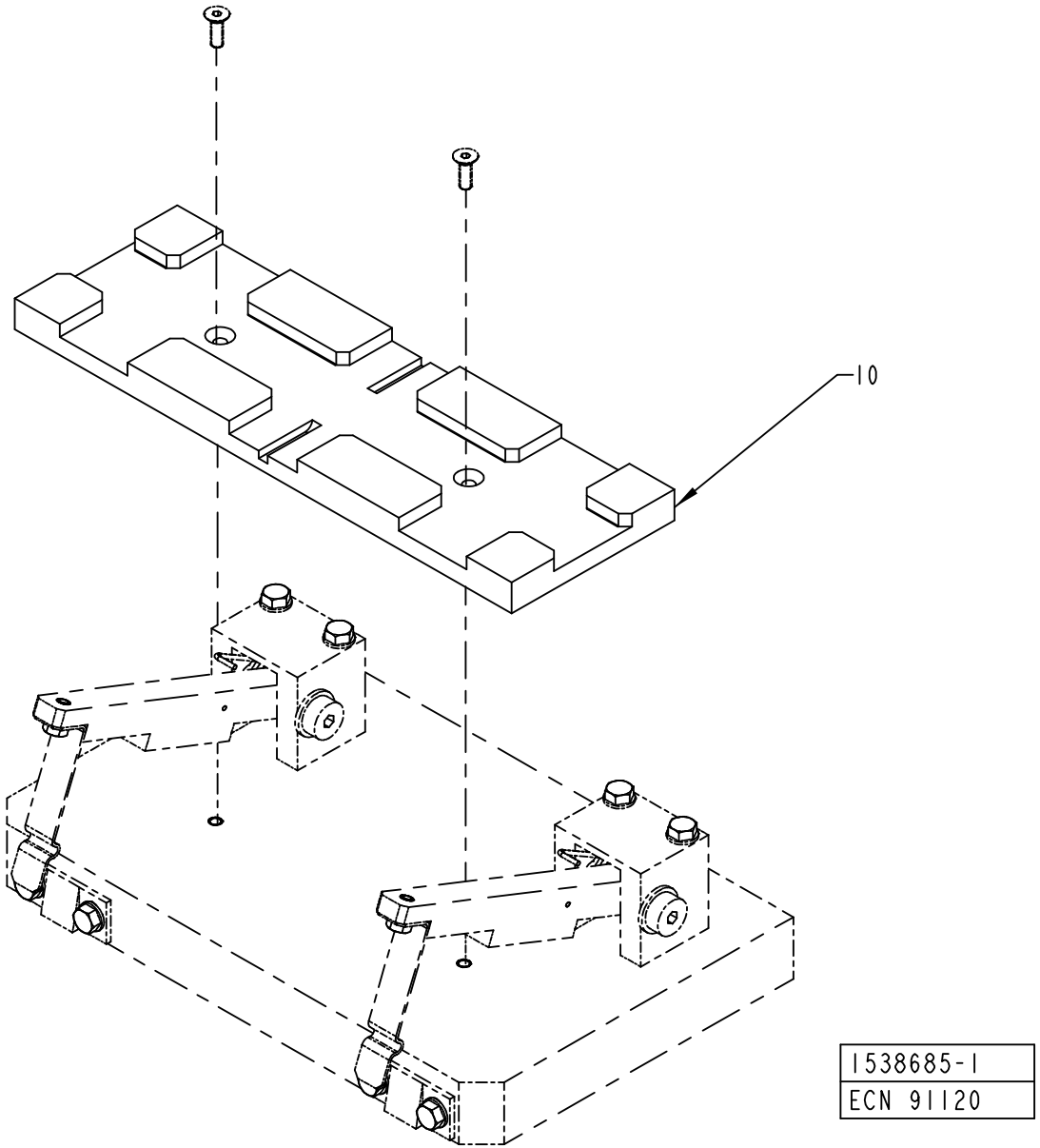

1538685-1
ECN 91120

ECM: 132357 - 20030710
Group number: 1538685-0100
Assembly Drawing: 1538685-1_1_AA

Pos	Part No	SP	UN	Qty	Description	Page No
PT21 HOLE48, PT21 HOLE55						
010	1499296-0002	B		1	GUIDE	
PT21 HOLE60						
010	1499296-0014	B		1	GUIDE	
PT21 HOLE72						
010	1499296-0001	B		1	GUIDE	
PT21 HOLE45, PT21 HOLE85, PT21 HOLE25, PT21 HOLE65						
010	1499296-0004	B		1	GUIDE	
PT21 HOLE50, PT21 HOLE90						
010	1499296-0003	B		1	GUIDE	

Pos	Part No	SP	UN	Qty	Description	Page No

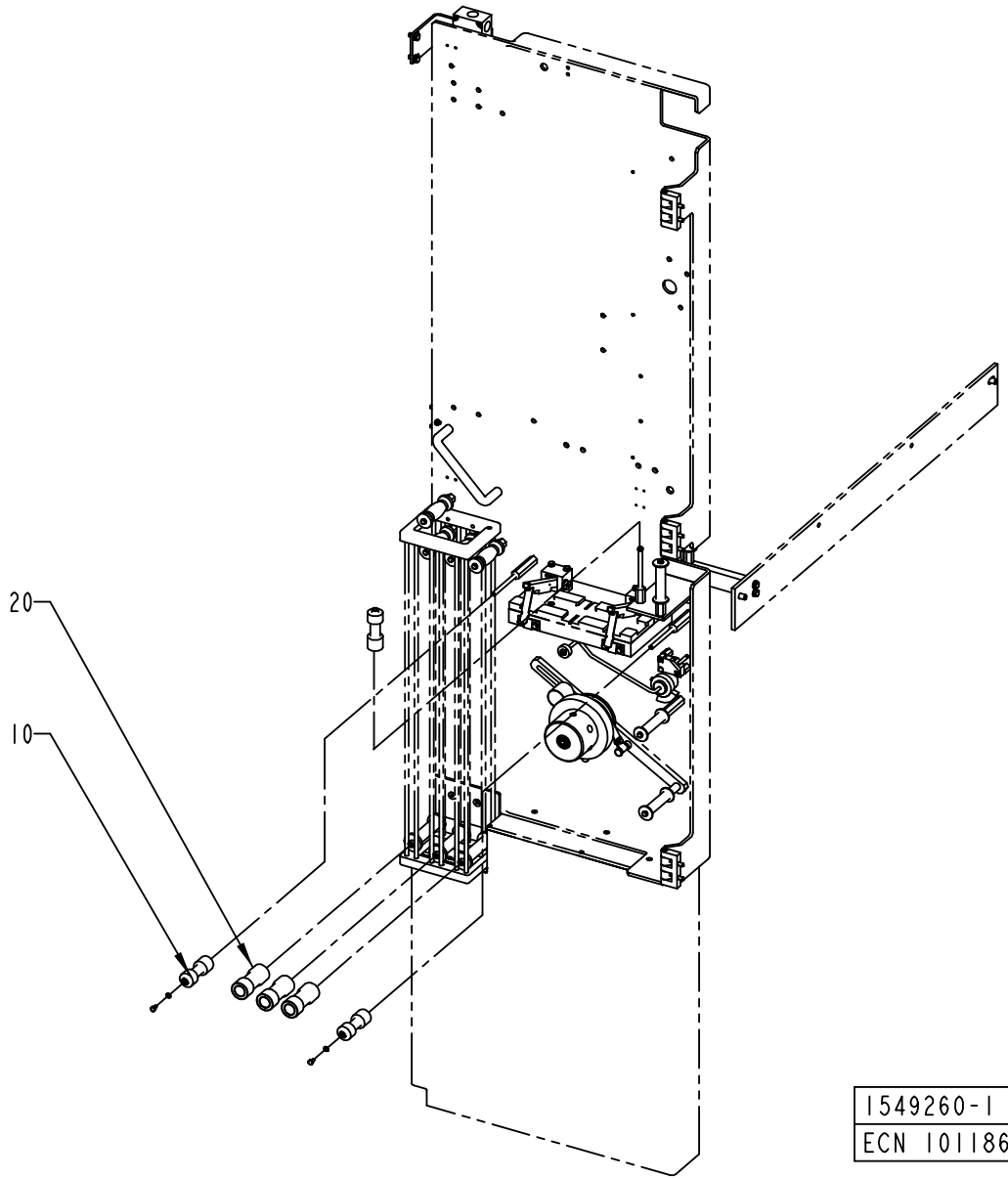

1549260-1
ECN 101186

ECM: 135932 - 20030624
Group number: 1549260-0100
Assembly Drawing: 1549260-1_1_AB

Pos	Part No	SP	UN	Qty	Description	Page No
HOLE55, HOLE48						
010	907358-0003	A		3	ROLLER	
020	2501790-0001	A		3	GUIDE ROLLER	
HOLE60						
010	907358-0010	A		3	ROLLER - 43	
020	2501790-0013	A		3	GUIDE ROLLER	
HOLE65, HOLE85						
010	907358-0012	A		3	ROLLER	
020	2501790-0003	A		3	GUIDE ROLLER	
HOLE72						
010	907358-0001	A		3	ROLLER - 25.5	
020	2501790-0010	A		3	GUIDE ROLLER	
HOLE90						
010	907358-0006	A		3	ROLLER	
020	2501790-0002	A		3	GUIDE ROLLER	

Pos	Part No	SP	UN	Qty	Description	Page No

BOBBIN HOLDER

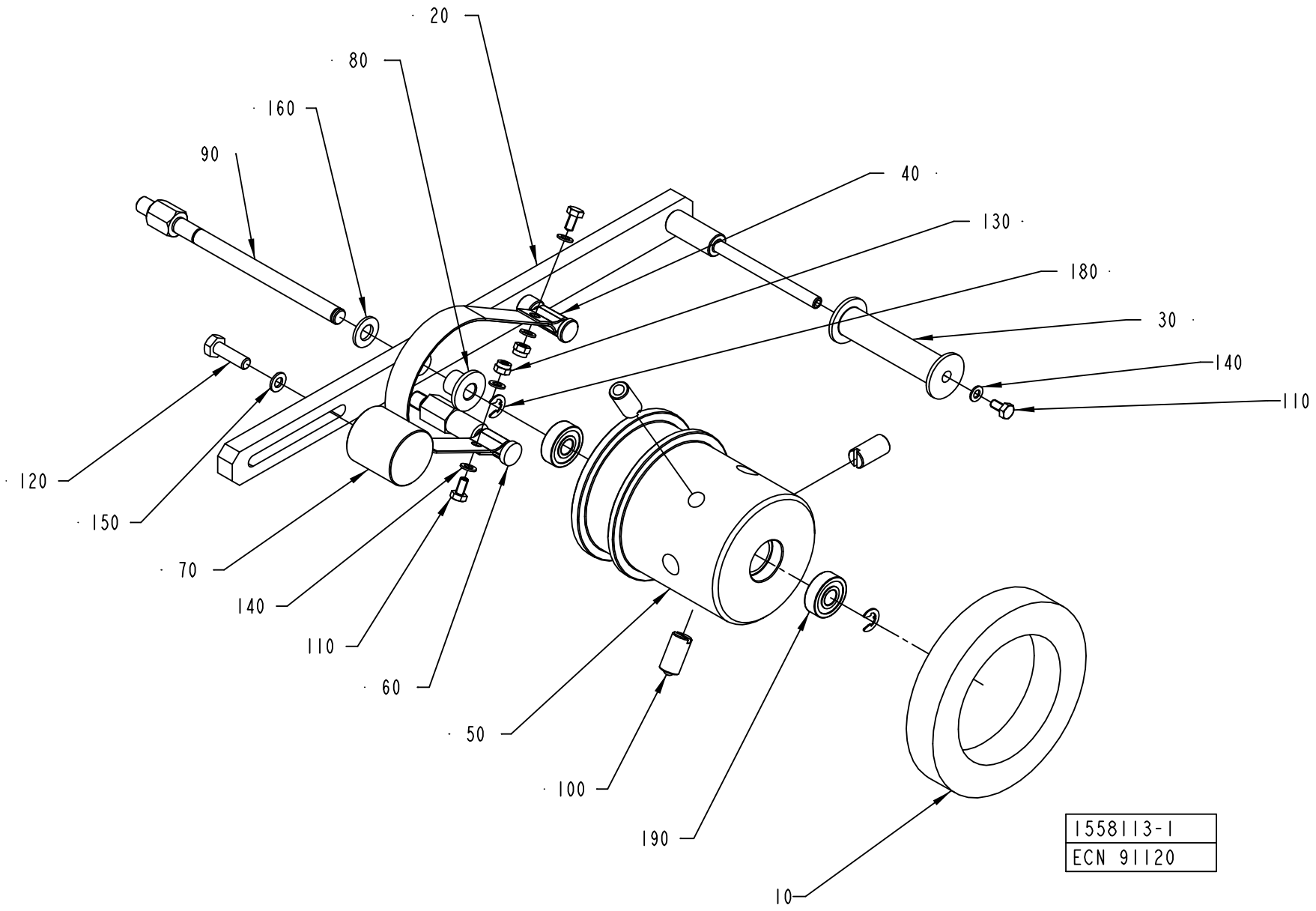

ECM: 91132 - 20010709
Group number: 1558113-0100
Assembly Drawing: 1558113-1_1_AA

Pos	Part No	SP	UN	Qty	Description	Page No
-						
010	1538684-0100	-		1	BOBBIN HOLDER	**1-235**
020	1498357-0000	-		1	LEVER	
030	905211-0000	A		1	ROLLER	
040	1498303-0000	A		1	BELT	
050	1498360-0000	-		1	HUB	
060	1347969-0000	-		1	PIN	
070	1498302-0000	-		1	COUNTERWEIGHT	
080	1498358-0000	A		1	BUSHING	
090	1498359-0000	-		1	SHAFT	
100	90287-0106	A		3	SCREW SPRINGLOAD. SLOTTED HEAD M10X21	
110	312105-0287	-		3	SCREW M6S ISO4017 M4X8 A470	
120	312105-0370	-		1	SCREW M6S ISO 4017 M6X20 A480	
130	312812-0312	-		2	HEXAGON NUT, NY-LOCK M4 A480	
140	315105-0136	-		5	WASHER BRB4,3XRFR	
150	315105-0146	-		1	WASHER BRB5,3X10RFR	
160	315105-0165	-		1	WASHER BRB8,4X16RFR	
180	315755-0108	-		2	RETAINING RING SHAFT DIN 6799 6 A2	
190	321302-0298	A		2	BALL BEARING, 8X22X7 MM	

Pos	Part No	SP	UN	Qty	Description	Page No

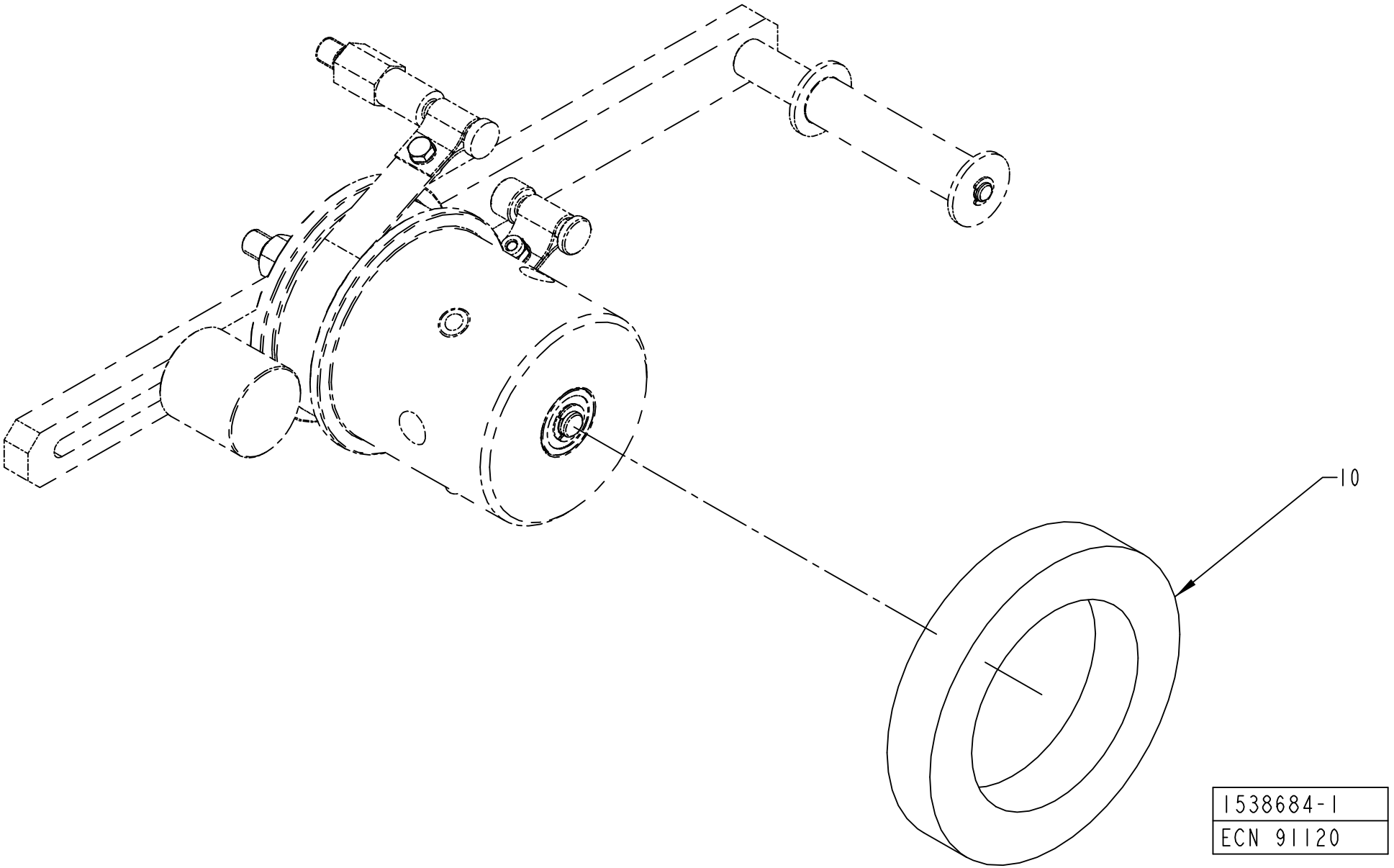
10
1538684-1
ECN 91120

ECM: 138902 - 20030919
Group number: 1538684-0100
Assembly Drawing: 1538684-1_1_AA

Pos	Part No	SP	UN	Qty	Description	Page No
PT21 HOLE48, PT21 HOLE55						
010	1347952-0003	-		1	SPACER	
PT21 HOLE60						
010	1347952-0009	-		1	SPACER	
PT21 HOLE72						
010	1347952-0002	-		1	SPACER	
PT21 HOLE45, PT21 HOLE85, PT21 HOLE25, PT21 HOLE65						
010	1347952-0006	-		1	SPACER	
PT21 HOLE50, PT21 HOLE90						
010	1347952-0004	-		1	SPACER	

Pos	Part No	SP	UN	Qty	Description	Page No

BLACK TAPE SENSOR

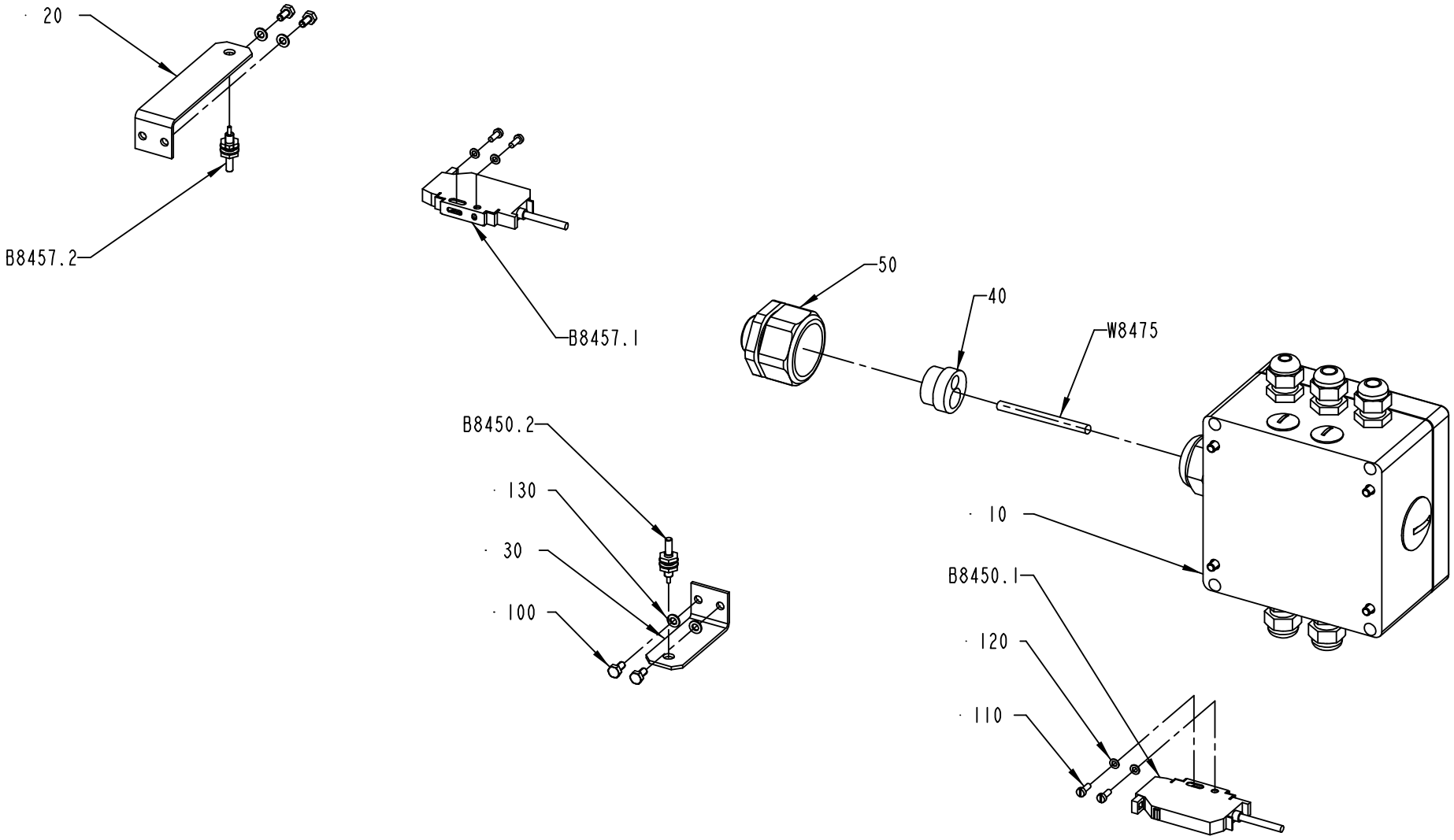

2501781-1
ECM 103833

ECM: 103833 - 20020214
Group number: 2501781-0100
Assembly Drawing: 2501781-1_1_AD

Pos	Part No	SP	UN	Qty	Description	Page No
-						
010	1558245-0100	-		1	CONNECTION BOX	**1-239**
020	1558079-0001	-		1	SUPPORT	
030	1558079-0002	-		1	SUPPORT	
040	2517080-0000	-		1	INSERT	
050.	353241-0008	-		1	EXTENDED WITHOUT INSERT, PG 16/29	
100	312105-0287	-		4	SCREW M6S ISO4017 M4X8 A470	
110	312125-0222	-		4	SCREW ISO 1207 M3X8 A4	
120	315105-0124	-		4	WASHER BRB3,2X6RFR	
130	315105-0136	-		4	WASHER BRB4,3XRFR	
B8450.1	90232-0123	A		1	PH.CELL WLL170-P135-6011723	
B8450.2	90232-0346	A		1	FIBRE LL3-DB01 5 308074	
B8457.1	90232-0123	A		1	PH.CELL WLL170-P135-6011723	
B8457.2	90232-0346	A		1	FIBRE LL3-DB01 5 308074	
W8475	351150-0407	-	M	3	CABLE OLFLEX 12X0,75 MM2 LIGHT/GREY	

Pos	Part No	SP	UN	Qty	Description	Page No

CONNECTION BOX

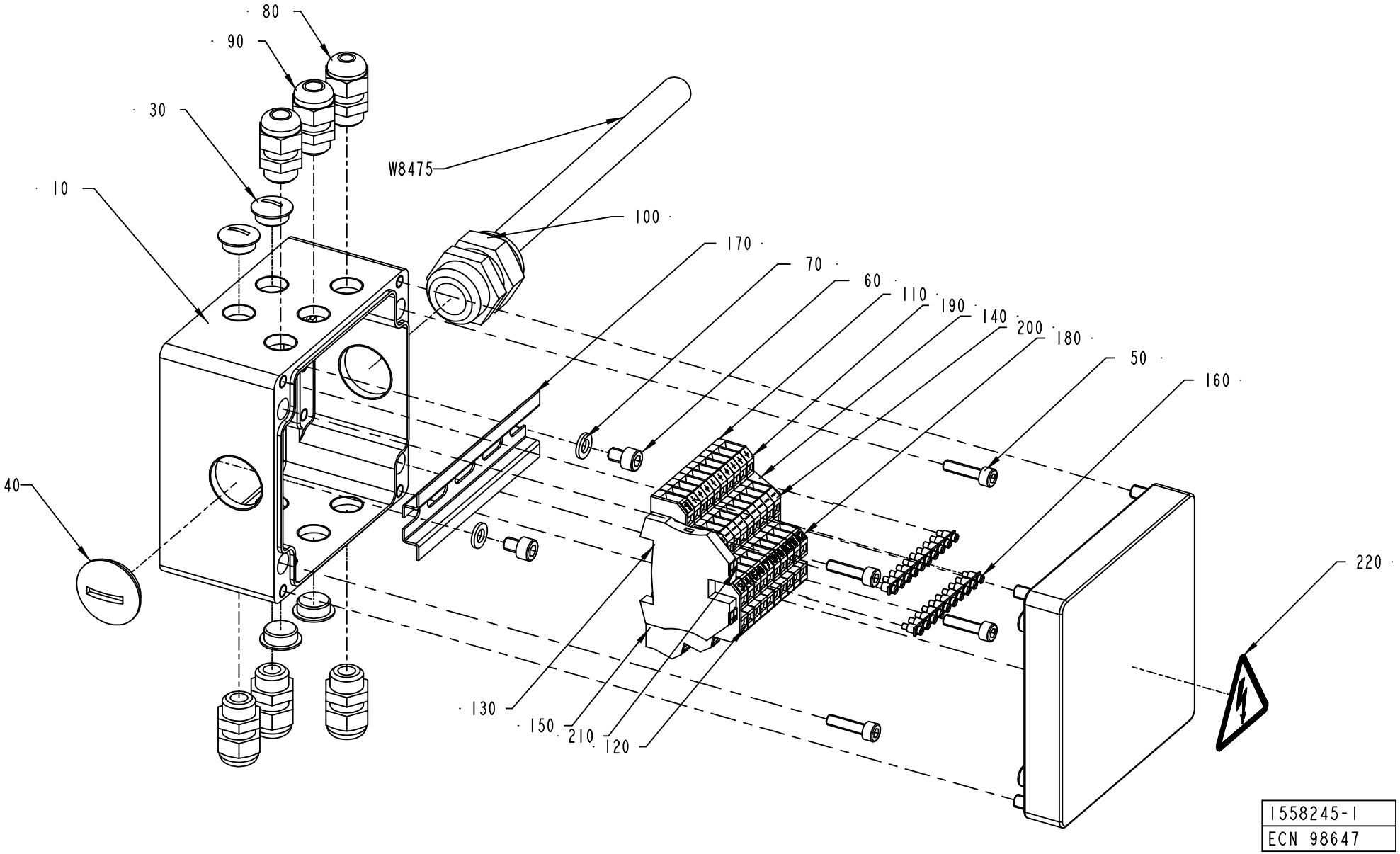

ECM: 100724 - 20020207
Group number: 1558245-0100
Assembly Drawing: 1558245-1_1_AB

Pos	Part No	SP	UN	Qty	Description	Page No
-						
010	1558244-0000	-		1	CONNECTION BOX	
030	90002-0013	-		4	BLANK-OFF PLUG, PR 15,2 SKINDICHT-BLK9	
040	90002-0012	-		1	BLANK-OFF PLUG, PR 28,3 SKINDICHT-BLK21	
050	312115-0331	-		4	SCREW ISO4762 M5X20 A4	
060	312115-0362	-		2	SCREW ISO4762 M6X8 A4	
070	315105-0153	-		2	WASHER BRB6,4X12RFR	
080	352103-0100	-		1	CABLE GLAND, STR 9, PR15,2/PG9	
090	352103-0101	-		5	CABLE GLAND, ST 9, PR15,2/PG9	
100	352103-0115	-		1	CABLE GLAND, STR 21, PR28,3/PG21	
110	353021-0301	-		9	TERMINALS,TRIPLE-LEVEL, DLI 2,5/35 PA	
120	353021-0302	-		1	TERMINALS,TRIPLE-LEVEL, DLD 2,5/35 PA	
130	353024-0205	-		1	EARTH TERMINAL, 1010.1	
140	353031-0201	-		1	END BRACKET EW35	
150	353032-0302	-		1	END PLATE WAP	
160	353034-0404	-		2	BRIDGE CONNECTOR Q10, 13131.0	
170	353042-0005	-	MM	110	RAIL TS 35/7.5	
180	359011-0807	-		24	MARKING PLATES 5-FW 1-50	
190	359011-0817	-		9	SYMBOL 5-GW (+) 50PC	
200	359011-0818	-		9	SYMBOL 5-GW (-) 50PC	
210	359011-0834	-		2	SET OF SIGNS 6-GW(EARTH)	
220	359705-0015	-		1	WARNING SIGN ISO, RISK OF ELECTRIC SHOCK	
W8475	351150-0407	-	M	2	CABLE OLFLEX 12X0,75 MM2 LIGHT/GREY	

Pos	Part No	SP	UN	Qty	Description	Page No

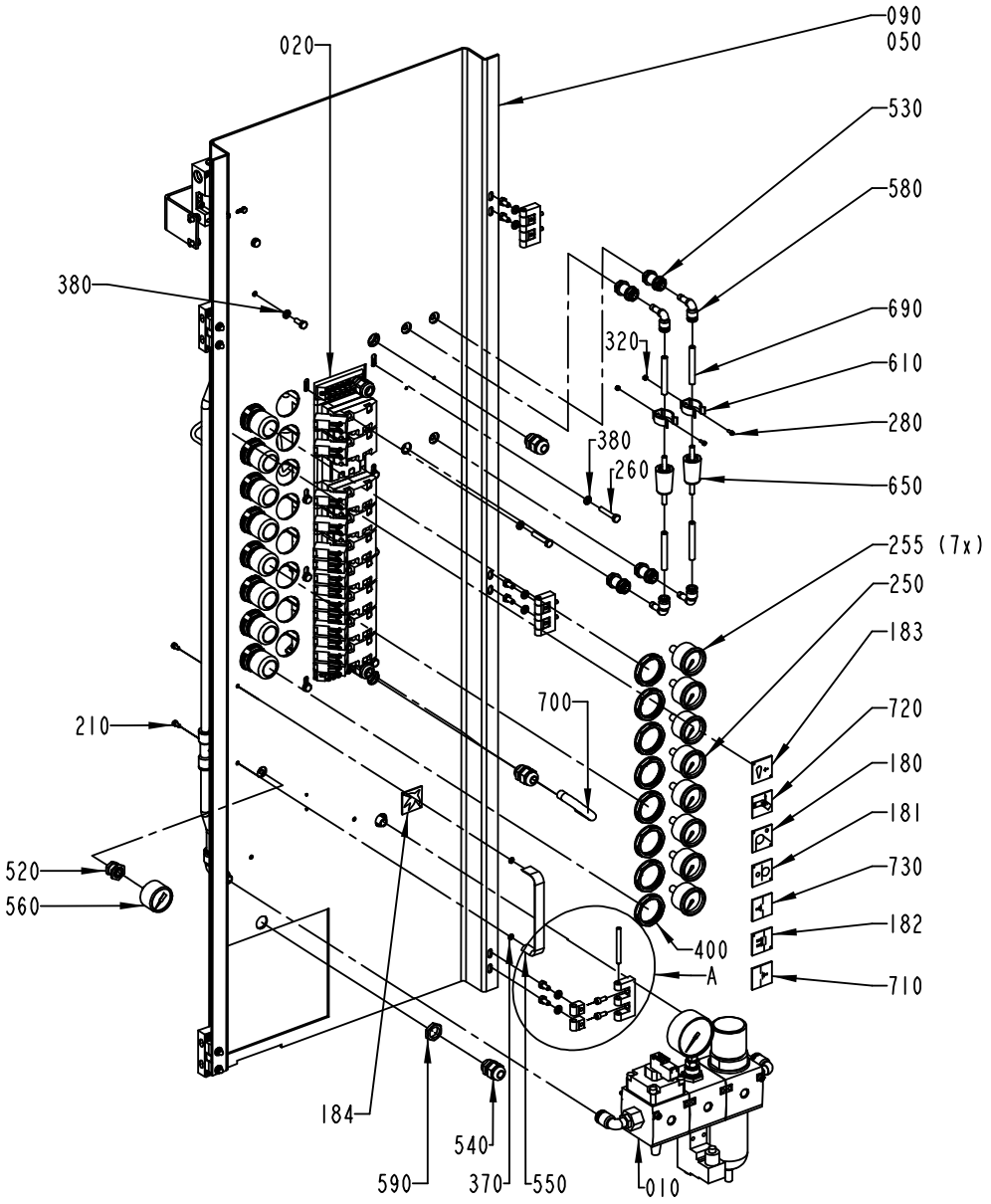

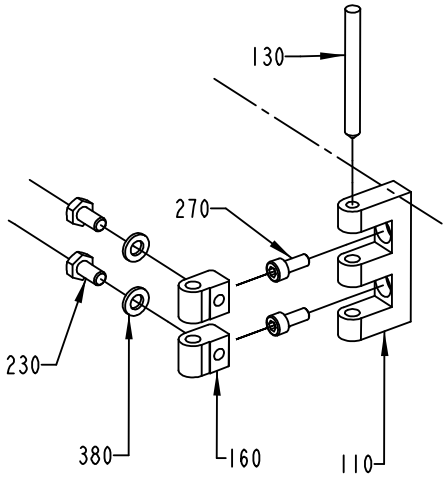

DETAIL A
SCALE 1:2

1185049-3
ECM 103830

ECM: 107535 - 20020214
Group number: 1185049-0300
Assembly Drawing: 1185049-3_1_AA

This list covers pages from 1-240 to 1-243

Pos	Part No	SP	UN	Qty	Description	Page No
-						
010	1185047-0100	A		1	AIR INLET GROUP	**1-245**
020	1185048-0200	-		1	VALVE GROUP	**1-247, 1-249**
050	2501820-0000	-		1	PNEUMATIC DIAGRAM	
090	2526547-0000	-		1	PLATE	
100	1082741-0000	-		1	HOLDER	
110	1035792-0000	-		3	E-HINGE	
120	1129042-0000	-		1	KEY	
130	988685-0000	-		3	PIN	
140	1036563-0000	-		1	WASHER	
160	1129770-0000	-		6	BLOCKING PIECE	
170	1140538-0000	-		2	BLOCKING PIECE	
180	359307-0012	-		1	SIGN" PRESSURE ROLLER TENSION DEVICE"	
181	359307-0011	-		1	SIGN" PRESSURE ROLLER DRIVE MOTOR"	
182	1145219-0000	-		1	SIGN	
183	979426-0000	-		1	SIGN	
184	273458-0000	-		1	LABEL (AIR)	
200	90457-0100	-		1	ACCUMULATOR CRVZS-2	
210	312115-0287	-		2	SCREW ISO4762 M4X8 A4	
220	312115-0329	-		2	SCREW ISO4762 M5X16 A4	
230	312105-0366	-		8	SCREW M6S ISO 4017 M6X12 A480	
240	312105-0368	-		2	SCREW M6S ISO 4017 M6X16 A480	
250	90043-0065	B		1	PRESSURE GAUGE, 2048 D=40 MM	
255	90043-0064	B		7	PRESSURE GAUGE, 2048 D=40 MM	
260	312109-0376	-		8	SCREW M6S ISO 4017 M6X35 A480	
270	312115-0327	-		6	SCREW ISO4762 M5X12 A4	
280	312125-0222	-		2	SCREW ISO 1207 M3X8 A4	
290	312125-0230	-		2	SCREW ISO 1207 M3X20 A4	
300	312105-0291	-		2	SCREW M6S ISO 4017 M4X12 A470	
310	312155-0289	-		8	SCREW EN 10642 MF6S M4X10 A480	
320	312605-0310	-		2	HEXAGON NUT, M6M M3 A280	
330	312605-0312	-		2	HEXAGON NUT, M6M M4 A280	
340	312605-0316	-		10	HEXAGON NUT, M6M M6 A280	
345	312705-0312	-		4	NUT HEX. DOMED CAP MHM-6 M4 A280	
350	315105-0146	-		2	WASHER BRB5,3X10RFR	
360	315105-0124	-		2	WASHER BRB3,2X6RFR	
370	315105-0136	-		6	WASHER BRB4,3XRFR	
380	315105-0153	-		32	WASHER BRB6,4X12RFR	
390	90113-0470	A		8	MANIFOLD REGULATOR 10 BAR	
400	90457-0078	-		8	PANEL NUT	
410	342700-0205	-		1	NIPPLES,HEXAGON,EXT.G-THREAD G1/2"-G1/4"	
420	342716-0203	-		2	REDUCER 6-8	
440	90458-2955	-		8	ELBOW PIPE JOINT, EXT.THREAD,	
450	342722-0209	-		1	STRAIGHT COUPLING D=12-G1/4"	
470	90458-2957	-		8	ELBOW PIPE JOINT, EXT.THREAD, D=6MM-G1/4	
480	342742-0110	-		1	T-COUPLING,ADJUST,F.PLAST.TUBE 12-G3/8"	
490	342735-0109	-		7	ELBOW PIPE JOINT	
500	342748-0102	-		1	T-CONNECTION 6MM	
510	342748-0109	-		1	T-CONNECTION 12MM	
520	342767-0100	-		2	CONN. BULKHEAD G1/8	
530	342768-0103	-		4	BULKHEAD CONNECTOR, 8 MM	
540	352103-0106	-		3	CABLE GLAND, ST 11, PR18,6/PG11	
550	90017-0017	-		1	HANDLE, NO. 547-128	
560	90043-0080	B		1	PRESSURE GAUGE	
580	90055-0118	-		8	ELBOW PIPE JOINT -8MM	
590	90099-0117	-		3	NUT, PR 18,6 (PG11)	
600	342770-0101	-		8	STRAIGHT COUPLING INT, D=4 MM - G1/8	
610	90165-0019	-		2	TOOL CLIP, 81/3, OPEN, 20 - 30 MM	
620	90224-0229	-		1	REDUCER, ART.NO RMM 1238	
640	90237-0070	-		2	SNAP-IN BALL LOCK, 69X19 MM	
650	90277-0035	A		2	FILTER / DFU 9933-05-A	
660	90187-0088	-		1	BALL VALVE G1/4, NPBR	
670	90364-0020	A		1	PIAB 3222097+3207007	
680	90166-0081	-	M	55	TUBE 6 MM PA BLUE	
690	90166-0013	-	M	70	TUBE 8 MM PA BLUE	
700	90166-0068	-	M	3	TUBE 12 MM PA BLUE	
710	359307-0002	-		1	SYMBOL SIGN "TAB C'JAW"	
720	359307-0010	-		1	SIGN "WASTE BLOWING"	
730	359307-0004	-		1	SYMBOL SIGN "PATCH C'JAW"	
750	342735-0100	-		8	ELBOW PIPE JOINT	
760	90458-2956	-		1	ELBOW PIPE JOINT, EXT.THREAD, D=6MM-G1/8	
770	90055-0217	-		1	ELBOW PIPE JOINT	
780	90458-2964	-		1	ELBOW PIPE JOINT, EXT.THREAD, D=8MM-G1/8	
790	90113-0140	-		8	QUICK CLAMP	
B8403	90044-0139	A		1	KEY SAF.SW. AZ16-02 ZVR K-2254	

Machine Type	Group Description	Used-In	Group Number	Page No

VALVE PANEL

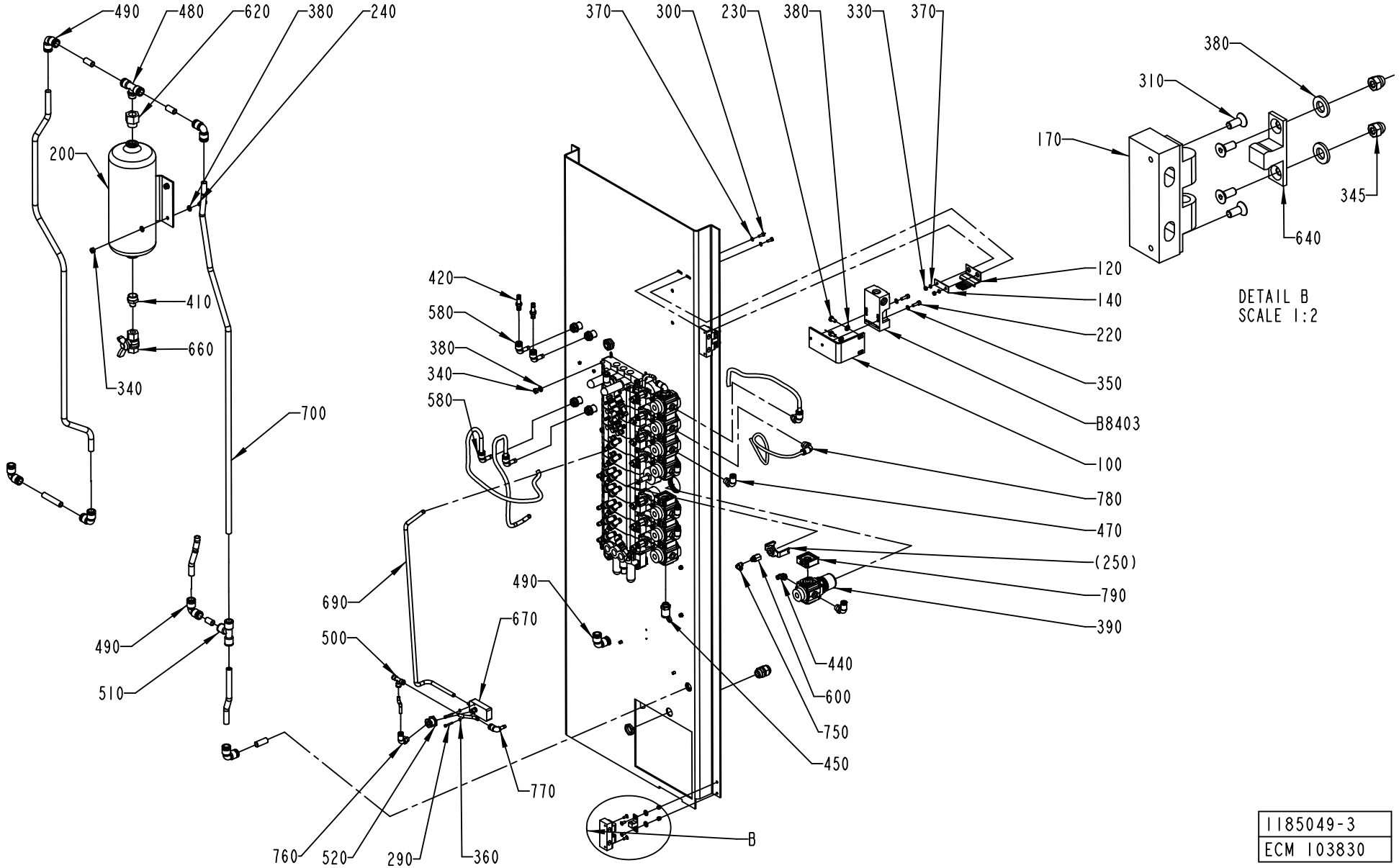

1185049-3
ECM 103830

ECM: 107535 - 20020214
Group number: 1185049-0300
Assembly Drawing: 1185049-3_2_AA

This list covers pages from 1-240 to 1-243

Pos	Part No	SP	UN	Qty	Description	Page No
-						
010	1185047-0100	A		1	AIR INLET GROUP	**1-245**
020	1185048-0200	-		1	VALVE GROUP	**1-247, 1-249**
050	2501820-0000	-		1	PNEUMATIC DIAGRAM	
090	2526547-0000	-		1	PLATE	
100	1082741-0000	-		1	HOLDER	
110	1035792-0000	-		3	E-HINGE	
120	1129042-0000	-		1	KEY	
130	988685-0000	-		3	PIN	
140	1036563-0000	-		1	WASHER	
160	1129770-0000	-		6	BLOCKING PIECE	
170	1140538-0000	-		2	BLOCKING PIECE	
180	359307-0012	-		1	SIGN" PRESSURE ROLLER TENSION DEVICE"	
181	359307-0011	-		1	SIGN" PRESSURE ROLLER DRIVE MOTOR"	
182	1145219-0000	-		1	SIGN	
183	979426-0000	-		1	SIGN	
184	273458-0000	-		1	LABEL (AIR)	
200	90457-0100	-		1	ACCUMULATOR CRVZS-2	
210	312115-0287	-		2	SCREW ISO4762 M4X8 A4	
220	312115-0329	-		2	SCREW ISO4762 M5X16 A4	
230	312105-0366	-		8	SCREW M6S ISO 4017 M6X12 A480	
240	312105-0368	-		2	SCREW M6S ISO 4017 M6X16 A480	
250	90043-0065	B		1	PRESSURE GAUGE, 2048 D=40 MM	
255	90043-0064	B		7	PRESSURE GAUGE, 2048 D=40 MM	
260	312109-0376	-		8	SCREW M6S ISO 4017 M6X35 A480	
270	312115-0327	-		6	SCREW ISO4762 M5X12 A4	
280	312125-0222	-		2	SCREW ISO 1207 M3X8 A4	
290	312125-0230	-		2	SCREW ISO 1207 M3X20 A4	
300	312105-0291	-		2	SCREW M6S ISO 4017 M4X12 A470	
310	312155-0289	-		8	SCREW EN 10642 MF6S M4X10 A480	
320	312605-0310	-		2	HEXAGON NUT, M6M M3 A280	
330	312605-0312	-		2	HEXAGON NUT, M6M M4 A280	
340	312605-0316	-		10	HEXAGON NUT, M6M M6 A280	
345	312705-0312	-		4	NUT HEX. DOMED CAP MHM-6 M4 A280	
350	315105-0146	-		2	WASHER BRB5,3X10RFR	
360	315105-0124	-		2	WASHER BRB3,2X6RFR	
370	315105-0136	-		6	WASHER BRB4,3XRFR	
380	315105-0153	-		32	WASHER BRB6,4X12RFR	
390	90113-0470	A		8	MANIFOLD REGULATOR 10 BAR	
400	90457-0078	-		8	PANEL NUT	
410	342700-0205	-		1	NIPPLES,HEXAGON,EXT.G-THREAD G1/2"-G1/4"	
420	342716-0203	-		2	REDUCER 6-8	
440	90458-2955	-		8	ELBOW PIPE JOINT, EXT.THREAD,	
450	342722-0209	-		1	STRAIGHT COUPLING D=12-G1/4"	
470	90458-2957	-		8	ELBOW PIPE JOINT, EXT.THREAD, D=6MM-G1/4	
480	342742-0110	-		1	T-COUPLING,ADJUST,F.PLAST.TUBE 12-G3/8"	
490	342735-0109	-		7	ELBOW PIPE JOINT	
500	342748-0102	-		1	T-CONNECTION 6MM	
510	342748-0109	-		1	T-CONNECTION 12MM	
520	342767-0100	-		2	CONN. BULKHEAD G1/8	
530	342768-0103	-		4	BULKHEAD CONNECTOR, 8 MM	
540	352103-0106	-		3	CABLE GLAND, ST 11, PR18,6/PG11	
550	90017-0017	-		1	HANDLE, NO. 547-128	
560	90043-0080	B		1	PRESSURE GAUGE	
580	90055-0118	-		8	ELBOW PIPE JOINT -8MM	
590	90099-0117	-		3	NUT, PR 18,6 (PG11)	
600	342770-0101	-		8	STRAIGHT COUPLING INT, D=4 MM - G1/8	
610	90165-0019	-		2	TOOL CLIP, 81/3, OPEN, 20 - 30 MM	
620	90224-0229	-		1	REDUCER, ART.NO RMM 1238	
640	90237-0070	-		2	SNAP-IN BALL LOCK, 69X19 MM	
650	90277-0035	A		2	FILTER / DFU 9933-05-A	
660	90187-0088	-		1	BALL VALVE G1/4, NPBR	
670	90364-0020	A		1	PIAB 3222097+3207007	
680	90166-0081	-	M	55	TUBE 6 MM PA BLUE	
690	90166-0013	-	M	70	TUBE 8 MM PA BLUE	
700	90166-0068	-	M	3	TUBE 12 MM PA BLUE	
710	359307-0002	-		1	SYMBOL SIGN "TAB C'JAW"	
720	359307-0010	-		1	SIGN "WASTE BLOWING"	
730	359307-0004	-		1	SYMBOL SIGN "PATCH C'JAW"	
750	342735-0100	-		8	ELBOW PIPE JOINT	
760	90458-2956	-		1	ELBOW PIPE JOINT, EXT.THREAD, D=6MM-G1/8	
770	90055-0217	-		1	ELBOW PIPE JOINT	
780	90458-2964	-		1	ELBOW PIPE JOINT, EXT.THREAD, D=8MM-G1/8	
790	90113-0140	-		8	QUICK CLAMP	
B8403	90044-0139	A		1	KEY SAF.SW. AZ16-02 ZVR K-2254	

Machine Type	Group Description	Used-In	Group Number	Page No

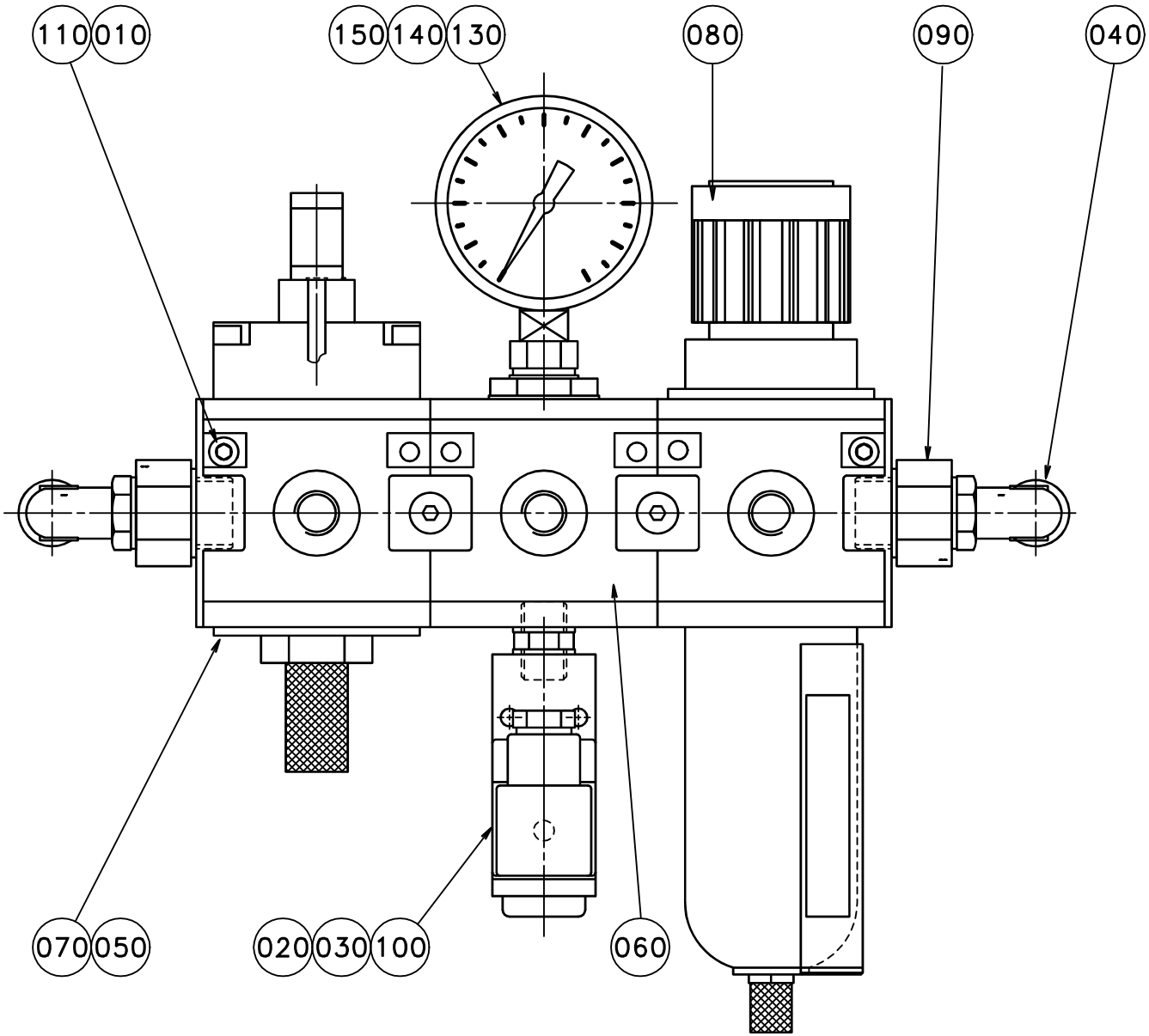
110
010
150
140
130
080
090
040
070
050
020
030
100
060

ECM: 123196 - 20030331
Group number: 1185047-0100
Assembly Drawing: 1185047-1_1_AD

Pos	Part No	SP	UN	Qty	Description	Page No
-						
010	315101-0146	-		2	WASHER PLAIN, BRB, 5,3/10 H=1	
020	315233-0110	-		2	WASHER CAPTIVE SEALING G1/4	
030	342700-0110	-		1	NIPPLES,HEXAGON,EXT.G-THREAD G1/4"-G1/4"	
040	342732-0110	-		2	ELBOW PIPE JOINT, EXT.THREAD,D=12MM-G3/8	
050	90042-0538	-		1	PILOT VALVE L=500MM	
060	90113-0375	-		1	PRESSURE DISTRIBUTION	
070	90113-0423	-		1	HIGH SPEED VENTING VALVE	
080	90113-0072	A		1	PRESSURE REGULATOR	
	90113-0387	*A*		*1*	*FILTER ELEMENT 40æM FOR 90113-0094*	
	90113-0459	*A*		*1*	*O-RING*	
090	90224-0229	-		2	REDUCER, ART.NO RMM 1238	
100	90274-0074	A		1	PRESSURE GUARD, 530 KPA	
110	90287-0212	-		2	SCREW MC6S M5X85 129	
130	90224-0090	-		1	REDUCER, ART. NO RMM 1418	
140	90224-0122	-		1	REDUCER, ART. NO RMM 1214	
150	90043-0020	B		1	PRESSURE GAUGE, 2040 D=63 MM	

Pos	Part No	SP	UN	Qty	Description	Page No

VALVE GROUP

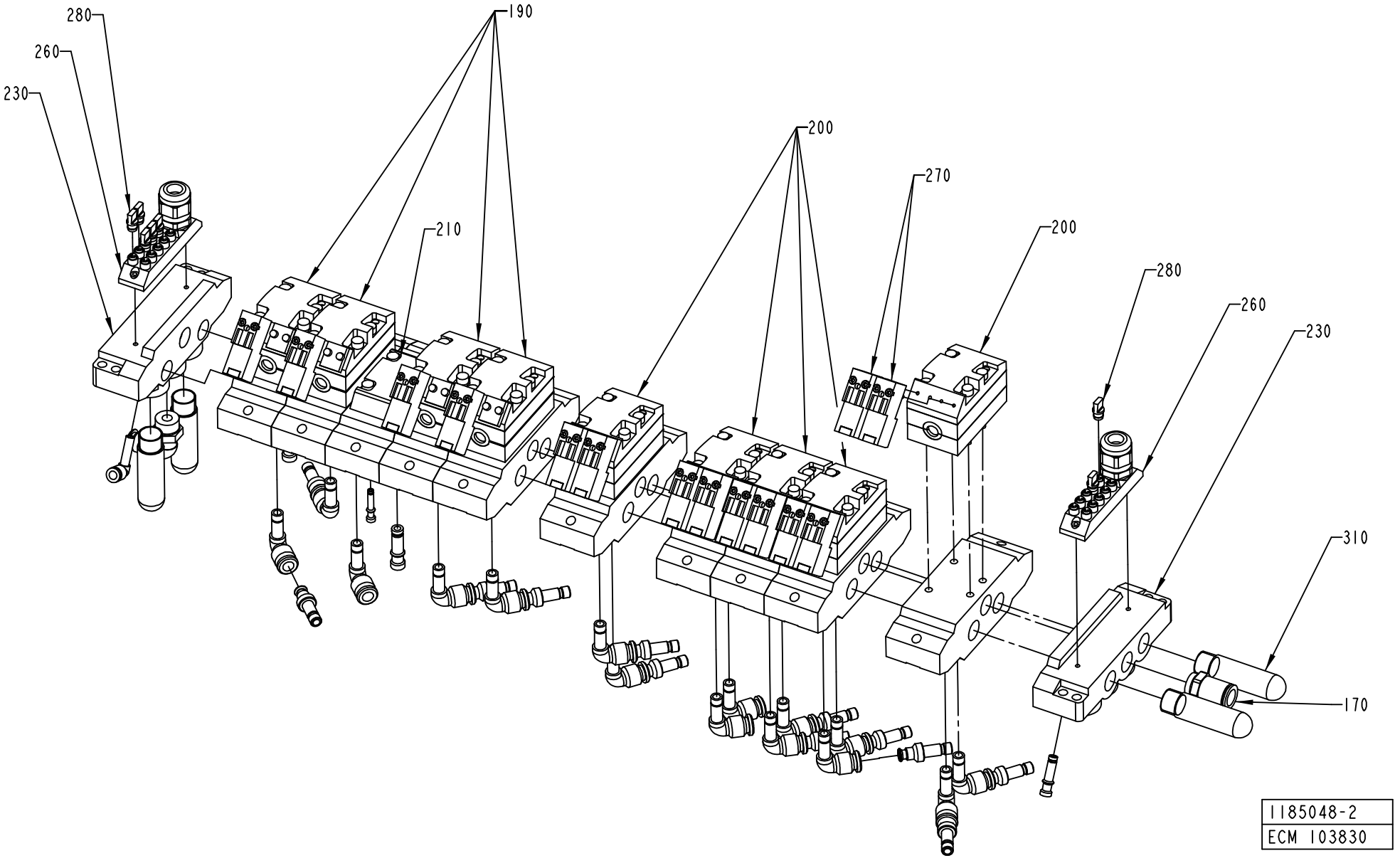
280
260
230
190
210
200
270
200
280
260
230
310
170
1185048-2
ECM 103830

ECM: 107522 - 20020214
Group number: 1185048-0200
Assembly Drawing: 1185048-2_1_AC

This list covers pages from 1-246 to 1-249

Pos	Part No	SP	UN	Qty	Description	Page No
-						
140	342715-0102	-		2	BLIND PLUG 6 MM	
150	342715-0103	-		11	BLIND PLUG 8 MM	
160	342716-0203	-		12	REDUCER 6-8	
170	342722-0210	-		1	STRAIGHT COUPLING, D=12 MM - G3/8"	
180	342732-0105	-		1	ELBOW PIPE D8-R3/8"	
190	90042-0215	A		4	VALVE BODY 5/2 UNISTABLE	
200	90042-0221	A		5	VALVE BODY 5/2 BISTABLE	
210	90042-0519	-		1	BLANK PLATE ISO SIZE 1	
220	90042-0520	-		2	BASE PLATE ISO SIZE 1	
230	90042-0522	-		2	PORTED END PIECE ISO SIZE 1	
240	90042-0528	-		3	BLANKING KIT SEALS ISO SIZE 1	
250	90042-0532	-		8	BASE PLATE ISO SIZE 1	
260	90042-0535	-		2	TERMINAL BOARD 19 CORDS	
270	90042-0539	A		14	PILOT VALVE L=350MM	
280	90042-0550	-		7	PROTECTION PLUG FOR UNUSED CONNECTION	
290	90055-0217	-		1	ELBOW PIPE JOINT	
300	90055-0118	-		15	ELBOW PIPE JOINT -8MM	
310	90328-0024	-		4	SILENCER G3/8	
320	342715-0100	-		4	BLIND PLUG 4 MM	

Pos	Part No	SP	UN	Qty	Description	Page No

Machine Type | Group Description | Used-In | Group Number | Page No

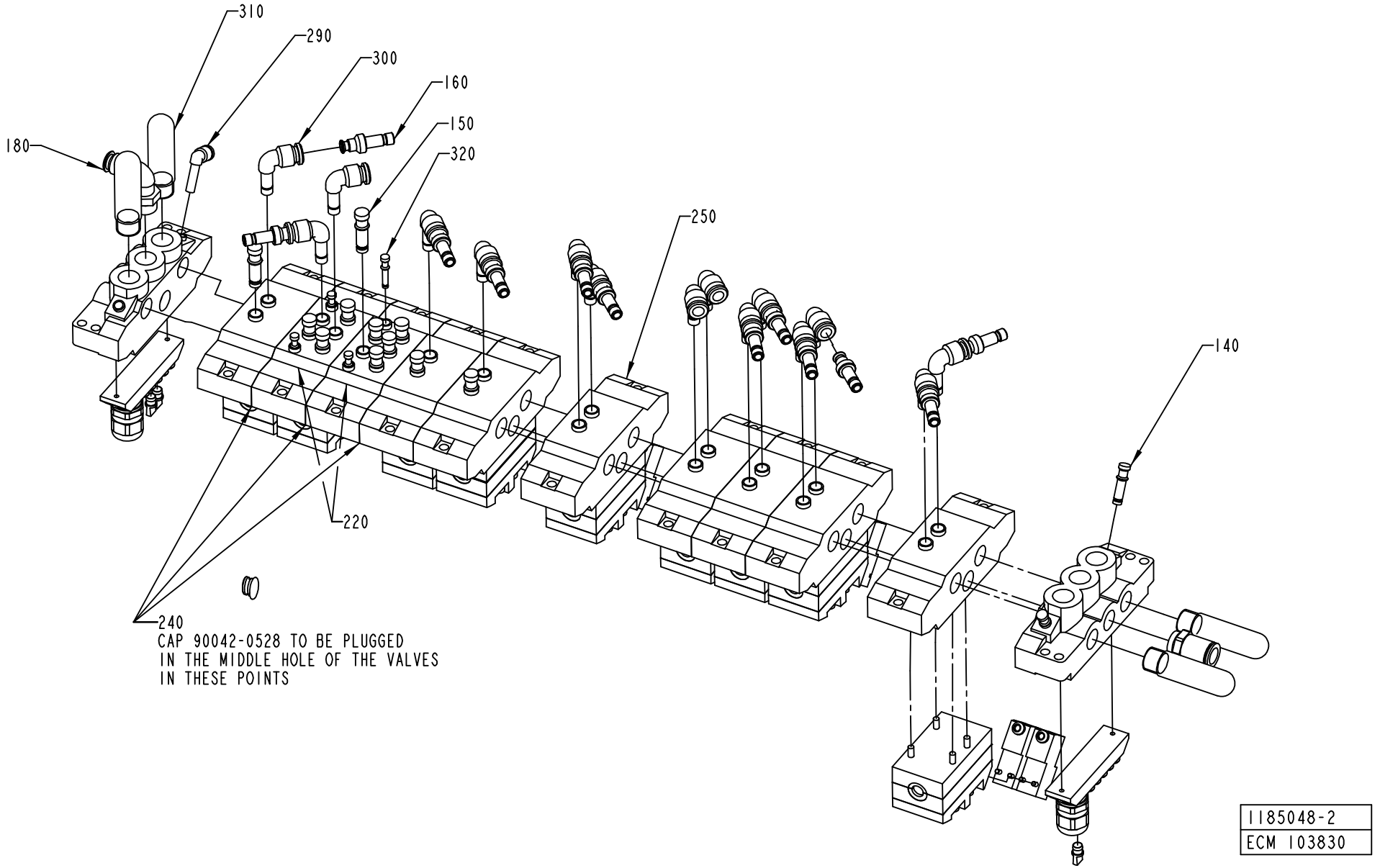
310
290
300
160
150
320
180
250
140
220
240
CAP 90042-0528 TO BE PLUGGED
IN THE MIDDLE HOLE OF THE VALVES
IN THESE POINTS
1185048-2
ECM 103830

ECM: 107522 - 20020214
Group number: 1185048-0200
Assembly Drawing: 1185048-2_2_AC

This list covers pages from 1-246 to 1-249

Pos	Part No	SP	UN	Qty	Description	Page No
-						
140	342715-0102	-		2	BLIND PLUG 6 MM	
150	342715-0103	-		11	BLIND PLUG 8 MM	
160	342716-0203	-		12	REDUCER 6-8	
170	342722-0210	-		1	STRAIGHT COUPLING, D=12 MM - G3/8"	
180	342732-0105	-		1	ELBOW PIPE D8-R3/8"	
190	90042-0215	A		4	VALVE BODY 5/2 UNISTABLE	
200	90042-0221	A		5	VALVE BODY 5/2 BISTABLE	
210	90042-0519	-		1	BLANK PLATE ISO SIZE 1	
220	90042-0520	-		2	BASE PLATE ISO SIZE 1	
230	90042-0522	-		2	PORTED END PIECE ISO SIZE 1	
240	90042-0528	-		3	BLANKING KIT SEALS ISO SIZE 1	
250	90042-0532	-		8	BASE PLATE ISO SIZE 1	
260	90042-0535	-		2	TERMINAL BOARD 19 CORDS	
270	90042-0539	A		14	PILOT VALVE L=350MM	
280	90042-0550	-		7	PROTECTION PLUG FOR UNUSED CONNECTION	
290	90055-0217	-		1	ELBOW PIPE JOINT	
300	90055-0118	-		15	ELBOW PIPE JOINT -8MM	
310	90328-0024	-		4	SILENCER G3/8	
320	342715-0100	-		4	BLIND PLUG 4 MM	

Pos	Part No	SP	UN	Qty	Description	Page No

This page is intentionally left blank.

ECM: 140905 - 20040119
Group number: 649060-0600
Assembly Drawing:

Pos	Part No	SP	UN	Qty	Description	Page No
-						
0010	42841-0600	-		1	ELECTRICAL DOCUMENT	

Pos	Part No	SP	UN	Qty	Description	Page No

Machine Type | Group Description | Used-In | Group Number | Page No

This page is intentionally left blank.

ECM: 158795 - 20040223
Group number: 2526515-0100
Assembly Drawing:

Pos	Part No	SP	UN	Qty	Description	Page No
TBA 0500S HOLE55						
010	2514029-0000	-		1	OPENING SPECIFICATION	
TBA 1000B HOLE65						
010	2514037-0000	-		1	OPENING SPECIFICATION	
TBA 1000B HOLE85						
010	2514035-0000	-		1	OPENING SPECIFICATION	
TBA 1000S HOLE65						
010	2514027-0000	-		1	OPENING SPECIFICATION	
TBA 1000S HOLE85						
010	2514025-0000	-		1	OPENING SPECIFICATION	
TBA 1000S HOLE90						
010	2579887-0000	-		1	OPENING SPECIFICATION	
TBA 1000SQ HOLE65						
010	2514038-0000	-		1	OPENING SPECIFICATION	
TBA 1000SQ HOLE85						
010	2514036-0000	-		1	OPENING SPECIFICATION	
TBA 1500S HOLE85						
010	2514026-0000	-		1	OPENING SPECIFICATION	
TBA 1500S HOLE90						
010	2635555-0000	-		1	OPENING SPECIFICATION	
TPA 0250SQ HOLE72						
010	2511638-0000	-		1	OPENING SPECIFICATION	
TPA 0330SQ HOLE48						
010	2514030-0000	-		1	OPENING SPECIFICATION	
TPA 1000S HOLE60						
010	2514031-0000	-		1	OPENING SPECIFICATION	
TPA 1000SQ HOLE60						
010	2526540-0000	-		1	OPENING SPECIFICATION	

Pos	Part No	SP	UN	Qty	Description	Page No

This page is intentionally left blank.

ECM: 143137 - 20040222
Group number: 1538982-0100
Assembly Drawing:

Pos	Part No	SP	UN	Qty	Description	Page No
TBA 0500S HOLE55						
010	1490129-0000	B		1	TEMPLATE	
TBA 1000B HOLE65						
010	1487733-0000	B		1	TEMPLATE	
TBA 1000B HOLE85						
010	1487236-0000	B		1	TEMPLATE	
TBA 1000S HOLE65						
010	1487732-0000	B		1	TEMPLATE	
TBA 1000S HOLE85						
010	1487235-0000	B		1	TEMPLATE	
TBA 1000SQ HOLE65						
010	1487711-0000	B		1	TEMPLATE	
TBA 1000SQ HOLE85						
010	1499183-0000	B		1	TEMPLATE	
TBA 1500S HOLE65						
010	1490170-0000	B		1	TEMPLATE	
TBA 1500S HOLE85						
010	1499181-0000	B		1	TEMPLATE	
TBA 1500S HOLE90						
	2651295-0000	-		1	TEMPLATE	
TPA 1000S HOLE60						
010	1484509-0000	B		1	TEMPLATE	

Pos	Part No	SP	UN	Qty	Description	Page No

This page is intentionally left blank.

ECM: 107812 - 20020214
Group number: 2526555-0100
Assembly Drawing:

Pos	Part No	SP	UN	Qty	Description	Page No
-						
010	1038865-0000	-		4	SPACER DISC	
020	311112-0377	-		4	SPRING PIN, ISO 8752 8X24-C	
030	312105-0451	-		4	SCREW M6S ISO 4017 M8X20 A480	
040	312105-0640	-		4	SCREW M6S ISO 4014 M16X100 A480	
050	315115-0165	-		4	WASHER PLAIN, TBRB 8,4/16 H=3	

Pos	Part No	SP	UN	Qty	Description	Page No

Tetra Pak

SPC
Spare Parts Catalogue

Part No	Description	Page No
2033-0001	WASHER	1-107, 1-109, 1-129, 1-131, 1-143, 1-145
2033-0003	WASHER	1-107, 1-109, 1-129, 1-131, 1-143, 1-145
2033-0006	WASHER	1-107, 1-109, 1-129, 1-131, 1-143, 1-145
28036-0000	WASHER	1-157
28509-0000	WASHER	1-135
32544-0000	INSULATION NUT	1-135
32644-0000	WASHER	1-135
42841-0600	ELECTRICAL DOCUMENT	1-251
67379-0215	TRANSFORMER	1-137
67379-0216	TRANSFORMER	1-137
67388-0101	FRONT MOUNTED RACK 42TE	1-25, 1-27
67600-0501	TPIH 2000 GENERATOR	1-13, 1-15
68262-0101	BACKPLANE FRONT RACK 8TE	1-25, 1-27
68445-0103	FRONT PLATE 6TE	1-25, 1-27
68445-0105	FRONT PLATE 10TE	1-25, 1-27
68450-0101	STEPPER MOTOR DRIVER	1-25, 1-27
90001-0033	WALL SOCKET OUTLET	1-25, 1-27
90002-0009	BLANK-OFF PLUG, PR 18.6 SKINDICHT-BLK11	1-13, 1-15, 1-41
90002-0012	BLANK-OFF PLUG, PR 28,3 SKINDICHT-BLK21	1-239
90002-0013	BLANK-OFF PLUG, PR 15,2 SKINDICHT-BLK9	1-43, 1-45, 1-63, 1-239
90005-0060	WASHER PLAIN, RBS 6,4/M6)/18,H=1,5	1-57
90005-0082	WASHER PLAIN ROUND 4,3(M4)/12,H=1	1-75, 1-207
90005-0105	WASHER PLAIN ROUND 8,4(M8)/24, H=1,5	1-225
90007-0128	CIRCUIT BREAKER, 1P 6 A K	1-29
90007-0129	CIRCUIT BREAKER, 1P 10 A K	1-29
90007-0156	CIRCUIT BREAKER, 1P 4 A K	1-29
90012-0063	CABLE GLAND PR 15,2	1-13, 1-15, 1-111, 1-147, 1-151
90012-0137	GLAND, EXTENDED WITH INSERT, PG11	1-93
90015-0021	LEAD-IN, TET10-14, E-1458023	1-93
90017-0014	HANDLE, NO 8305-2259	1-157
90017-0016	HANDLE, NO. 14.4012.02.120	1-225
90017-0017	HANDLE, NO. 547-128	1-25, 1-27, 1-207, 1-241, 1-243
90024-0037	INPUT FILTER, 8 A	1-19, 1-21
90031-0031	ENHANCED GENIUS COMMUNICATION MODULE	1-19, 1-21
90031-0050	BASEPLATE, 5-SLOT	1-19, 1-21
90031-0052	BASEPLATE, 5-SLOT	1-19, 1-21
90031-0057	PLC, DIGITAL INPUT MODULE	1-19, 1-21
90031-0058	PLC, DIGITAL INPUT MODULE	1-19, 1-21
90031-0059	PLC, DIGITAL OUTPUT MODULE	1-19, 1-21
90031-0062	PLC, ANALOG OUTPUT MODULE 8PT/CURR/VOLT	1-19, 1-21
90031-0065	PLC,TEMPERATUR CONTROL,INPUT MODULE 8 PT	1-19, 1-21
90031-0068	PLC, POWER SUPPLY	1-19, 1-21
90031-0075	CPU363, SERIAL COMMUNICATION	1-19, 1-21
90031-0302	I/O BUS TERMINATION PLUG	1-19, 1-21
90031-0305	I/O EXPANSION CABLE	1-19, 1-21
90042-0215	VALVE BODY 5/2 UNISTABLE	1-247, 1-249
90042-0221	VALVE BODY 5/2 BISTABLE	1-247, 1-249
90042-0519	BLANK PLATE ISO SIZE 1	1-247, 1-249
90042-0520	BASE PLATE ISO SIZE 1	1-247, 1-249
90042-0522	PORTED END PIECE ISO SIZE 1	1-247, 1-249
90042-0528	BLANKING KIT SEALS ISO SIZE 1	1-247, 1-249
90042-0532	BASE PLATE ISO SIZE 1	1-247, 1-249
90042-0535	TERMINAL BOARD 19 CORDS	1-247, 1-249
90042-0538	PILOT VALVE L=500MM	1-245
90042-0539	PILOT VALVE L=350MM	1-247, 1-249
90042-0550	PROTECTION PLUG FOR UNUSED CONNECTION	1-247, 1-249
90043-0020	PRESSURE GAUGE, 2040 D=63 MM	1-245
90043-0064	PRESSURE GAUGE, 2048 D=40 MM	1-241, 1-243
90043-0065	PRESSURE GAUGE, 2048 D=40 MM	1-241, 1-243
90043-0080	PRESSURE GAUGE	1-241, 1-243
90044-0094	LIMIT SW. 924 CE31-Y20-X5	1-83
90044-0139	KEY SAF.SW. AZ16-02 ZVR K-2254	1-171, 1-225, 1-241, 1-243
90044-0194	PROX.SW. IN5329/IN3002-BPKG	1-117, 1-183, 1-209, 1-225
90044-0310	KEY FOR SAFETY SWITCH, AZ 15/16 B1	1-207
90045-0192	STEP MOTORE21NSHT-LNF-NS-04	1-107, 1-109, 1-129, 1-131, 1-143, 1-145
90045-0194	SERVO MOTOR EP 115-131-66T3B	1-97
90051-0007	STELLAR KNOB, INT. THREAD, NO. 40	1-107, 1-109, 1-129, 1-131, 1-143, 1-145
90053-0031	HOUR COUNTER, B 609.10 10-50VDC	1-25, 1-27
90055-0096	STRAIGHT COUPLING	1-47, 1-49
90055-0118	ELBOW PIPE JOINT -8MM	1-241, 1-243, 1-247, 1-249
90055-0217	ELBOW PIPE JOINT	1-241, 1-243, 1-247, 1-249
90056-0179	GEARS, PLANETARY ANGLE WPLS 90	1-97
90059-0029	THERMOSTAT	1-61
90062-0021	LOCK WASHER DIN 6797 TYPE A 5,3	1-13, 1-15
90062-0022	LOCKING WASHER D=6,4/11	1-25, 1-27, 1-165
90064-0082	PUSH BUTTON, WHITE	1-25, 1-27
90075-0125	CONTACTOR, 7,5KW 24VDC	1-19, 1-21
90075-0127	NTACTOR, 4KW 24VDC	1-19, 1-21
90077-0030	TERMINAL STRIP 12 POLE	1-31
90077-0079	FEED THROUGH TERMINAL, 02943.6	1-63
90077-0328	RAIL TS15/5	1-63
90089-0001	REDUCING SLEEVE, PR18,6/PR15,2	1-111, 1-147, 1-151
90089-0008	REDUCING SLEEVE, PR22,5/PR28,3	1-39
90089-0031	ENLARGING SLEEVE	1-61

Part No	Description	Page No
90095-0077	OVERLOAD PROTECTION, PKZM 6-10 A	1-29
90099-0019	HEXAGON NUT, M12X1, DIN439	1-61
90099-0103	NUT, PR 47 (PG36)	1-31
90099-0104	NUT, PR 15,2 (PG9)	1-13, 1-15
90099-0117	NUT, PR 18,6 (PG11)	1-13, 1-15, 1-241, 1-243
90099-0119	NUT, PR 28,3 (PG21)	1-13, 1-15
90099-0191	HEXAGON NYLON NUT, M4X0,7	1-13, 1-15, 1-25, 1-27
90110-0121	FEMALE INSERT GDS A-H 09 06 215 2811	1-13, 1-15
90110-0122	COVER, 09 06 000 9957	1-13, 1-15
90110-0150	MALE INSERT 121110 0000	1-13, 1-15, 1-39
90110-0152	CABLE HOOD 24-POL 70.352.2428.1	1-13, 1-15, 1-39
90110-0153	CHASSIS HOUSING 24-P CHI 24, 121240 0000	1-13, 1-15
90110-0157	CABLE HOOD 6-POL 70.352.0628.1	1-13, 1-15, 1-39, 1-61
90110-0159	MALE INSERT 70.310.0640.0	1-13, 1-15, 1-39, 1-61
90110-0161	FEMALE INSERT 70 105 0653 0	1-13, 1-15
90110-0163	FEMALE INSERT 70 300 0640 0	1-13, 1-15
90110-0164	FEMALE INSERT 70 105 2453 3	1-13, 1-15
90110-0166	CHASSIS HOUSING 310144-33	1-13, 1-15
90110-0215	SOCKET	1-13, 1-15
90110-0216	MALE INSERT 70 310 1040 0	1-13, 1-15, 1-39
90110-0217	CABLE HOOD 10-POL 71.352.1028.1	1-13, 1-15, 1-39
90110-0218	CHASSIS HOUSING 310145-33	1-13, 1-15
90110-0235	CABLE CONTACT, PX0739/S	1-39
90110-0236	CHASSIS CONTACT PX0767/S	1-13, 1-15
90110-0295	CONNECTOR 4 POLE + EARTH	1-111, 1-147, 1-151
90110-0296	CONTACT SCREW	1-13, 1-15, 1-141
90110-0349	COOVER/TOOL PX 0733	1-13, 1-15
90110-0370	BASE HOUSING	1-13, 1-15, 1-101, 1-141
90110-0372	PLUG HOOD	1-13, 1-15, 1-111, 1-147, 1-151
90111-0172	EARTH FAULT BREAKER, F 362-25/0.03	1-29
90111-0193	ROTARY SWITCH	1-25, 1-27
90111-0197	SERVICE KEY, 2 CLOSED + 2 OPEN	1-25, 1-27
90113-0072	PRESSURE REGULATOR	1-245
90113-0140	QUICK CLAMP	1-241, 1-243
90113-0375	PRESSURE DISTRIBUTION	1-245
90113-0423	HIGH SPEED VENTING VALVE	1-245
90113-0470	MANIFOLD REGULATOR 10 BAR	1-241, 1-243
90115-0134	ROD END, ID=10 MM, M10X1,25	1-85, 1-97
90119-0056	RELAY, AUXILIARY MK3P5-S 24VDC	1-19, 1-21
90119-0067	SOLID-STATE RELAY, H12WD4850	1-19, 1-21
90119-0082	SSR 90119-67 + HEAT SINK	1-19, 1-21
90119-0084	EXPANSION RELAY, JSR1T-500MS	1-19, 1-21
90119-0089	SAFETY RELAY, JSBT4 24VDC	1-19, 1-21
90121-0116	RESISTANCE FIXED, 0,15 KOHM, 0,25 W	1-19, 1-21
90129-0006	BASE, S3-B	1-19, 1-21
90135-0026	EARTH TERMINAL, 3802.6	1-63
90135-0035	EARTH WIRE, L=250 MM 16 MM2	1-25, 1-27, 1-165
90135-0039	SHIELD CLIP KLBU 4-13.5	1-13, 1-15, 1-25, 1-27, 1-31
90141-0016	RETAINING RING FOR SHAFT DIN 471 10 A2	1-69, 1-79
90141-0020	RETAINING RING FOR BORE DIN 472 42 A2	1-69, 1-97
90143-0057	STRIP EMKA 1011-05 21X11MM	1-13, 1-15, 1-175
90143-0060	EDGE STRIP 9,5X6,3MM BLACK PVC	1-25, 1-27
90143-0071	RUBBER STRIP 4X20MM	1-187, 1-215, 1-227
90143-0073	RUBBER STRIP	1-13, 1-15
90152-0033	SPIRAL CONDUIT FOR PR 15,2(PG 9)	1-13, 1-15, 1-111, 1-147, 1-151
90153-0043	ADHESIVE, LOCTITE 495 20G	1-169
90157-0041	SEALING COMPOUND	1-165, 1-167, 1-171
90159-0097	CAPACITOR, 2 æF 450 V	1-63
90164-0015	LIGHT FIXTURE, DWDCV111B/230V 50HZ	1-47, 1-49
90164-0302	BRACKET	1-47, 1-49
90165-0019	TOOL CLIP, 81/3, OPEN, 20 - 30 MM	1-241, 1-243
90165-0060	PIPE CLIP FOR TUBE D=5 MM	1-47, 1-49
90166-0013	TUBE 8 MM PA BLUE	1-241, 1-243
90166-0068	TUBE 12 MM PA BLUE	1-11, 1-241, 1-243
90166-0081	TUBE 6 MM PA BLUE	1-241, 1-243
90166-0126	TUBE 12 MM PA,TRANSP.	1-61
90181-0044	CABLE DUCT, 25X60MM	1-29
90181-0045	CABLE DUCT, 40X60MM	1-25, 1-27, 1-29
90181-0046	CABLE DUCT, 60X60MM	1-13, 1-15
90181-0052	CABLE DUCT, 25X80MM	1-19, 1-21
90181-0053	CABLE DUCT, 40X80MM	1-19, 1-21
90181-0054	CABLE DUCT, 60X80MM	1-19, 1-21
90187-0088	BALL VALVE G1/4, NPBR	1-241, 1-243
90189-0021	BALL BUSHING, 12X22X32 MM	1-107, 1-109, 1-129, 1-131, 1-143, 1-145
90189-0024	BALL BUSHING, 12X22X32 MM	1-107, 1-109, 1-129, 1-131, 1-143, 1-145
90194-0080	SIGN, IDENTIFICATION OF WIRING	1-25, 1-27
90194-0133	SIGN "DELIVERED DESIGN"	1-25, 1-27
90194-0143	WARNING SIGN ISO, HOT SURFACE	1-101, 1-123, 1-141
90194-0152	SIGN, EARTH	1-19, 1-21, 1-25, 1-27, 1-165
90195-0019	TERMINAL BLOCK, 1978.2	1-13, 1-15
90208-0078	CLAMPING ELEMENT WITH SLEEVE, 20X28 MM	1-97
90208-0118	CLAMPING ELEMENT	1-85
90220-0034	THERMOCOUPLE CABLE K/ 2X0,5MM2	1-13, 1-15, 1-19, 1-21
90220-0084	MOTOR CABLE 4X2,5+2(2X0.75)+SHIELD	1-39

Part No	Description	Page No
90220-0104	SCR. CABLE 4X1,5MM2	1-13, 1-15
90220-0165	SCR. CABLE 5X0,34MM2	1-25, 1-27
90220-0183	SCR. CABLE 2X0,34MM2	1-13, 1-15, 1-19, 1-21
90224-0090	REDUCER, ART. NO RMM 1418	1-245
90224-0122	REDUCER, ART. NO RMM 1214	1-245
90224-0229	REDUCER, ART.NO RMM 1238	1-241, 1-243, 1-245
90226-0458	MOUNTING SCREW	1-179
90232-0103	PH.CELL E3S-CT61-L-5M	1-67, 1-95, 1-155
90232-0104	PH.CELL E3S-CT61-D-5M	1-67, 1-95, 1-155
90232-0106	PH.CELL E3S-CR11-5M	1-157
90232-0123	PH.CELL WLL170-P135-6011723	1-69, 1-183, 1-237
90232-0325	FIBRE E32-DC200	1-77
90232-0333	REFLECTOR E39-R1	1-157
90232-0346	FIBRE LL3-DB01 5 308074	1-183, 1-237
90233-0028	TUBE FUSE, 10A	1-29
90233-0303	FUSE HOLDER, ST 10 1-POLE	1-29
90235-0206	QUICK EXHAUST VALVE, SEU-1/8	1-107, 1-109, 1-119, 1-129, 1-131, 1-143, 1-145
90237-0070	SNAP-IN BALL LOCK, 69X19 MM	1-225, 1-241, 1-243
90237-0128	LOCK CYLINDER, 1109-U3	1-165, 1-167, 1-171, 1-173, 1-177
90237-0150	TURNING HANDLE, NO. 1125-U190-0A	1-165, 1-167, 1-171, 1-173, 1-177
90237-0151	GUIDE, 1001-U11	1-165
90237-0152	GUIDE, 1001-U12	1-165
90237-0153	LOCK HOUSING, 1121-U26-0B	1-165, 1-167, 1-171, 1-173
90237-0154	LOCK HOUSING, 1121-U60-0C	1-177
90237-0157	LOCK BOLT, 1000-230	1-25, 1-27
90237-0165	LATCH	1-177
90237-0169	LOCK ADAPTER, 1000-U49	1-165
90237-0319	LOCK HOUSING, 1000-U134	1-25, 1-27
90237-0320	LOCK HOUSING, 1000-U136	1-25, 1-27
90239-0486	REAR,CLEVIS,MINI-ISO 16	1-93
90239-0488	REAR,CLEVIS,MINI-ISO 32	1-85, 1-97
90239-0489	ROD END, CLEVIS WITH AXLE M6X1,25	1-93
90239-0834	DOUBLE ACTING, MINI-ISO, CYL.32-25	1-85, 1-97
90240-0026	PLAIN BEAR,SELF ADJ.SPHER. 15X26X12 MM	1-85, 1-97
90240-0221	FLANGE BUSHING,20X25X14 MM	1-69
90245-0045	TRANSFORMER, 1-PHASE 220V/48V 500VA	1-13, 1-15
90248-0026	HINGE, 1703-80X32	1-207
90259-0313	AUX. CONTACT K&M NHI21-PKZM0	1-29
90264-0069	FAN / R2E 190 AE 7705/M15 190 12	1-61
90270-0018	COMPRESSOR DANFOSS SC 12G	1-61
90274-0074	PRESSURE GUARD, 530 KPA	1-245
90277-0035	FILTER / DFU 9933-05-A	1-241, 1-243
90287-0106	SCREW SPRINGLOAD. SLOTTED HEAD M10X21	1-195, 1-211, 1-233
90287-0124	SCREW PAN HEAD MSCS M4X12 NYLON	1-19, 1-21, 1-29
90287-0151	SCREW CAP HEAD MSCS M3X5	1-203
90287-0163	SCREW SPRINGLOAD. SLOTTED HEAD M6X14	1-157
90287-0212	SCREW MC6S M5X85 129	1-245
90319-0010	ROPE	1-59
90326-0012	PROTECTIVE COVER, T31A4618	1-19, 1-21
90326-0053	THERMOCOUPLE, 12826-35	1-19, 1-21
90326-0060	THERMOCOUPLE, CR-AL	1-111, 1-147, 1-151
90328-0003	SILENCER	1-85, 1-97
90328-0024	SILENCER G3/8	1-247, 1-249
90330-0034	NUT, HEXAGON, G1/4	1-19, 1-21
90330-0038	NUT, HEXAGON, G3/8	1-47, 1-49
90335-0005	SPRING	1-119, 1-121
90335-0067	COMP. SPRING 22370, 1,6X9,6X31,75	1-107, 1-109, 1-129, 1-131, 1-143, 1-145
90335-0091	TENSION SPRING 41890, 1,2X13X48,2	1-93
90347-0054	DAMPER	1-69
90347-0175	MACHINE SHOE BRIK T 125	1-51
90348-0031	FREE WHEEL COUPLING	1-107, 1-109, 1-129, 1-131, 1-143, 1-145
90364-0020	PIAB 3222097+3207007	1-241, 1-243
90411-0018	INSULATOR, ALU-SILICATE HM 15643	1-111, 1-147, 1-151
90422-0041	HEAT EXCHANGER / 3R 10T 170L 2.5P 1C	1-61
90422-0042	HEAT EXCHANGER / 3R 8T 340L 1.6P 1C	1-61
90422-0316	HOOD	1-61
90422-0317	FILTER	1-61
90430-0070	FREQ.CONV. 6SE3213-6CA40	1-13, 1-15
90430-0326	FILTER 6SE3290-0BA87-0FB2	1-13, 1-15
90450-0380	SINGLE ACTING, PANCAKE EV-20/75-5	1-113, 1-135, 1-151
90450-0409	DOUBLE ACTING, COMPACT, CYL 32-15	1-107, 1-109, 1-129, 1-131, 1-143, 1-145
90457-0066	BELLOW COUPLING, 20X22 MM	1-97
90457-0078	PANEL NUT	1-241, 1-243
90457-0100	ACCUMULATOR CRVZS-2	1-241, 1-243
90457-0197	CYLINDER WITH INT. GUIDING BORE 25	1-151
90458-0031	CONNECTOR KIT 9032 010 353	1-31
90458-0138	PROX.SW. E2EG-X1R5B1-5M	1-107, 1-109, 1-129, 1-131, 1-143, 1-145, 1-203
90458-0397	SERVO DRIVE DMC2 50720 P	1-13, 1-15
90458-0401	SERVO DRIVE DMC2 50412	1-31
90458-0597	TENSION SPRING 3753	1-59, 1-157
90458-0602	PHOTOCELL,	1-125
90458-0603	CONNECTOR FEMALE 5 PINS	1-125
90458-0672	PROXIMITY SENSOR E2E2-X5MB1-5M	1-13, 1-15, 1-199, 1-209
90458-1492	GEARS, WORM MOTOR IGL 80-60 + E3	1-93

Part No	Description	Page No
90458-2163	HANDLE, OVAL, THREADED BUSH, M8 29X69 MM	1-69
90458-2164	ELBOW PIPE JOINT, EXT.THREAD,D=6MM M5	1-151
90458-2171	FLEXIBLE CONDUIT, 50/60MM PVC	1-117
90458-2460	ADJUSTABLE MECH. STOP, FOR CYL. 2711	1-151
90458-2950	BALL BEARING, 5X16X5 MM	1-71
90458-2954	ELBOW PIPE JOINT, EXT.THREAD, D=4MM M5	1-117
90458-2955	ELBOW PIPE JOINT, EXT.THREAD,	1-241, 1-243
90458-2956	ELBOW PIPE JOINT, EXT.THREAD, D=6MM-G1/8	1-107, 1-109, 1-119, 1-129, 1-131, 1-143, 1-145, 1-241, 1-243
90458-2957	ELBOW PIPE JOINT, EXT.THREAD, D=6MM-G1/4	1-241, 1-243
90458-2964	ELBOW PIPE JOINT, EXT.THREAD, D=8MM-G1/8	1-119, 1-241, 1-243
90459-0296	CYLINDER WITH INT. GUIDING BORE 40	1-119
90459-0975	LOCK NUT ROUND WITH SLOTS GUK M12X1	1-119
90459-1681	SCREW HEX.SOCK.SET CONEPT.MS6SS M4X12 A2	1-75
234844-0000	WHEEL	1-185
263150-0000	BRACKET	1-73, 1-85, 1-97
263152-0000	SHAFT	1-73, 1-85, 1-97
263153-0000	NUT	1-73, 1-85, 1-97
273458-0000	LABEL (AIR)	1-241, 1-243
294734-0000	WASHER	1-157
311103-0267	PARALLEL PIN ISO 2338 4M6X10 A1	1-113, 1-135, 1-151
311103-0270	PARALLEL PIN ISO 2338 4M6X16 A1	1-107, 1-109, 1-143, 1-145
311103-0280	PARALLEL PIN ISO 2338 4M6X40 A1	1-141
311103-0351	PARALLEL PIN ISO 2338 6M6X16 A1	1-85, 1-107, 1-109, 1-129, 1-131, 1-143, 1-145
311103-0355	PARALLELL PIN, M6, 6X25 MM	1-57
311103-0399	PARALLEL PIN ISO 2338 8M6X16 A1	1-141
311103-0401	PARALLEL PIN ISO 2338 8M6X20 A1	1-47, 1-49, 1-183, 1-209, 1-225
311112-0205	SPRING PIN, ISO 8752 3X10-C	1-107, 1-109, 1-129, 1-131, 1-143, 1-145
311112-0256	SPRING PIN, ISO 8752 4X20-C	1-69
311112-0260	SPRING PIN, ISO 8752 4X28-C	1-93
311112-0262	SPRING PIN, ISO 8752 4X32-C	1-85, 1-97
311112-0377	SPRING PIN, ISO 8752 8X24-C	1-47, 1-49, 1-85, 1-87, 1-93, 1-257
311411-0138	SPLIT PIN SP1,6X12RFR	1-83, 1-185
311520-0329	RIVET, BLANK 2,4X8	1-25, 1-27
312101-0343	SCREW M6S M5X60 FZB	1-107, 1-109, 1-135, 1-143, 1-145
312105-0287	SCREW M6S ISO4017 M4X8 A470	1-79, 1-107, 1-109, 1-129, 1-131, 1-143, 1-145, 1-183, 1-187, 1-195, 1-199, 1-209, 1-211, 1-215, 1-225, 1-227, 1-233, 1-237
312105-0291	SCREW M6S ISO 4017 M4X12 A470	1-67, 1-95, 1-183, 1-199, 1-203, 1-207, 1-209, 1-241, 1-243
312105-0295	SCREW M6S ISO4017 M4X20 A470	1-135
312105-0323	SCREW M6S ISO 4017 M5X8 A480	1-47, 1-49
312105-0325	SCREW M6S ISO 4017 M5X10 A480	1-125, 1-129, 1-131, 1-143, 1-145
312105-0327	SCREW M6S ISO 4017 M5X12 A480	1-13, 1-15, 1-157, 1-187, 1-199, 1-207, 1-215, 1-227
312105-0329	SCREW M6S ISO 4017 M5X16 A480	1-47, 1-49, 1-107, 1-109, 1-129, 1-131, 1-143, 1-145
312105-0339	SCREW M6S ISO 4014 M5X40 A480	1-107, 1-109, 1-129, 1-131, 1-143, 1-145, 1-225
312105-0340	SCREW M6S ISO 4014 M5X45 A480	1-187, 1-215, 1-227
312105-0366	SCREW M6S ISO 4017 M6X12 A480	1-47, 1-49, 1-115, 1-125, 1-199, 1-207, 1-209, 1-225, 1-241, 1-243
312105-0368	SCREW M6S ISO 4017 M6X16 A480	1-57, 1-67, 1-69, 1-87, 1-95, 1-171, 1-183, 1-225, 1-241, 1-243
312105-0370	SCREW M6S ISO 4017 M6X20 A480	1-67, 1-83, 1-93, 1-195, 1-211, 1-233
312105-0371	SCREW M6S ISO 4017 M6X22 A480	1-207
312105-0372	SCREW M6S ISO 4017 M6X25 A480	1-85, 1-95
312105-0379	SCREW M6S ISO 4014 M6X45 A480	1-69
312105-0447	SCREW M6S ISO 4017 M8X12 A480	1-61, 1-207
312105-0449	SCREW M6S ISO 4017 M8X16 A480	1-97, 1-141, 1-143, 1-145, 1-183, 1-203, 1-207, 1-209, 1-223, 1-225
312105-0451	SCREW M6S ISO 4017 M8X20 A480	1-47, 1-49, 1-87, 1-93, 1-103, 1-141, 1-157, 1-199, 1-257
312105-0453	SCREW M6S ISO 4017 M8X25 A480	1-47, 1-49, 1-53, 1-85, 1-93, 1-97, 1-117, 1-119, 1-125, 1-203, 1-221
312105-0455	SCREW M6S ISO 4017 M8X30 A480	1-69, 1-107, 1-109, 1-129, 1-131, 1-141, 1-143, 1-145, 1-159
312105-0462	SCREW M6S ISO 4014 M8X55 A480	1-203
312105-0463	SCREW M6S ISO 4014 M8X60 A480	1-107, 1-109, 1-129, 1-131, 1-143, 1-145
312105-0464	SCREW M6S ISO 4014 M8X65 A480	1-143, 1-145
312105-0465	SCREW M6S ISO 4014 M8X70 A480	1-93
312105-0505	SCREW M6S ISO 4014 M10X70 A480	1-47, 1-49
312105-0640	SCREW M6S ISO 4014 M16X100 A480	1-257
312109-0335	SCREW M6S ISO 4017 M5X30 A480	1-157
312109-0374	SCREW M6S ISO 4017 M6X30 A480	1-93, 1-101, 1-115, 1-139, 1-149
312109-0376	SCREW M6S ISO 4017 M6X35 A480	1-93, 1-117, 1-241, 1-243
312109-0457	SCREW M6S ISO 4017 M8X35 A480	1-69
312109-0459	SCREW M6S ISO 4017 M8X40 A480	1-105, 1-115, 1-117, 1-139, 1-149, 1-199
312109-0460	SCREW M6S ISO 4017 M8X45 A480	1-85, 1-97, 1-143, 1-145
312111-0455	SCREW HEX.SOCK.HD.MC6S-TT 8X30 88 FZB	1-117
312115-0222	SCREW ISO4762 M3X8 A4	1-101, 1-117, 1-141
312115-0226	SCREW ISO4762 M3X12 A4	1-107, 1-109, 1-129, 1-131, 1-143, 1-145, 1-157
312115-0228	SCREW ISO4762 M3X16 A4	1-117
312115-0287	SCREW ISO4762 M4X8 A4	1-19, 1-21, 1-25, 1-27, 1-31, 1-111, 1-127, 1-147, 1-241, 1-243
312115-0291	SCREW ISO4762 M4X12 A4	1-13, 1-15, 1-107, 1-109, 1-127, 1-129, 1-131, 1-143, 1-145
312115-0293	SCREW ISO4762 M4X16 A4	1-155
312115-0295	SCREW ISO4762 M4X20 A4	1-63
312115-0323	SCREW ISO4762 M5X8 A4	1-13, 1-15, 1-19, 1-21, 1-25, 1-27
312115-0327	SCREW ISO4762 M5X12 A4	1-47, 1-49, 1-93, 1-165, 1-167, 1-171, 1-173, 1-177, 1-179, 1-225, 1-241, 1-243
312115-0329	SCREW ISO4762 M5X16 A4	1-47, 1-49, 1-85, 1-171, 1-225, 1-241, 1-243
312115-0331	SCREW ISO4762 M5X20 A4	1-29, 1-41, 1-43, 1-45, 1-83, 1-113, 1-135, 1-151, 1-239

Part No	Description	Page No
312115-0333 ..	SCREW ISO4762 M5X25 A4	1-151
312115-0335 ..	SCREW ISO4762 M5X30 A4	1-221
312115-0341 ..	SCREW ISO4762 M5X50 A4	1-107, 1-109, 1-129, 1-131, 1-143, 1-145
312115-0362 ..	SCREW ISO4762 M6X8 A4	1-41, 1-43, 1-45, 1-157, 1-161, 1-163, 1-239
312115-0366 ..	SCREW ISO4762 M6X12 A4	1-25, 1-27, 1-29, 1-85, 1-97, 1-175
312115-0368 ..	SCREW ISO4762 M6X16 A4	1-175
312115-0370 ..	SCREW ISO4762 M6X20 A4	1-97
312115-0372 ..	SCREW ISO4762 M6X25 A4	1-93, 1-97
312115-0374 ..	SCREW ISO4762 M6X30 A4	1-119
312115-0447 ..	SCREW ISO4762 M8X12 A4	1-135
312115-0449 ..	SCREW ISO4762 M8X16 A4	1-13, 1-15, 1-79
312115-0451 ..	SCREW ISO4762 M8X20 A4	1-113, 1-127, 1-155
312115-0453 ..	SCREW ISO4762 M8X25 A4	1-79, 1-97, 1-113, 1-115, 1-135
312115-0455 ..	SCREW ISO4762 M8X30 A4	1-113, 1-135
312115-0459 ..	SCREW ISO4762 M8X40 A4	1-97
312125-0222 ..	SCREW ISO 1207 M3X8 A4	1-69, 1-183, 1-237, 1-241, 1-243
312125-0224 ..	SCREW ISO 1207 M3X10 A4	1-107, 1-109, 1-129, 1-131, 1-143, 1-145
312125-0230 ..	SCREW ISO 1207 M3X20 A4	1-31, 1-241, 1-243
312125-0285 ..	SCREW ISO 1207 M4X6 A4	1-151
312125-0287 ..	SCREW ISO 1207 M4X8 A4	1-13, 1-15, 1-47, 1-49, 1-63, 1-107, 1-109, 1-111, 1-129, 1-131, 1-143, 1-145, 1-147, 1-151, 1-203, 1-209, 1-225
312125-0289 ..	SCREW ISO 1207 M4X10 A4	1-85, 1-105, 1-115, 1-139, 1-149
312125-0378 ..	SCREW ISO 1207 M6X40 A4	1-25, 1-27
312145-0224 ..	SCREW ISO 2009 MFS M3X10 A4	1-107, 1-109, 1-129, 1-131, 1-143, 1-145
312145-0226 ..	SCREW ISO 2009 MFS M3X12 A4	1-113, 1-135
312145-0295 ..	SCREW ISO 2009 MFS M4X20 A4	1-77
312145-0301 ..	SCREW ISO 2009 MFS M4X35 A4	1-111, 1-129, 1-131, 1-147
312145-0449 ..	SCREW ISO 2009 MFS M8X16 A4	1-47, 1-49
312155-0224 ..	SCREW EN 10642 MF6S M3X10 A480	1-117
312155-0285 ..	SCREW HEX.SOCK.COUNT.MF6S M4X6 A480	1-157, 1-223
312155-0287 ..	SCREW EN 10642 MF6S M4X8 A480	1-207
312155-0289 ..	SCREW EN 10642 MF6S M4X10 A480	1-241, 1-243
312155-0291 ..	SCREW EN 10642 MF6S M4X12 A480	1-13, 1-15, 1-107, 1-109, 1-111, 1-143, 1-145, 1-147, 1-151, 1-187, 1-207, 1-215, 1-225, 1-227
312155-0293 ..	SCREW EN 10642 MF6S M4X16 A480	1-75, 1-175
312155-0323 ..	SCREW EN 10642 MF6S M5X8 A480	1-157
312155-0329 ..	SCREW EN 10642 MF6S M5X16 A480	1-135, 1-151, 1-157, 1-207
312155-0331 ..	SCREW EN 10642 MF6S M5X20 A480	1-113, 1-121
312155-0339 ..	SCREW EN 10642 MF6S M5X40 A480	1-113, 1-135
312155-0364 ..	SCREW EN 10642 MF6S M6X10 A480	1-157
312155-0368 ..	SCREW EN 10642 MF6S M6X16 A480	1-225
312155-0449 ..	SCREW EN 10642 MF6S M8X16 A480	1-223, 1-225
312155-0461 ..	SCREW EN 10642 MF6S M8X50 A480	1-203
312180-0455 ..	SCREW ISO7379 H8X30	1-187, 1-215, 1-227
312180-0495 ..	SCREW ISO7379 H10X30	1-85, 1-97
312311-0321 ..	SCREW ISO4028 M5X6 FZB	1-89
312311-0327 ..	SCREW ISO4028 M5X12 FZB	1-159
312311-0333 ..	SCREW ISO4028 M5X25 FZB	1-107, 1-109, 1-129, 1-131, 1-143, 1-145
312311-0366 ..	SCREW ISO4028 M6X12 FZB	1-57, 1-69, 1-93
312311-0374 ..	SCREW ISO4028 M6X30 FZB	1-57, 1-113, 1-127
312311-0376 ..	SCREW ISO4028 M6X35 FZB	1-151
312311-0451 ..	SCREW ISO4028 M8X20 FZB	1-107, 1-109, 1-129, 1-131, 1-143, 1-145
312311-0624 ..	SCREW ISO4028 M16X30 FZB	1-51
312318-0220 ..	SCREW ISO4029 M3X6 A4	1-199, 1-209
312318-0283 ..	SCREW ISO4029 M4X4 A4	1-77, 1-107, 1-109, 1-129, 1-131, 1-143, 1-145
312318-0285 ..	SCREW ISO4029 M4X6 A4	1-107, 1-109, 1-129, 1-131, 1-143, 1-145
312318-0287 ..	SCREW ISO4029 M4X8 A4	1-71
312318-0323 ..	SCREW ISO4029 M5X8 A4	1-83
312318-0327 ..	SCREW ISO4029 M5X12 A4	1-185
312318-0329 ..	SCREW ISO4029 M5X16 A4	1-79
312318-0362 ..	SCREW ISO4029 M6X8 A4	1-93, 1-159
312318-0366 ..	SCREW ISO4029 M6X12 A4	1-69, 1-79, 1-91
312601-0316 ..	NUT M6M 6-8 FZB	1-157
312602-0312 ..	HEXAGON NUT, EN 24032 M6M M4 NIPLBR	1-167, 1-173
312605-0310 ..	HEXAGON NUT, M6M M3 A280	1-157, 1-183, 1-209, 1-225, 1-241, 1-243
312605-0312 ..	HEXAGON NUT, M6M M4 A280	1-13, 1-15, 1-25, 1-27, 1-67, 1-75, 1-77, 1-95, 1-157, 1-167, 1-171, 1-173, 1-241, 1-243
312605-0314 ..	HEXAGON NUT, M6M M5 A280	1-19, 1-21, 1-107, 1-109, 1-129, 1-131, 1-135, 1-143, 1-145, 1-203, 1-207
312605-0316 ..	HEXAGON NUT, M6M M6 A280	1-13, 1-15, 1-25, 1-27, 1-31, 1-67, 1-69, 1-93, 1-95, 1-157, 1-165, 1-175, 1-225, 1-241, 1-243
312605-0318 ..	HEXAGON NUT, M6M M8 A280	1-69, 1-85, 1-87, 1-93, 1-97, 1-107, 1-109, 1-115, 1-129, 1-131, 1-143, 1-145, 1-203, 1-209
312605-0324 ..	HEXAGON NUT, M6M M16 A280	1-51
312621-0318 ..	ROD END,NUT M8	1-107, 1-109, 1-129, 1-131, 1-143, 1-145
312625-0316 ..	HEXAGON THIN NUT, EN 24035 ML6M M6 A4	1-81, 1-107, 1-109, 1-113, 1-127, 1-129, 1-131, 1-143, 1-145, 1-151
312625-0318 ..	HEXAGON THIN NUT, EN 24035 ML6M M8 A4	1-199
312705-0312 ..	NUT HEX. DOMED CAP MHM-6 M4 A280	1-241, 1-243
312705-0316 ..	NUT HEX. DOMED CAP MHM-6 M6 A280	1-71
312812-0312 ..	HEXAGON NUT, NY-LOCK M4 A480	1-135, 1-171, 1-195, 1-211, 1-225, 1-233
312902-0316 ..	NUT HEX. LEFT THREAD, M6 A280	1-107, 1-109, 1-129, 1-131, 1-143, 1-145
315101-0146 ..	WASHER PLAIN, BRB, 5,3/10 H=1	1-245
315103-0165 ..	WASHER PLAIN, BRB, 8,4/16,H=1,5 NIPL BR	1-103

Part No	Description	Page No
315105-0124 ..	WASHER BRB3,2X6RFR	1-69, 1-107, 1-109, 1-117, 1-129, 1-131, 1-143, 1-145, 1-157, 1-183, 1-203, 1-209, 1-225, 1-237, 1-241, 1-243
315105-0136 ..	WASHER BRB4,3XRFR	1-13, 1-15, 1-19, 1-21, 1-25, 1-27, 1-31, 1-47, 1-49, 1-63, 1-67, 1-77, 1-79, 1-85, 1-95, 1-107, 1-109, 1-127, 1-129, 1-131, 1-141, 1-143, 1-145, 1-155, 1-157, 1-167, 1-171, 1-183, 1-187, 1-195, 1-199, 1-203, 1-209, 1-211, 1-215, 1-225, 1-227, 1-233, 1-237, 1-241, 1-243
315105-0146 ..	WASHER BRB5,3X10RFR	1-13, 1-15, 1-19, 1-21, 1-25, 1-27, 1-29, 1-47, 1-49, 1-107, 1-109, 1-125, 1-129, 1-131, 1-135, 1-143, 1-145, 1-151, 1-157, 1-171, 1-177, 1-185, 1-187, 1-195, 1-199, 1-207, 1-211, 1-215, 1-225, 1-227, 1-233, 1-241, 1-243
315105-0153 ..	WASHER BRB6,4X12RFR	1-13, 1-15, 1-25, 1-27, 1-29, 1-41, 1-43, 1-45, 1-47, 1-49, 1-67, 1-69, 1-81, 1-83, 1-85, 1-87, 1-95, 1-97, 1-115, 1-117, 1-125, 1-165, 1-171, 1-175, 1-183, 1-199, 1-207, 1-209, 1-225, 1-239, 1-241, 1-243
315105-0156 ..	WASHER BRB 6.7X14 RFR	1-31, 1-71
315105-0165 ..	WASHER BRB8,4X16RFR	1-13, 1-15, 1-47, 1-49, 1-61, 1-69, 1-85, 1-97, 1-119, 1-125, 1-141, 1-143, 1-145, 1-183, 1-187, 1-195, 1-199, 1-207, 1-209, 1-211, 1-215, 1-221, 1-223, 1-225, 1-227, 1-233
315105-0173 ..	WASHER BRB10,5X22RFR	1-47, 1-49, 1-79
315115-0153 ..	WASHER PLAIN, TBRB 6,4/12 H=3	1-93, 1-101, 1-115, 1-139, 1-149
315115-0165 ..	WASHER PLAIN, TBRB 8,4/16 H=3	1-47, 1-49, 1-85, 1-87, 1-93, 1-97, 1-105, 1-107, 1-109, 1-113, 1-115, 1-117, 1-127, 1-129, 1-131, 1-135, 1-139, 1-141, 1-143, 1-145, 1-149, 1-155, 1-159, 1-199, 1-203, 1-257
315125-0153 ..	WASHER TBRSB 6,4X22X4 A4	1-87, 1-101, 1-115, 1-139, 1-149
315125-0165 ..	WASHER TBRSB 8,4X26X5 A4	1-53, 1-69
315233-0110 ..	WASHER CAPTIVE SEALING G1/4	1-245
315402-0136 ..	LOCK WASHER FBB 4,1	1-173
315705-0202 ..	PARALLEL KEY W ROUND ENDS 5X5X25MM	1-159
315705-0236 ..	PARALLEL KEY W. ROUND ENDS 6X6X30 MM	1-151
315742-0111 ..	RETAINING RING 15 SMS 199	1-159
315751-0103 ..	RETAINING RING FOR SHAFT DIN 471 6 A2	1-81
315751-0112 ..	RETAINING RING FOR SHAFT DIN 471 15 A2	1-73, 1-93, 1-159
315751-0116 ..	RETAINING RING FOR SHAFT DIN 471 20 A2	1-69, 1-97
315751-0119 ..	RETAINING RING FOR SHAFT DIN 471 25 A2	1-93
315751-0123 ..	RETAINING RING FOR SHAFT DIN 471 32 A2	1-139, 1-149, 1-159
315753-0117 ..	RETAINING RING FOR BORE DIN 472 22 A2	1-107, 1-109, 1-129, 1-131, 1-143, 1-145
315753-0122 ..	RETAINING RING FOR BORE DIN 472 30 A2	1-71
315753-0124 ..	RETAINING RING FOR BORE DIN 472 35 A2	1-93
315755-0108 ..	RETAINING RING SHAFT DIN 6799 6 A2	1-69, 1-71, 1-79, 1-195, 1-211, 1-233
318172-0179 ..	TIMING BELT T10X1780X16 POLYURETHANE	1-159
318800-0102 ..	HANDLES,SPHERICAL KNOB,INT.THRE.,D.20-M5	1-93
321111-0211 ..	FLANGE BUSHING, 15X21X10 MM	1-159
321111-0274 ..	FLANGE BUSHING, 18X24X18 MM	1-83
321120-0092 ..	BEARING BUSHING W/O FL, 4X5,5X6 MM	1-107, 1-109, 1-129, 1-131, 1-143, 1-145
321130-0180 ..	THRUST WASHER, 12X24X1,5 MM	1-115
321141-0060 ..	BEARING BUSHING W/O FL, 6X8X6 MM	1-107, 1-109, 1-129, 1-131, 1-143, 1-145
321141-0064 ..	BEARING BUSHING W/O FL, 6X8X10 MM	1-107, 1-109, 1-129, 1-131, 1-143, 1-145
321141-0140 ..	BEARING BUSHING W/O FL, 10X12X10 MM	1-107, 1-109, 1-129, 1-131, 1-143, 1-145
321302-0298 ..	BALL BEARING, 8X22X7 MM	1-195, 1-211, 1-233
321308-0202 ..	BALL BEARING, 15X32X9 MM	1-73, 1-85, 1-97
321308-0204 ..	BALL BEARING, 20X42X12 MM	1-69, 1-97
321308-0205 ..	BALL BEARING, 25X47X12MM	1-93
321313-0100 ..	BALL BEARING, 10X30X9 MM	1-71
321313-0102 ..	BALL BEARING, 15X35X11 MM	1-91, 1-93
321316-0200 ..	BALL BEARING, 10X35X11 MM	1-93
342700-0110 ..	NIPPLES,HEXAGON,EXT.G-THREAD G1/4"-G1/4"	1-245
342700-0205 ..	NIPPLES,HEXAGON,EXT.G-THREAD G1/2"-G1/4"	1-241, 1-243
342715-0100 ..	BLIND PLUG 4 MM	1-247, 1-249
342715-0102 ..	BLIND PLUG 6 MM	1-247, 1-249
342715-0103 ..	BLIND PLUG 8 MM	1-247, 1-249
342716-0203 ..	REDUCER 6-8	1-241, 1-243, 1-247, 1-249
342722-0197 ..	STRAIGHT COUPLING	1-151
342722-0198 ..	STRAIGHT COUPLING	1-151
342722-0202 ..	PIPE COUPLING 1/8" D=6MM	1-107, 1-109, 1-129, 1-131, 1-143, 1-145
342722-0204 ..	PIPE COUPLING	1-119
342722-0209 ..	STRAIGHT COUPLING D=12-G1/4"	1-241, 1-243
342722-0210 ..	STRAIGHT COUPLING, D=12 MM - G3/8"	1-247, 1-249
342732-0105 ..	ELBOW PIPE D8-R3/8"	1-247, 1-249
342732-0110 ..	ELBOW PIPE JOINT, EXT.THREAD,D=12MM-G3/8	1-245
342735-0100 ..	ELBOW PIPE JOINT	1-241, 1-243
342735-0109 ..	ELBOW PIPE JOINT	1-241, 1-243
342742-0110 ..	T-COUPLING,ADJUST,F.PLAST.TUBE 12-G3/8"	1-241, 1-243
342748-0102 ..	T-CONNECTION 6MM	1-241, 1-243
342748-0109 ..	T-CONNECTION 12MM	1-241, 1-243
342767-0100 ..	CONN. BULKHEAD G1/8	1-241, 1-243
342768-0103 ..	BULKHEAD CONNECTOR, 8 MM	1-241, 1-243
342770-0101 ..	STRAIGHT COUPLING INT, D=4 MM - G1/8	1-241, 1-243
342840-0105 ..	CLAMPING PIECE	1-117
342921-0111 ..	STRAIGHT COUPL,EXT.THREAD.6/4-M5	1-113, 1-129, 1-131, 1-135
342931-0113 ..	ELBOW 90 COUPL.,EXT.THREAD 6/4-G1/8"	1-85
342991-0100 ..	HOSE CLIP,WORM DRIVE TYPE 10-13	1-61
351150-0403 ..	CABLE OLFLEX 3X0,75 MM2 LIGHT/GREY	1-39
351150-0404 ..	CABLE OLFLEX 4X0,75 MM2 LIGHT/GREY	1-61
351150-0405 ..	CABLE OLFLEX 5X0,75 MM2 LIGHT/GREY	1-39
351150-0407 ..	CABLE OLFLEX 12X0,75 MM2 LIGHT/GREY	1-39, 1-237, 1-239
351150-0412 ..	CABLE OLFLEX 3X1,5 MM2 LIGHT/GREY	1-39, 1-61
351150-0413 ..	CABLE OLFLEX 4X1,5 MM2 LIGHT/GREY	1-39
351150-0414 ..	CABLE OLFLEX 5X1,5 MM2 LIGHT/GREY	1-61

Part No	Description	Page No
351150-0416 ..	CABLE OLFLEX 12X1,5 MM2 LIGHT/GREY	1-13, 1-15
351150-0419 ..	CABLE OLFLEX 5X2,5 MM2 LIGHT/GREY	1-13, 1-15
351160-0104 ..	CABLE AWM 1X1,5 MM2 DARKBLUE	1-13, 1-15
351172-0102 ..	CABLE AWM 1X 0,75 MM2 DARK-BLUE	1-41
351172-0104 ..	CABLE AWM 1X15 MM2 DARK-BLUE	1-63
352103-0100 ..	CABLE GLAND, STR 9, PR15,2/PG9	1-43, 1-45, 1-239
352103-0101 ..	CABLE GLAND, ST 9, PR15,2/PG9	1-43, 1-45, 1-63, 1-239
352103-0106 ..	CABLE GLAND, ST 11, PR18,6/PG11	1-41, 1-47, 1-49, 1-63, 1-241, 1-243
352103-0108 ..	CABLE GLAND, ST 13,5 , PR20,4/PG13,5	1-13, 1-15
352103-0111 ..	CABLE GLAND, ST 16, PR22,5/PG16	1-13, 1-15, 1-39
352103-0115 ..	CABLE GLAND, STR 21, PR28,3/PG21	1-41, 1-43, 1-45, 1-239
352103-0116 ..	CABLE GLAND, ST 21, PR28,3/PG21	1-13, 1-15
352113-0101 ..	CLIP STRIP, 92X2,5 MM	1-151
352113-0102 ..	CLIP-STRIP, BLACK 188X4,8 MM	1-63, 1-107, 1-109, 1-129, 1-131, 1-143, 1-145, 1-203, 1-209
352113-0204 ..	ANCHOR PLATES FOR STRIPS, TYPE TM3S25-M	1-47, 1-49, 1-85, 1-225
352113-0205 ..	ANCHOR PLATES FOR STRIPS, TYPE TM2S8-C10	1-13, 1-15, 1-47, 1-49, 1-63, 1-105, 1-107, 1-109, 1-115, 1-129, 1-131, 1-139, 1-143, 1-145, 1-149, 1-151, 1-203, 1-209
353021-0120 ..	FEED THROUGH TERMINAL, 10215.8	1-19, 1-21
353021-0122 ..	TERMINAL DISCONNECTBLE, WTR 2,5 D	1-19, 1-21
353021-0212 ..	FEED THROUGH TERMINAL, 10200.0	1-19, 1-21
353021-0216 ..	FEED THROUGH TERMINAL, 10200.8	1-41
353021-0301 ..	TERMINALS,TRIPLE-LEVEL, DLI 2,5/35 PA	1-43, 1-45, 1-239
353021-0302 ..	TERMINALS,TRIPLE-LEVEL, DLD 2,5/35 PA	1-43, 1-45, 1-239
353022-0002 ..	NEUTRAL TERMINAL, 10107.8	1-19, 1-21
353024-0205 ..	EARTH TERMINAL, 1010.1	1-19, 1-21, 1-41, 1-43, 1-45, 1-239
353024-0206 ..	EARTH TERMINAL, 1010.2	1-19, 1-21
353031-0201 ..	END BRACKET EW35	1-43, 1-45, 1-239
353031-0203 ..	END SUPPORT, WEW 35/2	1-19, 1-21
353032-0004 ..	END PLATE WAP 2,5-10 BEIGE	1-19, 1-21
353032-0005 ..	END PLATE WAP 2,5-10 BLUE	1-41
353032-0010 ..	END PLATE WAP	1-19, 1-21
353032-0302 ..	END PLATE WAP	1-43, 1-45, 1-239
353033-0104 ..	END PLATE, 10502.8	1-19, 1-21
353034-0030 ..	BRIDGE CONNECTOR WQV 2,5/10, 10544.6	1-19, 1-21
353034-0404 ..	BRIDGE CONNECTOR Q10, 13131.0	1-43, 1-45, 1-239
353041-0001 ..	RAIL 10X3MM SSCH	1-19, 1-21
353041-0104 ..	CLAMPING YOKE PZB 4 K	1-19, 1-21
353042-0004 ..	RAIL TS 35/7,5	1-19, 1-21, 1-29
353042-0005 ..	RAIL TS 35/7.5	1-41, 1-43, 1-45, 1-239
353240-0003 ..	NORMAL WITHOUT INSERT, PG 13,5	1-39
353240-0005 ..	NORMAL WITHOUT INSERT, PG 21	1-39, 1-61
353240-0006 ..	SCREW CAP PG 29	1-13, 1-15, 1-39
353240-0007 ..	NORMAL WITHOUT INSERT, PG 36	1-31
353241-0008 ..	EXTENDED WITHOUT INSERT, PG 16/29	1-13, 1-15, 1-237
353243-0002 ..	EXTENDED WITHOUT INSERT, PG11	1-141
353245-0005 ..	GLAND, EXTENDED WITH INSERT, PG16/PR 22,	1-97
353249-0010 ..	INSERT, SINGEL HOLE, EK 152/11	1-13, 1-15
359005-0010 ..	MARKING LABEL KIT 0 - 9, 04.841.2150.0	1-13, 1-15, 1-39, 1-61
359005-0050 ..	MARKING LABEL KIT X, 04.841.4550.0	1-13, 1-15, 1-39, 1-61
359011-0807 ..	MARKING PLATES 5-FW 1-50	1-19, 1-21, 1-41, 1-43, 1-45, 1-63, 1-239
359011-0817 ..	SYMBOL 5-GW (+) 50PC	1-43, 1-45, 1-239
359011-0818 ..	SYMBOL 5-GW (-) 50PC	1-43, 1-45, 1-239
359011-0821 ..	SET OF SIGNS 6-FW 1-50	1-19, 1-21
359011-0834 ..	SET OF SIGNS 6-GW(EARTH)	1-63, 1-239
359240-0100 ..	SIGN HOLDER FOR 359240-0001	1-25, 1-27
359241-0133 ..	SIGN, SERVICE SWITCH	1-25, 1-27
359241-0201 ..	SIGN "HOUR GLASS"	1-25, 1-27
359241-0471 ..	SIGN" PULL TAB FUNCTION"	1-25, 1-27
359301-0512 ..	BUTTON SIGN, INDEX TO POSITION	1-25, 1-27
359307-0002 ..	SYMBOL SIGN "TAB C'JAW"	1-241, 1-243
359307-0004 ..	SYMBOL SIGN "PATCH C'JAW"	1-241, 1-243
359307-0010 ..	SIGN "WASTE BLOWING"	1-241, 1-243
359307-0011 ..	SIGN" PRESSURE ROLLER DRIVE MOTOR"	1-241, 1-243
359307-0012 ..	SIGN" PRESSURE ROLLER TENSION DEVICE"	1-241, 1-243
359705-0015 ..	WARNING SIGN ISO, RISK OF ELECTRIC SHOCK	1-25, 1-27, 1-41, 1-43, 1-45, 1-63, 1-165, 1-179, 1-239
469095-0000 ..	HOLDER	1-53
469096-0000 ..	LEG	1-53
495118-0014 ..	DISTANCE PIPE L=14 MM	1-29
495130-0070 ..	SPACER TUBE L=70MM	1-29
495377-0000 ..	BUSH	1-25, 1-27
514993-0200 ..	BY-PASS SENSOR	1-65
529990-0000 ..	SUPPORT	1-207
532022-0000 ..	LOCK BAR	1-187, 1-215, 1-227
533972-0000 ..	INDICATOR CURVE	1-185
534497-0000 ..	SPACER	1-191
544427-0000 ..	TURN SPRING	1-187, 1-215, 1-227
548770-0001 ..	COAXIAL CABLE L=5000MM	1-13, 1-15
548770-0007 ..	COAXIAL CABLE L=3000 MM	1-13, 1-15
558230-0101 ..	TMCC CONTROLLER	1-25, 1-27
577135-0100 ..	PIPE-LINE	1-3, 1-5, 1-7, 1-9
578684-0000 ..	SPRING BRACKET	1-157
583713-0000 ..	SPRING BRACKET	1-69
583727-0000 ..	SHAFT	1-71

Part No	Description	Page No
649060-0600 ..	ELECTRIC EQUIPMENT	1-3, 1-5, 1-7, 1-9
731049-0000 ..	SLIDING STRIP TPIH	1-13, 1-15
905174-0000 ..	STEER PLATE	1-107, 1-109, 1-129, 1-131, 1-143, 1-145
905194-0000 ..	SHAFT	1-107, 1-109, 1-129, 1-131, 1-143, 1-145
905211-0000 ..	ROLLER	1-183, 1-195, 1-199, 1-209, 1-211, 1-225, 1-233
905212-0000 ..	SHAFT	1-143, 1-145
905215-0000 ..	BOLT	1-107, 1-109, 1-129, 1-131, 1-143, 1-145
905241-0000 ..	COUPLING	1-107, 1-109, 1-129, 1-131, 1-143, 1-145
905243-0000 ..	SHAFT	1-107, 1-109, 1-129, 1-131, 1-143, 1-145
905244-0000 ..	WEDGE	1-107, 1-109, 1-113, 1-117, 1-129, 1-131, 1-135, 1-143, 1-145
905246-0000 ..	BRACKET	1-107, 1-109, 1-129, 1-131, 1-143, 1-145
905285-0000 ..	STRIPPER PIN	1-119
905413-0000 ..	SHAFT	1-107, 1-109, 1-129, 1-131, 1-143, 1-145
905415-0000 ..	SHAFT	1-107, 1-109, 1-129, 1-131, 1-143, 1-145
905416-0000 ..	PIVOT BRACKET-SWIVEL	1-107, 1-109, 1-129, 1-131, 1-143, 1-145
905417-0000 ..	SHAFT	1-107, 1-109, 1-129, 1-131, 1-143, 1-145
905419-0000 ..	PIVOT ARM-SWIVEL	1-107, 1-109, 1-129, 1-131, 1-143, 1-145
905463-0000 ..	KEY	1-113, 1-135
905471-0000 ..	ROLLER-DRIVE	1-107, 1-109, 1-129, 1-131, 1-143, 1-145
905607-0000 ..	SCREW	1-107, 1-109, 1-129, 1-131, 1-143, 1-145
905608-0000 ..	SCREW	1-107, 1-109, 1-129, 1-131, 1-143, 1-145
905609-0000 ..	LOCK BAR	1-107, 1-109, 1-129, 1-131, 1-143, 1-145
905613-0000 ..	SHAFT	1-107, 1-109, 1-129, 1-131, 1-143, 1-145
906254-0000 ..	ROLLER	1-93
907136-0000 ..	HEATER	1-111, 1-147, 1-151
907249-0000 ..	CLAMP	1-111, 1-147
907358-0001 ..	ROLLER - 25.5	1-133, 1-231
907358-0003 ..	ROLLER	1-111, 1-133, 1-193, 1-201, 1-231
907358-0004 ..	ROLLER	1-147, 1-219
907358-0006 ..	ROLLER	1-133, 1-231
907358-0007 ..	ROLLER - 50.5	1-219
907358-0009 ..	ROLLER	1-147, 1-219
907358-0010 ..	ROLLER - 43	1-133, 1-231
907358-0011 ..	ROLLER	1-147, 1-219
907358-0012 ..	ROLLER	1-133, 1-147, 1-219, 1-231
907358-0013 ..	ROLLER	1-147, 1-219
907487-0000 ..	WASHER-CURVED	1-107, 1-109, 1-129, 1-131, 1-143, 1-145
907710-0000 ..	PIVOT PLATE	1-107, 1-109, 1-129, 1-131, 1-143, 1-145
907711-0000 ..	SHAFT	1-107, 1-109, 1-129, 1-131, 1-143, 1-145
907712-0000 ..	PIVOT PLATE	1-107, 1-109, 1-129, 1-131, 1-143, 1-145
907719-0000 ..	SPRING	1-107, 1-109, 1-129, 1-131, 1-143, 1-145
907731-0000 ..	O-RING	1-151
928919-0000 ..	FASTENING PLATE	1-113, 1-135
929607-0000 ..	EARTH BAR	1-13, 1-15, 1-31
970215-0000 ..	STOP BLOCK	1-25, 1-27
971346-0000 ..	GUIDE PIN	1-25, 1-27
979426-0000 ..	SIGN	1-241, 1-243
979974-0000 ..	INSERT	1-13, 1-15
985854-0000 ..	BRACKET	1-93
985855-0000 ..	SPACER BUSHING	1-93
985856-0000 ..	SHAFT	1-93
985865-0000 ..	BRACKET	1-93
985866-0000 ..	TOP FRAME	1-47, 1-49
985899-0000 ..	COUPLING	1-93
988685-0000 ..	PIN	1-165, 1-167, 1-171, 1-173, 1-179, 1-225, 1-241, 1-243
1010814-0000 .	ROLLER	1-83
1035076-0200 .	LEG	1-47, 1-49
1035471-0100 .	LEG	1-47, 1-49
1035792-0000 .	E-HINGE	1-165, 1-167, 1-171, 1-173, 1-179, 1-225, 1-241, 1-243
1036120-0000 .	SLEEVE	1-51
1036220-0000 .	SHAFT	1-93
1036227-0000 .	BRACKET	1-47, 1-49
1036232-0000 .	BRACKET	1-93
1036304-0005 .	LOCKING ARM	1-171, 1-173
1036304-0019 .	LOCKING ARM	1-171, 1-173
1036304-0020 .	LOCKING ARM	1-167
1036563-0000 .	WASHER	1-171, 1-225, 1-241, 1-243
1036622-0000 .	GUIDE ROLLER	1-71
1036623-0000 .	GUIDE ROLLER	1-71
1037762-0000 .	PIN	1-47, 1-49
1038865-0000 .	SPACER DISC	1-257
1082741-0000 .	HOLDER	1-207, 1-225, 1-241, 1-243
1082765-0000 .	PHOTOCELL BRACKET	1-95
1082861-0000 .	ARM	1-83
1095928-0100 .	COOLER	1-3, 1-5, 1-7, 1-9
1095931-0400 .	PAPER WEB PATH	1-3, 1-5, 1-7, 1-9
1095944-0300 .	DOOR EL-CABINET	1-161, 1-163
1095945-0200 .	DOOR	1-161, 1-163
1095946-0200 .	DOOR	1-161, 1-163
1095947-0200 .	DOOR	1-161, 1-163
1095948-0100 .	DOOR FOR WASTE BOX	1-161, 1-163
1095949-0100 .	DOOR FOR TPIH	1-161, 1-163
1095951-0500 .	DOORS AND COVERS	1-3, 1-5, 1-7, 1-9
1095952-0100 .	BENDING ROLLER ASSEMBLY	1-89, 1-93

Part No	Description	Page No
1095953-0200	.INFEED UNIT	1-65
1095955-0200	.WASTE BOX	1-99
1095969-0100	.BENDING ROLLER WITH FLANGES	1-85
1095979-0100	.PHOTOCELL UNIT	1-65
1095980-0100	.PHOTOCELL UNIT	1-65
1103299-0000	.NON-SKID	1-47, 1-49
1116048-0000	.SPACER	1-47, 1-49
1129042-0000	.KEY	1-171, 1-225, 1-241, 1-243
1129274-0000	.GUIDE LUG	1-167, 1-171, 1-173
1129275-0000	.BOX FOR DIAGRAM	1-165
1129767-0000	.SCREW	1-161, 1-163, 1-165, 1-167, 1-171, 1-173, 1-177, 1-179
1129770-0000	.BLOCKING PIECE	1-165, 1-167, 1-171, 1-173, 1-179, 1-225, 1-241, 1-243
1129867-0000	.SHEET	1-13, 1-15
1129906-0000	.PIN	1-85, 1-97
1129907-0000	.LEVER	1-85, 1-97
1129930-0000	.DOOR	1-179
1129931-0000	.DOOR	1-165
1129932-0000	.FRAME	1-165
1129951-0000	.BENDING ROLLER	1-91
1129952-0000	.BRACKET	1-91
1129971-0000	.BRACKET	1-177
1140016-0000	.PLATE	1-85, 1-97
1140045-0000	.FRAME	1-157
1140046-0000	.RAIL	1-157
1140048-0000	.LOCK PLATE	1-157
1140053-0000	.SPACER	1-13, 1-15, 1-31
1140131-0000	.FLANGE	1-89
1140132-0000	.ECCENTRIC	1-87, 1-93
1140133-0000	.AXLE PIN	1-91
1140134-0000	.PLATE	1-87
1140135-0000	.ROLLER	1-87
1140136-0000	.BRACKET	1-87
1140137-0000	.SHAFT	1-87
1140174-0000	.BEARING HOUSING	1-85, 1-97
1140184-0000	.BRACKET	1-85
1140185-0000	.SHAFT	1-85
1140187-0000	.WHEEL	1-85
1140209-0000	.GUIDE	1-67
1140211-0000	.PHOTOCELL BRACKET	1-67, 1-95
1140213-0000	.BRACKET	1-95
1140314-0000	.STOP LUG	1-13, 1-15
1140427-0000	.BRACKET	1-47, 1-49
1140503-0000	.ADJUSTMENT BRACKET	1-117
1140538-0000	.BLOCKING PIECE	1-241, 1-243
1140545-0000	.TEE BRACKET	1-107, 1-109, 1-129, 1-131, 1-143, 1-145
1140546-0000	.BRACKET	1-129, 1-131, 1-143, 1-145
1140547-0000	.SHAFT	1-107, 1-109, 1-129, 1-131, 1-143, 1-145
1140548-0000	.FLANGED BEARING BUSHING	1-107, 1-109, 1-129, 1-131, 1-143, 1-145
1140551-0000	.SHAFT	1-107, 1-109, 1-129, 1-131
1140727-0000	.ROLLER	1-225
1140771-0000	.COVERING PLATE	1-161, 1-163
1140772-0000	.COVERING PLATE	1-161, 1-163
1140773-0000	.COVERING PLATE	1-161, 1-163
1140774-0000	.COVERING PLATE	1-161, 1-163
1140775-0000	.COVERING PLATE	1-161, 1-163
1140776-0000	.COVERING PLATE	1-161, 1-163
1140777-0000	.COVERING PLATE	1-161, 1-163
1140817-0000	.BRACKET	1-203
1140889-0000	.BUSBAR	1-135
1140890-0000	.TRANSFORMER BRACKET	1-135
1143884-0000	.COPPER BRAID	1-13, 1-15
1145079-0000	.WHEEL	1-73
1145219-0000	.SIGN	1-241, 1-243
1145391-0000	.ROLLER	1-81
1145416-0000	.PUNCH HOLE 55	1-121
1145417-0000	.DIE HOLE 55	1-121
1145496-0000	.PUNCH HOLE 65	1-121
1145497-0000	.DIE HOLE 65	1-121
1147009-0000	.SPECIAL WASHER	1-115, 1-139, 1-149, 1-159
1147010-0000	.BUSHING	1-115, 1-139, 1-149, 1-159
1147049-0000	.BRACKET	1-159
1147050-0000	.SCREW	1-159
1147051-0000	.TOOTHED PULLEY	1-159
1185008-0300	.MAGAZINE	1-3, 1-5, 1-7, 1-9
1185047-0100	.AIR INLET GROUP	1-241, 1-243
1185048-0200	.VALVE GROUP	1-241, 1-243
1185049-0300	.VALVE PANEL	1-3, 1-5, 1-7, 1-9
1185078-0100	.LIFTING DEVICE	1-99
1255035-0000	.ECCENTRIC	1-83
1255311-0000	.FRAME	1-47, 1-49
1255682-0000	.DOOR	1-167
1255683-0000	.DOOR	1-177
1255684-0000	.HOLDER	1-171
1255685-0000	.DOOR	1-171

Part No	Description	Page No
1255686-0000	.DOOR	1-173
1255687-0000	.BRACKET	1-113, 1-127
1255692-0010	.CABLE	1-39
1255952-0000	.BOX FOR TPIH	1-13, 1-15
1255955-0000	.FRAME	1-25, 1-27
1260239-0000	.ANGLE BRACKET	1-117
1260329-0000	.BRACKET	1-83
1260389-0000	.CASTING APPLICATOR	1-129, 1-131, 1-143, 1-145
1260390-0200	.MISSING PATCH DETECTOR	1-123
1260395-0000	.PLATE	1-107, 1-109, 1-129, 1-131, 1-143, 1-145
1260397-0000	.BRACKET	1-139
1260398-0000	.BRACKET	1-105
1260401-0200	.SETTING TOOL	1-101, 1-123, 1-141
1260403-0000	.ROD	1-165
1260426-0100	.PATCH RESEAL BRACKET	1-123
1260427-0200	.OUTER PATCH BRACKET	1-101
1260428-0200	.FRAME	1-3, 1-5, 1-7, 1-9
1260440-0000	.BRACKET	1-25, 1-27
1260522-0000	.PHOTOCELL	1-127
1260523-0000	.CABLE	1-127
1260552-0000	.ROD	1-165
1260561-0000	.HOLDER	1-13, 1-15
1260642-0000	.LEVER	1-93
1260643-0000	.LEVER	1-93
1260644-0000	.LEVER	1-93
1260649-0000	.PAPER GUIDE	1-93
1260811-0100	.CONNECTION BOX	1-39
1260812-0100	.CONNECTION BOX	1-39
1260813-0100	.CONNECTION BOX	1-39
1260814-0000	.CONNECTION BOX	1-43, 1-45
1260815-0000	.CONNECTION BOX	1-41
1260902-0000	.INSERT	1-39
1279484-0000	.SHIM	1-113, 1-135
1279828-0000	.SEALING STRIP	1-167
1279829-0000	.SEALING STRIP	1-171, 1-173
1279830-0000	.SEALING STRIP	1-177
1279831-0000	.COVER	1-25, 1-27
1279832-0000	.PLATE	1-47, 1-49
1279833-0000	.RUBBER STRIP	1-47, 1-49
1282599-0000	.INSERT	1-39
1282600-0000	.INSERT	1-39
1282787-0000	.INSERT	1-39
1282788-0000	.INSERT	1-61
1285054-0100	.CONNECTION BOX	1-61
1296298-0000	.BUSHING	1-113, 1-135
1296300-0000	.WASHER	1-113, 1-135
1296752-0000	.BRACKET	1-107, 1-109, 1-129, 1-131, 1-143, 1-145
1296753-0000	.FLAG	1-107, 1-109, 1-129, 1-131, 1-143, 1-145
1296856-0000	.BRACKET	1-47, 1-49
1317233-0000	.PUNCH HOLE85	1-121
1317234-0000	.DIE HOLE85	1-121
1317254-0300	.ELECTRICAL CABINET	1-3, 1-5, 1-7, 1-9
1317354-0300	.MOUNTING PLATE	1-13, 1-15
1317355-0300	.SWING FRAME	1-13, 1-15
1317356-0300	.FUSE BOX	1-25, 1-27
1317357-0000	.MOUNTING PLATE	1-19, 1-21
1317358-0000	.SWING FRAME	1-25, 1-27
1317359-0000	.BRACKET	1-25, 1-27
1317360-0000	.FUSE BOX	1-29
1317361-0000	.COVER PLATE	1-29
1317483-0000	.TOUCH GUARD	1-19, 1-21
1317484-0000	.STUD SCREW	1-19, 1-21
1317485-0000	.ANGLE BRACKET	1-19, 1-21
1317657-0000	.INSERT	1-13, 1-15
1317672-0000	.AXLE PIN	1-203
1317673-0000	.PLATE	1-203
1317674-0000	.FLAG	1-203
1317675-0000	.AXLE PIN	1-203
1317676-0000	.PLATE	1-203
1317711-0000	.SHAFT	1-71
1317712-0000	.SHAFT	1-71
1317713-0000	.SHAFT	1-69, 1-79
1317715-0000	.HOLDER	1-69, 1-79
1317750-0000	.CABINET	1-13, 1-15
1317751-0100	.CABLE HARNESS	1-3, 1-5, 1-7, 1-9
1334322-0100	.BENDING ROLLER WITH FLANGES	1-3, 1-5, 1-7, 1-9, 1-87
1346162-0000	.PHOTOCELL BRACKET	1-127
1346219-0000	.REFLECTOR	1-127
1346824-0000	.INSERT	1-13, 1-15
1347952-0002	.SPACER	1-235
1347952-0003	.SPACER	1-197, 1-235
1347952-0004	.SPACER	1-235
1347952-0006	.SPACER	1-213, 1-235
1347952-0008	.SPACER	1-213

Part No	Description	Page No
1347952-0009	.SPACER	1-235
1347952-0011	.SPACER	1-213
1347952-0012	.SPACER	1-213
1347952-0015	.SPACER	1-213
1347952-0016	.SPACER	1-213
1347969-0000	.PIN	1-195, 1-211, 1-233
1348057-0000	.BRACKET	1-47, 1-49
1348058-0000	.CABLE DUCT	1-47, 1-49
1348236-0000	.INSULATING RAIL	1-151
1349916-0000	.CLAMP	1-111, 1-147, 1-151
1350146-0000	.CONNECTION BOX	1-63
1350785-0001	.SHIM	1-107, 1-109, 1-129, 1-131, 1-143, 1-145
1350785-0002	.SHIM	1-107, 1-109, 1-129, 1-131, 1-143, 1-145
1350785-0003	.SHIM	1-107, 1-109, 1-129, 1-131, 1-143, 1-145
1350785-0004	.SHIM	1-107, 1-109, 1-129, 1-131, 1-143, 1-145
1478479-0000	.HOLDER	1-111, 1-147, 1-151
1484230-0000	.PUNCH	1-121
1484231-0000	.DIE	1-121
1484509-0000	.TEMPLATE	1-255
1487235-0000	.TEMPLATE	1-255
1487236-0000	.TEMPLATE	1-255
1487264-0000	.PLATE	1-111, 1-129, 1-131, 1-147
1487711-0000	.TEMPLATE	1-255
1487712-0000	.LEG	1-51
1487732-0000	.TEMPLATE	1-255
1487733-0000	.TEMPLATE	1-255
1487757-0000	.FUSE BOARD	1-165
1490129-0000	.TEMPLATE	1-255
1490170-0000	.TEMPLATE	1-255
1490995-0000	.BRACKET	1-97
1490996-0000	.BRACKET	1-97
1490998-0000	.SHAFT	1-97
1490999-0000	.SHAFT	1-97
1498046-0000	.WHEEL	1-97
1498298-0000	.SHIM	1-119
1498302-0000	.COUNTERWEIGHT	1-195, 1-211, 1-233
1498303-0000	.BELT	1-195, 1-211, 1-233
1498322-0000	.WASTE HANDLING	1-117
1498323-0100	.PAPER GUIDE	1-79
1498335-0000	.ROLLER	1-69
1498347-0000	.WASHER	1-183, 1-209, 1-225
1498357-0000	.LEVER	1-195, 1-211, 1-233
1498358-0000	.BUSHING	1-195, 1-211, 1-233
1498359-0000	.SHAFT	1-195, 1-211, 1-233
1498360-0000	.HUB	1-195, 1-211, 1-233
1498496-0000	.GUIDE	1-151
1499181-0000	.TEMPLATE	1-255
1499183-0000	.TEMPLATE	1-255
1499250-0000	.AXLE PIN	1-183, 1-209, 1-225
1499251-0002	.AXLE PIN	1-183, 1-209, 1-225
1499251-0003	.AXLE PIN	1-183, 1-199, 1-225
1499251-0005	.AXLE PIN	1-183, 1-199, 1-225
1499252-0000	.ARM	1-185
1499253-0000	.BUSHING	1-183, 1-209, 1-225
1499255-0100	.DETECTOR	1-183, 1-209, 1-225
1499283-0000	.SHAFT	1-81
1499288-0000	.AXLE SUPPORT	1-187, 1-215, 1-227
1499290-0100	.SPLICING TABLE	1-225
1499296-0001	.GUIDE	1-229
1499296-0002	.GUIDE	1-189, 1-229
1499296-0003	.GUIDE	1-229
1499296-0004	.GUIDE	1-217, 1-229
1499296-0008	.GUIDE	1-217
1499296-0009	.GUIDE	1-217
1499296-0011	.GUIDE	1-217
1499296-0012	.GUIDE	1-217
1499296-0013	.GUIDE	1-217
1499296-0014	.GUIDE	1-229
1499296-0015	.GUIDE	1-217
1499297-0100	.COUNTER ROLLER	1-69
1499298-0000	.PIN	1-73
1511035-0000	.AIR DUCT	1-175
1512174-0000	.BRACKET	1-85
1512267-0000	.ECCENTRIC BUSHING	1-93
1512668-0000	.CONNECTION PLATE	1-175
1512669-0000	.GRID	1-169
1517036-0000	.BRACKET	1-221
1517037-0000	.ROLLER	1-191
1517039-0100	.BOBBIN HOLDER	1-209
1517044-0000	.PLATE	1-187, 1-215, 1-227
1519000-0000	.BRACKET	1-151
1519364-0000	.INSULATING RAIL	1-111, 1-147
1519379-0000	.FLAT KNIFE	1-111, 1-129, 1-131, 1-147
1519463-0000	.LOCKING CLAMP	1-187, 1-215, 1-227

Part No	Description	Page No
1519704-0000	.BRACKET	1-191
1519708-0100	.MAGAZINE	1-183, 1-225
1519714-0000	.SUPPORT	1-225
1519716-0000	.SUPPORT	1-225
1519723-0000	.SHAFT	1-129, 1-131, 1-143, 1-145
1520196-0000	.INDUCTOR	1-137
1520450-0000	.INDUCTOR	1-137
1523149-0000	.SPRING BRACKET	1-93
1523164-0000	.BLOCK	1-151
1523262-0000	.FLAG	1-199, 1-209
1523263-0001	.BRACKET	1-209
1524301-0000	.SPACER	1-107, 1-109, 1-129, 1-131, 1-143, 1-145
1524302-0000	.SCREW	1-107, 1-109, 1-129, 1-131, 1-143, 1-145
1524305-0000	.ROD	1-107, 1-109, 1-129, 1-131, 1-143, 1-145
1524306-0000	.HOLDER	1-129, 1-131, 1-143, 1-145
1524707-0200	.ELECTRIC EQUIPMENT	1-13, 1-15
1524708-0000	.GASKET	1-169
1524713-0100	.GRID ELEMENT	1-167, 1-173
1532461-0000	.BRACKET	1-77
1533366-0000	.INDUCTOR	1-137
1533367-0000	.INDUCTOR	1-137
1538462-0000	.PLATE	1-175
1538684-0100	.BOBBIN HOLDER	1-233
1538685-0100	.SPLICING TABLE	1-227
1538689-0100	.SPLICING TABLE	1-209
1538691-0100	.SPLICING TABLE	1-215
1538692-0100	.BOBBIN HOLDER	1-211
1538982-0100	.TEMPLATE	1-3, 1-5, 1-7, 1-9
1539142-0000	.WASTE PIPE	1-117
1539190-0100	.OUTER PATCH APPLICATOR	1-99
1539193-0100	.OUTER PATCH FEEDER	1-101
1539195-0000	.BRACKET	1-149
1539196-0100	.STATION BRACKET	1-141
1539197-0100	.TAB APPLICATOR	1-99
1539200-0000	.PLATE	1-117
1539201-0200	.PUNCH UNIT	1-117
1539202-0100	.PUNCH ARRANGEMENT	1-99
1539203-0000	.BRACKET	1-115
1539209-0000	.PLATE	1-225
1539210-0100	.TAB MAGAZINE	1-209
1539211-0001	.ROD	1-221
1539211-0002	.ROD	1-191
1539212-0100	.STRIP MAGAZINE	1-209
1539213-0000	.GUIDE	1-95
1539215-0000	.BRACKET	1-209
1539216-0000	.BRACKET	1-223
1539217-0000	.FRAME	1-209
1539218-0000	.SUPPORT	1-223
1539219-0000	.RAIL	1-223
1539221-0000	.COVER	1-115
1539222-0000	.SCREW	1-115
1539225-0000	.BRACKET	1-183, 1-225
1548168-0100	.AIR DUCT	1-173
1549216-0000	.CABLE	1-31
1549217-0000	.CABLE	1-31
1549220-0100	.BOBBIN HOLDER	1-183
1549221-0100	.BOBBIN HOLDER	1-195
1549222-0100	.SPLICING TABLE	1-183
1549223-0100	.SPLICING TABLE	1-187
1549224-0100	.FRAME	1-209
1549225-0100	.OUTER PATCH TURNING	1-199
1549226-0100	.OUTER PATCH TURNING	1-181
1549228-0000	.GUIDE	1-199
1549229-0000	.BRACKET	1-199
1549231-0000	.GUIDE	1-183
1549232-0000	.BLOCK	1-225
1549233-0000	.PLATE	1-199
1549234-0000	.BRACKET	1-199
1549235-0000	.BRACKET	1-107, 1-109
1549236-0000	.SHAFT	1-107, 1-109
1549237-0000	.BRACKET	1-199
1549238-0000	.BRACKET	1-199
1549239-0000	.BRACKET	1-107, 1-109
1549244-0000	.COUNTER PLATE	1-113
1549247-0000	.PLATE	1-107, 1-109, 1-129, 1-131, 1-143, 1-145
1549248-0100	.OUTER PATCH C'JAW	1-101
1549256-0100	.TAB C'JAW	1-141
1549260-0100	.PATCH MAGAZINE	1-225
1549261-0100	.OUTHER PATCH MAGAZINE	1-183
1558064-0100	.PUNCH BRACKET	1-115
1558065-0000	.PLATE	1-79
1558066-0000	.SHAFT	1-79
1558067-0000	.BRACKET	1-79
1558068-0000	.BRACKET	1-79

Part No	Description	Page No
1558069-0100	.PAPER GUIDE	1-65
1558070-0000	.LOCKING FINGER	1-187, 1-215, 1-227
1558071-0100	.PATCH MAGAZINE	1-181
1558073-0000	.BAR	1-69
1558077-0000	.BRACKET	1-69
1558078-0000	.SPACER	1-203
1558079-0001	.SUPPORT	1-237
1558079-0002	.SUPPORT	1-183, 1-237
1558091-0000	.CONNECTION	1-209
1558093-0000	.COVER	1-207
1558094-0000	.COVER	1-207
1558095-0000	.COVER	1-207
1558098-0000	.COVER	1-207
1558099-0000	.COVER	1-207
1558100-0100	.DETECTOR	1-141
1558101-0000	.BRACKET	1-155
1558102-0000	.BRACKET	1-47, 1-49
1558103-0000	.BRACKET	1-47, 1-49
1558107-0000	.PLATE	1-141
1558108-0000	.BRACKET	1-141
1558111-0000	.PROTECTION	1-225
1558112-0100	.OUTHER PATCH MAGAZINE	1-181
1558113-0100	.BOBBIN HOLDER	1-225
1558244-0000	.CONNECTION BOX	1-239
1558245-0100	.CONNECTION BOX	1-237
1558253-0000	.ROLLER	1-71
1558863-0000	.INSERT	1-31
1558888-0000	.CABLE	1-31
1558890-0000	.CABLE	1-31
1558902-0000	.CABLE	1-31
1558903-0000	.SERVO MOTOR	1-85
1566708-0000	.INDUCTOR	1-137
2500097-0000	.KNIFE	1-107, 1-109, 1-129, 1-131, 1-143, 1-145
2501778-0000	.COVER	1-207
2501779-0000	.COVER	1-207
2501781-0100	.BLACK TAPE SENSOR	1-181
2501782-0100	.OUTFEED TENSION DEVICE	1-65
2501783-0000	.CANTILEVER	1-69
2501784-0100	.DETECTOR	1-69
2501785-0000	.PLATE	1-77
2501786-0000	.BRACKET	1-69
2501788-0100	.TAB MAGAZINE	1-205
2501790-0001	.GUIDE ROLLER	1-193, 1-231
2501790-0002	.GUIDE ROLLER	1-231
2501790-0003	.GUIDE ROLLER	1-231
2501790-0005	.GUIDE ROLLER	1-219
2501790-0006	.GUIDE ROLLER	1-219
2501790-0007	.GUIDE ROLLER	1-219
2501790-0008	.GUIDE ROLLER	1-219
2501790-0009	.GUIDE ROLLER	1-219
2501790-0010	.GUIDE ROLLER	1-231
2501790-0013	.GUIDE ROLLER	1-231
2501790-0014	.GUIDE ROLLER	1-219
2501791-0000	.PLATE	1-225
2501792-0000	.GUIDE FORK	1-209
2501793-0000	.AXLE SUPPORT	1-69
2501794-0000	.SHAFT	1-69
2501795-0000	.SPACER	1-69
2501796-0000	.ROD	1-69
2501800-0100	.TAB C'JAW	1-151
2501801-0100	.TAB FEEDER	1-141
2501802-0000	.COVER	1-207
2501803-0000	.COVER	1-207
2501804-0000	.COVER	1-207
2501805-0000	.COVER	1-207
2501808-0100	.PATCH FEEDER	1-129, 1-131
2501809-0100	.PUNCH UNIT	1-119
2501810-0100	.PATCH C'JAW	1-135
2501811-0000	.BRACKET	1-69
2501815-0000	.PIN	1-121
2501818-0000	.SPRING	1-69
2501820-0000	.PNEUMATIC DIAGRAM	1-241, 1-243
2503473-0000	.PIN	1-69
2504597-0100	.TAB FEEDER	1-143, 1-145
2504598-0000	.APPLICATOR HEAD	1-107, 1-109, 1-143, 1-145
2504599-0000	.SEALING PLATE	1-147
2504606-0000	.SEALING PLATE	1-133
2504608-0000	.BRACKET	1-129, 1-131
2504611-0100	.MOTOR UNIT	1-65
2504612-0000	.SPACER	1-141
2504615-0000	.ANGLE BRACKET	1-117
2504616-0000	.SEALING PLATE	1-111
2506351-0101	.TMCC PROGRAMME	1-37
2506488-0000	.SUPPORT	1-57

Part No	Description	Page No
2506489-0000	.SUPPORT	1-57
2506490-0000	.BAR	1-57
2506491-0000	.BAR	1-57
2506492-0100	.SETTING TEMPLATE	1-55
2506493-0100	.BAR	1-55
2507104-0000	.ROLLER	1-221
2507105-0000	.ROLLER	1-183, 1-203, 1-209, 1-225
2507106-0000	.GUIDE	1-221
2507109-0000	.BRACKET	1-203
2507110-0000	.ROLLER	1-203
2507111-0000	.TAPE	1-137
2510381-0000	.SUPPORT	1-207
2511638-0000	.OPENING SPECIFICATION	1-253
2511639-0000	.DIE	1-121
2511640-0000	.SEALING PLATE	1-147
2511642-0000	.SEALING PLATE	1-147
2511643-0000	.SEALING PLATE	1-111
2511644-0000	.PUNCH	1-121
2511651-0000	.SEALING PLATE	1-153
2514025-0000	.OPENING SPECIFICATION	1-253
2514026-0000	.OPENING SPECIFICATION	1-253
2514027-0000	.OPENING SPECIFICATION	1-253
2514029-0000	.OPENING SPECIFICATION	1-253
2514030-0000	.OPENING SPECIFICATION	1-253
2514031-0000	.OPENING SPECIFICATION	1-253
2514035-0000	.OPENING SPECIFICATION	1-253
2514036-0000	.OPENING SPECIFICATION	1-253
2514037-0000	.OPENING SPECIFICATION	1-253
2514038-0000	.OPENING SPECIFICATION	1-253
2514040-0000	.CONNECTION	1-143, 1-145
2517068-0000	.SUPPORT	1-143, 1-145
2517072-0000	.SEALING PLATE	1-133
2517073-0000	.SPACER	1-117
2517079-0100	.SEALING UNIT	1-107, 1-109
2517080-0000	.INSERT	1-13, 1-15, 1-237
2517081-0100	.TAB MAGAZINE	1-181
2517082-0100	.PROTECTIVE COVER	1-205
2517084-0000	.COVER	1-207
2517086-0000	.PLATE	1-209
2517087-0000	.PROTECTION	1-223
2523784-0101	.DMC PROGRAMME	1-35
2523791-0101	.DMC PROGRAMME	1-35
2525289-0000	.DIE	1-121
2525290-0000	.PUNCH	1-121
2525291-0000	.PLATE	1-113, 1-135
2525292-0000	.SEALING PLATE	1-153
2525294-0000	.PLATE	1-113, 1-135
2525295-0000	.PLATE	1-117
2525296-0000	.SPACER	1-119
2525300-0000	.SEALING PLATE	1-133
2525302-0000	.GUIDE BRACKET	1-125
2525303-0000	.PAPER GUIDE	1-125
2525304-0000	.PAPER GUIDE	1-125
2525305-0000	.PHOTOCELL BRACKET	1-125
2525309-0100	.BAR CODE READER	1-123
2525310-0000	.RAIL	1-157
2525311-0000	.RAIL	1-157
2525312-0000	.BRACKET	1-157
2525313-0000	.COVER	1-157
2525314-0000	.WASTE BOX	1-157
2525319-0000	.PLATE	1-31
2525321-0100	.PATCH TURNING DEVICE	1-181
2525323-0000	.SEALING PLATE	1-147
2525324-0000	.SEALING PLATE	1-147
2525325-0000	.COVER	1-209
2525326-0000	.PLATE	1-117
2525327-0000	.BRACKET	1-117
2525328-0000	.SEALING PLATE	1-153
2525330-0100	.GUIDE	1-69
2525331-0000	.SUPPORT	1-75
2525332-0000	.PLATE	1-75
2525335-0000	.FUSE BOARD	1-165
2526510-0100	.SETTING TOOL	1-47, 1-49
2526514-0100	.APPLICATORS	1-3, 1-5, 1-7, 1-9
2526515-0100	.OPENING SPECIFICATION	1-3, 1-5, 1-7, 1-9
2526517-0000	.CATCH	1-59
2526518-0100	.PATCH APPLICATOR	1-99
2526519-0100	.RESEAL PATCH C'JAW UNIT	1-123
2526520-0000	.BRACKET	1-103
2526521-0100	.PATCH FEEDER	1-123
2526529-0000	.SEALING PLATE	1-133
2526531-0000	.SEALING PLATE	1-153
2526540-0000	.OPENING SPECIFICATION	1-253
2526543-0000	.BRACKET	1-97

Part No	Description	Page No
2526544-0100	.DRIVE MOTOR	1-65
2526547-0000	.PLATE	1-241, 1-243
2526548-0000	.SEALING PLATE	1-147
2526555-0100	.COMPONENT LIST	1-3, 1-5, 1-7, 1-9
2526559-0000	.GUIDE	1-115
2529121-0000	.PLATE	1-119
2529123-0000	.SCREW	1-119
2529125-0000	.SPRING	1-119
2533631-0000	.GLASS PANE	1-165, 1-167
2533632-0000	.GLASS PANE	1-171
2537105-0000	.SPACER	1-119
2555116-0000	.WHEEL	1-85, 1-97
2555123-0000	.BENDING ROLLER	1-93
2555124-0000	.BRACKET	1-141
2555125-0000	.WASTE PIPE	1-157
2563964-0100	.PAPER GUIDE	1-69, 1-79
2563965-0000	.BRACKET	1-71
2563966-0000	.SCREW	1-141
2563974-0000	.SEALING PLATE	1-153
2578450-0000	.PIN	1-71
2579886-0000	.SEALING PLATE	1-153
2579887-0000	.OPENING SPECIFICATION	1-253
2603681-0000	.SEALING PLATE	1-147
2603682-0000	.DIE	1-121
2603683-0000	.PUNCH	1-121
2603689-0000	.COVER	1-207
2603690-0000	.COVER	1-93
2635555-0000	.OPENING SPECIFICATION	1-253
2641419-0100	.SOFTWARE	1-13, 1-15
2641420-0100	.SOFTWARE PLC	1-33
2641421-0100	.SOFTWARE DMC	1-33
2641422-0100	.SOFTWARE TMCC	1-33
2651295-0000	.TEMPLATE	1-255
2656096-0001	.TMCC PROGRAMME	1-37

Part No	Description	Page No

Part No	Description	Page No	Part No	Description	Page No

Tetra Pak

SPC
Spare Parts Catalogue

Pos	Part No	Description	Page No
A			
A8201	90458-0397	SERVO DRIVE DMC2 50720 P	1-13, 1-15
A8201:1	2523784-0101	DMC PROGRAMME	1-35
A8202	90119-0089	SAFETY RELAY, JSBT4 24VDC	1-19, 1-21
A8205	67600-0501	TPIH 2000 GENERATOR	1-13, 1-15
A8205:1	90110-0121	FEMALE INSERT GDS A-H 09 06 215 2811	1-13, 1-15
A8205:2	90110-0121	FEMALE INSERT GDS A-H 09 06 215 2811	1-15
A8210	558230-0101	TMCC CONTROLLER	1-25, 1-27
A8210:1	2656096-0001	TMCC PROGRAMME	1-37
A8211	68450-0101	STEPPER MOTOR DRIVER	1-25, 1-27
A8212	68450-0101	STEPPER MOTOR DRIVER	1-25, 1-27
A8216	90430-0070	FREQ.CONV. 6SE3213-6CA40	1-13, 1-15
A8233	90458-0401	SERVO DRIVE DMC2 50412	1-31
A8233:1	2523791-0101	DMC PROGRAMME	1-35
A8250	558230-0101	TMCC CONTROLLER	1-25, 1-27
A8250:1	2506351-0101	TMCC PROGRAMME	1-37
A8251	68450-0101	STEPPER MOTOR DRIVER	1-25, 1-27
A8252	90119-0084	EXPANSION RELAY, JSR1T-500MS	1-19, 1-21
A8300:1	90031-0050	BASEPLATE, 5-SLOT	1-19, 1-21
A8300:2	90031-0052	BASEPLATE, 5-SLOT	1-19, 1-21
A8300:3	90031-0052	BASEPLATE, 5-SLOT	1-19, 1-21
A8301	90031-0058	PLC, DIGITAL INPUT MODULE	1-19, 1-21
A8302	90031-0059	PLC, DIGITAL OUTPUT MODULE	1-19, 1-21
A8303	90031-0059	PLC, DIGITAL OUTPUT MODULE	1-19, 1-21
A8304	90031-0057	PLC, DIGITAL INPUT MODULE	1-19, 1-21
A8305	90031-0057	PLC, DIGITAL INPUT MODULE	1-19, 1-21
A8306	90031-0057	PLC, DIGITAL INPUT MODULE	1-19, 1-21
A8308	90031-0065	PLC,TEMPERATUR CONTROL,INPUT MODULE 8 PT	1-19, 1-21
A8309	90031-0059	PLC, DIGITAL OUTPUT MODULE	1-19, 1-21
A8310	90031-0059	PLC, DIGITAL OUTPUT MODULE	1-19, 1-21
A8311	90031-0059	PLC, DIGITAL OUTPUT MODULE	1-19, 1-21
A8313	90031-0062	PLC, ANALOG OUTPUT MODULE 8PT/CURR/VOLT	1-19, 1-21
B			
B8201	90326-0053	THERMOCOUPLE, 12826-35	1-19, 1-21
B8202	90458-0672	PROXIMITY SENSOR E2E2-X5MB1-5M	1-13, 1-15
B8401	90044-0139	KEY SAF.SW. AZ16-02 ZVR K-2254	1-225
B8402	90044-0139	KEY SAF.SW. AZ16-02 ZVR K-2254	1-171
B8402	90044-0310	KEY FOR SAFETY SWITCH, AZ 15/16 B1	1-207
B8403	90044-0139	KEY SAF.SW. AZ16-02 ZVR K-2254	1-241, 1-243
B8408	90044-0194	PROX.SW. IN5329/IN3002-BPKG	1-225
B8411	90232-0123	PH.CELL WLL170-P135-6011723	1-69
B8411	90232-0325	FIBRE E32-DC200	1-77
B8413	90044-0194	PROX.SW. IN5329/IN3002-BPKG	1-209
B8414	90458-0672	PROXIMITY SENSOR E2E2-X5MB1-5M	1-209
B8421	90458-0138	PROX.SW. E2EG-X1R5B1-5M	1-129, 1-131
B8423	90458-0138	PROX.SW. E2EG-X1R5B1-5M	1-107, 1-109
B8424	90458-0138	PROX.SW. E2EG-X1R5B1-5M	1-143, 1-145
B8428	90059-0029	THERMOSTAT	1-61
B8429	90044-0194	PROX.SW. IN5329/IN3002-BPKG	1-117
B8450.1	90232-0123	PH.CELL WLL170-P135-6011723	1-237
B8450.2	90232-0346	FIBRE LL3-DB01 5 308074	1-237
B8452	90326-0060	THERMOCOUPLE, CR-AL	1-151
B8454	90044-0194	PROX.SW. IN5329/IN3002-BPKG	1-183
B8455	90458-0672	PROXIMITY SENSOR E2E2-X5MB1-5M	1-199
B8456.1	90232-0123	PH.CELL WLL170-P135-6011723	1-183
B8456.2	90232-0346	FIBRE LL3-DB01 5 308074	1-183
B8457.1	90232-0123	PH.CELL WLL170-P135-6011723	1-237
B8457.2	90232-0346	FIBRE LL3-DB01 5 308074	1-237
B84201	90458-0602	PHOTOCELL,	1-125
B84202	90458-0602	PHOTOCELL,	1-125
B84251	90232-0104	PH.CELL E3S-CT61-D-5M	1-155
B84252	90232-0103	PH.CELL E3S-CT61-L-5M	1-155
C			
C8401	90159-0097	CAPACITOR, 2 æF 450 V	1-63
C8402	90159-0097	CAPACITOR, 2 æF 450 V	1-63
D			
D8301	90031-0075	CPU363, SERIAL COMMUNICATION	1-19, 1-21
D8302	90031-0031	ENHANCED GENIUS COMMUNICATION MODULE	1-19, 1-21
F			
F8201	90007-0129	CIRCUIT BREAKER, 1P 10 A K	1-29
F8202	90007-0128	CIRCUIT BREAKER, 1P 6 A K	1-29
F8203	90007-0128	CIRCUIT BREAKER, 1P 6 A K	1-29
F8206	90007-0156	CIRCUIT BREAKER, 1P 4 A K	1-29
F8207:1	90233-0028	TUBE FUSE, 10A	1-29
F8207:2	90233-0028	TUBE FUSE, 10A	1-29
F8207:3	90233-0028	TUBE FUSE, 10A	1-29
F8210	90007-0129	CIRCUIT BREAKER, 1P 10 A K	1-29
F8211	90007-0156	CIRCUIT BREAKER, 1P 4 A K	1-29
F8213	90007-0156	CIRCUIT BREAKER, 1P 4 A K	1-29
F8250	90007-0156	CIRCUIT BREAKER, 1P 4 A K	1-29
F8252	90007-0156	CIRCUIT BREAKER, 1P 4 A K	1-29
F8253	90007-0156	CIRCUIT BREAKER, 1P 4 A K	1-29
F8260	90111-0172	EARTH FAULT BREAKER, F 362-25/0.03	1-29

Pos	Part No	Description	Page No
G			
G8301	90031-0068	PLC, POWER SUPPLY	1-19, 1-21
G8302	90031-0068	PLC, POWER SUPPLY	1-19, 1-21
G8303	90031-0068	PLC, POWER SUPPLY	1-19, 1-21
K			
K8201	90075-0125	CONTACTOR, 7,5KW 24VDC	1-19, 1-21
K8204	90075-0125	CONTACTOR, 7,5KW 24VDC	1-19, 1-21
K8205	90075-0125	CONTACTOR, 7,5KW 24VDC	1-19, 1-21
K8206	90075-0127	NTACTOR, 4KW 24VDC	1-19, 1-21
K8207	90119-0056	RELAY, AUXILIARY MK3P5-S 24VDC	1-19, 1-21
K8208	90119-0056	RELAY, AUXILIARY MK3P5-S 24VDC	1-19, 1-21
K8209	90119-0056	RELAY, AUXILIARY MK3P5-S 24VDC	1-19, 1-21
K8213	90119-0067	SOLID-STATE RELAY, H12WD4850	1-19, 1-21
K8214	90119-0056	RELAY, AUXILIARY MK3P5-S 24VDC	1-19, 1-21
K8250	90119-0056	RELAY, AUXILIARY MK3P5-S 24VDC	1-19, 1-21
K8252	90119-0067	SOLID-STATE RELAY, H12WD4850	1-19, 1-21
K8253	90119-0082	SSR 90119-67 + HEAT SINK	1-19, 1-21
L			
L8406	1520196-0000	INDUCTOR	1-137
L8406	1520450-0000	INDUCTOR	1-137
L8406	1533366-0000	INDUCTOR	1-137
L8406	1533367-0000	INDUCTOR	1-137
L8406	1566708-0000	INDUCTOR	1-137
M			
M8405	90045-0192	STEP MOTORE21NSHT-LNF-NS-04	1-129, 1-131
M8406	90045-0192	STEP MOTORE21NSHT-LNF-NS-04	1-143, 1-145
M8407	90264-0069	FAN / R2E 190 AE 7705/M15 190 12	1-61
M8408	90270-0018	COMPRESSOR DANFOSS SC 12G	1-61
M8409	90264-0069	FAN / R2E 190 AE 7705/M15 190 12	1-61
M8450	90045-0192	STEP MOTORE21NSHT-LNF-NS-04	1-107, 1-109
P			
P8201	90053-0031	HOUR COUNTER, B 609.10 10-50VDC	1-25, 1-27
Q			
Q8201	90095-0077	OVERLOAD PROTECTION, PKZM 6-10 A	1-29
Q8201:1	90259-0313	AUX. CONTACT K&M NHI21-PKZM0	1-29
R			
R8301	90121-0116	RESISTANCE FIXED, 0,15 KOHM, 0,25 W	1-19, 1-21
R8452	907136-0000	HEATER	1-151
S			
SH8202	90064-0082	PUSH BUTTON, WHITE	1-25, 1-27
S8201	90111-0193	ROTARY SWITCH	1-25, 1-27
S8202	90111-0197	SERVICE KEY, 2 CLOSED + 2 OPEN	1-25, 1-27
T			
T8250	90245-0045	TRANSFORMER, 1-PHASE 220V/48V 500VA	1-13, 1-15
T8406	67379-0215	TRANSFORMER	1-137
T8406	67379-0216	TRANSFORMER	1-137
V			
V8201	353021-0122	TERMINAL DISCONNECTBLE, WTR 2,5 D	1-19, 1-21
V8202	353021-0122	TERMINAL DISCONNECTBLE, WTR 2,5 D	1-19, 1-21
V8203	353021-0122	TERMINAL DISCONNECTBLE, WTR 2,5 D	1-19, 1-21
W			
W8201	351150-0419	CABLE OLFLEX 5X2,5 MM2 LIGHT/GREY	1-13, 1-15
W8202	351150-0416	CABLE OLFLEX 12X1,5 MM2 LIGHT/GREY	1-13, 1-15
W8203	90220-0183	SCR. CABLE 2X0,34MM2	1-13, 1-15
W8204	90220-0183	SCR. CABLE 2X0,34MM2	1-19, 1-21
W8205	90220-0165	SCR. CABLE 5X0,34MM2	1-25, 1-27
W8206	90220-0165	SCR. CABLE 5X0,34MM2	1-25, 1-27
W8207	90220-0165	SCR. CABLE 5X0,34MM2	1-25, 1-27
W8208	90220-0034	THERMOCOUPLE CABLE K/ 2X0,5MM2	1-19, 1-21
W8210	548770-0007	COAXIAL CABLE L=3000 MM	1-13, 1-15
W8217	1143884-0000	COPPER BRAID	1-13, 1-15
W8220	90220-0183	SCR. CABLE 2X0,34MM2	1-19, 1-21
W8221	90220-0183	SCR. CABLE 2X0,34MM2	1-19, 1-21
W8225	90220-0183	SCR. CABLE 2X0,34MM2	1-19, 1-21
W8226	90220-0183	SCR. CABLE 2X0,34MM2	1-19, 1-21
W8230	90031-0305	I/O EXPANSION CABLE	1-19, 1-21
W8231	90031-0305	I/O EXPANSION CABLE	1-19, 1-21
W8233	1558888-0000	CABLE	1-31
W8251	90220-0165	SCR. CABLE 5X0,34MM2	1-25, 1-27
W8401	90220-0084	MOTOR CABLE 4X2,5+2(2X0.75)+SHIELD	1-39
W8402	1255692-0010	CABLE	1-39
W8403	351150-0407	CABLE OLFLEX 12X0,75 MM2 LIGHT/GREY	1-39
W8404	351150-0405	CABLE OLFLEX 5X0,75 MM2 LIGHT/GREY	1-39
W8405	351150-0405	CABLE OLFLEX 5X0,75 MM2 LIGHT/GREY	1-39
W8406	351150-0405	CABLE OLFLEX 5X0,75 MM2 LIGHT/GREY	1-39
W8408	90458-0603	CONNECTOR FEMALE 5 PINS	1-125
W8409	90458-0603	CONNECTOR FEMALE 5 PINS	1-125
W8411	351160-0104	CABLE AWM 1X1,5 MM2 DARKBLUE	1-13, 1-15
W8412	351160-0104	CABLE AWM 1X1,5 MM2 DARKBLUE	1-15
W8421	351150-0403	CABLE OLFLEX 3X0,75 MM2 LIGHT/GREY	1-39
W8422	351150-0407	CABLE OLFLEX 12X0,75 MM2 LIGHT/GREY	1-39
W8433	351150-0407	CABLE OLFLEX 12X0,75 MM2 LIGHT/GREY	1-39
W8445	90220-0104	SCR. CABLE 4X1,5MM2	1-13, 1-15
W8446	351150-0413	CABLE OLFLEX 4X1,5 MM2 LIGHT/GREY	1-39

Pos	Part No	Description	Page No
W			
W8446	1558890-0000	CABLE	1-31
W8447	1558902-0000	CABLE	1-31
W8448	351150-0412	CABLE OLFLEX 3X1,5 MM2 LIGHT/GREY	1-39
W8450	351150-0414	CABLE OLFLEX 5X1,5 MM2 LIGHT/GREY	1-61
W8452	351150-0412	CABLE OLFLEX 3X1,5 MM2 LIGHT/GREY	1-61
W8454	351150-0404	CABLE OLFLEX 4X0,75 MM2 LIGHT/GREY	1-61
W8460	90220-0034	THERMOCOUPLE CABLE K/ 2X0,5MM2	1-13, 1-15
W8471	548770-0001	COAXIAL CABLE L=5000MM	1-13, 1-15
W8472	548770-0001	COAXIAL CABLE L=5000MM	1-15
W8475	351150-0407	CABLE OLFLEX 12X0,75 MM2 LIGHT/GREY	1-237, 1-239
X			
X106	90110-0159	MALE INSERT 70.310.0640.0	1-13, 1-15
X206	90110-0150	MALE INSERT 121110 0000	1-13, 1-15
X8201:1	90110-0159	MALE INSERT 70.310.0640.0	1-13, 1-15
X8201:2	90110-0163	FEMALE INSERT 70 300 0640 0	1-13, 1-15
X8202:1	90110-0150	MALE INSERT 121110 0000	1-13, 1-15
X8202:2	90110-0164	FEMALE INSERT 70 105 2453 3	1-13, 1-15
X8203	90110-0216	MALE INSERT 70 310 1040 0	1-39
X8203:1	90110-0216	MALE INSERT 70 310 1040 0	1-13, 1-15
X8203:2	90110-0215	SOCKET	1-13, 1-15
X8204	90110-0215	SOCKET	1-15
X8204	90110-0216	MALE INSERT 70 310 1040 0	1-39
X8205	90110-0235	CABLE CONTACT, PX0739/S	1-39
X8205	90110-0236	CHASSIS CONTACT PX0767/S	1-13, 1-15
X8206	90110-0235	CABLE CONTACT, PX0739/S	1-39
X8206	90110-0236	CHASSIS CONTACT PX0767/S	1-15
X8207	90110-0235	CABLE CONTACT, PX0739/S	1-39
X8207	90110-0236	CHASSIS CONTACT PX0767/S	1-15
X8208	90110-0159	MALE INSERT 70.310.0640.0	1-39
X8208	90110-0161	FEMALE INSERT 70 105 0653 0	1-13, 1-15
X8209	90110-0235	CABLE CONTACT, PX0739/S	1-39
X8209	90110-0236	CHASSIS CONTACT PX0767/S	1-13, 1-15
X8210	90110-0159	MALE INSERT 70.310.0640.0	1-39
X8210	90110-0161	FEMALE INSERT 70 105 0653 0	1-13, 1-15
X8211	90110-0235	CABLE CONTACT, PX0739/S	1-39
X8211	90110-0236	CHASSIS CONTACT PX0767/S	1-13, 1-15
X8212	90110-0150	MALE INSERT 121110 0000	1-39
X8212	90110-0164	FEMALE INSERT 70 105 2453 3	1-13, 1-15
X8213	90110-0215	SOCKET	1-13, 1-15
X8213	90110-0216	MALE INSERT 70 310 1040 0	1-39
X8214	90110-0215	SOCKET	1-15
X8214	90110-0216	MALE INSERT 70 310 1040 0	1-39
X8215	90110-0161	FEMALE INSERT 70 105 0653 0	1-13, 1-15
X8216	90110-0235	CABLE CONTACT, PX0739/S	1-39
X8216	90110-0236	CHASSIS CONTACT PX0767/S	1-13, 1-15
X8218	90001-0033	WALL SOCKET OUTLET	1-25, 1-27
X8221	90195-0019	TERMINAL BLOCK, 1978.2	1-13, 1-15
X8250.1	353021-0212	FEED THROUGH TERMINAL, 10200.0	1-19, 1-21
X8250.4	353031-0203	END SUPPORT, WEW 35/2	1-19, 1-21
X8250.2	353032-0004	END PLATE WAP 2,5-10 BEIGE	1-19, 1-21
X8250.3	353034-0030	BRIDGE CONNECTOR WQV 2,5/10, 10544.6	1-19, 1-21
X8250.5	359011-0807	MARKING PLATES 5-FW 1-50	1-19, 1-21
X8251	90110-0236	CHASSIS CONTACT PX0767/S	1-13, 1-15
X8401	1260813-0100	CONNECTION BOX	1-39
X8402	1260812-0100	CONNECTION BOX	1-39
X8403	1260811-0100	CONNECTION BOX	1-39
X8410	90110-0295	CONNECTOR 4 POLE + EARTH	1-147
X8410	90110-0296	CONTACT SCREW	1-13, 1-15
X8411	1285054-0100	CONNECTION BOX	1-61
X8452	90110-0295	CONNECTOR 4 POLE + EARTH	1-151
X8452	90110-0296	CONTACT SCREW	1-141
X8453	90110-0295	CONNECTOR 4 POLE + EARTH	1-111
X8453	90110-0370	BASE HOUSING	1-101
Z			
Z8201	90024-0037	INPUT FILTER, 8 A	1-19, 1-21
Z8216	90430-0326	FILTER 6SE3290-0BA87-0FB2	1-13, 1-15

Pos	Part No	Description	Page No	Pos	Part No	Description	Page No

Tetra Pak

SPC binder labels. 30 mm Half width using the **variable definitions** *made in the* **front page** *file!!*

Note! This page is generated **automatically.**

PT21 060V
648508-0600
Issue: 2004-03 Doc No: SPC-81759-0105

PT21 060V
648508-0600
Issue: 2004-03 Doc No: SPC-81759-0105

PT21 060V
648508-0600
Issue: 2004-03 Doc No: SPC-81759-0105

PT21 060V
648508-0600
Issue: 2004-03 Doc No: SPC-81759-0105

PT21 060V
648508-0600
Issue: 2004-03 Doc No: SPC-81759-0105

PT21 060V
648508-0600
Issue: 2004-03 Doc No: SPC-81759-0105

PT21 060V
648508-0600
Issue: 2004-03 Doc No: SPC-81759-0105

PT21 060V
648508-0600
Issue: 2004-03 Doc No: SPC-81759-0105

PT21 060V
648508-0600
Issue: 2004-03 Doc No: SPC-81759-0105

PT21 060V
648508-0600
Issue: 2004-03 Doc No: SPC-81759-0105

PT21 060V
648508-0600
Issue: 2004-03 Doc No: SPC-81759-0105

PT21 060V
648508-0600
Issue: 2004-03 Doc No: SPC-81759-0105

PT21 060V
648508-0600
Issue: 2004-03 Doc No: SPC-81759-0105

PT21 060V
648508-0600
Issue: 2004-03 Doc No: SPC-81759-0105

PT21 060V
648508-0600
Issue: 2004-03 Doc No: SPC-81759-0105