EM

Electrical Manual

Straw Applicator 30 by Tetra Pak

663350-0100

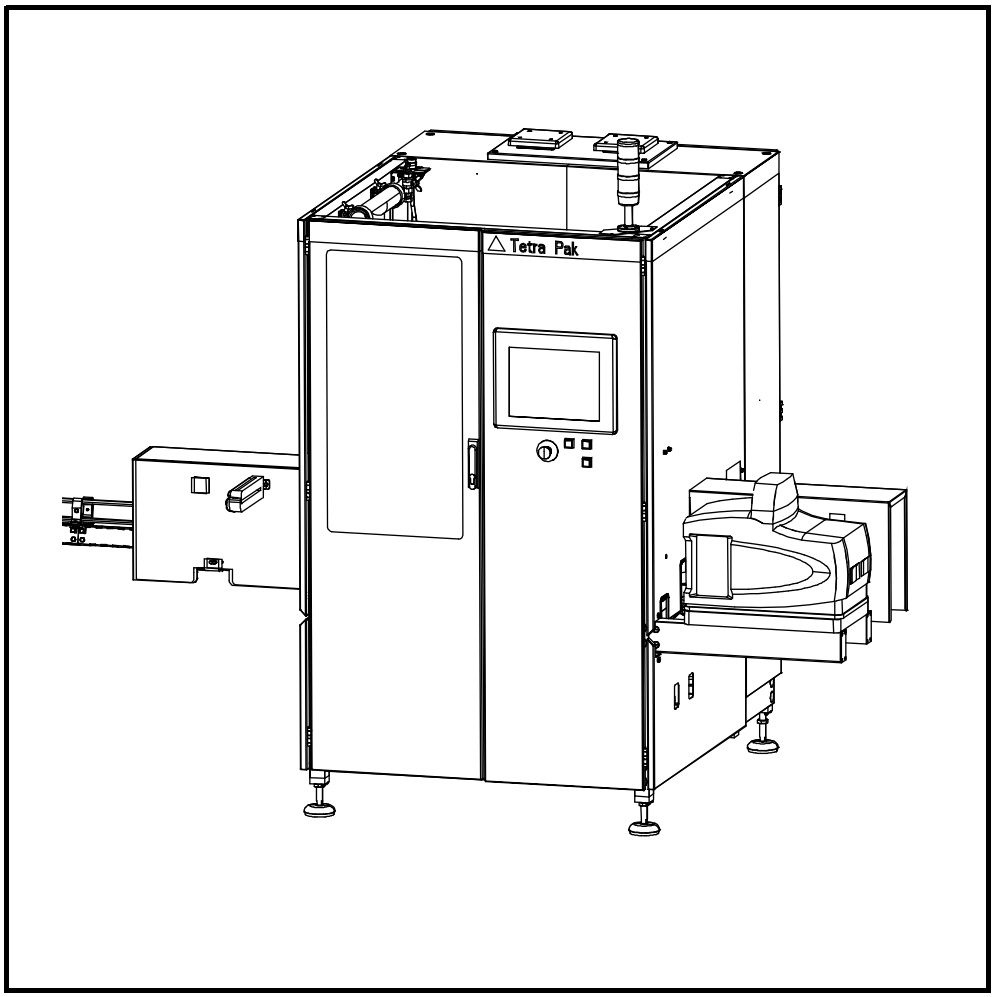

WARNING

Read and follow all safety precaution instructions throughout this manual and on safety signs attached to this equipment.

Failure to follow all safety precaution instructions could result in death or serious injury.

Tetra Pak

Doc. No. EM-2881128-0103

Copyright © 2008 Tetra Pak Group

All rights reserved. No part of this document may be reproduced or copied in any form or by any means without written permission from Tetra Pak Packaging Solutions AB.

Tetra Pak and all Tetra Pak products are trademarks belonging to the Tetra Pak Group.

The content of this manual is in accordance with the design and construction of the machine or equipment at the time of publishing. Tetra Pak reserves the right to introduce design modifications without prior notice.

The English version of this document is the original language version.

This document was produced by:

Tetra Pak Packaging Solutions AB
Ruben Rausings gata
SE-221 86 Lund
Sweden

Additional copies can be ordered from Tetra Pak. When ordering additional copies, always provide the document number.

Doc. No. EM-2881128-0103

Issue 2008-11

This manual is valid for:

Series No./ Machine No. Sign.

EM

Electrical Manual

Straw Applicator 30 by Tetra Pak
663350-0100

Machine or equipment configurations that this manual is valid for are described on the next page.

i Introduction

ii Safety Precautions

1 Electrical Systems Description

2 Document List

3 Position Summary

4 Circuit Diagrams

5 Line Summary

6 Cabinet Terminal Summary

7 Terminal Strip Overview

8 Cable Connection List

9 Mains Connection

10 Drawing Remarks

11 Other Information

Doc. No. EM-2881128-0103

Issue 2008-11

Tetra Pak

Tetra Pak Packaging Solutions AB

Valid for:

Name	Drawing Specification and Development Step	Additional Information
Straw Applicator 30 by Tetra Pak	663350-0100	Package Shape: - Tetra Brik Aseptic, TBA - Tetra Classic Aseptic, TCA

Optional Equipment:

Name	Drawing Specification and Development Step	Additional Information
Photocell Unit	2943553-0100	Valid for TBA
Quick Change Kit	2960583-0100	Valid for TBA

Update Log for Doc. No. EM-2881128-0103

This table shows all changes made to this manual, including installed rebuilding kits, added or removed pages. Page numbering on added pages begins with UP.

Date	Installed Kit	Added Pages (Doc. No.)	Removed Pages	Signature

Date	Installed Kit	Added Pages (Doc. No.)	Removed Pages	Signature

i Introduction

About the Introduction Chapter

This chapter contains basic information about this manual and the related Tetra Pak equipment.Abbreviations and Terminology

Abbreviation/ Terminology	Meaning	Translation
ANSI	American National Standards Institute	
CE	Communautés Européennes/European Communities	
EM	Electrical Manual	
HMI	Human Machine Interface	
IM	Installation Manual	
ISO	International Organization for Standardization	
MM	Maintenance Manual	
OM	Operation Manual	
PLC	Programmable Logic Controller	
SPC	Spare Parts Catalogue	
TBA	Tetra Brik Aseptic	
TCA	Tetra Classic Aseptic	

Manual Information . . . . . i - 5
Delivered Manuals . . . . . i - 5
Page Layout . . . . . i - 6
Page Numbering. . . . . i - 7
Typographical Conventions . . . . . i - 7
Symbols . . . . . i - 7
Machine Introduction . . . . . i - 8
Intended Use of the Equipment . . . . . i - 8
Manufacturer . . . . . i - 8
Support and Feedback . . . . . i - 8
Identification . . . . . i - 9
CE Classification . . . . . i - 9
Machine Plate . . . . . i - 9
Orientation . . . . . i - 10
Hygiene. . . . . i - 11
How to Use This EM . . . . . i - 12
Reference Designation . . . . . i - 14
List of Function Codes . . . . . i - 15
Optional Equipment . . . . . i - 16
How to Trace an Electrical Component . . . . . i - 17
Example 1: How to Trace a Line . . . . . i - 17
Example 2: How to Trace a Contactor . . . . . i - 19
Example 3: How to Trace a Terminal in the Electrical Cabinet . . . . . i - 20
Example 4: How to Trace a Terminal Outside the Electrical Cabinet . . . . . i - 21
Example 5: How to Find Electrical Components Using the SPC . . . . . i - 22

This page intentionally left blank

Manual Information

Tetra Pak recommends reading all delivered manuals carefully. Make sure that the delivered manuals are available to personnel who operate or maintain the equipment.

It is important to keep this manual for the lifetime of the equipment and to pass the manual on to any subsequent holder or user.

Tetra Pak will not be held responsible for any damage to the equipment caused by not following the instructions given in this manual.

Delivered Manuals

Manuals delivered with this equipment:

- EM
  The Electrical Manual provides technicians with information about the equipment's electrical system.
- IM
  The Installation Manual provides technicians with information required to safely install the equipment.
- MM
  The Maintenance Manual provides technicians with information on maintaining the equipment.
- OM
  The Operation Manual manual provides the operator with information on handling and operating the equipment before, during, and after production.
- SPC
  The Spare Parts Catalogue provides the information necessary to order spare parts from Tetra Pak

Page Layout

Every main page in a manual contains a header and a footer. The page header contains the chapter name (1) and the section name (2). The page footer contains the page number (3), and the document number (4). See also the Page Numbering section.

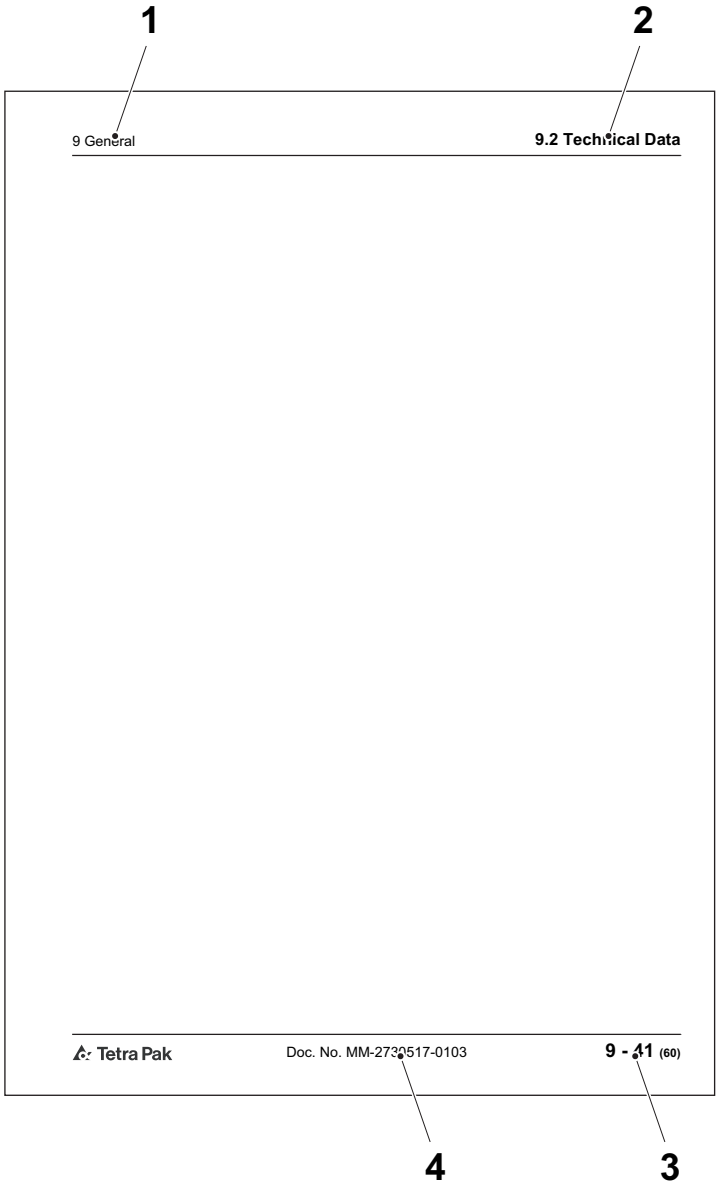

1 Chapter name
2 Section name
3 Page number
4 Document number

Page Numbering

A page number has three parts:

- chapter number (1)
- consecutive page number (2) within the chapter
- total number of pages (3) in the chapter.

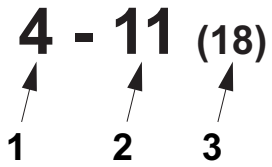

1 Chapter number
2 Consecutive page number
3 Total number of pages

Typographical Conventions

Controls on the operator panel, emergency stop devices, and program steps are printed in CAPITAL LETTERS.

Menu names, button names and other text displayed in software are printed in `Courier`.

Cross-references are underlined.

Symbols

Symbols used in illustrations.

	A pointer arrow indicates the position of an object.
	A zoom arrow indicates that an object view is enlarged. The arrow points towards the enlarged view of the object.
	A rotation movement arrow indicates rotational movement of an object. The arrow points in the direction of rotation.
	A straight movement arrow indicates movement of an object. The arrow points in the direction of movement.

Machine Introduction

Intended Use of the Equipment

The intended use of this Tetra Pak equipment is to attach drinking straws onto Tetra Pak Brik packages (TBA) or Tetra Pak Classic packages (TCA).

All other use is prohibited. Tetra Pak will not be held responsible for injury or damage if the equipment is used for any other purpose.

Manufacturer

This Tetra Pak equipment has been manufactured by

Tetra Pak Packaging Solutions AB
Ruben Rausings gata
SE-221 86 Lund
Sweden

Support and Feedback

If you encounter problems when operating this equipment or have other inquiries, comments, or suggestions for improvement, contact Tetra Pak.

Identification

CE Classification

This equipment complies with the basic health and safety regulations of the European Economic Area (EEA).

Machine Plate

The illustration below shows an example of the machine plate and its location on the equipment. The machine plate carries data needed when contacting Tetra Pak concerning this specific equipment.

Make sure that the equipment data in the front pages of this manual corresponds to the machine plate data and the machine specification.

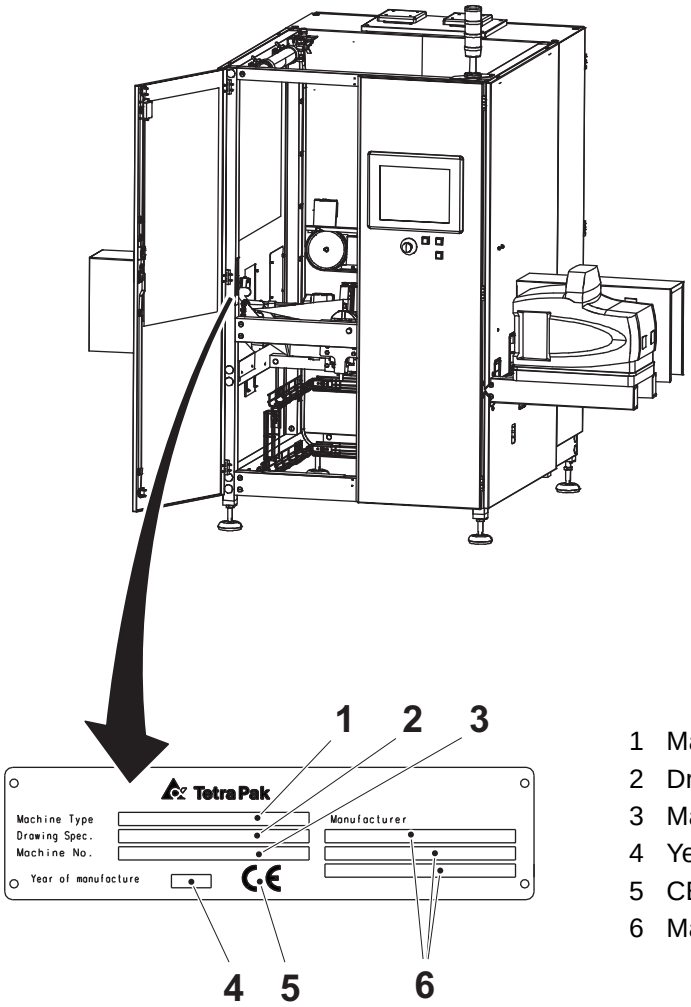

1 Machine type
2 Drawing specifications
3 Machine number
4 Year of manufacture
5 CE-mark
6 Manufactured by

Orientation

The illustration below shows the orientation of the equipment. This orientation information will be used throughout this manual. The arrows indicate the flow of material.

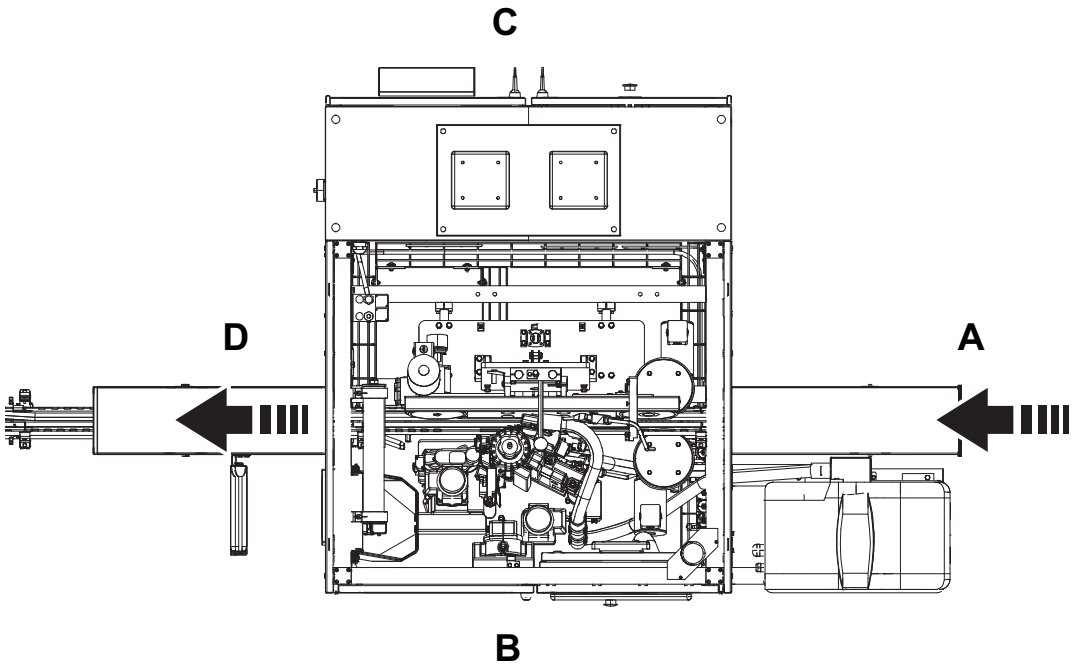

A Front
B Left-hand side
C Right-hand side
D Back

Hygiene

- Keep your hands clean.
- Always wear some type of hair protection (cap or hairnet) and clean clothes (preferably white).
- Do not wear a watch, ring, necklace, earrings, or any other exposed jewellery.

How to Use This EM

Chapters in this EM.

Chapter	Name	Drawing No.
i	Introduction	
ii	Safety Precautions	
1	Electrical Systems Description	
2	Document List	2856601-0001
3	Position Summary	2856601-0002
4	Circuit Diagrams	2856601-0003
5	Line Summary	2856601-0004
6	Cabinet Terminal Summary	2856601-0005
7	Terminal Strip Overview	2856601-0006
8	Cable Connection List	2856601-0007
9	Mains Connection	2856601-0008
10	Drawing Remarks	
11	Other Information	

The Document List chapter is a table of contents for the chapters 3 to 9, listing all drawings included.

In the Circuit Diagrams, the first pages are reserved for distribution terminals and the last pages can be used for pre-connected cables. Pre-connected cables are connected to spare terminals and are reserved for future use.

The diagrams in the Mains Connection chapter show how the machine should be connected to the local supply, the dimensions of the connection cable, and the connection of the matching transformer, when used.

The Drawing Remarks chapter lists the drawing remarks indicated with a number in the drawing.

The Program Documents chapter contains the PLC programs for this equipment.

(Cont'd)

(Cont'd)

The documents and drawings are identified by drawing number (1), version code (2), and page number (3). The page number is the consecutive numbering of the pages that belong to the main number and is used as a reference in the diagrams.

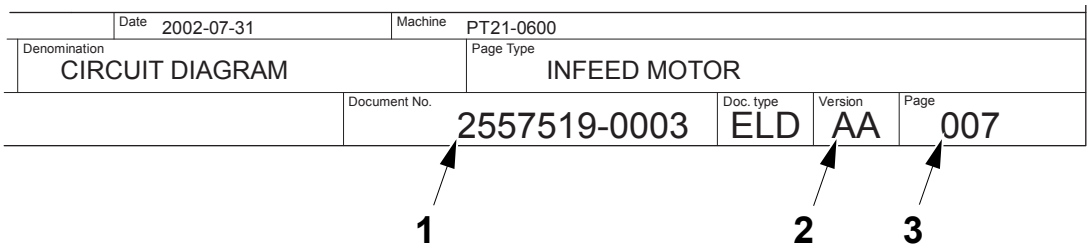

1 Drawing number
2 Version code
3 Page number

Reference Designation

Components are identified by the reference designation, defined by a function code (1), and a component code (2).

The object code for the group level (3) refers to the purpose or task of the group level that the component serves or supplies. See the List of Function Codes section.

The object code for the component level (4) refers to the purpose or task of the current object. The letter is in accordance with international standards. Examples: Code P for components that present information, such as an alarm lamp, a clock, or a volt meter. Code M for components that provide mechanical energy such as an actuator, or an electric motor.

Tetra Pak has chosen to always use the function oriented structure for reference designation. The prefix indicating function oriented structure (=) is not shown in the reference designation.

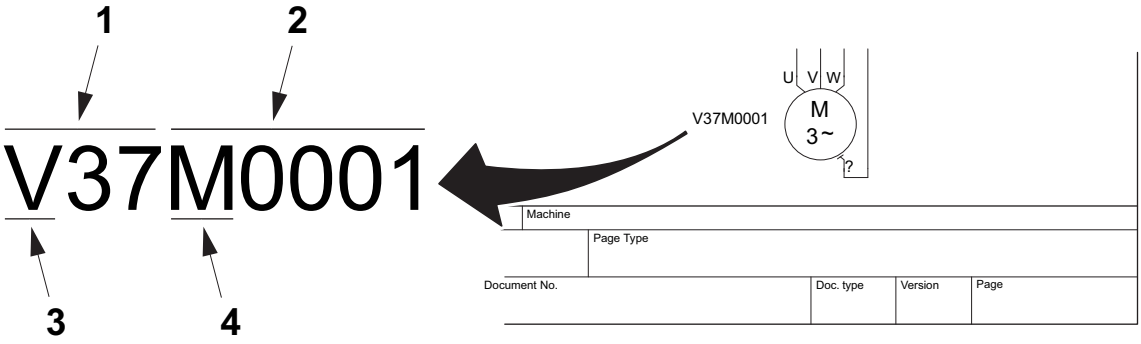

1 Function code
2 Component code
3 Object code, group level
4 Object code, component level

List of Function Codes

Function codes for this equipment.

Function Code	Identification
01	General
03	PLC
07	Genius
08	HMI
09	Safety Equipment
10	Infeed
30	Apply
40	Package
50	Straw
90	Discharge

Optional Equipment

An optional equipment designation indicates that the component belongs to specific optional equipment. The designation numbers for this equipment are explained in the Drawing Remarks chapter.

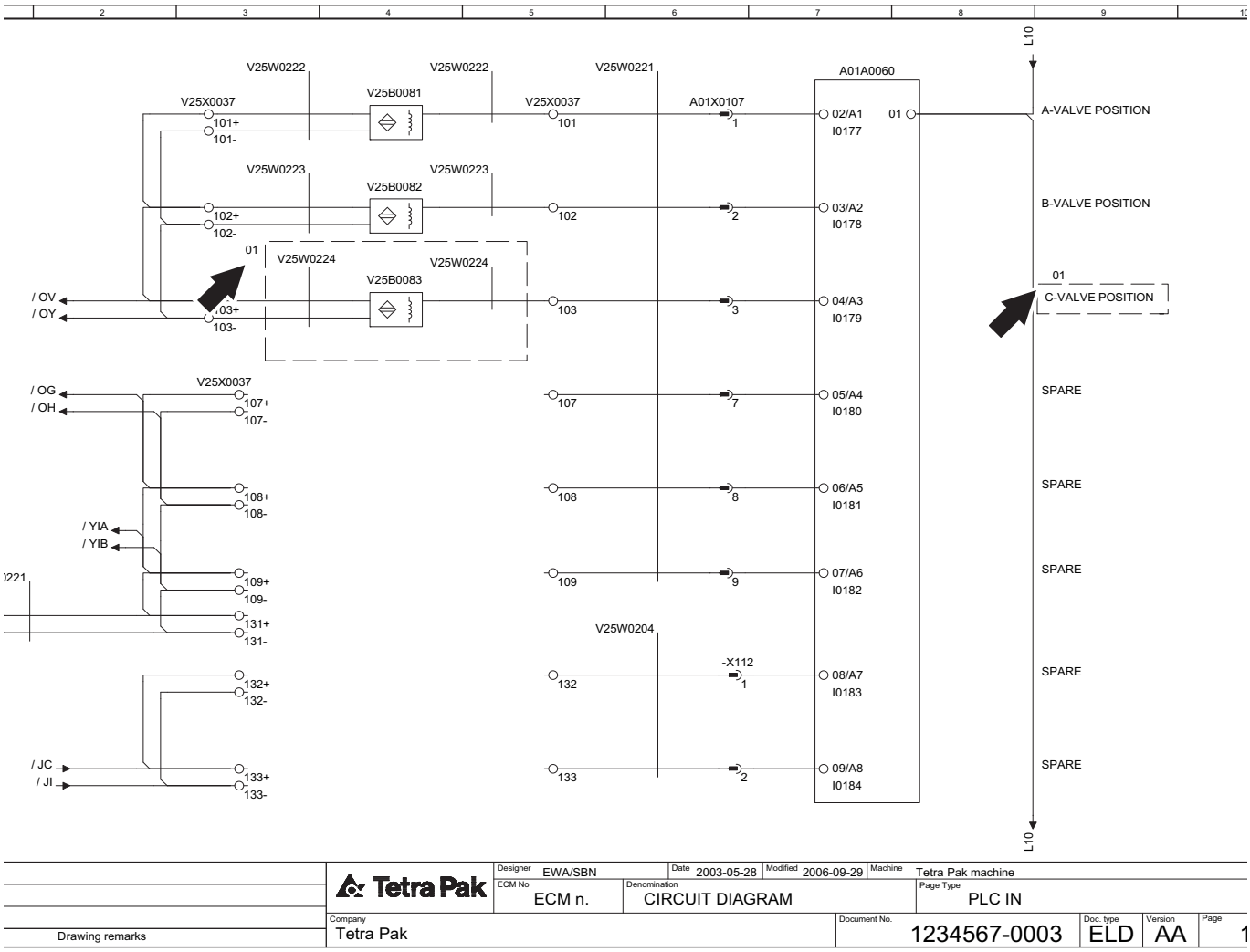

How to Trace an Electrical Component

Start tracing an electrical component by finding the correct list with page and column references to the Circuit Diagram.

Example 1 on pages i-17 to i-18 illustrates how to trace a Line. Use the Line Summary.

Example 2 on page i-19 illustrates how to trace a contactor. Find page references in the Position Summary. The procedure is identical when tracing sensors or other components. For cables, the page references are in the Cable Connection List. The number of spare cores is shown in the cable connection list.

Examples 3 and 4 on pages i-20 to i-21 illustrate how to trace a terminal. Find page references for terminals *in* the electrical cabinet in the Cabinet Terminal Summary, and page references for terminals *outside* the electrical cabinet in the Terminal Strip Overview.

Example 5 on page i-22 illustrates how to locate a component in the Spare Parts Catalogue, SPC.

Example 1: How to Trace a Line

Supply Voltage and Line Connection Order

The supply voltage in the electrical cabinet has power voltage and control voltage designations.

- Power voltage: lines with designations ending with 01 to 09, for example, L03 and L803
- Control voltage: lines with designations ending with 10 to 99, for example, L12 and L812

The line connection order is shown in the Line Summary.

(Cont'd)

(Cont'd)

How to Trace a Line

The illustration below shows how to trace line connection L10 from the component terminal A01X0107:24 to A01A0060:01.

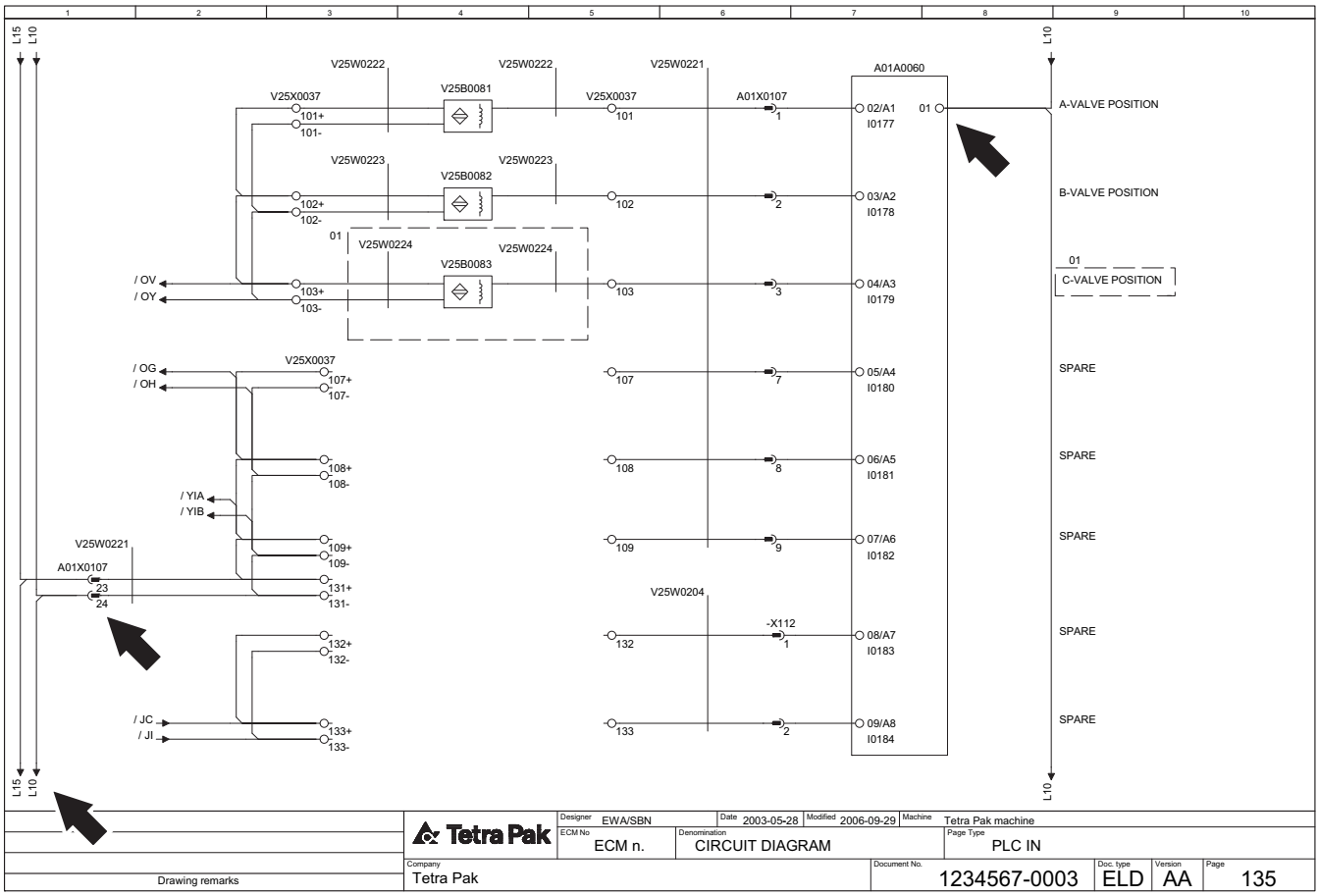

Line summary of 1234567-0003

Line	From	Page.Col.	Opt.	Area/Color
L10				
	A01XL0010:1	001 .1		0.75/L. BU
	A01X0107:24	135 .1		
	A01A0060:01	135 .8		

Example 2: How to Trace a Contactor

The illustration below shows how to trace contactor A01K0074 to page 188, column 6 in the Circuit diagram.

Related contacts are traced with a cross reference to page 004, column 3.

Note! For master and slave components, such as coils and contacts, only the master is reported in the Position Summary. The slave shows the page and column references of the master.

Position summary of 1234567-0003

Component	Page .Col.	Opt.
A01A0060	135 .7	
A01A0076	188 .1	
V25B0081	135 .4	
V25B0082	135 .4	
V25B0083	135 .4	01
A01K0073	188 .6	
A01K0074	188 .6	

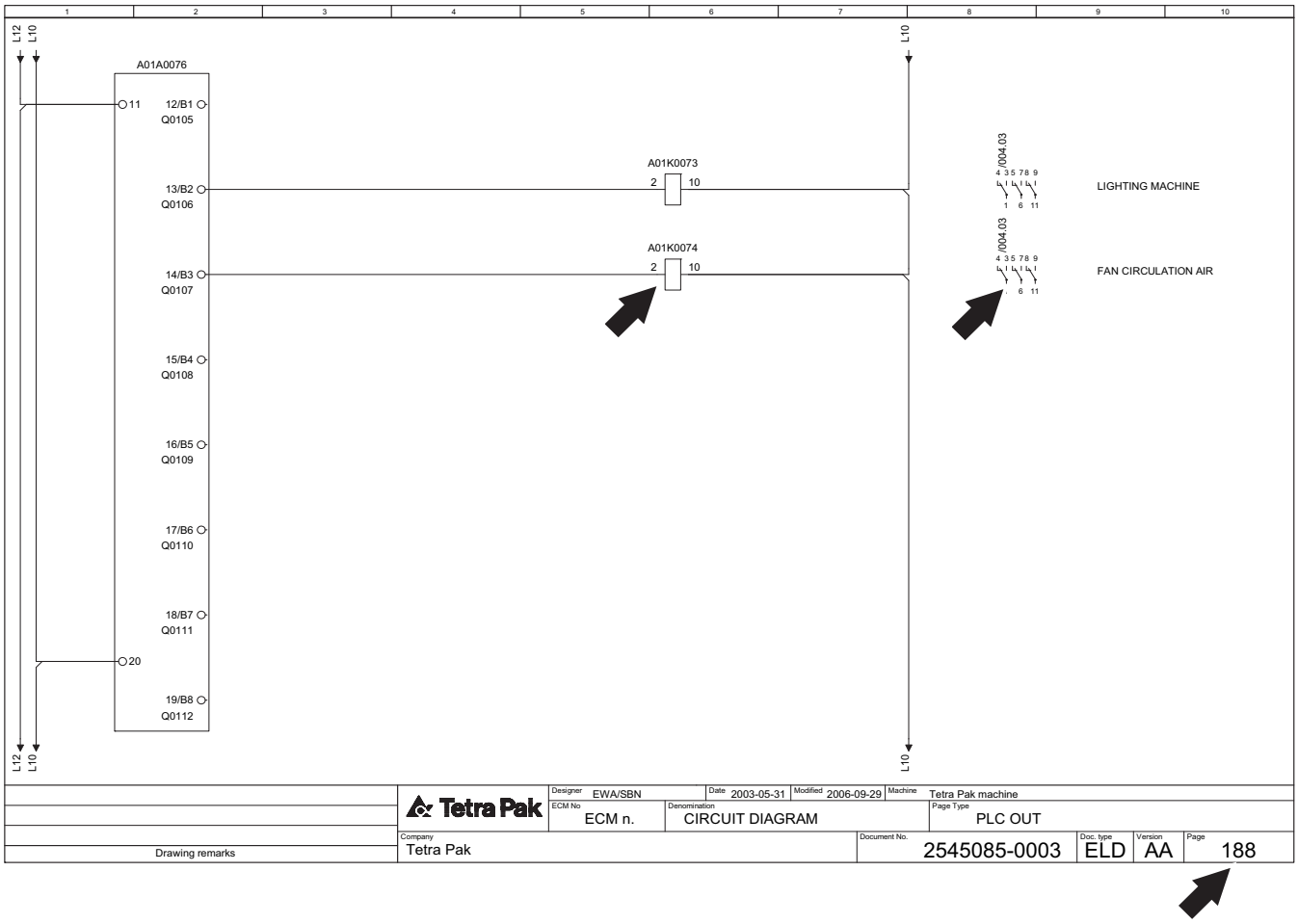

Example 3: How to Trace a Terminal in the Electrical Cabinet

The Cabinet Terminal Summary refers to the page and column where the relevant terminal is to be found.

The illustration below shows how to trace terminal A01X0107:1 to page 135, column 6 in the Circuit diagram.

Cabinet terminal summary of 1234567-0003

Terminal	Page .Col.	Opt.
A01X0107:1	135 .6	
A01X0107:2	135 .6	
A01X0107:3	135 .6	
A01X0107:4		
A01X0107:5		
A01X0107:6		
A01X0107:7	135 .6	
A01X0107:8	135 .6	
A01X0107:9	135 .6	

Terminal	Page .Col.	Opt.

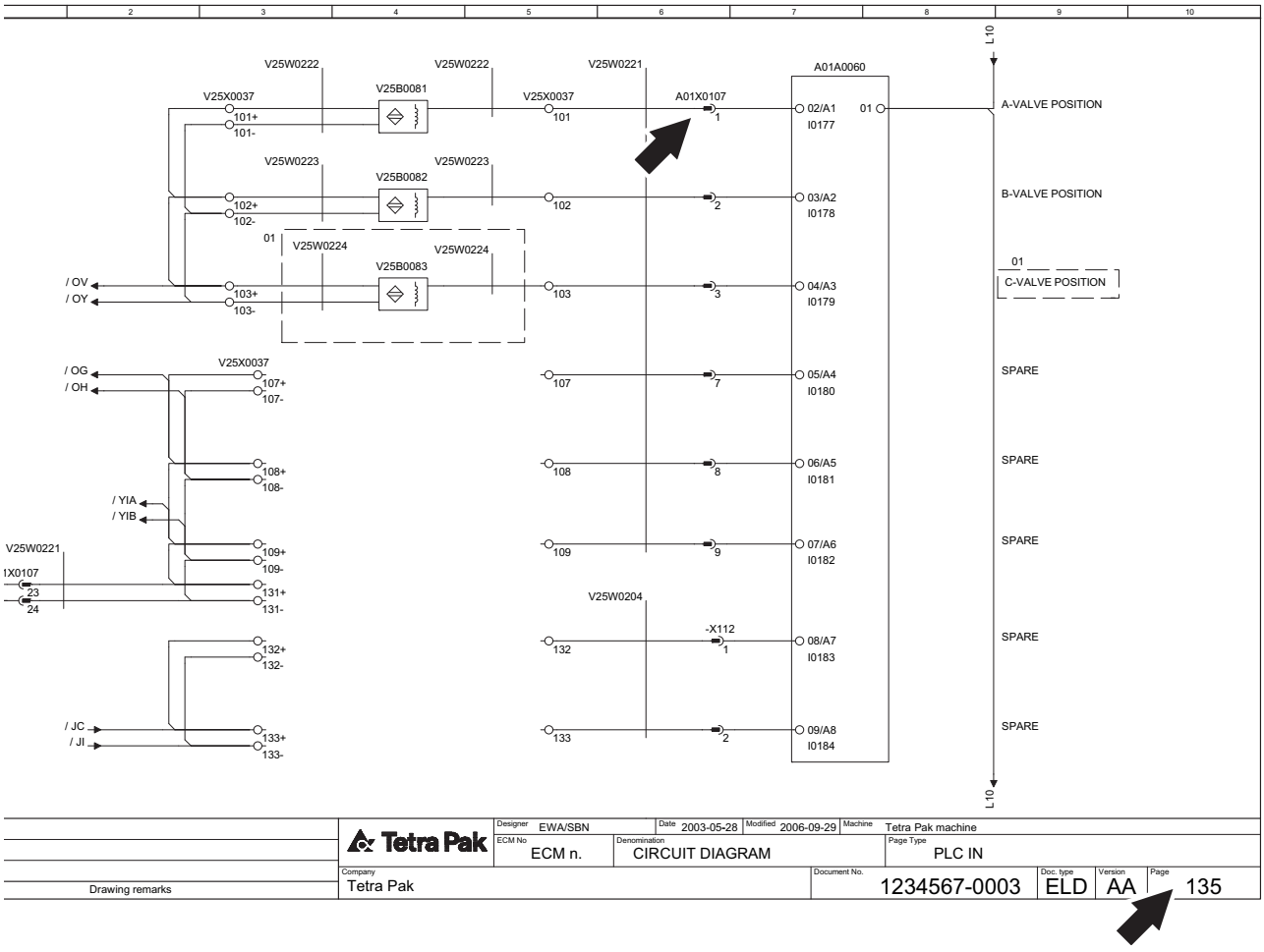

Example 4: How to Trace a Terminal Outside the Electrical Cabinet

The Terminal Strip Overview refer to the page and column where the relevant terminal is to be found.

The illustration below shows how to trace terminal V25X0037:101+ to page 135, column 3 in the Circuit diagram. Note the connected component, V25B0081.

Terminal strip of 1234567-0003

V25X0037

From	Cable	Internal Jumper	Terminal	External Jumper	Cable	To	Page.Col.	Option	Function text
A01X0107:1	V25W0221 :1		101		V25W0222 :BK	V25B0081:	135 .5		
			101+		V25W0222 :BN	V25B0081:	135 .3		
			101-		V25W0222 :BU	V25B0081:	135 .3		
A01X0107:2	V25W0221 :2		102		V25W0223 :BK	V25B0082:	135 .5		
			102+		V25W0223 :BN	V25B0082:	135 .3		
			102-		V25W0223 :BU	V25B0082:	135 .3		
A01X0107:3	V25W0221 :3		103		V25W0224 :BK	V25B0083:	135 .5	01	
			103+		V25W0224 :BN	V25B0083:	135 .3	01	
			103-		V25W0224 :BU	V25B0083:	135 .3	01	
			104						

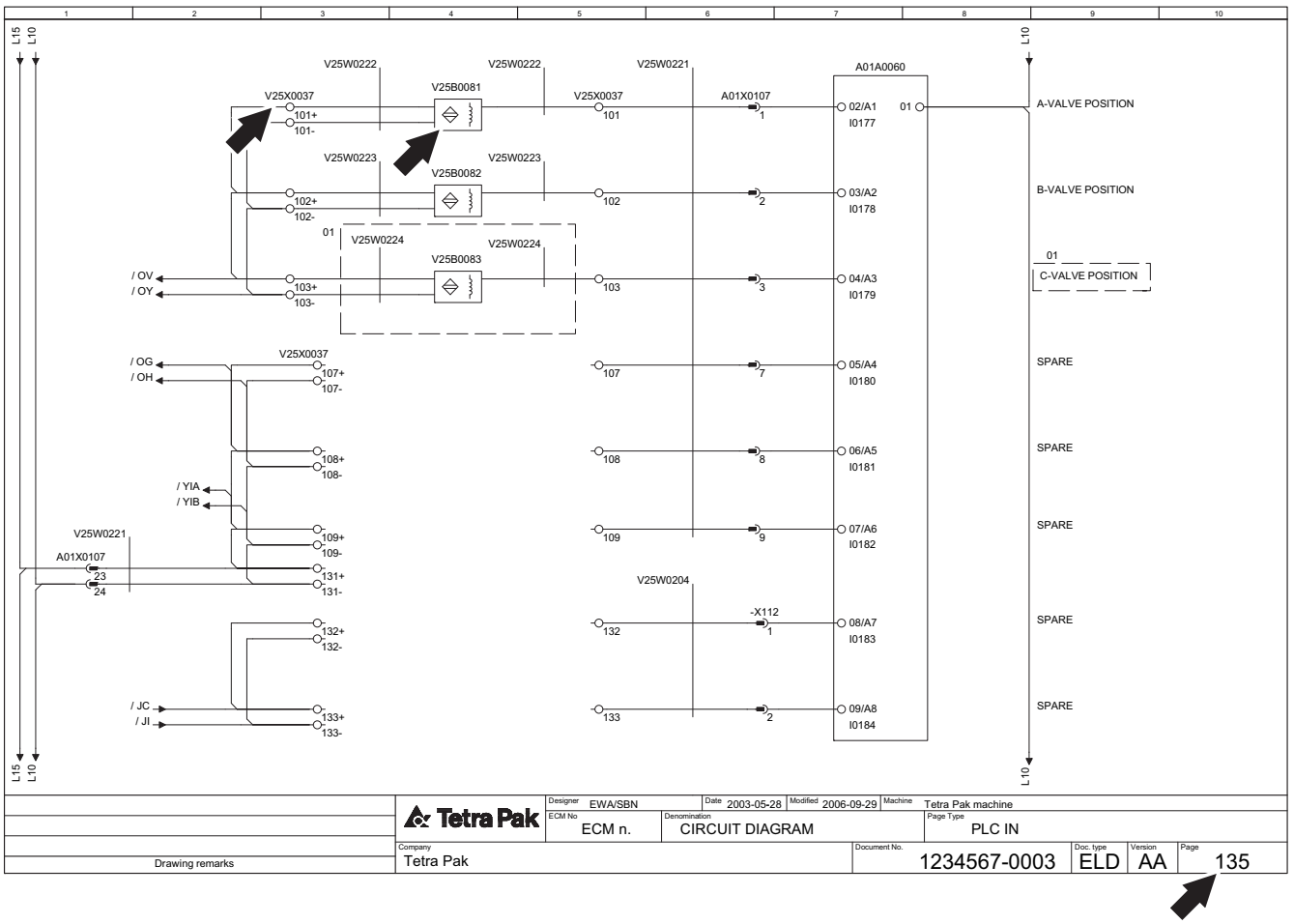

Example 5: How to Find Electrical Components Using the SPC

The Reference Designation Parts Index in the Spare Parts Catalogue, SPC, is used to locate electrical parts. For SPCs without a Reference Designation Parts Index, see the Component Location chapter in this manual.

The illustration below shows how to find component A04B0041 in the SPC. The Reference Designation Parts Index refers to page 2-5. In the drawing on page 2-4, the position number is the same as the reference designation for the component.

Tetra Pak Used in group: Pos. 020 CHAIN GUIDE Drawing file: 26906234_1_AA.hpgl **2-4** (6)

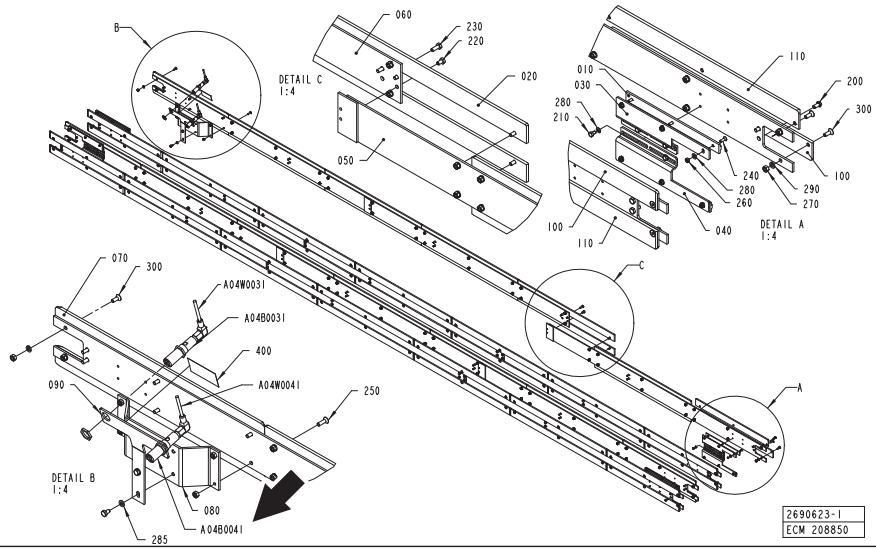

ECM: 209071 - 50001231
Group number: 2690623-0100
Assembly Drawing: 2690623-1_1_AA
This list covers pages from 2-2 to 2-5

Pos	Part No	UN	Qty	Description	Page No
-					
010	2597877-0000		8	CHAIN GUIDE	
020	2653358-0000		40	CHAIN GUIDE	
030	2653365-0000		4	SUPPORT	
040	2653366-0000		4	SUPPORT	
050	2653367-0000		8	PLATE	
060	2653368-0000		4	PLATE	
070	2653369-0000		8	CHAIN GUIDE	
080	2690632-0000		1	HOLDER	
090	2690633-0000		1	HOLDER	
100	2730969-0000		4	CHAIN GUIDE	
110	2730970-0000		4	CHAIN GUIDE	
200	90458-0072		8	SCREW ISO 7380 S M6X12 A2	
210	312105-0287		16	SCREW M6S ISO4017 M4X8 A470	
220	312105-0364		18	SCREW M6S ISO 4017 M6X10 A480	
230	312105-0368		40	SCREW M6S ISO 4017 M6X16 A480	
240	312155-0291		24	SCREW DIN 7991 MF6S M4X12 A4 70	
250	312155-0370		4	SCREW DIN 7991 MF6S M6X20 A4 70	
260	312605-0312		24	HEXAGON NUT, M6M M4 A280	
270	312605-0316		168	HEXAGON NUT, M6M M6 A280	
280	315105-0146		40	WASHER BRB5,3X10RFR	
285	315105-0153		2	WASHER BRB6,4X12RFR	
290	315402-0156		164	LOCK WASHER FBB 6,5	
300	31[illegible]-0368		164	SCREW DIN 7991 MF6S M6X16 A4 70	
400	[illegible]-98		1	WARNING SIGN ISO, LASER RADIATION	
A04W0041	[illegible]-0050		1	ACTUATOR/SENSOR CABLE RKWTN 4-225/5M	
A04W0031	[illegible]-0050		1	ACTUATOR/SENSOR CABLE RKWTN 4-225/5M	
A04B0041	90459-5012		1	LASER SENSOR, YD24PA3	
C05C0041	2690632-0000		1	HOLDER	
C05C0031	2653367-0000		8	PLATE	
T04B0031	90459-5012		1	LASER SENSOR, YD24PA3	
T05C0041	2653369-0000		8	CHAIN GUIDE	
T05C0031	2653368-0000		4	PLATE	

Tetra Pak **iv-2** (4)
Doc No: SPC-654654-0101

Pos	Part No	Description	Page No
A			
F09A0332	[illegible]	THERMOCOUPLE CABLE K/PVC/20AWG 2X0,5MM2	1-3, 1-5
T03A0321	[illegible]	THERMOCOUPLE CABLE K/PVC/20AWG 2X0,5MM2	1-3, 1-5
T03A0322	[illegible]	HEATING ELEMENT, 3000W, 220V	1-3, 1-5
B			
A04B0041	90459-5012	LASER SENSOR, YD24PA3	2-3, 2-5
C01B0001	351120-0145	CABLE SILFLEX SIHF 3X2,5 0046020	1-3, 1-5
C32B0001	90220-2259	THERMOCOUPLE CABLE K/PVC/20AWG 2X0,5MM2	1-3, 1-5
T04B0031	90459-5012	LASER SENSOR, YD24PA3	2-3, 2-5
C			
C05C0031	2653367-0000	PLATE	2-3, 2-5
C05C0041	2690632-0000	HOLDER	2-3, 2-5
T05C0031	2653368-0000	PLATE	2-3, 2-5

Page No

2-5 (6)
Doc No: SPC-654654-0101

ii Safety Precautions

Safety Precaution Instructions

WARNING

Read all safety precaution instructions throughout this manual and on safety signs attached to this equipment.
Failure to follow all safety precaution instructions could result in death or serious injury.

Definition of Lockout Procedure

A lockout procedure is a procedure to put each necessary energy isolating device in its safe position to prevent the energisation of the equipment, such as when a maintenance procedure should be carried out.

A lockout is the use of a device, for example, a padlock, to make sure that an energy isolating device cannot be operated.

An energy isolating device is a mechanical device that physically prevents transmission or release of energy, such as a power supply disconnector.
Safety Messages Description

A safety message is always accompanied by a safety alert symbol and a signal word.

The safety alert symbol is used to alert about potential personal injury hazards. To avoid hazards, obey all safety messages that follow this symbol.

The following safety alert symbols and signal words are used in this manual to inform the user of hazards.

DANGER	Danger indicates an imminently hazardous situation which, if not avoided, will result in death or serious injury.
WARNING	Warning indicates a potentially hazardous situation which, if not avoided, **could** result in **death or serious injury**.
CAUTION	Caution indicates a potentially hazardous situation which, if not avoided, **may** result in **minor or moderate injury.** It may also be used to alert against unsafe practices.
CAUTION	Caution without the safety alert symbol indicates a potentially hazardous situation which, if not avoided, **may** result in **property damage**.

Personnel Requirements . . . . . ii - 5
Skilled Person . . . . . ii - 5
Instructed Person. . . . . ii - 5
Safety Signs . . . . . ii - 6
Locations of Safety Signs . . . . . ii - 8
Protective Devices. . . . . ii - 9
Emergency Stop . . . . . ii - 9
Emergency Stop Push-Buttons . . . . . ii - 10
Safeguards . . . . . ii - 11
Warning Lamp . . . . . ii - 13
Personal Protection. . . . . ii - 14
Noise Hazard . . . . . ii - 14
Entanglement Hazard . . . . . ii - 14
Ergonomic Hazard . . . . . ii - 14
Supply Systems . . . . . ii - 15
Power Supply . . . . . ii - 15
Residual Voltage . . . . . ii - 16
Electrical Cabinet. . . . . ii - 16
Socket Outlet . . . . . ii - 17
Air Supply . . . . . ii - 18

This page intentionally left blank

Personnel Requirements

Note! Personnel includes all persons working on or near this equipment.

Only skilled or instructed persons are allowed to work with this equipment.

Skilled Person

A skilled person must have relevant education and experience to enable him or her to identify hazards, analyse risks, and avoid hazards which electricity, machinery, chemicals, other energies, and supply systems on this equipment can create.

Skilled persons must meet local regulations, such as certifications and qualifications for working with these energies and systems.

Instructed Person

An instructed person must be adequately advised or supervised by a skilled person. The skilled person enables the instructed person to identify hazards, analyse risks, and avoid hazards which electricity, machinery, chemicals, other energies, and supply systems on this equipment can create.

Safety Signs

WARNING

Damaged or missing safety signs increase the risk of death or serious injury.

Replace all missing or damaged safety signs immediately.

Safety signs are attached to the equipment. The table below lists all the signs that are used, and illustrations show their locations on the equipment. Each position number refers to two variants of a safety sign in the table, but only one is used on the equipment.

- Make sure that each safety sign is legible and in its correct position after installation and maintenance.
- Replace all missing or damaged safety signs immediately.

Pos.	ISO sign	ANSI sign
1	 **Hazardous voltage.** Will shock, burn, or cause death. Follow lockout procedure before maintenance.	
2	 **Hazardous voltage.** Can shock, burn, or cause death. Read Maintenance Manual (MM) before using this socket outlet.	
3	 **Risk of equipment damage.** Do not let water into this area.	
4	 **Burn hazard.** Trapped heat energy. Do not touch.	

Pos.	ISO sign	ANSI sign
5		
	Hot surface. Do not touch. Follow lockout procedure before maintenance.	
6		
	Moving part can crush and cut. Do not operate with guard removed. Follow lockout procedure before maintenance.	

Locations of Safety Signs

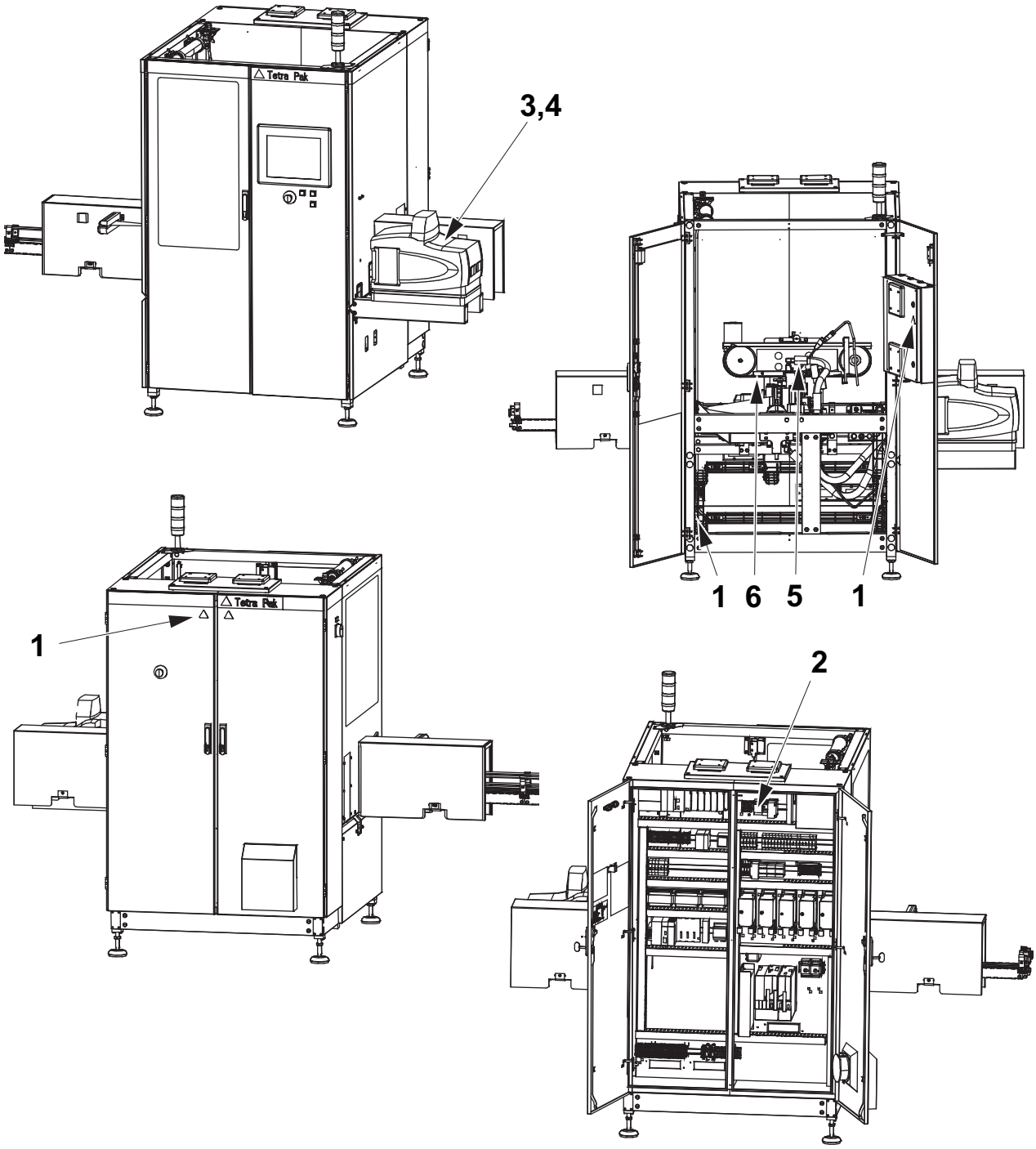

Protective Devices

WARNING

Hazardous zones.

Hazardous zones are safeguarded and provided with protective devices. Do not inch or run this equipment if any protective device is inoperative.

Change inoperative components of the safety system immediately.

WARNING

Hazardous voltage.

Hazardous voltage remains on this equipment after activating an EMERGENCY STOP or an interlocking device.

Emergency Stop

Emergency stop devices are used to stop this equipment immediately in an hazardous situation. Learn the positions of all emergency stop devices and how to use them.

Instructions for a normal production stop are included in the Stop chapter of the Operation Manual.

Emergency Stop Push-Buttons

Push two of the EMERGENCY STOP push-buttons to stop this equipment immediately.

The location of each EMERGENCY STOP push-button is shown by an arrow.

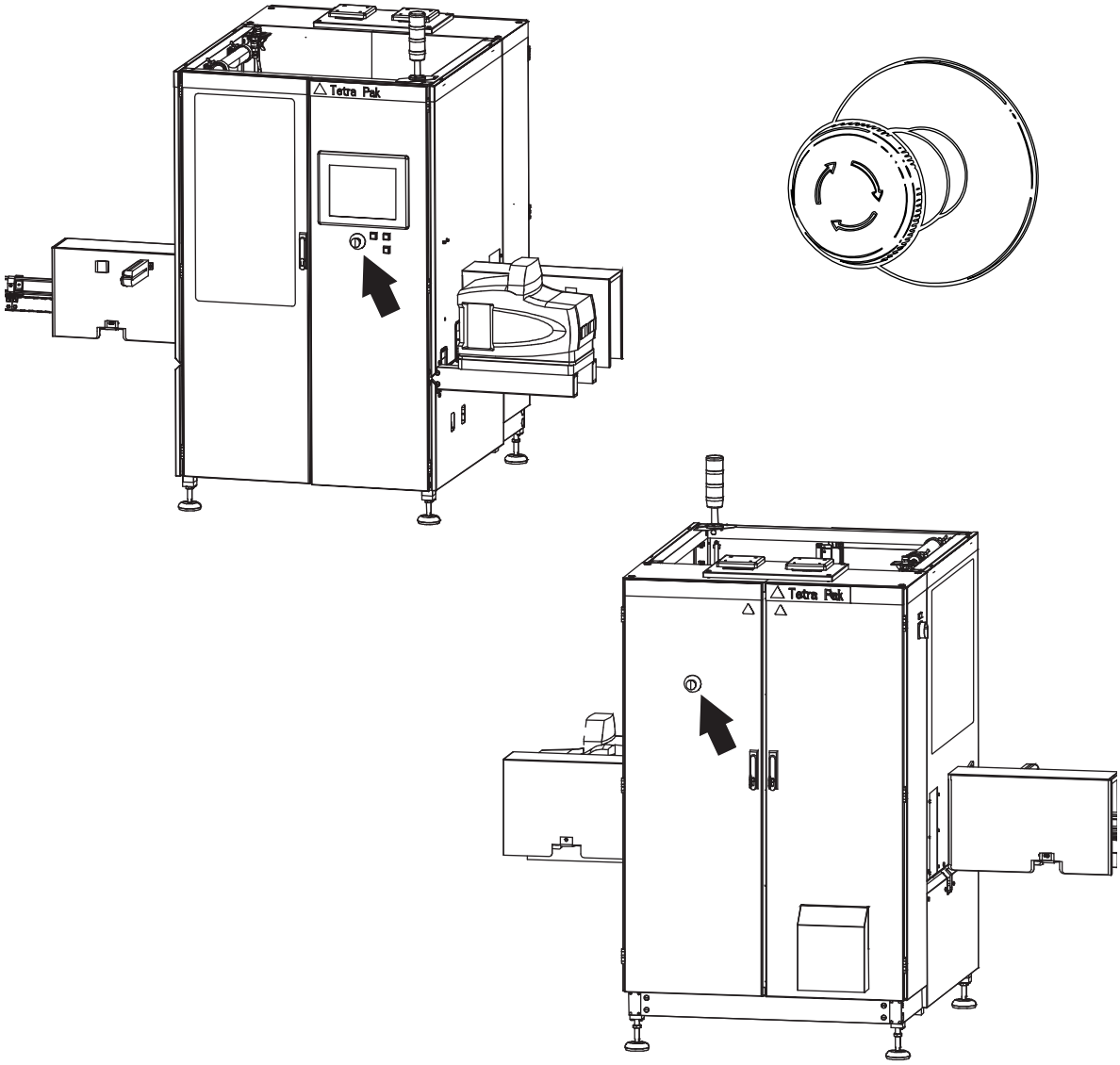

Safeguards

WARNING

Moving machinery.

Never defeat or bypass the interlocking devices.

Movable guards, for example, doors and covers leading to hazardous zones, are fitted with interlocking devices where required. These devices are usually electric safety switches that are parts of the safety system and must never be defeated, bypassed, or otherwise made inoperative.

WARNING

Corners and edges.

To prevent injury from corners and edges of open doors and covers, close them unless they must be open during such work. Be careful when working under an open door, cover or elsewhere below parts of the equipment with corners and edges.

CAUTION

Burn hazard.

Parts of this equipment may be hot after operation.

After installation and maintenance, and before this equipment is inched or run, check that all safeguards are in place and that they operate correctly.

(Cont'd)

(Cont'd)

CAUTION
Equipment damage.
Never stop this equipment by opening an interlocking guard.

The location of each interlocking guard is shown by an arrow.

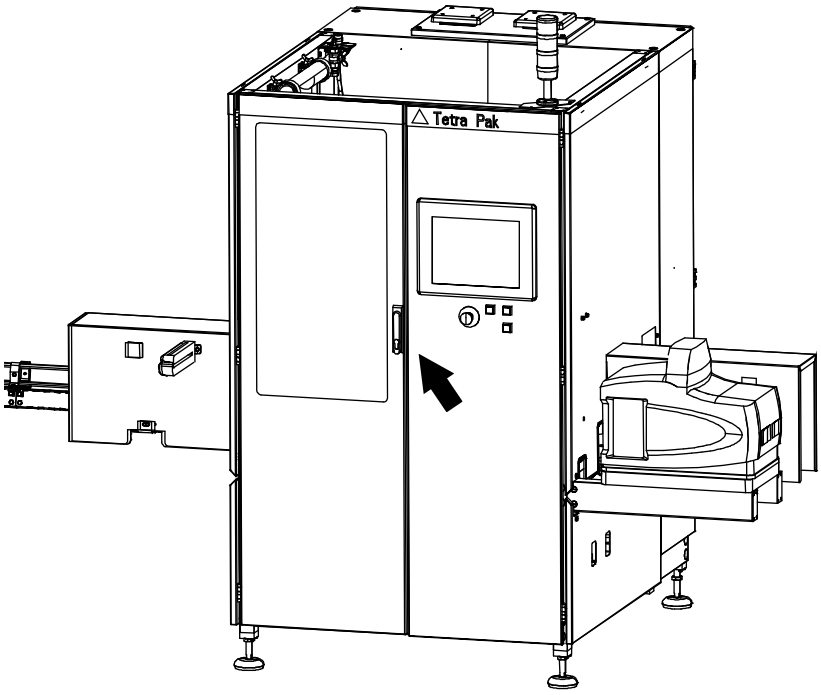

Warning Lamp

A warning lamp is a column of warning lights:

- A red light (1) indicates a hazardous condition. This is a situation that requires immediate action.
- A yellow light (2) indicates an abnormal or impending critical condition. This is a condition calling for action by the operator.
- A blue light (3) indicates that operator action is required.
- If the yellow and blue colours are flashing at the same time, this indicates a queue on the discharge side.

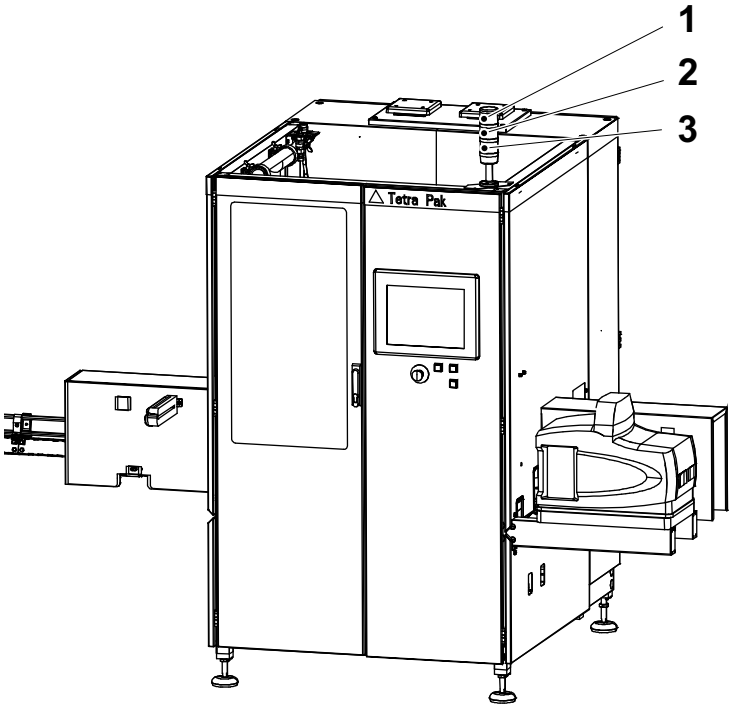

1 Red light
2 Yellow light
3 Blue light

Personal Protection

This section applies to all personnel at all times when this equipment is in operation.

Noise Hazard

WARNING

Hazardous noise.

Risk of impaired hearing.

Wear hearing protection whenever this equipment is in operation.

Entanglement Hazard

WARNING

Risk of entanglement.

Do not wear jewellery or loose clothing when working on or near this equipment. Long hair may not be loose.

Ergonomic Hazard

WARNING

Ergonomic hazard.

Handling materials and supplies, for the machine, can be repetitive manual work and involve ergonomic hazards with risk for personal injury. Materials and supplies should be located. e.g. layout design, to avoid twisting the body or bending the back when placing them into the machine. It is recommended to use aids such as a lifting table or lifting device for these tasks.

Follow instructions for safe work practices.

Supply Systems

Power Supply

DANGER

Hazardous voltage and moving machinery.
The power supply disconnector must be turned off and secured with a lock before any maintenance.

Note! The key to the lock must be removed by the technician and retained in his/her possession until all work is completed.

Certain maintenance procedures may require power supply systems to be on. These exceptions are clearly stated in the Maintenance Manual.

The illustrations show the power supply disconnector and its location.

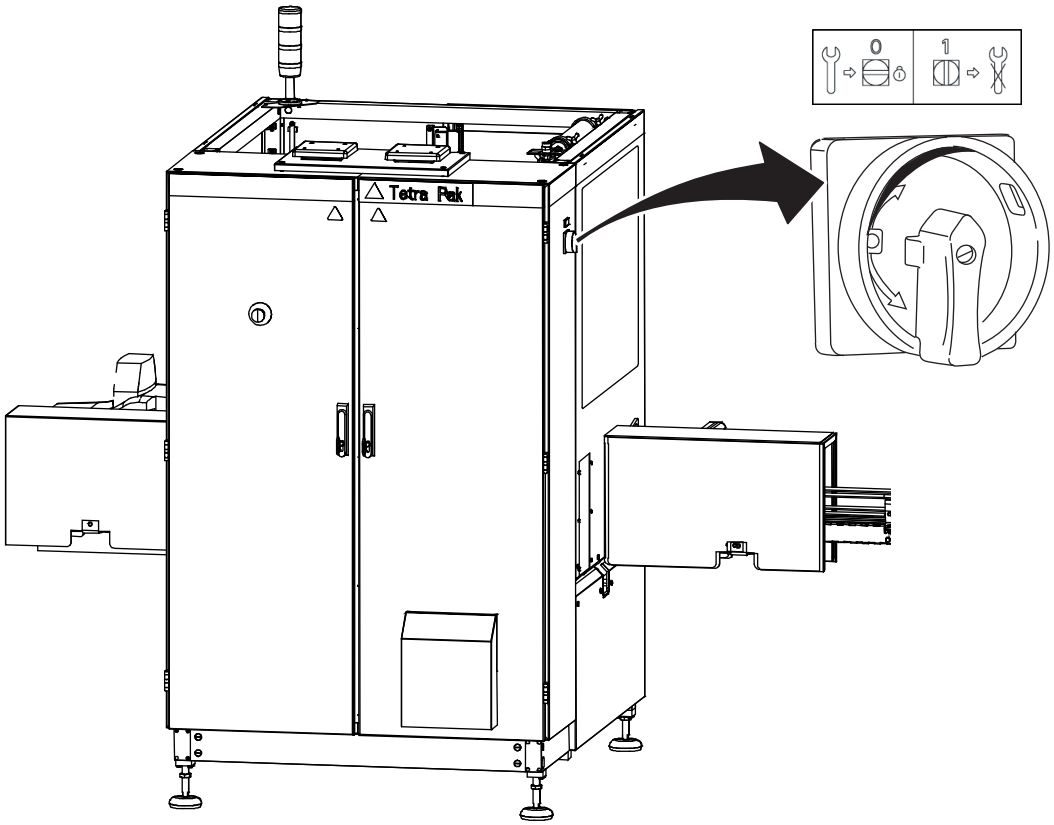

Residual Voltage

DANGER

Hazardous voltage.
Do not touch any terminals immediately after the power supply disconnector is turned off. Ensure that no residual voltage remains on the capacitors before touching. Wait five minutes. Failure to observe this information will cause death or serious injury.

After the power supply disconnector is turned off, residual voltage remains in the capacitor circuits.

Electrical Cabinet

DANGER

Hazardous voltage.
Will shock, burn, or cause death.
The power supply disconnector must be turned off and secured with a lock before maintenance inside the electrical cabinet.

Note! The key to the lock must be removed by the technician and retained in his/her possession until all work is completed.

Make sure that the electrical cabinet doors are closed after working inside the electrical cabinet. Doors with lock must be locked.

The location of each electrical cabinet is shown by an arrow.

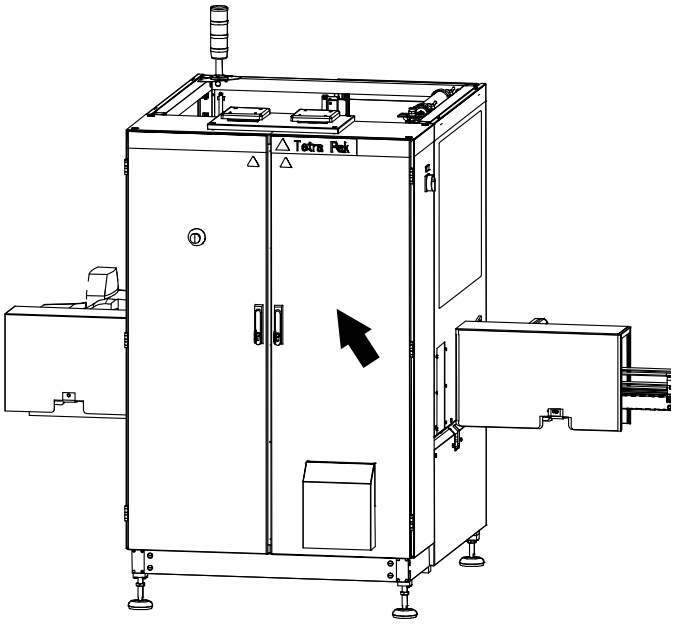

Socket Outlet

WARNING

Hazardous voltage.

Can shock, burn, or cause death. Read the Maintenance Manual before using this socket outlet.

The socket outlet (1) is connected to a residual current device (2) to protect users against electrical shock if there is an earth fault in the connected equipment. The residual current device shall be tested each time before the socket outlet is being used. See the MM for test procedure.

The illustrations show the socket outlet, the residual current device, and their location.

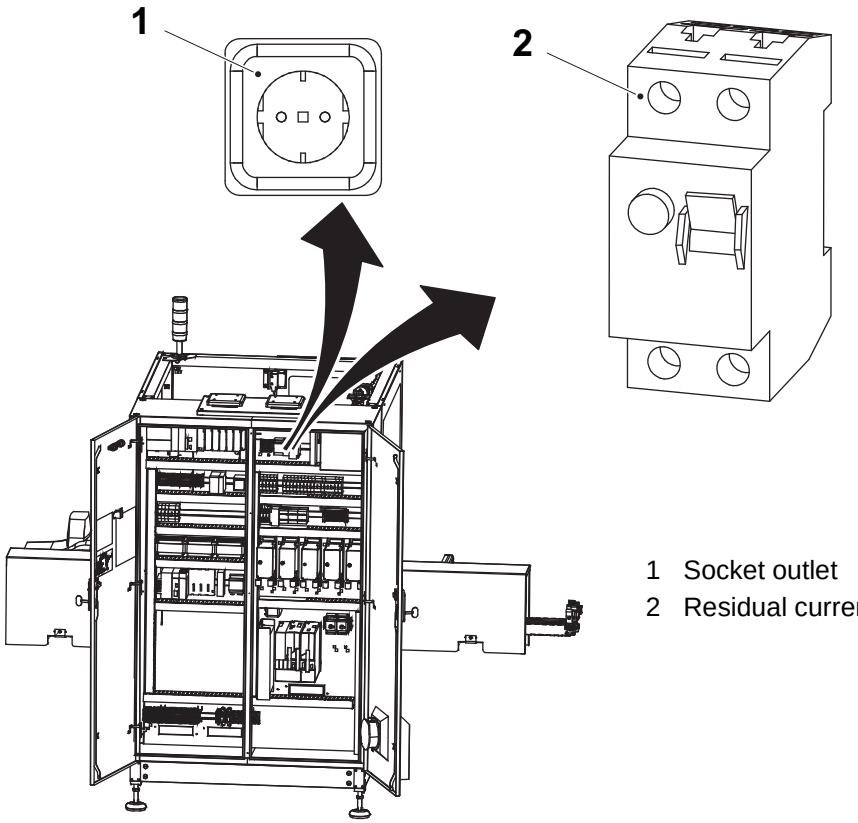

1 Socket outlet
2 Residual current device

Air Supply

WARNING

Compressed air and moving machinery.
Close the main air valve and lock it before any maintenance.

Note! The key to the lock must be removed by the technician and retained in his/her possession until all work is completed.

Certain maintenance procedures may require air supply systems to be on. These exceptions are clearly stated in the Maintenance Manual.

The illustrations show the main air valve (1), the lock (2), and their location.

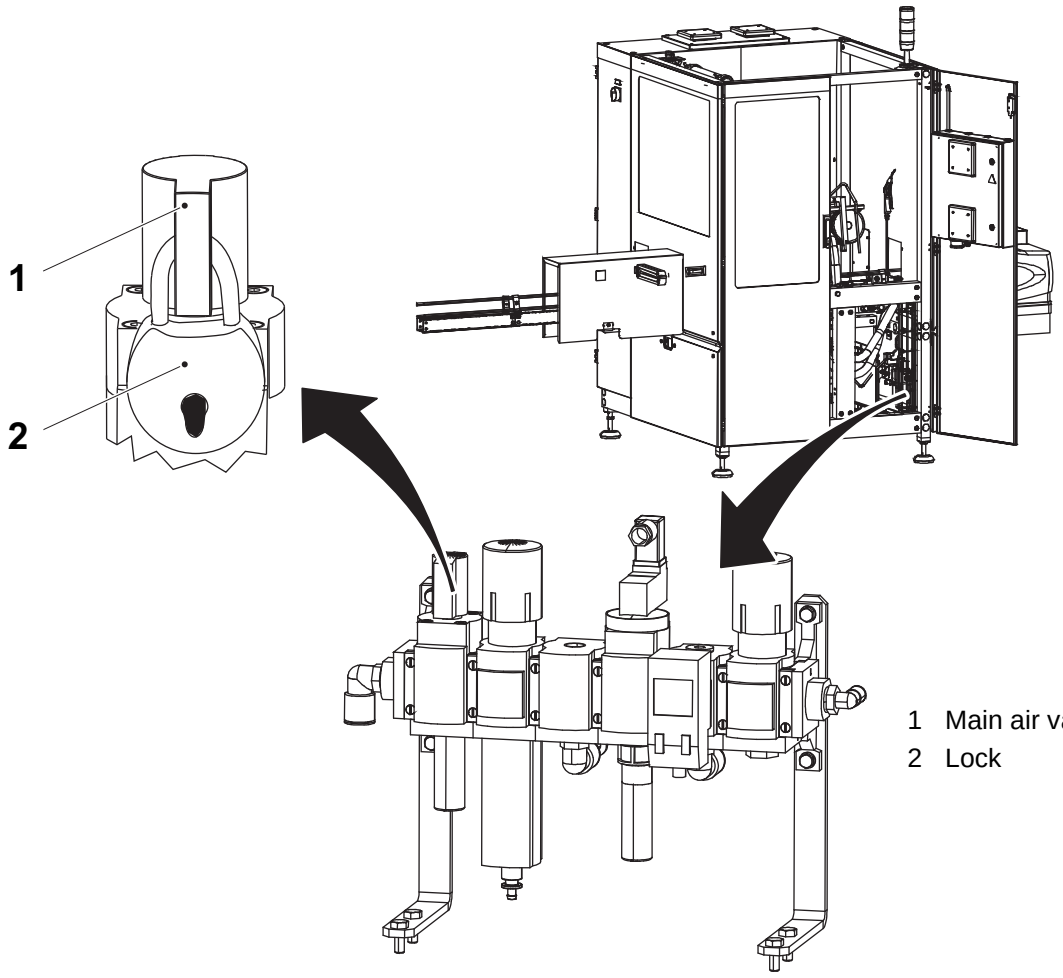

1 Main air valve
2 Lock

1 Electrical Systems Description

About the Electrical Systems Description Chapter

This chapter contains a description of the safety system connections in the machine or equipment.

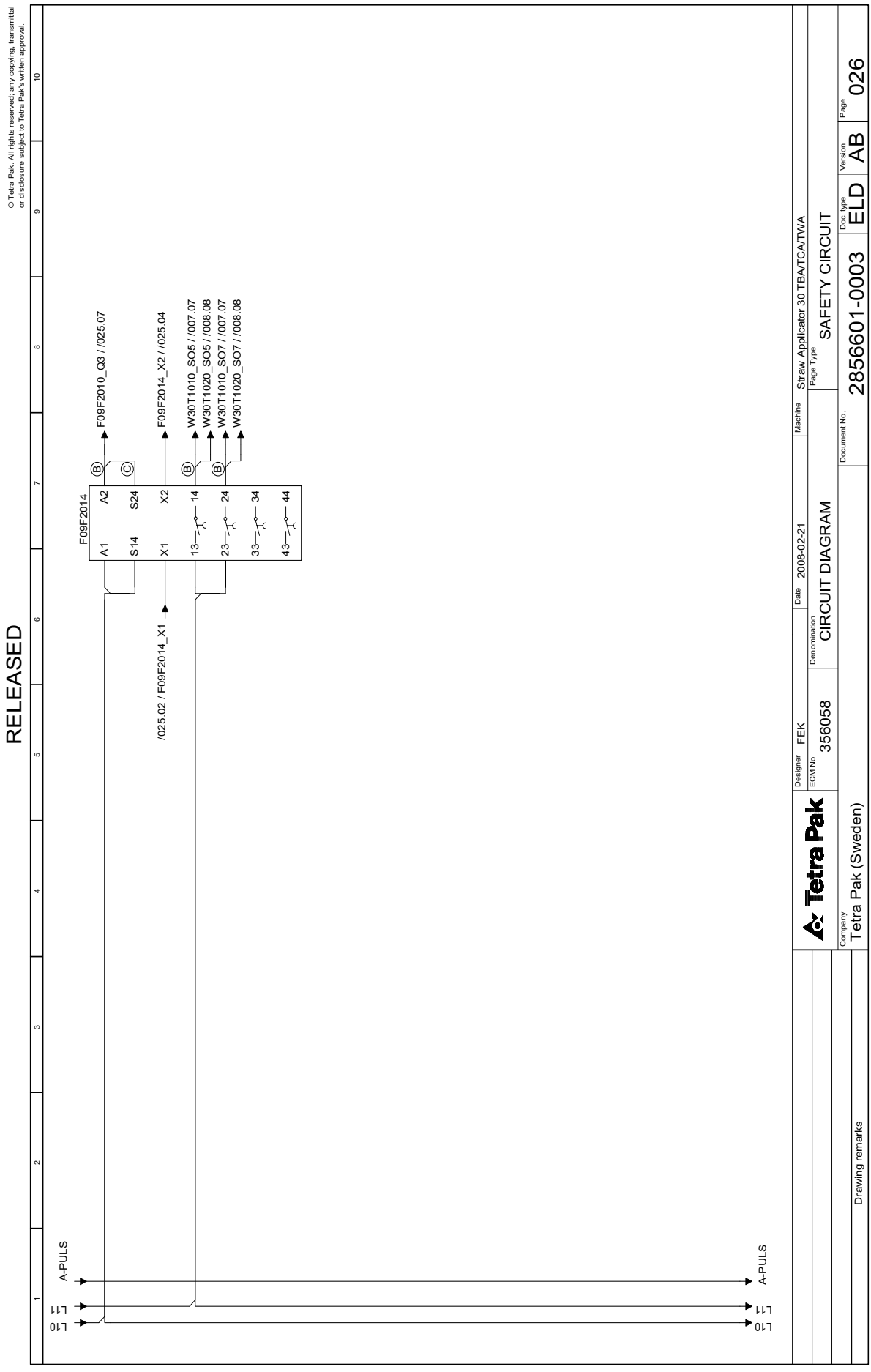
RELEASED
© Tetra Pak. All rights reserved; any copying, transmittal or disclosure subject to Tetra Pak's written approval.
A-PULS
L11
L10
F09F2014
A1
S14
A2
S24
X1
X2
13
14
23
24
33
34
43
44
/025.02 / F09F2014_X1
F09F2010_Q3 / /025.07
F09F2014_X2 / /025.04
W30T1010_SO5 / /007.07
W30T1020_SO5 / /008.08
W30T1010_SO7 / /007.07
W30T1020_SO7 / /008.08
Designer FEK
ECM No 356058
Denomination CIRCUIT DIAGRAM
Date 2008-02-21
Machine Straw Applicator 30 TBA/TCA/TWA
Page Type SAFETY CIRCUIT
Document No. 2856601-0003
Doc. type ELD
Version AB
Page 026
Company Tetra Pak (Sweden)
Drawing remarks

This page intentionally left blank

2 Document List

About the Document List Chapter

This chapter is a table of contents that includes the drawing specification for each electrical document valid for the equipment

© Tetra Pak. All rights reserved; any copying, transmittal or disclosure subject to Tetra Pak's written approval.

RELEASED

Documents list

Drawing No	Page	Denomination	Page type	Version
2856601-0001	001	DOCUMENT LIST	DOCUMENT LIST	AB
2856601-0001	002	DOCUMENT LIST	DOCUMENT LIST	AB
2856601-0002	001	POSITION SUMMARY	POSITION SUMMARY	AB
2856601-0002	002	POSITION SUMMARY	POSITION SUMMARY	AB
2856601-0003	001	CIRCUIT DIAGRAM	DISTRIBUTION TERMINALS	AB
2856601-0003	003	CIRCUIT DIAGRAM	MAIN SUPPLY DISTRIBUTION	AB
2856601-0003	004	CIRCUIT DIAGRAM	FREQUENCY CONVERTER	AB
2856601-0003	005	CIRCUIT DIAGRAM	FREQUENCY CONVERTER	AB
2856601-0003	006	CIRCUIT DIAGRAM	FREQUENCY CONVERTER	AB
2856601-0003	007	CIRCUIT DIAGRAM	SERVO UNIT	AB
2856601-0003	008	CIRCUIT DIAGRAM	SERVO UNIT	AB
2856601-0003	009	CIRCUIT DIAGRAM	SPARE	AB
2856601-0003	010	CIRCUIT DIAGRAM	HOT MELT, BFT	AB
2856601-0003	011	CIRCUIT DIAGRAM	FAN, COOLING UNIT	AB
2856601-0003	012	CIRCUIT DIAGRAM	SERVICE OUTLET, MACHINE LAMP	AB
2856601-0003	013	CIRCUIT DIAGRAM	STRAW DETECTOR	AB
2856601-0003	014	CIRCUIT DIAGRAM	POWER SUPPLY	AB
2856601-0003	016	CIRCUIT DIAGRAM	PLC, HMI, SNP	AB
2856601-0003	017	CIRCUIT DIAGRAM	GENIUS	AB
2856601-0003	018	CIRCUIT DIAGRAM	GENIUS	AB
2856601-0003	019	CIRCUIT DIAGRAM	FREQUENCY COMMUNICATION	AB
2856601-0003	020	CIRCUIT DIAGRAM	SERVO COMMUNICATION	AB
2856601-0003	025	CIRCUIT DIAGRAM	SAFETY CIRCUIT	AB
2856601-0003	026	CIRCUIT DIAGRAM	SAFETY CIRCUIT	AB
2856601-0003	027	CIRCUIT DIAGRAM	INPUT A03K2018	AB
2856601-0003	028	CIRCUIT DIAGRAM	INPUT A03K2018	AB
2856601-0003	029	CIRCUIT DIAGRAM	INPUT A03K2020	AB
2856601-0003	030	CIRCUIT DIAGRAM	INPUT A03K2020	AB
2856601-0003	031	CIRCUIT DIAGRAM	OUTPUT A03K2022	AB
2856601-0003	032	CIRCUIT DIAGRAM	OUTPUT A03K2022	AB
2856601-0003	033	CIRCUIT DIAGRAM	OUTPUT A03K2024	AB
2856601-0003	034	CIRCUIT DIAGRAM	OUTPUT A03K2024	AB
2856601-0003	040	CIRCUIT DIAGRAM	LINE COMMUNICATION	AB
2856601-0004	001	LINE SUMMARY	LINE SUMMARY	AB
2856601-0004	002	LINE SUMMARY	LINE SUMMARY	AB
2856601-0004	003	LINE SUMMARY	LINE SUMMARY	AB
2856601-0005	001	CABINET TERMINAL SUMMARY	CABINET TERMINAL SUMMARY	AB
2856601-0005	002	CABINET TERMINAL SUMMARY	CABINET TERMINAL SUMMARY	AB
2856601-0006	001	TERMINAL STRIP OVERVIEW	Terminal diagram: A08X1000 (1 - E1)	AB
2856601-0006	002	TERMINAL STRIP OVERVIEW	Terminal diagram: A08X2000 (E1 - E2)	AB
2856601-0006	003	TERMINAL STRIP OVERVIEW	Terminal diagram: P30X2020 (1 - 15)	AB
2856601-0006	004	TERMINAL STRIP OVERVIEW	Terminal diagram: W40X1032 (1 - 1)	AB
2856601-0006	005	TERMINAL STRIP OVERVIEW	Terminal diagram: W40X1034 (1 - 1)	AB
2856601-0007	001	CABLE CONNECTION LIST	CABLE CONNECTION LIST	AB
2856601-0007	002	CABLE CONNECTION LIST	CABLE CONNECTION LIST	AB
2856601-0007	003	CABLE CONNECTION LIST	CABLE CONNECTION LIST	AB

Tetra Pak

Designer FEK
ECM No 356058
Denomination DOCUMENT LIST
Date 2008-02-21
Machine Straw Applicator 30 TBA/TCA/TWA
Page Type DOCUMENT LIST
Document No. 2856601-0001
Doc. type ELD
Version AB
Page 001
Company Tetra Pak (Sweden)
Drawing remarks

© Tetra Pak. All rights reserved; any copying, transmittal or disclosure subject to Tetra Pak's written approval.

RELEASED

Documents list

Drawing No	Page	Denomination	Page type	Version
2856601-0007	004	CABLE CONNECTION LIST	CABLE CONNECTION LIST	AB
2856601-0007	005	CABLE CONNECTION LIST	CABLE CONNECTION LIST	AB
2856601-0007	006	CABLE CONNECTION LIST	CABLE CONNECTION LIST	AB
2856601-0008	001	MAINS CONNECTION	MAINS CONNECTION	AB
2856601-0008	002	MAINS CONNECTION	MAINS CONNECTION	AB

Tetra Pak

Company: Tetra Pak (Sweden)

Designer: FEK
ECM No: 356058

Date: 2008-02-21
Denomination: DOCUMENT LIST

Machine: Straw Applicator 30 TBA/TCA/TWA
Page Type: DOCUMENT LIST

Document No.: 2856601-0001
Doc. type: ELD
Version: AB
Page: 002

Drawing remarks

3 Position Summary

About the Position Summary Chapter

This chapter is a list of all electrical components that are shown in the electrical drawings, with page references to the drawings where they are located.

RELEASED

© Tetra Pak. All rights reserved; any copying, transmittal or disclosure subject to Tetra Pak's written approval.

1 2 3 4 5 6 7 8 9 10

Position summary of 2856601-0003

Component	Page .Col.	Opt.
A01B2010	027 .4	
A01F0001	003 .3	
A01F1010	014 .2	
A01F1020	012 .3	
A01F1022	012 .3	
A01F1030	011 .2	
A01F2010	014 .3	
A01F2012	014 .4	
A01K0001	003 .4	
A01K1030	032 .7	
A01K2012	033 .6	
A01P2010	031 .7	
A01P2014	031 .4	
A01Q0001	003 .2	
A01Q1010	033 .6	
A01T1010	014 .2	
A01U9998	025 .4	
A01U9999	025 .4	
A01V0001	003 .4	
A03F1010	016 .1	
A03K1010	016 .1	
A03K2010	016 .2	
A03K2012	020 .3	
A03K2014	016 .2	
A03K2016	019 .2	
A03K2018	027 .7	
A03K2020	029 .7	
A03K2022	032 .2	

Component	Page .Col.	Opt.
A03K2024	033 .2	
A03K2029	017 .7	(16)
A03K2031	017 .6	(16)
A03K2110	016 .6	
A03K2121	016 .3	(2)
A03R2029	017 .6	(16)
A03T1010	016 .1	
A07F1011	014 .7	
A07F1021	017 .2	
A07F2011	014 .8	(16)
A07K2021	017 .2	(16)
A07K2023	017 .2	(16)
A07K2025	017 .3	(16)
A07K2027	017 .5	(16)
A07R2025	017 .3	(16)
A07T1011	014 .7	(16)
A07T1021	017 .2	(16)
A08A2010	016 .8	
A08E2010	032 .7	
A08E2012	032 .7	
A08E2016	033 .7	
A08F1010	014 .5	
A08F2010	014 .5	
A08S2010	027 .4	
A08S2012	027 .4	
A08S2014	027 .4	
A08T1010	014 .5	
A30F1010	007 .2	

Component	Page .Col.	Opt.
A30F1020	007 .4	
A30Q1010	031 .7	
A30V1010	007 .2	
A30V1020	007 .3	
A40Q1010	033 .6	
E01E1013	011 .6	(13)
E01E1020	012 .6	
E01F1013	011 .6	
E01F1020	012 .6	
E01K1013	032 .7	
E01K1020	031 .7	
E01M1010	011 .2	(14)
E01Q2015	032 .4	(13)
E01Q2017	032 .6	(13)
E08M1010	011 .4	
F09F2010	025 .6	
F09F2012	025 .7	
F09F2014	026 .6	
F09F2020	025 .3	
F09F2022	025 .5	
F09F2026	025 .5	
F09F2028	025 .5	
F09Q1010	025 .8	
F09R2010	025 .6	
K10K2099	031 .7	
K90K2098	031 .7	
P30B2010	007 .8	
P50B1011	013 .2	(22)

Component	Page .Col.	Opt.
P50F1011	013 .2	
V10B2020	029 .4	(25)
V10B2022	029 .5	(25)
V30B2080	029 .4	
V30B2090	030 .4	(20)
V30B2120	030 .4	(21)
V30F1030	010 .3	
V30K2010	033 .6	
V30K2012	033 .6	(20)
V30K2020	033 .6	(21)
V30Q1030	032 .7	
V30V1030	010 .3	(5)
V40B2030	029 .4	(20)
V40B2032	029 .5	(20)
V40B2040	029 .4	(20)
V40B2042	029 .5	(20)
V40B2060	030 .4	
V40B2070	029 .4	(20)
V40B2072	029 .5	(20)
V40B2100	030 .4	(21)
V40B2102	030 .5	(21)
V50F1015	010 .7	
V50V1015	010 .6	(15)
V90B2050	029 .4	
V90B2052	029 .5	
W10F1010	004 .3	
W10K1010	004 .2	
W10K1012	004 .4	

Drawing remarks

Tetra Pak

Designer FEK | Date 2008-02-21 | Machine Straw Applicator 30 TBA/TCA/TWA

ECM No 356058 | Denomination POSITION SUMMARY | Page Type POSITION SUMMARY

Company Tetra Pak (Sweden) | Document No. 2856601-0002 | Doc. type ELD | Version AB | Page 001

RELEASED

© Tetra Pak. All rights reserved; any copying, transmittal or disclosure subject to Tetra Pak's written approval.

Position summary of 2856601-0003

Component	Page .Col.	Opt.
W10M1010	004 .5	
W10R2010	004 .3	
W10T1010	004 .2	
W10V1010	004 .3	
W30B2012	007 .7	
W30B2014	007 .8	
W30B2016	007 .8	
W30B2022	008 .7	
W30K2010	007 .7	(1)
W30K2012	007 .9	(11)
W30K2020	008 .7	(1)
W30K2022	008 .9	(11)
W30M1010	007 .3	
W30M1020	008 .3	
W30T1010	007 .2	
W30T1020	008 .2	
W40F1010	004 .7	
W40F1020	006 .3	
W40F1030	005 .3	
W40F1032	005 .5	(20)
W40F1034	005 .7	(20)
W40K1010	004 .7	
W40K1012	004 .9	
W40K1020	006 .2	(20)
W40K1022	006 .4	(20)
W40K1030	005 .2	(20)
W40K1032	005 .4	(20)
W40M1010	004 .9	

Component	Page .Col.	Opt.
W40M1020	006 .5	
W40M1032	005 .5	
W40M1034	005 .7	
W40R2030	005 .3	
W40T1010	004 .7	
W40T1020	006 .2	
W40T1030	005 .2	(20)
W40V1010	004 .7	
W40V1020	006 .3	(20)
W40V1030	005 .3	(20)
W90F1010	006 .7	
W90K1010	006 .7	
W90K1012	006 .9	
W90M1010	006 .9	
W90R2010	006 .8	
W90T1010	006 .7	
W90V1010	006 .7	

Component	Page .Col.	Opt.

Component	Page .Col.	Opt.

Drawing remarks

Tetra Pak

Designer FEK	Date 2008-02-21	Machine Straw Applicator 30 TBA/TCA/TWA	
ECM No 356058	Denomination POSITION SUMMARY	Page Type POSITION SUMMARY	
Company Tetra Pak (Sweden)	Document No. 2856601-0002	Doc. type ELD	Version AB / Page 002

4 Circuit Diagrams

About the Circuit Diagrams Chapter

All component drawings, such as programmable logic controller (PLC) modules, terminals, and cables, are included in this chapter. Other chapter lists are generated from these pages.

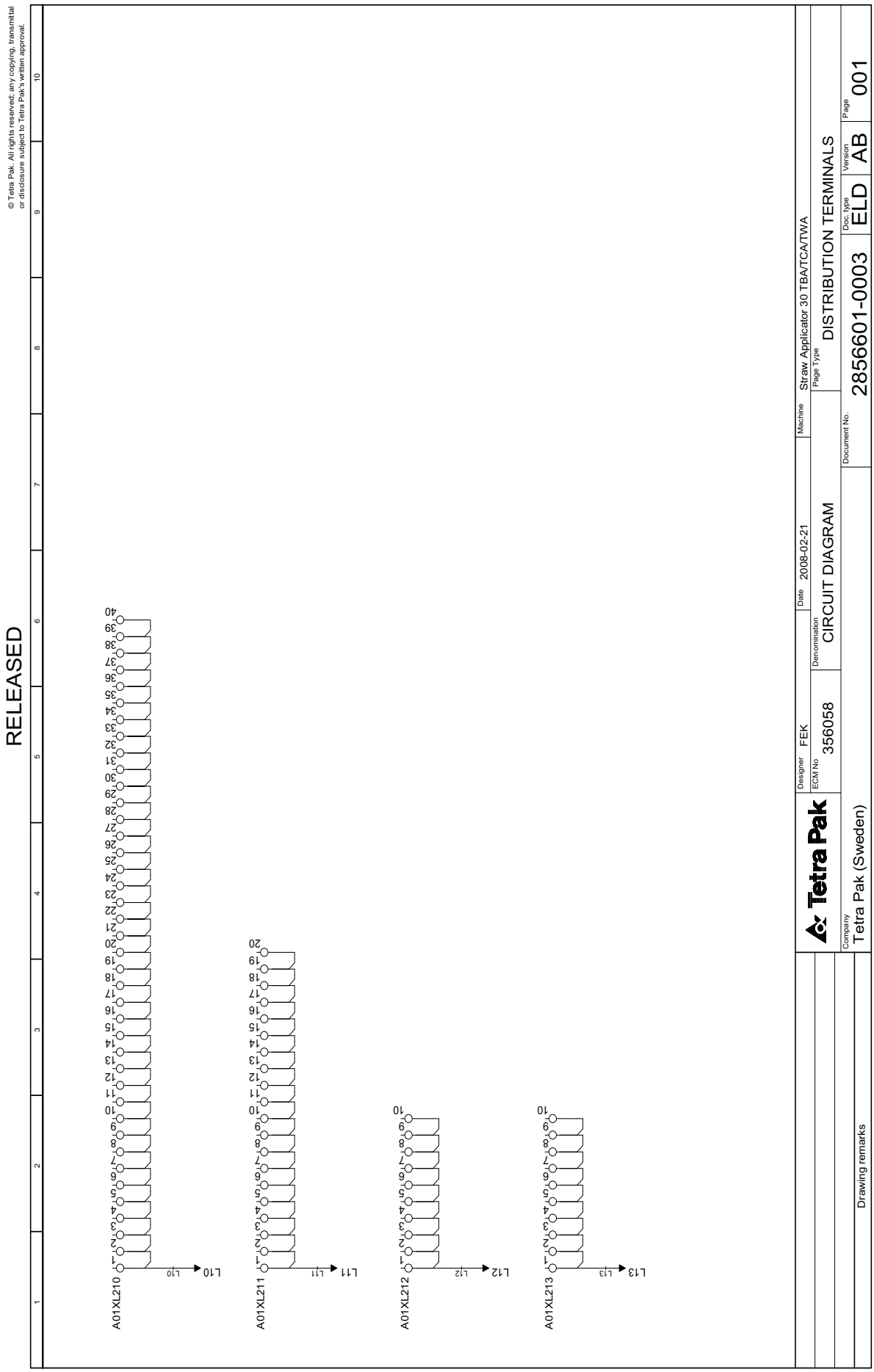
RELEASED
© Tetra Pak. All rights reserved; any copying, transmittal or disclosure subject to Tetra Pak's written approval.
A01XL210
L10
A01XL211
L11
A01XL212
L12
A01XL213
L13
Tetra Pak
Designer FEK
ECM No 356058
Denomination CIRCUIT DIAGRAM
Date 2008-02-21
Machine Straw Applicator 30 TBA/TCA/TWA
Page Type DISTRIBUTION TERMINALS
Document No. 2856601-0003
Doc. type ELD
Version AB
Page 001
Company Tetra Pak (Sweden)
Drawing remarks

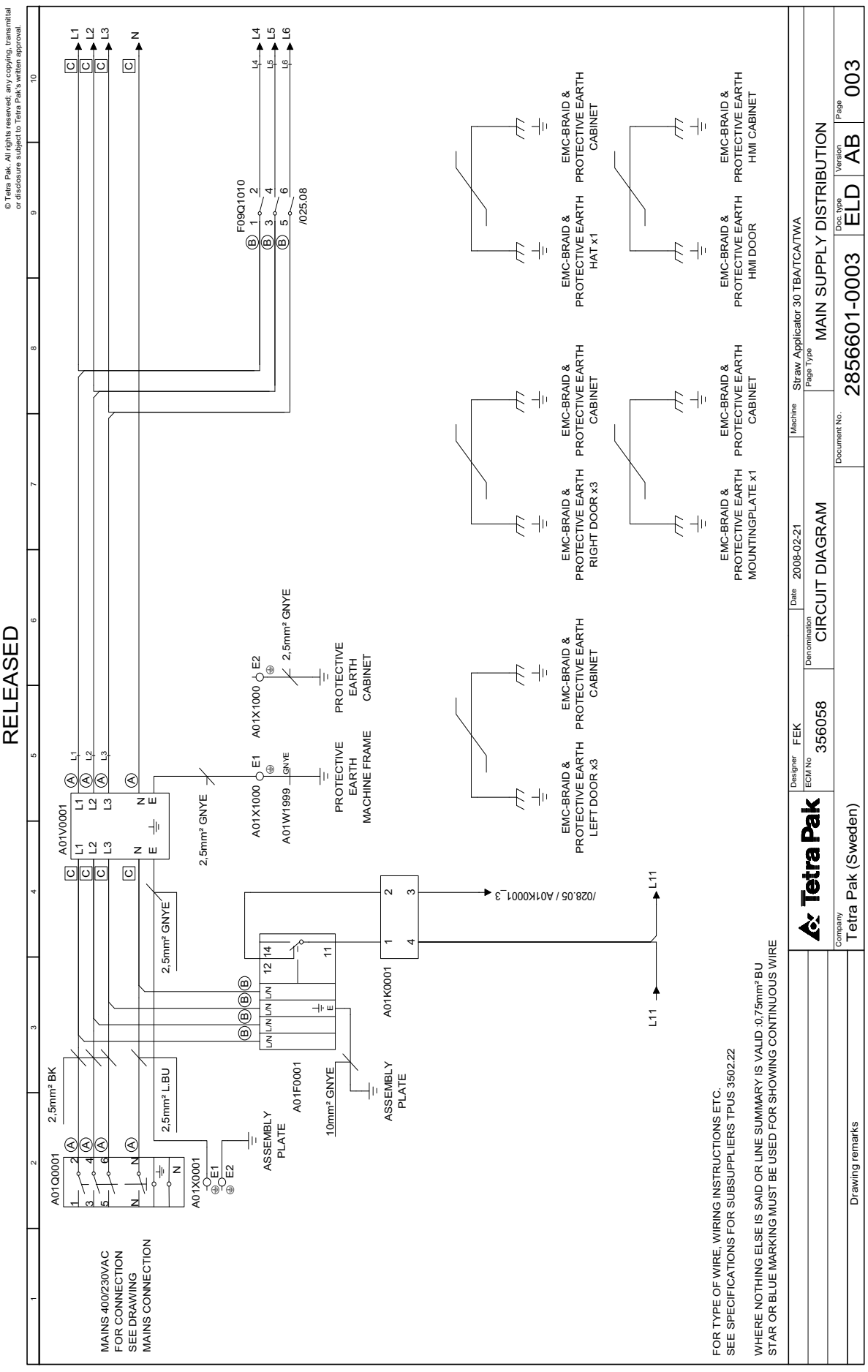
RELEASED
© Tetra Pak. All rights reserved; any copying, transmittal or disclosure subject to Tetra Pak's written approval.
Tetra Pak
Designer FEK
ECM No 356058
Denomination CIRCUIT DIAGRAM
Date 2008-02-21
Machine Straw Applicator 30 TBA/TCA/TWA
Page Type MAIN SUPPLY DISTRIBUTION
Document No. 2856601-0003
Doc. type ELD
Version AB
Page 003
Company Tetra Pak (Sweden)
Drawing remarks
MAINS 400/230VAC FOR CONNECTION SEE DRAWING MAINS CONNECTION
A01Q0001
A01X0001
A01V0001
A01F0001
A01K0001
A01X1000
A01W1999
F09Q1010
/025.08
2,5mm² BK
2,5mm² L.BU
2,5mm² GNYE
10mm² GNYE
ASSEMBLY PLATE
PROTECTIVE EARTH MACHINE FRAME
PROTECTIVE EARTH CABINET
EMC-BRAID & PROTECTIVE EARTH LEFT DOOR x3
EMC-BRAID & PROTECTIVE EARTH RIGHT DOOR x3
EMC-BRAID & PROTECTIVE EARTH CABINET
EMC-BRAID & PROTECTIVE EARTH HAT x1
EMC-BRAID & PROTECTIVE EARTH MOUNTINGPLATE x1
EMC-BRAID & PROTECTIVE EARTH HMI DOOR
/028.05 / A01K0001
L11
FOR TYPE OF WIRE, WIRING INSTRUCTIONS ETC. SEE SPECIFICATIONS FOR SUBSUPPLIERS TPUS 3502.22
WHERE NOTHING ELSE IS SAID OR LINE SUMMARY IS VALID :0,75mm² BU STAR OR BLUE MARKING MUST BE USED FOR SHOWING CONTINUOUS WIRE

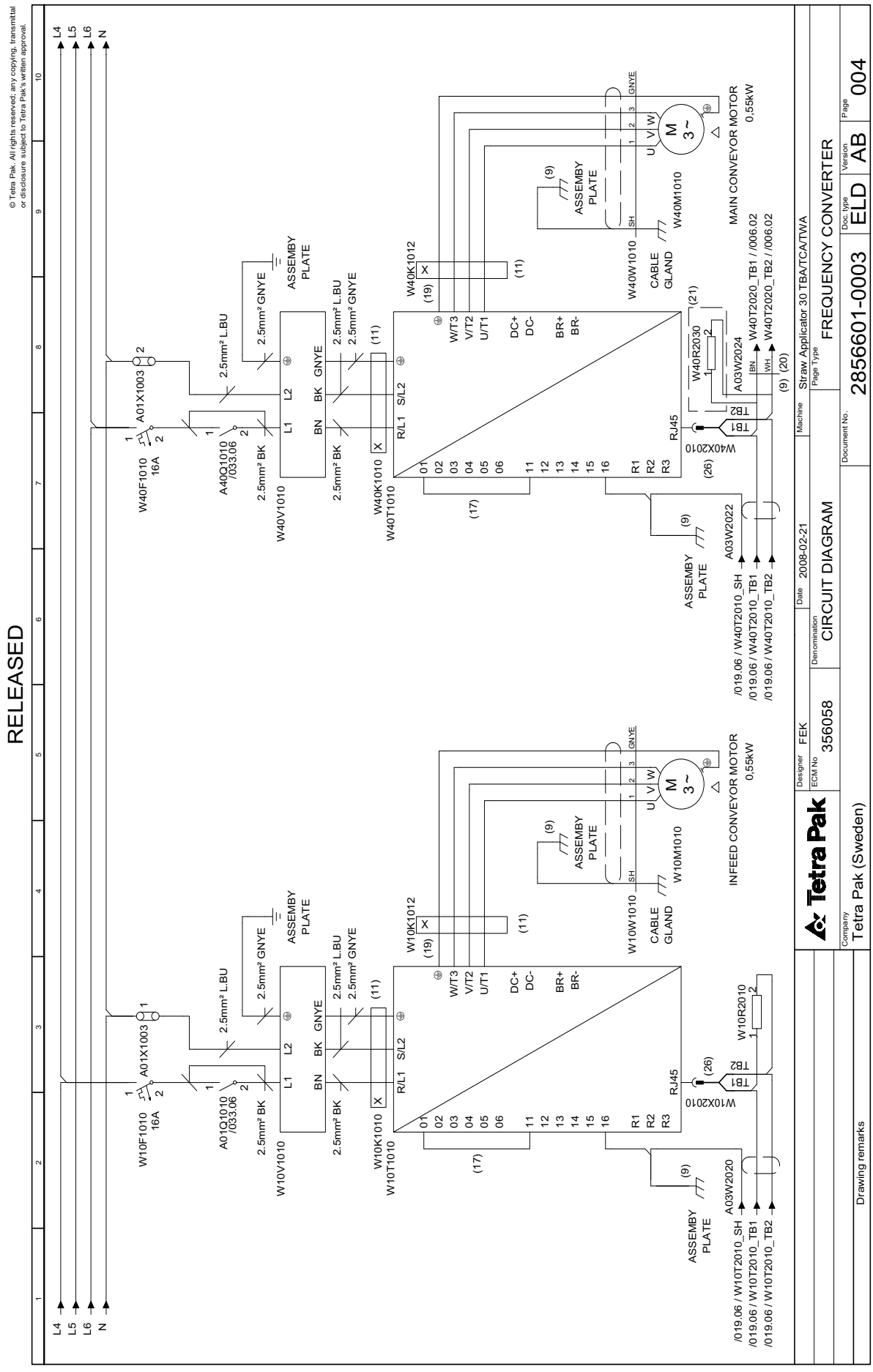
RELEASED
© Tetra Pak. All rights reserved; any copying, transmittal or disclosure subject to Tetra Pak's written approval.
L4
L5
L6
N
W40F1010
16A
A01X1003
A40Q1010
/033.06
2.5mm² BK
2.5mm² L.BU
2.5mm² GNYE
W40V1010
ASSEMBY PLATE
W40K1010
W40T1010
W40K1012
W/T3
V/T2
U/T1
DC+
DC-
BR+
BR-
W40R2030
A03W2024
W40T2020_TB1 / /006.02
W40T2020_TB2 / /006.02
W40X2010
RJ45
TB1
TB2
A03W2022
/019.06 / W40T2010_SH
/019.06 / W40T2010_TB1
/019.06 / W40T2010_TB2
W40W1010
CABLE GLAND
W40M1010
MAIN CONVEYOR MOTOR
0,55kW
W10F1010
W10V1010
W10K1010
W10T1010
W10K1012
W10M1010
INFEED CONVEYOR MOTOR
0,55kW
W10R2010
W10X2010
A03W2020
/019.06 / W10T2010_SH
/019.06 / W10T2010_TB1
/019.06 / W10T2010_TB2
Tetra Pak
Designer FEK
ECM No 356058
Date 2008-02-21
Denomination CIRCUIT DIAGRAM
Machine Straw Applicator 30 TBA/TCA/TWA
Page Type FREQUENCY CONVERTER
Company Tetra Pak (Sweden)
Drawing remarks
Document No. 2856601-0003
Doc. type ELD
Version AB
Page 004

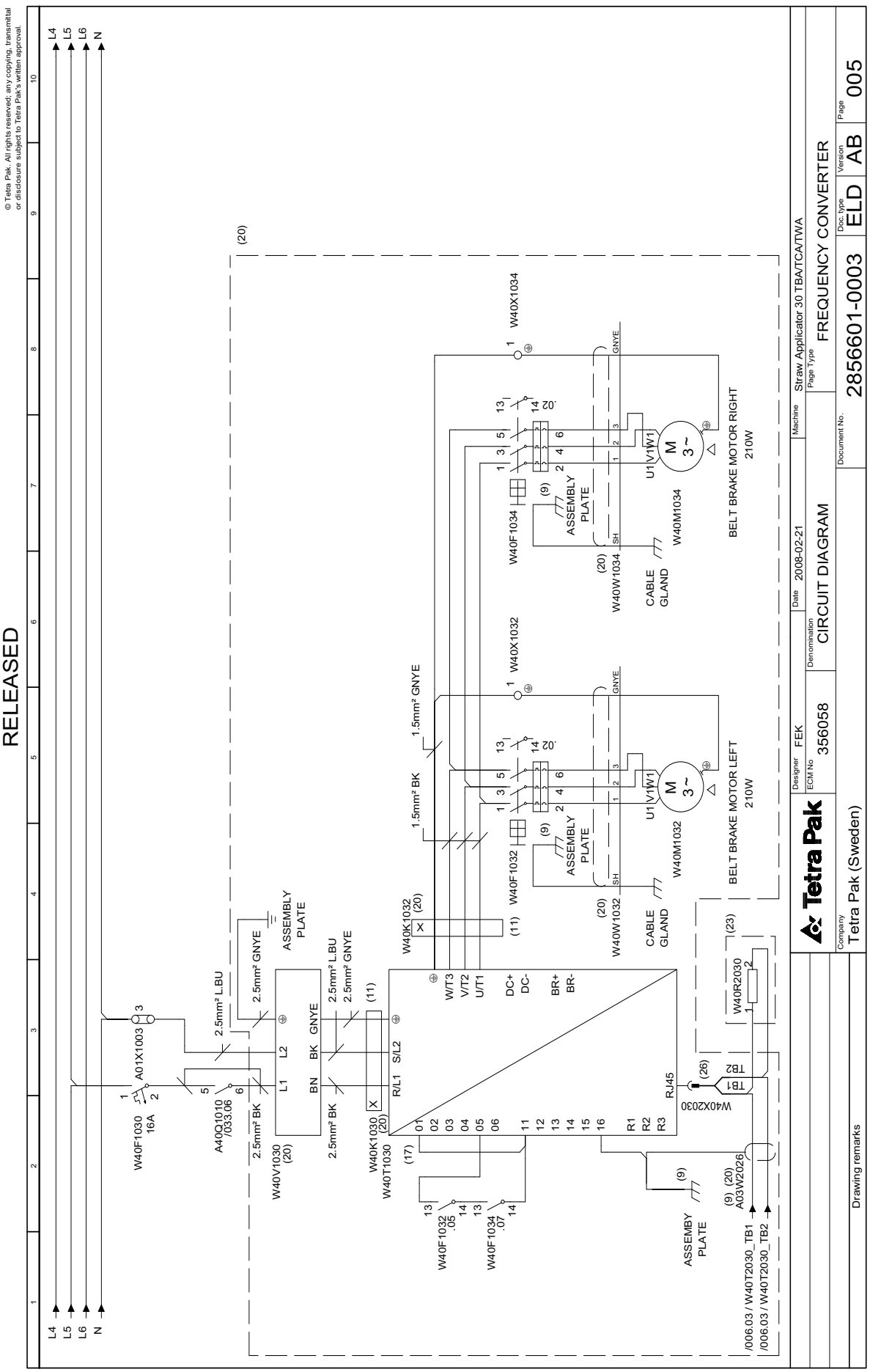
RELEASED
© Tetra Pak. All rights reserved; any copying, transmittal or disclosure subject to Tetra Pak's written approval.
Tetra Pak
Designer FEK
ECM No 356058
Date 2008-02-21
Denomination CIRCUIT DIAGRAM
Machine Straw Applicator 30 TBA/TCA/TWA
Page Type FREQUENCY CONVERTER
Document No. 2856601-0003
Doc. type ELD
Version AB
Page 005
Company Tetra Pak (Sweden)
Drawing remarks
L4 L5 L6 N
W40F1030 16A
A01X1003
A40Q1010 /033.06
W40V1030 (20)
2.5mm² L.BU
2.5mm² BK
2.5mm² GNYE
ASSEMBLY PLATE
W40K1030 (20)
W40T1030 (17)
R/L1 S/L2
W/T3 V/T2 U/T1
DC+ DC-
BR+ BR-
R1 R2 R3
RJ45
W40X2030
TB1 TB2
W40R2030
W40K1032 (20)
1.5mm² BK
1.5mm² GNYE
W40X1032
W40F1032
W40W1032
W40M1032
W40X1034
W40F1034
W40W1034
W40M1034
CABLE GLAND
BELT BRAKE MOTOR LEFT 210W
BELT BRAKE MOTOR RIGHT 210W
/006.03 / W40T2030_TB1
/006.03 / W40T2030_TB2
A03W2026

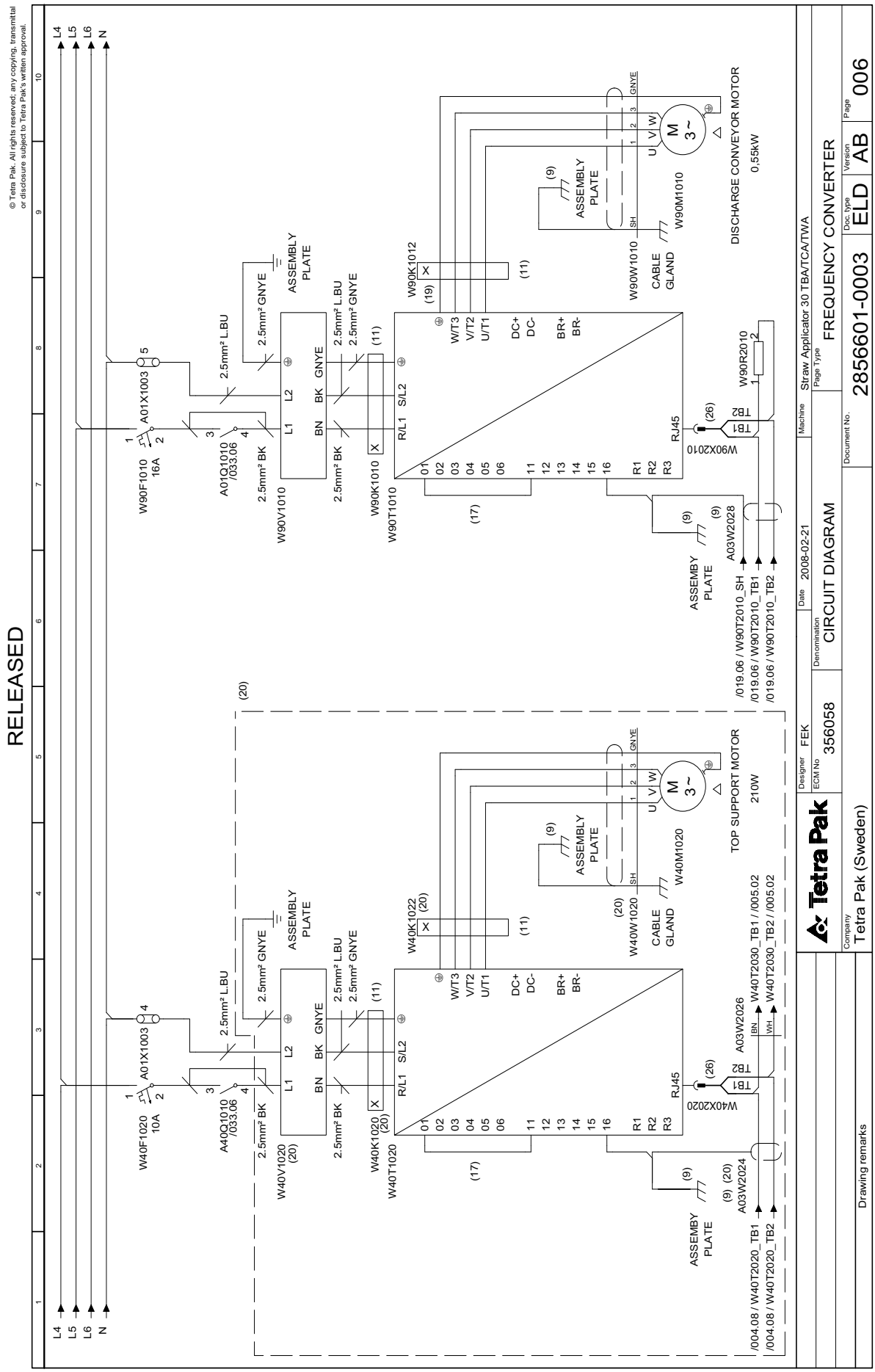
RELEASED
© Tetra Pak. All rights reserved; any copying, transmittal or disclosure subject to Tetra Pak's written approval.
Tetra Pak
Designer FEK
ECM No 356058
Denomination CIRCUIT DIAGRAM
Date 2008-02-21
Machine Straw Applicator 30 TBA/TCA/TWA
Page Type FREQUENCY CONVERTER
Document No. 2856601-0003
Doc. type ELD
Version AB
Page 006
Company Tetra Pak (Sweden)
Drawing remarks
L4 L5 L6 N
W90F1010 16A
A01X1003
A01Q1010 /033.06
W90V1010
W90K1010
W90T1010
W90K1012
W90W1010
W90M1010
CABLE GLAND
ASSEMBLY PLATE
DISCHARGE CONVEYOR MOTOR 0,55kW
W90X2010
W90R2010
A03W2028
/019.06 / W90T2010_SH
/019.06 / W90T2010_TB1
/019.06 / W90T2010_TB2
W40F1020 10A
A40Q1010 /033.06
W40V1020 (20)
W40K1020 (20)
W40T1020
W40K1022 (20)
W40W1020 (20)
W40M1020
TOP SUPPORT MOTOR 210W
W40X2020
A03W2026
W40T2030_TB1 / /005.02
W40T2030_TB2 / /005.02
A03W2024
/004.08 / W40T2020_TB1
/004.08 / W40T2020_TB2
2.5mm² L.BU
2.5mm² GNYE
2.5mm² BK
2.5mm² BN
GNYE
BK
BN
L1
L2
S/L2
R/L1
RJ45
TB1
TB2
W/T3
V/T2
U/T1
DC+
DC-
BR+
BR-
U V W
SH
M 3~

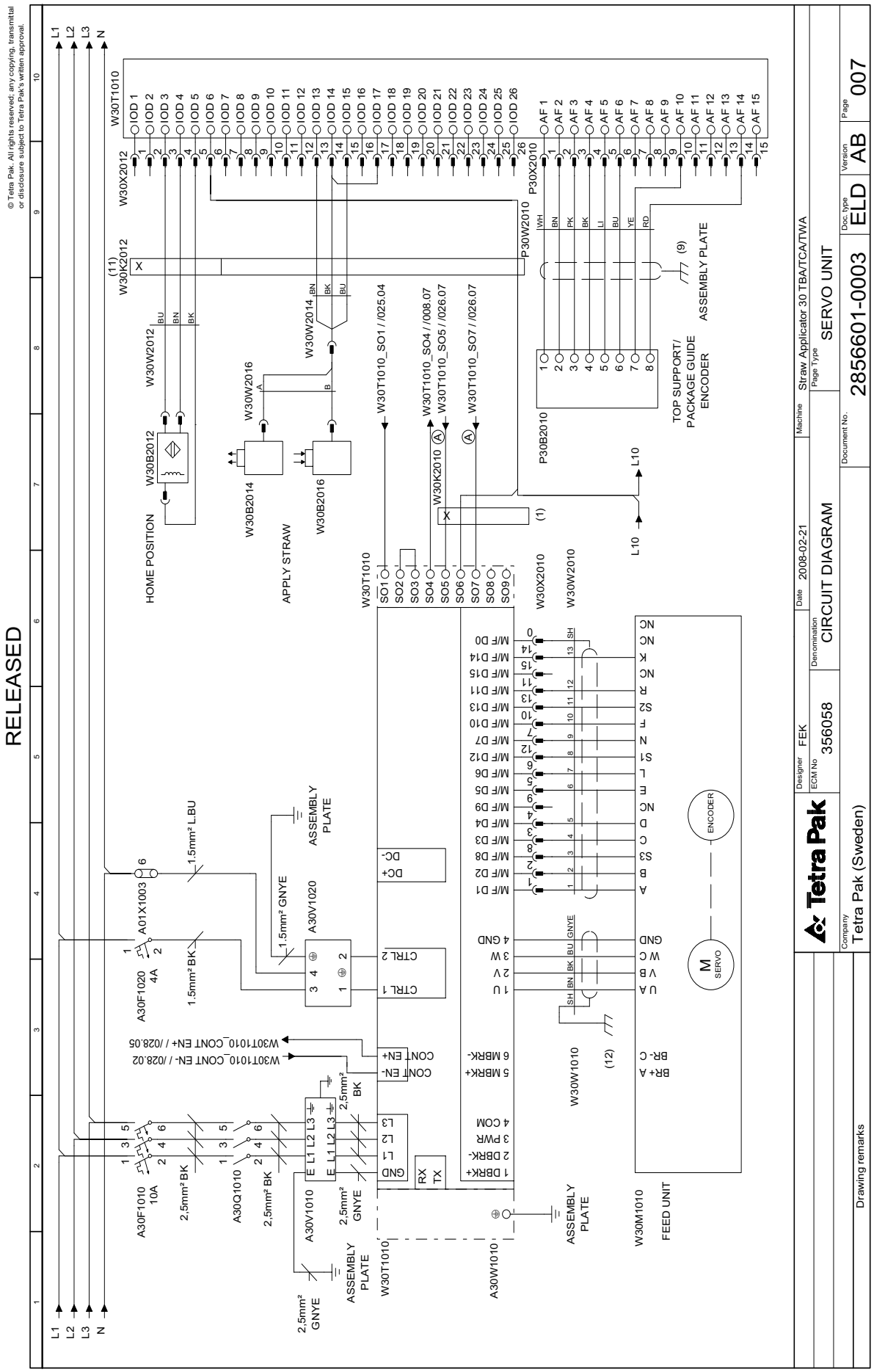
RELEASED
© Tetra Pak. All rights reserved; any copying, transmittal or disclosure subject to Tetra Pak's written approval.
Tetra Pak
Designer FEK
ECM No 356058
Date 2008-02-21
Denomination CIRCUIT DIAGRAM
Machine Straw Applicator 30 TBA/TCA/TWA
Page Type SERVO UNIT
Document No. 2856601-0003
Doc. type ELD
Version AB
Page 007
Company Tetra Pak (Sweden)
Drawing remarks
W30T1010
W30X2012
W30X2010
P30W2010
W30K2012
W30W2012
W30W2014
W30W2016
W30B2012
W30B2014
W30B2016
W30K2010
P30B2010
W30X2010
W30W2010
W30T1010_SO1 / /025.04
W30T1010_SO4 / /008.07
W30T1010_SO5 / /026.07
W30T1010_SO7 / /026.07
HOME POSITION
APPLY STRAW
TOP SUPPORT/ PACKAGE GUIDE ENCODER
ASSEMBLY PLATE
A01X1003
A30F1020 4A
A30V1020
A30F1010 10A
A30Q1010
A30V1010
A30W1010
W30M1010
FEED UNIT
W30W1010
W30T1010_CONT EN+ / /028.05
W30T1010_CONT EN- / /028.02
1.5mm² L.BU
1.5mm² BK
1.5mm² GNYE
2,5mm² BK
2,5mm² GNYE
ASSEMBLY PLATE
ENCODER
SERVO
L1
L2
L3
N
L10

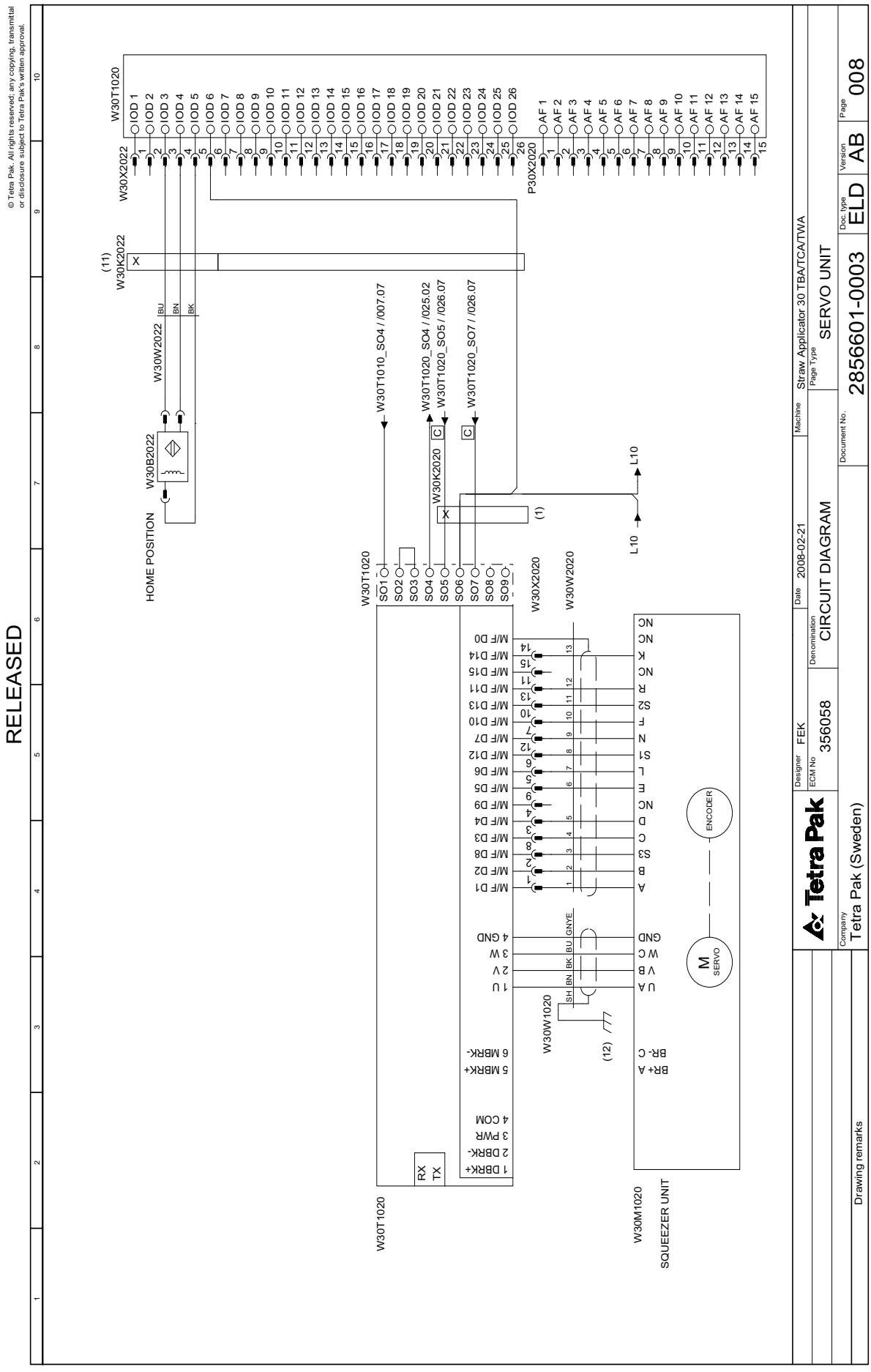
© Tetra Pak. All rights reserved; any copying, transmittal or disclosure subject to Tetra Pak's written approval.
RELEASED
W30T1020
W30X2022
W30K2022
W30W2022
W30B2022
HOME POSITION
W30T1010_SO4 / /007.07
W30T1020_SO4 / /025.02
W30T1020_SO5 / /026.07
W30T1020_SO7 / /026.07
W30K2020
W30X2020
W30W2020
W30W1020
W30M1020
SQUEEZER UNIT
P30X2020
L10
ENCODER
SERVO
Tetra Pak
Designer FEK
ECM No 356058
Denomination CIRCUIT DIAGRAM
Date 2008-02-21
Machine Straw Applicator 30 TBA/TCA/TWA
Page Type SERVO UNIT
Document No. 2856601-0003
Doc. type ELD
Version AB
Page 008
Company Tetra Pak (Sweden)
Drawing remarks

© Tetra Pak. All rights reserved; any copying, transmittal or disclosure subject to Tetra Pak's written approval.

RELEASED

		Designer FEK	Date 2008-02-21	Machine	Straw Applicator 30 TBA/TCA/TWA				
	Tetra Pak	ECM No 356058	Denomination CIRCUIT DIAGRAM		Page Type SPARE				
				Document No.	2856601-0003	Doc. type ELD	Version AB	Page 009	
	Company Tetra Pak (Sweden)								
	Drawing remarks								

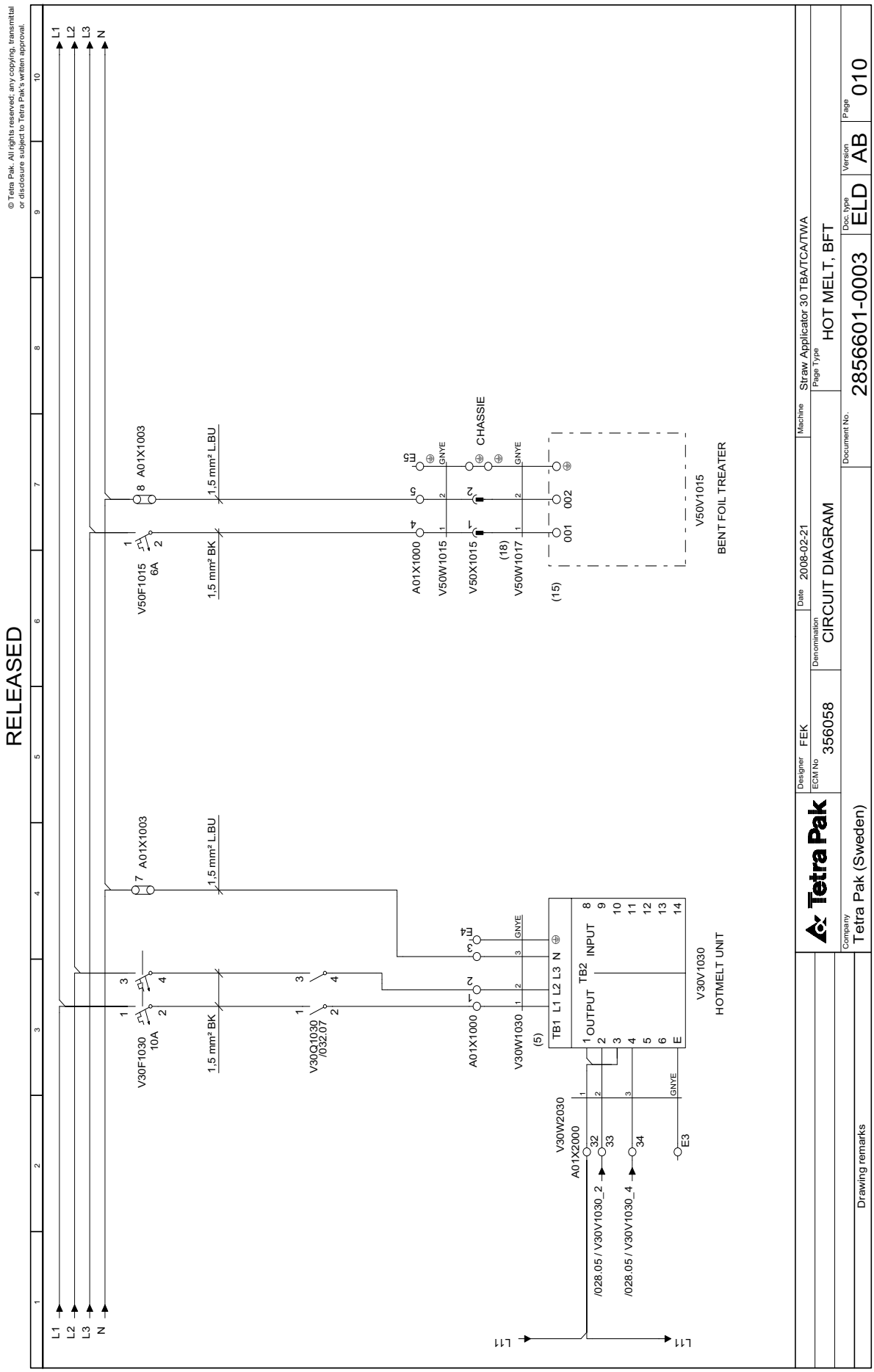
RELEASED
© Tetra Pak. All rights reserved; any copying, transmittal or disclosure subject to Tetra Pak's written approval.
L1
L2
L3
N
V30F1030 10A
V50F1015 6A
A01X1003
1,5 mm² BK
1,5 mm² LBU
V30Q1030 /032.07
A01X1000
V30W1030 (5)
V30V1030 HOTMELT UNIT
TB1 L1 L2 L3 N
TB2 INPUT
OUTPUT
V30W2030
A01X2000
/028.05 / V30V1030_2
/028.05 / V30V1030_4
E3
E4
E5
GNYE
V50W1015
V50X1015
CHASSIE
(18)
V50W1017
(15)
001
002
V50V1015
BENT FOIL TREATER
Tetra Pak
Designer FEK
ECM No 356058
Denomination CIRCUIT DIAGRAM
Date 2008-02-21
Machine Straw Applicator 30 TBA/TCA/TWA
Page Type HOT MELT, BFT
Document No. 2856601-0003
Doc. type ELD
Version AB
Page 010
Company Tetra Pak (Sweden)
Drawing remarks

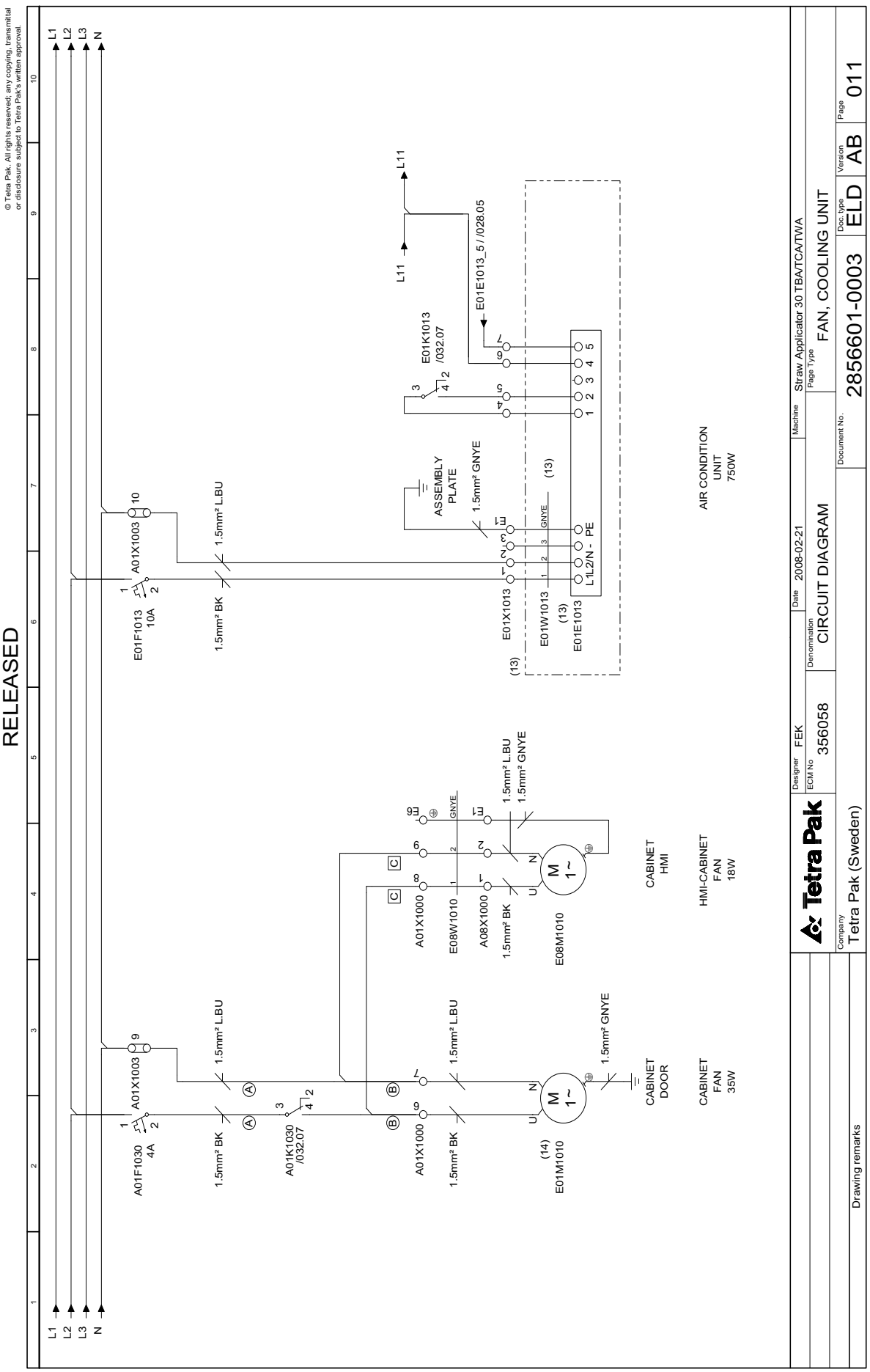
RELEASED
© Tetra Pak. All rights reserved; any copying, transmittal or disclosure subject to Tetra Pak's written approval.
L1
L2
L3
N
A01F1030 4A
A01X1003
E01F1013 10A
1.5mm² BK
1.5mm² L.BU
A01K1030 /032.07
A01X1000
E08W1010
A08X1000
E08M1010
(14) E01M1010
M 1~
CABINET DOOR
CABINET FAN 35W
CABINET HMI
HMI-CABINET FAN 18W
1.5mm² GNYE
ASSEMBLY PLATE
E01K1013 /032.07
L11
E01E1013_5 / /028.05
E01X1013
E01W1013
(13) E01E1013
L1L2/N - PE
AIR CONDITION UNIT 750W
Designer FEK
ECM No 356058
Date 2008-02-21
Denomination CIRCUIT DIAGRAM
Machine Straw Applicator 30 TBA/TCA/TWA
Page Type FAN, COOLING UNIT
Document No. 2856601-0003
Doc. type ELD
Version AB
Page 011
Company Tetra Pak (Sweden)
Drawing remarks

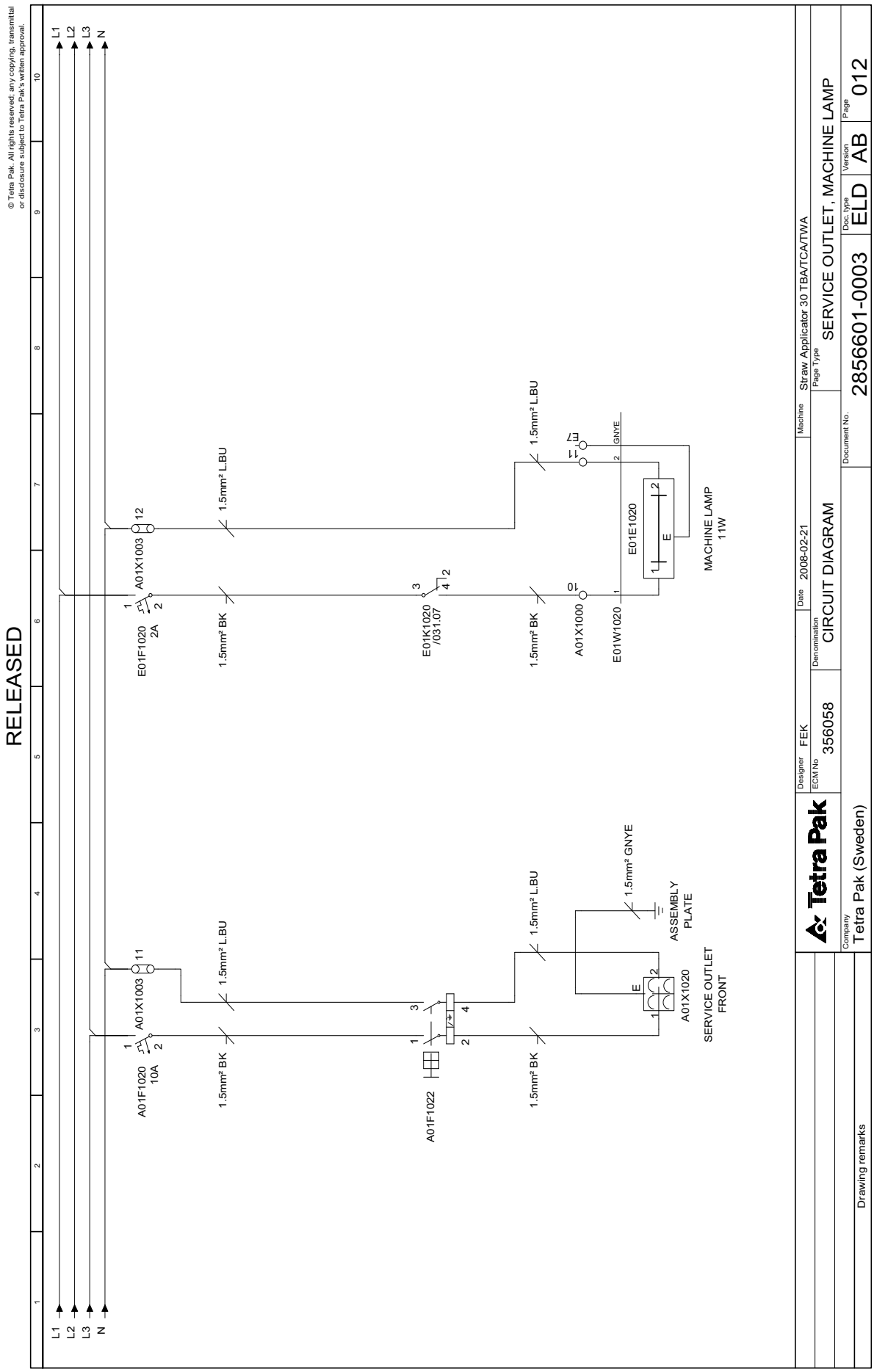
RELEASED
© Tetra Pak. All rights reserved; any copying, transmittal or disclosure subject to Tetra Pak's written approval.
L1
L2
L3
N
A01F1020 10A
A01X1003
1.5mm² BK
1.5mm² L.BU
A01F1022
A01X1020
SERVICE OUTLET FRONT
1.5mm² GNYE
ASSEMBLY PLATE
E01F1020 2A
E01K1020 /031.07
A01X1000
E01W1020
E01E1020
MACHINE LAMP 11W
Designer FEK
ECM No 356058
Date 2008-02-21
Denomination CIRCUIT DIAGRAM
Machine Straw Applicator 30 TBA/TCA/TWA
Page Type SERVICE OUTLET, MACHINE LAMP
Document No. 2856601-0003
Doc. type ELD
Version AB
Page 012
Company Tetra Pak (Sweden)
Drawing remarks

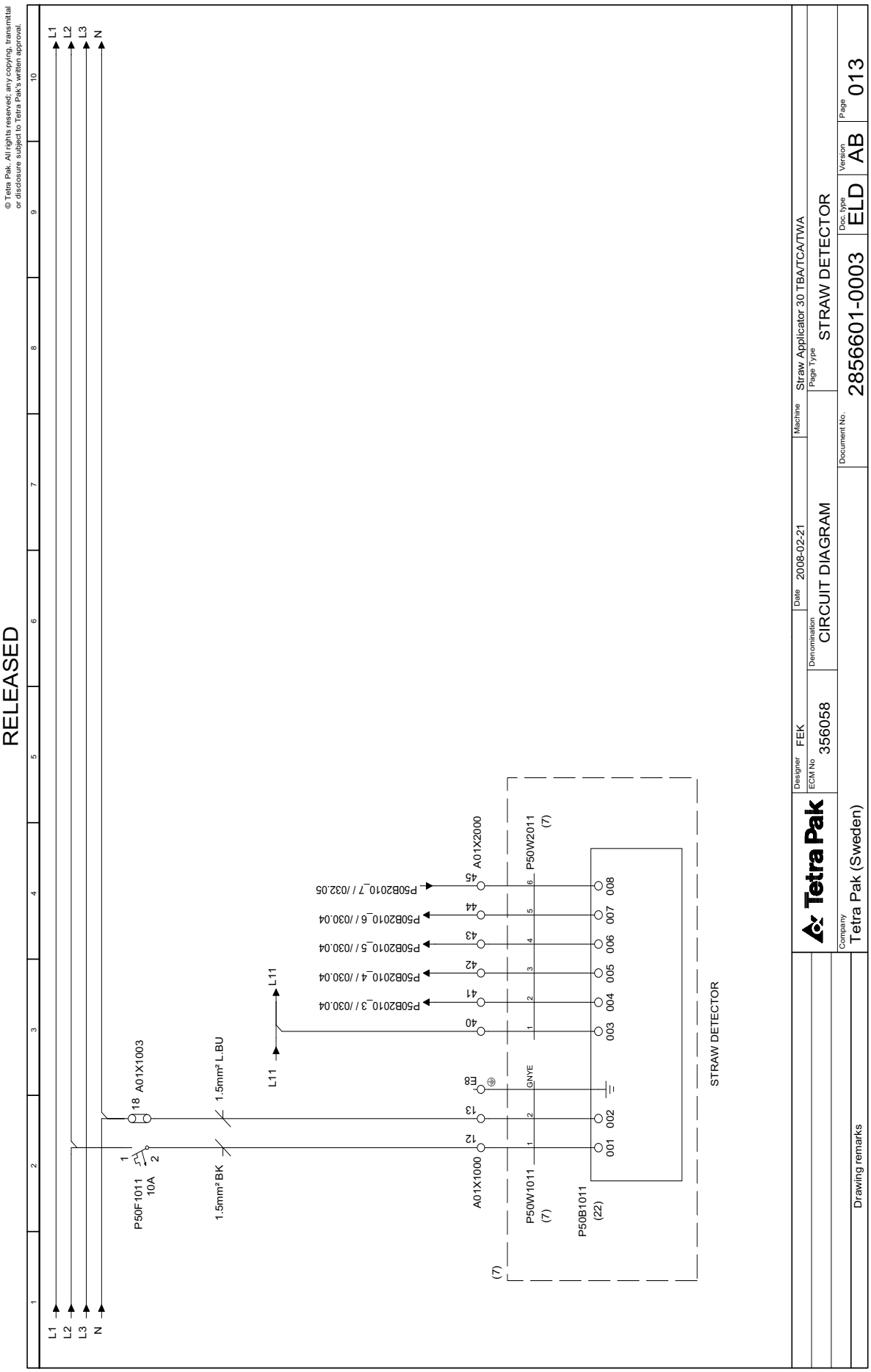
RELEASED
© Tetra Pak. All rights reserved; any copying, transmittal or disclosure subject to Tetra Pak's written approval.
L1
L2
L3
N
P50F1011
10A
A01X1003
18
1.5mm² BK
1.5mm² L.BU
L11
A01X1000
12
13
E8
GNYE
40
41
42
43
44
45
A01X2000
P50B2010_3 / /030.04
P50B2010_4 / /030.04
P50B2010_5 / /030.04
P50B2010_6 / /030.04
P50B2010_7 / /032.05
P50W1011
(7)
P50B1011
(22)
P50W2011
(7)
001 002 003 004 005 006 007 008
STRAW DETECTOR
Designer FEK
ECM No 356058
Denomination CIRCUIT DIAGRAM
Date 2008-02-21
Machine Straw Applicator 30 TBA/TCA/TWA
Page Type STRAW DETECTOR
Document No. 2856601-0003
Doc. type ELD
Version AB
Page 013
Company Tetra Pak (Sweden)
Drawing remarks

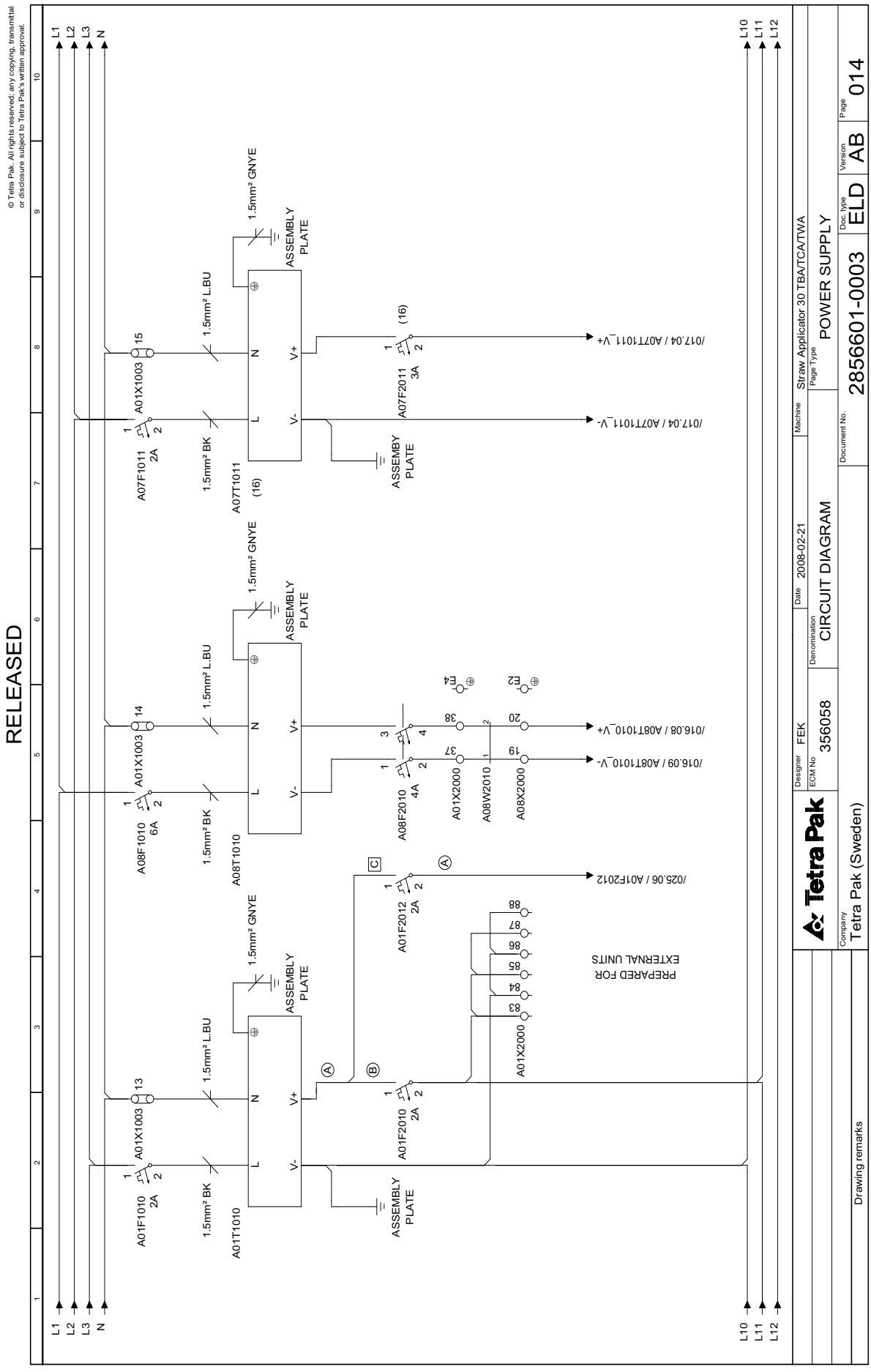
RELEASED
© Tetra Pak. All rights reserved; any copying, transmittal or disclosure subject to Tetra Pak's written approval.
L1
L2
L3
N
L10
L11
L12
A01F1010 2A
A01X1003 13
A01T1010
1.5mm² BK
1.5mm² L.BU
1.5mm² GNYE
ASSEMBLY PLATE
A08F1010 6A
A08T1010
A01X1003 14
A07F1011 2A
A07T1011
A01X1003 15
A01F2010 2A
A01F2012 2A
A08F2010 4A
A01X2000
A08W2010
A08X2000
PREPARED FOR EXTERNAL UNITS
/025.06 / A01F2012
/016.08 / A08T1010_V+
/016.09 / A08T1010_V-
/017.04 / A07T1011_V+
/017.04 / A07T1011_V-
A07F2011 3A
Designer FEK
Date 2008-02-21
Machine Straw Applicator 30 TBA/TCA/TWA
ECM No 356058
Denomination CIRCUIT DIAGRAM
Page Type POWER SUPPLY
Document No. 2856601-0003
Doc. type ELD
Version AB
Page 014
Company Tetra Pak (Sweden)
Drawing remarks

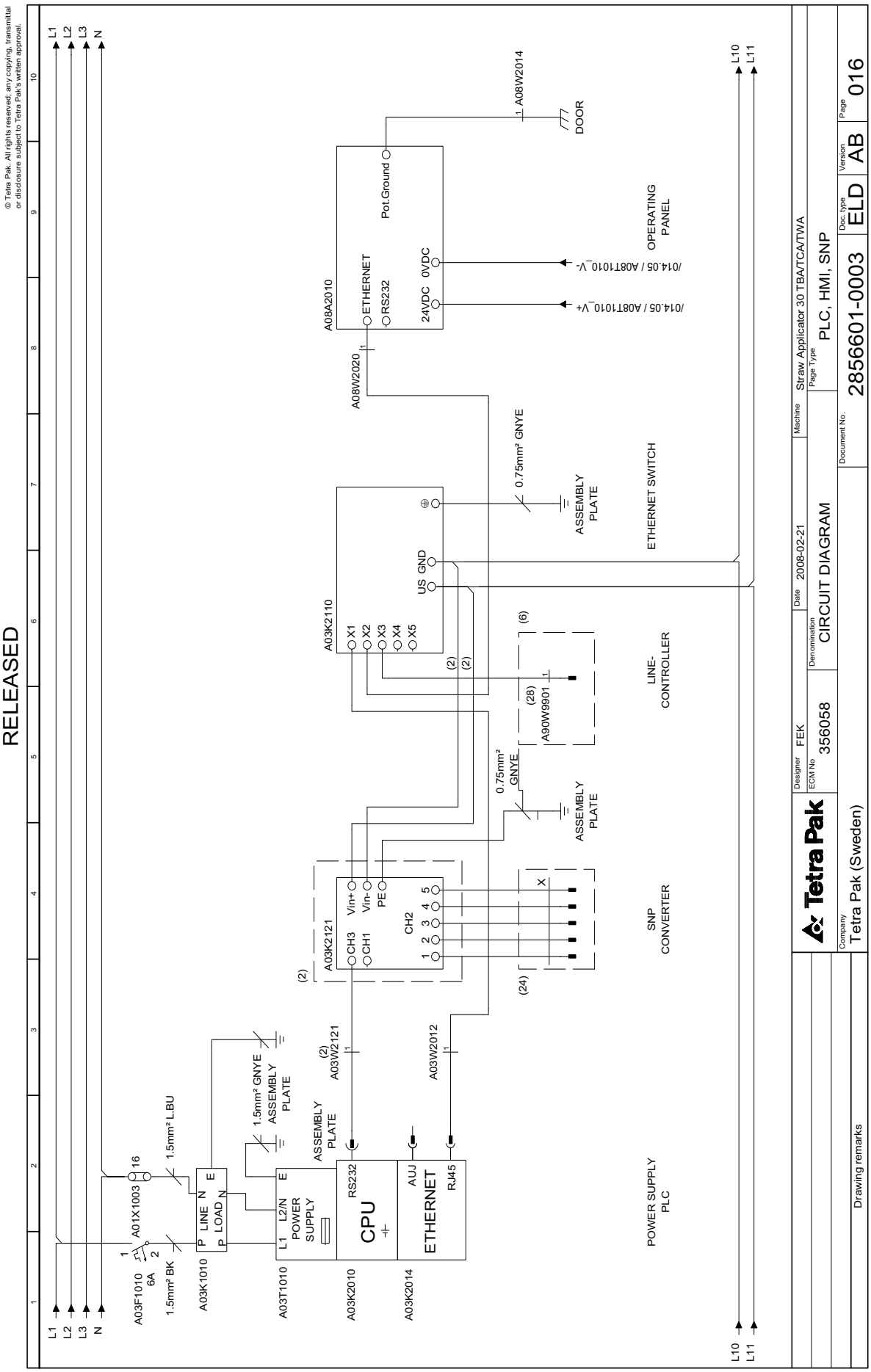
RELEASED
© Tetra Pak. All rights reserved; any copying, transmittal or disclosure subject to Tetra Pak's written approval.
L1
L2
L3
N
A01X1003
16
A03F1010
6A
1.5mm² BK
1.5mm² LBU
A03K1010
P LINE N E
P LOAD N
A03T1010
L1 L2/N E
POWER SUPPLY
1.5mm² GNYE
ASSEMBLY PLATE
ASSEMBLY PLATE
(2)
A03W2121
A03K2010
RS232
CPU
A03W2012
A03K2014
AUJ
ETHERNET
RJ45
POWER SUPPLY PLC
A03K2121
CH3
CH1
Vin+
Vin-
PE
CH2
1 2 3 4 5
SNP CONVERTER
0.75mm² GNYE
ASSEMBLY PLATE
(24)
(28)
A90W9901
(6)
A03K2110
X1
X2
X3
X4
X5
US GND
LINE-CONTROLLER
0.75mm² GNYE
ASSEMBLY PLATE
ETHERNET SWITCH
A08W2020
A08A2010
ETHERNET
RS232
24VDC 0VDC
Pot.Ground
A08W2014
DOOR
/014.05 / A08T1010_V+
/014.05 / A08T1010_V-
OPERATING PANEL
L10
L11
Tetra Pak
Designer FEK
ECM No 356058
Date 2008-02-21
Denomination CIRCUIT DIAGRAM
Machine Straw Applicator 30 TBA/TCA/TWA
Page Type PLC, HMI, SNP
Document No. 2856601-0003
Doc. type ELD
Version AB
Page 016
Company Tetra Pak (Sweden)
Drawing remarks

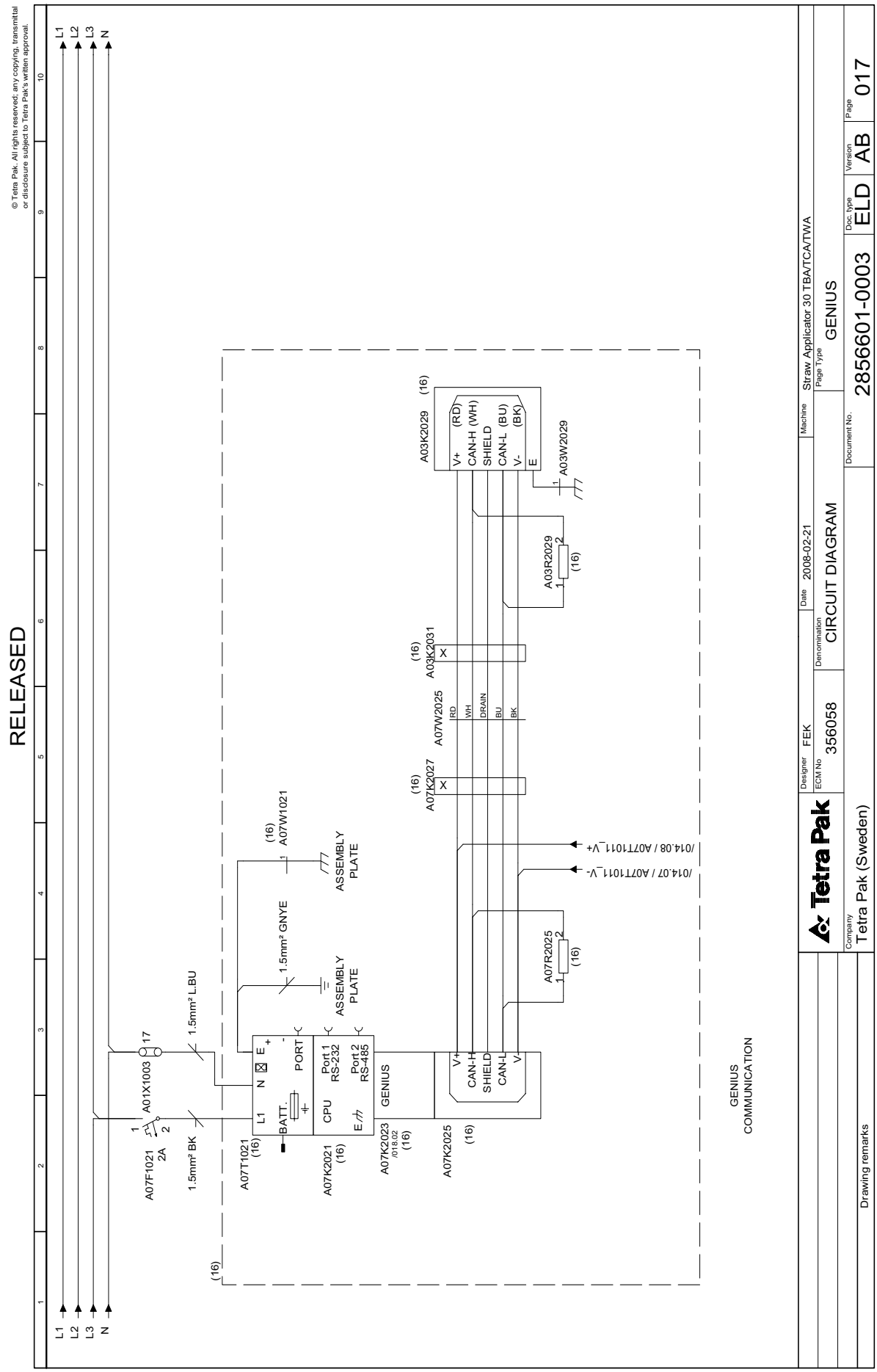
RELEASED
© Tetra Pak. All rights reserved; any copying, transmittal or disclosure subject to Tetra Pak's written approval.
L1
L2
L3
N
A01X1003
A07F1021 2A
1.5mm² BK
1.5mm² L.BU
1.5mm² GNYE
A07T1021 (16)
A07K2021 (16)
A07K2023 /018.02 (16)
A07K2025 (16)
A07W1021
ASSEMBLY PLATE
A07W2025
A07K2027
A07K2031
A03K2029
A03W2029
A03R2029
A07R2025
/014.08 / A07T1011_V+
/014.07 / A07T1011_V-
GENIUS COMMUNICATION
Tetra Pak
Designer FEK
ECM No 356058
Date 2008-02-21
Denomination CIRCUIT DIAGRAM
Machine Straw Applicator 30 TBA/TCA/TWA
Page Type GENIUS
Document No. 2856601-0003
Doc. type ELD
Version AB
Page 017
Company Tetra Pak (Sweden)
Drawing remarks

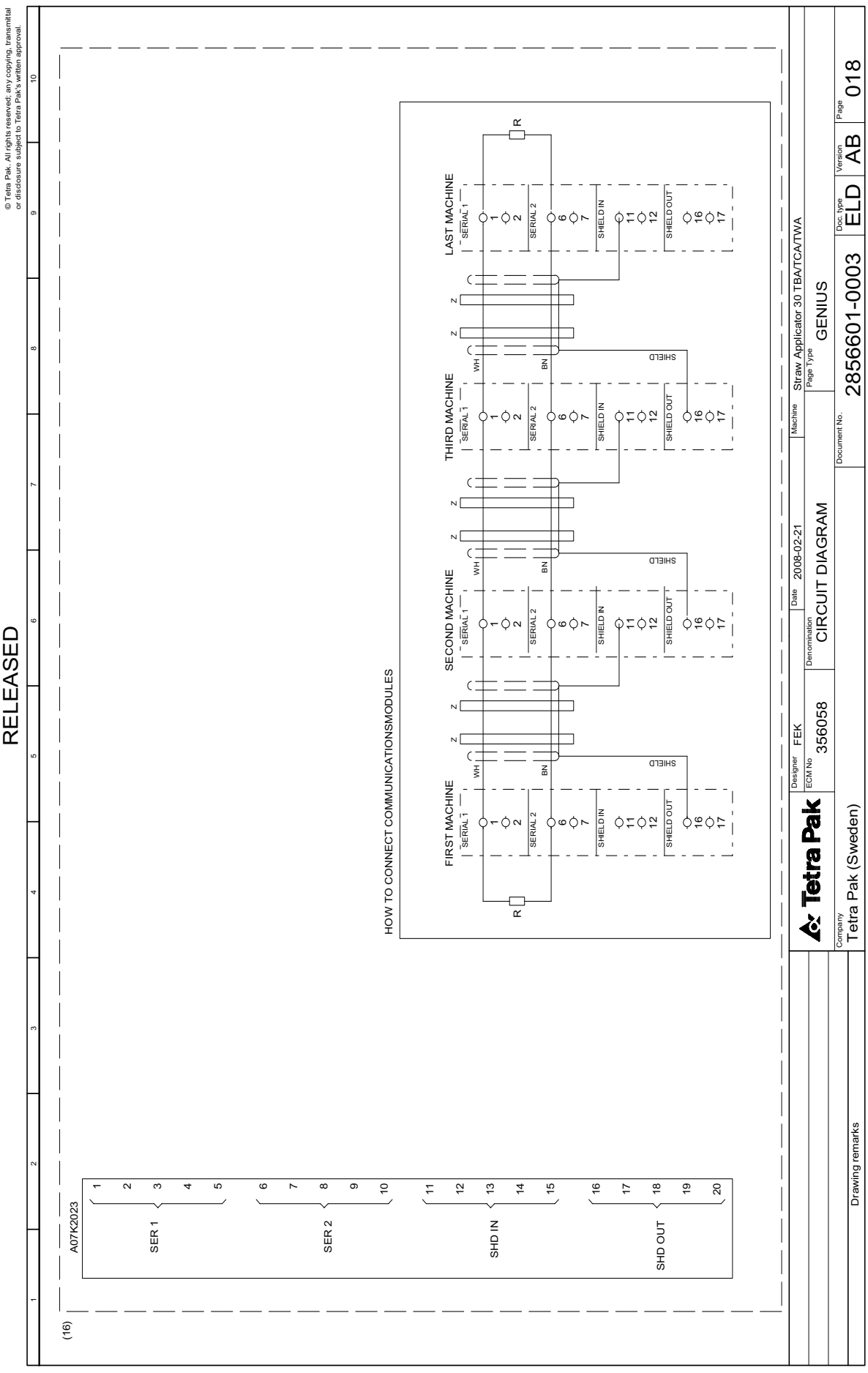
RELEASED
© Tetra Pak. All rights reserved; any copying, transmittal or disclosure subject to Tetra Pak's written approval.
HOW TO CONNECT COMMUNICATIONSMODULES
FIRST MACHINE
SECOND MACHINE
THIRD MACHINE
LAST MACHINE
SERIAL 1
SERIAL 2
SHIELD IN
SHIELD OUT
SHIELD
WH
BN
R
A07K2023
SER 1
SER 2
SHD IN
SHD OUT
Tetra Pak
Designer FEK
ECM No 356058
Date 2008-02-21
Denomination CIRCUIT DIAGRAM
Machine Straw Applicator 30 TBA/TCA/TWA
Page Type GENIUS
Document No. 2856601-0003
Doc. type ELD
Version AB
Page 018
Company Tetra Pak (Sweden)
Drawing remarks

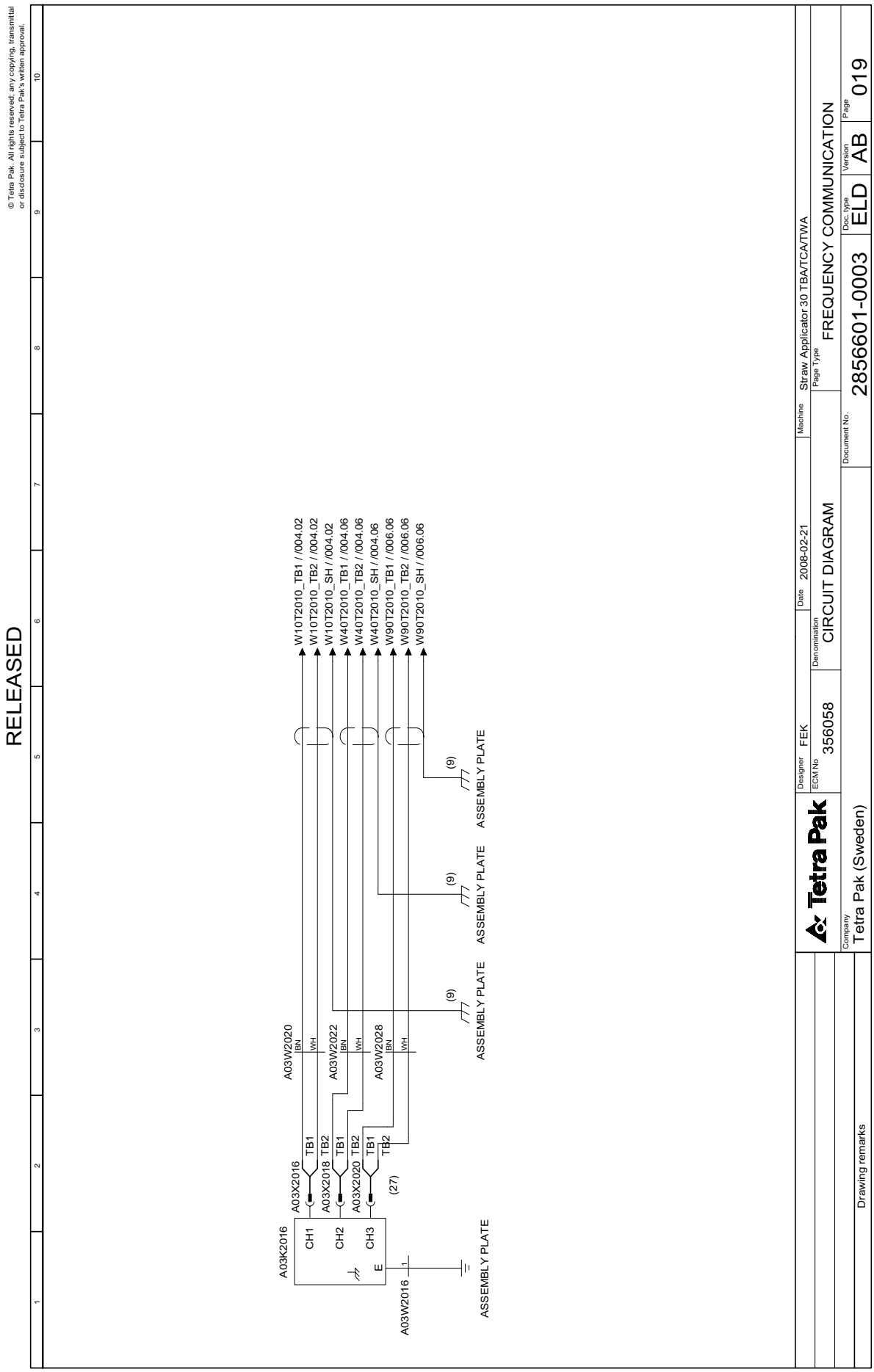
RELEASED
© Tetra Pak. All rights reserved; any copying, transmittal or disclosure subject to Tetra Pak's written approval.
A03K2016
CH1
CH2
CH3
E
A03X2016
A03X2018
A03X2020
TB1
TB2
(27)
A03W2016
A03W2020
A03W2022
A03W2028
BN
WH
W10T2010_TB1 / /004.02
W10T2010_TB2 / /004.02
W10T2010_SH / /004.02
W40T2010_TB1 / /004.06
W40T2010_TB2 / /004.06
W40T2010_SH / /004.06
W90T2010_TB1 / /006.06
W90T2010_TB2 / /006.06
W90T2010_SH / /006.06
(9)
ASSEMBLY PLATE
Designer FEK
Date 2008-02-21
Machine Straw Applicator 30 TBA/TCA/TWA
ECM No 356058
Denomination CIRCUIT DIAGRAM
Page Type FREQUENCY COMMUNICATION
Document No. 2856601-0003
Doc. type ELD
Version AB
Page 019
Company Tetra Pak (Sweden)
Drawing remarks

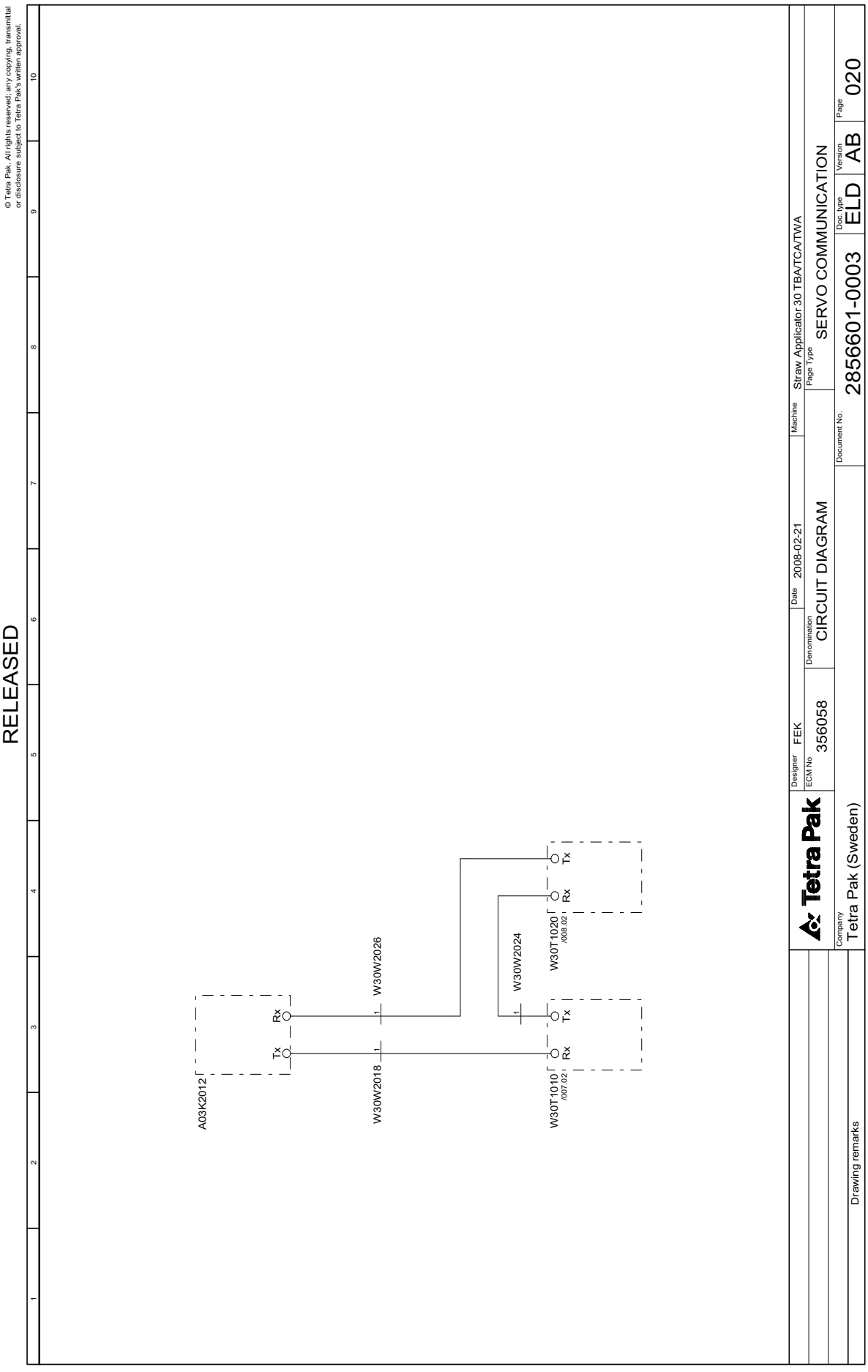
RELEASED
© Tetra Pak. All rights reserved; any copying, transmittal or disclosure subject to Tetra Pak's written approval.
A03K2012
Tx
Rx
W30W2018
W30W2026
W30W2024
W30T1010
/007.02
W30T1020
/008.02
Tx
Rx
Tx
Rx
Designer FEK
ECM No 356058
Denomination CIRCUIT DIAGRAM
Date 2008-02-21
Machine Straw Applicator 30 TBA/TCA/TWA
Page Type SERVO COMMUNICATION
Document No. 2856601-0003
Doc. type ELD
Version AB
Page 020
Company Tetra Pak (Sweden)
Drawing remarks
Tetra Pak

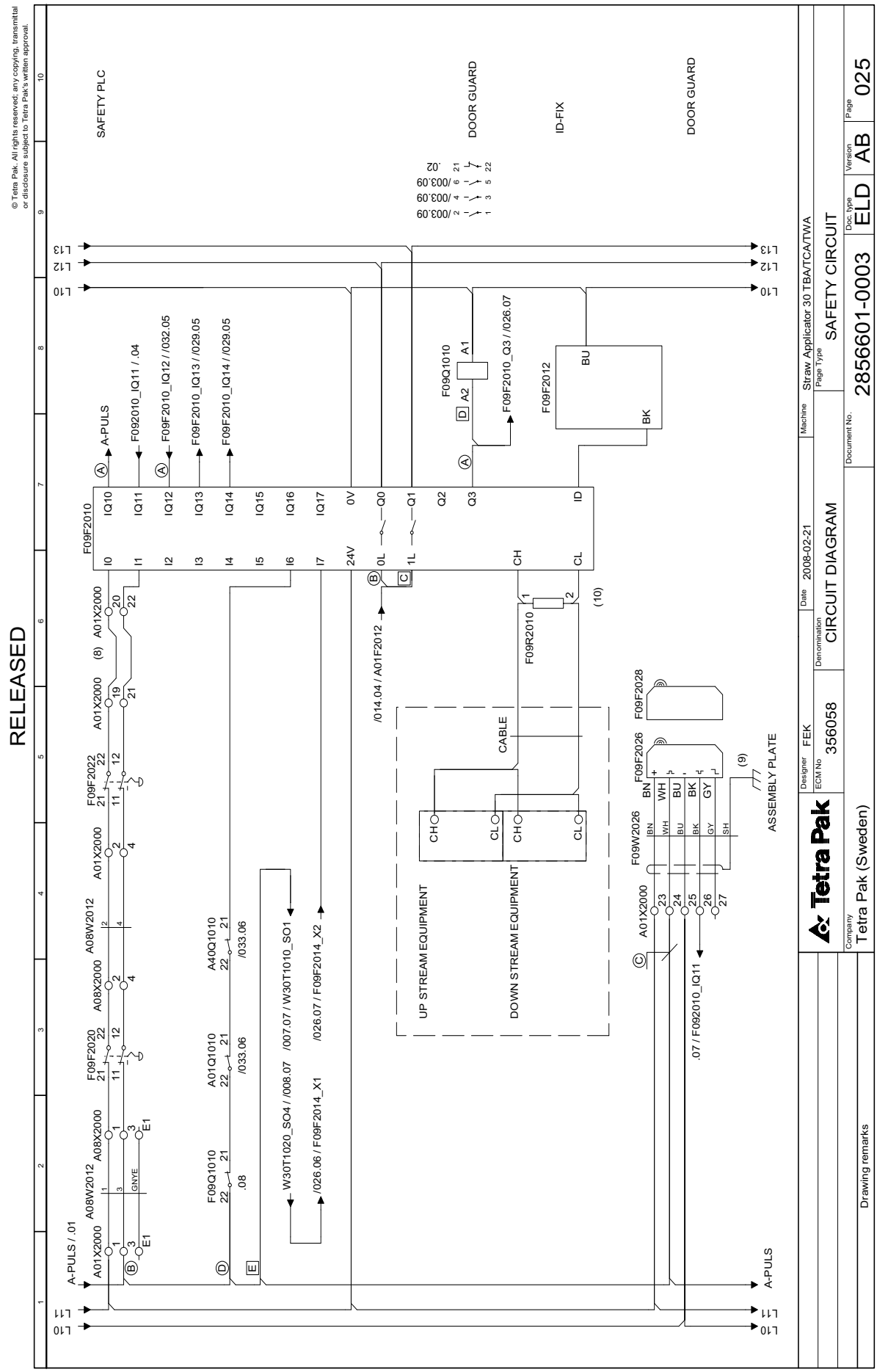
RELEASED
© Tetra Pak. All rights reserved; any copying, transmittal or disclosure subject to Tetra Pak's written approval.
SAFETY PLC
DOOR GUARD
ID-FIX
DOOR GUARD
F09F2010
F09Q1010
F09F2012
F09R2010
F09F2028
F09F2026
F09W2026
A01X2000
A08W2012
A08X2000
F09F2020
F09F2022
A01Q1010
A40Q1010
UP STREAM EQUIPMENT
DOWN STREAM EQUIPMENT
CABLE
ASSEMBLY PLATE
A-PULS
A-PULS / .01
F092010_IQ11 / .04
F09F2010_IQ12 / /032.05
F09F2010_IQ13 / /029.05
F09F2010_IQ14 / /029.05
/014.04 / A01F2012
W30T1020_SO4 / /008.07
/007.07 / W30T1010_SO1
/026.06 / F09F2014_X1
/026.07 / F09F2014_X2
.07 / F092010_IQ11
Tetra Pak
Designer FEK
ECM No 356058
Date 2008-02-21
Denomination CIRCUIT DIAGRAM
Machine Straw Applicator 30 TBA/TCA/TWA
Page Type SAFETY CIRCUIT
Company Tetra Pak (Sweden)
Document No. 2856601-0003
Doc. type ELD
Version AB
Page 025
Drawing remarks

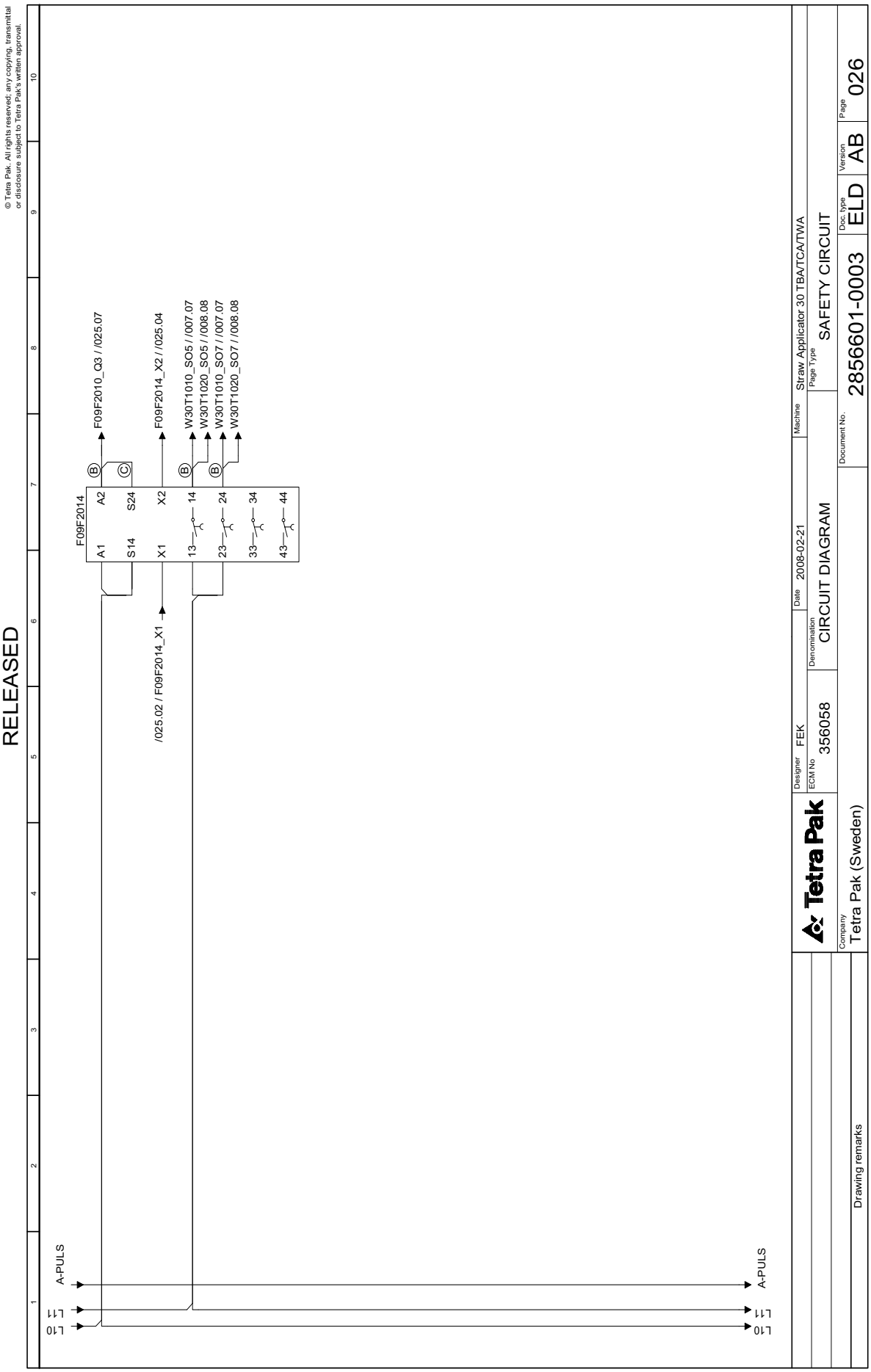
RELEASED
© Tetra Pak. All rights reserved; any copying, transmittal or disclosure subject to Tetra Pak's written approval.
A-PULS
L10
L11
F09F2014
A1
S14
X1
A2
S24
X2
13
14
23
24
33
34
43
44
/025.02 / F09F2014_X1
F09F2010_Q3 / /025.07
F09F2014_X2 / /025.04
W30T1010_SO5 / /007.07
W30T1020_SO5 / /008.08
W30T1010_SO7 / /007.07
W30T1020_SO7 / /008.08
Designer FEK
ECM No 356058
Denomination CIRCUIT DIAGRAM
Date 2008-02-21
Machine Straw Applicator 30 TBA/TCA/TWA
Page Type SAFETY CIRCUIT
Document No. 2856601-0003
Doc. type ELD
Version AB
Page 026
Company Tetra Pak (Sweden)
Drawing remarks

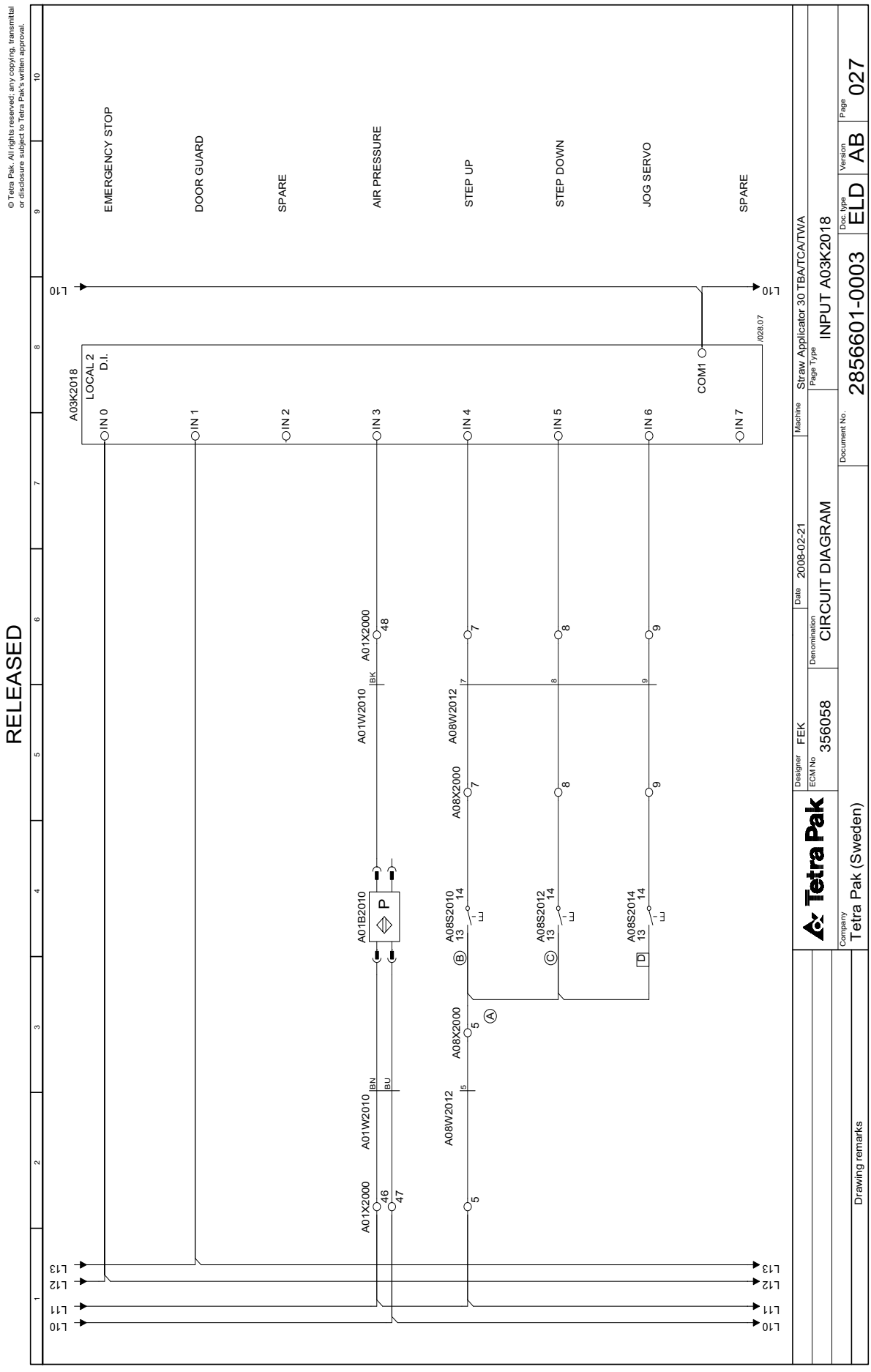
RELEASED
© Tetra Pak. All rights reserved; any copying, transmittal or disclosure subject to Tetra Pak's written approval.
EMERGENCY STOP
DOOR GUARD
SPARE
AIR PRESSURE
STEP UP
STEP DOWN
JOG SERVO
SPARE
A03K2018
LOCAL 2 D.I.
IN 0
IN 1
IN 2
IN 3
IN 4
IN 5
IN 6
IN 7
COM1
/028.07
L10
L11
L12
L13
A01X2000
A01W2010
A01B2010
A08W2012
A08X2000
A08S2010
A08S2012
A08S2014
Designer FEK
ECM No 356058
Date 2008-02-21
Denomination CIRCUIT DIAGRAM
Machine Straw Applicator 30 TBA/TCA/TWA
Page Type INPUT A03K2018
Document No. 2856601-0003
Doc. type ELD
Version AB
Page 027
Company Tetra Pak (Sweden)
Drawing remarks

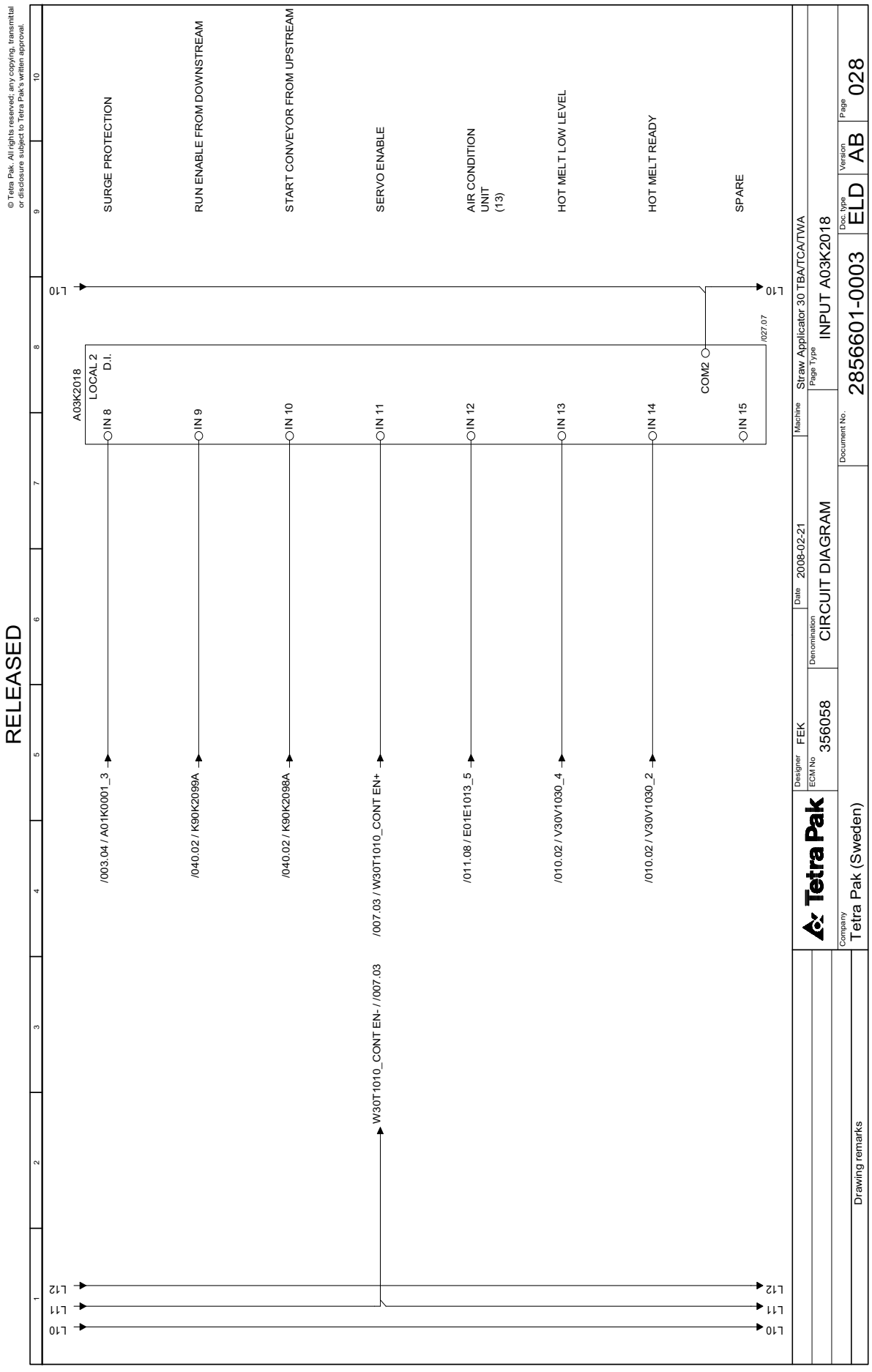
RELEASED
© Tetra Pak. All rights reserved; any copying, transmittal or disclosure subject to Tetra Pak's written approval.
A03K2018
LOCAL 2
D.I.
IN 8
IN 9
IN 10
IN 11
IN 12
IN 13
IN 14
IN 15
COM2
L10
L11
L12
/027.07
SURGE PROTECTION
RUN ENABLE FROM DOWNSTREAM
START CONVEYOR FROM UPSTREAM
SERVO ENABLE
AIR CONDITION UNIT (13)
HOT MELT LOW LEVEL
HOT MELT READY
SPARE
/003.04 / A01K0001_3
/040.02 / K90K2099A
/040.02 / K90K2098A
/007.03 / W30T1010_CONT EN+
/011.08 / E01E1013_5
/010.02 / V30V1030_4
/010.02 / V30V1030_2
W30T1010_CONT EN- / /007.03
Tetra Pak
Designer FEK
ECM No 356058
Date 2008-02-21
Denomination CIRCUIT DIAGRAM
Machine Straw Applicator 30 TBA/TCA/TWA
Page Type INPUT A03K2018
Document No. 2856601-0003
Doc. type ELD
Version AB
Page 028
Company Tetra Pak (Sweden)
Drawing remarks

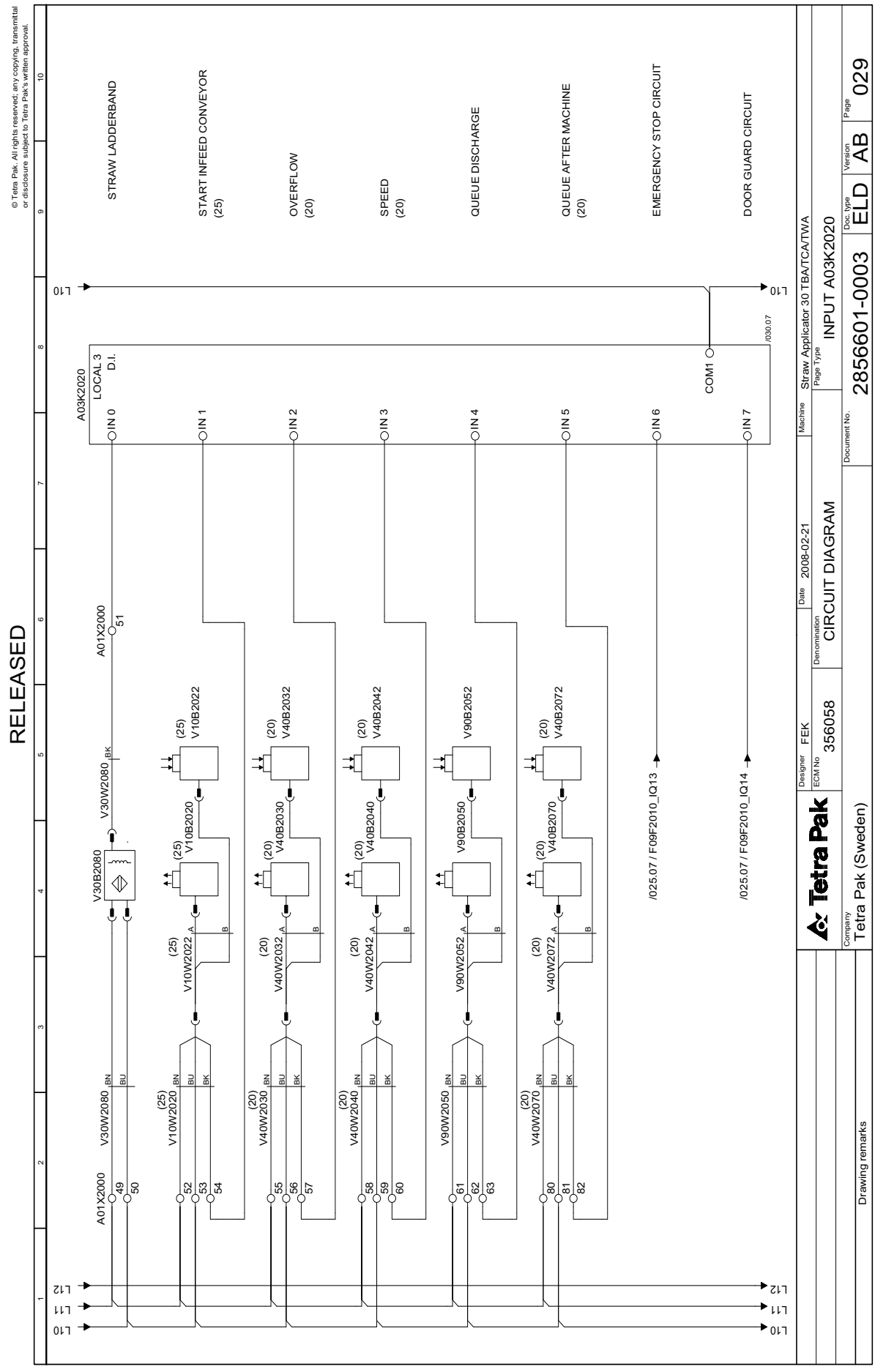
RELEASED
© Tetra Pak. All rights reserved; any copying, transmittal or disclosure subject to Tetra Pak's written approval.
STRAW LADDERBAND
START INFEED CONVEYOR (25)
OVERFLOW (20)
SPEED (20)
QUEUE DISCHARGE
QUEUE AFTER MACHINE (20)
EMERGENCY STOP CIRCUIT
DOOR GUARD CIRCUIT
A03K2020 LOCAL 3 D.I.
IN 0
IN 1
IN 2
IN 3
IN 4
IN 5
IN 6
IN 7
COM1
A01X2000
V30B2080
V30W2080
V10B2022
V10B2020
V40B2032
V40B2030
V40B2042
V40B2040
V90B2052
V90B2050
V40B2072
V40B2070
V10W2022
V10W2020
V40W2032
V40W2030
V40W2042
V40W2040
V90W2052
V90W2050
V40W2072
V40W2070
/025.07 / F09F2010_IQ13
/025.07 / F09F2010_IQ14
/030.07
L10
L11
L12
Tetra Pak
Designer FEK
ECM No 356058
Denomination CIRCUIT DIAGRAM
Date 2008-02-21
Machine Straw Applicator 30 TBA/TCA/TWA
Page Type INPUT A03K2020
Document No. 2856601-0003
Doc. type ELD
Version AB
Page 029
Company Tetra Pak (Sweden)
Drawing remarks

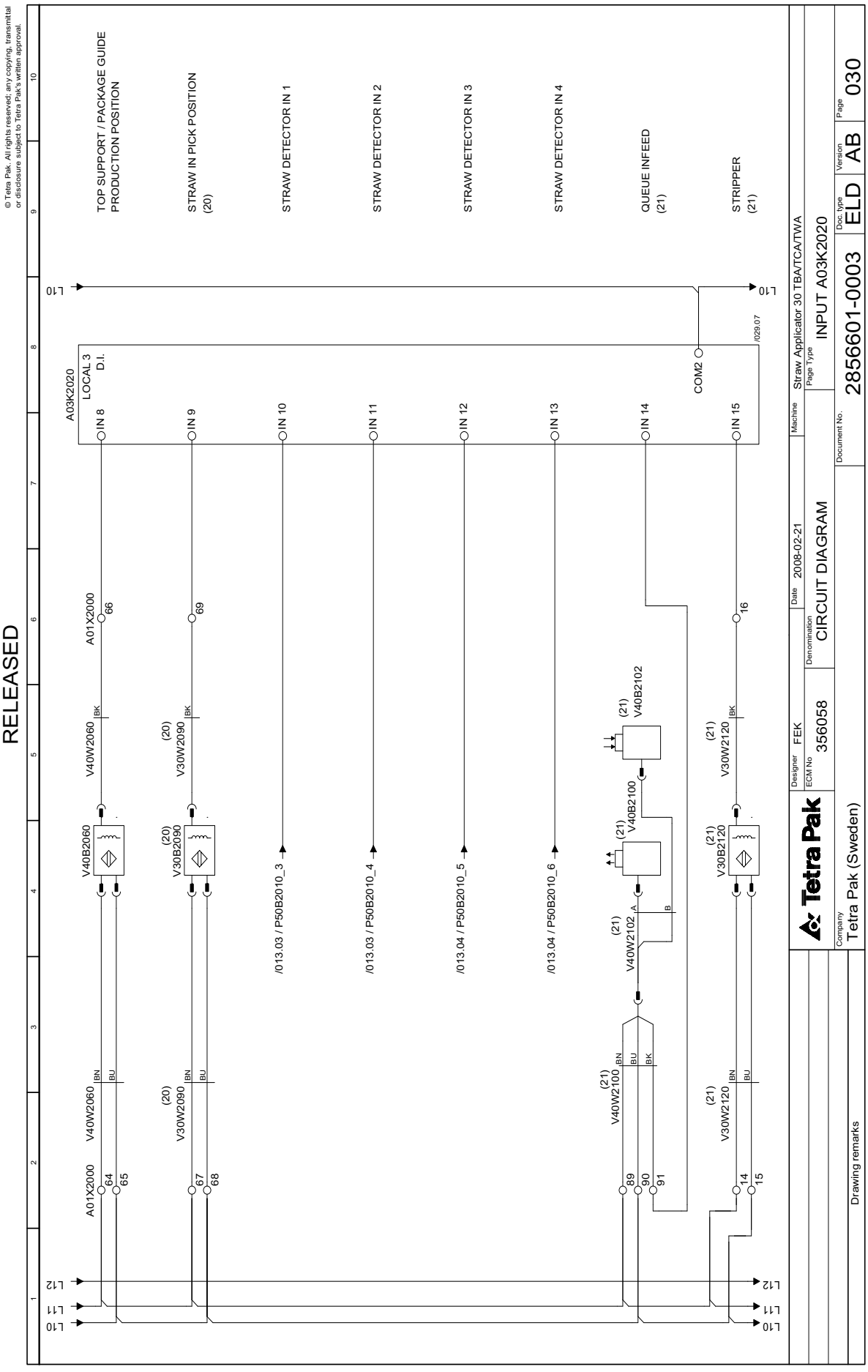
RELEASED
© Tetra Pak. All rights reserved; any copying, transmittal or disclosure subject to Tetra Pak's written approval.
TOP SUPPORT / PACKAGE GUIDE PRODUCTION POSITION
STRAW IN PICK POSITION (20)
STRAW DETECTOR IN 1
STRAW DETECTOR IN 2
STRAW DETECTOR IN 3
STRAW DETECTOR IN 4
QUEUE INFEED (21)
STRIPPER (21)
A03K2020 LOCAL 3 D.I.
IN 8
IN 9
IN 10
IN 11
IN 12
IN 13
IN 14
IN 15
COM2
L10
L11
L12
A01X2000
V40W2060
V40B2060
V30W2090
V30B2090
V40W2100
V40W2102
V40B2100
V40B2102
V30W2120
V30B2120
/013.03 / P50B2010_3
/013.03 / P50B2010_4
/013.04 / P50B2010_5
/013.04 / P50B2010_6
/029.07
Designer FEK
ECM No 356058
Date 2008-02-21
Denomination CIRCUIT DIAGRAM
Machine Straw Applicator 30 TBA/TCA/TWA
Page Type INPUT A03K2020
Document No. 2856601-0003
Doc. type ELD
Version AB
Page 030
Company Tetra Pak (Sweden)
Drawing remarks

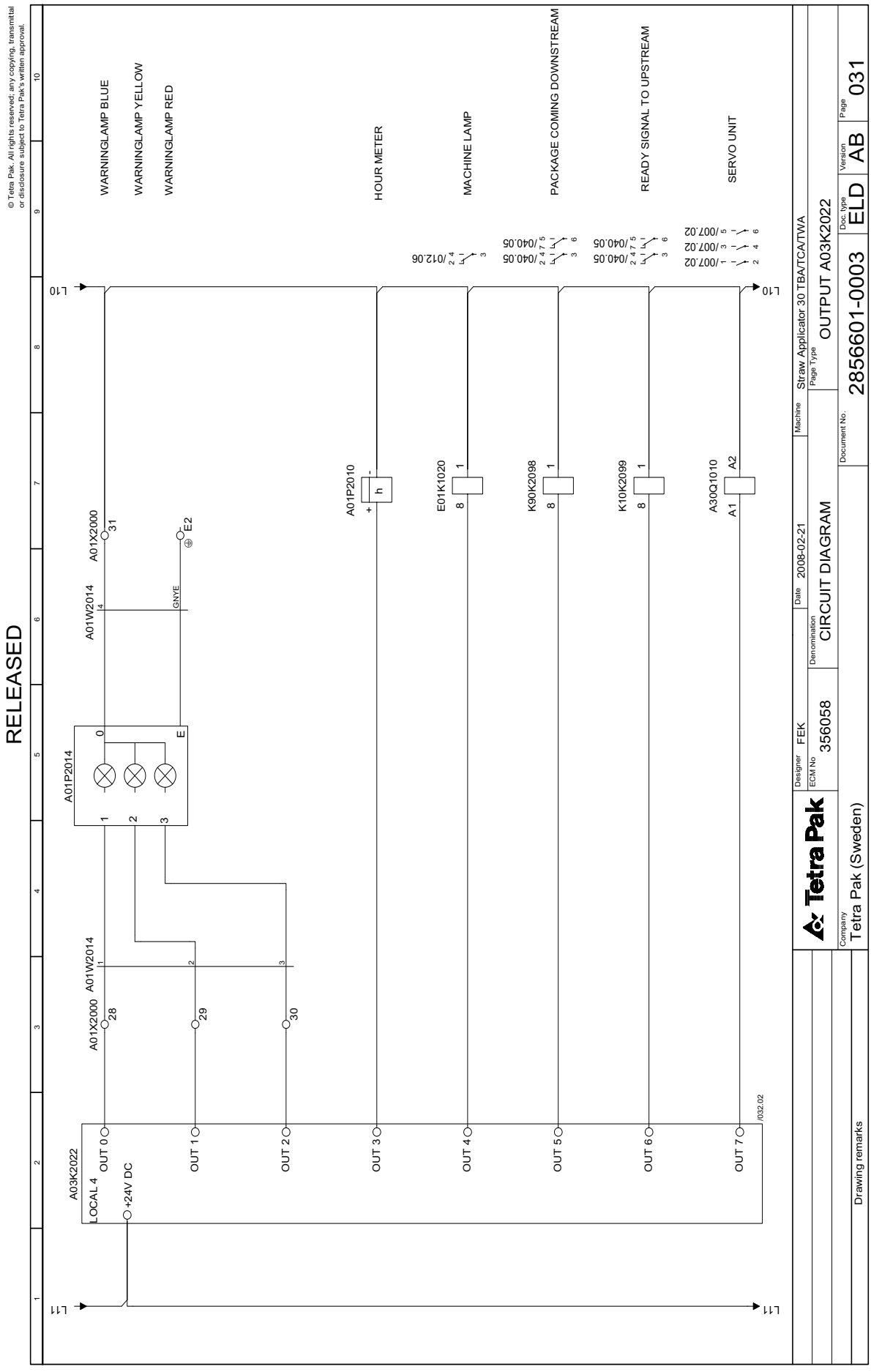
RELEASED
© Tetra Pak. All rights reserved; any copying, transmittal or disclosure subject to Tetra Pak's written approval.
WARNINGLAMP BLUE
WARNINGLAMP YELLOW
WARNINGLAMP RED
HOUR METER
MACHINE LAMP
PACKAGE COMING DOWNSTREAM
READY SIGNAL TO UPSTREAM
SERVO UNIT
L10
L11
A03K2022
LOCAL 4
+24V DC
OUT 0
OUT 1
OUT 2
OUT 3
OUT 4
OUT 5
OUT 6
OUT 7
A01P2014
A01W2014
A01X2000
A01P2010
E01K1020
K90K2098
K10K2099
A30Q1010
E2
GNYE
/012.06
/040.05
/007.02
/032.02
Designer FEK
ECM No 356058
Denomination CIRCUIT DIAGRAM
Date 2008-02-21
Machine Straw Applicator 30 TBA/TCA/TWA
Page Type OUTPUT A03K2022
Document No. 2856601-0003
Doc. type ELD
Version AB
Page 031
Company Tetra Pak (Sweden)
Drawing remarks

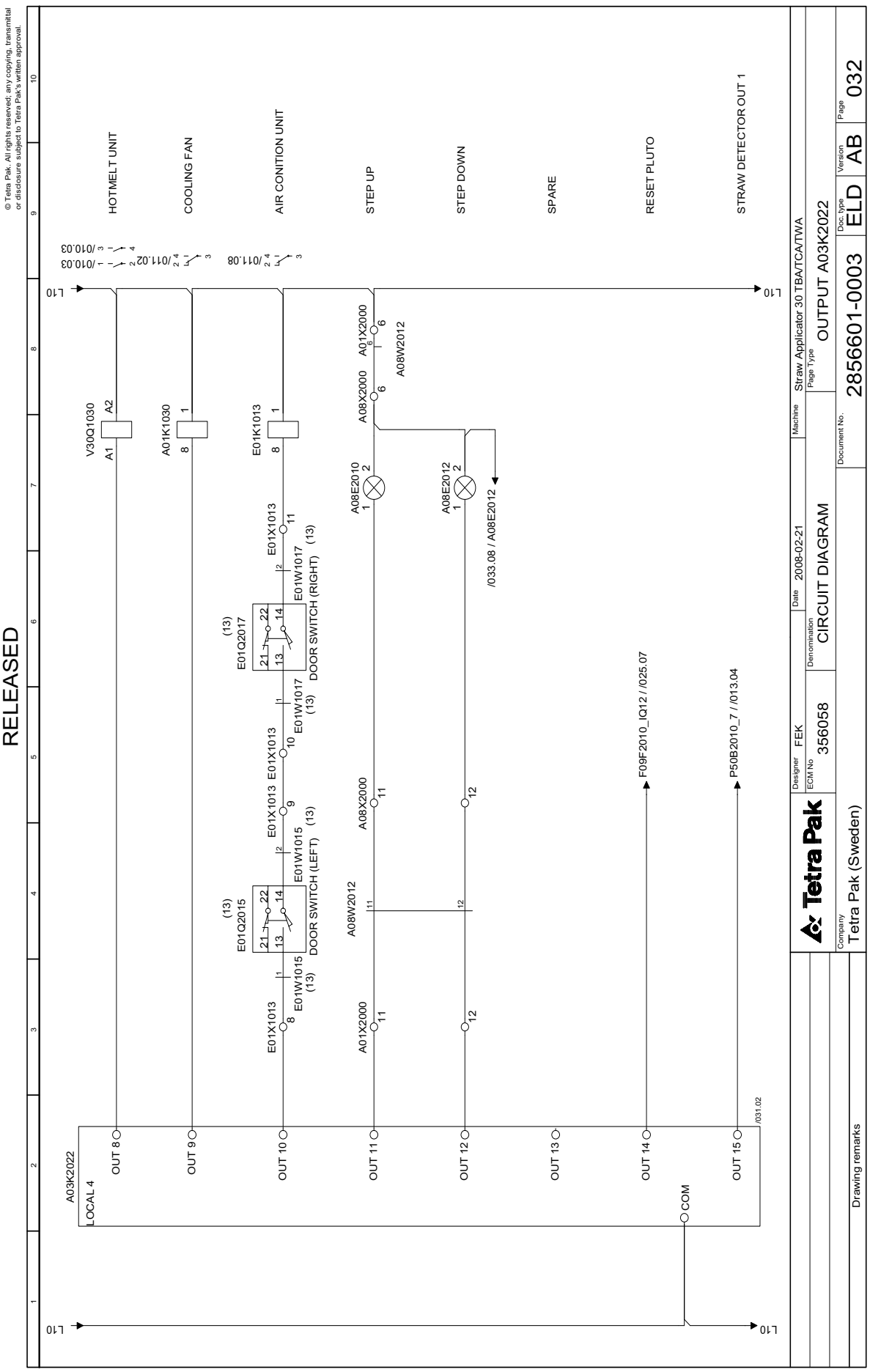
RELEASED
© Tetra Pak. All rights reserved; any copying, transmittal or disclosure subject to Tetra Pak's written approval.
HOTMELT UNIT
COOLING FAN
AIR CONITION UNIT
STEP UP
STEP DOWN
SPARE
RESET PLUTO
STRAW DETECTOR OUT 1
V30Q1030
A01K1030
E01K1013
A08E2010
A08E2012
A08X2000
A01X2000
A08W2012
E01X1013
E01W1017
E01W1015
E01Q2017
E01Q2015
DOOR SWITCH (RIGHT)
DOOR SWITCH (LEFT)
/033.08 / A08E2012
F09F2010_IQ12 / /025.07
P50B2010_7 / /013.04
/031.02
A03K2022
LOCAL 4
OUT 8
OUT 9
OUT 10
OUT 11
OUT 12
OUT 13
OUT 14
OUT 15
COM
L10
Tetra Pak
Designer FEK
ECM No 356058
Date 2008-02-21
Denomination CIRCUIT DIAGRAM
Machine Straw Applicator 30 TBA/TCA/TWA
Page Type OUTPUT A03K2022
Document No. 2856601-0003
Doc. type ELD
Version AB
Page 032
Company Tetra Pak (Sweden)
Drawing remarks

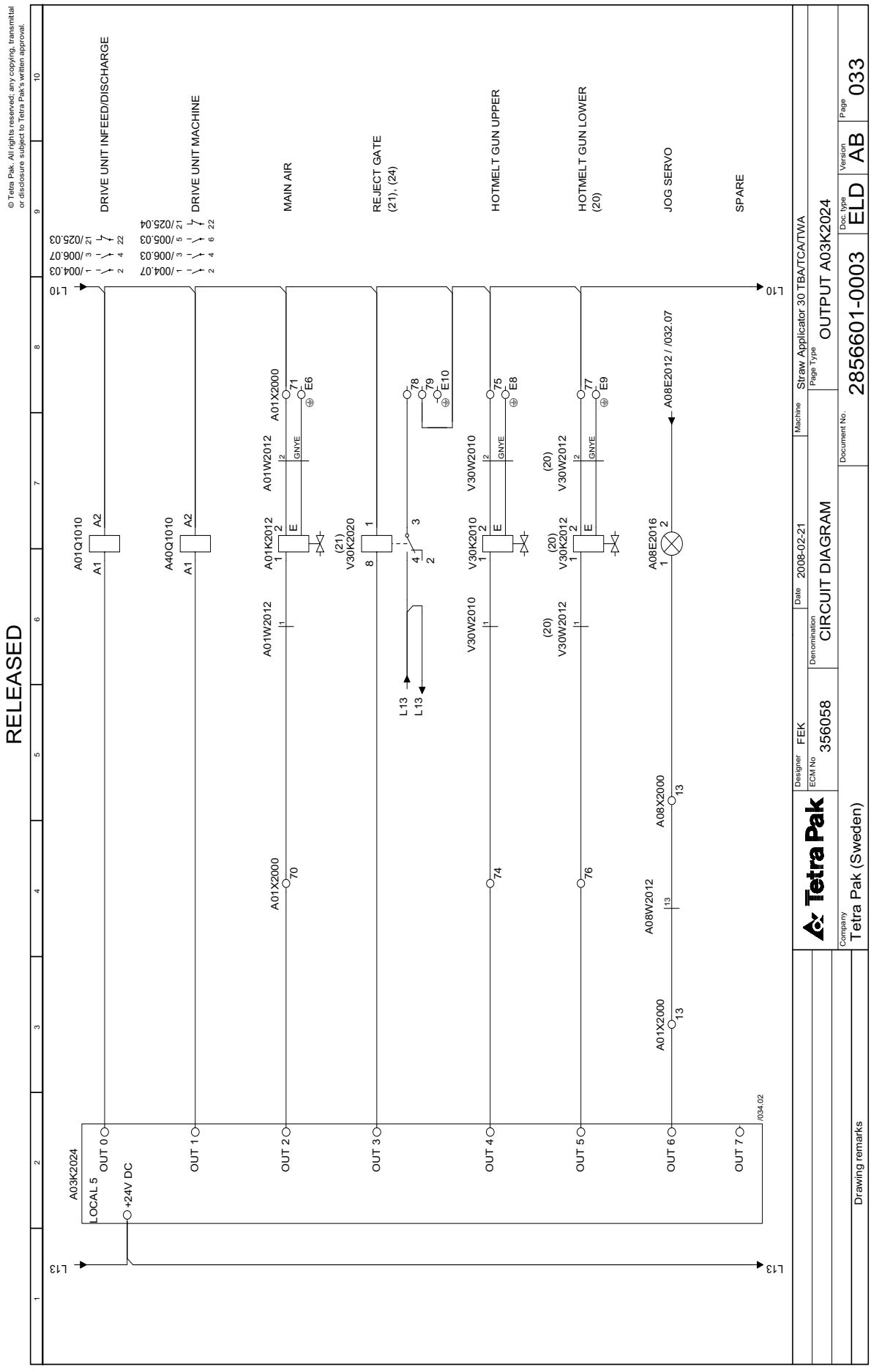
RELEASED
© Tetra Pak. All rights reserved; any copying, transmittal or disclosure subject to Tetra Pak's written approval.
DRIVE UNIT INFEED/DISCHARGE
DRIVE UNIT MACHINE
MAIN AIR
REJECT GATE (21), (24)
HOTMELT GUN UPPER
HOTMELT GUN LOWER (20)
JOG SERVO
SPARE
L10
L13
A01Q1010
A40Q1010
A03K2024
LOCAL 5
+24V DC
OUT 0
OUT 1
OUT 2
OUT 3
OUT 4
OUT 5
OUT 6
OUT 7
A01X2000
A01W2012
A01K2012
V30K2020
V30K2010
V30W2010
V30W2012
V30K2012
A08E2016
A08E2012 / /032.07
A08W2012
A08X2000
Designer FEK
ECM No 356058
Denomination CIRCUIT DIAGRAM
Date 2008-02-21
Machine Straw Applicator 30 TBA/TCA/TWA
Page Type OUTPUT A03K2024
Document No. 2856601-0003
Doc. type ELD
Version AB
Page 033
Company Tetra Pak (Sweden)
Drawing remarks

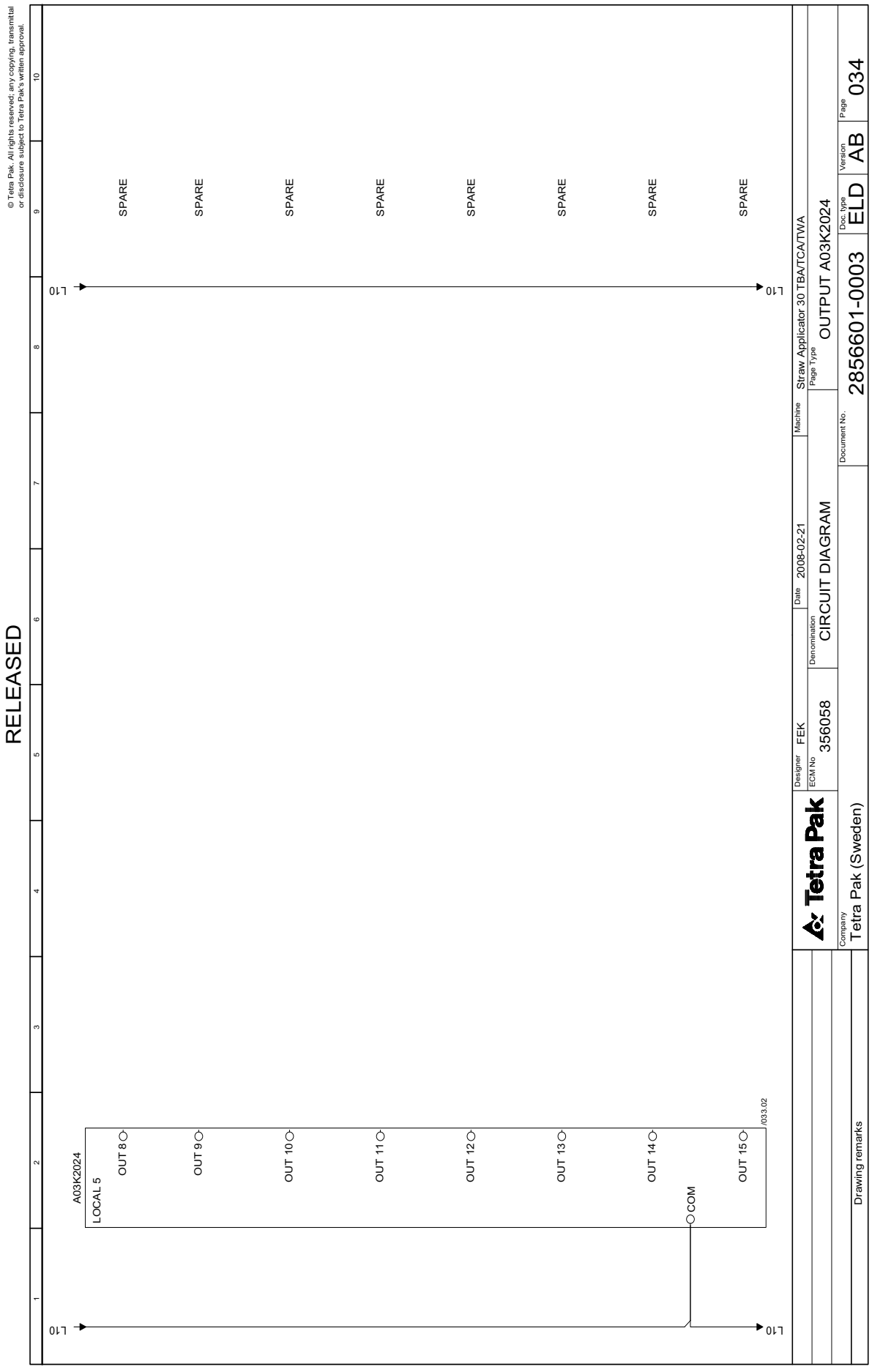
RELEASED
© Tetra Pak. All rights reserved; any copying, transmittal or disclosure subject to Tetra Pak's written approval.
L10
SPARE
SPARE
SPARE
SPARE
SPARE
SPARE
SPARE
SPARE
L10
A03K2024
LOCAL 5
OUT 8
OUT 9
OUT 10
OUT 11
OUT 12
OUT 13
OUT 14
OUT 15
COM
/033.02
L10
L10
Designer FEK
ECM No 356058
Denomination CIRCUIT DIAGRAM
Date 2008-02-21
Machine Straw Applicator 30 TBA/TCA/TWA
Page Type OUTPUT A03K2024
Document No. 2856601-0003
Doc. type ELD
Version AB
Page 034
Company Tetra Pak (Sweden)
Drawing remarks

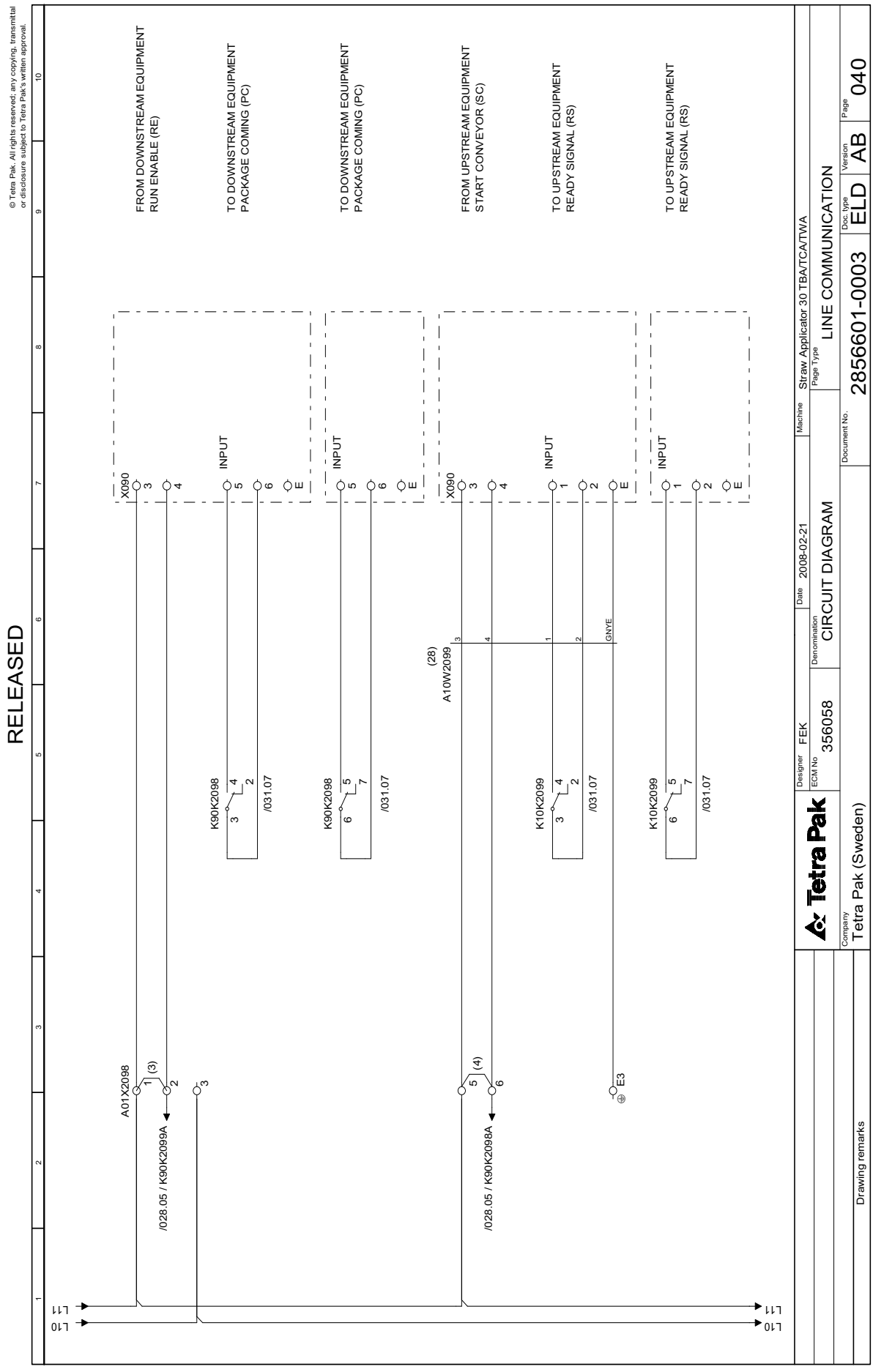
RELEASED
© Tetra Pak. All rights reserved; any copying, transmittal or disclosure subject to Tetra Pak's written approval.
FROM DOWNSTREAM EQUIPMENT RUN ENABLE (RE)
TO DOWNSTREAM EQUIPMENT PACKAGE COMING (PC)
TO DOWNSTREAM EQUIPMENT PACKAGE COMING (PC)
FROM UPSTREAM EQUIPMENT START CONVEYOR (SC)
TO UPSTREAM EQUIPMENT READY SIGNAL (RS)
TO UPSTREAM EQUIPMENT READY SIGNAL (RS)
X090
INPUT
K90K2098
K10K2099
A01X2098
A10W2099
/028.05 / K90K2098A
/028.05 / K90K2099A
/031.07
GNYE
E3
L10
L11
Designer FEK
ECM No 356058
Date 2008-02-21
Denomination CIRCUIT DIAGRAM
Machine Straw Applicator 30 TBA/TCA/TWA
Page Type LINE COMMUNICATION
Document No. 2856601-0003
Doc. type ELD
Version AB
Page 040
Company Tetra Pak (Sweden)
Drawing remarks

This page intentionally left blank

5 Line Summary

About the Line Summary Chapter

All connections inside the electrical cabinet are listed in this chapter.

RELEASED

© Tetra Pak. All rights reserved; any copying, transmittal or disclosure subject to Tetra Pak's written approval.

Line summary of 2856601-0003

Line	From	Page.Col.	Opt.	Area/Color
L1				
	A01V0001:L1	003 .4		2,5mm² BK
	F09Q1010:1	**003 .9**		RAIL
	A03F1010:1	**016 .1**		RAIL
	E01F1020:1	**012 .6**		RAIL
	A08F1010:1	**014 .5**		RAIL
	V30F1030:1	**010 .3**		RAIL
	A30F1010:1	**007 .2**		RAIL
	A30F1020:1	007 .4		
L2				
	A01V0001:L2	003 .4		2,5mm² BK
	F09Q1010:3	**003 .9**		RAIL
	A07F1011:1	**014 .7**		RAIL
	A01F1030:1	**011 .2**		RAIL
	E01F1013:1	**011 .6**		RAIL
	V30F1030:3	**010 .3**		RAIL
	A30F1010:3	**007 .2**		RAIL
	P50F1011:1	013 .2		
L3				
	A01V0001:L3	003 .4		2,5mm² BK
	F09Q1010:5	**003 .9**		RAIL
	A01F1020:1	**012 .3**		RAIL
	V50F1015:1	**010 .7**		RAIL
	A07F1021:1	**017 .2**		RAIL
	A01F1010:1	**014 .2**		RAIL
	A30F1010:5	007 .2		
L4				
	F09Q1010:2	003 .9		2,5mm² BK
	W10F1010:1	**004 .3**		RAIL
	W40F1020:1	006 .3		
L5				
	F09Q1010:4	003 .9		2,5mm² BK
	W90F1010:1	**006 .7**		RAIL
	W40F1030:1	005 .3		
L6				
	F09Q1010:6	003 .9		2,5mm² BK
	W40F1010:1	004 .7		
L10				
	A01XL210:1	001 .1		
	A01T1010:V-	**014 .2**		
	A01J0024:	014 .2		
L10				
	A01XL210:2	001 .1		
	A03K2018:COM1	**027 .8**		
	A03K2018:COM2	028 .8		
L10				
	A01XL210:3	001 .1		
	A03K2020:COM1	**029 .8**		
	A03K2020:COM2	030 .8		
L10				
	A01XL210:4	001 .2		
	A03K2022:COM	032 .2		
L10				
	A01XL210:5	001 .2		
	A03K2024:COM	034 .2		
L10				
	A01XL210:7	001 .2		
	A03K2110:GND	**016 .6**		
	A03K2121:Vin-	016 .4	(2)	
L10				
	A01XL210:8	001 .2		
	E01K1020:1	**031 .7**		
	E01K1013:1	**032 .7**		
	A01K1030:1	**032 .7**		
	V30K2020:1	**033 .6**	(21)	
	A30Q1010:A2	**031 .7**		
	V30Q1030:A2	**032 .7**		
	A01Q1010:A2	**033 .6**		
	A40Q1010:A2	033 .6		
L10				
	A01XL210:9	001 .2		
	K90K2098:1	**031 .7**		
	K10K2099:1	031 .7		
L10				
	A01XL210:10	001 .2		
	F09Q1010:A1	025 .8		
L10				
	A01XL210:11	001 .2		
	F09F2014:A1	**026 .6**		
	F09F2014:S14	**026 .6**		
	F09F2010:0V	025 .6		

Drawing remarks

Tetra Pak

Designer	Date	Machine
FEK	2008-02-21	Straw Applicator 30 TBA/TCA/TWA

ECM No	Denomination	Page Type
356058	LINE SUMMARY	LINE SUMMARY

Company	Document No.	Doc. type	Version	Page
Tetra Pak (Sweden)	2856601-0004	ELD	AB	001

RELEASED

© Tetra Pak. All rights reserved; any copying, transmittal or disclosure subject to Tetra Pak's written approval.

Line summary of 2856601-0003

Line	From	Page.Col.	Opt.	Area/Color
	F09F2010:0V	025 .6		
	F09F2012:BU	025 .7		
L10				
	A01XL210:12	001 .3		
	W30T1010:SO6	007 .6		
L10				
	A01XL210:13	001 .3		
	W30X2012:6	007 .9		
L10				
	A01XL210:14	001 .3		
	W30T1020:SO6	008 .6		
L10				
	A01XL210:15	001 .3		
	W30X2022:6	008 .9		
L10				
	A01XL210:16	001 .3		
	A01P2010:-	031 .7		
L10				
	A01XL210:17	001 .3		
	A01X2098:3	040 .3		
L10				
	A01XL210:18	001 .3		
	A01X2000:25	**025 .4**		
	A01X2000:31	**031 .7**		
	A01X2000:47	**027 .2**		
	A01X2000:53	**029 .2**		
	A01X2000:59	**029 .2**		
	A01X2000:65	030 .2		

Line	From	Page.Col.	Opt.	Area/Color
L10				
	A01XL210:19	001 .3		
	A01X2000:71	**033 .8**		
	A01X2000:75	**033 .8**		
	A01X2000:77	**033 .8**		
	A01X2000:79	**033 .8**		
	A01X2000:81	029 .2		
L10				
	A01XL210:20	001 .4		
	A01X2000:6	**032 .8**		
	A01X2000:15	**030 .2**		
	A01X2000:50	**029 .2**		
	A01X2000:56	**029 .2**		
	A01X2000:62	**029 .2**		
	A01X2000:68	030 .2		
L10				
	A01XL210:21	001 .4		
	A01X2000:84	**014 .3**		
	A01X2000:86	**014 .4**		
	A01X2000:88	**014 .4**		
	A01X2000:90	030 .2		
L11				
	A01XL211:1	001 .1		
	A01F2010:2	014 .3		
L11				
	A01XL211:2	001 .1		
	A03K2022:+24V DC	031 .2		

Line	From	Page.Col.	Opt.	Area/Color
L11				
	A01XL211:3	001 .1		
	A03K2110:US	**016 .6**		
	A03K2121:Vin+	016 .4	(2)	
L11				
	A01XL211:4	001 .2		
	F09F2010:24V	**025 .6**		
	F09F2014:13	**026 .6**		
	F09F2014:23	026 .6		
L11				
	A01XL211:5	001 .2		
	A01X2098:1	**040 .3**		
	A01X2098:5	040 .3		
L11				
	A01XL211:6	001 .2		
	A01X2000:1	**025 .1**		
	A01X2000:5	**027 .2**		
	A01X2000:14	**030 .2**		
	A01X2000:23	**025 .4**		
	A01X2000:49	029 .2		
L11				
	A01XL211:7	001 .2		
	A01X2000:55	**029 .2**		
	A01X2000:61	**029 .2**		
	A01X2000:67	030 .2		

Drawing remarks

Tetra Pak

Designer	Date	Machine
FEK	2008-02-21	Straw Applicator 30 TBA/TCA/TWA

ECM No	Denomination	Page Type
356058	LINE SUMMARY	LINE SUMMARY

Company	Document No.	Doc. type	Version	Page
Tetra Pak (Sweden)	2856601-0004	ELD	AB	002

RELEASED

© Tetra Pak. All rights reserved; any copying, transmittal or disclosure subject to Tetra Pak's written approval.

Line summary of 2856601-0003

Line	From	Page.Col.	Opt.	Area/Color
L11				
	A01XL211:8	001 .2		
	A01X2000:32	**010 .2**		
	A01X2000:40	**013 .3**		
	A01X2000:46	**027 .2**		
	A01X2000:52	**029 .2**		
	A01X2000:58	**029 .2**		
	A01X2000:64	**030 .2**		
	A01X2000:80	029 .2		
L11				
	A01XL211:9	001 .2		
	E01X1013:6	011 .8		
L11				
	A01XL211:10	001 .2		
	W30T1010:CONT EN-	007 .2		
L11				
	A01XL211:11	001 .2		
	A01K0001:4	003 .4		
L11				
	A01XL211:12	001 .3		
	A01X2000:83	**014 .3**		
	A01X2000:85	**014 .3**		
	A01X2000:87	**014 .4**		
	A01X2000:89	030 .2		
L12				
	A01XL212:1	001 .1		
	F09F2010:Q0	025 .6		

Line	From	Page.Col.	Opt.	Area/Color
L12				
	A01XL212:2	001 .1		
	A03K2018:IN 0	027 .7		
L13				
	A01XL213:1	001 .1		
	F09F2010:Q1	025 .6		
L13				
	A01XL213:2	001 .1		
	A03K2018:IN 1	027 .7		
L13				
	A01XL213:3	001 .1		
	A03K2024:+24V DC	033 .2		
L13				
	A01XL213:4	001 .2		
	V30K2020:4	033 .7	(21)	

Line	From	Page.Col.	Opt.	Area/Color

Drawing remarks

Designer FEK	Date 2008-02-21	Machine Straw Applicator 30 TBA/TCA/TWA	
ECM No 356058	Denomination LINE SUMMARY	Page Type LINE SUMMARY	
Company Tetra Pak (Sweden)	Document No. 2856601-0004	Doc. type ELD	Version AB	Page 003

This page intentionally left blank

6 Cabinet Terminal Summary

About the Cabinet Terminal Summary Chapter

All terminals inside the electrical cabinet are listed in this chapter. The field *Opt.* specifies if the terminal is reserved for an option.

RELEASED

© Tetra Pak. All rights reserved; any copying, transmittal or disclosure subject to Tetra Pak's written approval.

Cabinet terminal summary of 2856601-0003

Terminal	Page .Col.	Opt.
A01X0001:E1	003 .2	
A01X0001:E2	003 .2	
A01X1000:E1	003 .5	
A01X1000:E2	003 .6	
A01X1000:E3		
A01X1000:1	010 .3	
A01X1000:2	010 .3	
A01X1000:3	010 .4	
A01X1000:E4	010 .4	
A01X1000:4	010 .7	
A01X1000:5	010 .7	
A01X1000:E5	010 .7	
A01X1000:6	011 .2	
A01X1000:7	011 .3	
A01X1000:8	011 .4	
A01X1000:9	011 .4	
A01X1000:E6	011 .5	
A01X1000:10	012 .6	
A01X1000:11	012 .7	
A01X1000:E7	012 .7	
A01X1000:12	013 .2	
A01X1000:13	013 .2	
A01X1000:E8	013 .3	
A01X1000:14		
A01X1000:15		
A01X1000:E9		
A01X1003:1	004 .3	
A01X1003:2	004 .8	

Terminal	Page .Col.	Opt.
A01X1003:3	005 .3	
A01X1003:4	006 .3	
A01X1003:5	006 .8	
A01X1003:6	007 .4	
A01X1003:7	010 .4	
A01X1003:8	010 .7	
A01X1003:9	011 .3	
A01X1003:10	011 .7	
A01X1003:11	012 .3	
A01X1003:12	012 .7	
A01X1003:13	014 .2	
A01X1003:14	014 .5	
A01X1003:15	014 .8	
A01X1003:16	016 .2	
A01X1003:17	017 .3	
A01X1003:18	013 .2	
A01X1003:19		
A01X1003:20		
A01X2000:1	025 .1	
A01X2000:2	025 .4	
A01X2000:3	025 .1	
A01X2000:4	025 .4	
A01X2000:5	027 .2	
A01X2000:6	032 .8	
A01X2000:7	027 .6	
A01X2000:8	027 .6	
A01X2000:9	027 .6	
A01X2000:10		

Terminal	Page .Col.	Opt.
A01X2000:11	032 .3	
A01X2000:12	032 .3	
A01X2000:13	033 .3	
A01X2000:14	030 .2	
A01X2000:E1	025 .1	
A01X2000:E2	031 .7	
A01X2000:15	030 .2	
A01X2000:16	030 .6	
A01X2000:17		
A01X2000:18		
A01X2000:19	025 .5	
A01X2000:20	025 .6	
A01X2000:21	025 .5	
A01X2000:22	025 .6	
A01X2000:23	025 .4	
A01X2000:24	025 .4	
A01X2000:25	025 .4	
A01X2000:26	025 .4	
A01X2000:27	025 .4	
A01X2000:28	031 .3	
A01X2000:29	031 .3	
A01X2000:30	031 .3	
A01X2000:31	031 .7	
A01X2000:32	010 .2	
A01X2000:33	010 .2	
A01X2000:34	010 .2	
A01X2000:E3	010 .2	
A01X2000:E4	014 .5	

Terminal	Page .Col.	Opt.
A01X2000:35		
A01X2000:36		
A01X2000:37	014 .5	
A01X2000:38	014 .5	
A01X2000:40	013 .3	
A01X2000:41	013 .3	
A01X2000:E5		
A01X2000:E6	033 .8	
A01X2000:42	013 .3	
A01X2000:43	013 .4	
A01X2000:44	013 .4	
A01X2000:45	013 .4	
A01X2000:46	027 .2	
A01X2000:47	027 .2	
A01X2000:48	027 .6	
A01X2000:49	029 .2	
A01X2000:50	029 .2	
A01X2000:51	029 .6	
A01X2000:52	029 .2	
A01X2000:53	029 .2	
A01X2000:54	029 .2	
A01X2000:55	029 .2	
A01X2000:56	029 .2	
A01X2000:57	029 .2	
A01X2000:58	029 .2	
A01X2000:59	029 .2	
A01X2000:60	029 .2	
A01X2000:61	029 .2	

Drawing remarks

Tetra Pak

Designer	Date	Machine
FEK	2008-02-21	Straw Applicator 30 TBA/TCA/TWA

ECM No	Denomination	Page Type
356058	CABINET TERMINAL SUMMARY	CABINET TERMINAL SUMMARY

Company	Document No.	Doc. type	Version	Page
Tetra Pak (Sweden)	2856601-0005	ELD	AB	001

RELEASED

© Tetra Pak. All rights reserved; any copying, transmittal or disclosure subject to Tetra Pak's written approval.

Cabinet terminal summary of 2856601-0003

Terminal	Page .Col.	Opt.
A01X2000:62	029 .2	
A01X2000:63	029 .2	
A01X2000:64	030 .2	
A01X2000:65	030 .2	
A01X2000:66	030 .6	
A01X2000:67	030 .2	
A01X2000:68	030 .2	
A01X2000:69	030 .6	
A01X2000:70	033 .4	
A01X2000:71	033 .8	
A01X2000:72		
A01X2000:73		
A01X2000:E7		
A01X2000:E8	033 .8	
A01X2000:74	033 .4	
A01X2000:75	033 .8	
A01X2000:76	033 .4	
A01X2000:77	033 .8	
A01X2000:78	033 .8	
A01X2000:79	033 .8	
A01X2000:E9	033 .8	
A01X2000:E10	033 .8	
A01X2000:80	029 .2	
A01X2000:81	029 .2	
A01X2000:82	029 .2	
A01X2000:83	014 .3	
A01X2000:84	014 .3	
A01X2000:85	014 .3	

Terminal	Page .Col.	Opt.
A01X2000:86	014 .4	
A01X2000:87	014 .4	
A01X2000:88	014 .4	
A01X2000:89	030 .2	
A01X2000:90	030 .2	
A01X2000:91	030 .2	
A01X2000:92		
A01X2000:93		
A01X2000:94		
A01X2098:1	040 .3	
A01X2098:2	040 .3	
A01X2098:3	040 .3	
A01X2098:4		
A01X2098:E1		
A01X2098:E2		
A01X2098:5	040 .3	
A01X2098:6	040 .3	
A01X2098:7		
A01X2098:8		
A01X2098:E3	040 .3	
A01X2098:E4		

Terminal	Page .Col.	Opt.

Terminal	Page .Col.	Opt.

Drawing remarks

Tetra Pak

Designer FEK	Date 2008-02-21	Machine	Straw Applicator 30 TBA/TCA/TWA
ECM No 356058	Denomination CABINET TERMINAL SUMMARY	Page Type	CABINET TERMINAL SUMMARY
Company Tetra Pak (Sweden)	Document No. 2856601-0005	Doc. type ELD	Version AB / Page 002

7 Terminal Strip Overview

About the Terminal Strip Overview

All terminals used in the equipment except for those in the electrical cabinet are listed in this chapter.

RELEASED

© Tetra Pak. All rights reserved; any copying, transmittal or disclosure subject to Tetra Pak's written approval.

Terminal strip of 2856601-0003
A08X1000

From	Cable	Internal Jumper	Terminal	External Jumper	Cable	To	Page.Col.	Option	Function text
A01X1000:8	E08W1010 :1		1			E08M1010:U	011 .4		
A01X1000:9	E08W1010 :2		2			E08M1010:N	011 .4		
A01X1000:E6	E08W1010 :GNYE		E1		:GNYE	E08M1010:⏚	011 .5		

Drawing remarks	Tetra Pak	Designer FEK	Date 2008-02-21	Machine Straw Applicator 30 TBA/TCA/TWA	
		ECM No 356058	Denomination TERMINAL STRIP OVERVIEW	Page Type Terminal diagram: A08X1000 (1 - E1)	
	Company Tetra Pak (Sweden)	Document No. 2856601-0006	Doc. type ELD	Version AB	Page 001

RELEASED

© Tetra Pak. All rights reserved; any copying, transmittal or disclosure subject to Tetra Pak's written approval.

1	2	3	4	5	6	7	8	9	10

Terminal strip of 2856601-0003
A08X2000

From	Cable	Internal Jumper	Terminal	External Jumper	Cable	To	Page.Col.	Option	Function text
A01X2000:E1	A08W2012 :GNYE		E1				025 .2		
A01X2000:1	A08W2012 :1		1			F09F2020:21	025 .2		EMERGENCY STOP
A01X2000:2	A08W2012 :2		2			F09F2020:22	025 .3		EMERGENCY STOP
A01X2000:3	A08W2012 :3		3			F09F2020:11	025 .2		EMERGENCY STOP
A01X2000:4	A08W2012 :4		4			F09F2020:12	025 .3		EMERGENCY STOP
A01X2000:5	A08W2012 :5		5			A08S2010:13	027 .3		STEP UP
A01X2000:6	A08W2012 :6		6			A08E2010:2	032 .8		STEP UP
						A08E2012:2			STEP DOWN
A01X2000:7	A08W2012 :7		7			A08S2010:14	027 .5		STEP UP
A01X2000:8	A08W2012 :8		8			A08S2012:14	027 .5		STEP DOWN
A01X2000:9	A08W2012 :9		9			A08S2014:14	027 .5		JOG SERVO
			10						
A01X2000:11	A08W2012 :11		11			A08E2010:1	032 .5		STEP UP
A01X2000:12	A08W2012 :12		12			A08E2012:1	032 .5		STEP DOWN
A01X2000:13	A08W2012 :13		13			A08E2016:1	033 .5		JOG SERVO
			14						
			15						
			16						
			17						
			18						
A01X2000:37	A08W2010 :1		19			A08A2010:0VDC	014 .5		
A01X2000:38	A08W2010 :2		20			A08A2010:24VDC	014 .5		
			E2				014 .5		

Drawing remarks

Tetra Pak

Designer	Date	Machine
FEK	2008-02-21	Straw Applicator 30 TBA/TCA/TWA

ECM No	Denomination	Page Type
356058	TERMINAL STRIP OVERVIEW	Terminal diagram: A08X2000 (E1 - E2)

Company	Document No.	Doc. type	Version	Page
Tetra Pak (Sweden)	2856601-0006	ELD	AB	002

RELEASED

© Tetra Pak. All rights reserved; any copying, transmittal or disclosure subject to Tetra Pak's written approval.

Terminal strip of 2856601-0003
P30X2020

From	Cable	Internal Jumper	Terminal	External Jumper	Cable	To	Page.Col.	Option	Function text
			1			W30T1020:AF 1	008 .9		
			2			W30T1020:AF 2	008 .9		
			3			W30T1020:AF 3	008 .9		
			4			W30T1020:AF 4	008 .9		
			5			W30T1020:AF 5	008 .9		
			6			W30T1020:AF 6	008 .9		
			7			W30T1020:AF 7	008 .9		
			8			W30T1020:AF 8	008 .9		
			9			W30T1020:AF 9	008 .9		
			10			W30T1020:AF 10	008 .9		
			11			W30T1020:AF 11	008 .9		
			12			W30T1020:AF 12	008 .9		
			13			W30T1020:AF 13	008 .9		
			14			W30T1020:AF 14	008 .9		
			15			W30T1020:AF 15	008 .9		

Drawing remarks

Tetra Pak

Designer FEK | Date 2008-02-21 | Machine Straw Applicator 30 TBA/TCA/TWA

ECM No 356058 | Denomination TERMINAL STRIP OVERVIEW | Page Type Terminal diagram: P30X2020 (1 - 15)

Company Tetra Pak (Sweden) | Document No. 2856601-0006 | Doc. type ELD | Version AB | Page 003

RELEASED

© Tetra Pak. All rights reserved; any copying, transmittal or disclosure subject to Tetra Pak's written approval.

1	2	3	4	5	6	7	8	9	10

Terminal strip of 2856601-0003
W40X1032

From	Cable	Internal Jumper	Terminal	External Jumper	Cable	To	Page.Col.	Option	Function text
W40T1030:⏚			1		W40W1032 :GNYE	W40M1032:⏚	005 .5		BELT BRAKE MOTOR LEFT

Drawing remarks	Tetra Pak	Designer FEK	Date 2008-02-21	Machine Straw Applicator 30 TBA/TCA/TWA
		ECM No 356058	Denomination TERMINAL STRIP OVERVIEW	Page Type Terminal diagram: W40X1032 (1 - 1)
	Company Tetra Pak (Sweden)	Document No. 2856601-0006	Doc. type ELD	Version AB / Page 004

RELEASED

© Tetra Pak. All rights reserved; any copying, transmittal or disclosure subject to Tetra Pak's written approval.

Terminal strip of 2856601-0003
W40X1034

From	Cable	Internal Jumper	Terminal	External Jumper	Cable	To	Page.Col.	Option	Function text
W40T1030:⏚	:GNYE		1		W40W1034 :GNYE	W40M1034:⏚	005 .8		BELT BRAKE MOTOR RIGHT

Drawing remarks	Tetra Pak	Designer FEK	Date 2008-02-21	Machine Straw Applicator 30 TBA/TCA/TWA	
		ECM No 356058	Denomination TERMINAL STRIP OVERVIEW	Page Type Terminal diagram: W40X1034 (1 - 1)	
	Company Tetra Pak (Sweden)	Document No. 2856601-0006	Doc. type ELD	Version AB	Page 005

This page intentionally left blank

8 Cable Connection List

About the Cable Connection List

All cable connections used in the equipment are listed in this chapter.

RELEASED

© Tetra Pak. All rights reserved; any copying, transmittal or disclosure subject to Tetra Pak's written approval.

Cable Connection List of 2856601-0003

From	Cable	To	Page.Col.	Option
	A01W1999			
A01X1000:E1	GNYE	A01J9999:	/003.05	
	A01W2010			
A01X2000:46	BN	A01B2010:	/027.03	
A01X2000:47	BU	A01B2010:	/027.03	
A01X2000:48	BK	A01B2010:	/027.06	
	A01W2012			
A01X2000:70	1	A01K2012:1	/033.06	
A01X2000:71	2	A01K2012:2	/033.07	
A01X2000:E6	GNYE	A01K2012:E	/033.07	
	A01W2014			
A01X2000:28	1	A01P2014:1	/031.03	
A01X2000:29	2	A01P2014:2	/031.03	
A01X2000:30	3	A01P2014:3	/031.03	
A01X2000:31	4	A01P2014:0	/031.06	
A01X2000:E2	GNYE	A01P2014:E	/031.06	
	A03W2012			
A03K2014:	1	A03K2110:X1	/016.03	
	A03W2016			
A03K2016:E	1	A03J2010:	/019.01	
	A03W2020			
A03X2016:TB2	WH	W10X2010:TB1	/019.05	
A03X2016:TB1	BN	W10X2010:TB2	/019.05	
W10J1012:	SH	A03J2016:	/004.02	
	A03W2022			
A03X2018:TB2	WH	W40X2010:TB1	/019.03	

From	Cable	To	Page.Col.	Option
A03X2018:TB1	BN	W40X2010:TB2	/019.03	
W40J1012:	SH	A03J2018:	/004.07	
	A03W2024			
W40X2010:TB1	WH	W40X2020:TB1	/004.08	
W40X2010:TB2	BN	W40X2020:TB2	/004.08	
A03W2024:	SH	W40J1022:	/006.02	
	A03W2026			
W40X2030:TB1	WH	W40X2020:TB1	/005.02	
W40X2030:TB2	BN	W40X2020:TB2	/005.02	
A03W2026:	SH	W40J1031:	/005.02	
	A03W2028			
A03X2020:TB2	WH	W90X2010:TB1	/019.03	
A03X2020:TB1	BN	W90X2010:TB2	/019.03	
W90J1012:	SH	A03J2020:	/006.07	
	A03W2029			
A03J2029:	1	A03K2029:E	/017.07	
	A03W2121			
A03K2010:	1	A03K2121:CH3	/016.03	
	A07W1021			
A07T1021:E	1	A07J1021:	/017.04	
	A07W2025			
A07K2025:V-	BK	A03K2029:V-	/017.05	
A07K2025:CAN-L	BU	A03K2029:CAN-L	/017.05	
A07K2025:SHIELD	DRAIN	A03K2029:SHIELD	/017.05	
A07K2025:CAN-H	WH	A03K2029:CAN-H	/017.05	
A07K2025:V+	RD	A03K2029:V+	/017.05	

Drawing remarks

Tetra Pak

Designer	Date	Machine
FEK	2008-02-21	Straw Applicator 30 TBA/TCA/TWA

ECM No	Denomination	Page Type
356058	CABLE CONNECTION LIST	CABLE CONNECTION LIST

Company	Document No.	Doc. type	Version	Page
Tetra Pak (Sweden)	2856601-0007	ELD	AB	001

RELEASED

© Tetra Pak. All rights reserved; any copying, transmittal or disclosure subject to Tetra Pak's written approval.

Cable Connection List of 2856601-0003

From	Cable	To	Page.Col.	Option
	A08W2010			
A01X2000:37	1	A08X2000:19	/014.05	
A01X2000:38	2	A08X2000:20	/014.05	
	A08W2012			
A01X2000:1	1	A08X2000:1	/025.02	
A01X2000:2	2	A08X2000:2	/025.04	
A01X2000:3	3	A08X2000:3	/025.02	
A01X2000:4	4	A08X2000:4	/025.04	
A01X2000:5	5	A08X2000:5	/027.03	
A01X2000:6	6	A08X2000:6	/032.08	
A01X2000:7	7	A08X2000:7	/027.06	
A01X2000:8	8	A08X2000:8	/027.06	
A01X2000:9	9	A08X2000:9	/027.06	
	10			
A01X2000:11	11	A08X2000:11	/032.04	
A01X2000:12	12	A08X2000:12	/032.04	
A01X2000:13	13	A08X2000:13	/033.04	
	14			
	15			
	16			
	17			
A01X2000:E1	GNYE	A08X2000:E1	/025.02	
	A08W2014			
A08A2010:Pot.Gro	1	A08J2010:	/016.10	
	A08W2020			
A03K2110:X2	1	A08A2010:ETHERNE	/016.08	
	E01W1013			
E01X1013:1	1	E01E1013:L1	/011.06	
E01X1013:2	2	E01E1013:L2/N	/011.06	
E01X1013:3	3	E01E1013:-	/011.06	
E01X1013:E1	GNYE	E01E1013:PE	/011.06	
	E01W1015			
E01X1013:8	1	E01Q2015:13	/032.03	
E01X1013:9	2	E01Q2015:14	/032.04	
	E01W1017			
E01X1013:10	1	E01Q2017:13	/032.05	
E01X1013:11	2	E01Q2017:14	/032.06	
	E01W1020			
A01X1000:10	1	E01E1020:1	/012.06	
A01X1000:11	2	E01E1020:2	/012.06	
A01X1000:E7	GNYE	E01E1020:E	/012.06	
	E08W1010			
A01X1000:8	1	A08X1000:1	/011.04	
A01X1000:9	2	A08X1000:2	/011.04	
A01X1000:E6	GNYE	A08X1000:E1	/011.04	
	F09W2026			
A01X2000:23	BN	F09F2026:BN	/025.04	
A01X2000:24	WH	F09F2026:WH	/025.04	
A01X2000:25	BU	F09F2026:BU	/025.04	
A01X2000:26	BK	F09F2026:BK	/025.04	
A01X2000:27	GY	F09F2026:GY	/025.04	
F09J2026:	SH	F09W2026:	/025.04	
	P30W2010			
P30X2010:4	BK	P30B2010:4	/007.09	
	GY			
P30X2010:5	LI	P30B2010:5	/007.09	
P30X2010:10	YE	P30B2010:7	/007.09	

Drawing remarks

Tetra Pak

Designer FEK	Date 2008-02-21	Machine Straw Applicator 30 TBA/TCA/TWA	
ECM No 356058	Denomination CABLE CONNECTION LIST	Page Type CABLE CONNECTION LIST	
Company Tetra Pak (Sweden)	Document No. 2856601-0007	Doc. type ELD	Version AB / Page 002

RELEASED

© Tetra Pak. All rights reserved; any copying, transmittal or disclosure subject to Tetra Pak's written approval.

Cable Connection List of 2856601-0003

From	Cable	To	Page.Col.	Option
P30X2010:1	WH	P30B2010:1	/007.09	
P30X2010:2	BN	P30B2010:2	/007.09	
	OG			
P30X2010:3	PK	P30B2010:3	/007.09	
P30X2010:6	BU	P30B2010:6	/007.09	
	GN			
P30X2010:14	RD	P30B2010:8	/007.09	
	SH			
	P50W1011			
A01X1000:12	1	P50B1011:001	/013.02	
A01X1000:13	2	P50B1011:002	/013.02	
A01X1000:E8	GNYE	P50J0001:	/013.02	
	P50W2011			
A01X2000:40	1	P50B1011:003	/013.03	
A01X2000:41	2	P50B1011:004	/013.03	
A01X2000:42	3	P50B1011:005	/013.03	
A01X2000:43	4	P50B1011:006	/013.03	
A01X2000:44	5	P50B1011:007	/013.03	
A01X2000:45	6	P50B1011:008	/013.03	
	GNYE			
	V10W2020			
A01X2000:52	BN	V10W2022:	/029.03	
	WH			
A01X2000:53	BU	V10W2022:	/029.03	
A01X2000:54	BK	V10W2022:	/029.03	
	V10W2022			
V10W2020:	A	V10B2020:	/029.04	
V10W2020:	B	V10B2022:	/029.04	
	V30W1030			

From	Cable	To	Page.Col.	Option
A01X1000:1	1	V30V1030:L1	/010.03	
A01X1000:2	2	V30V1030:L2	/010.03	
A01X1000:3	3	V30V1030:N	/010.03	
A01X1000:E4	GNYE	V30V1030:⏚	/010.03	
	V30W2010			
A01X2000:74	1	V30K2010:1	/033.06	
A01X2000:75	2	V30K2010:2	/033.07	
A01X2000:E8	GNYE	V30K2010:E	/033.07	
	V30W2012			
A01X2000:76	1	V30K2012:1	/033.06	
A01X2000:77	2	V30K2012:2	/033.07	
A01X2000:E9	GNYE	V30K2012:E	/033.07	
	V30W2030			
A01X2000:32	1	V30V1030:3	/010.02	
A01X2000:33	2	V30V1030:2	/010.02	
A01X2000:34	3	V30V1030:4	/010.02	
A01X2000:E3	GNYE	V30V1030:E	/010.02	
	V30W2080			
A01X2000:49	BN	V30B2080:	/029.03	
	WH			
A01X2000:50	BU	V30B2080:	/029.03	
A01X2000:51	BK	V30B2080:	/029.05	
	V30W2090			
A01X2000:67	BN	V30B2090:	/030.03	
A01X2000:68	BU	V30B2090:	/030.03	
A01X2000:69	BK	V30B2090:	/030.05	
	V30W2120			
A01X2000:14	BN	V30B2120:	/030.03	

Drawing remarks

Tetra Pak

Designer	Date	Machine
FEK	2008-02-21	Straw Applicator 30 TBA/TCA/TWA

ECM No	Denomination	Page Type
356058	CABLE CONNECTION LIST	CABLE CONNECTION LIST

Company	Document No.	Doc. type	Version	Page
Tetra Pak (Sweden)	2856601-0007	ELD	AB	003

RELEASED

© Tetra Pak. All rights reserved; any copying, transmittal or disclosure subject to Tetra Pak's written approval.

Cable Connection List of 2856601-0003

From	Cable	To	Page.Col.	Option
A01X2000:15	BU	V30B2120:	/030.03	
A01X2000:16	BK	V30B2120:	/030.05	
	V40W2030			
A01X2000:55	BN	V40W2024:	/029.03	
	WH			
A01X2000:56	BU	V40W2024:	/029.03	
A01X2000:57	BK	V40W2024:	/029.03	
	V40W2032			
V40W2030:	A	V40B2030:	/029.04	
V40W2030:	B	V40B2032:	/029.04	
	V40W2040			
A01X2000:58	BN	V40W2025:	/029.03	
	WH			
A01X2000:59	BU	V40W2025:	/029.03	
A01X2000:60	BK	V40W2025:	/029.03	
	V40W2042			
V40W2040:	A	V40B2040:	/029.04	
V40W2040:	B	V40B2042:	/029.04	
	V40W2060			
A01X2000:64	BN	V40B2060:	/030.03	
A01X2000:65	BU	V40B2060:	/030.03	
A01X2000:66	BK	V40B2060:	/030.05	
	V40W2070			
A01X2000:80	BN	V40W2027:	/029.03	
	WH			
A01X2000:81	BU	V40W2027:	/029.03	
A01X2000:82	BK	V40W2027:	/029.03	
	V40W2072			

From	Cable	To	Page.Col.	Option
V40W2070:	A	V40B2070:	/029.04	
V40W2070:	B	V40B2072:	/029.04	
	V40W2100			
A01X2000:89	BN	V40W2027:	/030.03	
	WH			
A01X2000:90	BU	V40W2027:	/030.03	
A01X2000:91	BK	V40W2027:	/030.03	
	V40W2102			
V40W2070:	A	V40B2100:	/030.04	
V40W2070:	B	V40B2102:	/030.04	
	V50W1015			
A01X1000:4	1	V50X1015:1	/010.07	
A01X1000:5	2	V50X1015:2	/010.07	
A01X1000:E5	GNYE	V50X1015:CHASSIE	/010.07	
	V50W1017			
V50X1015:1	1	V50V1015:001	/010.07	
V50X1015:2	2	V50V1015:002	/010.07	
V50X1015:CHASSIE	GNYE	V50V1015:⏚	/010.07	
	V90W2050			
A01X2000:61	BN	V40W2026:	/029.03	
	WH			
A01X2000:62	BU	V40W2026:	/029.03	
A01X2000:63	BK	V40W2026:	/029.03	
	V90W2052			
V90W2050:	A	V90B2050:	/029.04	
V90W2050:	B	V90B2052:	/029.04	

Drawing remarks

Tetra Pak

Designer FEK	Date 2008-02-21	Machine Straw Applicator 30 TBA/TCA/TWA	
ECM No 356058	Denomination CABLE CONNECTION LIST	Page Type CABLE CONNECTION LIST	
Company Tetra Pak (Sweden)	Document No. 2856601-0007	Doc. type ELD	Version AB	Page 004

RELEASED

© Tetra Pak. All rights reserved; any copying, transmittal or disclosure subject to Tetra Pak's written approval.

Cable Connection List of 2856601-0003

From	Cable	To	Page.Col.	Option
	W10W1010			
W10M1010:U	1	W10T1010:U/T1	/004.04	(9)
W10M1010:V	2	W10T1010:V/T2	/004.04	(9)
W10M1010:W	3	W10T1010:W/T3	/004.04	(9)
W10M1010:⏚	GNYE	W10T1010:⏚	/004.04	(9)
W10M1010:	SH	W10J1010:	/004.04	
	W30W1010			
W30T1010:1 U	BN	W30M1010:U A	/007.03	
W30T1010:2 V	BK	W30M1010:V B	/007.03	
W30T1010:3 W	BU	W30M1010: W C	/007.03	
W30T1010:4 GND	GNYE	W30M1010:GND	/007.03	
W30W1010:	SH	W30J1010:	/007.03	
	W30W1020			
W30T1020:1 U	BN	W30M1020:U A	/008.03	
W30T1020:2 V	BK	W30M1020:V B	/008.03	
W30T1020:3 W	BU	W30M1020: W C	/008.03	
W30T1020:4 GND	GNYE	W30M1020:GND	/008.03	
W30W1020:	SH	W30J1020:	/008.03	
	W30W2010			
W30X2010:1	1	W30M1010:A	/007.04	
W30X2010:2	2	W30M1010:B	/007.04	
W30X2010:8	3	W30M1010:S3	/007.04	
W30X2010:3	4	W30M1010:C	/007.04	
W30X2010:4	5	W30M1010:D	/007.04	
W30X2010:5	6	W30M1010:E	/007.04	
W30X2010:6	7	W30M1010:L	/007.04	
W30X2010:12	8	W30M1010:S1	/007.04	
W30X2010:7	9	W30M1010:N	/007.04	
W30X2010:10	10	W30M1010:F	/007.04	
W30X2010:13	11	W30M1010:S2	/007.04	
W30X2010:11	12	W30M1010:R	/007.04	
W30X2010:14	13	W30M1010:K	/007.04	
W30X2010:0	SH		/007.04	
	W30W2012			
W30X2012:4	BN	W30B2012:	/007.08	
W30X2012:3	BU	W30B2012:	/007.08	
W30X2012:5	BK	W30B2012:	/007.08	
	W30W2014			
W30X2012:13	BN	W30W2016:	/007.08	
	WH			
W30X2012:15	BU	W30W2016:	/007.08	
W30X2012:14	BK	W30W2016:	/007.08	
	W30W2016			
W30W2014:	A	W30B2014:	/007.08	
W30W2014:	B	W30B2016:	/007.08	
	W30W2018			
A03K2012:Tx	1	W30T1010:Rx	/020.03	
	W30W2020			
W30X2020:1	1	W30M1020:A	/008.04	
W30X2020:2	2	W30M1020:B	/008.04	
W30X2020:8	3	W30M1020:S3	/008.04	
W30X2020:3	4	W30M1020:C	/008.04	
W30X2020:4	5	W30M1020:D	/008.04	
W30X2020:5	6	W30M1020:E	/008.04	
W30X2020:6	7	W30M1020:L	/008.04	
W30X2020:12	8	W30M1020:S1	/008.04	
W30X2020:7	9	W30M1020:N	/008.04	
W30X2020:10	10	W30M1020:F	/008.04	
W30X2020:13	11	W30M1020:S2	/008.04	

Drawing remarks

Tetra Pak

Designer	Date	Machine
FEK	2008-02-21	Straw Applicator 30 TBA/TCA/TWA

ECM No	Denomination	Page Type
356058	CABLE CONNECTION LIST	CABLE CONNECTION LIST

Company	Document No.	Doc. type	Version	Page
Tetra Pak (Sweden)	2856601-0007	ELD	AB	005

RELEASED

© Tetra Pak. All rights reserved; any copying, transmittal or disclosure subject to Tetra Pak's written approval.

Cable Connection List of 2856601-0003

From	Cable	To	Page.Col.	Option
W30X2020:11	12	W30M1020:R	/008.04	
W30X2020:14	13	W30M1020:K	/008.04	
W30T1020:M/F D0		W30W2020:	/008.04	
	W30W2022			
W30X2022:4	BN	W30B2022:	/008.08	
W30X2022:3	BU	W30B2022:	/008.08	
W30X2022:5	BK	W30B2022:	/008.08	
	W30W2024			
W30T1010:Tx	1	W30T1020:Rx	/020.03	
	W30W2026			
A03K2012:Rx	1	W30T1020:Tx	/020.03	
	W40W1010			
W40M1010:U	1	W40T1010:U/T1	/004.09	(9)
W40M1010:V	2	W40T1010:V/T2	/004.09	(9)
W40M1010:W	3	W40T1010:W/T3	/004.09	(9)
	GNYE			
W40M1010:	SH	W40J1010:	/004.09	
W40M1010:⏚	GNYE	W40T1010:⏚	/004.09	(9)
	W40W1020			
W40M1020:U	1	W40T1020:U/T1	/006.04	(9)
W40M1020:V	2	W40T1020:V/T2	/006.04	(9)
W40M1020:W	3	W40T1020:W/T3	/006.04	(9)
W40M1020:⏚	GNYE	W40T1020:⏚	/006.04	(9)
W40M1020:	SH	W40J1020:	/006.04	
	W40W1032			
W40F1032:2	1	W40M1032:U1	/005.04	
W40F1032:4	2	W40M1032:W1	/005.04	
W40F1032:6	3	W40M1032:V1	/005.04	

From	Cable	To	Page.Col.	Option
W40X1032:1	GNYE	W40M1032:⏚	/005.04	
W40J1032:	SH	W40M1032:	/005.04	
	W40W1034			
W40F1034:2	1	W40M1034:U1	/005.07	
W40F1034:4	2	W40M1034:W1	/005.07	
W40F1034:6	3	W40M1034:V1	/005.07	
W40X1034:1	GNYE	W40M1034:⏚	/005.07	
W40J1034:	SH	W40M1034:	/005.07	
	W90W1010			
W90M1010:U	1	W90T1010:U/T1	/006.09	(9)
W90M1010:V	2	W90T1010:V/T2	/006.09	(9)
W90M1010:W	3	W90T1010:W/T3	/006.09	(9)
W90M1010:⏚	GNYE	W90T1010:⏚	/006.09	(9)
W90M1010:	SH	W90J1010:	/006.09	

Drawing remarks

Tetra Pak

Designer FEK	Date 2008-02-21	Machine Straw Applicator 30 TBA/TCA/TWA	
ECM No 356058	Denomination CABLE CONNECTION LIST	Page Type CABLE CONNECTION LIST	
Company Tetra Pak (Sweden)	Document No. 2856601-0007	Doc. type ELD	Version AB	Page 006

9 Mains Connection

About the Mains Connection Chapter

The drawings that show the connection from the mains power to the electrical cabinet are included in this chapter.

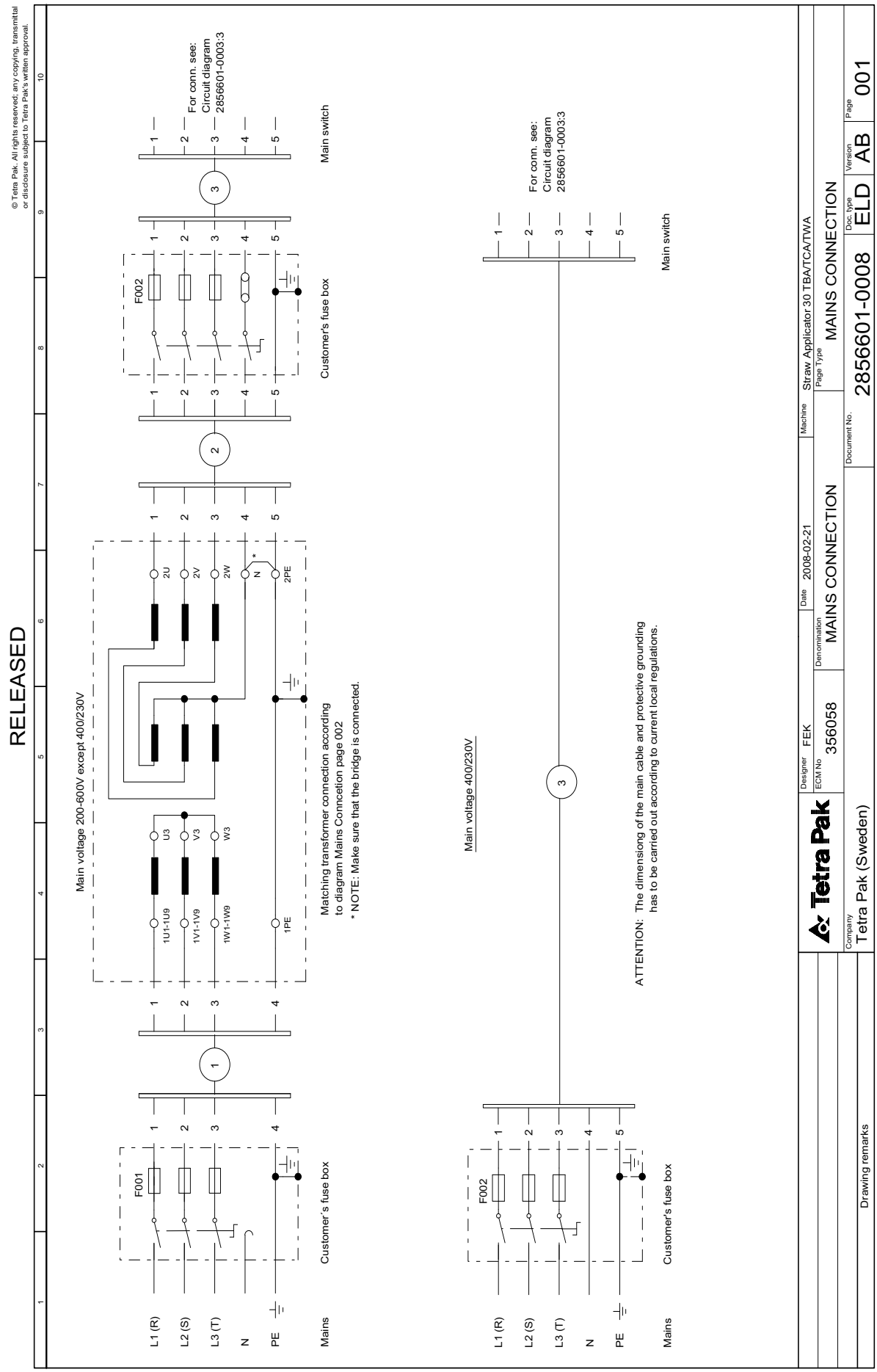
RELEASED
© Tetra Pak. All rights reserved; any copying, transmittal or disclosure subject to Tetra Pak's written approval.
Main voltage 200-600V except 400/230V
F001
F002
L1 (R)
L2 (S)
L3 (T)
N
PE
Mains
Customer's fuse box
1U1-1U9
1V1-1V9
1W1-1W9
1PE
U3
V3
W3
2U
2V
2W
N
2PE
Matching transformer connection according to diagram Mains Conncetion page 002
* NOTE: Make sure that the bridge is connected.
For conn. see: Circuit diagram 2856601-0003:3
Main switch
Main voltage 400/230V
ATTENTION: The dimensiong of the main cable and protective grounding has to be carried out according to current local regulations.
Tetra Pak
Designer FEK
Date 2008-02-21
Machine Straw Applicator 30 TBA/TCA/TWA
ECM No 356058
Denomination MAINS CONNECTION
Page Type MAINS CONNECTION
Company Tetra Pak (Sweden)
Drawing remarks
Document No. 2856601-0008
Doc. type ELD
Version AB
Page 001

RELEASED

© Tetra Pak. All rights reserved; any copying, transmittal or disclosure subject to Tetra Pak's written approval.

MAIN VOLTAGE	FUSES (SLOW) F001	FUSES (SLOW) F002	AREA TO COPPER (CU) CABLE WITH No. 1	2	3	CONNECTIONS ON MATCHING TRANSFORMER MAINS	TAP	CONNECT
V	A	A	mm²	mm²	mm²			
600/347 3x600	25	16	3x4/4	4x4/4	4x2,5/2,5	L1 L2 L3 PE	1U9 1V9 1W9 ⏚	1U3 - U4 1V3 - V4 1W3 - W4
550/318 3x550	35	16	3x6/6	4x4/4	4x2,5/2,5	L1 L2 L3 PE	1U8 1V8 1W8 ⏚	1U3 - U4 1V3 - V4 1W3 - W4
500/289 3x500	35	16	3x6/6	4x4/4	4x2,5/2,5	L1 L2 L3 PE	1U7 1V7 1W7 ⏚	1U3 - U4 1V3 - V4 1W3 - W4
480/277 3x480	35	16	3x6/6	4x4/4	4x2,5/2,5	L1 L2 L3 PE	1U6 1V6 1W6 ⏚	1U3 - U4 1V3 - V4 1W3 - W4
440/254 3x440	50	16	3x10/10	4x4/4	4x2,5/2,5	L1 L2 L3 PE	1U5 1V5 1W5 ⏚	1U2 - U4 1V2 - V4 1W2 - W4
415/240 3x415	50	16	3x10/10	4x4/4	4x2,5/2,5	L1 L2 L3 PE	1U5 1V5 1W5 ⏚	1U1 - U4 1V1 - V4 1W1 - W4
3x400	50	16	3x10/10	4x4/4	4x2,5/2,5	L1 L2 L3 PE	1U4 1V4 1W4 ⏚	1U1 - U4 1V1 - V4 1W1 - W4
400/230								
380/220 3x380	50	16	3x10/10	4x4/4	4x2,5/2,5	L1 L2 L3 PE	1U9 1V9 1W9 ⏚	1U3 - 1U5 1V3 - 1V5 1W3 - 1W5
240/140 3x240	80	16	3x16/16	4x4/4	4x2,5/2,5	L1 L2 L3 PE	1U3 1V3 1W3 ⏚	U3 - U4 1U3-1U6 V3 - V4 1V3-1V6 W3 - W4 1W3-1W6
220/127 3x220	80	16	3x16/16	4x4/4	4x2,5/2,5	L1 L2 L3 PE	1U2 1V2 1W2 ⏚	U3 - U4 1U2-1U5 V3 - V4 1V2-1V5 W3 - W4 1W2-1W5
200/115 3x200	80	16	3x16/16	4x4/4	4x2,5/2,5	L1 L2 L3 PE	1U1 1V1 1W1 ⏚	U3 - U4 1U1-1U4 V3 - V4 1V1-1V4 W3 - W4 1W1-1W4

MATCHING TRANSFORMER

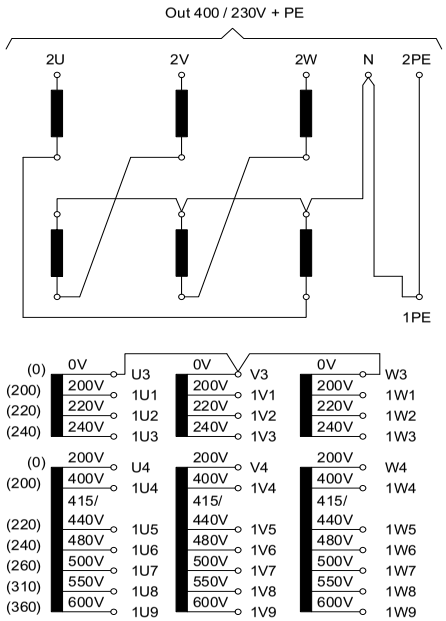

ATTENTION:

Cable areas are dimensioned according to Swedish regulations (ELSÄK-FS 1999:5 and SS4241424:6) 40 C ambient temp and cable on metal ladder with space between the cables.
National regulations have to be followed in each country.
Tetra Pak is not responsible for the dimensioning at installation.
Tetra Pak only provides recomendations.

Drawing remarks	Tetra Pak	Designer FEK	Date 2008-02-21	Machine Straw Applicator 30 TBA/TCA/TWA			
		ECM No 356058	Denomination MAINS CONNECTION	Page Type MAINS CONNECTION			
		Company Tetra Pak (Sweden)	Document No. 2856601-0008	Doc. type ELD	Version AB	Page 002	

10 Drawing Remarks

About the Drawing Remarks Chapter

This chapter contains a list of the drawing remarks indicated with a number in the drawing.

10.1 Drawing Remarks

Drawing No.	Note	Page	Remark
2856601	1	7, 8	The conductors in the ferrite shall pass the ferrite twice.
2856601	2	16	Only used when the machine is configured for SNP. See MM for connection.
2856601	3	40	Bridge A01X2098:1-2 if no machine is connected. The bridge can also be replaced by a external stop.
2856601	4	40	Bridge A01X2098: 5-6 if no line com. or no start conv. is connected.
2856601	5	10	Use internal wiring plug, (3+N+PE).
2856601	6	16	Only used when the machine is configured for Line Controller.
2856601	7	13	Only used when the machine has a Straw detector attached.
2856601	8	25	Remove for line emergency stop.
2856601	9	4, 5, 6, 7, 19, 25	Cable shield clamped to assembly plate.
2856601	10	25	Stand alone resistor or last in a Pluto network.
2856601	11	4, 5, 6, 7, 8	The conductors shall run straight through the ferrite.
2856601	12	7, 8	Cable shield clamped to servo drive.
2856601	13	11, 28, 32	Only used when the machine is configured with Cooling unit.
2856601	14	11	Not used when the machine is configured with Cooling unit.
2856601	15	10	Only used when the machine has a Bent foil treater attached.
2856601	16	14, 17, 18	Only used when the machine is configured for TBA22.
2856601	17	4, 5, 6	Prefabricated wire jumper, mounted at delivery.
2856601	18	10	Always delivered with the machine.
2856601	19	4, 6	Disconnect the motor cable before delivery.
2856601	20	4, 5, 6, 29, 30, 33	Only for TBA.

(Cont'd)

(Cont'd)

Drawing No.	Note	Page	Remark
2856601	21	4, 30, 33	Only for TCA and TWA.
2856601	22	13	See connection in manual for Straw detector.
2856601	23	5	Only for TBA. The connection for the component has to be changed for TCA and TWA. It shall be connected to W40X2010 instead.
2856601	24	16	See connection in manual for Filling machine or another DE machine.
2856601	25	29	Only used as Optional equipment.
2856601	26	4, 5, 6	White conductor shall be connected on the left side on the plug.
2856601	27	19	Brown conductor shall be connected on the top of the plugs.
2856601	28	16, 40	Only for TCA.

11 Other Information

About the Other Information Chapter

This chapter contains a list of the engineering change description.

11.1 Engineering Change Description

ECM No.	Drawing No.	Alteration
343991	2856601	Released dev. step -0100 version AA
356058	2856601	Implementation of TCA-variant. Update to AB.

This page intentionally left blank

Note! *This page is generated* ***automatically****.*
using the ***variable definitions*** *made in the* ***front page*** *file!*

Straw Applicator 30 by Tetra Pak
663350-0100
Issue 2008-11 Doc. No. EM-2881128-0103

Straw Applicator 30 by Tetra Pak 1(2)
663350-0100
Issue 2008-11 Doc. No. EM-2881128-0103

Straw Applicator 30 by Tetra Pak
663350-0100
Issue 2008-11 Doc. No. EM-2881128-0103

Straw Applicator 30 by Tetra Pak 1(2)
663350-0100
Issue 2008-11 Doc. No. EM-2881128-0103

Straw Applicator 30 by Tetra Pak
663350-0100
Issue 2008-11 Doc. No. EM-2881128-0103

Straw Applicator 30 by Tetra Pak 1(2)
663350-0100
Issue 2008-11 Doc. No. EM-2881128-0103

Straw Applicator 30 by Tetra Pak
663350-0100
Issue 2008-11 Doc. No. EM-2881128-0103

Straw Applicator 30 by Tetra Pak 1(2)
663350-0100
Issue 2008-11 Doc. No. EM-2881128-0103

Straw Applicator 30 by Tetra Pak
663350-0100
Issue 2008-11 Doc. No. EM-2881128-0103

Straw Applicator 30 by Tetra Pak 2(2)
663350-0100
Issue 2008-11 Doc. No. EM-2881128-0103

Straw Applicator 30 by Tetra Pak
663350-0100
Issue 2008-11 Doc. No. EM-2881128-0103

Straw Applicator 30 by Tetra Pak 2(2)
663350-0100
Issue 2008-11 Doc. No. EM-2881128-0103

Straw Applicator 30 by Tetra Pak
663350-0100
Issue 2008-11 Doc. No. EM-2881128-0103

Straw Applicator 30 by Tetra Pak 2(2)
663350-0100
Issue 2008-11 Doc. No. EM-2881128-0103

Straw Applicator 30 by Tetra Pak
663350-0100
Issue 2008-11 Doc. No. EM-2881128-0103

Straw Applicator 30 by Tetra Pak 2(2)
663350-0100
Issue 2008-11 Doc. No. EM-2881128-0103

Straw Applicator 30 by Tetra Pak
663350-0100

Issue 2008-11 Doc. No. EM-2881128-0103

Straw Applicator 30 by Tetra Pak 1(2)
663350-0100

Issue 2008-11 Doc. No. EM-2881128-0103

Straw Applicator 30 by Tetra Pak
663350-0100

Issue 2008-11 Doc. No. EM-2881128-0103

Straw Applicator 30 by Tetra Pak 1(2)
663350-0100

Issue 2008-11 Doc. No. EM-2881128-0103

Straw Applicator 30 by Tetra Pak
663350-0100

Issue 2008-11 Doc. No. EM-2881128-0103

Straw Applicator 30 by Tetra Pak 1(2)
663350-0100

Issue 2008-11 Doc. No. EM-2881128-0103

Straw Applicator 30 by Tetra Pak
663350-0100

Issue 2008-11 Doc. No. EM-2881128-0103

Straw Applicator 30 by Tetra Pak 2(2)
663350-0100

Issue 2008-11 Doc. No. EM-2881128-0103

Straw Applicator 30 by Tetra Pak
663350-0100

Issue 2008-11 Doc. No. EM-2881128-0103

Straw Applicator 30 by Tetra Pak 2(2)
663350-0100

Issue 2008-11 Doc. No. EM-2881128-0103

Straw Applicator 30 by Tetra Pak
663350-0100

Issue 2008-11 Doc. No. EM-2881128-0103

Straw Applicator 30 by Tetra Pak 2(2)
663350-0100

Issue 2008-11 Doc. No. EM-2881128-0103