IM

Installation Manual

Straw Applicator 30 by Tetra Pak

663350-0100

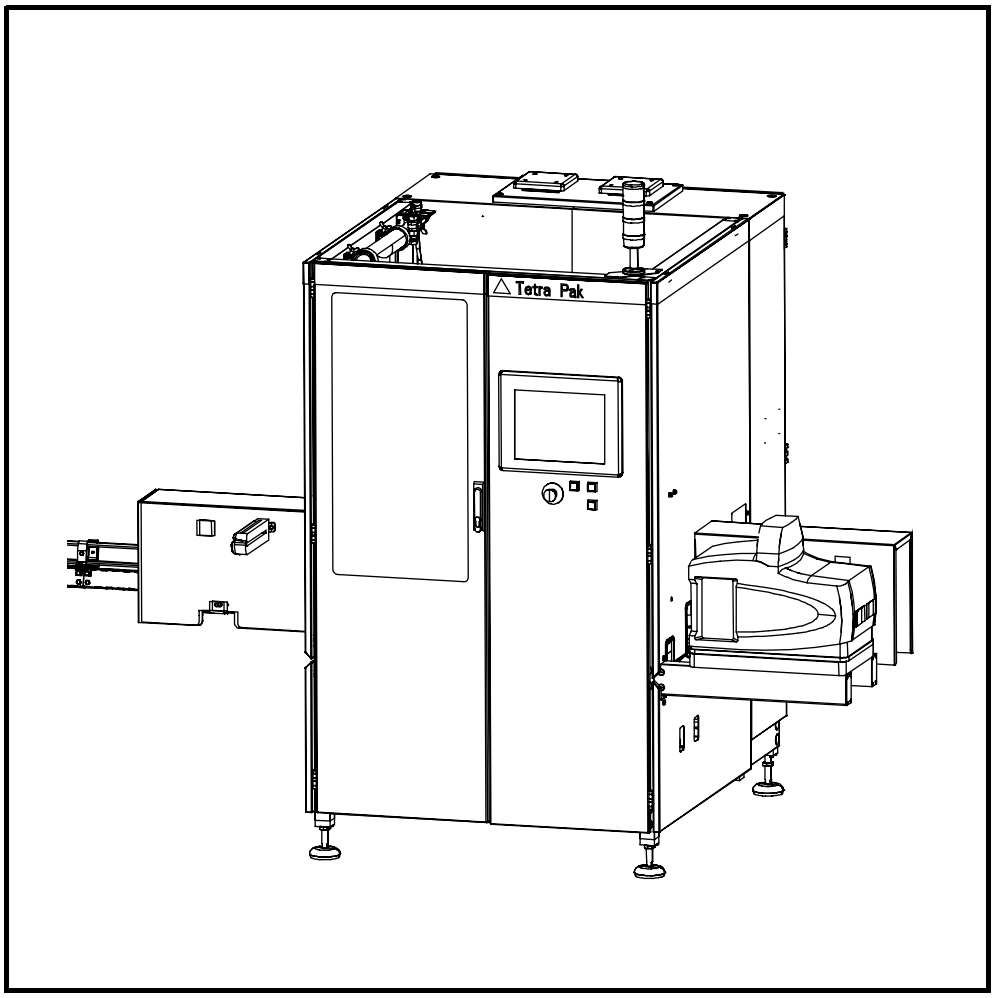

WARNING

Read and follow all safety precaution instructions throughout this manual and on safety signs attached to this equipment.

Failure to follow all safety precaution instructions could result in death or serious injury.

Tetra Pak

Doc. No. IM-2881126-0103

Copyright © 2008 Tetra Pak Group

All rights reserved. No part of this document may be reproduced or copied in any form or by any means without written permission from Tetra Pak Packaging Solutions AB.

Tetra Pak and all Tetra Pak products are trademarks belonging to the Tetra Pak Group.

The content of this manual is in accordance with the design and construction of the machine or equipment at the time of publishing. Tetra Pak reserves the right to introduce design modifications without prior notice.

The English version of this document is the original language version.

This document was produced by:

Tetra Pak Packaging Solutions AB
Ruben Rausings gata
SE-221 86 Lund
Sweden

Additional copies can be ordered from Tetra Pak. When ordering additional copies, always provide the document number.

Doc. No. IM-2881126-0103

Issue 2008-11

This manual is valid for:

Series No./ Machine No. Sign.

IM

Installation Manual

Straw Applicator 30 by Tetra Pak
663350-0100

i Introduction

ii Safety Precautions

1 Technical Data and Drawings

2 Preparation

3 Moving and Unpacking the Equipment

4 Positioning, Assembly, and Connections

5 Final Installation Check

6 Preparation for Commissioning

7 Disassembly and Removal

Machine or equipment configurations that this manual is valid for are described on the next page.

Doc. No. IM-2881126-0103

Issue 2008-11

Tetra Pak

Tetra Pak Packaging Solutions AB

Valid for:

Name	Drawing Specification and Development Step	Additional Information
Straw Applicator 30 by Tetra Pak	663350-0100	Package Shape: - TBA - TCA Optional Equipment: - 2943553-0100 Photocell Unit - 2960583-0100 Quick Change Kit

Update Log for Doc. No. IM-2881126-0103

This table shows all changes made to this manual, including installed rebuilding kits, added or removed pages. Page numbering on added pages begins with UP.

Date	Installed Kit	Added Pages (Doc. No.)	Removed Pages	Signature

Date	Installed Kit	Added Pages (Doc. No.)	Removed Pages	Signature

i Introduction

About the Introduction Chapter

This chapter contains basic information about this manual and the related Tetra Pak equipment.

Abbreviations and Terminology . . . . . i - 5
Manual Information . . . . . i - 6
Delivered Manuals . . . . . i - 6
Page Layout . . . . . i - 7
Page Numbering. . . . . i - 8
Typographical Conventions . . . . . i - 8
Symbols . . . . . i - 8
Machine Introduction . . . . . i - 9
Intended Use of the Equipment . . . . . i - 9
Manufacturer . . . . . i - 9
Support and Feedback . . . . . i - 9
Identification . . . . . i - 10
CE Classification . . . . . i - 10
Machine Plate . . . . . i - 10
Orientation . . . . . i - 11
Hygiene. . . . . i - 12

This page intentionally left blank

Abbreviations and Terminology

Abbreviation/ Terminology	Meaning	Translation
ANSI	American National Standards Institute	
CE	Communautés Européennes/European Communities	
EM	Electrical Manual	
IM	Installation Manual	
ISO	International Organization for Standardization	
MM	Maintenance Manual	
OM	Operation Manual	
SPC	Spare Parts Catalogue	
TCA	Tetra Classic Aseptic	
TWA	Tetra Wedge Aseptic	
TFA	Tetra Fino Aseptic	

Manual Information

Tetra Pak recommends reading all delivered manuals carefully. Make sure that the delivered manuals are available to personnel who operate or maintain the equipment.

It is important to keep this manual for the lifetime of the equipment and to pass the manual on to any subsequent holder or user.

Tetra Pak will not be held responsible for any damage to the equipment caused by not following the instructions given in this manual.

Delivered Manuals

Manuals delivered with this equipment:

- EM
  The Electrical Manual provides technicians with information about the equipment's electrical system.
- IM
  The Installation Manual provides technicians with information required to safely install the equipment.
- MM
  The Maintenance Manual provides technicians with information on maintaining the equipment.
- OM
  The Operation Manual manual provides the operator with information on handling and operating the equipment before, during, and after production.
- SPC
  The Spare Parts Catalogue provides the information necessary to order spare parts from Tetra Pak

Page Layout

Every main page in a manual contains a header and a footer. The page header contains the chapter name (1) and the section name (2). The page footer contains the page number (3), and the document number (4). See also the Page Numbering section.

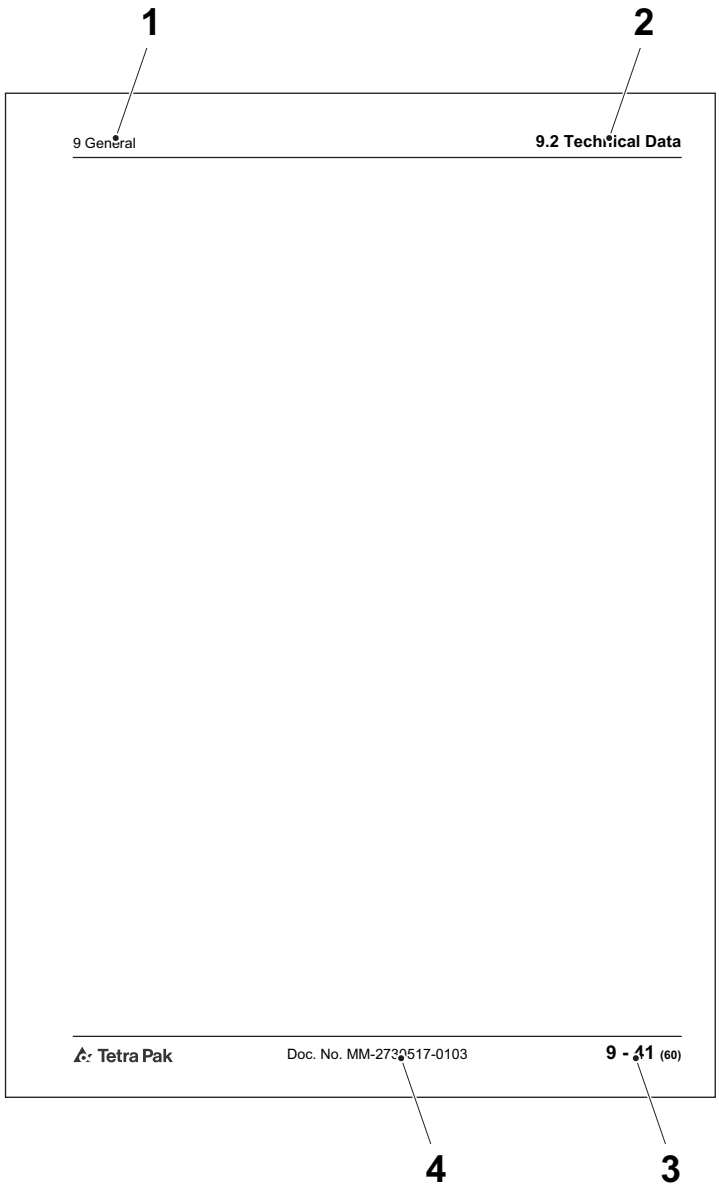

1 Chapter name
2 Section name
3 Page number
4 Document number

Page Numbering

A page number has three parts:

- chapter number (1)
- consecutive page number (2) within the chapter
- total number of pages (3) in the chapter.

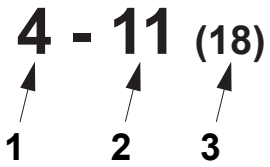

1 Chapter number
2 Consecutive page number
3 Total number of pages

Typographical Conventions

Controls on the operator panel, emergency stop devices, and program steps are printed in CAPITAL LETTERS.

Menu names, button names and other text displayed in software are printed in `Courier`.

Cross-references are underlined.

Symbols

Symbols used in illustrations.

	A pointer arrow indicates the position of an object.
	A zoom arrow indicates that an object view is enlarged. The arrow points towards the enlarged view of the object.
	A rotation movement arrow indicates rotational movement of an object. The arrow points in the direction of rotation.
	A straight movement arrow indicates movement of an object. The arrow points in the direction of movement.

Machine Introduction

Intended Use of the Equipment

The intended use of this Tetra Pak equipment is to attach drinking straws onto Tetra Pak Brik packages.

All other use is prohibited. Tetra Pak will not be held responsible for injury or damage if the equipment is used for any other purpose.

Manufacturer

This Tetra Pak equipment has been manufactured by

Tetra Pak Packaging Solutions AB
Ruben Rausings gata
SE-221 86 Lund
Sweden

Support and Feedback

If you encounter problems when operating this equipment or have other inquiries, comments, or suggestions for improvement, contact Tetra Pak.

Identification

CE Classification

This equipment complies with the basic health and safety regulations of the European Economic Area (EEA).

Machine Plate

The illustration below shows an example of the machine plate and its location on the equipment. The machine plate carries data needed when contacting Tetra Pak concerning this specific equipment.

Make sure that the equipment data in the front pages of this manual corresponds to the machine plate data and the machine specification.

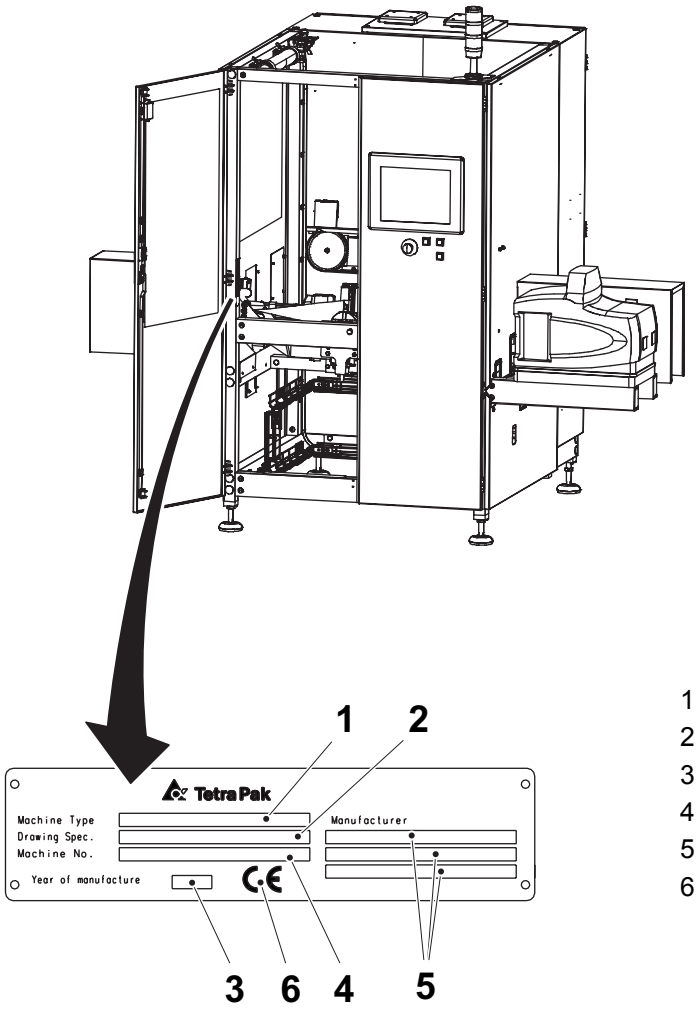

1 Machine type
2 Drawing specifications
3 Year of manufacture
4 Machine number
5 Manufactured by
6 CE

Orientation

The illustration below shows the orientation of the equipment. This orientation information will be used throughout this manual. The arrows indicate the flow of material.

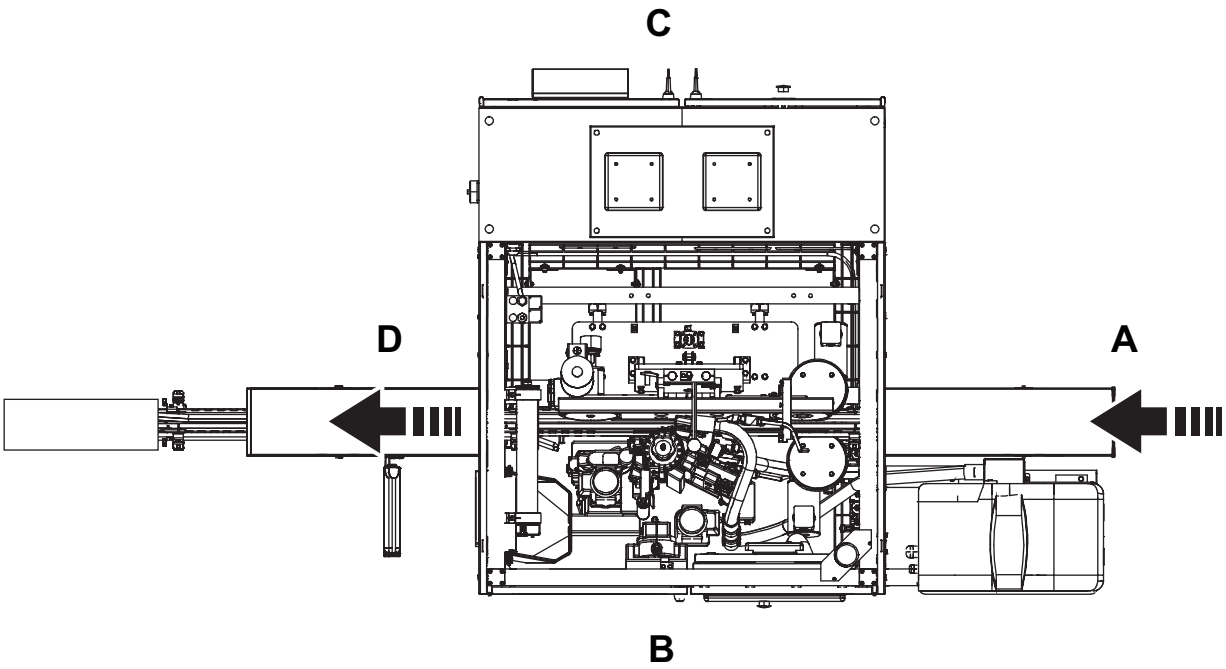

A Front
B Left-hand side
C Right-hand side
D Back

Hygiene

- Keep your hands clean.
- Always wear some type of hair protection (cap or hairnet) and clean clothes (preferably white).
- Do not wear a watch, ring, necklace, earrings, or any other exposed jewellery.

ii Safety Precautions

Safety Precaution Instructions

WARNING

Read all safety precaution instructions throughout this manual and on safety signs attached to this equipment.
Failure to follow all safety precaution instructions could result in death or serious injury.

Definition of Lockout Procedure

A lockout procedure is a procedure to put each necessary energy isolating device in its safe position to prevent the energisation of the equipment, such as when a maintenance procedure should be carried out.

A lockout is the use of a device, for example, a padlock, to make sure that an energy isolating device cannot be operated.

An energy isolating device is a mechanical device that physically prevents transmission or release of energy, such as a power supply disconnector.

Safety Messages Description . . . . . ii - 5
Personnel Requirements . . . . . ii - 6
Skilled Person . . . . . ii - 6
Instructed Person. . . . . ii - 6
Safety Signs . . . . . ii - 7
Locations of Safety Signs. . . . . ii - 9
Protective Devices. . . . . ii - 10
Emergency Stop. . . . . ii - 10
Emergency Stop Push-Buttons . . . . . ii - 11
Safeguards . . . . . ii - 12
Warning Lamp . . . . . ii - 14
Personal Protection. . . . . ii - 15
Noise Hazard . . . . . ii - 15
Entanglement Hazard . . . . . ii - 15
Ergonomic Hazard . . . . . ii - 15
Supply Systems. . . . . ii - 16
Power Supply . . . . . ii - 16
Residual Voltage . . . . . ii - 17
Electrical Cabinet. . . . . ii - 17
Socket Outlet . . . . . ii - 18
Air Supply . . . . . ii - 19

This page intentionally left blank

Safety Messages Description

A safety message is always accompanied by a safety alert symbol and a signal word.

The safety alert symbol is used to alert about potential personal injury hazards. To avoid hazards, obey all safety messages that follow this symbol.

The following safety alert symbols and signal words are used in this manual to inform the user of hazards.

DANGER	Danger indicates an imminently hazardous situation which, if not avoided, will result in death or serious injury.
WARNING	Warning indicates a potentially hazardous situation which, if not avoided, **could** result in **death or serious injury**.
CAUTION	Caution indicates a potentially hazardous situation which, if not avoided, **may** result in **minor or moderate injury.** It may also be used to alert against unsafe practices.
CAUTION	Caution without the safety alert symbol indicates a potentially hazardous situation which, if not avoided, **may** result in **property damage**.

Personnel Requirements

Note! Personnel includes all persons working on or near this equipment.

Only skilled or instructed persons are allowed to work with this equipment.

Skilled Person

A skilled person must have relevant education and experience to enable him or her to identify hazards, analyse risks, and avoid hazards which electricity, machinery, chemicals, other energies, and supply systems on this equipment can create.

Skilled persons must meet local regulations, such as certifications and qualifications for working with these energies and systems.

Instructed Person

An instructed person must be adequately advised or supervised by a skilled person. The skilled person enables the instructed person to identify hazards, analyse risks, and avoid hazards which electricity, machinery, chemicals, other energies, and supply systems on this equipment can create.

Safety Signs

WARNING

Damaged or missing safety signs increase the risk of death or serious injury.

Replace all missing or damaged safety signs immediately.

Safety signs are attached to the equipment. The table below lists all the signs that are used, and illustrations show their locations on the equipment. Each position number refers to two variants of a safety sign in the table, but only one is used on the equipment.

- Make sure that each safety sign is legible and in its correct position after installation and maintenance.
- Replace all missing or damaged safety signs immediately.

Pos.	ISO sign	ANSI sign
1		
	Hazardous voltage. Will shock, burn, or cause death. Follow lockout procedure before maintenance.	
2		
	Hazardous voltage. Can shock, burn, or cause death. Read Maintenance Manual (MM) before using this socket outlet.	
3		
	Risk of equipment damage. Do not let water into this area.	
4		
	Burn hazard. Trapped heat energy. Do not touch.	

Pos.	ISO sign	ANSI sign
5		
	Hot surface. Do not touch. Follow lockout procedure before maintenance.	
6		
	Moving part can crush and cut. Do not operate with guard removed. Follow lockout procedure before maintenance.	

Locations of Safety Signs

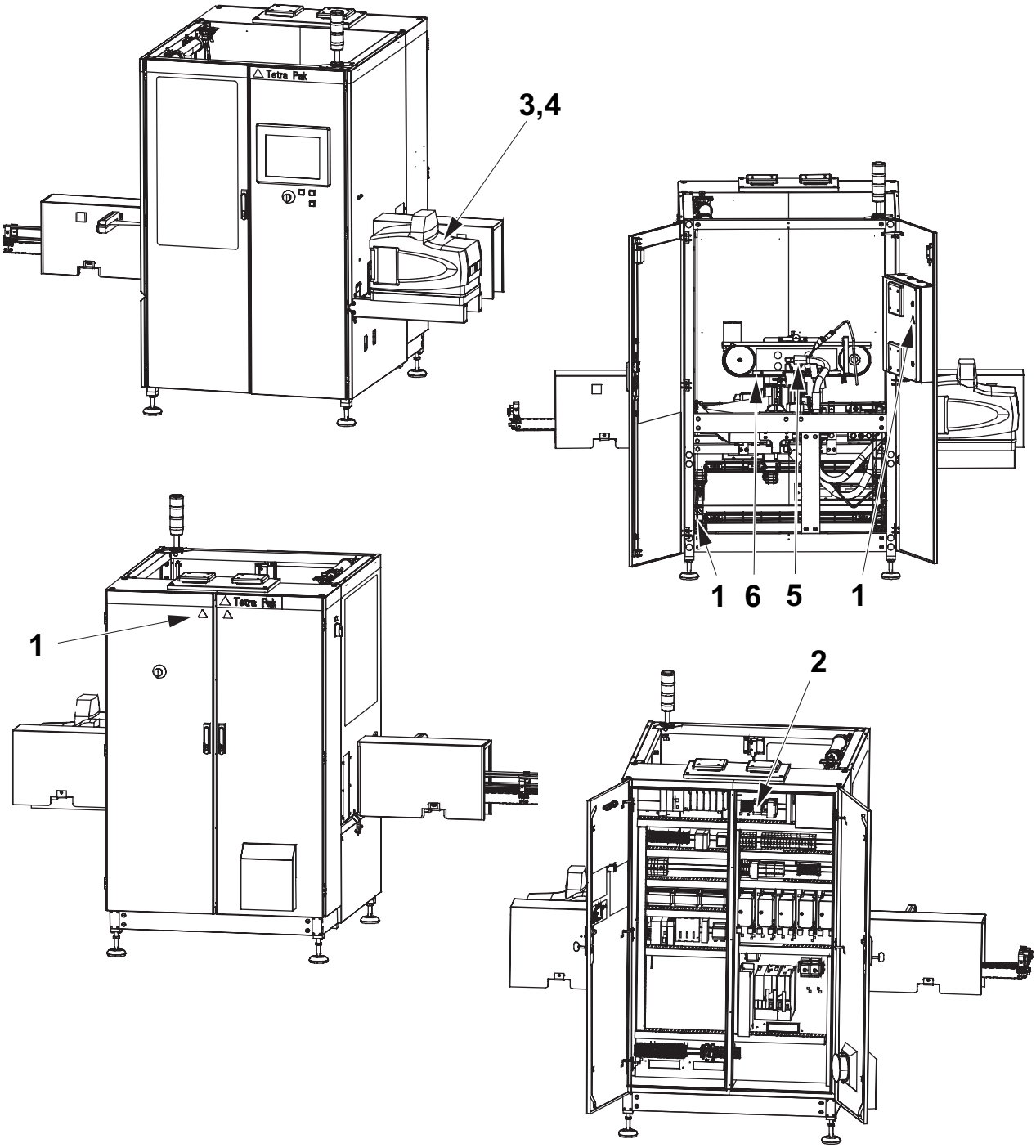

Protective Devices

WARNING

Hazardous zones.

Hazardous zones are safeguarded and provided with protective devices. Do not inch or run this equipment if any protective device is inoperative.

Change inoperative components of the safety system immediately.

WARNING

Hazardous voltage.

Hazardous voltage remains on this equipment after activating an EMERGENCY STOP or an interlocking device.

Emergency Stop

Emergency stop devices are used to stop this equipment immediately in an hazardous situation. Learn the positions of all emergency stop devices and how to use them.

Instructions for a normal production stop are included in the Stop chapter of the Operation Manual.

Emergency Stop Push-Buttons

Push two of the EMERGENCY STOP push-buttons to stop this equipment immediately.

The location of the EMERGENCY STOP push-button is shown by an arrow.

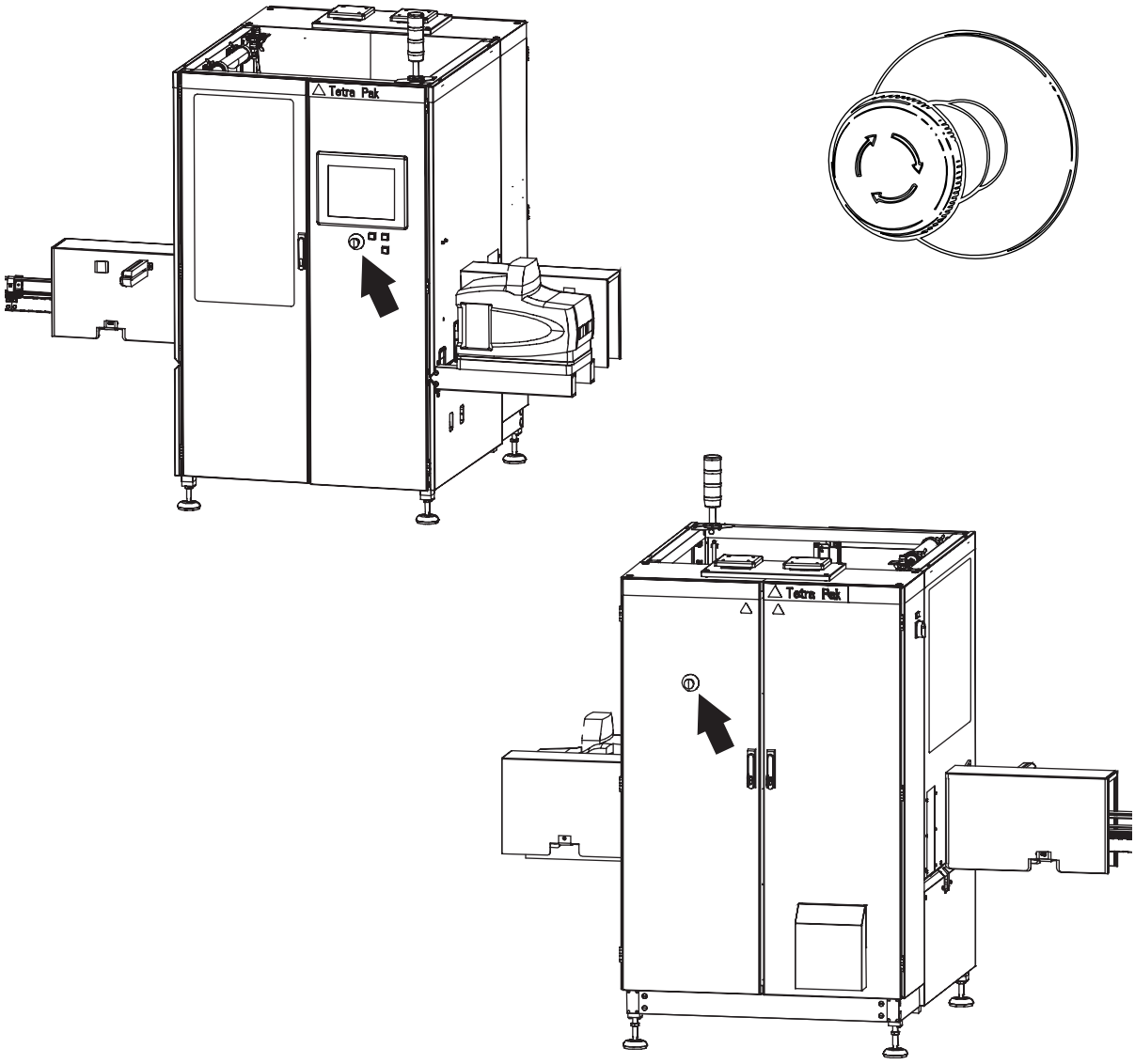

Safeguards

WARNING
Moving machinery.
Never defeat or bypass the interlocking devices.

Movable guards, for example, doors and covers leading to hazardous zones, are fitted with interlocking devices where required. These devices are usually electric safety switches that are parts of the safety system and must never be defeated, bypassed, or otherwise made inoperative.

WARNING
Corners and edges.
To prevent injury from corners and edges of open doors and covers, close them unless they must be open during such work. Be careful when working under an open door, cover or elsewhere below parts of the equipment with corners and edges.

CAUTION
Burn hazard.
Parts of this equipment may be hot after operation.

After installation and maintenance, and before this equipment is inched or run, check that all safeguards are in place and that they operate correctly.

(Cont'd)

(Cont'd)

CAUTION
Equipment damage.
Never stop this equipment by opening an interlocking guard.

The location of each interlocking guard is shown by an arrow.

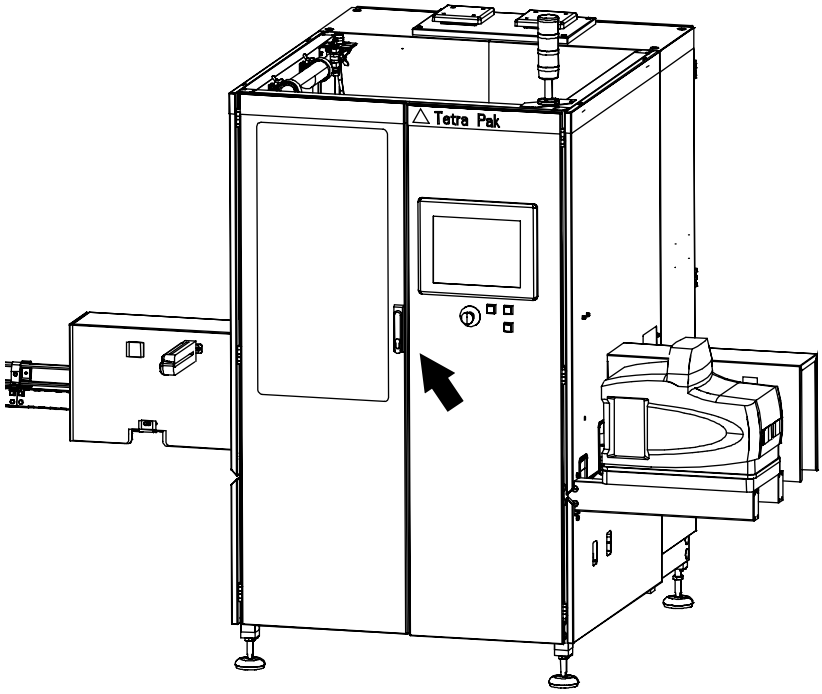

Warning Lamp

A warning lamp is a column of warning lights:

- A red light (1) indicates a hazardous condition. This is a situation that requires immediate action.
- A yellow light (2) indicates an abnormal or impending critical condition. This is a condition calling for action by the operator.
- A blue light (3) indicates that operator action is required.
- If the yellow and blue colours are flashing at the same time, this indicates a queue on the discharge side.

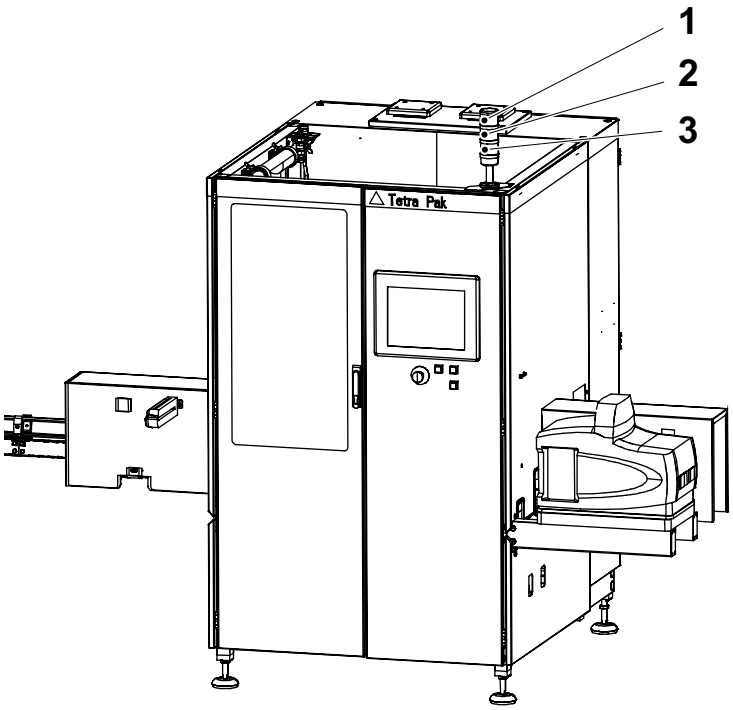

1 Red light
2 Yellow light
3 Blue light

Personal Protection

This section applies to all personnel at all times when this equipment is in operation.

Noise Hazard

WARNING

Hazardous noise.

Risk of impaired hearing.

Wear hearing protection whenever this equipment is in operation.

Entanglement Hazard

WARNING

Risk of entanglement.

Do not wear jewellery or loose clothing when working on or near this equipment. Long hair may not be loose.

Ergonomic Hazard

WARNING

Ergonomic hazard.

Handling materials and supplies, for the machine, can be repetitive manual work and involve ergonomic hazards with risk for personal injury.

Materials and supplies should be located. e.g. layout design, to avoid twisting the body or bending the back when placing them into the machine. It is recommended to use aids such as a lifting table or lifting device for these tasks.

Follow instructions for safe work practices.

Supply Systems

Power Supply

DANGER

Hazardous voltage and moving machinery.
The power supply disconnector must be turned off and secured with a lock before any maintenance.

Note! The key to the lock must be removed by the technician and retained in his/her possession until all work is completed.

Certain maintenance procedures may require power supply systems to be on. These exceptions are clearly stated in the Maintenance Manual.

The illustrations show the power supply disconnector and its location.

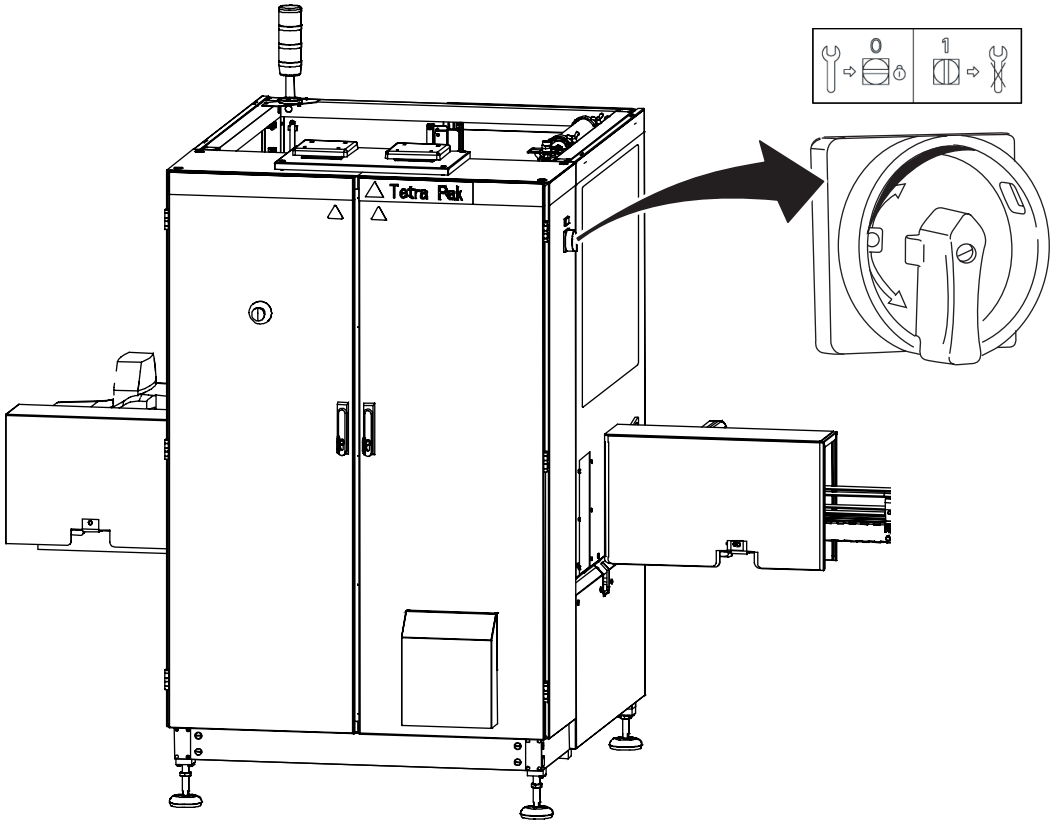

Residual Voltage

DANGER

Hazardous voltage.
Do not touch any terminals immediately after the power supply disconnector is turned off. Ensure that no residual voltage remains on the capacitors before touching. Wait five minutes. Failure to observe this information will cause death or serious injury.

After the power supply disconnector is turned off, residual voltage remains in the capacitor circuits.

Electrical Cabinet

DANGER

Hazardous voltage.
Will shock, burn, or cause death.
The power supply disconnector must be turned off and secured with a lock before maintenance inside the electrical cabinet.

Note! The key to the lock must be removed by the technician and retained in his/her possession until all work is completed.

Make sure that the electrical cabinet doors are closed after working inside the electrical cabinet. Doors with lock must be locked.

The location of each electrical cabinet is shown by an arrow.

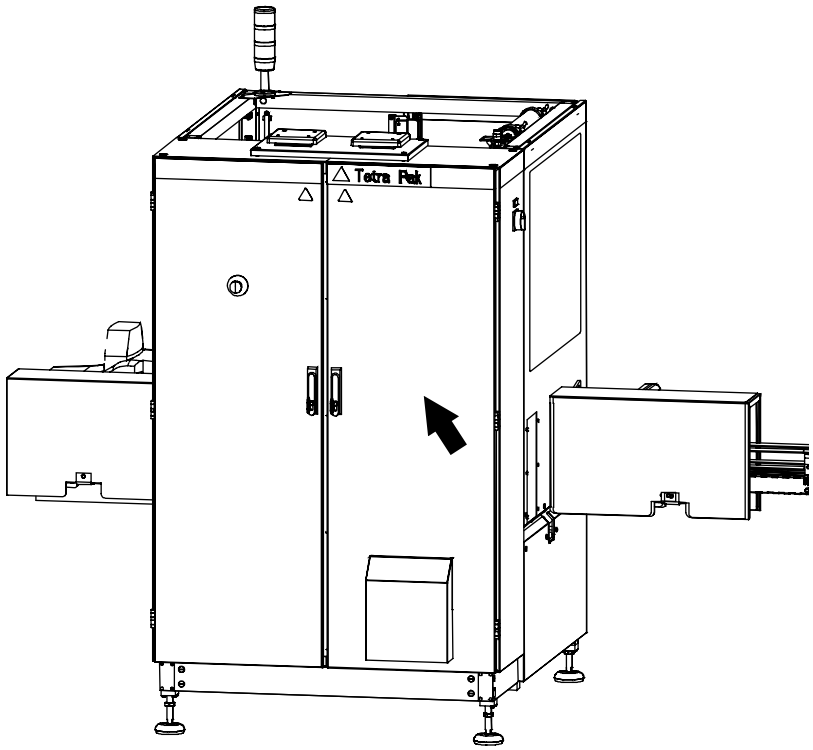

Socket Outlet

WARNING

Hazardous voltage.

Can shock, burn, or cause death. Read the Maintenance Manual before using this socket outlet.

The socket outlet (1) is connected to a residual current device (2) to protect users against electrical shock if there is an earth fault in the connected equipment. The residual current device shall be tested each time before the socket outlet is being used. See the MM for test procedure.

The illustrations show the socket outlet, the residual current device, and their location.

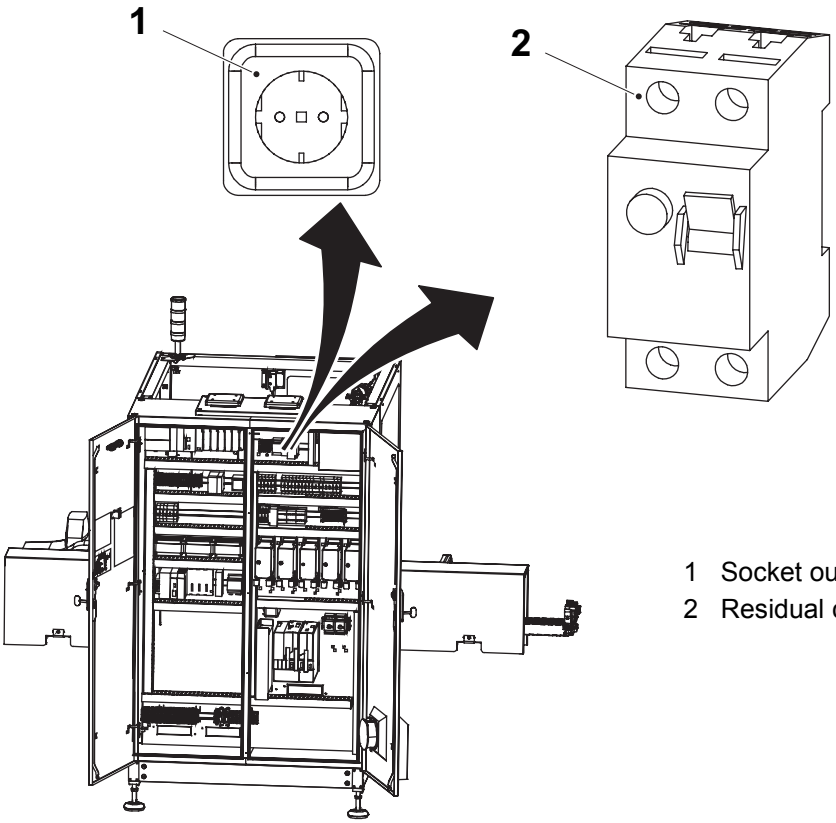

1 Socket outlet
2 Residual current device

Air Supply

WARNING

Compressed air and moving machinery.
Close the main air valve and lock it before any maintenance.

Note! The key to the lock must be removed by the technician and retained in his/her possession until all work is completed.

Certain maintenance procedures may require air supply systems to be on. These exceptions are clearly stated in the Maintenance Manual.

The illustrations show the main air valve (1), the lock (2), and their location.

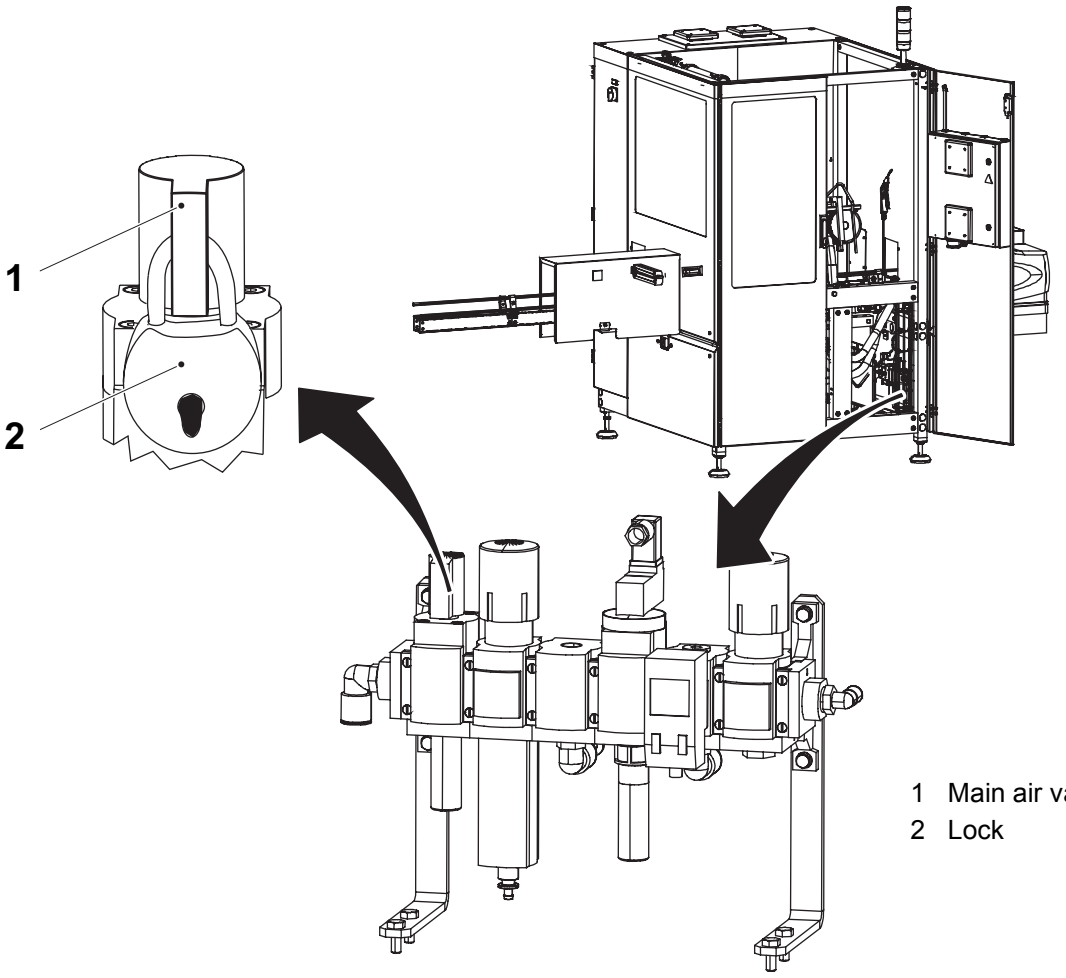

1 Main air valve
2 Lock

This page intentionally left blank

1 Technical Data and Drawings

About the Technical Data and Drawings Chapter

This chapter includes essential reference data and drawings used prior to and during the equipment installation.

1.1 Installation Drawings. . . . . 1 - 5
1.1.1 Side, Front, and Top Views . . . . . 1 - 5
1.1.2 Service and Operator Area . . . . . 1 - 6
1.1.3 Installation Layout . . . . . 1 - 7
1.1.3.1 Straight Through . . . . . 1 - 7
1.1.3.2 U-Discharge . . . . . 1 - 8
1.1.3.3 U-Infeed . . . . . 1 - 8
1.2 Mass (Weight) . . . . . 1 - 9
1.2.1 Centre of Gravity . . . . . 1 - 9
1.3 Utility Connection Data . . . . . 1 - 10
Valid only for TBA. . . . . 1 - 10
Valid only for TCA. . . . . 1 - 11
1.3.1 Conveyors. . . . . 1 - 12
1.3.2 Conveyor Lubrication . . . . . 1 - 12
1.4 Noise. . . . . 1 - 13
1.5 Mechanical Line Integration and Connection (Valid only for TCA) . . . . . 1 - 14
1.5.1 Upstream Connection to Tetra Pak A1 0900 TCA . . . . . 1 - 14
1.5.1.1 Short Interface . . . . . 1 - 15
1.5.1.2 Long Interface . . . . . 1 - 16
1.5.1.3 Hand Packing Line. . . . . 1 - 18

This page intentionally left blank

1.1 Installation Drawings

1.1.1 Side, Front, and Top Views

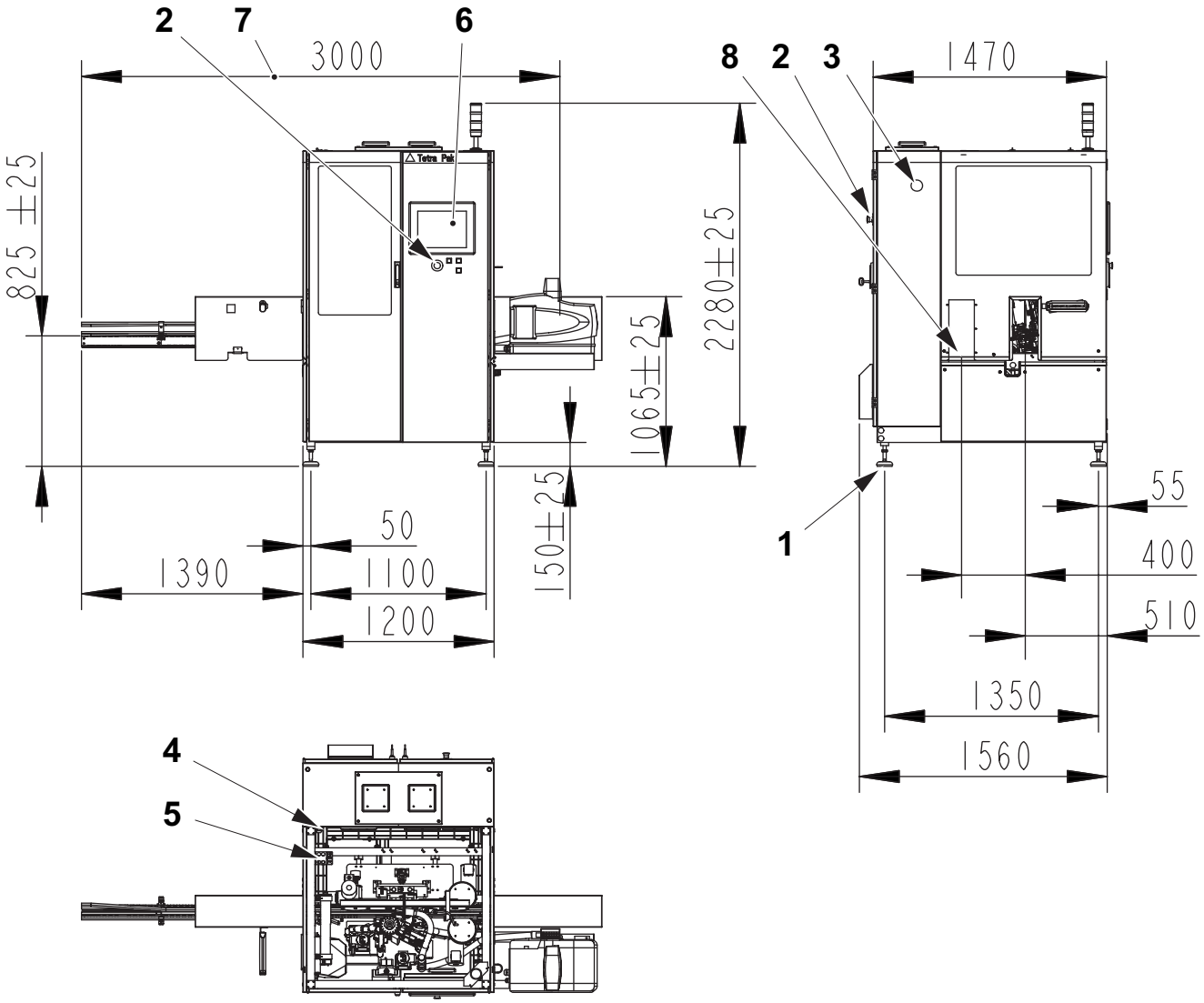

1 Adjustable footplate (four pieces)
2 Emergency stop button (two pieces)
3 Power supply disconnector
4 Cable entry for power supply. Cable length inside the machine is 0.3 m
5 Air supply connection
6 Control panel, TPOP
7 Conveyor length
8 Centre of return conveyor

1.1.2 Service and Operator Area

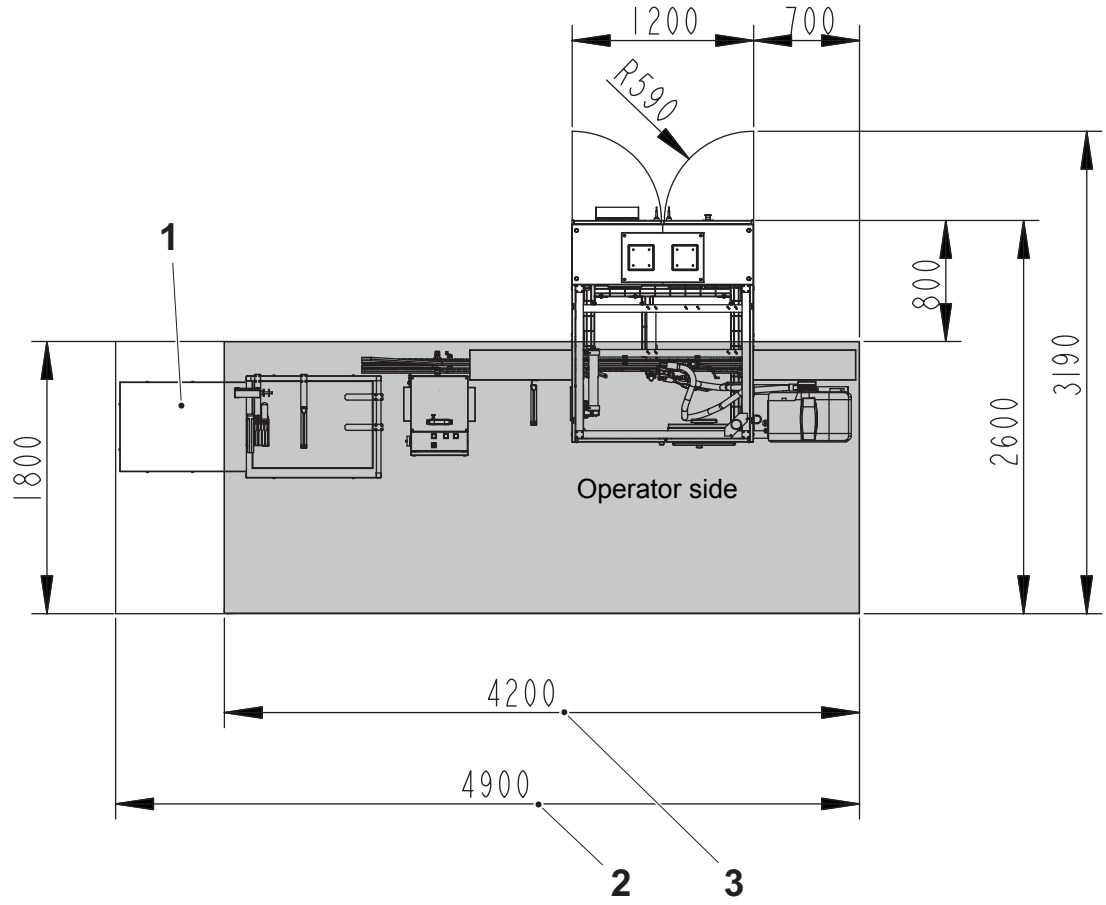

1 Double straw box (optional)
2 Measure with double straw box
3 Measure standard machine

1.1.3 Installation Layout

1.1.3.1 Straight Through

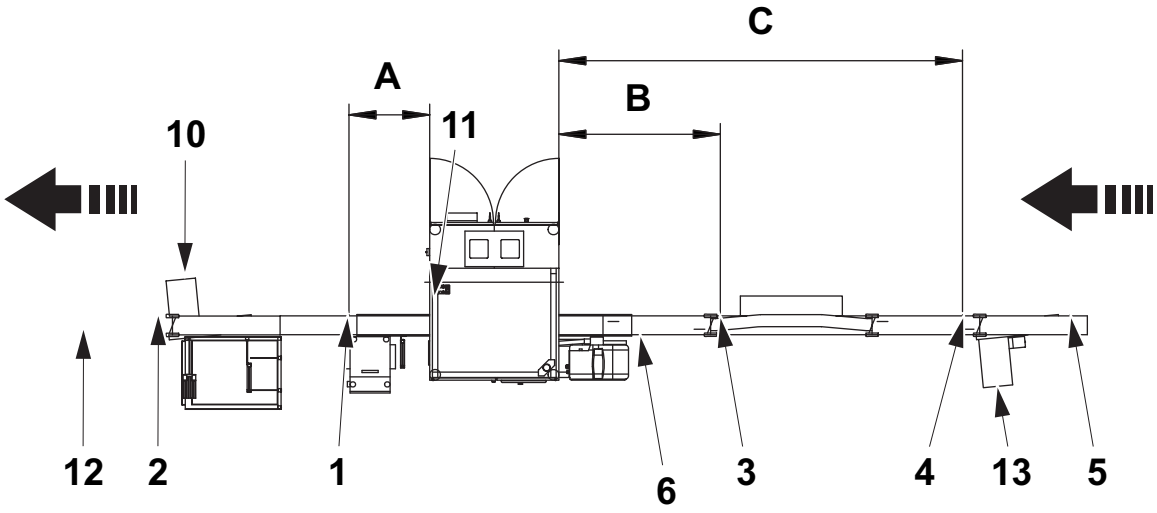

1.1.3.1.1 Sensors and Conveyors

Sensor			
Number	**Reference designation**	**Placement**	**Function**
1 (Only TBA)	V40B2070 V40B2072	A=0.5 m	Queue after machine
2	V90B2050 V90B2052	Place directly on downstream DE controlled conveyor	Queue discharge Restart photocell
3 (Only TBA)	V40B2040 V40B2042	B=1 to 1.5 m	Speed
4 (Only TBA)	V40B2030 V40B2032	C=2 to 2.5 m (C=B+1.5 m)	Overflow
5	V10B2020 V10B2022	Place directly on upstream DE controlled conveyor	Start
6 (Only TCA)	V40B2100 V40B2102	Fixed in the first part of main conveyer at the support roller	Queue Infeed

Conveyor				
Number	**Reference designation**	**Status**	**Description**	**Nominal speed, 50 Hz**
10 (Only TBA)	W40M1010	Mandatory	Main conveyor	39m/min, Speed (>15000 packages/hour) 25m/min, Flex (<15000 packages/hour)
11 (Only TCA)	W40M1010	Mandatory	Main conveyor	39m/min, Speed (>15000 packages/hour) 25m/min, Flex (<15000 packages/hour)
12	W90M1010	Prepared	Discharge conveyor	39m/min, Speed (>15000 packages/hour) 25m/min, Flex (<15000 packages/hour)
13	W10M1010	Prepared	Infeed conveyor	39m/min, Speed (>15000 packages/hour) 25m/min, Flex (<15000 packages/hour)

1.1.3.2 U-Discharge

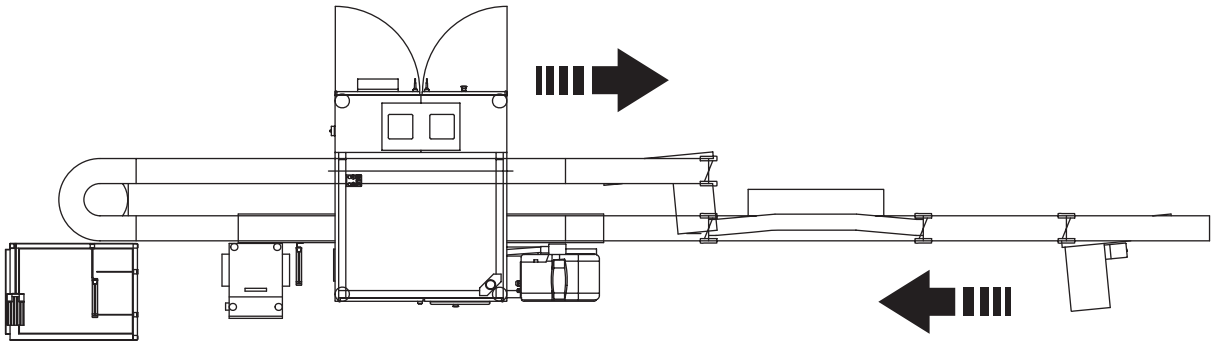

1.1.3.3 U-Infeed

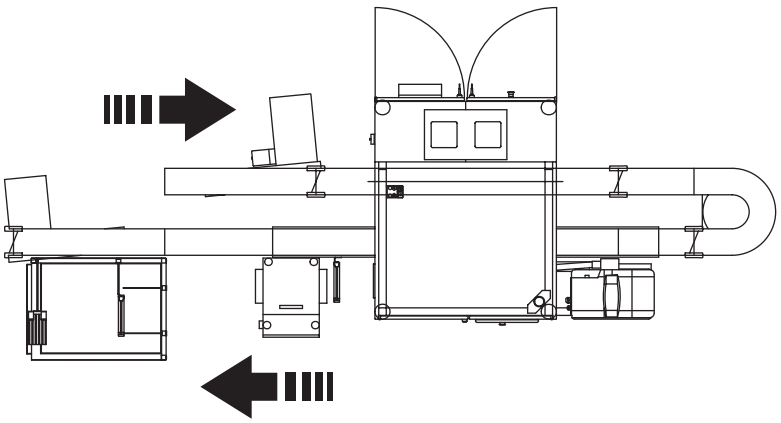

1.2 Mass (Weight)

The following table contains data needed for handling the uncrated machine:

Contents	Weight kg	Length mm	Width mm	Height mm
Straw Applicator 30	430	3720	1500	2350

1.2.1 Centre of Gravity

WARNING

Immediate danger to life.

The machine may tilt if the centre of gravity (1) or the fork lift points (2) are not observed. Failure to observe may result in immediate danger to life and/ or major damage to equipment.

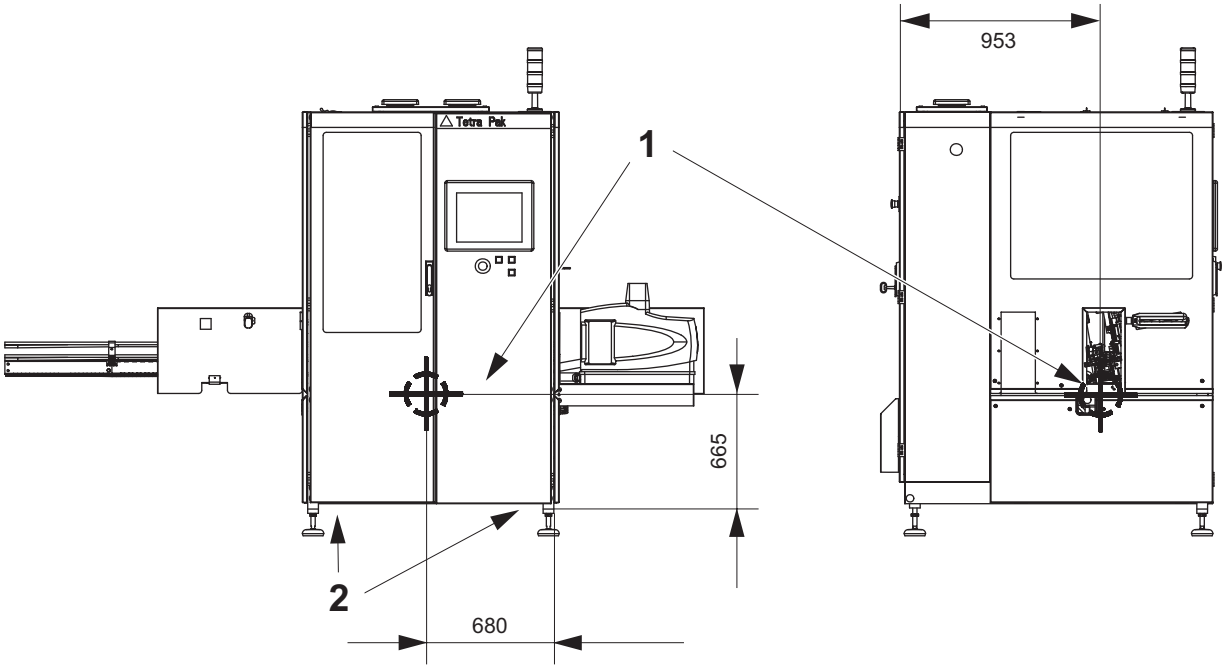

1 Centre of gravity
2 Fork lift points

1.3 Utility Connection Data

Valid only for TBA.

Capacity	4500 to 24000 packages/hour +25%
Electricity	
Phase	3N
Voltage	400/230 V AC
Frequency	50/60 Hz
Power consumption (8000 packages/hour)	< 2 kW
Power consumption (24000 packages/hour)	< 2.2 kW
Control system	Rockwell Automation
Compressed air	
Required pressure	0.69 to 1.0 MPa
Consumption (8000 packages/hour)	< 180 Nl / min
Consumption (24000 packages/hour)	< 385 Nl / min
Connection thread	G 1/4”
Hotmelt	
Recommended Hotmelt	Jowatherm Hotmelt 25605 National Instant-Pak 3200/Straw-Lok TP No: 90459-1042
Consumption	Approximately 40 g / 1000 straws
Machine conversion time	
Package and straw change, within same package family	Approximately 60 minutes
Package and straw change, within Quick Change map	Approximately 15 minutes
Conveyors	
Infeed	Package Conveyor 23
Discharge	Package Conveyor 23
Conveyor chain length	6 m
Optional Equipment	
Quick Change	
Photocell unit	2943553-0100

(Cont'd)

(Cont'd)

Valid only for TCA.

Capacity	14500 to 17500 packages/hour +25%
Electricity	
Phase	3N
Voltage	400/230 V AC
Frequency	50/60 Hz
Power consumption	< 1,5 kW
Control system	Rockwell Automation
Compressed air	
Required pressure	0.69 to 1.0 MPa
Consumption	< 325 Nl / min
Connection thread	G 1/4”
Hotmelt	
Recommended Hotmelt	Jowatherm Hotmelt 25030, TP No. 90458-1100 National Instant-Pak 3200/Straw-Lok TP No: 90459-1042
Consumption	Approximately 50 g / 1000 straws
Machine conversion time	
Package and straw change, within same package family	Approximately 60 minutes
Conveyors	
Infeed	Package Conveyor 24
Discharge	Package Conveyor 24
Optional Equipment	
Quick Change	
Photocell unit	2808068-0101

1.3.1 Conveyors

The drive unit must be **power supplied and controlled** from machine in order to fulfil the safety regulations.

Conveyor parts through the machine are included.

Note! The drive/end unit that drives the conveyor through the machine is not included. The unit must be of PC23 type without frequency control. Also see 1.1.3.1.1 Sensors and Conveyors.

The machine must always be connected to at least 1 m of uncut conveyor due to the mounting of the tunnels.

1.3.2 Conveyor Lubrication

This section is **only** valid for Tetra Pak conveyors in the production line, **not** for conveyors inside the machine.

- Conveyor lubrication must be used.
- The conveyor shall not be longer than ~ 15 m.

Note! In order to have optimized line performance it is **very** important that the conveyor lubrication is set in accordance with the conveyor lubrication technical manual (TeM).

1.4 Noise

Values declared in accordance with ISO 4871			
Symbol	Definition	Declared value	Notes
L_{pA} K_{WA}	Emission sound pressure level, operator position Uncertainty factor	73.5 dB(A) 2.5 dB(A)	Values determined using the basic standard ISO 11204 (Survey method)

1.5 Mechanical Line Integration and Connection (Valid only for TCA)

1.5.1 Upstream Connection to Tetra Pak A1 0900 TCA

Note! These layouts are only examples. Other setups may occur. It is required to use line communications between the machines.

1.5.1.1 Short Interface

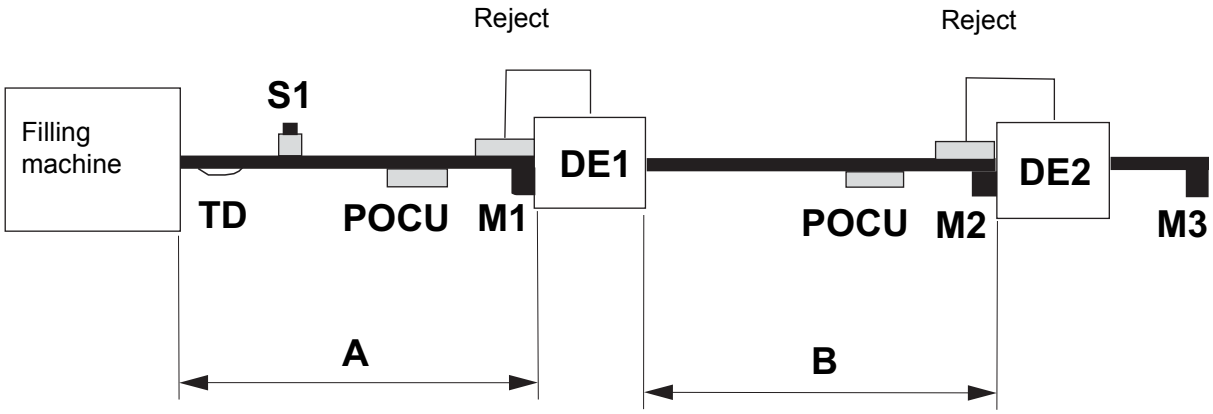

Equipment	Note
Filling machine	Tetra Pak A1 0900 TCA, TFA
TD	TCA only, Turning device is located directly after filling machine outfeed at straight conveyor.
S1	Optional stop button. Can be used to manually stop the filling machine e.g. DE equipment and filling machine is separated by a wall.
POCU	TCA only, Package Orientation Control Unit, shall be placed close to DE infeed at straight conveyor.
Reject	Reject gate are to be located at the end of previous machine outfeed conveyor to prevent packages to enter next DE infeed at stops.
M1	The filling machine's discharge conveyor, powered and controlled by filling machine.
M2	DE1 outfeed conveyor, powered and controlled by DE1.
M3	Optional DE 2 discharge conveyor.
Distance, Short Interface	
A	ǂ 3 m of straight conveyor; This is the distance required to fit TD, POCU & Reject gate. **Note!** UC24 installation guidelines such as maximum inclination angel & conveyor length must not be exceeded.
B	ǂ 4 m; This is the distance required not to exceed maximum inclination angle for UC24. **Note!** UC24 installation guidelines such as maximum inclination angel & conveyor length must not be exceeded.

1.5.1.2 Long Interface

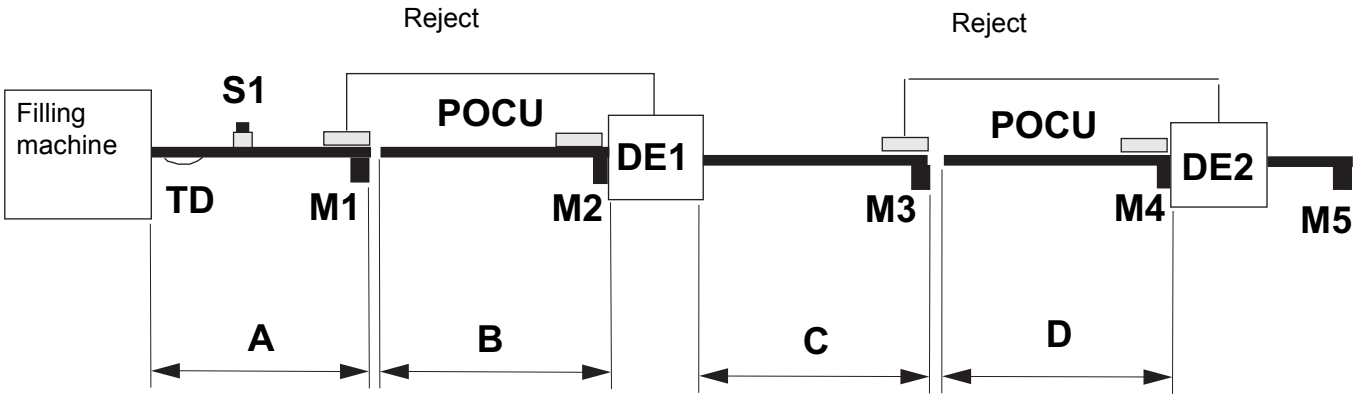

Equipment	Note
Filling machine	Tetra Pak A1 0900 TCA
TD	TCA only, Turning device is located directly after filling machine outfeed at straight conveyor.
S1	Optional stop button. Can be used to manually stop the filling machine e.g. DE equipment and filling machine is separated by a wall.
POCU	TCA only, Package Orientation Control Unit, are to be located close to DE infeed.
Reject	Reject gate are to be located at the end of previous machine discharged conveyor to prevent packages to enter next DE infeed at stops.
M1	The filling machine's outfeed conveyor, powered and controlled by filling machine.
M2	Optional conveyor, powered and controlled by DE1.
M3	DE1 outfeed conveyor, powered and controlled by DE1.
M4	Optional conveyor, powered and controlled by DE2.
M5	Optional DE 2 discharged conveyor.
Distance, Long Interface	
A	ǂ 2 m; This is the distance required to fit TD & reject gate. **Note!** UC24 installation guidelines such as maximum inclination angel & conveyor length must not be exceeded. A+B must exceed 3m.
B	This may be extended up to the maximum distance the drive & end unit can pul.l
C	This may be extended up to the maximum distance the drive & end unit can pull.

D	ǂ 4 m This is the distance required not to exceed maximum inclination angle for UC24. Depends on the difference of DE1 outfeed height and DE2 infeed height, **Note!** UC24 installation guidelines such as maximum inclination angle and conveyor length must not be exceeded.

1.5.1.3 Hand Packing Line

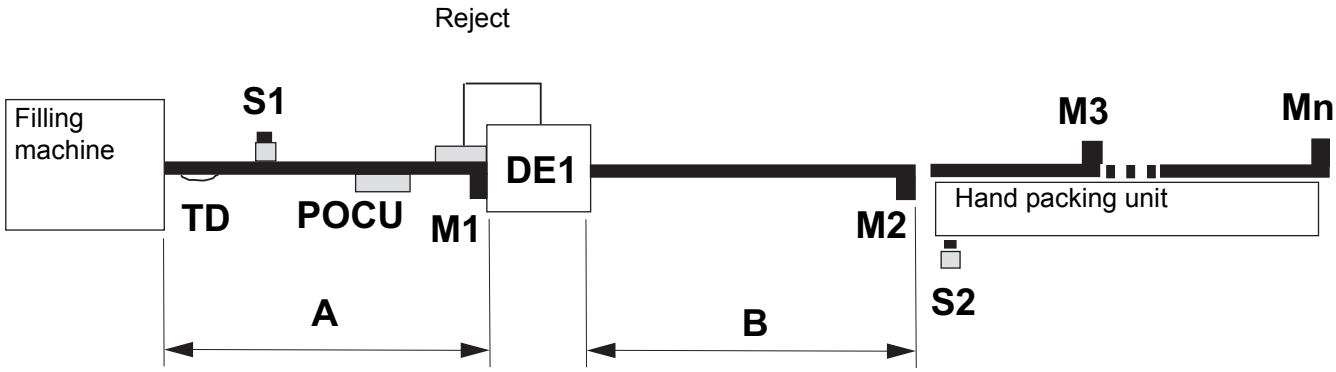

Equipment	Note
Filling Machine	Tetra Pak A1 0900 TCA
TD	Turning device is located directly after filling machine outfeed.
S1	Optional stop button. Can be used to manually stop the filling machine e.g. DE equipment and filling machine are separated by a wall.
POCU	Package Orientation Control Unit, must be placed close to DE infeed.
Reject	Reject gate are to be located at the end of previous machine discharge conveyor to prevent packages to enter next DE infeed at stops.
M1	The filling machine's outfeed conveyor, powered and controlled by filling machine.
M2	Optional outfeed conveyor, powered and controlled by SA30.
M3-Mn	Hand packing conveyors, powered and controlled by Hand Packing unit.
S2	Hand packing unit ready button, connected to filling machine to secure controlled stop.
Distance, Short Interface	
A	ǂ 3 m; This is the distance required to fit TD, POCU & Reject gate. **Note!** UC24 installation guidelines such as maximum inclination angle and conveyor length must not be exceeded.
B	This may be extended up to the maximum distance the drive and end unit can pull

2 Preparation

About the Preparation Chapter

This chapter contains preparatory requirements and information for the entire installation process, including requirements for utilities, space, tools and other required installation equipment, and specific construction details.

In order to obtain the best possible working conditions for the machine, it is necessary to follow our recommended data according to section 1 Technical Data and Drawings.

2.1 Requirements . . . . . 2 - 5

2.1.1 Space Requirements . . . . . 2 - 5

2.1.2 Floor . . . . . 2 - 5

2.1.3 Site Conditions . . . . . 2 - 6

2.1.4 Connections . . . . . 2 - 6

2.2 Special Tools and Auxiliary Equipment . . . . . 2 - 7

2.2.1 Equipment for Unpacking . . . . . 2 - 7

2.2.2 Equipment for Lifting and Moving . . . . . 2 - 7

2.2.3 Equipment for Levelling . . . . . 2 - 7

This page intentionally left blank

2.1 Requirements

2.1.1 Space Requirements

The space requirements for this machine are given in the installation drawings shown in chapter 1.1 Installation Drawings.

2.1.2 Floor

To obtain proper production, the machine must stand stably on the floor. It is important that the floor is in a good condition and has an angle of inclination of less than 4°.

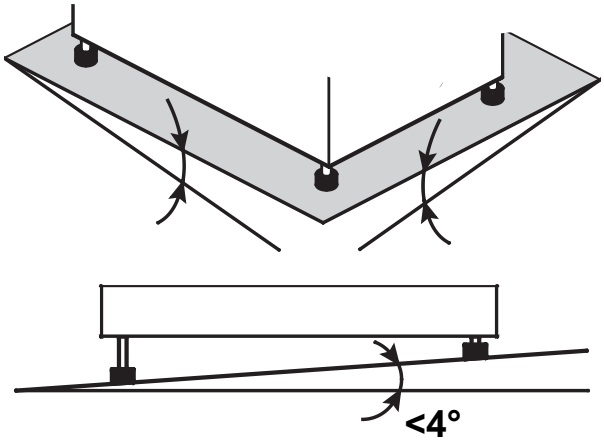

2.1.3 Site Conditions

Note! High humidity may damage components in the electrical cabinet!

The site should be prepared so that

- sufficient cooling is provided to ensure a working temperature below 50°C for the machine
- the ventilation can draw off any hotmelt vapours

CAUTION

Risk of minor personal injury.

If exposed to hotmelt vapours for a long time, minor personal injury may occur.

It is **required** that the site fulfil the following specification:

a) Conveyor lubrication should be used according to Tetra Pak standards.

It is recommended that the site fulfil the following specifications:

a) The site must accommodate transport of straws from storage to the machine.
b) The site should have sufficient lighting for work purposes.
c) Hot and cold water should be available for cleaning the machine.

2.1.4 Connections

The site must be prepared with the following supplies

- electrical supply: 400 V, 16 A, 3/N/PE
- compressed air supply: 0.69 to 1.0 MPa (6.3 to 10 bar)

2.2 Special Tools and Auxiliary Equipment

WARNING
Risk of personal injury.
Follow the recommendations below and avoid injury.

2.2.1 Equipment for Unpacking

The following equipment is needed when unpacking the machine.

Equipment	Capacity minimum	Quantity
Forklift	1000 kg	1
Hammer		1
Screwdriver		1
Adjustable wrench		1

2.2.2 Equipment for Lifting and Moving

The following equipment is recommended when lifting and moving the machine:

Equipment	Capacity minimum	Quantity
Forklift	500 kg	1

2.2.3 Equipment for Levelling

Use a spirit level when levelling the machine, see 4.3 Levelling.

This page intentionally left blank

3 Moving and Unpacking the Equipment

About the Moving and Unpacking the Equipment Chapter

This chapter contains information about the safest way to transport, store, and unpack the crated equipment prior to installation.

3.1 Crate Handling . . . . . 3 - 5
3.1.1 Crate Data . . . . . 3 - 5
3.1.2 Lifting and Unloading . . . . . 3 - 5
3.1.2.1 Centre of Gravity, Crate . . . . . 3 - 5
3.1.2.2 Correct Fork Lift Points . . . . . 3 - 6
3.1.3 Moving the Crated Equipment . . . . . 3 - 7
3.1.4 Storing the Crated Equipment . . . . . 3 - 8
3.2 Unpacking Sequence . . . . . 3 - 9
3.2.1 Inspection . . . . . 3 - 9
3.2.2 Opening the Crate . . . . . 3 - 9
3.2.3 Unpacking the Crate . . . . . 3 - 10
3.2.4 Inspection Documentation . . . . . 3 - 10
3.2.4.1 Transport Damage Report . . . . . 3 - 11
3.2.5 Disposing of Reusable Materials and Waste . . . 3 - 12

This page intentionally left blank

3.1 Crate Handling

3.1.1 Crate Data

The following table contains data needed for handling the crated machine:

Contents	Weight	Length	Width	Height
Crated machine (gross weight)	850 kg	3000 mm	1900 mm	2260 mm

3.1.2 Lifting and Unloading

See 2.2 Special Tools and Auxiliary Equipment before lifting and unloading.

3.1.2.1 Centre of Gravity, Crate

The illustration below shows how the centre of gravity is indicated on a Tetra Pak crate.

WARNING

Risk of serious personal injury.

The purpose of the illustration below is to give an example of how the centre of gravity is indicated on a crate! For information on the location of the centre of gravity for a specific crate, see the actual marks on the crate.

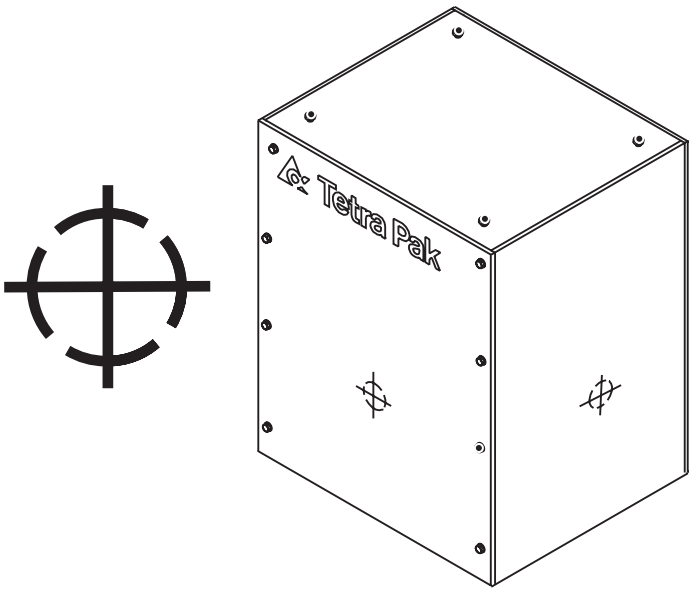

3.1.2.2 Correct Fork Lift Points

WARNING

Immediate danger to life!

The crate may tilt if the centre of gravity or the fork lift points are not observed. Failure to observe may result in immediate danger to life and/or major damage to equipment.

Insert the forks so that the centre of gravity (1) is placed between the forks. The forks should be set as wide apart as possible. Also see section 4.1 Transporting the Machine

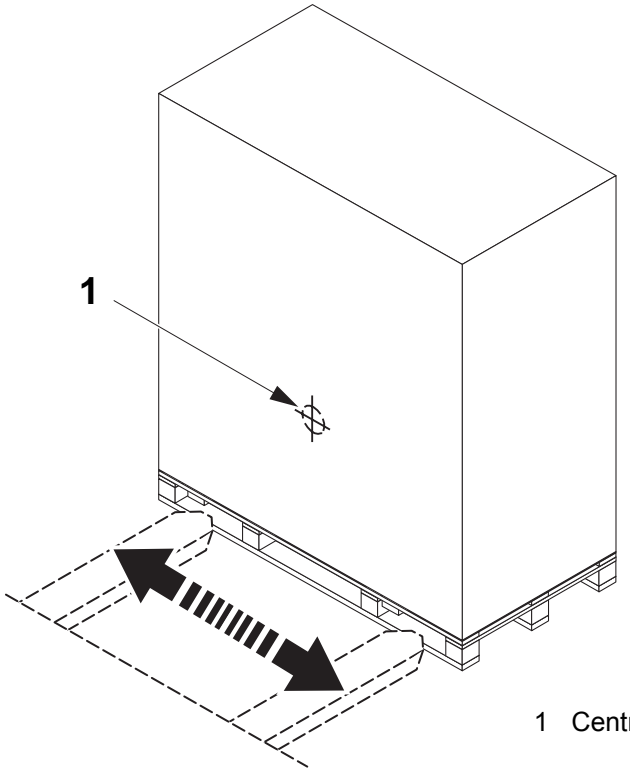

1 Centre of gravity

3.1.3 Moving the Crated Equipment

a) Lift the crate, see the section 3.1.2 Lifting and Unloading. Lift only enough to clear the floor.

b) Make sure that the crate remains stable on the lifting equipment.

CAUTION

Move the crate slowly and gently.

c) Move the crate to its destination.

d) Look through the customs inspection panel to see in what way the contents are facing. Position the crate to face the most convenient direction.

e) Lower the crate gently to the floor, leaving enough room around it for easy access to all sides.

f) Make sure that the crate is firmly supported. Put blocks or plates under it if necessary.

g) Remove the lifting equipment.

3.1.4 Storing the Crated Equipment

Contents	Recommended storage temperature	Recommended storage humidity	Special recommendations
SA 30	-20 °C to +70 °C	<80%	Keep dry to prevent condensation and corrosion on connections inside the electrical cabinet.
Drinking straws	+10 °C to +30 °C	65%	The boxes should be stored indoors under dry conditions and lying on the flat side. Never put a box directly on the floor, and never stack pallets on the top of each other.
Hotmelt	0 °C to +10 °C	Up to 55%	The hotmelt can be stored for a maximum of one year. Avoid dust and damp in the storage facility. The first box in should be the first box out.

3.2 Unpacking Sequence

3.2.1 Inspection

Inspect the crate for signs of damage. If any signs of damage is found, follow the appropriate local regulations, and contact the transportation company.

3.2.2 Opening the Crate

Plywood crate:

To open the crate, perform the following steps:

a) Remove the screws (1) holding the lid (2).

b) Remove the lid.

c) Remove the lower screws (3) holding the front (4).

d) Remove the screws (5) holding the cross beam (6).

e) Undo the clips on each side of the front, but do not undo the upper right and left clips yet.

WARNING

Risk of personal injury.

When undoing the top locking devices, the front as well as loose machine parts may fall out.

f) Undo the upper right and left clips and then carefully remove the front.

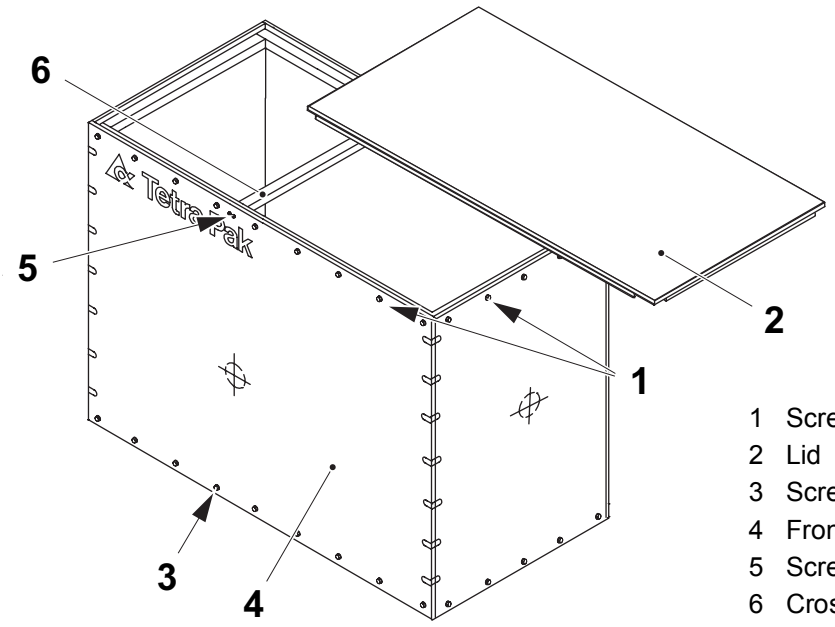

1 Screw
2 Lid
3 Screw
4 Front
5 Screw
6 Cross beam

3.2.3 Unpacking the Crate

WARNING

Immediate danger to life.

The machine may tilt if the centre of gravity or the fork lift points is not observed. Failure to observe may result in immediate danger to life and/or major damage to equipment.

WARNING

Remove the machine from the crate

When lifting the machine using a fork lift truck, use the fork lift positions as shown in 3.1.2.2 Correct Fork Lift Points.

Make sure that the equipment is inspected when unpacked.

3.2.4 Inspection Documentation

a) Use the packing list to check that nothing is missing.

b) Inspect the equipment for damage.

c) Open the machine document box and check that the documentation corresponds with the machine and the machine number.

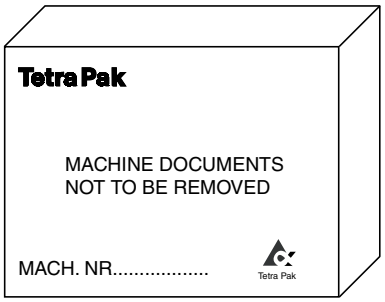

3.2.4.1 Transport Damage Report

Enclosed you will find a Transport Damage Report. Fill in the report as soon as the machine is uncrated and send it to the address below. If any Tetra Pak equipment is damaged when opening the crate, take pictures to illustrate the damage and enclose the photographs.

The report and the pictures (if any) should be sent to:

Tetra Pak Packaging Solutions AB
Quality Assurance
Ruben Rausings gata
SE-221 86 Lund
Sweden

Note! The Transport Damage Report must be filled in and returned even if there is no damage to report.

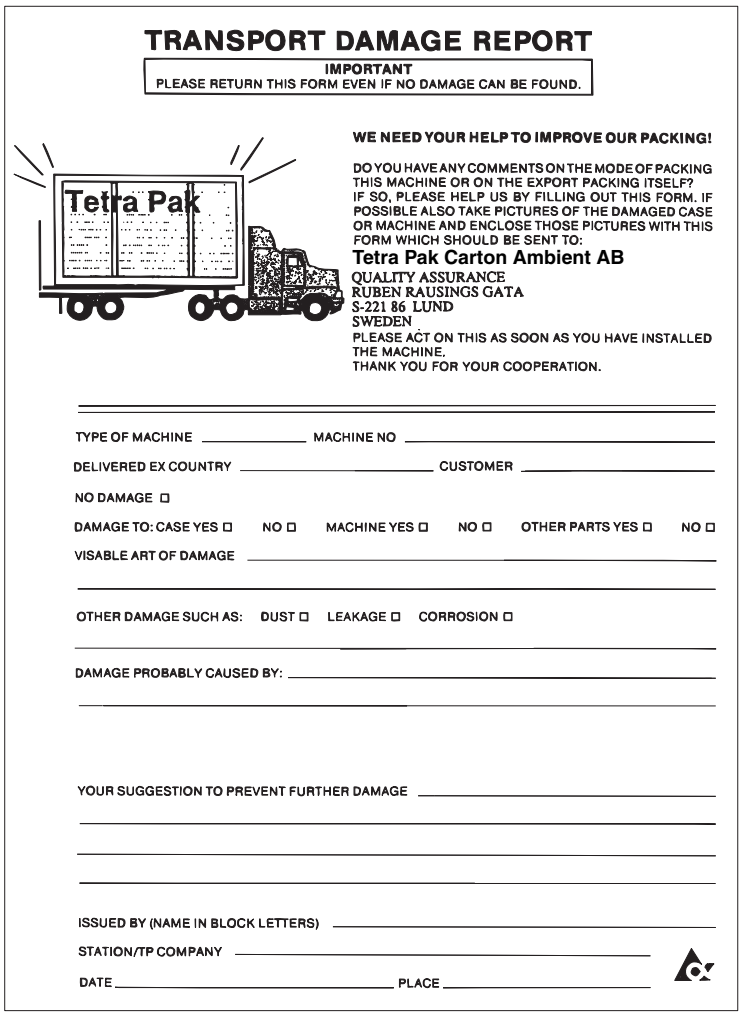

TRANSPORT DAMAGE REPORT

IMPORTANT
PLEASE RETURN THIS FORM EVEN IF NO DAMAGE CAN BE FOUND.

WE NEED YOUR HELP TO IMPROVE OUR PACKING!

DO YOU HAVE ANY COMMENTS ON THE MODE OF PACKING THIS MACHINE OR ON THE EXPORT PACKING ITSELF? IF SO, PLEASE HELP US BY FILLING OUT THIS FORM. IF POSSIBLE ALSO TAKE PICTURES OF THE DAMAGED CASE OR MACHINE AND ENCLOSE THOSE PICTURES WITH THIS FORM WHICH SHOULD BE SENT TO:

Tetra Pak Carton Ambient AB
QUALITY ASSURANCE
RUBEN RAUSINGS GATA
S-221 86 LUND
SWEDEN

PLEASE ACT ON THIS AS SOON AS YOU HAVE INSTALLED THE MACHINE.
THANK YOU FOR YOUR COOPERATION.

TYPE OF MACHINE _____ MACHINE NO _____

DELIVERED EX COUNTRY _____ CUSTOMER _____

NO DAMAGE ☐

DAMAGE TO: CASE YES ☐ NO ☐ MACHINE YES ☐ NO ☐ OTHER PARTS YES ☐ NO ☐

VISABLE ART OF DAMAGE _____

OTHER DAMAGE SUCH AS: DUST ☐ LEAKAGE ☐ CORROSION ☐

DAMAGE PROBABLY CAUSED BY: _____

YOUR SUGGESTION TO PREVENT FURTHER DAMAGE _____

ISSUED BY (NAME IN BLOCK LETTERS) _____

STATION/TP COMPANY _____

DATE _____ PLACE _____

3.2.5 Disposing of Reusable Materials and Waste

Reusable Packing Materials and Structures
Reusable packing materials and structures should be collected and re-used in accordance with local regulations.

Non Reusable Packing Materials and Structures
Non reusable packing materials and structures should be collected and disposed of in accordance with local regulations.

4 Positioning, Assembly, and Connections

About the Positioning, Assembly, and Connections Chapter

All procedures in this chapter are related to the uncrated equipment, including the following main phases of the installation process:

- transporting the uncrated equipment
- positioning the equipment
- assembling the equipment
- connecting the equipment to supply systems and to other equipment

4.1 Transporting the Machine . . . . . 4 - 5

4.2 Positioning . . . . . 4 - 6

4.3 Levelling . . . . . 4 - 7

4.4 Assembly . . . . . 4 - 8

4.4.1 Conveyors . . . . . 4 - 8

4.4.1-1 Infeed Conveyor . . . . . 4 - 8

4.4.1-2 Discharge Conveyor . . . . . 4 - 9

4.4.2 Chain . . . . . 4 - 11

4.4.3 Photocells . . . . . 4 - 12

4.4.4 Tunnels . . . . . 4 - 12

4.5 Connections . . . . . 4 - 13

4.5.1 Compressed Air . . . . . 4 - 13

4.5.1.1 Air Supply . . . . . 4 - 13

4.5.2 Electricity . . . . . 4 - 13

4.5.2.1 Main Supply Cable . . . . . 4 - 13

This page intentionally left blank

4.1 Transporting the Machine

DANGER

Immediate danger to life.

The machine may tilt if not observing the centre of gravity or the fork lift points. Failure to observe may result in immediate danger to life and major damage to equipment.

Use the correct lifting equipment. See the section 2.2.2 Equipment for Lifting and Moving.

a) Check that the machine can be transported to the assembly site without any problems regarding ceiling height, doors, passages.

b) Remove the machine from the crate. Lift only enough to clear the crate. When lifting the machine using a fork lift truck, use the fork lift positions as shown in 1.2.3 Fork Lift Position.

c) Manoeuvre the machine out of the crate.

d) Lower the machine feet approximately 85 mm to facilitate the levelling later on.

4.2 Positioning

Check that the machine can be transported to the final site without any problems with the ceiling height, doors, passages, and so on.

WARNING

Immediate danger to life.

The machine may tilt if the centre of gravity or the fork lift points are not observed. Failure to observe these may result in immediate danger to life and/or major damage to equipment.

Make sure that the machine can be lifted and moved in accordance with section 3.1.2 Lifting and Unloading and 4.1 Transporting the Machine.

4.3 Levelling

Make sure that the machine is level using, for example, a spirit level. Place the spirit level on the cross beams as well as on the longitudinal beams as shown in the illustration below. If necessary, adjust the level by turning the machine feet.

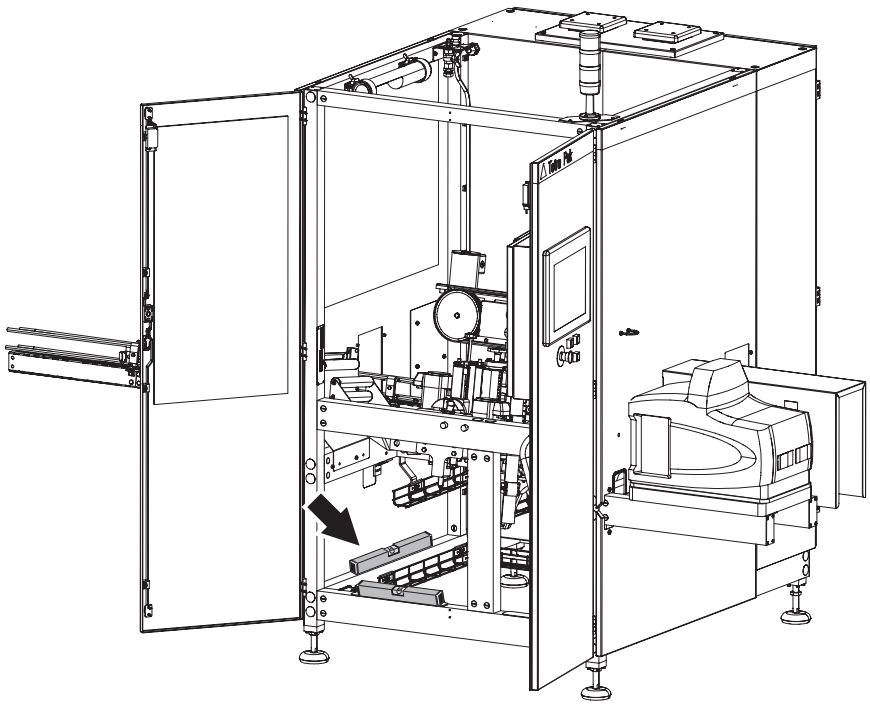

4.4 Assembly

4.4.1 Conveyors

CAUTION
Risk of damage to equipment.
To comply with safety demands, the chain drive motor has to be supplied and controlled according to the Electrical Manual (EM), see Connection diagrams.

Note! The drive motor for the chain is not part of the machine.

4.4.1-1 Infeed Conveyor

Assemble the infeed conveyor (1) to the conveyor section (2). Assemble holders and rails. See the documentation belonging to the infeed conveyor.

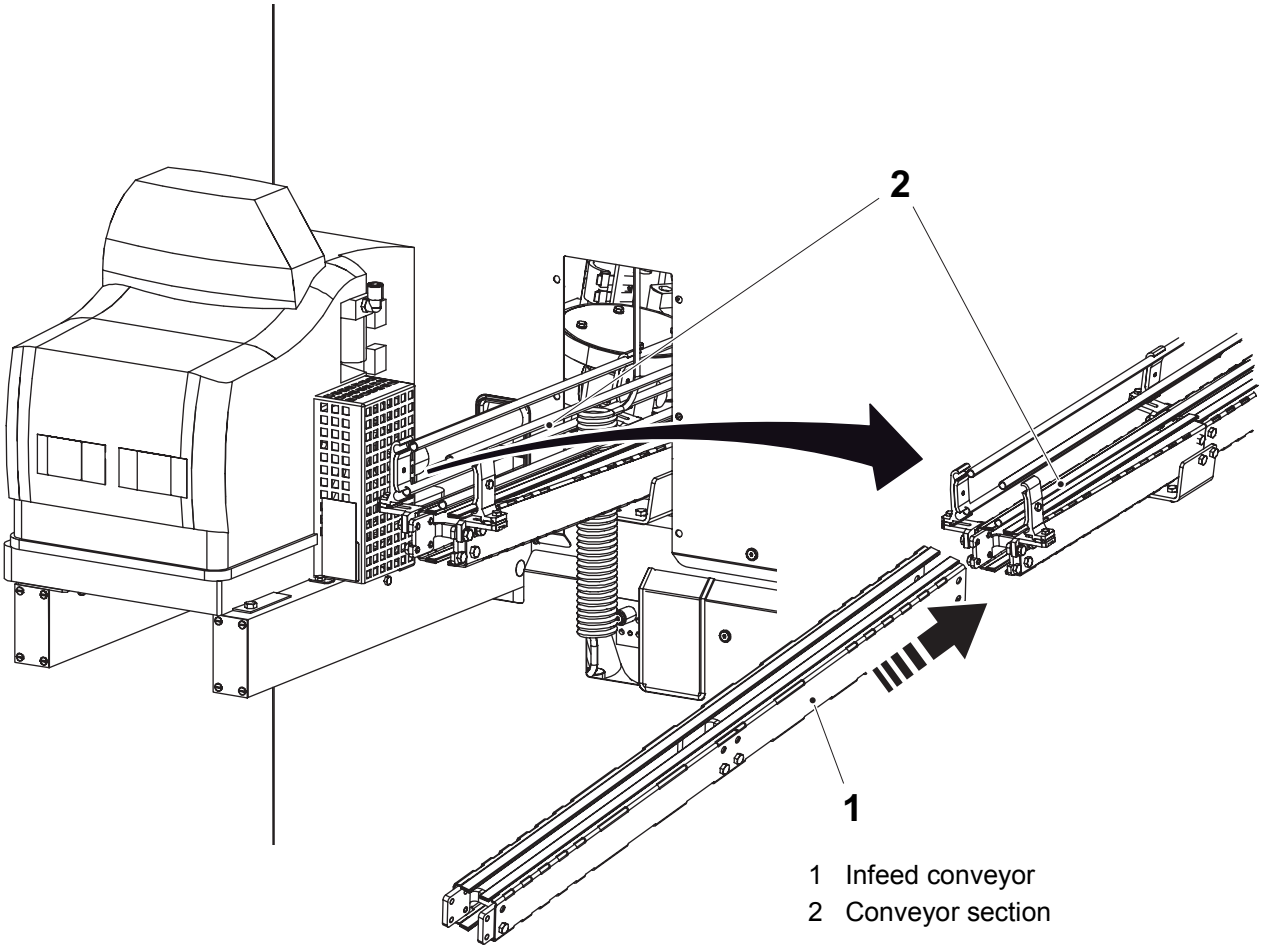

1 Infeed conveyor
2 Conveyor section

(Cont'd)

4.4.1-2 Discharge Conveyor

a) Assemble the discharge conveyor unit (1) to the bracket (2).

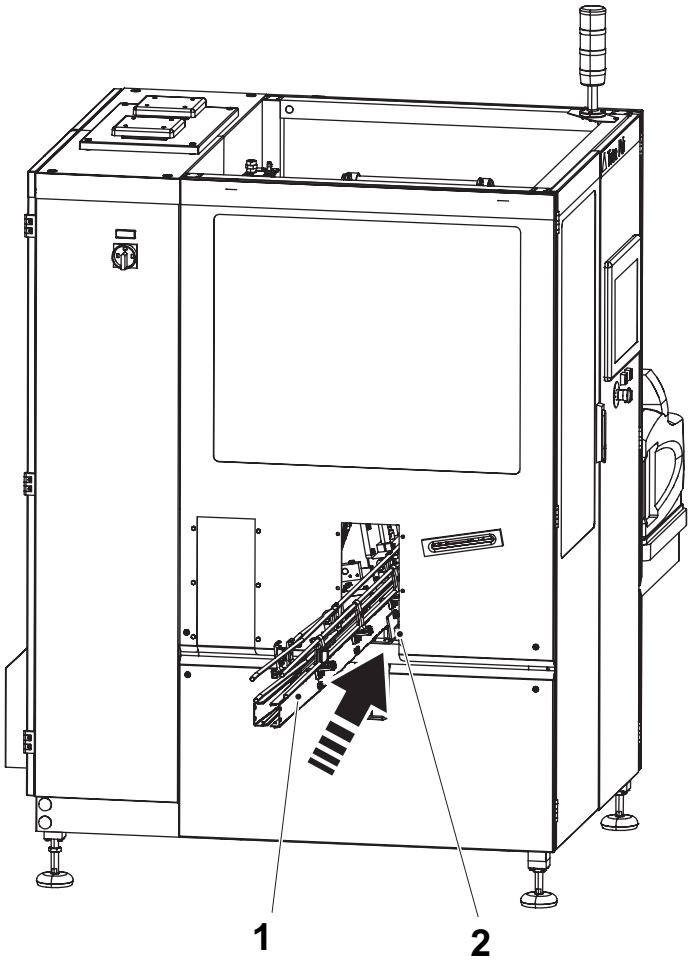

1 Discharge conveyor unit
2 Bracket

(Cont'd)

(Cont'd)

b) Assemble the conveyor (1) to the conveyor section (2). See the documentation belonging to the conveyor.

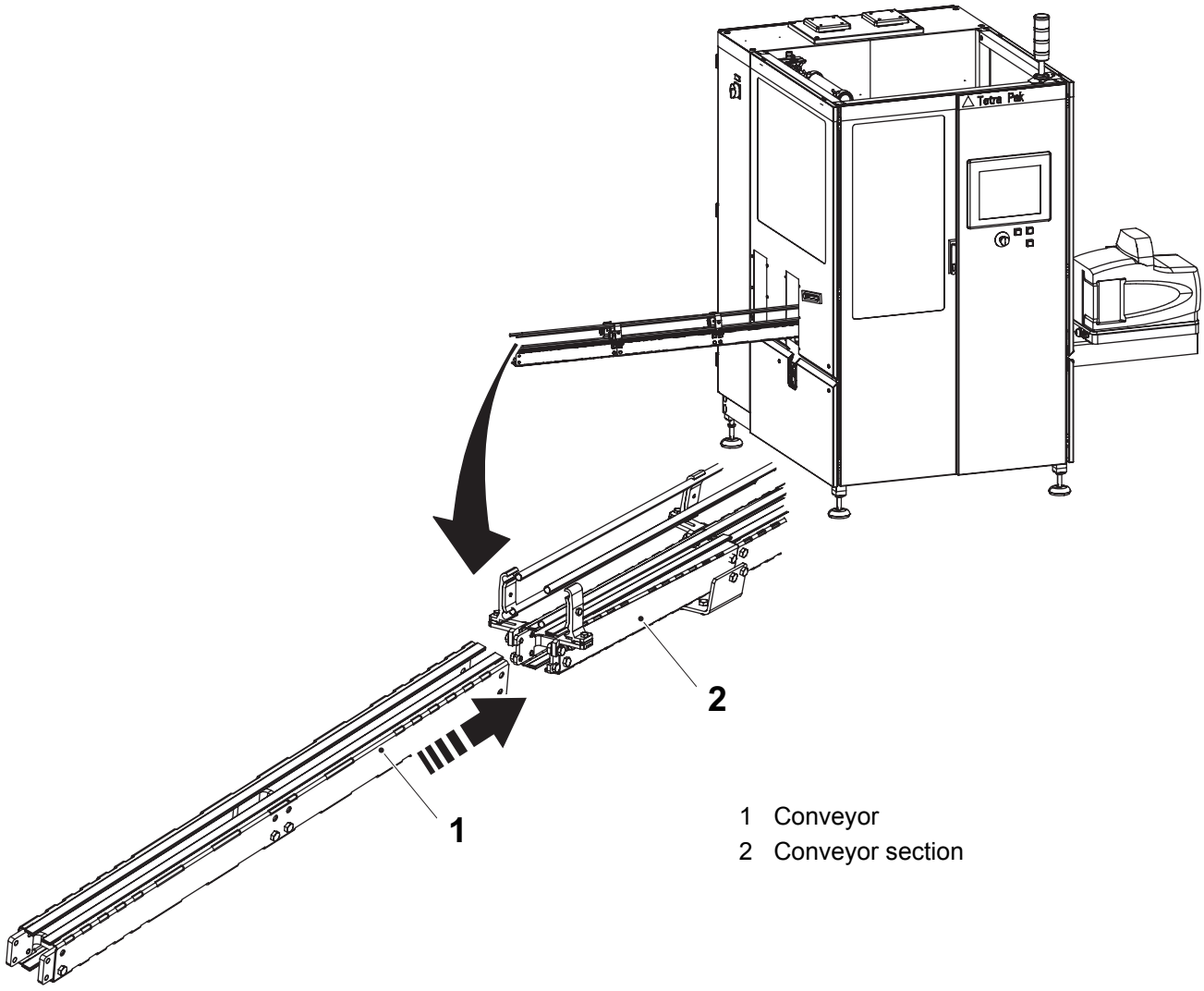

1 Conveyor
2 Conveyor section

4.4.2 Chain

CAUTION

Risk of damage to equipment!

To comply with safety demands, the chain drive motor has to be supplied and controlled according to the Electrical Manual (EM), see Connection diagrams.

Assemble the chain through the machine. See the documentation belonging to the conveyor.

Note! The drive motor for the chain is not part of the machine.

4.4.3 Photocells

Assemble the photocells, see 1.1.3 Installation Layout for placements.

To set the photocells, see instructions in the Maintenance Manual (MM).

4.4.4 Tunnels

Assemble the tunnels.

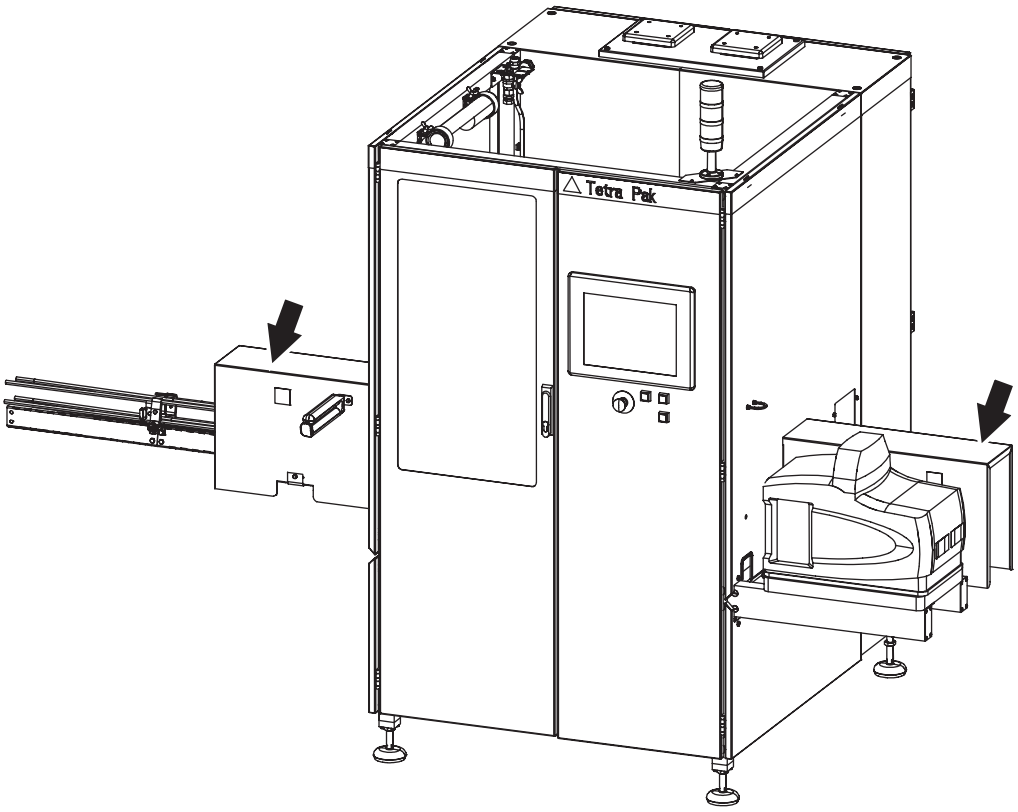

4.5 Connections

4.5.1 Compressed Air

4.5.1.1 Air Supply

WARNING
Risk of personal injury.
Make sure that air supply to the machine is switched OFF before performing any connection work.

Connect the compressed air to the air inlet valve, see 1.1 Installation Drawings, and the pneumatic diagram. Also see 1.3 Utility Connection Data.

4.5.2 Electricity

WARNING
Risk of electrical shock and short circuits.
Make sure that power is switched OFF upstream before performing any work on cables and electrical components.

Make the electrical connections according to Electrical Manual (EM) that belongs to the machine.

Also see 1.1 Installation Drawings, and 1.3 Utility Connection Data.

4.5.2.1 Main Supply Cable

The main supply cable must be routed 1 m straight up from the top of the machine before it turns away.

Note! The main supply cable must never be routed through the machine.

This page intentionally left blank

5 Final Installation Check

About the Final Installation Check Chapter

This chapter describes the checks to be made after the installation has been completed and prior to the start of commissioning this equipment.

5.1 Checklist. . . . . 5 - 5

This page intentionally left blank

5.1 Checklist

WARNING

Immediate danger to life.

During the final installation check, it is important that the procedures are followed very carefully since the safety devices may be non-functional. One of the reasons to make the final installation check is to check that the safety devices are functioning correctly.

Note! Some steps will require only mechanical checks, others will require running tests.

Follow these steps to complete the installation check:

Step	Text	Sign
1	Inspect the electrical connection. Make sure that the connection is made properly, and that the machine has the correct electrical supply. **WARNING** **Hazardous voltage.** The voltage is 400V inside the electrical cabinet. Contact with a 400 V voltage may cause electrical shock or serious injury. In case of accident, call for medical attention immediately.	
2	Inspect the compressed air connection. Make sure that the connection is made properly, and that the machine has the correct air supply.	
3	Make sure that all delivered equipment is assembled in accordance with the instructions in section 4.4 Assembly.	
4	Run the machine, see the Operation Manual (OM). Check that all functions, machine programs, and alarms are working.	
5	Make sure that the machine stops when an EMERGENCY STOP button is pushed. Test **all** EMERGENCY STOP buttons. See Emergency Stop in the Safety Precautions chapter. **WARNING** **Risk of serious injuries.** Never run the machine if any of the emergency stop buttons is non-operational.	
6	Make sure that the machine stops when the covers fitted with safety switches are opened. This should be tested for **all** safety switches. Make sure that all covers are fitted to the machine before it is run. If the machine is equipped with tunnels, also check the safety switches on the tunnels. See section Safeguards in the Safety Precautions chapter. **WARNING** **Risk of serious injuries.** Never run the machine if any safety switch is non-operational or any safety cover is not fitted.	
7	Make sure there are no abnormal noises, smells, and vibrations, when the machine is running.	

8	Make sure that all temperature settings are correctly set. See the Maintenance Manual (MM) for the correct settings.	
9	Check the settings of the servo motor.	
10	Check that the conveyor speed is equal to the “Tested conveyor speed” on the enclosed Final test report. If it is not, the conveyor speed must be adjusted. See the Maintenance Manual (MM).	

6 Preparation for Commissioning

Note! The machine does not require preparations for commissioning.

This page intentionally left blank

7 Disassembly and Removal

About the Disassembly and Removal Chapter

This chapter contains information about how to safely disassemble and remove the machine for reuse in another location or for final disposal.

Only skilled or instructed installation technicians are allowed to disassemble the equipment for moving to other installation positions.

7.1 Disconnect Utilities . . . . . 7 - 5
7.1.1 Compressed Air . . . . . 7 - 5
7.1.2 Electricity . . . . . 7 - 5
7.2 Disassemble Machine . . . . . 7 - 6
7.3 Preparation for Storage. . . . . 7 - 7
7.4 Moving . . . . . 7 - 8
7.5 Recrating . . . . . 7 - 9
7.6 Final Disposal . . . . . 7 - 10

This page intentionally left blank

7.1 Disconnect Utilities

7.1.1 Compressed Air

WARNING

Risk of personal injury.

Make sure that air supply to the machine is switched OFF before performing any disconnection work.

Disconnect the compressed air from the pressure regulator, also see 4.5 Connections.

7.1.2 Electricity

WARNING

Risk of electrical shock and short circuits.

Make sure that power is switched OFF upstream before performing any work on cables and electrical components.

Disconnect the electricity, see the Electrical Manual (EM), also see 4.5 Connections.

7.2 Disassemble Machine

WARNING

Risk of personal injury.

Before disassembling the machine, read the ii Safety Precautions Chapter.

Disassemble the machine in the reverse of the order described in section 4.4 Assembly.

7.3 Preparation for Storage

If the machine is going to be transported to a storage site, then see 3.1.4 Storing the Crated Equipment for more information about environmental factors, such as acceptable storage humidity and temperature range.

7.4 Moving

DANGER

Immediate danger to life.
The machine may tilt if the centre of gravity or the forklift points is not observed. Failure to observe these may result in immediate danger to life and/or major damage to equipment.

Prior to lifting and moving the machine from its production site, do the following:

- check that the machine can be transported without any problems with ceiling height, doors, passages, and so on.
- make sure that the machine can be lifted in accordance to section 3.1.2 Lifting and Unloading.

7.5 Recrating

Read the instructions in 3.2 Unpacking Sequence, and recrate the machine in the reverse order.

7.6 Final Disposal

Contact your Tetra Pak market company for more information about final disposal and reuse.

If the machine is to be permanently disposed of, perform the following operations:

a) Remove all packaging material and straws, and dispose of these according to local regulations.

b) Empty the hotmelt from the hotmelt equipment according to the Nordson Manual. Dispose of the hotmelt according to local regulations.

c) Disassemble the machine as far as possible and separate the following materials:
   - stainless steel (panels and doors)
   - cast iron
   - aluminium
   - glass (windows, and so on)
   - rubber (seals, O-rings, and so on)
   - nylon and other plastics
   - electrical cables
   - hydraulic and pneumatic hoses
   - electrical components (batteries, and so on)

d) Recycle or dispose of all materials, groups, and components according to local regulations.

Tetra Pak

Note! *This page is generated* ***automatically****.*
using the ***variable definitions*** *made in the* ***front page*** *file!*

Straw Applicator 30 by Tetra Pak
663350-0100
Issue 2008-11 Doc. No. IM-2881126-0103

Straw Applicator 30 by Tetra Pak 1(2)
663350-0100
Issue 2008-11 Doc. No. IM-2881126-0103

Straw Applicator 30 by Tetra Pak
663350-0100
Issue 2008-11 Doc. No. IM-2881126-0103

Straw Applicator 30 by Tetra Pak 1(2)
663350-0100
Issue 2008-11 Doc. No. IM-2881126-0103

Straw Applicator 30 by Tetra Pak
663350-0100
Issue 2008-11 Doc. No. IM-2881126-0103

Straw Applicator 30 by Tetra Pak 1(2)
663350-0100
Issue 2008-11 Doc. No. IM-2881126-0103

Straw Applicator 30 by Tetra Pak
663350-0100
Issue 2008-11 Doc. No. IM-2881126-0103

Straw Applicator 30 by Tetra Pak 1(2)
663350-0100
Issue 2008-11 Doc. No. IM-2881126-0103

Straw Applicator 30 by Tetra Pak
663350-0100
Issue 2008-11 Doc. No. IM-2881126-0103

Straw Applicator 30 by Tetra Pak 2(2)
663350-0100
Issue 2008-11 Doc. No. IM-2881126-0103

Straw Applicator 30 by Tetra Pak
663350-0100
Issue 2008-11 Doc. No. IM-2881126-0103

Straw Applicator 30 by Tetra Pak 2(2)
663350-0100
Issue 2008-11 Doc. No. IM-2881126-0103

Straw Applicator 30 by Tetra Pak
663350-0100
Issue 2008-11 Doc. No. IM-2881126-0103

Straw Applicator 30 by Tetra Pak 2(2)
663350-0100
Issue 2008-11 Doc. No. IM-2881126-0103

Straw Applicator 30 by Tetra Pak
663350-0100
Issue 2008-11 Doc. No. IM-2881126-0103

Straw Applicator 30 by Tetra Pak 2(2)
663350-0100
Issue 2008-11 Doc. No. IM-2881126-0103

Straw Applicator 30 by Tetra Pak
663350-0100

Issue 2008-11 Doc. No. IM-2881126-0103

Straw Applicator 30 by Tetra Pak 1(2)
663350-0100

Issue 2008-11 Doc. No. IM-2881126-0103

Straw Applicator 30 by Tetra Pak
663350-0100

Issue 2008-11 Doc. No. IM-2881126-0103

Straw Applicator 30 by Tetra Pak 1(2)
663350-0100

Issue 2008-11 Doc. No. IM-2881126-0103

Straw Applicator 30 by Tetra Pak
663350-0100

Issue 2008-11 Doc. No. IM-2881126-0103

Straw Applicator 30 by Tetra Pak 1(2)
663350-0100

Issue 2008-11 Doc. No. IM-2881126-0103

Straw Applicator 30 by Tetra Pak
663350-0100

Issue 2008-11 Doc. No. IM-2881126-0103

Straw Applicator 30 by Tetra Pak 2(2)
663350-0100

Issue 2008-11 Doc. No. IM-2881126-0103

Straw Applicator 30 by Tetra Pak
663350-0100

Issue 2008-11 Doc. No. IM-2881126-0103

Straw Applicator 30 by Tetra Pak 2(2)
663350-0100

Issue 2008-11 Doc. No. IM-2881126-0103

Straw Applicator 30 by Tetra Pak
663350-0100

Issue 2008-11 Doc. No. IM-2881126-0103

Straw Applicator 30 by Tetra Pak 2(2)
663350-0100

Issue 2008-11 Doc. No. IM-2881126-0103