MM

Maintenance Manual

Straw Applicator 30 by Tetra Pak

663350-0100

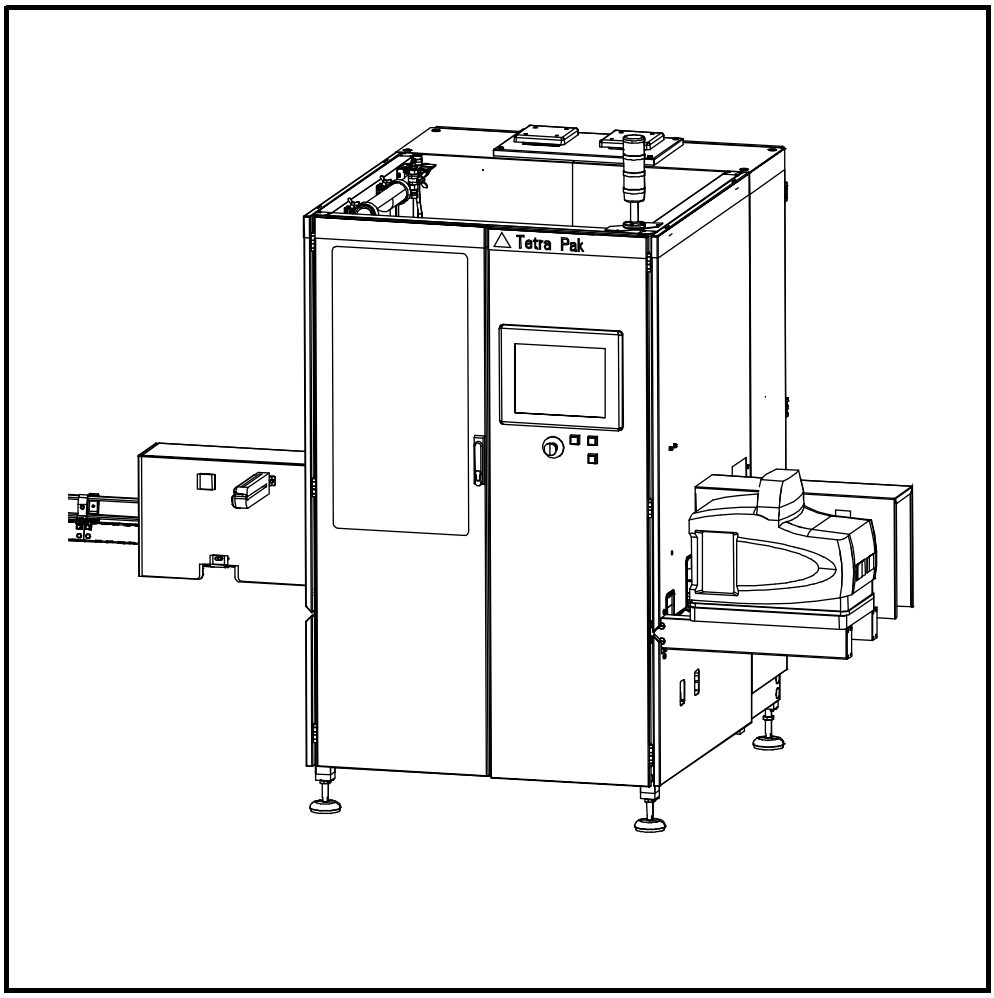

WARNING

Read and follow all safety precaution instructions throughout this manual and on safety signs attached to this equipment.

Failure to follow all safety precaution instructions could result in death or serious injury.

Tetra Pak

Doc. No. MM-2881125-0103

Copyright © 2008 Tetra Pak Group

All rights reserved. No part of this document may be reproduced or copied in any form or by any means without written permission from Tetra Pak Packaging Solutions AB.

Tetra Pak and all Tetra Pak products are trademarks belonging to the Tetra Pak Group.

The content of this manual is in accordance with the design and construction of the machine or equipment at the time of publishing. Tetra Pak reserves the right to introduce design modifications without prior notice.

The English version of this document is the original language version.

This document was produced by:

Tetra Pak Packaging Solutions AB
Ruben Rausings gata
SE-221 86 Lund
Sweden

Additional copies can be ordered from Tetra Pak. When ordering additional copies, always provide the document number.

Doc. No. MM-2881125-0103

Issue 2008-11

This manual is valid for:

Series No./ Machine No. Sign.

MM

Maintenance Manual

Straw Applicator 30 by Tetra Pak
663350-0100

Machine or equipment configurations that this manual is valid for are described on the next page.

i Introduction

ii Safety Precautions

1 Applicator Unit

2 Conveyor Section

3 Hotmelt Equipment

4 Machine Body

5 Machine Covering

6 Air Equipment

7 TPOP HMI

8 Electrical Cabinet

9 Electric Equipment

10 Regular Accessories

11 Optional Equipment

12 General

iii Index

Doc. No. MM-2881125-0103

Issue 2008-11

Tetra Pak

Tetra Pak Packaging Solutions AB

Valid for:

Name	Drawing Specification and Development Step	Additional Information
Straw Applicator 30 by Tetra Pak	663350-0100	Package Shape: - Tetra Brik Aseptic, TBA - Tetra Classic Aseptic, TCA

Optional Equipment:

Name	Drawing Specification and Development Step	Additional Information
Photocell Unit	2943553-0100	Valid for TBA
Quick Change Kit	2960583-0100	Valid for TBA

Update Log for Doc. No. MM-2881125-0103

This table shows all changes made to this manual, including installed rebuilding kits, added or removed pages. Page numbering on added pages begins with UP.

Date	Installed Kit	Added Pages (Doc. No.)	Removed Pages	Signature

Date	Installed Kit	Added Pages (Doc. No.)	Removed Pages	Signature

i Introduction

About the Introduction Chapter

This chapter contains basic information about this manual and the related Tetra Pak equipment.

Abbreviations and Terminology . . . . . i - 5
Manual Information . . . . . i - 6
Delivered Manuals . . . . . i - 6
Page Layout . . . . . i - 7
Page Numbering. . . . . i - 8
Typographical Conventions . . . . . i - 8
Symbols . . . . . i - 8
Machine Introduction . . . . . i - 9
Intended Use of the Equipment . . . . . i - 9
Manufacturer . . . . . i - 9
Support and Feedback . . . . . i - 9
Identification . . . . . i - 10
CE Classification . . . . . i - 10
Machine Plate . . . . . i - 10
Orientation . . . . . i - 11
Hygiene. . . . . i - 12
How to Use This MM . . . . . i - 13
Procedures . . . . . i - 13
Procedure Start Table . . . . . i - 14
TPMS . . . . . i - 15
Planned Maintenance Program . . . . . i - 15
Checklists and Spare Parts Recommendations . . i - 15

This page intentionally left blank

Abbreviations and Terminology

Abbreviation/ Terminology	Meaning	Translation
ANSI	American National Standards Institute	
CE	Communautés Européennes/European Communities	
EM	Electrical Manual	
HMI	Human Machine Interface	
IM	Installation Manual	
I/O	In/Out	
ISO	International Organization for Standardization	
MM	Maintenance Manual	
OM	Operation Manual	
PLC	Progammable Logic Controller	
PLMS	Production Line Monitoring System	
SPC	Spare Parts Catalogue	
TBA	Tetra Brik Aseptic	
TCA	Tetra Classic Aseptic	
TPMS	Tetra Pak Maintenance System	
TPOP	Tetra Pak Operator Panel	

Manual Information

Tetra Pak recommends reading all delivered manuals carefully. Make sure that the delivered manuals are available to personnel who operate or maintain the equipment.

It is important to keep this manual for the lifetime of the equipment and to pass the manual on to any subsequent holder or user.

Tetra Pak will not be held responsible for any damage to the equipment caused by not following the instructions given in this manual.

Delivered Manuals

Manuals delivered with this equipment:

- EM
  The Electrical Manual provides technicians with information about the equipment's electrical system.
- IM
  The Installation Manual provides technicians with information required to safely install the equipment.
- MM
  The Maintenance Manual provides technicians with information on maintaining the equipment.
- OM
  The Operation Manual manual provides the operator with information on handling and operating the equipment before, during, and after production.
- SPC
  The Spare Parts Catalogue provides the information necessary to order spare parts from Tetra Pak

Page Layout

Every main page in a manual contains a header and a footer. The page header contains the chapter name (1) and the section name (2). The page footer contains the page number (3), and the document number (4). See also the Page Numbering section.

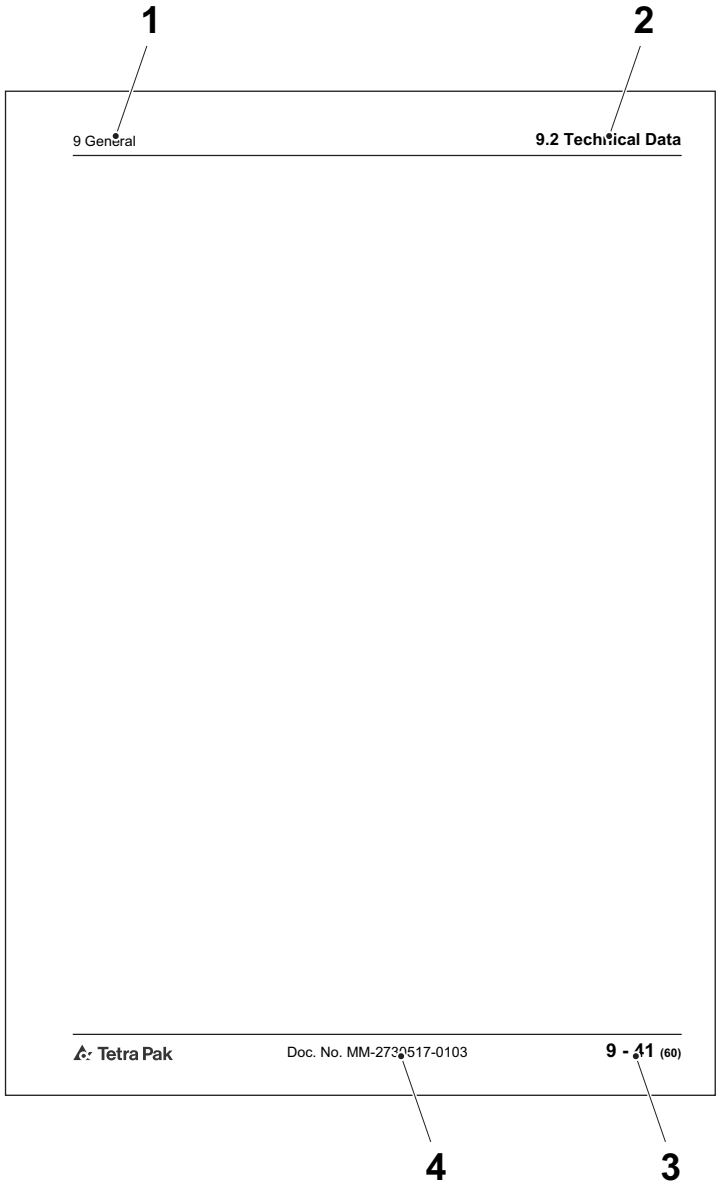

1 Chapter name
2 Section name
3 Page number
4 Document number

Page Numbering

A page number has three parts:

- chapter number (1)
- consecutive page number (2) within the chapter
- total number of pages (3) in the chapter.

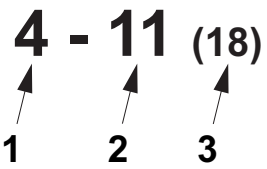

1 Chapter number
2 Consecutive page number
3 Total number of pages

Typographical Conventions

Controls on the operator panel, emergency stop devices, and program steps are printed in CAPITAL LETTERS.

Menu names, button names and other text displayed in software are printed in `Courier`.

Cross-references are underlined.

Symbols

Symbols used in illustrations.

	A pointer arrow indicates the position of an object.
	A zoom arrow indicates that an object view is enlarged. The arrow points towards the enlarged view of the object.
	A rotation movement arrow indicates rotational movement of an object. The arrow points in the direction of rotation.
	A straight movement arrow indicates movement of an object. The arrow points in the direction of movement.

Machine Introduction

Intended Use of the Equipment

The intended use of this Tetra Pak equipment is to attach drinking straws onto Tetra Pak Brik packages (TBA) or Tetra Pak Classic packages (TCA).

All other use is prohibited. Tetra Pak will not be held responsible for injury or damage if the equipment is used for any other purpose.

Manufacturer

This Tetra Pak equipment has been manufactured by

Tetra Pak Packaging Solutions AB
Ruben Rausings gata
SE-221 86 Lund
Sweden

Support and Feedback

If you encounter problems when operating this equipment or have other inquiries, comments, or suggestions for improvement, contact Tetra Pak.

Identification

CE Classification

This equipment complies with the basic health and safety regulations of the European Economic Area (EEA).

Machine Plate

The illustration below shows an example of the machine plate and its location on the equipment. The machine plate carries data needed when contacting Tetra Pak concerning this specific equipment.

Make sure that the equipment data in the front pages of this manual corresponds to the machine plate data and the machine specification.

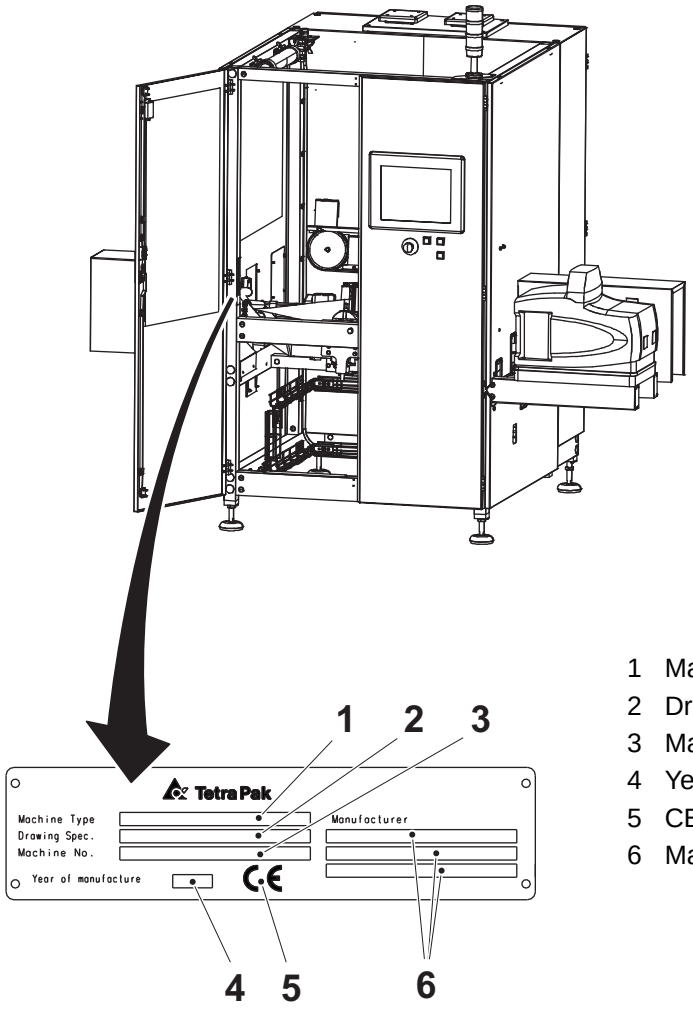

1 Machine type
2 Drawing specifications
3 Machine number
4 Year of manufacture
5 CE mark
6 Manufacturer

Orientation

The illustration below shows the orientation of the equipment. This orientation information will be used throughout this manual. The arrows indicate the flow of material.

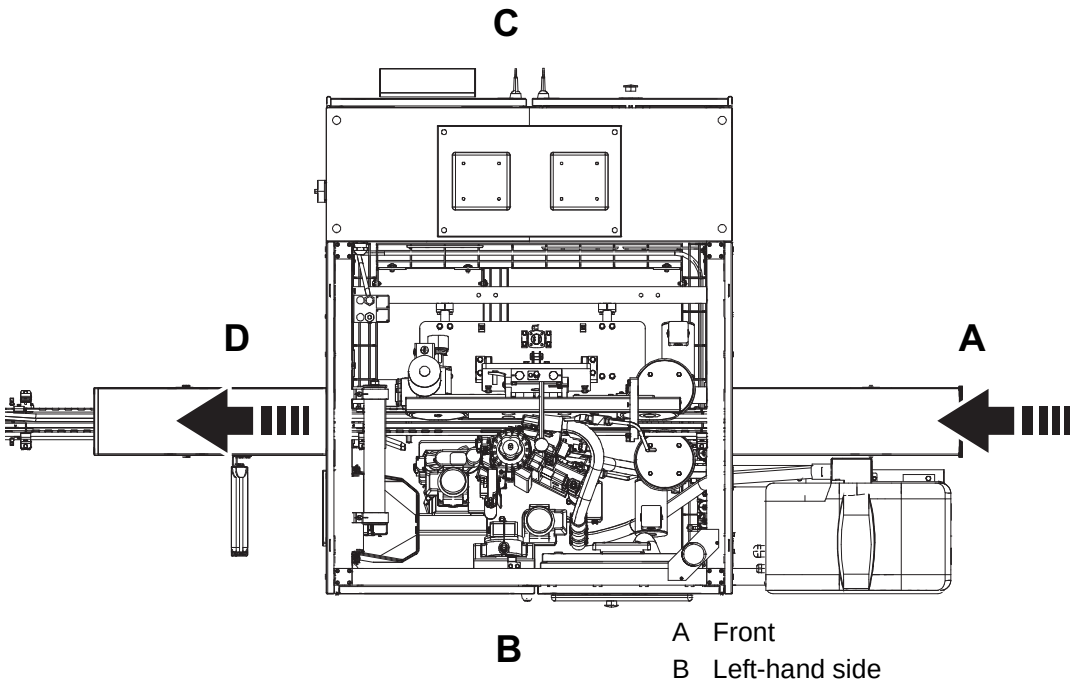

A Front
B Left-hand side
C Right-hand side
D Back

Hygiene

- Keep your hands clean.
- Always wear some type of hair protection (cap or hairnet) and clean clothes (preferably white).
- Do not wear a watch, ring, necklace, earrings, or any other exposed jewellery.

How to Use This MM

Procedures

The name of the chapters and sections in the MM correspond to the groups in the structure of the equipment. Procedures correspond to a chapter or a section:

- The dashes indicate that it is a procedure heading. The example below shows a heading for Procedure number 3 in Section 1.5.
- The text after the second dash tells what type of procedure it is. Check, Change and Set are common procedure types.



Maintenance procedures in this manual are connected to the Tetra Pak Maintenance System, TPMS. See the TPMS section.

(Cont'd)

(Cont'd)

Procedure Start Table

Procedures in this manual begin with a table providing information needed to begin the procedure.

- Machine Status (1) shows actuator status, program step, and any other machine status necessary to begin the procedure.
- Special Equipment (2) shows a list of personal protective equipment and special tools that are not normally carried by a service technician, but are needed in the procedure.
- Consumables (3) shows items, such as lubricants, that are required to perform the procedure. Consumables do not include replacement parts.
- SPC Reference (4) shows the assembly number, found in the index of the SPC.

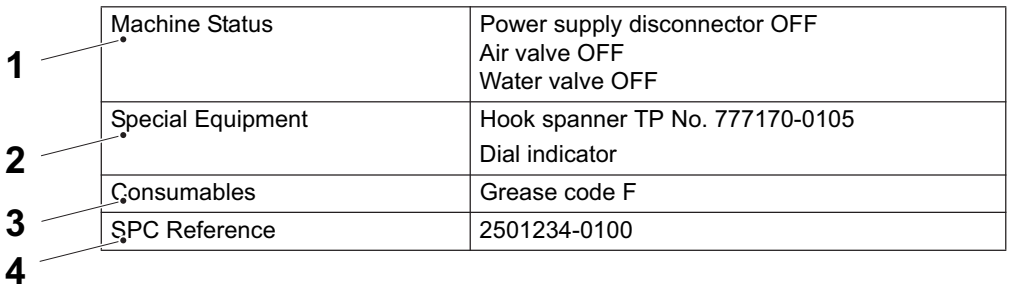

Machine Status	Power supply disconnector OFF Air valve OFF Water valve OFF
Special Equipment	Hook spanner TP No. 777170-0105 Dial indicator
Consumables	Grease code F
SPC Reference	2501234-0100

1 Machine Status
2 Special Equipment
3 Consumables
4 SPC Reference

TPMS

To ensure uninterrupted production, all machines and equipment must be maintained on a regular basis.

Tetra Pak has developed a planned maintenance system to keep pace with the ongoing development of new and existing machines and equipment from Tetra Pak, and to meet the demands set by customers for higher efficiency and better economy.

Planned Maintenance Program

The Tetra Pak planned maintenance system reduces unplanned downtime and maintenance time for complete production lines, as well as for individual machines and equipment.

With the Tetra Pak planned maintenance system, preventive maintenance can be performed before production is affected. The system is continually updated based on experience with Tetra Pak machines and equipment worldwide.

The Tetra Pak planned maintenance system maintains records of when maintenance is performed, when parts are changed, whether alterations are made, and so on. These records, combined with usage statistics, enable reliable predictions of the service life of all machine and equipment parts.

Checklists and Spare Parts Recommendations

Customers using the Tetra Pak planned maintenance system receive checklists from their local Tetra Pak office whenever planned maintenance is due. These checklists are individualised for each customer, according to the type of machine, equipment usage, and maintenance occasion. In addition, the system recommends spare parts, rotation units, tools, and templates according to the statistics collected.

Tip! Contact the local Tetra Pak office for additional information about the Tetra Pak Maintenance System and its planned maintenance program.

This page intentionally left blank

ii Safety Precautions

Safety Precaution Instructions

WARNING

Read all safety precaution instructions throughout this manual and on safety signs attached to this equipment.

Failure to follow all safety precaution instructions could result in death or serious injury.

Definition of Lockout Procedure

A lockout procedure is a procedure to put each necessary energy isolating device in its safe position to prevent the energisation of the equipment, such as when a maintenance procedure should be carried out.

A lockout is the use of a device, for example, a padlock, to make sure that an energy isolating device cannot be operated.

An energy isolating device is a mechanical device that physically prevents transmission or release of energy, such as a power supply disconnector.

Safety Messages Description . . . . . ii - 5
Personnel Requirements . . . . . ii - 6
Skilled Person . . . . . ii - 6
Instructed Person. . . . . ii - 6
Safety Signs . . . . . ii - 7
Locations of Safety Signs, TBA . . . . . ii - 9
Locations of Safety Signs, TCA . . . . . ii - 10
Protective Devices. . . . . ii - 11
Emergency Stop. . . . . ii - 11
Emergency Stop Push-Buttons . . . . . ii - 12
Safeguards . . . . . ii - 13
Warning Lamp . . . . . ii - 15
Personal Protection. . . . . ii - 16
Noise Hazard . . . . . ii - 16
Entanglement Hazard . . . . . ii - 16
Ergonomic Hazard . . . . . ii - 16
Supply Systems. . . . . ii - 17
Power Supply . . . . . ii - 17
Residual Voltage . . . . . ii - 18
Electrical Cabinet. . . . . ii - 18
Socket Outlet . . . . . ii - 19
Air Supply . . . . . ii - 20

This page intentionally left blank

Safety Messages Description

A safety message is always accompanied by a safety alert symbol and a signal word.

The safety alert symbol is used to alert about potential personal injury hazards. To avoid hazards, obey all safety messages that follow this symbol.

The following safety alert symbols and signal words are used in this manual to inform the user of hazards.

DANGER	Danger indicates an imminently hazardous situation which, if not avoided, will result in death or serious injury.
WARNING	Warning indicates a potentially hazardous situation which, if not avoided, **could** result in **death or serious injury**.
CAUTION	Caution indicates a potentially hazardous situation which, if not avoided, **may** result in **minor or moderate injury.** It may also be used to alert against unsafe practices.
CAUTION	Caution without the safety alert symbol indicates a potentially hazardous situation which, if not avoided, **may** result in **property damage**.

Personnel Requirements

Note! Personnel includes all persons working on or near this equipment.

Only skilled or instructed persons are allowed to work with this equipment.

Skilled Person

A skilled person must have relevant education and experience to enable him or her to identify hazards, analyse risks, and avoid hazards which electricity, machinery, chemicals, other energies, and supply systems on this equipment can create.

Skilled persons must meet local regulations, such as certifications and qualifications for working with these energies and systems.

Instructed Person

An instructed person must be adequately advised or supervised by a skilled person. The skilled person enables the instructed person to identify hazards, analyse risks, and avoid hazards which electricity, machinery, chemicals, other energies, and supply systems on this equipment can create.

Safety Signs

WARNING

Damaged or missing safety signs increase the risk of death or serious injury.

Replace all missing or damaged safety signs immediately.

Safety signs are attached to the equipment. The table below lists all the signs that are used, and illustrations show their locations on the equipment. Each position number refers to two variants of a safety sign in the table, but only one is used on the equipment.

- Make sure that each safety sign is legible and in its correct position after installation and maintenance.
- Replace all missing or damaged safety signs immediately.

Pos.	ISO sign	ANSI sign
1		
	Hazardous voltage. Will shock, burn, or cause death. Follow lockout procedure before maintenance.	
2		
	Hazardous voltage. Can shock, burn, or cause death. Read Maintenance Manual (MM) before using this socket outlet.	
3		
	Risk of equipment damage. Do not let water into this area.	
4		
	Burn hazard. Trapped heat energy. Do not touch.	

Pos.	ISO sign	ANSI sign
5		
	Hot surface. Do not touch. Follow lockout procedure before maintenance.	
6		
	Moving part can crush and cut. Do not operate with guard removed. Follow lockout procedure before maintenance.	

Locations of Safety Signs, TBA

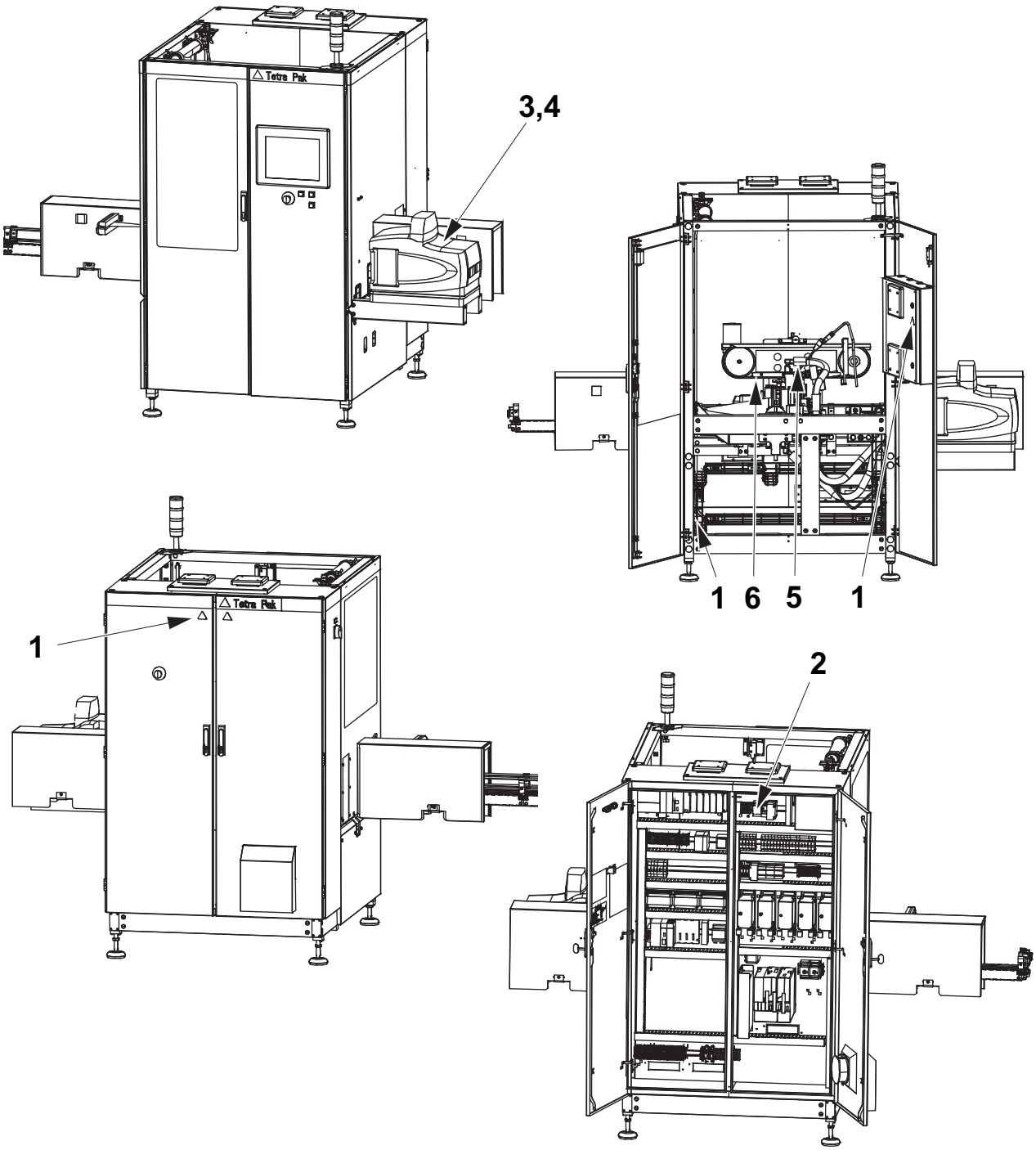

Locations of Safety Signs, TCA

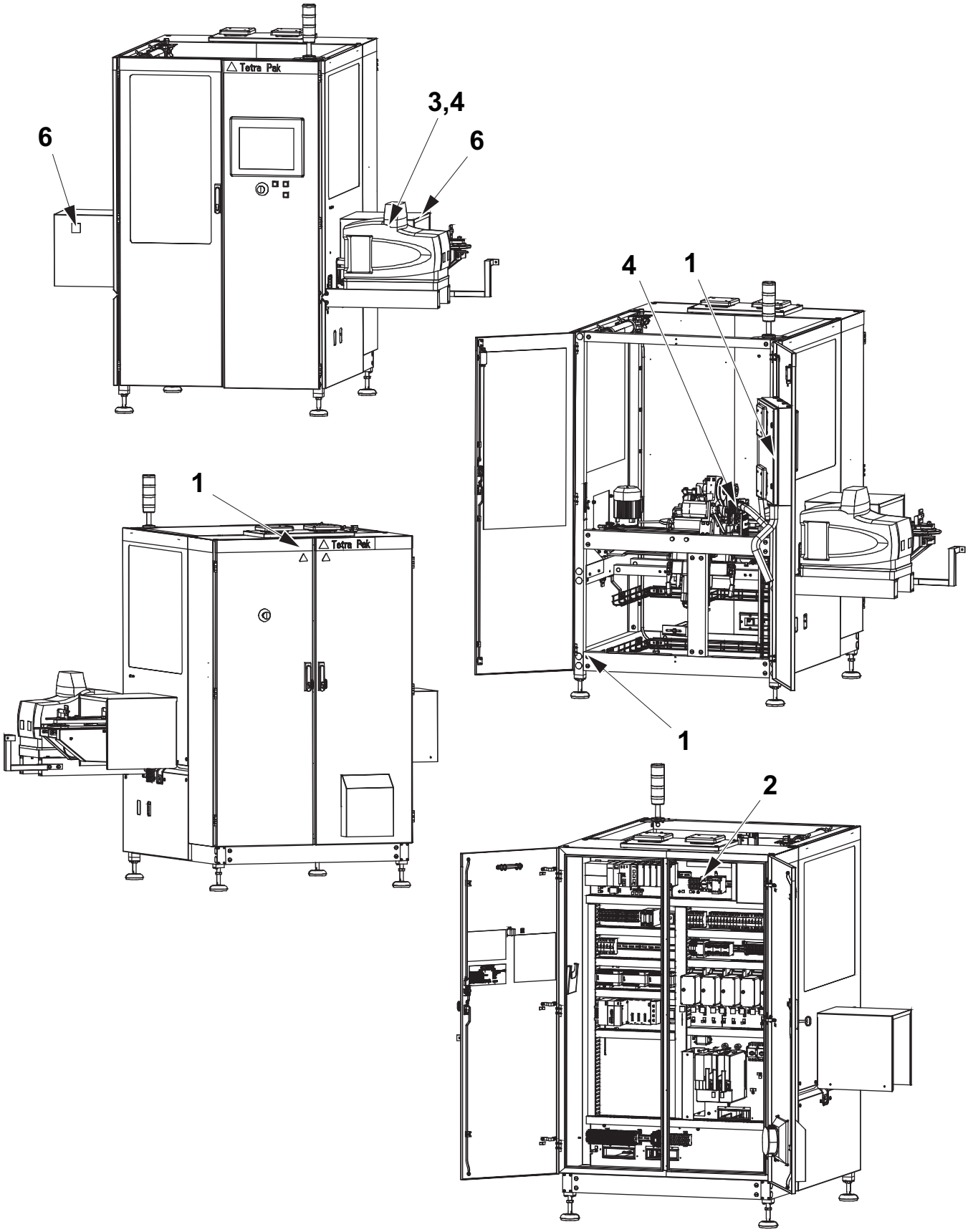

Protective Devices

WARNING

Hazardous zones.

Hazardous zones are safeguarded and provided with protective devices. Do not inch or run this equipment if any protective device is inoperative.

Change inoperative components of the safety system immediately.

WARNING

Hazardous voltage.

Hazardous voltage remains on this equipment after activating an EMERGENCY STOP or an interlocking device.

Emergency Stop

Emergency stop devices are used to stop this equipment immediately in an hazardous situation. Learn the positions of all emergency stop devices and how to use them.

Instructions for a normal production stop are included in the Stop chapter of the Operation Manual.

Emergency Stop Push-Buttons

Push the EMERGENCY STOP push-buttons to stop this equipment immediately.

The location of each EMERGENCY STOP push-button is shown by an arrow.

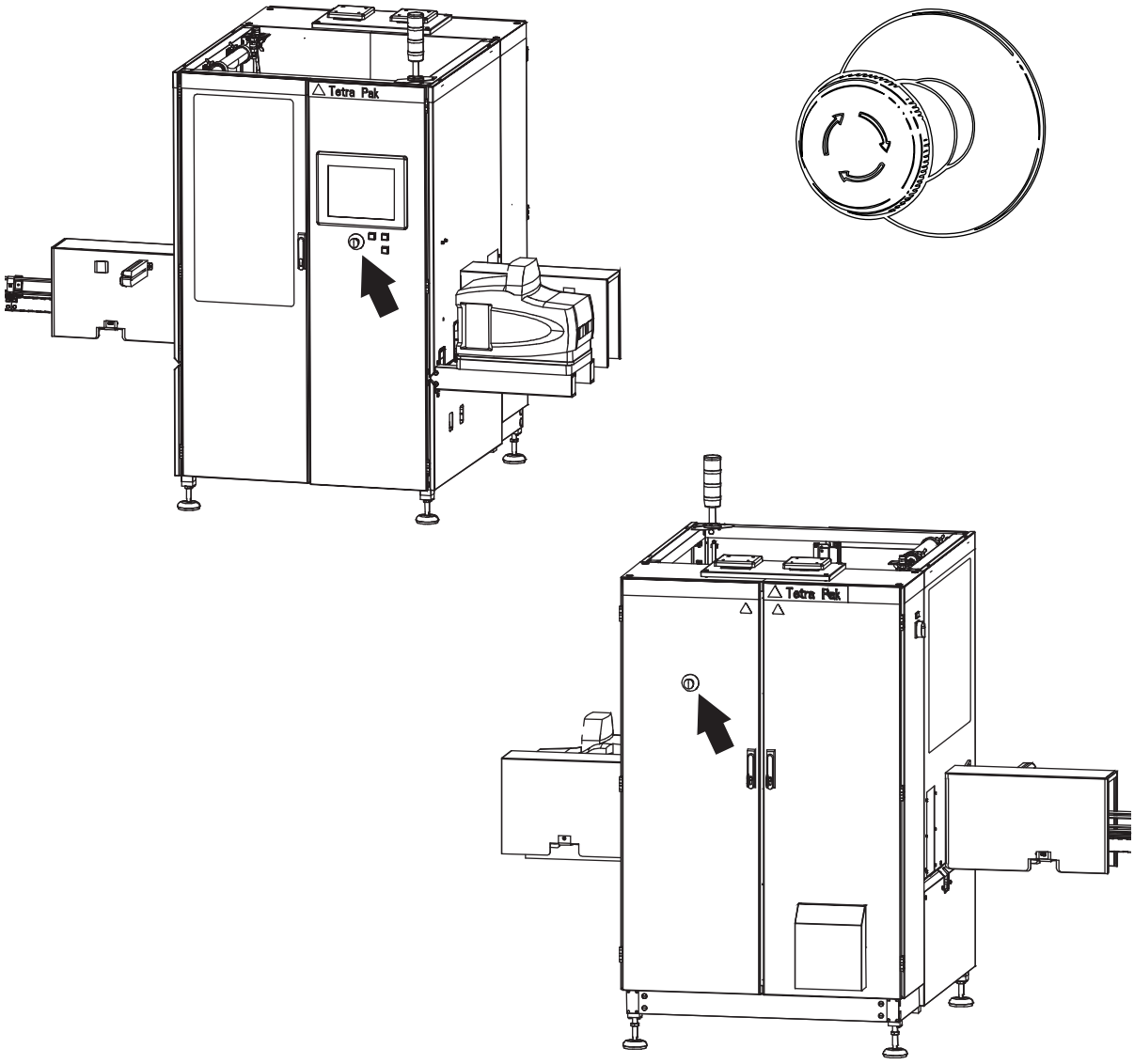

Safeguards

WARNING

Moving machinery.

Never defeat or bypass the interlocking devices.

Movable guards, for example, doors and covers leading to hazardous zones, are fitted with interlocking devices where required. These devices are usually electric safety switches that are parts of the safety system and must never be defeated, bypassed, or otherwise made inoperative.

WARNING

Corners and edges.

To prevent injury from corners and edges of open doors and covers, close them unless they must be open during such work. Be careful when working under an open door, cover or elsewhere below parts of the equipment with corners and edges.

CAUTION

Burn hazard.

Parts of this equipment may be hot after operation.

After installation and maintenance, and before this equipment is inched or run, check that all safeguards are in place and that they operate correctly.

(Cont'd)

(Cont'd)

CAUTION
Equipment damage.
Never stop this equipment by opening an interlocking guard.

The location of each interlocking guard is shown by an arrow.

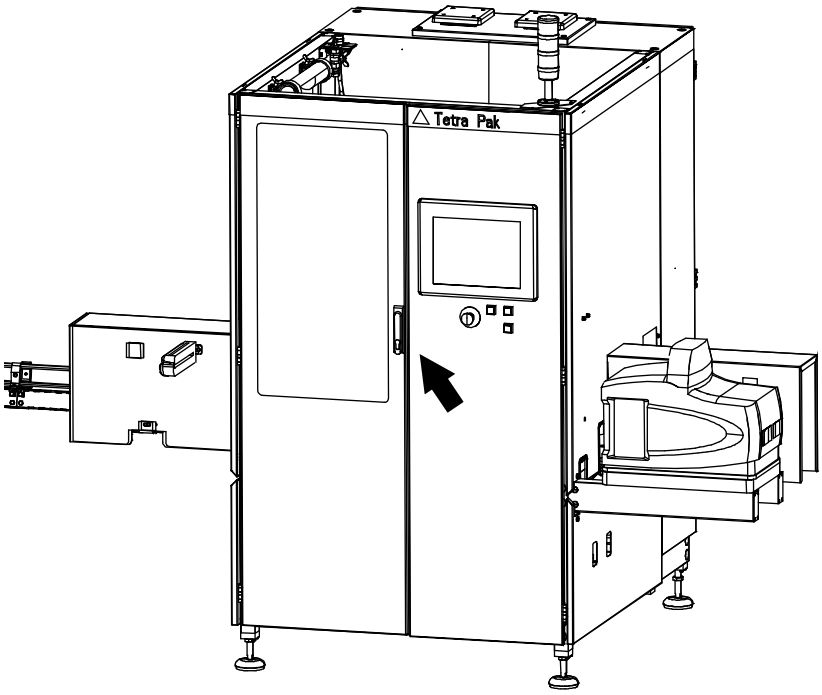

Warning Lamp

A warning lamp is a column of warning lights:

- A red light (1) indicates a hazardous condition. This is a situation that requires immediate action.
- A yellow light (2) indicates an abnormal or impending critical condition. This is a condition calling for action by the operator.
- A blue light (3) indicates that operator action is required.
- If the yellow and blue colours are flashing at the same time, this indicates a queue on the discharge side.

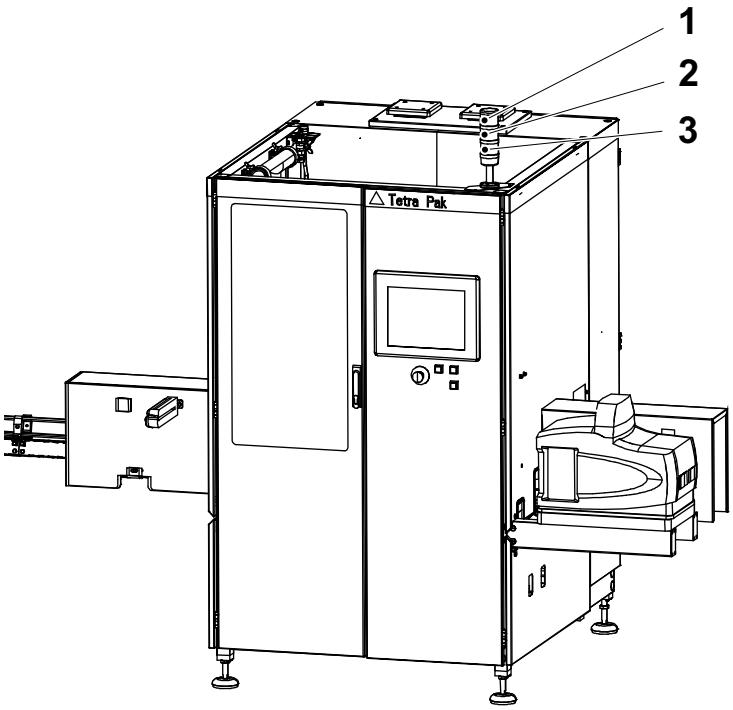

1 Red light
2 Yellow light
3 Blue light

Personal Protection

This section applies to all personnel at all times when this equipment is in operation.

Noise Hazard

WARNING

Hazardous noise.

Risk of impaired hearing.

Wear hearing protection whenever this equipment is in operation.

Entanglement Hazard

WARNING

Risk of entanglement.

Do not wear jewellery or loose clothing when working on or near this equipment. Long hair may not be loose.

Ergonomic Hazard

WARNING

Ergonomic hazard.

Handling materials and supplies, for the machine, can be repetitive manual work and involve ergonomic hazards with risk for personal injury. Materials and supplies should be located. e.g. layout design, to avoid twisting the body or bending the back when placing them into the machine. It is recommended to use aids such as a lifting table or lifting device for these tasks. Follow instructions for safe work practices.

Supply Systems

Power Supply

DANGER

Hazardous voltage and moving machinery.
The power supply disconnector must be turned off and secured with a lock before any maintenance.

Note! The key to the lock must be removed by the technician and retained in his/her possession until all work is completed.

Certain maintenance procedures may require power supply systems to be on. These exceptions are clearly stated in this manual.

The illustrations show the power supply disconnector and its location.

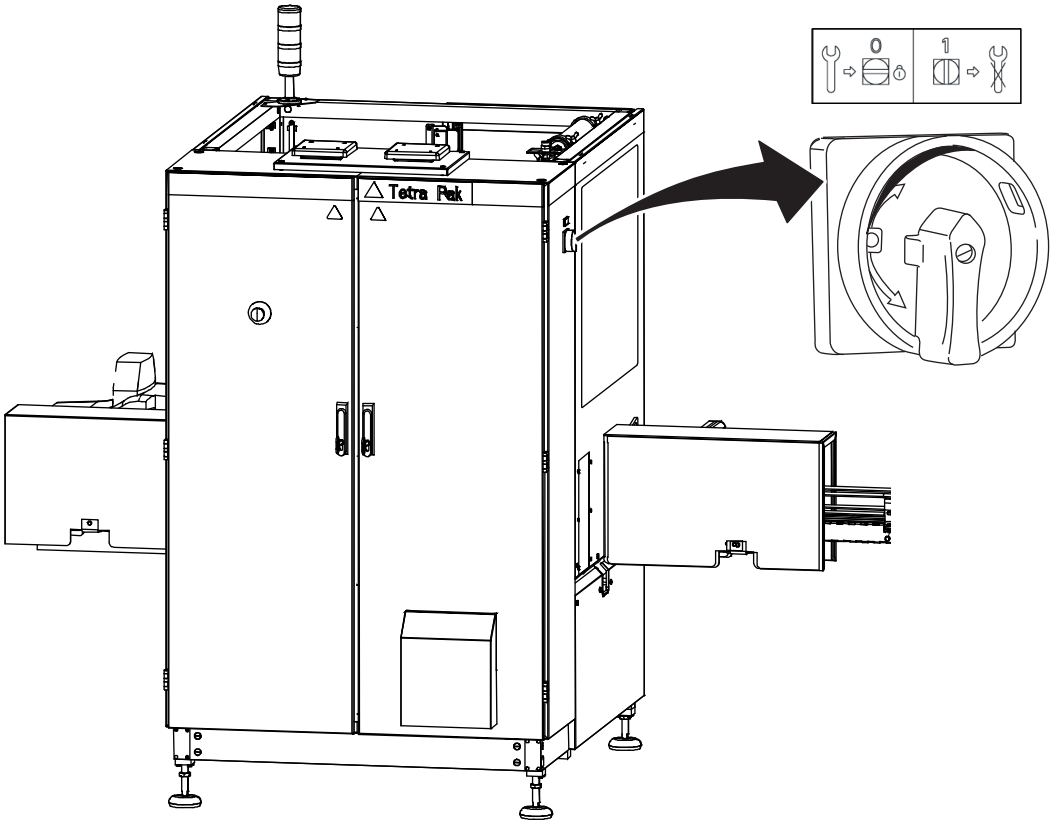

Residual Voltage

DANGER

Hazardous voltage.
Do not touch any terminals immediately after the power supply disconnector is turned off. Ensure that no residual voltage remains on the capacitors before touching. Wait five minutes. Failure to observe this information will cause death or serious injury.

After the power supply disconnector is turned off, residual voltage remains in the capacitor circuits.

Electrical Cabinet

DANGER

Hazardous voltage.
Will shock, burn, or cause death.
The power supply disconnector must be turned off and secured with a lock before maintenance inside the electrical cabinet.

Note! The key to the lock must be removed by the technician and retained in his/her possession until all work is completed.

Make sure that the electrical cabinet doors are closed after working inside the electrical cabinet. Doors with lock must be locked.

The location of each electrical cabinet is shown by an arrow.

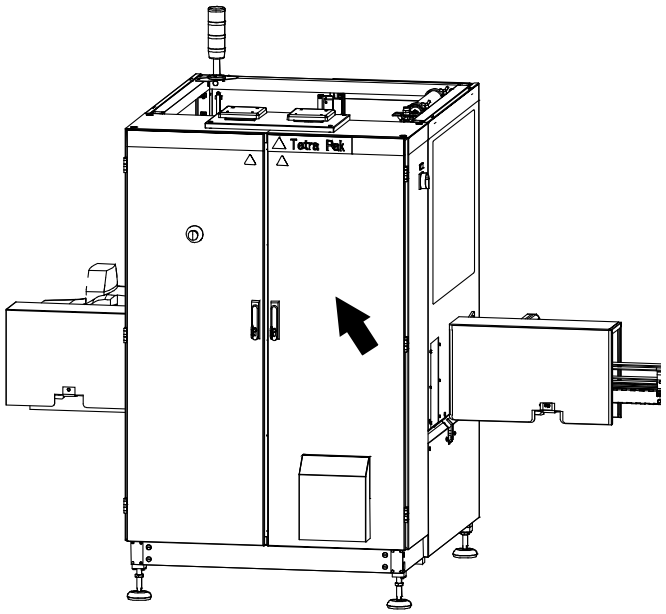

Socket Outlet

WARNING

Hazardous voltage.

Can shock, burn, or cause death. Read the Maintenance Manual before using this socket outlet.

The socket outlet (1) is connected to a residual current device (2) to protect users against electrical shock if there is an earth fault in the connected equipment. The residual current device shall be tested each time before the socket outlet is being used. See Section 8.7.1-2 Electrical Materials - Check Residual Current Device for test procedure.

The illustrations show the socket outlet, the residual current device, and their location.

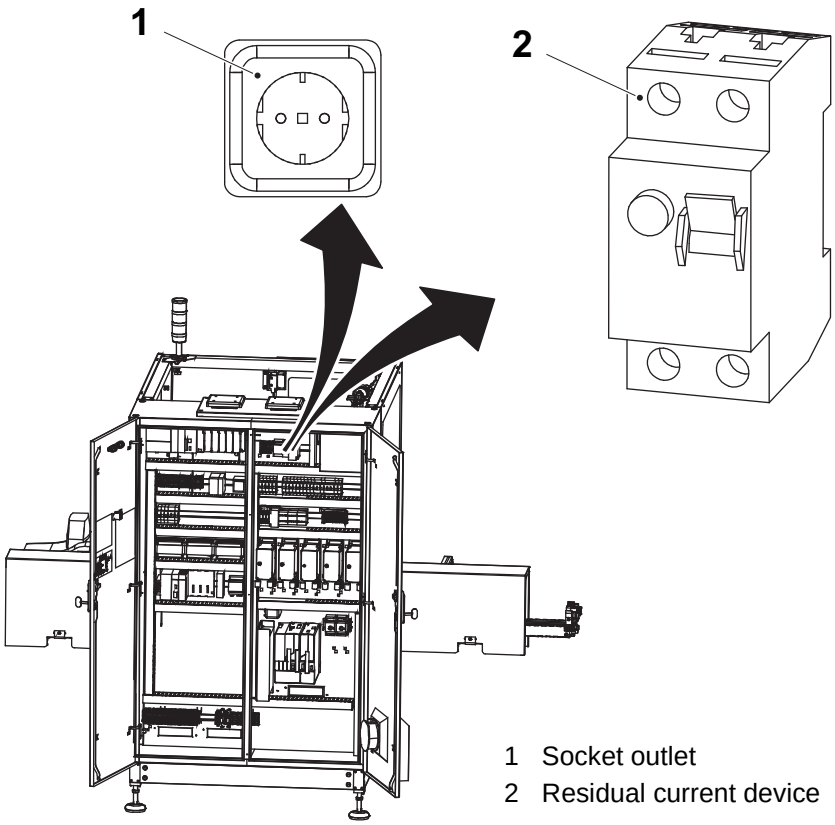

1 Socket outlet
2 Residual current device

Air Supply

WARNING

Compressed air and moving machinery.
Close the main air valve and lock it before any maintenance.

Note! The key to the lock must be removed by the technician and retained in his/her possession until all work is completed.

Certain maintenance procedures may require air supply systems to be on. These exceptions are clearly stated in this manual.

The illustrations show the main air valve (1), the lock (2), and their location.

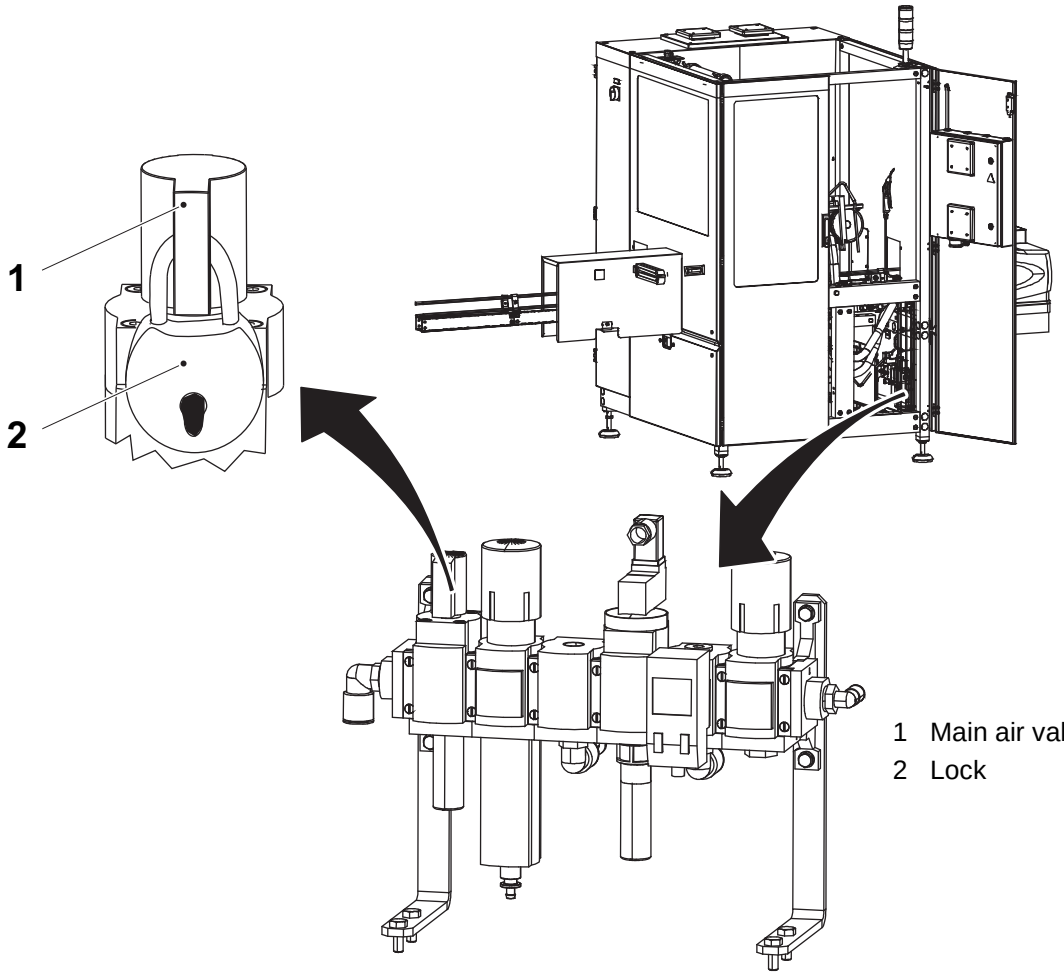

1 Main air valve
2 Lock

1 Applicator Unit

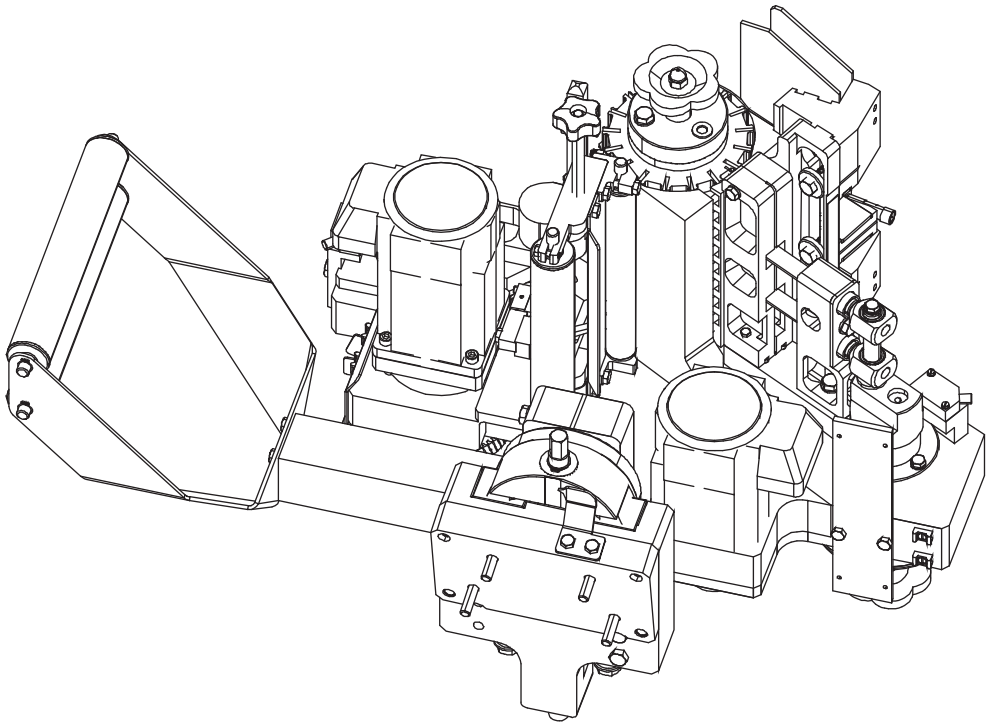

Applicator Unit - Description

SPC Reference	663301

TBA

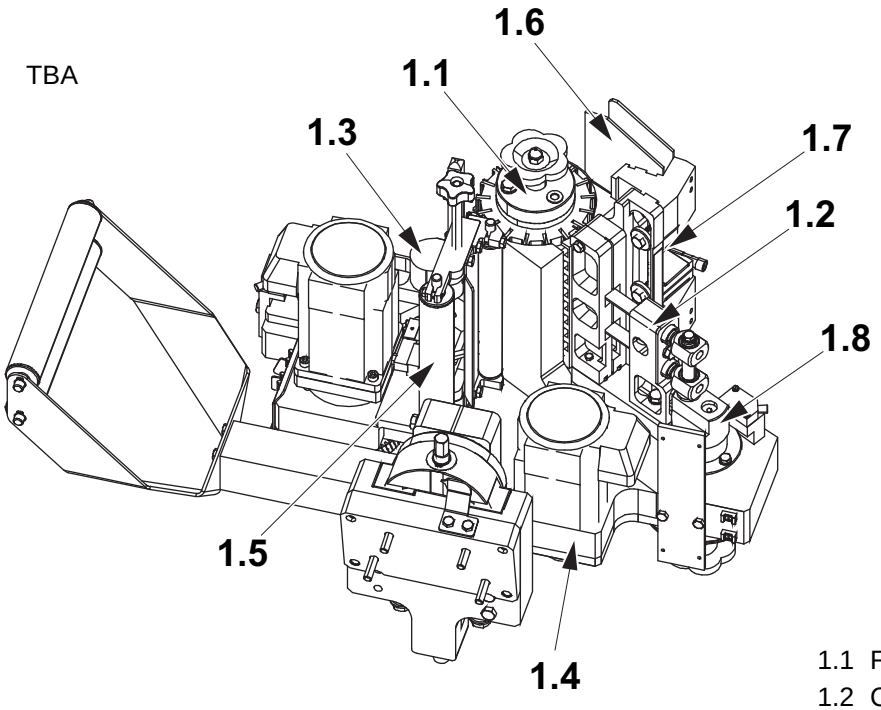

1.1 Feed wheel unit
1.2 Cutting unit
1.3 Squeezer
1.4 Frame
1.5 Ladderband unit
1.6 Guide console
1.7 Spring holder
1.8 Crankshaft

TCA

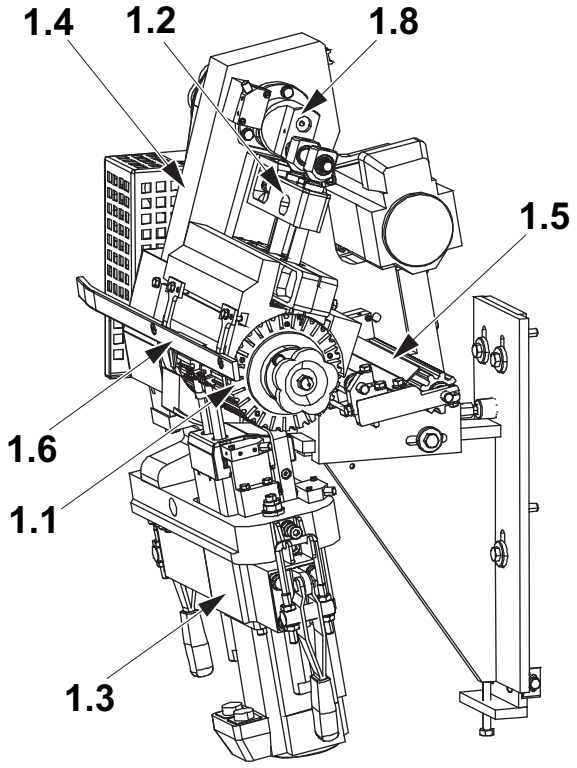

1-1 Applicator Unit - Check . . . . . 1 - 5

1-2 Applicator Unit - Set Angle (TBA) . . . . . 1 - 6

1-3 Applicator Unit - Set Height and Straw Position (TBA) . . . . . 1 - 7

1-4 Applicator Unit - Set Height (TCA) . . . . . 1 - 8

1.1 Feed Wheel Unit. . . . . 1 - 10

1.1-1 Feed Wheel Unit - Check Parts (TBA) . . . . . 1 - 10

1.1-2 Feed Wheel Unit - Check Parts (TCA) . . . . . 1 - 16

1.1-3 Feed Wheel Unit - Change Parts . . . . . 1 - 19

1.1-4 Feed Wheel Unit - Set . . . . . 1 - 20

1.1.1 Feed Wheel . . . . . 1 - 22

1.1.1-1 Feed Wheel - Change (TBA) . . . . . 1 - 22

1.1.1-2 Feed Wheel - Change (TCA) . . . . . 1 - 24

1.2 Cutting Unit . . . . . 1 - 25

1.2-1 Cutting Unit - Check Parts . . . . . 1 - 25

1.2-2 Cutting Unit - Change Parts . . . . . 1 - 28

1.3 Squeezer. . . . . 1 - 31

1.3.1 Crank Housing . . . . . 1 - 31

1.3.1-1 Crank Housing - Check Parts (TBA) . . . . . 1 - 31

1.3.1-2 Crank Housing - Change Parts (TBA) . . . . . 1 - 34

1.3.2 Drive Motor . . . . . 1 - 38

1.3.2-1 Drive Motor - No Procedure Described . . . . . 1 - 38

1.3.3 Pressure Arm . . . . . 1 - 39

1.3.3-1 Pressure Arm - Check Parts (TBA) . . . . . 1 - 39

1.3.3-2 Pressure Arm - Change Parts (TBA) . . . . . 1 - 40

1.3.3-3 Pressure Arm - Set (TBA) . . . . . 1 - 41

1.3.3-4 Pressure Arm - Set Override (TBA) . . . . . 1 - 42

1.3.4 Pressure Unit . . . . . 1 - 43

1.3.4-1 Pressure Unit - Set (TCA) . . . . . 1 - 43

1.3.5 Lock Holder . . . . . 1 - 44

1.3.5-1 Lock Holder - Set Gun Holder (TCA) . . . . . 1 - 44

1.4 Frame . . . . . 1 - 45

1.4.1 Frame Housing . . . . . 1 - 45

1.4.1-1 Frame Housing - Check Timing Belt (TBA) . . . 1 - 45

1.4.1-2 Frame Housing - Check Timing Belt (TCA) . . . 1 - 47

1.4.1-3 Frame Housing - Change Timing Belt . . . . . 1 - 48

1.4.2 Belt Tightener . . . . . 1 - 54

1.4.2-1 Belt Tightener - Check Parts . . . . . 1 - 54

1.4.2-2 Belt Tightener - Change Parts . . . . . 1 - 59

1.5 Ladderband Unit . . . . . 1 - 61

1.5.1 Ladder Band Guide . . . . . 1 - 61

1.5.1-1 Ladder Band Guide - Set . . . . . 1 - 61

1.5.2 Inductive Switch . . . . . 1 - 62

1.5.2-1 Inductive Switch - Check Parts . . . . . 1 - 62

1.5.2-2 Inductive Switch - Change Parts . . . . . 1 - 63

1.6 Guide Console . . . . . 1 - 64

1.6-1 Guide Console - Change Guide Arms (TBA) . . 1 - 64

1.6-2 Guide Console - Set Gun Holder (TBA) . . . . . 1 - 66

1.6-3 Guide Console - Set (TCA) . . . . . 1 - 67

1.7 Spring Holder . . . . . 1 - 68

1.7-1 Spring Holder - Check Parts (TBA) . . . . . 1 - 68

1.7-2 Spring Holder - Change Compression Springs (TBA) . . . . . 1 - 69

1.7-3 Spring Holder - Set Leaf Spring (TBA) . . . . . 1 - 71

1.8 Crankshaft . . . . . 1 - 72

1.8-1 Crankshaft - Check Parts . . . . . 1 - 72

1.8-2 Crankshaft - Change Parts . . . . . 1 - 79

1-1 Applicator Unit - Check

Machine Status	Power Supply Disconnector OFF Air Valve OFF
SPC Reference	663301

Check the resistance in the applicator unit by turning the stellar knob (1) to the left, as indicated in the illustrations below. It should be possible to turn it by hand without difficulties.

TBA

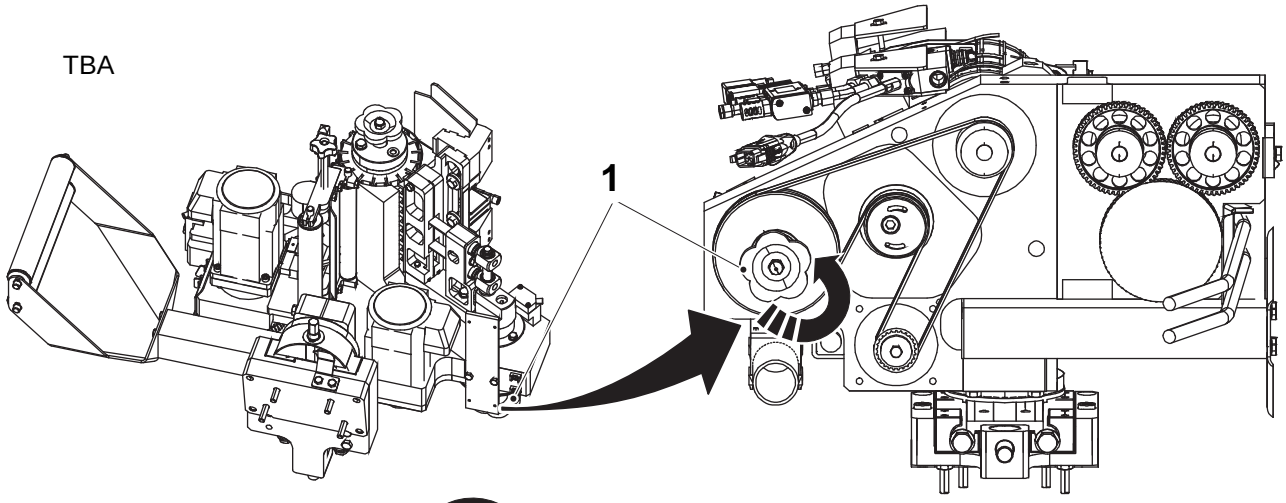

TCA

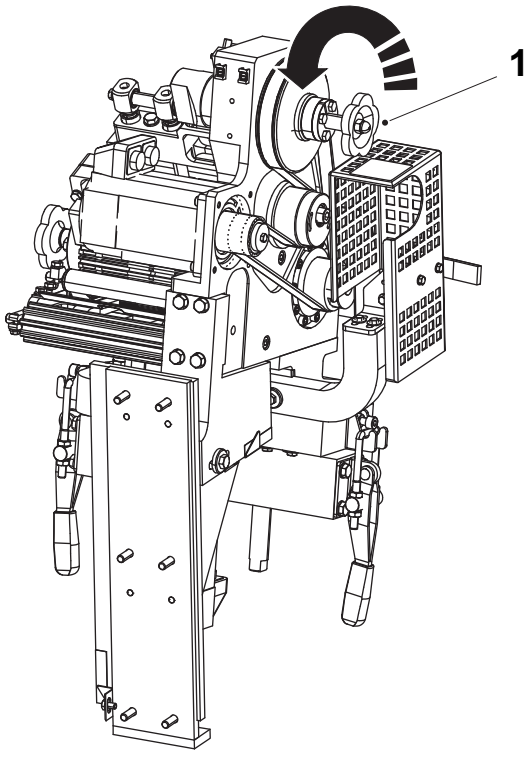

1 Stellar knob

1-2 Applicator Unit - Set Angle (TBA)

Machine Status	Power Supply Disconnector OFF Air Valve OFF
SPC Reference	663301

Note! This is only a guideline setting. For finer adjustment of the straw angle, operate the machine and run packages through the machine. Check the angle and adjust accordingly.

a) Loosen the screw (1), and turn the applicator unit to the angle chosen in the recipe on the TPOP. Use the scale (2) to set the value. The angle can also be read in Section 12.1 Guideline Settings, TBA.

b) Tighten the screw (1).

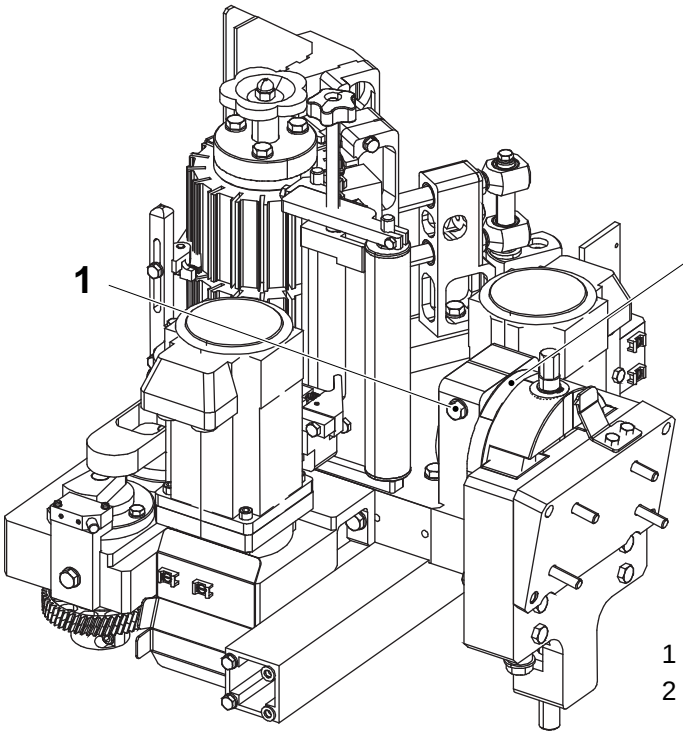

1 Screw
2 Scale

1-3 Applicator Unit - Set Height and Straw Position (TBA)

Machine Status	Power Supply Disconnector OFF Air Valve OFF
SPC Reference	663301

Note! This is only a guideline setting. For finer adjustments of the straw height, operate the machine and run packages through the machine. Check the height and adjust accordingly.

a) Set the height of the straw position on the package by turning the adjusting screw (1). Use the scale (2) to set the value, according to table in Section 12.1 Guideline Settings, TBA.

b) Make sure that the straw foil does not go outside of the package bottom.

c) The height distance Y must be the same at the top and at the bottom of the package, see the illustration below.

d) To adjust the horizontal distance X of the straw, use the Straw Position function on the TPOP, see Section 2.6 Setting Menu in the Operation Manual belonging to the machine. The distance X must be the same on both sides of the straw, see the illustration below.

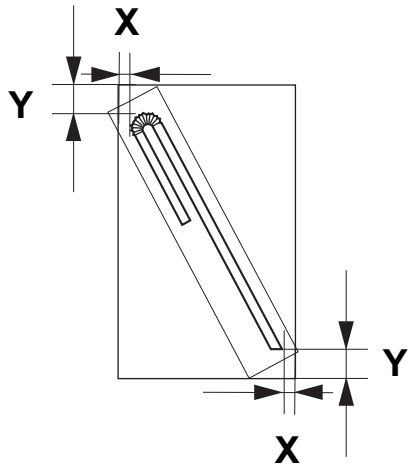

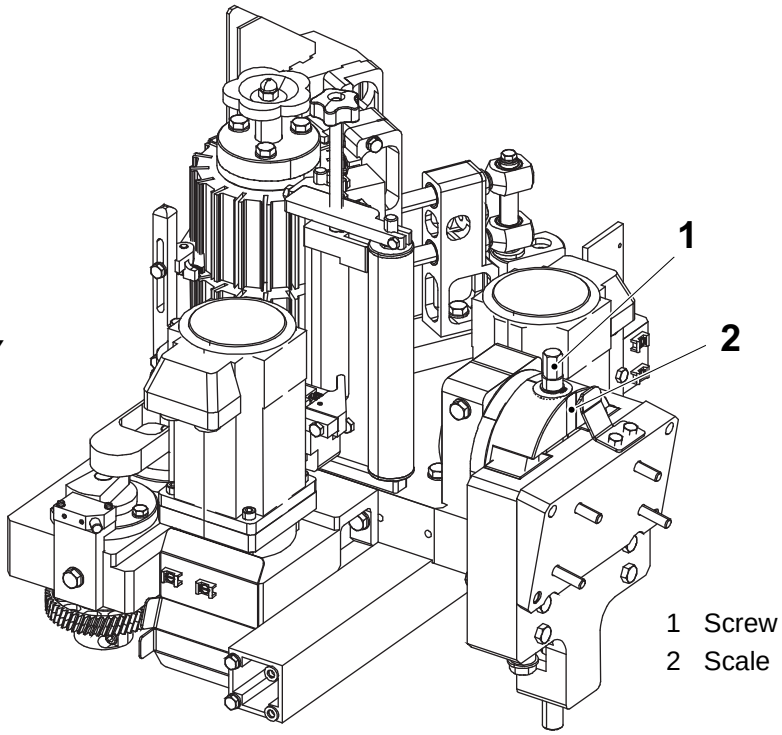

1 Screw
2 Scale

1-4 Applicator Unit - Set Height (TCA)

Machine Status	Power supply disconnector OFF Air valve OFF
SPC Reference	663301

a) Operate the machine and apply some straws for reference.

b) Read the value on the scale (1).

c) Loosen the screws (2).

d) Adjust the height upwards or downwards with the adjusting screw (3).

e) Tighten the screws (2).

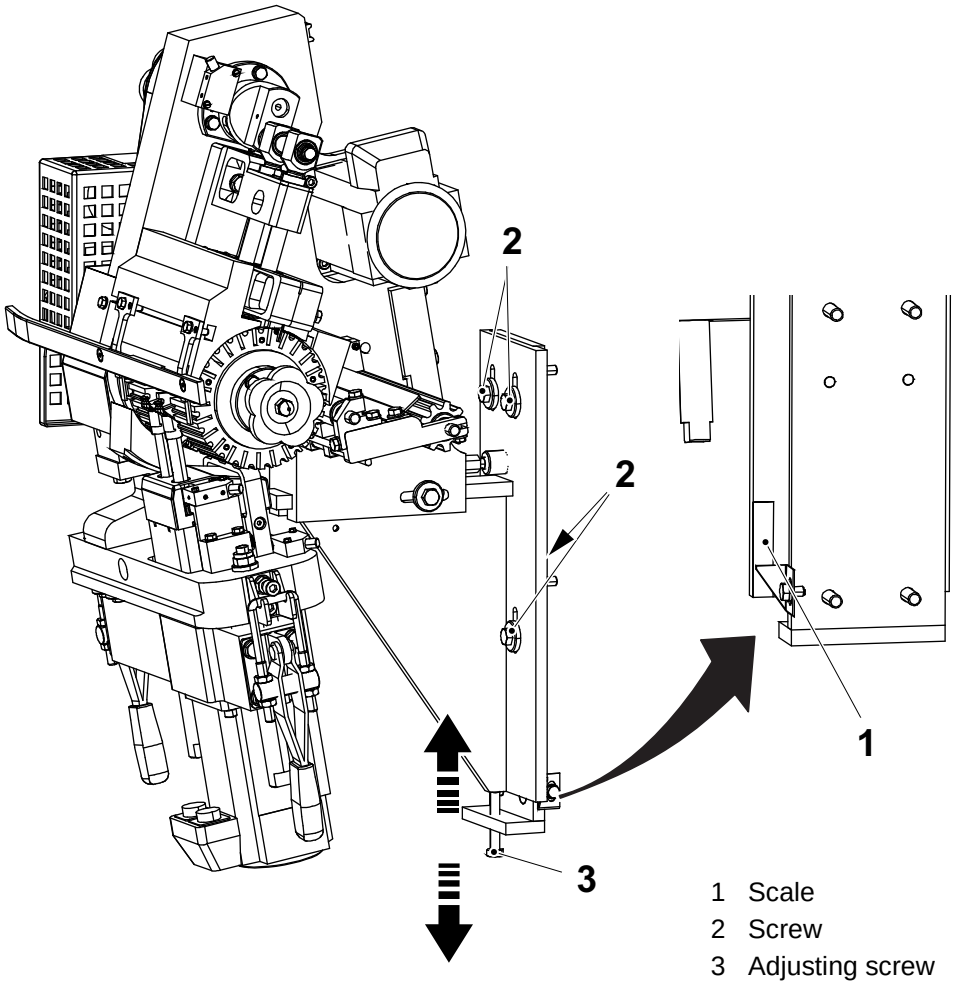

(Cont'd)

(Cont'd)

f) Read the value on the scale (4).

g) Loosen the screws (5).

h) Set the squeezers (6) in their outer position.

i) Put a package on the conveyor and put a straw between the package and the squeezers. Set the horizontal depth position by turning the adjusting screw (7). The squeezers are to press the straw gently against the package, see the illustration below.

j) Tighten the screws (5).

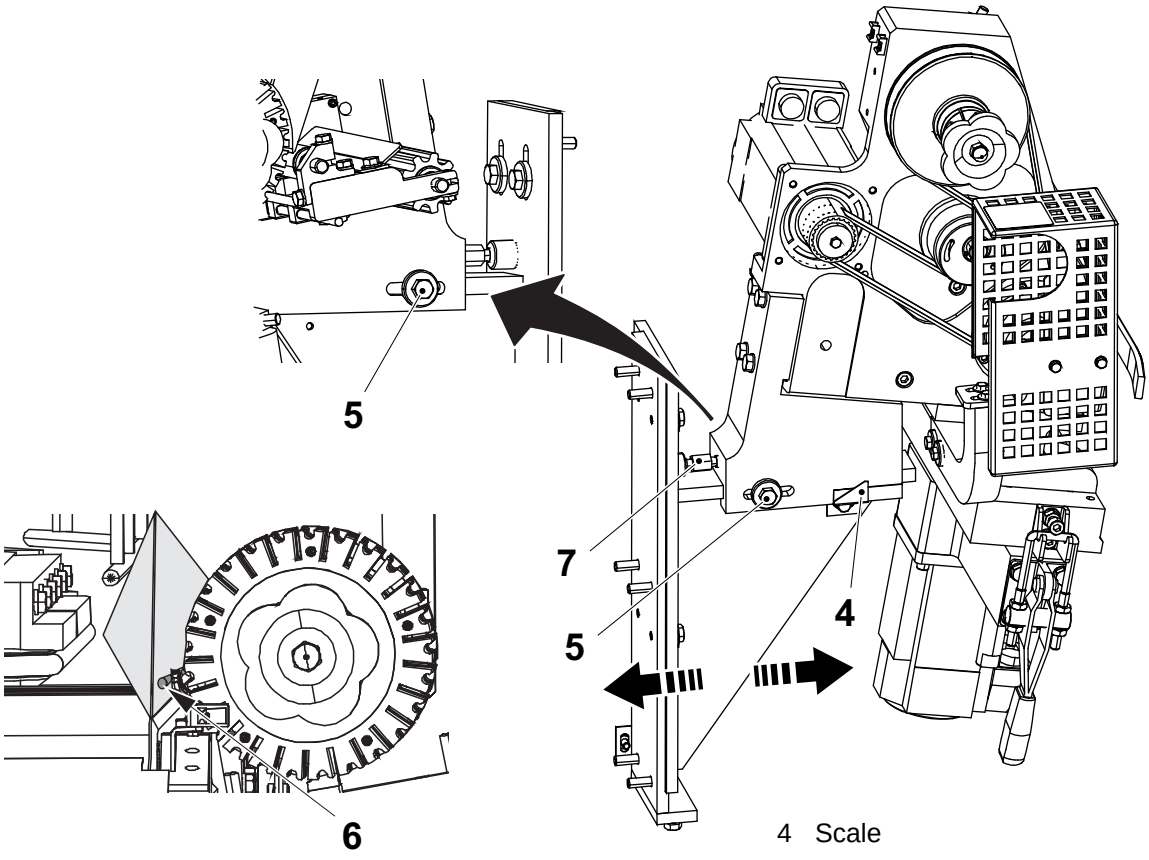

4 Scale
5 Screw
6 Squeezer
7 Adjusting screw

1.1 Feed Wheel Unit

1.1-1 Feed Wheel Unit - Check Parts (TBA)

Machine Status	Power Supply Disconnector OFF Air Valve OFF
Special Equipment	Template TP No. 2959983
SPC Reference	2929773

WARNING

Burn hazard.

The hotmelt unit can be very hot and there is risk of severe burns. Use caution when working near the hotmelt unit.

a) Turn the bearing housing (1) to move the pressure arms (2) to a position outside the feed wheel slots.

b) Turn the stellar knob (3) until the knife (4) is in its outer position.

c) Turn the stellar knob (5) to the left until the feed wheel (6) is released from the shaft.

d) Press the leaf spring (7) outwards from the feed wheel and pull up the feed wheel.

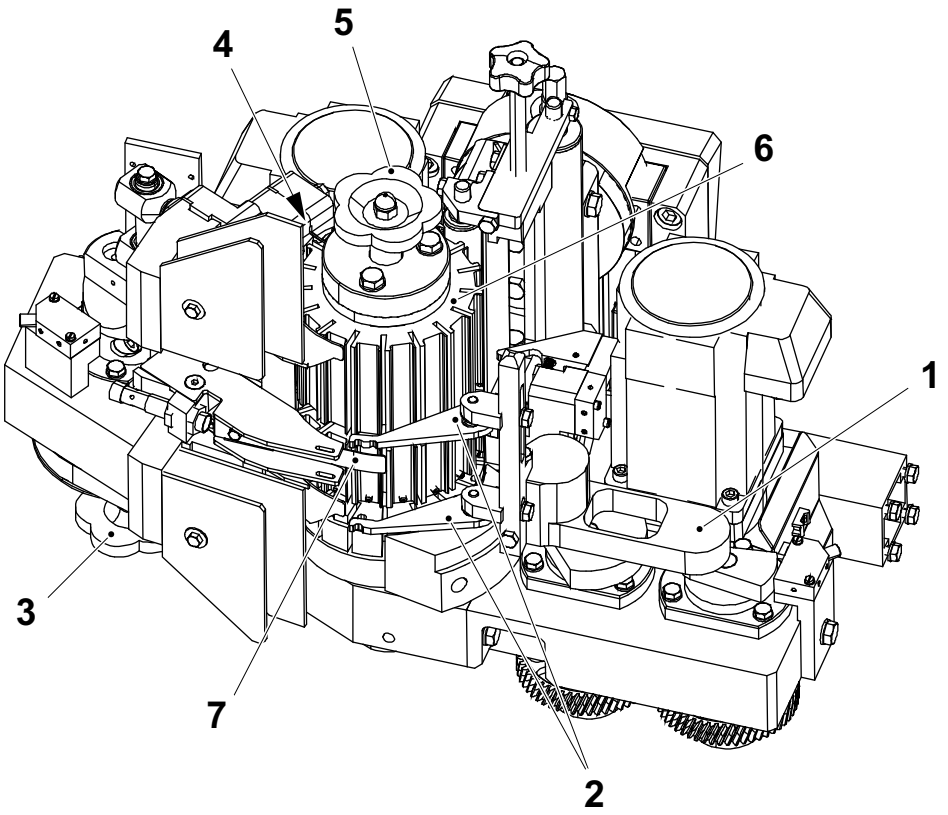

1 Bearing housing
2 Pressure arm
3 Stellar knob
4 Knife
5 Stellar knob
6 Feed wheel
7 Leaf spring

(Cont'd)

(Cont'd)

e) Loosen the screw (8) and rotate the applicator unit approximately 90° to the left. Cut the ladder band before turning.

f) Tighten the screw (8) again.

g) Turn the applicator unit back.

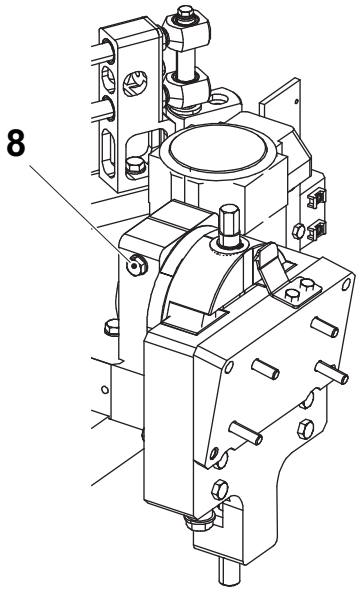

8 Screw

(Cont'd)

(Cont'd)

h) Assemble the template (9) and remove the screw (10).

i) Remove the template. Remove the screw (11).

CAUTION

Risk of personal injury.

The knife is very sharp. Be careful when working near the knife.

j) Remove the screws (12) and (13), and remove the ladder band guide (14).

k) Remove the knife holding unit (15).

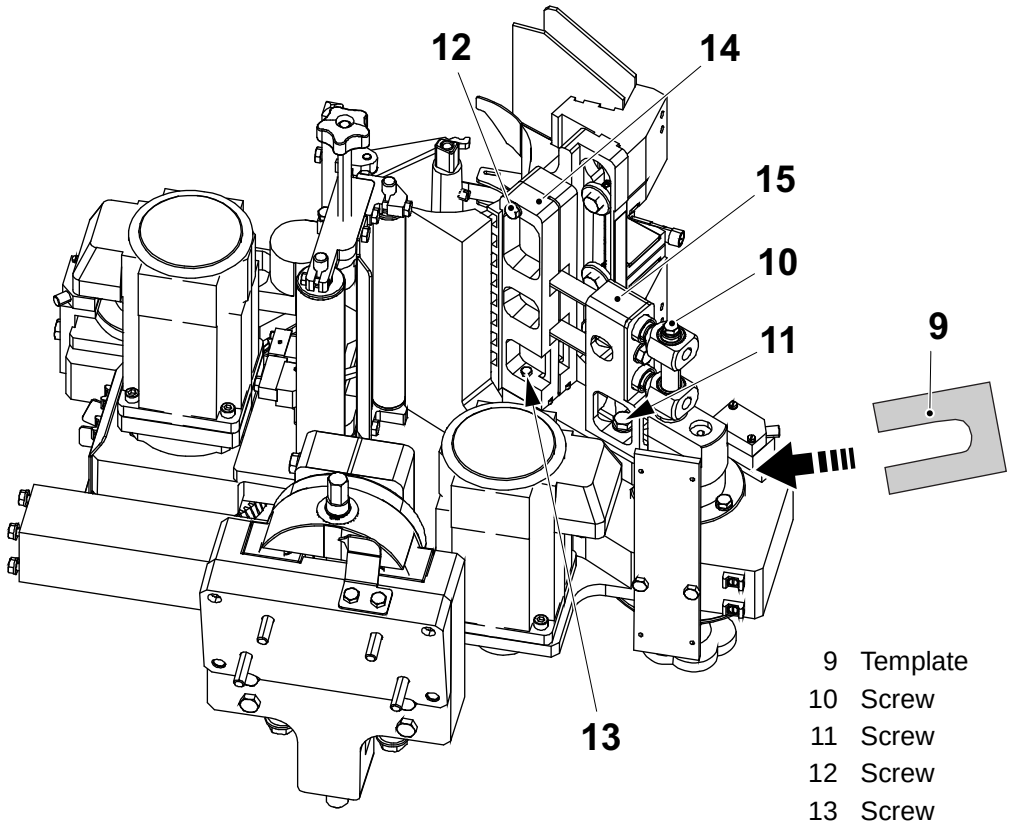

9 Template
10 Screw
11 Screw
12 Screw
13 Screw
14 Ladder band guide
15 Knife holding unit

(Cont'd)

(Cont'd)

l) Remove the screw (16) and the guide console (17).

m) Remove the screw (18) and the ladder band guide (19)

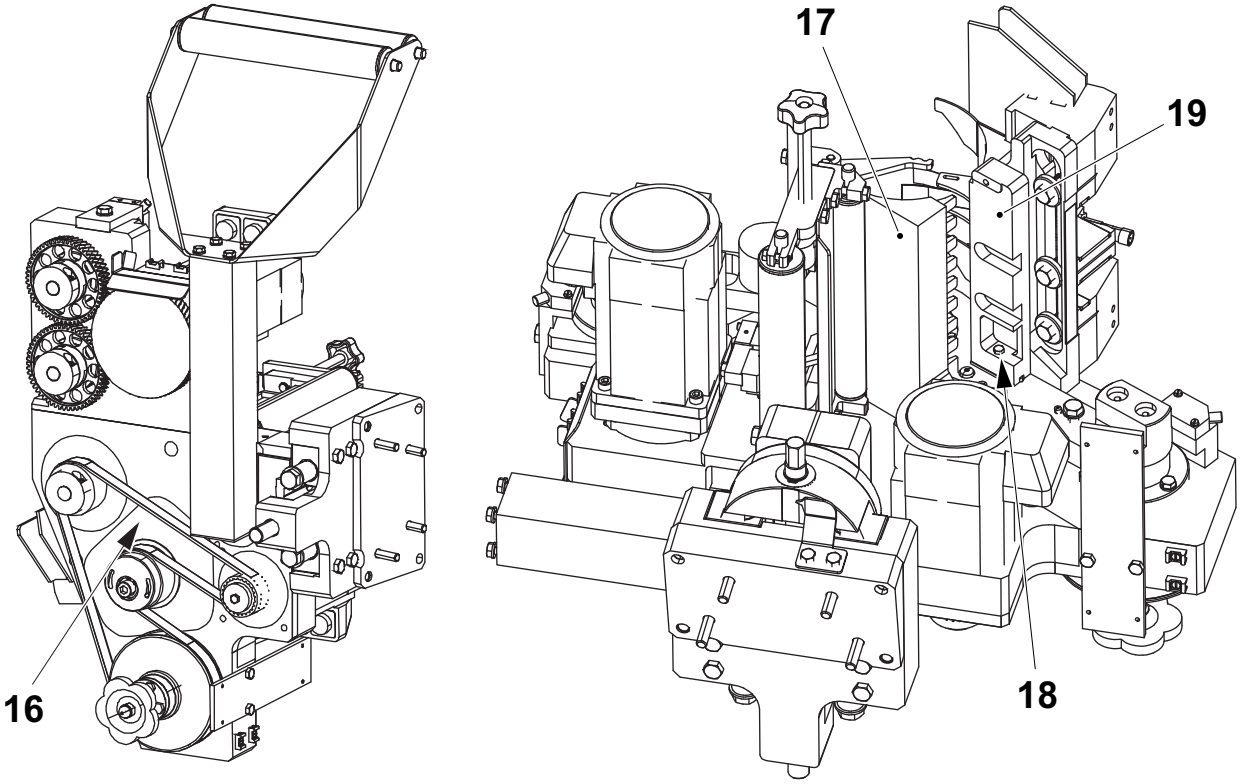

16 Screw
17 Guide console
18 Pressure arm unit
19 Ladder band guide

(Cont'd)

(Cont'd)

n) Remove the screws (20) and the pressure arm unit (21).

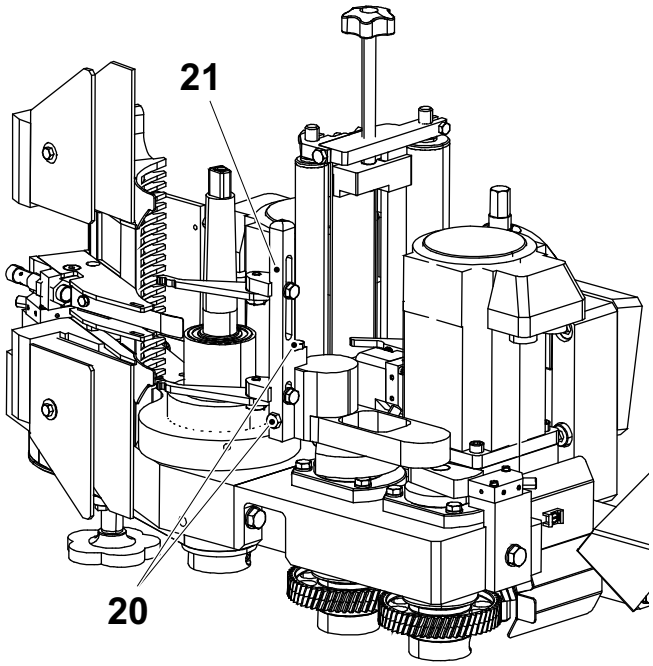

20 Screw
21 Pressure arm unit

(Cont'd)

(Cont'd)

o) Remove the feed wheel shaft (22).

p) Check the retaining ring (23), the ball bearings (24), and the axle bolt (25) for wear or damage. Change if necessary, see Procedure 1.1-3 Feed Wheel Unit - Change Parts.

q) Assemble in the reverse order.

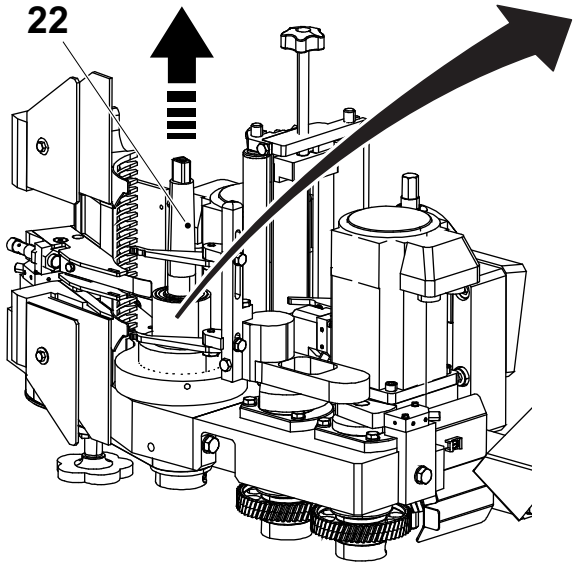

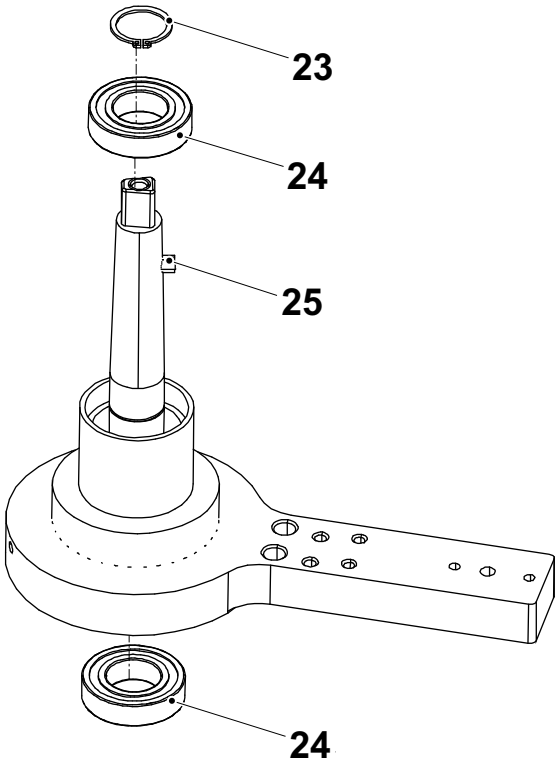

22 Feed wheel shaft
23 Retaining ring
24 Ball bearing
25 Axle bolt

1.1-2 Feed Wheel Unit - Check Parts (TCA)

Machine Status	Power Supply Disconnector OFF Air Valve OFF
Special Equipment	Template TP No. 2959983
SPC Reference	2929773

a) Lower the pressure unit (1) by turning the handles (2) upwards.

b) Remove the screw (3).

c) Lift up the cutting unit and remove the screws (4). Remove the knife (5).

CAUTION

Risk of personal injury.

The knife is very sharp. Be careful when working near the knife.

d) Turn the stellar knob (6) to the left until the feed wheel unit (7) is released from the shaft.

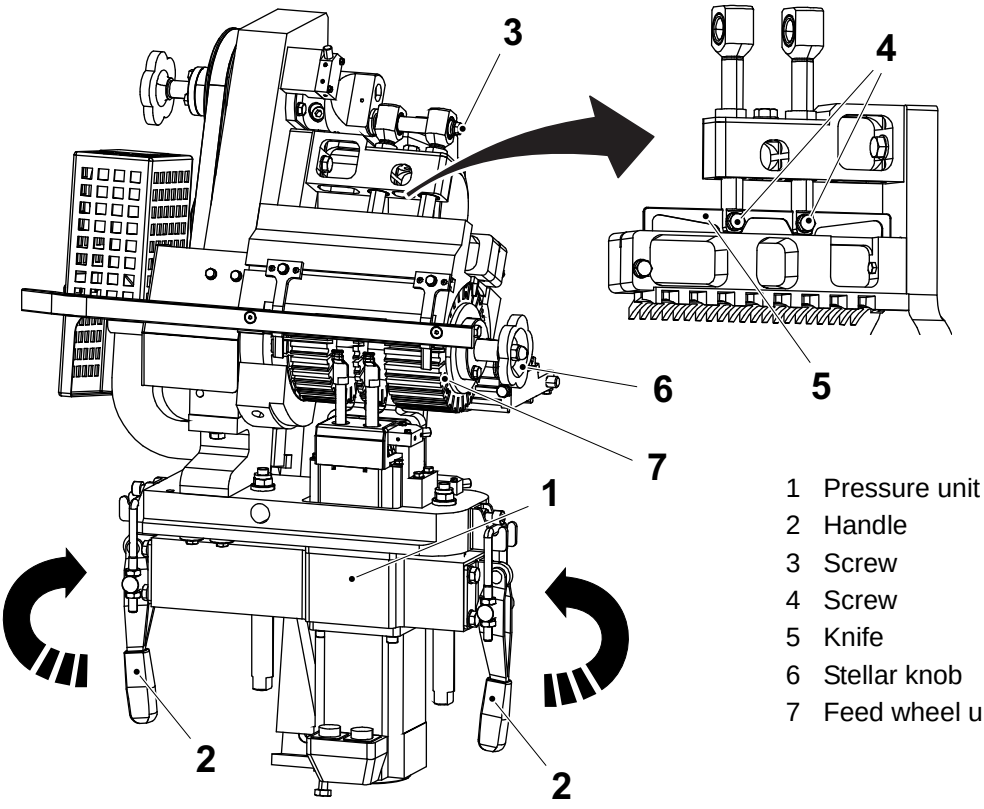

1 Pressure unit
2 Handle
3 Screw
4 Screw
5 Knife
6 Stellar knob
7 Feed wheel unit

(Cont'd)

(Cont'd)

e) Remove the screw (8) and remove the guide (9).

f) Remove the hotmelt gun unit by loosening the screws (10).

WARNING

Burn hazard.

The hotmelt gun and the cover are very hot. Be careful when working near the gun and the cover.

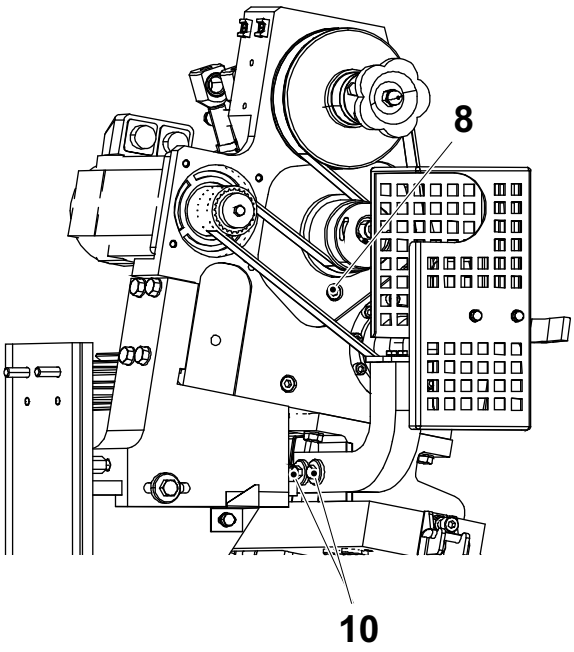

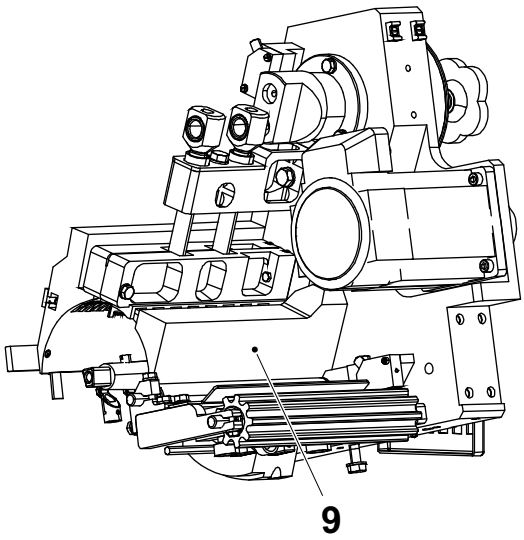

8 Screw
9 Guide
10 Screw

(Cont'd)

(Cont'd)

g) Loosen the screw (11).

h) Turn the belt tightener 3/4 of a revolution with the hook spanner (12) to release the belt tension. Tighten the screw (11) again.

i) Turn the shaft (13) and check for play in the ball bearings. Change if necessary, see item b) to c) in Procedure 1.1-3 Feed Wheel Unit - Change Parts.

j) Check the axle bolt (14), and the retaining ring (15) for wear or damage. Change if necessary, see item b) to c) in Procedure 1.1-3 Feed Wheel Unit - Change Parts.

k) Assemble in the reverse order.

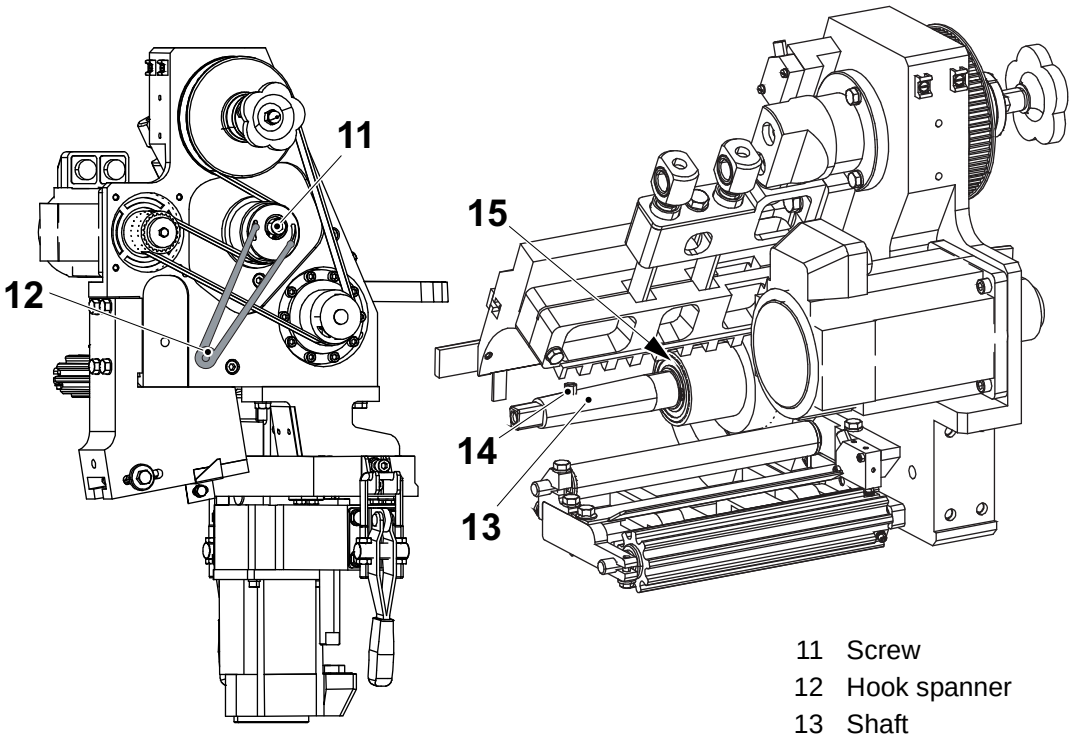

11 Screw
12 Hook spanner
13 Shaft
14 Axle bolt
15 Retaining ring

1.1-3 Feed Wheel Unit - Change Parts

Machine Status	Power Supply Disconnector OFF Air Valve OFF
Special Equipment	Template TP No. 2959983
SPC Reference	2929773

a) To change the retaining ring (1), the ball bearings (2), and the axle bolt (3), perform items a) to o) in Procedure 1.1-1 Feed Wheel Unit - Check Parts (TBA) for TBA and items a) to h) in Procedure 1.1-2 Feed Wheel Unit - Check Parts (TCA) for TCA.

b) For TCA: Loosen the screw (4). Remove the guide (5), and remove the cutting unit (6)

c) Change the retaining ring, the ball bearings, and the axle bolt.

d) Assemble in the reverse order.

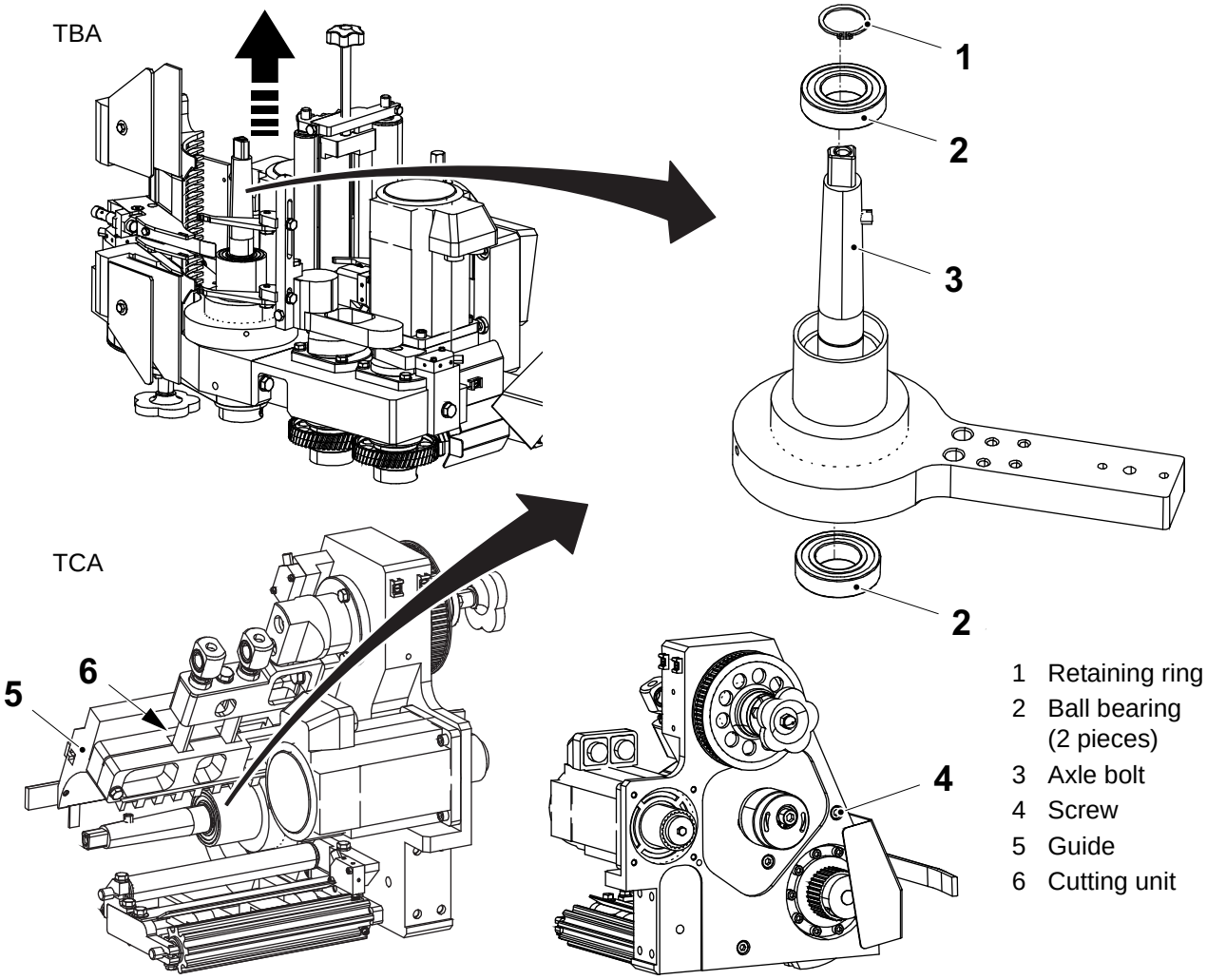

1.1-4 Feed Wheel Unit - Set

Machine Status	Power Supply Disconnector OFF Air Valve OFF
Special Equipment	Template TP No. 2959983
SPC Reference	2929773

a) Turn the feed wheel by hand with the stellar knob (1) in order to set the knife (2) into the feed wheel slot.

b) Fit the template (3).

c) Loosen the screws (4).

TBA

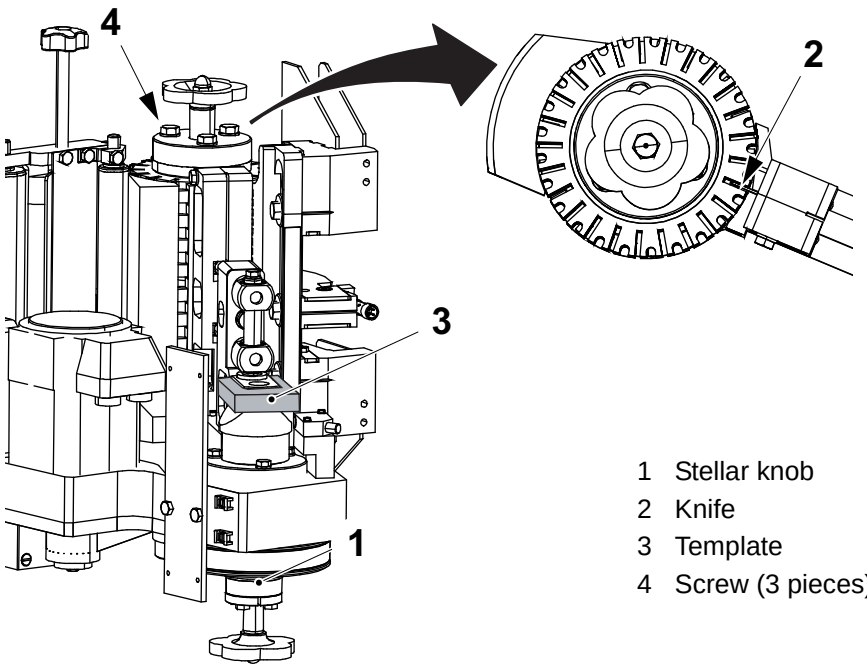

1 Stellar knob
2 Knife
3 Template
4 Screw (3 pieces)

TCA

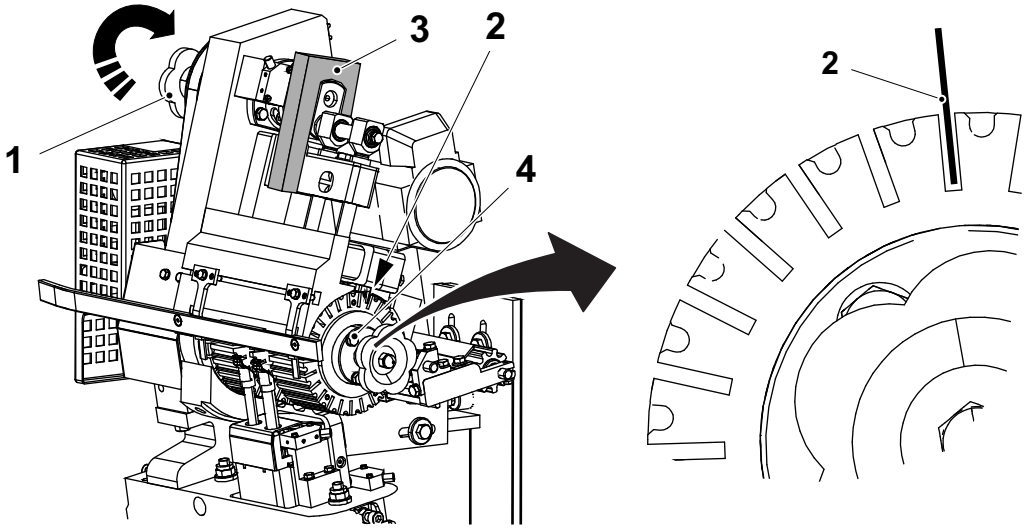

(Cont'd)

(Cont'd)

d) Adjust the feed wheel so that the knife (2) is slightly to the side in the feed wheel slot

e) Tighten the screws (4).

f) Remove the template (3).

g) Turn the feed wheel by hand to check that the knife moves without touching the slot edges.

TBA

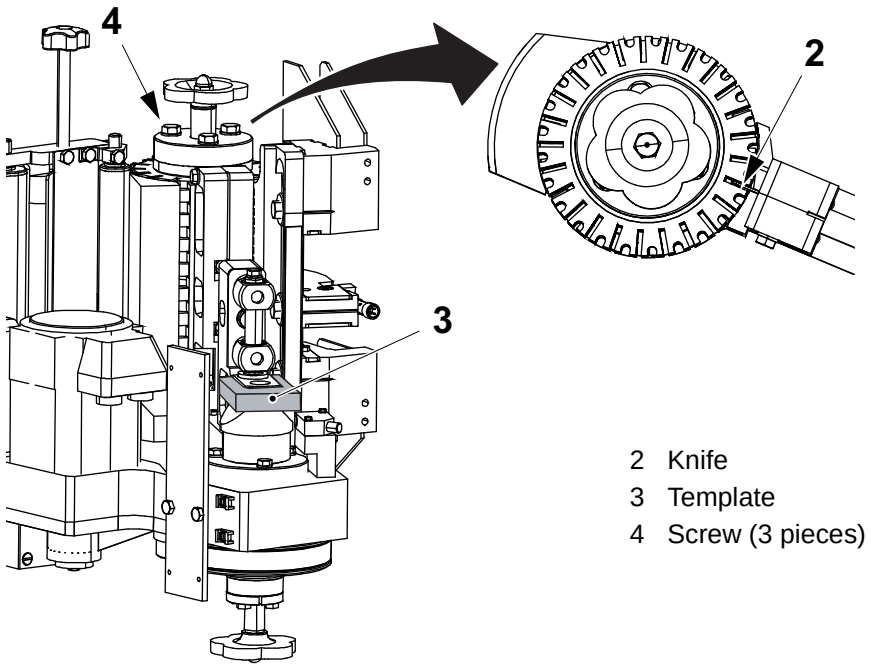

2 Knife
3 Template
4 Screw (3 pieces)

TCA

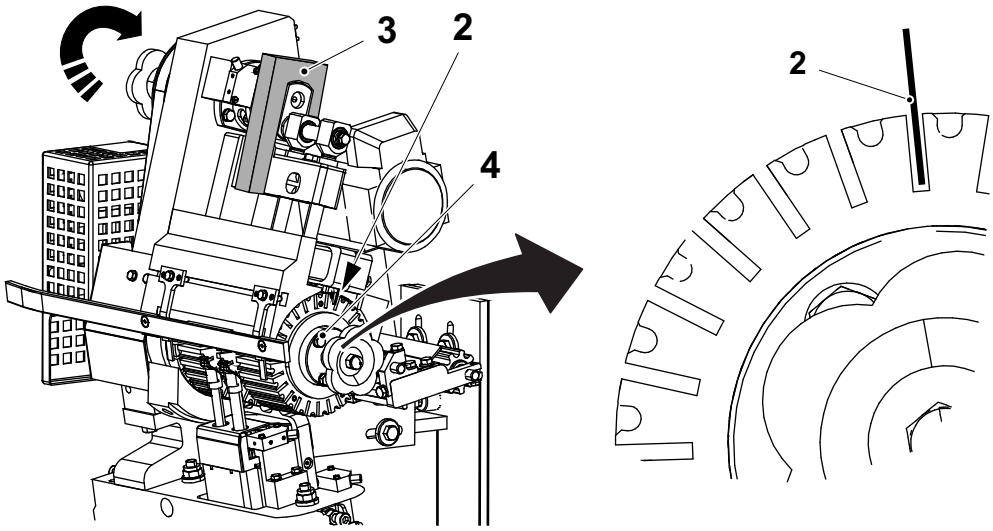

1.1.1 Feed Wheel

1.1.1-1 Feed Wheel - Change (TBA)

Machine Status	Power Supply Disconnector OFF Air Valve OFF
SPC Reference	2829443

a) Turn the bearing housing (1) to move the pressure arms (2) to a position outside the feed wheel slots.

b) Turn the stellar knob (3) until the knife (4) is in its outer position.

c) Loosen the screws (6).

d) Turn the stellar knob (7) to the left until the feed wheel (8) is released from the shaft.

e) Press the leaf spring (9) outwards from the wheel and pull up the feed wheel.

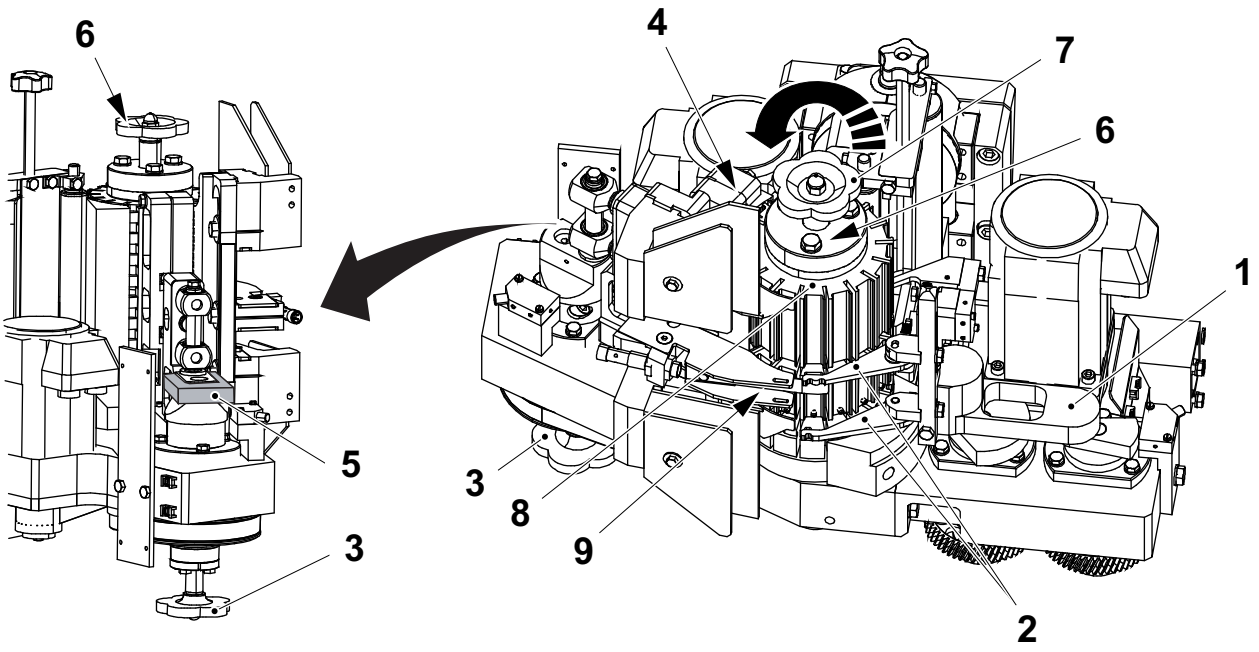

1 Bearing housing
2 Pressure arm
3 Stellar knob
4 Knife
5 Template
6 Screw (3pieces)
7 Stellar knob
8 Feed wheel
9 Leaf spring

(Cont'd)

(Cont'd)

f) Remove the screws (6) and pull out the centre parts from the feed wheel.

g) Lift the centre parts into the new feed wheel and fit the screws (6) in position. Tighten the screws loosely by hand.

h) Lift the feed wheel unit back into the machine.

i) Tighten the stellar knob (7) until the feed wheel fits in its correct position.

j) Adjust the feed wheel so that the knife (4) is in the centre of the slot.

k) Fit the template (5).

l) Tighten the screws (6) and remove the template (5).

m) Turn the feed wheel by hand to check that the knife moves without touching the slot edges.

n) Adjust the pressure arms (2), see Section 1.2-1 Cutting Unit - Check Parts.

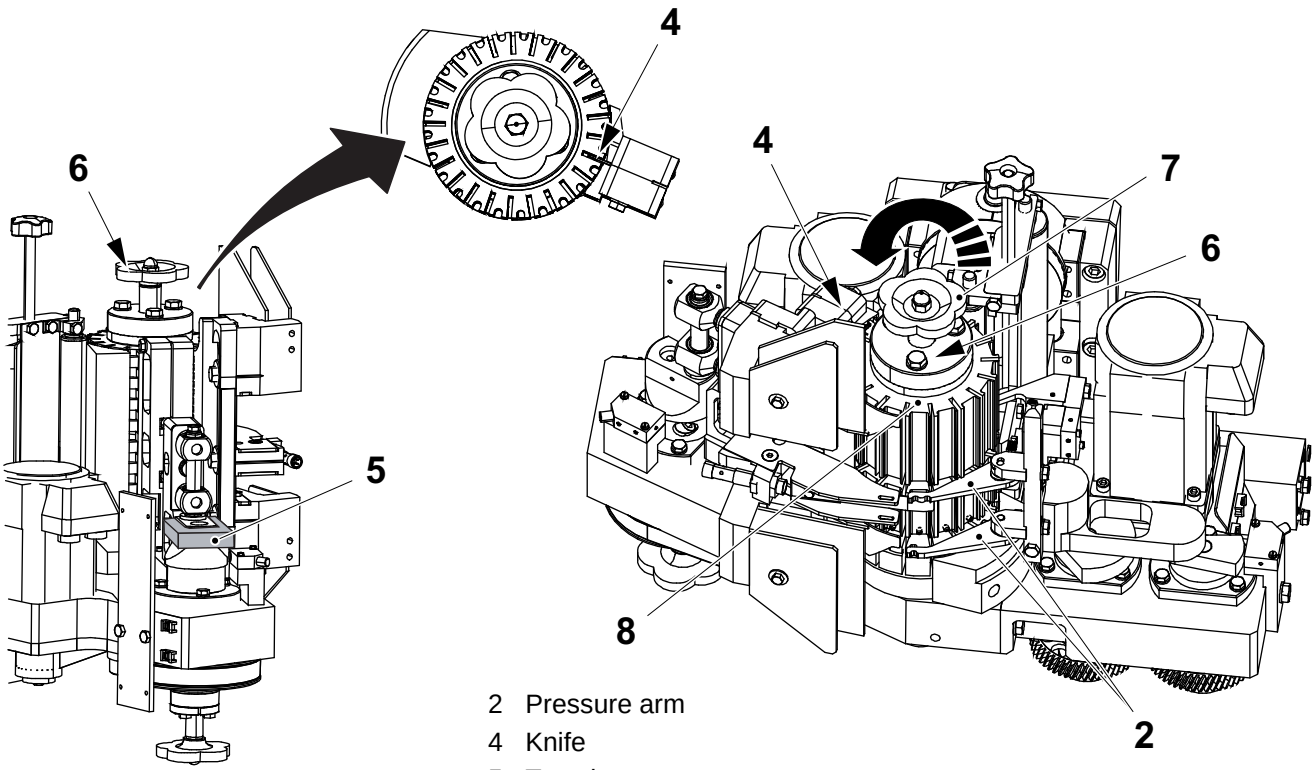

2 Pressure arm
4 Knife
5 Template
6 Screw (3 pieces)
7 Stellar knob
8 Feed wheel

1.1.1-2 Feed Wheel - Change (TCA)

Machine Status	Power Supply Disconnector OFF Air Valve OFF
Special Equipment	Template TP No. 2959983
SPC Reference	2829443

a) Lower the pressure unit (1) by turning the handles (2) upwards.

b) Turn the stellar knob (3) until the knife (4) is in its outer position.

c) Turn the stellar knob (5) to the left until the feed wheel unit (6) is released from the shaft.

d) Change the feed wheel unit.

e) Assemble in the reverse order.

f) Turn the handles (2) downwards to raise the pressure unit.

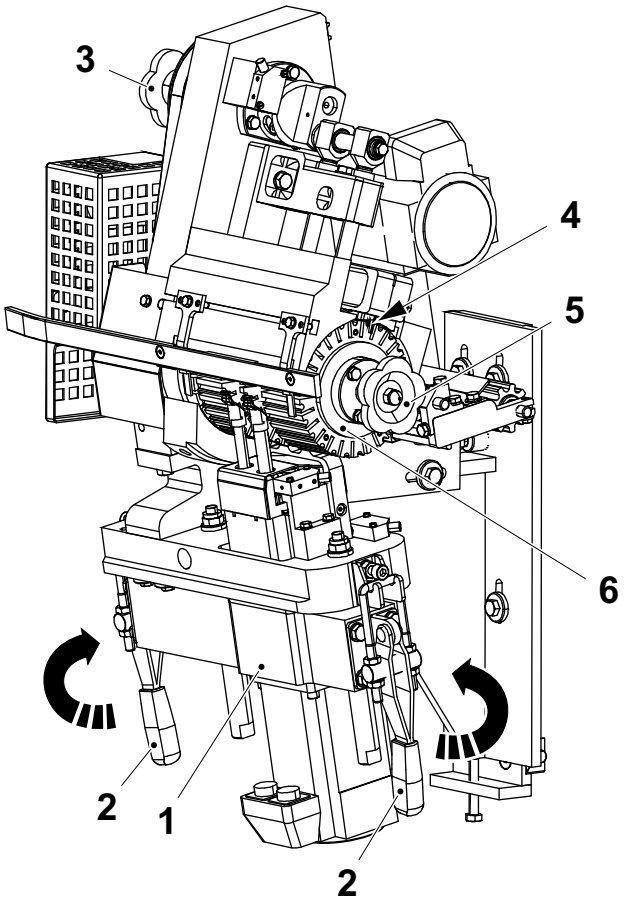

1 Pressure unit
2 Handle
3 Stellar knob
4 Knife
5 Stellar knob
6 Feed wheel unit

1.2 Cutting Unit

1.2-1 Cutting Unit - Check Parts

Machine Status	Power Supply Disconnector OFF Air Valve OFF
SPC Reference	2829431

CAUTION

Risk of personal injury.

The knife is very sharp. Be careful when working near the knife.

a) Check that the knife cuts the straws satisfactorily. If not, turn the stellar knob (1) until the knife (2) is in its outer position.

b) Assemble the template (3).

c) Remove the screw (4).

TBA

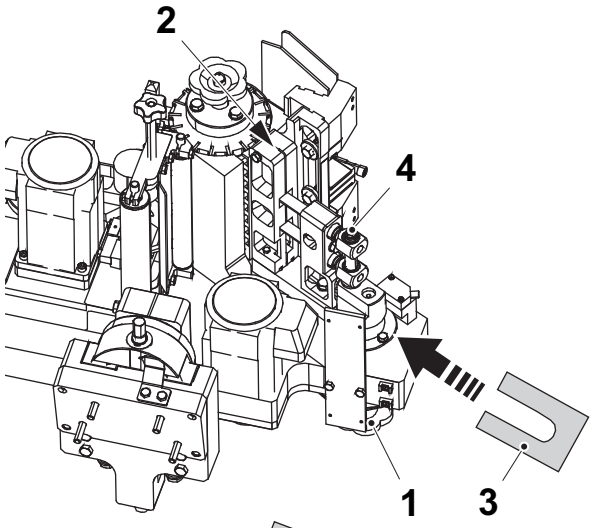

TCA

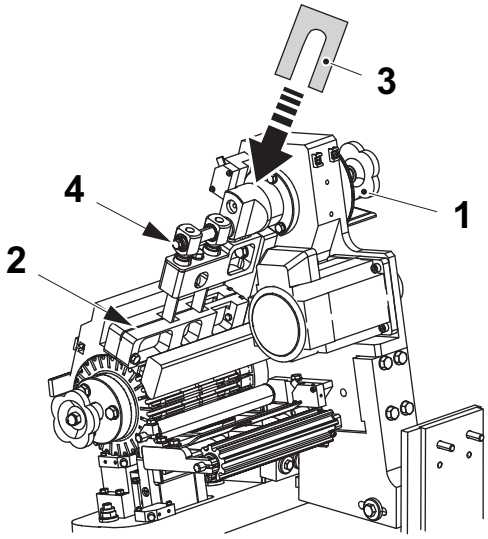

1 Stellar knob
2 Knife
3 Template
4 Screw

(Cont'd)

(Cont'd)

d) Remove the template (3) and loosen the screw (5).

e) Remove the knife holder unit (6).

f) Check the knife (2) for wear or damage. Change if necessary, see 1.2-2 Cutting Unit - Change Parts.

g) Remove the screws (7) and remove the knife.

TBA

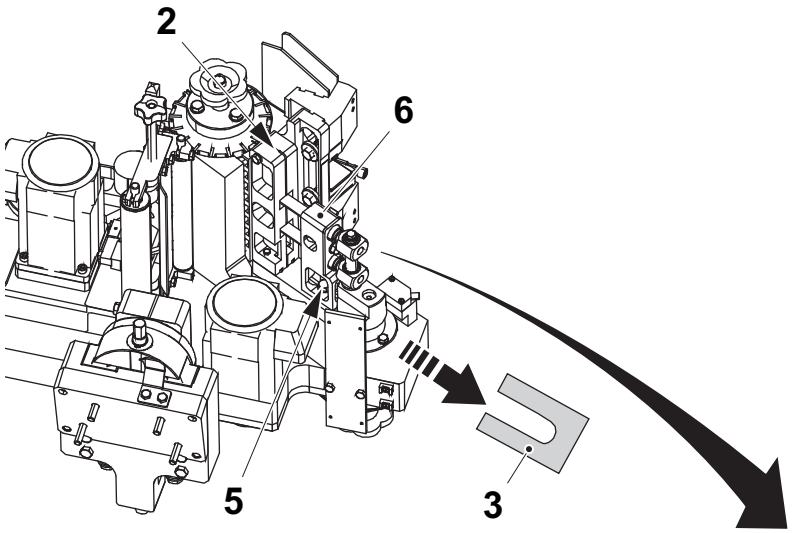

TCA

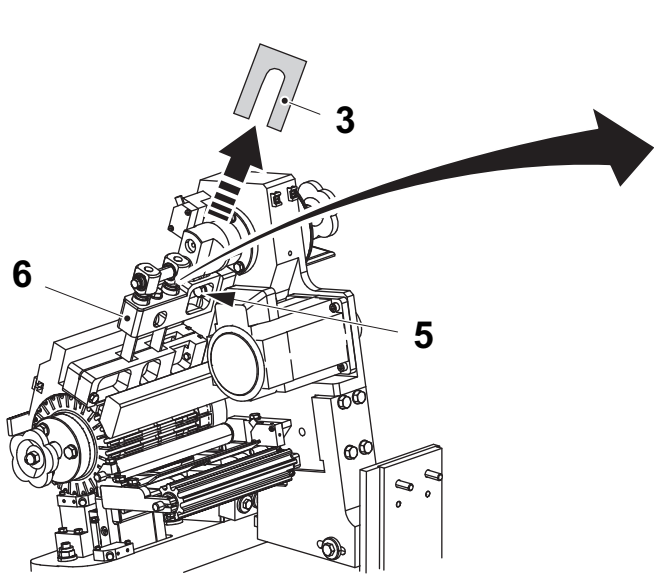

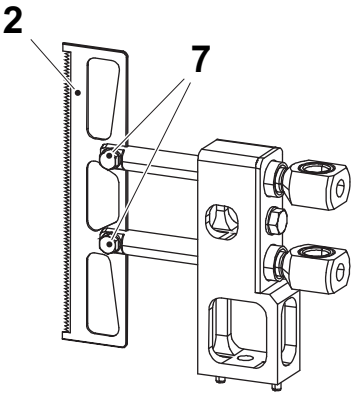

2 Knife
3 Template
5 Screw
6 Knife holder
7 Screw

(Cont'd)

(Cont'd)

h) Remove the screw (8) and the clamping plate (9).

i) Check the bearing bushings (10), the shafts (11) and the guide bushings (12) for wear or damage. Change if necessary. See 1.2-2 Cutting Unit - Change Parts.

j) Assemble in the reverse order.

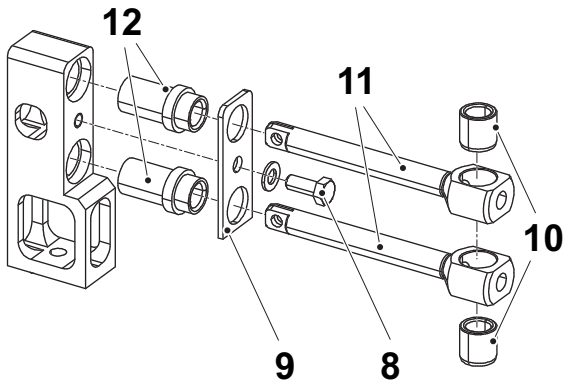

8 Screw
9 Clamping plate
10 Bearing bushing
11 Shaft
12 Guide bushing

1.2-2 Cutting Unit - Change Parts

Machine Status	Power Supply Disconnector OFF Air Valve OFF
SPC Reference	2829431

CAUTION

Risk of personal injury.

The knife is very sharp. Be careful when working near the knife.

a) Turn the stellar knob (1) until the knife (2) is in its outer position.

b) Assemble the template (3).

c) Remove the screw (4).

TBA

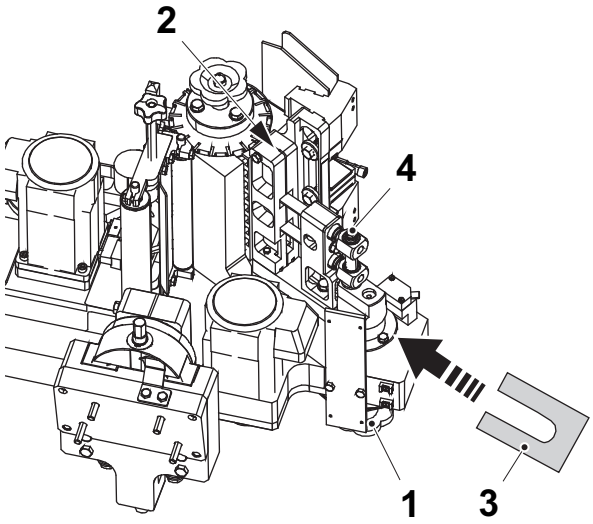

TCA

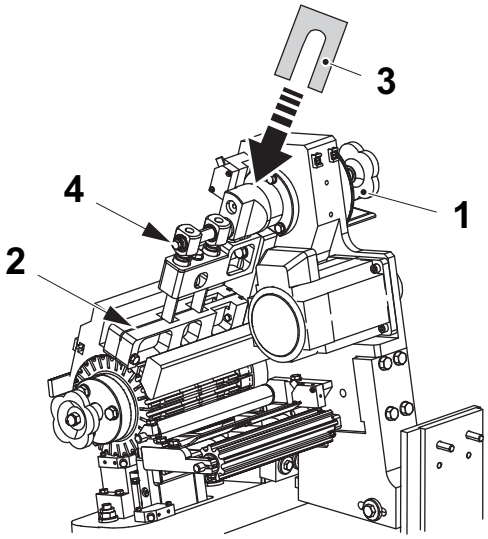

1 Stellar knob
2 Knife
3 Template
4 Screw

(Cont'd)

(Cont'd)

d) Remove the template (3) and loosen the screw (5).
e) Remove the knife holder unit (6).
f) Remove the screws (7) and change the knife (2).

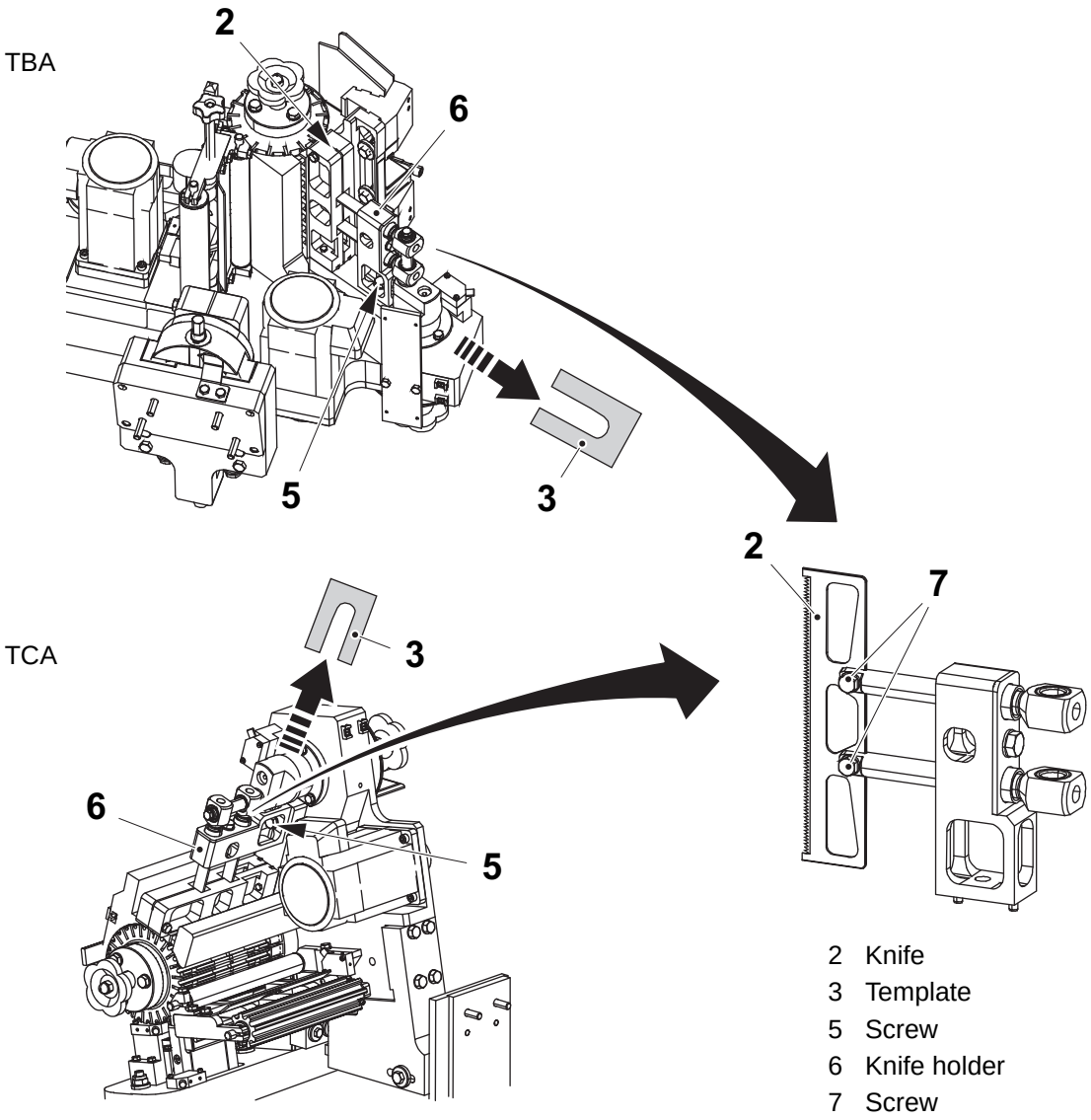

(Cont'd)

(Cont'd)

g) Remove the screw (8) and the clamping plate (9).

h) Change the bearing bushings (10), the shafts (11) and the guide bushings (12) for wear or damage.

i) Assemble in the reverse order.

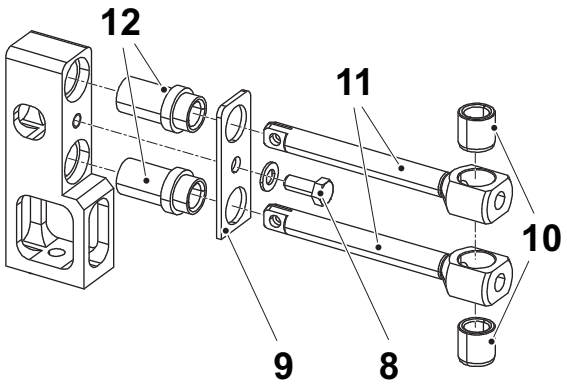

8 Screw
9 Clamping plate
10 Bearing bushing
11 Shaft
12 Guide bushing

1.3 Squeezer

1.3.1 Crank Housing

1.3.1-1 Crank Housing - Check Parts (TBA)

Machine Status	Power Supply Disconnector OFF Air Valve OFF
SPC Reference	2929771 valid for TBA

a) Turn the bearing housing (1) to move the pressure arms (2) to a position outside the feed wheel slots.

b) Remove the screws (3) and remove the pressure arm unit (4).

c) Loosen the screw (5) and remove the bearing housing (1).

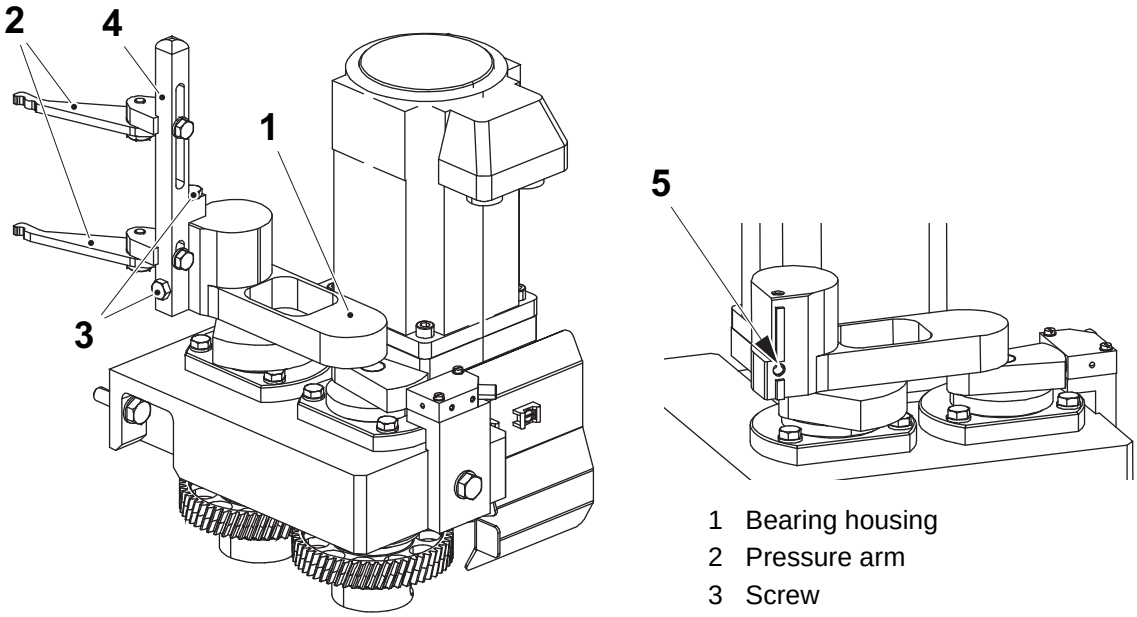

1 Bearing housing
2 Pressure arm
3 Screw
4 Pressure arm unit
5 Screw

(Cont'd)

(Cont'd)

d) Check the retaining rings (6), the ball bearings (7), and the retaining rings (8) for wear or damage. Change if necessary, see 1.3.1-2 Crank Housing - Change Parts (TBA).

CAUTION
Risk of damage to equipment.
Use a puller to remove the ball bearings.

e) Check the O-ring (9), for wear or damage. Change if necessary, see 1.3.1-2 Crank Housing - Change Parts (TBA).

f) Remove the screws (10).

g) Remove the clamping elements (11) by loosen the locking screws (12) and remove the gear wheels (13).

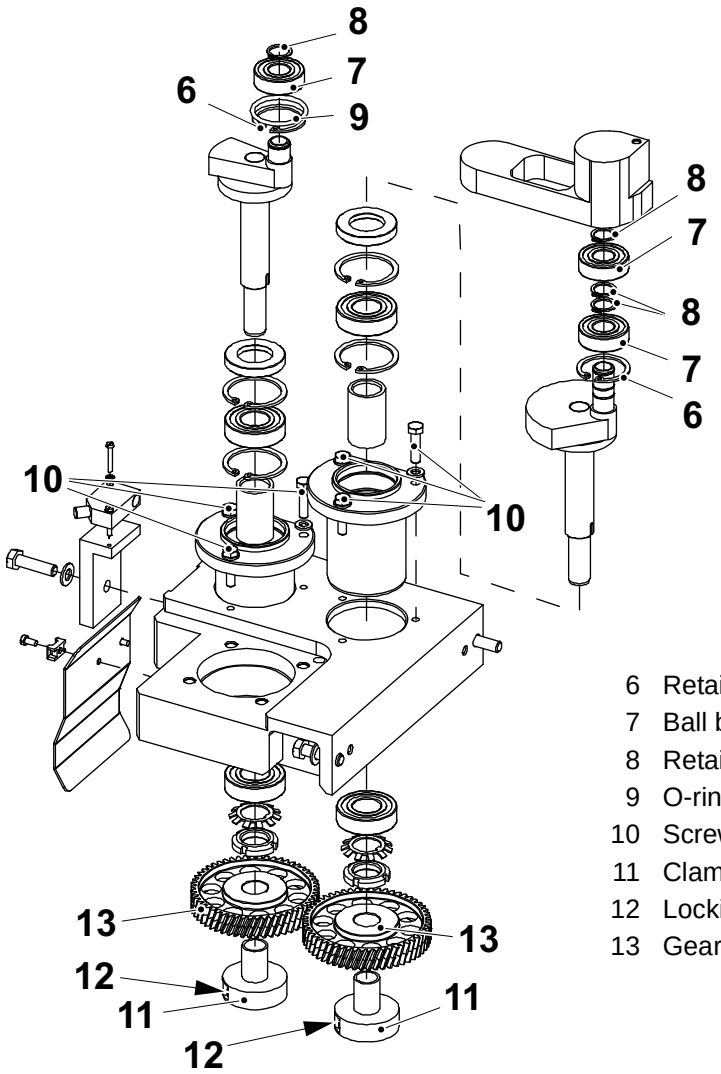

6 Retaining ring (2 pieces)
7 Ball bearing (3 pieces)
8 Retaining ring (4 pieces)
9 O-ring
10 Screw (6 pieces)
11 Clamping element
12 Locking screw
13 Gear wheel

(Cont'd)

(Cont'd)

h) Remove the round nut (14) and the lock washer (15).

i) Remove the shaft (16).

j) Check the radial seals (17), the retaining rings (18), and the ball bearings (19) for wear or damage. Change if necessary, see 1.3.1-2 Crank Housing - Change Parts (TBA).

k) Assemble in the reverse order.

Note! The clamping elements (11) are to be tightened with a torque of 5 Nm.

CAUTION
Risk of damage to equipment.
The ball bearings must be pressed onto the shafts. Use appropriate equipment.

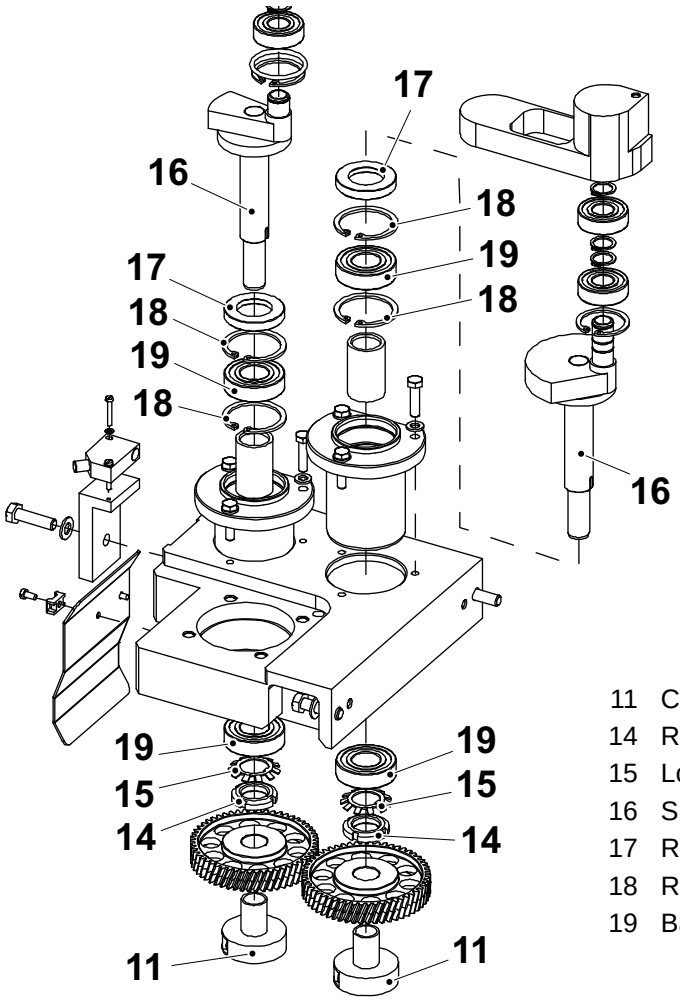

11 Clamping element
14 Round nut
15 Lock washer
16 Shaft
17 Radial seal (2 pieces)
18 Retaining ring (4 pieces)
19 Ball bearing (4 pieces)

1.3.1-2 Crank Housing - Change Parts (TBA)

Machine Status	Power Supply Disconnector OFF Air Valve OFF
SPC Reference	2929771 valid for TBA

a) Loosen the screw (1) and rotate the applicator unit approximately 90° to the right. Cut the ladder band before turning.

Note! Remember the angle position, see the scale (2).

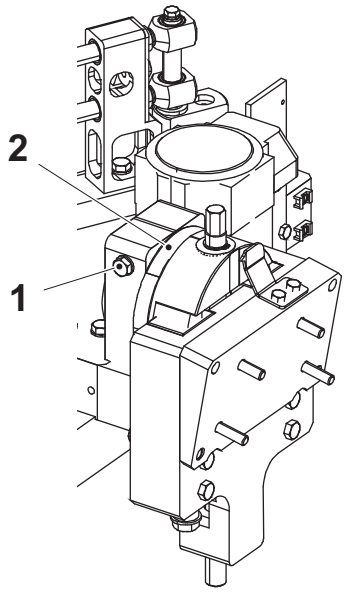

1 Screw
2 Scale

(Cont'd)

(Cont'd)

b) Turn the bearing housing (3) to move the pressure arms (4) to a position outside the feed wheel slots.

c) Remove the screws (5) and the pressure arm unit (6).

d) Remove the retaining rings (7) with a pair of 90º bent internal retaining ring pliers.

e) Pull up the bearing housing.

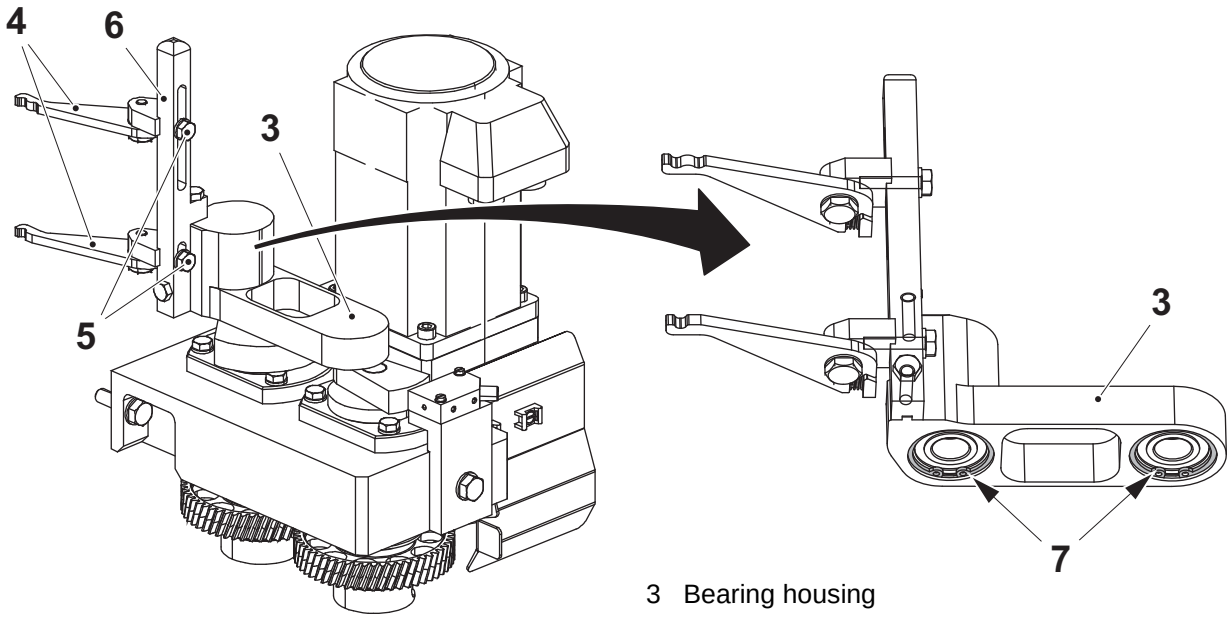

3 Bearing housing
4 Pressure arm
5 Screw
6 Pressure arm unit
7 Retaining ring

(Cont'd)

(Cont'd)

f) Change the retaining rings (7), the ball bearings (8), and the retaining rings (9).

CAUTION
Risk of damage to equipment.
Use a puller to remove the ball bearings.

g) Change the O-ring (10).

h) Remove the screws (11).

i) Remove the clamping elements (12) by loosen the locking screws (13) and remove the gear wheels (14).

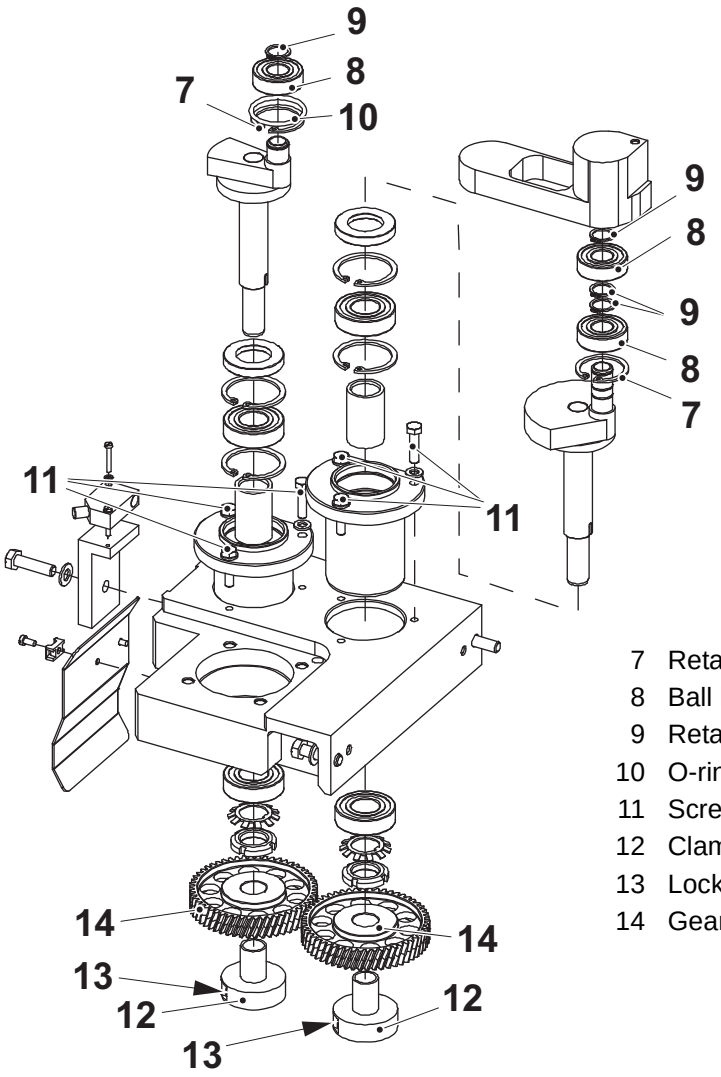

7 Retaining ring (2 pieces)
8 Ball bearing (3 pieces)
9 Retaining ring (4 pieces)
10 O-ring
11 Screw (6 pieces)
12 Clamping element
13 Locking screw
14 Gear wheel

(Cont'd)

(Cont'd)

j) Remove the round nuts (15) and the lock washers (16).

k) Remove the shafts (17).

l) Change the radial seals (18), the retaining rings (19), and the ball bearings (20).

m) Assemble in the reverse order.

Note! The clamping elements (12) are to be tightened with a torque of 5 Nm.

CAUTION
Risk of damage to equipment.
The ball bearings must be pressed onto the shafts. Use appropriate equipment.

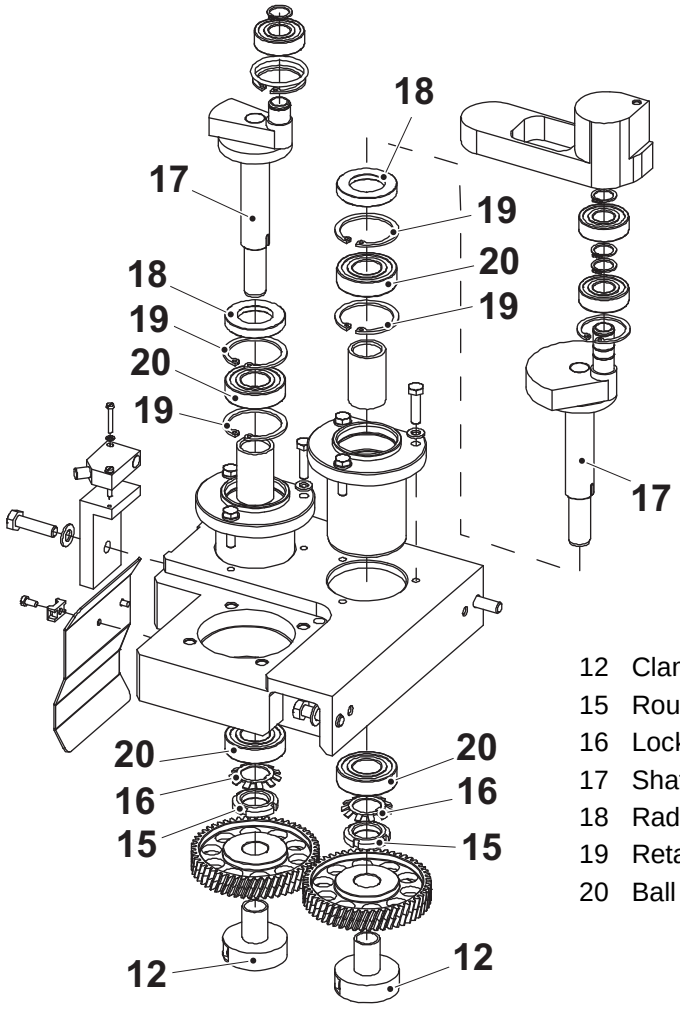

12 Clamping element
15 Round nut
16 Lock washer
17 Shaft
18 Radial seal (2 pieces)
19 Retaining ring (4 pieces)
20 Ball bearing (4 pieces)

1.3.2 Drive Motor

1.3.2-1 Drive Motor - No Procedure Described

SPC Reference	2829439-0100 valid for TBA

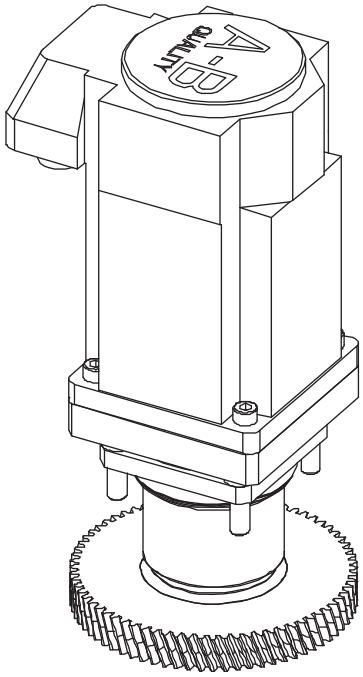

1.3.3 Pressure Arm

1.3.3-1 Pressure Arm - Check Parts (TBA)

Machine Status	Power Supply Disconnector OFF Air Valve OFF
SPC Reference	2867568 valid for TBA

a) Turn the bearing housing (1) to move the pressure arms (2) to a position outside the feed wheel slots.

b) Remove the pressure arms (2) by removing the screws (3).

c) Check the flange bushings (4) and the compression springs (5) for wear or damage. Change if necessary, see 1.3.3-2 Pressure Arm - Change Parts (TBA).

d) Assemble the parts, see item c) to e) in Section 1.3.3-3 Pressure Arm - Set (TBA)

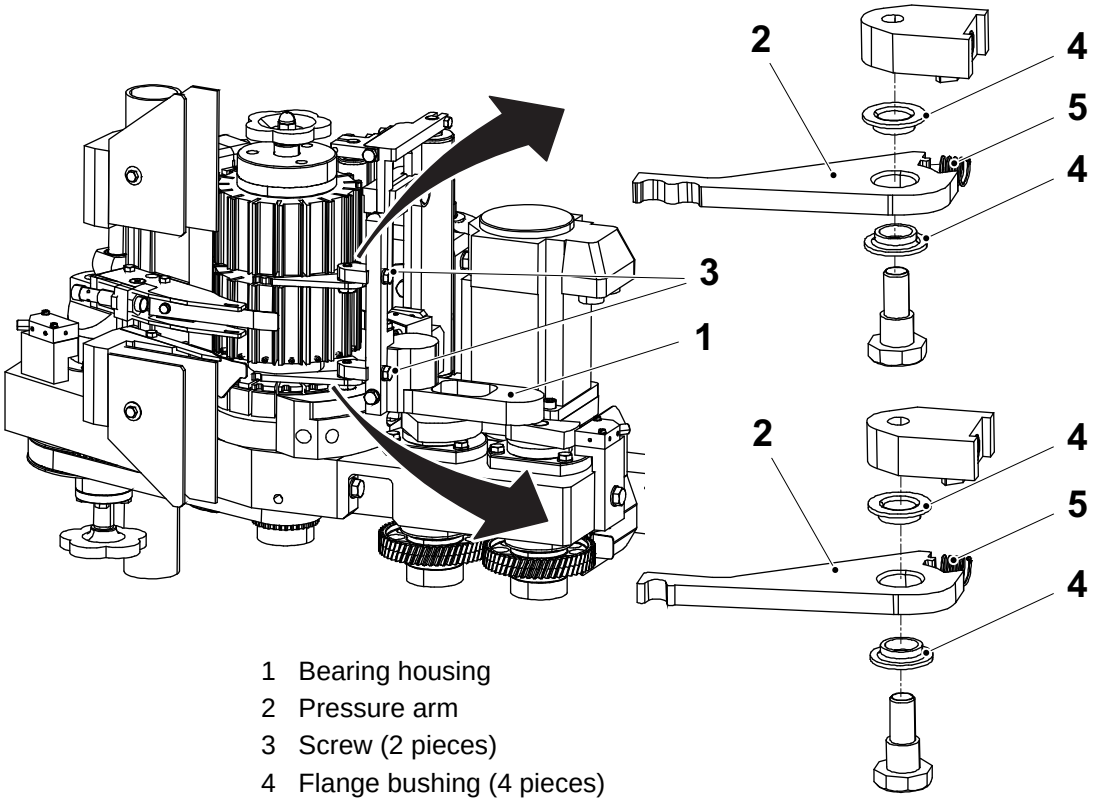

1 Bearing housing
2 Pressure arm
3 Screw (2 pieces)
4 Flange bushing (4 pieces)
5 Compression spring (2 pieces)

1.3.3-2 Pressure Arm - Change Parts (TBA)

Machine Status	Power Supply Disconnector OFF Air Valve OFF
SPC Reference	2867568 valid for TBA

a) Turn the bearing housing (1) to move the pressure arms (2) to a position outside the feed wheel slots.

b) Remove the pressure arms (2) by removing the screws (3).

c) Remove the screws (4).

d) Use a screwdriver or a similar tool to remove the old flange bushings (5).

e) Press in the new flange bushings in the pressure arms.

f) Replace the springs (6) with new ones.

g) Assemble in the reverse order.

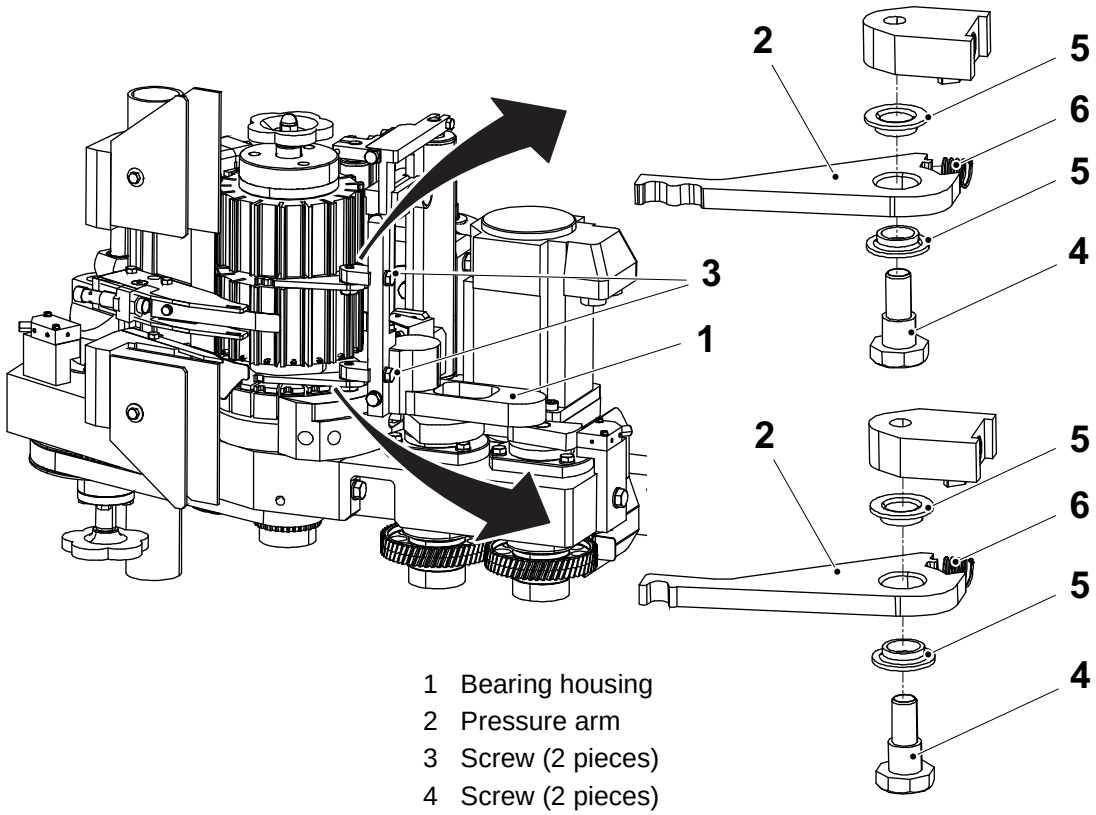

1 Bearing housing
2 Pressure arm
3 Screw (2 pieces)
4 Screw (2 pieces)
5 Flange bushing (4 pieces)
6 Spring (2 pieces)

1.3.3-3 Pressure Arm - Set (TBA)

Machine Status	Power Supply Disconnector OFF Air Valve OFF
SPC Reference	2867568 valid for TBA

a) Turn the bearing housing (1) to move the pressure arms (2) to a position outside the feed wheel slots.

b) Loosen the screws (3).

c) Set the height of the pressure arms in the centre of the slots on the feed wheel.

d) Tighten the screws (3).

e) Turn the bearing housing (1) a few revolutions to check that the pressure arms can move without touching the sides of the feed wheel.

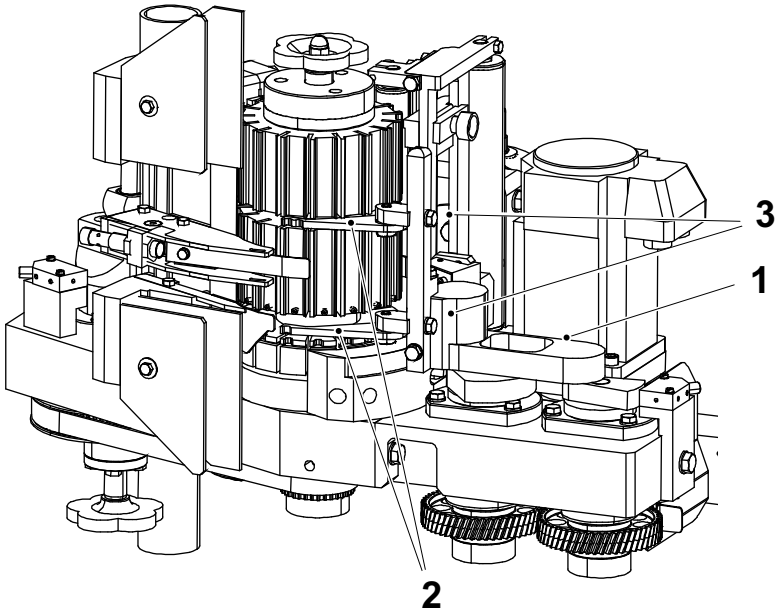

1 Bearing housing
2 Pressure arm
3 Screw

1.3.3-4 Pressure Arm - Set Override (TBA)

Machine Status	Power Supply Disconnector OFF Air Valve OFF
SPC Reference	2867568 valid for TBA

To set the override of the pressure arms, see 2.1.3-1 Adjustment Plate - Set Override.

1.3.4 Pressure Unit

1.3.4-1 Pressure Unit - Set (TCA)

Machine Status	Power Supply Disconnector OFF Air Valve OFF
SPC Reference	2948250 valid for TCA

a) On the TPOP, choose the MAINTENANCE button, and then press the APPLY UNIT button.

b) Press the PICK POSITION icon.

c) The height position of the squeezer slots (1) must agree with the feed wheel slot (2), see the illustration below. Turn the squeezers by hand to check the position.

Note! Do not turn the feed wheel by hand.

d) Loosen the nuts (3). Keep hold of the shafts (4).

e) Adjust the height of the pressure unit. Make sure that the height is equal on both sides.

f) Tighten the nuts (3).

g) Adjust the clamping elements (5).

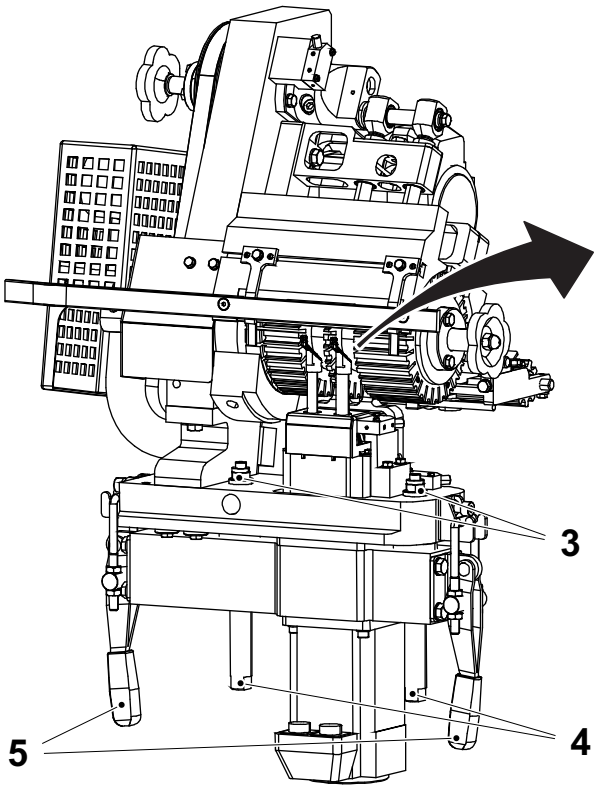

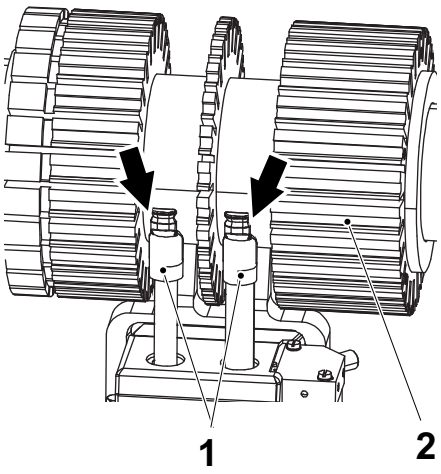

1 Squeezer
2 Feed wheel slot
3 Nut
4 Shaft
5 Clamping element

1.3.5 Lock Holder

1.3.5-1 Lock Holder - Set Gun Holder (TCA)

Machine Status	Power Supply Disconnector OFF Air Valve OFF
SPC Reference	2948255 valid for TCA

WARNING

Burn Hazard.

The hotmelt gun and the protective cover can be very hot. Be careful when working near the hotmelt gun and the cover.

a) Adjust the height of the hotmelt gun holder by loosening the screws (1). The height must match the height of the straw on the package.

b) Tighten the screws (1).

c) Adjust the horizontal depth position of the hotmelt gun holder by loosening the screws (2). The distance between the hotmelt nozzle tip and the package should be approximately 3 mm.

d) Tighten the screws (2).

e) Check the clearance between the hotmelt nozzle tip and the package.

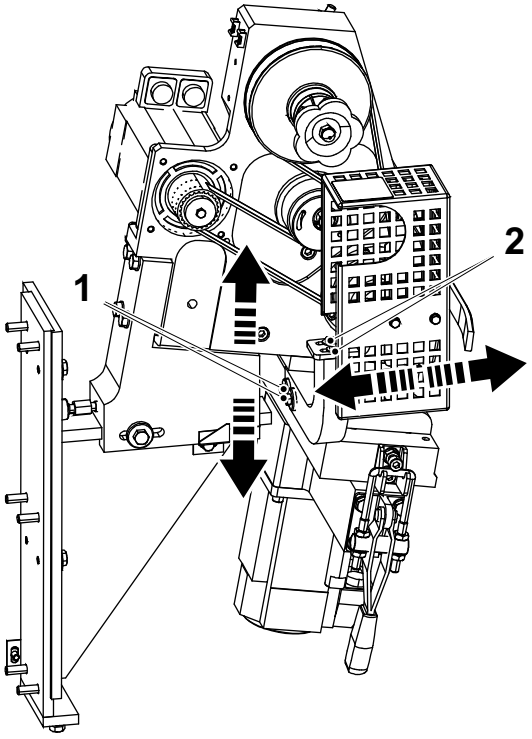

1 Screw
2 Screw

1.4 Frame

1.4.1 Frame Housing

1.4.1-1 Frame Housing - Check Timing Belt (TBA)

Machine Status	Power Supply Disconnector OFF Air Valve OFF
Special Equipment	Hook Spanner TP No. 90243-0164 Template TP No. 2959983
SPC Reference	2829433

WARNING

Burn Hazard.

The hotmelt unit can be very hot and there is risk of severe burns. Use caution when working near the hotmelt unit.

a) Turn the stellar knob (1) until the template (2) fits. The knife (3) should be positioned inside the feed wheel.

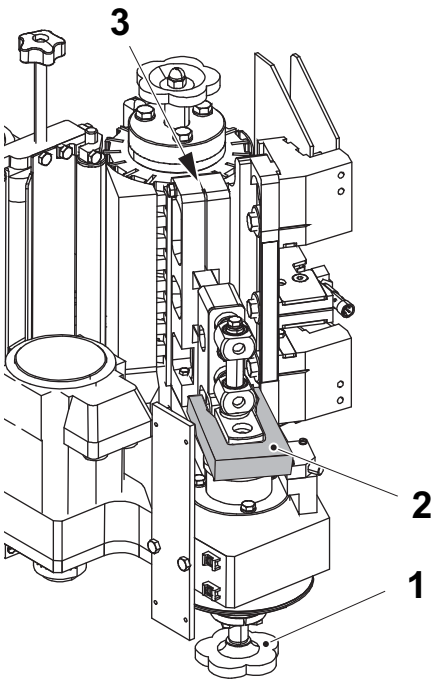

1 Stellar knob
2 Template
3 Knife

(Cont'd)

(Cont'd)

b) Loosen the screw (4) and rotate the applicator unit approximately 90° to the left. Cut the ladder band before turning.

Note! Remember the angle position, see the scale (5).

c) Check the timing belt (6) for wear or damage. Change if necessary, see 1.4.1-3 Frame Housing - Change Timing Belt.

d) Check the tension of the timing belt (6). If the tension is not equal between the pulleys, perform items o) to s) in Section 1.4.1-3 Frame Housing - Change Timing Belt.

e) Turn the applicator unit back. Check the scale (5) to set the same angle as before.

f) Tighten the screw (4).

g) Remove the template.

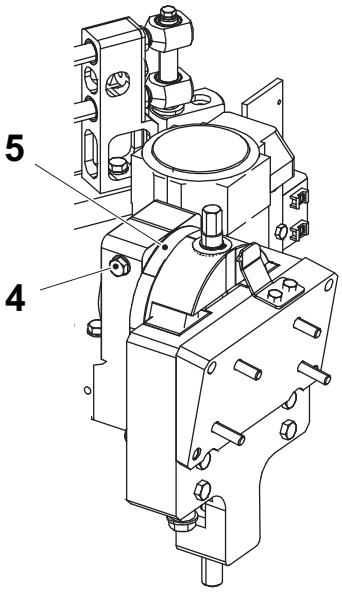

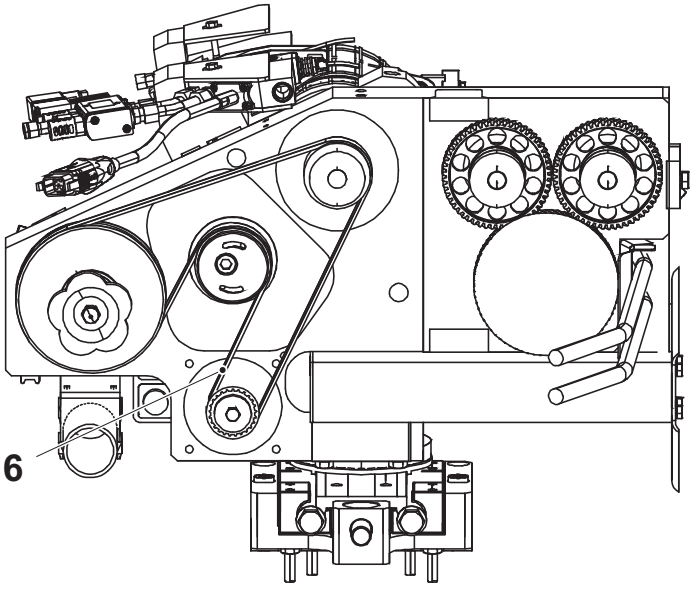

4 Screw
5 Scale
6 Timing belt

1.4.1-2 Frame Housing - Check Timing Belt (TCA)

Machine Status	Power Supply Disconnector OFF Air Valve OFF
SPC Reference	2829433

a) Check the timing belt (1) for wear or damage. Change if necessary, see Procedure 1.4.1-3 Frame Housing - Change Timing Belt.

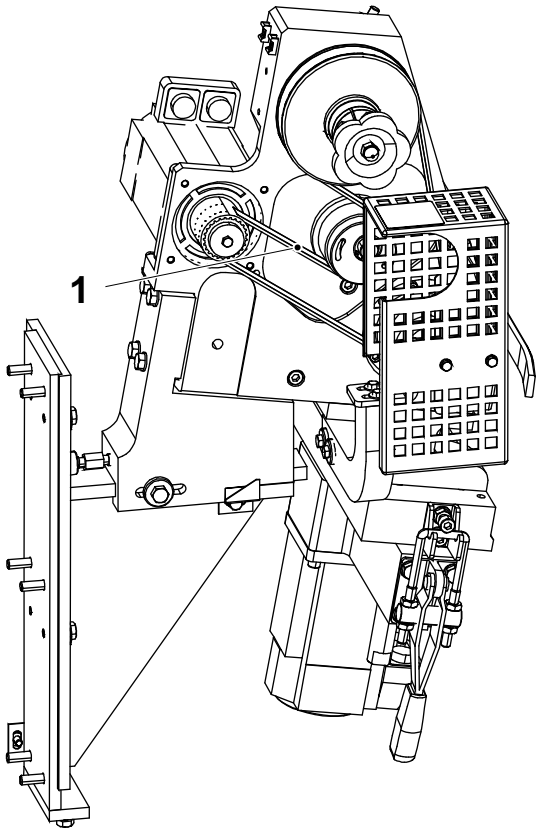

1 Timing belt

1.4.1-3 Frame Housing - Change Timing Belt

Machine Status	Power Supply Disconnector OFF Air Valve OFF
Special Equipment	Hook Spanner TP No. 90243-0164 Template TP No. 2959983
SPC Reference	2829433

WARNING

Burn Hazard.

The hotmelt unit can be very hot and there is risk of severe burns. Use caution when working near the hotmelt unit.

a) Turn the stellar knob (1) until the template (2) fits. The knife (3) should be positioned inside the feed wheel.

TBA

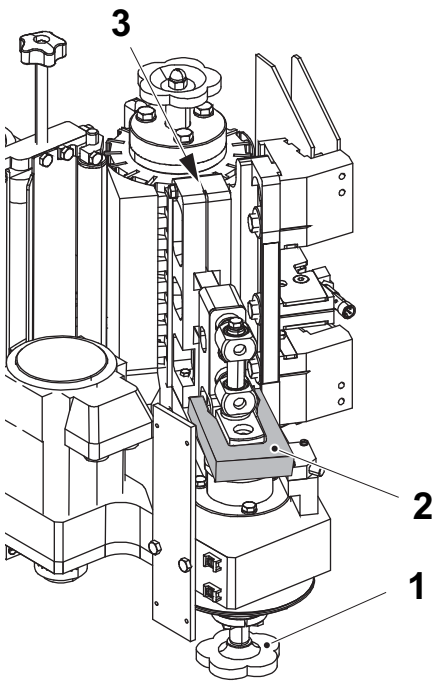

TCA

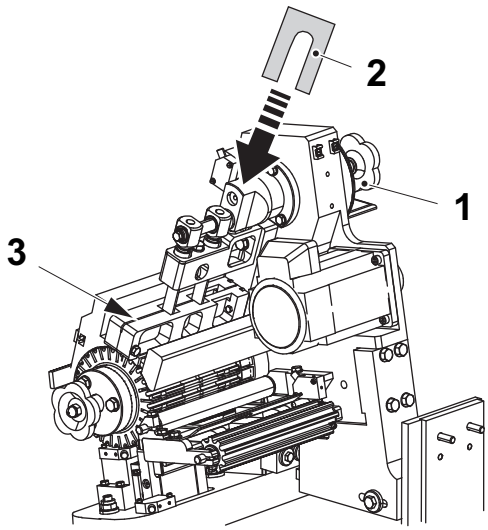

1 Stellar knob
2 Template
3 Knife

(Cont'd)

(Cont'd)

b) For TBA: Loosen the screw (4) and rotate the applicator unit approximately 90° to the left. Cut the ladder band before turning.

Note! Remember the angle position, see the scale (5).

c) For TCA: Remove the hotmelt gun unit (6) by removing the screws (7).

TBA

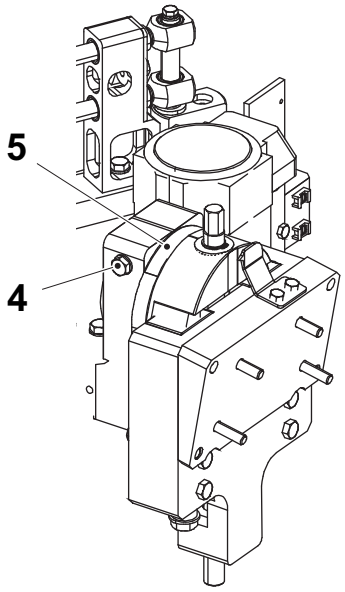

4 Screw
5 Scale
6 Hotmelt gun unit
7 Screw

TCA

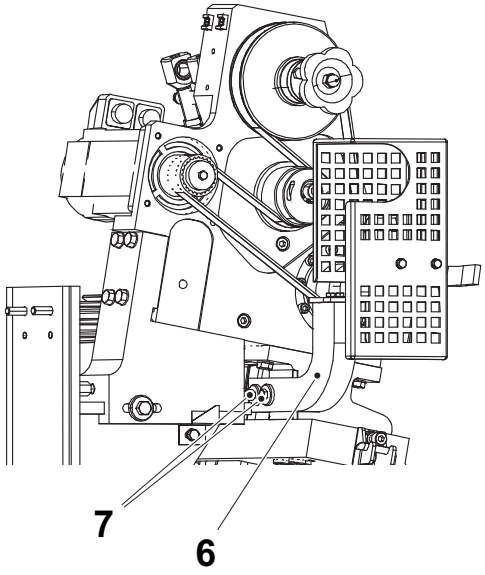

(Cont'd)

(Cont'd)

d) Loosen the screw (8) on the belt tightener.

e) Turn the belt tightener 3/4 of a revolution to the right to release the belt tension.

Note! Turning the belt tightener more than 3/4 of a revolution will destroy the torsion spring.

f) Remove the old timing belt (9). If the same straw types as before will be used go to item m).

g) Loosen the screw (10) and remove the clamping element (11).

h) Remove the pulley (12).

i) To run straight straws put on the pulley 2829491, to run u-straws put on the pulley 2864774.

j) Put the clamping element (11) on the pulley (12) and tighten the screw (10) with a torque of 5 Nm.

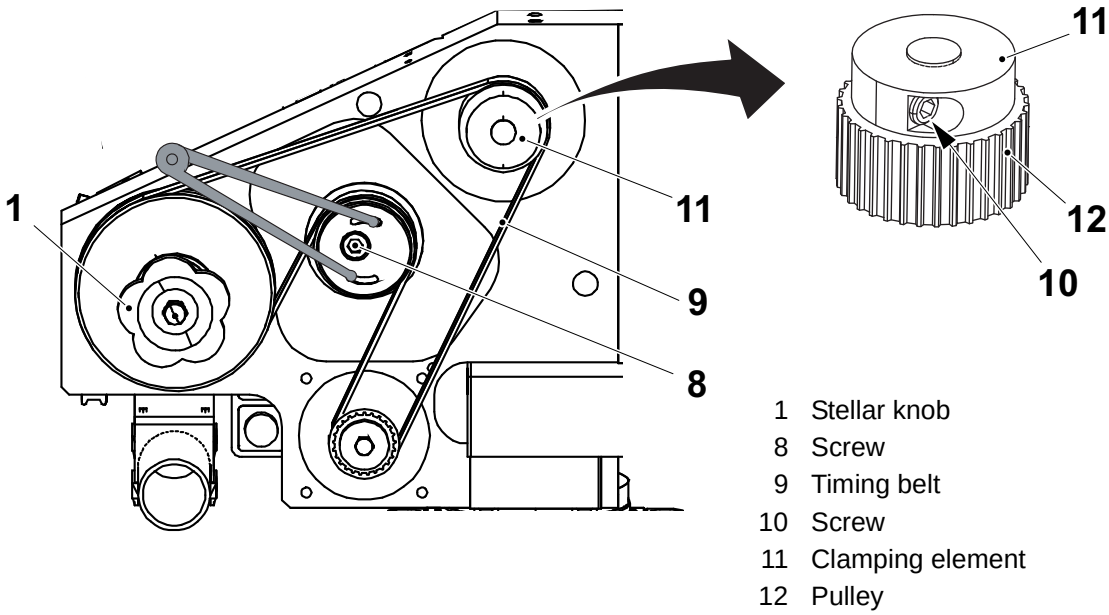

1 Stellar knob
8 Screw
9 Timing belt
10 Screw
11 Clamping element
12 Pulley

(Cont'd)

(Cont'd)

k) Loosen the screw (8) entirely and pull it out together with the belt tightener and the turn spring (13).

l) Move the loosened parts to the hole stamped with an S for straight straws, or to the hole stamped with a U for u-straws. Do not tighten the screw yet.

m) Put the new timing belt over the pulleys.

n) Remove the template and turn the stellar knob (1) approximately five revolutions to even out the tension of the belt. Fit the template again, according to item a).

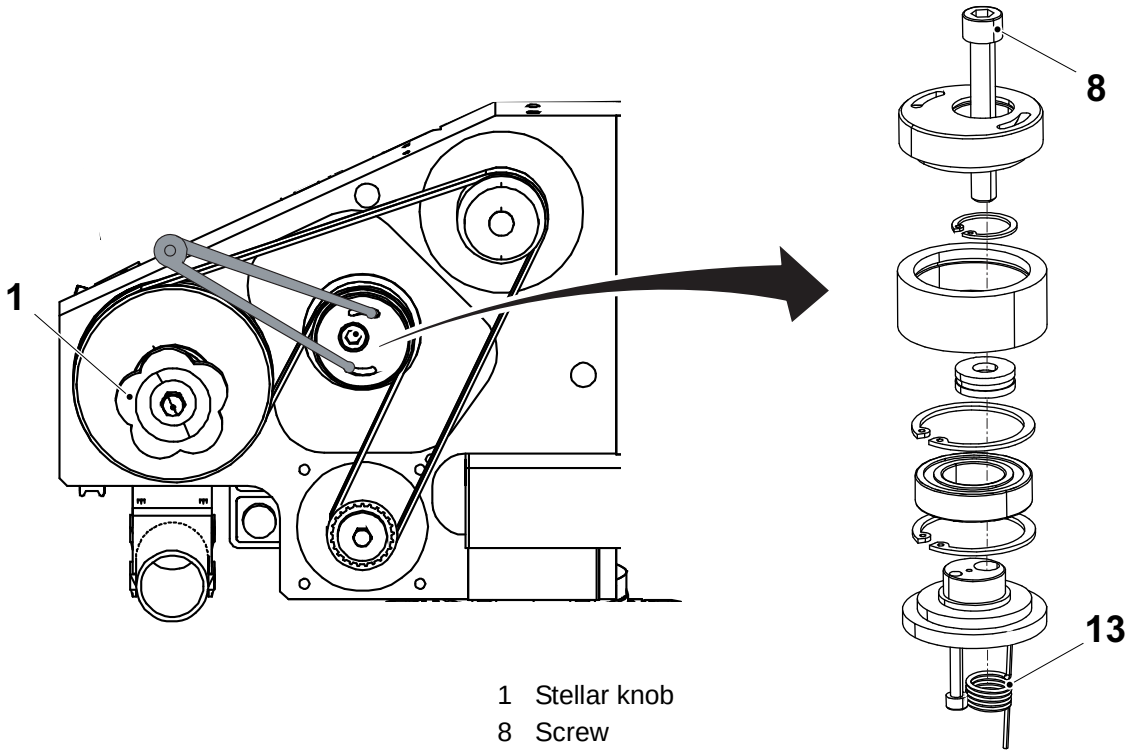

1 Stellar knob
8 Screw
13 Turn spring

(Cont'd)

(Cont'd)

o) Check that the belt tension is equal between all the pulleys. If not, loosen the pulley (12) with the screw (10) on the clamping element (11) and adjust the tension of the timing belt.

p) Check that the belt is properly positioned over all the pulleys.

q) Tighten the screw (10) on the clamping element (11) with a torque of 5 Nm.

r) Tighten the screw (8) on the belt tightener.

Note! Do not overtighten the clamping element.

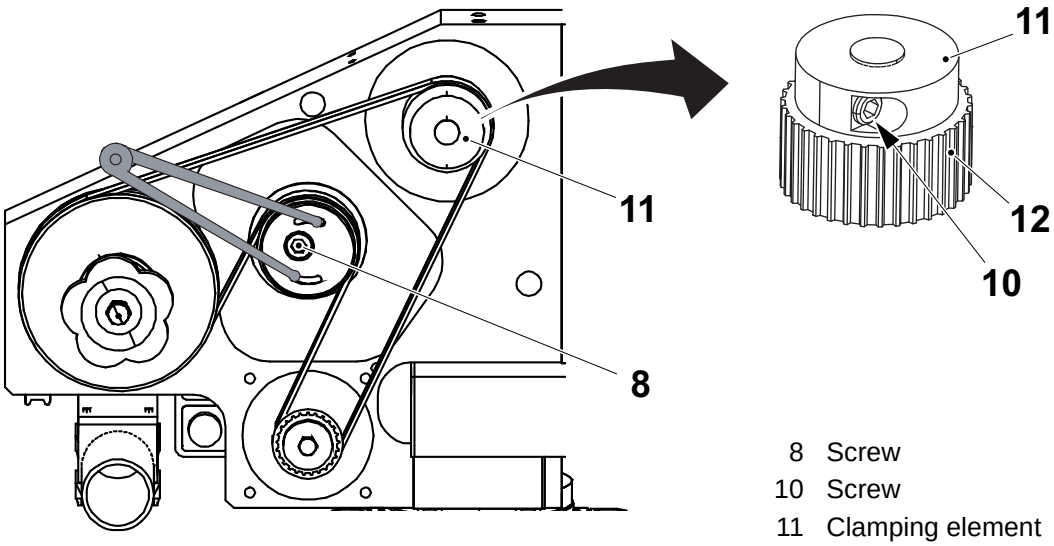

8 Screw
10 Screw
11 Clamping element
12 Pulley

(Cont'd)

(Cont'd)

s) To make a final adjustment of the belt tension, loosen the screw (8) once again and adjust the tension. Tighten the screw (8).

t) For TBA: Turn the applicator unit back. Make sure that the scale (5) has the same value as before and tighten the screw (4).

u) Check that the knife is in the centre of the feed wheel slot. If not, adjust the feed wheel unit, see 1.1-4 Feed Wheel Unit - Set.

v) Remove the template.

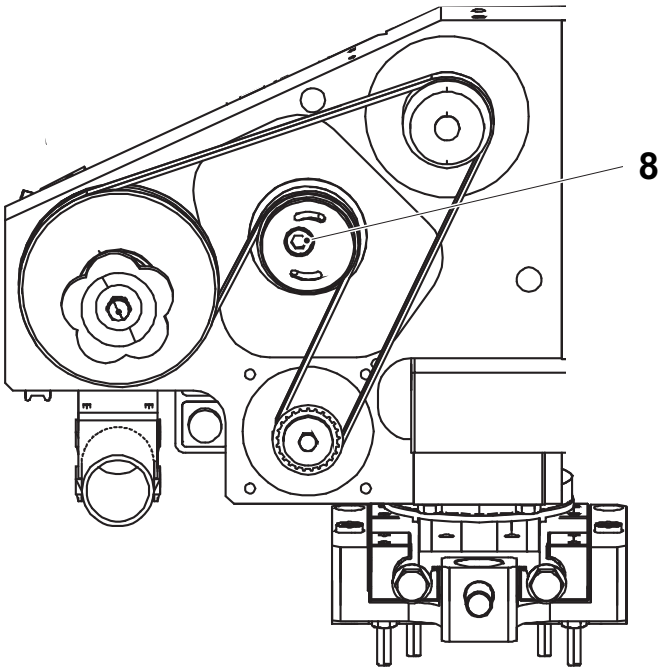

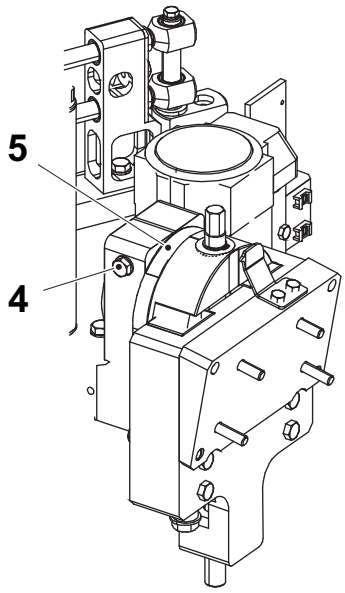

4 Screw
5 Scale
8 Screw

1.4.2 Belt Tightener

1.4.2-1 Belt Tightener - Check Parts

Machine Status	Power Supply Disconnector OFF Air Valve OFF
Special Equipment	Hook spanner TP No. 90243-0164 Template TP No. 2959983
SPC Reference	2829441

WARNING

Burn hazard.

The hotmelt guns can be very hot. Use caution when working near the hotmelt guns.

a) Turn the stellar knob (1) until the template (2) fits. The knife (3) should be positioned inside the feed wheel slot.

TBA

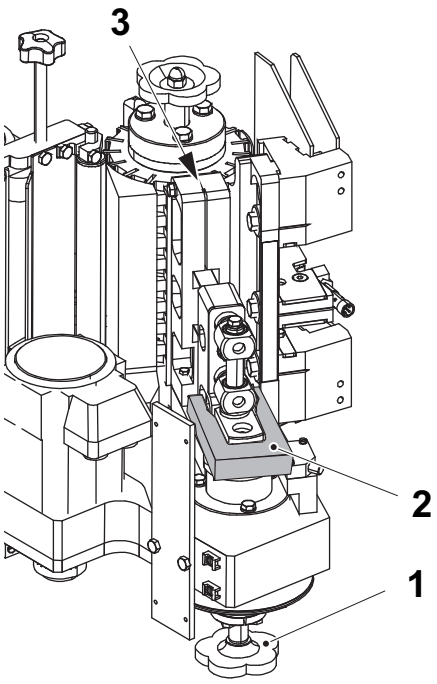

TCA

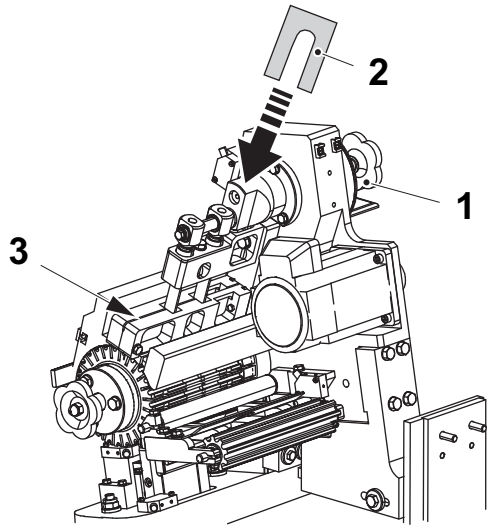

1 Stellar knob
2 Template
3 Knife

(Cont'd)

(Cont'd)

b) For TBA: Loosen the screw (4) and rotate the applicator unit approximately 90° to the left. Cut the ladder band before turning.

Note! Remember the angle position, see the scale (5).

c) For TCA: Remove the hotmelt gun unit (6) by removing the screws (7).

TBA

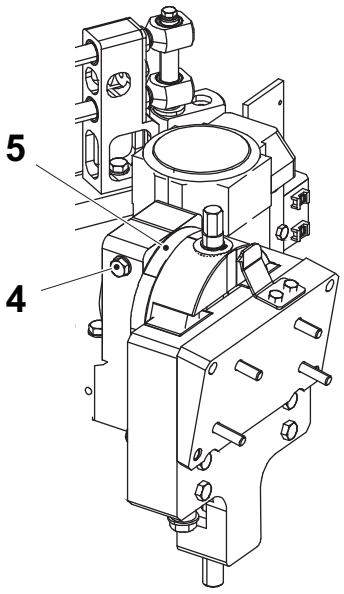

TCA

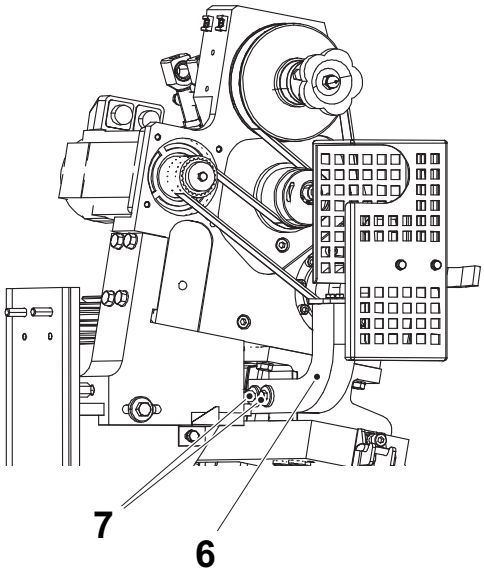

4 Screw
5 Scale
6 Hotmelt gun unit
7 Screw

(Cont'd)

(Cont'd)

d) Loosen the screw (8) on the belt tightener.

e) Turn the belt tightener to the right 3/4 of a revolution to release the belt tension. Use the hook spanner (9) if needed.

Note! Turning the belt tightener more than 3/4 of a revolution will destroy the torsion spring.

f) Remove the timing belt (10) and the screw (8).

g) Remove the belt tightener.

h) Check the turn spring (11) and the screw (8) for wear or damage. Change if necessary, see 1.4.2-2 Belt Tightener - Change Parts.

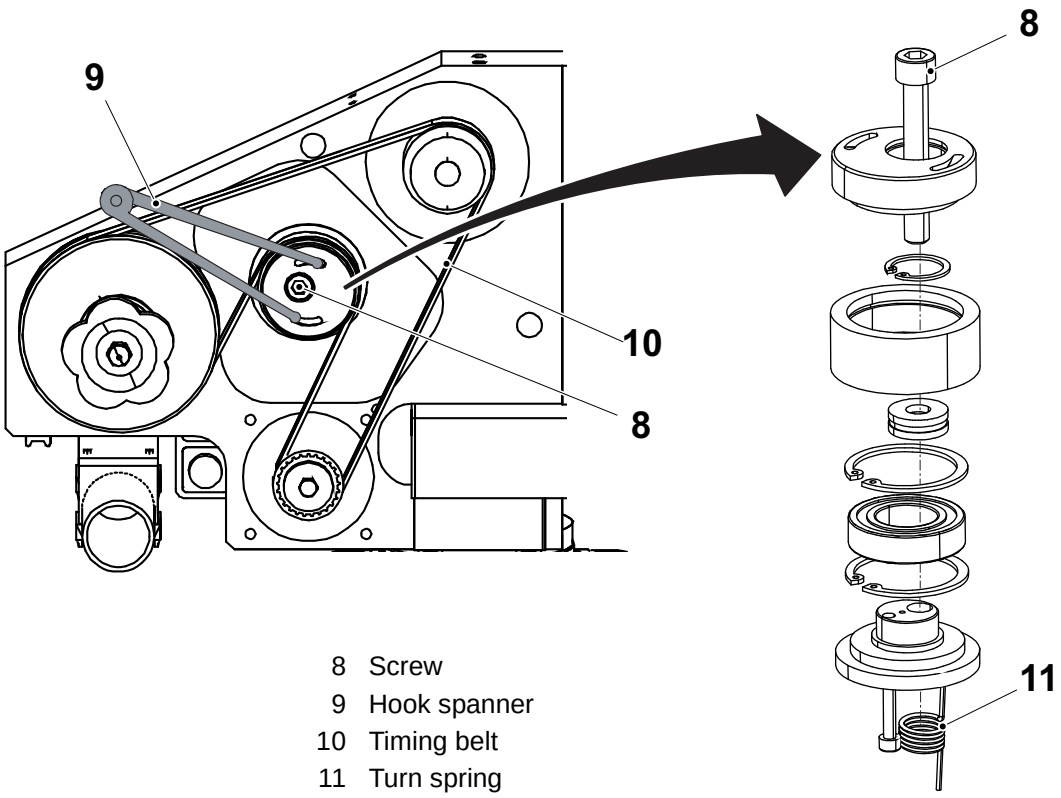

8 Screw
9 Hook spanner
10 Timing belt
11 Turn spring

(Cont'd)

(Cont'd)

i) Remove the lid (12).

j) Check the ball bearing (13), the retaining rings (14), and the thrust ball bearing (15) for wear or damage. Change if necessary, see 1.4.2-2 Belt Tightener - Change Parts.

k) Put the lid (12) back on the belt tightener.

l) Put the belt tightener into place with the screw (8), but without yet tightening the screw.

m) Put the belt over the pulleys.

n) Turn the belt tightener 3/4 of a revolution with the hook spanner (9).

o) Tighten the screw (8) on the belt tightener. Tighten the clamping element (16) with a torque of 5 Nm.

p) Remove the template and turn the stellar knob (1) approximately five revolutions to even out the tension of the belt. Fit the template again, according to item a).

q) Check the tension of the timing belt. If the tension is not equal between the pulleys, perform items o) to s) in Section 1.4.1-3 Frame Housing - Change Timing Belt.

Note! Do not overtighten the clamping element.

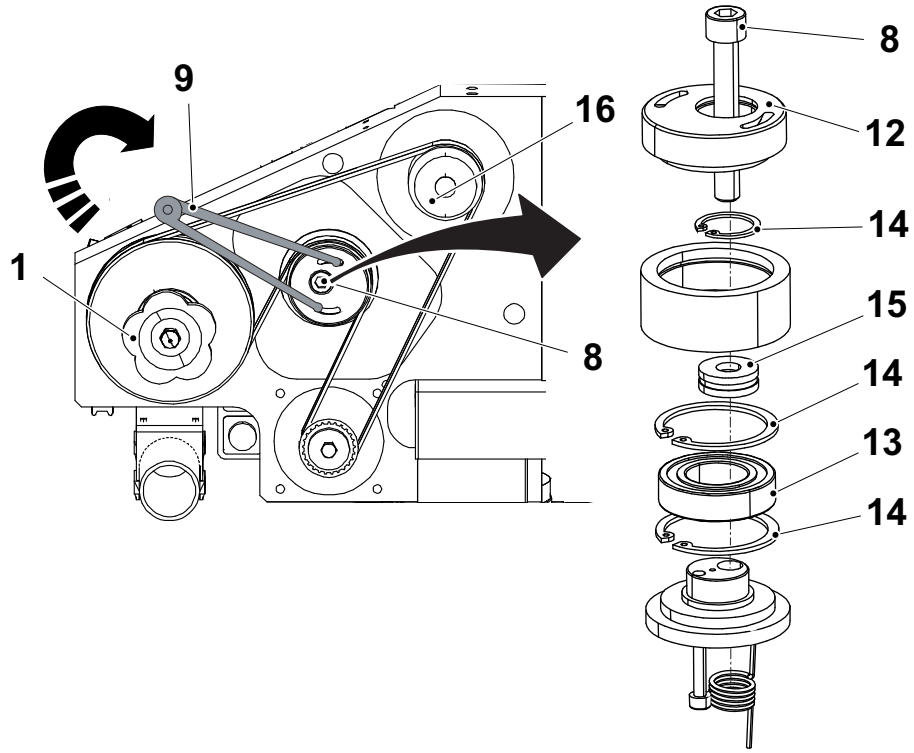

1 Stellar knob
8 Screw
9 Hook spanner
12 Lid
13 Ball bearing
14 Retaining ring
15 Thrust ball bearing
16 Clamping element

(Cont'd)

(Cont'd)

r) For TBA: Turn the applicator unit back.

s) Check that the knife is in the centre of the feed wheel slot. If not, adjust the feed wheel unit, see 1.1-4 Feed Wheel Unit - Set.

t) Remove the template.

1.4.2-2 Belt Tightener - Change Parts

Machine Status	Power Supply Disconnector OFF Air Valve OFF
Special Equipment	Hook spanner TP No. 90243-0164 Template TP No. 2959983
SPC Reference	2829441

WARNING

Burn hazard.

The hotmelt guns can be very hot. Use caution when working near the hotmelt guns.

CAUTION

Risk of damage to equipment.

The nozzles are easily damaged. Handle the nozzles with care when removing the gun modules.

a) To change parts, perform items a) to g) in Section 1.4.2-1 Belt Tightener - Check Parts.

(Cont'd)

(Cont'd)

b) Change the turn spring (1) and the screw (2).

c) Remove the lid (3).

d) Change the retaining rings (4), the ball bearing (5), and the thrust ball bearing (6).

e) To assemble the belt tightener, perform items k) to t) in Section 1.4.2-1 Belt Tightener - Check Parts.

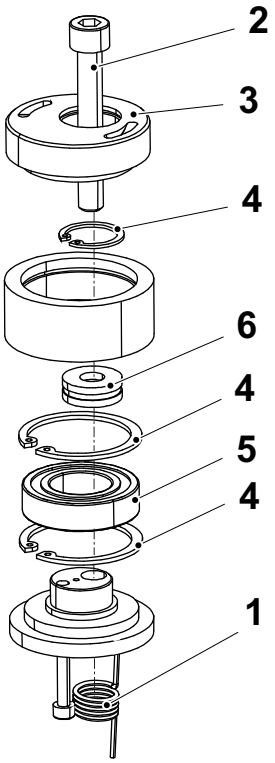

1 Turn spring
2 Screw
3 Lid
4 Retaining ring (3 pieces)
5 Ball bearing
6 Thrust ball bearing

1.5 Ladderband Unit

1.5.1 Ladder Band Guide

1.5.1-1 Ladder Band Guide - Set

Machine Status	Power Supply Disconnector OFF Air Valve OFF
SPC Reference	2937220

Adjust the ladder band guide with the height adjuster (1) according to distance A and the illustration below. The guide is to just barely touch the foil.

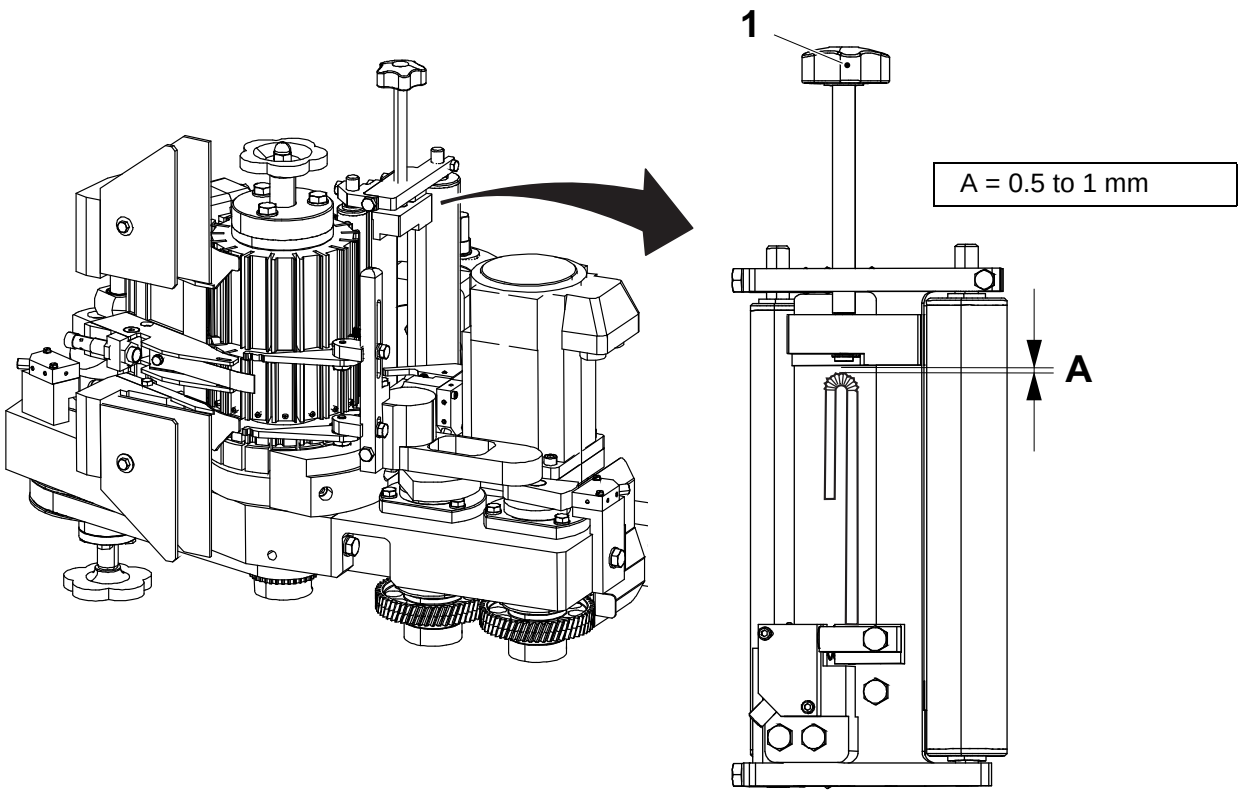

1 Height adjuster

1.5.2 Inductive Switch

1.5.2-1 Inductive Switch - Check Parts

Machine Status	Power Supply Disconnector OFF Air Valve OFF
SPC Reference	2939708

a) Check the compression spring (1), the spring bracket (2), and the parallel pin (3) for wear or damage.

b) Change if necessary, see 1.5.2-2 Inductive Switch - Change Parts.

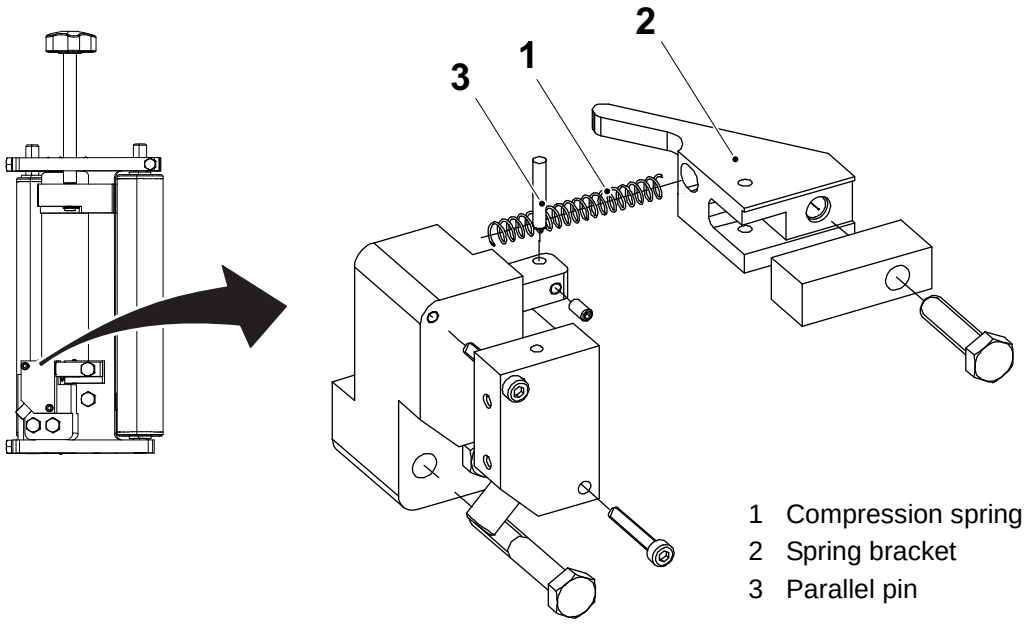

1 Compression spring
2 Spring bracket
3 Parallel pin

1.5.2-2 Inductive Switch - Change Parts

Machine Status	Power Supply Disconnector OFF Air Valve OFF
SPC Reference	2939708

a) Remove the inductive switch unit from the ladder band guide by loosen the screw (1).

b) Remove the screw (2).

c) Change the spring bracket (4) and the parallel pin (5).

d) Change the compression spring (5).

e) Assemble in the reverse order.

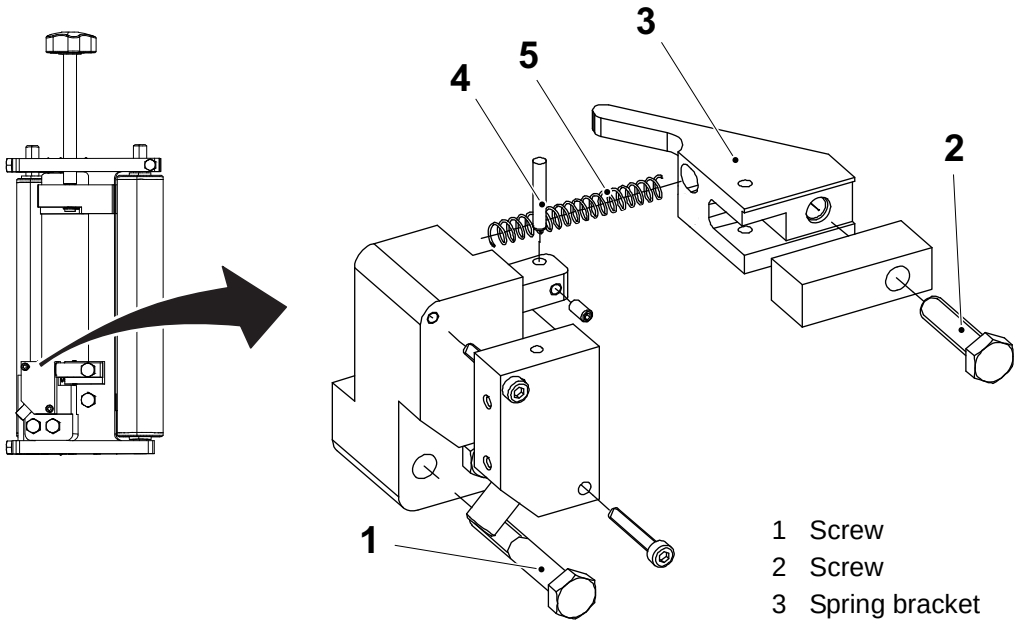

1 Screw
2 Screw
3 Spring bracket
4 Parallel pin
5 Compression spring

1.6 Guide Console

1.6-1 Guide Console - Change Guide Arms (TBA)

Machine Status	Power Supply Disconnector OFF Air Valve OFF
SPC Reference	2829435 valid for TBA

WARNING

Burn hazard.

The hotmelt guns can be very hot. Use caution when working near the hotmelt guns.

a) Remove the hose from the holder.

CAUTION

Risk of damage to equipment.

The nozzles are easily damaged. Handle the nozzles with care when removing the gun holders.

Note! Remember the positions of the gun holders (1), and the spring holder (2), see the scale (3).

b) Loosen the screws (4), (5), and (6). Slide the gun holders (1) and the spring holder (2) upwards and pull the screws out of the hole (7).

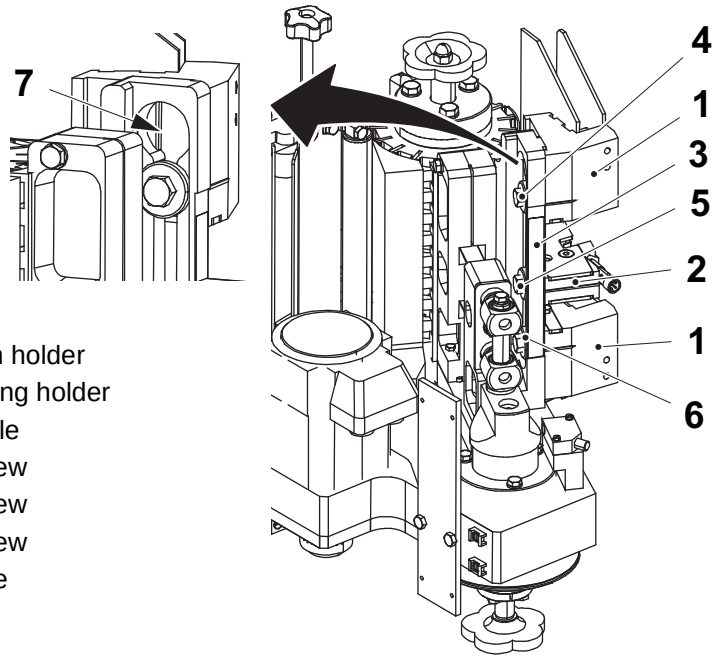

1 Gun holder
2 Spring holder
3 Scale
4 Screw
5 Screw
6 Screw
7 Hole

(Cont'd)

(Cont'd)

c) Loosen the screw (8) and change the guide arm (9).

d) Assemble in the reverse order.

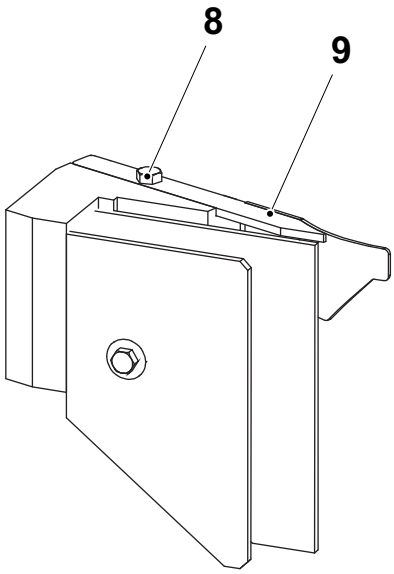

8 Screw
9 Guide arm

1.6-2 Guide Console - Set Gun Holder (TBA)

To set the position of the gun holders, see 3.1.1-3 Hotmelt Gun - Set Gun Holder (TBA).

1.6-3 Guide Console - Set (TCA)

Machine Status	Power supply disconnector OFF Air valve OFF
SPC Reference	2957700 valid for TCA

a) Loosen the screws (1).

b) Adjust the distance between the holders (2). Make sure the holders hold on the plastic foil, but not on the straw.

c) Tighten the screws (1).

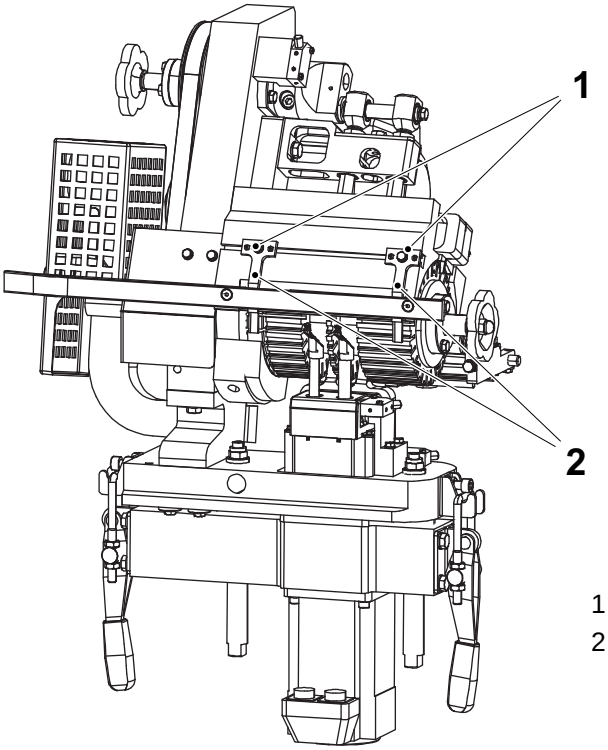

1 Screw
2 Holder

1.7 Spring Holder

1.7-1 Spring Holder - Check Parts (TBA)

Machine Status	Power Supply Disconnector OFF Air Valve OFF
SPC Reference	2923353 valid for TBA

a) Check that there is no residue on the leaf spring (1) or in between the surfaces of the spring holder (2) and the spring bracket (3). Clean if necessary.

b) Check the compression springs (4) by pressing on the leaf spring (1), that it moves in an elastic way. Change if necessary, see 1.7-2 Spring Holder - Change Compression Springs (TBA).

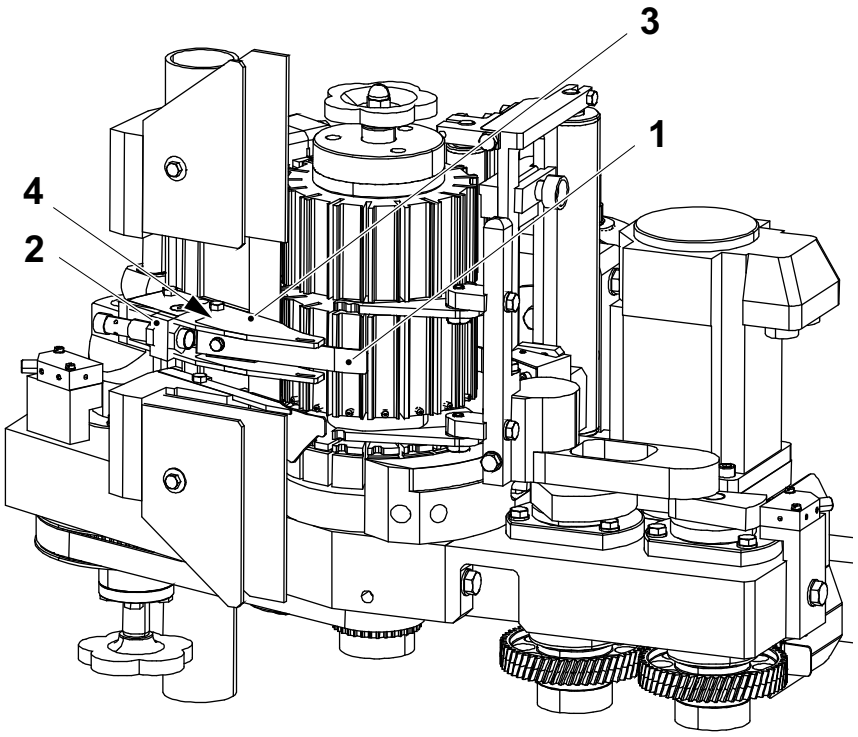

1 Leaf spring
2 Spring holder
3 Spring bracket
4 Compression spring (2 pieces)

1.7-2 Spring Holder - Change Compression Springs (TBA)

Machine Status	Power Supply Disconnector OFF Air Valve OFF
SPC Reference	2923353 valid for TBA

WARNING

Burn hazard.

The hotmelt guns can be very hot. Use caution when working near the hotmelt guns.

a) Remove the hose from the holder.

CAUTION

Risk of damage to equipment.

The nozzles are easily damaged. Handle the nozzles with care when removing the gun holders.

Note! Remember the positions of the gun holder (1), and the spring holder (2), see the scale (3).

b) Loosen the screws (4) and (5). Slide the gun holder (1) and the spring holder (2) upwards and pull the screws out of the hole (7).

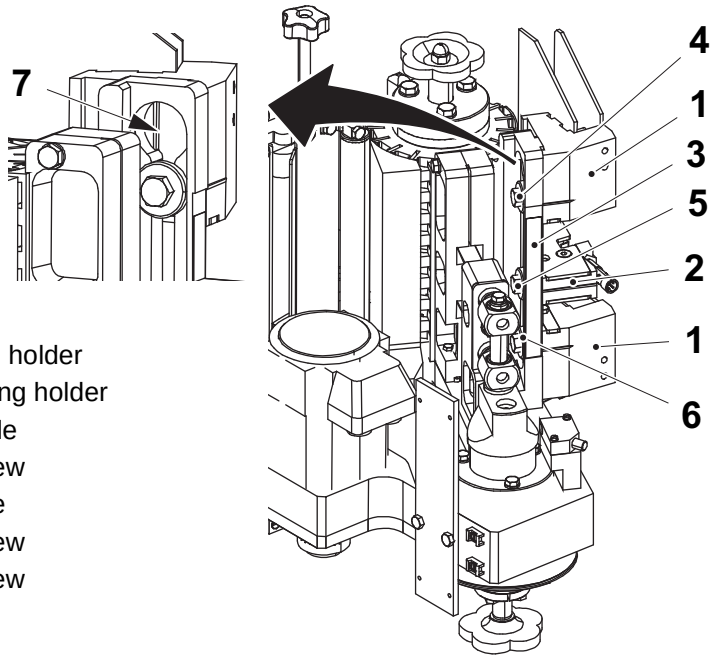

1 Gun holder
2 Spring holder
3 Scale
4 Screw
5 Hole
6 Screw
7 Screw

(Cont'd)

(Cont'd)

c) Remove the screws (6) and (7).
d) Remove the bracket (8).
e) Change the compression springs (9).
f) Assemble in the reverse order.

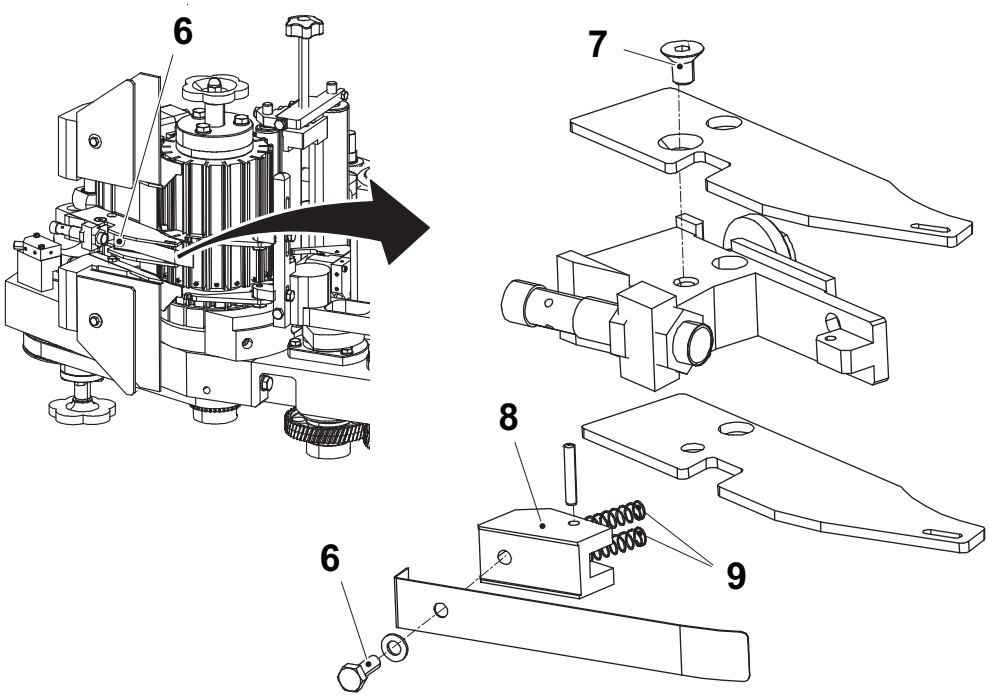

6 Screw
7 Screw
8 Bracket
9 Compression spring (2 pieces)

1.7-3 Spring Holder - Set Leaf Spring (TBA)

Machine Status	Power Supply Disconnector OFF Air Valve OFF
SPC Reference	2923353 valid for TBA

a) Loosen the screw (1).

b) Set the leaf spring (2) in position between the pressure arms (3). Use the scale (4) to set the height according to the table in Section 12.1 Guideline Settings, TBA.

Note! The leaf spring should hold the U-straw bend, see the illustration below.

c) Tighten the screw (1).

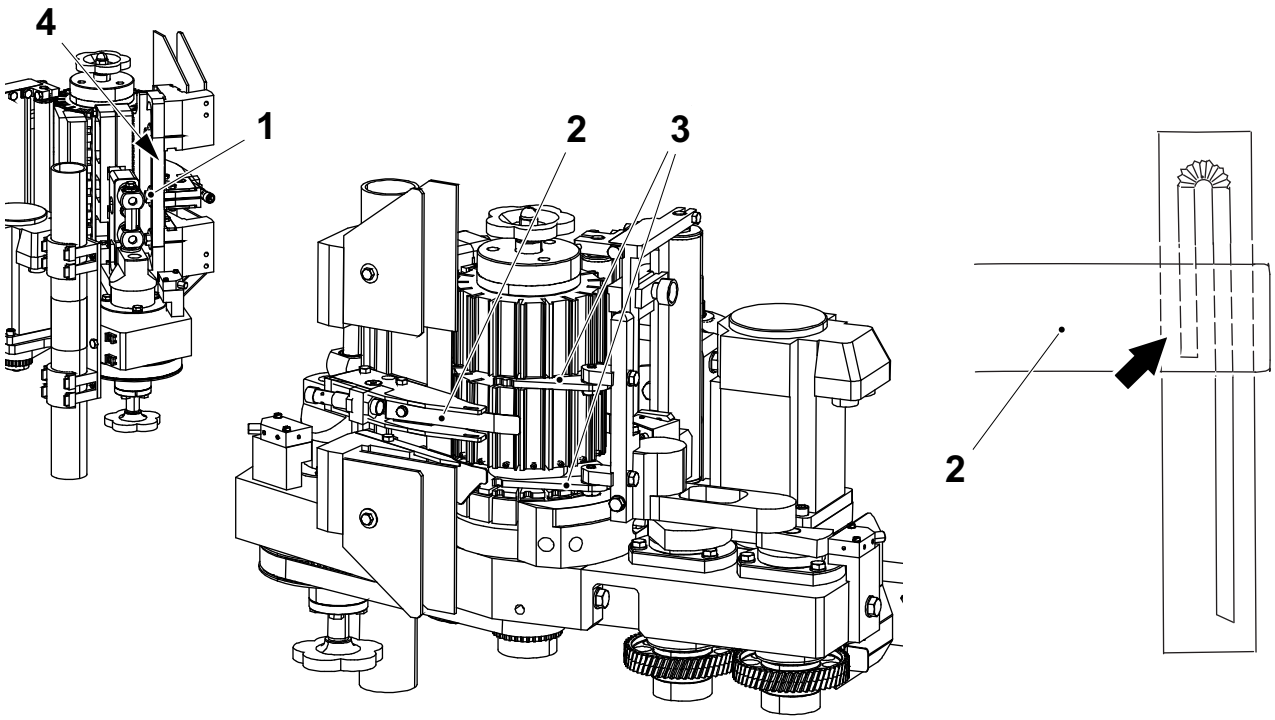

1 Screw
2 Leaf spring
3 Pressure arm (2 pieces)
4 Scale

1.8 Crankshaft

1.8-1 Crankshaft - Check Parts

Machine Status	Power Supply Disconnector OFF Air Valve OFF
Special Equipment	Hook spanner TP No. 90243-0164
SPC Reference	2829436

a) Turn the stellar knob (1) until the knife (2) is in its outer position.

b) Assemble the template (3) and remove the screw (4).

c) Remove the template and remove the screw (5).

d) Remove the knife holder unit (6).

CAUTION

Risk of personal injury.

The knife is very sharp. Be careful when working near the knife.

TBA

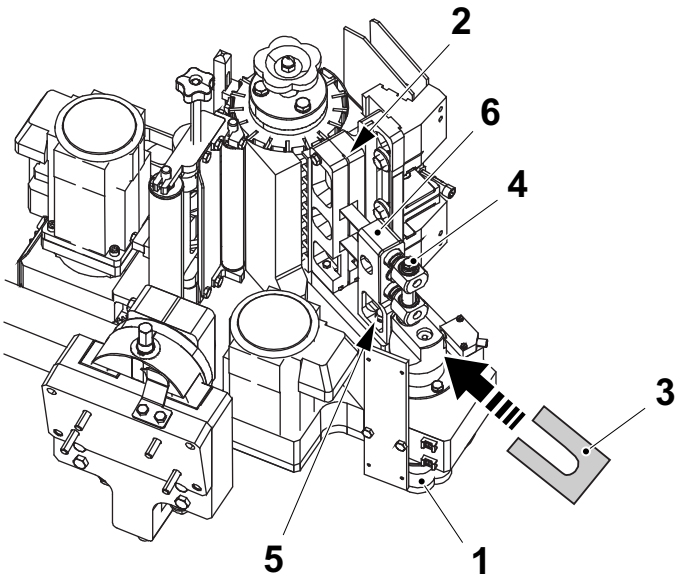

TCA

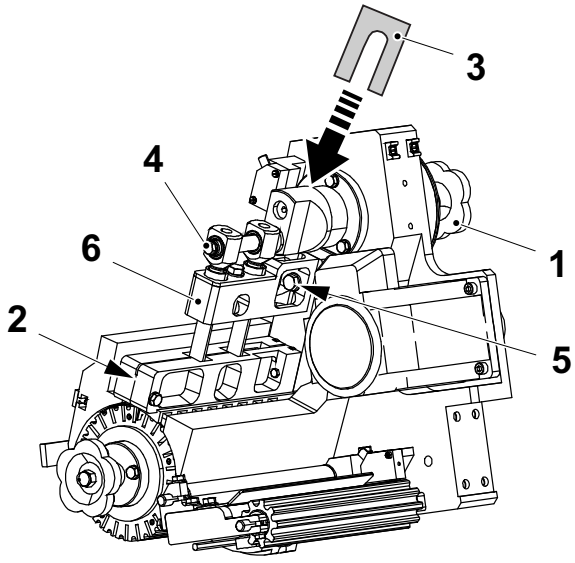

1 Stellar knob
2 Knife
3 Template
4 Screw
5 Screw
6 Knife holder unit

(Cont'd)

(Cont'd)

e) Remove the screws (7) and the sensor (8).

f) Remove the screw (9) and the bracket (10).

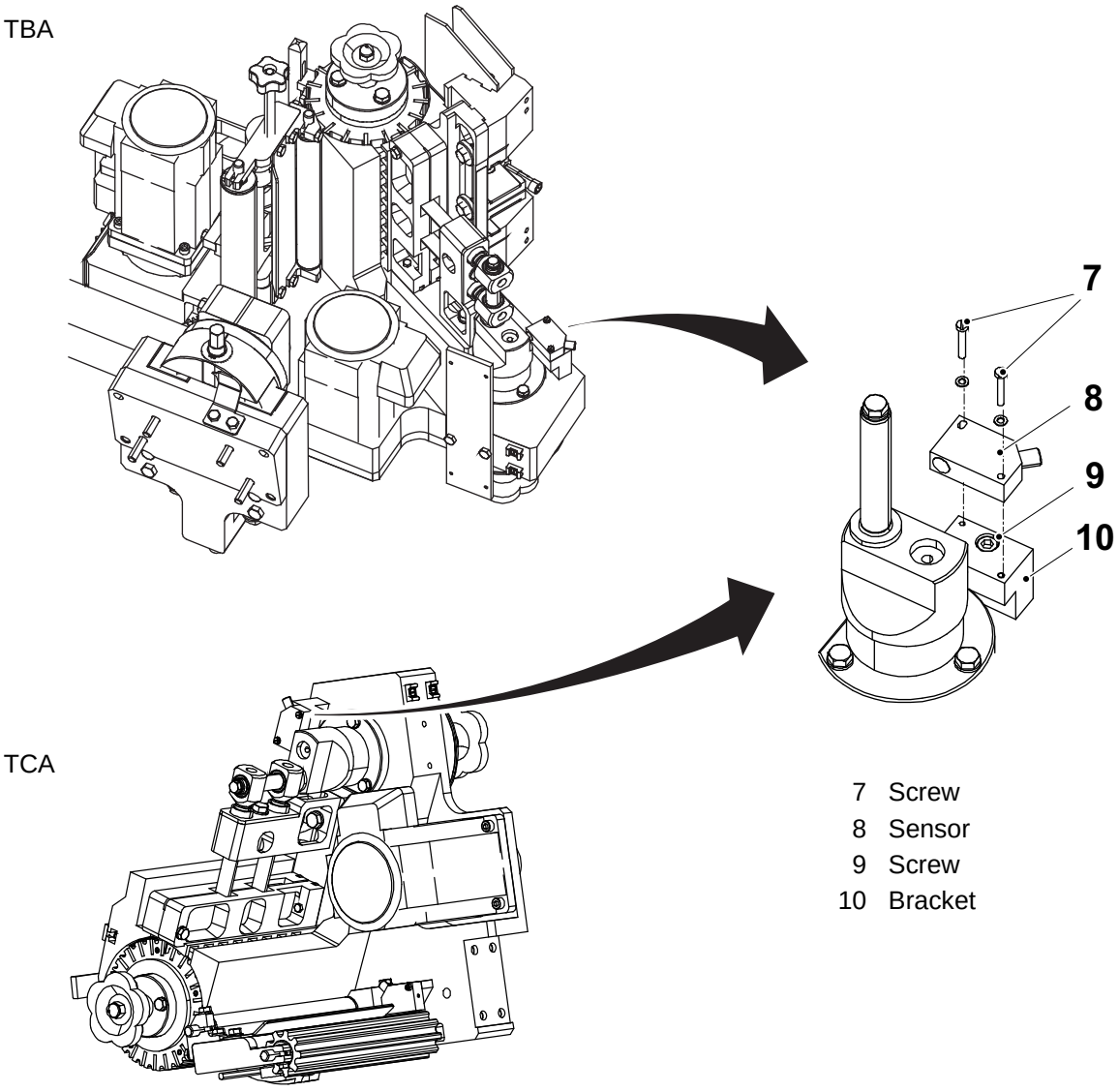

7 Screw
8 Sensor
9 Screw
10 Bracket

(Cont'd)

(Cont'd)

g) For TBA: Loosen the screw (11) and rotate the applicator unit approximately 90° to the left. Cut the ladder band before turning.

Note! Remember the angle position, see the scale (12).

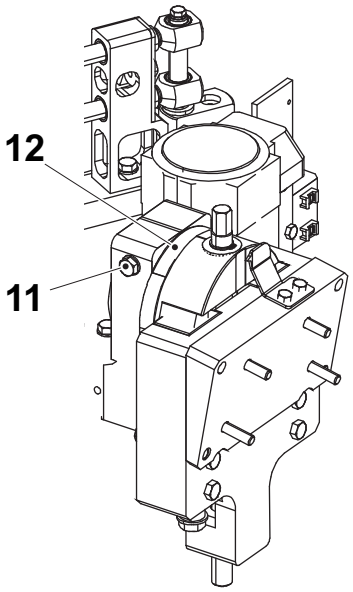

11 Screw
12 Scale

(Cont'd)

(Cont'd)

h) Loosen the screw (13) and turn the belt tightener 3/4 of a revolution with the hook spanner (14) to release the belt tension. Tighten the screw.

i) Remove the timing belt (15).

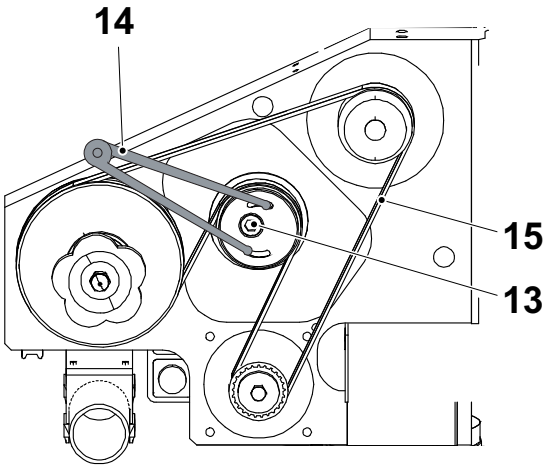

13 Screw
14 Hook spanner
15 Timing belt

(Cont'd)

(Cont'd)

j) Loosen the screw (16).
k) Remove the screws (17).
l) Remove the screw (18) and the stellar knob (19).

TBA

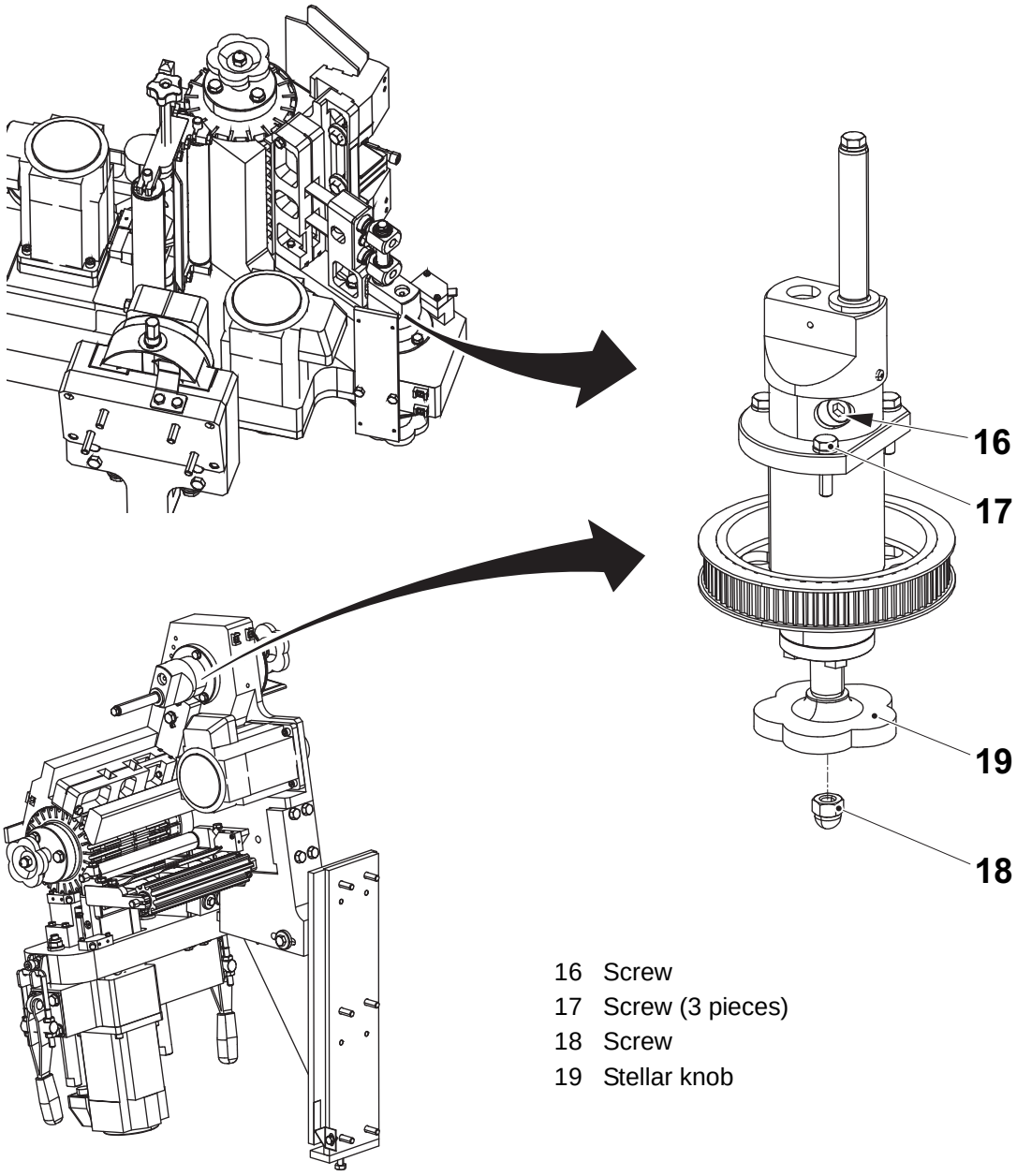

TCA

16 Screw
17 Screw (3 pieces)
18 Screw
19 Stellar knob

(Cont'd)

(Cont'd)

m) Remove the screws (20) and put two of them in the holes (21).

n) Tighten the two screws in order to loosen the pulley (22).

o) Check the screw (4), and the axle pin (23) for wear or damage. Change if necessary, see 1.8-2 Crankshaft - Change Parts.

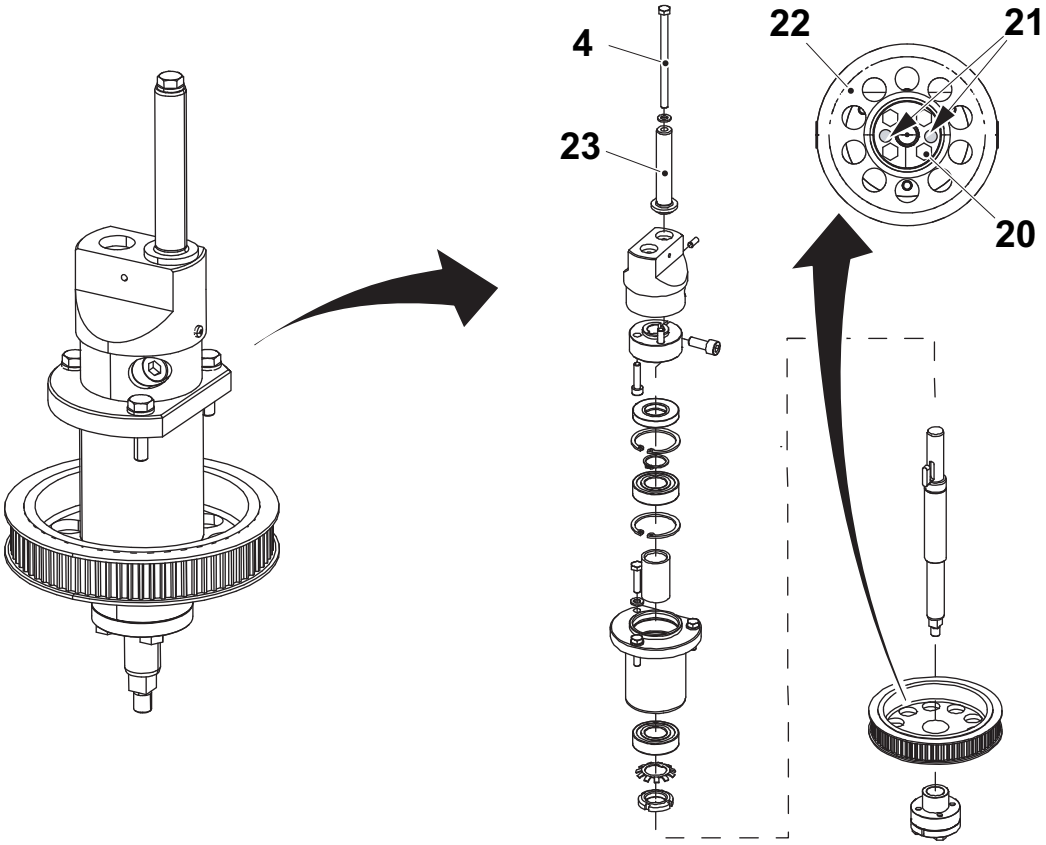

4 Screw
20 Screw (4 pieces)
21 Hole
22 Pulley

(Cont'd)

(Cont'd)

p) Check the radial seal (23), the retaining ring (24), the ball bearings (25), the lock washer (26), and the retaining rings (27) for wear or damage. Change if necessary, see 1.8-2 Crankshaft - Change Parts.

CAUTION
Risk of damage to equipment.
Use a puller to remove the ball bearings.

q) Assemble in the reverse order.

CAUTION
Risk of damage to equipment.
The ball bearings must be pressed onto the shafts. Use appropriate equipment.

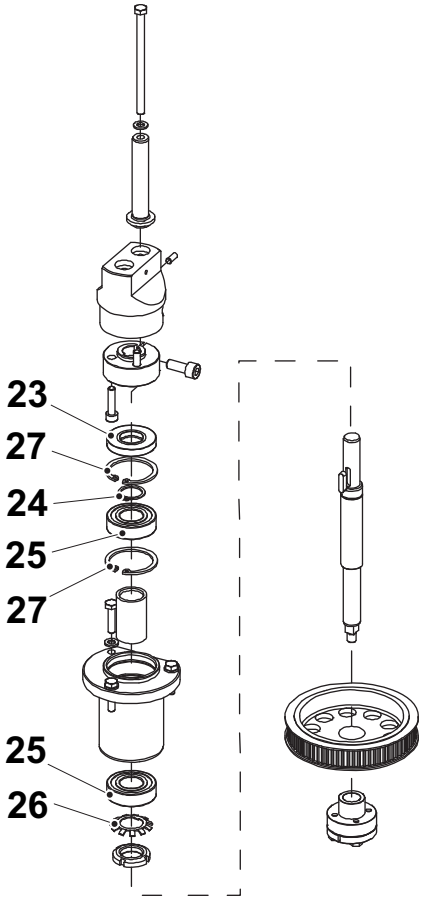

23 Radial seal
24 Retaining ring
25 Ball bearing (2 pieces)
26 Lock washer
27 Retaining ring (2 pieces)

1.8-2 Crankshaft - Change Parts

Machine Status	Power Supply Disconnector OFF Air Valve OFF
SPC Reference	2829436

a) Perform item a) to n) in procedure 1.8-1 Crankshaft - Check Parts.

CAUTION
Risk of damage to equipment.
Use a puller to remove the ball bearings.

b) Change the screw (1), the axle pin (2), the radial seal (3), the retaining ring (4), the ball bearings (5), the lock washer (6), and the retaining rings (7).

CAUTION
Risk of damage to equipment.
The ball bearings must be pressed onto the shafts. Use appropriate equipment.

c) Assemble in the reverse order.

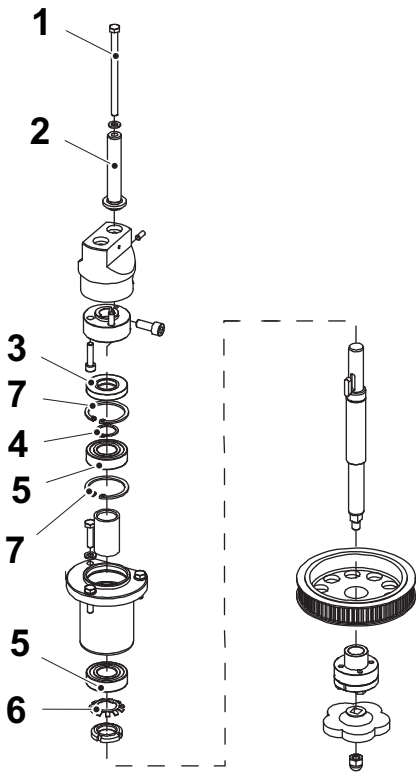

1 Screw
2 Axle pin
3 Radial seal
4 Retaining ring
5 Ball bearing
6 Lock washer
7 Retaining ring

This page intentionally left blank

2 Conveyor Section

TBA

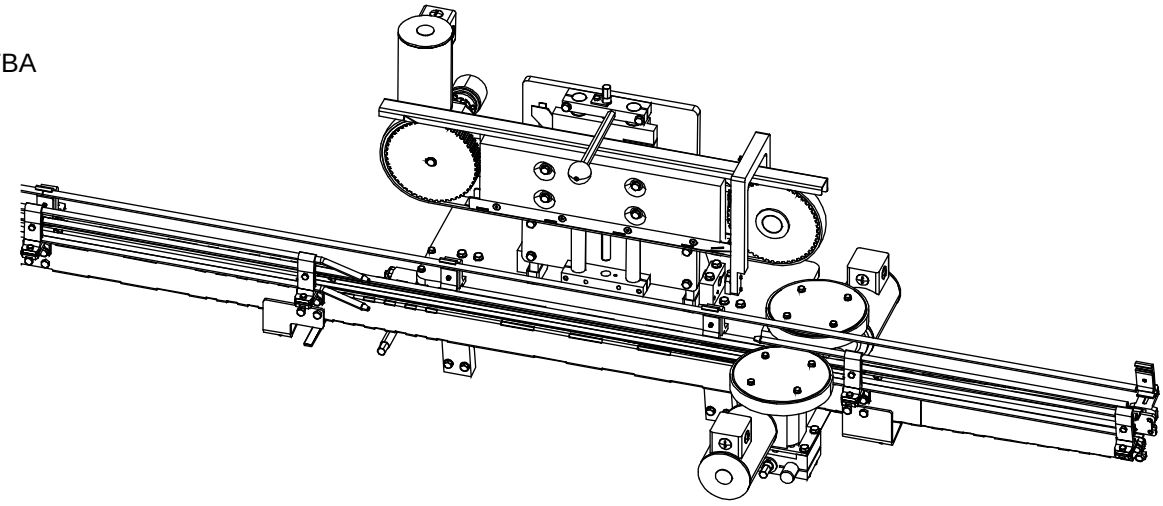

TCA

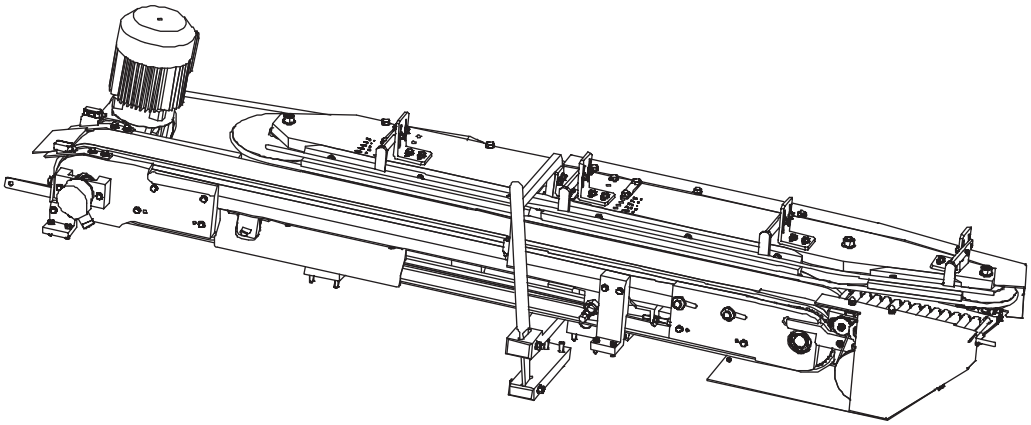

Conveyor Section - Description

SPC Reference	663302

TBA

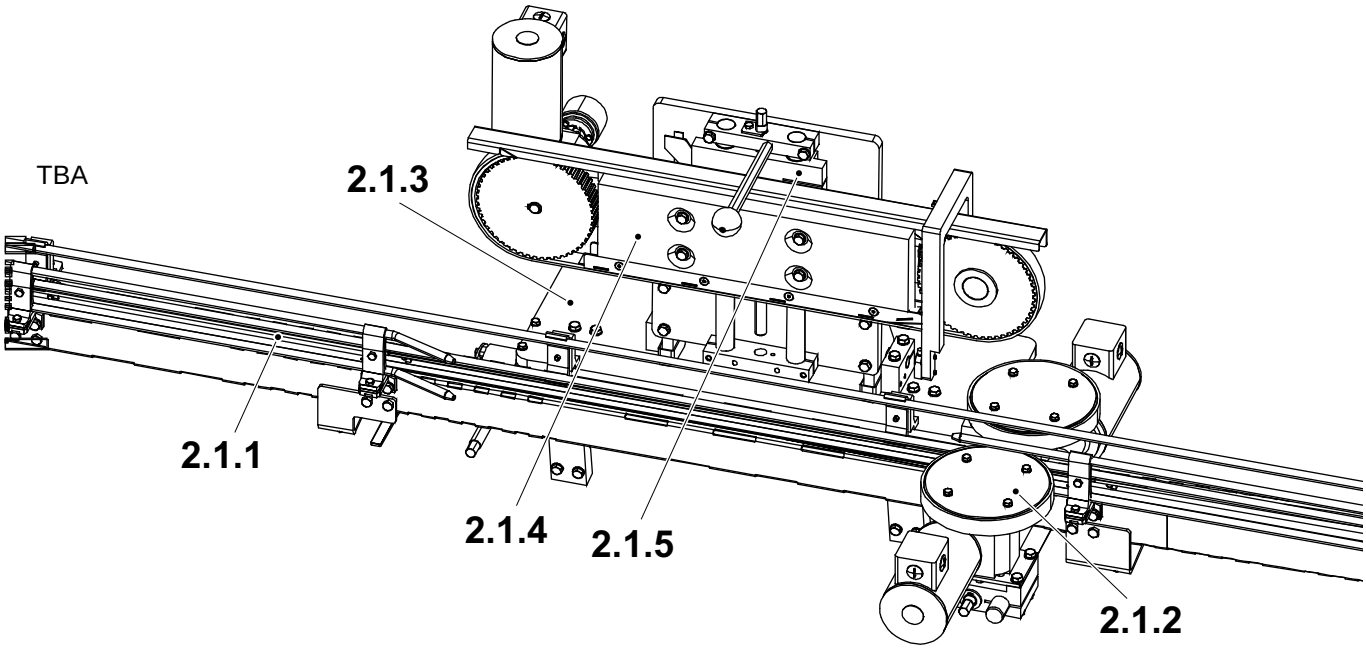

2.1.1 Conveyor
2.1.2 Belt brake
2.1.3 Adjustment plate
2.1.4 Top support
2.1.5 Height adjustment

TCA

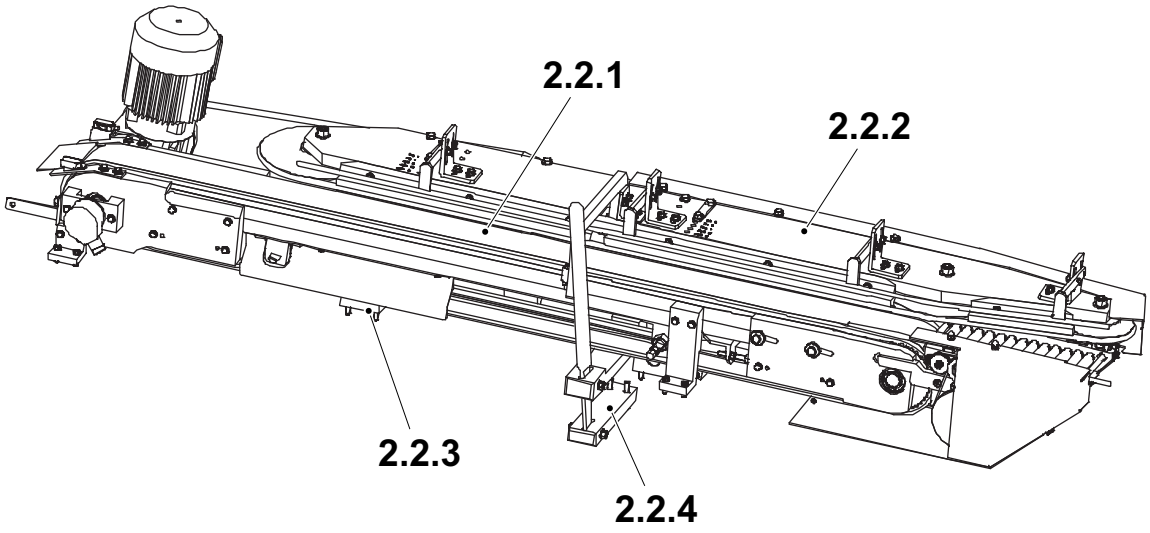

2.2.1 Conveyor
2.2.2 Package transfer
2.2.3 Adjustment plate
2.2.4 Side adjuster

2.1 Conveyor Section Tetra Brik Aseptic, TBA . . . . 2 - 5

2.1.1 Conveyor. . . . . 2 - 6

2.1.1.1 Support Rail . . . . . 2 - 6

2.1.1.1-1 Support Rail - Set . . . . . 2 - 6

2.1.2 Belt Brake . . . . . 2 - 7

2.1.2-1 Belt Brake - Check Timing Belt . . . . . 2 - 7

2.1.2-2 Belt Brake - Change Timing Belt . . . . . 2 - 8

2.1.2-3 Belt Brake - Set . . . . . 2 - 9

2.1.3 Adjustment Plate . . . . . 2 - 10

2.1.3-1 Adjustment Plate - Set Override . . . . . 2 - 10

2.1.4 Top Support . . . . . 2 - 11

2.1.4.1 Support Belt . . . . . 2 - 11

2.1.4.1-1 Support Belt - Check Timing Belt . . . . . 2 - 11

2.1.4.1-2 Support Belt - Change Timing Belt . . . . . 2 - 12

2.1.4.1-3 Support Belt - Set Timing Belt Tension . . . . . 2 - 13

2.1.4.2 Wheel . . . . . 2 - 14

2.1.4.2-1 Wheel - Check Parts . . . . . 2 - 14

2.1.4.2-2 Wheel - Change Parts . . . . . 2 - 15

2.1.5 Height Adjustment . . . . . 2 - 17

2.1.5-1 Height Adjustment - Set Height . . . . . 2 - 17

2.1.5-2 Height Adjustment - Check Shock Absorber . . . 2 - 18

2.1.5-3 Height Adjustment - Change Shock Absorber . . 2 - 19

2.2 Conveyor Section Tetra Classic Aseptic, TCA 2 - 20

2.2.1 Conveyor. . . . . 2 - 21

2.2.1-1 Conveyor - Set . . . . . 2 - 21

2.2.1.1 Drive and End Unit. . . . . 2 - 23

2.2.1.1-1 Drive and End Unit - Change Ball Bearings . . . 2 - 23

2.2.1.2 Conveyor . . . . . 2 - 27

2.2.1.2-1 Conveyor - Check Drive Belts . . . . . 2 - 27

2.2.1.2-2 Conveyor - Change Drive Belts . . . . . 2 - 28

2.2.1.2-3 Conveyor - Check Ball Bearings . . . . . 2 - 29

2.2.1.2-4 Conveyor - Change Ball Bearings . . . . . 2 - 30

2.2.1.3 Belt Conveyor, Infeed. . . . . 2 - 32

2.2.1.3-1 Belt Conveyor, Infeed - Check Conveyor Belt . 2 - 32

2.2.1.3-2 Belt Conveyor, Infeed - Change Conveyor Belt 2 - 33

2.2.1.3-3 Belt Conveyor, Infeed - Check Ball Bearings . . 2 - 35

2.2.1.3-4 Belt Conveyor, Infeed - Change Ball Bearings . 2 - 36

2.2.2 Package Transfer. . . . . 2 - 39

2.2.2-1 Package Transfer - Set . . . . . 2 - 39

2.2.2-2 Package Transfer - Check Ball Bearings . . . . . 2 - 42

2.2.2-3 Package Transfer - Change Ball Bearings . . . . . 2 - 43

2.2.2-4 Package Transfer - Check Belts . . . . . 2 - 45

2.2.2-5 Package Transfer - Change Belts . . . . . 2 - 46

2.2.3 Adjustment Plate . . . . . 2 - 47

2.2.3-1 Adjustment Plate - Set Cylinder . . . . . 2 - 47

2.2.3-2 Adjustment Plate - Check Cylinder . . . . . 2 - 48

2.2.3-3 Adjustment Plate - Change Cylinder . . . . . 2 - 49

2.2.4 Side Adjuster . . . . . 2 - 50

2.2.4-1 Side Adjuster - No Procedure Described . . . . . 2 - 50

2.1 Conveyor Section Tetra Brik Aseptic, TBA

SPC Reference	663302

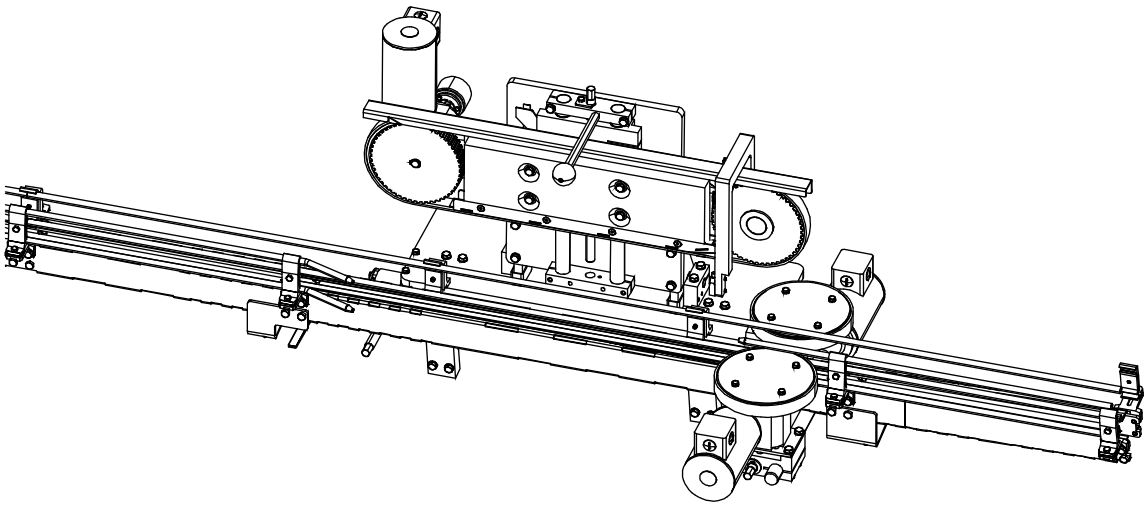

2.1.1 Conveyor

2.1.1.1 Support Rail

2.1.1.1-1 Support Rail - Set

Machine Status	Power Supply Disconnector OFF Air Valve OFF
SPC Reference	2845848

a) Loosen the nuts (1).

b) Put a package on the conveyor between the support rails (2).

c) Set the distance between the rails to approximately the package width plus 5 mm on each side of the package. The package must not be able to turn around.

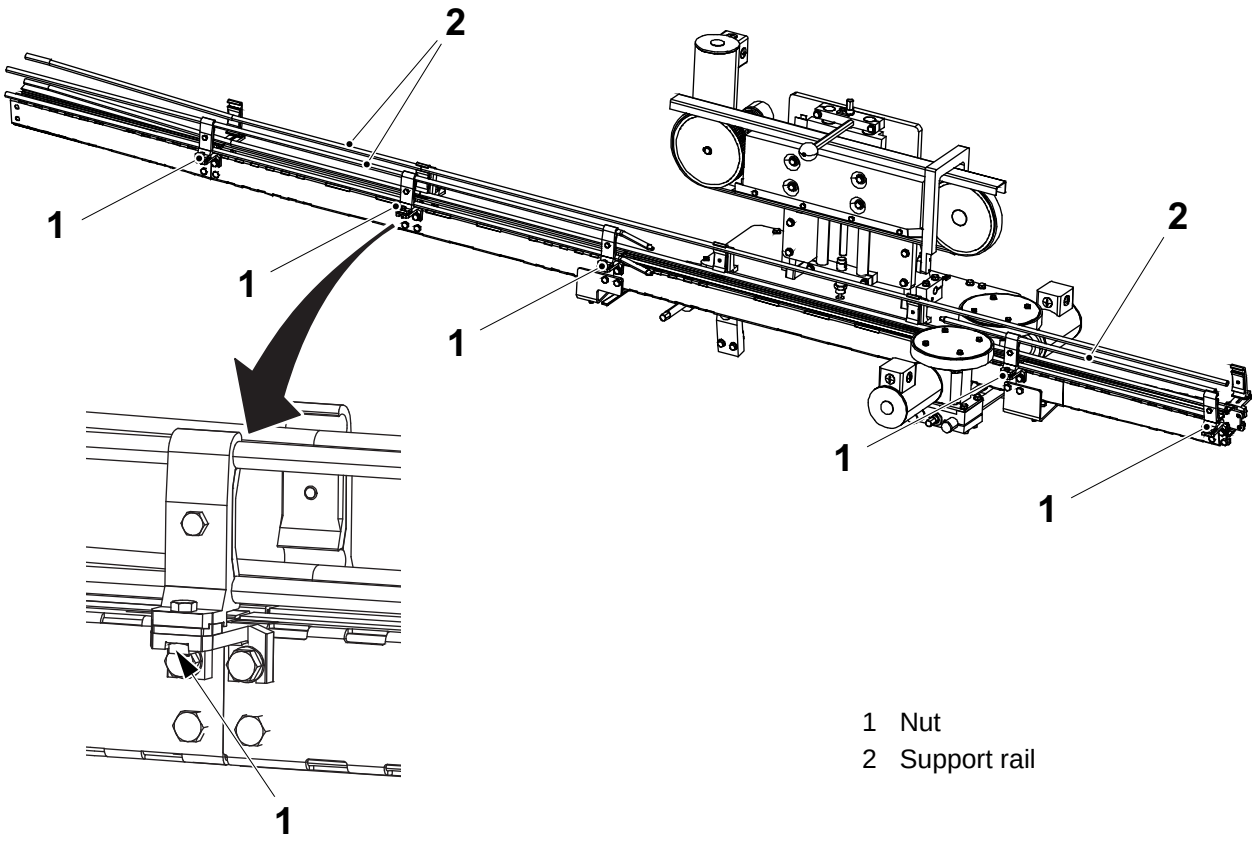

1 Nut
2 Support rail

2.1.2 Belt Brake

2.1.2-1 Belt Brake - Check Timing Belt

Machine Status	Power Supply Disconnector OFF Air Valve OFF
SPC Reference	2829393

Check the condition of the timing belts (1) and (2). Change if necessary, see 2.1.2-2 Belt Brake - Change Timing Belt.

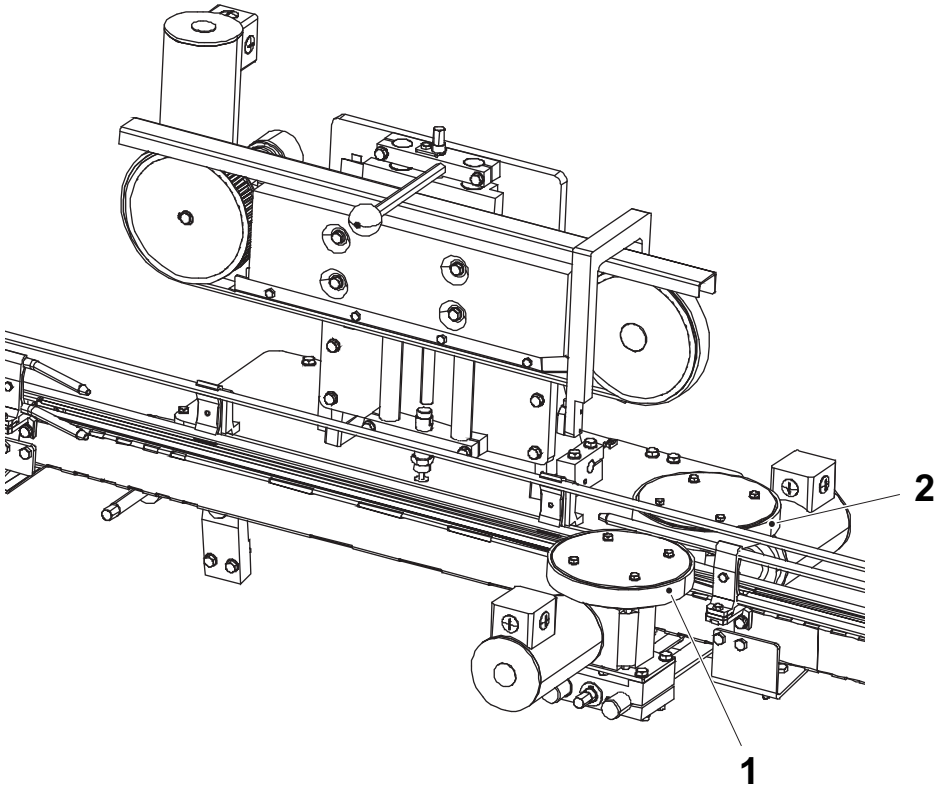

1 Timing belt
2 Timing belt

2.1.2-2 Belt Brake - Change Timing Belt

Machine Status	Power Supply Disconnector OFF Air Valve OFF
SPC Reference	2829393

a) Remove the screws (1).

b) Change the timing belts (2) and (3).

c) Assemble in the reverse order.

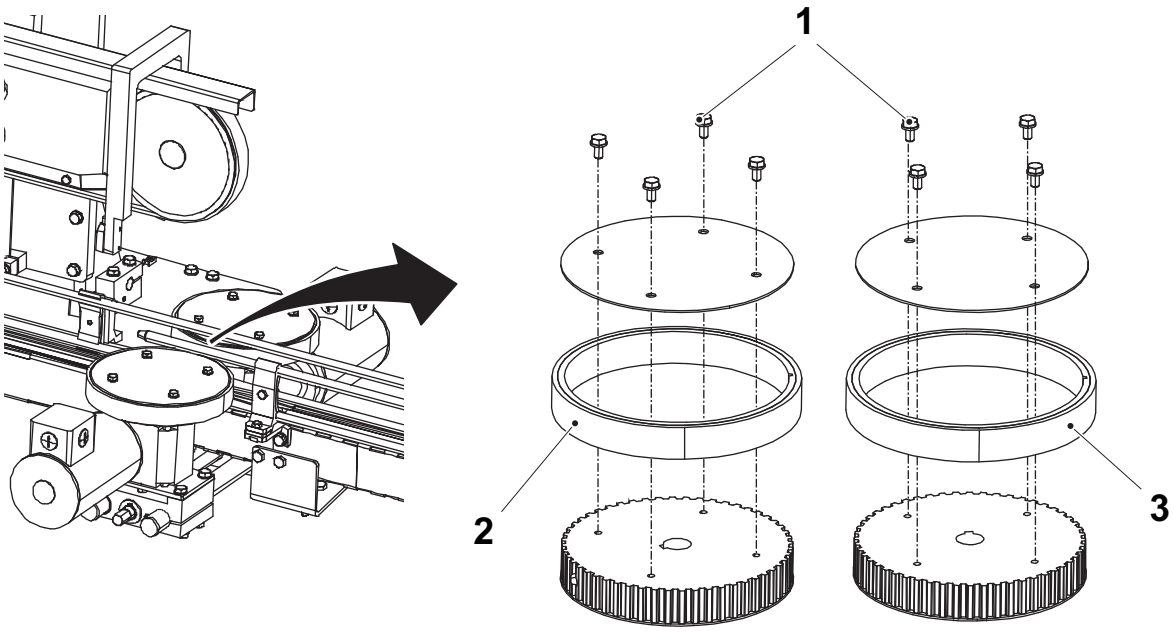

1 Screw (8 pieces)
2 Timing belt
3 Timing belt

2.1.2-3 Belt Brake - Set

Machine Status	Power Supply Disconnector OFF Air Valve OFF
SPC Reference	2829393

a) Loosen the screws (1).

b) Put a package on the conveyor between the two belt brakes and adjust the pressure on the package by turning the screw (2).

c) Set the value of the scale (3) according to Section 12.1 Guideline Settings, TBA. The distance between the belt brakes should be approximately the package width minus 2 mm.

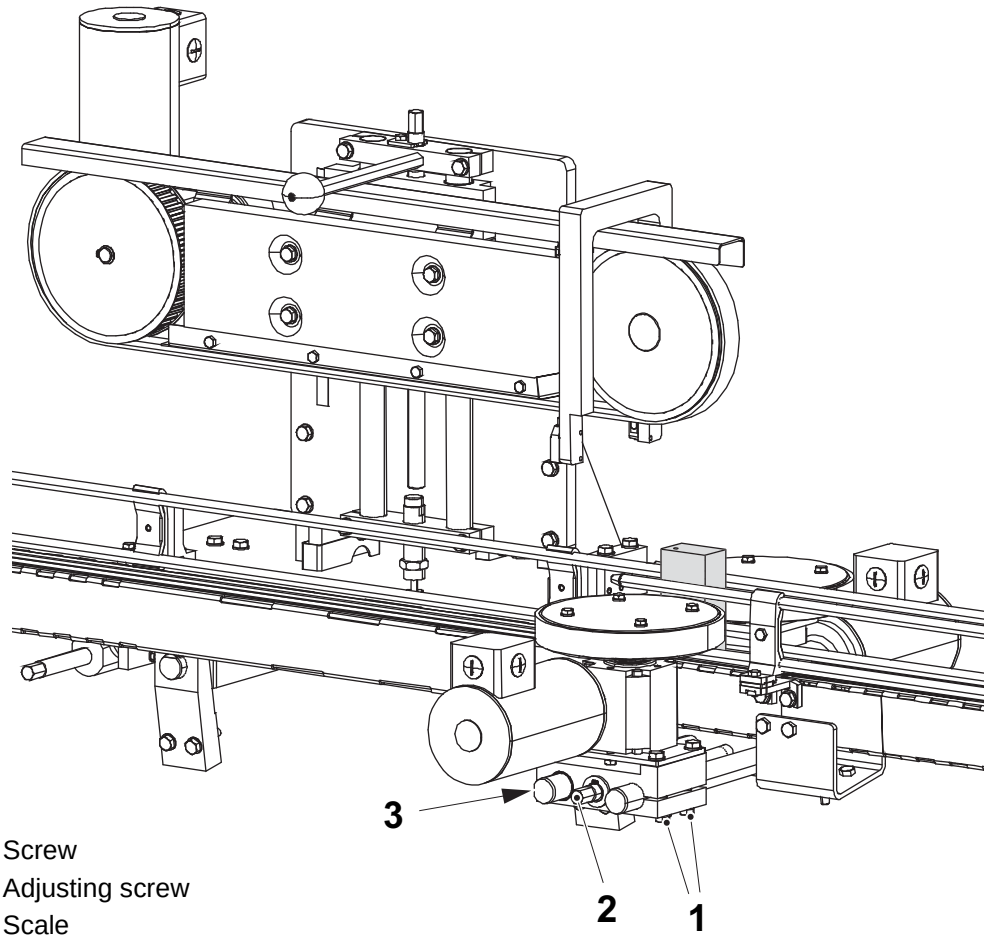

1 Screw
2 Adjusting screw
3 Scale

2.1.3 Adjustment Plate

2.1.3-1 Adjustment Plate - Set Override

Machine Status	Power Supply Disconnector OFF Air Valve OFF
SPC Reference	2829416

Adjust the override of the adjustment plate unit (1) with the shaft (2). Set the value of the scale (3) according to Section 12.1 Guideline Settings, TBA. The pressure arms (4) should now gently touch the package.

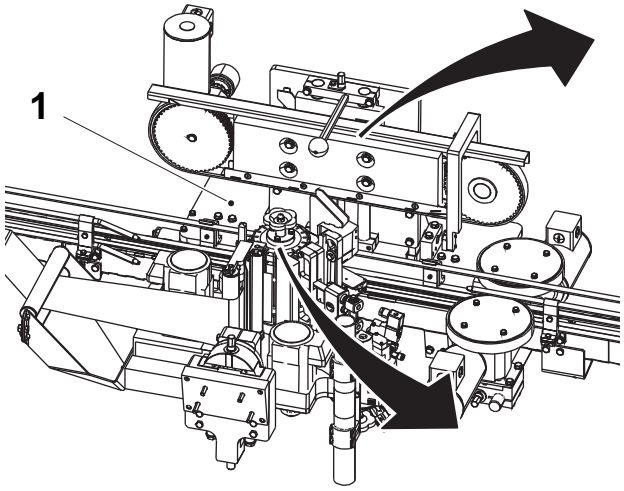

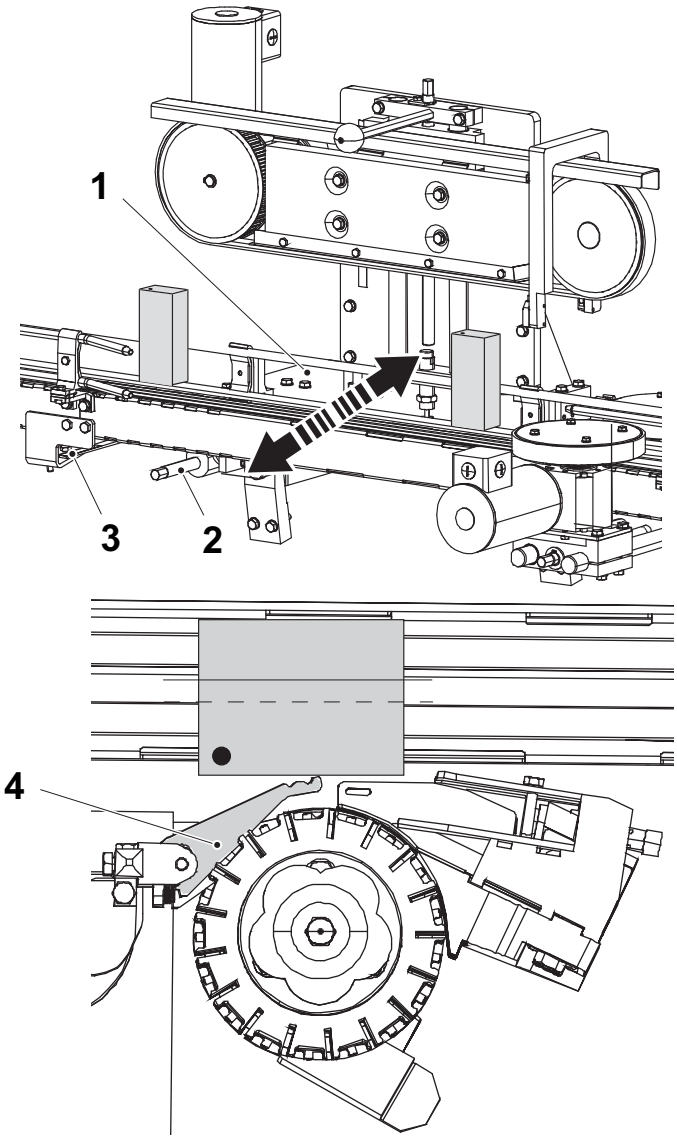

1 Adjustment plate unit
2 Shaft
3 Scale
4 Pressure arm

2.1.4 Top Support

2.1.4.1 Support Belt

2.1.4.1-1 Support Belt - Check Timing Belt

Machine Status	Power Supply Disconnector OFF Air Valve OFF
SPC Reference	2737080

a) Check the timing belt (1) for wear or damage. Change if necessary, see 2.1.4.1-2 Support Belt - Change Timing Belt.

b) Check the tension of the timing belt. Set the tension if necessary, see 2.1.4.1-3 Support Belt - Set Timing Belt Tension.

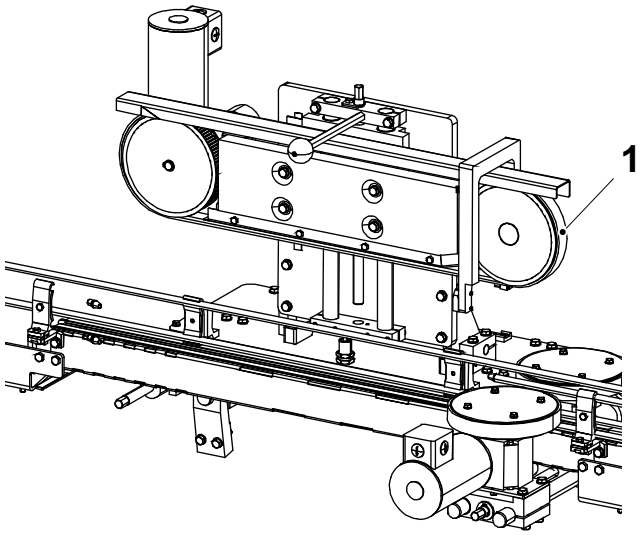

1 Timing belt

2.1.4.1-2 Support Belt - Change Timing Belt

Machine Status	Power Supply Disconnector OFF Air Valve OFF
SPC Reference	2737080

a) Loosen the screws (1) and (2).

b) Change the timing belt (3).

c) Adjust the timing belt tension with the screw (2).

d) Tighten the screws (1).

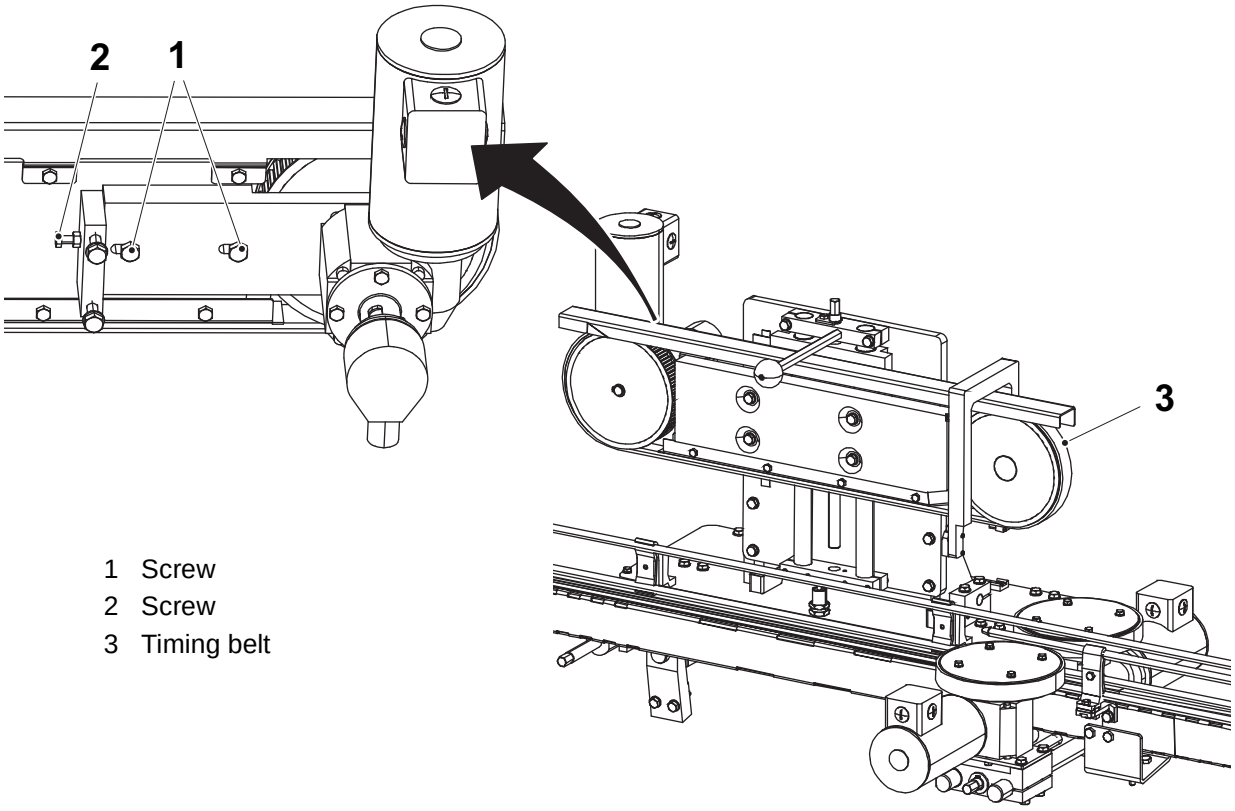

1 Screw
2 Screw
3 Timing belt

2.1.4.1-3 Support Belt - Set Timing Belt Tension

Machine Status	Power Supply Disconnector OFF Air Valve OFF
SPC Reference	2737080

a) Loosen the screws (1).

b) Adjust the timing belt tension with the screw (2).

c) Tighten the screws (1).

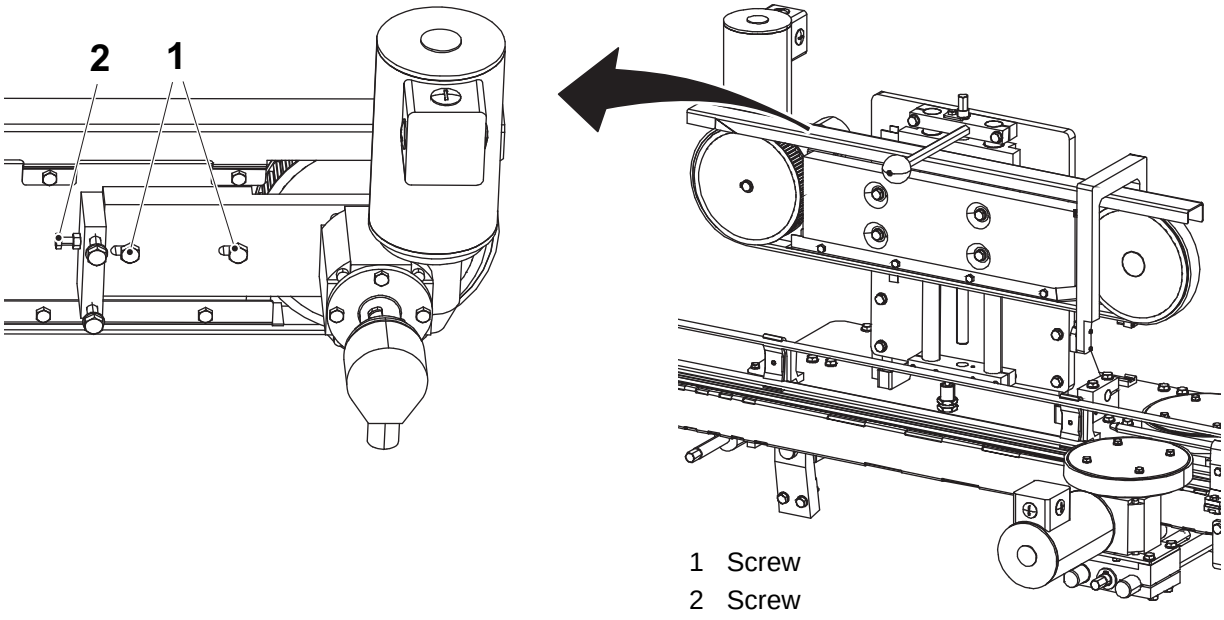

1 Screw
2 Screw

2.1.4.2 Wheel

2.1.4.2-1 Wheel - Check Parts

Machine Status	Power Supply Disconnector OFF Air Valve OFF
Special Equipment	Mandrel (Ø3 mm)
SPC Reference	2924673

a) Loosen the screws (1) and (2).

b) Remove the timing belt (3).

c) Rotate the toothed pulley (4) and check if there is a play in the ball bearing (10). Change if necessary, see 2.1.4.2-2 Wheel - Change Parts.

d) Loosen the screw (5) and remove the pulley (4) from the bracket (6).

e) Use a mandrel (Ø3 mm) to remove the radial seal (7).

f) Check the radial seal (7), the retaining rings (8) and (9), and the seal ring (11) for wear or damage. Change if necessary, see 2.1.4.2-2 Wheel - Change Parts.

g) Assemble in the reverse order.

h) Set the timing belt (3) tension, see 2.1.4.1-3 Support Belt - Set Timing Belt Tension.

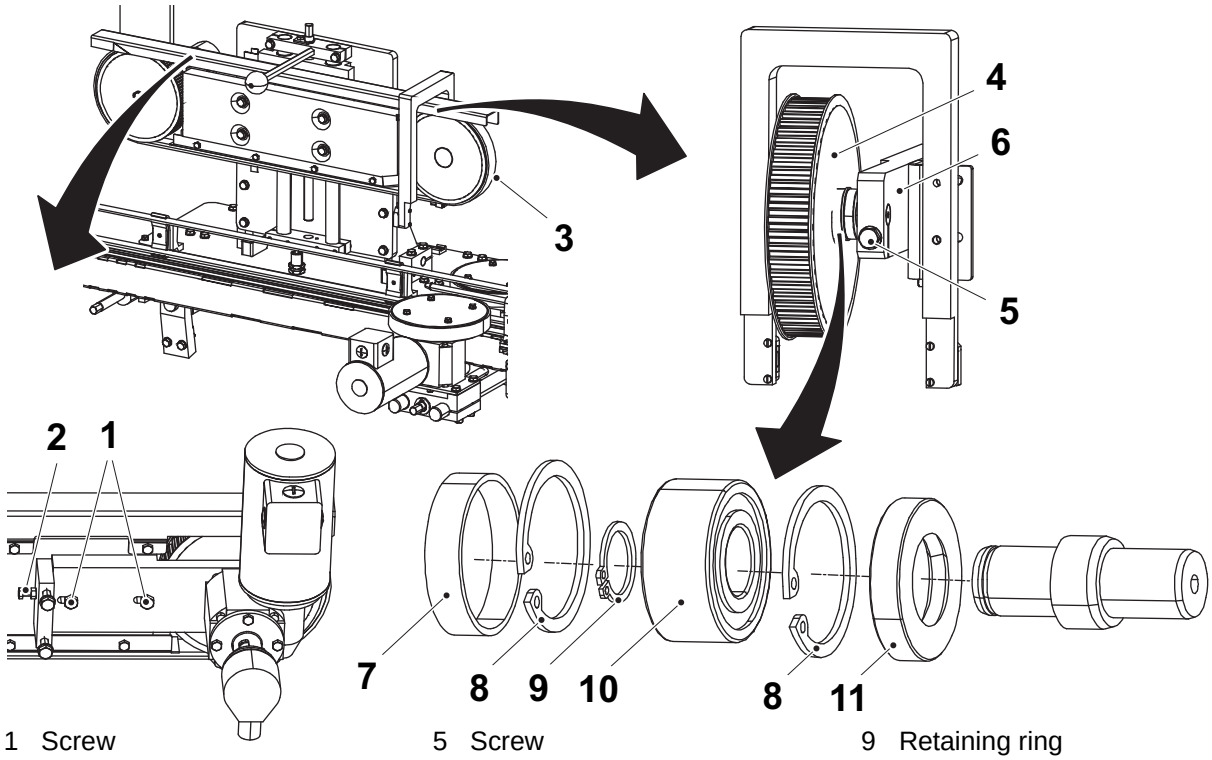

1 Screw
2 Screw
3 Timing belt
4 Toothed pulley
5 Screw
6 Bracket
7 Radial seal
8 Retaining ring
9 Retaining ring
10 Ball bearing
11 Seal ring

2.1.4.2-2 Wheel - Change Parts

Machine Status	Power Supply Disconnector OFF Air Valve OFF
Special Equipment	Mandrel (Ø3 mm)
SPC Reference	2924673

a) Loosen the screws (1) and (2).

b) Remove the timing belt (3).

c) Loosen the screw (5) and remove the pulley (4) from the bracket (6).

d) Use a mandrel (Ø3 mm) to remove the radial seal (7).

e) Change the radial seal (7), the retaining rings (8) and (9), the ball bearing (10), and the seal ring (11).

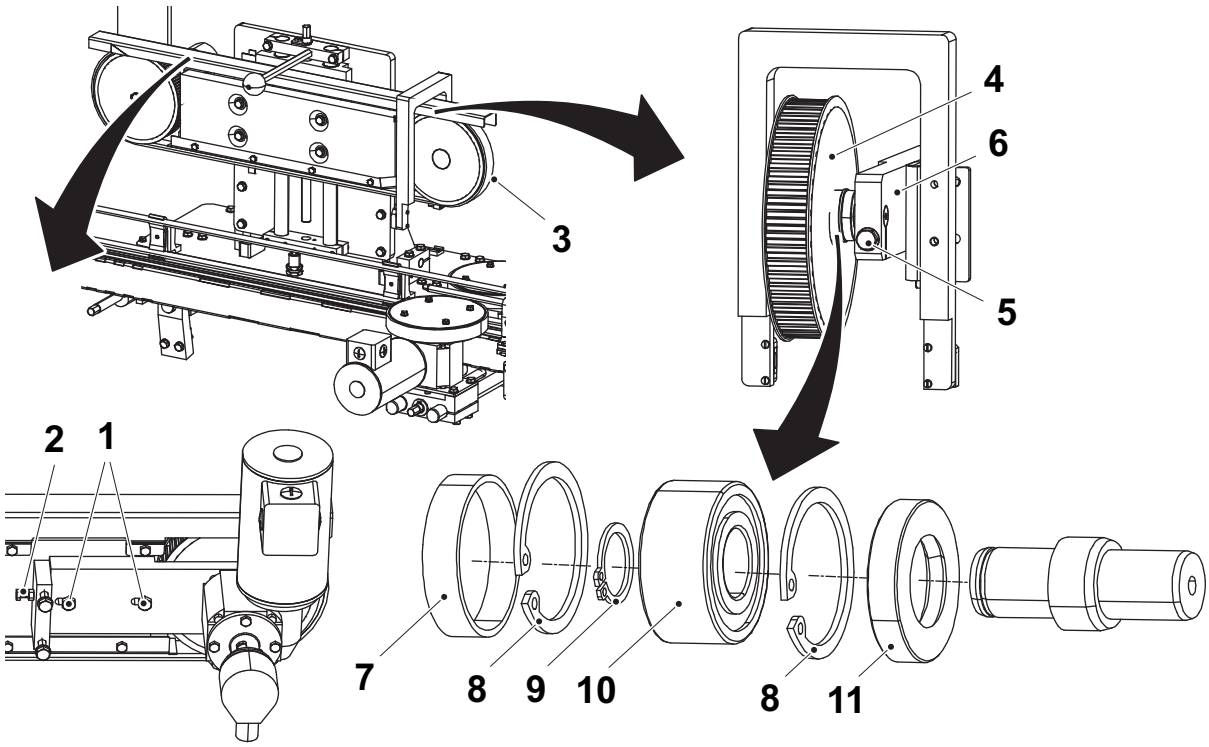

1 Screw
2 Screw
3 Timing belt
4 Pulley
5 Screw
6 Bracket
7 Radial seal
8 Retaining ring
9 Retaining ring
10 Ball bearing
11 Seal ring

(Cont'd)

(Cont'd)

f) Assemble in the reverse order.

g) Set the timing belt tension, see 2.1.4.1-3 Support Belt - Set Timing Belt Tension.

2.1.5 Height Adjustment

2.1.5-1 Height Adjustment - Set Height

Machine Status	Power Supply Disconnector OFF Air Valve OFF
SPC Reference	2929774

a) Loosen the screw (1).

b) Adjust the top support upwards and downwards with the adjusting screw (2).

c) Set the value of the scale (3) according to Section 12.1 Guideline Settings, TBA.

d) Lock the setting by tighten the screw (1).

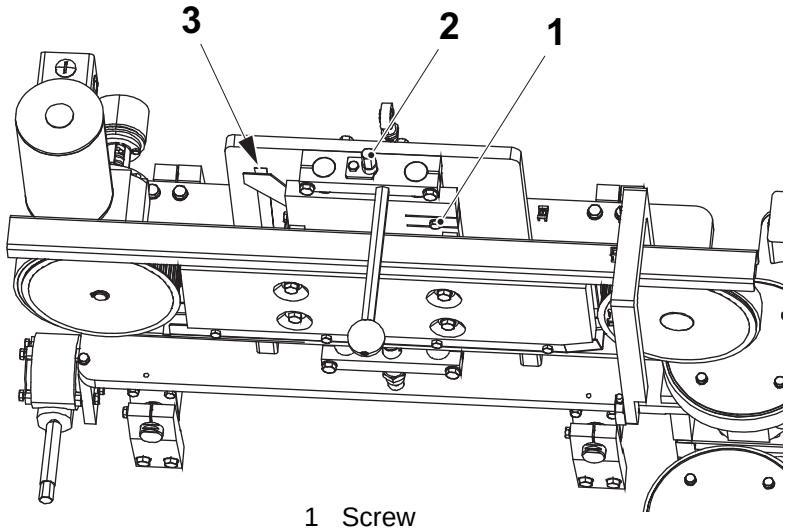

1 Screw
2 Adjusting screw
3 Scale

2.1.5-2 Height Adjustment - Check Shock Absorber

Machine Status	Power Supply Disconnector OFF Air Valve OFF
SPC Reference	2929774

Check the shock absorber (1) for wear or damage. Check that the shock absorber is damping the top support properly. Change if necessary, see 2.1.5-3 Height Adjustment - Change Shock Absorber.

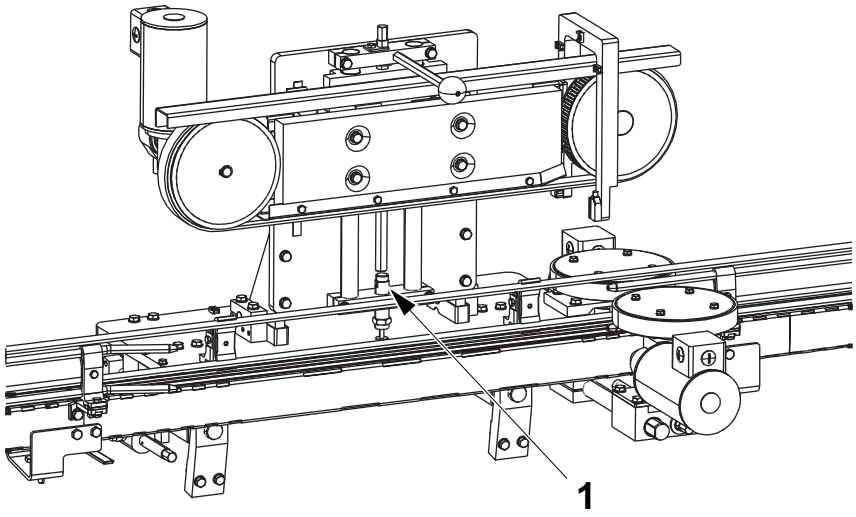

1 Shock absorber

2.1.5-3 Height Adjustment - Change Shock Absorber

Machine Status	Power Supply Disconnector OFF Air Valve OFF
SPC Reference	2929774

a) Use the handle (1) to move the top support (2) out of the way, according to the illustration below.

b) Loosen the nut (3).

c) Pull the shock absorber (4) downwards through the hole.

d) Change the shock absorber.

e) Assemble in the reverse order.

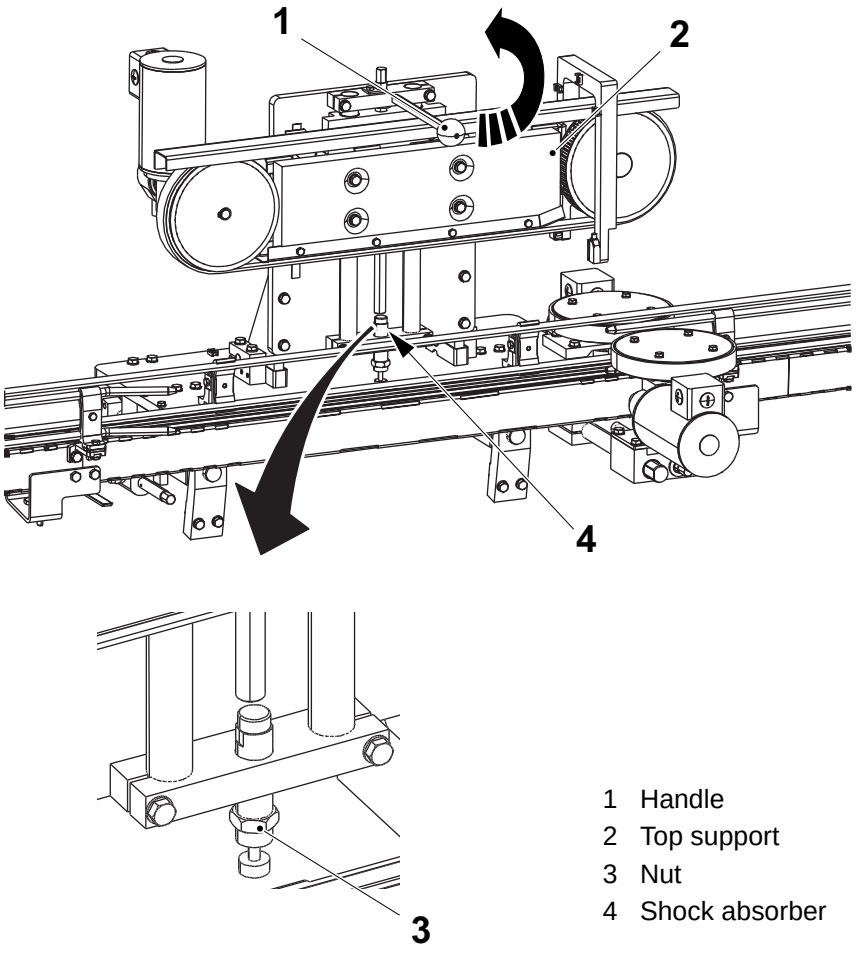

1 Handle
2 Top support
3 Nut
4 Shock absorber

2.2 Conveyor Section Tetra Classic Aseptic, TCA

SPC Reference	663302

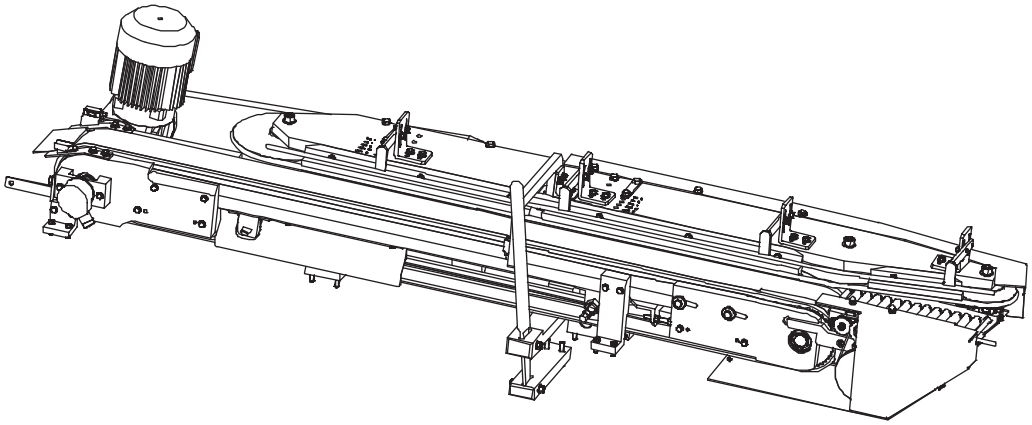

2.2.1 Conveyor

2.2.1-1 Conveyor - Set

Machine Status	Power supply disconnector OFF Air valve OFF
SPC Reference	2933980

a) Loosen the screws (1).

b) Loosen the nuts (2) and adjust the tension of the conveyor belt (3) with the screws (4).

c) Tighten the nuts (2) and the screws (1).

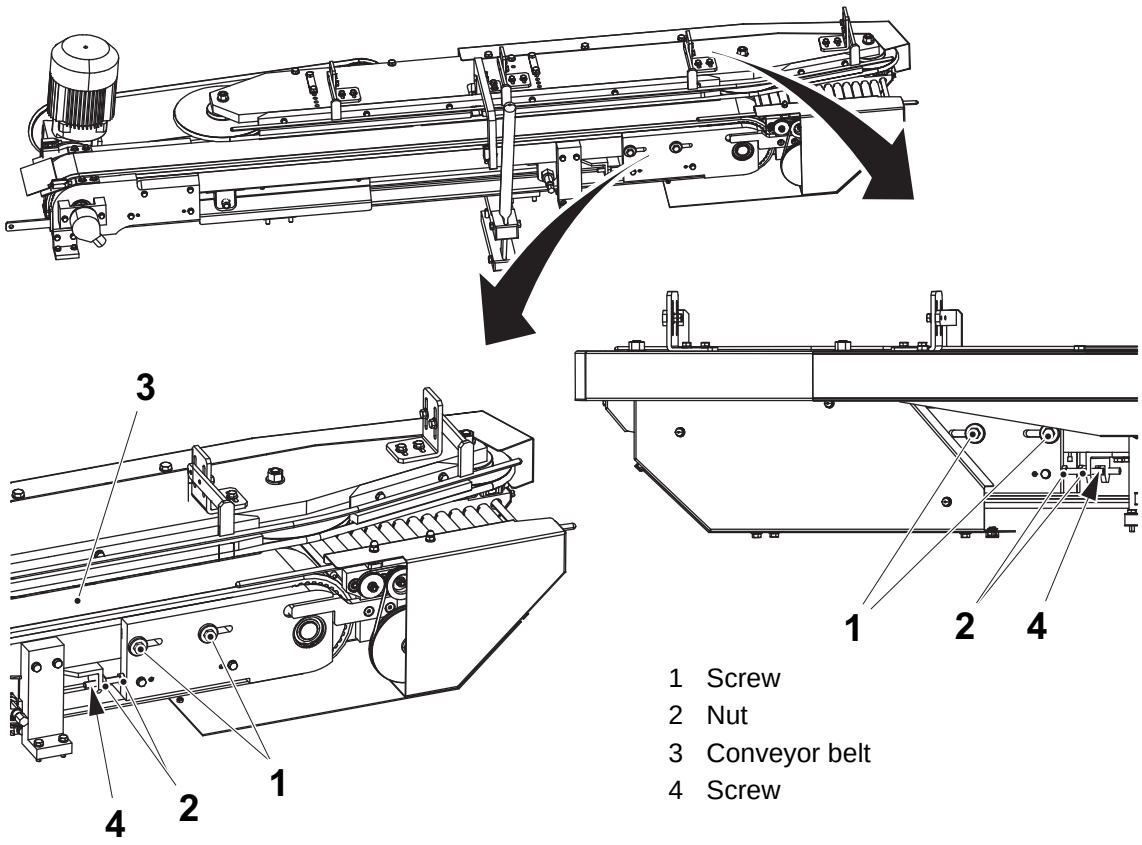

1 Screw
2 Nut
3 Conveyor belt
4 Screw

(Cont'd)

(Cont'd)

d) Remove the cover (5).
e) Loosen the screws (6) and adjust the tension of the drive belt (7)
f) Tighten the screws (6).
g) Assemble the cover (5).

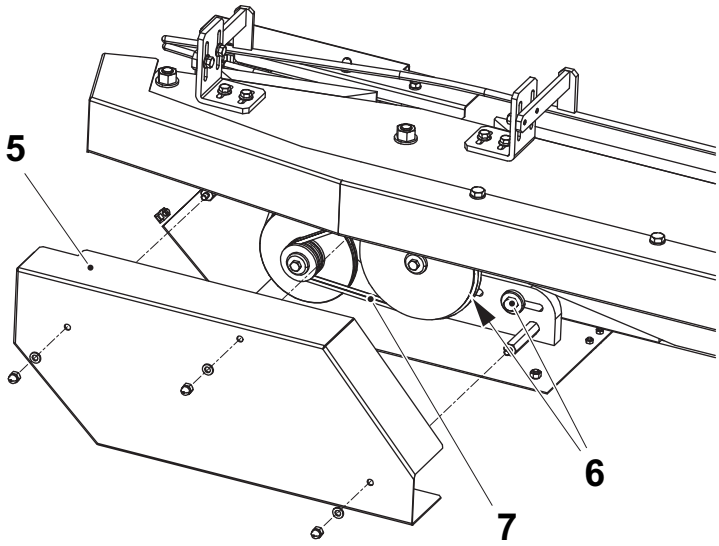

5 Cover
6 Screw
7 Drive belt

2.2.1.1 Drive and End Unit

2.2.1.1-1 Drive and End Unit - Change Ball Bearings

Machine Status	Power supply disconnector OFF Air valve OFF
SPC Reference	2933965

a) Disconnect the encoder (1).

b) Remove the screws (2).

c) Remove the bracket (3).

d) Loosen the screws (4).

e) Loosen the screws (5).

f) Remove the screws (6) and remove the plate (7).

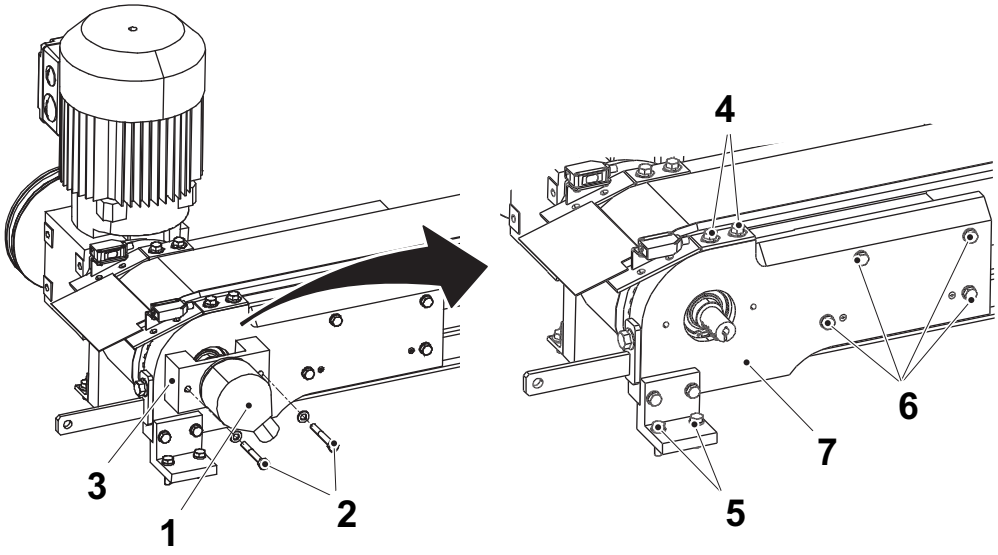

1 Encoder
2 Screw
3 Bracket
4 Screw
5 Screw
6 Screw
7 Plate

(Cont'd)

(Cont'd)

g) Remove the retaining ring (8).

h) Change the ball bearing (9).

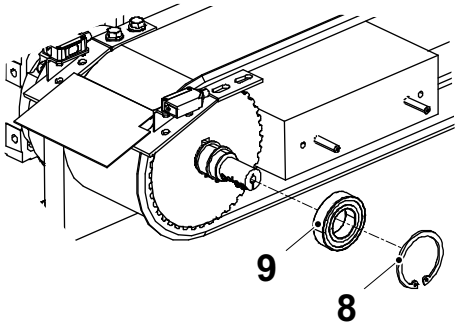

8 Retaining ring
9 Ball bearing

(Cont'd)

(Cont'd)

i) Remove the drive belt (10).

j) Remove the screw (11) and the wheel (12).

k) Loosen the screws (13) and remove the motor unit (14).

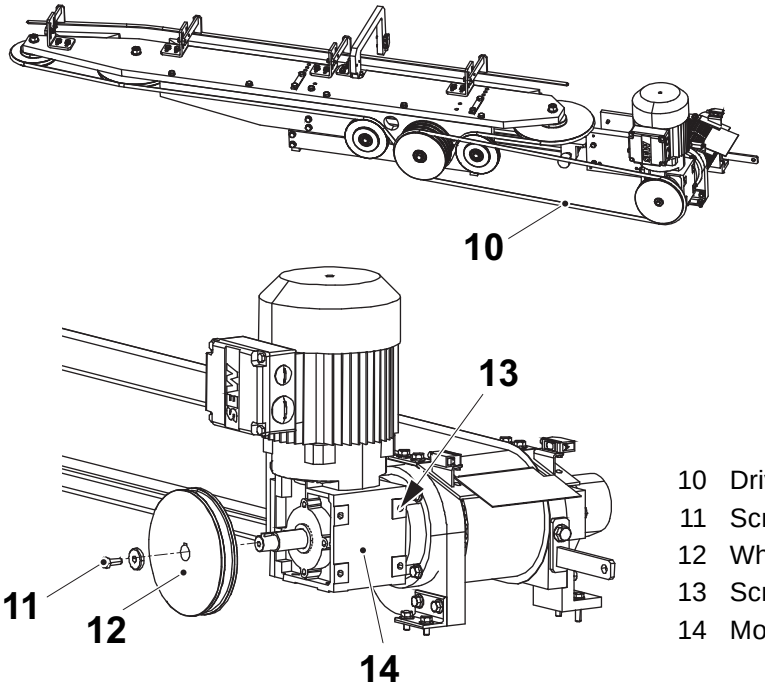

10 Drive belt
11 Screw
12 Wheel
13 Screw (4 pieces)
14 Motor unit

(Cont'd)

(Cont'd)

l) Loosen the screws (15).
m) Loosen the screws (16).
n) Remove the screws (17) and remove the plate (18).
o) Remove the retaining ring (19).
p) Change the ball bearing (20).
q) Assemble in the reverse order.

Note! Be careful when assembling the encoder.

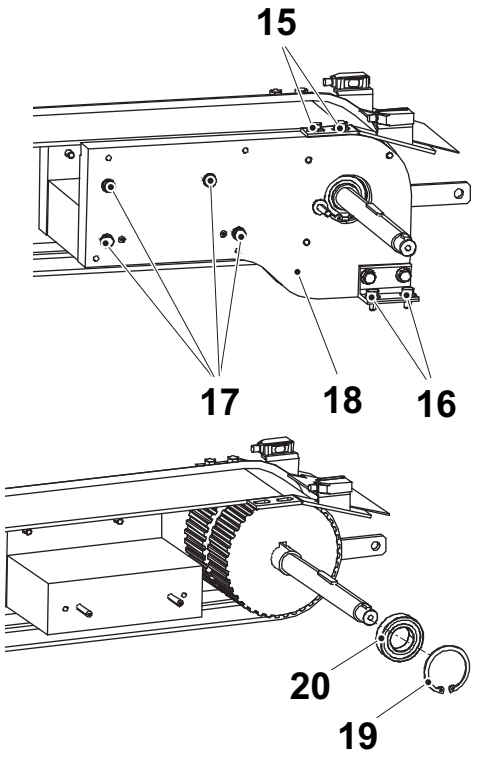

15 Screw
16 Screw
17 Screw
18 Plate
19 Retaining ring
20 Ball bearing

2.2.1.2 Conveyor

2.2.1.2-1 Conveyor - Check Drive Belts

Machine Status	Power supply disconnector OFF Air valve OFF
SPC Reference	2957680

Remove the covers (1) and check the drive belts (2) for wear or damage. Change if necessary, see 2.2.1.2-2 Conveyor - Change Drive Belts.

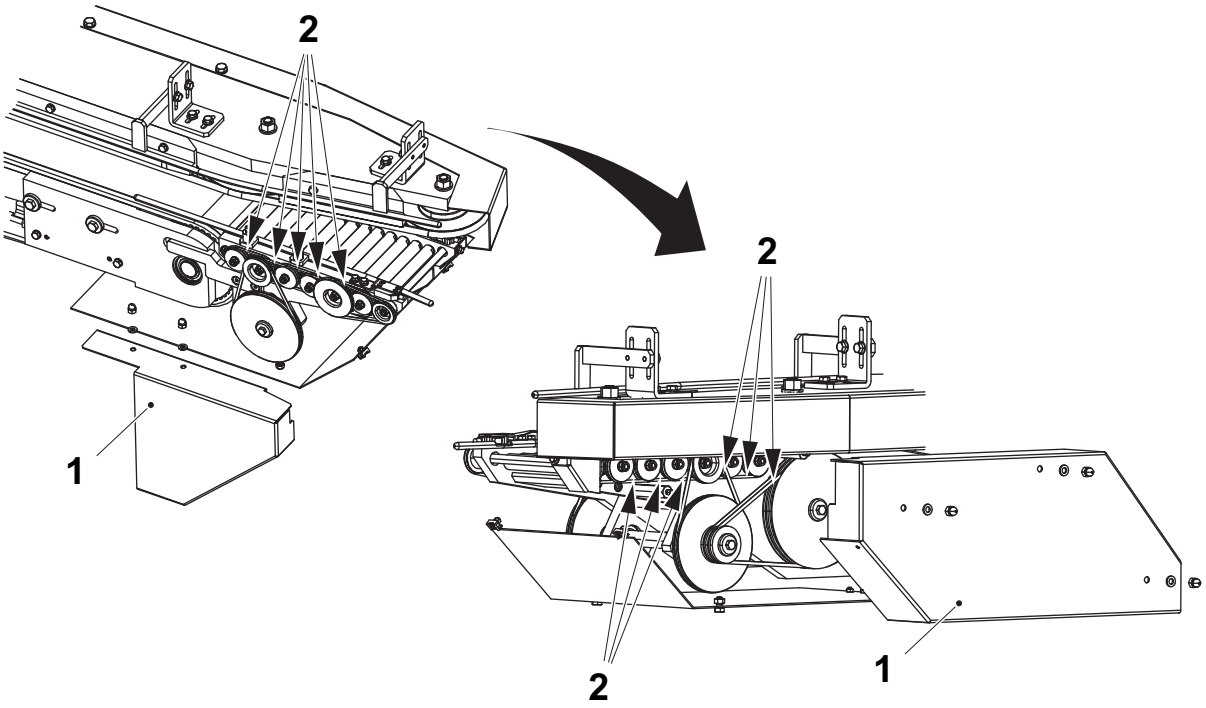

1 Cover
2 Drive belt

2.2.1.2-2 Conveyor - Change Drive Belts

Machine Status	Power supply disconnector OFF Air valve OFF
SPC Reference	2957680

Remove the covers (1) and change the drive belts (2).

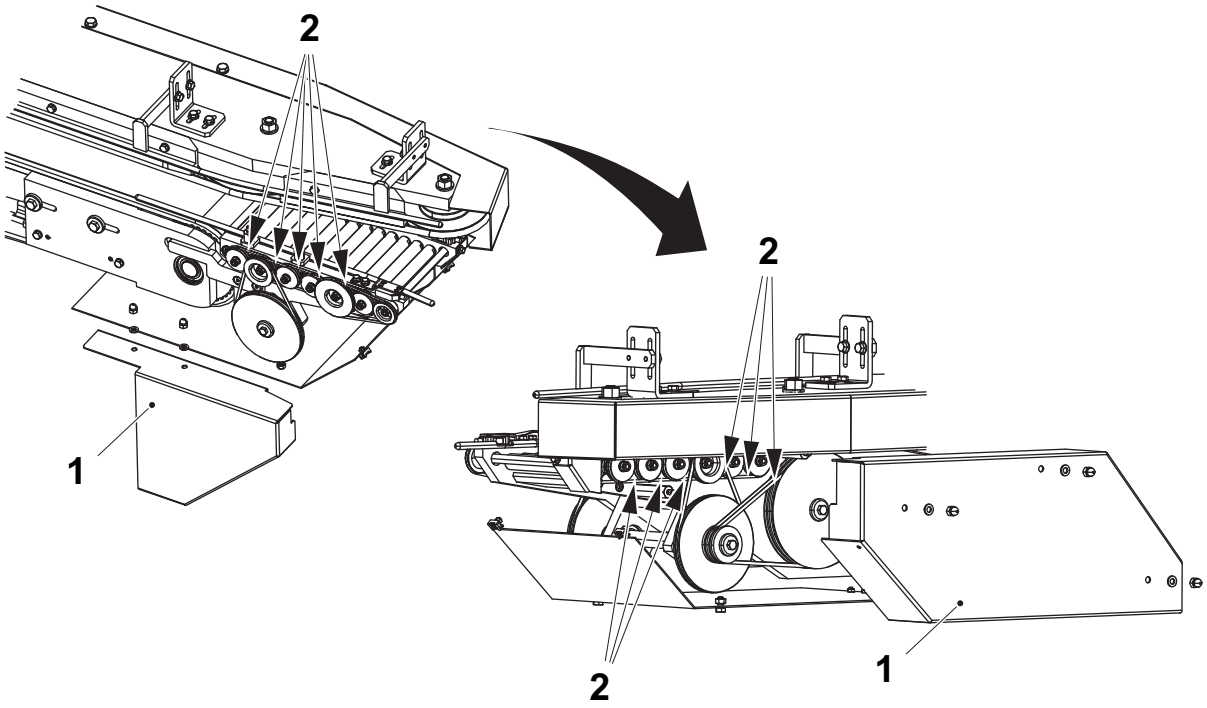

1 Cover
2 Drive belt

2.2.1.2-3 Conveyor - Check Ball Bearings

Machine Status	Power supply disconnector OFF Air valve OFF
SPC Reference	2957680

a) Remove the covers (1) and remove the drive belts (2).

b) Check for play in the 26 ball bearings on the conveyor (3). Change if necessary, see 2.2.1.2-4 Conveyor - Change Ball Bearings.

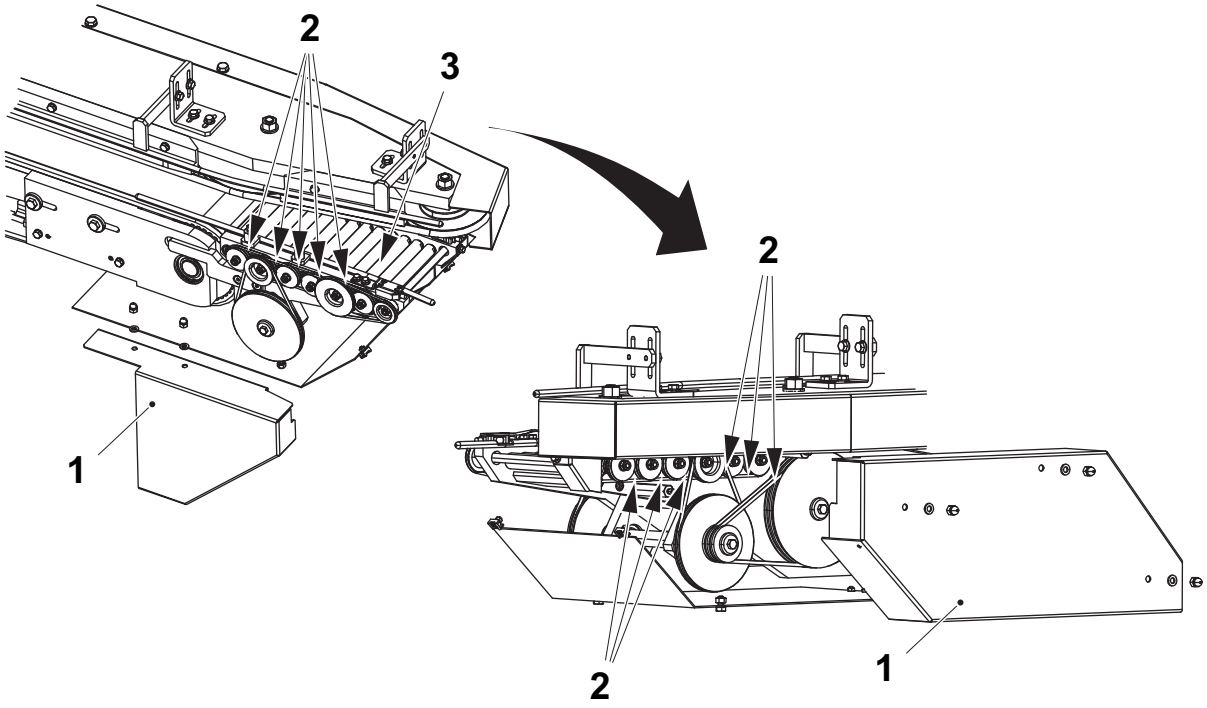

1 Cover
2 Drive belt
3 Conveyor

2.2.1.2-4 Conveyor - Change Ball Bearings

Machine Status	Power supply disconnector OFF Air valve OFF
SPC Reference	2957680

a) Remove the covers (1) and the drive belts (2).

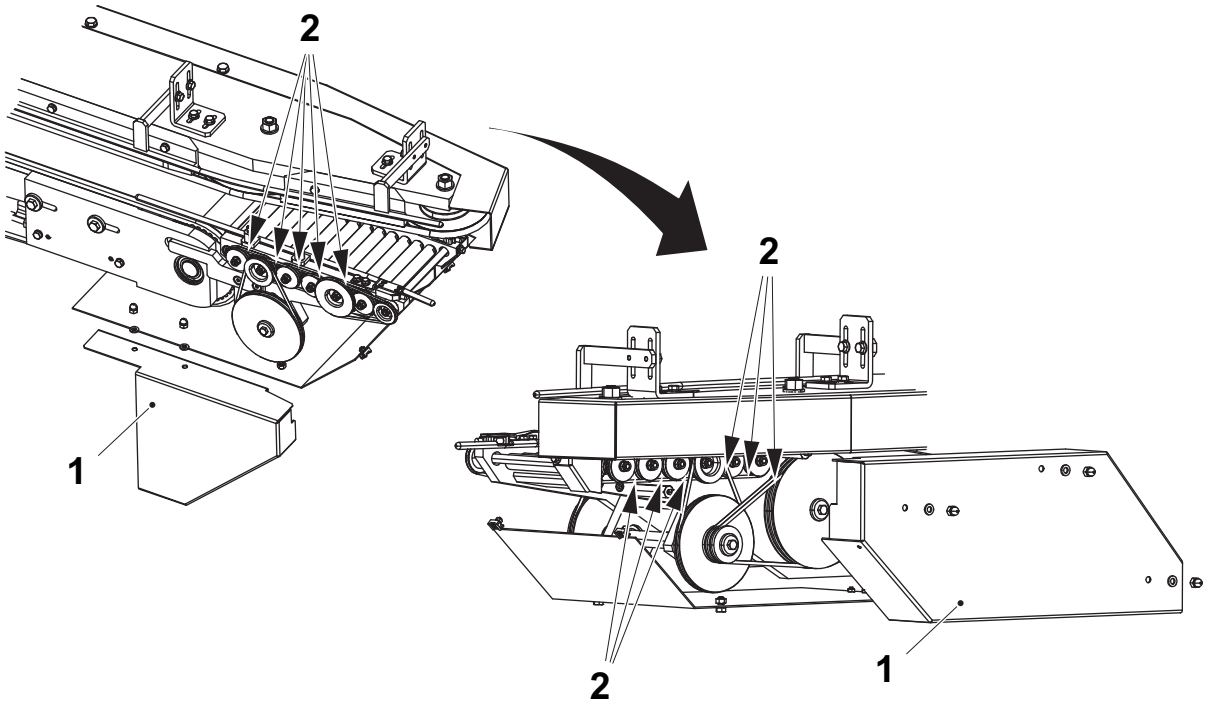

1 Cover
2 Drive belt

(Cont'd)

(Cont'd)

b) Remove the screws (3) and remove the wheels (4).
c) Change the ball bearings (5).
d) Remove the screw (6) and remove the protection (7).
e) Remove the nut (8) and remove the wheel (9).
f) Change the ball bearing (10).
g) Perform item e) and f) on all the remaining ball bearings.

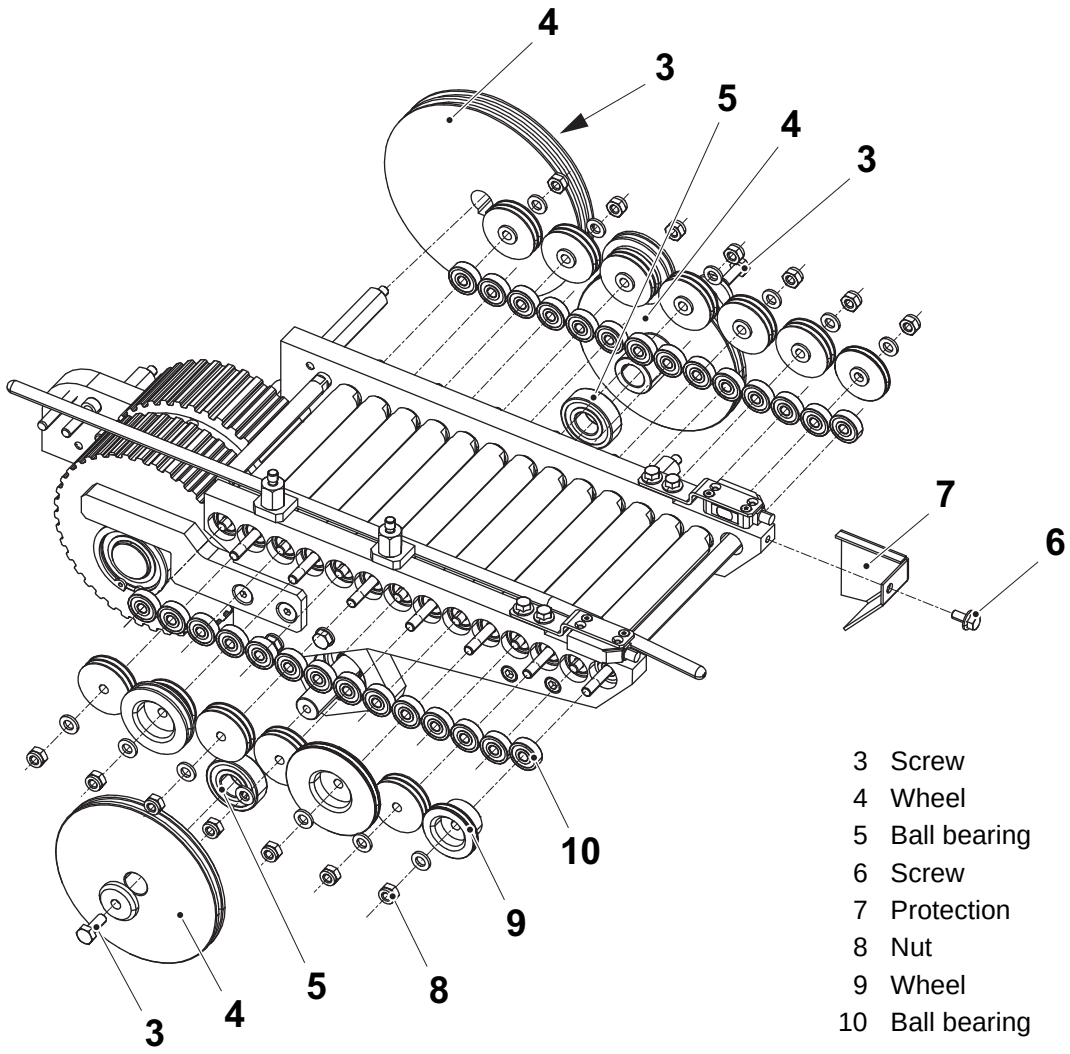

3 Screw
4 Wheel
5 Ball bearing
6 Screw
7 Protection
8 Nut
9 Wheel
10 Ball bearing

2.2.1.3 Belt Conveyor, Infeed

2.2.1.3-1 Belt Conveyor, Infeed - Check Conveyor Belt

Machine Status	Power supply disconnector OFF Air valve OFF
SPC Reference	2957690

Check the condition of the conveyor belt (1). Change if necessary, see 2.2.1.3-2 Belt Conveyor, Infeed - Change Conveyor Belt.

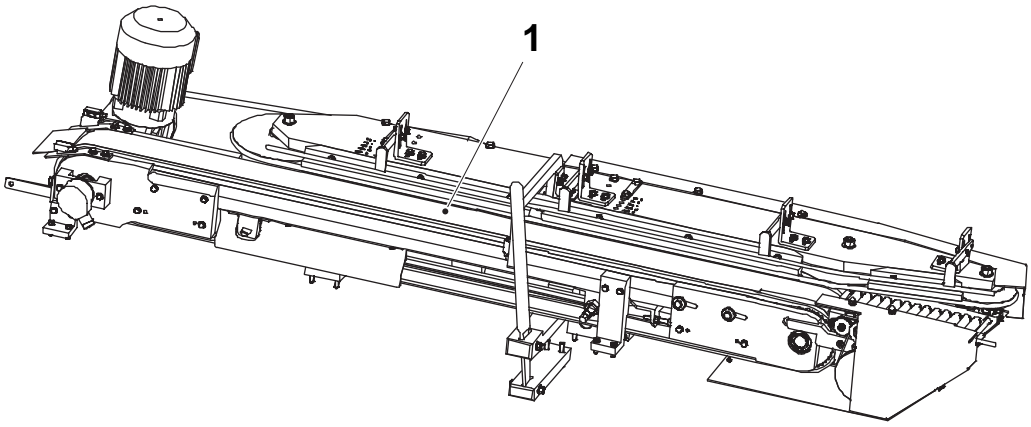

1 Conveyor belt

2.2.1.3-2 Belt Conveyor, Infeed - Change Conveyor Belt

Machine Status	Power supply disconnector OFF Air valve OFF
SPC Reference	2957690

a) Loosen the brackets (1) by loosening the screws (2).

b) Loosen the tension of the conveyor belt by loosening the screws (3) and (4).

c) Remove the screws (5) and remove the plate (6).

d) Disconnect the sensor (7).

e) Disconnect the cable connection from the encoder (8).

f) Loosen the screw (9) and remove the bracket (10).

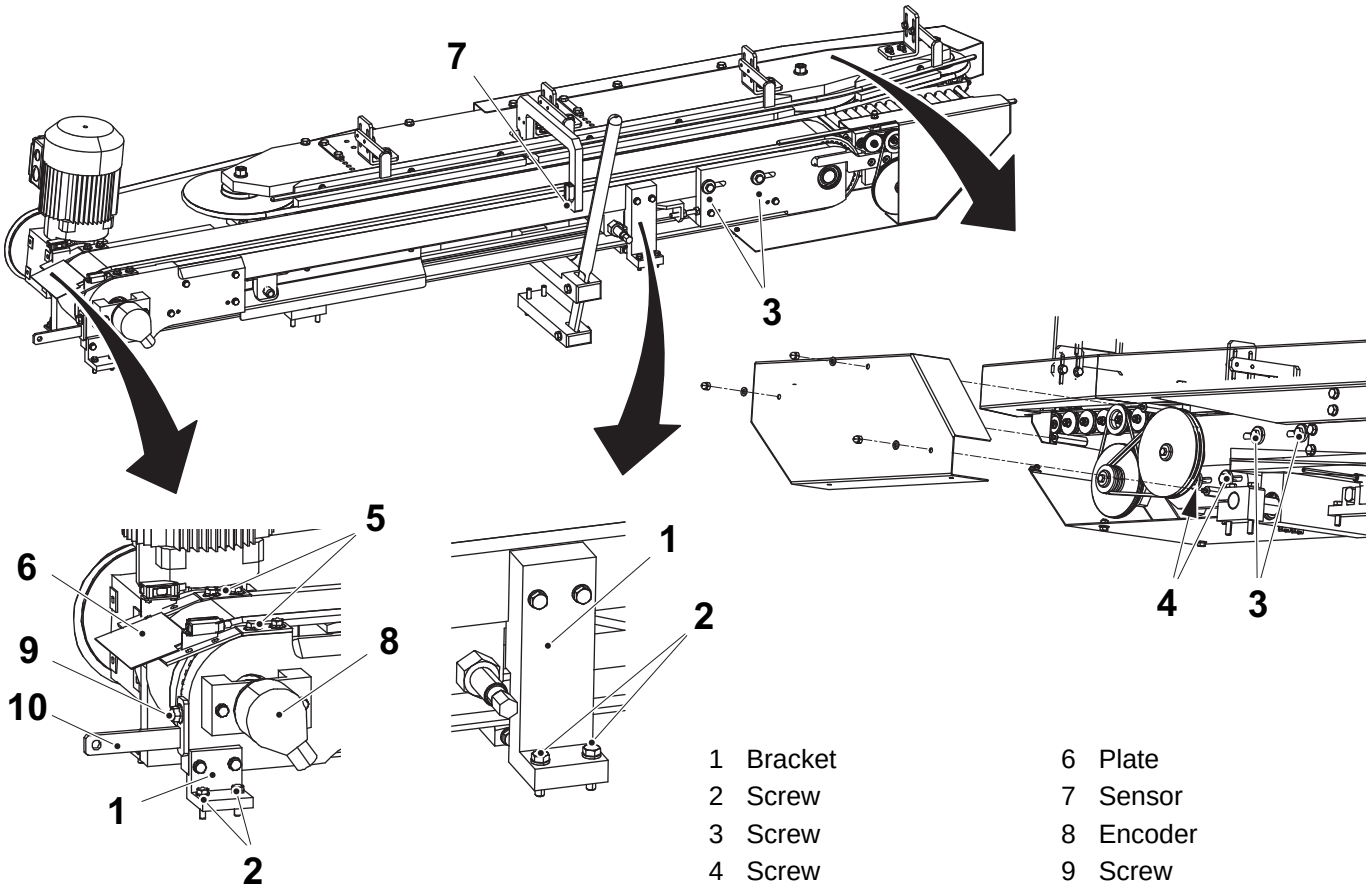

1 Bracket
2 Screw
3 Screw
4 Screw
5 Screw
6 Plate
7 Sensor
8 Encoder
9 Screw
10 Bracket

(Cont'd)

(Cont'd)

g) Move the applicator unit outwards, see 1-4 Applicator Unit - Set Height (TCA), item g) to j). Note the value of the scale.

h) Remove the old conveyor belt (11) and assemble the new belt.

i) Adjust the applicator unit back.

j) Assemble in the reverse order.

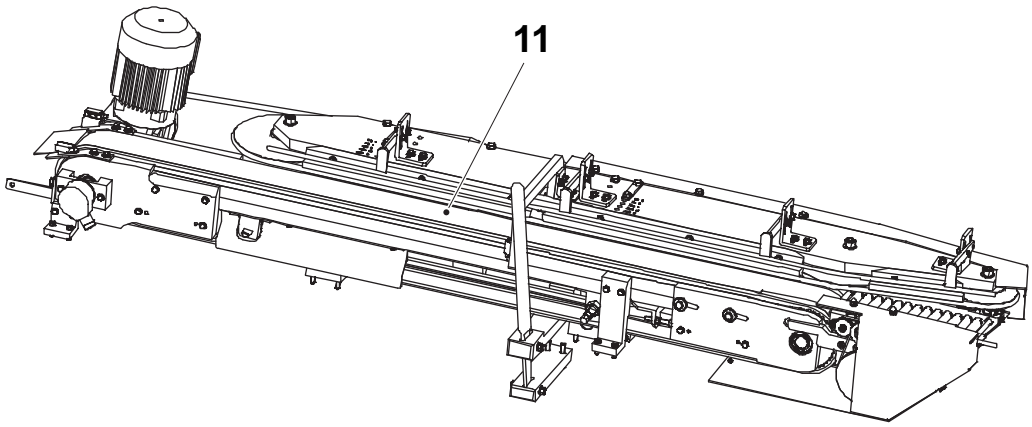

11 Conveyor belt

2.2.1.3-3 Belt Conveyor, Infeed - Check Ball Bearings

Machine Status	Power supply disconnector OFF Air valve OFF
SPC Reference	2957690

a) Loosen the tension of the conveyor belt (1) by loosen the screws (2) and the screws (3).

b) Check for play in the ball bearings (4).

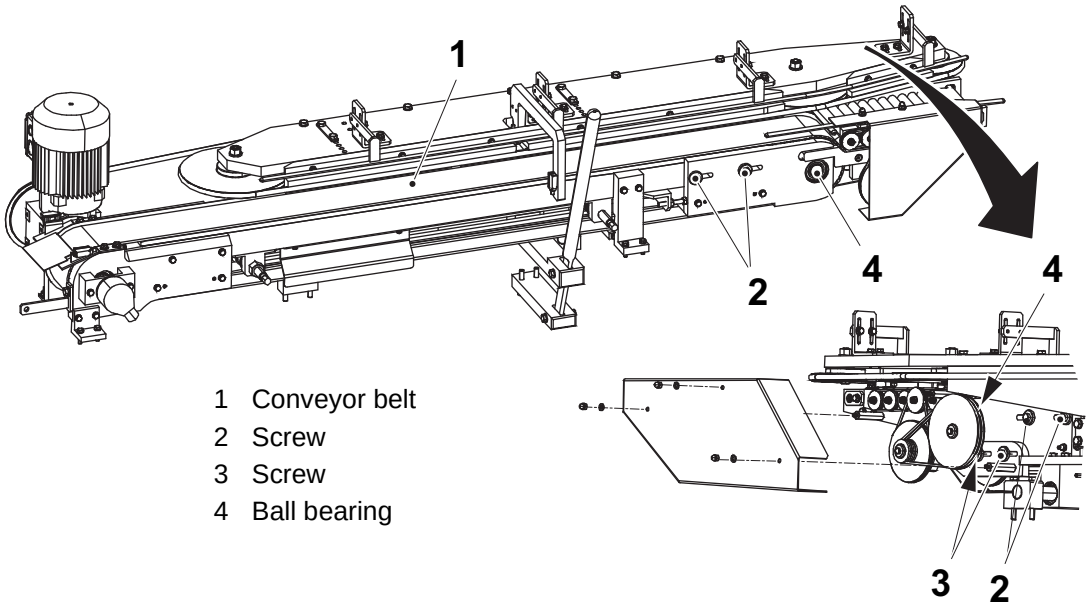

1 Conveyor belt
2 Screw
3 Screw
4 Ball bearing

2.2.1.3-4 Belt Conveyor, Infeed - Change Ball Bearings

Machine Status	Power supply disconnector OFF Air valve OFF
SPC Reference	2957690

a) Loosen the tension of the conveyor belt (1) by loosen the screws (2).

b) Remove the screws (3).

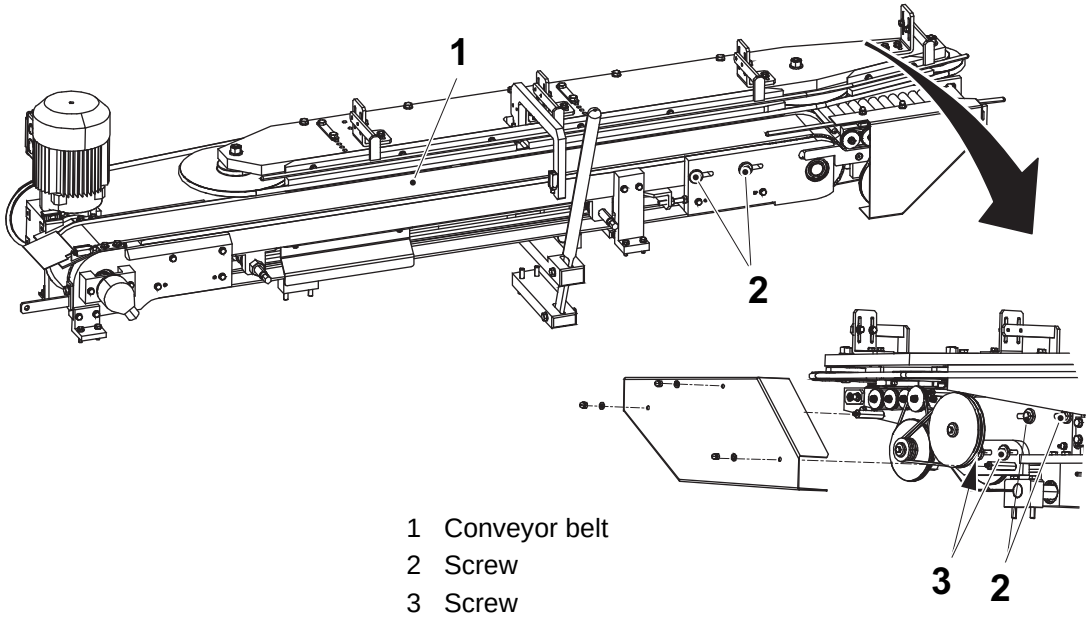

1 Conveyor belt
2 Screw
3 Screw

(Cont'd)

(Cont'd)

c) Remove the drive belts (4).
d) Remove the screw (5) and remove the wheel (6).
e) Loosen the screws (7) and remove the conveyor unit (8).
f) Remove the screw (9) and remove the plate (10).

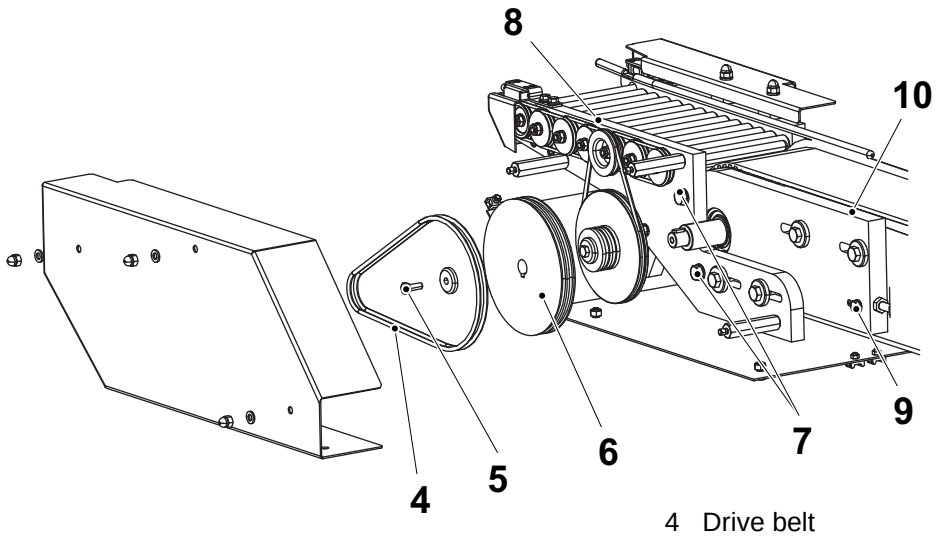

4 Drive belt
5 Screw
6 Wheel
7 Screw
8 Conveyor unit
9 Screw
10 Plate

(Cont'd)

(Cont'd)

g) Remove the retaining rings (11) and (12).
h) Change the ball bearing (13).
i) Remove the screws (14) and remove the plate (15).
j) Remove the retaining ring (16).
k) Change the ball bearing (17).
l) Assemble in the reverse order.

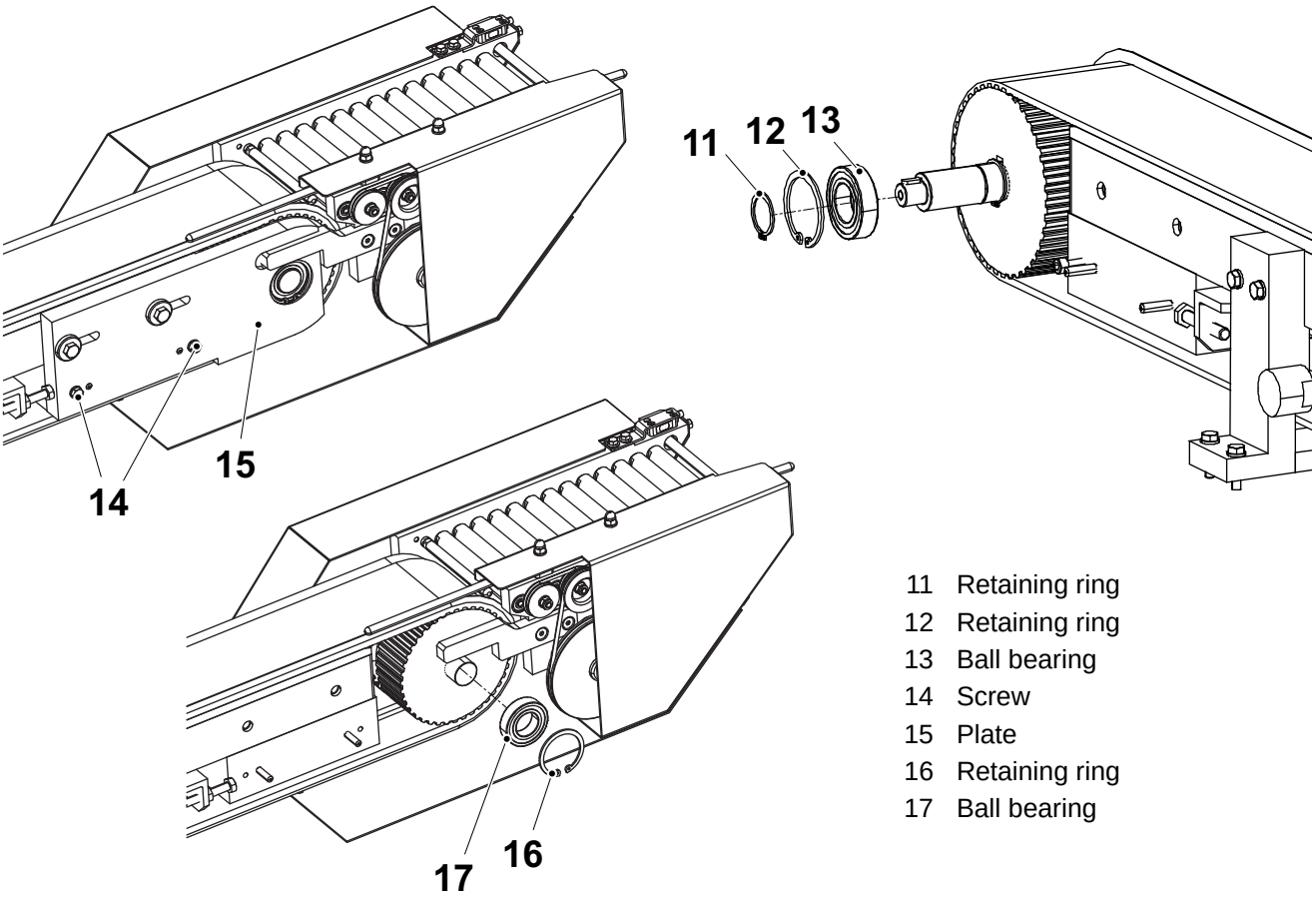

11 Retaining ring
12 Retaining ring
13 Ball bearing
14 Screw
15 Plate
16 Retaining ring
17 Ball bearing

2.2.2 Package Transfer

2.2.2-1 Package Transfer - Set

Machine Status	Power supply disconnector OFF Air valve OFF
SPC Reference	2926070

a) Loosen the screws (1).

b) Set the position of the package transfer (2). Choose the hole pair (3) for the current package type, according to the marks on the plate.

c) Tighten the screws (1).

d) Put two packages (4) on the belt against the edge and pull the side adjuster (5) forwards to set the package transfer to its production position.

e) Adjust the position of the package transfer by loosening the nut (6) and turning the adjusting screw (7). The support belt (8) is to gently touch the packages.

f) Tighten the nut (6).

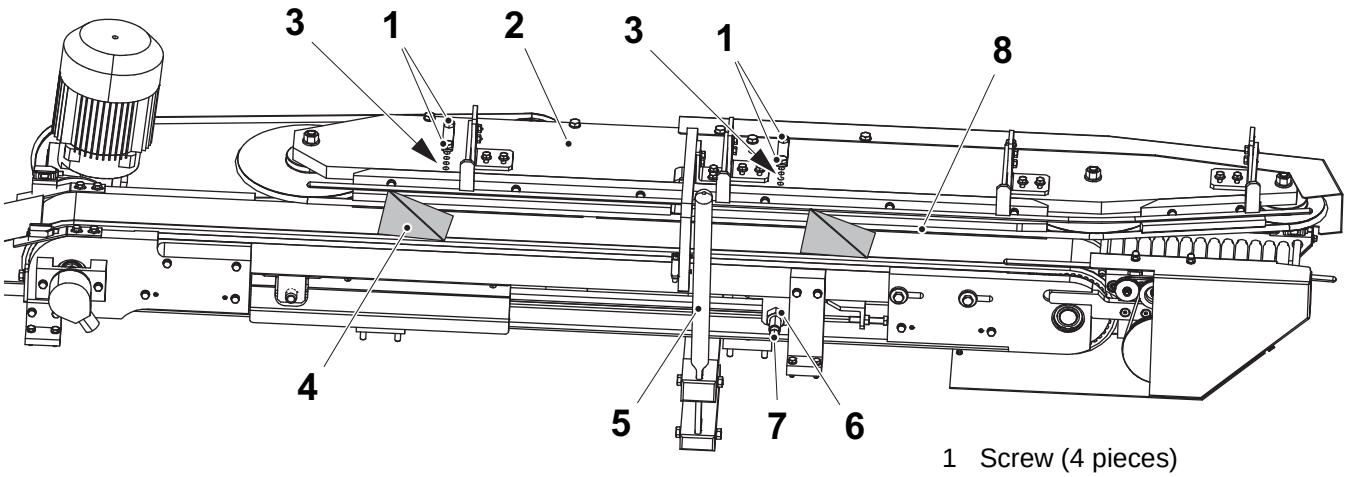

1 Screw (4 pieces)
2 Package transfer
3 Hole pair
4 Package
5 Side adjuster
6 Nut
7 Adjusting screw
8 Support belt

(Cont'd)

(Cont'd)

g) Loosen the screws (9) and set the height distance A between the steering rail (10) and the conveyor belt (11) according to the table below. Tighten the screws.

h) Loosen the screws (12). Adjust the steering rail (10). The steering rail is to gently touch the packages.

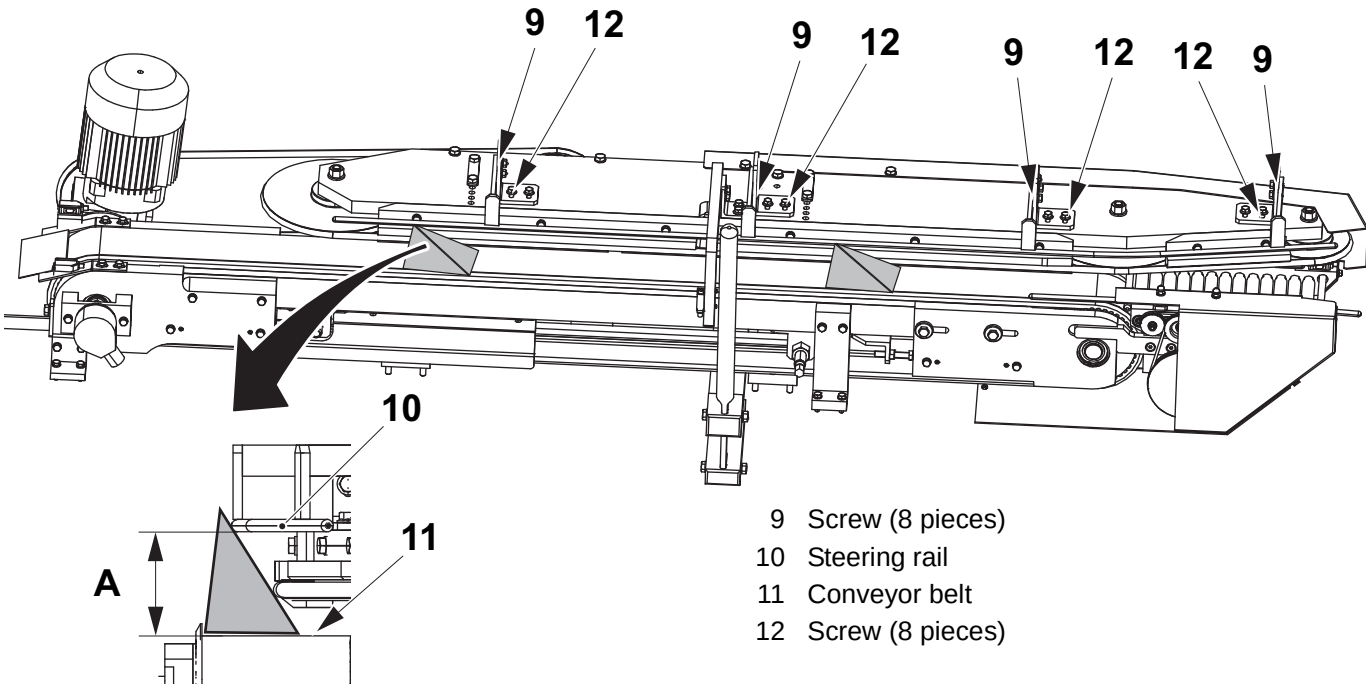

9 Screw (8 pieces)
10 Steering rail
11 Conveyor belt
12 Screw (8 pieces)

Package type	A
65S	46 mm
110S	61 mm
150S	66 mm
200M	71 mm
200B	76 mm

(Cont'd)

(Cont'd)

i) Make sure that the support belt (8) and the drive belt (13) are parallel with the package transfer. Change groove on the pulley (14) if necessary.

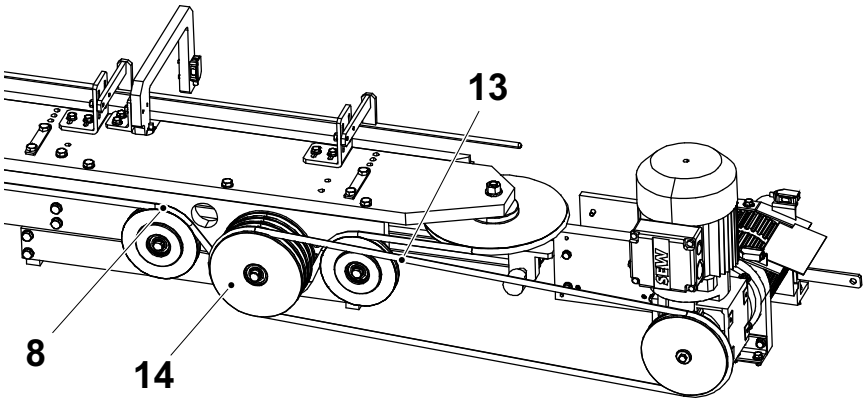

8 Support belt
13 Drive belt
14 Pulley

2.2.2-2 Package Transfer - Check Ball Bearings

Machine Status	Power supply disconnector OFF Air valve OFF
SPC Reference	2926070

a) Loosen the drive belt (1) and the support belt (2).

b) Turn the drive wheels (3) by hand to check for play in the ball bearings. Change if necessary, see 2.2.2-3 Package Transfer - Change Ball Bearings.

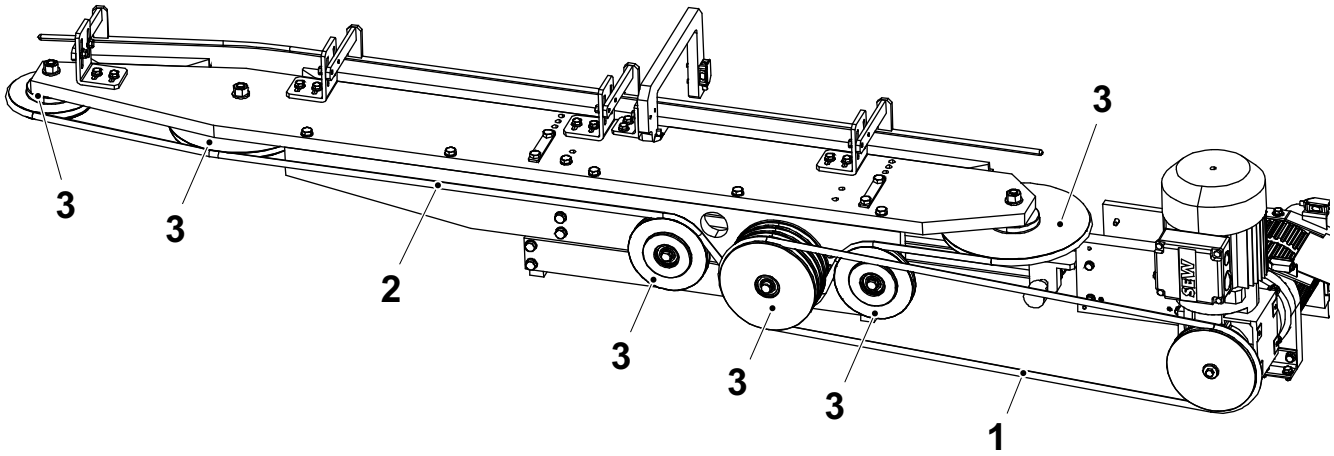

1 Drive belt
2 Support belt
3 Drive wheel

2.2.2-3 Package Transfer - Change Ball Bearings

Machine Status	Power supply disconnector OFF Air valve OFF
SPC Reference	2926070

a) Disconnect the sensor (1).

b) Remove the drive belt (2) and the support belt (3).

c) Remove the screws (4).

d) Remove the package transfer unit from the machine and put it on a workbench to change the ball bearings.

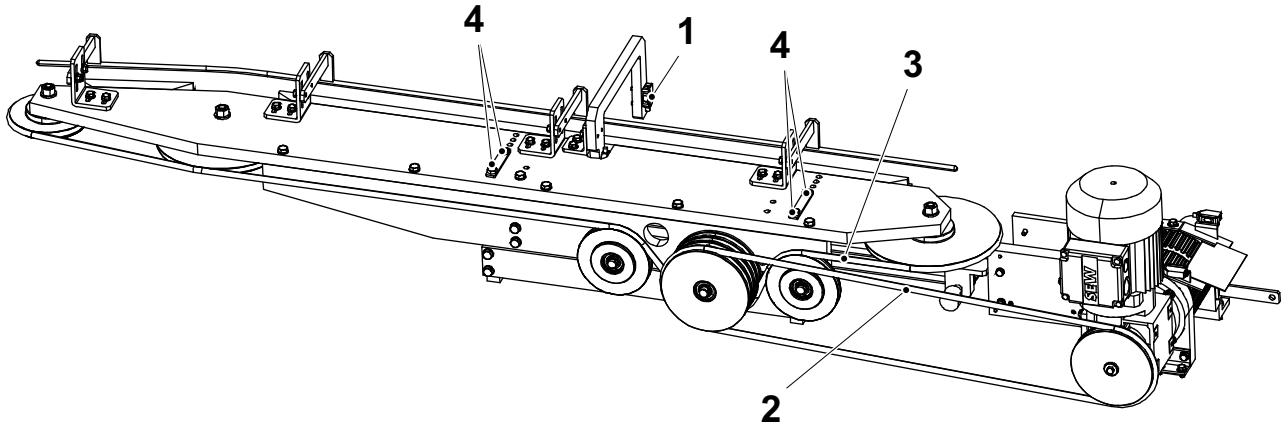

1 Sensor
2 Drive belt
3 Support belt
4 Screw

(Cont'd)

(Cont'd)

e) Remove the retaining rings (5).
f) Pull out the drive wheels (6) with the shafts.
g) Remove the retaining rings (7).
h) Change the ball bearings (8).
i) Assemble in the reverse order.

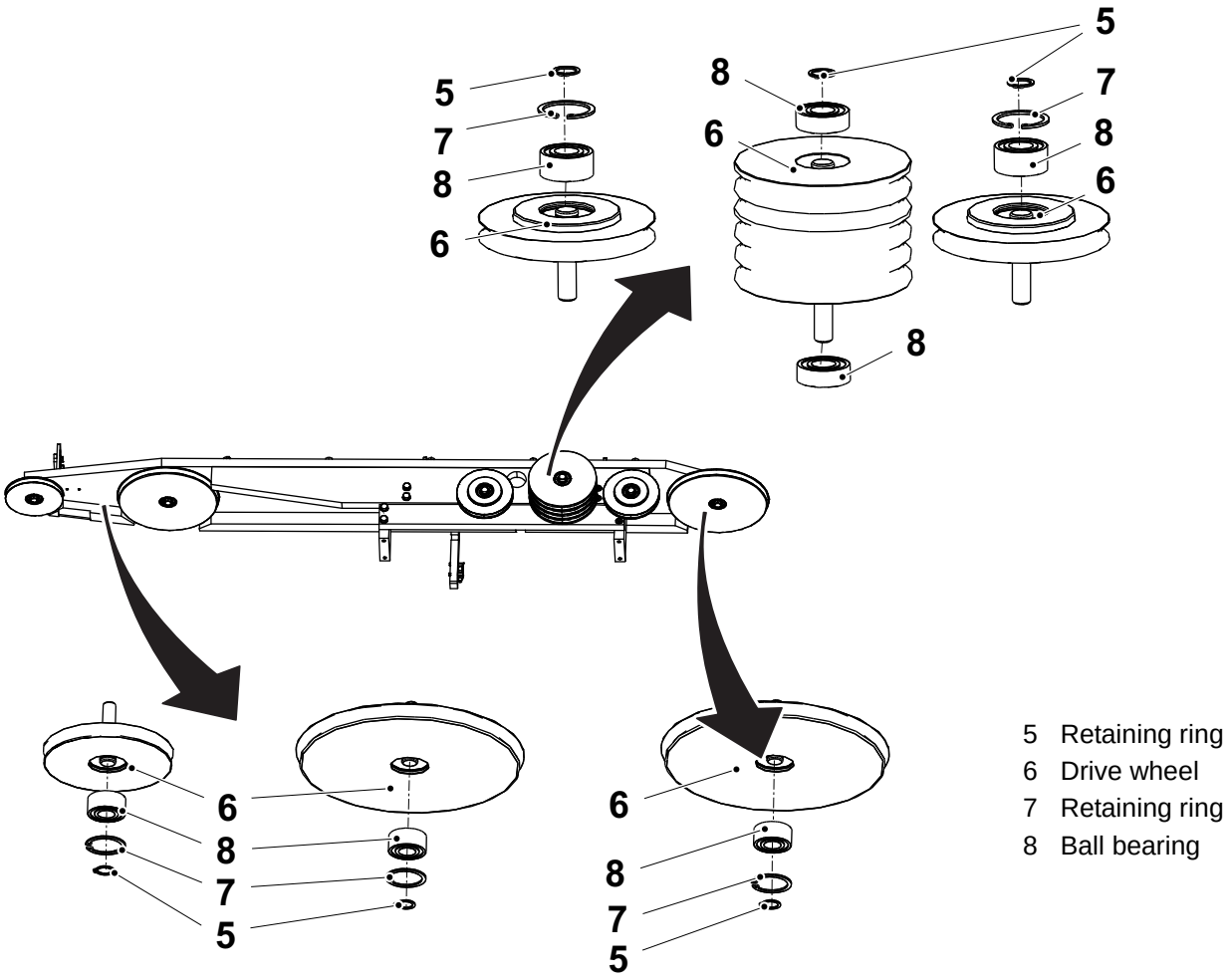

5 Retaining ring
6 Drive wheel
7 Retaining ring
8 Ball bearing

2.2.2-4 Package Transfer - Check Belts

Machine Status	Power supply disconnector OFF Air valve OFF
SPC Reference	2926070

Check the condition of the drive belt (1) and the support belt (2). Change if necessary, see 2.2.2-5 Package Transfer - Change Belts.

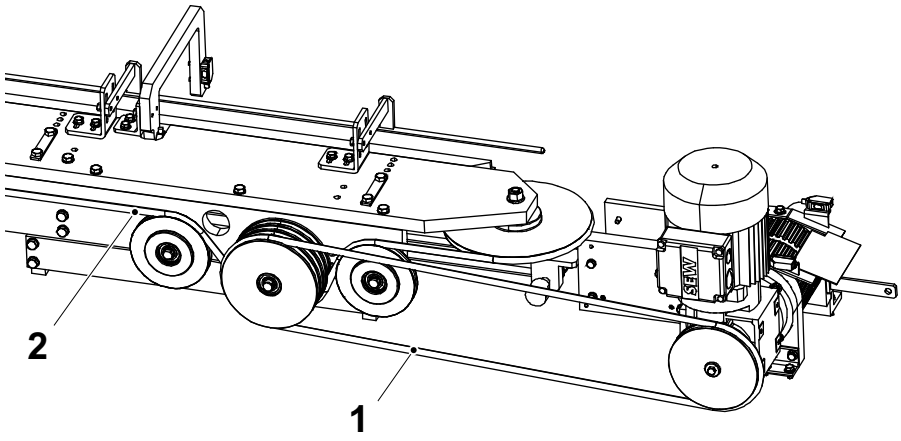

1 Drive belt
2 Support belt

2.2.2-5 Package Transfer - Change Belts

Machine Status	Power supply disconnector OFF Air valve OFF
SPC Reference	2926070

Change the drive belt (1) and the support belt (2). Pull the old belts off and assemble the new belts.

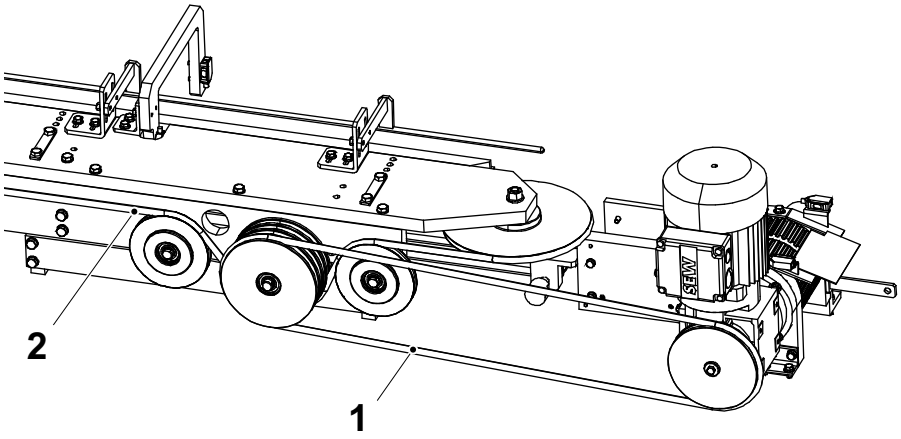

1 Drive belt
2 Support belt

2.2.3 Adjustment Plate

2.2.3-1 Adjustment Plate - Set Cylinder

Machine Status	Power supply disconnector OFF Air valve OFF
SPC Reference	2926075

Adjust the position of the cylinder (1) by turning the nut (2).

Note! The cylinder must not be set in its maximum position.

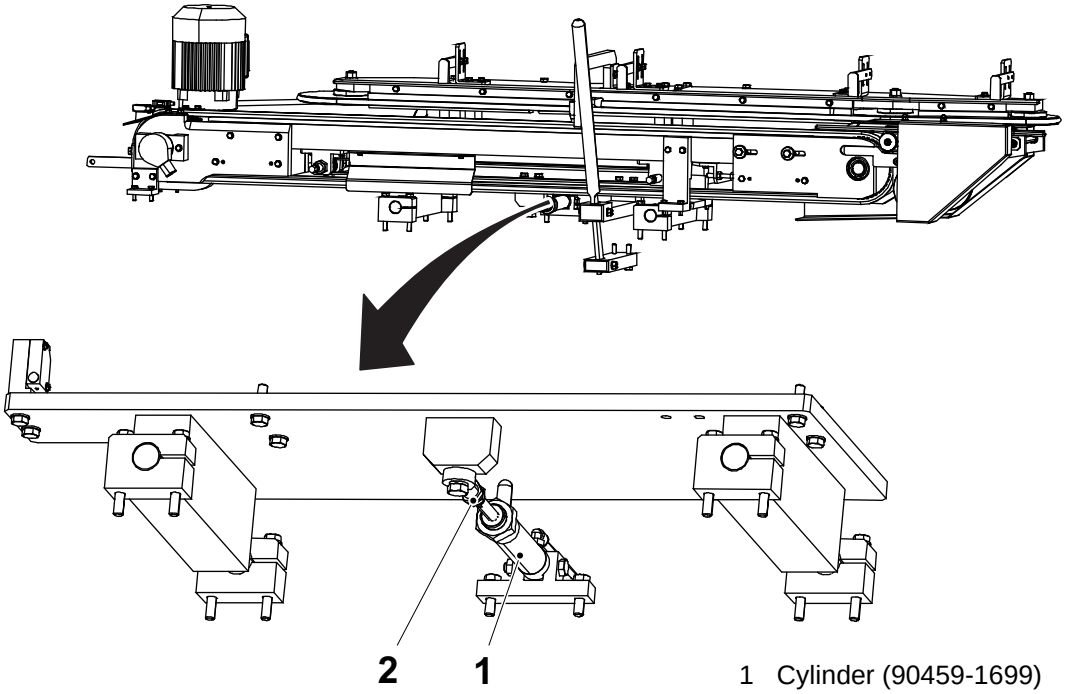

1 Cylinder (90459-1699)
2 Nut

2.2.3-2 Adjustment Plate - Check Cylinder

Machine Status	Power supply disconnector OFF Air valve OFF
SPC Reference	2926075

Check that the cylinder (1) works properly. Change if necessary, see 2.2.3-3 Adjustment Plate - Change Cylinder.

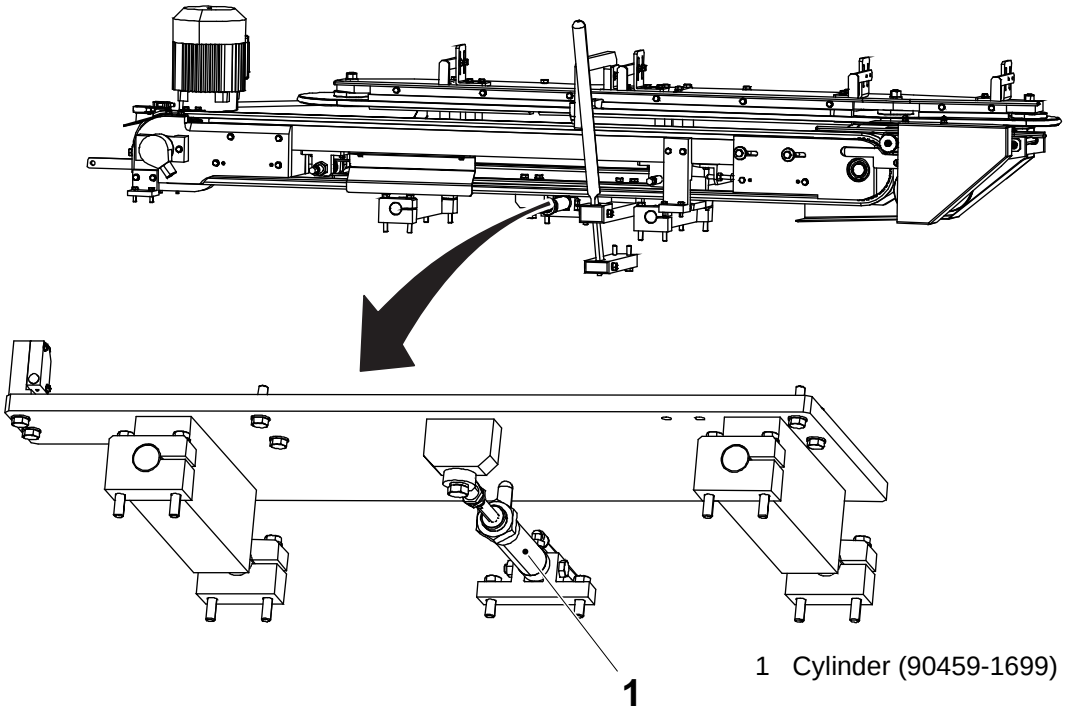

1 Cylinder (90459-1699)

2.2.3-3 Adjustment Plate - Change Cylinder

Machine Status	Power supply disconnector OFF Air valve OFF
SPC Reference	2926075

a) Loosen the screw (1).

b) Loosen the screws (2).

c) Change the cylinder (3).

d) Assemble in the reverse order.

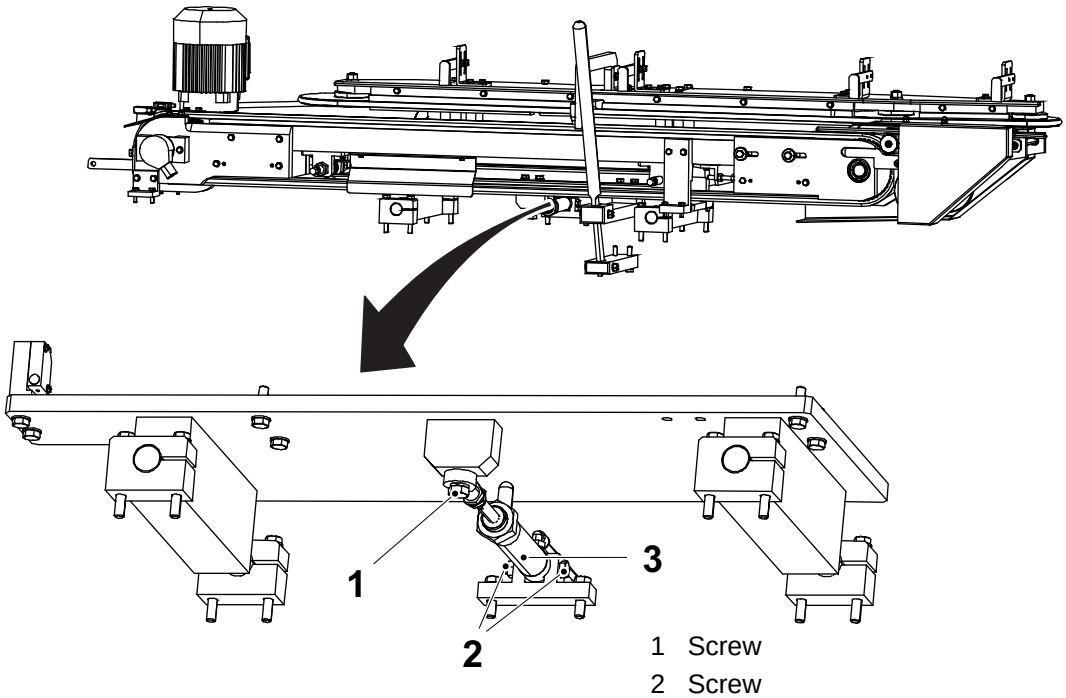

1 Screw
2 Screw
3 Cylinder (90459-1699)

2.2.4 Side Adjuster

2.2.4-1 Side Adjuster - No Procedure Described

SPC Reference	2957705

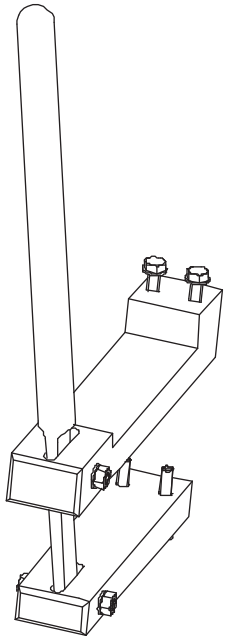

3 Hotmelt Equipment

Hotmelt Equipment - Description

SPC Reference	663303

TBA

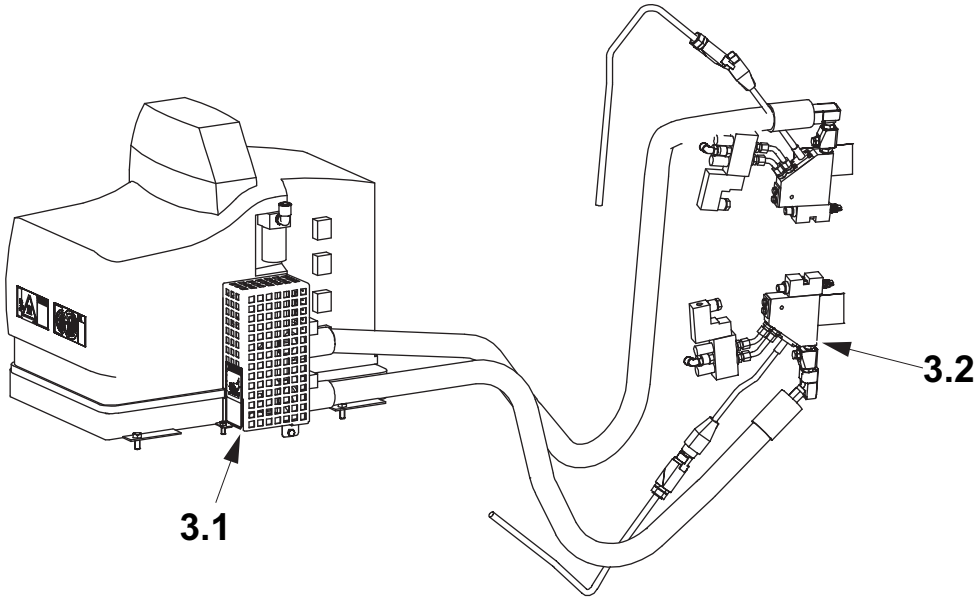

TCA

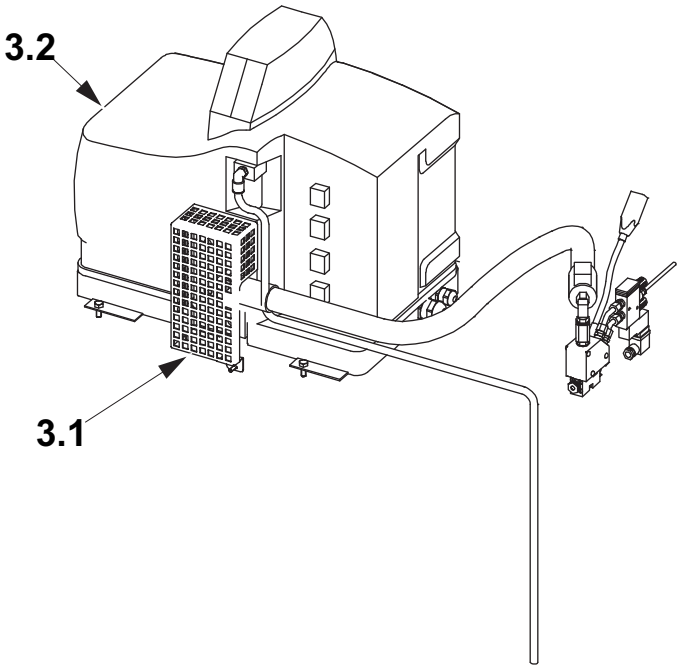

3.1 Hotmelt Equipment Miscellaneous

3.2 Hotmelt Equipment Nordson

3.1 Hotmelt Equipment Miscellaneous . . . . . 3 - 5

3.1-1 Hotmelt Equipment Miscellaneous - No Procedure Described . . . . . 3 - 5

3.2 Hotmelt Equipment Nordson . . . . . 3 - 6

3.2-1 Hotmelt Equipment Nordson - Set Hotmelt Unit . 3 - 6

3.2-2 Hotmelt Equipment Nordson - Change Adhesive . . . . . 3 - 14

3.2-3 Hotmelt Equipment Nordson - Bleed System (TBA) . . . . . 3 - 15

3.2-4 Hotmelt Equipment Nordson - Hotmelt Unit, F2 Alarm . . . . . 3 - 16

3.2-5 Hotmelt Equipment Nordson - Check Hose . . . . 3 - 17

3.2-6 Hotmelt Equipment Nordson - Clean Nozzle . . 3 - 18

3.2-7 Hotmelt Equipment Nordson - Change Nozzle (TBA) . . . . . 3 - 19

3.2-8 Hotmelt Equipment - Change Nozzle (TCA) . . . 3 - 20

3.2-9 Hotmelt Equipment Nordson - Change Filter . . 3 - 21

3.2.1 Hotmelt Gun . . . . . 3 - 24

3.2.1-1 Hotmelt Gun - Change Gun Module . . . . . 3 - 24

3.2.1-2 Hotmelt Gun - Change Solenoid Valve . . . . . 3 - 26

3.2.1-3 Hotmelt Gun - Set Gun Holder (TBA) . . . . . 3 - 27

This page intentionally left blank

3.1 Hotmelt Equipment Miscellaneous

3.1-1 Hotmelt Equipment Miscellaneous - No Procedure Described

Machine Status	Power Supply Disconnector ON Air Valve ON
SPC Reference	2864776

3.2 Hotmelt Equipment Nordson

3.2-1 Hotmelt Equipment Nordson - Set Hotmelt Unit

Machine Status	Power Supply Disconnector ON Air Valve ON
SPC Reference	2892717 - valid for TBA 2863510 - valid for TCA

WARNING

Burn hazard.

During heating and production the hotmelt unit gets hot. Do not touch the hotmelt unit and beware of the trapped heat inside the unit when service is performed.

Make sure that there is adhesive in the tank (1) and switch ON (2) the hotmelt unit.
For recommended type of adhesive, see the Operation Manual (OM).

Note! The colour of the adhesive should be light yellow. If the adhesive has become brown, exchange it. To obtain a prolonged lifetime of the adhesive, the temperature can be decreased during longer production stops.

Tip! When connecting hoses, always use port 1 (3). The port position is stamped on the face of the manifold.

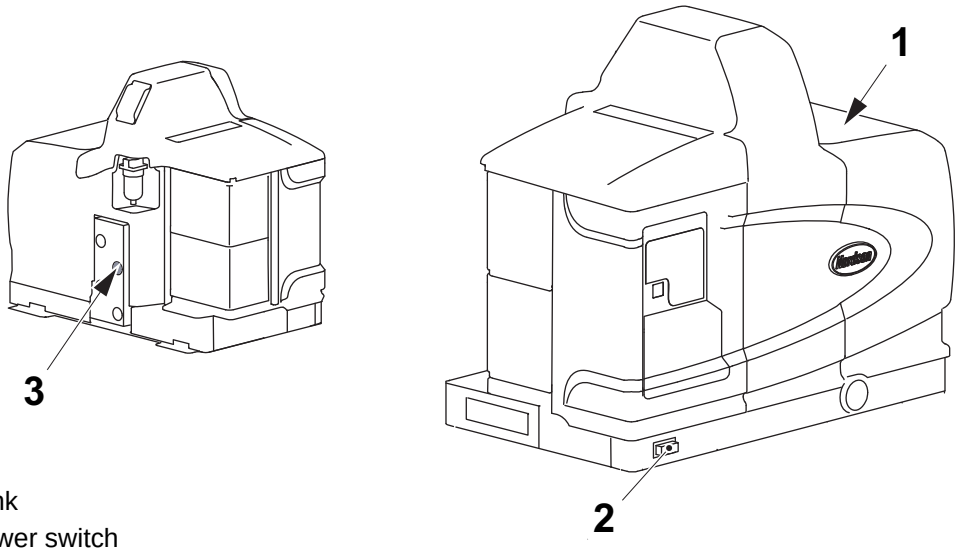

1 Tank
2 Power switch
3 Port 1

(Cont'd)

(Cont'd)

Operator Panel Overview

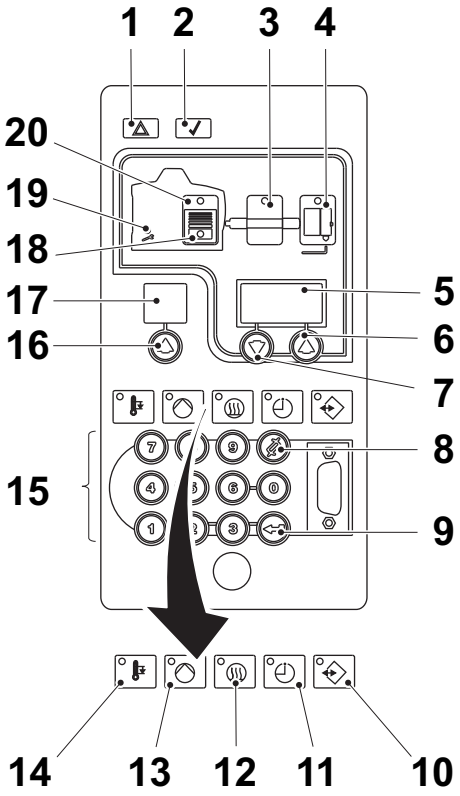

1 Fault LED
2 Ready LED
3 Hose-key
4 Gun-key
5 Multipurpose display
6 Up-key for multipurpose display
7 Down-key for multipurpose display
8 Clear/Reset-key
9 Enter-key
10 Setup-key
11 Seven day clock key
12 Heater-key
13 Pump-key
14 Standby-key
15 Keypad
16 Up-key for selector display
17 Selector display
18 Low level LED
19 Service LED
20 Tank-key

Note! For further information read the Nordson Pro Blue Adhesive Melters Manual.

(Cont'd)

(Cont'd)

Parameter Settings

Parameter	Function	Description	Setting
4	System-ready time delay	Allows you to set the amount of additional time for adhesive to melt after all zones have reached their setpoint temperatures.	0 minutes
20	Celsius/Fahrenheit	Allows you to display temperature measurements in Celsius or Fahrenheit. 0 = Celsius 1 = Fahrenheit	Celsius
21	Over temperature set-point	Allows you to specify the maximum temperature. The features 1 to 3 can reach before the system initiates a fault condition.	15° C
22	Under temperature delta	The number of degrees that the temperature of any component can decrease from its set-point temperature before an under temperature fault (F2) occurs.	5° C
40	Standard output 1	Ready and Pump is on	2
41	Standard output 2	Low level	4

(Cont'd)

(Cont'd)

Set the parameters as follows:

a) Press SETUP (10). The selector display (17) will start flashing. Use UP (6) (or keypad (15)) to select parameter and confirm with ENTER (9).

b) The multipurpose display (5) starts flashing. Use UP (6), or DOWN (7) (or use the keypad (15)) to select required value and confirm with ENTER (9).

Tip! If the setting is unadjustable the display is password protected! For further information read Nordson Pro Blue Adhesive Melters Manual, chapter 4, “Enter the Melter Password”.

c) When the selector display shows next parameter and setting, either continue with next parameter or exit by pressing SETUP (10) twice.

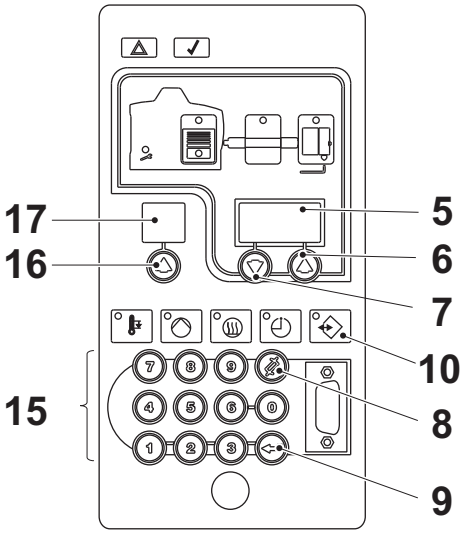

5 Multipurpose display
6 UP
7 DOWN
8 Clear/Reset-key
9 ENTER
10 SETUP
15 Keypad
16 UP
17 Selector display

(Cont'd)

(Cont'd)

Tank, Hoses, and Guns Temperature

There are different settings for different types of adhesive.

Too high temperature will make the adhesive deteriorate quicker, resulting in reduced quality.

Too low temperature results in threads of adhesive, and increased cooling-off time.

(Cont'd)

(Cont'd)

Set the temperature of the tank as follows:

a) Press tank-key (20) for 3 seconds.

b) The digit “1” appears flashing in selector display (17). If the digit “0” appears, press UP (6) (or keypad (15)) for selector display until digit “1” appears. Confirm the choice by pressing ENTER (9).

c) Then the Multipurpose display (5) starts flashing. Press the multipurpose display DOWN (7) or UP (6) (or keypad (15)) to enter the required value.

d) Confirm the setting by pressing ENTER (9).

e) Exit by pressing SETUP (10) twice.

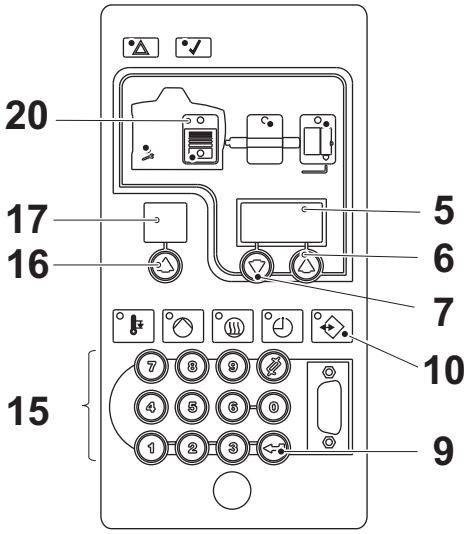

5 Multipurpose display
6 UP
7 DOWN
9 ENTER
10 SETUP
15 Keypad
16 UP
17 Selector display
20 Tank-key

Position	Button	Description	Setting
1	Tank-key	Allows you to specify the tank setpoint temperature	≈ 150°C

(Cont'd)

(Cont'd)

Note! Remember to set **all** hoses and guns.

Set the temperature of the hoses and guns as follows:

a) Press hose-key (3) or gun-key (4) for 3 seconds.

b) The digit “1” appears flashing in selector display (17). Press UP (16) (or keypad (15)) for selector display until digit 0 appears. Confirm the choice by pressing ENTER (9).

c) Then the Multipurpose display (5) starts flashing. Press the multipurpose display DOWN (7) or UP (6) (or keypad (15)) to enter the required value. Confirm the setting by pressing ENTER (9).

d) Exit by pressing the SETUP (10) twice.

e) Press heater-key (12) to heat up the hotmelt unit.

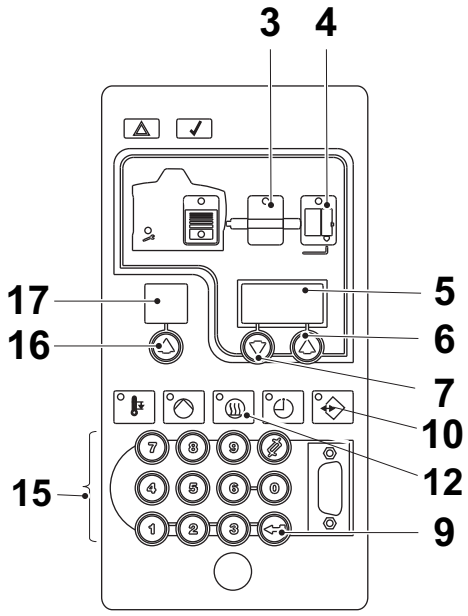

3 Hose-key
4 Gun-key
5 Multipurpose display
6 UP
7 DOWN
9 ENTER
10 SETUP
12 Heater-key
15 Keypad
16 UP
17 Selector display

Position	Button	Description	Optional setting TBA	Optional setting TCA
1	Hose-key	Allows you to specify the hose setpoint temperature	≈ 155° C	≈ 160° C
2	Gun-key	Allows you to specify the gun setpoint temperature	≈ 160° C	≈ 170° C

(Cont'd)

(Cont'd)

Air Pressure

Pressure	Unit	Value TBA	Value TCA
Working pressure	MPa	0.55	0.55
Hotmelt gun	MPa	0.4 to 0.45	0.35
Hotmelt unit	MPa	0.3*	0.3*
* Basic setting			

Note! The values are also stated in the OM.

Set the air pressures as follows:

a) Set the pressure on the hotmelt unit to 0.3 MPa by turning the pressure regulator screw (1) on the hotmelt unit. The pressure is stated on the manometer (2)

b) For TBA: Set the gun pressure to 0.4 to 0.45 MPa with the pressure gauge (3). The pressure is stated on the manometer (4).

c) For TCA: Set the gun pressure to 0.35 MPa with the pressure gauge (3). The pressure is stated on the manometer (4).

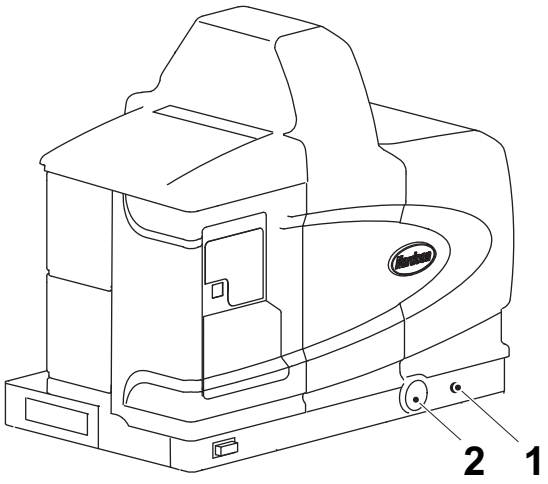

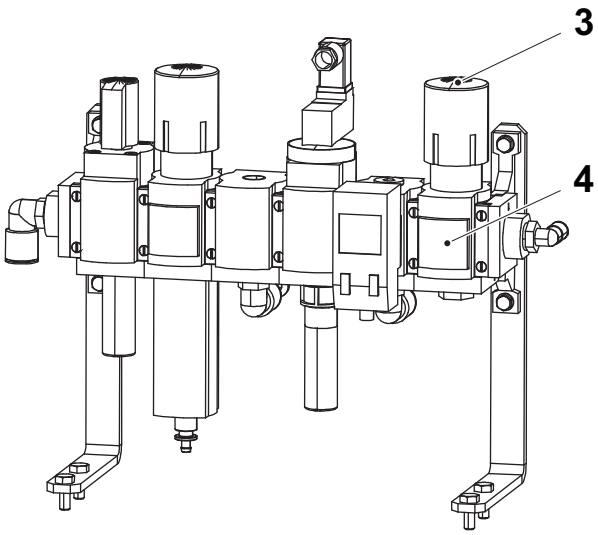

1 Regulator screw
2 Manometer
3 Pressure gauge
4 Manometer

3.2-2 Hotmelt Equipment Nordson - Change Adhesive

Machine Status	Power Supply Disconnector ON Air Valve
SPC Reference	2892717 - valid for TBA 2863510 - valid for TCA

Note! The machine must be preheated before the work can start.

WARNING

Hot adhesive.

Risk of personal injury. Wear safety glasses, protective gloves, and other protective clothing to avoid injuries from adhesive pouring out. Never touch the drain shut during tank drainage.

To change the adhesive, do the following:

a) Put a container under the drain shut (1).

b) Pull down the drain shut (1).

c) Open the drain valve (2) by slowly turning it to the left until the adhesive begins to flow.

d) Empty the tank.

e) Close the drain valve (2) and pull up the drain shut (1). Fill the tank (3) with adhesive.

To bleed the system, see 3.2-3 Hotmelt Equipment Nordson - Bleed System (TBA).

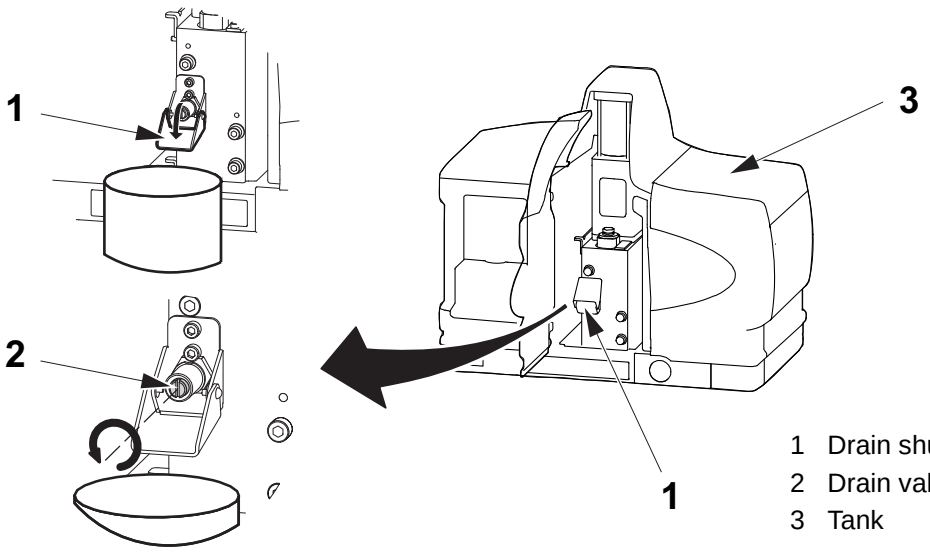

1 Drain shut
2 Drain valve
3 Tank

3.2-3 Hotmelt Equipment Nordson - Bleed System (TBA)

Machine Status	Power Supply Disconnector ON Air Valve ON
SPC Reference	2892717 - valid for TBA 2863510 - valid for TCA

Note! The machine must be preheated, and the guns have reached operating temperature.

WARNING

Burn hazard.

Risk of personal injury. Wear safety glasses, protective gloves, and other protective clothing to avoid injuries from adhesive pouring out through the nozzles.

a) Remove the nozzles, see instructions in the Nordson Pro Blue Manual.

b) Reduce the pressure on the hotmelt unit to 0.1 MPa by turning the pressure regulator screw (1). The pressure is stated on the manometer (2).

c) Place a container under the nozzle holes (3), to collect the adhesive.

d) Press the pin (4) on the hotmelt gun valve unit manually, and pump out the adhesive until it is pure without air bubbles.

e) Fit the nozzles back.

f) Set the hotmelt unit pressure to 0.3 MPa by turning the pressure regulator screw (1).

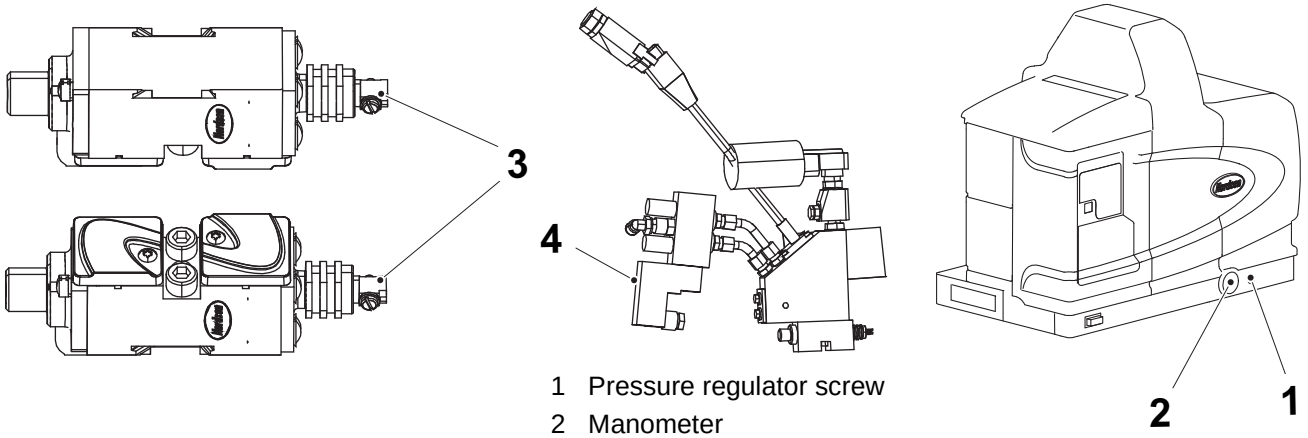

1 Pressure regulator screw
2 Manometer
3 Nozzle hole
4 Pin

3.2-4 Hotmelt Equipment Nordson - Hotmelt Unit, F2 Alarm

Machine Status	Power Supply Disconnector Air Valve
SPC Reference	2892717 - valid for TBA 2863510 - valid for TCA

If the guns are cooled down an alarm called "**F2**" locks the hotmelt unit. The hotmelt unit needs to be reset and reheated.

a) Press the clear/reset-key (1).

b) Press the heater-key (2).

c) The hotmelt unit starts to heat up.

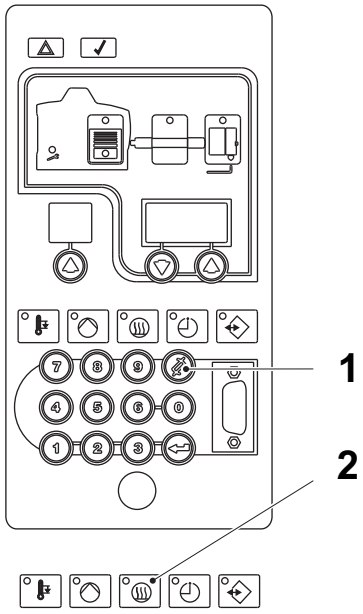

1 Clear/Reset-key
2 Heater-key

3.2-5 Hotmelt Equipment Nordson - Check Hose

Machine Status	Power Supply Disconnector OFF Air Valve OFF
SPC Reference	2892717- valid for TBA 2863510 - valid for TCA

WARNING

Burn hazard.

Risk of personal injury. Wear safety glasses, protective gloves, and other protective clothing to avoid injuries from adhesive pouring out.

a) Check the hoses (arrows) for wear and the connections for leakage.

b) If required, replace or tighten the hose connections.

TBA

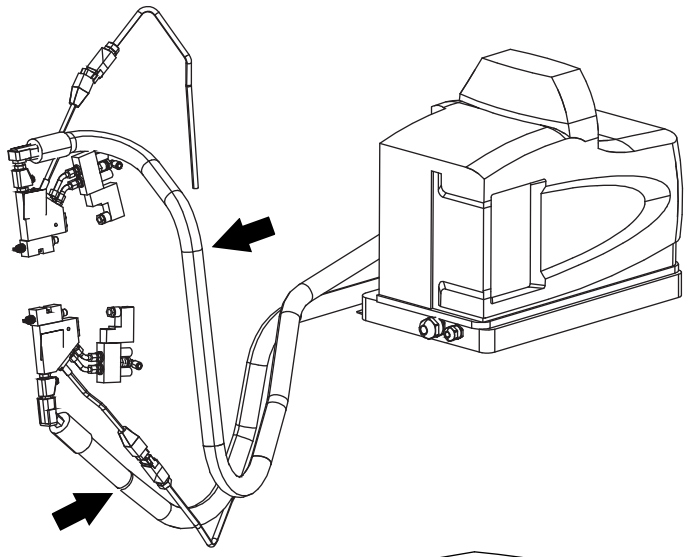

TCA

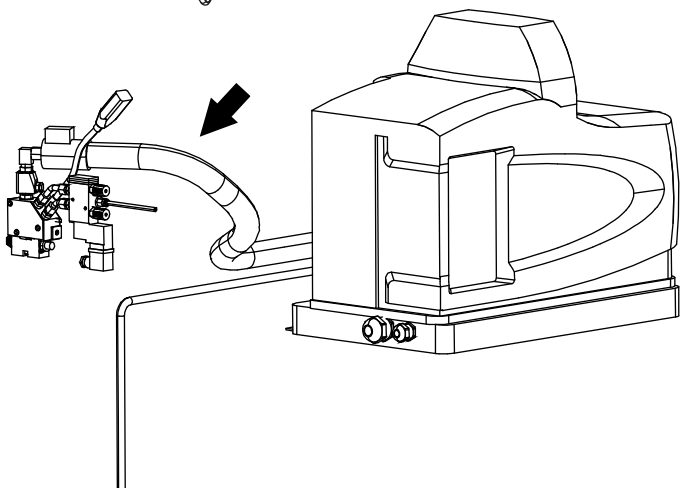

3.2-6 Hotmelt Equipment Nordson - Clean Nozzle

Machine Status	Power Supply Disconnector OFF Air Valve OFF
SPC Reference	2892717- valid for TBA 2863510 - valid for TCA

WARNING

Burn hazard.

Hot adhesive and hot equipment. Wear safety glasses and protective gloves to avoid injuries from adhesive pouring out. Let the hotmelt gun cool off before performing any work on it.

a) Reduce the air pressure to zero, see 6.1-1 Air Supply - Set Air Pressure.

b) Clean the nozzle (arrow) from hotmelt remains.

To clean the nozzles (arrows), see instructions in the Nordson Pro Blue Adhesive Melters Manual.

Note! When reducing the pump air pressure to zero (0), follow the instruction 6.1-1 Air Supply - Set Air Pressure.

TBA

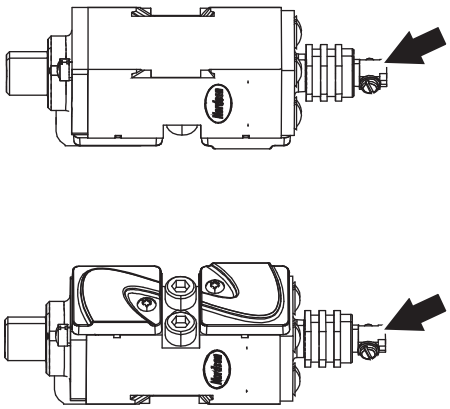

TCA

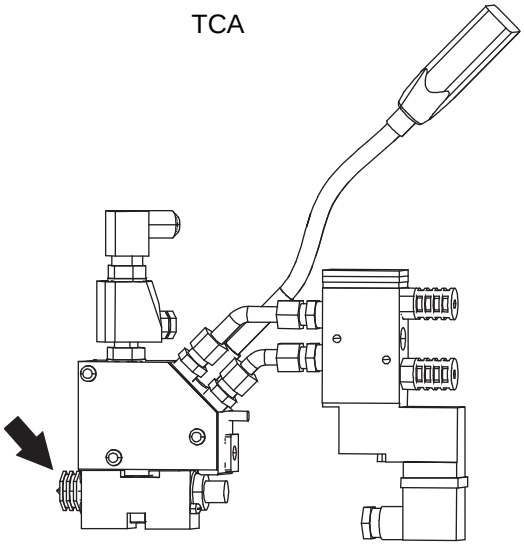

3.2-7 Hotmelt Equipment Nordson - Change Nozzle (TBA)

Machine Status	Power Supply Disconnector OFF Air Valve OFF
SPC Reference	2892717 - valid for TBA

To change the nozzles (arrows), see instructions in the Nordson Pro Blue Adhesive Melters Manual.

Note! When reducing the pump air pressure to zero (0), follow the instruction 6.1-1 Air Supply - Set Air Pressure.

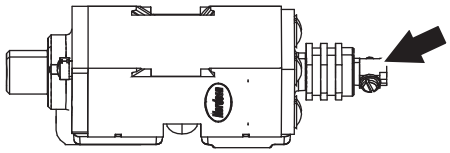

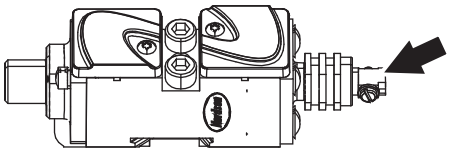

3.2-8 Hotmelt Equipment - Change Nozzle (TCA)

Machine Status	Power supply disconnector OFF Air valve OFF
SPC Reference	2863510

WARNING

Burn hazard.

Hot adhesive and hot equipment. Wear safety glasses and protective gloves to avoid injuries from adhesive pouring out. Let the hotmelt gun cool off before performing any work on it.

a) Reduce the air pressure to zero, see 6.1-1 Air Supply - Set Air Pressure.

b) Remove the hotmelt gun cover (1).

c) Change the nozzle (2).

d) Assemble the cover.

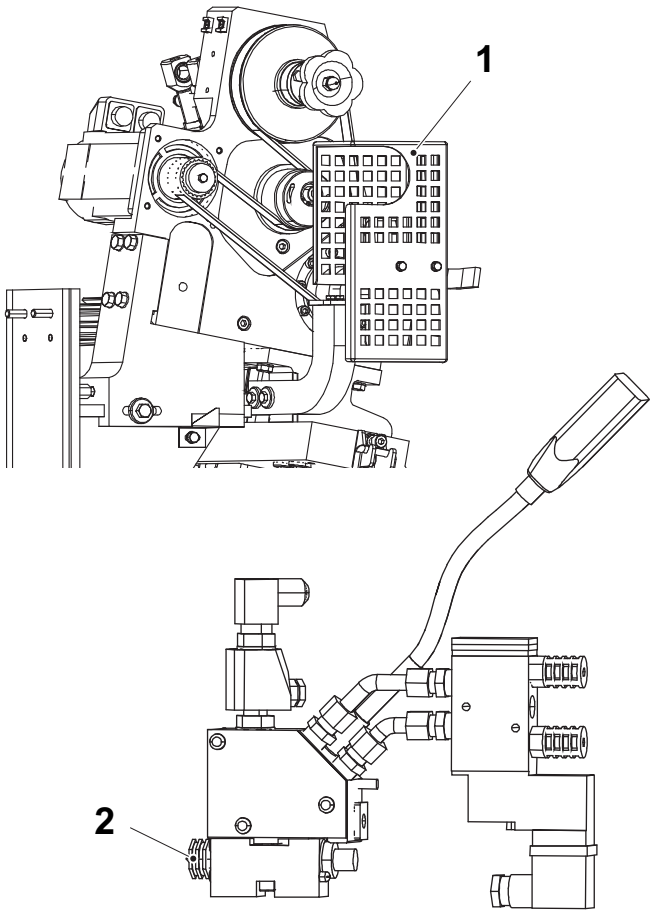

1 Cover
2 Nozzle

3.2-9 Hotmelt Equipment Nordson - Change Filter

Machine Status	Power Supply Disconnector ON Air Valve ON
SPC Reference	2892717 - valid for TBA 2863510 - valid for TCA

WARNING

Burn hazard.

Risk of personal injury. Wear safety glasses, protective gloves, and other protective clothing to avoid injuries from adhesive pouring out.

To change the filters, do the following:

a) Press the pump-key (1) to stop the pump.

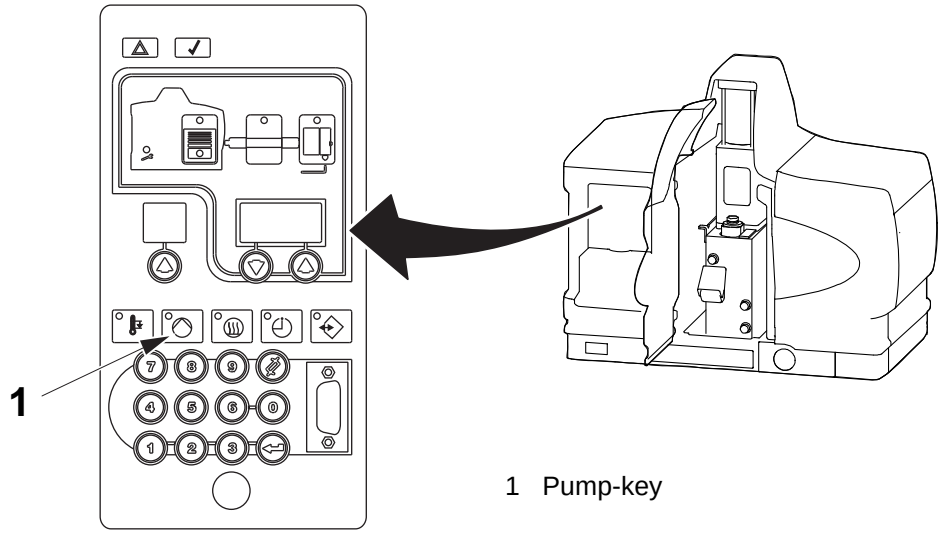

1 Pump-key

(Cont'd)

(Cont'd)

b) Use an 8 mm allen key, wrench to the left, to loosen the nut (2) and then properly dispose the old filter.

c) Before fitting the new filter, check that the O-ring (3) is in good condition. Tighten the nut (2) to 4.5 Nm.

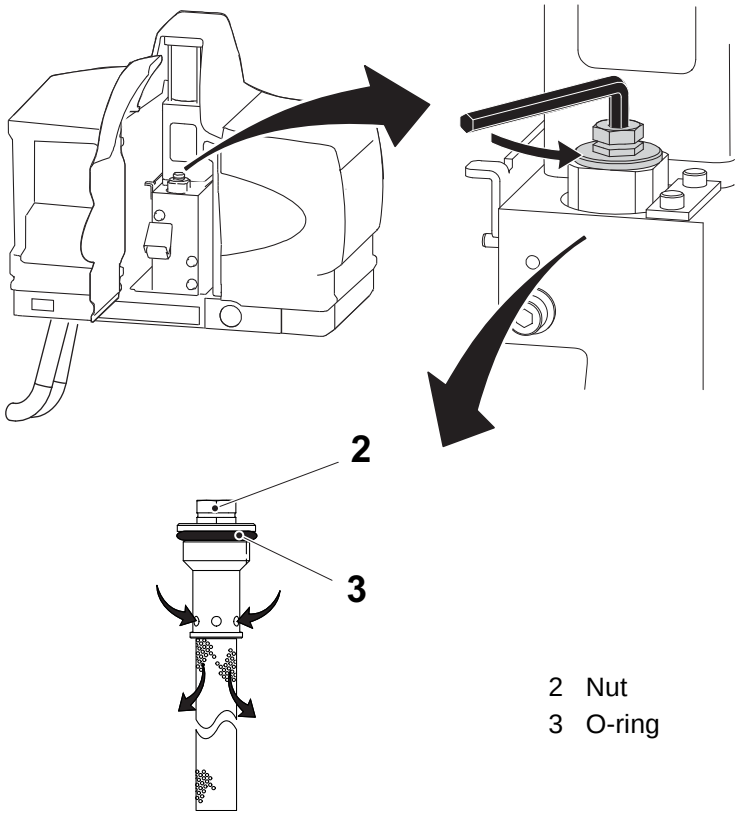

2 Nut
3 O-ring

(Cont'd)

(Cont'd)

d) On the hoses; loosen the nut (4) to dismantle the filter (5).
e) Change and insert the filter (5). Tighten the nut (4).
f) Press the pump-key (1) to start the pump.

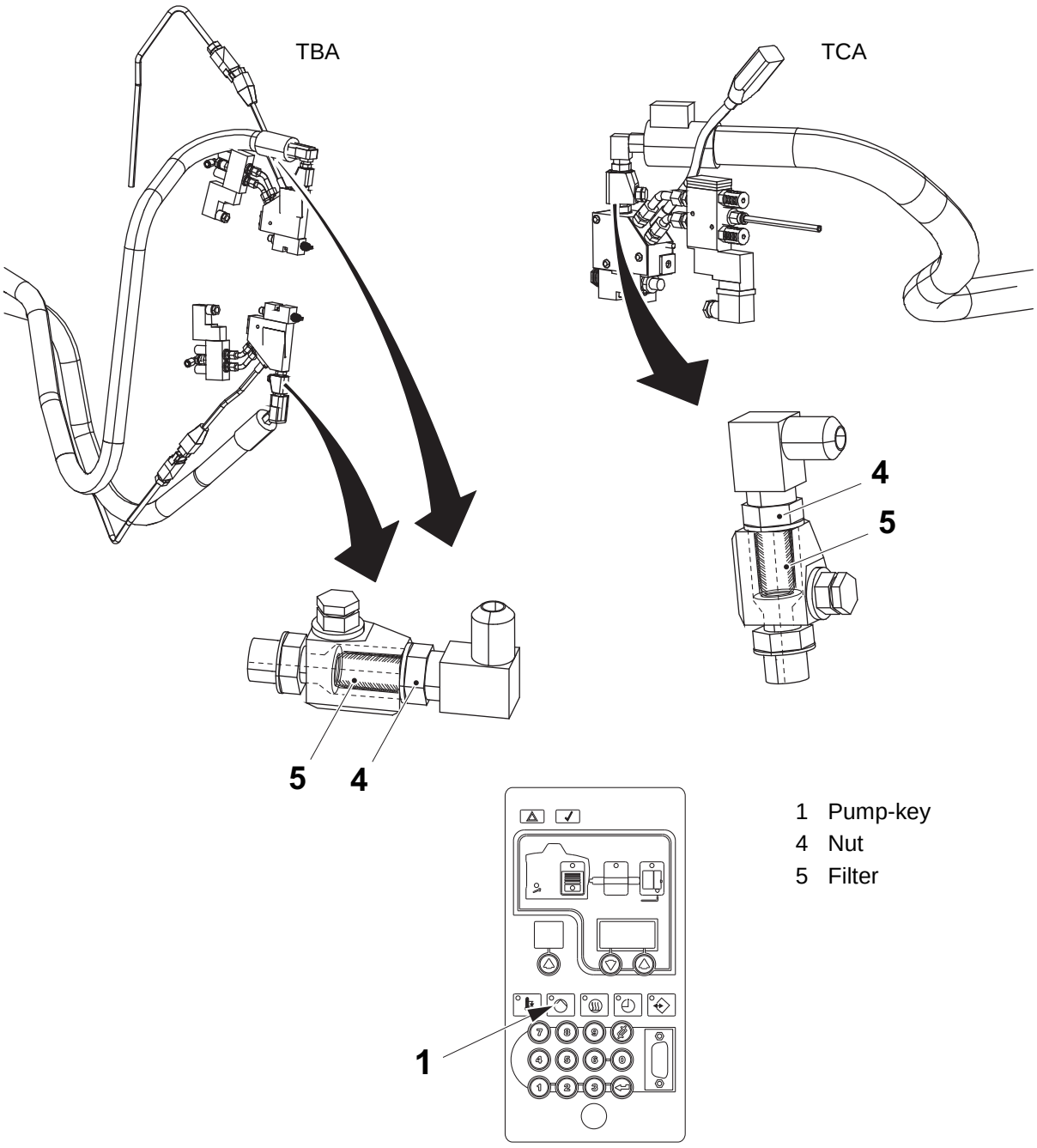

1 Pump-key
4 Nut
5 Filter

3.2.1 Hotmelt Gun

3.2.1-1 Hotmelt Gun - Change Gun Module

Machine Status	Power Supply Disconnector ON Air Valve ON
SPC Reference	90600-2959 - valid for TBA 90459-6475 - valid for TCA

Note! The machine must be preheated, and the guns have reached operating temperature. Set the pump air pressure to zero.

WARNING

Burn hazard.

Risk of personal injury. Wear safety glasses, protective gloves, and other protective clothing to avoid injuries from adhesive pouring out.

To change the module, do the following:

a) Press the pump-key (1) to stop the pump.

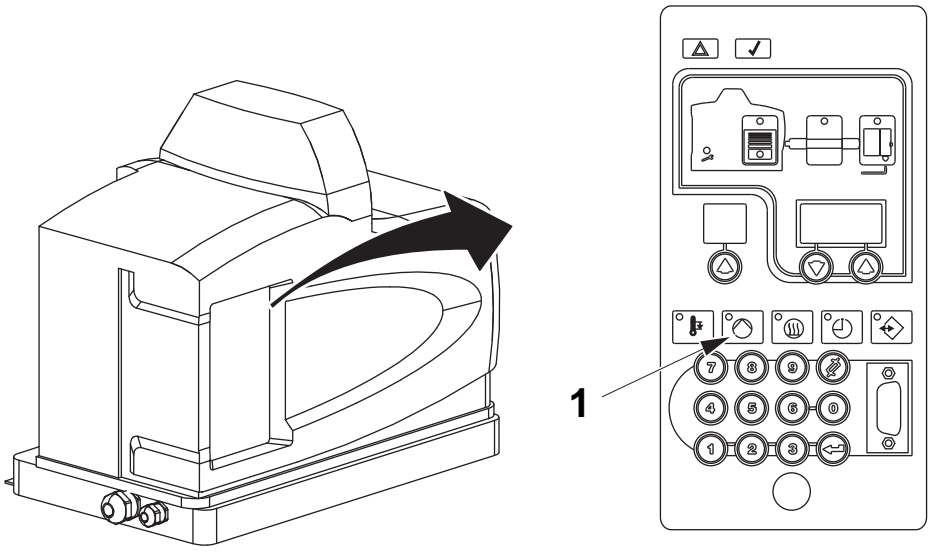

1 Pump-key

(Cont'd)

(Cont'd)

b) Remove the module (2) and/or (3). Use allen key 5/32’’.

c) Carefully wipe the contact surface with a dry cloth to remove any hotmelt waste.

d) Change the module.

e) Press the pump-key (1) to start the pump.

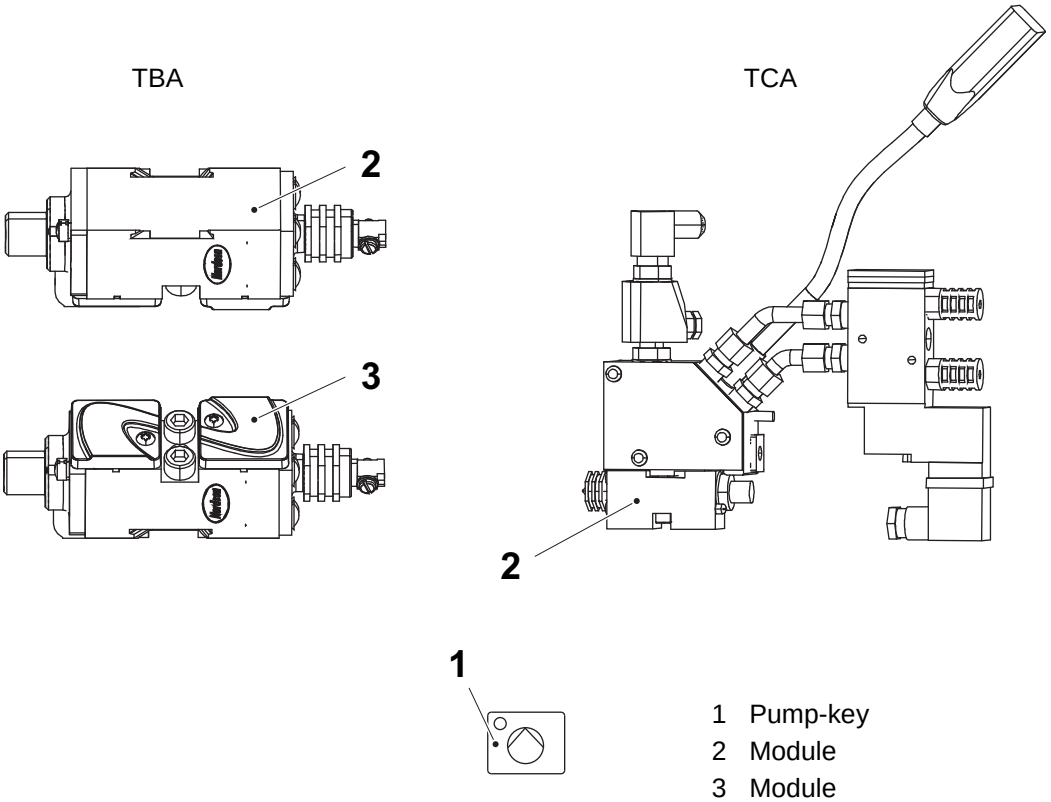

1 Pump-key
2 Module
3 Module

3.2.1-2 Hotmelt Gun - Change Solenoid Valve

Machine Status	Power Supply Disconnector OFF Air Valve OFF
SPC Reference	90600-2959- valid for TBA 90459-6475 - valid for TCA

WARNING

Burn hazard.

Risk of personal injury. Wear safety glasses, protective gloves, and other protective clothing to avoid injuries from adhesive pouring out.

Change the two solenoid valves (arrows).

TBA

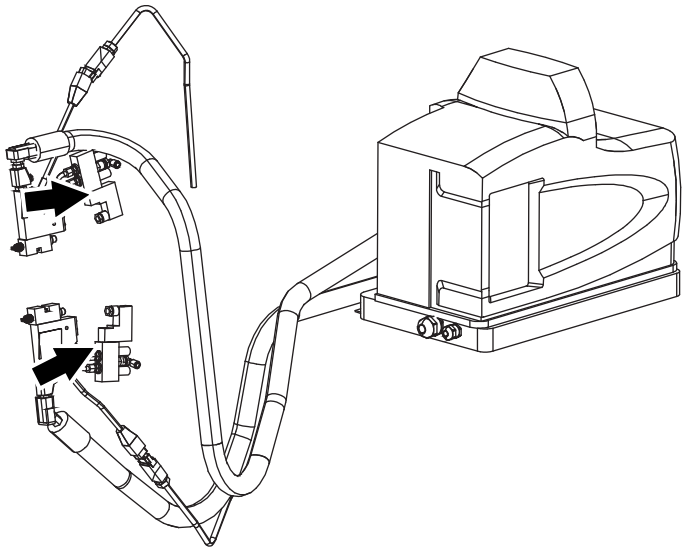

TCA

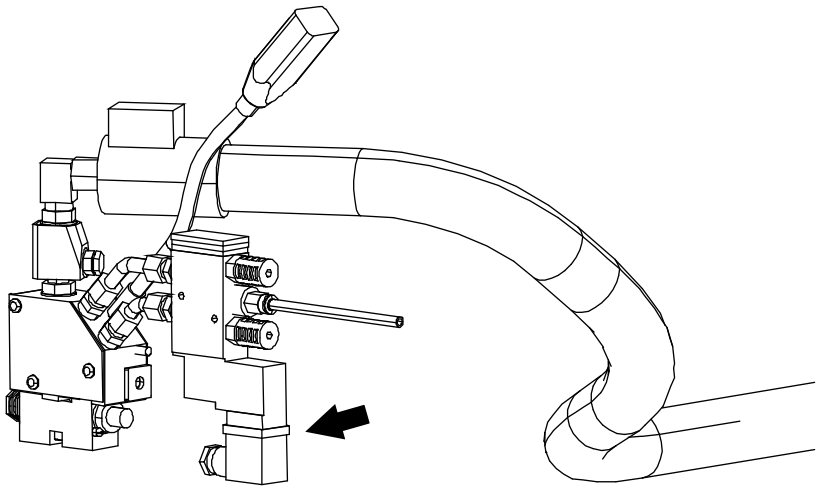

3.2.1-3 Hotmelt Gun - Set Gun Holder (TBA)

Machine Status	Power Supply Disconnector ON Air Valve ON

WARNING

Burn hazard.

Risk of personal injury. The hotmelt guns are hot. Be careful when handling the gun holder.

Lower Dot Position

Move the gun holder (1) upwards/downwards by loosen the screw (2). Set the value of the scale mark (3) according to Section 12.1 Guideline Settings, TBA.

Upper Dot Position

Move the gun holder (4) upwards/downwards by loosen the screw (5). Set the value of the scale mark (6) according to Section 12.1 Guideline Settings, TBA.

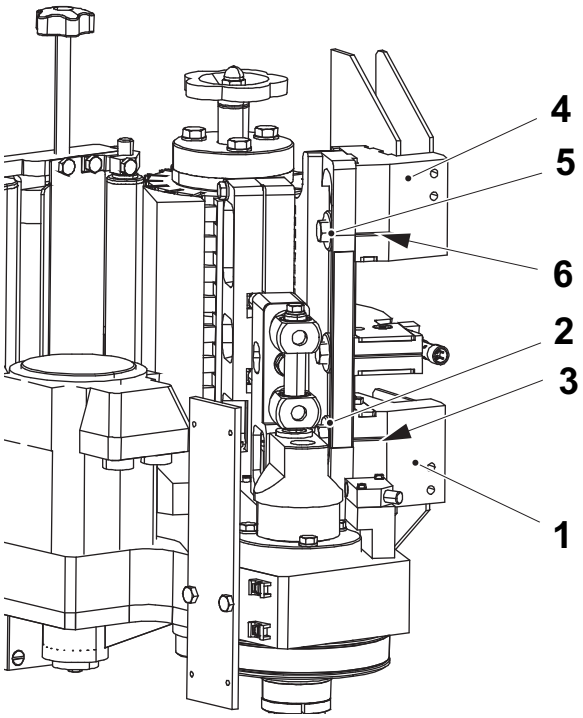

1 Lower gun holder
2 Screw
3 Scale mark
4 Upper gun holder
5 Screw
6 Scale mark

(Cont'd)

(Cont'd)

Operate the machine. Check that the hotmelt dots (7) are deposited on the straw according to the illustrations below.

Straight Straw
Check the A measure. The dots should be equally positioned from the package edges.

U-Straw
The upper dot should be positioned on the straw bend, see the illustration below.

Note! Horizontal adjustments of the straw position can be made in the TPOP.

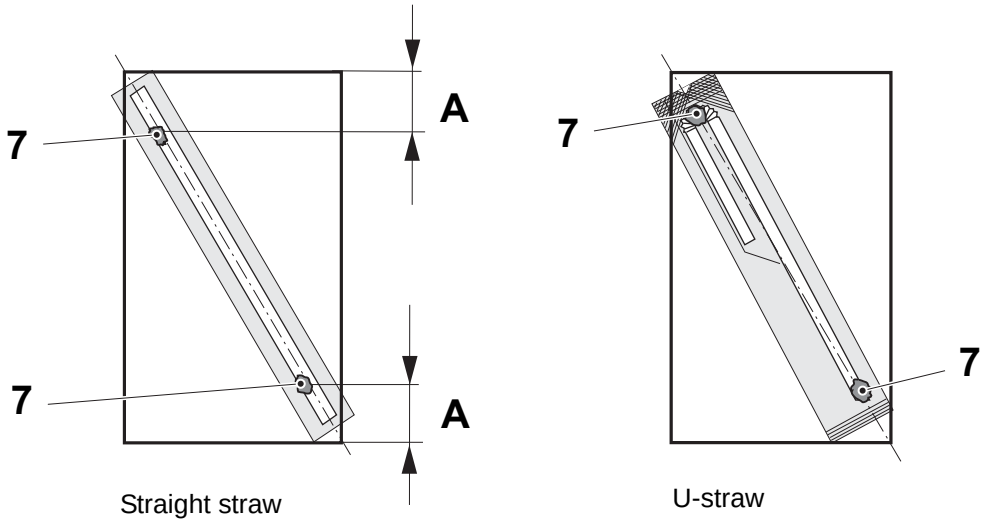

Straight straw

U-straw

7 Hotmelt dot

4 Machine Body

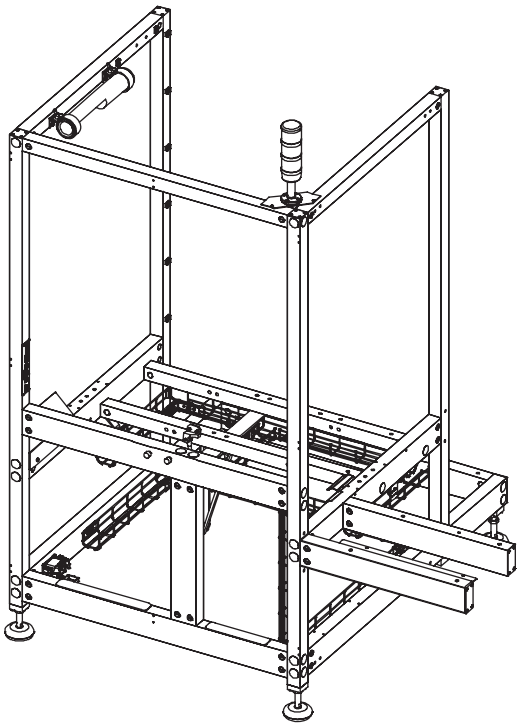

Machine Body - Description

SPC Reference	663304

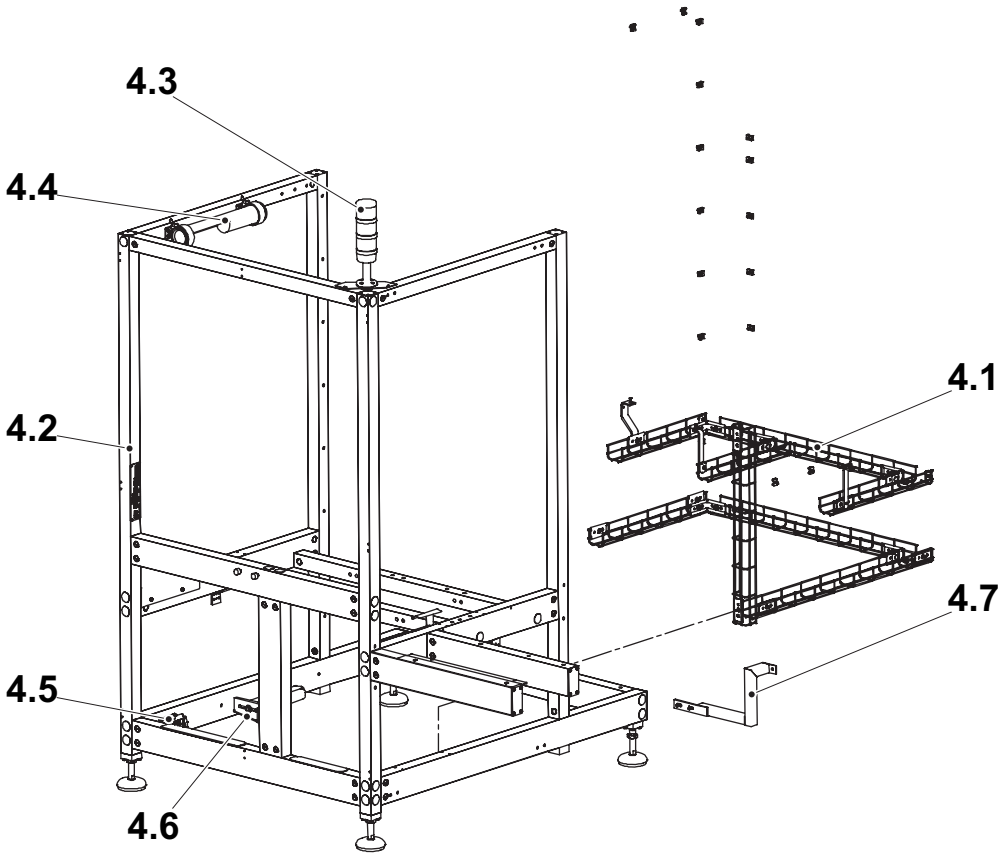

4.1 Cable duct
4.2 Machine body
4.3 Warning lamp
4.4 Light fixture
4.5 Connector
4.6 Guide arm
4.7 Bracket

4.1 Cable Duct . . . . . 4 - 5

4.1-1 Cable Duct - No Procedure Described . . . . . 4 - 5

4.2 Machine Body . . . . . 4 - 6

4.2-1 Machine Body - No Procedure Described . . . . . 4 - 6

4.3 Warning Lamp . . . . . 4 - 7

4.3-1 Warning Lamp - No Procedure Described . . . . . 4 - 7

4.4 Light Fixture . . . . . 4 - 8

4.4-1 Light Fixture - No Procedure Described . . . . . 4 - 8

4.5 Connector . . . . . 4 - 9

4.5-1 Connector - No Procedure Described . . . . . 4 - 9

4.6 Guide Arm . . . . . 4 - 10

4.6-1 Guide Arm - Set . . . . . 4 - 10

4.7 Bracket . . . . . 4 - 11

4.7-1 Bracket - No Procedure Described . . . . . 4 - 11

This page intentionally left blank

4.1 Cable Duct

4.1-1 Cable Duct - No Procedure Described

SPC Reference	2843700

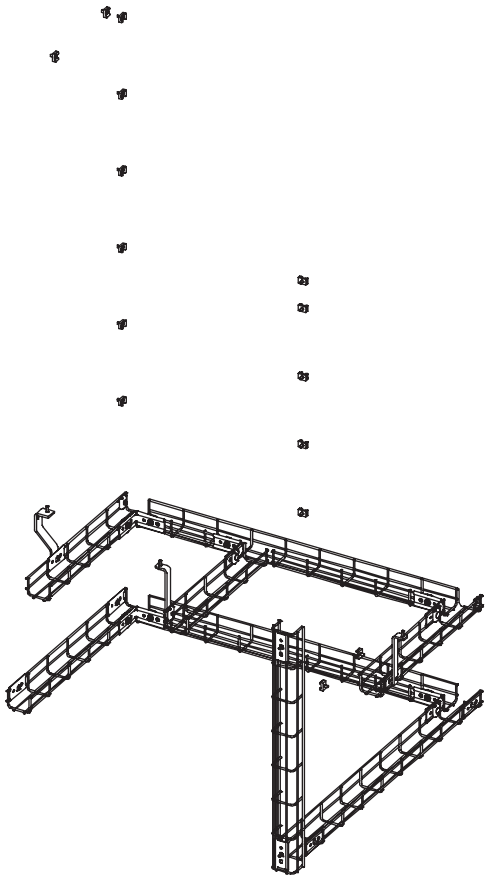

4.2 Machine Body

4.2-1 Machine Body - No Procedure Described

SPC Reference	2788657

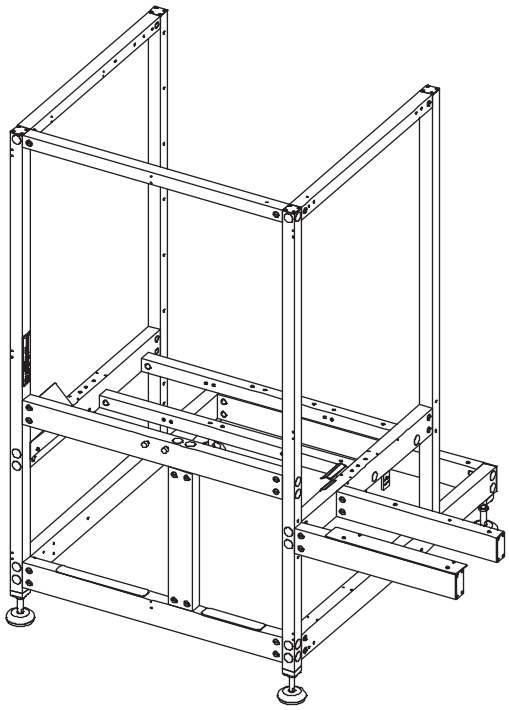

4.3 Warning Lamp

4.3-1 Warning Lamp - No Procedure Described

SPC Reference	581689

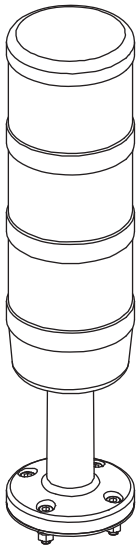

4.4 Light Fixture

4.4-1 Light Fixture - No Procedure Described

SPC Reference	2901717

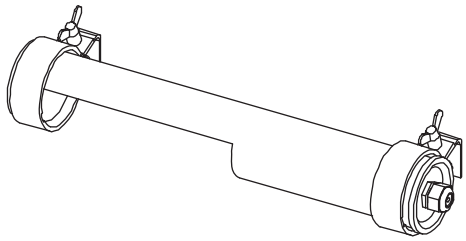

4.5 Connector

4.5-1 Connector - No Procedure Described

SPC Reference	2913340

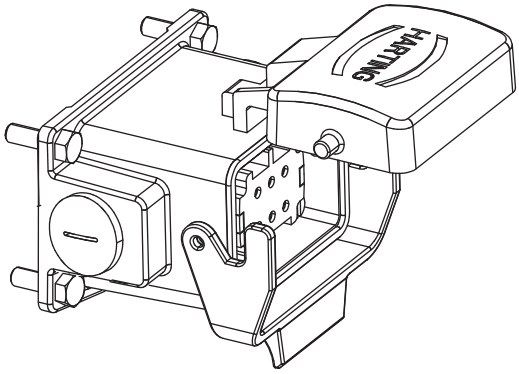

4.6 Guide Arm

4.6-1 Guide Arm - Set

Machine Status	Power supply disconnector OFF Air valve OFF
SPC Reference	2948240 - Valid for TCA

a) Loosen the screw (1).

b) Set the guide arm (2) so that it is aligned with the centre of the ladder band (arrow).

c) Tighten the screw (1).

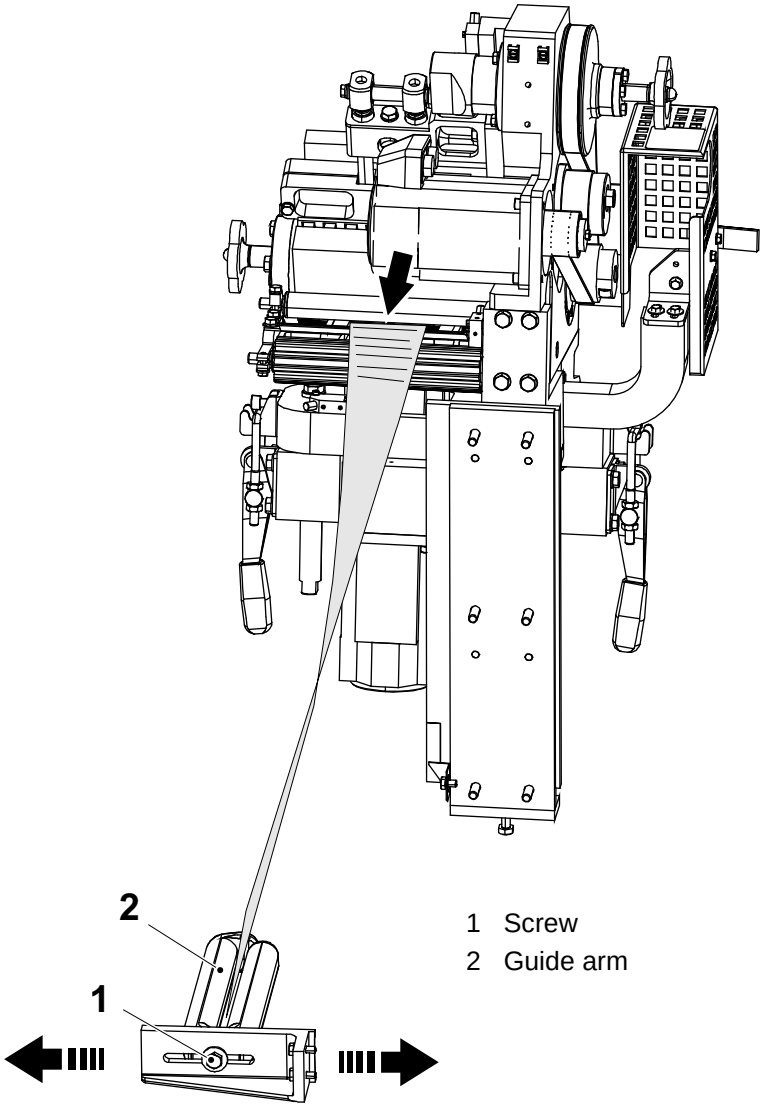

4.7 Bracket

4.7-1 Bracket - No Procedure Described

SPC Reference	2957740 - Valid for TCA

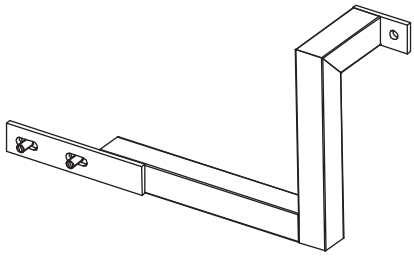

This page intentionally left blank

5 Machine Covering

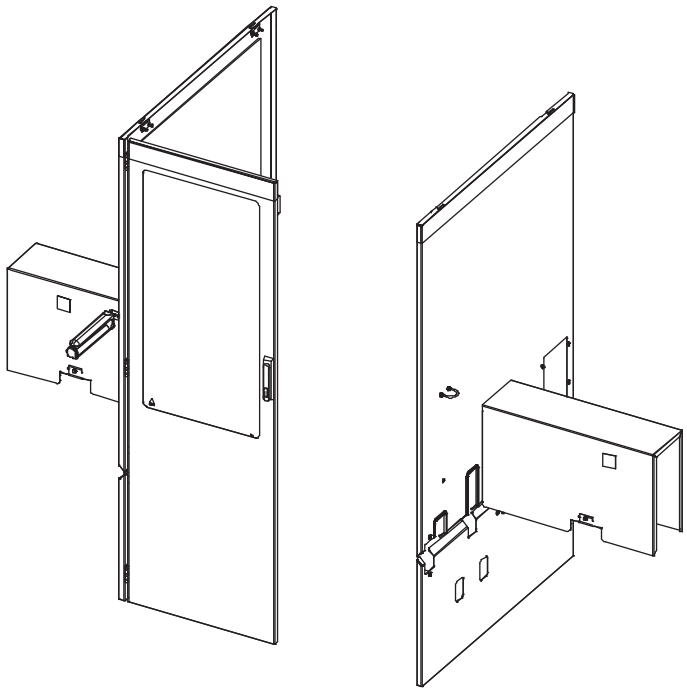

Machine Covering - Description

SPC Reference	663305

TBA

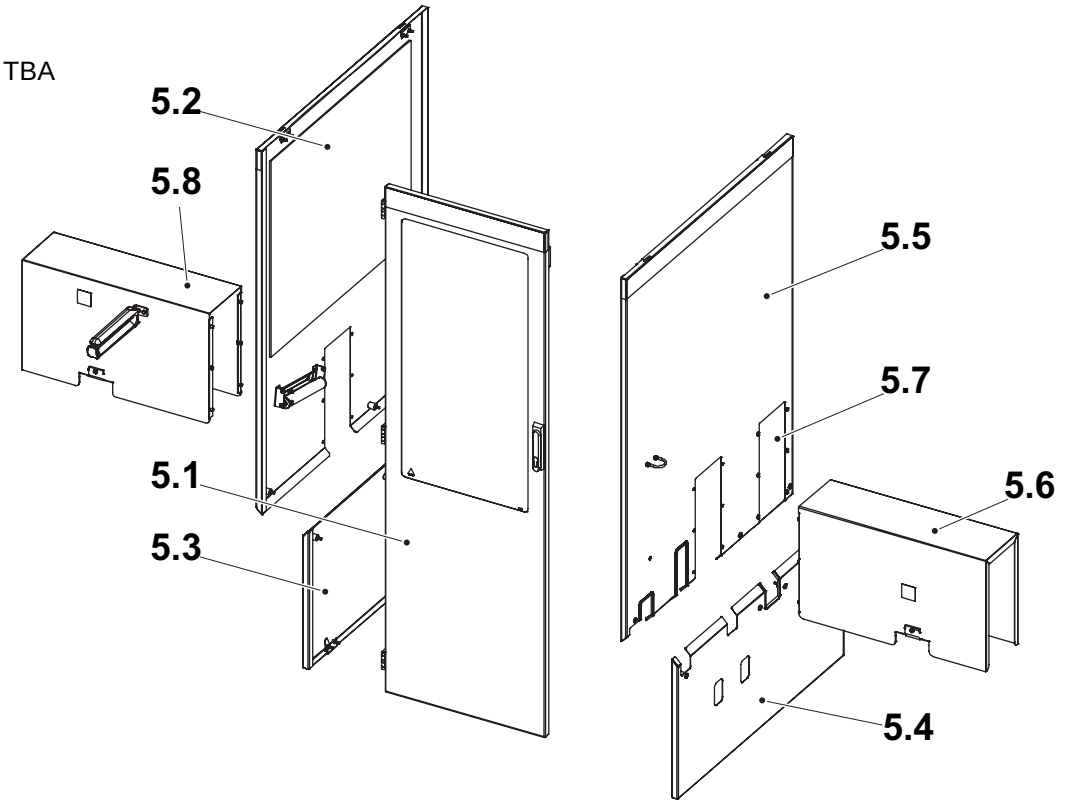

TCA

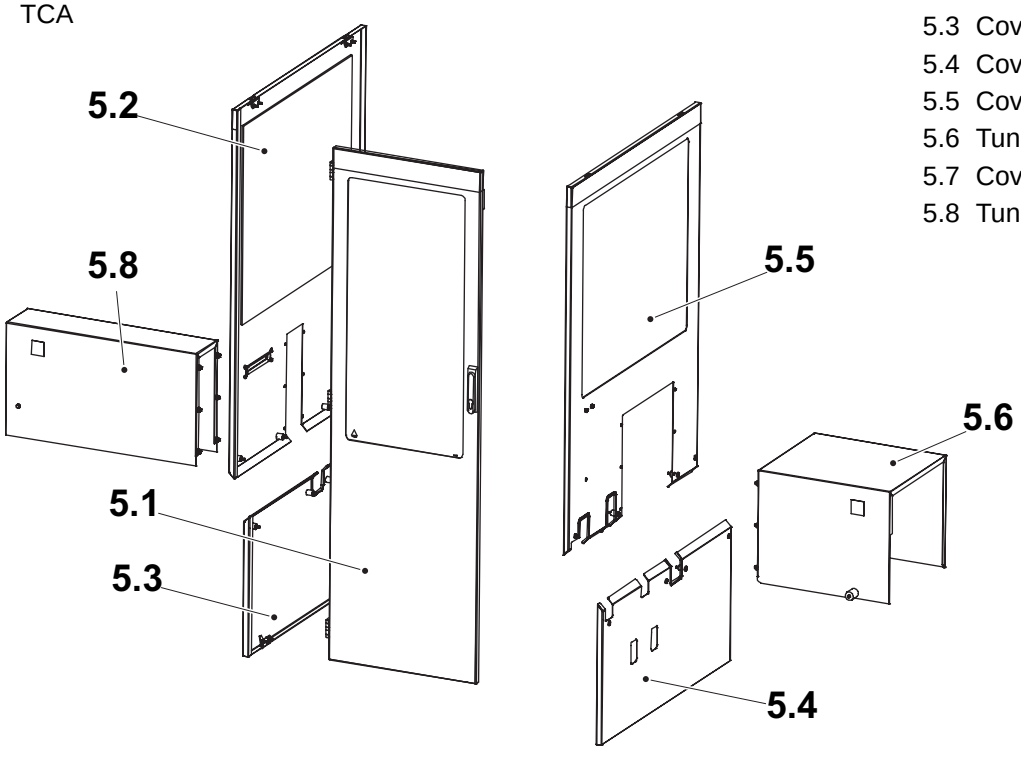

5.1 Glass Door
5.2 Cover
5.3 Cover
5.4 Cover
5.5 Cover
5.6 Tunnel
5.7 Cover
5.8 Tunnel

5.1 Glass Door . . . . . 5 - 5

5.1-1 Glass Door - No Procedure Described . . . . . 5 - 5

5.2 Cover . . . . . 5 - 6

5.2-1 Cover - No Procedure Described . . . . . 5 - 6

5.3 Cover . . . . . 5 - 7

5.3-1 Cover - No Procedure Described . . . . . 5 - 7

5.4 Cover . . . . . 5 - 8

5.4-1 Cover - No Procedure Described . . . . . 5 - 8

5.5 Cover . . . . . 5 - 9

5.5-1 Cover - No Procedure Described . . . . . 5 - 9

5.6 Tunnel . . . . . 5 - 10

5.6-1 Tunnel - No Procedure Described . . . . . 5 - 10

5.7 Cover . . . . . 5 - 11

5.7-1 Cover - No Procedure Described . . . . . 5 - 11

5.8 Tunnel . . . . . 5 - 12

5.8-1 Tunnel - No Procedure Described . . . . . 5 - 12

This page intentionally left blank

5.1 Glass Door

5.1-1 Glass Door - No Procedure Described

Machine Status	Power Supply Disconnector ON Air Valve ON
SPC Reference	2839815

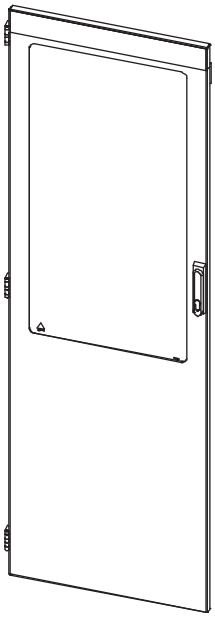

5.2 Cover

5.2-1 Cover - No Procedure Described

Machine Status	Power Supply Disconnector ON Air Valve ON
SPC Reference	2839820 - Valid for TBA 2957710 - Valid for TCA

TBA

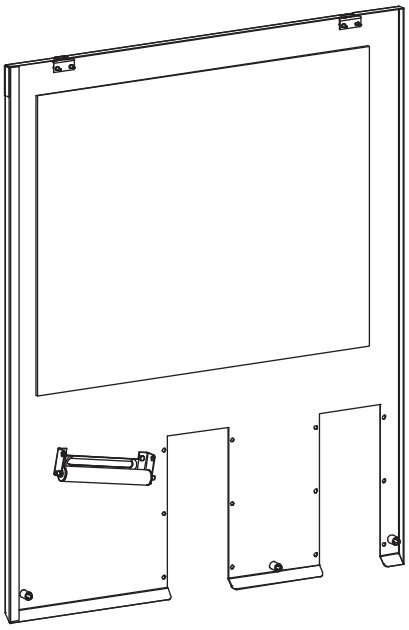

TCA

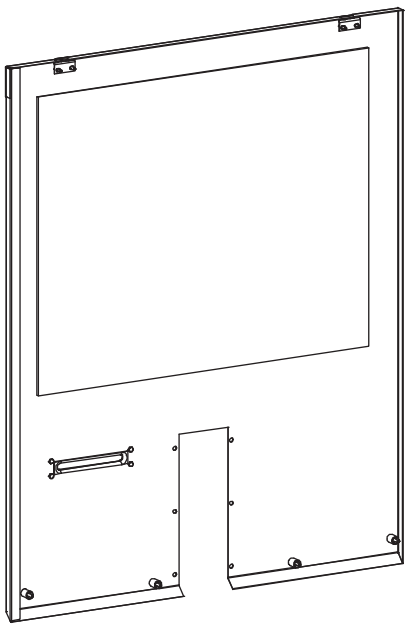

5.3 Cover

5.3-1 Cover - No Procedure Described

Machine Status	Power Supply Disconnector ON Air Valve ON
SPC Reference	2840888

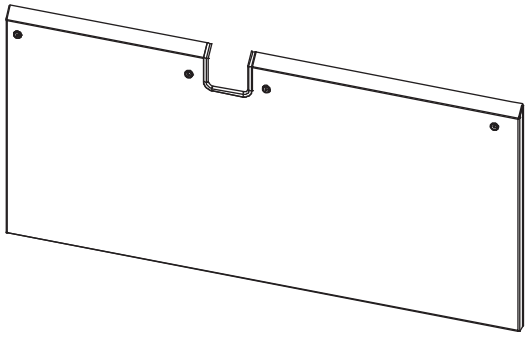

5.4 Cover

5.4-1 Cover - No Procedure Described

Machine Status	Power Supply Disconnector ON Air Valve ON
SPC Reference	2840890

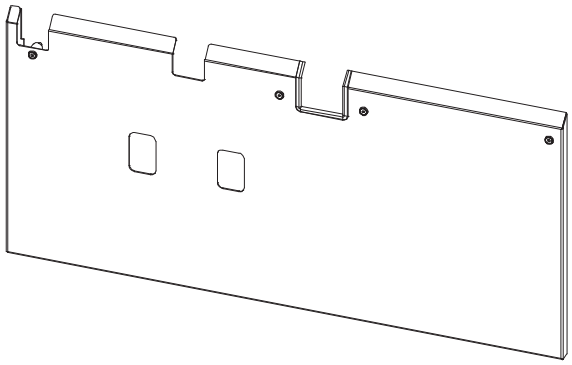

5.5 Cover

5.5-1 Cover - No Procedure Described

Machine Status	Power Supply Disconnector ON Air Valve ON
SPC Reference	2840892 - Valid for TBA 2957720 - Valid for TCA

TBA

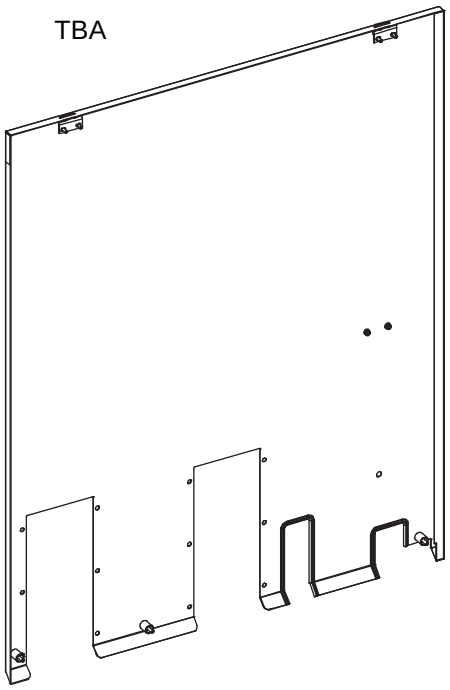

TCA

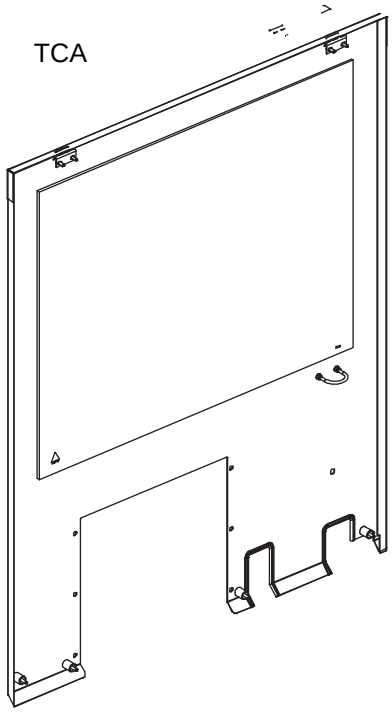

5.6 Tunnel

5.6-1 Tunnel - No Procedure Described

Machine Status	Power Supply Disconnector ON Air Valve ON
SPC Reference	2885383 - Valid for TBA 2934020 - Valid for TCA

TBA

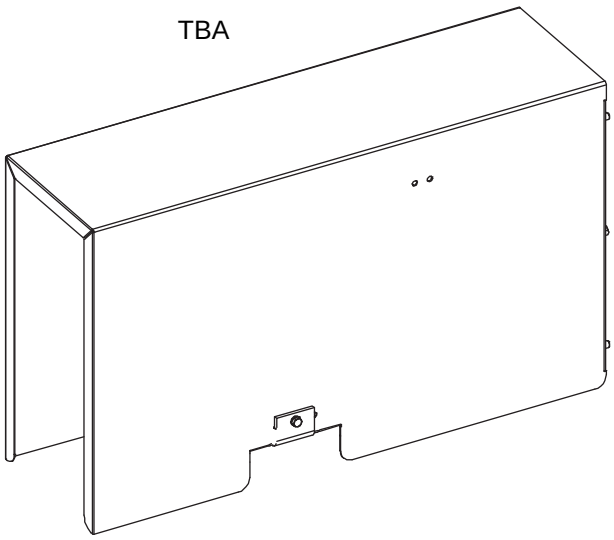

TCA

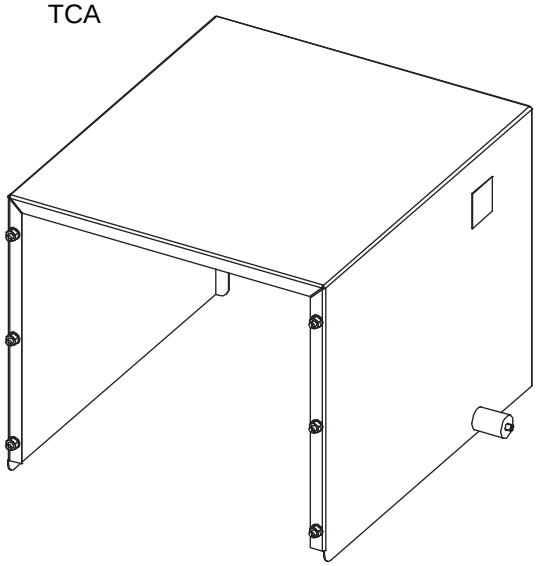

5.7 Cover

5.7-1 Cover - No Procedure Described

Machine Status	Power Supply Disconnector ON Air Valve ON
SPC Reference	2941199 - Valid for TBA

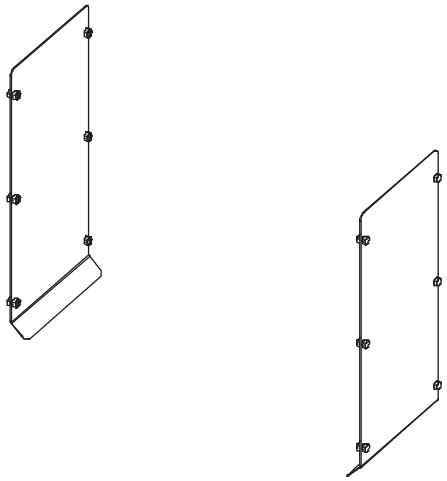

5.8 Tunnel

5.8-1 Tunnel - No Procedure Described

Machine Status	Power Supply Disconnector ON Air Valve ON
SPC Reference	2946723 - Valid for TBA 2934010 - Valid for TCA

TBA

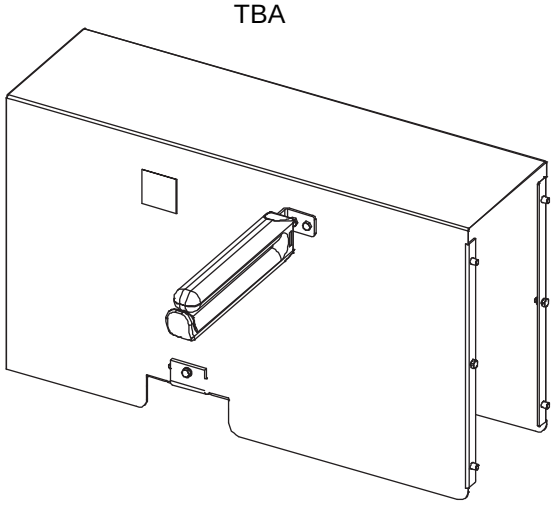

TCA

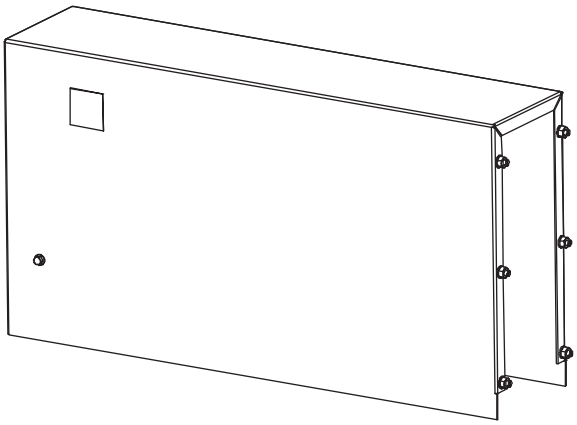

6 Air Equipment

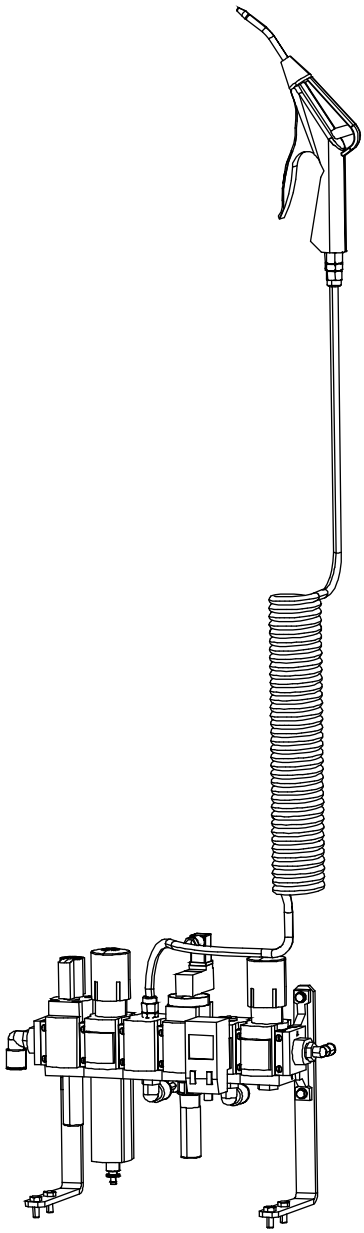

Air Equipment - Description

SPC Reference	663306

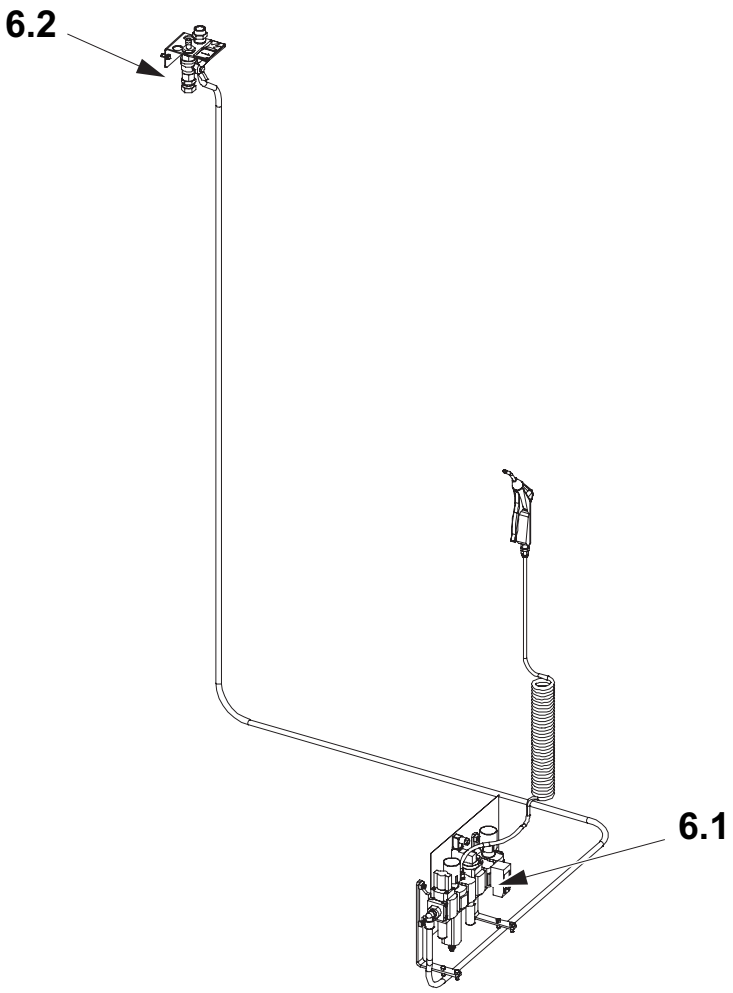

6.1 Air supply
6.2 Main pipe

6.1 Air Supply . . . . . 6 - 5

6.1-1 Air Supply - Set Air Pressure . . . . . 6 - 5

6.1-2 Air Supply - Reduce Air Pressure . . . . . 6 - 6

6.1-3 Air Supply - Set Pressure Sensor . . . . . 6 - 7

6.1-4 Air Supply - Set Hotmelt Regulator . . . . . 6 - 12

6.2 Main Pipe . . . . . 6 - 13

6.2-1 Main Pipe - No Procedure Described . . . . . 6 - 13

This page intentionally left blank

6.1 Air Supply

6.1-1 Air Supply - Set Air Pressure

Machine Status	Power Supply Disconnector ON Air Valve ON
SPC Reference	2839813

a) Open the shut-off valve (1) by lifting and turning the shut-off valve to the right.

Note! In the illustration the valve is closed.

b) Set the air pressure to 0.6 MPa with the filter regulator (2).

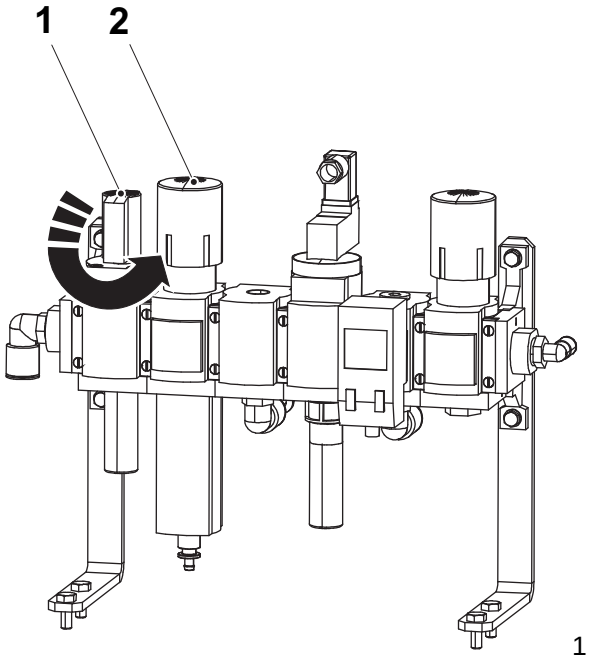

1 Shut-off valve
2 Filter regulator

6.1-2 Air Supply - Reduce Air Pressure

Machine Status	Power Supply Disconnector ON Air Valve ON
SPC Reference	2839813

To reduce the air pressure close the shut-off valve (1) by pressing and turning the shut-off valve to the left. Check that the air pressure is zero on the filter regulator (2).

Note! In the illustration the shut off valve is closed.

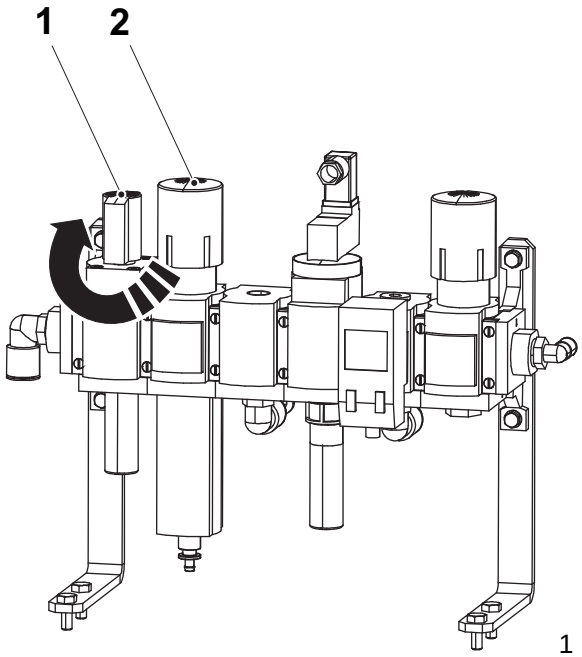

1 Shut-off valve
2 Filter regulator

6.1-3 Air Supply - Set Pressure Sensor

Machine Status	Power Supply Disconnector ON Air Valve ON
SPC Reference	2839813

Set the pressure sensor (1) to 5.5 bar (0.55 MPa).

Note! In the illustration the shut off valve is closed.

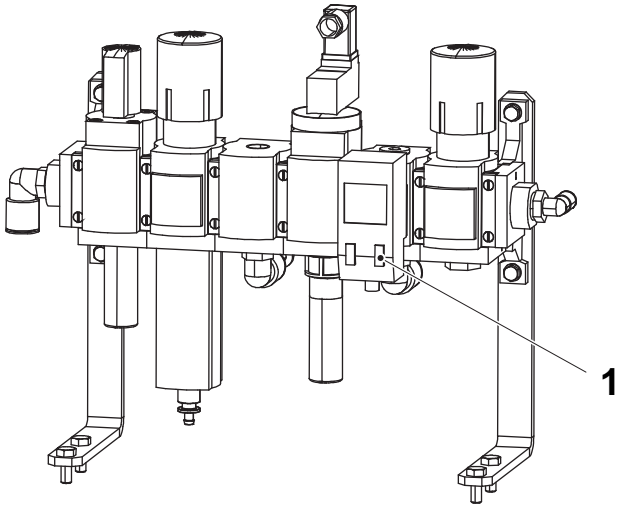

1 pressure sensor

(Cont'd)

(Cont'd)

Basic Setting

Press up- (2) and down-key (3), at the same time, once and the setting for minimum value is shown.

Press up- (2) and down-key (3), at the same time, twice and the setting for maximum value is shown.

Press up-key (2) to view the current settings on the pressure switch.

Unit Definition

a) Press the edit button (4) with a pointed object.

b) Press up- key(2) or down-key (3) to find the unit definition and confirm the choice by pressing the edit button (4).

c) Press up-key (2) to select between: Bar, Pascal or PSI. The default value is always Bar.

d) Confirm with the edit button (4).

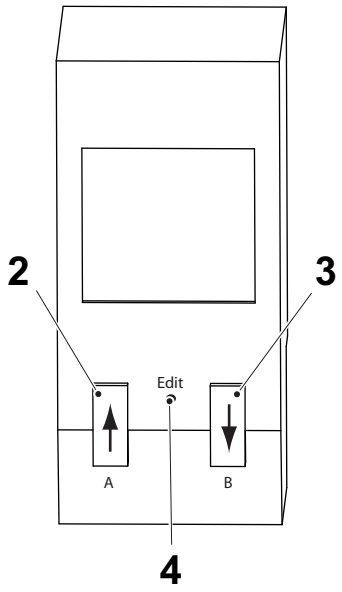

2 Up-key
3 Down-key
4 Edit button

(Cont'd)

(Cont'd)

Password Definition

a) Press up-key (2) or down-key (3) to find the password definition and confirm the choice by pressing the edit button (4).

b) Select either:

- 0 = No password
- 1 = Password

Note! The default value is 0.

c) Confirm the setting by pressing the edit button (4).

d) If password protection is chosen, choose the password with up-key (2) or /and down-key (3) and confirm the setting with the edit button (4).

e) Press the edit button (4) once more to return to the main menu.

Remove a Password

a) Turn off power supply disconnector.

b) Press edit button (4), up-key (2) and down-key (3), simultaneously, while turning on power supply disconnector.

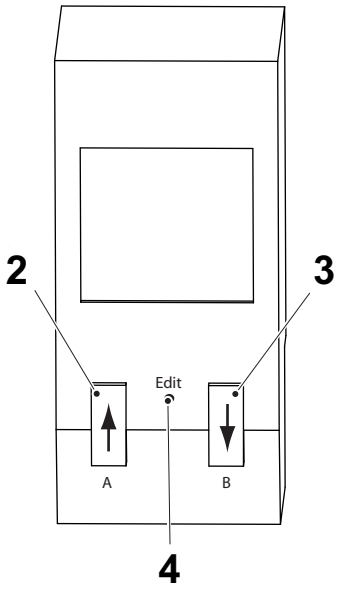

2 Up-key
3 Down-key
4 Edit button

(Cont'd)

(Cont'd)

Parameter Settings

a) Press the edit button (4) twice with a pointed object.

b) Press up-key (2) or down-key (3) to select between: threshold- or window comparator. Choose window comparator (5). The selected value starts flashing.

c) Confirm the setting by pressing the edit button (4).

d) Press up-key (2) or down-key (3) to set air pressure 5 bar (0.5 MPa).

e) Confirm the setting by pressing the edit button (4).

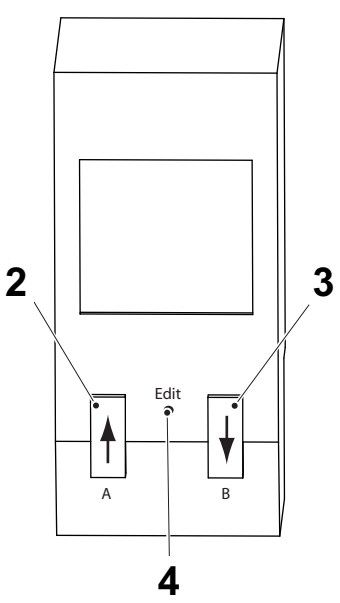

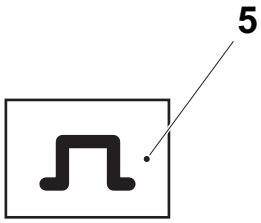

2 Up-key
3 Down-key
4 Edit button
5 Symbol for Window comparator

(Cont'd)

(Cont'd)

f) Press up-key (2) or down-key (3) to set shut off pressure to 6 bar (0.60 MPa).

g) Confirm the setting by pressing the edit button (4).

h) Press up-key (2) or down-key (3) to select hysteresis value [HY].

i) Press up-key (2) or down-key (3) to set hysteresis value to 0.2 bar (0.02 MPa).

j) Confirm the setting by pressing the edit button (4).

k) Press up-key (2) or down-key (3) to select between normally open or normally closed. Choose normally open [NO]

l) Confirm the choice by pressing the edit button (4).

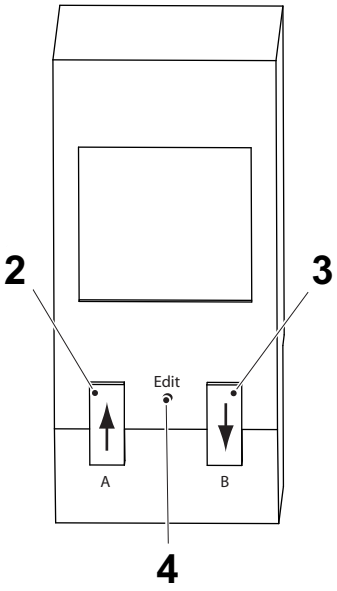

2 Up-key
3 Down-key
4 Edit button

6.1-4 Air Supply - Set Hotmelt Regulator

Machine Status	Power Supply Disconnector ON Air Valve ON
SPC Reference	2839813

Set the hotmelt regulator to 4 to 4.5 bar (0.4 to 0.45 MPa) with the pressure gauge (1). The pressure is stated on the manometer (2), also see Air Pressure in 3.2-1 Hotmelt Equipment Nordson - Set Hotmelt Unit.

Note! In the illustration the shut off valve is closed.

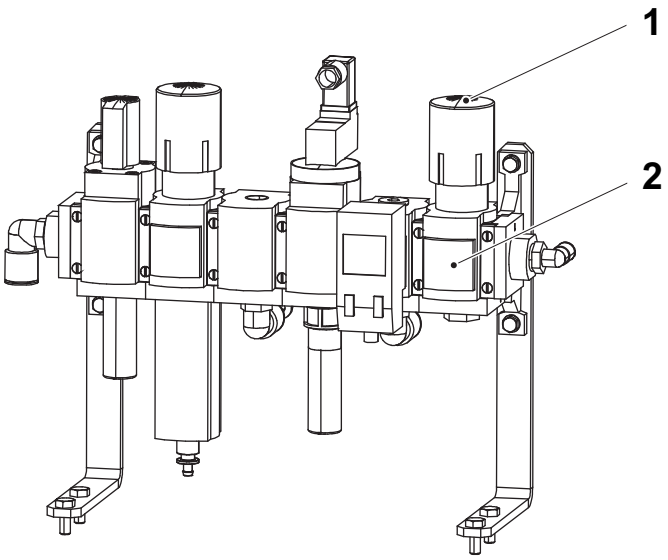

1 Pressure gauge
2 Manometer

6.2 Main Pipe

6.2-1 Main Pipe - No Procedure Described

SPC Reference	2941716

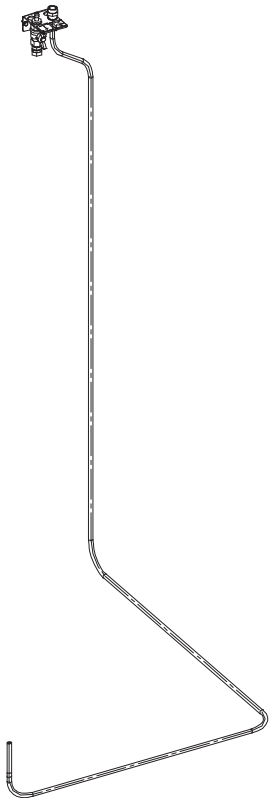

This page intentionally left blank

7 TPOP HMI

TPOP HMI - Description

SPC Reference	663307

7.1 TPOP Control Panel Tetra Brik Aseptic, TBA . . 7 - 5

7.1.1 Recipes . . . . . 7 - 5

7.1.1-1 Recipes - Set Recipe . . . . . 7 - 5

7.1.2 Maintenance . . . . . 7 - 10

7.1.2-1 Maintenance - Set Apply Unit . . . . . 7 - 10

7.1.2-2 Maintenance - Set Pick Position . . . . . 7 - 12

7.1.2-3 Maintenance - Set Discharge Unit . . . . . 7 - 16

7.1.2-4 Maintenance - Set Infeed Unit Parameters . . . . . 7 - 18

7.1.2-5 Maintenance - Set Package Unit Parameters . . . 7 - 20

7.1.3 Setup . . . . . 7 - 24

7.1.3-1 Setup - Add Language . . . . . 7 - 24

7.1.3-2 Setup - Change User Settings . . . . . 7 - 26

7.1.3-3 Setup - Check Diagnostic . . . . . 7 - 28

7.1.3-4 Setup - Shut Down . . . . . 7 - 29

7.1.4 Configuration . . . . . 7 - 31

7.1.4-1 Configuration - Change PLMS Communication 7 - 31

7.1.4-2 Configuration - Change Package Type . . . . . 7 - 32

7.1.4-3 Configuration - Set Line Communication . . . . . 7 - 33

7.1.4-4 Configuration - Change Conveyor Velocity . . . . 7 - 34

7.1.4-5 Configuration - Change IP Address . . . . . 7 - 35

7.2 TPOP Control Panel Tetra Classic Aseptic, TCA . . . . . 7 - 36

7.2.1 TPOP - System Settings . . . . . 7 - 36

7.2.1-1 User . . . . . 7 - 36

7.2.1-2 Configuration . . . . . 7 - 37

7.2.1-3 Diagnostic . . . . . 7 - 39

7.2.1-4 Shut down . . . . . 7 - 40

7.2.2 TPOP - Settings . . . . . 7 - 41

7.2.2-1 Set Recipe . . . . . 7 - 41

7.2.3 TPOP - Maintenance . . . . . 7 - 44

7.2.3-1 Apply Unit Maintenance . . . . . 7 - 44

7.2.3-2 Discharge Unit Maintenance . . . . . 7 - 46

7.2.3-3 Infeed Unit Maintenance . . . . . 7 - 48
7.2.3-4 Package Unit Maintenance . . . . . 7 - 50

7.1 TPOP Control Panel Tetra Brik Aseptic, TBA

7.1.1 Recipes

7.1.1-1 Recipes - Set Recipe

Machine status	Power supply disconnector ON Air valve ON

a) In the button bar, press the RECIPE button (1) to display the recipe window (2).

b) Step the machine to PREHEATING.

c) Press the OPEN button (3) to open an existing recipe or the NEW RECIPE button (4) to create a new recipe.

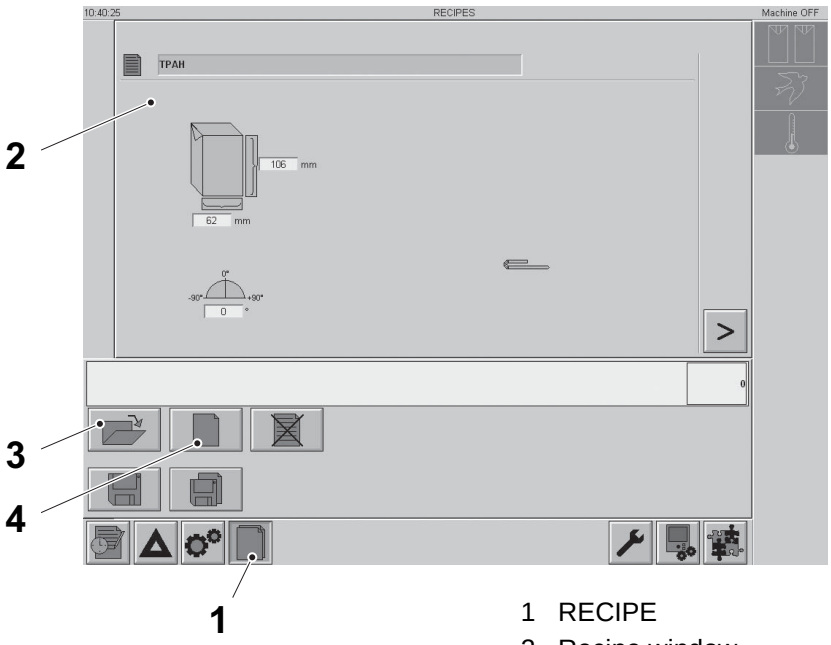

1 RECIPE
2 Recipe window
3 OPEN
4 NEW RECIPE

(Cont'd)

(Cont'd)

Open an Existing Recipe

d) Choose a recipe in the list by using the ARROW buttons (5), and press the CONFIRMATION button (6) to select the recipe. Press the CANCEL button (7) to abort the selection.

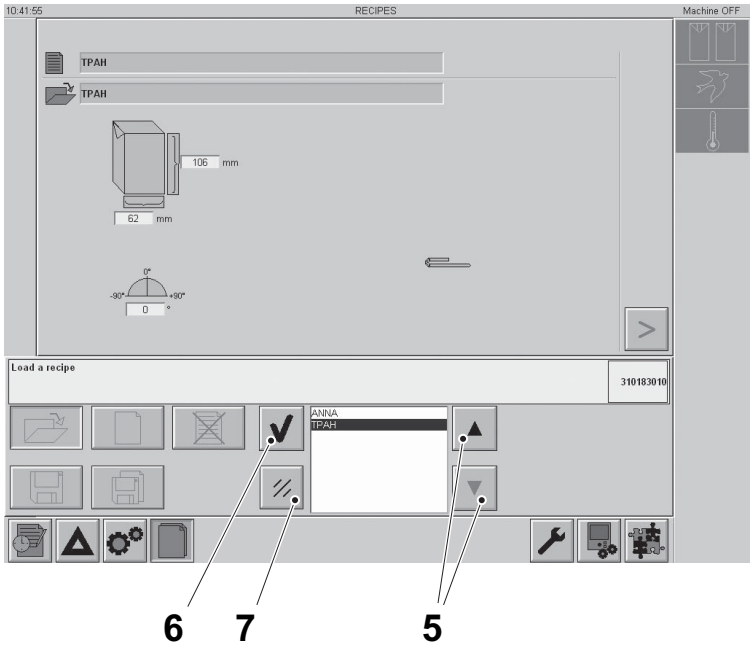

5 ARROW
6 CONFIRMATION
7 CANCEL

(Cont'd)

(Cont'd)

Create a New Recipe

e) Press the NEW RECIPE button (4) and the CONFIRMATION button (6).

f) Type the recipe name with the keyboard and press ENTER (8).

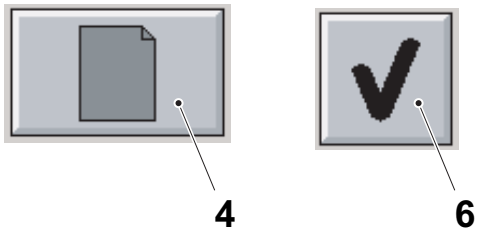



4 NEW RECIPE
6 CONFIRMATION
8 ENTER

(Cont'd)

(Cont'd)

g) Press a symbol in the recipe window (9) to change the corresponding setting. The settings that can be available are the buttons (10) to (20) in the illustration below. If a symbol is grey, the setting is not available. Use the CHANGE WINDOW buttons (21) to change between the recipe windows (9).

h) Use the ARROW buttons or the keypad to change the settings.

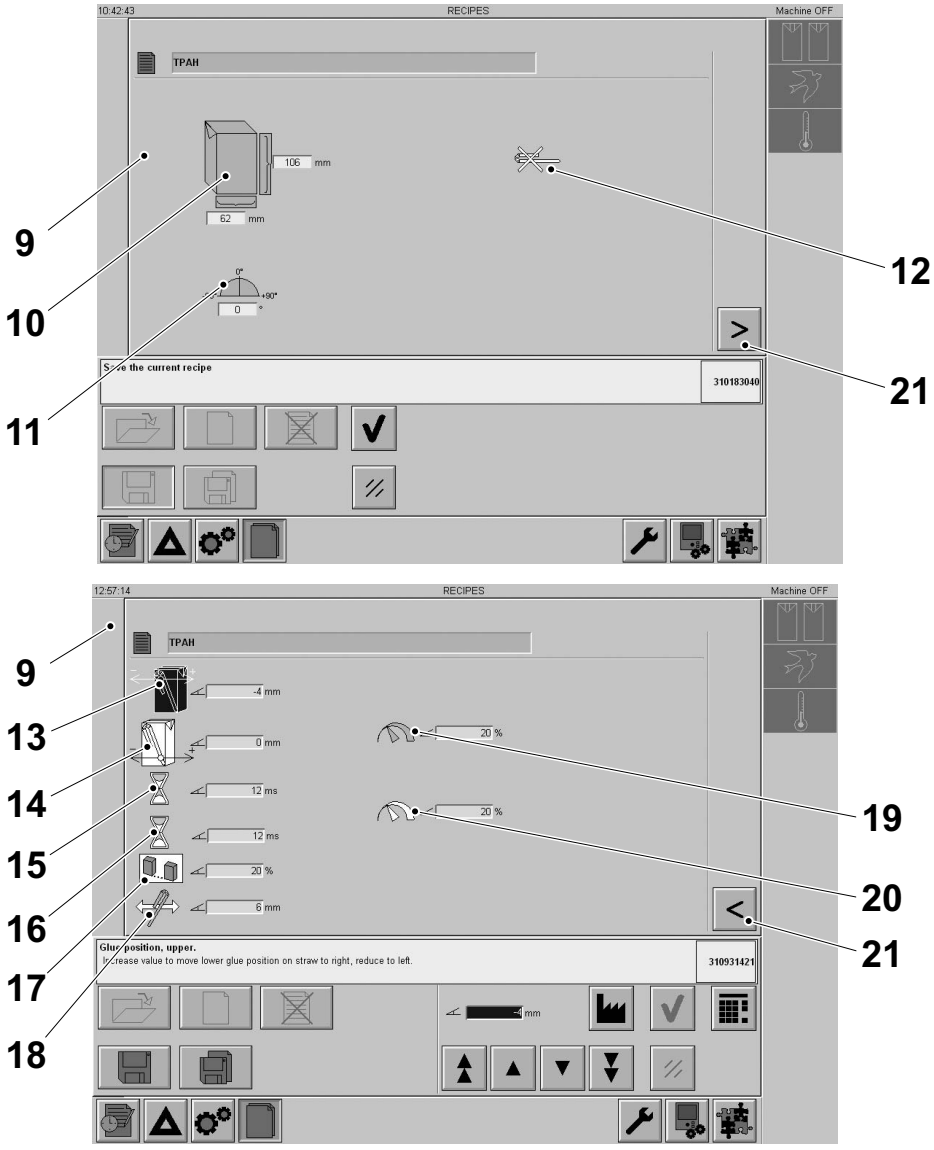

9	Recipe window	14	Glue position lower	19	Infeed speed factor
10	Package size	15	Glue duration upper	20	Discharge speed factor
11	Angle of applicator unit	16	Glue duration lower	21	CHANGE WINDOW
12	Straw mode	17	Gap size		
13	Glue position upper	18	Position of straw on package		

(Cont'd)

(Cont'd)

Save Current Recipe

i) Press the SAVE button (20) to save the current recipe.

j) Press the CONFIRMATION button (6) to save the current recipe, or press CANCEL (7) to abort the saving.

Save Recipe with New Name

k) Press the SAVE AS button (21) to save the recipe with a new name.

l) Type the recipe name with the keyboard and press ENTER.

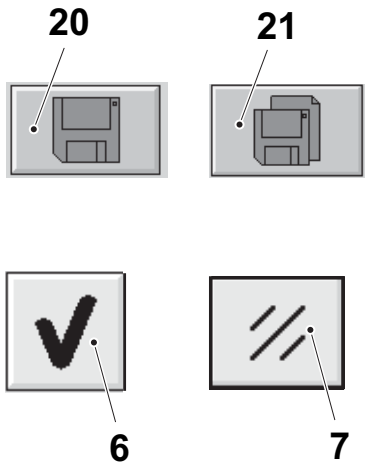

6 CONFIRMATION
7 CANCEL
22 SAVE
23 SAVE AS

7.1.2 Maintenance

7.1.2-1 Maintenance - Set Apply Unit

Machine status	Power supply disconnector ON Air valve ON

a) In the button bar, press the MAINTENANCE button (1) to display the maintenance window (2).

b) Press the APPLY UNIT button (3).

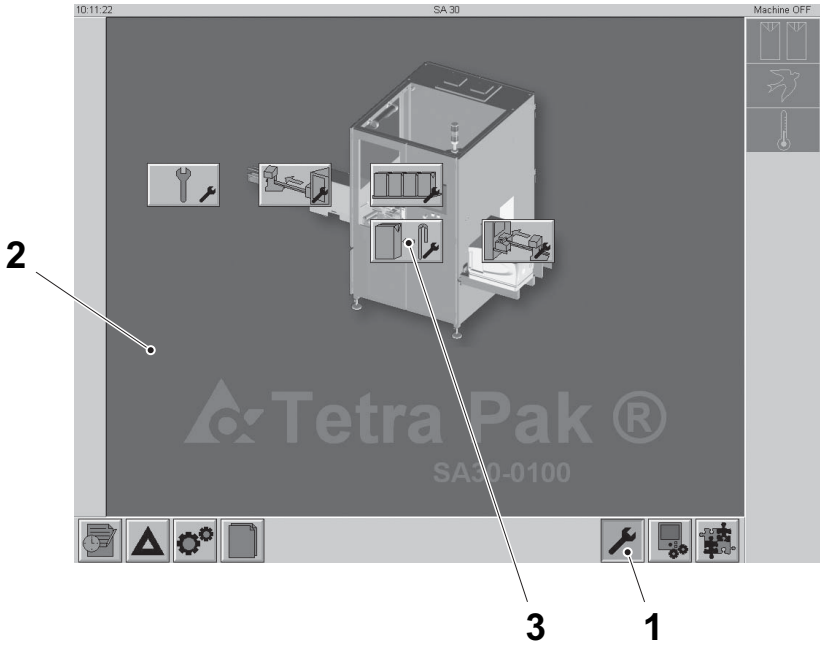

1 MAINTENANCE
2 Maintenance window
3 APPLY UNIT

(Cont'd)

(Cont'd)

c) In the apply unit maintenance window it is possible to set the glue duration (4), the glue position (5), and the pick position (6).

d) Press one of the symbols to show the corresponding setting display (7). The setting display looks similar for glue duration and glue position. To set pick position, see Procedure 7.1.2-2 Maintenance - Set Pick Position.

e) Use the ARROW buttons (8) to set the desired values.

f) Confirm the setting with the CONFIRMATION button (9).

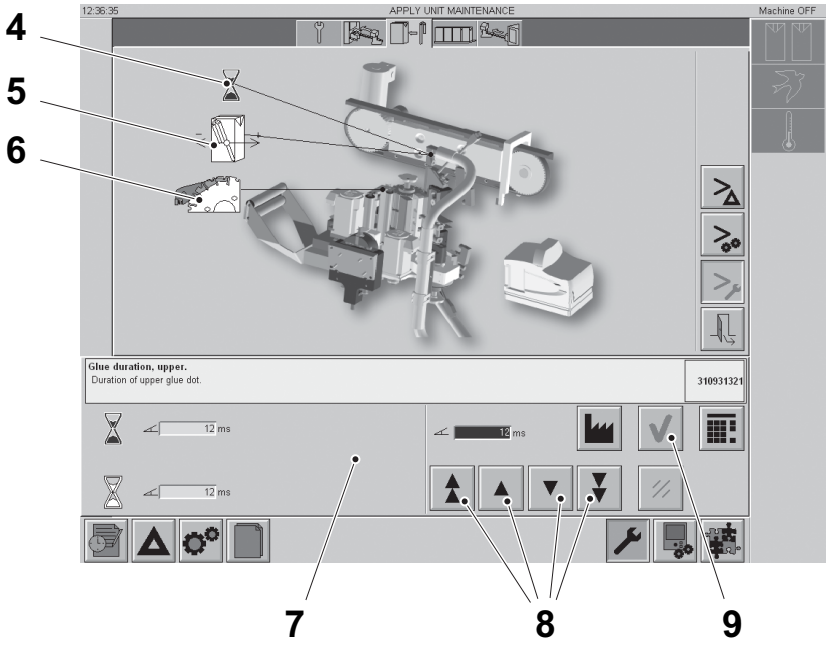

4 Glue duration
5 Glue position
6 Pick position
7 Setting display
8 ARROW
9 CONFIRMATION

7.1.2-2 Maintenance - Set Pick Position

Machine status	Power supply disconnector ON Air valve ON Machine status PREHEATING

a) In the button bar, press the MAINTENANCE button (1) to display the maintenance window (2).

b) Press the APPLY UNIT button (3).

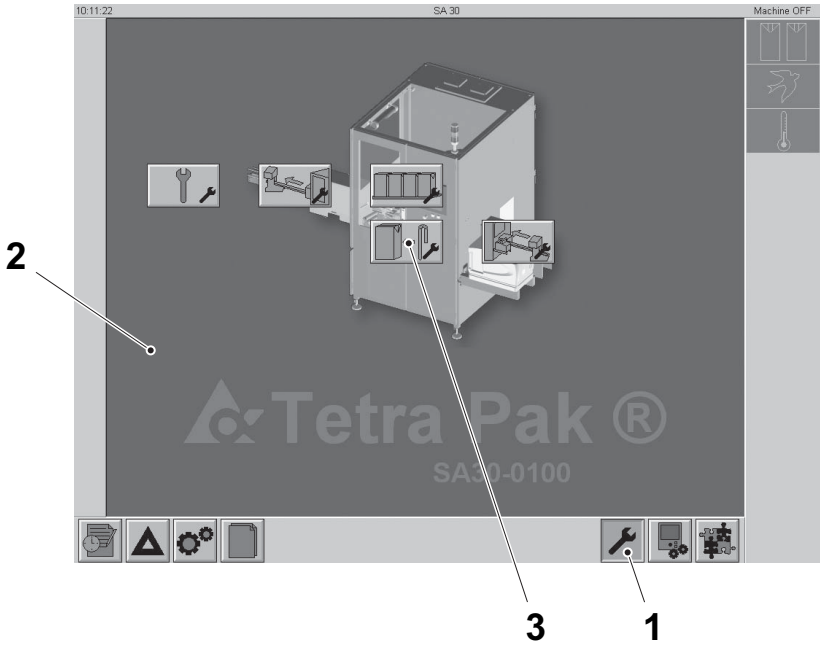

1 MAINTENANCE
2 Maintenance window
3 APPLY UNIT

(Cont'd)

(Cont'd)

c) Press the pick position icon (4).

d) Press the SELECT button (5) and the CONFIRMATION button (6).

e) The feed wheel and the pressure arms will turn to the current pick position. The SELECT button will then turn green.

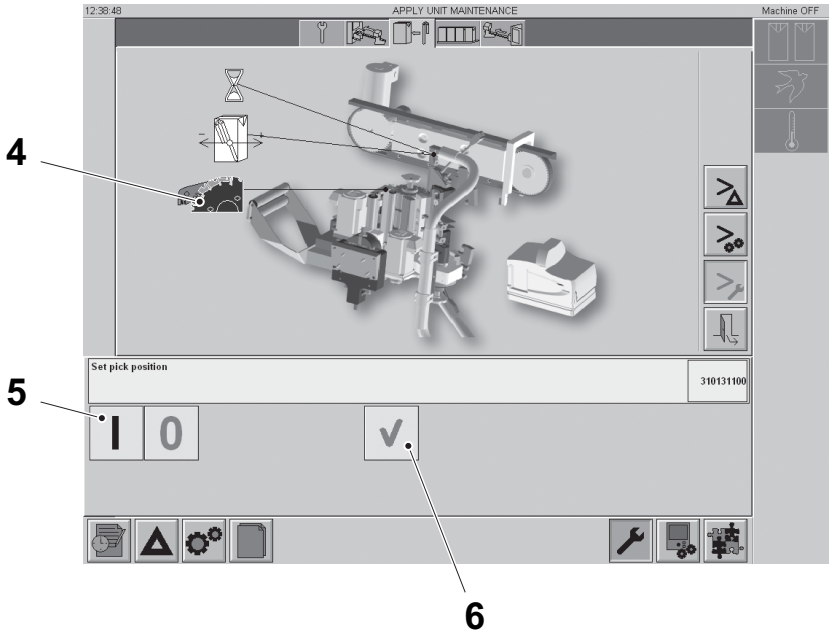

4 Pick position
5 SELECT
6 CONFIRMATION

(Cont'd)

(Cont'd)

f) Open the doors to the machine. Turn the feed wheel (7) and/or the pressure arms (8) manually with the stellar knob (10) until the pressure arms fit into the feed wheel slots (9).

g) Close the doors.

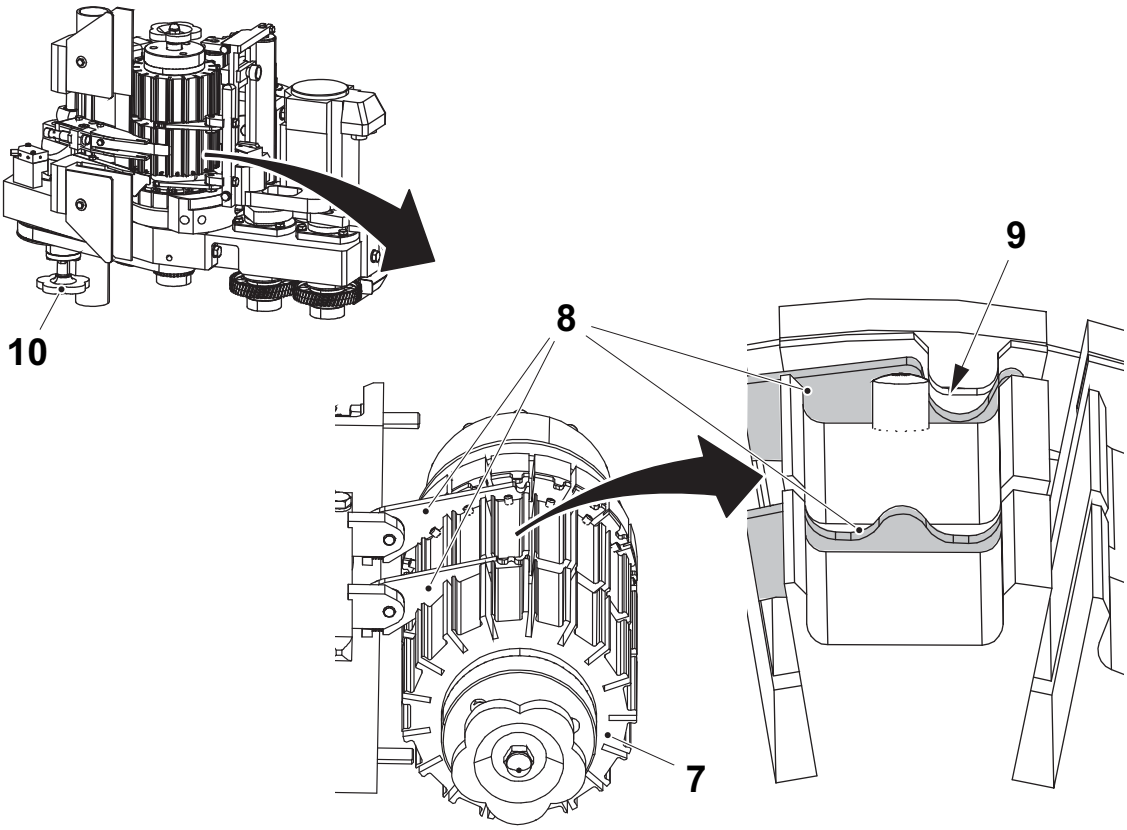

7 Feed wheel
8 Pressure arm
9 Slot
10 Stellar knob

(Cont'd)

(Cont'd)

h) Confirm the changing by pressing the CONFIRMATION button (6), or just press DESELECT (11) if no change was made.

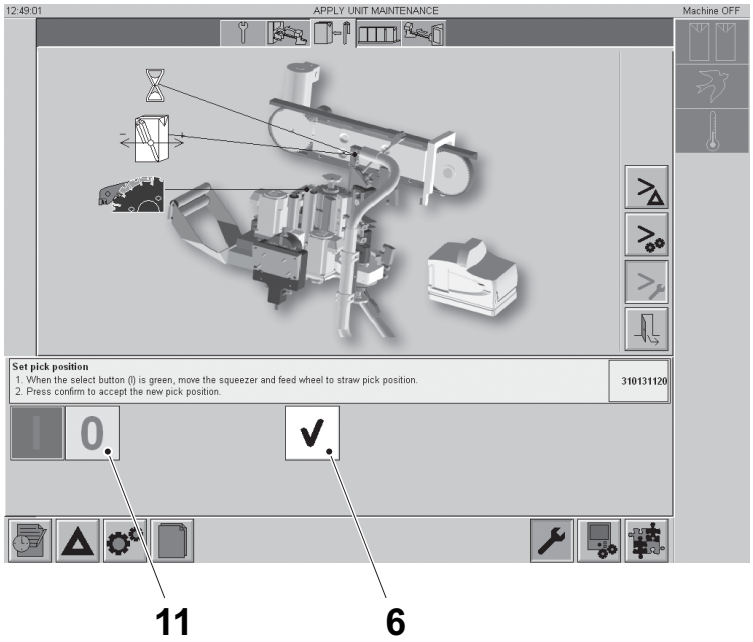

6 CONFIRMATION
11 DESELECT

7.1.2-3 Maintenance - Set Discharge Unit

Machine status	Power supply disconnector ON Air valve ON Machine status PREHEATING

a) In the button bar, press the MAINTENANCE button (1) to display the maintenance window (2).

b) Press the DISCHARGE UNIT button (3).

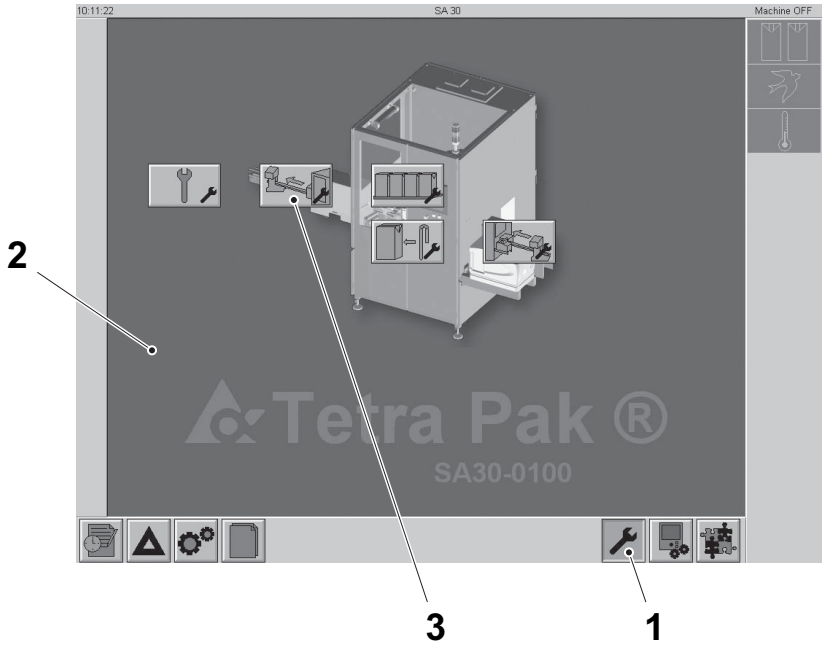

1 MAINTENANCE
2 Maintenance window
3 DISCHARGE UNIT

(Cont'd)

(Cont'd)

c) In the discharge unit maintenance window it is possible to set the discharge speed factor (4) and the discharge conveyor length (5).

d) Press one of the symbols to show the corresponding setting display (6).

e) Use the ARROW buttons (7) to set the desired value.

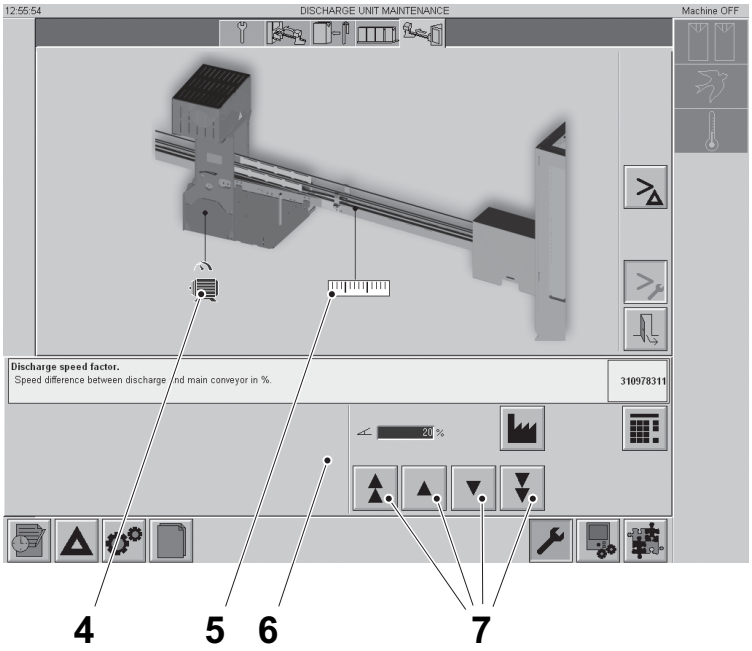

4 Discharge speed factor
5 Discharge conveyor length
6 Setting display
7 ARROW

7.1.2-4 Maintenance - Set Infeed Unit Parameters

Machine status	Power supply disconnector ON Air valve ON Machine status PREHEATING

a) In the button bar, press the MAINTENANCE button (1) to display the maintenance window (2).

b) Press the INFEED UNIT button (3).

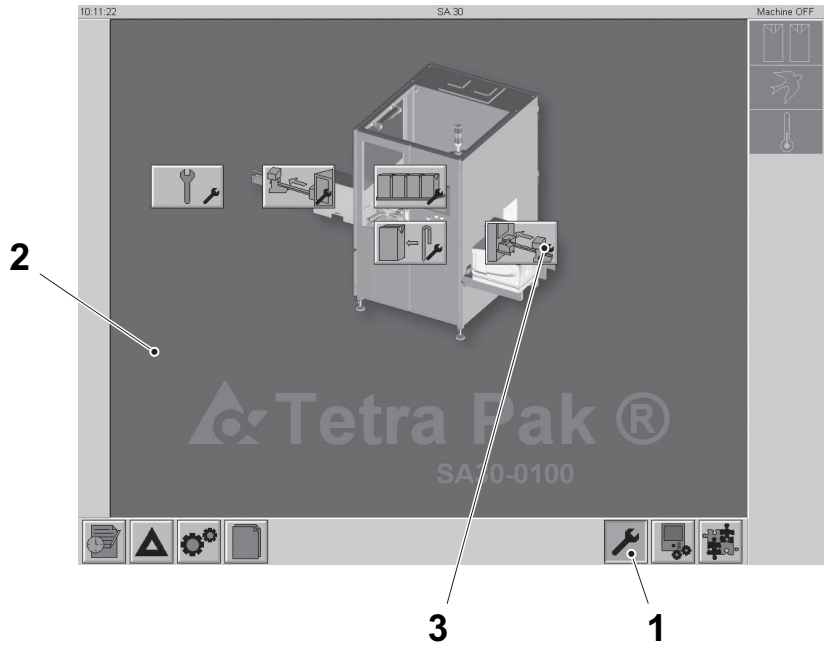

1 MAINTENANCE
2 Maintenance window
3 INFEED UNIT

(Cont'd)

(Cont'd)

c) If the machine is equipped with an infeed conveyor, it is possible to set the infeed conveyor length (4) and the speed factor. (5).

d) Press one of the symbols to show the corresponding setting display (6).

e) Use the ARROW buttons (7) to set the desired value.

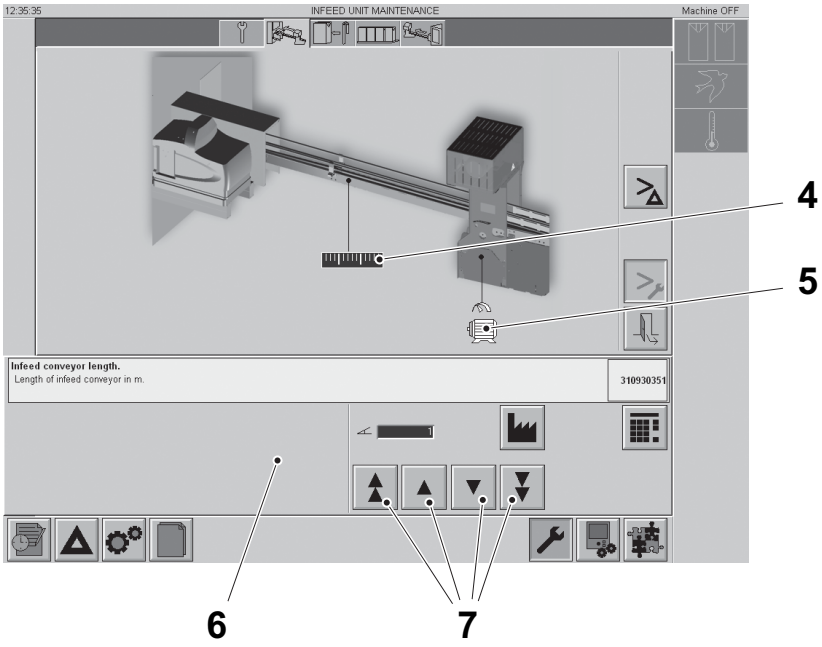

4 Infeed conveyor length
5 Speed factor
6 Setting display
7 ARROW

7.1.2-5 Maintenance - Set Package Unit Parameters

Machine status	Power supply disconnector ON Air valve ON Machine status PREHEATING

a) In the button bar, press the MAINTENANCE button (1) to display the maintenance window (2).

b) Press the PACKAGE UNIT button (3).

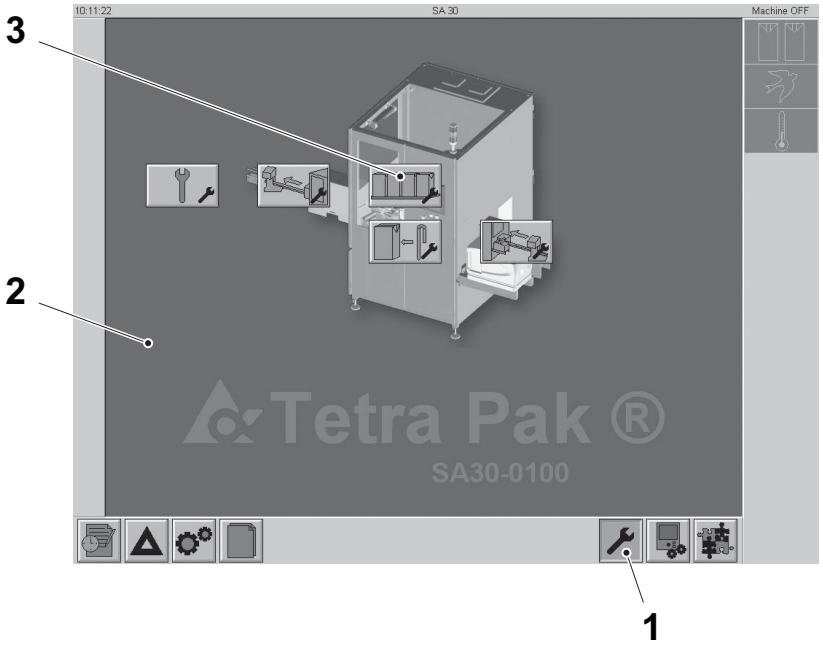

1 MAINTENANCE
2 Maintenance window
3 PACKAGE UNIT

(Cont'd)

(Cont'd)

c) In the package unit maintenance window it is possible to set the speed parameters (4), the queue alarm activation delay (5), and the gap size (6). The speed parameter is only set the first time the machine starts.

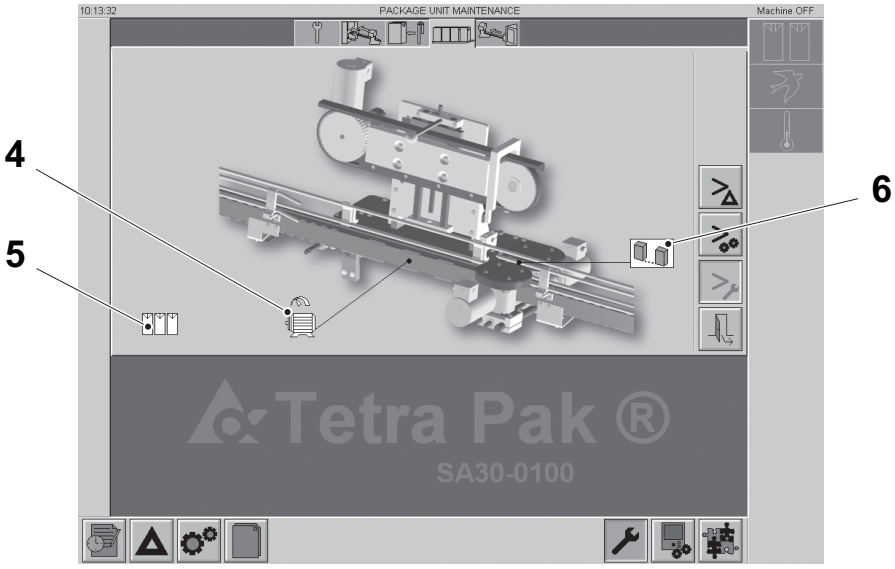

4 Set speed parameters
5 Queue alarm activation delay
6 Gap size

(Cont'd)

(Cont'd)

Set Speed Parameters

d) Press the set speed parameter icon (6).

e) Press the SELECT button (7).

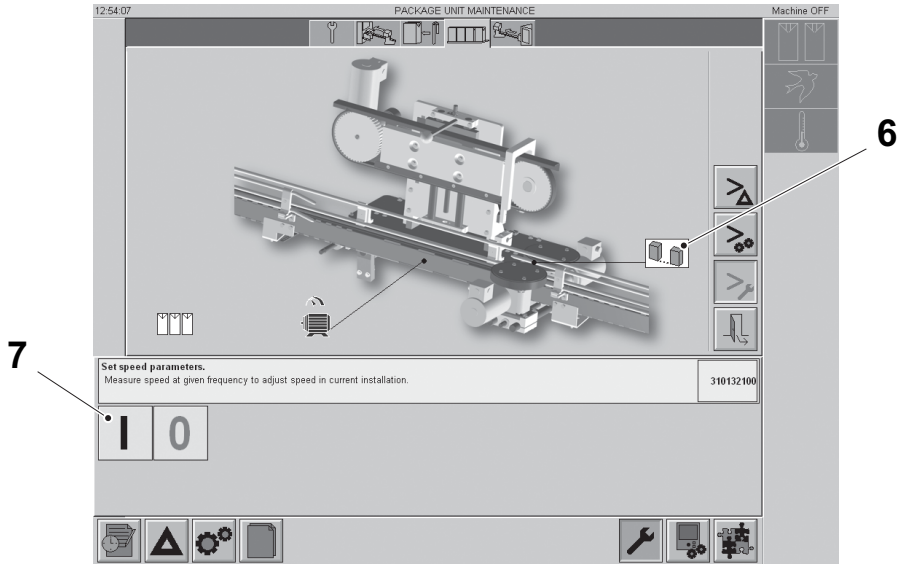

6 Set speed parameters
7 SELECT

(Cont'd)

(Cont'd)

f) Press the FREQUENCY button (8) to select a value to set.

g) To measure the speed of the main conveyor, use a tachometer.

h) Measure the speed at 20 Hz to 90 Hz, in steps of 10 Hz. Change the frequency (8) by the ARROW buttons (10).

i) Enter the measured speed value for each step on the display (9).

j) Confirm the setting by pressing the NEXT FREQUENCY button (11).

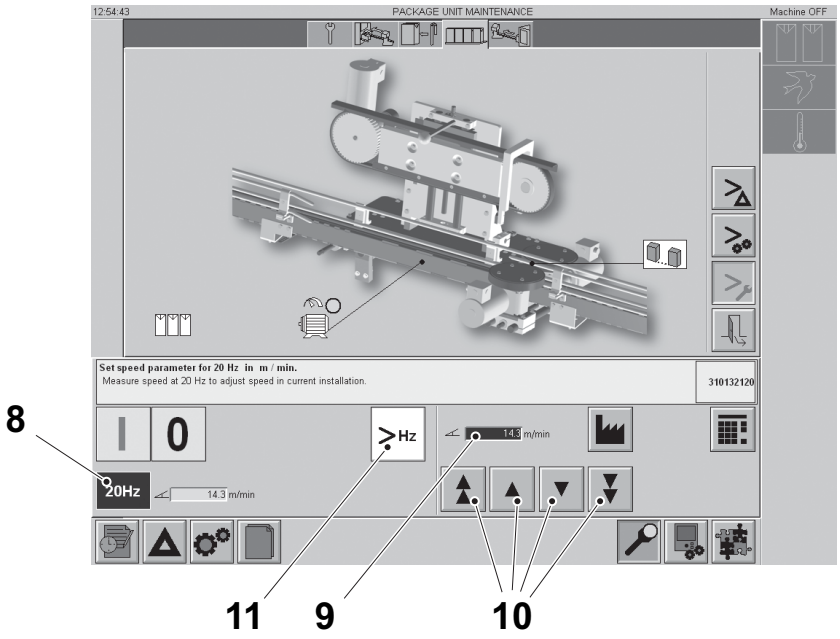

8 FREQUENCY
9 Speed of main conveyor
10 ARROW
11 NEXT FREQUENCY

7.1.3 Setup

7.1.3-1 Setup - Add Language

Machine status	Power supply disconnector ON Air valve ON

a) In the button bar, press the SETUP button (1) to display the setup window (2).

b) Press the LANGUAGE button (3) to add a new language.

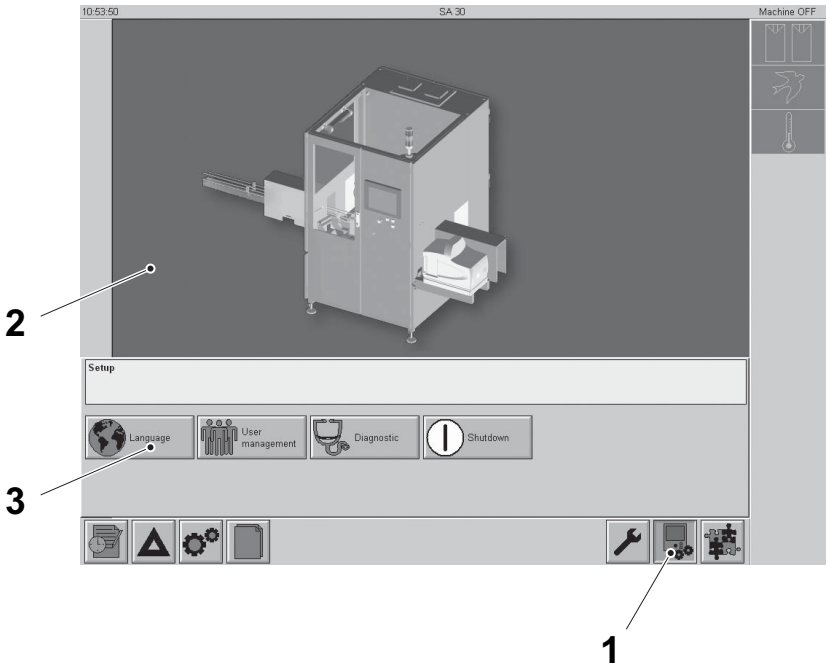

1 CONFIGURATION
2 Setup window
3 LANGUAGE

(Cont'd)

(Cont'd)

c) Press the ADD LANGUAGE button to add a new language.

d) Press one of the grey LANGUAGE buttons that shows on the screen. Keep pressing the button until the language that is to be added shows.

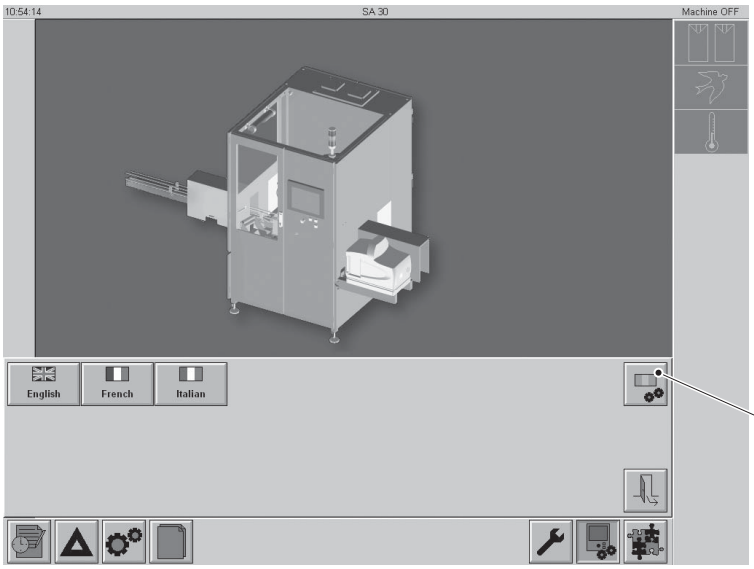

4 ADD LANGUAGE

7.1.3-2 Setup - Change User Settings

Machine status	Power supply disconnector ON Air valve ON

a) In the button bar, press the SETUP button (1) to display the setup window (2).

b) Press the USER MANAGEMENT button (3).

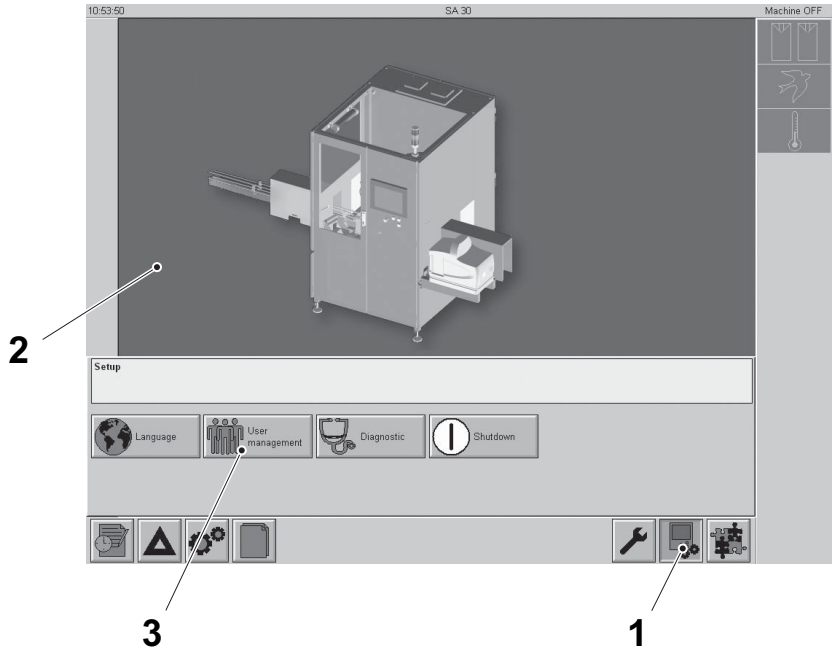

1 SETUP
2 Setup window
3 USER MANAGEMENT

(Cont'd)

(Cont'd)

c) Press the LOG-OUT button (4) to log out, the LOG-IN button (5) to log in, or the CHANGE PASSWORD button (6) to change password (if available).

Note! After 5 minutes of inactivity on the TPOP the user is automatically logged out.

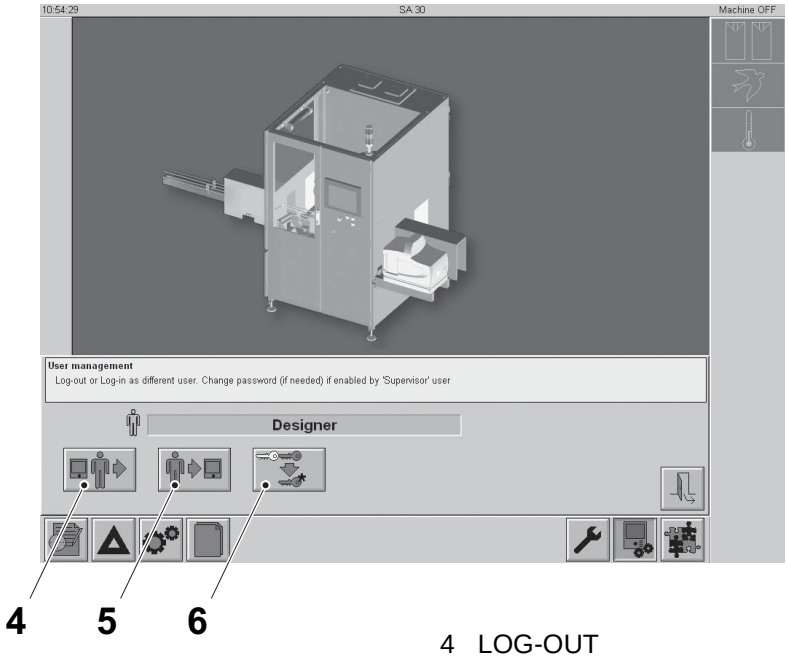

4 LOG-OUT
5 LOG-IN
6 CHANGE PASSWORD

7.1.3-3 Setup - Check Diagnostic

Machine status	Power supply disconnector ON Air valve ON

a) In the button bar, press the SETUP button (1) to display the setup window (2).

b) Press the DIAGNOSTIC button (3) to display the diagnostic list (4). The list contains all events in the running application and can be useful for troubleshooting.

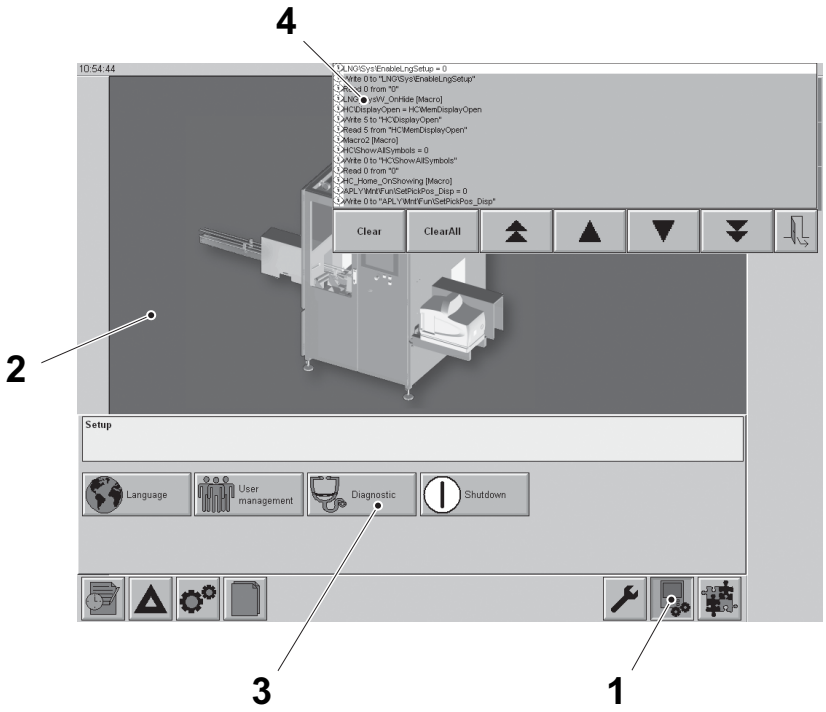

1 SYSTEM SETTING
2 System setting window
3 DIAGNOSTIC
4 Diagnostic list

7.1.3-4 Setup - Shut Down

Machine status	Power supply disconnector ON Air valve ON

a) In the button bar, press the SETUP button (1) to display the setup window (2).

b) Press the SHUT DOWN button (3) to shut down the control panel.

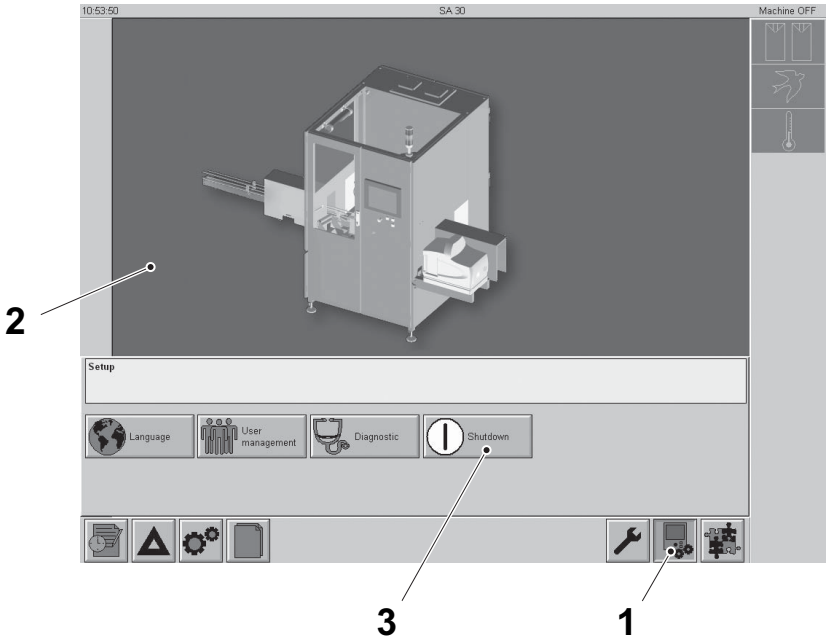

1 SYSTEM SETTING
2 System setting window
3 SHUT DOWN

(Cont'd)

(Cont'd)

c) Press the CONFIRMATION button (4) to shut down, or the CANCEL button (5) to cancel.

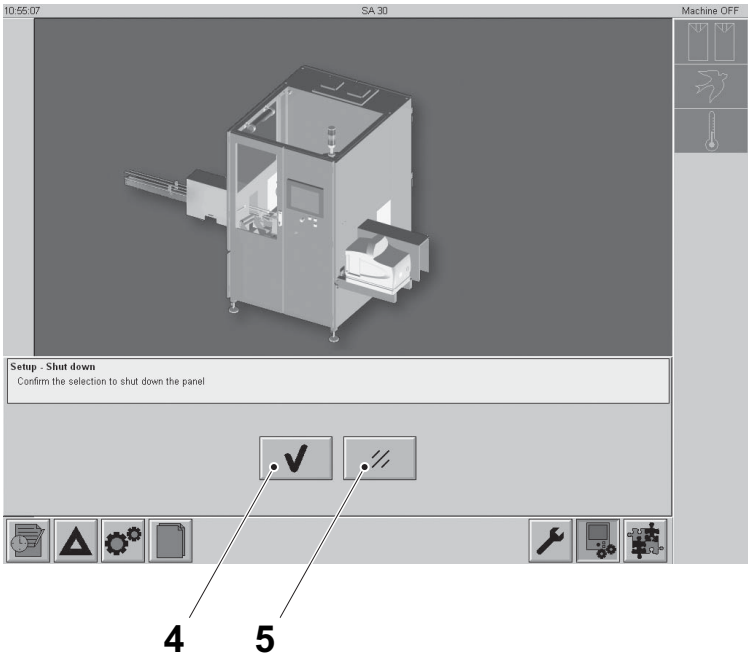

4 CONFITRMATION
5 CANCEL

7.1.4 Configuration

7.1.4-1 Configuration - Change PLMS Communication

Machine status	Power supply disconnector ON Air valve ON

a) In the button bar, press the CONFIGURATION button (1) to display the configuration window (2).

b) Press the PLMS symbol (3) to change the communication type (4).

c) Use the ARROW buttons (5) to change the communication type (4) according to the current type of filling machine.

d) Confirm the setting with the CONFIRMATION button (6) or press the CANCEL button (7) to abort.

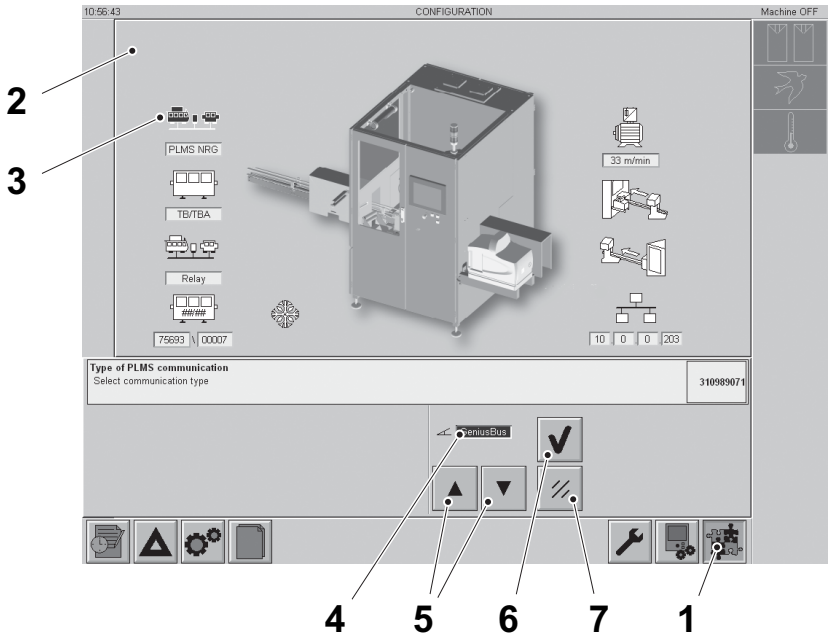

1 CONFIGURATION
2 Configuration window
3 PLMS
4 Communication type
5 ARROW
6 CONFIRMATION
7 CANCEL

7.1.4-2 Configuration - Change Package Type

Machine status	Power supply disconnector ON Air valve ON

a) In the button bar, press the CONFIGURATION button (1) to display the configuration window (2).

b) Press the Package type symbol (3) to change the package type (4).

c) Use the ARROW buttons (5) to change the package type (4).

d) Confirm the setting with the CONFIRMATION button (6) or press the CANCEL button (7) to abort.

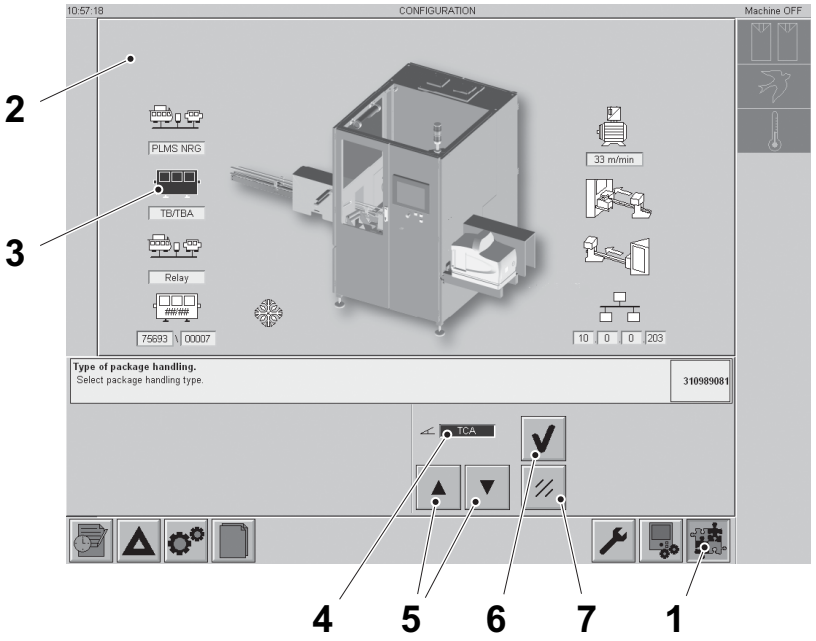

1 CONFIGURATION
2 Configuration window
3 Package type
4 Communication type
5 ARROW
6 CONFIRMATION
7 CANCEL

7.1.4-3 Configuration - Set Line Communication

Machine status	Power supply disconnector ON Air valve ON

a) In the button bar, press the CONFIGURATION button (1) to display the configuration window (2).

b) Press the line communication symbol (3).

c) Choose type of line communication (4) if the machine uses photocells, relays, or other. If the machine is controlled by Line Controller (LC), this setting is automatically set and no setting has to be made.

d) Use the ARROW buttons (5) to change the type of line communication (4).

e) Confirm the setting with the CONFIRMATION button (6) or press the CANCEL button (7) to abort.

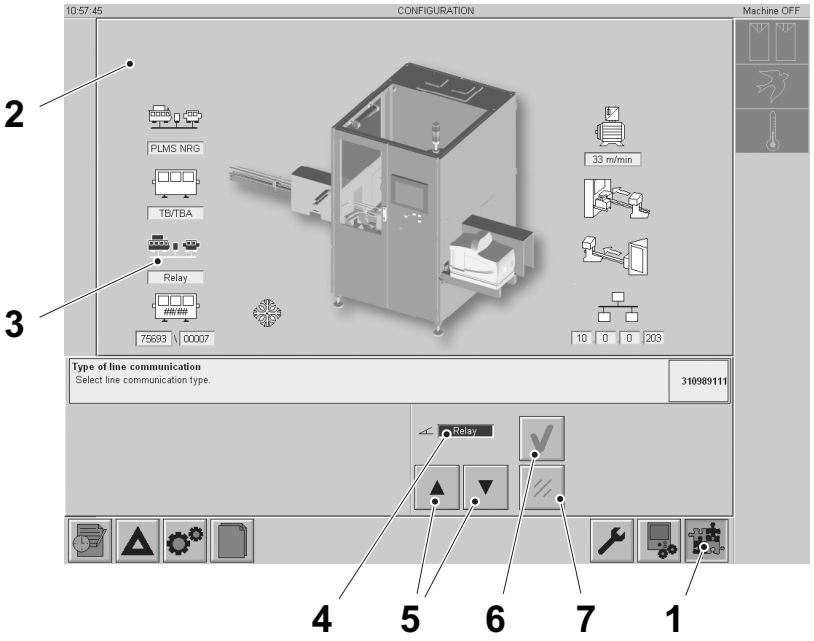

1 CONFIGURATION
2 Configuration window
3 Line communication
4 Type of line communication
5 ARROW
6 CONFIRMATION
7 CANCEL

7.1.4-4 Configuration - Change Conveyor Velocity

Machine status	Power supply disconnector ON Air valve ON

a) In the button bar, press the CONFIGURATION button (1) to display the configuration window (2).

b) Press the conveyor handling symbol (3).

c) Use the ARROW buttons (4) to edit the conveyor velocity (5).

d) Confirm the setting with the CONFIRMATION button (6) or press the CANCEL button (7) to abort.

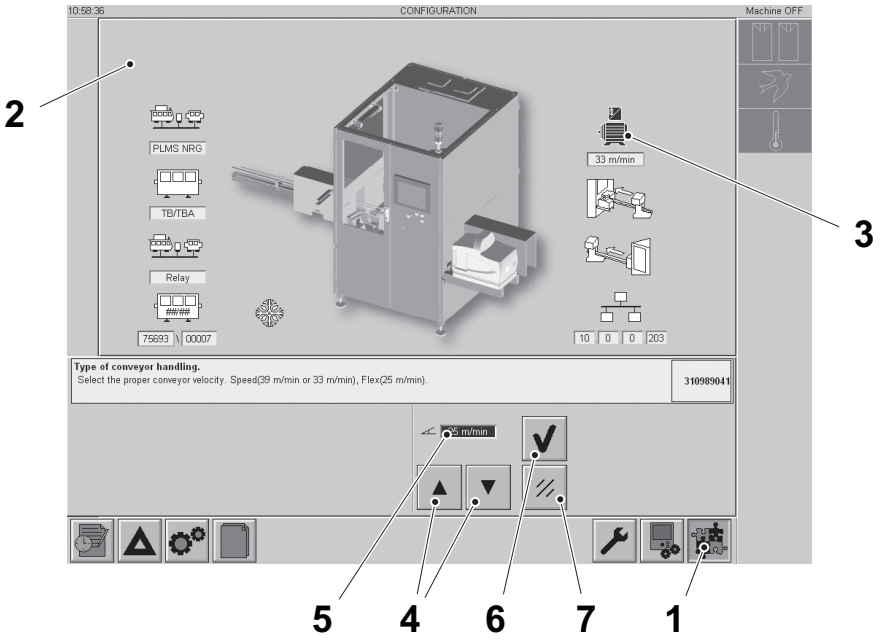

1 CONFIGURATION
2 Configuration window
3 Conveyor handling
4 ARROW
5 Conveyor velocity
6 CONFIRMATION
7 CANCEL

7.1.4-5 Configuration - Change IP Address

Machine status	Power supply disconnector ON Air valve ON

a) In the button bar, press the CONFIGURATION button (1) to display the configuration window (2).

b) Press the IP address symbol (3).

c) To change the IP address, choose one of the FIELD buttons (4) to (7). The FIELD 1-button (4) corresponds to address part 1 (8), The FIELD 2-button (5) corresponds to address part 2 (9), and so on.

d) To set the value (12) use the ARROW buttons (13) or the KEYPAD button (14).

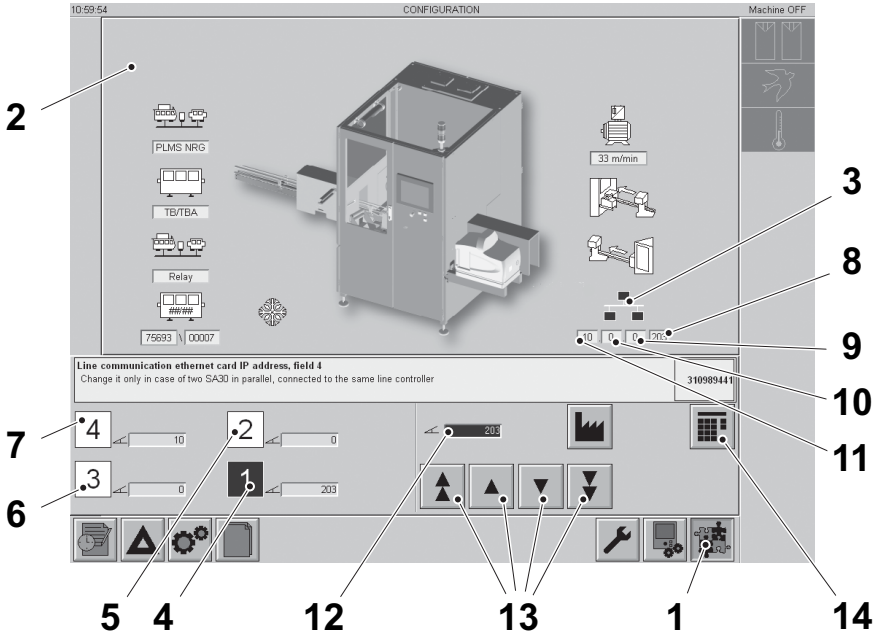

1 CONFIGURATION
2 Configuration window
3 IP address
4 FIELD 1
5 FIELD 2
6 FIELD 3
7 FIELD 4
8 Address part 1
9 Address part 2
10 Address part 3
11 Address part 4
12 Value
13 ARROW
14 KEYPAD

7.2 TPOP Control Panel Tetra Classic Aseptic, TCA

7.2.1 TPOP - System Settings

7.2.1-1 User

Machine Status	Power supply disconnector ON Air valve ON

a) In the button bar, press the SYSTEM SETTING button (1).

b) Press the USER button (2) to log in as a user or to change user.

Note! After 5 minutes of inactivity on the TPOP the user is automatically logged out.

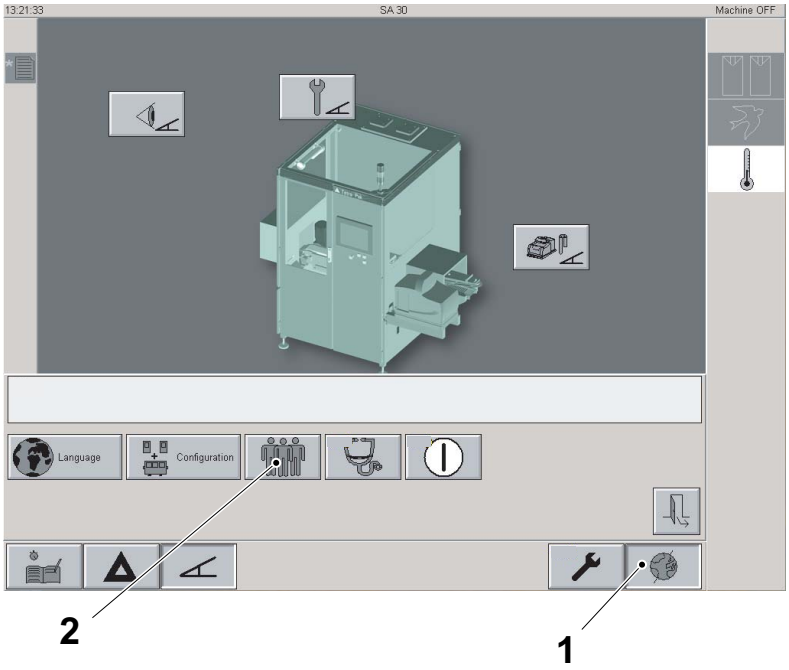

1 SYSTEM SETTING
2 USER

7.2.1-2 Configuration

Machine Status	Power supply disconnector ON Air valve ON

a) In the button bar, press the SYSTEM SETTING button (1).

b) Press the CONFIGURATION button (2) to display the configurations of the machine.

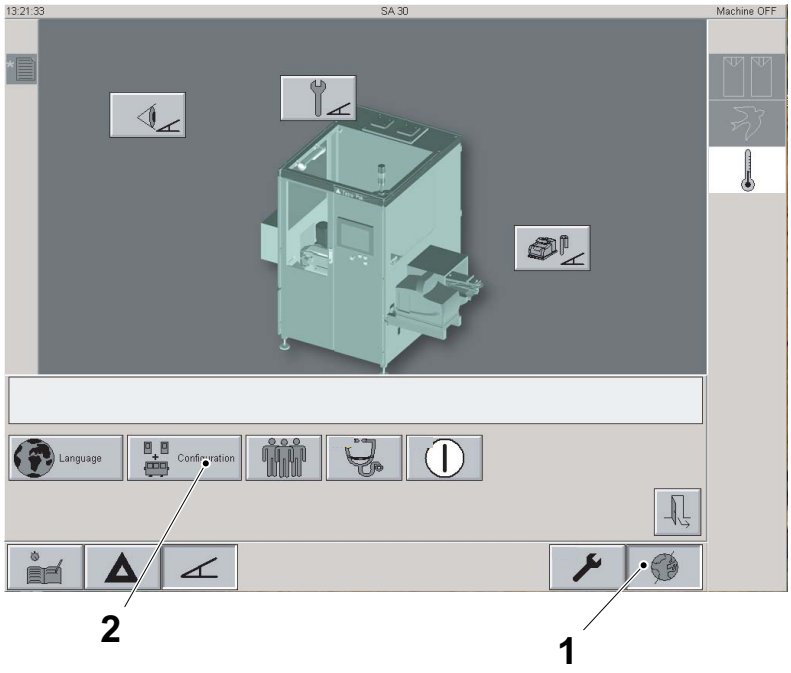

1 SYSTEM SETTING
2 CONFIGURATION

(Cont'd)

(Cont'd)

c) In the configuration window it is possible to change the configurations of the machine. The settings that are possible to make are the buttons (3) to (7) in the illustration below.

d) Choose type of PLMS communication (3) according to the current type of filling machine.

e) Choose current type of package (4).

f) Choose type of line communication (5) if the machine uses photocells, relays, or other. If the machine is controlled by LC (Line Controller), this setting is automatically set.

Note! The machine number (6) should be set only once.

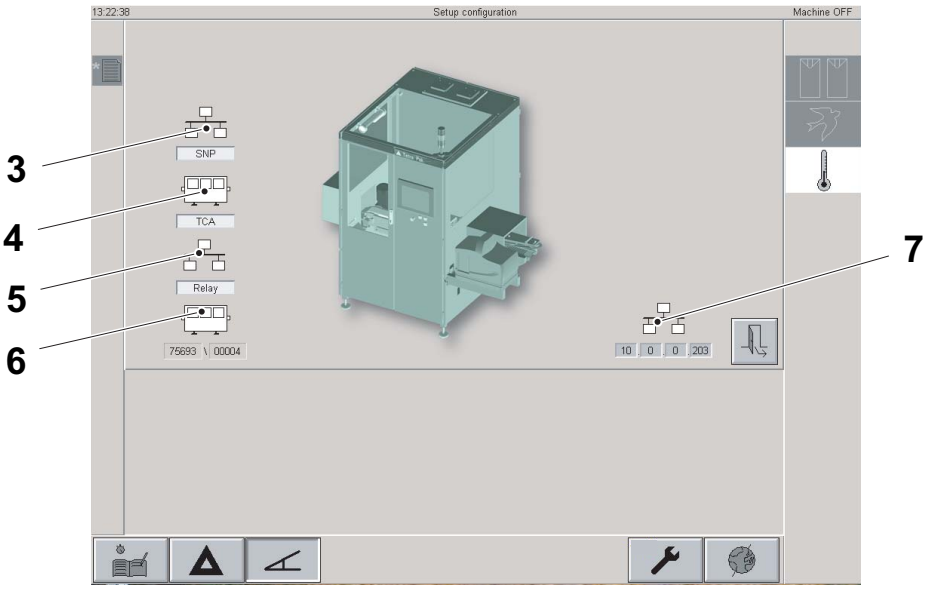

3 Type of PLMS communication (Production Line Monitoring System)
4 Type of package
5 Type of line communication
6 Machine number
7 IP-address setting

7.2.1-3 Diagnostic

Machine Status	Power supply disconnector ON Air valve ON

a) In the button bar, press the SYSTEM SETTING button (1).

b) Press the DIAGNOSTIC button (2) to display the diagnostic list. The list contains all events in the running application and can be useful for troubleshooting.

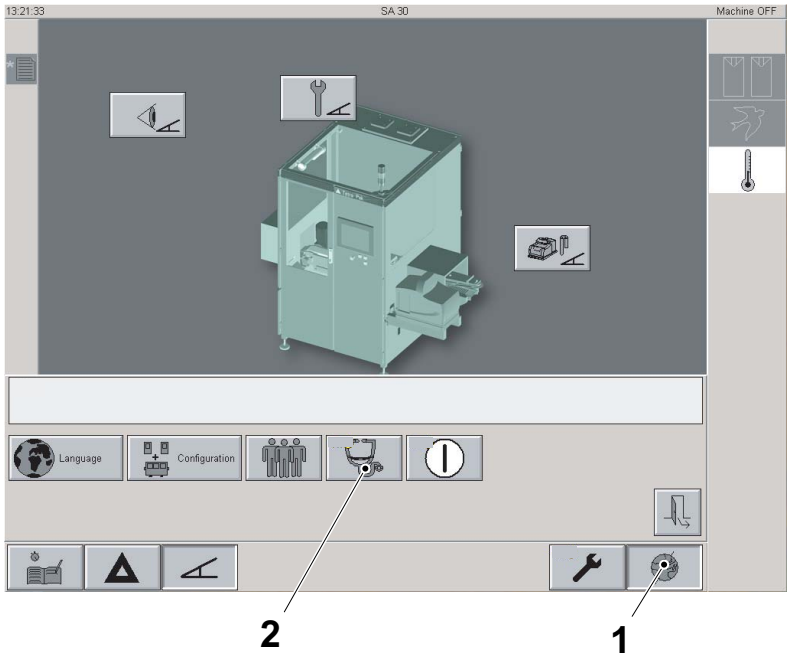

1 SYSTEM SETTING
2 DIAGNOSTIC

7.2.1-4 Shut down

Machine Status	Power supply disconnector ON Air valve ON

a) In the button bar, press the SYSTEM SETTING button (1).

b) Press the SHUT DOWN button (2) to shut down the control panel.

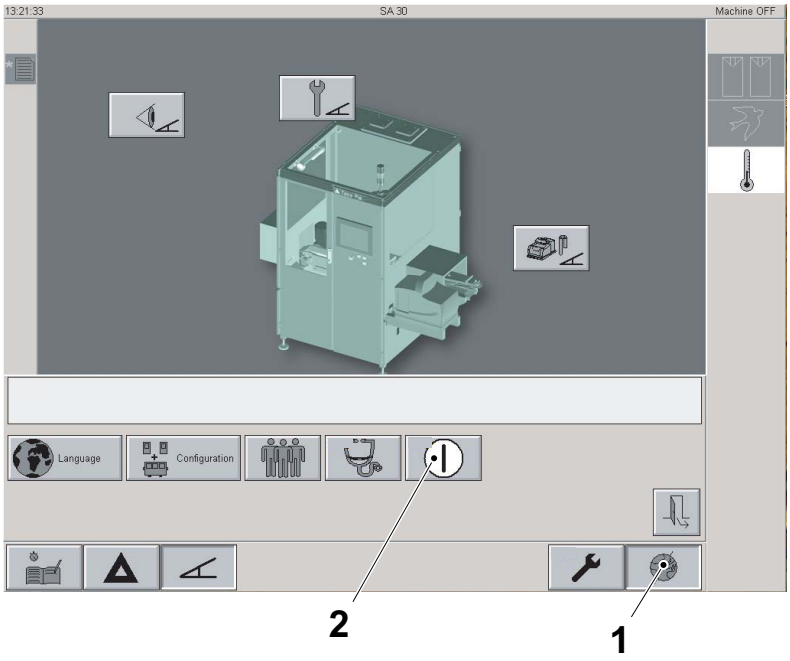

1 SYSTEM SETTING
2 SHUT DOWN

7.2.2 TPOP - Settings

7.2.2-1 Set Recipe

Machine Status	Power supply disconnector ON Air valve ON

a) In the button bar, press the SETTING button (1) to display the setting window.

b) In the setting window, press the RECIPE button (2).

c) Step the machine to PREHEATING.

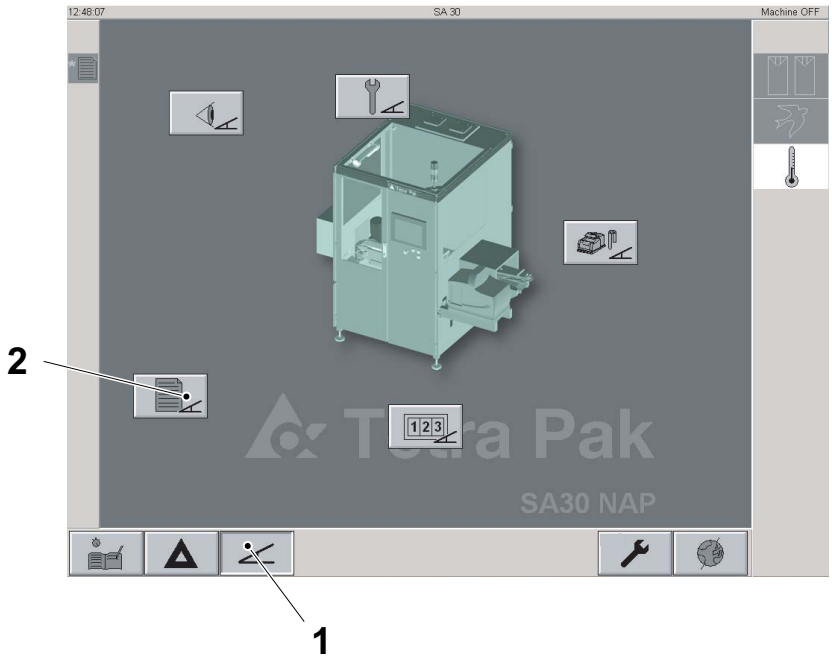

1 SETTING
2 RECIPE

(Cont'd)

(Cont'd)

d) Press the OPEN button (3) to open an existing recipe or the NEW RECIPE button (4) to create a new recipe.

Open an Existing Recipe

e) Choose a recipe in the list by using the ARROW buttons, and press the CONFIRMATION button (5) to select the recipe. Press the CANCEL button (6) to abort the selection.

Create a New Recipe

f) Press a symbol in the recipe window (7) to change the corresponding setting. The settings that are possible to select are the buttons (8) to (12) in the illustration below. Use the ARROW buttons or the keypad to change the settings.

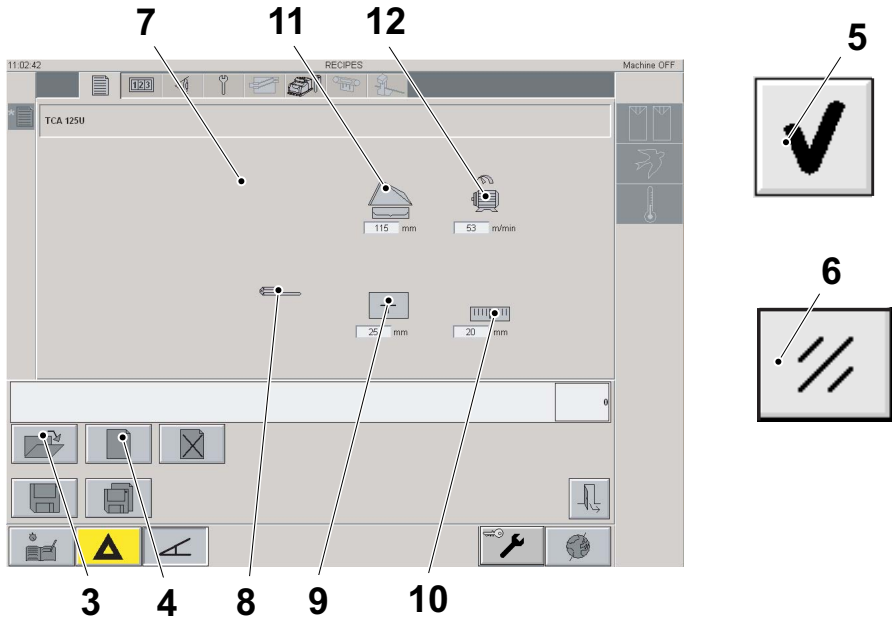

3 OPEN
4 NEW RECIPE
5 CONFIRMATION
6 CANCEL
7 Recipe window
8 Straw mode
9 Glue start position
10 Glue length
11 Package length
12 Speed of main conveyor

(Cont'd)

(Cont'd)

Save Current Recipe

g) Press the SAVE button (13) to save the current recipe.

Save Recipe with New Name

h) Press the SAVE AS button (14) to save the recipe with a new name.

i) Press the CONFIRMATION button (5) to start saving the recipe or press the CANCEL button (6) to abort the saving.

j) Type the recipe name with the keyboard and press ENTER.

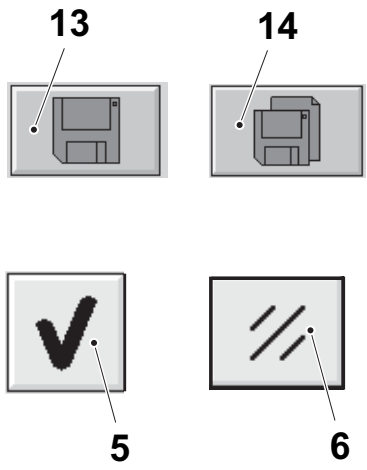

5 CONFIRMATION
6 CANCEL
13 SAVE
14 SAVE AS

7.2.3 TPOP - Maintenance

7.2.3-1 Apply Unit Maintenance

Machine Status	Power supply disconnector ON Air valve ON

a) In the button bar, press the MAINTENANCE button (1).

b) Press the APPLY UNIT button (2).

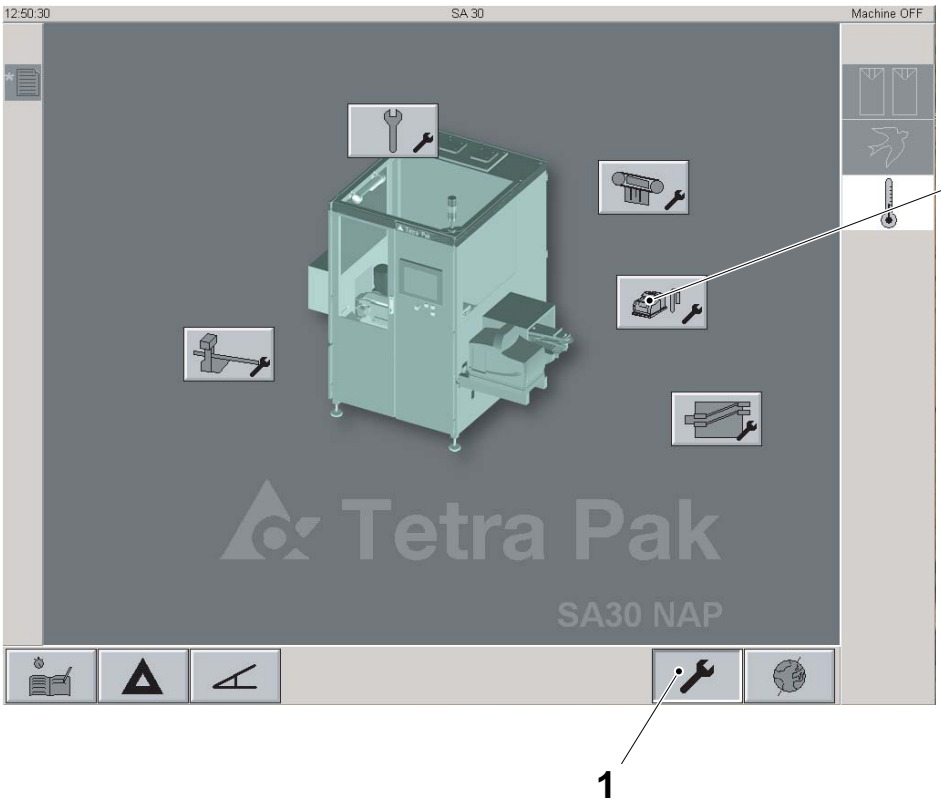

1 MAINTENANCE
2 APPLY UNIT

(Cont'd)

(Cont'd)

c) In the apply unit maintenance window it is possible to set the glue position (3).

d) Press the icon (3) to show the setting display. The settings that are available are glue start (4), and glue length on package (5).

e) Use the ARROW buttons (6) to set the desired values.

f) Confirm the setting with the CONFIRMATION button (7).

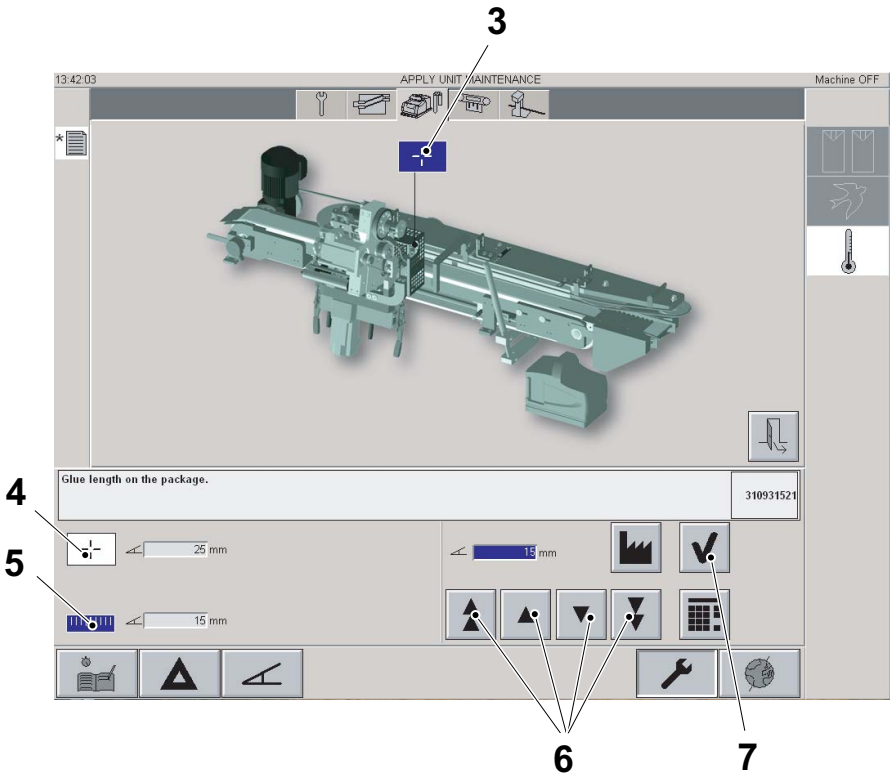

3 Glue position
4 Glue start position
5 Glue length
6 ARROW
7 CONFIRMATION

7.2.3-2 Discharge Unit Maintenance

Machine status	Power supply disconnector ON Air valve ON

a) In the button bar, press the MAINTENANCE button (1).

b) Press the DISCHARGE UNIT button (2).

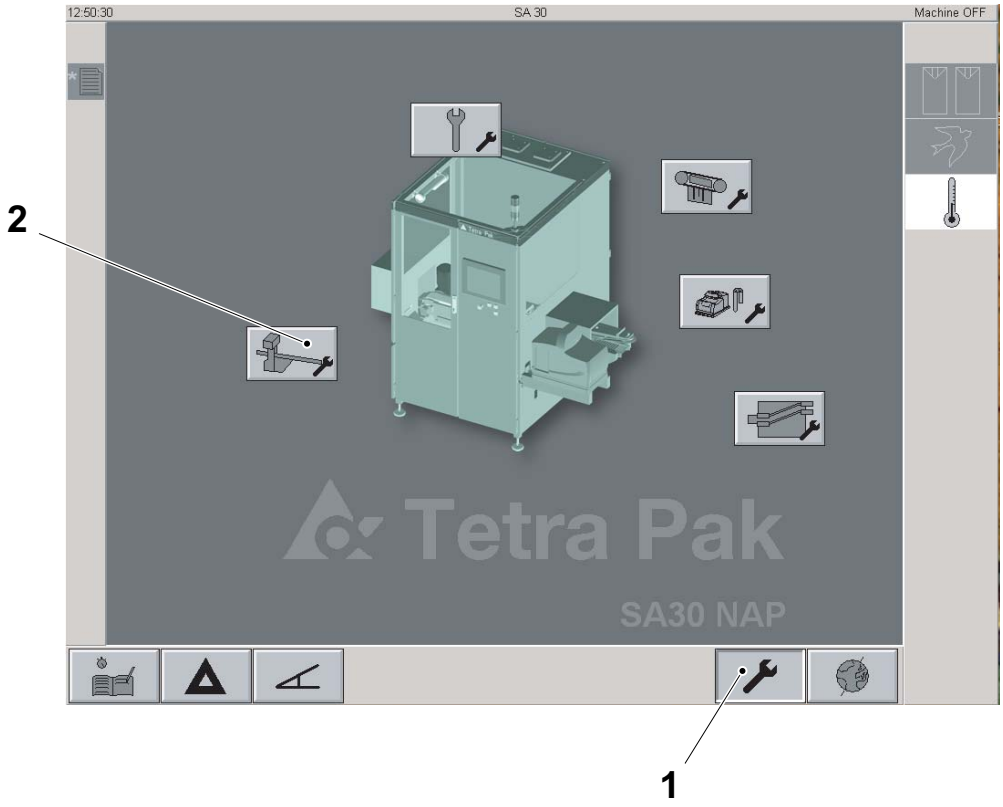

1 MAINTENANCE
2 DISCHARGE UNIT

(Cont'd)

(Cont'd)

c) In the discharge unit maintenance window it is possible to set the speed of the discharge conveyor (3).

d) Press the icon for discharge conveyor speed (4) to make adjustments.

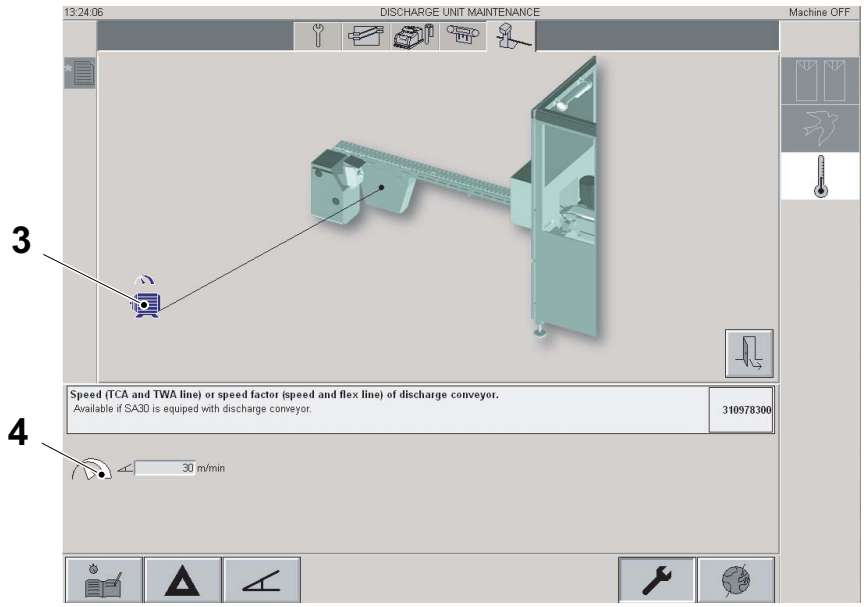

3 Speed of discharge conveyor
4 Speed of discharge conveyor

7.2.3-3 Infeed Unit Maintenance

Machine status	Power supply disconnector ON Air valve ON

a) In the button bar, press the MAINTENANCE button (1).

b) Press the INFEED UNIT button (2).

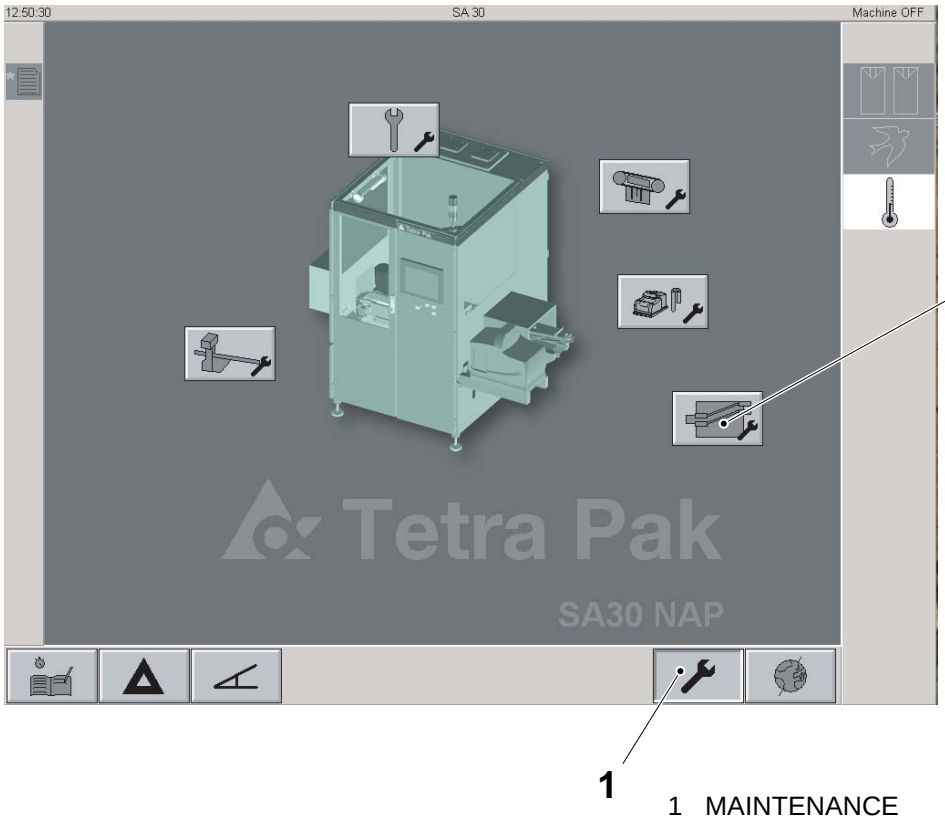

1 MAINTENANCE
2 INFEED UNIT

(Cont'd)

(Cont'd)

c) In the infeed unit maintenance window it is possible to set the speed of the infeed conveyor. (3).

d) Press the icon for infeed conveyor speed (4) to make adjustments.

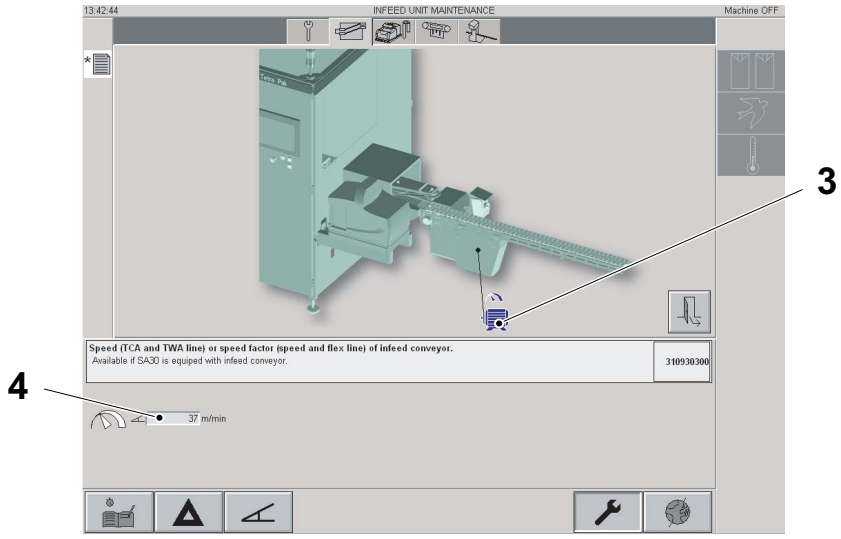

3 Speed of infeed conveyor
4 Speed of infeed conveyor

7.2.3-4 Package Unit Maintenance

Machine status	Power supply disconnector ON Air valve ON

a) In the button bar, press the MAINTENANCE button (1).

b) Press the PACKAGE UNIT button (2).

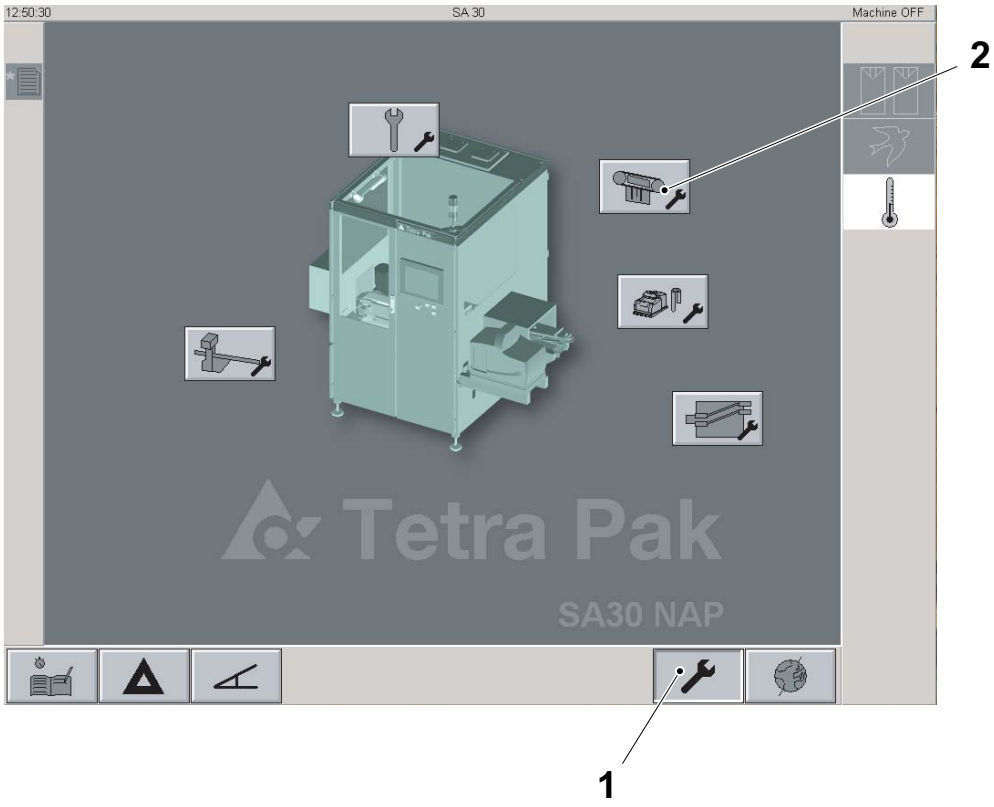

1 MAINTENANCE
2 PACKAGE UNIT

(Cont'd)

(Cont'd)

c) In the package unit maintenance window it is possible to set the speed of main conveyor (3).

d) Press the icon for main conveyor speed (3) to make adjustments. Use the ARROW buttons (4) to set the desired value.

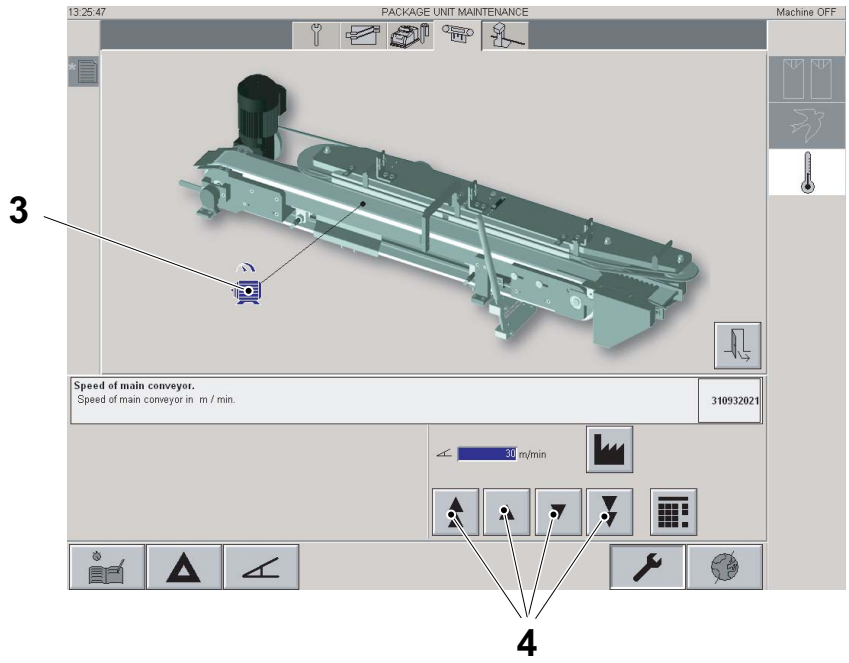

3 Speed of main conveyor
4 ARROW

This page intentionally left blank

8 Electrical Cabinet

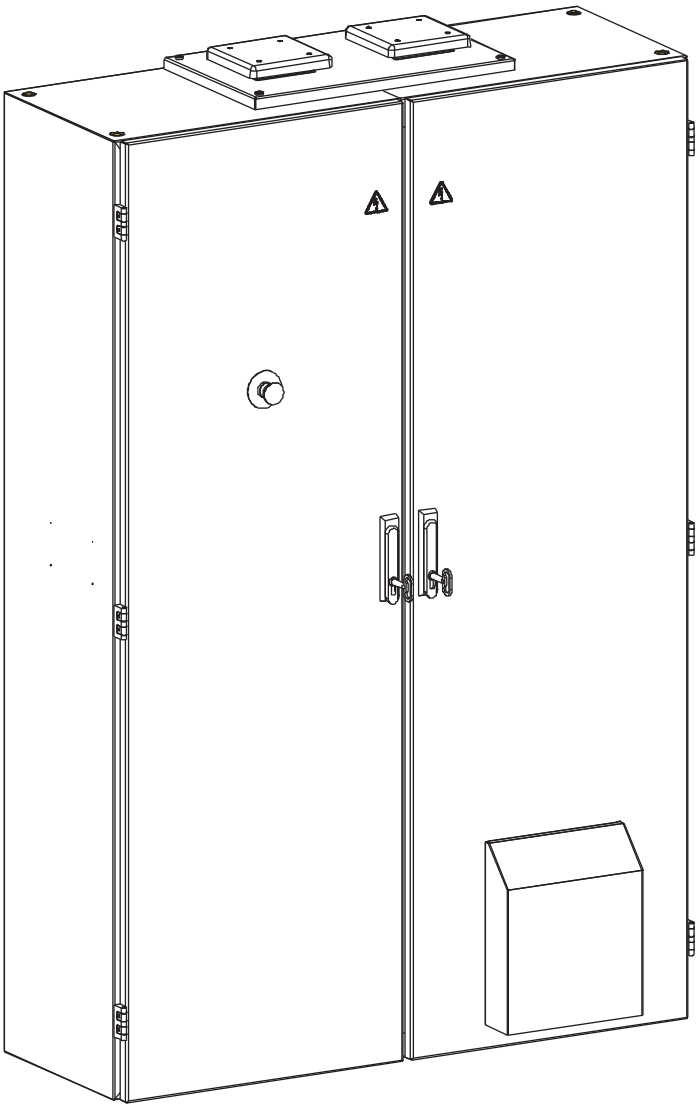

Electrical Cabinet - Description

SPC Reference	663308

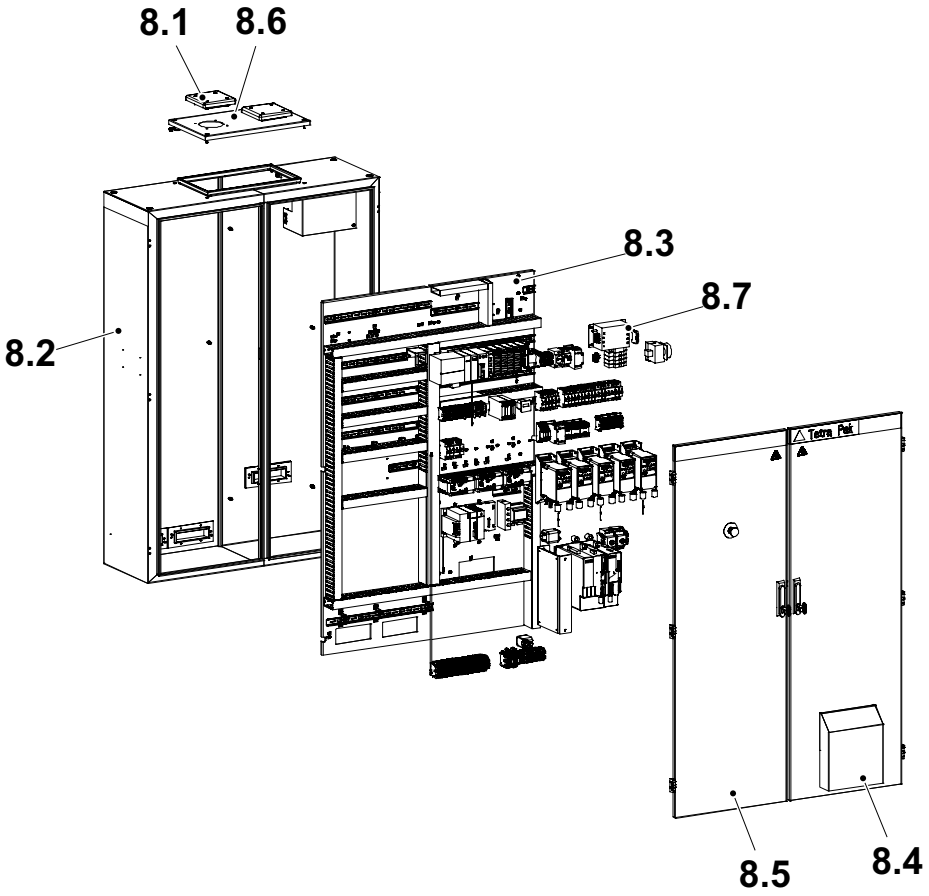

8.1 Cooling air outlet
8.2 Electrical cabinet
8.3 Mounting plate
8.4 El-cabinet door
8.5 El-cabinet door
8.6 Cover
8.7 Electric materials

8.1 Cooling Air Outlet . . . . . 8 - 5

8.1-1 Cooling Air Outlet - No Procedure Described . . . 8 - 5

8.2 Electrical Cabinet . . . . . 8 - 6

8.2-1 Electrical Cabinet - No Procedure Described . . . 8 - 6

8.3 Mounting Plate . . . . . 8 - 7

8.3-1 Mounting Plate- No Procedure Described . . . . . 8 - 7

8.4 El-Cabinet Door . . . . . 8 - 8

8.4-1 El-Cabinet Door - Check Filter Fan . . . . . 8 - 8

8.5 El-Cabinet Door . . . . . 8 - 9

8.5-1 El-Cabinet Door - No Procedure Described . . . . . 8 - 9

8.6 Cover . . . . . 8 - 10

8.6-1 Cover - No Procedure Described . . . . . 8 - 10

8.7 Electric Materials . . . . . 8 - 11

8.7.1 Electrical Materials. . . . . 8 - 11

8.7.1-1 Electrical Materials - Change Fuse on Overvoltage Protector . . . . . 8 - 11

8.7.1-2 Electrical Materials - Check Residual Current Device . . . . . 8 - 12

8.7.1-3 Electrical Materials - Reset Fuse in Miniature Circuit Breaker . . . . . 8 - 13

8.7.1-4 Electrical Materials - Description of Variable Frequency Drive . . . . . 8 - 14

8.7.1-5 Electrical Materials - Set Variable Frequency Drive . . . . . 8 - 15

8.7.1-6 Electrical Materials - Variable Frequency Drive Fault Codes . . . . . 8 - 18

8.7.1-7 Electrical Materials - Set Sercos Communication on Servo Amplifier . . . . . 8 - 20

8.7.1-8 Set Baud Node Address on Servo Amplifier . . . 8 - 21

8.7.1-9 Electrical Materials - Servo Amplifier Error Codes . . . . . 8 - 22

8.7.1-10 Electrical Materials - Change Fuse in PLC Power Supply . . . . . 8 - 29

8.7.1-11 Electrical Materials - Description of PLC SM2 8 - 30
8.7.1-12 Electrical Materials - Set Switches at PLC SM2 8 - 31
8.7.1-13 Electrical Materials - Set DIP Switch on SNP Converter . . . . . 8 - 32
8.7.1-14 Electrical Materials - Electrical Connection of SNP Converter . . . . . 8 - 33
8.7.1-15 Electrical Materials - Description of Safety System . . . . . 8 - 35
8.7.1-16 Electrical Materials - Set Address after Replacing an ID-FIX in Safety System . . . . . 8 - 36
8.7.1-17 Electrical Materials - Change Baud Rate, Error Code E26 in Safety System . . . . . 8 - 38
8.7.1-18 Electrical Materials - Change a Safety PLC in an Existing Application Afterwards in Safety System . . . . . 8 - 39
8.7.1-19 Electrical Materials - Download Program from a PC to a Safety PLC . . . . . 8 - 41
8.7.1-20 Electrical Materials - Safety System Error Codes . . . . . 8 - 44
8.7.1-21 Electrical Materials - Check Photocell . . . . . 8 - 45
8.7.1-22 Electrical Materials - Set Photocell Sensitivity . 8 - 46

8.1 Cooling Air Outlet

8.1-1 Cooling Air Outlet - No Procedure Described

SPC Reference	599749

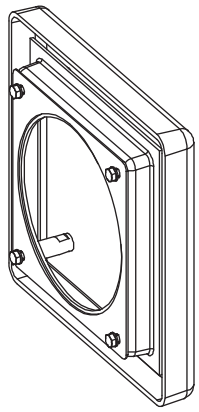

8.2 Electrical Cabinet

8.2-1 Electrical Cabinet - No Procedure Described

SPC Reference	2844515

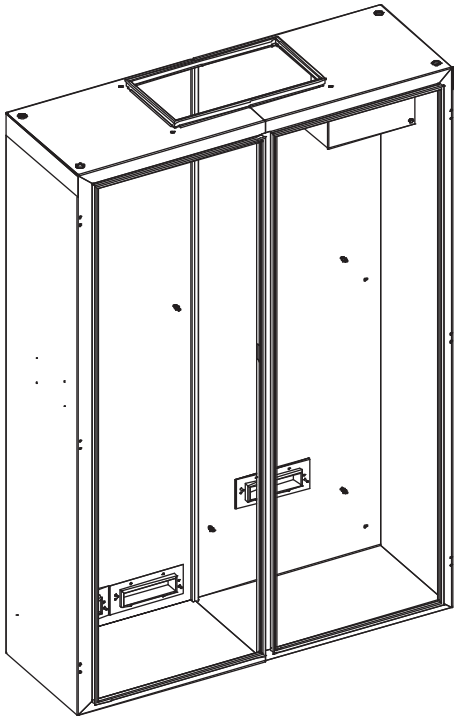

8.3 Mounting Plate

8.3-1 Mounting Plate- No Procedure Described

SPC Reference	2844517

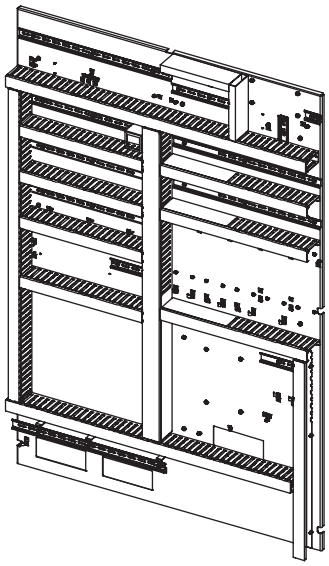

8.4 El-Cabinet Door

8.4-1 El-Cabinet Door - Check Filter Fan

Machine Status	Production
SPC Reference	2844518

Check while the filter fan (1) is running, that it is running without any noise from worn parts. Change if necessary.

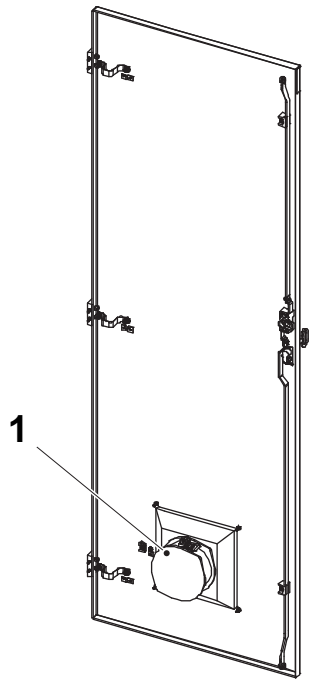

1 Filter fan

8.5 El-Cabinet Door

8.5-1 El-Cabinet Door - No Procedure Described

SPC Reference	2844519

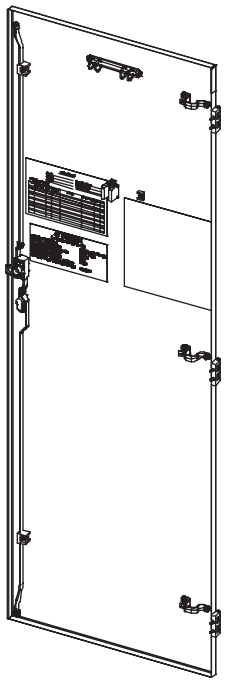

8.6 Cover

8.6-1 Cover - No Procedure Described

SPC Reference	2858602

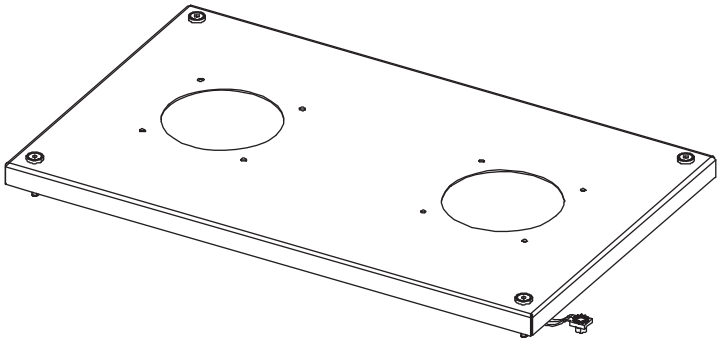

8.7 Electric Materials

8.7.1 Electrical Materials

8.7.1-1 Electrical Materials - Change Fuse on Overvoltage Protector

Machine Status	Power supply disconnector OFF Air valve OFF
SPC Reference	2844513

When one or more of the phases are subject to an overvoltage, the overvoltage protector (1) will break the power supply.

When a fuses has tripped, the colour in the indication windows (2) will also change from green to red.

Change all tripped fuses.

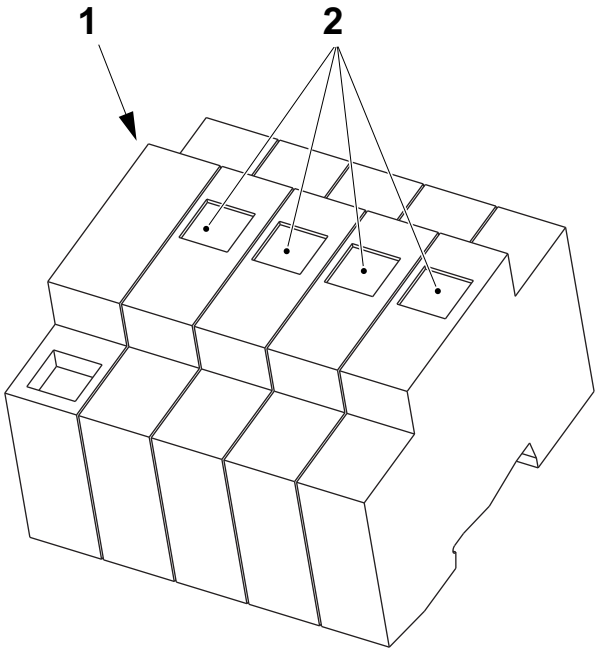

1 Overvoltage protector
2 Indication window

8.7.1-2 Electrical Materials - Check Residual Current Device

Machine Status	Power Supply Disconnector OFF Air Valve OFF
SPC Reference	2844513

DANGER

Hazardous voltage.
Electrical shock will cause death or serious injury. Change the residual current device (1) if it does not trip immediately.

Note! Test the function of the residual current device (1) by using the test button (2) monthly. The residual current device must always be tested before using the socket outlet (3).

a) Make sure that the switch (4) is ON.

b) Press the test button (2).

c) The residual current device must trip immediately; the switch (5) will jump to position OFF.

d) Turn back the switch (4) to position ON.

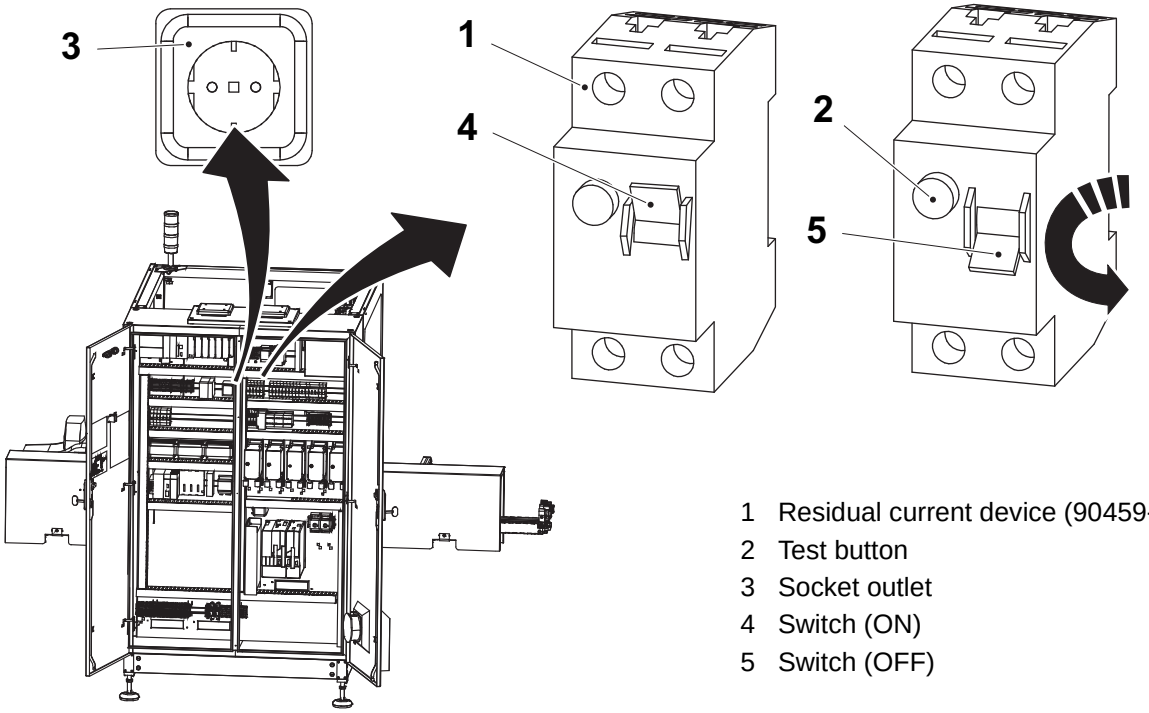

1 Residual current device (90459-5811)
2 Test button
3 Socket outlet
4 Switch (ON)
5 Switch (OFF)

8.7.1-3 Electrical Materials - Reset Fuse in Miniature Circuit Breaker

Machine Status	Power Supply Disconnector OFF Air valve OFF
SPC Reference	2844513

a) The fuse is tripped when the switch (1) is pointing downwards.

b) Turn back the switch (2) to ON.

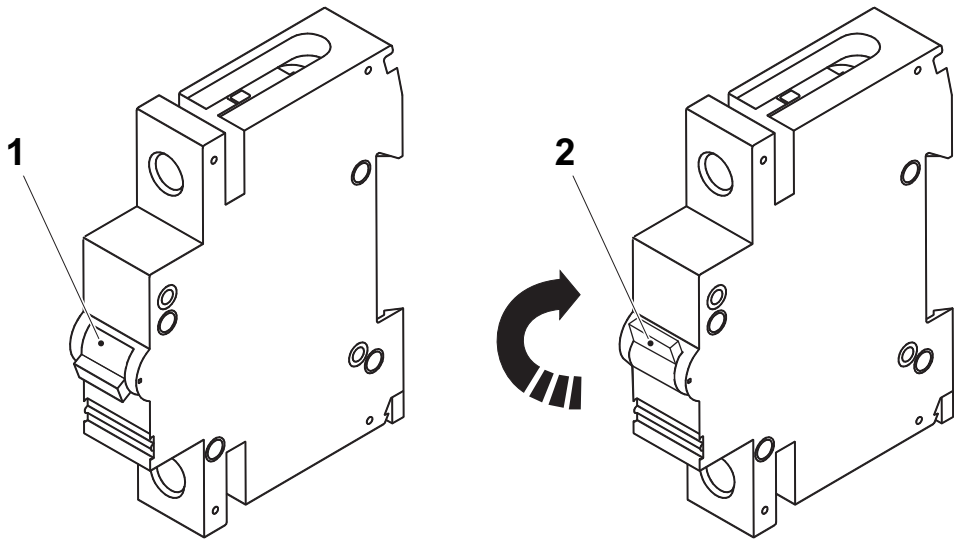

1 Switch (OFF)
2 Switch (ON)

8.7.1-4 Electrical Materials - Description of Variable Frequency Drive

SPC Reference	2844513

Controls

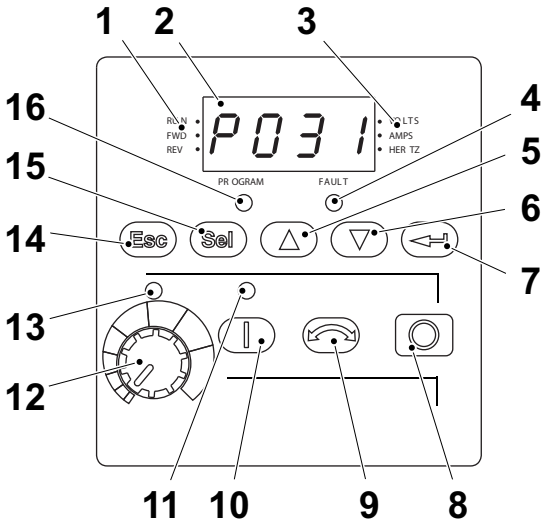

1 Running / Direction status LEDs
2 Display
3 Unit LEDs
4 Error status LED
5 Up / Increase frequency button
6 Down / Decrease frequency button
7 Enter button
8 Stop / Reset button
9 Reverse button
10 Start button
11 Start button status LED
12 Potentiometer
13 Potentiometer status LED
14 Escape button
15 Select button
16 Program status LED

8.7.1-5 Electrical Materials - Set Variable Frequency Drive

Machine Status	PREHEATING
SPC Reference	2844513

If the variable frequency drives is replaced, make sure to set the Parameter Values in the Advanced Program Group (A), according to the table Variable Frequency Drive Settings, TBA.

When the machine is stepped up the PLC automatically sets all other parameters to the variable frequency drives.

Set

a) Make sure the Sink/Source DIP switch (1) is set to SRC.

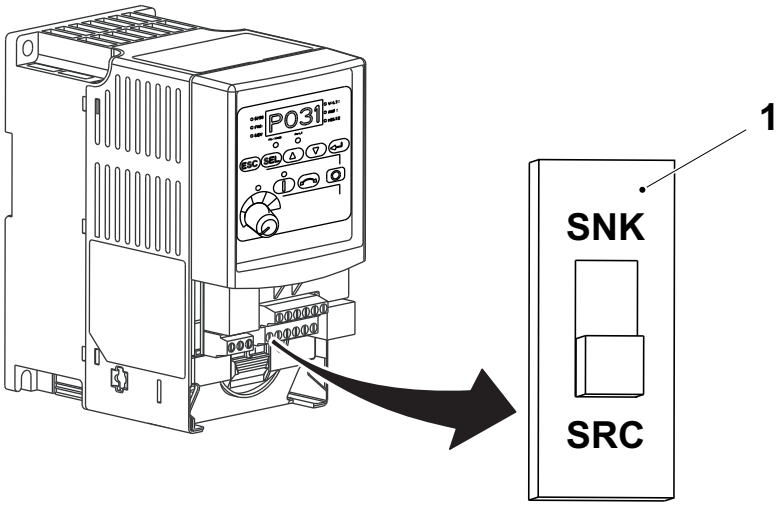

1 Sink/Source DIP switch

(Cont'd)

(Cont'd)

b) Press the ESC button (6) twice.The display (2) shows a letter and three digits, with the letter flashing. There are three parameter groups: **D** (display group), **P** (basic program group), and **A** (advanced program group).

c) Press the UP button (3) or the DOWN button (4) until the parameter group A is displayed. Press the ENTER button (5) to select that group.

d) Press the UP button or the DOWN button to select a parameter to set.

e) Press the ENTER button to view the current value of the selected parameter.

f) Press the UP button or the DOWN button to change the value of the parameter.

g) Press ENTER button to confirm and set the new value, or press the ESCAPE button (6) to leave the value unchanged and return to item d).

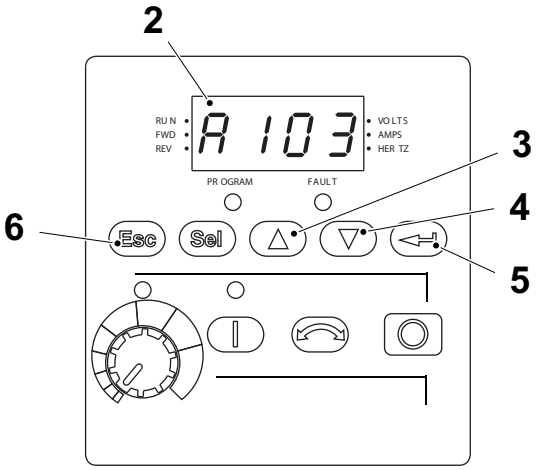

2 Display
3 UP / Increase frequency button
4 DOWN / Decrease frequency button
5 ENTER button
6 ESCAPE button

(Cont'd)

(Cont'd)

Variable Frequency Drive Settings, TBA

Variable Frequency Drive	Parameter		
	A103 (Baud Rate)	A104 (Node Address)	P036 (Start Source)
W10T1010	4	10	5
W90T1010	4	30	5
W40T1010	4	20	5
W40T1020	4	21	5
W40T1030	4	22	5

Variable Frequency Drive Settings, TCA

Variable Frequency Drive	Parameter		
	A103 (Baud Rate)	A104 (Node Address)	P036 (Start Source)
W10T1010	4	10	5
W90T1010	4	30	5
W40T1010	4	20	5

8.7.1-6 Electrical Materials - Variable Frequency Drive Fault Codes

SPC Reference	2844513

In the event of a fault, the converter switches off and a fault code appears on the display.

Fault Code	Cause	Description	Action
F2	Auxiliary input	Auxiliary input interlock is open.	Check remote wiring. Verify communications programming for intentional fault.
F3	Power Loss	DC bus voltage remained below 85% of nominal.	Check the incoming AC line for low voltage or line power interruption. Check input fuses.
F4	UnderVoltage	DC bus voltage fell below the minimum value.	Check the incoming AC line for low voltage or line power interruption.
F5	OverVoltage	DC bus voltage exceeded maximum value.	Check the AC line for high line voltage or transient conditions. Bus overvoltage can also be caused by motor regeneration. Extend the decel time or install dynamic brake option.
F6	Motor Stalled	Drive is unable to accelerate motor.	Increase P039 - A067 (Accel Time x) or reduce load so drive output current does not exceed the current set by parameter A089 (Current Limit 1).
F7	Motor Overload	Internal electronic overload trip.	An excessive motor load exists. Reduce load so drive output current does not exceed the current set by parameter P033 (Motor OL Current). Verify A084 (Boost Select) setting.
F8	Heatsink OvrTmp	Heatsink temperature exceeds a predefined value.	Check for blocked or dirty heat sink fins. Verify that ambient temperature has not exceeded 40° C (104° F) for IP 30/NEMA 1/UL Type 1 installations or 50° C (122°F) for IP20/Open type installations. Check the fan.
F12	HW OverCurrent	The drive output current has exceeded the hardware current limit.	Check programming. Check for excess load, improper A084 (Boost Select) setting, DC brake volts set too high or other causes of excess current.
F13	Ground Fault	A current path to earth ground has been detected at one or more of the drive output terminals.	Check the motor and external wiring to the drive output terminals for a grounded condition.
F29	Analog Input Loss	An analog input is configured to fault on signal loss. A signal loss has occurred. Configure with A122 (Analog In Loss).	Check parameters. Check for broken/loose connections at inputs.

Fault Code	Cause	Description	Action
F33	Auto Rstrt Tries	Drive unsuccessfully attempted to reset a fault and resume running for the programmed number of A092 (Auto Rstrt Tries).	Correct the cause of the fault and reset manually.
F38	Phase U to ground	A phase to ground fault has been detected between the drive and motor in this phase.	Check the wiring between the drive and motor. Check motor for grounded phase. Replace drive if fault can not be corrected.
F39	Phase V to ground		
F40	Phase W to ground		
F41	Phase UV Short	Excessive current has been detected between these two output terminals.	Check the motor and drive output terminal wiring for a shorted condition. Replace drive if fault can not be corrected.
F42	Phase UW Short		
F43	Phase VW Short		
F48	Params Defaulted	The drive was commanded to write default values to EEPROM.	Clear the fault or cycle power to the drive. Program the drive parameters as needed.
F63	SW OverCurrent	Programmed A098 (SW Current Trip) has been exceeded.	Check load requirements and A098 (SW Current Trip) setting.
F64	Drive Overload	Drive rating of 150% for 1 minute or 200% for 3 seconds has been exceeded.	Reduce load or extend Accel Time.
F70	Power Unit	Failure has been detected in the drive power section.	Cycle power. Replace drive if fault cannot be cleared.
F71	Net Loss	The communication network has faulted.	Cycle power. Check communications cabling. Check network adapter setting. Check external network status.
F80	SVC Autotune	The autotune function was either cancelled by the user or failed.	Restart procedure.
F81	Comm Loss	RS485 (DSI) port stopped communicating.	If adapter was not intentionally disconnected, check wiring to the port. Replace wiring, port expander, adapters or complete drive as required. Check connection. An adapter was intentionally disconnected. Turn off using A105 (Comm Loss Action).
F100	Parameter Checksum	The checksum read from the board does not match the checksum calculated.	Set P041 (Reset To Defaults) to option 1 “Reset Defaults”.
F122	I/O Board Fail	Failure has been detected in the drive control and I/O section.	Cycle power. Replace drive if fault cannot be cleared.

8.7.1-7 Electrical Materials - Set Sercos Communication on Servo Amplifier

Machine Status	Power Supply Disconnector ON Air Valve OFF
SPC Reference	2844513

Set the DIP switches for sercos baud rate according to the illustration below.

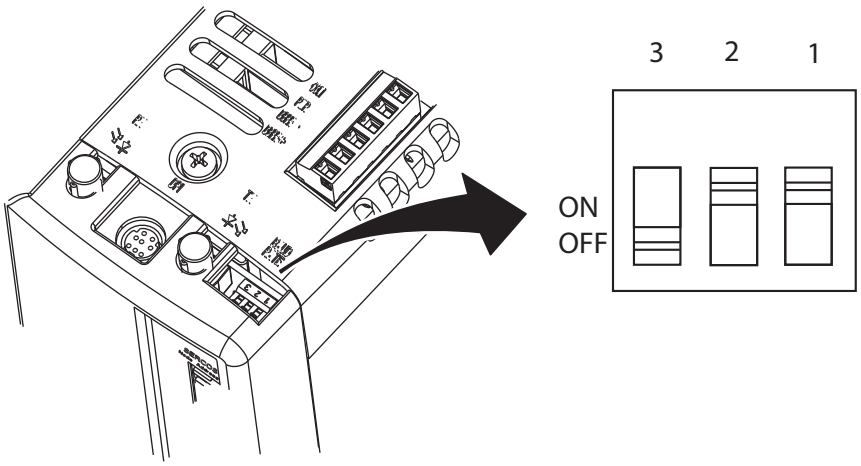

8.7.1-8 Set Baud Node Address on Servo Amplifier

Machine Status	Power Supply Disconnector ON Air Valve OFF
SPC Reference	2844513

Set the baud node address to 01 by pressing the plus switches (1) and/or the minus switches (2).

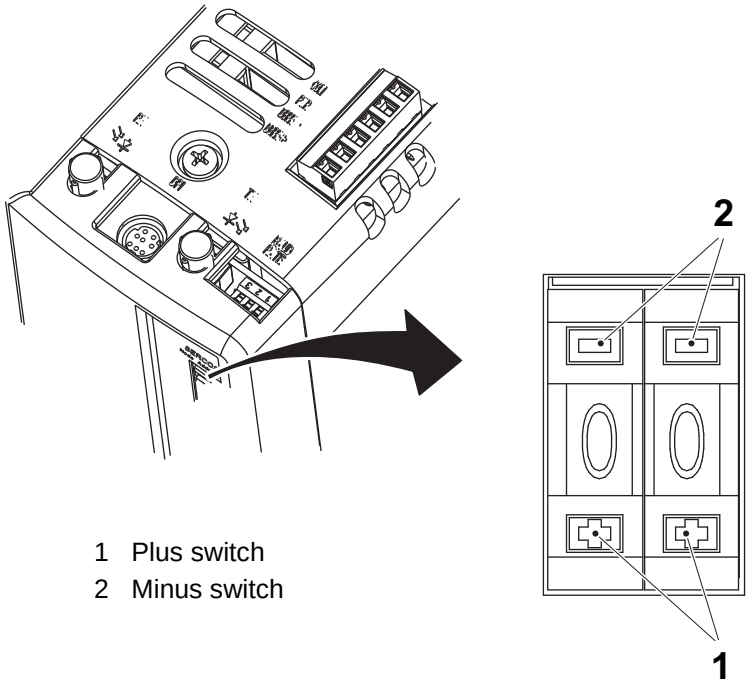

1 Plus switch
2 Minus switch

8.7.1-9 Electrical Materials - Servo Amplifier Error Codes

Machine Status	Power Supply Disconnector ON Air Valve OFF
SPC Reference	2844513

If the Logic Power LED is ON and the Status LED is flashing “E” followed by a two-digit error code, one digit at a time, the servo amplifier has an error. See the table below to resolve problems when an assigned error code or a problematic symptom (no error code) is encountered.

Error Codes Status LED

Error code	**Fault Message RSLogix** (HIM)	**Problem or symptom**	**Possible cause(s)**	**Action/Solution**
		Power (PWR) indicator not ON	No AC power or auxiliary logic power.	Verify power AC power is applied to the Kinetix 6000 system.
			Internal power supply malfunction.	Call your Rockwell Automation sales representative to return module for repair.
		Motor jumps when first enabled	Motor wiring error.	- Check motor wiring. - Run Hookup test in RSLogix 5000 software.
			Incorrect motor chosen.	Verify the proper motor is selected.
		Digital I/O not working correctly	I/O power supply disconnected.	Verify connections and I/O power source.
00	**BusUndervoltage Fault** (Blown fuse)	A blown fuse was detected on the inverter PCB	Blown fuse.	Call your Rockell Automation sales representative to return module for repair.
04	**MotorOvertemp Fault** (Motor Overtemp)	Motor thermal switch tripped	- High motor ambient temperature and/or - Excessive current	- Operate within (not above) the continuous torque rating for the ambient temperature (40°C maximum). - Lower ambient temperature, increase motor cooling.
			Motor wiring error.	Check motor wiring at MF connector on the IAM/AM.
			Incorrect motor selection.	Verify the proper motor has been selected.

Error code	Fault Message RSLogix (HIM)	Problem or symptom	Possible cause(s)	Action/Solution
05	**DriveOvercurrent Fault** (Power Fault)	Self-protection of the Intelligent Power Module (IPM) is indicating a major power related fault condition	Motor cables shorted.	Verify continuity of motor power cable and connector.
			Motor winding shorted internally.	Disconnect motor power cables from the motor. If the motor is difficult to turn by hand, it may need to be replaced.
			Kinetix 6000 temperature too high.	- Check for clogged vents or defective fan. - Ensure cooling is not restricted by insufficient space around the unit.
			Operation above continuous power rating and/or product environment ratings.	- Verify ambient temperature is not too high. - Operate within the continuous power rating. - Reduce acceleration rates.
			Kinetix 6000 has a short circuit, overcurrent, or failed component.	Remove all power and motor connections, and perform a continuity check from the DC bus to the U, V, and W motor outputs. If a continuity exists, check for wire fibers between terminals, or send drive in for repair.
06	**HardOvertravel Fault** (+/- Hard Overtravel)	Axis moved beyond the physical limits in the positive/ negative direction	Dedicated overtravel input is inactive.	- Check wiring. - Verify motion profile. - Verify axis configuration in software.
07	**MotorFeedback Fault** (Motor Feedback Loss)	The feedback wiring is open, shorted or missing.		- Check motor encoder wiring. - Run Hookup test in PSLogix 5000 software.
09	**BusUndervoltage Fault** (Bus Undervoltage)	With three-phase power present, the DC bus voltage is below limits	- DC bus voltage for 460 V system is below 275 V - DC bus voltage for 230 V system is below 137 V	- Verify voltage level of the incoming AC power. - Check AC power source for glitches or line drop. - Install an uninterruptible power supply (UPS) on your AC input.
		DC bus voltage fell below the undervoltage limit while an axis on the follower power rail was enabled		Disable follower axis before removing power.

Error code	Fault Message RSLogix (HIM)	Problem or symptom	Possible cause(s)	Action/Solution
10	**Drive Overvoltage Fault** (Bus Overvoltage)	The DC bus voltage is above limits	Excessive regeneration of power. When the motor is driven by an external mechanical power source, it may regenerate too much peak energy through the drive power supply. The system faults to save itself from an overload.	- Change the deceleration or motion profile. - Use a larger system (motor and Kinetix 6000 drive). - Install shunt module.
			- DC bus voltage for 460 V system is over 820 V - DC bus voltage for 230 V system is over 410 V	Verify input is within specifications.
11	**MotFeedback Fault** (Illegal Hall State)	State of Hall feedback is incorrect	Bad connections.	- Verify the Hall wiring. - Verify 5 V power supply to the encoder.
16	**SoftOvertravel Fault** (+/- Software Overtravel)	Axis position exceeded maximum software setting		- Verify motion profile. - Verify overtravel settings are appropriate.
18	**OverSpeedFault** (Overspeed Fault)	Motor speed has exceeded 150% of maximum rated speed.The 100% trip point is dictated by the lesser of the user velocity limits or the motor rated base speed		- Check cables for noise. - Check tuning.
19	**PositionError Fault** (Follow Error)	Position error limit was exceeded		- Increase the feed forward gain. - Increase following error limit or time. - Check position loop tuning. - Verify sizing of system. - Verify mechanical integrity of system within specification limits.
20	**MotFeedback Fault** (Mtr Fdbk AQB)	Motor Encoder State Error	The motor encoder encountered an illegal transition.	- Use shielded cables with twisted pair wires. - Route the feedback away from potential noise sources. - Check the system grounds. - Replace the motor/encoder.
21	**AuxFeedback Fault** (Aux Feedback Comm)	Communication was not established with an intelligent encoder		Verify auxiliary encoder wiring.
30	**MotFeedback Fault** (Motor Feedback Comm)	Communication was not established with an intelligent encoder		- Verify motor selection. - Verify the motor supports automatic identification. - Verify motor encoder wiring.

Error code	Fault Message **RSLogix** (HIM)	Problem or symptom	Possible cause(s)	Action/Solution
34	**GroundShortFault** (Ground Fault)	Excessive ground current in the converter was detected	Wiring error.	- Check motor power wiring. - Check input power wiring.
			Motor internal ground short.	Replace motor.
			Internal malfunction.	Disconnect motor power cable from drive and enable drive with current limit set to 0. If fault remains, call sales representative. If fault clears, then a wiring error or motor internal problem exists.
			Ground control power terminal (applies to 230 V systems only).	- Remove ground from control power input. - Source control power from three-phase input power. - Add isolation transformer for control power.
35	**DriveUnder-voltage Fault** (Pre-charge Fault)	Converter pre-charge cycle failed	Low AC input voltage.	Check input AC voltage on all phases.
			Internal malfunctioin.	Call your sales representative.
36	**DriveOvertemp Fault** (System Overtemperature)	Converter thermal switch tripped	Excessive heat exists in the power circuitry.	- Reduce acceleration rates. - Reduce duty cycle (ON/OFF) of commanded motion. - Increase time permitted for motion. - Use larger Kinetix 6000 converter. - Check for clogged vents or defective fan. - Make sure cooling is not restricted by insufficient space around the unit.
37	**PowerPhaseLoss Fault** (Phase Loss Fit)	- One or more phases of the input AC power is missing. - Axis was enabled when main (three-phase) power was removed. - Common bus follower axis was enabled when DC bus power was removed.		- Check input AC voltage on all phases. - Disable axis before removing power.
38	**SERCOSFault** (SERCOS Ring Flt)	The SERCOS ring is not active after being active and operational	Cable disconnected.	Check that fiber-optic cable is present and connected properly.
39	**DriveHardFault** (Self Sense Flt)	Self-sensing Commutation Startup Error	Motion required for self-sensing startup commutation was obstructed.	- Verify that there are no impediments to motion at startup, such as hard limits. - Increase self-sensing current if high friction or load conditions exist. - Check motor or encoder wiring using wiring diagnostics.
43	**DriveEnableInput Fault** (Drive Enable Flt)	Missing Drive Enable Input Signal	- An attempt was made to enable the axis through software while the Drive Enable hardware input was inactive. - The Drive Enable input transitioned from active to inactive while the axis was enabled.	- Disable the Drive Enable Input fault. - Verify that Drive Enable hardware input is active whenever the drive is enabled through software.

Error code	Fault Message RSLogix (HIM)	Problem or symptom	Possible cause(s)	Action/Solution
49	**DriveHardFault** (Safe-off HW Flt)	Safe-off function mismatch. Drive will not allow motion.	- Loose wiring at SO connector. - Cable/header not seated properly in SO connector. - Safe-off circuit missing +24V DC.	- Verify wire terminations, cable/header connections, and +24V. - Reset error and run proof test. - If error persists, return the drive to Rockwell Automation.
50	**SERCOSFault** (SERCOS Same ADDR)	Duplicate node address detected on SERCOS ring		Verify that each SERCOS drive is assigned a unique node address.
54	**DriveHardFault** (Ifbk HW Fault)	Current feedback hardware fault detected		Replace the module.
60	**DriveHardFault** (Unknown Axis)	Illegal ID bits detected		Replace the module.
61	**AuxFeedback Fault** (Aux Fdbk AQB)	Auxiliary Encoder State Error	The auxiliary encoder encountered an illegal transition.	- Use shielded cables with twisted pair wires. - Route the feedback away from potential noise sources. - Check the system grounds. - Replace the motor/encoder.
62	**AuxFeedback Fault** (Aux Fdbk Loss)	The feedback wiring is open, shorted, or missing		Check the motor feedback cable connectors/wiring to the IAM/AM and motor.
63	**AuxFeedback Noise** (Aux Fdbk Noise)	Noise on auxiliary feedback cable	Recommended grounding, per installation instructions, has not been followed.	- Verify grounding. - Route feedback cable away from noise sources. - Refer to System Design for Control of Electrical Noise Reference Manual, publication GMC-RM001.
64	**MotorFeedback Noise** (Mtr Fdbk Noise)	Noise on motor feedback cable		
65	**No Fault Message (condition indicated by on-screen message)** (Hookup Fault)	Hookup procedure failed	Motor or feedback device malfunction.	- Check motor power/feedback wiring. - Refer to on-screen message for resolution.
66	**No Fault Message (condition indicated by on-screen message)** (Atune Flt)	Autotune procedure failed	Motor or feedback device malfunction.	- Check motor power/feedback wiring. - Refer to on-screen message for resolution. - Perform Hookup in RSLogix 5000 software. - Consult RSLogix 5000 help screen.
67	**DriveHardFault** (Task init)	Operating system failed	Software initialization fault detected due to hardware failure.	- Cycle power. - If fault persists, replace module.
68	**DriveHardFault** (SCANport Comm)	DPI communication failed	The DPI device or cable is faulty.	Check DPI connections.
69	**DriveHardFault** (Objects Init)	Non-volatile memory is corrupt due to control board hardware failure		Load default parameters, save to non-volatile memory, and recycle power or reset the drive.

Error code	Fault Message **RSLogix** (HIM)	Problem or symptom	Possible cause(s)	Action/Solution
70	**DriveHardFault** (NV Mem Init)	Non-volatile memory is corrupt due to control board software error.		Load default parameters, save to non-volatile me ory, and recycle power or reset the drive.
71	**DriveHardFault** (Memory Init)	RAM or Flash memory validation failure		- Cycle power. - If fault persists, replace module.
72	**DriveOvertemp Fault** (Drive Overtemp)	Inverter thermal switch tripped	The fan on the IAM or an AM failed.	Replace the failed module.
			The cabinet ambient temperature is above rating.	Check the cabinet temperature.
			The machine duty cycle requires an RMS current exceeding the continuous rating of the controller.	Change the command profile to reduce speed or increase time.
			The airflow access to the Kinetix 6000 system is limited or blocked.	Check airflow and re-route cables away from the Kinetix 6000 system.
73	**Communicate** (Backplane Comm)	Power rail CAN communications failed.		Check module for proper mount.
		Power rail connection shorted or open.		Check power rail and module for foreign objects.
74	**DriveOvercurrent Fault** (Bus OverCurrent)	DC link current exceeds rating	Motor or transmission malfunction.	- Check for proper motor sizing. - Check/replace transmission device. - Check/replace motor.
			IAM not properly sized.	- Check for proper IAM sizing. - Install larger kW rated IAM.
75	**DriveOvervoltage Fault** (Shunt Time Out)	The IAM, AM, or SM has exceeded its shunt resistor continuous rating		- Use a properly sized shunt or modify duty cycle of the application. - System uses internal shunt and requires external shunt for additional capacity.
76	**DriveHardFault** (CAN Init)	DPI hardware initialization fault detected	Control board hardware failure.	- Reset System. - If fault persists, replace system module.
77	**DriveHardFault** (Module Mismatch)	Either 230V AM is installed on power rail with 460V IAM, or 460V AM is installed on power rail with 230V IAM		Replace mismatched module.
78	**DriveHardFault** (SERCOS Init)	Control hardware fault detected		- Cycle power. - If fault persists, replace module.
79	**DriveOvervoltage** Fault (Shunt Module Flt)	Shunt module temperature fault LED indicator is steady red		Refer to Temperature Fault LED Indicator on page 154.
		Shunt module shunt fault LED indicator is steady red		Refer to Shunt Fault LED Indicator on page 154.
		Module missing from power rail		- Install missing module on power rail. - Fill empty slot with slot filler module.
80	**DriveHardFault** (CPLD Flt)	Control hardware fault detected		Replace module.
81	**DriveHardFault** (Common Bus Flt)	Follower IAM detected AC input power being applied		Remove ac input power connections from follower IAM.

Error code	**Fault Message RSLogix** (HIM)	**Problem or symptom**	**Possible cause(s)**	**Action/Solution**
90	**DriveHardFault** (Pre-charge Timeout Flt)	Pre-charge resistor power exceeds the resistor rating.		Allow resistor to cool.
All others	RESERVED			Call your local Rockwell Automation sales representative.

8.7.1-10 Electrical Materials - Change Fuse in PLC Power Supply

Machine Status	Power Supply Disconnector OFF Air Valve OFF
Consumable	Fine-Wire fuse 3.15A
SPC Reference	2844513

a) Remove Compact I/O system power and correct the conditions causing the short circuit.

b) Remove fuse housing cover (1). Place a slotted screwdriver under the tab (2) to remove.

c) Remove the front access fuse. Use a fuse puller or similar device to remove the fuse. Use care so that the printed circuit board and surrounding electronics are not damaged.

d) Replace the front access fuse. Centre the replacement fuse over the fuse clip and press down. If a tool is used to press the fuse in place, apply pressure to the metal end caps only, not the centre of the fuse.

e) Assemble the fuse housing cover.

f) Restore Compact I/O system power.

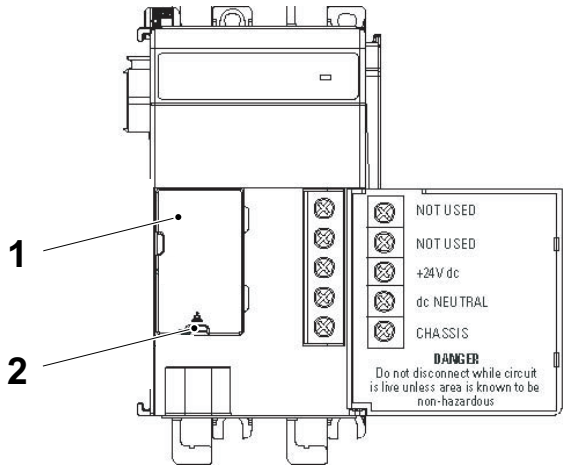

1 Fuse housing cover
2 Tab

8.7.1-11 Electrical Materials - Description of PLC SM2

Machine Status	Power Supply Disconnector OFF Air Valve OFF
SPC Reference	2844513

The SM2 module has four status indicators. They can be viewed on the front of the module.

Status	Cause	Corrective Action
Off	The module is not powered. The channel is not connected to a DSI-supported drive. The channel is operating in Modbus RTU Master mode, but is not transmitting.	• Apply power to the module. • Apply power to the DSI-supported drive. • Connect the module channel to the drive using a communications cable.
Flashing red	In Single mode, the channel is not receiving communication from the drive. In Multi-Drive mode, the channel is not receiving communication from one or more configured drives.	• Verify that the 22-RJ45CBL-C* communications cable is securely connected and not damaged. Replace cable if necessary. • Verify the setting for the DSI I/O Cfg x parameter. • Verify the settings for the Drv x Addr x parameters. • Verify the settings for the node address and data rZte parameters in the drive. • Cycle power to the drive.
Flashing green	The channel is properly connected and is communicating with the drive, but is not sending I/O to the drive. The channel is operating in Modbus RTU Master mode, and is transmitting.	No action required.
Solid green	The channel is properly connected and is communicating with the drive, and is sending I/O to the drive.	No action required.

Module

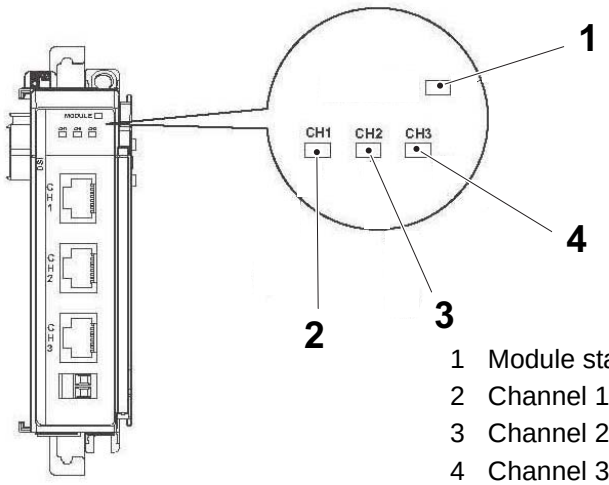

1 Module status
2 Channel 1 status
3 Channel 2 status
4 Channel 3 status

8.7.1-12 Electrical Materials - Set Switches at PLC SM2

Machine Status	Power Supply Disconnector OFF Air Valve OFF
SPC Reference	2844513

CAUTION
Before inserting or removing modules you must be electrostatically discharged.
Note! When handling the card, hold it by the card edges. Do not touch the solder side or component side.

The switches set Configuration Mode and Single/Multi-Drive Operation.

Set the switches at Controller position (CONT) and Multi-Drive operation position (5X), see the illustration below.

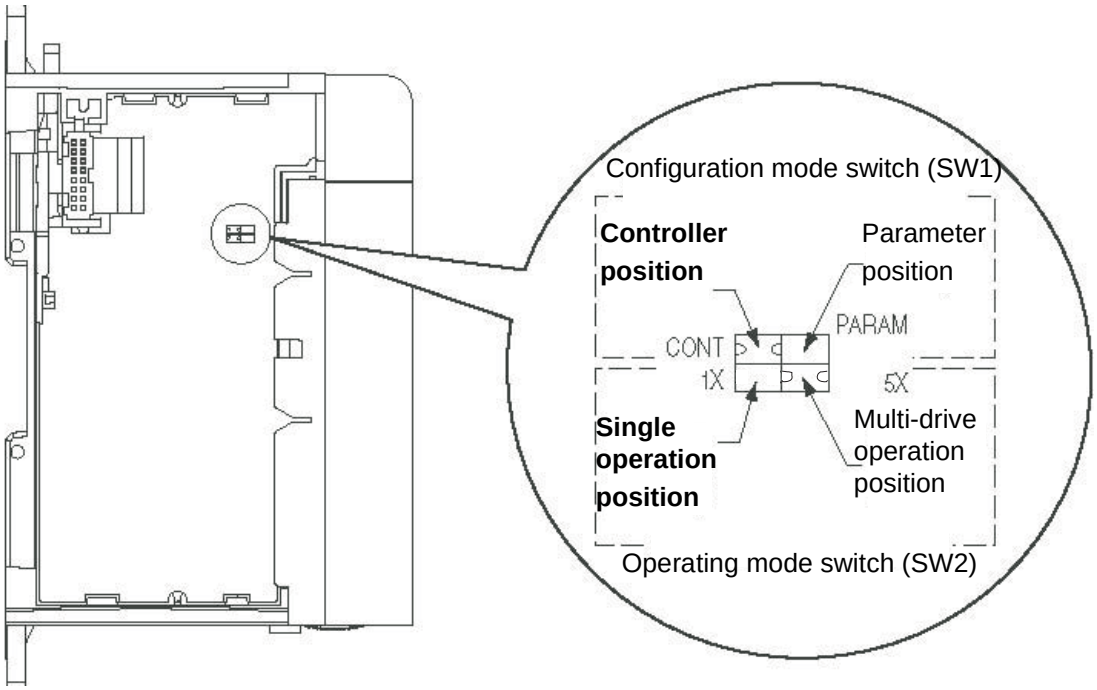

8.7.1-13 Electrical Materials - Set DIP Switch on SNP Converter

Machine Status	Power Disconnector OFF Air Valve OFF
SPC Reference	2844513

Set the 4 bit DIP switches (1), the 8 bit DIP switches (2), and the term switch (3) according to the table below.

4 Bit DIP Switch	**Position**
1	1
2	1
3	0
4	0
8 Bit DIP Switch	**Position**
1	Not used
2	1
3	Not used
4	1
5	Not used
6	Not used
7	Not used
8	1
Term switch	Off

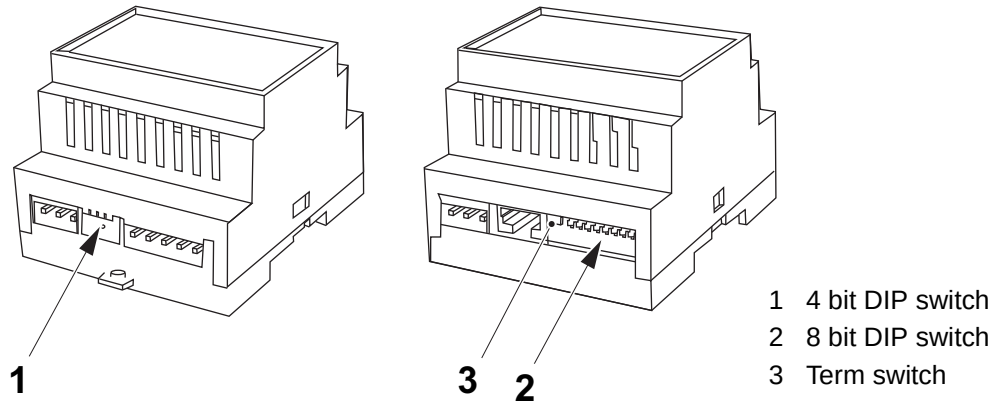

1 4 bit DIP switch
2 8 bit DIP switch
3 Term switch

8.7.1-14 Electrical Materials - Electrical Connection of SNP Converter

Machine Status	Power Disconnector OFF Air Valve OFF
SPC Reference	2844513

Connect the SNP converter according to the table on the following page.

(Cont'd)

Connect the SNP converter according to the table below.

SNP - DF1		GE-Fanuc Series 90 PLC				Flexbox (Filling machine)		
COM2 RS-422		RS-422 Serial port pin				COM4		
Pin number	Signal name	Pin number	Signal name	Description	Note	Pin number	Signal name	Cable, colour
x	x	6	RTS (A)	Request To Send	connect with pin 15			
x	x	8	CTS (B')	Clear To Send	connect with pin 14			
1	Receive, inverting	10	RD (A')	Receive Data		5		Brown
2	Receive, non-inverting	11	RD (B')	Receive Data		4		White
3	Transmit, inverting	12	SD (A)	Send Data		9		Yellow
4	Transmit, non-inverting	13	SD (B)	Send Data		8		Green
x	x	14	RTS (B)	Request To Send	connect with pin 8			
x	x	15	CTS (A')	Clear To Send	connect with pin 6			
5	Shield	1	Shield			connect to chassis	Shield	

8.7.1-15 Electrical Materials - Description of Safety System

Machine Status	Power Supply Disconnector OFF Air Valve OFF
SPC Reference	2844513

All safety devices like doors and emergency stop buttons are connected by two channels, one constant +24V DC and one pulse shaped voltage from the safety PLCs (1). Both channels have to be opened and closed at the same time to allow the system to reset however it is enough that one channel is open to make the system to trip. The system monitors the contactors that will be turned off when the system trip. If a “feedback” circuit is not OK after the system has tripped it is not possible to reset.

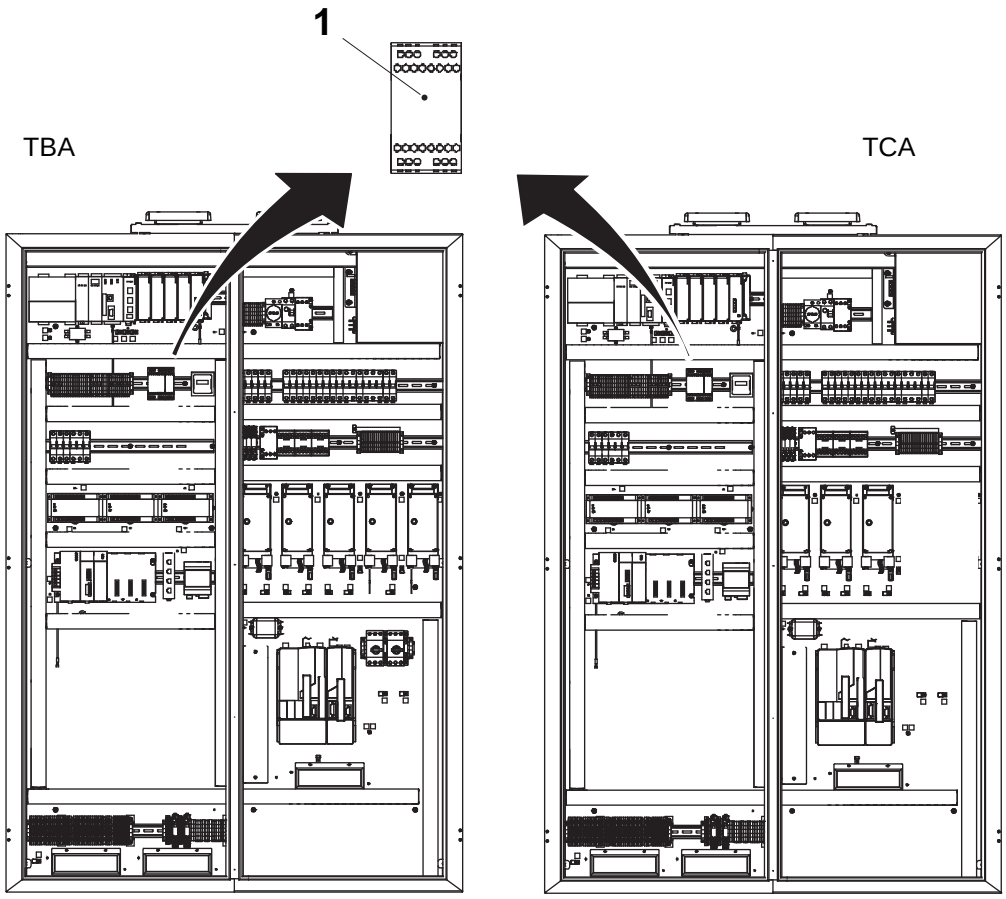

1 Safety PLC

8.7.1-16 Electrical Materials - Set Address after Replacing an ID-FIX in Safety System

Machine status	Power Supply Disconnector ON Air Valve OFF
Special Equipment	PC with software Pluto Manager Pluto Programming Cable TP No. 90459-6033
SPC Reference	2913341

If one of the ID-fix has been replaced the address has to be set. There is a function for programmable identifier circuits IDFIX-RW.

Note! All settings in the Safety System must be performed by skilled personnel only.

a) From the Tools menu select Write ID circuit (1).

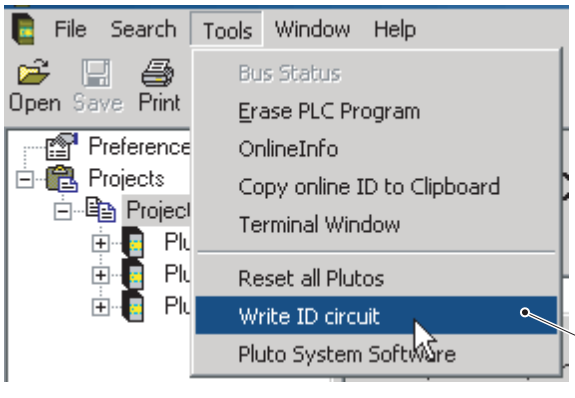

1 Write ID circuit

(Cont'd)

(Cont'd)

b) If the ID number is not in the ID number field (2), write the ID number 11000009F001 in the ID number field (2).

CAUTION
Irreversible action.
By selection of the Erase protect ID checkbox (3) the circuit can never be changed again. Do not use this feature.

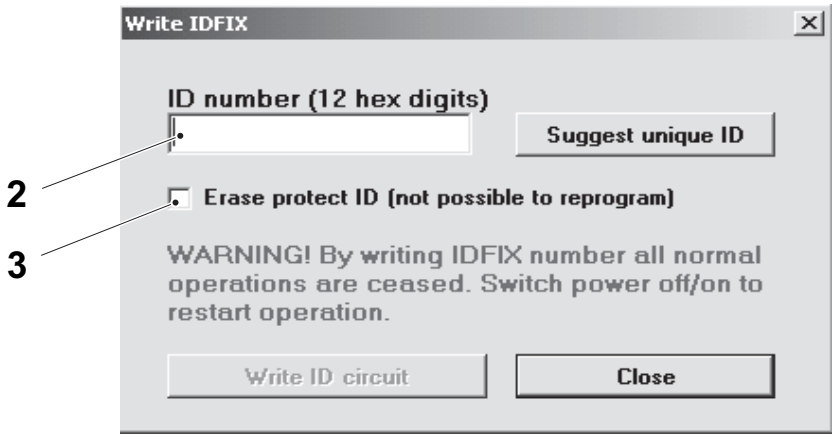

2 ID number field
3 Erase protect ID checkbox

8.7.1-17 Electrical Materials - Change Baud Rate, Error Code E26 in Safety System

Machine status	Power Supply Disconnector ON Air Valve OFF
Software	Pluto Manager
SPC Reference	2913341

A safety PLC unit can not change baud rate during operation. If a unit is loaded with a program with new baud rate, it will continue with the old baud rate and indicate error code E26. The error code E26 indicates that a unit is running with another baud rate than it is programmed for.

Note! All changes in the Safety System must be performed by skilled personnel only.

Change baud rate by reboot the computer:

- Reboot by Power On/Off, or
- via Pluto Manager by selecting the `Tools` menu and then select `Reset all Plutos` (1).

If a safety PLC that is empty of program (error code E20) is loaded with a program it will also indicate error code E26 and has to be rebooted in order to start with the programmed baud rate.

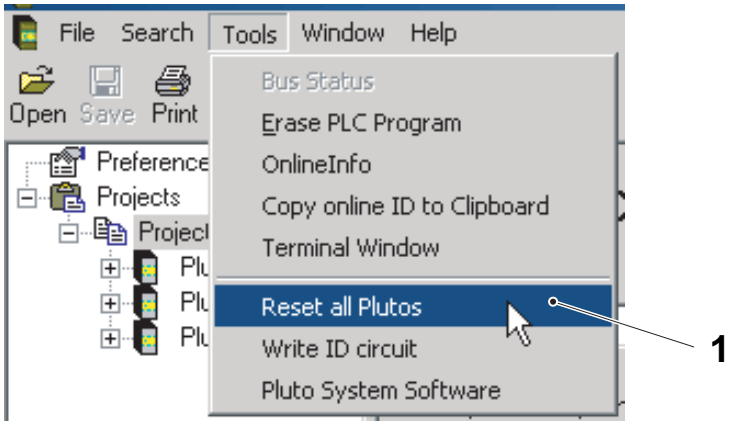

1 Reset all Plutos

8.7.1-18 Electrical Materials - Change a Safety PLC in an Existing Application Afterwards in Safety System

Machine Status	Power Supply Disconnector OFF Air Valve OFF
SPC Reference	2844513

Note! All changes in the Safety System must be performed by skilled personnel only.

When safety PLC units are loaded with program for several units, the units check each other so they have exactly the same version of the program. By mismatch they do not accept each others I/O.

If a unit belonging to a program project is connected to the bus afterwards, two situations can appear depending on what PLC program the system is loaded with:

1) The new safety PLC is empty of PLC program (message code E20) and is fitted with correct ID-fix circuit.

   Recommended method:

   The new safety PLC can be programmed by using self-programming without a PC.

   a) Press the ‘K’-button (1) in the in the safety PLC front panel for two seconds.

   b) The display (2) flashes ‘L’ which indicates that the system is ready for self programming.

   c) Press the ‘K’-button (1) one more time.

   d) The program load is started indicated by a steady ‘L’ on the display (2).

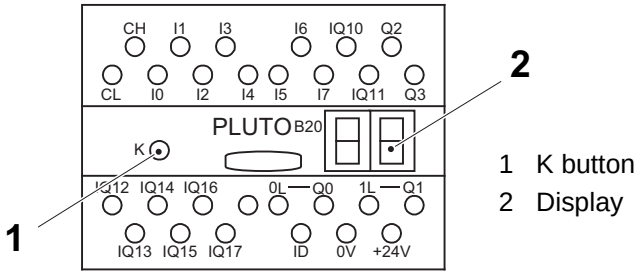

(Cont'd)

(Cont'd)

Not recommended method:

The new safety PLC can be loaded with a program through a new download from the PC to any safety PLC in the same program project, see 8.7.1-19 Electrical Materials - Download Program from a PC to a Safety PLC.

2) The new safety PLC is fitted with correct ID-fix circuit but loaded with wrong version of the program.

   By connection all units of the project will give error code E27 because they detect units belonging to their own program project, but with mismatching program as the new unit has the wrong version installed. The units will run the PLC program, but will not accept I/Os in safety PLC units with a mismatching program. By a new download to any of the units in the project, all of them will be updated with the same version.

8.7.1-19 Electrical Materials - Download Program from a PC to a Safety PLC

Machine Status	Power Supply Disconnector ON Air Valve OFF
Special Equipment	PC with software Pluto Manager Pluto Programming Cable TP No. 90459-6033
SPC Reference	2844513

Note! All changes in the Safety System must be performed by authorized personnel only.

Note! The program must be compiled before it can be downloaded. A fault message is shown if the program is not compiled.

a) Press the DOWN button (1) in the tool bar.

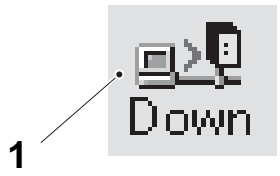

1 DOWN button

b) If the unit is not loaded with a password, a dialogue box appears asking for a new password.

c) Type the password "abc80" in the password field (2).

d) Confirm the password in the confirm password field (3) and click the OK button (4).

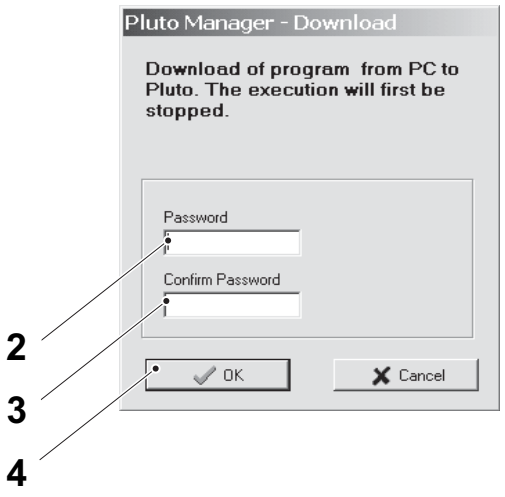

2 Password field
3 Confirm Password field
4 OK button

(Cont'd)

(Cont'd)

e) If the unit is loaded with a password, a dialogue box appears asking for the password.

f) Type the password "`abc80`" in the password field (5).

g) Click the OK button (6).



5 Password field
6 OK button

- If the fault message "`Couldn't establish connection..`" appears there is no connection at all.
- If the fault message "`Connection time out..`" appears the communication is interrupted.

  If any of these two fault messages appears check that the communication cable is correctly connected.

h) If everything is OK a dialogue box appears telling that the file is downloaded together with the question whether execution of program shall be started or not.

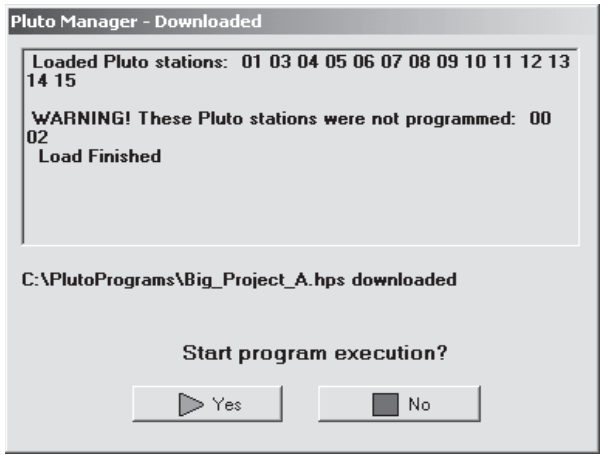

(Cont'd)

(Cont'd)

i) Click the YES button (7).

j) If the NO button (8) is selected it is possible to start execution by pressing the ONLINE button (9) and then START button (10).

Note! A warning is given if the program project is for several safety PLC stations and all stations are not connected to the bus.

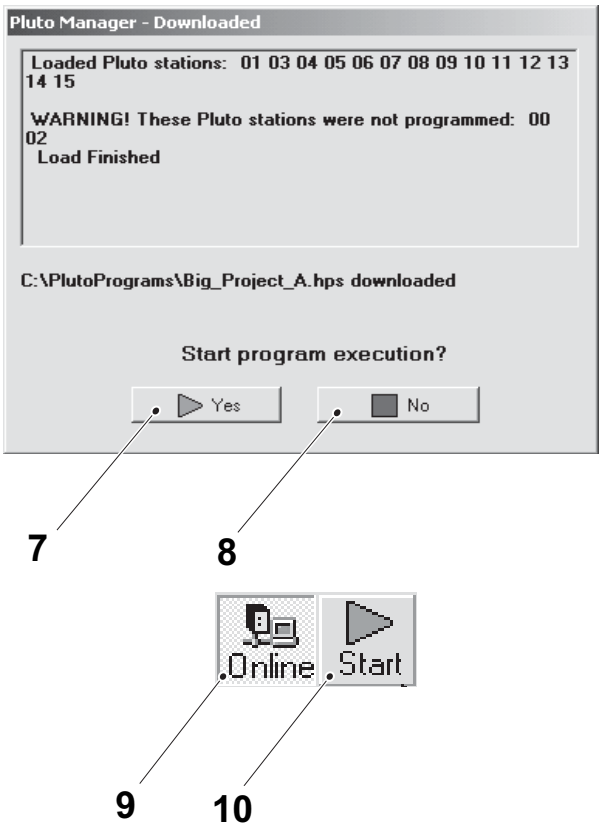

7 YES
8 NO
9 ONLINE
10 START

8.7.1-20 Electrical Materials - Safety System Error Codes

Machine Status	Power Supply Disconnector ON Air Valve OFF
SPC Reference	2844513

If an error occurs in the safety PLC, a user error code appears on the display (1).

Code	Description	Remark
00	One channel missing	E-stop I0, I1
10	Two channel fault	E-stop I0, I1
26	Missing feedback	Feedback input I6
27	Missing feedback	Feedback input I7
32	Constant reset	Reset input IQ12

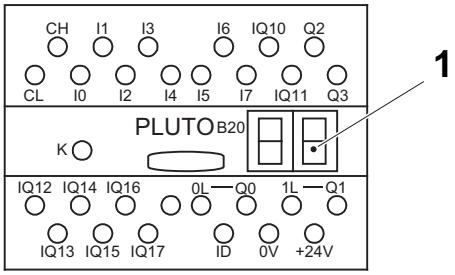

1 Display

8.7.1-21 Electrical Materials - Check Photocell

Machine Status	Power Supply Disconnector ON Air Valve OFF
SPC Reference	2844513

a) Check the photocell (1) by closing the signal, the orange light (2) should lit. Change if necessary.

b) Clean the photocell with a cloth.

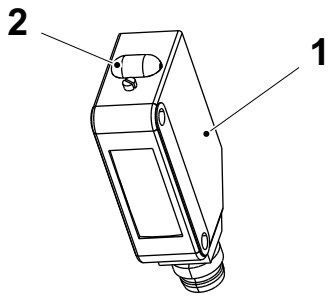

1 Photocell
2 Orange light

8.7.1-22 Electrical Materials - Set Photocell Sensitivity

Machine Status	Power Supply Disconnector ON Air Valve OFF
SPC Reference	2844513

a) Line up the photocell.

b) Set the distance adjuster (1) to position max until a click sound occurs.

c) Place the object to be detected at the desired position in front of the photocell.

d) Turn the distance adjuster (1) towards position min until only the stability indicator LED (2) is lit.

e) Turn the distance adjuster (1) towards position max until both the operation indicator LED (3) and the stability indicator LED (2) are lit.

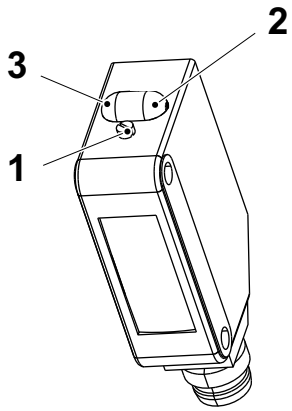

1 Distance adjuster
2 Stability indicator LED (green)
3 Operation indicator LED (orange)

9 Electric Equipment

Electric Equipment - Description

SPC Reference	663309

9.1 Document . . . . . 9 - 5

9.1-1 Document - No Procedure Described . . . . . 9 - 5

9.2 Software CD . . . . . 9 - 6

9.2-1 Software CD - Download PLC Program . . . . . 9 - 6

This page intentionally left blank

9.1 Document

9.1-1 Document - No Procedure Described

Machine Status	Power Supply Disconnector ON Air Valve ON
SPC Reference	2958794

9.2 Software CD

9.2-1 Software CD - Download PLC Program

Machine Status	Power Supply Disconnector ON Air Valve OFF
Special Equipment	PC with CD drive Ethernet communication cable
SPC Reference	2958130

Note! To connect to the PLC using an ethernet communication cable, the PC must first be configured for this type of communication.

a) Connect the ethernet communication cable between a vacant connection port on the ethernet switch (1) and the PC (2).

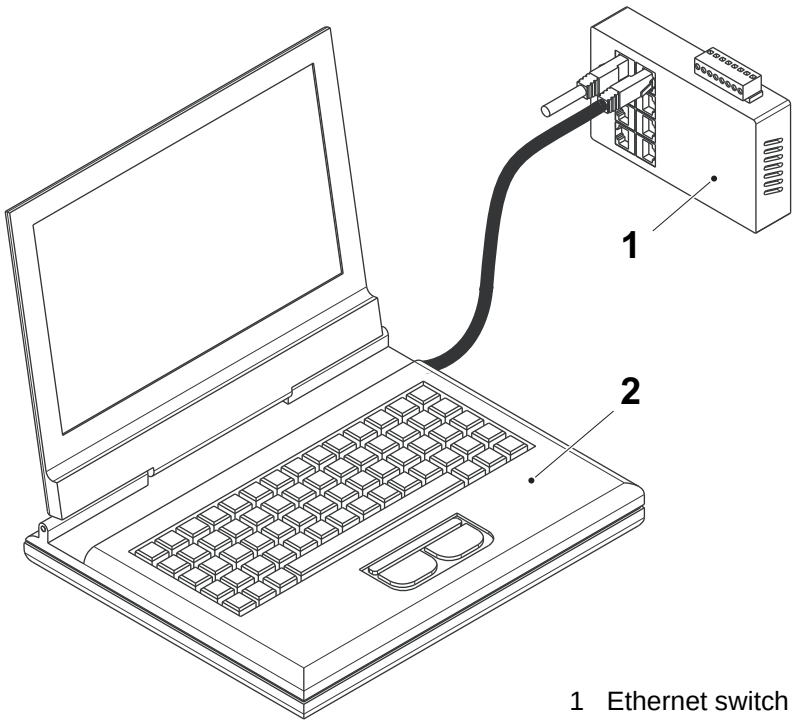

1 Ethernet switch
2 PC

(Cont'd)

(Cont'd)

b) Make sure the mains power switch is ON and the machine is at STEP 0.

c) Insert the PLC program CD into the PC CD drive.

d) Browse to the CD drive and copy the compressed program folder to the PC desktop and extract the program file with the format *.ADC.

e) Double click on the program file to automatically start the RSLogix program and open the program file.

f) Use the COMMUNICATIONS menu (3) in RSLogix and select GO ONLINE (4).

g) If the program:
– matches the program in the PLC Processor, an online connection will be established without any further messages. A download is not necessary.
– does not match the program in the PLC Processor, the CONNECTED TO GO ONLINE window (5) will appear.

h) Select the DOWNLOAD button (6).

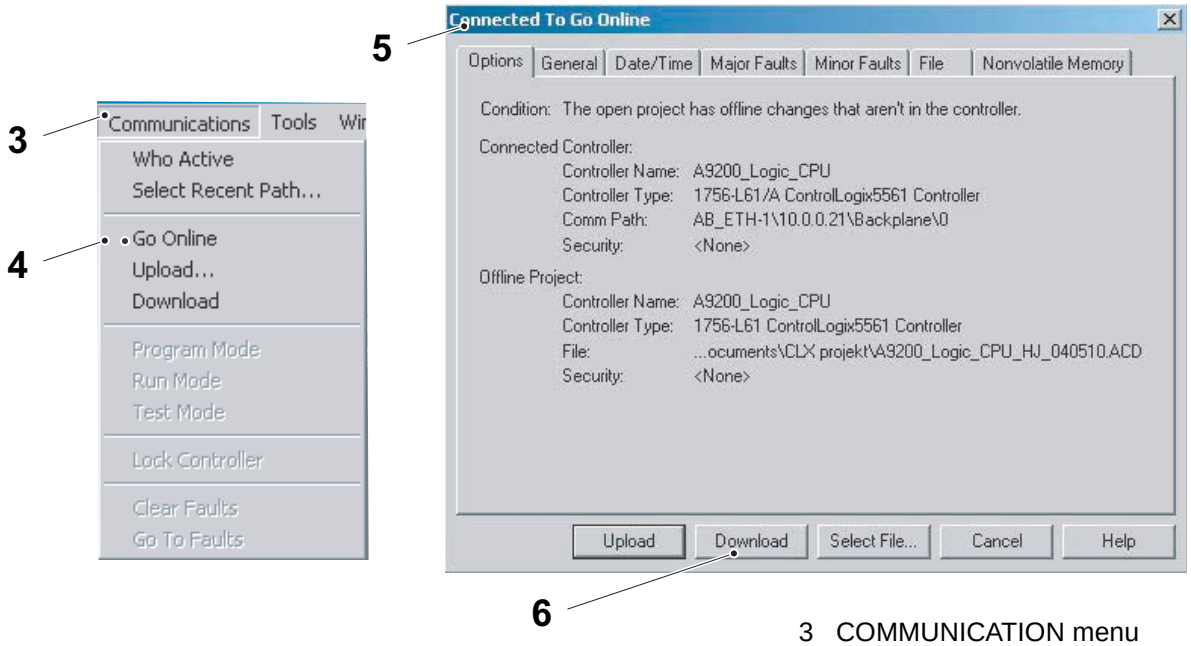

3 COMMUNICATION menu
4 GO ONLINE
5 CONNECTED TO GO ONLINE window
6 DOWNLOAD

(Cont'd)

(Cont'd)

i) In the DOWNLOAD window (7), select the DOWNLOAD button (8).

Note! All the values and settings in the PLC Processor will be replaced with those from the downloaded program.

j) When the download is complete the dialogue box (9) appears. Press the YES button (10) to put the PLC in RUN mode.

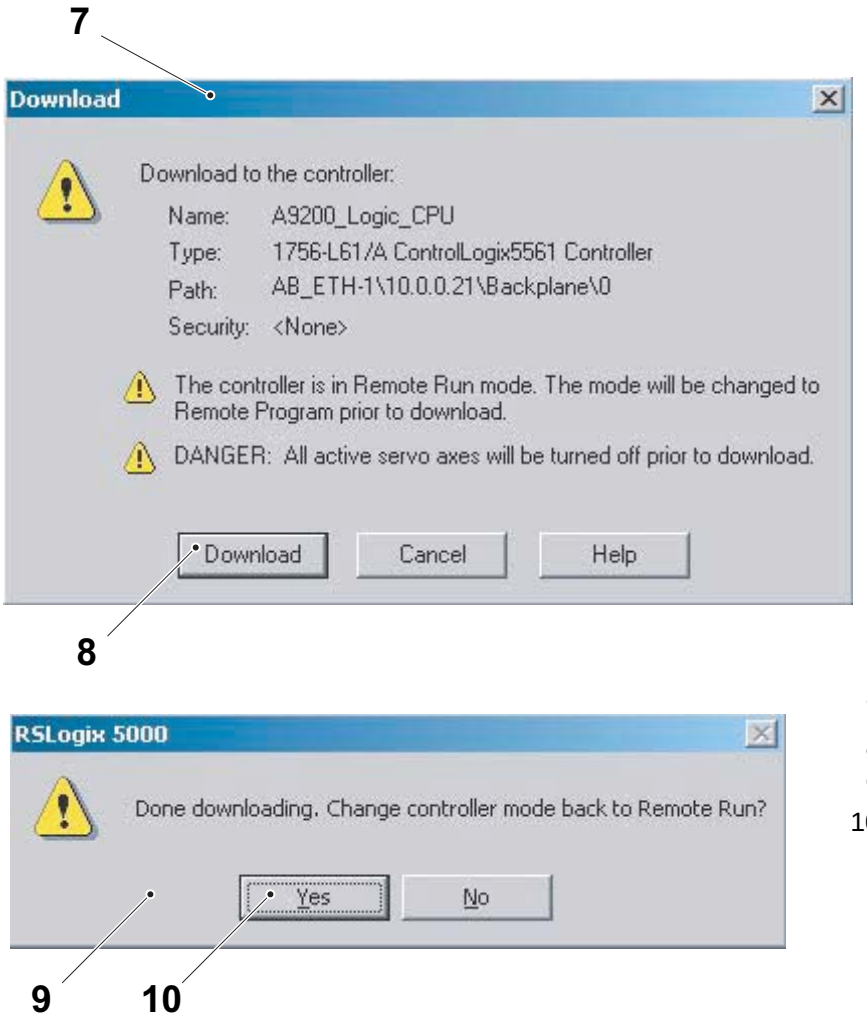

7 DOWNLOAD window
8 DOWNLOAD
9 Dialogue box
10 YES

(Cont'd)

(Cont'd)

k) If the download is to:
– an existing PLC, cycle the PLC power supply to force the PLC to store the PLC program to the CompactFlash card. The download procedure is complete
– a replacement PLC controller continue with the procedure below to set the nonvolatile memory.

Set Nonvolatile Memory

a) Select the COMMUNICATION menu (1) and then select GO ONLINE (2).

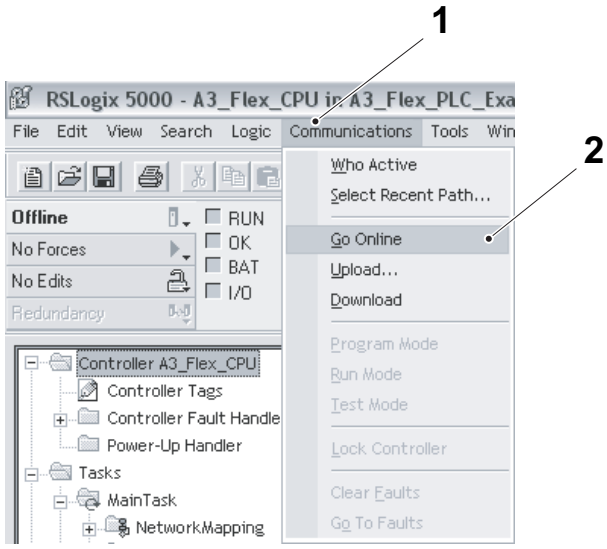

1 COMMUNICATION menu
2 GO ONLINE

(Cont'd)

(Cont'd)

b) b) Select the COMMUNICATION menu (1), then select PROGRAM MODE (3).

c) When the RSLOGIX box (4) appears, select the YES button (5) to put the PLC in PROGRAM mode.

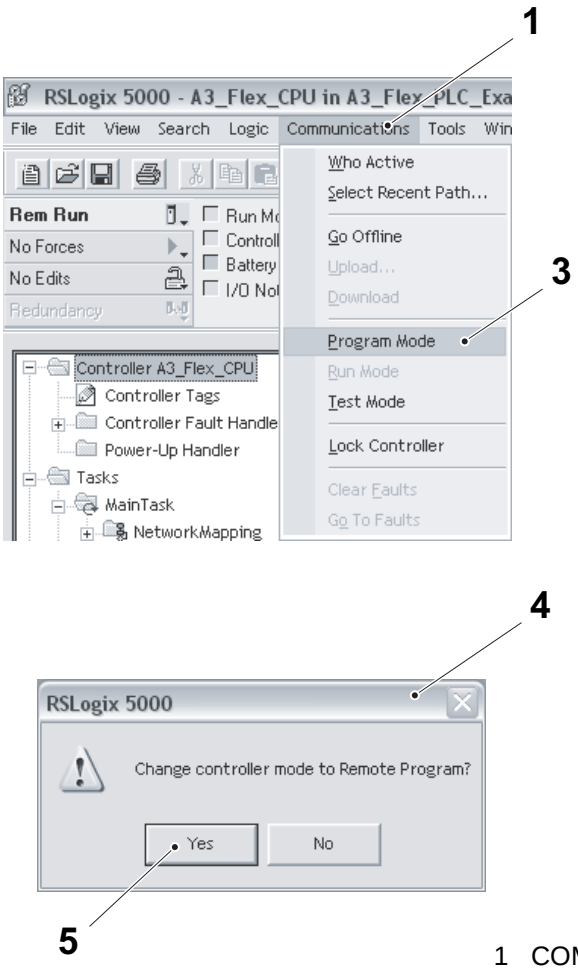

1 COMMUNICATION menu
3 PROGRAM MODE
4 RSLOGIX box
5 YES

(Cont'd)

(Cont'd)

d) In the RSLOGIX 5000 window (6), select the CONTROLLER PROPERTIES button (7). The CONTROLLER PROPERTIES window (8) opens.

e) Select the NONVOLATILE MEMORY tab (9).

f) Select the LOAD/STORE button (10).

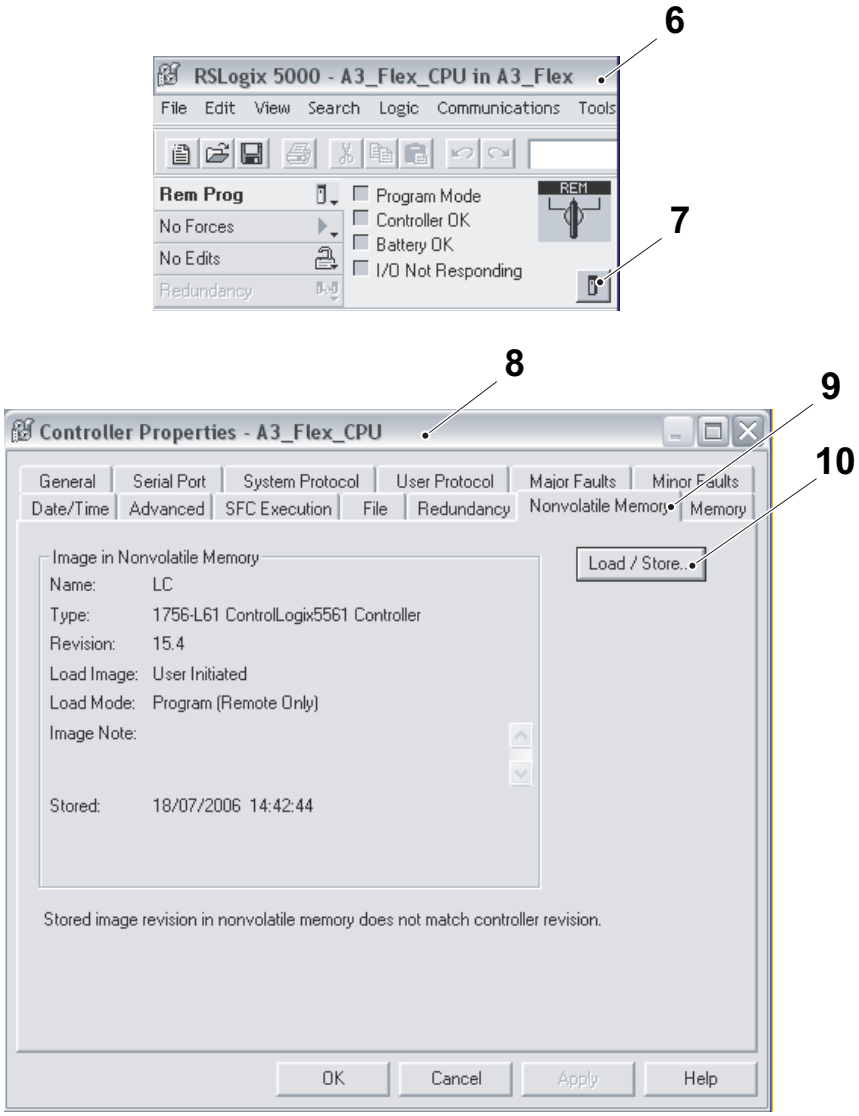

6 RSLOGIX 5000 window
7 CONTROLLER PROPERTIES
8 CONTROLLER PROPERTIES window
9 NONVOLATILE MEMORY tab
10 LOAD/STORE

(Cont'd)

(Cont'd)

g) In the NONVOLATILE MEMORY LOAD/STORE window (11), select ON CORRUPT MEMORY (12) from the drop down list of the LOAD IMAGE option (13).

h) In the NONVOLATILE MEMORY LOAD/STORE window (11), select PROGRAM (REMOTE ONLY) (14) from the drop down list of the LOAD MODE option (15).

i) Select the STORE button (16).

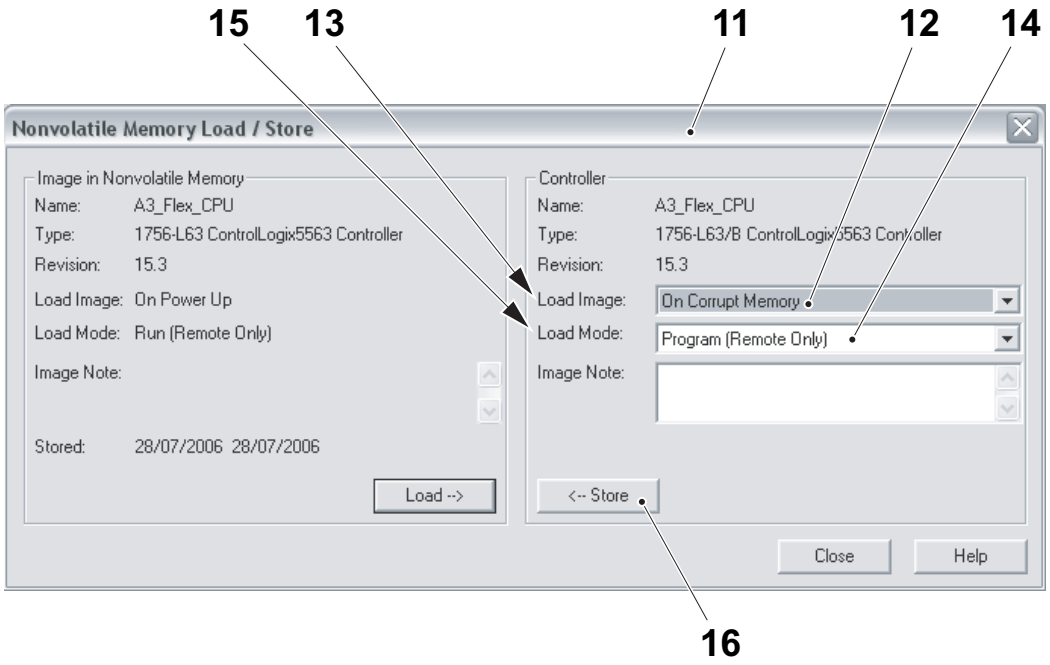

11 NONVOLATILE MEMORY LOAD/STORE window
12 ON CORRUPT memory
13 LOAD IMAGE option
14 PROGRAM (REMOTE ONLY)
15 LOAD MODE option
16 STORE

(Cont'd)

(Cont'd)

j) Select the YES button (17) to confirm the store.

k) During the process a dialogue box indicates that the store is in progress, select the OK button (18).

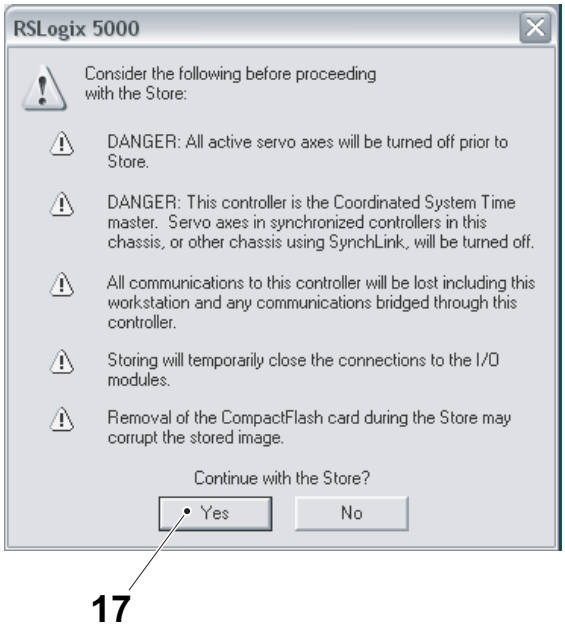

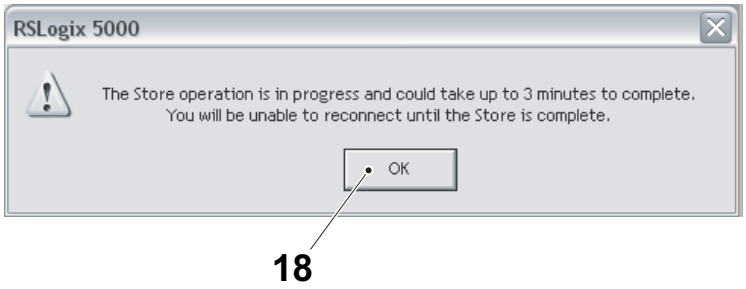

17 YES
18 OK

(Cont'd)

(Cont'd)

l) Select the OK button (19) to close the CONTROLLER PROPERTIES window (8).

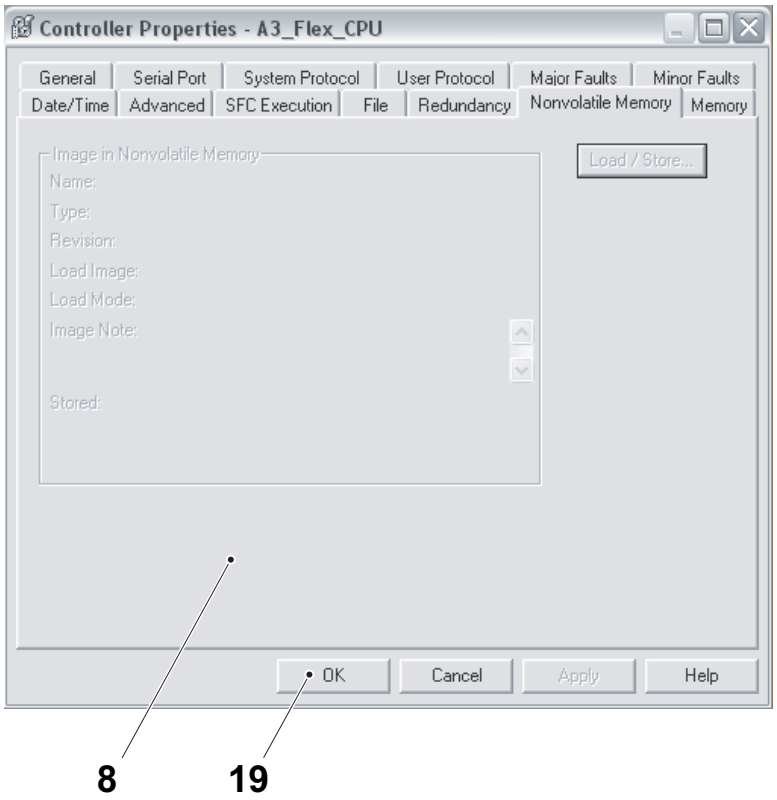

8 CONTROLLER PROPERTIES window
19 OK

(Cont'd)

(Cont'd)

m) Select the COMMUNICATION menu (1) and then select GO ONLINE (2).

n) Select the COMMUNICATION menu (1), then select RUN mode (20) to put the PLC in RUN mode.

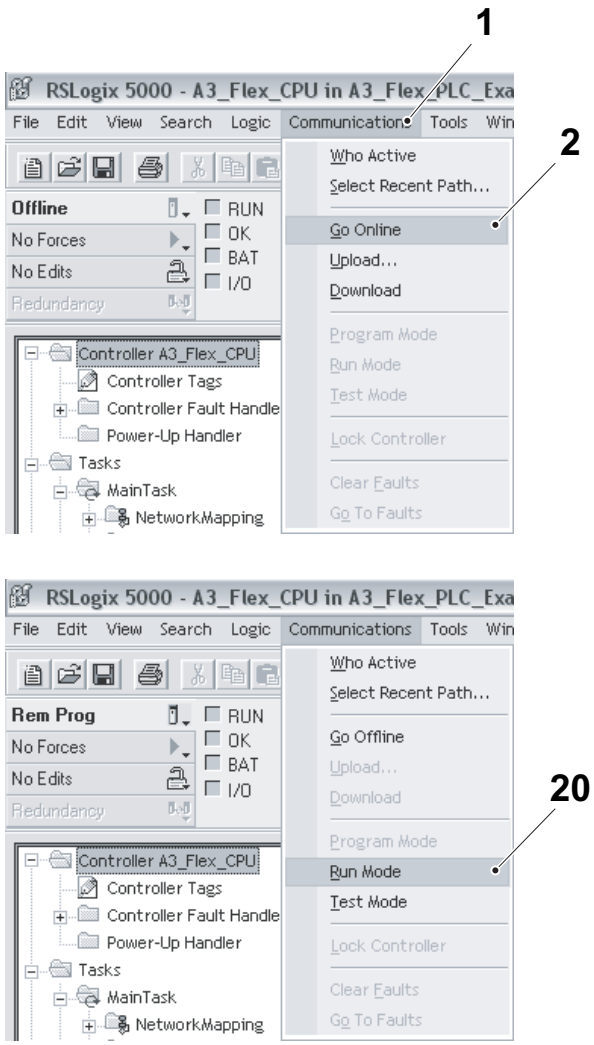

1 Communication menu
2 Go online
20 RUN mode

This page intentionally left blank

10 Regular Accessories

Regular Accessories - Description

SPC Reference	663310

10.1 Photocell Unit . . . . . 10 - 5

10.1-1 Photocell Unit - No Procedure Described . . . . . 10 - 5

10.2 Straw Magazine . . . . . 10 - 6

10.2-1 Straw Magazine - No Procedure Described . . . . 10 - 6

10.3 Tools and Templates . . . . . 10 - 7

10.3.1 Setting Template . . . . . 10 - 7

10.3.1-1 Setting Template- No Procedure Described . . . . 10 - 7

10.3.2 Hook Spanner . . . . . 10 - 8

10.3.2-1 Hook Spanner - No Procedure Described . . . . . 10 - 8

This page intentionally left blank

10.1 Photocell Unit

10.1-1 Photocell Unit - No Procedure Described

Machine Status	Power Supply Disconnector ON Air Valve ON
SPC Reference	2909952 - Valid for TBA

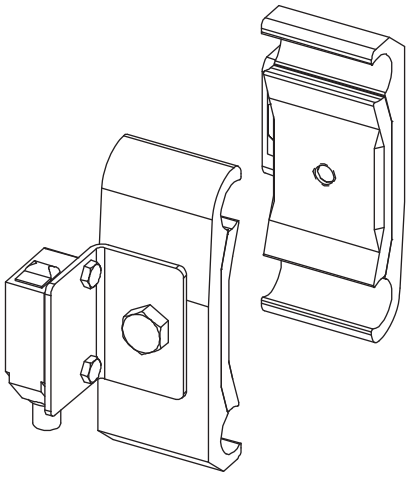

10.2 Straw Magazine

10.2-1 Straw Magazine - No Procedure Described

Machine Status	Power Supply Disconnector ON Air Valve ON
SPC Reference	2923344

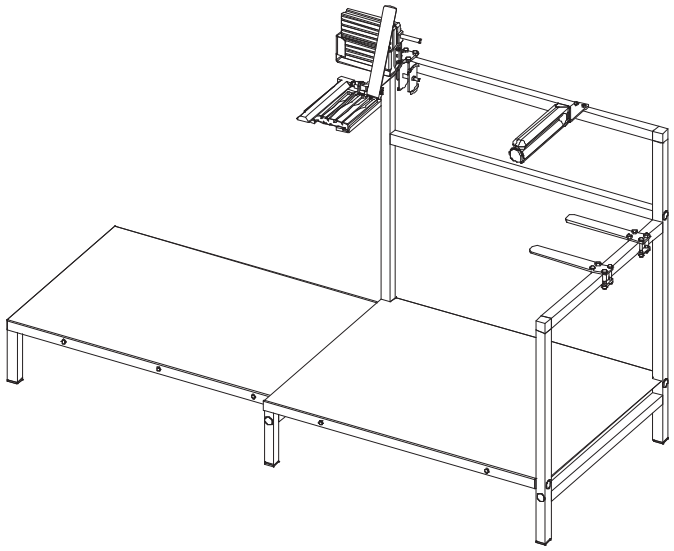

10.3 Tools and Templates

10.3.1 Setting Template

10.3.1-1 Setting Template- No Procedure Described

Machine Status	Power Supply Disconnector ON Air Valve ON
SPC Reference	2959983-0000

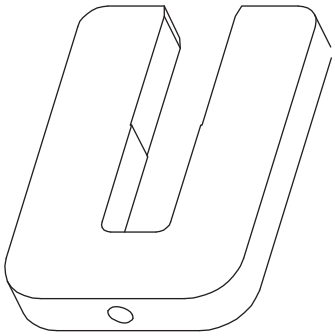

10.3.2 Hook Spanner

10.3.2-1 Hook Spanner - No Procedure Described

SPC Reference	90243-0164

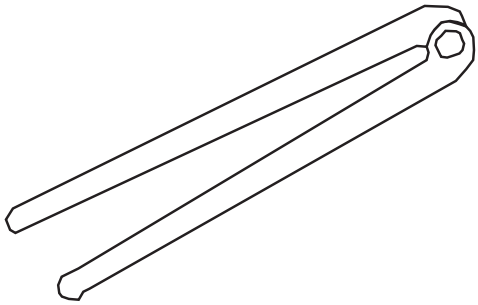

11 Optional Equipment

Optional Equipment - Description

Optional Equipment	663311

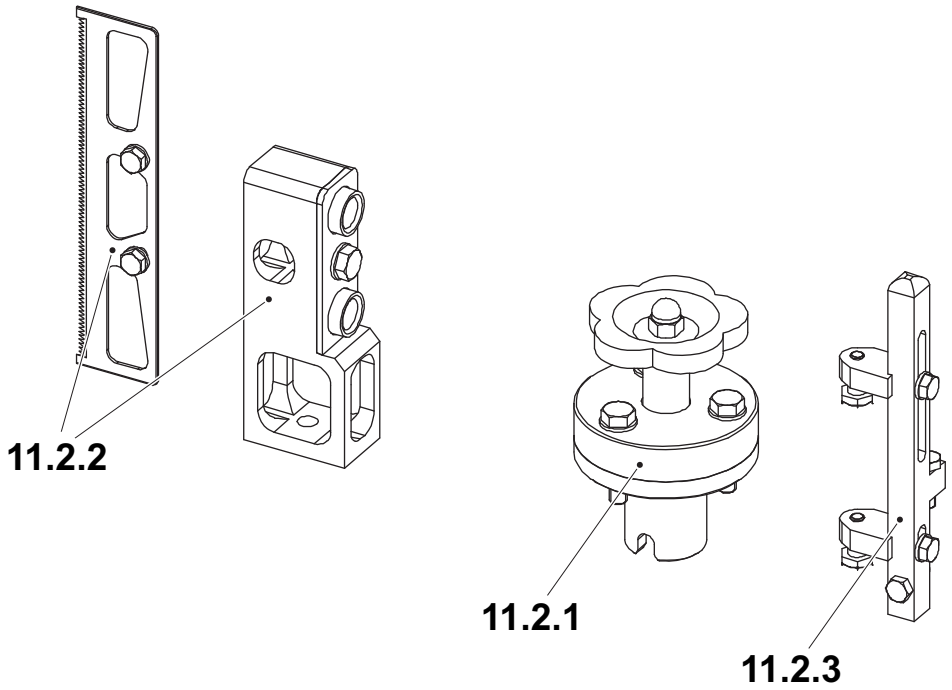

11.2.1 Feed wheel
11.2.2 Cutting unit
11.2.3 Pressure arm

11.1 Photocell Unit . . . . . 11 - 5

11.1-1 Photocell Unit - No Procedure Described . . . . . 11 - 5

11.2 Quick Change . . . . . 11 - 6

11.2.1 Feed Wheel . . . . . 11 - 6

11.2.1-1 Feed Wheel - Assemble . . . . . 11 - 6

11.2.2 Cutting Unit. . . . . 11 - 7

11.2.2-1 Cutting Unit - Assemble . . . . . 11 - 7

11.2.3 Pressure Arm . . . . . 11 - 8

11.2.3-1 Pressure Arm - Assemble . . . . . 11 - 8

This page intentionally left blank

11.1 Photocell Unit

11.1-1 Photocell Unit - No Procedure Described

SPC Reference	2943553-0100 - Valid for TBA

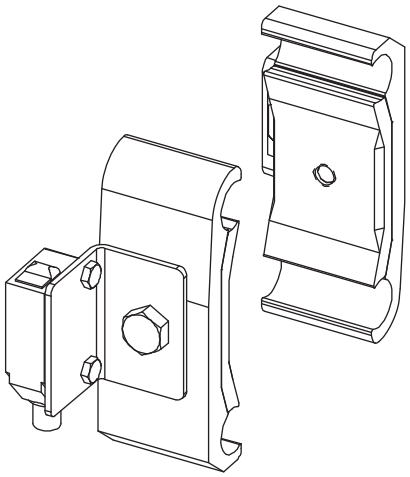

11.2 Quick Change

11.2.1 Feed Wheel

11.2.1-1 Feed Wheel - Assemble

SPC Reference	2960584 - Valid for TBA

Prepare the feed wheel quick change kit by assemble the variant feed wheel to the quick change parts by the screws (1).

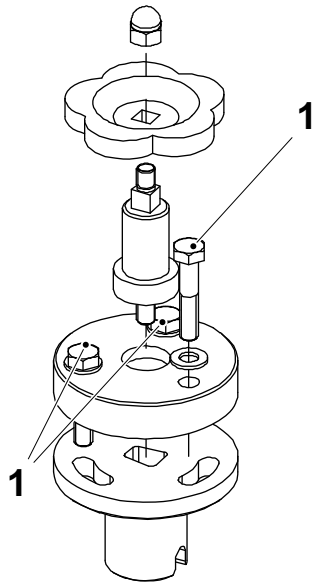

1 Screw

11.2.2 Cutting Unit

11.2.2-1 Cutting Unit - Assemble

SPC Reference	2960585 - Valid for TBA

Prepare the cutting unit quick change kit by assemble the variant cutting unit shafts to the quick change parts by the arrows in the illustration below.

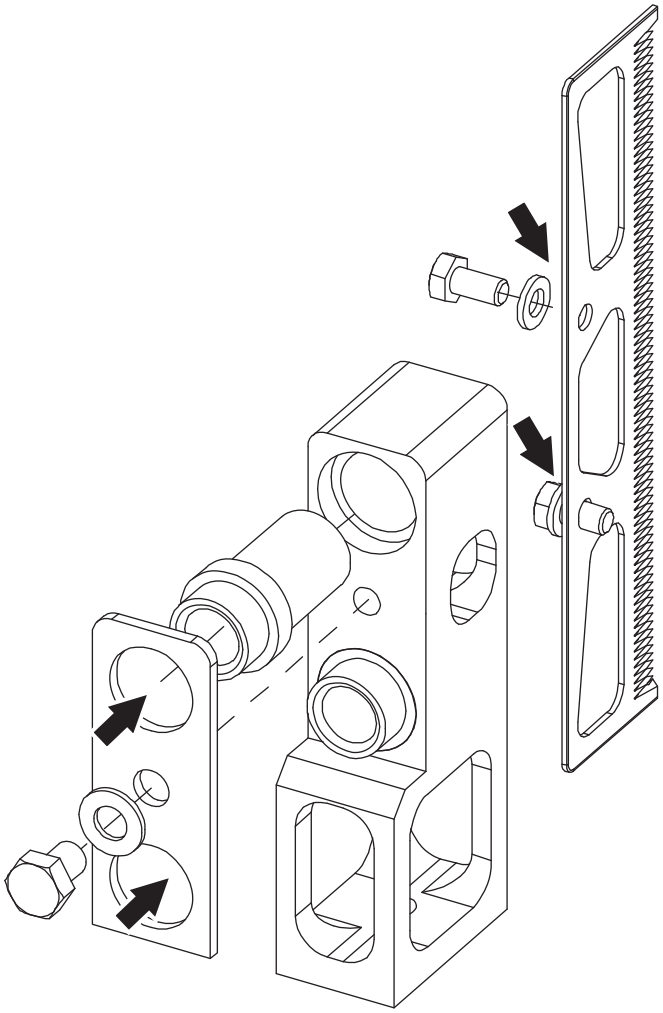

11.2.3 Pressure Arm

11.2.3-1 Pressure Arm - Assemble

SPC Reference	2960586 - Valid for TBA

Prepare the quick change pressure arm kit by assemble the variant pressure arms to the quick change parts by the screws (1).

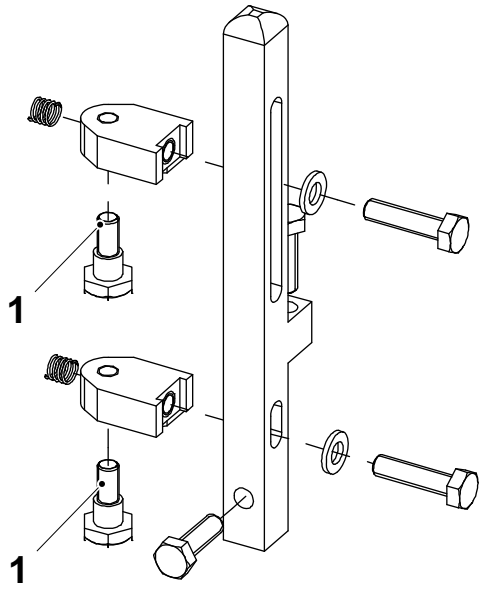

1 Screw

12 General

General - Description

This chapter includes general guideline settings.

12.1 Guideline Settings, TBA . . . . . 12 - 5

12.2 Conversion . . . . . 12 - 6

12.2-1 Change Straw Type (TBA) . . . . . 12 - 6

12.2-2 Change Straw Type (TCA) . . . . . 12 - 9

This page intentionally left blank

12.1 Guideline Settings, TBA

Package type		200S		200B	
Straw type		U-1654		U-1455	
Package size		84x63		120x50	
Straw direction		Top Right	Top Left	Top Right	Top Left
Setting	**Procedure**	**Value**	**Value**	**Value**	**Value**
Applicator unit angle	1-2 Applicator Unit - Set Angle (TBA)	23° right	15° left	38° right	31° left
Applicator unit height	1-3 Applicator Unit - Set Height and Straw Position (TBA)	-	-	-	-
Leaf spring	1.7-3 Spring Holder - Set Leaf Spring (TBA)	65 mm	65 mm	57 mm	47 mm
Support rails	2.1.1.1-1 Support Rail - Set	pack. width + 5 mm on each side	pack. width + 5 mm on each side	pack. width + 5 mm on each side	pack. width + 5 mm on each side
Belt brake	2.1.2-3 Belt Brake - Set	35 mm	35 mm	39 mm	39 mm
Adjustment plate override	2.1.3-1 Adjustment Plate - Set Override	40 mm	40 mm	43 mm	40 mm
Top support height	2.1.5-1 Height Adjustment - Set Height	137 mm	137 mm	99 mm	99 mm
Gun holder upper	3.1.1-3 Hotmelt Gun - Set Gun Holder (TBA)	105 mm	105 mm	90 mm	79 mm
Gun holder lower	3.1.1-3 Hotmelt Gun - Set Gun Holder (TBA)	21 mm	15 mm	18 mm	15 mm
Nozzle size upper		0.016''	0.016''	0.016''	0.016''
Nozzle size lower		0.016''	0.016''	0.016''	0.016''

12.2 Conversion

12.2-1 Change Straw Type (TBA)

Machine Status	Power Supply Disconnector OFF Air Valve OFF
SPC Reference	663301

a) Change the feed wheel, see Section 1.1.1-1 Feed Wheel - Change (TBA).

b) If changing between straight straws and U-straws the cutting unit shafts need to be changed. If not, go to item j).

CAUTION

Risk of personal injury.

The knife is very sharp. Be careful when working near the knife.

a) Turn the stellar knob (1) until the knife (2) is in its outer position.

b) Fit the template (3).

c) Remove the screw (4).

TBA

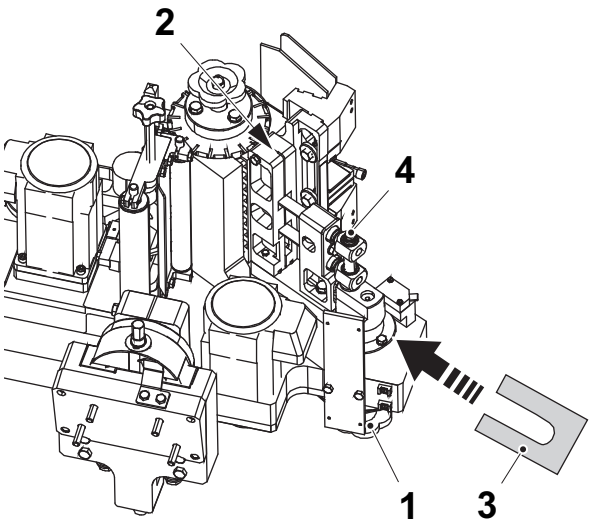

1 Stellar knob
2 Knife
3 Template
4 Screw

(Cont'd)

(Cont'd)

d) Remove the template (3) and loosen the screw (5).
e) Remove the knife holder unit (6).
f) Remove the screws (7).

TBA

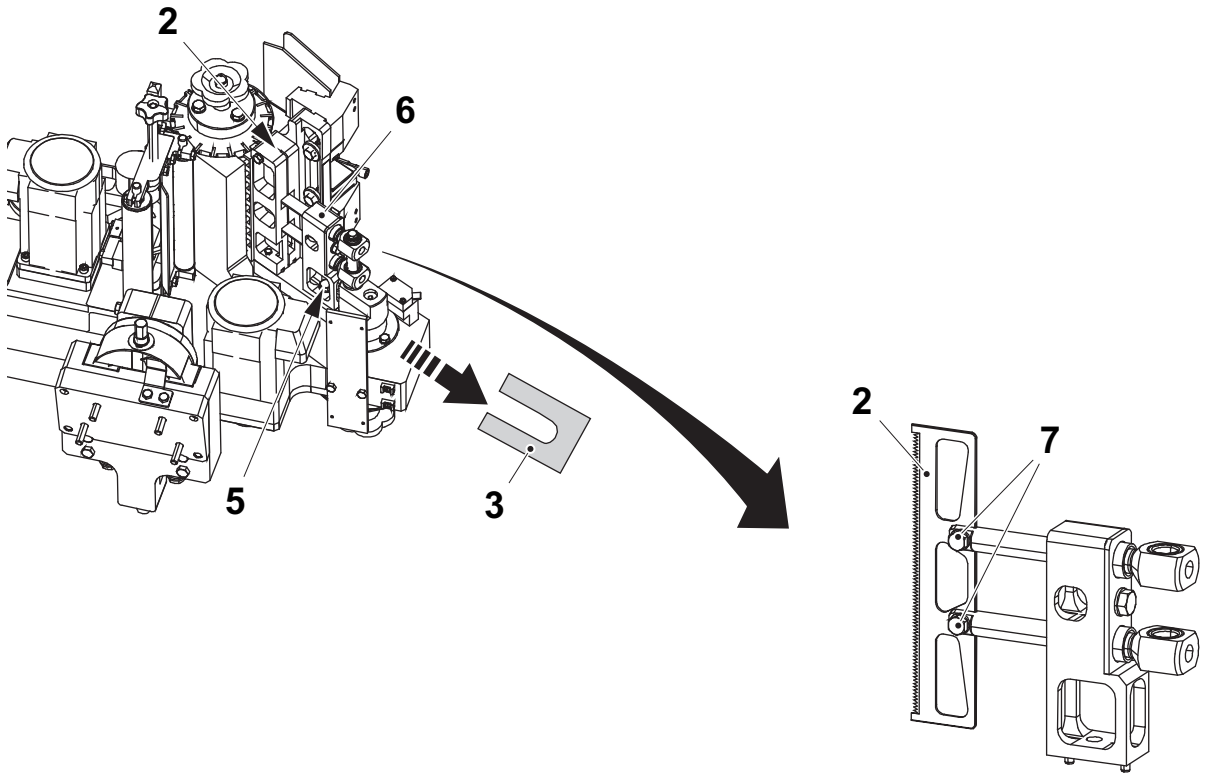

2 Knife
3 Template
5 Screw
6 Knife holder
7 Screw

(Cont'd)

(Cont'd)

g) Remove the screw (8) and the clamping plate (9).

h) Use the shafts stamped with a U for U-straws and the shafts stamped with an S for straight straws.

i) Assemble in the reverse order.

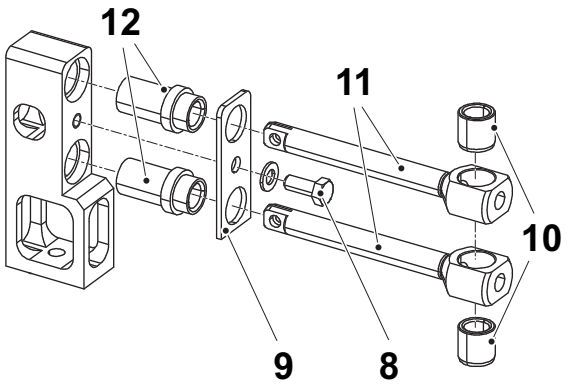

8 Screw
9 Clamping plate
10 Bearing bushing
11 Shaft
12 Guide bushing

j) Adjust the pressure arms, see Section 1.3.3-3 Pressure Arm - Set (TBA).

k) If changing between straight straws and U-straws the belt tightener needs to be adjusted, see Section 1.4.1-3 Frame Housing - Change Timing Belt.

l) Set pick position, see Section 7.1.2-2 Maintenance - Set Pick Position.

12.2-2 Change Straw Type (TCA)

Machine Status	Power supply disconnector OFF Air valve OFF
Special Equipment	Hook spanner TP No. 90243-0164
SPC Reference	2957734, 2957735, 2957737, 2957738 2864774, 2864775 2829489, 2856539 2863517, 2939679

a) Lower the pressure unit (1) by turning the handles (2) upwards.

b) Turn the stellar knob (3) until the knife (4) is in its outer position.

c) Turn the stellar knob (5) to the left until the feed wheel unit (6) is released from the shaft.

d) Remove the feed wheel unit.

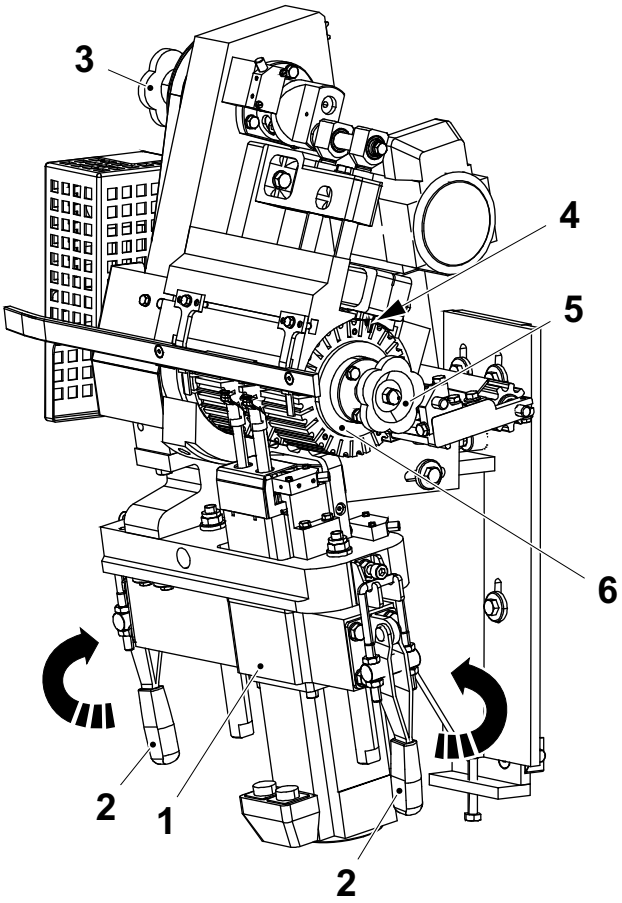

1 Pressure unit
2 Handle
3 Stellar knob
4 Knife
5 Stellar knob
6 Feed wheel unit

(Cont'd)

(Cont'd)

e) Loosen the screws (7).

f) Prepare the new feed wheel unit by assembling the feed wheel (8) with the stellar knob (5).

g) Tighten the screws (7).

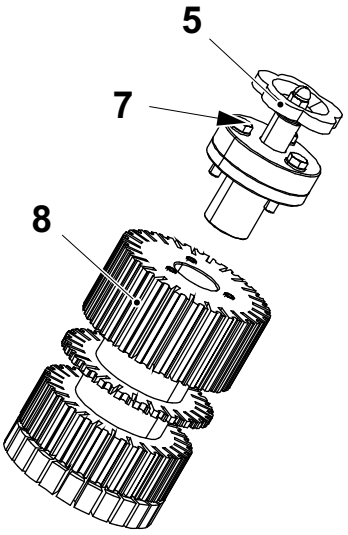

5 Stellar knob
7 Screw (3 pieces)
8 Feed wheel

(Cont'd)

(Cont'd)

h) Remove the hotmelt gun unit by loosen the screws (9).

WARNING

Burn hazard.

The hotmelt gun and the gun cover are very hot. Be careful when working near the gun and the cover.

i) Remove the cover (10) by loosening the screws (11).

j) Remove the belt tightener by loosen the screw (12), see 1.4.2-1 Belt Tightener - Check Parts, items d) to g).

k) Remove the clamping element (13) by loosen the screw (14).

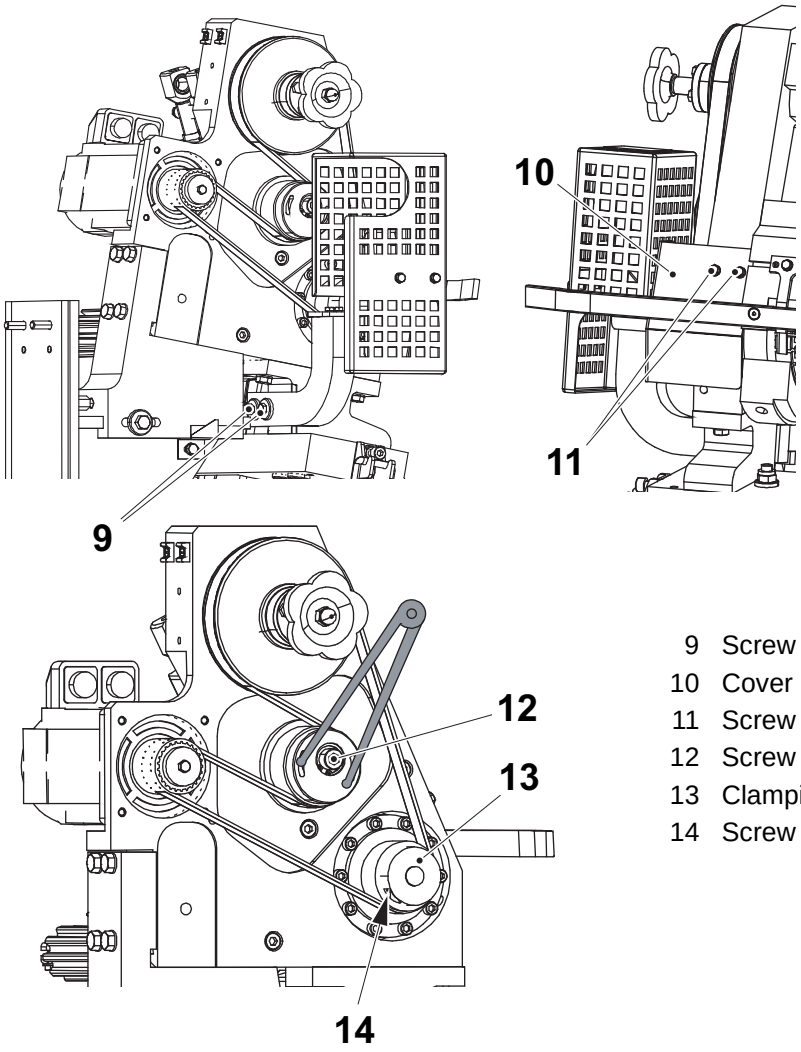

9 Screw
10 Cover
11 Screw
12 Screw
13 Clamping element
14 Screw

(Cont'd)

(Cont'd)

l) Change the wheel (15).

m) Assemble the clamping element back with the new wheel.

n) Put the screw (12) and the belt tightener in the appropriate hole (arrow), according to the straw type marking beside the hole.

o) Assemble the belt tightener and the timing belt according to 1.4.2-1 Belt Tightener - Check Parts, items l) to q).

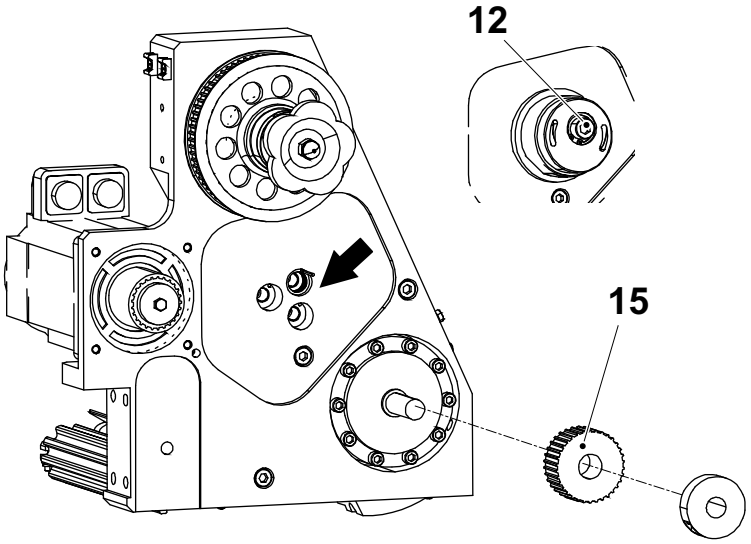

12 Screw
15 Wheel

(Cont'd)

(Cont'd)

p) Remove the screw (16).

q) Lift up the cutting unit and remove the screws (17) and remove the knife (4).

CAUTION

Risk of personal injury.

The knife is very sharp. Be careful when working near the knife.

r) Pull out the axle pin (18) with the shafts (19).

s) Change the shafts (19) and place the axle pin (18) in the appropriate hole, according to the marking on the eccentric (20).

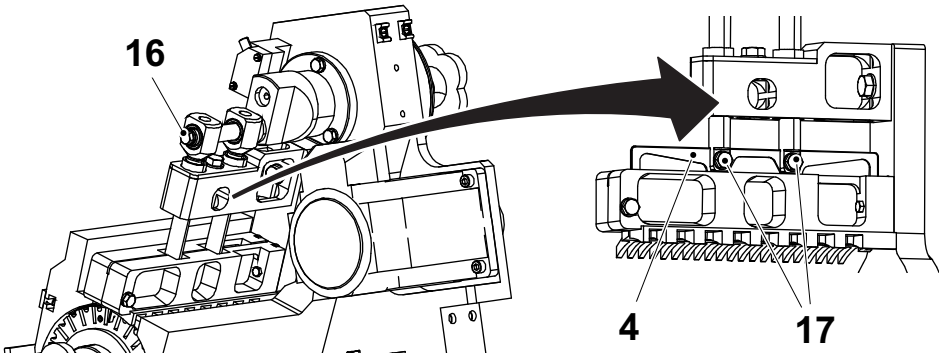

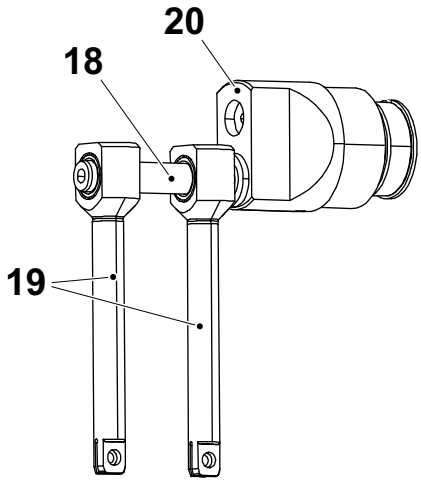

4 Knife
16 Screw
17 Screw
18 Axle pin
19 Shaft
20 Eccentric

(Cont'd)

(Cont'd)

t) Loosen the screws (21) on the squeezers (22), and change the squeezers.

Note! Do not overtigthen the screws.

u) Assemble the knife and the feed wheel unit. Perform 1.1-4 Feed Wheel Unit - Set.

v) Loosen the screws (23) on the guide console and move the holders (24) to the sides.

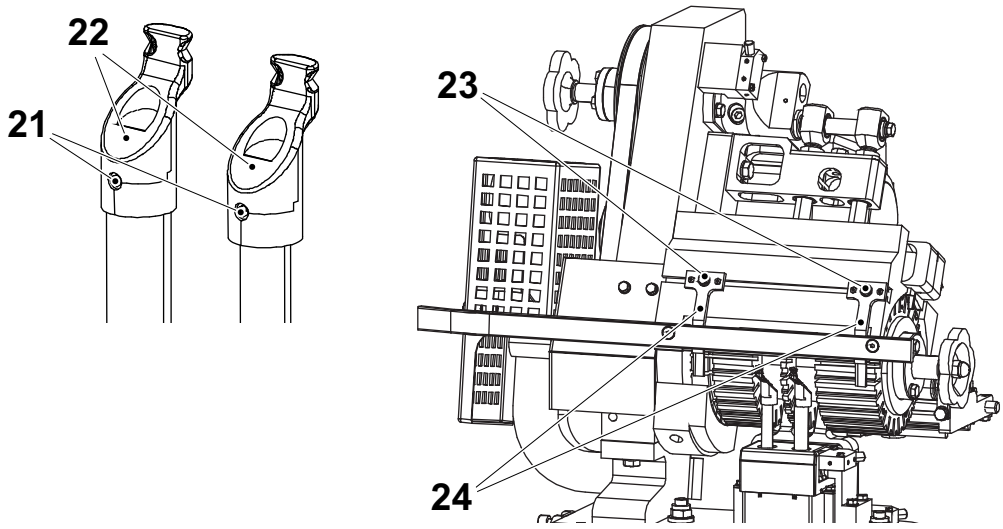

21 Screw
22 Squeezer
23 Screw
24 Holder

(Cont'd)

(Cont'd)

w) Raise the pressure unit by pulling the handles (2) downwards.

x) Set the squeezers by loosening the screws (25) and adjust the position of the pressure unit (1). The squeezers are to be centered in the feed wheel slots.

y) Tighten the screws (25). Check that the height of the squeezer slots agree with the feed wheel slot, see the illustration below. If not, perform 1.3.4-1 Pressure Unit - Set (TCA).

z) Perform 1.5.1-1 Ladder Band Guide - Set and 1.6-3 Guide Console - Set (TCA).

aa) Change recipe on the TPOP.

ab) Check the straw position and the hotmelt string position.

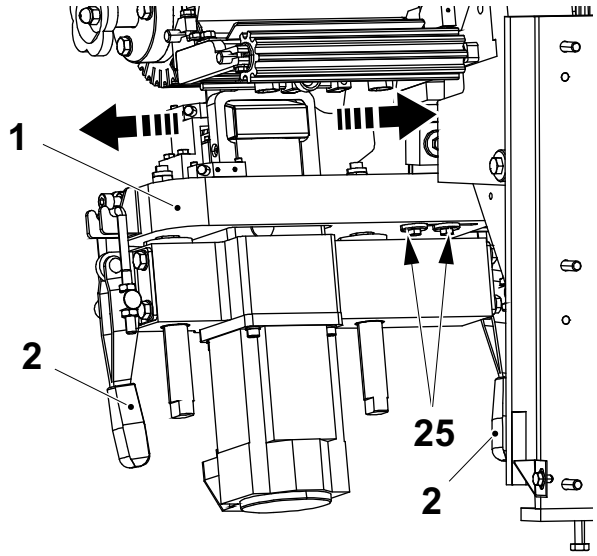

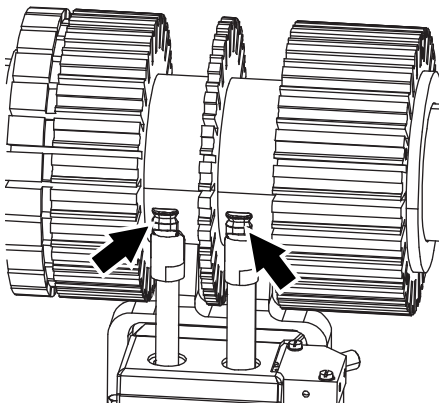

1 Pressure unit
2 Handle
25 Screw (4 pieces)

This page intentionally left blank

A

Adjustment Plate - Change Cylinder . . . . . 2 - 49
Adjustment Plate - Check Cylinder . . . . . 2 - 48
Adjustment Plate - Set Cylinder . . . . . 2 - 47
Adjustment Plate - Set Override . . . . . 2 - 10
Air Supply - Reduce Air Pressure . . . . . 6 - 6
Air Supply - Set Air Pressure . . . . . 6 - 5
Air Supply - Set Hotmelt Regulator . . . . . 6 - 12
Air Supply - Set Pressure Sensor . . . . . 6 - 7
Applicator Unit - Check . . . . . 1 - 5
Applicator Unit - Set Angle (TBA) . . . . . 1 - 6
Applicator Unit - Set Height (TCA) . . . . . 1 - 8
Applicator Unit - Set Height and Straw Position (TBA) . . . . . 1 - 7
Apply Unit Maintenance . . . . . 7 - 44

B

Belt Brake - Change Timing Belt . . . . . 2 - 8
Belt Brake - Check Timing Belt . . . . . 2 - 7
Belt Brake - Set . . . . . 2 - 9
Belt Conveyor, Infeed - Change Ball Bearings 2 - 36
Belt Conveyor, Infeed - Change Conveyor Belt . . . . . 2 - 33
Belt Conveyor, Infeed - Check Ball Bearings . 2 - 35
Belt Conveyor, Infeed - Check Conveyor Belt 2 - 32
Belt Tightener - Change Parts . . . . . 1 - 59
Belt Tightener - Check Parts . . . . . 1 - 54
Bracket - No Procedure Described . . . . . 4 - 11

C

Cable Duct - No Procedure Described . . . . . 4 - 5
Change Straw Type (TBA) . . . . . 12 - 6
Change Straw Type (TCA) . . . . . 12 - 9
Configuration . . . . . 7 - 37
Configuration - Change Conveyor Velocity . . 7 - 34
Configuration - Change IP Address . . . . . 7 - 35
Configuration - Change Package Type . . . . . 7 - 32
Configuration - Change PLMS Communication . . . . . 7 - 31
Configuration - Set Line Communication . . . . 7 - 33
Connector - No Procedure Described . . . . . 4 - 9
Conveyor - Change Ball Bearings . . . . . 2 - 30
Conveyor - Change Drive Belts . . . . . 2 - 28
Conveyor - Check Ball Bearings . . . . . 2 - 29
Conveyor - Check Drive Belts . . . . . 2 - 27
Conveyor - Set . . . . . 2 - 21
Cooling Air Outlet - No Procedure Described . . 8 - 5
Cover - No Procedure Described . . . .5 - 6, 5 - 7, 5 - 8, 5 - 9, 5 - 11, 8 - 10
Crank Housing - Change Parts (TBA) . . . . . 1 - 34
Crank Housing - Check Parts (TBA) . . . . . 1 - 31
Crankshaft - Change Parts . . . . . 1 - 79
Crankshaft - Check Parts . . . . . 1 - 72
Cutting Unit - Assemble . . . . . 11 - 7
Cutting Unit - Change Parts . . . . . 1 - 28
Cutting Unit - Check Parts . . . . . 1 - 25

D

Diagnostic . . . . . 7 - 39
Discharge Unit Maintenance . . . . . 7 - 46
Document - No Procedure Described . . . . . 9 - 5
Drive and End Unit - Change Ball Bearings . . 2 - 23
Drive Motor - No Procedure Described . . . . . 1 - 38

E

El-Cabinet Door - Check Filter Fan . . . . . 8 - 8
El-Cabinet Door - No Procedure Described . . . 8 - 9
Electrical Cabinet - No Procedure Described . . 8 - 6
Electrical Materials - Change a Safety PLC in an Existing Application Afterwards in Safety System . . . . . 8 - 39
Electrical Materials - Change Baud Rate, Error Code E26 in Safety System . . . . . 8 - 38
Electrical Materials - Change Fuse in PLC Power Supply . . . . . 8 - 29
Electrical Materials - Change Fuse on Overvoltage Protector . . . . . 8 - 11
Electrical Materials - Check Photocell . . . . . 8 - 45
Electrical Materials - Check Residual Current Device . . . . . 8 - 12

Electrical Materials - Description of PLC SM2 8 - 30
Electrical Materials - Description of Safety System . . . . . 8 - 35
Electrical Materials - Description of Variable Frequency Drive . . . . . 8 - 14
Electrical Materials - Download Program from a PC to a Safety PLC . . . . . 8 - 41
Electrical Materials - Electrical Connection of SNP Converter . . . . . 8 - 33
Electrical Materials - Reset Fuse in Miniature Circuit Breaker . . . . . 8 - 13
Electrical Materials - Safety System Error Codes . . . . . 8 - 44
Electrical Materials - Servo Amplifier Error Codes . . . . . 8 - 22
Electrical Materials - Set Address after Replacing an ID-FIX in Safety System . . . . . 8 - 36
Electrical Materials - Set DIP Switch on SNP Converter . . . . . 8 - 32
Electrical Materials - Set Photocell Sensitivity 8 - 46
Electrical Materials - Set Sercos Communication on Servo Amplifier . . . . . 8 - 20
Electrical Materials - Set Switches at PLC SM2 . . . . . 8 - 31
Electrical Materials - Set Variable Frequency Drive . . . . . 8 - 15
Electrical Materials - Variable Frequency Drive Fault Codes . . . . . 8 - 18

F

Feed Wheel - Assemble . . . . . 11 - 6
Feed Wheel - Change (TBA) . . . . . 1 - 22
Feed Wheel - Change (TCA) . . . . . 1 - 24
Feed Wheel Unit - Change Parts . . . . . 1 - 19
Feed Wheel Unit - Check Parts (TBA) . . . . . 1 - 10
Feed Wheel Unit - Check Parts (TCA) . . . . . 1 - 16
Feed Wheel Unit - Set . . . . . 1 - 20
Frame Housing - Change Timing Belt . . . . . 1 - 48
Frame Housing - Check Timing Belt (TBA) . . 1 - 45
Frame Housing - Check Timing Belt (TCA) . . 1 - 47

G

Glass Door - No Procedure Described . . . . . 5 - 5
Guide Arm - Set . . . . . 4 - 10
Guide Console - Change Guide Arms (TBA) . 1 - 64
Guide Console - Set Gun Holder (TBA) . . . . . 1 - 66
Guide Console - Set (TCA) . . . . . 1 - 67

H

Height Adjustment - Change Shock Absorber . 2 - 19
Height Adjustment - Check Shock Absorber . . 2 - 18
Height Adjustment - Set Height . . . . . 2 - 17
Hook Spanner - No Procedure Described . . . . 10 - 8
Hotmelt Equipment - Change Nozzle (TCA) . . 3 - 20
Hotmelt Equipment Miscellaneous - No Procedure Described . . . . . 3 - 5
Hotmelt Equipment Nordson - Bleed System (TBA) . . . . . 3 - 15
Hotmelt Equipment Nordson - Change Adhesive . . . . . 3 - 14
Hotmelt Equipment Nordson - Change Filter . 3 - 21
Hotmelt Equipment Nordson - Change Nozzle (TBA) . . . . . 3 - 19
Hotmelt Equipment Nordson - Check Hose . . 3 - 17
Hotmelt Equipment Nordson - Clean Nozzle . . 3 - 18
Hotmelt Equipment Nordson - Hotmelt Unit, F2 Alarm . . . . . 3 - 16
Hotmelt Equipment Nordson - Set Hotmelt Unit 3 - 6
Hotmelt Gun - Change Gun Module . . . . . 3 - 24
Hotmelt Gun - Change Solenoid Valve . . . . . 3 - 26
Hotmelt Gun - Set Gun Holder (TBA) . . . . . 3 - 27

I

Inductive Switch - Change Parts . . . . . 1 - 63
Inductive Switch - Check Parts . . . . . 1 - 62
Infeed Unit Maintenance . . . . . 7 - 48

L

Ladder Band Guide - Set . . . . . 1 - 61
Light Fixture - No Procedure Described . . . . . 4 - 8
Lock Holder - Set Gun Holder (TCA) . . . . . 1 - 44

M

Machine Body - No Procedure Described . . . . 4 - 6
Main Pipe - No Procedure Described . . . . . 6 - 13
Maintenance - Set Apply Unit . . . . . 7 - 10
Maintenance - Set Discharge Unit . . . . . 7 - 16
Maintenance - Set Infeed Unit Parameters . . 7 - 18
Maintenance - Set Package Unit Parameters 7 - 20
Maintenance - Set Pick Position . . . . . 7 - 12
Mounting Plate- No Procedure Described . . . . 8 - 7

P

Package Transfer - Change Ball Bearings . . . 2 - 43
Package Transfer - Change Belts . . . . . 2 - 46
Package Transfer - Check Ball Bearings . . . . 2 - 42
Package Transfer - Check Belts . . . . . 2 - 45
Package Transfer - Set . . . . . 2 - 39
Package Unit Maintenance . . . . . 7 - 50
Photocell Unit - No Procedure Described . . . 10 - 5, ... 11 - 5
Pressure Arm - Assemble . . . . . 11 - 8
Pressure Arm - Change Parts (TBA) . . . . . 1 - 40
Pressure Arm - Check Parts (TBA) . . . . . 1 - 39
Pressure Arm - Set (TBA) . . . . . 1 - 41
Pressure Arm - Set Override (TBA) . . . . . 1 - 42
Pressure Unit - Set (TCA) . . . . . 1 - 43

R

Recipes - Set Recipe . . . . . 7 - 5

S

Set Baud Node Address on Servo Amplifier . 8 - 21
Set Recipe . . . . . 7 - 41
Setting Template- No Procedure Described . 10 - 7
Setup - Add Language . . . . . 7 - 24
Setup - Change User Settings . . . . . 7 - 26
Setup - Check Diagnostic . . . . . 7 - 28
Setup - Shut Down . . . . . 7 - 29
Shut down . . . . . 7 - 40
Side Adjuster - No Procedure Described . . . . 2 - 50
Software CD - Download PLC Program . . . . . 9 - 6
Spring Holder - Change Compression Springs (TBA) . . . . . 1 - 69
Spring Holder - Check Parts (TBA) . . . . . 1 - 68
Spring Holder - Set Leaf Spring (TBA) . . . . . 1 - 71
Straw Magazine - No Procedure Described . . 10 - 6
Support Belt - Change Timing Belt . . . . . 2 - 12
Support Belt - Check Timing Belt . . . . . 2 - 11
Support Belt - Set Timing Belt Tension . . . . . 2 - 13
Support Rail - Set . . . . . 2 - 6

T

Tunnel - No Procedure Described . . . . 5 - 10, 5 - 12

U

User . . . . . 7 - 36

W

Warning Lamp - No Procedure Described . . . . 4 - 7
Wheel - Change Parts . . . . . 2 - 15
Wheel - Check Parts . . . . . 2 - 14

This page intentionally left blank

***Note!** This page is generated **automatically**.*
*using the **variable definitions** made in the **front page** file!*

Straw Applicator 30 by Tetra Pak
663350-0100
Issue 2008-11 Doc. No. MM-2881125-0103

Straw Applicator 30 by Tetra Pak 1(2)
663350-0100
Issue 2008-11 Doc. No. MM-2881125-0103

Straw Applicator 30 by Tetra Pak
663350-0100
Issue 2008-11 Doc. No. MM-2881125-0103

Straw Applicator 30 by Tetra Pak 1(2)
663350-0100
Issue 2008-11 Doc. No. MM-2881125-0103

Straw Applicator 30 by Tetra Pak
663350-0100
Issue 2008-11 Doc. No. MM-2881125-0103

Straw Applicator 30 by Tetra Pak 1(2)
663350-0100
Issue 2008-11 Doc. No. MM-2881125-0103

Straw Applicator 30 by Tetra Pak
663350-0100
Issue 2008-11 Doc. No. MM-2881125-0103

Straw Applicator 30 by Tetra Pak 1(2)
663350-0100
Issue 2008-11 Doc. No. MM-2881125-0103

Straw Applicator 30 by Tetra Pak
663350-0100
Issue 2008-11 Doc. No. MM-2881125-0103

Straw Applicator 30 by Tetra Pak 2(2)
663350-0100
Issue 2008-11 Doc. No. MM-2881125-0103

Straw Applicator 30 by Tetra Pak
663350-0100
Issue 2008-11 Doc. No. MM-2881125-0103

Straw Applicator 30 by Tetra Pak 2(2)
663350-0100
Issue 2008-11 Doc. No. MM-2881125-0103

Straw Applicator 30 by Tetra Pak
663350-0100
Issue 2008-11 Doc. No. MM-2881125-0103

Straw Applicator 30 by Tetra Pak 2(2)
663350-0100
Issue 2008-11 Doc. No. MM-2881125-0103

Straw Applicator 30 by Tetra Pak
663350-0100
Issue 2008-11 Doc. No. MM-2881125-0103

Straw Applicator 30 by Tetra Pak 2(2)
663350-0100
Issue 2008-11 Doc. No. MM-2881125-0103

Straw Applicator 30 by Tetra Pak
663350-0100

Issue 2008-11 Doc. No. MM-2881125-0103

Straw Applicator 30 by Tetra Pak 1(2)
663350-0100

Issue 2008-11 Doc. No. MM-2881125-0103

Straw Applicator 30 by Tetra Pak
663350-0100

Issue 2008-11 Doc. No. MM-2881125-0103

Straw Applicator 30 by Tetra Pak 1(2)
663350-0100

Issue 2008-11 Doc. No. MM-2881125-0103

Straw Applicator 30 by Tetra Pak
663350-0100

Issue 2008-11 Doc. No. MM-2881125-0103

Straw Applicator 30 by Tetra Pak 1(2)
663350-0100

Issue 2008-11 Doc. No. MM-2881125-0103

Straw Applicator 30 by Tetra Pak
663350-0100

Issue 2008-11 Doc. No. MM-2881125-0103

Straw Applicator 30 by Tetra Pak 2(2)
663350-0100

Issue 2008-11 Doc. No. MM-2881125-0103

Straw Applicator 30 by Tetra Pak
663350-0100

Issue 2008-11 Doc. No. MM-2881125-0103

Straw Applicator 30 by Tetra Pak 2(2)
663350-0100

Issue 2008-11 Doc. No. MM-2881125-0103

Straw Applicator 30 by Tetra Pak
663350-0100

Issue 2008-11 Doc. No. MM-2881125-0103

Straw Applicator 30 by Tetra Pak 2(2)
663350-0100

Issue 2008-11 Doc. No. MM-2881125-0103