SPC

Spare Parts Catalogue

Straw Applicator 30 by Tetra Pak

663350-0100

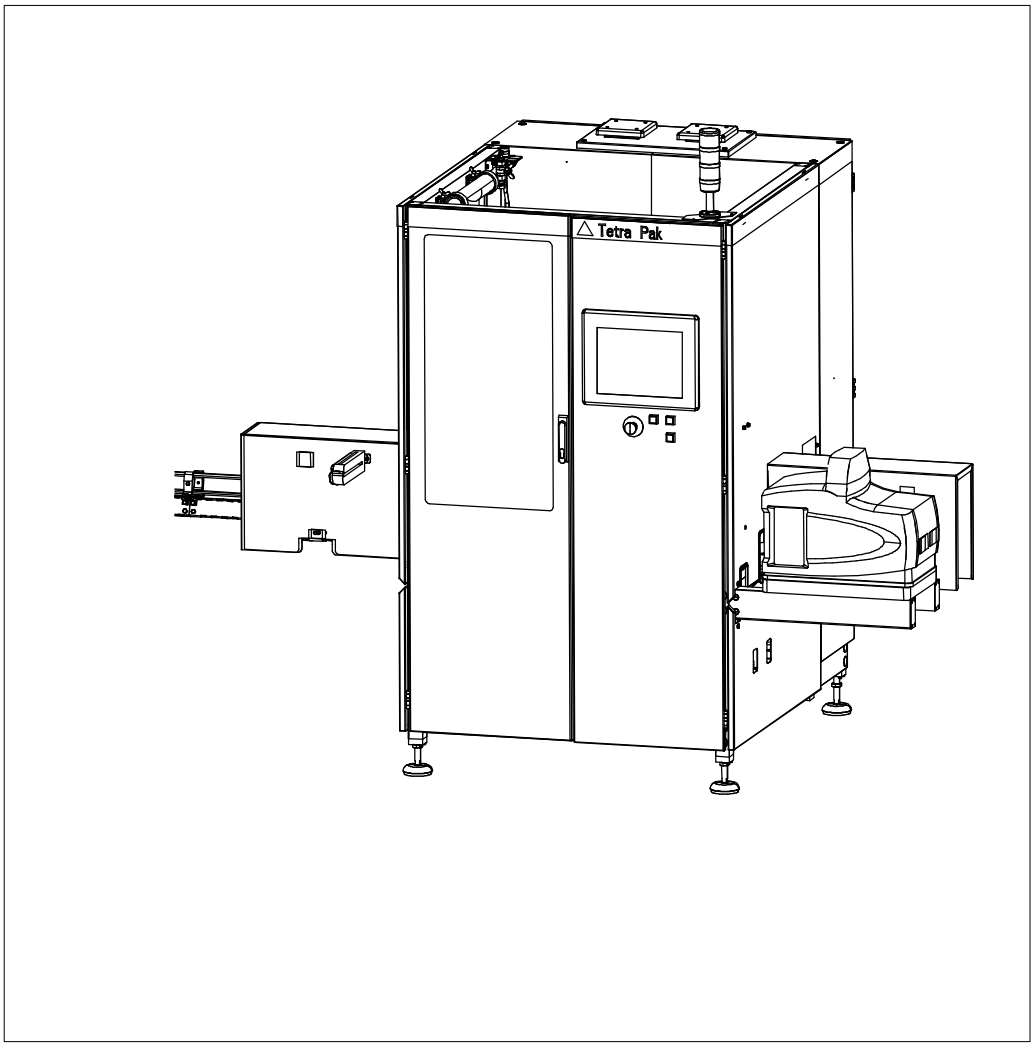

Tetra Pak

Doc. No: SPC-2888281-0102

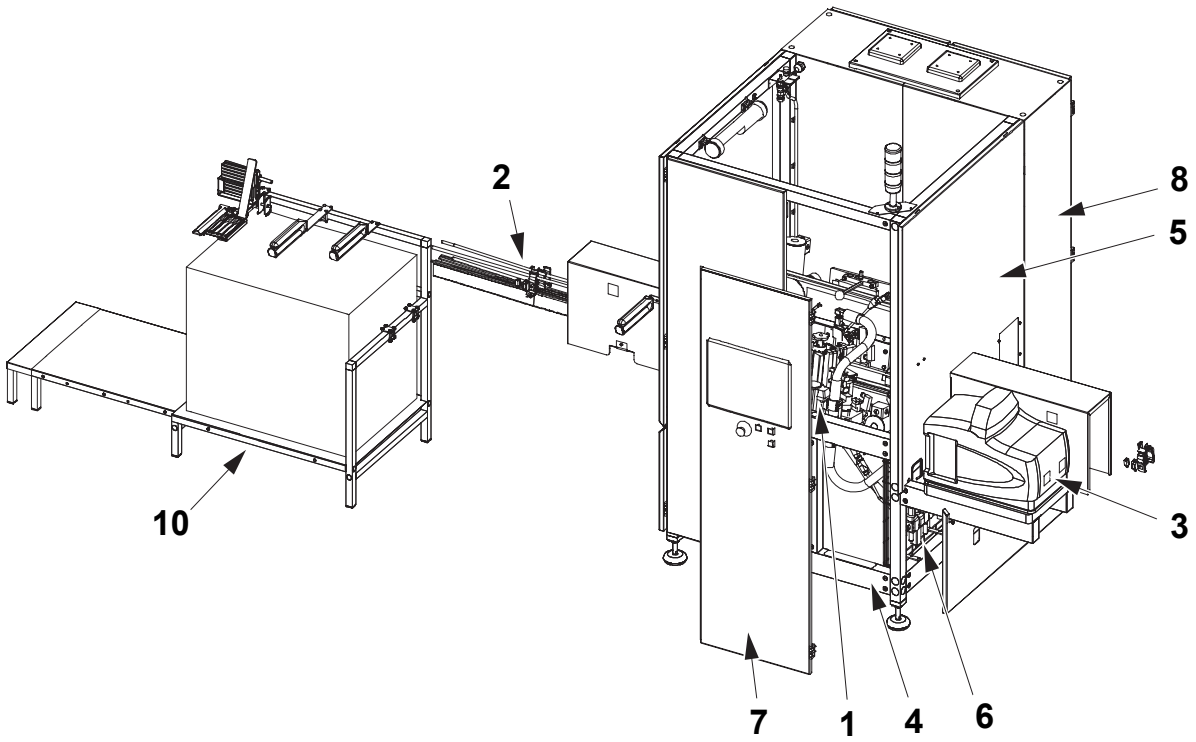

The position numbers in the illustration correspond with the chapter numbers listed on the next page.

Copyright © 2008 Tetra Pak Group

All rights reserved. No part of this document may be reproduced or copied in any form or by any means without written permission from Tetra Pak Packaging Solutions AB.

Tetra Pak and all Tetra Pak products are trademarks belonging to the Tetra Pak Group.

The content of this manual is in accordance with the design and construction of the machine or equipment at the time of publishing. Tetra Pak reserves the right to introduce design modifications without prior notice.

This document was produced by:

Tetra Pak Packaging Solutions AB
Ruben Rausings gata
221 86 Lund
SWEDEN

Additional copies can be ordered from Tetra Pak. When ordering additional copies, always provide the document number.

Doc. No. SPC-2888281-0102

Issue 2008-11

This document is valid from:

Series No/Machine No Sign.

SPC

Spare Parts Catalogue

Straw Applicator 30 by Tetra Pak
663350-0100

Machine or equipment configurations that this catalogue is valid for are described on the next page.

i Introduction

1 Applicator Unit

2 Conveyor Section

3 Hotmelt Equipment

4 Machine Body

5 Machine Covering

6 Air Equipment

7 Tpop Hmi

8 Electrical Cabinet

9 Electric Equipment

10 Regular Accessories

11 Optional Equipment

ii Part Number Index

iii Ref. Des. Parts Index

Doc. No: SPC-2888281-0102

Issue 2008-11

Tetra Pak

Tetra Pak Packaging Solutions

Valid for:

Name	Drawing Specification and Development Step	Additional Information
Straw Applicator 30 by Tetra Pak	663350-0100	Package Shape: - Tetra Brik Aseptic, TBA - Tetra Classic Aseptic, TCA

Optional Equipment:

Name	Drawing Specification and Development Step	Additional Information
Photocell Unit	2943553-0100	Valid for TBA
Quick Change Kit	2960583-0100	Valid for TBA

Update Log for Doc. No. SPC-2888281-0102

This table shows all changes made to this catalogue, including installed rebuilding kits, added or removed pages.

Date	Installed Kit	Added Pages (Doc. No.)	Removed Pages	Signature

Date	Installed Kit	Added Pages (Doc. No.)	Removed Pages	Signature

i Introduction

en About the Introduction Chapter
This chapter contains basic information about this catalogue and related Tetra Pak equipment.

bg За уводната глава
Тази глава съдържа основна информация за този каталог и приложимото Tetra Pak оборудване.

cs O kapitole Úvod
Tato kapitola obsahuje základní informace o této příručce a souvisejícím zařízení Tetra Pak.

da Om indledningen
Kapitlet indeholder grundlæggende oplysninger om dette katalog og tilhørende Tetra Pak-udstyr.

de Über das Einleitungskapitel
Diese Kapitel enthält grundlegende Informationen über diesen Katalog und die zugehörige Tetra Pak-Ausrüstung

el Σχετικά με το Κεφάλαιο 'Εισαγωγή'
Αυτό το κεφάλαιο περιέχει βασικές πληροφορίες για τον παρόντα κατάλογο και τον σχετικό εξοπλισμό της Tetra Pak.

es Acerca del capítulo Introducción
Este capítulo contiene información básica sobre este catálogo y el equipo Tetra Pak relacionado.

et Sissejuhatava peatüki kohta
See peatükk sisaldab teavet käesoleva kataloogi ja sellega seonduva Tetra Paki seadme kohta.

fi Tietoja Johdanto-luvusta
Tässä luvussa on perustietoja tästä luettelosta ja Tetra Pak -laitteesta.

fr À propos du chapitre Introduction
Ce chapitre contient les informations de base à propos de ce catalogue et de l'équipement Tetra Pak concerné.

hu A Bevezetés fejezetről
Ez a fejezet alapvető információkat tartalmaz a katalógusról és a hozzá tartozó Tetra Pak berendezésről.

is Um inngangskaflann
Þessi kafli inniheldur grundvallarupplýsingar um þennan vörulista og tengdan Tetra Pak búnað.

it Informazioni sul capitolo Introduzione
Questo capitolo contiene informazioni generali sul presente catalogo e sulla relativa macchina Tetra Pak.

lt Apie įvadinį skyrių
Šiame skyriuje pateikta pagrindinė informacija apie šį katalogą ir su juo susijusią "Tetra Pak" įrangą.

lv Par Ievada nodaļu
Šī nodaļa ietver galveno informāciju par šo katalogu un saistītajām Tetra Pak iekārtām.

nl Over de inleiding
Dit hoofdstuk bevat basisinformatie omtrent deze catalogus en aanverwante Tetra Pak-installatie.

no Om kapitlet Introduksjon
Dette kapitlet inneholder grunnleggende informasjon om denne katalogen og relatert Tetra Pak-utstyr.

pl Informacje na temat rozdziału wprowadzającego
Rozdział wprowadzający zawiera podstawowe informacje dotyczące niniejszego katalogu i związanej z nim maszyny Tetra Pak.

pt Acerca do Capítulo de Introdução
Este capítulo contém informações básicas sobre este catálogo e os equipamentos relacionados da Tetra Pak.

ro Despre capitolul introductiv
Acest capitol conține informații de bază despre acest catalog și despre echipamentul Tetra Pak corelat.

sk O kapitole Úvod
Táto kapitola obsahuje základné informácie o tomto návode a informácie súvisiace so zariadením Tetra Pak.

sl O uvodnem poglavju
To poglavje vsebuje osnovne informacije o tem katalogu in opremi Tetra Pak.

sv Om inledningskapitlet
Det här kapitlet innehåller grundläggande information om katalogen och Tetra Pak-utrustningen.

Introduction

Illustrations . . . . . i - 5
English Text . . . . . i - 7

Увод

Илюстрации . . . . . i - 5
Текст на български език . . . . . i -11

Úvod

Obrázky . . . . . i -5
Český text . . . . . i - 15

Indledning

Illustrationer . . . . . i - 5
Dansk tekst . . . . . i - 19

Einleitung

Abbildungen . . . . . i - 5
Deutscher Text . . . . . i - 23

Εισαγωγή

Εικόνες . . . . . i - 5
Ελληνικό Κείμενο . . . . . i - 27

Introducción

Ilustraciones . . . . . i - 5
Texto en español . . . . . i - 31

Sissejuhatus

Joonised . . . . . i - 5
Eestikeelne tekst . . . . . i - 35

Johdanto

Kuvat . . . . . i - 5
Suomenkielinen teksti . . . . . i - 39

Introduction

Illustrations . . . . . i - 5
Texte français . . . . . i - 43

Bevezetés

Ábrák . . . . . i - 5
Magyar szöveg . . . . . i - 47

Inngangur

Skýringarmyndir . . . . . i - 5
Íslenskur texti . . . . . i - 51

Introduzione

Figure . . . . . i - 5
Testo in italiano . . . . . i - 55

Įvadas

Paveikslėliai . . . . . i - 5
Lietuviškas tekstas . . . . . i - 59

Ievads

Ilustrācijas . . . . . i - 5
Teksts latviešu valodā . . . . . i - 63

Inleiding

Afbeeldingen . . . . . i - 5
Nederlands tekst . . . . . i - 67

Introduksjon

Illustrasjoner . . . . . i - 5
Norsk tekst . . . . . i - 71

Wprowadzenie

Rysunki . . . . . i - 5
Tekst polski . . . . . i - 75

Introdução

Ilustrações . . . . . i - 5
Texto em português . . . . . i - 79

Introducere

Ilustrații . . . . . i - 5
Text în limba română . . . . . i - 83

Úvod

Ilustrácie . . . . . i – 5
Slovenský text . . . . . i - 87

Uvod

Slike . . . . . i - 5
Slovensko besedilo . . . . . i - 91

Inledning

Bilder . . . . . i - 5
Svensk text . . . . . i - 95

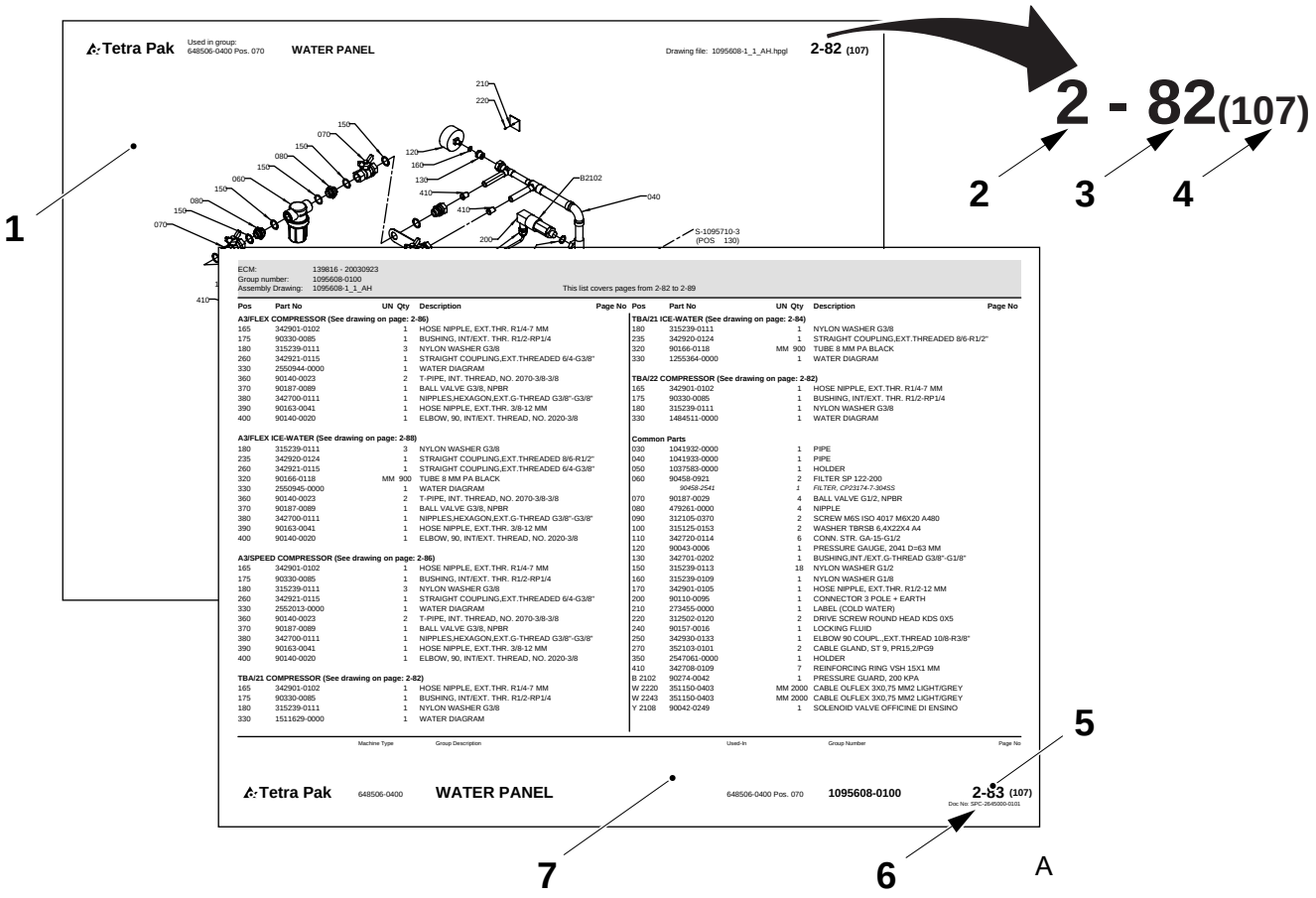
Tetra Pak
Used in group: 648506-0400 Pos. 070
WATER PANEL
Drawing file: 1095608-1_1_AH.hpgl
2-82 (107)
2 - 82(107)
1
2
3
4
5
6
7
A
ECM: 139816 - 20030923
Group number: 1095608-0100
Assembly Drawing: 1095608-1_1_AH
This list covers pages from 2-82 to 2-89
Tetra Pak
648506-0400
WATER PANEL
648506-0400 Pos. 070
1095608-0100
2-83 (107)

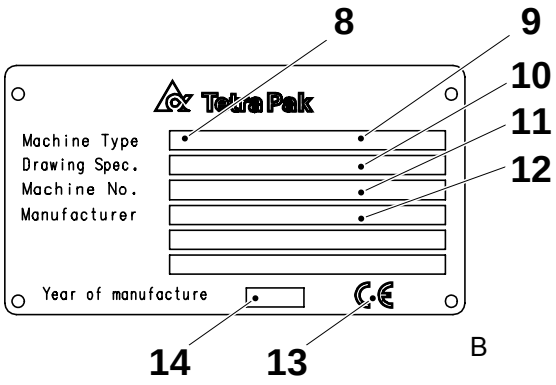
8
9
10
11
12
Tetra Pak
Machine Type
Drawing Spec.
Machine No.
Manufacturer
Year of manufacture
14
13
B

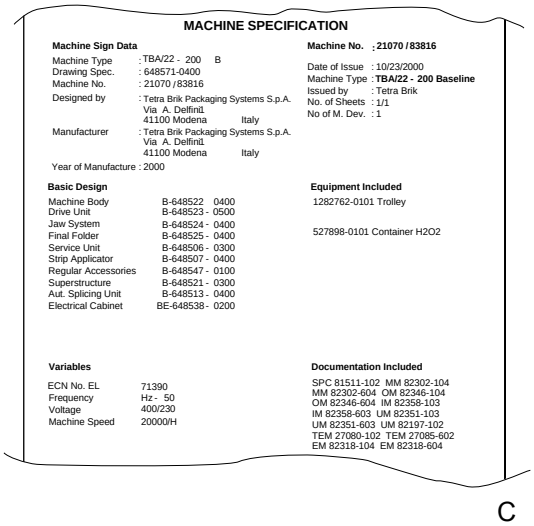
MACHINE SPECIFICATION
Machine Sign Data
Machine Type : TBA/22 - 200 B
Drawing Spec. : 648571-0400
Machine No. : 21070 / 83816
Designed by : Tetra Brik Packaging Systems S.p.A. Via A. Delfini1 41100 Modena Italy
Manufacturer : Tetra Brik Packaging Systems S.p.A. Via A. Delfini1 41100 Modena Italy
Year of Manufacture : 2000
Machine No. ; 21070 / 83816
Date of Issue : 10/23/2000
Machine Type : TBA/22 - 200 Baseline
Issued by : Tetra Brik
No. of Sheets : 1/1
No of M. Dev. : 1
Basic Design
Machine Body B-648522 0400
Drive Unit B-648523 - 0500
Jaw System B-648524 - 0400
Final Folder B-648525 - 0400
Service Unit B-648506 - 0300
Strip Applicator B-648507 - 0400
Regular Accessories B-648547 - 0100
Superstructure B-648521 - 0300
Aut. Splicing Unit B-648513 - 0400
Electrical Cabinet BE-648538 - 0200
Equipment Included
1282762-0101 Trolley
527898-0101 Container H2O2
Variables
ECN No. EL 71390
Frequency Hz - 50
Voltage 400/230
Machine Speed 20000/H
Documentation Included
SPC 81511-102 MM 82302-104
MM 82302-604 OM 82346-104
OM 82346-604 IM 82358-103
IM 82358-603 UM 82351-103
UM 82351-603 UM 82197-102
TEM 27080-102 TEM 27085-602
EM 82318-104 EM 82318-604
C

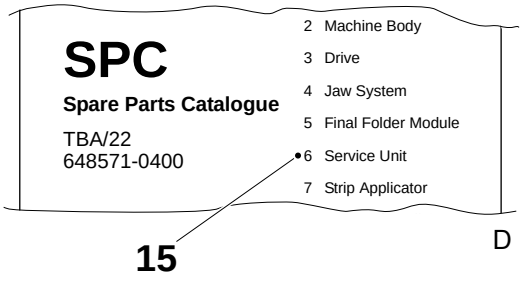
SPC
Spare Parts Catalogue
TBA/22
648571-0400
2 Machine Body
3 Drive
4 Jaw System
5 Final Folder Module
6 Service Unit
7 Strip Applicator
15
D

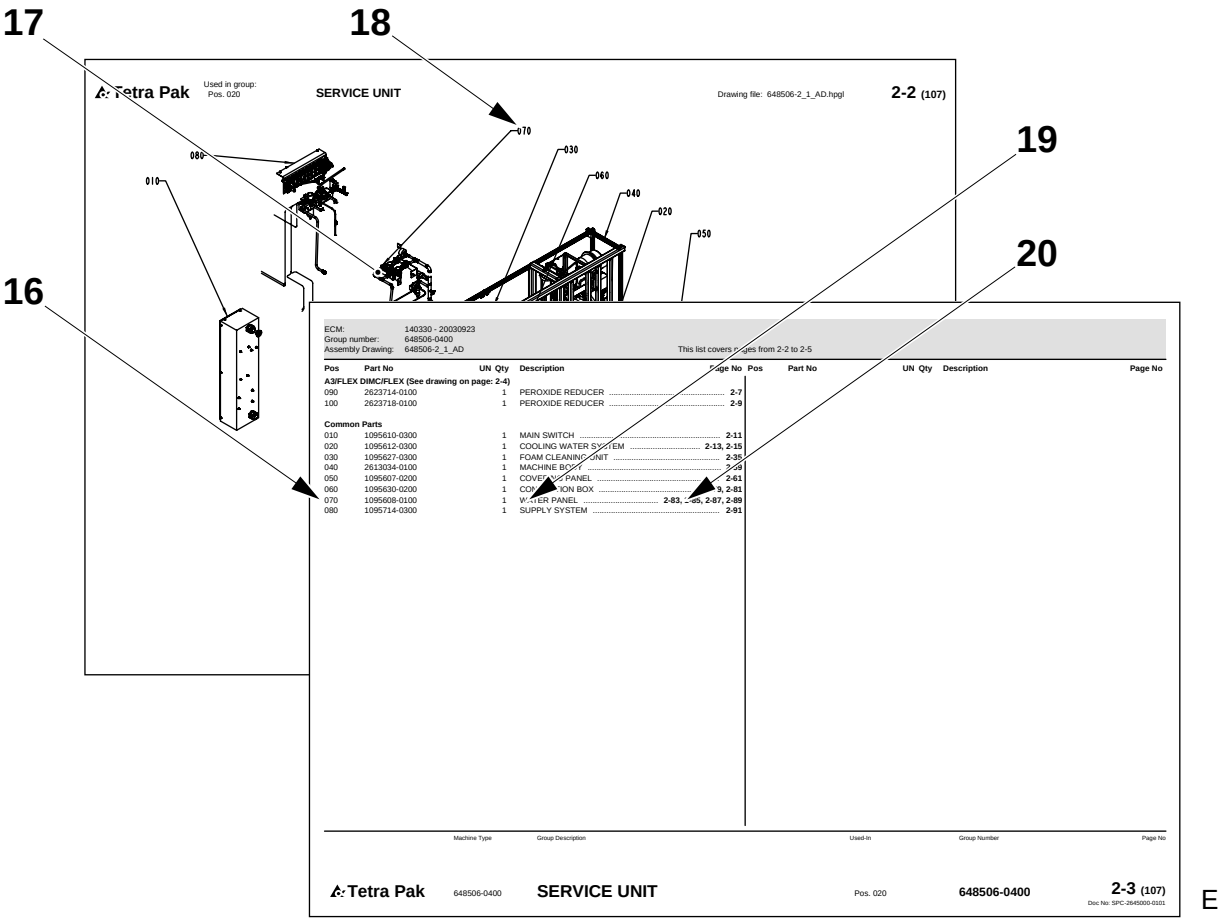
17
18
19
20
16
Tetra Pak
Used in group:
Pos. 020
SERVICE UNIT
Drawing file: 648506-2_1_AD.hpgl
2-2 (107)
070
030
080
060
010
040
020
050
ECM: 140330 - 20030923
Group number: 648506-0400
Assembly Drawing: 648506-2_1_AD
This list covers pages from 2-2 to 2-5
Pos Part No UN Qty Description Page No
A3/FLEX DIMC/FLEX (See drawing on page: 2-4)
090 2623714-0100 1 PEROXIDE REDUCER 2-7
100 2623718-0100 1 PEROXIDE REDUCER 2-9
Common Parts
010 1095610-0300 1 MAIN SWITCH 2-11
020 1095612-0300 1 COOLING WATER SYSTEM 2-13, 2-15
030 1095627-0300 1 FOAM CLEANING UNIT 2-35
040 2613034-0100 1 MACHINE BODY 2-39
050 1095607-0200 1 COVERING PANEL 2-61
060 1095630-0200 1 CONNECTION BOX 2-79, 2-81
070 1095608-0100 1 WATER PANEL 2-83, 2-85, 2-87, 2-89
080 1095714-0300 1 SUPPLY SYSTEM 2-91
Pos Part No UN Qty Description Page No
Machine Type Group Description Used-In Group Number Page No
Tetra Pak 648506-0400 SERVICE UNIT Pos. 020 648506-0400 2-3 (107)
Doc No: SPC-2645000-0101
E

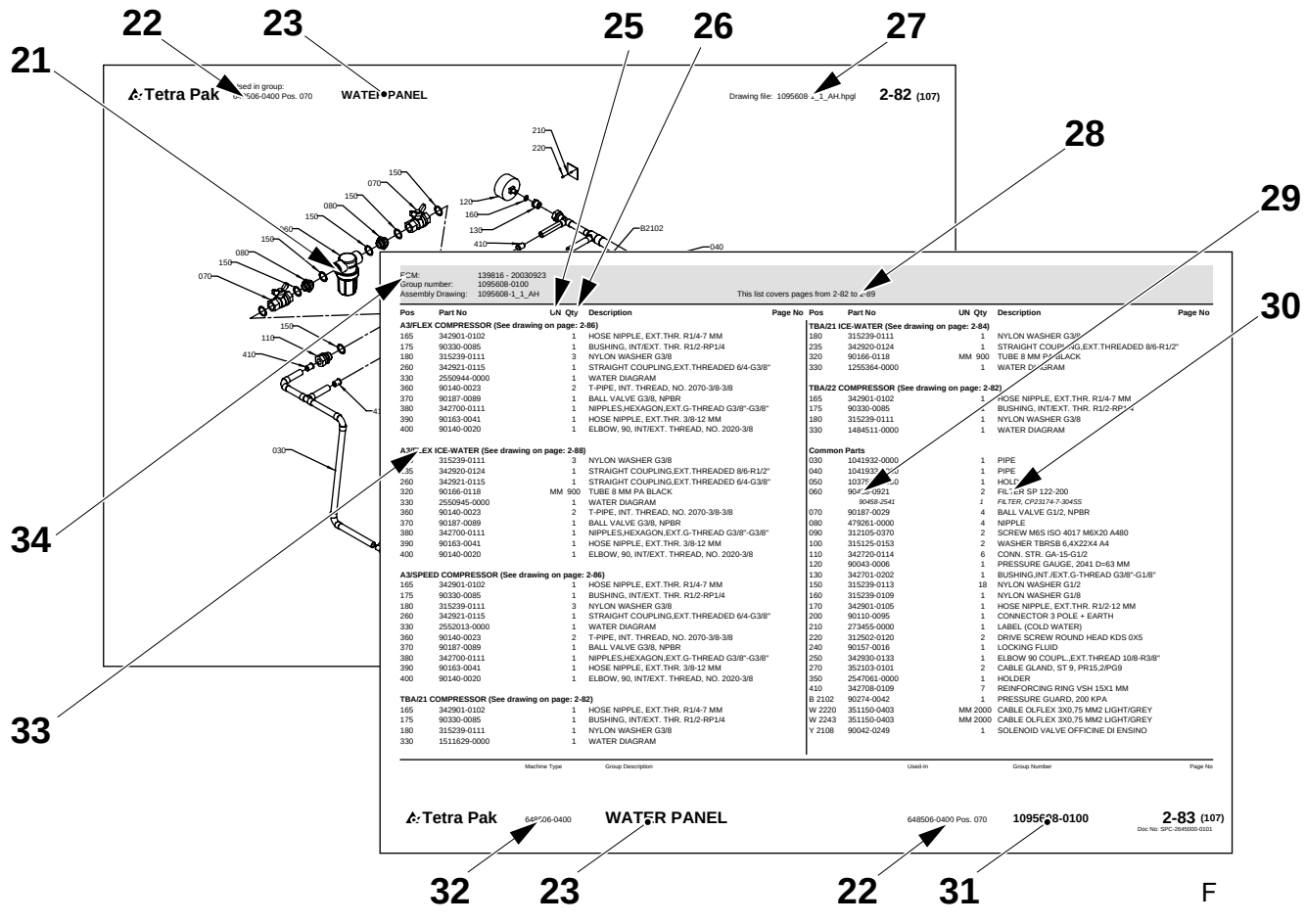
22
23
25
26
27
21
28
29
30
34
33
Tetra Pak
Used in group:
Pos. 070
WATER PANEL
Drawing file: 1095608-1_1_AH.hpgl
2-82 (107)
210
220
150
070
080
150
150
080
150
070
120
160
130
410
B2102
040
030
110
410
ECM: 139816 - 20030923
Group number: 1095608-0100
Assembly Drawing: 1095608-1_1_AH
This list covers pages from 2-82 to 2-89
Pos Part No UN Qty Description Page No
A3/FLEX COMPRESSOR (See drawing on page: 2-86)
165 342901-0102 1 HOSE NIPPLE, EXT.THR. R1/4-7 MM
175 90330-0085 1 BUSHING, INT/EXT. THR. R1/2-RP1/4
180 315239-0111 3 NYLON WASHER G3/8
260 342921-0115 1 STRAIGHT COUPLING,EXT.THREADED 6/4-G3/8"
330 2550944-0000 1 WATER DIAGRAM
360 90140-0023 2 T-PIPE, INT. THREAD, NO. 2070-3/8-3/8
370 90187-0089 1 BALL VALVE G3/8, NPBR
380 342700-0111 1 NIPPLES,HEXAGON,EXT.G-THREAD G3/8"-G3/8"
390 90163-0041 1 HOSE NIPPLE, EXT.THR. 3/8-12 MM
400 90140-0020 1 ELBOW, 90, INT/EXT. THREAD, NO. 2020-3/8
A3/FLEX ICE-WATER (See drawing on page: 2-88)
235 315239-0111 3 NYLON WASHER G3/8
235 342920-0124 1 STRAIGHT COUPLING,EXT.THREADED 8/6-R1/2"
260 342921-0115 1 STRAIGHT COUPLING,EXT.THREADED 6/4-G3/8"
320 90166-0118 MM 900 TUBE 8 MM PA BLACK
330 2550945-0000 1 WATER DIAGRAM
360 90140-0023 2 T-PIPE, INT. THREAD, NO. 2070-3/8-3/8
370 90187-0089 1 BALL VALVE G3/8, NPBR
380 342700-0111 1 NIPPLES,HEXAGON,EXT.G-THREAD G3/8"-G3/8"
390 90163-0041 1 HOSE NIPPLE, EXT.THR. 3/8-12 MM
400 90140-0020 1 ELBOW, 90, INT/EXT. THREAD, NO. 2020-3/8
A3/SPEED COMPRESSOR (See drawing on page: 2-86)
165 342901-0102 1 HOSE NIPPLE, EXT.THR. R1/4-7 MM
175 90330-0085 1 BUSHING, INT/EXT. THR. R1/2-RP1/4
180 315239-0111 3 NYLON WASHER G3/8
260 342921-0115 1 STRAIGHT COUPLING,EXT.THREADED 6/4-G3/8"
330 2552013-0000 1 WATER DIAGRAM
360 90140-0023 2 T-PIPE, INT. THREAD, NO. 2070-3/8-3/8
370 90187-0089 1 BALL VALVE G3/8, NPBR
380 342700-0111 1 NIPPLES,HEXAGON,EXT.G-THREAD G3/8"-G3/8"
390 90163-0041 1 HOSE NIPPLE, EXT.THR. 3/8-12 MM
400 90140-0020 1 ELBOW, 90, INT/EXT. THREAD, NO. 2020-3/8
TBA/21 COMPRESSOR (See drawing on page: 2-82)
165 342901-0102 1 HOSE NIPPLE, EXT.THR. R1/4-7 MM
175 90330-0085 1 BUSHING, INT/EXT. THR. R1/2-RP1/4
180 315239-0111 1 NYLON WASHER G3/8
330 1511629-0000 1 WATER DIAGRAM
TBA/21 ICE-WATER (See drawing on page: 2-84)
180 315239-0111 1 NYLON WASHER G3/8
235 342920-0124 1 STRAIGHT COUPLING,EXT.THREADED 8/6-R1/2"
320 90166-0118 MM 900 TUBE 8 MM PA BLACK
330 1255364-0000 1 WATER DIAGRAM
TBA/22 COMPRESSOR (See drawing on page: 2-82)
165 342901-0102 1 HOSE NIPPLE, EXT.THR. R1/4-7 MM
175 90330-0085 1 BUSHING, INT/EXT. THR. R1/2-RP1/4
180 315239-0111 1 NYLON WASHER G3/8
330 1484511-0000 1 WATER DIAGRAM
Common Parts
030 1041932-0000 1 PIPE
040 1041933-0000 1 PIPE
050 1037[illegible]-0000 1 HOLDER
060 90458-0921 2 FILTER SP 122-200
90458-2541 FILTER, CP23174-7-304SS
070 90187-0029 4 BALL VALVE G1/2, NPBR
080 479261-0000 4 NIPPLE
090 312105-0370 2 SCREW M6S ISO 4017 M6X20 A480
100 315125-0153 2 WASHER TBRSB 6,4X22X4 A4
110 342720-0114 6 CONN. STR. GA-15-G1/2
120 90043-0006 1 PRESSURE GAUGE, 2041 D=63 MM
130 342701-0202 1 BUSHING,INT./EXT.G-THREAD G3/8"-G1/8"
150 315239-0113 18 NYLON WASHER G1/2
160 315239-0109 1 NYLON WASHER G1/8
170 342901-0105 1 HOSE NIPPLE, EXT.THR. R1/2-12 MM
200 90110-0095 1 CONNECTOR 3 POLE + EARTH
210 273455-0000 1 LABEL (COLD WATER)
220 312502-0120 2 DRIVE SCREW ROUND HEAD KDS 0X5
240 90157-0016 1 LOCKING FLUID
250 342930-0133 1 ELBOW 90 COUPL.,EXT.THREAD 10/8-R3/8"
270 352103-0101 2 CABLE GLAND, ST 9, PR15,2/PG9
350 2547061-0000 1 HOLDER
410 342708-0109 7 REINFORCING RING VSH 15X1 MM
B 2102 90274-0042 1 PRESSURE GUARD, 200 KPA
W 2220 351150-0403 MM 2000 CABLE OLFLEX 3X0,75 MM2 LIGHT/GREY
W 2243 351150-0403 MM 2000 CABLE OLFLEX 3X0,75 MM2 LIGHT/GREY
Y 2108 90042-0249 1 SOLENOID VALVE OFFICINE DI ENSINO
Pos Part No UN Qty Description Page No
Machine Type Group Description Used-In Group Number Page No
Tetra Pak 648506-0400 WATER PANEL 648506-0400 Pos. 070 1095608-0100 2-83 (107)
Doc No: SPC-2645000-0101
32 23 22 31
F

Introduction

Manual Information

Tetra Pak recommends reading all delivered manuals carefully. Make sure that the delivered manuals are available to personnel who operate or maintain the equipment.

It is important to keep this catalogue for the lifetime of the equipment and to pass the catalogue on to any subsequent holder or user.

Tetra Pak will not be held responsible for any damage to the equipment caused by not following the instructions given in the manuals that accompany this equipment.

Delivered Manuals

Manuals delivered with this equipment may include

- EM
  The Electrical Manual provides technicians with information about the equipment's electrical system.
- IM
  The Installation Manual provides technicians with information required to safely install the equipment.
- MM
  The Maintenance Manual provides technicians with information on maintaining the equipment.
- OM
  The Operation Manual manual provides the operator with information on handling and operating the equipment before, during, and after production.
- SPC
  The Spare Parts Catalogue provides the information necessary to order spare parts from Tetra Pak.

Page Layout

Refer to the illustration (A) on page i-5: The main pages in a Spare Parts Catalogue consist of an illustration page (1) and a corresponding list page (7). The page number (5) is shown in the header of an illustration page and in the footer of a list page. The document number (6) is shown in the footer of a list page.

Page Numbering

Refer to the illustration (A) on page i-5: A page number (5) has three parts:

- chapter number (2)
- consecutive page number within the chapter (3)
- total number of pages in the chapter (4)

Machine Introduction

Manufacturer

For the manufacturer's name and address, see the second page of this catalogue.

Service

To order spare parts for this machine, or to report problems associated with operating this machine, contact the nearest Tetra Pak office.

Contact the Liaison with other inquiries, comments, or suggestions for improvement regarding the equipment and its documentation.

Identification

CE Classification

This equipment complies with the basic health and safety regulations of the European Economic Area (EEA).

Machine Plate

The illustration (B) on page i-5 shows an example of a machine plate. An illustration of the valid machine plate and its location on the equipment is shown in the Introduction chapter of the manuals delivered with this equipment. The machine plate contains the data listed below, needed when contacting Tetra Pak concerning this specific equipment.

- Machine type (8)
- Volume (9)
- Drawing specifications (10)
- Machine serial number (11)
- Manufacturer (12)
- CE mark (13)
- Year of manufacture (14)

The illustration (C) on page i-5 shows an example of a machine specification. Make sure that the equipment data listed in the front pages of this manual corresponds to the machine plate data and the machine specification.

How to Use This Spare Parts Catalogue

Locate a Spare Part Number

a) Refer to the illustration (D) on page i-5: Go to the chapter number (15) indicated beside the main group that contains the part you want to locate.

Items b) and c) refer to the illustration (E) on page i-6.

b) On the main group illustration, look for the machine subgroup (17) that contains the part or subgroup you are looking for. Note the position number (18) and go to the list page that follows the illustration.

c) Look for the position number/reference designation (16) or the subgroup name (19). Go to the corresponding page number (20) listed in the right-hand column. Tetra Pak has chosen to always use the function oriented structure for reference designation. The prefix indicating function oriented structure (=) is not shown in the reference designation.

Items d) and e) refer to the illustration (F) on page i-6.

d) Locate the part (21) that you are looking for on the subgroup illustration and note the part's position number.

e) The part number (29) and part description (30) are listed beside the position number on the list page.

Information Listed in a Spare Parts Catalogue

The list below refers to the illustration (F) on page i-6. A Spare Parts Catalogue contains the following information about groups, subgroups, and spare parts for the equipment:

- Group structure reference (22). Indicates the next higher group in the equipment list structure.
- Group name (23)
- Unit of measure (25)
- Quantity (26)
- Assembly drawing number (27)
- List page range (28). Included if there are multiple pages in the group illustration or list.
- Part or subgroup number (29)
- Subgroup name or part description (30)
- Group number (31)
- Equipment number (32)
- Group information heading (33). Indicates if the section below the heading is for a specific machine variant or if it is a list of common parts. If a list has more than one variant and each variant has its own assembly drawing, a page reference to the variant's assembly drawing is shown.
- Internal information (34)

Увод

Информация за ръководството

Tetra Pak Ви препоръчва да прочетете внимателно всички доставени ръководства. Проверете дали доставените ръководства са достъпни за служителите, които поддържат или работят с оборудването.

Важно е да запазите този каталог през целия живот на оборудването и да го предадете на трети лица, които ще използват или съхраняват оборудването.

Tetra Pak не може да бъде държана под отговорност за щети върху оборудването, причинени от неспазване на даденте инструкции в ръководствата, които съпровождат оборудването.

Доставени ръководства

Ръководствата, доставени с това оборудване, могат да включват

- CM
  Ръководството за приспособяване осигурява на техническите лица информация за приспособяването на оборудване към различни производствени режими.
- EM
  Електрическото ръководство осигурява на техническите лица информация за електрическата система на оборудването.
- IM
  Ръководството за инсталиране предоставя на техническите лица информацията, която е необходима за безопасно инсталиране на оборудването.
- MM
  Ръководството за поддръжка предоставя на техническите лица информация относно поддържането на оборудването.
- OM
  Ръководството за операции предоставя на операторите информация за това, как да боравят и функционират с оборудването преди, по време на и след производство.
- SPC
  Каталогът с резервни части предоставя необходимата информация за поръчка на резервни части от Tetra Pak
- TeM
  Техническото ръководство
  - предоставя на техническите лица необходимата информация за безопасно инсталиране на оборудването
  - предоставя на техническите лица информация за поддръжка на оборудването
  - предоставя на техническите лица информация за електрическата система на машината/оборудването
  - предоставя необходимата информация за поръчка на резервни части от Tetra Pak.

Формат на страниците

Разгледайте илюстрация (A) на страница i-5: Главните страници в Каталога с резервни части се състоят от страница с илюстрация (1) и прилежаща страница със списък (7). Номерът на страницата (5) е посочен в горната част на страницата с илюстрация и в долната част на страницата със списъка. Номерът на документа (6) е показан в долната част на страницата със списъка.

Номериране на страници

Разгледайте илюстрация (A) на страница i-5: Един номер на страница (5) има три части:

- номер на глава (2)
- последователен номер на страница в една глава (3)
- общ брой страници в главата (4)

Машини Увод

Производител

Вижте втората страница на този каталог, за да проверите името и адреса на производителя.

Обслужване

За да поръчате резервни части за тази машина или да докладвате за проблеми, свързани с работата с тази машина, се свържете с най-близкия офис на Tetra Pak.

Свържете се с отдела за контакти с клиенти за други запитвания, коментари и предложения за подобрение по отношение на оборудването и прилежащата му документация.

Идентификация

Класификация на ЦЕ

Това оборудване отговаря на основните наредби, свързани с опазване на здравето и безопасността на Европейската Икономическа Общност (ЕИО).

Табелка на машина

Илюстрация (B) на страница i-5 показва пример с табелка на машина. В уводната глава на ръководствата, доставени с това оборудване, е показана илюстрация с валидната табелка на машината и нейното положение върху оборудването. Табелката на машината съдържа посочените по-долу данни, които Ви трябват, когато се свързвате с Tetra Pak относно това специфично оборудване.

- Тип машина (8)
- Обем (9)
- Спесификации за чертане (10)
- Сериен номер на машината (11)
- Производител (12)
- CE печат (13)
- Година на производство (14)

Илюстрация (C) на страница i-5 показва пример със спесификация за машина. Проверете дали данните за оборудването, изброени на предните страници в това ръководство отговарят на данните от табелката на машината и на спесификацията на машината.

Как да използвате този Каталог за резервни части

Намерете Номер на резервна част

a) Разгледайте илюстрация (D) на страница i-5: Отидете в глава номер (15) посочена до главната група, която съдържа частта, която искате да намерите.

Артикули b) и c) се отнасят до илюстрация (E) на страница i-6.

b) На главната обща илюстрация вижте подгрупата на машината (17), която съдържа частта или подгрупата, която търсите. Намерете номера на позицията (18) и отворете на страницата със списъка, която е след илюстрацията.

c) Намерете номера на позицията/референцията (16) или името на подгрупата (19). Отворете съответстващия номер на страница (20) в дясната колона. Tetra Pak е избрала да използва винаги функционално-ориентирана структура при обозначаване на референциите. Префиксът, който показва функционално-ориентирана структура (=) не е посочен в обозначаването на референциите.

Артикули d) и e) се отнасят до илюстрация (F) на страница i-6.

d) Намерете частта (21), която търсите в илюстрацията на подгрупата и запомнете номера на частта.

e) Номерът на частта (29) и описанието на частта (30) са изброени до номера на позицията на страницата със списъка.

Изброена информация в Каталога с резервни части

По-долу посоченият списък се отнася до илюстрация (F) на страница i-6. Каталогът с резервни части съдържа следната информация за групи, подгрупи и резервни части за оборудването:

- Референция за структурата (22). Показва следващата по-голяма група в структурата със списъка на оборудването.
- Име на група (23)
- Единица мярка (25)
- Количество (26)
- Номер за монтажен чертеж (27)
- Обхват на страницата със списък (28). Включен, ако има няколко страници в илюстрацията на групата или списъка.
- Номер на част или подгрупа (29)
- Име на подгрупа или описание на част (30)
- Номер на група (31)
- Номер на оборудване (32)
- Референция за информацията за групата (33). Показва дали частта под заглавието е за специфична версия на машината или е списък с общи части. Ако един списък има повече от един вариант и всеки вариант има собствен монтажен чертеж, се показва референцията на страницата към монтажния чертеж на варианта.
- Вътрешна информация (34)

Úvod

Informace o manuálu

Tetra Pak doporučuje, abyste si pozorně přečetli všechny dodané příručky. Přesvědčte se, že dodané manuály jsou k dispozici personálu, který obsluhuje nebo provádí údržbu zařízení.

Je důležité ponechat si tuto příručku po celou dobu životnosti zařízení a předat ho jakémukoliv následujícímu vlastníkovi nebo uživateli.

Tetra Pak nebude odpovídat za žádné škody zařízení, způsobené nedodržováním pokynů uvedených v této příručce.

Dodané příručky

Příručky dodané s tímto zařízením mohou obsahovat

- CM
  Konverzní manuál (CM) poskytuje technikům informace o konverzi zařízení mezi různými výrobními režimy.
- EM
  Elektrický manuál (EM) poskytuje technikům informace o elektrickém systému tohoto zařízení.
- IM
  Instalační manuál (IM) poskytuje technikům informace potřebné k bezpečné instalaci zařízení.
- MM
  Údržbový manuál (MM) poskytuje technikům informace o údržbě tohoto zařízení.
- OM
  Provozní manuál (OM) poskytuje operátorovi informace o manipulaci s tímto zařízením a provozu před, během a po výrobě.
- SPC
  Katalog náhradních dílů (SPC) poskytuje informace potřebné pro objednávání náhradních dílů od společnosti Tetra Pak
- TeM
  Technický manuál
  - poskytuje technikům informace potřebné k bezpečné instalaci tohoto zařízení
  - poskytuje technikům informace o údržbě tohoto zařízení
  - poskytuje technikům informace o elektrickém systému tohoto zařízení
  - poskytuje informace potřebné pro objednávání náhradních dílů od společnosti Tetra Pak

Rozvržení stránky

Viz obrázek (A) na straně i-5: Hlavní strany Katalogu náhradních dílů obsahují stranu s obrázky (1) a odpovídající stranu seznamu (7). Číslo strany (5) je uvedeno v záhlaví strany s obrázky a v zápatí strany seznamu. Číslo dokumentu (6) je uvedeno v zápatí strany seznamu.

Číslování stran

Viz obrázek (A) na straně i-5: Číslo strany (5) sestává ze tří částí:

- číslo kapitoly (2)
- pořadové číslo strany (3) v kapitole
- celkový počet stránek (4) v kapitole

Úvod ke stroji

Výrobce

Název a adresa výrobce je uvedena na druhé straně tohoto katalogu.

Servis

Chcete-li objednat náhradní díly nebo ohlásit problémy související s provozem tohoto stroje, kontaktujte nejbližší kancelář Tetra Pak.

S dalšími dotazy, připomínkami nebo náměty na vylepšení ohledně zařízení a této dokumentace se obracejte na kontaktní osobu.

Identifikace

Klasifikace CE

Toto zařízení splňuje základní zdravotní a bezpečnostní předpisy Evropského hospodářského prostoru (EEA).

Štítek na stroji

Obrázek (B) na straně i-5 znázorňuje příklad štítku na stroji. Obrázek platného štítku na stroji a jeho umístění na zařízení je uveden v příručkách dodaných s tímto strojem v kapitole Úvod. Na štítku jsou uvedeny údaje potřebné při kontaktování společnosti Tetra Pak, týkající se tohoto specifického zařízení.

- Typ stroje (8)
- Objem (9)
- Výkresové specifikace (10)
- Výrobní číslo stroje (11)
- Výrobce (12)
- Označení CE (13)
- Rok výroby (14)

Obrázek (C) na straně i-5 zobrazuje příklad specifikace stroje. Přesvědčte se, že údaje o zařízení uvedená v seznamu na předních stranách tohoto manuálu odpovídají údajům štítku na stroji a specifikaci stroje.

Jak používat tento Katalog náhradních dílů

Vyhledejte číslo náhradního dílu

a) Viz obrázek (D) na straně i-5: Přejděte na číslo kapitoly (15) uvedené vedle hlavní skupiny, která obsahuje hledaný díl.

Položky b) a c) odkazují na obrázek (E) na straně i-6.

b) Na vyobrazení hlavní skupiny vyhledejte strojní podskupinu (17), která obsahuje hledaný díl nebo podskupinu. Poznamenejte si číslo pozice (18) a přejděte na stranu seznamu vyplývající z obrázku.

c) Vyhledejte číslo pozice/označení odkazu (16) nebo název podskupiny (19). Přejděte na odpovídající číslo strany (20) v seznamu v pravém sloupci. Tetra Pak zvolil pro označování odkazu používat vždy uspořádání orientované na funkci. Prefix indikující uspořádání orientované na funkci (=) není uveden v označení odkazu.

Položky d) a e) odkazují na obrázek (F) na straně i-6.

d) Vyhledejte díl (21), který hledáte na vyobrazení podskupiny a poznamenejte si číslo pozice dílu.

e) Číslo dílu (29) a popis dílu (30) jsou uvedeny v seznamu vedle čísla pozice na straně seznamu.

Informace uvedené v seznamu v Katalogu náhradních dílů

Níže uvedený seznam odkazuje na obrázek (F) na straně i-6. Katalog náhradních dílů obsahuje následující informace o skupinách, podskupinách a náhradních dílech pro toto zařízení:

- Odkaz na uspořádání skupiny (22). Indikuje další vyšší skupinu v uspořádání seznamu zařízení.
- Název skupiny (23)
- Měrná jednotka (25)
- Množství (26)
- Číslo montážního výkresu (27)
- Rozsah stran seznamu (28). Včetně toho, zda existuje více stran v obrázku skupiny nebo seznamu.
- Díl nebo číslo podskupiny (29)
- Název podskupiny nebo popis dílu (30)
- Číslo skupiny (31)
- Číslo zařízení (32)
- Záhlaví informace o skupině (33). Indikuje, že oddíl pod záhlavím je pro specifickou variantu stroje nebo jde-li o seznam běžných dílů. Jestliže seznam obsahuje více než jednu variantu a každá varianta má svůj vlastní montážní výkres, pak je uveden odkaz na stranu montážního výkresu této varianty.
- Interní informace (34)

Indledning

Oplysninger om manualen

Tetra Pak anbefaler, at alle leverede manualer læses omhyggeligt. Sørg for, at de udleverede manualer er til rådighed for personale, som arbejder med eller vedligeholder udstyret.

Det er vigtigt at opbevare dette katalog hele udstyrets levetid og give kataloget videre til eventuelt kommende ejere eller brugere.

Tetra Pak kan ikke holdes ansvarlig for eventuel beskadigelse af udstyr, der opstår, fordi instruktionerne i manualerne til dette udstyr ikke følges.

Udleverede manualer

De manualer, der leveres sammen med dette udstyr, kan omfatte

- CM
  Denne konverteringsmanual forsyner teknikere med oplysninger om konvertering af udstyret mellem forskellige produktionstilstande.
- EM
  Denne elektriske manual forsyner teknikere med informationer om udstyrets elektriske system.
- IM
  Denne installationsmanual forsyner teknikere med nødvendig information i forbindelse med sikker installation af udstyret.
- MM
  Denne vedligeholdelsesmanual forsyner teknikere med information om vedligeholdelse af udstyret.
- OM
  Denne betjeningsmanual giver operatøren oplysninger om betjening af udstyret før, under og efter produktion.
- SPC
  Denne reservedelskatalog indeholder oplysninger, der er nødvendig for at bestille reservedele fra Tetra Pak
- TeM
  Den tekniske manual
  – forsyner teknikere med information, der er nødvendig for en sikker installation af udstyret.
  – forsyner teknikere med information om vedligeholdelse af udstyret.
  – forsyner teknikere med information om maskinens/udstyrets elektriske system.
  – indeholder de informationer, der er nødvendige for at kunne bestille reservedele fra Tetra Pak.

Sidelayout

Se illustration (A) på side i-5: Hovedsiderne i et reservedelskatalog består af en illustrationsside (1) og en tilsvarende listeside (7). Sidenummeret (5) vises i sidehovedet på en illlustrationsside og i sidefoden på en listeside. Dokumentnummeret (6) vises i sidefoden på en listeside.

Sidenummerering

Se illustrationen (A) på side i-5: Et sidenummer (5) har tre dele:

- kapitelnummer (2)
- fortløbende sidenummer i kapitlet (3)
- samlet sideantal i kapitlet (4)

Præsentation af maskinen

Producent

Producentens navn og adresse findes på side to i dette katalog.

Service

Kontakt nærmeste Tetra Pak-kontor for at bestille reservedele eller rapportere problemer i forbindelse med betjening af denne maskine.

Henvendelse til vores kontaktperson med andre forespørgsler, kommentarer eller forslag til forbedring angående udstyr og dokumentation.

Identificering

CE-klassificering

Dette udstyr lever op til de grundlæggende regulativer for sundhed og sikkerhed indenfor den Europæiske Økonomiske Samarbejdsområde (EØS).

Maskinskilt

Illustrationen (B) på side i-5 viser et eksempel på et maskinskilt.
En illustration af et gyldigt maskinskilt og dets placering på udstyret er vist i indledningskapitlet i de manualer, der leveres med dette udstyr. Maskinskiltet indeholder nedennævnte data. Disse er nødvendige ved kontakt med Tetra Pak vedrørende dette specifikke udstyr.

- Maskintype (8)
- Volumen (9)
- Tegningsspecifikationer (10)
- Maskinens serienummer (11)
- Producent (12)
- CE-mærke (13)
- Produktionsår (14)

Illustrationen (C) på side i-5 viser et eksempel på en maskinspecifikation. Kontroller, at de udstyrsdata, der er anført på de første sider i denne manual, svarer til maskinskiltsdataene og maskinspecifikationen.

Sådan bruges dette reservedelskatalog.

Find et reservedelsnummer

a) Se illustrationen (D) på side i-5: Gå til kapitelnummeret (15), der er angivet ved siden af hovedgruppen, der indeholder den del, der ønskes fundet.

Punkterne b) og c) refererer til illustrationen (E) på side i-6.

b) I hovedgruppeillustrationen skal man se efter maskinundergruppen (17), som indeholder den del eller undergruppe, der søges. Bemærk placeringsnummeret (18), og gå til listesiden, som følger illustrationen.

c) Se efter placeringsnummeret/henvisningsbetegnelse (16) eller undergruppens navn (19). Gå til det tilsvarende sidenummer (20) angivet i den højre kolonne. Tetra Pak har valgt altid at anvende den funktionsorienterede struktur til henvisningsbetegnelse. Præfikset angiver funktionsorienteret struktur (=) ikke vist i henvisningsbetegnelsen.

Punkterne d) og e) refererer til illustrationen (F) på side i-6.

d) Find den del (21), du søger i undergruppeillustrationen, og notér delens placeringsnummer.

e) Reservedelsnummeret (29) og -beskrivelsen (30) er angivet ved siden af placeringsnummeret på listesiden.

Informationer der er angivet i et reservedelskatalog

Listen nedenfor refererer til illustrationen (F) på side i-6. Et reservedelskatalog indeholder følgende informationer om grupper, undergrupper og reservedele til udstyret:

- Gruppestrukturreference (22). Angiver næste overordnede gruppe i udstyrslistestrukturen.
- Gruppenavn (23)
- Måleenhed (25)
- Antal (26)
- Samletegningsnummer (27)
- Listens sideområde (28). Er angivet, hvis gruppeillustrationen eller -listen inkluderer mange sider.
- Del- eller undergruppenummer (29)
- Undergruppens navn eller delsbeskrivelse (30)
- Gruppenummer (31)
- Udstyrsnummer (32)
- Overskrift for gruppeinformation (33). Angiver, om afsnittet under overskriften er for en specifik maskinvariant, eller om det er en liste over fælles dele. Hvis en liste har mere end én variant, og hver variant har sin egen samletegning, vises en sidereference til variantens samletegning.
- Intern information (34)

Einleitung

Informationen über das Handbuch

Tetra Pak empfiehlt, alle mitgelieferten Handbücher sorgfältig durchzulesen. Stellen Sie sicher, dass die Handbücher dem Personal, das die Ausrüstung betreibt oder wartet, zur Verfügung steht.

Es ist wichtig, dass Sie diesen Katalog für die gesamte Lebensdauer der Ausrüstung vorliegen haben und einem etwaigen Nachbesitzer oder -betreiber übergeben.

Tetra Pak haftet nicht für Schäden an der Ausrüstung, die aufgrund von Nichtbeachtung der Anweisungen aus den Handbüchern, die mit diesem Gerät geliefert werden, entstehen.

Gelieferte Handbücher

Die Handbücher, die mit dieser Ausrüstung geliefert wird, können Folgendes beinhalten

- CM
  Das Umbauhandbuch gibt den Technikern Informationen über den Umbau der Ausrüstung zwischen verschiedenen Produktionsweisen.
- EM
  Das Elektrohandbuch gibt den Technikern Informationen zum Elektrosystem der Ausrüstung.
- IM
  Das Installationshandbuch gibt den Technikern Informationen für die sichere Installation der Ausrüstung.
- MM
  Das Wartungshandbuch gibt den Technikern Informationen für die Wartung der Ausrüstung.
- OM
  Das Betriebshandbuch gibt dem Bediener Informationen über die Bedienung und den Betrieb der Ausrüstung vor, während und nach der Produktion.
- SPC
  Der Ersatzteilkatalog liefert die Informationen, die für die Bestellung von Ersatzteilen bei Tetra Pak erforderlich sind.
- TeM
  Das technische Handbuch
  - gibt den Technikern Informationen für die sichere Installation der Ausrüstung
  - gibt den Technikern Informationen für die Wartung der Ausrüstung
  - gibt den Techniker Informationen zum Elektrosystem der Ausrüstung/der Maschine
  - liefert die Informationen, die für die Bestellung von Ersatzteilen bei Tetra Pak erforderlich sind.

Seitenlayout

Bezugnahme auf Abbildung (A) auf Seite i-5: Die Hauptseiten in einem Ersatzteilkatalog bestehen aus einer Abbildungsseite (1) und einer entsprechenden Listenseite (7). Die Seitennummer (5) wird in der Kopfzeile einer Abbildungsseite und in der Fußzeile einer Listenseite aufgeführt. Die Dokumentennummer (6) wird in der Fußzeile einer Listenseite aufgeführt.

Seitennummerierung

Bezugnahme auf Abbildung (A) auf Seite i-5: Eine Seitennummer (5) besteht aus drei Teilen:

- Kapitelnummer (2)
- Fortlaufende Seitennummer innerhalb des Kapitels (3)
- Gesamtzahl der Seiten im Kapitel (4)

Einführung zur Maschine

Hersteller

Bitte entnehmen Sie den Namen und die Adresse des Herstellers der zweiten Seite dieses Katalogs.

Service

Zur Bestellung von Ersatzteilen für diese Maschine oder um Probleme im Zusammenhang mit dem Betrieb dieser Maschine zu melden, wenden Sie sich bitte an das nächstgelegene Büro von Tetra Pak.

Wenden Sie sich bei anderen Anfragen, Kommentaren oder Verbesserungsvorschlägen mit Bezug auf die Ausrüstung und seine Dokumentation an die Verbindungsstelle.

Identifizierung

CE-Klassifizierung

Diese Ausrüstung erfüllt die wesentlichen Anforderungen des Europäischen Wirtschaftsraum (EWR) für Gesundheitsschutz und die Sicherheit.

Maschinenschild

Die Abbildung (B) auf Seite i-5 zeigt ein Beispiel eines Maschinenschilds. Die Abbildung eines gültigen Maschinenschildes und seine Position auf der Ausrüstung wird im Einleitungskapitel der mit dieser Ausrüstung gelieferten Handbücher gezeigt. Das Maschinenschild enthält die Daten, die erforderlich sind, wenn Sie sich bezüglich dieser speziallen Ausrüstung an Tetra Pak wenden.

- Maschinentyp (8)
- Volumen (9)
- Zeichnungsspezifikationen (10)
- Seriennummer der Maschine (11)
- Hersteller (12)
- CE-Zeichen (13)
- Baujahr (14)

Die Abbildung (C) auf Seite i-5 zeigt ein Beispiel einer Maschinenspezifikation. Stellen Sie sicher, dass die Ausrüstungsdaten, die in den vorderen Seiten dieses Handbuchs aufgelistet sind, mit den Maschinenschilddaten und der Maschinenspezifikation übereinstimmen.

Benutzung dieses Ersatzteilkatalogs

Finden einer Ersatzteilnummer

a) Bezugnahme auf Abbildung (D) auf Seite i-5: Weiter zur Kapitel nummer (15), die neben der Hauptgruppe angegeben ist, die das entsprechende Teil enthält.

Die Positionen b) und c) beziehen sich auf die Abbildung (E) auf Seite i-6.

b) Suchen Sie auf der Hauptgruppenillustration nach der Maschinen-Untergruppe (17), die das gesuchte Teil oder die Untergruppe enthält. Notieren Sie die Positionsnummer (18) und gehen Sie dann zur Listenseite, die der Abbildung folgt.

c) Suchen Sie nach der Positionsnummer/Referenzbezeichnung (16) oder dem Namen der Untergruppe (19). Gehen Sie zur entsprechenden Seitennummer (20), die in der rechten Spalte aufgelistet ist. Tetra Pak hat sich dazu entschieden, stets eine funktionsorientierte Struktur für die Referenzbezeichnung zu verwenden. Die vorangestellte Kennzeichnung, welche die funktionsorientierte Struktur angibt (=), wird in der Referenzbezeichnung nicht angezeigt.

Die Positionen d) und e) beziehen sich auf die Abbildung (F) auf Seite i-6.

d) Finden Sie das gesuchte Teil (21) auf der Abbildung der Untergruppe und notieren Sie die Positionsnummer des Teils.

e) Die Teilenummer (29) und die Teilebeschreibung (30) werden neben der Positionsnummer auf der Listenseite aufgelistet.

In einem Ersatzteilkatalog aufgelistete Informationen

Die folgende Liste bezieht sich auf die Abbildung (F) auf Seite i-6. Ein Ersatzteilkatalog enthält folgende Informationen über Gruppen, Untergruppen und Ersatzteile für die Ausrüstung:

- Gruppenstrukturreferenz (22). Sie gibt die nächst höhere Gruppe in der Ausrüstungslistenstruktur an.
- Gruppenname (23)
- Maßeinheit (25)
- Menge (26)
- Nummer der Zusammenbauzeichnung (27)
- Listenseitenbereich (28). Enthalten, wenn es mehrere Seiten in der Gruppenabbildung oder Liste gibt.
- Teile- oder Untergruppennummer (29)
- Untergruppenname oder Teilebeschreibung (30)
- Gruppennummer (31)
- Ausrüstungsnummer (32)
- Gruppeninformationsüberschrift (33). Gibt an, ob sich der Abschnitt unter der Überschrift auf eine spezifische Maschinenvariante bezieht oder ob es sich um eine Liste der allgemeinen Teile handelt. Wenn eine Liste mehr als eine Variante hat und jede Variante über eine eigene Zusammenbauzeichnung verfügt, wird eine Seitenreferenz zur Zusammenbauzeichnung angezeigt.
- Interne Informationen (34)

Εισαγωγή

Πληροφορίες για το Εγχειρίδιο

Η Tetra Pak σάς συνιστά να διαβάζετε προσεκτικά όλα τα παρεχόμενα εγχειρίδια. Εξασφαλίζετε ότι όλα τα παρεχόμενα εγχειρίδια διατίθενται στο προσωπικό που χειρίζεται ή συντηρεί τον εξοπλισμό.

Είναι σημαντικό να διατηρείτε αυτό τον κατάλογο καθ' όλη τη διάρκεια ζωής του εξοπλισμού καθώς και να παραδίδετε τον κατάλογο στον τυχόν επόμενο ιδιοκτήτη ή χρήστη του εξοπλισμού.

Η Tetra Pak δεν πρόκειται να αναλάβει καμία ευθύνη για οποιαδήποτε ζημιά που μπορεί να προκληθεί στον εξοπλισμό εξαιτίας της μη τήρησης των οδηγιών οι οποίες παρέχονται στα εγχειρίδια που συνοδεύουν αυτό τον εξοπλισμό.

Παρεχόμενα Εγχειρίδια

Στα εγχειρίδια που παρέχονται μαζί μ' αυτό τον εξοπλισμό, μπορεί να περιλαμβάνονται τα εξής:

- CM
  Αυτό το Εγχειρίδιο Μετατροπής παρέχει στους τεχνικούς πληροφορίες για τη μετατροπή του εξοπλισμού μεταξύ των διάφορων λειτουργιών παραγωγής.
- EM
  Αυτό το Ηλεκτρικό Εγχειρίδιο παρέχει στους τεχνικούς πληροφορίες για το ηλεκτρικό σύστημα του εξοπλισμού.
- IM
  Αυτό το Εγχειρίδιο Εγκατάστασης παρέχει στους τεχνικούς τις απαιτούμενες πληροφορίες για την ασφαλή εγκατάσταση του εξοπλισμού.
- MM
  Αυτό το Εγχειρίδιο Συντήρησης παρέχει στους τεχνικούς πληροφορίες για τη συντήρηση του εξοπλισμού.
- OM
  Αυτό το Εγχειρίδιο Χειρισμού παρέχει στο χειριστή πληροφορίες για το χειρισμό και τη λειτουργία του εξοπλισμού πριν, κατά τη διάρκεια και μετά την παραγωγή.
- SPC
  Αυτός ο Κατάλογος Ανταλλακτικών παρέχει τις απαραίτητες πληροφορίες για την παραγγελία ανταλλακτικών από την Tetra Pak.
- TeM
  Το Τεχνικό Εγχειρίδιο
  - παρέχει στους τεχνικούς τις απαιτούμενες πληροφορίες για την ασφαλή εγκατάσταση του εξοπλισμού
  - παρέχει στους τεχνικούς πληροφορίες για τη συντήρηση του εξοπλισμού
  - παρέχει στους τεχνικούς πληροφορίες για το ηλεκτρικό σύστημα του εξοπλισμού/μηχανής
  - παρέχει τις απαραίτητες πληροφορίες για την παραγγελία ανταλλακτικών από την Tetra Pak.

Διάταξη Σελίδων

Ανατρέξτε στην εικόν (A) της σελίδας i-5: Οι κύριες σελίδες ενός Καταλόγου Ανταλλακτικών αποτελούνται από μία εικονογραφημένη σελίδα (1) και από μία αντίστοιχη σελίδα λίστας (7). Ο αριθμός σελίδας (5) εμφανίζεται στην κεφαλίδα μιας εικονογραφημένης σελίδας και στο υποσέλιδο μιας σελίδας λίστας. Ο αριθμός εγγράφου (6) εμφανίζεται στο υποσέλιδο μιας σελίδας λίστας.

Αρίθμηση Σελίδων

Ανατρέξτε στην εικόνα (A) της σελίδας i-5: Ένας αριθμός σελίδας (5) αποτελείται από τα εξής τρία μέρη:

- αριθμός κεφαλαίου (2)
- αύξων αριθμός σελίδας του κεφαλαίου (3)
- συνολικός αριθμός σελίδων του κεφαλαίου (4)

Παρουσίαση Μηχανής

Κατασκευαστής

Για το όνομα και τη διεύθυνση του κατασκευαστή, ανατρέξτε στη δεύτερη σελίδα αυτού του καταλόγου.

Τεχνική Εξυπηρέτηση

Για να παραγγείλετε ανταλλακτικά για τη συγκεκριμένη μηχανή ή για να αναφέρετε προβλήματα που σχετίζονται με τη λειτουργία αυτής της μηχανής, επικοινωνήστε με το πλησιέστερο γραφείο της Tetra Pak.

Εάν έχετε άλλου είδους ερωτήσεις, σχόλια ή προτάσεις βελτίωσης σχετικά με τον εξοπλισμό και την έγγραφη τεκμηρίωσή του, επικοινωνήστε με το Τμήμα Σχέσεων.

Στοιχεία Ταυτότητας

Σήμανση CE

Αυτός ο εξοπλισμός συμμορφώνεται με τους βασικούς κανονισμούς υγείας και ασφάλειας του Ευρωπαϊκού Οικονομικού Χώρου (ΕΟΧ).

Πινακίδα Αναγνώρισης Μηχανής

Η εικόνα (B) της σελίδας i-5 δείχνει ένα παράδειγμα μιας πινακίδας αναγνώρισης μηχανής.
Μια εικόνα που δείχνει την ενδεδειγμένη μορφή και θέση της πινακίδας αναγνώρισης μηχανής στον εξοπλισμό, παρουσιάζεται στο κεφάλαιο 'Εισαγωγή' των εγχειριδίων που παρέχονται μ' αυτόν τον εξοπλισμό.
Η πινακίδα αναγνώρισης μηχανής αναγράφει τα δεδομένα που παρατίθενται στη συνέχεια, τα οποία είναι απαραίτητα όταν επικοινωνείτε με την Tetra Pak για θέματα που αφορούν αυτό το συγκεκριμένο εξοπλισμό.

- Τύπος μηχανής (8)
- Χωρητικότητα (9)
- Στοιχεία σχεδίου (10)
- Αριθμός σειράς μηχανής (11)
- Κατασκευαστής (12)
- Σήμανση CE (13)
- Έτος κατασκευής (14)

Η εικόνα (Γ) της σελίδας i-5 δείχνει ένα παράδειγμα τεχνικών χαρακτηριστικών μηχανής. Βεβαιωθείτε ότι τα δεδομένα εξοπλισμού που παρατίθενται στις πρώτες σελίδες αυτού του εγχειριδίου συμφωνούν με τα δεδομένα της πινακίδας αναγνώρισης μηχανής και των τεχνικών χαρακτηριστικών μηχανής.

Πώς Χρησιμοποιείται Αυτός ο Κατάλογος Ανταλλακτικών

Εύρεση ενός Αριθμού Ανταλλακτικού

a) Ανατρέξτε στην εικόνα (Δ) της σελίδας i-5: Πηγαίνετε στον αριθμό κεφαλαίου (15) που υποδεικνύεται δίπλα από την κύρια ομάδα της μηχανής η οποία περιλαμβάνει το εξάρτημα που θέλετε να βρείτε.

Τα βήματα b) και c) αναφέρονται στην εικόνα (Ε) της σελίδας i-6.

b) Στην εικόνα της κύριας ομάδας μηχανής, αναζητήστε την υποομάδα μηχανής (17) η οποία περιλαμβάνει το εξάρτημα ή την υποομάδα που αναζητάτε. Σημειώστε τον αριθμό θέσης (18) και πηγαίνετε στη σελίδα λίστας που ακολουθεί την εικόνα.

c) Αναζητήστε τον αριθμό θέσης/ονομασία αναφοράς (16) ή το όνομα υποομάδας (19). Πηγαίνετε στον αντίστοιχο αριθμό σελίδας (20) που αναγράφεται στη δεξιά στήλη. Η Tetra Pak έχει επιλέξει να χρησιμοποιεί πάντα δομή ονομασίας αναφοράς με βάση τη λειτουργία. Το πρόθεμα που υποδεικνύει τη δομή με βάση τη λειτουργία (=) δε φαίνεται στο διάγραμμα αναφοράς.

Τα βήματα d) και e) αναφέρονται στην εικόνα (ΣΤ) της σελίδας i-6.

d) Βρείτε το εξάρτημα (21) που αναζητάτε στην εικόνα υποομάδας μηχανής και σημειώστε τον αριθμό θέσης του εξαρτήματος.

e) Ο αριθμός του εξαρτήματος (29) και η περιγραφή του εξαρτήματος (30) παρατίθενται δίπλα στον αριθμό θέσης στη σελίδα λίστας.

Πληροφορίες που Περιέχονται σε έναν Κατάλογο Ανταλλακτικών

Η λίστα που ακολουθεί αναφέρεται στην εικόνα (F) της σελίδας i-6. Ένας Κατάλογος Ανταλλακτικών περιέχει τις παρακάτω πληροφορίες σχετικά με τις ομάδες, τις υποομάδες και τα ανταλλακτικά του εξοπλισμού:

- Αναφορά δομής ομάδας (22). Υποδηλώνει την επόμενη μεγαλύτερη ομάδα στη δομή λίστας του εξοπλισμού.
- Όνομα ομάδας (23)
- Μονάδα μέτρησης (25)
- Ποσότητα (26)
- Αριθμός σχεδίου συγκροτήματος (27)
- Περιοχή σελίδων λίστας (28). Περιλαμβάνεται εφόσον η εικόνα ή η λίστα μιας ομάδας εκτίθεται σε περισσότερες από μία σελίδες.
- Αριθμός εξαρτήματος ή υποομάδας (29)
- Αριθμός υποομάδας ή περιγραφή εξαρτήματος (30)
- Αριθμός ομάδας (31)
- Αριθμός εξοπλισμού (32)
- Επικεφαλίδα πληροφοριών ομάδας (33). Υποδεικνύει εάν η ενότητα κάτω από την επικεφαλίδα αφορά μια συγκεκριμένη παραλλαγή μηχανής ή αποτελεί μια λίστα κοινών εξαρτημάτων. Σε περίπτωση που μια λίστα περιέχει περισσότερες από μία παραλλαγές και κάθε παραλλαγή έχει ξεχωριστό σχέδιο συγκροτήματος, εμφανίζεται μια παραπομπή προς τη σελίδα όπου βρίσκεται το σχέδιο συγκροτήματος της παραλλαγής.
- Εσωτερικές πληροφορίες (34)

Introducción

Información sobre el manual

Tetra Pak recomienda leer atentamente todos los manuales suministrados. Asegúrese de que los manuales están disponibles para el personal que opera o mantiene el equipo.

Es importante conservar este catálogo durante la vida útil del equipo, así como facilitárselo a cualquier propietario o usuario posterior.

Tetra Pak no se responsabilizará de daños en el equipo por no seguir las instrucciones proporcionadas en los manuales que acompañan este equipo.

Manuales entregados

Los manuales entregados con este equipo pueden incluir:

- CM
  El Manual de conversión proporciona a los técnicos información sobre cómo convertir el equipo a diferentes modos de producción.
- EM
  El Manual eléctrico proporciona a los técnicos información sobre el sistema eléctrico del equipo.
- IM
  El Manual de instalación proporciona a los técnicos la información necesaria para instalar el equipo de manera segura.
- MM
  El Manual de mantenimiento proporciona a los técnicos información sobre el mantenimiento del equipo.
- OM
  El Manual de funcionamiento proporciona al operador información sobre el manejo y el funcionamiento del equipo antes, durante y después de la producción.
- SPC
  El Catálogo de recambios proporciona la información necesaria para pedir las piezas de recambio a Tetra Pak.
- TeM
  El Manual técnico
  - proporciona a los técnicos la información necesaria para instalar de manera segura el equipo
  - proporciona a los técnicos información sobre el mantenimiento del equipo
  - proporciona a los técnicos información sobre el sistema eléctrico de la máquina/equipo
  - proporciona la información necesaria para pedir las piezas de recambio a Tetra Pak.

Organización de las páginas

Consultar la ilustración (A) en la página i-5: Las páginas principales en un Catálogo de recambios se componen de una página de ilustración (1) y una página de lista correspondiente (7). El número de la página (5) se muestra en el encabezado de una página de ilustración y en el pie de página de una página de lista. El número del documento (6) se muestra en el pie de página de una página de lista.

Numeración de las páginas

Consulte la ilustración (A) en la página i-5: Un número de página (5) consta de tres partes:

- número de capítulo (2)
- número de página consecutivo dentro del capítulo (3)
- número total de páginas del capítulo (4)

Introducción a la máquina

Fabricante

Para obtener el nombre y la dirección del fabricante, véase la segunda página de este catálogo.

Servicio

Para pedir recambios para esta máquina o informar de problemas asociados con el funcionamiento de la misma, póngase en contacto con la oficina de Tetra Pak más cercana.

Póngase en contacto con el representante para otras consultas, comentarios o consejos sobre mejoras referidos al equipo y su documentación.

Identificación

Clasificación de la CE

Este equipo cumple con la normativa básica sobre salud y seguridad del Espacio Económico Europeo (EEE).

Placa de máquina

La ilustración (B) en la página i-5 muestra un ejemplo de una placa de máquina.
En el capítulo Introducción de los manuales entregados con este equipo, se muestra una ilustración de la placa de máquina válida y su ubicación en el equipo. La placa de máquina contiene los datos que se enumeran a continuación, requeridos al ponerse en contacto con Tetra Pak en relación con este equipo específico.

- Tipo de máquina (8)
- Volumen (9)
- Especificaciones de plano (10)
- Número de serie de la máquina (11)
- Fabricante (12)
- Marca de la CE (13)
- Año de fabricación (14)

La ilustración (C) en la página i-5 muestra un ejemplo de especificación de la máquina. Asegúrese de que los datos de equipo que se enumeran en las páginas de la cubierta de este manual corresponden a los datos de la placa y las especificaciones de la máquina.

Cómo utilizar este Catálogo de recambios

Localizar un número de recambio

a) Consulte la ilustración (D) en la página i-5: Vaya al número de capítulo (15) indicado junto al grupo principal que contiene la pieza que desea localizar.

Los puntos b) y c) hacen referencia a la ilustración (E) en la página i-6.

b) En la ilustración del grupo principal, busque el subgrupo de la máquina (17) que contiene la pieza o el subgrupo que busca. Anote el número de posición (18) y vaya a la página de lista que sigue a la ilustración.

c) Busque el número de posición/denominación de referencia (16) o el nombre del subgrupo (19). Vaya al número de página correspondiente (20) que aparece en la columna de la derecha. Tetra Pak ha elegido utilizar siempre la estructura orientada a la función para la denominación de referencia. El prefijo que indica la estructura orientada a la función (=) no aparece en la denominación de referencia.

Los puntos d) y e) hacen referencia a la ilustración (F) en la página i-6.

d) Localice la pieza (21) que busca en la ilustración del subgrupo y anote el número de posición de la pieza.

e) El número de pieza (29) y la descripción de la misma (30) aparecen junto al número de posición en la página de lista.

Información que contiene un Catálogo de recambios

La lista que aparece a continuación hace referencia a la ilustración (F) en la página i-6. Un Catálogo de recambios contiene la siguiente información sobre grupos, subgrupos y recambios para el equipo:

- Referencia de estructura de grupo (22). Indica el siguiente grupo más alto en la estructura de lista del equipo.
- Nombre del grupo (23)
- Unidad de medida (25)
- Cantidad (26)
- Número de dibujo del conjunto (27)
- Intervalo de página de lista (28). Incluido si hay varias páginas en la ilustración o lista de grupo.
- Número de pieza o subgrupo (29)
- Nombre de subgrupo o descripción de pieza (30)
- Número de grupo (31)
- Número de equipo (32)
- Encabezado de información de grupo (33). Indica si la sección que aparece debajo del encabezado corresponde a una variante específica de la máquina o si es una lista de piezas comunes. Si la lista tiene más de una variante y cada variante tiene su propio dibujo de conjunto, se muestra una referencia de página al dibujo de conjunto de la variante.
- Información interna (34)

Sissejuhatus

Juhendi teave

Tetra Pak soovitab kõik juhendid hoolikalt läbi lugeda. Kontrollige, et juhendid oleksid seadmetega töötavatele ja neid hooldavatele isikutele kättesaadavad.

Kataloog tuleb seadme kasutusaja vältel alles hoida ning järgmisele omanikule või kasutajale edasi anda.

Tetra Pak ei vastuta seadme vigastuste eest, mis on tekkinud seadmega kaasnevate juhendite mittejärgimise tõttu.

Kaasaolevad juhendid

Seadmega kaasasolevad juhendid võivad sisaldada järgmist:

- CM
  Ümberseadistusjuhend annab tehnikutele teavet seadme ümber seadistamise kohta eri tootmisrežiimide korral.
- EM
  Elektrijuhend annab tehnikutele informatsiooni seadme elektrisüsteemi kohta.
- IM
  Paigaldusjuhend annab tehnikutele vajalikku teavet seadme ohutu paigaldamise kohta.
- MM
  Hooldusjuhend annab tehnikutele teavet seadme hoolduse kohta.
- OM
  Kasutusjuhend annab operaatorile teavet seadme käsitsemise ja kasutamise kohta enne tootmist, selle ajal ja pärast seda.
- SPC
  Varuosade kataloog annab vajalikku teavet Tetra Pakilt varuosade tellimiseks
- TeM
  Tehniline juhend
  - annab tehnikutele vajalikku teavet seadme ohutuks paigaldamiseks
  - annab tehnikutele teavet seadme hooldamise kohta
  - annab tehnikutele teavet masina/seadme elektrisüsteemi kohta
  - annab vajalikku teavet Tetra Pakilt varuosade tellimiseks.

Lehekülje kujundus

Vt joonist (A) lk i-5: Varuosade kataloogi põhilehtedeks on jooniste lehekülg (1) ja vastav loeteluleht (7). Lehekülje number (5) on toodud joonistelehe päises ja loetelulehe jaluses. Dokumendi number (6) on toodud loetelulehe jaluses.

Lehekülje nummerdus

Vt joonist (A) lk i-5: Lehekülje number (5) koosneb kolmest osast:

- peatüki number (2)
- järgneva lehekülje number (3) peatükis
- lehekülgede koguarv peatükis (4)

Sissejuhatus masina kohta

Tootja

Tootja nimi ja aadress on toodud kataloogi teisel lehel.

Teenindus

Masina varuosade tellimiseks või masina kasutamisega seonduvate probleemide teatamiseks võtke ühendust lähima Tetra Pak kontoriga.

Seadme ja dokumendiga seonduvate küsimuste, kommentaaride ja parandusettepanekute puhul võtke ühendust ettevõtte esindajaga.

Identifikatsioon

CE klassifikatsioon

Seade on kooskõlas Euroopa Majanduspiirkonna (EEA) tervishoiu- ja ohutusnõuetega.

Masina andmeplaat

Joonisel (B) leheküljel i-5 on kujutatud masina andmeplaati. Masina andmeplaadi joonis ja selle asukoht seadmel on toodud seadmega kaasasoleva juhendi sissejuhatavas peatükis. Masina andmeplaadil on toodud allpool loetletud andmed, mida vajate antud konkreetse seadmega seoses Tetra Paki poole pöördudes.

- Masina tüüp (8)
- Maht (9)
- Joonisspetsifikatsioonid (10)
- Masina seerianumber (11)
- Tootja (12)
- CE tähis (13)
- Tootmisaasta (14)

Joonisel (C) leheküljel i-5 on kujutatud näide masina spetsifikatsioonist. Veenduge, et juhendi esimestel lehekülgedel toodud andmed seadme kohta vastavad masina andmesildil olevatele andmetele ja masina spetsifikatsioonile.

Kuidas varuosade kataloogi kasutada

Leidke varuosa number

a) Vt joonist (D) lk i-5: Leidke peatükk, mille number (15) on toodud selle põhirühma juures, mis sisaldab otsitavat varuosa.

Punktid b) ja c) viitavad joonisele (E) lk i-6.

b) Põhirühma joonisel leidke masina alamrühm (17), mis sisaldab otsitavat osa või alamrühma. Leidke positsiooninumber (18) ja avage joonisele järgnev loeteluleht.

c) Leidke positsiooninumber/viite tähis (16) või alamgrupi nimetus (19). Avage parempoolses veerus loetletud vastav lehekülje number (20). Tetra Pak on valinud viite tähise puhul alatiseks kasutamiseks funktsioonile suunatud struktuuri. Funktsioonile suunatud struktuuri prefiks (=) pole viite tähises näidatud.

Punktid d) ja e) viitavad jooniselerefer (F) lk i-6.

d) Leidke otsitav osa (21) alamrühma joonisel ja seejärel osa positsioonnumber.

e) Osa number (29) ja osa kirjeldus (30) on toodud loetelulehel positsioonnumbri kõrval.

Varuosade kataloogis toodud teave

Allpool toodud loetelui viitab joonisele (F) lk i-6. Varuosade kataloog sisaldab järgmist teavet seadme rühmade, alamrühmade ja varuosade kohta:

- Rühmastruktuuri viide (22). Märgib seadme loetelu struktuuris järgmist kõrgemat rühma.
- Rühma nimetus (23)
- Mõõtühik (25)
- Kogus (26)
- Koostejoonise number (27)
- Loetelu lehekülgede vahemik (28). Kaasatud kui rühma joonised või loetelu on toodud mitmel lehel.
- Osa või alamrühma number (29)
- Alamrühma nimetus või osa kirjeldus (30)
- Rühma number (31)
- Seadme number (32)
- Rühma teabe pealkiri (33). Näitab, kas pealkirja all toodud jaotis on konkreetse masinavariandi kohta või on tegemist tavaliste varuosade loeteluga. Kui loetelus on toodud rohkem kui üks variant ja iga variandi jaoks on oma koostejoonis, esitatakse viide selle variandi koostejoonise leheküljele.
- Siseteave (34)

Johdanto

Tietoja käsikirjasta

Tetra Pak suosittelee kaikkien toimitettavien oppaiden lukemista huolellisesti. Varmista, että toimitetut oppaat ovat laitetta käyttävän tai huoltavan henkilökunnan saatavilla.

Tämä luettelo on säilytettävä laitteen käyttöiän ajan ja toimitettava edelleen mahdolliselle seuraavalle omistajalle tai käyttäjälle.

Tetra Pak ei vastaa laitevaurioista, jotka aiheutuvat laitteen mukana tulevissa oppaissa annettujen ohjeiden noudattamatta jättämisestä.

Toimitettavat ohjeet

Tämän laitteen mukana toimitettaviin ohjeisiin kuuluvat:

- CM
  Muunnoskirjassa on teknikoille tarkoitettuja ohjeita laitteiston muuttamisesta eri tuotantotiloihin.
- EM
  Sähkökirjassa on teknikoille tarkoitettuja tietoja laitteen sähköjärjestelmästä.
- IM
  Asennuskäsikirjassa on teknikoille tarkoitettuja tietoja, jotka tarvitaan laitteen turvallista asentamista varten.
- MM
  Huoltokäsikirjassa on teknikoille tarkoitettuja tietoja tämän laitteen huoltamisesta.
- OM
  Käyttäjän käsikirjassa on käyttäjälle tarkoitettuja tietoja laitteen käsittelystä ja käyttämisestä ennen tuotantoa, tuotannon aikana ja sen jälkeen.
- SPC
  Varaosaluettelossa on tietoja, joita tarvitaan varaosien tilaamiseen Tetra Pakilta.
- TeM
  Tekninen käsikirja
  - sisältää teknikoille tarkoitettuja tietoja, joita tarvitaan laitteen turvallista asentamista varten
  - sisältää teknikoille tarkoitettuja tietoja laitteen huoltamisesta
  - sisältää teknikoille tarkoitettuja tietoja koneen/laitteen sähköjärjestelmästä
  - sisältää tietoja, joita tarvitaan varaosien tilaamiseen Tetra Pakilta.

Sivujen asettelu

Katso kuva (A) sivulla i-5: Varaosaluettelon pääsivut koostuvat kuvasivusta (1) ja sitä vastaavasta luettelosivusta (7). Sivunumero (5) näytetään kuvasivun ylätunnisteessa ja luettelosivun alatunnisteessa. Asiakirjan numero (6) näytetään luettelosivun alatunnisteessa.

Sivunumerointi

Katso kuva (A) sivulla i-5: Sivunumerossa (5) on kolme osaa:

- luvun numero (2)
- perättäinen sivunumero (3) luvun sisällä
- luvun kokonaissivumäärä (4).

Koneen esittely

Valmistaja

Valmistajan nimi ja osoite on ilmoitettu tämän luettelon toisella sivulla.

Huolto

Jos haluat tilata tähän koneeseen varaosia tai jos tämän koneen käytössä ilmenee ongelmia, jotka haluat raportoida, ota yhteyttä lähimpään Tetra Pakin toimistoon.

Jos sinulla on muuta kysyttävää, huomautettavaa tai ehdotuksia ja sen asiakirjoja koskevista parannuksista, ota yhteys yhteyshenkilöön.

Tunnistetiedot

CE-luokitus

Tämä laite vastaa Euroopan talousalueen (ETA) terveyttä ja turvallisuutta koskevia perusvaatimuksia.

Koneen tyyppikilpi

Kuvassa (B) sivulla i-5 on esimerkki koneen tyyppikilvestä. Voimassa olevan tyyppikilven kuva ja sen sijainti koneessa käy ilmi laitteiston mukana tulleiden ohjeiden Johdanto-luvusta. Tyyppikilvessä on tarvitsemasi Tetra Pakin voimassa olevat yhteystiedot, kun on kyseessä tämä nimenomainen laite.

- Konetyyppi (8)
- Tilavuus (9)
- Piirustuserittely (10)
- Koneen sarjanumero (11)
- Valmistaja (12)
- CE-merkki (13)
- Valmistusvuosi (14)

Kuvassa (C) sivulla i-5 on esimerkki koneen erittelystä. Varmista, että tämän ohjeen etusivuilla ilmoitetut laitetiedot vastaavat tyyppikilven ja kone-erittelyn tietoja.

Tämän varaosaluettelon käyttäminen

Etsi varaosan numero

a) Katso kuva (D) sivulla i-5: Siirry lukuun (15), joka on ilmoitettu etsittävän osan pääryhmän vieressä.

Kohdat b) ja c) viittaavat kuvaan (E) sivulla i-6.

b) Etsi pääryhmän kuvasta koneen alaryhmä (17), joka sisältää etsimäsi osan tai alaryhmän. Merkitse muistiin paikkanumero (18) ja siirry luettelosivulle, joka seuraa kuvaa.

c) Etsi paikkanumero (16) tai alaryhmän nimi (19). Siirry vastaavalle sivunumerolle (20), joka on ilmoitettu oikeassa sarakkeessa. Tetra Pak on päättänyt aina noudattaa toimintoperusteista rakennetta viitemerkinnöissä. Viitemerkinnässä ei esitetä toimintoperusteisen rakenteen osoittavaa etuliitettä (=).

Kohdat d) ja e) viittaavat kuvaan (F) sivulla i-6.

d) Hae etsittävä osa (21) alaryhmän kuvasta ja merkitse osan paikkanumero muistiin.

e) Osanumero (29) ja osan kuvaus (30) on annettu paikkanumeron vieressä luettelosivulla.

Varaosaluettelossa olevat tiedot

Alla oleva luettelo viittaa kuvaan (F) sivulla i-6. Varaosaluettelo sisältää seuraavat tiedot ryhmistä, alaryhmistä ja laitteen varaosista:

- Ryhmärakenneviite (22). Osoittaa seuraavaksi ylemmän ryhmän laiteluettelorakenteessa.
- Ryhmän nimi (23)
- Mittayksikkö (25)
- Määrä (26)
- Kokoonpanopiirustuksen numero (27)
- Luettelon sivualue (28). Tämä on mukana, jos ryhmäkuvassa tai luettelossa on useita sivuja.
- Osan tai alaryhmän numero (29)
- Alaryhmän nimi tai osan kuvaus (30)
- Ryhmän numero (31)
- Laitteen numero (32)
- Ryhmätietojen otsikko (33). Osoittaa, koskeeko alla oleva osio tiettyä koneversiota vai onko kyseessä yhteisten osien luettelo. Jos luettelolla on useampi kuin yksi versio ja kullakin versiolla on oma kokoonpanopiirustuksensa, näytetään version kokoonpanopiirustuksen sivuviittaus.
- Sisäiset tiedot (34)

Introduction

Informations sur ce manuel

Tetra Pak recommande de lire attentivement tous les manuels remis. S'assurer que ceux-ci sont accessibles au personnel d'exploitation et de maintenance de l'équipement.

Il est important de conserver ce catalogue pendant la durée de vie de l'équipement et de le transmettre à tout détenteur ou à tout utilisateur ultérieur de l'équipement.

Tetra Pak ne pourra être tenu responsable d'aucun dommage causé à l'équipement suite au non respect des instructions fournies dans les manuels remis avec cet équipement.

Manuels remis

Les manuels remis avec cet équipement peuvent comprendre

- CM
  Le Manuel de Conversion contient les informations destinées aux techniciens pour la conversion de l'équipement en vue des différents modes de production.
- EM
  Le Manuel Electrique fournit aux techniciens des informations sur le système électrique de l'équipement.
- IM
  Le Manuel d'Installation fournit les informations nécessaires aux techniciens pour installer l'équipement en toute sécurité.
- MM
  Le Manuel d'Entretien contient les informations nécessaires aux techniciens pour la maintenance de l'équipement.
- OM
  Le Manuel d'Utilisation fournit à l'opérateur les informations nécessaires à la manutention et à l'exploitation de l'équipement, avant, pendant et après la production.
- SPC
  Le Catalogue des Pièces de Rechange contient les informations permettant de commander des pièces de rechange auprès de Tetra Pak
- TeM
  Le Manuel Technique
  - contient les informations nécessaires aux techniciens pour installer l'équipement en toute sécurité.
  - contient les informations nécessaires aux techniciens pour la maintenance de l'équipement.
  - fournit aux techniciens des informations sur le système électrique de la machine/de l'équipement.
  - fournit les informations permettant de commander des pièces de rechange auprès de Tetra Pak.

Mise en page

Reportez-vous au schéma (A) page i-5 : Dans un catalogue de Pièces de Rechange, les pages principales sont les pages de schémas (1) et les pages de listes correspondantes (7). Le numéro de page (5) est indiqué en en-tête sur une page de schéma et en bas de page sur une page de liste. Le numéro de document (6) est indiqué au bas d'une page de liste.

Numérotation des pages

Reportez-vous au schéma (A) page i-5 : Un numéro de page (5) se compose de trois éléments :

- numéro du chapitre (2)
- numéro de page séquentiel à l'intérieur du chapitre (3)
- nombre total de pages du chapitre (4)

Présentation de la machine

Fabricant

Les nom et adresse du fabricant sont donnés en deuxième page de ce catalogue.

Assistance technique

Pour commander des pièces de rechange pour cette machine ou signaler un problème lié à son fonctionnement, contactez l'agence Tetra Pak la plus proche.

Contactez le responsable de liaison pour tout autre renseignement, commentaire ou suggestion d'amélioration relatifs à l'équipement et à sa documentation.

Identification

Certification CE

Cet équipement est conforme aux réglementations essentielles en matière d'hygiène et de sécurité de l'Espace économique européen (EEE).

Plaque signalétique de la machine

Le schéma (B) de la page i-5 reproduit un exemple de plaque signalétique de la machine.
Le chapitre Introduction des manuels remis avec cet équipement comprend une reproduction de la plaque signalétique valide de la machine et indique son emplacement sur l'équipement. La plaque comporte les caractéristiques indiquées ci-dessous, nécessaires pour prendre contact avec Tetra Pak à propos de cet équipement spécifique.

- Type de la machine (8)
- Volume (9)
- Caractéristiques schéma (10)
- Numéro de série de la machine (11)
- Fabricant (12)
- Marquage CE (13)
- Année de fabrication (14)

Le schéma (C) de la page i-5 reproduit un exemple de plaque signalétique de la machine. Assurez-vous que les données relatives à l'équipement qui se trouvent au début de ce manuel correspondent bien aux données figurant sur la plaque signalétique de la machine et à ses spécifications.

Comment utiliser ce Catalogue des Pièces de Rechange

Trouver un numéro de pièce de rechange

a) Reportez-vous au schéma (D) page i-5 : Allez au numéro de chapitre (15) indiqué à côté du groupe principal contenant la pièce que vous recherchez.

Les éléments b) et c) se rapportent au schéma (E) de la page i-6.

b) Sur le schéma du groupe principal, recherchez le sous-groupe de la machine (17) contenant la pièce ou le sous-groupe que vous recherchez. Notez le numéro de position (18) et reportez-vous à la page de liste suivant le schéma.

c) Recherchez le numéro de position/la désignation de référence (16) ou le nom du sous-groupe (19). Allez au numéro de page correspondant (20) figurant dans la liste de la colonne de droite. Tetra Pak a pris le parti de toujours utiliser la structure de la fonction pour la désignation de la référence. Le préfixe indiquant la structure de la fonction (=) ne figure pas dans la désignation de la référence.

Les éléments d) et e) se rapportent au schéma (F) de la page i-6.

d) Repérez la pièce (21) que vous recherchez dans le schéma du sous-groupe et notez le numéro de position de la pièce.

e) Le numéro de la pièce (29) et sa description (30) figurent à côté du numéro de position sur la page de liste.

Informations données dans un Catalogue de Pièces de Rechange

La liste ci-dessous se rapporte au schéma (F) de la page i-6. Un Catalogue de Pièces de Rechange contient les informations suivantes concernant les groupes, sous-groupes et pièces de rechange de l'équipement :

- Référence de structure de groupe (22). Indique le groupe immédiatement supérieur dans la structure de liste de l'équipement.
- Nom du groupe (23)
- Unité de mesure (25)
- Quantité (26)
- Numéro de plan de montage (27)
- Groupe de pages de liste (28). Indiqué si la liste ou l'illustration du groupe comporte plusieurs pages.
- Numéro de pièce ou de sous-groupe (29)
- Nom du sous-groupe ou description de la pièce (30)
- Numéro de groupe (31)
- Numéro de l'équipement (32)
- Titre information du groupe (33) Indique si la section en-dessous du titre est destinée à une variante spécifique de la machine ou s'il s'agit d'une liste de pièces communes. Si une liste comprend plus d'une variante et que chaque variante a son propre plan de montage, une référence de page est donnée pour le plan de montage de la variante.
- Information interne (34)

Bevezetés

Kézikönyvre vonatkozó információk

A Tetra Pak javasolja, hogy az összes kapott kézikönyvet gondosan olvassa el. Gondoskodjon róla, hogy a kézikönyvek a berendezést üzemeltető és karbantartó személyzet számára elérhetők legyenek.

Fontos, hogy megőrizzék ezt a katalógust a berendezés élettartama alatt, és átadják a következő tulajdonosoknak és felhasználóknak.

A Tetra Pak nem vállal felelősséget a berendezés semmilyen megrongálódása esetén, ha nem követték a berendezéshez tartozó kézikönyvekben leírt utasításokat.

Szállított kézikönyvek

A berendezéssel szállított kézikönyvek az alábbiak lehetnek

- CM
  Az Átállási kézikönyv a műszaki szakemberek számára a berendezés különböző gyártási módjai közötti átállásra vonatkozó információkat tartalmaz.
- EM
  A Villamossági kézikönyv a berendezés elektronikai rendszerére vonatkozó információkat szolgáltat a műszaki szakemberek részére.
- IM
  Az Üzembe helyezési kézikönyv a berendezés biztonságos üzembe helyezésére vonatkozó információkat biztosít a technikai szakemberek részére.
- MM
  A Karbantartási kézikönyv a berendezés karbantartására vonatkozó információkat biztosít a technikai szakemberek részére.
- OM
  Az Üzemeltetési kézikönyv az üzemeltető személyzetnek szolgáltat a berendezés kezelésére és üzemeltetésére, a feldolgozás előtti, közbeni és utáni teendőkre vonatkozó információkat.
- SPC
  A Tartalékalkatrész-katalógus információt biztosít a pótalkatrészek Tetra Pak-tól történő megrendeléséhez.
- TeM
  A Technikai kézikönyv
  – a berendezés biztonságos üzembe helyezésére vonatkozó információkat biztosít a technikai szakemberek részére.
  – a berendezés karbantartására vonatkozó információkat biztosít a technikai szakemberek részére.
  – a gép/berendezés elektromos rendszerére vonatkotó információkat szolgáltat a technikai szakemberek számára.
  – információkat biztosít a pótalkatrészek Tetra Pak-tól történő megrendeléséhez.

Oldalelrendezés

Tekintse meg az i-5 oldalon lévő (A) ábrát: A Tartalékalkatrész-katalógus főoldalai egy rajzoldalból (1) és egy hozzá tartozó listaoldalból (7) állnak. Az oldalszám (5) a rajzoldal fejlécében és a listaoldal láblécében látható. A dokumentum száma (6) a listaoldal láblécében jelenik meg.

Oldalszámozás

Tekintse meg az i-5 oldalon lévő (A) ábrát: Az oldalszám (5) három részből áll:

- fejezetszám (2)
- folyamatos oldalszám (3) a fejezeten belül
- összes oldalszám (4) a fejezeten belül.

Bevezetés

Gyártó

A gyártó neve és címe a katalógus második oldalán található.

Szerviz

A gép valamely pótalkatrészének megrendelése vagy a berendezés működésével kapcsolatos zavarok bejelentése végett forduljon a legközelebbi Tetra Pak képviselethez.

Bármilyen más, a berendezésre illetve a dokumentációra vonatkozó kérdéseivel, megjegyzéseivel vagy javaslataival forduljon területi képviselőjéhez.

Azonosítás

CE besorolás

Ez a berendezés megfelel az Európai Gazdasági Régió (EEA) alapvető egészségügyi és biztonsági előírásainak.

Gépcímke

A(z) i-5 oldalon található (B) ábra a gépcímke egy példáját mutatja be. Egy érvényes gépcímkét és megfelelő elhelyezését ábrázoló rajz látható a berendezéssel szállított kézikönyv Bevezetés fejezetében. A gépcímke azokat az alább felsorolt adatokat tartalmazza, amelyek a Tetra Pak-kal történő, a berendezésre vonatkozó kommunikációhoz szükségesek.

- Géptípus (8)
- Térfogat (9)
- Tervrajzok (10)
- A gép sorozatszáma (11)
- Gyártó (12)
- CE jelzés (13)
- Gyártási év (14)

A(z) i-5 oldalon található (C) ábra a gép műszaki specifikációjának egy példáját mutatja be. Győződjön meg róla, hogy a kézikönyv első lapjain közölt berendezésadatok megegyeznek a gép adattábláján és a gép műszaki leírásában megjelenő információkkal.

A Tartalékalkatrész-katalógus használata

A tartalékalkatrész számának kikeresése

a) Tekintse meg a(z) i-5 oldalon lévő (D) ábrát: Lapozzon a keresett alkatrészt tartalmazó főcsoport mellett feltüntetett (15) számú fejezetre.

A b) és c) elemek az i-6 oldalon található ábrára vonatkoznak.

b) A főcsoport-ábrán keresse meg azt az alcsoportot (17), amelyik a keresett alkatrészt vagy alcsoportot tartalmazza. Jegyezze meg a pozíciószámot (18), majd lapozzon az ábrát követő listaoldalra.

c) Keresse meg a lejegyzett pozíciószámot/hivatkozási megjelölést (16) vagy a keresett alcsoport nevét (19). Lapozzon a jobb oldali oszlopban feltüntetett számú (20) oldalra. A Tetra Pak a hivatkozási jelöléseket mindig funkció-orientált struktúra alapján végzi el. Az előtaggal jelölt funkció-orientált struktúra (=) nem jelenik meg a hivatkozási jelölésben.

A d) és e) elemek az i-6 oldalon található (F) ábrára vonatkoznak.

d) Az alcsoport ábrán keresse meg a kívánt alkatrészt (21), és jegyezze meg az alkatrész pozíciószámát.

e) Az alkatrész száma (29) és leírása (30) a listaoldalon, a pozíciószám mellett látható.

A Tartalékalkatrész-katalógusban megtalálható információk

Az alábbi lista az i-6 oldalon található (F) ábrára vonatkozik.
A Tartalékalkatrész-katalógus a következő, csoportokra, alcsoportokra és pótalkatrészekre vonatkozó adatokat tartalmazza:

- Csoportstruktúra-hivatkozás (22). A berendezés listás struktúrájában közvetlenül az aktuális csoport fölött álló csoportot jelöli.
- Csoportnév (23)
- Mértékegység (25)
- Mennyiség (26)
- Összeszerelési rajzszám (27)
- Lista oldaltartománya (28). Abban az esetben jelenik meg, ha a csoport ábrája vagy listája többoldalas.
- Alkatrész vagy alcsoport száma (29)
- Alcsoport neve vagy alkatrész leírása (30)
- Csoportszám (31)
- Berendezésszám (32)
- Csoportinformáció fejléce (33). Azt mutatja, hogy a fejléc után következő rész egy speciális gépváltozatra vonatkozik vagy az általános pótalkatrészek listája. Ha a listának több változata van, és mindegyikhez saját összeszerelési rajz tartozik, az illető összeszerelési rajz oldalhivatkozása is megjelenik.
- Belső információ (34)

Inngangur

Upplýsingar um handbók

Tetra Pak mælir með því að allar handbækur sem afhentar eru séu lesnar vandlega. Gætið þess að afhentar handbækur séu tiltækar fyrir starfsfólk sem vinnur við eða viðheldur tækjabúnaðinum.

Það er mikilvægt að halda upp á þennan vörulista allan líftíma tækjabúnaðarins og að láta síðari eiganda eða notanda hafa vörulistann.

Ekki er hægt að gera Tetra Pak ábyrgt fyrir neinum skemmdum sem verða á tækjabúnaðinum vegna þess að ekki er farið eftir leiðbeiningunum í þeim handbókum sem fylgja tækjabúnaðinum.

Afhentar handbækur

Handbækur sem afhentar eru með þessum tækjabúnaði geta verið

- CM
  Breytingahandbók, sem veitir tæknimönnum upplýsingar um breytingar á tækjabúnaðinum milli mismunandi framleiðsluhama.
- EM
  Rafmagnshandbók, sem veitir tæknimönnum upplýsingar um rafkerfi tækjabúnaðarins.
- IM
  Uppsetningarhandbók, sem veitir tæknimönnum nauðsynlegar upplýsingar til að setja tækjabúnaðinn upp á öruggan hátt.
- MM
  Viðhaldshandbók, sem eitir tæknimönnum upplýsingar um viðhald tækjabúnaðarins.
- OM
  Notkunarhandbók, sem veitir stjórnandanum upplýsingar um meðhöndlun og notkun tækjabúnaðarins, fyrir, eftir og meðan á framleiðslu stendur.
- SPC
  Varahlutavörulisti, sem veitir nauðsynlegar upplýsingar til pöntunar varahluta frá Tetra Pak.
- TeM
  Tæknihandbók
  - sem veitir tæknimönnum nauðsynlegar upplýsingar til að setja tækjabúnaðinn upp á öruggan hátt
  - sem veitir tæknimönnum upplýsingar um viðhald tækjabúnaðarins
  - sem veitir tæknimönnum upplýsingar um rafkerfi vélarinnar/ tækjabúnaðarins
  - sem veitir nauðsynlegar upplýsingar til pöntunar varahluta frá Tetra Pak.

Umbrot

Sjá skýringarmynd (A) á síðu i-5: Aðalsíðurnar í Varahlutavörulistanum samanstanda af skýringarsíðu (1) og samsvarandi listasíðu (7). Síðunúmerið (5) er sýnt í haus síðunnar með skýringarmyndinni og í fæti listasíðunnar. Skjalnúmerið (6) er sýnt í fæti listasíðunnar.

Númerun síðu

Sjá skýringarmynd (A) á síðu i-5: Síðunúmer (5) er í þremur hlutum:

- kaflanúmer (2)
- samfellt síðunúmer innan kaflans (3)
- heildarfjölda blaðsíðna í kaflanum (4)

Kynning á vél

Framleiðandi

Fyrir nafn og heimilisfang framleiðanda, sjá síðu tvö í þessum vörulista.

Þjónusta

Til að panta varahluti fyrir þessa vél, eða til að tilkynna vandamál sem tengjast notkun þessarar vélar, skal hafa samband við næstu Tetra Pak skrifstofu.

Hafðu samband við Samskiptatengsl með aðrar fyrirspurnir, athugasemdir eða uppástungur varðandi tækjabúnaðinn og fylgiskjöl hans.

Kennsl

CE flokkun

Þessi tækjabúnaður er í samræmi við grundvallar heilbrigðis- og öryggisreglugerðir á Evrópska efnahags svæðinu (EES).

Nafnplata

Skýringarmynd (B) á síðu i-5 sýnir dæmi um nafnplötu.
Skýringarmynd af gildri nafnplötu og staðsetningu hennar á tækjabúnaðinum er sýnd í Inngangskafla handbókanna sem afhentar eru með þessum tækjabúnaði. Á nafnplötunni eru upplýsingarnar sem taldar eru upp hér að neðan, sem þörf er á þegar haft er samband við Tetra Pak varðandi þennan tiltekna tækjabúnað.

- Vélartegund (8)
- Fjöldi (9)
- Teikniupplýsingar (10)
- Raðnúmer vélar (11)
- Framleiðandi (12)
- CE merki (13)
- Framleiðsluár (14)

Skýringarmynd (C) á síðu i-5 sýnir dæmi um tæknilýsingu vélar. Gættu þess að upplýsingar um tækjabúnað sem talinn er upp á fremstu síðum þessarar handbóka samsvari upplýsingum á nafnplötu og tæknilýsingu vélar.

Hvernig nota á þennan Varahlutavörulista

Finndu varahlutarnúmer

a) Sjá skýringarmynd (D) á síðu i-5: Farðu í kaflanúmerið (15) sem gefið er til kynna við hlið aðalflokksins sem inniheldur hlutinn sem þú vilt finna.

Atriði b) og c) vísa til skýringarmyndar (E) á síðu i-6:

b) Á skýringarmynd aðalflokksins skaltu leita að undirflokki (17) vélarinnar, sem inniheldur hlutinn eða undirflokkinn sem þú ert að leita að. Taktu eftir stöðunúmerinu (18) og farðu á listasíðuna sem fylgir skýringarmyndinni.

c) Leitaðu að stöðunúmeri/tilvísunartitli (16) eða heiti undirflokksins (19). Farðu á samsvarandi síðunúmer (20) sem sýnt er í hægri dálkinum. Tetra Pak hefur kosið að nota alltaf sérhæfða skipan fyrir tilvísunartitla. Forskeytið sem gefur til kynna sérhæfða skipan (=) er ekki sýnt í tilvísunartitlinum.

Atriði d) og e) vísa til skýringarmyndar (F) á síðu i-6:

d) Finndu hlutinn (21) sem þú ert að leita að á undirflokksskýringarmyndinni og taktu eftir stöðunúmeri hlutarins.

e) Hlutarnúmerið (29) og lýsing hlutar (30) eru skráð hjá stöðunúmerinu á listasíðunni.

Upplýsingar skráðar í Varahlutavörulista

Listinn að neðan vísar til skýringarmyndar (F) á síðu i-6: Varahlutavörulisti inniheldur eftirfarandi upplýsingar um flokka, undirflokka og varahluti fyrir tækjabúnaðinn:

- Tilvísun flokkaskipunar (22). Gefur til kynna næsta flokk fyrir ofan í listaskipan tækjabúnaðarins.
- Heiti flokks (23)
- Mælieining (25)
- Magn (26)
- Númer samsetningarteikningar (27)
- Röð listasíðu (28). Fylgir með ef það eru margar blaðsíður í skýringarmynd eða lista flokksins.
- Númer hlutar eða undirflokks (29)
- Heiti undirflokks eða lýsing hlutar (30)
- Númer flokks (31)
- Númer tækjabúnaðar (32)
- Fyrirsögn flokkaskipunar (33). Gefur til kynna ef kaflinn fyrir neðan fyrirsögnina er fyrir sérstakt afbrigði vélar eða ef hann er listi yfir algenga hluti. Ef listi er með meira en eitt afbrigði og hvert afbrigði á sína eigin samsetningarteikningu, er sýnd blaðsíðutilvísun til samsetningarteikningar afbrigðisins.
- Innri upplýsingar (34)

Introduzione

Informazioni sul manuale

Tetra Pak consiglia di leggere con attenzione tutti i manuali forniti in dotazione. Assicurarsi che tutti i manuali in dotazione siano disponibili per il personale addetto al funzionamento o alla manutenzione della macchina.

È importante conservare il presente catalogo per tutta la durata della macchina e consegnarlo al successivo proprietario o utilizzatore.

Tetra Pak non sarà da ritenersi responsabile per eventuali danni alla macchina causati dal mancato rispetto delle istruzioni fornite nei manuali che accompagnano questa macchina.

Manuali in dotazione

I manuali consegnati con la presente macchina possono comprendere:

- CM (Manuale di conversione)
  Questo manuale fornisce ai tecnici le informazioni necessarie per la conversione della macchina da una modalità di produzione a un'altra.
- EM (Manuale elettrico)
  Questo manuale fornisce ai tecnici informazioni sull'impianto elettrico della macchina.
- IM (Manuale d'installazione)
  Questo manuale fornisce ai tecnici le informazioni necessarie per installare in sicurezza la macchina.
- MM (Manuale di manutenzione)
  Questo manuale fornisce ai tecnici le informazioni sulla manutenzione della macchina.
- OM (Manuale operativo)
  Questo manuale fornisce all'operatore le informazioni sull'utilizzo e il funzionamento della macchina prima, durante e dopo la produzione.
- SPC (Catalogo dei pezzi di ricambio)
  Questo catalogo fornisce le informazioni necessarie per ordinare i pezzi di ricambio a Tetra Pak.
- TeM (Manuale tecnico)
  Questo manuale:
  - fornisce ai tecnici le informazioni necessarie per installare in sicurezza la macchina
  - fornisce ai tecnici le informazioni sulla manutenzione della macchina
  - fornisce ai tecnici informazioni sull'impianto elettrico della macchina
  - fornisce le informazioni necessarie per ordinare i pezzi di ricambio a Tetra Pak.

Schema delle pagine

Consultare la figura (A) a pagina i-5: Le pagine principali di un Catalogo dei pezzi di ricambio sono costituite da una pagina con la figura (1) e una pagina elenco corrispondente (7). Il numero di pagina (5) è indicato nell'intestazione delle pagine con le figure e nel piè di pagina delle pagine elenco. Il codice del documento (6) è indicato nel piè di pagina delle pagine elenco.

Numerazione delle pagine

Consultare la figura (A) a pagina i-5: Il numero di pagina (5) è suddiviso in tre parti:

- numero del capitolo (2)
- numero progressivo di pagina all'interno del capitolo (3)
- numero totale di pagine nel capitolo (4)

Introduzione alla macchina

Fabbricante

Il nome e l'indirizzo del fabbricante sono riportati sulla seconda pagina del presente catalogo.

Assistenza

Per ordinare i pezzi di ricambio per questa macchina oppure per riferire problemi associati al funzionamento della macchina, contattare l'ufficio Tetra Pak più vicino.

Per tutte le altre richieste, commenti o suggerimenti per eventuali miglioramenti da apportare alla macchina e alla relativa documentazione, contattare il responsabile di collegamento.

Identificazione

Classificazione CE

Questa macchina è conforme alle principali norme sanitarie e di sicurezza dell'Area Economica Europea (EEA).

Targhetta della macchina

La figura (B) a pagina i-5 mostra un esempio di targhetta della macchina. Il capitolo Introduzione di tutti i manuali consegnati con la presente macchina contiene invece la figura della targhetta della macchina valida e la sua posizione sulla macchina. La targhetta riporta i dati elencati qui sotto, che sono necessari per contattare Tetra Pak in relazione a questa macchina specifica.

- Tipo di macchina (8)
- Volume (9)
- Specifiche disegno (10)
- Numero di matricola della macchina (11)
- Fabbricante (12)
- Marchio CE (13)
- Anno di fabbricazione (14)

La figura (C) a pagina i-5 mostra un esempio delle specifiche di una macchina. Verificare che i dati relativi alla macchina elencati nelle pagine iniziali del presente manuale corrispondano ai dati riportati sulla targhetta della macchina e nelle specifiche della macchina.

Come usare questo Catalogo dei pezzi di ricambio

Individuare il numero del pezzo di ricambio

a) Consultare la figura (D) a pagina i-5: andare al numero del capitolo (15) indicato accanto al gruppo principale che contiene il pezzo che si desidera individuare.

I punti b) e c) fanno riferimento alla figura (E) a pagina i-6.

b) Nella figura del gruppo principale, identificare il sottogruppo della macchina (17) che contiene il pezzo o il sottogruppo cercato. Annotare il numero di posizione (18) e andare alla pagina elenco che segue la figura.

c) Identificare il numero di posizione/l'indicazione di riferimento (16) o il nome del sottogruppo (19). Andare al numero di pagina corrispondente (20) indicato nella colonna di destra. Per le indicazioni di riferimento, Tetra Pak ha scelto di usare sempre la struttura "function-oriented". Il prefisso che indica la struttura "function-oriented" (=) non è mostrato nell'indicazione di riferimento.

I punti d) e e) fanno riferimento alla figura (F) a pagina i-6.

d) Individuare il pezzo (21) cercato sulla figura del sottogruppo e annotare il numero di posizione del pezzo.

e) Il numero del pezzo (29) e la descrizione del pezzo (30) sono indicati accanto al numero di posizione sulla pagina elenco.

Informazioni contenute nel Catalogo dei pezzi di ricambio

L'elenco seguente fa riferimento alla figura (F) a pagina i-6. Il Catalogo dei pezzi di ricambio contiene le seguenti informazioni sui gruppi, i sottogruppi e i pezzi di ricambio della macchina:

- Riferimento struttura gruppo (22). Indica il gruppo superiore successivo nella struttura elenco della macchina.
- Nome gruppo (23)
- Unità di misura (25)
- Quantità (26)
- Numero disegno di assemblaggio (27)
- Intervallo delle pagine elenco (28). Questa informazione è presente se la figura o l'elenco relativi al gruppo occupano più di una pagina del manuale.
- Numero pezzo o sottogruppo (29)
- Nome sottogruppo o descrizione pezzo (30)
- Numero gruppo (31)
- Numero macchina (32)
- Intestazione informazioni gruppo (33). Indica se la sezione che segue l'intestazione si riferisce a una variante di macchina specifica oppure se si tratta di un elenco di parti comuni. Se un elenco contiene più di una variante ed esiste un disegno di assemblaggio specifico per ogni variante, viene fornito il riferimento alla pagina in cui è mostrato il disegno di assemblaggio relativo alla variante.
- Informazioni interne (34)

Įvadas

Informacija apie instrukciją

"Tetra Pak" rekomenduoja atidžiai perskaityti visas pateiktas instrukcijas. Pasirūpinkite, kad instrukcijos būtų prieinamos darbuotojams, kurie eksploatuoja arba prižiūri įrangą.

Svarbu šį katalogą išsaugoti visą įrangos tarnavimo laiką ir perduoti jį kitam įrangos savininkui arba naudotojui.

"Tetra Pak" neprisiima atsakomybės už įrangos sugadinimą, jei nesilaikoma nurodymų, pateiktų prie šios įrangos pridedamuose kataloguose.

Pateikiamos instrukcijos

Su šia įranga pateikiamose instrukcijose gali būti

- CM
  Transformacijos instrukcija, suteikianti technikams informaciją apie įrangos transformavimą skirtingiems gamybos režimams.
- EM
  Elektrinės dalies instrukcija, suteikianti technikams informaciją apie įrangos elektros sistemą.
- IM
  Įrengimo instrukcija, suteikianti technikams informaciją, reikalingą norint saugiai sumontuoti įrangą.
- MM
  Techninės priežiūros instrukcija, suteikianti technikams informaciją apie įrangos priežiūrą.
- OM
  Eksploatavimo instrukcijos paskirtis yra suteikti informaciją operatoriui, kaip naudoti ir valdyti įrangą prieš gamybos procesą, jo metu ir po jo.
- SPC
  Atsarginių dalių katalogas, kuriame yra informacija, reikalinga atsarginėms dalims iš "Tetra Pak" užsakyti
- TeM
  Techninė instrukcija
  – suteikia technikams informaciją, reikalingą saugiai sumontuoti įrangą
  – suteikia technikams informaciją apie įrangos priežiūrą
  – suteikia technikams informaciją apie įrangos elektros sistemą
  – suteikia informaciją, reikalingą užsakyti iš "Tetra Pak" atsargines dalis

Puslapių išdėstymas

Žr. paveikslėlį (A) puslapyje i-5. Pagrindiniai atsarginių dalių katalogo puslapiai sudaryti iš paveikslėlio puslapio (1) ir atitinkamo sąrašo puslapio (7). Puslapio numeris (5) nurodomas paveikslėlio puslapio viršuje ir sąrašo puslapio apačioje. Dokumento numeris (6) nurodomas sąrašo puslapio apačioje.

Puslapių numeravimas

Žr. iliustraciją (A) puslapyje i-5. Puslapio numerį (5) sudaro trys dalys:

- skyriaus numeris (2)
- puslapio eilės numeris (3) skyriuje
- bendras puslapių skaičius (4) skyriuje

Įrenginio pristatymas

Gamintojas

Gamintojo pavadinimas ir adresas pateikti antrajame šio katalogo puslapyje.

Aptarnavimas

Jei reikia šiai įrangai užsakyti atsarginių dalių arba pranešti apie jos eksploatavimo nesklandumus, kreipkitės į artimiausią "Tetra Pak" biurą.

Su kitais klausimais, pastabomis ar įrangos ir jos dokumentacijos tobulinimo pasiūlymais kreipkitės į savo kontaktinį asmenį.

Identifikavimas

CE klasifikacija

Šis įrenginys atitinka esminius Europos ekonominės erdvės (EEE) sveikatos ir saugumo reikalavimus.

Vardinė plokštelė

Puslapyje i-5 pateiktame paveikslėlyje (B) parodytas įrangos vardinės plokštelės pavyzdys.
Atitinkamos įrangos vardinė plokštelė ir jos vieta ant įrangos parodoma su šia įranga pateikiamų instrukcijų įvade. Įrangos vardinėje plokštelėje pateikiami žemiau nurodyti duomenys, kurie reikalingi kreipiantis į "Tetra Pak" dėl konkretaus įrenginio.

- Mašinos tipas (8)
- Tomas (9)
- Brėžinių specifikacijos (10)
- Įrangos serijos numeris (11)
- Gamintojas (12)
- CE ženklas (13)
- Pagaminimo metai (14)

Paveikslėlyje (C) puslapyje i-5 parodytas įrangos specifikacijos pavyzdys. Patikrinkite, ar šios instrukcijos pirmuosiuose puslapiuose nurodyti duomenys atitinka duomenis vardinėje plokštelėje ir įrangos specifikaciją.

Kaip naudotis atsarginių dalių katalogu

Atsarginės dalies numerio suradimas

a) Žr. iliustraciją (D) puslapyje i-5. Atsiverskite skyrių (15), nurodytą šalia pagrindinio mazgo, kuriame yra jūsų ieškoma dalis.

Punktai b) ir c) atitinka paveikslėlį (E) puslapyje i-6.

b) Pagrindinio mazgo paveikslėlyje suraskite smulkesnį įrangos mazgą (17), kuriame yra jūsų ieškoma dalis arba mazgas. Pasižiūrėkite pozicijos numerį (18) ir suraskite jį toliau pateiktame sąraše.

c) Suraskite pozicijos numerį/pavadinimą (16) arba smulkesnio mazgo pavadinimą (19). Atsiverskite dešiniajame stulpelyje nurodytą puslapį (20). "Tetra Pak" nusprendė pavadinimuose visada naudoti paskirtį atitinkančią struktūrą. Pavadinimuose nepateikiamas paskirtį atitinkančios struktūros prefiksas (=).

Punktai d) ir e) atitinka paveikslėlį (F) puslapyje i-6.

d) Suraskite ieškomą dalį (21) smulkesnio mazgo paveikslėlyje ir pasižiūrėkite dalies pozicijos numerį.

e) Dalies numeris (29) ir dalies aprašymas (30) sąrašo puslapyje nurodyti šalia pozicijos numerio.

Atsarginių dalių kataloge pateikiama informacija

Žemiau pateiktas sąrašas atitinka paveikslėlį (F) puslapyje i-6. Atsarginių dalių kataloge apie įrangos mazgus, smulkesnius mazgus ir atsargines dalis pateikiama tokia informacija:

- Struktūrinė mazgo nuoroda (22). Nurodo stambesnį mazgą įrangos sąrašo struktūroje.
- Mazgo pavadinimas (23)
- Matavimo vienetai (25)
- Kiekis (26)
- Surinkimo brėžinio numeris (27)
- Sąrašo puslapių intervalas (28) Pateikiamas, jei mazgo paveikslėlis arba sąrašas užima kelis puslapius.
- Dalies arba smulkesnio mazgo numeris (29)
- Smulkesnio mazgo arba dalies aprašymas (30)
- Mazgo numeris (31)
- Įrangos numeris (32)
- Informacijos apie mazgą puslapio antraštė (33). Nurodo, ar po antrašte pateikta informacija yra specifinio įrangos varianto, ar tai paprastų dalių sąrašas. Jei yra daugiau kaip vienas sąrašo variantas ir kiekvienam variantui yra atskiras surinkimo brėžinys, nurodomas puslapis, kuriame pateiktas konkretaus varianto surinkimo brėžinys.
- Vidinė informacija (34)

Ievads

Informācija par rokasgrāmatu

Tetra Pak iesaka rūpīgi izlasīt visas piegādātās rokasgrāmatas. Jānodrošina, lai piegādātas rokasgrāmatas būtu pieejamas personālam, kas apkalpo iekārtas vai veic to apkopi.

Šo katalogu ir nepieciešams saglabāt visu laiku, kamēr iekārtas tiek izmantotas, un nodot katalogu nākamajam īpašniekam vai lietotājam.

Tetra Pak neatbild par jebkuriem iekārtas bojājumiem, kuri rodas līdz ar iekārtu piegādāto instrukciju neievērošanas rezultātā.

Piegādātas rokasgrāmatas

Līdz ar iekārtu var tikt piegādātas šādas rokasgrāmatas

- CM
  Pārslēgšanas rokasgrāmata sniedz tehniķiem informāciju par iekārtas pārslēgšanu dažādos atšķirīgos ražošanas režīmos.
- EM
  Elektriskās instalācijas rokasgrāmata sniedz tehniķiem informāciju par iekārtas elektriskās instalācijas sistēmu.
- IM
  Uzstādīšanas rokasgrāmata sniedz tehniķiem informāciju, kas nepieciešama drošai iekārtas uzstādīšanai.
- MM
  Apkopes rokasgrāmata sniedz tehniķiem informāciju par iekārtas apkopi.
- OM
  Ekspluatācijas rokasgrāmata sniedz apkalpojošajam personālam informāciju par iekārtas apkalpošanu un ekspluatēšanu pirms darba sākuma, darba laikā un pēc darba beigām.
- SPC
  Rezerves daļu katalogs sniedz informāciju, kas nepieciešama, lai pasūtītu rezerves daļas no Tetra Pak
- TeM
  Tehniskā rokasgrāmata
  - sniedz tehniķiem informāciju, kas nepieciešama drošai iekārtas uzstādīšanai
  - sniedz tehniķiem informāciju par iekārtas apkopi
  - sniedz tehniķiem informāciju par mašīnas/iekārtas elektrisko instalāciju
  - sniedz informāciju, kas nepieciešama, lai pasūtītu rezerves daļas no Tetra Pak.

Lappuses izkārtojums

Skatīt ilustrāciju (A) i-5 lappusē: Galvenās lappuses Rezerves daļu katalogā sastāv no ilustrāciju lapas (1) un atbilstīgās saraksta lapas (7). Lappuses numurs (5) ir norādīts ilustrāciju lapas galvenē un saraksta lapas kājenē. Dokumenta numurs (6) ir norādīts saraksta lapas kājenē.

Lappušu numerācija

Skatīt ilustrāciju (A) lappusē i-5: Lappuses numurs (5) sastāv no trim daļām:

- nodaļas numura (2)
- secīga lappuses numura nodaļas ietvaros (3)
- kopējā lappušu skaita nodaļā (3)

Iepazīstināšana ar iekārtu

Ražotājs

Ražotāja nosaukumu un adresi skatīt šī kataloga otrajā lappusē.

Serviss

Lai pasūtītu rezerves daļas šai mašīnai vai lai ziņotu par problēmām saistībā ar šīs mašīnas ekspluatāciju, sazinieties ar tuvāko Tetra Pak pārstāvniecību.

Ja Jums ir citi jautājumi, piezīmes vai ieteikumi par iekārtas un tās dokumentācijas uzlabošanu, tad lūdzam sazināties ar Sakaru biroju.

Identifikācija

EK klasifikācija

Šī iekārta atbilst galvenajām Eiropas Ekonomiskās Zonas (EEA) regulām, kuras attiecas uz veselību un drošību.

Mašīnas tipa plāksnīte

Ilustrācijā (B) i-5 lappusē ir redzams mašīnas tipa plāksnītes paraugs. Aktuālās mašīnas tipa plāksnīte un tās atrašanās vieta uz iekārtas ir parādīta līdz ar šo iekārtu piegādāto rokasgrāmatu Ievada nodaļā. Mašīnas tipa plāksnīte ietver turpmāk uzskaitīto informāciju, kura ir nepieciešama, sazinoties ar Tetra Pak par šo konkrēto iekārtu.

- Mašīnas tips (8)
- Daudzums (9)
- Rasējuma specifikācijas (10)
- Mašīnas sērijas numurs (11)
- Ražotājs (12)
- CE apzīmējums (13)
- Izgatavošanas gads (14)

Ilustrācijā (C) lappusē i-5 ir parādīts mašīnas specifikācijas paraugs. Pārliecinieties, ka šīs rokasgrāmatas titullapās minētā informācija par iekārtu atbilst tai, kas norādīta uz mašīnas tipa plāksnītes un mašīnas specifikācijā.

Rezerves daļu kataloga lietošana

Vajadzīgās rezerves daļas numura atrašana

a) Skatiet ilustrāciju (D) lappusē i-5: Atrodiet nodaļas numuru (15), kas norādīts līdzās galvenajai grupai, kurā ietilpst Jūsu meklētā rezerves daļa.

Pozīcijas b) un c) skatiet ilustrāciju (E) lappusē i-6.

b) Galvenās grupas ilustrācijā atrodiet mašīnas apakšgrupu (17), kurā ietilpst Jūsu meklētā detaļa vai apakšgrupa. Atzīmējiet pozīcijas numuru (18) un pievērsieties saraksta lappusei, kura seko šai ilustrācijai.

c) Sameklējiet atbilstīgo pozīcijas numuru (16) vai apakšgrupas nosaukumu (19). Pievērsieties atbilstīgajam lappuses numuram (20), kas norādīts ailē pa labi. Tetra Pak norādes apzīmēšanai ir izvēlējies vienmēr izmantot uz funkciju orientētu struktūru. Priedēklis, kas norāda uz funkciju orientētu struktūru (=), norādes apzīmējumā nav parādīts.

Pozīcijas d) un e) skatiet ilustrāciju (F) lappusē i-6.

d) Atrodiet vajadzīgo rezerves daļu (21) apakšgrupas ilustrācijā un atzīmējiet šīs detaļas pozīcijas numuru.

e) Šīs detaļas numurs (29) un apraksts (30) atrodas saraksta lapā līdzās pozīcijas numuram.

Rezerves daļu katalogā sniegtā informācija

Šis saraksts attiecas uz ilustrāciju (F) lappusē i-6. Rezerves daļu katalogs satur šādu informāciju par grupām, apakšgrupām un iekārtas rezerves daļām:

- Grupas struktūras norāde (22). Norāda nākamo augstāko grupu iekārtas saraksta struktūrā.
- Grupas nosaukums (23)
- Mērvienība (25)
- Skaits (26)
- Montāžas rasējuma numurs (27)
- Saraksta lappuses zona (28). Tiek izmantota tad, ja grupas ilustrācija vai saraksts ir uz vairākām lappusēm.
- Daļas vai apakšgrupas numurs (29)
- Apakšgrupas nosaukums vai daļas apraksts (30)
- Grupas numurs (31)
- Iekārtas numurs (32)
- Grupas informācijas iedaļas apzīmējums (33). Norāda, vai iedaļa zem šī apzīmējuma attiecas uz noteiktu mašīnas variantu, vai arī tas ir kopējo rezerves daļu saraksts. Ja sarakstam ir vairāk nekā viens variants un katram variantam ir savs montāžas rasējums, tad tiek dota atsauce uz lappusi, kur atrodams katra varianta montāžas rasējums.
- Iekšējā informācija (34)

Inleiding

Informatiehandboek

Tetra Pak adviseert alle meegeleverde handboeken zorgvuldig te lezen. Controleer of het bedienende of onderhoudspersoneel van de machine de beschikking heeft over de meegeleverde handboeken

Het is belangrijk deze catalogus tijdens de levensduur van de machine te bewaren en de catalogus door te geven aan iedere volgende eigenaar of gebruiker.

Tetra Pak stelt zich niet aansprakelijk voor eventuele schade aan de installatie als gevolg van het niet naleven van de instructies die in de meegeleverde handboeken worden gegeven.

Meegeleverde handboeken

De bij deze installatie meegeleverde handboeken omvatten

- CM
  Het conversiehandboek geeft technici informatie met betrekking tot de ombouw van de installatie tussen verschillende productiemodi.
- EM
  Het elektriciteitshandboek informeerttechnici omtrent het elektrischesysteem van de installatie.
- IM
  Het installatiehandboek informeert technici hoe men de installatie op veilige wijze installeert.
- MM
  Het onderhoudshandboek geeft technici informatie over het onderhoud van de installatie.
- OM
  Het bedieningshandboek informeert de operator betreffende het omgaan met en het bedienen van de installatie voor, tijdens en na de productie.
- SPC
  De reserveonderdelencatalogus geeft de nodige informatie omtrent het bestellen van reserveonderdelen bij Tetra Pak
- TeM
  Het technische handboek
  - informeert technici hoe men de installatie op veilige wijze installeert
  - informeert technici omtrent het onderhoud van de installatie
  - informeert technici omtrent het elektrische systeem van de machine/ installatie
  - informeert over welke informatie men nodig heeft om reserveonderdelen bij Tetra Pak te bestellen.

Pagina layout

Zie afbeelding (A) op pagina i-5: De belangrijkste bladzijden van een reserveonderdelencatalogus bestaan uit een bladzijde met afbeeldingen (1) en een bladzijde met een corresponderende lijst (7). Het bladzijde-nummer (5) is te vinden in de kop van een bladzijde met een afbeelding en in de voetnoot van een lijstbladzijde. Het documentennummer (6) is te vinden in de voetnoot van een lijstbladzijde.

Bladzijdenummering

Zie afbeelding (A) op pagina: i-5: Een bladzijdenummer (5) bestaat uit drie delen:

- hoofdstuknummer (2)
- opeenvolgend bladzijdenummer in het hoofdstuk (3)
- totaal aantal bladzijden in het hoofdstuk (4)

Introductie van de machine

Fabrikant

Zie de tweede bladzijde van deze catalogus voor naam en adres van de fabrikant.

Service

Neem voor het bestellen van reserveonderdelen voor deze machine, of om bedieningsproblemen met betrekking tot deze machine te melden, contact op met de dichtstbijzijnde Tetra Pak vestiging.

Neem contact op met de contactpersoon voor verdere informatie, opmerkingen of suggesties ter verbetering van de installatie en de bijbehorende documentatie.

Identificatie

CE-classificatie

Deze installatie voldoet aan de basisvoorschriften voor gezondheid en veiligheid voor het Europese Economische Gebied (EEG).

Machineplaatje

Afbeelding (B) op bladzijde i-5 toont een voorbeeld van een machineplaatje. Een afbeelding van het geldige machineplaatje en de plaatsing ervan worden getoond in de Inleiding van de handboeken, die bij deze installatie worden meegeleverd. Het machineplaatje bevat onderstaande gegevens, die men nodig heeft wanneer men omtrent de desbetreffende installatie contact opneemt met Tetra Pak.

- Machinetype (8)
- Volume (9)
- Specificatietekeningen (10)
- Serienummer van de machine (11)
- Fabrikant (12)
- CE-markering (13)
- Jaar van fabrikage (14)

Afbeelding (C) op pagina i-5 toont een voorbeeld van een machinespecificatie. Controleer of de gegevens betreffende de installatie op de eerste bladzijden van dit handboek overeenkomen met de gegevens op het machineplaatje en de machinespecificatie.

Gebruik van de reserveonderdelencatalogus

Vinden van het bestelnummer van een reserveonderdeel

a) Zie afbeelding (D) op pagina i-5: Ga naar het hoofdstuknummer (15) dat wordt aangeven naast de hoofdgroep waarin zich het door u gezochte onderdeel bevindt.

Items b) en c) verwijzen naar afbeelding (E) op pagina i-6.

b) Op de afbeelding van de hoofdgroep zoekt u de machinesubgroep (17), die het gezochte onderdeel of de gezochte subgroep bevat. Noteer het positienummer (18) en ga naar de lijstbladzijde die op de afbeelding volgt.

c) Zoek naar het positienummer/de referentie (16) of de subgroep-naam (19). Ga naar de corresponderende bladzijde (20) die in de rechterkolom staat vermeld. Tetra Pak heeft voor de benoeming van de referenties gekozen voor de functiegeoriënteerde structuur. De prefixaanduidende functiegeoriënteerde structuur (=) wordt niet in de referentie getoond.

Items d) en e) verwijzen naar afbeelding (F) op pagina i-6.

d) Zoek het gewenste deel (21) op de subgroepafbeelding en noteer het positienummer van het onderdeel.

e) Het bestelnummer (29) en de omschrijving (30) van het onderdeel staan naast het positienummer op de lijstbladzijde.

Informatie die in een reserveonderdelencatalogus wordt gegeven

De onderstaande lijst verwijst naar afbeelding (F) op bladzijde i-6. Een reserveonderdelencatalogus bevat de volgende informatie over groepen, subgroepen en reserveronderdelen voor de installatie:

- Referentie groepstructuur (22). Geeft de volgende hogere groep in de lijststructuur van de installatie aan.
- Groepsnaam (23)
- Meeteenheid (25)
- Hoeveelheid (26)
- Nummer montagetekening (27)
- Lijst bladzijdenreeks (28). Wordt vermeld wanneer er meerdere bladzijden in de groepsafbeelding of -lijst voorkomen.
- Deel- of subgroepnummer (29)
- Subgroepnaam of onderdeelbeschrijving (30)
- Groepsnummer (31)
- Machinenummer (32)
- Titel groepsinformatie (33). Geeft aan of het gedeelte onder de titel voor een specifieke machinesoort is of dat het een lijst met gebruikelijke onderdelen is. Indien een lijst meer dan één type bevat en ieder type zijn eigen montagetekening heeft, wordt een bladzijdereferentie getoond voor de montagetekening van het type.
- Interne informatie (34)

Introduksjon

Informasjon om manualen

Tetra Pak anbefaler at du leser nøye gjennom alle leverte manualer. Sørg for at manualene er tilgjengelige for alle som betjener eller vedlikeholder utstyret.

Det er viktig at du tar vare på denne katalogen under hele levetiden til utstyret og at du gir den videre til eventuelle nye eiere eller brukere.

Tetra Pak vil ikke være ansvarlig for skader på utstyret som oppstår fordi brukeren ikke følger instruksjonene i manualene som følger med utstyret.

Leverte manualer

Manualene som leveres med dette utstyret, kan inkludere

- CM
  Konverteringsmanualen gir teknikere informasjon om hvordan de konverterer utstyret mellom ulike produksjonsmodi.
- EM
  Den elektriske manualen gir teknikere informasjon om utstyrets elektriske system.
- IM
  Installasjonsmanualen gir teknikere informasjon som kreves for å kunne installere utstyret på en sikker måte.
- MM
  Vedlikeholdsmanualen gir teknikere informasjon om vedlikehold av utstyret.
- OM
  Driftsmanualen gir operatøren informasjon om hvordan han håndterer og bruker utstyret før, under og etter produksjon.
- SPC
  Reservedelskatalogen inneholder informasjon som du trenger for å bestille reservedeler fra Tetra Pak
- TeM
  Den tekniske manualen
  – gir teknikere informasjon om sikker installasjon av utstyret
  – gir teknikere informasjon om vedlikehold av utstyret
  – gir teknikere informasjon om maskinens/utstyrets elektriske system
  – inneholder informasjon som du trenger for å bestille reservedeler fra Tetra Pak.

Sideoppsett

Se illustrasjonen (A) på side i-5: Hovedsidene i reservedelskatalogen består av en illustrasjonsside (1) og en korresponderende listeside (7). Sidenummeret (5) vises i topteksten på illustrasjonssiden og i bunnteksten på listesiden. Dokumentnummeret (6) vises i bunnteksten på listesiden.

Sidenummerering

Se illustrasjonen (A) på side i-5: Et sidenummer (5) består av tre deler:

- kapittelnummer (2)
- etterfølgende sidenummer i kapitlet (3)
- det totale antall sider i kapitlet (4)

Introduksjon av maskinen

Produsent

Hvis du ønsker produsentens navn og adresse, kan du se side to i denne katalogen.

Service

Når du skal bestille reservedeler til denne maskinen eller rapportere problemer forbundet med driften av denne maskinen, må du kontakte ditt nærmeste Tetra Pak-kontor.

Når det gjelder andre forespørsler, kommentarer eller forslag til forbedringer av utstyret og dets dokumentasjon, kan du ta kontakt med din kontaktperson.

Identifisering

CE-klassifisering

Dette utstyret er i overensstemmelse med de grunnleggende helse- og sikkerhetsforskriftene i Det europeiske økonomiske samarbeidsområdet (EØS).

Maskinplate

Illustrasjonen (B) på side i-5 viser et eksempel på en maskinplate.
En illustrasjon av en gyldig maskinplate og hvor denne er plassert på utstyret, er vist i introduksjonskapitlet i manualene som følger med dette utstyret. Maskinplaten inneholder nedenstående data, som du trenger når du skal kontakte Tetra Pak angående dette bestemte utstyret.

- Maskintype (8)
- Volum (9)
- Tegningsspesifikasjoner (10)
- Maskin-serienummer (11)
- Produsent (12)
- CE-merke (13)
- Produksjonsår (14)

Illustrasjonen (C) på side i-5 viser et eksempel på en maskinspesifikasjon. Sørg for at utstyrsdataene som står oppført foran i denne manualen, samsvarer med dataene på maskinplaten og maskinspesifikasjonen.

Hvordan bruke denne reservedelskatalogen

Finn et reservedelsnummer

a) Se illustrasjonen (D) på side i-5: Gå til kapittelnummeret (15) som er angitt ved siden av hovedgruppen som inneholder delen du vil finne.

Punkt b) og c) viser til illustrasjonen (E) på side i-6.

b) På hovedgruppeillustrasjonen ser du etter maskinundergruppen (17) som inneholder delen eller undergruppen du ser etter. Merk deg posisjonsnummeret (18), og gå til listesiden som kommer etter illustrasjonen.

c) Se etter posisjonsnummeret/referansebetegnelsen (16) eller undergruppenavnet (19). Gå til det korresponderende sidenummeret (20) som står oppført i høyre kolonne. Tetra Pak har valgt å alltid bruke den funksjonsorienterte inndelingen for referansebetegnelse. Prefiksen som angir funksjonsorientert inndeling (=), er ikke vist i referansebetegnelsen.

Punkt d) og e) viser til illustrasjonen (F) på side i-6.

d) Finn delen (21) du ser etter på undergruppeillustrasjonen, og merk deg delens posisjonsnummer.

e) Delenummeret (29) og delebeskrivelsen (30) finner du ved siden av posisjonsnummeret på listesiden.

Informasjon i en reservedelskatalog

Listen nedenfor viser til illustrasjonen (F) på side i-6. En reservedelskatalog inneholder følgende informasjon om grupper, undergrupper og reservedeler for utstyret:

- Gruppeinndelingsreferanse (22). Angir den neste gruppen opp i inndelingen av utstyrslisten.
- Gruppenavn (23)
- Målenhet (25)
- Antall (26)
- Tegningsnummer (27)
- Listesideområde (28). Inkludert hvis det er flere sider i gruppe-illustrasjonen eller listen.
- Dele- eller undergruppenummer (29)
- Undergruppenavn eller delebeskrivelse (30)
- Gruppenummer (31)
- Utstyrsnummer (32)
- Gruppeinformasjonsoverskrift (33). Angir om avsnittet under overskriften er for en bestemt maskinvariant eller om det er en liste over vanlige deler. Hvis en liste har flere varianter og hver variant har sin egen sammenstillingstegning, vises det en sidereferanse til variantens sammenstillingstegning.
- Intern informasjon (34)

Wprowadzenie

Informacje na temat instrukcji

Firma Tetra Pak zaleca dokładne przeczytanie wszystkich dostarczonych instrukcji. Należy upewnić się, że dostarczone instrukcje są dostępne dla personelu, który obsługuje lub konserwuje maszynę.

Należy przechowywać ten katalog przez cały okres użytkowania maszyny i przekazać go kolejnemu właścicielowi lub użytkownikowi.

Firma Tetra Pak nie będzie ponosić odpowiedzialności za jakiekolwiek uszkodzenia maszyny spowodowane niestosowaniem się do zaleceń zawartych w instrukcjach dostarczonych z maszyną.

Dostarczone instrukcje

W skład dokumentacji dostarczonej z maszyną wchodzą:

- Instrukcja konwersji (CM)
  W tej instrukcji zawarte są informacje dotyczące dostosowania maszyny do różnych trybów produkcji.
- Instrukcja dotycząca wyposażenia elektrycznego (EM)
  W tej instrukcji zawarte są informacje dotyczące układu elektrycznego maszyny.
- Instrukcja instalacji (IM)
  W tej instrukcji zawarte są informacje niezbędne do bezpiecznego zainstalowania maszyny.
- Instrukcja konserwacji (MM)
  W tej instrukcji zawarte są informacje dotyczące konserwacji maszyny.
- Instrukcja obsługi (OM)
  W tej instrukcji zawarte są informacje dotyczące obsługi maszyny przed rozpoczęciem produkcji, w jej trakcie oraz po jej zakończeniu.
- Katalog części zamiennych (SPC)
  W katalogu zawarte są informacje dotyczące zamawiania części zamiennych w firmie Tetra Pak.
- Instrukcja techniczna (TeM)
  Instrukcja techniczna zawiera informacje:
  - dotyczące bezpiecznego instalowania maszyny,
  - dotyczące konserwacji maszyny,
  - dotyczące układu elektrycznego maszyny,
  - dotyczące zamawiania części zamiennych w firmie Tetra Pak.

Układ strony

Patrz rysunek (A) na stronie i-5: Główne strony w Katalogu części zamiennych składają się ze strony zawierającej rysunek (1) i odpowiadającej jej strony zawierającej listę (7). Numer strony (5) znajduje się w nagłówku strony zawierającej rysunek i w stopce strony zawierającej listę. Numer dokumentu (6) znajduje się w stopce strony zawierającej listę.

Numeracja stron

Patrz rysunek (A) na stronie i-5: Numer strony (5) składa się z trzech części:

- numeru rozdziału (2),
- kolejnego numeru strony w rozdziale (3),
- całkowitej liczby stron w rozdziale (4).

Ogólne informacje o maszynie

Producent

Nazwę i adres producenta można znaleźć na drugiej stronie niniejszego katalogu.

Serwis

Aby zamówić części zapasowe do tej maszyny lub zgłosić problemy związane z jej pracą, należy skontaktować się z najbliższym biurem Tetra Pak.

Można kontaktować się także w przypadku innych zapytań, uwag lub sugestii dotyczących udoskonalenia urządzenia i dokumentacji.

Identyfikacja

Klasyfikacja CE

Maszyna spełnia podstawowe wymogi z zakresu bezpieczeństwa i ochrony zdrowia obowiązujące w Europejskiej Strefie Ekonomicznej (EEA).

Tabliczka znamionowa

Na rysunku (B), znajdującym się na stronie i-5, pokazano przykładową tabliczkę znamionową.
Rysunek prawidłowej tabliczki znamionowej oraz jej umiejscowienie na maszynie pokazano w rozdziale Wprowadzenie zawartym w instrukcjach dostarczonych z maszyną. Tabliczka znamionowa zawiera następujące dane potrzebne w przypadku kontaktowania się z firmą Tetra Pak w sprawie dotyczącej danej maszyny:

- typ maszyny (8),
- objętość (9),
- specyfikacje rysunkowe (10),
- numer seryjny maszyny (11),
- nazwę producenta (12),
- oznaczenie CE (13),
- rok produkcji (14).

Na rysunku (C) zamieszczonym na stronie i-5 pokazano przykład specyfikacji maszyny. Należy sprawdzić, czy dane dotyczące maszyny przedstawione na pierwszej stronie tej instrukcji odpowiadają danym zawartym na tabliczce znamionowej maszyny oraz specyfikacji maszyny.

Jak korzystać z niniejszego Katalogu części zamiennych

Należy odnaleźć numer części zamiennej

a) Zapoznaj się z rysunkiem (D) na stronie i-5: przejdź do numeru rozdziału (15) pokazanego obok głównej grupy zawierającej część, którą chcesz odszukać.

Punkty b) i c) odnoszą się do rysunku (E) na stronie i-6.

b) Na rysunku grupy głównej odszukaj podgrupę maszyny (17), która zawiera odpowiednią część lub podgrupę, której szukasz. Zanotuj numer pozycji (18) i przejdź do strony z listą odpowiadającą rysunkowi.

c) Odszukaj numer pozycji/oznaczenie odnośnika (16) lub nazwę podgrupy (19). Przejdź do odpowiedniego numeru strony (20) podanego w kolumnie umieszczonej po prawej stronie. Firma Tetra Pak w przypadku oznaczenia odnośnika korzysta ze struktury ukierunkowanej na funkcję. Przedrostek wskazujący strukturę ukierunkowaną na funkcję (=) nie jest pokazany w oznaczeniu odnośnika.

Punkty d) i e) odnoszą się do rysunku (F) na stronie i-6.

d) Na rysunku podgrupyodszukaj odpowiednią część (21) i zanotuj numer pozycji części.

e) Numer części (29) oraz jej opis (30) podano na stronie zawierającej listę obok numeru pozycji.

Informacje zawarte w Katalogu części zamiennych

Poniższa lista odnosi się do rysunku (F), znajdującego się na stronie i-6. Katalog części zamiennych zawiera następujące informacje o grupach, podgrupach oraz częściach zamiennych maszyny:

- Odnośnik struktury grup (22). Wskazuje następną wyższą grupę zawartą w strukturze listy maszyny.
- Nazwa grupy (23).
- Jednostka miary (25).
- Liczba (26).
- Numer rysunku złożeniowego (27).
- Zakres stron zawierających listę (28). Podany w przypadku występowania wielu stron zawierających rysunek grupy lub listę.
- Numer części lub podgrupy (29).
- Nazwa podgrupy lub opis części (30).
- Numer grupy (31).
- Numer maszyny (32).
- Nagłówek informacyjny grupy (33). Wskazuje, czy sekcja umieszczona pod nagłówkiem dotyczy określonego wariantu maszyny, czy też jest to lista wspólna dla wszystkich wariantów. Jeśli lista występuje w wielu wariantach i dla każdego z nich dostępny jest osobny rysunek złożeniowy, podany jest odnośnik strony do rysunku złożeniowego dla danego wariantu.
- Informacje wewnętrzne (34).

Introdução

Informações sobre o Manual

A Tetra Pak recomenda que leia atentamente todos os manuais incluídos. Certifique-se de que os manuais incluídos estão disponíveis para o pessoal que utiliza ou faz a manutenção do equipamento.

É importante que mantenha este catálogo durante toda a vida útil do equipamento, devendo ainda ser fornecido a quaisquer proprietários e operadores subsequentes do mesmo.

A Tetra Pak não será responsável por quaisquer danos no equipamento provocados pelo não seguimento das instruções fornecidas nos manuais que acompanham este equipamento.

Manuais Fornecidos

Os manuais fornecidos com este equipamento podem incluir

- CM
  O Manual de Conversão (Conversion Manual) fornece aos técnicos informações sobre a conversão do equipamento entre modos de produção diferentes.
- EM
  O Manual Eléctrico (Electrical Manual) fornece aos técnicos informações sobre o sistema eléctrico do equipamento.
- IM
  O Manual de Instalação (Installation Manual) fornece aos técnicos as informações necessárias à instalação do equipamento em segurança.
- MM
  O Manual de Manutenção (Maintenance Manual) fornece aos técnicos informações sobre como realizar a manutenção do equipamento.
- OM
  O Manual de Funcionamento (Operation Manual) fornece ao operador informações sobre o manuseamento e funcionamento do equipamento antes, durante e após a produção.
- SPC
  O Spare Parts Catalogue (Catálogo das Peças Sobressalentes) fornece as informações necessárias para encomendar peças sobressalentes à Tetra Pak
- TeM
  O Manual Técnico (Technical Manual)
  - fornece aos técnicos as informações necessárias à instalação do equipamento em segurança
  - fornece aos técnicos informações sobre a manutenção do equipamento
  - fornece aos técnicos informações sobre o sistema eléctrico da máquina/equipamento
  - fornece as informações necessárias para encomendar peças sobressalentes à Tetra Pak.

Desenho da Página

Consulte a ilustração (A) na página i-5: As páginas principais num Catálogo de Peças Sobressalentes são constituídas por uma página de ilustração (1) e uma página de lista correspondente (7). O número de página (5) é apresentado no cabeçalho de uma página de ilustração e no rodapé de uma página de lista. O número do documento (6) é apresentado no rodapé de uma página de lista.

Numeração das Páginas

Consulte a ilustração (A) na página i-5: Um número de página (5) tem três partes:

- número do capítulo (2)
- número das páginas consecutivas dentro do capítulo (3)
- número de páginas total no capítulo (4)

Introdução da Máquina

Fabricante

Quanto ao nome e endereço do fabricante, consulte a segunda página deste catálogo.

Manutenção

Para encomendar peças sobressalentes para esta máquina ou para apresentar relatórios de problemas associados com o funcionamento desta máquina, contacte os escritórios mais próximos da Tetra Pak.

Contacte a Ligação com outras questões, comentários ou sugestões para melhoria referentes ao equipamento e à sua documentação.

Identificação

Classificação da CE

Este equipamento está em conformidade com as regulamentações básicas da saúde e segurança da Área Económica Europeia (AEE).

Chapa de Identificação da Máquina

A ilustração (B) na página i-5 mostra um exemplo de uma chapa de identificação da máquina.
No capítulo Introdução dos manuais entregues com este equipamento é apresentada uma ilustração da chapa de identificação válida da máquina e a sua localização no equipamento. A chapa de identificação da máquina contém os dados listados em baixo, necessários quando contactar a Tetra Pak em relação a este equipamento específico.

- Tipo de máquina (8)
- Volume (9)
- Especificações do desenho (10)
- Número de série da máquina (11)
- Fabricante (12)
- Marca da CE (13)
- Ano de fabricação (14)

A ilustração (C) na página i-5 mostra um exemplo de uma especificação da máquina. Certifique-se de que os dados do equipamento listados nas primeiras páginas deste manual correspondem aos dados indicados na chapa de identificação da máquina e às especificações da máquina.

Como utilizar este Catálogo de Peças Sobressalentes

Localize o Número da Peça Sobressalente

a) Consulte a ilustração (D) na página i-5: Vá para o número do capítulo (15) indicado no grupo principal que contém a peça que pretende localizar.

Os itens b) e c) referem-se à ilustração (E) na página i-6:

b) Na ilustração do grupo principal, procure o subgrupo da máquina (17) que contém a peça ou o subgrupo que procura. Tome nota do número de posição (18) e vá para a página de lista a seguir à ilustração.

c) Procure o número de posição/designação de referência (16) ou o nome do subgrupo (19). Vá para o número de página correspondente (20) indicado na coluna do lado direito. A Tetra Pak preferiu utilizar sempre a estrutura orientada para a função como designação de referência. O prefixo que inicia a estrutura orientada para a função (=) não está indicada na designação de referência.

Os itens d) e e) referem-se à ilustração (F) na página i-6:

d) Localize a peça (21) que procura na ilustração do subgrupo e tome nota do número de posição da peça.

e) O número de peça (29) e a descrição da peça (30) são apresentados ao lado do número da posição na página de lista.

Informações listadas num Catálogo de Peças Sobressalentes

A lista em baixo refere-se à ilustração (F) na página i-6: Um Catálogo de Peças Sobressalentes contém as seguintes informações sobre grupos, subgrupos e peças sobressalentes para o equipamento:

- Referência da estrutura do grupo (22). Indica o grupo mais elevado seguinte na estrutura da lista do equipamento.
- Nome do grupo (23)
- Unidade de medida (25)
- Quantidade (26)
- Número de série do conjunto (27)
- Intervalo de páginas da lista (28). Incluído se existirem várias páginas na ilustração ou na lista do grupo.
- Número de peça ou subgrupo (29)
- Nome do subgrupo ou descrição da peça (30)
- Número do grupo (31)
- Número do equipamento (32)
- Cabeçalho das informações do grupo (33). Indica se a secção em baixo do cabeçalho é de uma variante específica da máquina ou se é uma lista de peças comuns. Se uma lista tiver mais de uma variante e cada variante tiver o seu próprio desenho de conjunto, é apresentada uma referência de página ao desenho do conjunto da variante.
- Informações internas (34)

Introducere

Informații despre manual

Tetra Pak recomandă citirea cu atenție a tuturor manualelor livrate. Asigurați-vă că manualele livrate sunt puse la îndemâna personalului care exploatează sau întreține echipamentul.

Este important să păstrați acest catalog pe întreaga durată de viață a echipamentului și să transmiteți catalogul deținătorilor sau utilizatorilor ulteriori.

Tetra Pak nu va fi răspunzător pentru niciun defect al echipamentului cauzat prin nerespectarea instrucțiunilor date în manualele care însoțesc acest echipament.

Manuale livrate

Manualele livrate cu acest echipament pot include

- CM
  Manualul de conversie furnizează tehnicienilor informații despre conversia echipamentului între diferite moduri de producție.
- EM
  Manualul electric furnizează tehnicienilor informații despre sistemul electric al echipamentului.
- IM
  Manualul de instalare furnizează tehnicienilor informații necesare pentru instalarea în siguranță a echipamentului.
- MM
  Manualul de întreținere furnizează tehnicienilor informații cu privire la întreținerea echipamentului.
- OM
  Manualul de exploatare pune la dispoziție operatorilor informații despre manevrarea și exploatarea echipamentului înainte, în timpul și după producție.
- SPC
  Catalogul pieselor de schimb furnizează informații necesare pentru comandarea pieselor de schimb de la Tetra Pak.
- TeM
  Manualul tehnic
  – furnizează tehnicienilor informații necesare pentru instalarea în siguranță a echipamentului
  – furnizează tehnicienilor informații necesare cu privire la întreținerea echipamentului
  – furnizează tehnicienilor informații despre sistemul electric al mașinii/echipamentului
  – furnizează informații necesare pentru comandarea pieselor de schimb de la Tetra Pak.

Configurația paginilor

Examinați ilustrația (A) de pe pagina i-5: Paginile principale dintr-un catalog de piese de schimb constau dintr-o pagină de ilustrare (1) și o pagină de liste corespunzătoare (7). Numărul paginii (5) apare în antetul unei pagini de ilustrare și în subsolul unei pagini de liste. Numărul documentului (6) apare în subsolul unei pagini de liste.

Numerotarea paginilor

Examinați ilustrația (A) de la pagina i-5: Un număr de pagină (5) are trei părți:

- numărul capitolului (2)
- numărul paginii consecutive din cadrul capitolului (3)
- număr total de pagini din capitol (4)

Prezentare introductivă a mașinii

Producător

Pentru numele și adresa producătorului, consultați pagina a doua a acestui catalog.

Service

Pentru comandarea pieselor de schimb pentru această mașină sau pentru a raporta problemele asociate cu exploatarea acestei mașini, contactați cel mai apropiat birou Tetra Pak.

Contactați Liaison cu privire la alte întrebări, comentarii sau sugestii legate de îmbunătățirea echipamentului și a documentației acestuia.

Identificare

Clasificare CE

Acest echipament este fabricat în conformitate cu reglementările de bază cu privire la sănătate și siguranță din Zona economică europeană (EEA).

Plăcuța mașinii

Ilustrația (B) de la pagina i-5 arată un exemplu al unei plăcuțe de mașină. O ilustrație a plăcuței valide a mașinii și a poziției acesteia pe echipament este arătată în capitolul introductiv al manualelor livrate împreună cu acest echipament. Plăcuța mașinii conține datele listate mai jos, necesare în cazul în care contactați Tetra Pak în legătură cu acest echipament specific.

- Tip mașină (8)
- Volum (9)
- Specificații de desen (10)
- Număr de serie al mașinii (11)
- Producător (12)
- Marcaj CE (13)
- Anul fabricației (14)

Ilustrația (C) de la pagina i-5 arată un exemplu al unei specificații de mașină. Asigurați-vă că datele specifice echipamentului, listate în paginile din față ale acestui manual, corespund cu datele de pe plăcuța mașinii și cu specificațiile mașinii.

Cum se utilizează acest catalog de piese de schimb

Localizarea unui număr de piesă de schimb

a) Examinați ilustrația (D) de la pagina i-5: Treceți la numărul de capitol (15) indicat lângă grupa principală care conține piesa pe care doriți să o localizați.

Articolele b) și c) se referă la ilustrația (E) de la pagina i-6.

b) Pe ilustrația grupei principale, căutați subgrupa aferentă mașinii (17) care conține piesa sau subgrupa pe care o căutați. Notați numărul poziției (18) și treceți la pagina de liste care urmează după ilustrație.

c) Căutați numărul poziției/marcarea de referință (16) sau numele subgrupei (19). Treceți la numărul de pagină corespunzător (20) listat în coloana din partea dreaptă. Tetra Pak a optat ca întotdeauna să utilizeze structura orientată pe funcție pentru marcarea de referință. Prefixul care indică structura orientată pe funcție (=) nu este arătat în marcarea de referință.

Articolele d) și e) se referă la ilustrația (F) de la pagina i-6.

d) Localizați piesa (21) pe care o căutați pe ilustrația subgrupei și notați numărul de poziție al piesei.

e) Numărul piesei (29) și descrierea piesei (30) sunt listate lângă numărul de poziție de pe pagina de liste.

Informațiile listate într-un catalog de piese de schimb

Lista de mai jos se referă la ilustrația (F) de la pagina i-6. Un catalog de piese de schimb conține următoarele informații despre grupe, subgrupe și piese de schimb pentru echipament:

- Referința despre structura grupelor (22). Indică următoarea grupă superioară din structura de liste a echipamentului.
- Numele grupei (23)
- Unitatea de măsură (25)
- Cantitatea (26)
- Numărul de desen de ansamblu (27)
- Intervalul de pagini de liste (28). Inclus dacă există mai multe pagini în ilustrația sau lista grupei.
- Numărul piesei sau al subgrupei (29)
- Numele subgrupei sau descrierea piesei (30)
- Numărul grupei (31)
- Numărul echipamentului (32)
- Antet cu informații despre grupă (33). Indică dacă secțiunea de sub antet se referă la o anumită variantă de mașină sau este o listă de piese comune. Dacă o listă are mai multe variante și fiecare variantă are propriul său desen de ansamblu, este arătată o referință de pagină pentru desenul de ansamblu al variantei.
- Informații interne (34)

Úvod

Informácie o návode

Spoločnosť Tetra Pak odporúča, starostlivo si prečítať všetky dodané návody. Dbajte, aby pracovníci, obsluhujúci zariadenie alebo zabezpečujúci jeho údržbu, mali vždy dodané návody k dispozícii.

Je dôležité, aby bol tento katalóg k dispozícii počas celého času životnosti zariadenia, a aby sa katalóg dostal aj k jeho prípadnému ďalšiemu držiteľovi alebo používateľovi.

Spoločnosť Tetra Pak nepreberá zodpovednosť za akékoľvek poškodenie zariadenia spôsobené nedodržaním pokynov uvedených v návodoch dodávaných s týmto zariadením.

Dodané návody

S týmto zariadením vám mohli byť dodané nasledujúce návody:

- CM
  Návod na prestavovanie poskytuje technikom informácie o prestavovaní zariadenia do rôznych výrobných režimov.
- EM
  Elektrotechnický návod poskytujetechnikom informácie o elektrickom systéme zariadenia.
- IM
  Návod na inštaláciu poskytuje technikom informácie potrebné na bezpečnú inštaláciu zariadenia.
- MM
  Návod na údržbu poskytujetechnikom informácie o údržbe zariadenia.
- OM
  Návod na obsluhu poskytuje obsluhe informácie o zaobchádzaní a obsluhe zariadenia pred, počas a po prevádzke.
- SPC
  Katalóg náhradných dielcov poskytuje informácie potrebné na objednávanie náhradných dielcov od spoločnosti Tetra Pak
- TeM
  Technický návod
  - poskytuje technikom informácie potrebné na bezpečnú inštaláciu zariadenia
  - poskytuje technikom informácie o údržbe zariadenia
  - poskytuje technikom informácie o elektrickom systéme stroja/ zariadenia
  - poskytuje informácie potrebné na objednávanie náhradných dielcov od spoločnosti Tetra Pak.

Rozloženie strany

Pozri ilustráciu (A) na strane i-5: Hlavné strany Katalógu náhradných dielcov obsahujú stránku s ilustráciami (1) a príslušnú stranu so zoznamom (7). Číslo strany (5) sa uvádza v záhlaví na strane s ilustráciami a v päte strany so zoznamom. Číslo dokumentu (6) sa uvádza v päte strany so zoznamom.

Číslovanie strán

Pozri ilustráciu (A) na strane i-5: Číslo strany (5) má tri časti:

- číslo kapitoly (2)
- poradové číslo strany v rámci kapitoly (3)
- celkový počet strán v kapitole (4)

Základné informácie o stroji

Výrobca

Meno a adresa výrobcu sa uvádza na druhej strane tohto katalógu.

Servis

Pri objednávaní náhradných dielcov pre tento stroj alebo na nahlasovanie problémov súvisiacich s prevádzkou tohto stroja sa obráťte na najbližšie zastúpenie spoločnosti Tetra Pak.

S ostatnými otázkami, pripomienkami a podnetmi na vylepšenie stroja alebo zariadenia a jeho dokumentácie sa obracajte na kontaktnú osobu.

Identifikácia

Klasifikácia CE

Toto zariadenie spĺňa základné predpisy o ochrane zdravia a bezpečnosti Európskeho hospodárskeho priestoru (EEA).

Typový štítok stroja

Na ilustrácii (B) na strane i-5 uvádzame príklad typového štítku. Ilustrácia platného typového štítku stroja a jeho umiestnenia na zariadení sa uvádza v kapitole Úvod v návodoch, dodaných s týmto zariadením. Typový štítok obsahuje dolu údaje uvedené, potrebné pri kontaktoch so spoločnosťou Tetra Pak ohľadom tohto špecifického zariadenia.

- Typ stroja (8)
- Objem (9)
- Údaje o výkrese (10)
- Výrobné číslo stroja (11)
- Výrobca (12)
- Značka CE (13)
- Rok výroby (14)

Ilustrácia (C) na strane i-5 zobrazuje príklad špecifikácie stroja. Presvedčite sa, že údaje zariadenia uvedené na predných stranách tohto návodu zodpovedajú údajom na typovom štítku a v špecifikácii stroja.

Ako sa tento Katalóg náhradných dielcov používa

Vyhľadanie čísla náhradného dielca

a) Pozri ilustráciu (D) na strane i-5: Prejdite na číslo kapitoly (15) uvedené vedľa hlavnej skupiny obsahujúcej dielec, ktorý chcete vyhľadať.

Položky b) a c) odkazujú na ilustráciu (E) na strane i-6.

b) Na ilustrácii hlavnej skupiny hľadajte podskupinu stroja (17), ktorý obsahuje dielec alebo podskupinu, ktorú hľadáte. Poznamenajte si číslo položky (18) a prejdite stranu so zoznamom nasledujúcu po ilustrácii.

c) Vyhľadajte číslo položky/referenčné označenie (16) alebo názov podskupiny (19). Prejdite na príslušné číslo strany (20) uvedené v zozname v pravom stĺpci. Spoločnosť Tetra Pak sa rozhodla vždy používať funkčne zameranú štruktúru na referenčné označovanie. Predčíslie udávajúce funkčne orientovanú štruktúra (=) sa v referenčnom označení nezobrazuje.

Položky d) a e) odkazujú na ilustráciu (F) na strane i-6.

d) Nájdite dielec (21), ktorý hľadáte, na ilustrácii podskupiny a poznamenajte si číslo položky daného dielca.

e) Číslo dielca (29) a popis dielca (30) sa uvádza vedľa čísla položky na stránke so zoznamom.

Informácie uvádzané v Katalógu náhradných dielcov

Dolu uvedený zoznam odkazuje na ilustráciu (F) na strane i-6. Katalóg náhradných dielcov obsahuje nasledujúce informácia o skupinách, podskupinách a náhradných dielcov zariadenia:

- Referenčná štruktúrna skupina (22). Označuje najbližšiu vyššiu skupinu v štruktúre zoznamu zariadenia.
- Názobv skupiny (23)
- Jednotka merania (25)
- Množstvo (26)
- Číslo výkresu celkovej zostavy (27)
- Rozsah strán zoznamu (28). Uvádza sa, ak má ilustrácia alebo zoznam skupiny viac strán.
- Číslo dielca alebo podskupiny (29)
- Názov podskupiny alebo popis dielca (30)
- Číslo skupiny (31)
- Číslo zariadenia (32)
- Záhlavie informácií o skupine (33). Uvádza, či je časť nasledujúca pod záhlavím určená pre špecifický variant stroja, alebo či ide o zoznam spoločných dielcov. Ak má zoznam viac ako jeden variant a každý z variantov má vlastný výkres celkovej zostavy, uvádza sa odkaz na stranu s výkresom zostavy daného variantu.
- Interné informácie (34)

Uvod

Informacije o priročnikih

Tetra Pak priporoča, da natančno preberete vse priložene priročnike. Osebje, ki upravlja in vzdržuje opremo mora imeti dostop do priloženih priročnikov.

Katalog hranite v celotnem času uporabe opreme. V primeru, ko opremo pridobi drug imetnik ali uporabnik, mu obenem izročite tudi katalog.

Podjetje Tetra Pak ne prevzema odgovornosti za poškodbe na opremi, ki nastanejo zaradi neupoštevanja navodil iz priročnikov, ki so priloženi opremi.

Priloženi priročniki

Priročniki, ki so priloženi tej opremi, lahko vključujejo

- Priročnik za zamenjavo (CM)
  V tem priročniku so podatki, ki tehnikom omogočajo izvesti zamenjavo opreme med različnimi načini proizvodnje.
- Elektrotehnični priročnik (EM)
  Priročnik vsebuje podatke za tehnike o električnem sistemu opreme.
- Priročnik za montažo (IM)
  Priročnik vsebuje podatke, ki jih tehniki potrebujejo za varno montažo opreme.
- Priročnik za vzdrževanje (MM)
  Priročnik vsebuje podatke za tehnike o vzdrževanju opreme.
- Priročnik za obratovanje (OM)
  Priročnik je namenjen informiranju za pravilno rokovanje in upravljanje s strojem pred, med in po proizvodnem postopku.
- Katalog nadomestnih delov (SPC)
  Katalog vsebuje potrebne podatke za naročilo nadomestnih delov pri podjetju Tetra Pak.
- Tehnični priročnik (TeM)
  Priročnik
  - vsebuje podatke, ki jih tehniki potrebujejo za varno montažo opreme;
  - vsebuje podatke za tehnike o vzdrževanju opreme;
  - vsebuje podatke za tehnike o električnem sistemu stroja/opreme;
  - vsebuje potrebne podatke za naročilo nadomestnih delov pri podjetju Tetra Pak.

Postavitev strani

Poglejte sliko (A) na strani i-5: Glavne strani v Katalogu nadomestnih delov sestavljata stran s sliko (1) in ustrezna stran s seznamom (7). Številka strani (5) je prikazana na vrhu strani s sliko in na dnu strani s seznamom. Številka dokumenta (6) je prikazana na dnu strani s seznamom.

Številčenje strani

Oglejte si sliko (A) na strani i-5: Številka strani (5) ima tri dele:

- številko poglavja (2);
- zaporedno številko strani v poglavju (3);
- število vseh strani v poglavju (4).

Predstavitev stroja

Proizvajalec

Ime in naslov proizvajalca najdete na drugi strani kataloga.

Servisiranje

Za naročanje nadomestnih delov za stroj ter za sporočanje motenj pri delovanju stroja se obrnite na najbližjo servisno službo podjetja Tetra Pak.

V primeru drugih zahtev, komentarjev, predlogov za izboljšavo opreme ali dokumentacije se obrnite na odgovorno osebo.

Identifikacijska oznaka

CE-klasifikacija

Oprema je izdelana v skladu z osnovnimi zdravstvenimi in varnostnimi predpisi Evropskega gospodarskega prostora (EGS).

Napisna ploščica

Slika (B) na strani i-5 prikazuje primer napisne ploščice.
Sliko veljavne napisne ploščice in njeno mesto na opremi najdete v uvodnem poglavju priloženih priročnikov. Ploščica vsebuje spodaj navedene podatke, ki jih potrebujete, ko se v zvezi z določeno opremo obrnete na podjetje Tetra Pak:

- tip stroja (8);
- prostornino (9);
- specifikacije risbe (10);
- serijsko številko stroja (11);
- proizvajalca (12);
- oznako CE (13);
- leto izdelave (14).

Slika (C) na strani i-5 prikazuje primer specifikacije stroja. Podatki o opremi, navedeni na prvih straneh tega priročnika, se morajo ujemati s podatki o stroju, navedenimi na napisni ploščici in v specifikacijah.

Uporaba Kataloga nadomestnih delov

Iskanje številke nadomestnega dela

a) Oglejte si sliko (D) na strani i-5: Poiščite številko poglavja (15), navedeno poleg glavne skupine, ki vsebuje iskani del.

Točki b) in c) se nanašata na sliko (E) na strani i-6.

b) Na sliki glavne skupine poiščite podskupino stroja (17), ki vsebuje iskani del ali podskupino. Zapomnite si pozicijsko številko (18) in poiščite stran s seznamom, ki pripada sliki.

c) Poiščite pozicijsko številko/referenčno oznako (16) ali ime podskupine (19). Pojdite na stran (20), navedeno v desnem stolpcu. Tetra Pak za referenčno označevanje vedno uporablja funkcijsko strukturo. Predpona, ki označuje funkcijsko strukturo (=), ni prikazana v referenčni oznaki.

Točki d) in e) se nanašata na sliko (F) na strani i-6.

d) Na sliki podskupine poiščite del (21), ki ga iščete, in si zapomnite njegovo pozicijsko številko.

e) Številka (29) in opis dela (30) sta navedena poleg pozicijske številke na strani s seznamom.

Informacije v Katalogu nadomestnih delov

Spodnji seznam se nanaša na sliko (F) na strani i-6. Katalog nadomestnih delov vsebuje naslednje informacije o skupinah, podskupinah in nadomestnih delih za opremo:

- referenco strukture skupine (22); Označuje naslednjo višjo skupino v strukturi seznamov opreme.
- ime skupine (23);
- mersko enoto (25);
- količino (26);
- številko sestavne risbe (27);
- število strani seznama (28); Če je slika ali seznam skupine sestavljen iz več strani.
- številko dela ali podskupine (29);
- ime podskupine ali opis dela (30);
- številko skupine (31);
- številko opreme (32);
- naslov z informacijami o skupini (33). Označuje, ali je razdelek pod naslovom namenjen specifični izvedbi stroja ali gre za seznam skupnih delov. Če ima seznam več izvedb in če ima vsaka od njih svojo sestavno risbo, je ob vsaki izvedbi navedena referenčna stran s sestavno risbo.
- interne informacije (34).

Inledning

Information om manualen

Tetra Pak rekommenderar att alla manualer läses noggrant. Se till att manualerna är tillgängliga för personalen som använder eller underhåller utrustningen.

Det är viktigt att denna katalog behålls under utrustningens livslängd, och att den överlämnas till varje efterföljande innehavare eller användare av utrustningen.

Tetra Pak tar inte ansvar för någon skada på utrustningen som orsakats av att instruktionerna i medföljande manualer inte har följts.

Medföljande manualer

Följande manualer kan levereras tillsammans med utrustningen:

- CM
  Konverteringsmanualen (CM) innehåller information för tekniker om hur man konverterar utrustningen mellan olika produktionslägen.
- EM
  Den elektriska manualen (EM) innehåller information för tekniker om utrustningens elektriska system.
- IM
  Installationsmanualen (IM) innehåller information för tekniker om hur utrustningen installeras på ett säkert sätt.
- MM
  Underhållsmanualen (MM) innehåller information för tekniker om hur utrustningen underhålls.
- OM
  Driftsmanualen (OM) innehåller information för operatören om hur utrustningen ska hanteras före, under och efter produktion.
- SPC
  Reservdelskatalogen (SPC) innehåller den information som behövs för att beställa reservdelar från Tetra Pak.
- TeM
  Den tekniska manualen (TeM)
  - innehåller information för tekniker om hur utrustningen installeras på ett säkert sätt.
  - innehåller information för tekniker om hur utrustningen underhålls.
  - innehåller information för tekniker om maskinens/utrustningens elektriska system.
  - innehåller den information som behövs för att beställa reservdelar från Tetra Pak.

Sidlayout

Se bild (A) på sidan i-5: Huvudsidorna i reservdelskatalogen består av en bildsida (1) och en motsvarande listsida (7). Sidnumret (5) visas i sidhuvudet på bildsidan och i sidfoten på listsidan. Dokumentnumret (6) visas i sidfoten på listsidan.

Sidnumrering

Se bild (A) på sidan i-5: Ett sidnummer (5) består av tre delar:

- kapitlets nummer (2)
- löpande sidnummer inom kapitlet (3)
- totalt sidantal i kapitlet (4)

Introduktion till maskinen

Tillverkare

Tillverkarens namn och adress finns på sidan 2 i katalogen.

Service

För att beställa reservdelar till denna maskin eller för att rapportera problem som uppstått i samband med driften kontaktar du närmaste Tetra Pak-kontor.

Om du har andra frågor, kommentarer eller förslag till förbättringar av utrustningen och dokumentationen vänder du dig till din kontaktperson på Tetra Pak.

Identifiering

CE-märkning

Denna utrustning överensstämmer med den grundläggande hälso- och säkerhetslagstiftningen inom Europeiska ekonomiska samarbetsområdet (EES).

Maskinskylt

Bild (B) på sidan i-5 visar ett exempel på en maskinskylt.
En bild på giltig maskinskylt och dess placering på utrustningen visas i inledningskapitlet som medföljer utrustningen. Skylten innehåller de uppgifter som listas nedan och som behövs vid kontakt med Tetra Pak angående utrustningen.

- Maskintyp (8)
- Volym (9)
- Ritningsspecifikationer (10)
- Maskinnummer (11)
- Tillverkare (12)
- CE-märkning (13)
- Tillverkningsår (14)

Bild (C) på sidan i-5 visar ett exempel på en maskinspecifikation. Kontrollera att informationen om utrustningen som listas på de första sidorna i manualen motsvarar informationen på maskinskylten och i maskinspecifikationen.

Använda reservdelskatalogen

Hitta ett reservdelsnummer

a) Se bild (D) på sidan i-5: Gå till kapitelnumret (15) som står vid sidan om huvudgruppen som innehåller den del du vill hitta.

Punkt b) och c) hänvisar till bild (E) på sidan i-6.

b) På huvudgruppsbilden letar du efter den maskinundergrupp (17) som innehåller delen eller undergruppen du letar efter. Notera positionsnumret (18) och gå till listsidan som anges efter bilden.

c) Leta efter positionsnumret/referensbeteckningen (16) eller undergruppsnamnet (19). Gå till motsvarande sidnummer (20) som listas i den högra kolumnen. Tetra Pak har valt allt alltid använda en funktionsorienterad struktur för referensbeteckningarna. Prefixet för funktionsorienterad struktur (=) visas inte i referensbeteckningen.

Punkt d) och e) hänvisar till bild (F) på sidan i-6.

d) Leta reda på delen (21) i undergruppsbilden och notera delens positionsnummer.

e) Reservdelsnumret (29) och reservdelsbeskrivningen (30) står bredvid positionsnumret på listsidan.

Information i reservdelskatalogen

Listan nedan hänvisar till bild (F) på sidan i-6. Reservdelskatalogen innehåller följande information om grupper, undergrupper och reservdelar för utrustningen:

- Gruppstrukturreferens (22). Anger nästa högre grupp i utrustningslistans struktur.
- Gruppnamn (23)
- Måttenhet (25)
- Kvantitet (26)
- Monteringsritningsnummer (27)
- Listsideintervall (28). Anges om det finns flera sidor i gruppbilden eller grupplistan.
- Reservdels- eller undergruppsnummer (29)
- Undergruppsnamn eller reservdelsbeskrivning (30)
- Gruppnummer (31)
- Utrustningsnummer (32)
- Gruppinformationsrubrik (33). Anger om avsnittet under rubriken gäller en viss maskinvariant eller om det är en lista över allmänna delar. Om en lista har fler än en variant och varje variant har sin egen monteringsritning visas en sidhänvisning till variantens monteringsritning.
- Intern information (34)

SPC
Spare Parts Catalogue

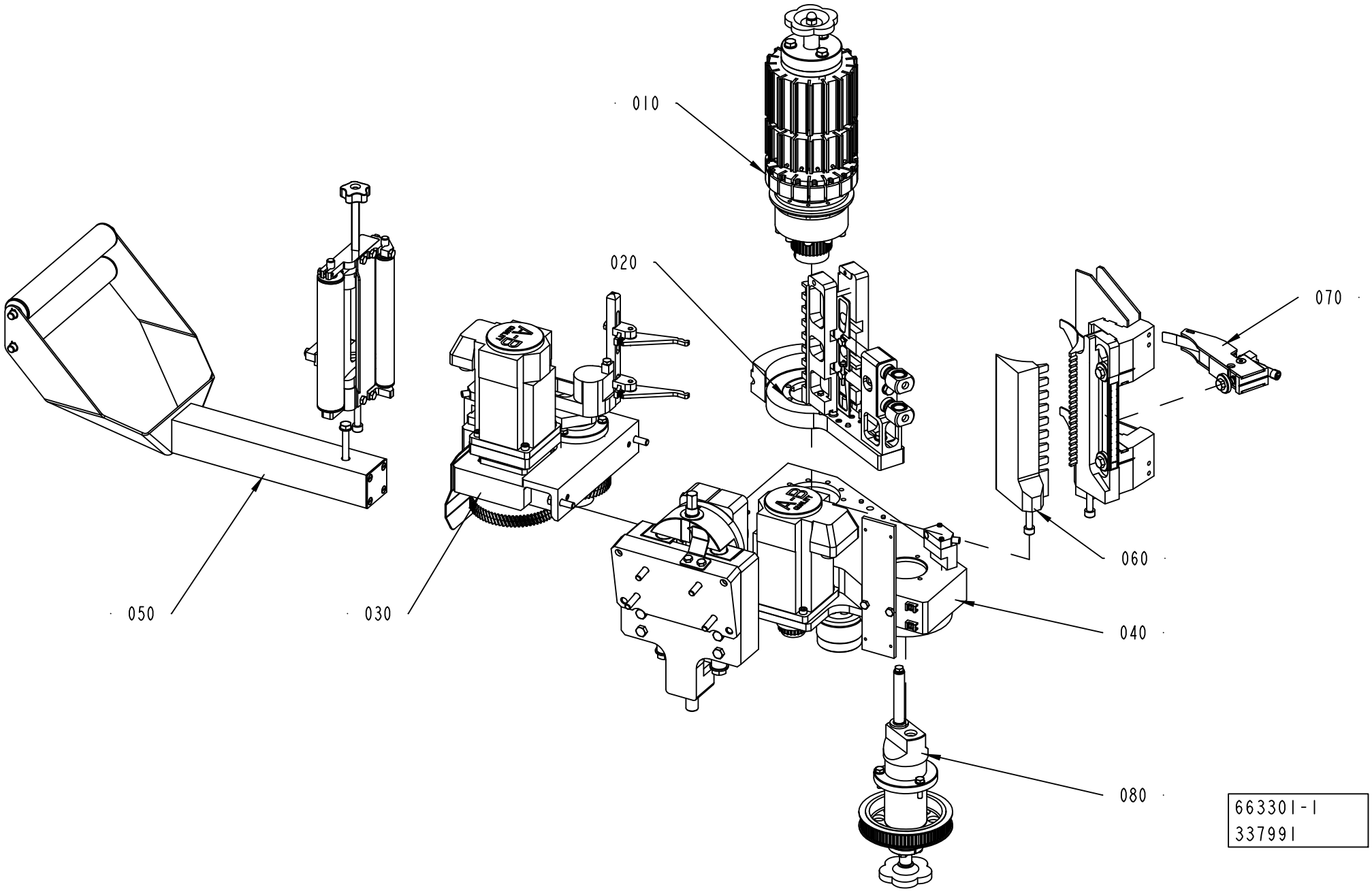
010
020
030
040
050
060
070
080
663301-1
337991

ECM: 354939 - 20081009
Group number: 663301-0100
Assembly Drawing: 663301-1_1_AA

This list covers pages from 1-2 to 1-5

Pos	Part No	UN	Qty	Description	Page No
TBA, TB (See drawing on page: 1-2)					
030	2929771-0100		1	SQUEEZER	**1-7**
050	2913342-0100		1	LADDERBAND UNIT	**1-15**
060	2829435-0100		1	GUIDE CONSOLE	**1-23**
070	2923353-0100		1	SPRING HOLDER	**1-25**
TCA (See drawing on page: 1-4)					
030	2934000-0100		1	SQUEEZER	**1-27**
050	2948170-0100		1	LADDER BAND GUIDE	**1-33**
060	2957700-0100		1	GUIDE CONSOLE	**1-35**
Common Parts					
010	2929773-0100		1	FEED WHEEL UNIT	**1-37**
020	2829431-0100		1	CUTTING UNIT	**1-43**
040	2913343-0100		1	FRAME	**1-45, 1-47**
080	2829436-0100		1	CRANK SHAFT	**1-61**

Pos	Part No	UN	Qty	Description	Page No

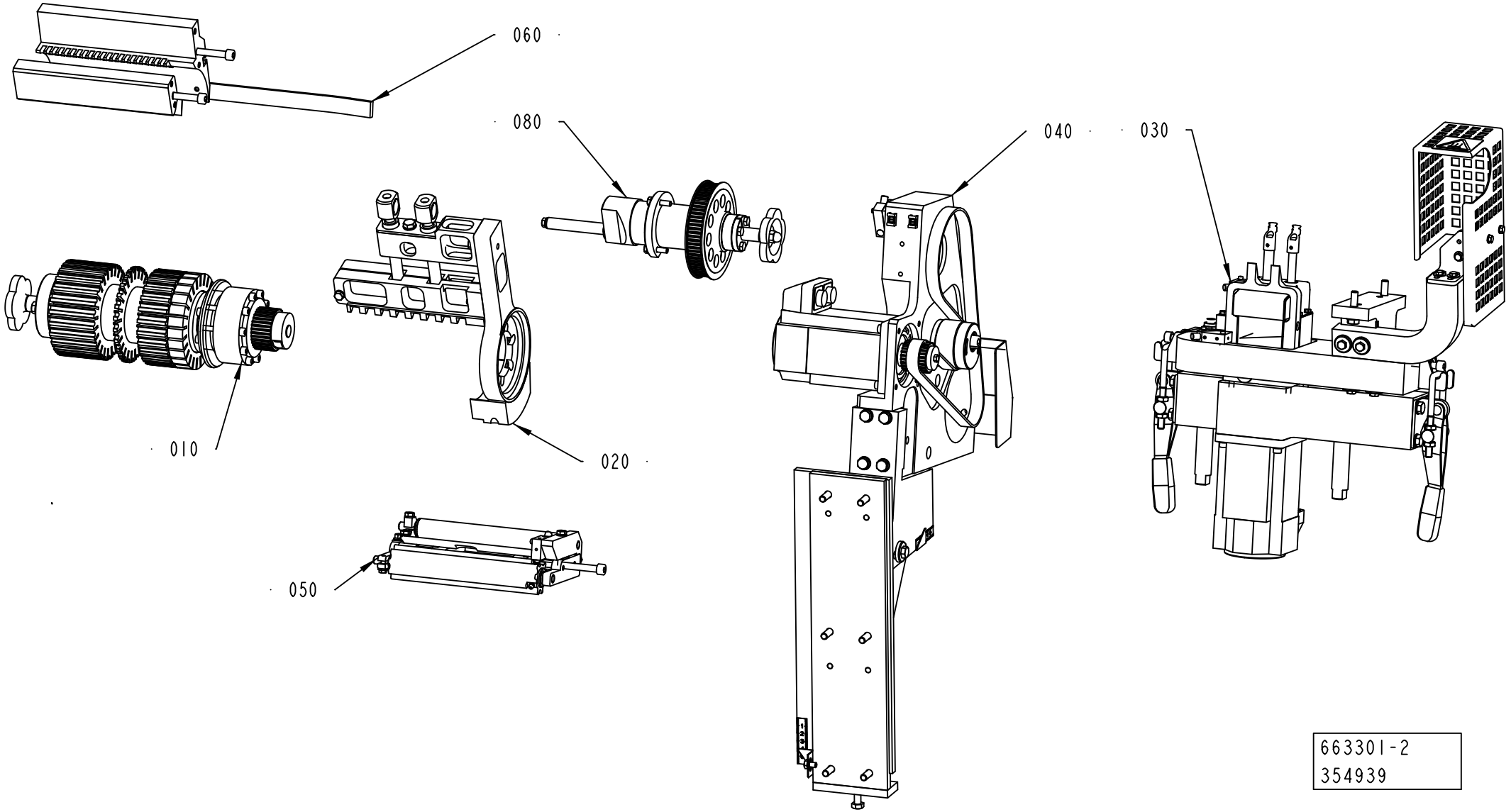
060
080
040
030
010
020
050
663301-2
354939

ECM: 354939 - 20081009
Group number: 663301-0100
Assembly Drawing: 663301-2_1_AA

This list covers pages from 1-2 to 1-5

Pos	Part No	UN	Qty	Description	Page No
TBA, TB (See drawing on page: 1-2)					
030	2929771-0100		1	SQUEEZER	**1-7**
050	2913342-0100		1	LADDERBAND UNIT	**1-15**
060	2829435-0100		1	GUIDE CONSOLE	**1-23**
070	2923353-0100		1	SPRING HOLDER	**1-25**
TCA (See drawing on page: 1-4)					
030	2934000-0100		1	SQUEEZER	**1-27**
050	2948170-0100		1	LADDER BAND GUIDE	**1-33**
060	2957700-0100		1	GUIDE CONSOLE	**1-35**
Common Parts					
010	2929773-0100		1	FEED WHEEL UNIT	**1-37**
020	2829431-0100		1	CUTTING UNIT	**1-43**
040	2913343-0100		1	FRAME	**1-45, 1-47**
080	2829436-0100		1	CRANK SHAFT	**1-61**

Pos	Part No	UN	Qty	Description	Page No

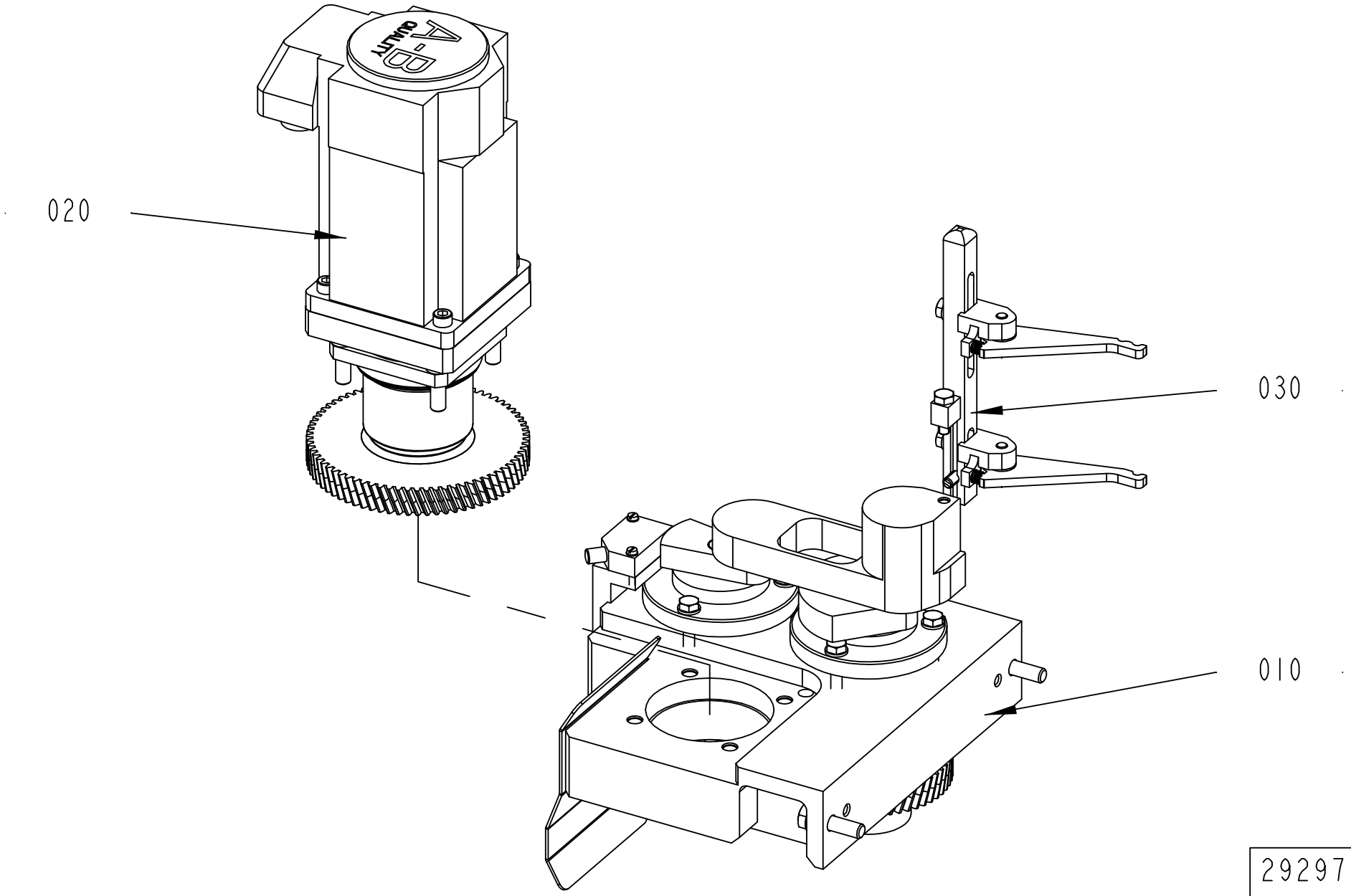
020
030
010
2929771-1
337989

ECM: 337989 - 20080303
Group number: 2929771-0100
Assembly Drawing: 2929771-1_1_AA

Pos	Part No	UN	Qty	Description	Page No
-					
010	2829432-0100		1	CRANK HOUSING	**1-9**
020	2829439-0100		1	DRIVE MOTOR	**1-11**
030	2867568-0100		1	PRESSURE ARM	**1-13**

Pos	Part No	UN	Qty	Description	Page No

CRANK HOUSING

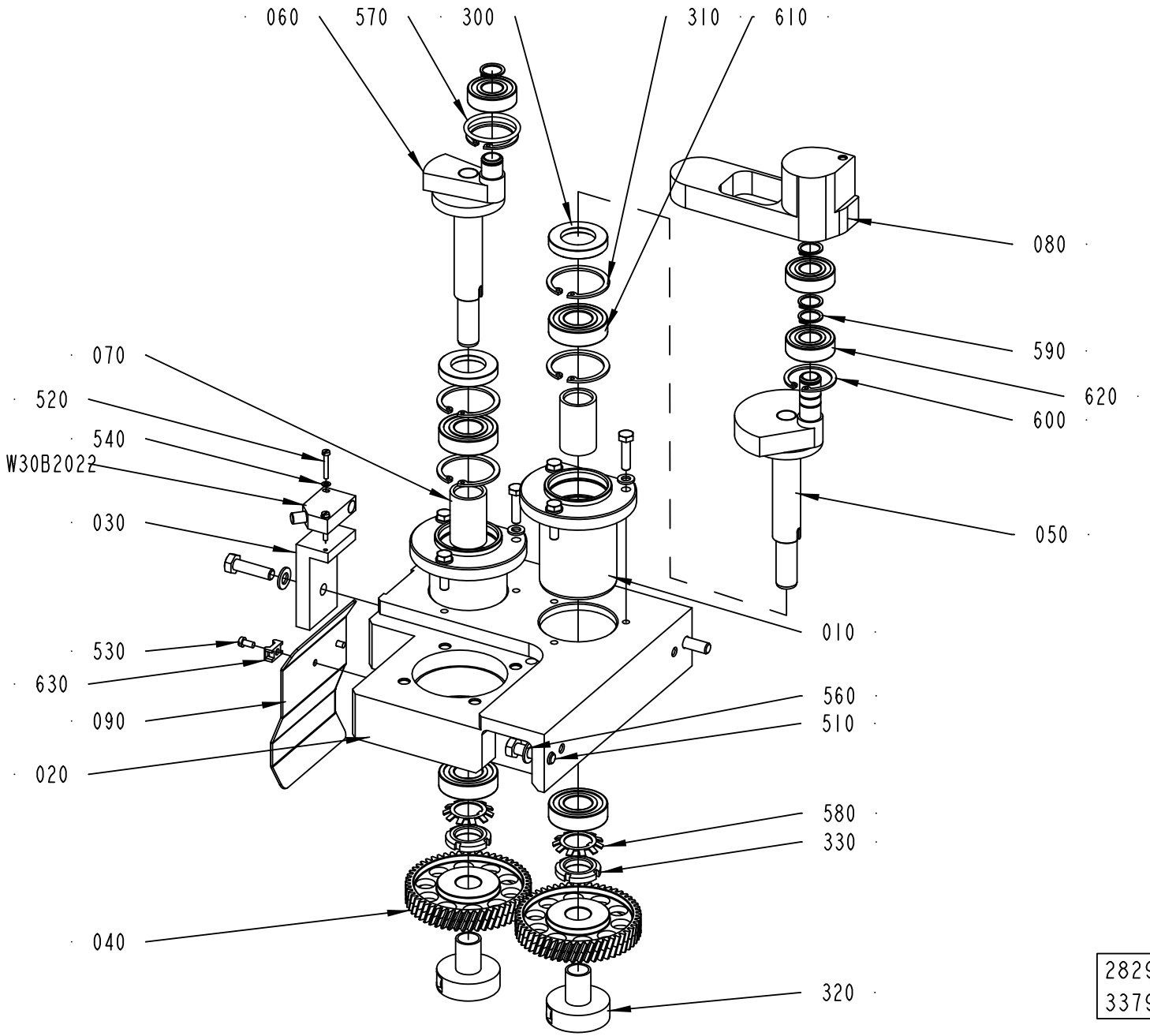

ECM: 337987 - 20080303
Group number: 2829432-0100
Assembly Drawing: 2829432-1_1_AA

Pos	Part No	UN	Qty	Description	Page No
-					
010	2848826-0000		2	BEARING SLEEVE	
020	2848844-0000		1	FRAME SECTION	
030	2848846-0000		1	SWITCH BRACKET	
040	2856559-0000		2	GEAR WHEEL	
050	2856560-0000		1	CRANK SHAFT	
060	2856561-0000		1	CRANK SHAFT	
070	2856562-0000		2	SPACER SLEEVE	
080	2910475-0000		1	BEARING HOUSING	
090	2946730-0000		1	PLATE	
300	90091-0322		2	RADIAL SEAL 25X42X7 MM DUST LIP	
310	90141-0020		4	RETAINING RING FOR BORE DIN 472 42 A2	
320	90458-1814		2	CLAMPING ELEMENT WITH SLEEVE, 15X18 MM	
330	90600-1766		2	NUT ROUND WITH SLOTS M20X1 SS	
500	312105-0372		6	SCREW M6S ISO 4017 M6X25 A480	
510	312105-0455		3	SCREW M6S ISO 4017 M8X30 A480	
520	312125-0230		2	SCREW ISO 1207 M3X20 A4	
530	312125-0287		2	SCREW ISO 1207 M4X8 A4	
540	315105-0124		2	WASHER BRB 3,2X6 RFR	
550	315105-0153		6	WASHER BRB 6,4X12 RFR	
560	315105-0165		3	WASHER BRB 8,4X16 RFR	
570	315204-0221		1	O-RING 34,2X3 MM	
580	90600-4710		2	LOCK WASHER MB 4 D=20 H=1 SS	
590	315751-0112		4	RETAINING RING FOR SHAFT DIN 471 15 SS	
600	315753-0124		2	RETAINING RING FOR BORE DIN 472 35 A2	
610	321308-0204		4	BALL BEARING, 20X42X12 MM	
620	321313-0102		3	BALL BEARING, 15X35X11 MM	
630	352113-0205		2	ANCHOR PLATES FOR STRIPS, TYPE TM2S8-C10	
W30B2022	90459-2409		1	INDUCTIVE SWITCH IN-3002-BPKG/AS	

Pos	Part No	UN	Qty	Description	Page No

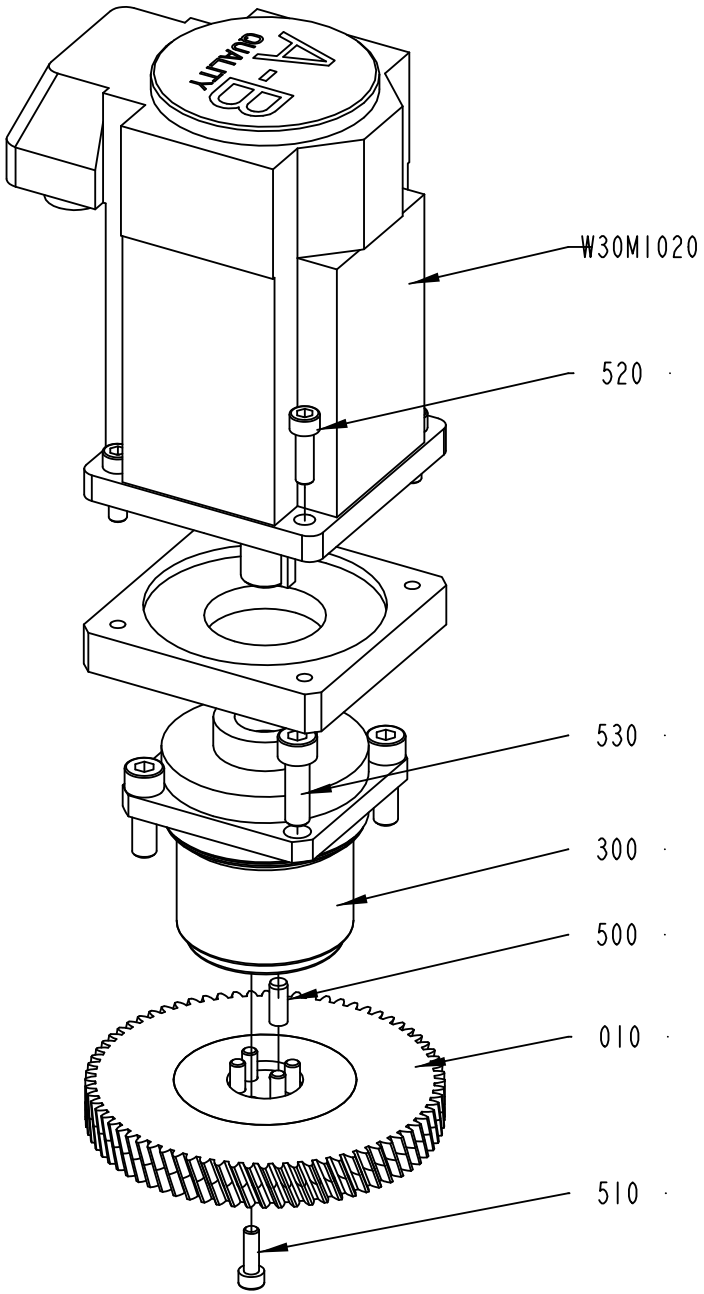

2829439-1
337989

ECM: 337989 - 20080303
Group number: 2829439-0100
Assembly Drawing: 2829439-1_1_AA

Pos	Part No	UN	Qty	Description	Page No
-					
010	2856558-0000		1	GEAR WHEEL	
300	90600-1765		1	GEARS, PLANETARY LPB+ 070-M01-3-111/PLPB	
500	311103-0351		1	PARALLEL PIN ISO 2338 6M6X16 A1	
510	312115-0329		5	SCREW ISO4762 M5X16 A4 80	
520	312115-0370		4	SCREW ISO4762 M6X20 A4 80	
530	312115-0453		4	SCREW ISO4762 M8X25 A4 80	
W30M1020	90459-2579		1	SERVO MOTOR MPL-B320P-SJ22AA	

Pos	Part No	UN	Qty	Description	Page No

PRESSURE ARM

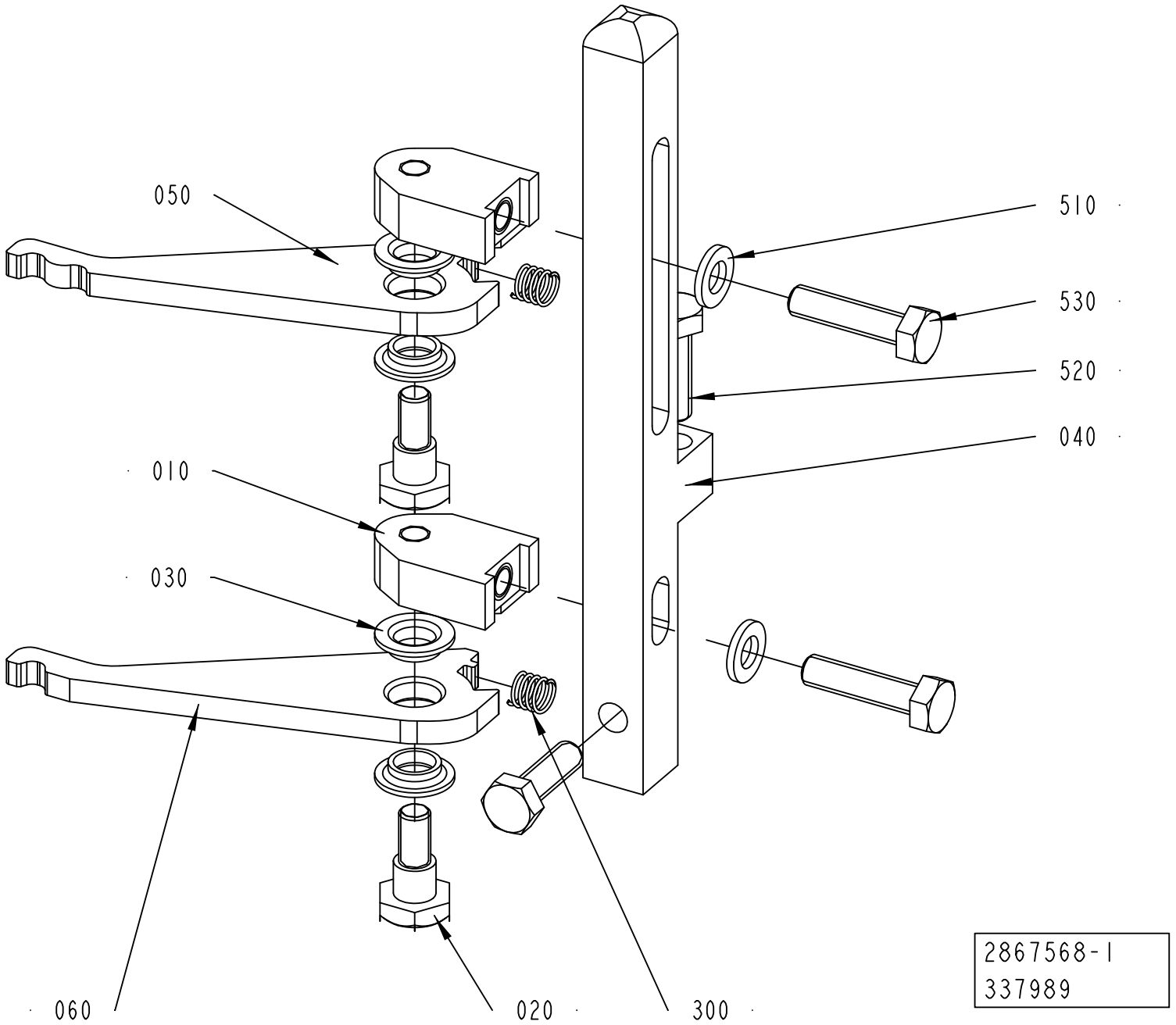

ECM: 337989 - 20080303
Group number: 2867568-0100
Assembly Drawing: 2867568-1_1_AA

Pos	Part No	UN	Qty	Description	Page No
S-STRAW3, T-STRAW3					
030	2870445-0000		4	FLANGE BUSHING	
060	2946855-0000		2	ARM	
S-STRAW4, T-STRAW4					
030	2870445-0000		4	FLANGE BUSHING	
050	2946850-0000		2	ARM	
S-STRAW5, T-STRAW5					
030	2870445-0000		4	FLANGE BUSHING	
060	2946854-0000		2	ARM	
S-STRAW6, T-STRAW6					
030	2870445-0000		4	FLANGE BUSHING	
060	2946856-0000		2	ARM	
U-STRAW4					
030	2870445-0000		4	FLANGE BUSHING	
050	2946850-0000		1	ARM	
060	2946853-0000		1	ARM	
U-STRAW5					
030	2870445-0000		4	FLANGE BUSHING	
060	2946854-0000		1	ARM	
060	2946852-0000		1	ARM	
Common Parts					
010	2870443-0000		2	BRACKET	
020	2870444-0000		2	SCREW	
040	2910474-0000		1	POST	
300	90600-1851		2	COMP. SPRING 5896, 0,63X6,93X11,5	
510	315105-0153		2	WASHER BRB 6,4X12 RFR	
520	312105-0370		2	SCREW M6S ISO 4017 M6X20 A480	
530	312105-0372		2	SCREW M6S ISO 4017 M6X25 A480	

Pos	Part No	UN	Qty	Description	Page No

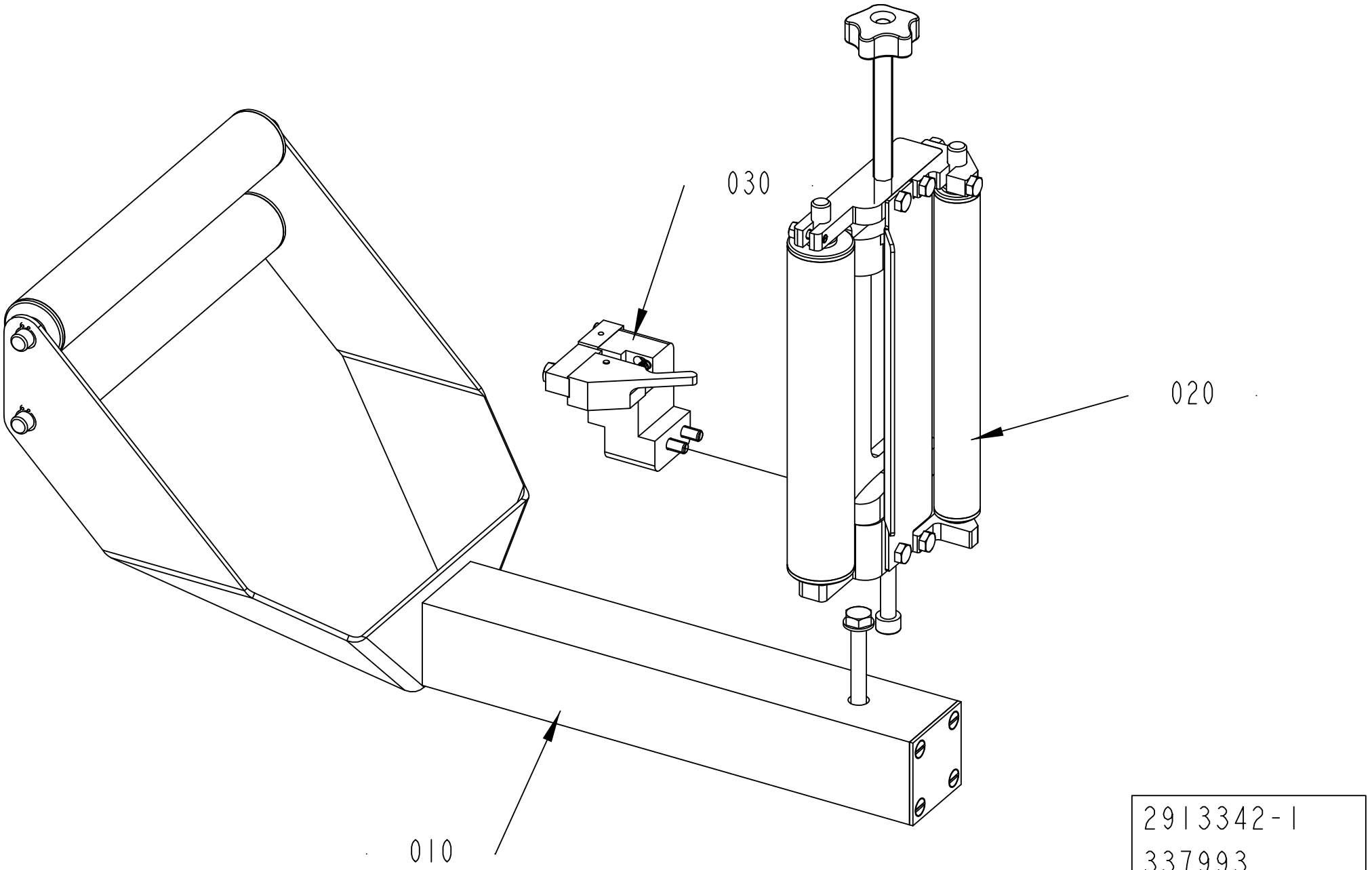

2913342-1
337993

ECM: 337993 - 20080303
Group number: 2913342-0100
Assembly Drawing: 2913342-1_1_AA

Pos	Part No	UN	Qty	Description	Page No
-					
010	2829442-0100		1	GUIDE ARM	**1-17**
020	2937220-0100		1	LADDER BAND GUIDE	**1-19**
030	2939708-0100		1	INDUCTIVE SWITCH	**1-21**

Pos	Part No	UN	Qty	Description	Page No

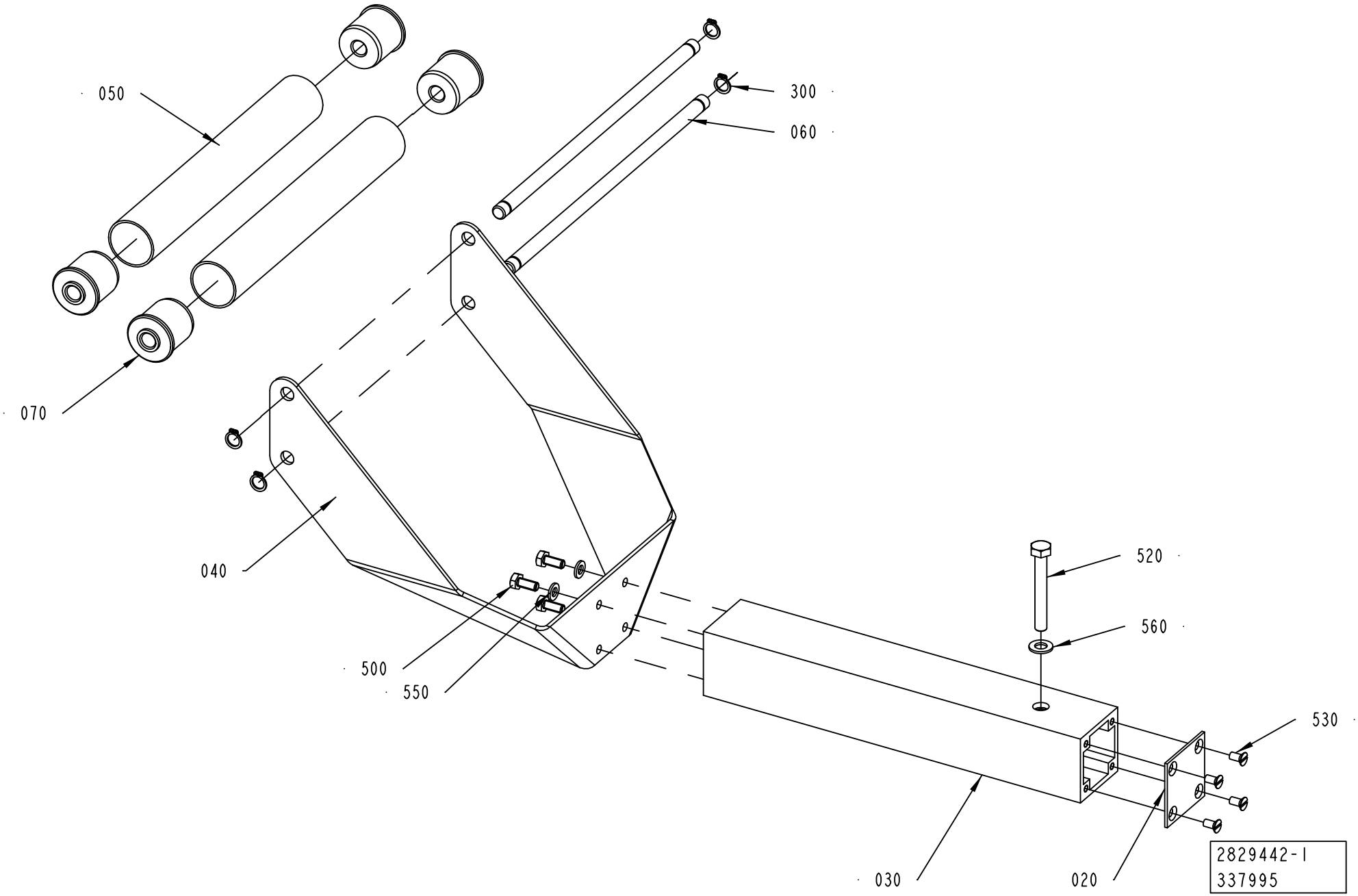
050
300
060
070
040
500
550
520
560
530
030
020
2829442-1
337995

ECM: 337995 - 20080303
Group number: 2829442-0100
Assembly Drawing: 2829442-1_1_AA

Pos	Part No	UN	Qty	Description	Page No
-					
020	556604-0000		1	COVER PLATE	
030	2856565-0000		1	PROFILE 50X50	
040	2935826-0000		1	BRACKET	
050	2935827-0000		2	PIPE	
060	2935828-0000		2	SHAFT	
070	2935834-0000		4	END SECTION	
300	90141-0016		4	RETAINING RING FOR SHAFT DIN 471 10 SS	
500	312105-0367		4	SCREW M6S ISO 4017 M6X14 A480	
520	312105-0463		1	SCREW M6S ISO 4014 M8X60 A480	
530	312145-0325		4	SCREW ISO 2009 MFS M5X10 A4	
550	315105-0153		4	WASHER BRB 6,4X12 RFR	
560	315105-0165		1	WASHER BRB 8,4X16 RFR	

Pos	Part No	UN	Qty	Description	Page No

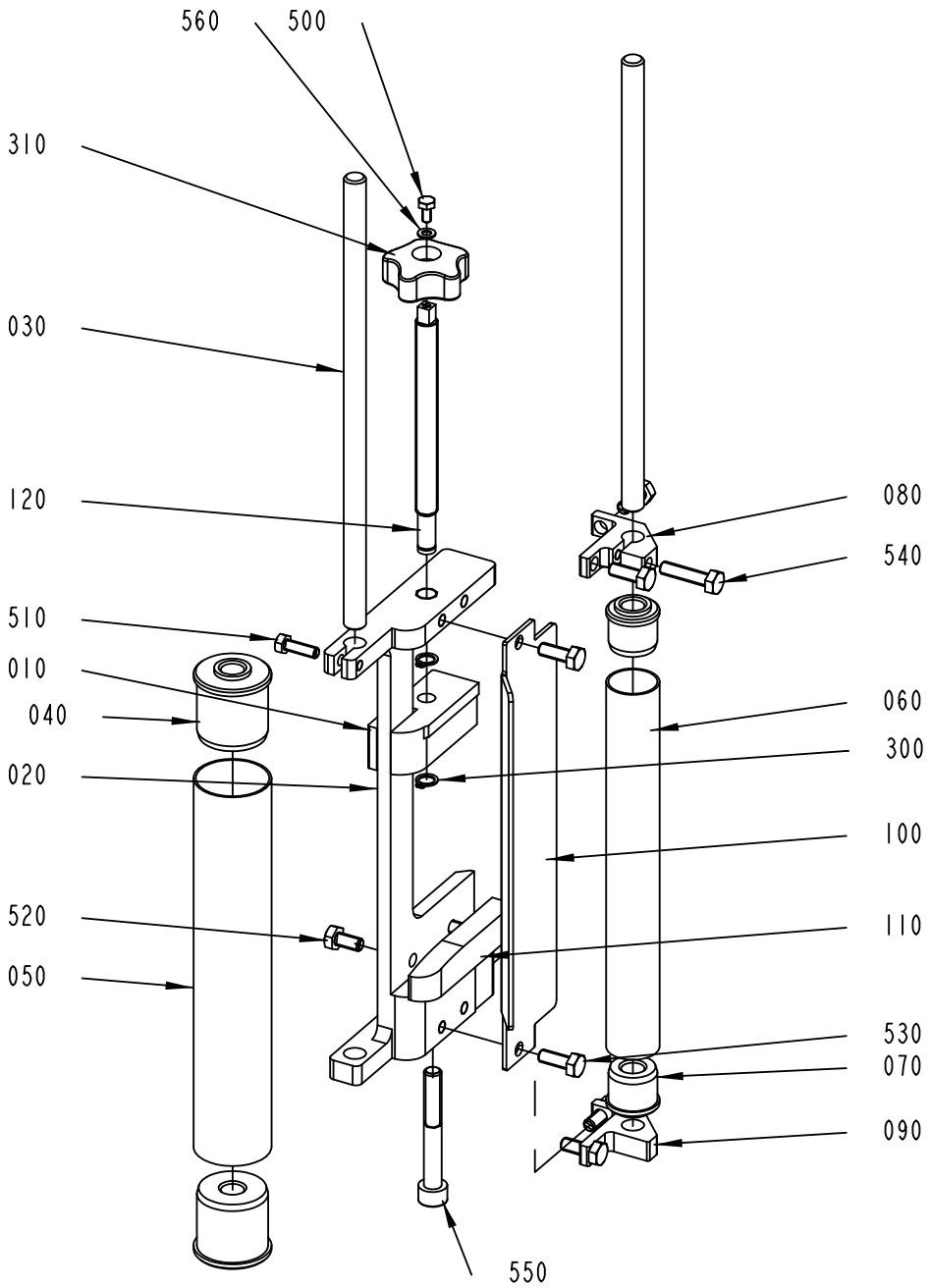
560
500
310
030
120
510
010
040
020
520
050
550
080
540
060
300
100
110
530
070
090
2937220-1
337993

ECM: 337993 - 20080303
Group number: 2937220-0100
Assembly Drawing: 2937220-1_1_AA

Pos	Part No	UN	Qty	Description	Page No
-					
010	2829450-0000		1	BRACKET	
020	2924694-0000		1	LADDER BAND GUIDE	
030	2935833-0000		1	SHAFT	
040	2935834-0000		2	END SECTION	
050	2935835-0000		1	PIPE	
060	2937211-0000		1	PIPE	
070	2937212-0000		2	END SECTION	
080	2937215-0000		1	BRACKET	
090	2937216-0000		1	BRACKET	
100	2937218-0000		1	BRACKET	
110	2939707-0000		1	SPACER PLATE	
120	2959331-0000		1	SHAFT	
300	90141-0015		2	RETAINING RING FOR SHAFT DIN 471 8 SS	
310	90459-3512		1	HANDWHEEL	
500	312105-0287		1	SCREW M6S ISO 4017 M4X8 A470	
510	312105-0329		1	SCREW M6S ISO 4017 M5X16 A480	
520	312105-0366		2	SCREW M6S ISO 4017 M6X12 A480	
530	312105-0368		6	SCREW M6S ISO 4017 M6X16 A480	
540	312105-0372		1	SCREW M6S ISO 4017 M6X25 A480	
550	312115-0463		1	SCREW ISO4762 M8X60 A4 80	
560	315105-0136		1	WASHER BRB 4,3X8 RFR	

Pos	Part No	UN	Qty	Description	Page No

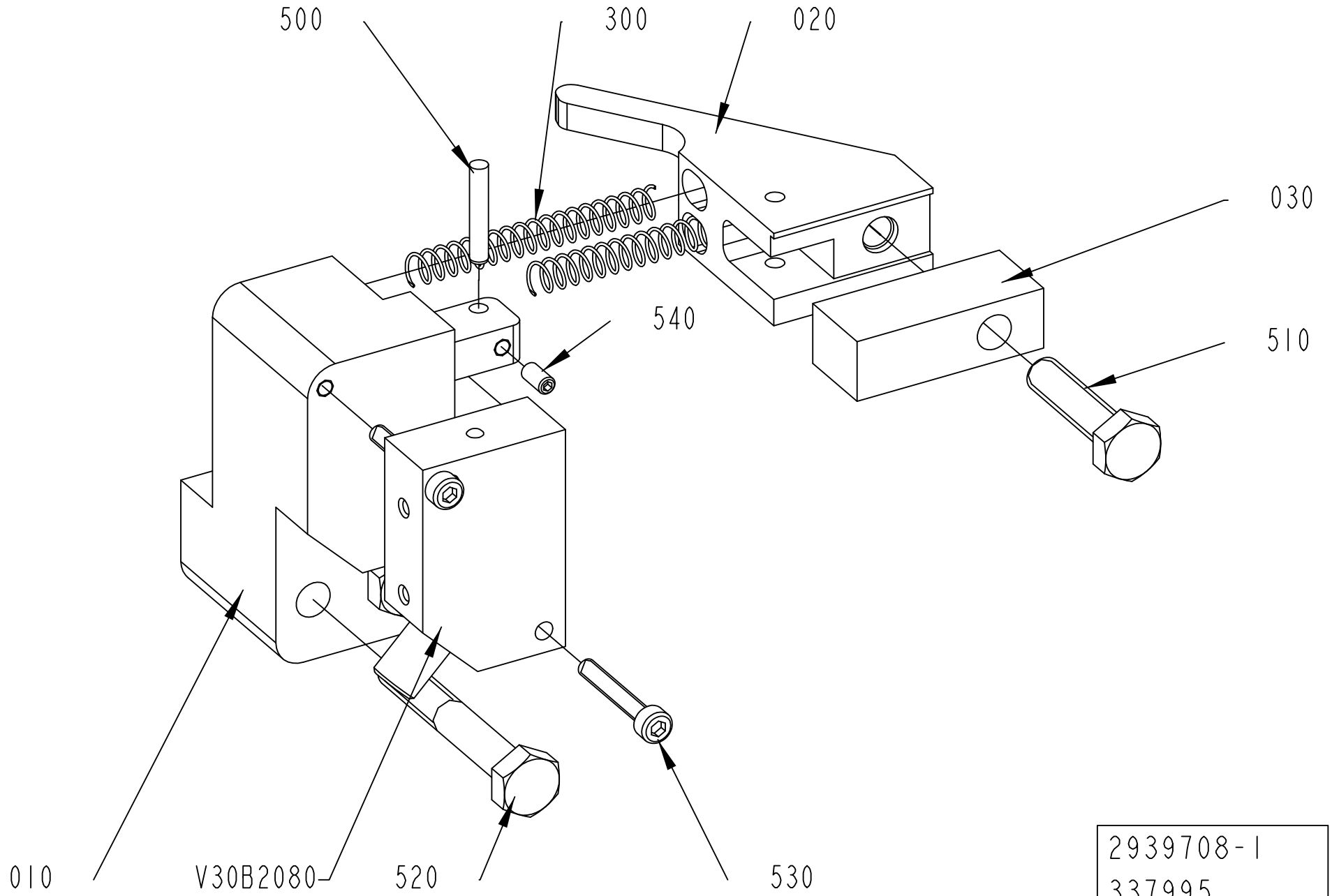

2939708-1
337995

ECM: 337995 - 20080303
Group number: 2939708-0100
Assembly Drawing: 2939708-1_1_AA

Pos	Part No	UN	Qty	Description	Page No
-					
010	2937223-0000		1	SPRING HOLDER	
020	2939706-0000		1	SPRING BRACKET	
030	2950979-0000		1	SPACER	
300	90600-4711		1	COMP. SPRING 5849, 0,5X5,5X44,5	
500	311102-0237		1	PARALLEL PIN ISO 2338 3M6X18 ST	
510	312105-0372		1	SCREW M6S ISO 4017 M6X25 A480	
520	312105-0378		2	SCREW M6S ISO 4014 M6X40 A480	
530	312115-0230		2	SCREW ISO4762 M3X20 A4 80	
540	312318-0220		1	SCREW ISO4029 M3X6 A4	
W30B2080	90459-2409		1	INDUCTIVE SWITCH IN-3002-BPKG/AS	

Pos	Part No	UN	Qty	Description	Page No

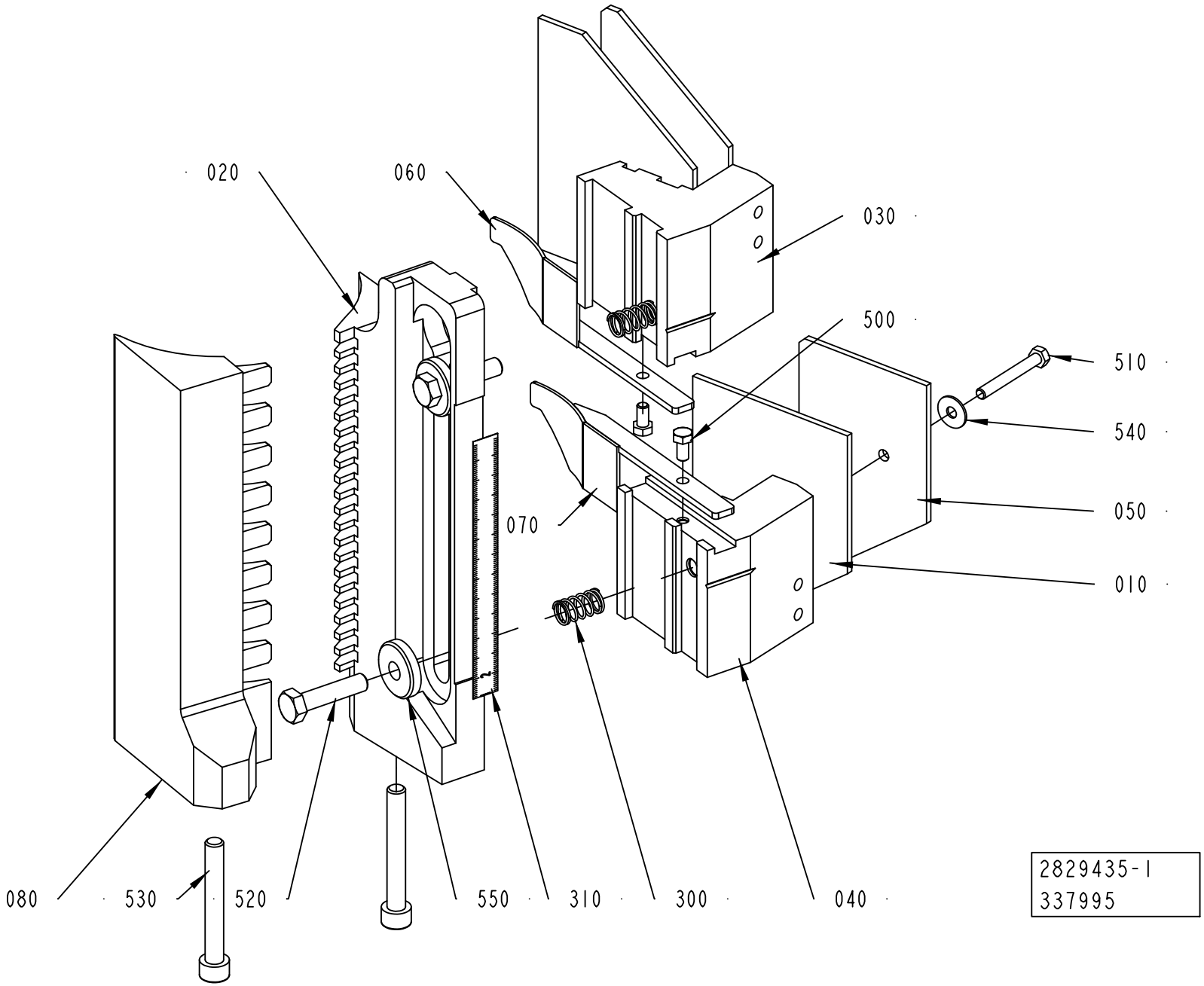
020
060
030
500
510
540
050
010
070
080
530
520
550
310
300
040
2829435-1
337995

ECM: 337995 - 20080303
Group number: 2829435-0100
Assembly Drawing: 2829435-1_1_AA

Pos	Part No	UN	Qty	Description	Page No
-					
010	2848835-0000		2	INSULATING PLATE	
020	2848852-0000		1	GUIDE CONSOLE	
030	2848854-0000		1	GUN HOLDER	
040	2848855-0000		1	GUN HOLDER	
050	2848856-0000		2	INSULATING PLATE	
060	2848857-0000		1	GUIDE ARM	
070	2848858-0000		1	GUIDE ARM	
080	2939713-0000		1	GUIDE CONSOLE	
300	90458-2082		2	COMP. SPRING SF-TF 1X9X20 SS 2331-06	
310	90458-2780		1	SCALE ,1000-0 MM ADHESIVE	
500	312105-0325		2	SCREW M6S ISO 4017 M5X10 A480	
510	312105-0339		2	SCREW M6S ISO 4014 M5X40 A480	
520	312105-0457		2	SCREW M6S ISO 4014 M8X35 A480	
530	312115-0463		2	SCREW ISO4762 M8X60 A4 80	
540	315125-0146		2	WASHER TBRSB 5.3X15X1 A4	
550	315125-0165		2	WASHER TBRSB 8,4X26X5 A4	

Pos	Part No	UN	Qty	Description	Page No

SPRING HOLDER

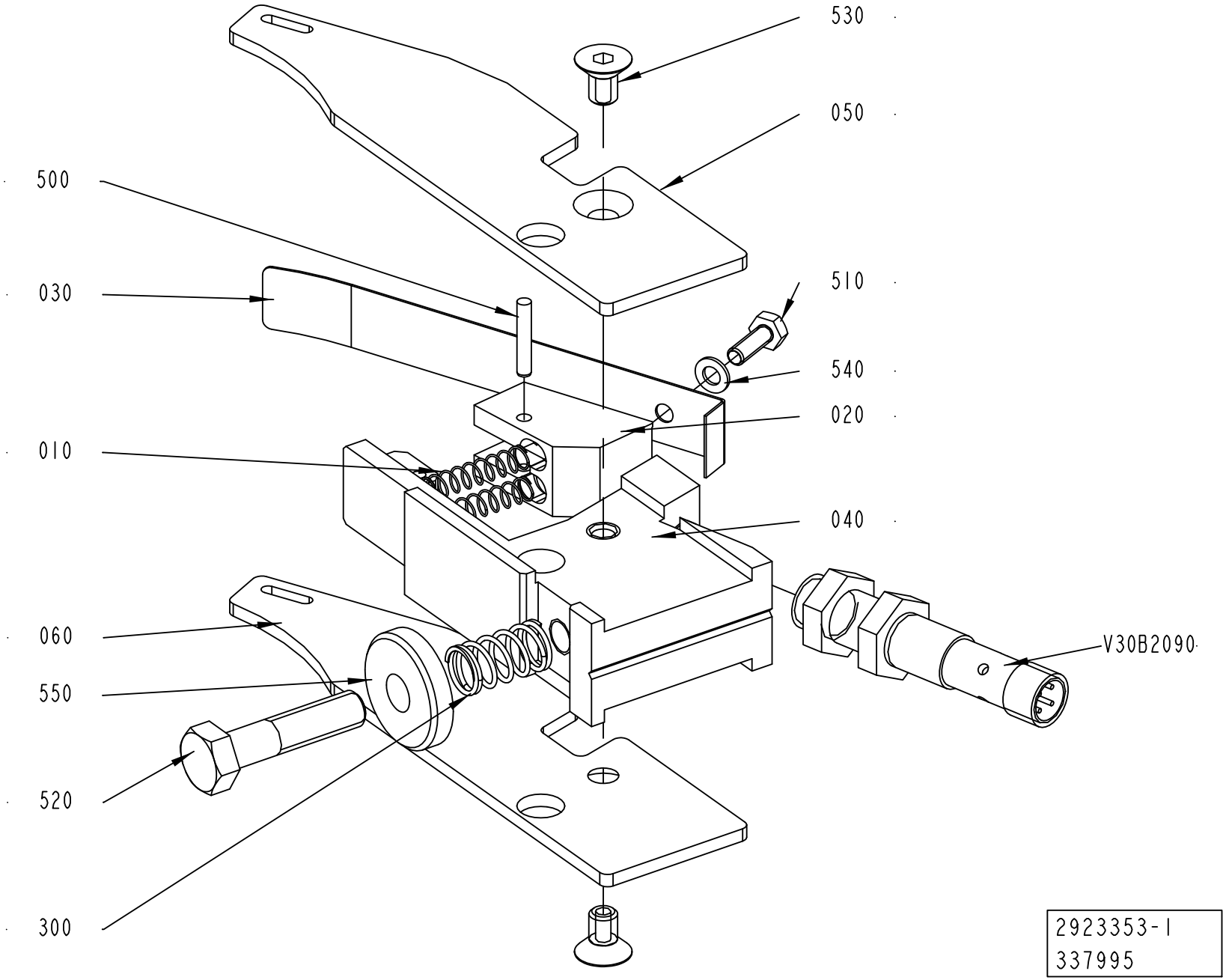

ECM: 360189 - 20081009
Group number: 2923353-0100
Assembly Drawing: 2923353-1_1_AA

Pos	Part No	UN	Qty	Description	Page No
TBA, TB					
V30B2090	90458-0590		1	PROX.SENSOR IM12-04BPS-ZC1	
Common Parts					
010	536204-0000		2	COMPRESSION SPRING	
020	2848840-0000		1	SPRING BRACKET	
030	2848842-0000		1	LEAF SPRING	
040	2923354-0000		1	SPRING HOLDER	
050	2923358-0000		1	GUIDE ARM	
060	2941714-0000		1	GUIDE ARM	
300	90458-2082		1	COMP. SPRING SF-TF 1X9X20 SS 2331-06	
500	311102-0237		1	PARALLEL PIN ISO 2338 3M6X18 ST	
510	312105-0291		1	SCREW M6S ISO 4017 M4X12 A470	
520	312105-0457		1	SCREW M6S ISO 4014 M8X35 A480	
530	312155-0364		2	SCREW DIN 7991 MF6S M6X10 A4 70	
540	315105-0136		1	WASHER BRB 4,3X8 RFR	
550	315125-0165		1	WASHER TBRSB 8,4X26X5 A4	

Pos	Part No	UN	Qty	Description	Page No

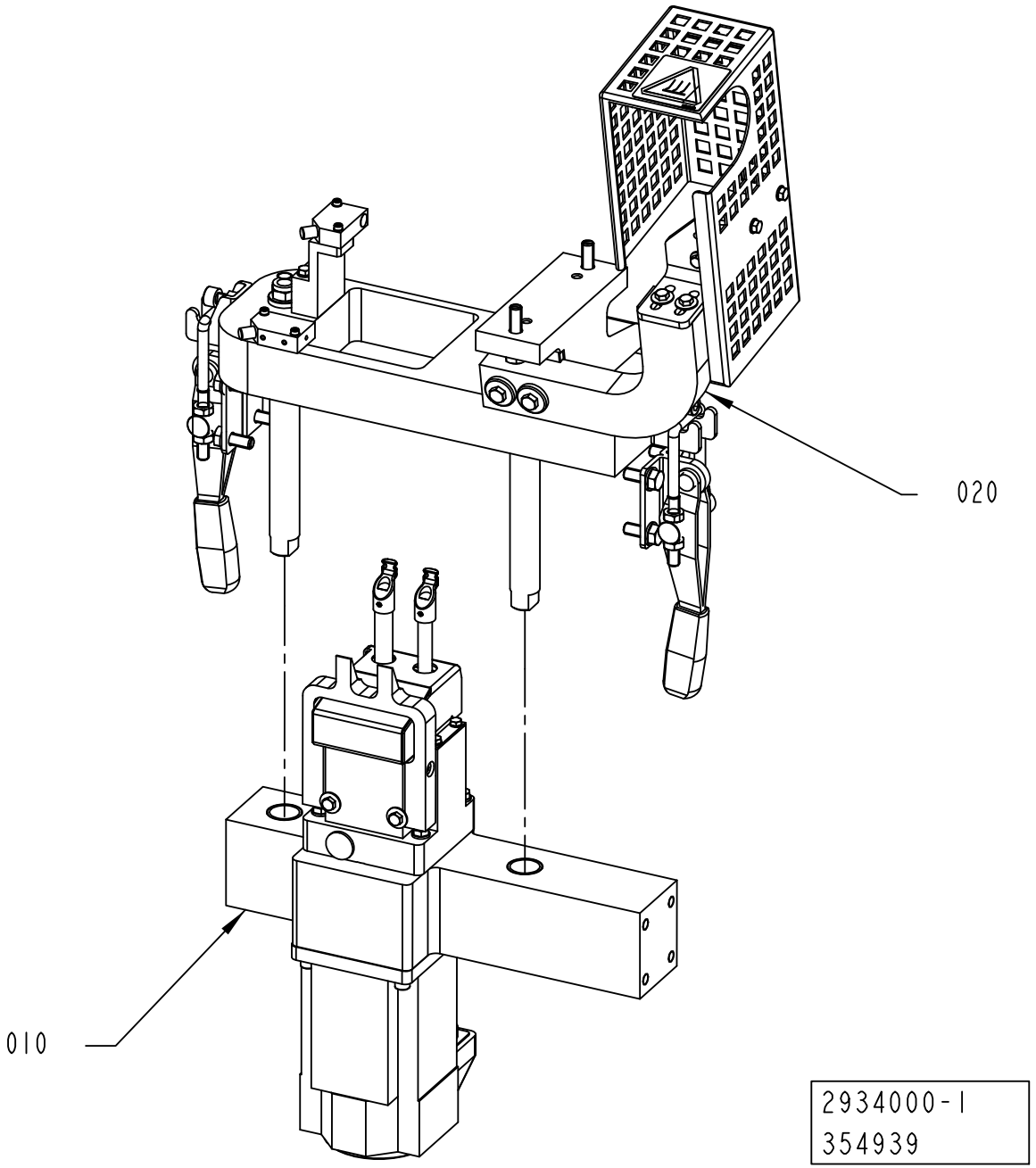
020
010
2934000-1
354939

ECM: 354939 - 20081009
Group number: 2934000-0100
Assembly Drawing: 2934000-1_1_AA

Pos	Part No	UN	Qty	Description	Page No
-					
010	2948250-0100		1	PRESSURE UNIT	**1-29**
020	2948255-0100		1	LOCK HOLDER	**1-31**

Pos	Part No	UN	Qty	Description	Page No

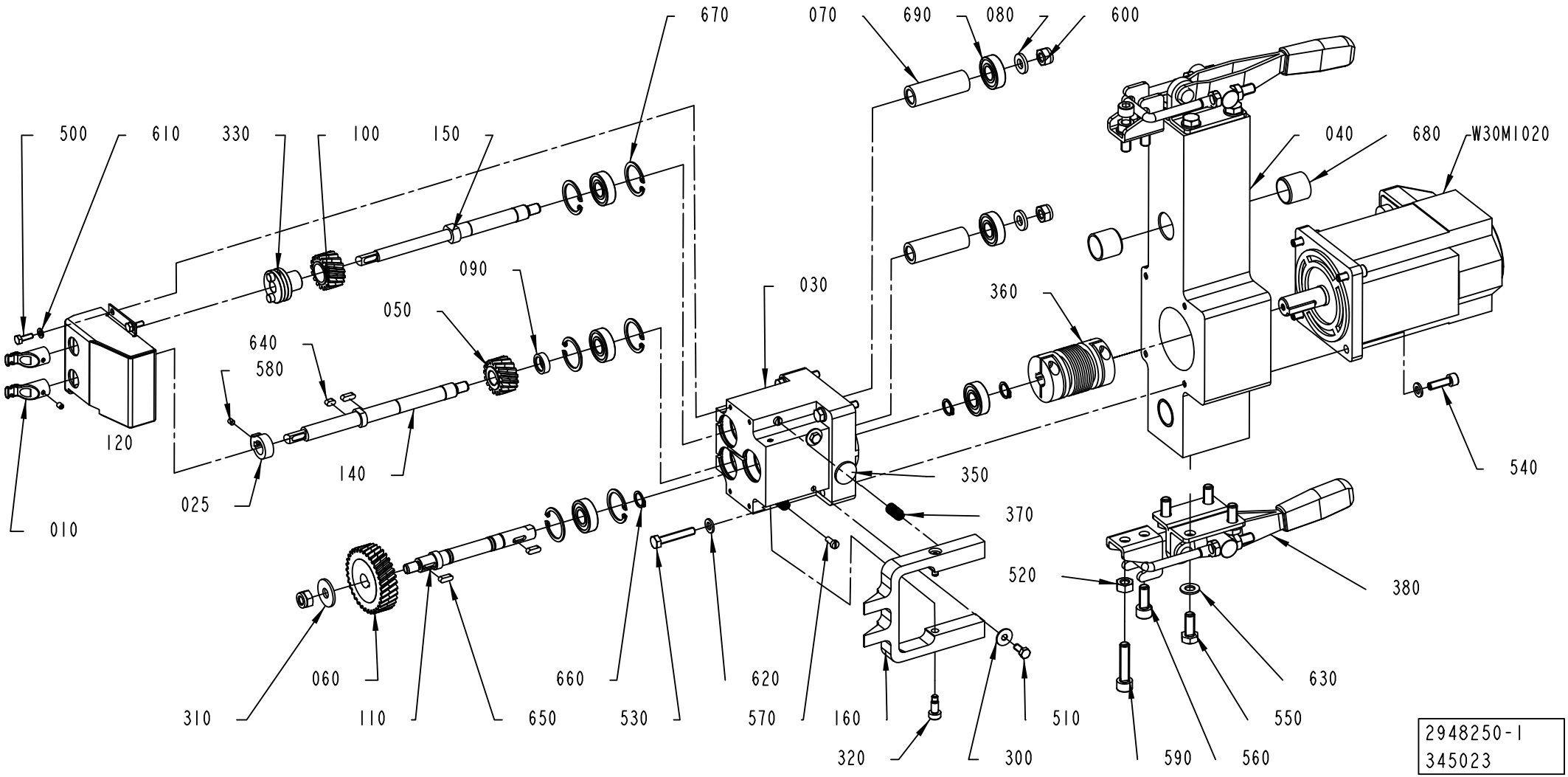
670
070
690
080
600
500
610
330
100
150
040
680
W30M1020
090
050
030
360
640
580
120
140
025
010
350
370
540
520
380
060
660
620
630
310
110
650
530
570
160
510
550
320
300
590
560
2948250-1
345023

ECM: 353346 - 20081009
Group number: 2948250-0100
Assembly Drawing: 2948250-1_1_AA

Pos	Part No	UN	Qty	Description	Page No
S-STRAW, T-STRAW (See drawing on page: 1-28)					
010	2863517-0000		2	ECCENTRIC	
U-STRAW (See drawing on page: 1-28)					
010	2939679-0000		2	ECCENTRIC	
Common Parts					
025	2863493-0000		1	FLAG	
030	2904764-0000		1	BEARING HOUSING	
040	2904765-0000		1	HOUSE	
050	2916011-0000		1	GEAR WHEEL	
060	2916012-0000		1	GEAR WHEEL	
070	2916017-0000		2	SPACER SLEEVE	
080	2916021-0000		2	WASHER	
090	2916022-0000		1	SPACER SLEEVE	
100	2916024-0000		1	GEAR WHEEL	
110	2916039-0000		1	SHAFT	
120	2934028-0000		1	COVER	
140	2939676-0000		1	SHAFT	
150	2939677-0000		1	SHAFT	
160	2957682-0000		1	FORK	
300	90005-0114		2	WASHER PLAIN ROUND 5,3(M5)/15, H=1	
310	90005-0116		1	WASHER PLAIN ROUND 8,4(M8)/24, H=2	
320	90287-0229		2	SCREW, HEX.SOCK.HEAD SHOULD. M5X6	
330	90458-2068		1	CLAMPING ELEMENT WITH SLEEVE, 3/8"X16 MM	
350	90459-7245		1	PLUG, BLIND, PLASTIC GPN300F11	
360	90600-0439		1	BELLOW COUPLING, 12X16 MM	
370	90600-1092		2	COMP. SPRING D21550, 0,63X8,63X16	
380	90600-5062		2	QUICK-LOCK, GN 851-700-T2-N1	
500	312105-0291		4	SCREW M6S ISO 4017 M4X12 A470	
510	312105-0327		2	SCREW M6S ISO 4017 M5X12 A480	
520	312605-0318		2	HEXAGON NUT, M6M M8 A280	
530	312109-0376		4	SCREW M6S ISO 4017 M6X35 A480	
540	312115-0370		4	SCREW ISO4762 M6X20 A4 80	
550	312105-0451		8	SCREW M6S ISO 4017 M8X20 A480	
560	312115-0451		2	SCREW ISO4762 M8X20 A4 80	
570	312125-0289		2	SCREW ISO 1207 M4X10 A4	
580	312318-0284		3	SCREW ISO4029 M4X5 A4	
590	312115-0457		2	SCREW ISO4762 M8X35 A4 80	
600	312812-0318		3	HEXAGON NUT, NY-LOCK M8 A480	
610	315105-0136		4	WASHER BRB 4,3X8 RFR	
620	315105-0153		8	WASHER BRB 6,4X12 RFR	
630	315105-0165		12	WASHER BRB 8,4X16 RFR	
640	315705-0164		1	PARALLEL KEY W. ROUND ENDS 4X4X8 MM	
650	315705-0166		3	PARAPARALLEL KEY W. ROUND ENDS 4X4X12 MM	
660	315751-0109		3	RETAINING RING FOR SHAFT DIN 471 12 SS	
670	315753-0121		6	RETAINING RING FOR BORE DIN 472 28 A2	
680	321133-0260		4	BUSHING, 20X23X20 MM	
690	321308-0201		6	BALL BEARING, 12X28X8 MM	
W30M1020	90459-2579		1	SERVO MOTOR MPL-B320P-SJ22AA	

Machine Type	Group Description	Used-In	Group Number	Page No

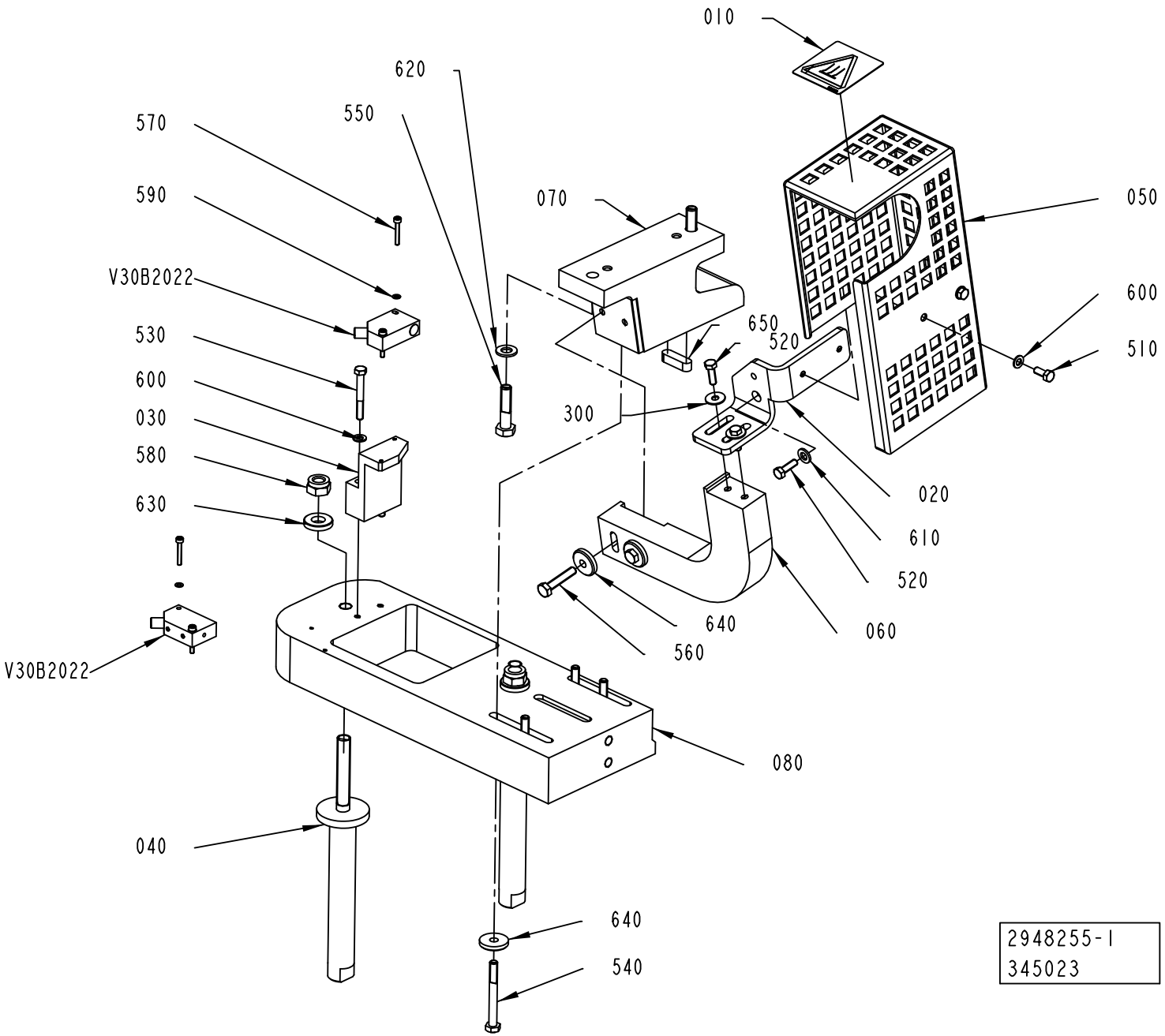
010
620
550
570
590
070
050
V30B2022
530
600
650
520
510
600
030
300
580
020
630
610
520
640
060
560
V30B2022
080
040
640
540
2948255-1
345023

ECM: 353347 - 20081009
Group number: 2948255-0100
Assembly Drawing: 2948255-1_1_AA

Pos	Part No	UN	Qty	Description	Page No
-					
010	1128853-0000		1	CAUTION SIGN	
020	2863518-0000		1	BRACKET	
030	2934029-0000		1	BRACKET	
040	2939672-0000		2	SHAFT	
050	2939673-0000		1	COVER	
060	2939674-0000		1	BRACKET	
070	2939675-0000		1	BRACKET	
080	2939678-0000		1	BRACKET	
300	90005-0114		2	WASHER PLAIN ROUND 5,3(M5)/15, H=1	
510	312105-0327		2	SCREW M6S ISO 4017 M5X12 A480	
520	312105-0329		3	SCREW M6S ISO 4017 M5X16 A480	
530	312105-0339		2	SCREW M6S ISO 4014 M5X40 A480	
540	312105-0381		4	SCREW M6S ISO 4014 M6X55 A480	
550	312105-0457		2	SCREW M6S ISO 4014 M8X35 A480	
560	312109-0374		2	SCREW M6S ISO 4017 M6X30 A480	
570	312115-0230		4	SCREW ISO4762 M3X20 A4 80	
580	312812-0320		2	HEXAGON NUT, NY-LOCK M10 A480	
590	315105-0124		4	WASHER BRB 3,2X6 RFR	
600	315105-0146		4	WASHER BRB 5,3X10 RFR	
610	315105-0153		1	WASHER BRB 6,4X12 RFR	
620	315106-0165		2	WASHER ISO 7089-8-200 HV A4	
630	315115-0173		2	WASHER PLAIN, TBRB 10,5/22 H=4	
640	315125-0153		6	WASHER TBRSB 6,4X22X4 A4	
650	315705-0266		1	PARALLEL KEY W. ROUND ENDS 8X7X28 MM	
V30B2022	90459-2409		1	INDUCTIVE SWITCH IN-3002-BPKG/AS	
V30B2120	90459-2409		1	INDUCTIVE SWITCH IN-3002-BPKG/AS	

Pos	Part No	UN	Qty	Description	Page No

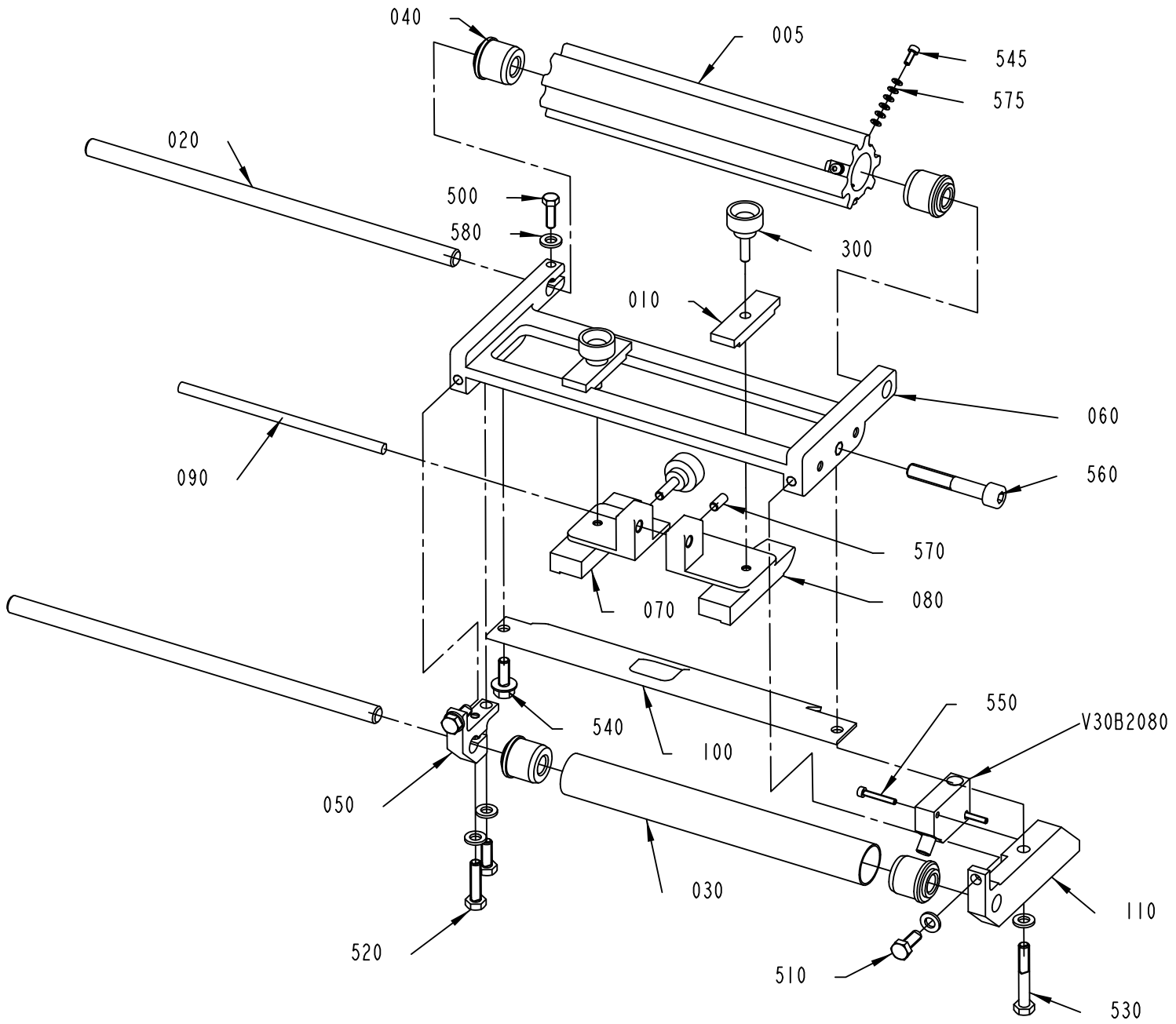

2948170-1
354939

ECM: 355322 - 20081009
Group number: 2948170-0100
Assembly Drawing: 2948170-1_1_AA

Pos	Part No	UN	Qty	Description	Page No
T-STRAW, S-STRAW (See drawing on page: 1-32)					
005	2957724-0000		1	TOOTHED WHEEL	
U-STRAW (See drawing on page: 1-32)					
005	2957726-0000		1	TOOTHED WHEEL	
Common Parts					
010	2856552-0000		2	CLAMP	
020	2935833-0000		2	SHAFT	
030	2937211-0000		1	PIPE	
040	2937212-0000		4	END SECTION	
050	2937215-0000		1	BRACKET	
060	2948167-0000		1	LADDER BAND GUIDE	
070	2948168-0000		1	BRACKET	
080	2948169-0000		1	BRACKET	
090	2948173-0000		1	SHAFT	
100	2948179-0000		1	TOP SECTION	
110	2957725-0000		1	PHOTOCELL BRACKET	
300	90051-0035		3	KNOB, EXTERNAL THREAD. NO. 8308-1135	
500	312105-0329		1	SCREW M6S ISO 4017 M5X16 A480	
510	312105-0368		3	SCREW M6S ISO 4017 M6X16 A480	
520	312105-0372		1	SCREW M6S ISO 4017 M6X25 A480	
530	312105-0378		1	SCREW M6S ISO 4014 M6X40 A480	
540	312108-0368		1	SCREW EN 1665 TYPE F M6X16 A270	
545	312111-0222		3	SCREW HEX.SOCK.HD.MC6S-TT 3X8 88 FZB	
550	312115-0230		2	SCREW ISO4762 M3X20 A4 80	
560	312115-0461		1	SCREW ISO4762 M8X50 A4 80	
570	312318-0327		1	SCREW ISO4029 M5X12 A4	
575	315105-0124		18	WASHER BRB 3,2X6 RFR	
580	315106-0153		6	WASHER ISO 7089-6-200 HV A4	
V30B2080	90459-2409		1	INDUCTIVE SWITCH IN-3002-BPKG/AS	

Pos	Part No	UN	Qty	Description	Page No

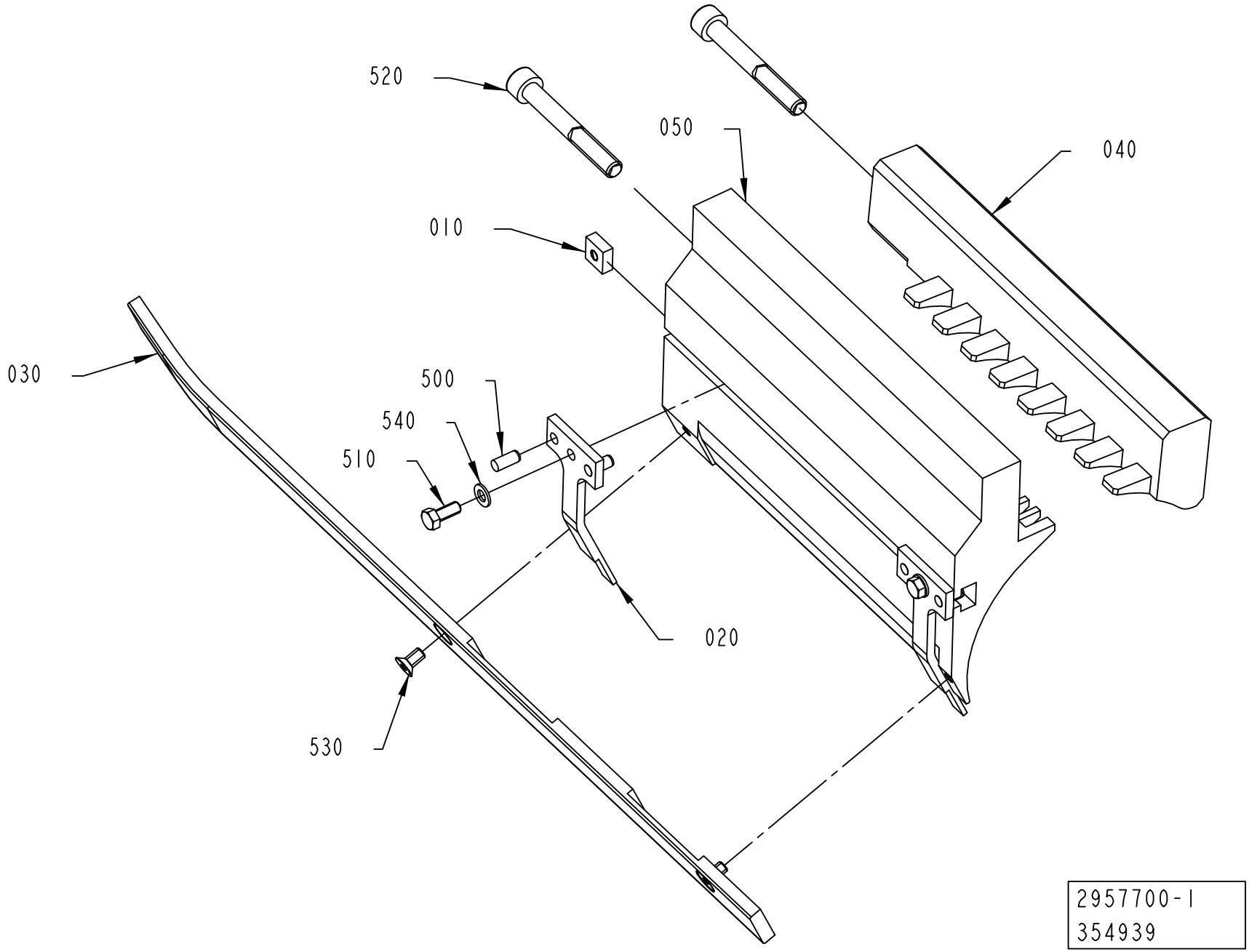
520
050
040
010
030
500
540
510
020
530
2957700-1
354939

ECM: 355178 - 20081009
Group number: 2957700-0100
Assembly Drawing: 2957700-1_1_AA

Pos	Part No	UN	Qty	Description	Page No
-					
010	2863512-0000		2	NUT	
020	2863513-0000		2	HOLDER	
030	2916036-0000		1	GUIDE	
040	2848849-0000		1	GUIDE CONSOLE	
050	2948234-0000		1	GUIDE CONSOLE	
500	311103-0306		4	PARALLEL PIN ISO 2338 5M6X12 A1	
510	312105-0327		2	SCREW M6S ISO 4017 M5X12 A480	
520	312115-0463		2	SCREW ISO4762 M8X60 A4 80	
530	312155-0325		2	SCREW DIN 7991 MF6S M5X10 A4 70	
540	315105-0146		2	WASHER BRB 5,3X10 RFR	

Pos	Part No	UN	Qty	Description	Page No

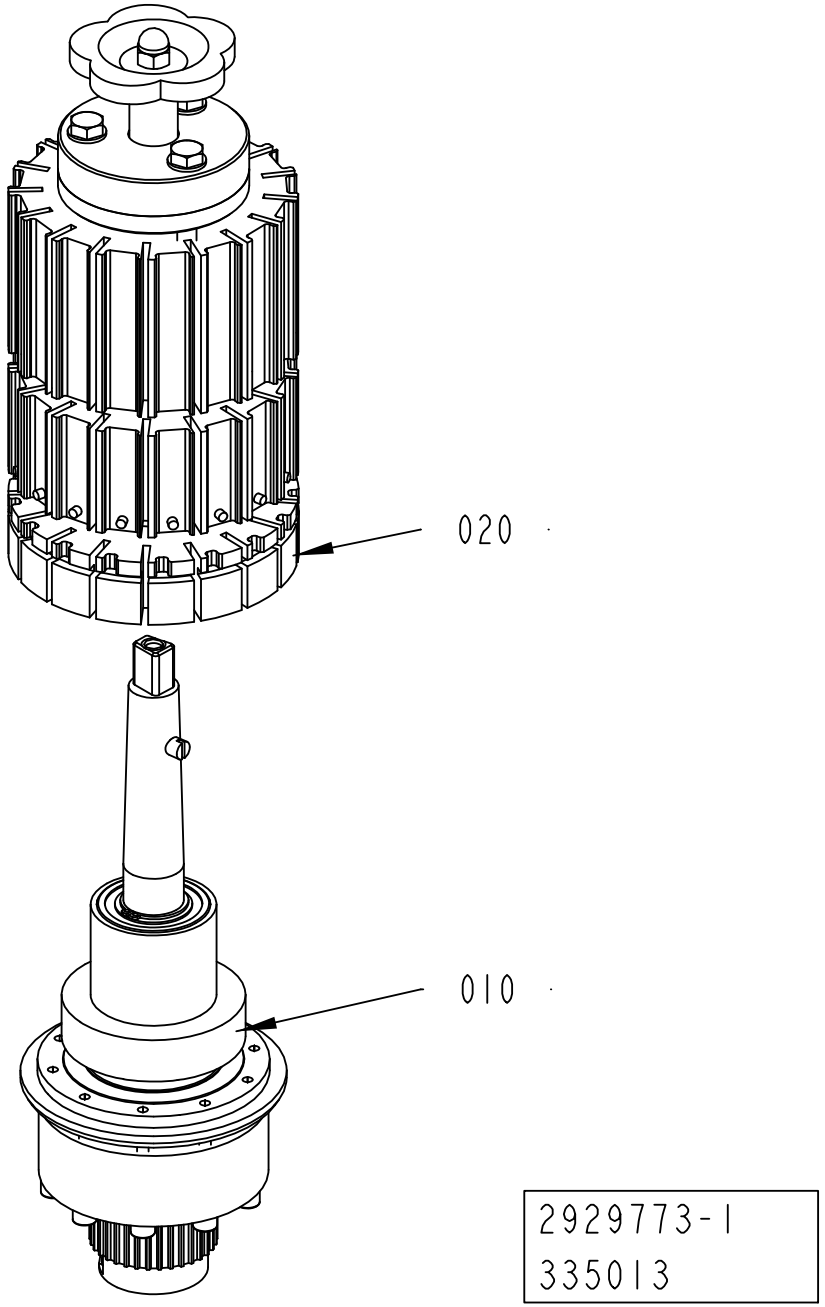
020
010
2929773-1
335013

ECM: 355390 - 20081009
Group number: 2929773-0100
Assembly Drawing: 2929773-1_1_AA

Pos	Part No	UN	Qty	Description	Page No
-					
010	2829430-0100		1	FEED SHAFT	**1-39**
020	2829443-0100		1	FEED WHEEL	**1-41**

Pos	Part No	UN	Qty	Description	Page No

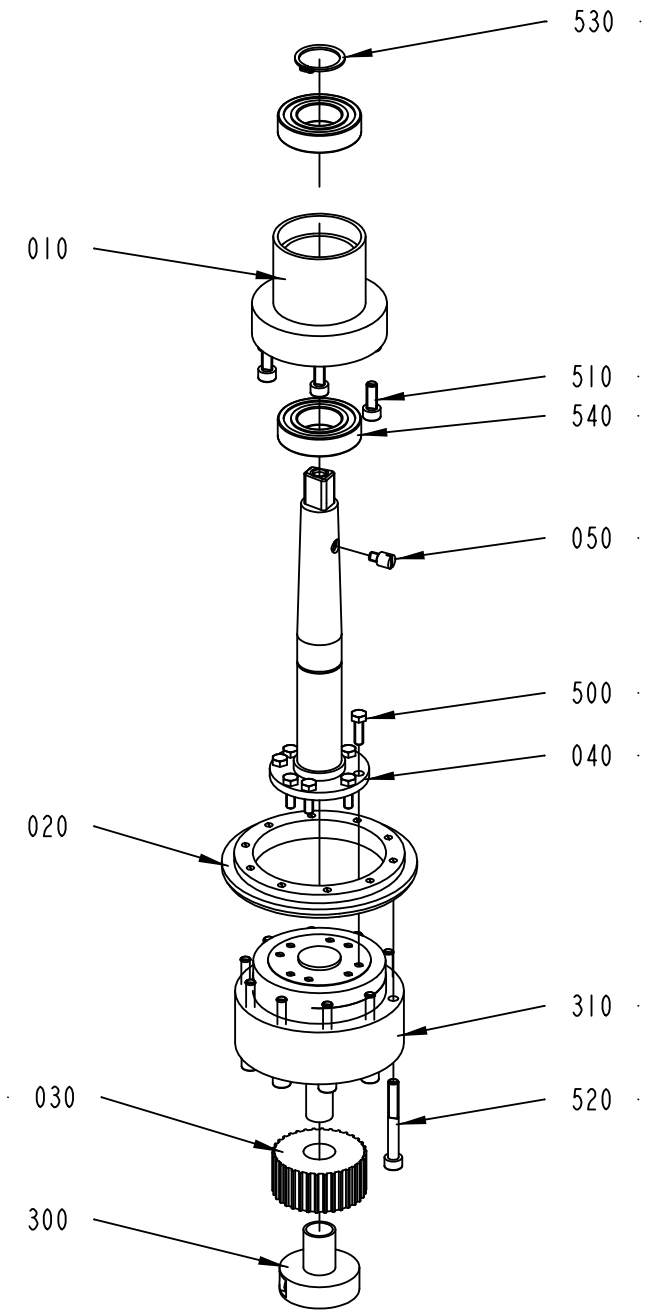

2829430-1
335013

ECM: 337868 - 20080303
Group number: 2829430-0100
Assembly Drawing: 2829430-1_1_AA

Pos	Part No	UN	Qty	Description	Page No
Straw Pitch 15					
030	2829491-0000		1	PULLEY	
Straw Pitch 22					
030	2864774-0000		1	PULLEY	
Common Parts					
010	2848823-0000		1	BEARING HUB	
020	2848827-0000		1	RING	
040	2950969-0000		1	SHAFT	
050	2959332-0000		1	AXLE BOLT	
300	90458-1814		1	CLAMPING ELEMENT WITH SLEEVE, 15X18 MM	
310	90600-1155		1	GEARS, PLANETARY TS 80-037-E-E15 P-092 0	
500	312105-0329		8	SCREW M6S ISO 4017 M5X16 A480	
510	312115-0368		6	SCREW ISO4762 M6X16 A4 80	
520	312115-0380		10	SCREW ISO4762 M6X50 A4 80	
530	315751-0119		1	RETAINING RING FOR SHAFT DIN 471 25 SS	
540	321308-0205		2	BALL BEARING, 25X47X12MM	

Pos	Part No	UN	Qty	Description	Page No

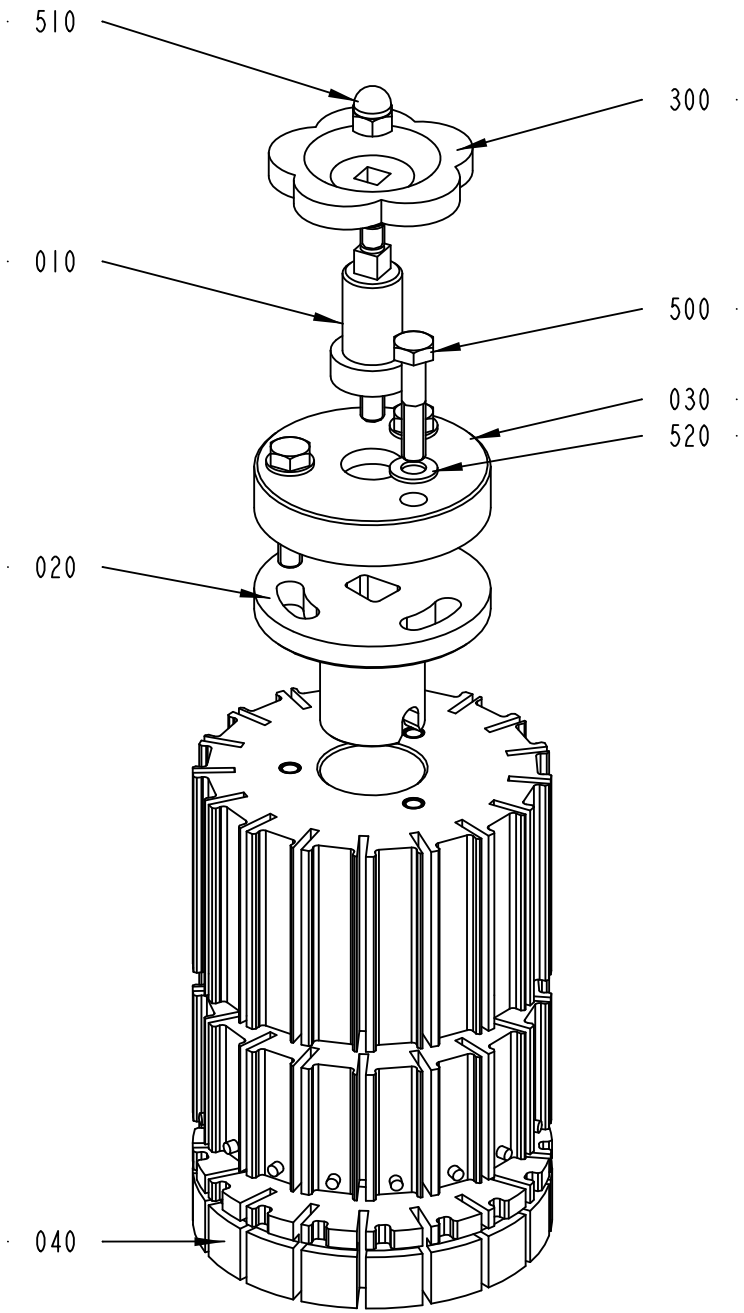

2829443-1
337987

ECM: 355389 - 20081009
Group number: 2829443-0100
Assembly Drawing: 2829443-1_1_AA

Pos	Part No	UN	Qty	Description	Page No
TB T4/5-120, TBA T4/5-120					
040	2959336-0000		1	FEED WHEEL	
TB T5/6-125, TBA T5/6-125					
040	2959333-0000		1	FEED WHEEL	
TB T5/6-150, TBA T5/6-150					
040	2959334-0000		1	FEED WHEEL	
TB T5/6-190, TBA T5/6-190					
040	2959335-0000		1	FEED WHEEL	
TB U4-145, TBA U4-145					
040	2959337-0000		1	FEED WHEEL	
TB U4-165, TBA U4-165					
040	2959339-0000		1	FEED WHEEL	
TB U5-145, TBA U5-145					
040	2959338-0000		1	FEED WHEEL	
TB U5-165, TBA U5-165					
040	2959340-0000		1	FEED WHEEL	
TB U5-180, TBA U5-180					
040	2959341-0000		1	FEED WHEEL	
TCA S4-80, TCA S4-100, TCA S4-120					
040	2957734-0000		1	FEED WHEEL	
TCA S5-100, TCA S5-120					
040	2957735-0000		1	FEED WHEEL	
TCA T5/6-150					
040	2957733-0000		1	FEED WHEEL	
TCA U4-145, TCA U4-165					
040	2957737-0000		1	FEED WHEEL	
TCA U5-145, TCA U5-165					
040	2957738-0000		1	FEED WHEEL	
Common Parts					
010	2864773-0000		1	SHAFT	
020	2950968-0000		1	FLANGE	
030	2950971-0000		1	FLANGE	
300	90051-0079		1	KNOB, SQUARE HOLE, NO. 8306 1304	
500	312105-0459		3	SCREW M6S ISO 4014 M8X40 A480	
510	312705-0318		1	NUT HEX. DOMED CAP MHM-6 M8 A280	
520	315105-0165		3	WASHER BRB 8,4X16 RFR	

Pos	Part No	UN	Qty	Description	Page No

Machine Type | Group Description | Used-In | Group Number | Page No

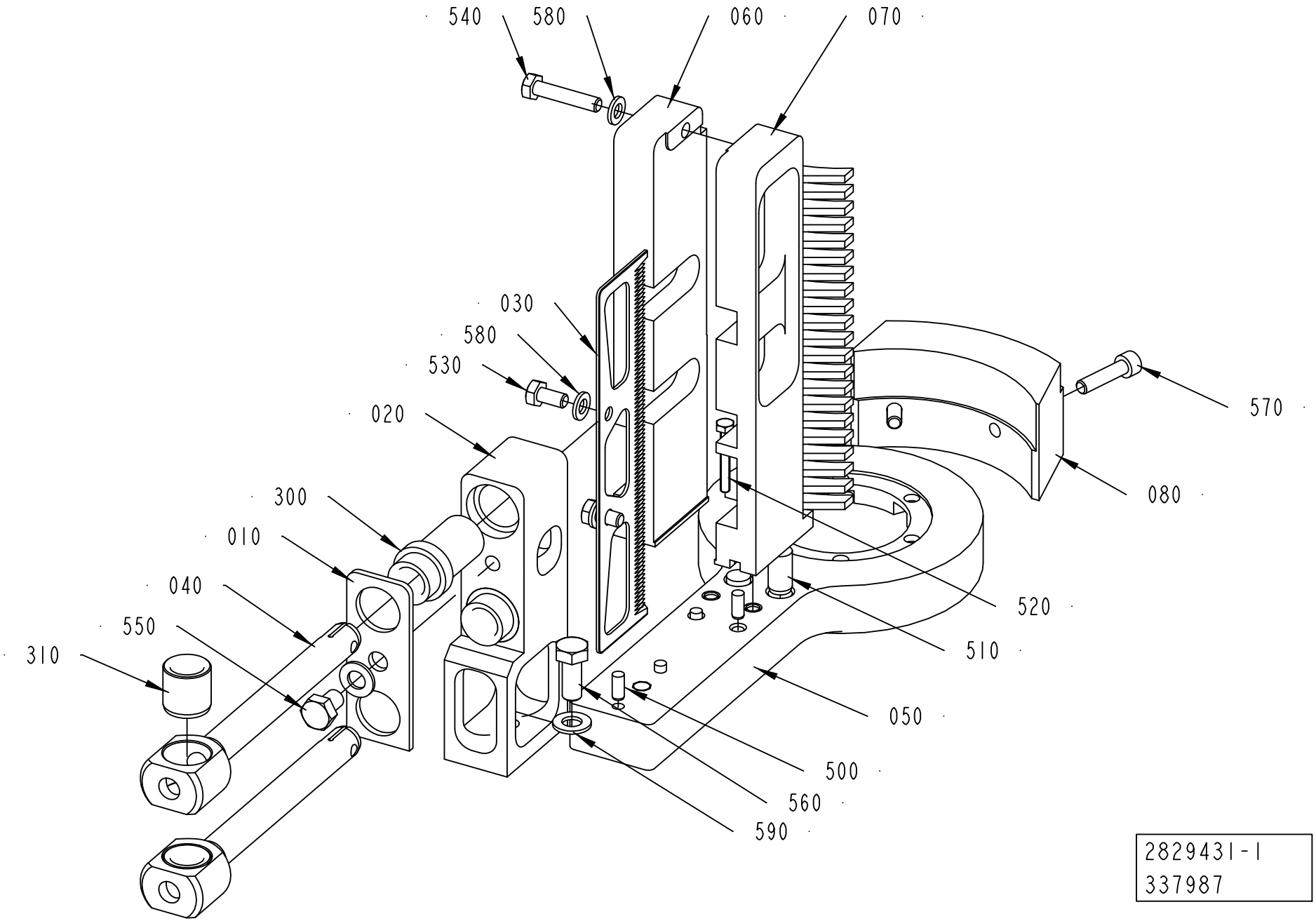
540
580
060
070
030
580
530
020
570
300
080
010
040
520
550
510
310
050
500
560
590
2829431-1
337987

ECM: 337987 - 20080303
Group number: 2829431-0100
Assembly Drawing: 2829431-1_1_AA

Pos	Part No	UN	Qty	Description	Page No
S-STRAW PITCH15, T-STRAW PITCH15					
040	2829489-0000		2	SHAFT	
310	90600-3958		2	BEAR. BUSH. WITHOUT FL, 14X20X20 MM	
U-STRAW PITCH22					
040	2856539-0000		2	SHAFT	
310	90600-3958		2	BEAR. BUSH. WITHOUT FL, 14X20X20 MM	
Common Parts					
010	2737088-0000		1	CLAMPING PLATE	
020	2829426-0000		1	BRACKET	
030	2856537-0000		1	KNIFE	
050	2924689-0000		1	ARM	
060	2924690-0000		1	LADDER BAND GUIDE	
070	2924691-0000		1	LADDER BAND GUIDE	
080	2946865-0000		1	COUNTERWEIGHT	
300	90600-3957		2	GUIDE BUSHING, 14X20X45	
500	311103-0306		4	PARALLEL PIN ISO 2338 5M6X12 A1	
510	311103-0454		2	PARALLEL PIN ISO 2338 10M6X20 A1	
520	312105-0299		2	SCREW M6S ISO 4017 M4X30 A470	
530	312105-0366		2	SCREW M6S ISO 4017 M6X12 A480	
540	312105-0374		1	SCREW M6S ISO 4014 M6X30 A480	
550	312105-0447		1	SCREW M6S ISO 4017 M8X12 A480	
560	312105-0451		1	SCREW M6S ISO 4017 M8X20 A480	
570	312115-0372		2	SCREW ISO4762 M6X25 A4 80	
580	315105-0153		3	WASHER BRB 6,4X12 RFR	
590	315105-0165		2	WASHER BRB 8,4X16 RFR	

Pos	Part No	UN	Qty	Description	Page No

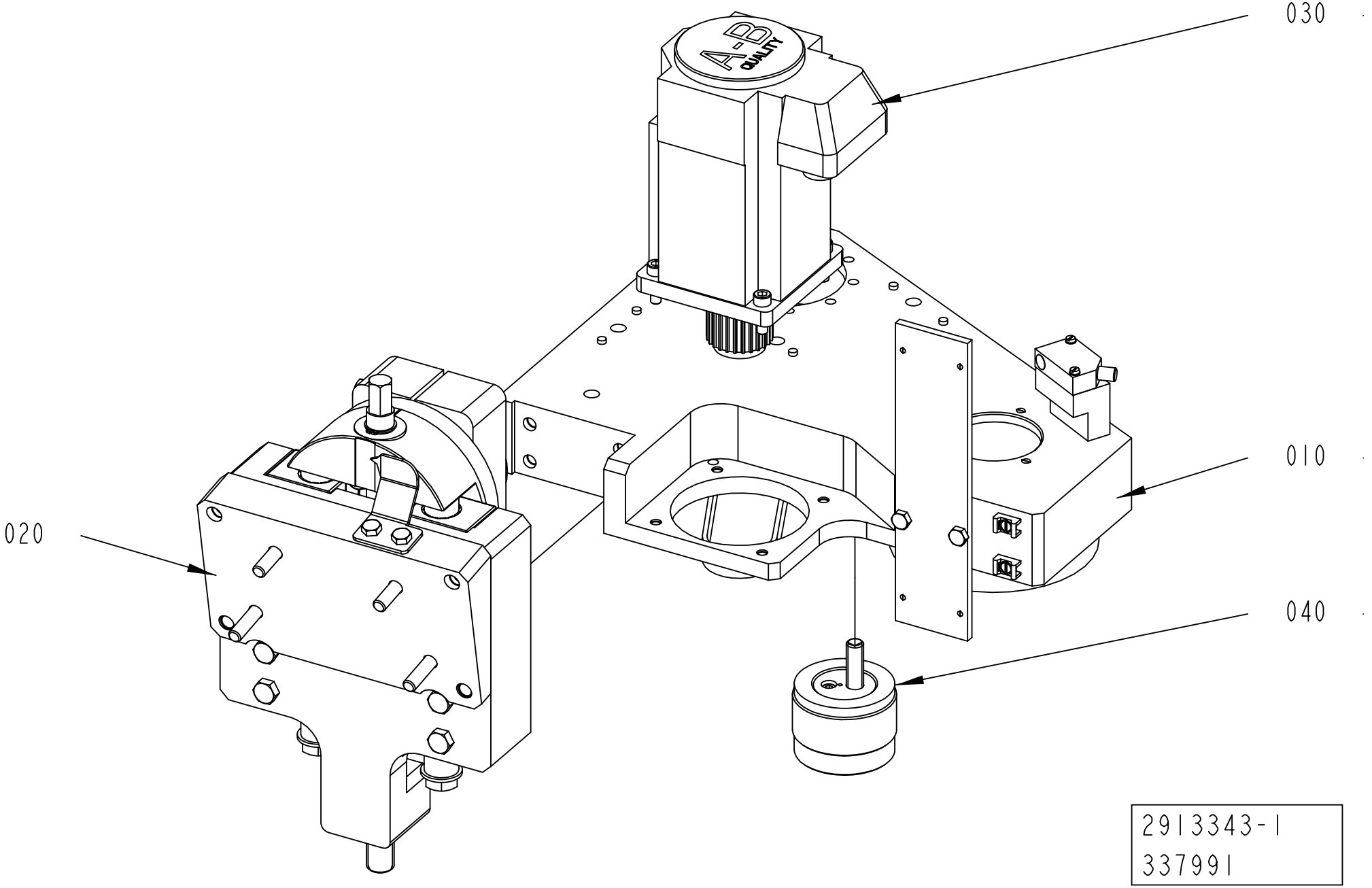

2913343-1
337991

ECM: 354985 - 20081009
Group number: 2913343-0100
Assembly Drawing: 2913343-1_1_AA

This list covers pages from 1-44 to 1-47

Pos	Part No	UN	Qty	Description	Page No
TBA, TB (See drawing on page: 1-44)					
020	2829438-0100		1	ADJUSTMENT BRACKET	**1-49**
TCA (See drawing on page: 1-46)					
020	2893440-0100		1	ADJUSTMENT BRACKET	**1-51**
Common Parts					
010	2829433-0100		1	FRAME HOUSING	**1-53, 1-55**
030	2829440-0100		1	DRIVE MOTOR	**1-57**
040	2829441-0100		1	BELT TIGHTENER	**1-59**

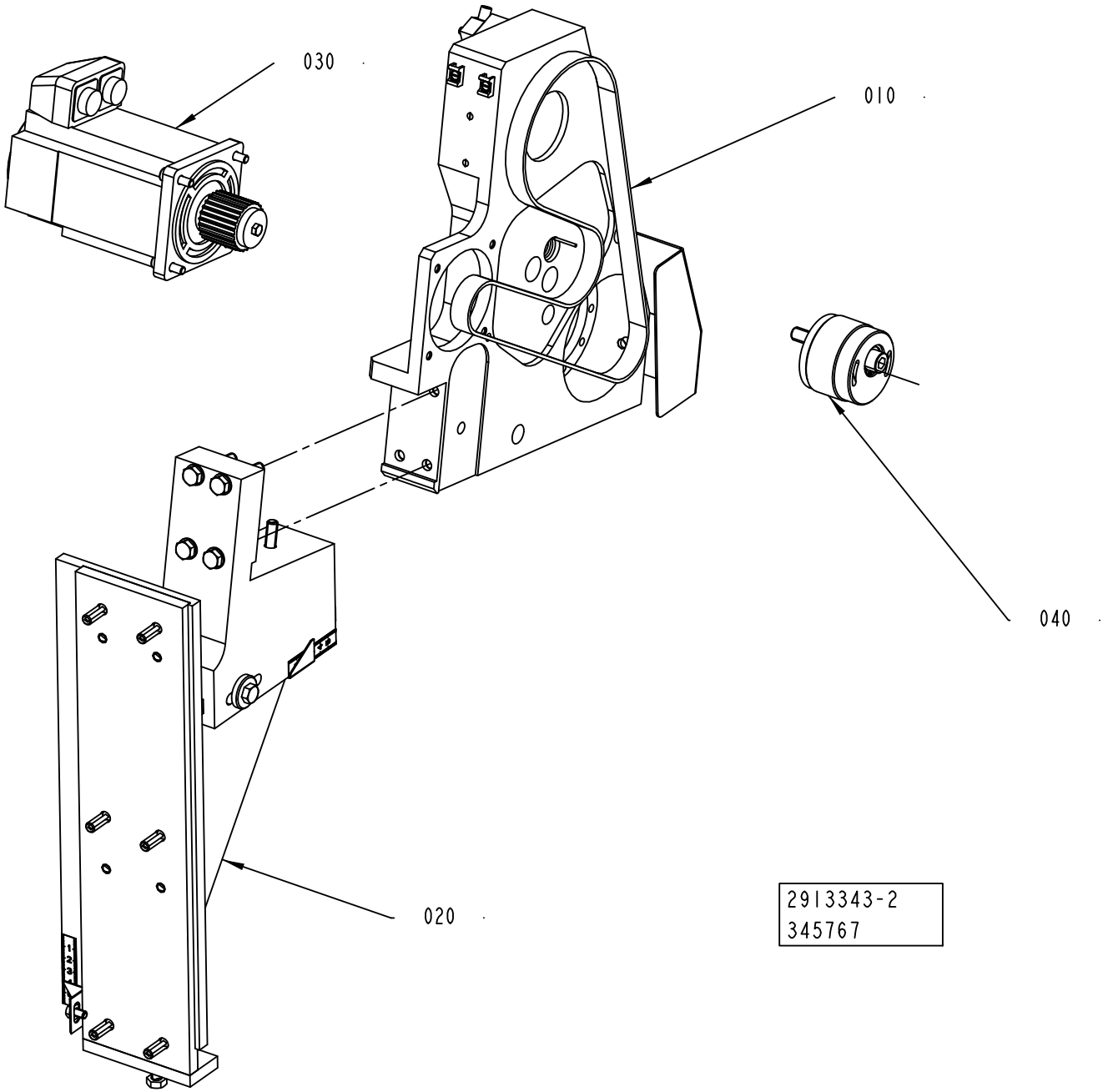
030
010
040
020
2913343-2
345767

ECM: 354985 - 20081009
Group number: 2913343-0100
Assembly Drawing: 2913343-2_1_AA

This list covers pages from 1-44 to 1-47

Pos	Part No	UN	Qty	Description	Page No
TBA, TB (See drawing on page: 1-44)					
020	2829438-0100		1	ADJUSTMENT BRACKET	**1-49**
TCA (See drawing on page: 1-46)					
020	2893440-0100		1	ADJUSTMENT BRACKET	**1-51**
Common Parts					
010	2829433-0100		1	FRAME HOUSING	**1-53, 1-55**
030	2829440-0100		1	DRIVE MOTOR	**1-57**
040	2829441-0100		1	BELT TIGHTENER	**1-59**

Pos	Part No	UN	Qty	Description	Page No

ADJUSTMENT BRACKET

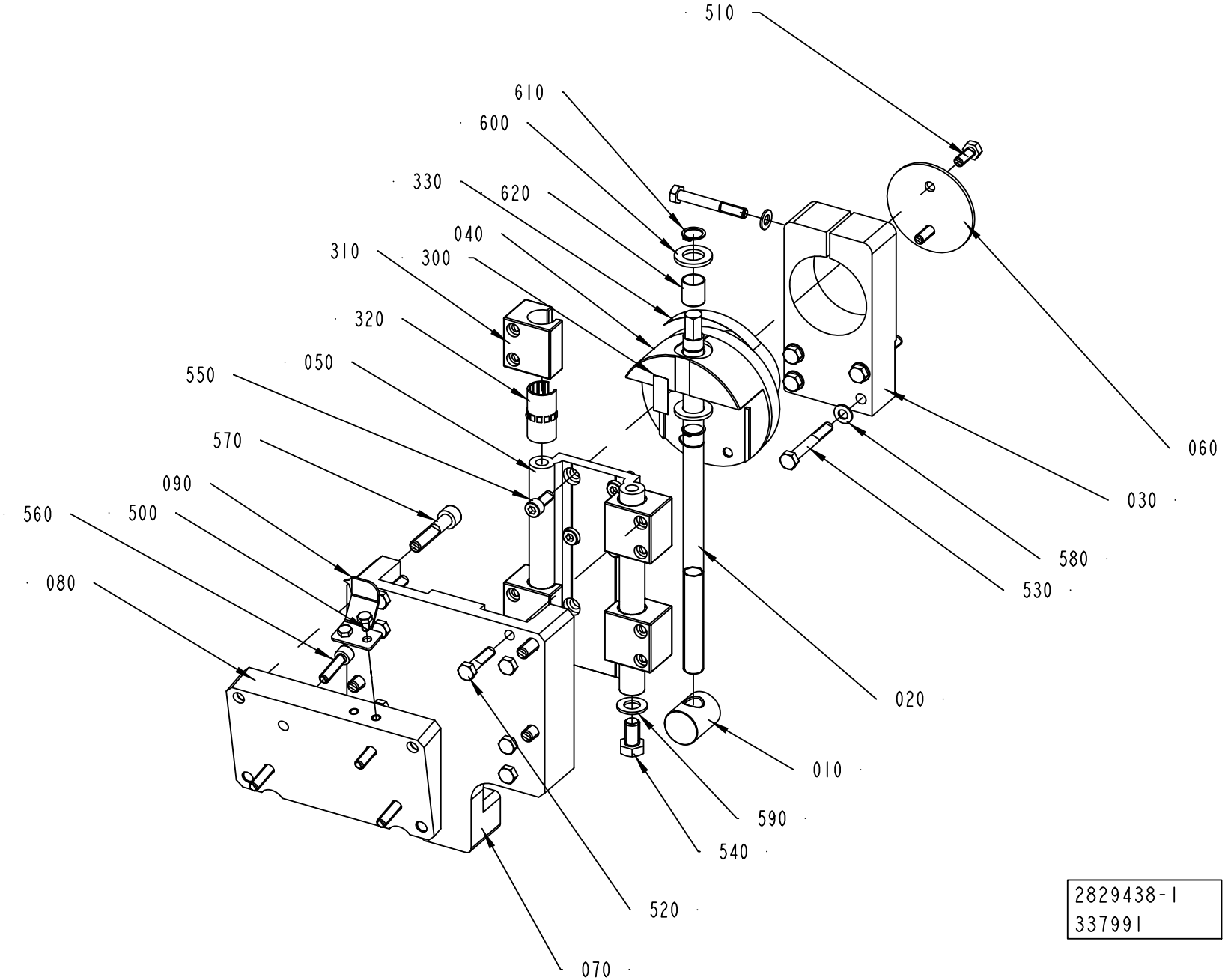

ECM: 337991 - 20080303
Group number: 2829438-0100
Assembly Drawing: 2829438-1_1_AA

Pos	Part No	UN	Qty	Description	Page No
-					
010	2835350-0000		1	ADJUSTING NUT	
020	2835351-0000		1	ADJUSTING SCREW	
030	2848828-0000		1	CLAMP BLOCK	
040	2848829-0000		1	PIVOT AXLE	
050	2848830-0000		1	GUIDE RAIL	
060	2848831-0000		1	END WASHER	
070	2848832-0000		1	BEARING PLATE	
080	2885386-0000		1	BRACKET	
090	2946729-0000		1	POINTER	
300	90600-3713		1	SCALE, 90600-3713	
310	90600-0429		4	SLIDER, WM-01-20	
320	90600-0431		4	BUSHING INSERT, J200UMO-01-20	
330	90600-3713		1	SCALE, 90600-3713	
500	312105-0364		2	SCREW M6S ISO 4017 M6X10 A480	
510	312105-0451		2	SCREW M6S ISO 4017 M8X20 A480	
520	312105-0457		8	SCREW M6S ISO 4014 M8X35 A480	
530	312105-0463		5	SCREW M6S ISO 4014 M8X60 A480	
540	312105-0532		2	SCREW M6S ISO 4017 M12X20 A480	
550	312115-0451		4	SCREW ISO4762 M8X20 A4 80	
560	312115-0455		4	SCREW ISO4762 M8X30 A4 80	
570	312115-0501		4	SCREW ISO4762 M10X50 A4 80	
580	315105-0165		5	WASHER BRB 8,4X16 RFR	
590	315105-0178		2	WASHER BRB 13X24 RFR	
600	315106-0186		2	WASHER ISO 7089-16-200 HV A4	
610	315751-0113		2	RETAINING RING FOR SHAFT DIN 471 16 SS	
620	321133-0224		1	BUSHING, 16X18X20 MM	

Pos	Part No	UN	Qty	Description	Page No

ADJUSTMENT BRACKET

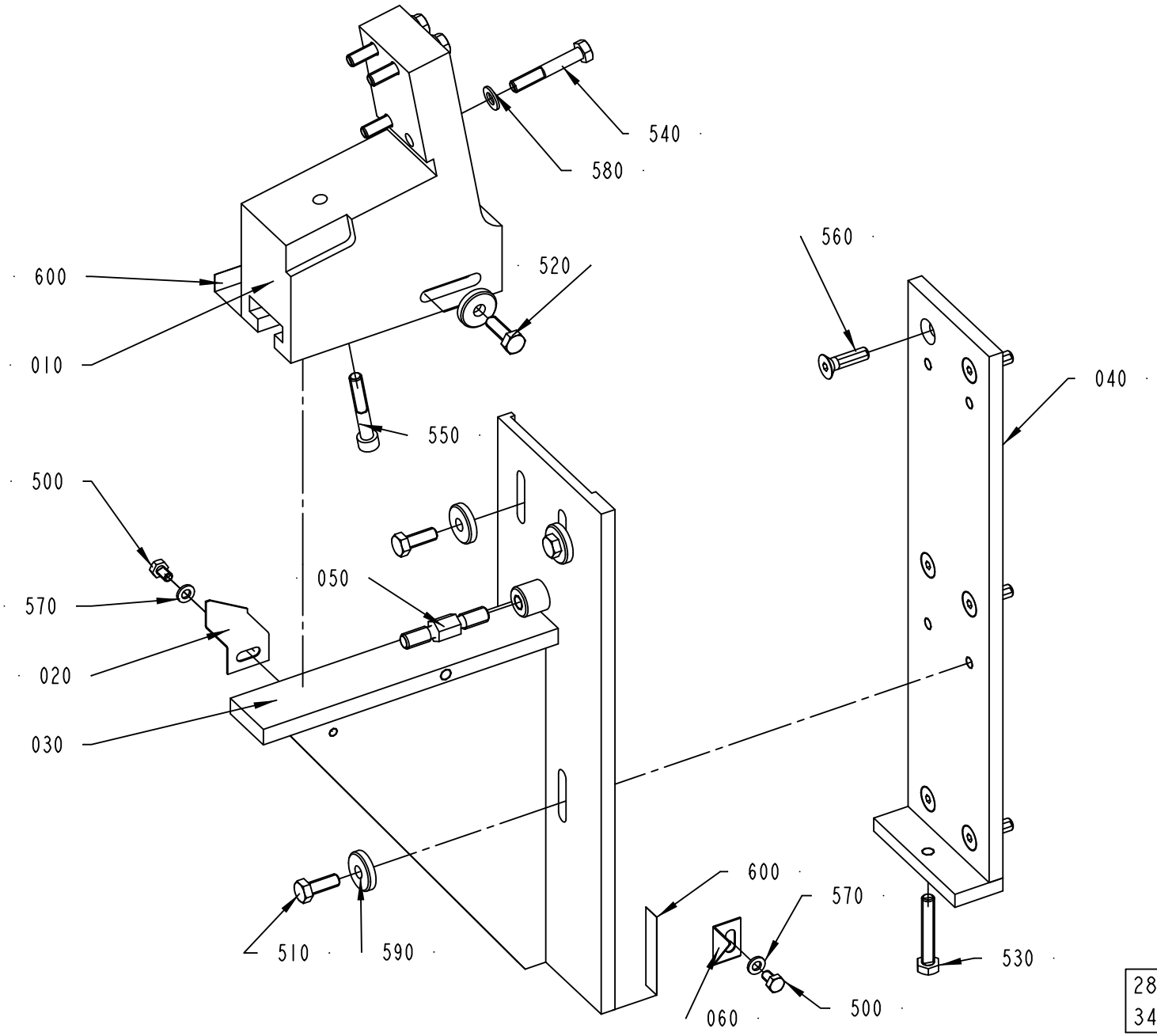

ECM: 354983 - 20081009
Group number: 2893440-0100
Assembly Drawing: 2893440-1_1_AA

Pos	Part No	UN	Qty	Description	Page No
-					
010	2893442-0000		1	ANGLE BRACKET	
020	2893443-0000		1	SCALE POINTER	
030	2893444-0000		1	ADJUSTMENT BRACKET	
040	2893445-0000		1	SPACER PIECE	
050	2904847-0000		1	ADJUSTING SCREW	
060	2904848-0000		1	SCALE POINTER	
500	312105-0364		2	SCREW M6S ISO 4017 M6X10 A480	
510	312105-0452		4	SCREW M6S ISO 4017 M8X22 A480	
520	312105-0453		2	SCREW M6S ISO 4017 M8X25 A480	
530	312109-0461		1	SCREW M6S ISO 4017 M8X50 A480	
540	312105-0461		4	SCREW M6S ISO 4014 M8X50 A480	
550	312115-0461		1	SCREW ISO4762 M8X50 A4 80	
560	312155-0455		6	SCREW DIN 7991 MF6S M8X30 A4 70	
570	315105-0153		2	WASHER BRB 6,4X12 RFR	
580	315105-0165		4	WASHER BRB 8,4X16 RFR	
590	315125-0165		6	WASHER TBRSB 8,4X26X5 A4	
600	90458-2779		2	SCALE , 0-1000MM ADHESIVE	

Pos	Part No	UN	Qty	Description	Page No

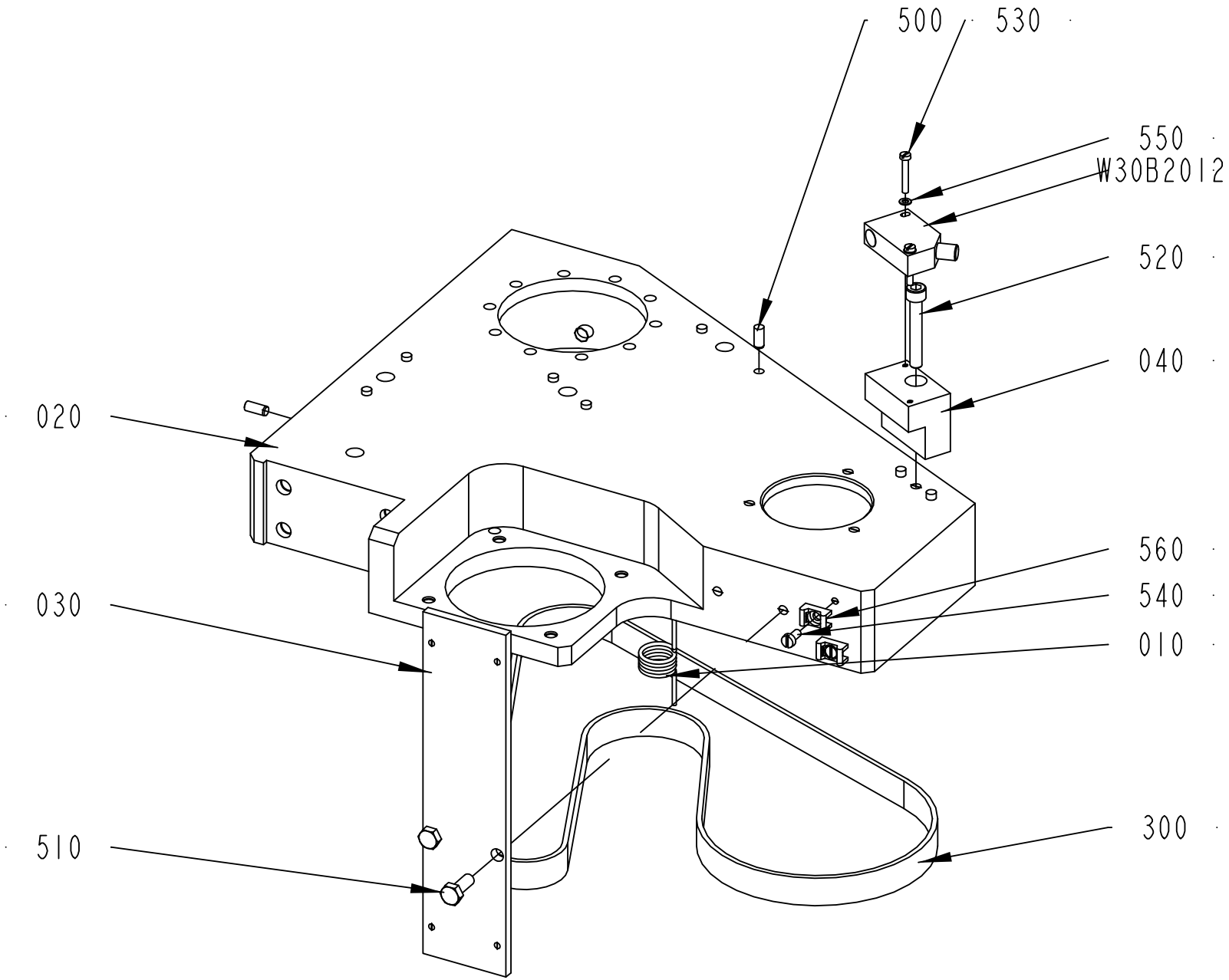

2829433-1
337991

ECM: 354950 - 20081009
Group number: 2829433-0100
Assembly Drawing: 2829433-1_1_AA

This list covers pages from 1-52 to 1-55

Pos	Part No	UN	Qty	Description	Page No
TBA, TB (See drawing on page: 1-52)					
030	2848834-0000		1	HOSE HOLDER	
510	312105-0368		2	SCREW M6S ISO 4017 M6X16 A480	
TCA (See drawing on page: 1-54)					
050	2893434-0000		1	COVER	
510	312105-0327		2	SCREW M6S ISO 4017 M5X12 A480	
570	315105-0146		2	WASHER BRB 5,3X10 RFR	
Common Parts					
010	595873-0000		1	TURN SPRING	
020	2848825-0000		1	FRAME	
040	2856544-0000		1	BRACKET	
300	90417-0417		1	TIMING BELT AT5 1075X16 MM	
500	311103-0306		10	PARALLEL PIN ISO 2338 5M6X12 A1	
520	312115-0378		1	SCREW ISO4762 M6X40 A4 80	
530	312125-0230		2	SCREW ISO 1207 M3X20 A4	
540	312125-0287		2	SCREW ISO 1207 M4X8 A4	
550	315105-0124		2	WASHER BRB 3,2X6 RFR	
560	352113-0205		2	ANCHOR PLATES FOR STRIPS, TYPE TM2S8-C10	
W30B2012	90459-2409		1	INDUCTIVE SWITCH IN-3002-BPKG/AS	

Pos	Part No	UN	Qty	Description	Page No

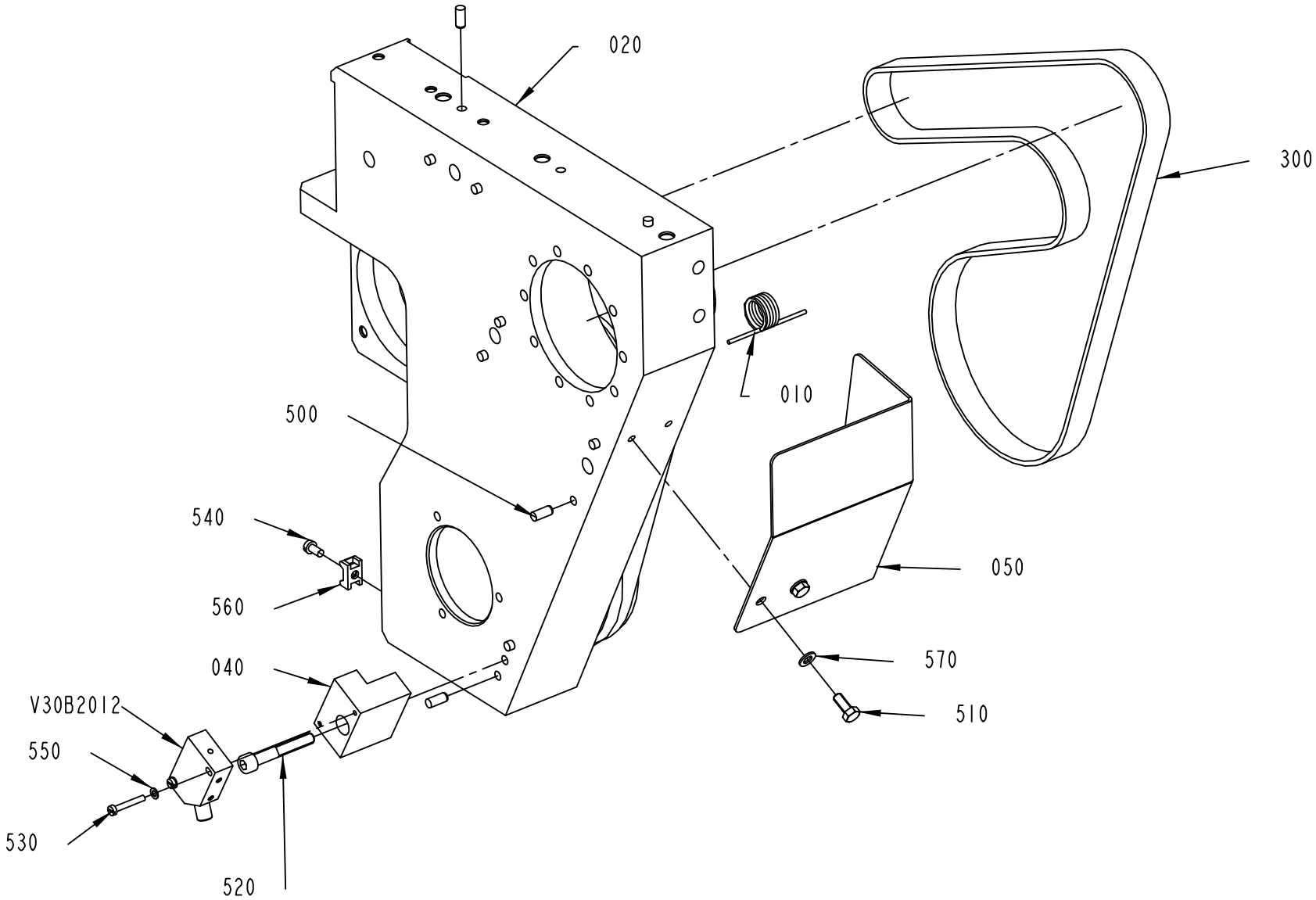

2829433-2
354939

ECM: 354950 - 20081009
Group number: 2829433-0100
Assembly Drawing: 2829433-2_1_AA

This list covers pages from 1-52 to 1-55

Pos	Part No	UN	Qty	Description	Page No
TBA, TB (See drawing on page: 1-52)					
030	2848834-0000		1	HOSE HOLDER	
510	312105-0368		2	SCREW M6S ISO 4017 M6X16 A480	
TCA (See drawing on page: 1-54)					
050	2893434-0000		1	COVER	
510	312105-0327		2	SCREW M6S ISO 4017 M5X12 A480	
570	315105-0146		2	WASHER BRB 5,3X10 RFR	
Common Parts					
010	595873-0000		1	TURN SPRING	
020	2848825-0000		1	FRAME	
040	2856544-0000		1	BRACKET	
300	90417-0417		1	TIMING BELT AT5 1075X16 MM	
500	311103-0306		10	PARALLEL PIN ISO 2338 5M6X12 A1	
520	312115-0378		1	SCREW ISO4762 M6X40 A4 80	
530	312125-0230		2	SCREW ISO 1207 M3X20 A4	
540	312125-0287		2	SCREW ISO 1207 M4X8 A4	
550	315105-0124		2	WASHER BRB 3,2X6 RFR	
560	352113-0205		2	ANCHOR PLATES FOR STRIPS, TYPE TM2S8-C10	
W30B2012	90459-2409		1	INDUCTIVE SWITCH IN-3002-BPKG/AS	

Pos	Part No	UN	Qty	Description	Page No

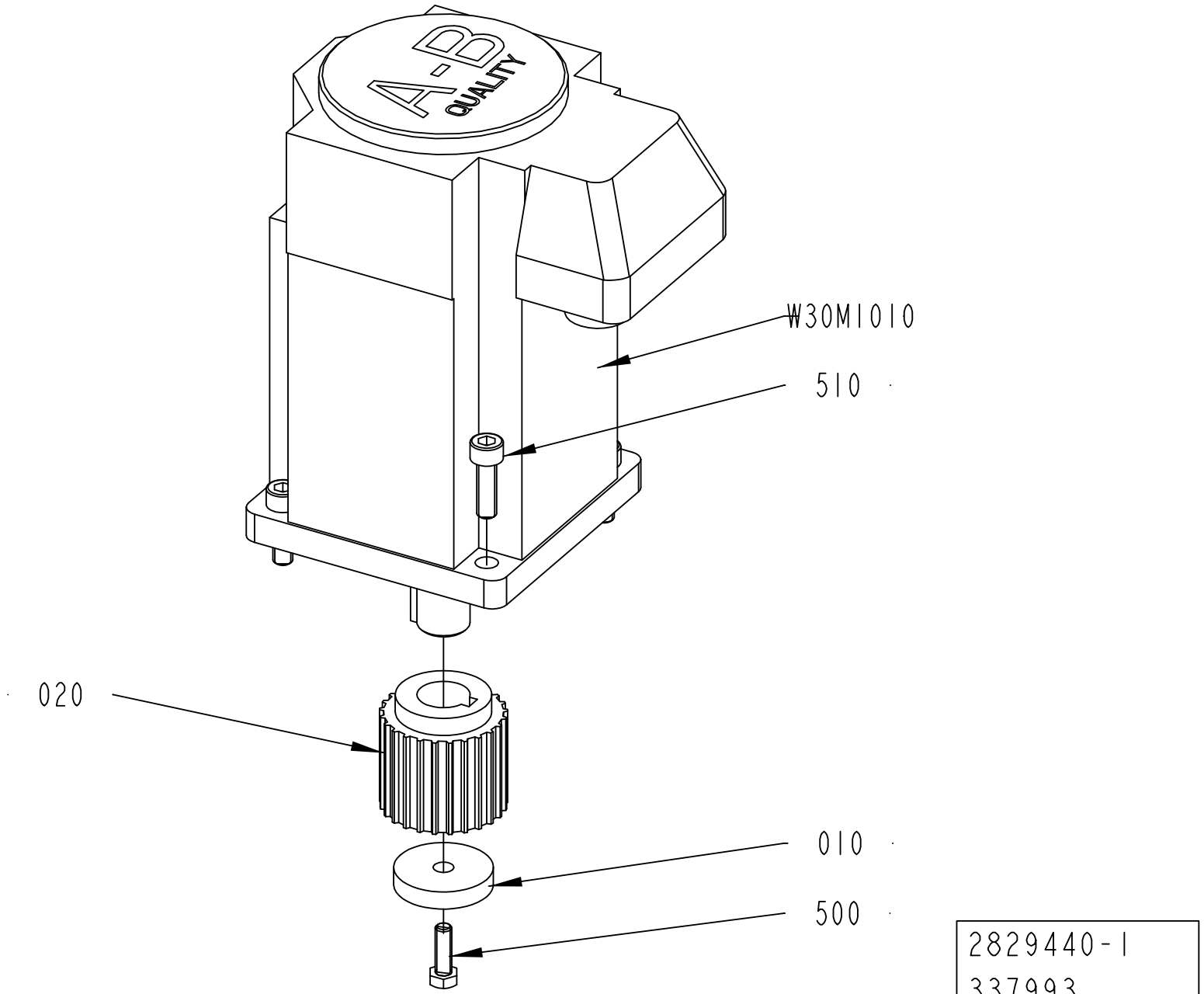
A-B
QUALITY
W30M1010
510
020
010
500
2829440-1
337993

ECM: 337993 - 20080303
Group number: 2829440-0100
Assembly Drawing: 2829440-1_1_AA

Pos	Part No	UN	Qty	Description	Page No
-					
010	595772-0000		1	WASHER	
020	2910476-0000		1	PULLEY	
500	312105-0329		1	SCREW M6S ISO 4017 M5X16 A480	
510	312115-0370		4	SCREW ISO4762 M6X20 A4 80	
W30M1010	90459-2579		1	SERVO MOTOR MPL-B320P-SJ22AA	

Pos	Part No	UN	Qty	Description	Page No

BELT TIGHTENER

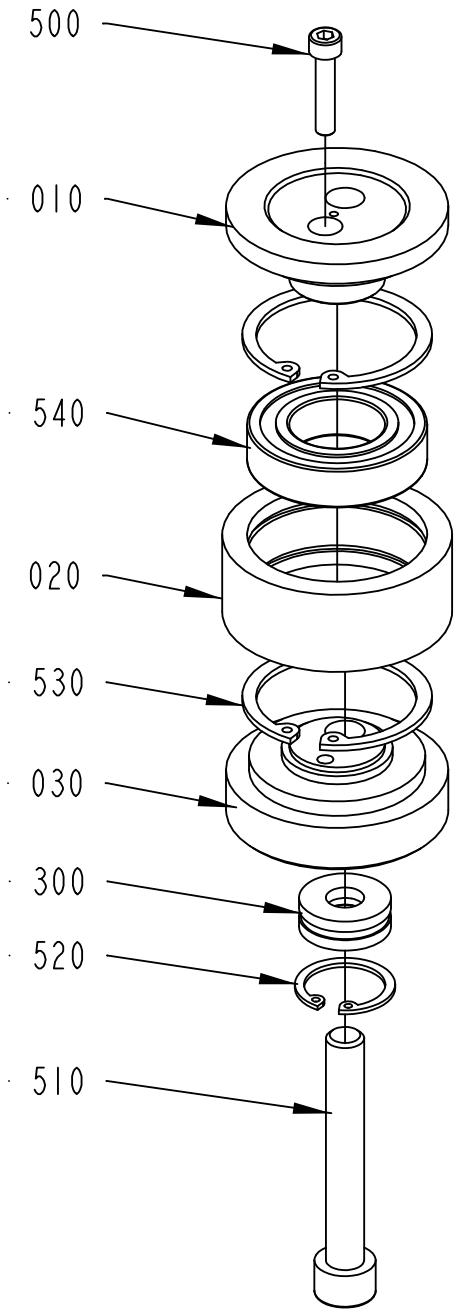

2829441-1
337993

ECM: 337993 - 20080303
Group number: 2829441-0100
Assembly Drawing: 2829441-1_1_AA

Pos	Part No	UN	Qty	Description	Page No
-					
010	595773-0000		1	BEARING HOLDER	
020	595774-0000		1	BEARING SLEEVE	
030	2950966-0000		1	LID	
300	90600-4713		1	THRUST BALL BEARING, 11X24X9 MM	
500	312115-0333		1	SCREW ISO4762 M5X25 A4 80	
510	312115-0505		1	SCREW ISO4762 M10X70 A4 80	
520	315753-0119		1	RETAINING RING FOR BORE DIN 472 25 A2	
530	315753-0130		2	RETAINING RING FOR BORE DIN 472 47 A2	
540	321308-0205		1	BALL BEARING, 25X47X12MM	

Pos	Part No	UN	Qty	Description	Page No

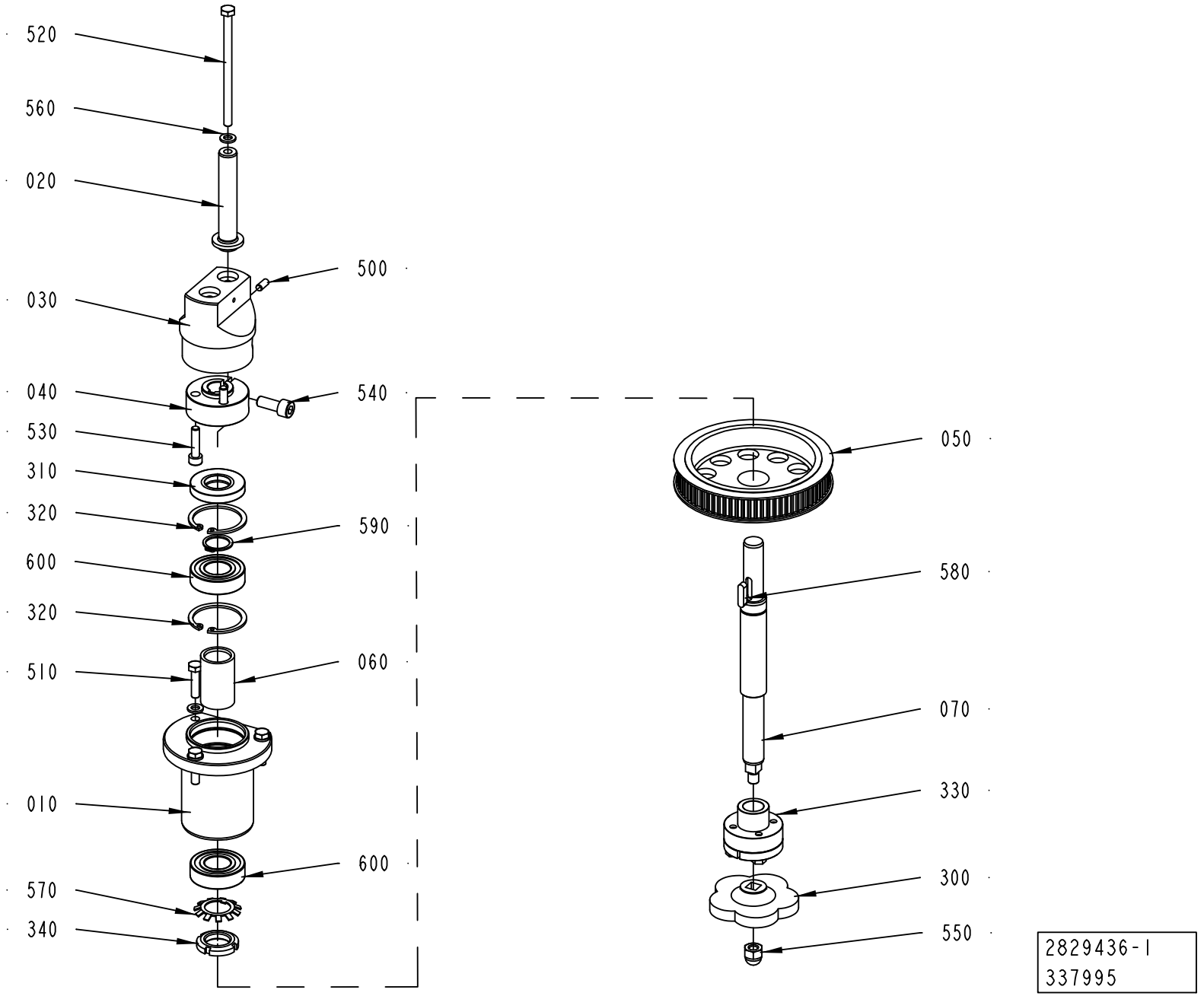
520
560
020
030
040
530
310
320
600
320
510
010
570
340
500
540
590
060
600
050
580
070
330
300
550
2829436-1
337995

ECM: 337995 - 20080303
Group number: 2829436-0100
Assembly Drawing: 2829436-1_1_AA

Pos	Part No	UN	Qty	Description	Page No
-					
010	2848826-0000		1	BEARING SLEEVE	
020	2856540-0000		1	AXLE PIN	
030	2856541-0000		1	ECCENTRIC	
040	2856542-0000		1	CLAMPING RING	
050	2856545-0000		1	PULLEY	
060	2856562-0000		1	SPACER SLEEVE	
070	2950967-0000		1	SHAFT	
300	90051-0079		1	KNOB, SQUARE HOLE, NO. 8306 1304	
310	90091-0446		1	RADIAL SEAL 20X42X7 MM DUST LIP	
320	90141-0020		2	RETAINING RING FOR BORE DIN 472 42 A2	
330	90600-0454		1	CLAMPING ELEMENT WITH SLEEVE, 16X24 MM	
340	90600-1766		1	NUT ROUND WITH SLOTS M20X1 SS	
500	311103-0306		1	PARALLEL PIN ISO 2338 5M6X12 A1	
510	312105-0372		3	SCREW M6S ISO 4017 M6X25 A480	
520	312105-0390		1	SCREW M6S ISO 4014 M6X100 A480	
530	312115-0372		2	SCREW ISO4762 M6X25 A4 80	
540	312115-0451		1	SCREW ISO4762 M8X20 A4 80	
550	312705-0318		1	NUT HEX. DOMED CAP MHM-6 M8 A280	
560	315105-0153		4	WASHER BRB 6,4X12 RFR	
570	90600-4710		1	LOCK WASHER MB 4 D=20 H=1 SS	
580	315701-0201		1	PARALLEL KEY W. ROUND ENDS 5X5X20 MM	
590	315751-0116		1	RETAINING RING FOR SHAFT DIN 471 20 SS	
600	321308-0204		2	BALL BEARING, 20X42X12 MM	

Pos	Part No	UN	Qty	Description	Page No

Tetra Pak

SPC
Spare Parts Catalogue

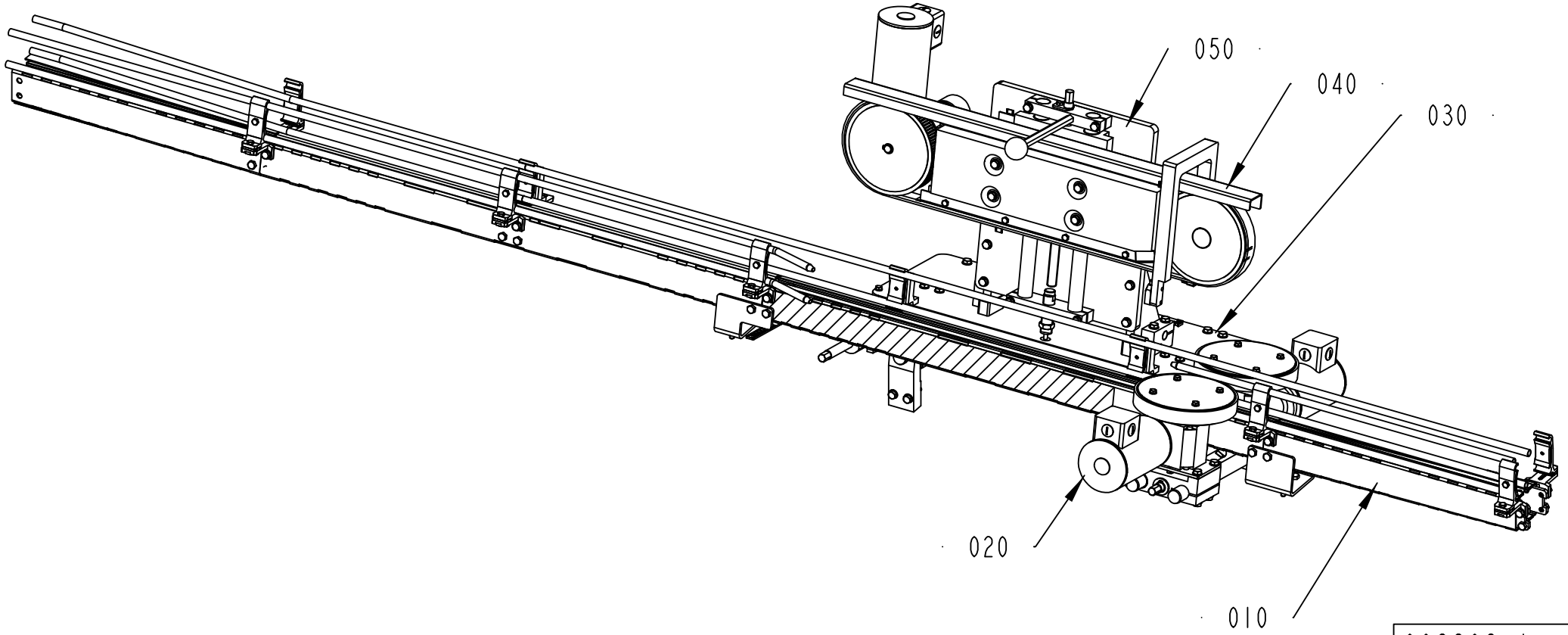

663302-1
315383

ECM: 348382 - 20081009
Group number: 663302-0100
Assembly Drawing: 663302-1_1_AA

This list covers pages from 2-2 to 2-5

Pos	Part No	UN	Qty	Description	Page No
TBA, TB (See drawing on page: 2-2)					
010	2793903-0100		1	CONVEYOR	**2-7**
020	2829393-0100		1	BELT BRAKE	**2-21**
030	2829416-0100		1	ADJUSTMENT PLATE	**2-23**
040	2924675-0100		1	TOP SUPPORT	**2-25**
050	2929774-0100		1	HEIGHT ADJUSTMENT	**2-33**
TCA (See drawing on page: 2-4)					
010	2933980-0100		1	CONVEYOR	**2-35**
020	2926070-0100		1	PACKAGE TRANSFER	**2-47**
030	2926075-0100		1	ADJUSTMENT PLATE	**2-49**
040	2957705-0100		1	SIDE ADJUSTER	**2-51**

Pos	Part No	UN	Qty	Description	Page No

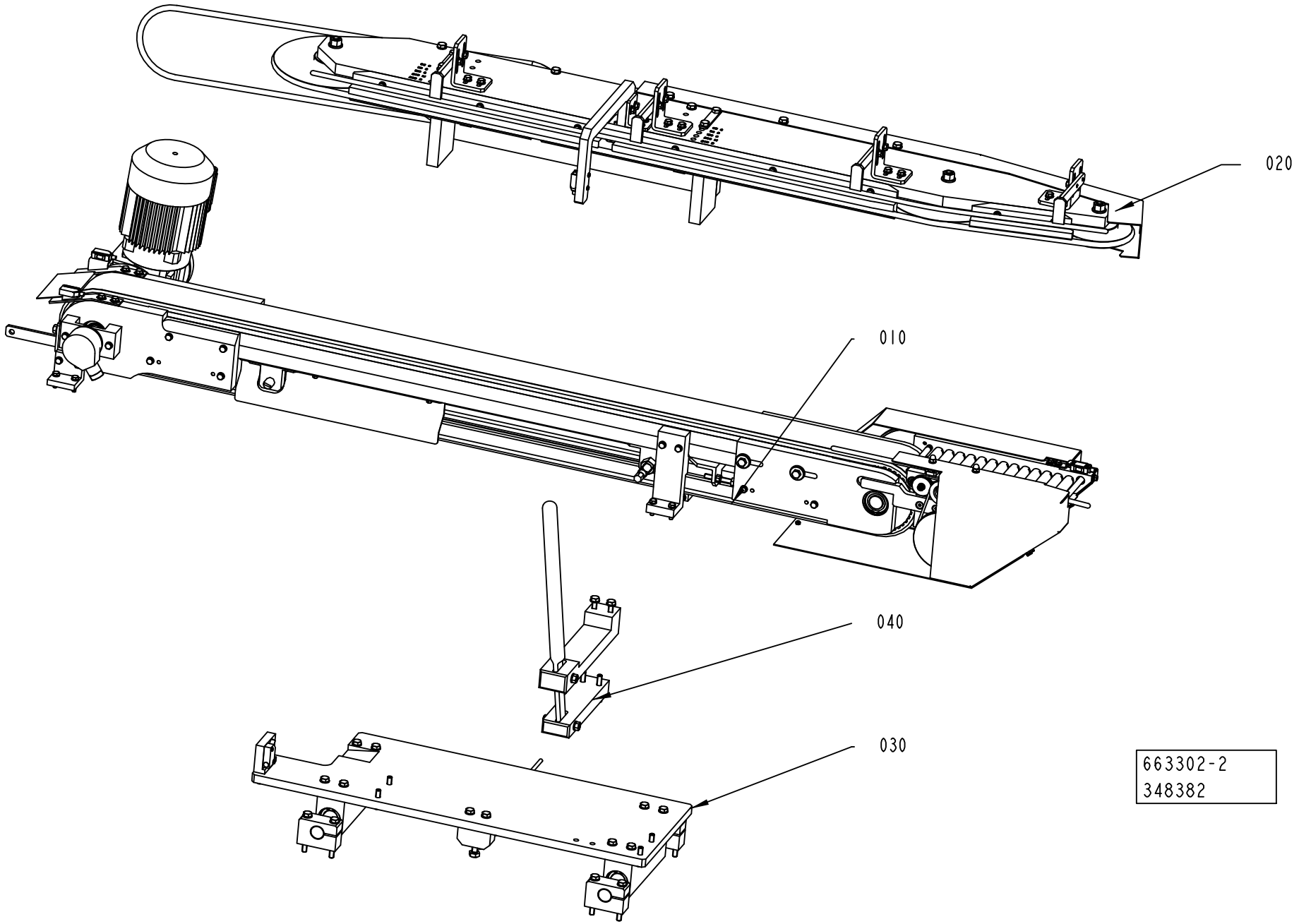
020
010
040
030
663302-2
348382

ECM: 348382 - 20081009
Group number: 663302-0100
Assembly Drawing: 663302-2_1_AA

This list covers pages from 2-2 to 2-5

Pos	Part No	UN	Qty	Description	Page No
TBA, TB (See drawing on page: 2-2)					
010	2793903-0100		1	CONVEYOR	**2-7**
020	2829393-0100		1	BELT BRAKE	**2-21**
030	2829416-0100		1	ADJUSTMENT PLATE	**2-23**
040	2924675-0100		1	TOP SUPPORT	**2-25**
050	2929774-0100		1	HEIGHT ADJUSTMENT	**2-33**
TCA (See drawing on page: 2-4)					
010	2933980-0100		1	CONVEYOR	**2-35**
020	2926070-0100		1	PACKAGE TRANSFER	**2-47**
030	2926075-0100		1	ADJUSTMENT PLATE	**2-49**
040	2957705-0100		1	SIDE ADJUSTER	**2-51**

Pos	Part No	UN	Qty	Description	Page No

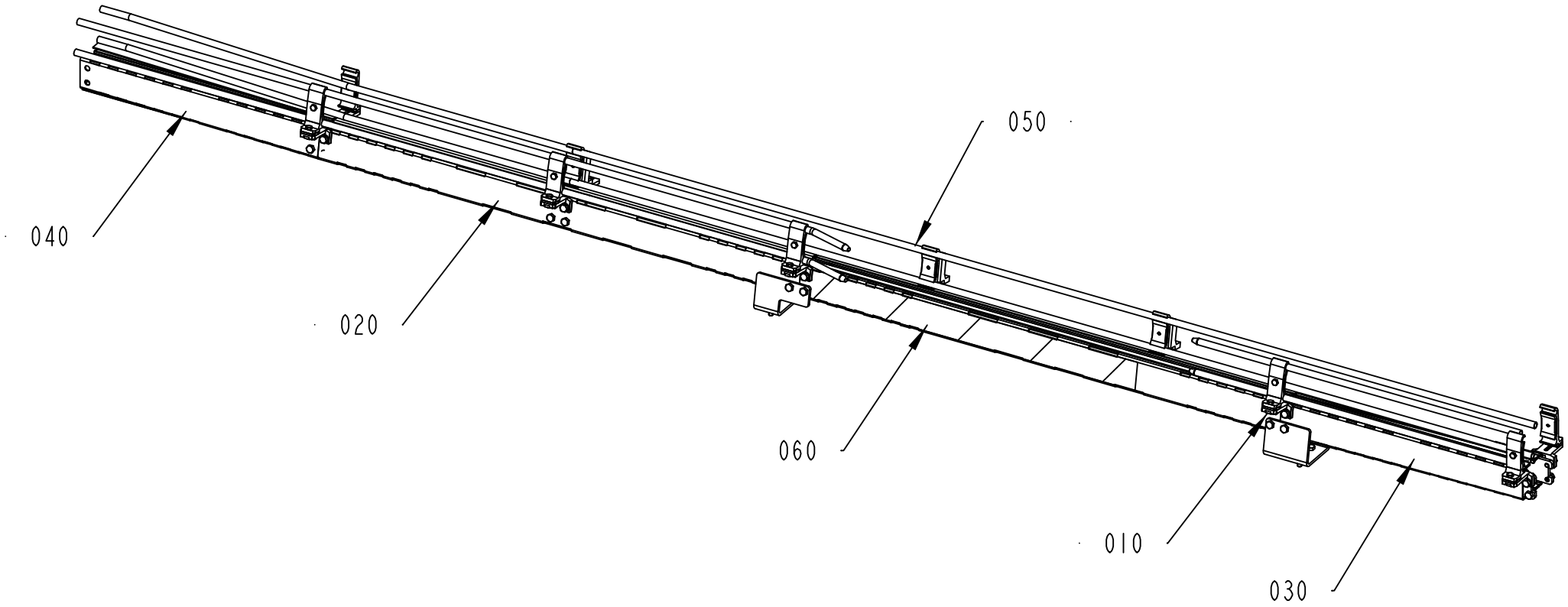

2793903-1
328655

ECM: 328655 - 20080303
Group number: 2793903-0100
Assembly Drawing: 2793903-1_1_AA

Pos	Part No	UN	Qty	Description	Page No
-					
010	1550743-0200		7	RAIL HOLDER	**2-9**
020	2561273-0103		1	CONVEYOR BODY	**2-11**
030	2835380-0100		1	CONVEYOR BODY	**2-13**
040	2835381-0100		1	CONVEYOR	**2-15**
050	2845848-0100		1	SUPPORT RAIL	**2-17**
060	2901712-0100		1	CONVEYOR BODY	**2-19**

Pos	Part No	UN	Qty	Description	Page No

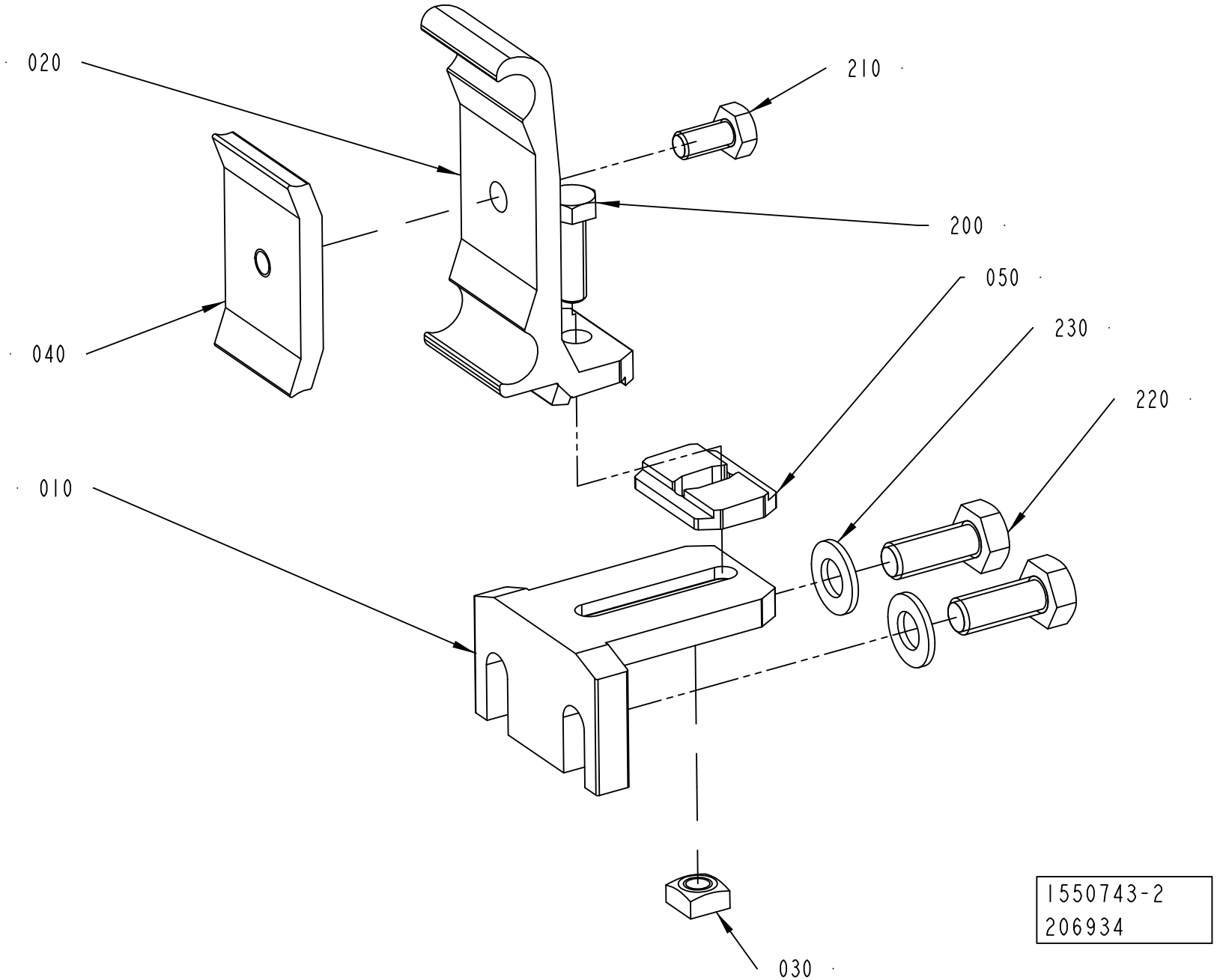
020
210
200
050
230
040
220
010
030
1550743-2
206934

ECM: 206965 - 20050602
Group number: 1550743-0200
Assembly Drawing: 1550743-2_1_AA

Pos	Part No	UN	Qty	Description	Page No
-					
010	1550772-0000		1	HOLDER	
020	2699437-0000		1	RAIL HOLDER	
030	1359565-0000		1	NUT	
040	1366727-0000		1	CLAMP	
050	2699436-0000		1	SPACER	
200	312105-0370		1	SCREW M6S ISO 4017 M6X20 A480	
210	312105-0366		1	SCREW M6S ISO 4017 M6X12 A480	
220	312105-0451		2	SCREW M6S ISO 4017 M8X20 A480	
230	315105-0165		2	WASHER BRB 8,4X16 RFR	

Pos	Part No	UN	Qty	Description	Page No

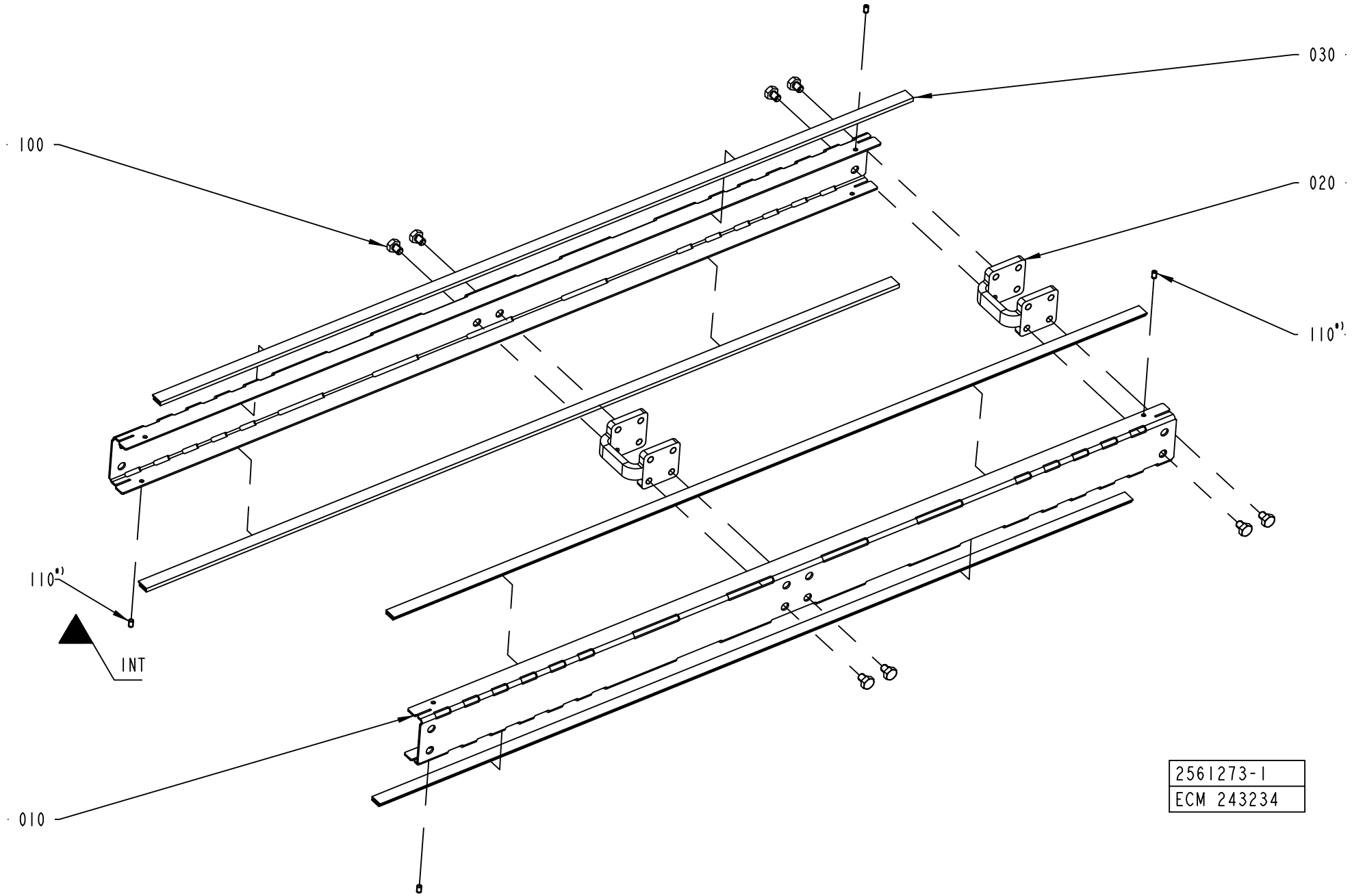
030
100
020
110*)
110*)
INT
010
2561273-1
ECM 243234

ECM: 243234 -
Group number: 2561273-0103
Assembly Drawing: 2561273-1_1_AE

Pos	Part No	UN	Qty	Description	Page No
L 1000					
010	1550695-0003		2	SIDE PLATE	
020	2561206-0000		2	SPACER	
030	1550595-9960		4	SLIDING STRIP	
100	90459-4735		8	SCREW M6S ISO 4017 M8X10 A480	
Common Parts					
110	90459-7293		6	SET SCREW DIN 551M5X8 PA66	

Pos	Part No	UN	Qty	Description	Page No

Machine Type | Group Description | Used-In | Group Number | Page No

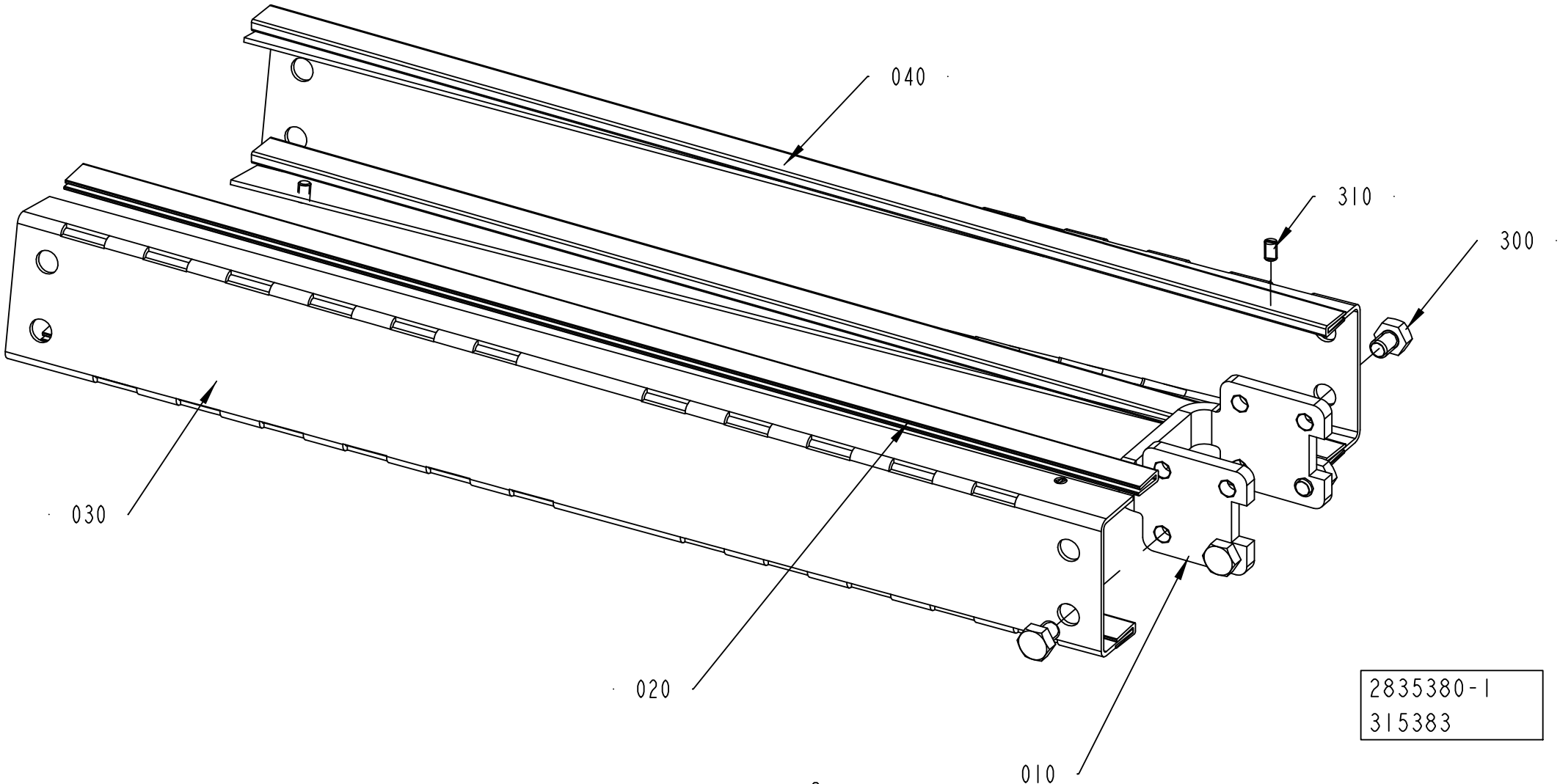

Conveyor section twisted 10°.

ECM: 328014 - 20080303
Group number: 2835380-0100
Assembly Drawing: 2835380-1_1_AA

Pos	Part No	UN	Qty	Description	Page No
-					
010	2561206-0000		1	SPACER	
020	2699305-0496		4	SLIDING STRIP	
030	2799922-0000		1	SIDE PLATE	
040	2799923-0000		1	SIDE PLATE	
300	90459-4735		4	SCREW M6S ISO 4017 M8X10 A480	
310	90459-7293		4	SET SCREW DIN 551M5X8 PA66	

Pos	Part No	UN	Qty	Description	Page No

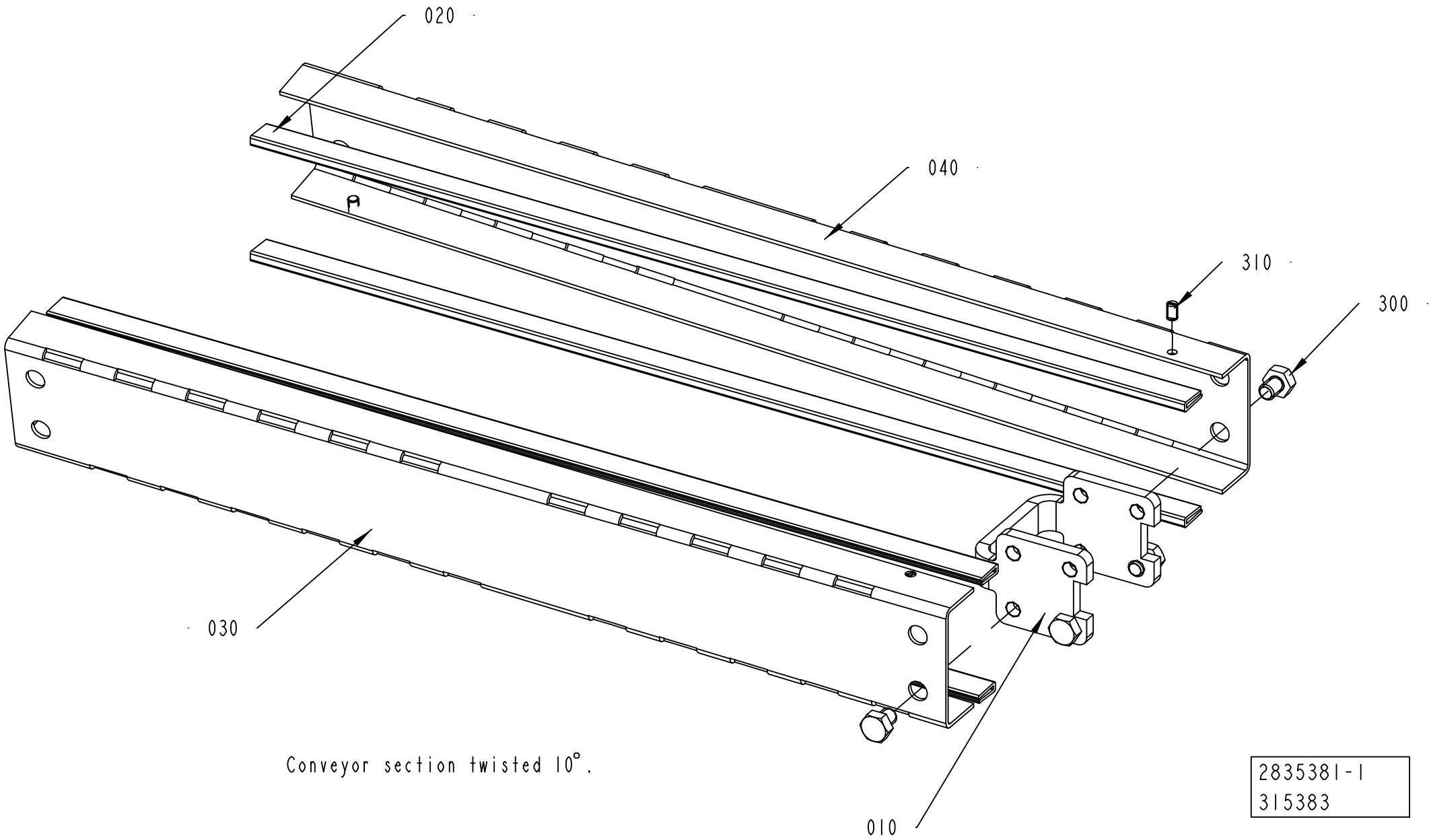
020
040
310
300
030
010
Conveyor section twisted 10°.
2835381-1
315383

ECM: 327360 - 20080303
Group number: 2835381-0100
Assembly Drawing: 2835381-1_1_AA

Pos	Part No	UN	Qty	Description	Page No
-					
010	2561206-0000		1	SPACER	
020	2699305-0496		4	SLIDING STRIP	
030	2799924-0000		1	SIDE PLATE	
040	2804855-0000		1	SIDE PLATE	
300	90459-4735		4	SCREW M6S ISO 4017 M8X10 A480	
310	90459-7293		4	SET SCREW DIN 551M5X8 PA66	

Pos	Part No	UN	Qty	Description	Page No

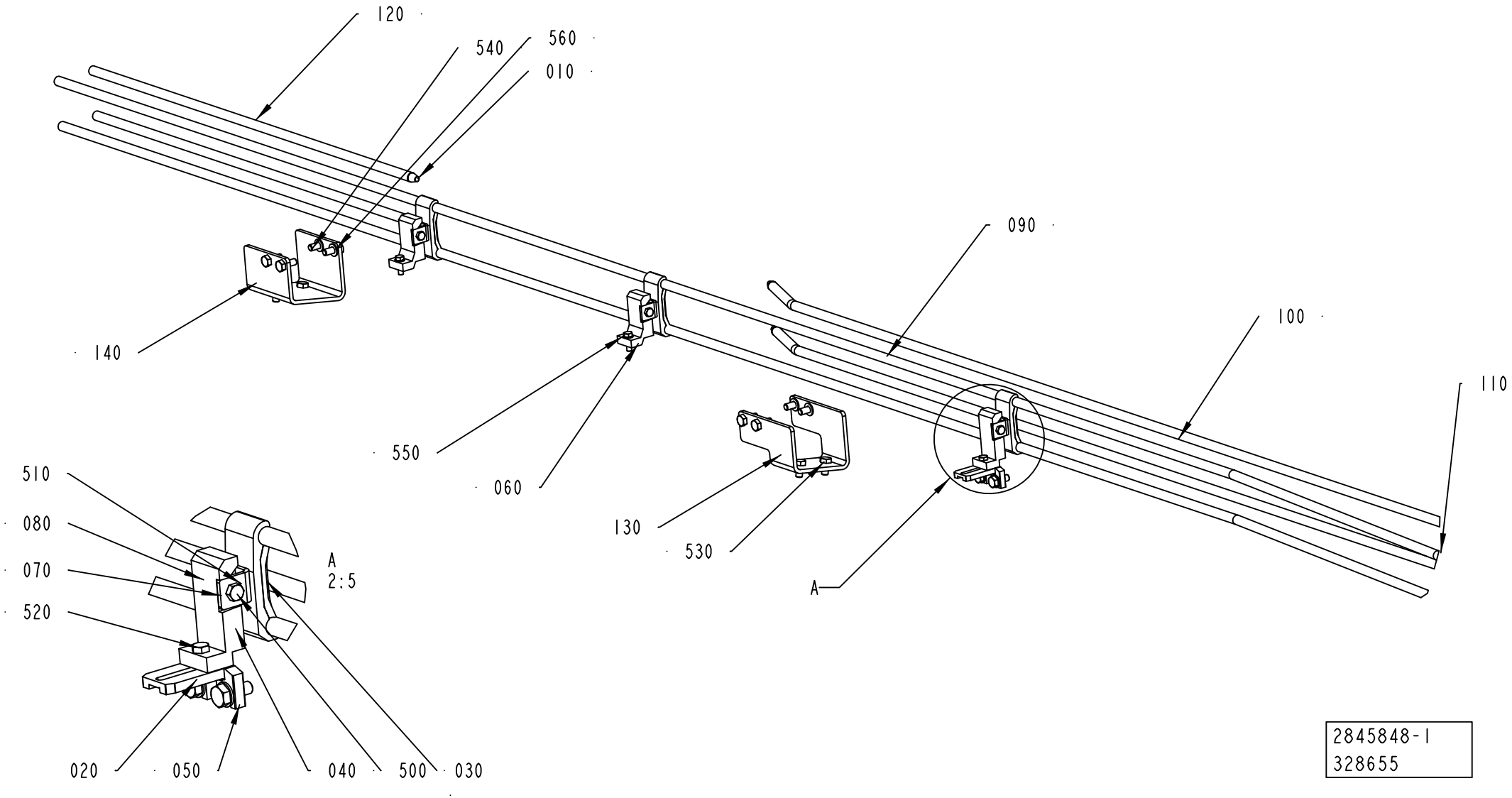
120
540
560
010
140
090
100
110
550
060
130
530
A
510
080
070
520
A
2:5
020
050
040
500
030
2845848-1
328655

ECM: 328655 - 20080303
Group number: 2845848-0100
Assembly Drawing: 2845848-1_1_AA

Pos	Part No	UN	Qty	Description	Page No
-					
010	540169-0000		4	DOWEL	
020	1359565-0000		1	NUT	
030	1366727-0000		3	CLAMP	
040	1366750-0000		3	HOLDER	
050	1550772-0000		1	HOLDER	
060	2835388-0000		2	HOLDER	
070	2845853-0000		3	FASTENING BRACKET	
080	2845854-0000		1	HOLDER	
090	2845855-0000		2	PIPE	
100	2845856-0000		2	PIPE	
110	2845857-0000		2	PIPE	
120	2845862-0000		2	PIPE	
130	2885387-0000		1	BRACKET	
140	2885388-0000		1	BRACKET	
500	312105-0366		3	SCREW M6S ISO 4017 M6X12 A480	
510	312105-0367		3	SCREW M6S ISO 4017 M6X14 A480	
520	312105-0370		3	SCREW M6S ISO 4017 M6X20 A480	
530	312105-0449		4	SCREW M6S ISO 4017 M8X16 A480	
540	312105-0451		10	SCREW M6S ISO 4017 M8X20 A480	
550	315105-0153		2	WASHER BRB 6,4X12 RFR	
560	315105-0165		10	WASHER BRB 8,4X16 RFR	

Pos	Part No	UN	Qty	Description	Page No

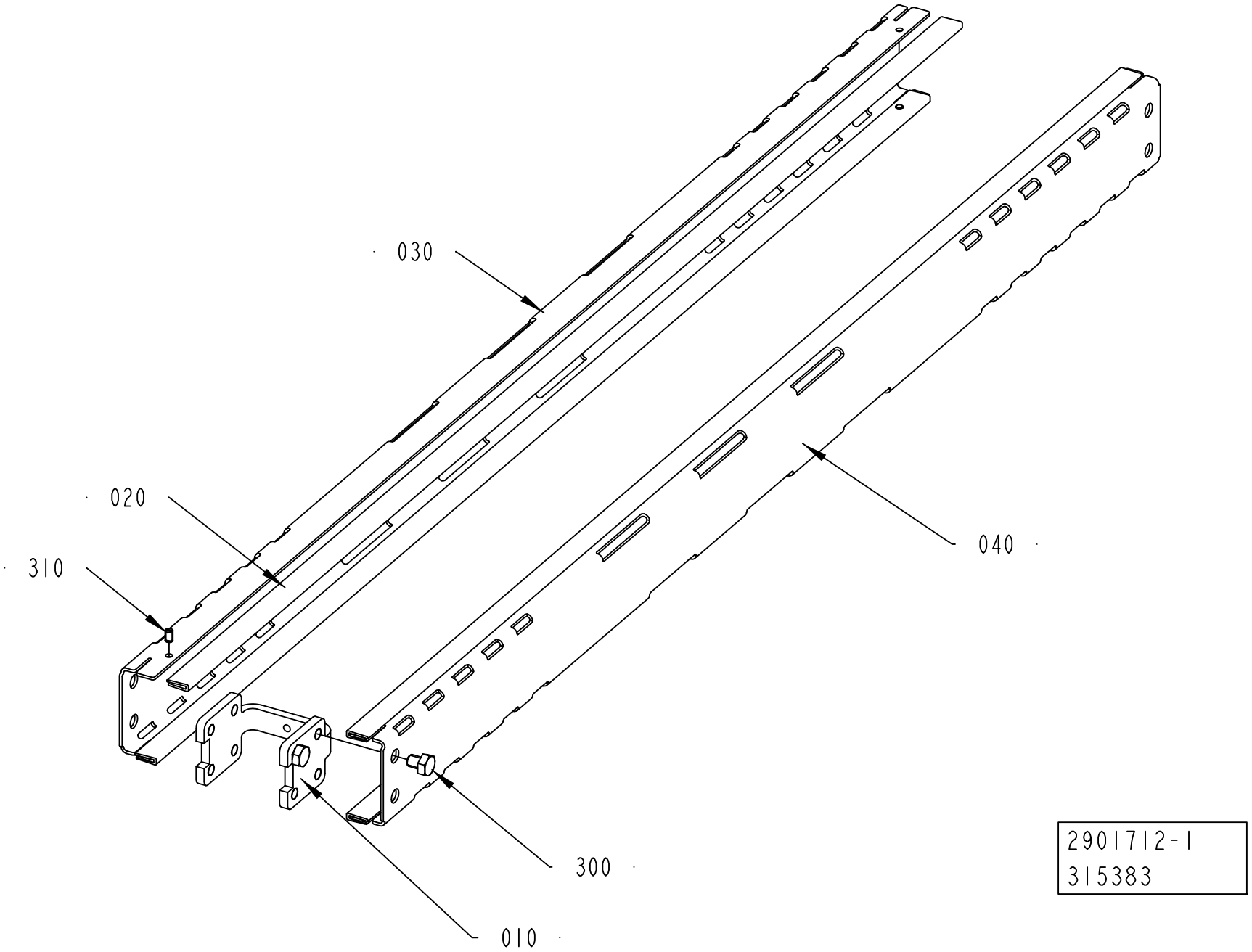
030
020
310
040
300
010
2901712-1
315383

ECM: 336305 - 20080303
Group number: 2901712-0100
Assembly Drawing: 2901712-1_1_AA

Pos	Part No	UN	Qty	Description	Page No
-					
010	2561206-0000		1	SPACER	
020	2699305-0996		4	SLIDING STRIP	
030	2901713-0000		1	SIDE PLATE	
040	2901714-0000		1	SIDE PLATE	
300	90459-4735		2	SCREW M6S ISO 4017 M8X10 A480	
310	90459-7293		4	SET SCREW DIN 551M5X8 PA66	

Pos	Part No	UN	Qty	Description	Page No

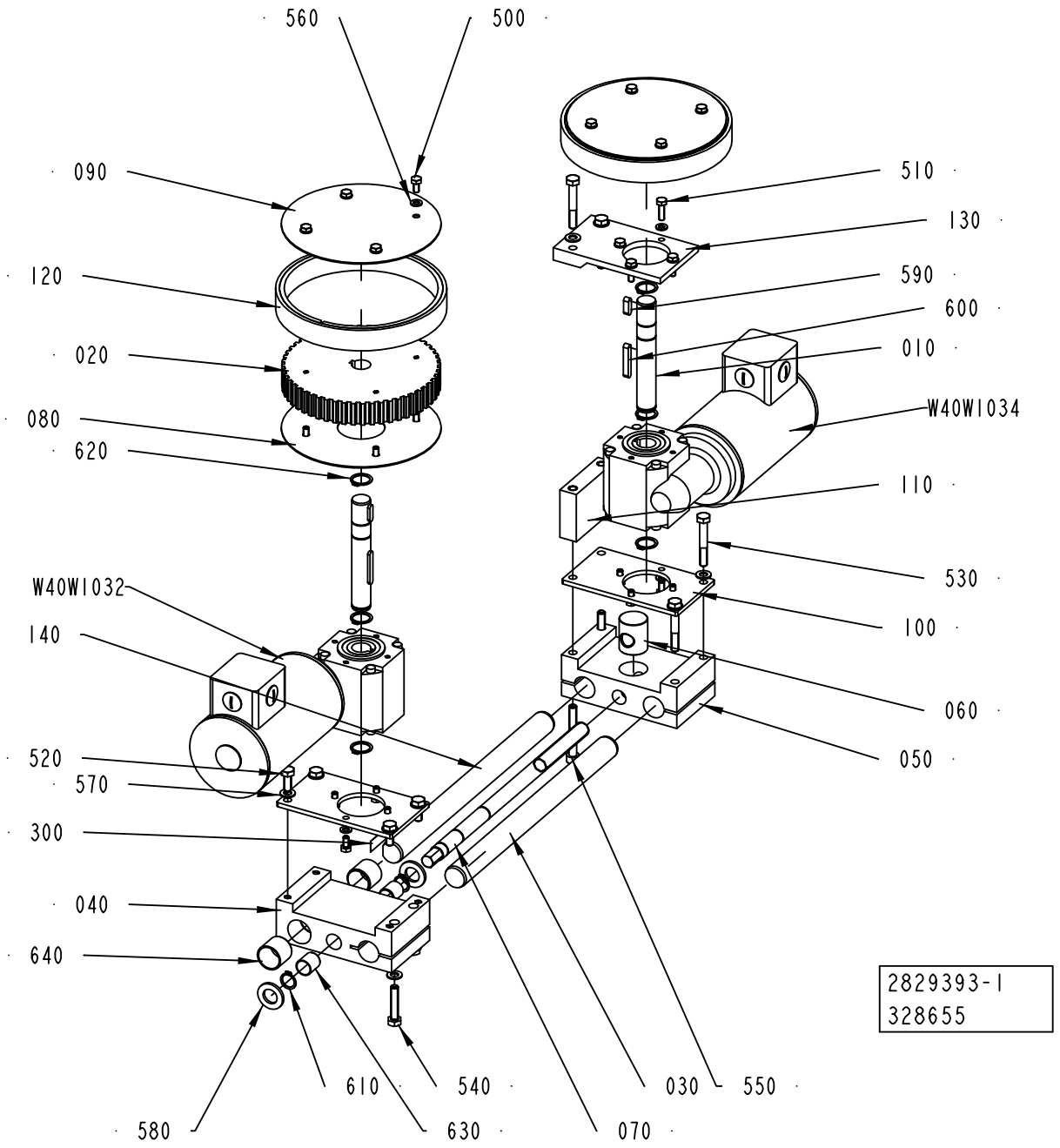
560
500
090
120
020
080
620
W40W1032
140
520
570
300
040
640
580
610
540
630
070
030
550
510
130
590
600
010
W40W1034
110
530
100
060
050
2829393-1
328655

ECM: 328655 - 20080303
Group number: 2829393-0100
Assembly Drawing: 2829393-1_1_AA

Pos	Part No	UN	Qty	Description	Page No
-					
010	2829397-0000		2	SHAFT	
020	2829400-0000		2	TOOTHED PULLEY	
030	2835345-0000		1	SHAFT	
040	2835347-0000		1	MOTOR BRACKET	
050	2835348-0000		1	BRACKET	
060	2835350-0000		1	ADJUSTING NUT	
070	2835351-0000		1	ADJUSTING SCREW	
080	2835352-0000		2	GABLE PLATE	
090	2835353-0000		2	GABLE PLATE	
100	2835354-0000		2	MOUNTING SHEET	
110	2835355-0000		1	BRACKET	
120	90600-4507		2	TIMING BELT T10/530X25	
130	2835379-0000		1	MOUNTING SHEET	
140	2835392-0000		1	SHAFT	
300	90458-2779		1	SCALE , 0-1000MM ADHESIVE	
500	312105-0366		24	SCREW M6S ISO 4017 M6X12 A480	
510	312105-0370		4	SCREW M6S ISO 4017 M6X20 A480	
520	312105-0451		4	SCREW M6S ISO 4017 M8X20 A480	
530	312105-0462		4	SCREW M6S ISO 4014 M8X55 A480	
540	312109-0459		2	SCREW M6S ISO 4017 M8X40 A480	
550	312115-0463		2	SCREW ISO4762 M8X60 A4 80	
560	315105-0153		28	WASHER BRB 6,4X12 RFR	
570	315105-0165		10	WASHER BRB 8,4X16 RFR	
580	315106-0186		2	WASHER ISO 7089-16-200 HV A4	
590	315705-0232		2	PARALLEL KEY W. ROUND ENDS 6X6X20 MM	
600	315705-0239		2	PARALLEL KEY W. ROUND ENDS 6X6X40 MM	
610	315751-0113		2	RETAINING RING FOR SHAFT DIN 471 16 SS	
620	315751-0116		6	RETAINING RING FOR SHAFT DIN 471 20 SS	
630	321133-0224		2	BUSHING, 16X18X20 MM	
640	321133-0300		2	BUSHING, 25X28X25 MM	
W40W1032	90600-3210		1	GEARS, WORM MOTOR D9582/SC401-H/1600117	
W40W1034	90600-3210		1	GEARS, WORM MOTOR D9582/SC401-H/1600117	

Pos	Part No	UN	Qty	Description	Page No

ADJUSTMENT PLATE

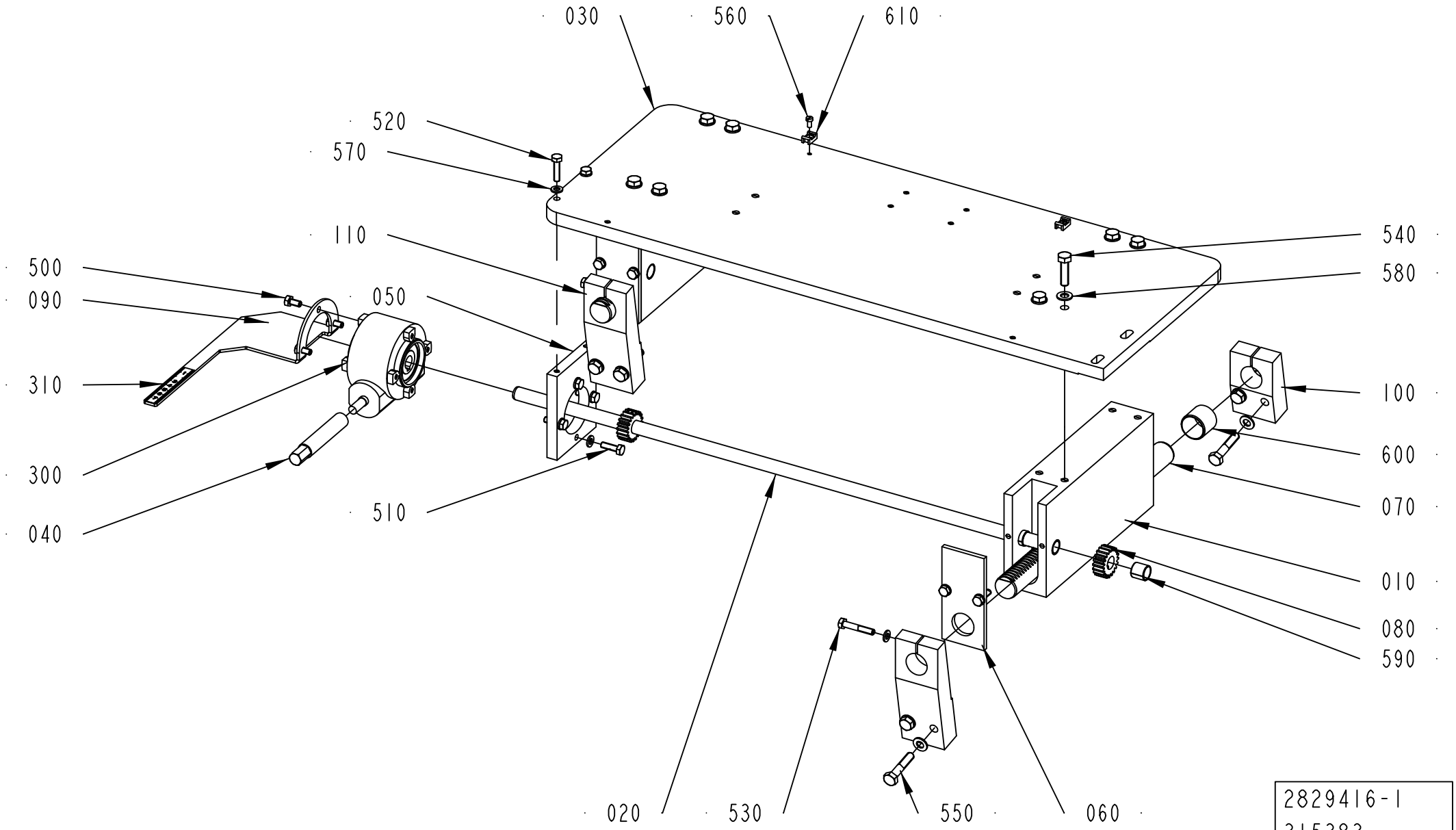

ECM: 328015 - 20080303
Group number: 2829416-0100
Assembly Drawing: 2829416-1_1_AA

Pos	Part No	UN	Qty	Description	Page No
-					
010	2811516-0000		2	BRACKET	
020	2811518-0000		1	SHAFT	
030	2829402-0000		1	PLATE	
040	2835378-0000		1	SHAFT	
050	2835382-0000		1	MOUNTING SHEET	
060	2835390-0000		2	LID	
070	2845859-0000		2	RACK GEAR	
080	2845860-0000		2	GEAR WHEEL	
090	2859418-0000		1	SCALE POINTER	
100	2901721-0000		2	BRACKET	
110	2913339-0000		2	BRACKET	
300	90056-0174		1	WORM GEAR VF 30 P1 70 HS B3	
310	90458-2779		1	SCALE , 0-1000MM ADHESIVE	
500	312105-0366		3	SCREW M6S ISO 4017 M6X12 A480	
510	312105-0370		8	SCREW M6S ISO 4017 M6X20 A480	
520	312105-0372		2	SCREW M6S ISO 4017 M6X25 A480	
530	312105-0376		2	SCREW M6S ISO 4014 M6X35 A480	
540	312105-0455		8	SCREW M6S ISO 4017 M8X30 A480	
550	312105-0459		8	SCREW M6S ISO 4014 M8X40 A480	
560	312125-0287		2	SCREW ISO 1207 M4X8 A4	
570	315105-0153		12	WASHER BRB 6,4X12 RFR	
580	315105-0165		16	WASHER BRB 8,4X16 RFR	
590	90600-4289		4	BEAR. BUSH. WITHOUT FL, 14X16X15 MM	
600	321133-0300		4	BUSHING, 25X28X25 MM	
610	352113-0205		2	ANCHOR PLATES FOR STRIPS, TYPE TM2S8-C10	

Pos	Part No	UN	Qty	Description	Page No

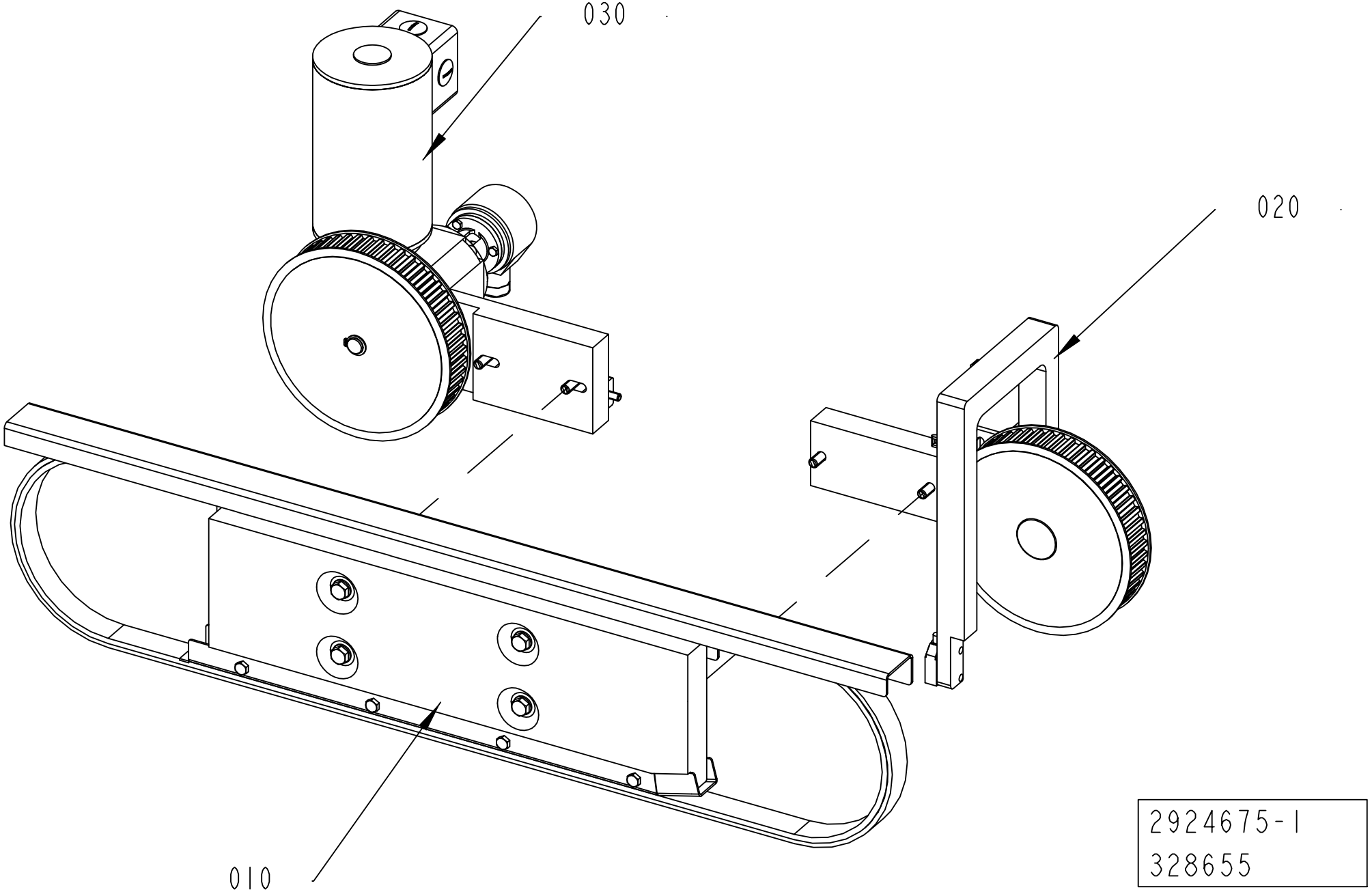
030
020
010
2924675-1
328655

ECM: 335756 - 20080303
Group number: 2924675-0100
Assembly Drawing: 2924675-1_1_AA

Pos	Part No	UN	Qty	Description	Page No
-					
010	2737080-0100		1	SUPPORT BELT	**2-27**
020	2924673-0100		1	WHEEL	**2-29**
030	2924674-0100		1	DRIVE WHEEL	**2-31**

Pos	Part No	UN	Qty	Description	Page No

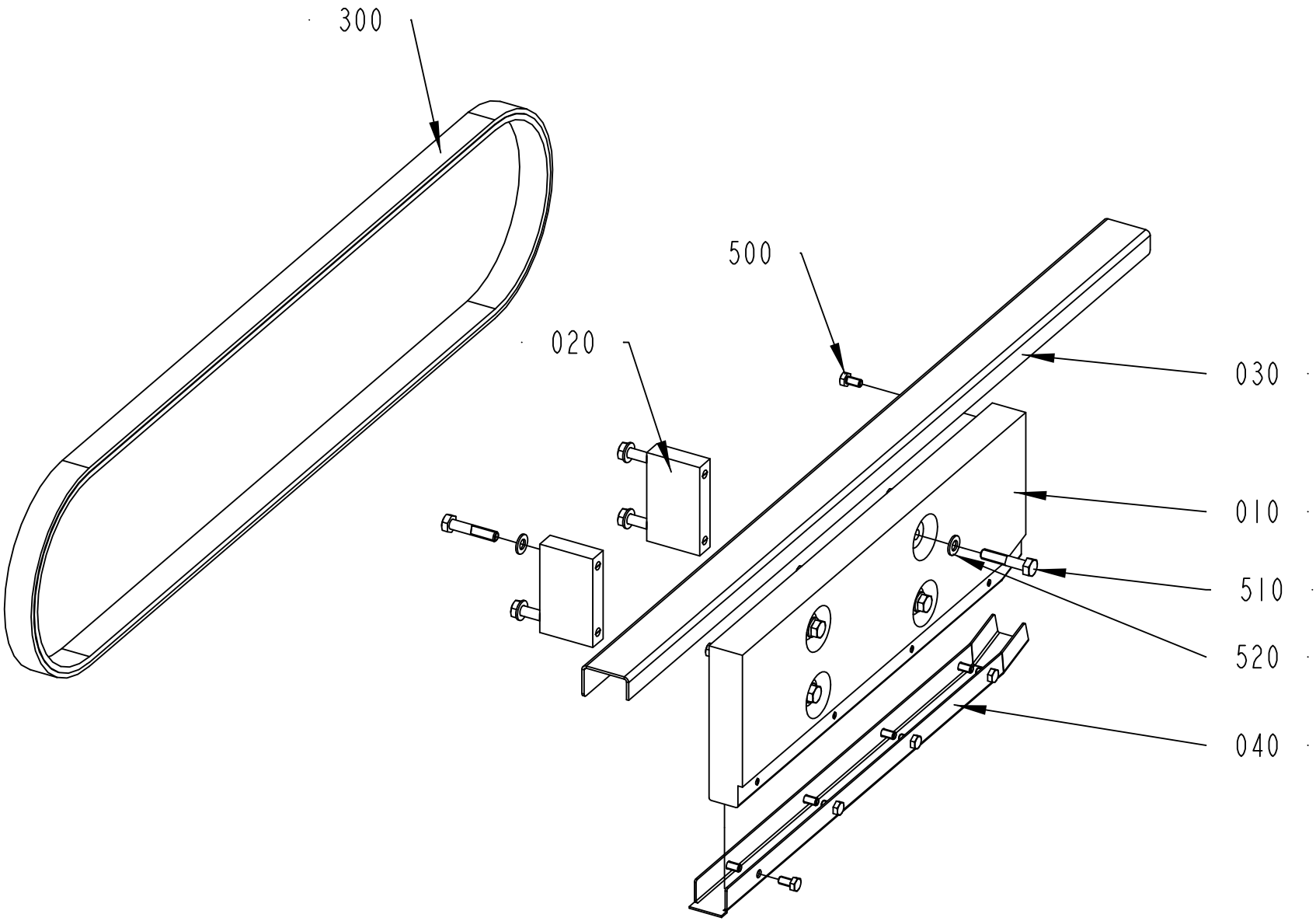
300
500
020
030
010
510
520
040
2737080-1
315383

ECM: 329242 - 20080303
Group number: 2737080-0100
Assembly Drawing: 2737080-1_1_AA

Pos	Part No	UN	Qty	Description	Page No
-					
040	2941711-0000		1	SLIDE SHEET	
300	90600-4508		1	TIMING BELT T10/1790X25	
500	312105-0366		12	SCREW M6S ISO 4017 M6X12 A480	
510	312105-0459		8	SCREW M6S ISO 4014 M8X40 A480	
520	315105-0165		8	WASHER BRB 8,4X16 RFR	

Pos	Part No	UN	Qty	Description	Page No

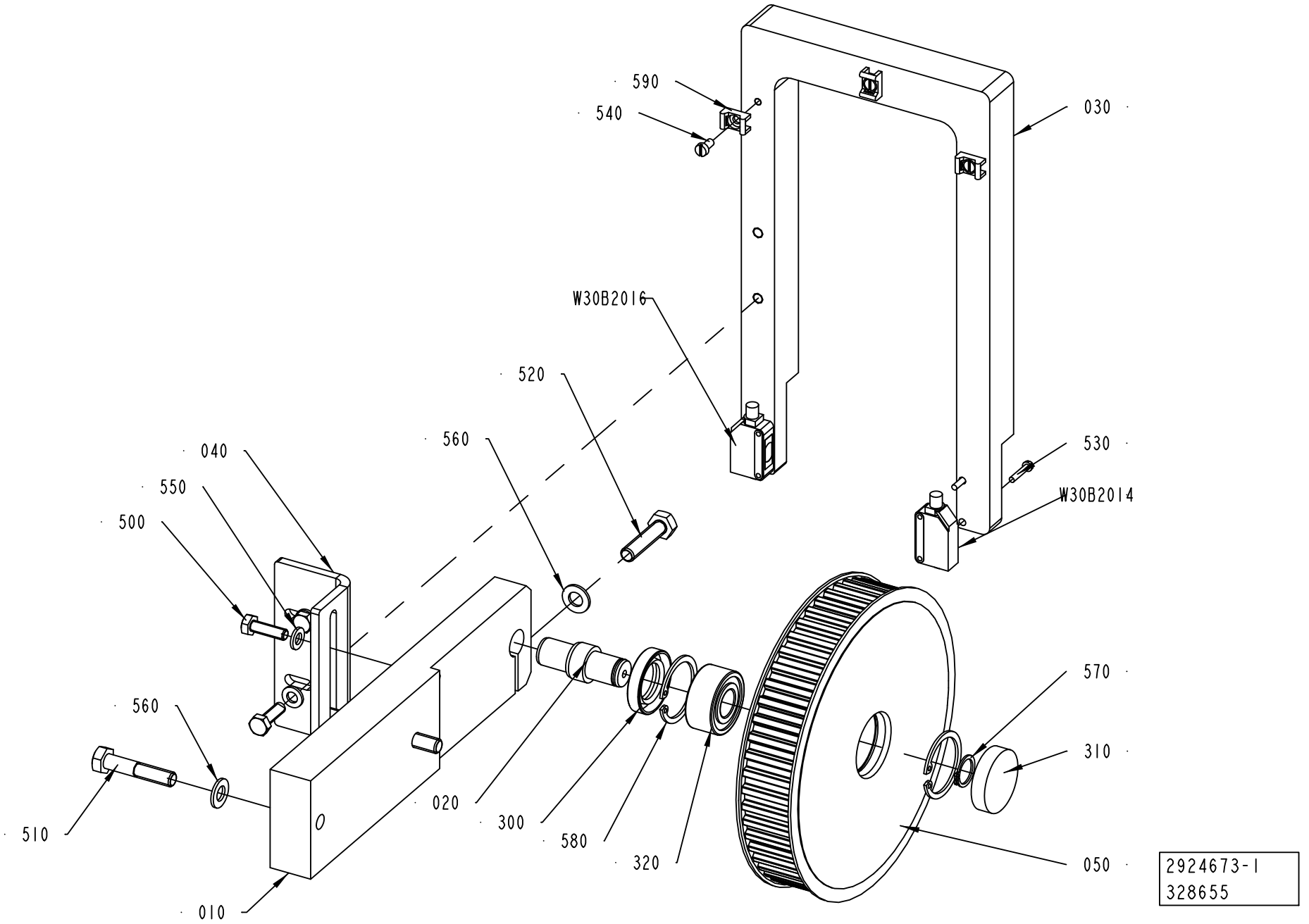
590
540
030
W30B2016
520
560
040
550
500
530
W30B2014
560
570
310
020
300
580
320
510
010
050
2924673-1
328655

ECM: 328655 - 20080303
Group number: 2924673-0100
Assembly Drawing: 2924673-1_1_AA

Pos	Part No	UN	Qty	Description	Page No
-					
010	2737082-0000		1	BRACKET	
020	2797698-0000		1	SHAFT	
030	2799919-0000		1	BRACKET	
040	2845858-0000		1	HOLDER	
050	2867565-0000		1	PULLEY	
300	90091-0303		1	RADIAL SEAL 20X35X7 MM DUST LIP	
310	90091-0323		1	SEAL RING	
320	90459-2676		1	ANG. BALL BEAR, 15X35X15,9 MM	
500	312105-0370		4	SCREW M6S ISO 4017 M6X20 A480	
510	312105-0459		2	SCREW M6S ISO 4014 M8X40 A480	
520	312109-0457		1	SCREW M6S ISO 4017 M8X35 A480	
530	312125-0228		4	SCREW ISO 1207 M3X16 A4	
540	312125-0287		3	SCREW ISO 1207 M4X8 A4	
550	315105-0153		4	WASHER BRB 6,4X12 RFR	
560	315105-0165		3	WASHER BRB 8,4X16 RFR	
570	315751-0112		1	RETAINING RING FOR SHAFT DIN 471 15 SS	
580	315753-0124		2	RETAINING RING FOR BORE DIN 472 35 A2	
590	352113-0205		3	ANCHOR PLATES FOR STRIPS, TYPE TM2S8-C10	
W30B2014	90459-7273		1	PHOTOCELL E3Z-T81C-G0SR D-CN	
W30B2016	90459-7274		1	PHOTOCELL E3Z-T81C-G0SR L-CN	

Pos	Part No	UN	Qty	Description	Page No

Machine Type	Group Description	Used-In	Group Number	Page No

DRIVE WHEEL

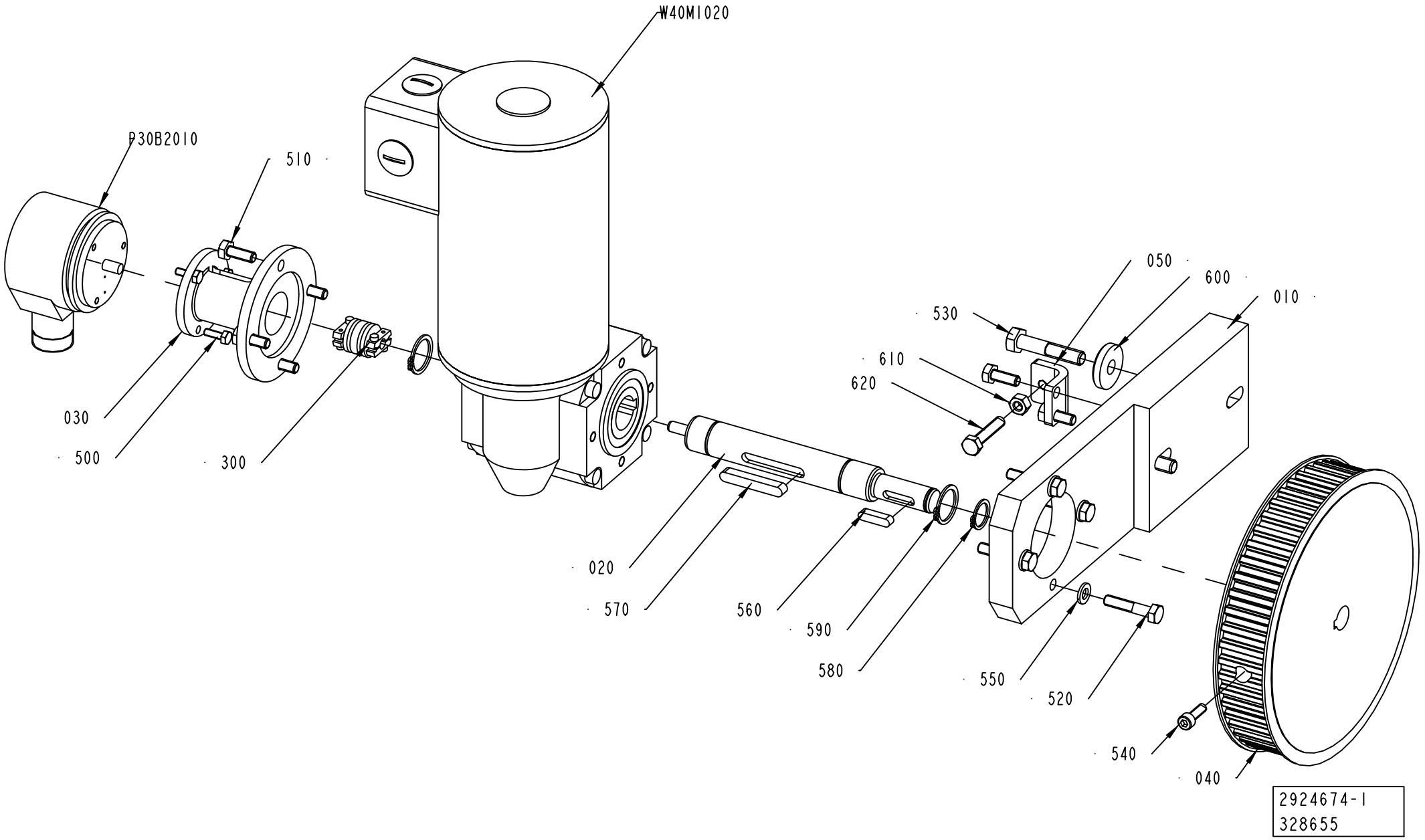
W40M1020
P30B2010
510
050
600
010
530
610
620
030
500
300
020
570
560
590
580
550
520
540
040
2924674-1
328655

ECM: 360190 - 20081009
Group number: 2924674-0100
Assembly Drawing: 2924674-1_1_AA

Pos	Part No	UN	Qty	Description	Page No
TBA, TB					
W40M1020	90600-3210		1	GEARS, WORM MOTOR D9582/SC401-H/1600117	
Common Parts					
010	2737081-0000		1	HOLDER	
020	2797700-0000		1	SHAFT	
030	2885389-0000		1	BRACKET	
040	2941712-0000		1	PULLEY	
050	2956887-0000		1	BRACKET	
300	90458-0962		1	FLEXIBLE COUPLING, 6X6 MM	
500	312105-0291		3	SCREW M6S ISO 4017 M4X12 A470	
510	312105-0368		6	SCREW M6S ISO 4017 M6X16 A480	
520	312105-0374		4	SCREW M6S ISO 4014 M6X30 A480	
530	312105-0459		2	SCREW M6S ISO 4014 M8X40 A480	
540	312115-0329		1	SCREW ISO4762 M5X16 A4 80	
550	315105-0153		4	WASHER BRB 6,4X12 RFR	
560	315705-0201		1	PARALLEL KEY W. ROUND ENDS 5X5X20 MM	
570	315705-0239		1	PARALLEL KEY W. ROUND ENDS 6X6X40 MM	
580	315751-0112		1	RETAINING RING FOR SHAFT DIN 471 15 SS	
590	315751-0116		2	RETAINING RING FOR SHAFT DIN 471 20 SS	
600	315125-0165		2	WASHER TBRSB 8,4X26X5 A4	
610	312605-0316		1	HEXAGON NUT, M6M M6 A280	
620	312109-0374		1	SCREW M6S ISO 4017 M6X30 A480	
P30B2010	90600-3004		1	INCREMENTAL ENC., DGS60-A1A10000,1032277	

Pos	Part No	UN	Qty	Description	Page No

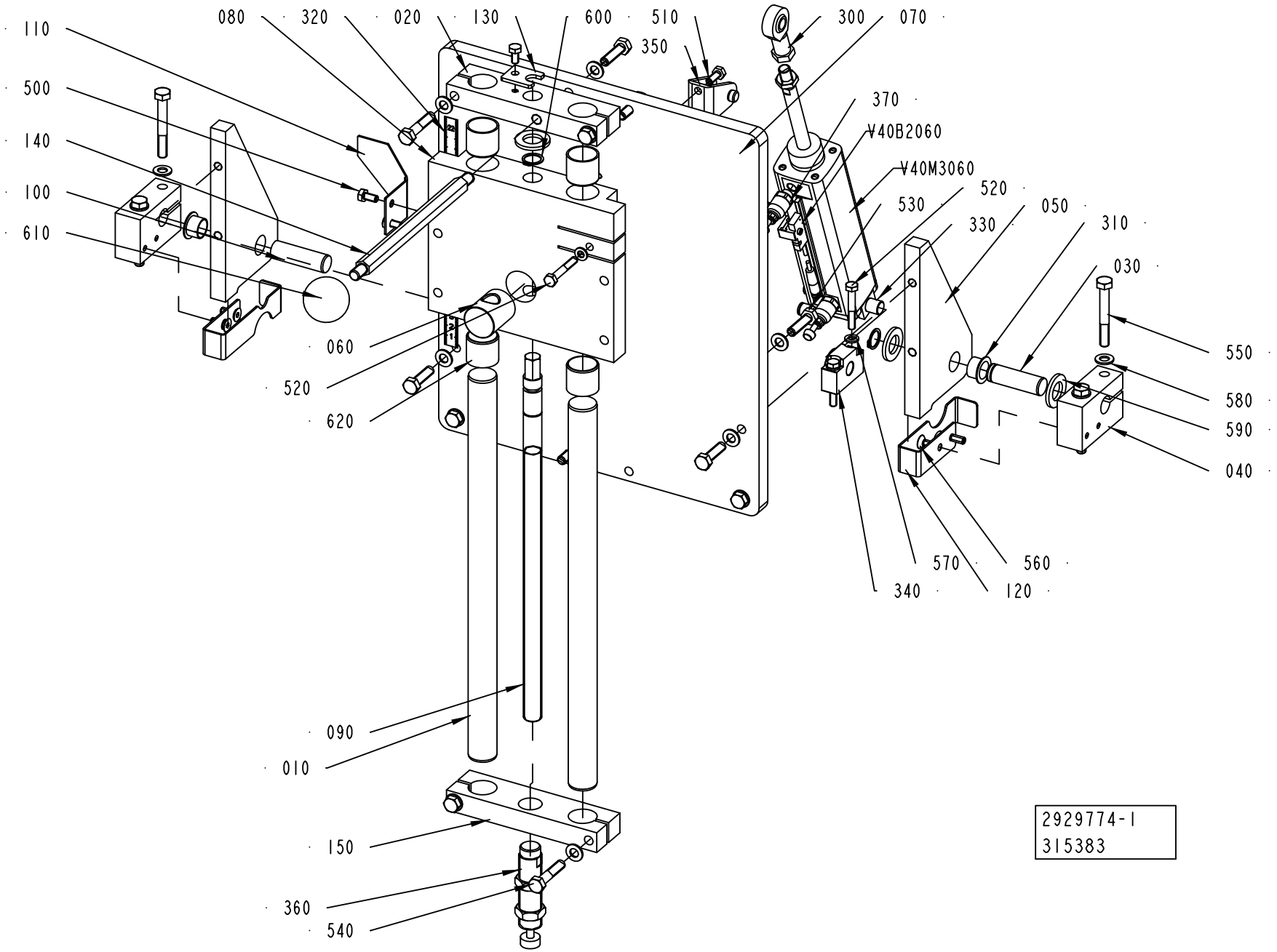
110
500
140
100
610
080
320
020
130
600
510
350
300
070
370
V40B2060
V40M3060
520
530
330
050
310
030
550
580
590
040
060
520
620
570
560
340
120
090
010
150
360
540
2929774-1
315383

ECM: 335755 - 20080303
Group number: 2929774-0100
Assembly Drawing: 2929774-1_1_AA

Pos	Part No	UN	Qty	Description	Page No
-					
010	2829412-0000		2	SHAFT	
020	2829413-0000		1	BRACKET	
030	2829417-0000		1	SHAFT	
040	2829418-0000		2	BRACKET	
050	2829419-0000		2	PLATE	
060	2835350-0000		1	ADJUSTING NUT	
070	2835360-0000		1	MOUNTING PLATE	
080	2835361-0000		1	PLATE	
090	2835362-0000		1	ADJUSTING SCREW	
100	2835365-0000		1	SHAFT	
110	2845863-0000		1	SCALE POINTER	
120	2885391-0000		2	COVER	
130	2901715-0000		1	BRACKET	
140	2901716-0000		1	BAR	
150	2941713-0000		1	BRACKET	
300	90115-0134		1	ROD END, ID=10 MM, M10X1,25	
310	90240-0325		2	FLANGE BUSHING, 16X18X12 MM	
320	90458-2780		1	SCALE ,1000-0 MM ADHESIVE	
330	90459-0580		1	BRACKET, PIVOT MOUNTING CRZNG-32	
340	90459-0584		2	BEARING BRACKET CRLNZG-32	
350	90459-5949		1	REAR CLEVIS FOOT MOUNTING , CRLBN-32	
360	90600-4444		1	SCHOCK ABSORBER, MC 225 MH2+PP 225+KM20X	
370	90459-7116		2	THROTTLE CHECK VALVE, G1/8", MANUAL,4	
500	312105-0366		3	SCREW M6S ISO 4017 M6X12 A480	
510	312105-0368		2	SCREW M6S ISO 4017 M6X16 A480	
520	312105-0378		5	SCREW M6S ISO 4014 M6X40 A480	
530	312105-0455		8	SCREW M6S ISO 4017 M8X30 A480	
540	312105-0459		4	SCREW M6S ISO 4014 M8X40 A480	
550	312105-0463		4	SCREW M6S ISO 4014 M8X60 A480	
560	312155-0368		4	SCREW DIN 7991 MF6S M6X16 A4 70	
570	315105-0153		5	WASHER BRB 6,4X12 RFR	
580	315105-0165		16	WASHER BRB 8,4X16 RFR	
590	315106-0186		3	WASHER ISO 7089-16-200 HV A4	
600	315751-0113		2	RETAINING RING FOR SHAFT DIN 471 16 SS	
610	318800-0106		1	HANDLE,SPHERICAL KNOB,INT.THRE,D.40-M10	
620	321133-0300		4	BUSHING, 25X28X25 MM	
V40B2060	90459-2392		1	PROX.SENSOR SMT-C1-PS-24V-K0,3-M8-SA	
V40M3060	90459-6273		1	DOUBLE ACTING, PROFILE,CYL 32-80	

Pos	Part No	UN	Qty	Description	Page No

Machine Type	Group Description	Used-In	Group Number	Page No

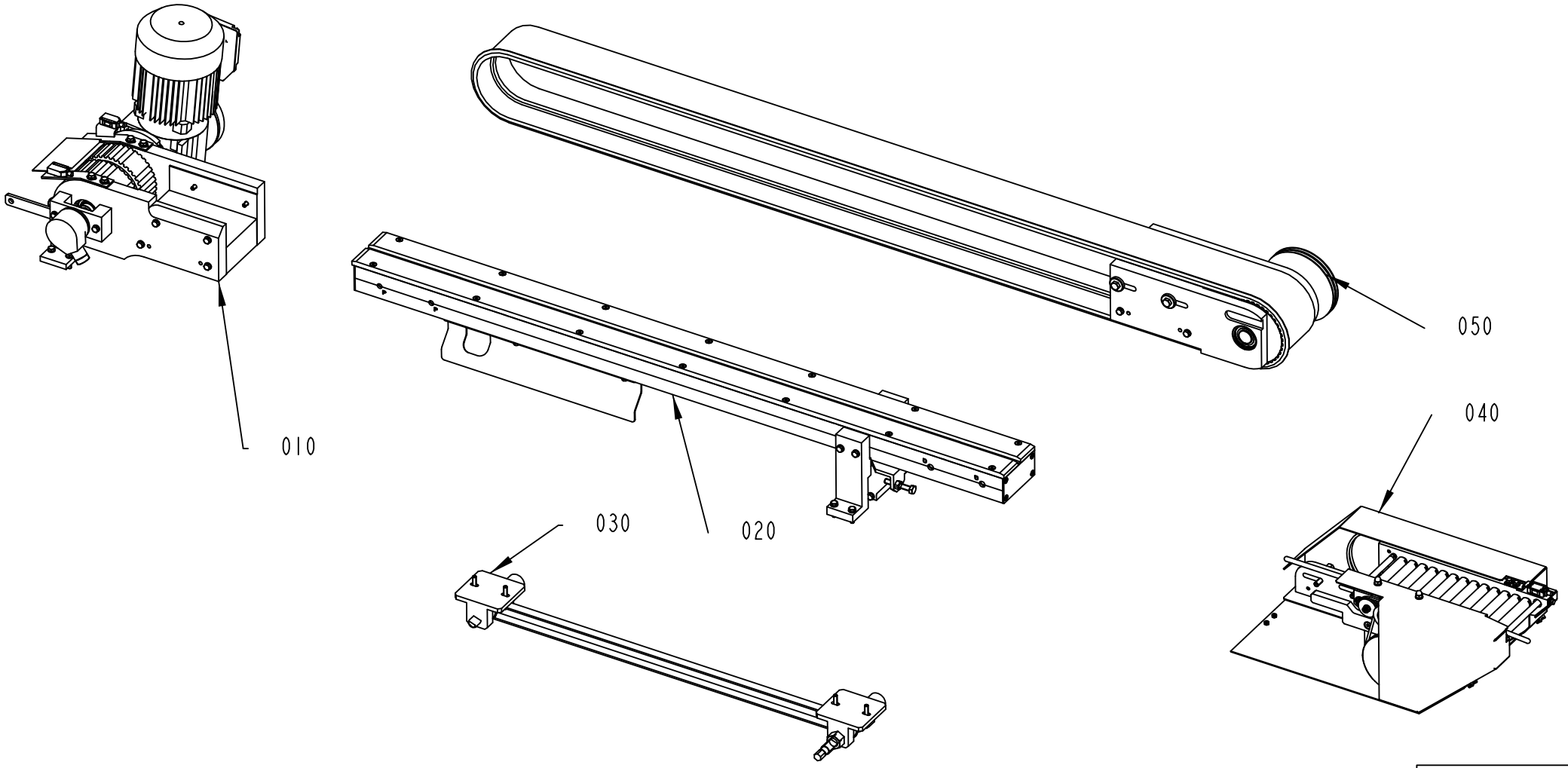

2933980-1
348382

ECM: 348382 - 20081009
Group number: 2933980-0100
Assembly Drawing: 2933980-1_1_AA

Pos	Part No	UN	Qty	Description	Page No
-					
010	2933965-0100		1	DRIVE AND END UNIT	**2-37**
020	2933970-0100		1	CONVEYOR BODY	**2-39**
030	2933990-0100		1	ADJUSTER	**2-41**
040	2957680-0100		1	CONVEYOR	**2-43**
050	2957690-0100		1	BELT CONVEYOR, INFEED	**2-45**

Pos	Part No	UN	Qty	Description	Page No

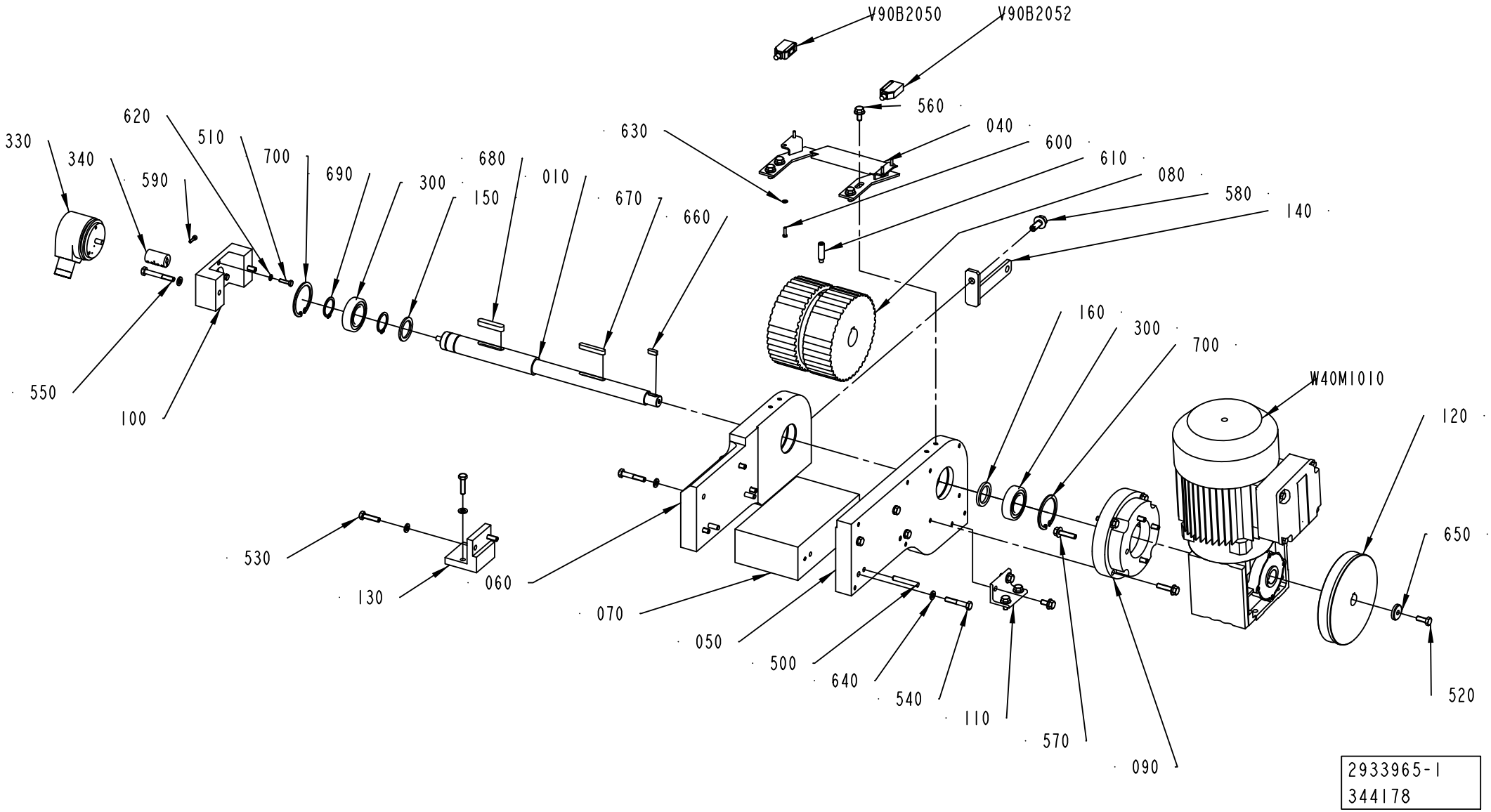
V90B2050
V90B2052
560
040
600
610
080
580
140
630
620
510
700
690
300
680
150
010
670
660
330
340
590
550
100
160
300
700
W40M1010
120
650
520
530
130
060
070
050
500
640
540
110
570
090
2933965-1
344178

ECM: 348214 - 20081009
Group number: 2933965-0100
Assembly Drawing: 2933965-1_1_AA

Pos	Part No	UN	Qty	Description	Page No
-					
010	2904767-0000		1	SHAFT	
040	2916047-0000		1	SLIDE PLATE	
050	2926027-0000		1	BRACKET	
060	2926028-0000		1	BRACKET	
070	2926029-0000		1	SPACER BLOCK	
080	2933958-0000		1	TIMING BELT PULLEY	
090	2933964-0000		1	BRACKET	
100	2933966-0000		1	BRACKET	
110	2933969-0000		1	BRACKET	
120	2934013-0000		1	PULLEY	
130	2957713-0000		1	BRACKET	
140	2957719-0000		1	BRACKET	
150	2992447-0000		1	SPACER RING	
160	2992448-0000		1	SPACER RING	
300	90214-0163		2	BALL BEARING SOLID OIL 25X47X12 MM	
330	90600-3004		1	INCREMENTAL ENC., DGS60-A1A10000,1032277	
340	90600-5059		1	TORQUE RIGID COUPLING, 6X6 MM	
500	311103-0361		4	PARALLEL PIN ISO 2338 6M6X40 A1	
510	312105-0293		3	SCREW M6S ISO 4017 M4X16 A470	
520	312105-0368		1	SCREW M6S ISO 4017 M6X16 A480	
530	312105-0372		4	SCREW M6S ISO 4017 M6X25 A480	
540	312105-0376		8	SCREW M6S ISO 4014 M6X35 A480	
550	312105-0379		2	SCREW M6S ISO 4014 M6X45 A480	
560	312108-0366		8	SCREW EN 1665 TYPE F M6X12 A270	
570	312108-0372		8	SCREW EN 1665 TYPE F M6X25 A270	
580	312108-0451		1	SCREW EN 1665 TYPE F M8X20 A270	
590	312115-0226		4	SCREW ISO4762 M3X12 A4 80	
600	312125-0226		4	SCREW ISO 1207 M3X12 A4	
610	312311-0455		1	SCREW ISO4028 M8X30 FZB	
620	315105-0136		3	WASHER BRB 4,3X8 RFR	
630	315106-0124		4	WASHER ISO 7089-3-200 HV A4	
640	315106-0153		14	WASHER ISO 7089-6-200 HV A4	
650	315125-0153		1	WASHER TBRSB 6,4X22X4 A4	
660	315705-0198		1	PARALLEL KEY W. ROUND ENDS 5X5X14 MM	
670	315705-0239		1	PARALLEL KEY W. ROUND ENDS 6X6X40 MM	
680	315705-0270		1	PARALLEL KEY W. ROUND ENDS 8X7X40 MM	
690	315751-0119		2	RETAINING RING FOR SHAFT DIN 471 25 SS	
700	315753-0130		2	RETAINING RING FOR BORE DIN 472 47 A2	
V90B2050	90459-7273		1	PHOTOCELL E3Z-T81C-G0SR D-CN	
V90B2052	90459-7274		1	PHOTOCELL E3Z-T81C-G0SR L-CN	
W40M1010	90600-5064		1	GEARS, WORM MOTOR WA 20 DT71 D4	

Pos	Part No	UN	Qty	Description	Page No

Machine Type	Group Description	Used-In	Group Number	Page No

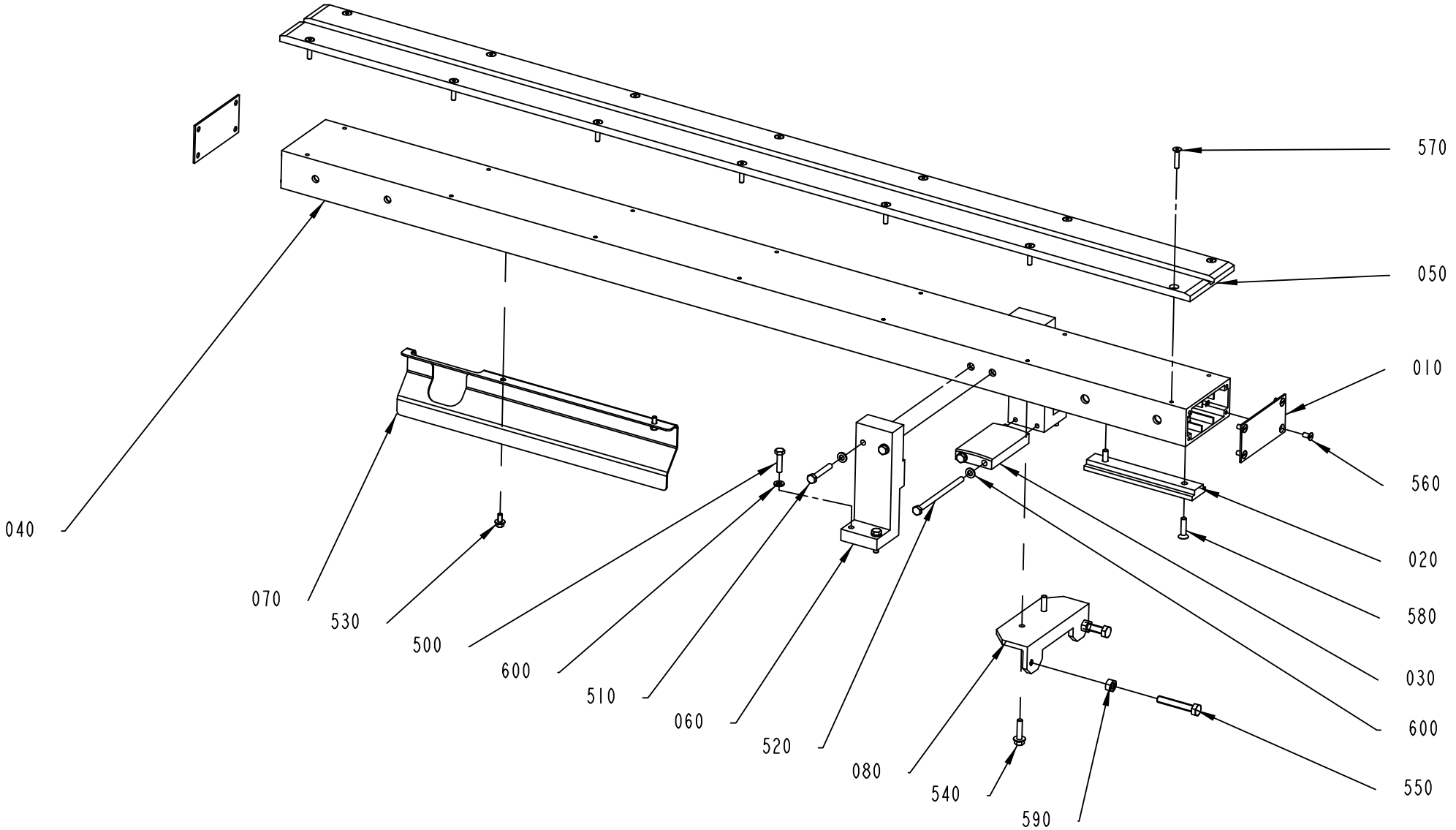
570
050
010
560
020
580
030
600
550
590
540
080
520
060
510
600
500
530
070
040
2933970-1
344178

ECM: 348215 - 20081009
Group number: 2933970-0100
Assembly Drawing: 2933970-1_1_AA

Pos	Part No	UN	Qty	Description	Page No
-					
010	556603-0000		2	COVER PLATE	
020	2904836-0000		1	ADJUSTMENT BRACKET	
030	2904856-0000		1	SUPPORT	
040	2933962-0000		1	PROFILE 50X100	
050	2933963-0000		1	SLIDE RAIL	
060	2948161-0000		2	BRACKET	
070	2948162-0000		1	PROTECTION PLATE	
080	2957679-0000		1	FASTENING BRACKET	
500	312105-0372		4	SCREW M6S ISO 4017 M6X25 A480	
510	312105-0378		4	SCREW M6S ISO 4014 M6X40 A480	
520	312105-0390		2	SCREW M6S ISO 4014 M6X100 A480	
530	312108-0325		2	SCREW EN 1665 TYPE F M5X10 A270	
540	312108-0372		2	SCREW EN 1665 TYPE F M6X25 A270	
550	312109-0461		2	SCREW M6S ISO 4017 M8X50 A480	
560	312145-0325		8	SCREW ISO 2009 MFS M5X10 A4	
570	312155-0333		14	SCREW DIN 7991 MF6S M5X25 A4 70	
580	312155-0372		2	SCREW DIN 7991 MF6S M6X25 A4 70	
590	312605-0318		2	HEXAGON NUT, M6M M8 A280	
600	315106-0153		10	WASHER ISO 7089-6-200 HV A4	

Pos	Part No	UN	Qty	Description	Page No

Machine Type | Group Description | Used-In | Group Number | Page No

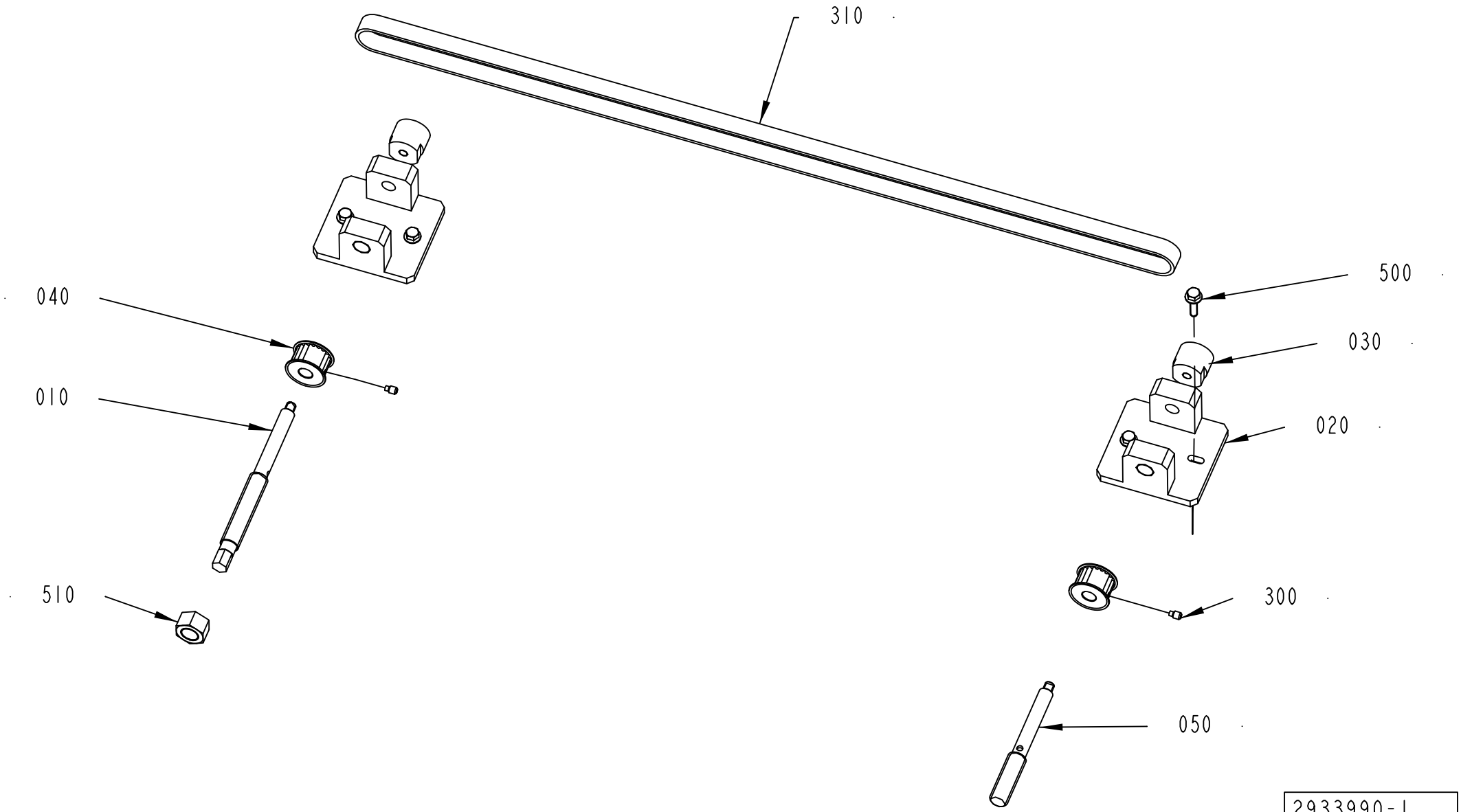
310
040
010
510
500
030
020
300
050
2933990-1
344491

ECM: 348217 - 20081009
Group number: 2933990-0100
Assembly Drawing: 2933990-1_1_AA

Pos	Part No	UN	Qty	Description	Page No
-					
010	2926058-0000		1	ADJUSTING SCREW	
020	2933986-0000		2	SCREW HOLDER	
030	2934005-0000		2	THRUST WASHER	
040	2934006-0000		2	TOOTHED PULLEY	
050	2982627-0000		1	ADJUSTING SCREW	
300	90287-0154		2	SCREW, SOCK.SET DOGPOINT M6X10	
310	90600-5067		1	TIMING BELT T5X1500X16 POLYURETHANE	
500	312108-0372		4	SCREW EN 1665 TYPE F M6X25 A270	
510	312607-0324		1	HEXAGON NUT, EN 24032 M6M M16 A480	

Pos	Part No	UN	Qty	Description	Page No

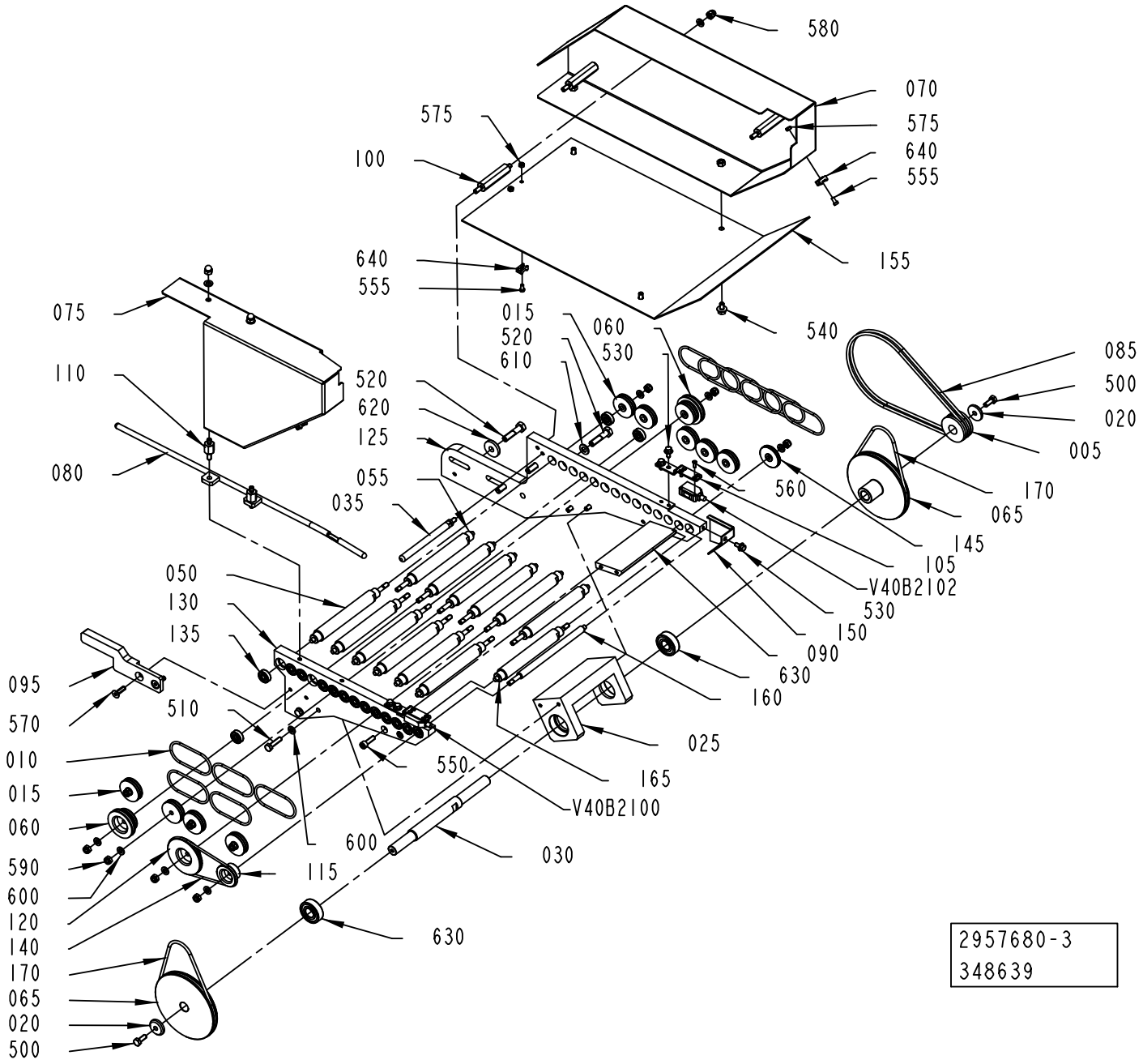
580
070
575
640
555
155
575
100
640
555
015
520
610
060
530
540
085
500
020
005
075
110
080
520
620
125
055
035
560
170
065
145
105
V40B2102
530
150
090
630
160
025
165
V40B2100
030
050
130
135
095
570
510
010
015
060
590
600
120
140
170
065
020
500
550
600
115
630
2957680-3
348639

ECM: 348639 - 20081009
Group number: 2957680-0100
Assembly Drawing: 2957680-3_1_AA

Pos	Part No	UN	Qty	Description	Page No
-					
005	2925995-0000		1	DRIVE WHEEL	
010	2925998-0000		11	DRIVE BELT	
015	2926082-0000		9	DRIVE WHEEL	
020	2933942-0000		2	WASHER	
025	2957685-0000		1	BEARING CONSOLE	
030	2957686-0000		1	SHAFT	
035	2957687-0000		1	SUPPORT ROD	
050	2957691-0000		6	SUPPORT ROLLER	
055	2957692-0000		6	SUPPORT ROLLER	
060	2957701-0000		2	DRIVE WHEEL	
065	2957702-0000		2	DRIVE WHEEL	
070	2957704-0000		1	PROTECTIVE CASING	
075	2957707-0000		1	PROTECTIVE CASING	
080	2957711-0000		1	RULING GUIDE	
085	2957712-0000		2	DRIVE BELT	
090	2957714-0000		1	SPACER ELEMENT	
095	2957715-0000		1	GUIDE LUG	
100	2957718-0000		3	SPACER PIN	
105	2957728-0000		2	PHOTOCELL BRACKET	
110	2957729-0000		2	SPACER PIN	
115	2957761-0000		1	DRIVE WHEEL	
120	2957762-0000		1	DRIVE WHEEL	
125	2957764-0000		1	SIDE PLATE	
130	2957766-0000		1	SIDE PLATE	
135	2957767-0000		28	BALL BEARING	
140	2957768-0000		1	DRIVE BELT	
145	2957769-0000		1	DRIVE WHEEL	
150	2957772-0000		1	PROTECTION	
155	2957773-0000		1	PROTECTION PLATE	
160	2982592-0000		1	DRIVE ROLLER	
165	2982594-0000		1	DRIVE ROLLER	
170	2982626-0000		2	DRIVE BELT	
500	312105-0368		2	SCREW M6S ISO 4017 M6X16 A480	
510	312105-0372		4	SCREW M6S ISO 4017 M6X25 A480	
520	312105-0457		4	SCREW M6S ISO 4014 M8X35 A480	
530	312108-0325		5	SCREW EN 1665 TYPE F M5X10 A270	
540	312108-0364		3	SCREW EN 1665 TYPE F M6X10 A270	
550	312115-0370		4	SCREW ISO4762 M6X20 A4 80	
555	312125-0287		4	SCREW ISO 1207 M4X8 A4	
560	312155-0224		4	SCREW DIN 7991 MF6S M3X10 A4 70	
570	312155-0370		2	SCREW DIN 7991 MF6S M6X20 A4 70	
575	312605-0312		4	HEXAGON NUT, M6M M4 A280	
580	312705-0316		5	NUT HEX. DOMED CAP MHM-6 M6 A280	
590	312812-0316		14	HEXAGON NUT, NY-LOCK M6 A480	
600	315106-0153		23	WASHER ISO 7089-6-200 HV A4	
610	315106-0165		2	WASHER ISO 7089-8-200 HV A4	
620	315125-0165		2	WASHER TBRSB 8,4X26X5 A4	
630	90214-0169		2	BALL BEARING SOLID OIL 15X35X11 MM	
640	352113-0205		4	ANCHOR PLATES FOR STRIPS, TYPE TM2S8-C10	
V40B2100	90459-7273		1	PHOTOCELL E3Z-T81C-G0SR D-CN	
V40B2102	90459-7274		1	PHOTOCELL E3Z-T81C-G0SR L-CN	

Machine Type	Group Description	Used-In	Group Number	Page No

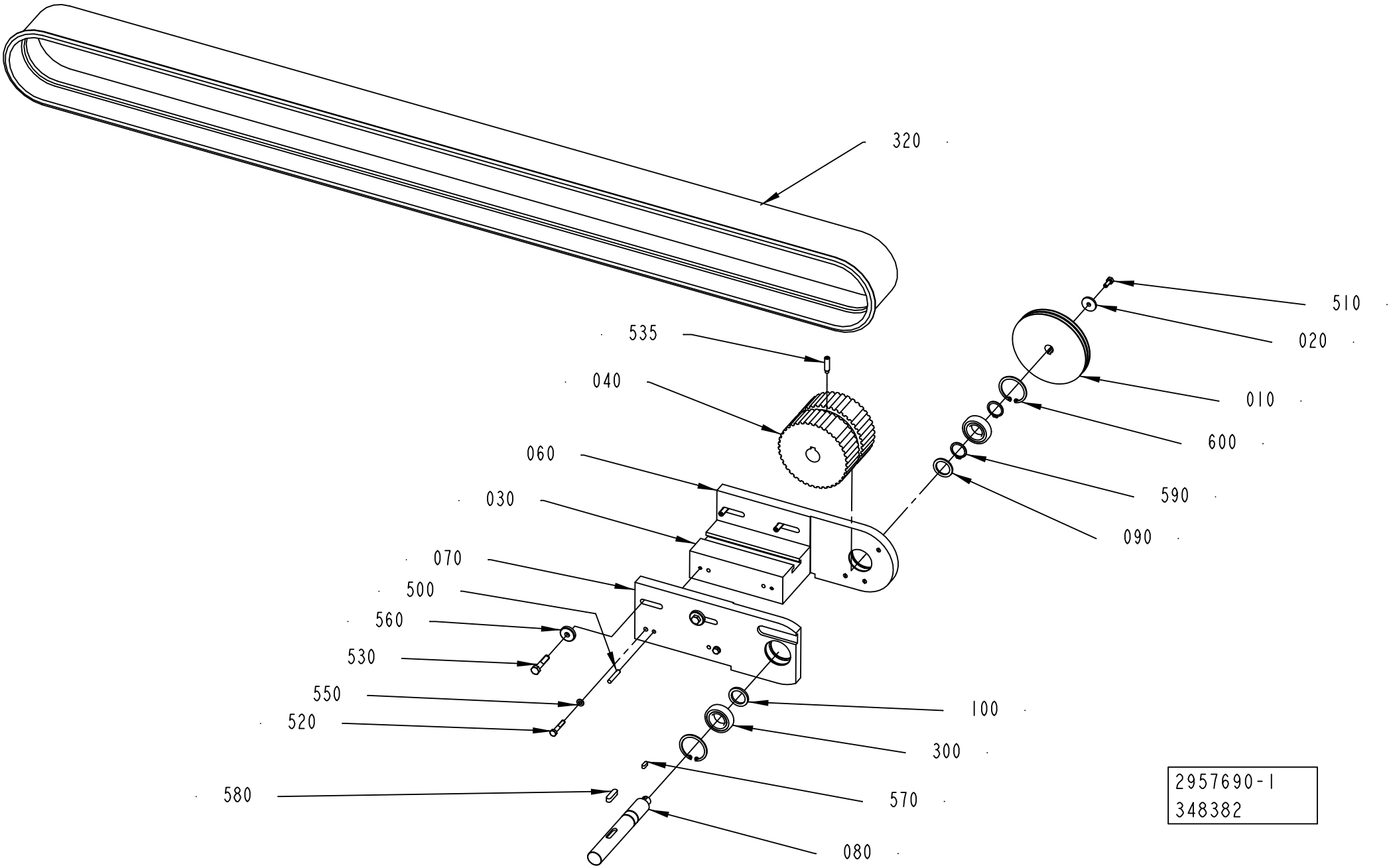
320
535
040
060
030
070
500
560
530
550
520
580
510
020
010
600
590
090
100
300
570
080
2957690-1
348382

ECM: 348382 - 20081009
Group number: 2957690-0100
Assembly Drawing: 2957690-1_1_AA

Pos	Part No	UN	Qty	Description	Page No
-					
010	2925997-0000		1	DRIVE WHEEL	
020	2933942-0000		1	WASHER	
030	2933956-0000		1	SPACER BLOCK	
040	2933958-0000		1	TIMING BELT PULLEY	
060	2957695-0000		1	BRACKET	
070	2957696-0000		1	BRACKET	
080	2957709-0000		1	SHAFT	
090	2992447-0000		1	SPACER RING	
100	2992448-0000		1	SPACER RING	
300	90214-0163		2	BALL BEARING SOLID OIL 25X47X12 MM	
320	90600-5069		1	TIMING BELT ATK10 3280X100 MM	
500	311103-0359		4	PARALLEL PIN ISO 2338 6M6X35 A1	
510	312105-0368		1	SCREW M6S ISO 4017 M6X16 A480	
520	312105-0376		3	SCREW M6S ISO 4014 M6X35 A480	
530	312105-0459		4	SCREW M6S ISO 4014 M8X40 A480	
535	312311-0455		1	SCREW ISO4028 M8X30 FZB	
540	312115-0372		1	SCREW ISO4762 M6X25 A4 80	
550	315105-0153		3	WASHER BRB 6,4X12 RFR	
560	315125-0165		4	WASHER TBRSB 8,4X26X5 A4	
570	315705-0198		1	PARALLEL KEY W. ROUND ENDS 5X5X14 MM	
580	315705-0267		1	PARALLEL KEY W. ROUND ENDS 8X7X30 MM	
590	315751-0119		2	RETAINING RING FOR SHAFT DIN 471 25 SS	
600	315753-0130		2	RETAINING RING FOR BORE DIN 472 47 A2	

Pos	Part No	UN	Qty	Description	Page No

Machine Type | Group Description | Used-In | Group Number | Page No

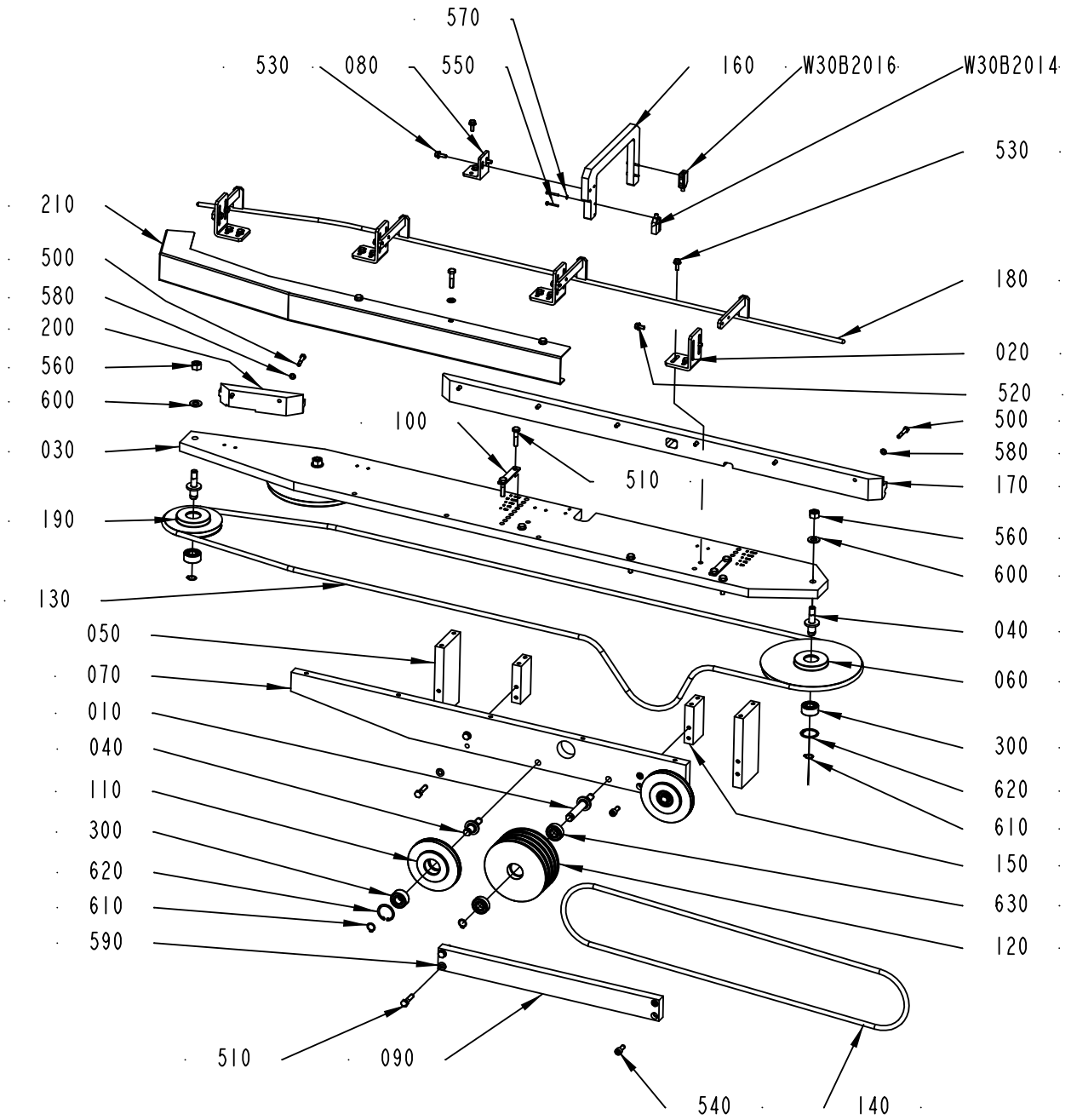

2926070-1
343936

ECM: 348208 - 20081009
Group number: 2926070-0100
Assembly Drawing: 2926070-1_1_AA

Pos	Part No	UN	Qty	Description	Page No
-					
010	2926048-0000		1	AXLE PIN	
020	2926051-0000		4	BRACKET	
030	2926052-0000		1	MOUNTING SHEET	
040	2926054-0000		5	AXLE PIN	
050	2926056-0000		2	LOCATING PIECE	
060	2926059-0000		2	PULLEY	
070	2926063-0000		1	AXLE SUPPORT	
080	2926066-0000		1	ANGLE BRACKET	
090	2926068-0000		1	CROSS BAR	
100	2926071-0000		2	COVER DISC	
110	2933971-0000		2	PULLEY	
120	2933972-0000		1	PULLEY	
130	2933973-0000		1	DRIVE BELT	
140	2933974-0000		1	BELT	
150	2933979-0000		2	LOCATING PIECE	
160	2934009-0000		1	BRACKET	
170	2934016-0000		1	SLIDE RAIL	
180	2934021-0000		1	STEERING	
190	2934027-0000		1	PULLEY	
200	2957727-0000		1	SLIDE RAIL	
210	2982599-0000		1	PROTECTIVE CASING	
300	90459-2676		5	ANG. BALL BEAR, 15X35X15,9 MM	
500	312105-0376		8	SCREW M6S ISO 4014 M6X35 A480	
510	312105-0457		18	SCREW M6S ISO 4014 M8X35 A480	
520	312108-0366		8	SCREW EN 1665 TYPE F M6X12 A270	
530	312108-0368		12	SCREW EN 1665 TYPE F M6X16 A270	
540	312115-0451		4	SCREW ISO4762 M8X20 A4 80	
550	312125-0232		4	SCREW ISO 1207 M3X25 A4	
560	312607-0322		6	HEXAGON NUT, EN 24032 M6M M12 A480	
570	315106-0124		4	WASHER ISO 7089-3-200 HV A4	
580	315106-0153		8	WASHER ISO 7089-6-200 HV A4	
590	315106-0165		13	WASHER ISO 7089-8-200 HV A4	
600	315106-0178		6	WASHER ISO 7089-12-200 HV A4	
610	315751-0112		6	RETAINING RING FOR SHAFT DIN 471 15 SS	
620	315753-0124		4	RETAINING RING FOR BORE DIN 472 35 A2	
630	321313-0102		2	BALL BEARING, 15X35X11 MM	
W30B2014	90459-7273		1	PHOTOCELL E3Z-T81C-G0SR D-CN	
W30B2016	90459-7274		1	PHOTOCELL E3Z-T81C-G0SR L-CN	

Pos	Part No	UN	Qty	Description	Page No

Machine Type	Group Description	Used-In	Group Number	Page No

ADJUSTMENT PLATE

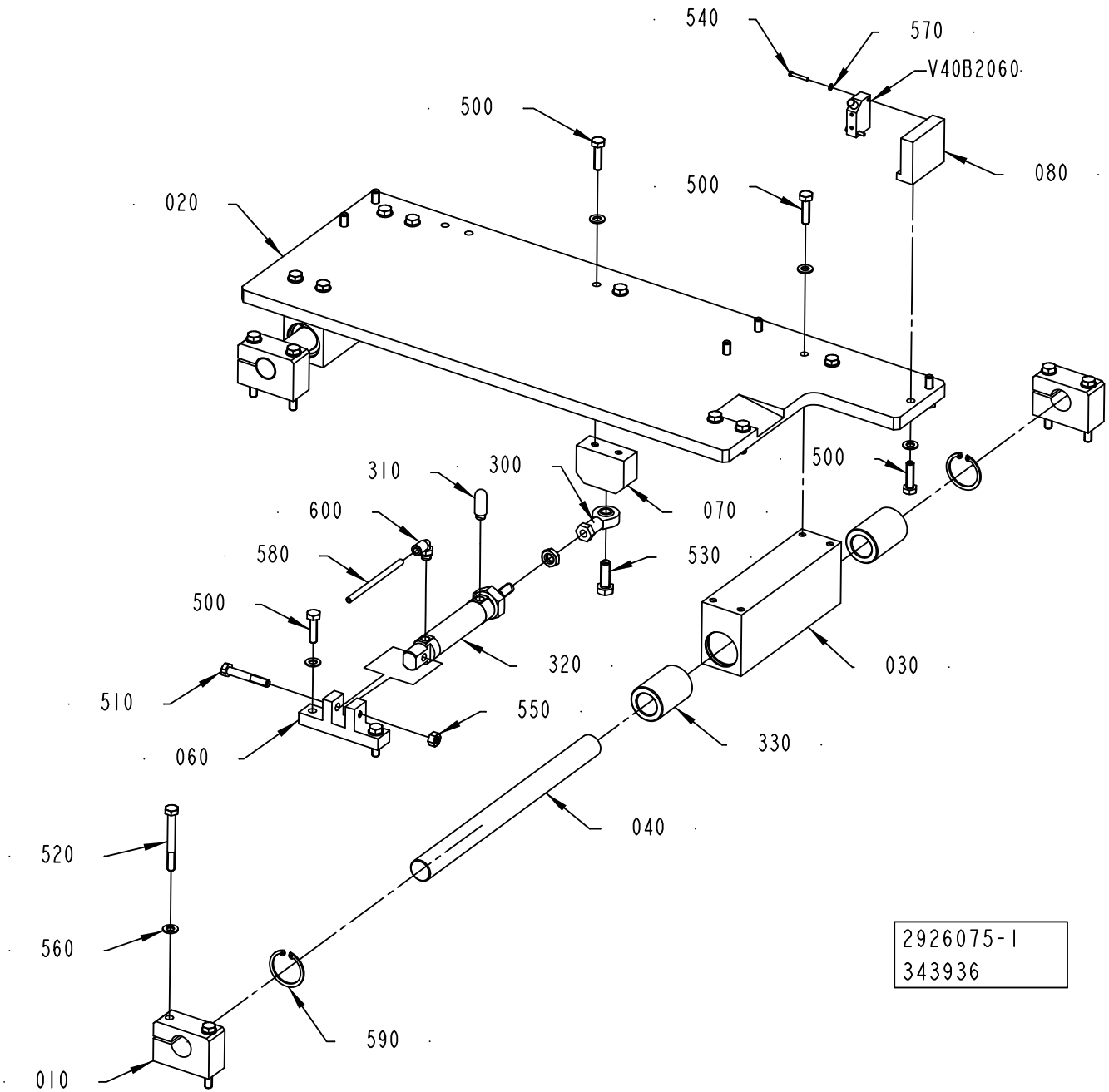

ECM: 348209 - 20081009
Group number: 2926075-0100
Assembly Drawing: 2926075-1_1_AA

Pos	Part No	UN	Qty	Description	Page No
-					
010	2829403-0000		4	BRACKET	
020	2926061-0000		1	PLATE	
030	2926062-0000		2	BEARING HOLDER	
040	2933948-0000		2	RUNNER ROD	
060	2933976-0000		1	CYLINDER BRACKET	
070	2933977-0000		1	CYLINDER BRACKET	
080	2933978-0000		1	STOP LUG	
300	90115-0134		1	ROD END, ID=10 MM, M10X1,25	
310	90328-0047		1	SILENCER G1/8"	
320	90459-1699		1	DOUBLE ACTING, MINI-ISO, CYL 25-50	
330	90600-5061		1	BUSHING, 25X40X58 MM	
500	312105-0455		19	SCREW M6S ISO 4017 M8X30 A480	
510	312105-0461		1	SCREW M6S ISO 4014 M8X50 A480	
520	312105-0465		8	SCREW M6S ISO 4014 M8X70 A480	
530	312105-0495		1	SCREW M6S ISO 4017 M10X30 A480	
540	312125-0230		2	SCREW ISO 1207 M3X20 A4	
550	312607-0318		1	HEXAGON NUT, EN 24032 M6M M8 A480	
560	315105-0165		27	WASHER BRB 8,4X16 RFR	
570	315106-0124		2	WASHER ISO 7089-3-200 HV A4	
580	315400-0001	M	3	TUBE PUN-H-6X1-BL	
590	315753-0127		4	RETAINING RING FOR BORE DIN 472 40 A2	
600	350002-0006		1	PUSH-IN L-FITTING QSL-F-G1/8-6	
V40B2060	90459-2409		1	INDUCTIVE SWITCH IN-3002-BPKG/AS	

Pos	Part No	UN	Qty	Description	Page No

SIDE ADJUSTER

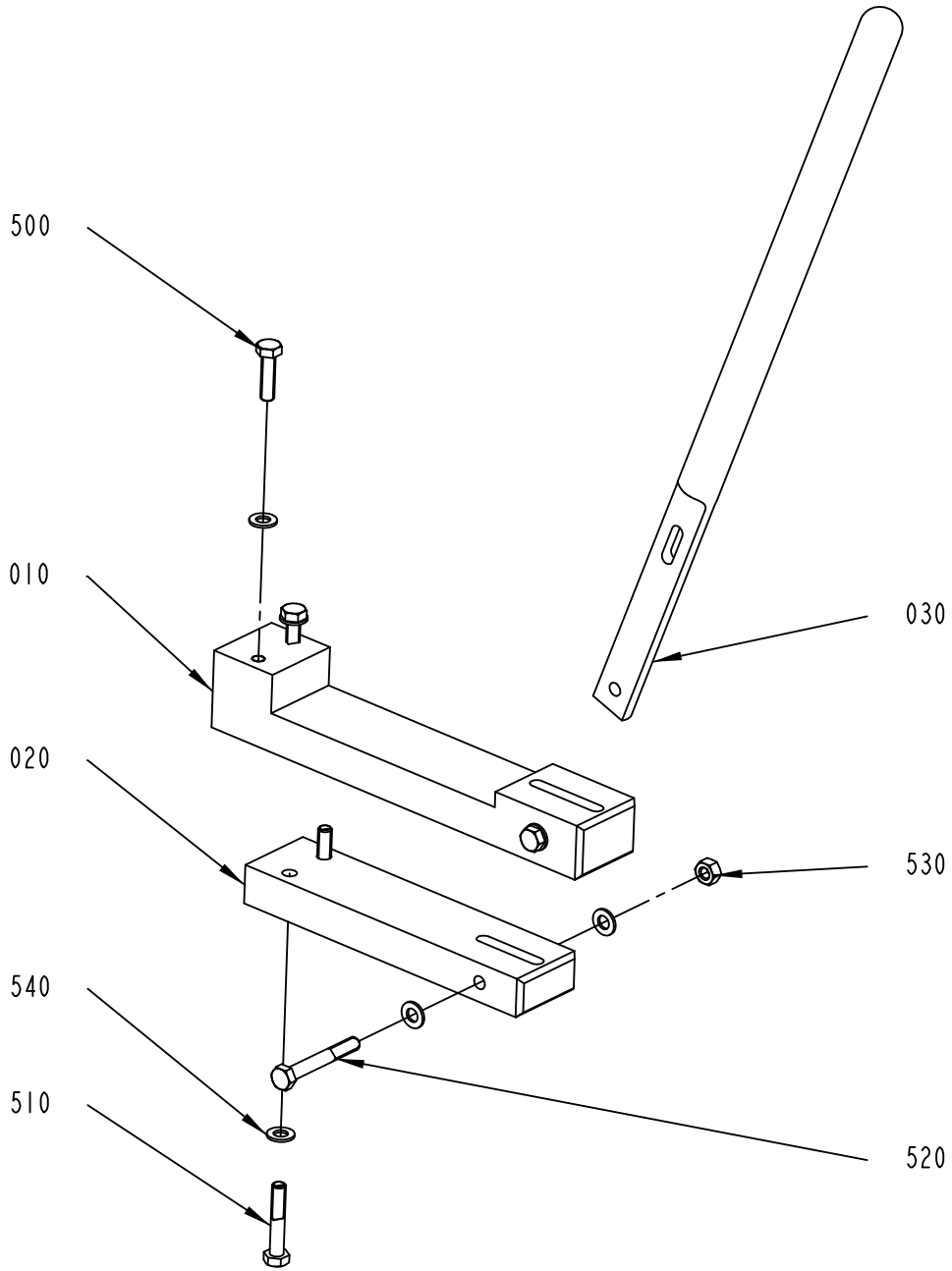

2957705-1
348382

ECM: 348382 - 20081009
Group number: 2957705-0100
Assembly Drawing: 2957705-1_1_AA

Pos	Part No	UN	Qty	Description	Page No
-					
010	2957698-0000		1	CONNECTION LINK	
020	2957699-0000		1	LINK ATTACHMENT	
030	2957703-0000		1	LEVER BAR	
500	312105-0455		2	SCREW M6S ISO 4017 M8X30 A480	
510	312105-0460		2	SCREW M6S ISO 4014 M8X45 A480	
520	312105-0463		2	SCREW M6S ISO 4014 M8X60 A480	
530	312605-0318		2	HEXAGON NUT, M6M M8 A280	
540	315105-0165		8	WASHER BRB 8,4X16 RFR	

Pos	Part No	UN	Qty	Description	Page No

Tetra Pak

SPC
Spare Parts Catalogue

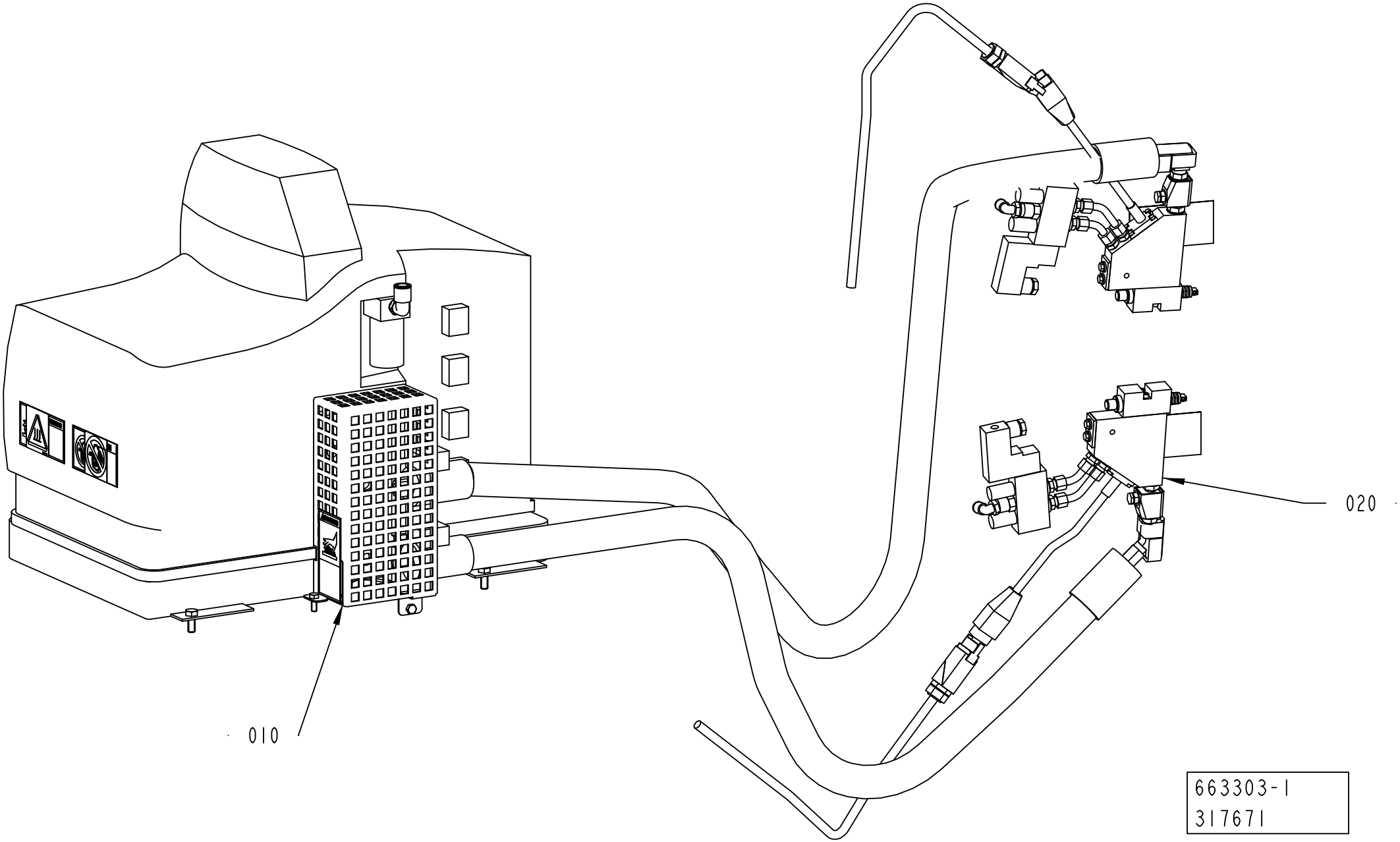
010
020
663303-1
317671

ECM: 355724 - 20081009
Group number: 663303-0100
Assembly Drawing: 663303-1_1_AA

This list covers pages from 3-2 to 3-5

Pos	Part No	UN	Qty	Description	Page No
TBA, TB (See drawing on page: 3-2)					
020	2892717-0100		1	HOTMELT EQUIPMENT NORDSON	**3-7**
TCA (See drawing on page: 3-4)					
020	2863510-0100		1	HOTMELT EQUIPMENT NORDSON	**3-9**
Common Parts					
010	2864776-0100		1	HOTMELT EQUIPMENT MISCELLANEOUS	**3-11, 3-13**

Pos	Part No	UN	Qty	Description	Page No

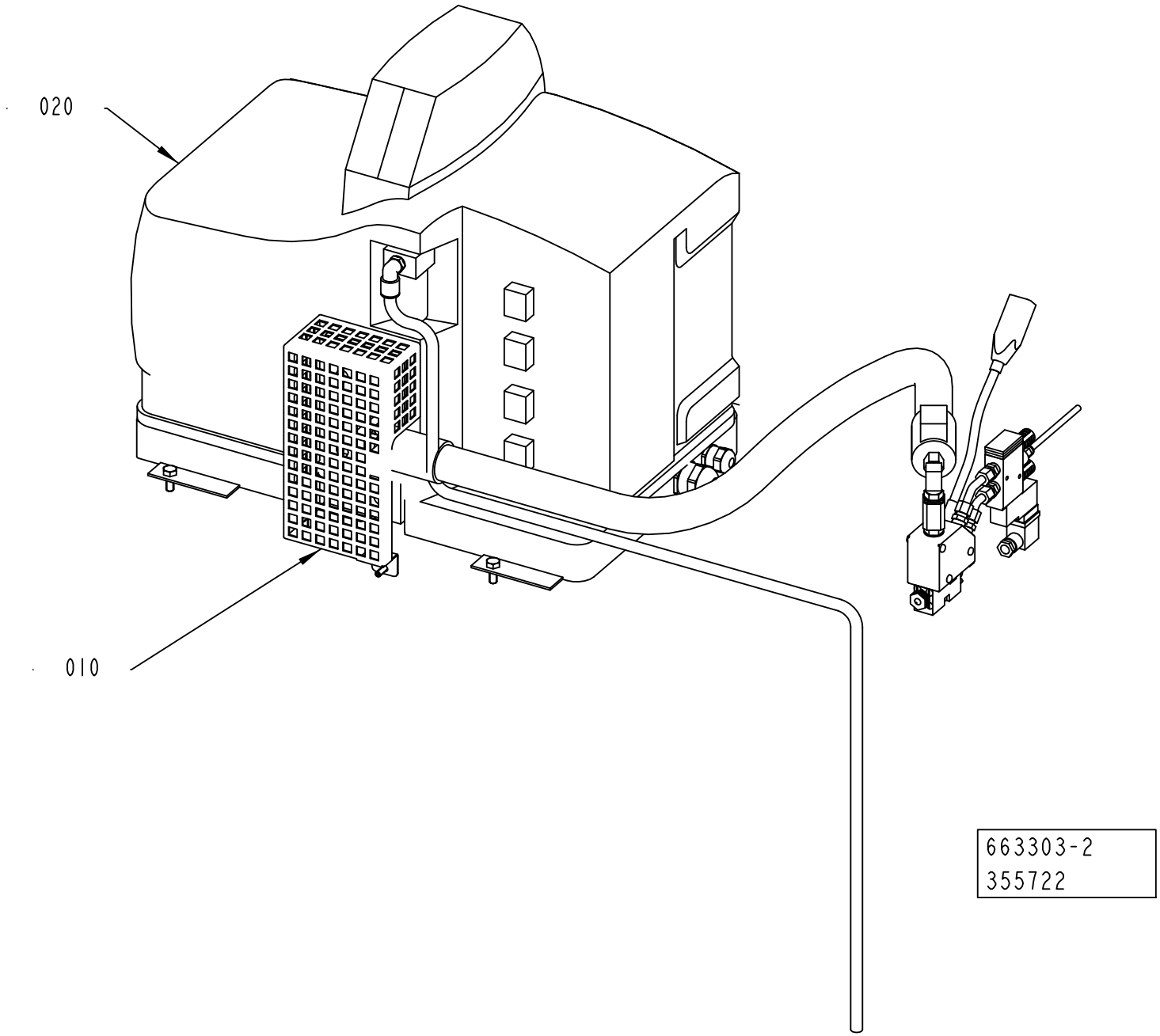
020
010
663303-2
355722

ECM: 355724 - 20081009
Group number: 663303-0100
Assembly Drawing: 663303-2_1_AA

This list covers pages from 3-2 to 3-5

Pos	Part No	UN	Qty	Description	Page No
TBA, TB (See drawing on page: 3-2)					
020	2892717-0100		1	HOTMELT EQUIPMENT NORDSON	**3-7**
TCA (See drawing on page: 3-4)					
020	2863510-0100		1	HOTMELT EQUIPMENT NORDSON	**3-9**
Common Parts					
010	2864776-0100		1	HOTMELT EQUIPMENT MISCELLANEOUS	**3-11, 3-13**

Pos	Part No	UN	Qty	Description	Page No

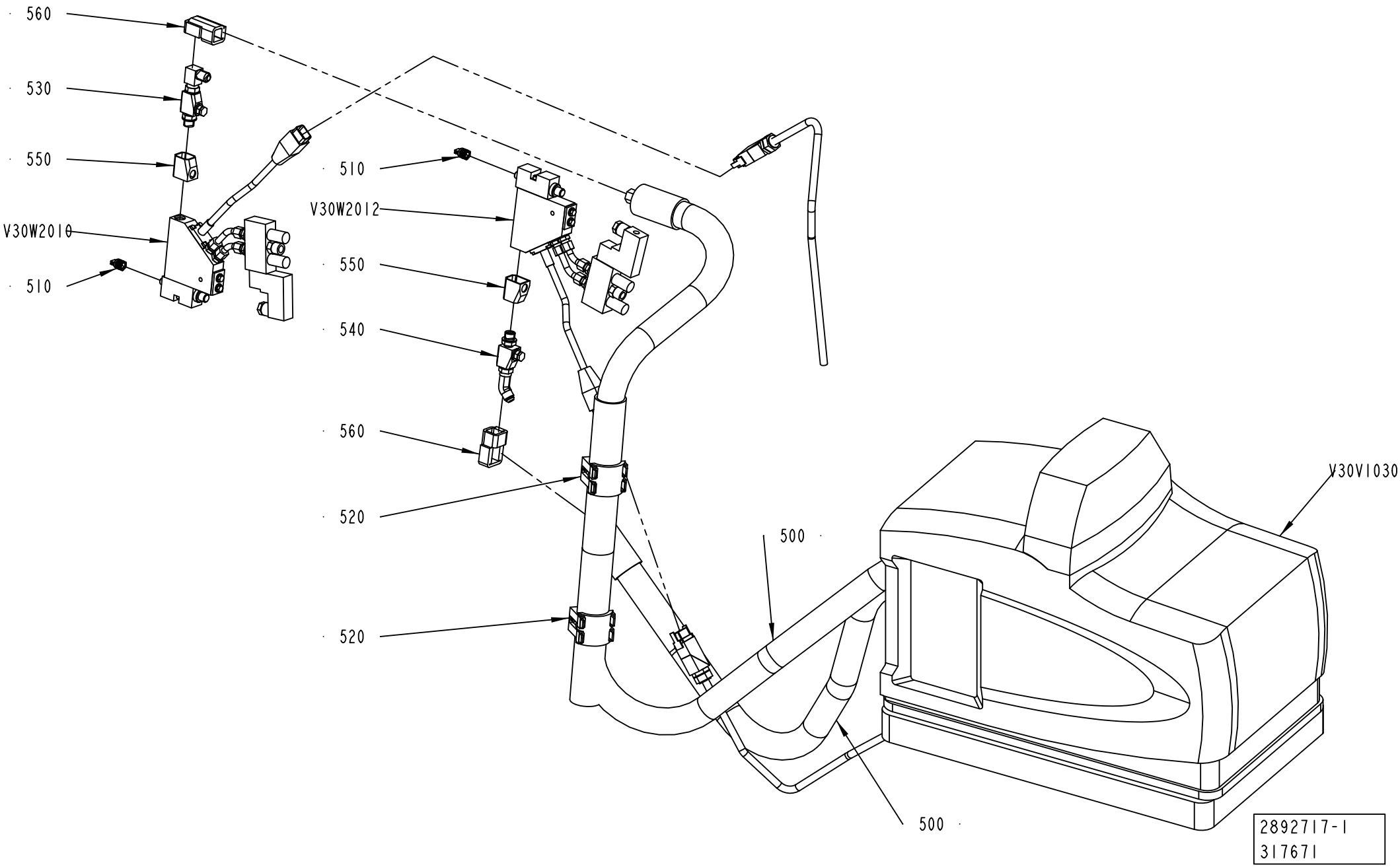
560
530
550
V30W2010
510
510
V30W2012
550
540
560
520
520
500
500
V30V1030
2892717-1
317671

ECM: 361146 - 20081014
Group number: 2892717-0100
Assembly Drawing: 2892717-1_1_AA

Pos	Part No	UN	Qty	Description	Page No
-					
500	90439-0212		2	274792 HOSE	
510	90439-0236		2	NOZZLE,1011012	
520	90439-0295		2	SERVICE KIT, NO. 111940	
530	90458-2566		1	FILTER 90 DEGREES 100 MESH, 1007231	
	90458-2567		*1*	*FILTER INSERT 100 MESH, 1007373*	
540	90459-2364		1	FILTER, 10077234	
	90458-2567		*1*	*FILTER INSERT 100 MESH, 1007373*	
550	90600-0547		2	SATURN IN-LINE FILTER JACKET, #1056296	
560	90600-3956		2	HEAT INSULATION, #1081862	
V30K2010	90600-2959		1	HOT MELT GUN REV. A10, #1071632	
	90439-0206		*1*	*CABLE*	
	90459-6327		*1*	*SOLENOID VALVE, #1053894*	
	90459-6332		*1*	*SILENCER, #1058058*	
	90042-0392		*1*	*CONTACT 2 POLE + EARTH*	
	90459-6329		*1*	*GUN MODULE SOLIDBLUE A #1052927*	
V30K2012	90600-2959		1	HOT MELT GUN REV. A10, #1071632	
	90439-0206		*1*	*CABLE*	
	90459-6327		*1*	*SOLENOID VALVE, #1053894*	
	90459-6332		*1*	*SILENCER, #1058058*	
	90042-0392		*1*	*CONTACT 2 POLE + EARTH*	
	90459-6329		*1*	*GUN MODULE SOLIDBLUE A #1052927*	
V30V1030	90459-1991		1	HOT MELT UNIT, #1022230	
	90459-1989		*1*	*COVERS,FRAME,CHASSIS, P4 #1021660*	
	90459-1988		*1*	*COV.,FRAME,SUBBASE MOUNT.PL.(P4)#1021661*	
	90459-1987		*1*	*PNEUM. PANEL ASS. (P4/7/10) #1028307*	
	90459-1986		*1*	*REPL. SATURN® FILTER, 100 MESH #1028305*	
	90459-1985		*1*	*PUMP SERVICE KIT (P4,P7,P10) #1028304*	
	90459-1984		*1*	*PUMP ASS. SERV. KIT (P4/7/10) #102830*	
	90459-1983		*1*	*HEATER-BLOCK KIT, #1064649*	
	90459-1982		*1*	*AUTO. PR. DIS. VALVE (P4/7/10)#1028308*	
	90459-1981		*1*	*MANIFOLD SERVICE KIT (P4,P7,P10)#1028309*	
	90459-1980		*1*	*MANIFOLD ASSEMBLY, 4-HOSE #1064651*	
	90439-0241		*1*	*ANGLE NIPPLE*	
	90459-1971		*1*	*HOSE/GUN MODULE KIT(P4,P7,P10),#1028328*	
	90459-1972		*1*	*FUSE KIT,HOSE/GUN (P4,P7,P10)),#1028331*	
	90459-1973		*1*	*MAIN CIRC.BOARD SERV.KIT(P4,P7),#1028322*	
	90459-1974		*1*	*FUSE KIT,MAIN CIRC.B.(P4/7/10),#1028329*	
	90459-1975		*1*	*CPU CONT.BOARD SERV.KIT(P4/7/10)#1028325*	
	90459-1976		*1*	*OPER. PANEL/ENCL.SERV.KIT(P4/7)#1028326*	
	90459-1977		*1*	*WELDMENT, TANK, P4 #1051033*	
	90459-1978		*1*	*RTD SERVICE KIT (P4,P7,P10) #1028320*	
	90459-1979		*1*	*THERMOSTAT SERV. KIT(P4,P7,P10) #1028321*	

Machine Type	Group Description	Used-In	Group Number	Page No

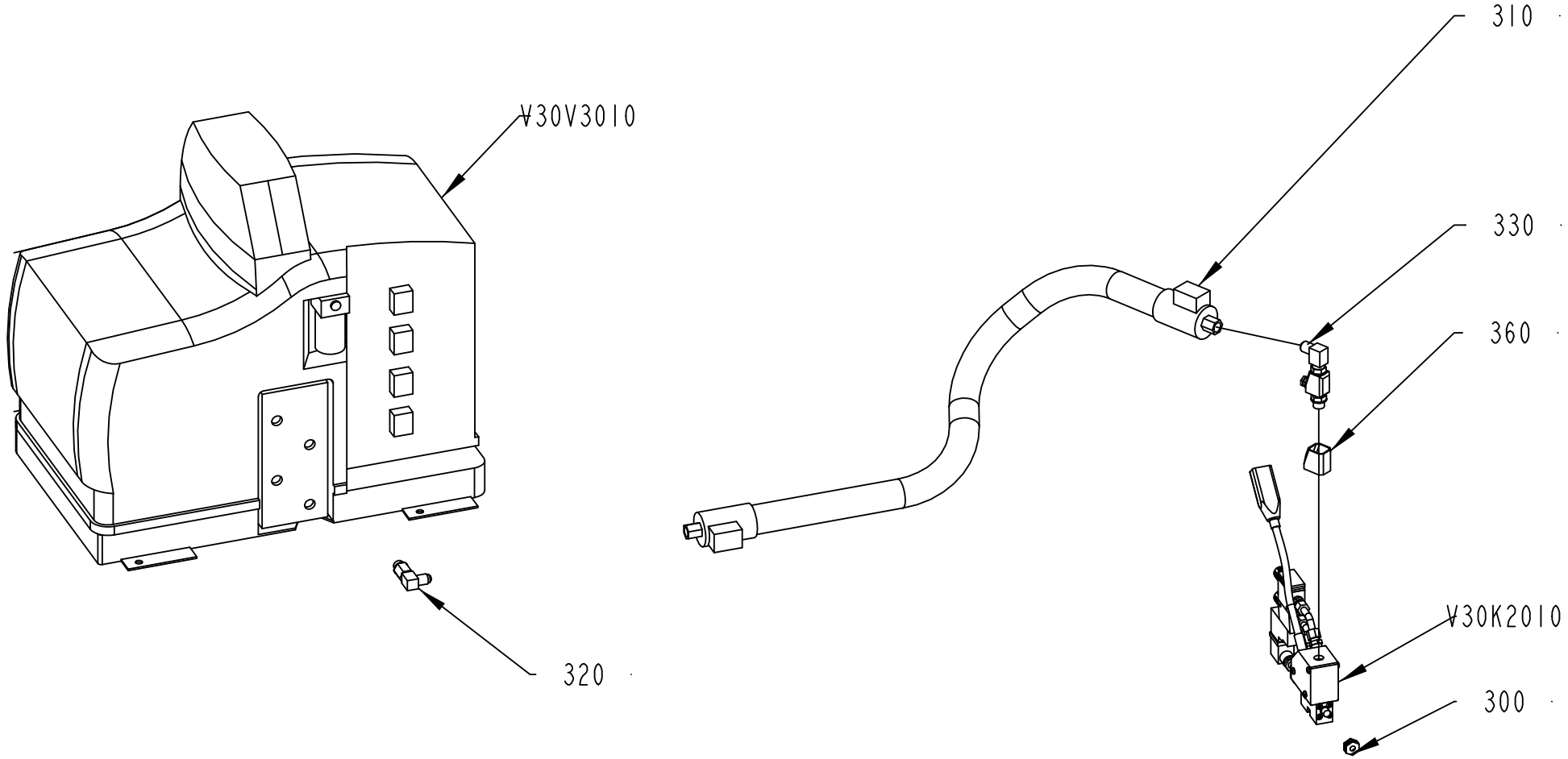

2863510-1
355722

ECM: 355723 - 20081009
Group number: 2863510-0100
Assembly Drawing: 2863510-1_1_AA

Pos	Part No	UN	Qty	Description	Page No
-					
300	90439-0155		1	PRECISION NOZZLE SATURN 322012	
310	90439-0209		1	HOSE	
320	90439-0241		1	ANGLE NIPPLE	
330	90458-2566		1	FILTER 90 DEGREES 100 MESH, 1007231	
	90458-2567		*1*	*FILTER INSERT 100 MESH, 1007373*	
360	90600-0547		1	SATURN IN-LINE FILTER JACKET, #1056296	
V30K2010	90459-6475		1	HOT MELT GUN, SOLIDBLUE A #8505768	
	90439-0206		*1*	*CABLE*	
	90459-6327		*1*	*SOLENOID VALVE, #1053894*	
	90459-6332		*1*	*SILENCER, #1058058*	
	90042-0392		*1*	*CONTACT 2 POLE + EARTH*	
	90459-6329		*1*	*GUN MODULE SOLIDBLUE A #1052927*	
	90459-6476		*1*	*HEATER, HTR, CRTG, 147W, 240V*	
V30V3010	90459-1991		1	HOT MELT UNIT, #1022230	
	90459-1989		*1*	*COVERS,FRAME,CHASSIS, P4 #1021660*	
	90459-1988		*1*	*COV.,FRAME,SUBBASE MOUNT.PL.(P4)#1021661*	
	90459-1987		*1*	*PNEUM. PANEL ASS. (P4/7/10) #1028307*	
	90459-1986		*1*	*REPL. SATURN® FILTER, 100 MESH #1028305*	
	90459-1985		*1*	*PUMP SERVICE KIT (P4,P7,P10) #1028304*	
	90459-1984		*1*	*PUMP ASS. SERV. KIT (P4/7/10) #102830*	
	90459-1983		*1*	*HEATER-BLOCK KIT, #1064649*	
	90459-1982		*1*	*AUTO. PR. DIS. VALVE (P4/7/10)#1028308*	
	90459-1981		*1*	*MANIFOLD SERVICE KIT (P4,P7,P10)#1028309*	
	90459-1980		*1*	*MANIFOLD ASSEMBLY, 4-HOSE #1064651*	
	90439-0241		*1*	*ANGLE NIPPLE*	
	90459-1971		*1*	*HOSE/GUN MODULE KIT(P4,P7,P10),#1028328*	
	90459-1972		*1*	*FUSE KIT,HOSE/GUN (P4,P7,P10)),#1028331*	
	90459-1973		*1*	*MAIN CIRC.BOARD SERV.KIT(P4,P7),#1028322*	
	90459-1974		*1*	*FUSE KIT,MAIN CIRC.B.(P4/7/10),#1028329*	
	90459-1975		*1*	*CPU CONT.BOARD SERV.KIT(P4/7/10)#1028325*	
	90459-1976		*1*	*OPER. PANEL/ENCL.SERV.KIT(P4/7)#1028326*	
	90459-1977		*1*	*WELDMENT, TANK, P4 #1051033*	
	90459-1978		*1*	*RTD SERVICE KIT (P4,P7,P10) #1028320*	
	90459-1979		*1*	*THERMOSTAT SERV. KIT(P4,P7,P10) #1028321*	

Pos	Part No	UN	Qty	Description	Page No

Machine Type	Group Description	Used-In	Group Number	Page No

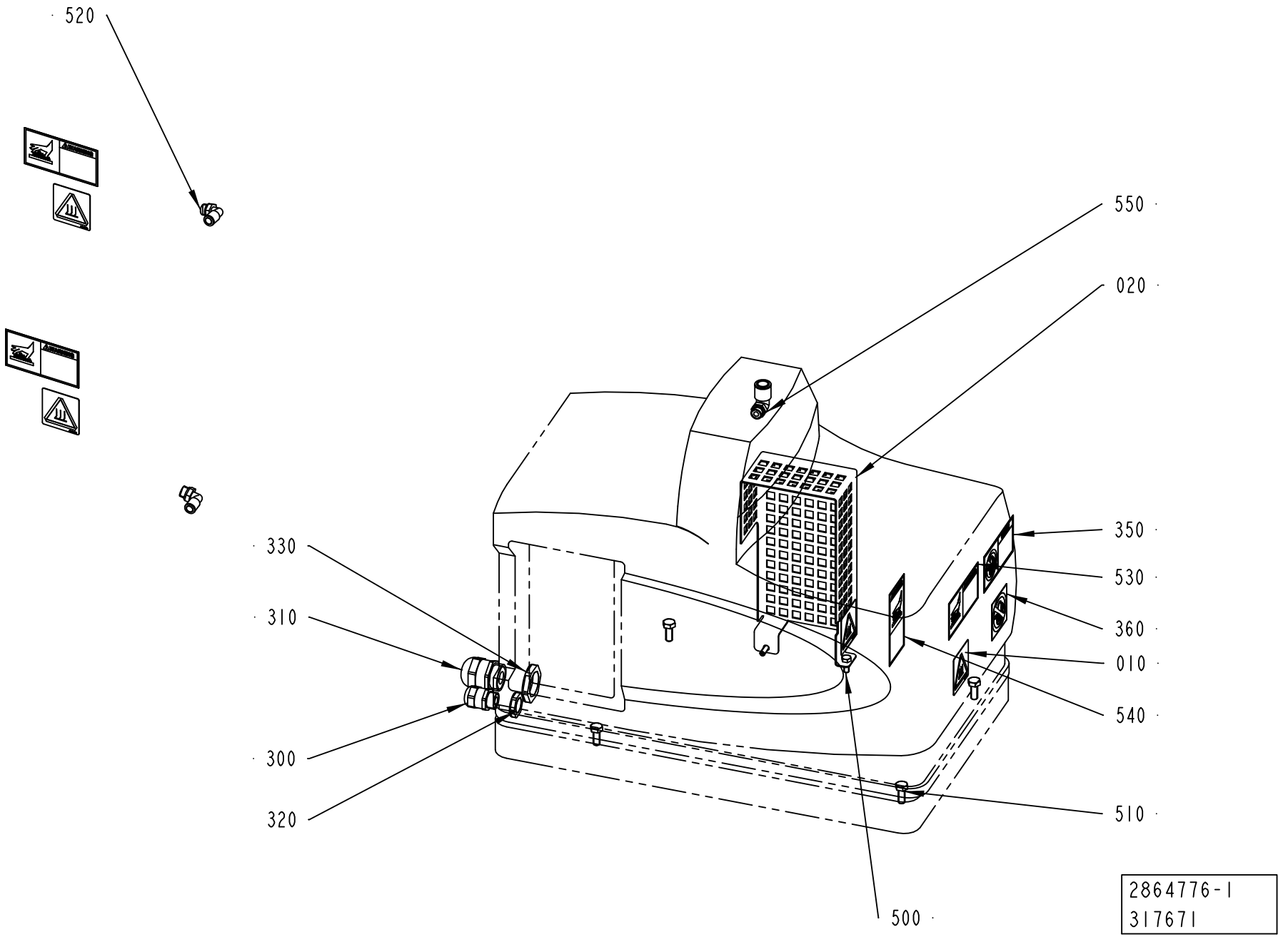
520
550
020
330
310
350
530
360
010
540
300
320
510
500
2864776-1
317671

ECM: 355725 - 20081009
Group number: 2864776-0100
Assembly Drawing: 2864776-1_1_AA

This list covers pages from 3-10 to 3-13

Pos	Part No	UN	Qty	Description	Page No
TBA ANSI, TB ANSI (See drawing on page: 3-10)					
350	90459-2232		1	WARNING SIGN ANSI (H), DO NOT WASH	
520	350002-0009		2	PUSH-IN L-FITTING QSL-F-G1/4-8	
530	359725-0116		3	WARNING SIGN ANSI (H), HOT SURFACE	
540	359725-0117		1	WARNING SIGN ANSI (V), HOT SURFACE	
TBA ISO, TB ISO (See drawing on page: 3-10)					
010	1128853-0000		4	CAUTION SIGN	
360	90459-2265		1	PROHIBITION SIGN ISO, DO NOT WASH	
520	350002-0009		2	PUSH-IN L-FITTING QSL-F-G1/4-8	
TCA ANSI (See drawing on page: 3-12)					
560	315400-0001	M	3	TUBE PUN-H-6X1-BL	
570	315400-0010	M	0.9	TUBE PUN-H-12X2-BL	
580	350008-0004		1	PUSH-IN FITTING QSF-F-G1/4-6	
TCA ISO (See drawing on page: 3-12)					
010	1128853-0000		2	CAUTION SIGN	
360	90459-2265		1	PROHIBITION SIGN ISO, DO NOT WASH	
560	315400-0001	M	3	TUBE PUN-H-6X1-BL	
570	315400-0010	M	0.9	TUBE PUN-H-12X2-BL	
580	350008-0004		1	PUSH-IN FITTING QSF-F-G1/4-6	
Common Parts					
020	2864777-0000		1	COVER	
300	90458-0315		1	CABLE GLAND, M20X1,5, NO.5311 1120	
310	90458-0317		1	CABLE GLAND, M32X1,5, NO.5311 1140	
320	90458-0323		1	NUT, M20X1,5	
330	90458-0325		1	NUT, M32X1,5	
500	312105-0368		2	SCREW M6S ISO 4017 M6X16 A480	
510	312105-0451		4	SCREW M6S ISO 4017 M8X20 A480	
550	350002-0011		1	PUSH-IN L-FITTING QSL-F-G1/4-12	

Pos	Part No	UN	Qty	Description	Page No

Machine Type | Group Description | Used-In | Group Number | Page No

HOTMELT EQUIPMENT MISCELLANEOUS

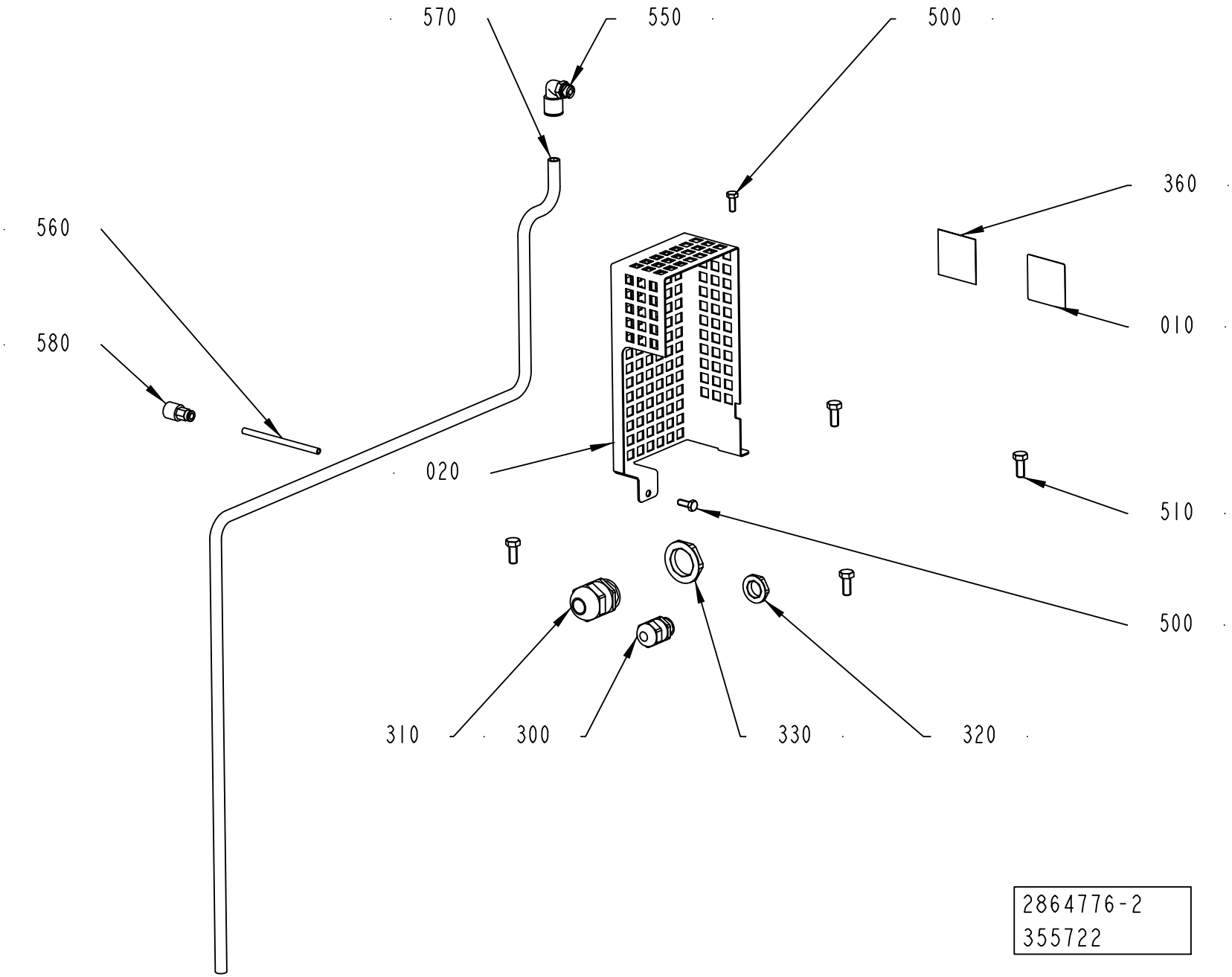

ECM: 355725 - 20081009
Group number: 2864776-0100
Assembly Drawing: 2864776-2_1_AA

This list covers pages from 3-10 to 3-13

Pos	Part No	UN	Qty	Description	Page No
TBA ANSI, TB ANSI (See drawing on page: 3-10)					
350	90459-2232		1	WARNING SIGN ANSI (H), DO NOT WASH	
520	350002-0009		2	PUSH-IN L-FITTING QSL-F-G1/4-8	
530	359725-0116		3	WARNING SIGN ANSI (H), HOT SURFACE	
540	359725-0117		1	WARNING SIGN ANSI (V), HOT SURFACE	
TBA ISO, TB ISO (See drawing on page: 3-10)					
010	1128853-0000		4	CAUTION SIGN	
360	90459-2265		1	PROHIBITION SIGN ISO, DO NOT WASH	
520	350002-0009		2	PUSH-IN L-FITTING QSL-F-G1/4-8	
TCA ANSI (See drawing on page: 3-12)					
560	315400-0001	M	3	TUBE PUN-H-6X1-BL	
570	315400-0010	M	0.9	TUBE PUN-H-12X2-BL	
580	350008-0004		1	PUSH-IN FITTING QSF-F-G1/4-6	
TCA ISO (See drawing on page: 3-12)					
010	1128853-0000		2	CAUTION SIGN	
360	90459-2265		1	PROHIBITION SIGN ISO, DO NOT WASH	
560	315400-0001	M	3	TUBE PUN-H-6X1-BL	
570	315400-0010	M	0.9	TUBE PUN-H-12X2-BL	
580	350008-0004		1	PUSH-IN FITTING QSF-F-G1/4-6	
Common Parts					
020	2864777-0000		1	COVER	
300	90458-0315		1	CABLE GLAND, M20X1,5, NO.5311 1120	
310	90458-0317		1	CABLE GLAND, M32X1,5, NO.5311 1140	
320	90458-0323		1	NUT, M20X1,5	
330	90458-0325		1	NUT, M32X1,5	
500	312105-0368		2	SCREW M6S ISO 4017 M6X16 A480	
510	312105-0451		4	SCREW M6S ISO 4017 M8X20 A480	
550	350002-0011		1	PUSH-IN L-FITTING QSL-F-G1/4-12	

Pos	Part No	UN	Qty	Description	Page No

Machine Type | Group Description | Used-In | Group Number | Page No

Tetra Pak

SPC
Spare Parts Catalogue

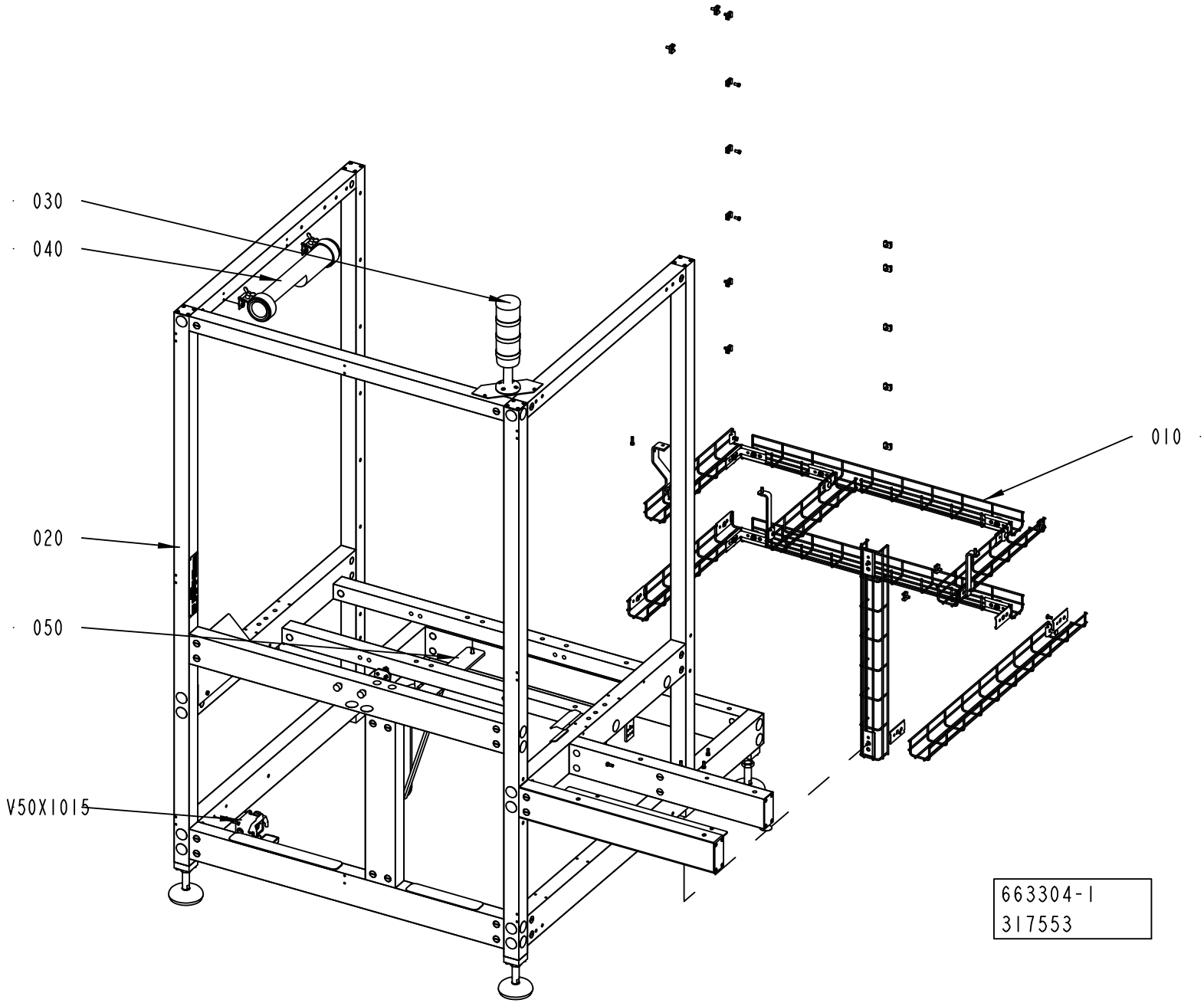
030
040
020
050
V50X1015
010
663304-1
317553

ECM: 350580 - 20081009
Group number: 663304-0100
Assembly Drawing: 663304-1_1_AA

This list covers pages from 4-2 to 4-5

Pos	Part No	UN	Qty	Description	Page No
TCA (See drawing on pages: 4-2, 4-4)					
060	2948240-0100		1	GUIDE ARM	**4-7**
070	2957740-0100		1	BRACKET	**4-9**
Common Parts					
010	2843700-0100		1	CABLE DUCT	**4-11**
020	2788657-0100		1	MACHINE BODY	**4-13**
030	581689-0600		1	WARNING LAMP	**4-15**
040	2901717-0100		1	LIGHT FIXTURE	**4-17**
V50X1015	2913340-0100		1	CONNECTOR	**4-19**

Pos	Part No	UN	Qty	Description	Page No

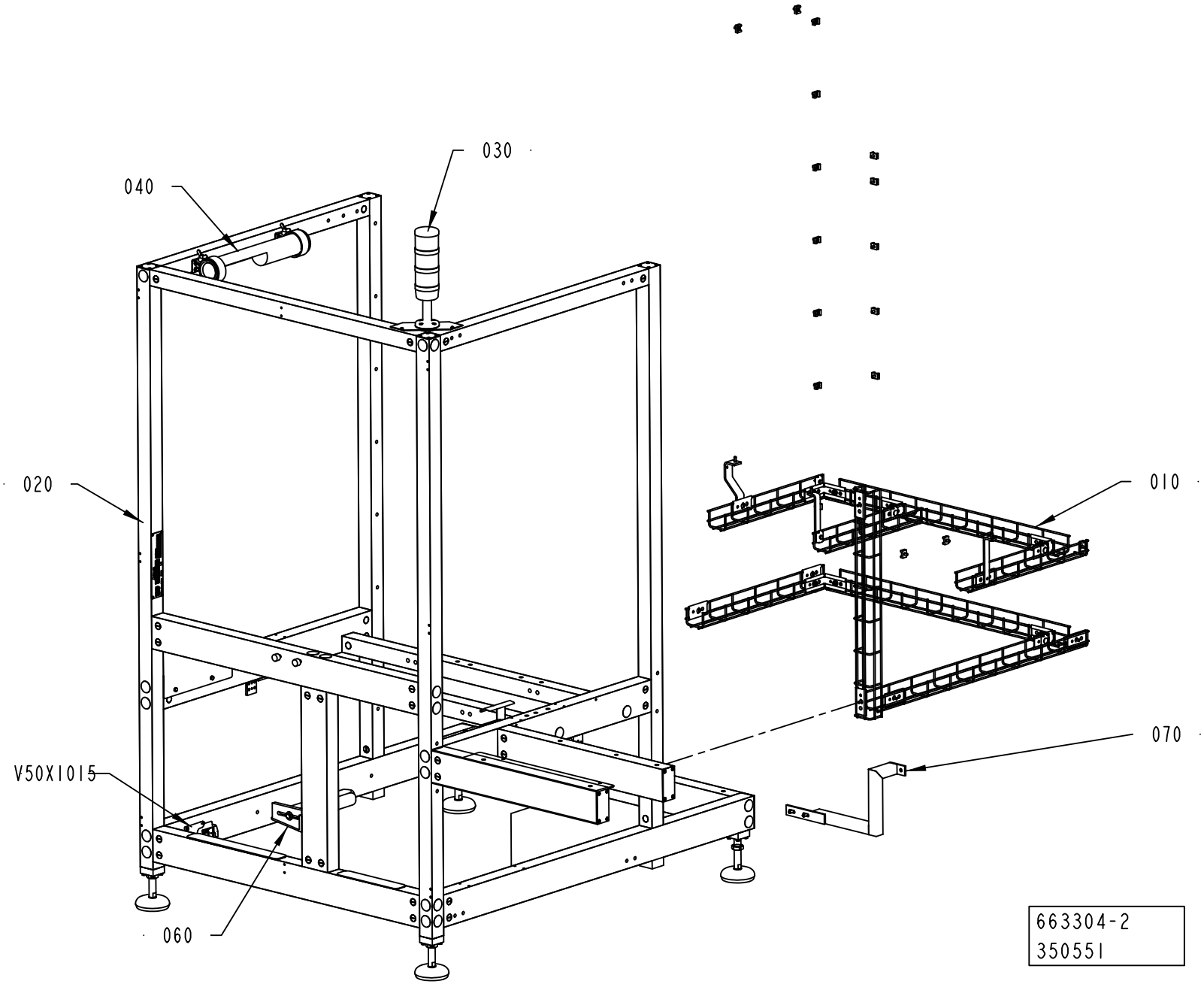
030
040
020
010
070
V50X1015
060
663304-2
350551

ECM: 350580 - 20081009
Group number: 663304-0100
Assembly Drawing: 663304-2_1_AA

This list covers pages from 4-2 to 4-5

Pos	Part No	UN	Qty	Description	Page No
TCA (See drawing on pages: 4-2, 4-4)					
060	2948240-0100		1	GUIDE ARM	**4-7**
070	2957740-0100		1	BRACKET	**4-9**
Common Parts					
010	2843700-0100		1	CABLE DUCT	**4-11**
020	2788657-0100		1	MACHINE BODY	**4-13**
030	581689-0600		1	WARNING LAMP	**4-15**
040	2901717-0100		1	LIGHT FIXTURE	**4-17**
V50X1015	2913340-0100		1	CONNECTOR	**4-19**

Pos	Part No	UN	Qty	Description	Page No

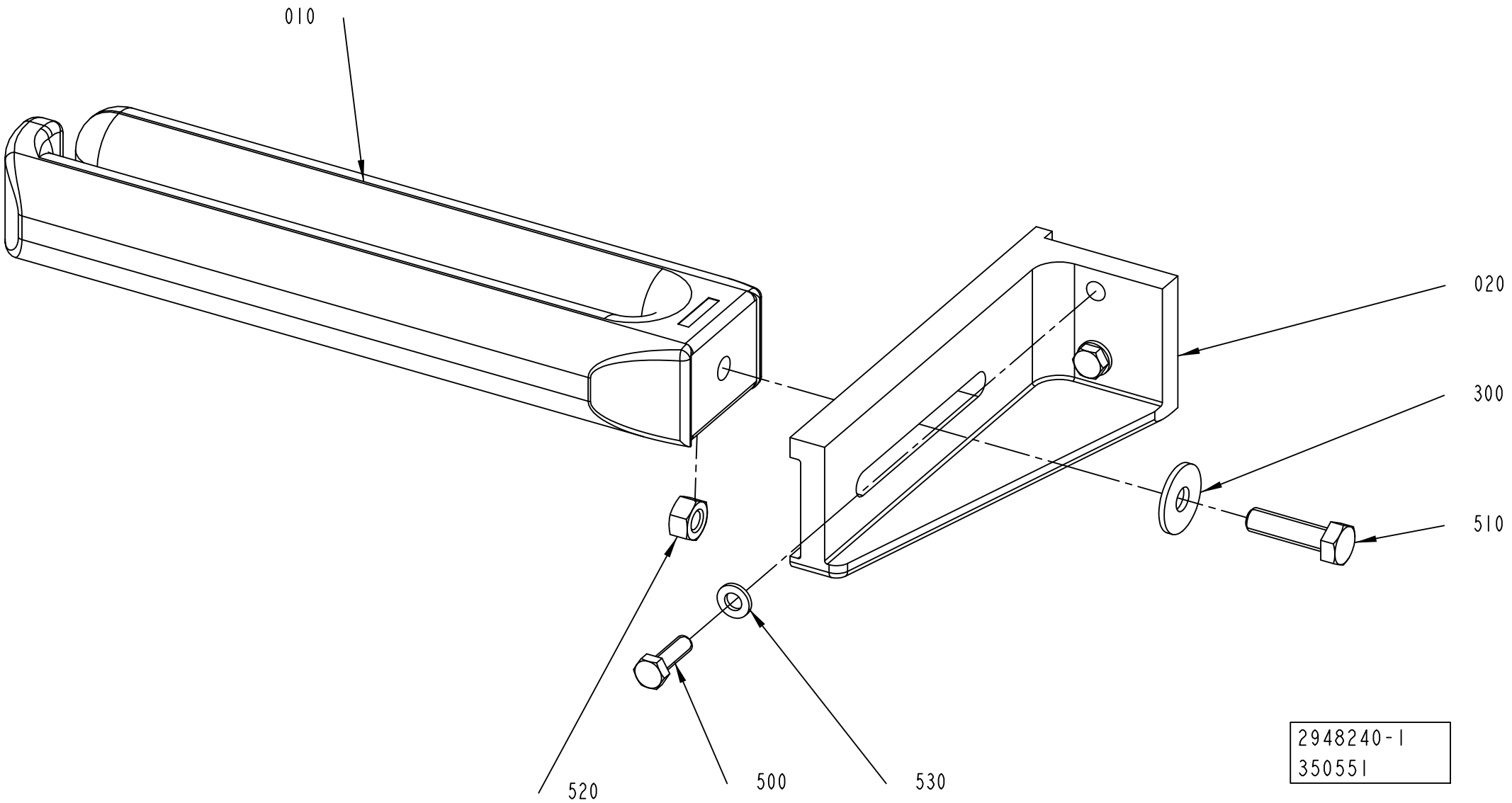
010
020
300
510
520
500
530
2948240-1
350551

ECM: 350581 - 20081009
Group number: 2948240-0100
Assembly Drawing: 2948240-1_1_AA

Pos	Part No	UN	Qty	Description	Page No
-					
010	556386-0000		1	STEERING	
020	2948232-0000		1	BRACKET	
300	90005-0116		1	WASHER PLAIN ROUND 8,4(M8)/24, H=2	
500	312105-0370		2	SCREW M6S ISO 4017 M6X20 A480	
510	312105-0455		1	SCREW M6S ISO 4017 M8X30 A480	
520	312605-0318		1	HEXAGON NUT, M6M M8 A280	
530	315106-0153		2	WASHER ISO 7089-6-200 HV A4	

Pos	Part No	UN	Qty	Description	Page No

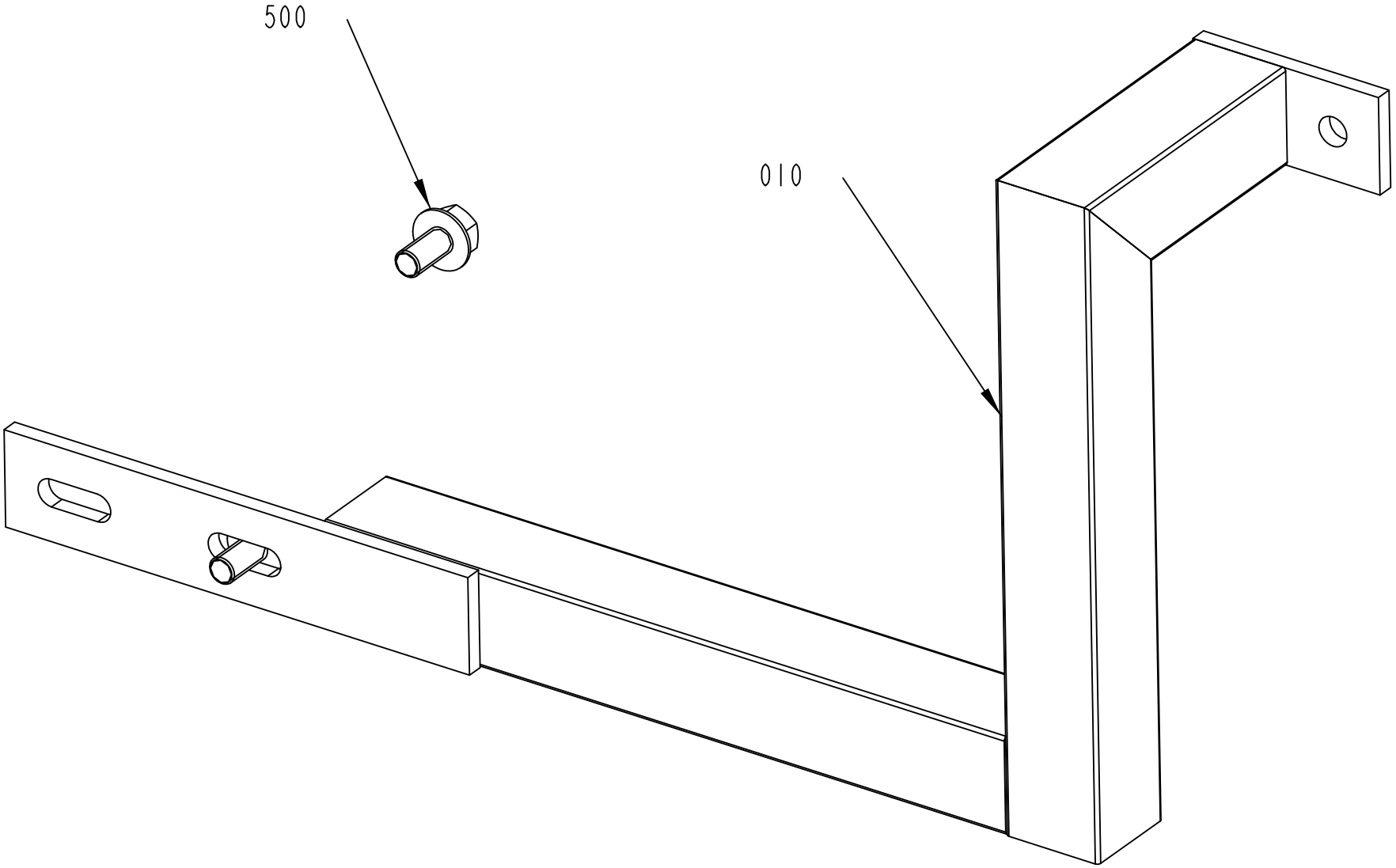

2957740-1
350551

ECM: 350582 - 20081009
Group number: 2957740-0100
Assembly Drawing: 2957740-1_1_AA

Pos	Part No	UN	Qty	Description	Page No
-					
010	2957721-0000		1	BRACKET	
500	312108-0449		2	SCREW EN 1665 TYPE F M8X16 A270	

Pos	Part No	UN	Qty	Description	Page No

CABLE DUCT

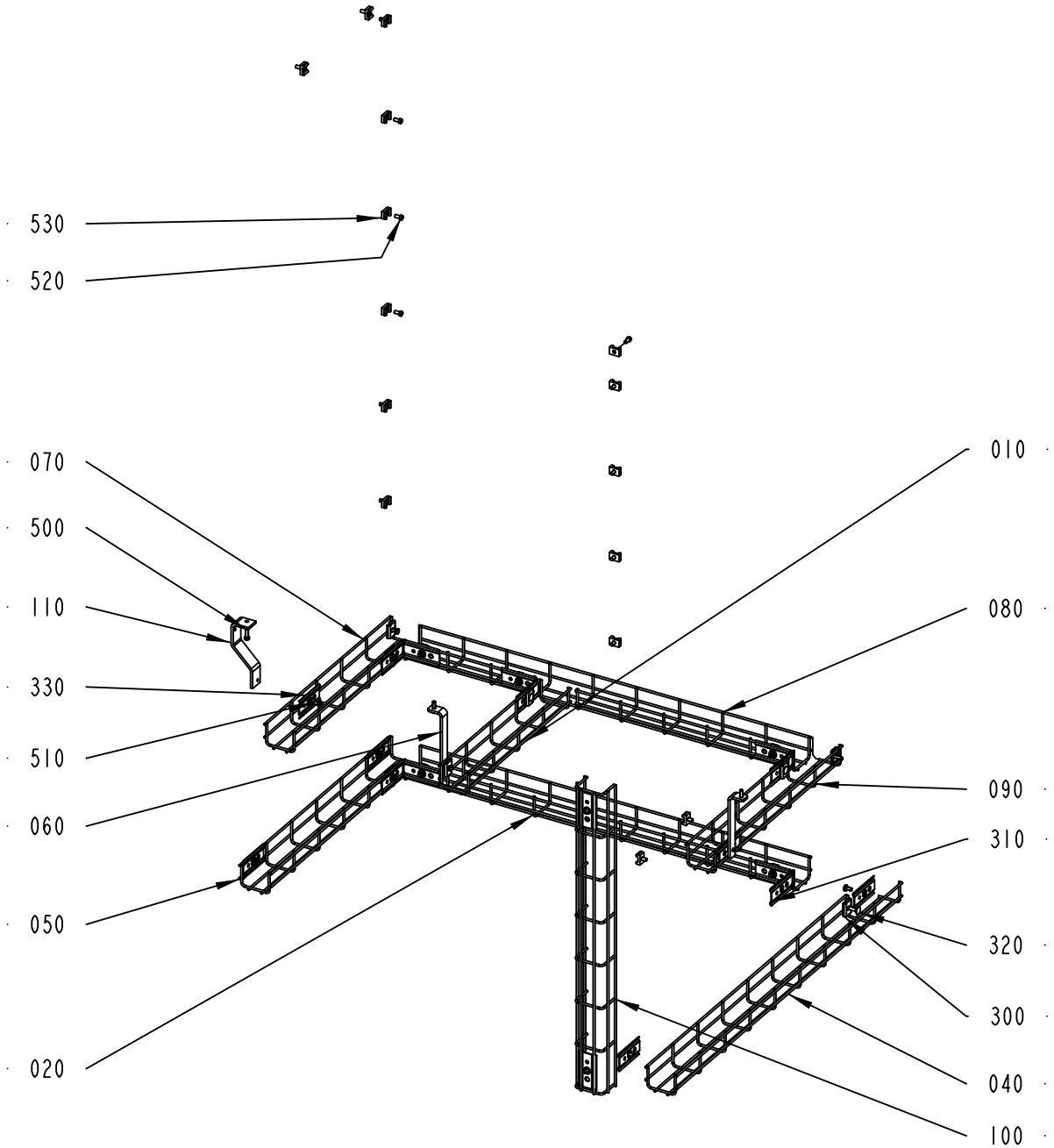
530
520
070
500
110
330
510
060
050
020
010
080
090
310
320
300
040
100
2843700-1
317553

ECM: 329444 - 20080303
Group number: 2843700-0100
Assembly Drawing: 2843700-1_1_AA

Pos	Part No	UN	Qty	Description	Page No
-					
010	2843699-0000		1	CABLE TRENCH	
020	2843703-0000		1	CABLE TRENCH	
040	2843706-0000		1	CABLE TRENCH	
050	2843708-0000		1	CABLE TRENCH	
060	2909945-0000		2	SUPPORT	
070	2909947-0000		1	CABLE TRENCH	
080	2909948-0000		1	CABLE TRENCH	
090	2909949-0000		1	CABLE TRENCH	
100	2909950-0000		1	CABLE TRENCH	
110	2946726-0000		1	BRACKET	
300	90181-0183		15	CABLE DUCT, FITTING, B2	
310	90181-0186		5	CABLE DUCT, ELBOW BRACKET, B27	
320	90181-0314		10	CABLE TRENCH PARTS	
330	90459-2701		8	CABLE DUCT, FITTING, B1	
500	312105-0370		6	SCREW M6S ISO 4017 M6X20 A480	
510	312113-0366		8	SERRATED COMBI TORX SCREW M6X12 A2	
520	312125-0366		16	SCREW ISO 1207 M6X12 A4	
530	352113-0204		16	ANCHOR PLATES FOR STRIPS, TYPE TM3S25-M	

Pos	Part No	UN	Qty	Description	Page No

MACHINE BODY

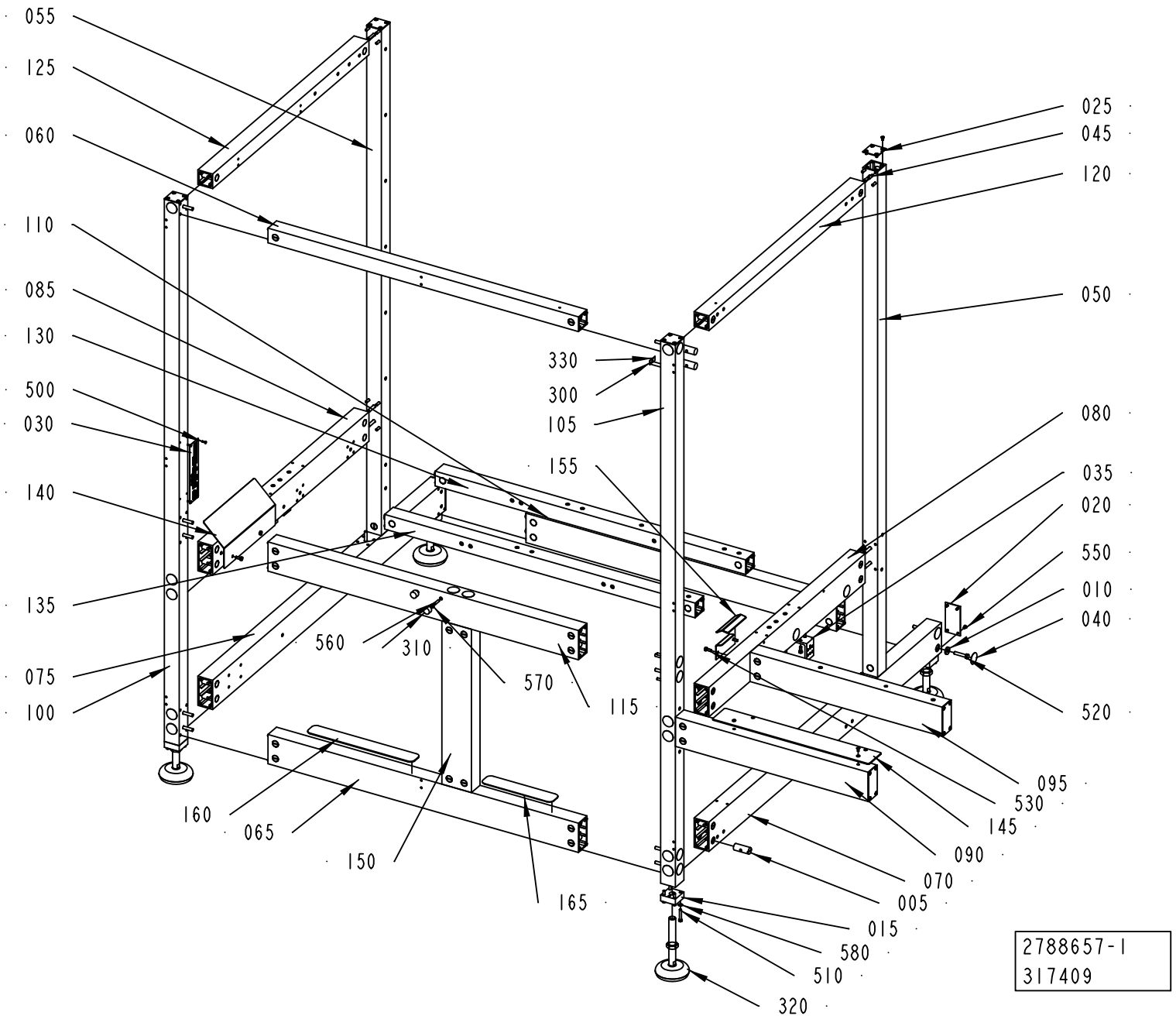

ECM: 329443 - 20080303
Group number: 2788657-0100
Assembly Drawing: 2788657-1_1_AA

Pos	Part No	UN	Qty	Description	Page No
-					
005	486268-0000		44	NUT	
010	548599-0000		44	WASHER	
015	556601-0000		4	BRACKET	
020	556603-0000		4	COVER PLATE	
025	556604-0000		4	COVER PLATE	
030	580923-0000		1	MACHINE SIGN CE	
035	975884-0000		3	BRACKET	
040	1021933-0000		44	COVER TAPE	
045	1065410-0000		112	SLOTTED PIN	
050	2752867-0000		1	PROFILE 50X50	
055	2752868-0000		1	PROFILE 50X50	
060	2752869-0000		1	PROFILE 50X50	
065	2752890-0000		1	PROFILE 50X100	
070	2752891-0000		1	PROFILE 50X100	
075	2752893-0000		1	PROFILE 50X100	
080	2752895-0000		1	PROFILE 50X100	
085	2752896-0000		1	PROFILE 50X100	
090	2752901-0000		1	PROFILE 50X100	
095	2752902-0000		1	PROFILE 50X100	
100	2752903-0000		1	PROFILE 50X50	
105	2752904-0000		1	PROFILE 50X50	
110	2818263-0000		1	PROFILE 50X100	
115	2833867-0000		1	PROFILE 50X100	
120	2833872-0000		1	PROFILE 50X50	
125	2833873-0000		1	PROFILE 50X50	
130	2833876-0000		1	PROFILE 50X50	
135	2839812-0000		1	PROFILE 50X50	
140	2858603-0000		1	PLATE	
145	2885390-0000		1	PLATE	
150	2893441-0000		1	PROFILE 50X100	
155	2946727-0000		1	FORK	
160	1103299-0000		1	NON-SKID	
165	1103300-0000		1	NON-SKID	
300	90194-0152		2	SIGN, EARTH	
310	90347-0011		2	VIBRATION DAMPER MEGI 781056	
320	90458-1508		4	FLOOR PLATE, DAMPER, M105-20-160	
330	90459-2928		2	LABEL 60417-2-IEC-5020, COMM. REF. POT.	
500	311521-0144		4	RIVET, BLANK 3,2X10	
510	312105-0376		16	SCREW M6S ISO 4014 M6X35 A480	
520	312105-0459		44	SCREW M6S ISO 4014 M8X40 A480	
530	312105-0368		10	SCREW M6S ISO 4017 M6X16 A480	
550	312145-0325		34	SCREW ISO 2009 MFS M5X10 A4	
560	312318-0372		2	SCREW ISO4029 M6X25 A4	
570	312625-0316		2	HEXAGON THIN NUT, EN 24035 ML6M M6 A4	
580	315105-0153		16	WASHER BRB 6,4X12 RFR	

Machine Type | Group Description | Used-In | Group Number | Page No

WARNING LAMP

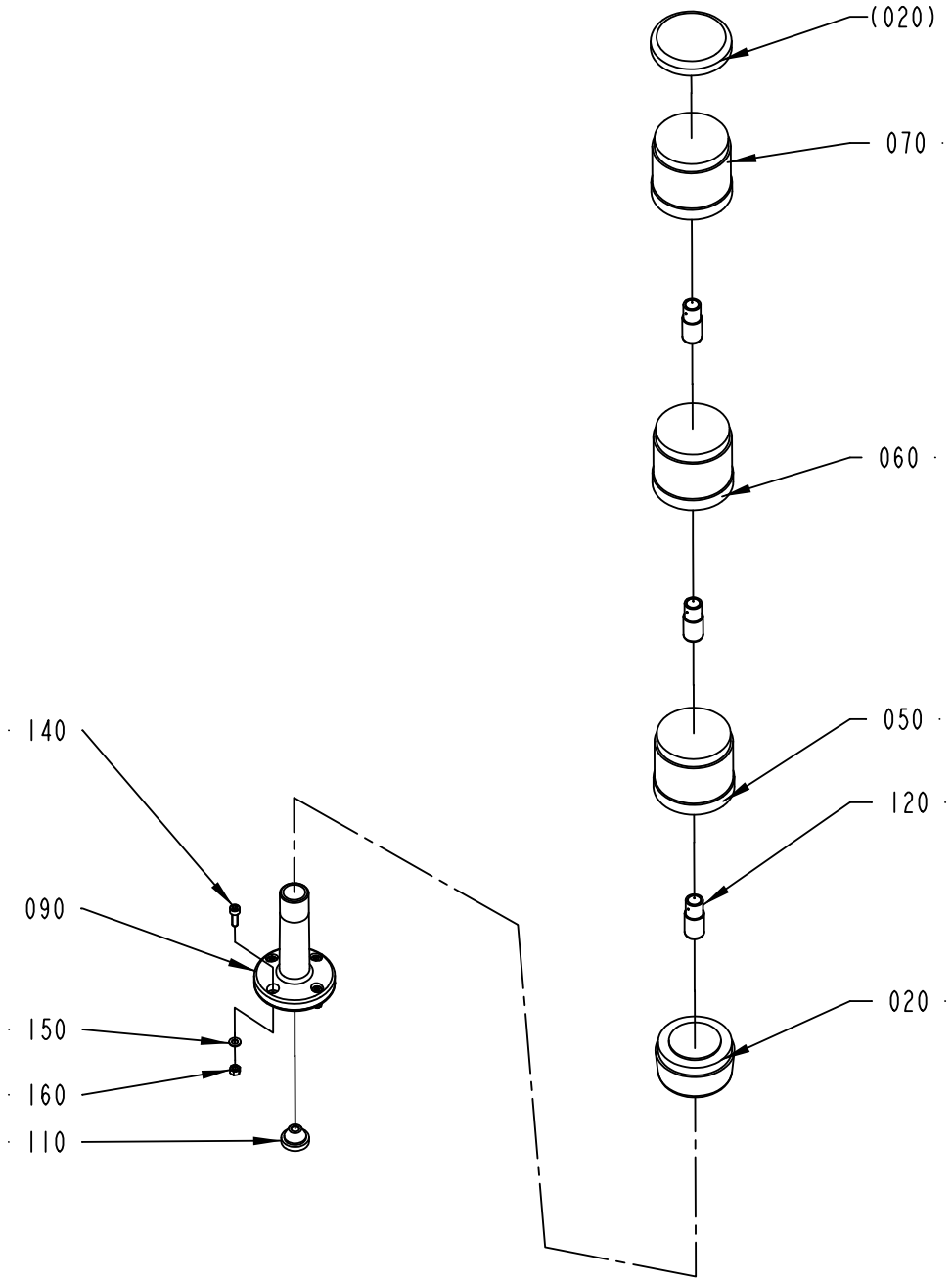

581689-6
312707

ECM: 312757 - 20071025
Group number: 581689-0600
Assembly Drawing: 581689-6_1_AA

Pos	Part No	UN	Qty	Description	Page No
-					
020	90458-0292		1	BASE, KT70-1001	
050	90458-0295		1	LIGHT ELEMENT, BLUE, KL70-401L	
060	90458-0294		1	LIGHT ELEMENT, YELLOW, KL70-401Y	
070	90458-0293		1	LIGHT ELEMENT, RED, KL70-401R	
090	90458-0297		1	BASE WITH TUBE 110 MM KA70-1011	
110	90015-0023		1	LEAD-IN, TET7-10, E-1458019	
120	90036-0068		3	BULB 6.5W 24V	
140	312115-0329		4	SCREW ISO4762 M5X16 A4 80	
150	315105-0146		8	WASHER BRB 5,3X10 RFR	
160	312605-0314		4	HEXAGON NUT, M6M M5 A280	

Pos	Part No	UN	Qty	Description	Page No

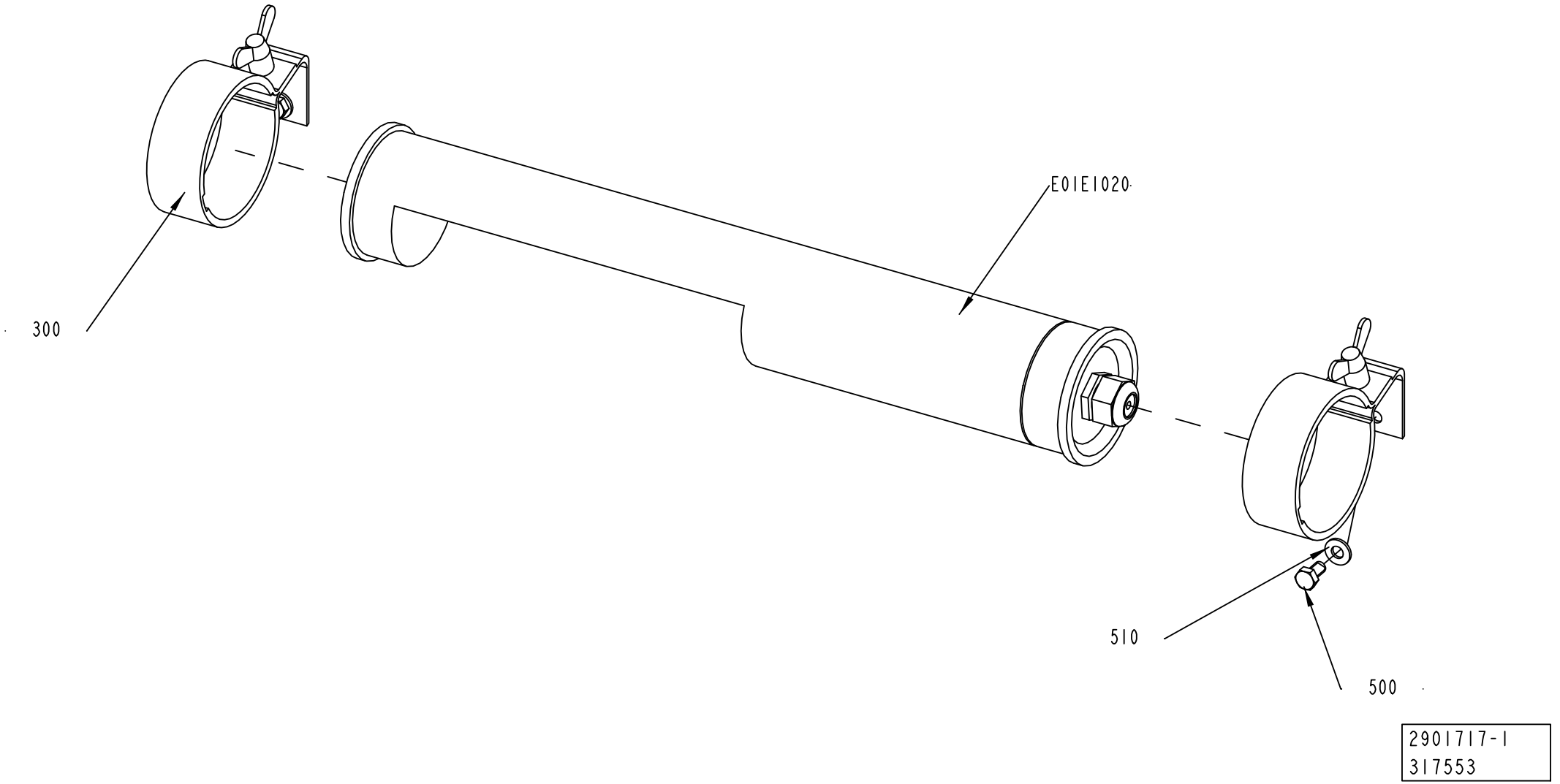
300
E01E1020
510
500
2901717-1
317553

ECM: 329446 - 20080303
Group number: 2901717-0100
Assembly Drawing: 2901717-1_1_AA

Pos	Part No	UN	Qty	Description	Page No
-					
300	90164-0303		2	LIGHT FIXTURE, BRACKET 70MM	
500	312105-0366		4	SCREW M6S ISO 4017 M6X12 A480	
510	315105-0156		4	WASHER BRB 6,7X14 RFR	
E01E1020	90164-0015		1	LIGHT FIXTURE, RL70CV-111 / 230V 50HZ	
	92297-0301		*1*	*STARTER 4-65W S10, E 8219023*	
	90297-0007		*1*	*FLUORESCENT TUBE, PLS 11*	

Pos	Part No	UN	Qty	Description	Page No

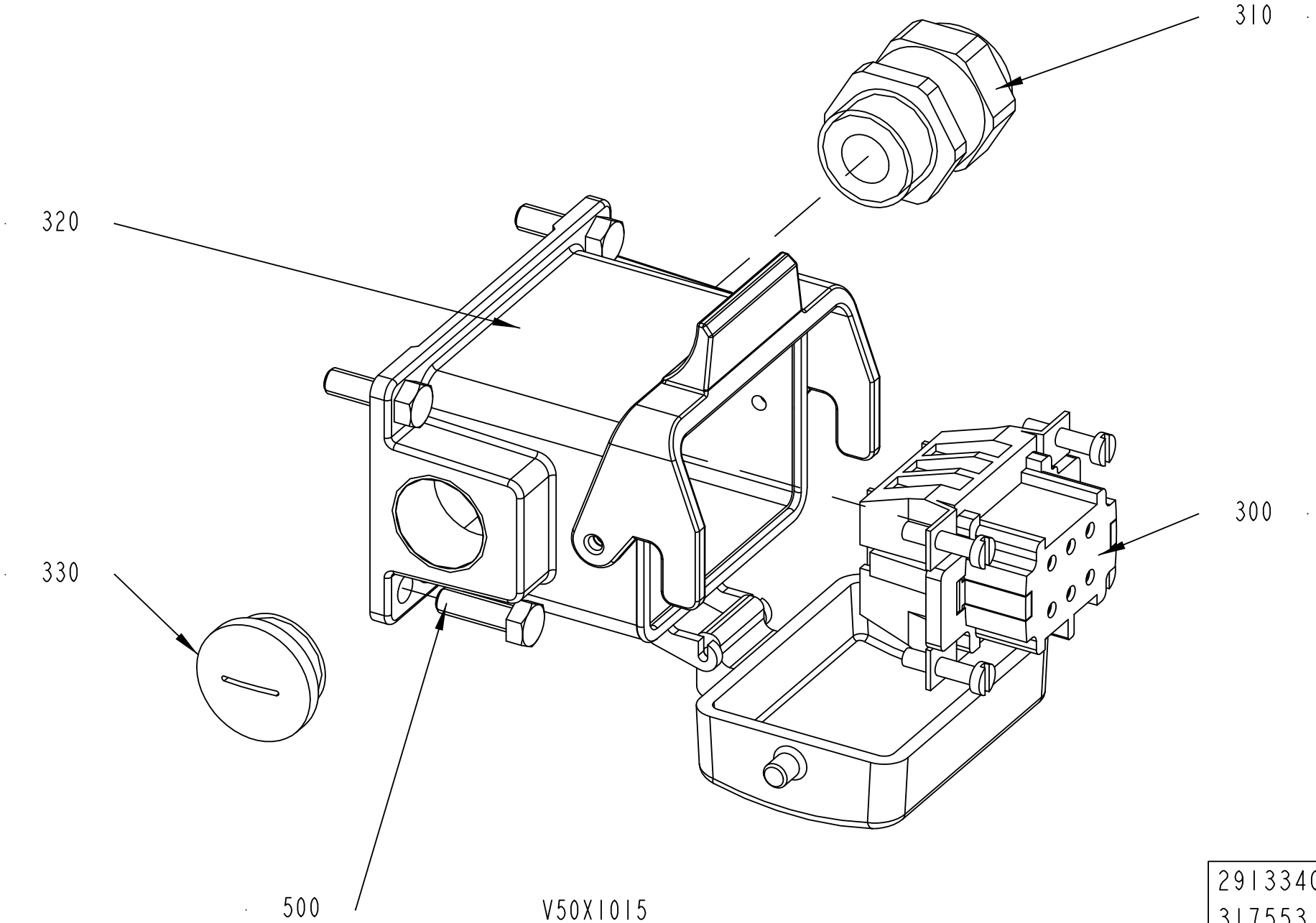

2913340-1
317553

ECM: 329447 - 20080303
Group number: 2913340-0100
Assembly Drawing: 2913340-1_1_AA

Pos	Part No	UN	Qty	Description	Page No
-					
300	90110-0053		1	FEMALE INSERT HAN 6 E 09 33 006 2701	
310	90458-0315		1	CABLE GLAND, M20X1,5, NO.5311 1120	
320	90600-2071		1	HOUSING 6B SURF MOUNT, 19 30 006 2295	
330	90458-1308		1	BLIND PLUG CIRCULAR, M20X1,5 514GFK/220	
500	312105-0329		4	SCREW M6S ISO 4017 M5X16 A480	

Pos	Part No	UN	Qty	Description	Page No

Tetra Pak

SPC
Spare Parts Catalogue

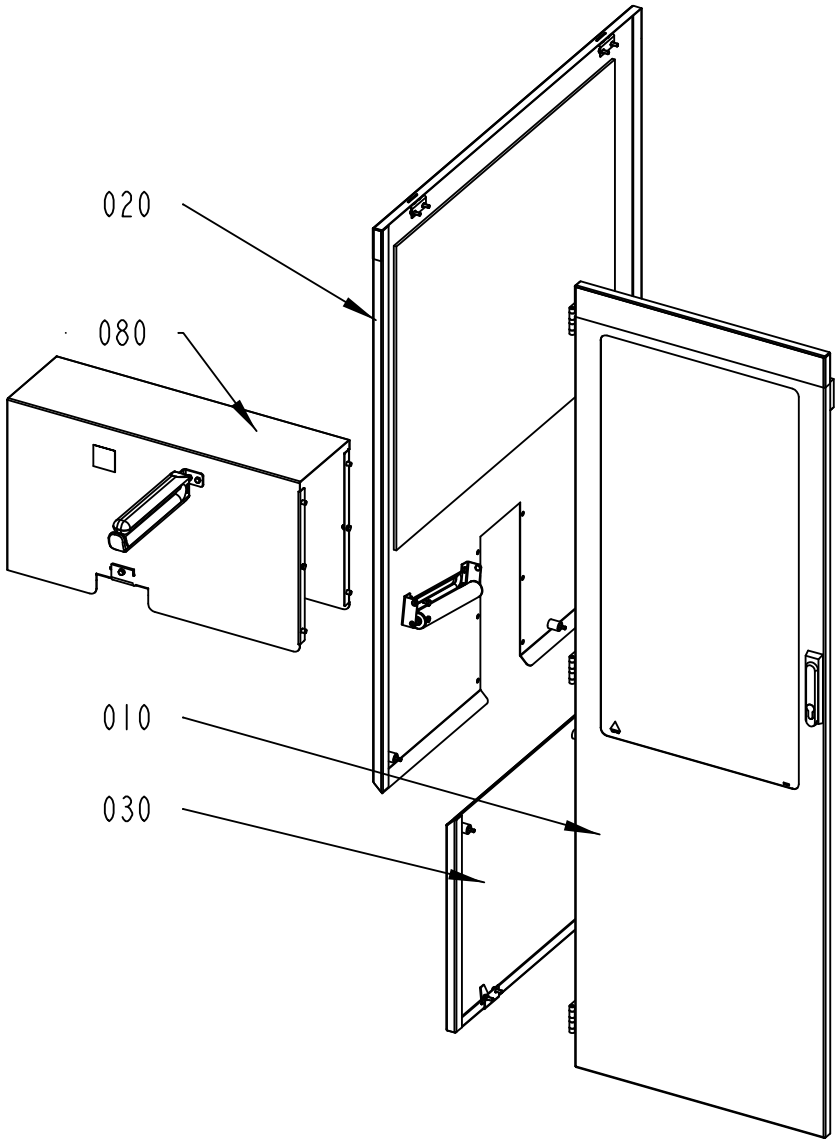

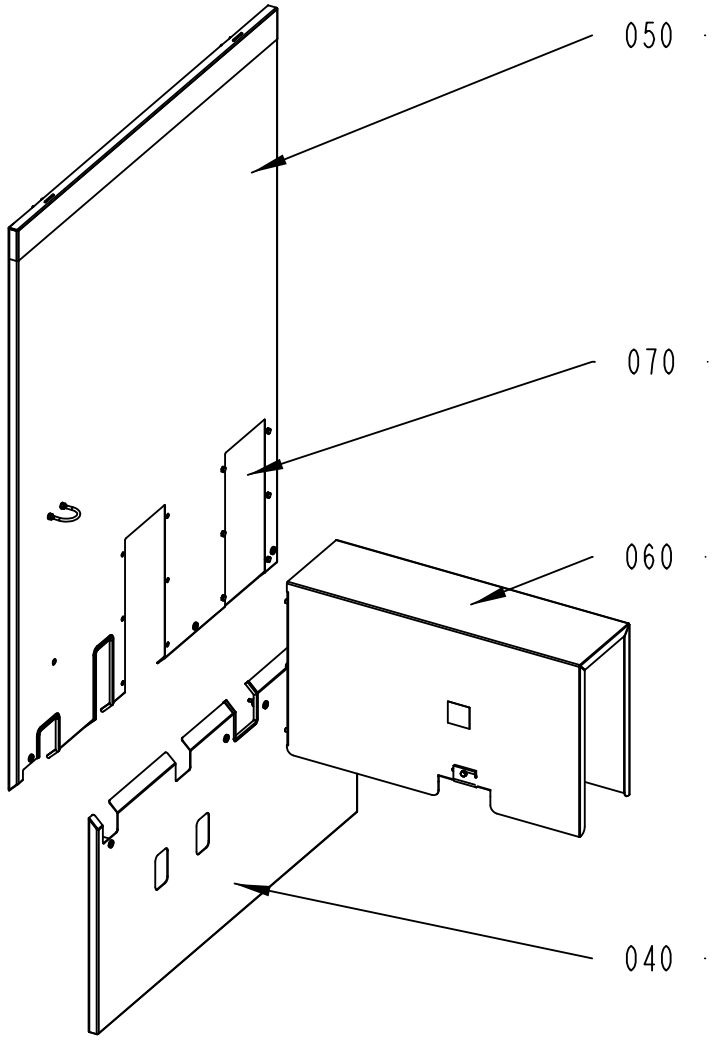

663305-1
317554

ECM: 350551 - 20081009
Group number: 663305-0100
Assembly Drawing: 663305-1_1_AA

This list covers pages from 5-2 to 5-5

Pos	Part No	UN	Qty	Description	Page No
TBA STRAIGHT INFEED,,, TB STRAIGHT OUTFEED (See drawing on page: 5-2)					
020	2839820-0100		1	COVER	**5-7**
050	2840892-0100		1	COVER	**5-9**
060	2885383-0100		1	TUNNEL	**5-11**
070	2941199-0100		1	COVER	**5-13**
080	2946723-0100		1	TUNNEL	**5-15**
TBA U-OUTFEED, TB U-OUTFEED, TBA U-INFEED, TB U-INFEED (See drawing on page: 5-2)					
020	2839820-0100		1	COVER	**5-7**
050	2840892-0100		1	COVER	**5-9**
060	2885383-0100		3	TUNNEL	**5-11**
080	2946723-0100		1	TUNNEL	**5-15**
TCA STRAIGHT INFEED, TCA STRAIGHT OUTFEED (See drawing on page: 5-4)					
020	2957710-0100		1	COVERING PANEL	**5-17**
050	2957720-0100		1	COVERING PANEL	**5-19**
060	2934020-0100		1	TUNNEL	**5-21**
080	2934010-0100		1	TUNNEL	**5-23**
Common Parts					
010	2839815-0100		1	GLASS DOOR	**5-25**
030	2840888-0100		1	COVER	**5-27**
040	2840890-0100		1	COVER	**5-29**

Pos	Part No	UN	Qty	Description	Page No

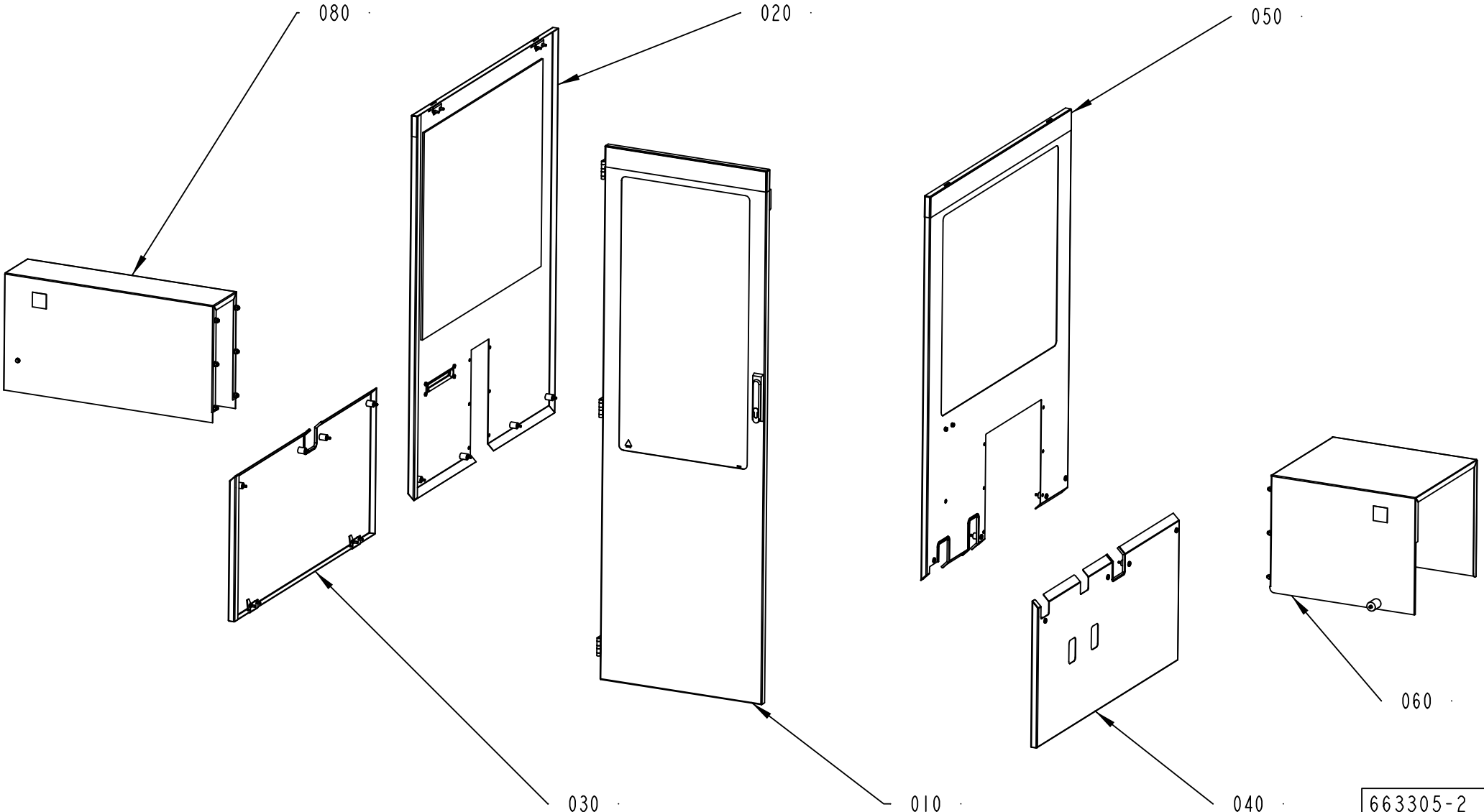
080
020
050
030
010
040
060
663305-2
350551

ECM: 350551 - 20081009
Group number: 663305-0100
Assembly Drawing: 663305-2_1_AA

This list covers pages from 5-2 to 5-5

Pos	Part No	UN	Qty	Description	Page No
TBA STRAIGHT INFEED,,, TB STRAIGHT OUTFEED (See drawing on page: 5-2)					
020	2839820-0100		1	COVER	**5-7**
050	2840892-0100		1	COVER	**5-9**
060	2885383-0100		1	TUNNEL	**5-11**
070	2941199-0100		1	COVER	**5-13**
080	2946723-0100		1	TUNNEL	**5-15**
TBA U-OUTFEED, TB U-OUTFEED, TBA U-INFEED, TB U-INFEED (See drawing on page: 5-2)					
020	2839820-0100		1	COVER	**5-7**
050	2840892-0100		1	COVER	**5-9**
060	2885383-0100		3	TUNNEL	**5-11**
080	2946723-0100		1	TUNNEL	**5-15**
TCA STRAIGHT INFEED, TCA STRAIGHT OUTFEED (See drawing on page: 5-4)					
020	2957710-0100		1	COVERING PANEL	**5-17**
050	2957720-0100		1	COVERING PANEL	**5-19**
060	2934020-0100		1	TUNNEL	**5-21**
080	2934010-0100		1	TUNNEL	**5-23**
Common Parts					
010	2839815-0100		1	GLASS DOOR	**5-25**
030	2840888-0100		1	COVER	**5-27**
040	2840890-0100		1	COVER	**5-29**

Pos	Part No	UN	Qty	Description	Page No

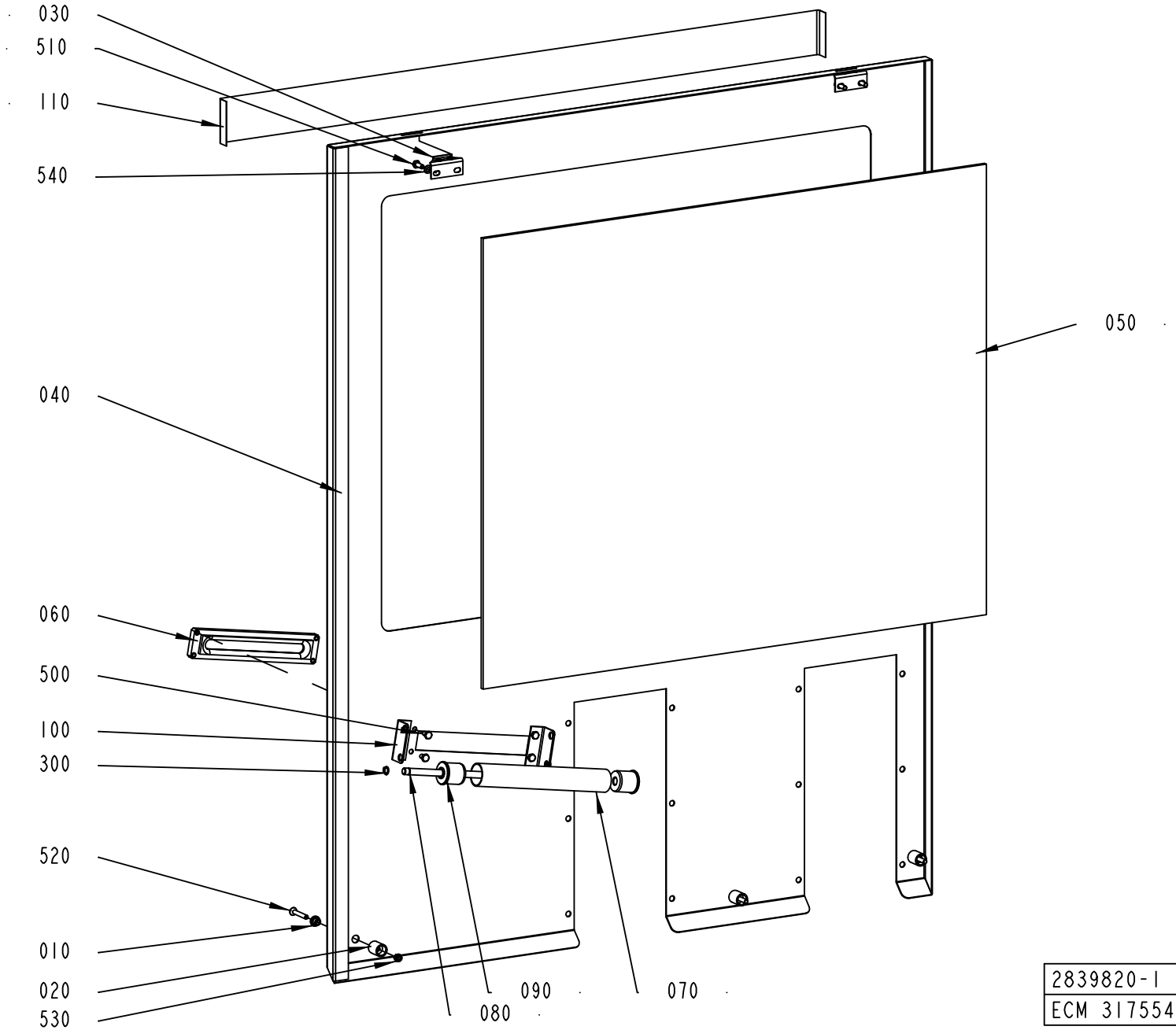
030
510
110
540
050
040
060
500
100
300
520
010
020
530
080
090
070
2839820-1
ECM 317554

ECM: 327356 - 20080303
Group number: 2839820-0100
Assembly Drawing: 2839820-1_1_AA

Pos	Part No	UN	Qty	Description	Page No
-					
010	578196-0000		3	SLEEVE	
020	578197-0000		3	SPACER	
030	1030767-0000		2	CATCH	
040	2839821-0000		1	PROTECTIVE COVER	
050	2840887-0000		1	GLASS	
060	2850070-0000		1	GUIDE	
070	2935827-0000		1	PIPE	
080	2935828-0000		1	SHAFT	
090	2935834-0000		2	END SECTION	
100	2940710-0000		2	ROLLER BRACKET	
110	2939688-0000		1	TAPE	
300	90141-0016		2	RETAINING RING FOR SHAFT DIN 471 10 SS	
310	90157-0041	L	1	SEALING COMPOUND, RHODORSEAL 5651	
500	312105-0364		4	SCREW M6S ISO 4017 M6X10 A480	
510	312105-0368		4	SCREW M6S ISO 4017 M6X16 A480	
520	312155-0378		3	SCREW DIN 7991 MF6S M6X40 A4 70	
530	312812-0316		2	HEXAGON NUT, NY-LOCK M6 A480	
540	315105-0153		4	WASHER BRB 6,4X12 RFR	

Pos	Part No	UN	Qty	Description	Page No

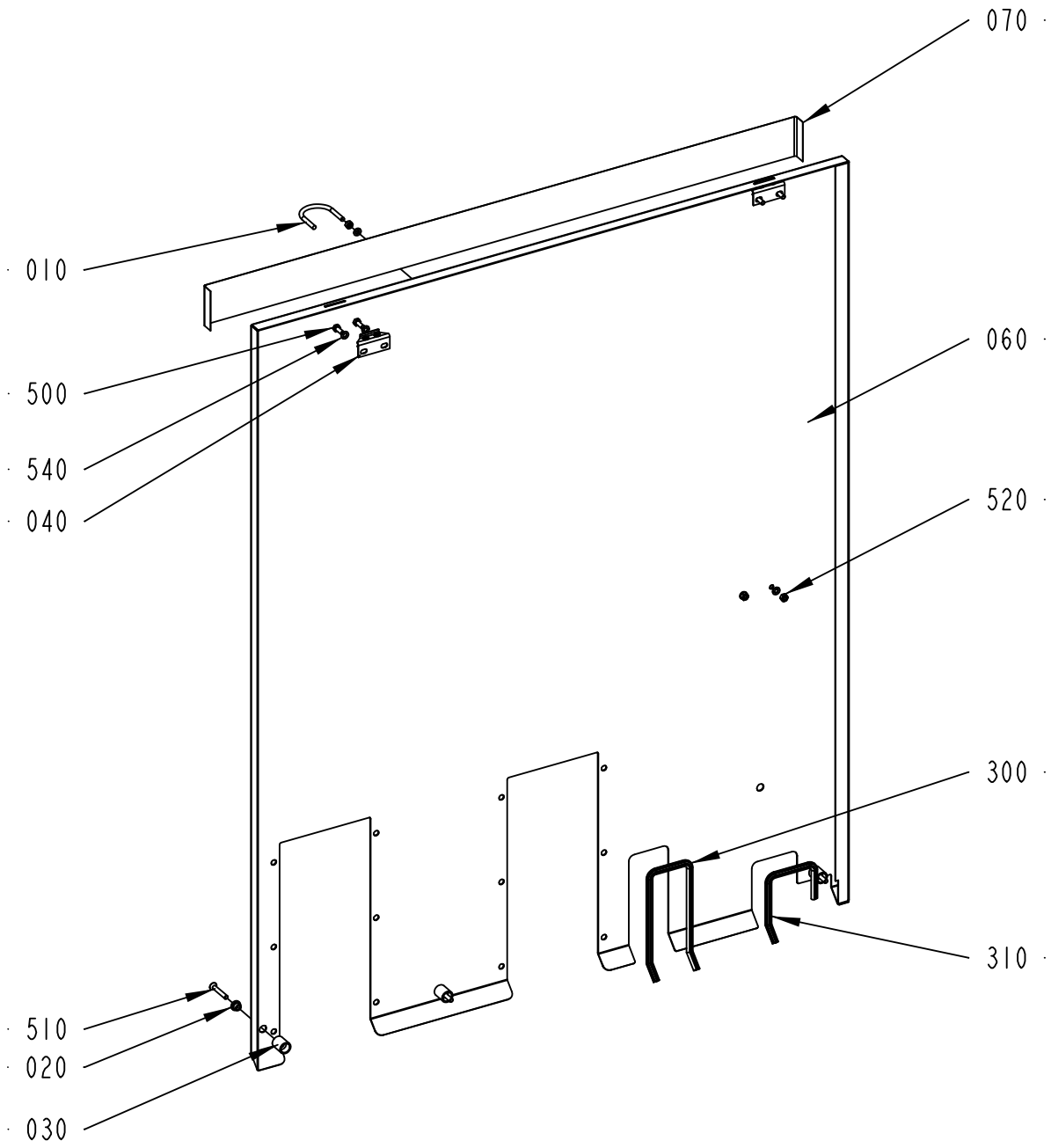

2840892-1
317554

ECM: 327353 - 20080303
Group number: 2840892-0100
Assembly Drawing: 2840892-1_1_AA

Pos	Part No	UN	Qty	Description	Page No
-					
010	531616-0000		1	HOLDER	
020	578196-0000		3	SLEEVE	
030	578197-0000		3	SPACER	
040	1030767-0000		2	CATCH	
060	2840893-0000		1	PROTECTIVE COVER	
070	2939688-0000		1	TAPE	
300	90143-0060	MM	442	EDGE STRIP 9,5X6,3MM BLACK PVC	
310	90143-0060	MM	250	EDGE STRIP 9,5X6,3MM BLACK PVC	
500	312105-0368		4	SCREW M6S ISO 4017 M6X16 A480	
510	312155-0378		3	SCREW DIN 7991 MF6S M6X40 A4 70	
520	312605-0316		4	HEXAGON NUT, M6M M6 A280	
540	315105-0153		8	WASHER BRB 6,4X12 RFR	

Pos	Part No	UN	Qty	Description	Page No

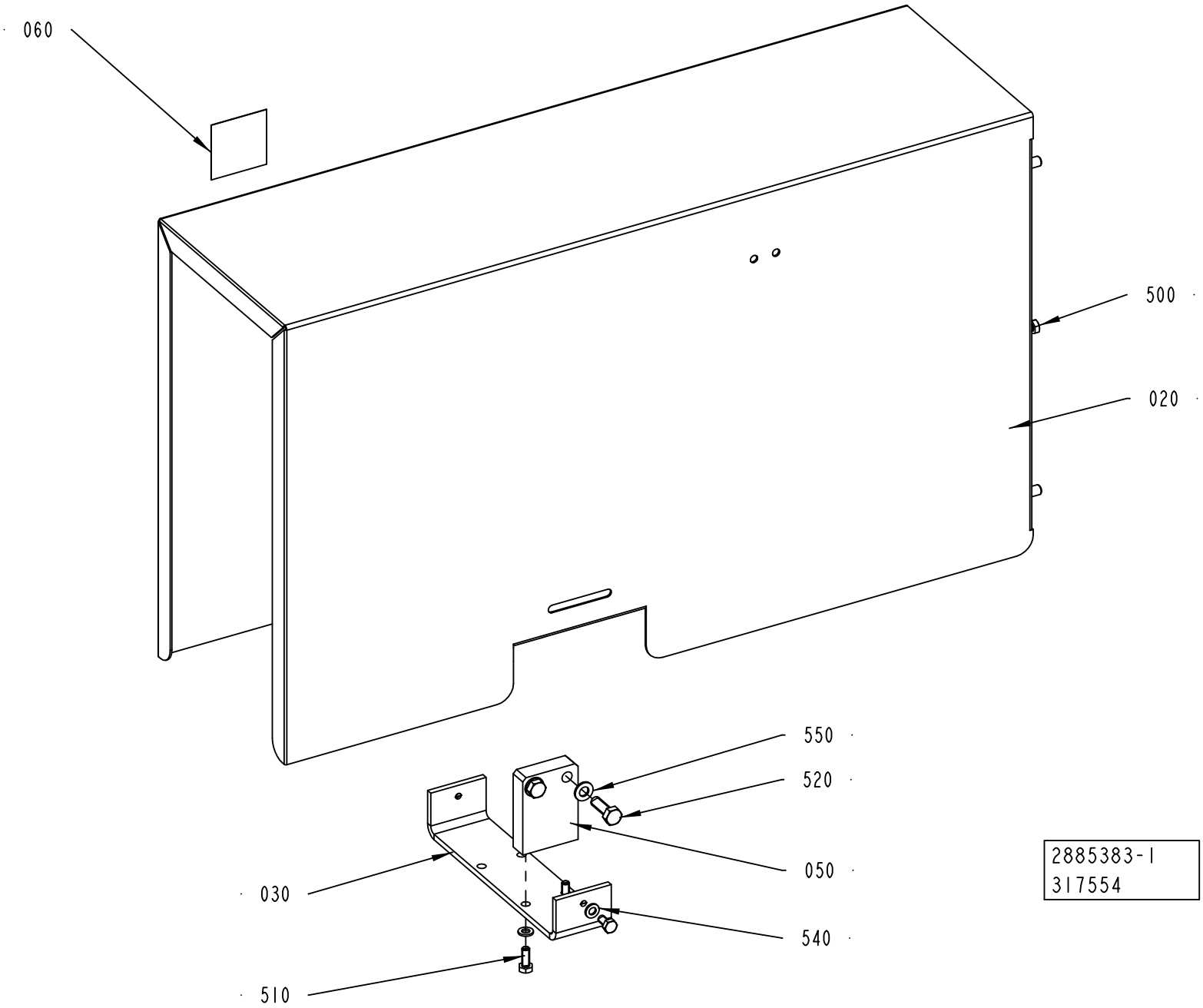
060
500
020
550
520
050
030
540
510
2885383-1
317554

ECM: 327358 - 20080303
Group number: 2885383-0100
Assembly Drawing: 2885383-1_1_AA

Pos	Part No	UN	Qty	Description	Page No
-					
020	2904939-0000		1	PROTECTION PLATE	
030	2904940-0000		1	BRACKET	
050	2904942-0000		1	PLATE	
060	90459-7584		1	PROHOBITION SIGN ISO, DO NOT REACH IN	
500	312105-0366		4	SCREW M6S ISO 4017 M6X12 A480	
510	312105-0368		2	SCREW M6S ISO 4017 M6X16 A480	
520	312105-0453		2	SCREW M6S ISO 4017 M8X25 A480	
540	315105-0153		4	WASHER BRB 6,4X12 RFR	
550	315105-0165		2	WASHER BRB 8,4X16 RFR	

Pos	Part No	UN	Qty	Description	Page No

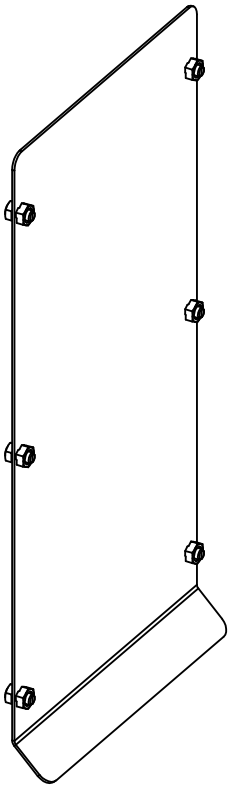

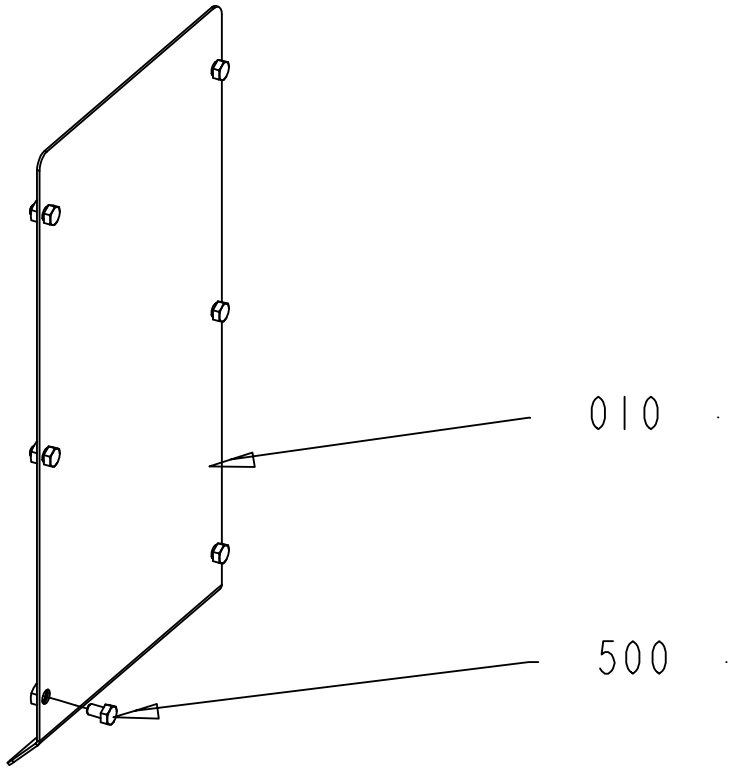

2941199-1
317554

ECM: 333789 - 20080303
Group number: 2941199-0100
Assembly Drawing: 2941199-1_1_AA

Pos	Part No	UN	Qty	Description	Page No
-					
010	2840886-0000		2	COVER PLATE	
500	312105-0364		12	SCREW M6S ISO 4017 M6X10 A480	

Pos	Part No	UN	Qty	Description	Page No

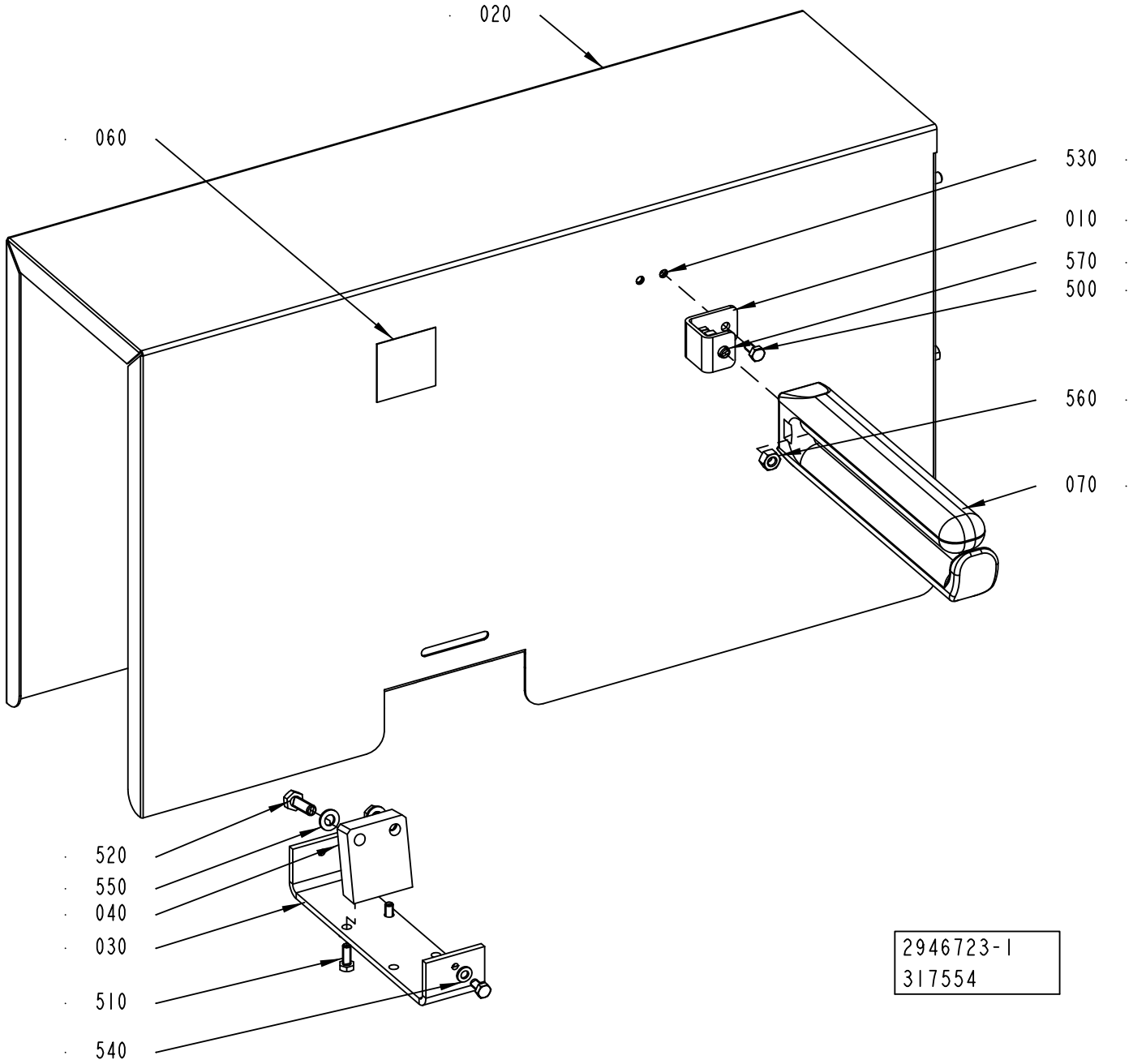
020
060
530
010
570
500
560
070
520
550
040
030
510
540
Φ7
2946723-1
317554

ECM: 341954 - 20080303
Group number: 2946723-0100
Assembly Drawing: 2946723-1_1_AA

Pos	Part No	UN	Qty	Description	Page No
-					
010	2850074-0000		1	BRACKET	
020	2904939-0000		1	PROTECTION PLATE	
030	2904940-0000		1	BRACKET	
040	2904941-0000		1	PLATE	
060	90459-7584		1	PROHOBITION SIGN ISO, DO NOT REACH IN	
070	556386-0000		1	STEERING	
500	312105-0366		6	SCREW M6S ISO 4017 M6X12 A480	
510	312105-0368		2	SCREW M6S ISO 4017 M6X16 A480	
520	312105-0453		2	SCREW M6S ISO 4017 M8X25 A480	
530	312605-0316		2	HEXAGON NUT, M6M M6 A280	
540	315105-0153		4	WASHER BRB 6,4X12 RFR	
550	315105-0165		2	WASHER BRB 8,4X16 RFR	
560	312605-0318		1	HEXAGON NUT, M6M M8 A280	
570	312105-0451		1	SCREW M6S ISO 4017 M8X20 A480	

Pos	Part No	UN	Qty	Description	Page No

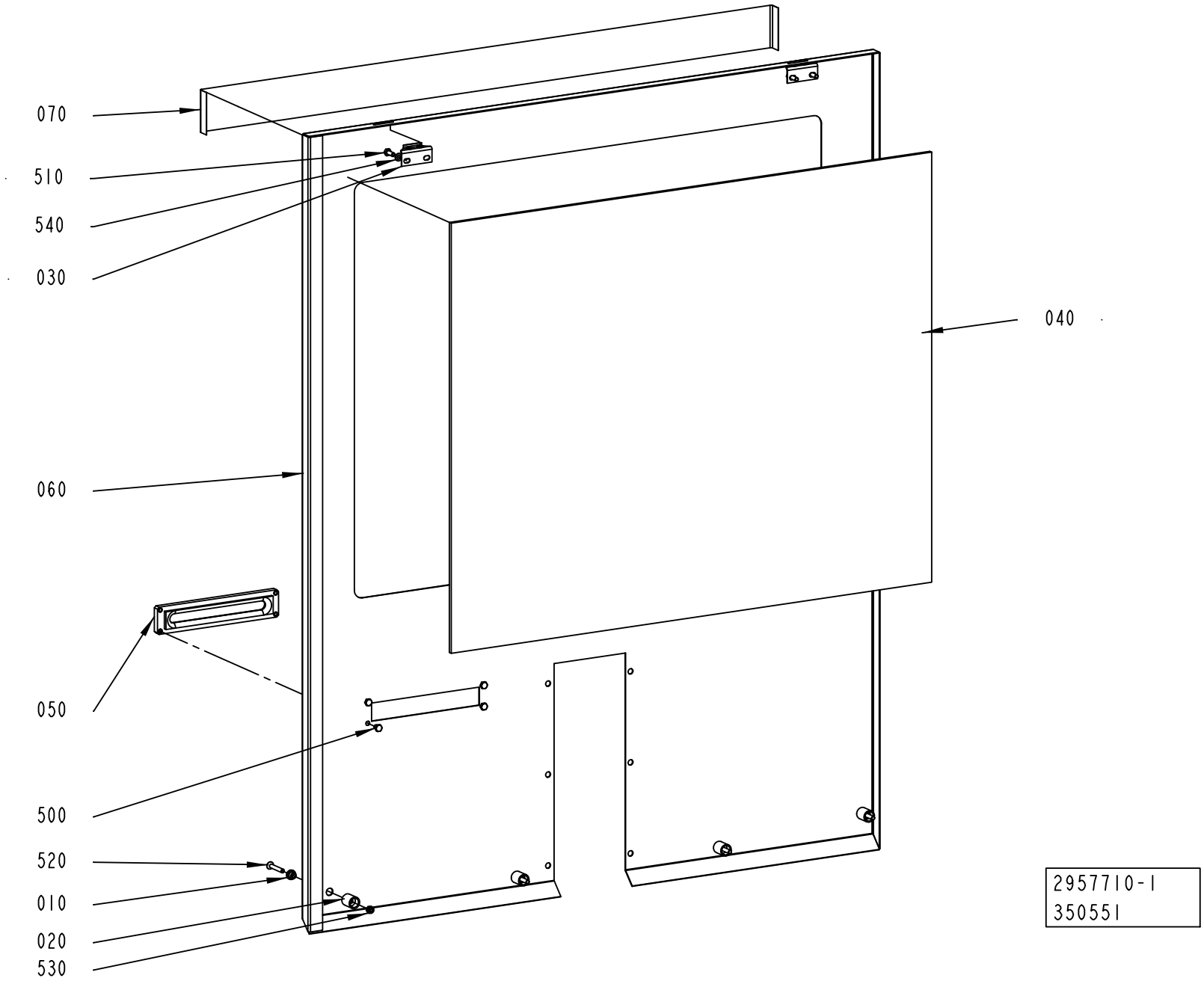
070
510
540
030
040
060
050
500
520
010
020
530
2957710-1
350551

ECM: 350551 - 20081009
Group number: 2957710-0100
Assembly Drawing: 2957710-1_1_AA

Pos	Part No	UN	Qty	Description	Page No
-					
010	578196-0000		4	SLEEVE	
020	578197-0000		4	SPACER	
030	1030767-0000		2	CATCH	
040	2840887-0000		1	GLASS	
050	2850070-0000		1	GUIDE	
060	2926031-0000		1	PROTECTION PLATE	
070	2939688-0000		1	TAPE	
300	90157-0041	L	1	SEALING COMPOUND, RHODORSEAL 5651	
500	312105-0362		4	SCREW M6S ISO 4017 M6X8 A480	
510	312105-0368		4	SCREW M6S ISO 4017 M6X16 A480	
520	312155-0378		4	SCREW DIN 7991 MF6S M6X40 A4 70	
530	312812-0316		3	HEXAGON NUT, NY-LOCK M6 A480	
540	315105-0153		4	WASHER BRB 6,4X12 RFR	

Pos	Part No	UN	Qty	Description	Page No

Machine Type | Group Description | Used-In | Group Number | Page No

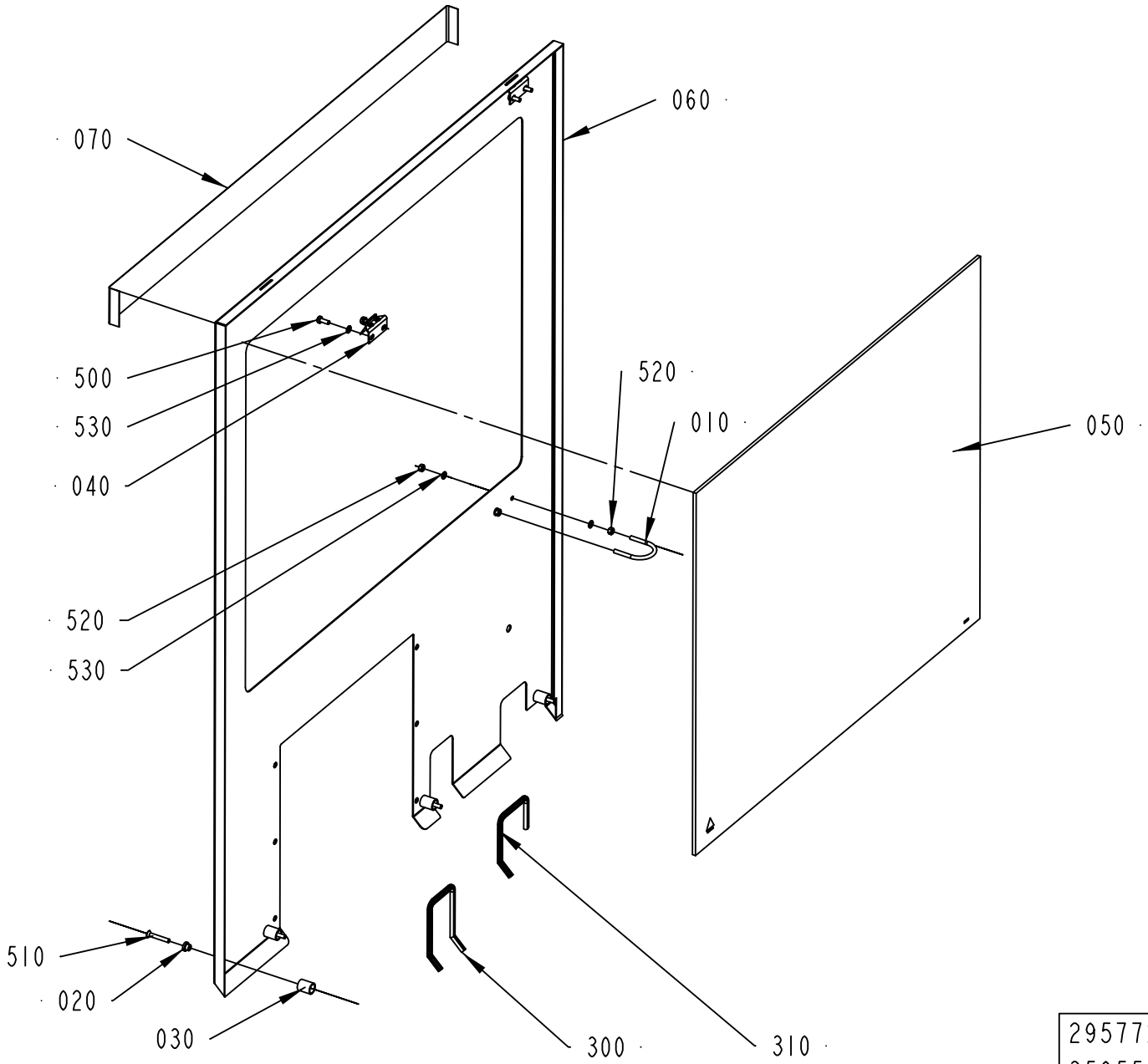

2957720-1
350551

ECM: 350551 - 20081009
Group number: 2957720-0100
Assembly Drawing: 2957720-1_1_AA

Pos	Part No	UN	Qty	Description	Page No
-					
010	531616-0000		1	HOLDER	
020	578196-0000		4	SLEEVE	
030	578197-0000		4	SPACER	
040	1030767-0000		2	CATCH	
050	2840887-0000		1	GLASS	
060	2926032-0000		1	PROTECTION PLATE	
070	2939688-0000		1	TAPE	
300	90143-0060	M	0.45	EDGE STRIP 9,5X6,3MM BLACK PVC	
310	90143-0060	M	0.25	EDGE STRIP 9,5X6,3MM BLACK PVC	
500	312105-0368		4	SCREW M6S ISO 4017 M6X16 A480	
510	312155-0378		4	SCREW DIN 7991 MF6S M6X40 A4 70	
520	312812-0316		4	HEXAGON NUT, NY-LOCK M6 A480	
530	315105-0153		8	WASHER BRB 6,4X12 RFR	

Pos	Part No	UN	Qty	Description	Page No

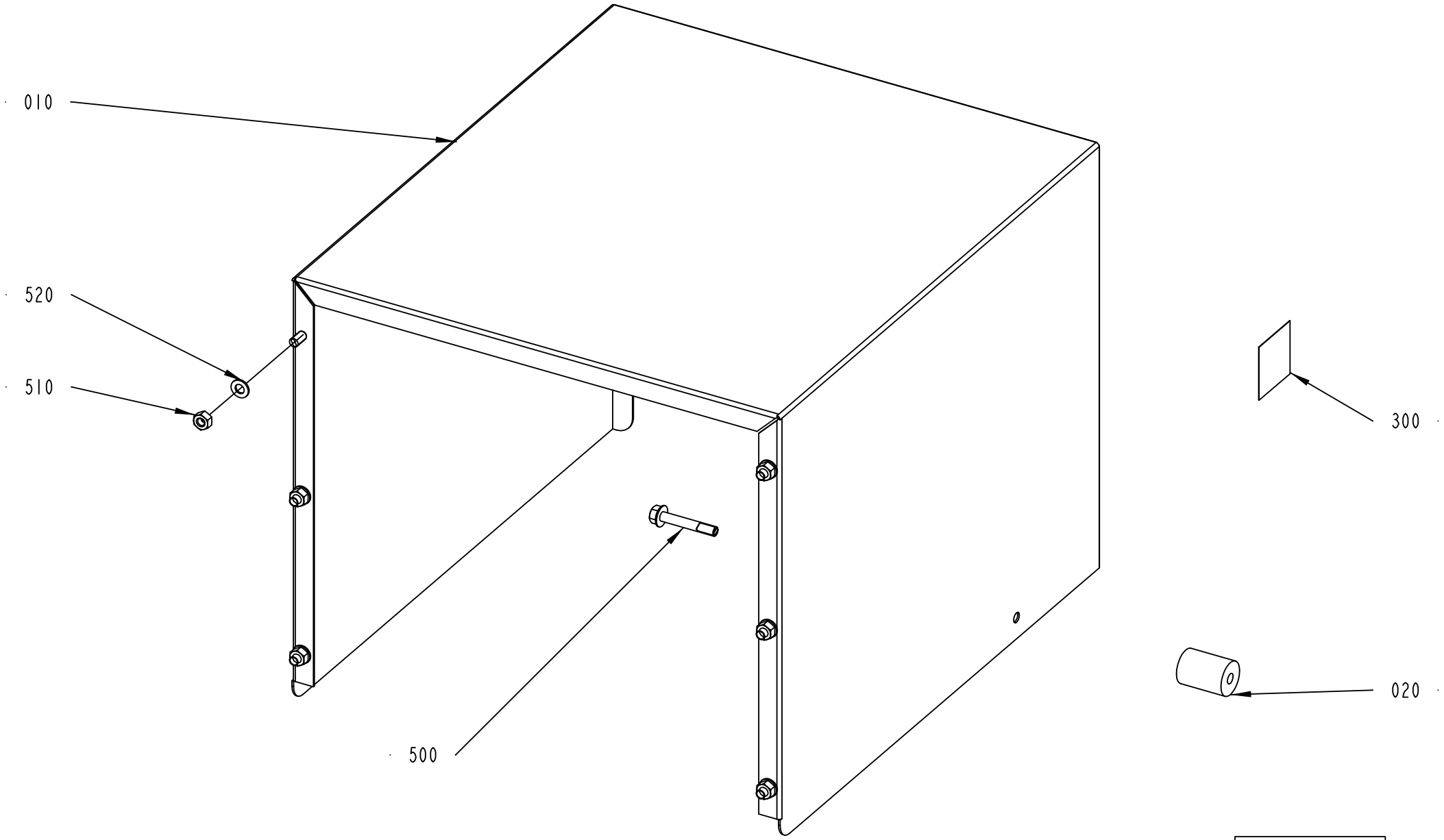

2934020-1
350551

ECM: 350551 - 20081009
Group number: 2934020-0100
Assembly Drawing: 2934020-1_1_AA

Pos	Part No	UN	Qty	Description	Page No
-					
010	2934023-0000		1	PROTECTION PLATE	
020	2957739-0000		1	SPACER SLEEVE	
300	90459-7584		1	PROHOBITION SIGN ISO, DO NOT REACH IN	
500	312108-0461		1	SCREW EN 1665 TYPE F M8X50 A270	
510	312605-0318		6	HEXAGON NUT, M6M M8 A280	
520	315105-0165		6	WASHER BRB 8,4X16 RFR	

Pos	Part No	UN	Qty	Description	Page No

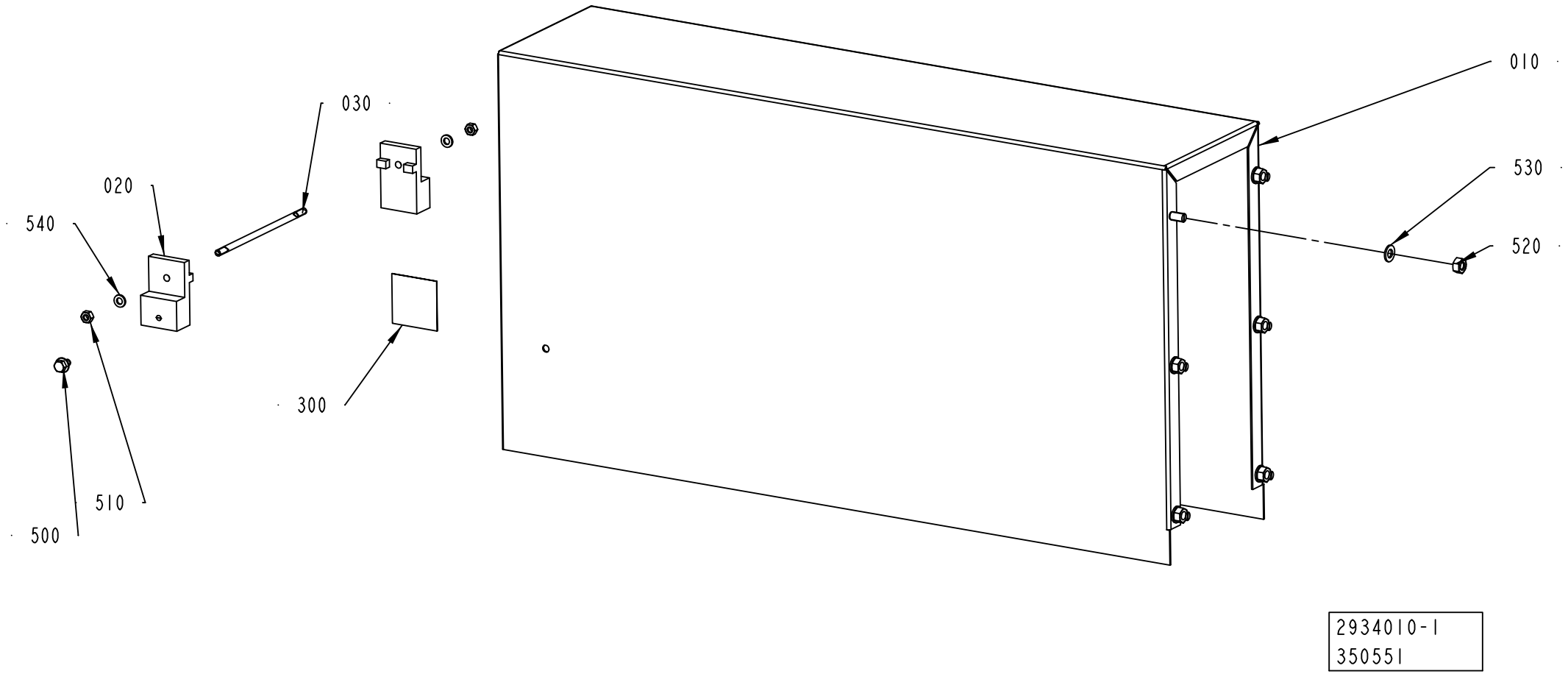
010
020
030
300
500
510
520
530
540
2934010-1
350551

ECM: 350551 - 20081009
Group number: 2934010-0100
Assembly Drawing: 2934010-1_1_AA

Pos	Part No	UN	Qty	Description	Page No
-					
010	2934025-0000		1	PROTECTION PLATE	
020	2982612-0000		2	SPACER ELEMENT	
030	2982617-0000		1	STUD BOLT	
300	90459-7584		1	PROHOBITION SIGN ISO, DO NOT REACH IN	
500	312108-0364		2	SCREW EN 1665 TYPE F M6X10 A270	
510	312108-0368		2	SCREW EN 1665 TYPE F M6X16 A270	
520	312605-0318		6	HEXAGON NUT, M6M M8 A280	
530	315105-0165		6	WASHER BRB 8,4X16 RFR	
540	315106-0153		2	WASHER ISO 7089-6-200 HV A4	

Pos	Part No	UN	Qty	Description	Page No

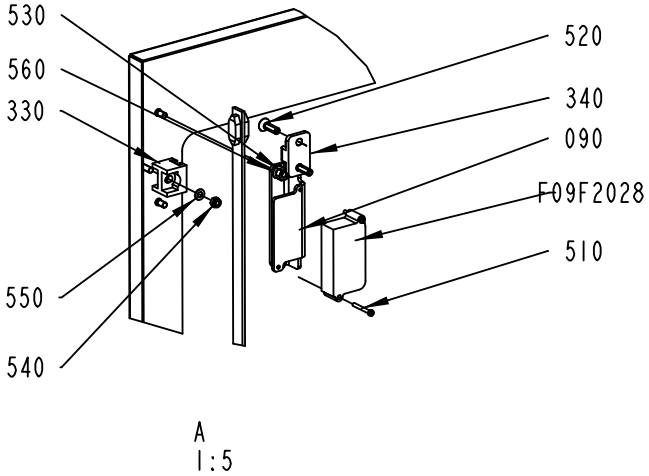

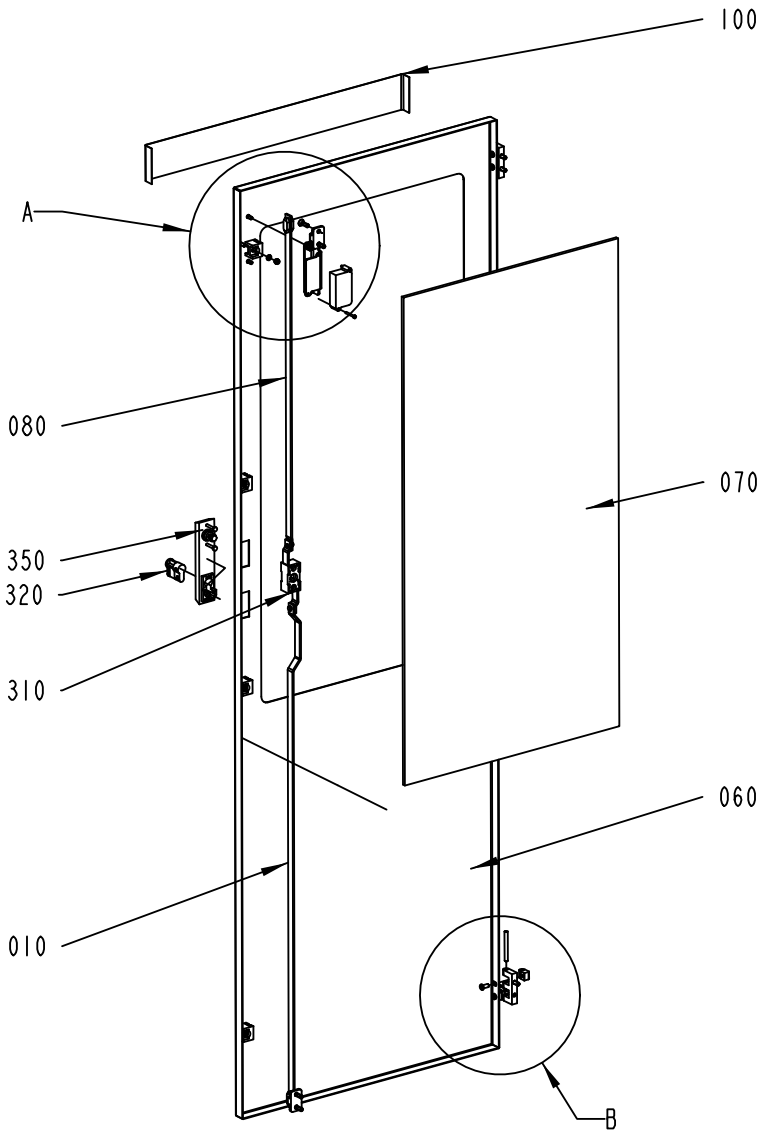

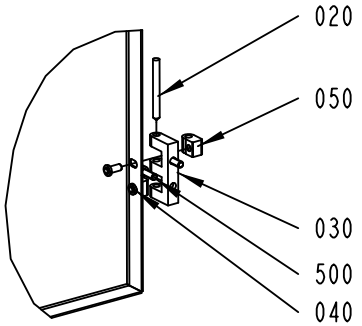

2839815-1
ECM 317554

ECM: 327357 - 20080303
Group number: 2839815-0100
Assembly Drawing: 2839815-1_1_AA

Pos	Part No	UN	Qty	Description	Page No
-					
010	975889-0017		1	STRUT	
020	988685-0000		3	PIN	
030	1035792-0000		3	E-HINGE	
040	1129767-0000		6	SCREW	
050	1129770-0000		6	BLOCKING PIECE	
060	2839816-0000		1	DOOR	
070	2839817-0000		1	GLASS	
080	2839818-0000		1	STRUT	
090	2860893-0000		1	BRACKET	
100	2939684-0000		1	TAPE	
300	90157-0041	L		SEALING COMPOUND, RHODORSEAL 5651	
310	90237-0123		1	LOCK, 1121-U10C	
320	90237-0128		1	LOCK CYLINDER, 1109-SU125	
330	90237-0144		4	GUIDE, 1121-SU540	
340	90237-0147		2	LOCKING LUG, NO. 1121-53-0P	
350	90237-0175		1	TURNING HANDLE, 1125-U185-0A	
500	312115-0368		6	SCREW ISO4762 M6X16 A4 80	
510	312125-0232		2	SCREW ISO 1207 M3X25 A4	
520	312155-0370		4	SCREW DIN 7991 MF6S M6X20 A4 70	
530	312605-0316		2	HEXAGON NUT, M6M M6 A280	
540	312812-0314		4	HEXAGON NUT, NY-LOCK M5 A480	
550	315105-0146		4	WASHER BRB 5,3X10 RFR	
560	315105-0153		2	WASHER BRB 6,4X12 RFR	
F09F2028	90459-4089		1	SAFETY SENSOR NON-CONTACT EVA E	

Pos	Part No	UN	Qty	Description	Page No

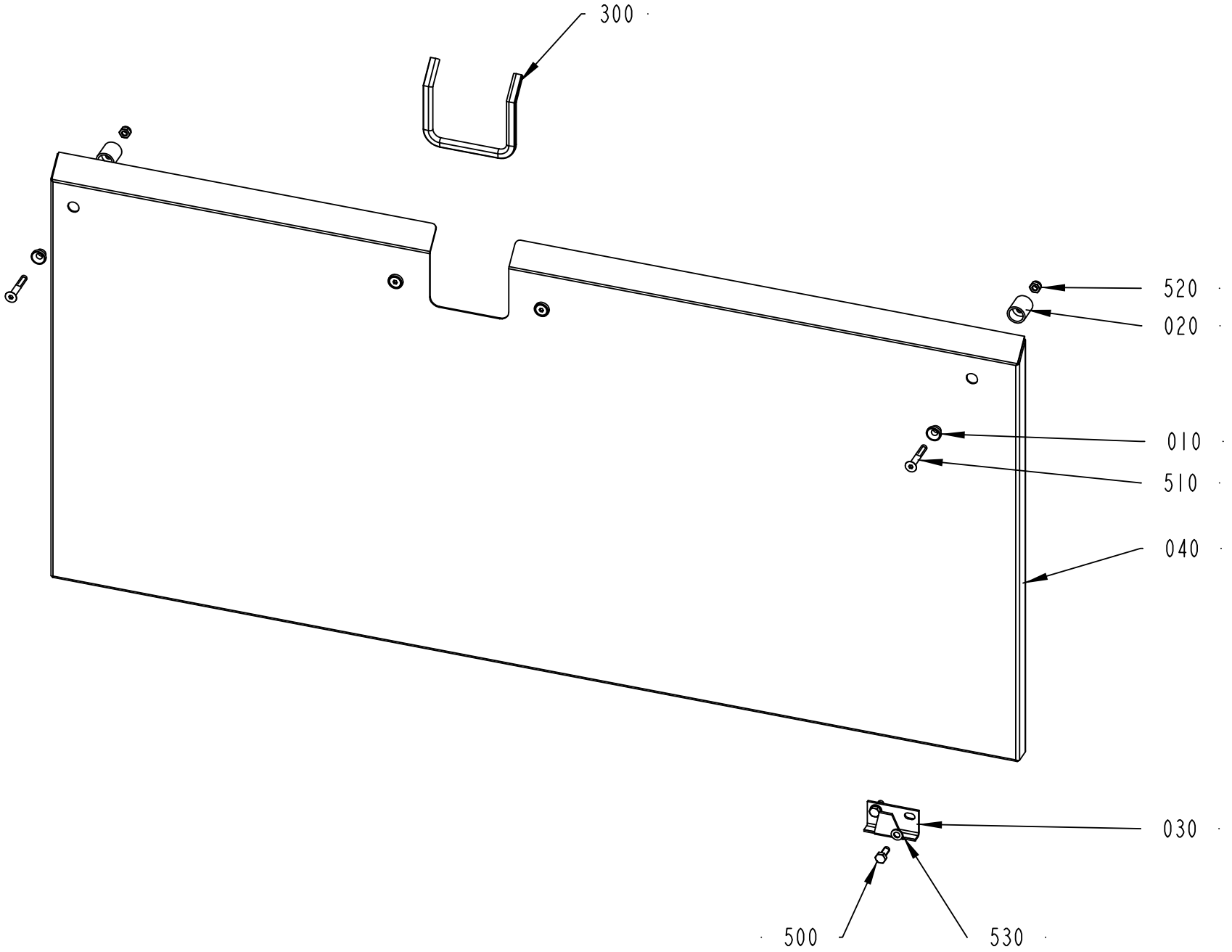

2840888-1
317554

ECM: 327355 - 20080303
Group number: 2840888-0100
Assembly Drawing: 2840888-1_1_AA

Pos	Part No	UN	Qty	Description	Page No
-					
010	578196-0000		2	SLEEVE	
020	578197-0000		2	SPACER	
030	975887-0000		2	CATCH	
040	2840889-0000		1	PROTECTION PLATE	
300	90143-0060	MM	300	EDGE STRIP 9,5X6,3MM BLACK PVC	
500	312105-0368		4	SCREW M6S ISO 4017 M6X16 A480	
510	312155-0378		2	SCREW DIN 7991 MF6S M6X40 A4 70	
520	312812-0316		2	HEXAGON NUT, NY-LOCK M6 A480	
530	315105-0153		6	WASHER BRB 6,4X12 RFR	

Pos	Part No	UN	Qty	Description	Page No

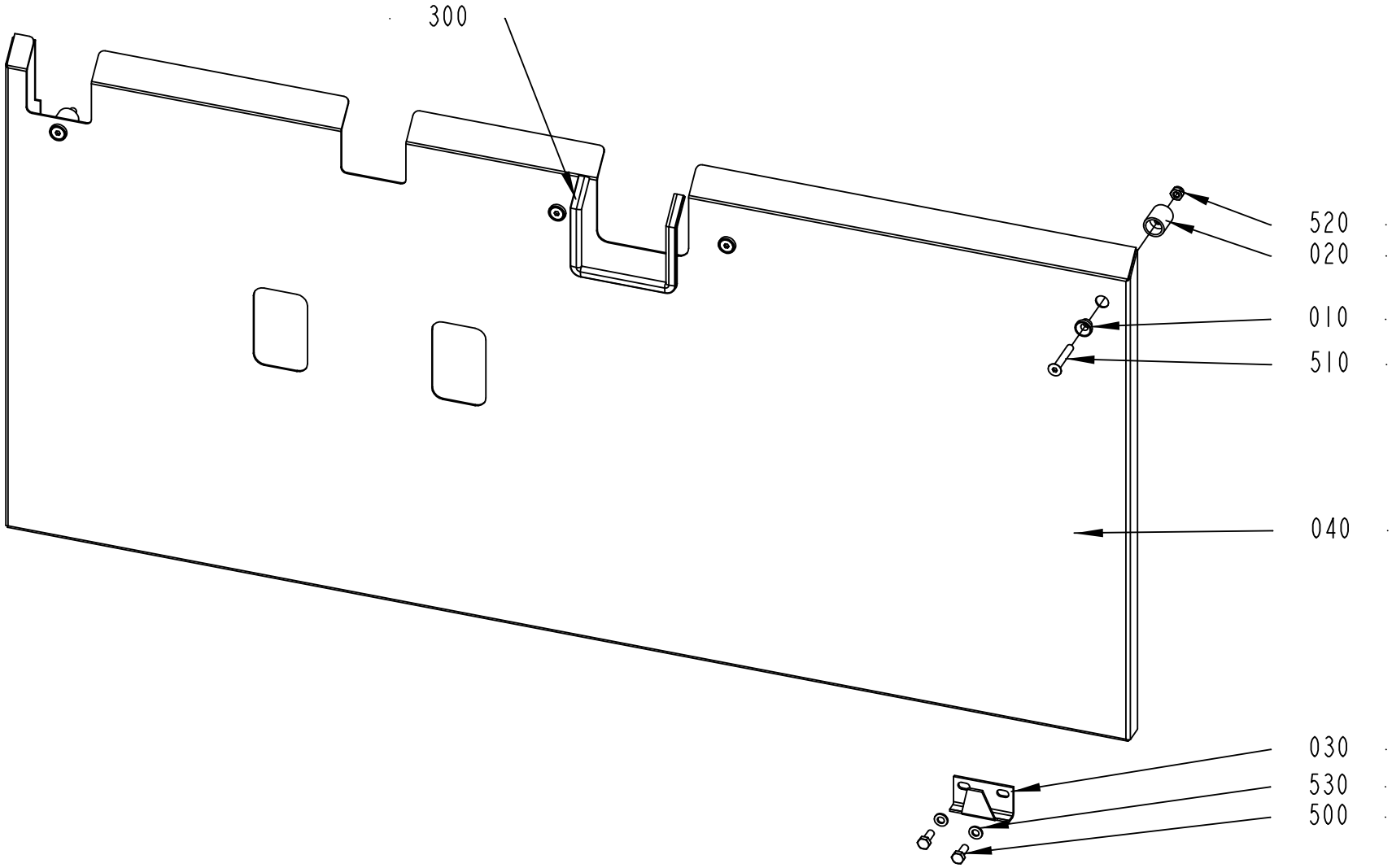

2840890-1
ECM 317554

ECM: 327354 - 20080303
Group number: 2840890-0100
Assembly Drawing: 2840890-1_1_AA

Pos	Part No	UN	Qty	Description	Page No
-					
010	578196-0000		2	SLEEVE	
020	578197-0000		2	SPACER	
030	975887-0000		2	CATCH	
040	2840891-0000		1	PROTECTION PLATE	
300	90143-0060	MM	300	EDGE STRIP 9,5X6,3MM BLACK PVC	
500	312105-0368		4	SCREW M6S ISO 4017 M6X16 A480	
510	312155-0378		4	SCREW DIN 7991 MF6S M6X40 A4 70	
530	312812-0316		4	HEXAGON NUT, NY-LOCK M6 A480	
540	315105-0153		4	WASHER BRB 6,4X12 RFR	

Pos	Part No	UN	Qty	Description	Page No

Tetra Pak

SPC
Spare Parts Catalogue

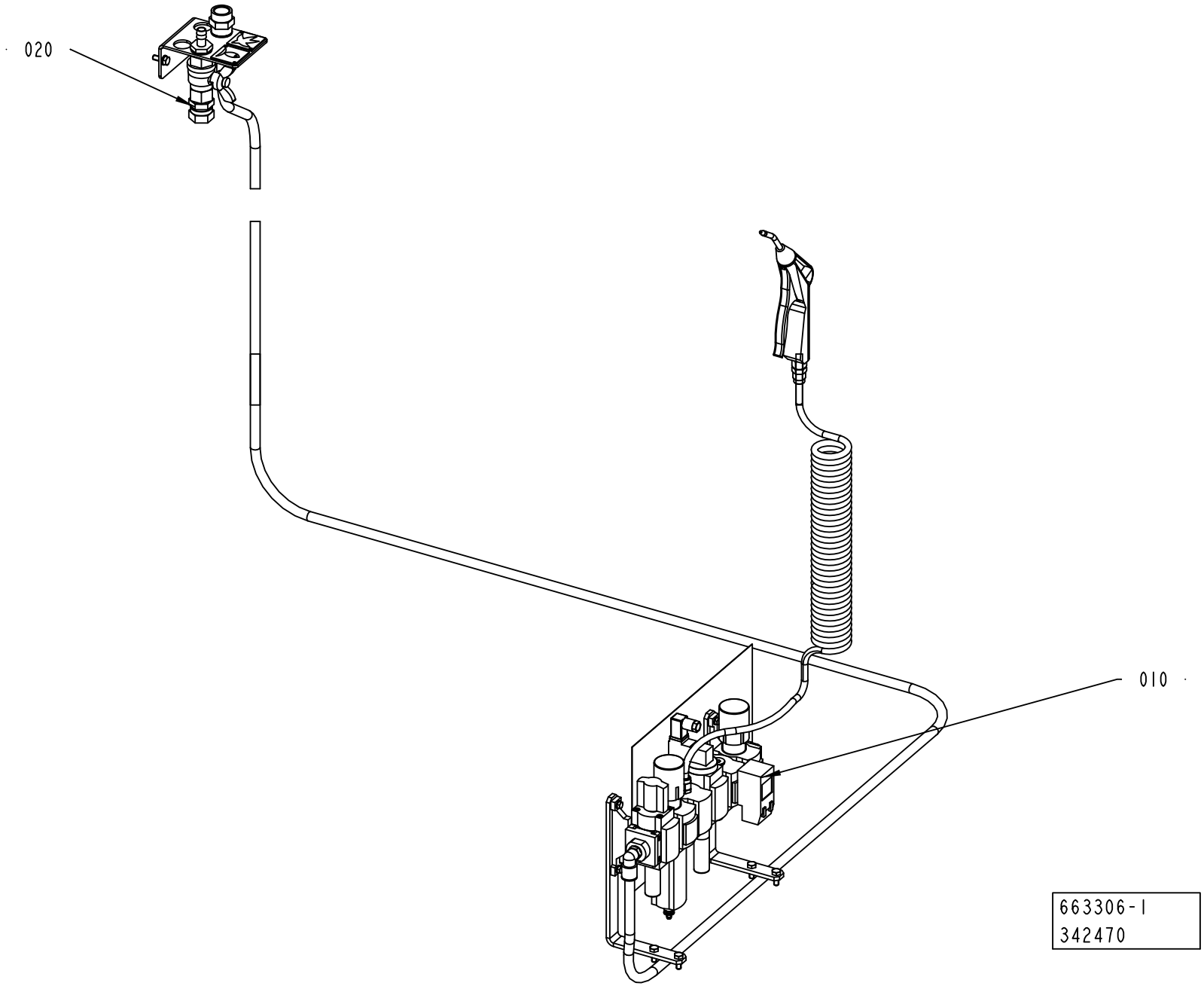
020
010
663306-1
342470

ECM: 342470 - 20080303
Group number: 663306-0100
Assembly Drawing: 663306-1_1_AA

Pos	Part No	UN	Qty	Description	Page No
-					
010	2839813-0100		1	AIR SUPPLY	**6-5**
020	2941716-0100		1	MAIN PIPE	**6-7**

Pos	Part No	UN	Qty	Description	Page No

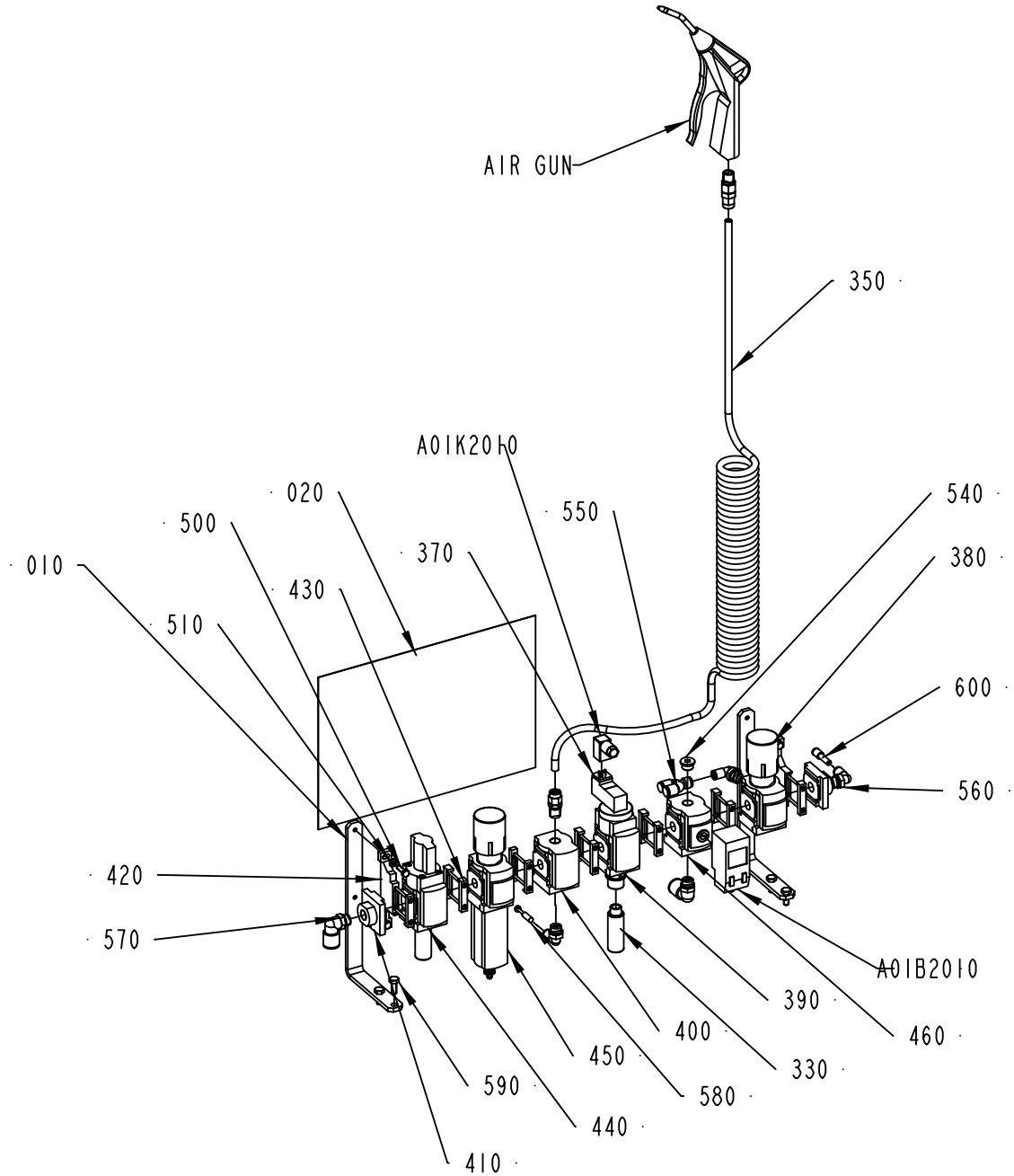

2839813-1
342470

ECM: 370140 - 20081009
Group number: 2839813-0100
Assembly Drawing: 2839813-1_1_AA

Pos	Part No	UN	Qty	Description	Page No
TBA, TB					
020	2860894-0000		1	PNEUMATIC DIAGRAM	
TCA					
020	2957745-0000		1	PNEUMATIC DIAGRAM	
Common Parts					
010	2909946-0000		2	BRACKET	
330	90328-0013		2	SILENCER U-1/4, 2316	
350	90458-1740		1	AIR GUN ASSEMBLY, CEJN 199589668	
370	90459-2137		1	ILLUMINATING SEAL, MEB-LD-12-24DC	
380	90459-2242		1	REGULATOR, MS4-LRB-1/4-D7-AS	
390	90459-2243		1	SHUT OFF VALVE, MS4-EE-1/4-10V24	
400	90459-2245		1	DISTRIBUTOR, MS4-FRM-1/4	
410	90459-2246		2	END PLATE, MS4-AGB	
420	90459-2247		2	BRACKET, MS4-WP	
430	90459-2248		5	BRACKET, MS4-MV	
440	90459-2337		1	SHUT OFF VALVE, MS4-EM1-1/4	
450	90459-2339		1	FILTER REGULATOR, MS4-LFR-1/4-D7-ERV-AS	
	90459-3814		*1*	*FILTER CARTRIDGE, MS4-LFP-E*	
460	90459-3000		1	DISTRIBUTOR, MS4-FRM-1/4-A8	
500	312105-0329		4	SCREW M6S ISO 4017 M5X16 A480	
510	315106-0146		4	WASHER ISO 7089-5-200 HV A4	
540	342713-0210		1	PLUG, EXT THREAD HEX SOCKET	
550	90055-0257		1	Y-FITTING QSY-6	
560	350002-0008		3	PUSH-IN L-FITTING QSL-F-G1/4-6	
570	350002-0011		2	PUSH-IN L-FITTING QSL-F-G1/4-12	
580	350013-0002		1	PLUG QSC-6H	
590	312105-0368		4	SCREW M6S ISO 4017 M6X16 A480	
600	350006-0001		1	PUSH-IN FITTING QS-F-6H-4	
610	315400-0016	MM	1500	TUBE PUN-H-4X0,75-BL	
620	315400-0001	MM	2000	TUBE PUN-H-6X1-BL	
A01B2010	90458-2730		1	PRESSURE SENS. SDE1-D10-G2-R18-C-P1-M8	
A01K2010	90458-2837		1	PLUG SOCKET, KMEB-1-24-5-LED	

Pos	Part No	UN	Qty	Description	Page No

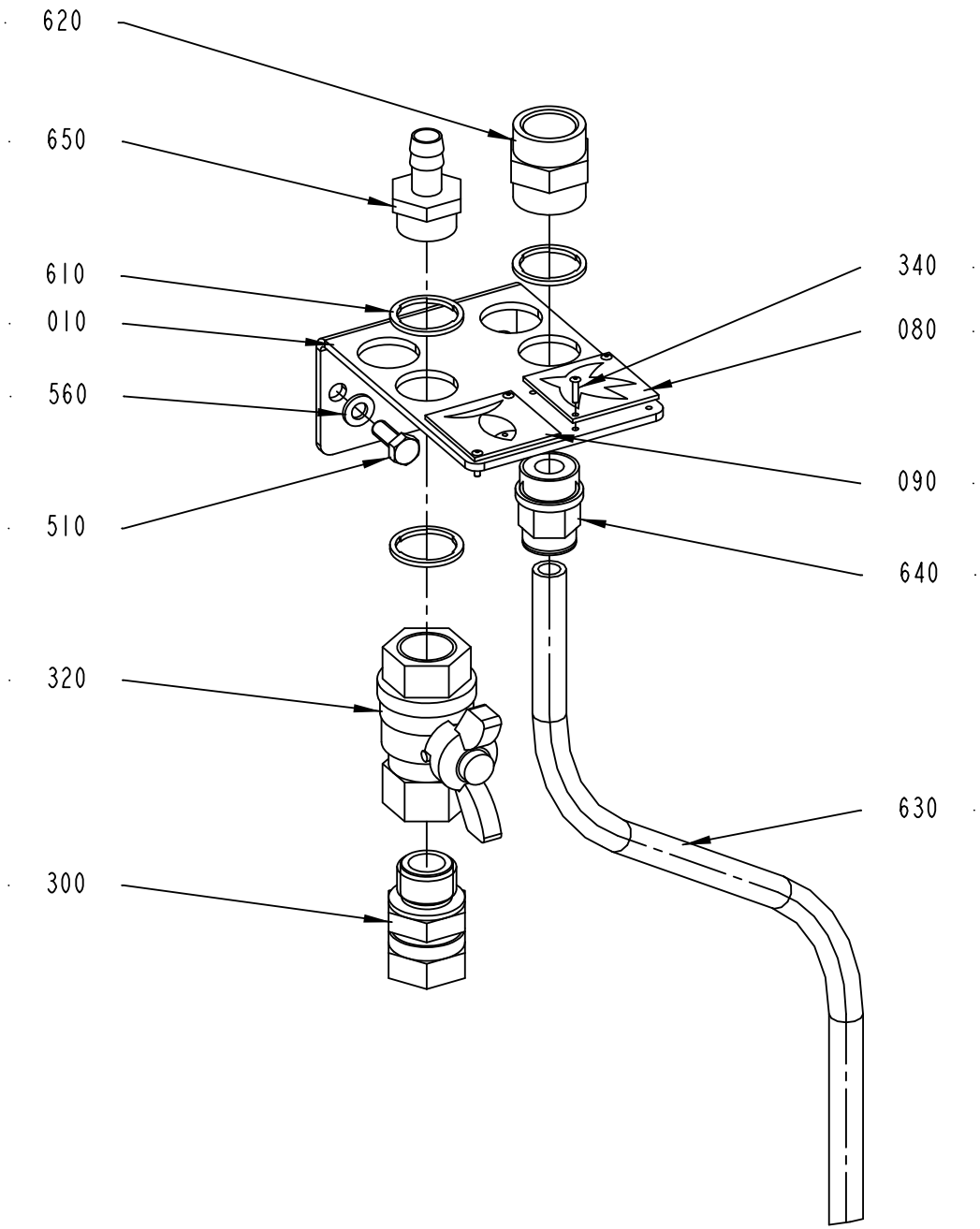

2941716-1
342470

ECM: 342470 - 20080303
Group number: 2941716-0100
Assembly Drawing: 2941716-1_1_AA

Pos	Part No	UN	Qty	Description	Page No
-					
010	2565207-0000		1	BRACKET	
080	273458-0000		1	SIGN, AIR	
090	273455-0000		1	SIGN, COLD WATER	
300	90030-0188		1	CONN. STR. GA-15-G1/2	
320	90187-0029		1	BALL VALVE G1/2, NPBR	
340	90457-0105		4	BLANK RIVET 2X9	
510	312105-0368		2	SCREW M6S ISO 4017 M6X16 A480	
560	315105-0153		2	WASHER BRB 6,4X12 RFR	
610	315239-0113		3	NYLON WASHER G1/2, 1/2RRP	
620	342707-0113		1	SLEEVE, INT. THREAD, NO. 2543-1/2	
630	315400-0010	MM	4000	TUBE PUN-H-12X2-BL	
640	350001-0016		1	PUSH-IN FITTING QS-F-G1/2-12	
650	342901-0105		1	HOSE NIPPLE, EXT.THR. R1/2-12 MM	

Pos	Part No	UN	Qty	Description	Page No

Tetra Pak

SPC
Spare Parts Catalogue

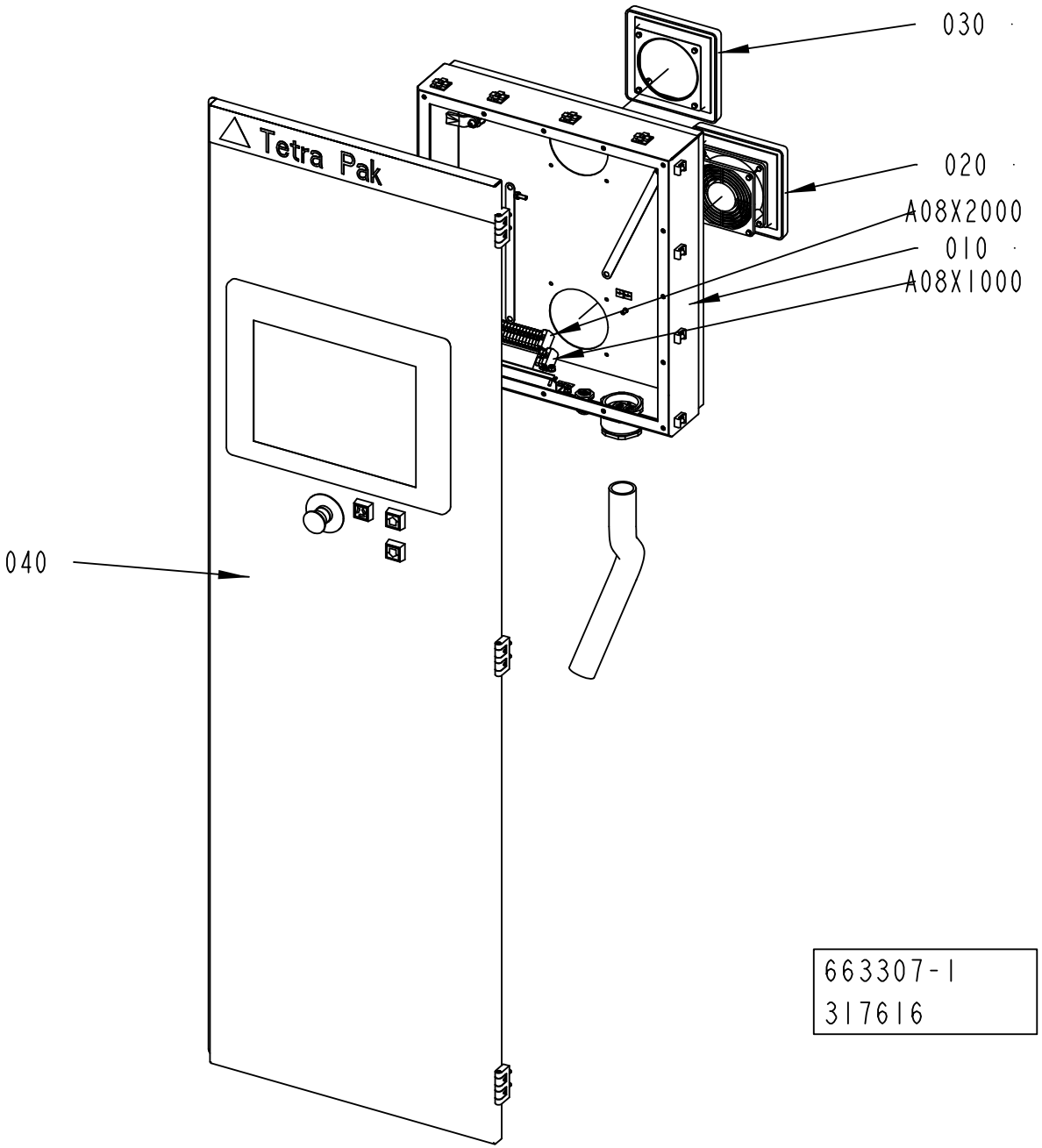
030
020
A08X2000
010
A08X1000
040
Tetra Pak
663307-1
317616

ECM: 335017 - 20080303
Group number: 663307-0100
Assembly Drawing: 663307-1_1_AA

Pos	Part No	UN	Qty	Description	Page No
-					
010	2859681-0100		1	CONNECTION BOX	**7-5**
020	2582040-0100		1	COOLING AIR INTAKE	**7-7**
030	599749-0100		1	COOLING AIR OUTLET	**7-9, 8-7**
040	2846737-0100		1	DOOR	**7-11**
A08X1000	2892718-0100		1	TERMINAL	**7-13**
A08X2000	2892719-0100		1	TERMINAL	**7-15**

Pos	Part No	UN	Qty	Description	Page No

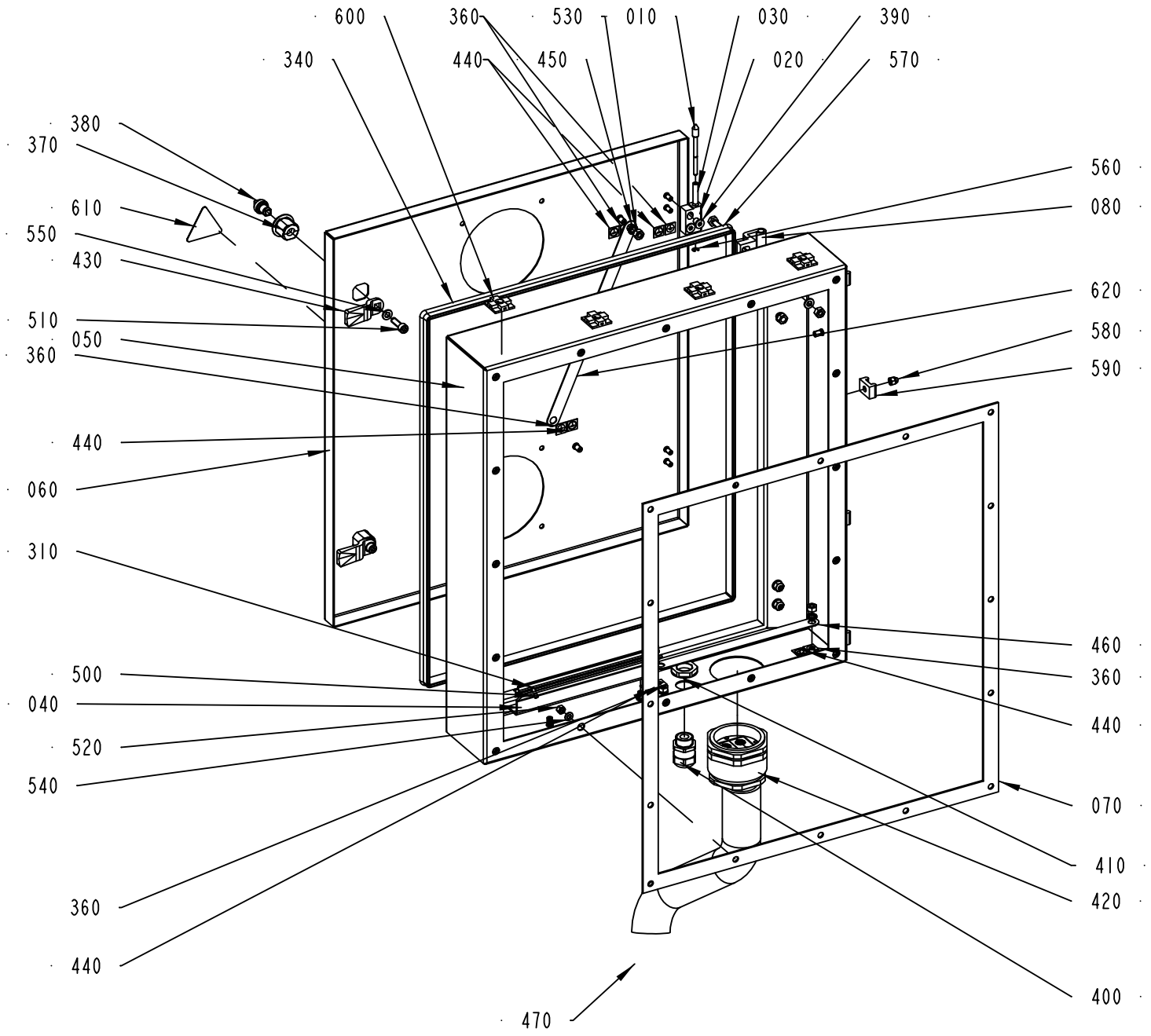

2859681-1
317616

ECM: 335019 - 20080303
Group number: 2859681-0100
Assembly Drawing: 2859681-1_1_AA

Pos	Part No	UN	Qty	Description	Page No
-					
010	959656-0000		2	COTTER	
020	959657-0000		2	HINGE FLANGE	
030	959658-0000		2	SPRING	
040	2557494-0000		1	BRACKET	
050	2859680-0000		1	PROTECTIVE COVER	
060	2859682-0000		1	COVER	
070	2860891-0000		1	RUBBER GASKET	
080	975880-0000		2	HINGE FLANGE	
310	90077-0328	MM	185	RAIL TS15/5	
340	90143-0057	MM	1790	STRIP EMKA 1011-05 21X11MM	
360	90194-0152		5	SIGN, EARTH	
370	90237-0142		2	LOCK HOUSING, 1000-U45	
380	90237-0202		2	LOCK, INSERT SQUARE,1000-U2 8 MM	
390	90287-0205		4	SCREW	
400	90458-0315		1	CABLE GLAND, M20X1,5, NO.5311 1120	
410	90458-0323		1	NUT, M20X1,5	
420	90458-1150		1	CABLE GLAND, RG M63/4	
430	90459-1292		2	LOCK CAM, 1000-50 GH 18	
440	90459-2928		5	LABEL 60417-2-IEC-5020, COMM. REF. POT.	
450	90062-0015		4	LOCK WASHER SERRAT.EXT.GEAR,6,4/11 H=0,7	
460	90458-1869		1	EMC EARTH BRAID, 16MM2 L=200MM	
470	90024-0062	MM	1000	CABLE PROTECTION, 40MM	
500	312105-0291		2	SCREW M6S ISO 4017 M4X12 A470	
510	312115-0370		2	SCREW ISO4762 M6X20 A4 80	
520	312605-0314		16	HEXAGON NUT, M6M M5 A280	
530	312605-0316		10	HEXAGON NUT, M6M M6 A280	
540	315105-0146		16	WASHER BRB 5,3X10 RFR	
550	315105-0153		12	WASHER BRB 6,4X12 RFR	
560	315755-0105		2	RETAINING RING SHAFT DIN 6799 3,2 A2	
570	312105-0370		4	SCREW M6S ISO 4017 M6X20 A480	
580	312705-0314		4	NUT HEX. DOMED CAP MHM-6 M5 A280	
590	352113-0204		4	ANCHOR PLATES FOR STRIPS, TYPE TM3S25-M	
600	352113-0206		4	ANCHOR PLATES FOR STRIPS, TYPE ABM100-AT	
610	359705-0015		1	WARNING SIGN ISO, RISK OF ELECTRIC SHOCK	
620	90600-2904		1	EARTH BRAID, 250/16/8,5	

Pos	Part No	UN	Qty	Description	Page No

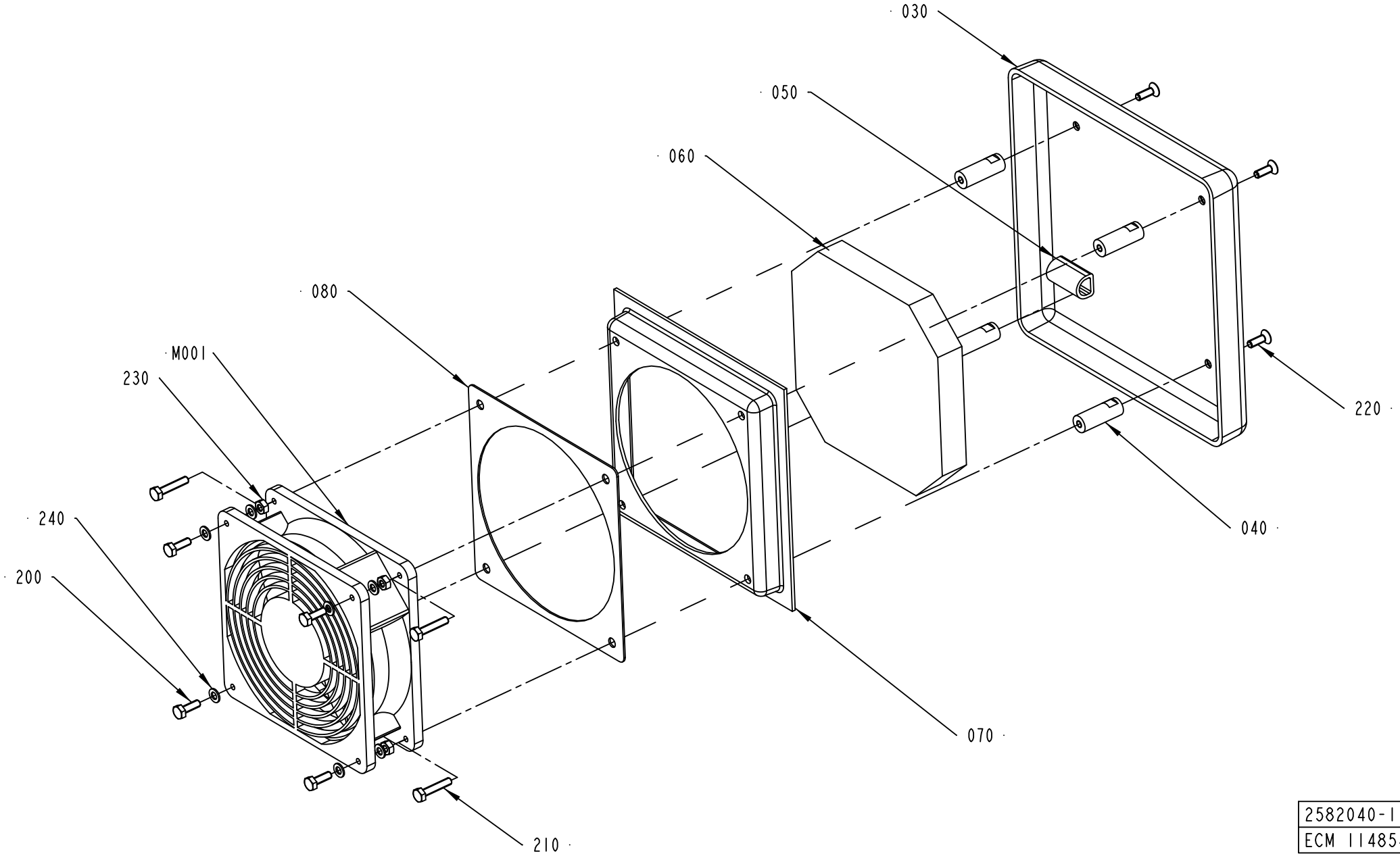

2582040-1
ECM 114854

ECM: 132070 - 20040618
Group number: 2582040-0100
Assembly Drawing: 2582040-1_1_AA

Pos	Part No	UN	Qty	Description	Page No
-					
030	599752-0000		1	COVER	
040	599753-0000		4	SPACER	
050	599760-0000		1	SPACER	
060	599750-0000		1	FILTER	
070	599751-0000		1	INSERT	
080	599755-0000		1	GASKET	
200	312105-0291		4	SCREW M6S ISO 4017 M4X12 A470	
210	312105-0295		4	SCREW M6S ISO 4017 M4X20 A470	
220	312155-0291		4	SCREW DIN 7991 MF6S M4X12 A4 70	
230	312605-0312		4	HEXAGON NUT, M6M M4 A280	
240	315105-0136		8	WASHER BRB 4,3X8 RFR	
M001	90264-0032		1	FAN, 4656N+LZ30+LZ 120,220V 50HZ	

Pos	Part No	UN	Qty	Description	Page No

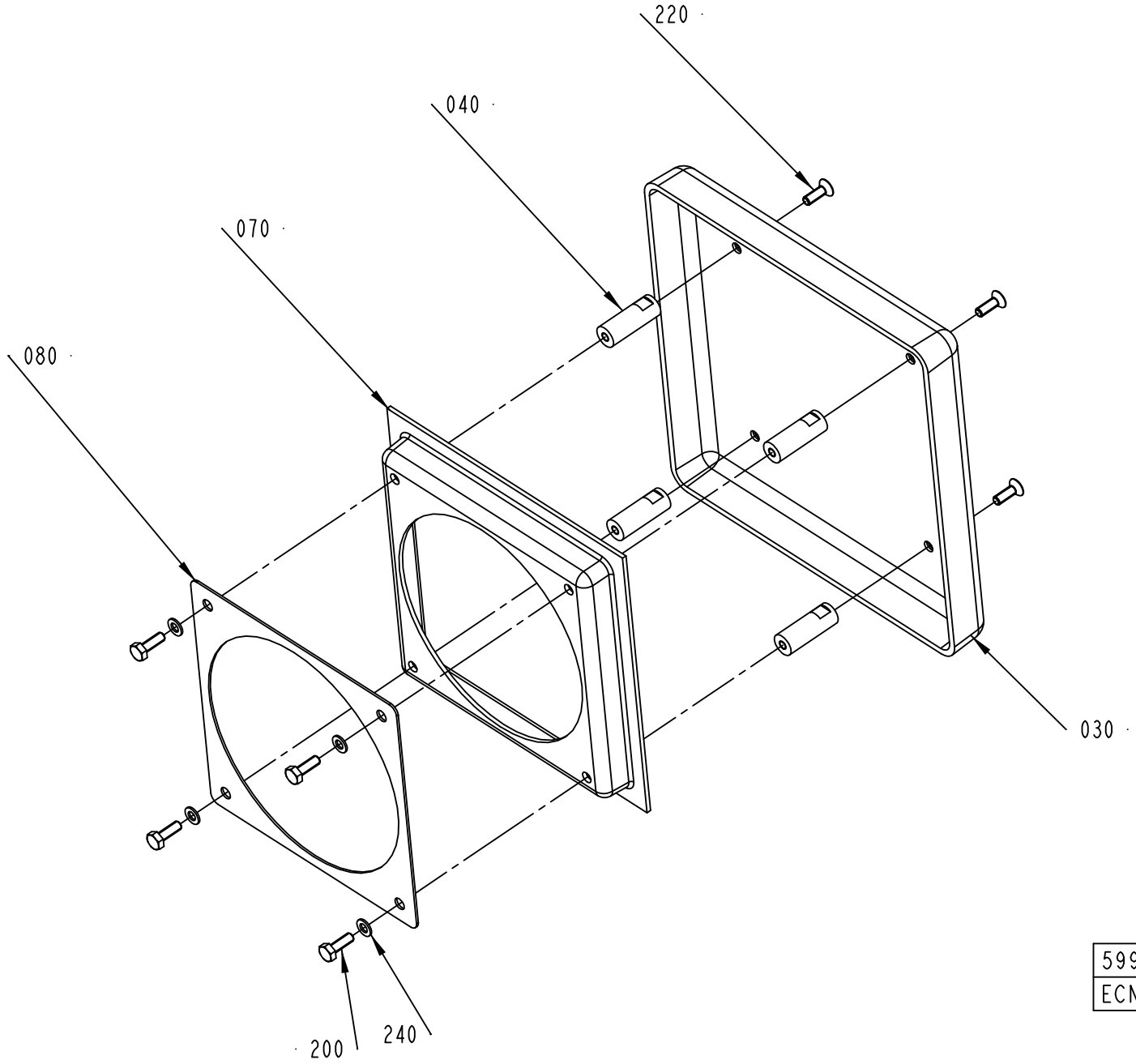

599749-1
ECN 73648

ECM: 176457 - 20041206
Group number: 599749-0100
Assembly Drawing: 599749-1_1_AB

Pos	Part No	UN	Qty	Description	Page No
-					
030	599752-0000		1	COVER	
040	599753-0000		4	SPACER	
070	599751-0000		1	INSERT	
080	599755-0000		1	GASKET	
200	312105-0291		4	SCREW M6S ISO 4017 M4X12 A470	
220	312155-0291		4	SCREW DIN 7991 MF6S M4X12 A4 70	
240	315105-0136		4	WASHER BRB 4,3X8 RFR	

Pos	Part No	UN	Qty	Description	Page No

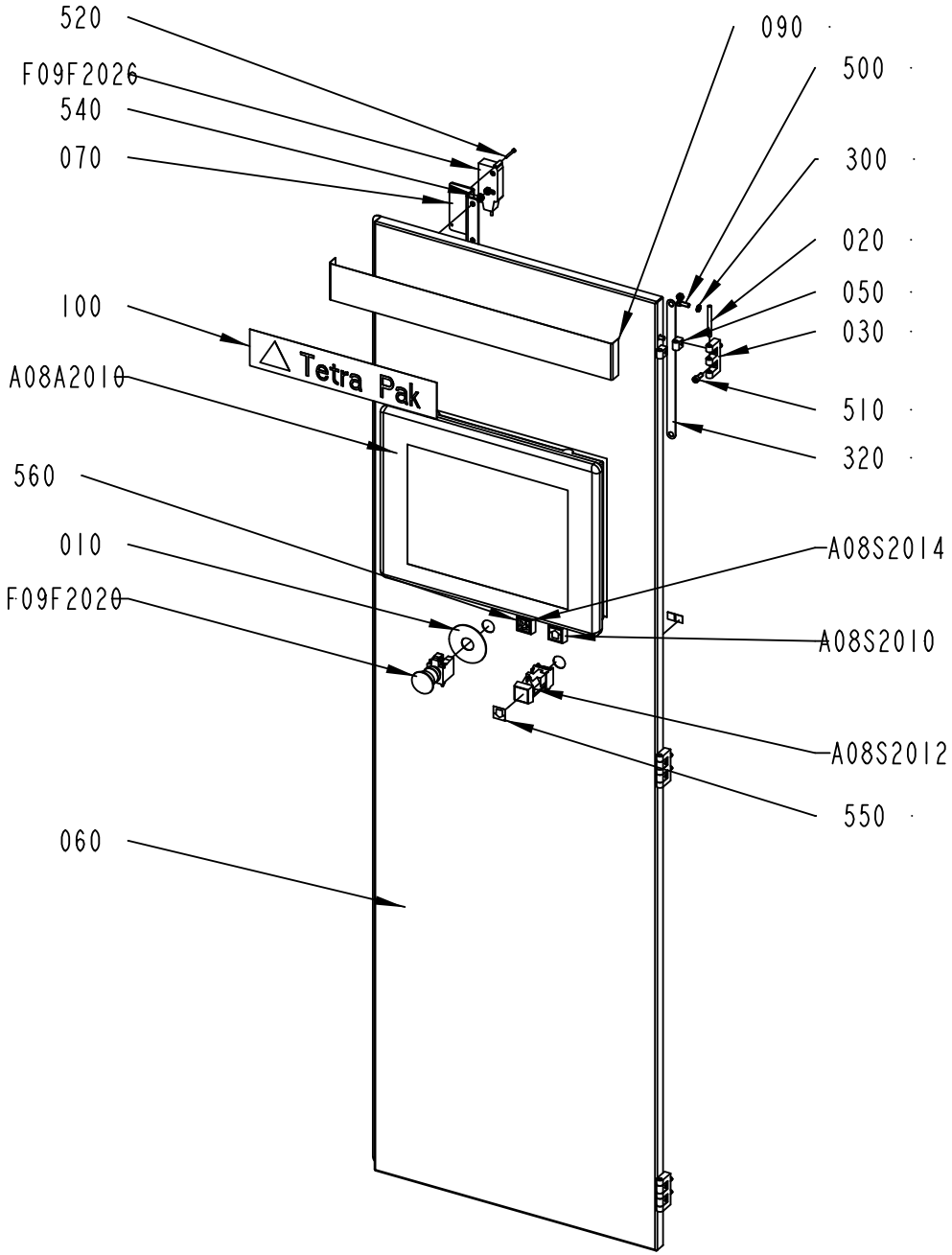

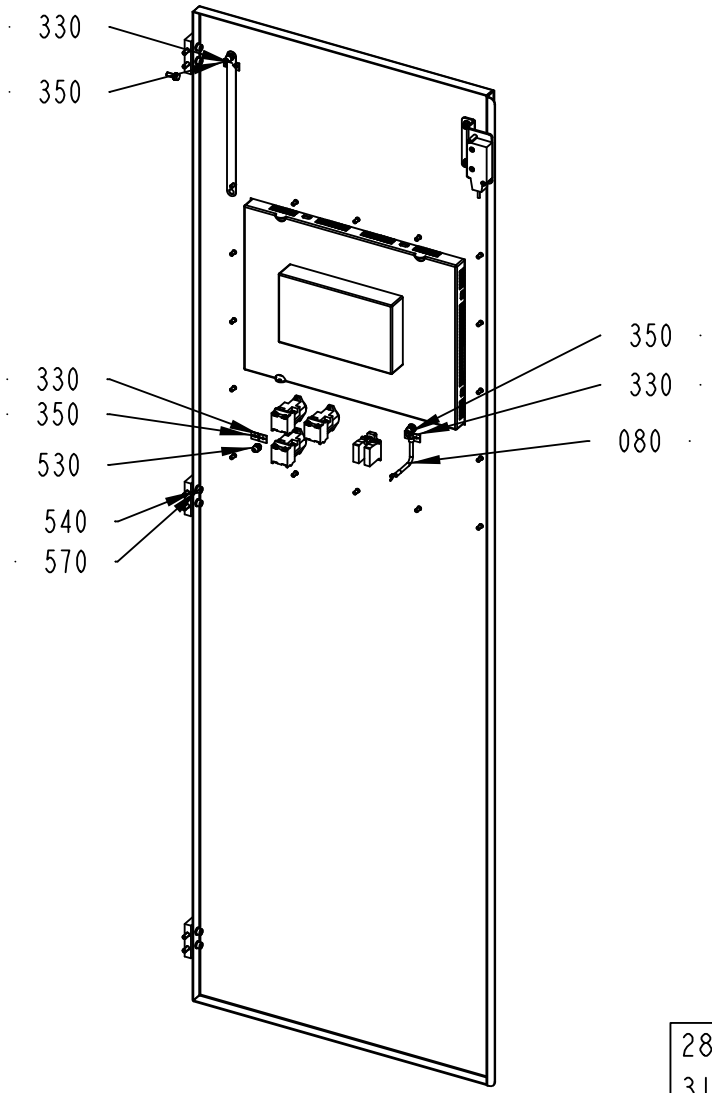

2846737-1
317616

ECM: 335018 - 20080303
Group number: 2846737-0100
Assembly Drawing: 2846737-1_1_AA

Pos	Part No	UN	Qty	Description	Page No
-					
010	486826-0001		1	SIGN "EMERGENCY STOP"	
020	988685-0000		3	PIN	
030	1035792-0000		3	E-HINGE	
050	1129770-0000		6	BLOCKING PIECE	
060	2846738-0000		1	DOOR	
070	2860892-0000		1	BRACKET	
080	2937123-0000		1	EARTH WIRE	
090	2939685-0000		1	TAPE	
100	1021990-0000		1	SIGN 356X70MM HOUSE MARK TEXT TETRA PAK	
300	90062-0015		4	LOCK WASHER SERRAT.EXT.GEAR,6,4/11 H=0,7	
320	90600-2904		1	EARTH BRAID, 250/16/8,5	
330	90194-0152		3	SIGN, EARTH	
350	90459-2928		3	LABEL 60417-2-IEC-5020, COMM. REF. POT.	
500	312105-0368		1	SCREW M6S ISO 4017 M6X16 A480	
510	312115-0368		6	SCREW ISO4762 M6X16 A4 80	
520	312125-0232		2	SCREW ISO 1207 M3X25 A4	
530	312605-0316		5	HEXAGON NUT, M6M M6 A280	
540	315105-0153		8	WASHER BRB 6,4X12 RFR	
550	359301-0001		2	BUTTON SIGN, UP	
560	359301-0090		1	BUTTON SIGN, INCHING	
570	312115-0366		6	SCREW ISO4762 M6X12 A4 80	
A08A2010	90600-0980		1	OPERATOR PANEL 15"+, 2711P-T15C4D2-TP	
A08S2010	90064-0082		1	PUSH BUTTON, WHITE	
	90036-0057		*1*	*LIGHT BULB, BA9S 28V*	
A08S2012	90064-0082		1	PUSH BUTTON, WHITE	
	90036-0057		*1*	*LIGHT BULB, BA9S 28V*	
A08S2014	90064-0082		1	PUSH BUTTON, WHITE	
	90036-0057		*1*	*LIGHT BULB, BA9S 28V*	
F09F2020	90458-1651		1	EMERGENCY STOP, ZB4-BS-844 ZB4-BZ-104	
F09F2026	90459-6961		1	SAFETY SENSOR, NON CONT. ADAM-E M12 0,5M	

Pos	Part No	UN	Qty	Description	Page No

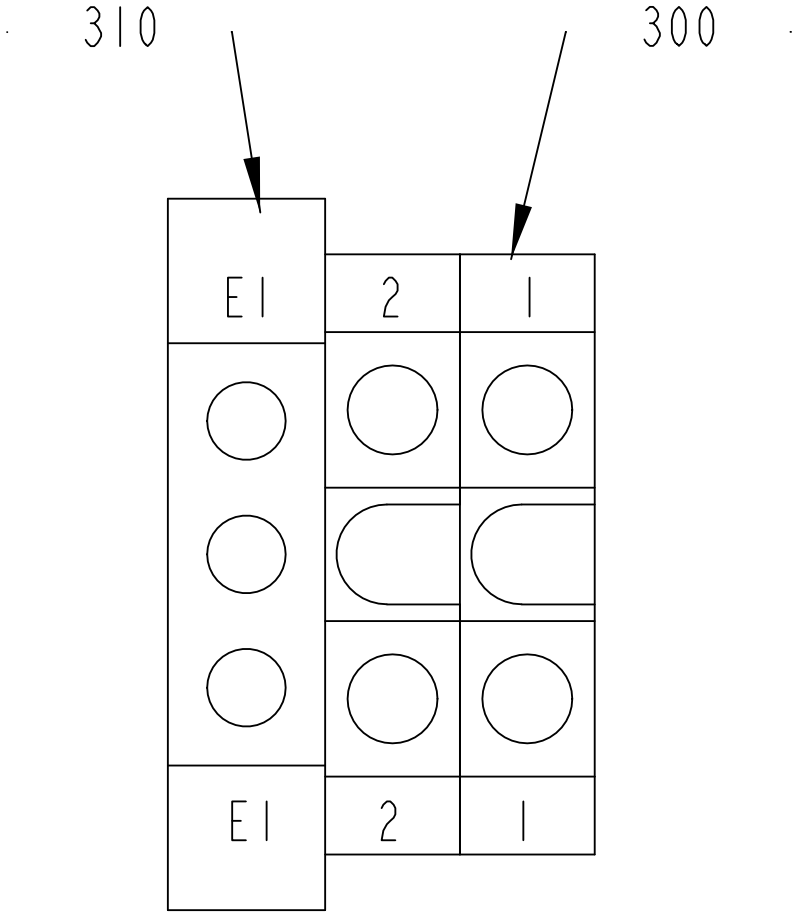

A08X1000

2892718-1
317616

ECM: 335020 - 20080303
Group number: 2892718-0100
Assembly Drawing: 2892718-1_1_AA

Pos	Part No	UN	Qty	Description	Page No
-					
300	90077-0079		2	FEED THROUGH TERMINAL, 02943.6	
310	90135-0026		1	EARTH TERMINAL, 3802.6	

Pos	Part No	UN	Qty	Description	Page No

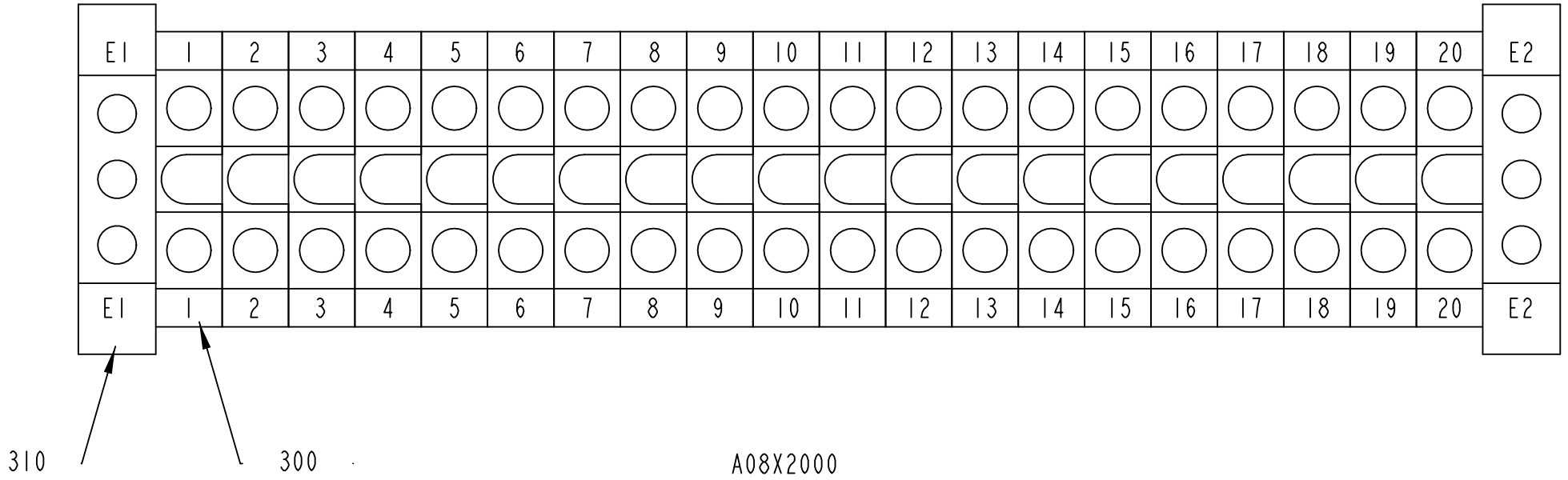

2892719-1
317616

ECM: 335021 - 20080303
Group number: 2892719-0100
Assembly Drawing: 2892719-1_1_AA

Pos	Part No	UN	Qty	Description	Page No
-					
300	90077-0079		20	FEED THROUGH TERMINAL, 02943.6	
310	90135-0026		2	EARTH TERMINAL, 3802.6	

Pos	Part No	UN	Qty	Description	Page No

Tetra Pak

SPC
Spare Parts Catalogue

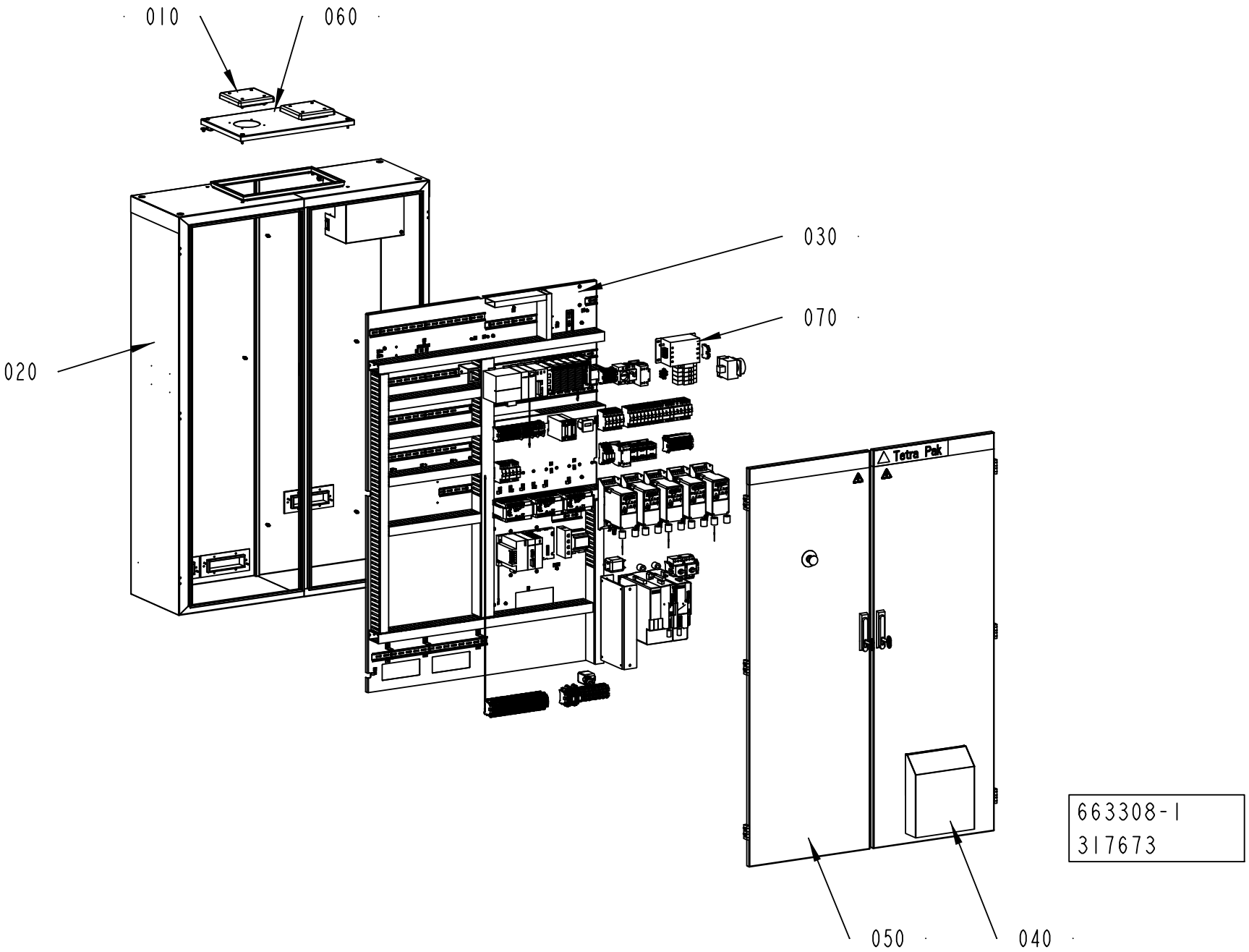
010
060
030
070
020
Tetra Pak
050
040
663308-1
317673

ECM: 326980 - 20080303
Group number: 663308-0100
Assembly Drawing: 663308-1_1_AA

This list covers pages from 8-2 to 8-5

Pos	Part No	UN	Qty	Description	Page No
-					
010	599749-0100		2	COOLING AIR OUTLET	**7-9, 8-7**
020	2844515-0100		1	ELECTRICAL CABINET	**8-9**
030	2844517-0100		1	MOUNTING PLATE	**8-11**
040	2844518-0100		1	EL-CABINET DOOR	**8-13**
050	2844519-0100		1	EL-CABINET DOOR	**8-15**
060	2858602-0100		1	COVER	**8-17**
070	2913341-0100		1	ELECTRIC MATERIALS	**8-19**

Pos	Part No	UN	Qty	Description	Page No

This page is intentionally left blank.

ECM: 326980 - 20080303
Group number: 663308-0100
Assembly Drawing: 2870320-0001

This list covers pages from 8-2 to 8-5

Pos	Part No	UN	Qty	Description	Page No
-					
010	599749-0100		2	COOLING AIR OUTLET	**7-9, 8-7**
020	2844515-0100		1	ELECTRICAL CABINET	**8-9**
030	2844517-0100		1	MOUNTING PLATE	**8-11**
040	2844518-0100		1	EL-CABINET DOOR	**8-13**
050	2844519-0100		1	EL-CABINET DOOR	**8-15**
060	2858602-0100		1	COVER	**8-17**
070	2913341-0100		1	ELECTRIC MATERIALS	**8-19**

Pos	Part No	UN	Qty	Description	Page No

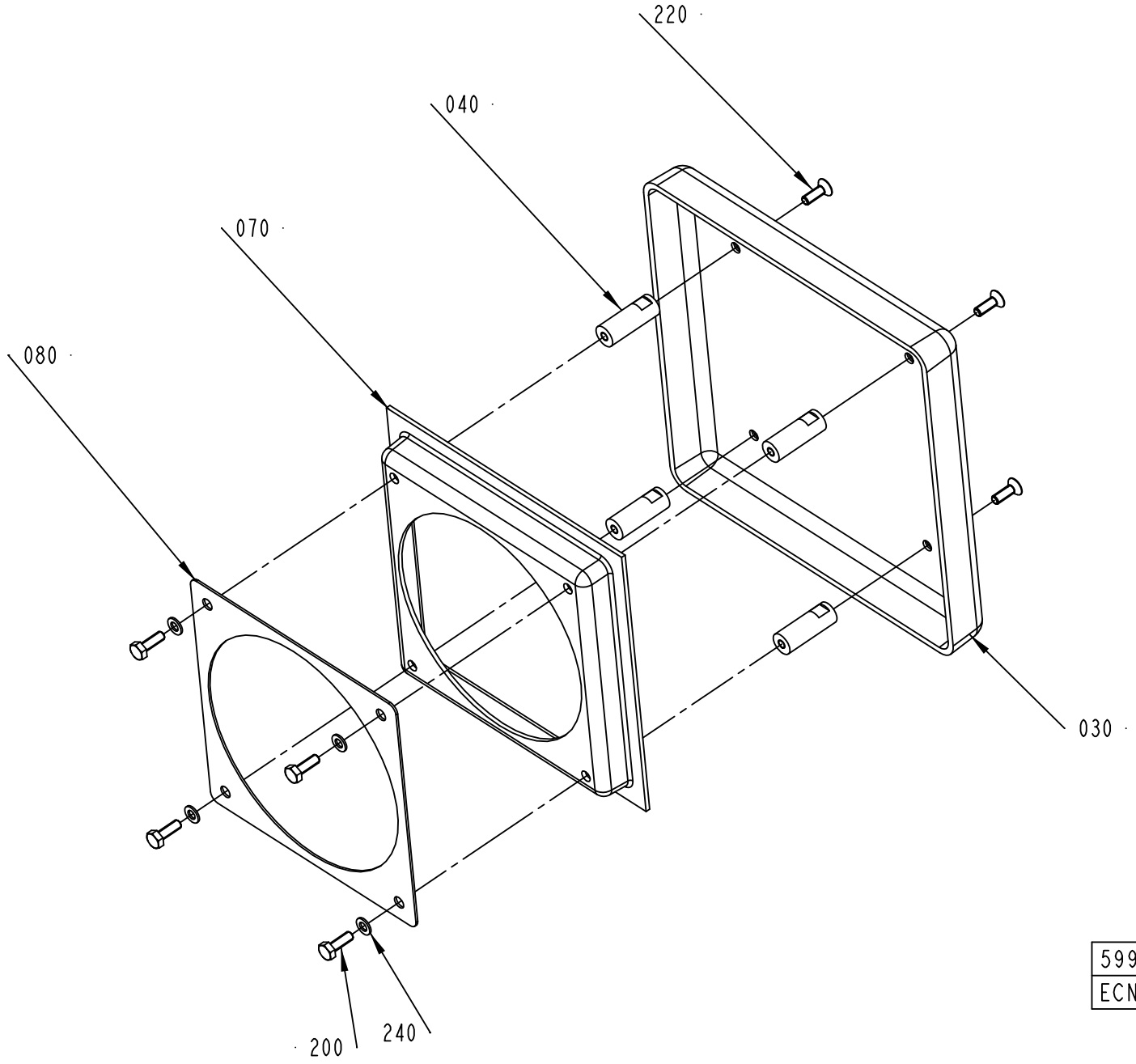

599749-1
ECN 73648

ECM: 176457 - 20041206
Group number: 599749-0100
Assembly Drawing: 599749-1_1_AB

Pos	Part No	UN	Qty	Description	Page No
-					
030	599752-0000		1	COVER	
040	599753-0000		4	SPACER	
070	599751-0000		1	INSERT	
080	599755-0000		1	GASKET	
200	312105-0291		4	SCREW M6S ISO 4017 M4X12 A470	
220	312155-0291		4	SCREW DIN 7991 MF6S M4X12 A4 70	
240	315105-0136		4	WASHER BRB 4,3X8 RFR	

Pos	Part No	UN	Qty	Description	Page No

ELECTRICAL CABINET

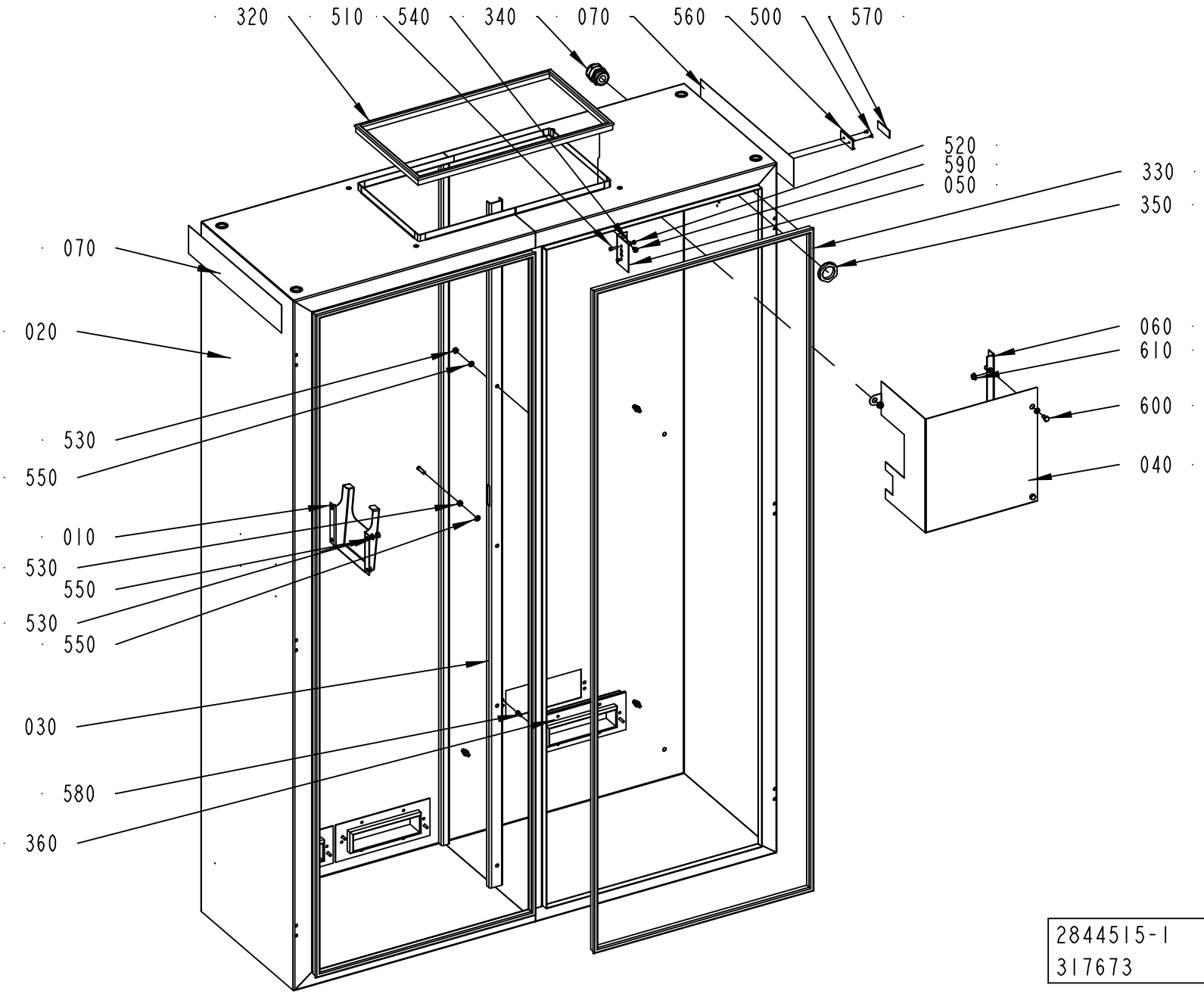

ECM: 326802 - 20080303
Group number: 2844515-0100
Assembly Drawing: 2844515-1_1_AA

Pos	Part No	UN	Qty	Description	Page No
-					
010	2837851-0000		1	CD BOX	
020	2844514-0000		1	EL-CABINET CHASSIE	
030	2870316-0000		1	PLATE	
040	2870317-0000		1	PROTECTIVE COVER	
050	2870318-0000		1	PROTECTIVE COVER	
060	2937532-0000		1	BRACKET	
070	2939687-0000		2	TAPE	
320	90143-0057	MM	1480	STRIP EMKA 1011-05 21X11MM	
330	90143-0057	MM	4400	STRIP EMKA 1011-05 21X11MM	
340	90458-0309		1	CABLE GLAND, M32X1,5, NO.5311 1040	
350	90458-0325		1	NUT, M32X1,5	
360	90458-2343		3	FRAME CF 16	
500	311521-0143		2	RIVET, BLANK 3,2X8	
510	312121-0293		2	SCREW ISO 1207 M4X16 4.8-5.8 Z.PL.	
520	312605-0312		2	HEXAGON NUT, M6M M4 A280	
530	312605-0316		18	HEXAGON NUT, M6M M6 A280	
540	315101-0136		2	WASHER BRB, 4,3/8 H=0,8	
550	315105-0153		20	WASHER BRB 6,4X12 RFR	
560	359240-0100		1	SIGN HOLDER FOR 359240-0001	
570	359241-0803		1	SIGN: "SUPPLY DISCONNECTING DEVICE"	
580	312115-0325		6	SCREW ISO4762 M5X10 A4 80	
590	312113-0323		2	SERRATED COMBI TORX SCREW M5X8 A2	
600	312105-0366		2	SCREW M6S ISO 4017 M6X12 A480	
610	312107-0316		3	HEXAGON FLANGE NUT ISO 4161 M6 A2	

Pos	Part No	UN	Qty	Description	Page No

MOUNTING PLATE

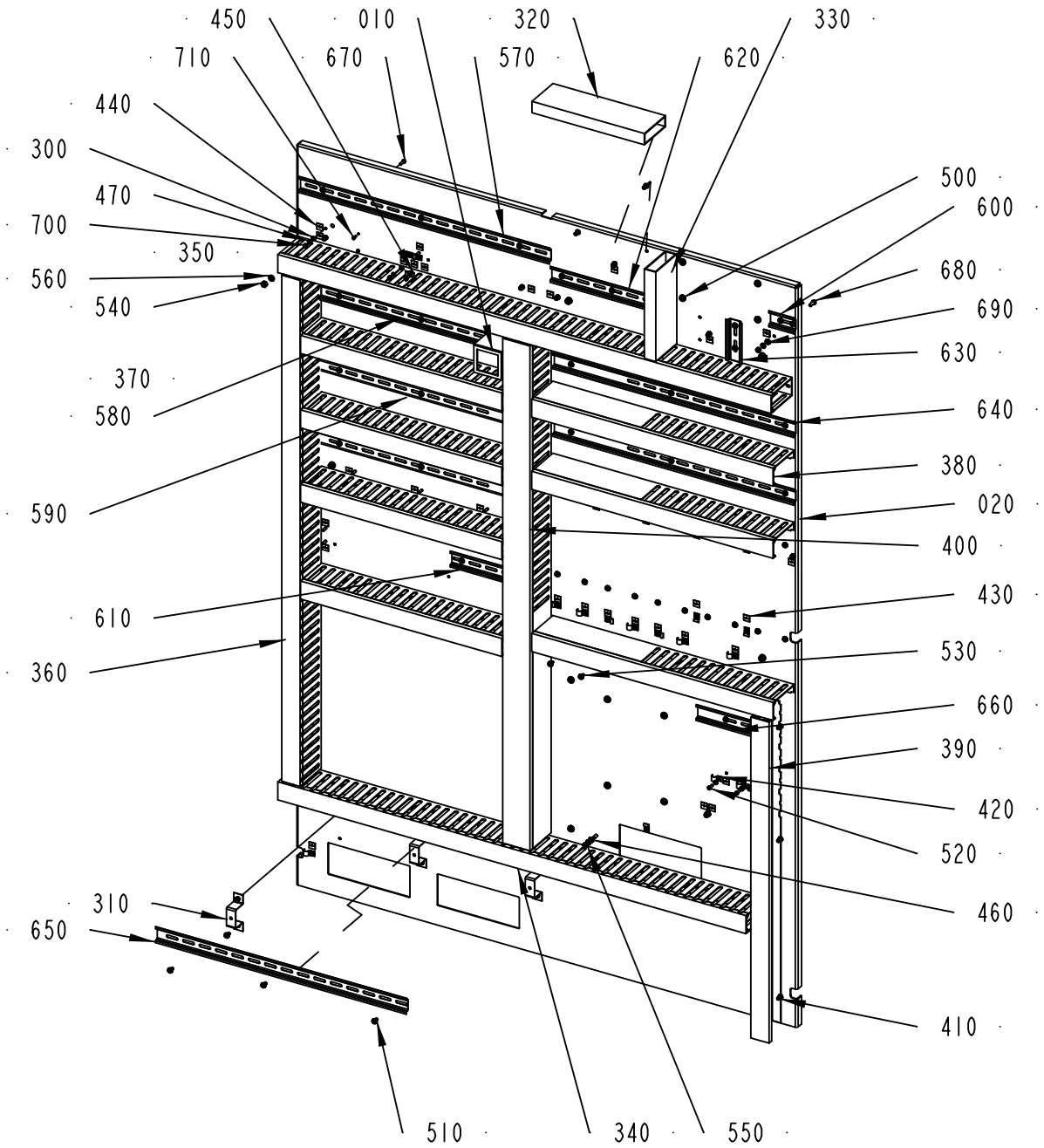

2844517-1
317673

ECM: 326801 - 20080303
Group number: 2844517-0100
Assembly Drawing: 2844517-1_1_AA

Pos	Part No	UN	Qty	Description	Page No
-					
010	583570-0000		1	BRACKET	
020	2844516-0000		1	MOUNTING PLATE	
300	90062-0059		24	LOCK WASKER SERRAT.EXT.GEAR,4,3/8 H=0,5	
310	90077-0310		3	BRACKET, TSTR, 10-0099003-1	
320	90181-0052	MM	247	CABLE DUCT 25X80MM	
330	90181-0052	MM	198	CABLE DUCT 25X80MM	
340	90181-0053	MM	1028	CABLE DUCT 40X80MM	
350	90181-0053	MM	1083	CABLE DUCT 40X80MM	
360	90181-0053	MM	1123	CABLE DUCT 40X80MM	
370	90181-0053	MM	442	CABLE DUCT 40X80MM	
380	90181-0053	MM	530	CABLE DUCT 40X80MM	
390	90181-0053	MM	712	CABLE DUCT 40X80MM	
400	90181-0054	MM	1120	CABLE DUCT 60X80MM	
410	90181-0088		51	PLASTIC RIVET, PR 52314	
420	90458-0721		7	PIPE CLIP FOR TUBE D=8 MMSZ 2367080	
430	90459-2928		19	LABEL 60417-2-IEC-5020, COMM. REF. POT.	
440	90194-0152		21	SIGN, EARTH	
450	90459-6646		9	CABLE CLIPS, D=4 MM	
460	90062-0060		3	LOCK WASHER 5,3/10 H=0,6 FZB	
470	315105-0136		13	WASHER BRB 4,3X8 RFR	
500	312113-0366		10	SERRATED COMBI TORX SCREW M6X12 A2	
510	312113-0323		57	SERRATED COMBI TORX SCREW M5X8 A2	
520	312121-0289		18	SCREW ISO 1207 M4X10 4.8-5.8 Z.PL.	
530	312113-0287		2	SERRATED COMBI TORX SCREW M4X8 A2	
540	312605-0316		9	HEXAGON NUT, M6M M6 A280	
550	312605-0314		3	HEXAGON NUT, M6M M5 A280	
560	315105-0153		9	WASHER BRB 6,4X12 RFR	
570	353042-0004	MM	550	RAIL TS 35/7,5	
580	353042-0004	MM	380	RAIL TS 35/7,5	
590	353042-0004	MM	442	RAIL TS 35/7,5	
600	353042-0004	MM	55	RAIL TS 35/7,5	
610	353042-0004	MM	155	RAIL TS 35/7,5	
620	353042-0004	MM	245	RAIL TS 35/7,5	
630	353042-0004	MM	90	RAIL TS 35/7,5	
640	353042-0004	MM	530	RAIL TS 35/7,5	
650	353042-0004	MM	550	RAIL TS 35/7,5	
660	353042-0004	MM	140	RAIL TS 35/7,5	
670	312121-0291		21	SCREW ISO 1207 M4X12 4.8-5.8 Z.PL.	
680	312121-0327		3	SCREW ISO 1207 M5X12 4.8-5.8 Z.PL.	
690	315105-0146		3	WASHER BRB 5,3X10 RFR	
700	312605-0312		13	HEXAGON NUT, M6M M4 A280	
710	312125-0222		2	SCREW ISO 1207 M3X8 A4	

Machine Type	Group Description	Used-In	Group Number	Page No

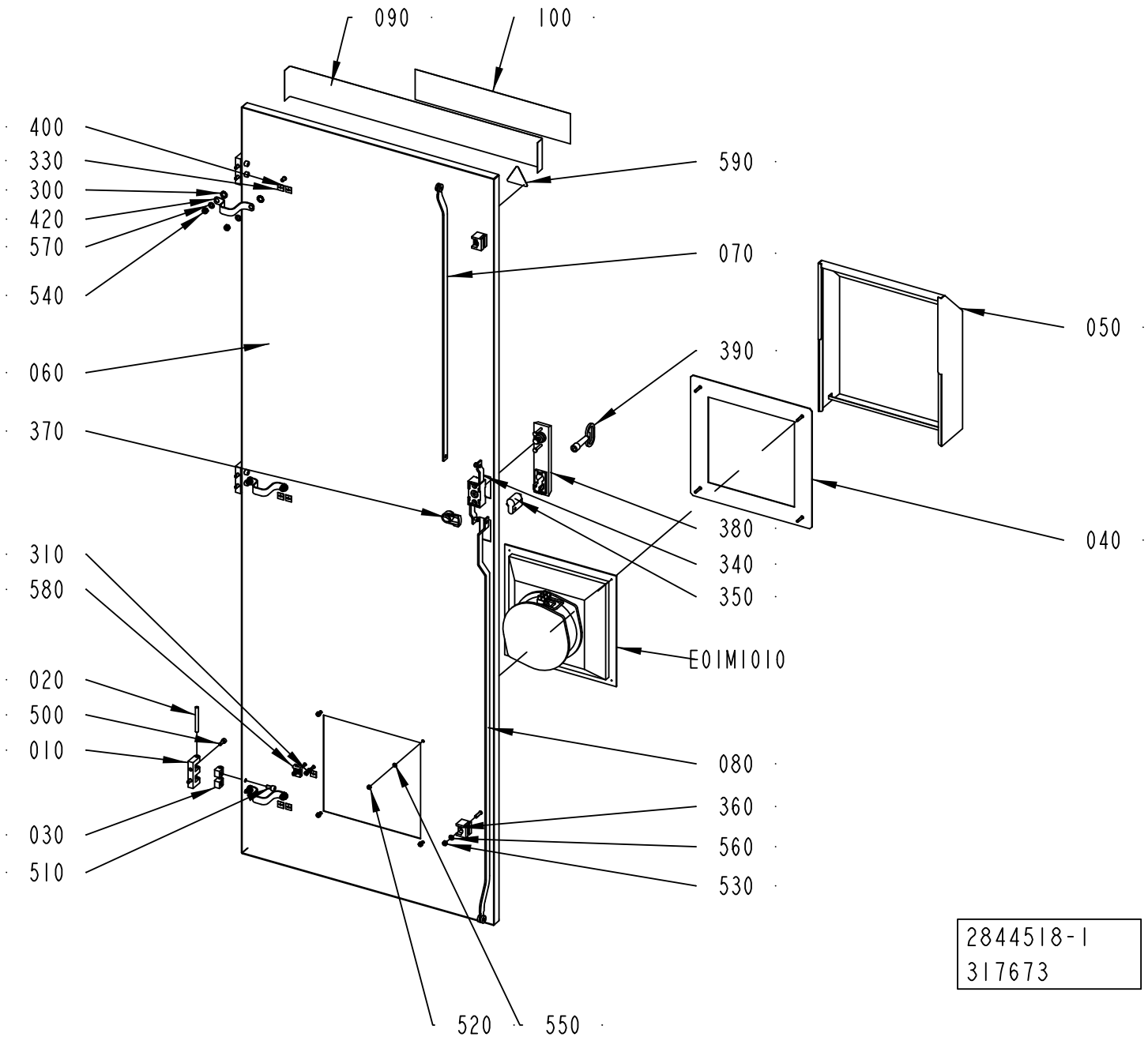
090
100
400
330
300
420
570
540
060
370
310
580
020
500
010
030
510
590
070
050
390
040
380
340
350
E01M1010
080
360
560
530
520
550
2844518-1
317673

ECM: 326800 - 20080303
Group number: 2844518-0100
Assembly Drawing: 2844518-1_1_AA

Pos	Part No	UN	Qty	Description	Page No
-					
010	1035792-0000		3	E-HINGE	
020	1035793-0000		3	PIN	
030	1035794-0000		6	BLOCKING PIECE	
040	2693488-0000		1	PLATE	
050	2694881-0000		1	COVER	
060	2846736-0000		1	DOOR	
070	2858604-0000		1	STRUT	
080	2859679-0000		1	STRUT	
090	2939686-0000		1	TAPE	
100	1021990-0000		1	SIGN 356X70MM HOUSE MARK TEXT TETRA PAK	
300	90062-0016		6	LOCK WASHER SERRAT.EXT.GEAR,8,4/15 H=0,8	
310	90062-0059		1	LOCK WASKER SERRAT.EXT.GEAR,4,3/8 H=0,5	
320	90144-0072		1	TAPE SCOTCH VHBS 4945 W=12,7MM	
330	90194-0152		4	SIGN, EARTH	
340	90237-0123		1	LOCK, 1121-U10C	
350	90237-0129		1	LOCK CYLINDER, 1109-U6	
360	90237-0144		2	GUIDE, 1121-SU540	
370	90237-0165		1	LATCH	
380	90237-0175		1	TURNING HANDLE, 1125-U185-0A	
390	90237-0324		1	KEY, 1104-02 FOR SQUARE 8 MM	
400	90459-2928		3	LABEL 60417-2-IEC-5020, COMM. REF. POT.	
420	90600-2904		3	EARTH BRAID, 250/16/8,5	
500	312115-0328		6	SCREW ISO4762 M5X14 A4 80	
510	312115-0366		6	SCREW ISO4762 M6X12 A4 80	
520	312605-0312		6	HEXAGON NUT, M6M M4 A280	
530	312812-0314		2	HEXAGON NUT, NY-LOCK M5 A480	
540	312812-0316		6	HEXAGON NUT, NY-LOCK M6 A480	
550	315105-0136		4	WASHER BRB 4,3X8 RFR	
560	315105-0146		2	WASHER BRB 5,3X10 RFR	
570	315105-0153		6	WASHER BRB 6,4X12 RFR	
580	352113-0204		1	ANCHOR PLATES FOR STRIPS, TYPE TM3S25-M	
590	359705-0015		1	WARNING SIGN ISO, RISK OF ELECTRIC SHOCK	
E01M1010	90459-5877		1	FILTER FAN SK 3325.107	

Pos	Part No	UN	Qty	Description	Page No

Machine Type	Group Description	Used-In	Group Number	Page No

EL-CABINET DOOR

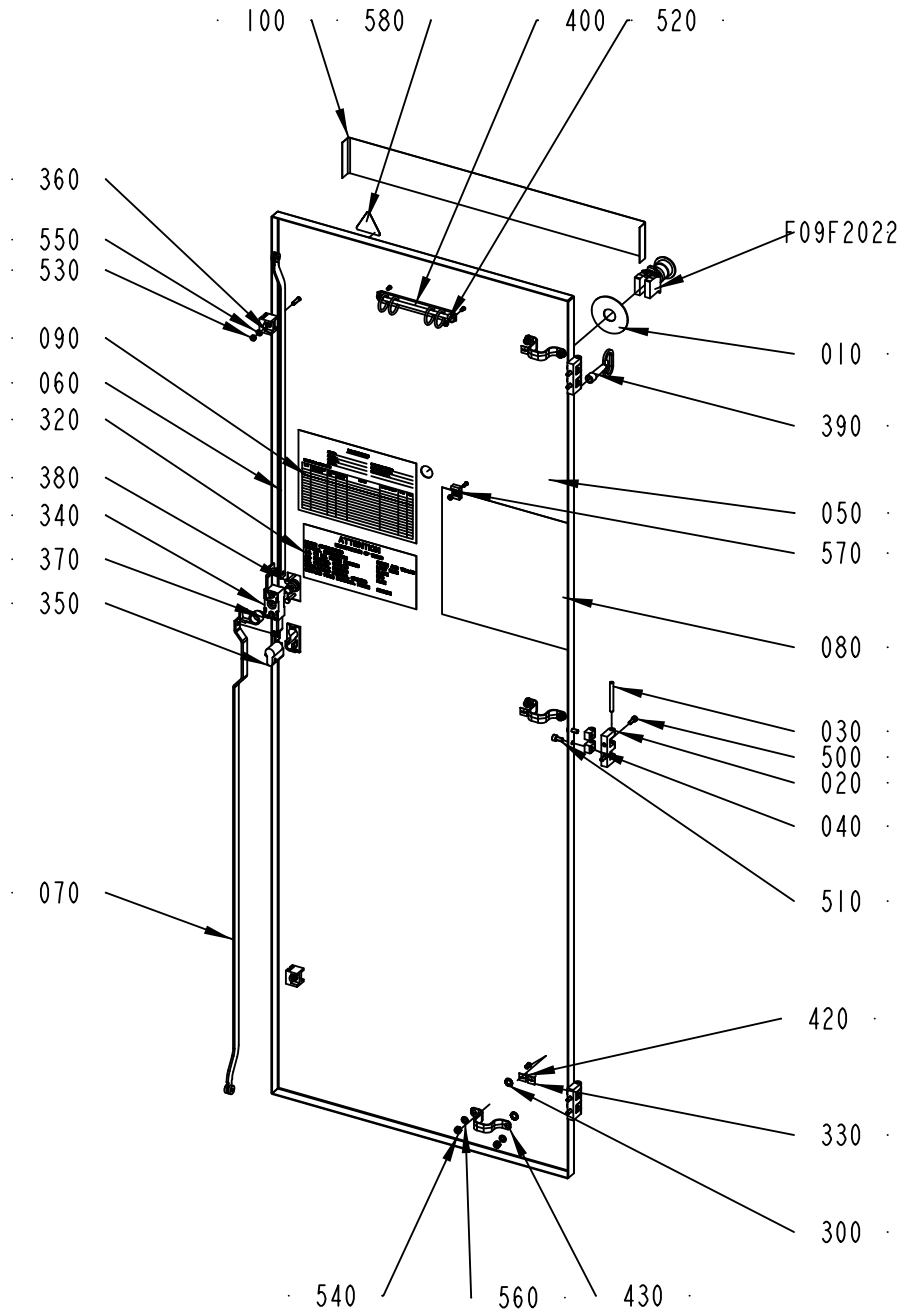

2844519-1
317673

ECM: 326799 - 20080303
Group number: 2844519-0100
Assembly Drawing: 2844519-1_1_AA

Pos	Part No	UN	Qty	Description	Page No
-					
010	486826-0001		1	SIGN "EMERGENCY STOP"	
020	1035792-0000		3	E-HINGE	
030	1035793-0000		3	PIN	
040	1035794-0000		6	BLOCKING PIECE	
050	2846735-0000		1	DOOR	
060	2858604-0000		1	STRUT	
070	2858605-0000		1	STRUT	
080	2870319-0000		1	FUSE PANEL LABEL	
090	2870321-0000		1	DELIVERED DESIGN	
100	2939686-0000		1	TAPE	
300	90062-0016		6	LOCK WASHER SERRAT.EXT.GEAR,8,4/15 H=0,8	
310	90144-0072	MM	1500	TAPE SCOTCH VHBS 4945 W=12,7MM	
320	90194-0080		1	SIGN, IDENTIFICATION OF WIRING	
330	90194-0152		3	SIGN, EARTH	
340	90237-0123		1	LOCK, 1121-U10C	
350	90237-0129		1	LOCK CYLINDER, 1109-U6	
360	90237-0144		2	GUIDE, 1121-SU540	
370	90237-0165		1	LATCH	
380	90237-0175		1	TURNING HANDLE, 1125-U185-0A	
390	90237-0324		1	KEY, 1104-02 FOR SQUARE 8 MM	
400	90243-0169		1	BINDER CLIP, DIAM.29 MM, NO. 4670819	
420	90459-2928		3	LABEL 60417-2-IEC-5020, COMM. REF. POT.	
430	90600-2904		3	EARTH BRAID, 250/16/8,5	
500	312115-0328		6	SCREW ISO4762 M5X14 A4 80	
510	312115-0366		6	SCREW ISO4762 M6X12 A4 80	
520	312605-0312		3	HEXAGON NUT, M6M M4 A280	
530	312812-0314		2	HEXAGON NUT, NY-LOCK M5 A480	
540	312812-0316		6	HEXAGON NUT, NY-LOCK M6 A480	
550	315105-0146		2	WASHER BRB 5,3X10 RFR	
560	315105-0153		6	WASHER BRB 6,4X12 RFR	
570	352113-0204		1	ANCHOR PLATES FOR STRIPS, TYPE TM3S25-M	
580	359705-0015		1	WARNING SIGN ISO, RISK OF ELECTRIC SHOCK	
F09F2022	90458-1651		1	EMERGENCY STOP, ZB4-BS-844 ZB4-BZ-104	

Pos	Part No	UN	Qty	Description	Page No

Machine Type | Group Description | Used-In | Group Number | Page No

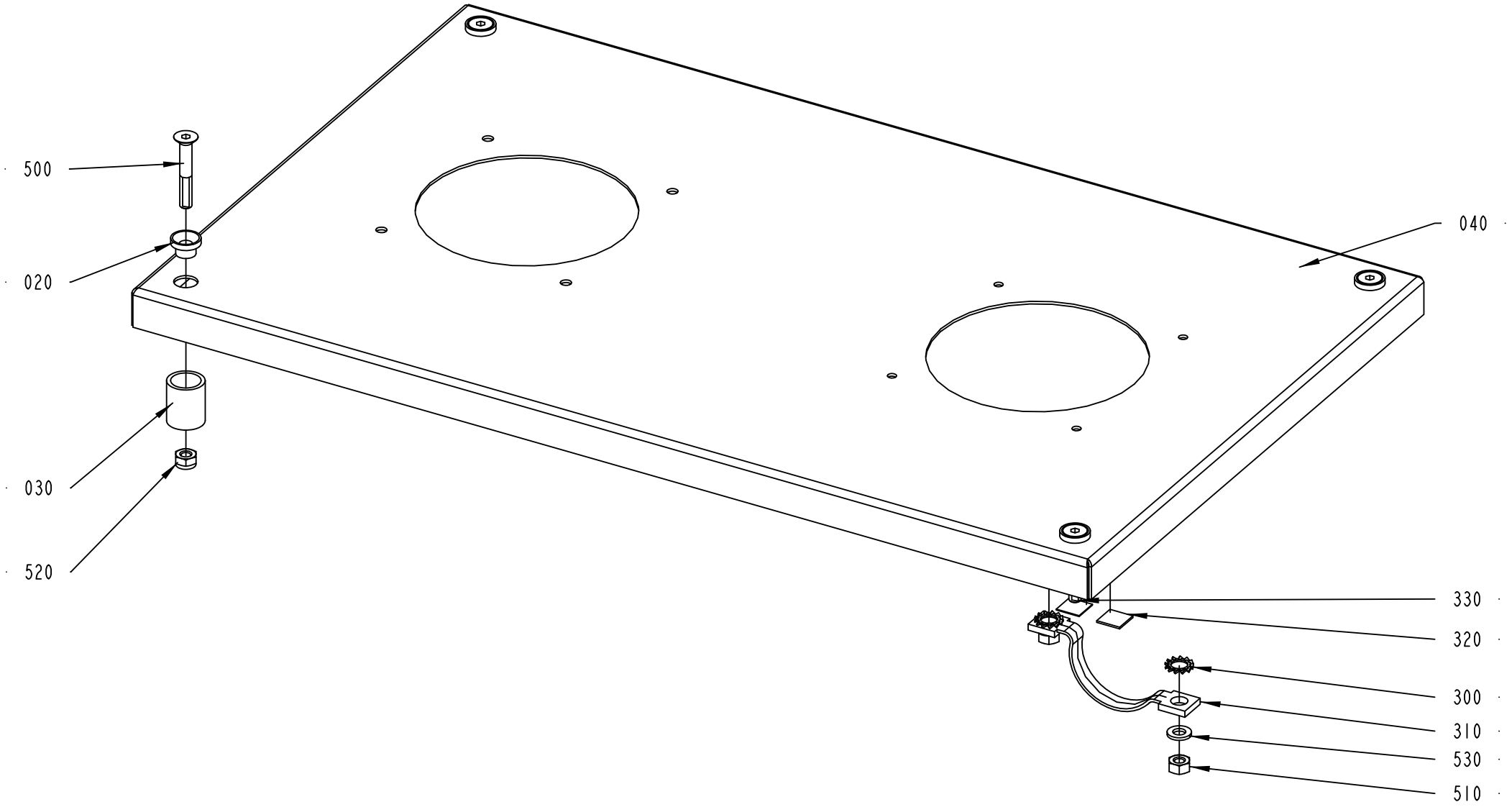
500
020
030
520
040
330
320
300
310
530
510
2858602-1
317673

ECM: 326797 - 20080303
Group number: 2858602-0100
Assembly Drawing: 2858602-1_1_AA

Pos	Part No	UN	Qty	Description	Page No
-					
020	578196-0000		4	SLEEVE	
030	578197-0000		4	SPACER	
040	2858601-0000		1	COVER	
300	90062-0016		2	LOCK WASHER SERRAT.EXT.GEAR,8,4/15 H=0,8	
310	90135-0040		1	EARTH WIRE, L=150 MM 16 MM2	
320	90194-0152		1	SIGN, EARTH	
330	90459-2928		1	LABEL 60417-2-IEC-5020, COMM. REF. POT.	
500	312155-0378		4	SCREW DIN 7991 MF6S M6X40 A4 70	
510	312602-0316		2	NUT, EN 24032 M6M M6 NIPLBR	
520	312812-0316		4	HEXAGON NUT, NY-LOCK M6 A480	
530	315101-0153		2	WASHER PLAIN, BRB, 6,4/12 H=1,5	

Pos	Part No	UN	Qty	Description	Page No

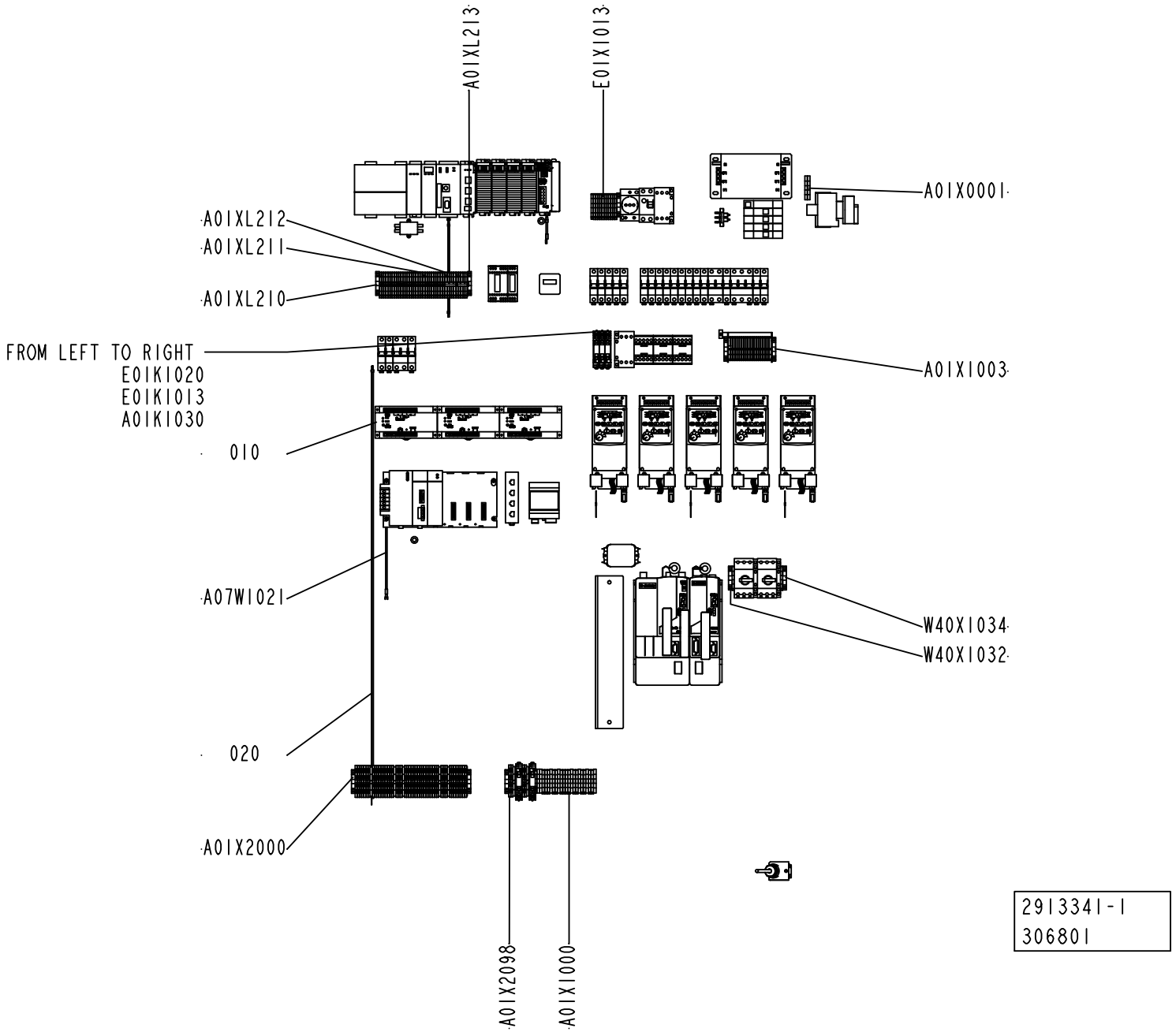
A01XL213
E01X1013
A01X0001
A01XL212
A01XL211
A01XL210
FROM LEFT TO RIGHT
E01K1020
E01K1013
A01K1030
A01X1003
010
A07W1021
W40X1034
W40X1032
020
A01X2000
A01X2098
A01X1000
2913341-1
306801

ECM: 356473 - 20081014
Group number: 2913341-0100
Assembly Drawing: 2913341-1_1_AA

Pos	Part No	UN	Qty	Description	Page No
TB LINE COMMUNICATION GENIUS, TBA LINE COMMUNICATION GENIUS					
A07W1021	1368508-0101		1	WIRE	**8-21**
W40X1032	2884591-0100		1	TERMINAL	**8-23**
W40X1034	2884593-0100		1	TERMINAL	**8-25**
TB LINE COMMUNICATION SNP, TBA LINE COMMUNICATION SNP					
W40X1032	2884591-0100		1	TERMINAL	**8-23**
W40X1034	2884593-0100		1	TERMINAL	**8-25**
Common Parts					
010	2844513-0100		1	ELECTRICAL MATERIALS	**8-27, 8-29, 8-31**
020	2954533-0100		1	CABLE SET	**8-33**
A01K1030	2901720-0100		1	RELAY	**8-35**
A01XL213	2872319-0100		1	TERMINAL	**8-37**
A01XL212	2872318-0100		1	TERMINAL	**8-39**
A01XL211	2872299-0100		1	TERMINAL	**8-41**
A01XL210	2872298-0100		1	TERMINAL	**8-43**
A01X0001	2884592-0100		1	TERMINAL	**8-45**
A01X1000	2896524-0100		1	TERMINAL	**8-47**
A01X1003	2884594-0100		1	TERMINAL	**8-49**
A01X2000	2872337-0100		1	TERMINAL	**8-51**
A01X2098	2884589-0100		1	TERMINAL	**8-53**
E01K1013	2901718-0100		1	RELAY	**8-55**
E01K1020	2901719-0100		1	RELAY	**8-57**
E01X1013	2872336-0100		1	TERMINAL	**8-59**

Pos	Part No	UN	Qty	Description	Page No

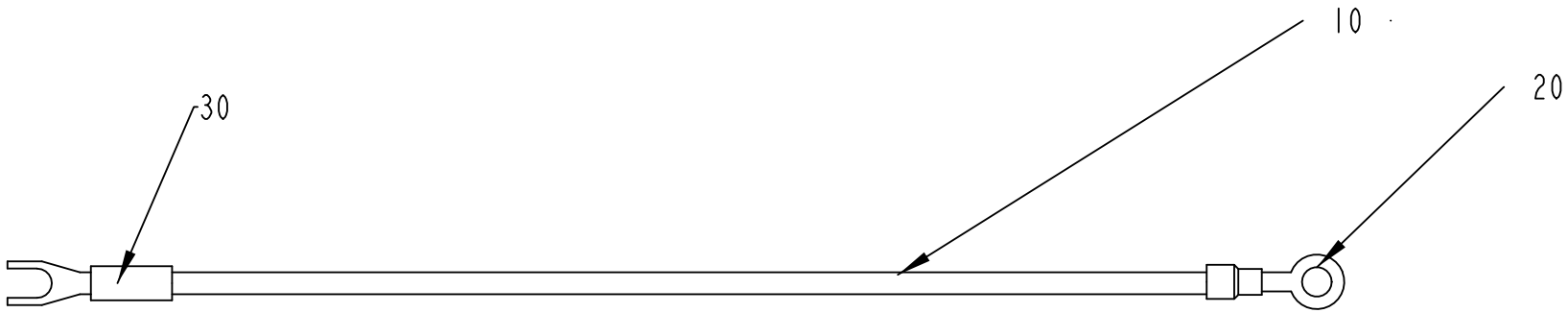

1368508-1
ECN 94176

ECM: 274618 - 20061212
Group number: 1368508-0101
Assembly Drawing: 1368508-1_1_AA

Pos	Part No	UN	Qty	Description	Page No
-					
10	1556781-0000		1	CABLE	
20	353101-0120		1	CABLE SHOE 0,5-1,5MM2 M4 RED	
30	353103-0120		1	CABLE SHOE 1,25 MM² RED	

Pos	Part No	UN	Qty	Description	Page No

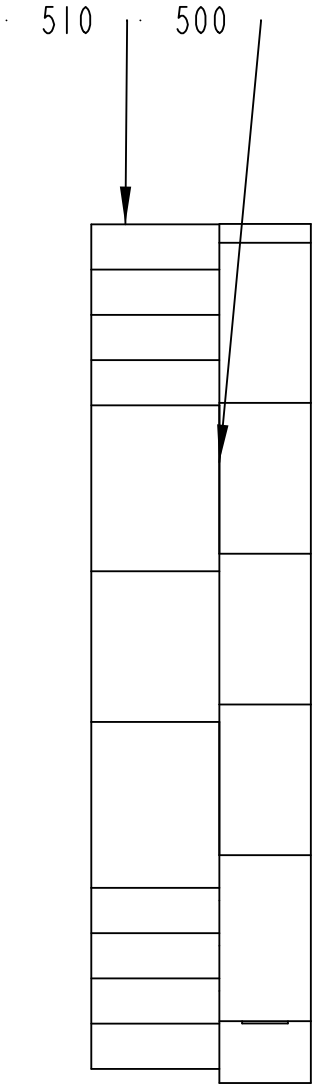

W40X1032

2884591-1
306801

ECM: 326789 - 20080303
Group number: 2884591-0100
Assembly Drawing: 2884591-1_1_AA

Pos	Part No	UN	Qty	Description	Page No	Pos	Part No	UN	Qty	Description	Page No
-											
500	353021-0213		1	FEED THROUGH TERMINAL, 10201.0							
510	353031-0203		1	END SUPPORT, WEW 35/2							

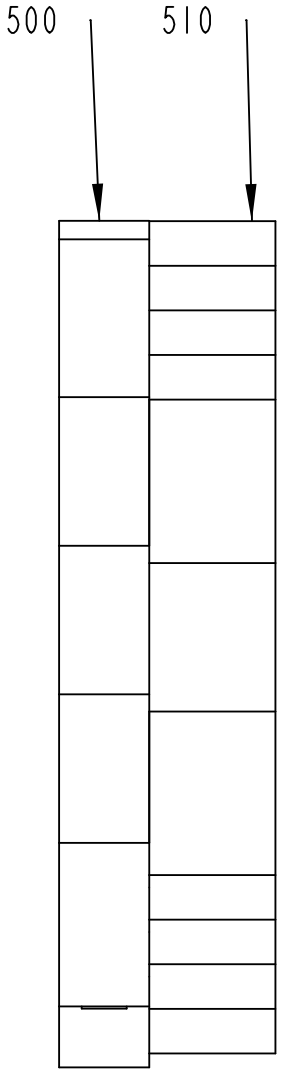

W40X1034

2884593-1
306801

ECM: 326787 - 20080303
Group number: 2884593-0100
Assembly Drawing: 2884593-1_1_AA

Pos	Part No	UN	Qty	Description	Page No
-					
500	353021-0213		1	FEED THROUGH TERMINAL, 10201.0	
510	353031-0203		1	END SUPPORT, WEW 35/2	

Pos	Part No	UN	Qty	Description	Page No

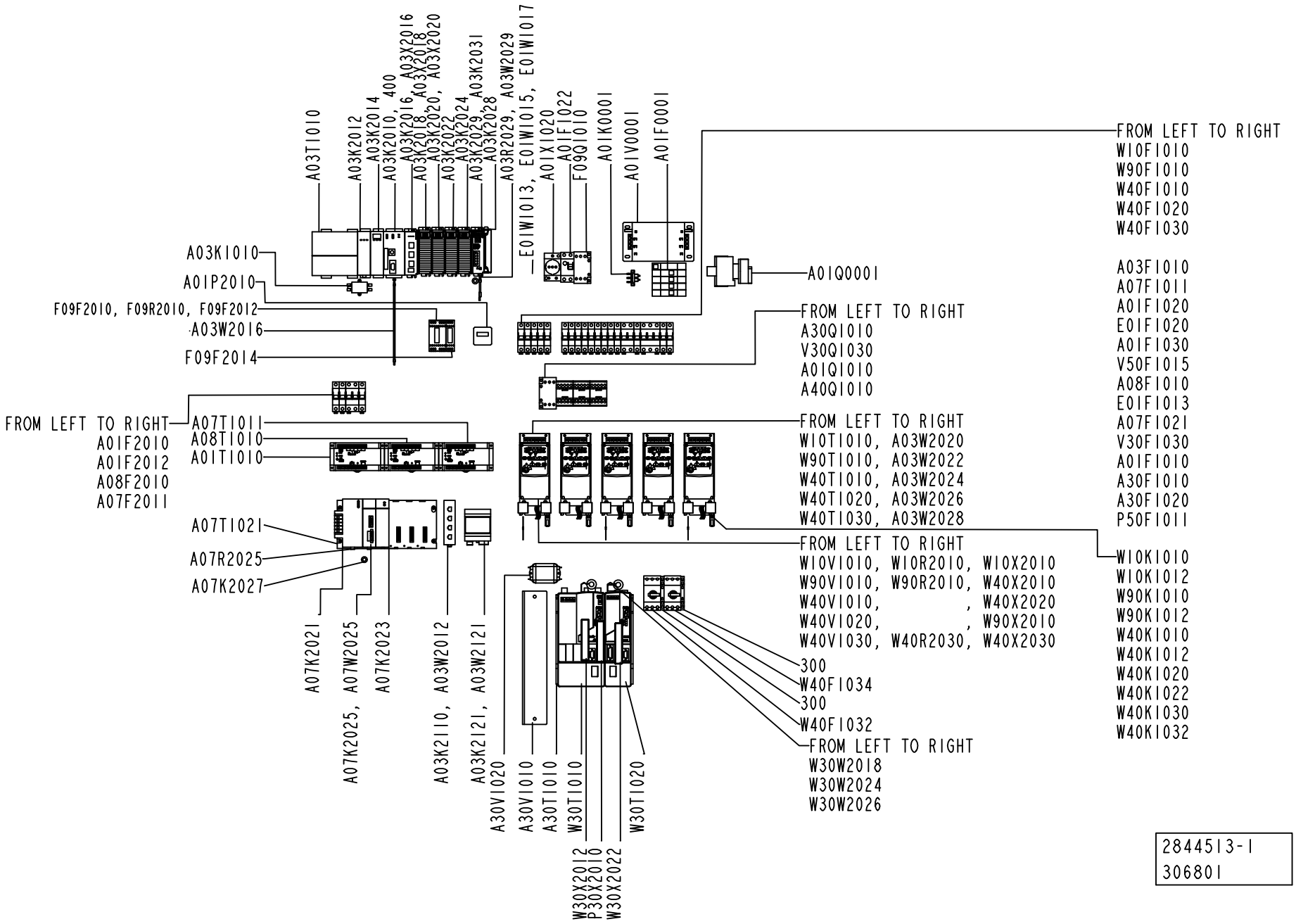
A03T1010
A03K2012
A03K2014
A03K2010, 400
A03K2016, A03X2016
A03K2018, A03X2018
A03K2020, A03X2020
A03K2022
A03K2024
A03K2029, A03K2031
A03K2028
A03R2029, A03W2029
E01W1013, E01W1015, E01W1017
A01X1020
A01F1022
F09Q1010
A01K0001
A01V0001
A01F0001
A03K1010
A01P2010
F09F2010, F09R2010, F09F2012
A03W2016
F09F2014
A01Q0001
FROM LEFT TO RIGHT
W10F1010
W90F1010
W40F1010
W40F1020
W40F1030
A03F1010
A07F1011
A01F1020
E01F1020
A01F1030
V50F1015
A08F1010
E01F1013
A07F1021
V30F1030
A01F1010
A30F1010
A30F1020
P50F1011
FROM LEFT TO RIGHT
A30Q1010
V30Q1030
A01Q1010
A40Q1010
FROM LEFT TO RIGHT
A07T1011
A08T1010
A01T1010
FROM LEFT TO RIGHT
A01F2010
A01F2012
A08F2010
A07F2011
FROM LEFT TO RIGHT
W10T1010, A03W2020
W90T1010, A03W2022
W40T1010, A03W2024
W40T1020, A03W2026
W40T1030, A03W2028
A07T1021
A07R2025
A07K2027
FROM LEFT TO RIGHT
W10V1010, W10R2010, W10X2010
W90V1010, W90R2010, W40X2010
W40V1010, , W40X2020
W40V1020, , W90X2010
W40V1030, W40R2030, W40X2030
W10K1010
W10K1012
W90K1010
W90K1012
W40K1010
W40K1012
W40K1020
W40K1022
W40K1030
W40K1032
300
W40F1034
300
W40F1032
FROM LEFT TO RIGHT
W30W2018
W30W2024
W30W2026
A07K2021
A07K2025, A07W2025
A07K2023
A03K2110, A03W2012
A03K2121, A03W2121
A30V1020
A30V1010
A30T1010
W30T1010
W30T1020
W30X2012
P30X2010
W30X2022
2844513-1
306801

Pos	Part No	UN	Qty	Description	Page No
TB LINE COMMUNICATION GENIUS, TBA LINE COMMUNICATION GENIUS					
300	90259-0313		2	AUX. CONTACT K&M NHI21-PKZM0	
A07F2011	354000-0030		1	MINIATURE CIRCUIT BREAKER, FAZ-C3/1	
A03K2029	90459-2483		1	DEVICENET SCANNER, 1769-SDN SERIES B	
A03K2031	90458-1141		1	FERRITE, RI-16-28-9	
A07K2021	90031-0070		1	CPU313, INTEGRATED IN 5-SLOT BASEPLATE	
A07K2023	90031-0078		1	GENIUS BUS CONTROLLER	
A07K2025	90459-4234		1	DEVICENET SLAVE MODULE	
A07K2027	90458-1141		1	FERRITE, RI-16-28-9	
A07T1011	90459-4245		1	POWER SUPPLY UNIT 230VAC/24VDC 3,75A	
A07T1021	90031-0068		1	PLC, POWER SUPPLY	
	352551-0134		*1*	*FINE-WIRE FUSE 2 A SLOW,5X20MM*	
	90031-0301		*1*	*SPARE BATTERY CPU,PCM,2PCS*	
A03W2024	90220-0183	M	0.5	SCR. CABLE 2X0,34MM2	
A03W2026	90220-0183	M	0.5	SCR. CABLE 2X0,34MM2	
A03W2029	578874-0000		1	HF BRAIDED WIRE 1,6 MM2	
A07W2025	90459-2530	M	3	DEVICENET CABLE THIN	
W40F1032	90459-5323		1	OVERLOAD PROTECTION, PKZM0-1	
W40F1034	90459-5323		1	OVERLOAD PROTECTION, PKZM0-1	
W40K1020	90458-1140		1	FERRITE, RI-26-28-13	
W40K1022	90458-1140		1	FERRITE, RI-26-28-13	
W40K1030	90458-1140		1	FERRITE, RI-26-28-13	
W40K1032	90458-1140		1	FERRITE, RI-26-28-13	
W40T1020	90459-3449		1	VARIABLE FREQUENCY DRIVE 22A-A2P3N104	
W40T1030	90459-3450		1	VARIABLE FREQUENCY DRIVE 22A-A4P5N104	
W40V1020	90459-3460		1	FOOTPRINT FILTER 22-RF010-AL	
W40V1030	90459-3460		1	FOOTPRINT FILTER 22-RF010-AL	
W40X2020	90459-6470		1	CONNECTOR RJ45 TER. BL., AK-U0-RJ45-TB2P	
W40X2030	90459-6470		1	CONNECTOR RJ45 TER. BL., AK-U0-RJ45-TB2P	
TB LINE COMMUNICATION SNP, TBA LINE COMMUNICATION SNP					
300	90259-0313		2	AUX. CONTACT K&M NHI21-PKZM0	
A03K2121	90459-4235		1	SNP TO DF1 GATEWAY, 0220 1166 01 REV B	
A03W2024	90220-0183	M	0.5	SCR. CABLE 2X0,34MM2	
A03W2026	90220-0183	M	0.5	SCR. CABLE 2X0,34MM2	
A03W2121	90600-0850		1	CABLE, SNP-DF1 GATEWAY	
W40F1032	90459-5323		1	OVERLOAD PROTECTION, PKZM0-1	
W40F1034	90459-5323		1	OVERLOAD PROTECTION, PKZM0-1	
W40K1020	90458-1140		1	FERRITE, RI-26-28-13	
W40K1022	90458-1140		1	FERRITE, RI-26-28-13	
W40K1030	90458-1140		1	FERRITE, RI-26-28-13	
W40K1032	90458-1140		1	FERRITE, RI-26-28-13	
W40T1020	90459-3449		1	VARIABLE FREQUENCY DRIVE 22A-A2P3N104	
W40T1030	90459-3450		1	VARIABLE FREQUENCY DRIVE 22A-A4P5N104	
W40V1020	90459-3460		1	FOOTPRINT FILTER 22-RF010-AL	
W40V1030	90459-3460		1	FOOTPRINT FILTER 22-RF010-AL	
W40X2020	90459-6470		1	CONNECTOR RJ45 TER. BL., AK-U0-RJ45-TB2P	
W40X2030	90459-6470		1	CONNECTOR RJ45 TER. BL., AK-U0-RJ45-TB2P	
TCA LINE COMMUNICATION SNP					
A03K2121	90459-4235		1	SNP TO DF1 GATEWAY, 0220 1166 01 REV B	
A03W2121	90600-0850		1	CABLE, SNP-DF1 GATEWAY	
Common Parts					
400	90459-3145		1	FLASH MEMORY 64MBYTE, 1784-CF64	
500	312113-0287		6	SERRATED COMBI TORX SCREW M4X8 A2	
510	312113-0323		20	SERRATED COMBI TORX SCREW M5X8 A2	
520	312113-0366		6	SERRATED COMBI TORX SCREW M6X12 A2	
530	312125-0220		2	SCREW ISO 1207 M3X6 A4	
540	312125-0285		4	SCREW ISO 1207 M4X6 A4	
550	351160-0102		1	WIRE AWM 1X0,75 MM2 DARKBLUE	
555	351161-0104	M	1	WIRE AWM 1X1,5 MM2 LIGHTBLUE	
560	351161-0105	M	1	WIRE AWM 1X2,5 MM2 LIGHTBLUE	
570	351162-0102	M	1	WIRE AWM 1X0,75 MM2 YELLOW-GREEN	
580	351162-0104	M	1	WIRE AWM 1X1,5 MM2 YELLOW-GREEN	
590	351162-0105	M	1	WIRE AWM 1X2,5 MM2 YELLOW-GREEN	
600	351162-0108	M	1	WIRE AWM 1X10 MM2 YELLOW-GREEN	
610	351164-0104	M	1	WIRE AWM 1X1,5 MM2 BLACK	
620	351164-0105	M	1	WIRE AWM 1X2,5 MM2 BLACK	
630	353001-0113		1	END SLEEVE 0,75MM2	
640	353001-0114		1	END SLEEVE 1,50 MM2	
650	353001-0115		1	END SLEEVE 2,5/14	
660	353001-0120		1	END SLEEVE H 10/28	
670	353210-0075		1	END SLEEVE, TWIN COLL, 0,75 MM2	
680	353210-0150		1	END SLEEVE, TWIN COLL, 1,5 MM2	
690	353210-0250		1	END SLEEVE, TWIN COLL, 2,5 MM2	
A01F0001	90082-0013		1	OVER VOLT. PROTECT. PU 4C-R 230 VAC	
	90082-0301		*3*	*OVER VOLT. PROTECT. PU 0 C 833951*	
A01F1010	354000-0020		1	MINIATURE CIRCUIT BREAKER, FAZ-C2/1	
A01F1020	354000-0100		1	MINIATURE CIRCUIT BREAKER, FAZ-C10/1	
A01F1022	90459-5811		1	RESIDUAL CURRENT DEVICE, FI-25/2/003-A	
A01F1030	354000-0040		1	MINIATURE CIRCUIT BREAKER, FAZ-C4/1	
A01F2010	354000-0020		1	MINIATURE CIRCUIT BREAKER, FAZ-C2/1	
A01F2012	354000-0020		1	MINIATURE CIRCUIT BREAKER, FAZ-C2/1	
A03F1010	354000-0060		1	MINIATURE CIRCUIT BREAKER, FAZ-C6/1	
A07F1011	354000-0020		1	MINIATURE CIRCUIT BREAKER, FAZ-C2/1	
A07F1021	354000-0020		1	MINIATURE CIRCUIT BREAKER, FAZ-C2/1	

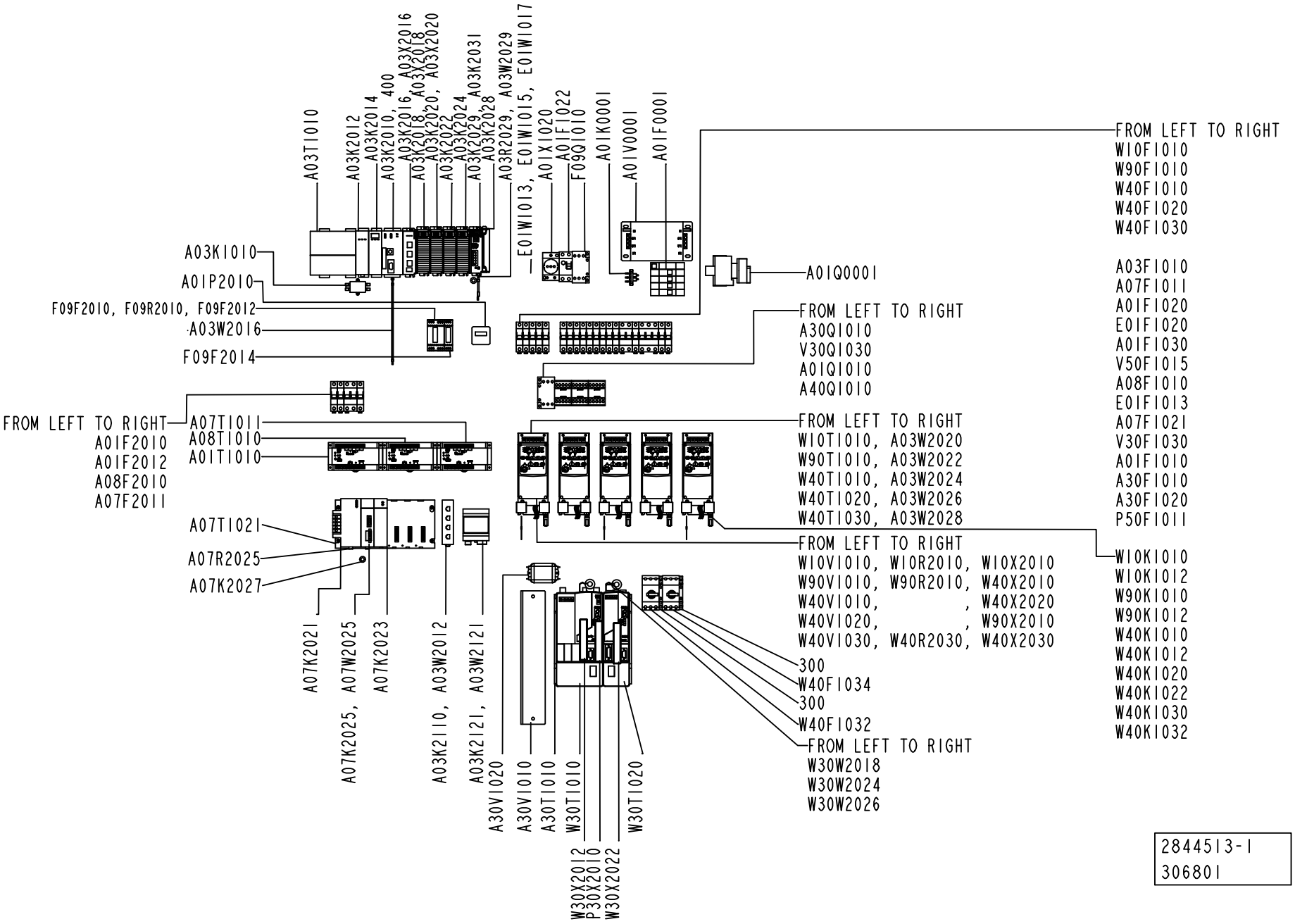
A03T1010
A03K2012
A03K2014
A03K2010, 400
A03K2016, A03X2016
A03K2018, A03X2018
A03K2020, A03X2020
A03K2022
A03K2024
A03K2029, A03K2031
A03K2028
A03R2029, A03W2029
E01W1013, E01W1015, E01W1017
A01X1020
A01F1022
F09Q1010
A01K0001
A01V0001
A01F0001
A03K1010
A01P2010
F09F2010, F09R2010, F09F2012
A03W2016
F09F2014
A01Q0001
FROM LEFT TO RIGHT
W10F1010
W90F1010
W40F1010
W40F1020
W40F1030
A03F1010
A07F1011
A01F1020
E01F1020
A01F1030
V50F1015
A08F1010
E01F1013
A07F1021
V30F1030
A01F1010
A30F1010
A30F1020
P50F1011
FROM LEFT TO RIGHT
A30Q1010
V30Q1030
A01Q1010
A40Q1010
FROM LEFT TO RIGHT
A07T1011
A08T1010
A01T1010
FROM LEFT TO RIGHT
A01F2010
A01F2012
A08F2010
A07F2011
FROM LEFT TO RIGHT
W10T1010, A03W2020
W90T1010, A03W2022
W40T1010, A03W2024
W40T1020, A03W2026
W40T1030, A03W2028
FROM LEFT TO RIGHT
W10V1010, W10R2010, W10X2010
W90V1010, W90R2010, W40X2010
W40V1010, , W40X2020
W40V1020, , W90X2010
W40V1030, W40R2030, W40X2030
W10K1010
W10K1012
W90K1010
W90K1012
W40K1010
W40K1012
W40K1020
W40K1022
W40K1030
W40K1032
A07T1021
A07R2025
A07K2027
A07K2021
A07W2025
A07K2023
A07K2025, A07K2025
A03K2110, A03W2012
A03K2121, A03W2121
A30V1020
A30V1010
A30T1010
W30T1010
W30T1020
W30X2012
P30X2010
W30X2022
300
W40F1034
300
W40F1032
FROM LEFT TO RIGHT
W30W2018
W30W2024
W30W2026
2844513-1
306801

Pos	Part No	UN	Qty	Description	Page No
Common Parts (Cont'd)					
A08F1010	354000-0060		1	MINIATURE CIRCUIT BREAKER, FAZ-C6/1	
A08F2010	354001-0040		1	MINIATURE CIRCUIT BREAKER, FAZ-C4/2	
A30F1010	354002-0100		1	MINIATURE CIRCUIT BREAKER, FAZ-C10/3	
A30F1020	354000-0040		1	MINIATURE CIRCUIT BREAKER, FAZ-C4/1	
A01K0001	90024-0036		1	FEED THROUGH FILTER, 52-160-002	
A03K1010	90459-1359		1	FILTER 1 A, 250 VAC, FN 332-1/05	
A03K2010	90600-1345		1	PROCESSOR L43, SERIES A, 1768-L43/A	
A03K2012	90600-1349		1	SERCOS MOTION MODULE 4-AXIS, 1768-M04SE/	
A03K2014	90600-1348		1	ETHERNET /IP BRIDGE MODULE, 1768-ENBT/A	
A03K2016	90459-6553		1	PLC DSI /MODBUS COMMUN. MOD., 1769-SM2/A	
A03K2018	90459-2473		1	DIG INP. MOD.16 PTS FAST,1769-IQ16F SERA	
A03K2020	90459-2473		1	DIG INP. MOD.16 PTS FAST,1769-IQ16F SERA	
A03K2022	90459-2476		1	DIGIT. OUT. MOD. 16 P ESCP, 1769-OB16P	
A03K2024	90459-2476		1	DIGIT. OUT. MOD. 16 P ESCP, 1769-OB16P	
A03K2028	90459-2491		1	PLC RIGHT END CAP/TERMINATOR, 1769-ECR	
A03K2110	90600-1847		1	ETHERNET SWITCH, FL SWITCH SFN 5TX	
A01P2010	90178-0007		1	HOUR COUNTER, BG 40,17-1 12-48VDC	
A01Q0001	90111-0132		1	MAIN SWITCH P1-25/EA/SVB-SW/N/HI11/H-P14	
A01Q1010	90459-5440		1	CONTACTOR 4KW 24VDC, DILM9-01	
A30Q1010	90459-5441		1	CONTACTOR 7,5KW 24VDC, DILM17-01	
A40Q1010	90459-5440		1	CONTACTOR 4KW 24VDC, DILM9-01	
A01T1010	90459-4245		1	POWER SUPPLY UNIT 230VAC/24VDC 3,75A	
A03T1010	90600-1347		1	POWER SUPPLY 120/240 VAC, 1768-PA3/A	
A08T1010	90459-4245		1	POWER SUPPLY UNIT 230VAC/24VDC 3,75A	
A01V0001	90024-0049		1	FILTER 16 A 400 VAC, FN 356-16/29	
A30V1010	90459-2549		1	AC LINE FILTER 3-PHASE 30A, 2090-XXLF-X3	
A30V1020	90459-3931		1	LINE FILTER, 3EP1, 3A 120/250 VAC	
A03W2012	351501-0010		1	ETHERNET PATCH CABLE, FL CAT5 PATCH 1,0	
A03W2016	2855106-0000		1	COPPER BRAID	
A03W2020	90220-0183	M	3	SCR. CABLE 2X0,34MM2	
A03W2022	90220-0183	M	3	SCR. CABLE 2X0,34MM2	
A03W2028	90220-0183	M	3	SCR. CABLE 2X0,34MM2	
A30W1010	90459-5189		1	SLIM POW. RAIL, KINETIX, 2 AX, 2094-PRS2	
A01X1020	90459-3845		1	POWER SOCKET, Z-SD230	
A03X2016	90459-6470		1	CONNECTOR RJ45 TER. BL., AK-U0-RJ45-TB2P	
A03X2018	90459-6470		1	CONNECTOR RJ45 TER. BL., AK-U0-RJ45-TB2P	
A03X2020	90459-6470		1	CONNECTOR RJ45 TER. BL., AK-U0-RJ45-TB2P	
E01F1013	354000-0100		1	MINIATURE CIRCUIT BREAKER, FAZ-C10/1	
E01F1020	354000-0020		1	MINIATURE CIRCUIT BREAKER, FAZ-C2/1	
E01W1013	351150-0415	M	1	CABLE OLFLEX 7X1,5 MM2 LIGHT/GREY	
E01W1015	351150-0431	M	2	CABLE OLFLEX 2X0,75 MM2 LIGHT/GREY	
E01W1017	351150-0431	M	2	CABLE OLFLEX 2X0,75 MM2 LIGHT/GREY	
F09F2010	90459-6692		1	SAFETY PLC, PLUTO B20 20-070-06	
F09F2012	90459-4891		1	PROGR. IDENTIFIER ID-FIX RW, 20-070-21	
F09F2014	90459-2291		1	SAFETY TIME RELAY, E1T-0.5S-24VDC	
F09Q1010	90459-5441		1	CONTACTOR 7,5KW 24VDC, DILM17-01	
P50F1011	354000-0100		1	MINIATURE CIRCUIT BREAKER, FAZ-C10/1	
P30X2010	90459-6679		1	CONN 15 P FEM, AUX. FEEDB,2090-K6CK-D15F	
V30F1030	354001-0100		1	MINIATURE CIRCUIT BREAKER, FAZ-C10/2	
V50F1015	354000-0060		1	MINIATURE CIRCUIT BREAKER, FAZ-C6/1	
V30Q1030	90459-5440		1	CONTACTOR 4KW 24VDC, DILM9-01	
W10F1010	354000-0160		1	MINIATURE CIRCUIT BREAKER, FAZ-C16/1	
W40F1010	354000-0160		1	MINIATURE CIRCUIT BREAKER, FAZ-C16/1	
W40F1020	354000-0100		1	MINIATURE CIRCUIT BREAKER, FAZ-C10/1	
W40F1030	354000-0160		1	MINIATURE CIRCUIT BREAKER, FAZ-C16/1	
W90F1010	354000-0160		1	MINIATURE CIRCUIT BREAKER, FAZ-C16/1	
W10K1010	90458-1140		1	FERRITE, RI-26-28-13	
W10K1012	90458-1140		1	FERRITE, RI-26-28-13	
W30K2010	90458-1140		1	FERRITE, RI-26-28-13	
W30K2012	90458-1141		1	FERRITE, RI-16-28-9	
W30K2020	90458-1140		1	FERRITE, RI-26-28-13	
W30K2022	90458-1141		1	FERRITE, RI-16-28-9	
W40K1010	90458-1140		1	FERRITE, RI-26-28-13	
W40K1012	90458-1140		1	FERRITE, RI-26-28-13	
W90K1010	90458-1140		1	FERRITE, RI-26-28-13	
W90K1012	90458-1140		1	FERRITE, RI-26-28-13	
W10R2010	90459-1297		1	RESISTANCE FIXED, 120 OHM, 0,25 W	
W40R2030	90459-1297		1	RESISTANCE FIXED, 120 OHM, 0,25 W	
W90R2010	90459-1297		1	RESISTANCE FIXED, 120 OHM, 0,25 W	
W10T1010	90459-3450		1	VARIABLE FREQUENCY DRIVE 22A-A4P5N104	
W30T1010	90459-7210		1	AXIS MOD. W. INTEG. PS,2094-BC01-M01-S/A	
W30T1020	90459-7214		1	AXIS MODULE 650V, 6,1A, 2094-BM01-S	
W40T1010	90459-3450		1	VARIABLE FREQUENCY DRIVE 22A-A4P5N104	
W90T1010	90459-3450		1	VARIABLE FREQUENCY DRIVE 22A-A4P5N104	
W10V1010	90459-3460		1	FOOTPRINT FILTER 22-RF010-AL	
W40V1010	90459-3460		1	FOOTPRINT FILTER 22-RF010-AL	
W90V1010	90459-3460		1	FOOTPRINT FILTER 22-RF010-AL	
W30W2018	90459-2540		1	SERCOS CABLE 3.0M, 2090-SCEP3-0	
W30W2024	90459-2536		1	SERCOS CABLE 0.1M, 2090-SCEP0-1	
W30W2026	90459-2540		1	SERCOS CABLE 3.0M, 2090-SCEP3-0	
W10X2010	90459-6470		1	CONNECTOR RJ45 TER. BL., AK-U0-RJ45-TB2P	
W30X2012	90459-2550		1	I/O CONNECTOR 26 PIN MALE, 2090-K6CK-D26	
W30X2022	90459-2550		1	I/O CONNECTOR 26 PIN MALE, 2090-K6CK-D26	

Machine Type | Group Description | Used-In | Group Number | Page No

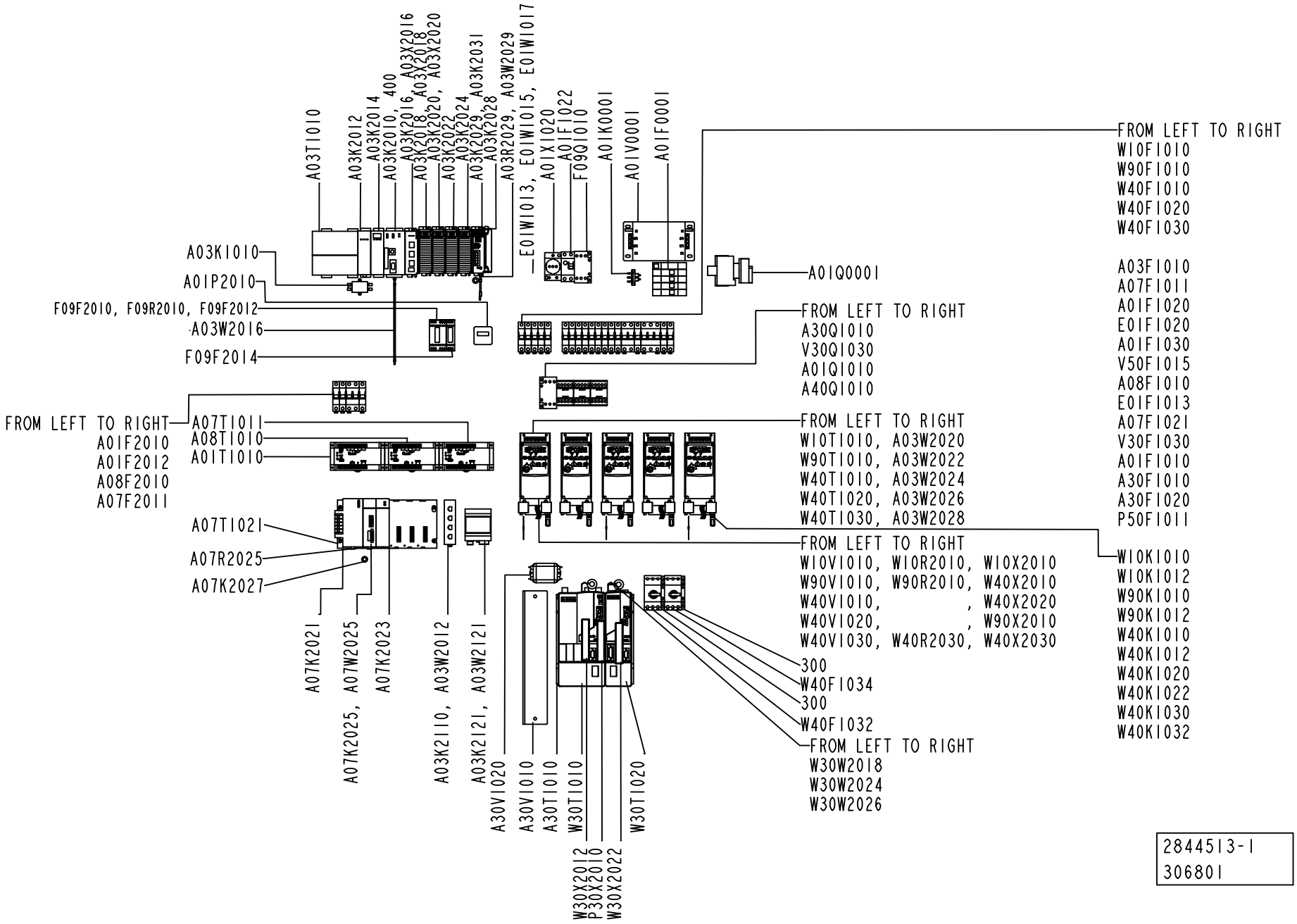
A03T1010
A03K2012
A03K2014
A03K2010, 400
A03K2016, A03X2016
A03K2018, A03X2018
A03K2020, A03X2020
A03K2022
A03K2024
A03K2029, A03K2031
A03K2028
A03R2029, A03W2029
E01W1013, E01W1015, E01W1017
A01X1020
A01F1022
F09Q1010
A01K0001
A01V0001
A01F0001
A03K1010
A01P2010
F09F2010, F09R2010, F09F2012
A03W2016
F09F2014
A01Q0001
FROM LEFT TO RIGHT
W10F1010
W90F1010
W40F1010
W40F1020
W40F1030
A03F1010
A07F1011
A01F1020
E01F1020
A01F1030
V50F1015
A08F1010
E01F1013
A07F1021
V30F1030
A01F1010
A30F1010
A30F1020
P50F1011
FROM LEFT TO RIGHT
A30Q1010
V30Q1030
A01Q1010
A40Q1010
FROM LEFT TO RIGHT
A07T1011
A08T1010
A01T1010
FROM LEFT TO RIGHT
A01F2010
A01F2012
A08F2010
A07F2011
FROM LEFT TO RIGHT
W10T1010, A03W2020
W90T1010, A03W2022
W40T1010, A03W2024
W40T1020, A03W2026
W40T1030, A03W2028
A07T1021
A07R2025
A07K2027
FROM LEFT TO RIGHT
W10V1010, W10R2010, W10X2010
W90V1010, W90R2010, W40X2010
W40V1010, , W40X2020
W40V1020, , W90X2010
W40V1030, W40R2030, W40X2030
W10K1010
W10K1012
W90K1010
W90K1012
W40K1010
W40K1012
W40K1020
W40K1022
W40K1030
W40K1032
300
W40F1034
300
W40F1032
FROM LEFT TO RIGHT
W30W2018
W30W2024
W30W2026
A07K2021
A07K2025, A07W2025
A07K2023
A03K2110, A03W2012
A03K2121, A03W2121
A30V1020
A30V1010
A30T1010
W30T1010
W30T1020
W30X2012
P30X2010
W30X2022
2844513-1
306801

Pos	Part No	UN	Qty	Description	Page No
Common Parts (Cont'd)					
W40X2010	90459-6470		1	CONNECTOR RJ45 TER. BL., AK-U0-RJ45-TB2P	
W90X2010	90459-6470		1	CONNECTOR RJ45 TER. BL., AK-U0-RJ45-TB2P	

Pos	Part No	UN	Qty	Description	Page No

This page is intentionally left blank.

ECM: 356474 - 20081014
Group number: 2954533-0100
Assembly Drawing:

Pos	Part No	UN	Qty	Description	Page No
TBA, TB					
P50W1011	351150-0412	M	10	CABLE OLFLEX 3X1,5 MM2 LIGHT/GREY	
P50W2011	351150-0406	M	10	CABLE OLFLEX 7X0,75 MM2 LIGHT/GREY	
V30W2012	351150-0403	M	3	CABLE OLFLEX 3X0,75 MM2 LIGHT/GREY	
V30W2080	351304-0050		1	ACTUATOR/SENSOR CABLE RKMWVN 3-224/5M	
V30W2090	351309-0050		1	'ACTUATOR/SENSOR CABLE PRKT 4-07/5M	
V40W2030	351309-0100		1	ACTUATOR/SENSOR CABLE PRKT 4-07/10M	
V40W2032	90459-6586		1	ACT/SENS.Y-CABLE, ASBN 2-PRKMV 4-07/0,6M	
V40W2040	351309-0100		1	ACTUATOR/SENSOR CABLE PRKT 4-07/10M	
V40W2042	90459-6586		1	ACT/SENS.Y-CABLE, ASBN 2-PRKMV 4-07/0,6M	
V40W2070	351309-0100		1	ACTUATOR/SENSOR CABLE PRKT 4-07/10M	
V40W2072	90459-6586		1	ACT/SENS.Y-CABLE, ASBN 2-PRKMV 4-07/0,6M	
W30W2022	351304-0050		1	ACTUATOR/SENSOR CABLE RKMWVN 3-224/5M	
W40W1020	90220-0104	M	3	SCR. CABLE 4X1,5MM2	
W40W1032	90220-0104	M	3.5	SCR. CABLE 4X1,5MM2	
W40W1034	90220-0104	M	3.5	SCR. CABLE 4X1,5MM2	
TCA					
A10W2099	351150-0405	M	50	CABLE OLFLEX 5X0,75 MM2 LIGHT/GREY	
A90W9901	2992449-0000		1	CABLE WITH CONNECTOR	
	90600-0788		*2*	*CONNECTOR RJ45, VS-08-RJ45-5-Q/IP20*	
	90600-0778	*M*	*50*	*CABLE, ETHERNET FL CAT5 HEAVY*	
V30W2080	351303-0050		1	ACTUATOR/SENSOR CABLE RKMVN 3-224/5M	
V30W2120	351303-0050		1	ACTUATOR/SENSOR CABLE RKMVN 3-224/5M	
V40W2100	351309-0100		1	ACTUATOR/SENSOR CABLE PRKT 4-07/10M	
V40W2102	90459-6586		1	ACT/SENS.Y-CABLE, ASBN 2-PRKMV 4-07/0,6M	
W30W2022	351303-0050		1	ACTUATOR/SENSOR CABLE RKMVN 3-224/5M	
Common Parts					
A01W1999	2954506-0000		1	COPPER BRAID	
A01W2010	351303-0050		1	ACTUATOR/SENSOR CABLE RKMVN 3-224/5M	
A01W2012	90458-2837		1	PLUG SOCKET, KMEB-1-24-5-LED	
A01W2014	351150-0405	M	4.5	CABLE OLFLEX 5X0,75 MM2 LIGHT/GREY	
A08W2010	351150-0431	M	4	CABLE OLFLEX 2X0,75 MM2 LIGHT/GREY	
A08W2012	351150-0424	M	4	CABLE OLFLEX 18X0,75 MM2 LIGHT/GREY	
A08W2020	351501-0050		1	ETHERNET PATCH CABLE, FL CAT5 PATCH 5,0	
E01W1020	351150-0412	M	4	CABLE OLFLEX 3X1,5 MM2 LIGHT/GREY	
E08W1010	351150-0403	M	3.5	CABLE OLFLEX 3X0,75 MM2 LIGHT/GREY	
F09W2026	90459-4252		1	CABLE M12-C101, 20-056-10	
P30W2010	90459-6604		1	CABLE, SICK DOL-2312-G 05MMA3	
V10W2020	351309-0100		1	ACTUATOR/SENSOR CABLE PRKT 4-07/10M	
V10W2022	90459-6586		1	ACT/SENS.Y-CABLE, ASBN 2-PRKMV 4-07/0,6M	
V30W1030	351150-0413	M	3.5	CABLE OLFLEX 4GX1,5 MM2 LIGHT/GREY	
V30W2010	351150-0403	M	3	CABLE OLFLEX 3X0,75 MM2 LIGHT/GREY	
V30W2030	351150-0404	M	3.5	CABLE OLFLEX 4X0,75 MM2 LIGHT/GREY	
V40W2060	351303-0050		1	ACTUATOR/SENSOR CABLE RKMVN 3-224/5M	
V50W1015	351150-0412	M	2.5	CABLE OLFLEX 3X1,5 MM2 LIGHT/GREY	
V90W2050	351309-0100		1	ACTUATOR/SENSOR CABLE PRKT 4-07/10M	
V90W2052	90459-6586		1	ACT/SENS.Y-CABLE, ASBN 2-PRKMV 4-07/0,6M	
W10W1010	90220-0104	M	10	SCR. CABLE 4X1,5MM2	
W30W1010	90600-3295		1	MOTOR CABLE 16 AWG 2090-XXNPMP-16S03	
W30W1020	90600-3295		1	MOTOR CABLE 16 AWG 2090-XXNPMP-16S03	
W30W2010	90600-3296		1	MOTOR FEEDBACK CABLE 2090-UXNFBMP-S03/C	
W30W2012	351304-0050		1	ACTUATOR/SENSOR CABLE RKMWVN 3-224/5M	
W30W2014	351309-0050		1	'ACTUATOR/SENSOR CABLE PRKT 4-07/5M	
W30W2016	90459-6586		1	ACT/SENS.Y-CABLE, ASBN 2-PRKMV 4-07/0,6M	
W30W2020	90600-3296		1	MOTOR FEEDBACK CABLE 2090-UXNFBMP-S03/C	
W40W1010	90220-0104	M	10	SCR. CABLE 4X1,5MM2	
W90W1010	90220-0104	M	10	SCR. CABLE 4X1,5MM2	

Machine Type | Group Description | Used-In | Group Number | Page No

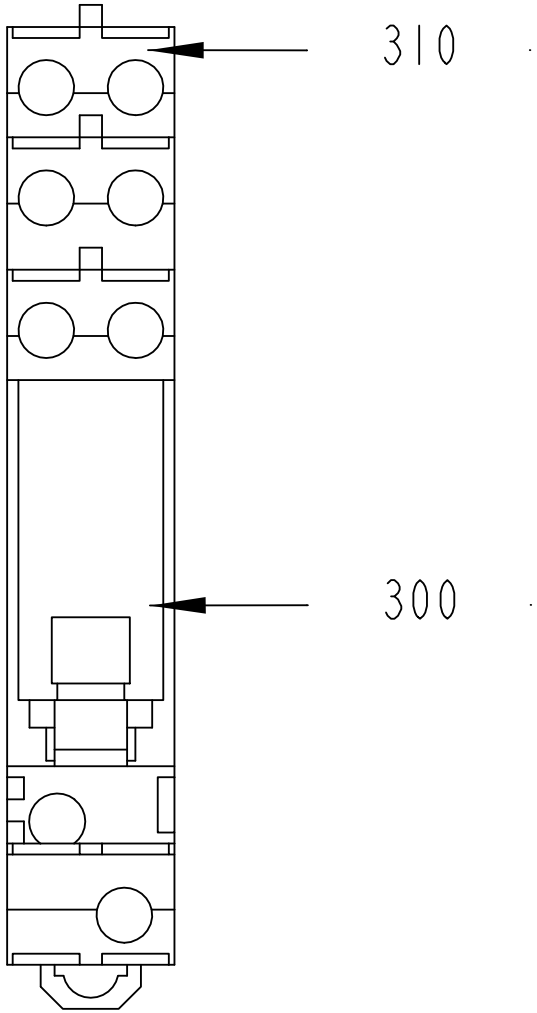

A01K1030

2901720-1
306801

ECM: 326782 - 20080303
Group number: 2901720-0100
Assembly Drawing: 2901720-1_1_AA

Pos	Part No	UN	Qty	Description	Page No
-					
300	90119-0108		1	RELAY OMRON G2R-2-SNI-24DC	
	90129-0018		*1*	*BASE OMRON P2RF-08-E*	
310	90129-0018		1	BASE OMRON P2RF-08-E	

Pos	Part No	UN	Qty	Description	Page No

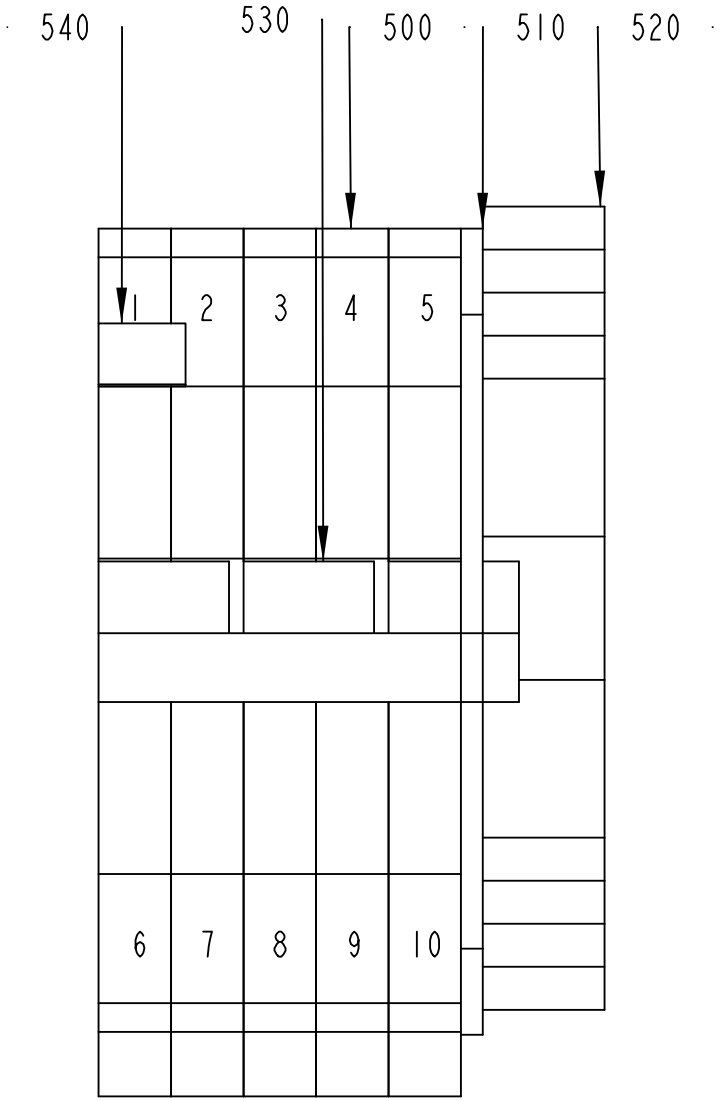

A01XL2013

2872319-1
306801

ECM: 326793 - 20080303
Group number: 2872319-0100
Assembly Drawing: 2872319-1_1_AA

Pos	Part No	UN	Qty	Description	Page No
-					
500	353021-0212		5	FEED THROUGH TERMINAL, 10200.0	
510	353033-0105		1	PARTITITION, 10501.0	
520	353031-0203		1	END SUPPORT, WEW 35/2	
530	353034-0030		1	BRIDGE CONNECTOR WQV 2,5/10, 10544.6	
540	359011-0821		1	SET OF SIGNS 6-FW 1-50	

Pos	Part No	UN	Qty	Description	Page No

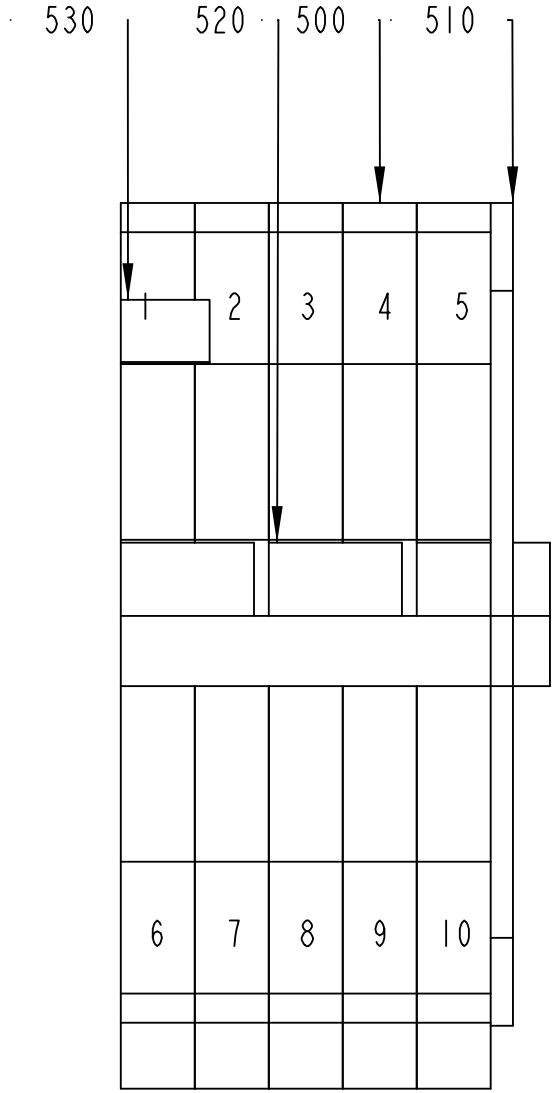

A01XL2012

2872318-1
306801

ECM: 326794 - 20080303
Group number: 2872318-0100
Assembly Drawing: 2872318-1_1_AA

Pos	Part No	UN	Qty	Description	Page No
-					
500	353021-0212		5	FEED THROUGH TERMINAL, 10200.0	
510	353033-0105		1	PARTITITION, 10501.0	
520	353034-0030		1	BRIDGE CONNECTOR WQV 2,5/10, 10544.6	
530	359011-0821		1	SET OF SIGNS 6-FW 1-50	

Pos	Part No	UN	Qty	Description	Page No

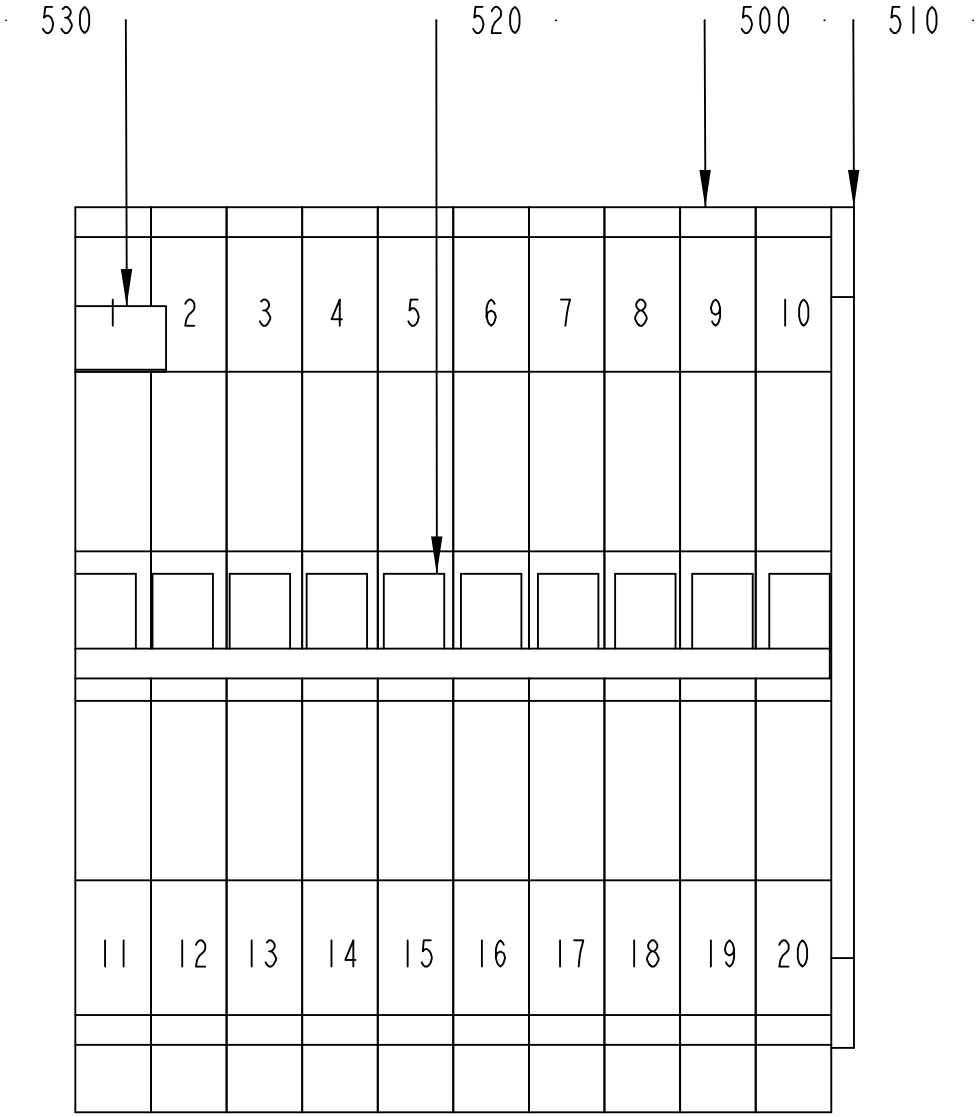

A01XL2011

2872299-1
306801

ECM: 326795 - 20080303
Group number: 2872299-0100
Assembly Drawing: 2872299-1_1_AA

Pos	Part No	UN	Qty	Description	Page No
-					
500	353021-0212		10	FEED THROUGH TERMINAL, 10200.0	
510	353033-0105		1	PARTITITION, 10501.0	
520	353034-0030		1	BRIDGE CONNECTOR WQV 2,5/10, 10544.6	
530	359011-0821		1	SET OF SIGNS 6-FW 1-50	

Pos	Part No	UN	Qty	Description	Page No

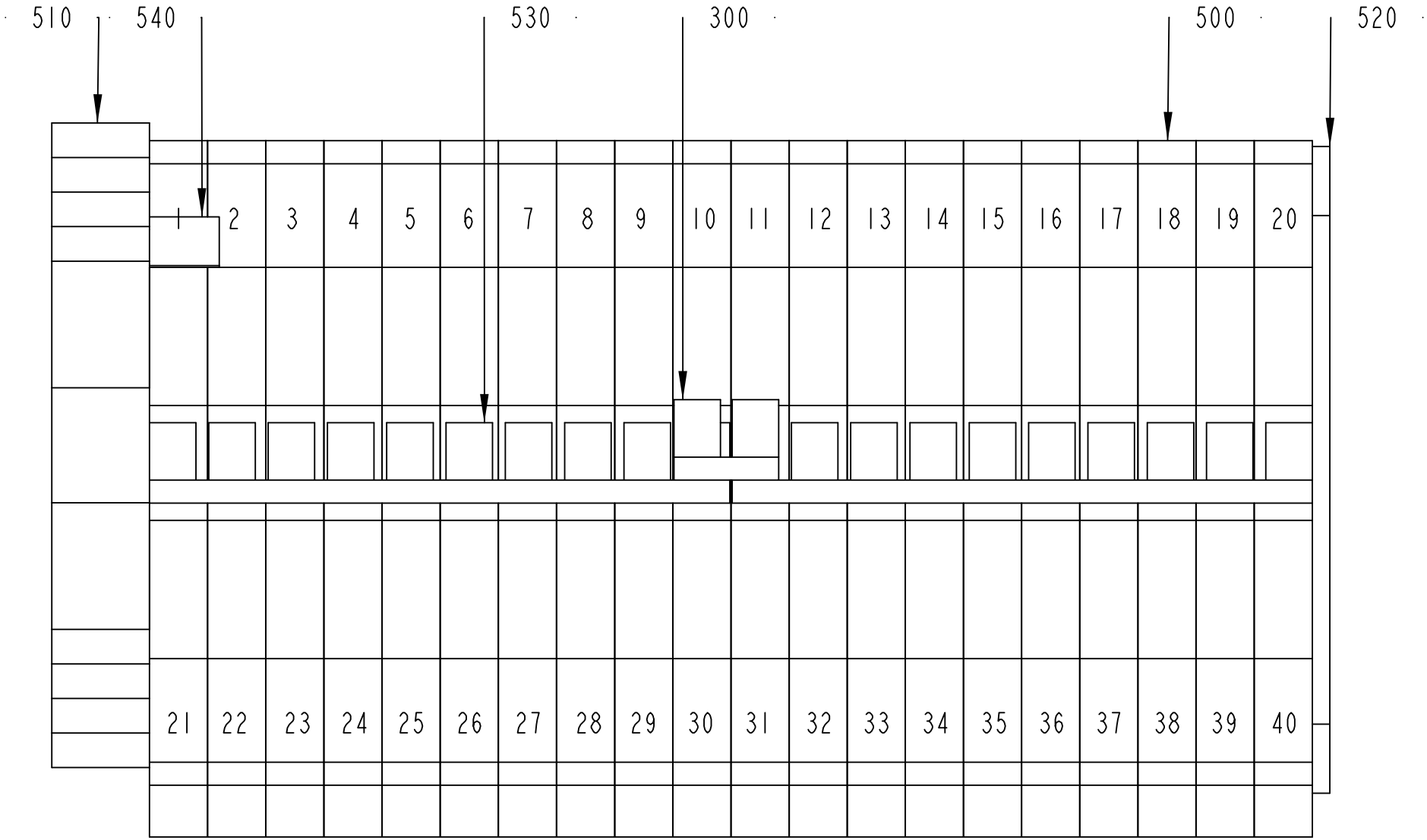

A01XL2010

2872298-1
306801

ECM: 326796 - 20080303
Group number: 2872298-0100
Assembly Drawing: 2872298-1_1_AA

Pos	Part No	UN	Qty	Description	Page No
-					
300	90459-1811		1	BRIDGE CONNECTOR WQV 2,5/2, 105366	
500	353021-0212		20	FEED THROUGH TERMINAL, 10200.0	
510	353031-0203		1	END SUPPORT, WEW 35/2	
520	353033-0105		1	PARTITITION, 10501.0	
530	353034-0030		2	BRIDGE CONNECTOR WQV 2,5/10, 10544.6	
540	359011-0821		1	SET OF SIGNS 6-FW 1-50	

Pos	Part No	UN	Qty	Description	Page No

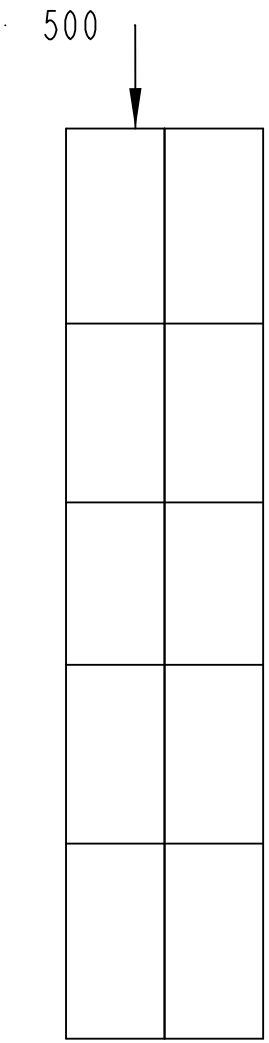

A01X0001

2884592-1
306801

ECM: 326788 - 20080303
Group number: 2884592-0100
Assembly Drawing: 2884592-1_1_AA

Pos	Part No	UN	Qty	Description	Page No	Pos	Part No	UN	Qty	Description	Page No
-											
500	353024-0205		2	EARTH TERMINAL, 1010.1							

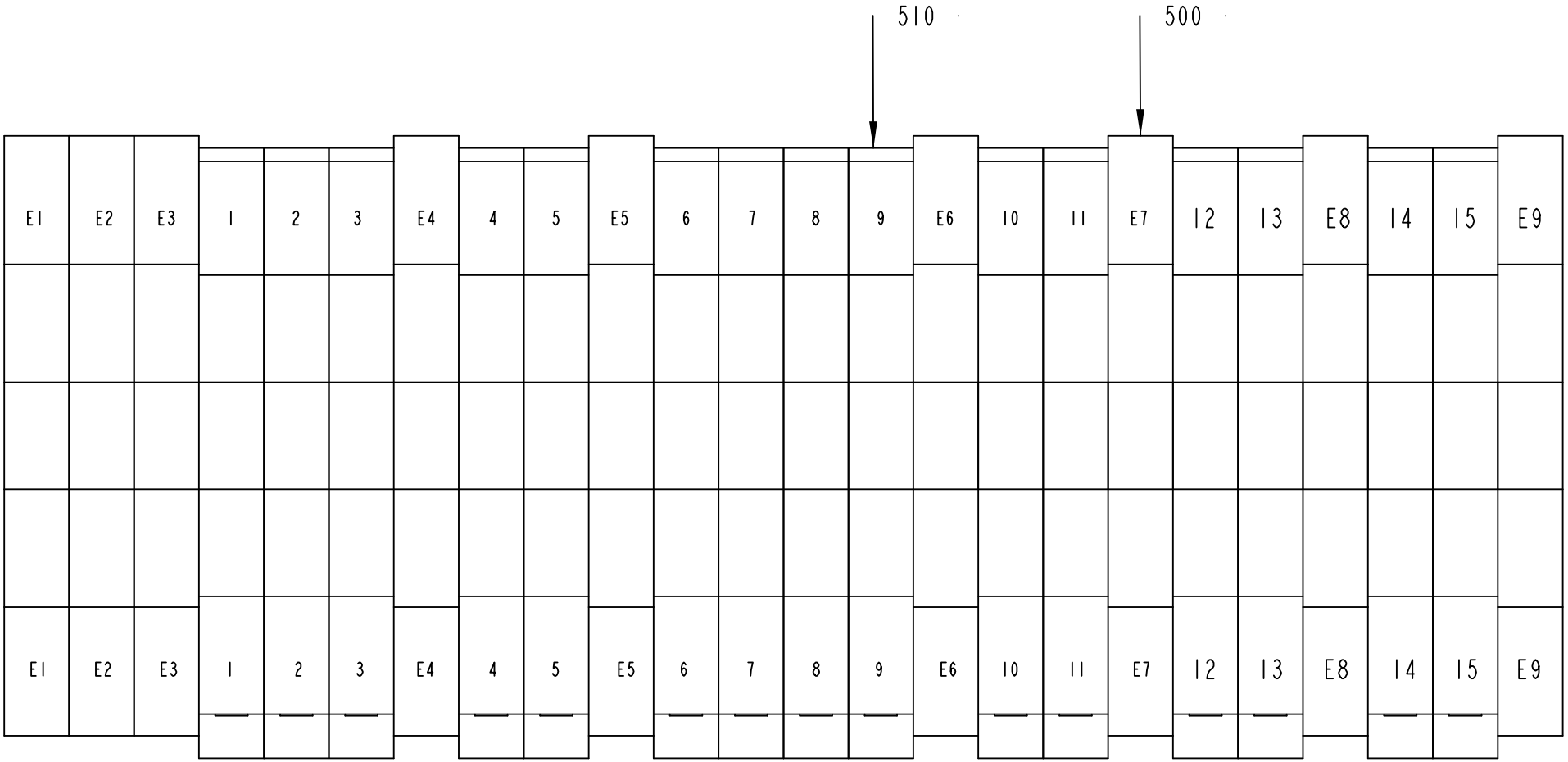

A01X1000

2896524-1
306801

ECM: 326785 - 20080303
Group number: 2896524-0100
Assembly Drawing: 2896524-1_1_AA

Pos	Part No	UN	Qty	Description	Page No	Pos	Part No	UN	Qty	Description	Page No
-											
500	353024-0205		9	EARTH TERMINAL, 1010.1							
510	353021-0213		15	FEED THROUGH TERMINAL, 10201.0							

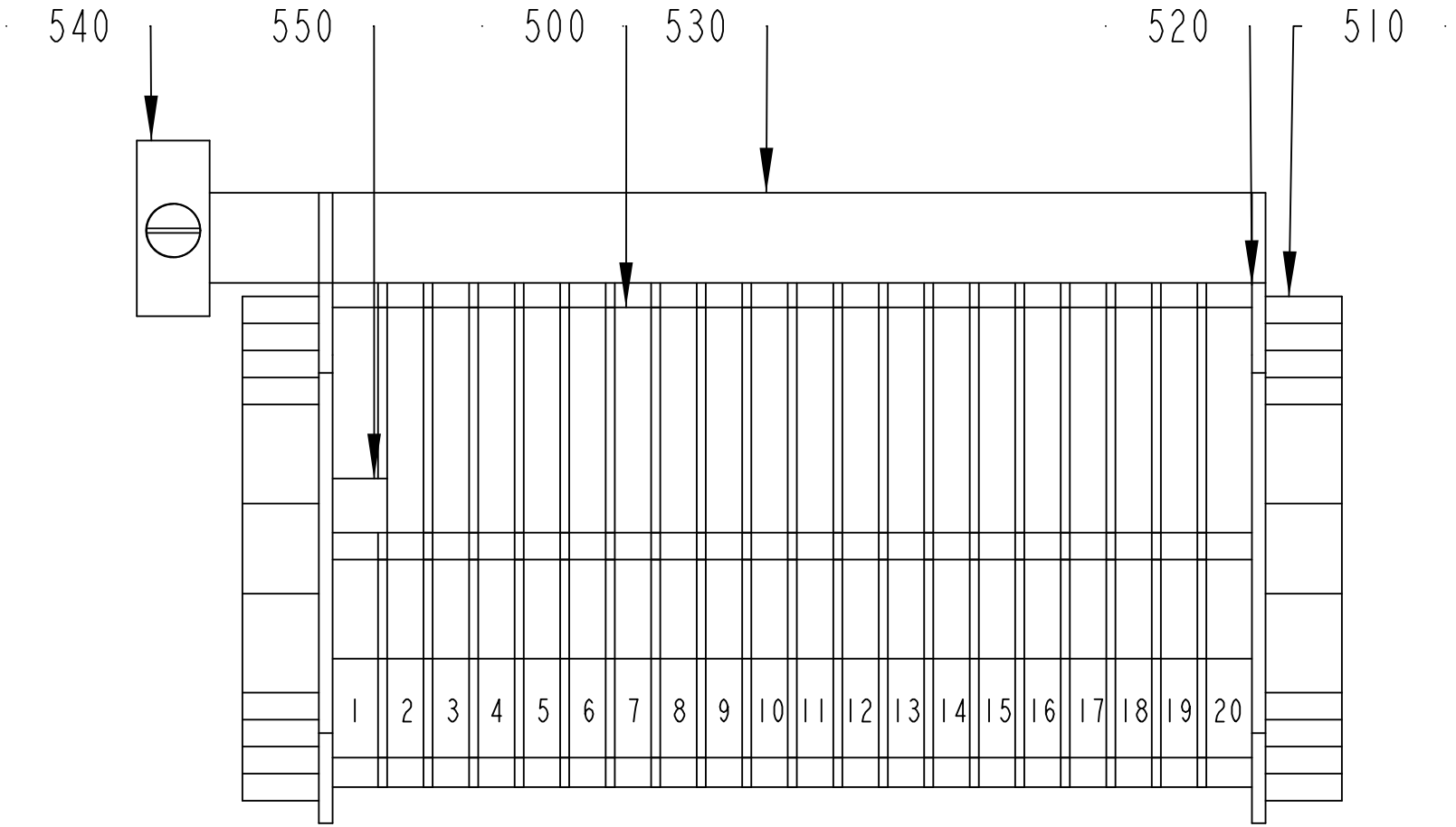

A01X1003

2884594-1
306801

ECM: 326786 - 20080303
Group number: 2884594-0100
Assembly Drawing: 2884594-1_1_AA

Pos	Part No	UN	Qty	Description	Page No
-					
500	353022-0002		20	NEUTRAL TERMINAL, 10107.8	
510	353031-0203		2	END SUPPORT, WEW 35/2	
520	353033-0104		2	END PLATE, 10502.8	
530	353041-0001	MM	150	BUS BAR RAIL 10X3MM SSCH	
540	353041-0104		1	CLAMPING YOKE PZB 4 K	
550	359011-0821		1	SET OF SIGNS 6-FW 1-50	

Pos	Part No	UN	Qty	Description	Page No

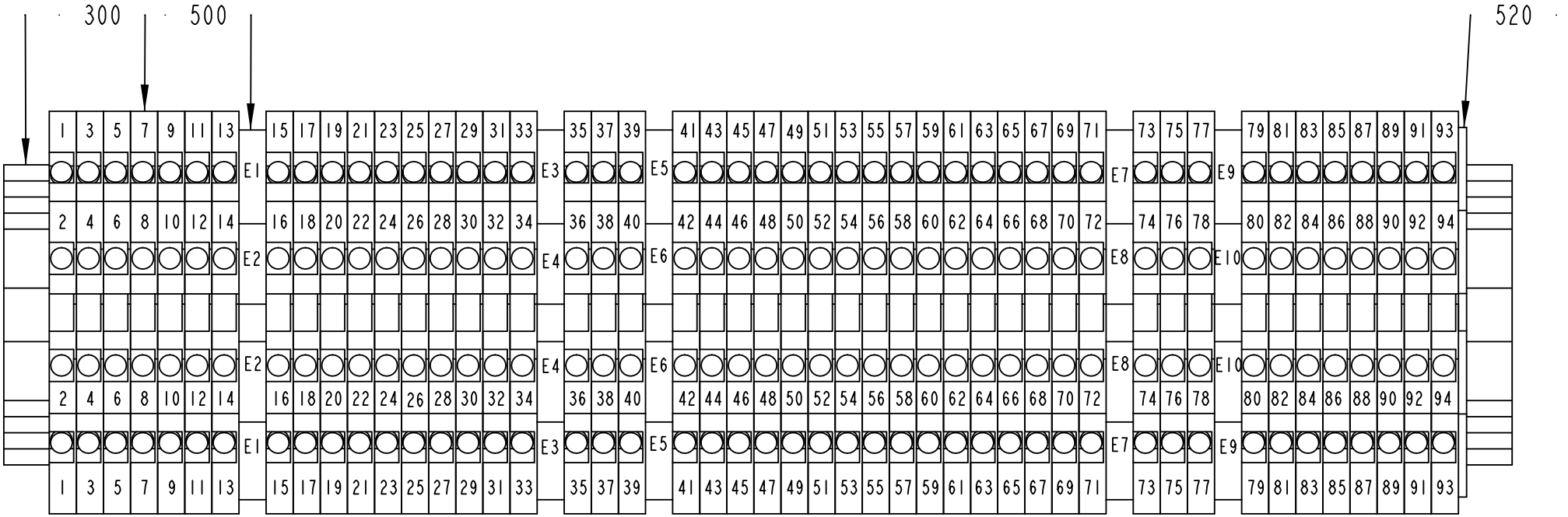

A01X2000

2872337-1
306801

ECM: 326791 - 20080303
Group number: 2872337-0100
Assembly Drawing: 2872337-1_1_AA

Pos	Part No	UN	Qty	Description	Page No
-					
300	90077-0113		47	FEED THROUGH TERMINAL, 10-00102150-1	
500	353024-0212		5	EARTH TERMINAL, 10363.0	
510	353031-0203		2	END SUPPORT, WEW 35/2	
520	353032-0009		1	END PLATE, WAP FOR WDK	

Pos	Part No	UN	Qty	Description	Page No

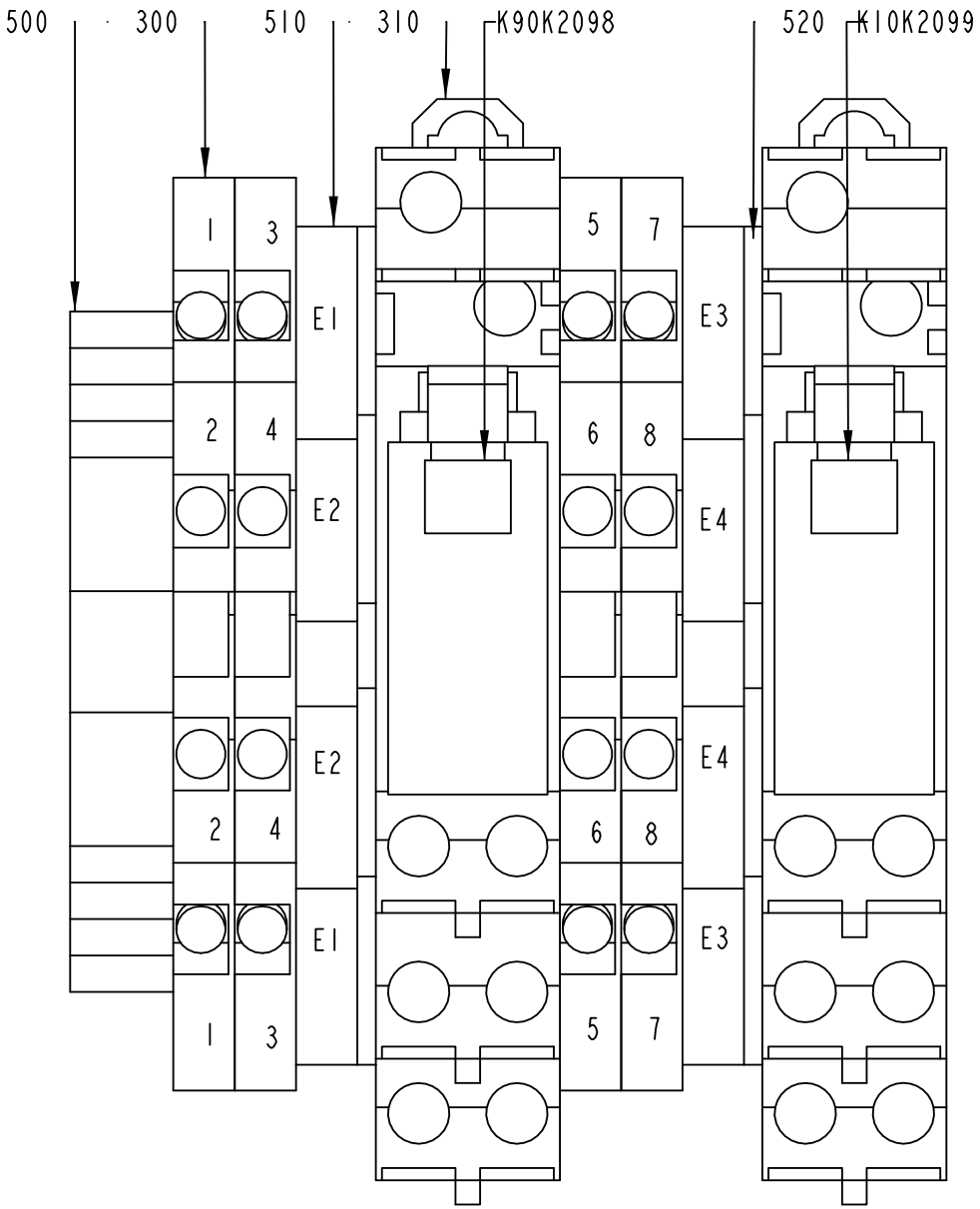

A01X2098

2884589-1
306801

ECM: 326790 - 20080303
Group number: 2884589-0100
Assembly Drawing: 2884589-1_1_AA

Pos	Part No	UN	Qty	Description	Page No
-					
300	90077-0113		4	FEED THROUGH TERMINAL, 10-00102150-1	
310	90129-0018		2	BASE OMRON P2RF-08-E	
500	353031-0203		1	END SUPPORT, WEW 35/2	
510	353024-0212		2	EARTH TERMINAL, 10363.0	
520	353032-0009		2	END PLATE, WAP FOR WDK	
K10K2099	90119-0108		1	RELAY OMRON G2R-2-SNI-24DC	
	90129-0018		*1*	*BASE OMRON P2RF-08-E*	
K90K2098	90119-0108		1	RELAY OMRON G2R-2-SNI-24DC	
	90129-0018		*1*	*BASE OMRON P2RF-08-E*	

Pos	Part No	UN	Qty	Description	Page No

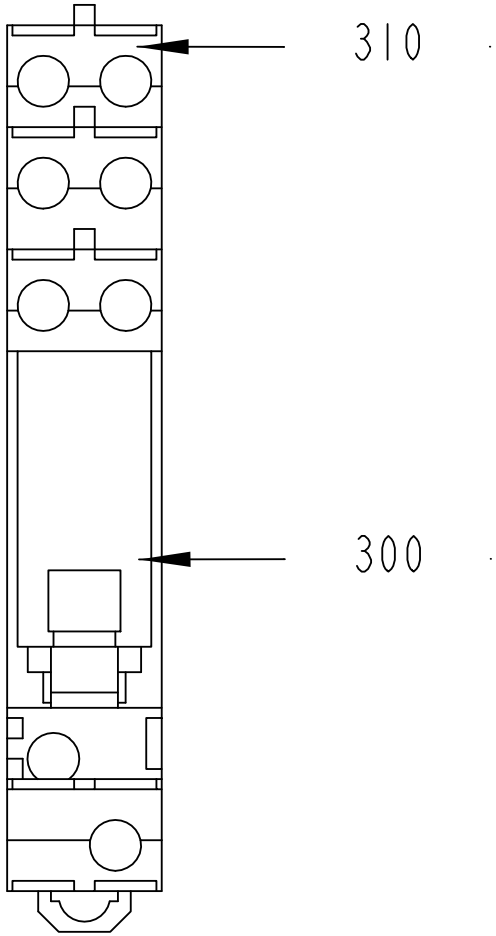

E01K1013

2901718-1
306801

ECM: 326784 - 20080303
Group number: 2901718-0100
Assembly Drawing: 2901718-1_1_AA

Pos	Part No	UN	Qty	Description	Page No
-					
300	90119-0108		1	RELAY OMRON G2R-2-SNI-24DC	
	90129-0018		*1*	*BASE OMRON P2RF-08-E*	
310	90129-0018		1	BASE OMRON P2RF-08-E	

Pos	Part No	UN	Qty	Description	Page No

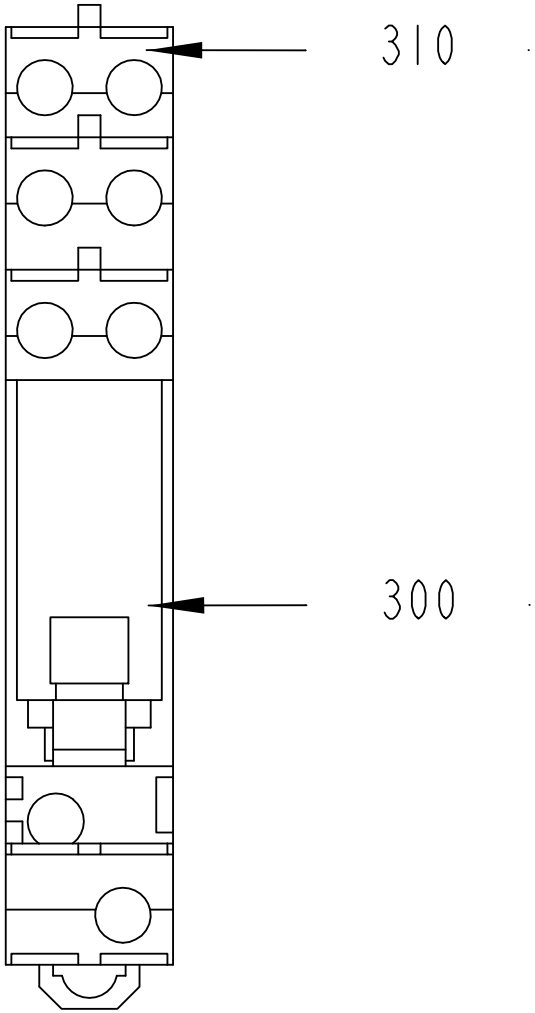

E01K1020

2901719-1
306801

ECM: 326783 - 20080303
Group number: 2901719-0100
Assembly Drawing: 2901719-1_1_AA

Pos	Part No	UN	Qty	Description	Page No
-					
300	90119-0108		1	RELAY OMRON G2R-2-SNI-24DC	
	90129-0018		*1*	*BASE OMRON P2RF-08-E*	
310	90129-0018		1	BASE OMRON P2RF-08-E	

Pos	Part No	UN	Qty	Description	Page No

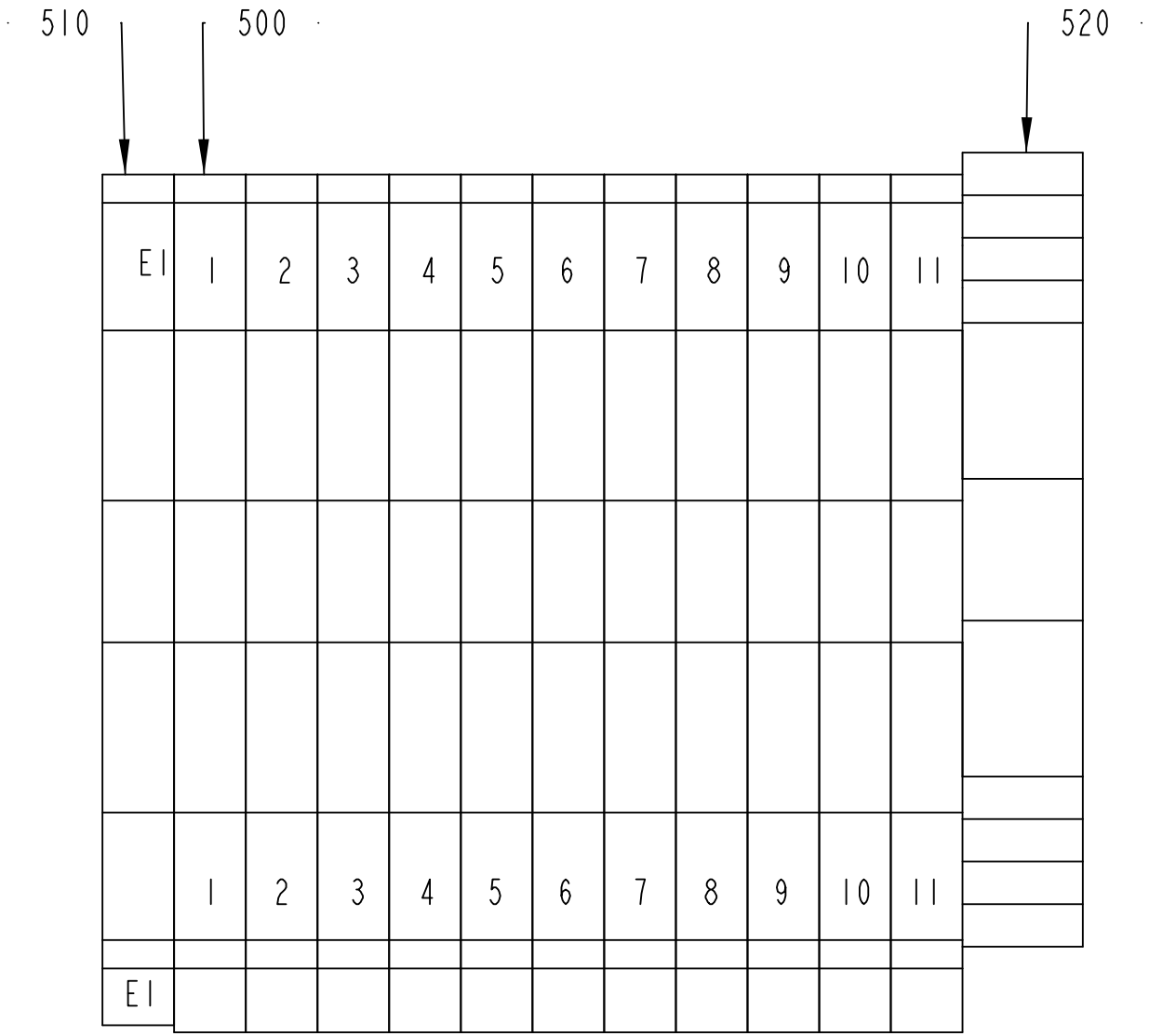

E01X1013

2872336-1
306801

ECM: 326792 - 20080303
Group number: 2872336-0100
Assembly Drawing: 2872336-1_1_AA

Pos	Part No	UN	Qty	Description	Page No
-					
500	353021-0212		11	FEED THROUGH TERMINAL, 10200.0	
510	353024-0204		1	EARTH TERMINAL WPE 2,5	
520	353031-0203		1	END SUPPORT, WEW 35/2	

Pos	Part No	UN	Qty	Description	Page No

Tetra Pak

SPC
Spare Parts Catalogue

This page is intentionally left blank.

ECM: 343226 - 20080303
Group number: 663309-0100
Assembly Drawing:

Pos	Part No	UN	Qty	Description	Page No
-					
010	2958794-0100		1	DOCUMENT	
020	2958130-0001		1	SOFTWARE CD	**9-5**

Pos	Part No	UN	Qty	Description	Page No

This page is intentionally left blank.

ECM: 344164 - 20080303
Group number: 2958130-0001
Assembly Drawing:

Pos	Part No	UN	Qty	Description	Page No	Pos	Part No	UN	Qty	Description	Page No
-											
020	2958129-0000		1	LABEL CD							
040	90458-0118		1	COMPACT DISC RECORDABLE							
050	2958135-1001		1	PLMS NRG CONFIG FILE							
060	2958138-1001		1	EDS FILE							
070	2958139-1001		1	FIRMWARE							
A08A2010	2958134-1001		1	HMI PROGRAM CODE							
A03K2010	2958133-1001		1	PLC PROGRAM CODE							
A03K2029	2958137-1001		1	DEVICE NET CONFIG FILE							
A07K2021	1591675-1001		1	PLC PROGRAM CODE							
F09F2010	2958136-1001		1	SAFETY PLC SOFTWARE							

Tetra Pak

SPC
Spare Parts Catalogue

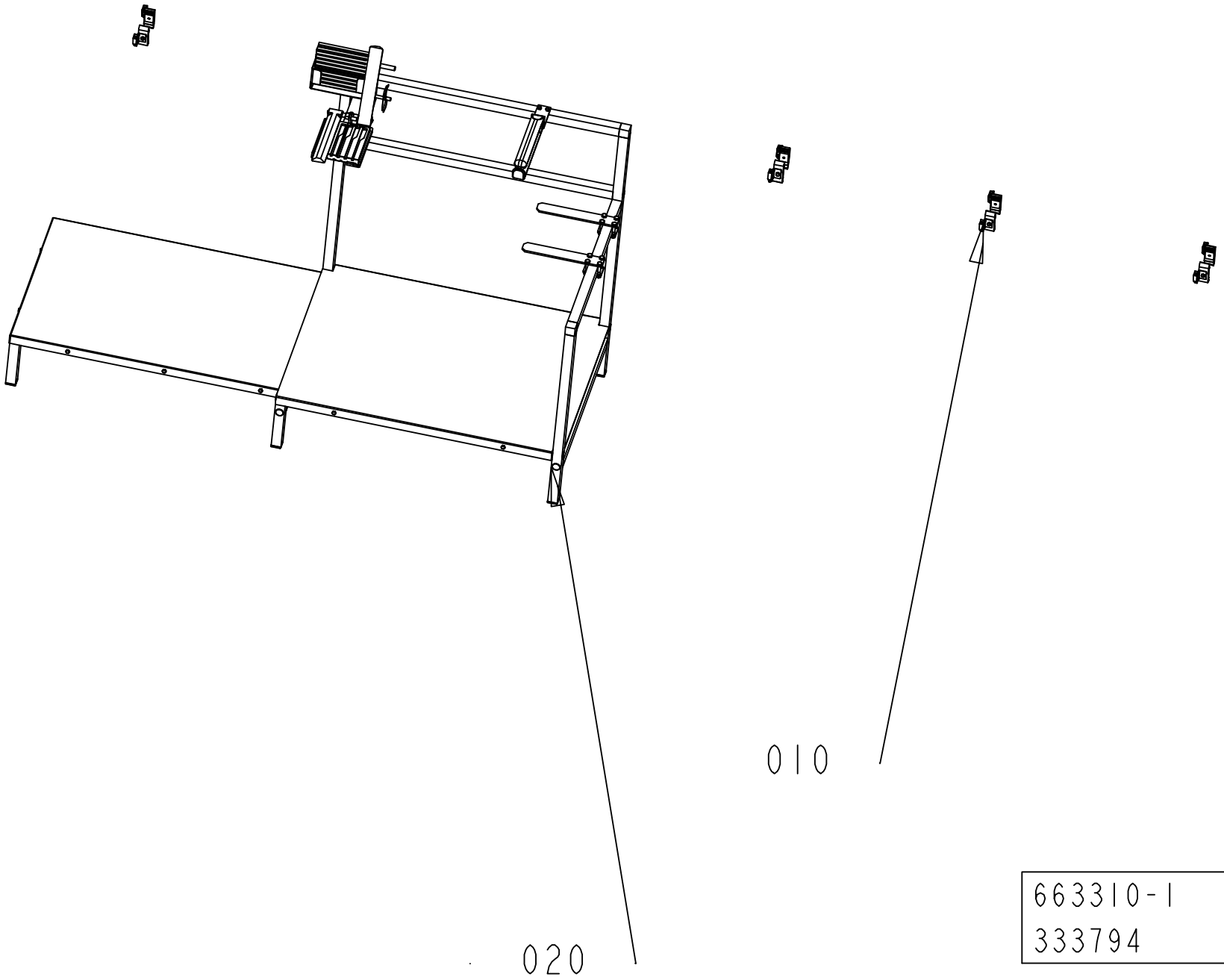
010
020
663310-1
333794

ECM: 356472 - 20081009
Group number: 663310-0100
Assembly Drawing: 663310-1_1_AA

This list covers pages from 10-2 to 10-5

Pos	Part No	UN	Qty	Description	Page No
TBA, TB (See drawing on page: 10-2)					
010	2909952-0100		1	PHOTOCELL UNIT	**10-7**
Common Parts					
020	2923344-0100		1	STRAW MAGAZINE	**10-9**
030	2957779-0100		1	TOOLS AND TEMPLATES	**10-21**

Pos	Part No	UN	Qty	Description	Page No

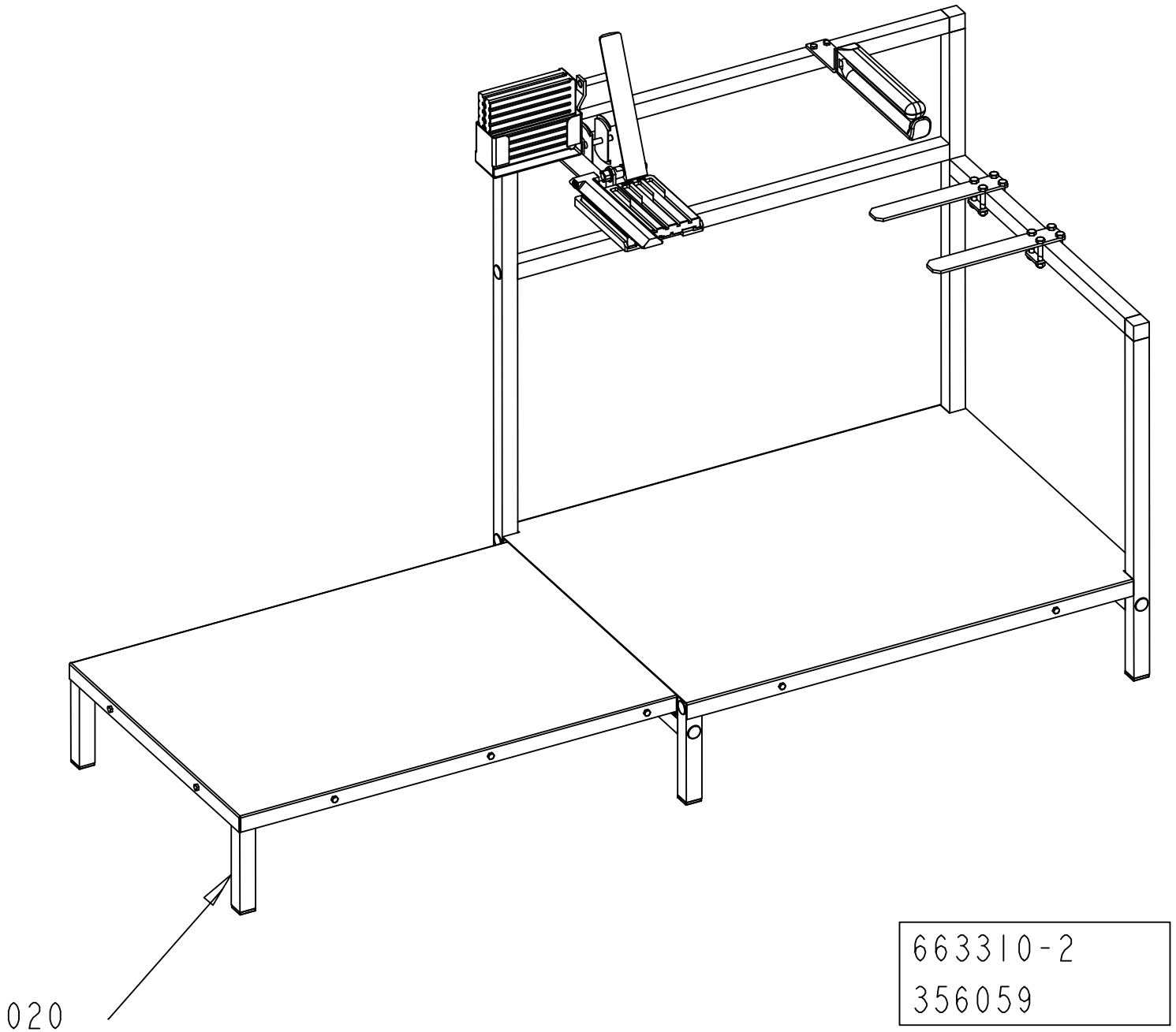
020
663310-2
356059

ECM: 356472 - 20081009
Group number: 663310-0100
Assembly Drawing: 663310-2_1_AA

This list covers pages from 10-2 to 10-5

Pos	Part No	UN	Qty	Description	Page No
TBA, TB (See drawing on page: 10-2)					
010	2909952-0100		1	PHOTOCELL UNIT	**10-7**
Common Parts					
020	2923344-0100		1	STRAW MAGAZINE	**10-9**
030	2957779-0100		1	TOOLS AND TEMPLATES	**10-21**

Pos	Part No	UN	Qty	Description	Page No

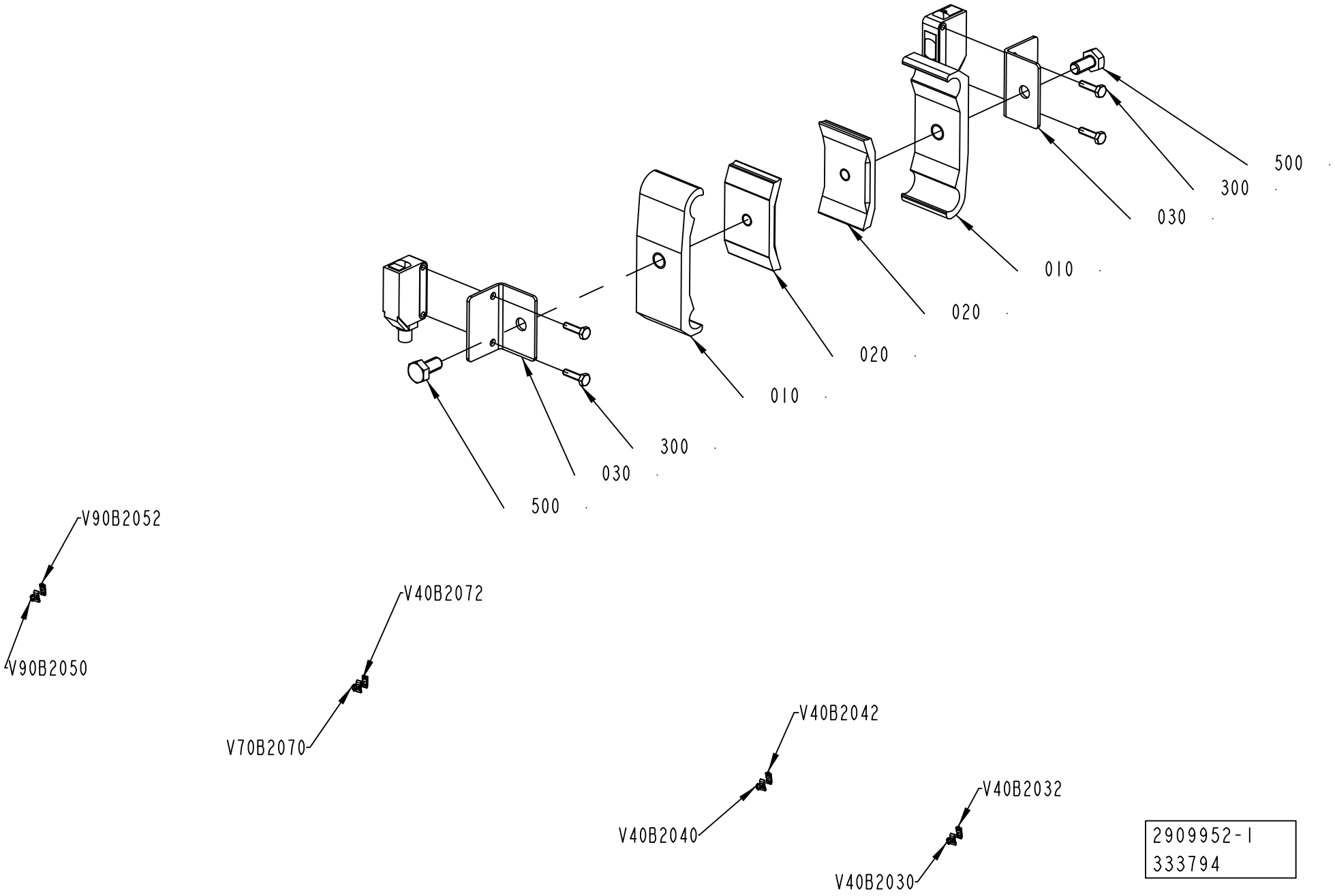
500
300
030
010
020
020
010
030
300
500
V90B2052
V90B2050
V40B2072
V70B2070
V40B2042
V40B2040
V40B2032
V40B2030
2909952-1
333794

ECM: 361386 - 20081014
Group number: 2909952-0100
Assembly Drawing: 2909952-1_1_AA

Pos	Part No	UN	Qty	Description	Page No
TBA					
010	1366750-0000		8	HOLDER	
020	1366727-0000		8	CLAMP	
030	2892716-0000		8	BRACKET	
300	90287-0175		16	SCREW M6S M3X12 A480	
500	312105-0366		8	SCREW M6S ISO 4017 M6X12 A480	
V40B2030	90459-7273		1	PHOTOCELL E3Z-T81C-G0SR D-CN	
V40B2032	90459-7274		1	PHOTOCELL E3Z-T81C-G0SR L-CN	
V40B2040	90459-7273		1	PHOTOCELL E3Z-T81C-G0SR D-CN	
V40B2042	90459-7274		1	PHOTOCELL E3Z-T81C-G0SR L-CN	
V40B2070	90459-7273		1	PHOTOCELL E3Z-T81C-G0SR D-CN	
V40B2072	90459-7274		1	PHOTOCELL E3Z-T81C-G0SR L-CN	
TCA					
010	1366750-0000		2	HOLDER	
020	1366727-0000		2	CLAMP	
030	2892716-0000		2	BRACKET	
300	90287-0175		4	SCREW M6S M3X12 A480	
500	312105-0366		2	SCREW M6S ISO 4017 M6X12 A480	
Common Parts					
V90B2050	90459-7273		1	PHOTOCELL E3Z-T81C-G0SR D-CN	
V90B2052	90459-7274		1	PHOTOCELL E3Z-T81C-G0SR L-CN	

Pos	Part No	UN	Qty	Description	Page No

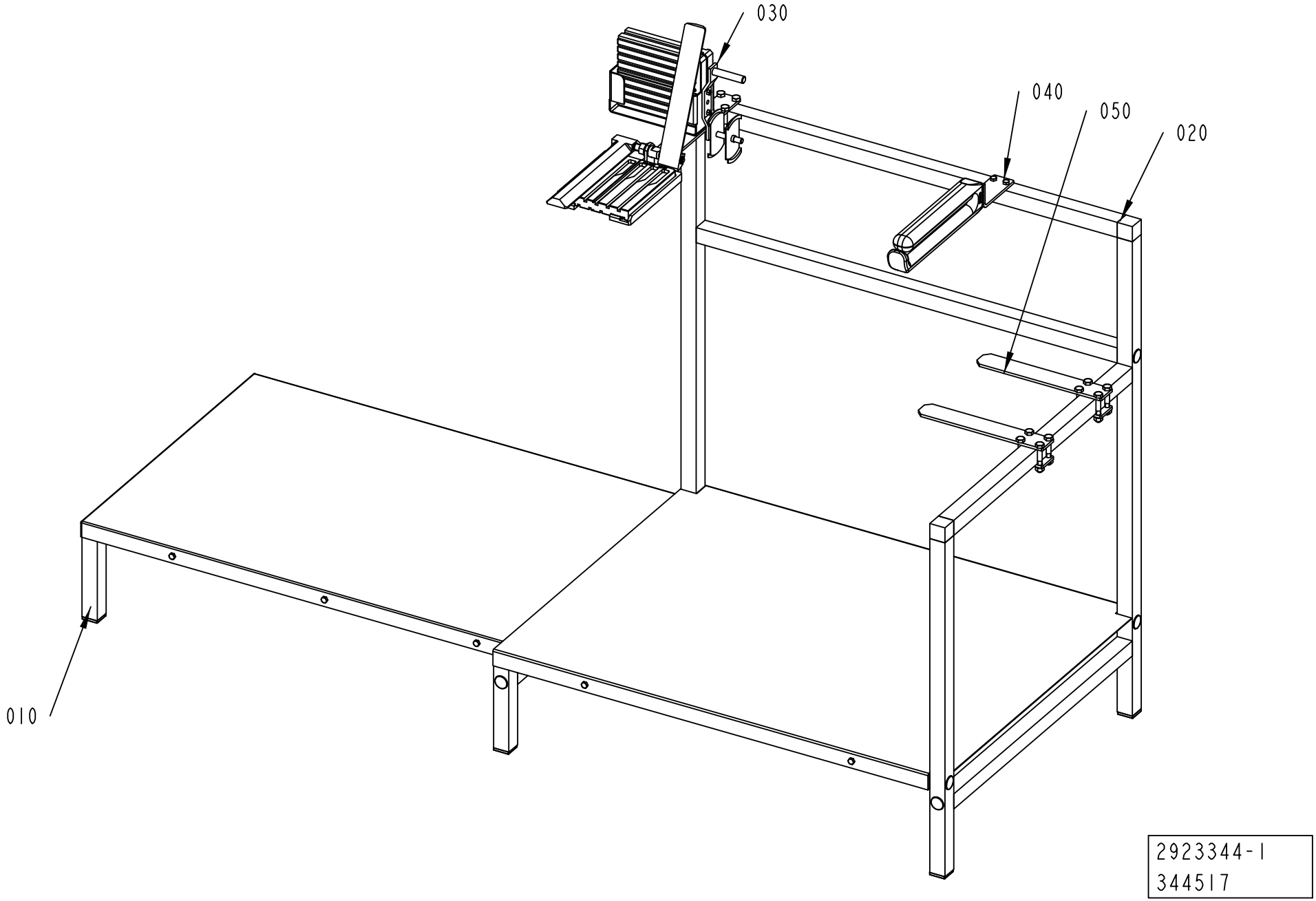
030
040
050
020
010
2923344-1
344517

ECM: 344517 - 20080303
Group number: 2923344-0100
Assembly Drawing: 2923344-1_1_AA

Pos	Part No	UN	Qty	Description	Page No
-					
010	2923342-0100		1	FRAME	**10-11**
020	2923343-0100		1	FRAME	**10-13**
030	2946135-0100		1	SPLICING TABLE	**10-15**
040	2946720-0100		1	GUIDE	**10-17**
050	2946724-0100		2	HOLDER	**10-19**

Pos	Part No	UN	Qty	Description	Page No

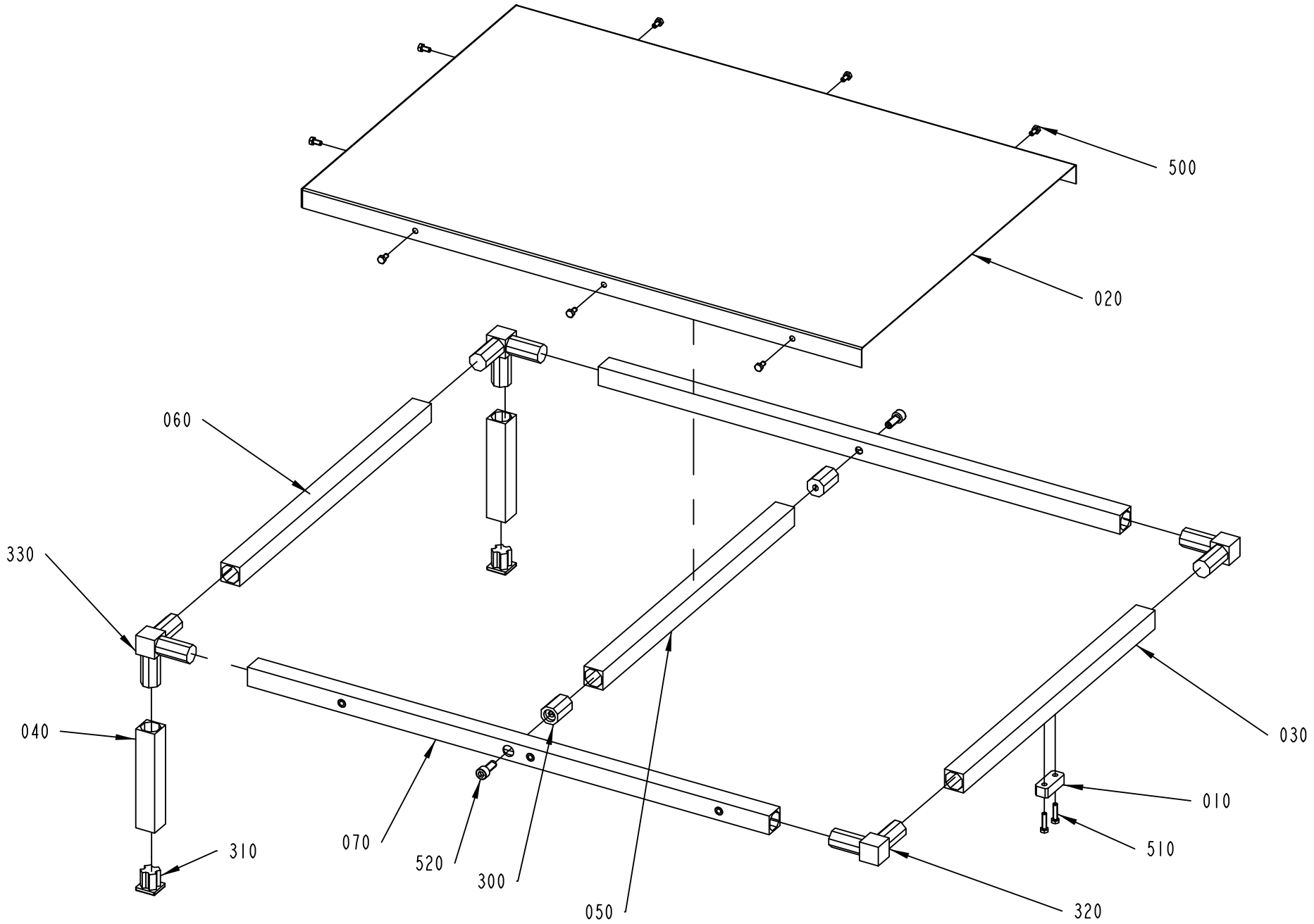
500
020
060
330
040
310
070
520
300
050
320
510
010
030

ECM: 344517 - 20080303
Group number: 2923342-0100
Assembly Drawing: 2923342-1_1_AA

Pos	Part No	UN	Qty	Description	Page No
-					
010	2923320-0000		1	BLOCKING PIECE	
020	2923319-0000		1	PLATE	
030	2923333-0000		1	PROFILE	
040	2923334-0000		2	PROFILE	
050	2923345-0000		1	PROFILE	
060	2946738-0000		1	PROFILE	
070	2946739-0000		2	PROFILE	
300	90458-0692		2	JOINT, THREAD.CONN. 30 MM, NO 851.008.95	
310	90458-0693		2	PLASTIC FOOT 30 MM, NO 856.211.95	
320	90458-0694		2	ELBOW JOINT 2T 30 MM, NO 851.012.95	
330	90600-4352		2	JOINT 3TV 30MM, 851 014 92	
500	312105-0366		8	SCREW M6S ISO 4017 M6X12 A480	
510	312105-0372		2	SCREW M6S ISO 4017 M6X25 A480	
520	312115-0493		2	SCREW ISO4762 M10X25 A4 80	

Pos	Part No	UN	Qty	Description	Page No

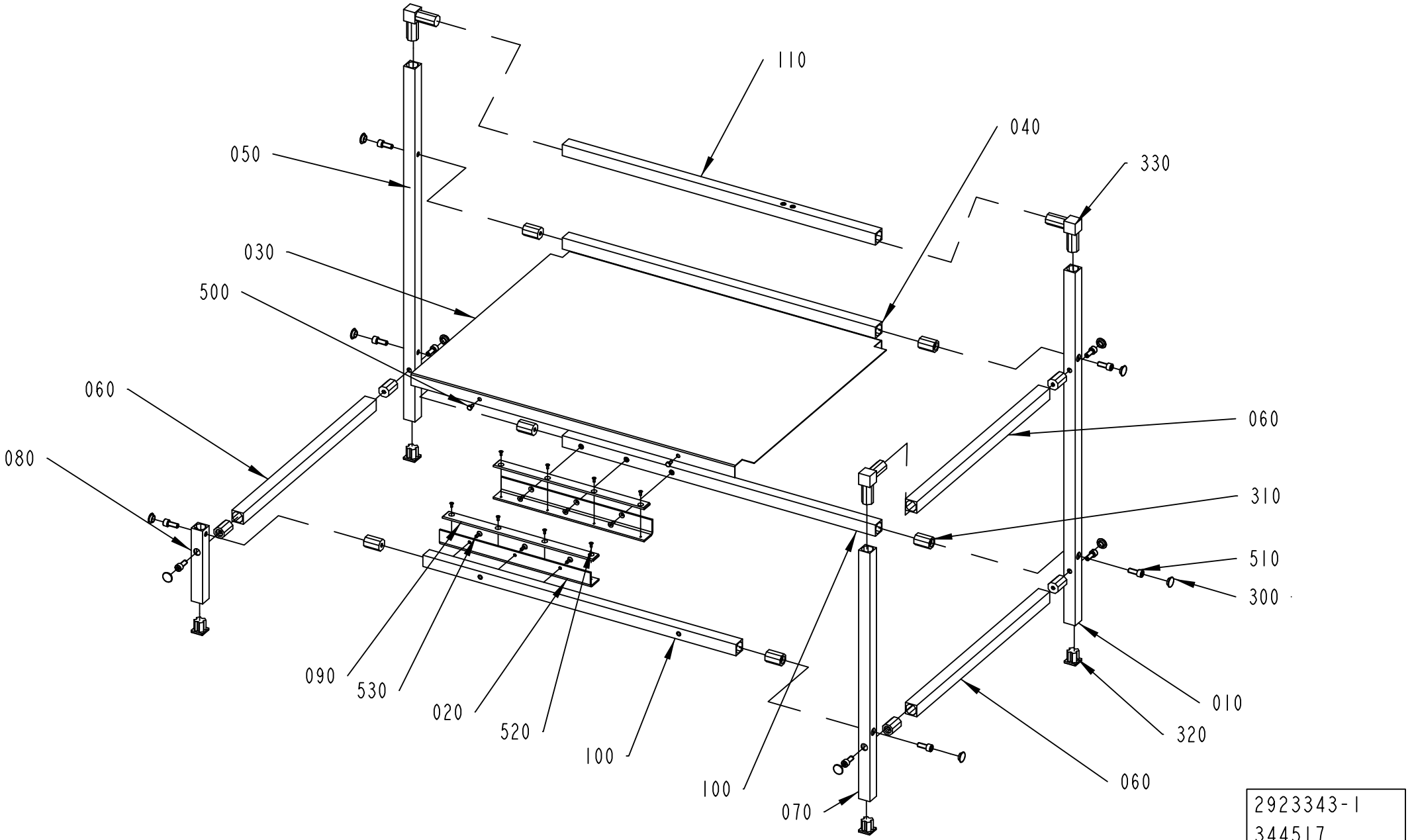
110
040
330
050
030
500
060
080
060
310
510
300
090
530
020
520
100
100
070
010
320
060
2923343-1
344517

ECM: 344517 - 20080303
Group number: 2923343-0100
Assembly Drawing: 2923343-1_1_AA

Pos	Part No	UN	Qty	Description	Page No
-					
010	2923007-0000		1	PROFILE	
020	2923019-0000		2	ANGLE	
030	2923329-0000		1	PLATE	
040	2923335-0000		1	PROFILE	
050	2923336-0000		1	PROFILE	
060	2923338-0000		3	PROFILE	
070	2923339-0000		1	PROFILE	
080	2923341-0000		1	PROFILE	
090	2923347-0000		2	SLIDING STRIP	
100	2946740-0000		2	PROFILE	
110	2958719-0000		1	PROFILE	
300	90458-0498		11	PLUG, BLIND, PLASTIC PLUG B24, 5/17	
310	90458-0692		11	JOINT, THREAD.CONN. 30 MM, NO 851.008.95	
320	90458-0693		4	PLASTIC FOOT 30 MM, NO 856.211.95	
330	90458-0694		3	ELBOW JOINT 2T 30 MM, NO 851.012.95	
500	312105-0366		4	SCREW M6S ISO 4017 M6X12 A480	
510	312115-0493		11	SCREW ISO4762 M10X25 A4 80	
520	312155-0289		8	SCREW DIN 7991 MF6S M4X10 A4 70	
530	312155-0368		6	SCREW DIN 7991 MF6S M6X16 A4 70	

Pos	Part No	UN	Qty	Description	Page No

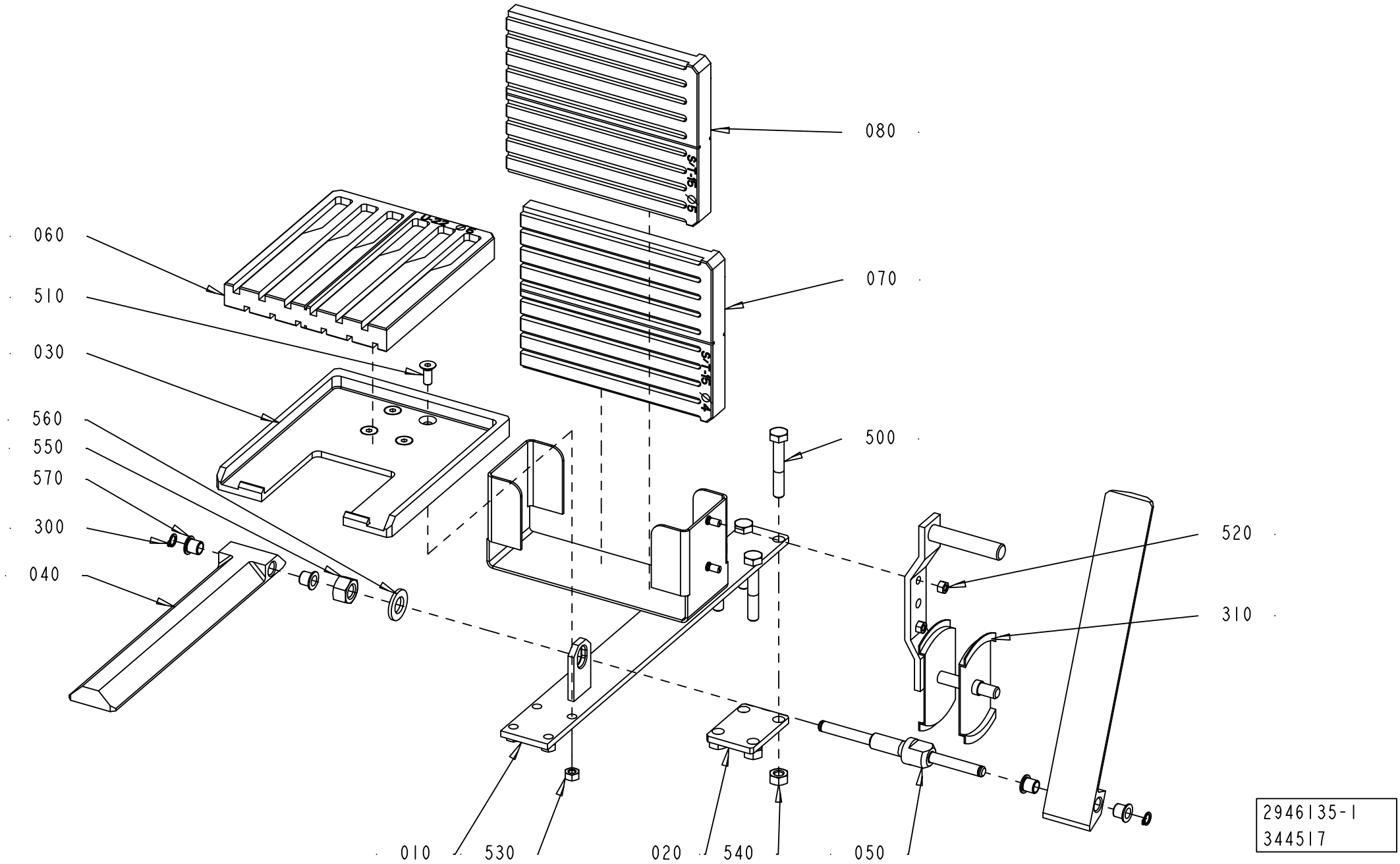
080
070
060
510
030
560
550
570
300
040
500
520
310
010
530
020
540
050
2946135-1
344517

ECM: 344517 - 20080303
Group number: 2946135-0100
Assembly Drawing: 2946135-1_1_AA

Pos	Part No	UN	Qty	Description	Page No
-					
010	2946144-0000		1	CANTILEVER	
020	2946722-0000		1	PLATE	
030	2946136-0000		1	HOLDER	
040	2946141-0000		2	PRESSURE PLATE	
050	2946142-0000		1	SHAFT	
060	2946137-0000		1	PLATE	
070	2946138-0000		1	PLATE	
080	2959850-0000		1	PLATE	
300	90141-0015		2	RETAINING RING FOR SHAFT DIN 471 8 SS	
310	90256-0001		1	TAPE SUPPLY HOLDER, TYPE 2000	
500	312105-0461		4	SCREW M6S ISO 4014 M8X50 A480	
510	312155-0368		4	SCREW DIN 7991 MF6S M6X16 A4 70	
520	312605-0314		2	HEXAGON NUT, M6M M5 A280	
530	312605-0316		4	HEXAGON NUT, M6M M6 A280	
540	312605-0318		4	HEXAGON NUT, M6M M8 A280	
550	312605-0322		1	HEXAGON NUT, M6M M12 A280	
560	315106-0178		1	WASHER ISO 7089-12-200 HV A4	
570	321153-0102		4	FLANGE BUSHING, 8X10X10 MM	

Pos	Part No	UN	Qty	Description	Page No

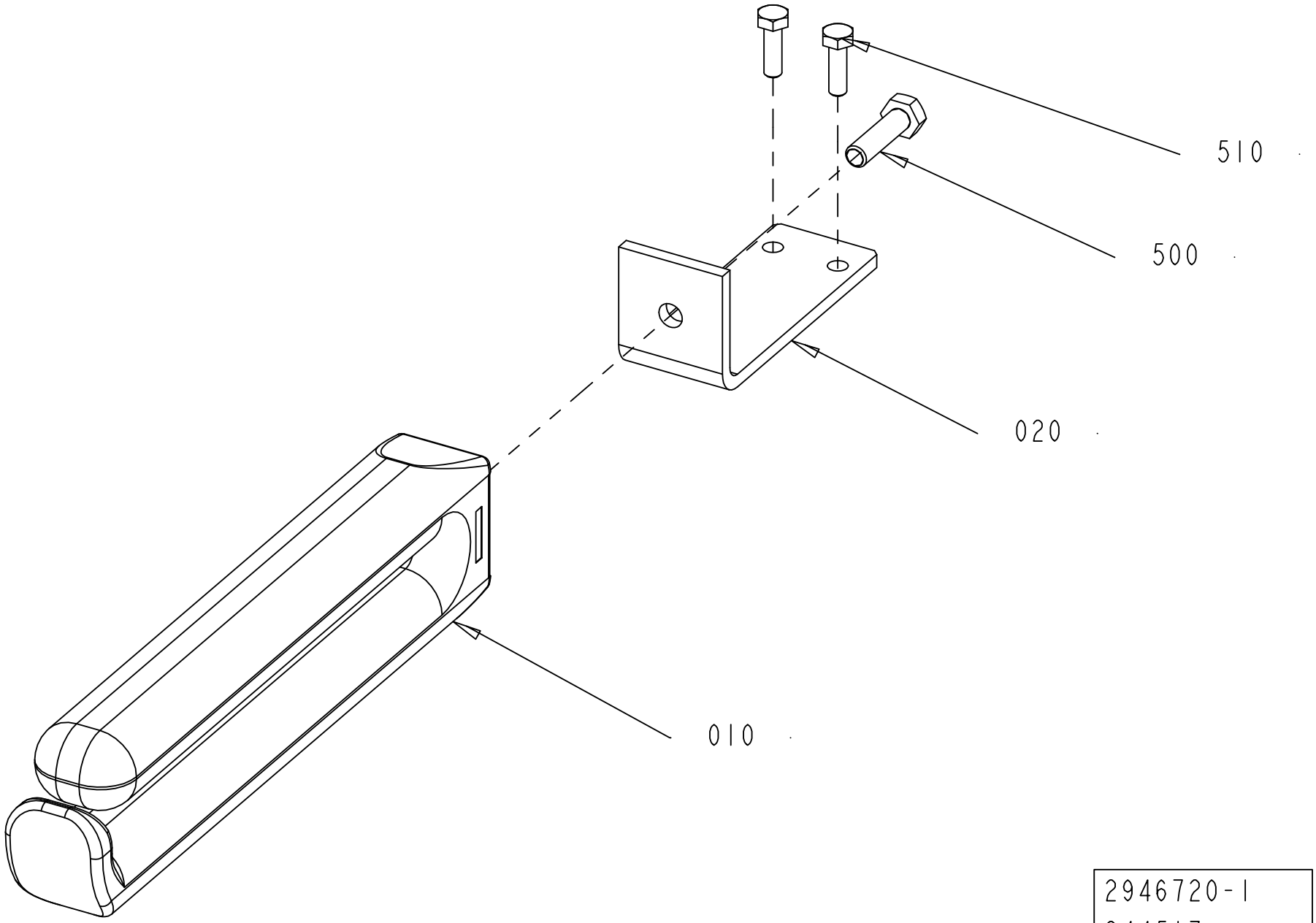

2946720-1
344517

ECM: 344517 - 20080303
Group number: 2946720-0100
Assembly Drawing: 2946720-1_1_AA

Pos	Part No	UN	Qty	Description	Page No
-					
010	556386-0000		1	STEERING	
020	2946721-0000		1	CANTILEVER	
500	312105-0455		1	SCREW M6S ISO 4017 M8X30 A480	
510	312105-0370		2	SCREW M6S ISO 4017 M6X20 A480	

Pos	Part No	UN	Qty	Description	Page No

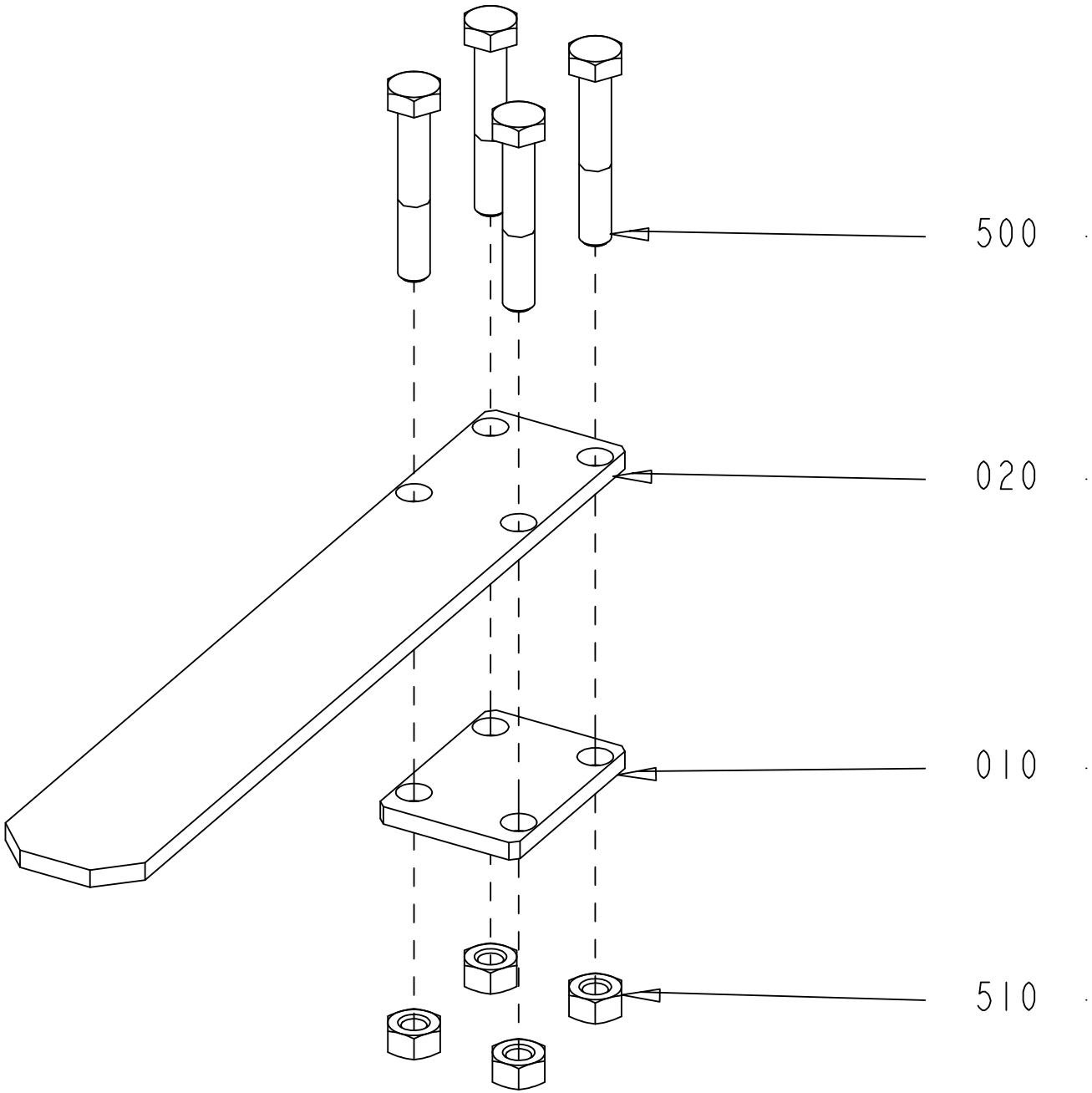

2946724-1
344517

ECM: 344517 - 20080303
Group number: 2946724-0100
Assembly Drawing: 2946724-1_1_AA

Pos	Part No	UN	Qty	Description	Page No
-					
010	2946722-0000		1	PLATE	
020	2946725-0000		1	CANTILEVER	
500	312105-0461		4	SCREW M6S ISO 4014 M8X50 A480	
510	312605-0318		4	HEXAGON NUT, M6M M8 A280	

Pos	Part No	UN	Qty	Description	Page No

This page is intentionally left blank.

ECM: 340145 - 20080303
Group number: 2957779-0100
Assembly Drawing:

Pos	Part No	UN	Qty	Description	Page No
-					
010	2959983-0000		1	SETTING TEMPLATE	
020	90243-0164		1	HOOK SPANNER ADJUST.DIA.4	

Pos	Part No	UN	Qty	Description	Page No

Tetra Pak

SPC
Spare Parts Catalogue

This page is intentionally left blank.

ECM: 369930 - 20081009
Group number: 663311-0100
Assembly Drawing:

Pos	Part No	UN	Qty	Description	Page No
TBA, TB					
010	2943553-0100		1	PHOTOCELL UNIT	**11-5**
020	2960583-0100		1	QUICK CHANGE	**11-7**

Pos	Part No	UN	Qty	Description	Page No

Machine Type | Group Description | Used-In | Group Number | Page No

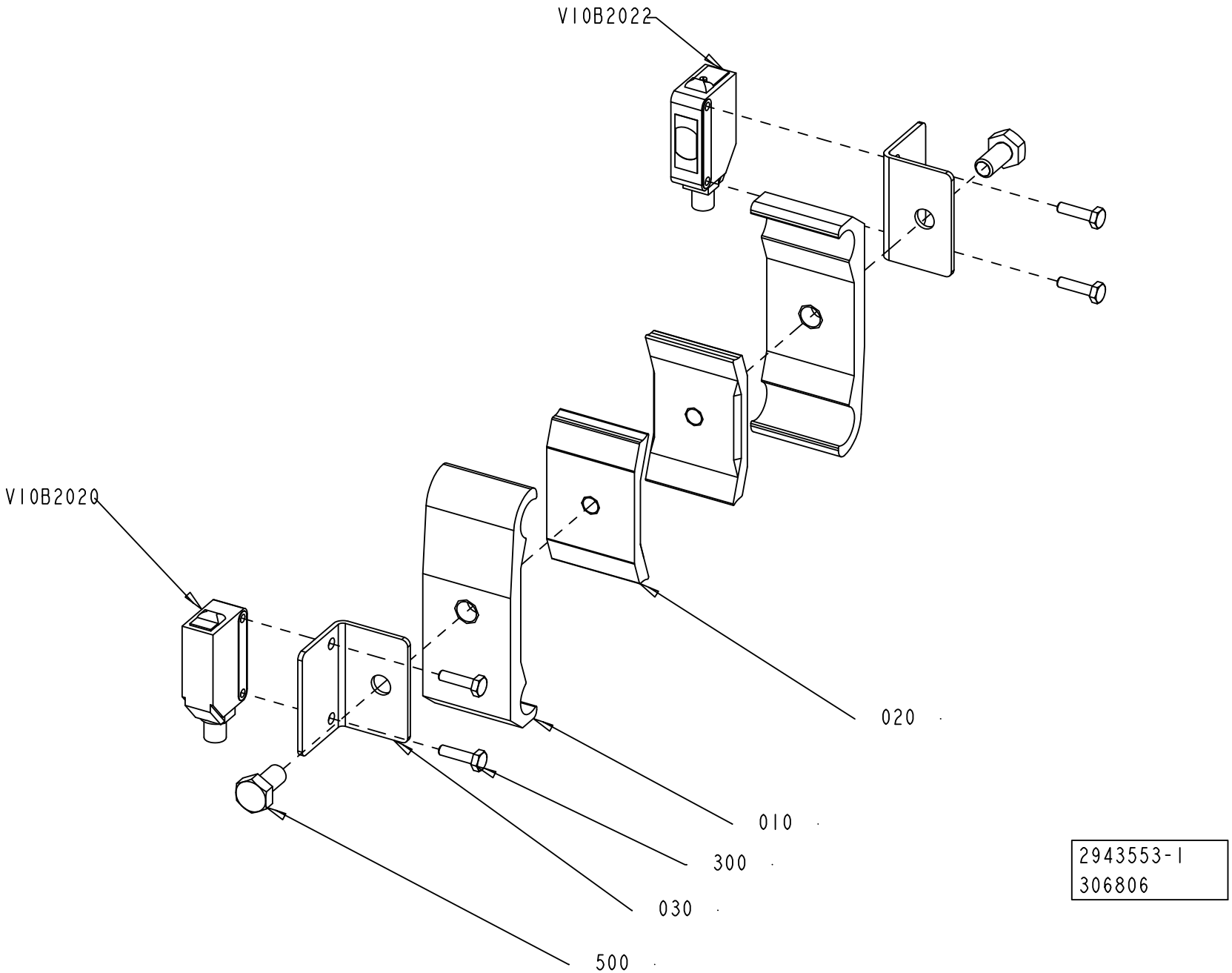

2943553-1
306806

ECM: 335175 - 20080303
Group number: 2943553-0100
Assembly Drawing: 2943553-1_1_AA

Pos	Part No	UN	Qty	Description	Page No
-					
010	1366750-0000		2	HOLDER	
020	1366727-0000		2	CLAMP	
030	2892716-0000		2	BRACKET	
300	90287-0175		4	SCREW M6S M3X12 A480	
500	312105-0366		2	SCREW M6S ISO 4017 M6X12 A480	
V10B2020	90459-7273		1	PHOTOCELL E3Z-T81C-G0SR D-CN	
V10B2022	90459-7274		1	PHOTOCELL E3Z-T81C-G0SR L-CN	

Pos	Part No	UN	Qty	Description	Page No

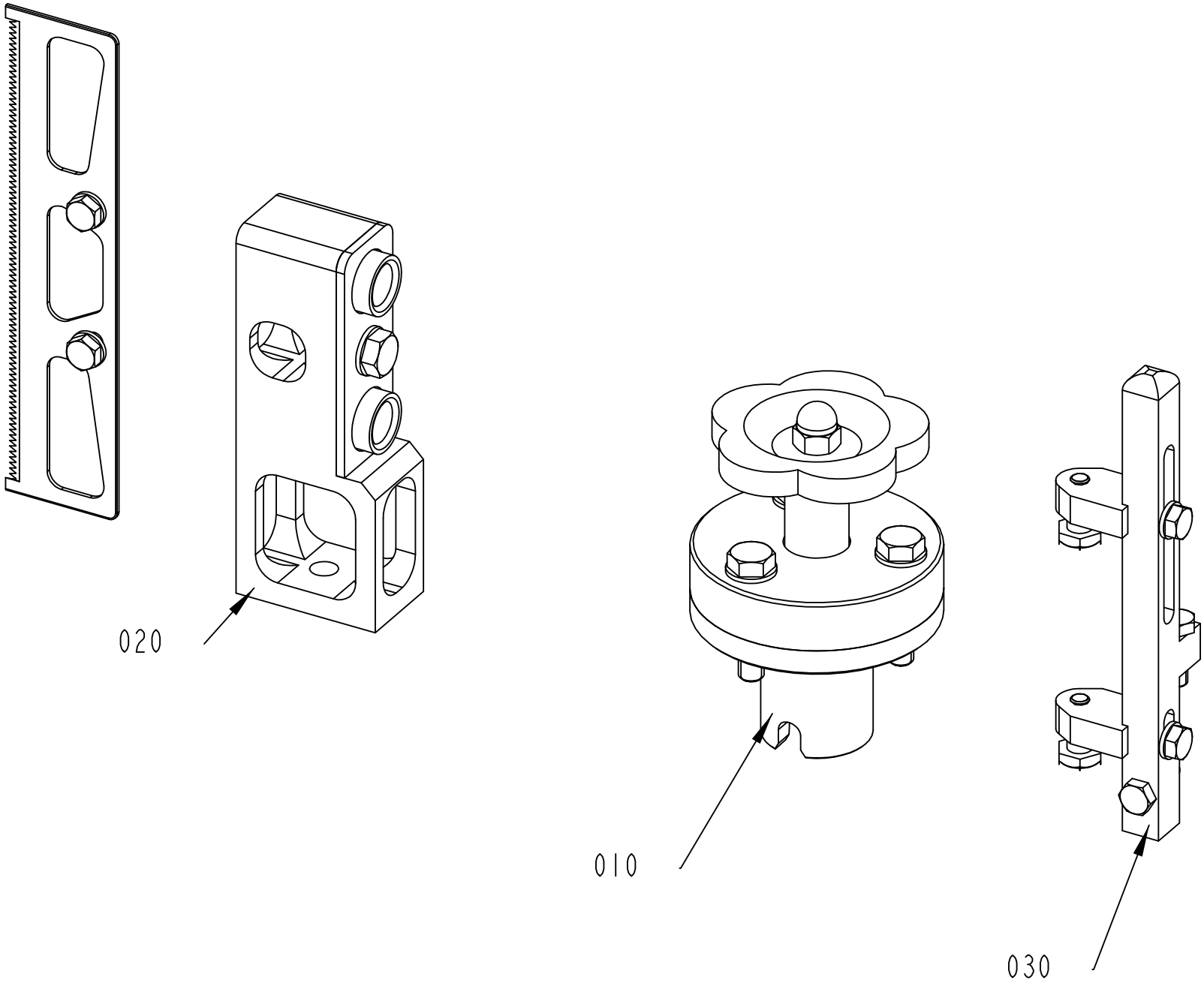

2960583-1
306806

ECM: 346240 - 20080303
Group number: 2960583-0100
Assembly Drawing: 2960583-1_1_AA

Pos	Part No	UN	Qty	Description	Page No
-					
010	2960584-0100		1	FEED WHEEL	**11-9**
020	2960585-0100		1	CUTTING UNIT	**11-11**
030	2960586-0100		1	PRESSURE ARM	**11-13**

Pos	Part No	UN	Qty	Description	Page No

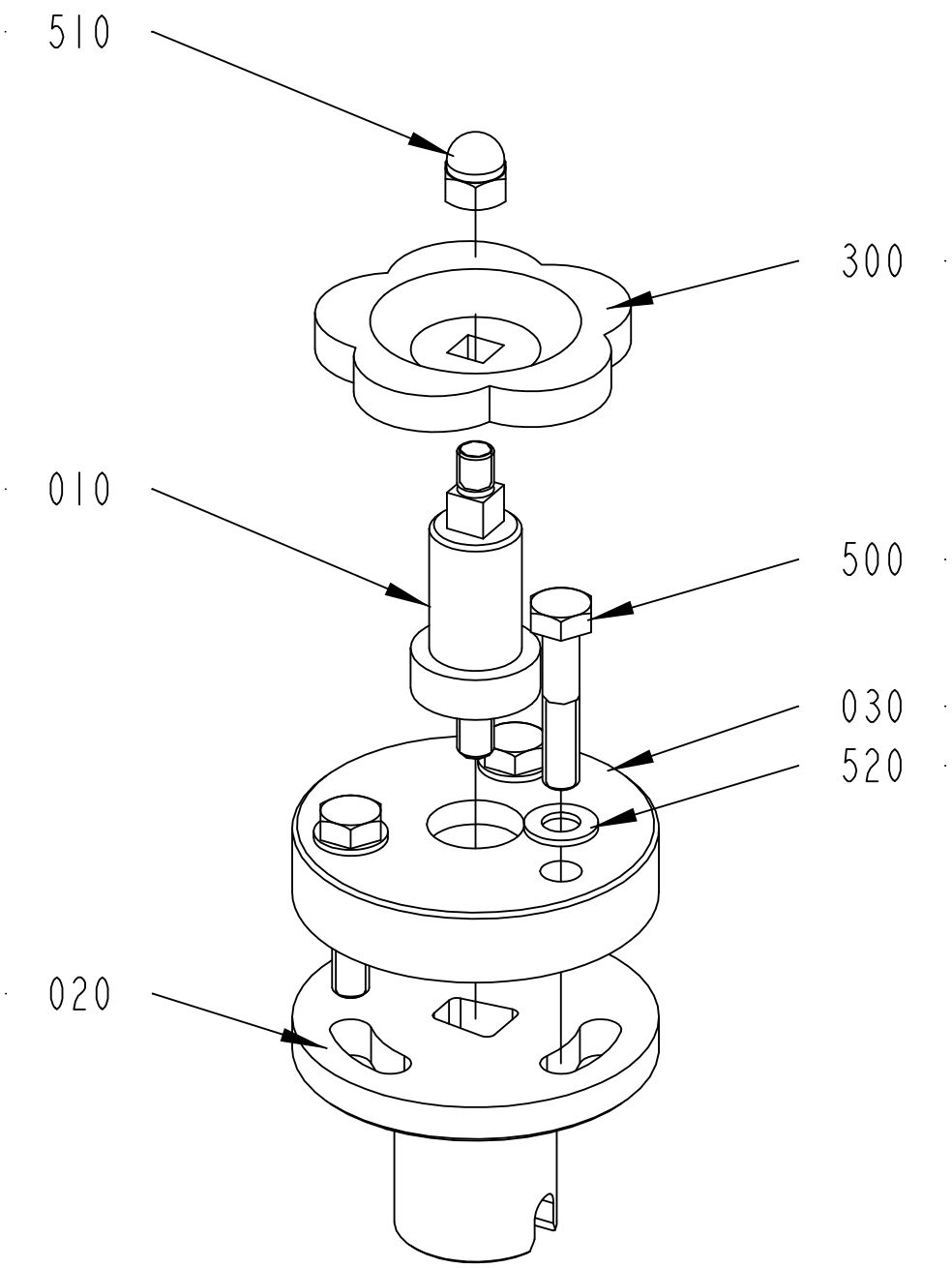

2960584-1
306806

ECM: 346241 - 20080303
Group number: 2960584-0100
Assembly Drawing: 2960584-1_1_AA

Pos	Part No	UN	Qty	Description	Page No
-					
010	2864773-0000		1	SHAFT	
020	2950968-0000		1	FLANGE	
030	2950971-0000		1	FLANGE	
300	90051-0079		1	KNOB, SQUARE HOLE, NO. 8306 1304	
500	312105-0459		3	SCREW M6S ISO 4014 M8X40 A480	
510	312705-0318		1	NUT HEX. DOMED CAP MHM-6 M8 A280	
520	315105-0165		3	WASHER BRB 8,4X16 RFR	

Pos	Part No	UN	Qty	Description	Page No

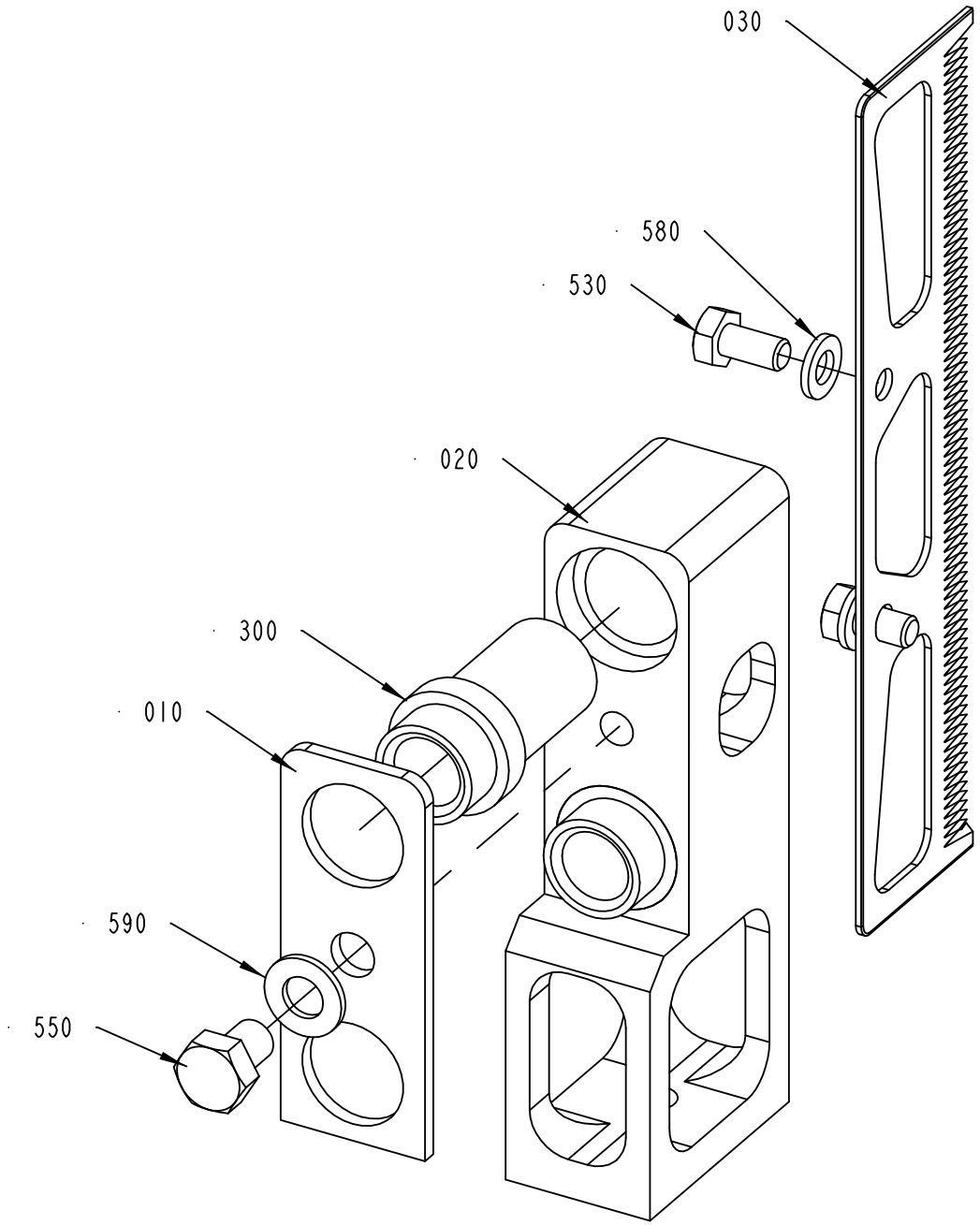

2960585-1
306806

ECM: 346242 - 20080303
Group number: 2960585-0100
Assembly Drawing: 2960585-1_1_AA

Pos	Part No	UN	Qty	Description	Page No
-					
010	2737088-0000		1	CLAMPING PLATE	
020	2829426-0000		1	BRACKET	
030	2856537-0000		1	KNIFE	
300	90600-3957		2	GUIDE BUSHING, 14X20X45	
530	312105-0366		2	SCREW M6S ISO 4017 M6X12 A480	
550	312105-0447		1	SCREW M6S ISO 4017 M8X12 A480	
580	315105-0153		2	WASHER BRB 6,4X12 RFR	
590	315105-0165		1	WASHER BRB 8,4X16 RFR	

Pos	Part No	UN	Qty	Description	Page No

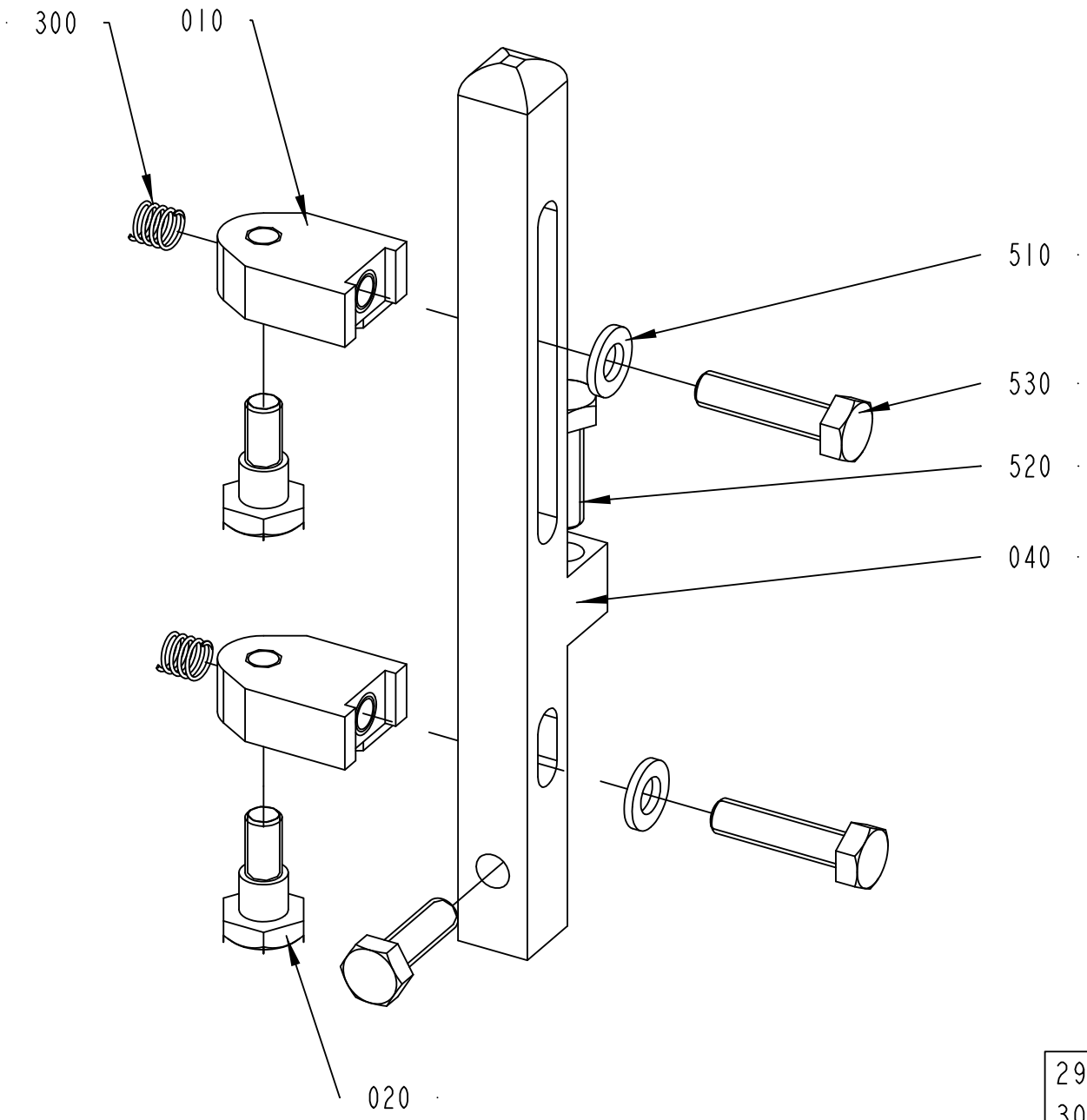

2960586-1
306806

ECM: 346243 - 20080303
Group number: 2960586-0100
Assembly Drawing: 2960586-1_1_AA

Pos	Part No	UN	Qty	Description	Page No
-					
010	2870443-0000		2	BRACKET	
020	2870444-0000		2	SCREW	
040	2910474-0000		1	POST	
300	90600-1851		2	COMP. SPRING 5896, 0,63X6,93X11,5	
510	315105-0153		2	WASHER BRB 6,4X12 RFR	
520	312105-0370		2	SCREW M6S ISO 4017 M6X20 A480	
530	312105-0372		2	SCREW M6S ISO 4017 M6X25 A480	

Pos	Part No	UN	Qty	Description	Page No

Tetra Pak

SPC
Spare Parts Catalogue

Part No	Description	Page No
90005-0114	WASHER PLAIN ROUND 5,3(M5)/15, H=1	1-29, 1-31
90005-0116	WASHER PLAIN ROUND 8,4(M8)/24, H=2	1-29, 4-7
90015-0023	LEAD-IN, TET7-10, E-1458019	4-15
90024-0036	FEED THROUGH FILTER, 52-160-002	8-27, 8-29, 8-31
90024-0049	FILTER 16 A 400 VAC, FN 356-16/29	8-27, 8-29, 8-31
90024-0062	CABLE PROTECTION, 40MM	7-5
90030-0188	CONN. STR. GA-15-G1/2	6-7
90031-0068	PLC, POWER SUPPLY	8-27, 8-29, 8-31
90031-0070	CPU313, INTEGRATED IN 5-SLOT BASEPLATE	8-27, 8-29, 8-31
90031-0078	GENIUS BUS CONTROLLER	8-27, 8-29, 8-31
90036-0068	BULB 6.5W 24V	4-15
90051-0035	KNOB, EXTERNAL THREAD. NO. 8308-1135	1-33
90051-0079	KNOB, SQUARE HOLE, NO. 8306 1304	1-41, 1-61, 11-9
90055-0257	Y-FITTING QSY-6	6-5
90056-0174	WORM GEAR VF 30 P1 70 HS B3	2-23
90062-0015	LOCK WASHER SERRAT.EXT.GEAR,6,4/11 H=0,7	7-5, 7-11
90062-0016	LOCK WASHER SERRAT.EXT.GEAR,8,4/15 H=0,8	8-13, 8-15, 8-17
90062-0059	LOCK WASKER SERRAT.EXT.GEAR,4,3/8 H=0,5	8-11, 8-13
90062-0060	LOCK WASHER 5,3/10 H=0,6 FZB	8-11
90064-0082	PUSH BUTTON, WHITE	7-11
90077-0079	FEED THROUGH TERMINAL, 02943.6	7-13, 7-15
90077-0113	FEED THROUGH TERMINAL, 10-00102150-1	8-51, 8-53
90077-0310	BRACKET, TSTR, 10-0099003-1	8-11
90077-0328	RAIL TS15/5	7-5
90082-0013	OVER VOLT. PROTECT. PU 4C-R 230 VAC	8-27, 8-29, 8-31
90091-0303	RADIAL SEAL 20X35X7 MM DUST LIP	2-29
90091-0322	RADIAL SEAL 25X42X7 MM DUST LIP	1-9
90091-0323	SEAL RING	2-29
90091-0446	RADIAL SEAL 20X42X7 MM DUST LIP	1-61
90110-0053	FEMALE INSERT HAN 6 E 09 33 006 2701	4-19
90111-0132	MAIN SWITCH P1-25/EA/SVB-SW/N/HI11/H-P14	8-27, 8-29, 8-31
90115-0134	ROD END, ID=10 MM, M10X1,25	2-33, 2-49
90119-0108	RELAY OMRON G2R-2-SNI-24DC	8-35, 8-53, 8-55, 8-57
90129-0018	BASE OMRON P2RF-08-E	8-35, 8-53, 8-55, 8-57
90135-0026	EARTH TERMINAL, 3802.6	7-13, 7-15
90135-0040	EARTH WIRE, L=150 MM 16 MM2	8-17
90141-0015	RETAINING RING FOR SHAFT DIN 471 8 SS	1-19, 10-15
90141-0016	RETAINING RING FOR SHAFT DIN 471 10 SS	1-17, 5-7
90141-0020	RETAINING RING FOR BORE DIN 472 42 A2	1-9, 1-61
90143-0057	STRIP EMKA 1011-05 21X11MM	7-5, 8-9
90143-0060	EDGE STRIP 9,5X6,3MM BLACK PVC	5-9, 5-19, 5-27, 5-29
90144-0072	TAPE SCOTCH VHBS 4945 W=12,7MM	8-13, 8-15
90157-0041	SEALING COMPOUND, RHODORSEAL 5651	5-7, 5-17, 5-25
90164-0015	LIGHT FIXTURE, RL70CV-111 / 230V 50HZ	4-17
90164-0303	LIGHT FIXTURE, BRACKET 70MM	4-17
90178-0007	HOUR COUNTER, BG 40,17-1 12-48VDC	8-27, 8-29, 8-31
90181-0052	CABLE DUCT 25X80MM	8-11
90181-0053	CABLE DUCT 40X80MM	8-11
90181-0054	CABLE DUCT 60X80MM	8-11
90181-0088	PLASTIC RIVET, PR 52314	8-11
90181-0183	CABLE DUCT, FITTING, B2	4-11
90181-0186	CABLE DUCT, ELBOW BRACKET, B27	4-11
90181-0314	CABLE TRENCH PARTS	4-11
90187-0029	BALL VALVE G1/2, NPBR	6-7
90194-0080	SIGN, IDENTIFICATION OF WIRING	8-15
90194-0152	SIGN, EARTH	4-13, 7-5, 7-11, 8-11, 8-13, 8-15, 8-17
90214-0163	BALL BEARING SOLID OIL 25X47X12 MM	2-37, 2-45
90214-0169	BALL BEARING SOLID OIL 15X35X11 MM	2-43
90220-0104	SCR. CABLE 4X1,5MM2	8-33
90220-0183	SCR. CABLE 2X0,34MM2	8-27, 8-29, 8-31
90237-0123	LOCK, 1121-U10C	5-25, 8-13, 8-15
90237-0128	LOCK CYLINDER, 1109-SU125	5-25
90237-0129	LOCK CYLINDER, 1109-U6	8-13, 8-15
90237-0142	LOCK HOUSING, 1000-U45	7-5
90237-0144	GUIDE, 1121-SU540	5-25, 8-13, 8-15
90237-0147	LOCKING LUG, NO. 1121-53-0P	5-25
90237-0165	LATCH	8-13, 8-15
90237-0175	TURNING HANDLE, 1125-U185-0A	5-25, 8-13, 8-15
90237-0202	LOCK, INSERT SQUARE,1000-U2 8 MM	7-5
90237-0324	KEY, 1104-02 FOR SQUARE 8 MM	8-13, 8-15
90240-0325	FLANGE BUSHING, 16X18X12 MM	2-33
90243-0164	HOOK SPANNER ADJUST.DIA.4	10-21
90243-0169	BINDER CLIP, DIAM.29 MM, NO. 4670819	8-15
90256-0001	TAPE SUPPLY HOLDER, TYPE 2000	10-15
90259-0313	AUX. CONTACT K&M NHI21-PKZM0	8-27, 8-29, 8-31
90264-0032	FAN, 4656N+LZ30+LZ 120,220V 50HZ	7-7
90287-0154	SCREW, SOCK.SET DOGPOINT M6X10	2-41
90287-0175	SCREW M6S M3X12 A480	10-7, 11-5
90287-0205	SCREW	7-5
90287-0229	SCREW, HEX.SOCK.HEAD SHOULD. M5X6	1-29
90328-0013	SILENCER U-1/4, 2316	6-5
90328-0047	SILENCER G1/8"	2-49
90347-0011	VIBRATION DAMPER MEGI 781056	4-13
90417-0417	TIMING BELT AT5 1075X16 MM	1-53, 1-55

Part No	Description	Page No
90439-0155	PRECISION NOZZLE SATURN 322012	3-9
90439-0209	HOSE	3-9
90439-0212	274792 HOSE	3-7
90439-0236	NOZZLE,1011012	3-7
90439-0241	ANGLE NIPPLE	3-9
90439-0295	SERVICE KIT, NO. 111940	3-7
90457-0105	BLANK RIVET 2X9	6-7
90458-0118	COMPACT DISC RECORDABLE	9-5
90458-0292	BASE, KT70-1001	4-15
90458-0293	LIGHT ELEMENT, RED, KL70-401R	4-15
90458-0294	LIGHT ELEMENT, YELLOW, KL70-401Y	4-15
90458-0295	LIGHT ELEMENT, BLUE, KL70-401L	4-15
90458-0297	BASE WITH TUBE 110 MM KA70-1011	4-15
90458-0309	CABLE GLAND, M32X1,5, NO.5311 1040	8-9
90458-0315	CABLE GLAND, M20X1,5, NO.5311 1120	3-11, 3-13, 4-19, 7-5
90458-0317	CABLE GLAND, M32X1,5, NO.5311 1140	3-11, 3-13
90458-0323	NUT, M20X1,5	3-11, 3-13, 7-5
90458-0325	NUT, M32X1,5	3-11, 3-13, 8-9
90458-0498	PLUG, BLIND, PLASTIC PLUG B24, 5/17	10-13
90458-0590	PROX.SENSOR IM12-04BPS-ZC1	1-25
90458-0692	JOINT, THREAD.CONN. 30 MM, NO 851.008.95	10-11, 10-13
90458-0693	PLASTIC FOOT 30 MM, NO 856.211.95	10-11, 10-13
90458-0694	ELBOW JOINT 2T 30 MM, NO 851.012.95	10-11, 10-13
90458-0721	PIPE CLIP FOR TUBE D=8 MMSZ 2367080	8-11
90458-0962	FLEXIBLE COUPLING, 6X6 MM	2-31
90458-1140	FERRITE, RI-26-28-13	8-27, 8-29, 8-31
90458-1141	FERRITE, RI-16-28-9	8-27, 8-29, 8-31
90458-1150	CABLE GLAND, RG M63/4	7-5
90458-1308	BLIND PLUG CIRCULAR, M20X1,5 514GFK/220	4-19
90458-1508	FLOOR PLATE, DAMPER, M105-20-160	4-13
90458-1651	EMERGENCY STOP, ZB4-BS-844 ZB4-BZ-104	7-11, 8-15
90458-1740	AIR GUN ASSEMBLY, CEJN 199589668	6-5
90458-1814	CLAMPING ELEMENT WITH SLEEVE, 15X18 MM	1-9, 1-39
90458-1869	EMC EARTH BRAID, 16MM2 L=200MM	7-5
90458-2068	CLAMPING ELEMENT WITH SLEEVE, 3/8"X16 MM	1-29
90458-2082	COMP. SPRING SF-TF 1X9X20 SS 2331-06	1-23, 1-25
90458-2343	FRAME CF 16	8-9
90458-2566	FILTER 90 DEGREES 100 MESH, 1007231	3-7, 3-9
90458-2730	PRESSURE SENS. SDE1-D10-G2-R18-C-P1-M8	6-5
90458-2779	SCALE , 0-1000MM ADHESIVE	1-51, 2-21, 2-23
90458-2780	SCALE ,1000-0 MM ADHESIVE	1-23, 2-33
90458-2837	PLUG SOCKET, KMEB-1-24-5-LED	6-5, 8-33
90459-0580	BRACKET, PIVOT MOUNTING CRZNG-32	2-33
90459-0584	BEARING BRACKET CRLNZG-32	2-33
90459-1292	LOCK CAM, 1000-50 GH 18	7-5
90459-1297	RESISTANCE FIXED, 120 OHM, 0,25 W	8-27, 8-29, 8-31
90459-1359	FILTER 1 A, 250 VAC, FN 332-1/05	8-27, 8-29, 8-31
90459-1699	DOUBLE ACTING, MINI-ISO, CYL 25-50	2-49
90459-1811	BRIDGE CONNECTOR WQV 2,5/2, 105366	8-43
90459-1991	HOT MELT UNIT, #1022230	3-7, 3-9
90459-2137	ILLUMINATING SEAL, MEB-LD-12-24DC	6-5
90459-2232	WARNING SIGN ANSI (H), DO NOT WASH	3-11, 3-13
90459-2242	REGULATOR, MS4-LRB-1/4-D7-AS	6-5
90459-2243	SHUT OFF VALVE, MS4-EE-1/4-10V24	6-5
90459-2245	DISTRIBUTOR, MS4-FRM-1/4	6-5
90459-2246	END PLATE, MS4-AGB	6-5
90459-2247	BRACKET, MS4-WP	6-5
90459-2248	BRACKET, MS4-MV	6-5
90459-2265	PROHIBITION SIGN ISO, DO NOT WASH	3-11, 3-13
90459-2291	SAFETY TIME RELAY, E1T-0.5S-24VDC	8-27, 8-29, 8-31
90459-2337	SHUT OFF VALVE, MS4-EM1-1/4	6-5
90459-2339	FILTER REGULATOR, MS4-LFR-1/4-D7-ERV-AS	6-5
90459-2364	FILTER, 10077234	3-7
90459-2392	PROX.SENSOR SMT-C1-PS-24V-K0,3-M8-SA	2-33
90459-2409	INDUCTIVE SWITCH IN-3002-BPKG/AS	1-9, 1-21, 1-31, 1-33, 1-53, 1-55, 2-49
90459-2473	DIG INP. MOD.16 PTS FAST,1769-IQ16F SERA	8-27, 8-29, 8-31
90459-2476	DIGIT. OUT. MOD. 16 P ESCP, 1769-OB16P	8-27, 8-29, 8-31
90459-2483	DEVICENET SCANNER, 1769-SDN SERIES B	8-27, 8-29, 8-31
90459-2491	PLC RIGHT END CAP/TERMINATOR, 1769-ECR	8-27, 8-29, 8-31
90459-2530	DEVICENET CABLE THIN	8-27, 8-29, 8-31
90459-2536	SERCOS CABLE 0.1M, 2090-SCEP0-1	8-27, 8-29, 8-31
90459-2540	SERCOS CABLE 3.0M, 2090-SCEP3-0	8-27, 8-29, 8-31
90459-2549	AC LINE FILTER 3-PHASE 30A, 2090-XXLF-X3	8-27, 8-29, 8-31
90459-2550	I/O CONNECTOR 26 PIN MALE, 2090-K6CK-D26	8-27, 8-29, 8-31
90459-2579	SERVO MOTOR MPL-B320P-SJ22AA	1-11, 1-29, 1-57
90459-2676	ANG. BALL BEAR, 15X35X15,9 MM	2-29, 2-47
90459-2701	CABLE DUCT, FITTING, B1	4-11
90459-2928	LABEL 60417-2-IEC-5020, COMM. REF. POT.	4-13, 7-5, 7-11, 8-11, 8-13, 8-15, 8-17
90459-3000	DISTRIBUTOR, MS4-FRM-1/4-A8	6-5
90459-3145	FLASH MEMORY 64MBYTE, 1784-CF64	8-27, 8-29, 8-31
90459-3449	VARIABLE FREQUENCY DRIVE 22A-A2P3N104	8-27, 8-29, 8-31
90459-3450	VARIABLE FREQUENCY DRIVE 22A-A4P5N104	8-27, 8-29, 8-31
90459-3460	FOOTPRINT FILTER 22-RF010-AL	8-27, 8-29, 8-31
90459-3512	HANDWHEEL	1-19

Part No	Description	Page No
90459-3845	POWER SOCKET, Z-SD230	8-27, 8-29, 8-31
90459-3931	LINE FILTER, 3EP1, 3A 120/250 VAC	8-27, 8-29, 8-31
90459-4089	SAFETY SENSOR NON-CONTACT EVA E	5-25
90459-4234	DEVICENET SLAVE MODULE	8-27, 8-29, 8-31
90459-4235	SNP TO DF1 GATEWAY, 0220 1166 01 REV B	8-27, 8-29, 8-31
90459-4245	POWER SUPPLY UNIT 230VAC/24VDC 3,75A	8-27, 8-29, 8-31
90459-4252	CABLE M12-C101, 20-056-10	8-33
90459-4735	SCREW M6S ISO 4017 M8X10 A480	2-11, 2-13, 2-15, 2-19
90459-4891	PROGR. IDENTIFIER ID-FIX RW, 20-070-21	8-27, 8-29, 8-31
90459-5189	SLIM POW. RAIL, KINETIX, 2 AX, 2094-PRS2	8-27, 8-29, 8-31
90459-5323	OVERLOAD PROTECTION, PKZM0-1	8-27, 8-29, 8-31
90459-5440	CONTACTOR 4KW 24VDC, DILM9-01	8-27, 8-29, 8-31
90459-5441	CONTACTOR 7,5KW 24VDC, DILM17-01	8-27, 8-29, 8-31
90459-5811	RESIDUAL CURRENT DEVICE, FI-25/2/003-A	8-27, 8-29, 8-31
90459-5877	FILTER FAN SK 3325.107	8-13
90459-5949	REAR CLEVIS FOOT MOUNTING , CRLBN-32	2-33
90459-6273	DOUBLE ACTING, PROFILE,CYL 32-80	2-33
90459-6470	CONNECTOR RJ45 TER. BL., AK-U0-RJ45-TB2P	8-27, 8-29, 8-31
90459-6475	HOT MELT GUN, SOLIDBLUE A #8505768	3-9
90459-6553	PLC DSI /MODBUS COMMUN. MOD., 1769-SM2/A	8-27, 8-29, 8-31
90459-6586	ACT/SENS.Y-CABLE, ASBN 2-PRKMV 4-07/0,6M	8-33
90459-6604	CABLE, SICK DOL-2312-G 05MMA3	8-33
90459-6646	CABLE CLIPS, D=4 MM	8-11
90459-6679	CONN 15 P FEM, AUX. FEEDB,2090-K6CK-D15F	8-27, 8-29, 8-31
90459-6692	SAFETY PLC, PLUTO B20 20-070-06	8-27, 8-29, 8-31
90459-6961	SAFETY SENSOR, NON CONT. ADAM-E M12 0,5M	7-11
90459-7116	THROTTLE CHECK VALVE, G1/8", MANUAL,4	2-33
90459-7210	AXIS MOD. W. INTEG. PS,2094-BC01-M01-S/A	8-27, 8-29, 8-31
90459-7214	AXIS MODULE 650V, 6,1A, 2094-BM01-S	8-27, 8-29, 8-31
90459-7245	PLUG, BLIND, PLASTIC GPN300F11	1-29
90459-7273	PHOTOCELL E3Z-T81C-G0SR D-CN	2-29, 2-37, 2-43, 2-47, 10-7, 11-5
90459-7274	PHOTOCELL E3Z-T81C-G0SR L-CN	2-29, 2-37, 2-43, 2-47, 10-7, 11-5
90459-7293	SET SCREW DIN 551M5X8 PA66	2-11, 2-13, 2-15, 2-19
90459-7584	PROHOBITION SIGN ISO, DO NOT REACH IN	5-11, 5-15, 5-21, 5-23
90600-0429	SLIDER, WM-01-20	1-49
90600-0431	BUSHING INSERT, J200UMO-01-20	1-49
90600-0439	BELLOW COUPLING, 12X16 MM	1-29
90600-0454	CLAMPING ELEMENT WITH SLEEVE, 16X24 MM	1-61
90600-0547	SATURN IN-LINE FILTER JACKET, #1056296	3-7, 3-9
90600-0850	CABLE, SNP-DF1 GATEWAY	8-27, 8-29, 8-31
90600-0980	OPERATOR PANEL 15"+, 2711P-T15C4D2-TP	7-11
90600-1092	COMP. SPRING D21550, 0,63X8,63X16	1-29
90600-1155	GEARS, PLANETARY TS 80-037-E-E15 P-092 0	1-39
90600-1345	PROCESSOR L43, SERIES A, 1768-L43/A	8-27, 8-29, 8-31
90600-1347	POWER SUPPLY 120/240 VAC, 1768-PA3/A	8-27, 8-29, 8-31
90600-1348	ETHERNET /IP BRIDGE MODULE, 1768-ENBT/A	8-27, 8-29, 8-31
90600-1349	SERCOS MOTION MODULE 4-AXIS, 1768-M04SE/	8-27, 8-29, 8-31
90600-1765	GEARS, PLANETARY LPB+ 070-M01-3-111/PLPB	1-11
90600-1766	NUT ROUND WITH SLOTS M20X1 SS	1-9, 1-61
90600-1847	ETHERNET SWITCH, FL SWITCH SFN 5TX	8-27, 8-29, 8-31
90600-1851	COMP. SPRING 5896, 0,63X6,93X11,5	1-13, 11-13
90600-2071	HOUSING 6B SURF MOUNT, 19 30 006 2295	4-19
90600-2904	EARTH BRAID, 250/16/8,5	7-5, 7-11, 8-13, 8-15
90600-2959	HOT MELT GUN REV. A10, #1071632	3-7
90600-3004	INCREMENTAL ENC., DGS60-A1A10000,1032277	2-31, 2-37
90600-3210	GEARS, WORM MOTOR D9582/SC401-H/1600117	2-21, 2-31
90600-3295	MOTOR CABLE 16 AWG 2090-XXNPMP-16S03	8-33
90600-3296	MOTOR FEEDBACK CABLE 2090-UXNFBMP-S03/C	8-33
90600-3713	SCALE, 90600-3713	1-49
90600-3956	HEAT INSULATION, #1081862	3-7
90600-3957	GUIDE BUSHING, 14X20X45	1-43, 11-11
90600-3958	BEAR. BUSH. WITHOUT FL, 14X20X20 MM	1-43
90600-4289	BEAR. BUSH. WITHOUT FL, 14X16X15 MM	2-23
90600-4352	JOINT 3TV 30MM, 851 014 92	10-11
90600-4444	SCHOCK ABSORBER, MC 225 MH2+PP 225+KM20X	2-33
90600-4507	TIMING BELT T10/530X25	2-21
90600-4508	TIMING BELT T10/1790X25	2-27
90600-4710	LOCK WASHER MB 4 D=20 H=1 SS	1-9, 1-61
90600-4711	COMP. SPRING 5849, 0,5X5,5X44,5	1-21
90600-4713	THRUST BALL BEARING, 11X24X9 MM	1-59
90600-5059	TORQUE RIGID COUPLING, 6X6 MM	2-37
90600-5061	BUSHING, 25X40X58 MM	2-49
90600-5062	QUICK-LOCK, GN 851-700-T2-N1	1-29
90600-5064	GEARS, WORM MOTOR WA 20 DT71 D4	2-37
90600-5067	TIMING BELT T5X1500X16 POLYURETHANE	2-41
90600-5069	TIMING BELT ATK10 3280X100 MM	2-45
273455-0000	SIGN, COLD WATER	6-7
273458-0000	SIGN, AIR	6-7
311102-0237	PARALLEL PIN ISO 2338 3M6X18 ST	1-21, 1-25
311103-0306	PARALLEL PIN ISO 2338 5M6X12 A1	1-35, 1-43, 1-53, 1-55, 1-61
311103-0351	PARALLEL PIN ISO 2338 6M6X16 A1	1-11
311103-0359	PARALLEL PIN ISO 2338 6M6X35 A1	2-45
311103-0361	PARALLEL PIN ISO 2338 6M6X40 A1	2-37
311103-0454	PARALLEL PIN ISO 2338 10M6X20 A1	1-43

Part No	Description	Page No
311521-0143 ..	RIVET, BLANK 3,2X8	8-9
311521-0144 ..	RIVET, BLANK 3,2X10	4-13
312105-0287 ..	SCREW M6S ISO 4017 M4X8 A470	1-19
312105-0291 ..	SCREW M6S ISO 4017 M4X12 A470	1-25, 1-29, 2-31, 7-5, 7-7, 7-9, 8-7
312105-0293 ..	SCREW M6S ISO 4017 M4X16 A470	2-37
312105-0295 ..	SCREW M6S ISO 4017 M4X20 A470	7-7
312105-0299 ..	SCREW M6S ISO 4017 M4X30 A470	1-43
312105-0325 ..	SCREW M6S ISO 4017 M5X10 A480	1-23
312105-0327 ..	SCREW M6S ISO 4017 M5X12 A480	1-29, 1-31, 1-35, 1-53, 1-55
312105-0329 ..	SCREW M6S ISO 4017 M5X16 A480	1-19, 1-31, 1-33, 1-39, 1-57, 4-19, 6-5
312105-0339 ..	SCREW M6S ISO 4014 M5X40 A480	1-23, 1-31
312105-0362 ..	SCREW M6S ISO 4017 M6X8 A480	5-17
312105-0364 ..	SCREW M6S ISO 4017 M6X10 A480	1-49, 1-51, 5-7, 5-13
312105-0366 ..	SCREW M6S ISO 4017 M6X12 A480	1-19, 1-43, 2-9, 2-17, 2-21, 2-23, 2-27, 2-33, 4-17, 5-11, 5-15, 8-9, 10-7, 10-11, 10-13, 11-5, 11-11
312105-0367 ..	SCREW M6S ISO 4017 M6X14 A480	1-17, 2-17
312105-0368 ..	SCREW M6S ISO 4017 M6X16 A480	1-19, 1-33, 1-53, 1-55, 2-31, 2-33, 2-37, 2-43, 2-45, 3-11, 3-13, 4-13, 5-7, 5-9, 5-11, 5-15, 5-17, 5-19, 5-27, 5-29, 6-5, 6-7, 7-11
312105-0370 ..	SCREW M6S ISO 4017 M6X20 A480	1-13, 2-9, 2-17, 2-21, 2-23, 2-29, 4-7, 4-11, 7-5, 10-17, 11-13
312105-0372 ..	SCREW M6S ISO 4017 M6X25 A480	1-9, 1-13, 1-19, 1-21, 1-33, 1-61, 2-23, 2-37, 2-39, 2-43, 10-11, 11-13
312105-0374 ..	SCREW M6S ISO 4014 M6X30 A480	1-43, 2-31
312105-0376 ..	SCREW M6S ISO 4014 M6X35 A480	2-23, 2-37, 2-45, 2-47, 4-13
312105-0378 ..	SCREW M6S ISO 4014 M6X40 A480	1-21, 1-33, 2-33, 2-39
312105-0379 ..	SCREW M6S ISO 4014 M6X45 A480	2-37
312105-0381 ..	SCREW M6S ISO 4014 M6X55 A480	1-31
312105-0390 ..	SCREW M6S ISO 4014 M6X100 A480	1-61, 2-39
312105-0447 ..	SCREW M6S ISO 4017 M8X12 A480	1-43, 11-11
312105-0449 ..	SCREW M6S ISO 4017 M8X16 A480	2-17
312105-0451 ..	SCREW M6S ISO 4017 M8X20 A480	1-29, 1-43, 1-49, 2-9, 2-17, 2-21, 3-11, 3-13, 5-15
312105-0452 ..	SCREW M6S ISO 4017 M8X22 A480	1-51
312105-0453 ..	SCREW M6S ISO 4017 M8X25 A480	1-51, 5-11, 5-15
312105-0455 ..	SCREW M6S ISO 4017 M8X30 A480	1-9, 2-23, 2-33, 2-49, 2-51, 4-7, 10-17
312105-0457 ..	SCREW M6S ISO 4014 M8X35 A480	1-23, 1-25, 1-31, 1-49, 2-43, 2-47
312105-0459 ..	SCREW M6S ISO 4014 M8X40 A480	1-41, 2-23, 2-27, 2-29, 2-31, 2-33, 2-45, 4-13, 11-9
312105-0460 ..	SCREW M6S ISO 4014 M8X45 A480	2-51
312105-0461 ..	SCREW M6S ISO 4014 M8X50 A480	1-51, 2-49, 10-15, 10-19
312105-0462 ..	SCREW M6S ISO 4014 M8X55 A480	2-21
312105-0463 ..	SCREW M6S ISO 4014 M8X60 A480	1-17, 1-49, 2-33, 2-51
312105-0465 ..	SCREW M6S ISO 4014 M8X70 A480	2-49
312105-0495 ..	SCREW M6S ISO 4017 M10X30 A480	2-49
312105-0532 ..	SCREW M6S ISO 4017 M12X20 A480	1-49
312107-0316 ..	HEXAGON FLANGE NUT ISO 4161 M6 A2	8-9
312108-0325 ..	SCREW EN 1665 TYPE F M5X10 A270	2-39, 2-43
312108-0364 ..	SCREW EN 1665 TYPE F M6X10 A270	2-43, 5-23
312108-0366 ..	SCREW EN 1665 TYPE F M6X12 A270	2-37, 2-47
312108-0368 ..	SCREW EN 1665 TYPE F M6X16 A270	1-33, 2-47, 5-23
312108-0372 ..	SCREW EN 1665 TYPE F M6X25 A270	2-37, 2-39, 2-41
312108-0449 ..	SCREW EN 1665 TYPE F M8X16 A270	4-9
312108-0451 ..	SCREW EN 1665 TYPE F M8X20 A270	2-37
312108-0461 ..	SCREW EN 1665 TYPE F M8X50 A270	5-21
312109-0374 ..	SCREW M6S ISO 4017 M6X30 A480	1-31, 2-31
312109-0376 ..	SCREW M6S ISO 4017 M6X35 A480	1-29
312109-0457 ..	SCREW M6S ISO 4017 M8X35 A480	2-29
312109-0459 ..	SCREW M6S ISO 4017 M8X40 A480	2-21
312109-0461 ..	SCREW M6S ISO 4017 M8X50 A480	1-51, 2-39
312111-0222 ..	SCREW HEX.SOCK.HD.MC6S-TT 3X8 88 FZB	1-33
312113-0287 ..	SERRATED COMBI TORX SCREW M4X8 A2	8-11, 8-27, 8-29, 8-31
312113-0323 ..	SERRATED COMBI TORX SCREW M5X8 A2	8-9, 8-11, 8-27, 8-29, 8-31
312113-0366 ..	SERRATED COMBI TORX SCREW M6X12 A2	4-11, 8-11, 8-27, 8-29, 8-31
312115-0226 ..	SCREW ISO4762 M3X12 A4 80	2-37
312115-0230 ..	SCREW ISO4762 M3X20 A4 80	1-21, 1-31, 1-33
312115-0325 ..	SCREW ISO4762 M5X10 A4 80	8-9
312115-0328 ..	SCREW ISO4762 M5X14 A4 80	8-13, 8-15
312115-0329 ..	SCREW ISO4762 M5X16 A4 80	1-11, 2-31, 4-15
312115-0333 ..	SCREW ISO4762 M5X25 A4 80	1-59
312115-0366 ..	SCREW ISO4762 M6X12 A4 80	7-11, 8-13, 8-15
312115-0368 ..	SCREW ISO4762 M6X16 A4 80	1-39, 5-25, 7-11
312115-0370 ..	SCREW ISO4762 M6X20 A4 80	1-11, 1-29, 1-57, 2-43, 7-5
312115-0372 ..	SCREW ISO4762 M6X25 A4 80	1-43, 1-61, 2-45
312115-0378 ..	SCREW ISO4762 M6X40 A4 80	1-53, 1-55
312115-0380 ..	SCREW ISO4762 M6X50 A4 80	1-39
312115-0451 ..	SCREW ISO4762 M8X20 A4 80	1-29, 1-49, 1-61, 2-47
312115-0453 ..	SCREW ISO4762 M8X25 A4 80	1-11
312115-0455 ..	SCREW ISO4762 M8X30 A4 80	1-49
312115-0457 ..	SCREW ISO4762 M8X35 A4 80	1-29
312115-0461 ..	SCREW ISO4762 M8X50 A4 80	1-33, 1-51
312115-0463 ..	SCREW ISO4762 M8X60 A4 80	1-19, 1-23, 1-35, 2-21
312115-0493 ..	SCREW ISO4762 M10X25 A4 80	10-11, 10-13
312115-0501 ..	SCREW ISO4762 M10X50 A4 80	1-49
312115-0505 ..	SCREW ISO4762 M10X70 A4 80	1-59
312121-0289 ..	SCREW ISO 1207 M4X10 4.8-5.8 Z.PL.	8-11
312121-0291 ..	SCREW ISO 1207 M4X12 4.8-5.8 Z.PL.	8-11
312121-0293 ..	SCREW ISO 1207 M4X16 4.8-5.8 Z.PL.	8-9

Part No	Description	Page No
312121-0327 ..	SCREW ISO 1207 M5X12 4.8-5.8 Z.PL.	8-11
312125-0220 ..	SCREW ISO 1207 M3X6 A4	8-27, 8-29, 8-31
312125-0222 ..	SCREW ISO 1207 M3X8 A4	8-11
312125-0226 ..	SCREW ISO 1207 M3X12 A4	2-37
312125-0228 ..	SCREW ISO 1207 M3X16 A4	2-29
312125-0230 ..	SCREW ISO 1207 M3X20 A4	1-9, 1-53, 1-55, 2-49
312125-0232 ..	SCREW ISO 1207 M3X25 A4	2-47, 5-25, 7-11
312125-0285 ..	SCREW ISO 1207 M4X6 A4	8-27, 8-29, 8-31
312125-0287 ..	SCREW ISO 1207 M4X8 A4	1-9, 1-53, 1-55, 2-23, 2-29, 2-43
312125-0289 ..	SCREW ISO 1207 M4X10 A4	1-29
312125-0366 ..	SCREW ISO 1207 M6X12 A4	4-11
312145-0325 ..	SCREW ISO 2009 MFS M5X10 A4	1-17, 2-39, 4-13
312155-0224 ..	SCREW DIN 7991 MF6S M3X10 A4 70	2-43
312155-0289 ..	SCREW DIN 7991 MF6S M4X10 A4 70	10-13
312155-0291 ..	SCREW DIN 7991 MF6S M4X12 A4 70	7-7, 7-9, 8-7
312155-0325 ..	SCREW DIN 7991 MF6S M5X10 A4 70	1-35
312155-0333 ..	SCREW DIN 7991 MF6S M5X25 A4 70	2-39
312155-0364 ..	SCREW DIN 7991 MF6S M6X10 A4 70	1-25
312155-0368 ..	SCREW DIN 7991 MF6S M6X16 A4 70	2-33, 10-13, 10-15
312155-0370 ..	SCREW DIN 7991 MF6S M6X20 A4 70	2-43, 5-25
312155-0372 ..	SCREW DIN 7991 MF6S M6X25 A4 70	2-39
312155-0378 ..	SCREW DIN 7991 MF6S M6X40 A4 70	5-7, 5-9, 5-17, 5-19, 5-27, 5-29, 8-17
312155-0455 ..	SCREW DIN 7991 MF6S M8X30 A4 70	1-51
312311-0455 ..	SCREW ISO4028 M8X30 FZB	2-37, 2-45
312318-0220 ..	SCREW ISO4029 M3X6 A4	1-21
312318-0284 ..	SCREW ISO4029 M4X5 A4	1-29
312318-0327 ..	SCREW ISO4029 M5X12 A4	1-33
312318-0372 ..	SCREW ISO4029 M6X25 A4	4-13
312602-0316 ..	NUT, EN 24032 M6M M6 NIPLBR	8-17
312605-0312 ..	HEXAGON NUT, M6M M4 A280	2-43, 7-7, 8-9, 8-11, 8-13, 8-15
312605-0314 ..	HEXAGON NUT, M6M M5 A280	4-15, 7-5, 8-11, 10-15
312605-0316 ..	HEXAGON NUT, M6M M6 A280	2-31, 5-9, 5-15, 5-25, 7-5, 7-11, 8-9, 8-11, 10-15
312605-0318 ..	HEXAGON NUT, M6M M8 A280	1-29, 2-39, 2-51, 4-7, 5-15, 5-21, 5-23, 10-15, 10-19
312605-0322 ..	HEXAGON NUT, M6M M12 A280	10-15
312607-0318 ..	HEXAGON NUT, EN 24032 M6M M8 A480	2-49
312607-0322 ..	HEXAGON NUT, EN 24032 M6M M12 A480	2-47
312607-0324 ..	HEXAGON NUT, EN 24032 M6M M16 A480	2-41
312625-0316 ..	HEXAGON THIN NUT, EN 24035 ML6M M6 A4	4-13
312705-0314 ..	NUT HEX. DOMED CAP MHM-6 M5 A280	7-5
312705-0316 ..	NUT HEX. DOMED CAP MHM-6 M6 A280	2-43
312705-0318 ..	NUT HEX. DOMED CAP MHM-6 M8 A280	1-41, 1-61, 11-9
312812-0314 ..	HEXAGON NUT, NY-LOCK M5 A480	5-25, 8-13, 8-15
312812-0316 ..	HEXAGON NUT, NY-LOCK M6 A480	2-43, 5-7, 5-17, 5-19, 5-27, 5-29, 8-13, 8-15, 8-17
312812-0318 ..	HEXAGON NUT, NY-LOCK M8 A480	1-29
312812-0320 ..	HEXAGON NUT, NY-LOCK M10 A480	1-31
315101-0136 ..	WASHER BRB, 4,3/8 H=0,8	8-9
315101-0153 ..	WASHER PLAIN, BRB, 6,4/12 H=1,5	8-17
315105-0124 ..	WASHER BRB 3,2X6 RFR	1-9, 1-31, 1-33, 1-53, 1-55
315105-0136 ..	WASHER BRB 4,3X8 RFR	1-19, 1-25, 1-29, 2-37, 7-7, 7-9, 8-7, 8-11, 8-13
315105-0146 ..	WASHER BRB 5,3X10 RFR	1-31, 1-35, 1-53, 1-55, 4-15, 5-25, 7-5, 8-11, 8-13, 8-15
315105-0153 ..	WASHER BRB 6,4X12 RFR	1-9, 1-13, 1-17, 1-29, 1-31, 1-43, 1-51, 1-61, 2-17, 2-21, 2-23, 2-29 2-31, 2-33, 2-45, 4-13, 5-7, 5-9, 5-11, 5-15, 5-17, 5-19, 5-25, 5-27, 5-29, 6-7, 7-5, 7-11, 8-9, 8-11 8-13, 8-15, 11-11, 11-13
315105-0156 ..	WASHER BRB 6,7X14 RFR	4-17
315105-0165 ..	WASHER BRB 8,4X16 RFR	1-9, 1-17, 1-29, 1-41, 1-43, 1-49, 1-51, 2-9, 2-17, 2-21, 2-23, 2-27 2-29, 2-33, 2-49, 2-51, 5-11, 5-15, 5-21, 5-23, 11-9, 11-11
315105-0178 ..	WASHER BRB 13X24 RFR	1-49
315106-0124 ..	WASHER ISO 7089-3-200 HV A4	2-37, 2-47, 2-49
315106-0146 ..	WASHER ISO 7089-5-200 HV A4	6-5
315106-0153 ..	WASHER ISO 7089-6-200 HV A4	1-33, 2-37, 2-39, 2-43, 2-47, 4-7, 5-23
315106-0165 ..	WASHER ISO 7089-8-200 HV A4	1-31, 2-43, 2-47
315106-0178 ..	WASHER ISO 7089-12-200 HV A4	2-47, 10-15
315106-0186 ..	WASHER ISO 7089-16-200 HV A4	1-49, 2-21, 2-33
315115-0173 ..	WASHER PLAIN, TBRB 10,5/22 H=4	1-31
315125-0146 ..	WASHER TBRSB 5.3X15X1 A4	1-23
315125-0153 ..	WASHER TBRSB 6,4X22X4 A4	1-31, 2-37
315125-0165 ..	WASHER TBRSB 8,4X26X5 A4	1-23, 1-25, 1-51, 2-31, 2-43, 2-45
315204-0221 ..	O-RING 34,2X3 MM	1-9
315239-0113 ..	NYLON WASHER G1/2, 1/2RRP	6-7
315400-0001 ..	TUBE PUN-H-6X1-BL	2-49, 3-11, 3-13, 6-5
315400-0010 ..	TUBE PUN-H-12X2-BL	3-11, 3-13, 6-7
315400-0016 ..	TUBE PUN-H-4X0,75-BL	6-5
315701-0201 ..	PARALLEL KEY W. ROUND ENDS 5X5X20 MM	1-61
315705-0164 ..	PARALLEL KEY W. ROUND ENDS 4X4X8 MM	1-29
315705-0166 ..	PARAPARALLEL KEY W. ROUND ENDS 4X4X12 MM	1-29
315705-0198 ..	PARALLEL KEY W. ROUND ENDS 5X5X14 MM	2-37, 2-45
315705-0201 ..	PARALLEL KEY W. ROUND ENDS 5X5X20 MM	2-31
315705-0232 ..	PARALLEL KEY W. ROUND ENDS 6X6X20 MM	2-21
315705-0239 ..	PARALLEL KEY W. ROUND ENDS 6X6X40 MM	2-21, 2-31, 2-37
315705-0266 ..	PARALLEL KEY W. ROUND ENDS 8X7X28 MM	1-31
315705-0267 ..	PARALLEL KEY W. ROUND ENDS 8X7X30 MM	2-45
315705-0270 ..	PARALLEL KEY W. ROUND ENDS 8X7X40 MM	2-37
315751-0109 ..	RETAINING RING FOR SHAFT DIN 471 12 SS	1-29
315751-0112 ..	RETAINING RING FOR SHAFT DIN 471 15 SS	1-9, 2-29, 2-31, 2-47

Part No	Description	Page No
315751-0113 ..	RETAINING RING FOR SHAFT DIN 471 16 SS	1-49, 2-21, 2-33
315751-0116 ..	RETAINING RING FOR SHAFT DIN 471 20 SS	1-61, 2-21, 2-31
315751-0119 ..	RETAINING RING FOR SHAFT DIN 471 25 SS	1-39, 2-37, 2-45
315753-0119 ..	RETAINING RING FOR BORE DIN 472 25 A2	1-59
315753-0121 ..	RETAINING RING FOR BORE DIN 472 28 A2	1-29
315753-0124 ..	RETAINING RING FOR BORE DIN 472 35 A2	1-9, 2-29, 2-47
315753-0127 ..	RETAINING RING FOR BORE DIN 472 40 A2	2-49
315753-0130 ..	RETAINING RING FOR BORE DIN 472 47 A2	1-59, 2-37, 2-45
315755-0105 ..	RETAINING RING SHAFT DIN 6799 3,2 A2	7-5
318800-0106 ..	HANDLE,SPHERICAL KNOB,INT.THRE,D.40-M10	2-33
321133-0224 ..	BUSHING, 16X18X20 MM	1-49, 2-21
321133-0260 ..	BUSHING, 20X23X20 MM	1-29
321133-0300 ..	BUSHING, 25X28X25 MM	2-21, 2-23, 2-33
321153-0102 ..	FLANGE BUSHING, 8X10X10 MM	10-15
321308-0201 ..	BALL BEARING, 12X28X8 MM	1-29
321308-0204 ..	BALL BEARING, 20X42X12 MM	1-9, 1-61
321308-0205 ..	BALL BEARING, 25X47X12MM	1-39, 1-59
321313-0102 ..	BALL BEARING, 15X35X11 MM	1-9, 2-47
342707-0113 ..	SLEEVE, INT. THREAD, NO. 2543-1/2	6-7
342713-0210 ..	PLUG, EXT THREAD HEX SOCKET	6-5
342901-0105 ..	HOSE NIPPLE, EXT.THR. R1/2-12 MM	6-7
350001-0016 ..	PUSH-IN FITTING QS-F-G1/2-12	6-7
350002-0006 ..	PUSH-IN L-FITTING QSL-F-G1/8-6	2-49
350002-0008 ..	PUSH-IN L-FITTING QSL-F-G1/4-6	6-5
350002-0009 ..	PUSH-IN L-FITTING QSL-F-G1/4-8	3-11, 3-13
350002-0011 ..	PUSH-IN L-FITTING QSL-F-G1/4-12	3-11, 3-13, 6-5
350006-0001 ..	PUSH-IN FITTING QS-F-6H-4	6-5
350008-0004 ..	PUSH-IN FITTING QSF-F-G1/4-6	3-11, 3-13
350013-0002 ..	PLUG QSC-6H	6-5
351150-0403 ..	CABLE OLFLEX 3X0,75 MM2 LIGHT/GREY	8-33
351150-0404 ..	CABLE OLFLEX 4X0,75 MM2 LIGHT/GREY	8-33
351150-0405 ..	CABLE OLFLEX 5X0,75 MM2 LIGHT/GREY	8-33
351150-0406 ..	CABLE OLFLEX 7X0,75 MM2 LIGHT/GREY	8-33
351150-0412 ..	CABLE OLFLEX 3X1,5 MM2 LIGHT/GREY	8-33
351150-0413 ..	CABLE OLFLEX 4GX1,5 MM2 LIGHT/GREY	8-33
351150-0415 ..	CABLE OLFLEX 7X1,5 MM2 LIGHT/GREY	8-27, 8-29, 8-31
351150-0424 ..	CABLE OLFLEX 18X0,75 MM2 LIGHT/GREY	8-33
351150-0431 ..	CABLE OLFLEX 2X0,75 MM2 LIGHT/GREY	8-27, 8-29, 8-31, 8-33
351160-0102 ..	WIRE AWM 1X0,75 MM2 DARKBLUE	8-27, 8-29, 8-31
351161-0104 ..	WIRE AWM 1X1,5 MM2 LIGHTBLUE	8-27, 8-29, 8-31
351161-0105 ..	WIRE AWM 1X2,5 MM2 LIGHTBLUE	8-27, 8-29, 8-31
351162-0102 ..	WIRE AWM 1X0,75 MM2 YELLOW-GREEN	8-27, 8-29, 8-31
351162-0104 ..	WIRE AWM 1X1,5 MM2 YELLOW-GREEN	8-27, 8-29, 8-31
351162-0105 ..	WIRE AWM 1X2,5 MM2 YELLOW-GREEN	8-27, 8-29, 8-31
351162-0108 ..	WIRE AWM 1X10 MM2 YELLOW-GREEN	8-27, 8-29, 8-31
351164-0104 ..	WIRE AWM 1X1,5 MM2 BLACK	8-27, 8-29, 8-31
351164-0105 ..	WIRE AWM 1X2,5 MM2 BLACK	8-27, 8-29, 8-31
351303-0050 ..	ACTUATOR/SENSOR CABLE RKMVN 3-224/5M	8-33
351304-0050 ..	ACTUATOR/SENSOR CABLE RKMWVN 3-224/5M	8-33
351309-0050 ..	'ACTUATOR/SENSOR CABLE PRKT 4-07/5M	8-33
351309-0100 ..	ACTUATOR/SENSOR CABLE PRKT 4-07/10M	8-33
351501-0010 ..	ETHERNET PATCH CABLE, FL CAT5 PATCH 1,0	8-27, 8-29, 8-31
351501-0050 ..	ETHERNET PATCH CABLE, FL CAT5 PATCH 5,0	8-33
352113-0204 ..	ANCHOR PLATES FOR STRIPS, TYPE TM3S25-M	4-11, 7-5, 8-13, 8-15
352113-0205 ..	ANCHOR PLATES FOR STRIPS, TYPE TM2S8-C10	1-9, 1-53, 1-55, 2-23, 2-29, 2-43
352113-0206 ..	ANCHOR PLATES FOR STRIPS, TYPE ABM100-AT	7-5
353001-0113 ..	END SLEEVE 0,75MM2	8-27, 8-29, 8-31
353001-0114 ..	END SLEEVE 1,50 MM2	8-27, 8-29, 8-31
353001-0115 ..	END SLEEVE 2,5/14	8-27, 8-29, 8-31
353001-0120 ..	END SLEEVE H 10/28	8-27, 8-29, 8-31
353021-0212 ..	FEED THROUGH TERMINAL, 10200.0	8-37, 8-39, 8-41, 8-43, 8-59
353021-0213 ..	FEED THROUGH TERMINAL, 10201.0	8-23, 8-25, 8-47
353022-0002 ..	NEUTRAL TERMINAL, 10107.8	8-49
353024-0204 ..	EARTH TERMINAL WPE 2,5	8-59
353024-0205 ..	EARTH TERMINAL, 1010.1	8-45, 8-47
353024-0212 ..	EARTH TERMINAL, 10363.0	8-51, 8-53
353031-0203 ..	END SUPPORT, WEW 35/2	8-23, 8-25, 8-37, 8-43, 8-49, 8-51, 8-53, 8-59
353032-0009 ..	END PLATE, WAP FOR WDK	8-51, 8-53
353033-0104 ..	END PLATE, 10502.8	8-49
353033-0105 ..	PARTITITION, 10501.0	8-37, 8-39, 8-41, 8-43
353034-0030 ..	BRIDGE CONNECTOR WQV 2,5/10, 10544.6	8-37, 8-39, 8-41, 8-43
353041-0001 ..	BUS BAR RAIL 10X3MM SSCH	8-49
353041-0104 ..	CLAMPING YOKE PZB 4 K	8-49
353042-0004 ..	RAIL TS 35/7,5	8-11
353101-0120 ..	CABLE SHOE 0,5-1,5MM2 M4 RED	8-21
353103-0120 ..	CABLE SHOE 1,25 MM² RED	8-21
353210-0075 ..	END SLEEVE, TWIN COLL, 0,75 MM2	8-27, 8-29, 8-31
353210-0150 ..	END SLEEVE, TWIN COLL, 1,5 MM2	8-27, 8-29, 8-31
353210-0250 ..	END SLEEVE, TWIN COLL, 2,5 MM2	8-27, 8-29, 8-31
354000-0020 ..	MINIATURE CIRCUIT BREAKER, FAZ-C2/1	8-27, 8-29, 8-31
354000-0030 ..	MINIATURE CIRCUIT BREAKER, FAZ-C3/1	8-27, 8-29, 8-31
354000-0040 ..	MINIATURE CIRCUIT BREAKER, FAZ-C4/1	8-27, 8-29, 8-31
354000-0060 ..	MINIATURE CIRCUIT BREAKER, FAZ-C6/1	8-27, 8-29, 8-31
354000-0100 ..	MINIATURE CIRCUIT BREAKER, FAZ-C10/1	8-27, 8-29, 8-31

Part No	Description	Page No
354000-0160 ..	MINIATURE CIRCUIT BREAKER, FAZ-C16/1	8-27, 8-29, 8-31
354001-0040 ..	MINIATURE CIRCUIT BREAKER, FAZ-C4/2	8-27, 8-29, 8-31
354001-0100 ..	MINIATURE CIRCUIT BREAKER, FAZ-C10/2	8-27, 8-29, 8-31
354002-0100 ..	MINIATURE CIRCUIT BREAKER, FAZ-C10/3	8-27, 8-29, 8-31
359011-0821 ..	SET OF SIGNS 6-FW 1-50	8-37, 8-39, 8-41, 8-43, 8-49
359240-0100 ..	SIGN HOLDER FOR 359240-0001	8-9
359241-0803 ..	SIGN: "SUPPLY DISCONNECTING DEVICE"	8-9
359301-0001 ..	BUTTON SIGN, UP	7-11
359301-0090 ..	BUTTON SIGN, INCHING	7-11
359705-0015 ..	WARNING SIGN ISO, RISK OF ELECTRIC SHOCK	7-5, 8-13, 8-15
359725-0116 ..	WARNING SIGN ANSI (H), HOT SURFACE	3-11, 3-13
359725-0117 ..	WARNING SIGN ANSI (V), HOT SURFACE	3-11, 3-13
486268-0000 ..	NUT	4-13
486826-0001 ..	SIGN "EMERGENCY STOP"	7-11, 8-15
531616-0000 ..	HOLDER	5-9, 5-19
536204-0000 ..	COMPRESSION SPRING	1-25
540169-0000 ..	DOWEL	2-17
548599-0000 ..	WASHER	4-13
556386-0000 ..	STEERING	4-7, 5-15, 10-17
556601-0000 ..	BRACKET	4-13
556603-0000 ..	COVER PLATE	2-39, 4-13
556604-0000 ..	COVER PLATE	1-17, 4-13
578196-0000 ..	SLEEVE	5-7, 5-9, 5-17, 5-19, 5-27, 5-29, 8-17
578197-0000 ..	SPACER	5-7, 5-9, 5-17, 5-19, 5-27, 5-29, 8-17
578874-0000 ..	HF BRAIDED WIRE 1,6 MM2	8-27, 8-29, 8-31
580923-0000 ..	MACHINE SIGN CE	4-13
581689-0600 ..	WARNING LAMP	4-3, 4-5
583570-0000 ..	BRACKET	8-11
595772-0000 ..	WASHER	1-57
595773-0000 ..	BEARING HOLDER	1-59
595774-0000 ..	BEARING SLEEVE	1-59
595873-0000 ..	TURN SPRING	1-53, 1-55
599749-0100 ..	COOLING AIR OUTLET	7-3, 8-3, 8-5
599750-0000 ..	FILTER	7-7
599751-0000 ..	INSERT	7-7, 7-9, 8-7
599752-0000 ..	COVER	7-7, 7-9, 8-7
599753-0000 ..	SPACER	7-7, 7-9, 8-7
599755-0000 ..	GASKET	7-7, 7-9, 8-7
599760-0000 ..	SPACER	7-7
959656-0000 ..	COTTER	7-5
959657-0000 ..	HINGE FLANGE	7-5
959658-0000 ..	SPRING	7-5
975880-0000 ..	HINGE FLANGE	7-5
975884-0000 ..	BRACKET	4-13
975887-0000 ..	CATCH	5-27, 5-29
975889-0017 ..	STRUT	5-25
988685-0000 ..	PIN	5-25, 7-11
1021933-0000 .	COVER TAPE	4-13
1021990-0000 .	SIGN 356X70MM HOUSE MARK TEXT TETRA PAK	7-11, 8-13
1030767-0000 .	CATCH	5-7, 5-9, 5-17, 5-19
1035792-0000 .	E-HINGE	5-25, 7-11, 8-13, 8-15
1035793-0000 .	PIN	8-13, 8-15
1035794-0000 .	BLOCKING PIECE	8-13, 8-15
1065410-0000 .	SLOTTED PIN	4-13
1103299-0000 .	NON-SKID	4-13
1103300-0000 .	NON-SKID	4-13
1128853-0000 .	CAUTION SIGN	1-31, 3-11, 3-13
1129767-0000 .	SCREW	5-25
1129770-0000 .	BLOCKING PIECE	5-25, 7-11
1359565-0000 .	NUT	2-9, 2-17
1366727-0000 .	CLAMP	2-9, 2-17, 10-7, 11-5
1366750-0000 .	HOLDER	2-17, 10-7, 11-5
1368508-0101 .	WIRE	8-19
1550595-9960 .	SLIDING STRIP	2-11
1550695-0003 .	SIDE PLATE	2-11
1550743-0200 .	RAIL HOLDER	2-7
1550772-0000 .	HOLDER	2-9, 2-17
1556781-0000 .	CABLE	8-21
1591675-1001 .	PLC PROGRAM CODE	9-5
2557494-0000 .	BRACKET	7-5
2561206-0000 .	SPACER	2-11, 2-13, 2-15, 2-19
2561273-0103 .	CONVEYOR BODY	2-7
2565207-0000 .	BRACKET	6-7
2582040-0100 .	COOLING AIR INTAKE	7-3
2693488-0000 .	PLATE	8-13
2694881-0000 .	COVER	8-13
2699305-0496 .	SLIDING STRIP	2-13, 2-15
2699305-0996 .	SLIDING STRIP	2-19
2699436-0000 .	SPACER	2-9
2699437-0000 .	RAIL HOLDER	2-9
2737080-0100 .	SUPPORT BELT	2-25
2737081-0000 .	HOLDER	2-31
2737082-0000 .	BRACKET	2-29
2737088-0000 .	CLAMPING PLATE	1-43, 11-11

Part No	Description	Page No
2752867-0000	.PROFILE 50X50	4-13
2752868-0000	.PROFILE 50X50	4-13
2752869-0000	.PROFILE 50X50	4-13
2752890-0000	.PROFILE 50X100	4-13
2752891-0000	.PROFILE 50X100	4-13
2752893-0000	.PROFILE 50X100	4-13
2752895-0000	.PROFILE 50X100	4-13
2752896-0000	.PROFILE 50X100	4-13
2752901-0000	.PROFILE 50X100	4-13
2752902-0000	.PROFILE 50X100	4-13
2752903-0000	.PROFILE 50X50	4-13
2752904-0000	.PROFILE 50X50	4-13
2788657-0100	.MACHINE BODY	4-3, 4-5
2793903-0100	.CONVEYOR	2-3, 2-5
2797698-0000	.SHAFT	2-29
2797700-0000	.SHAFT	2-31
2799919-0000	.BRACKET	2-29
2799922-0000	.SIDE PLATE	2-13
2799923-0000	.SIDE PLATE	2-13
2799924-0000	.SIDE PLATE	2-15
2804855-0000	.SIDE PLATE	2-15
2811516-0000	.BRACKET	2-23
2811518-0000	.SHAFT	2-23
2818263-0000	.PROFILE 50X100	4-13
2829393-0100	.BELT BRAKE	2-3, 2-5
2829397-0000	.SHAFT	2-21
2829400-0000	.TOOTHED PULLEY	2-21
2829402-0000	.PLATE	2-23
2829403-0000	.BRACKET	2-49
2829412-0000	.SHAFT	2-33
2829413-0000	.BRACKET	2-33
2829416-0100	.ADJUSTMENT PLATE	2-3, 2-5
2829417-0000	.SHAFT	2-33
2829418-0000	.BRACKET	2-33
2829419-0000	.PLATE	2-33
2829426-0000	.BRACKET	1-43, 11-11
2829430-0100	.FEED SHAFT	1-37
2829431-0100	.CUTTING UNIT	1-3, 1-5
2829432-0100	.CRANK HOUSING	1-7
2829433-0100	.FRAME HOUSING	1-45, 1-47
2829435-0100	.GUIDE CONSOLE	1-3, 1-5
2829436-0100	.CRANK SHAFT	1-3, 1-5
2829438-0100	.ADJUSTMENT BRACKET	1-45, 1-47
2829439-0100	.DRIVE MOTOR	1-7
2829440-0100	.DRIVE MOTOR	1-45, 1-47
2829441-0100	.BELT TIGHTENER	1-45, 1-47
2829442-0100	.GUIDE ARM	1-15
2829443-0100	.FEED WHEEL	1-37
2829450-0000	.BRACKET	1-19
2829489-0000	.SHAFT	1-43
2829491-0000	.PULLEY	1-39
2833867-0000	.PROFILE 50X100	4-13
2833872-0000	.PROFILE 50X50	4-13
2833873-0000	.PROFILE 50X50	4-13
2833876-0000	.PROFILE 50X50	4-13
2835345-0000	.SHAFT	2-21
2835347-0000	.MOTOR BRACKET	2-21
2835348-0000	.BRACKET	2-21
2835350-0000	.ADJUSTING NUT	1-49, 2-21, 2-33
2835351-0000	.ADJUSTING SCREW	1-49, 2-21
2835352-0000	.GABLE PLATE	2-21
2835353-0000	.GABLE PLATE	2-21
2835354-0000	.MOUNTING SHEET	2-21
2835355-0000	.BRACKET	2-21
2835360-0000	.MOUNTING PLATE	2-33
2835361-0000	.PLATE	2-33
2835362-0000	.ADJUSTING SCREW	2-33
2835365-0000	.SHAFT	2-33
2835378-0000	.SHAFT	2-23
2835379-0000	.MOUNTING SHEET	2-21
2835380-0100	.CONVEYOR BODY	2-7
2835381-0100	.CONVEYOR	2-7
2835382-0000	.MOUNTING SHEET	2-23
2835388-0000	.HOLDER	2-17
2835390-0000	.LID	2-23
2835392-0000	.SHAFT	2-21
2837851-0000	.CD BOX	8-9
2839812-0000	.PROFILE 50X50	4-13
2839813-0100	.AIR SUPPLY	6-3
2839815-0100	.GLASS DOOR	5-3, 5-5
2839816-0000	.DOOR	5-25
2839817-0000	.GLASS	5-25
2839818-0000	.STRUT	5-25
2839820-0100	.COVER	5-3, 5-5

Part No	Description	Page No
2839821-0000	.PROTECTIVE COVER	5-7
2840886-0000	.COVER PLATE	5-13
2840887-0000	.GLASS	5-7, 5-17, 5-19
2840888-0100	.COVER	5-3, 5-5
2840889-0000	.PROTECTION PLATE	5-27
2840890-0100	.COVER	5-3, 5-5
2840891-0000	.PROTECTION PLATE	5-29
2840892-0100	.COVER	5-3, 5-5
2840893-0000	.PROTECTIVE COVER	5-9
2843699-0000	.CABLE TRENCH	4-11
2843700-0100	.CABLE DUCT	4-3, 4-5
2843703-0000	.CABLE TRENCH	4-11
2843706-0000	.CABLE TRENCH	4-11
2843708-0000	.CABLE TRENCH	4-11
2844513-0100	.ELECTRICAL MATERIALS	8-19
2844514-0000	.EL-CABINET CHASSIE	8-9
2844515-0100	.ELECTRICAL CABINET	8-3, 8-5
2844516-0000	.MOUNTING PLATE	8-11
2844517-0100	.MOUNTING PLATE	8-3, 8-5
2844518-0100	.EL-CABINET DOOR	8-3, 8-5
2844519-0100	.EL-CABINET DOOR	8-3, 8-5
2845848-0100	.SUPPORT RAIL	2-7
2845853-0000	.FASTENING BRACKET	2-17
2845854-0000	.HOLDER	2-17
2845855-0000	.PIPE	2-17
2845856-0000	.PIPE	2-17
2845857-0000	.PIPE	2-17
2845858-0000	.HOLDER	2-29
2845859-0000	.RACK GEAR	2-23
2845860-0000	.GEAR WHEEL	2-23
2845862-0000	.PIPE	2-17
2845863-0000	.SCALE POINTER	2-33
2846735-0000	.DOOR	8-15
2846736-0000	.DOOR	8-13
2846737-0100	.DOOR	7-3
2846738-0000	.DOOR	7-11
2848823-0000	.BEARING HUB	1-39
2848825-0000	.FRAME	1-53, 1-55
2848826-0000	.BEARING SLEEVE	1-9, 1-61
2848827-0000	.RING	1-39
2848828-0000	.CLAMP BLOCK	1-49
2848829-0000	.PIVOT AXLE	1-49
2848830-0000	.GUIDE RAIL	1-49
2848831-0000	.END WASHER	1-49
2848832-0000	.BEARING PLATE	1-49
2848834-0000	.HOSE HOLDER	1-53, 1-55
2848835-0000	.INSULATING PLATE	1-23
2848840-0000	.SPRING BRACKET	1-25
2848842-0000	.LEAF SPRING	1-25
2848844-0000	.FRAME SECTION	1-9
2848846-0000	.SWITCH BRACKET	1-9
2848849-0000	.GUIDE CONSOLE	1-35
2848852-0000	.GUIDE CONSOLE	1-23
2848854-0000	.GUN HOLDER	1-23
2848855-0000	.GUN HOLDER	1-23
2848856-0000	.INSULATING PLATE	1-23
2848857-0000	.GUIDE ARM	1-23
2848858-0000	.GUIDE ARM	1-23
2850070-0000	.GUIDE	5-7, 5-17
2850074-0000	.BRACKET	5-15
2855106-0000	.COPPER BRAID	8-27, 8-29, 8-31
2856537-0000	.KNIFE	1-43, 11-11
2856539-0000	.SHAFT	1-43
2856540-0000	.AXLE PIN	1-61
2856541-0000	.ECCENTRIC	1-61
2856542-0000	.CLAMPING RING	1-61
2856544-0000	.BRACKET	1-53, 1-55
2856545-0000	.PULLEY	1-61
2856552-0000	.CLAMP	1-33
2856558-0000	.GEAR WHEEL	1-11
2856559-0000	.GEAR WHEEL	1-9
2856560-0000	.CRANK SHAFT	1-9
2856561-0000	.CRANK SHAFT	1-9
2856562-0000	.SPACER SLEEVE	1-9, 1-61
2856565-0000	.PROFILE 50X50	1-17
2858601-0000	.COVER	8-17
2858602-0100	.COVER	8-3, 8-5
2858603-0000	.PLATE	4-13
2858604-0000	.STRUT	8-13, 8-15
2858605-0000	.STRUT	8-15
2859418-0000	.SCALE POINTER	2-23
2859679-0000	.STRUT	8-13
2859680-0000	.PROTECTIVE COVER	7-5
2859681-0100	.CONNECTION BOX	7-3

Part No	Description	Page No
2859682-0000	.COVER	7-5
2860891-0000	.RUBBER GASKET	7-5
2860892-0000	.BRACKET	7-11
2860893-0000	.BRACKET	5-25
2860894-0000	.PNEUMATIC DIAGRAM	6-5
2863493-0000	.FLAG	1-29
2863510-0100	.HOTMELT EQUIPMENT NORDSON	3-3, 3-5
2863512-0000	.NUT	1-35
2863513-0000	.HOLDER	1-35
2863517-0000	.ECCENTRIC	1-29
2863518-0000	.BRACKET	1-31
2864773-0000	.SHAFT	1-41, 11-9
2864774-0000	.PULLEY	1-39
2864776-0100	.HOTMELT EQUIPMENT MISCELLANEOUS	3-3, 3-5
2864777-0000	.COVER	3-11, 3-13
2867565-0000	.PULLEY	2-29
2867568-0100	.PRESSURE ARM	1-7
2870316-0000	.PLATE	8-9
2870317-0000	.PROTECTIVE COVER	8-9
2870318-0000	.PROTECTIVE COVER	8-9
2870319-0000	.FUSE PANEL LABEL	8-15
2870321-0000	.DELIVERED DESIGN	8-15
2870443-0000	.BRACKET	1-13, 11-13
2870444-0000	.SCREW	1-13, 11-13
2870445-0000	.FLANGE BUSHING	1-13
2872298-0100	.TERMINAL	8-19
2872299-0100	.TERMINAL	8-19
2872318-0100	.TERMINAL	8-19
2872319-0100	.TERMINAL	8-19
2872336-0100	.TERMINAL	8-19
2872337-0100	.TERMINAL	8-19
2884589-0100	.TERMINAL	8-19
2884591-0100	.TERMINAL	8-19
2884592-0100	.TERMINAL	8-19
2884593-0100	.TERMINAL	8-19
2884594-0100	.TERMINAL	8-19
2885383-0100	.TUNNEL	5-3, 5-5
2885386-0000	.BRACKET	1-49
2885387-0000	.BRACKET	2-17
2885388-0000	.BRACKET	2-17
2885389-0000	.BRACKET	2-31
2885390-0000	.PLATE	4-13
2885391-0000	.COVER	2-33
2892716-0000	.BRACKET	10-7, 11-5
2892717-0100	.HOTMELT EQUIPMENT NORDSON	3-3, 3-5
2892718-0100	.TERMINAL	7-3
2892719-0100	.TERMINAL	7-3
2893434-0000	.COVER	1-53, 1-55
2893440-0100	.ADJUSTMENT BRACKET	1-45, 1-47
2893441-0000	.PROFILE 50X100	4-13
2893442-0000	.ANGLE BRACKET	1-51
2893443-0000	.SCALE POINTER	1-51
2893444-0000	.ADJUSTMENT BRACKET	1-51
2893445-0000	.SPACER PIECE	1-51
2896524-0100	.TERMINAL	8-19
2901712-0100	.CONVEYOR BODY	2-7
2901713-0000	.SIDE PLATE	2-19
2901714-0000	.SIDE PLATE	2-19
2901715-0000	.BRACKET	2-33
2901716-0000	.BAR	2-33
2901717-0100	.LIGHT FIXTURE	4-3, 4-5
2901718-0100	.RELAY	8-19
2901719-0100	.RELAY	8-19
2901720-0100	.RELAY	8-19
2901721-0000	.BRACKET	2-23
2904764-0000	.BEARING HOUSING	1-29
2904765-0000	.HOUSE	1-29
2904767-0000	.SHAFT	2-37
2904836-0000	.ADJUSTMENT BRACKET	2-39
2904847-0000	.ADJUSTING SCREW	1-51
2904848-0000	.SCALE POINTER	1-51
2904856-0000	.SUPPORT	2-39
2904939-0000	.PROTECTION PLATE	5-11, 5-15
2904940-0000	.BRACKET	5-11, 5-15
2904941-0000	.PLATE	5-15
2904942-0000	.PLATE	5-11
2909945-0000	.SUPPORT	4-11
2909946-0000	.BRACKET	6-5
2909947-0000	.CABLE TRENCH	4-11
2909948-0000	.CABLE TRENCH	4-11
2909949-0000	.CABLE TRENCH	4-11
2909950-0000	.CABLE TRENCH	4-11
2909952-0100	.PHOTOCELL UNIT	10-3, 10-5
2910474-0000	.POST	1-13, 11-13

Part No	Description	Page No
2910475-0000	.BEARING HOUSING	1-9
2910476-0000	.PULLEY	1-57
2913339-0000	.BRACKET	2-23
2913340-0100	.CONNECTOR	4-3, 4-5
2913341-0100	.ELECTRIC MATERIALS	8-3, 8-5
2913342-0100	.LADDERBAND UNIT	1-3, 1-5
2913343-0100	.FRAME	1-3, 1-5
2916011-0000	.GEAR WHEEL	1-29
2916012-0000	.GEAR WHEEL	1-29
2916017-0000	.SPACER SLEEVE	1-29
2916021-0000	.WASHER	1-29
2916022-0000	.SPACER SLEEVE	1-29
2916024-0000	.GEAR WHEEL	1-29
2916036-0000	.GUIDE	1-35
2916039-0000	.SHAFT	1-29
2916047-0000	.SLIDE PLATE	2-37
2923007-0000	.PROFILE	10-13
2923019-0000	.ANGLE	10-13
2923319-0000	.PLATE	10-11
2923320-0000	.BLOCKING PIECE	10-11
2923329-0000	.PLATE	10-13
2923333-0000	.PROFILE	10-11
2923334-0000	.PROFILE	10-11
2923335-0000	.PROFILE	10-13
2923336-0000	.PROFILE	10-13
2923338-0000	.PROFILE	10-13
2923339-0000	.PROFILE	10-13
2923341-0000	.PROFILE	10-13
2923342-0100	.FRAME	10-9
2923343-0100	.FRAME	10-9
2923344-0100	.STRAW MAGAZINE	10-3, 10-5
2923345-0000	.PROFILE	10-11
2923347-0000	.SLIDING STRIP	10-13
2923353-0100	.SPRING HOLDER	1-3, 1-5
2923354-0000	.SPRING HOLDER	1-25
2923358-0000	.GUIDE ARM	1-25
2924673-0100	.WHEEL	2-25
2924674-0100	.DRIVE WHEEL	2-25
2924675-0100	.TOP SUPPORT	2-3, 2-5
2924689-0000	.ARM	1-43
2924690-0000	.LADDER BAND GUIDE	1-43
2924691-0000	.LADDER BAND GUIDE	1-43
2924694-0000	.LADDER BAND GUIDE	1-19
2925995-0000	.DRIVE WHEEL	2-43
2925997-0000	.DRIVE WHEEL	2-45
2925998-0000	.DRIVE BELT	2-43
2926027-0000	.BRACKET	2-37
2926028-0000	.BRACKET	2-37
2926029-0000	.SPACER BLOCK	2-37
2926031-0000	.PROTECTION PLATE	5-17
2926032-0000	.PROTECTION PLATE	5-19
2926048-0000	.AXLE PIN	2-47
2926051-0000	.BRACKET	2-47
2926052-0000	.MOUNTING SHEET	2-47
2926054-0000	.AXLE PIN	2-47
2926056-0000	.LOCATING PIECE	2-47
2926058-0000	.ADJUSTING SCREW	2-41
2926059-0000	.PULLEY	2-47
2926061-0000	.PLATE	2-49
2926062-0000	.BEARING HOLDER	2-49
2926063-0000	.AXLE SUPPORT	2-47
2926066-0000	.ANGLE BRACKET	2-47
2926068-0000	.CROSS BAR	2-47
2926070-0100	.PACKAGE TRANSFER	2-3, 2-5
2926071-0000	.COVER DISC	2-47
2926075-0100	.ADJUSTMENT PLATE	2-3, 2-5
2926082-0000	.DRIVE WHEEL	2-43
2929771-0100	.SQUEEZER	1-3, 1-5
2929773-0100	.FEED WHEEL UNIT	1-3, 1-5
2929774-0100	.HEIGHT ADJUSTMENT	2-3, 2-5
2933942-0000	.WASHER	2-43, 2-45
2933948-0000	.RUNNER ROD	2-49
2933956-0000	.SPACER BLOCK	2-45
2933958-0000	.TIMING BELT PULLEY	2-37, 2-45
2933962-0000	.PROFILE 50X100	2-39
2933963-0000	.SLIDE RAIL	2-39
2933964-0000	.BRACKET	2-37
2933965-0100	.DRIVE AND END UNIT	2-35
2933966-0000	.BRACKET	2-37
2933969-0000	.BRACKET	2-37
2933970-0100	.CONVEYOR BODY	2-35
2933971-0000	.PULLEY	2-47
2933972-0000	.PULLEY	2-47
2933973-0000	.DRIVE BELT	2-47

Part No	Description	Page No
2933974-0000	.BELT	2-47
2933976-0000	.CYLINDER BRACKET	2-49
2933977-0000	.CYLINDER BRACKET	2-49
2933978-0000	.STOP LUG	2-49
2933979-0000	.LOCATING PIECE	2-47
2933980-0100	.CONVEYOR	2-3, 2-5
2933986-0000	.SCREW HOLDER	2-41
2933990-0100	.ADJUSTER	2-35
2934000-0100	.SQUEEZER	1-3, 1-5
2934005-0000	.THRUST WASHER	2-41
2934006-0000	.TOOTHED PULLEY	2-41
2934009-0000	.BRACKET	2-47
2934010-0100	.TUNNEL	5-3, 5-5
2934013-0000	.PULLEY	2-37
2934016-0000	.SLIDE RAIL	2-47
2934020-0100	.TUNNEL	5-3, 5-5
2934021-0000	.STEERING	2-47
2934023-0000	.PROTECTION PLATE	5-21
2934025-0000	.PROTECTION PLATE	5-23
2934027-0000	.PULLEY	2-47
2934028-0000	.COVER	1-29
2934029-0000	.BRACKET	1-31
2935826-0000	.BRACKET	1-17
2935827-0000	.PIPE	1-17, 5-7
2935828-0000	.SHAFT	1-17, 5-7
2935833-0000	.SHAFT	1-19, 1-33
2935834-0000	.END SECTION	1-17, 1-19, 5-7
2935835-0000	.PIPE	1-19
2937123-0000	.EARTH WIRE	7-11
2937211-0000	.PIPE	1-19, 1-33
2937212-0000	.END SECTION	1-19, 1-33
2937215-0000	.BRACKET	1-19, 1-33
2937216-0000	.BRACKET	1-19
2937218-0000	.BRACKET	1-19
2937220-0100	.LADDER BAND GUIDE	1-15
2937223-0000	.SPRING HOLDER	1-21
2937532-0000	.BRACKET	8-9
2939672-0000	.SHAFT	1-31
2939673-0000	.COVER	1-31
2939674-0000	.BRACKET	1-31
2939675-0000	.BRACKET	1-31
2939676-0000	.SHAFT	1-29
2939677-0000	.SHAFT	1-29
2939678-0000	.BRACKET	1-31
2939679-0000	.ECCENTRIC	1-29
2939684-0000	.TAPE	5-25
2939685-0000	.TAPE	7-11
2939686-0000	.TAPE	8-13, 8-15
2939687-0000	.TAPE	8-9
2939688-0000	.TAPE	5-7, 5-9, 5-17, 5-19
2939706-0000	.SPRING BRACKET	1-21
2939707-0000	.SPACER PLATE	1-19
2939708-0100	.INDUCTIVE SWITCH	1-15
2939713-0000	.GUIDE CONSOLE	1-23
2940710-0000	.ROLLER BRACKET	5-7
2941199-0100	.COVER	5-3, 5-5
2941711-0000	.SLIDE SHEET	2-27
2941712-0000	.PULLEY	2-31
2941713-0000	.BRACKET	2-33
2941714-0000	.GUIDE ARM	1-25
2941716-0100	.MAIN PIPE	6-3
2943553-0100	.PHOTOCELL UNIT	11-3
2946135-0100	.SPLICING TABLE	10-9
2946136-0000	.HOLDER	10-15
2946137-0000	.PLATE	10-15
2946138-0000	.PLATE	10-15
2946141-0000	.PRESSURE PLATE	10-15
2946142-0000	.SHAFT	10-15
2946144-0000	.CANTILEVER	10-15
2946720-0100	.GUIDE	10-9
2946721-0000	.CANTILEVER	10-17
2946722-0000	.PLATE	10-15, 10-19
2946723-0100	.TUNNEL	5-3, 5-5
2946724-0100	.HOLDER	10-9
2946725-0000	.CANTILEVER	10-19
2946726-0000	.BRACKET	4-11
2946727-0000	.FORK	4-13
2946729-0000	.POINTER	1-49
2946730-0000	.PLATE	1-9
2946738-0000	.PROFILE	10-11
2946739-0000	.PROFILE	10-11
2946740-0000	.PROFILE	10-13
2946850-0000	.ARM	1-13
2946852-0000	.ARM	1-13

Part No	Description	Page No
2946853-0000	.ARM	1-13
2946854-0000	.ARM	1-13
2946855-0000	.ARM	1-13
2946856-0000	.ARM	1-13
2946865-0000	.COUNTERWEIGHT	1-43
2948161-0000	.BRACKET	2-39
2948162-0000	.PROTECTION PLATE	2-39
2948167-0000	.LADDER BAND GUIDE	1-33
2948168-0000	.BRACKET	1-33
2948169-0000	.BRACKET	1-33
2948170-0100	.LADDER BAND GUIDE	1-3, 1-5
2948173-0000	.SHAFT	1-33
2948179-0000	.TOP SECTION	1-33
2948232-0000	.BRACKET	4-7
2948234-0000	.GUIDE CONSOLE	1-35
2948240-0100	.GUIDE ARM	4-3, 4-5
2948250-0100	.PRESSURE UNIT	1-27
2948255-0100	.LOCK HOLDER	1-27
2950966-0000	.LID	1-59
2950967-0000	.SHAFT	1-61
2950968-0000	.FLANGE	1-41, 11-9
2950969-0000	.SHAFT	1-39
2950971-0000	.FLANGE	1-41, 11-9
2950979-0000	.SPACER	1-21
2954506-0000	.COPPER BRAID	8-33
2954533-0100	.CABLE SET	8-19
2956887-0000	.BRACKET	2-31
2957679-0000	.FASTENING BRACKET	2-39
2957680-0100	.CONVEYOR	2-35
2957682-0000	.FORK	1-29
2957685-0000	.BEARING CONSOLE	2-43
2957686-0000	.SHAFT	2-43
2957687-0000	.SUPPORT ROD	2-43
2957690-0100	.BELT CONVEYOR, INFEED	2-35
2957691-0000	.SUPPORT ROLLER	2-43
2957692-0000	.SUPPORT ROLLER	2-43
2957695-0000	.BRACKET	2-45
2957696-0000	.BRACKET	2-45
2957698-0000	.CONNECTION LINK	2-51
2957699-0000	.LINK ATTACHMENT	2-51
2957700-0100	.GUIDE CONSOLE	1-3, 1-5
2957701-0000	.DRIVE WHEEL	2-43
2957702-0000	.DRIVE WHEEL	2-43
2957703-0000	.LEVER BAR	2-51
2957704-0000	.PROTECTIVE CASING	2-43
2957705-0100	.SIDE ADJUSTER	2-3, 2-5
2957707-0000	.PROTECTIVE CASING	2-43
2957709-0000	.SHAFT	2-45
2957710-0100	.COVERING PANEL	5-3, 5-5
2957711-0000	.RULING GUIDE	2-43
2957712-0000	.DRIVE BELT	2-43
2957713-0000	.BRACKET	2-37
2957714-0000	.SPACER ELEMENT	2-43
2957715-0000	.GUIDE LUG	2-43
2957718-0000	.SPACER PIN	2-43
2957719-0000	.BRACKET	2-37
2957720-0100	.COVERING PANEL	5-3, 5-5
2957721-0000	.BRACKET	4-9
2957724-0000	.TOOTHED WHEEL	1-33
2957725-0000	.PHOTOCELL BRACKET	1-33
2957726-0000	.TOOTHED WHEEL	1-33
2957727-0000	.SLIDE RAIL	2-47
2957728-0000	.PHOTOCELL BRACKET	2-43
2957729-0000	.SPACER PIN	2-43
2957733-0000	.FEED WHEEL	1-41
2957734-0000	.FEED WHEEL	1-41
2957735-0000	.FEED WHEEL	1-41
2957737-0000	.FEED WHEEL	1-41
2957738-0000	.FEED WHEEL	1-41
2957739-0000	.SPACER SLEEVE	5-21
2957740-0100	.BRACKET	4-3, 4-5
2957745-0000	.PNEUMATIC DIAGRAM	6-5
2957761-0000	.DRIVE WHEEL	2-43
2957762-0000	.DRIVE WHEEL	2-43
2957764-0000	.SIDE PLATE	2-43
2957766-0000	.SIDE PLATE	2-43
2957767-0000	.BALL BEARING	2-43
2957768-0000	.DRIVE BELT	2-43
2957769-0000	.DRIVE WHEEL	2-43
2957772-0000	.PROTECTION	2-43
2957773-0000	.PROTECTION PLATE	2-43
2957779-0100	.TOOLS AND TEMPLATES	10-3, 10-5
2958129-0000	.LABEL CD	9-5
2958130-0001	.SOFTWARE CD	9-3

Part No	Description	Page No
2958133-1001	.PLC PROGRAM CODE	9-5
2958134-1001	.HMI PROGRAM CODE	9-5
2958135-1001	.PLMS NRG CONFIG FILE	9-5
2958136-1001	.SAFETY PLC SOFTWARE	9-5
2958137-1001	.DEVICE NET CONFIG FILE	9-5
2958138-1001	.EDS FILE	9-5
2958139-1001	.FIRMWARE	9-5
2958719-0000	.PROFILE	10-13
2958794-0100	.DOCUMENT	9-3
2959331-0000	.SHAFT	1-19
2959332-0000	.AXLE BOLT	1-39
2959333-0000	.FEED WHEEL	1-41
2959334-0000	.FEED WHEEL	1-41
2959335-0000	.FEED WHEEL	1-41
2959336-0000	.FEED WHEEL	1-41
2959337-0000	.FEED WHEEL	1-41
2959338-0000	.FEED WHEEL	1-41
2959339-0000	.FEED WHEEL	1-41
2959340-0000	.FEED WHEEL	1-41
2959341-0000	.FEED WHEEL	1-41
2959850-0000	.PLATE	10-15
2959983-0000	.SETTING TEMPLATE	10-21
2960583-0100	.QUICK CHANGE	11-3
2960584-0100	.FEED WHEEL	11-7
2960585-0100	.CUTTING UNIT	11-7
2960586-0100	.PRESSURE ARM	11-7
2982592-0000	.DRIVE ROLLER	2-43
2982594-0000	.DRIVE ROLLER	2-43
2982599-0000	.PROTECTIVE CASING	2-47
2982612-0000	.SPACER ELEMENT	5-23
2982617-0000	.STUD BOLT	5-23
2982626-0000	.DRIVE BELT	2-43
2982627-0000	.ADJUSTING SCREW	2-41
2992447-0000	.SPACER RING	2-37, 2-45
2992448-0000	.SPACER RING	2-37, 2-45
2992449-0000	.CABLE WITH CONNECTOR	8-33

Tetra Pak

SPC
Spare Parts Catalogue

Pos	Part No	Description	Page No
A			
A08A2010	90600-0980	OPERATOR PANEL 15"+, 2711P-T15C4D2-TP	7-11
A08A2010	2958134-1001	HMI PROGRAM CODE	9-5
B			
A01B2010	90458-2730	PRESSURE SENS. SDE1-D10-G2-R18-C-P1-M8	6-5
P30B2010	90600-3004	INCREMENTAL ENC., DGS60-A1A10000,1032277	2-31
V10B2020	90459-7273	PHOTOCELL E3Z-T81C-G0SR D-CN	11-5
V10B2022	90459-7274	PHOTOCELL E3Z-T81C-G0SR L-CN	11-5
V30B2022	90459-2409	INDUCTIVE SWITCH IN-3002-BPKG/AS	1-31
V30B2080	90459-2409	INDUCTIVE SWITCH IN-3002-BPKG/AS	1-33
V30B2090	90458-0590	PROX.SENSOR IM12-04BPS-ZC1	1-25
V30B2120	90459-2409	INDUCTIVE SWITCH IN-3002-BPKG/AS	1-31
V40B2030	90459-7273	PHOTOCELL E3Z-T81C-G0SR D-CN	10-7
V40B2032	90459-7274	PHOTOCELL E3Z-T81C-G0SR L-CN	10-7
V40B2040	90459-7273	PHOTOCELL E3Z-T81C-G0SR D-CN	10-7
V40B2042	90459-7274	PHOTOCELL E3Z-T81C-G0SR L-CN	10-7
V40B2060	90459-2392	PROX.SENSOR SMT-C1-PS-24V-K0,3-M8-SA	2-33
V40B2060	90459-2409	INDUCTIVE SWITCH IN-3002-BPKG/AS	2-49
V40B2070	90459-7273	PHOTOCELL E3Z-T81C-G0SR D-CN	10-7
V40B2072	90459-7274	PHOTOCELL E3Z-T81C-G0SR L-CN	10-7
V40B2100	90459-7273	PHOTOCELL E3Z-T81C-G0SR D-CN	2-43
V40B2102	90459-7274	PHOTOCELL E3Z-T81C-G0SR L-CN	2-43
V90B2050	90459-7273	PHOTOCELL E3Z-T81C-G0SR D-CN	2-37, 10-7
V90B2052	90459-7274	PHOTOCELL E3Z-T81C-G0SR L-CN	2-37, 10-7
W30B2012	90459-2409	INDUCTIVE SWITCH IN-3002-BPKG/AS	1-53, 1-55
W30B2014	90459-7273	PHOTOCELL E3Z-T81C-G0SR D-CN	2-29, 2-47
W30B2016	90459-7274	PHOTOCELL E3Z-T81C-G0SR L-CN	2-29, 2-47
W30B2022	90459-2409	INDUCTIVE SWITCH IN-3002-BPKG/AS	1-9
W30B2080	90459-2409	INDUCTIVE SWITCH IN-3002-BPKG/AS	1-21
E			
E01E1020	90164-0015	LIGHT FIXTURE, RL70CV-111 / 230V 50HZ	4-17
F			
A01F0001	90082-0013	OVER VOLT. PROTECT. PU 4C-R 230 VAC	8-27, 8-29, 8-31
A01F1010	354000-0020	MINIATURE CIRCUIT BREAKER, FAZ-C2/1	8-27, 8-29, 8-31
A01F1020	354000-0100	MINIATURE CIRCUIT BREAKER, FAZ-C10/1	8-27, 8-29, 8-31
A01F1022	90459-5811	RESIDUAL CURRENT DEVICE, FI-25/2/003-A	8-27, 8-29, 8-31
A01F1030	354000-0040	MINIATURE CIRCUIT BREAKER, FAZ-C4/1	8-27, 8-29, 8-31
A01F2010	354000-0020	MINIATURE CIRCUIT BREAKER, FAZ-C2/1	8-27, 8-29, 8-31
A01F2012	354000-0020	MINIATURE CIRCUIT BREAKER, FAZ-C2/1	8-27, 8-29, 8-31
A03F1010	354000-0060	MINIATURE CIRCUIT BREAKER, FAZ-C6/1	8-27, 8-29, 8-31
A07F1011	354000-0020	MINIATURE CIRCUIT BREAKER, FAZ-C2/1	8-27, 8-29, 8-31
A07F1021	354000-0020	MINIATURE CIRCUIT BREAKER, FAZ-C2/1	8-27, 8-29, 8-31
A07F2011	354000-0030	MINIATURE CIRCUIT BREAKER, FAZ-C3/1	8-27, 8-29, 8-31
A08F1010	354000-0060	MINIATURE CIRCUIT BREAKER, FAZ-C6/1	8-27, 8-29, 8-31
A08F2010	354001-0040	MINIATURE CIRCUIT BREAKER, FAZ-C4/2	8-27, 8-29, 8-31
A30F1010	354002-0100	MINIATURE CIRCUIT BREAKER, FAZ-C10/3	8-27, 8-29, 8-31
A30F1020	354000-0040	MINIATURE CIRCUIT BREAKER, FAZ-C4/1	8-27, 8-29, 8-31
E01F1013	354000-0100	MINIATURE CIRCUIT BREAKER, FAZ-C10/1	8-27, 8-29, 8-31
E01F1020	354000-0020	MINIATURE CIRCUIT BREAKER, FAZ-C2/1	8-27, 8-29, 8-31
F09F2010	90459-6692	SAFETY PLC, PLUTO B20 20-070-06	8-27, 8-29, 8-31
F09F2010	2958136-1001	SAFETY PLC SOFTWARE	9-5
F09F2012	90459-4891	PROGR. IDENTIFIER ID-FIX RW, 20-070-21	8-27, 8-29, 8-31
F09F2014	90459-2291	SAFETY TIME RELAY, E1T-0.5S-24VDC	8-27, 8-29, 8-31
F09F2020	90458-1651	EMERGENCY STOP, ZB4-BS-844 ZB4-BZ-104	7-11
F09F2022	90458-1651	EMERGENCY STOP, ZB4-BS-844 ZB4-BZ-104	8-15
F09F2026	90459-6961	SAFETY SENSOR, NON CONT. ADAM-E M12 0,5M	7-11
F09F2028	90459-4089	SAFETY SENSOR NON-CONTACT EVA E	5-25
P50F1011	354000-0100	MINIATURE CIRCUIT BREAKER, FAZ-C10/1	8-27, 8-29, 8-31
V30F1030	354001-0100	MINIATURE CIRCUIT BREAKER, FAZ-C10/2	8-27, 8-29, 8-31
V50F1015	354000-0060	MINIATURE CIRCUIT BREAKER, FAZ-C6/1	8-27, 8-29, 8-31
W10F1010	354000-0160	MINIATURE CIRCUIT BREAKER, FAZ-C16/1	8-27, 8-29, 8-31
W40F1010	354000-0160	MINIATURE CIRCUIT BREAKER, FAZ-C16/1	8-27, 8-29, 8-31
W40F1020	354000-0100	MINIATURE CIRCUIT BREAKER, FAZ-C10/1	8-27, 8-29, 8-31
W40F1030	354000-0160	MINIATURE CIRCUIT BREAKER, FAZ-C16/1	8-27, 8-29, 8-31
W40F1032	90459-5323	OVERLOAD PROTECTION, PKZM0-1	8-27, 8-29, 8-31
W40F1034	90459-5323	OVERLOAD PROTECTION, PKZM0-1	8-27, 8-29, 8-31
W90F1010	354000-0160	MINIATURE CIRCUIT BREAKER, FAZ-C16/1	8-27, 8-29, 8-31
K			
A01K0001	90024-0036	FEED THROUGH FILTER, 52-160-002	8-27, 8-29, 8-31
A01K1030	2901720-0100	RELAY	8-19
A01K2010	90458-2837	PLUG SOCKET, KMEB-1-24-5-LED	6-5
A03K1010	90459-1359	FILTER 1 A, 250 VAC, FN 332-1/05	8-27, 8-29, 8-31
A03K2010	90600-1345	PROCESSOR L43, SERIES A, 1768-L43/A	8-27, 8-29, 8-31
A03K2010	2958133-1001	PLC PROGRAM CODE	9-5
A03K2012	90600-1349	SERCOS MOTION MODULE 4-AXIS, 1768-M04SE/	8-27, 8-29, 8-31
A03K2014	90600-1348	ETHERNET /IP BRIDGE MODULE, 1768-ENBT/A	8-27, 8-29, 8-31
A03K2016	90459-6553	PLC DSI /MODBUS COMMUN. MOD., 1769-SM2/A	8-27, 8-29, 8-31
A03K2018	90459-2473	DIG INP. MOD.16 PTS FAST,1769-IQ16F SERA	8-27, 8-29, 8-31
A03K2020	90459-2473	DIG INP. MOD.16 PTS FAST,1769-IQ16F SERA	8-27, 8-29, 8-31
A03K2022	90459-2476	DIGIT. OUT. MOD. 16 P ESCP, 1769-OB16P	8-27, 8-29, 8-31
A03K2024	90459-2476	DIGIT. OUT. MOD. 16 P ESCP, 1769-OB16P	8-27, 8-29, 8-31
A03K2028	90459-2491	PLC RIGHT END CAP/TERMINATOR, 1769-ECR	8-27, 8-29, 8-31
A03K2029	90459-2483	DEVICENET SCANNER, 1769-SDN SERIES B	8-27, 8-29, 8-31

Pos	Part No	Description	Page No
K			
A03K2029	2958137-1001	DEVICE NET CONFIG FILE	9-5
A03K2031	90458-1141	FERRITE, RI-16-28-9	8-27, 8-29, 8-31
A03K2110	90600-1847	ETHERNET SWITCH, FL SWITCH SFN 5TX	8-27, 8-29, 8-31
A03K2121	90459-4235	SNP TO DF1 GATEWAY, 0220 1166 01 REV B	8-27, 8-29, 8-31
A07K2021	90031-0070	CPU313, INTEGRATED IN 5-SLOT BASEPLATE	8-27, 8-29, 8-31
A07K2021	1591675-1001	PLC PROGRAM CODE	9-5
A07K2023	90031-0078	GENIUS BUS CONTROLLER	8-27, 8-29, 8-31
A07K2025	90459-4234	DEVICENET SLAVE MODULE	8-27, 8-29, 8-31
A07K2027	90458-1141	FERRITE, RI-16-28-9	8-27, 8-29, 8-31
E01K1013	2901718-0100	RELAY	8-19
E01K1020	2901719-0100	RELAY	8-19
K10K2099	90119-0108	RELAY OMRON G2R-2-SNI-24DC	8-53
K90K2098	90119-0108	RELAY OMRON G2R-2-SNI-24DC	8-53
V30K2010	90459-6475	HOT MELT GUN, SOLIDBLUE A #8505768	3-9
V30K2010	90600-2959	HOT MELT GUN REV. A10, #1071632	3-7
V30K2012	90600-2959	HOT MELT GUN REV. A10, #1071632	3-7
W10K1010	90458-1140	FERRITE, RI-26-28-13	8-27, 8-29, 8-31
W10K1012	90458-1140	FERRITE, RI-26-28-13	8-27, 8-29, 8-31
W30K2010	90458-1140	FERRITE, RI-26-28-13	8-27, 8-29, 8-31
W30K2012	90458-1141	FERRITE, RI-16-28-9	8-27, 8-29, 8-31
W30K2020	90458-1140	FERRITE, RI-26-28-13	8-27, 8-29, 8-31
W30K2022	90458-1141	FERRITE, RI-16-28-9	8-27, 8-29, 8-31
W40K1010	90458-1140	FERRITE, RI-26-28-13	8-27, 8-29, 8-31
W40K1012	90458-1140	FERRITE, RI-26-28-13	8-27, 8-29, 8-31
W40K1020	90458-1140	FERRITE, RI-26-28-13	8-27, 8-29, 8-31
W40K1022	90458-1140	FERRITE, RI-26-28-13	8-27, 8-29, 8-31
W40K1030	90458-1140	FERRITE, RI-26-28-13	8-27, 8-29, 8-31
W40K1032	90458-1140	FERRITE, RI-26-28-13	8-27, 8-29, 8-31
W90K1010	90458-1140	FERRITE, RI-26-28-13	8-27, 8-29, 8-31
W90K1012	90458-1140	FERRITE, RI-26-28-13	8-27, 8-29, 8-31
M			
M001	90264-0032	FAN, 4656N+LZ30+LZ 120,220V 50HZ	7-7
E01M1010	90459-5877	FILTER FAN SK 3325.107	8-13
V40M3060	90459-6273	DOUBLE ACTING, PROFILE,CYL 32-80	2-33
W30M1010	90459-2579	SERVO MOTOR MPL-B320P-SJ22AA	1-57
W30M1020	90459-2579	SERVO MOTOR MPL-B320P-SJ22AA	1-11, 1-29
W40M1010	90600-5064	GEARS, WORM MOTOR WA 20 DT71 D4	2-37
W40M1020	90600-3210	GEARS, WORM MOTOR D9582/SC401-H/1600117	2-31
P			
A01P2010	90178-0007	HOUR COUNTER, BG 40,17-1 12-48VDC	8-27, 8-29, 8-31
Q			
A01Q0001	90111-0132	MAIN SWITCH P1-25/EA/SVB-SW/N/HI11/H-P14	8-27, 8-29, 8-31
A01Q1010	90459-5440	CONTACTOR 4KW 24VDC, DILM9-01	8-27, 8-29, 8-31
A30Q1010	90459-5441	CONTACTOR 7,5KW 24VDC, DILM17-01	8-27, 8-29, 8-31
A40Q1010	90459-5440	CONTACTOR 4KW 24VDC, DILM9-01	8-27, 8-29, 8-31
F09Q1010	90459-5441	CONTACTOR 7,5KW 24VDC, DILM17-01	8-27, 8-29, 8-31
V30Q1030	90459-5440	CONTACTOR 4KW 24VDC, DILM9-01	8-27, 8-29, 8-31
R			
W10R2010	90459-1297	RESISTANCE FIXED, 120 OHM, 0,25 W	8-27, 8-29, 8-31
W40R2030	90459-1297	RESISTANCE FIXED, 120 OHM, 0,25 W	8-27, 8-29, 8-31
W90R2010	90459-1297	RESISTANCE FIXED, 120 OHM, 0,25 W	8-27, 8-29, 8-31
S			
A08S2010	90064-0082	PUSH BUTTON, WHITE	7-11
A08S2012	90064-0082	PUSH BUTTON, WHITE	7-11
A08S2014	90064-0082	PUSH BUTTON, WHITE	7-11
T			
A01T1010	90459-4245	POWER SUPPLY UNIT 230VAC/24VDC 3,75A	8-27, 8-29, 8-31
A03T1010	90600-1347	POWER SUPPLY 120/240 VAC, 1768-PA3/A	8-27, 8-29, 8-31
A07T1011	90459-4245	POWER SUPPLY UNIT 230VAC/24VDC 3,75A	8-27, 8-29, 8-31
A07T1021	90031-0068	PLC, POWER SUPPLY	8-27, 8-29, 8-31
A08T1010	90459-4245	POWER SUPPLY UNIT 230VAC/24VDC 3,75A	8-27, 8-29, 8-31
W10T1010	90459-3450	VARIABLE FREQUENCY DRIVE 22A-A4P5N104	8-27, 8-29, 8-31
W30T1010	90459-7210	AXIS MOD. W. INTEG. PS,2094-BC01-M01-S/A	8-27, 8-29, 8-31
W30T1020	90459-7214	AXIS MODULE 650V, 6,1A, 2094-BM01-S	8-27, 8-29, 8-31
W40T1010	90459-3450	VARIABLE FREQUENCY DRIVE 22A-A4P5N104	8-27, 8-29, 8-31
W40T1020	90459-3449	VARIABLE FREQUENCY DRIVE 22A-A2P3N104	8-27, 8-29, 8-31
W40T1030	90459-3450	VARIABLE FREQUENCY DRIVE 22A-A4P5N104	8-27, 8-29, 8-31
W90T1010	90459-3450	VARIABLE FREQUENCY DRIVE 22A-A4P5N104	8-27, 8-29, 8-31
V			
A01V0001	90024-0049	FILTER 16 A 400 VAC, FN 356-16/29	8-27, 8-29, 8-31
A30V1010	90459-2549	AC LINE FILTER 3-PHASE 30A, 2090-XXLF-X3	8-27, 8-29, 8-31
A30V1020	90459-3931	LINE FILTER, 3EP1, 3A 120/250 VAC	8-27, 8-29, 8-31
V30V1030	90459-1991	HOT MELT UNIT, #1022230	3-7
V30V3010	90459-1991	HOT MELT UNIT, #1022230	3-9
W10V1010	90459-3460	FOOTPRINT FILTER 22-RF010-AL	8-27, 8-29, 8-31
W40V1010	90459-3460	FOOTPRINT FILTER 22-RF010-AL	8-27, 8-29, 8-31
W40V1020	90459-3460	FOOTPRINT FILTER 22-RF010-AL	8-27, 8-29, 8-31
W40V1030	90459-3460	FOOTPRINT FILTER 22-RF010-AL	8-27, 8-29, 8-31
W90V1010	90459-3460	FOOTPRINT FILTER 22-RF010-AL	8-27, 8-29, 8-31
W			
A01W1999	2954506-0000	COPPER BRAID	8-33
A01W2010	351303-0050	ACTUATOR/SENSOR CABLE RKMVN 3-224/5M	8-33

Pos	Part No	Description	Page No
W			
A01W2012	90458-2837	PLUG SOCKET, KMEB-1-24-5-LED	8-33
A01W2014	351150-0405	CABLE OLFLEX 5X0,75 MM2 LIGHT/GREY	8-33
A03W2012	351501-0010	ETHERNET PATCH CABLE, FL CAT5 PATCH 1,0	8-27, 8-29, 8-31
A03W2016	2855106-0000	COPPER BRAID	8-27, 8-29, 8-31
A03W2020	90220-0183	SCR. CABLE 2X0,34MM2	8-27, 8-29, 8-31
A03W2022	90220-0183	SCR. CABLE 2X0,34MM2	8-27, 8-29, 8-31
A03W2024	90220-0183	SCR. CABLE 2X0,34MM2	8-27, 8-29, 8-31
A03W2026	90220-0183	SCR. CABLE 2X0,34MM2	8-27, 8-29, 8-31
A03W2028	90220-0183	SCR. CABLE 2X0,34MM2	8-27, 8-29, 8-31
A03W2029	578874-0000	HF BRAIDED WIRE 1,6 MM2	8-27, 8-29, 8-31
A03W2121	90600-0850	CABLE, SNP-DF1 GATEWAY	8-27, 8-29, 8-31
A07W1021	1368508-0101	WIRE	8-19
A07W2025	90459-2530	DEVICENET CABLE THIN	8-27, 8-29, 8-31
A08W2010	351150-0431	CABLE OLFLEX 2X0,75 MM2 LIGHT/GREY	8-33
A08W2012	351150-0424	CABLE OLFLEX 18X0,75 MM2 LIGHT/GREY	8-33
A08W2020	351501-0050	ETHERNET PATCH CABLE, FL CAT5 PATCH 5,0	8-33
A10W2099	351150-0405	CABLE OLFLEX 5X0,75 MM2 LIGHT/GREY	8-33
A30W1010	90459-5189	SLIM POW. RAIL, KINETIX, 2 AX, 2094-PRS2	8-27, 8-29, 8-31
A90W9901	2992449-0000	CABLE WITH CONNECTOR	8-33
E01W1013	351150-0415	CABLE OLFLEX 7X1,5 MM2 LIGHT/GREY	8-27, 8-29, 8-31
E01W1015	351150-0431	CABLE OLFLEX 2X0,75 MM2 LIGHT/GREY	8-27, 8-29, 8-31
E01W1017	351150-0431	CABLE OLFLEX 2X0,75 MM2 LIGHT/GREY	8-27, 8-29, 8-31
E01W1020	351150-0412	CABLE OLFLEX 3X1,5 MM2 LIGHT/GREY	8-33
E08W1010	351150-0403	CABLE OLFLEX 3X0,75 MM2 LIGHT/GREY	8-33
F09W2026	90459-4252	CABLE M12-C101, 20-056-10	8-33
P30W2010	90459-6604	CABLE, SICK DOL-2312-G 05MMA3	8-33
P50W1011	351150-0412	CABLE OLFLEX 3X1,5 MM2 LIGHT/GREY	8-33
P50W2011	351150-0406	CABLE OLFLEX 7X0,75 MM2 LIGHT/GREY	8-33
V10W2020	351309-0100	ACTUATOR/SENSOR CABLE PRKT 4-07/10M	8-33
V10W2022	90459-6586	ACT/SENS.Y-CABLE, ASBN 2-PRKMV 4-07/0,6M	8-33
V30W1030	351150-0413	CABLE OLFLEX 4GX1,5 MM2 LIGHT/GREY	8-33
V30W2010	351150-0403	CABLE OLFLEX 3X0,75 MM2 LIGHT/GREY	8-33
V30W2012	351150-0403	CABLE OLFLEX 3X0,75 MM2 LIGHT/GREY	8-33
V30W2030	351150-0404	CABLE OLFLEX 4X0,75 MM2 LIGHT/GREY	8-33
V30W2080	351303-0050	ACTUATOR/SENSOR CABLE RKMVN 3-224/5M	8-33
V30W2080	351304-0050	ACTUATOR/SENSOR CABLE RKMWVN 3-224/5M	8-33
V30W2090	351309-0050	'ACTUATOR/SENSOR CABLE PRKT 4-07/5M	8-33
V30W2120	351303-0050	ACTUATOR/SENSOR CABLE RKMVN 3-224/5M	8-33
V40W2030	351309-0100	ACTUATOR/SENSOR CABLE PRKT 4-07/10M	8-33
V40W2032	90459-6586	ACT/SENS.Y-CABLE, ASBN 2-PRKMV 4-07/0,6M	8-33
V40W2040	351309-0100	ACTUATOR/SENSOR CABLE PRKT 4-07/10M	8-33
V40W2042	90459-6586	ACT/SENS.Y-CABLE, ASBN 2-PRKMV 4-07/0,6M	8-33
V40W2060	351303-0050	ACTUATOR/SENSOR CABLE RKMVN 3-224/5M	8-33
V40W2070	351309-0100	ACTUATOR/SENSOR CABLE PRKT 4-07/10M	8-33
V40W2072	90459-6586	ACT/SENS.Y-CABLE, ASBN 2-PRKMV 4-07/0,6M	8-33
V40W2100	351309-0100	ACTUATOR/SENSOR CABLE PRKT 4-07/10M	8-33
V40W2102	90459-6586	ACT/SENS.Y-CABLE, ASBN 2-PRKMV 4-07/0,6M	8-33
V50W1015	351150-0412	CABLE OLFLEX 3X1,5 MM2 LIGHT/GREY	8-33
V90W2050	351309-0100	ACTUATOR/SENSOR CABLE PRKT 4-07/10M	8-33
V90W2052	90459-6586	ACT/SENS.Y-CABLE, ASBN 2-PRKMV 4-07/0,6M	8-33
W10W1010	90220-0104	SCR. CABLE 4X1,5MM2	8-33
W30W1010	90600-3295	MOTOR CABLE 16 AWG 2090-XXNPMP-16S03	8-33
W30W1020	90600-3295	MOTOR CABLE 16 AWG 2090-XXNPMP-16S03	8-33
W30W2010	90600-3296	MOTOR FEEDBACK CABLE 2090-UXNFBMP-S03/C	8-33
W30W2012	351304-0050	ACTUATOR/SENSOR CABLE RKMWVN 3-224/5M	8-33
W30W2014	351309-0050	'ACTUATOR/SENSOR CABLE PRKT 4-07/5M	8-33
W30W2016	90459-6586	ACT/SENS.Y-CABLE, ASBN 2-PRKMV 4-07/0,6M	8-33
W30W2018	90459-2540	SERCOS CABLE 3.0M, 2090-SCEP3-0	8-27, 8-29, 8-31
W30W2020	90600-3296	MOTOR FEEDBACK CABLE 2090-UXNFBMP-S03/C	8-33
W30W2022	351303-0050	ACTUATOR/SENSOR CABLE RKMVN 3-224/5M	8-33
W30W2022	351304-0050	ACTUATOR/SENSOR CABLE RKMWVN 3-224/5M	8-33
W30W2024	90459-2536	SERCOS CABLE 0.1M, 2090-SCEP0-1	8-27, 8-29, 8-31
W30W2026	90459-2540	SERCOS CABLE 3.0M, 2090-SCEP3-0	8-27, 8-29, 8-31
W40W1010	90220-0104	SCR. CABLE 4X1,5MM2	8-33
W40W1020	90220-0104	SCR. CABLE 4X1,5MM2	8-33
W40W1032	90220-0104	SCR. CABLE 4X1,5MM2	8-33
W40W1032	90600-3210	GEARS, WORM MOTOR D9582/SC401-H/1600117	2-21
W40W1034	90220-0104	SCR. CABLE 4X1,5MM2	8-33
W90W1010	90220-0104	SCR. CABLE 4X1,5MM2	8-33
X			
A01X0001	2884592-0100	TERMINAL	8-19
A01X1000	2896524-0100	TERMINAL	8-19
A01X1003	2884594-0100	TERMINAL	8-19
A01X1020	90459-3845	POWER SOCKET, Z-SD230	8-27, 8-29, 8-31
A01X2000	2872337-0100	TERMINAL	8-19
A01X2098	2884589-0100	TERMINAL	8-19
A03X2016	90459-6470	CONNECTOR RJ45 TER. BL., AK-U0-RJ45-TB2P	8-27, 8-29, 8-31
A03X2018	90459-6470	CONNECTOR RJ45 TER. BL., AK-U0-RJ45-TB2P	8-27, 8-29, 8-31
A03X2020	90459-6470	CONNECTOR RJ45 TER. BL., AK-U0-RJ45-TB2P	8-27, 8-29, 8-31
A08X1000	2892718-0100	TERMINAL	7-3
A08X2000	2892719-0100	TERMINAL	7-3
E01X1013	2872336-0100	TERMINAL	8-19

Pos	Part No	Description	Page No
X			
P30X2010	90459-6679	CONN 15 P FEM, AUX. FEEDB,2090-K6CK-D15F	8-27, 8-29, 8-31
V50X1015	2913340-0100	CONNECTOR	4-3, 4-5
W10X2010	90459-6470	CONNECTOR RJ45 TER. BL., AK-U0-RJ45-TB2P	8-27, 8-29, 8-31
W30X2012	90459-2550	I/O CONNECTOR 26 PIN MALE, 2090-K6CK-D26	8-27, 8-29, 8-31
W30X2022	90459-2550	I/O CONNECTOR 26 PIN MALE, 2090-K6CK-D26	8-27, 8-29, 8-31
W40X1032	2884591-0100	TERMINAL	8-19
W40X1034	2884593-0100	TERMINAL	8-19
W40X2010	90459-6470	CONNECTOR RJ45 TER. BL., AK-U0-RJ45-TB2P	8-27, 8-29, 8-31
W40X2020	90459-6470	CONNECTOR RJ45 TER. BL., AK-U0-RJ45-TB2P	8-27, 8-29, 8-31
W40X2030	90459-6470	CONNECTOR RJ45 TER. BL., AK-U0-RJ45-TB2P	8-27, 8-29, 8-31
W90X2010	90459-6470	CONNECTOR RJ45 TER. BL., AK-U0-RJ45-TB2P	8-27, 8-29, 8-31
A01XL210	2872298-0100	TERMINAL	8-19
A01XL211	2872299-0100	TERMINAL	8-19
A01XL212	2872318-0100	TERMINAL	8-19
A01XL213	2872319-0100	TERMINAL	8-19

Tetra Pak

SPC binder labels. 40 mm Full width *Note! This page is generated* **automatically.**
using the **variable definitions** *made in the* **front page** *file!!*

Straw Applicator 30 by Tetra Pak
663350-0100
Issue: 2008-11 Doc No: SPC-2888281-0102

Straw Applicator 30 by Tetra Pak
663350-0100
Issue: 2008-11 Doc No: SPC-2888281-0102

Straw Applicator 30 by Tetra Pak
663350-0100
Issue: 2008-11 Doc No: SPC-2888281-0102

Straw Applicator 30 by Tetra Pak
663350-0100
Issue: 2008-11 Doc No: SPC-2888281-0102

Straw Applicator 30 by Tetra Pak
663350-0100
Issue: 2008-11 Doc No: SPC-2888281-0102

Straw Applicator 30 by Tetra Pak
663350-0100
Issue: 2008-11 Doc No: SPC-2888281-0102

Straw Applicator 30 by Tetra Pak
663350-0100
Issue: 2008-11 Doc No: SPC-2888281-0102

Straw Applicator 30 by Tetra Pak
663350-0100
Issue: 2008-11 Doc No: SPC-2888281-0102

Straw Applicator 30 by Tetra Pak
663350-0100
Issue: 2008-11 Doc No: SPC-2888281-0102

Straw Applicator 30 by Tetra Pak
663350-0100
Issue: 2008-11 Doc No: SPC-2888281-0102

SPC binder labels. 30 mm Half width *Note! This page is generated* **automatically.**
using the **variable definitions** *made in the* **front page** *file!!*

Straw Applicator 30 by Tetra Pak
663350-0100
Issue: 2008-11 Doc No: SPC-2888281-0102

Straw Applicator 30 by Tetra Pak
663350-0100
Issue: 2008-11 Doc No: SPC-2888281-0102

Straw Applicator 30 by Tetra Pak
663350-0100
Issue: 2008-11 Doc No: SPC-2888281-0102

Straw Applicator 30 by Tetra Pak
663350-0100
Issue: 2008-11 Doc No: SPC-2888281-0102

Straw Applicator 30 by Tetra Pak
663350-0100
Issue: 2008-11 Doc No: SPC-2888281-0102

Straw Applicator 30 by Tetra Pak
663350-0100
Issue: 2008-11 Doc No: SPC-2888281-0102

Straw Applicator 30 by Tetra Pak
663350-0100
Issue: 2008-11 Doc No: SPC-2888281-0102

Straw Applicator 30 by Tetra Pak
663350-0100
Issue: 2008-11 Doc No: SPC-2888281-0102

Straw Applicator 30 by Tetra Pak
663350-0100
Issue: 2008-11 Doc No: SPC-2888281-0102

Straw Applicator 30 by Tetra Pak
663350-0100
Issue: 2008-11 Doc No: SPC-2888281-0102

Straw Applicator 30 by Tetra Pak
663350-0100
Issue: 2008-11 Doc No: SPC-2888281-0102

Straw Applicator 30 by Tetra Pak
663350-0100
Issue: 2008-11 Doc No: SPC-2888281-0102