EM

Electrical Manual

Straw Applicator 30 by Tetra Pak

663350-0300

Other Countries

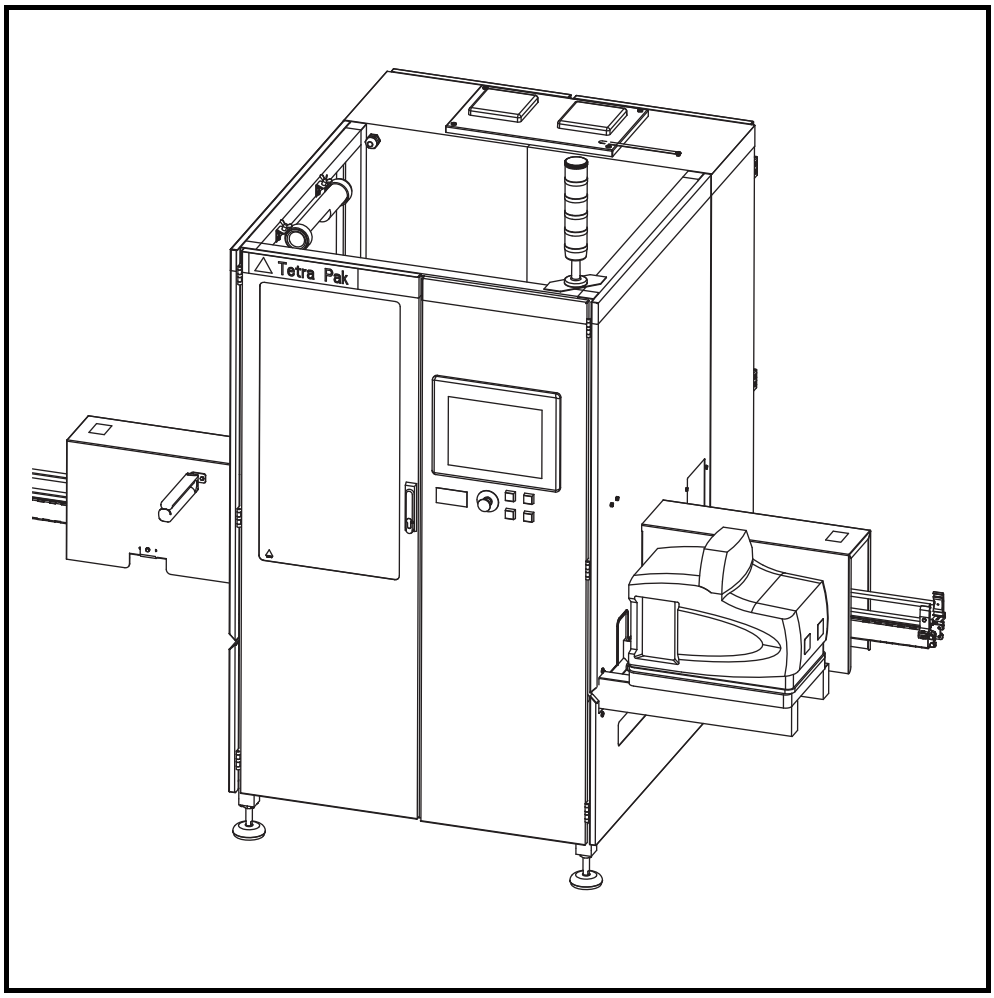

WARNING

Read and follow all safety precaution instructions throughout this manual and on safety signs attached to this equipment.
Failure to follow all safety precaution instructions could result in death or serious injury.

Tetra Pak

Doc. No. EM-3039537-0105

Copyright © 2010 Tetra Pak Group

All rights reserved. No part of this document may be reproduced or copied in any form or by any means without written permission from Tetra Pak Packaging Solutions AB.

Tetra Pak and all Tetra Pak products are trademarks belonging to the Tetra Pak Group.

The content of this manual is in accordance with the design and construction of the machine or equipment at the time of publishing. Tetra Pak reserves the right to introduce design modifications without prior notice.

The English language version of this document contains the original instructions. All other language versions are translations of the original instructions.

This document was produced by:

Tetra Pak Packaging Solutions AB
Ruben Rausings gata
SE-221 86 Lund
Sweden

Additional copies can be ordered from Tetra Pak. When ordering additional copies, always provide the document number.

Doc. No. EM-3039537-0105

Issue 2010-06

This manual is valid for:

Series No./ Machine No. Sign.

EM

Electrical Manual

Straw Applicator 30 by Tetra Pak
663350-0300
This manual is valid for all countries **except** USA and Canada.

Machine or equipment configurations that this manual is valid for are described on the next page.

i Introduction

ii Safety Precautions

1 Electrical Systems Description

2 Document List

3 Position Summary

4 Circuit Diagrams

5 Line Summary

6 Cabinet Terminal Summary

7 Terminal Strip Overview

8 Cable Connection List

9 Mains Connection

10 Drawing Remarks

11 Other Information

12 Program Documents

Doc. No. EM-3039537-0105

Issue 2010-06

Tetra Pak

Tetra Pak Packaging Solutions AB

Valid for:

Name	Drawing Specification and Development Step	Additional Information
Straw Applicator 30 by Tetra Pak	663350-0300	Package Shape: - Tetra Brik, TB - Tetra Brik Aseptic, TBA - Tetra Classic Aseptic, TCA - Tetra Prisma Aseptic, TPA - Tetra Wedge Aseptic, TWA

Mandatory Equipment:

Name	Drawing Specification and Development Step	Additional Information
Bent Foil Treater	2643050-0400	Mandatory for TB/TBA speed lines
Straw Detector 30	663550-0300	Mandatory for TB/TBA speed lines
Package Orientation Controller	2976909-0100	Mandatory for TCA lines
Rejecting Unit	3010247-0100	Mandatory for TCA/TWA lines

Optional Equipment:

Name	Drawing Specification and Development Step	Additional Information
Photocell Unit	2943553-0100	Valid for TB/TBA/TPA
Quick Change	3025775-0200	Valid for TB/TBA/TPA
Bent Foil Treater	2643050-0400	Valid for all machine variants
Straw Detector 30	663550-0300	Valid for TB/TBA
Cooling Unit	3039857-0100	Valid for all machine variants
Second Discharge Unit	3088860-0100	Valid for TB/TBA/TPA

Update Log for Doc. No. EM-3039537-0105

This table shows all changes made to this manual, including installed rebuilding kits, added or removed pages. Page numbering on added pages begins with UP.

Date	Installed Kit	Added Pages (Doc. No.)	Removed Pages	Signature

Date	Installed Kit	Added Pages (Doc. No.)	Removed Pages	Signature

i Introduction

About the Introduction Chapter

This chapter contains basic information about this manual and the related Tetra Pak equipment.

Abbreviations and Terminology . . . . . i - 5
Manual Information . . . . . i - 6
Delivered Manuals . . . . . i - 6
Page Layout . . . . . i - 7
Page Numbering. . . . . i - 8
Typographical Conventions . . . . . i - 8
Symbols . . . . . i - 8
Machine Introduction . . . . . i - 9
Intended Use of the Equipment . . . . . i - 9
Manufacturer . . . . . i - 9
Support and Feedback . . . . . i - 9
Declaration of Conformity . . . . . i - 9
Identification . . . . . i - 10
CE Classification . . . . . i - 10
Machine Plate . . . . . i - 10
Orientation . . . . . i - 12
Hygiene. . . . . i - 14
How to Use This EM . . . . . i - 15
Reference Designation . . . . . i - 17
List of Function Codes . . . . . i - 18
Optional Equipment . . . . . i - 19
How to Trace an Electrical Component . . . . . i - 20
Example 1: How to Trace a Line . . . . . i - 20
Example 2: How to Trace a Contactor . . . . . i - 22
Example 3: How to Trace a Terminal in the Electrical Cabinet . . . . . i - 23
Example 4: How to Trace a Terminal Outside the Electrical Cabinet . . . . . i - 24

Example 5: How to Trace a Network. . . . . i - 25

Example 6: How to Find Electrical Components Using the SPC. . . . . i - 28

Abbreviations and Terminology

Abbreviation/ Terminology	Meaning	Translation
ANSI	American National Standards Institute	
BFT	Bent Foil Treater	
CE	Communautés Européennes/European Communities	
EM	Electrical Manual	
HMI	Human Machine Interface	
IM	Installation Manual	
ISO	International Organization for Standardization	
MM	Maintenance Manual	
OK	Optional Kit	
OM	Operation Manual	
PLC	Programmable Logic Controller	
POCU	Package Orientation Controller	
SA30	Straw Applicator 30	
SD30	Straw Detector 30	
SPC	Spare Parts Catalogue	
TB	Tetra Brik	
TBA	Tetra Brik Aseptic	
TCA	Tetra Classic Aseptic	
TPA	Tetra Prisma Aseptic	
TWA	Tetra Wedge Aseptic	

Manual Information

Tetra Pak recommends reading all delivered manuals carefully. Make sure that the delivered manuals are available to personnel who operate or maintain the equipment.

It is important to keep this manual for the lifetime of the equipment and to pass the manual on to any subsequent holder or user.

Tetra Pak will not be held responsible for any damage to the equipment caused by not following the instructions given in this manual.

Delivered Manuals

Manuals delivered with this equipment:

- EM
  The Electrical Manual provides technicians with information about the equipment's electrical system.
- IM
  The Installation Manual provides technicians with information required to safely install the equipment.
- MM
  The Maintenance Manual provides technicians with information on maintaining the equipment.
- OM
  The Operation Manual manual provides the operator with information on handling and operating the equipment before, during, and after production.
- SPC
  The Spare Parts Catalogue provides the information necessary to order spare parts from Tetra Pak

Page Layout

Every main page in a manual contains a header and a footer. The page header contains the chapter name (1) and the section name (2). The page footer contains the page number (3), and the document number (4). See also the Page Numbering section.

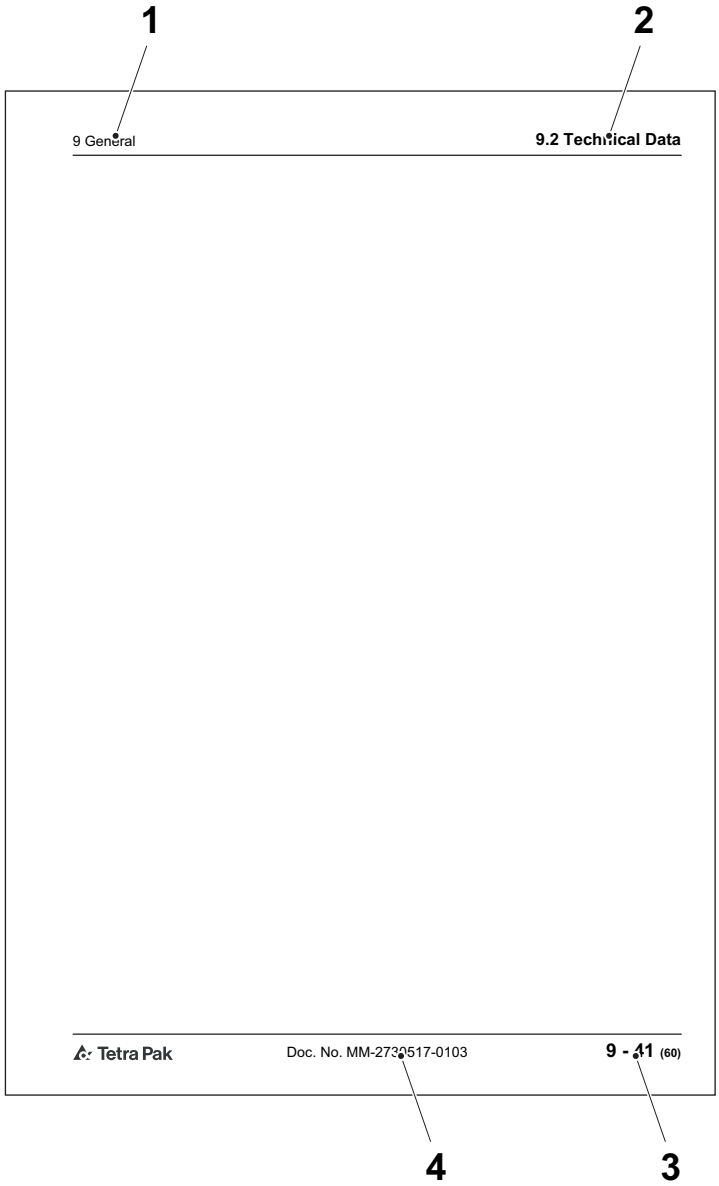

1 Chapter name
2 Section name
3 Page number
4 Document number

Page Numbering

A page number has three parts:

- chapter number (1)
- consecutive page number (2) within the chapter
- total number of pages (3) in the chapter.

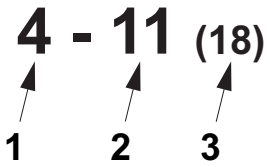

1 Chapter number
2 Consecutive page number
3 Total number of pages

Typographical Conventions

Controls on the operator panel, emergency stop devices, and program steps are printed in CAPITAL LETTERS.

Menu names, button names and other text displayed in software are printed in `Courier`.

Cross-references are underlined.

Symbols

Symbols used in illustrations.

	A pointer arrow indicates the position of an object.
	A zoom arrow indicates that an object view is enlarged. The arrow points towards the enlarged view of the object.
	A rotation movement arrow indicates rotational movement of an object. The arrow points in the direction of rotation.
	A straight movement arrow indicates movement of an object. The arrow points in the direction of movement.

Machine Introduction

Intended Use of the Equipment

The intended use of this Tetra Pak equipment is to attach drinking straws onto Tetra Brik packages (TB and TBA), Tetra Classic Aseptic packages (TCA), Tetra Prisma Aseptic packages (TPA), or Tetra Wedge Aseptic packages (TWA).

All other use is prohibited. Tetra Pak will not be held responsible for injury or damage if the equipment is used for any other purpose than the intended use described above.

Manufacturer

This Tetra Pak equipment has been manufactured by

Tetra Pak Packaging Solutions AB
Ruben Rausings gata
SE-221 86 Lund
Sweden

Support and Feedback

If you encounter problems when operating this equipment or have other inquiries, comments, or suggestions for improvement, contact Tetra Pak.

Declaration of Conformity

A copy of the Declaration of Conformity can be found in the Installation Manual. The signed Declaration of Conformity is delivered separately with the equipment.

Identification

CE Classification

This equipment complies with the basic health and safety regulations of the European Economic Area (EEA).

Machine Plate

The illustration below shows an example of the machine plate and its location on the equipment. The machine plate carries data needed when contacting Tetra Pak concerning this specific equipment.

Make sure that the equipment data in the front pages of this manual corresponds to the machine plate data and the machine specification.

Main machine

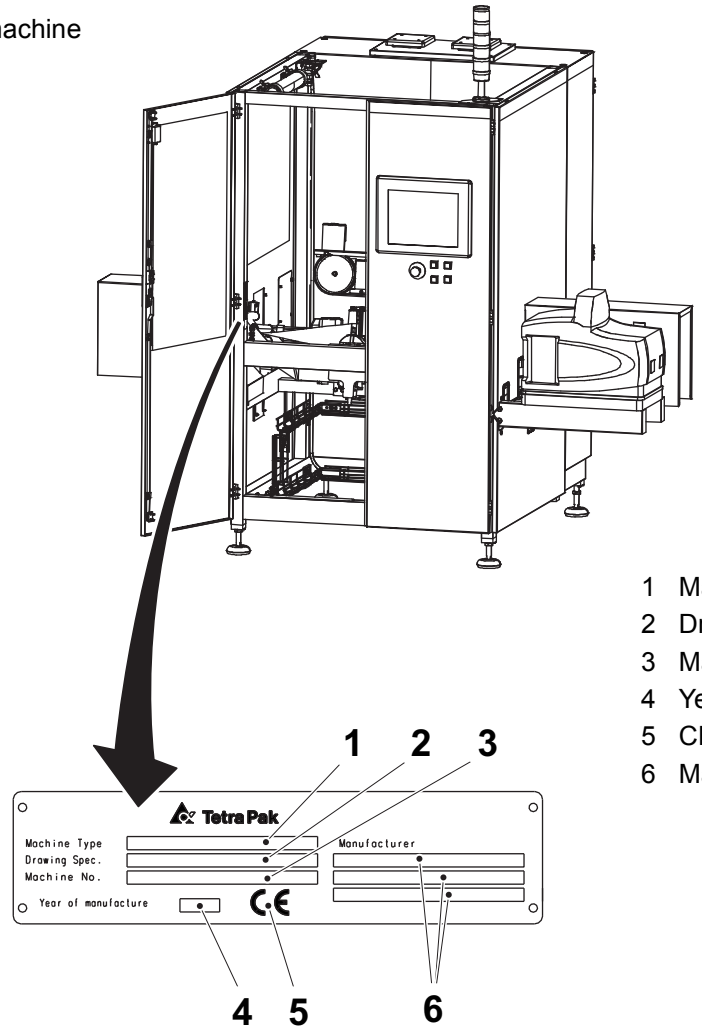

1 Machine type
2 Drawing specifications
3 Machine number
4 Year of manufacture
5 CE mark
6 Manufacturer

(Cont'd)

(Cont'd)

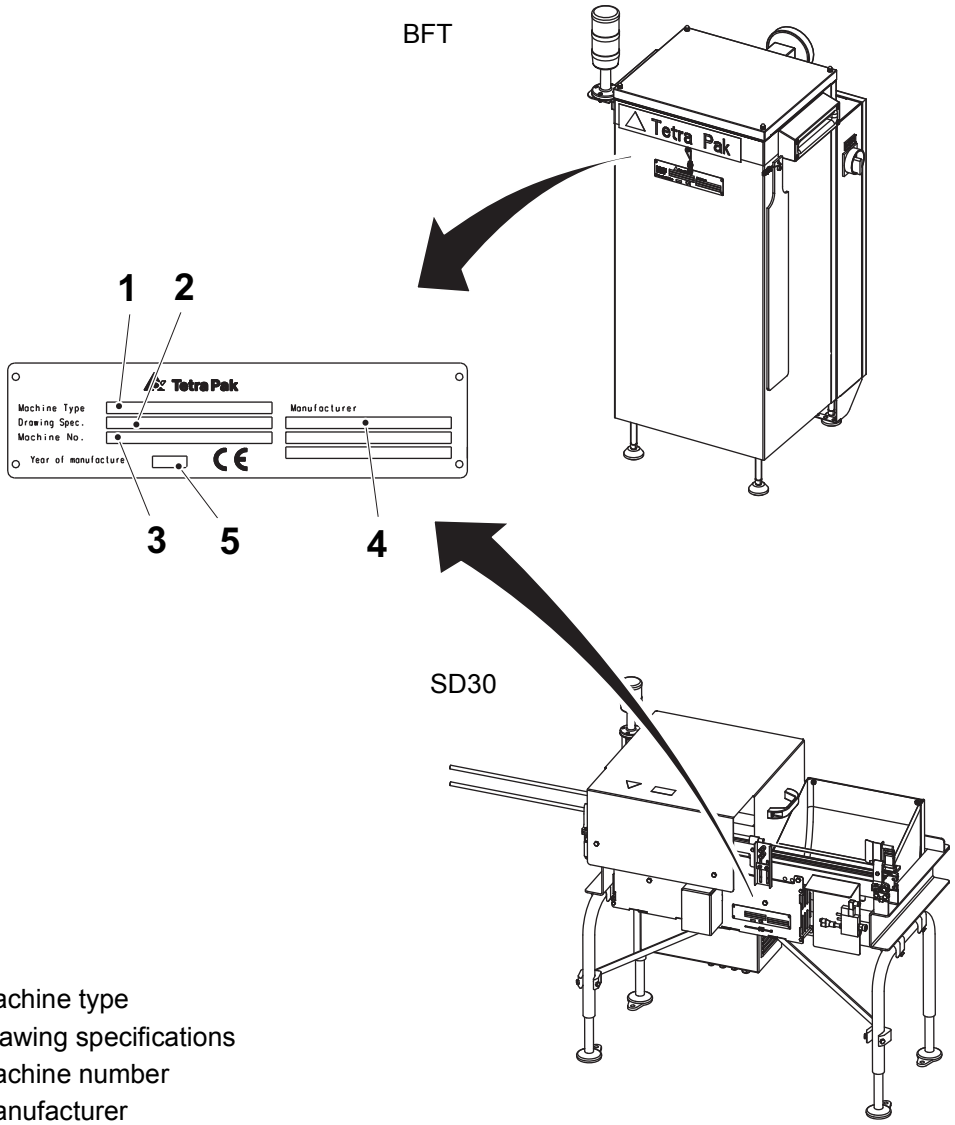

1 Machine type
2 Drawing specifications
3 Machine number
4 Manufacturer
5 Year of manufacture

Orientation

The illustration below shows the orientation of the equipment. This orientation information will be used throughout this manual. The arrows indicate the flow of material.

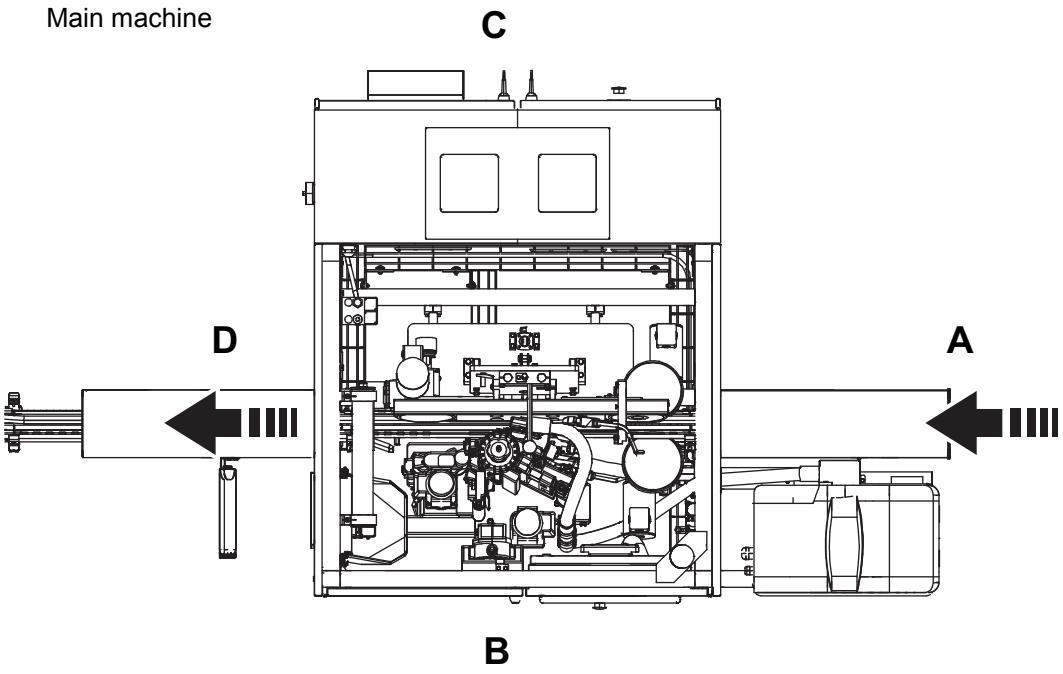

A Front
B Left-hand side
C Right-hand side
D Discharge

(Cont'd)

(Cont'd)

BFT

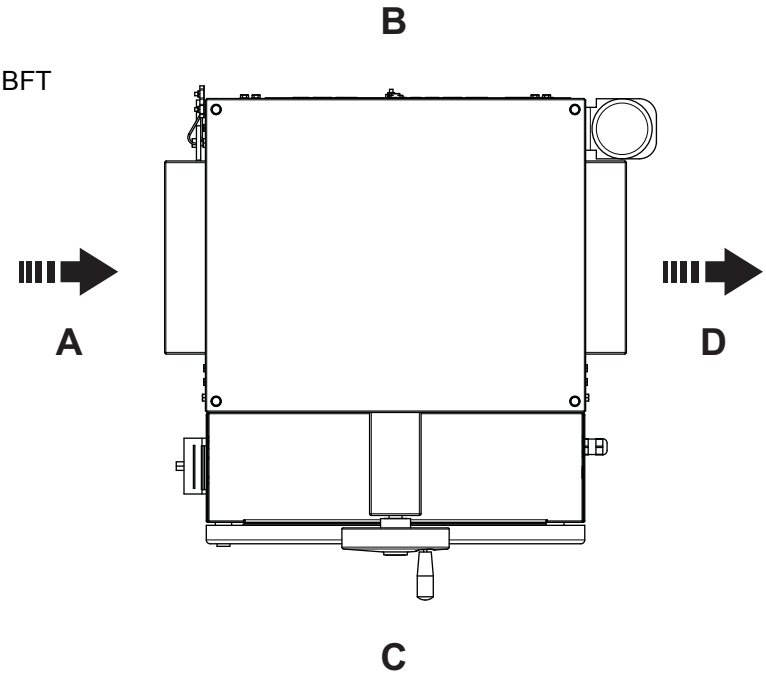

A Front
B Left-hand side
C Right-hand side
D Discharge

Note! The BFT can process the straw ladder band in either direction.

SD30

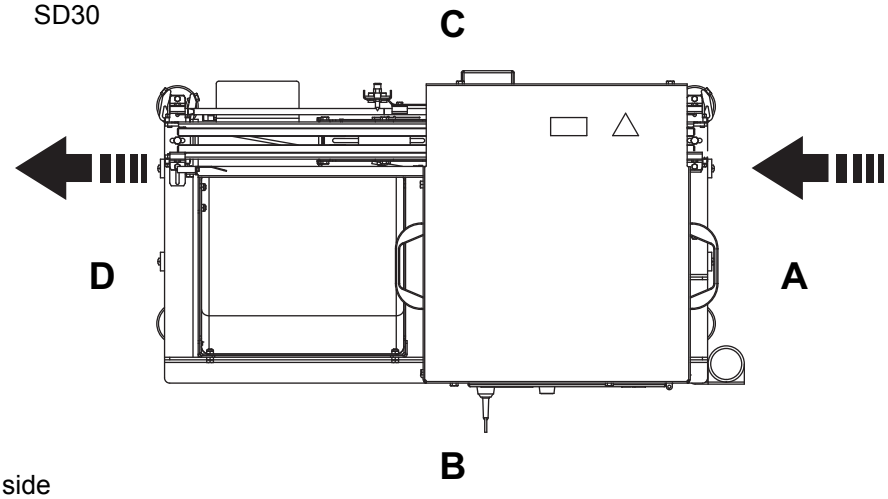

A Front
B Left-hand side
C Right-hand side
D Discharge

Hygiene

- Never clean the floors or the machine when the machine is in production.
- Keep your hands clean.
- Always wear some type of hair protection (cap or hairnet) and clean clothes (preferably white).
- Do not wear a watch, ring, necklace, earrings, or any other exposed jewellery.

How to Use This EM

Chapters in this EM.

Chapter	Name	Drawing No.
i	Introduction	
ii	Safety Precautions	
1	Electrical Systems Description	
2	Document List	xxxxxxx-0001
3	Position Summary	xxxxxxx-0002
4	Circuit Diagrams	xxxxxxx-0003
5	Line Summary	xxxxxxx-0004
6	Cabinet Terminal Summary	xxxxxxx-0005
7	Terminal Strip Overview	xxxxxxx-0006
8	Cable Connection List	xxxxxxx-0007
9	Mains Connection	xxxxxxx-0008
10	Drawing Remarks	
11	Other Information	
12	Program Documents	

The Document List chapter is a table of contents for the chapters 3 to 9, listing all drawings included.

In the Circuit Diagrams, the first pages are reserved for distribution terminals and the last pages can be used for pre-connected cables. Pre-connected cables are connected to spare terminals and are reserved for future use.

The diagrams in the Mains Connection chapter show how the machine should be connected to the local supply, the dimensions of the connection cable, and the connection of the matching transformer, when used.

The Drawing Remarks chapter lists the drawing remarks indicated with a number in the drawing.

The Program Documents chapter contains the PLC programs for this equipment.

(Cont'd)

(Cont'd)

The documents and drawings are identified by drawing number (1), version code (2), and page number (3). The page number is the consecutive numbering of the pages that belong to the main number and is used as a reference in the diagrams.

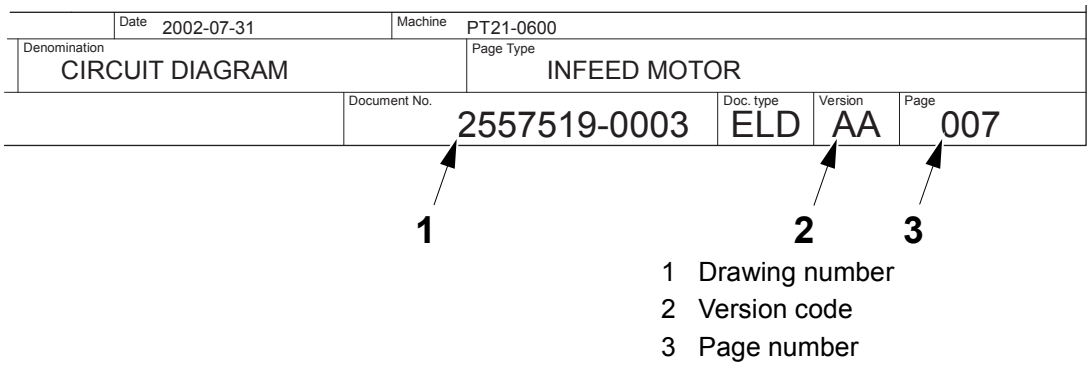

1 Drawing number
2 Version code
3 Page number

Reference Designation

Components are identified by the reference designation, defined by a function code (1), and a component code (2).

The object code for the group level (3) refers to the purpose or task of the group level that the component serves or supplies. See the List of Function Codes section.

The object code for the component level (4) refers to the purpose or task of the current object. The letter is in accordance with international standards. Examples: Code P for components that present information, such as an alarm lamp, a clock, or a volt meter. Code M for components that provide mechanical energy such as an actuator, or an electric motor.

Tetra Pak has chosen to always use the function oriented structure for reference designation. The prefix indicating function oriented structure (=) is not shown in the reference designation.

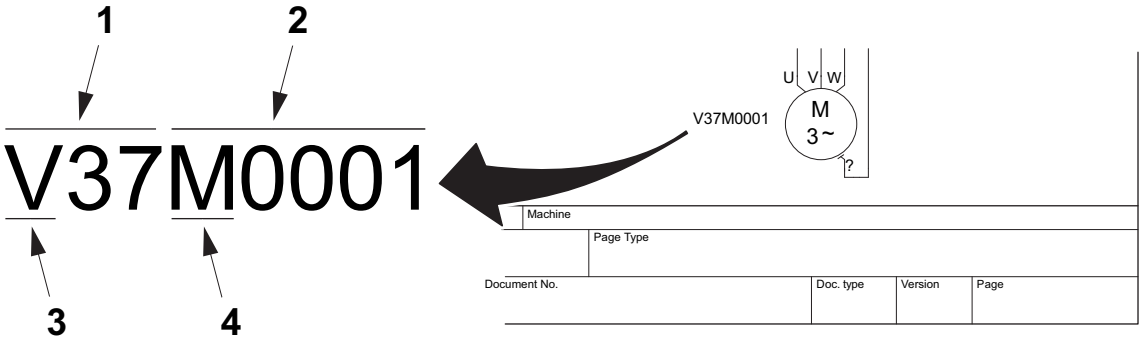

1 Function code
2 Component code
3 Object code, group level
4 Object code, component level

List of Function Codes

Function codes for this equipment.

Function Code	Identification
01	General
03	PLC
07	Genius
08	HMI
09	Safety Equipment
10	Infeed
30	Apply
40	Package
50	Straw
90	Discharge

Optional Equipment

An optional equipment designation indicates that the component belongs to specific optional equipment. The designation numbers for this equipment are explained in the Drawing Remarks chapter.

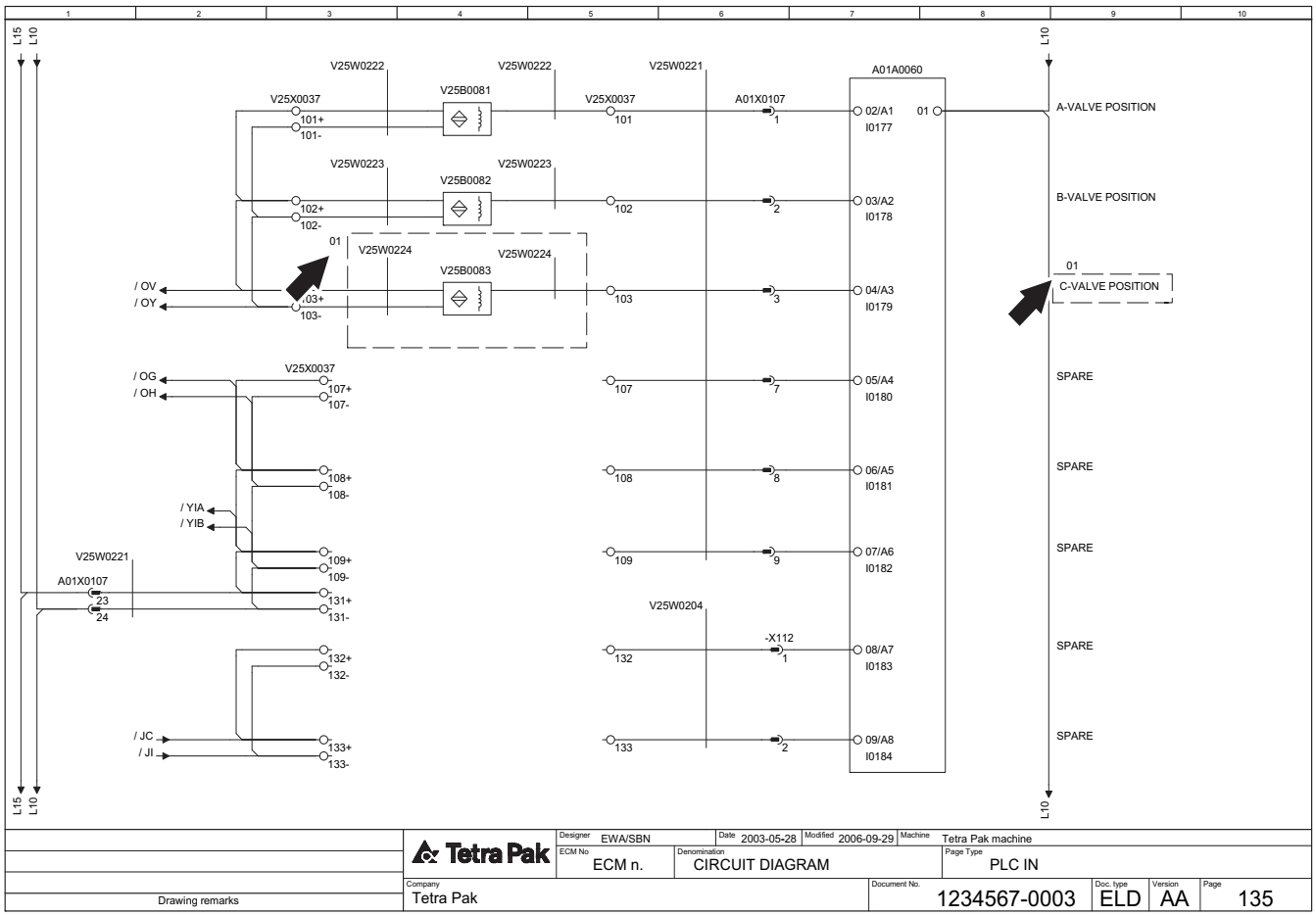

How to Trace an Electrical Component

Start tracing an electrical component by finding the correct list with page and column references to the Circuit Diagram.

Example 1 on pages i-20 to i-21 illustrates how to trace a Line. Use the Line Summary.

Example 2 on page i-22 illustrates how to trace a contactor. Find page references in the Position Summary. The procedure is identical when tracing sensors or other components. For cables, the page references are in the Cable Connection List. The number of spare cores is shown in the cable connection list.

Examples 3 and 4 on pages i-23 to i-24 illustrate how to trace a terminal. Find page references for terminals *in* the electrical cabinet in the Cabinet Terminal Summary, and page references for terminals *outside* the electrical cabinet in the Terminal Strip Overview.

Example 5 on pages i-25 to i-27 illustrates how to trace a network (DeviceNet, Ethernet etc.). The last pages of the Circuit Diagrams are reserved for the network layout; these provide an overview of the network with cross references to locate the components in the circuit diagrams.

Example 6 on page i-25 illustrates how to locate a component in the Spare Parts Catalogue, SPC.

Example 1: How to Trace a Line

Supply Voltage and Line Connection Order

The supply voltage in the electrical cabinet has power voltage and control voltage designations.

- Power voltage: lines with designations ending with 01 to 09, for example, L03 and L803
- Control voltage: lines with designations ending with 10 to 99, for example, L12 and L812

The line connection order is shown in the Line Summary.

(Cont'd)

(Cont'd)

How to Trace a Line

The illustration below shows how to trace line connection L10 from the component terminal A01X0107:24 to A01A0060:01.

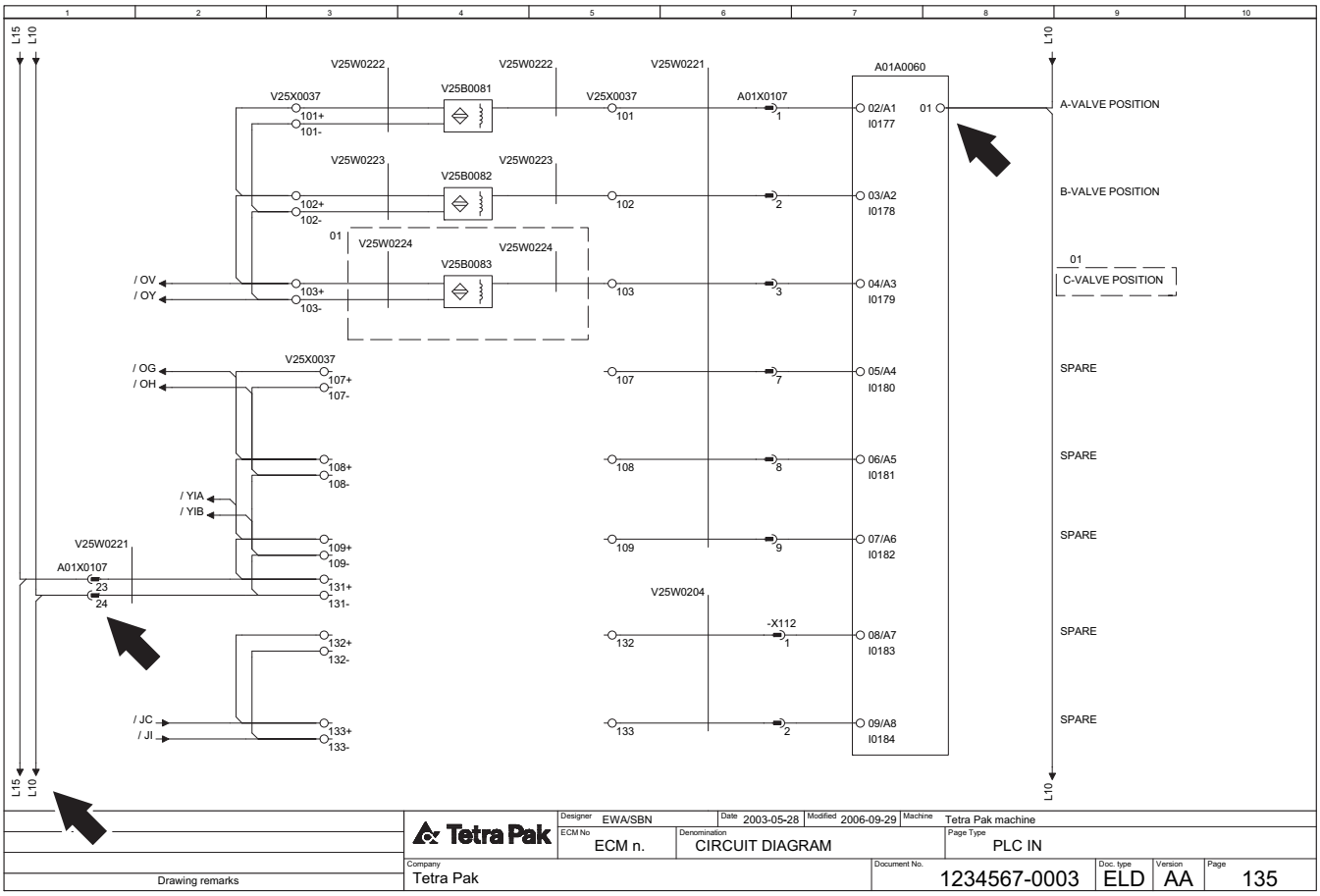

Line summary of 1234567-0003

Line	From	Page.Col.	Opt.	Area/Color
L10				
	A01XL0010:1	001 .1		0.75/L. BU
	A01X0107:24	135 .1		
	A01A0060:01	135 .8		

Example 2: How to Trace a Contactor

The illustration below shows how to trace contactor A01K0074 to page 188, column 6 in the Circuit diagram.

Related contacts are traced with a cross reference to page 004, column 3.

Note! For master and slave components, such as coils and contacts, only the master is reported in the Position Summary. The slave shows the page and column references of the master.

1 2 3

Position summary of 1234567-0003

Component	Page .Col.	Opt.
A01A0060	135 .7	
A01A0076	188 .1	
V25B0081	135 .4	
V25B0082	135 .4	
V25B0083	135 .4	01
A01K0073	188 .6	
A01K0074	188 .6	

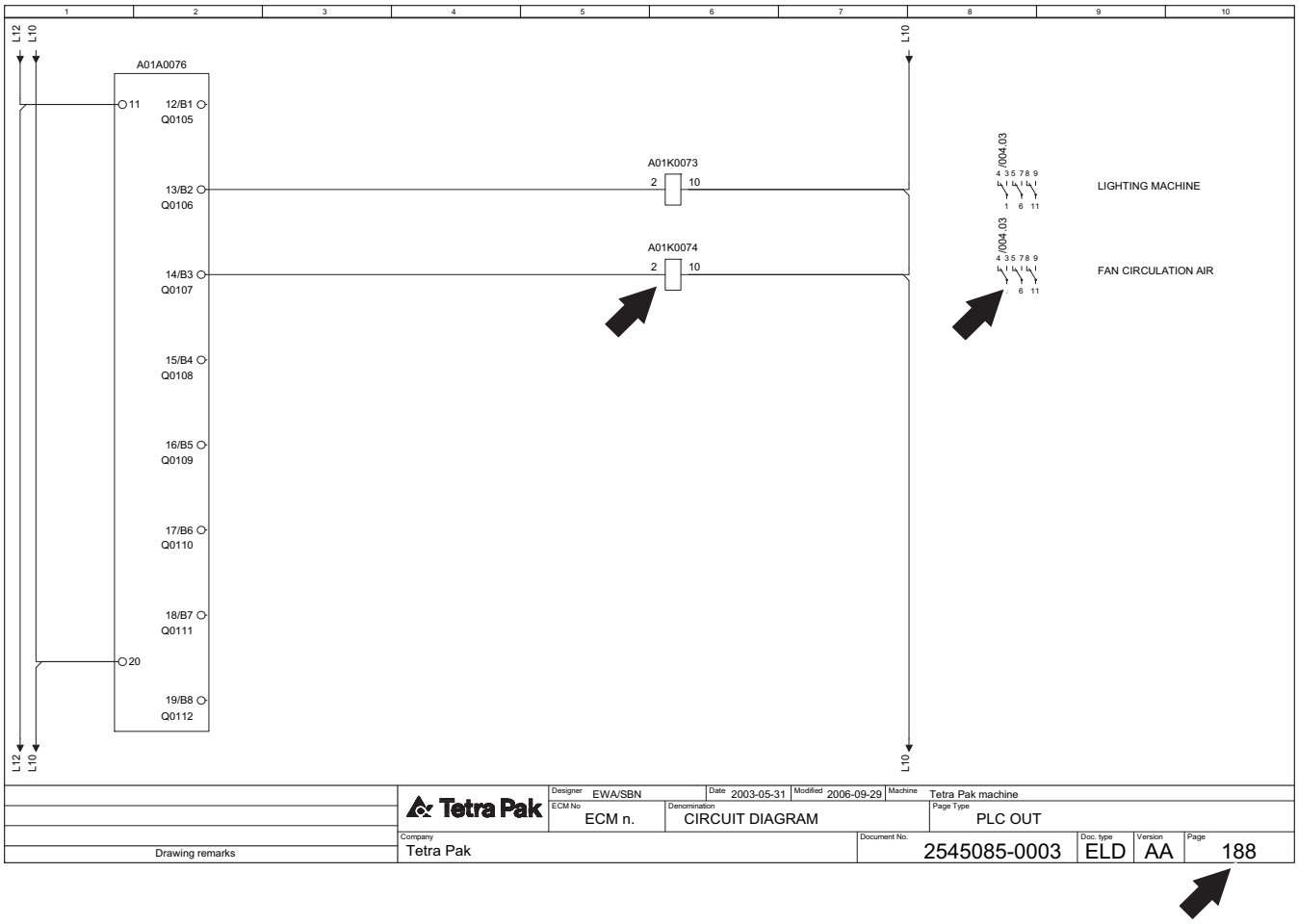

Example 3: How to Trace a Terminal in the Electrical Cabinet

The Cabinet Terminal Summary refers to the page and column where the relevant terminal is to be found.

The illustration below shows how to trace terminal A01X0107:1 to page 135, column 6 in the Circuit diagram.

Cabinet terminal summary of 1234567-0003

Terminal	Page .Col.	Opt.	Terminal	Page .Col.	Opt.
A01X0107:1	135 .6				
A01X0107:2	135 .6				
A01X0107:3	135 .6				
A01X0107:4					
A01X0107:5					
A01X0107:6					
A01X0107:7	135 .6				
A01X0107:8	135 .6				
A01X0107:9	135 .6				

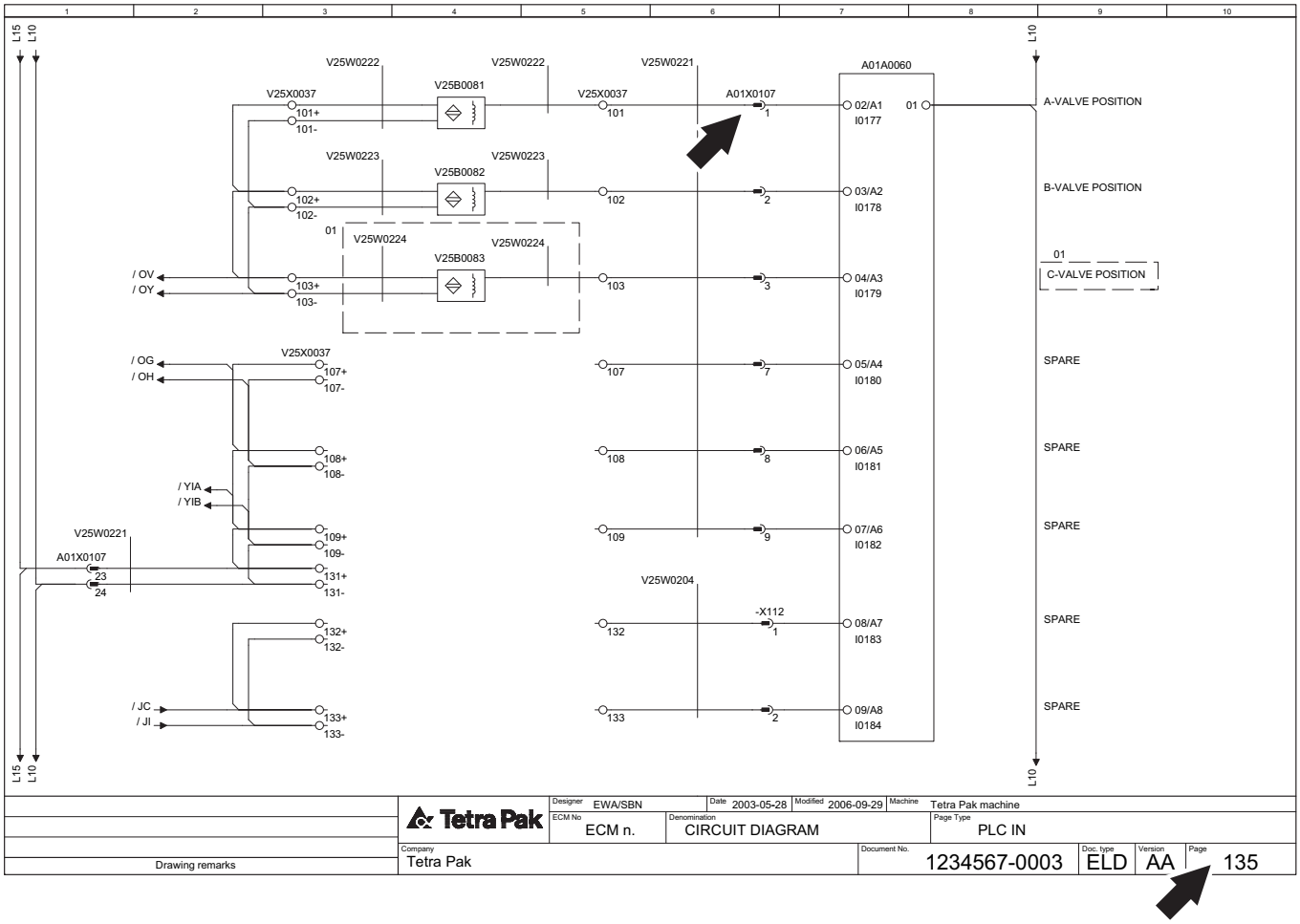

Example 4: How to Trace a Terminal Outside the Electrical Cabinet

The Terminal Strip Overview refer to the page and column where the relevant terminal is to be found.

The illustration below shows how to trace terminal V25X0037:101+ to page 135, column 3 in the Circuit diagram. Note the connected component, V25B0081.

Terminal strip of 1234567-0003

V25X0037

From	Cable	Internal Jumper	Terminal	External Jumper	Cable	To	Page.Col.	Option	Function text
A01X0107:1	V25W0221 :1		101		V25W0222 :BK	V25B0081:	135 .5		
			101+		V25W0222 :BN	V25B0081:	135 .3		
			101-		V25W0222 :BU	V25B0081:	135 .3		
A01X0107:2	V25W0221 :2		102		V25W0223 :BK	V25B0082:	135 .5		
			102+		V25W0223 :BN	V25B0082:	135 .3		
			102-		V25W0223 :BU	V25B0082:	135 .3		
A01X0107:3	V25W0221 :3		103		V25W0224 :BK	V25B0083:	135 .5	01	
			103+		V25W0224 :BN	V25B0083:	135 .3	01	
			103-		V25W0224 :BU	V25B0083:	135 .3	01	
			104						

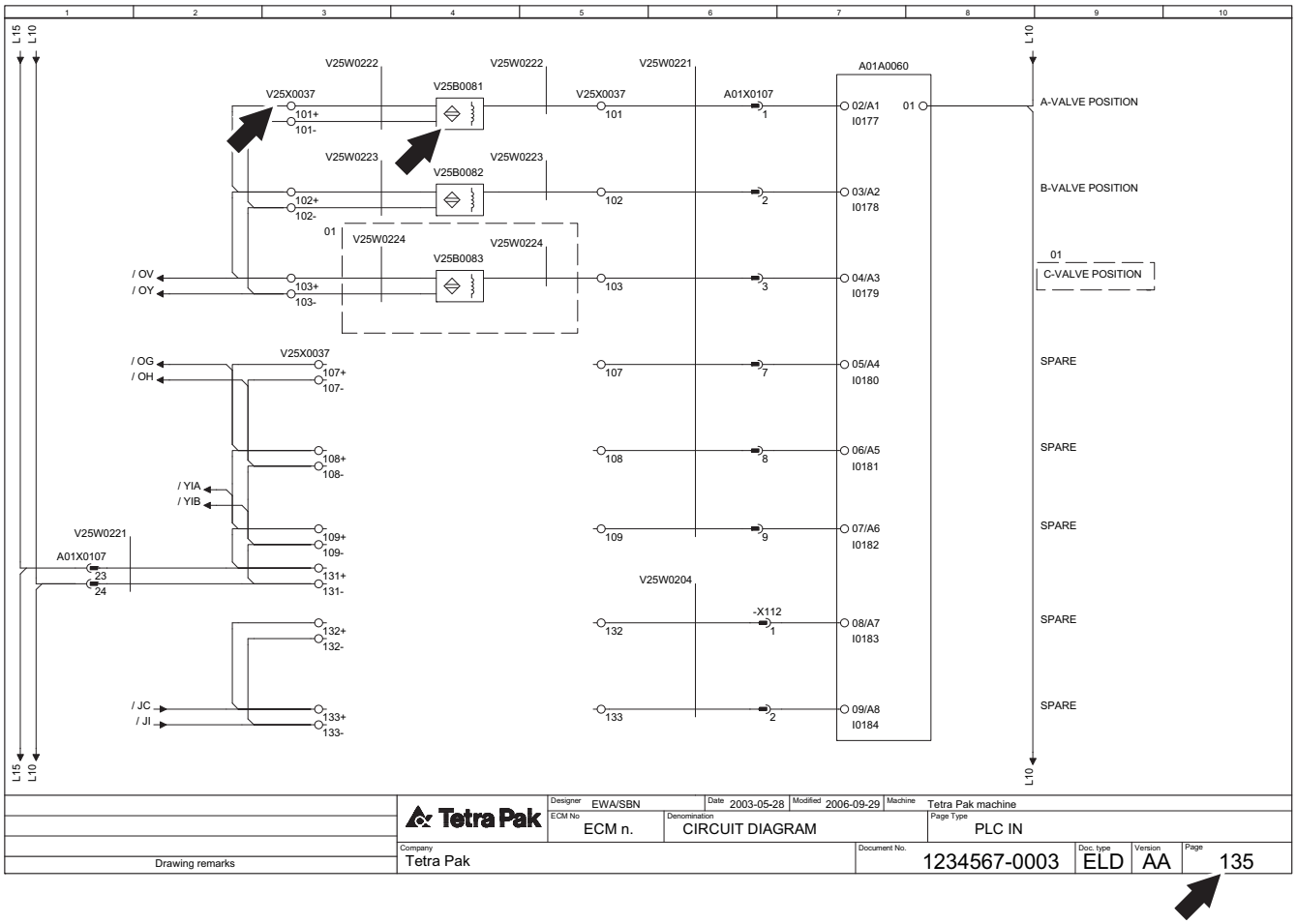

Example 5: How to Trace a Network

The illustration below shows how to find the component A20K5020, the terminal strip A20X5540 and the network cable A20W5510 in the network overview page(s).

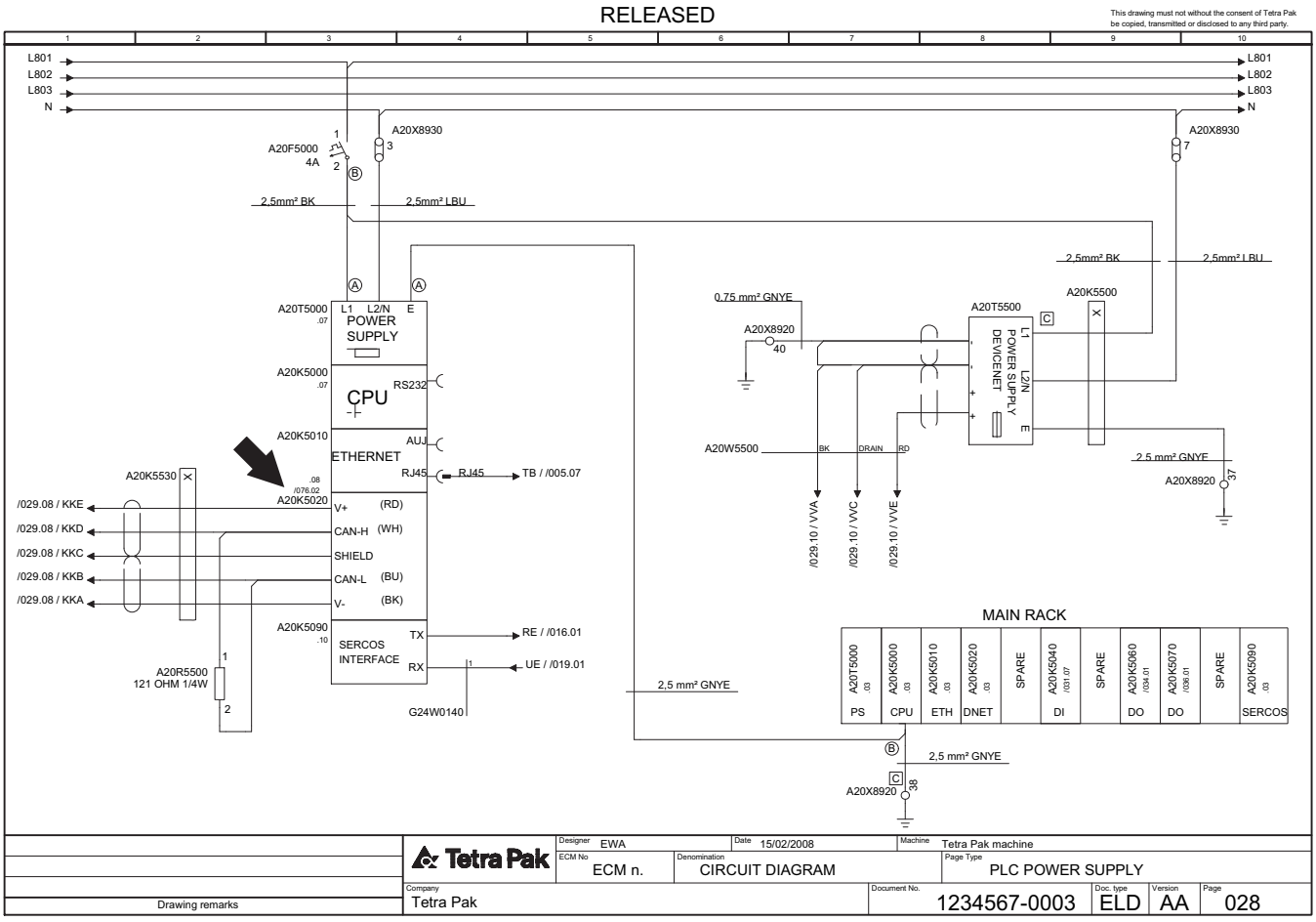

(Cont'd)

(Cont'd)

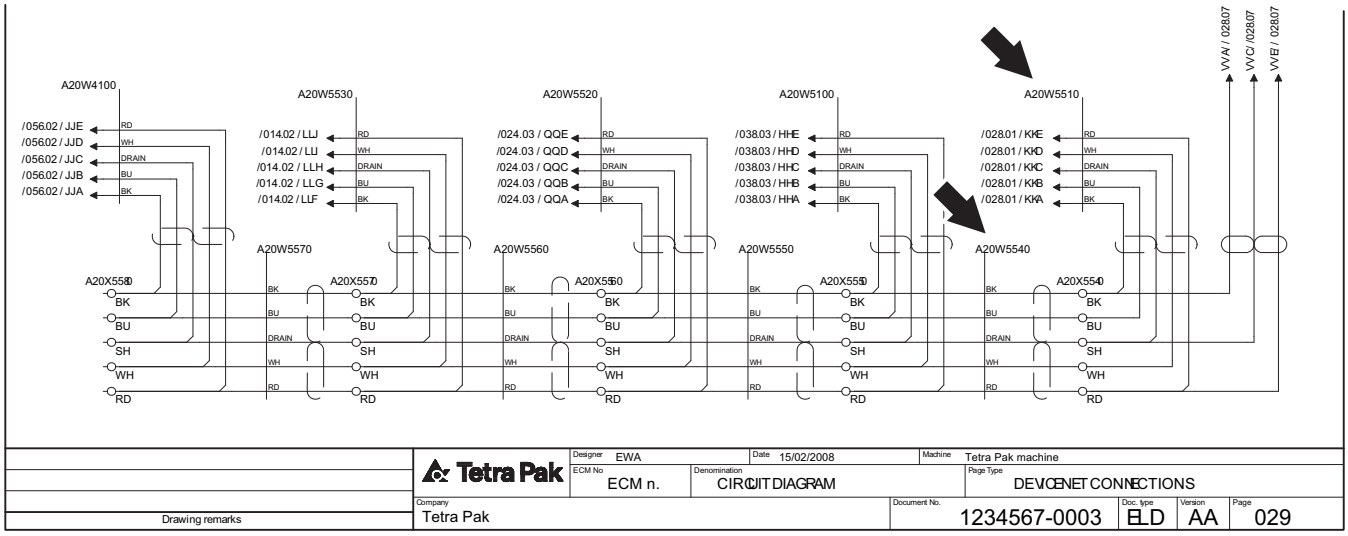

The figure reference, for example; “Fig C” or “Fig G” in the Network Overview page, refers to the Network Figure Drawing which provides a description of the component wiring, see the following page.

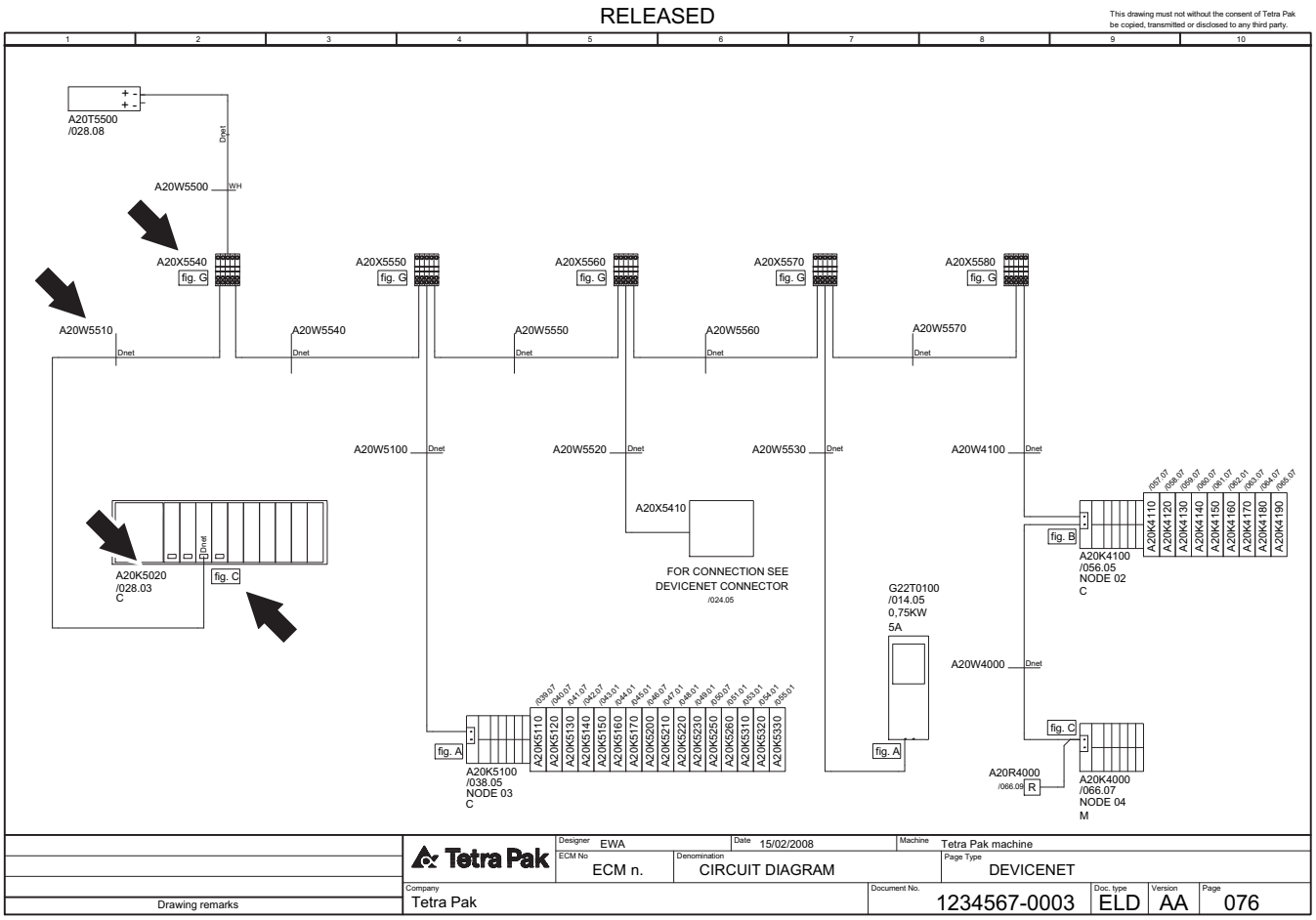

(Cont'd)

(Cont'd)

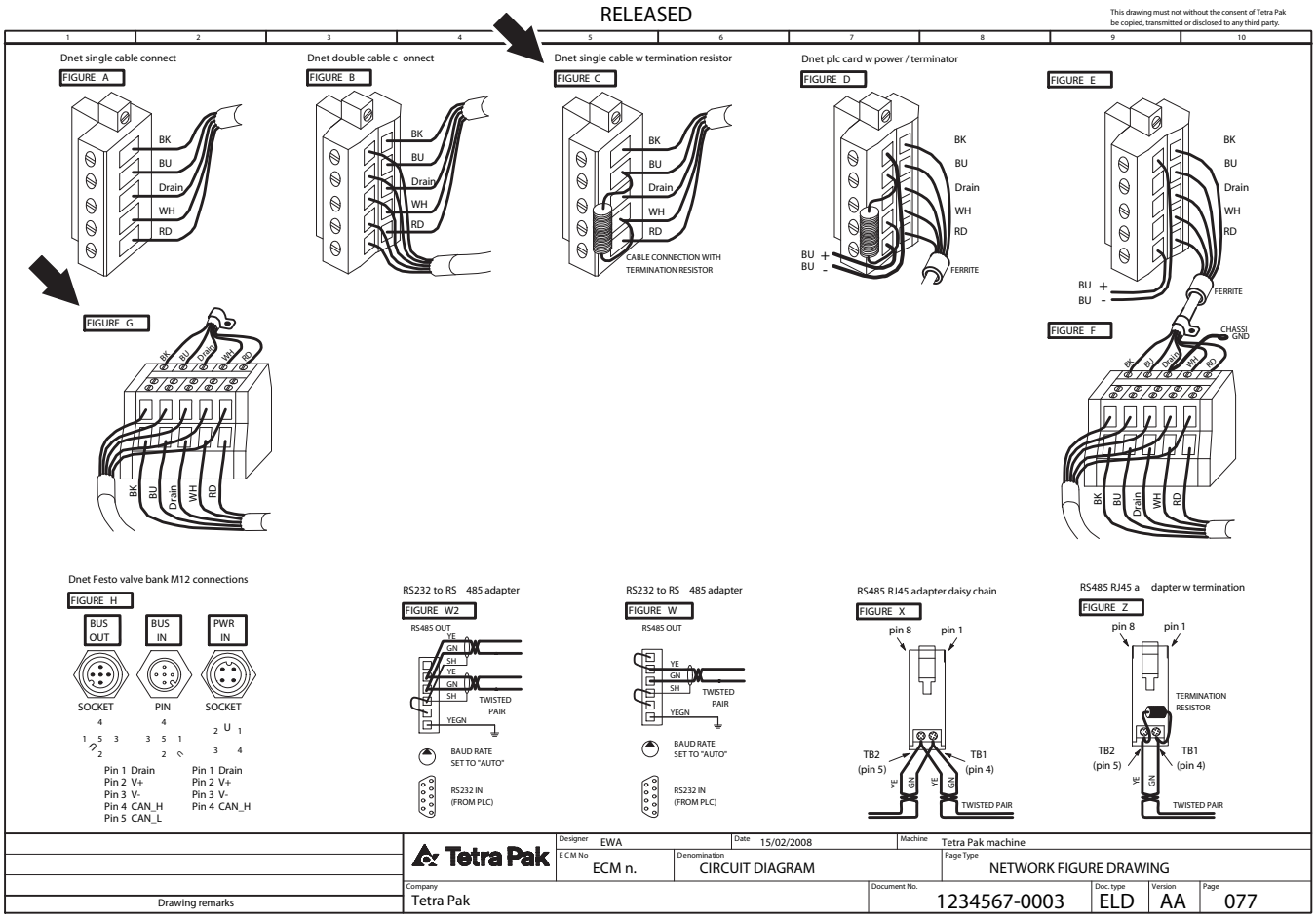
RELEASED
This drawing must not without the consent of Tetra Pak be copied, transmitted or disclosed to any third party.
Dnet single cable connect
FIGURE A
Dnet double cable c onnect
FIGURE B
Dnet single cable w termination resistor
FIGURE C
CABLE CONNECTION WITH TERMINATION RESISTOR
Dnet plc card w power / terminator
FIGURE D
FERRITE
FIGURE E
FERRITE
CHASSI GND
FIGURE F
FIGURE G
BK
BU
Drain
WH
RD
Dnet Festo valve bank M12 connections
FIGURE H
BUS OUT
BUS IN
PWR IN
SOCKET
PIN
SOCKET
Pin 1 Drain
Pin 2 V+
Pin 3 V-
Pin 4 CAN_H
Pin 5 CAN_L
Pin 1 Drain
Pin 2 V+
Pin 3 V-
Pin 4 CAN_H
RS232 to RS 485 adapter
FIGURE W2
RS485 OUT
YE
GN
SH
YEGN
TWISTED PAIR
BAUD RATE SET TO "AUTO"
RS232 IN (FROM PLC)
RS232 to RS 485 adapter
FIGURE W
RS485 OUT
TWISTED PAIR
BAUD RATE SET TO "AUTO"
RS232 IN (FROM PLC)
RS485 RJ45 adapter daisy chain
FIGURE X
pin 8
pin 1
TB2 (pin 5)
TB1 (pin 4)
TWISTED PAIR
RS485 RJ45 a dapter w termination
FIGURE Z
TERMINATION RESISTOR
Tetra Pak
Designer EWA
Date 15/02/2008
Machine Tetra Pak machine
E.C.M No ECM n.
Denomination CIRCUIT DIAGRAM
Page Type NETWORK FIGURE DRAWING
Company Tetra Pak
Document No. 1234567-0003
Doc. type ELD
Version AA
Page 077
Drawing remarks

Example 6: How to Find Electrical Components Using the SPC

The Reference Designation Parts Index in the Spare Parts Catalogue, SPC, is used to locate electrical parts. For SPCs without a Reference Designation Parts Index, see the Component Location chapter in this manual.

The illustration below shows how to find component A04B0041 in the SPC. The Reference Designation Parts Index refers to page 2-5. In the drawing on page 2-4, the position number is the same as the reference designation for the component.

Tetra Pak Used in group: Pos. 020 CHAIN GUIDE Drawing file: 26906234_1_AA.hpgl **2-4** (6)

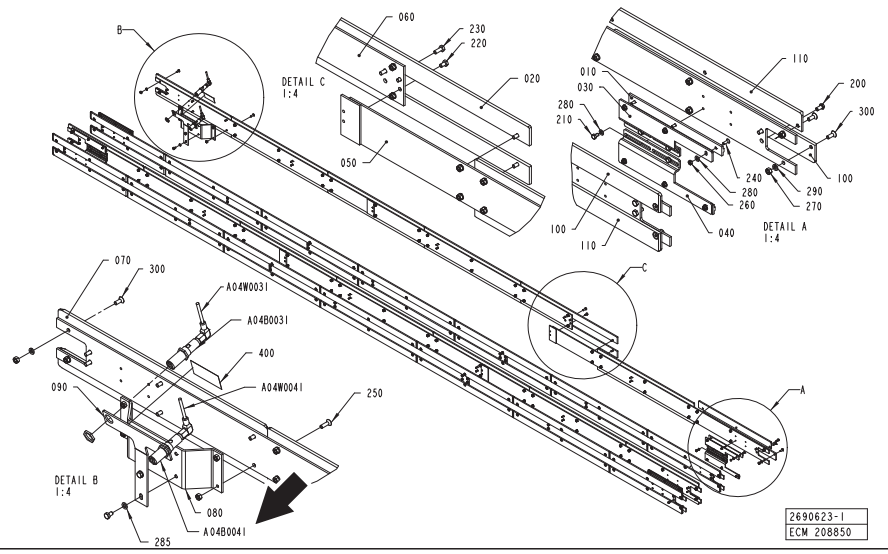

ECM: 209071 - 50001231
Group number: 2690623-0100
Assembly Drawing: 2690623-1_1_AA
This list covers pages from 2-2 to 2-5

Pos	Part No	UN	Qty	Description	Page No
-					
010	2597877-0000		8	CHAIN GUIDE	
020	2653358-0000		40	CHAIN GUIDE	
030	2653365-0000		4	SUPPORT	
040	2653366-0000		4	SUPPORT	
050	2653367-0000		8	PLATE	
060	2653368-0000		4	PLATE	
070	2653369-0000		8	CHAIN GUIDE	
080	2690632-0000		1	HOLDER	
090	2690633-0000		1	HOLDER	
100	2730969-0000		4	CHAIN GUIDE	
110	2730970-0000		4	CHAIN GUIDE	
200	90458-0072		8	SCREW ISO 7380 S M6X12 A2	
210	312105-0287		16	SCREW M6S ISO4017 M4X8 A470	
220	312105-0364		18	SCREW M6S ISO 4017 M6X10 A480	
230	312105-0368		40	SCREW M6S ISO 4017 M6X16 A480	
240	312155-0291		24	SCREW DIN 7991 MF6S M4X12 A4 70	
250	312155-0370		4	SCREW DIN 7991 MF6S M6X20 A4 70	
260	312605-0312		24	HEXAGON NUT, M6M M4 A280	
270	312605-0316		168	HEXAGON NUT, M6M M6 A280	
280	315105-0146		40	WASHER BRB5,3X10RFR	
285	315105-0153		2	WASHER BRB6,4X12RFR	
290	315402-0156		164	LOCK WASHER FBB 6,5	
300	31[illegible]-0368		164	SCREW DIN 7991 MF6S M6X16 A4 70	
400	[illegible]98		1	WARNING SIGN ISO, LASER RADIATION	
A04W0041	[illegible]-0050		1	ACTUATOR/SENSOR CABLE RKWTN 4-225/5M	
A04W0031	[illegible]-0050		1	ACTUATOR/SENSOR CABLE RKWTN 4-225/5M	
A04B0041	90459-5012		1	LASER SENSOR, YD24PA3	
C05C0041	2690632-0000		1	HOLDER	
C05C0031	2653367-0000		8	PLATE	
T04B0031	90459-5012		1	LASER SENSOR, YD24PA3	
T05C0041	2653369-0000		8	CHAIN GUIDE	
T05C0031	2653368-0000		4	PLATE	

Tetra Pak **iv-2** (4)
Doc No: SPC-654654-0101

Pos	Part No	Description	Page No
A			
F09A0332	[illegible]02	THERMOCOUPLE CABLE K/PVC/20AWG 2X0,5MM2	1-3, 1-5
T03A0321	[illegible]9	THERMOCOUPLE CABLE K/PVC/20AWG 2X0,5MM2	1-3, 1-5
T03A0322	[illegible]030	HEATING ELEMENT, 3000W, 220V	1-3, 1-5
B			
A04B0041	90459-5012	LASER SENSOR, YD24PA3	2-3, 2-5
C01B0001	351120-0145	CABLE SILFLEX SIHF 3X2,5 0046020	1-3, 1-5
C32B0001	90220-2259	THERMOCOUPLE CABLE K/PVC/20AWG 2X0,5MM2	1-3, 1-5
T04B0031	90459-5012	LASER SENSOR, YD24PA3	2-3, 2-5
C			
C05C0031	2653367-0000	PLATE	2-3, 2-5
C05C0041	2690632-0000	HOLDER	2-3, 2-5
T05C0031	2653368-0000	PLATE	2-3, 2-5

Page No

2-5 (6)
c No: SPC-654654-0101

ii Safety Precautions

Description

Safety Precaution Instructions

WARNING

Read and understand this manual before using the machine.
Failure to follow safety precautions and instructions can result in death or serious injury.

Definition of Lockout Procedure

A lockout procedure is a procedure to put each necessary energy isolating device in its safe position to prevent the energisation of the equipment, such as when a maintenance procedure should be carried out.

A lockout is the use of a device, for example, a padlock, to make sure that an energy isolating device cannot be operated.

An energy isolating device is a mechanical device that physically prevents transmission or release of energy, such as a power supply disconnector.

Safety Messages Description . . . . . ii - 5
Personnel Requirements . . . . . ii - 6
Skilled Person . . . . . ii - 6
Instructed Person. . . . . ii - 6
Safety Signs . . . . . ii - 7
Locations of Safety Signs, TB/TBA/TPA . . . . . ii - 11
Locations of Safety Signs, TCA . . . . . ii - 12
Locations of Safety Signs, TWA. . . . . ii - 13
Locations of Safety Signs, Optional Equipment. ii - 14
Protective Devices. . . . . ii - 15
Emergency Stop. . . . . ii - 15
Emergency Stop Buttons . . . . . ii - 16
Safeguards . . . . . ii - 17
Warning Lamp . . . . . ii - 19
Audible Alarm. . . . . ii - 19
Protective Covers. . . . . ii - 20
Safe Manual Handling . . . . . ii - 21
Personal Protection. . . . . ii - 22
Noise . . . . . ii - 22
Entanglement . . . . . ii - 22
Supply Systems. . . . . ii - 23
Power Supply . . . . . ii - 23
Residual Voltage . . . . . ii - 26
Electrical Cabinet. . . . . ii - 26
Socket Outlet . . . . . ii - 28
Air Supply . . . . . ii - 29
Hotmelt Equipment . . . . . ii - 30

This page intentionally left blank

Safety Messages Description

A safety message is always accompanied by a safety alert symbol and a signal word.

The safety alert symbol is used to alert about potential personal injury hazards. To avoid hazards, obey all safety messages that follow this symbol.

The following safety alert symbols and signal words are used in this manual to inform the user of hazards.

DANGER	Danger indicates an imminently hazardous situation which, if not avoided, **will** result in **death or serious injury**.
WARNING	Warning indicates a potentially hazardous situation which, if not avoided, **could** result in **death or serious injury**.
CAUTION	Caution indicates a potentially hazardous situation which, if not avoided, **may** result in **minor or moderate injury.** It may also be used to alert against unsafe practices.
CAUTION	Caution without the safety alert symbol indicates a potentially hazardous situation which, if not avoided, **may** result in **property damage**.

Personnel Requirements

Note! Personnel includes all persons working on or near this equipment.

Only skilled or instructed persons are allowed to work with this equipment.

Skilled Person

A skilled person must have relevant education and experience to enable him or her to identify hazards, analyse risks, and avoid hazards which electricity, machinery, chemicals, other energies, and supply systems on this equipment can create.

Skilled persons must meet local regulations, such as certifications and qualifications for working with these energies and systems.

Instructed Person

An instructed person must be adequately advised or supervised by a skilled person. The skilled person enables the instructed person to identify hazards, analyse risks, and avoid hazards which electricity, machinery, chemicals, other energies, and supply systems on this equipment can create.

Safety Signs

WARNING

Damaged or missing safety signs.
Safety signs are used to indicate safety hazards.
If the signs are missing or damaged, they can not fulfil this function. Replace all missing or damaged safety signs immediately.

Safety signs are attached to the equipment. The table below lists all the signs that are used, and illustrations show their locations on the equipment. Each position number refers to two standards of a safety sign in the table, but only one is used on the equipment.

- Make sure that each safety sign is legible and in its correct position after installation and maintenance.
- Replace all missing or damaged safety signs immediately.

Pos.	ISO standard	ANSI standard
1		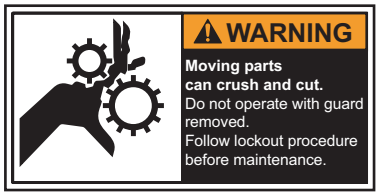
	Moving parts can crush and cut. Do not operate with guard removed. Follow lockout procedure before maintenance.	
2		
	Moving part can crush and cut. Do not operate with guard removed. Follow lockout procedure before maintenance.	
3		
	Moving part can crush and cut. Do not put hands into the machine. Follow lockout procedure before maintenance.	

Pos.	ISO standard	ANSI standard
4		
	Hazardous voltage. Will shock, burn, or cause death. Follow lockout procedure before maintenance.	
5		
	Hazardous residual voltage on capacitors. Will shock, burn or cause death. Do not touch until safe. Follow instructions for safe work practices.	
6		
	Laser Radiation. Do not stare into beam. Class 2 laser product.	
7		
	Risk of equipment damage. Do not let water into this area.	
8		
	Hot surface. Do not touch. Follow lockout procedure before maintenance.	

Pos.	ISO standard	ANSI standard
9		
	Equipment starts automatically. May cause injury. Stay clear from equipment.	
10		
	Do not reach in. Moving parts may cause injury Follow instructions for safe work practice.	
11		
	To prevent serious injury: Do not operate this machine unless all doors are closed and guards are in place and operating. Read manual before first operating machine. If manual is missing, contact Tetra Pak.	
12	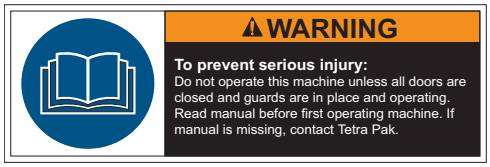	
	To prevent serious injury: Do not operate this machine unless all doors are closed and guards are in place and operating. Read manual before first operating machine. If manual is missing, contact Tetra Pak.	
13		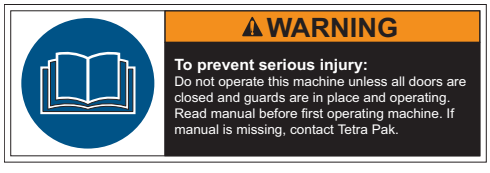
	To prevent serious injury: Do not operate this machine unless all doors are closed and guards are in place and operating. Read manual before first operating machine. If manual is missing, contact Tetra Pak.	

Pos.	ISO standard	ANSI standard
14		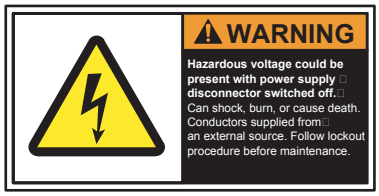
15		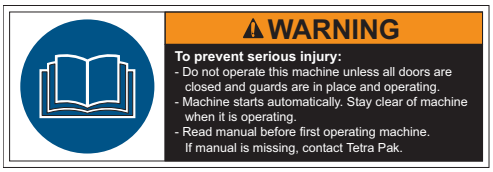

Hazardous voltage could be present with power supply disconnector switched off.
Can shock, burn or cause death.
Conductors supplied from an external source.
Follow lockout procedure before maintenance.

To prevent serious injury:
- Do not operate this machine unless all doors are closed and guards are in place and operating.
- Machine starts automatically. Stay clear of machine when it is operating.
- Read manual before first operating machine. If manual is missing, contact Tetra Pak.

Locations of Safety Signs, TB/TBA/TPA

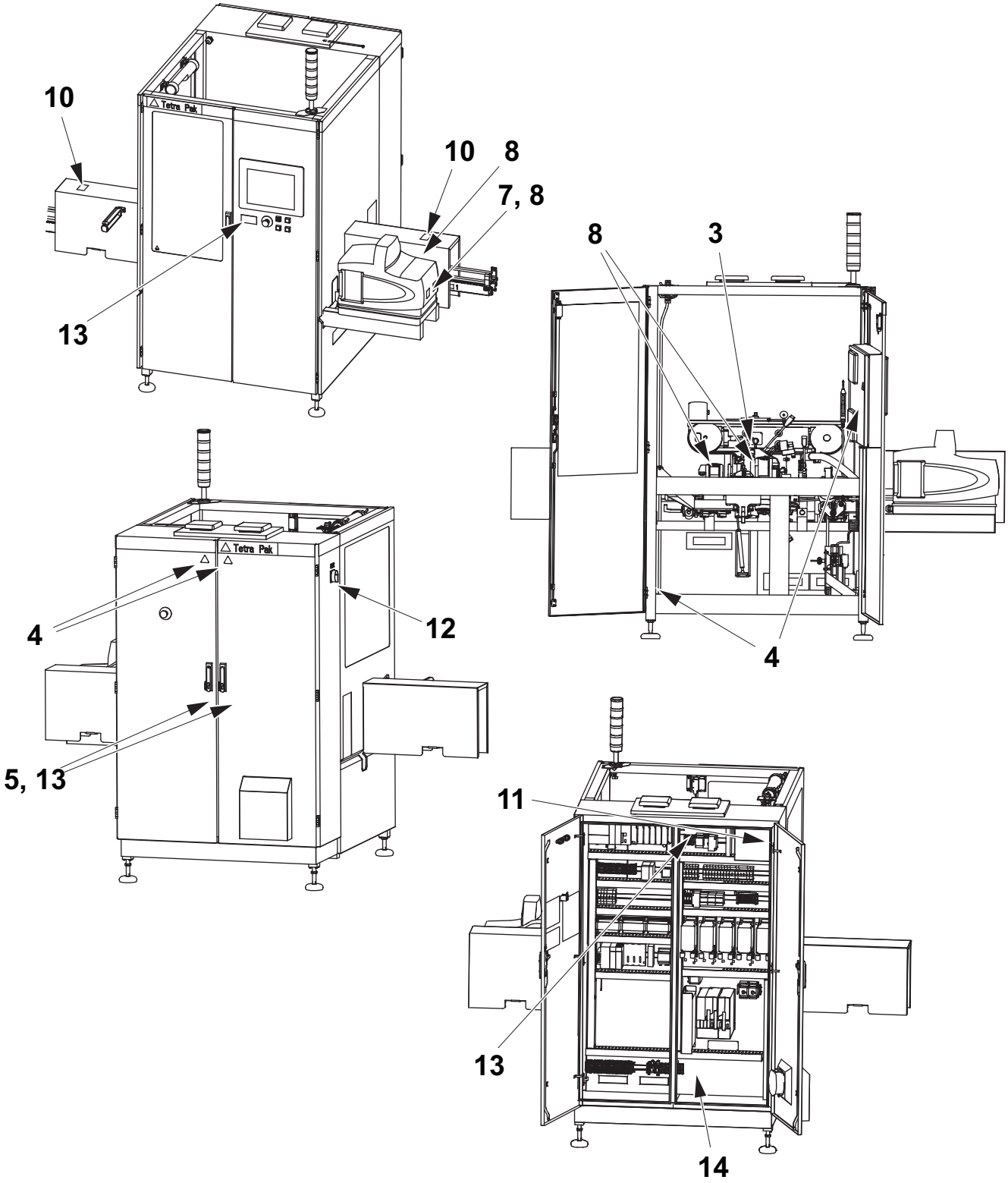

Locations of Safety Signs, TCA

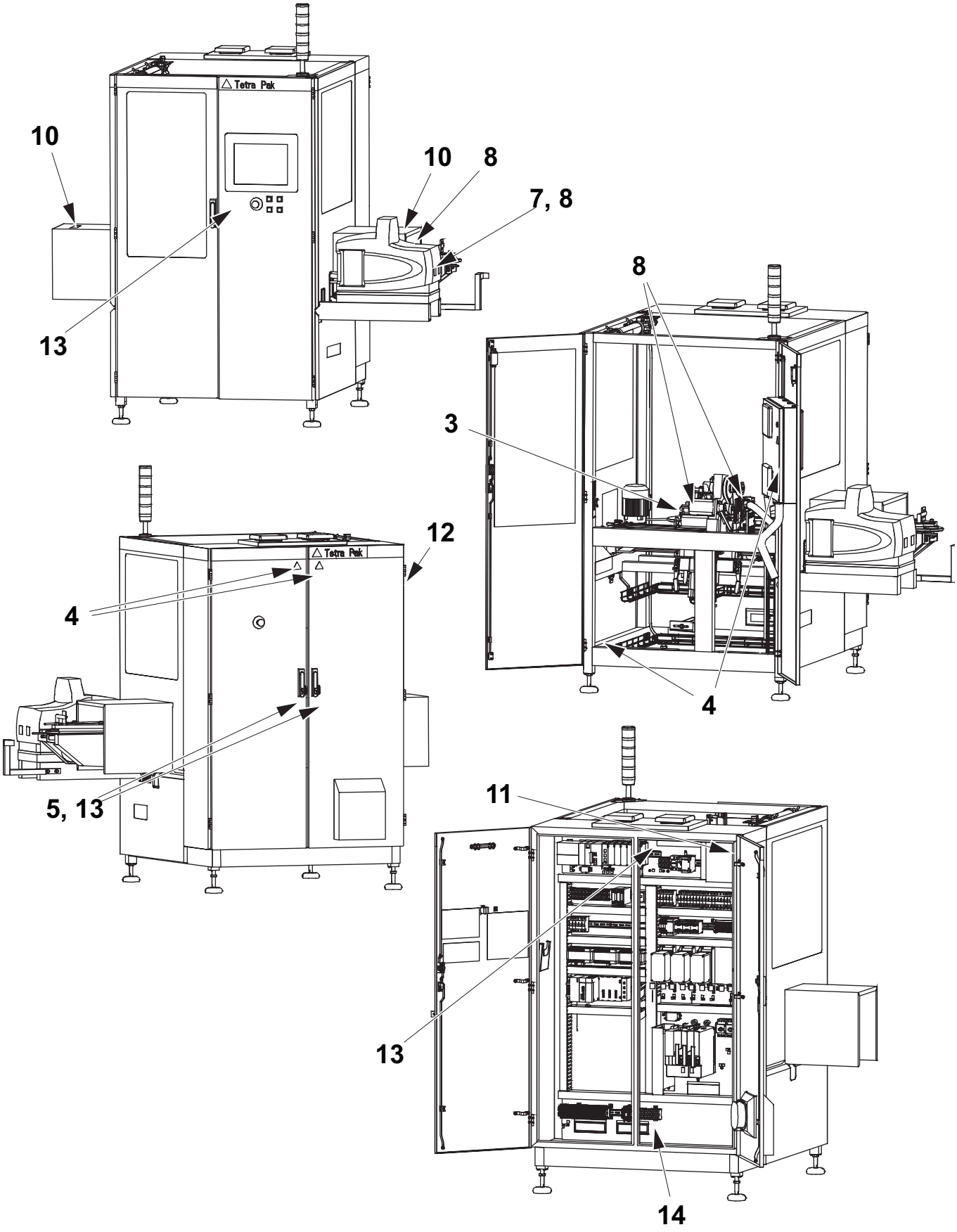

Locations of Safety Signs, TWA

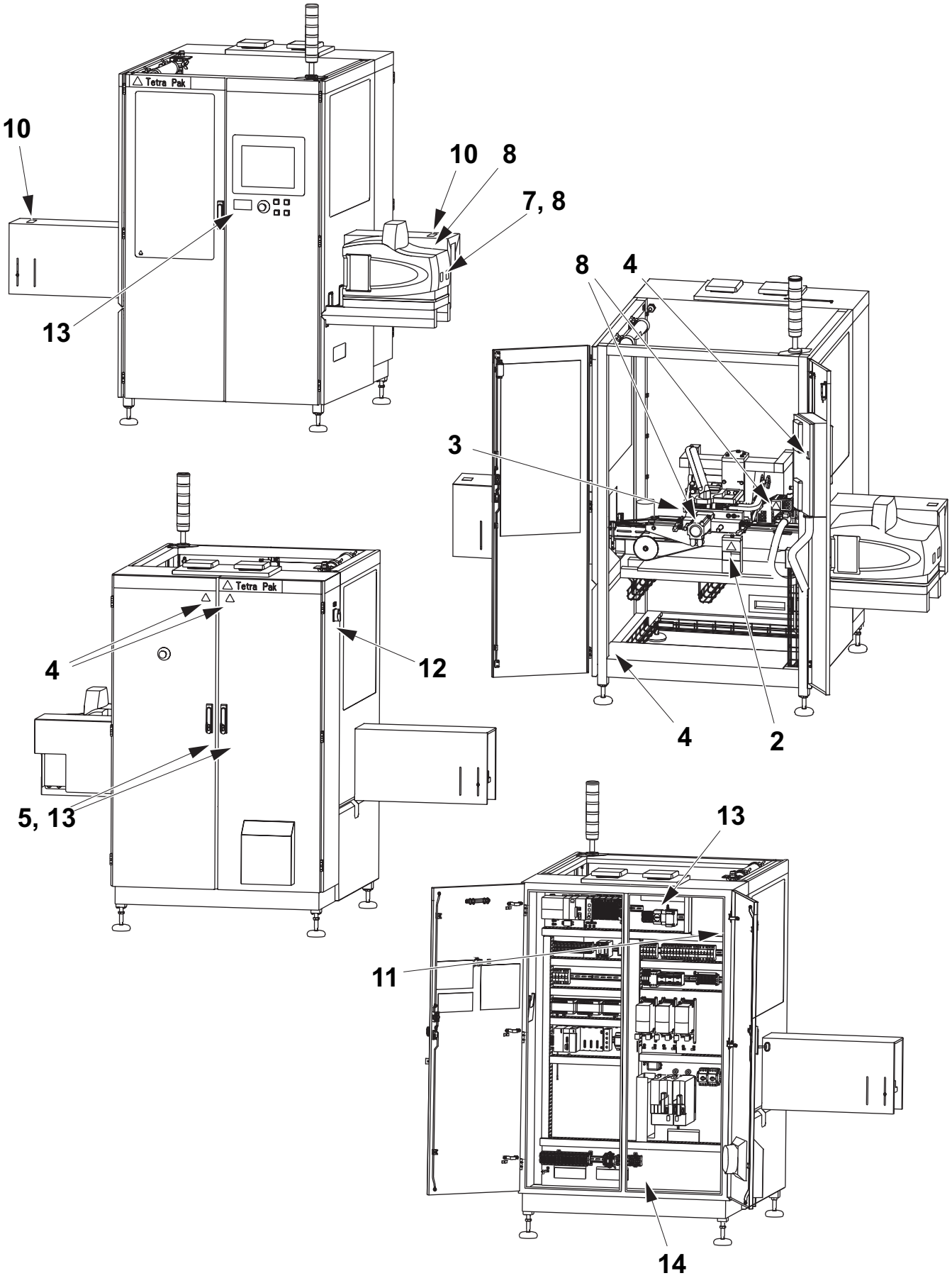

Locations of Safety Signs, Optional Equipment

BFT

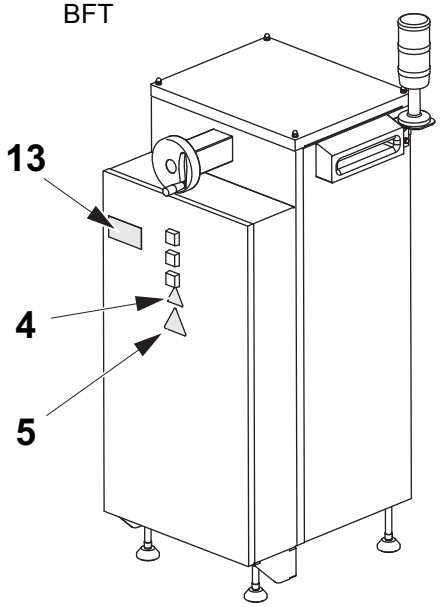

SD30

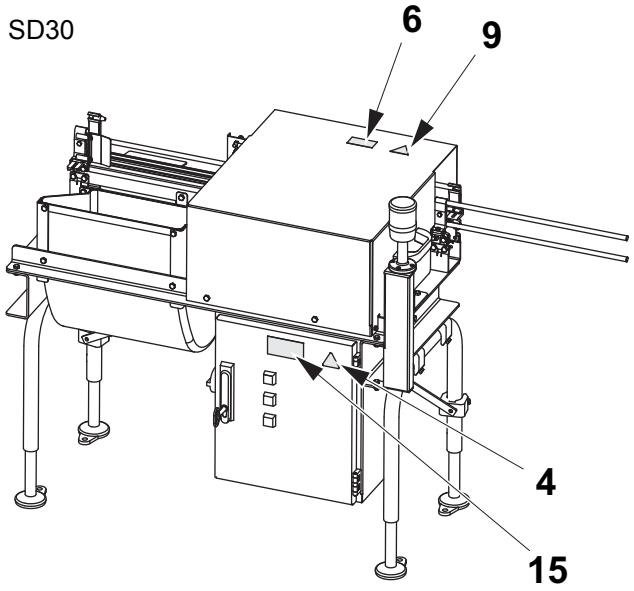

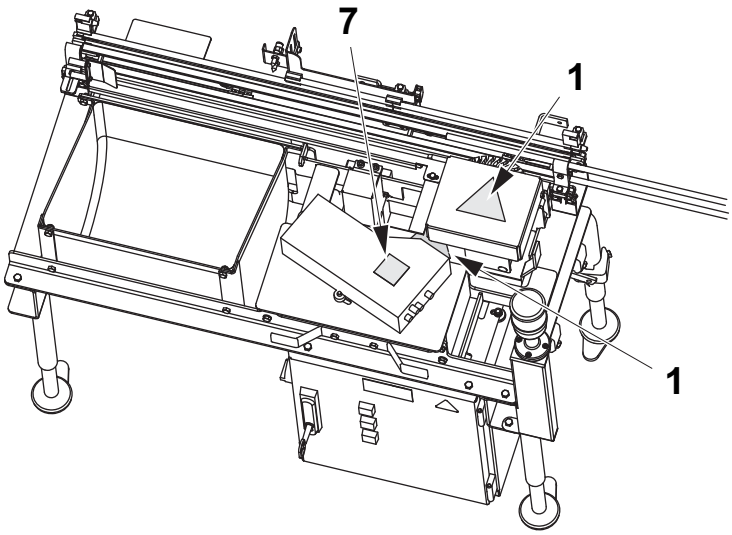

Protective Devices

There are different kinds of protective device designed to ensure safe use of the equipment. See the sections below.

WARNING

Hazardous zones.

Hazardous zones are safeguarded and provided with protective devices. Do not inch or run this equipment if any protective device is inoperative.

Change inoperative components of the safety system immediately.

For the locations of safeguards and/or other protective devices not mentioned in this section, see the Maintenance Manual.

DANGER

Hazardous voltage.

Will shock, burn, or cause death.

Hazardous voltage remains ON after activating an EMERGENCY STOP.

Emergency Stop

Emergency stop devices are used to stop this equipment immediately in an hazardous situation. Learn the positions of all emergency stop devices and how to use them.

Instructions for a normal production stop are included in the Stop chapter of the Operation Manual.

Emergency Stop Buttons

Push one of the EMERGENCY STOP buttons to stop this equipment immediately.

The location of each EMERGENCY STOP button is shown by an arrow.

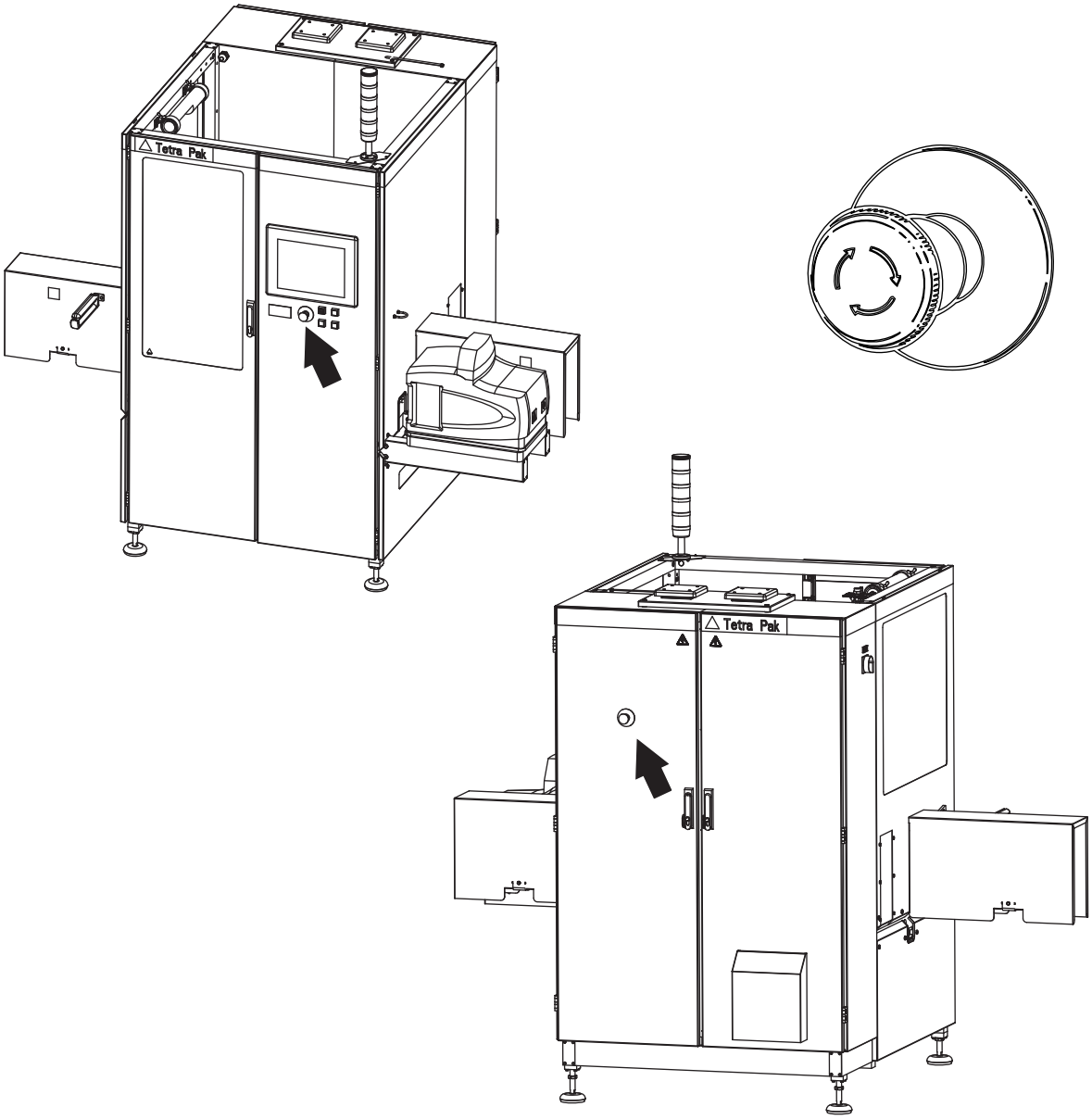

Safeguards

WARNING

Moving machinery parts.

Never defeat or bypass the interlocking devices.

Movable guards, for example, doors and covers leading to hazardous zones, are fitted with interlocking devices where required. These devices are usually electric safety switches that are parts of the safety system and must never be defeated, bypassed, or otherwise made inoperative.

CAUTION

Corners and edges.

Close the doors, guards, or parts of the equipment unless they must be open during work.

CAUTION

Burn hazard.

Parts of the equipment protected by guards may be hot after operation. Allow components to cool down or use personal protective equipment.

After installation and maintenance, and before this equipment is inched or run, check that all safeguards are in place and that they operate correctly.

(Cont'd)

(Cont'd)

CAUTION
Equipment damage.
The equipment can be damaged if it is not stopped in the correct way. Never stop this equipment by opening a movable guard, for example, a door or cover, equipped with an interlocking device.

The location of the interlocking device is shown by an arrow.

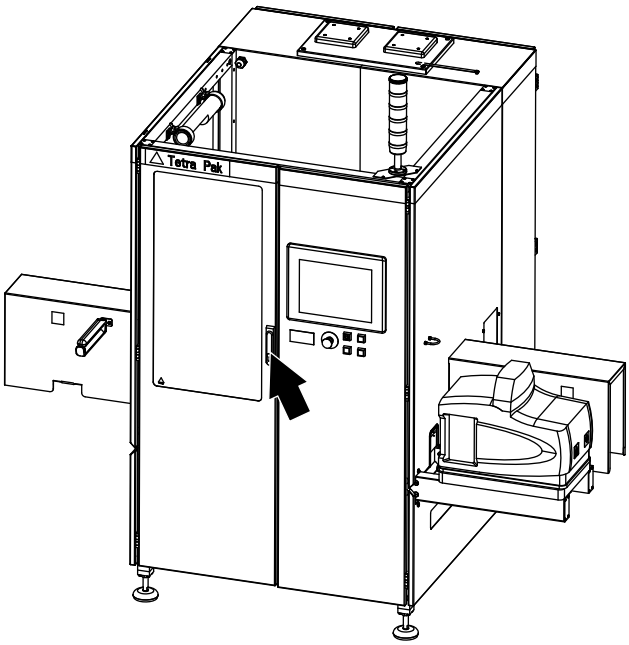

Warning Lamp

A warning lamp is a column of warning lights:

- A red light (2) indicates a hazardous condition. This is a situation that requires immediate action.
- A yellow light (3) indicates an abnormal or impending critical condition. This is a condition calling for action by the operator.
- A blue light (4) indicates that operator action is required.
- A green light (5) indicates a normal condition.

Audible Alarm

The audible alarm (1) produces a warning signal before the safety circuit is reset.The warning signal sounds for approximately three seconds to alert personnel. The reset of the safety circuit will make it possible to step up the machine and allow the equipment to start.

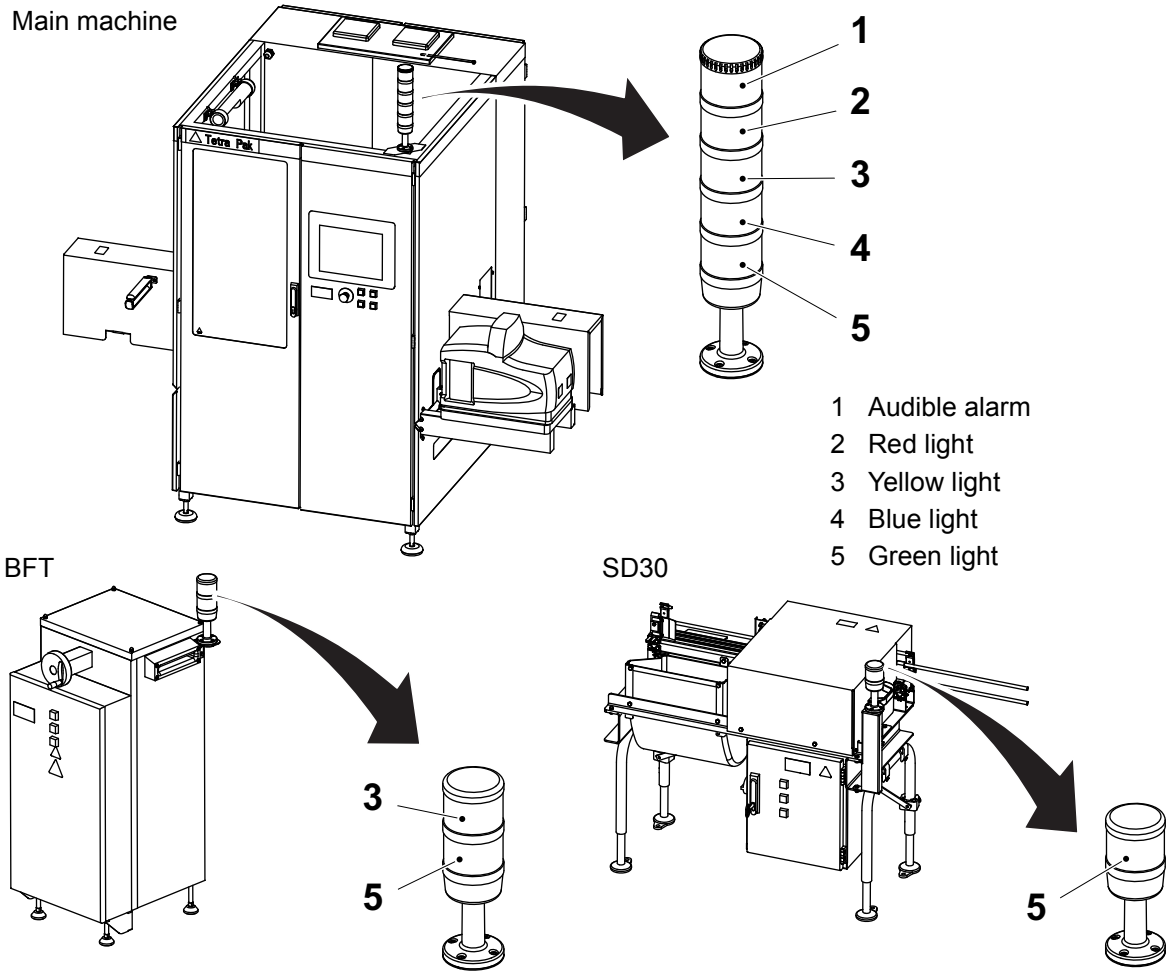

Protective Covers

Note! After maintenance, check that all covers are fitted to the machine before it is run.

SD30

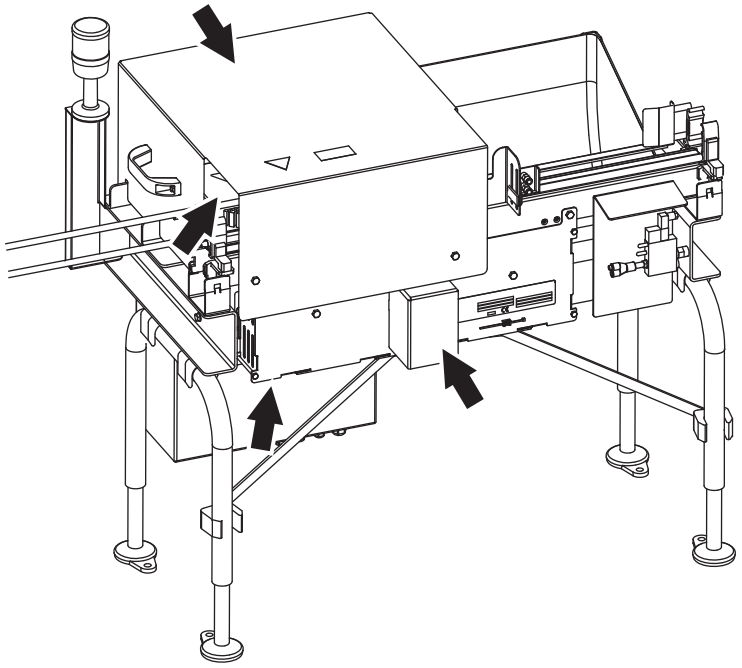

Safe Manual Handling

Use mechanical lifting aids whenever possible. If mechanical lifting aids are not available, do not attempt to lift loads over 23 kg without the assistance of a colleague. Avoid lifting below knee height and above shoulder height. If it is necessary to lift from the floor, follow the instructions below to reduce the risk of back and disc injuries.

- Use safety shoes and be sure that the surface of the floor is not slippery.
- Get close to the load.
- Take a wide stance and find the best positions for your feet.
- Bend your hips and knees, and use your leg muscles.
- Keep the load close to your body.
- Do not twist your body while moving the load.
- Take small steps when turning.

In order to reduce the risk of injury to discs and back muscles, be careful to not bend or twist your back when lifting. Keep the load close to your body to reduce the strain on your back.

To reduce the ergonomic risks to each individual operator, job rotation is recommended, so that recovery and variety are provided.

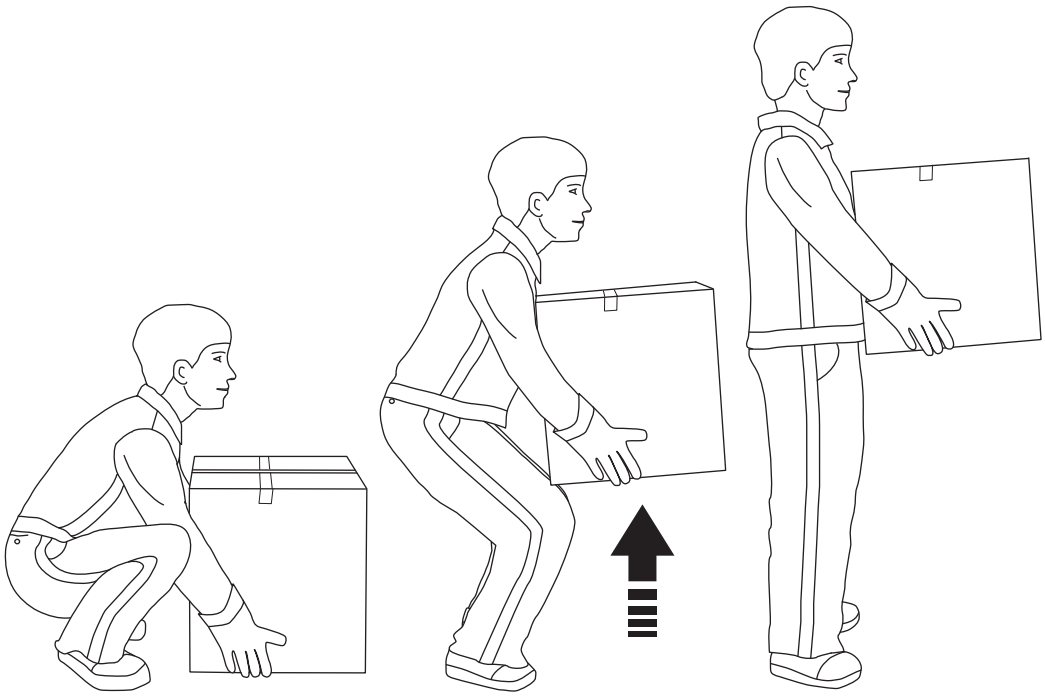

Personal Protection

This section applies to all personnel at all times when this equipment is in operation.

Noise

CAUTION

Hazardous noise.

May cause impaired hearing.

Hearing protection is recommended whenever this equipment is in operation.

Entanglement

WARNING

Risk of entanglement.

Do not wear jewellery or loose clothing when working on or near this equipment. Restrain long hair with, for example, clips or rubber bands.

Supply Systems

Power Supply

DANGER

Hazardous voltage and moving machinery.
The power supply disconnector must be turned off and secured with a lock before any maintenance.

Note! The key to the lock must be removed by the technician and retained in his/her possession until all work is completed.

DANGER

Hazardous voltage can be present with the power supply switched off.
Circuits identified by orange-coloured conductors are not disconnected by the main power supply disconnector. The location of the power supply disconnector of these circuits is described in the Maintenance Manual procedures that include work on these types of circuit.

Certain maintenance procedures may require power supply systems to be on. These exceptions are clearly stated in the Maintenance Manual.

(Cont'd)

(Cont'd)

The illustrations show the power supply disconnector (main switch) and its location.

The power supply disconnectors (main switches) are coloured red and yellow on this equipment, which means that it can be used as an emergency switching off device.

Any equipment connected to the main machine will be dead when the power supply disconnector (main switch) on the main machine is switched OFF.

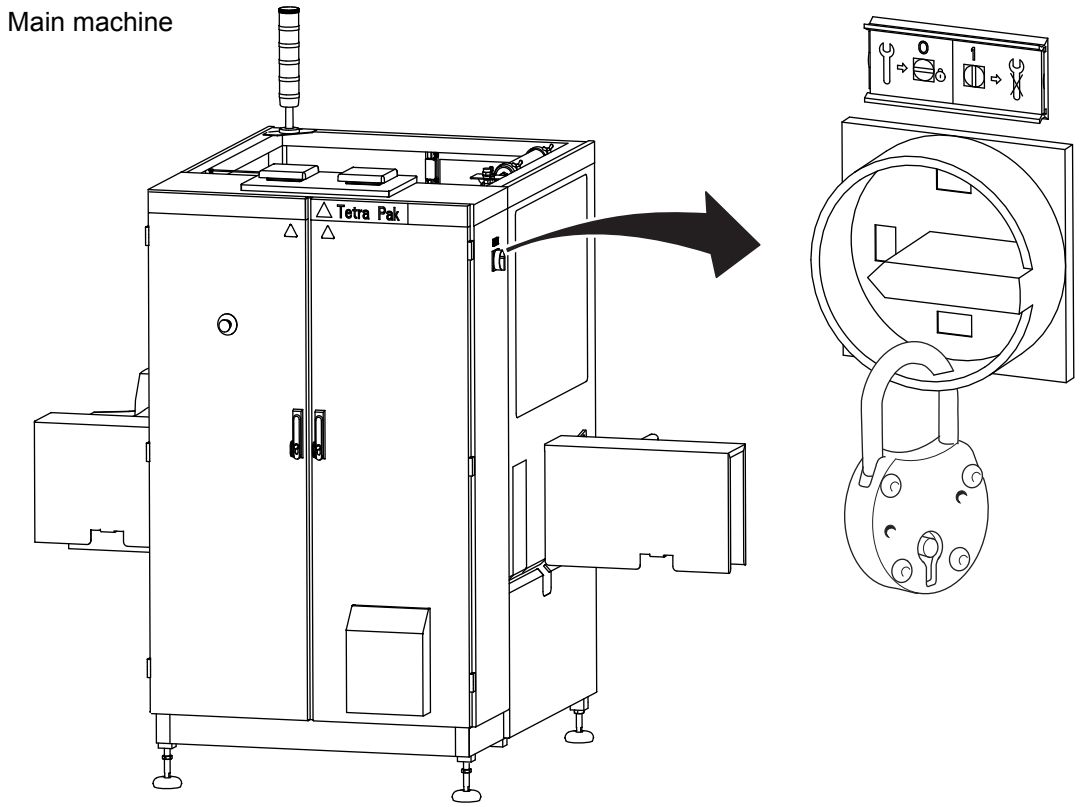

(Cont'd)

(Cont'd)

BFT

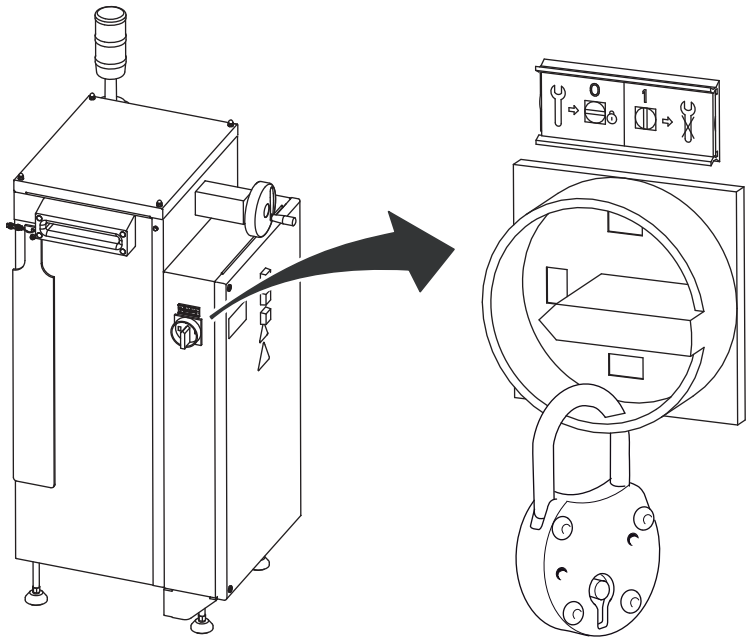

SD30

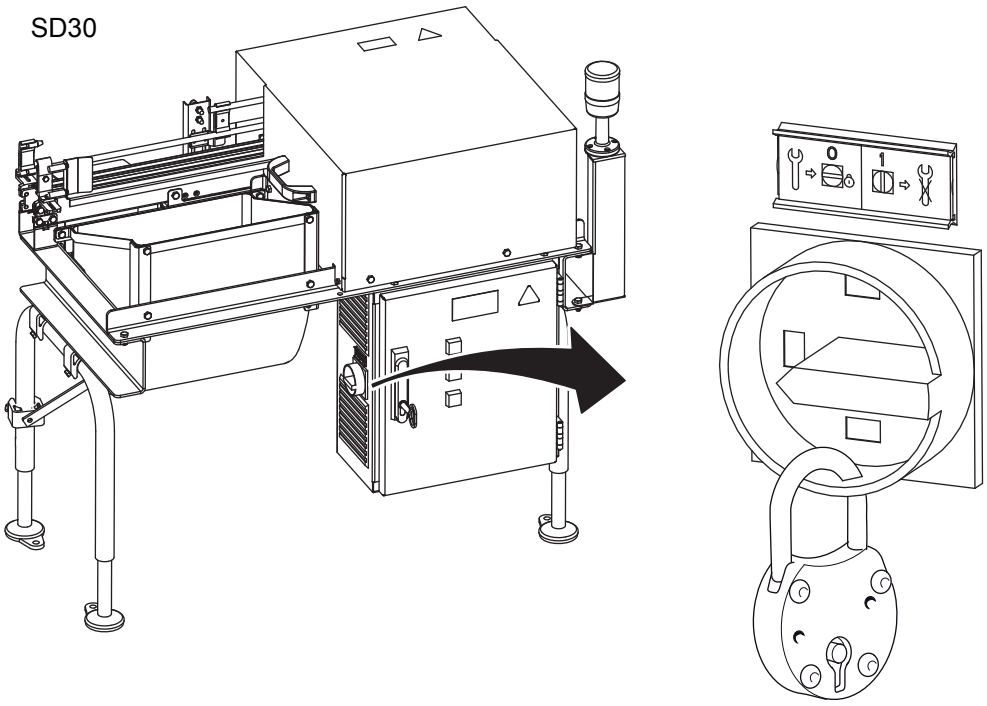

Residual Voltage

DANGER

Hazardous voltage.
Will shock, burn, or cause death.
After the power supply disconnector is turned off, residual voltage remains in the capacitor circuits.
Wait five minutes before opening the enclosure containing these circuits.
Ensure that no residual voltage remains on the capacitors before touching them.

Electrical Cabinet

DANGER

Hazardous voltage.
Will shock, burn, or cause death.
Parts behind doors to electrical enclosures may be live. The power supply disconnector must be turned off and secured with a lock before performing maintenance inside the electrical cabinet.

Note! The key to the lock must be removed by the technician and retained in his/her possession until all work is completed.

(Cont'd)

(Cont'd)

The use of a key or a tool is necessary to access to the electrical cabinet.

Make sure that the electrical cabinet doors are closed after working inside the electrical cabinet. Doors with locks must be locked.

The location of each electrical cabinet is shown by an arrow.

Main machine

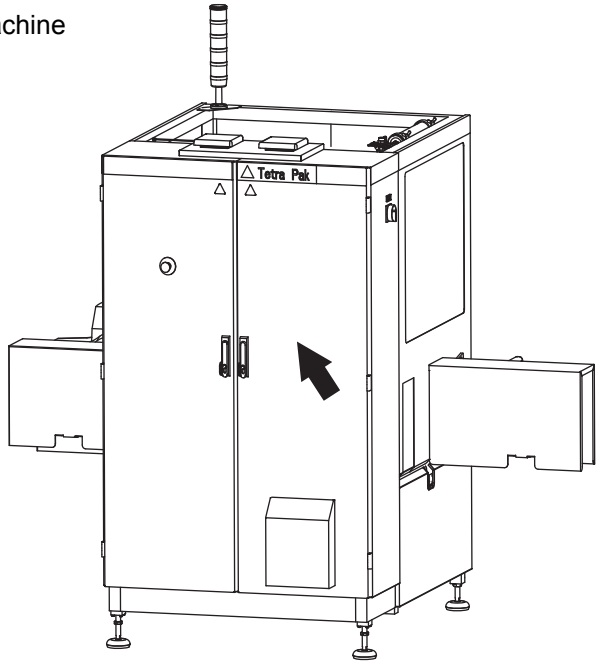

BFT

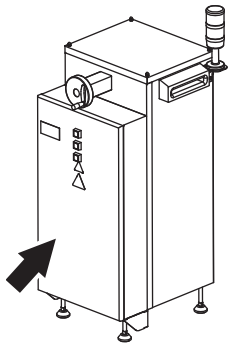

SD30

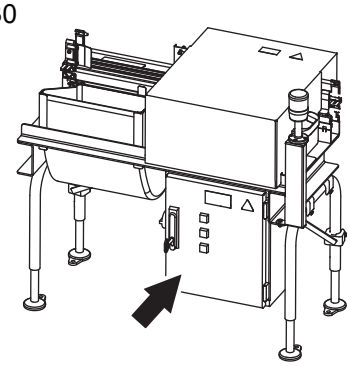

Socket Outlet

WARNING
Hazardous voltage.
Can shock, burn, or cause death.
Read the Maintenance Manual before using this socket outlet.

The socket outlet (1) is connected to a residual current device (2) to protect users against electrical shock if there is an earth fault in the connected equipment. The residual current device must be tested each time before the socket outlet is being used. See the MM for test procedure.

The illustrations show the socket outlet, the residual current device, and their locations.

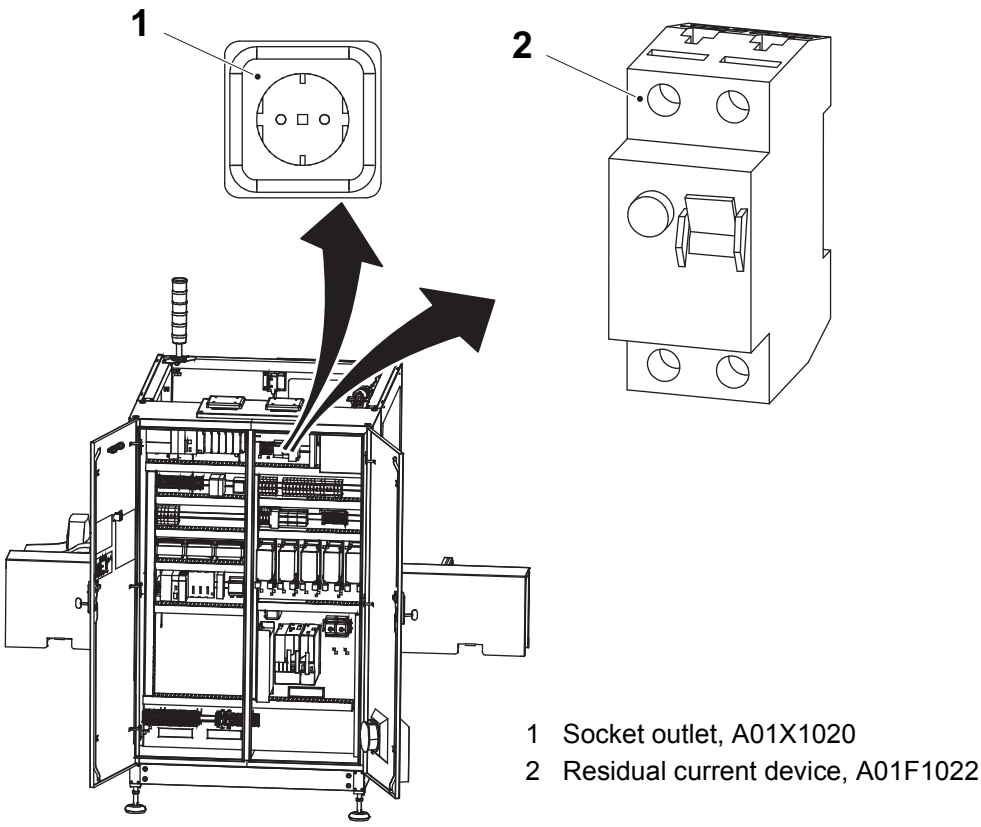

1 Socket outlet, A01X1020
2 Residual current device, A01F1022

Air Supply

WARNING

Compressed air and moving machinery.
Close the main air valve and lock it, and safely release compressed air from the air system before any maintenance.

Note! The key to the lock must be removed by the technician and retained in his/her possession until all work is completed.

Certain maintenance procedures may require air supply systems to be on. These exceptions are clearly stated in the Maintenance Manual.

The illustrations show the main air valve (1), the lock (2), and their location.

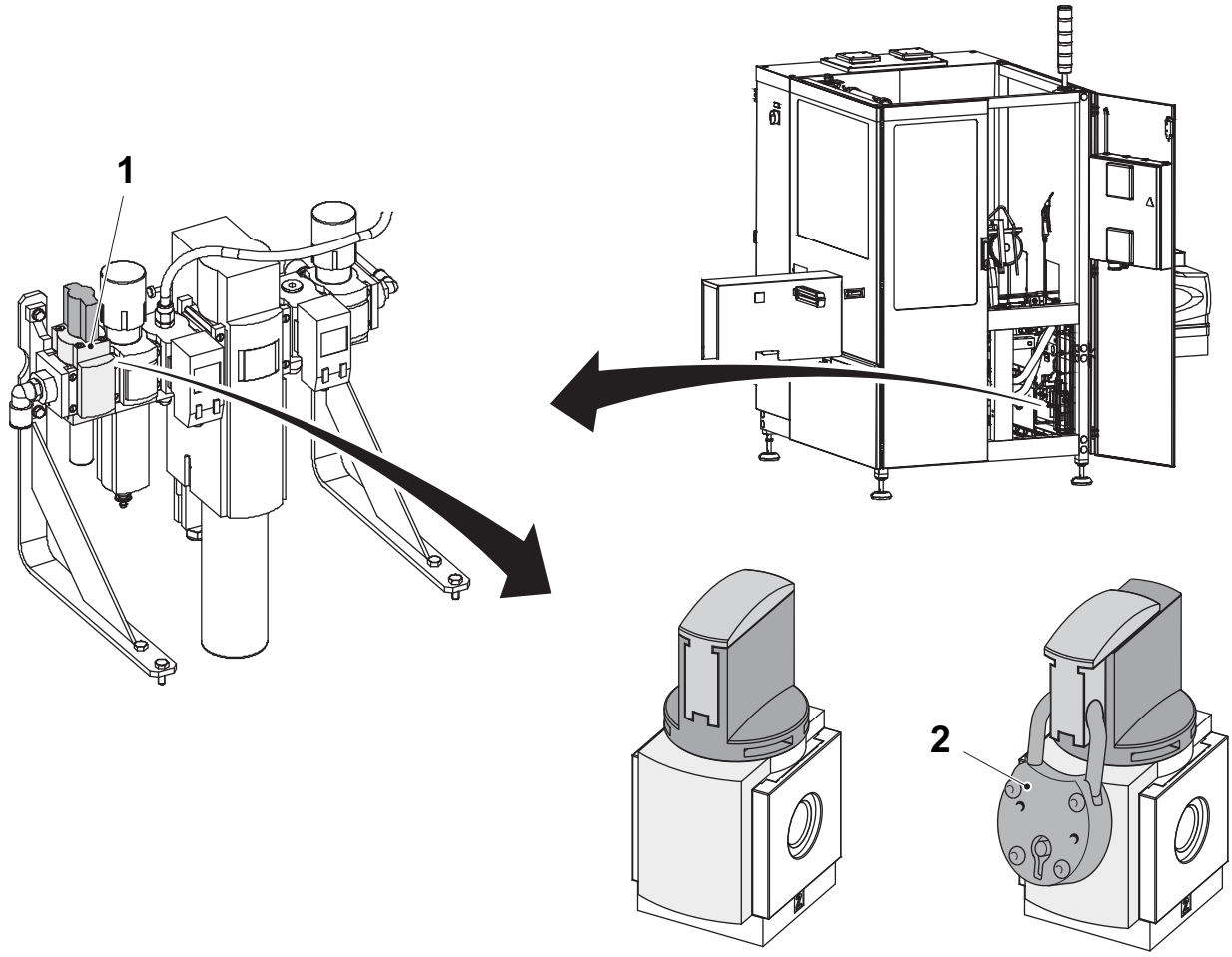

1 Main air valve
2 Lock

Hotmelt Equipment

DANGER

Hazardous voltage.
The voltage is 400V inside the hotmelt unit. Risk of immediate danger to life through electrical shock.

Never flush water or any other liquid towards the hotmelt unit when cleaning the machine. Failure to obey will result in danger to your life.

WARNING

Important when working on hotmelt equipment.
All service work on the hotmelt unit must be carried out by authorized personnel. Always wear safety glasses, protective gloves, and other protective clothing to avoid injuries caused by splashing adhesive.

Never remove any part or component until air and the electrical supply to the machine have been disconnected and the pressure of the adhesive in the system has been relieved.

Failure to relieve any remaining air or liquid (adhesive) pressure may cause serious injuries from burning when the hotmelt filter is detached or flushed.

During heating and production the unit gets hot. The hotmelt tank contains heated adhesive which can cause serious injuries. Do not touch the adhesive!

During tank drainage never touch the drain shut!

(Cont'd)

(Cont'd)

WARNING

Burn hazard.

The hotmelt nozzles and their covers are very hot and there is risk of severe burns. Never touch the hotmelt nozzles or their covers!

Note! The section Hotmelt equipment in this manual only deals with what is specific for this machine.

Always refer to the documentation provided from Nordson Corporation (is included in english in the delivery from Tetra Pak) before doing any kind of work on the hotmelt equipment.

TB/TBA/TPA

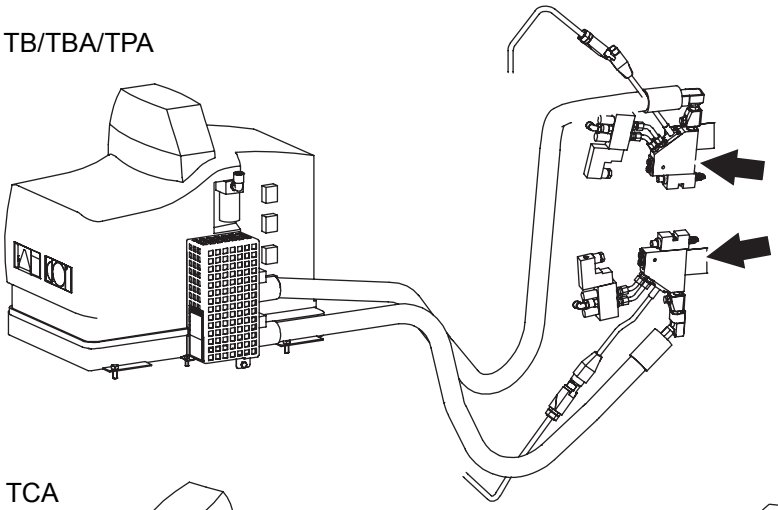

TCA

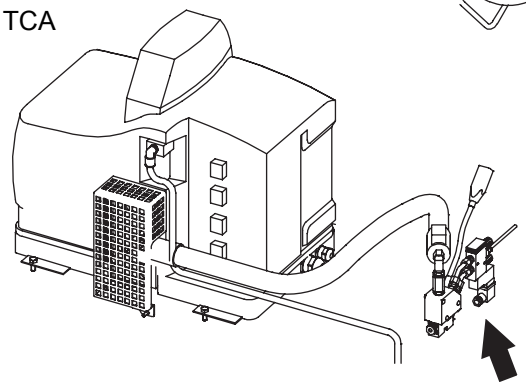

TWA

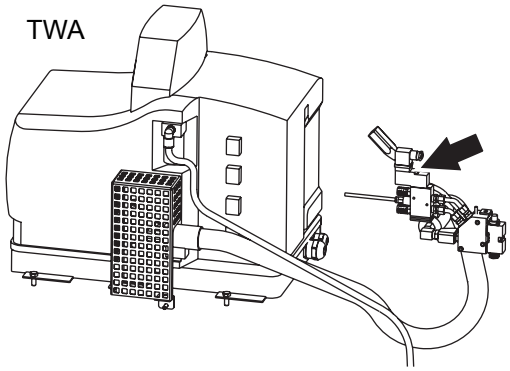

This page intentionally left blank

1 Electrical Systems Description

About the Electrical Systems Description Chapter

This chapter contains a description of the safety system connections in the machine or equipment.

1.1 Main Machine . . . . . 1 - 5

This page intentionally left blank

1.1 Main Machine

This page intentionally left blank

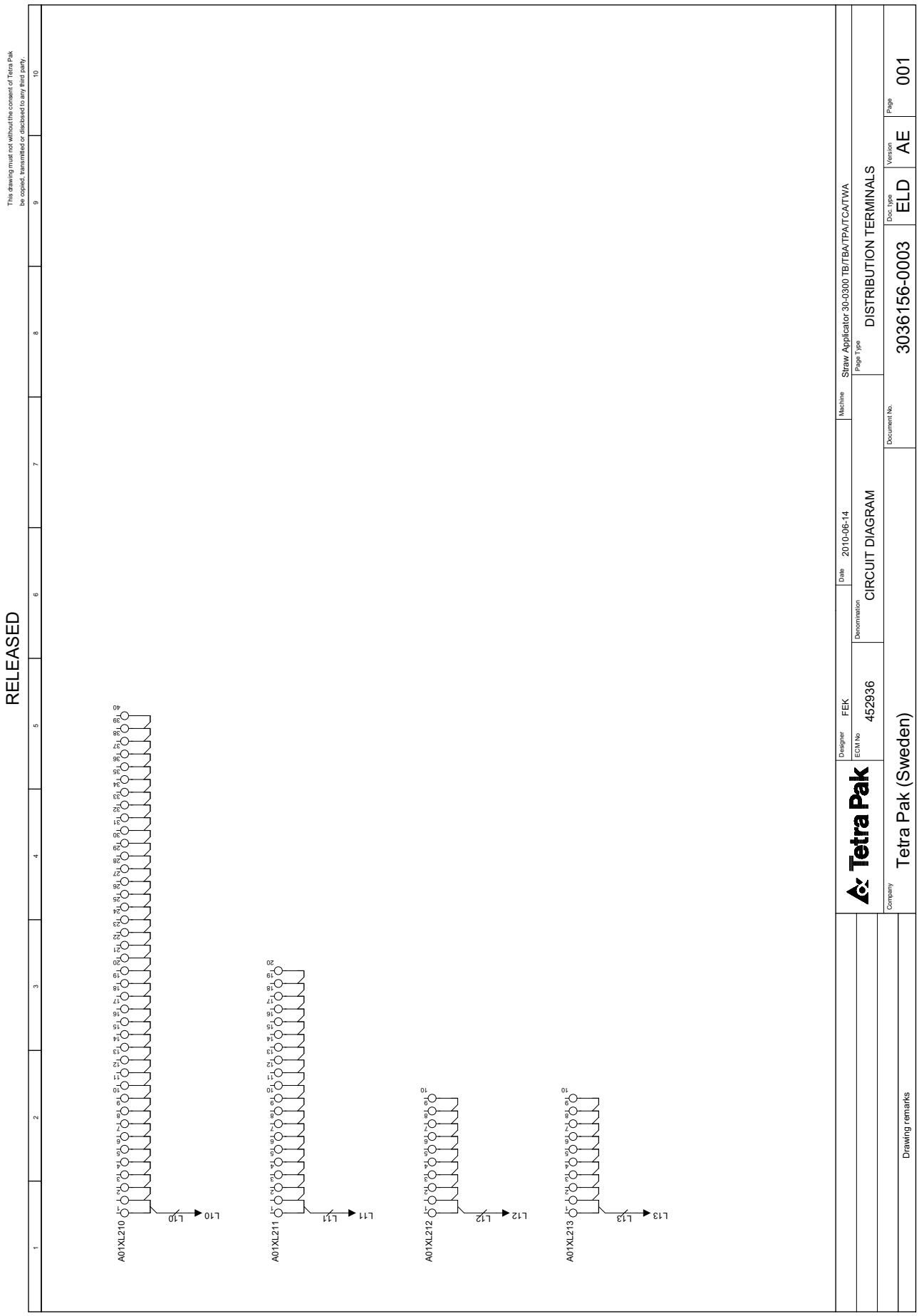
RELEASED
This drawing must not without the consent of Tetra Pak be copied, transmitted or disclosed to any third party.
A01XL210
A01XL211
A01XL212
A01XL213
L10
L11
L12
L13
Tetra Pak
Designer FEK
Date 2010-06-14
Machine Straw Applicator 30-0300 TB/TBA/TPA/TCA/TWA
ECM No 452936
Denomination CIRCUIT DIAGRAM
Page Type DISTRIBUTION TERMINALS
Company Tetra Pak (Sweden)
Document No. 3036156-0003
Doc. type ELD
Version AE
Page 001
Drawing remarks

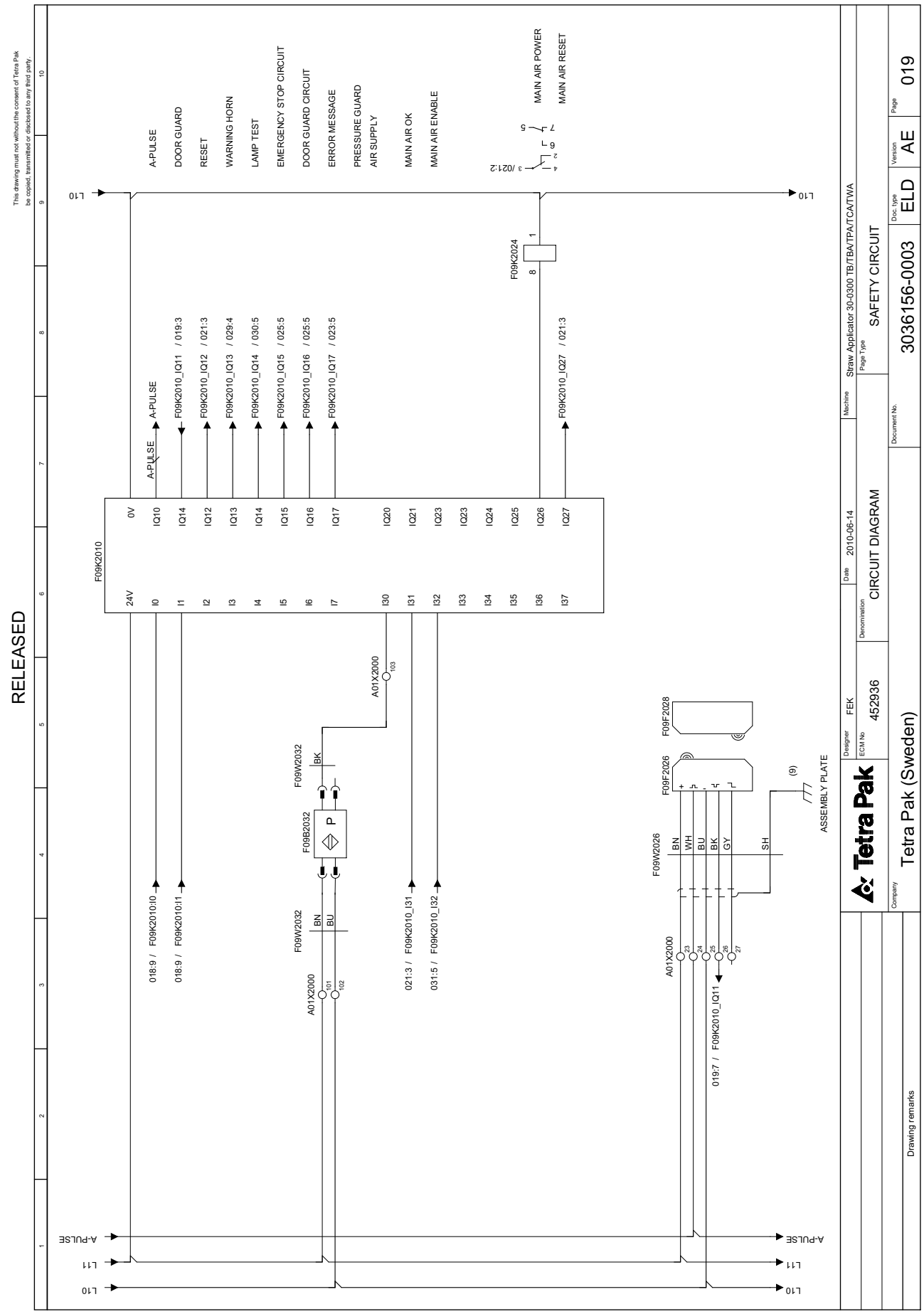
RELEASED
This drawing must not without the consent of Tetra Pak be copied, transmitted or disclosed to any third party
L10
L11
A-PULSE
F09K2010
A-PULSE
DOOR GUARD
RESET
WARNING HORN
LAMP TEST
EMERGENCY STOP CIRCUIT
DOOR GUARD CIRCUIT
ERROR MESSAGE
PRESSURE GUARD
AIR SUPPLY
MAIN AIR OK
MAIN AIR ENABLE
MAIN AIR POWER
MAIN AIR RESET
F09K2024
F09K2010_IQ11 / 019:3
F09K2010_IQ12 / 021:3
F09K2010_IQ13 / 029:4
F09K2010_IQ14 / 030:5
F09K2010_IQ15 / 025:5
F09K2010_IQ16 / 025:5
F09K2010_IQ17 / 023:5
F09K2010_IQ27 / 021:3
018:9 / F09K2010:I0
018:9 / F09K2010:I1
021:3 / F09K2010_I31
031:5 / F09K2010_I32
019:7 / F09K2010_IQ11
A01X2000
F09W2032
F09B2032
F09W2026
F09F2026
F09F2028
ASSEMBLY PLATE
Designer FEK
ECM No 452936
Denomination CIRCUIT DIAGRAM
Date 2010-06-14
Machine Straw Applicator 30-0300 TB/TBA/TPA/TCA/TWA
Page Type SAFETY CIRCUIT
Document No. 3036156-0003
Doc. type ELD
Version AE
Page 019
Company Tetra Pak (Sweden)
Drawing remarks

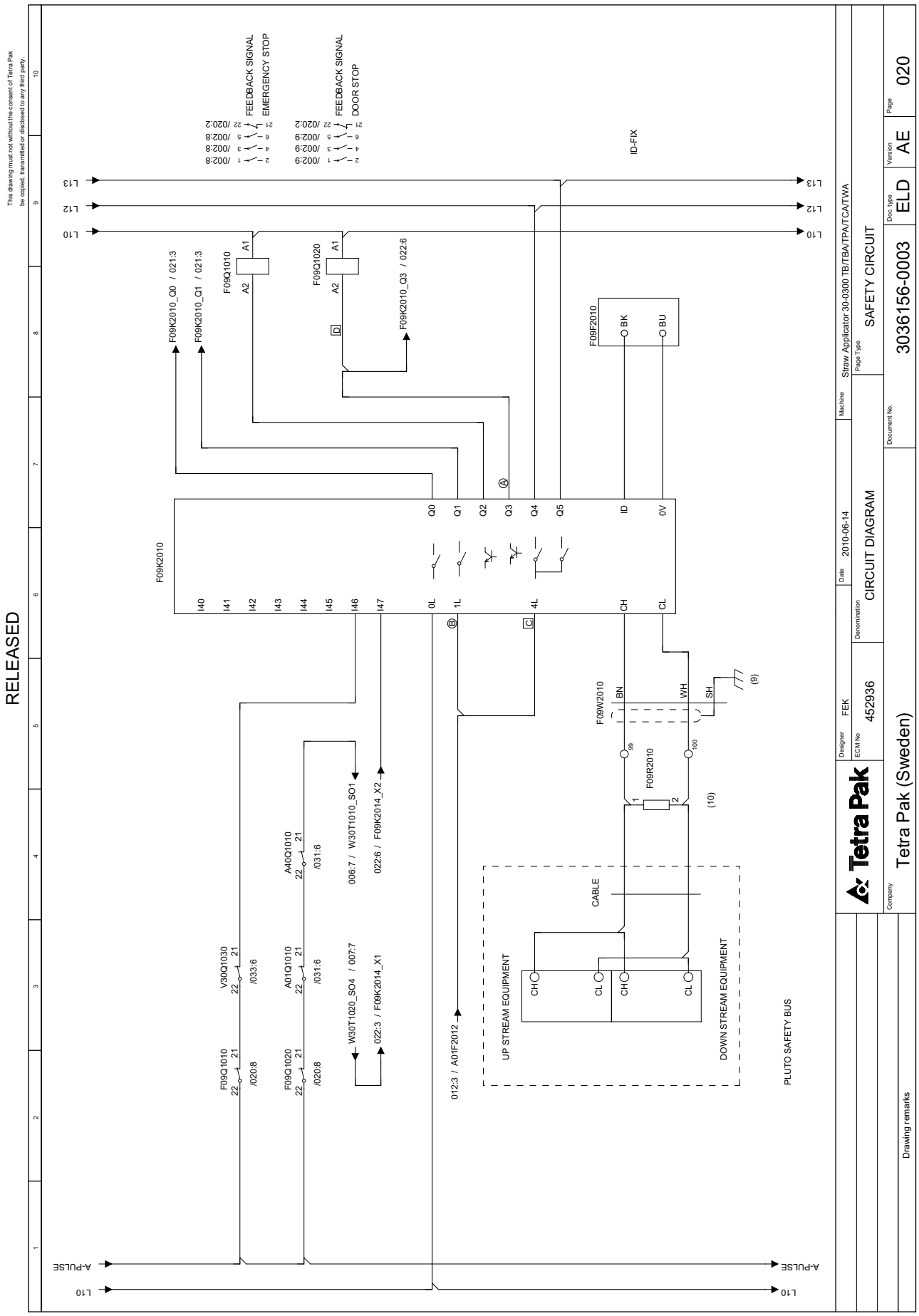
RELEASED
This drawing must not without the consent of Tetra Pak be copied, transmitted or disclosed to any third party.
FEEDBACK SIGNAL EMERGENCY STOP
FEEDBACK SIGNAL DOOR STOP
ID-FIX
F09K2010
F09Q1010
F09Q1020
F09F2010
F09W2010
F09R2010
F09K2010_Q0 / 021:3
F09K2010_Q1 / 021:3
F09K2010_Q3 / 022:6
L10
L12
L13
A-PULSE
UP STREAM EQUIPMENT
DOWN STREAM EQUIPMENT
CABLE
PLUTO SAFETY BUS
012:3 / A01F2012
W30T1020_SO4 / 007:7
022:3 / F09K2014_X1
006:7 / W30T1010_SO1
022:6 / F09K2014_X2
Tetra Pak
Designer FEK
EDM No 452936
Denomination CIRCUIT DIAGRAM
Date 2010-06-14
Machine Straw Applicator 30-0300 TB/TBA/TPA/TCA/TWA
Page Type SAFETY CIRCUIT
Document No. 3036156-0003
Doc. type ELD
Version AE
Page 020
Company Tetra Pak (Sweden)
Drawing remarks

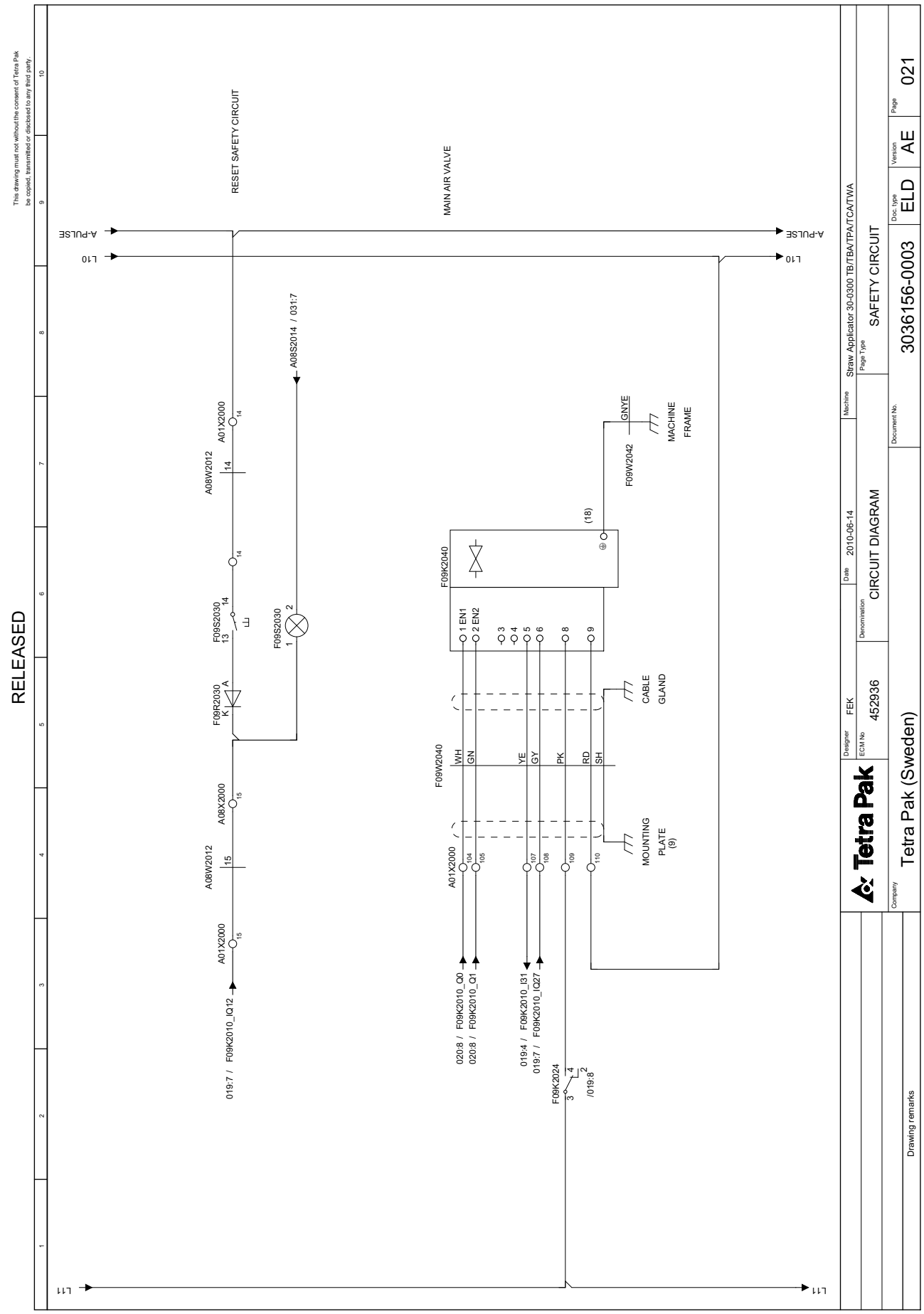
RELEASED
This drawing must not without the consent of Tetra Pak be copied, transmitted or disclosed to any third party.
RESET SAFETY CIRCUIT
MAIN AIR VALVE
A-PULSE
L10
L11
A08S2014 / 031:7
A01X2000
A08W2012
F09S2030
F09S2030
F09R2030
K1
A08X2000
A08W2012
A01X2000
019:7 / F09K2010_IQ12
F09K2040
F09W2042
GNYE
MACHINE FRAME
(18)
F09W2040
WH
GN
YE
GY
PK
RD
SH
CABLE GLAND
MOUNTING PLATE (9)
A01X2000
020:8 / F09K2010_Q0
020:8 / F09K2010_Q1
019:4 / F09K2010_I31
019:7 / F09K2010_IQ27
F09K2024
/019:8
Designer FEK
ECM No 452936
Denomination CIRCUIT DIAGRAM
Date 2010-06-14
Machine Straw Applicator 30-0300 TB/TBA/TPA/TCA/TWA
Page Type SAFETY CIRCUIT
Document No. 3036156-0003
Doc. type ELD
Version AE
Page 021
Company Tetra Pak (Sweden)
Drawing remarks
Tetra Pak

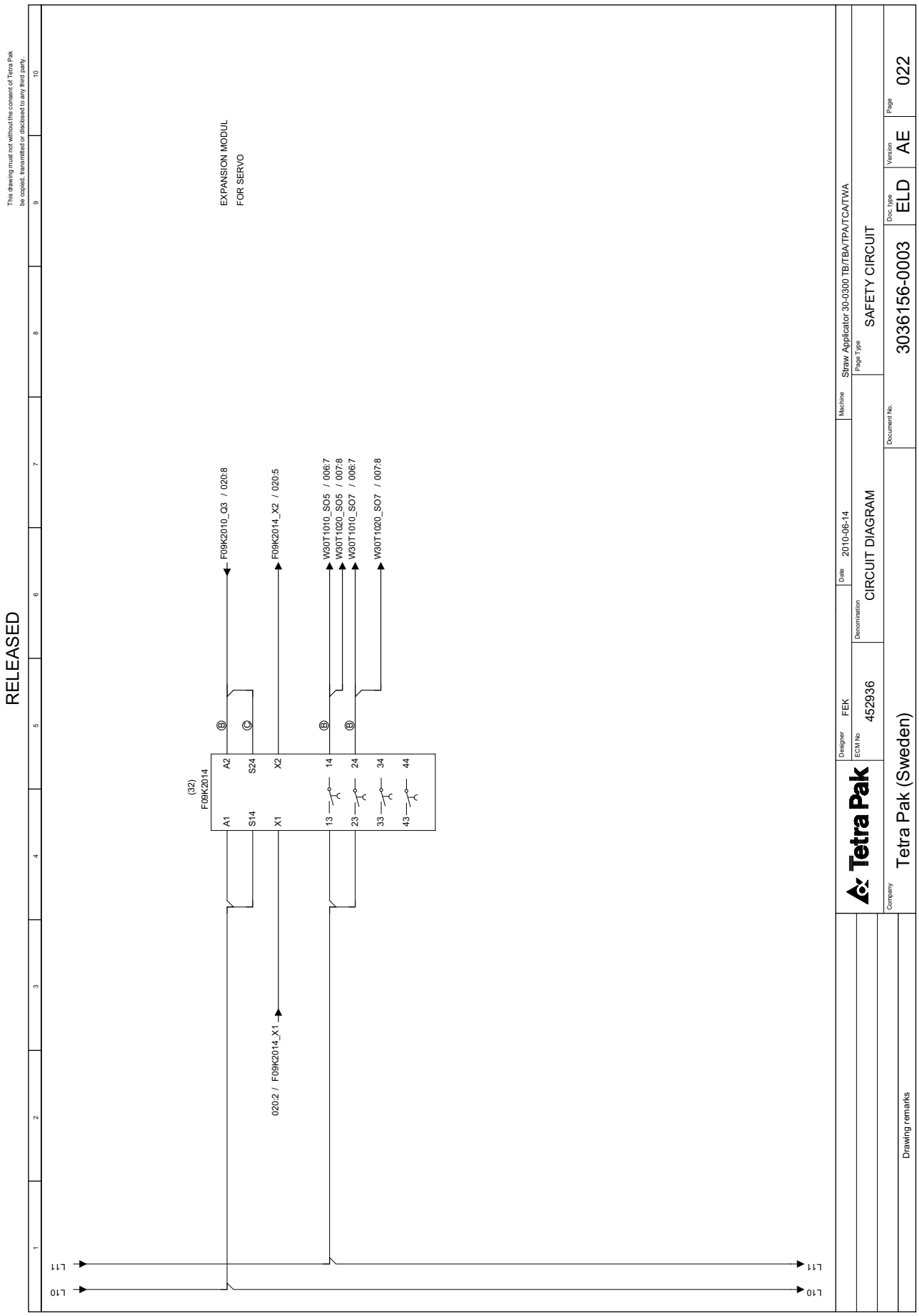
RELEASED
This drawing must not without the consent of Tetra Pak be copied, transmitted or disclosed to any third party.
EXPANSION MODUL
FOR SERVO
F09K2010_Q3 / 020:8
F09K2014_X2 / 020:5
W30T1010_SO5 / 006:7
W30T1020_SO5 / 007:8
W30T1010_SO7 / 006:7
W30T1020_SO7 / 007:8
(32)
F09K2014
A1
S14
X1
A2
S24
X2
13
14
23
24
33
34
43
44
020:2 / F09K2014_X1
L11
L10
Designer FEK
ECM No 452936
Denomination CIRCUIT DIAGRAM
Date 2010-06-14
Machine Straw Applicator 30-0300 TB/TBA/TPA/TCA/TWA
Page Type SAFETY CIRCUIT
Document No. 3036156-0003
Doc. type ELD
Version AE
Page 022
Company Tetra Pak (Sweden)
Drawing remarks

This page intentionally left blank

2 Document List

About the Document List Chapter

This chapter is a table of contents that includes the drawing specification for each electrical document valid for the equipment

2.1 Main Machine . . . . . 2 - 5

2.2 Optional Equipment . . . . . 2 - 9

2.2.1 Bent Foil Treater . . . . . 2 - 9

2.2.2 Straw Detector 30 . . . . . 2 - 12

This page intentionally left blank

2.1 Main Machine

Document number 3036156-0001

This page intentionally left blank

This drawing must not without the consent of Tetra Pak be copied, transmitted or disclosed to any third party.

RELEASED

Documents list

Drawing No	Page	Denomination	Page type	Version
3036156-0001	001	DOCUMENTS LIST	DOCUMENTS LIST	AE
3036156-0001	002	DOCUMENTS LIST	DOCUMENTS LIST	AE
3036156-0002	001	POSITION SUMMARY	POSITION SUMMARY	AE
3036156-0002	002	POSITION SUMMARY	POSITION SUMMARY	AE
3036156-0003	001	CIRCUIT DIAGRAM	DISTRIBUTION TERMINALS	AE
3036156-0003	002	CIRCUIT DIAGRAM	MAIN SUPPLY DISTRIBUTION	AE
3036156-0003	003	CIRCUIT DIAGRAM	FREQUENCY CONVERTER	AE
3036156-0003	004	CIRCUIT DIAGRAM	FREQUENCY CONVERTER	AE
3036156-0003	005	CIRCUIT DIAGRAM	FREQUENCY CONVERTER	AE
3036156-0003	006	CIRCUIT DIAGRAM	SERVO UNIT	AE
3036156-0003	007	CIRCUIT DIAGRAM	SERVO UNIT	AE
3036156-0003	008	CIRCUIT DIAGRAM	HOT MELT, BFT	AE
3036156-0003	009	CIRCUIT DIAGRAM	FAN, COOLING UNIT	AE
3036156-0003	010	CIRCUIT DIAGRAM	SERVICE OUTLET, MACHINE LAMP	AE
3036156-0003	011	CIRCUIT DIAGRAM	STRAW DETECTOR, PCU	AE
3036156-0003	012	CIRCUIT DIAGRAM	POWER SUPPLY	AE
3036156-0003	013	CIRCUIT DIAGRAM	PLC, HMI, SNP	AE
3036156-0003	014	CIRCUIT DIAGRAM	GENIUS	AE
3036156-0003	015	CIRCUIT DIAGRAM	GENIUS	AE
3036156-0003	016	CIRCUIT DIAGRAM	FREQUENCY COMMUNICATION	AE
3036156-0003	017	CIRCUIT DIAGRAM	SERVO COMMUNICATION	AE
3036156-0003	018	CIRCUIT DIAGRAM	E-STOPS	AE
3036156-0003	019	CIRCUIT DIAGRAM	SAFETY CIRCUIT	AE
3036156-0003	020	CIRCUIT DIAGRAM	SAFETY CIRCUIT	AE
3036156-0003	021	CIRCUIT DIAGRAM	SAFETY CIRCUIT	AE
3036156-0003	022	CIRCUIT DIAGRAM	SAFETY CIRCUIT	AE
3036156-0003	023	CIRCUIT DIAGRAM	INPUT A03K2018	AE
3036156-0003	024	CIRCUIT DIAGRAM	INPUT A03K2018	AE
3036156-0003	025	CIRCUIT DIAGRAM	INPUT A03K2020	AE
3036156-0003	026	CIRCUIT DIAGRAM	INPUT A03K2020	AE
3036156-0003	027	CIRCUIT DIAGRAM	INPUT A03K2022	AE
3036156-0003	028	CIRCUIT DIAGRAM	INPUT A03K2022	AE
3036156-0003	029	CIRCUIT DIAGRAM	OUTPUT A03K2024	AE
3036156-0003	030	CIRCUIT DIAGRAM	OUTPUT A03K2024	AE
3036156-0003	031	CIRCUIT DIAGRAM	OUTPUT A03K2026	AE
3036156-0003	032	CIRCUIT DIAGRAM	OUTPUT A03K2026	AE
3036156-0003	033	CIRCUIT DIAGRAM	OUTPUT A03K2028	AE
3036156-0003	034	CIRCUIT DIAGRAM	OUTPUT A03K2028	AE
3036156-0003	035	CIRCUIT DIAGRAM	LINE COMMUNICATION	AE
3036156-0004	001	LINE SUMMARY	LINE SUMMARY	AE
3036156-0005	001	CABINET TERMINAL SUMMARY	CABINET TERMINAL SUMMARY	AE
3036156-0005	002	CABINET TERMINAL SUMMARY	CABINET TERMINAL SUMMARY	AE
3036156-0005	003	CABINET TERMINAL SUMMARY	CABINET TERMINAL SUMMARY	AE
3036156-0006	001	TERMINAL STRIP OVERVIEW	TERMINAL STRIP OVERVIEW	AE
3036156-0006	002	TERMINAL STRIP OVERVIEW	TERMINAL STRIP OVERVIEW	AE
3036156-0006	003	TERMINAL STRIP OVERVIEW	TERMINAL STRIP OVERVIEW	AE

Tetra Pak

Designer FEK | Date 2010-06-14 | Machine Straw Applicator 30-0300 TB/TBA/TPA/TCA/TWA

ECM No 452936 | Denomination DOCUMENTS LIST | Page Type DOCUMENTS LIST

Company Tetra Pak (Sweden) | Document No. 3036156-0001 | Doc. type ELD | Version AE | Page 001

Drawing remarks

This drawing must not without the consent of Tetra Pak be copied, transmitted or disclosed to any third party.

RELEASED

Documents list

Drawing No	Page	Denomination	Page type	Version
3036156-0007	001	CABLE CONNECTION LIST	CABLE CONNECTION LIST	AE
3036156-0007	002	CABLE CONNECTION LIST	CABLE CONNECTION LIST	AE
3036156-0007	003	CABLE CONNECTION LIST	CABLE CONNECTION LIST	AE
3036156-0007	004	CABLE CONNECTION LIST	CABLE CONNECTION LIST	AE
3036156-0007	005	CABLE CONNECTION LIST	CABLE CONNECTION LIST	AE
3036156-0007	006	CABLE CONNECTION LIST	CABLE CONNECTION LIST	AE
3036156-0007	007	CABLE CONNECTION LIST	CABLE CONNECTION LIST	AE
3036156-0007	008	CABLE CONNECTION LIST	CABLE CONNECTION LIST	AE
3036156-0008	001	MAINS CONNECTION	MAINS CONNECTION	AE
3036156-0008	002	MAINS CONNECTION	MAINS CONNECTION	AE
3036156-0098	001	DRAWING REMARKS	DRAWING REMARKS	AE
3036156-0099	001	ENGINEERING CHANGE DESCRIPTION	ENGINEERING CHANGE DESCRIPTION	AE

Tetra Pak

Designer FEK
ECM No 452936
Date 2010-06-14
Denomination DOCUMENTS LIST
Machine Straw Applicator 30-0300 TB/TBA/TPA/TCA/TWA
Page Type DOCUMENTS LIST
Document No. 3036156-0001
Doc. type ELD
Version AE
Page 002
Company Tetra Pak (Sweden)
Drawing remarks

2.2 Optional Equipment

2.2.1 Bent Foil Treater

Document number 3040262-0001

This page intentionally left blank

This drawing must not without the consent of Tetra Pak be copied, transmitted or disclosed to any third party.

RELEASED

Documents list

Drawing No	Page	Denomination	Page type	Version
3040262-0001	001	DOCUMENT LIST	DOCUMENT LIST	AD
3040262-0002	001	POSITION SUMMARY	POSITION SUMMARY	AD
3040262-0003	001	CIRCUIT DIAGRAM	MAIN SUPPLY	AD
3040262-0003	002	CIRCUIT DIAGRAM	REGULATOR UNIT, FAN	AD
3040262-0003	003	CIRCUIT DIAGRAM	HEATING ELEMENT	AD
3040262-0003	004	CIRCUIT DIAGRAM	CONTROL CIRCUIT	AD
3040262-0004	001	LINE SUMMARY	LINE SUMMARY	AD
3040262-0005	001	CABINET TERMINAL SUMMARY	CABINET TERMINAL SUMMARY	AD
3040262-0006	001	TERMINAL STRIP OVERVIEW	Terminal diagram: V50X1015 (1 - CHASSIE)	AD
3040262-0006	002	TERMINAL STRIP OVERVIEW	Terminal diagram: V50X2010 (- - +)	AD
3040262-0007	001	CABLE CONNECTION LIST	CABLE CONNECTION LIST	AD
3040262-0008	001	MAINS CONNECTION	MAINS CONNECTION	AD

Tetra Pak

Designer THN | ECM No 427807 | Denomination DOCUMENT LIST | Date 2009-11-27

Machine Bent Foil Treater 0400 | Page Type DOCUMENT LIST

Company Tetra Pak (Sweden)

Drawing remarks

Document No. 3040262-0001 | Doc. type ELD | Version AD | Page 001

2.2.2 Straw Detector 30

Document number 3036165-0001

© Tetra Pak. All rights reserved; any copying, transmittal or disclosure subject to Tetra Pak's written approval.

RELEASED

Documents list

Drawing No	Page	Denomination	Page type	Version
3036165-0001	001	DOCUMENT LIST	DOCUMENT LIST	AC
3036165-0002	001	POSITION SUMMARY	Device list: (A01B0130 - V01K0140)	AC
3036165-0003	001	CIRCUIT DIAGRAM	MAIN SUPPLY	AC
3036165-0003	002	CIRCUIT DIAGRAM	POWER SUPPLY, FAN	AC
3036165-0003	003	CIRCUIT DIAGRAM	CONTROL CIRCUIT	AC
3036165-0003	004	CIRCUIT DIAGRAM	REJECTION VALVES	AC
3036165-0003	005	CIRCUIT DIAGRAM	VISION CAMERA	AC
3036165-0004	001	LINE SUMMARY	LINE SUMMARY	AC
3036165-0005	001	CABINET TERMINAL SUMMARY	CABINET TERMINAL SUMMARY	AC
3036165-0006	001	TERMINAL STRIP OVERVIEW	Terminal diagram: (-)	AC
3036165-0007	001	CABLE CONNECTION LIST	CABLE CONNECTION LIST	AC
3036165-0008	001	MAINS CONNECTION	MAINS CONNECTION	AC

Tetra Pak

Designer THN | ECM No 417765 | Denomination DOCUMENT LIST | Date 2009-06-26 | Machine Straw Detector 30-0300 | Page Type DOCUMENT LIST

Company Tetra Pak (Sweden) | Document No. 3036165-0001 | Doc. type ELD | Version AC | Page 001

Drawing remarks

This page intentionally left blank

3 Position Summary

About the Position Summary Chapter

This chapter is a list of all electrical components that are shown in the electrical drawings, with page references to the drawings where they are located.

3.1 Main Machine . . . . . 3 - 5

3.2 Optional Equipment . . . . . 3 - 9

3.2.1 Bent Foil Treater . . . . . 3 - 9

3.2.2 Straw Detector 30 . . . . . 3 - 12

This page intentionally left blank

3.1 Main Machine

Document number 3036156-0002

This page intentionally left blank

RELEASED

This drawing must not without the consent of Tetra Pak be copied, transmitted or disclosed to any third party.

1 2 3 4 5 6 7 8 9 10

Position summary of 3036156-0003

Component	Page .Col.	Opt.
	016.10	
A01B2010	023.4	
A01F0001	002.2	
A01F1010	012.3	
A01F1020	010.3	
A01F1022	010.3	
A01F1030	009.2	
A01F2010	012.3	
A01K0001	002.3	
A01K0002	002.3	
A01K1030	030.8	
A01P2010	030.8	
A01P2014	029.5	
A01Q0001	002.2	
A01Q1010	031.6	
A01T1010	012.3	
A01V0001	002.4	
A03F1010	013.1	
A03K1010	013.1	
A03K2010	013.2	
A03K2012	017.3	
A03K2014	013.2	
A03K2016	016.1	
A03K2018	023.7	
A03K2020	025.7	
A03K2022	027.7	
A03K2024	029.2	
A03K2026	031.2	

Component	Page .Col.	Opt.
A03K2028	033.2	
A03K2029	014.7	(16)
A03K2031	014.6	(16)
A03K2110	013.6	
A03K2121	013.3	
A03R2029	014.6	(16)
A03T1010	013.1	
A07F1011	012.8	
A07F1021	014.2	
A07F2011	012.9	(16)
A07K2021	014.2	(16)
A07K2023	014.2	(16)
A07K2025	014.2	(16)
A07K2027	014.5	(16)
A07R2025	014.3	(16)
A07T1011	012.8	(16)
A07T1021	014.2	(16)
A08A2010	013.8	
A08F1010	012.6	
A08F2010	012.6	
A08S2010	023.4	
A08S2012	023.4	
A08S2014	023.4	
A08T1010	012.6	
A10B2000	011.6	
A30F1010	006.2	
A30F1020	006.4	
A30Q1010	029.7	

Component	Page .Col.	Opt.
A30V1010	006.2	
A30V1020	006.3	
A40Q1010	031.6	
E01E1013	009.6	(13)
E01E1020	010.6	
E01F1013	009.6	
E01F1020	010.6	
E01K1013	030.8	
E01K1020	030.8	
E01M1010	009.2	(14)
E01Q2015	030.4	(13)
E01Q2017	030.6	(13)
E08M1010	009.4	
F09B2032	019.5	
F09F2010	020.8	
F09F2020	018.5	
F09F2022	018.7	
F09F2026	019.4	
F09F2028	019.5	
F09K2010	019.7	
F09K2014	022.4	(32)
F09K2024	019.8	
F09K2040	021.6	
F09Q1010	020.8	
F09Q1020	020.8	
F09R2010	020.4	
F09R2030	021.5	
F09S2030	021.6	

Component	Page .Col.	Opt.
K10K2099	029.7	
K90K2098	029.7	
P30B2010	006.8	
P50B1011	011.2	(22)
P50F1011	011.2	
V10B2020	025.4	(25)
V10B2022	025.5	(25)
V30B2080	025.4	
V30B2090	026.4	(20)
V30B2120	027.4	(21)
V30F1030	008.3	
V30K2010	031.6	
V30K2012	031.6	(20)
V30K2020	033.6	
V30Q1030	033.6	
V30V1030	008.3	(5)
V40B2030	025.4	(20)
V40B2032	025.5	(20)
V40B2040	025.4	(20)
V40B2042	025.5	(20)
V40B2060	026.4	
V40B2070	025.4	(20)
V40B2072	025.5	(20)
V40B2100	027.4	(21)
V40B2102	027.5	(21)
V50F1015	008.7	
V50V1015	008.6	
V90B2050	025.4	

Drawing remarks

Tetra Pak

Designer	Date	Machine
FEK	2010-06-14	Straw Applicator 30-0300 TB/TBA/TPA/TCA/TWA

ECM No	Denomination	Page Type
452936	POSITION SUMMARY	POSITION SUMMARY

Company	Document No.	Doc. type	Version	Page
Tetra Pak (Sweden)	3036156-0002	ELD	AE	001

RELEASED

This drawing must not without the consent of Tetra Pak be copied, transmitted or disclosed to any third party.

1 2 3 4 5 6 7 8 9 10

Position summary of 3036156-0003

Component	Page .Col.	Opt.
V90B2052	025.5	
V90B2130	023.4	(25)
V90B2132	023.5	(25)
V90B2140	024.4	(25)
W10F1010	003.3	
W10K1010	003.3	
W10K1012	003.4	
W10M1010	003.4	
W10Q1010	003.4	(34)
W10R2010	016.3	
W10T1010	016.3	
W10V1010	003.3	
W30B2012	006.8	
W30B2014	006.7	
W30B2016	006.7	
W30B2022	007.8	
W30K2010	006.7	(1)
W30K2012	006.9	(11)
W30K2020	007.7	(1)
W30K2022	007.9	(11)
W30M1010	006.3	
W30M1020	007.3	
W30T1010	006.10	
W30T1020	007.10	
W40F1010	003.7	
W40F1020	005.3	
W40F1030	004.3	
W40F1032	004.6	(20)

Component	Page .Col.	Opt.
W40F1034	004.8	(20)
W40K1010	003.7	
W40K1012	003.9	
W40K1020	005.3	(20)
W40K1022	005.4	(20)
W40K1030	004.3	(20)
W40K1032	004.4	(20)
W40M1010	003.9	
W40M1020	005.5	
W40M1032	004.6	
W40M1034	004.8	
W40Q1010	003.9	(34)
W40R2030	016.8	
W40T1010	016.5	
W40T1020	016.6	
W40T1030	016.8	
W40V1010	003.7	
W40V1020	005.3	(20)
W40V1030	004.3	(20)
W90F1010	005.7	
W90K1010	005.7	
W90K1012	005.9	
W90M1010	005.9	
W90Q1010	005.9	(34)
W90R2010	016.10	
W90T1010	016.10	
W90V1010	005.7	

Component	Page .Col.	Opt.

Component	Page .Col.	Opt.

Drawing remarks

Tetra Pak

Designer FEK | Date 2010-06-14 | Machine Straw Applicator 30-0300 TB/TBA/TPA/TCA/TWA

ECM No 452936 | Denomination POSITION SUMMARY | Page Type POSITION SUMMARY

Company Tetra Pak (Sweden) | Document No. 3036156-0002 | Doc. type ELD | Version AE | Page 002

3.2 Optional Equipment

3.2.1 Bent Foil Treater

Document number 3040262-0002

This page intentionally left blank

RELEASED

This drawing must not without the consent of Tetra Pak be copied, transmitted or disclosed to any third party.

1 2 3 4 5 6 7 8 9 10

Position summary of 3040262-0003

Component	Page .Col.	Opt.
A01F1001	001 .9	
A01K2010	004 .8	
A01P2010	004 .7	
A01Q0001	001 .2	
A01T1001	001 .9	
A08E2010	004 .8	
A08E2020	004 .8	
A08S2010	004 .2	
A08S2020	004 .4	
A08S2030	004 .3	
A50K2020	004 .8	
A50K2030	004 .8	
A50K2040	004 .8	
A50K2042	004 .8	
A50P2050	004 .7	
Q50F1020	002 .7	
V50B2010	002 .4	
V50C1020	002 .8	
V50E1020	002 .7	(1)
V50E1030	003 .8	
V50E1032	003 .8	
V50F1030	003 .3	
V50K1010	002 .3	
V50K1030	003 .7	
V50K1032	003 .4	
V50Q1030	003 .3	(2)

Component	Page .Col.	Opt.

Component	Page .Col.	Opt.

Component	Page .Col.	Opt.

Drawing remarks

Tetra Pak

Designer THN	Date 2009-11-27	Machine Bent Foil Treater 0400	
ECM No 427807	Denomination POSITION SUMMARY	Page Type POSITION SUMMARY	
Company Tetra Pak (Sweden)	Document No. 3040262-0002	Doc. type ELD	Version AD	Page 001

3.2.2 Straw Detector 30

Document number 3036165-0002

RELEASED

© Tetra Pak. All rights reserved; any copying, transmittal or disclosure subject to Tetra Pak's written approval.

Position summary of 3036165-0003

Component	Page .Col.	Opt.
A01B0130	005 .3	
A01F0001	002 .2	
A01F0002	002 .3	
A01P0010	003 .8	
A01P0020	003 .7	
A01Q0000	001 .1	
A01Q0001	003 .8	
A01S0080	003 .3	
A01S0081	003 .4	
A01S0082	003 .5	
A01T0001	002 .2	(2)
B01B0135	005 .1	
B01B0136	005 .6	
B01B0137	005 .5	
E01F0005	002 .8	
E01M0005	002 .8	
K01K0012	005 .6	
K01K0014	004 .7	
K01K0018	003 .8	
K01K0040	005 .6	
T01F0004	002 .5	
T01T0003	002 .3	(2)
V01K0140	004 .7	

Component	Page .Col.	Opt.

Component	Page .Col.	Opt.

Component	Page .Col.	Opt.

Drawing remarks

Designer THN	Date 2009-06-26	Machine Straw Detector 30-0300	
ECM No 417765	Denomination POSITION SUMMARY	Page Type Device list: (A01B0130 - V01K0140)	
Company Tetra Pak (Sweden)	Document No. 3036165-0002	Doc. type ELD	Version AC	Page 001

This page intentionally left blank

4 Circuit Diagrams

About the Circuit Diagrams Chapter

All component drawings, such as programmable logic controller (PLC) modules, terminals, and cables, are included in this chapter. Other chapter lists are generated from these pages.

4.1 Main Machine . . . . . 4 - 5

4.2 Optional Equipment . . . . . 4 - 42

4.2.1 Bent Foil Treater . . . . . 4 - 42

4.2.2 Straw Detector 30 . . . . . 4 - 47

This page intentionally left blank

4.1 Main Machine

Document number 3036156-0003

This page intentionally left blank

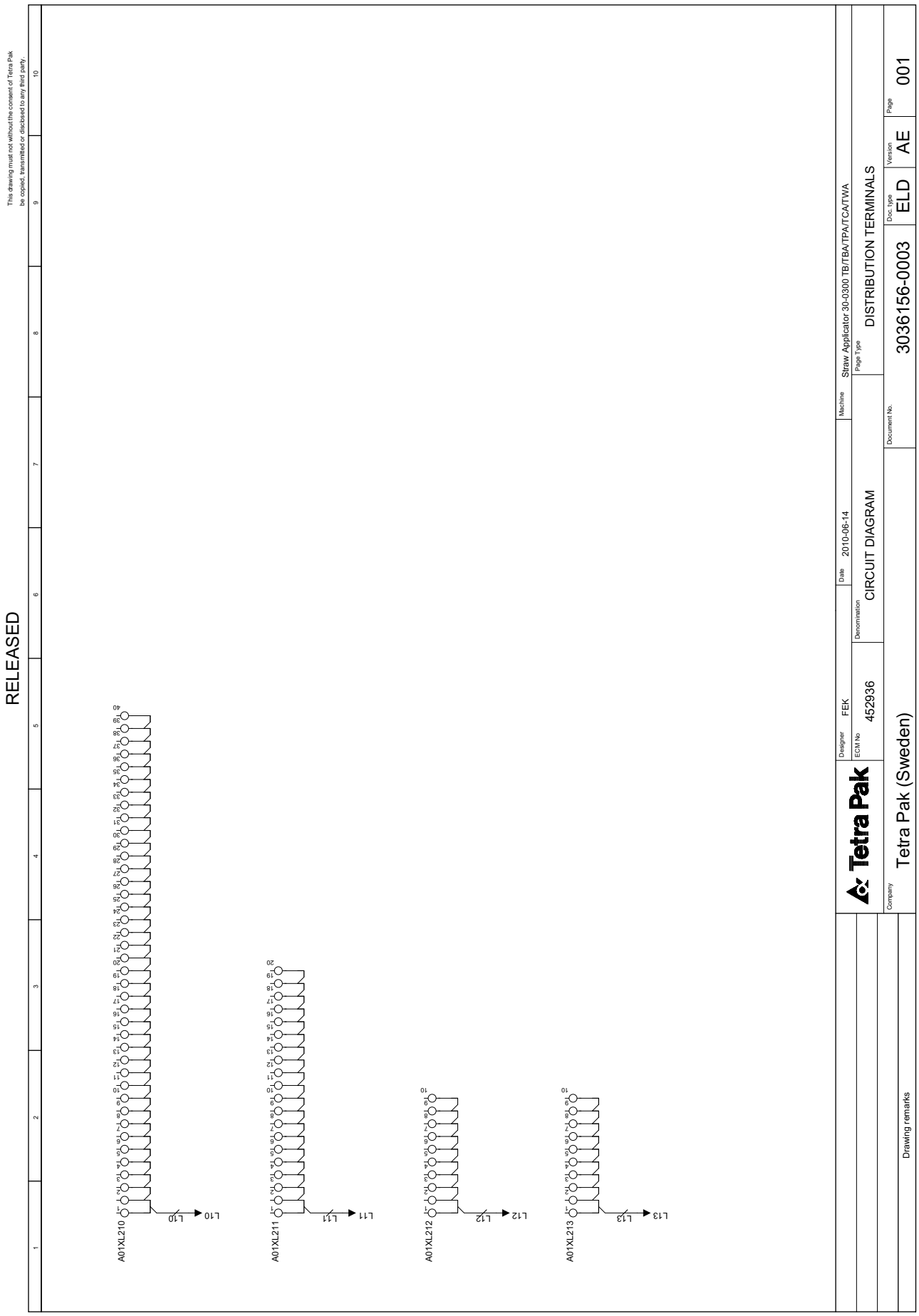
RELEASED
This drawing must not without the consent of Tetra Pak be copied, transmitted or disclosed to any third party.
A01XL210
A01XL211
A01XL212
A01XL213
L10
L11
L12
L13
Tetra Pak
Designer FEK
ECM No 452936
Denomination CIRCUIT DIAGRAM
Date 2010-06-14
Machine Straw Applicator 30-0300 TB/TBA/TPA/TCA/TWA
Page Type DISTRIBUTION TERMINALS
Company Tetra Pak (Sweden)
Drawing remarks
Document No. 3036156-0003
Doc. type ELD
Version AE
Page 001

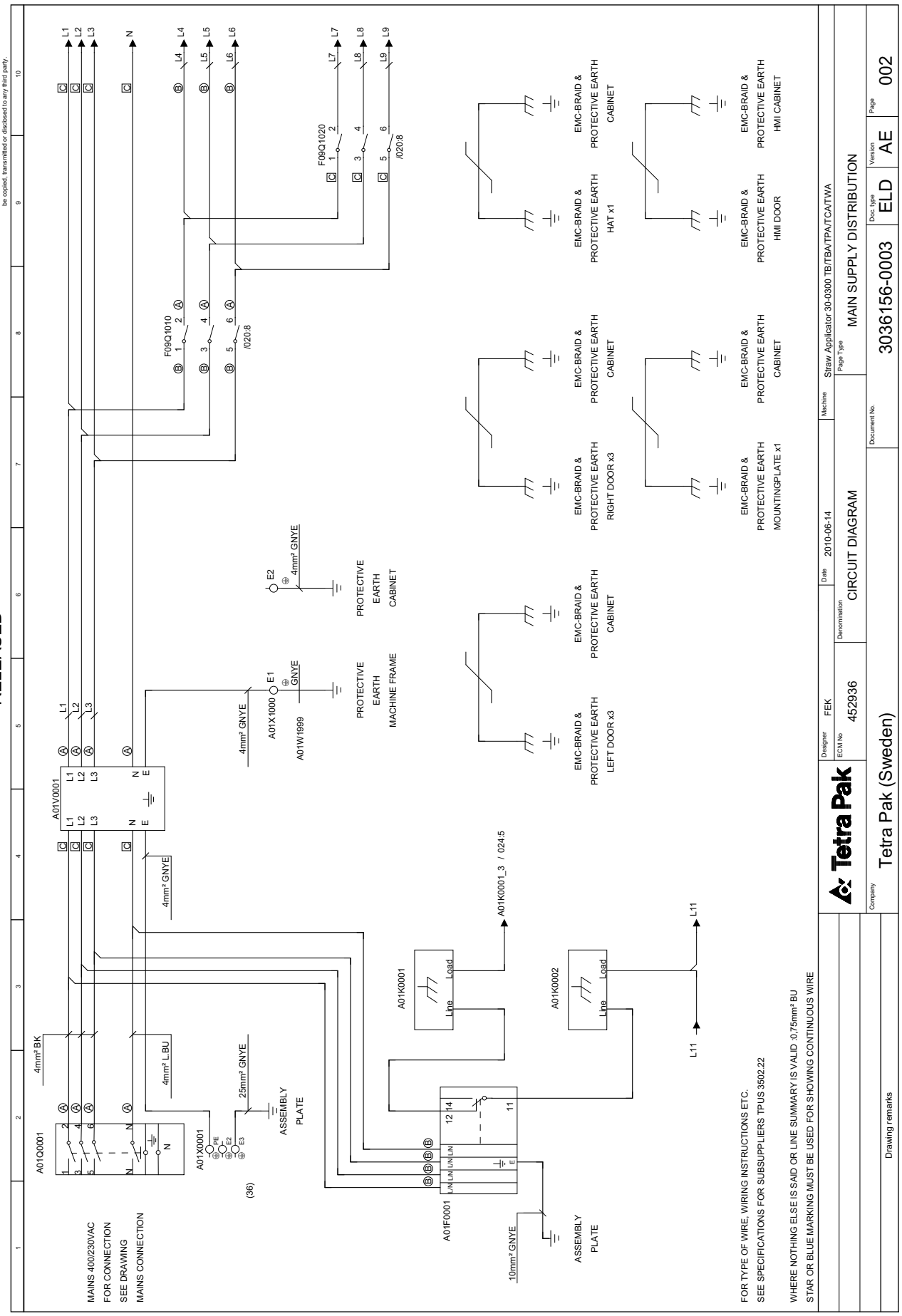
RELEASED
This drawing must not without the consent of Tetra Pak be copied, transmitted or disclosed to any third party.
Tetra Pak
Designer FEK
Date 2010-06-14
Machine Straw Applicator 30-0300 TB/TBA/TPA/TCA/TWA
ECM No 452936
Denomination CIRCUIT DIAGRAM
Page Type MAIN SUPPLY DISTRIBUTION
Company Tetra Pak (Sweden)
Document No. 3036156-0003
Doc. type ELD
Version AE
Page 002
Drawing remarks
MAINS 400/230VAC FOR CONNECTION SEE DRAWING MAINS CONNECTION
A01Q0001
A01X0001
A01V0001
A01K0001
A01K0002
A01F0001
A01X1000
A01W1999
F09Q1010
F09Q1020
4mm² BK
4mm² L BU
4mm² GNYE
25mm² GNYE
10mm² GNYE
ASSEMBLY PLATE
PROTECTIVE EARTH MACHINE FRAME
PROTECTIVE EARTH CABINET
EMC-BRAID & PROTECTIVE EARTH LEFT DOOR x3
EMC-BRAID & PROTECTIVE EARTH RIGHT DOOR x3
EMC-BRAID & PROTECTIVE EARTH CABINET
EMC-BRAID & PROTECTIVE EARTH HAT x1
EMC-BRAID & PROTECTIVE EARTH MOUNTINGPLATE x1
EMC-BRAID & PROTECTIVE EARTH CABINET
EMC-BRAID & PROTECTIVE EARTH HMI DOOR
EMC-BRAID & PROTECTIVE EARTH HMI CABINET
FOR TYPE OF WIRE, WIRING INSTRUCTIONS ETC. SEE SPECIFICATIONS FOR SUBSUPPLIERS TPUS 3502.22
WHERE NOTHING ELSE IS SAID OR LINE SUMMARY IS VALID :0,75mm² BU STAR OR BLUE MARKING MUST BE USED FOR SHOWING CONTINUOUS WIRE

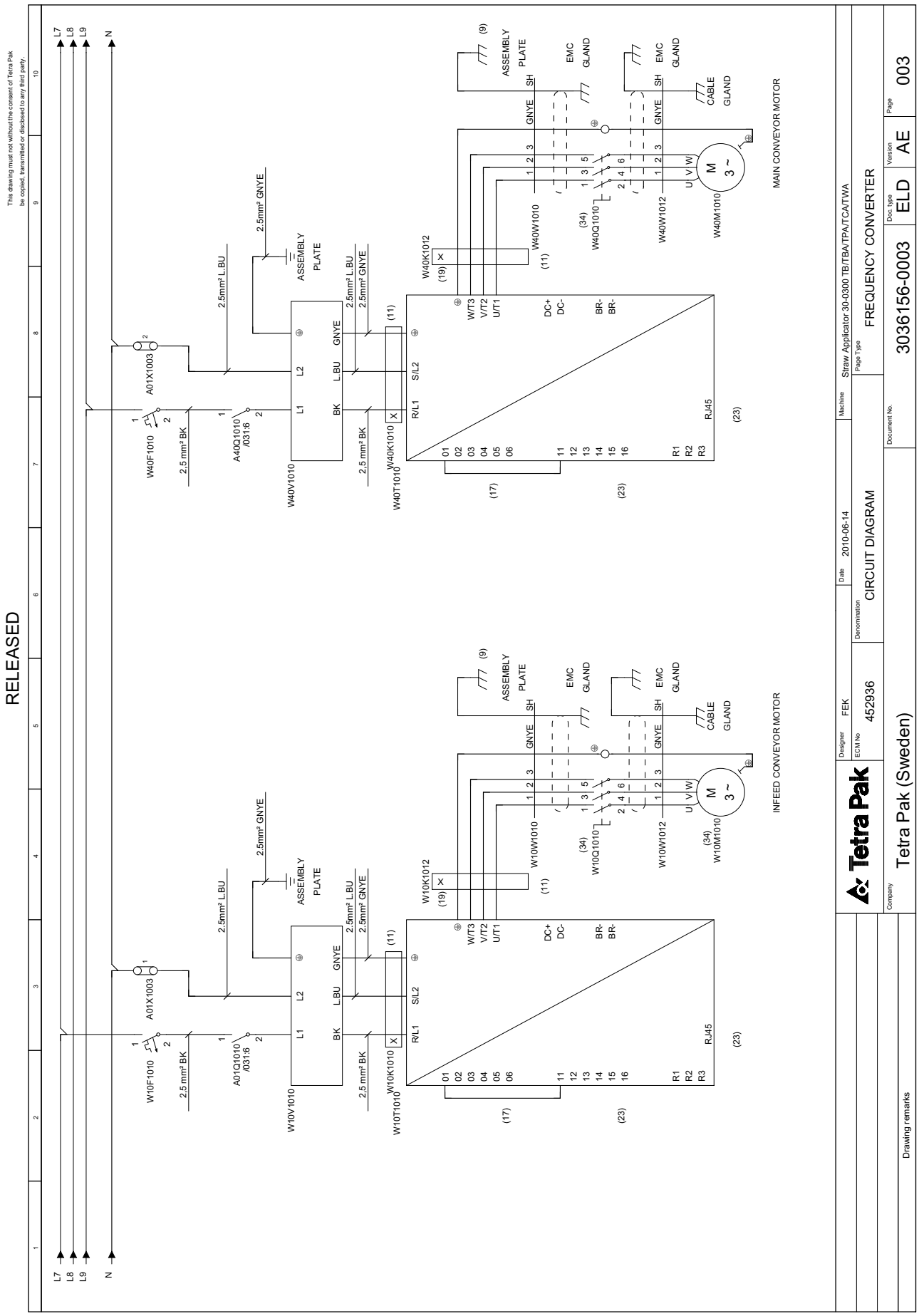
RELEASED
This drawing must not without the consent of Tetra Pak be copied, transmitted or disclosed to any third party.
L7
L8
L9
N
A01X1003
W40F1010
2.5 mm² BK
A40Q1010 /031:6
2.5mm² L.BU
2.5mm² GNYE
ASSEMBLY PLATE
W40V1010
W40T1010
W40K1010
W40K1012
W40W1010
W40Q1010
W40W1012
W40M1010
MAIN CONVEYOR MOTOR
W10F1010
A01Q1010 /031:6
W10V1010
W10T1010
W10K1010
W10K1012
W10W1010
W10Q1010
W10W1012
W10M1010
INFEED CONVEYOR MOTOR
EMC GLAND
CABLE GLAND
R/L1
S/L2
RJ45
DC+
DC-
BR-
W/T3
V/T2
U/T1
Tetra Pak
Designer FEK
Date 2010-06-14
Machine Straw Applicator 30-0300 TB/TBA/TPA/TCA/TWA
ECM No 452936
Denomination CIRCUIT DIAGRAM
Page Type FREQUENCY CONVERTER
Document No. 3036156-0003
Doc. type ELD
Version AE
Page 003
Company Tetra Pak (Sweden)
Drawing remarks

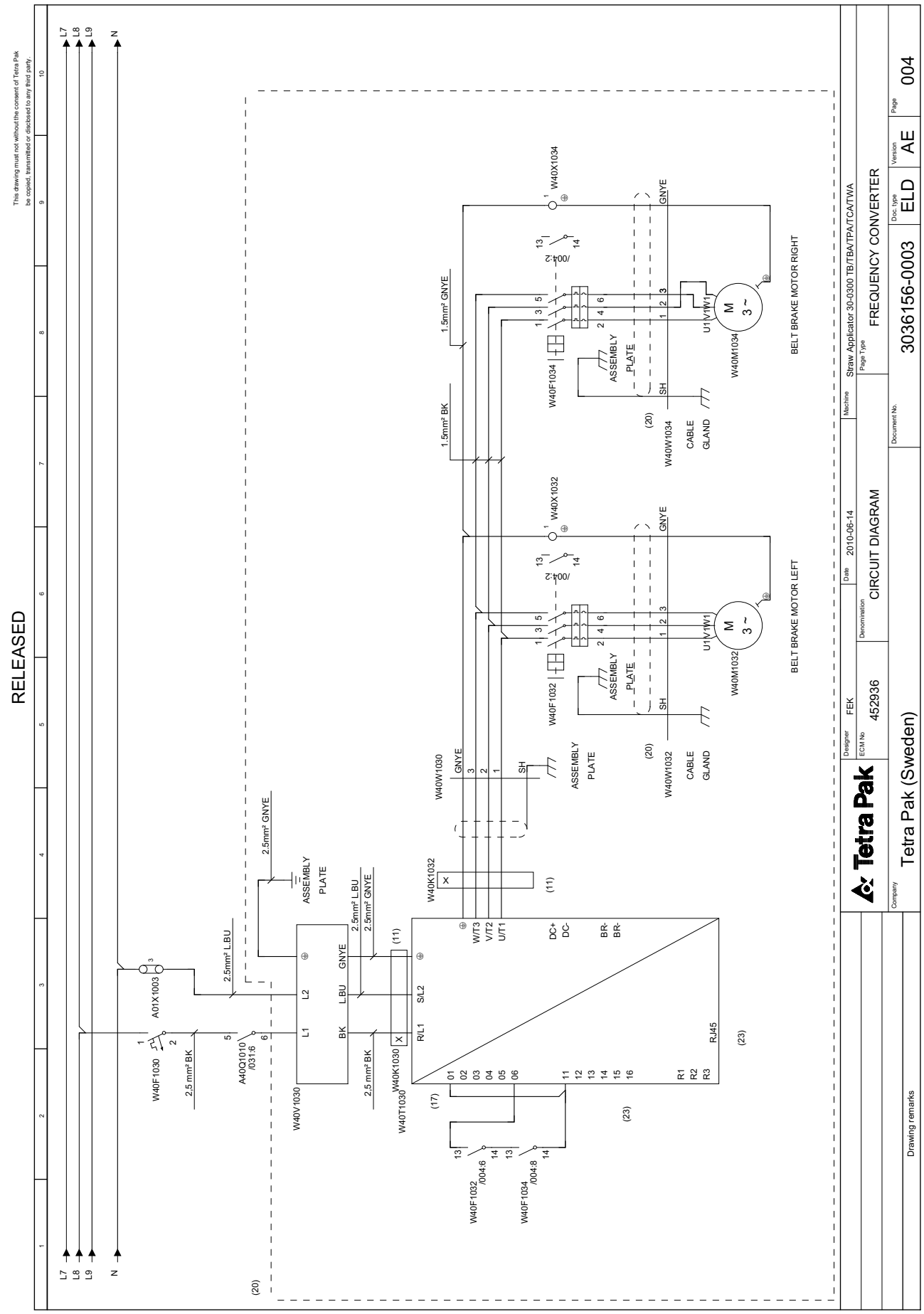
RELEASED
This drawing must not without the consent of Tetra Pak be copied, transmitted or disclosed to any third party
L7
L8
L9
N
A01X1003
W40F1030
2,5 mm² BK
2.5mm² LBU
A40Q1010 /031:6
W40V1030
2.5mm² GNYE
ASSEMBLY PLATE
W40T1030
W40K1030
W40K1032
W40W1030
GNYE
SH
ASSEMBLY PLATE
W/T3
V/T2
U/T1
DC+
DC-
BR-
BR-
R/L1
S/L2
RJ45
R1
R2
R3
W40F1032 /004:6
W40F1034 /004:8
W40X1032
W40X1034
1.5mm² GNYE
1.5mm² BK
W40F1032
W40F1034
ASSEMBLY PLATE
W40M1032
W40M1034
U1
V1
W1
M
3 ~
W40W1032
W40W1034
CABLE GLAND
BELT BRAKE MOTOR LEFT
BELT BRAKE MOTOR RIGHT
Tetra Pak
Designer FEK
ECM No 452936
Date 2010-06-14
Denomination CIRCUIT DIAGRAM
Machine Straw Applicator 30-0300 TB/TBA/TPA/TCA/TWA
Page Type FREQUENCY CONVERTER
Company Tetra Pak (Sweden)
Drawing remarks
Document No. 3036156-0003
Doc. type ELD
Version AE
Page 004

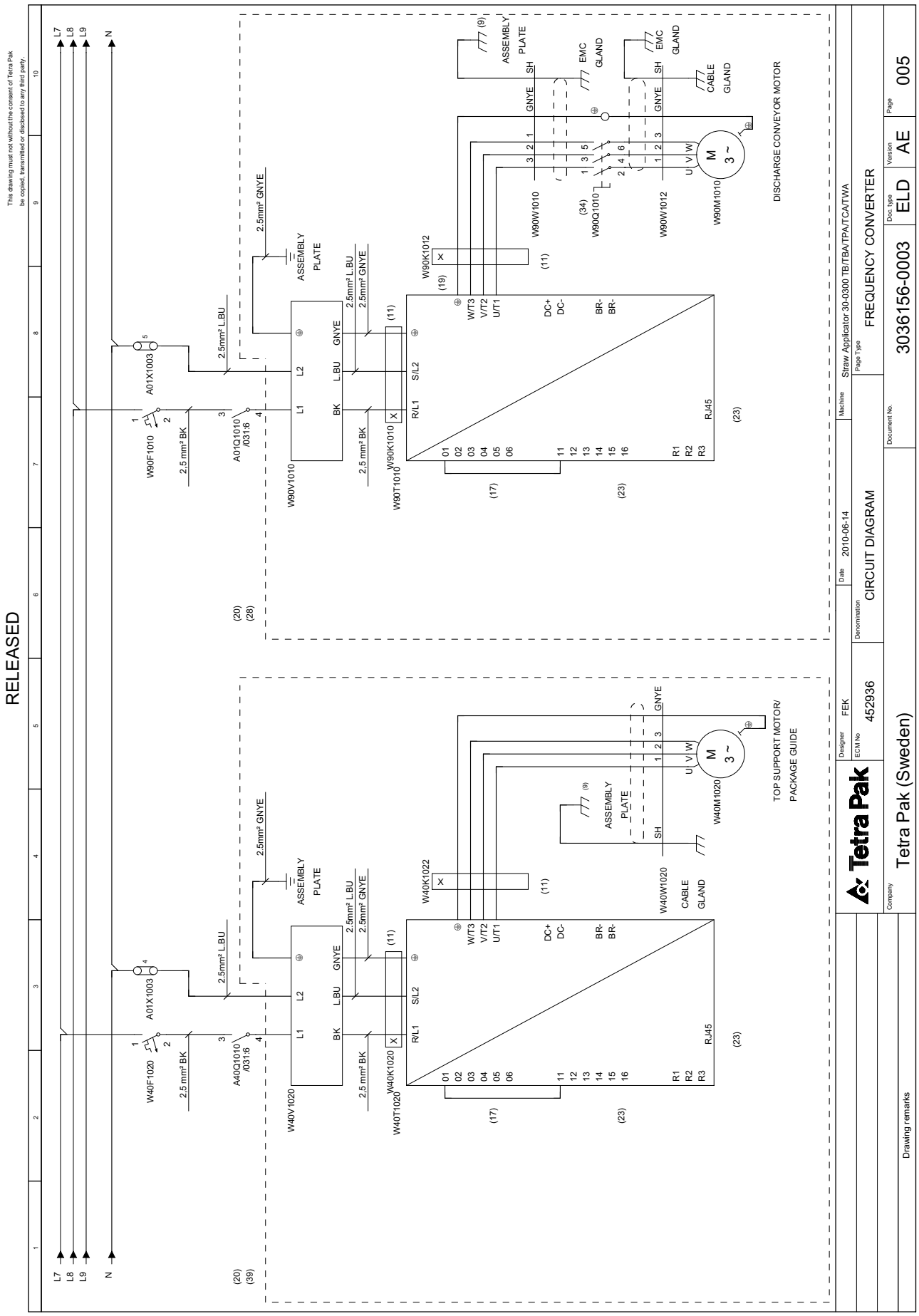
RELEASED
This drawing must not without the consent of Tetra Pak be copied, transmitted or disclosed to any third party.
L7
L8
L9
N
A01X1003
W90F1010
2.5 mm² BK
A01Q1010 /031:6
2.5mm² L.BU
2.5mm² GNYE
ASSEMBLY PLATE
W90V1010
W90T1010
W90K1010
W90K1012
W90W1010
W90Q1010
W90W1012
W90M1010
DISCHARGE CONVEYOR MOTOR
EMC GLAND
CABLE GLAND
A40Q1010 /031:6
W40V1020
W40T1020
W40K1020
W40K1022
W40W1020
W40M1020
TOP SUPPORT MOTOR/ PACKAGE GUIDE
Tetra Pak
Designer FEK
ECM No 452936
Denomination CIRCUIT DIAGRAM
Date 2010-06-14
Machine Straw Applicator 30-0300 TB/TBA/TPA/TCA/TWA
Page Type FREQUENCY CONVERTER
Document No. 3036156-0003
Doc. type ELD
Version AE
Page 005
Company Tetra Pak (Sweden)
Drawing remarks

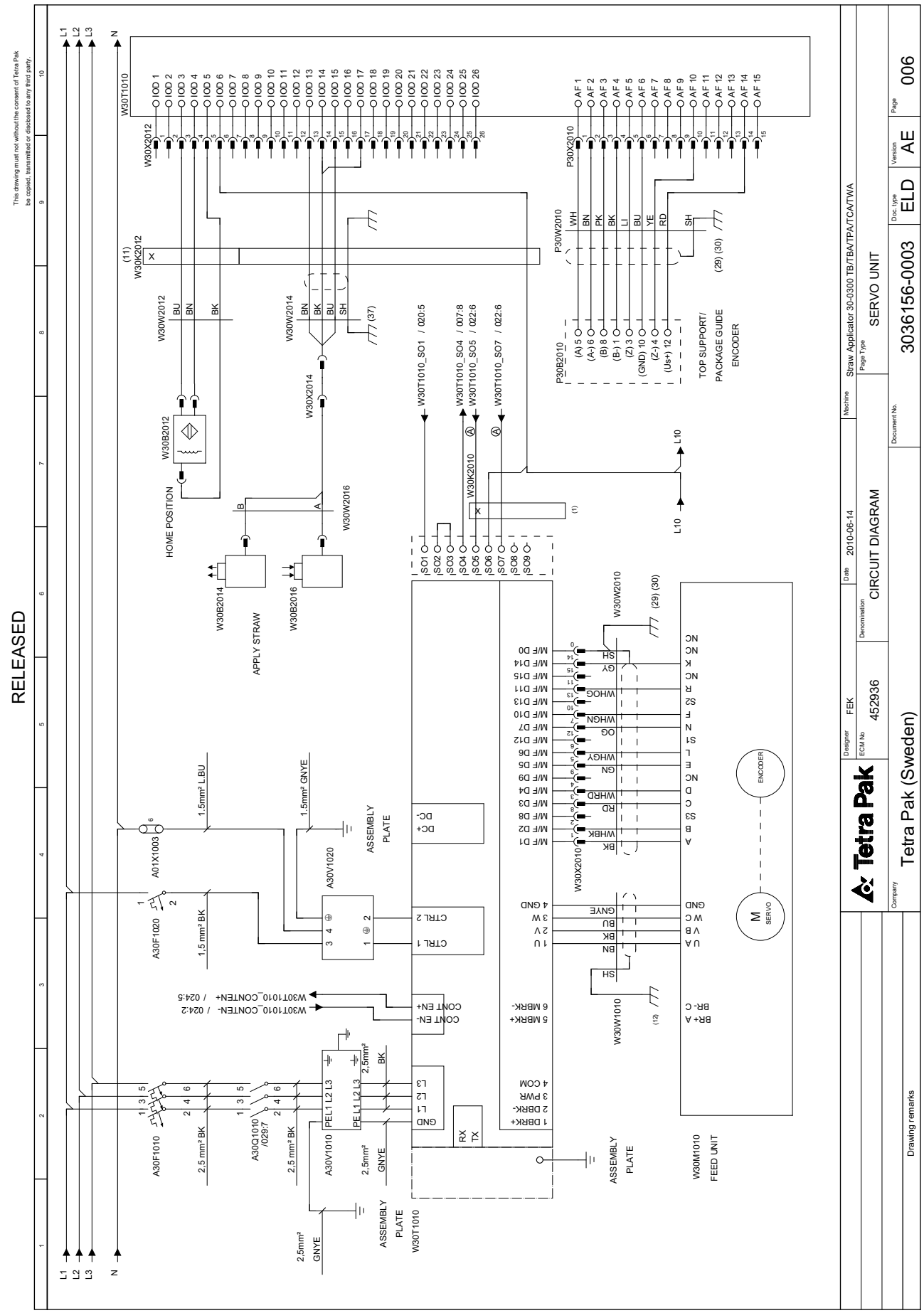
RELEASED
This drawing must not without the consent of Tetra Pak be copied, transmitted or disclosed to any third party.
Tetra Pak
Designer FEK
ECM No 452936
Date 2010-06-14
Denomination CIRCUIT DIAGRAM
Machine Straw Applicator 30-0300 TB/TBA/TPA/TCA/TWA
Page Type SERVO UNIT
Document No. 3036156-0003
Doc. type ELD
Version AE
Page 006
Company Tetra Pak (Sweden)
Drawing remarks
W30T1010
W30X2012
W30K2012
W30W2012
W30B2012
HOME POSITION
W30W2014
W30X2014
W30B2014
APPLY STRAW
W30W2016
W30B2016
P30X2010
P30W2010
P30B2010
TOP SUPPORT/
PACKAGE GUIDE
ENCODER
W30T1010_SO1 / 020:5
W30T1010_SO4 / 007:8
W30T1010_SO5 / 022:6
W30T1010_SO7 / 022:6
W30K2010
W30W2010
W30X2010
W30V1010
W30M1010
FEED UNIT
A01X1003
A30F1020
A30V1020
A30F1010
A30Q1010
ASSEMBLY PLATE
W30T1010_CONTEN+ / 024:5
W30T1010_CONTEN- / 024:2
CONT EN+
CONT EN-
CTRL 2
CTRL 1
DC+
DC-
SERVO
ENCODER
1.5mm² LBU
1.5mm² GNYE
1,5 mm² BK
2,5 mm² BK
2,5mm² GNYE
L1
L2
L3
N
L10

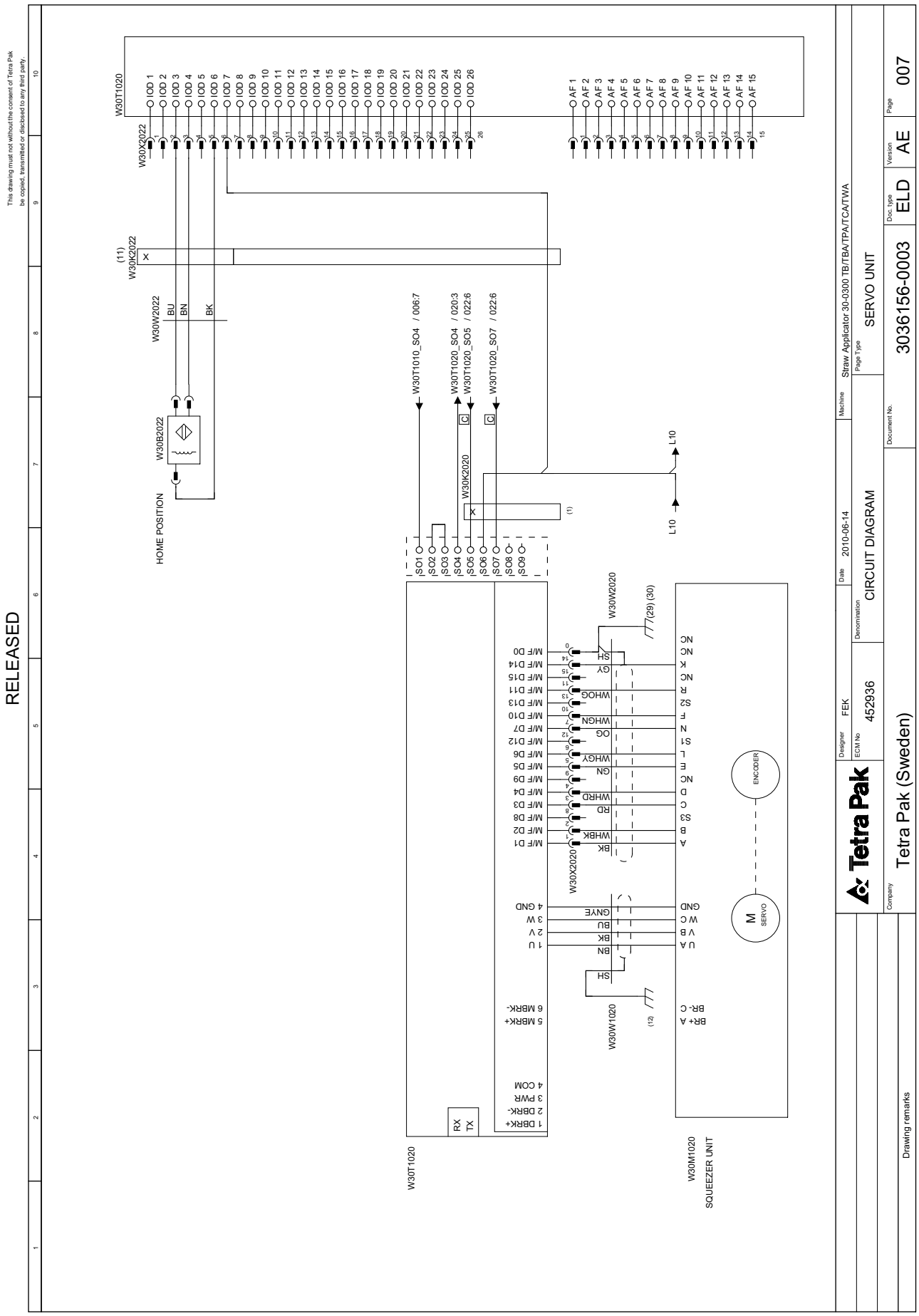
RELEASED
This drawing must not without the consent of Tetra Pak be copied, transmitted or disclosed to any third party.
W30T1020
W30X2022
W30K2022
W30W2022
W30B2022
HOME POSITION
W30T1010_SO4 / 006:7
W30T1020_SO4 / 020:3
W30T1020_SO5 / 022:6
W30T1020_SO7 / 022:6
W30K2020
L10
W30W2020
W30X2020
W30W1020
W30T1020
W30M1020
SQUEEZER UNIT
ENCODER
SERVO
Tetra Pak
Designer FEK
EDM No 452936
Date 2010-06-14
Denomination CIRCUIT DIAGRAM
Machine Straw Applicator 30-0300 TB/TBA/TPA/TCA/TWA
Page Type SERVO UNIT
Document No. 3036156-0003
Doc. type ELD
Version AE
Page 007
Company Tetra Pak (Sweden)
Drawing remarks

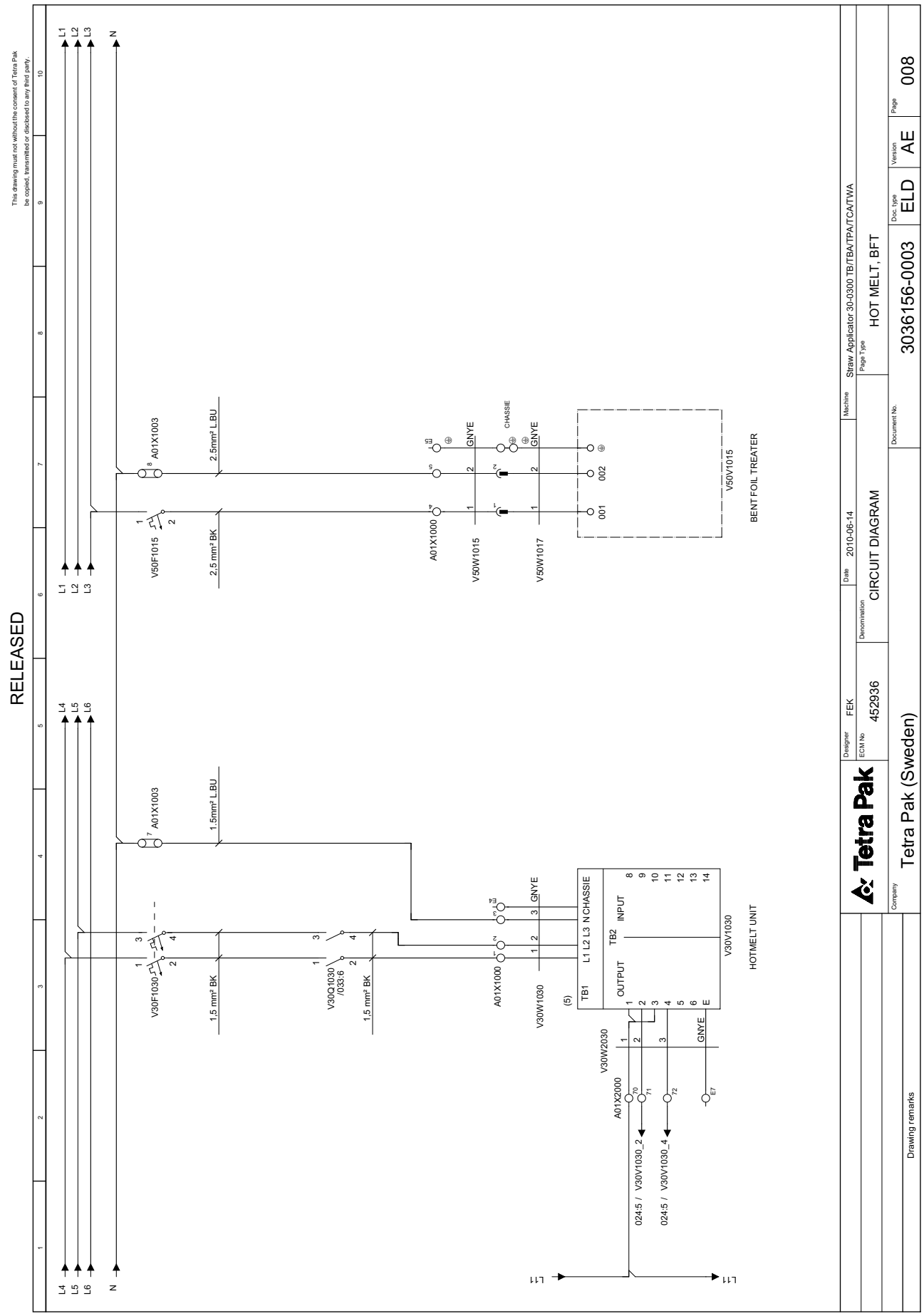
RELEASED
This drawing must not without the consent of Tetra Pak be copied, transmitted or disclosed to any third party.
L1 L2 L3 N
L4 L5 L6 N
A01X1003
2.5mm² LBU
2.5 mm² BK
V50F1015
A01X1000
V50W1015
V50W1017
GNYE
CHASSIE
V50V1015
BENT FOIL TREATER
1.5mm² LBU
1.5 mm² BK
V30F1030
V30Q1030 /033:6
V30W1030
(5)
TB1 L1 L2 L3 N CHASSIE
TB2 INPUT
OUTPUT
V30V1030
HOTMELT UNIT
V30W2030
A01X2000
024:5 / V30V1030_2
024:5 / V30V1030_4
Designer FEK
ECM No 452936
Denomination CIRCUIT DIAGRAM
Date 2010-06-14
Machine Straw Applicator 30-0300 TB/TBA/TPA/TCA/TWA
Page Type HOT MELT, BFT
Document No. 3036156-0003
Doc. type ELD
Version AE
Page 008
Company Tetra Pak (Sweden)
Drawing remarks

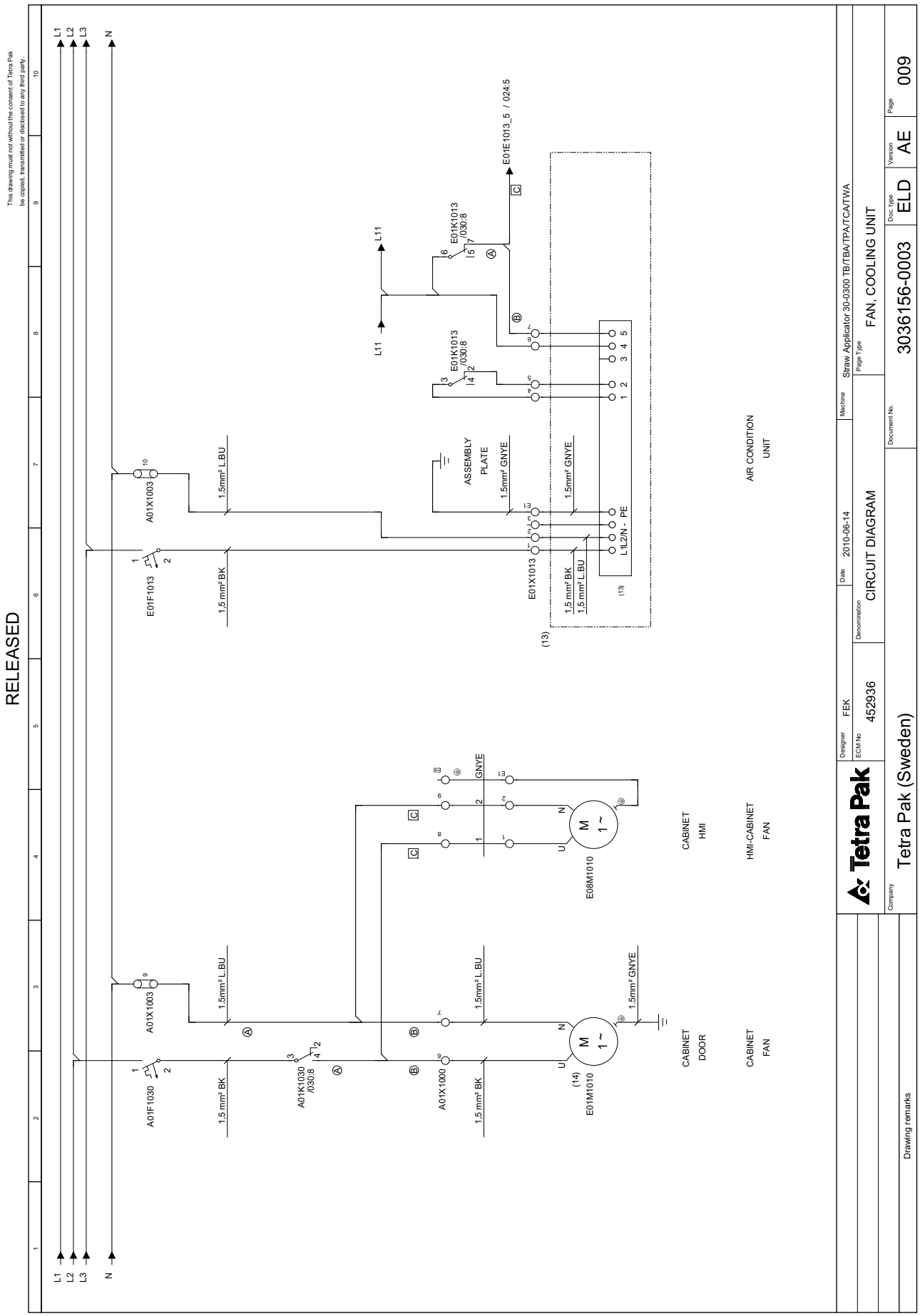
RELEASED
This drawing must not without the consent of Tetra Pak be copied, transmitted or disclosed to any third party.
L1
L2
L3
N
A01X1003
A01F1030
A01K1030 /030:8
A01X1000
E01M1010
E08M1010
E01F1013
E01X1013
E01K1013 /030:8
E01E1013_5 / 024:5
1,5 mm² BK
1,5mm² L.BU
1,5mm² GNYE
ASSEMBLY PLATE
L1L2/N - PE
AIR CONDITION UNIT
CABINET DOOR
CABINET FAN
CABINET HMI
HMI-CABINET FAN
Tetra Pak
Designer FEK
ECM No 452936
Date 2010-06-14
Denomination CIRCUIT DIAGRAM
Machine Straw Applicator 30-0300 TB/TBA/TPA/TCA/TWA
Page Type FAN, COOLING UNIT
Company Tetra Pak (Sweden)
Document No. 3036156-0003
Doc. type ELD
Version AE
Page 009
Drawing remarks

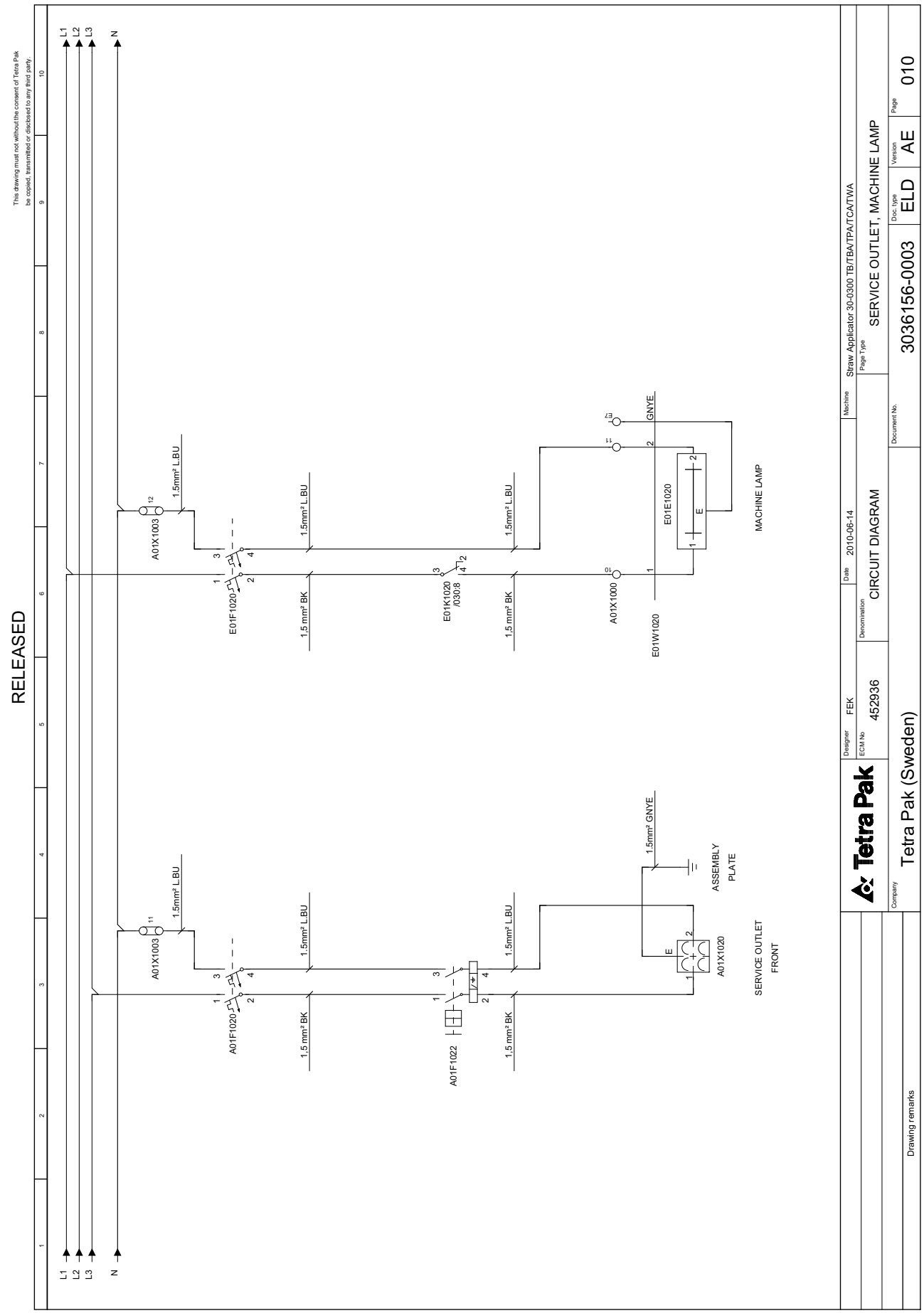
RELEASED
This drawing must not without the consent of Tetra Pak be copied, transmitted or disclosed to any third party.
L1
L2
L3
N
A01X1003
1.5mm² L.BU
E01F1020
1.5 mm² BK
E01K1020 /0308
A01X1000
E01W1020
E01E1020
GNYE
MACHINE LAMP
A01F1020
A01F1022
1.5mm² GNYE
ASSEMBLY PLATE
A01X1020
SERVICE OUTLET FRONT
Tetra Pak
Designer FEK
ECM No 452936
Denomination CIRCUIT DIAGRAM
Date 2010-06-14
Machine Straw Applicator 30-0300 TB/TBA/TPA/TCA/TWA
Page Type SERVICE OUTLET, MACHINE LAMP
Document No. 3036156-0003
Doc. type ELD
Version AE
Page 010
Company Tetra Pak (Sweden)
Drawing remarks

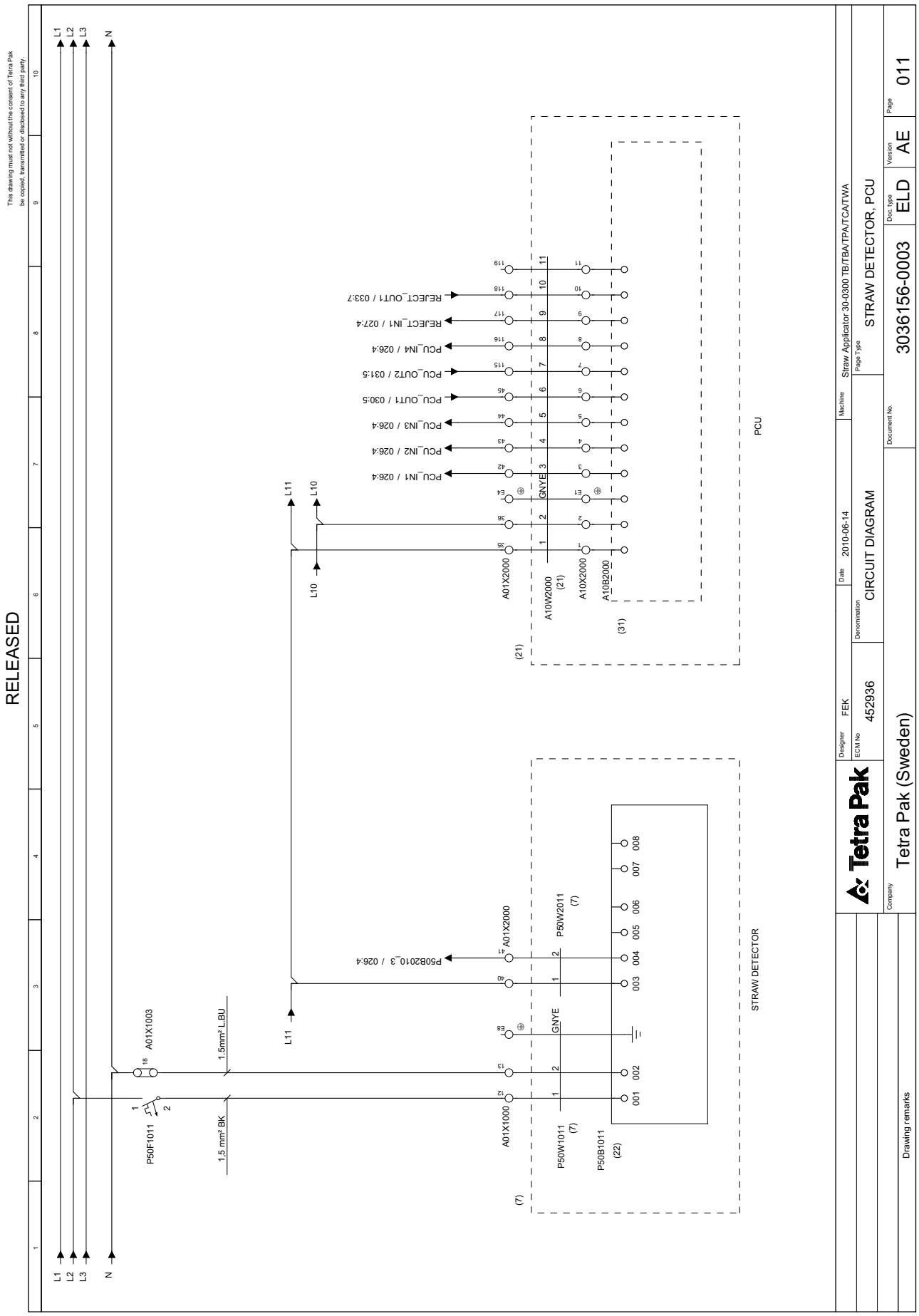
RELEASED
This drawing must not without the consent of Tetra Pak be copied, transmitted or disclosed to any third party.
L1
L2
L3
N
L10
L11
P50F1011
A01X1003
1.5mm² L.BU
1,5 mm² BK
A01X1000
A01X2000
P50W1011
P50W2011
P50B1011
P50B2010_3 / 026:4
GNYE
001
002
003
004
005
006
007
008
STRAW DETECTOR
PCU
A10W2000
A10X2000
A10B2000
PCU_IN1 / 026:4
PCU_IN2 / 026:4
PCU_IN3 / 026:4
PCU_OUT1 / 030:5
PCU_OUT2 / 031:5
PCU_IN4 / 026:4
REJECT_IN1 / 027:4
REJECT_OUT1 / 033:7
Tetra Pak
Designer FEK
ECM No 452936
Date 2010-06-14
Denomination CIRCUIT DIAGRAM
Machine Straw Applicator 30-0300 TB/TBA/TPA/TCA/TWA
Page Type STRAW DETECTOR, PCU
Company Tetra Pak (Sweden)
Document No. 3036156-0003
Doc. type ELD
Version AE
Page 011
Drawing remarks

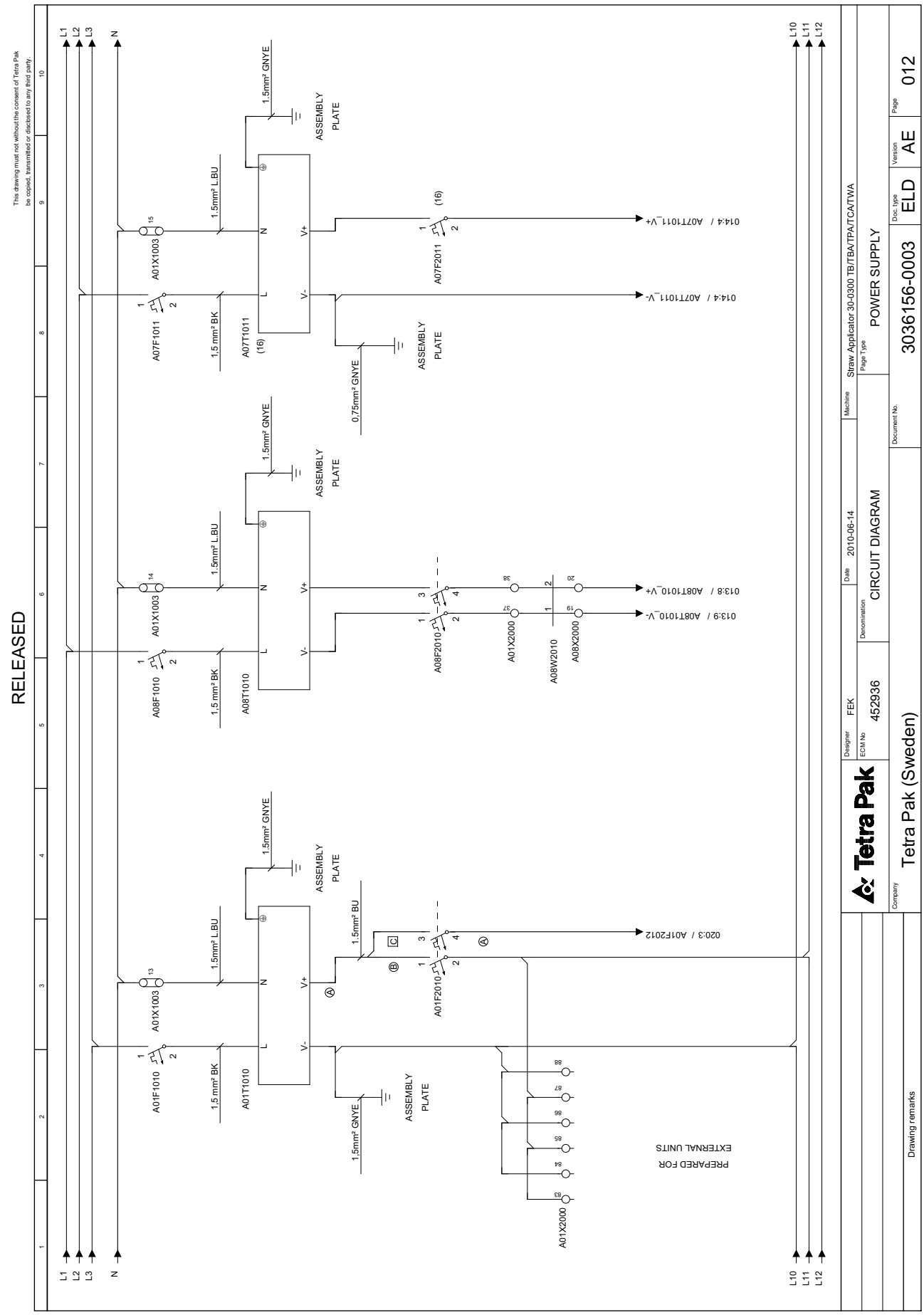
RELEASED
This drawing must not without the consent of Tetra Pak be copied, transmitted or disclosed to any third party
L1
L2
L3
N
L10
L11
L12
A01X1003
A07F1011
A07T1011
A07F2011
A08F1010
A08T1010
A08F2010
A01X2000
A08W2010
A08X2000
A01F1010
A01T1010
A01F2010
1.5mm² L.BU
1.5 mm² BK
1.5mm² GNYE
0,75mm² GNYE
ASSEMBLY PLATE
014:4 / A07T1011_V+
014:4 / A07T1011_V-
013:8 / A08T1010_V+
013:9 / A08T1010_V-
020:3 / A01F2012
PREPARED FOR EXTERNAL UNITS
Tetra Pak
Designer FEK
ECM No 452936
Date 2010-06-14
Denomination CIRCUIT DIAGRAM
Machine Straw Applicator 30-0300 TB/TBA/TPA/TCA/TWA
Page Type POWER SUPPLY
Document No. 3036156-0003
Doc. type ELD
Version AE
Page 012
Company Tetra Pak (Sweden)
Drawing remarks

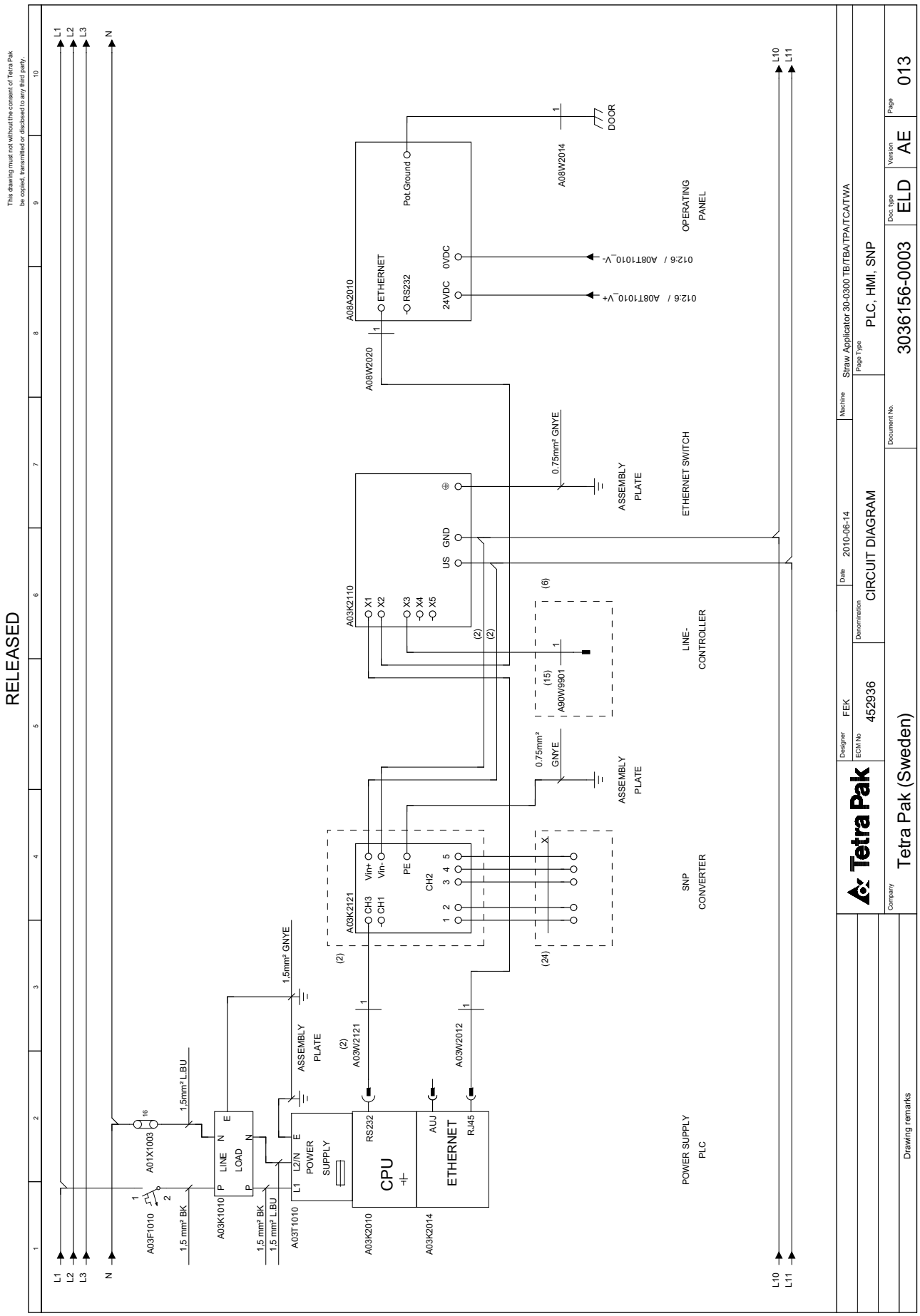
RELEASED
This drawing must not without the consent of Tetra Pak be copied, transmitted or disclosed to any third party.
L1
L2
L3
N
L10
L11
A03F1010
A01X1003
A03K1010
A03T1010
A03K2010
A03K2014
A03K2110
A03K2121
A08A2010
A08W2014
A08W2020
A03W2121
A03W2012
A90W9901
1,5 mm² BK
1,5 mm² LBU
1,5mm² GNYE
0,75mm² GNYE
LINE
LOAD
POWER SUPPLY
CPU
RS232
AUJ
ETHERNET
RJ45
PE
CH1
CH2
CH3
Vin+
Vin-
X1
X2
X3
X4
X5
US
GND
ETHERNET
RS232
24VDC
0VDC
Pot.Ground
DOOR
ASSEMBLY PLATE
POWER SUPPLY PLC
SNP CONVERTER
LINE-CONTROLLER
ETHERNET SWITCH
OPERATING PANEL
Tetra Pak
Designer FEK
ECM No 452936
Date 2010-06-14
Denomination CIRCUIT DIAGRAM
Machine Straw Applicator 30-0300 TB/TBA/TPA/TCA/TWA
Page Type PLC, HMI, SNP
Company Tetra Pak (Sweden)
Document No. 3036156-0003
Doc. type ELD
Version AE
Page 013
Drawing remarks

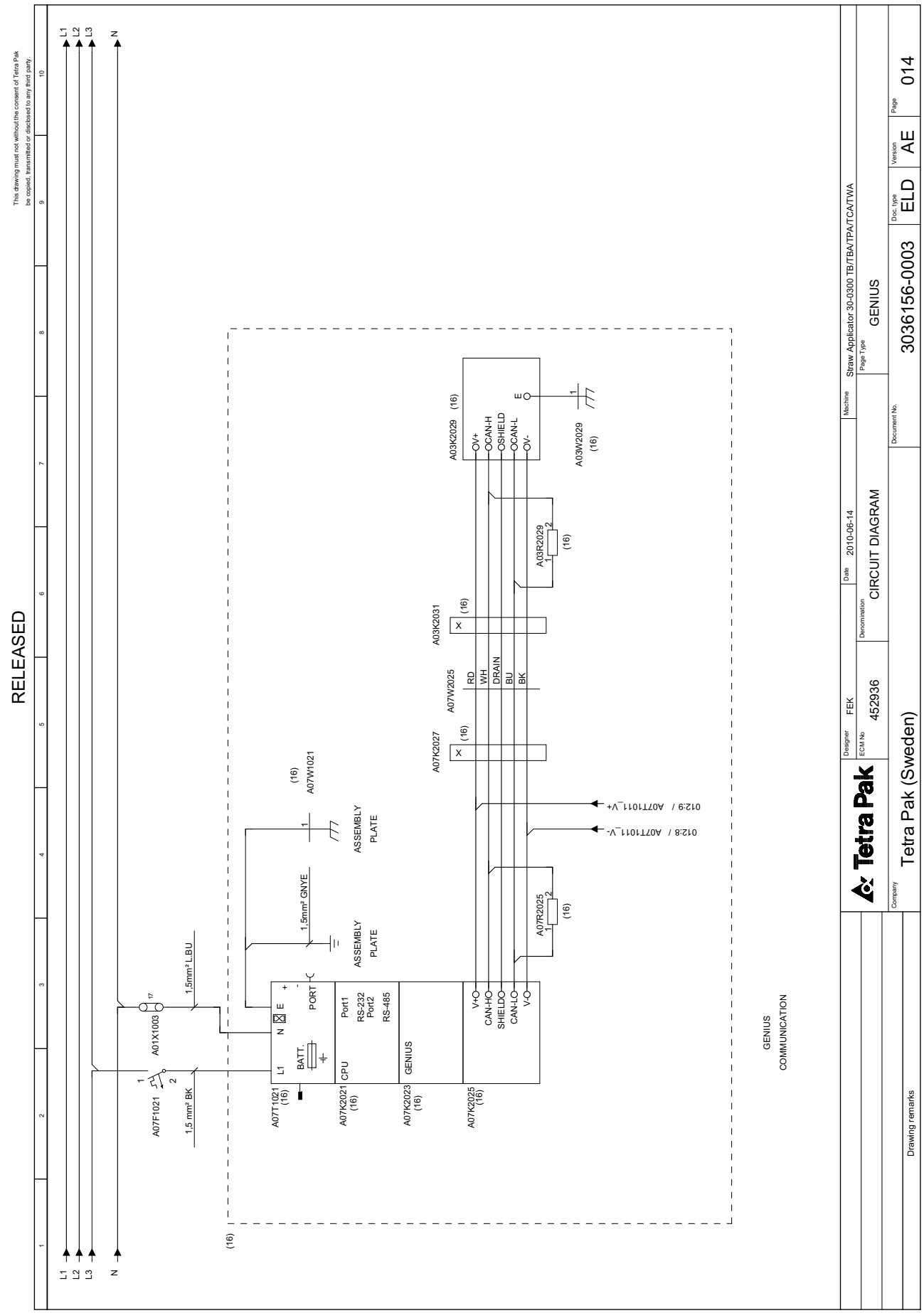
RELEASED
This drawing must not without the consent of Tetra Pak be copied, transmitted or disclosed to any third party
L1
L2
L3
N
A01X1003
A07F1021
1,5mm² LBU
1,5 mm² BK
A07T1021 (16)
A07K2021 (16)
A07K2023 (16)
A07K2025 (16)
BATT.
PORT
CPU
Port1
RS-232
Port2
RS-485
GENIUS
V+
CAN-H
SHIELD
CAN-L
V-
1,5mm² GNYE
ASSEMBLY PLATE
A07W1021
A07K2027
A07W2025
RD
WH
DRAIN
BU
BK
A03K2031
A03K2029
OSHIELD
E
A03W2029
A03R2029
A07R2025
012:9 / A07T1011_V+
012:8 / A07T1011_V-
GENIUS COMMUNICATION
Tetra Pak
Designer FEK
ECM No 452936
Denomination CIRCUIT DIAGRAM
Date 2010-06-14
Machine Straw Applicator 30-0300 TB/TBA/TPA/TCA/TWA
Page Type GENIUS
Document No. 3036156-0003
Doc. type ELD
Version AE
Page 014
Company Tetra Pak (Sweden)
Drawing remarks

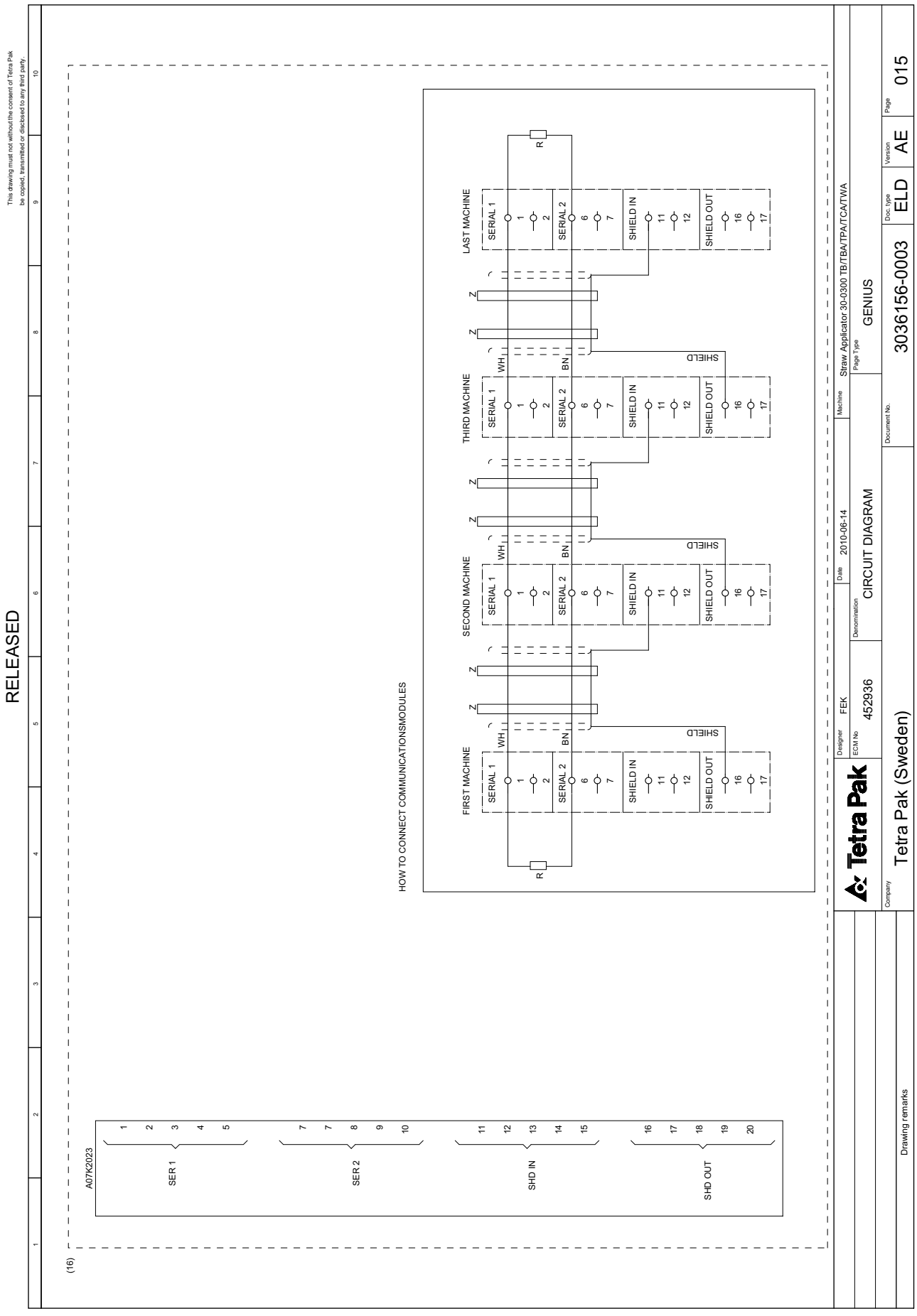
RELEASED
This drawing must not without the consent of Tetra Pak be copied, transmitted or disclosed to any third party.
HOW TO CONNECT COMMUNICATIONSMODULES
FIRST MACHINE
SECOND MACHINE
THIRD MACHINE
LAST MACHINE
SERIAL 1
SERIAL 2
SHIELD IN
SHIELD OUT
SHIELD
WH
BN
R
A07K2023
SER 1
SER 2
SHD IN
SHD OUT
Tetra Pak
Designer FEK
Date 2010-06-14
Machine Straw Applicator 30-0300 TB/TBA/TPA/TCA/TWA
ECM No 452936
Denomination CIRCUIT DIAGRAM
Page Type GENIUS
Company Tetra Pak (Sweden)
Document No. 3036156-0003
Doc. type ELD
Version AE
Page 015
Drawing remarks

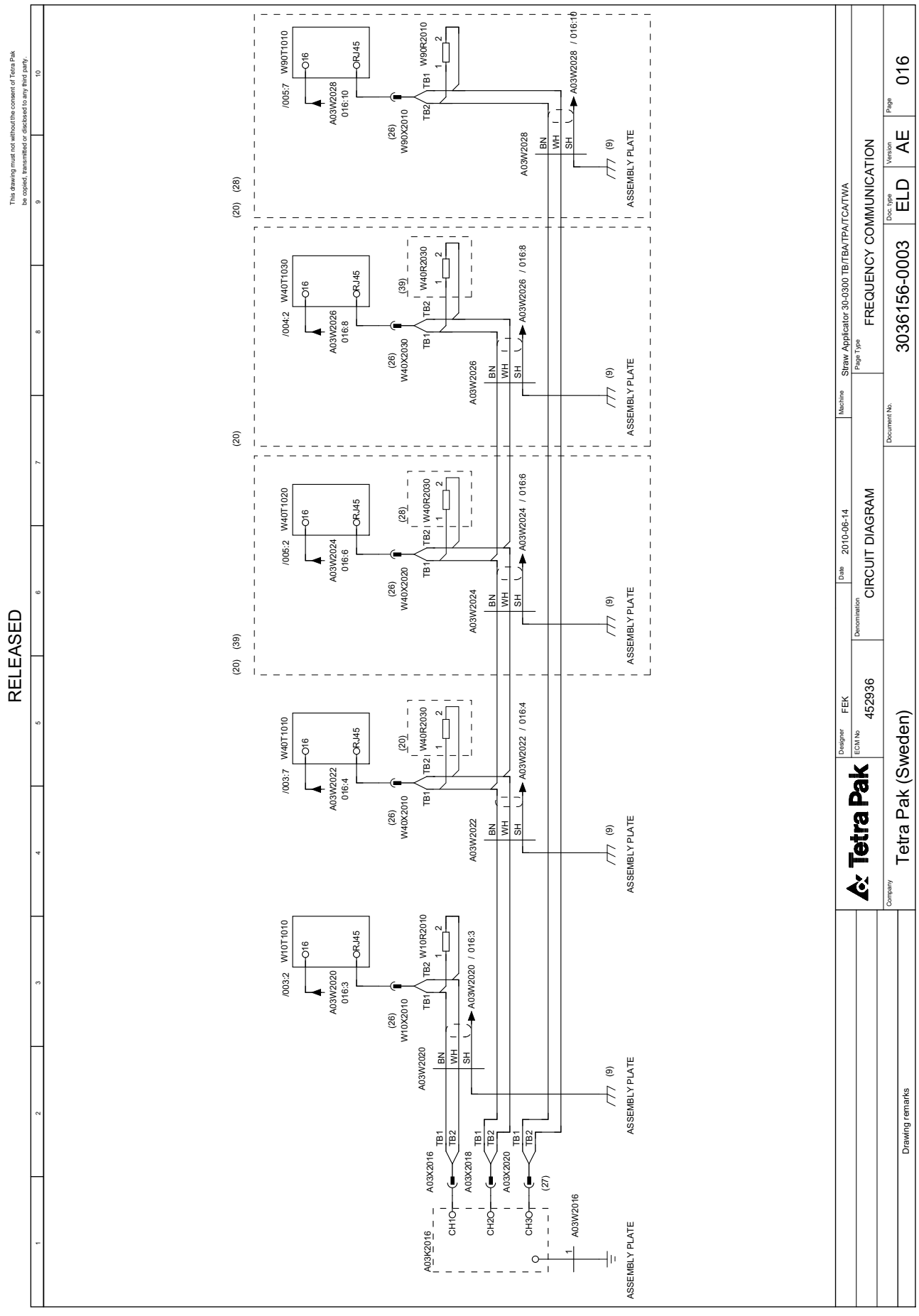
RELEASED
This drawing must not without the consent of Tetra Pak be copied, transmitted or disclosed to any third party.
Tetra Pak
Designer FEK
ECM No 452936
Denomination CIRCUIT DIAGRAM
Date 2010-06-14
Machine Straw Applicator 30-0300 TB/TBA/TPA/TCA/TWA
Page Type FREQUENCY COMMUNICATION
Document No. 3036156-0003
Doc. type ELD
Version AE
Page 016
Company Tetra Pak (Sweden)
Drawing remarks
A03K2016
A03X2016
A03X2018
A03X2020
A03W2016
A03W2020
A03W2022
A03W2024
A03W2026
A03W2028
W10T1010
W40T1010
W40T1020
W40T1030
W90T1010
W10R2010
W40R2030
W90R2010
W10X2010
W40X2010
W40X2020
W40X2030
W90X2010
ASSEMBLY PLATE
CH1
CH2
CH3
TB1
TB2
BN
WH
SH
ORJ45
O16

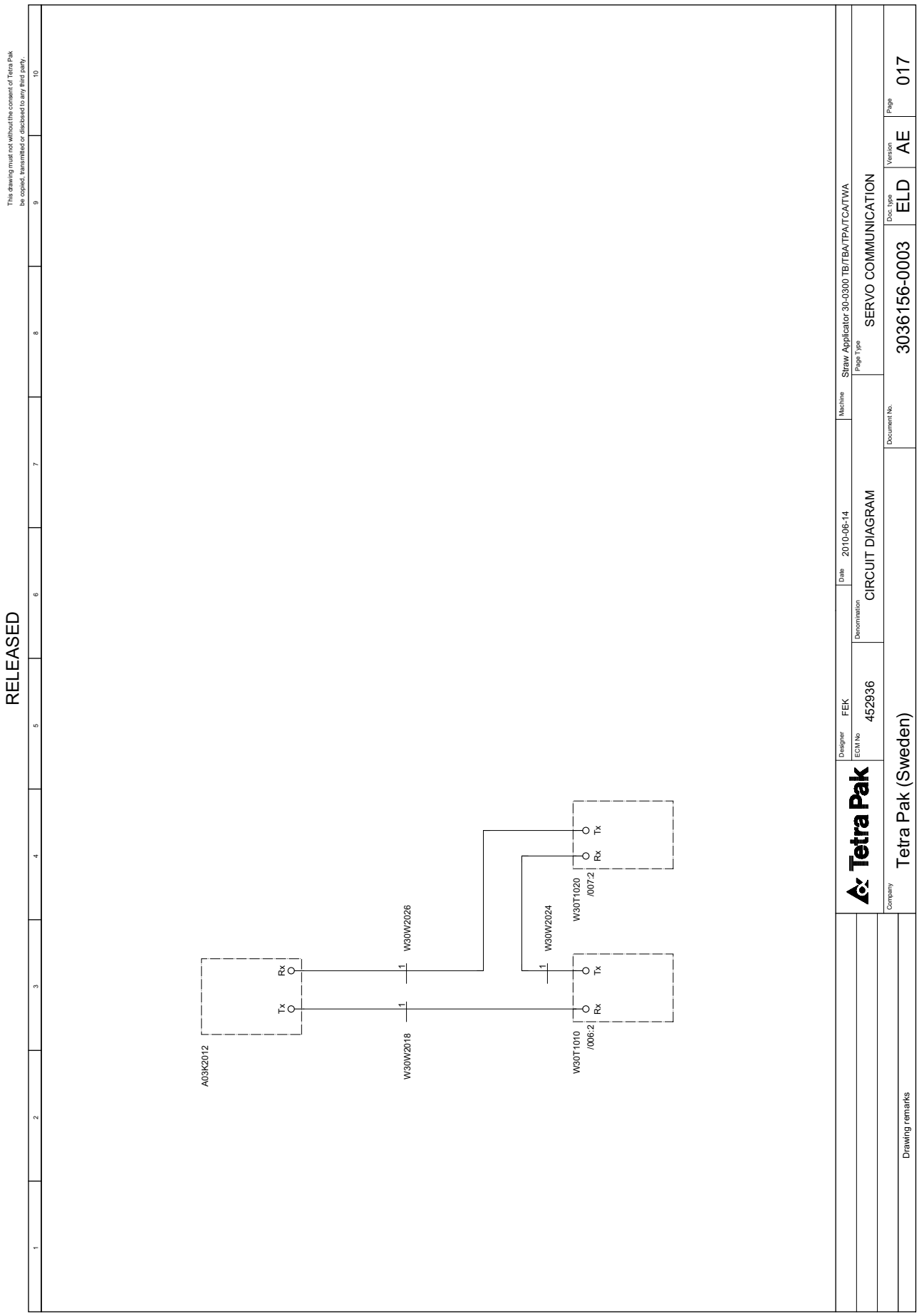
RELEASED
This drawing must not without the consent of Tetra Pak be copied, transmitted or disclosed to any third party.
A03K2012
Rx
Tx
W30W2018
W30W2026
W30W2024
W30T1010 /006:2
W30T1020 /007:2
Tx
Rx
Tx
Rx
Tetra Pak
Designer FEK
ECM No 452936
Denomination CIRCUIT DIAGRAM
Date 2010-06-14
Machine Straw Applicator 30-0300 TB/TBA/TPA/TCA/TWA
Page Type SERVO COMMUNICATION
Company Tetra Pak (Sweden)
Document No. 3036156-0003
Doc. type ELD
Version AE
Page 017
Drawing remarks

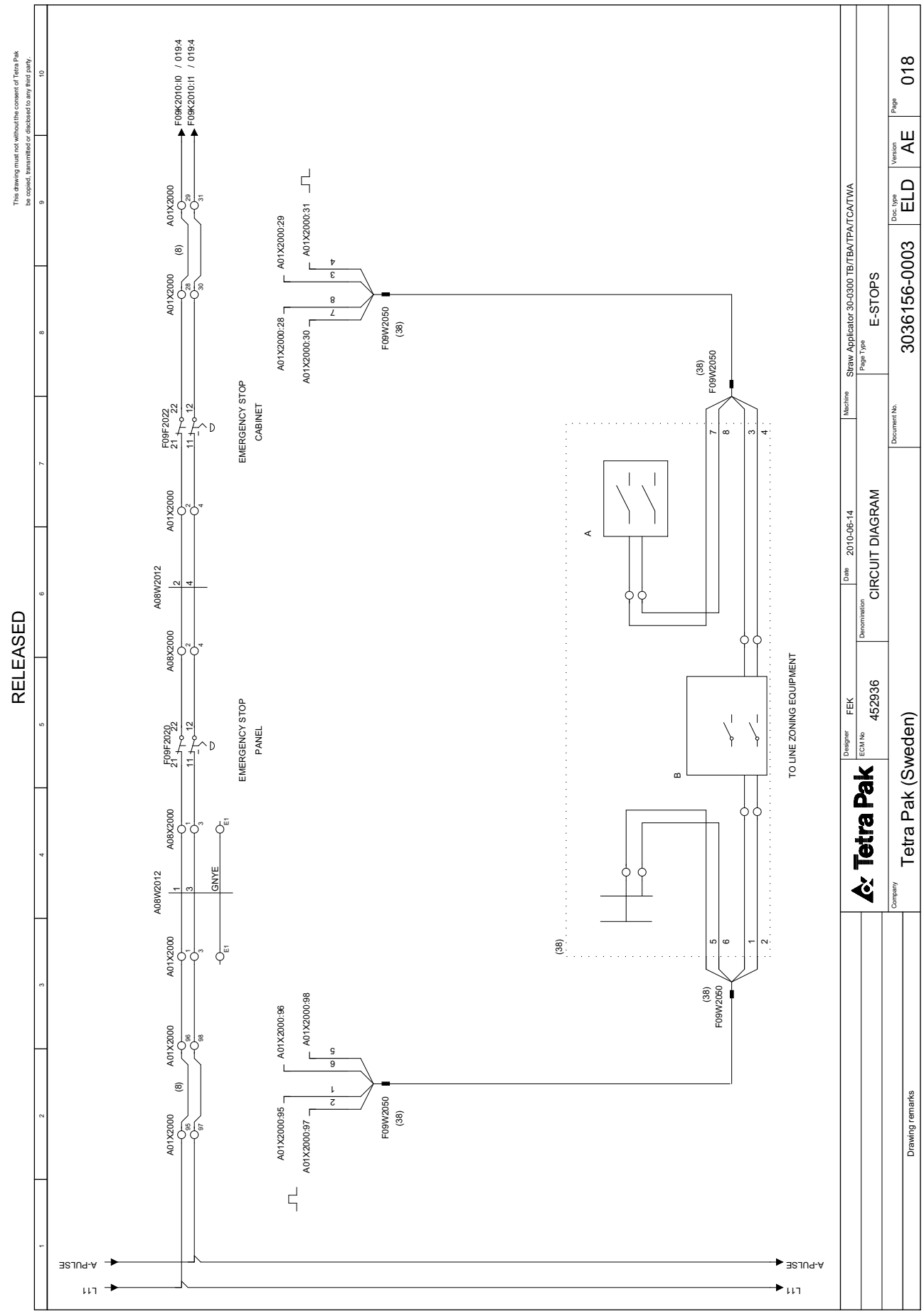
RELEASED
This drawing must not without the consent of Tetra Pak be copied, transmitted or disclosed to any third party
L11
A-PULSE
EMERGENCY STOP PANEL
EMERGENCY STOP CABINET
TO LINE ZONING EQUIPMENT
A
B
GNYE
F09K2010:10 / 019:4
F09K2010:11 / 019:4
A01X2000:95
A01X2000:96
A01X2000:97
A01X2000:98
A01X2000:28
A01X2000:29
A01X2000:30
A01X2000:31
F09W2050 (38)
A08W2012
F09F2020
F09F2022
Designer FEK
ECM No 452936
Denomination CIRCUIT DIAGRAM
Date 2010-06-14
Machine Straw Applicator 30-0300 TB/TBA/TPA/TCA/TWA
Page Type E-STOPS
Document No. 3036156-0003
Doc. type ELD
Version AE
Page 018
Company Tetra Pak (Sweden)
Drawing remarks

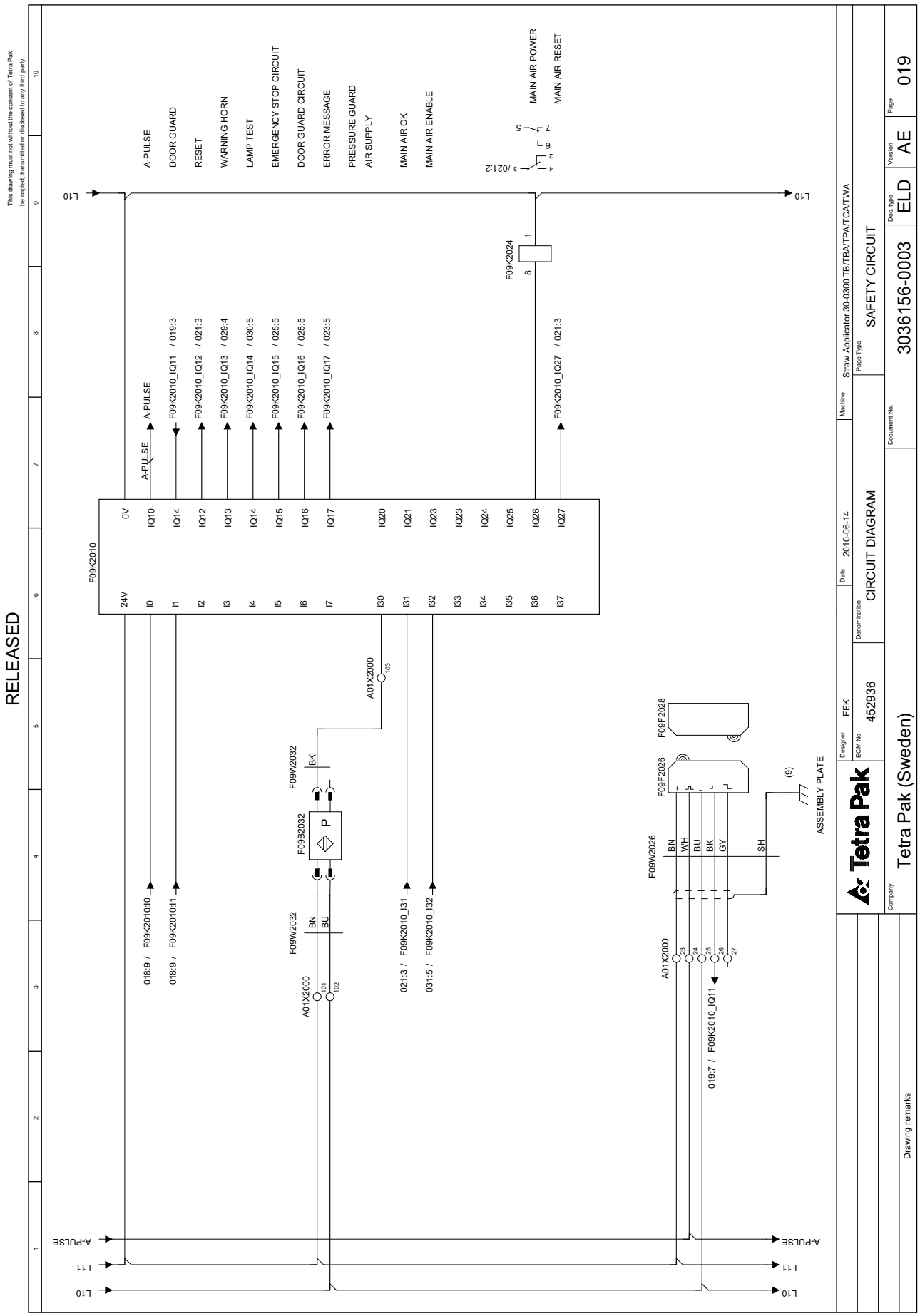
RELEASED
This drawing must not without the consent of Tetra Pak be copied, transmitted or disclosed to any third party.
L10
L11
A-PULSE
A-PULSE
DOOR GUARD
RESET
WARNING HORN
LAMP TEST
EMERGENCY STOP CIRCUIT
DOOR GUARD CIRCUIT
ERROR MESSAGE
PRESSURE GUARD
AIR SUPPLY
MAIN AIR OK
MAIN AIR ENABLE
MAIN AIR POWER
MAIN AIR RESET
F09K2010
F09K2024
F09K2010_IQ11 / 019:3
F09K2010_IQ12 / 021:3
F09K2010_IQ13 / 029:4
F09K2010_IQ14 / 030:5
F09K2010_IQ15 / 025:5
F09K2010_IQ16 / 025:5
F09K2010_IQ17 / 023:5
F09K2010_IQ27 / 021:3
018:9 / F09K2010:I0
018:9 / F09K2010:I1
021:3 / F09K2010_I31
031:5 / F09K2010_I32
A01X2000
F09W2032
F09B2032
F09W2026
F09F2026
F09F2028
ASSEMBLY PLATE
019:7 / F09K2010_IQ11
Tetra Pak
Designer FEK
EDM No 452936
Denomination CIRCUIT DIAGRAM
Date 2010-06-14
Machine Straw Applicator 30-0300 TB/TBA/TPA/TCA/TWA
Page Type SAFETY CIRCUIT
Document No. 3036156-0003
Doc. type ELD
Version AE
Page 019
Company Tetra Pak (Sweden)
Drawing remarks

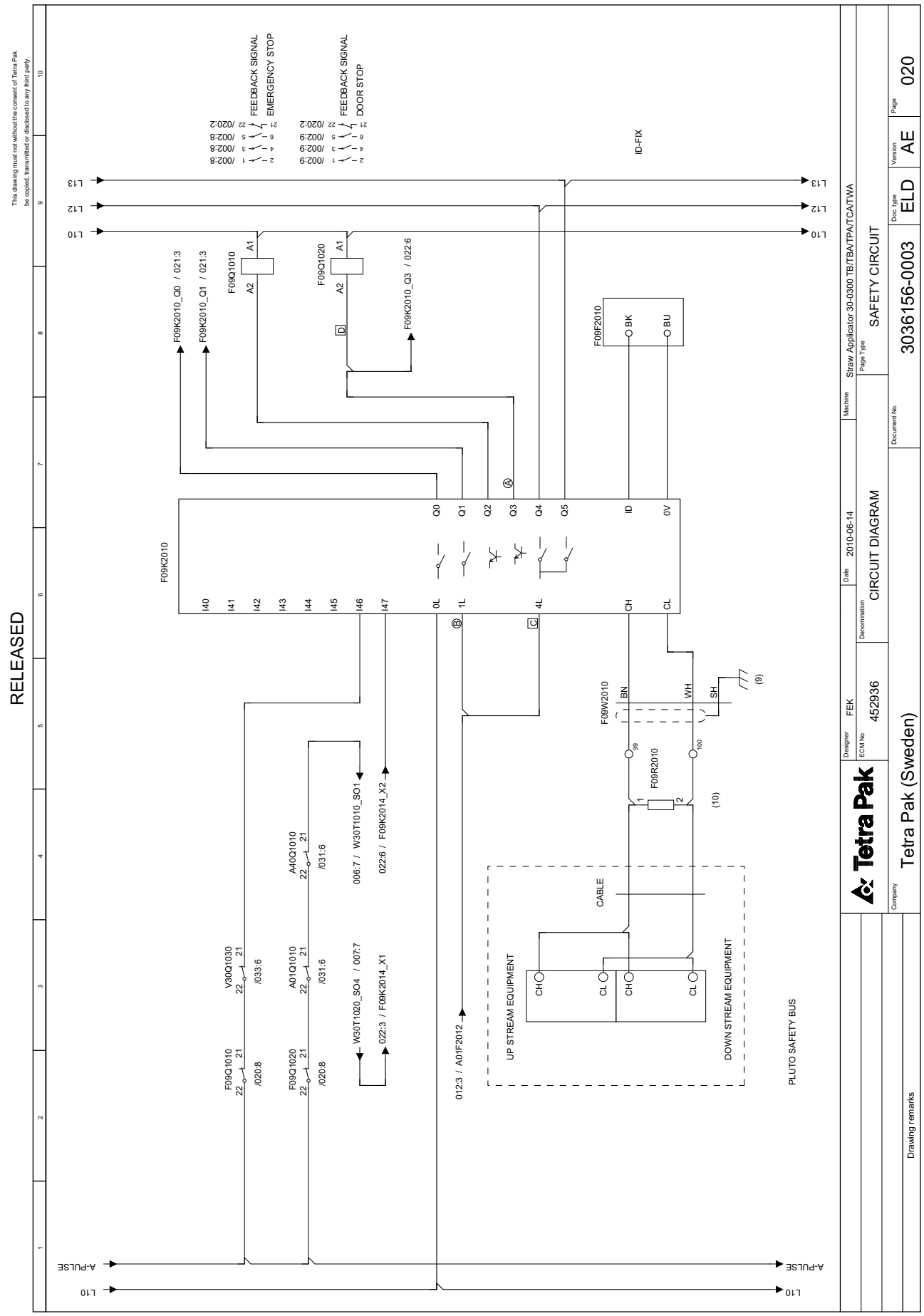
RELEASED
This drawing must not without the consent of Tetra Pak be copied, transmitted or disclosed to any third party.
FEEDBACK SIGNAL EMERGENCY STOP
FEEDBACK SIGNAL DOOR STOP
ID-FIX
F09K2010
F09Q1010
F09Q1020
F09K2010_Q0 / 021:3
F09K2010_Q1 / 021:3
F09K2010_Q3 / 022:6
F09F2010
F09W2010
F09R2010
V30Q1030
A01Q1010
A40Q1010
W30T1020_SO4 / 007:7
022:3 / F09K2014_X1
006:7 / W30T1010_SO1
022:6 / F09K2014_X2
012:3 / A01F2012
UP STREAM EQUIPMENT
DOWN STREAM EQUIPMENT
CABLE
PLUTO SAFETY BUS
L10
L12
L13
A-PULSE
Tetra Pak
Designer FEK
ECM No 452936
Denomination CIRCUIT DIAGRAM
Date 2010-06-14
Machine Straw Applicator 30-0300 TB/TBA/TPA/TCA/TWA
Page Type SAFETY CIRCUIT
Document No. 3036156-0003
Doc. type ELD
Version AE
Page 020
Company Tetra Pak (Sweden)
Drawing remarks

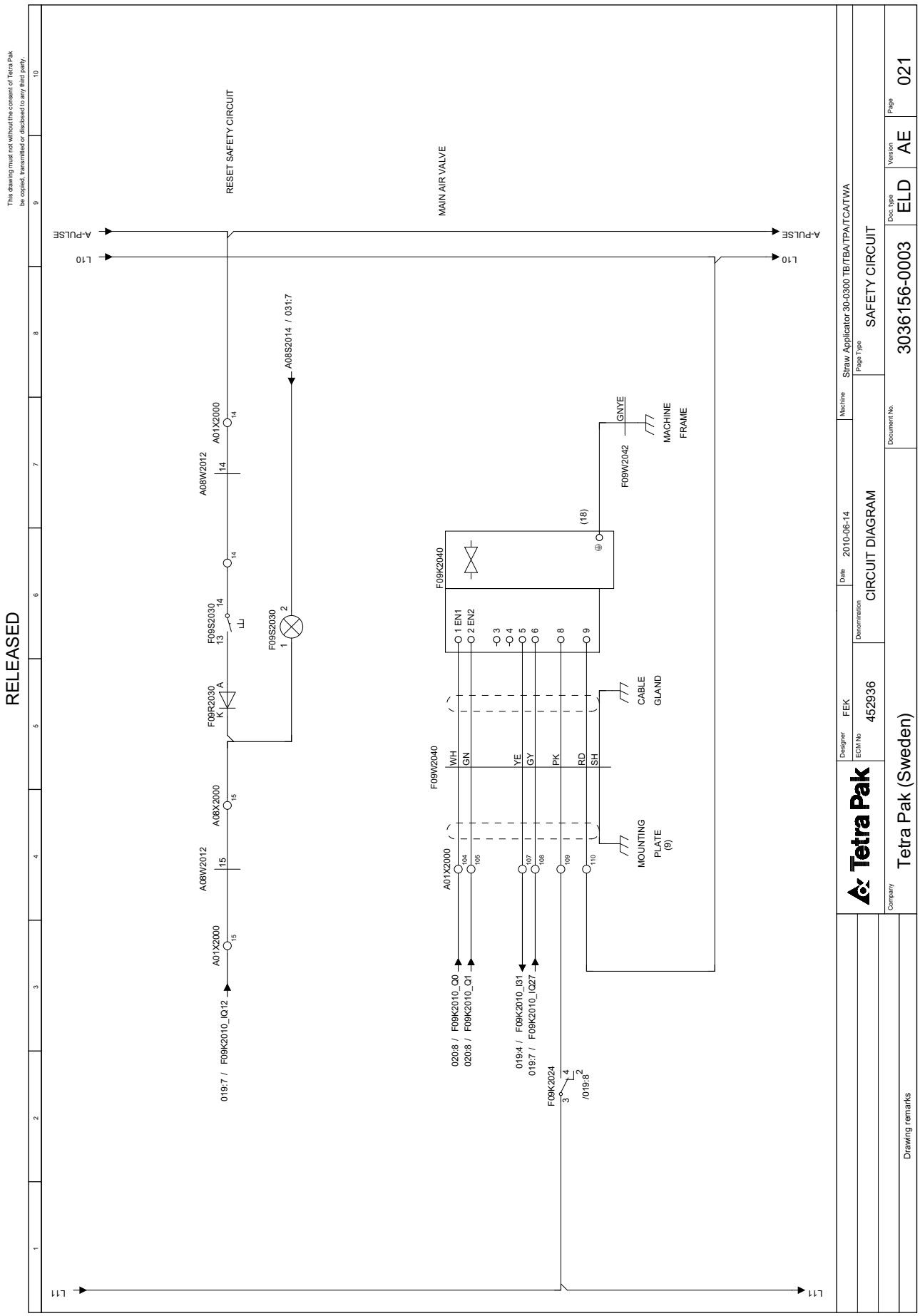
RELEASED
This drawing must not without the consent of Tetra Pak be copied, transmitted or disclosed to any third party.
RESET SAFETY CIRCUIT
MAIN AIR VALVE
A-PULSE
L10
L11
A08S2014 / 031:7
A01X2000
A08W2012
A08X2000
F09S2030
F09S2030
F08R2030
F09K2040
F09W2042
GNYE
MACHINE FRAME
F09W2040
WH
GN
YE
GY
PK
RD
SH
CABLE GLAND
MOUNTING PLATE (9)
019:7 / F09K2010_IQ12
020:8 / F09K2010_Q0
020:8 / F09K2010_Q1
019:4 / F09K2010_I31
019:7 / F09K2010_IQ27
F08K2024
/019:8
Tetra Pak
Designer FEK
EDM No 452936
Date 2010-06-14
Machine
Denomination CIRCUIT DIAGRAM
Page Type SAFETY CIRCUIT
Straw Applicator 30-0300 TB/TBA/TPA/TCA/TWA
Company Tetra Pak (Sweden)
Document No. 3036156-0003
Doc. type ELD
Version AE
Page 021
Drawing remarks

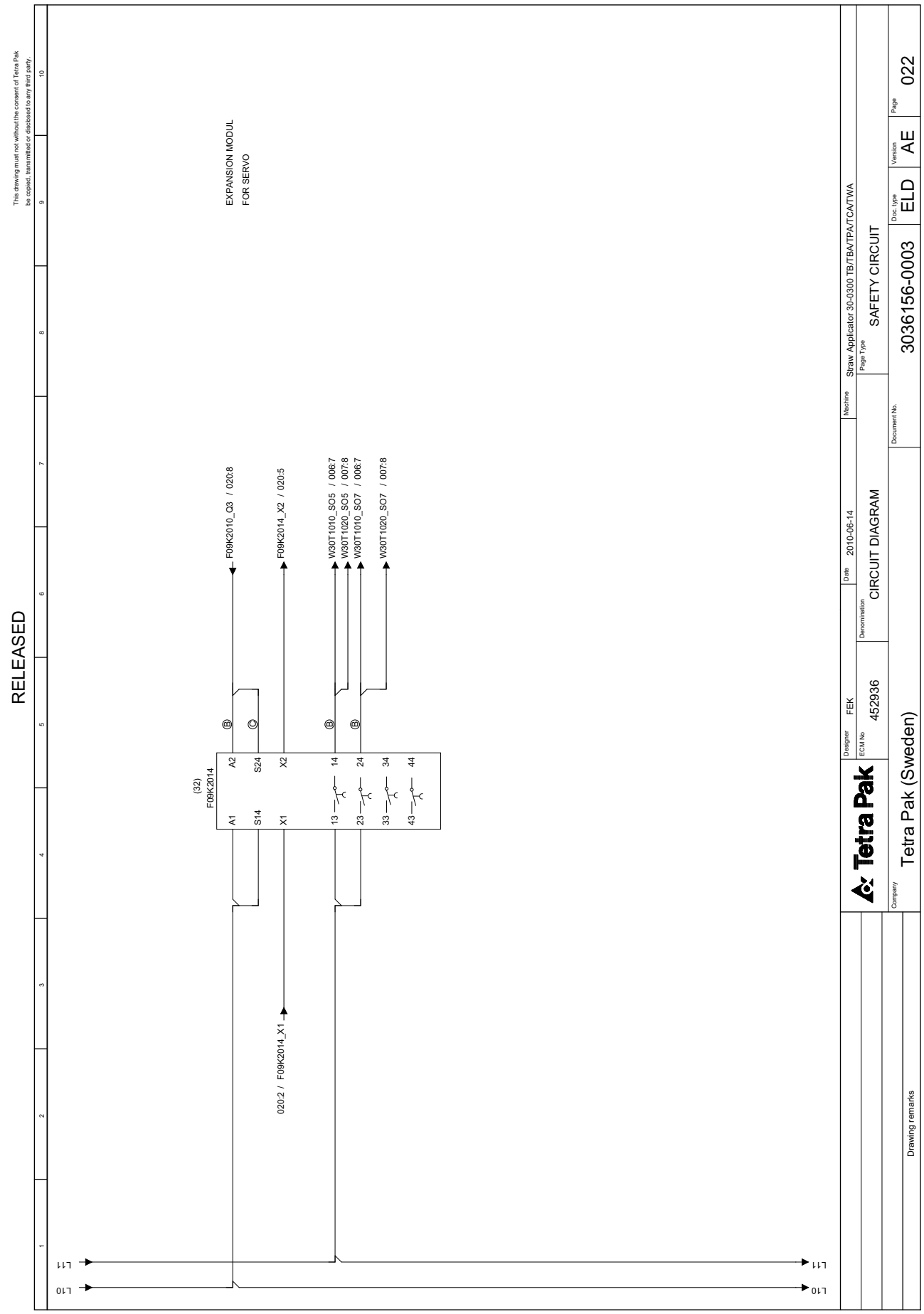
RELEASED
This drawing must not without the consent of Tetra Pak be copied, transmitted or disclosed to any third party.
EXPANSION MODUL
FOR SERVO
(32)
F09K2014
A1
S14
A2
S24
X2
X1
13
14
23
24
33
34
43
44
F09K2010_Q3 / 020:8
F09K2014_X2 / 020:5
W30T1010_SO5 / 006:7
W30T1020_SO5 / 007:8
W30T1010_SO7 / 006:7
W30T1020_SO7 / 007:8
020:2 / F09K2014_X1
L11
L10
Designer FEK
ECM No 452936
Denomination CIRCUIT DIAGRAM
Date 2010-06-14
Machine Straw Applicator 30-0300 TB/TBA/TPA/TCA/TWA
Page Type SAFETY CIRCUIT
Document No. 3036156-0003
Doc. type ELD
Version AE
Page 022
Company Tetra Pak (Sweden)
Drawing remarks
Tetra Pak

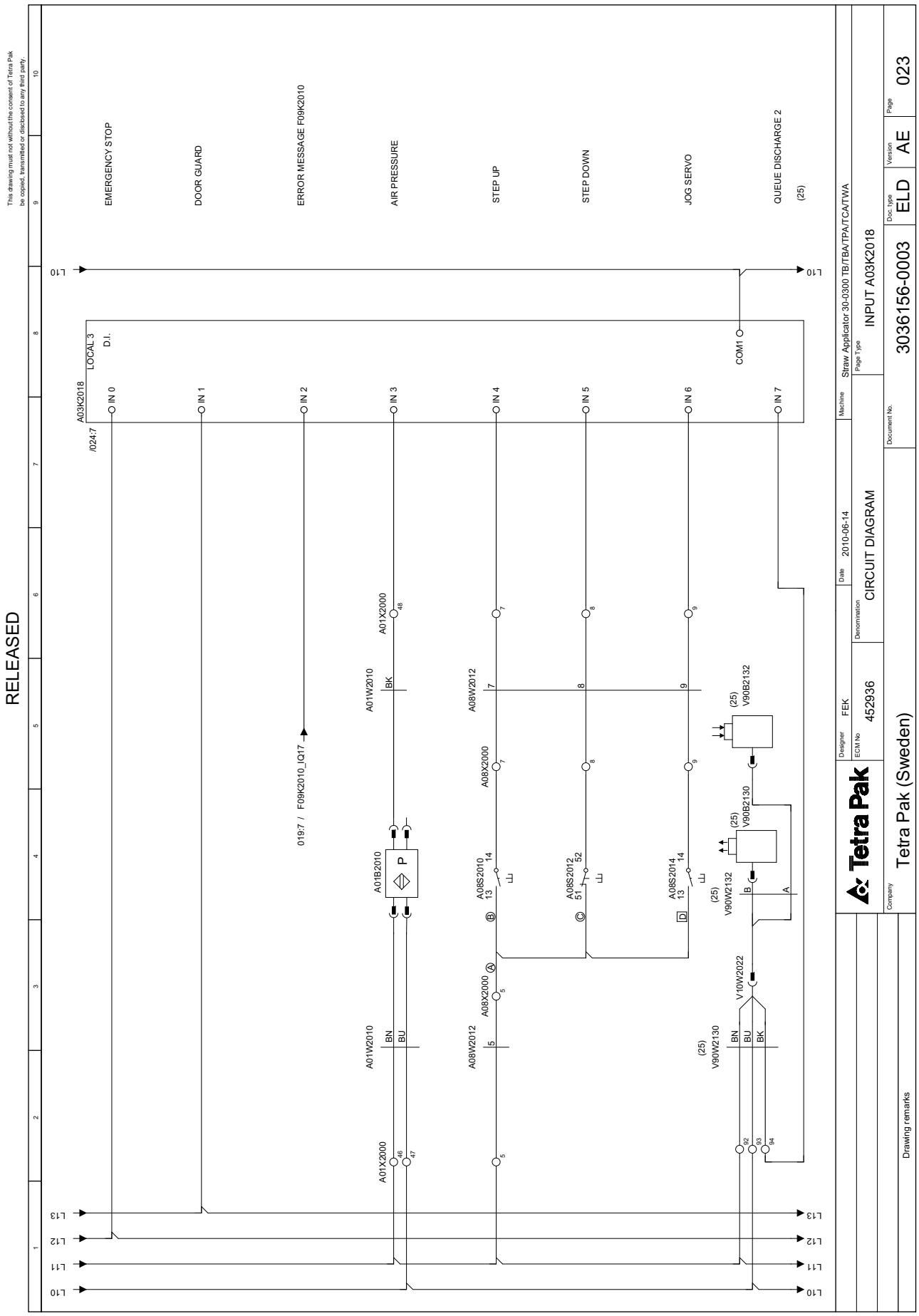
RELEASED
This drawing must not without the consent of Tetra Pak be copied, transmitted or disclosed to any third party.
EMERGENCY STOP
DOOR GUARD
ERROR MESSAGE F09K2010
AIR PRESSURE
STEP UP
STEP DOWN
JOG SERVO
QUEUE DISCHARGE 2
(25)
A03K2018
LOCAL 3
D.I.
IN 0
IN 1
IN 2
IN 3
IN 4
IN 5
IN 6
IN 7
COM1
/024:7
019:7 / F09K2010_IQ17
A01X2000
A01W2010
A01B2010
A08W2012
A08X2000
A08S2010
A08S2012
A08S2014
V10W2022
V90B2132
V90B2130
V90W2132
V90W2130
Tetra Pak
Designer FEK
ECM No 452936
Denomination CIRCUIT DIAGRAM
Date 2010-06-14
Machine Straw Applicator 30-0300 TB/TBA/TPA/TCA/TWA
Page Type INPUT A03K2018
Document No. 3036156-0003
Doc. type ELD
Version AE
Page 023
Company Tetra Pak (Sweden)
Drawing remarks

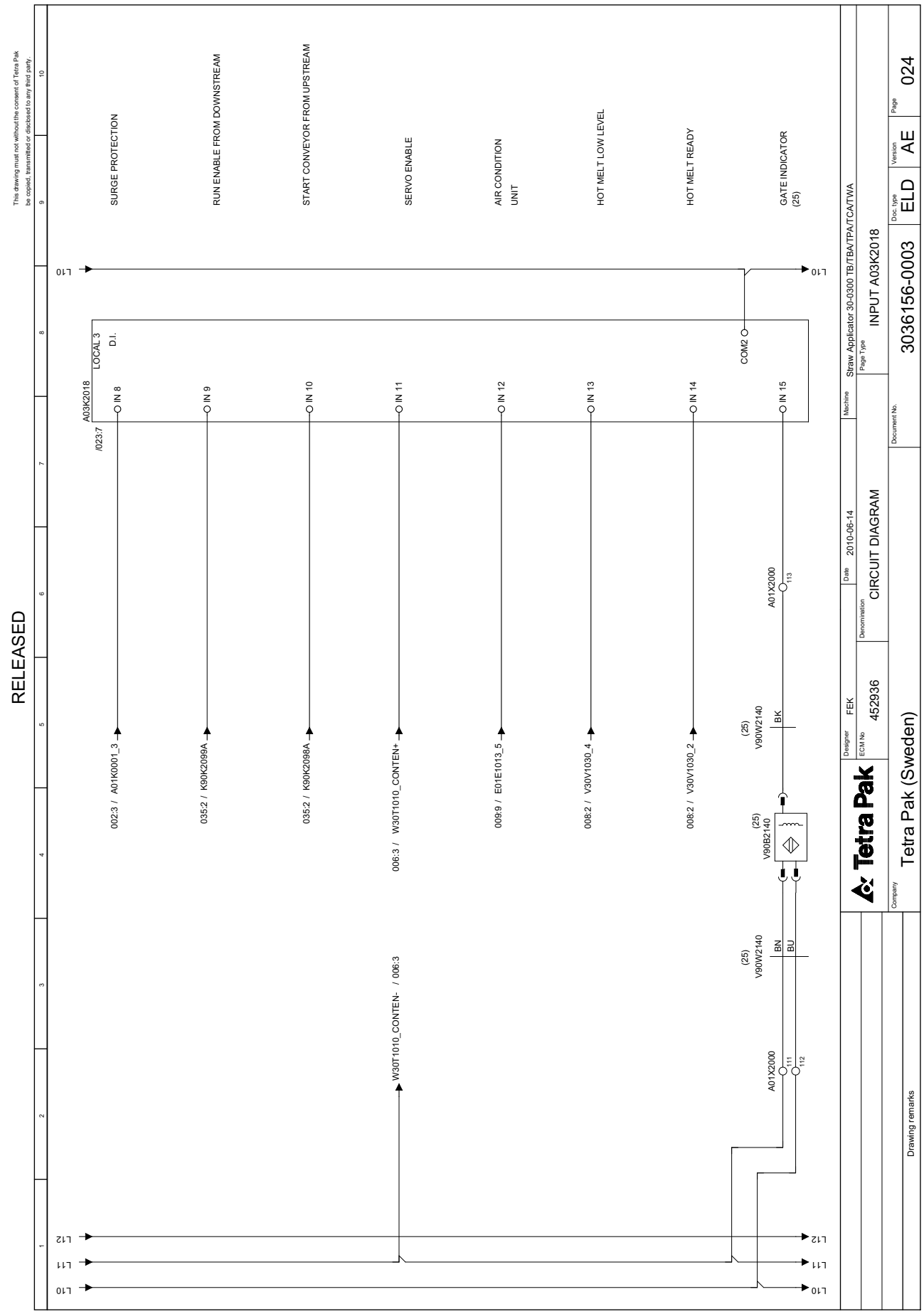
RELEASED
This drawing must not without the consent of Tetra Pak be copied, transmitted or disclosed to any third party.
SURGE PROTECTION
RUN ENABLE FROM DOWNSTREAM
START CONVEYOR FROM UPSTREAM
SERVO ENABLE
AIR CONDITION UNIT
HOT MELT LOW LEVEL
HOT MELT READY
GATE INDICATOR (25)
A03K2018
LOCAL 3
D.I.
/023:7
IN 8
IN 9
IN 10
IN 11
IN 12
IN 13
IN 14
IN 15
COM2
L10
L11
L12
002:3 / A01K0001_3
035:2 / K90K2099A
035:2 / K90K2098A
006:3 / W30T1010_CONTEN+
009:9 / E01E1013_5
008:2 / V30V1030_4
008:2 / V30V1030_2
W30T1010_CONTEN- / 006:3
(25) V90W2140
BK
BN
BU
(25) V90B2140
A01X2000
111
112
113
Designer FEK
ECM No 452936
Denomination CIRCUIT DIAGRAM
Date 2010-06-14
Machine Straw Applicator 30-0300 TB/TBA/TPA/TCA/TWA
Page Type INPUT A03K2018
Document No. 3036156-0003
Doc. type ELD
Version AE
Page 024
Company Tetra Pak (Sweden)
Drawing remarks

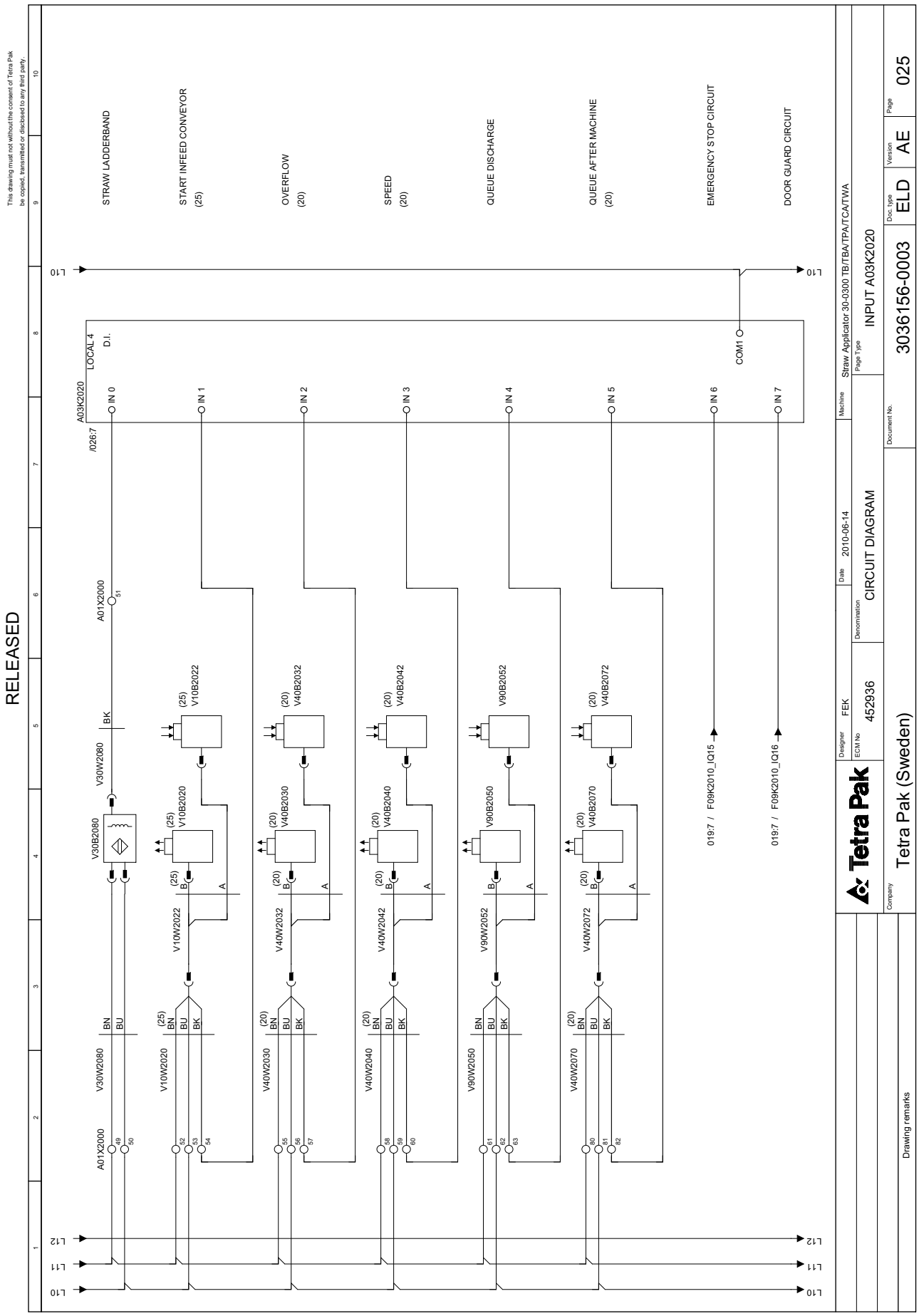
RELEASED
This drawing must not without the consent of Tetra Pak be copied, transmitted or disclosed to any third party.
STRAW LADDERBAND
START INFEED CONVEYOR
(25)
OVERFLOW
(20)
SPEED
(20)
QUEUE DISCHARGE
QUEUE AFTER MACHINE
(20)
EMERGENCY STOP CIRCUIT
DOOR GUARD CIRCUIT
A03K2020
LOCAL 4
D.I.
/026:7
IN 0
IN 1
IN 2
IN 3
IN 4
IN 5
IN 6
IN 7
COM1
L10
L11
L12
A01X2000
V30W2080
V30B2080
V10B2022
V10B2020
V40B2032
V40B2030
V40B2042
V40B2040
V90B2052
V90B2050
V40B2072
V40B2070
V10W2022
V10W2020
V40W2032
V40W2030
V40W2042
V40W2040
V90W2052
V90W2050
V40W2072
V40W2070
BK
BN
BU
019:7 / F09K2010_IQ15
019:7 / F09K2010_IQ16
Tetra Pak
Designer FEK
ECM No 452936
Denomination CIRCUIT DIAGRAM
Date 2010-06-14
Machine Straw Applicator 30-0300 TB/TBA/TPA/TCA/TWA
Page Type INPUT A03K2020
Document No. 3036156-0003
Doc. type ELD
Version AE
Page 025
Company Tetra Pak (Sweden)
Drawing remarks

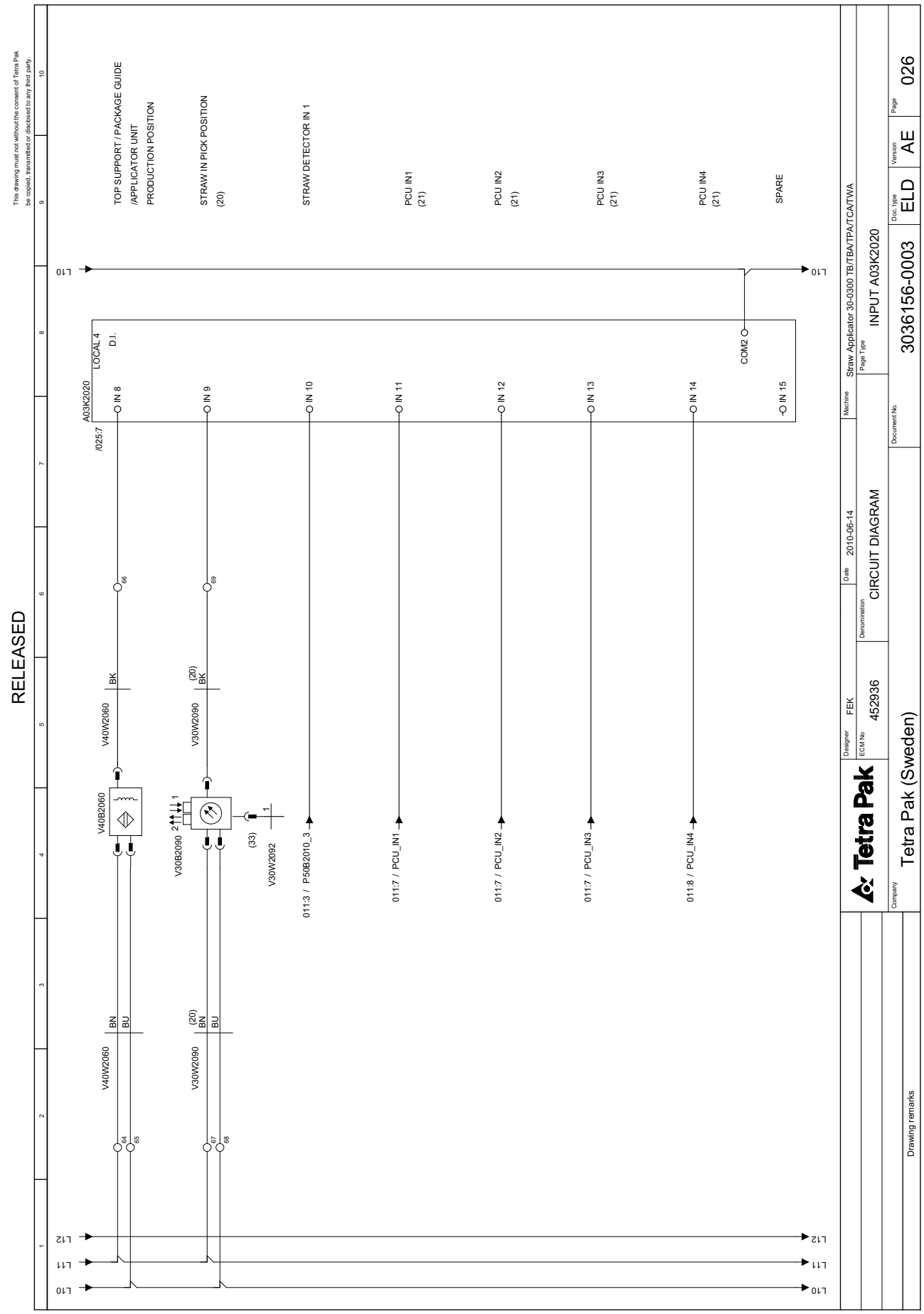
RELEASED
This drawing must not without the consent of Tetra Pak be copied, transmitted or disclosed to any third party.
TOP SUPPORT / PACKAGE GUIDE /APPLICATOR UNIT PRODUCTION POSITION
STRAW IN PICK POSITION (20)
STRAW DETECTOR IN 1
PCU IN1 (21)
PCU IN2 (21)
PCU IN3 (21)
PCU IN4 (21)
SPARE
A03K2020
LOCAL 4 D.I.
/025:7
IN 8
IN 9
IN 10
IN 11
IN 12
IN 13
IN 14
IN 15
COM2
L10
L11
L12
V40W2060
V40B2060
V30W2090
V30B2090
V30W2092
BK
BN
BU
(20)
(33)
011:3 / P50B2010_3
011:7 / PCU_IN1
011:7 / PCU_IN2
011:7 / PCU_IN3
011:8 / PCU_IN4
Designer FEK
ECM No 452936
Denomination CIRCUIT DIAGRAM
Date 2010-06-14
Machine Straw Applicator 30-0300 TB/TBA/TPA/TCA/TWA
Page Type INPUT A03K2020
Document No. 3036156-0003
Doc. type ELD
Version AE
Page 026
Company Tetra Pak (Sweden)
Drawing remarks
Tetra Pak

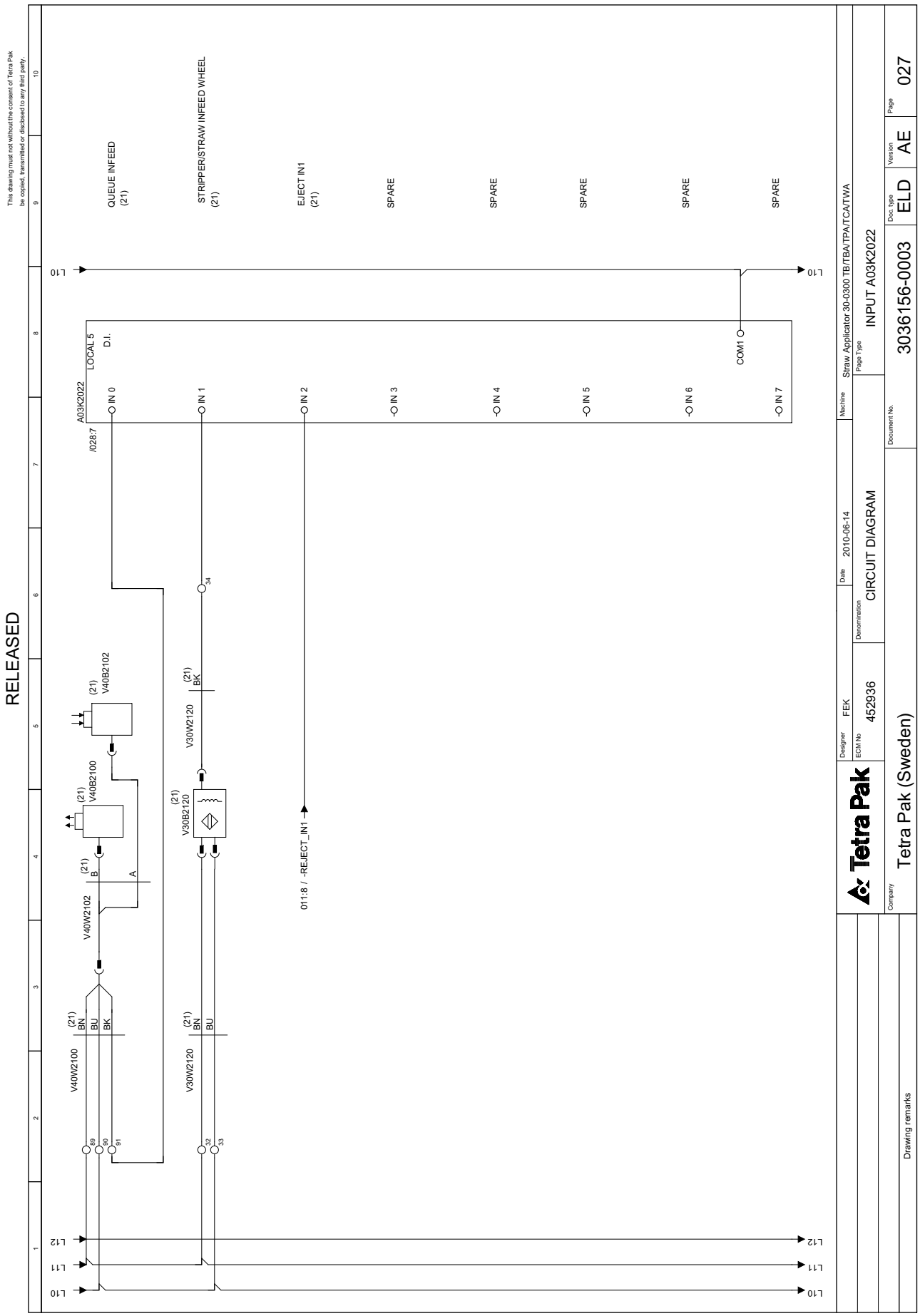
RELEASED
This drawing must not without the consent of Tetra Pak be copied, transmitted or disclosed to any third party.
QUEUE INFEED (21)
STRIPPER/STRAW INFEED WHEEL (21)
EJECT IN1 (21)
SPARE
SPARE
SPARE
SPARE
SPARE
A03K2022
LOCAL 5
D.I.
/028:7
IN 0
IN 1
IN 2
IN 3
IN 4
IN 5
IN 6
IN 7
COM1
011:8 / -REJECT_IN1
V40B2102
V40B2100
V30B2120
V40W2102
V40W2100
V30W2120
(21) BN
(21) BU
(21) BK
L10
L11
L12
Tetra Pak
Designer FEK
ECM No 452936
Denomination CIRCUIT DIAGRAM
Date 2010-06-14
Machine Straw Applicator 30-0300 TB/TBA/TPA/TCA/TWA
Page Type INPUT A03K2022
Company Tetra Pak (Sweden)
Drawing remarks
Document No. 3036156-0003
Doc. type ELD
Version AE
Page 027


RELEASED
This drawing must not without the consent of Tetra Pak be copied, transmitted or disclosed to any third party.
L10
L11
L12
A03K2022
LOCAL 5 D.I.
/027:7
-O IN 8
-O IN 9
-O IN 10
-O IN 11
-O IN 12
-O IN 13
-O IN 14
-O IN 15
COM2
SPARE
Tetra Pak
Designer FEK
ECM No 452936
Denomination CIRCUIT DIAGRAM
Date 2010-06-14
Machine Straw Applicator 30-0300 TB/TBA/TPA/TCA/TWA
Page Type INPUT A03K2022
Document No. 3036156-0003
Doc. type ELD
Version AE
Page 028
Company Tetra Pak (Sweden)
Drawing remarks

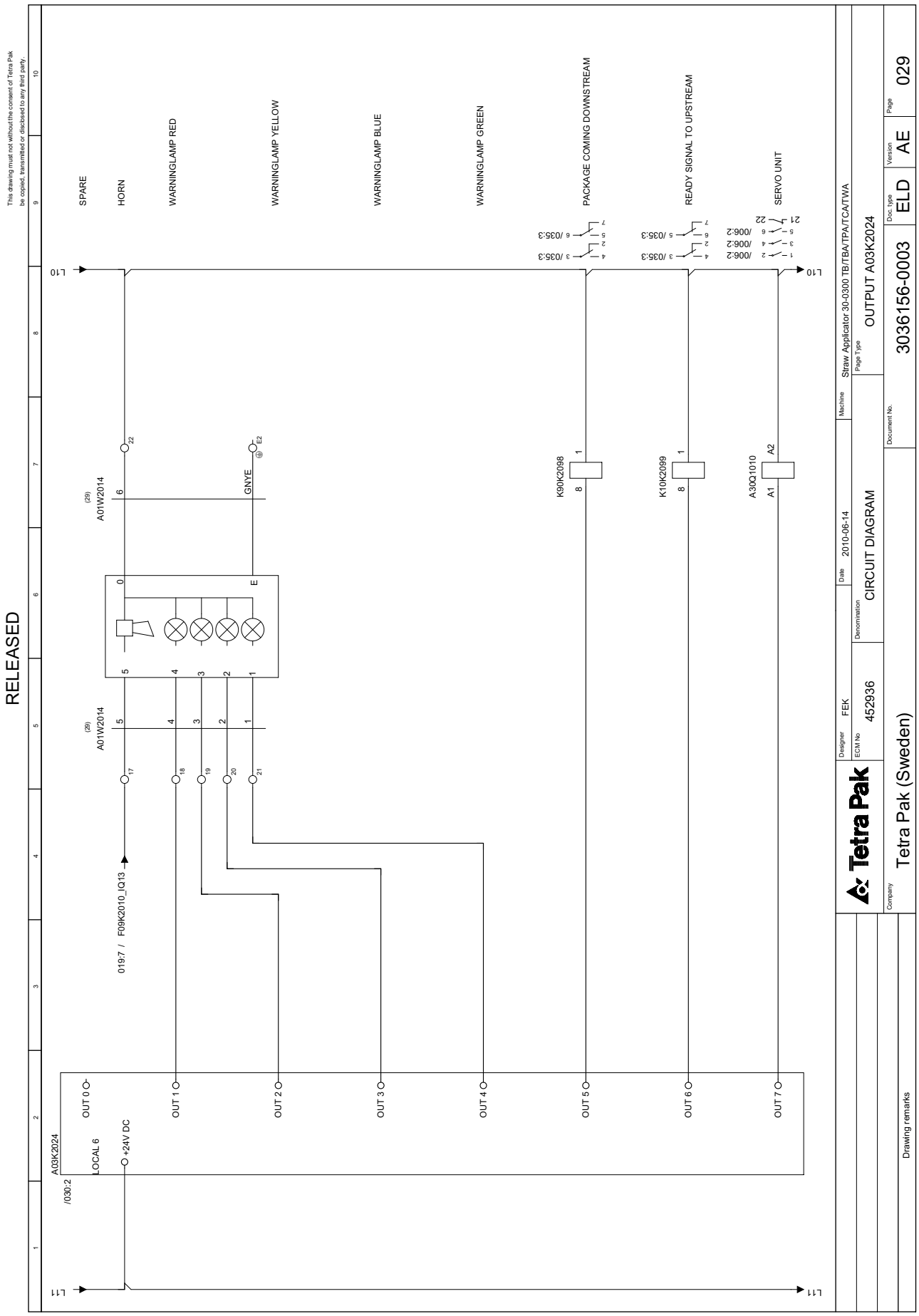
RELEASED
This drawing must not without the consent of Tetra Pak be copied, transmitted or disclosed to any third party.
SPARE
HORN
WARNINGLAMP RED
WARNINGLAMP YELLOW
WARNINGLAMP BLUE
WARNINGLAMP GREEN
PACKAGE COMING DOWNSTREAM
READY SIGNAL TO UPSTREAM
SERVO UNIT
L10
L11
A03K2024
/030:2
LOCAL 6
+24V DC
OUT 0
OUT 1
OUT 2
OUT 3
OUT 4
OUT 5
OUT 6
OUT 7
A01W2014
(29)
GNYE
E2
K90K2098
K10K2099
A30Q1010
A2
A1
019:7 / F09K2010_IQ13
/035:3
/006:2
Designer FEK
ECM No 452936
Date 2010-06-14
Machine
Straw Applicator 30-0300 TB/TBA/TPA/TCA/TWA
Denomination CIRCUIT DIAGRAM
Page Type OUTPUT A03K2024
Document No. 3036156-0003
Doc. type ELD
Version AE
Page 029
Company Tetra Pak (Sweden)
Drawing remarks

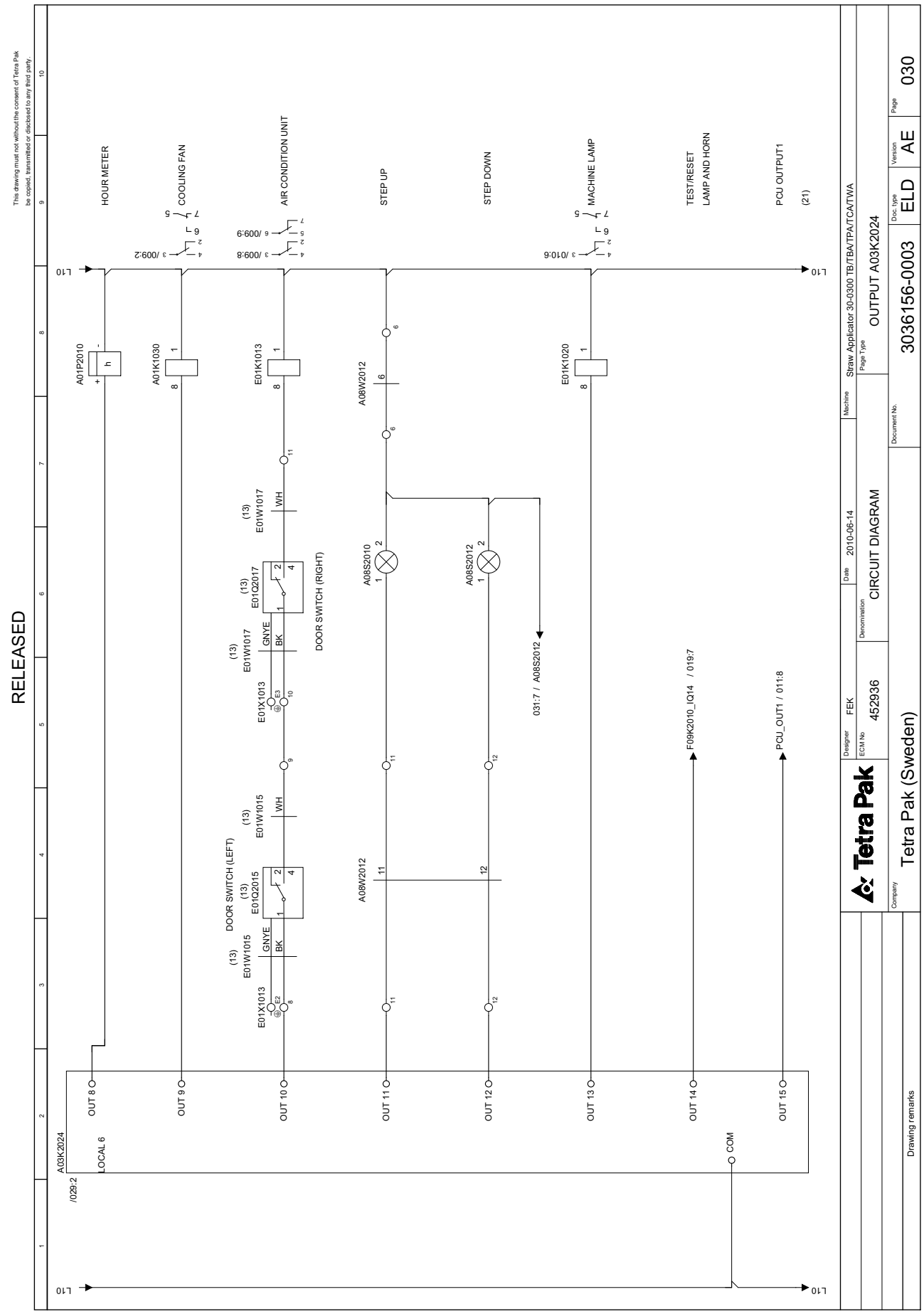
RELEASED
This drawing must not without the consent of Tetra Pak be copied, transmitted or disclosed to any third party.
HOUR METER
COOLING FAN
AIR CONDITION UNIT
STEP UP
STEP DOWN
MACHINE LAMP
TEST/RESET LAMP AND HORN
PCU OUTPUT1
(21)
A01P2010
A01K1030
E01K1013
A08W2012
E01K1020
A08S2010
A08S2012
E01W1017
E01Q2017
DOOR SWITCH (RIGHT)
E01W1015
E01Q2015
DOOR SWITCH (LEFT)
E01X1013
GNYE
BK
WH
L10
A03K2024
LOCAL 6
/029:2
OUT 8
OUT 9
OUT 10
OUT 11
OUT 12
OUT 13
OUT 14
OUT 15
COM
031:7 / A08S2012
F09K2010_IQ14 / 019:7
PCU_OUT1 / 011:8
/009:2
/009:8
/009:9
/010:6
Designer FEK
ECM No 452936
Denomination CIRCUIT DIAGRAM
Date 2010-06-14
Machine Straw Applicator 30-0300 TB/TBA/TPA/TCA/TWA
Page Type OUTPUT A03K2024
Company Tetra Pak (Sweden)
Drawing remarks
Document No. 3036156-0003
Doc. type ELD
Version AE
Page 030

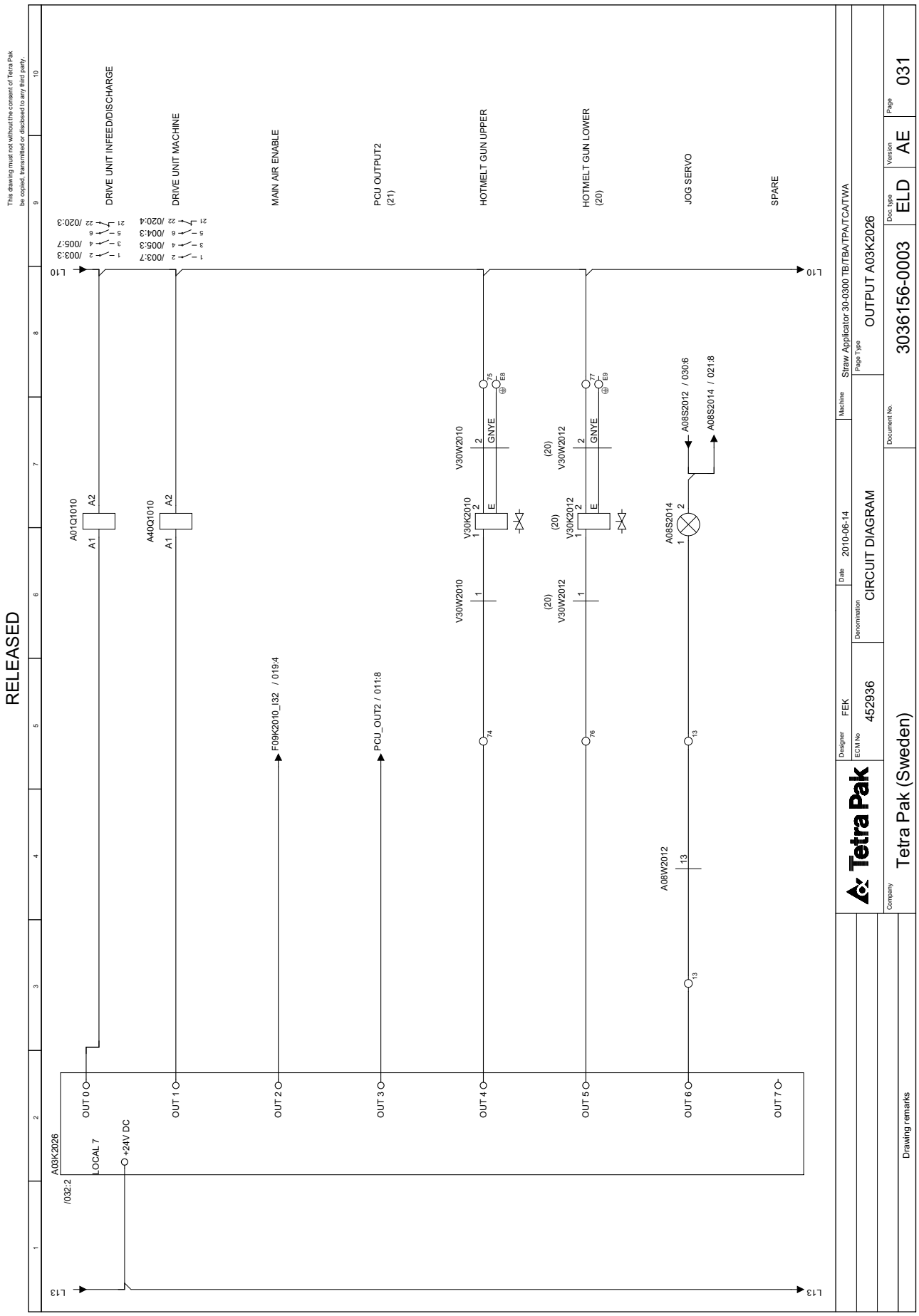
RELEASED
This drawing must not without the consent of Tetra Pak be copied, transmitted or disclosed to any third party.
DRIVE UNIT INFEED/DISCHARGE
DRIVE UNIT MACHINE
MAIN AIR ENABLE
PCU OUTPUT2 (21)
HOTMELT GUN UPPER
HOTMELT GUN LOWER (20)
JOG SERVO
SPARE
A03K2026
LOCAL 7
+24V DC
OUT 0
OUT 1
OUT 2
OUT 3
OUT 4
OUT 5
OUT 6
OUT 7
A01Q1010
A40Q1010
V30K2010
V30K2012
V30W2010
V30W2012
A08S2014
A08W2012
F09K2010_I32 / 019:4
PCU_OUT2 / 011:8
A08S2012 / 030:6
A08S2014 / 021:8
Tetra Pak
Designer FEK
Date 2010-06-14
Machine Straw Applicator 30-0300 TB/TBA/TPA/TCA/TWA
EDM No 452936
Denomination CIRCUIT DIAGRAM
Page Type OUTPUT A03K2026
Company Tetra Pak (Sweden)
Document No. 3036156-0003
Doc. type ELD
Version AE
Page 031
Drawing remarks

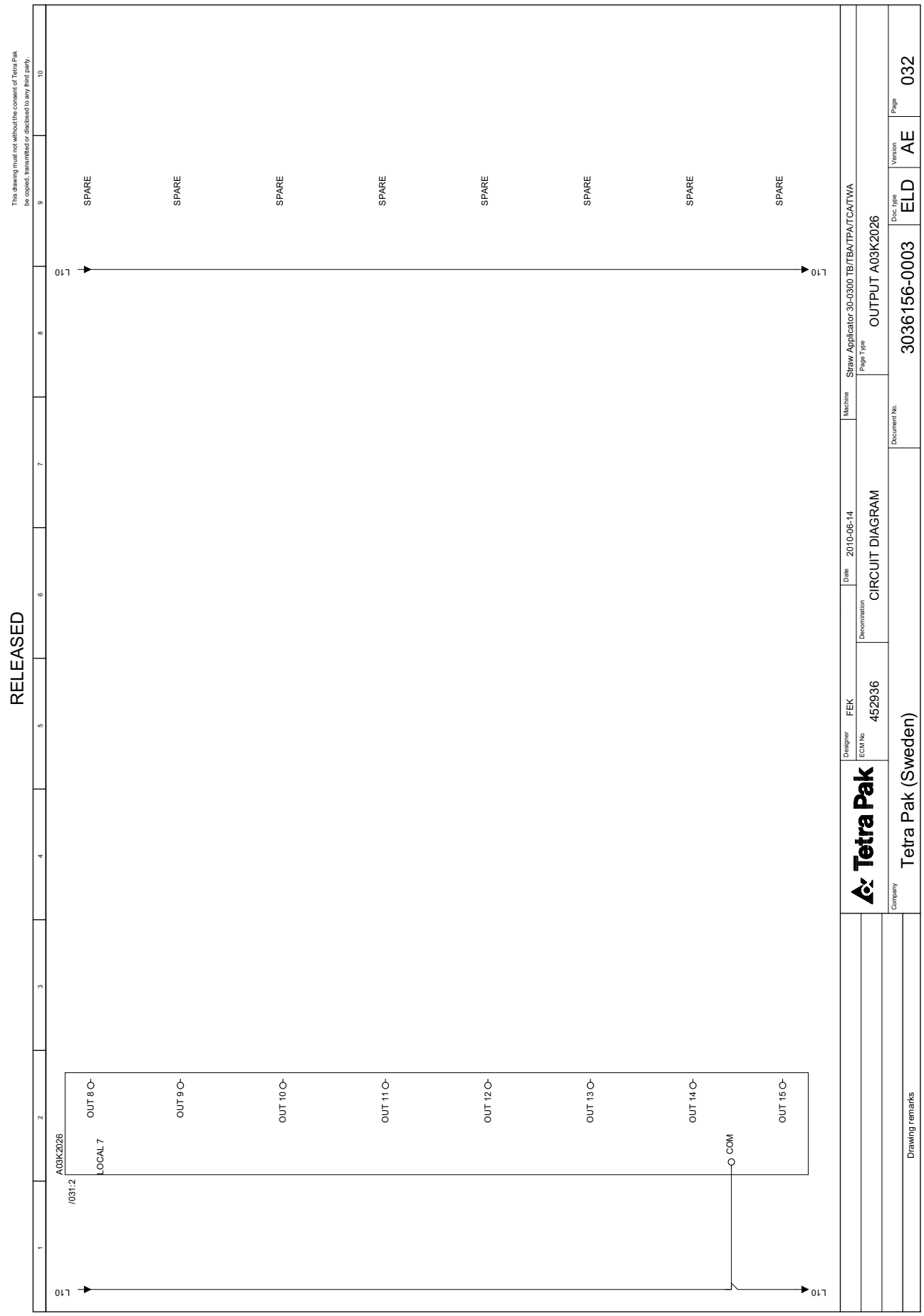
RELEASED
This drawing must not without the consent of Tetra Pak be copied, transmitted or disclosed to any third party.
L10
SPARE
SPARE
SPARE
SPARE
SPARE
SPARE
SPARE
SPARE
L10
/031:2
A03K2026
LOCAL 7
OUT 8
OUT 9
OUT 10
OUT 11
OUT 12
OUT 13
OUT 14
OUT 15
COM
L10
Tetra Pak
Designer FEK
ECM No 452936
Denomination CIRCUIT DIAGRAM
Date 2010-06-14
Machine Straw Applicator 30-0300 TB/TBA/TPA/TCA/TWA
Page Type OUTPUT A03K2026
Document No. 3036156-0003
Doc. type ELD
Version AE
Page 032
Company Tetra Pak (Sweden)
Drawing remarks

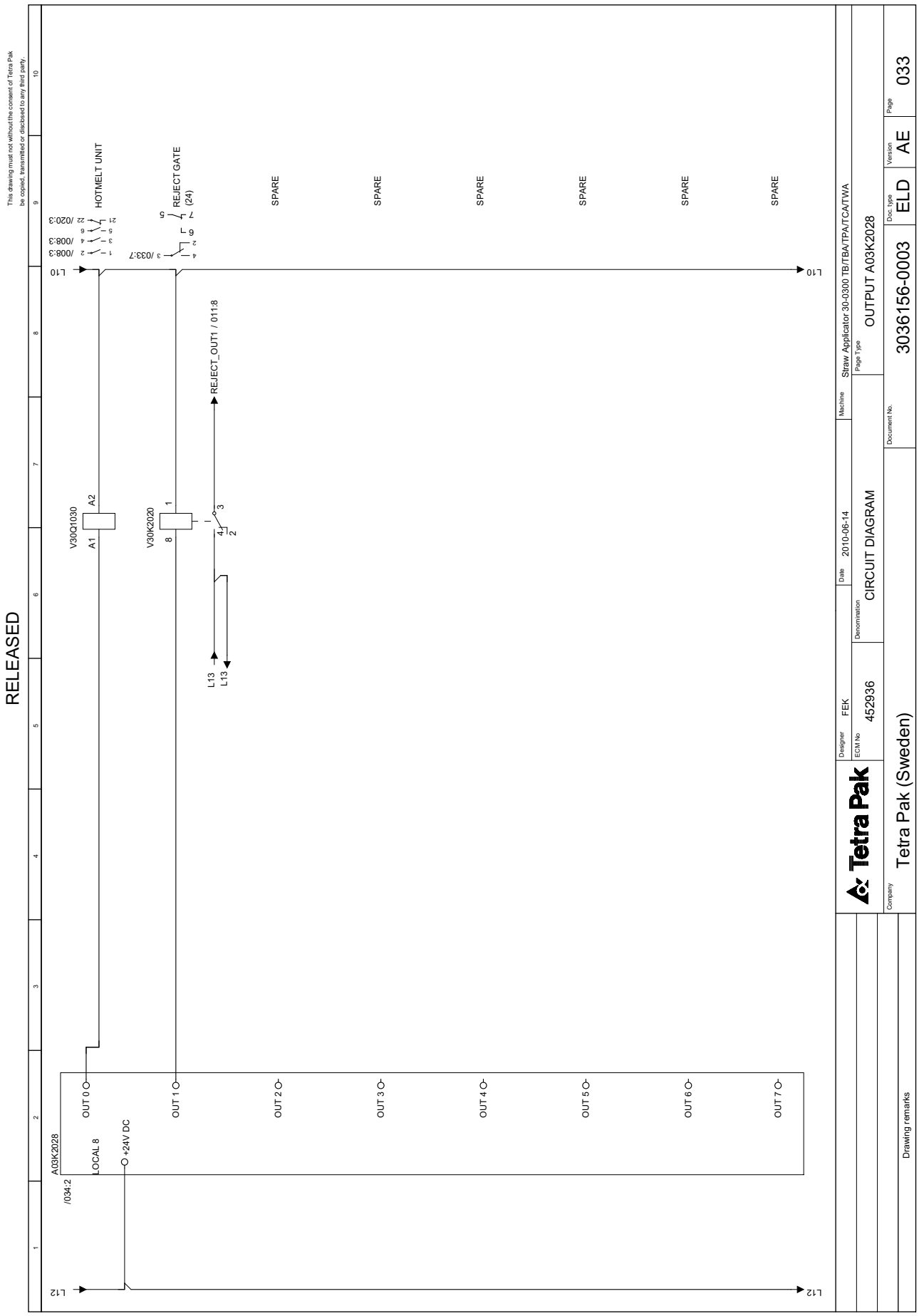
RELEASED
This drawing must not without the consent of Tetra Pak be copied, transmitted or disclosed to any third party.
HOTMELT UNIT
REJECT GATE (24)
SPARE
SPARE
SPARE
SPARE
SPARE
SPARE
L10
L10
/008:3
/008:3
/020:3
/033:7
V30Q1030
A2
A1
V30K2020
1
8
3
4
2
REJECT_OUT1 / 011:8
L13
L13
A03K2028
/034:2
LOCAL 8
+24V DC
OUT 0
OUT 1
OUT 2
OUT 3
OUT 4
OUT 5
OUT 6
OUT 7
L12
L12
Tetra Pak
Designer FEK
ECM No 452936
Date 2010-06-14
Denomination CIRCUIT DIAGRAM
Machine Straw Applicator 30-0300 TB/TBA/TPA/TCA/TWA
Page Type OUTPUT A03K2028
Document No. 3036156-0003
Doc. type ELD
Version AE
Page 033
Company Tetra Pak (Sweden)
Drawing remarks

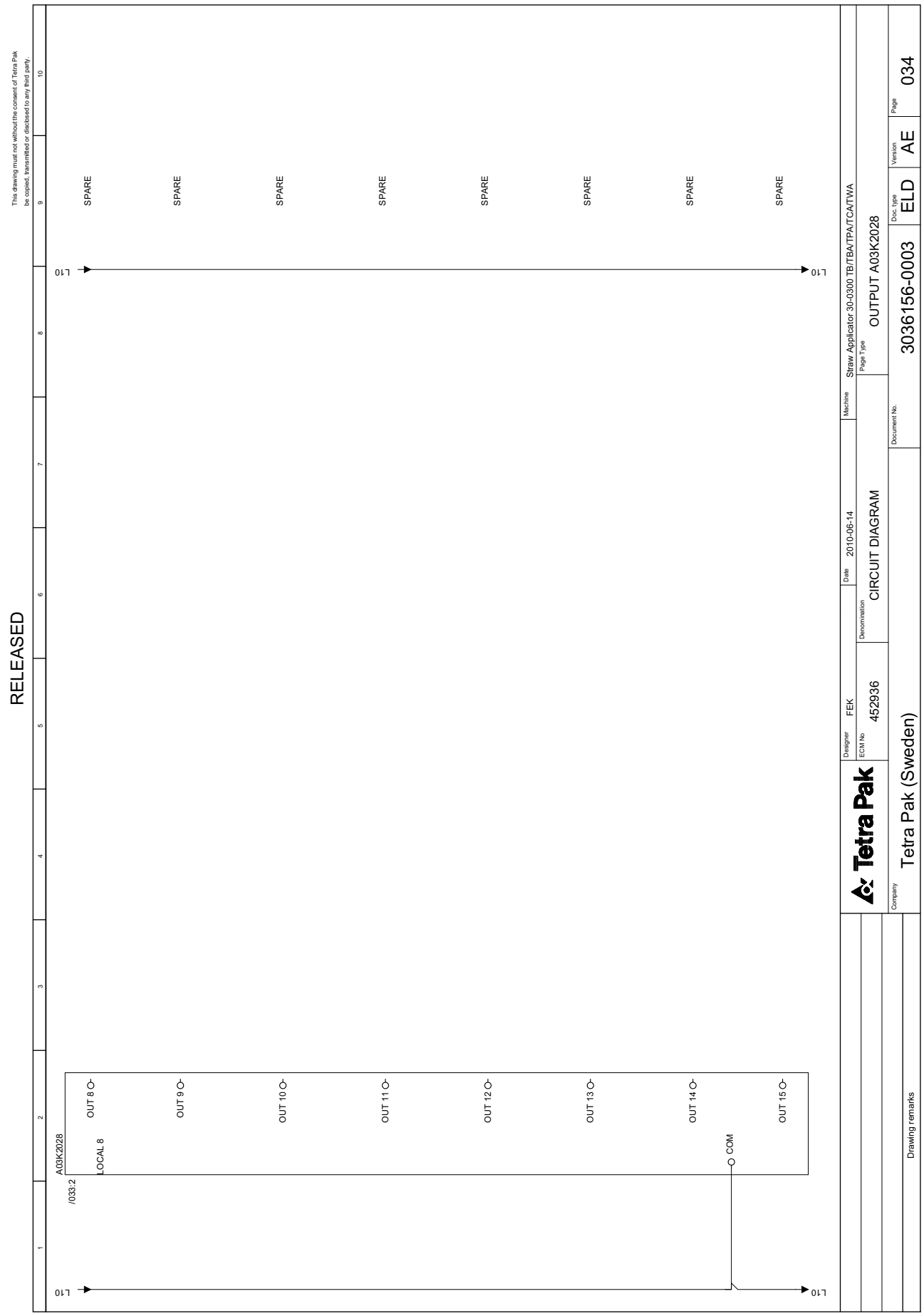
RELEASED
This drawing must not without the consent of Tetra Pak be copied, transmitted or disclosed to any third party.
L10
SPARE
SPARE
SPARE
SPARE
SPARE
SPARE
SPARE
SPARE
L10
/033:2
A03K2028
LOCAL 8
OUT 8
OUT 9
OUT 10
OUT 11
OUT 12
OUT 13
OUT 14
OUT 15
COM
L10
Tetra Pak
Designer FEK
ECM No 452936
Denomination CIRCUIT DIAGRAM
Date 2010-06-14
Machine Straw Applicator 30-0300 TB/TBA/TPA/TCA/TWA
Page Type OUTPUT A03K2028
Document No. 3036156-0003
Doc. type ELD
Version AE
Page 034
Company Tetra Pak (Sweden)
Drawing remarks

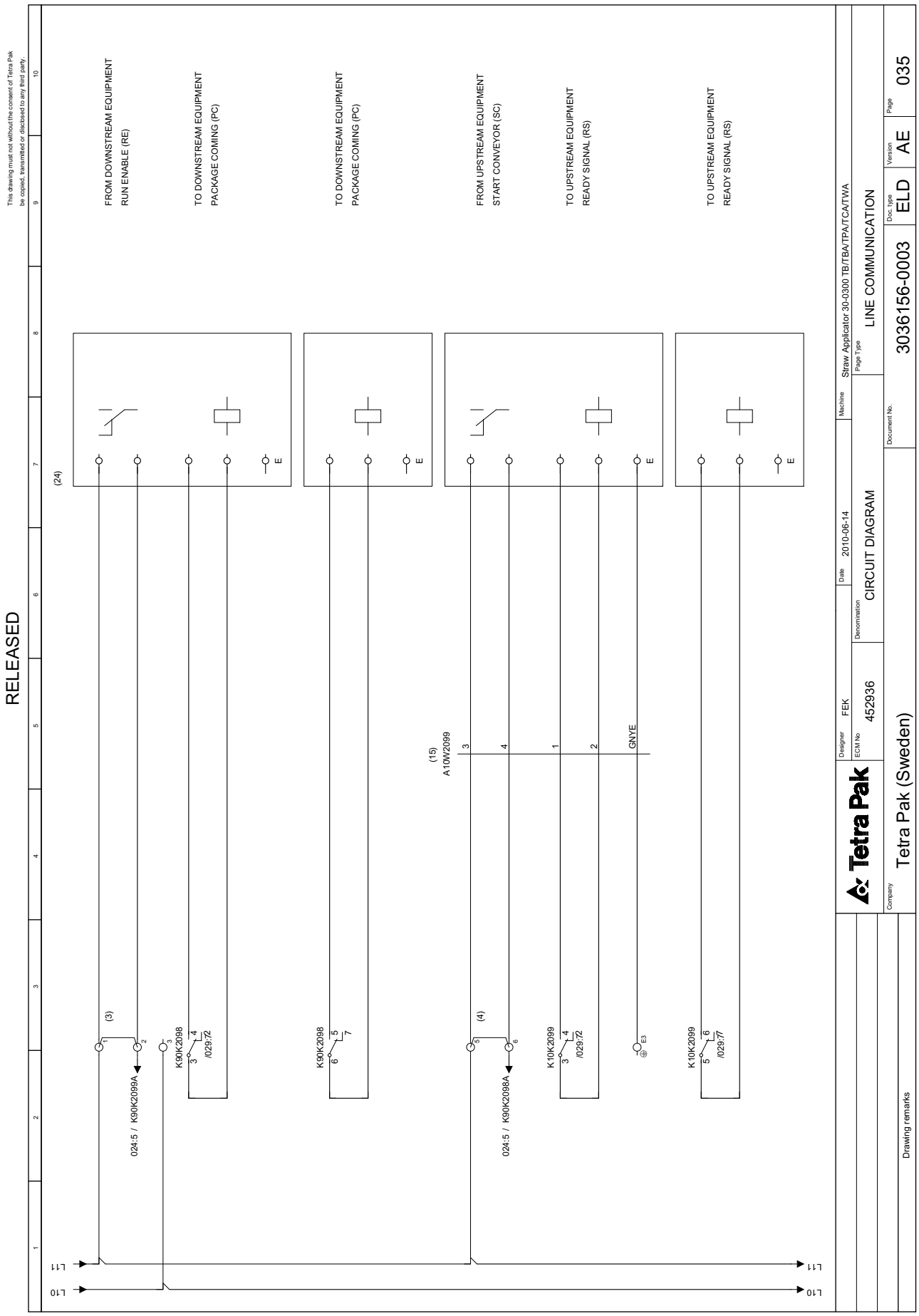
RELEASED
This drawing must not without the consent of Tetra Pak be copied, transmitted or disclosed to any third party.
FROM DOWNSTREAM EQUIPMENT
RUN ENABLE (RE)
TO DOWNSTREAM EQUIPMENT
PACKAGE COMING (PC)
TO DOWNSTREAM EQUIPMENT
PACKAGE COMING (PC)
FROM UPSTREAM EQUIPMENT
START CONVEYOR (SC)
TO UPSTREAM EQUIPMENT
READY SIGNAL (RS)
TO UPSTREAM EQUIPMENT
READY SIGNAL (RS)
(24)
(3)
(4)
(15)
A10W2099
K90K2098
K10K2099
024:5 / K90K2099A
024:5 / K90K2098A
/029:72
/029:77
GNYE
L11
L10
Tetra Pak
Designer FEK
Date 2010-06-14
Machine Straw Applicator 30-0300 TB/TBA/TPA/TCA/TWA
EDM No 452936
Denomination CIRCUIT DIAGRAM
Page Type LINE COMMUNICATION
Company Tetra Pak (Sweden)
Document No. 3036156-0003
Doc. type ELD
Version AE
Page 035
Drawing remarks

4.2 Optional Equipment

4.2.1 Bent Foil Treater

Document number 3040262-0003

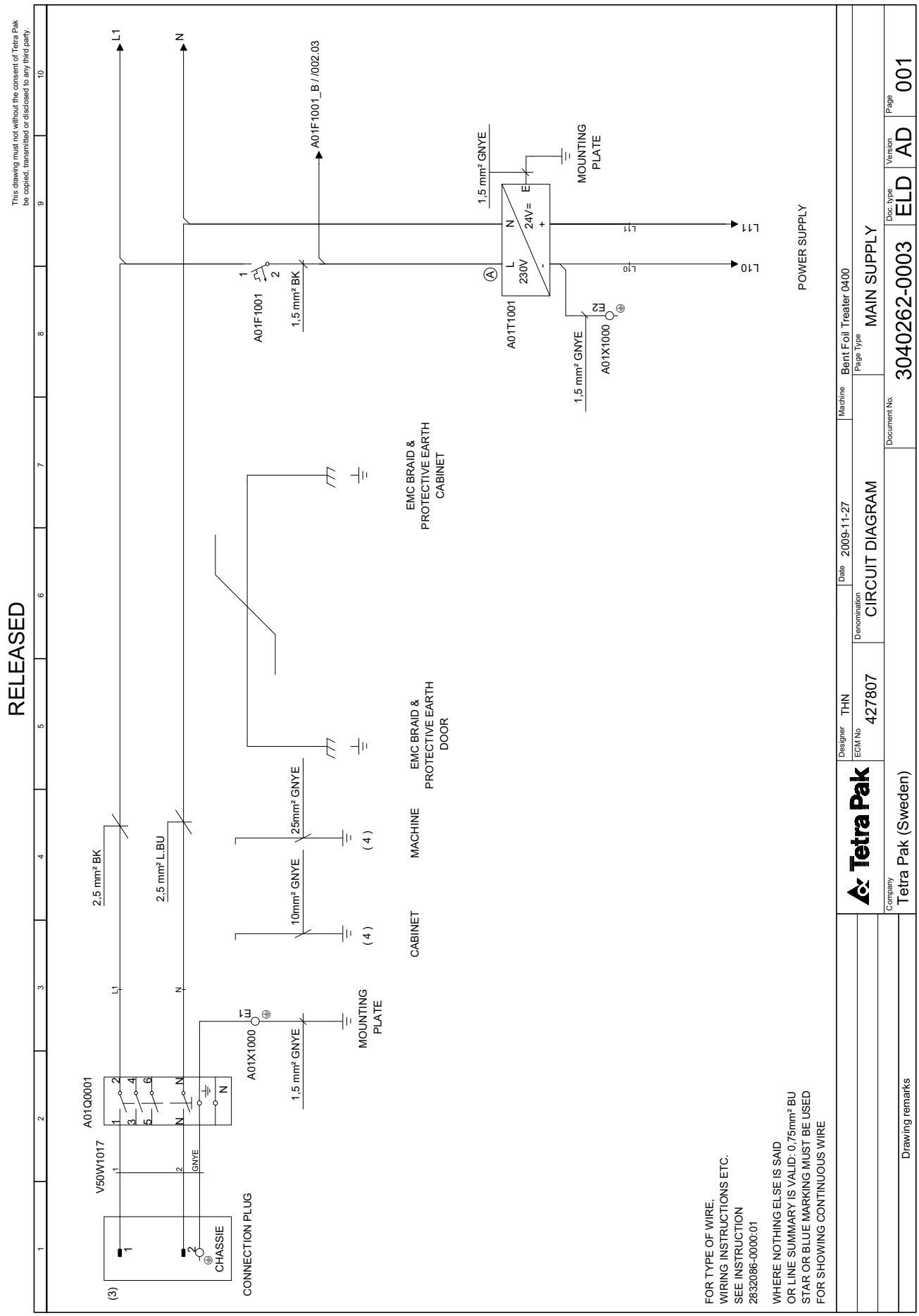
RELEASED
This drawing must not without the consent of Tetra Pak be copied, transmitted or disclosed to any third party.
L1
N
A01F1001_B / /002.03
A01F1001
1,5 mm² BK
1,5 mm² GNYE
A01T1001
MOUNTING PLATE
A01X1000
POWER SUPPLY
L11
L10
2,5 mm² BK
2,5 mm² L.BU
25mm² GNYE
10mm² GNYE
EMC BRAID & PROTECTIVE EARTH CABINET
EMC BRAID & PROTECTIVE EARTH DOOR
CABINET
MACHINE
A01Q0001
V50W1017
GNYE
CHASSIE
CONNECTION PLUG
(3)
(4)
FOR TYPE OF WIRE, WIRING INSTRUCTIONS ETC. SEE INSTRUCTION 2832086-0000:01
WHERE NOTHING ELSE IS SAID OR LINE SUMMARY IS VALID: 0,75mm² BU STAR OR BLUE MARKING MUST BE USED FOR SHOWING CONTINUOUS WIRE
Tetra Pak
Designer THN
Date 2009-11-27
Machine Bent Foil Treater 0400
ECM No 427807
Denomination CIRCUIT DIAGRAM
Page Type MAIN SUPPLY
Company Tetra Pak (Sweden)
Drawing remarks
Document No. 3040262-0003
Doc. type ELD
Version AD
Page 001

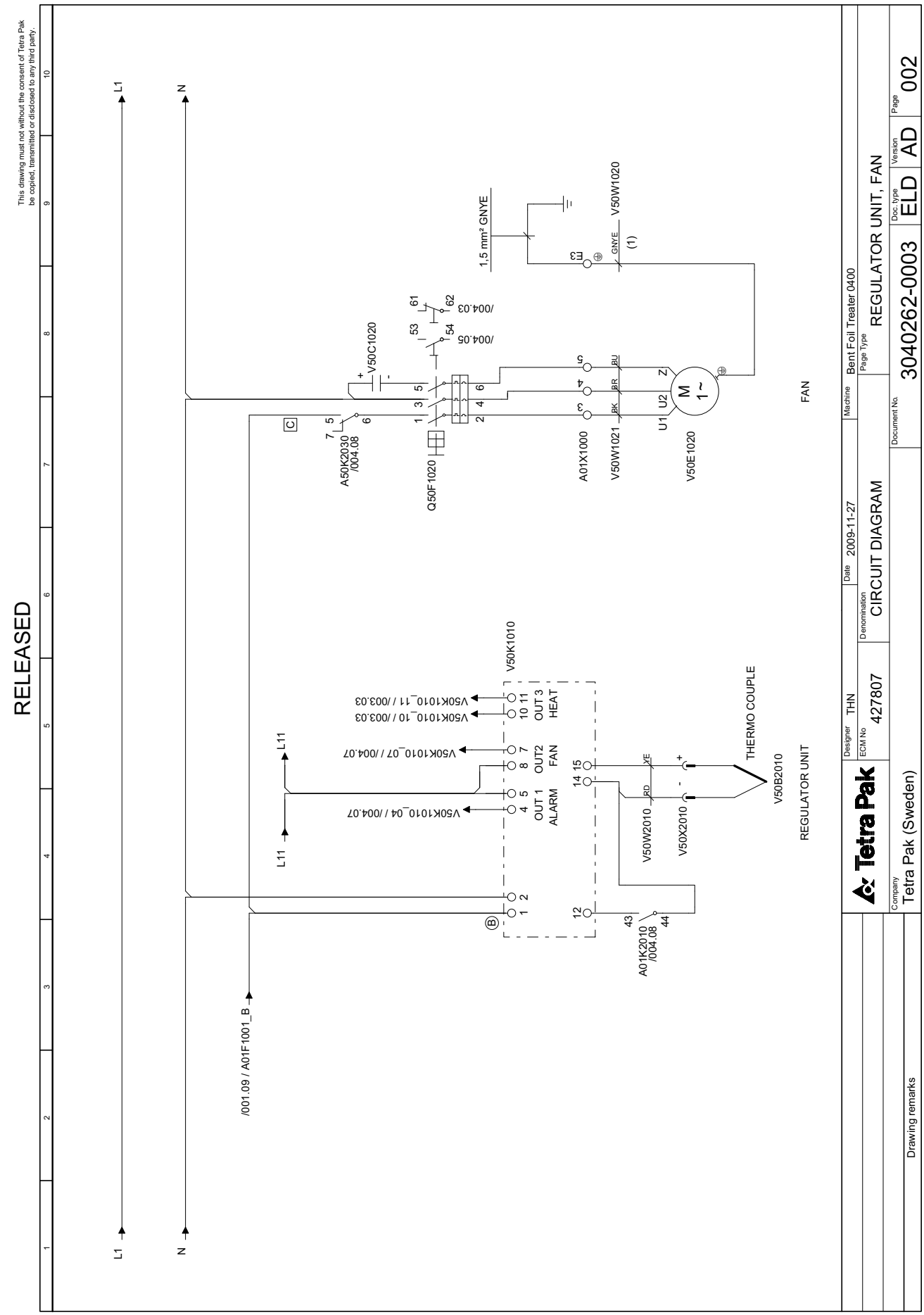
RELEASED
This drawing must not without the consent of Tetra Pak be copied, transmitted or disclosed to any third party.
L1
N
1,5 mm² GNYE
V50W1020
GNYE
(1)
PE
V50C1020
/004.03
/004.05
A50K2030
/004.08
Q50F1020
A01X1000
V50W1021
V50E1020
M
1~
FAN
V50K1010
V50K1010_11 / /003.03
V50K1010_10 / /003.03
V50K1010_07 / /004.07
V50K1010_04 / /004.07
OUT 3 HEAT
OUT2 FAN
OUT 1 ALARM
L11
/001.09 / A01F1001_B
A01K2010
/004.08
V50W2010
V50X2010
THERMO COUPLE
V50B2010
REGULATOR UNIT
Designer THN
Date 2009-11-27
Machine Bent Foil Treater 0400
ECM No 427807
Denomination CIRCUIT DIAGRAM
Page Type REGULATOR UNIT, FAN
Document No. 3040262-0003
Doc. type ELD
Version AD
Page 002
Company Tetra Pak (Sweden)
Drawing remarks

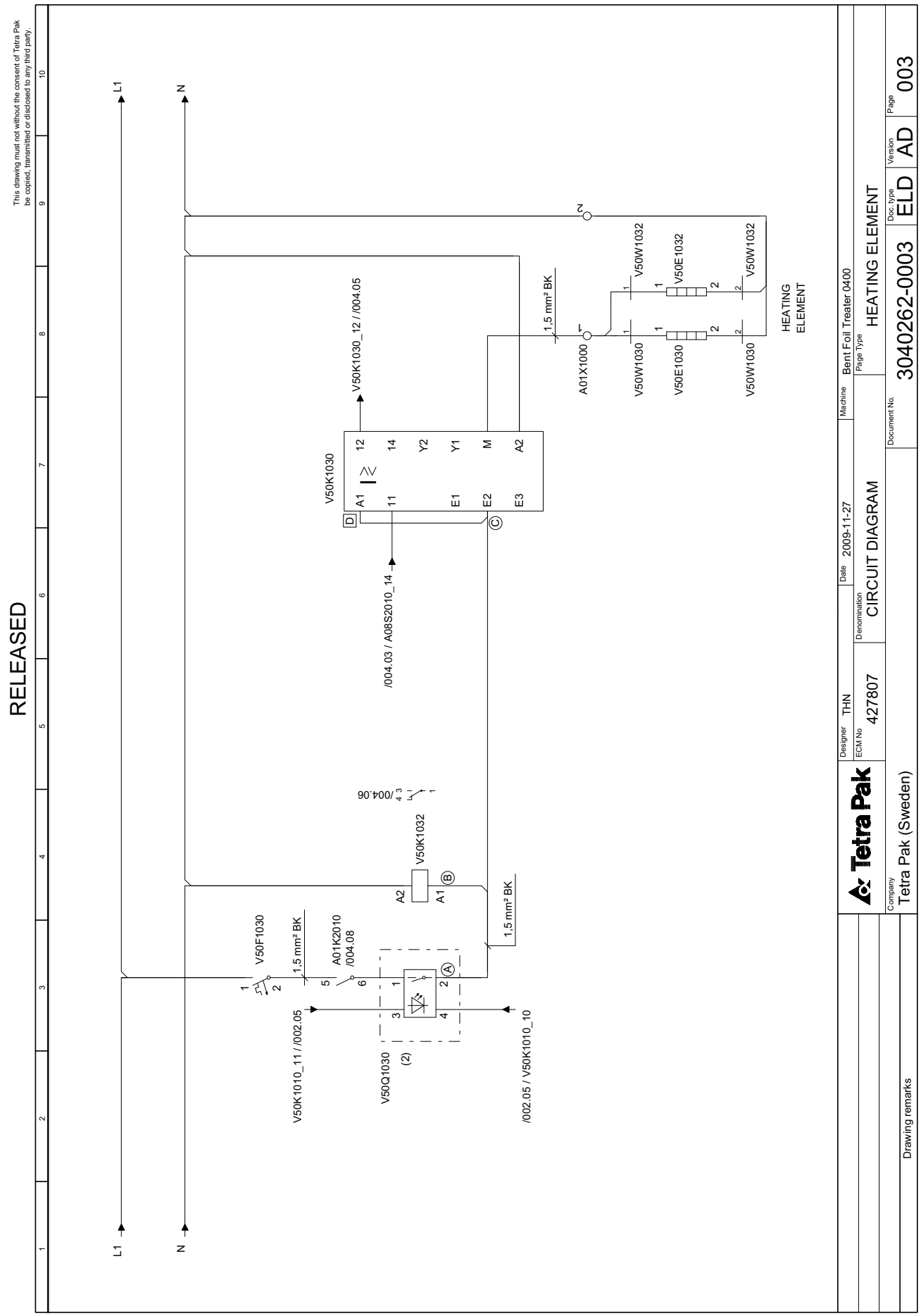
RELEASED
This drawing must not without the consent of Tetra Pak be copied, transmitted or disclosed to any third party.
L1
N
V50K1030_12 / /004.05
V50K1030
A1
11
12
14
Y2
Y1
M
A2
E1
E2
E3
/004.03 / A08S2010_14
/004.06
V50K1032
A2
A1
1,5 mm² BK
V50F1030
A01K2010
/004.08
V50K1010_11 / /002.05
V50Q1030
(2)
/002.05 / V50K1010_10
A01X1000
V50W1030
V50E1030
V50W1032
V50E1032
HEATING ELEMENT
Tetra Pak
Designer THN
ECM No 427807
Date 2009-11-27
Denomination CIRCUIT DIAGRAM
Machine Bent Foil Treater 0400
Page Type HEATING ELEMENT
Company Tetra Pak (Sweden)
Document No. 3040262-0003
Doc. type ELD
Version AD
Page 003
Drawing remarks

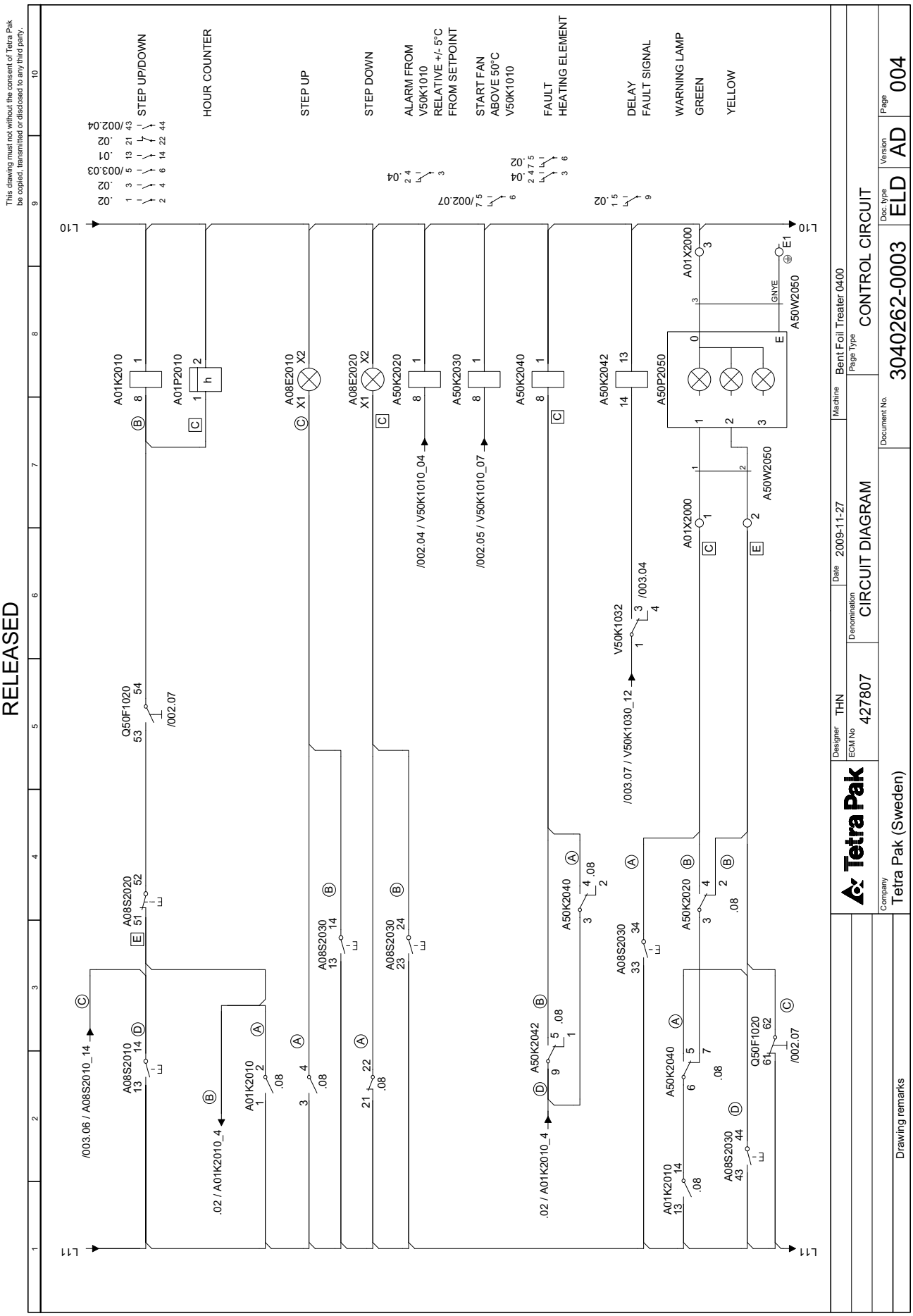
RELEASED
This drawing must not without the consent of Tetra Pak be copied, transmitted or disclosed to any third party.
L10
L11
STEP UP/DOWN
HOUR COUNTER
STEP UP
STEP DOWN
ALARM FROM V50K1010 RELATIVE +/- 5°C FROM SETPOINT
START FAN ABOVE 50°C V50K1010
FAULT HEATING ELEMENT
DELAY FAULT SIGNAL
WARNING LAMP GREEN
YELLOW
A01K2010
A01P2010
A08E2010
A08E2020
A50K2020
A50K2030
A50K2040
A50K2042
A50P2050
A01X2000
A50W2050
A50W2040
E1
Q50F1020
A08S2020
A08S2030
A08S2010
V50K1032
/003.06 / A08S2010_14
/002.07
/002.04 / V50K1010_04
/002.05 / V50K1010_07
/003.07 / V50K1030_12
/003.04
.02 / A01K2010_4
Tetra Pak
Designer THN
ECM No 427807
Denomination CIRCUIT DIAGRAM
Date 2009-11-27
Machine Bent Foil Treater 0400
Page Type CONTROL CIRCUIT
Document No. 3040262-0003
Doc. type ELD
Version AD
Page 004
Company Tetra Pak (Sweden)
Drawing remarks

4.2.2 Straw Detector 30

Document number 3036165-0003

This page intentionally left blank

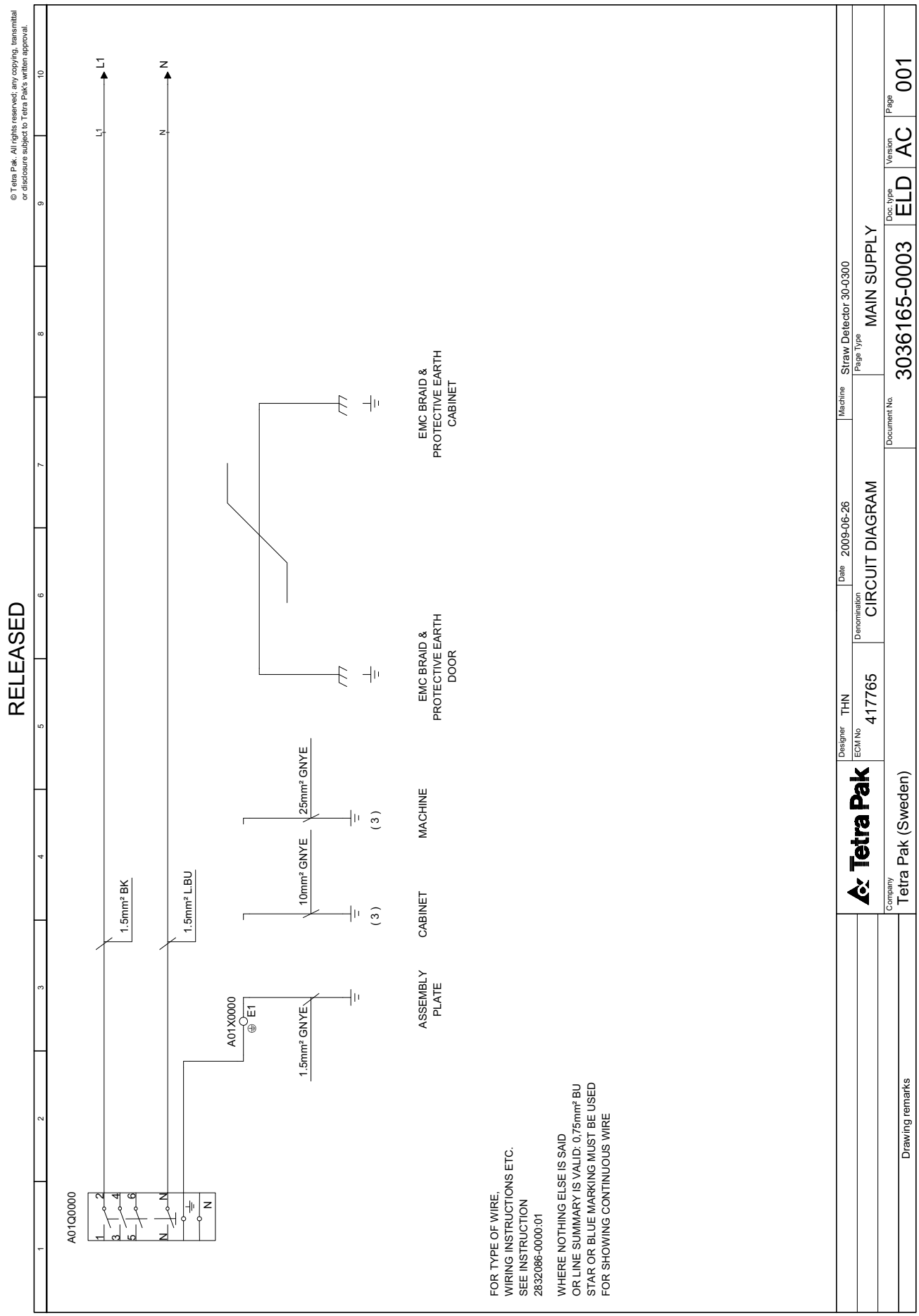
© Tetra Pak. All rights reserved; any copying, transmittal or disclosure subject to Tetra Pak's written approval.
RELEASED
A01Q0000
1
2
3
4
5
6
N
N
L1
N
1.5mm² BK
1.5mm² L.BU
A01X0000
E1
1.5mm² GNYE
10mm² GNYE
25mm² GNYE
(3)
(3)
ASSEMBLY PLATE
CABINET
MACHINE
EMC BRAID & PROTECTIVE EARTH DOOR
EMC BRAID & PROTECTIVE EARTH CABINET
FOR TYPE OF WIRE, WIRING INSTRUCTIONS ETC. SEE INSTRUCTION 2832086-0000-01
WHERE NOTHING ELSE IS SAID OR LINE SUMMARY IS VALID: 0,75mm² BU STAR OR BLUE MARKING MUST BE USED FOR SHOWING CONTINUOUS WIRE
Tetra Pak
Designer THN
Date 2009-06-26
Machine Straw Detector 30-0300
ECM No 417765
Denomination CIRCUIT DIAGRAM
Page Type MAIN SUPPLY
Company Tetra Pak (Sweden)
Drawing remarks
Document No. 3036165-0003
Doc. type ELD
Version AC
Page 001

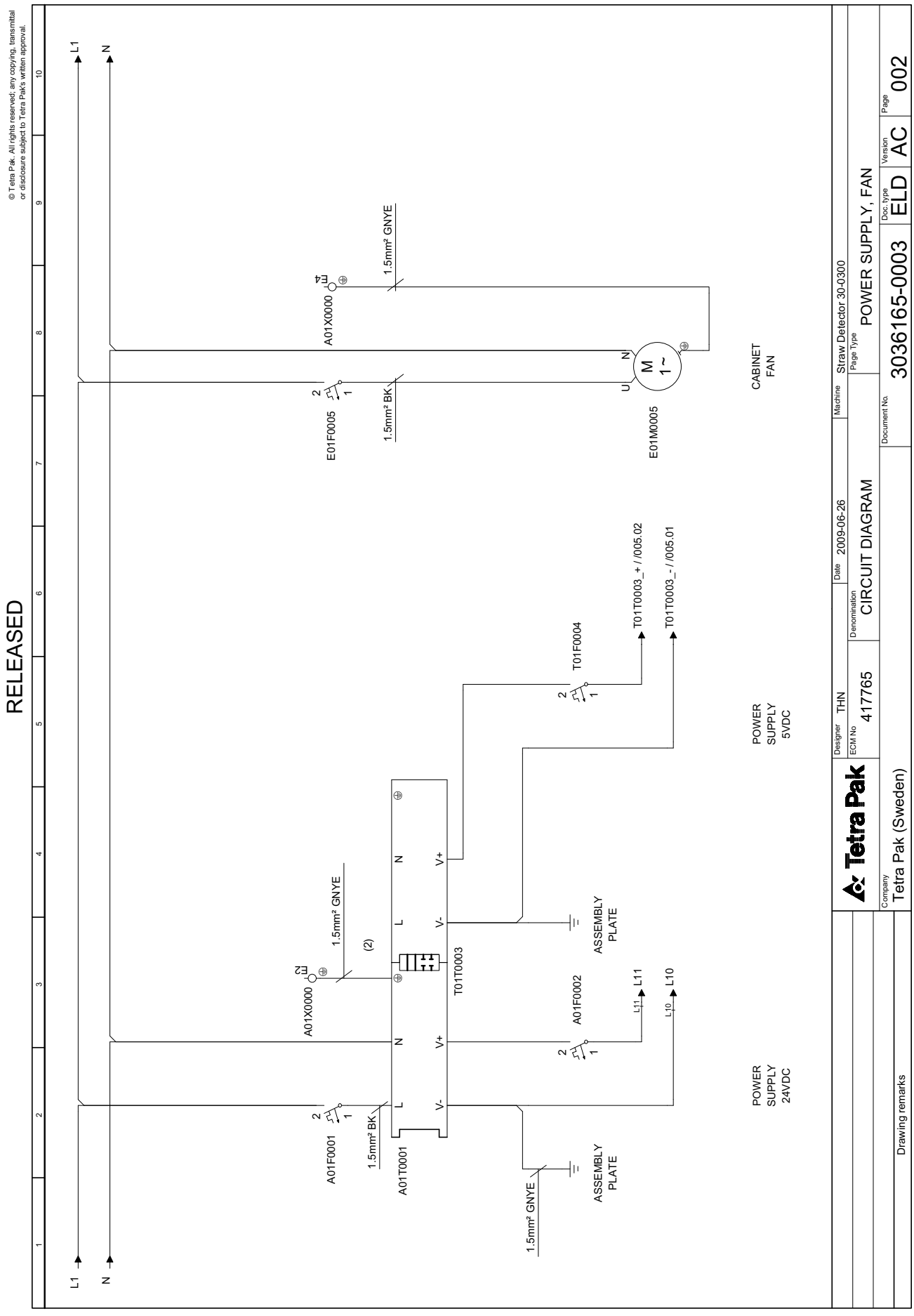
© Tetra Pak. All rights reserved; any copying, transmittal or disclosure subject to Tetra Pak's written approval.
RELEASED
L1
N
A01X0000
F4
1.5mm² GNYE
E01F0005
1.5mm² BK
E01M0005
CABINET FAN
A01X0000
F2
1.5mm² GNYE
(2)
A01F0001
1.5mm² BK
A01T0001
T01T0003
A01F0002
T01F0004
T01T0003_+ / /005.02
T01T0003_- / /005.01
ASSEMBLY PLATE
POWER SUPPLY 5VDC
POWER SUPPLY 24VDC
L11
L10
Designer THN
Date 2009-06-26
Machine Straw Detector 30-0300
ECM No 417765
Denomination CIRCUIT DIAGRAM
Page Type POWER SUPPLY, FAN
Document No. 3036165-0003
Doc. type ELD
Version AC
Page 002
Company Tetra Pak (Sweden)
Drawing remarks

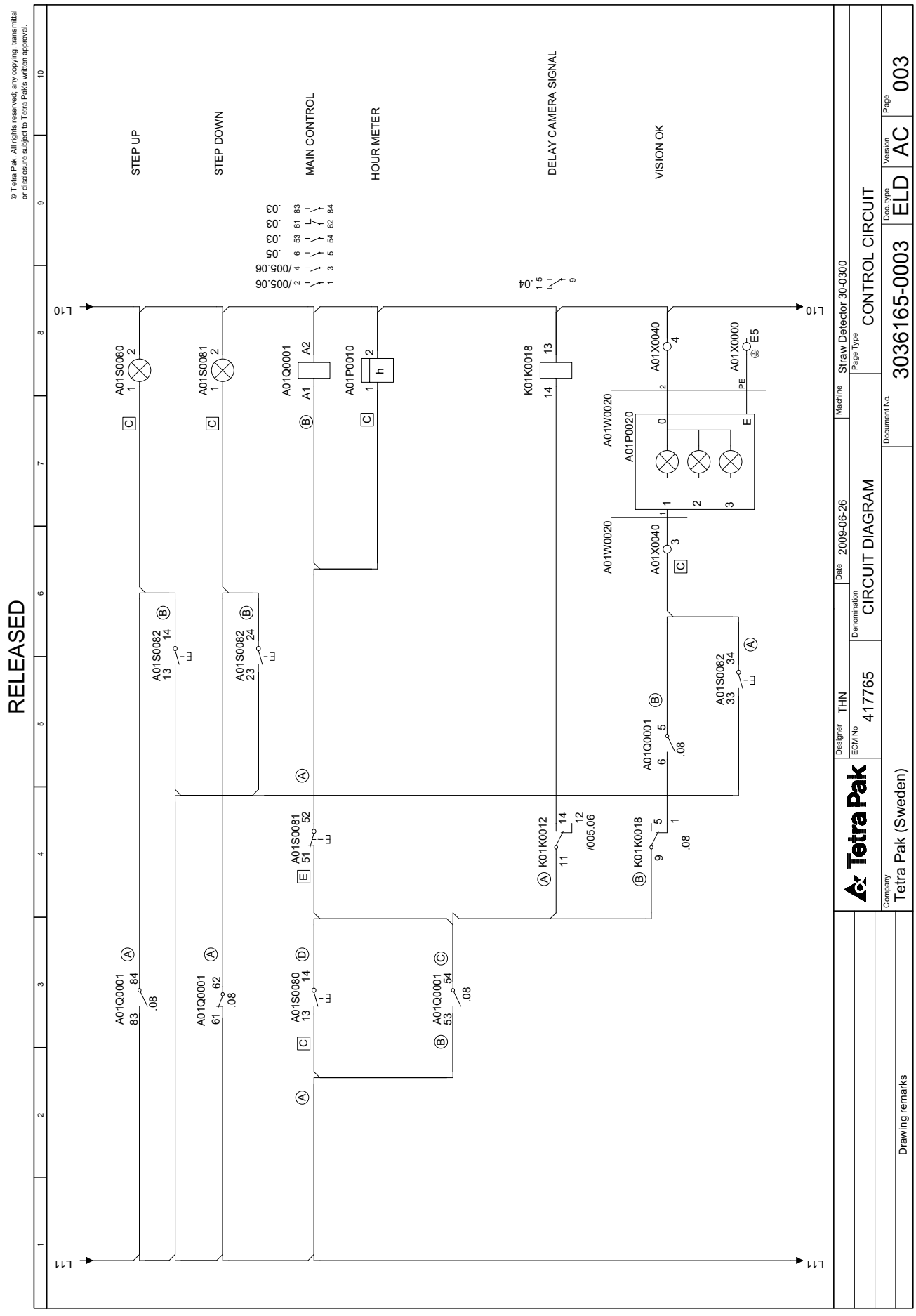
RELEASED
© Tetra Pak. All rights reserved; any copying, transmittal or disclosure subject to Tetra Pak's written approval.
STEP UP
STEP DOWN
MAIN CONTROL
HOUR METER
DELAY CAMERA SIGNAL
VISION OK
L10
L11
A01S0080
A01S0081
A01Q0001
A01P0010
K01K0018
A01W0020
A01P0020
A01X0040
A01X0000
A01S0082
A01Q0001
K01K0012
K01K0018
Tetra Pak
Designer THN
Date 2009-06-26
Machine Straw Detector 30-0300
ECM No 417765
Denomination CIRCUIT DIAGRAM
Page Type CONTROL CIRCUIT
Company Tetra Pak (Sweden)
Drawing remarks
Document No. 3036165-0003
Doc. type ELD
Version AC
Page 003

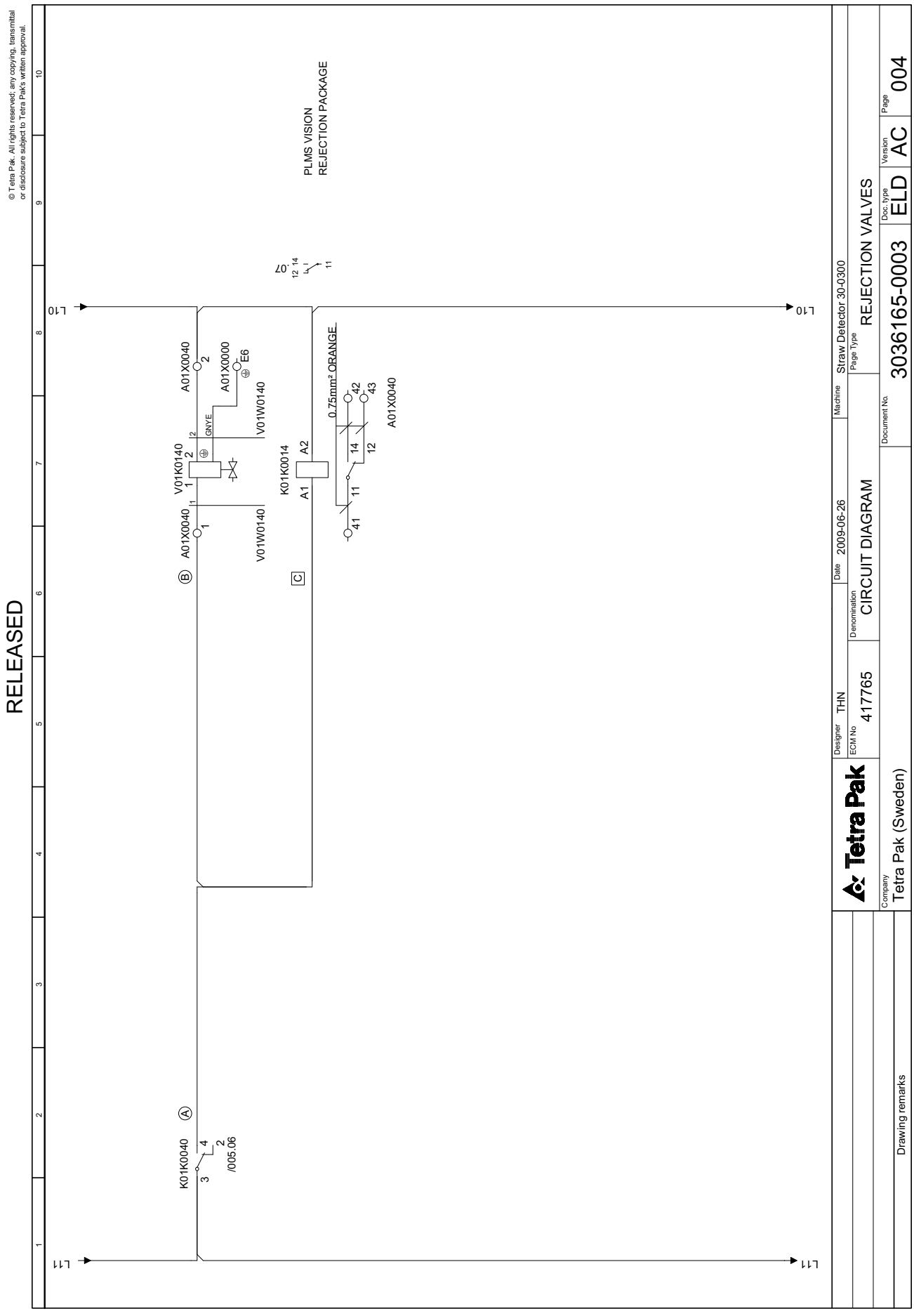
© Tetra Pak. All rights reserved; any copying, transmittal or disclosure subject to Tetra Pak's written approval.
RELEASED
PLMS VISION
REJECTION PACKAGE
L10
L11
K01K0040
/005.06
V01K0140
A01X0040
GNYE
A01X0000
E6
V01W0140
K01K0014
A2
A1
0.75mm² ORANGE
42
43
14
12
11
41
Tetra Pak
Designer THN
ECM No 417765
Denomination CIRCUIT DIAGRAM
Date 2009-06-26
Machine Straw Detector 30-0300
Page Type REJECTION VALVES
Document No. 3036165-0003
Doc. type ELD
Version AC
Page 004
Company Tetra Pak (Sweden)
Drawing remarks

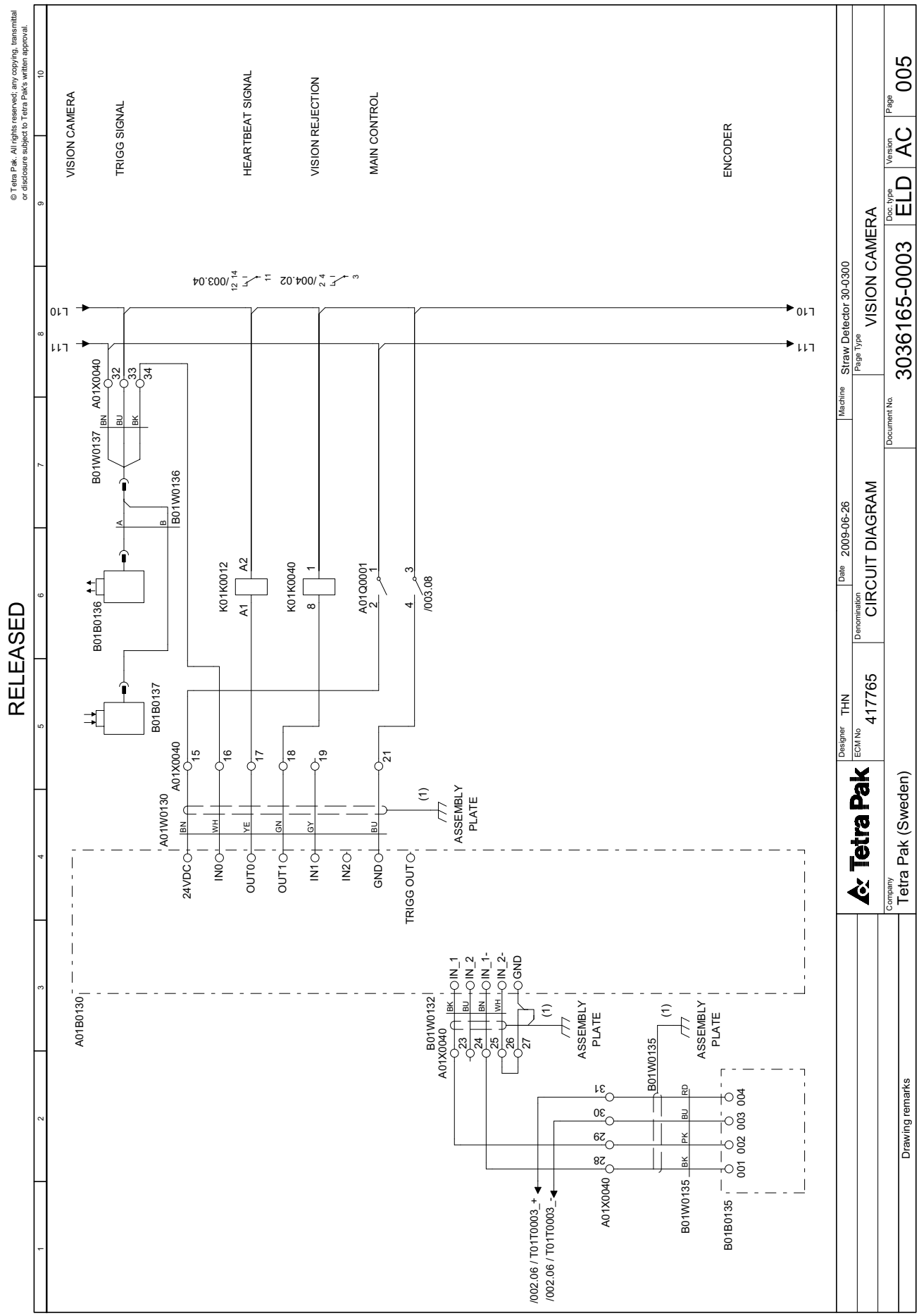
© Tetra Pak. All rights reserved; any copying, transmittal or disclosure subject to Tetra Pak's written approval.
RELEASED
VISION CAMERA
TRIGG SIGNAL
HEARTBEAT SIGNAL
VISION REJECTION
MAIN CONTROL
ENCODER
L10
L11
/003.04
/004.02
B01W0137
A01X0040
B01W0136
B01B0136
B01B0137
K01K0012
K01K0040
A01Q0001
/003.08
A01W0130
24VDC
IN0
OUT0
OUT1
IN1
IN2
GND
TRIGG OUT
ASSEMBLY PLATE
A01B0130
B01W0132
IN_1
IN_2
IN_1-
IN_2-
B01W0135
B01B0135
/002.06 / T01T0003_+
/002.06 / T01T0003_-
Tetra Pak
Designer THN
ECM No 417765
Denomination CIRCUIT DIAGRAM
Date 2009-06-26
Machine Straw Detector 30-0300
Page Type VISION CAMERA
Document No. 3036165-0003
Doc. type ELD
Version AC
Page 005
Company Tetra Pak (Sweden)
Drawing remarks

This page intentionally left blank

5 Line Summary

About the Line Summary Chapter

All connections inside the electrical cabinet are listed in this chapter.

5.1 Main Machine . . . . . 5 - 5
5.2 Optional Equipment . . . . . 5 - 11
5.2.1 Bent Foil Treater . . . . . 5 - 11
5.2.2 Straw Detector 30 . . . . . 5 - 14

This page intentionally left blank

5.1 Main Machine

Document number 3036156-0004

This page intentionally left blank

This drawing must not without the consent of Tetra Pak:
be copied, transmitted or disclosed to any third party.

Line	From	Page.Col.	Option	Area/Color	Line	From	Page.Col.	Option	Area/Color	Line	From	Page.Col.	Option	Area/Color
A-PULS	F09K2010:IQ10	19.7		0,75 BU		A07F1021:1	14.2		4 BK	L10	A01XL210:1	1,1		0,75 BU
	A01X2000:14	21.7		0,75 BU		A01F1020:1	10.3				A01T1010:V-	12,3		
	A01X2000:24	19.3		0,75 BU										
	A01X2000:97	18.2		0,75 BU										
	F09Q1010:22	20.2		0,75 BU	L4	F09Q1010:2	2.8		4 BK	L10	A01XL210:2	1,1		0,75 BU
	F09Q1020:22	20.2				F09Q1020:1	2.9		4 BK		A03K2018:COM1	23,8		0,75 BU
						V30F1030:1	8.3				A03K2018:COM2	24,8		
L1	A01V0001:L1	2.4		4 BK										
	F09Q1010:1	2.8		4 BK	L5	F09Q1010:4	2.8		4 BK	L10	A01XL210:3	1.1		0,75 BU
	A03F1010:1	13.1		4 BK		F09Q1020:3	2.9		4 BK		A03K2020:COM1	25.8		0,75 BU
	A08F1010:1	12.6		4 BK		V30F1030:3	8.3				A03K2020:COM2	26.8		
	A30F1010:1	6.2		4 BK										
	A30F1020:1	6.4		4 BK	L6	F09Q1010:6	2.8		4 BK					
	E01F1020:1	10.6				F09Q1020:5	2.9			L10	A01XL210:4	1.2		0,75 BU
											A03K2024:COM	30.2		
L2	A01V0001:L2	2.4		4 BK	L7	F09Q1020:2	2.9		4 BK					
	F09Q1010:3	2.8		4 BK		W10F1010:1	3.3		4 BK	L10	A01XL210:5	1.2		0,75 BU
	A07F1011:1	12.8		4 BK		W40F1020:1	5.3				A03K2026:COM	32.2		
	A01F1030:1	9.2		4 BK										
	A30F1010:3	6.2		4 BK										
	P50F1011:1	11.2			L8	F09Q1020:4	2.9		4 BK	L10	A01XL210:6	1.2		0,75 BU
						W90F1010:1	5.7		4 BK		A03K2028:COM	34.2		
						W40F1030:1	4.3							
L3	A01V0001:L3	2.4		4 BK										
	F09Q1010:5	2.8		4 BK						L10	A01XL210:7	1.2		0,75 BU
	V50F1015:1	8.7		4 BK	L9	F09Q1020:6	2.9		4 BK		A03K2110:GND	13,6		0,75 BU
	A01F1010:1	12.3		4 BK		W40F1010:1	3.7				A03K2121:Vin-	13,4	(2)	
	A30F1010:5	6.2		4 BK										
	E01F1013:1	9.6		4 BK										
	A07F1021:1	14.2		4 BK										

	Tetra Pak	Designer FEK	Date 6/15/2010	Machine SA30-0300 TB/TBA/TPA/TCA/TWA		
		ECM No. 452936	Denomination LINE SUMMARY	Page Type LINE SUMMARY		
Drawing remarks	Company Tetra Pak (Sweden)		Document No. 3036159-0004	Doc. Type ELD	Version AE	Page: 001

This drawing must not without the consent of Tetra Pak: be copied, transmitted or disclosed to any third party.

Line	From	Page.Col.	Option	Area/Color	Line	From	Page.Col.	Option	Area/Color	Line	From	Page.Col.	Option	Area/Color
L10	A01XL210:8	1,2		0,75 BU	L10	A01XL210:13	1,3		0,75 BU	L10	A01XL210:20	1,4		0,75 BU
	E01K1020:1	30,8		0,75 BU		W30T1010:SO6	6,6				A01X2000:75	31,8		0,75 BU
	E01K1013:1	30,8		0,75 BU							A01X2000:77	31,8		0,75 BU
	A01K1030:1	30,8		0,75 BU							A01X2000:79	33,8		0,75 BU
	A30Q1010:A2	29,7		0,75 BU	L10	A01XL210:14	1,3		0,75 BU		A01X2000:81	25,2		0,75 BU
	V30Q1030:A2	33,7				W30X2012:6	6,9				A01X2000:93	23,2		
L10	A01XL210:9	1,2		0,75 BU	L10	A01XL210:15	1,3		0,75 BU	L10	A01XL210:21	1,4		0,75 BU
	A01Q1010:A2	31,6		0,75 BU		W30T1020:SO6	7,6				A01X2000:6	30,8		0,75 BU
	A40Q1010:A2	31,6		0,75 BU							A01X2000:22	29,7		0,75 BU
	F09K2024:1	19,8		0,75 BU							A01X2000:36	11,7		0,75 BU
	V30K2020:1	33,7			L10	A01XL210:16	1,3		0,75 BU		A01X2000:50	25,2		0,75 BU
						W30X2022:6	7,9				A01X2000:56	25,2		
L10	A01XL210:10	1,2		0,75 BU										
	K90K2098:1	29,7		0,75 BU	L10	A01XL210:17	1,3		0,75 BU	L10	A01XL210:22	1,4		0,75 BU
	K10K2099:1	29,7				A01P2010:-	30,8				A01X2000:62	25,2		0,75 BU
											A01X2000:68	26,2		0,75 BU
L10	A01XL210:11	1,2		0,75 BU	L10	A01XL210:18	1,3		0,75 BU		A01X2000:84	12,2		0,75 BU
	F09Q1010:A1	20,8		0,75 BU		A01X2098:3	35,6				A01X2000:86	12,2		0,75 BU
	F09Q1020:A1	20,8									A01X2000:88	12,2		
					L10	A01XL210:19	1,3		0,75 BU	L10	A01XL210:23	1,4		0,75 BU
L10	A01XL210:12	1,3		0,75 BU		A01X2000:25	19,3		0,75 BU		A01X2000:90	26,2		0,75 BU
	F09K2014:A1	22,4	(32)	0,75 BU		A01X2000:33	26,2		0,75 BU		A01X2000:102	19,2		0,75 BU
	F09K2014:S14	22,4	(32)	0,75 BU		A01X2000:47	23,2		0,75 BU		A01X2000:110	21,4		0,75 BU
	F09K2010:0V	19,7		0,75 BU		A01X2000:53	25,2		0,75 BU		A01X2000:112	24,2		
	F09K2010:0L	20,6				A01X2000:59	25,2		0,75 BU					
						A01X2000:65	26,2							

			Designer	FEK	Date	6/15/2010	Machine	SA30-0300 TB/TBA/TPA/TCA/TWA
	Tetra Pak		ECM No. 452936	Denomination LINE SUMMARY			Page Type	LINE SUMMARY
			Company Tetra Pak (Sweden)			Document No. 3036159-0004	Doc. Type ELD	Version AE
	Drawing remarks							Page: 002

This drawing must not without the consent of Tetra Pak:
be copied, transmitted or disclosed to any third party.

Line	From	Page.Col.	Option	Area/Color	Line	From	Page.Col.	Option	Area/Color	Line	From	Page.Col.	Option	Area/Color
L10	A01XL210:24	1,4		0,75 BU	**L11**	A01XL211:6	1,2		0,75 BU	**L11**	A01XL211:10	1,2		0,75 BU
	A03K2022:COM1	27,8		0,75 BU		A01X2000:5	23,2		0,75 BU		A01X2000:64	26,2		0,75 BU
	A03K2022:COM2	28,8				A01X2000:23	19,3		0,75 BU		A01X2000:70	8,2		0,75 BU
						A01X2000:35	11,6		0,75 BU		A01X2000:80	25,2		0,75 BU
						A01X2000:49	25,2		0,75 BU		A01X2000:92	23,2		
L11	A01XL211:1	1,1		0,75 BU		A01X2000:55	25,2							
	A01F2010:2	12,3								**L11**	A01XL211:11	1,2		0,75 BU
					L11	A01XL211:7	1,2		0,75 BU		E01X1013:6	9,8		0,75 BU
L11	A01XL211:2	1,1		0,75 BU		A01X2000:61	25,2		0,75 BU		E01K1013:6	9,9		
	A03K2024:+24V	29,2				A01X2000:67	16,2		0,75 BU					
						A01X2000:83	12,1		0,75 BU					
						A01X2000:85	12,2		0,75 BU	**L11**	A01XL211:12	1,3		0,75 BU
L11	A01XL211:3	1,1		0,75 BU		A01X2000:87	12,2				A01K0002: Load	2,3		
	A03K2110:US	13,6		0,75 BU										
	A03K2121:Vin+	13,4	(2)											
					L11	A01XL211:8	1,2		0,75 BU	**L11**	A01XL211:13	1,3		0,75 BU
						A01X2000:89	26,2		0,75 BU		W30T1010:CONT EN-	6,2		
L11	A01XL211:4	1,2		0,75 BU		A01X2000:95	18,2		0,75 BU					
	F09K2010:24V	19,7		0,75 BU		A01X2000:101	19,3		0,75 BU					
	F09K2014:13	22,4	(32)	0,75 BU		A01X2000:111	24,2			**L12**	A01XL212:1	1,1		0,75 BU
	F09K2014:23	22,4	(32)	0,75 BU							F09K2010:Q4	20,6		
	F09K2024:3	21,2												
					L11	A01XL211:9	1,2		0,75 BU					
						A01X2000:32	26,2		0,75 BU	**L12**	A01XL212:2	1,1		0,75 BU
L11	A01XL211:5	1,2		0,75 BU		A01X2000:40	11,3		0,75 BU		A03K2018:IN 0	23,7		
	A01X2098:1	35,2		0,75 BU		A01X2000:46	23,2		0,75 BU					
	A01X2098:5	35,3				A01X2000:52	25,2		0,75 BU					
						A01X2000:58	25,2			**L12**	A01XL212:3	1,1		0,75 BU
											A03K2028:+24V DC	23,7		

	Tetra Pak	Designer FEK	Date 4/21/2010	Machine SA30-0300 TB/TBA/TPA/TCA/TWA		
		ECM No. 452936	Denomination LINE SUMMARY	Page Type LINE SUMMARY		
Drawing remarks	Company Tetra Pak (Sweden)		Document No. 3036159-0004	Doc. Type ELD	Version AE	Page: 003

This drawing must not without the consent of Tetra Pak: be copied, transmitted or disclosed to any third party.

Line	From	Page.Col.	Option	Area/Color	Line	From	Page.Col.	Option	Area/Color	Line	From	Page.Col.	Option	Area/Color
L13	A01XL213:1 F09K2010:Q5	1,1 20,6		0,75 BU										
L13	A01XL213:2 A03K2018:IN 1	1,1 23,7		0,75 BU										
L13	A01XL213:3 A03K2026:+24V DC	1,1 31,2		0,75 BU										
L13	A01XL213:4 V30K2020:4	1,2 33,7		0,75 BU										

		Designer	FEK	Date	4/21/2010	Machine	SA30-0300 TB/TBA/TPA/TCA/TWA
	Tetra Pak	ECM No. 452936	Denomination LINE SUMMARY			Page Type	LINE SUMMARY
					Document No. 3036159-0004	Doc. Type ELD	Version AE
	Company Tetra Pak (Sweden)						Page: 004
	Drawing remarks						

5.2 Optional Equipment

5.2.1 Bent Foil Treater

Document number 3040262-0004

This page intentionally left blank

RELEASED

This drawing must not without the consent of Tetra Pak be copied, transmitted or disclosed to any third party.

Line summary of 3040262-0003

Line	From	Page.Col.	Opt.	Area/Color
L1				
	A01Q0001:2	001 .2		2,5mm² BK
	A01F1001:1	001 .9		2,5mm² BK
	V50F1030:1	003 .3		
L10				
	A01T1001:-	001 .9		
	A01X1000:E2	001 .8		
	A01P2010:2	004 .7		
	A01K2010:1	004 .8		
	A50K2020:1	004 .8		
	A50K2030:1	004 .8		
	A50K2040:1	004 .8		
	A50K2042:13	004 .8		
	A01X2000:3	004 .9		
	A08E2010:X2	004 .8		
	A08E2020:X2	004 .8		
L11				
	A01T1001:+	001 .9		
	V50K1010:5	002 .4		
	V50K1010:8	002 .5		
	Q50F1020:61	004 .3		
	A01K2010:1	004 .2		
	A01K2010:3	004 .2		
	A01K2010:13	004 .1		
	A01K2010:21	004 .2		
	A08S2010:13	004 .2		
	A08S2030:13	004 .3		

Line	From	Page.Col.	Opt.	Area/Color
	A08S2030:13	004 .3		
	A08S2030:23	004 .3		
	A08S2030:43	004 .2		
	A08S2030:33	004 .3		
N				
	A01Q0001:N	001 .2		2,5mm² L.BU
	A01T1001:N	001 .9		2,5mm² L.BU
	Q50F1020:3	002 .7		2,5mm² L.BU
	V50C1020:+	002 .8		2,5mm² L.BU
	V50K1010:2	002 .4		2,5mm² L.BU
	V50K1030:A2	003 .7		2,5mm² L.BU
	V50K1032:A2	003 .4		2,5mm² L.BU
	A01X1000:2	003 .9		

Line	From	Page.Col.	Opt.	Area/Color

Drawing remarks

Tetra Pak

Designer	Date	Machine
THN	2009-11-27	Bent Foil Treater 0400

ECM No	Denomination	Page Type
427807	LINE SUMMARY	LINE SUMMARY

Company	Document No.	Doc. type	Version	Page
Tetra Pak (Sweden)	3040262-0004	ELD	AD	001

5.2.2 Straw Detector 30

Document number 3036165-0004

RELEASED

© Tetra Pak. All rights reserved; any copying, transmittal or disclosure subject to Tetra Pak's written approval.

Line summary of 3036165-0003

Line	From	Page.Col.	Opt.	Area/Color
L1				
	A01Q0000:2	001 .1		1,5mm² BK
	A01F0001:2	002 .2		1,5mm² BK
	E01F0005:2	002 .8		
L10				
	A01T0001:V-	002 .2	(2)	
	A01Q0001:A2	003 .8		
	A01Q0001:3	005 .6		
	A01P0010:2	003 .8		
	K01K0040:1	005 .6		
	K01K0012:A2	005 .6		
	K01K0014:A2	004 .7		
	K01K0018:13	003 .8		
	A01X0040:2	004 .8		
	A01X0040:4	003 .8		
	A01X0040:33	005 .8		
	A01S0080:2	003 .8		
	A01S0081:2	003 .8		
L10				
	A01T0001:V-	002 .2	(2)	
	J0006:	002 .2		
L11				
	A01F0002:1	002 .3		
	A01Q0001:1	005 .6		
	A01Q0001:61	003 .3		
	A01Q0001:53	003 .3		
	A01Q0001:83	003 .3		

Line	From	Page.Col.	Opt.	Area/Color
	A01Q0001:83	003 .3		
	K01K0040:3	004 .2		
	A01S0080:13	003 .3		
	A01S0082:13	003 .5		
	A01S0082:23	003 .5		
	A01S0082:33	003 .5		
	A01X0040:32	005 .8		
N				
	A01Q0000:N	001 .1		1,5mm² L.BU
	A01T0001:N	002 .2	(2)	1,5mm² L.BU
	E01M0005:N	002 .8		

Line	From	Page.Col.	Opt.	Area/Color

Drawing remarks

Tetra Pak

Designer	Date	Machine
THN	2009-06-26	Straw Detector 30-0300

ECM No	Denomination	Page Type
417765	LINE SUMMARY	LINE SUMMARY

Company	Document No.	Doc. type	Version	Page
Tetra Pak (Sweden)	3036165-0004	ELD	AC	001

This page intentionally left blank

6 Cabinet Terminal Summary

About the Cabinet Terminal Summary Chapter

All terminals inside the electrical cabinet are listed in this chapter. The field *Opt.* specifies if the terminal is reserved for an option.

6.1 Main Machine . . . . . 6 - 5
6.2 Optional Equipment . . . . . 6 - 10
6.2.1 Bent Foil Treater . . . . . 6 - 10
6.2.2 Straw Detector 30 . . . . . 6 - 12

This page intentionally left blank

6.1 Main Machine

Document number 3036156-0005

This page intentionally left blank

RELEASED

This drawing must not without the consent of Tetra Pak be copied, transmitted or disclosed to any third party.

Cabinet terminal summary of 3036156-0003

A01X0001	Page .Col.	Opt.
A01X0001:PE	002.2	
A01X0001:E2	002.2	
A01X0001:E3	002.2	

A01X1000	Page .Col.	Opt.
A01X1000:E1	002.5	
A01X1000:E2	002.6	
A01X1000:E3		
A01X1000:1	008.3	
A01X1000:2	008.3	
A01X1000:3	008.4	
A01X1000:E4	008.4	
A01X1000:4	008.7	
A01X1000:5	008.7	
A01X1000:E5	008.7	
A01X1000:6	009.2	
A01X1000:7	009.3	
A01X1000:8	009.4	
A01X1000:9	009.4	
A01X1000:E6	009.5	
A01X1000:10	010.6	
A01X1000:11	010.7	
A01X1000:E7	010.7	
A01X1000:12	011.2	
A01X1000:13	011.2	
A01X1000:E8	011.3	
A01X1000:14		
A01X1000:15		
A01X1000:E9		

A01X1003	Page .Col.	Opt.
A01X1003:1	003.3	
A01X1003:2	003.8	
A01X1003:3	004.3	
A01X1003:4	005.3	
A01X1003:5	005.8	
A01X1003:6	006.4	
A01X1003:7	008.4	
A01X1003:8	008.7	
A01X1003:9	009.3	
A01X1003:10	009.7	
A01X1003:11	010.3	
A01X1003:12	010.7	
A01X1003:13	012.3	
A01X1003:14	012.6	
A01X1003:15	012.9	
A01X1003:16	013.2	
A01X1003:17	014.3	
A01X1003:18	011.2	
A01X1003:19		
A01X1003:20		

A01X2000	Page .Col.	Opt.
A01X2000:1	018.3	
A01X2000:2	018.7	
A01X2000:3	018.3	
A01X2000:4	018.7	
A01X2000:5	023.2	
A01X2000:6	030.8	
A01X2000:7	023.6	
A01X2000:8	023.6	
A01X2000:9	023.6	
A01X2000:10		
A01X2000:11	030.3	
A01X2000:12	030.3	
A01X2000:13	031.3	
A01X2000:14	021.7	
A01X2000:E1	018.3	
A01X2000:E2	029.7	
A01X2000:15	021.3	
A01X2000:16		
A01X2000:17	029.5	
A01X2000:18	029.5	
A01X2000:19	029.5	
A01X2000:20	029.5	
A01X2000:21	029.5	
A01X2000:22	029.7	
A01X2000:23	019.3	
A01X2000:24	019.3	
A01X2000:25	019.3	
A01X2000:26	019.3	
A01X2000:27	019.3	
A01X2000:28	018.8	
A01X2000:29	018.9	
A01X2000:30	018.8	
A01X2000:31	018.9	
A01X2000:32	027.2	
A01X2000:33	027.2	
A01X2000:34	027.6	
A01X2000:E3		
A01X2000:E4	011.7	
A01X2000:35	011.6	
A01X2000:36	011.7	
A01X2000:37	012.6	
A01X2000:38	012.6	
A01X2000:39		
A01X2000:40	011.3	
A01X2000:E5		
A01X2000:E6		
A01X2000:41	011.3	
A01X2000:42	011.7	

Drawing remarks

Tetra Pak

Designer	Date	Machine
FEK	2010-06-14	Straw Applicator 30-0300 TB/TBA/TPA/TCA/TWA

ECM No	Denomination	Page Type
452936	CABINET TERMINAL SUMMARY	CABINET TERMINAL SUMMARY

Company	Document No.	Doc. type	Version	Page
Tetra Pak (Sweden)	3036156-0005	ELD	AE	001

RELEASED

This drawing must not without the consent of Tetra Pak be copied, transmitted or disclosed to any third party.

1	2	3	4	5	6	7	8	9	10

Cabinet terminal summary of 3036156-0003

A01X2000	Page .Col.	Opt.
A01X2000:43	011.7	
A01X2000:44	011.7	
A01X2000:45	011.8	
A01X2000:46	023.2	
A01X2000:47	023.2	
A01X2000:48	023.6	
A01X2000:49	025.2	
A01X2000:50	025.2	
A01X2000:51	025.6	
A01X2000:52	025.2	
A01X2000:53	025.2	
A01X2000:54	025.2	
A01X2000:55	025.2	
A01X2000:56	025.2	
A01X2000:57	025.2	
A01X2000:58	025.2	
A01X2000:59	025.2	
A01X2000:60	025.2	
A01X2000:61	025.2	
A01X2000:62	025.2	
A01X2000:63	025.2	
A01X2000:64	026.2	
A01X2000:65	026.2	
A01X2000:66	026.6	
A01X2000:67	026.2	
A01X2000:68	026.2	
A01X2000:69	026.6	
A01X2000:70	008.2	
A01X2000:71	008.2	
A01X2000:72	008.2	
A01X2000:E7	008.2	
A01X2000:E8	031.8	
A01X2000:73		
A01X2000:74	031.5	
A01X2000:75	031.8	
A01X2000:76	031.5	
A01X2000:77	031.8	
A01X2000:E9	031.8	
A01X2000:80	025.2	
A01X2000:81	025.2	
A01X2000:82	025.2	
A01X2000:83	012.1	
A01X2000:84	012.2	
A01X2000:85	012.2	
A01X2000:86	012.2	
A01X2000:87	012.2	
A01X2000:88	012.2	
A01X2000:89	027.2	
A01X2000:90	027.2	
A01X2000:91	027.2	
A01X2000:92	023.2	
A01X2000:93	023.2	
A01X2000:94	023.2	
A01X2000:E11		
A01X2000:E12		
A01X2000:95	018.2	
A01X2000:96	018.3	
A01X2000:97	018.2	
A01X2000:98	018.3	
A01X2000:99	020.5	
A01X2000:100	020.5	
A01X2000:101	019.3	
A01X2000:102	019.3	
A01X2000:103	019.5	
A01X2000:104	021.4	
A01X2000:E13		
A01X2000:E14		
A01X2000:105	021.4	
A01X2000:106		
A01X2000:107	021.4	
A01X2000:108	021.4	
A01X2000:109	021.4	
A01X2000:110	021.4	
A01X2000:111	024.2	
A01X2000:112	024.2	
A01X2000:113	024.6	
A01X2000:114		
A01X2000:E15		
A01X2000:E16		
A01X2000:115	011.8	
A01X2000:116	011.8	
A01X2000:117	011.8	
A01X2000:118	011.8	
A01X2000:119	011.8	
A01X2000:120		
A01X2000:121		
A01X2000:122		
A01X2000:123		
A01X2000:124		
A01X2000:E17		
A01X2000:E18		

A01X2098	Page .Col.	Opt.
A01X2098:1	035.3	
A01X2098:2	035.3	
A01X2098:3	035.3	
A01X2098:4		
A01X2098:E1		
A01X2098:E2		
A01X2098:5	035.3	

Drawing remarks

Tetra Pak

Designer	Date	Machine
FEK	2010-06-14	Straw Applicator 30-0300 TB/TBA/TPA/TCA/TWA

ECM No	Denomination	Page Type
452936	CABINET TERMINAL SUMMARY	CABINET TERMINAL SUMMARY

Company	Document No.	Doc. type	Version	Page
Tetra Pak (Sweden)	3036156-0005	ELD	AE	002

RELEASED

This drawing must not without the consent of Tetra Pak be copied, transmitted or disclosed to any third party.

Cabinet terminal summary of 3036156-0003

A01X2098	Page .Col.	Opt.
A01X2098:6	035.3	
A01X2098:6		
A01X2098:7		
A01X2098:8		
A01X2098:E3	035.3	
A01X2098:E4		

E01X1013	Page .Col.	Opt.
E01X1013:E1	009.7	
E01X1013:E2	030.3	
E01X1013:E3	030.5	
E01X1013:1	009.6	
E01X1013:2	009.6	
E01X1013:3	009.7	
E01X1013:4	009.8	
E01X1013:5	009.8	
E01X1013:6	009.8	
E01X1013:7	009.8	
E01X1013:8	030.3	
E01X1013:9	030.5	
E01X1013:10	030.5	
E01X1013:11	030.7	

Drawing remarks

Tetra Pak

Designer	Date	Machine
FEK	2010-06-14	Straw Applicator 30-0300 TB/TBA/TPA/TCA/TWA

ECM No	Denomination	Page Type
452936	CABINET TERMINAL SUMMARY	CABINET TERMINAL SUMMARY

Company	Document No.	Doc. type	Version	Page
Tetra Pak (Sweden)	3036156-0005	ELD	AE	003

6.2 Optional Equipment

6.2.1 Bent Foil Treater

Document number 3040262-0005

RELEASED

This drawing must not without the consent of Tetra Pak be copied, transmitted or disclosed to any third party.

1 2 3 4 5 6 7 8 9 10

Cabinet terminal summary of 3040262-0003

Terminal	Page .Col.	Opt.
A01X1000:E1	001 .3	
A01X1000:E2	001 .8	
A01X1000:1	003 .8	
A01X1000:2	003 .9	
A01X1000:3	002 .7	
A01X1000:4	002 .8	
A01X1000:5	002 .8	
A01X1000:6		
A01X1000:E3	002 .9	
A01X2000:E1	004 .9	
A01X2000:E2		
A01X2000:1	004 .7	
A01X2000:2	004 .7	
A01X2000:3	004 .9	
A01X2000:4		
A01X2000:5		
A01X2000:E3		
V50X1015:1	001 .1	(3)
V50X1015:2	001 .1	(3)
V50X1015:CHASSIE	001 .1	(3)
V50X2010:-	002 .4	
V50X2010:+	002 .5	

Terminal	Page .Col.	Opt.

Terminal	Page .Col.	Opt.

Terminal	Page .Col.	Opt.

Drawing remarks

Tetra Pak

Designer THN	Date 2009-11-27	Machine Bent Foil Treater 0400	
ECM No 427807	Denomination CABINET TERMINAL SUMMARY	Page Type CABINET TERMINAL SUMMARY	
Company Tetra Pak (Sweden)	Document No. 3040262-0005	Doc. type ELD	Version AD	Page 001

6.2.2 Straw Detector 30

Document number 3036165-0005

RELEASED

© Tetra Pak. All rights reserved; any copying, transmittal or disclosure subject to Tetra Pak's written approval.

Cabinet terminal summary of 3036165-0003

Terminal	Page .Col.	Opt.
A01X0000:E1	001 .3	
A01X0000:E1		
A01X0000:E2	002 .3	
A01X0000:E2		
A01X0000:E3		
A01X0000:E3		
A01X0000:E4	002 .8	
A01X0000:E4		
A01X0000:E5	003 .8	
A01X0000:E5		
A01X0000:E6	004 .8	
A01X0000:E6		
A01X0040:1	004 .6	
A01X0040:2	004 .8	
A01X0040:3	003 .6	
A01X0040:4	003 .8	
A01X0040:5		
A01X0040:6		
A01X0040:7		
A01X0040:8		
A01X0040:9		
A01X0040:10		
A01X0040:11		
A01X0040:12		
A01X0040:13		
A01X0040:14		
A01X0040:15	005 .5	
A01X0040:16	005 .5	

Terminal	Page .Col.	Opt.
A01X0040:17	005 .5	
A01X0040:18	005 .5	
A01X0040:19	005 .5	
A01X0040:20		
A01X0040:21	005 .5	
A01X0040:22		
A01X0040:23	005 .2	
A01X0040:24	005 .2	
A01X0040:25	005 .2	
A01X0040:26	005 .2	
A01X0040:27	005 .2	
A01X0040:28	005 .2	
A01X0040:29	005 .2	
A01X0040:30	005 .2	
A01X0040:31	005 .2	
A01X0040:32	005 .8	
A01X0040:33	005 .8	
A01X0040:34	005 .8	
A01X0040:35		
A01X0040:36		
A01X0040:37		
A01X0040:38		
A01X0040:39		
A01X0040:40		
A01X0040:41	004 .6	
A01X0040:42	004 .7	
A01X0040:43	004 .7	
A01X0040:44		

Terminal	Page .Col.	Opt.
A01X0040:45		
A01X0040:46		
A01X0040:47		
A01X0040:48		
A01X0040:49		
A01X0040:50		

Terminal	Page .Col.	Opt.

Drawing remarks

Designer THN	Date 2009-06-26	Machine Straw Detector 30-0300		
ECM No 417765	Denomination CABINET TERMINAL SUMMARY	Page Type CABINET TERMINAL SUMMARY		
Company Tetra Pak (Sweden)	Document No. 3036165-0005	Doc. type ELD	Version AC	Page 001

This page intentionally left blank

7 Terminal Strip Overview

About the Terminal Strip Overview

All terminals used in the equipment except for those in the electrical cabinet are listed in this chapter.

7.1 Main Machine . . . . . 7 - 5

7.2 Optional Equipment . . . . . 7 - 10

7.2.1 Bent Foil Treater . . . . . 7 - 10

7.2.2 Straw Detector 30 . . . . . 7 - 13

This page intentionally left blank

7.1 Main Machine

Document number 3036156-0006

This page intentionally left blank

RELEASED

This drawing must not without the consent of Tetra Pak be copied, transmitted or disclosed to any third party.

Terminal strip of 3036156-0003

A08X1000

From	Cable	Internal Jumper	Terminal	External Jumper	Cable	To	Page.Col.	Option	Function text
A01X1000:8	E08W1010-1		1			E08M1010:U	009.4		
A01X1000:9	E08W1010-2		2			E08M1010:N	009.4		
A01X1000:E6	E08W1010-GNYE		E1			E08M1010:⏚	009.5		

Drawing remarks	Tetra Pak	Designer FEK	Date 2010-06-14	Machine Straw Applicator 30-0300 TB/TBA/TPA/TCA/TWA	
		ECM No 452936	Denomination TERMINAL STRIP OVERVIEW	Page Type TERMINAL STRIP OVERVIEW	
		Company Tetra Pak (Sweden)	Document No. 3036156-0006	Doc. type ELD	Version AE	Page 001

RELEASED

This drawing must not without the consent of Tetra Pak be copied, transmitted or disclosed to any third party.

Terminal strip of 3036156-0003 A08X2000

From	Cable	Internal Jumper	Terminal		External Jumper	Cable	To	Page.Col.	Option	Function text
A01X2000:E1	A08W2012-GNYE			E1				018.4		
A01X2000:1	A08W2012-1		'	1			F09F2020:21	018.4		EMERGENCY STOP
A01X2000:2	A08W2012-2		'	2			F09F2020:22	018.6		EMERGENCY STOP
A01X2000:3	A08W2012-3		'	3			F09F2020:11	018.4		EMERGENCY STOP
A01X2000:4	A08W2012-4		'	4			F09F2020:12	018.6		EMERGENCY STOP
A01X2000:5	A08W2012-5		'	5			A08S2010:13	023.3		STEP UP
A01X2000:6	A08W2012-6		'	6			A08S2010:2	030.7		STEP UP
							A08S2012:2			STEP DOWN
A01X2000:7	A08W2012-7		'	7			A08S2010:14	023.5		STEP UP
A01X2000:8	A08W2012-8		'	8			A08S2012:52	023.5		STEP DOWN
A01X2000:9	A08W2012-9		'	9			A08S2014:14	023.5		JOG SERVO
			'	10						
A01X2000:11	A08W2012-11		'	11			A08S2010:1	030.5		STEP UP
A01X2000:12	A08W2012-12		'	12			A08S2012:1	030.5		STEP DOWN
A01X2000:13	A08W2012-13		'	13			A08S2014:1	031.5		JOG SERVO
A01X2000:14	A08W2012-14		'	14			F09S2030:14	021.6		RESET SAFETY CIRCUIT
A01X2000:15	A08W2012-15		'	15			F09S2030:1	021.4		RESET SAFETY CIRCUIT
			'	16						
			'	17						
			'	18						
A01X2000:37	A08W2010-1		'	19			A08A2010:0VDC	012.6		
A01X2000:38	A08W2010-2		'	20			A08A2010:24VDC	012.6		
			'	E2						

Drawing remarks

Tetra Pak

Designer	Date	Machine
FEK	2010-06-14	Straw Applicator 30-0300 TB/TBA/TPA/TCA/TWA

ECM No	Denomination	Page Type
452936	TERMINAL STRIP OVERVIEW	TERMINAL STRIP OVERVIEW

Company	Document No.	Doc. type	Version	Page
Tetra Pak (Sweden)	3036156-0006	ELD	AE	002

RELEASED

This drawing must not without the consent of Tetra Pak be copied, transmitted or disclosed to any third party.

Terminal strip of 3036156-0003 A10X2000

From	Cable	Internal Jumper	Terminal	External Jumper	Cable	To	Page.Col.	Option	Function text
A01X2000:E4	A10W2000-GNYE		E1			A10B2000	011.7		
A01X2000:35	A10W2000-1		1			A10B2000	011.6		
A01X2000:36	A10W2000-2		2			A10B2000	011.7		
A01X2000:42	A10W2000-3		3			A10B2000	011.7		
A01X2000:43	A10W2000-4		4			A10B2000	011.7		
A01X2000:44	A10W2000-5		5			A10B2000	011.7		
A01X2000:45	A10W2000-6		6			A10B2000	011.8		
A01X2000:115	A10W2000-7		7			A10B2000	011.8		
A01X2000:116	A10W2000-8		8			A10B2000	011.8		
A01X2000:117	A10W2000-9		9			A10B2000	011.8		
A01X2000:118	A10W2000-10		10			A10B2000	011.8		
A01X2000:119	A10W2000-11		11			A10B2000	011.8		
			12						
			13						
			14						
			15						
			16						
			17						
			18						
			19						
			20						
			E2						

Drawing remarks

Tetra Pak

Designer	Date	Machine
FEK	2010-06-14	Straw Applicator 30-0300 TB/TBA/TPA/TCA/TWA

ECM No	Denomination	Page Type
452936	TERMINAL STRIP OVERVIEW	TERMINAL STRIP OVERVIEW

Company	Document No.	Doc. type	Version	Page
Tetra Pak (Sweden)	3036156-0006	ELD	AE	003

7.2 Optional Equipment

7.2.1 Bent Foil Treater

Document number 3040262-0006

RELEASED

This drawing must not without the consent of Tetra Pak be copied, transmitted or disclosed to any third party.

Terminal strip of 3040262-0003

V50X1015

From	Cable	Internal Jumper	Terminal	External Jumper	Cable	To	Page.Col.	Option	Function text
			1		V50W1017 :1	A01Q0001:1	001 .1	(3)	
			2		V50W1017 :2	A01Q0001:N	001 .1	(3)	
			CHASSIE		V50W1017 :GNYE	A01Q0001:	001 .1	(3)	

Drawing remarks

Tetra Pak

Designer THN | Date 2009-11-27 | Machine Bent Foil Treater 0400

ECM No 427807 | Denomination TERMINAL STRIP OVERVIEW | Page Type Terminal diagram: V50X1015 (1 - CHASSIE)

Company Tetra Pak (Sweden) | Document No. 3040262-0006 | Doc. type ELD | Version AD | Page 001

RELEASED

This drawing must not without the consent of Tetra Pak be copied, transmitted or disclosed to any third party.

Terminal strip of 3040262-0003 V50X2010

From	Cable	Internal Jumper	Terminal	External Jumper	Cable	To	Page.Col.	Option	Function text
V50K1010:14	V50W2010 :RD		-				002 .4		
V50K1010:15	V50W2010 :YE		+				002 .5		

Drawing remarks	Tetra Pak	Designer THN	Date 2009-11-27	Machine Bent Foil Treater 0400
		ECM No 427807	Denomination TERMINAL STRIP OVERVIEW	Page Type Terminal diagram: V50X2010 (- - +)
	Company Tetra Pak (Sweden)	Document No. 3040262-0006	Doc. type ELD	Version AD / Page 002

7.2.2 Straw Detector 30

Document number 3036165-0006

This page intentionally left blank

RELEASED

© Tetra Pak. All rights reserved; any copying, transmittal or disclosure subject to Tetra Pak's written approval.

1 2 3 4 5 6 7 8 9 10

Terminal strip of 3036165-0003

From		Cable	Internal Jumper	Terminal	External Jumper	Cable		To	Page.Col.	Option	Function text

This page intentionally left blank

8 Cable Connection List

About the Cable Connection List

All cable connections used in the equipment are listed in this chapter.

8.1 Main machine . . . . . 8 - 5

8.2 Optional Equipment . . . . . 8 - 15

8.2.1 Bent Foil Treater . . . . . 8 - 15

8.2.2 Straw Detector 30 . . . . . 8 - 18

This page intentionally left blank

8.1 Main machine

Document number 3036156-0007

This page intentionally left blank

RELEASED

This drawing must not without the consent of Tetra Pak be copied, transmitted or disclosed to any third party.

Cable Connection List of 3036156-0003

From	Cable	To	Page.Col.	Option
A01W1999				
A01X1000:E1	GNYE	A01J9999	002.5	
A01W2010				
A01X2000:46	BN	A01B2010	023.4	
A01X2000:47	BU	A01B2010	023.4	
A01X2000:48	BK	A01B2010	023.4	
A01W2014				
A01X2000:21	1	A01P2014:1	029.5	
A01X2000:20	2	A01P2014:2	029.5	
A01X2000:19	3	A01P2014:3	029.5	
A01X2000:18	4	A01P2014:4	029.5	
A01X2000:17	5	A01P2014:5	029.5	
A01X2000:22	6	A01P2014:0	029.5	
A01X2000:E2	GNYE	A01P2014:E	029.5	
A03W2012				
A03K2110:X1	1	A03K2014	013.2	
A03W2016				
A03J2016	1	A03K2016	016.1	
A03W2020				
W10X2010:TB2	WH	A03X2016:TB2	016.2	
W10X2010:TB1	BN	A03X2016:TB1	016.2	
W10T1010:16	SH	A03J2020	016.2	
A03W2022				
W40X2010:TB2	WH	A03X2018:TB2	016.2	
W40X2010:TB1	BN	A03X2018:TB1	016.2	
W40T1010:16	SH	A03J2022	016.4	

From	Cable	To	Page.Col.	Option
A03W2024				
W40X2010:TB2	WH	W40X2020:TB2	016.6	
W40X2010:TB1	BN	W40X2020:TB1	016.6	
W40T1020:16	SH	A03J2023	016.6	
A03W2026				
W40X2020:TB2	WH	W40X2030:TB2	016.8	
W40X2020:TB1	BN	W40X2030:TB1	016.8	
W40T1030:16	SH	A03J2024	016.8	
A03W2028				
A03X2020:TB2	WH	W90X2010:TB1	016.10	
A03X2020:TB1	BN	W90X2010:TB2	016.10	
A03J2028	SH	W90T1010:16	016.10	
A03W2029				
A03K2029:E	1	A03J2029	014.8	
A03W2121				
A03K2010	1	A03K2121:CH3	013.4	
A07W1021				
A07T1021:E	1	A07J1021	014.4	

Drawing remarks	Tetra Pak	Designer: FEK	Date: 2010-06-14	Machine: Straw Applicator 30-0300 TB/TBA/TPA/TCA/TWA	
		ECM No: 452936	Denomination: CABLE CONNECTION LIST	Page Type: CABLE CONNECTION LIST	
		Company: Tetra Pak (Sweden)	Document No.: 3036156-0007	Doc. type: ELD	Version: AE	Page: 001

RELEASED

This drawing must not without the consent of Tetra Pak be copied, transmitted or disclosed to any third party.

1 2 3 4 5 6 7 8 9 10

Cable Connection List of 3036156-0003

From	Cable	To	Page.Col.	Option
A07W2025				
A07K2025:V-	BK	A03K2029:V-	014.7	
A07K2025:CAN-L	BU	A03K2029:CAN-L	014.7	
A07K2025:SHIELD	DRAIN	A03K2029:SHIELD	014.7	
A07K2025:CAN-H	WH	A03K2029:CAN-H	014.7	
A07K2025:V+	RD	A03K2029:V+	014.7	
A08W2010				
A01X2000:37	1	A08X2000:19	012.6	
A01X2000:38	2	A08X2000:20	012.6	
A08W2012				
A01X2000:1	1	A08X2000:1	018.4	
A01X2000:2	2	A08X2000:2	018.6	
A01X2000:3	3	A08X2000:3	018.4	
A01X2000:4	4	A08X2000:4	018.6	
A01X2000:5	5	A08X2000:5	023.3	
A01X2000:6	6	A08X2000:6	030.7	
A01X2000:7	7	A08X2000:7	023.5	
A01X2000:8	8	A08X2000:8	023.5	
A01X2000:9	9	A08X2000:9	023.5	
	10			
A01X2000:11	11	A08X2000:11	030.5	
A01X2000:12	12	A08X2000:12	030.5	
A01X2000:13	13	A08X2000:13	031.5	
A01X2000:14	14	A08X2000:14	021.6	
A01X2000:15	15	A08X2000:15	021.4	
	16			
	17			
A01X2000:E1	GNYE	A08X2000:E1	018.4	
A08W2014				
A08A2010:Pot.Ground	1	A08J2010	013.10	

From	Cable	To	Page.Col.	Option
A08W2020				
A03K2110:X2	1	A08A2010:ETHERNET	013.8	
A10W2000				
A01X2000:35	1	A10X2000:1	011.6	
A01X2000:36	2	A10X2000:2	011.7	
A01X2000:42	3	A10X2000:3	011.7	
A01X2000:43	4	A10X2000:4	011.7	
A01X2000:44	5	A10X2000:5	011.7	
A01X2000:45	6	A10X2000:6	011.8	
A01X2000:115	7	A10X2000:7	011.8	
A01X2000:116	8	A10X2000:8	011.8	
A01X2000:117	9	A10X2000:9	011.8	
A01X2000:118	10	A10X2000:10	011.8	
A01X2000:119	11	A10X2000:11	011.8	
A01X2000:E4	GNYE	A10X2000:E1	011.7	
A10W2099				
K10K2099:4	1		035.7	
K10K2099:3	2		035.7	
A01X2098:5	3		035.7	
A01X2098:6	4		035.7	
A01X2098:E3	GNYE	:E	035.7	
A90W9901				
A03K2110:X3	1	A03J2110	013.6	
E01W1015				
E01X1013:8	BK	E01Q2015:1	030.4	
E01X1013:9	WH	E01Q2015:4	030.4	
	RD			
E01X1013:E2	GNYE	E01Q2015	030.4	

Drawing remarks

Tetra Pak

Designer: FEK	Date: 2010-06-14	Machine: Straw Applicator 30-0300 TB/TBA/TPA/TCA/TWA	
ECM No: 452936	Denomination: CABLE CONNECTION LIST	Page Type: CABLE CONNECTION LIST	
Company: Tetra Pak (Sweden)	Document No.: 3036156-0007	Doc. type: ELD	Version: AE / Page: 002

RELEASED

This drawing must not without the consent of Tetra Pak be copied, transmitted or disclosed to any third party.

Cable Connection List of 3036156-0003

From	Cable	To	Page.Col.	Option
E01W1017				
E01X1013:10	BK	E01Q2017:1	030.6	
E01X1013:11	WH	E01Q2017:4	030.6	
	RD			
E01X1013:E3	GNYE	E01Q2017	030.6	
E01W1020				
A01X1000:10	1	E01E1020:1	010.6	
A01X1000:11	2	E01E1020:2	010.6	
A01X1000:E7	GNYE	E01E1020:E	010.6	
E08W1010				
A01X1000:8	1	A08X1000:1	009.4	
A01X1000:9	2	A08X1000:2	009.4	
A01X1000:E6	GNYE	A08X1000:E1	009.5	
F09W2010				
A01X2000:100	WH	F09K2010:CL	020.6	
A01X2000:99	BN	F09K2010:CH	020.6	
F09J2010	SH	F09W2010:SH	020.5	
F09W2026				
A01X2000:23	BN	F09F2026:BN	019.4	
A01X2000:24	WH	F09F2026:WH	019.4	
A01X2000:25	BU	F09F2026:BU	019.4	
A01X2000:26	BK	F09F2026:BK	019.4	
A01X2000:27	GY	F09F2026:GY	019.4	
F09J2026	SH	F09W2026:SH	019.4	
F09W2032				
A01X2000:101	BN	F09B2032	019.5	
A01X2000:102	BU	F09B2032	019.5	

From	Cable	To	Page.Col.	Option
A01X2000:103	BK	F09B2032	019.5	
F09W2040				
	BN			
	BU			
A01X2000:104	WH	F09K2040:1 EN1	021.6	
A01X2000:107	YE	F09K2040:5	021.6	
	BK			
A01X2000:109	PK	F09K2040:8	021.6	
A01X2000:105	GN	F09K2040:2 EN2	021.6	
A01X2000:108	GY	F09K2040:6	021.6	
A01X2000:110	RD	F09K2040:9	021.6	
F09J1422	SH	F09J1423	021.5	
F09W2042				
F09K2040:⏚	GNYE	F09J1420	021.7	
P30W2010				
P30X2010:4	BK	P30B2010:(B-) 1	006.8	
	GY			
P30X2010:5	LI	P30B2010:(Z) 3	006.8	
P30X2010:10	YE	P30B2010:(Z-) 4	006.8	
P30X2010:1	WH	P30B2010:(A) 5	006.8	
P30X2010:2	BN	P30B2010:(A-) 6	006.8	
	OG			
P30X2010:3	PK	P30B2010:(B) 8	006.8	
P30X2010:6	BU	P30B2010:(GND) 10	006.8	
	GN			
P30X2010:14	RD	P30B2010:(Us+) 12	006.8	
P30J2010	SH	P30W2010:SH	006.9	
P50W1011				
A01X1000:12	1	P50B1011:001	011.2	
A01X1000:13	2	P50B1011:002	011.2	

Drawing remarks

Tetra Pak

Designer	Date	Machine
FEK	2010-06-14	Straw Applicator 30-0300 TB/TBA/TPA/TCA/TWA

ECM No	Denomination	Page Type
452936	CABLE CONNECTION LIST	CABLE CONNECTION LIST

Company	Document No.	Doc. type	Version	Page
Tetra Pak (Sweden)	3036156-0007	ELD	AE	003

RELEASED

This drawing must not without the consent of Tetra Pak be copied, transmitted or disclosed to any third party.

Cable Connection List of 3036156-0003

From	Cable	To	Page.Col.	Option
P50W1011				
A01X1000:E8	GNYE	P50B1011	011.3	
P50W2011				
A01X2000:40	1	P50B1011:003	011.3	
A01X2000:41	2	P50B1011:004	011.3	
	3			
	4			
	5			
	6			
	GNYE			
V10W2020				
A01X2000:52	BN	V10W2022	025.3	
	WH			
A01X2000:53	BU	V10W2022	025.3	
A01X2000:54	BK	V10W2022	025.3	
V10W2022				
V10W2020	A	V10B2022	025.5	
V10W2020	B	V10B2020	025.4	
V30W1030				
A01X1000:1	1	V30V1030:L1	008.3	
A01X1000:2	2	V30V1030:L2	008.3	
A01X1000:3	3	V30V1030:N	008.3	
A01X1000:E4	GNYE	V30V1030:CHASSIE	008.3	
V30W2010				
A01X2000:74	1	V30K2010:1	031.6	
A01X2000:75	2	V30K2010:2	031.6	
A01X2000:E8	GNYE	V30K2010:E	031.6	

From	Cable	To	Page.Col.	Option
V30W2012				
A01X2000:76	1	V30K2012:1	031.6	
A01X2000:77	2	V30K2012:2	031.6	
A01X2000:E9	GNYE	V30K2012:E	031.6	
V30W2030				
A01X2000:70	1	V30V1030:3	008.3	
A01X2000:71	2	V30V1030:2	008.3	
A01X2000:72	3	V30V1030:4	008.3	
A01X2000:E7	GNYE	V30V1030:E	008.3	
V30W2080				
A01X2000:49	BN	V30B2080	025.4	
	WH			
A01X2000:50	BU	V30B2080	025.4	
A01X2000:51	BK	V30B2080	025.4	
V30W2090				
A01X2000:67	BN	V30B2090	026.4	
A01X2000:68	BU	V30B2090	026.4	
A01X2000:69	BK	V30B2090	026.4	
V30W2092				
V30B2090	1	V30B2090	026.4	
V30W2120				
A01X2000:32	BN	V30B2120	027.4	
A01X2000:33	BU	V30B2120	027.4	
A01X2000:34	BK	V30B2120	027.4	

Drawing remarks

Tetra Pak

Designer: FEK	Date: 2010-06-14	Machine: Straw Applicator 30-0300 TB/TBA/TPA/TCA/TWA	
ECM No: 452936	Denomination: CABLE CONNECTION LIST	Page Type: CABLE CONNECTION LIST	
Company: Tetra Pak (Sweden)	Document No.: 3036156-0007	Doc. type: ELD	Version: AE / Page: 004

RELEASED

This drawing must not without the consent of Tetra Pak be copied, transmitted or disclosed to any third party.

Cable Connection List of 3036156-0003

From	Cable	To	Page.Col.	Option
V40W2030				
A01X2000:55	BN	V40W2024	025.3	
	WH			
A01X2000:56	BU	V40W2024	025.3	
A01X2000:57	BK	V40W2024	025.3	
V40W2032				
V40W2030	A	V40B2032	025.5	
V40W2030	B	V40B2030	025.4	
V40W2040				
A01X2000:58	BN	V40W2025	025.3	
	WH			
A01X2000:59	BU	V40W2025	025.3	
A01X2000:60	BK	V40W2025	025.3	
V40W2042				
V40W2040	A	V40B2042	025.5	
V40W2040	B	V40B2040	025.4	
V40W2060				
A01X2000:64	BN	V40B2060	026.4	
A01X2000:65	BU	V40B2060	026.4	
A01X2000:66	BK	V40B2060	026.4	
V40W2070				
A01X2000:80	BN	V40W2027	025.3	
	WH			
A01X2000:81	BU	V40W2027	025.3	
A01X2000:82	BK	V40W2027	025.3	
V40W2072				
V40W2070	A	V40B2072	025.5	
V40W2070	B	V40B2070	025.4	
V40W2100				
A01X2000:89	BN	V40W2027	027.3	
	WH			
A01X2000:90	BU	V40W2027	027.3	
A01X2000:91	BK	V40W2027	027.3	
V40W2102				
V40W2070	A	V40B2102	027.5	
V40W2070	B	V40B2100	027.4	
V50W1015				
A01X1000:4	1	V50X1015:1	008.7	
A01X1000:5	2	V50X1015:2	008.7	
A01X1000:E5	GNYE	V50X1015:CHASSIE.	008.7	
V50W1017				
V50X1015:1	1	V50V1015:001	008.7	
V50X1015:2	2	V50V1015:002	008.7	
V50X1015:CHASSIE	GNYE	V50V1015:⏚	008.7	
V90W2050				
A01X2000:61	BN	V40W2026	025.3	
	WH			
A01X2000:62	BU	V40W2026	025.3	
A01X2000:63	BK	V40W2026	025.3	

Drawing remarks	Tetra Pak	Designer FEK	Date 2010-06-14	Machine Straw Applicator 30-0300 TB/TBA/TPA/TCA/TWA	
		ECM No 452936	Denomination CABLE CONNECTION LIST	Page Type CABLE CONNECTION LIST	
		Company Tetra Pak (Sweden)	Document No. 3036156-0007	Doc. type ELD	Version AE	Page 005

RELEASED

This drawing must not without the consent of Tetra Pak be copied, transmitted or disclosed to any third party.

1 2 3 4 5 6 7 8 9 10

Cable Connection List of 3036156-0003

From	Cable	To	Page.Col.	Option
V90W2052				
V90W2050	A	V90B2052	025.5	
V90W2050	B	V90B2050	025.4	
V90W2130				
A01X2000:92	BN	V10W2022	023.3	
	WH			
A01X2000:93	BU	V10W2022	023.3	
A01X2000:94	BK	V10W2022	023.3	
V90W2132				
V90B2132	A	V10W2020	023.3	
V90B2130	B	V10W2020	023.3	
V90W2140				
A01X2000:111	BN	V90B2140	024.4	
A01X2000:112	BU	V90B2140	024.4	
A01X2000:113	BK	V90B2140	024.4	
W10W1010				
W10Q1010:1	1	W10T1010:U/T1	003.2	
W10Q1010:3	2	W10T1010:V/T2	003.2	
W10Q1010:5	3	W10T1010:W/T3	003.2	
W10Q1010:⏚	GNYE	W10T1010:⏚	003.2	
W10J1010	SH	W10J1011	003.5	
W10W1012				
W10M1010:U	1	W10Q1010:2	003.4	
W10M1010:V	2	W10Q1010:4	003.4	
W10M1010:W	3	W10Q1010:6	003.4	
W10M1010:⏚	GNYE	W10Q1010	003.4	
W10J1012	SH	W10J1013	003.5	

From	Cable	To	Page.Col.	Option
W30W1010				
W30M1010:U A	BN	W30T1010:1 U	006.2	
W30M1010:V B	BK	W30T1010:2 V	006.2	
W30M1010:W C	BU	W30T1010:3 W	006.2	
W30M1010:GND	GNYE	W30T1010:4 GND	006.2	
W30J1020	SH	W30W1010:SH	006.3	
W30W1020				
W30M1020:U A	BN	W30T1020:1 U	007.2	
W30M1020:V B	BK	W30T1020:2 V	007.2	
W30M1020:W C	BU	W30T1020:3 W	007.2	
W30M1020:GND	GNYE	W30T1020:4 GND	007.2	
W30J1020	SH	W30W1020:SH	007.3	
W30W2010				
W30X2010:1	BK	W30M1010:A	006.3	
W30X2010:2	WHBK	W30M1010:B	006.3	
W30X2010:3	RD	W30M1010:C	006.3	
W30X2010:4	WHRD	W30M1010:D	006.3	
W30X2010:5	GN	W30M1010:E	006.3	
W30X2010:10	WHGN	W30M1010:F	006.3	
W30X2010:14	GY	W30M1010:K	006.3	
W30X2010:6	WHGY	W30M1010:L	006.3	
W30X2010:7	OG	W30M1010:N	006.3	
W30X2010:11	WHOG	W30M1010:R	006.3	
	BU			
	WHBU			
W30X2010:0	SH	W30J2010	006.6	
W30W2012				
W30X2012:4	BN	W30B2012	006.8	
W30X2012:3	BU	W30B2012	006.8	
W30X2012:5	BK	W30B2012	006.8	

Drawing remarks

Tetra Pak

Designer: FEK	Date: 2010-06-14	Machine: Straw Applicator 30-0300 TB/TBA/TPA/TCA/TWA	
ECM No: 452936	Denomination: CABLE CONNECTION LIST	Page Type: CABLE CONNECTION LIST	
Company: Tetra Pak (Sweden)	Document No.: 3036156-0007	Doc. type: ELD	Version: AE / Page: 006

RELEASED

This drawing must not without the consent of Tetra Pak be copied, transmitted or disclosed to any third party.

Cable Connection List of 3036156-0003

From	Cable	To	Page.Col.	Option
	W30W2014			
W30X2012:14	BK	W30W2016	006.8	
W30X2012:15	BU	W30W2016	006.8	
W30X2012:13	BN	W30W2016	006.8	
	WH			
	GY			
W30J2014	SH	W30J2015	006.9	
W30X2012:17	BK	W30W2016	006.8	
	W30W2016			
W30X2014	A	W30B2016	006.7	
W30X2014	B	W30B2014	006.7	
	W30W2018			
A03K2012:Tx	1	W30T1010:Rx	017.3	
	W30W2020			
W30X2020:1	BK	W30M1020:A	007.3	
W30X2020:2	WHBK	W30M1020:B	007.3	
W30X2020:3	RD	W30M1020:C	007.3	
W30X2020:4	WHRD	W30M1020:D	007.3	
W30X2020:5	GN	W30M1020:E	007.3	
W30X2020:10	WHGN	W30M1020:F	007.3	
W30X2020:14	GY	W30M1020:K	007.3	
W30X2020:6	WHGY	W30M1020:L	007.3	
W30X2020:7	OG	W30M1020:N	007.3	
W30X2020:11	WHOG	W30M1020:R	007.3	
	BU			
	WHBU			
W30J2020	SH	W30W2020:SH	007.4	
	W30W2022			
W30X2022:4	BN	W30B2022	007.8	
W30X2022:3	BU	W30B2022	007.8	
W30X2022:6	BK	W30B2022	007.8	
	W30W2024			
W30T1010:Tx	1	W30T1020:Rx	017.4	
	W30W2026			
A03K2012:Rx	1	W30T1020:Tx	017.4	
	W40W1010			
W40Q1010:1	1	W40T1010:U/T1	003.7	
W40Q1010:3	2	W40T1010:V/T2	003.7	
W40Q1010:5	3	W40T1010:W/T3	003.7	
W40Q1010:⏚	GNYE	W40T1010:⏚	003.7	
W40J1010	SH	W40J1011	003.10	
	W40W1012			
W40M1010:U	1	W40Q1010:2	003.9	
W40M1010:V	2	W40Q1010:4	003.9	
W40M1010:W	3	W40Q1010:6	003.9	
W40M1010:⏚	GNYE	W40Q1010	003.9	
W10J1012	SH	W10J1013	003.10	
	W40W1020			
W40M1020:U	1	W40T1020:U/T1	005.2	
W40M1020:V	2	W40T1020:V/T2	005.2	
W40M1020:W	3	W40T1020:W/T3	005.2	
W40M1020:⏚	GNYE	W40T1020:⏚	005.2	
W40J1020	SH	W40J1021	005.4	
	W40W1030			
W40F1032:1	1	W40T1030:U/T1	004.2	
W40F1032:3	2	W40T1030:V/T2	004.2	

Drawing remarks	Designer FEK	Date 2010-06-14	Machine Straw Applicator 30-0300 TB/TBA/TPA/TCA/TWA	
	ECM No 452936	Denomination CABLE CONNECTION LIST	Page Type CABLE CONNECTION LIST	
	Company Tetra Pak (Sweden)	Document No. 3036156-0007	Doc. type ELD	Version AE	Page 007

RELEASED

This drawing must not without the consent of Tetra Pak be copied, transmitted or disclosed to any third party.

1 2 3 4 5 6 7 8 9 10

Cable Connection List of 3036156-0003

From	Cable	To	Page.Col.	Option
	W40W1030			
W40F1032:5	3	W40T1030:W/T3	004.2	
W40X1032:1	GNYE	W40T1030:⏚	004.2	
W40J1030	SH	W40W1030	004.5	
	W40W1032			
W40M1032:U1	1	W40F1032:2	004.6	
W40M1032:V1	2	W40F1032:4	004.6	
W40M1032:W1	3	W40F1032:6	004.6	
W40M1032:⏚	GNYE	W40X1032:1	004.6	
W40J1021	SH	W40J1020	004.5	
	W40W1034			
W40M1034:U1	1	W40F1034:2	004.8	
W40M1034:W1	2	W40F1034:4	004.8	
W40M1034:V1	3	W40F1034:6	004.8	
W40M1034:⏚	GNYE	W40X1034:1	004.9	
W40J1035	SH	W40J1035	004.8	
	W90W1010			
W90Q1010:5	1	W90T1010:W/T3	005.7	
W90Q1010:3	2	W90T1010:V/T2	005.7	
W90Q1010:1	3	W90T1010:U/T1	005.7	
W90Q1010:⏚	GNYE	W90T1010:⏚	005.7	
W90J1010	SH	W90J1011	005.10	
	W90W1012			
W90M1010:U	1	W90Q1010:2	005.9	
W90M1010:V	2	W90Q1010:4	005.9	
W90M1010:W	3	W90Q1010:6	005.9	
W90M1010:⏚	GNYE	W90Q1010	005.9	
W90J1012	SH	W90J1013	005.10	

From	Cable	To	Page.Col.	Option

Drawing remarks

Tetra Pak

Designer: FEK	Date: 2010-06-14	Machine: Straw Applicator 30-0300 TB/TBA/TPA/TCA/TWA	
ECM No: 452936	Denomination: CABLE CONNECTION LIST	Page Type: CABLE CONNECTION LIST	
Company: Tetra Pak (Sweden)	Document No.: 3036156-0007	Doc. type: ELD	Version: AE / Page: 008

8.2 Optional Equipment

8.2.1 Bent Foil Treater

Document number 3040262-0007

This page intentionally left blank

RELEASED

This drawing must not without the consent of Tetra Pak be copied, transmitted or disclosed to any third party.

Cable Connection List of 3040262-0003

From	Cable	To	Page.Col.	Option
	A50W2050			
A01X2000:1	1	A50P2050:1	004.7	
A01X2000:2	2	A50P2050:2	004.7	
A01X2000:3	3	A50P2050:0	004.9	
A01X2000:E1	GNYE	A50P2050:E	004.9	
	V50W1017			
V50X1015:1	1	A01Q0001:1	001.2	
V50X1015:2	2	A01Q0001:N	001.2	
V50X1015:CHASSIE	GNYE	A01Q0001:	001.2	
	V50W1020			
A01X1000:E3	GNYE	V50E1020:⏚	002.9	
	V50W1021			
A01X1000:3	BK	V50E1020:U1	002.7	
A01X1000:4	BR	V50E1020:U2	002.8	
A01X1000:5	BU	V50E1020:Z	002.8	
	V50W1030			
A01X1000:1	1	V50E1030:1	003.8	
A01X1000:2	2	V50E1030:2	003.9	
	V50W1032			
A01X1000:1	1	V50E1032:1	003.8	
A01X1000:2	2	V50E1032:2	003.9	
	V50W2010			
V50X2010:-	RD	V50K1010:14	002.5	
V50X2010:+	YE	V50K1010:15	002.5	

From	Cable	To	Page.Col.	Option

Drawing remarks

Tetra Pak

Designer THN	Date 2009-11-27	Machine Bent Foil Treater 0400	
ECM No 427807	Denomination CABLE CONNECTION LIST	Page Type CABLE CONNECTION LIST	
Company Tetra Pak (Sweden)	Document No. 3040262-0007	Doc. type ELD	Version AD	Page 001

8.2.2 Straw Detector 30

Document number 3036165-0007

RELEASED

© Tetra Pak. All rights reserved; any copying, transmittal or disclosure subject to Tetra Pak's written approval.

Cable Connection List of 3036165-0003

From	Cable	To	Page.Col.	Option
	A01W0020			
A01X0040:3	1	A01P0020:1	/003.07	
A01X0000:E5	PE	A01P0020:E	/003.08	
A01X0040:4	2	A01P0020:0	/003.08	
	A01W0130			
A01X0040:15	BN	A01B0130:24VDC	/005.04	
A01X0040:16	WH	A01B0130:IN0	/005.04	
A01X0040:17	YE	A01B0130:OUT0	/005.04	
A01X0040:18	GN	A01B0130:OUT1	/005.04	
	PK			
A01X0040:19	GY	A01B0130:IN1	/005.04	
A01X0040:21	BU	A01B0130:GND	/005.04	
	RD			
A01W0130:	SH	A01J0130:	/005.04	
	B01W0132			
A01X0040:23	BK	A01B0130:IN_1	/005.03	
A01X0040:24	BU	A01B0130:IN_2	/005.03	
A01X0040:25	BN	A01B0130:IN_1-	/005.03	
A01X0040:26	WH	A01B0130:IN_2-	/005.03	
	GY			
B01J0132:	SH	B01W0132:	/005.03	
A01X0040:27		B01W0132:	/005.03	
B01W0132:		A01B0130:GND	/005.03	
	B01W0135			
A01X0040:28	BK	B01B0135:001	/005.02	
	GY			
	LI			
	YE			
	WH			
	BN			

From	Cable	To	Page.Col.	Option
	OG			
A01X0040:29	PK	B01B0135:002	/005.02	
A01X0040:30	BU	B01B0135:003	/005.02	
	GN			
A01X0040:31	RD	B01B0135:004	/005.02	
B01W0135:	SH	B01J0135:	/005.02	
	B01W0136			
B01W1137:	A	B01B0136:	/005.07	
B01W1137:	B	B01B0137:	/005.07	
	B01W0137			
A01X0040:32	BN	B01B0137:	/005.07	
	WH			
A01X0040:33	BU	B01B0137:	/005.07	
A01X0040:34	BK	B01B0137:	/005.07	
	V01W0140			
A01X0040:1	1	V01K0140:1	/004.07	
A01X0040:2	2	V01K0140:2	/004.07	
A01X0000:E6	GNYE	V01K0140:⏚	/004.07	

Drawing remarks

Tetra Pak	Designer THN	Date 2009-06-26	Machine Straw Detector 30-0300		
	ECM No 417765	Denomination CABLE CONNECTION LIST	Page Type CABLE CONNECTION LIST		
Company Tetra Pak (Sweden)	Document No. 3036165-0007	Doc. type ELD	Version AC	Page 001	

This page intentionally left blank

9 Mains Connection

About the Mains Connection Chapter

The drawings that show the connection from the mains power to the electrical cabinet are included in this chapter.

9.1 Main Machine . . . . . 9 - 5

9.2 Optional Equipment . . . . . 9 - 9

9.2.1 Bent Foil Treater . . . . . 9 - 9

9.2.2 Straw Detector 30 . . . . . 9 - 12

This page intentionally left blank

9.1 Main Machine

Document number 3036156-0008

This page intentionally left blank

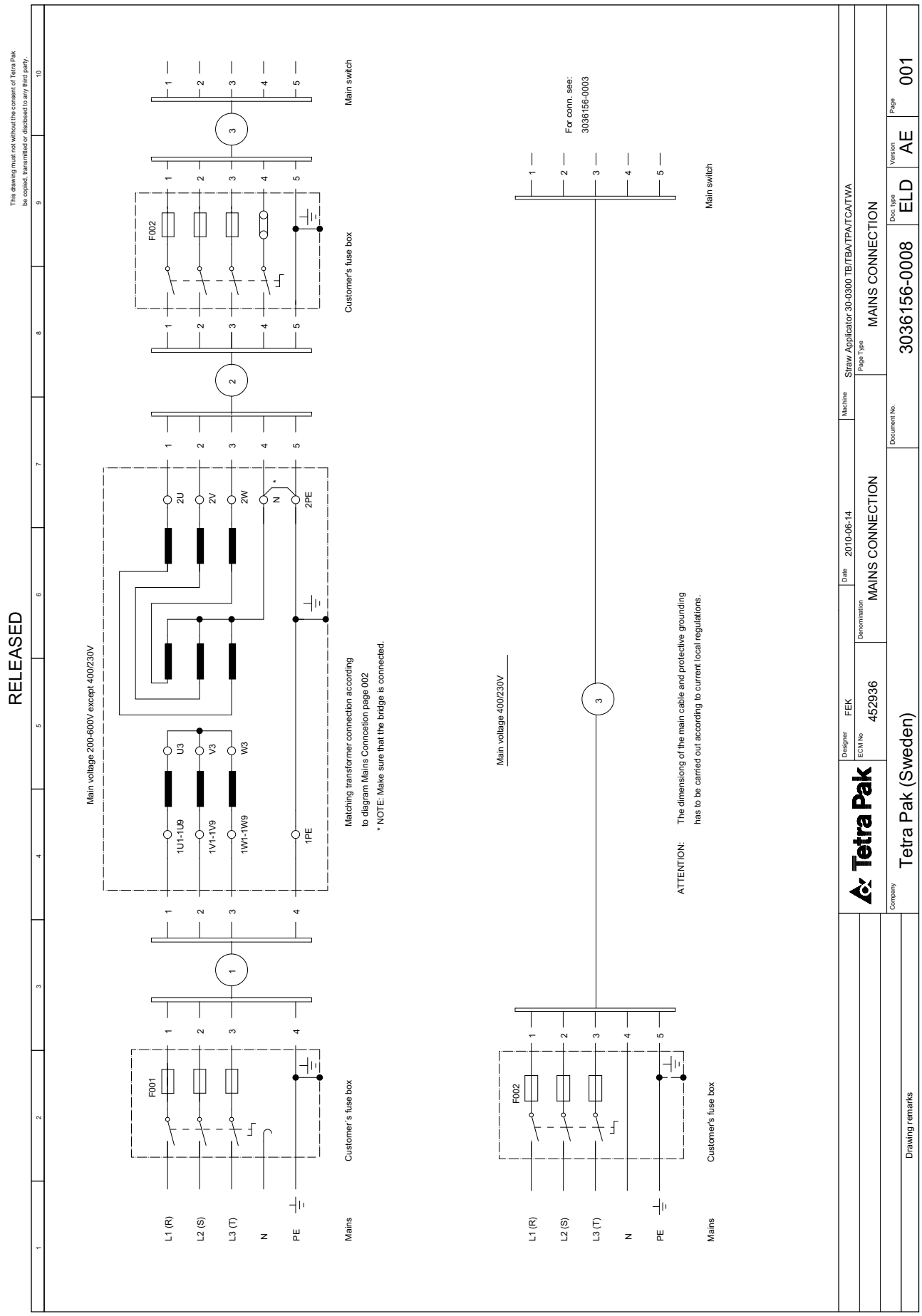
RELEASED
This drawing must not without the consent of Tetra Pak be copied, transmitted or disclosed to any third party.
Main voltage 200-600V except 400/230V
F001
F002
1U1-1U9
1V1-1V9
1W1-1W9
U3
V3
W3
2U
2V
2W
N
2PE
1PE
L1 (R)
L2 (S)
L3 (T)
N
PE
Mains
Customer´s fuse box
Customer's fuse box
Main switch
Matching transformer connection according to diagram Mains Conncetion page 002
* NOTE: Make sure that the bridge is connected.
Main voltage 400/230V
For conn. see: 3036156-0003
ATTENTION: The dimensiong of the main cable and protective grounding has to be carried out according to current local regulations.
Tetra Pak
Designer FEK
Date 2010-06-14
Machine Straw Applicator 30-0300 TB/TBA/TPA/TCA/TWA
EDM No 452936
Denomination MAINS CONNECTION
Page Type MAINS CONNECTION
Company Tetra Pak (Sweden)
Document No. 3036156-0008
Doc. type ELD
Version AE
Page 001
Drawing remarks

RELEASED

This drawing must not without the consent of Tetra Pak be copied, transmitted or disclosed to any third party.

1	2	3	4	5	6	7	8	9	10

MAIN VOLTAGE	FUSES (SLOW) F001	FUSES (SLOW) F002	AREA TO COPPER (CU) CABLE WITH No. 1	2	3	CONNECTIONS ON MATCHING TRANSFORMER MAINS	TAP	CONNECT
V	A	A	mm²	mm²	mm²			
600/347 3x600	35	16	3x4/4	3x6/6	3x2,5/2,5	L1 L2 L3 PE	1U9 1V9 1W9 ⏚	1U3 - U4 1V3 - V4 1W3 - W4
550/318 3x550	35	16	3x4/4	3x6/6	3x2,5/2,5	L1 L2 L3 PE	1U8 1V8 1W8 ⏚	1U3 - U4 1V3 - V4 1W3 - W4
500/289 3x500	35	16	3x4/4	3x6/6	3x2,5/2,5	L1 L2 L3 PE	1U7 1V7 1W7 ⏚	1U3 - U4 1V3 - V4 1W3 - W4
480/277 3x480	35	16	3x4/4	3x6/6	3x2,5/2,5	L1 L2 L3 PE	1U6 1V6 1W6 ⏚	1U3 - U4 1V3 - V4 1W3 - W4
440/254 3x440	50	16	3x6/6	3x6/6	3x2,5/2,5	L1 L2 L3 PE	1U5 1V5 1W5 ⏚	1U2 - U4 1V2 - V4 1W2 - W4
415/240 3x415	50	16	3x6/6	3x6/6	3x2,5/2,5	L1 L2 L3 PE	1U5 1V5 1W5 ⏚	1U1 - U4 1V1 - V4 1W1 - W4
3x400	50	16	3x6/6	3x6/6	3x2,5/2,5	L1 L2 L3 PE	1U4 1V4 1W4 ⏚	1U1 - U4 1V1 - V4 1W1 - W4
400/230					3x2,5/2,5			
380/220 3x380	50	16	3x6/6	3x6/6	3x2,5/2,5	L1 L2 L3 PE	1U9 1V9 1W9 ⏚	1U3 - 1U5 1V3 - 1V5 1W3 - 1W5
240/140 3x240	80	16	3x6/6	3x6/6	3x2,5/2,5	L1 L2 L3 PE	1U3 1V3 1W3 ⏚	U3 - U4 1U3-1U6 V3 - V4 1V3-1V6 W3 - W4 1W3-1W6
220/127 3x220	80	16	3x6/6	3x6/6	3x2,5/2,5	L1 L2 L3 PE	1U2 1V2 1W2 ⏚	U3 - U4 1U2-1U5 V3 - V4 1V2-1V5 W3 - W4 1W2-1W5
200/115 3x200	80	16	3x10/10	3x6/6	3x2,5/2,5	L1 L2 L3 PE	1U1 1V1 1W1 ⏚	U3 - U4 1U1-1U4 V3 - V4 1V1-1V4 W3 - W4 1W1-1W4

MATCHING TRANSFORMER

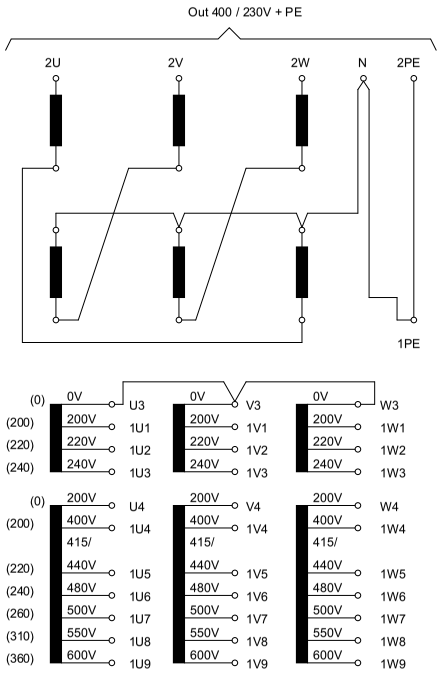

ATTENTION:

Cable areas are dimensioned according to Swedish regulations (ELSÄK-FS 1999:5 and SS4241424:6) 40 C ambient temp and cable on metal ladder with space between the cables.
National regulations have to be followed in each country.
Tetra Pak is not responsible for the dimensioning at installation.
Tetra Pak only provides recomendations.

	Tetra Pak	Designer FEK	Date 2010-06-14	Machine Straw Applicator 30-0300 TB/TBA/TPA/TCA/TWA		
		ECM No 452936	Denomination MAINS CONNECTION	Page Type MAINS CONNECTION		
Drawing remarks		Company Tetra Pak (Sweden)	Document No. 3036156-0008	Doc. type ELD	Version AE	Page 002

9.2 Optional Equipment

9.2.1 Bent Foil Treater

Document number 3040262-0008

This page intentionally left blank

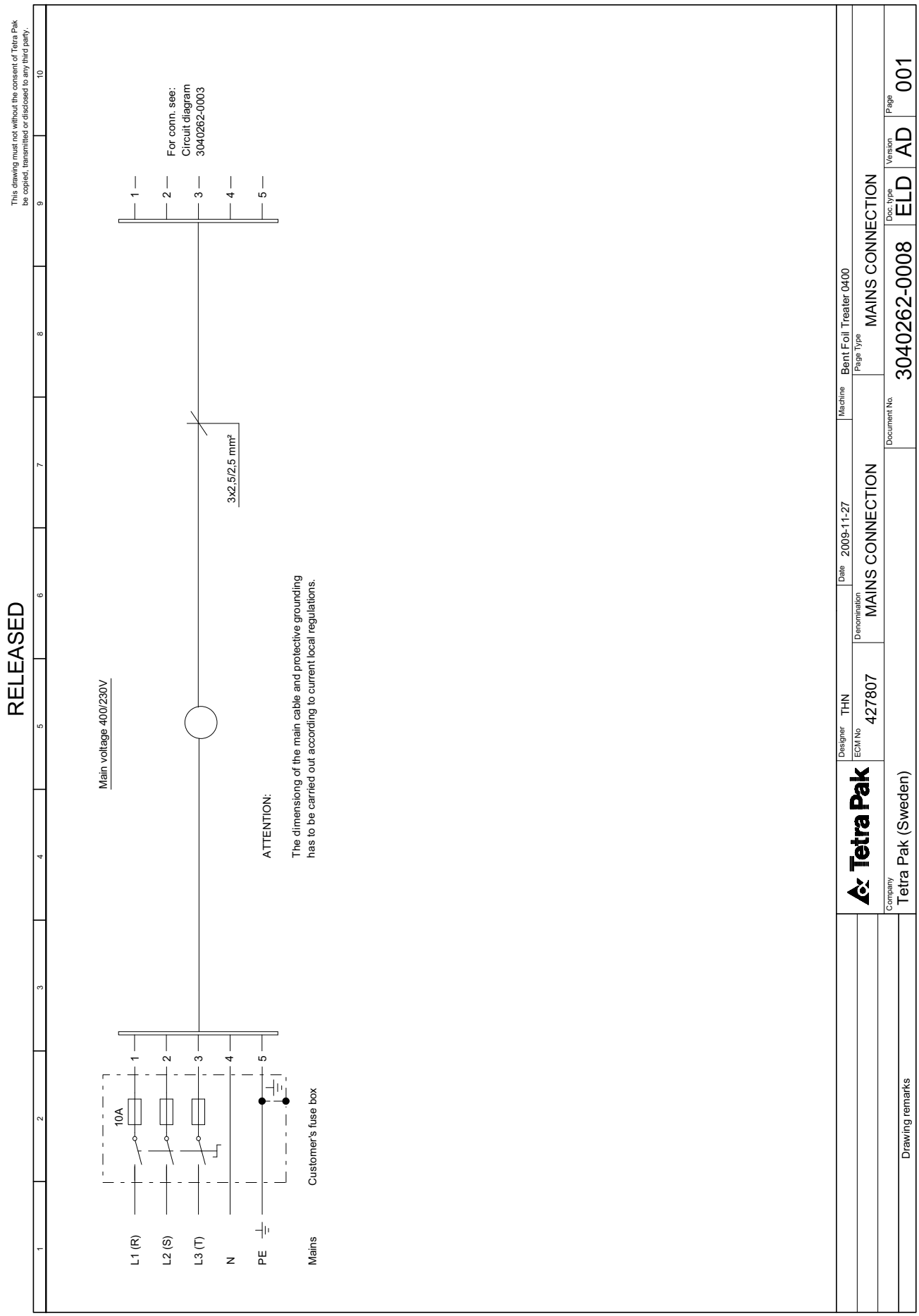
RELEASED
This drawing must not without the consent of Tetra Pak be copied, transmitted or disclosed to any third party.
Main voltage 400/230V
For conn. see: Circuit diagram 3040262-0003
3x2,5/2,5 mm²
ATTENTION:
The dimensiong of the main cable and protective grounding has to be carried out according to current local regulations.
10A
L1 (R)
L2 (S)
L3 (T)
N
PE
Mains
Customer's fuse box
Tetra Pak
Designer THN
Date 2009-11-27
Machine Bent Foil Treater 0400
ECM No 427807
Denomination MAINS CONNECTION
Page Type MAINS CONNECTION
Document No. 3040262-0008
Doc. type ELD
Version AD
Page 001
Company Tetra Pak (Sweden)
Drawing remarks

9.2.2 Straw Detector 30

Document number 3036165-0008

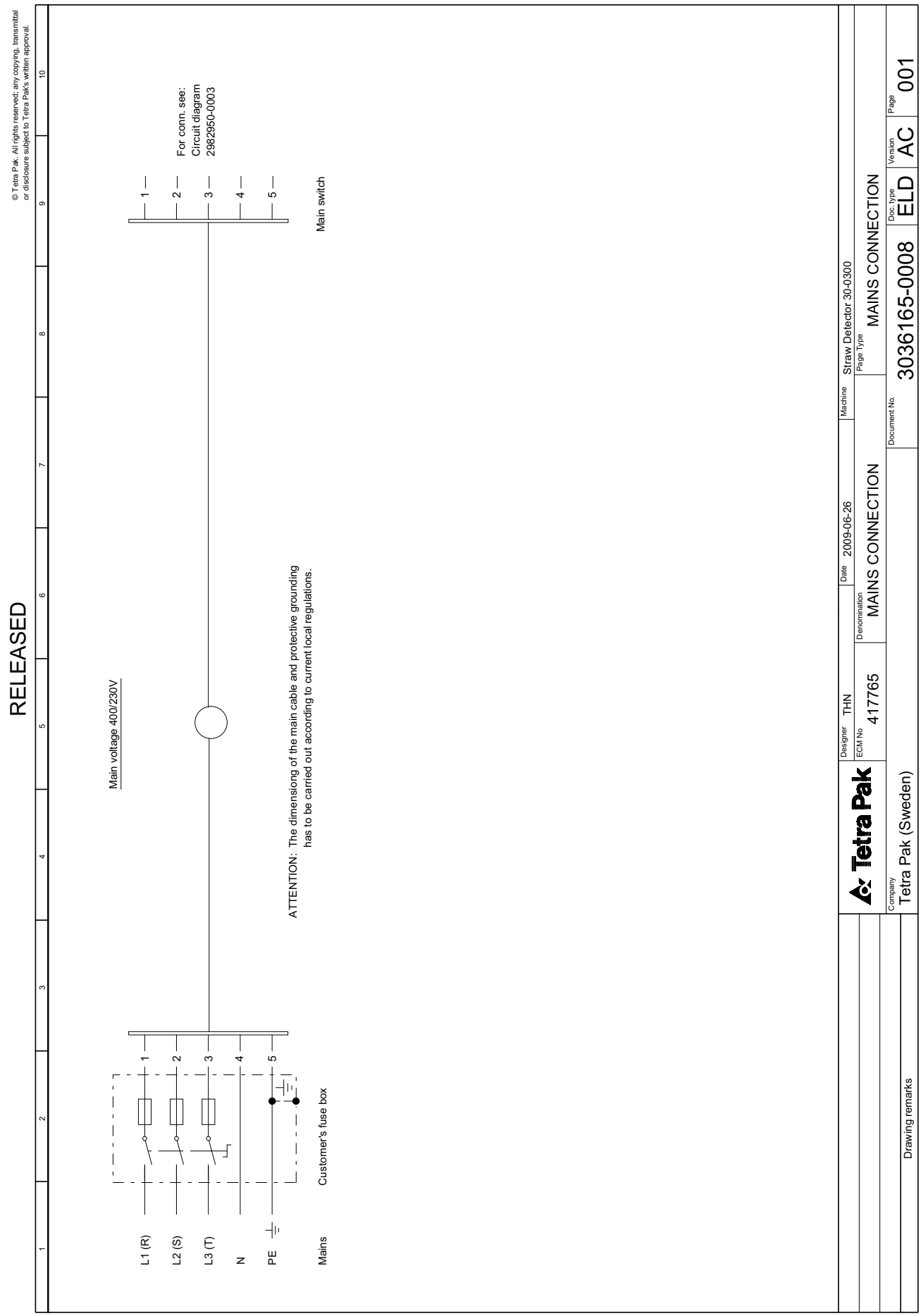
RELEASED
© Tetra Pak. All rights reserved; any copying, transmittal or disclosure subject to Tetra Pak's written approval.
Main voltage 400/230V
For conn. see: Circuit diagram 2982950-0003
Main switch
ATTENTION: The dimensiong of the main cable and protective grounding has to be carried out according to current local regulations.
L1 (R)
L2 (S)
L3 (T)
N
PE
Mains
Customer's fuse box
Tetra Pak
Designer THN
Date 2009-06-26
Machine Straw Detector 30-0300
ECM No 417765
Denomination MAINS CONNECTION
Page Type MAINS CONNECTION
Company Tetra Pak (Sweden)
Drawing remarks
Document No. 3036165-0008
Doc. type ELD
Version AC
Page 001

This page intentionally left blank

10 Drawing Remarks

About the Drawing Remarks Chapter

This chapter contains a list of the drawing remarks indicated with a number in the drawing.

10.1 Main Machine . . . . . 10 - 5

10.2 Optional Equipment . . . . . 10 - 7

10.2.1 Bent Foil Treater . . . . . 10 - 7

10.2.2 Straw Detector 30 . . . . . 10 - 7

This page intentionally left blank

10.1 Main Machine

Drawing No.	Note	Page	Remark
3036156	1	6, 7	The conductors in the ferrite shall pass the ferrite twice.
3036156	2	13	Only used when the machine is configured for SNP. See MM for connection.
3036156	3	35	Bridge A01X2098:1-2 if no machine is connected. The bridge can also be replaced by an external stop.
3036156	4	35	Bridge A01X2098: 5-6 if no line com. or no start conv. is connected.
3036156	5	8	Use internal wiring plug, (3+N+PE).
3036156	6	13	Used when the machine is configured for Line Controller or another Line communication.
3036156	7	11	Only used when the machine has a Straw detector attached.
3036156	8	18	Remove for line emergency stop.
3036156	9	3, 4, 5, 16, 19, 20, 21	Cable shield clamped to assembly plate.
3036156	10	20	Stand alone resistor or last in a Pluto network.
3036156	11	3, 4, 5, 6, 7	The conductors shall run straight through the ferrite.
3036156	12	6, 7	Cable shield clamped to servo drive.
3036156	13	9, 30	Only used when the machine is configured with Cooling unit.
3036156	14	9	Not used when the machine is configured with Cooling unit.
3036156	15	13, 35	Reference destination only for TCA.
3036156	16	12, 14, 15	Only used when the machine is configured for TBA22.
3036156	17	3, 4, 5	Prefabricated wire jumper, mounted at delivery.
3036156	18	21	EMC grounding connected to the chassie for the valve and the machine frame.
3036156	19	3, 5	Disconnect the conductors before delivery if the unit is placed outside the machine frame.
3036156	20	4, 5, 25, 26, 31	Only for TBA.

(Cont'd)

(Cont'd)

Drawing No.	Note	Page	Remark
3036156	21	11, 26, 30, 31	Only for TCA and TWA.
3036156	22	11	See connection in manual for Straw detector.
3036156	23	3, 4, 5	See page 016.
3036156	24	13, 33, 35	See connection in manual for Filling machine or another DE machine.
3036156	25	23, 24, 25	Only used as Optional equipment.
3036156	26	16	White conductor shall be connected on the left side on the plug.
3036156	27	16	Brown conductor shall be connected on the top of the plugs.
3036156	28	5, 16	Only for TCA.
3036156	29	6, 7, 29	Not used conductors must be insulated.
3036156	30	6, 7	The cable shield must be clamped in the connector.
3036156	31	11	See manual for Package Control Unit, PCU, which includes Package Oriental Control Unit, POCU and Package Distance Control Unit, PDCU
3036156	32	22	Mounted with distance to next unit.
3036156	33	26	The fibre-optic wire must be mounted with a hose.
3036156	34	3, 5	The motor is placed outside the machine.
3036156	35	3	If the motor is placed in the machine, disconnector is not necessary.
3036156	36	2	See manual for installation. Terminal, marked PE is intended for main protective conductor. Terminal, marked E2, is intended for an additional protective bonding conductor due to high earth leak currents. Terminal, marked E3, is intended for a supplementary bonding to the building´s equipotential net.
3036156	37	6	EMC grounding through the bracket.
3036156	38	18	External equipment
3036156	39	5, 16	Only for TWA.

10.2 Optional Equipment

10.2.1 Bent Foil Treater

Drawing No.	Note	Page	Remark
3040262	1	2	Connect a separate Green-Yellow mono conductor for earth protection. Use a shrinkable hose for this mono conductor and the fixed motor mono conductors to protect the conductors all the way through the cable gland.
3040262	2	3	Heat sink shall be grounded according to Siemens installation instructions. Obs! both side of mounting plate for solid state relay.
3040262	3	1	Delivered with connection plug. If there is no corresponding unit installed in the straw applicator, the connection plug removes.
3040262	4	1	See installation instruction in TEM manual.

10.2.2 Straw Detector 30

Drawing No.	Note	Page	Remark
3036165	1	5	Cable shield clamped to assembly plate.
3036165	2	2	Use bus connector between the Power supplies.
3036165	3	1	See installation instruction in manual, TeM.

This page intentionally left blank

11 Other Information

About the Other Information Chapter

This chapter contains a list of the engineering change description.

11.1 Engineering Change Description . . . . . 11 - 5

11.1.1 Main Machine . . . . . 11 - 5

11.1.2 Optional Equipment . . . . . 11 - 7

11.1.2.1 Bent Foil Treater . . . . . 11 - 7

11.1.2.2 Straw Detector 30 . . . . . 11 - 7

This page intentionally left blank

11.1 Engineering Change Description

11.1.1 Main Machine

ECM No.	Drawing No.	Alteration
399388	3036156	Released dev. Step – 0300 version AA
413435	3036156	Update version AB. • New servocablage and connector for feedback. • Updated connections to F09K2010 (Pluto B46) 1L, 4L and reference designation. • Updated shield connection for cable F09W2010. • Updated Line Summary. • Updated reference designation for indication lamps (pushbuttons) to match mechanical drawings.
420663	3036156	Update version AC. • New Input module (A03K2022) and there for changed reference designation on next modules (to A03K2024, A03K2026, A03K2028 and A03K2030). • New connection for relay E01K1013 for Air Condition. • Changed Drawing Remark for V90B2140.
427806	3036156	Update version AD. • Updated earth connection for W30W2010 and W30W2020 • New connection for relay E01K1013 for Air Condition. • Updated Line Communication.

(Cont'd)

(Cont'd)

ECM No.	Drawing No.	Alteration
452936	3036156	Update version AE. • Converting to drawing tool P8 • Updated for Wedge. • New terminals for Package Control Unit (POCU and PDCU) and new input and outputsignal. • Changed connection for Reject Gate. • Other freq for TWA. • Redrawing the SM2 connection for freq.

11.1.2 Optional Equipment

11.1.2.1 Bent Foil Treater

ECM No.	Drawing No.	Alteration
267755	2980288	New release of step -0300 based on eldoc 2738776:AB
399388	3040262	New release of step -0400, Following NMD
413436	3040262	Update Drawings delete info according fuse data
417765	3040262	New PDMLink upload. Corrected from concept.
427807	3040262	Updated ref des, A08E2010 and A08E2020.

11.1.2.2 Straw Detector 30

ECM No.	Drawing No.	Alteration
	2982950	Development step 0200, changes from step 0100: Redraw trap aero function, width measurement photocells and air pressure guard (yellow alarm fault indication). New design of cabinet fan.
	3036165	SD30 Development step 0300, changes from step 0200. Machine directive e.g Lamp test, Green lamp, added machine deviation
	3036165	Update Drawings delete info according fuse data.
	3036165	New PDMLink upload. Corrected from concept.
436101	3036165	Drawing Remark has been updated

This page intentionally left blank

12 Program Documents

About the Other Information Chapter

This chapter contains information about where to find the program documents.

12.1 Program Documents . . . . . 12 - 5
12.1.1 Main Machine . . . . . 12 - 5
12.1.2 Optional Equipment . . . . . 12 - 5
12.1.2.1 Bent Foil Treater . . . . . 12 - 5
12.1.2.2 Straw Detector 30 . . . . . 12 - 5

This page intentionally left blank

12.1 Program Documents

12.1.1 Main Machine

The list 3036157-0003 contains all software on the software CD.

12.1.2 Optional Equipment

12.1.2.1 Bent Foil Treater

The BFT does not have any program documents.

12.1.2.2 Straw Detector 30

The list 3036161-0001 contains all software on the software CD.

This page intentionally left blank


Tetra Pak

Note! *This page is generated* ***automatically****.*
using the ***variable definitions*** *made in the* ***front page*** *file!*

Straw Applicator 30 by Tetra Pak
663350-0300
Issue 2010-06 Doc. No. EM-3039537-0105

Straw Applicator 30 by Tetra Pak 1(2)
663350-0300
Issue 2010-06 Doc. No. EM-3039537-0105

Straw Applicator 30 by Tetra Pak
663350-0300
Issue 2010-06 Doc. No. EM-3039537-0105

Straw Applicator 30 by Tetra Pak 1(2)
663350-0300
Issue 2010-06 Doc. No. EM-3039537-0105

Straw Applicator 30 by Tetra Pak
663350-0300
Issue 2010-06 Doc. No. EM-3039537-0105

Straw Applicator 30 by Tetra Pak 1(2)
663350-0300
Issue 2010-06 Doc. No. EM-3039537-0105

Straw Applicator 30 by Tetra Pak
663350-0300
Issue 2010-06 Doc. No. EM-3039537-0105

Straw Applicator 30 by Tetra Pak 1(2)
663350-0300
Issue 2010-06 Doc. No. EM-3039537-0105

Straw Applicator 30 by Tetra Pak
663350-0300
Issue 2010-06 Doc. No. EM-3039537-0105

Straw Applicator 30 by Tetra Pak 2(2)
663350-0300
Issue 2010-06 Doc. No. EM-3039537-0105

Straw Applicator 30 by Tetra Pak
663350-0300
Issue 2010-06 Doc. No. EM-3039537-0105

Straw Applicator 30 by Tetra Pak 2(2)
663350-0300
Issue 2010-06 Doc. No. EM-3039537-0105

Straw Applicator 30 by Tetra Pak
663350-0300
Issue 2010-06 Doc. No. EM-3039537-0105

Straw Applicator 30 by Tetra Pak 2(2)
663350-0300
Issue 2010-06 Doc. No. EM-3039537-0105

Straw Applicator 30 by Tetra Pak
663350-0300
Issue 2010-06 Doc. No. EM-3039537-0105

Straw Applicator 30 by Tetra Pak 2(2)
663350-0300
Issue 2010-06 Doc. No. EM-3039537-0105

40 mm Full width ***Note!*** *This page is generated* ***automatically****.*
using the ***variable definitions*** *made in the* ***front page*** *file!*

Straw Applicator 30 by Tetra Pak
663350-0300

Issue 2010-06 Doc. No. EM-3039537-0105

Straw Applicator 30 by Tetra Pak 1(2)
663350-0300

Issue 2010-06 Doc. No. EM-3039537-0105

Straw Applicator 30 by Tetra Pak
663350-0300

Issue 2010-06 Doc. No. EM-3039537-0105

Straw Applicator 30 by Tetra Pak 1(2)
663350-0300

Issue 2010-06 Doc. No. EM-3039537-0105

Straw Applicator 30 by Tetra Pak
663350-0300

Issue 2010-06 Doc. No. EM-3039537-0105

Straw Applicator 30 by Tetra Pak 1(2)
663350-0300

Issue 2010-06 Doc. No. EM-3039537-0105

Straw Applicator 30 by Tetra Pak
663350-0300

Issue 2010-06 Doc. No. EM-3039537-0105

Straw Applicator 30 by Tetra Pak 2(2)
663350-0300

Issue 2010-06 Doc. No. EM-3039537-0105

Straw Applicator 30 by Tetra Pak
663350-0300

Issue 2010-06 Doc. No. EM-3039537-0105

Straw Applicator 30 by Tetra Pak 2(2)
663350-0300

Issue 2010-06 Doc. No. EM-3039537-0105

Straw Applicator 30 by Tetra Pak
663350-0300

Issue 2010-06 Doc. No. EM-3039537-0105

Straw Applicator 30 by Tetra Pak 2(2)
663350-0300

Issue 2010-06 Doc. No. EM-3039537-0105