IM

Installation Manual

Straw Applicator 30 by Tetra Pak

663350-0300

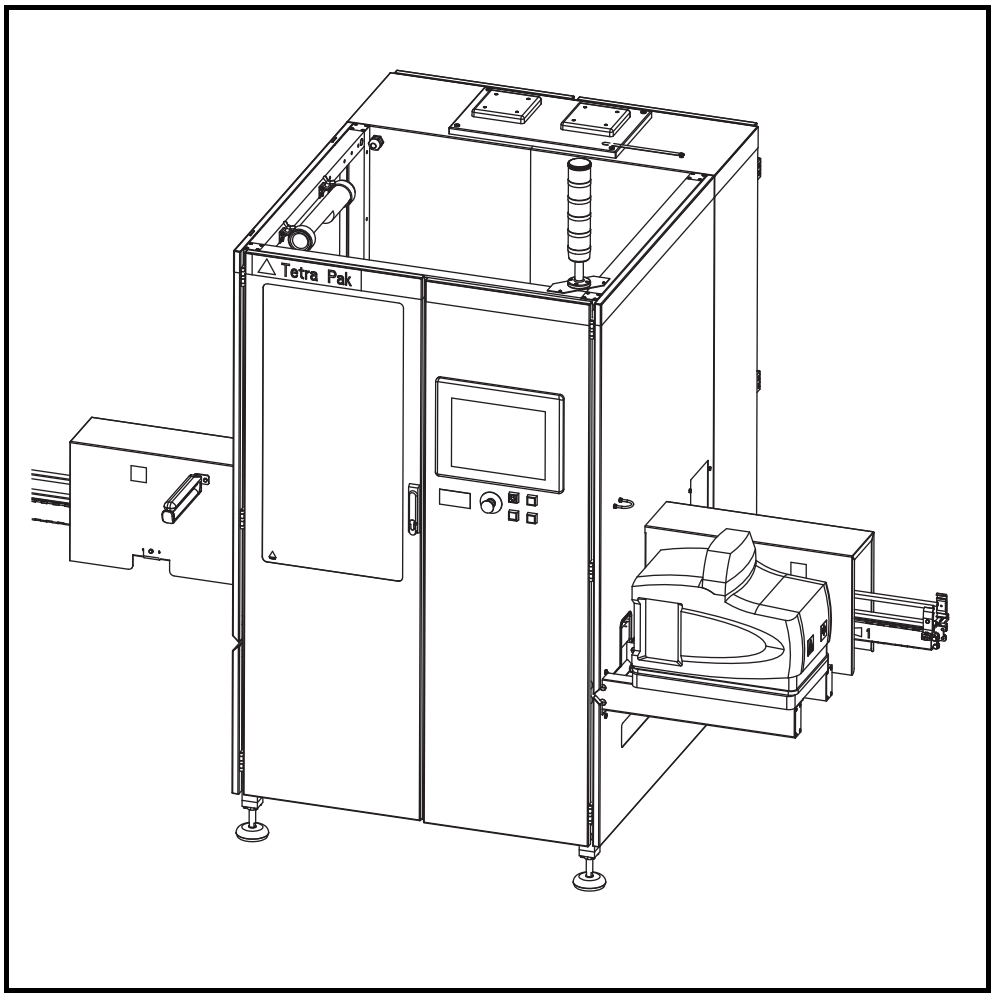

WARNING

Read and follow all safety precaution instructions throughout this manual and on safety signs attached to this equipment.

Failure to follow all safety precaution instructions could result in death or serious injury.

Tetra Pak

Doc. No. IM-3039536-0104

Copyright © 2010 Tetra Pak Group

All rights reserved. No part of this document may be reproduced or copied in any form or by any means without written permission from Tetra Pak Packaging Solutions AB.

Tetra Pak and all Tetra Pak products are trademarks belonging to the Tetra Pak Group.

The content of this manual is in accordance with the design and construction of the machine or equipment at the time of publishing. Tetra Pak reserves the right to introduce design modifications without prior notice.

The English language version of this document contains the original instructions. All other language versions are translations of the original instructions.

This document was produced by:

Tetra Pak Packaging Solutions AB
Ruben Rausings gata
SE-221 86 Lund
Sweden

Additional copies can be ordered from Tetra Pak. When ordering additional copies, always provide the document number.

Doc. No. IM-3039536-0104

Issue 2010-03

This manual is valid for:

Series No./ Machine No. Sign.

IM

Installation Manual

Straw Applicator 30 by Tetra Pak
663350-0300

i Introduction

ii Safety Precautions

1 Technical Specification

2 Preparatory Requirements

3 Mechanical Completion

4 Commissioning

5 Performance Validation

6 Disassembly and Removal

Machine or equipment configurations that this manual is valid for are described on the next page.

Doc. No. IM-3039536-0104

Issue 2010-03

Tetra Pak

Tetra Pak Packaging Solutions AB

Valid for:

Name	Drawing Specification and Development Step	Additional Information
Straw Applicator 30 by Tetra Pak	663350-0300	Package Shape: - Tetra Brik, TB - Tetra Brik Aseptic, TBA - Tetra Classic Aseptic, TCA - Tetra Prisma Aseptic, TPA - Tetra Wedge Aseptic, TWA

Mandatory Equipment:

Name	Drawing Specification and Development Step	Additional Information
Bent Foil Treater	2643050-0400	Mandatory for TB/TBA speed lines
Straw Detector 30	663550-0300	Mandatory for TB/TBA speed lines
Package Orientation Controller	2976909-0100	Mandatory for TCA lines
Rejecting Unit	3010247-0100	Mandatory for TCA/TWA lines

Optional Equipment:

Name	Drawing Specification and Development Step	Additional Information
Photocell Unit	2943553-0100	Valid for TB/TBA/TPA
Quick Change	3025775-0200	Valid for TB/TBA/TPA
Bent Foil Treater	2643050-0400	Valid for all machine variants
Straw Detector 30	663550-0300	Valid for TB/TBA
Cooling Unit	3039857-0100	Valid for all machine variants
Second Discharge Unit	3088860-0100	Valid for TB/TBA/TPA

Update Log for Doc. No. IM-3039536-0104

This table shows all changes made to this manual, including installed rebuilding kits, added or removed pages. Page numbering on added pages begins with UP.

Date	Installed Kit	Added Pages (Doc. No.)	Removed Pages	Signature

Date	Installed Kit	Added Pages (Doc. No.)	Removed Pages	Signature

i Introduction

About the Introduction Chapter

This chapter contains basic information about this manual and the related Tetra Pak equipment.

Abbreviations and Terminology . . . . . i - 5

Manual Information . . . . . i - 6

Delivered Manuals . . . . . i - 6

Page Layout . . . . . i - 7

Page Numbering. . . . . i - 8

Typographical Conventions . . . . . i - 8

Symbols . . . . . i - 8

Machine Introduction . . . . . i - 9

Intended Use of the Equipment . . . . . i - 9

Manufacturer . . . . . i - 9

Support and Feedback . . . . . i - 9

Declaration of Conformity . . . . . i - 9

Identification . . . . . i - 17

CE Classification . . . . . i - 17

Machine Plate . . . . . i - 17

Orientation . . . . . i - 19

Hygiene. . . . . i - 21

How to Use This IM . . . . . i - 22

Purpose of the IM . . . . . i - 22

Installation Workflow . . . . . i - 22

This page intentionally left blank

Abbreviations and Terminology

Abbreviation/ Terminology	Meaning	Translation
BFT	Bent Foil Treater	
CE	Communautés Européennes/European Communities	
DE	Distribution Equipment	
EM	Electrical Manual	
EMC	Electromagnetic Compatibility	
HMI	Human Machine Interface	
IM	Installation Manual	
LC	Line Controller	
MM	Maintenance Manual	
OM	Operation Manual	
PC23	Package Conveyor 23	
PLMS	Packaging Line Monitoring System	
POCU	Package Orientation Controller	
SA30	Straw Applicator 30	
SD	Straw Detector	
SPC	Spare Parts Catalogue	
TB	Tetra Brik	
TBA	Tetra Brik Aseptic	
TCA	Tetra Classic Aseptic	
TD	Turning Device	
TeM	Technical Manual	
TPA	Tetra Prisma Aseptic	
TPMS	Tetra Pak Maintenance System	
TWA	Tetra Wedge Aseptic	
UC24	Unit Conveyor 24	

Manual Information

Tetra Pak recommends reading all delivered manuals carefully. Make sure that the delivered manuals are available to personnel who operate or maintain the equipment.

It is important to keep this manual for the lifetime of the equipment and to pass the manual on to any subsequent holder or user.

Tetra Pak will not be held responsible for any damage to the equipment caused by not following the instructions given in this manual.

Delivered Manuals

Manuals delivered with this equipment:

- EM
  The Electrical Manual provides technicians with information about the equipment's electrical system.
- IM
  The Installation Manual provides technicians with information required to safely install the equipment.
- MM
  The Maintenance Manual provides technicians with information on maintaining the equipment.
- OM
  The Operation Manual manual provides the operator with information on handling and operating the equipment before, during, and after production.
- SPC
  The Spare Parts Catalogue provides the information necessary to order spare parts from Tetra Pak

Page Layout

Every main page in a manual contains a header and a footer. The page header contains the chapter name (1) and the section name (2). The page footer contains the page number (3), and the document number (4). See also the Page Numbering section.

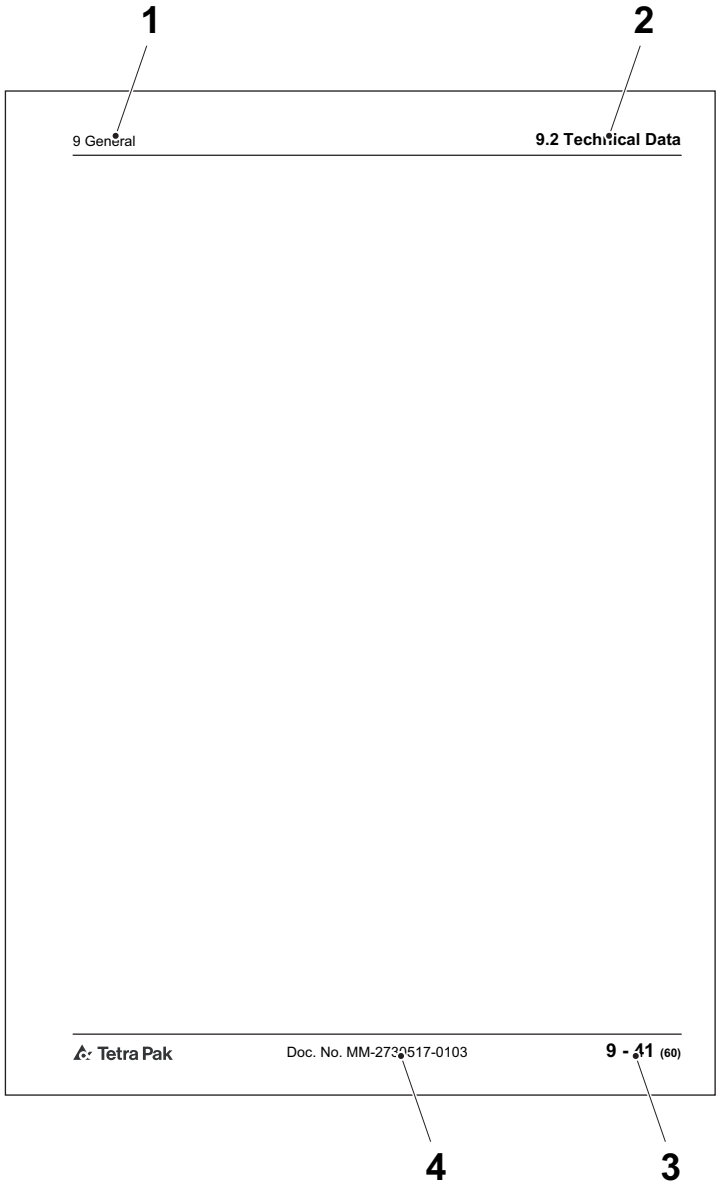

1 Chapter name
2 Section name
3 Page number
4 Document number

Page Numbering

A page number has three parts:

- chapter number (1)
- consecutive page number (2) within the chapter
- total number of pages (3) in the chapter.

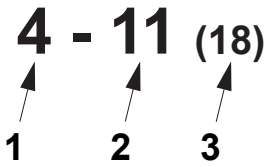

1 Chapter number
2 Consecutive page number
3 Total number of pages

Typographical Conventions

Controls on the operator panel, emergency stop devices, and program steps are printed in CAPITAL LETTERS.

Menu names, button names and other text displayed in software are printed in `Courier`.

Cross-references are underlined.

Symbols

Symbols used in illustrations.

	A pointer arrow indicates the position of an object.
	A zoom arrow indicates that an object view is enlarged. The arrow points towards the enlarged view of the object.
	A rotation movement arrow indicates rotational movement of an object. The arrow points in the direction of rotation.
	A straight movement arrow indicates movement of an object. The arrow points in the direction of movement.

Machine Introduction

Intended Use of the Equipment

The intended use of this Tetra Pak equipment is to attach drinking straws onto Tetra Brik packages (TB and TBA), Tetra Classic Aseptic packages (TCA), Tetra Prisma Aseptic packages (TPA), or Tetra Wedge Aseptic packages (TWA).

All other use is prohibited. Tetra Pak will not be held responsible for injury or damage if the equipment is used for any other purpose than the intended use described above.

Manufacturer

This Tetra Pak equipment has been manufactured by

Tetra Pak Packaging Solutions AB
Ruben Rausings gata
SE-221 86 Lund
Sweden

Support and Feedback

If you encounter problems when operating this equipment or have other inquiries, comments, or suggestions for improvement, contact Tetra Pak.

Declaration of Conformity

A copy of the Declaration of Conformity can be found below. The signed Declaration of Conformity is delivered separately with the equipment.

Tetra Pak

Declaration of Conformity

Tetra Pak Packaging Solution AB
Ruben Rausings Gata
SE-221 86 Lund
Sweden

declare that this machine/ equipment/ complex installation:

Straw Applicator 30 by Tetra Pak
663350-0300

is in conformity with the following harmonized standards:

EN ISO 12100-1:2003+A1:2009
EN ISO 12100-2:2003+A1:2009
EN ISO 13857:2008
EN ISO 13850:2008
EN 61000-6-2:2005
EN 61000-6-4:2007
EN 60204-1:2006 + A1:2009
EN 349:1993 + A1:2008
EN ISO 13849-1:2008
EN ISO 13732-1:2006

and is in conformity with the provisions of the Directive(s) - including amendments:

[X] 2006/42/EC Machinery

[X] 2004/108/EC Electromagnetic compatibility (EMC)

[X] 2006/95/EC Low Voltage

The following person is authorised to compile the technical file:

Mauro Ferretti
Tetra Pak Packaging Solutions S.p.A
Via Delfini 1
I-41100, Modena
Italy

Lund 2010-02-24

Robert Bertilsson
Manager Cardboard & Straw

English

Technical File CD-1620932 FORM 5293 version 2010-01-14

Tetra Pak

Konformitätserklärung

Tetra Pak Packaging Solution AB
Ruben Rausings Gata
SE-221 86 Lund
Sweden

erklärt hiermit, dass diese Maschine / Anlage / komplexe Einrichtung:

Straw Applicator 30 by Tetra Pak
663350-0300

konform ist mit den folgenden harmonisierten Standards:

EN ISO 12100-1:2003+A1:2009
EN ISO 12100-2:2003+A1:2009
EN ISO 13857:2008
EN ISO 13850:2008
EN 61000-6-2:2005
EN 61000-6-4:2007
EN 60204-1:2006 + A1:2009
EN 349:1993 + A1:2008
EN ISO 13849-1:2008
EN ISO 13732-1:2006

und übereinstimmt mit den Vorschriften der Richtlinien einschließlich deren Ergänzungen:

[x] 2006/42/EC Maschine
[x] 2004/108/EC Elektromagnetische Verträglichkeit (EMV)
[x] 2006/95/EC Niederspannung

Folgender Person ist es gestattet, die technischen Unterlagen zusammenzustellen:

Mauro Ferretti
Tetra Pak Packaging Solutions S.p.A
Via Delfini 1
I-41100, Modena
Italy

Lund 2010-02-24

Robert Bertilsson
Manager Cardboard & Straw

Deutsch/German
Technical File CD-1620932 FORM 5293 version 2010-01-14

Tetra Pak

Konformitetserklæring

Tetra Pak Packaging Solution AB
Ruben Rausings Gata
SE-221 86 Lund
Sweden

erklærer at dette maskineri/dette udstyr/ kompleks installation:

Straw Applicator 30 by Tetra Pak
663350-0300

holder følgende harmoniserede standarder:

EN ISO 12100-1:2003+A1:2009
EN ISO 12100-2:2003+A1:2009
EN ISO 13857:2008
EN ISO 13850:2008
EN 61000-6-2:2005
EN 61000-6-4:2007
EN 60204-1:2006 + A1:2009
EN 349:1993 + A1:2008
EN ISO 13849-1:2008
EN ISO 13732-1:2006

samt bestemmelserne iht. direktivet/direktiverne, inkl. ændringer:

[x] 2006/42/EC Maskineri
[x] 2004/108/EC Elektromagnetisk kompatibilitet
[x] 2006/95/EC Lav spænding

Følgende person er authoriseret til at udarbejde den tekniske fil:

Mauro Ferretti
Tetra Pak Packaging Solutions S.p.A
Via Delfini 1
I-41100, Modena
Italy

Lund 2010-02-24

Robert Bertilsson
Manager Cardboard & Straw

Dansk/Danish
Technical File CD-1620932 FORM 5293 version 2010-01-14

Tetra Pak

Declaración de Conformidad

Tetra Pak Packaging Solution AB
Ruben Rausings Gata
SE-221 86 Lund
Sweden

declaramos que esta máquina/equipo/instalación compleja:

Straw Applicator 30 by Tetra Pak
663350-0300

es conforme a los siguientes estándares armonizados:

EN ISO 12100-1:2003+A1:2009
EN ISO 12100-2:2003+A1:2009
EN ISO 13857:2008
EN ISO 13850:2008
EN 61000-6-2:2005
EN 61000-6-4:2007
EN 60204-1:2006 + A1:2009
EN 349:1993 + A1:2008
EN ISO 13849-1:2008
EN ISO 13732-1:2006

y cumple con lo que dicta(n) la(s) Directiva(s) - y sucesivas modificaciones:

[x] 2006/42/EC máquinas
[x] 2004/108/EC compatibilidad electromagnética
[x] 2006/95/EC equipo eléctrico diseñado para el uso dentro de ciertos límites de voltaje

La persona indicada a continuación está autorizada para compilar el archivo técnico:

Mauro Ferretti
Tetra Pak Packaging Solutions S.p.A
Via Delfini 1
I-41100, Modena
Italy

Lund 2010-02-24

Robert Bertilsson
Manager Cardboard & Straw

Español/Spanish
Technical File CD-1620932 FORM 5293 version 2010-01-14

Tetra Pak

Yhdenmukaistusvakuutus

Tetra Pak Packaging Solution AB
Ruben Rausings Gata
SE-221 86 Lund
Sweden

vakuuttaa, että allamainittu kone/koneen osa/laitteisto/kompleksi asennus:

Straw Applicator 30 by Tetra Pak
663350-0300

vastaa seuraavia harmonisoituja standardeja:

EN ISO 12100-1:2003+A1:2009
EN ISO 12100-2:2003+A1:2009
EN ISO 13857:2008
EN ISO 13850:2008
EN 61000-6-2:2005
EN 61000-6-4:2007
EN 60204-1:2006 + A1:2009
EN 349:1993 + A1:2008
EN ISO 13849-1:2008
EN ISO 13732-1:2006

sekä seuraavia direktiivejä ja niihin liittyviä muutoksia:

[x] 2006/42/EY Kone
[x] 2004/108/EY Sähkömagneettinen yhteensopivuus
[x] 2006/95/EY Pienjännite

Seuraava henkilö on valtuutettu täyttämään teknisen tiedoston:

Mauro Ferretti
Tetra Pak Packaging Solutions S.p.A
Via Delfini 1
I-41100, Modena
Italy

Lund 2010-02-24

Robert Bertilsson
Manager Cardboard & Straw

Suomi/Finnish
Technical File CD-1620932 FORM 5293 version 2010-01-14

Tetra Pak

Déclaration de Conformité

Tetra Pak Packaging Solution AB
Ruben Rausings Gata
SE-221 86 Lund
Sweden

déclare que la présente machine / l'équipement / l'installation complexe :

Straw Applicator 30 by Tetra Pak
663350-0300

est conforme aux normes harmonisées suivantes :

EN ISO 12100-1:2003+A1:2009
EN ISO 12100-2:2003+A1:2009
EN ISO 13857:2008
EN ISO 13850:2008
EN 61000-6-2:2005
EN 61000-6-4:2007
EN 60204-1:2006 + A1:2009
EN 349:1993 + A1:2008
EN ISO 13849-1:2008
EN ISO 13732-1:2006

et est conforme aux dispositions des directives suivantes (amendements compris) :

[x] 2006/42/EC Machine
[x] 2004/108/EC Compatibilité électromagnétique (EMC)
[x] 2006/95/EC Basse tension

La personne suivante est autorisée à élaborer le dossier technique :

Mauro Ferretti
Tetra Pak Packaging Solutions S.p.A
Via Delfini 1
I-41100, Modena
Italy

Lund 2010-02-24

Robert Bertilsson
Manager Cardboard & Straw

Français / French
Technical File CD-1620932 FORM 5293 version 2010-01-14

Tetra Pak

Δήλωση Συμμόρφωσης

Tetra Pak Packaging Solution AB
Ruben Rausings Gata
SE-221 86 Lund
Sweden

δηλώνει ότι η μηχανή / ο εξοπλισμός / σύνθετες εγκατάστασεις:

Straw Applicator 30 by Tetra Pak
663350-0300

είναι σε συμμόρφωση με τα ακόλουθα εναρμονισμένα πρότυπα:

EN ISO 12100-1:2003+A1:2009
EN ISO 12100-2:2003+A1:2009
EN ISO 13857:2008
EN ISO 13850:2008
EN 61000-6-2:2005
EN 61000-6-4:2007
EN 60204-1:2006 + A1:2009
EN 349:1993 + A1:2008
EN ISO 13849-1:2008
EN ISO 13732-1:2006

και είναι σε συμμόρφωση με τις διατάξεις της(των) Οδηγίας(ών) - συμπεριλαμβανόμενων των τροπολογιών:

[x] 2006/42/ΕΚ Μηχανημάτων
[x] 2004/108/ΕΚ Ηλεκτρομαγνητικής Συμβατότητας (EMC)
[x] 2006/95/ΕΚ Χαμηλής Τάσης

Το παρακάτω άτομο είναι εξουσιοδοτημένο να συντάξει τον τεχνικό φάκελο:

Mauro Ferretti
Tetra Pak Packaging Solutions S.p.A
Via Delfini 1
I-41100, Modena
Italy

Lund 2010-02-24

Robert Bertilsson
Manager Cardboard & Straw

Ελληνικά/Greek
Technical File CD-1620932 FORM 5293 version 2010-01-14

Tetra Pak

Verklaring van Overeenstemming

Tetra Pak Packaging Solution AB
Ruben Rausings Gata
SE-221 86 Lund
Sweden

verklaart dat deze machine/uitrusting/ complexe installatie:

Straw Applicator 30 by Tetra Pak
663350-0300

overeenstemt met de volgende geharmoniseerde normen:

EN ISO 12100-1:2003+A1:2009
EN ISO 12100-2:2003+A1:2009
EN ISO 13857:2008
EN ISO 13850:2008
EN 61000-6-2:2005
EN 61000-6-4:2007
EN 60204-1:2006 + A1:2009
EN 349:1993 + A1:2008
EN ISO 13849-1:2008
EN ISO 13732-1:2006

en overeenstemt met de bepalingen van de Richtlijn(en) - inclusief amendementen:

[x] 2006/42/EG Machine(s)
[x] 2004/108/ EG Elektromagnetische compatibiliteit (EMC)
[x] 2006/95/EG Laagspanning

De volgende persoon heeft toestemming om het technische dossier samen te stellen:

Mauro Ferretti
Tetra Pak Packaging Solutions S.p.A
Via Delfini 1
I-41100, Modena
Italy

Lund 2010-02-24

Robert Bertilsson
Manager Cardboard & Straw

Nederlands/Dutch
Technical File CD-1620932 FORM 5293 version 2010-01-14

Tetra Pak

Erklæring om samsvar

Tetra Pak Packaging Solution AB
Ruben Rausings Gata
SE-221 86 Lund
Sweden

erklærer at denne maskinen / dette utstyret / denne komplekse installasjonen:

Straw Applicator 30 by Tetra Pak
663350-0300

er i samsvar med følgende harmoniserte standarder:

EN ISO 12100-1:2003+A1:2009
EN ISO 12100-2:2003+A1:2009
EN ISO 13857:2008
EN ISO 13850:2008
EN 61000-6-2:2005
EN 61000-6-4:2007
EN 60204-1:2006 + A1:2009
EN 349:1993 + A1:2008
EN ISO 13849-1:2008
EN ISO 13732-1:2006

og er i samsvar med bestemmelsene i følgende direktiver med endringer:

[x] 2006/42/EF Maskiner
[x] 2004/108/EF Elektromagnetisk kompatibilitet (EMC)
[x] 2006/95/EF Lavspenning

Følgende person er autorisert til å kompilere den tekniske filen:

Mauro Ferretti
Tetra Pak Packaging Solutions S.p.A
Via Delfini 1
I-41100, Modena
Italy

Lund 2010-02-24

Robert Bertilsson
Manager Cardboard & Straw

Norsk/Norwegian
Technical File CD-1620932 FORM 5293 version 2010-01-14

Tetra Pak

Declaração de Conformidade

Tetra Pak Packaging Solution AB
Ruben Rausings Gata
SE-221 86 Lund
Sweden

declaramos que a máquina/ equipamento/ instalação complexa

Straw Applicator 30 by Tetra Pak
663350-0300

está em conformidade com as seguintes normas harmonizadas:

EN ISO 12100-1:2003+A1:2009
EN ISO 12100-2:2003+A1:2009
EN ISO 13857:2008
EN ISO 13850:2008
EN 61000-6-2:2005
EN 61000-6-4:2007
EN 60204-1:2006 + A1:2009
EN 349:1993 + A1:2008
EN ISO 13849-1:2008
EN ISO 13732-1:2006

e está em conformidade com as disposições da(s) Directiva(s) - inclusive as sucessivas modificações:

[x] 2006/42/CE Máquinas
[x] 2004/108/CE Compatibilidade electromagnética (CEM)
[x] 2006/95/CE Baixa Tensão

A pessoa abaixo está autorizada a compilar o ficheiro técnico:

Mauro Ferretti
Tetra Pak Packaging Solutions S.p.A
Via Delfini 1
I-41100, Modena
Italy

Lund 2010-02-24

Robert Bertilsson
Manager Cardboard & Straw

Português/Portuguese
Technical File CD-1620932 FORM 5293 version 2010-01-14

Tetra Pak

Samræmisyfirlýsing

Tetra Pak Packaging Solution AB
Ruben Rausings Gata
SE-221 86 Lund
Sweden

lýsa hér með yfir að viðkomandi vélbúnaður/búnaður/ uppsetning samstæðu:

Straw Applicator 30 by Tetra Pak
663350-0300

er í samræmi við eftirfarandi samræmda staðla:

EN ISO 12100-1:2003+A1:2009
EN ISO 12100-2:2003+A1:2009
EN ISO 13857:2008
EN ISO 13850:2008
EN 61000-6-2:2005
EN 61000-6-4:2007
EN 60204-1:2006 + A1:2009
EN 349:1993 + A1:2008
EN ISO 13849-1:2008
EN ISO 13732-1:2006

og í samræmi við ákvæði þessara tilskipana - að meðtöldum breytingum:

[x] 2006/42/EB Vélbúnaður
[x] 2004/108/EB Rafsegulsviðssamhæfi (EMC)
[x] 2006/95/EB Lágspenna

Eftirfarandi einstaklingur hefur heimild til að taka saman tækniskjalið:

Mauro Ferretti
Tetra Pak Packaging Solutions S.p.A
Via Delfini 1
I-41100, Modena
Italy

Lund 2010-02-24

Robert Bertilsson
Manager Cardboard & Straw

Íslenska/Icelandic
Technical File CD-1620932 FORM 5293 version 2010-01-14

Tetra Pak

Dichiarazione di Conformità

Tetra Pak Packaging Solution AB
Ruben Rausings Gata
SE-221 86 Lund
Sweden

dichiara che questa macchina/ apparecchiatura/ installazione complessa:

Straw Applicator 30 by Tetra Pak
663350-0300

è conforme alle seguenti norme armonizzate:

EN ISO 12100-1:2003+A1:2009
EN ISO 12100-2:2003+A1:2009
EN ISO 13857:2008
EN ISO 13850:2008
EN 61000-6-2:2005
EN 61000-6-4:2007
EN 60204-1:2006 + A1:2009
EN 349:1993 + A1:2008
EN ISO 13849-1:2008
EN ISO 13732-1:2006

ed in conformità con quanto disposto nelle Direttive - e relativi emendamenti:

[x] 2006/42/EC Macchinari
[x] 2004/108/EC Compatibilità elettromagnetica (EMC)
[x] 2006/95/EC Bassa tensione

La seguente persona è autorizzata a redigere il file tecnico:

Mauro Ferretti
Tetra Pak Packaging Solutions S.p.A
Via Delfini 1
I-41100, Modena
Italy

Lund 2010-02-24

Robert Bertilsson
Manager Cardboard & Straw

Italiano/Italian
Technical File CD-1620932 FORM 5293 version 2010-01-14

Tetra Pak

Försäkran om överensstämmelse

Tetra Pak Packaging Solution AB
Ruben Rausings Gata
SE-221 86 Lund
Sweden

försäkrar att denna maskin/utrustning/komplexa anläggning

Straw Applicator 30 by Tetra Pak
663350-0300

är i överensstämmelse med följande harmoniserade standarder:

EN ISO 12100-1:2003+A1:2009
EN ISO 12100-2:2003+A1:2009
EN ISO 13857:2008
EN ISO 13850:2008
EN 61000-6-2:2005
EN 61000-6-4:2007
EN 60204-1:2006 + A1:2009
EN 349:1993 + A1:2008
EN ISO 13849-1:2008
EN ISO 13732-1:2006

och överensstämmer med bestämmelserna i följande direktiv inklusive tillhörande ändringar:

[x] 2006/42/EG, maskiner
[x] 2004/108/EG, elektromagnetisk kompatibilitet (EMC)
[x] 2006/95/EG, lågspänning

Följande person är behörig att ställa samman den tekniska dokumentationen:

Mauro Ferretti
Tetra Pak Packaging Solutions S.p.A
Via Delfini 1
I-41100, Modena
Italy

Lund 2010-02-24

Robert Bertilsson
Manager Cardboard & Straw

Svenska/Swedish
Technical File CD-1620932 FORM 5293 version 2010-01-14

Tetra Pak

Prohlášení o shodě

Tetra Pak Packaging Solution AB
Ruben Rausings Gata
SE-221 86 Lund
Sweden

prohlašuje, že tento stroj/vybavení/komplexní instalace:

Straw Applicator 30 by Tetra Pak
663350-0300

je v souladu s následujícími sladěnými normami:

EN ISO 12100-1:2003+A1:2009
EN ISO 12100-2:2003+A1:2009
EN ISO 13857:2008
EN ISO 13850:2008
EN 61000-6-2:2005
EN 61000-6-4:2007
EN 60204-1:2006 + A1:2009
EN 349:1993 + A1:2008
EN ISO 13849-1:2008
EN ISO 13732-1:2006

a je v souladu s ustanoveními následujících směrnic
včetně jejich dodatků:

[x] 2006/42/EC Strojní zařízení
[x] 2004/108/EC Elektromagnetická kompatibilita
[x] 2006/95/EC Nízké napětí

Ke zpracování technických souborů je oprávněna následující osoba:

Mauro Ferretti
Tetra Pak Packaging Solutions S.p.A
Via Delfini 1
I-41100, Modena
Italy

Lund 2010-02-24

Robert Bertilsson
Manager Cardboard & Straw

Tetra Pak

Vastavuse Deklaratsioon

Tetra Pak Packaging Solution AB
Ruben Rausings Gata
SE-221 86 Lund
Sweden

deklareerib, et käesolev masin/seade/komplekspaigaldis

Straw Applicator 30 by Tetra Pak
663350-0300

vastab järgmistele harmoniseeritud standardite nõuetele:

EN ISO 12100-1:2003+A1:2009
EN ISO 12100-2:2003+A1:2009
EN ISO 13857:2008
EN ISO 13850:2008
EN 61000-6-2:2005
EN 61000-6-4:2007
EN 60204-1:2006 + A1:2009
EN 349:1993 + A1:2008
EN ISO 13849-1:2008
EN ISO 13732-1:2006

ja on vastavuses direktiivide sätetega
kaasa arvatud muudatused:

[x] 2006/42/EC Masinad
[x] 2004/108/EC Elektromagnetiline ühilduvus
[x] 2006/95/EC Madalpinge

Tehnilise faili koostamiseks on luba järgmisel isikul:

Mauro Ferretti
Tetra Pak Packaging Solutions S.p.A
Via Delfini 1
I-41100, Modena
Italy

Lund 2010-02-24

Robert Bertilsson
Manager Cardboard & Straw

Tetra Pak

Megfelelőségi Nyilatkozat

Tetra Pak Packaging Solution AB
Ruben Rausings Gata
SE-221 86 Lund
Sweden

nyilatkozom, hogy ez a gép/berendezés/komplex összeszerelés

Straw Applicator 30 by Tetra Pak
663350-0300

megfelel a következő harmonizált szabványoknak

EN ISO 12100-1:2003+A1:2009
EN ISO 12100-2:2003+A1:2009
EN ISO 13857:2008
EN ISO 13850:2008
EN 61000-6-2:2005
EN 61000-6-4:2007
EN 60204-1:2006 + A1:2009
EN 349:1993 + A1:2008
EN ISO 13849-1:2008
EN ISO 13732-1:2006

és megfelel a következő, módosításokat is magukban foglalc
Direktíváknak:

[x] 2006/42/EC Gépek
[x] 2004/108/EC Elektromágneses összeférhetőség (EMC)
[x] 2006/95/EC Alacsony feszültségi direktíva

A műszaki dokumentum összeállítására jogosult személy:

Mauro Ferretti
Tetra Pak Packaging Solutions S.p.A
Via Delfini 1
I-41100, Modena
Italy

Lund 2010-02-24

Robert Bertilsson
Manager Cardboard & Straw

Tetra Pak

Atbilstības deklarācija

Tetra Pak Packaging Solution AB
Ruben Rausings Gata
SE-221 86 Lund
Sweden

deklarējam to, ka šī mašīna/iekārta/sarežģīta instalācija:

Straw Applicator 30 by Tetra Pak
663350-0300

atbilst šādiem harmonizētajiem standartiem:

EN ISO 12100-1:2003+A1:2009
EN ISO 12100-2:2003+A1:2009
EN ISO 13857:2008
EN ISO 13850:2008
EN 61000-6-2:2005
EN 61000-6-4:2007
EN 60204-1:2006 + A1:2009
EN 349:1993 + A1:2008
EN ISO 13849-1:2008
EN ISO 13732-1:2006

un ir saskaņā ar direktīvas(u) prasībām,
ieskaitot direktīvas(u) labojumus:

[x] 2006/42/EK Mašīnas
[x] 2004/108/EK Elektromagnētiskā savietojamība
[x] 2006/95/EK Zemspriegums

Sastādīt tehnisko lietu ir pilnvarota šāda persona:

Mauro Ferretti
Tetra Pak Packaging Solutions S.p.A
Via Delfini 1
I-41100, Modena
Italy

Lund 2010-02-24

Robert Bertilsson
Manager Cardboard & Straw

Tetra Pak

Deklaracja Zgodności

Tetra Pak Packaging Solution AB
Ruben Rausings Gata
SE-221 86 Lund
Sweden

deklaruje, że niniejsza maszyna/wyposażenie,
instalacja kompleksowa:

Straw Applicator 30 by Tetra Pak
663350-0300

jest zgodna z następującymi normami zharmonizowanymi

EN ISO 12100-1:2003+A1:2009
EN ISO 12100-2:2003+A1:2009
EN ISO 13857:2008
EN ISO 13850:2008
EN 61000-6-2:2005
EN 61000-6-4:2007
EN 60204-1:2006 + A1:2009
EN 349:1993 + A1:2008
EN ISO 13849-1:2008
EN ISO 13732-1:2006

oraz jest zgodna z postanowieniami następujących Dyrektyw
wraz ze zmianami:

[x] 2006/42/WE Maszyny
[x] 2004/108/WE Kompatybilność elektromagnetyczna
[x] 2006/95/WE Niskonapięciowy sprzęt elektryczny

Następująca osoba jest upoważniona do opracowania pliku technicznego:

Mauro Ferretti
Tetra Pak Packaging Solutions S.p.A
Via Delfini 1
I-41100, Modena
Italy

Lund 2010-02-24

Robert Bertilsson
Manager Cardboard & Straw

Polski/Polish

Tetra Pak

Atitikties deklaracija

Tetra Pak Packaging Solution AB
Ruben Rausings Gata
SE-221 86 Lund
Sweden

pareiškia, kad šis mechanizmas/įrenginys/kompleksinė įranga

Straw Applicator 30 by Tetra Pak
663350-0300

atitinka šiuos darniuosius standartus:

EN ISO 12100-1:2003+A1:2009
EN ISO 12100-2:2003+A1:2009
EN ISO 13857:2008
EN ISO 13850:2008
EN 61000-6-2:2005
EN 61000-6-4:2007
EN 60204-1:2006 + A1:2009
EN 349:1993 + A1:2008
EN ISO 13849-1:2008
EN ISO 13732-1:2006

taip pat atitinka šių direktyvų nuostatas,
įskaitant jų pataisas:

[x] 2006/42/EB mašinų direktyva
[x] 2004/108/EB direktyva dėl elektromagnetinio suderinamumo
[x] 2006/95/EB žemųjų įtampų direktyva

Techninį failą sudaryti įgaliotas šis asmuo:

Mauro Ferretti
Tetra Pak Packaging Solutions S.p.A
Via Delfini 1
I-41100, Modena
Italy

Lund 2010-02-24

Robert Bertilsson
Manager Cardboard & Straw

Lietuvių k./Lithuanian

Tetra Pak

ДЕКЛАРАЦИЯ ЗА СЪОТВЕТСТВИЕ

Tetra Pak Packaging Solution AB
Ruben Rausings Gata
SE-221 86 Lund
Sweden

декларира, че тази машина/ оборудване/ сложна инсталация

Straw Applicator 30 by Tetra Pak
663350-0300

е в съответствие със следните хармонизационни стандарти:

EN ISO 12100-1:2003+A1:2009
EN ISO 12100-2:2003+A1:2009
EN ISO 13857:2008
EN ISO 13850:2008
EN 61000-6-2:2005
EN 61000-6-4:2007
EN 60204-1:2006 + A1:2009
EN 349:1993 + A1:2008
EN ISO 13849-1:2008
EN ISO 13732-1:2006

и е в съответствие с клаузите на Директивата(ите): ·
включително поправките:

[x] 2006/42/EC Машини
[x] 2004/108/EC Електромагнитна съвместимост (EMC)
[x] 2006/95/EC Нисък волтаж

Следното лице е оторизирано да попълни техническия файл:

Mauro Ferretti
Tetra Pak Packaging Solutions S.p.A
Via Delfini 1
I-41100, Modena
Italy

Lund 2010-02-24

Robert Bertilsson
Manager Cardboard & Straw

Български/ Bulgarian

Tetra Pak

Declarație de conformitate

Tetra Pak Packaging Solution AB
Ruben Rausings Gata
SE-221 86 Lund
Sweden

declară că această mașină/ echipament/ instalație complexă:

Straw Applicator 30 by Tetra Pak
663350-0300

este în conformitate cu următoarele standarde armonizate

EN ISO 12100-1:2003+A1:2009
EN ISO 12100-2:2003+A1:2009
EN ISO 13857:2008
EN ISO 13850:2008
EN 61000-6-2:2005
EN 61000-6-4:2007
EN 60204-1:2006 + A1:2009
EN 349:1993 + A1:2008
EN ISO 13849-1:2008
EN ISO 13732-1:2006

şi este în conformitate cu prevederile Directivelor -
inclusiv cu amendamentele:

[x] 2006/42/EC Utilaje
[x] 2004/108/EC Compatibilitate electromagnetică (EMC)
[x] 2006/95/EC Joasă tensiune

Următoarea persoană este autorizată să redacteze dosarul tehnic:

Mauro Ferretti
Tetra Pak Packaging Solutions S.p.A
Via Delfini 1
I-41100, Modena
Italy

Lund 2010-02-24

Robert Bertilsson
Manager Cardboard & Straw

Română/Romanian

Tetra Pak

Vyhlásenie o zhode

Tetra Pak Packaging Solution AB
Ruben Rausings Gata
SE-221 86 Lund
Sweden

vyhlasuje, že tento stroj/zariadenie/komplexná inštalácia:

Straw Applicator 30 by Tetra Pak
663350-0300

zodpovedá požiadavkám nasledujúcich harmonizovaných noriem:

EN ISO 12100-1:2003+A1:2009
EN ISO 12100-2:2003+A1:2009
EN ISO 13857:2008
EN ISO 13850:2008
EN 61000-6-2:2005
EN 61000-6-4:2007
EN 60204-1:2006 + A1:2009
EN 349:1993 + A1:2008
EN ISO 13849-1:2008
EN ISO 13732-1:2006

a je v zhode s ustanoveniami Smernice (Smernic) -
vrátane ich zmien a doplnkov:

[x] 2006/42/ES Strojárska
[x] 2004/108/ES Elektromagnetická kompatibilita (EMC)
[x] 2006/95/ES Nízkonapäťové zariadenia

Nasledujúca osoba je oprávnená zostavovať súbor technickej dokumentácie:

Mauro Ferretti
Tetra Pak Packaging Solutions S.p.A
Via Delfini 1
I-41100, Modena
Italy

Lund 2010-02-24

Robert Bertilsson
Manager Cardboard & Straw

Slovensky/Sloval

Technical File CD-1620932 FORM 5293 version 2010-01-14

Tetra Pak

Deklaracija o Skladnosti

Tetra Pak Packaging Solution AB
Ruben Rausings Gata
SE-221 86 Lund
Sweden

izjavljam, da je ta stroj/oprema/kompleksna namestitev:

Straw Applicator 30 by Tetra Pak
663350-0300

izdelan v skladu z naslednjimi standardi:

EN ISO 12100-1:2003+A1:2009
EN ISO 12100-2:2003+A1:2009
EN ISO 13857:2008
EN ISO 13850:2008
EN 61000-6-2:2005
EN 61000-6-4:2007
EN 60204-1:2006 + A1:2009
EN 349:1993 + A1:2008
EN ISO 13849-1:2008
EN ISO 13732-1:2006

in v skladu z direktivo (direktivami) - vključno z dopolnili

[x] 2006/42/EC Varnost strojev
[x] 2004/108/EC Elektromagnetna združljivost (EMC)
[x] 2006/95/EC Električna oprema, namenjena za uporabo v določenih napetostnih območjih

Oseba, ki je pooblaščena za sestavljanje tehnične datoteke:

Mauro Ferretti
Tetra Pak Packaging Solutions S.p.A
Via Delfini 1
I-41100, Modena
Italy

Lund 2010-02-24

Robert Bertilsson
Manager Cardboard & Straw

Slovenščina/Slovenian

Technical File CD-1620932 FORM 5293 version 2010-01-14

Identification

CE Classification

This equipment complies with the basic health and safety regulations of the European Economic Area (EEA).

Machine Plate

The illustration below shows an example of the machine plate and its location on the equipment. The machine plate carries data needed when contacting Tetra Pak concerning this specific equipment.

Make sure that the equipment data in the front pages of this manual corresponds to the machine plate data and the machine specification.

Main machine

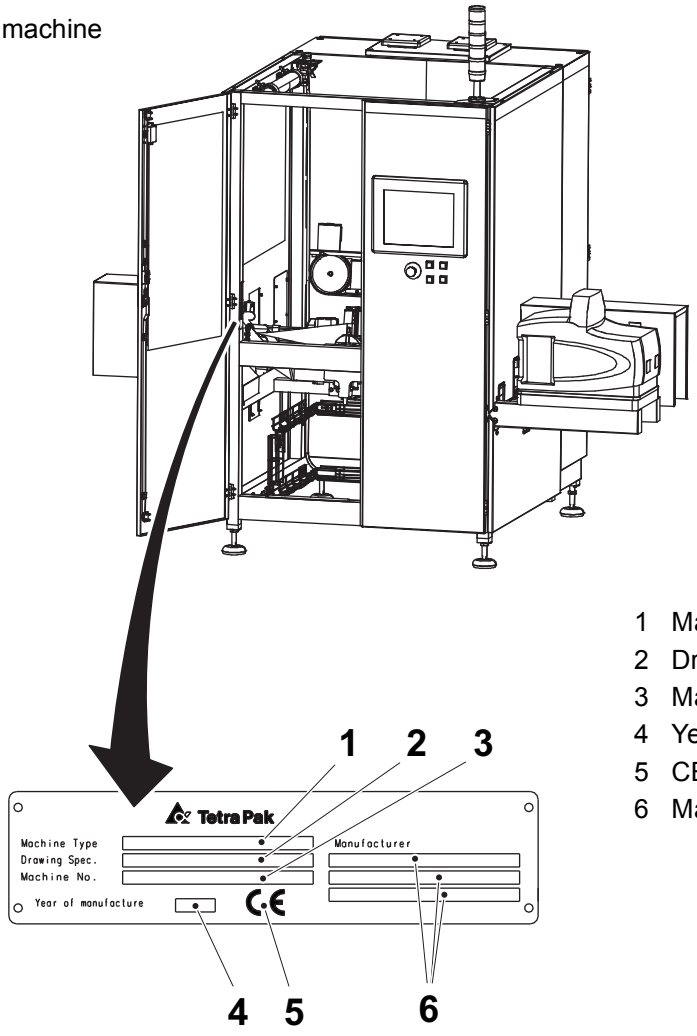

1 Machine type
2 Drawing specifications
3 Machine number
4 Year of manufacture
5 CE mark
6 Manufactured by

(Cont'd)

(Cont'd)

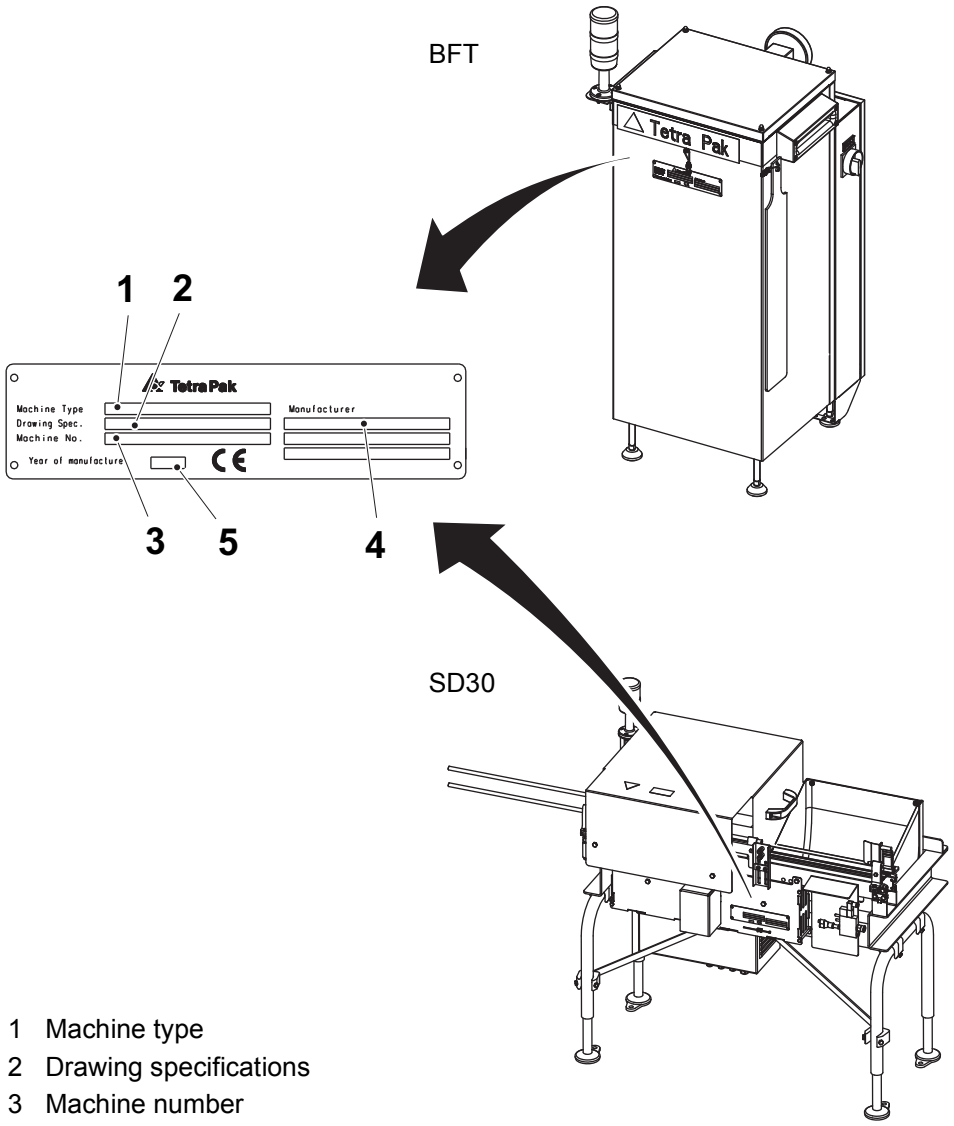

1 Machine type
2 Drawing specifications
3 Machine number
4 Manufacturer
5 Year of manufacture

Orientation

The illustration below shows the orientation of the equipment. This orientation information will be used throughout this manual. The arrows indicate the flow of material.

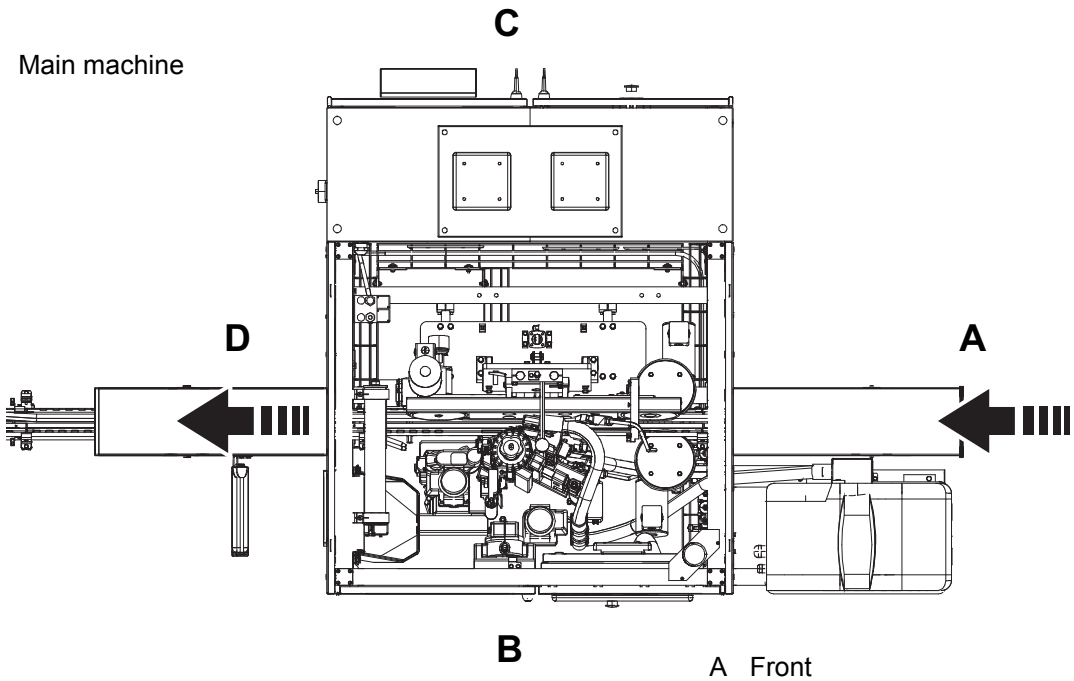

A Front
B Left-hand side
C Right-hand side
D Back

(Cont'd)

(Cont'd)

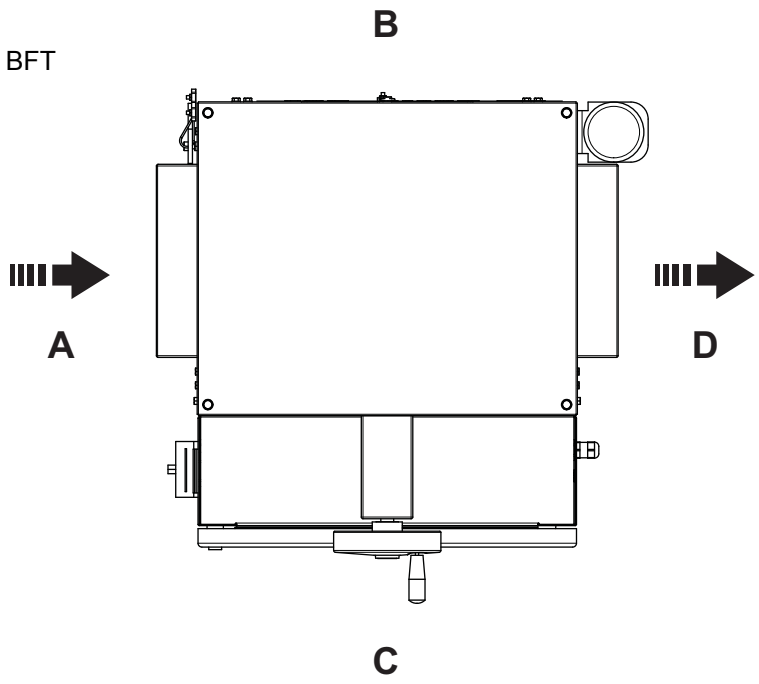

A Front
B Left-hand side
C Right-hand side
D Discharge

Note! The BFT can process the straw ladder band in either direction.

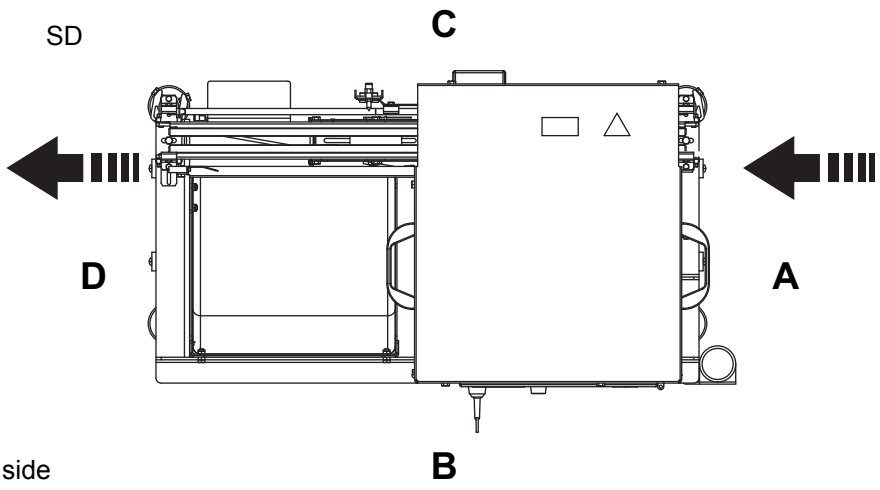

A Front
B Left-hand side
C Right-hand side
D Discharge

Hygiene

- Never clean the floors or the machine when the machine is in production.
- Keep your hands clean.
- Always wear some type of hair protection (cap or hairnet) and clean clothes (preferably white).
- Do not wear a watch, ring, necklace, earrings, or any other exposed jewellery.

How to Use This IM

Purpose of the IM

The IM provides technical specifications and preparatory information needed during the quotation of the equipment and during the entire installation process. The IM describes the equipment requirements in the packaging line. It also provides instructions on how to mechanically install, commission, and validate the performance of the equipment, and how to disassemble and remove the equipment.

The intended users of the IM are project leaders, installation planners, installation technicians, and other technicians involved in the equipment installation project.

Installation Workflow

An installation of any Tetra Pak equipment follows the Installation to Performance process. The process consists of five main activities and the IM is structured to support the process. See the illustration and the table below.

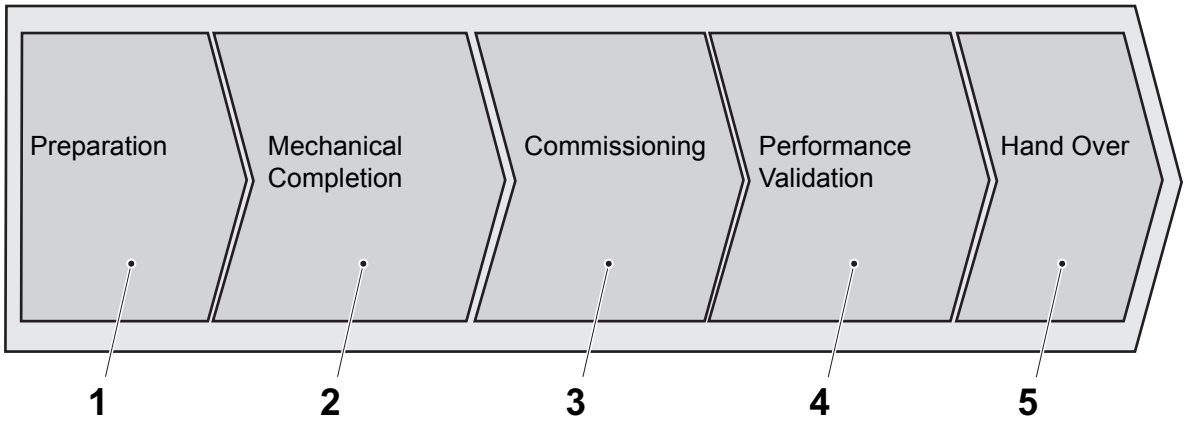

Pos.	Process Activity	End State	Related IM Chapters	Intended User
1	Preparation	Equipment at prepared site	Chapter 1 and 2	Installation planner/ Project leader
2	Mechanical Completion	Equipment mechanically installed	Chapter 3	Installation technician
3	Commissioning	Equipment commissioned and functionally validated	Chapter 4	Installation technician
4	Performance Validation	Equipment performance validated	Chapter 5	Project leader
5	Hand Over	Contract fulfilled	-	-

ii Safety Precautions

Description

Safety Precaution Instructions

WARNING

Read and understand this manual before using the machine.
Failure to follow safety precautions and instructions can result in death or serious injury.

Definition of Lockout Procedure

A lockout procedure is a procedure to put each necessary energy isolating device in its safe position to prevent the energisation of the equipment, such as when a maintenance procedure should be carried out.

A lockout is the use of a device, for example, a padlock, to make sure that an energy isolating device cannot be operated.

An energy isolating device is a mechanical device that physically prevents transmission or release of energy, such as a power supply disconnector.

Safety Messages Description . . . . . ii - 5
Personnel Requirements . . . . . ii - 6
Skilled Person . . . . . ii - 6
Instructed Person. . . . . ii - 6
Safety Signs . . . . . ii - 7
Locations of Safety Signs, TB/TBA/TPA . . . . . ii - 11
Locations of Safety Signs, TCA . . . . . ii - 12
Locations of Safety Signs, TWA. . . . . ii - 13
Locations of Safety Signs, Optional Equipment. ii - 14
Protective Devices. . . . . ii - 15
Emergency Stop. . . . . ii - 15
Emergency Stop Buttons . . . . . ii - 16
Safeguards . . . . . ii - 17
Warning Lamp . . . . . ii - 19
Audible Alarm. . . . . ii - 19
Protective Covers. . . . . ii - 20
Safe Manual Handling . . . . . ii - 21
Personal Protection. . . . . ii - 22
Noise . . . . . ii - 22
Entanglement . . . . . ii - 22
Supply Systems. . . . . ii - 23
Power Supply . . . . . ii - 23
Residual Voltage . . . . . ii - 26
Electrical Cabinet. . . . . ii - 26
Socket Outlet . . . . . ii - 28
Air Supply . . . . . ii - 29

This page intentionally left blank

Safety Messages Description

A safety message is always accompanied by a safety alert symbol and a signal word.

The safety alert symbol is used to alert about potential personal injury hazards. To avoid hazards, obey all safety messages that follow this symbol.

The following safety alert symbols and signal words are used in this manual to inform the user of hazards.

DANGER	Danger indicates an imminently hazardous situation which, if not avoided, **will** result in **death or serious injury**.
WARNING	Warning indicates a potentially hazardous situation which, if not avoided, **could** result in **death or serious injury**.
CAUTION	Caution indicates a potentially hazardous situation which, if not avoided, **may** result in **minor or moderate injury.** It may also be used to alert against unsafe practices.
CAUTION	Caution without the safety alert symbol indicates a potentially hazardous situation which, if not avoided, **may** result in **property damage**.

Personnel Requirements

Note! Personnel includes all persons working on or near this equipment.

Only skilled or instructed persons are allowed to work with this equipment.

Skilled Person

A skilled person must have relevant education and experience to enable him or her to identify hazards, analyse risks, and avoid hazards which electricity, machinery, chemicals, other energies, and supply systems on this equipment can create.

Skilled persons must meet local regulations, such as certifications and qualifications for working with these energies and systems.

Instructed Person

An instructed person must be adequately advised or supervised by a skilled person. The skilled person enables the instructed person to identify hazards, analyse risks, and avoid hazards which electricity, machinery, chemicals, other energies, and supply systems on this equipment can create.

Safety Signs

WARNING

Damaged or missing safety signs.
Safety signs are used to indicate safety hazards.
If the signs are missing or damaged, they can not fulfil this function. Replace all missing or damaged safety signs immediately.

Safety signs are attached to the equipment. The table below lists all the signs that are used, and illustrations show their locations on the equipment. Each position number refers to two standards of a safety sign in the table, but only one is used on the equipment.

- Make sure that each safety sign is legible and in its correct position after installation and maintenance.
- Replace all missing or damaged safety signs immediately.

Pos.	ISO standard	ANSI standard
1		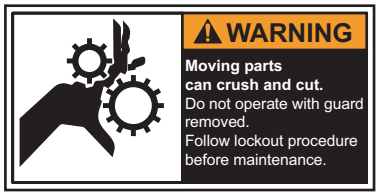
	Moving parts can crush and cut. Do not operate with guard removed. Follow lockout procedure before maintenance.	
2		
	Moving part can crush and cut. Do not operate with guard removed. Follow lockout procedure before maintenance.	
3		
	Moving part can crush and cut. Do not put hands into the machine. Follow lockout procedure before maintenance.	

Pos.	ISO standard	ANSI standard
4		
	Hazardous voltage. Will shock, burn, or cause death. Follow lockout procedure before maintenance.	
5		
	Hazardous residual voltage on capacitors. Will shock, burn or cause death. Do not touch until safe. Follow instructions for safe work practices.	
6		
	Laser Radiation. Do not stare into beam. Class 2 laser product.	
7		
	Risk of equipment damage. Do not let water into this area.	
8		
	Hot surface. Do not touch. Follow lockout procedure before maintenance.	

Pos.	ISO standard	ANSI standard
9		
	Equipment starts automatically. May cause injury. Stay clear from equipment.	
10		
	Do not reach in. Moving parts may cause injury Follow instructions for safe work practice.	
11		
	To prevent serious injury: Do not operate this machine unless all doors are closed and guards are in place and operating. Read manual before first operating machine. If manual is missing, contact Tetra Pak.	
12	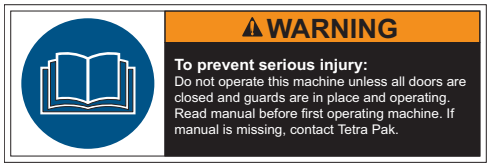	
	To prevent serious injury: Do not operate this machine unless all doors are closed and guards are in place and operating. Read manual before first operating machine. If manual is missing, contact Tetra Pak.	
13		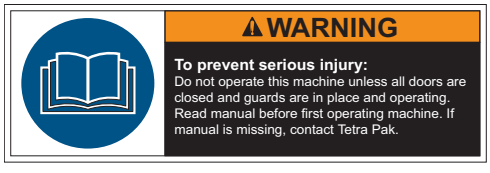
	To prevent serious injury: Do not operate this machine unless all doors are closed and guards are in place and operating. Read manual before first operating machine. If manual is missing, contact Tetra Pak.	

Pos.	ISO standard	ANSI standard
14		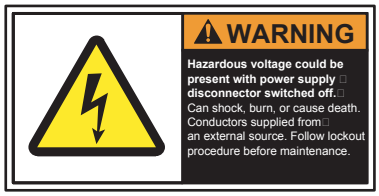
	Hazardous voltage could be present with power supply disconnector switched off. Can shock, burn or cause death. Conductors supplied from an external source. Follow lockout procedure before maintenance.	
15		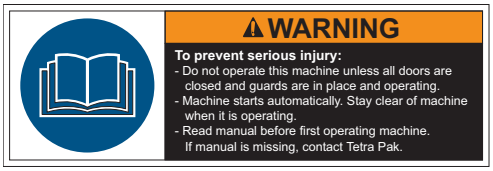
	To prevent serious injury: - Do not operate this machine unless all doors are closed and guards are in place and operating. - Machine starts automatically. Stay clear of machine when it is operating. - Read manual before first operating machine. If manual is missing, contact Tetra Pak.	

Locations of Safety Signs, TB/TBA/TPA

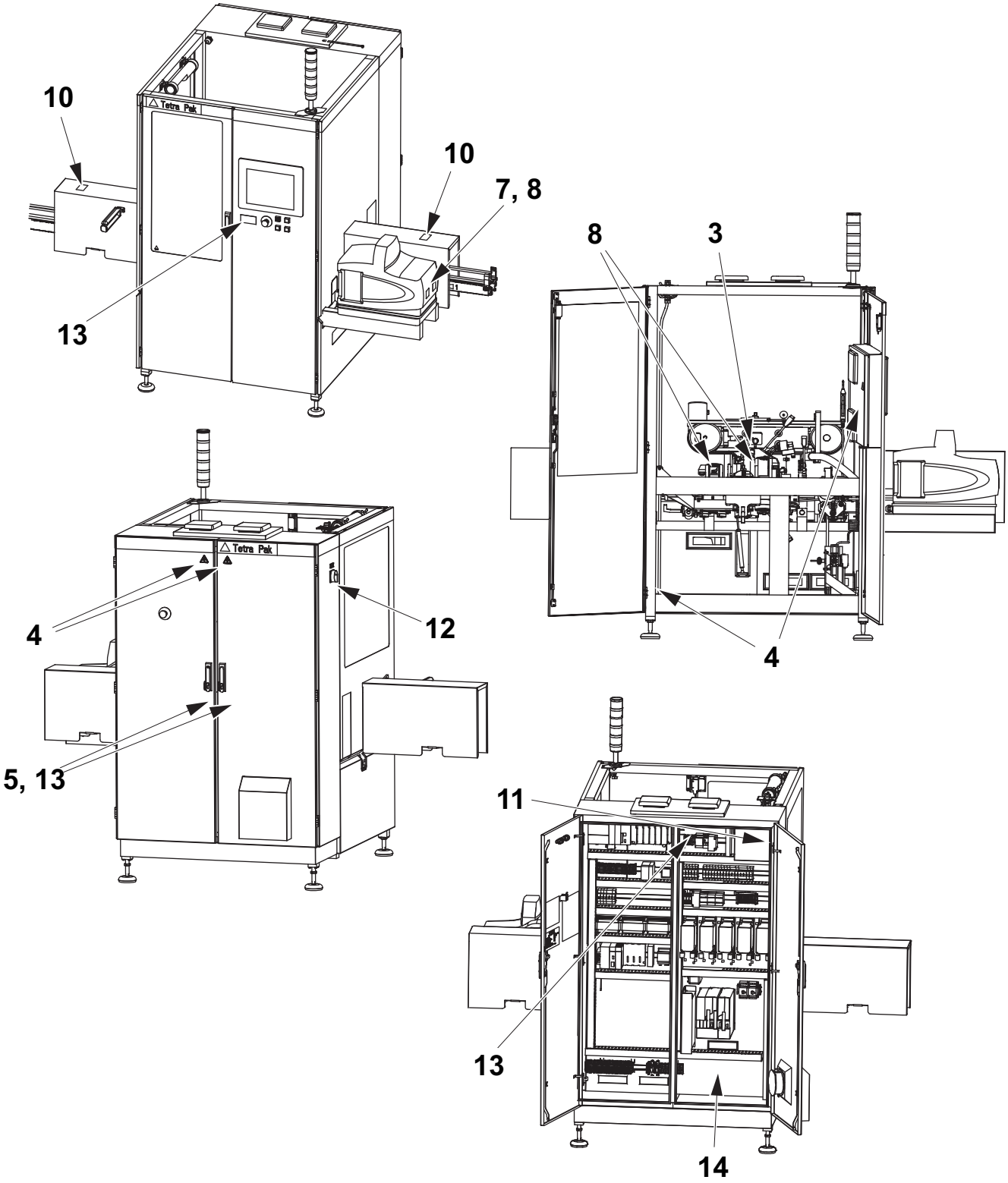

Locations of Safety Signs, TCA

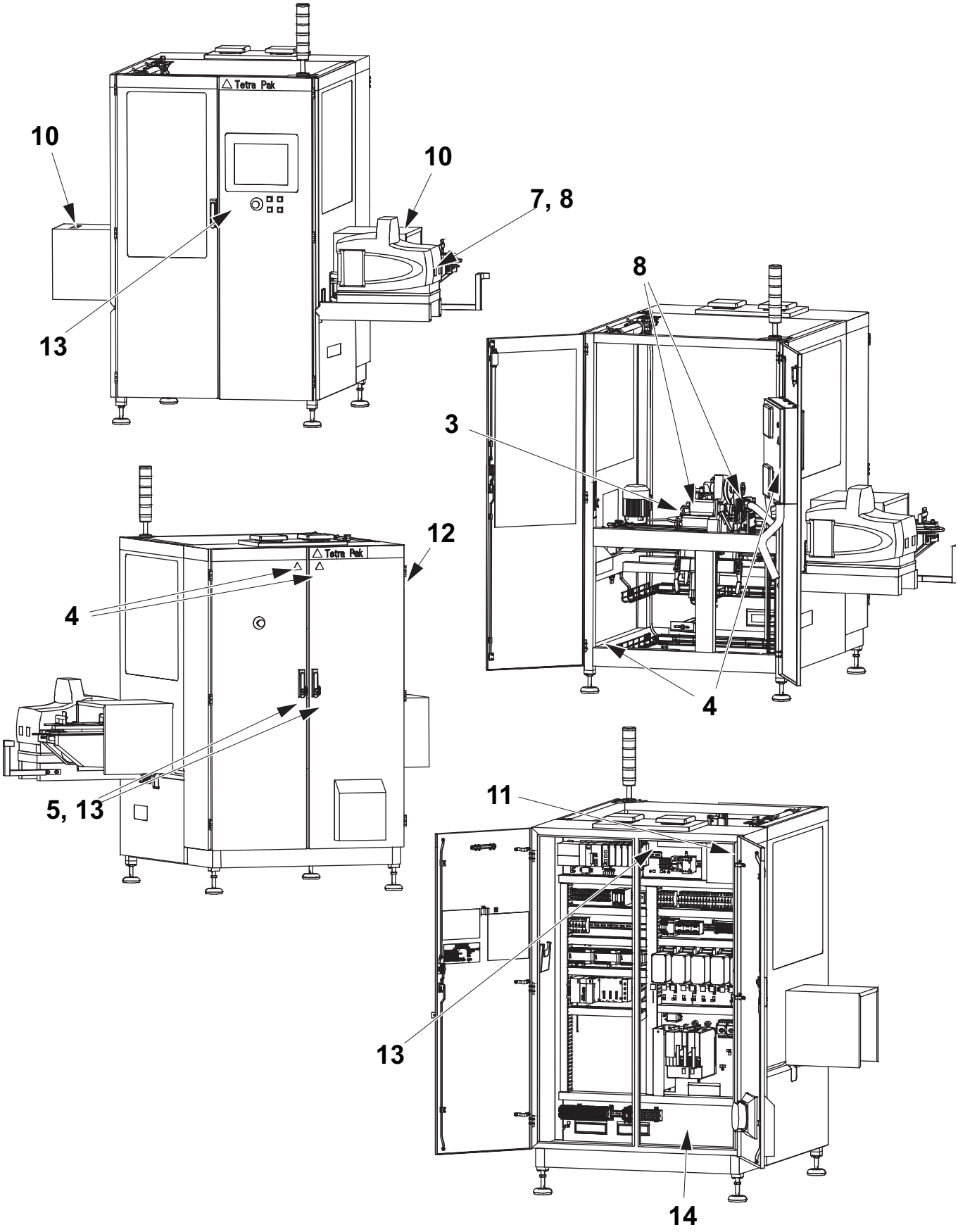

Locations of Safety Signs, TWA

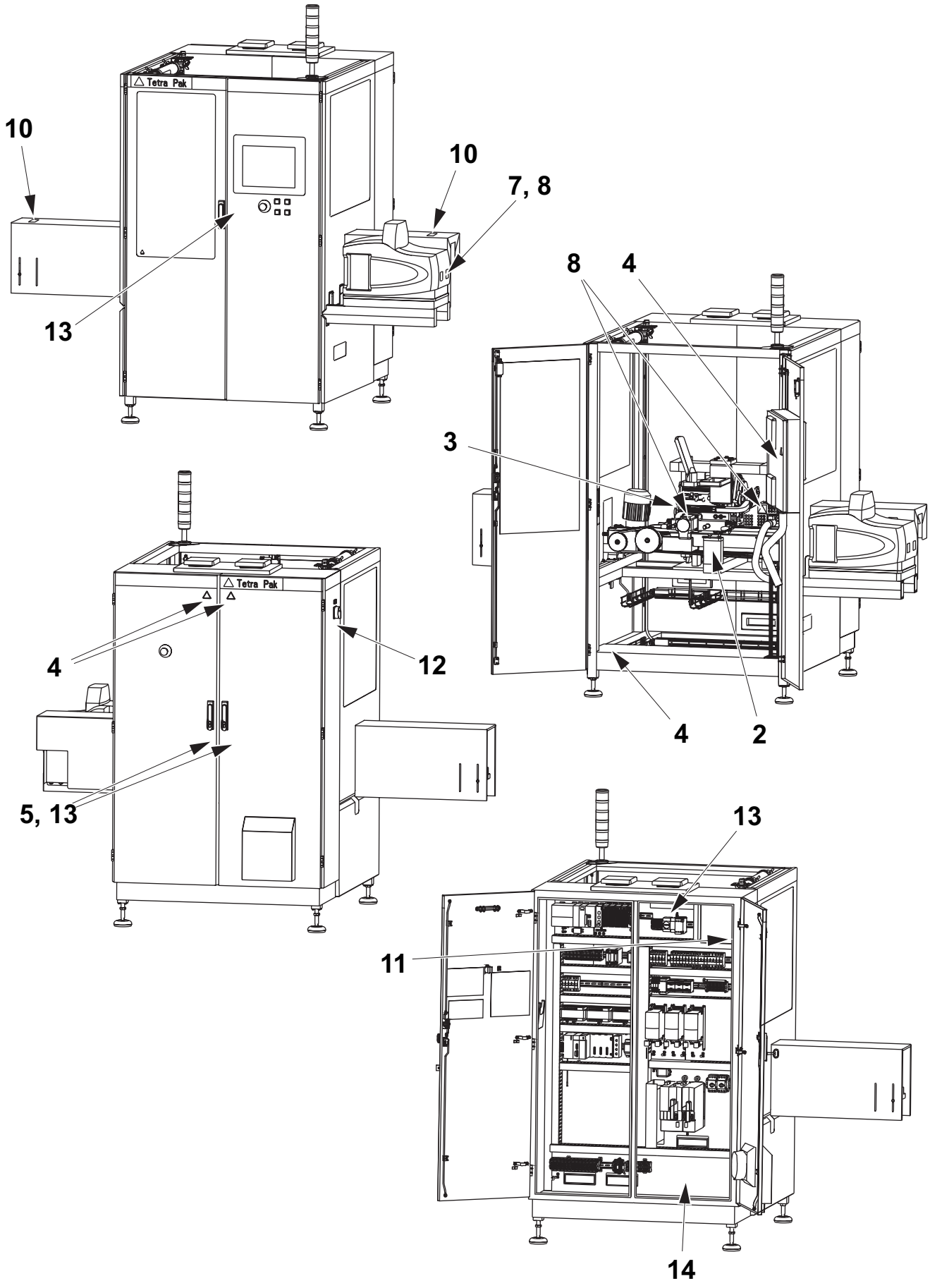

Locations of Safety Signs, Optional Equipment

BFT

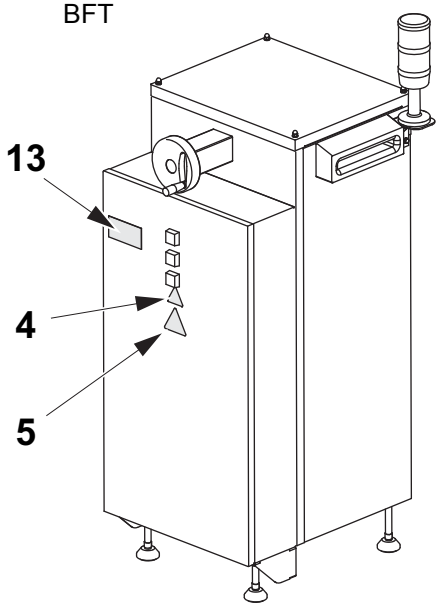

SD30

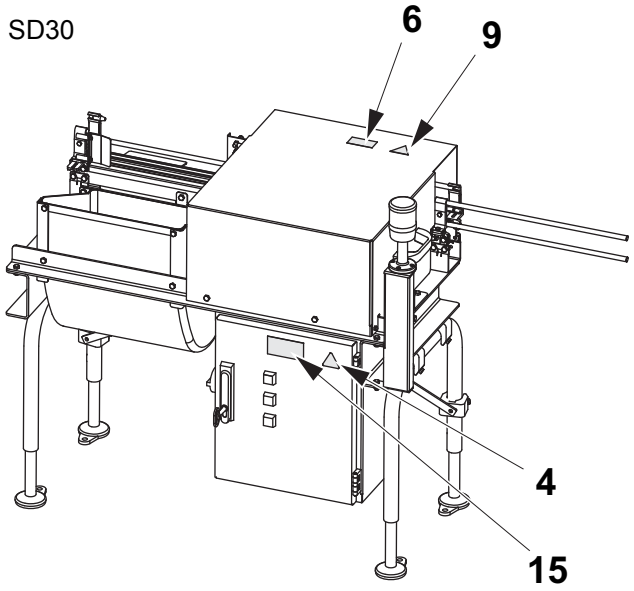

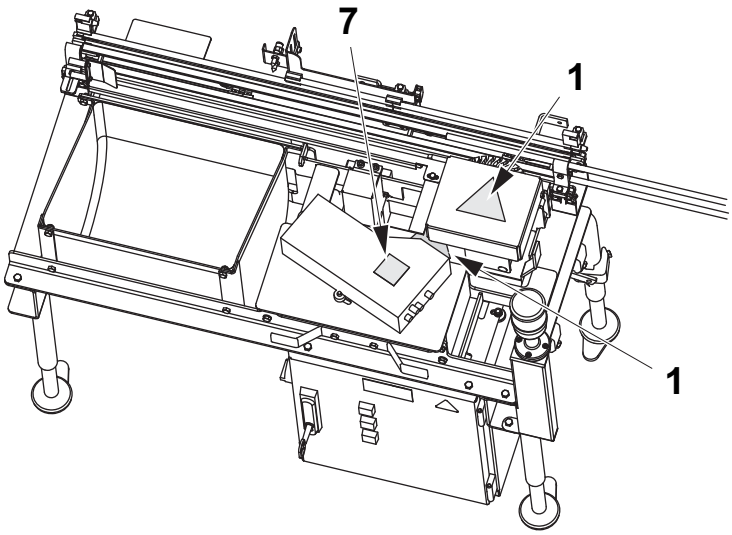

Protective Devices

There are different kinds of protective device designed to ensure safe use of the equipment. See the sections below.

WARNING

Hazardous zones.

Hazardous zones are safeguarded and provided with protective devices. Do not inch or run this equipment if any protective device is inoperative.

Change inoperative components of the safety system immediately.

For the locations of safeguards and/or other protective devices not mentioned in this section, see the Maintenance Manual.

DANGER

Hazardous voltage.

Will shock, burn, or cause death.

Hazardous voltage remains ON after activating an EMERGENCY STOP.

Emergency Stop

Emergency stop devices are used to stop this equipment immediately in an hazardous situation. Learn the positions of all emergency stop devices and how to use them.

Instructions for a normal production stop are included in the Stop chapter of the Operation Manual.

Emergency Stop Buttons

Push one of the EMERGENCY STOP buttons to stop this equipment immediately.

The location of each EMERGENCY STOP button is shown by an arrow.

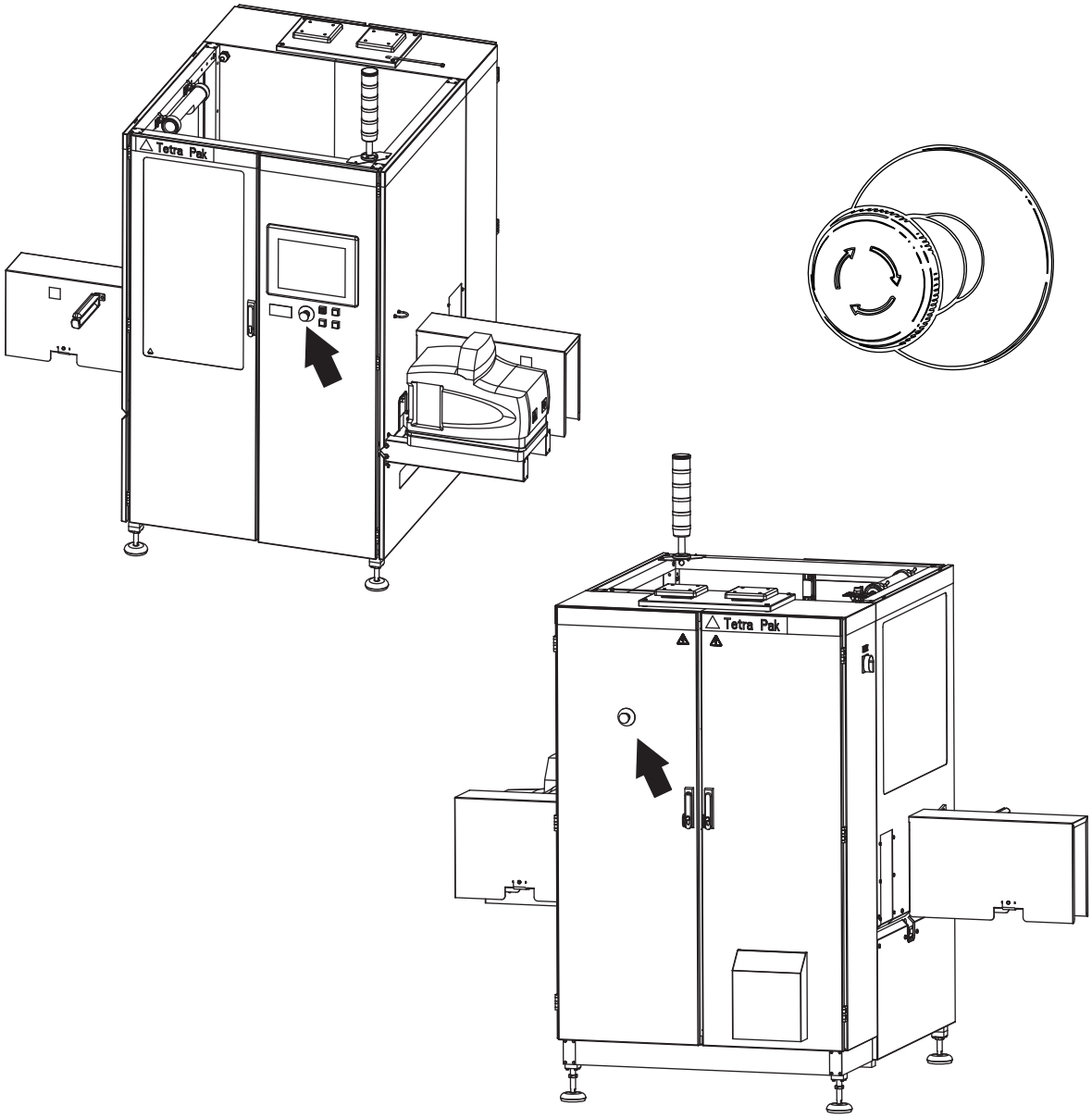

Safeguards

WARNING

Moving machinery parts.

Never defeat or bypass the interlocking devices.

Movable guards, for example, doors and covers leading to hazardous zones, are fitted with interlocking devices where required. These devices are usually electric safety switches that are parts of the safety system and must never be defeated, bypassed, or otherwise made inoperative.

CAUTION

Corners and edges.

Close the doors, guards, or parts of the equipment unless they must be open during work.

CAUTION

Burn hazard.

Parts of the equipment protected by guards may be hot after operation. Allow components to cool down or use personal protective equipment.

After installation and maintenance, and before this equipment is inched or run, check that all safeguards are in place and that they operate correctly.

(Cont'd)

(Cont'd)

CAUTION
Equipment damage.
The equipment can be damaged if it is not stopped in the correct way. Never stop this equipment by opening a movable guard, for example, a door or cover, equipped with an interlocking device.

The location of the interlocking device is shown by an arrow.

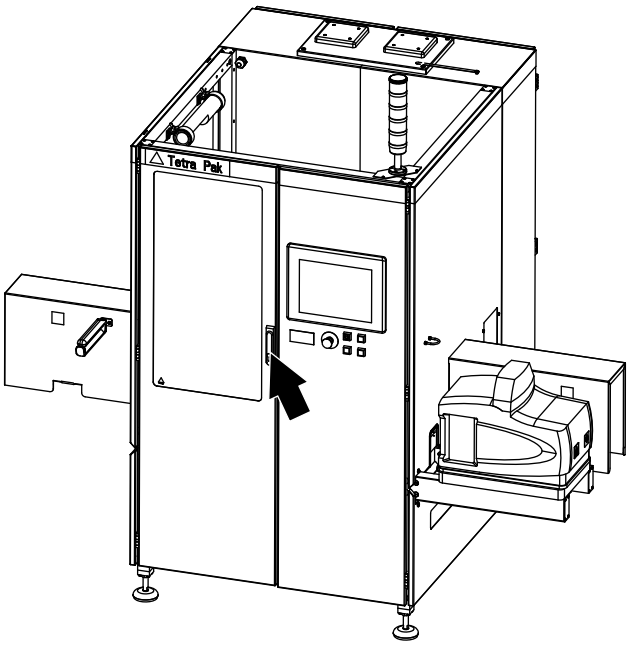

Warning Lamp

A warning lamp is a column of warning lights:

- A red light (2) indicates a hazardous condition. This is a situation that requires immediate action.
- A yellow light (3) indicates an abnormal or impending critical condition. This is a condition calling for action by the operator.
- A blue light (4) indicates that operator action is required.
- A green light (5) indicates a normal condition.

Audible Alarm

The audible alarm (1) produces a warning signal before the safety circuit is reset.The warning signal sounds for approximately three seconds to alert personnel. The reset of the safety circuit will make it possible to step up the machine and allow the equipment to start.

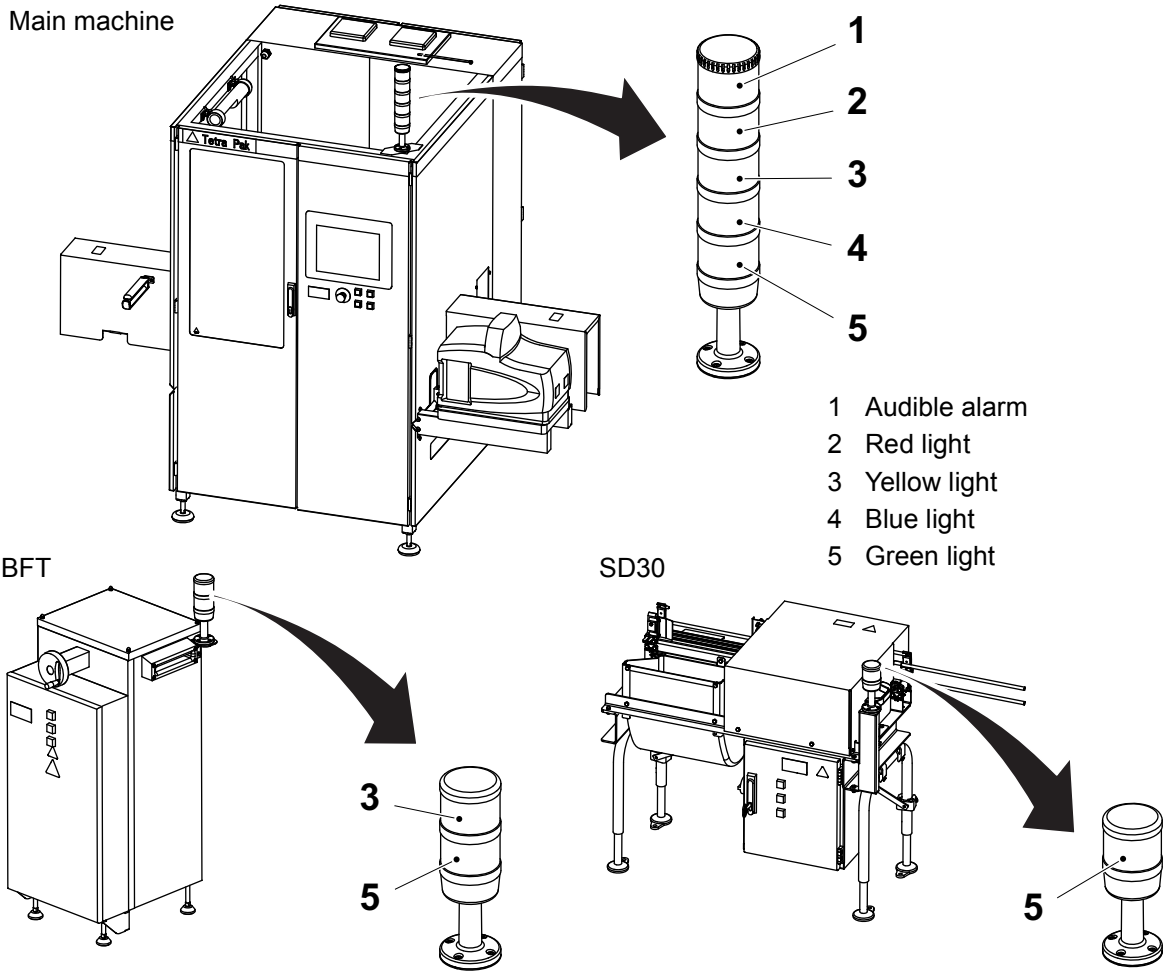

Protective Covers

Note! After maintenance, check that all covers are fitted to the machine before it is run.

SD30

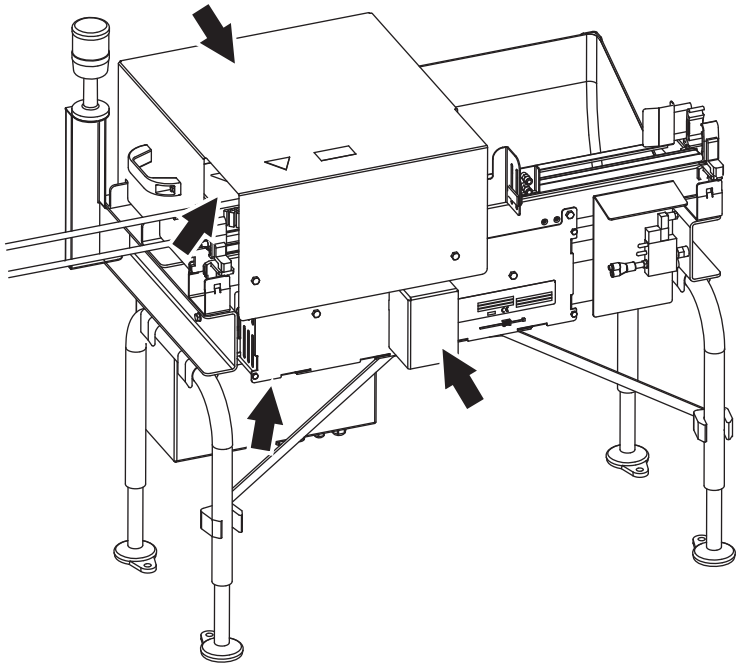

Safe Manual Handling

Use mechanical lifting aids whenever possible. If mechanical lifting aids are not available, do not attempt to lift loads over 23 kg without the assistance of a colleague. Avoid lifting below knee height and above shoulder height. If it is necessary to lift from the floor, follow the instructions below to reduce the risk of back and disc injuries.

- Use safety shoes and be sure that the surface of the floor is not slippery.
- Get close to the load.
- Take a wide stance and find the best positions for your feet.
- Bend your hips and knees, and use your leg muscles.
- Keep the load close to your body.
- Do not twist your body while moving the load.
- Take small steps when turning.

In order to reduce the risk of injury to discs and back muscles, be careful to not bend or twist your back when lifting. Keep the load close to your body to reduce the strain on your back.

To reduce the ergonomic risks to each individual operator, job rotation is recommended, so that recovery and variety are provided.

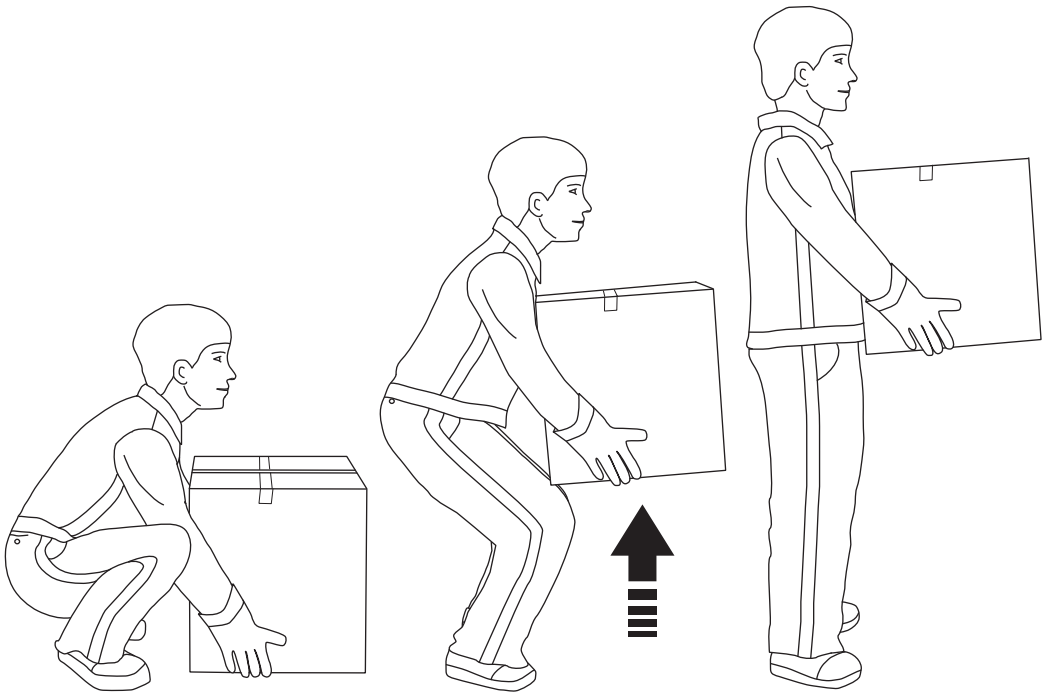

Personal Protection

This section applies to all personnel at all times when this equipment is in operation.

Noise

CAUTION

Hazardous noise.

May cause impaired hearing.

Hearing protection is recommended whenever this equipment is in operation.

Entanglement

WARNING

Risk of entanglement.

Do not wear jewellery or loose clothing when working on or near this equipment. Restrain long hair with, for example, clips or rubber bands.

Supply Systems

Power Supply

DANGER

Hazardous voltage and moving machinery.
The power supply disconnector must be turned off and secured with a lock before any maintenance.

Note! The key to the lock must be removed by the technician and retained in his/her possession until all work is completed.

DANGER

Hazardous voltage can be present with the power supply switched off.
Circuits identified by orange-coloured conductors are not disconnected by the main power supply disconnector. The location of the power supply disconnector of these circuits is described in the Maintenance Manual procedures that include work on these types of circuit.

Certain maintenance procedures may require power supply systems to be on. These exceptions are clearly stated in the Maintenance Manual.

(Cont'd)

(Cont'd)

The illustrations show the power supply disconnector (main switch) and its location.

The power supply disconnectors (main switches) are coloured red and yellow on this equipment, which means that it can be used as an emergency switching off device.

Any equipment connected to the main machine will be dead when the power supply disconnector (main switch) on the main machine is switched OFF.

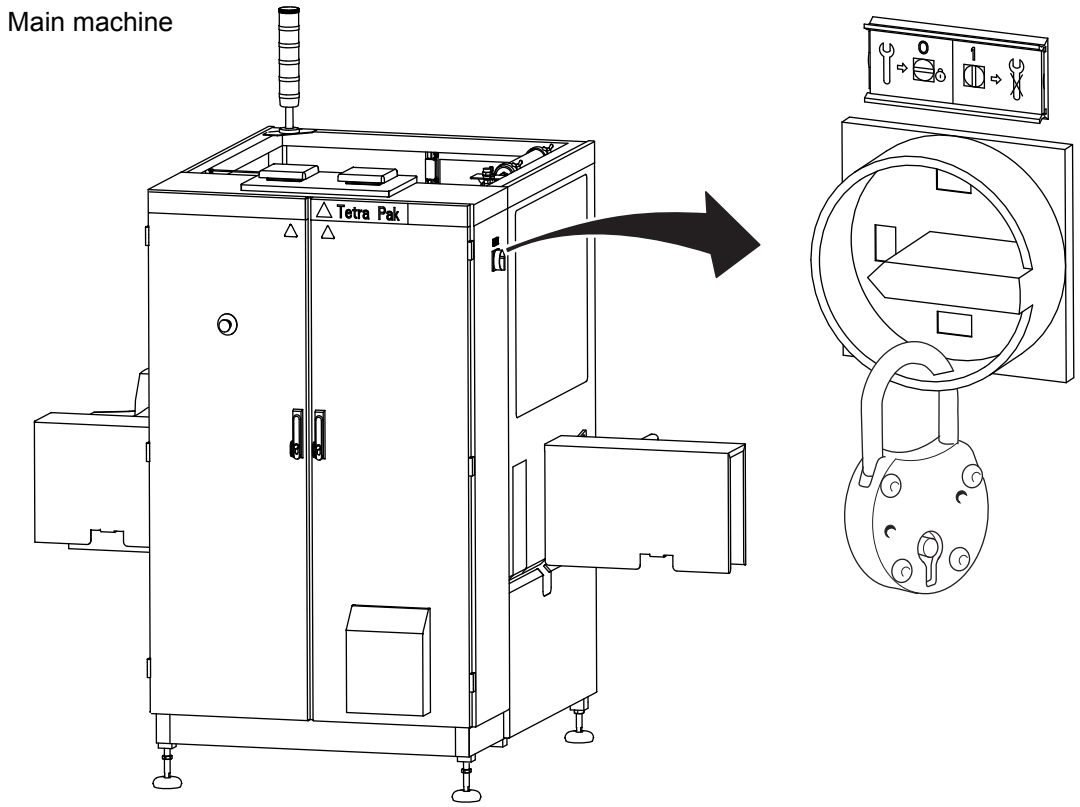

(Cont'd)

(Cont'd)

BFT

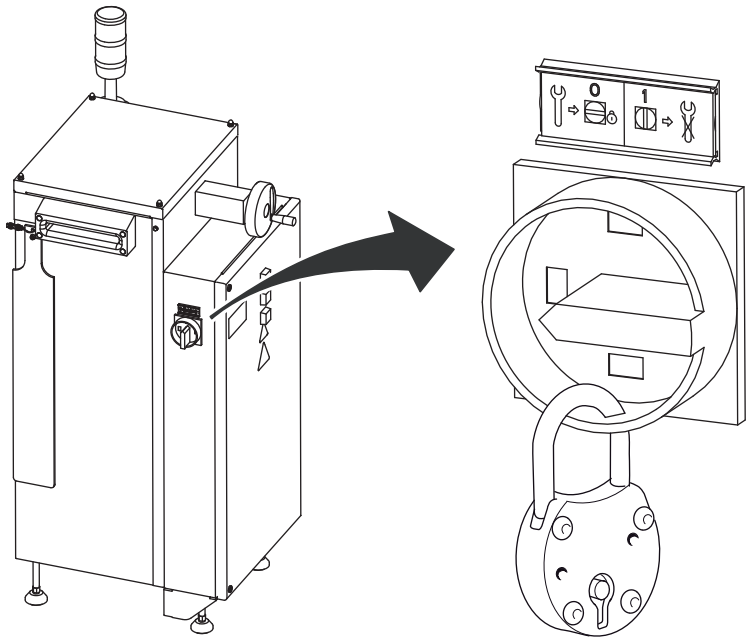

SD30

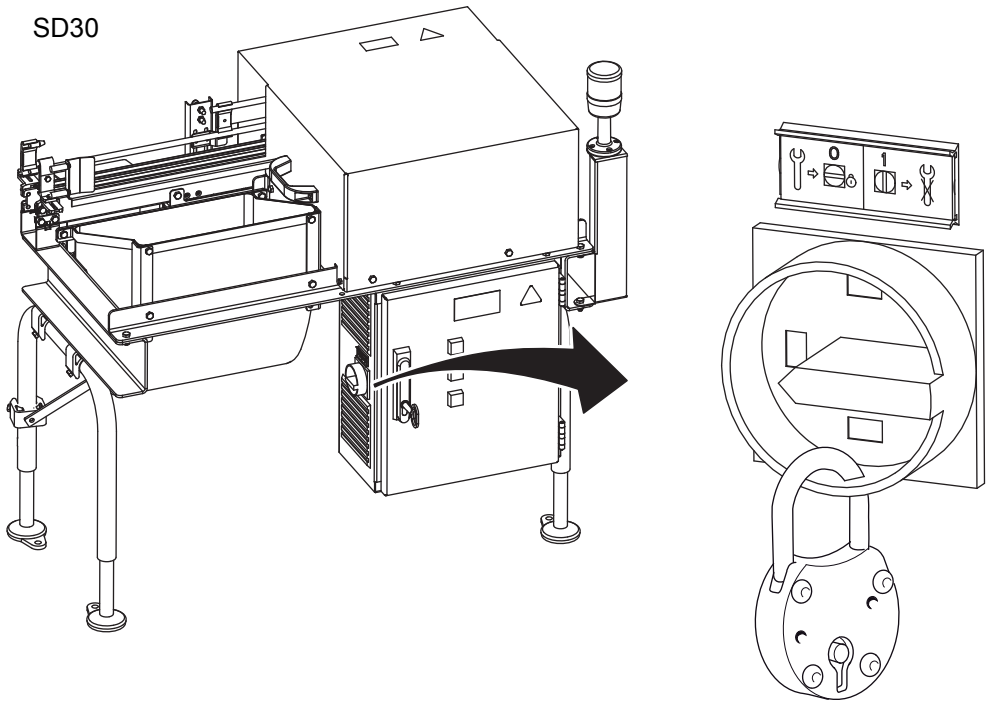

Residual Voltage

DANGER

Hazardous voltage.
Will shock, burn, or cause death.
After the power supply disconnector is turned off, residual voltage remains in the capacitor circuits.
Wait five minutes before opening the enclosure containing these circuits.
Ensure that no residual voltage remains on the capacitors before touching them.

Electrical Cabinet

DANGER

Hazardous voltage.
Will shock, burn, or cause death.
Parts behind doors to electrical enclosures may be live. The power supply disconnector must be turned off and secured with a lock before performing maintenance inside the electrical cabinet.

Note! The key to the lock must be removed by the technician and retained in his/her possession until all work is completed.

(Cont'd)

(Cont'd)

The use of a key or a tool is necessary to access to the electrical cabinet.

Make sure that the electrical cabinet doors are closed after working inside the electrical cabinet. Doors with locks must be locked.

The location of each electrical cabinet is shown by an arrow.

Main machine

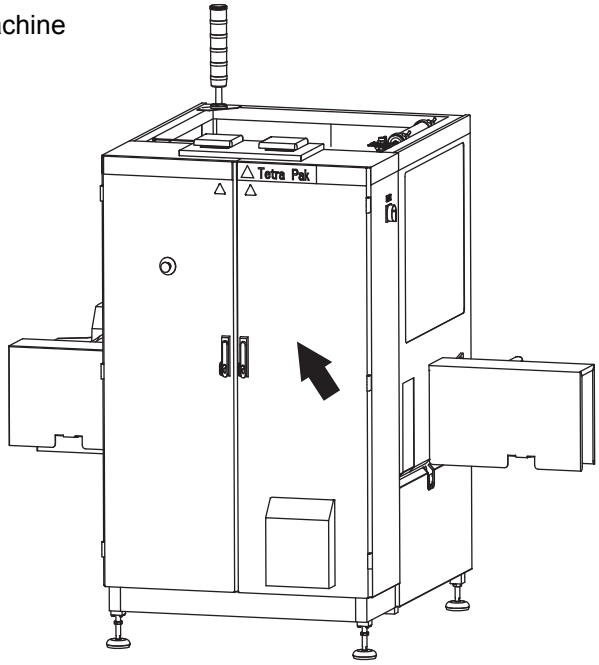

BFT

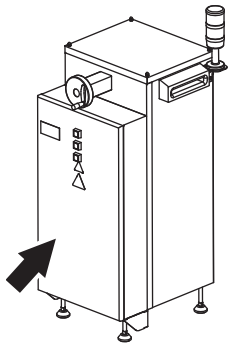

SD30

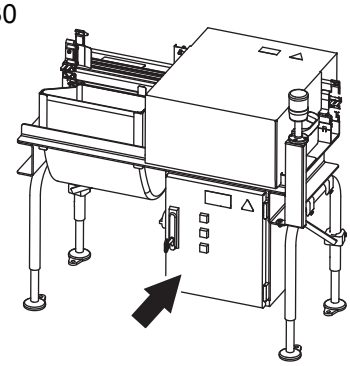

Socket Outlet

WARNING
Hazardous voltage.
Can shock, burn, or cause death.
Read the Maintenance Manual before using this socket outlet.

The socket outlet (1) is connected to a residual current device (2) to protect users against electrical shock if there is an earth fault in the connected equipment. The residual current device must be tested each time before the socket outlet is being used. See the MM for test procedure.

The illustrations show the socket outlet, the residual current device, and their locations.

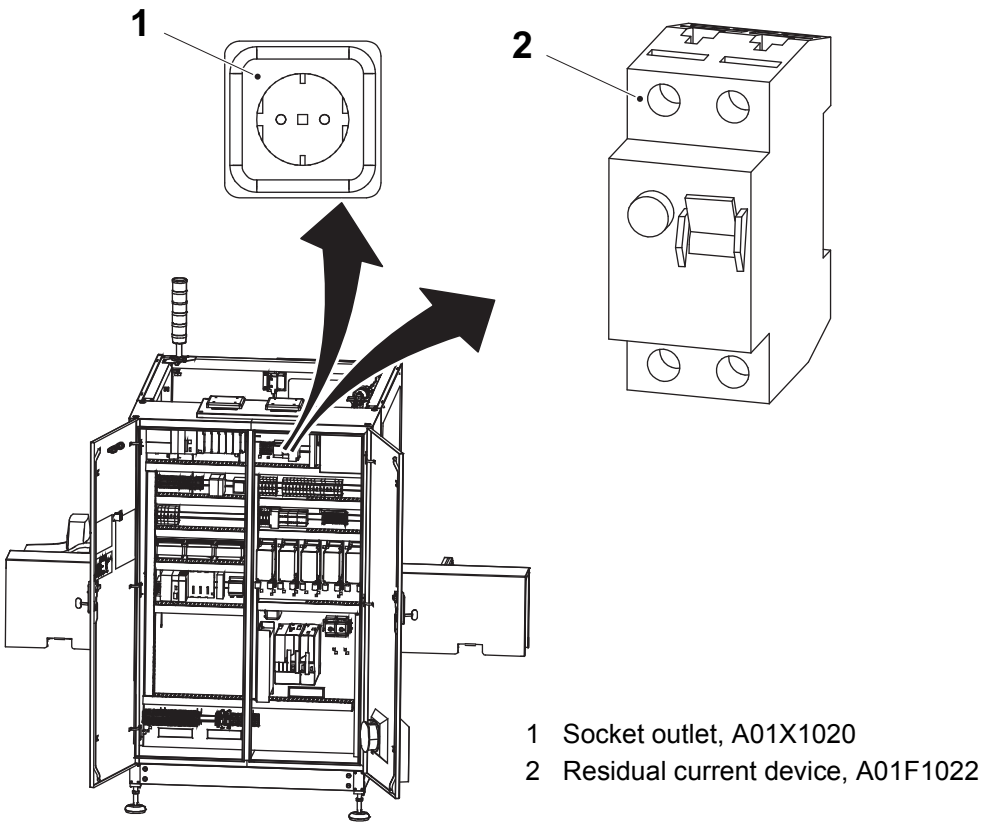

1 Socket outlet, A01X1020
2 Residual current device, A01F1022

Air Supply

WARNING

Compressed air and moving machinery.
Close the main air valve and lock it, and safely release compressed air from the air system before any maintenance.

Note! The key to the lock must be removed by the technician and retained in his/her possession until all work is completed.

Certain maintenance procedures may require air supply systems to be on. These exceptions are clearly stated in the Maintenance Manual.

The illustrations show the main air valve (1), the lock (2), and their location.

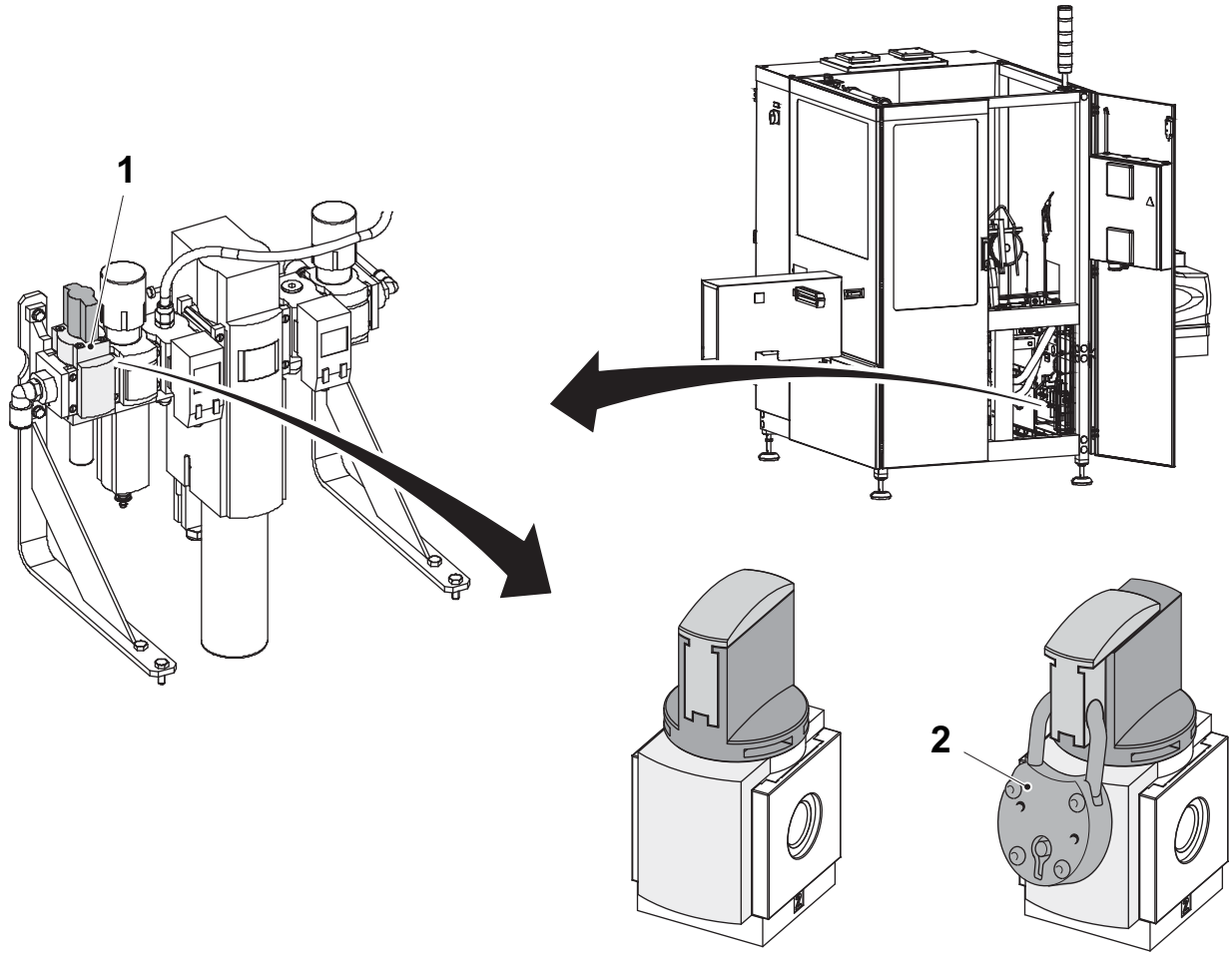

1 Main air valve
2 Lock

This page intentionally left blank

1 Technical Specification

Description

This chapter describes the equipment's technical specification and data. The information is used during the planning and installation of the equipment.

1.1 Installation Drawings. . . . . 1 - 7
1.1.1 TB/TBA/TPA . . . . . 1 - 7
1.1.2 TCA . . . . . 1 - 8
1.1.3 TWA . . . . . 1 - 9
1.1.4 Bent Foil Treater (Optional Equipment) . . . . . 1 - 10
1.1.5 Straw Detector 30 (Optional Equipment TB/TBA). . . . . 1 - 11
1.1.6 Cooling Unit (Optional Equipment) . . . . . 1 - 13
1.1.7 Service and Operator Area . . . . . 1 - 14
Main Machine . . . . . 1 - 14
Straw Detector 30 . . . . . 1 - 15
1.1.8 Installation Layout . . . . . 1 - 16
1.1.8.1 Straight Through (TB/TBA/TPA) . . . . . 1 - 16
1.1.8.2 Straight Through (TCA/TWA) . . . . . 1 - 18
1.1.8.3 U-Discharge (TB/TBA/TPA) . . . . . 1 - 20
1.1.8.4 U-Infeed (TB/TBA/TPA) . . . . . 1 - 20
1.2 Equipment Specification. . . . . 1 - 21
1.2.1 Capacity . . . . . 1 - 21
1.2.2 Configurations and Limitations . . . . . 1 - 21
1.2.2.1 Other Needed Line Components . . . . . 1 - 21
1.2.3 Mass and Dimensions . . . . . 1 - 22
1.2.3.1 Main machine . . . . . 1 - 22
1.2.3.2 Optional Equipment. . . . . 1 - 22
1.2.4 Infeed and Discharge Requirements . . . . . 1 - 23
1.2.4.1 Infeed and Discharge Conveyors . . . . . 1 - 23
1.2.4.2 Conveyor Lubrication . . . . . 1 - 23
1.2.5 Additional Equipment . . . . . 1 - 23
1.2.6 Start Up Material. . . . . 1 - 23
1.2.7 Production Material . . . . . 1 - 24
1.2.7.1 Hotmelt . . . . . 1 - 24

1.2.7.2 Drinking Straws . . . . . 1 - 24
1.2.8 Changeover Time . . . . . 1 - 25
1.3 Lifting and Transportation Data . . . . . 1 - 26
1.3.1 Crate and Equipment . . . . . 1 - 26
1.3.1.1 Main machine . . . . . 1 - 26
1.3.1.2 Optional Equipment . . . . . 1 - 26
1.3.2 Auxiliary Equipment . . . . . 1 - 27
1.3.3 Space Requirements . . . . . 1 - 27
1.4 Utility and Utility Connection Data . . . . . 1 - 28
1.4.1 Electrical Power Specification . . . . . 1 - 28
1.4.1.1 Main Machine . . . . . 1 - 28
1.4.1.2 Optional Equipment . . . . . 1 - 29
1.4.2 Compressed Air Specification . . . . . 1 - 30
1.4.2.1 Main Machine . . . . . 1 - 30
1.4.2.2 Optional Equipment . . . . . 1 - 30
1.5 Hygiene Function Connection Data . . . . . 1 - 31
1.5.1 Manual Cleaning . . . . . 1 - 31
1.6 Mechanical Line Integration and Connection (TCA) . . . . . 1 - 32
1.6.1 Upstream Connection to Tetra Pak A1 0900 TCA . . . . . 1 - 32
1.6.1.1 Normal Interface . . . . . 1 - 32
1.6.1.2 Hand Packing Line . . . . . 1 - 33
1.7 Noise . . . . . 1 - 34
1.7.1 Main Machine . . . . . 1 - 34
1.7.2 Optional Equipment . . . . . 1 - 34
BFT . . . . . 1 - 34
SD30 (TB/TBA) . . . . . 1 - 34
Cooling Unit . . . . . 1 - 34
1.8 Emissions . . . . . 1 - 35

1.9 Site Environment Specification . . . . . 1 - 36
1.9.1 Ambient Temperature . . . . . 1 - 36
1.9.2 Space Requirements . . . . . 1 - 36
Optional Equipment. . . . . 1 - 36
1.9.3 Connections . . . . . 1 - 37
1.9.4 Floor . . . . . 1 - 37

This page intentionally left blank

1.1 Installation Drawings

1.1.1 TB/TBA/TPA

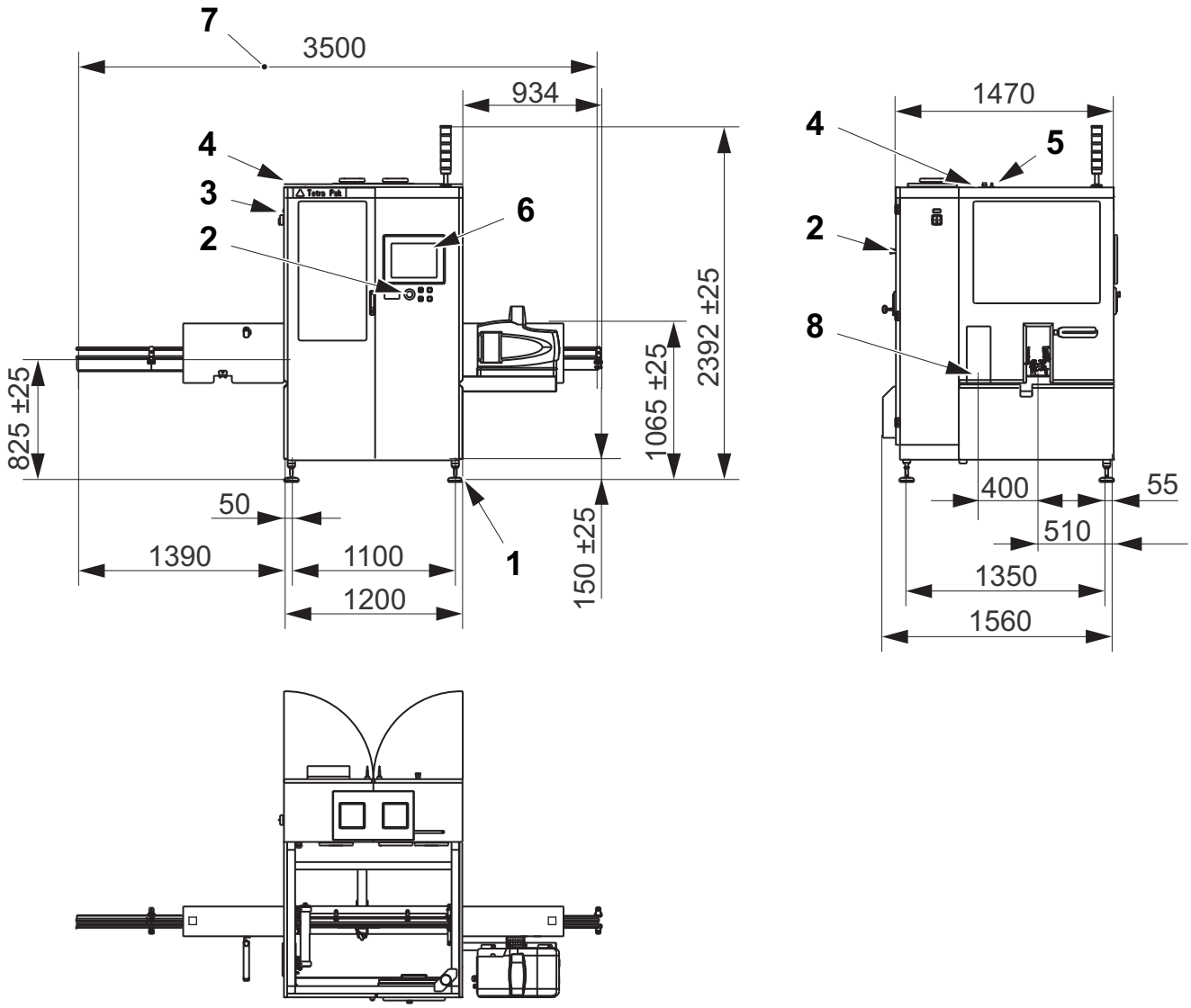

1 Adjustable footplate (four pieces)
2 Emergency stop button
3 Main switch
4 Cable entry for power supply. Cable length inside the machine is 0.3 m
5 Air supply connection
6 Control panel
7 Conveyor length
8 Centre of return conveyor

1.1.2 TCA

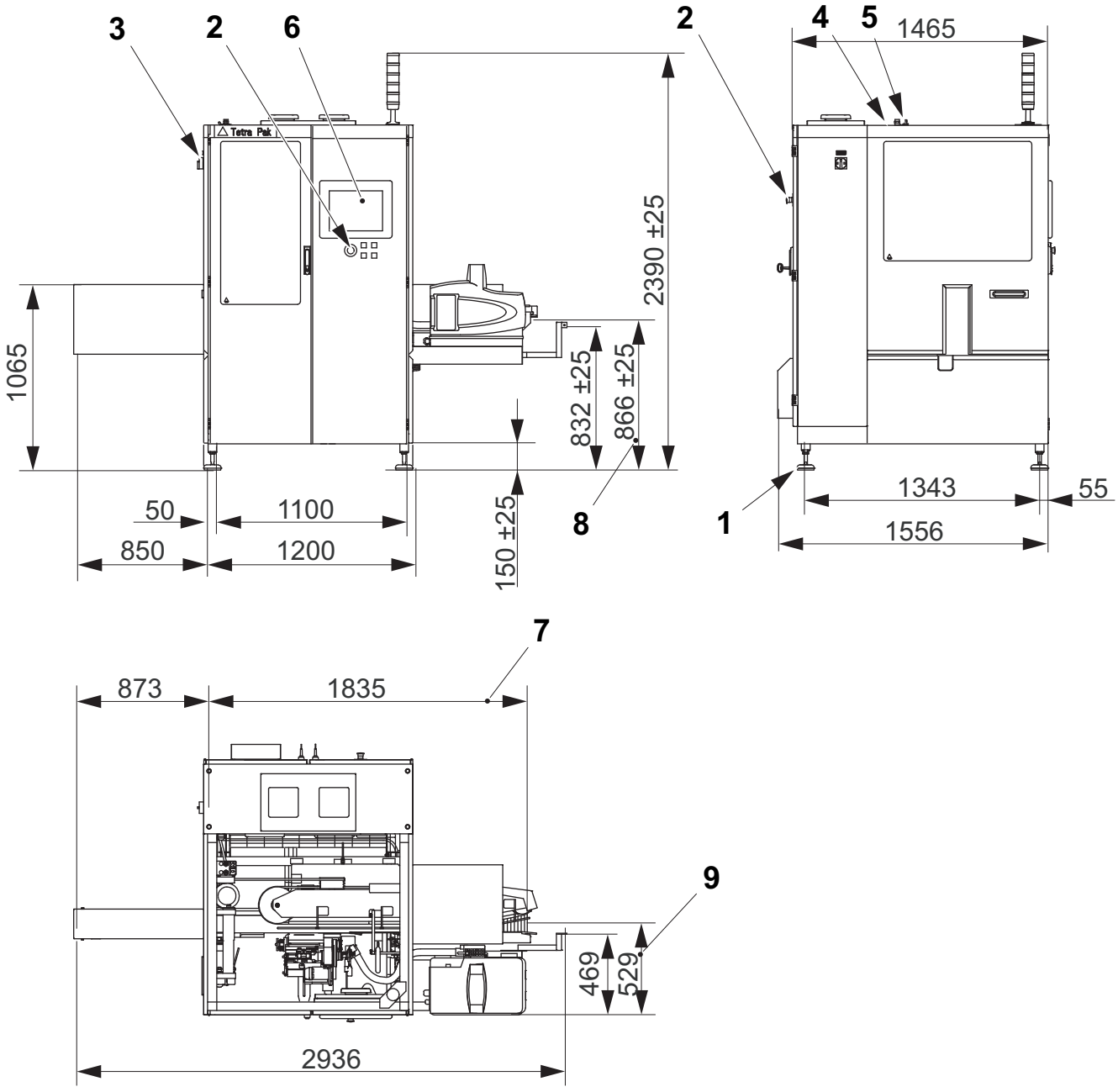

1 Adjustable footplate (four pieces)
2 Emergency stop button
3 Main switch
4 Cable entry for power supply. Cable length inside the machine is 0.3 m
5 Air supply connection
6 Control panel
7 SA30 Conveyor length
8 Conveyor height
9 Conveyor centre

1.1.3 TWA

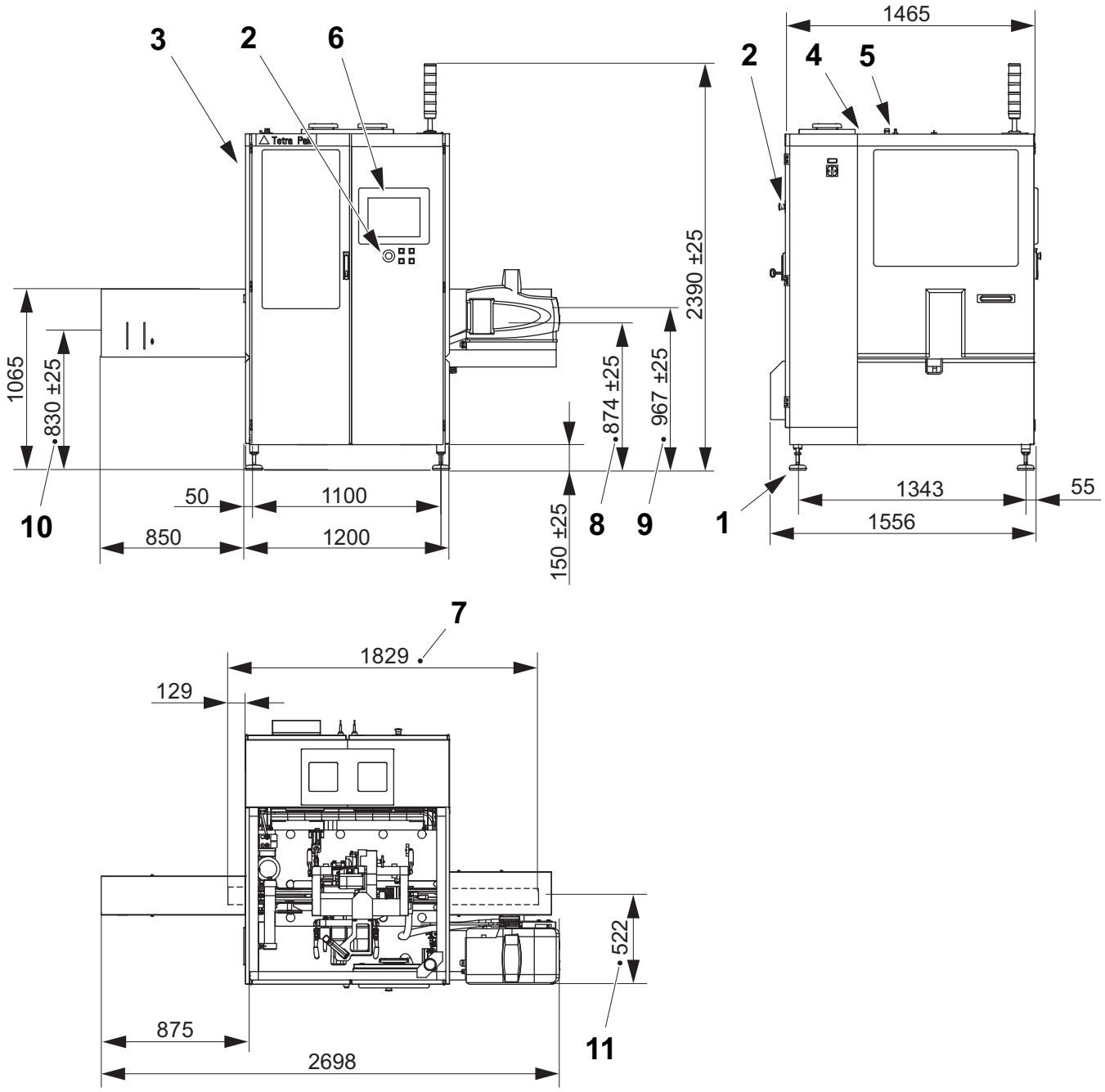

1 Adjustable footplate (four pieces)
2 Emergency stop button
3 Main switch
4 Cable entry for power supply. Length inside the machine is 0.3 m
5 Air supply connection
6 Control panel
7 SA30 Conveyor length
8 SA30 Conveyor height
9 Conveyor height, infeed
10 Conveyor height, discharge
11 Conveyor centre

1.1.4 Bent Foil Treater (Optional Equipment)

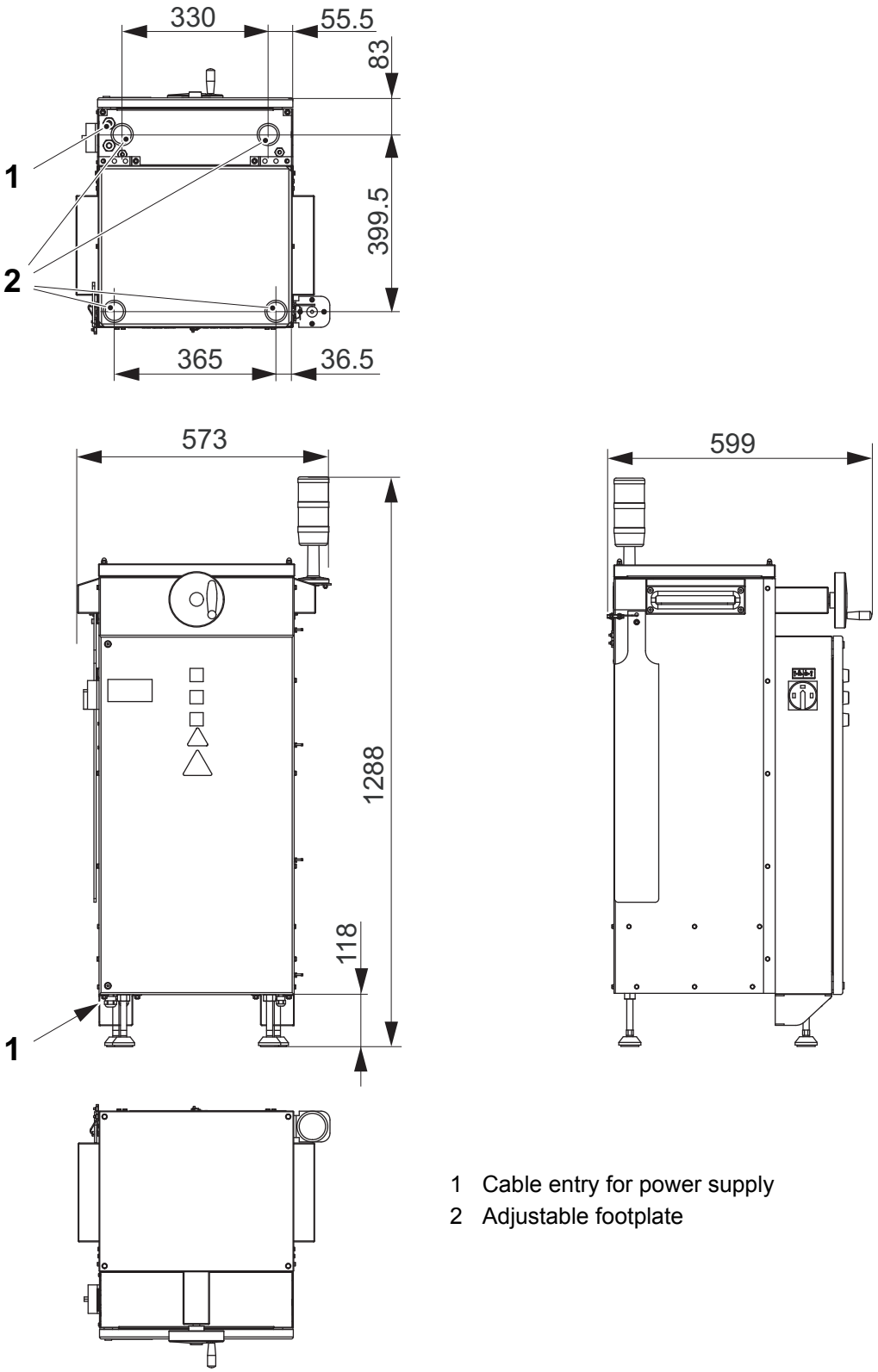

1 Cable entry for power supply
2 Adjustable footplate

1.1.5 Straw Detector 30 (Optional Equipment TB/TBA)

When SD30 is installed together with SA30:

- SD30 shall be placed on the discharge conveyor driven by SA30.
- There must be a minimum of 1 m between SD30 and the next (downstream) conveyor.
- There must be a minimum of 0.5 m straight conveyor upstreams from the SD30.

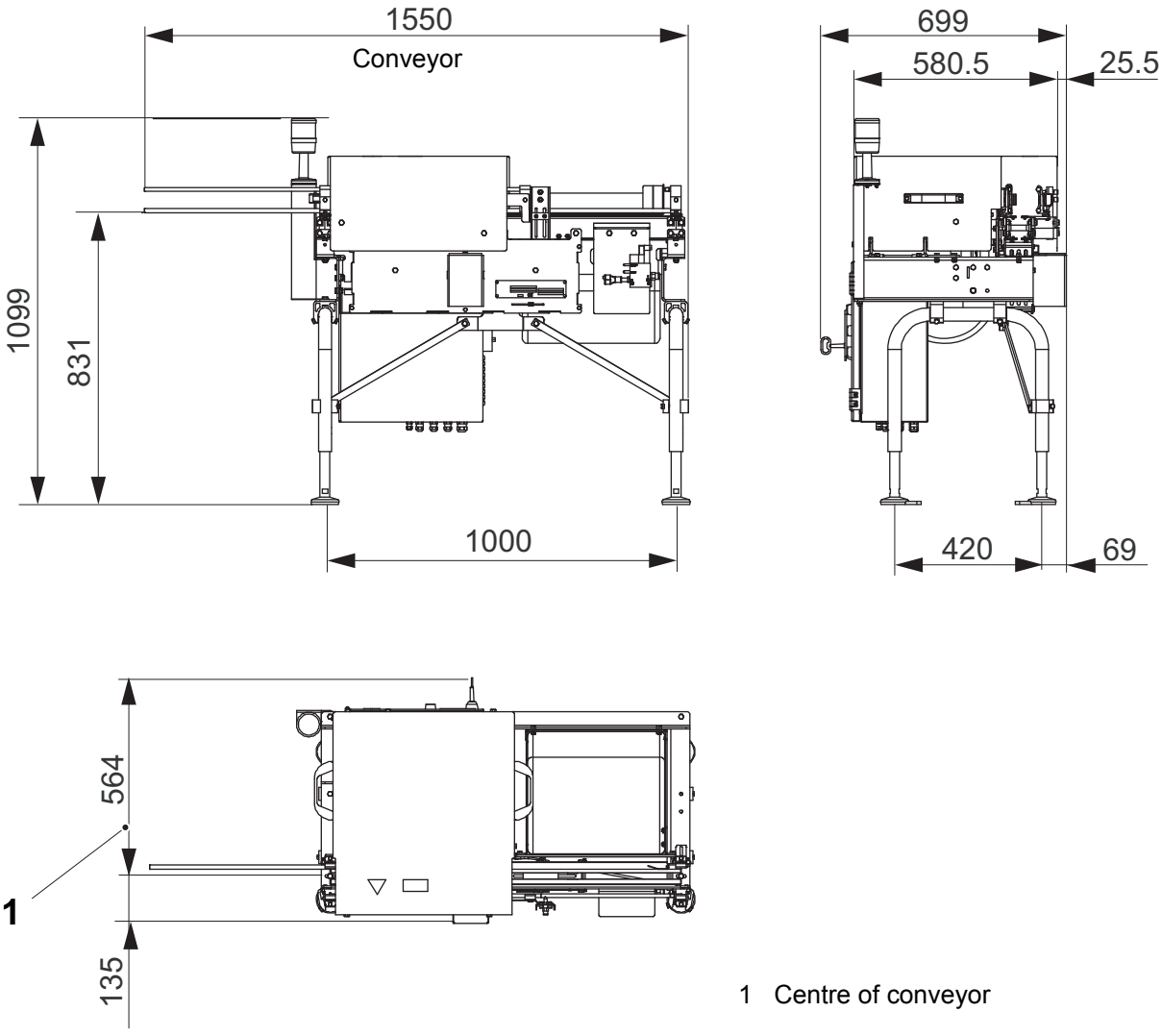

1 Centre of conveyor

(Cont'd)

(Cont'd)

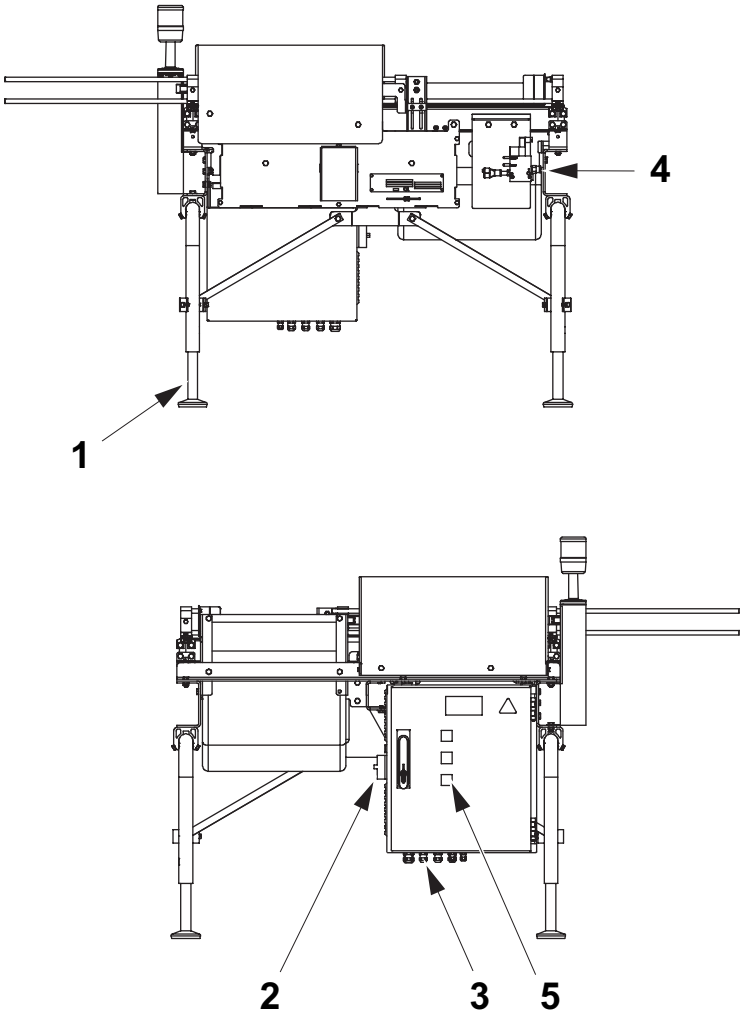

1 Adjustable leg (4 pieces)
2 Main switch
3 Cable entry, above, for power supply (cable not included in machine)
4 Air connection Ø12
5 Control buttons

1.1.6 Cooling Unit (Optional Equipment)

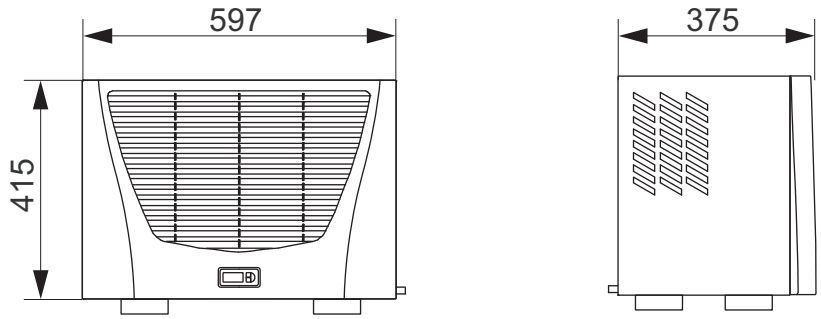

Position of the cooling unit on the main machine:

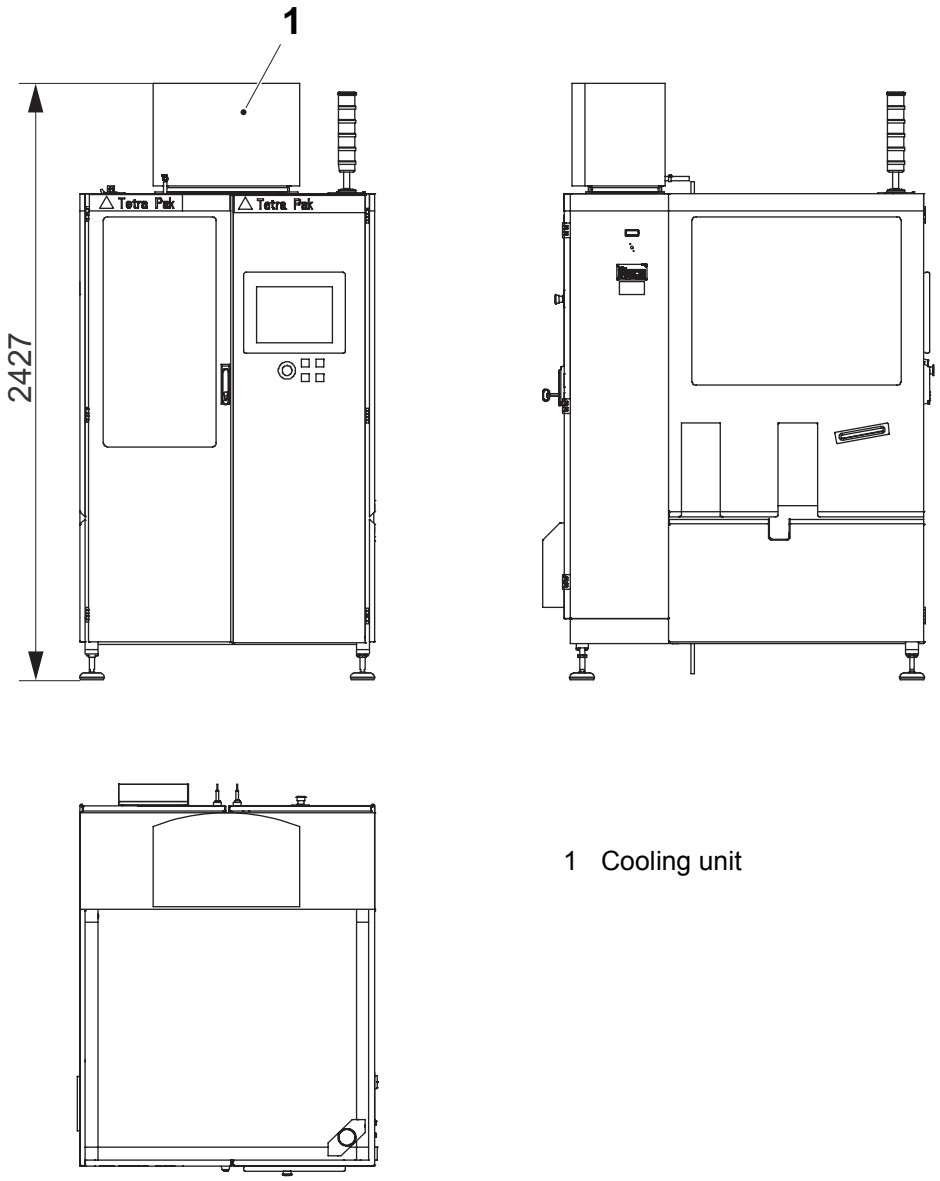

1 Cooling unit

1.1.7 Service and Operator Area

Main Machine

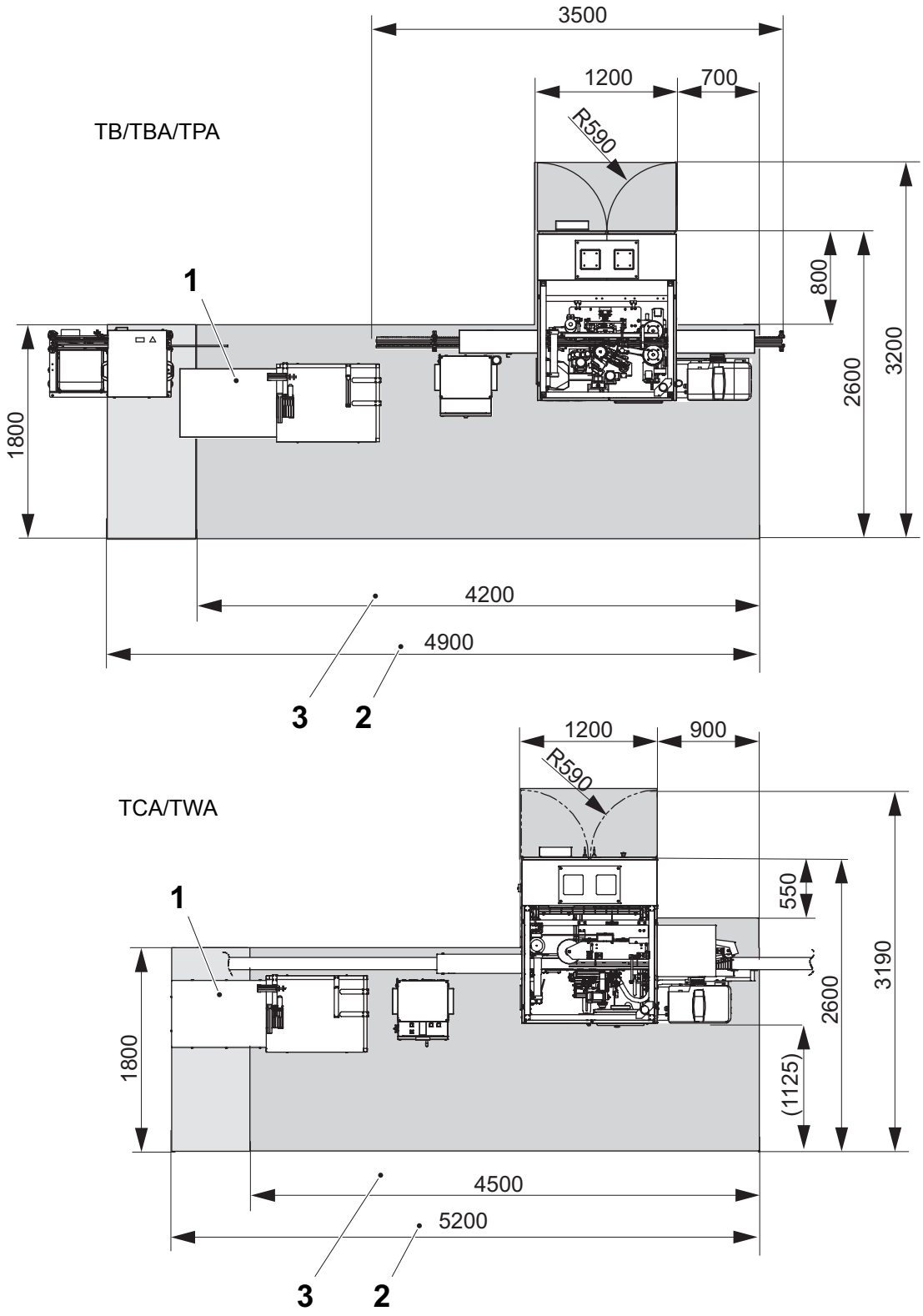

1 Double straw box (optional)
2 Measure with double straw box
3 Measure standard machine

Straw Detector 30

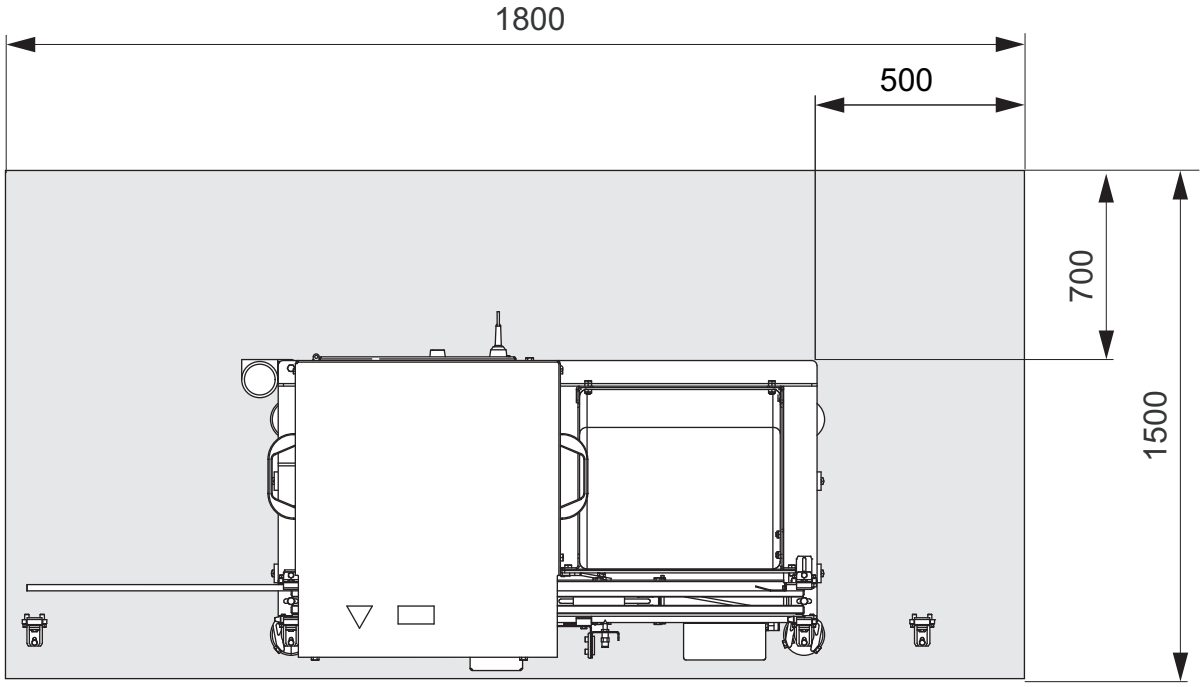

1.1.8 Installation Layout

1.1.8.1 Straight Through (TB/TBA/TPA)

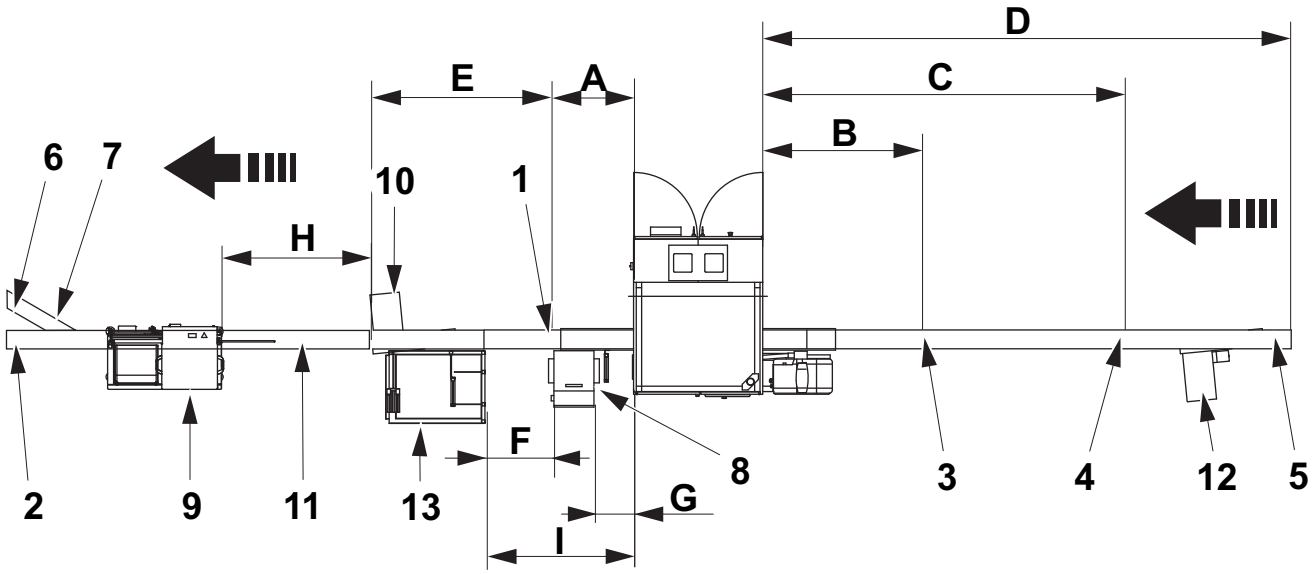

Note! Sensors must be placed on straight conveyor.

Sensor			
Number	**Reference designation**	**Placement**	**Function**
1	V40B2070 V40B2072	A = 0.5 m	Queue after machine
2	V90B2050 V90B2052	Place directly on downstream DE controlled conveyor	Queue discharge Restart photocell
3	V40B2040 V40B2042	B = 1 m	Speed
4	V40B2030 V40B2032	C = B + 1.5 m	Overflow
5	V10B2020 V10B2022	Place directly on upstream DE controlled conveyor	Start infeed conveyor (optional)
6	V90B2130 V90B2132	To be placed directly on second downstream DE controlled conveyor	Queue discharge 2 Restart photocell (optional)
7	V90B2140	To be placed as indicator for gate to second downstream conveyor	Indication of selected discharge (optional)

(Cont'd)

(Cont'd)

Optional Equipment			
Number	**Placement**	**Description**	**Connections**
8	To be placed between the Straw Magazine and the SA30. F ≤ 0.2 m 0.34 ≤ G ≤ 0.45 m	Bent Foil Treater	
9	Shall be placed on the discharge conveyor driven by the SA30. There must be a minimum of one meter between the Straw Detector and the next (downstream) conveyor H ≥ 0.5 m There must be a minimum of 0.5 m straight conveyor upstreams from the Straw Detector 30.	Straw Detector 30	Controlled from SA30 if no LC is used.

Conveyor				
Number	**Reference designation**	**Status**	**Description**	**Nominal speed, 50 Hz**
10	W40M1010	Mandatory	Main conveyor D = 4 m E = 2 m (with discharge conveyor) E = 6 m (without discharge conveyor) Total max = 13 m Frequency converter W40T1010 (0,75 kW)	39 m/min, Speed (>15000 packages/hour) 25 m/min, Flex (<15000 packages/hour)
11	W90M1010	Prepared	Discharge conveyor Frequency converter W90T1010 (0,75 kW)	39 m/min, Speed (>15000 packages/hour) 25 m/min, Flex (<15000 packages/hour)
12	W10M1010	Prepared	Infeed conveyor Frequency converter W10T1010 (0,75 kW)	39 m/min, Speed (>15000 packages/hour) 25 m/min, Flex (<15000 packages/hour)

Regular Accessories		
Number	**Placement**	**Description**
13	I ≤ 0.2 m without a Bent Foil Treater.	Straw Magazine

1.1.8.2 Straight Through (TCA/TWA)

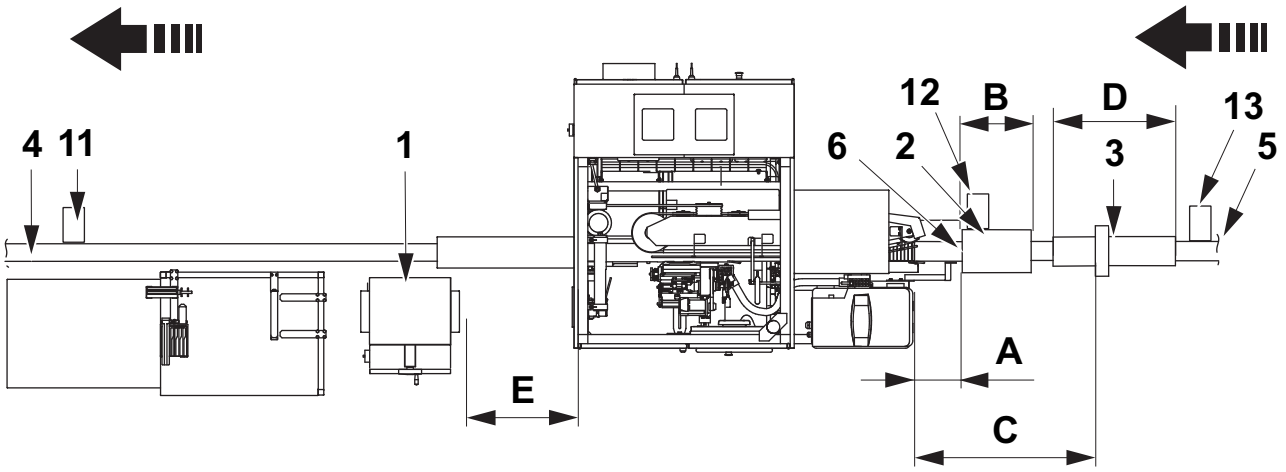

Optional Equipment			
Number	**Placement**	**Description**	**Connections**
1	To be placed between the Straw Magazine and the SA30. E ≥ 500 mm	Bent Foil Treater (BFT)	

Other Needed Line Components			
Number	**Placement**	**Description**	**Connections**
2	To be placed directly on upstream conveyor, close to the driving unit. A ≈ 110 mm B ≈ 600 mm	Rejecting Unit	Supplied with air and 24VDC by SA30. Controlled by SA30.
3 (Only TCA)	To be placed upstream the Rejecting Unit. C = 1400 to 1800 mm D ≈ 1500 mm	Package Orientation Control Unit (POCU)	Supplied with air and 24VDC by SA30. Controlled by SA30.

Sensor			
Number	**Reference designation**	**Placement**	**Function**
4	V90B2050 V90B2052	Place directly on downstream DE controlled conveyor	Queue discharge Restart photocell
5	V10B2020 V10B2022	Place directly on upstream DE controlled conveyor (Option)	Start
6	V40B2100 V40B2102	Fixed in the first part of main conveyer at the support roller	Queue Infeed

(Cont'd)

(Cont'd)

Conveyor				
Number	**Reference designation**	**Status**	**Description**	**Nominal speed, 50 Hz**
11	W90M1010	Mandatory	Discharge conveyor Frequency converter W90T1010 (0,75 kW) Drive unit shall have right hand motor position.	
			- UC24 for TCA	42 m/min (Frequency controlled)
			- PC23/TWA for TWA	39 m/min (Frequency controlled)
12	W10M1010	Mandatory	Infeed conveyor Frequency converter W10T1010 (0,75 kW) Drive unit shall have right hand motor position.	
			- UC24 for TCA	42 m/min (Frequency controlled)
			- PC23/TWA for TWA	39 m/min (Frequency controlled)
13			Controlled by upstreams equipment	

1.1.8.3 U-Discharge (TB/TBA/TPA)

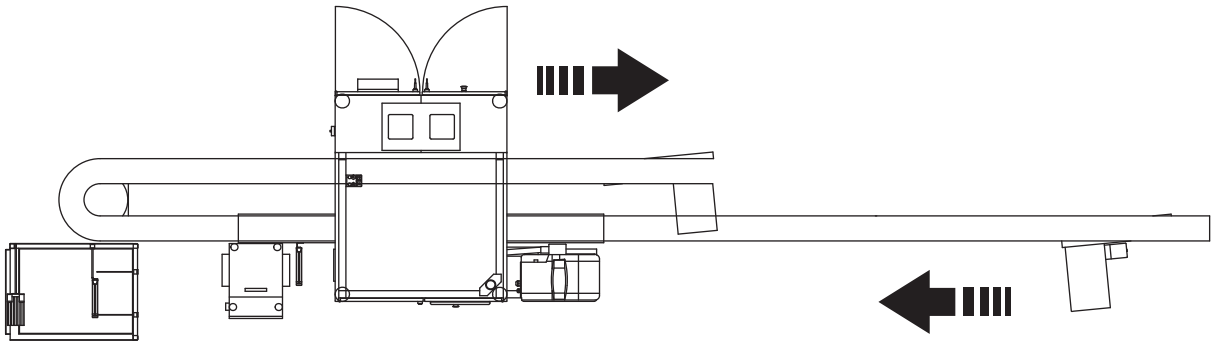

1.1.8.4 U-Infeed (TB/TBA/TPA)

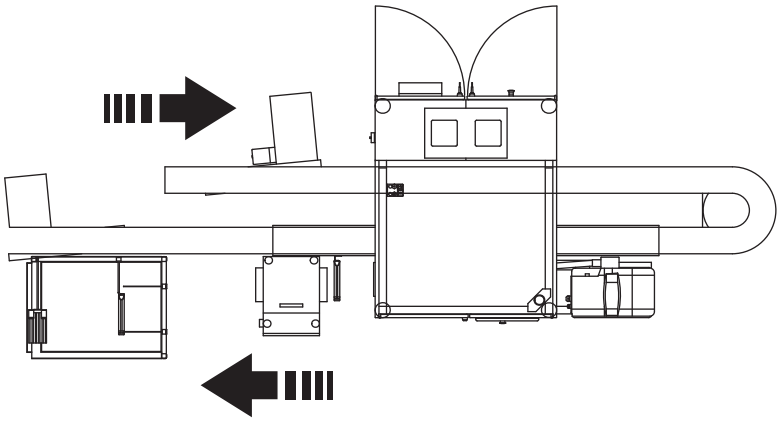

1.2 Equipment Specification

1.2.1 Capacity

Type	Packages per hour
TB/TBA/TPA	4500 to 24000 packages/hour +25%
TCA	14500 to 17500 packages/hour +45%
TWA	11300 to 15000 packages/hour +30%

1.2.2 Configurations and Limitations

Machine Variants		
Straight through	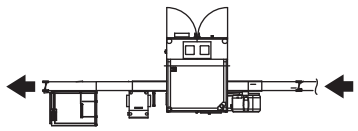	
U-Discharge	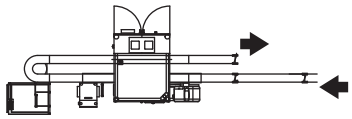	TB/TBA/TPA only
U-Infeed	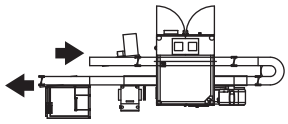	TB/TBA/TPA only

1.2.2.1 Other Needed Line Components

Type	TP No.	Note
Rejecting Unit	3010247-0100	TCA/TWA only. Supplied with air and 24VDC by SA30. Controlled by SA30. Mandatory for TCA lines.
Package Orientation Controller (POCU)	2976909-0100	TCA only. Supplied with air and 24VDC by SA30. Controlled by SA30. Mandatory for TCA lines.

1.2.3 Mass and Dimensions

1.2.3.1 Main machine

TB/TBA/TPA		
Characteristic	**Value**	**Note**
Machine mass	≈ 740 kg net	
Length	3720 mm	
Width	1500 mm	
Height	2390 mm	
TCA/TWA		
Characteristic	**Value**	**Note**
Machine mass	≈ 775 kg net	
Length	3720 mm	
Width	1500 mm	
Height	2390 mm	

1.2.3.2 Optional Equipment

BFT, 2643050-0400		
Characteristic	**Value**	**Note**
Machine mass	≈ 113 kg net	
Length	570 mm	
Width	600 mm	
Height	1290 mm	
SD30, 663550-0300		
Characteristic	**Value**	**Note**
Machine mass	≈ 113 kg net	Optional equipment for TB/TBA
Length	1000 mm	
Width	617 mm	
Height	1100 mm	
Cooling Unit		
Characteristic	**Value**	**Note**
Machine mass	≈ 32 kg	
Length	597 mm	
Width	375 mm	
Height	415 mm	

1.2.4 Infeed and Discharge Requirements

1.2.4.1 Infeed and Discharge Conveyors

Infeed and Discharge Conveyors (TB/TBA/TPA)		
Recommended conveyor make/ model	Package Conveyor 23	Conveyor chain length inside machine: 6 m **Note!** Do not install a conveyor longer than three meters before the drive station.
Infeed and Discharge Conveyors (TCA)		
Recommended conveyor make/ model	Unit Conveyor 24	
Infeed and Discharge Conveyors (TWA)		
Recommended conveyor make/ model	Package Conveyor 23/TWA	

1.2.4.2 Conveyor Lubrication

This section is only valid for Tetra Pak conveyors in the production line, not for conveyors inside the machine.

Note! In order to have optimized line performance it is very important that the conveyor lubrication is set in accordance with the conveyor lubrication Technical Manual (TeM).

1.2.5 Additional Equipment

Equipment	TP No.	Note
Forklift	-	

1.2.6 Start Up Material

The following material is needed during start up of the equipment.

Material	Note
Hotmelt	See Section 1.2.7.1 Hotmelt for more information.
Drinking Straws	See Section 1.2.7.2 Drinking Straws for more information.

1.2.7 Production Material

The following material is needed during production.

1.2.7.1 Hotmelt

Hotmelt	
Characteristic	**Note**
Recommended storage temperature	0 °C to +10 °C
Recommended storage humidity	Up to 55%
Special recommendations	The hotmelt can be stored for a maximum of one year. Avoid dust and damp in the storage facility. The first box in should be the first box out.
Required Hotmelt	See Chapter Technical Data in the Operation Manual (OM) for required hotmelt types.
TB/TBA/TPA	
Consumption Hotmelt	Approximately 40 g / 1000 straws
TCA/TWA	
Consumption Hotmelt	Approximately 50 g / 1000 straws

1.2.7.2 Drinking Straws

Drinking Straws	
Characteristic	**Note**
Supply	The straws are wrapped in plastic film and joined to a ladder band, like cartridges in a cartridge belt. The ladder bands are packed in boxes. the boxes are delivered on pallets. The first box in should be the first box out.
Recommended storage temperature	+10 °C to +30 °C
Recommended storage humidity	65%
Special recommendations	The boxes should be stored indoors under dry conditions and lying on the flat side. Never put a box directly on the floor, and never stack pallets on the top of each other.

1.2.8 Changeover Time

Changeover Time (TB/TBA/TPA)	
Package and straw change, within same package family	Approximately 60 min
Package and straw change, within Quick Change map	Approximately 15 min
Changeover Time (TCA/TWA)	
Package and straw type	Approximately 90 min
Package size, within Quick Change map	Approximately 60 min
Changeover Time (SD30)	
When changing packages with different width, changes have to be made in the web-interface for the camera. These changes take less than five minutes.	

1.3 Lifting and Transportation Data

1.3.1 Crate and Equipment

1.3.1.1 Main machine

TB/TBA/TPA				
Contents	**Weight**	**Length**	**Width**	**Height**
Crated machine (gross weight)	1050 kg*	2500 mm	1900 mm	2200 mm
TCA/TWA				
Contents	**Weight**	**Length**	**Width**	**Height**
Crated machine (gross weight)	1085 kg*	2500 mm	1900 mm	2200 mm
*) The crate weight will increase with approximately 35 kg if cooling unit (optional equipment) is included.				

1.3.1.2 Optional Equipment

BFT 2643050-0200				
Contents	**Weight**	**Length**	**Width**	**Height**
Crated machine (gross weight)	120 kg	760 mm	590 mm	1250 mm
SD30, 663550-0300				
Contents	**Weight**	**Length**	**Width**	**Height**
Crated machine (gross weight)	133 kg	1200 mm	800 mm	1130 mm

1.3.2 Auxiliary Equipment

The following equipment is needed when unpacking the machine.

Equipment	Capacity minimum	Quantity	Note	When Used
Forklift	1500 kg	1	Pallet forks must be at least as long as the crate is wide.	3.1 Crate Handling
Forklift	1000 kg	1	Pallet forks must be at least as long as the machine is wide.	3.2 Positioning and Assembly
Overhead gantry, mobile crane, or fork lift.			To be used when lifting Cooling unit (optional equipment)	3.2.3.7-1 Cooling Unit - Assemble
Lifting strap		2	To be used when lifting Cooling unit (optional equipment)	3.2.3.7-1 Cooling Unit - Assemble

1.3.3 Space Requirements

Measure and mark the designated position of the machine. For recommended clearances around the machine, see Section 1.1 Installation Drawings.

1.4 Utility and Utility Connection Data

1.4.1 Electrical Power Specification

1.4.1.1 Main Machine

WARNING

This product can cause a current in the protective earthing conductor. The external protective conductor associated with the power supply to this product must have a cross-sectional area of at least 10 mm^2. Where a residual current-operated protective (RCD) or monitoring (RCM) device is used for protection in case of direct or indirect contact, only an RCD or RCM of Type B is allowed on the supply side of this product.

Electrical Power Specification	
Phase	3N
Voltage	400/230 V AC
Frequency	50/60 Hz
Fuse dimension	16 A
Power consumption	1,4 kW
Control system	Rockwell Automation
Earth leakage current	39 mA
TB/TBA/TPA	
Power consumption (8000 packages/hour)	< 2 kW
Power consumption (24000 packages/hour)	< 2.2 kW
TCA/TWA	
Power consumption	1,4 kW

1.4.1.2 Optional Equipment

BFT	
Phase	1N~
Voltage	230 V
Frequency	50 or 60 Hz **Note!** Set the corresponding configuration for the frequency on the temperature regulator, see the Maintenance Manual ((MM).
Power consumption	Preheating - maximum 0.7 kW Production - maximum 0.7 kW
Fuse dimension	10 A
Cable type	2 wire plus ground
Earth leakage current	2 mA
The BFT is prepared for supplementary bonding to the building's equipotential net.	
SD30 (TB/TBA)	
Phase	1N~
Voltage	230 V AC
Frequency	50/60 Hz
Power consumption	0,12 kW
Fuse dimension	10 A
Cable type	1/N/PE
Earth leakage current (measured on a -0200 machine)	2 mA
The SD30 is prepared for supplementary bonding to the building's equipotential net.	

1.4.2 Compressed Air Specification

1.4.2.1 Main Machine

Compressed Air	
Required pressure	0.69 to 1.0 MPa (6.9 to 10 bar)
Connection thread	G 1/4”
TB/TBA/TPA	
Consumption (8000 packages/hour)	< 180 Nl / min
Consumption (24000 packages/hour)	< 385 Nl / min
TCA/TWA	
Consumption	325 Nl / min

1.4.2.2 Optional Equipment

SD30 (TB/TBA)	
Air is only used when rejecting packages.	
Required pressure	0.63 to 1.0 MPa (6.3 to 10 bar)
Consumption	700 Nl / minute
Connection hose diameter	12 mm

1.5 Hygiene Function Connection Data

1.5.1 Manual Cleaning

Hot and cold water must be available for cleaning the machine. For information on the cleaning, see the Chapter Care and Cleaning in the Operation Manual (OM).

1.6 Mechanical Line Integration and Connection (TCA)

1.6.1 Upstream Connection to Tetra Pak A1 0900 TCA

Note! These layouts are only examples. Other setups may occur. It is required to use line communications between the machines.

1.6.1.1 Normal Interface

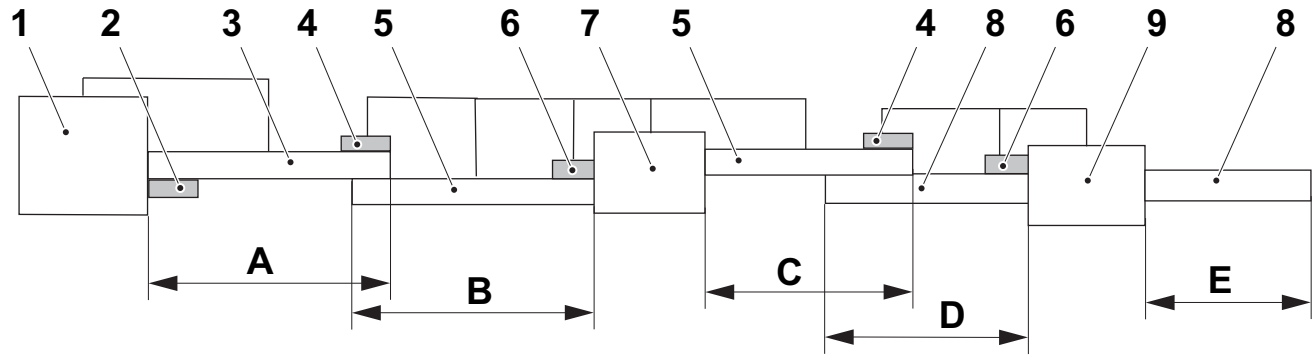

Conveyor	Length (m)
A	1 to 10
B	1 to 10
C	1 to 10
D	1 to 10
E	1 to 10

1 Filling machine
2 Turning unit
3 Conveyor powered by filling machine
4 Reject unit
5 Conveyor powered by distribution equipment 1
6 Package Orientation Control Unit/ Package Direction Control Unit
7 Distribution equipment 1
8 Conveyor powered by distribution equipment 2
9 Distribution equipment 2

1.6.1.2 Hand Packing Line

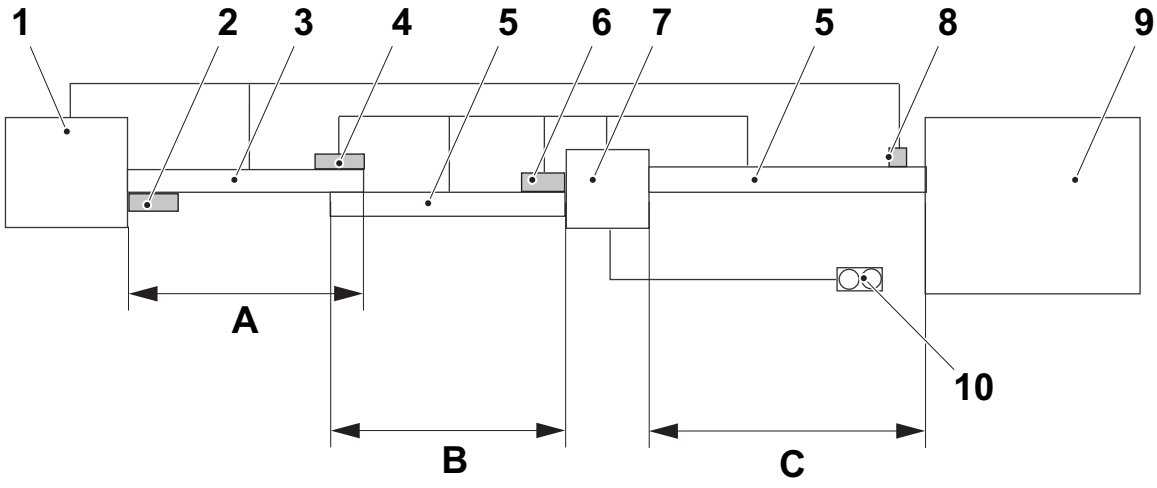

Conveyor	Length (m)
A	1 to 10
B	1 to 10
C	1 to 10

1 Filling machine
2 Turning unit
3 Conveyor powered by filling machine
4 Reject unit
5 Conveyor powered by distribution equipment 1
6 Package Orientation Control Unit/ Package Direction Control Unit
7 Distribution equipment
8 Last point DE photocell
9 External packaging solution
10 EMERGENCY STOP and STOP button (Optional equipment)

1.7 Noise

CAUTION
Hazardous noise.
Risk of impaired hearing.
Hearing protection is recommended whenever this equipment is in operation.

1.7.1 Main Machine

Values declared in accordance with ISO 4871			
Symbol	**Definition**	**Declared value**	**Notes**
L_{pA}	Emission sound pressure level, operator position	73.5 dB(A)	Values determined using the basic standard ISO 11204 (Survey method)
K_{WA}	Uncertainty	2.5 dB(A)	

1.7.2 Optional Equipment

BFT

Values declared in accordance with ISO 4871			
Symbol	**Definition**	**Declared value**	**Notes**
L_{pA}	Emission sound pressure level, operator position	< 70 dB(A)	Values determined using the basic standard ISO 11204 (Survey method)
K_{WA}	Uncertainty	5 dB(A)	

SD30 (TB/TBA)

Values declared in accordance with ISO 4871			
Symbol	**Definition**	**Declared value**	**Notes**
L_{pA}	Emission sound pressure level, operator position	74.5 dB(A)	Values determined using the basic standard ISO 11204 (Survey method)
K_{WA}	Uncertainty	2.5 dB(A)	

Cooling Unit

Symbol	**Definition**	**Declared value**	**Notes**
L_{pA}		64 dB(A)	

1.8 Emissions

The Straw Applicator 30 by Tetra Pak produces no significant emissions to air.

1.9 Site Environment Specification

CAUTION

Risk of minor personal injury.

If exposed to hotmelt vapours for a long time, minor personal injury may occur.

It is **required** that the site fulfil the following specification:

a) Conveyor lubrication should be used according to Tetra Pak standards.

It is **recommended** that the site fulfil the following specifications:

a) The site must accommodate transport of straws from storage to the machine.
b) The site should have sufficient lighting for work purposes.
c) Hot and cold water should be available for cleaning the machine.

1.9.1 Ambient Temperature

Note! High humidity may damage components in the electrical cabinet!

The site should be prepared so that

- sufficient cooling is provided to ensure a working temperature below
  - 50°C for the main machine.
  - 40°C for the SD30 (Optional equipment, TB/TBA)
- the ventilation can draw off any hotmelt vapours.

1.9.2 Space Requirements

The space requirements for this machine are given in the installation drawings shown in chapter 1.1 Installation Drawings.

The ceiling height must be at least 3000 mm.

Optional Equipment

When SD30 is installed together with SA30:

- SD30 shall be placed on the discharge conveyor driven by SA30.
- There must be a minimum of 1 m between SD30 and the next (downstream) conveyor.

1.9.3 Connections

The site must be prepared with the following supplies

- electrical supply: 400 V, 16 A, 3/N/PE
- compressed air supply: 0.69 to 1.0 MPa (6.3 to 10 bar)

1.9.4 Floor

To obtain proper production, the machine must stand stably on the floor. It is important that the floor is in a good condition and has an angle of inclination of less than 4°.

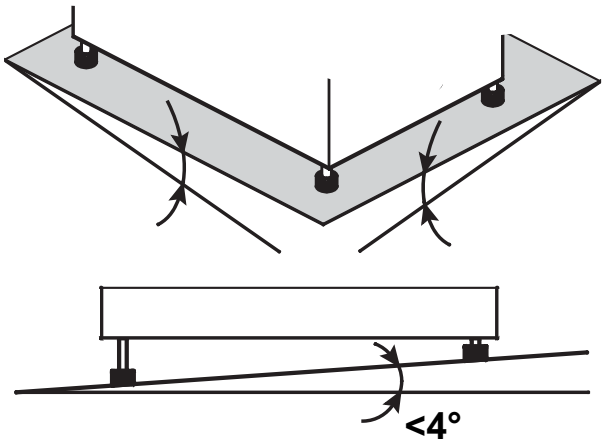

This page intentionally left blank

2 Preparatory Requirements

Description

This chapter describes preparatory requirements and recommendations to ensure a good installation. Its purpose is to help the installation technicians and other involved in the installation project to quickly locate information about the site preparation, including requirements for utility, space, tools, and other required installation equipment, and specific construction details.

2.1 Organization and Training . . . . . 2 - 5
2.1.1 Resources . . . . . 2 - 5
2.1.2 Special Skills . . . . . 2 - 5
2.1.3 Special Practices . . . . . 2 - 5
2.1.4 Training . . . . . 2 - 5
2.2 Special Equipment . . . . . 2 - 6
2.3 Maintenance Details . . . . . 2 - 7
2.4 Spare Parts Supply . . . . . 2 - 8
2.4.1 Start-Up Parts . . . . . 2 - 8
2.4.2 Parts Inventory Management System . . . . . 2 - 8
2.4.3 Parts Recommendation Tool . . . . . 2 - 8
2.5 Quality Level and Procedures . . . . . 2 - 9
2.5.1 Good Manufacturing Practices . . . . . 2 - 9
2.6 Site Preparation . . . . . 2 - 10
2.6.1 General Requirements . . . . . 2 - 10
2.6.2 Floor . . . . . 2 - 10

This page intentionally left blank

2.1 Organization and Training

2.1.1 Resources

During Installation		
Personnel	No.	Note
Technicians	1	
Electrician	1	
During Production		
Personnel	No.	Note
Operators	1	
Technician	1	For troubleshooting purposes.
During Maintenance		
Personnel	No.	Note
Technicians	1	
Electrician	0	

2.1.2 Special Skills

During the start-up of the equipment, a person with the ability to program a PLC system must be available.

2.1.3 Special Practices

Tetra Pak recommends that Tetra Pak staff and the final users cooperate during installation, commissioning, and validation of the equipment. The cooperation is a part of the training in how to operate and maintain the equipment.

2.1.4 Training

All operators of the equipment must have participated at a Tetra Pak operator training.

2.2 Special Equipment

Equipment	
Frequency meter	Used for checking the timing belt tension. see Chapter 2.4 Frame Housing in the MM.

2.3 Maintenance Details

Tetra Pak recommends that the Tetra Pak Maintenance System (TPMS) is used. See the TPMS section in the Maintenance Manual for more information.

2.4 Spare Parts Supply

The spare parts supply must be managed to ensure the availability of needed spare parts. Tetra Pak provides services to support the spare parts supply.

2.4.1 Start-Up Parts

Start-Up Parts is a service that supports the final user of the equipment in optimizing the on-site parts inventory for selected equipment. The service is available during the first 12 months of production or 3000 hours of production. Tetra Pak and the final user regularly analyse parts consumption and optimize the inventory accordingly.

The service gives good parts management, optimized total parts cost, easy access to the right parts at the right time, improved cash flow, and reduced working capital, all of which leads to increased production availability.

2.4.2 Parts Inventory Management System

Parts Inventory Management System (PIMS) has been developed to provide an appropriate level of administration and control of the stock held on the final user's site. The main purpose of the system is to optimize the quantity of stock held, in order to ensure that the correct spare parts are available when needed.

2.4.3 Parts Recommendation Tool

The Parts Recommendation Tool identifies the type and quantity of parts the final user of the equipment should have on hand when installing new equipment. This recommendation focuses on the first 3000 production hours and is based on the final user's operation, equipment, and level of security and risk.

2.5 Quality Level and Procedures

2.5.1 Good Manufacturing Practices

Good Manufacturing Practices (GMPs) are guidelines used by food processing and packaging facilities. Important GMPs are listed below:

- Keep facilities clean and in good repair.
- Use well constructed trash receptacles and keep them clean and in good repair.
- Provide adequate ventilation to minimize odours and vapours.
- Identify toxic cleaning compounds and sanitation agents and store them carefully, so that they cannot contaminate product, product-contact surfaces, or packaging materials.
- Clean and decontaminate all product-contact surfaces regularly. See the Operation Manual for information about cleaning procedures.
- Also the non-product contact surfaces should be clean. Clean as needed to protect against contamination of product. See the Operation Manual for information about cleaning procedures.
- Make sure that sewage and liquid waste are drained from the product processing and packaging areas.
- Provide adequate floor drainage for water, cleaning solutions, and product that is released onto the floor.
- Sewers and drains must be accessible for cleaning. Drains should never be located directly underneath the equipment.
- Provide convenient hand washing facilities with warm running water.
- Provide properly designed heating, venting, and air conditioning (HVAC) systems to reduce the risk of airborne contamination.
- Provide proper personal hygiene apparel as described in your facility's GMPs and operating and safety procedures.

2.6 Site Preparation

2.6.1 General Requirements

Place the equipment in a working environment that is compatible with the hygienic design and function of the machine. We recommend that you take advantage of Tetra Pak's technical consulting services during the planning stages.

2.6.2 Floor

To obtain a proper production it is necessary that the machine is standing stable on the floor. It is important that the floor is in good condition. See Section 1.2.3 Mass and Dimensions in Chapter 1 Technical Specification for static load of the Straw Applicator 30.

3 Mechanical Completion

Description

This chapter describes the mechanical completion of the equipment. The mechanical completion covers all activities from receipt of the equipment until the equipment is mechanically installed. The mechanical completion activity is finalized when a mechanical completion certificate is signed.

The chapter includes procedures to receive, assemble, and install the equipment. It also includes a checklist used to verify that the equipment is mechanical correctly installed.

3.1 Crate Handling . . . . . 3 - 5

3.1.1 Goods Reception and Storage . . . . . 3 - 5

3.1.1.1 Lifting and Unloading the Crated Equipment . . . . 3 - 5

3.1.1.2 Location of Packing List . . . . . 3 - 6

3.1.1.3 Centre of Gravity . . . . . 3 - 7

3.1.1.4 Correct Fork Lift Points . . . . . 3 - 8

3.1.1.5 Inspection . . . . . 3 - 9

3.1.1.6 Lifting Devices . . . . . 3 - 9

3.1.2 Moving the Crated Equipment . . . . . 3 - 10

3.1.3 Storing the Crated Equipment . . . . . 3 - 11

3.1.4 Delivery Checks . . . . . 3 - 11

3.1.5 Opening the Crate . . . . . 3 - 12

3.1.6 Unpacking the Crate . . . . . 3 - 16

3.1.7 Disposal of Reusable Material and Waste . . . . . 3 - 16

Reusable Packing Materials and Structures . . . . 3 - 16

Non Reusable Packing Materials and Structures 3 - 16

3.2 Positioning and Assembly . . . . . 3 - 17

3.2.1 Moving and Positioning . . . . . 3 - 17

3.2.2 Levelling . . . . . 3 - 22

3.2.3 Assembly . . . . . 3 - 23

3.2.3.1 Warning Lamp . . . . . 3 - 23

3.2.3.1-1 Warning Lamps - Assemble . . . . . 3 - 23

3.2.3.2 Conveyors . . . . . 3 - 24

3.2.3.2-1 Conveyor - Assemble (TB/TBA/TPA) . . . . . 3 - 24

3.2.3.2-2 Infeed Conveyor - Assemble (TB/TBA/TPA) . . 3 - 26

3.2.3.2-3 Infeed Conveyor - Assemble (TCA) . . . . . 3 - 26

3.2.3.2-4 Infeed Conveyor - Assemble (TWA) . . . . . 3 - 27

3.2.3.2-5 Discharge Conveyor (TB/TBA/TPA) - Assemble . . . . . 3 - 28

3.2.3.2-6 Discharge Conveyor (TCA) - Assemble . . . . . 3 - 30

3.2.3.2-7 Discharge Conveyor (TWA) - Assemble . . . . . 3 - 31

3.2.3.3 Conveyor Chain . . . . . 3 - 32

3.2.3.4 Photocells . . . . . 3 - 32
3.2.3.5 Tunnels . . . . . 3 - 32
3.2.3.6 Bottom Panel . . . . . 3 - 33
3.2.3.6-1 Bottom Panel - Assemble . . . . . 3 - 33
3.2.3.7 Cooling Unit (Optional Equipment) . . . . . 3 - 34
3.2.3.7-1 Cooling Unit - Assemble . . . . . 3 - 34
3.2.3.8 SD (Optional Equipment, TB/TBA) . . . . . 3 - 40
3.2.3.8-1 SD - Connect Conveyor and Chain . . . . . 3 - 40

3.3 Equipment Interfaces and Connections . . . . . 3 - 41
3.3.1 Utility Connections . . . . . 3 - 41
3.3.1.1 Compressed Air . . . . . 3 - 41
3.3.1.2 Electricity . . . . . 3 - 41

3.4 Restore Tools and Site . . . . . 3 - 43

3.5 Mechanical Completion Inspection . . . . . 3 - 44
3.5.1 Mechanical Completion Checklist . . . . . 3 - 45
3.5.2 Crate Handling . . . . . 3 - 45
3.5.3 Positioning and Assembly . . . . . 3 - 47
3.5.3.1 SA30 . . . . . 3 - 47
3.5.3.2 BFT (Optional Equipment) . . . . . 3 - 49
3.5.3.3 SD (Optional Equipment, TB/TBA) . . . . . 3 - 49
3.5.4 Equipment Interfaces and Connections . . . . . 3 - 50
3.5.4.1 SA30 . . . . . 3 - 50
3.5.4.2 BFT (Optional Equipment) . . . . . 3 - 51
3.5.4.3 SD (Optional Equipment, TB/TBA) . . . . . 3 - 51
3.5.5 Mechanical Completion Inspection . . . . . 3 - 52

3.1 Crate Handling

3.1.1 Goods Reception and Storage

Inspect the crate for signs of damage. If any signs of damage is found, follow the appropriate local regulations, and contact the transportation company.

3.1.1.1 Lifting and Unloading the Crated Equipment

DANGER

Immediate danger to life.

To ensure safe and efficient handling of the crate, carefully study the following instructions.

Symbol	Meaning
	Centre of gravity
	Lifting points for chains, cables, ropes or slings.
	This way up.
	Fragile
	Keep dry
HANDLE WITH CARE	“Handle with care” warning
NOT TO BE DROPPED	“Not to be dropped” warning
	“Do not stack on top” warning
GROSS KG.	“Gross weight” value
NET KG.	“Net weight” value
REMOVE THIS SIDE FIRST	“Remove this side first” first side to remove from crate. **Note!** This is an additional label that does not exist on all crates.

3.1.1.2 Location of Packing List

The packing list is located inside the inspection hatch. See the arrow in the illustration below.

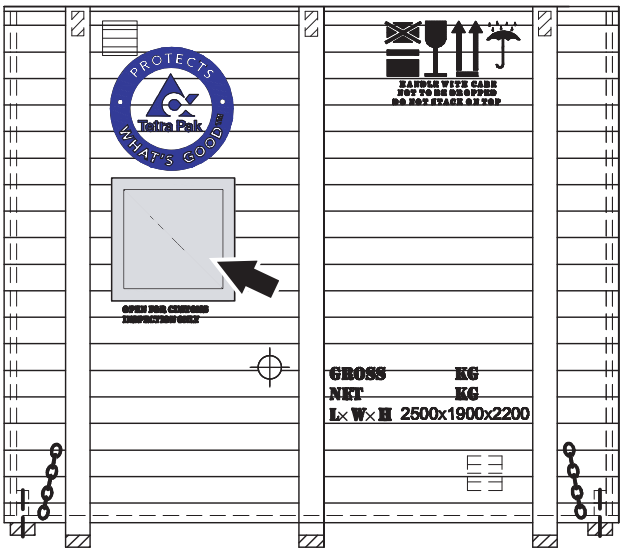

3.1.1.3 Centre of Gravity

The illustration below shows how the centre of gravity is indicated on a Tetra Pak crate. The centre of gravity is marked on all four sides of the crate.

WARNING

Risk of serious personal injury.

The purpose of the illustration below is to give an example of how the centre of gravity is indicated on a crate! For information on the location of the centre of gravity for a specific crate, see the actual marks on the crate.

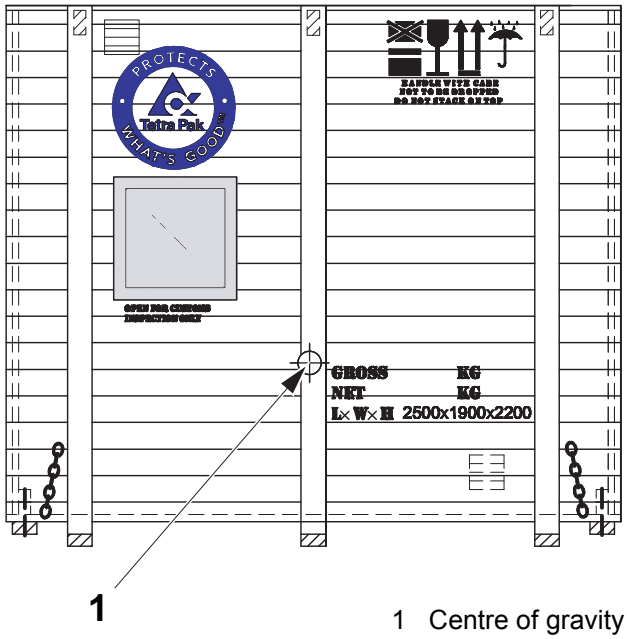

1 Centre of gravity symbol

3.1.1.4 Correct Fork Lift Points

WARNING

Immediate danger to life!

The crate may tilt if the centre of gravity or the fork lift points are not observed. Failure to observe may result in immediate danger to life and/or major damage to equipment.

Insert the forks so that the centre of gravity (1) is placed between the forks. The forks should be set as wide apart as possible.

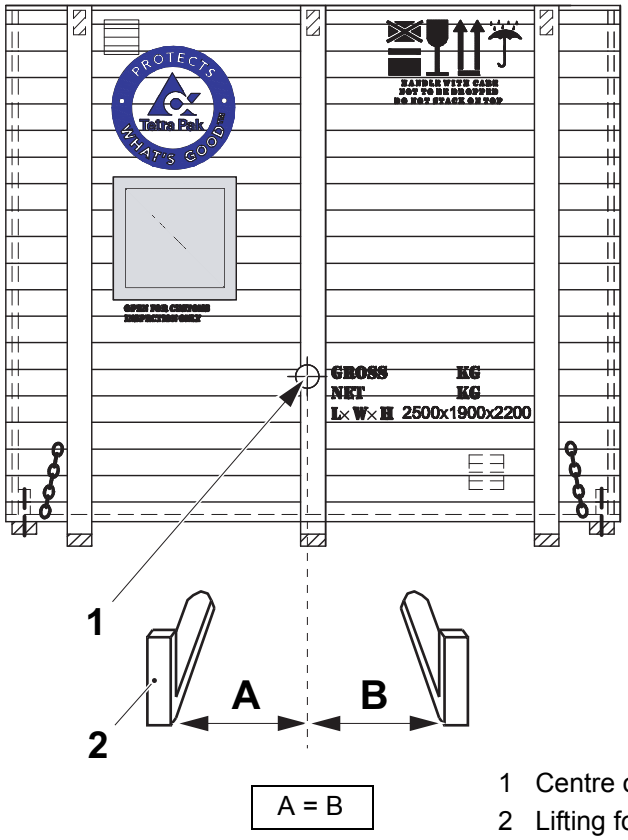

1 Centre of gravity
2 Lifting fork

3.1.1.5 Inspection

a) Use the packing list to check that nothing is missing.

b) Inspect the equipment for damage.

c) Open the machine document box and check that the documentation corresponds with the machine and the machine number.

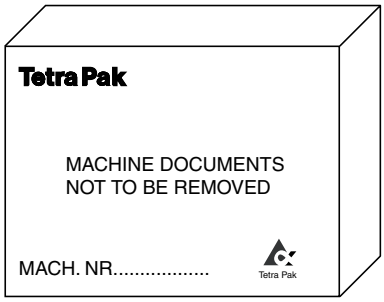

3.1.1.6 Lifting Devices

See 1.3.2 Auxiliary Equipment before lifting and unloading.

3.1.2 Moving the Crated Equipment

For mass and dimensions of the crate, see Section 1.2.3 Mass and Dimensions.

a) Lift the crate, see the section 3.1.1.1 Lifting and Unloading the Crated Equipment. Lift only enough to clear the floor.

b) Make sure that the crate remains stable on the lifting equipment.

CAUTION

Risk of personal injury

Move the crate slowly and gently.

c) Move the crate to its destination.

d) Look through the customs inspection panel to see in what way the contents are facing. Position the crate to face the most convenient direction.

e) Lower the crate gently to the floor, leaving enough room around it for easy access to all sides.

f) Make sure that the crate is firmly supported. Put blocks or plates under it if necessary.

g) Remove the lifting equipment.

3.1.3 Storing the Crated Equipment

Contents	Recommended storage temperature	Recommended storage humidity	Special recommendations
SA 30	-20°C to +70°C	<80%	Keep dry to prevent condensation and corrosion on connections inside the electrical cabinet.
BFT	-20°C to +70°C		
SD	-20°C to +70°C	30% to 95%	Temperature gradient: 2°C per minute

3.1.4 Delivery Checks

Inspect the crate for signs of damage. If any signs of damage is found, follow the appropriate local regulations, and contact the transportation company.

3.1.5 Opening the Crate

WARNING

Risk of crushing.

The crate sides may tilt during removal. Failure to observe can result in serious personal injury.

a) Remove the bolts on the front edge (1) of the top lid.

b) Remove the bolts on the rear edge (2) of the top lid.

c) Remove the bolts on the sides (3) and (4) of the top lid.

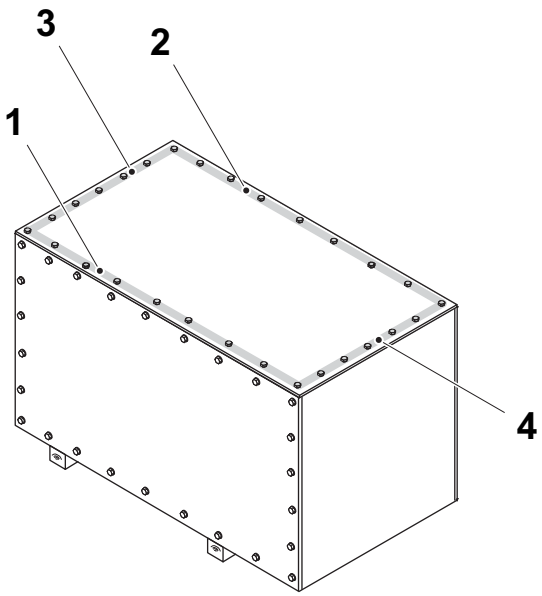

1 Front edge
2 Rear edge
3 Side
4 Side

(Cont'd)

(Cont'd)

d) Use the forklift truck to lift off the top lid.

Note! Use a crowbar or a similar tool to lift up the front edge (1) of the top lid so the forks can reach under the lid.

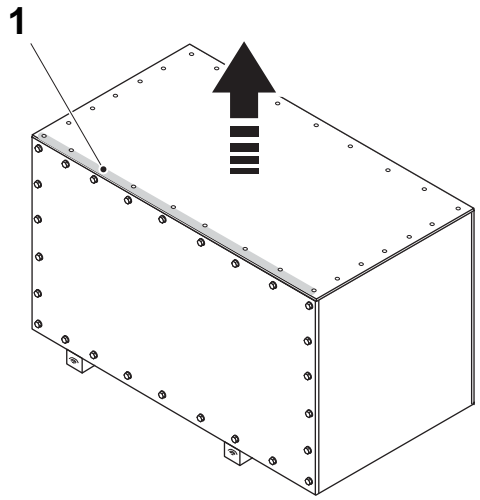

1 Front edge

e) Remove the cross beams (5). The number and location of the cross beams (5) may vary depending of machine variant.

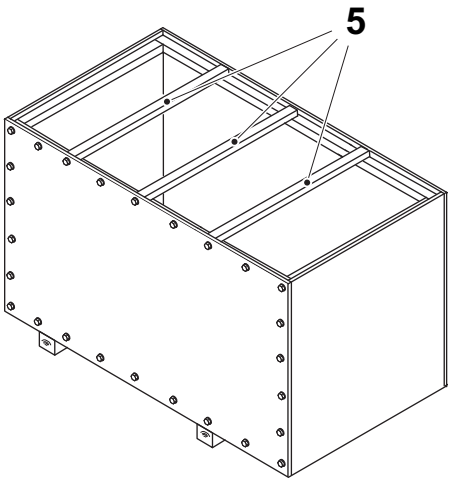

5 Cross beam

(Cont'd)

(Cont'd)

f) Before removing any bolts, position a forklift truck with its forks (6) in the direction indicated with an arrow in the illustration. This will protect the front from falling.

Note! Start with the side marked “Remove this side first” if such marking is present on the crate.

g) Remove the bolts on the sides (7) and (8).

h) Remove the bolts on the upper edge (9) of the crate.

i) Remote the bolts on the lower edge (10) of the crate.

Note! Do not remove the corner bolts (11) yet.

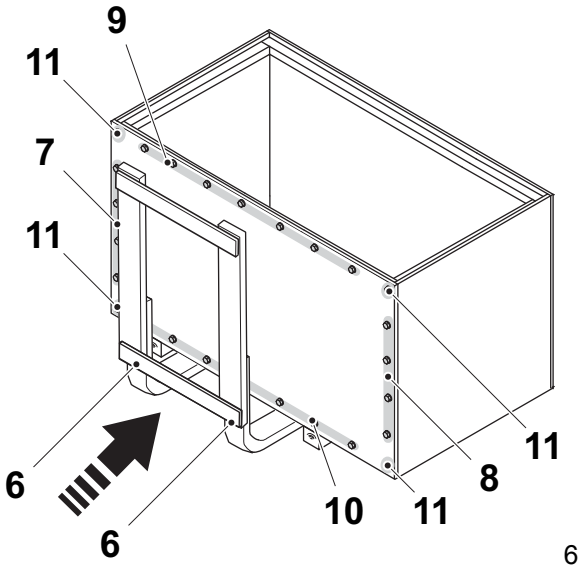

6 Forks
7 Side
8 Side
9 Upper edge
10 Lower edge
11 Bolt

(Cont'd)

(Cont'd)

j) Make sure that the forks (6) are close to the front.

k) Remove the corner bolts (11) and lower the front against the forklift truck.

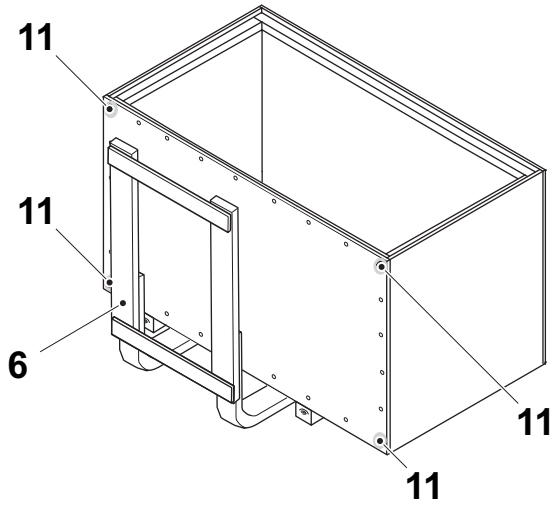

6 Forks
11 Bolt

l) Remove the beam (12).

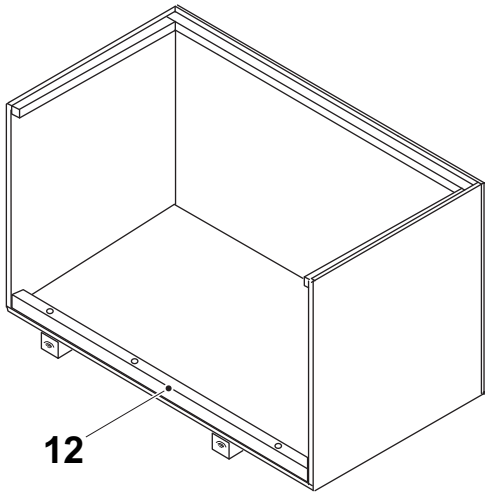

12 Beam

3.1.6 Unpacking the Crate

WARNING

Immediate danger to life.

The machine may tilt if the centre of gravity or the fork lift points is not observed. Failure to observe may result in immediate danger to life and/or major damage to equipment.

WARNING

Remove the machine from the crate

When lifting the machine using a fork lift truck, use the fork lift positions as shown in 3.1.1.4 Correct Fork Lift Points.

Make sure that the equipment is inspected when unpacked.

3.1.7 Disposal of Reusable Material and Waste

Reusable Packing Materials and Structures

Reusable packing materials and structures should be collected and re-used in accordance with local regulations.

Non Reusable Packing Materials and Structures

Non reusable packing materials and structures should be collected and disposed of in accordance with local regulations.

3.2 Positioning and Assembly

3.2.1 Moving and Positioning

DANGER

Immediate danger to life.
The machine may tilt if not observing the centre of gravity or the fork lift points. Failure to observe may result in immediate danger to life and major damage to equipment.

CAUTION
Possible machine damage.
Do not move the machine with pallet forks after assembling the bottom panel.

Use the correct lifting equipment. See the section 1.3.2 Auxiliary Equipment.

a) Check that the machine can be transported to the assembly site without any problems regarding ceiling height, doors, passages and so on.

TB/TBA/TPA

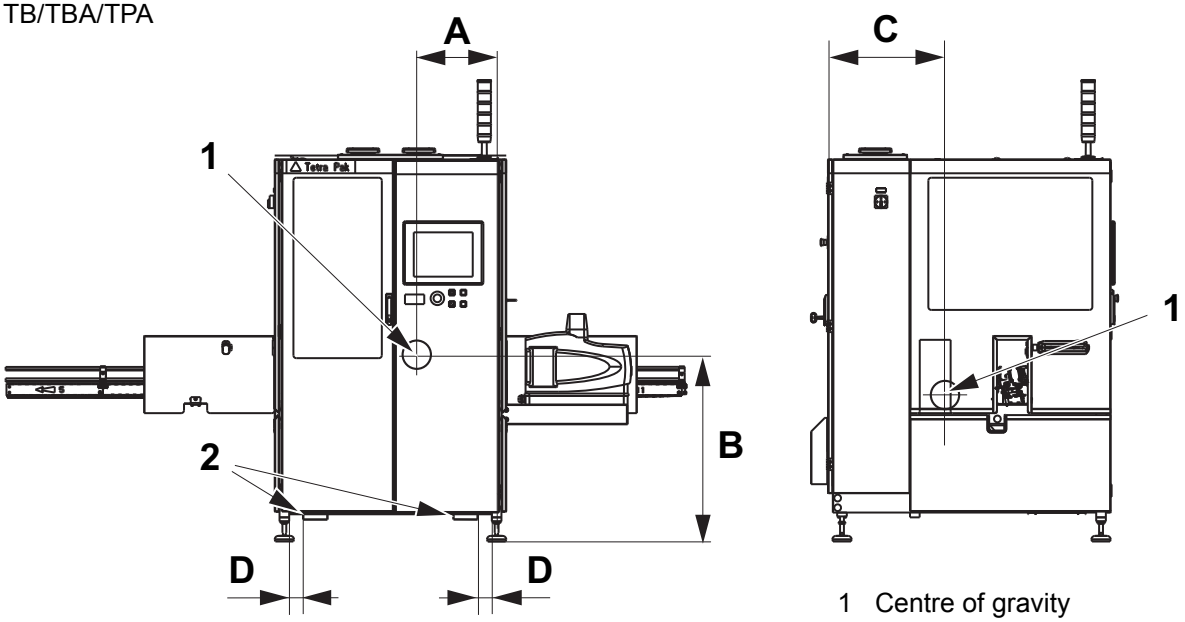

1 Centre of gravity
2 Fork lift points

Type	A (mm)	B (mm)	C (mm)	D (mm)
TB/TBA/TPA	415	1011	582	≤ 75

(Cont'd)

(Cont'd)

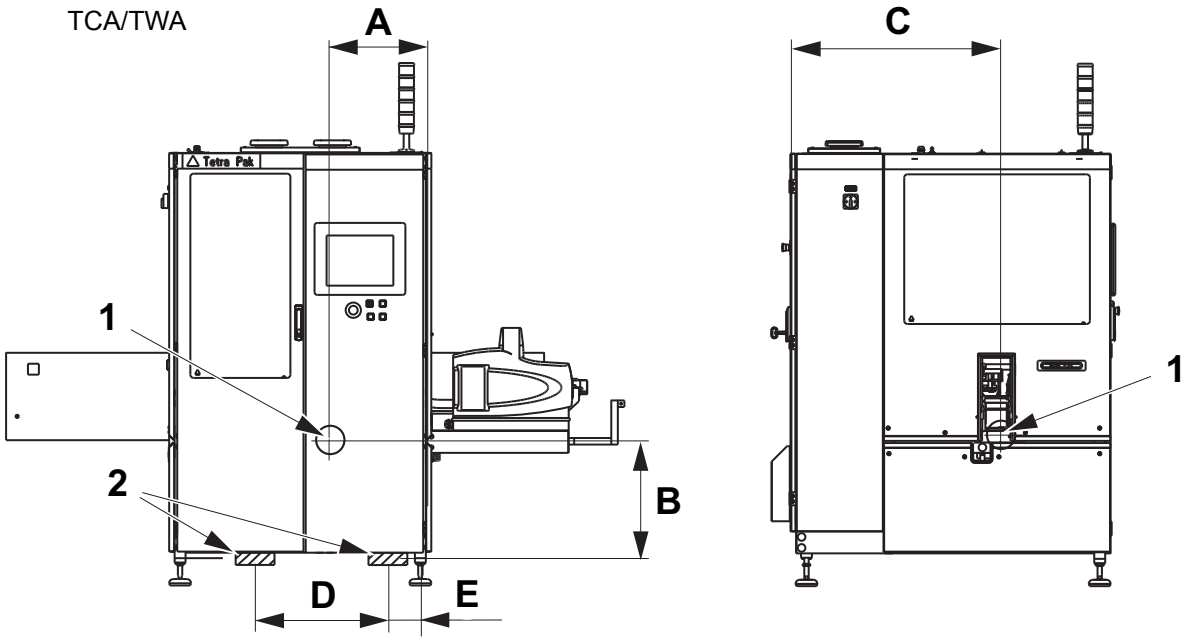

1 Centre of gravity
2 Fork lift points

Type	A (mm)	B (mm)	C (mm)	D (mm)	E (mm)
TCA	440	530	960	700 to 800	100
TWA	440	630	870	700 to 800	100

(Cont'd)

(Cont'd)

BFT
(Optional equipment)

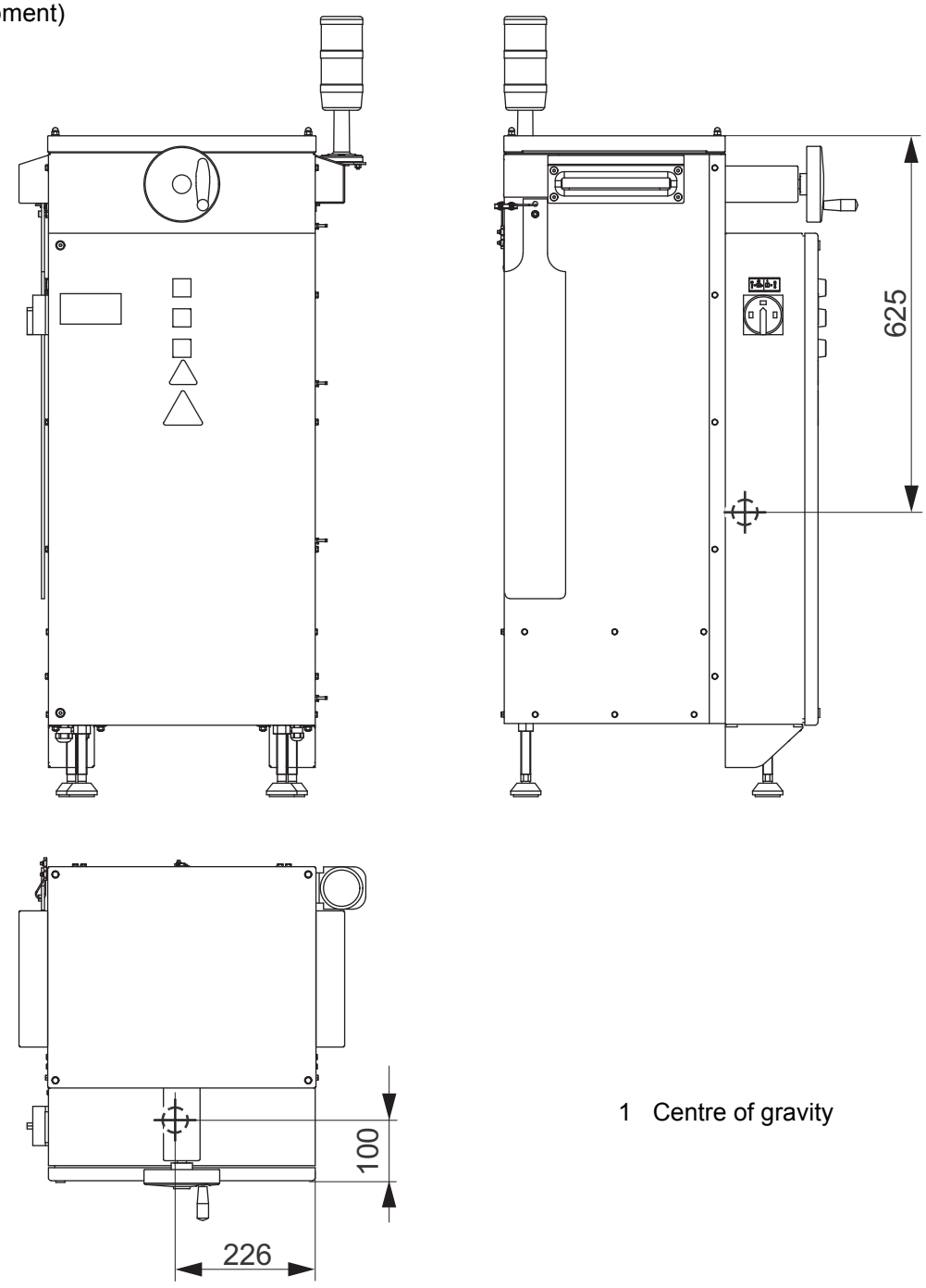

1 Centre of gravity

(Cont'd)

(Cont'd)

SD30
(Optional equipment, TB/TBA)
Note! Put on pallet when lifting Straw Detector 30.

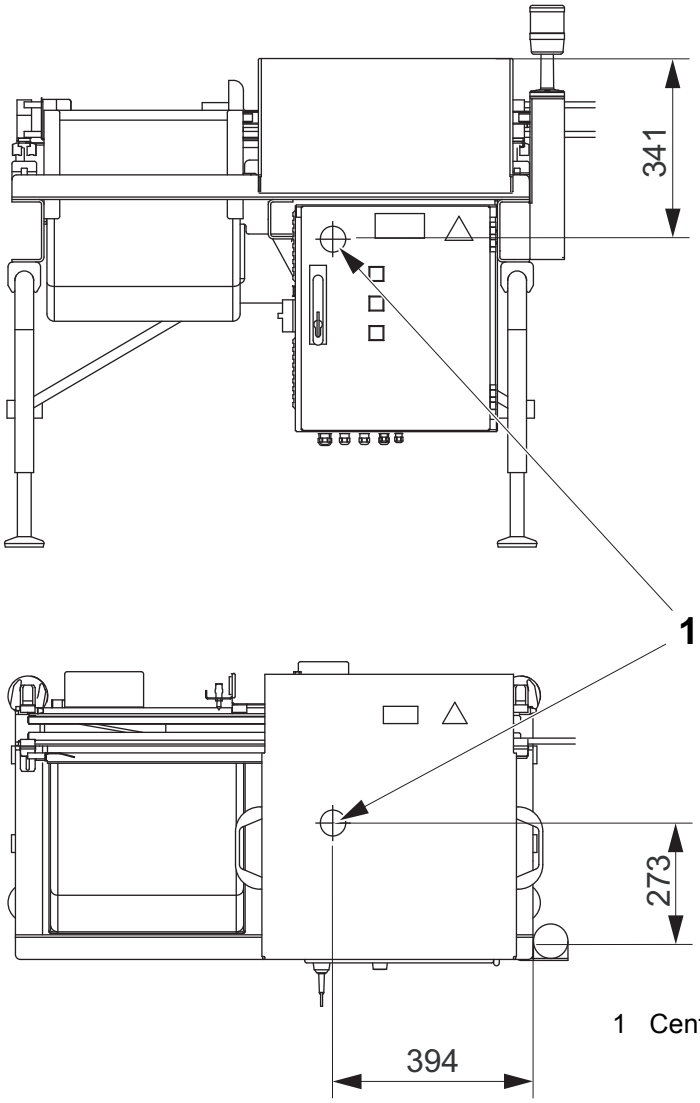

1 Centre of gravity

(Cont'd)

(Cont'd)

b) Remove the machine from the crate. Lift only enough to clear the crate. When lifting the machine using a fork lift truck, use the fork lift positions.

c) Manoeuvre the machine out of the crate.

d) Lower the machine feet approximately 85 mm to facilitate the levelling later on.

3.2.2 Levelling

Make sure that the machine is positioned horizontally by, for example, using a spirit level. Place the spirit level on the cross beams as well as on the longitudinal beams as shown in the illustration below. If necessary, adjust the level by turning the machine feet.

Main machine

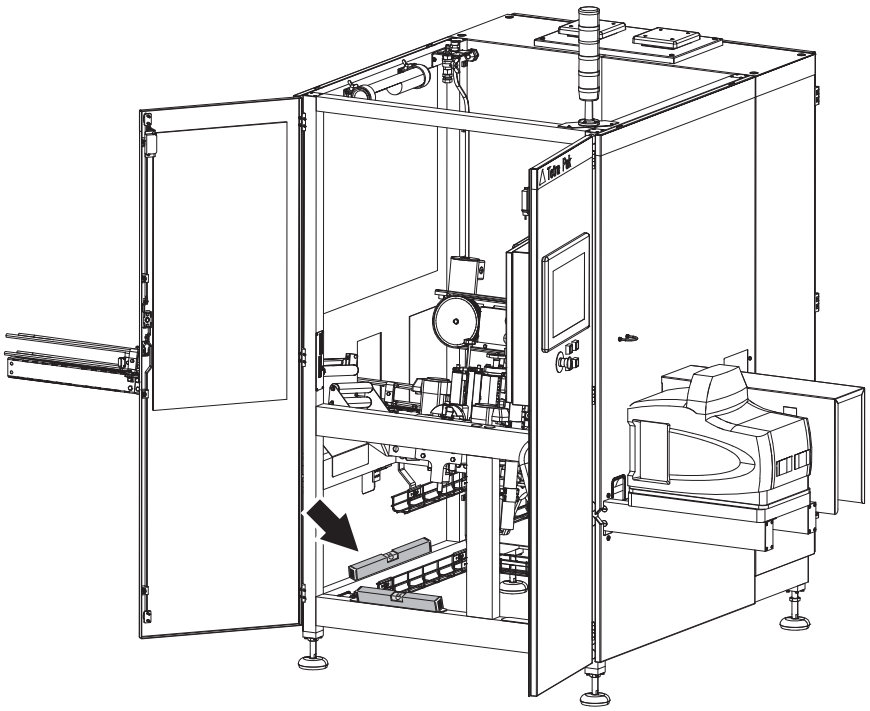

SD
(Optional equipment, TB/TBA)

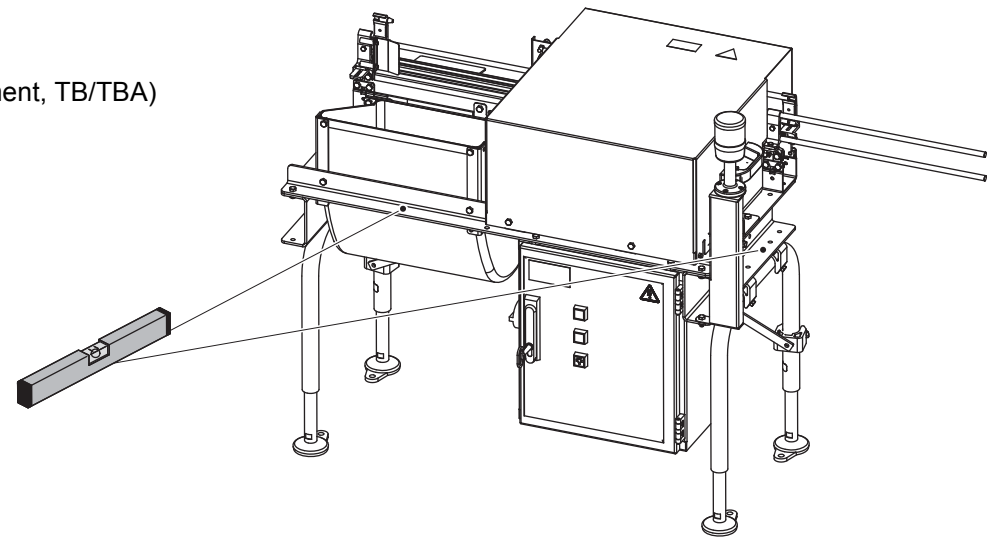

3.2.3 Assembly

3.2.3.1 Warning Lamp

3.2.3.1-1 Warning Lamps - Assemble

The warning lamps have been mounted upside down in order for the machines to fit their crates.

a) Loosen the warning lamp (1).

b) Turn the warning lamp and assemble it in the same holes as it was assembled before, with the same screws on the same place. The warning lamp should be assembled to the machine at position (2).

Main machine

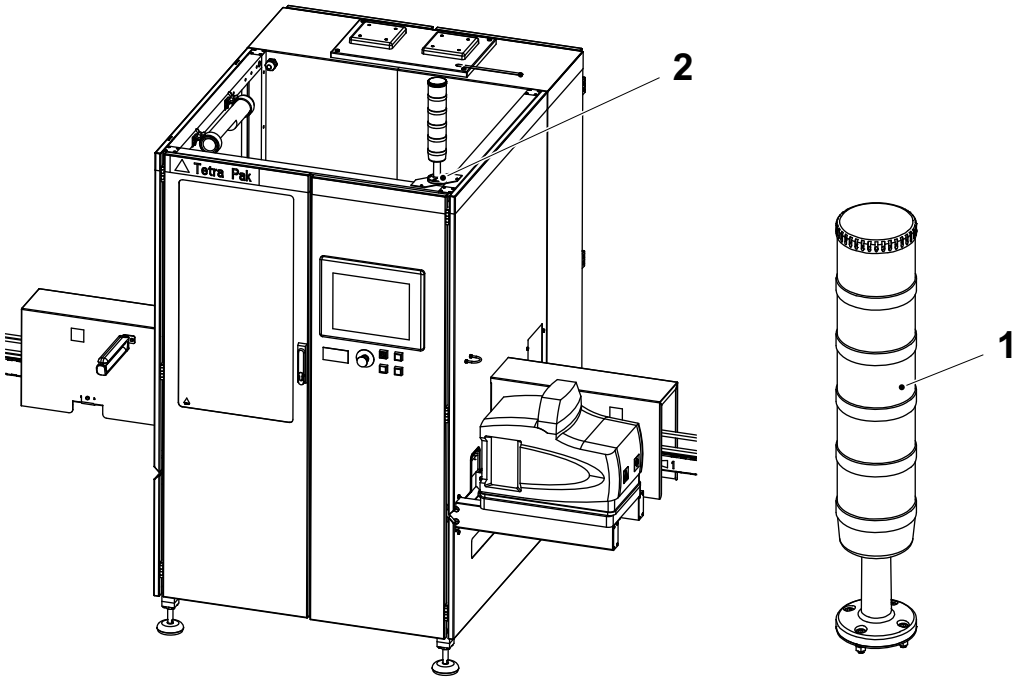

BFT (Optional equipment)

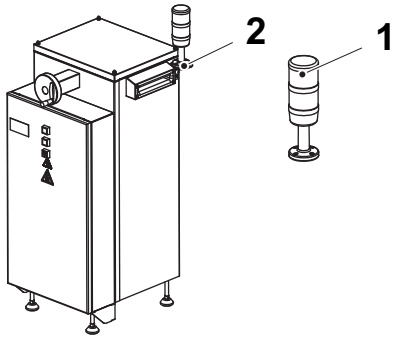

SD (Optional equipment, TB/TBA)

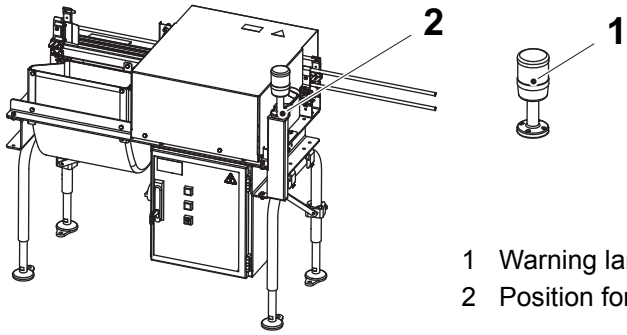

1 Warning lamp
2 Position for warning lamp

3.2.3.2 Conveyors

CAUTION
Risk of damage to equipment
To comply with safety demands, the chain drive motor has to be supplied and controlled according to the Electrical Manual (EM), see Connection diagrams.

Note! The drive motor for the chain is not part of the machine.

3.2.3.2-1 Conveyor - Assemble (TB/TBA/TPA)

Note! The conveyor has twisted side plates at the first section on the infeed side, and on the last section on the discharge side. The side plates are marked with numbers and arrows corresponding to the product flow.

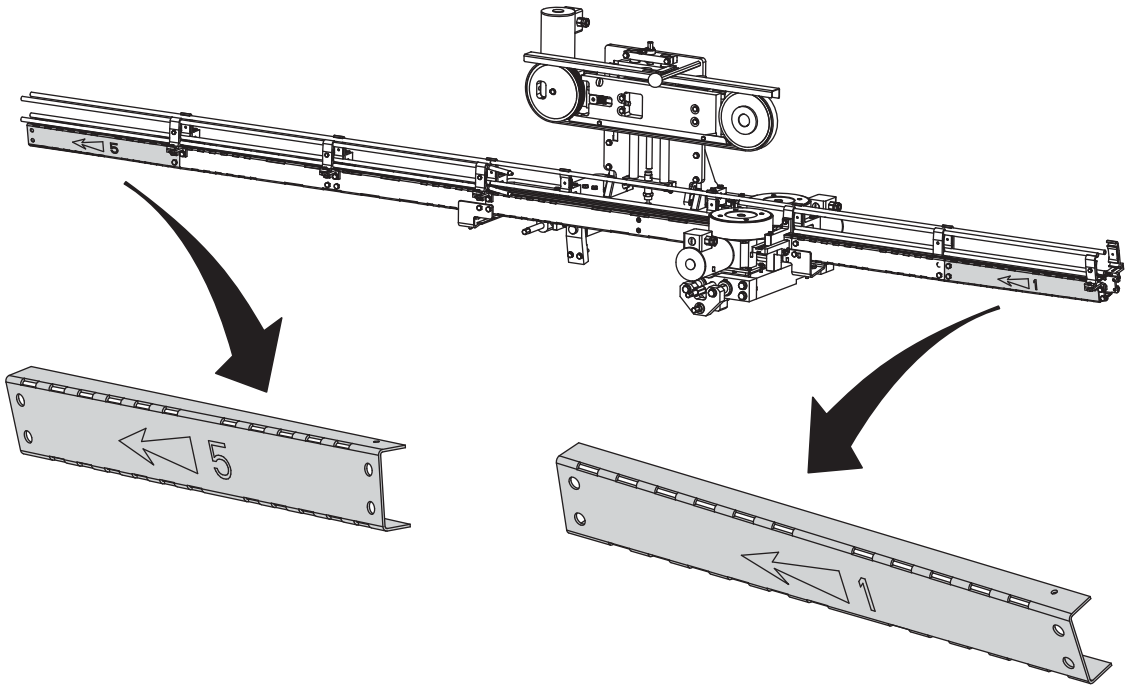

(Cont'd)

(Cont'd)

a) Use the screws (1) to assemble the conveyor part (2) with the discharge side of the conveyor (3) inside the machine.

b) Tighten the screws (1).

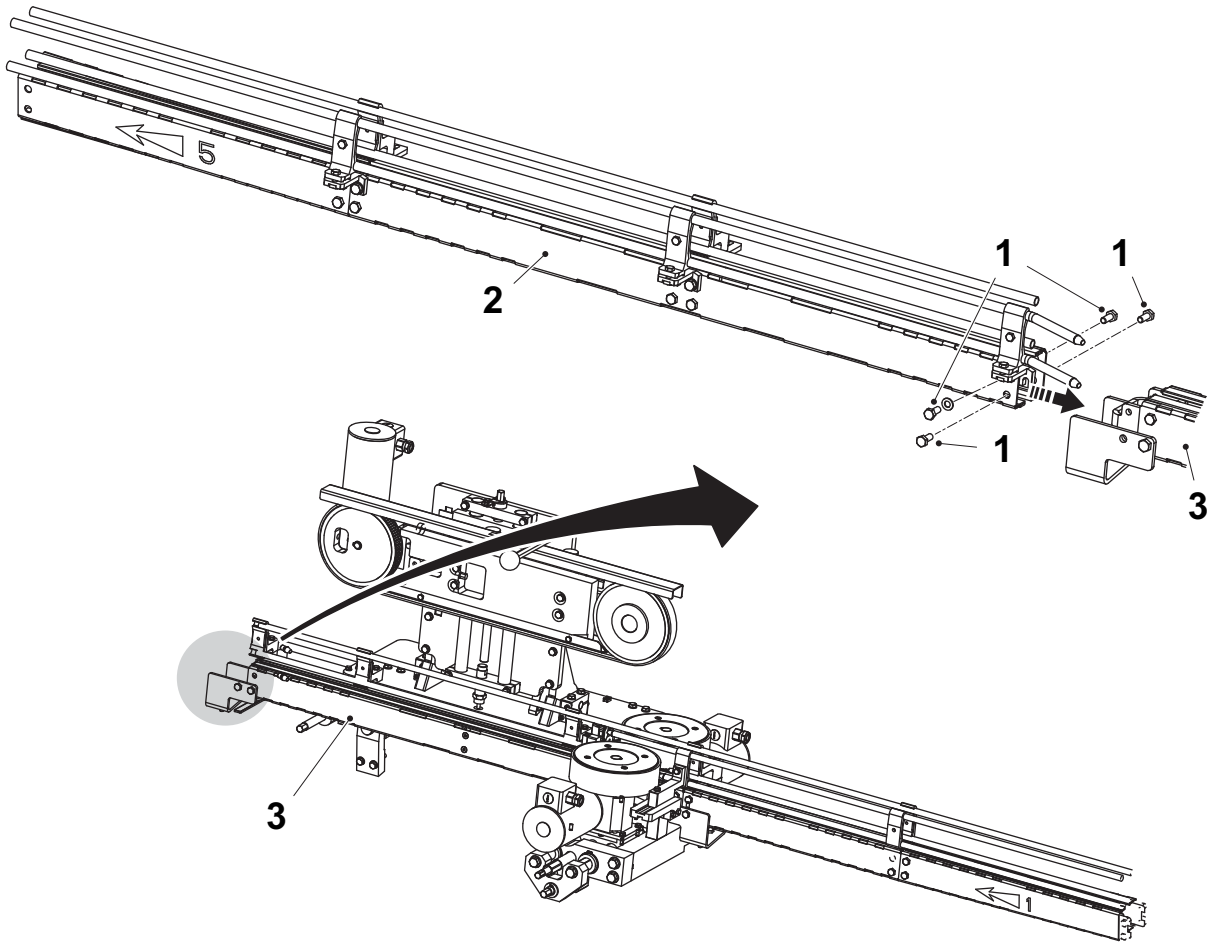

1 Screw
2 Conveyor part
3 Conveyor

3.2.3.2-2 Infeed Conveyor - Assemble (TB/TBA/TPA)

Note! Don not install an infeed conveyor longer than three meters before the drive station.

Assemble the infeed conveyor (1) with the conveyor section (2). Assemble holders and rails. See the documentation belonging to the infeed conveyor.

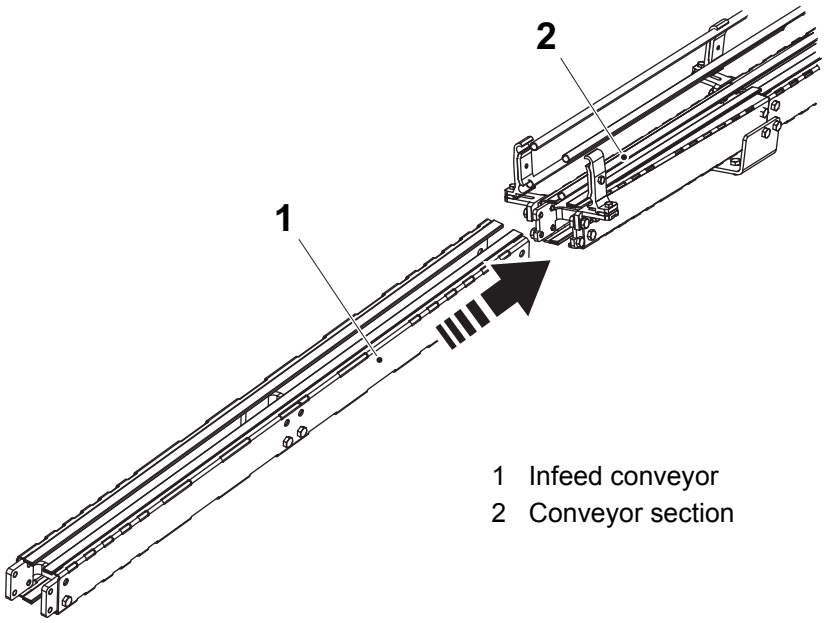

1 Infeed conveyor
2 Conveyor section

3.2.3.2-3 Infeed Conveyor - Assemble (TCA)

Assemble the infeed conveyor to the bracket (1). See the documentation belonging to the conveyor.

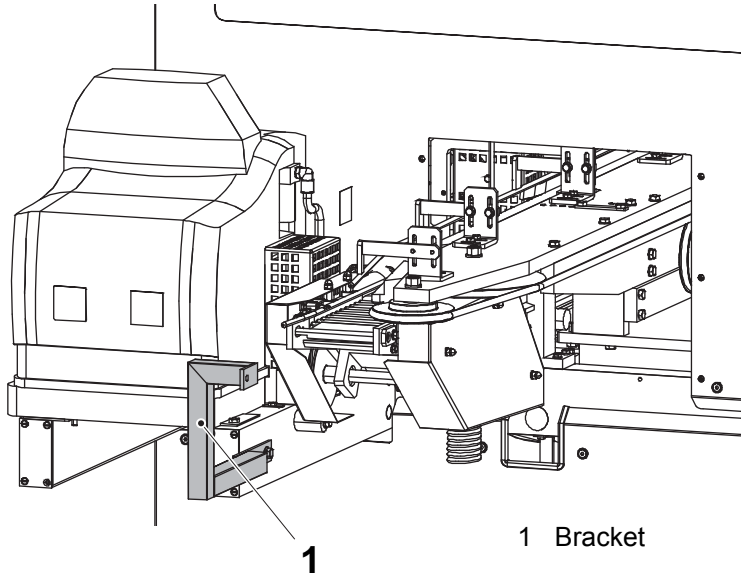

1 Bracket

3.2.3.2-4 Infeed Conveyor - Assemble (TWA)

Assemble the infeed conveyor to the bracket (1). See the documentation belonging to the conveyor.

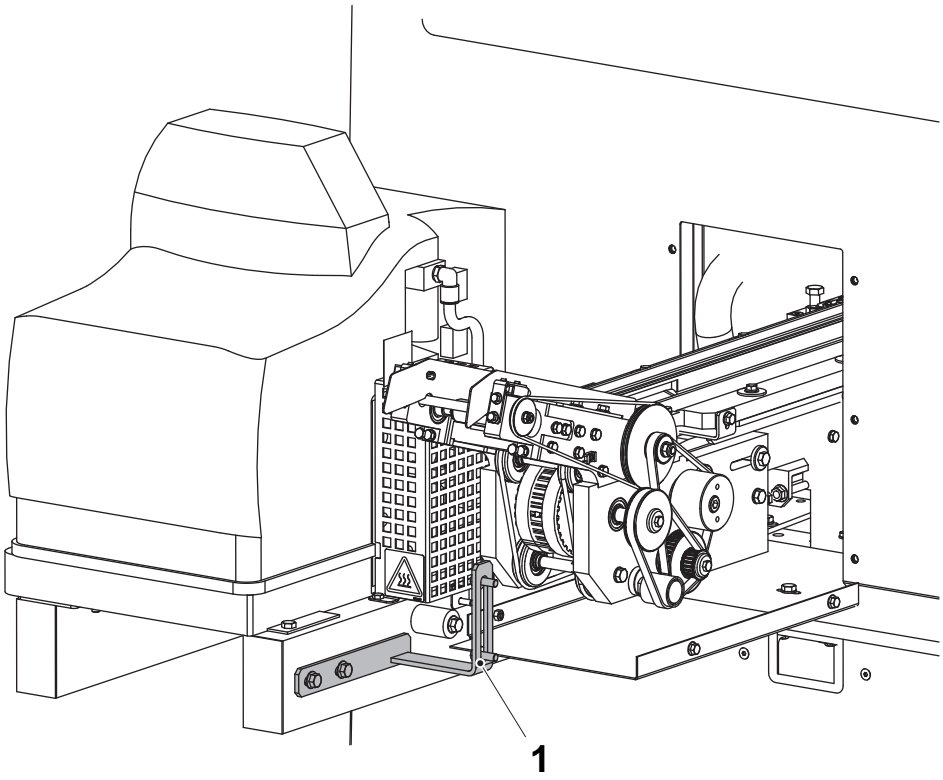

1 Bracket

3.2.3.2-5 Discharge Conveyor (TB/TBA/TPA) - Assemble

a) Assemble the discharge conveyor unit (1) to the bracket (2).

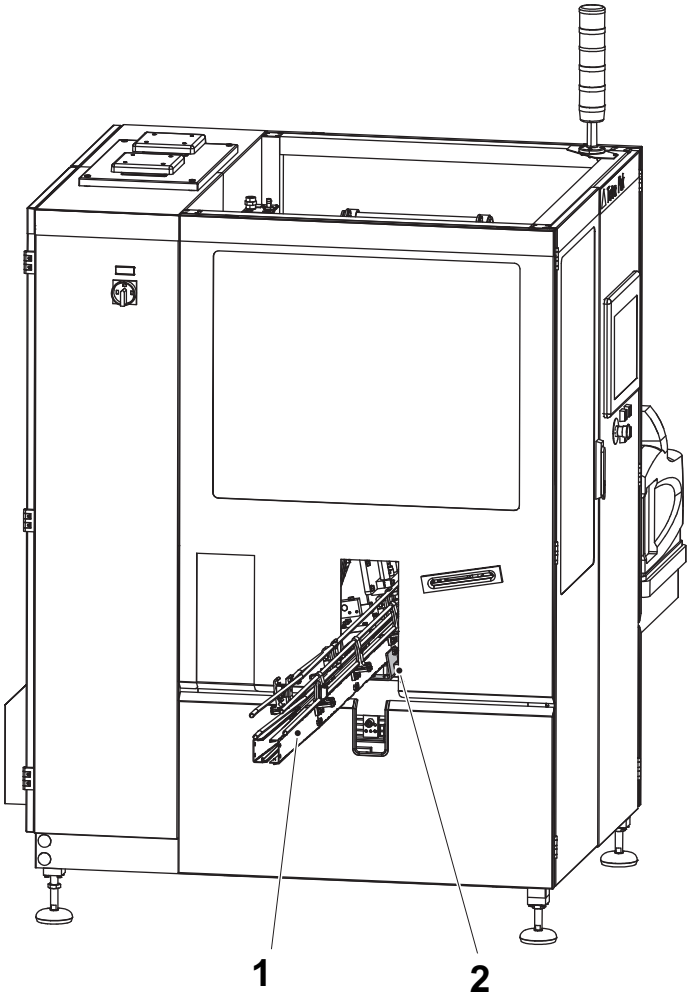

1 Discharge conveyor unit
2 Bracket

(Cont'd)

(Cont'd)

b) Assemble the conveyor (1) to the conveyor section (2). See the documentation belonging to the conveyor.

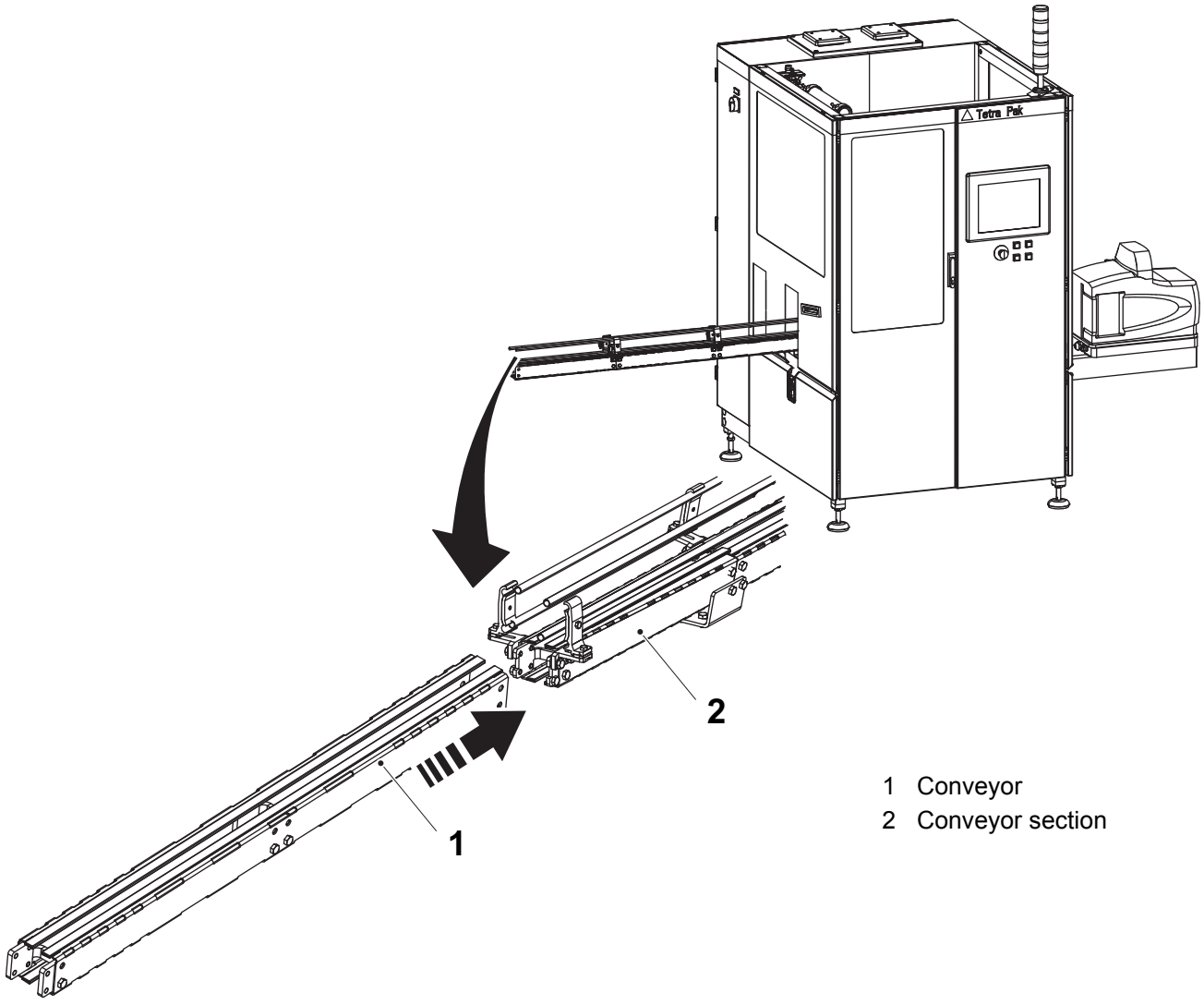

1 Conveyor
2 Conveyor section

3.2.3.2-6 Discharge Conveyor (TCA) - Assemble

Assemble the discharge conveyor to the bracket (1). See the documentation belonging to the conveyor.

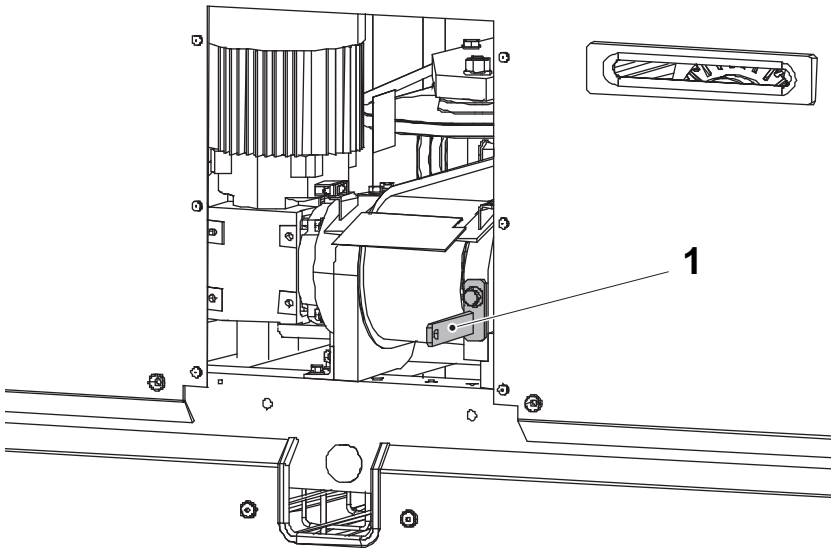

1 Bracket

3.2.3.2-7 Discharge Conveyor (TWA) - Assemble

Assemble the discharge conveyor to the bracket (1) with the screw (2). See the documentation belonging to the conveyor.

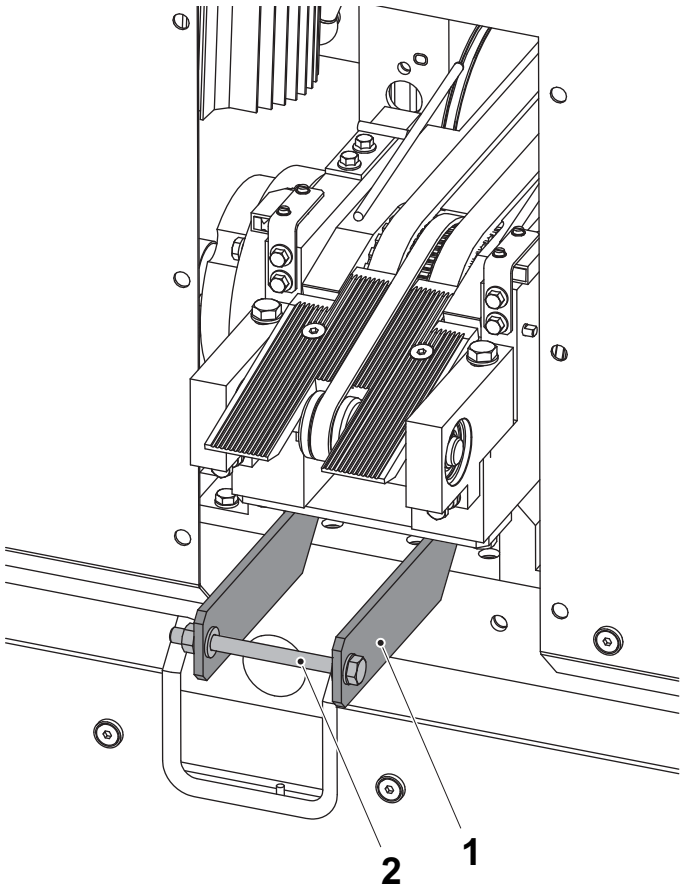

1 Bracket
2 Screw

3.2.3.3 Conveyor Chain

CAUTION

Risk of damage to equipment.

To comply with safety demands, the chain drive motor has to be supplied and controlled according to the Electrical Manual (EM), see Connection diagrams.

Assemble the chain through the machine. See the documentation belonging to the conveyor.

Note! The drive motor for the chain is not part of the machine.

3.2.3.4 Photocells

Assemble the photocells, see 1.1.8 Installation Layout for placements.

To set the photocells, see instructions in the Maintenance Manual (MM).

3.2.3.5 Tunnels

Assemble the tunnels.

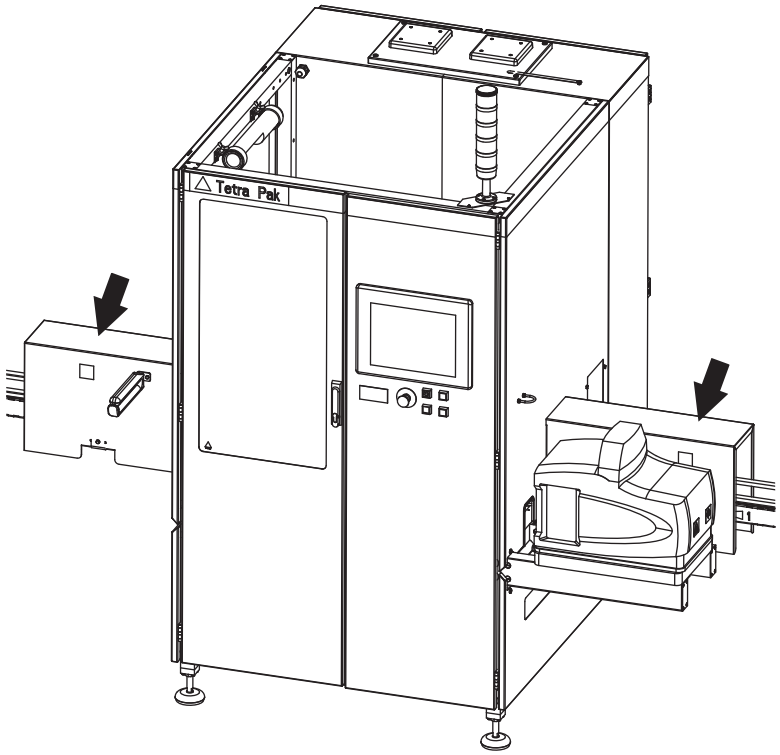

3.2.3.6 Bottom Panel

3.2.3.6-1 Bottom Panel - Assemble

Assemble the bottom panel (1) to the machine body.

CAUTION
Possible machine damage.
Do not move the machine with pallet forks after assembling the bottom panel.

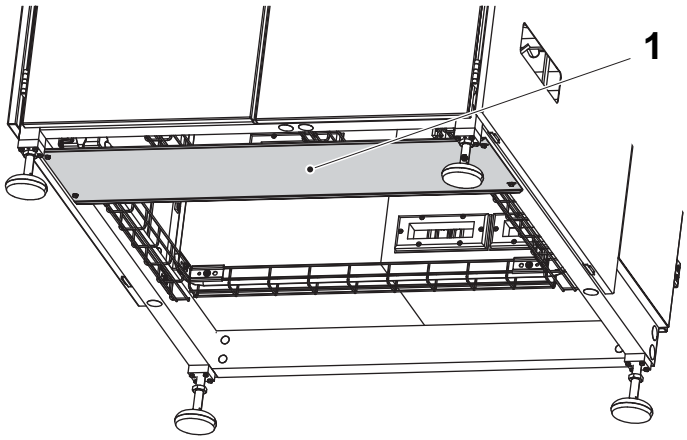

1 Bottom panel

3.2.3.7 Cooling Unit (Optional Equipment)

3.2.3.7-1 Cooling Unit - Assemble

Note! Do not use a cooling unit if the electrical cabinet is equipped with a door with a fan in it.

a) Attach the sealing frame (1) to the frame (2) with adhesive.

b) Install the frame (2) with the screws (3) on the electrical cabinet (4).

c) Attach the foam rubber strip (5), included with the cooling unit, on the frame (2).

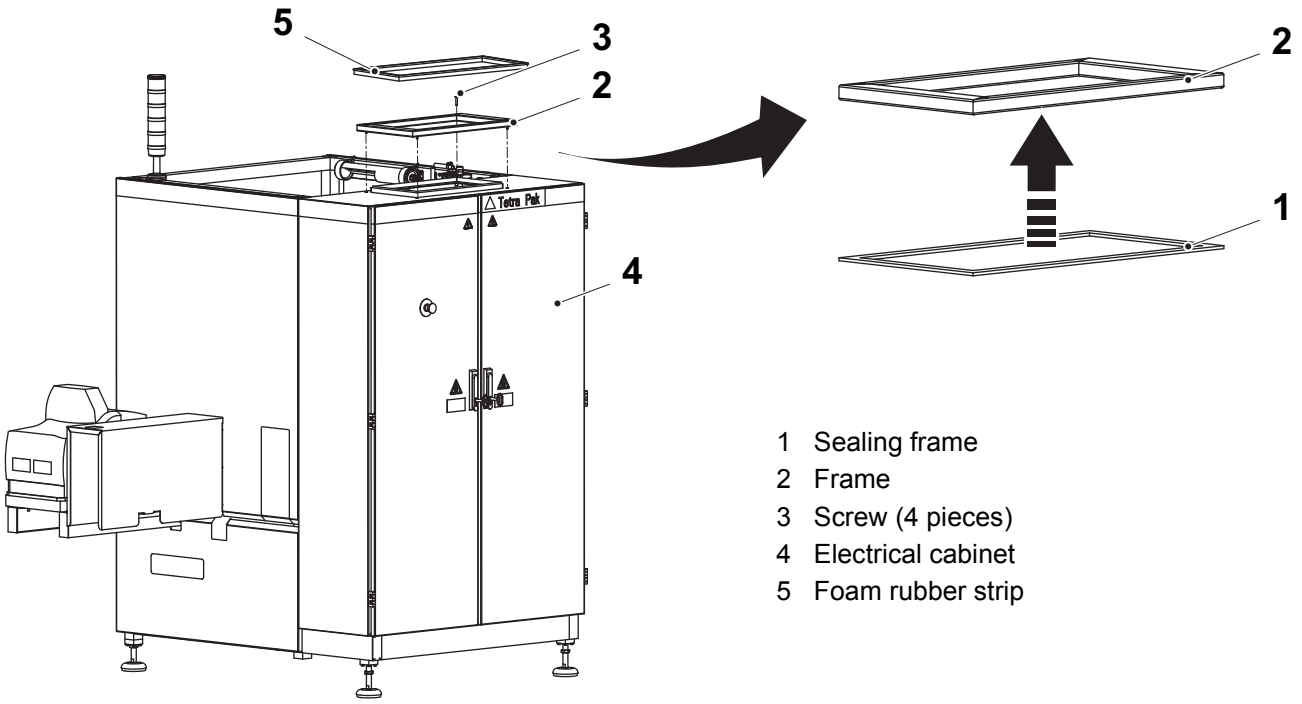

1 Sealing frame
2 Frame
3 Screw (4 pieces)
4 Electrical cabinet
5 Foam rubber strip

(Cont'd)

(Cont'd)

WARNING

Ergonomic hazard

The cooling unit is heavy. Avoid lifting the cooling unit without the use of a lifting device. When this is not possible, make sure to have two persons available for lifting the heating unit.

Tip! Lift the cooling unit with lifting straps. Use an overhead gantry, mobile crane, or fork lift. See the illustration below.

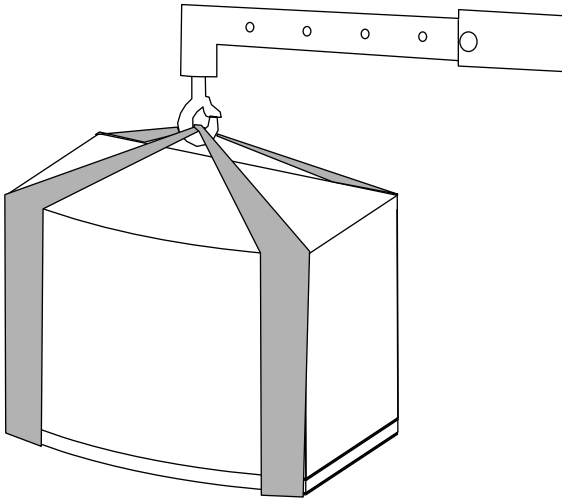

(Cont'd)

(Cont'd)

d) Put the straps around the cooling unit (6) and lift it above the electrical cabinet with a lifting device.

e) Place the cooling unit (6) on top of the frame (2).

f) Tilt the cooling unit (6) from side to side to release the straps.

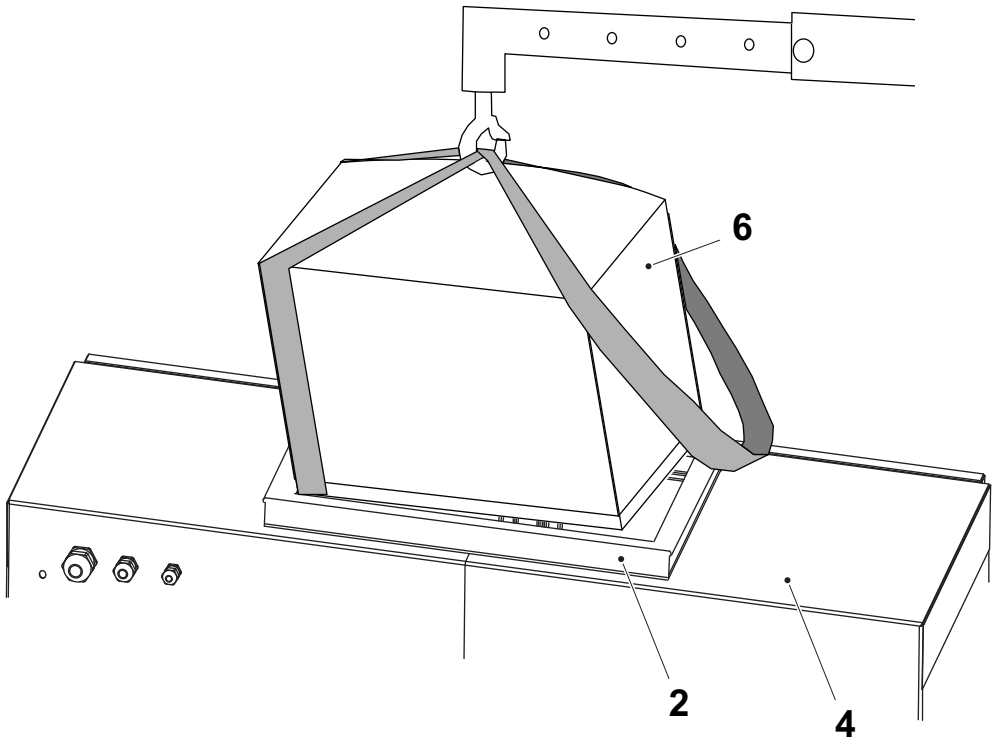

2 Frame
4 Electrical cabinet
6 Cooling unit

(Cont'd)

(Cont'd)

g) Connect the hose (7) with a hose clip (8) to the connection on the back of the cooling unit. There are two connections on the cooling unit, the one that is not used shall be plugged.

h) Connect the elbow pipe (9) with the hose (7).

i) Connect the hose (10) with the elbow pipe (9).

j) Let the hose (10) follow the air hose (11) inside the machine down to the floor.

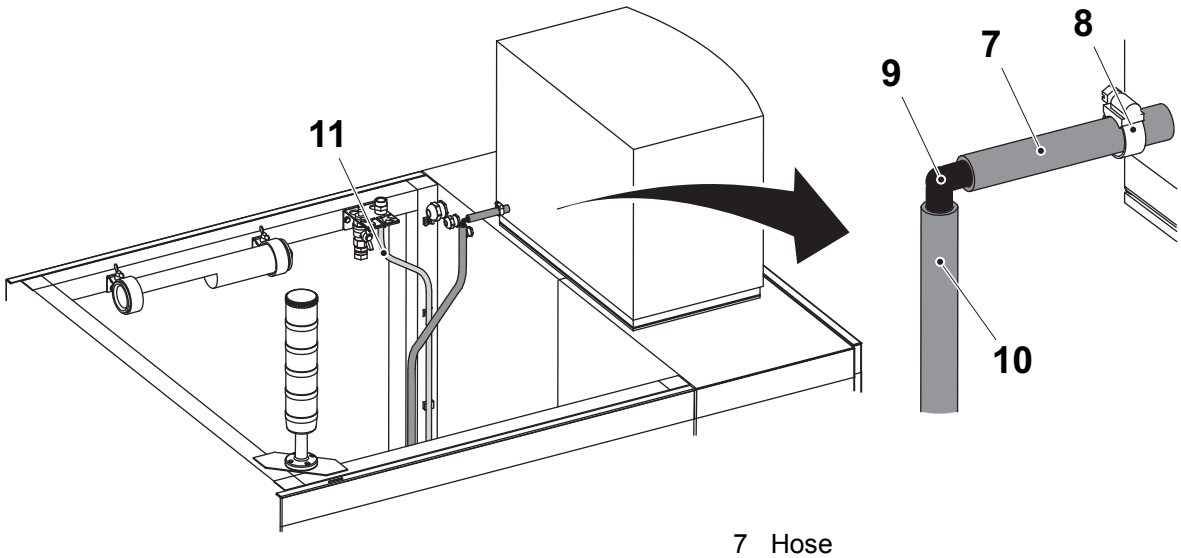

7 Hose
8 Hose clip
9 Elbow pipe
10 Hose
11 Air hose

(Cont'd)

(Cont'd)

k) Open the doors to the electrical cabinet.

l) Secure the cooling unit to the electrical cabinet with the fastening brackets (12).

m) Assemble the limit switches (13) and (14) and the anchor plate (15) with the bracket (16).

n) Install the bracket (16) in the electrical cabinet.

o) Make the electrical connections from the cooling unit and the limit switches to the electrical cabinet according to the Electrical Manual (EM).

p) Secure the cables from the limit switches with a strip to the anchor plate (15).

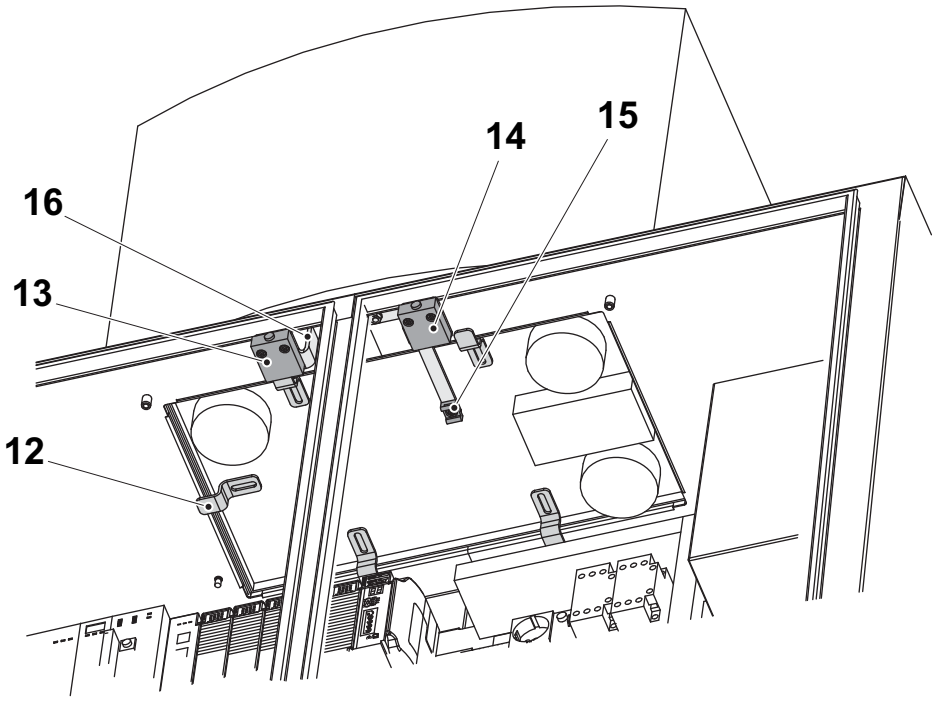

12 Fastening bracket (5 pieces)
13 Limit switch, E01Q2015
14 Limit switch, E01Q2017
15 Anchor plate
16 Bracket

(Cont'd)

(Cont'd)

q) If cooling unit is not selected on the HMI, the fan in the cooling unit will run without cooling the air. See Section 7.2.4 in the Maintenance Manual (MM) for instructions.

r) The basic controller (17) on the cooling unit supervises and regulates the cooling system. Set the temperature to 35 °C, see Section 11.5 in the MM for instructions.

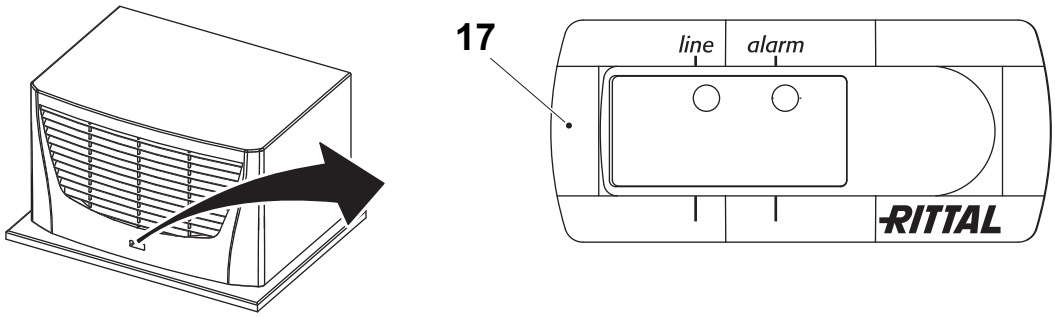

17 Basic controller

3.2.3.8 SD (Optional Equipment, TB/TBA)

3.2.3.8-1 SD - Connect Conveyor and Chain

Also see 1.1 Installation Drawings.

a) Connect the conveyor and chain (1) to the machine as illustrated.

b) Set the bracket (2) so that the packages will be guided by it when they pass through the straw detector.

Note! Make sure that there is no railing in front of the camera.

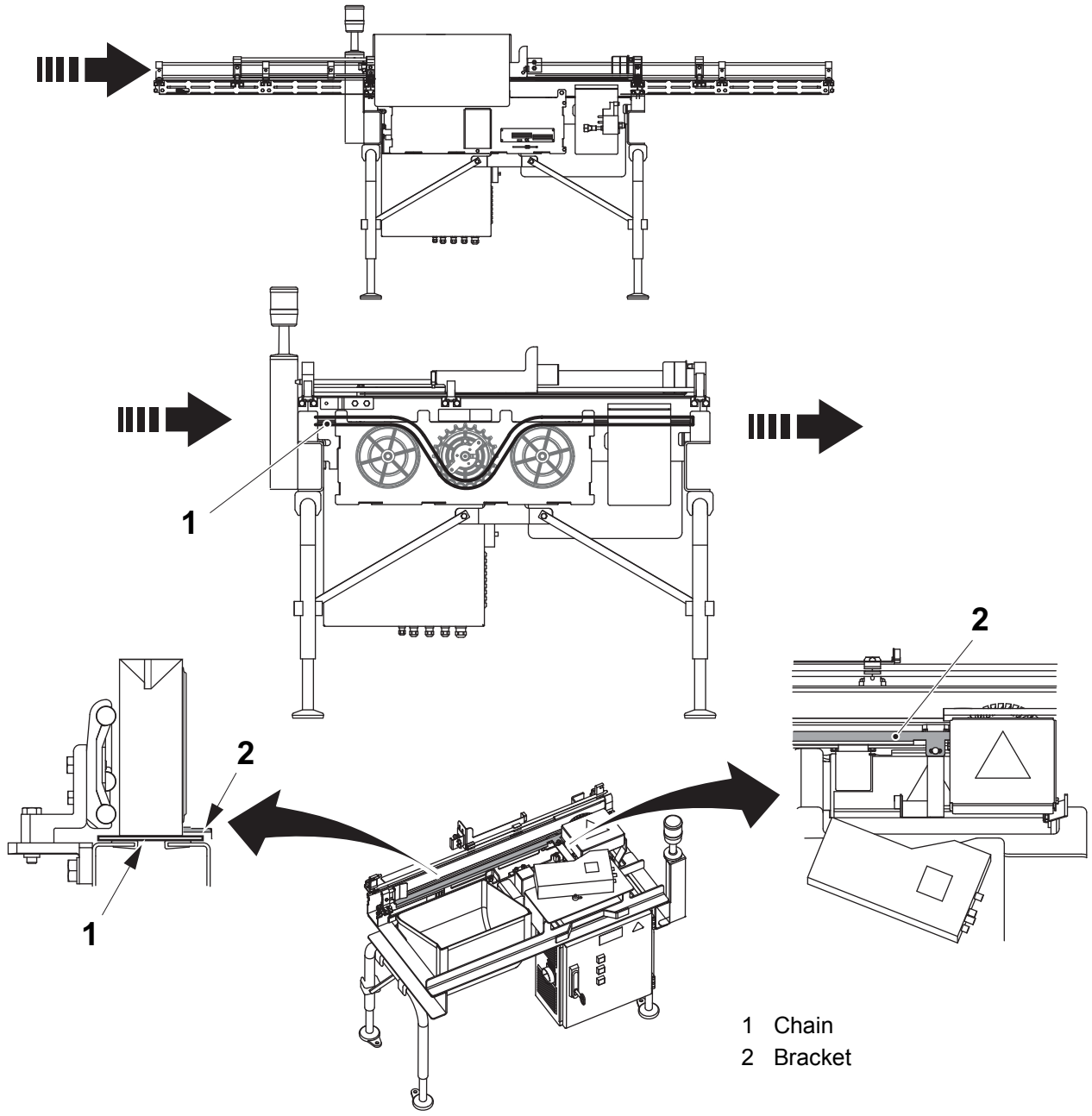

1 Chain
2 Bracket

3.3 Equipment Interfaces and Connections

3.3.1 Utility Connections

3.3.1.1 Compressed Air

WARNING
Risk of personal injury.
Make sure that air supply to the machine is switched OFF before performing any connection work.

Connect the compressed air to the air inlet valve, see 1.1 Installation Drawings, and the pneumatic diagram. Also see 1.4.2 Compressed Air Specification.

3.3.1.2 Electricity

DANGER
Risk of electrical shock and short circuits.
Make sure that power is switched OFF upstream before performing any work on cables and electrical components.

Make the electrical connections according to Electrical Manual (EM) that belongs to the machine.

Also see 1.1 Installation Drawings, and 1.4.1 Electrical Power Specification.

3.3.1.2.1 Main Supply Cable

CAUTION
The EMC regulations will only be fulfilled if the main supply cable is routed correctly.
The main supply cable must be routed 1 m straight up from the top of the machine before it turns away. The main supply cable must never be routed through the machine.

3.3.1.2.2 External Conveyors

DANGER
Risk of electrical shock and short circuits.
The power supply cables to the external conveyors must be connected before the main power is switched ON.

3.3.1.2.3 Optional Equipment

WARNING
Risk of electrical shock and short circuits.
Make sure that power is switched OFF before performing any work on cables and electrical components.

The power supply cables should be connected in the electrical cabinets, see the Electrical Manual (EM).

Make the electrical connections according to the EM.

The machines are prepared for supplementary bonding to the building's equipotential net. Use a cable shoe to connect to the welding bolt (1). The cable gland (2) is reserved for this. See the circuit diagrams in the EM.

BFT

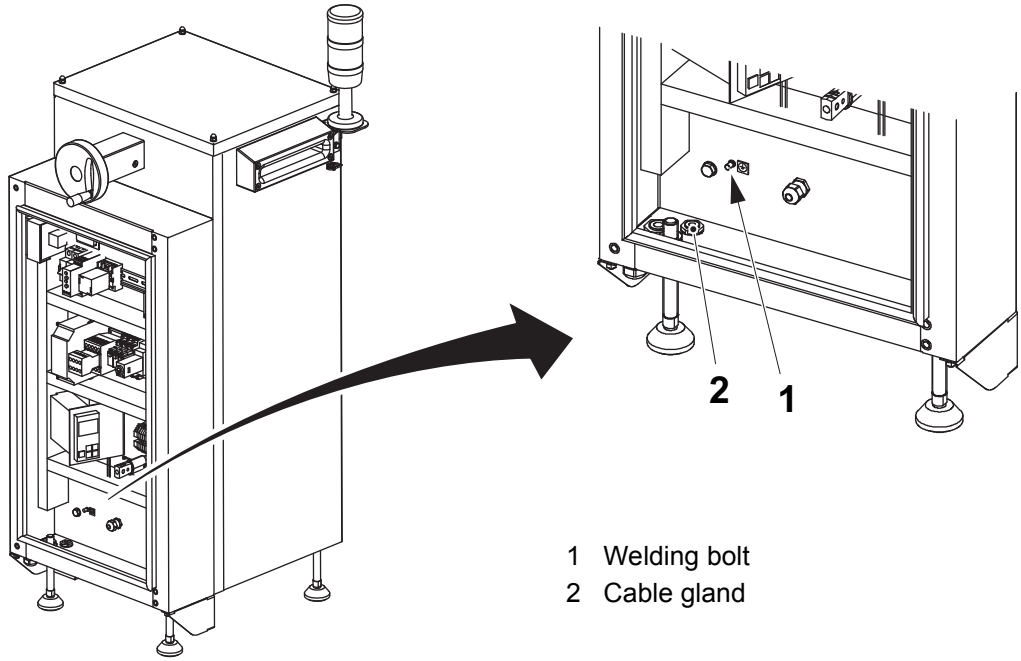

1 Welding bolt
2 Cable gland

SD30

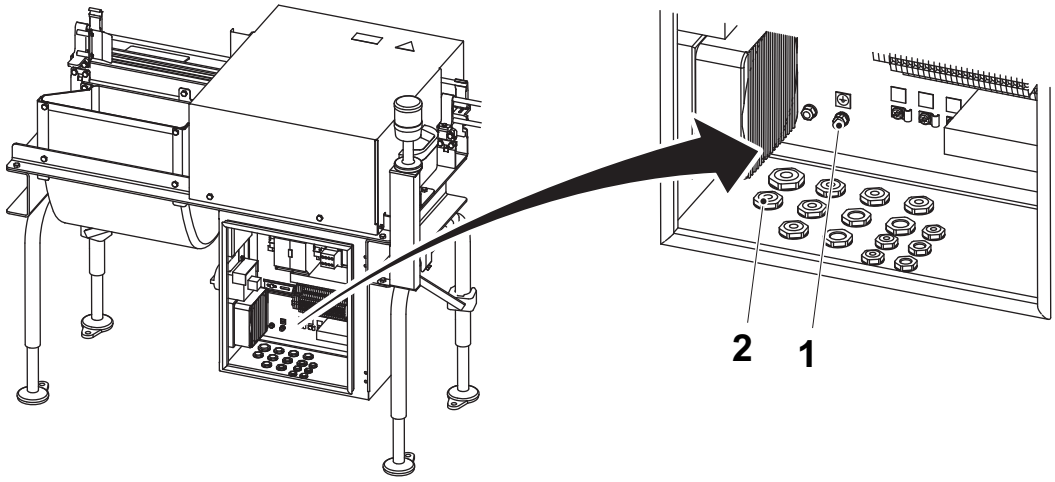

3.4 Restore Tools and Site

Make sure that

- all protective plastic is removed from the equipment
- all lifting tools and other installation tools are removed from the area around the equipment
- the area around the equipment is properly cleaned
- the equipment is properly cleaned
- the site is restored to production status

3.5 Mechanical Completion Inspection

The purpose of the mechanical completion inspection is to verify that the equipment in question has been delivered and is installed in accordance with the relevant documentation. This inspection must be carried out in conjunction with all involved parties, and prior to commissioning. All relevant installation documents are to be used for this task.

Defects or faults together with necessary actions and timing to correct the deviations must be recorded in the checklist. See Section 3.5.1 Mechanical Completion Checklist. Commissioning must not be started until the mechanical completion inspection has been completed.

Use the checklist as follows:

- Under Note, document any deviations, incorrect values, or comments.
- Under Value, document the actual value.
- Under Signature, sign that the check is performed.

3.5.1 Mechanical Completion Checklist

Machine No.	Country	Final user	Site
		Checklist completed by	Checklist completion date

3.5.2 Crate Handling

	Check	Reference Document (IM unless other document specified)	Note	Value	Signature
1	All equipment has been delivered according to packing list. All delivered equipment has been checked for transport damages All transport damages have been reported.	Packing list			
2	The packaging material to be used for tests is taken care of and stored according to the instruction in the IM.				

	Check	Reference Document (IM unless other document specified)	Note	Value	Signature
3	Ensure that the documents below are available in the correct EU language, quantity (2 of each), and correspond with the specific machine. – IM – MM – OM – SPC – EM All documentation has been stored as agreed with the user.	Receipt of Documentation (ItP)			
4	Secure that the IMD (Individual Machine Documentation) is included in the delivery containing the following: -Machine specification -Machine Deviation (if relevant) -Declaration of Conformity SA 30 The binder has been stored as agreed with the user.	Receipt of Documentation (ItP)			
5	Ensure that the Machine Program Binder is included in the delivery. The binder has been stored as agreed with the user.	Receipt of Documentation (ItP)			

	Check	Reference Document (IM unless other document specified)	Note	Value	Signature
6	The disposal/return of crates, and so on, has been taken care of as agreed with the user.				

3.5.3 Positioning and Assembly

3.5.3.1 SA30

	Check	Reference document IM unless other document specified	Note	Value	Signature
1	The main machine is positioned according to approved layout and without interference with service area.	Layout drawing			
2	The electrical cabinet work is finished: – The flanges are mounted and tightened. – All the cables are connected to the terminals. – All quick connections are in place and locked.				
3	The machine legs/feet are mounted and the machine is levelled.				
4	The machine body work is finished: – The doors and door stops are fitted. – The doors open and close correctly. – The covers are fitted.				

	Check	Reference document IM unless other document specified	Note	Value	Signature
5	The warning lamp and alarms are fitted and connected.				
6	The conveyors are mounted: – The main conveyor (TB/TBA/TPA) – The infeed conveyor (For TB/TBA/TPA the installed conveyor is maximum 3 m before the drive station) – The discharge conveyor				
7	The conveyor chain is mounted				
8	The photocells are mounted				
9	The tunnels are mounted.				
10	The protective plastic film on all doors and covers is removed and disposed of.				
11	The Individual Machine Documentation (IMD binder) has been reviewed (machine deviations, last minute updates for implementation, and so on).				
12	The transport equipment is stored at the user site or sent to Tetra Pak according to agreement.				

3.5.3.2 BFT (Optional Equipment)

	Check	Reference document IM unless other document specified	Note	Value	Signature
1	The machine legs/feet are mounted and the machine is levelled.				

3.5.3.3 SD (Optional Equipment, TB/TBA)

	Check	Reference document IM unless other document specified	Note	Value	Signature
1	The machine legs/feet are mounted and the machine is levelled.				
2	The conveyor and the conveyor chain are connected to the machine.				

3.5.4 Equipment Interfaces and Connections

Note! It is important that the fuses to sensitive equipment (PLC etc.) are switched off before any welding is performed on the filling machine/line. It's also important that the welding machine is correctly earthed as close as possible to the welding area.

3.5.4.1 SA30

	Check	Reference document IM unless other document specified	Note	Value	Signature
1	Matching transformer (if applicable): – connected according to drawing.	EM			
2	Electrical supply: – fuse rating checked – cable installation is finished – connection of phases, neutral, and earth have been checked – all protective covers are in place and secure.				
3	The main supply cable is not routed through the machine. It is routed 1 m straight up from the top of the machine before it turns away				
4	The power supply cables to the external conveyors are connected before the main power is switched ON.				
5	There are no leakages from the utility connections: – compressed air				

	Check	Reference document IM unless other document specified	Note	Value	Signature
6	Check which communication is needed for the distribution equipment in the installation.				
7	Electrical site test has been performed.	KA 2727.10 DE-P450 DE-P451			

3.5.4.2 BFT (Optional Equipment)

	Check	Reference document IM unless other document specified	Note	Value	Signature
1	The power supply cable is connected in the electrical cabinet.				
2	Electrical site test has been performed.	KA 2727.10 DE-P458 DE-P459			

3.5.4.3 SD (Optional Equipment, TB/TBA)

	Check	Reference document IM unless other document specified	Note	Value	Signature
1	The power supply cable is connected in the electrical cabinet.				
2	There are no leakages from the utility connections: – compressed air				
3	Electrical site test has been performed.	KA 2727.10 DE-P454 DE-P455			

3.5.5 Mechanical Completion Inspection

	Check	Reference document IM unless other document specified	Note	Value	Signature
1	Position and assembly of equipment verified.	IM/Layout drawing			
2	Layout drawing(s) updated to “as built” status if applicable.				
3	Risk and safety assessment completed.				
4	Mechanical completion certificate issued.				

4 Commissioning

Description

This chapter describes the commissioning of the equipment. The commissioning covers all activities from the first start up of the equipment until the equipment is validated and ready for commercial production. The commissioning activity is finalized when a commissioning certificate is signed.

The chapter includes procedures to start up and validate the function of the equipment. It also describes the commissioning validation of the equipment, and how to verify the packages with package integrity tests and microbiological validation.

4.1 Functional Validation . . . . . 4 - 5

4.1.1 Check and Set Machine . . . . . 4 - 5

4.1.1-1 Machine - Check and Set . . . . . 4 - 5

4.1.1-2 Control Panel - Set TPOP . . . . . 4 - 6

4.1.1-3 PLMS – Install Configuration File . . . . . 4 - 9

4.1.1-4 Machine - Check before Test Run . . . . . 4 - 10

4.1.2 Test Run . . . . . 4 - 11

4.1.2.1 Verify PLMS Reports . . . . . 4 - 11

4.1.2.2 Validate Packages Specification . . . . . 4 - 11

4.2 Commissioning Validation . . . . . 4 - 12

4.2.1 Verify Plant Conditions . . . . . 4 - 12

4.3 Commissioning Inspection. . . . . 4 - 13

4.3.1 Commissioning Checklist SA30 . . . . . 4 - 14

4.3.2 Functional Validation . . . . . 4 - 14

4.3.2.1 Presence and Correctness . . . . . 4 - 14

4.3.2.2 Start Up . . . . . 4 - 17

4.3.2.3 Check Normal Operation. . . . . 4 - 19

4.3.3 Commissioning Validation . . . . . 4 - 20

4.3.3.1 Training . . . . . 4 - 20

4.3.3.2 Program Safety Backup . . . . . 4 - 21

4.3.3.3 TPMS . . . . . 4 - 21

4.3.4 Commissioning Inspection . . . . . 4 - 22

This page intentionally left blank

4.1 Functional Validation

4.1.1 Check and Set Machine

These procedures are performed to set and fine tune the equipment. After the settings a test run and some verifications are performed.

4.1.1-1 Machine - Check and Set

Machine Status	Main Switch OFF Air valve OFF

Perform the setting sequence presented in Chapter 12 in the Maintenance Manual (MM).

4.1.1-2 Control Panel - Set TPOP

Machine Status	Main Switch ON Air valve OFF

Configure the TPOP on the machine by entering the following information. See the Maintenance Manual and the Operation Manual for descriptions and detailed explanations of the TPOP.

- Set the date and time.
- Set language group
  - Press the SETUP button (1) and then SHUT DOWN (2)
  - Press the CONFIRMATION button (3) to shut down the HMI or the CANCEL button (4) to abort the operation.

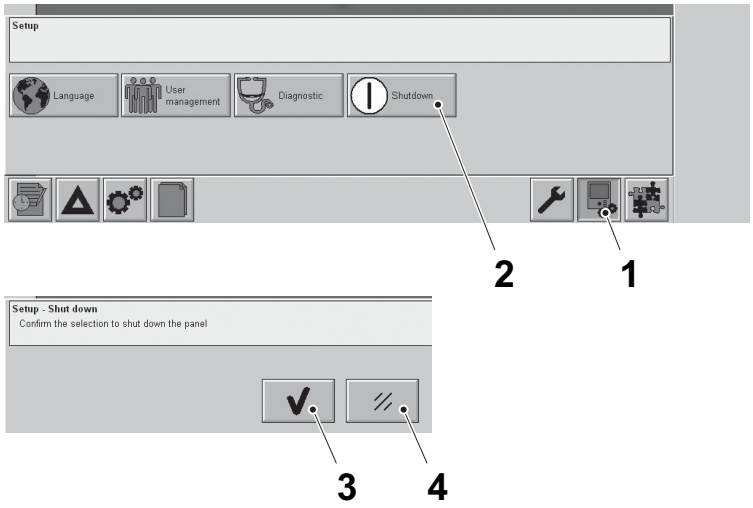

1 SETUP
2 SHUT DOWN
3 CONFIRMATION
4 CANCEL

(Cont'd)

(Cont'd)

– Press LOAD APPLICATION (5) to select the required language-group.
– Press RUN APPLICATION (6) to start the application with your selected language group.

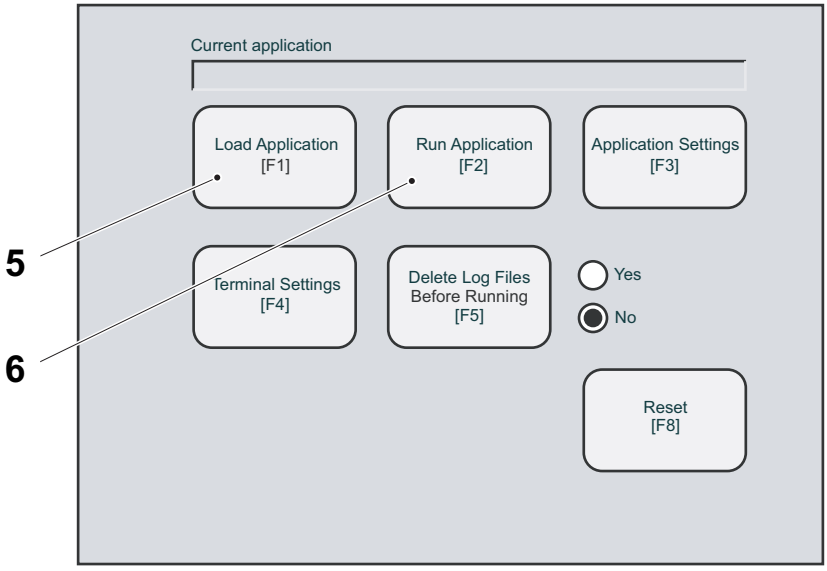

5 LOAD APPLICATION [F1]
6 RUN APPLICATION [F2]

Group A		Group B		Group C	
English	01	English	01	English	01
Swedish	02	Czech	17	Arabic	21
German	03	Serbian	19	Persian	22
French	04	Croatian	31	Malay	23
Spanish	05	Slovenian	32	Japanese	24
Italian	06	Slovak	33	Simplified Chinese	25
Portuguese	07	Romanian	35	Thai	28
Danish	08	Bulgarian	36	Korean	30
Greek	09	Bosnian	37	Traditional Chinese	53
Finnish	11	Hungarian	52	Vietnamese	54
Polish	18	Macedonian	38		
Dutch	26	Russian	12		
Norwegian	27	Latvian	13		
Icelandic	29	Estonian	14		
Turkish	20	Lithuanian	15		

(Cont'd)

(Cont'd)

- Set the language.
  - Press the SETUP button (1).
  - Press the LANGUAGE button (2).
  - The selectable languages (3) are shown.
  - Press the ADD LANGUAGE button (4) to add a language.
  - Press the LANGUAGE button (5) multiple times until the desired language is shown.
  - The selected language is now loaded and selectable.

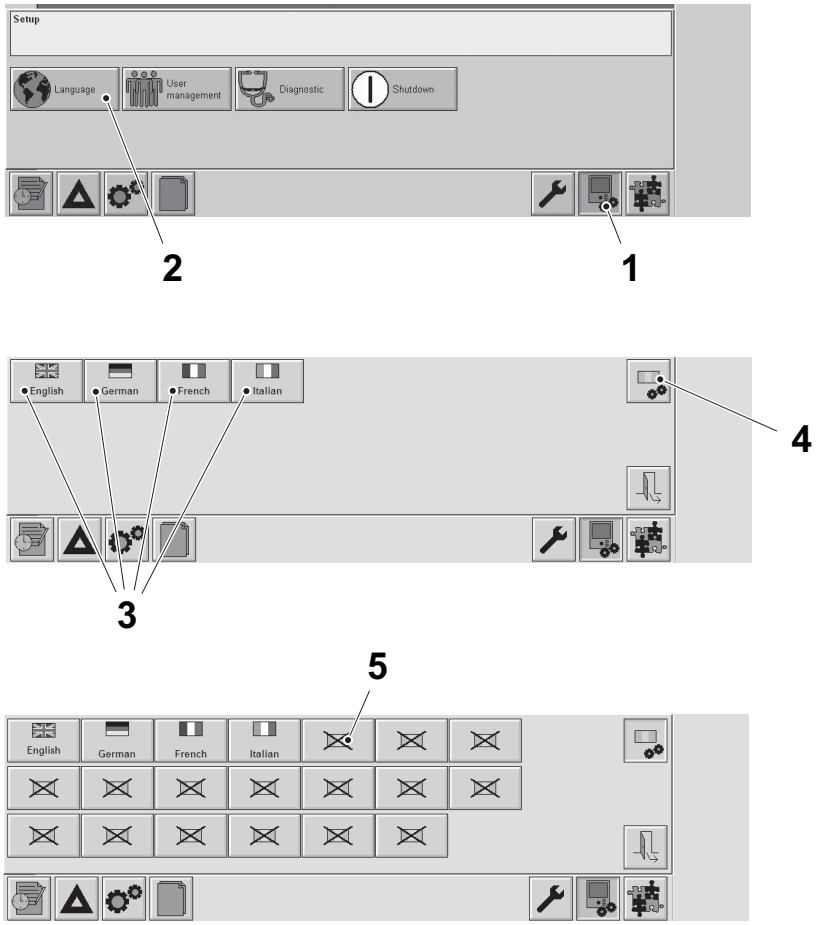

1 SETUP
2 LANGUAGE
3 Selectable languages
4 ADD LANGUAGE
5 LANGUAGE

(Cont'd)

(Cont'd)

- Check the machine number and set the distribution equipment configuration (see the Maintenance Manual).
- If a cooling unit has been installed, check that it is selected on the TPOP (see the Maintenance Manual).

4.1.1-3 PLMS – Install Configuration File

Machine Status	Main Switch ON Air valve OFF

Install the configuration file into the filling machine, see the Maintenance Manual belonging to the filling machine. The PLMS configuration file for SA30 is located on the Software CD.

4.1.1-4 Machine - Check before Test Run

Machine Status	Main Switch OFF Air valve OFF

Before the test run of the equipment, complete the following checks. Make sure that

- all installation checks have been completed
- all required production personnel are available
- the operators have been trained and informed about
  - machine operation
  - use of the Operation Manual
  - emergency stops and utility supply shut-off devices
  - safety and hazard information
- all site preparation is finished
- the utility pipes have been pressure tested
- the floor work is finished, including gutters and drains
- work with pipe supports, guides, and fixing points is finished
- the utility supplies are sufficient and stable
  - compressed air
  - electrical power
- the utility supply shut-off devices are working properly
- all consumables are available in sufficient supply and properly stored
  - packaging material
  - cleaning chemicals
- connections to the cleaning system have been made
  - cleaning solution
  - communications
- product is available, stable, and of the correct quality
- the machine is clean

4.1.2 Test Run

The machine's operation must be verified. This verification must include all functions of the machine, including internal and external cleaning. By verifying the cleaning functions, the Foaming and Sanitizing Unit and the Separate Cleaning Unit (if used) can also be verified.

Machine verifications are performed using water as a fill medium. To accomplish this, coordination with the plant is necessary.

See the Operation Manual for instructions to run the machine.

Produce both water-filled and product-filled packages for all the volumes the final user will produce. Verify package integrity and machine functions, including internal and external cleaning.

For additional information about the test run, contact Tetra Pak.

4.1.2.1 Verify PLMS Reports

Make sure the PLMS reporting system is running properly. You should be receiving WebMon reports automatically if requested. Make sure the production figures match your figures for the filling machine.

If there are any problems with the PLMS system, contact the PLMS expert in your market, or contact your designated Tetra Pak liaison.

4.1.2.2 Validate Packages Specification

Perform a package check. See the Package Check chapter in the Operation Manual.

4.2 Commissioning Validation

The commissioning validation is performed during the installation of the equipment and in cooperation with the Tetra Pak installation project and the final user. It consists of a verification of the plant conditions and a microbiological validation of the packed product. The validation must be performed in accordance with the instructions specified in this chapter and the recommendations from Tetra Pak Quality Assurance Management (QAM). The following guidelines exist.

Document Name	Document Number	Note
Guideline for Microbiological Evaluation of Commercially Sterile Products	FSQ-588002-xxxx	Available in English, German, and Spanish
Guideline for Microbiological Evaluation of Chilled Dairy Products	FSQ-588003-xxxx	Available in English, German, and Spanish

Contact Tetra Pak for more information about the documents.

4.2.1 Verify Plant Conditions

See section 4.3 Commissioning Inspection for the plant conditions to verify.

4.3 Commissioning Inspection

The purpose of the commissioning inspection is to verify that the equipment in question is ready for commercial production. This inspection must be carried out in conjunction with all involved parties, and prior to the performance validation.

Defects or faults together with necessary actions and timing to correct the deviations must be recorded in the checklist. See Section 4.3.1 Commissioning Checklist SA30. Performance validation must not be started until the commissioning inspection has been completed.

Use the checklist as follows:

- Under Note, document any deviations, incorrect values, or comments.
- Under Value, document the actual value.
- Under Signature, sign that the check is performed.

4.3.1 Commissioning Checklist SA30

Machine No.	Country	Final User	Site
		Checklist completed by	Checklist completion date
		LL	

4.3.2 Functional Validation

4.3.2.1 Presence and Correctness

SA30

	Check	Reference document IM unless other document specified	Note	Value	Signature
1	The program in the “flash memory” corresponds to the program in the PLC.				
2	TPOP: – check that no alarms are present.	OM			
3	The supply and quality of product is sufficient for commissioning.				

4	All supplies are of the correct type and are available in sufficient quantities for commissioning: – Drinking straws – Hotmelt				
5	The OM is available to the operator.	OM			
6	The spare parts have been deposited in the spare parts stores.				
7	The tools and templates are on site and stored in an appropriate way.				
8	Consumables are available on site.				
9	The machine is clean	OM	Follow the instructions for daily care in Chapter 9 Care and Cleaning.		
10	The machine is clean	OM	Follow the instructions for daily care in Chapter 9 Care and Cleaning.		

BFT (Optional Equipment)

	Check	**Reference document IM unless other document specified**	**Note**	**Value**	**Signature**

1	The electrical connection is made properly, and the machine has the correct electrical supply.				
2	The delivered equipment is assembled in accordance with Section 3.2 Positioning and Assembly.				

SD (Optional Equipment, TB/TBA)

	Check	**Reference document IM unless other document specified**	**Note**	**Value**	**Signature**
1	The electrical connection is made properly, and the machine has the correct electrical supply.				
2	The delivered equipment is assembled in accordance with the instructions in Procedure 3.2.3.8-1 SD - Connect Conveyor and Chain				

Cooling Unit (Optional Equipment)

	Check	**Reference document IM unless other document specified**	**Note**	**Value**	**Signature**

1	The electrical connection is made properly.	EM			
2	The cooling unit is selected on the TPOP.	MM			

4.3.2.2 Start Up

SA30 (power switched on)

	Check	Reference document IM unless other document specified	Note	Value	Signature
1	Electrical power supply: – voltage – the direction of rotation has been checked on all electrical motors				
2	Perform the “Machine ID Setup” in the TPOP.	MM			
3	Confirm that the machine configuration is correct (TPOP).	MM			
4	Test the machine safety systems.				

5	First DE conveyor and belt brake after SA30: – set speed of conveyors – speed of belt brake	MM			

SA30 (power and compressed air switched on)

	Check	**Reference document IM unless other document specified**	**Note**	**Value**	**Signature**
1	Ensure that the compressed air supply is sufficient for initial step-up of machine.				
2	Test the machine safety systems.				
3	All the EMERGENCY STOP buttons and cords activate the correct alarm on the TPOP.	OM			
4	All the door, cover, and guard safety switches activate the correct alarm on the TPOP.	OM			

4.3.2.3 Check Normal Operation

SA30

	Check	Reference document IM unless other document specified	Note	Value	Signature
1	There are no visible leaks in the machine: – compressed air				
2	The package discharge conveyor speed is set properly. The packages must enter the external conveyor chain without problems.				
3	Finished packages (final user packaging material) are correct in terms of: – no damage on the lid – straw application	OM			

BFT (Optional Equipment)

	Check	Reference document IM unless other document specified	Note	Value	Signature
1	All functions and alarms are working.	OM			
2	There are no abnormal noises, smells, or vibrations, when the machine is running.				

SD (Optional Equipment, TB/TBA)

	Check	Reference document IM unless other document specified	Note	Value	Signature
1	Run the machine. Check that all functions are working.	OM			
2	There are no abnormal noises, smells, or vibrations, when the machine is running.				

4.3.3 Commissioning Validation

4.3.3.1 Training

	Check	Reference document IM unless other document specified	Note	Value	Signature
1	Training level of final user technicians – Participation during installation work – Service work				
2	Training level of final user operators – Operator training completed – Number of operators trained – Names of operators trained	OM			

4.3.3.2 Program Safety Backup

	Check	Reference document IM unless other document specified	Note	Value	Signature
1	When the SA30 has been started up and all functions have been verified, make sure that the “flash memory” is updated and that an updated back up CD-RW is stored in the electrical cabinet.				

4.3.3.3 TPMS

	Check	Reference document IM unless other document specified	Note	Value	Signature
1	Procedures for maintenance (TPMS) have been established (not later than in time for the completion of the Commissioning) – Daily check list – Weekly check list – 250 h check list “training”	CLO			

4.3.4 Commissioning Inspection

	Check	Reference document IM unless other document specified	Note	Value	Signature
1	Functional validation performed.				
2	Commissioning validation performed.				
3	Commissioning certificate issued.				

5 Performance Validation

Description

This chapter describes the performance validation of the equipment. The performance validation covers the activities from when the equipment is ready for commercial production until the equipment is handed over to the final user.

The chapter includes information on how to verify that the equipment achieves the performance targets during commercial production.

5.1 Performance Preconditions . . . . . 5 - 5
5.2 Commercial Production . . . . . 5 - 6
5.3 Monitor and Improve the Performance . . . . . 5 - 7
5.4 Performance Test . . . . . 5 - 8
5.5 Performance Validation Inspection . . . . . 5 - 9
5.5.1 Performance Validation Checklist SA30 . . . . . 5 - 10
5.5.2 Performance Validation Criteria . . . . . 5 - 11
5.5.3 Performance Validation Completed . . . . . 5 - 12

This page intentionally left blank

5.1 Performance Preconditions

To ensure an effective and successful performance validation, the following has to be in place prior to the execution of the performance validation:

- Commercial production: commercial production must have started.
- Attendance: both Tetra Pak and the final user must have appointed representatives to participate in the performance validation.
- Operation: the equipment must be operated according to the Operation Manual for each component in the line.

  Qualified personnel from the final user should operate the equipment during the performance validation procedures.
- Production plan: a production plan covering the duration of the performance validation must be available and agreed between Tetra Pak and the final user of the equipment before the start of performance validation.

  The production plan should reflect the normal constant running conditions, including the range of products and packaging material that the final user intends to use with the equipment, as well as any expected product changes.

  The production plan should include, in particular
  - preparation/sterilisation schedule
  - production schedule and resources
  - CIP schedule
  - volume to be produced
  - number of product changes and product availability
  - number of design changes and packaging/additional material availability
- Packaging material: all packaging materials and secondary packaging material must be available (including strips, tabs, and so on).
- Consumables: all relevant consumables (hydrogen peroxide, lubricants, ink, and so on) have to be available.

Parts: an adequate supply of spare parts must be maintained on site according to Tetra Pak recommendations.

5.2 Commercial Production

The performance validation is performed when the equipment runs in commercial production. See the sales agreement for more information.

5.3 Monitor and Improve the Performance

During the performance monitoring period the actual performance of the equipment is measured and any non-performance issues are solved. See the sales agreement for more information.

5.4 Performance Test

During the performance test the actual performance of the equipment during a pre-defined period is measured. The result of the performance test is recorded as the certified performance in the performance certificate. See the sales agreement for more information.

5.5 Performance Validation Inspection

The purpose of the performance validation inspection is to verify that the equipment in question fulfils the performance agreed upon. This inspection must be carried out in conjunction with all involved parties, prior to final hand over of the equipment.

Defects or faults together with necessary actions and time to correct the deviations must be recorded in the checklist. See Section 5.5.1 Performance Validation Checklist SA30.

Use the checklist as follows:

- Under Note, document any deviations, incorrect values, or comments.
- Under Value, document the actual value.
- Under Signature, sign that the check is performed.

5.5.1 Performance Validation Checklist SA30

Machine No.	Country	Final User	Site
		Checklist completed by	Checklist completion date

5.5.2 Performance Validation Criteria

	Check	Reference document IM unless other document specified	Note	Value	Signature
1	Commercial production started.				
2	The General Performance Preconditions are fulfilled.	Sales agreement with schedules			
3	The Special Performance Preconditions are fulfilled (if applicable).	Sales agreement with schedules			
4	A production plan for the performance validation period is established and communicated.	Sales agreement with schedules			
5	The Machine Mechanical Efficiency (MME) and Line Machine Mechanical Efficiency (LMME) has been monitored and optimized.				
6	Performance Test has been carried out (if applicable).	PLMS, Performance specification			
7	PLMS data (bin files) has been downloaded for Performance Monitoring Period and Line Performance Test and sent back to BSTT.	PLMS			

5.5.3 Performance Validation Completed

	Check	Reference document IM unless other document specified	Note	Value	Signature
1	Performance certificate issued.				

6 Disassembly and Removal

Description

The chapter contains information about how to safely disassemble and remove the machine for reuse in another location or for final disposal.

6.1 Disconnect Utilities . . . . . 6 - 5
6.1.1 Compressed Air . . . . . 6 - 5
6.1.2 Electricity . . . . . 6 - 5
6.2 Disassemble Machine . . . . . 6 - 6
6.3 Recrating . . . . . 6 - 7
6.4 Move and Store . . . . . 6 - 8
6.5 Return to Manufacturer . . . . . 6 - 9
6.6 Final Disposal . . . . . 6 - 10

This page intentionally left blank

6.1 Disconnect Utilities

6.1.1 Compressed Air

WARNING

Risk of personal injury.

Make sure that air supply to the machine is switched OFF before performing any disconnection work.

Disconnect the compressed air from the pressure regulator, also see 1.4.2 Compressed Air Specification.

6.1.2 Electricity

WARNING

Risk of electrical shock and short circuits.

Make sure that power is switched OFF upstream before performing any work on cables and electrical components.

Disconnect the electricity, see the Electrical Manual (EM), also see 1.4.1 Electrical Power Specification.

6.2 Disassemble Machine

WARNING

Risk of personal injury.

Before disassembling the machine, read the ii Safety Precautions Chapter.

Disassemble the machine in the reverse of the order described in section 3.2 Positioning and Assembly.

6.3 Recrating

Read the instructions in 3.1.6 Unpacking the Crate, and recrate the machine in the reverse order.

6.4 Move and Store

DANGER

Immediate danger to life.

The machine may tilt if the centre of gravity or the forklift points is not observed. Failure to observe these may result in immediate danger to life and/or major damage to equipment.

Prior to lifting and moving the machine from its production site, do the following:

- check that the machine can be transported without any problems with ceiling height, doors, passages, and so on.

make sure that the machine can be lifted in accordance to section 3.1.1.1 Lifting and Unloading the Crated Equipment.

If the machine is going to be transported to a storage site, then see 3.1.3 Storing the Crated Equipment for more information about environmental factors, such as acceptable storage humidity and temperature range.

6.5 Return to Manufacturer

Contact your Tetra Pak market company for more information about final disposal and reuse.

6.6 Final Disposal

Contact your Tetra Pak market company for more information about final disposal and reuse.

If the machine is to be permanently disposed of, perform the following operations:

a) Remove all packaging material and straws, and dispose of these according to local regulations.

b) Empty the hotmelt from the hotmelt equipment according to the Nordson Manual. Dispose of the hotmelt according to local regulations.

c) Disassemble the machine as far as possible and separate the following materials:
   - stainless steel (panels and doors)
   - cast iron
   - aluminium
   - glass (windows, and so on)
   - rubber (seals, O-rings, and so on)
   - nylon and other plastics
   - electrical cables
   - hydraulic and pneumatic hoses
   - electrical components (batteries, and so on)

d) Recycle or dispose of all materials, groups, and components according to local regulations.


Tetra Pak

Note! *This page is generated* ***automatically****.*
using the ***variable definitions*** *made in the* ***front page*** *file!*

Straw Applicator 30 by Tetra Pak
663350-0300
Issue 2010-03 Doc. No. IM-3039536-0104

Straw Applicator 30 by Tetra Pak 1(2)
663350-0300
Issue 2010-03 Doc. No. IM-3039536-0104

Straw Applicator 30 by Tetra Pak
663350-0300
Issue 2010-03 Doc. No. IM-3039536-0104

Straw Applicator 30 by Tetra Pak 1(2)
663350-0300
Issue 2010-03 Doc. No. IM-3039536-0104

Straw Applicator 30 by Tetra Pak
663350-0300
Issue 2010-03 Doc. No. IM-3039536-0104

Straw Applicator 30 by Tetra Pak 1(2)
663350-0300
Issue 2010-03 Doc. No. IM-3039536-0104

Straw Applicator 30 by Tetra Pak
663350-0300
Issue 2010-03 Doc. No. IM-3039536-0104

Straw Applicator 30 by Tetra Pak 1(2)
663350-0300
Issue 2010-03 Doc. No. IM-3039536-0104

Straw Applicator 30 by Tetra Pak
663350-0300
Issue 2010-03 Doc. No. IM-3039536-0104

Straw Applicator 30 by Tetra Pak 2(2)
663350-0300
Issue 2010-03 Doc. No. IM-3039536-0104

Straw Applicator 30 by Tetra Pak
663350-0300
Issue 2010-03 Doc. No. IM-3039536-0104

Straw Applicator 30 by Tetra Pak 2(2)
663350-0300
Issue 2010-03 Doc. No. IM-3039536-0104

Straw Applicator 30 by Tetra Pak
663350-0300
Issue 2010-03 Doc. No. IM-3039536-0104

Straw Applicator 30 by Tetra Pak 2(2)
663350-0300
Issue 2010-03 Doc. No. IM-3039536-0104

Straw Applicator 30 by Tetra Pak
663350-0300
Issue 2010-03 Doc. No. IM-3039536-0104

Straw Applicator 30 by Tetra Pak 2(2)
663350-0300
Issue 2010-03 Doc. No. IM-3039536-0104

Straw Applicator 30 by Tetra Pak
663350-0300

Issue 2010-03 Doc. No. IM-3039536-0104

Straw Applicator 30 by Tetra Pak 1(2)
663350-0300

Issue 2010-03 Doc. No. IM-3039536-0104

Straw Applicator 30 by Tetra Pak
663350-0300

Issue 2010-03 Doc. No. IM-3039536-0104

Straw Applicator 30 by Tetra Pak 1(2)
663350-0300

Issue 2010-03 Doc. No. IM-3039536-0104

Straw Applicator 30 by Tetra Pak
663350-0300

Issue 2010-03 Doc. No. IM-3039536-0104

Straw Applicator 30 by Tetra Pak 1(2)
663350-0300

Issue 2010-03 Doc. No. IM-3039536-0104

Straw Applicator 30 by Tetra Pak
663350-0300

Issue 2010-03 Doc. No. IM-3039536-0104

Straw Applicator 30 by Tetra Pak 2(2)
663350-0300

Issue 2010-03 Doc. No. IM-3039536-0104

Straw Applicator 30 by Tetra Pak
663350-0300

Issue 2010-03 Doc. No. IM-3039536-0104

Straw Applicator 30 by Tetra Pak 2(2)
663350-0300

Issue 2010-03 Doc. No. IM-3039536-0104

Straw Applicator 30 by Tetra Pak
663350-0300

Issue 2010-03 Doc. No. IM-3039536-0104

Straw Applicator 30 by Tetra Pak 2(2)
663350-0300

Issue 2010-03 Doc. No. IM-3039536-0104