MM

Maintenance Manual

Straw Applicator 30 by Tetra Pak

663350-0300

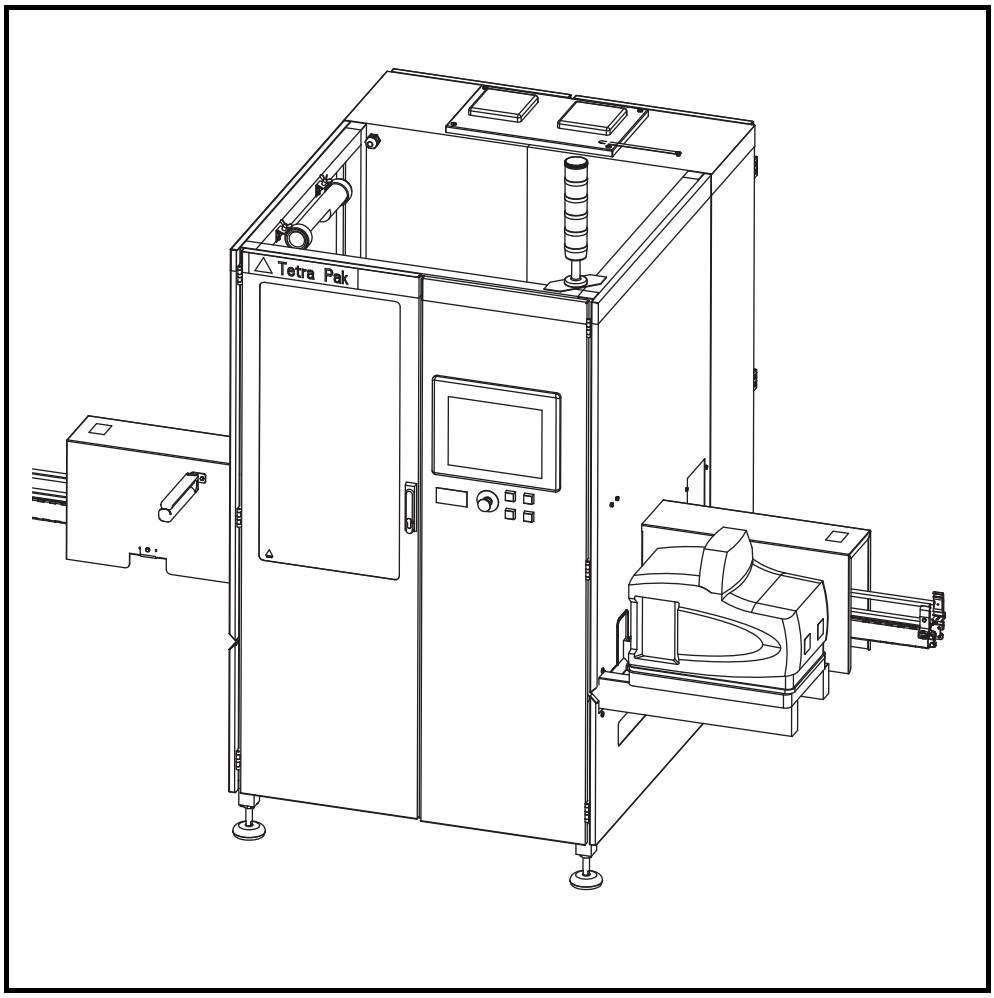

WARNING

Read and follow all safety precaution instructions throughout this manual and on safety signs attached to this equipment.
Failure to follow all safety precaution instructions could result in death or serious injury.

Tetra Pak

Doc. No. MM-3039535-0105

Copyright © 2010 Tetra Pak Group

All rights reserved. No part of this document may be reproduced or copied in any form or by any means without written permission from Tetra Pak Packaging Solutions AB.

Tetra Pak and all Tetra Pak products are trademarks belonging to the Tetra Pak Group.

The content of this manual is in accordance with the design and construction of the machine or equipment at the time of publishing. Tetra Pak reserves the right to introduce design modifications without prior notice.

The English language version of this document contains the original instructions. All other language versions are translations of the original instructions.

This document was produced by:

Tetra Pak Packaging Solutions AB
Ruben Rausings gata
SE-221 86 Lund
Sweden

Additional copies can be ordered from Tetra Pak. When ordering additional copies, always provide the document number.

Doc. No. MM-3039535-0105

Issue 2010-06

This manual is valid for:

Series No./ Machine No. Sign.

MM

Maintenance Manual

Straw Applicator 30 by Tetra Pak
663350-0300

Machine or equipment configurations that this manual is valid for are described on the next page.

i Introduction

ii Safety Precautions

1 Conveyor Section

2 Applicator Unit

3 Hotmelt Equipment

4 Machine Body

5 Machine Covering

6 Air Equipment

7 TPOP HMI

8 Electrical Cabinet

9 Electric Equipment

10 Regular Accessories

11 Optional Equipment

12 General

iii Index

Doc. No. MM-3039535-0105

Issue 2010-06

Tetra Pak

Tetra Pak Packaging Solutions AB

Valid for:

Name	Drawing Specification and Development Step	Additional Information
Straw Applicator 30 by Tetra Pak	663350-0300	Package Shape: - Tetra Brik, TB - Tetra Brik Aseptic, TBA - Tetra Classic Aseptic, TCA - Tetra Prisma Aseptic, TPA - Tetra Wedge Aseptic, TWA

Mandatory Equipment:

Name	Drawing Specification and Development Step	Additional Information
Bent Foil Treater	2643050-0400	Mandatory for TB/TBA speed lines
Straw Detector 30	663550-0300	Mandatory for TB/TBA speed lines
Package Orientation Controller	2976909-0100	Mandatory for TCA lines
Rejecting Unit	3010247-0100	Mandatory for TCA/TWA lines

Optional Equipment:

Name	Drawing Specification and Development Step	Additional Information
Photocell Unit	2943553-0100	Valid for TB/TBA/TPA
Quick Change	3025775-0200	Valid for TB/TBA/TPA
Bent Foil Treater	2643050-0400	Valid for all machine variants
Straw Detector 30	663550-0300	Valid for TB/TBA
Cooling Unit	3039857-0100	Valid for all machine variants
Second Discharge Unit	3088860-0100	Valid for TB/TBA/TPA

Update Log for Doc. No. MM-3039535-0105

This table shows all changes made to this manual, including installed rebuilding kits, added or removed pages. Page numbering on added pages begins with UP.

Date	Installed Kit	Added Pages (Doc. No.)	Removed Pages	Signature

Date	Installed Kit	Added Pages (Doc. No.)	Removed Pages	Signature

i Introduction

About the Introduction Chapter

This chapter contains basic information about this manual and the related Tetra Pak equipment.

Abbreviations and Terminology . . . . . i - 5
Manual Information . . . . . i - 6
Delivered Manuals . . . . . i - 6
Page Layout . . . . . i - 7
Page Numbering. . . . . i - 8
Typographical Conventions . . . . . i - 8
Symbols . . . . . i - 8
Machine Introduction . . . . . i - 9
Intended Use of the Equipment . . . . . i - 9
Manufacturer . . . . . i - 9
Support and Feedback . . . . . i - 9
Declaration of Conformity . . . . . i - 9
Identification . . . . . i - 10
CE Classification . . . . . i - 10
Machine Plate . . . . . i - 10
Orientation . . . . . i - 12
Hygiene. . . . . i - 14
How to Use This MM . . . . . i - 15
Procedures . . . . . i - 15
Procedure Start Table . . . . . i - 15
TPMS . . . . . i - 16
Planned Maintenance Program . . . . . i - 16
Checklists and Spare Parts Recommendations . . i - 16

This page intentionally left blank

Abbreviations and Terminology

Abbreviation/ Terminology	Meaning	Translation
ANSI	American National Standards Institute	
BFT	Bent Foil Treater	
CE	Communautés Européennes/European Communities	
CF	Compact Flash	
EM	Electrical Manual	
HMI	Human Machine Interface	
IM	Installation Manual	
I/O	In/Out	
ISO	International Organization for Standardization	
LC	Line Controller	
MM	Maintenance Manual	
OK	Optional Kit	
OM	Operation Manual	
PLC	Progammable Logic Controller	
PLMS	Production Line Monitoring System	
SA30	Straw Applicator 30	
SD30	Straw Detector 30	
SPC	Spare Parts Catalogue	
TB	Tetra Brik	
TBA	Tetra Brik Aseptic	
TCA	Tetra Classic Aseptic	
TPA	Tetra Prisma Aseptic	
TPMS	Tetra Pak Maintenance System	
TWA	Tetra Wedge Aseptic	
TPOP	Tetra Pak Operator Panel	

Manual Information

Tetra Pak recommends reading all delivered manuals carefully. Make sure that the delivered manuals are available to personnel who operate or maintain the equipment.

It is important to keep this manual for the lifetime of the equipment and to pass the manual on to any subsequent holder or user.

Tetra Pak will not be held responsible for any damage to the equipment caused by not following the instructions given in this manual.

Delivered Manuals

Manuals delivered with this equipment:

- EM
  The Electrical Manual provides technicians with information about the equipment's electrical system.
- IM
  The Installation Manual provides technicians with information required to safely install the equipment.
- MM
  The Maintenance Manual provides technicians with information on maintaining the equipment.
- OM
  The Operation Manual manual provides the operator with information on handling and operating the equipment before, during, and after production.
- SPC
  The Spare Parts Catalogue provides the information necessary to order spare parts from Tetra Pak

Page Layout

Every main page in a manual contains a header and a footer. The page header contains the chapter name (1) and the section name (2). The page footer contains the page number (3), and the document number (4). See also the Page Numbering section.

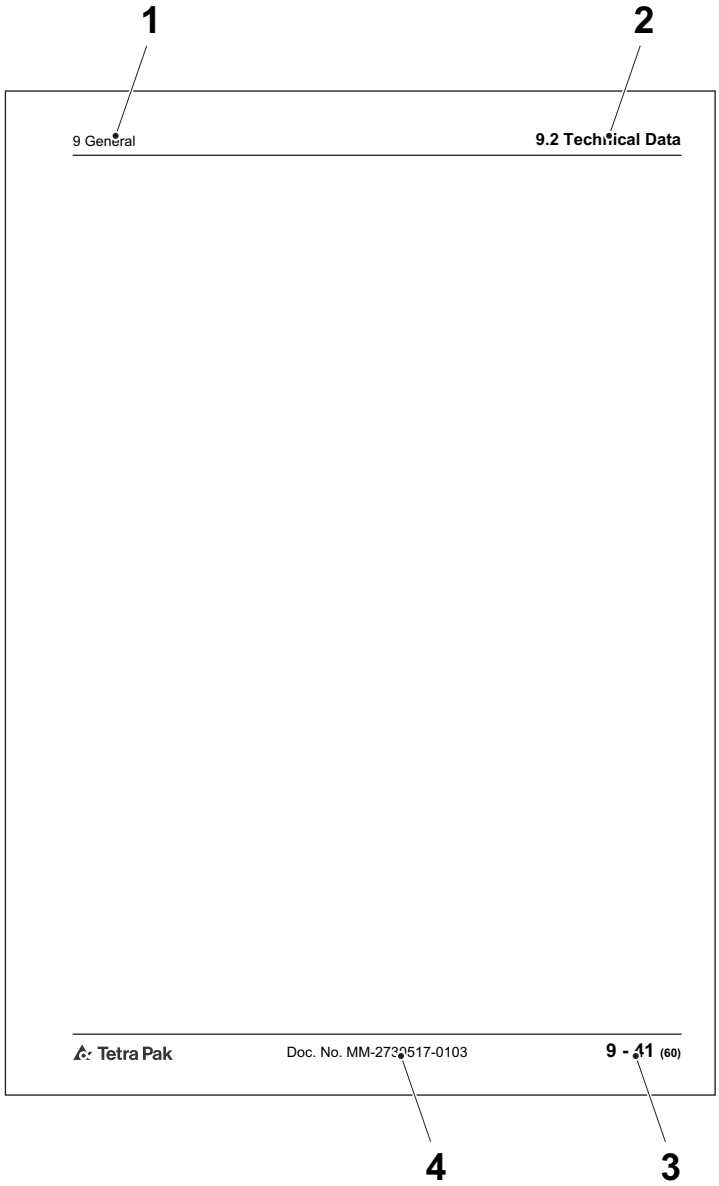

1 Chapter name
2 Section name
3 Page number
4 Document number

Page Numbering

A page number has three parts:

- chapter number (1)
- consecutive page number (2) within the chapter
- total number of pages (3) in the chapter.

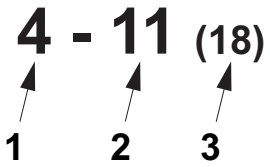

1 Chapter number
2 Consecutive page number
3 Total number of pages

Typographical Conventions

Controls on the operator panel, emergency stop devices, and program steps are printed in CAPITAL LETTERS.

Menu names, button names and other text displayed in software are printed in `Courier`.

Cross-references are underlined.

Symbols

Symbols used in illustrations.

	A pointer arrow indicates the position of an object.
	A zoom arrow indicates that an object view is enlarged. The arrow points towards the enlarged view of the object.
	A rotation movement arrow indicates rotational movement of an object. The arrow points in the direction of rotation.
	A straight movement arrow indicates movement of an object. The arrow points in the direction of movement.

Machine Introduction

Intended Use of the Equipment

The intended use of this Tetra Pak equipment is to attach drinking straws onto Tetra Brik packages (TB and TBA), Tetra Classic packages (TCA), Tetra Prisma Aseptic packages (TPA), or Tetra Wedge Aseptic packages (TWA).

All other use is prohibited. Tetra Pak will not be held responsible for injury or damage if the equipment is used for any other purpose than the intended use described above.

Manufacturer

This Tetra Pak equipment has been manufactured by

Tetra Pak Packaging Solutions AB
Ruben Rausings gata
SE-221 86 Lund
Sweden

Support and Feedback

If you encounter problems when operating this equipment or have other inquiries, comments, or suggestions for improvement, contact Tetra Pak.

Declaration of Conformity

A copy of the Declaration of Conformity can be found in the Installation Manual. The signed Declaration of Conformity is delivered separately with the equipment.

Identification

CE Classification

This equipment complies with the basic health and safety regulations of the European Economic Area (EEA).

Machine Plate

The illustration below shows an example of the machine plate and its location on the equipment. The machine plate carries data needed when contacting Tetra Pak concerning this specific equipment.

Make sure that the equipment data in the front pages of this manual corresponds to the machine plate data and the machine specification.

Main machine

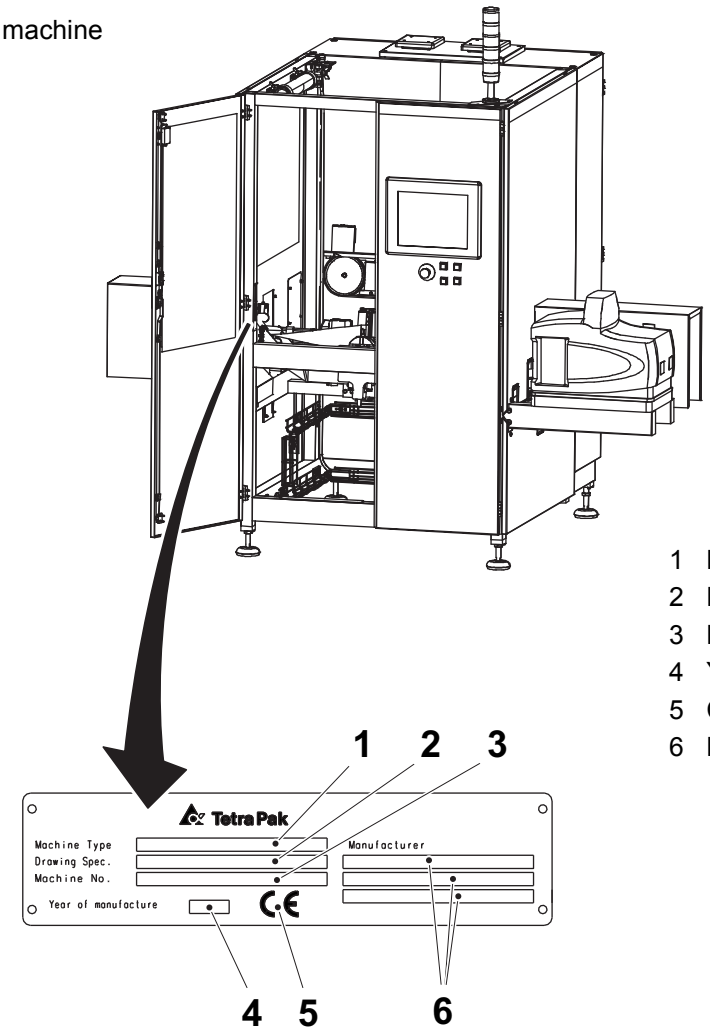

1 Machine type
2 Drawing specifications
3 Machine number
4 Year of manufacture
5 CE mark
6 Manufacturer

(Cont'd)

(Cont'd)

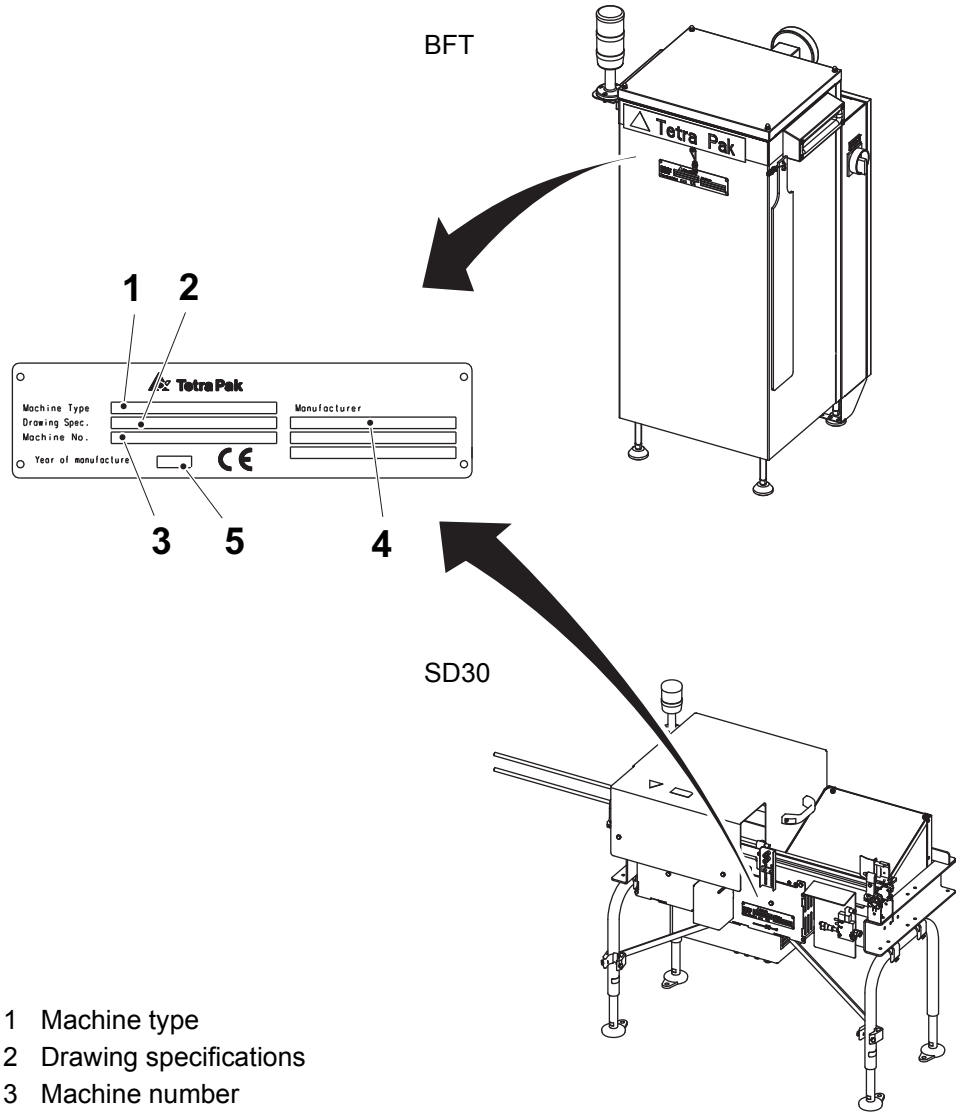

1 Machine type
2 Drawing specifications
3 Machine number
4 Manufacturer
5 Year of manufacture

Orientation

The illustration below shows the orientation of the equipment. This orientation information will be used throughout this manual. The arrows indicate the flow of material.

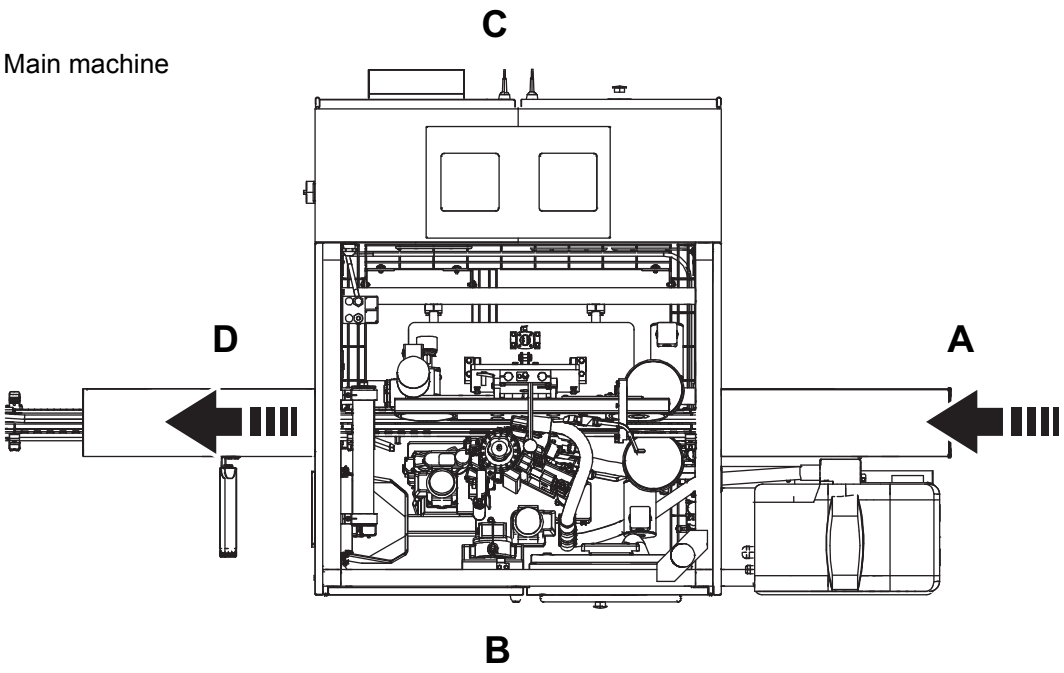

A Front
B Left-hand side
C Right-hand side
D Discharge

(Cont'd)

(Cont'd)

BFT

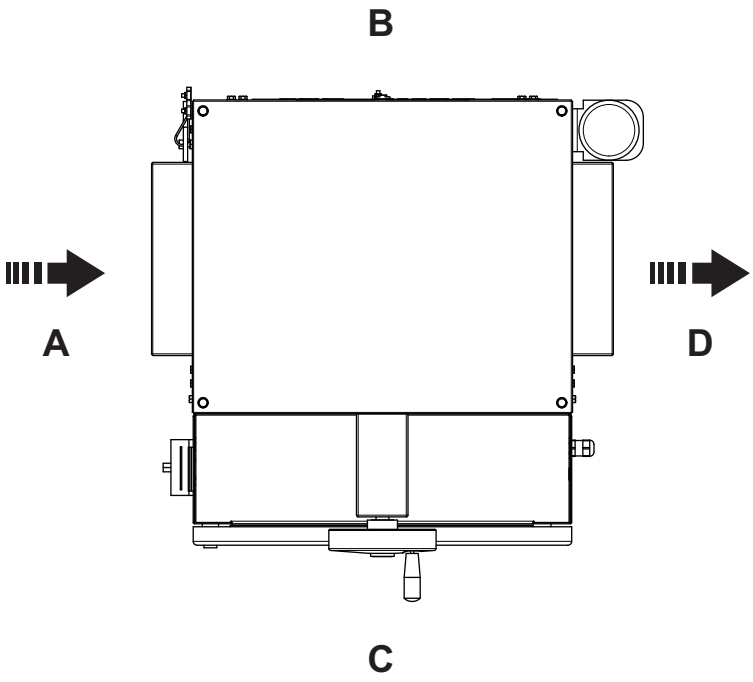

A Front
B Left-hand side
C Right-hand side
D Discharge

Note! The BFT can process the straw ladder band in either direction.

SD30

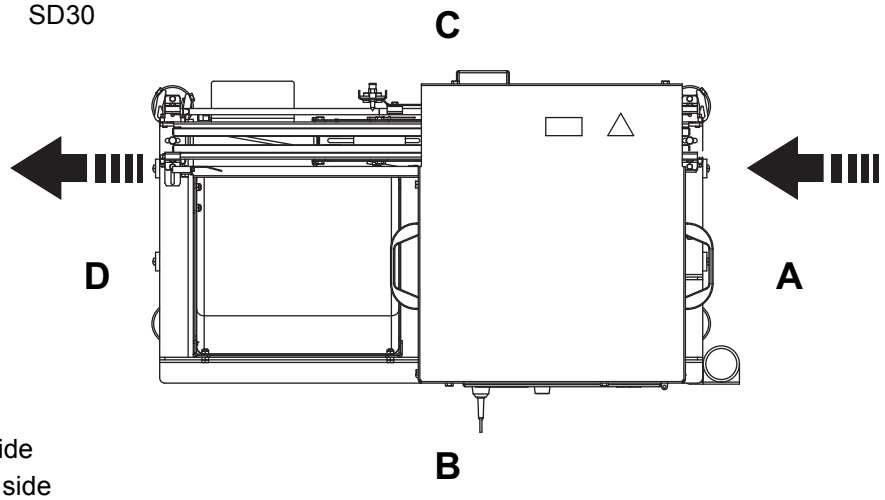

A Front
B Left-hand side
C Right-hand side
D Discharge

Hygiene

- Never clean the floors or the machine when the machine is in production.
- Keep your hands clean.
- Always wear some type of hair protection (cap or hairnet) and clean clothes (preferably white).
- Do not wear a watch, ring, necklace, earrings, or any other exposed jewellery.

How to Use This MM

Procedures

The name of the chapters and sections in the MM correspond to the groups in the structure of the equipment. Procedures correspond to a chapter or a section:

- The hyphens indicate that it is a procedure heading. The example shows a heading for Procedure number 3 in Section 1.5.
- The text after the second hyphen tells what type of procedure it is. Check, Change, and Set are common procedure types.

1.5-3 Outfeed Servo - Change Bearings

Maintenance procedures in this manual are connected to the Tetra Pak Maintenance System, TPMS. See the TPMS section.

Procedure Start Table

Procedures in this manual begin with a table providing information needed to perform the procedure.

- Machine Status (1) shows actuator status, program step, and any other machine status necessary to begin the procedure.
- Special Equipment (2) shows a list of personal protective equipment and special tools that are not normally carried by a service technician, but are needed in the procedure.
- Consumables (3) shows items, such as lubricants, that are required to perform the procedure. Consumables do not include replacement parts.
- SPC Reference (4) shows the assembly number, found in the index of the SPC.

1	Machine Status	Power supply disconnector OFF Air valve OFF Water valve OFF
2	Special Equipment	Hook spanner TP No. 777170-0105 Dial indicator
3	Consumables	Grease code F
4	SPC Reference	2501234-0100

1 Machine Status
2 Special Equipment
3 Consumables
4 SPC Reference

TPMS

To ensure uninterrupted production, all machines and equipment must be maintained on a regular basis.

Tetra Pak has developed a planned maintenance system to keep pace with the ongoing development of new and existing machines and equipment from Tetra Pak, and to meet the demands set by Tetra Pak's customers for higher efficiency and better economy.

Planned Maintenance Program

The Tetra Pak planned maintenance system reduces unplanned downtime and maintenance time for complete production lines, as well as for individual machines and equipment.

With the Tetra Pak planned maintenance system, preventive maintenance can be performed before production is affected. The system is continually updated based on experience with Tetra Pak machines and equipment worldwide.

The Tetra Pak planned maintenance system maintains records of when maintenance is performed, when parts are changed, whether alterations are made, and so on. These records, combined with usage statistics, enable reliable predictions of the service life of all machine and equipment parts.

Checklists and Spare Parts Recommendations

Customers using the Tetra Pak planned maintenance system receive checklists from their local Tetra Pak office whenever planned maintenance is due. These checklists are individualised for each of Tetra Pak's customer, according to the type of machine, equipment usage, and maintenance occasion. In addition, the system recommends spare parts, rotation units, tools, and templates according to the statistics collected.

Tip! Contact the local Tetra Pak office for additional information about the Tetra Pak Maintenance System and its planned maintenance program.

ii Safety Precautions

Description

Safety Precaution Instructions

WARNING

Read and understand this manual before using the machine.
Failure to follow safety precautions and instructions can result in death or serious injury.

Definition of Lockout Procedure

A lockout procedure is a procedure to put each necessary energy isolating device in its safe position to prevent the energisation of the equipment, such as when a maintenance procedure should be carried out.

A lockout is the use of a device, for example, a padlock, to make sure that an energy isolating device cannot be operated.

An energy isolating device is a mechanical device that physically prevents transmission or release of energy, such as a power supply disconnector.

Safety Messages Description . . . . . ii - 5
Personnel Requirements . . . . . ii - 6
Skilled Person . . . . . ii - 6
Instructed Person. . . . . ii - 6
Safety Signs . . . . . ii - 7
Locations of Safety Signs, TB/TBA/TPA . . . . . ii - 11
Locations of Safety Signs, TCA . . . . . ii - 12
Locations of Safety Signs, TWA. . . . . ii - 13
Locations of Safety Signs, Optional Equipment. ii - 14
Protective Devices. . . . . ii - 15
Emergency Stop. . . . . ii - 15
Emergency Stop Buttons . . . . . ii - 16
Safeguards . . . . . ii - 17
Warning Lamp . . . . . ii - 19
Audible Alarm. . . . . ii - 19
Protective Covers. . . . . ii - 20
Safe Manual Handling . . . . . ii - 21
Personal Protection. . . . . ii - 22
Noise . . . . . ii - 22
Entanglement . . . . . ii - 22
Supply Systems. . . . . ii - 23
Power Supply . . . . . ii - 23
Residual Voltage . . . . . ii - 26
Electrical Cabinet. . . . . ii - 26
Socket Outlet . . . . . ii - 28
Air Supply . . . . . ii - 29
Hotmelt Equipment . . . . . ii - 30

This page intentionally left blank

Safety Messages Description

A safety message is always accompanied by a safety alert symbol and a signal word.

The safety alert symbol is used to alert about potential personal injury hazards. To avoid hazards, obey all safety messages that follow this symbol.

The following safety alert symbols and signal words are used in this manual to inform the user of hazards.

DANGER	Danger indicates an imminently hazardous situation which, if not avoided, **will** result in **death or serious injury**.
WARNING	Warning indicates a potentially hazardous situation which, if not avoided, **could** result in **death or serious injury**.
CAUTION	Caution indicates a potentially hazardous situation which, if not avoided, **may** result in **minor or moderate injury.** It may also be used to alert against unsafe practices.
CAUTION	Caution without the safety alert symbol indicates a potentially hazardous situation which, if not avoided, **may** result in **property damage**.

Personnel Requirements

Note! Personnel includes all persons working on or near this equipment.

Only skilled or instructed persons are allowed to work with this equipment.

Skilled Person

A skilled person must have relevant education and experience to enable him or her to identify hazards, analyse risks, and avoid hazards which electricity, machinery, chemicals, other energies, and supply systems on this equipment can create.

Skilled persons must meet local regulations, such as certifications and qualifications for working with these energies and systems.

Instructed Person

An instructed person must be adequately advised or supervised by a skilled person. The skilled person enables the instructed person to identify hazards, analyse risks, and avoid hazards which electricity, machinery, chemicals, other energies, and supply systems on this equipment can create.

Safety Signs

WARNING

Damaged or missing safety signs.
Safety signs are used to indicate safety hazards.
If the signs are missing or damaged, they can not fulfil this function. Replace all missing or damaged safety signs immediately.

Safety signs are attached to the equipment. The table below lists all the signs that are used, and illustrations show their locations on the equipment. Each position number refers to two standards of a safety sign in the table, but only one is used on the equipment.

- Make sure that each safety sign is legible and in its correct position after installation and maintenance.
- Replace all missing or damaged safety signs immediately.

Pos.	ISO standard	ANSI standard
1		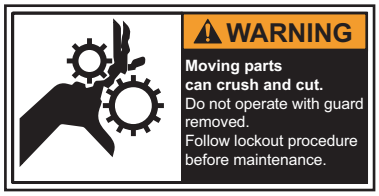
	Moving parts can crush and cut. Do not operate with guard removed. Follow lockout procedure before maintenance.	
2		
	Moving part can crush and cut. Do not operate with guard removed. Follow lockout procedure before maintenance.	
3		
	Moving part can crush and cut. Do not put hands into the machine. Follow lockout procedure before maintenance.	

Pos.	ISO standard	ANSI standard
4		
	Hazardous voltage. Will shock, burn, or cause death. Follow lockout procedure before maintenance.	
5		
	Hazardous residual voltage on capacitors. Will shock, burn or cause death. Do not touch until safe. Follow instructions for safe work practices.	
6		
	Laser Radiation. Do not stare into beam. Class 2 laser product.	
7		
	Risk of equipment damage. Do not let water into this area.	
8		
	Hot surface. Do not touch. Follow lockout procedure before maintenance.	

Pos.	ISO standard	ANSI standard
9		
	Equipment starts automatically. May cause injury. Stay clear from equipment.	
10		
	Do not reach in. Moving parts may cause injury Follow instructions for safe work practice.	
11		
	To prevent serious injury: Do not operate this machine unless all doors are closed and guards are in place and operating. Read manual before first operating machine. If manual is missing, contact Tetra Pak.	
12	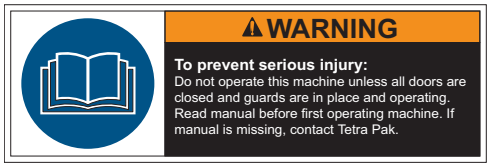	
	To prevent serious injury: Do not operate this machine unless all doors are closed and guards are in place and operating. Read manual before first operating machine. If manual is missing, contact Tetra Pak.	
13		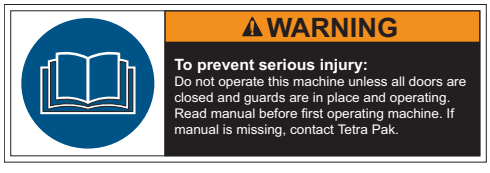
	To prevent serious injury: Do not operate this machine unless all doors are closed and guards are in place and operating. Read manual before first operating machine. If manual is missing, contact Tetra Pak.	

Pos.	ISO standard	ANSI standard
14		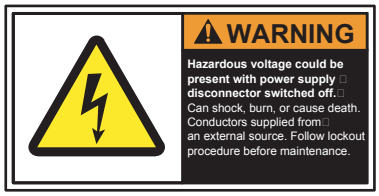
15		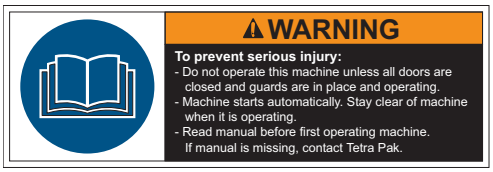

Hazardous voltage could be present with power supply disconnector switched off.
Can shock, burn or cause death.
Conductors supplied from an external source.
Follow lockout procedure before maintenance.

To prevent serious injury:
- Do not operate this machine unless all doors are closed and guards are in place and operating.
- Machine starts automatically. Stay clear of machine when it is operating.
- Read manual before first operating machine. If manual is missing, contact Tetra Pak.

Locations of Safety Signs, TB/TBA/TPA

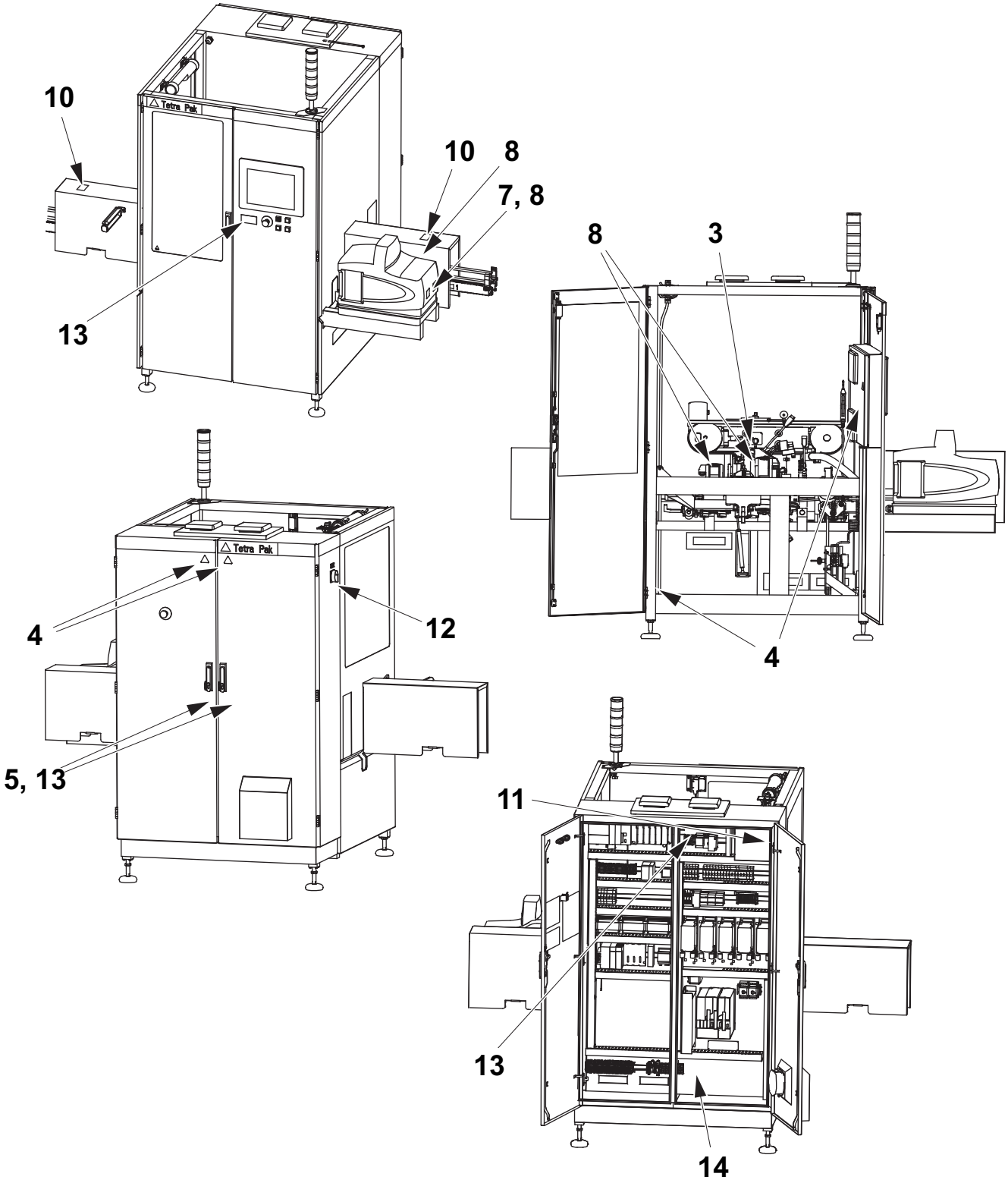

Locations of Safety Signs, TCA

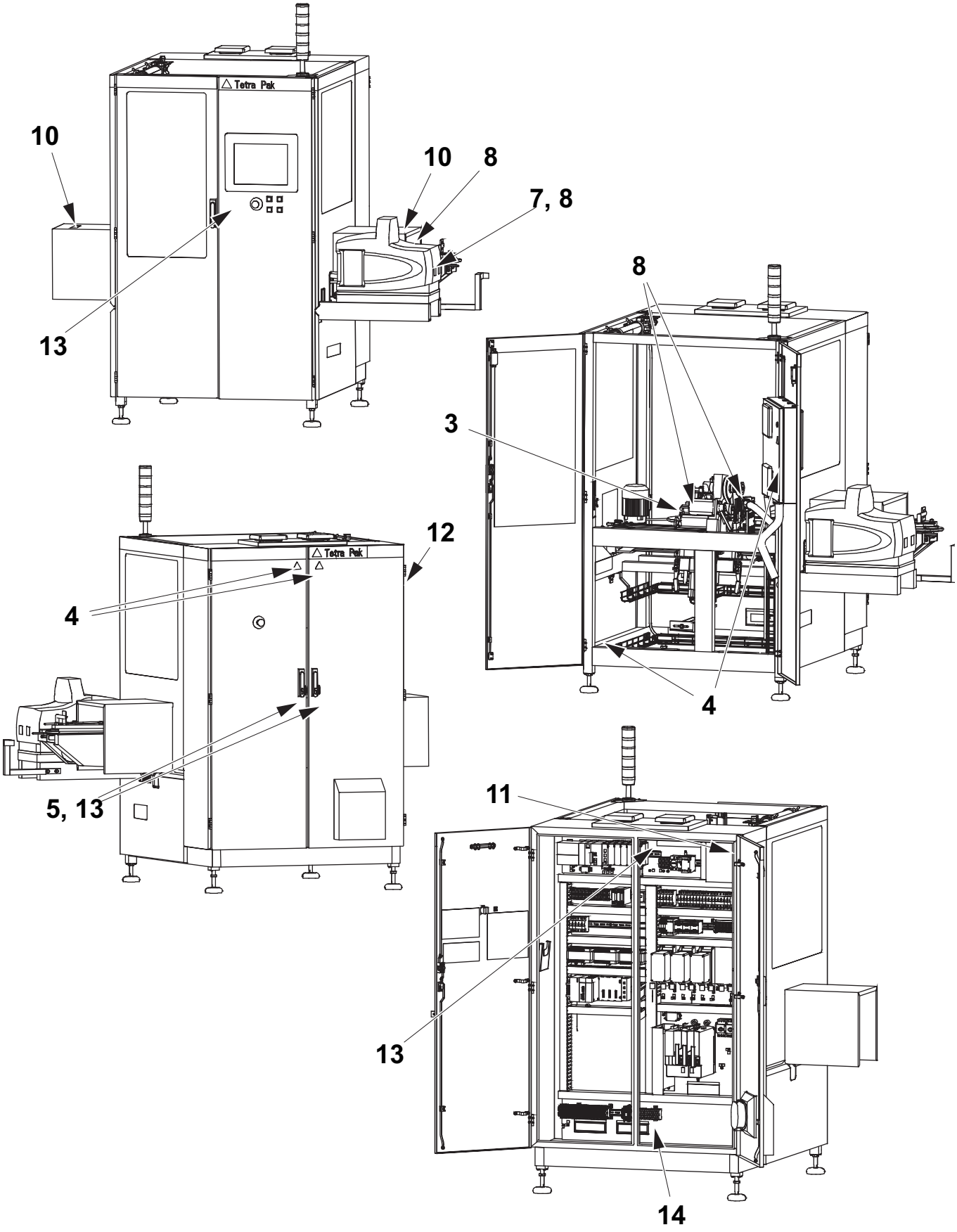

Locations of Safety Signs, TWA

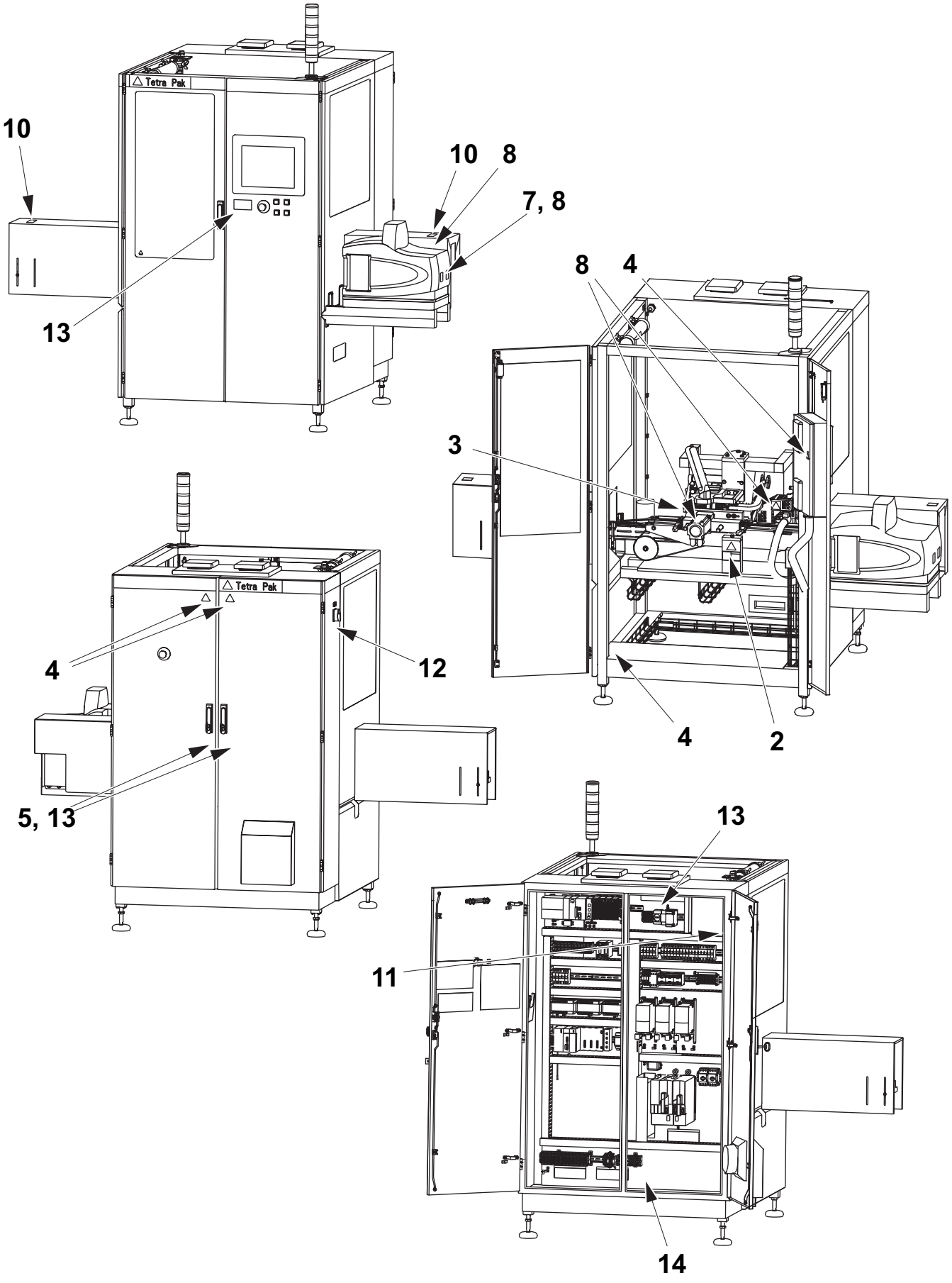

Locations of Safety Signs, Optional Equipment

BFT

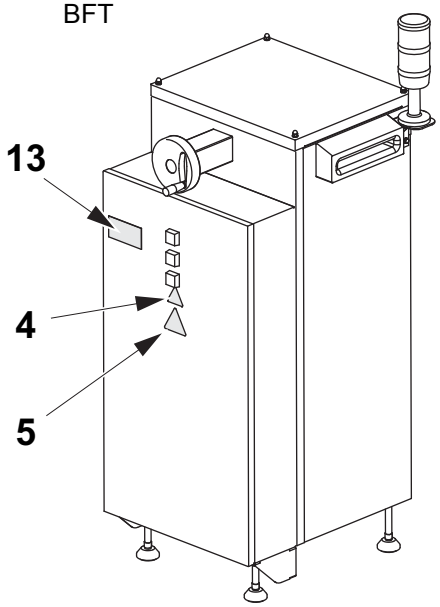

SD30

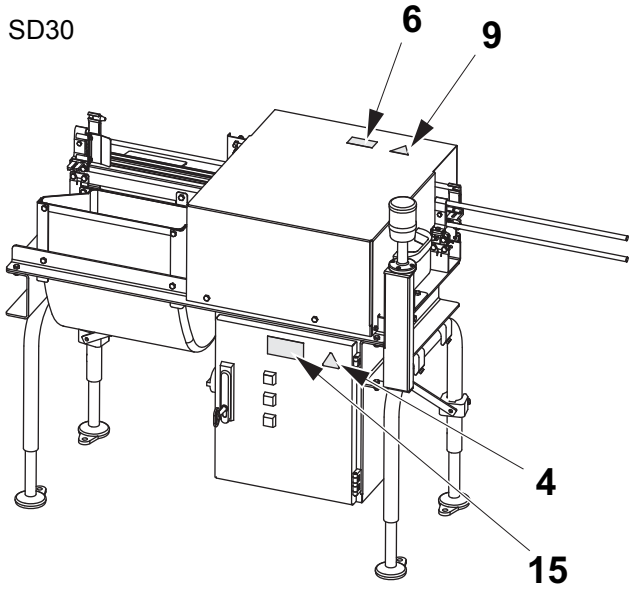

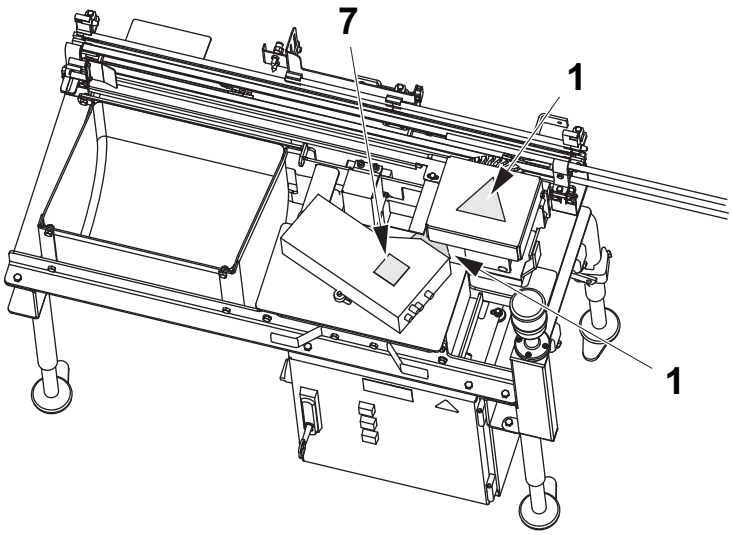

Protective Devices

There are different kinds of protective device designed to ensure safe use of the equipment. See the sections below.

WARNING

Hazardous zones.

Hazardous zones are safeguarded and provided with protective devices. Do not inch or run this equipment if any protective device is inoperative.

Change inoperative components of the safety system immediately.

For the locations of safeguards and/or other protective devices not mentioned in this section, see the Maintenance Manual.

DANGER

Hazardous voltage.

Will shock, burn, or cause death.

Hazardous voltage remains ON after activating an EMERGENCY STOP.

Emergency Stop

Emergency stop devices are used to stop this equipment immediately in an hazardous situation. Learn the positions of all emergency stop devices and how to use them.

Instructions for a normal production stop are included in the Stop chapter of the Operation Manual.

Emergency Stop Buttons

Push one of the EMERGENCY STOP buttons to stop this equipment immediately.

The location of each EMERGENCY STOP button is shown by an arrow.

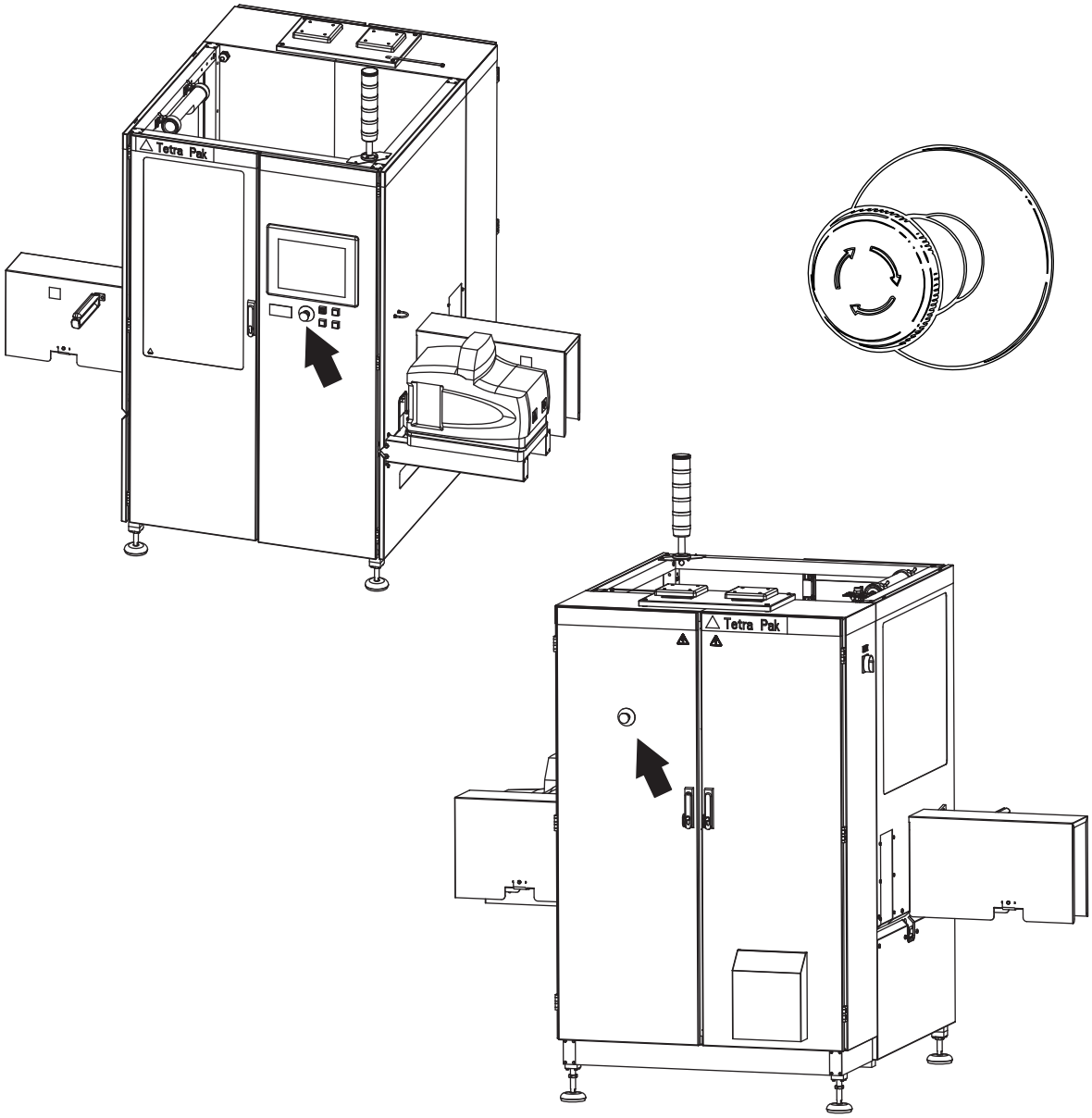

Safeguards

WARNING

Moving machinery parts.

Never defeat or bypass the interlocking devices.

Movable guards, for example, doors and covers leading to hazardous zones, are fitted with interlocking devices where required. These devices are usually electric safety switches that are parts of the safety system and must never be defeated, bypassed, or otherwise made inoperative.

CAUTION

Corners and edges.

Close the doors, guards, or parts of the equipment unless they must be open during work.

CAUTION

Burn hazard.

Parts of the equipment protected by guards may be hot after operation. Allow components to cool down or use personal protective equipment.

After installation and maintenance, and before this equipment is inched or run, check that all safeguards are in place and that they operate correctly.

(Cont'd)

(Cont'd)

CAUTION
Equipment damage.
The equipment can be damaged if it is not stopped in the correct way. Never stop this equipment by opening a movable guard, for example, a door or cover, equipped with an interlocking device.

The location of the interlocking device is shown by an arrow.

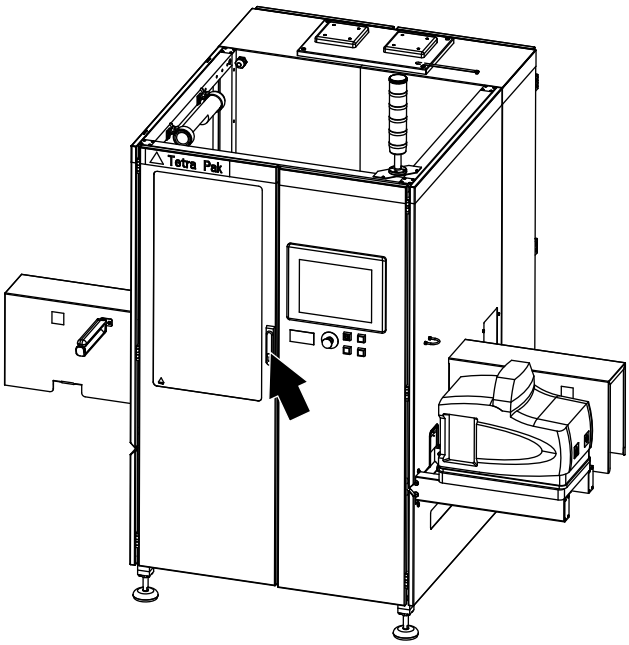

Warning Lamp

A warning lamp is a column of warning lights:

- A red light (2) indicates a hazardous condition. This is a situation that requires immediate action.
- A yellow light (3) indicates an abnormal or impending critical condition. This is a condition calling for action by the operator.
- A blue light (4) indicates that operator action is required.
- A green light (5) indicates a normal condition.

Audible Alarm

The audible alarm (1) produces a warning signal before the safety circuit is reset.The warning signal sounds for approximately three seconds to alert personnel. The reset of the safety circuit will make it possible to step up the machine and allow the equipment to start.

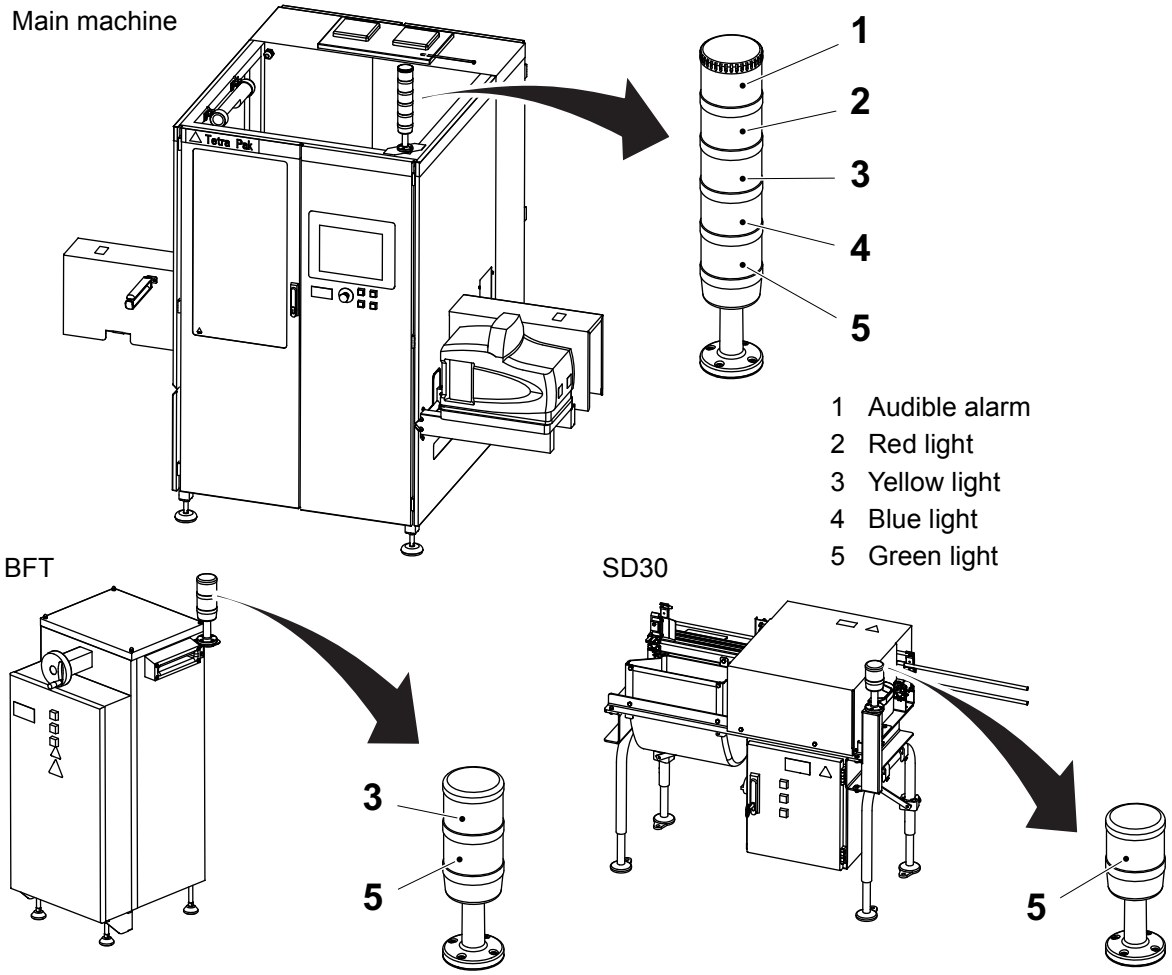

Protective Covers

Note! After maintenance, check that all covers are fitted to the machine before it is run.

SD30

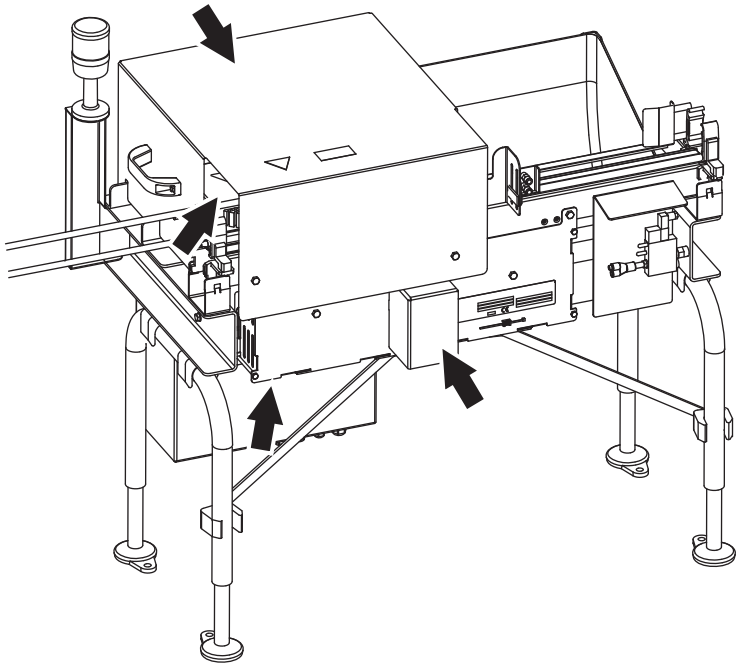

Safe Manual Handling

Use mechanical lifting aids whenever possible. If mechanical lifting aids are not available, do not attempt to lift loads over 23 kg without the assistance of a colleague. Avoid lifting below knee height and above shoulder height. If it is necessary to lift from the floor, follow the instructions below to reduce the risk of back and disc injuries.

- Use safety shoes and be sure that the surface of the floor is not slippery.
- Get close to the load.
- Take a wide stance and find the best positions for your feet.
- Bend your hips and knees, and use your leg muscles.
- Keep the load close to your body.
- Do not twist your body while moving the load.
- Take small steps when turning.

In order to reduce the risk of injury to discs and back muscles, be careful to not bend or twist your back when lifting. Keep the load close to your body to reduce the strain on your back.

To reduce the ergonomic risks to each individual operator, job rotation is recommended, so that recovery and variety are provided.

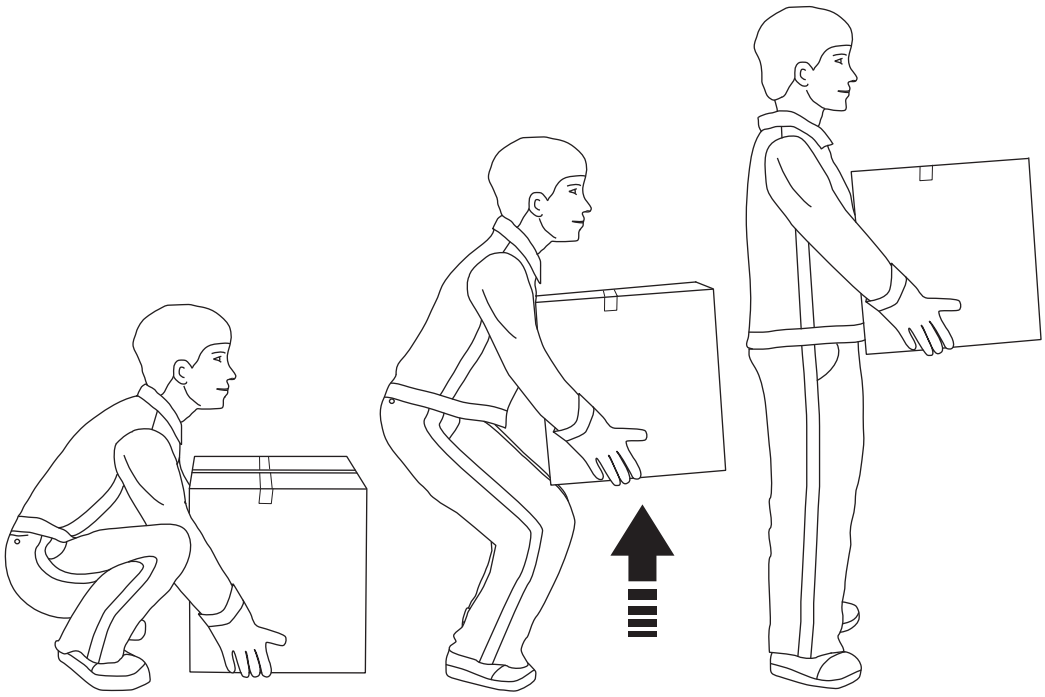

Personal Protection

This section applies to all personnel at all times when this equipment is in operation.

Noise

CAUTION

Hazardous noise.

May cause impaired hearing.

Hearing protection is recommended whenever this equipment is in operation.

Entanglement

WARNING

Risk of entanglement.

Do not wear jewellery or loose clothing when working on or near this equipment. Restrain long hair with, for example, clips or rubber bands.

Supply Systems

Power Supply

DANGER

Hazardous voltage and moving machinery.
The power supply disconnector must be turned off and secured with a lock before any maintenance.

Note! The key to the lock must be removed by the technician and retained in his/her possession until all work is completed.

DANGER

Hazardous voltage can be present with the power supply switched off.
Circuits identified by orange-coloured conductors are not disconnected by the main power supply disconnector. The location of the power supply disconnector of these circuits is described in the Maintenance Manual procedures that include work on these types of circuit.

Certain maintenance procedures may require power supply systems to be on. These exceptions are clearly stated in the Maintenance Manual.

(Cont'd)

(Cont'd)

The illustrations show the power supply disconnector (main switch) and its location.

The power supply disconnectors (main switches) are coloured red and yellow on this equipment, which means that it can be used as an emergency switching off device.

Any equipment connected to the main machine will be dead when the power supply disconnector (main switch) on the main machine is switched OFF.

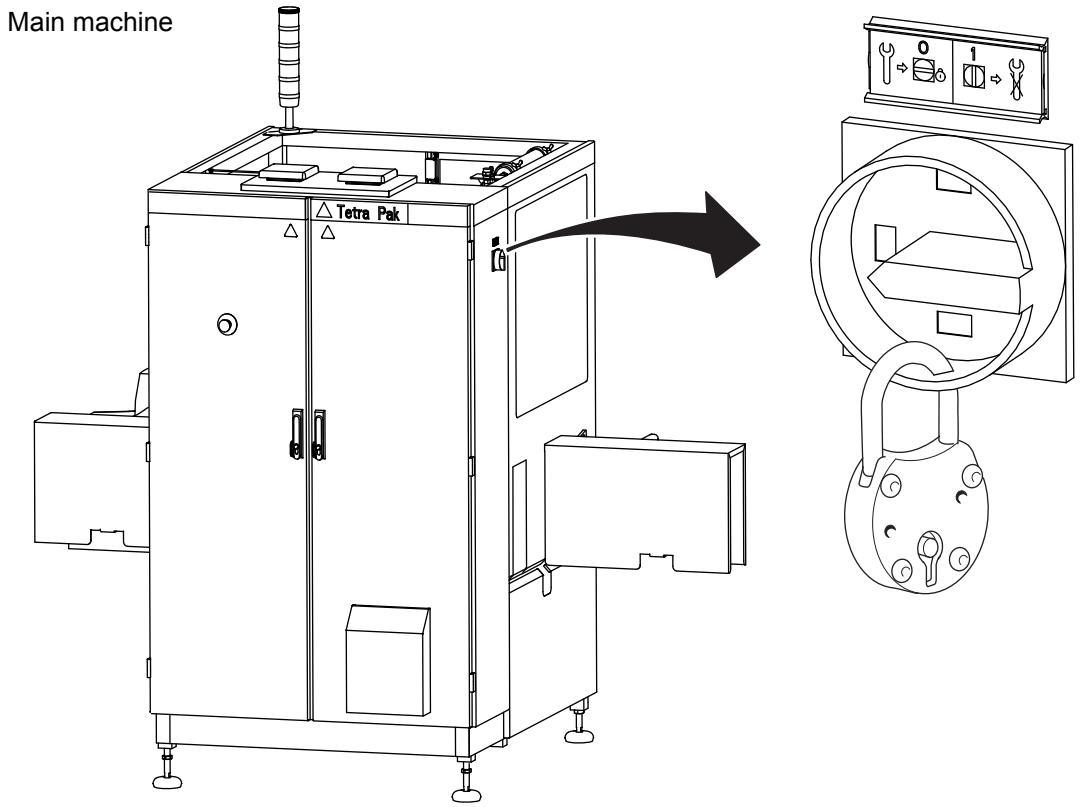

(Cont'd)

(Cont'd)

BFT

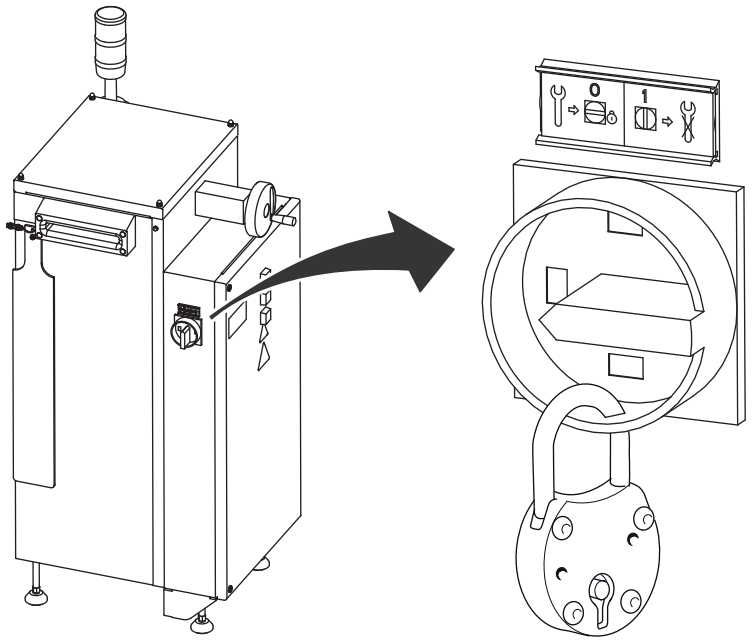

SD30

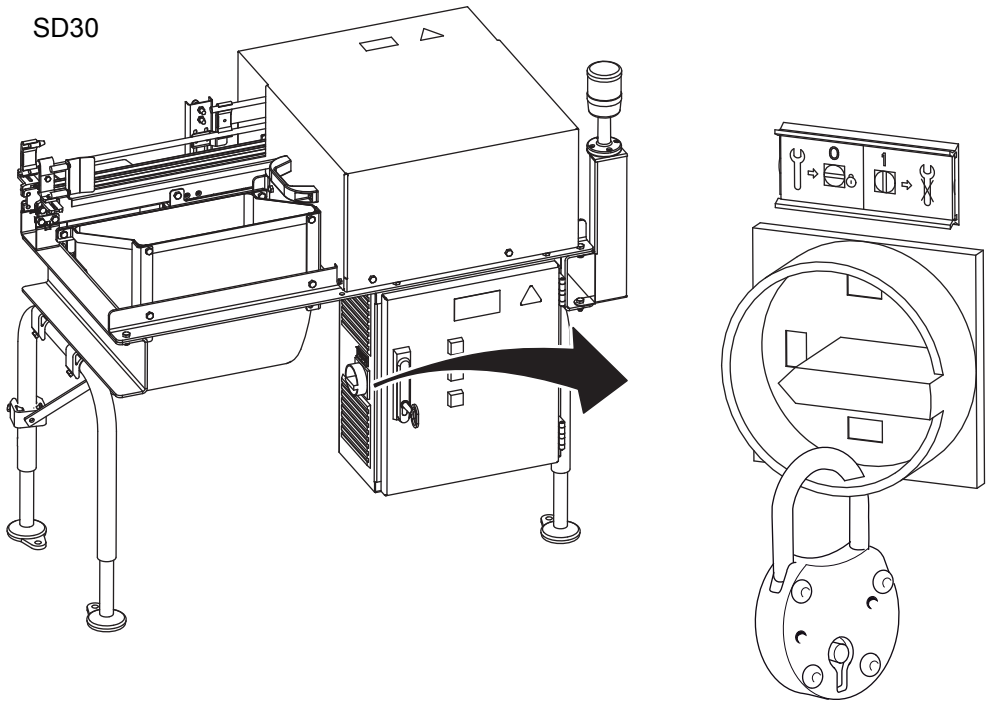

Residual Voltage

DANGER

Hazardous voltage.
Will shock, burn, or cause death.
After the power supply disconnector is turned off, residual voltage remains in the capacitor circuits.
Wait five minutes before opening the enclosure containing these circuits.
Ensure that no residual voltage remains on the capacitors before touching them.

Electrical Cabinet

DANGER

Hazardous voltage.
Will shock, burn, or cause death.
Parts behind doors to electrical enclosures may be live. The power supply disconnector must be turned off and secured with a lock before performing maintenance inside the electrical cabinet.

Note! The key to the lock must be removed by the technician and retained in his/her possession until all work is completed.

(Cont'd)

(Cont'd)

The use of a key or a tool is necessary to access to the electrical cabinet.

Make sure that the electrical cabinet doors are closed after working inside the electrical cabinet. Doors with locks must be locked.

The location of each electrical cabinet is shown by an arrow.

Main machine

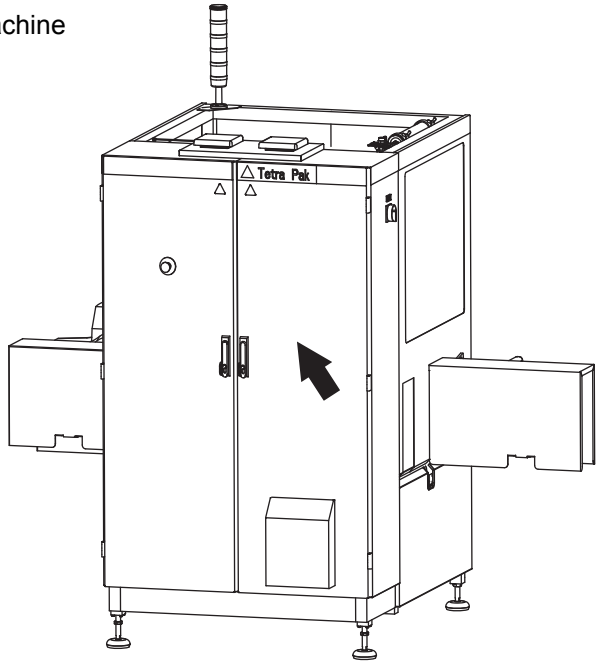

BFT

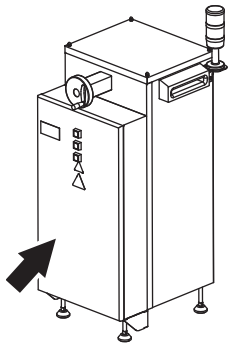

SD30

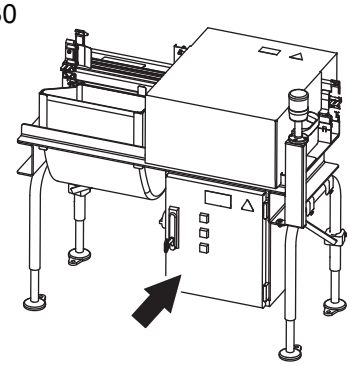

Socket Outlet

WARNING
Hazardous voltage.
Can shock, burn, or cause death.
Read the Maintenance Manual before using this socket outlet.

The socket outlet (1) is connected to a residual current device (2) to protect users against electrical shock if there is an earth fault in the connected equipment. The residual current device must be tested each time before the socket outlet is being used. See the MM for test procedure.

The illustrations show the socket outlet, the residual current device, and their locations.

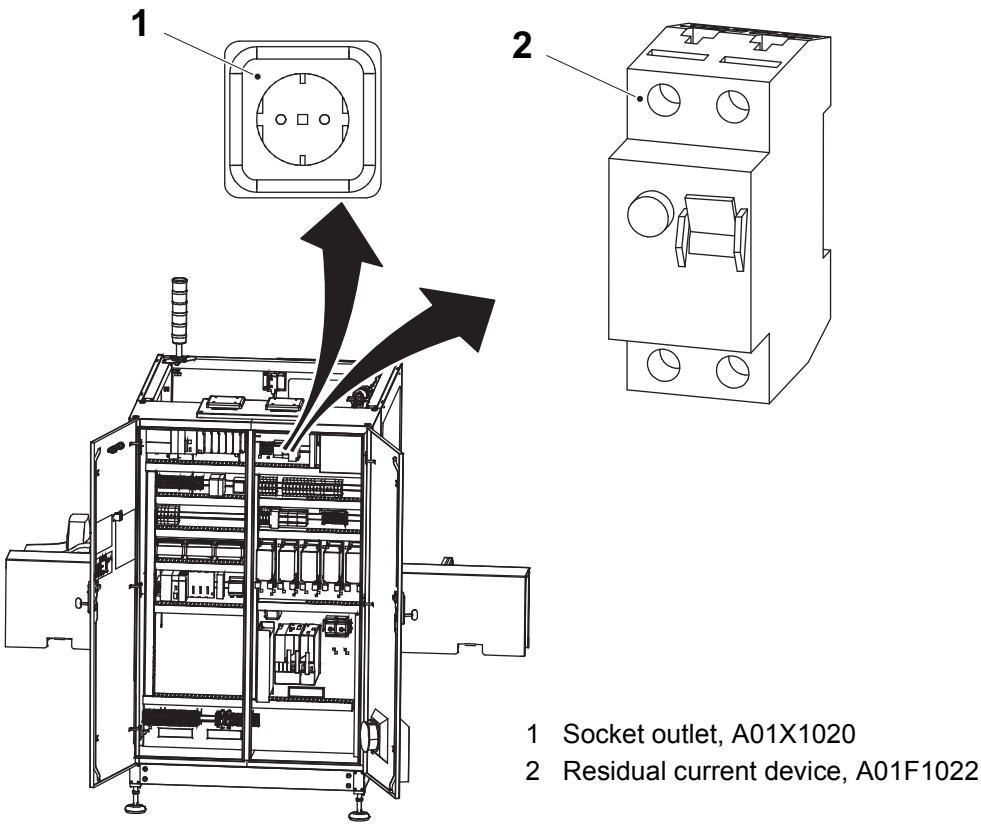

1 Socket outlet, A01X1020
2 Residual current device, A01F1022

Air Supply

WARNING

Compressed air and moving machinery.
Close the main air valve and lock it, and safely release compressed air from the air system before any maintenance.

Note! The key to the lock must be removed by the technician and retained in his/her possession until all work is completed.

Certain maintenance procedures may require air supply systems to be on. These exceptions are clearly stated in the Maintenance Manual.

The illustrations show the main air valve (1), the lock (2), and their location.

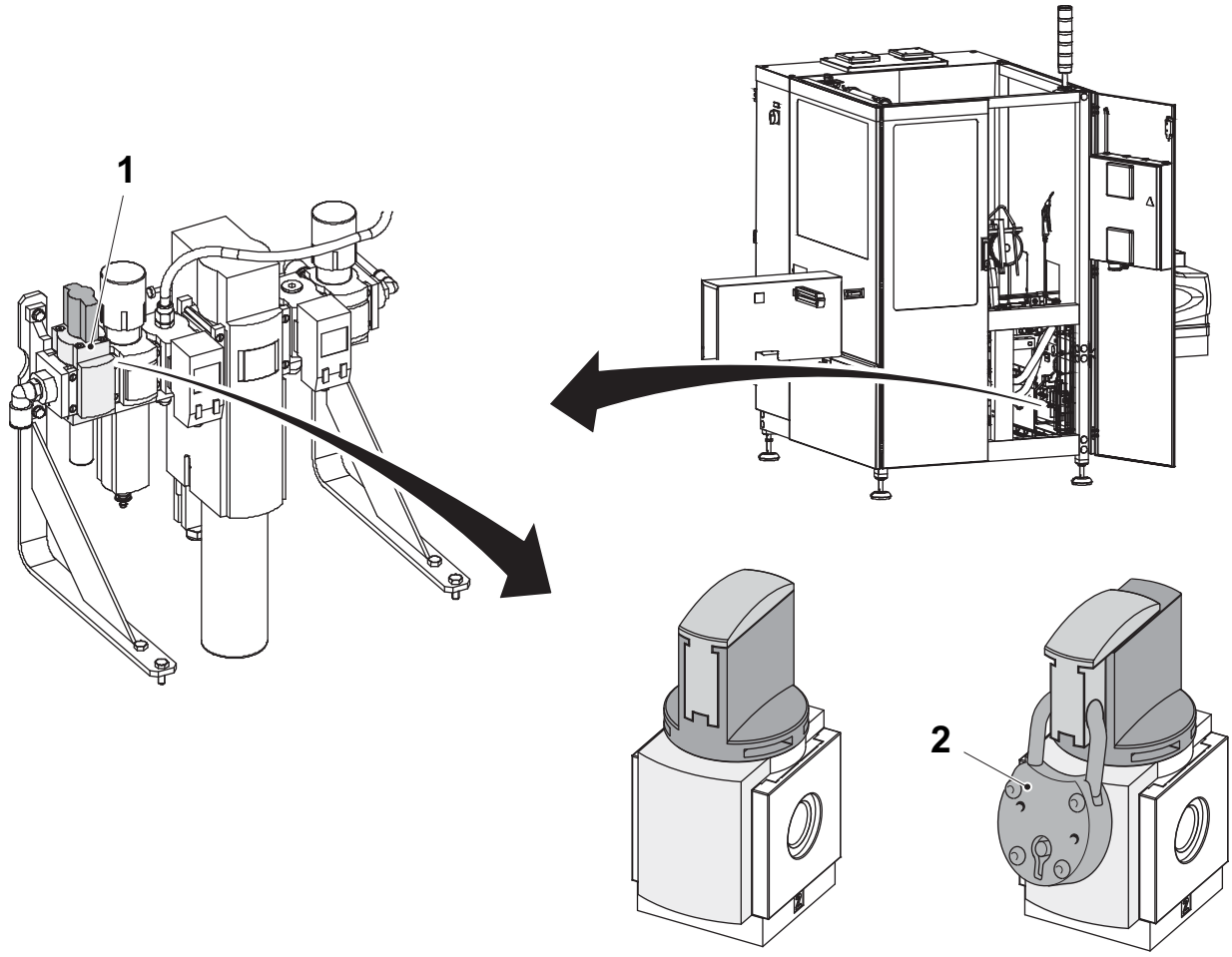

1 Main air valve
2 Lock

Hotmelt Equipment

DANGER

Hazardous voltage.
The voltage is 400V inside the hotmelt unit. Risk of immediate danger to life through electrical shock.

Never flush water or any other liquid towards the hotmelt unit when cleaning the machine. Failure to obey will result in danger to your life.

WARNING

Important when working on hotmelt equipment.
All service work on the hotmelt unit must be carried out by authorized personnel. Always wear safety glasses, protective gloves, and other protective clothing to avoid injuries caused by splashing adhesive.

Never remove any part or component until air and the electrical supply to the machine have been disconnected and the pressure of the adhesive in the system has been relieved.

Failure to relieve any remaining air or liquid (adhesive) pressure may cause serious injuries from burning when the hotmelt filter is detached or flushed.

During heating and production the unit gets hot. The hotmelt tank contains heated adhesive which can cause serious injuries. Do not touch the adhesive!

During tank drainage never touch the drain shut!

(Cont'd)

(Cont'd)

WARNING

Burn hazard.

The hotmelt nozzles and their covers are very hot and there is risk of severe burns. Never touch the hotmelt nozzles or their covers!

Note! The section Hotmelt equipment in this manual only deals with what is specific for this machine.

Always refer to the documentation provided from Nordson Corporation (is included in english in the delivery from Tetra Pak) before doing any kind of work on the hotmelt equipment.

TB/TBA/TPA

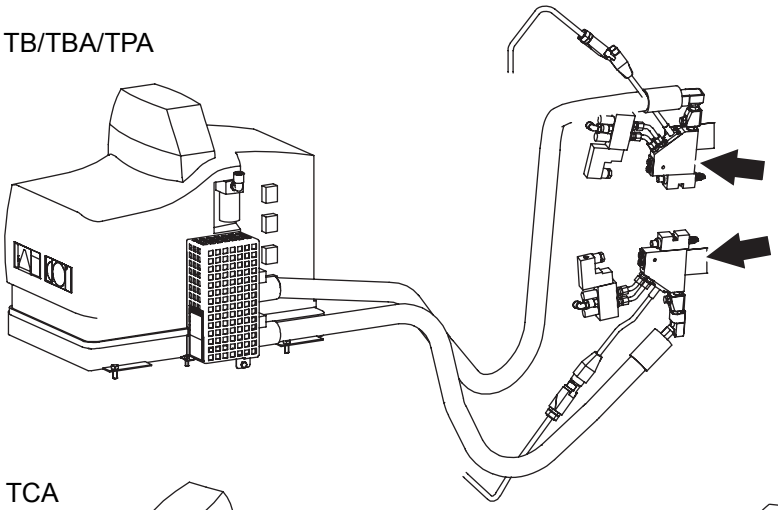

TCA

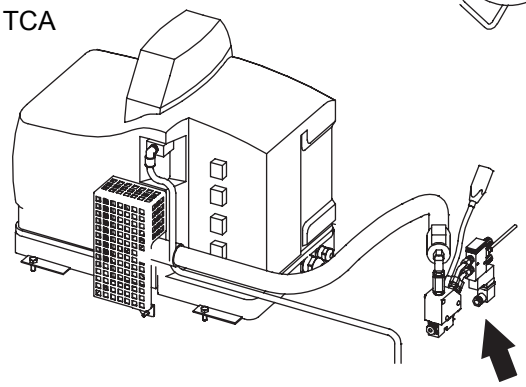

TWA

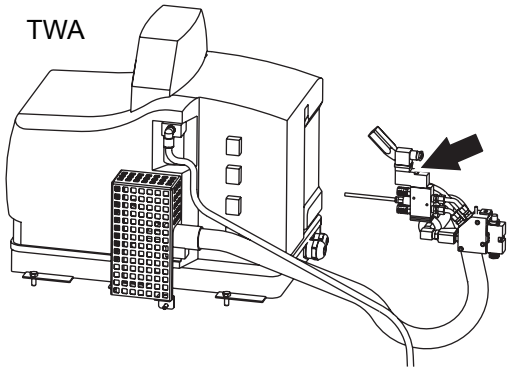

This page intentionally left blank

1 Conveyor Section

TB/TBA/TPA

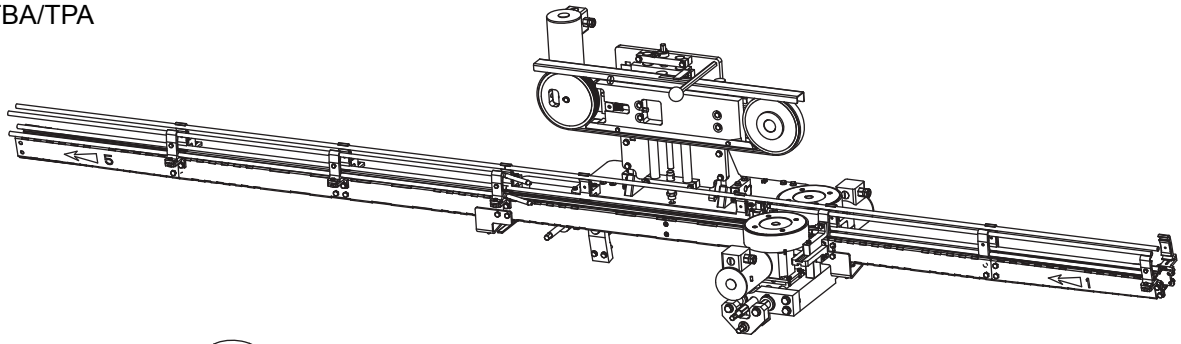

TCA

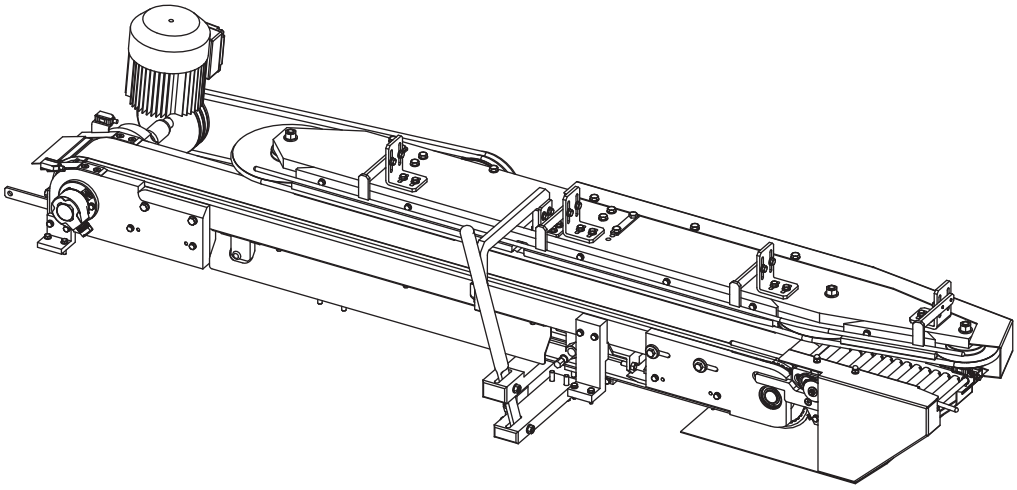

TWA

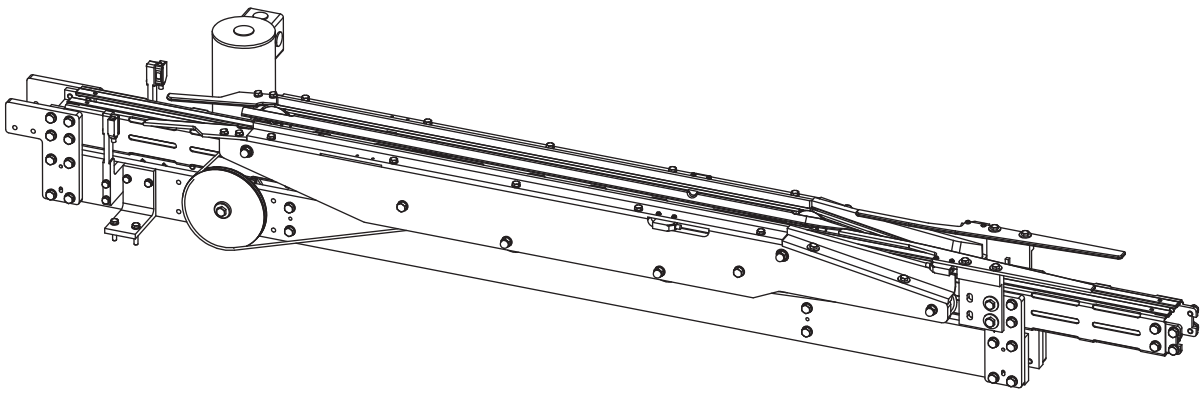

Conveyor Section - Description

SPC Reference	663302

TB/TBA/TPA

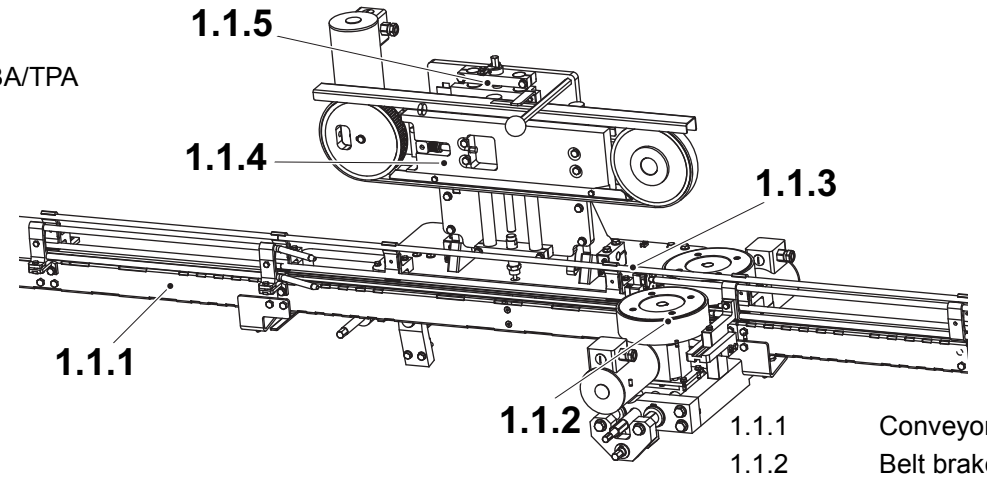

1.1.1	Conveyor
1.1.2	Belt brake
1.1.3	Adjustment plate
1.1.4	Top support
1.1.5	Height adjustment

TCA

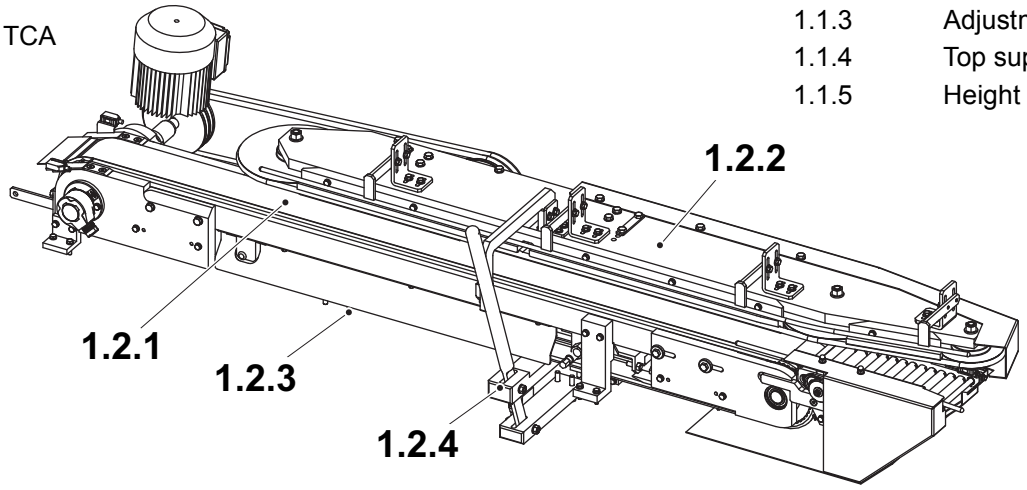

1.2.1	Conveyor
1.2.2	Package transfer
1.2.3	Adjustment plate
1.2.4	Side adjuster

TWA

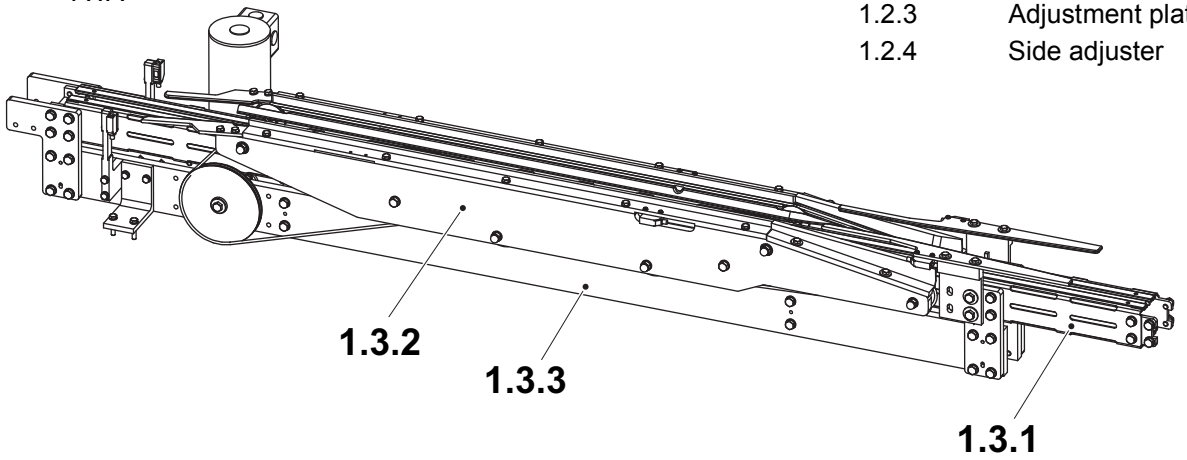

1.3.1	Conveyor body
1.3.2	Support Belt
1.3.3	Drive Wheel

1.1 Conveyor Section TB/TBA/TPA . . . . . 1 - 5

1.1.1 Conveyor. . . . . 1 - 6

1.1.1.1 Support Rail . . . . . 1 - 6

1.1.1.1-1 Support Rail - Set (TB/TBA/TPA) . . . . . 1 - 6

1.1.2 Belt Brake . . . . . 1 - 10

1.1.2-1 Belt Brake - Check Timing Belt . . . . . 1 - 10

1.1.2-2 Belt Brake - Change Timing Belt . . . . . 1 - 11

1.1.2-3 Belt Brake - Set . . . . . 1 - 12

1.1.3 Adjustment Plate . . . . . 1 - 14

1.1.3-1 Adjustment Plate - No Procedure Described . . . 1 - 14

1.1.4 Top Support . . . . . 1 - 15

1.1.4-1 Top Support - Set Horizontal Position . . . . . 1 - 15

1.1.4.1 Support Belt . . . . . 1 - 16

1.1.4.1-1 Support Belt - Check Timing Belt . . . . . 1 - 16

1.1.4.1-2 Support Belt - Change Timing Belt . . . . . 1 - 17

1.1.4.1-3 Support Belt - Set Timing Belt Tension . . . . . 1 - 18

1.1.4.2 Wheel . . . . . 1 - 19

1.1.4.2-1 Wheel - Check Parts . . . . . 1 - 19

1.1.4.2-2 Wheel - Change Parts . . . . . 1 - 21

1.1.5 Height Adjustment . . . . . 1 - 23

1.1.5-1 Height Adjustment - Set Height . . . . . 1 - 23

1.1.5-2 Height Adjustment - Check Shock Absorber . . . 1 - 24

1.1.5-3 Height Adjustment - Change Shock Absorber . . 1 - 25

1.2 Conveyor Section TCA . . . . . 1 - 26

1.2.1 Conveyor. . . . . 1 - 27

1.2.1-1 Conveyor - Check Belt Tension . . . . . 1 - 27

1.2.1-2 Conveyor - Set . . . . . 1 - 28

1.2.1.1 Drive and End Unit. . . . . 1 - 30

1.2.1.1-1 Drive and End Unit - Change Ball Bearings . . . 1 - 30

1.2.1.2 Conveyor . . . . . 1 - 34

1.2.1.2-1 Conveyor - Check Drive Belts . . . . . 1 - 34

1.2.1.2-2 Conveyor - Change Drive Belts . . . . . 1 - 35

1.2.1.2-3 Conveyor - Check Ball Bearings . . . . . 1 - 36
1.2.1.2-4 Conveyor - Change Ball Bearings . . . . . 1 - 37
1.2.1.3 Belt Conveyor, Infeed. . . . . 1 - 39
1.2.1.3-1 Belt Conveyor, Infeed - Check Timing Belt . . . 1 - 39
1.2.1.3-2 Belt Conveyor, Infeed - Change Timing Belt . . 1 - 40
1.2.1.3-3 Belt Conveyor, Infeed - Check Ball Bearings . . 1 - 42
1.2.1.3-4 Belt Conveyor, Infeed - Change Ball Bearings . 1 - 43
1.2.2 Package Transfer. . . . . 1 - 45
1.2.2-1 Package Transfer - Set . . . . . 1 - 45
1.2.2-2 Package Transfer - Check Ball Bearings . . . . . 1 - 48
1.2.2-3 Package Transfer - Change Ball Bearings . . . . . 1 - 49
1.2.2-4 Package Transfer - Check Belts . . . . . 1 - 51
1.2.2-5 Package Transfer - Change Belts . . . . . 1 - 52
1.2.3 Adjustment Plate . . . . . 1 - 53
1.2.3-1 Adjustment Plate - Set Cylinder . . . . . 1 - 53
1.2.3-2 Adjustment Plate - Check Cylinder . . . . . 1 - 54
1.2.3-3 Adjustment Plate - Change Cylinder . . . . . 1 - 55
1.2.4 Side Adjuster . . . . . 1 - 56
1.2.4-1 Side Adjuster - No Procedure Described . . . . . 1 - 56
1.2.5 Cable. . . . . 1 - 56
1.2.5-1 Cable - No Procedure Described . . . . . 1 - 56
1.3 Conveyor TWA . . . . . 1 - 57
1.3-1 Conveyor - Set Package Size . . . . . 1 - 58
1.3.1 Conveyor Body . . . . . 1 - 60
1.3.1-1 Conveyor Body - No procedure described . . . . 1 - 60
1.3.2 Support Belt. . . . . 1 - 61
1.3.2-1 Support Belt - Check Ball Bearings and Drive Belts . . . . . 1 - 61
1.3.2-2 Support Belt - Change Ball Bearings . . . . . 1 - 62
1.3.2-3 Support Belt - Change Drive Belts . . . . . 1 - 63
1.3.3 Drive Wheel . . . . . 1 - 64
1.3.3-1 Drive Wheel - Check . . . . . 1 - 64
1.3.3-2 Drive Wheel - Change . . . . . 1 - 65

1.1 Conveyor Section TB/TBA/TPA

SPC Reference	663302

The conveyor has twisted side plates at the first section on the infeed side, and on the last section on the discharge side. The side plates are marked with numbers and arrows corresponding to the product flow.

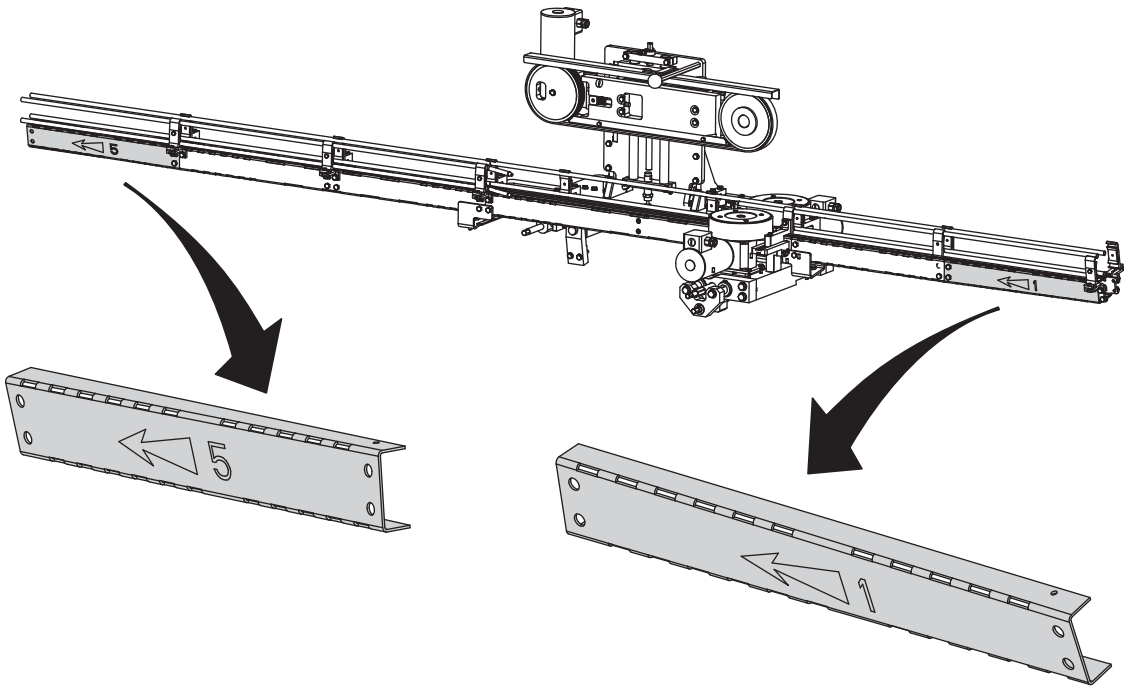

1.1.1 Conveyor

1.1.1.1 Support Rail

1.1.1.1-1 Support Rail - Set (TB/TBA/TPA)

Machine Status	Main Switch OFF Air Valve OFF
SPC Reference	2845848 - valid for TB/TBA 3013606 - valid for TPA

Note! The illustrations show how to set the TB/TBA variant. The procedure is the same for TPA.

a) Put a package (1) on the conveyor, under the top support (2).

b) Adjust the inner support rail (3) with the shaft (4). The distance A, from the side of the conveyor to the side of the package, should be approximately 1 to 2 mm.

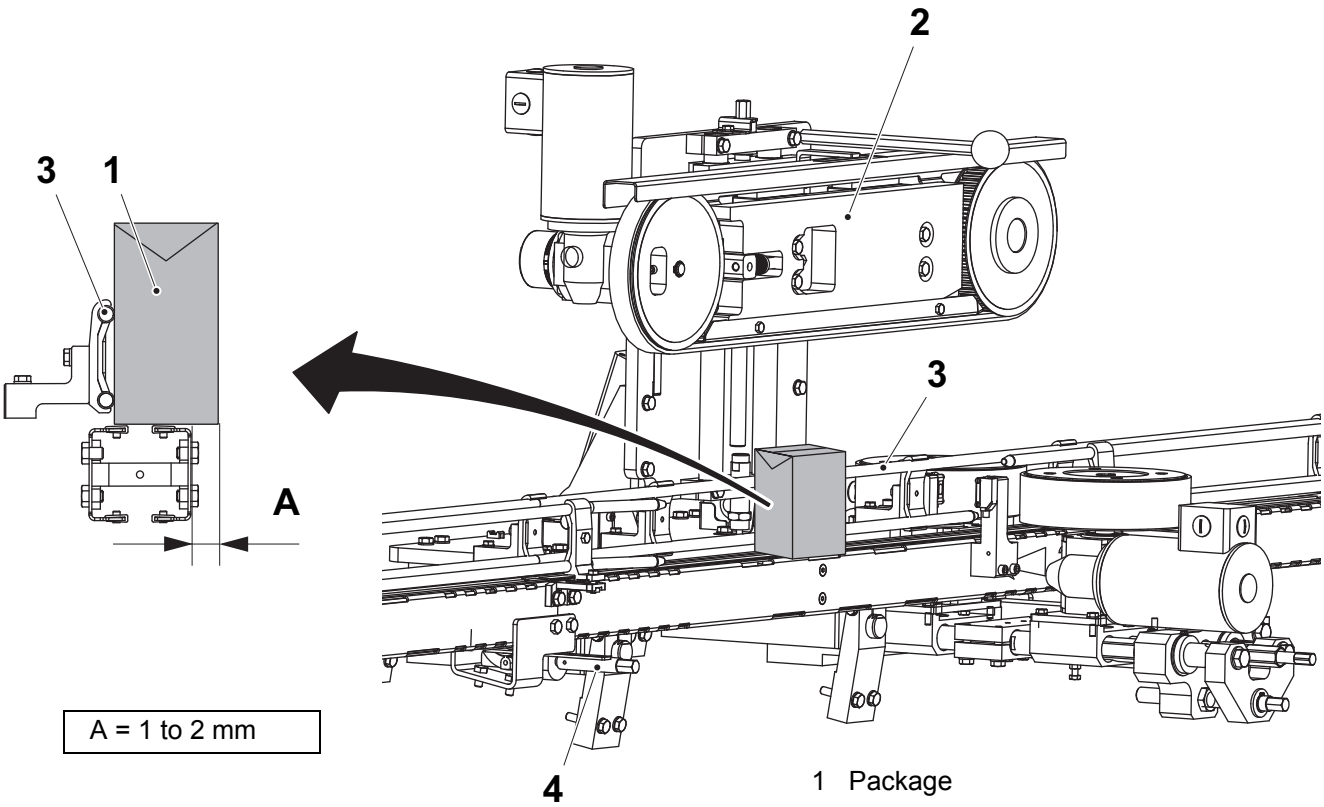

1 Package
2 Top support
3 Support rail
4 Shaft

(Cont'd)

(Cont'd)

c) Put the package (1) in front of the belt brakes (5) and (6).

d) Loosen the screw (7).

e) Set the width between the lower parts of the support rails (8) and (3). It should be approximately the width of the package plus 5 to 6 mm play. Set the railings as symmetrical as possible over the conveyor.

f) Tighten the screw (7).

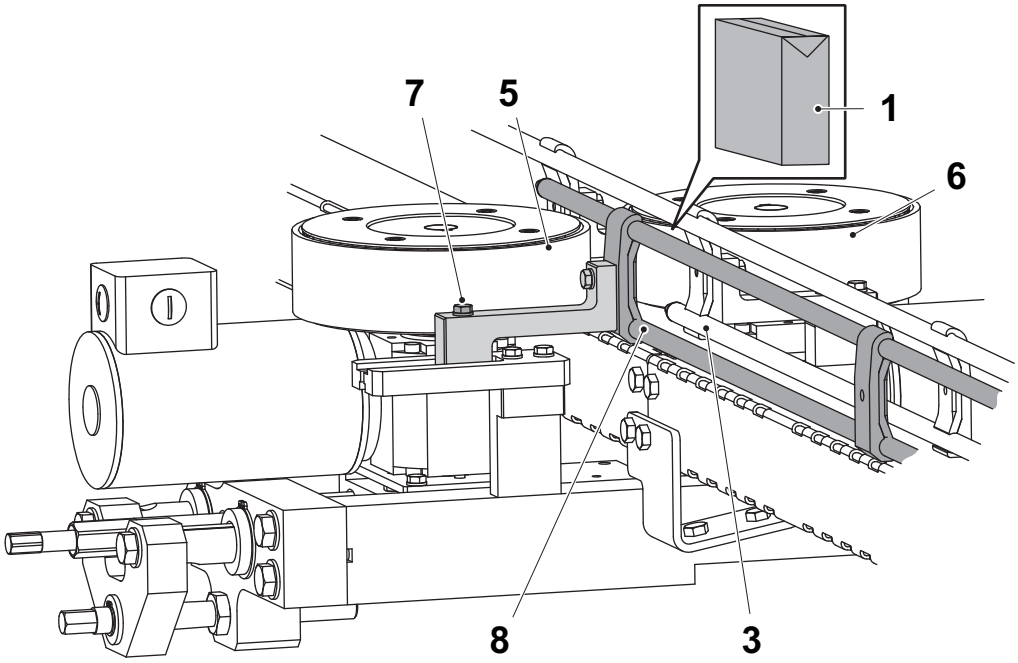

1 Package
3 Support rail
5 Belt brake
6 Belt brake
7 Screw
8 Support rail

(Cont'd)

(Cont'd)

g) Move the package (1) to the rail holders (9) and (10).

h) Loosen the screw (11).

i) Set the rail holder (9) as close to the conveyor chain as possible.

j) Tighten the screw (11).

k) Loosen the screw (12).

Note! For TB/TBA; Set the distance B according to the illustration below. For TPA, set the support rail as close to the package as possible.

l) Set the rail holder (10) so that there is a distance B between the support rail (8) and the package.

m) Tighten the screw (12).

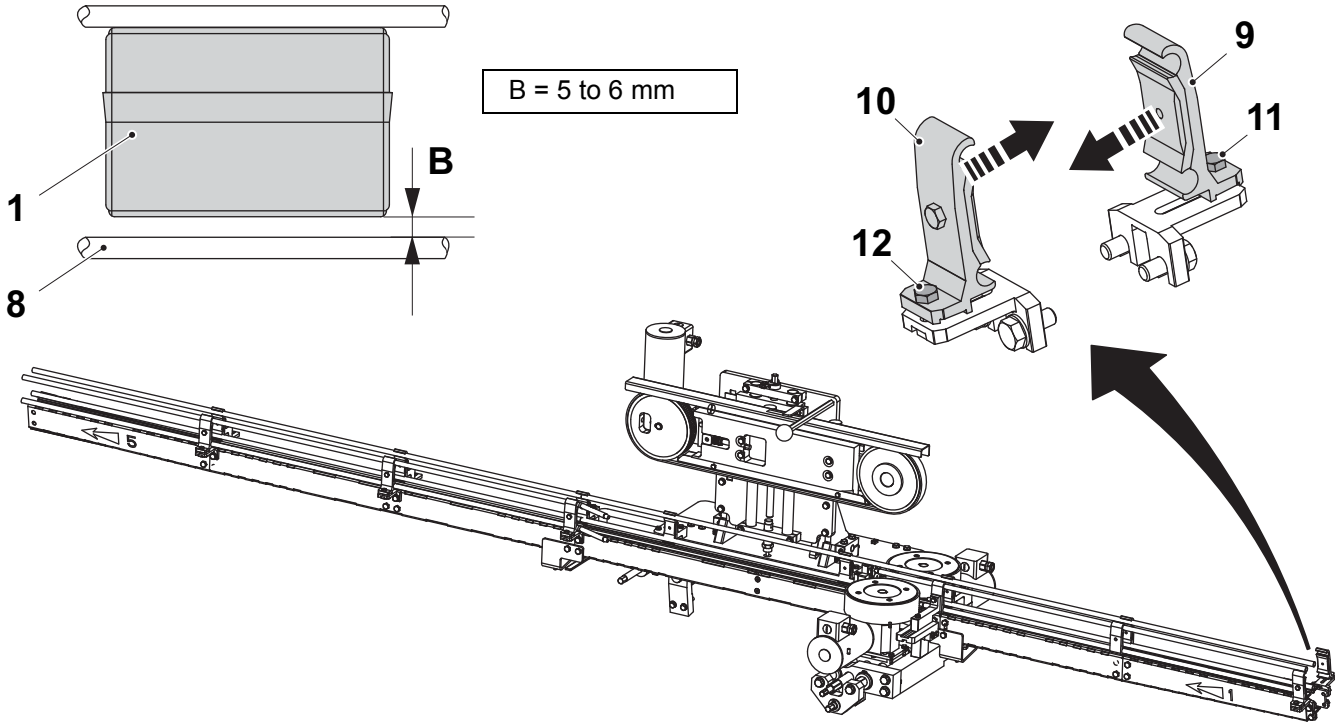

1 Package
8 Support rail
9 Rail holder
10 Rail holder
11 Screw
12 Screw

(Cont'd)

(Cont'd)

n) Move the package (1) to the rail holders (14) and (16). Start with the rail holders closest to the top support.

o) Loosen the screw (13).

p) Move the holder (14) so that the rear of the package (1) is positioned the distance C from the side of the conveyor chain (17).

q) Tighten the screw (13).

r) Loosen the screw (15).

Note! The straw must not be in contact with the rail, until minimum 1 m after the applicator.

s) Adjust the rail holder (16) so that there is a distance D between the package (1) and the support rail (8).

t) Move the package to the next set of rail holders and repeat item o) to s).

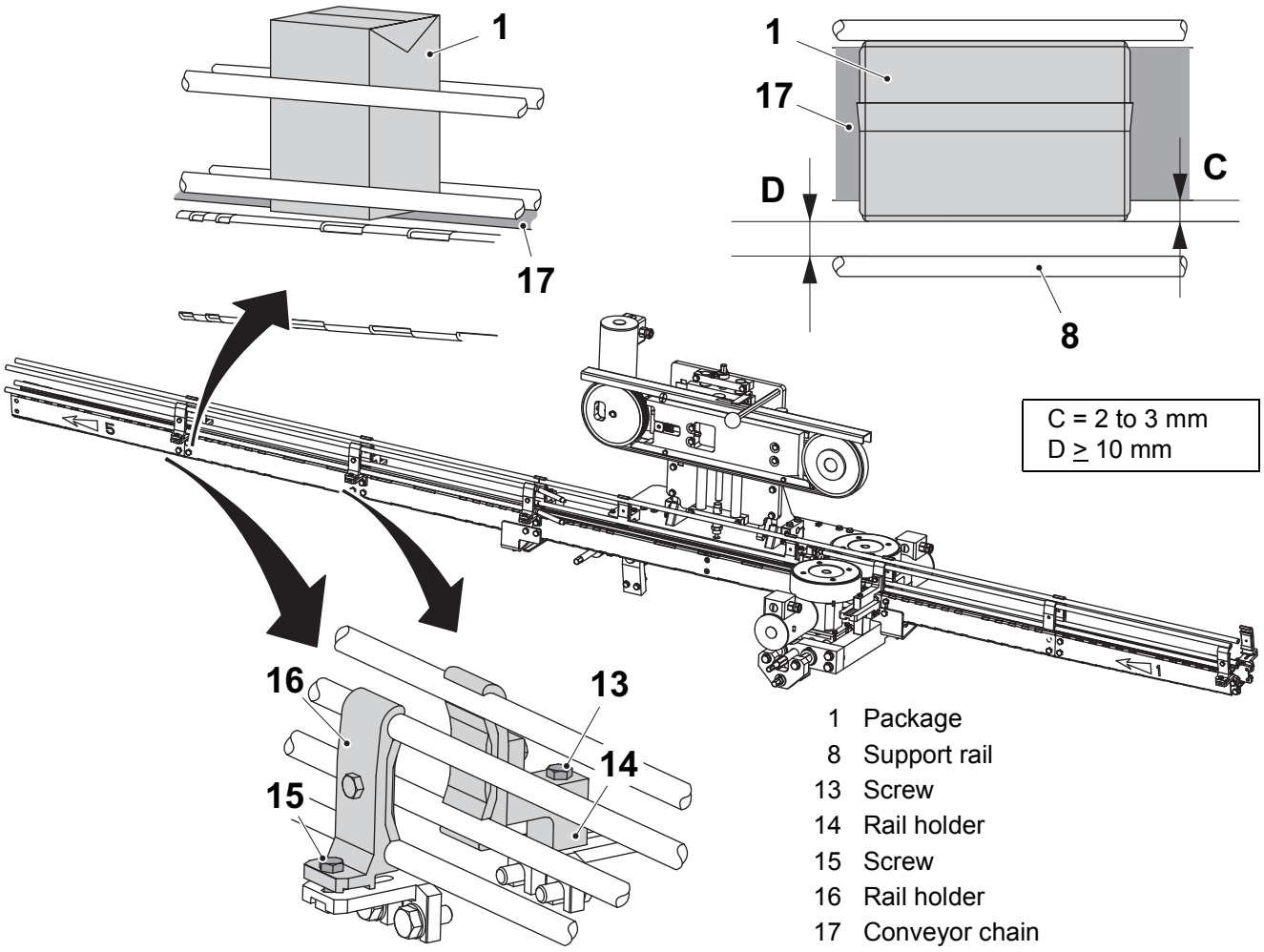

1 Package
8 Support rail
13 Screw
14 Rail holder
15 Screw
16 Rail holder
17 Conveyor chain

1.1.2 Belt Brake

1.1.2-1 Belt Brake - Check Timing Belt

Machine Status	Main Switch OFF Air Valve OFF
SPC Reference	3008046

Check the condition of the timing belts (1) and (2). Change if necessary, see 1.1.2-2 Belt Brake - Change Timing Belt.

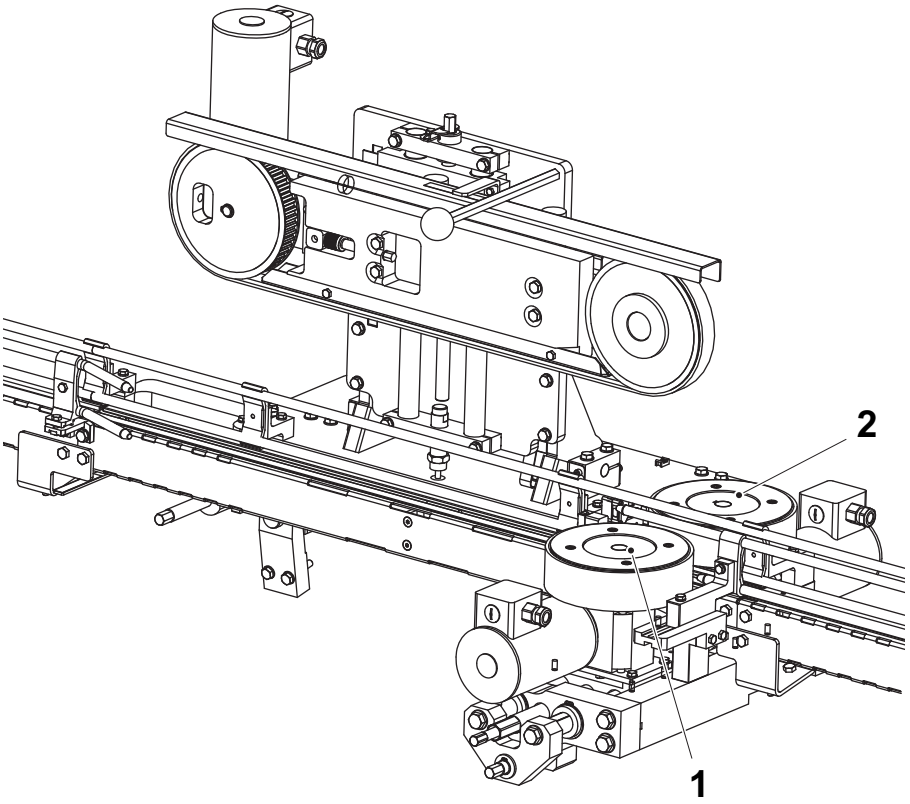

1 Timing belt
2 Timing belt

1.1.2-2 Belt Brake - Change Timing Belt

Machine Status	Main Switch OFF Air Valve OFF
SPC Reference	3008046

a) Remove the screws (1) and the gable plates (2).

b) Change the timing belts (3).

c) Assemble in the reverse order.

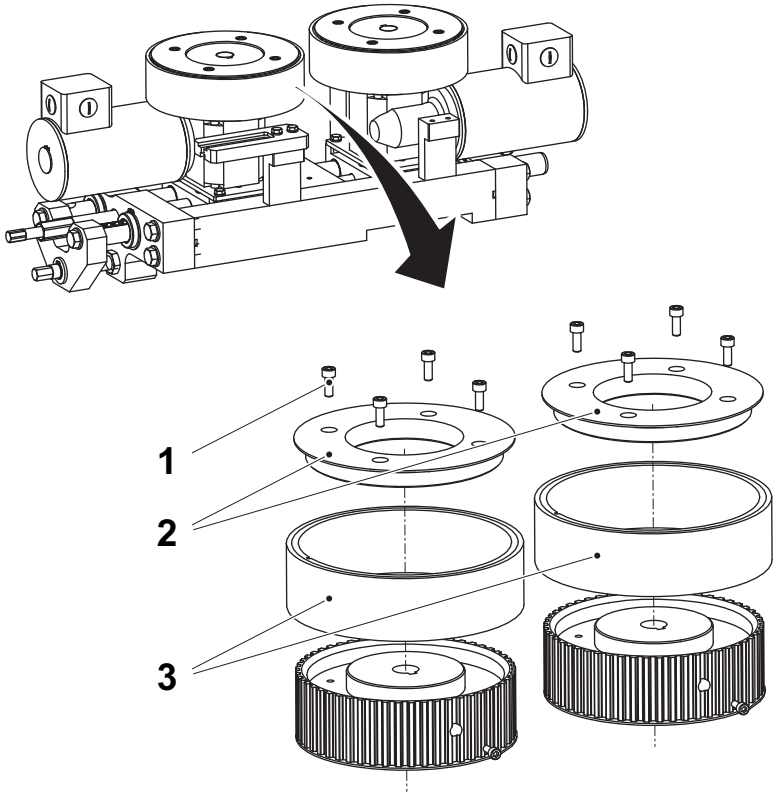

1 Screw (8 pieces)
2 Gable plate
3 Timing belt

1.1.2-3 Belt Brake - Set

Machine Status	Main Switch OFF Air Valve OFF
Special Equipment	Template TP No. 2959983
SPC Reference	3008046

a) Loosen the lock nut (1).

b) Put a package (2) on the conveyor, between the belt brakes (3) and (4).

c) Hold the lock nut (1) and adjust the distance between the belt brakes by turning the adjusting screw (5). The belt brakes should touch the package.

d) Move the belt brakes approximately 2 mm closer together.

e) Tighten the lock nut (1).

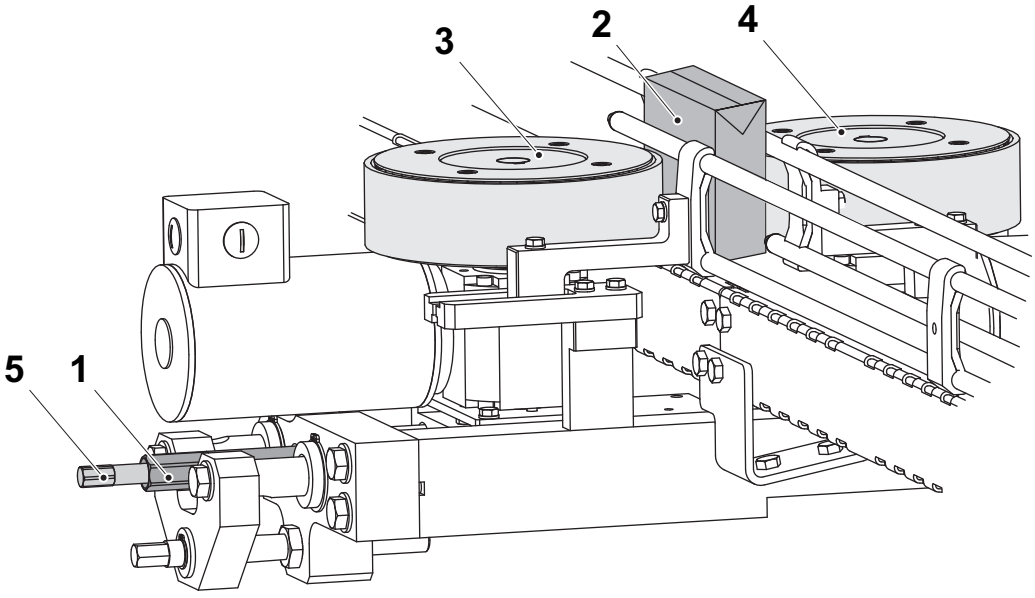

1 Lock nut
2 Package
3 Belt brake
4 Belt brake
5 Adjusting screw

(Cont'd)

(Cont'd)

f) Loosen the nut (6).

g) Adjust the position of the belt brakes with the adjusting screw (7). The package (2) should be aligned with the support rail (8).

h) Tighten the nut (6).

i) Loosen the screw (9). Set the distance A between the package (2) and the support rail (10).

j) Run a few packages in the machine. Fine tune if needed.

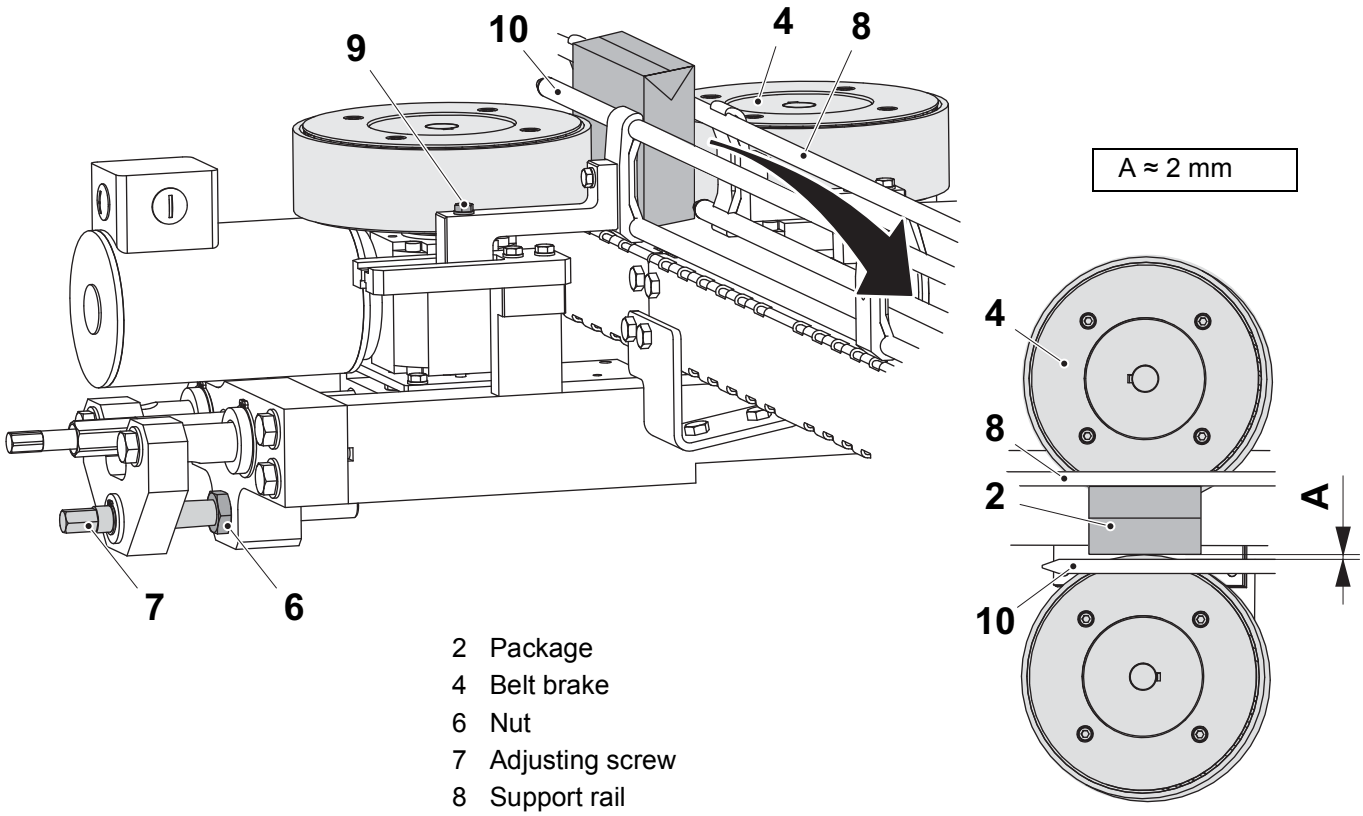

2 Package
4 Belt brake
6 Nut
7 Adjusting screw
8 Support rail
9 Screw
10 Support rail

1.1.3 Adjustment Plate

1.1.3-1 Adjustment Plate - No Procedure Described

SPC Reference	2829416

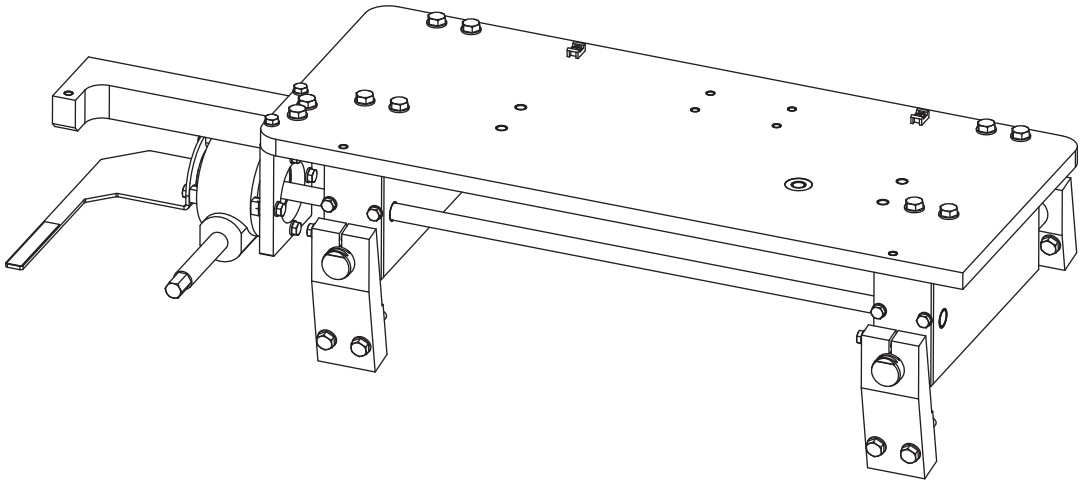

1.1.4 Top Support

1.1.4-1 Top Support - Set Horizontal Position

Machine Status	Main Switch OFF Air Valve OFF
SPC Reference	2924675

Note! Set the height of the top support first, see Procedure 1.1.5-1 Height Adjustment - Set Height.

a) Loosen the clamping elements (1).

b) Put a package (2) after the belt brake, on the conveyor, so that it touches the beltbrake pulleys (3) with its corners.

c) Set the horizontal position of the top support so that it touches the package.

d) Tighten the clamping elements (1).

e) Note the value of the scale (4) for future reference.

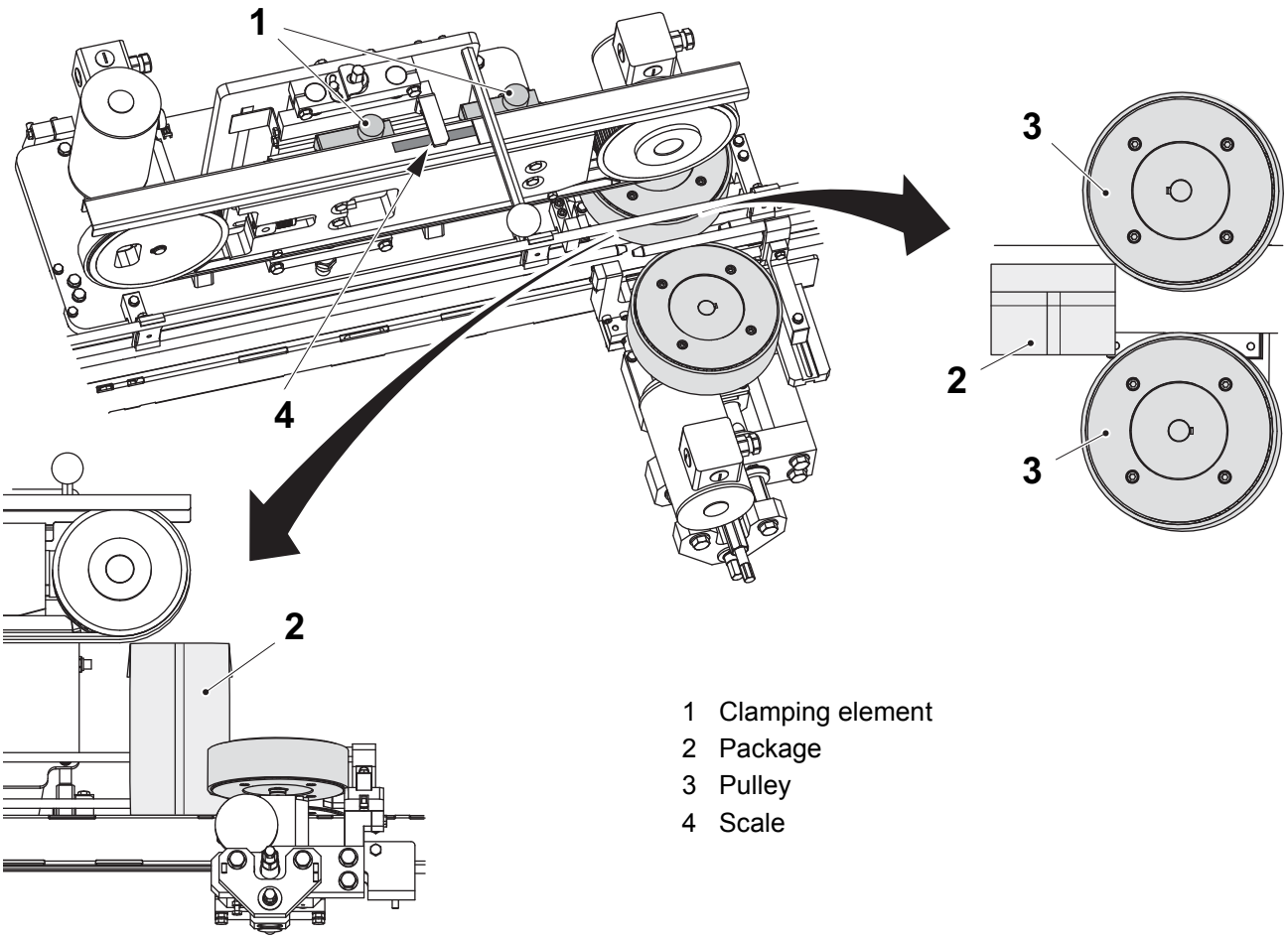

1 Clamping element
2 Package
3 Pulley
4 Scale

1.1.4.1 Support Belt

1.1.4.1-1 Support Belt - Check Timing Belt

Machine Status	Main Switch OFF Air Valve OFF
SPC Reference	2737080

a) Check the timing belt (1) for wear or damage. Change if necessary, see 1.1.4.1-2 Support Belt - Change Timing Belt.

b) Check the tension of the timing belt. Set the tension if necessary, see 1.1.4.1-3 Support Belt - Set Timing Belt Tension.

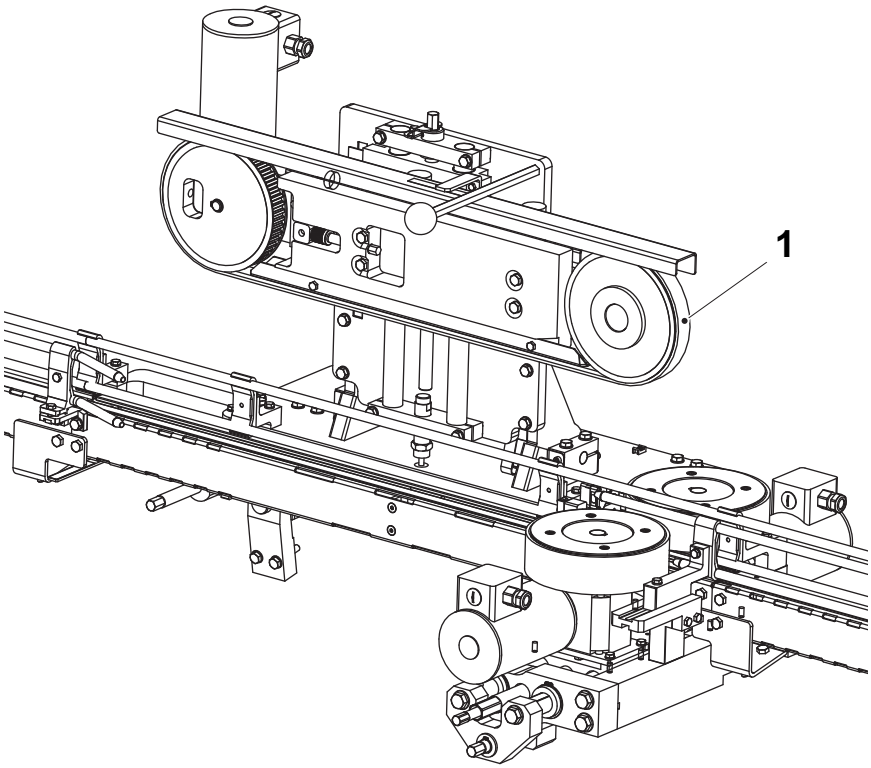

1 Timing belt

1.1.4.1-2 Support Belt - Change Timing Belt

Machine Status	Main Switch OFF Air Valve OFF
SPC Reference	2737080

a) Loosen the screws (1) and the setting screw (2).

b) Change the timing belt (3).

c) Set the tension of the timing belt (3), see item b) in Procedure 1.1.4.1-3 Support Belt - Set Timing Belt Tension.

d) Tighten the screws (1).

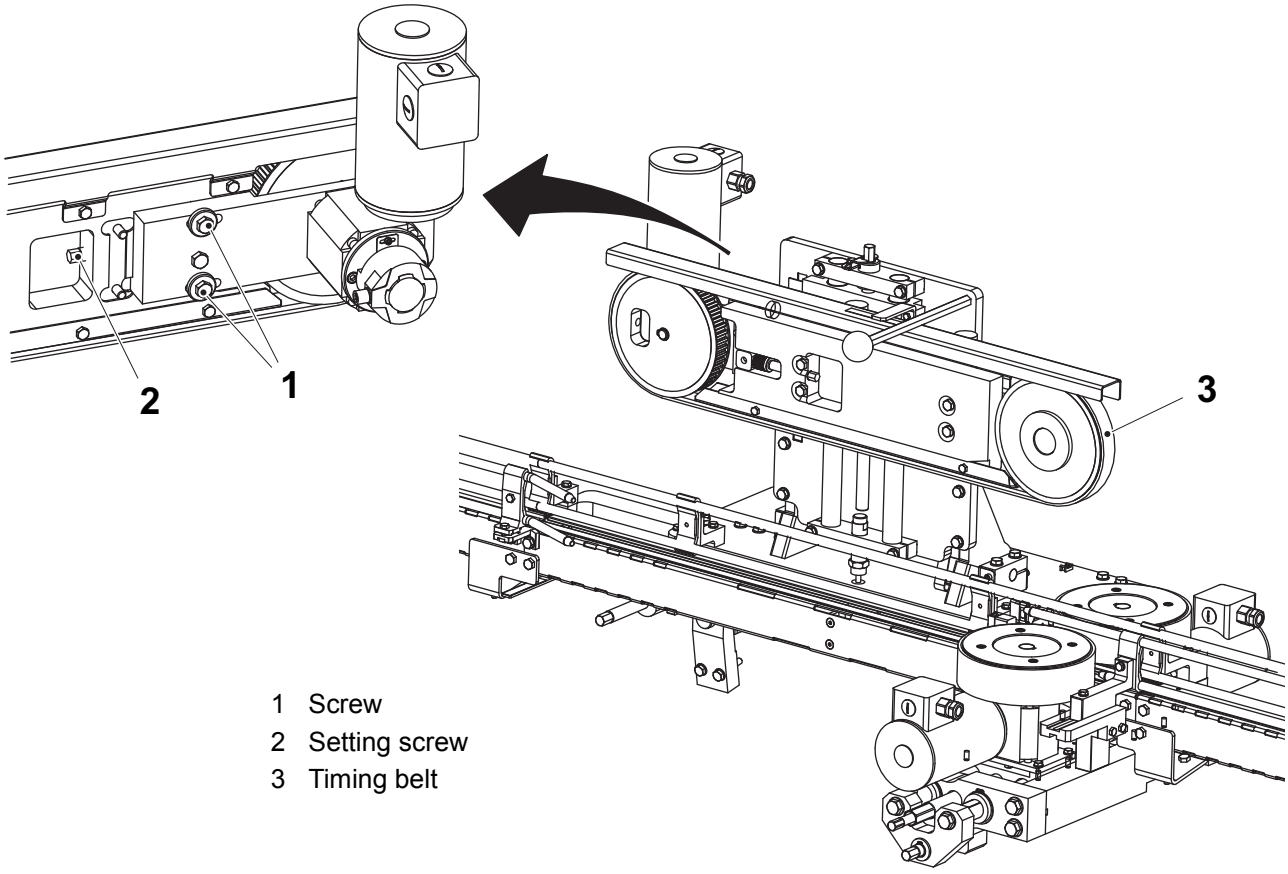

1 Screw
2 Setting screw
3 Timing belt

1.1.4.1-3 Support Belt - Set Timing Belt Tension

Machine Status	Main Switch OFF Air Valve OFF
SPC Reference	2737080

a) Loosen the screws (1).

b) Adjust the tension of the timing belt (2) with the setting screw (3). Set the distance A.

c) Tighten the screws (1).

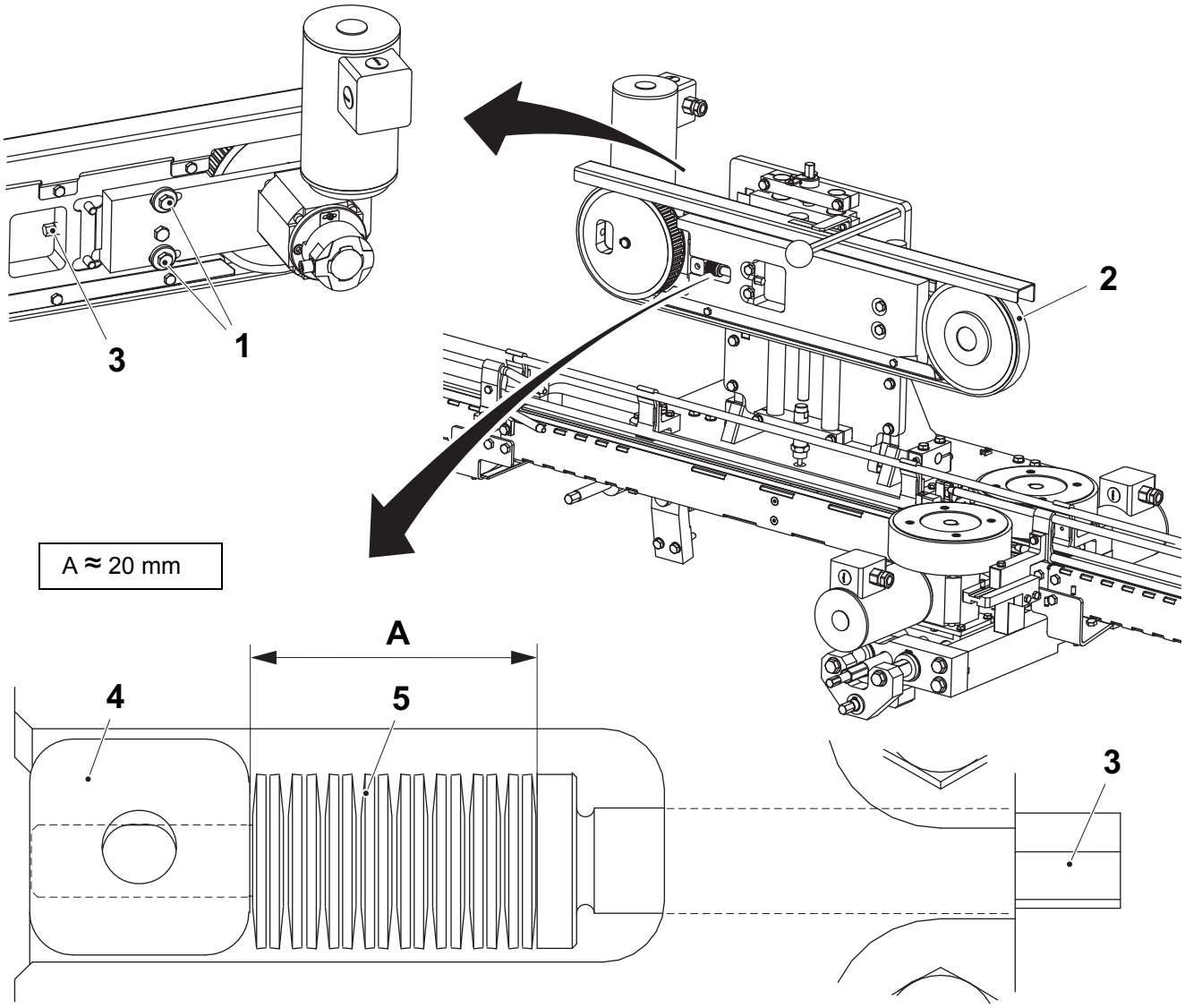

1 Screw
2 Timing belt
3 Setting screw
4 Bracket
5 Disc spring (16 pieces)

1.1.4.2 Wheel

1.1.4.2-1 Wheel - Check Parts

Machine Status	Main Switch OFF Air Valve OFF
SPC Reference	2924673

a) Loosen the screws (1) and the setting screw (2).

b) Remove the timing belt (3).

c) Rotate the toothed pulley (4) and check if there is a play in the ball bearing (5). Change if necessary, see 1.1.4.2-2 Wheel - Change Parts.

d) Loosen the screw (6) and remove the pulley (4) from the bracket (7).

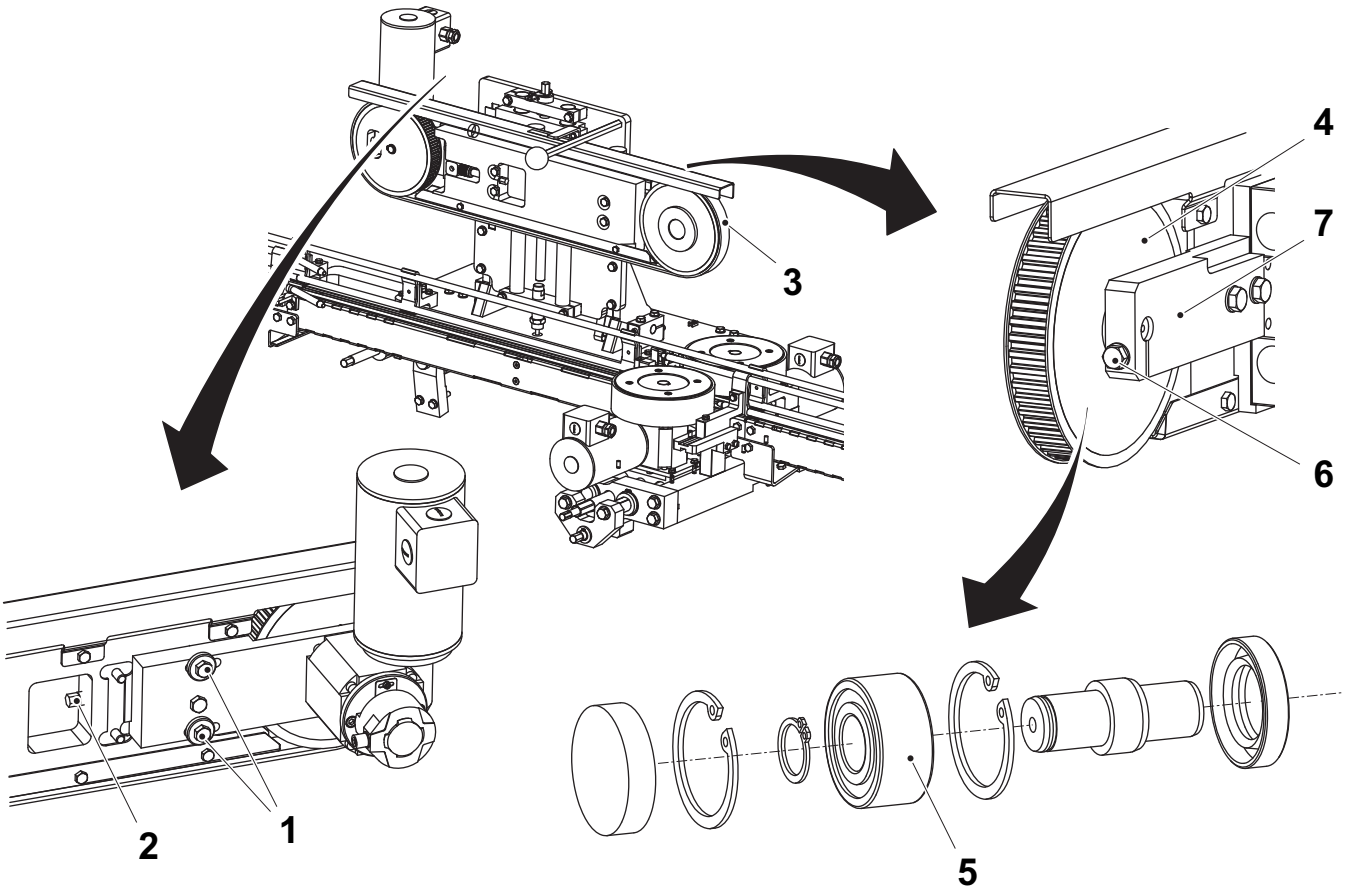

1 Screw
2 Setting screw
3 Timing belt
4 Toothed pulley
5 Ball bearing
6 Screw
7 Bracket

(Cont'd)

(Cont'd)

e) Remove the seal cover (8).

f) Check the seal cover (8), the retaining rings (9) and (10), and the seal ring (11) for wear or damage. Change if necessary, see 1.1.4.2-2 Wheel - Change Parts.

g) Assemble in the reverse order.

h) Set the tension of the timing belt (3), see 1.1.4.1-3 Support Belt - Set Timing Belt Tension.

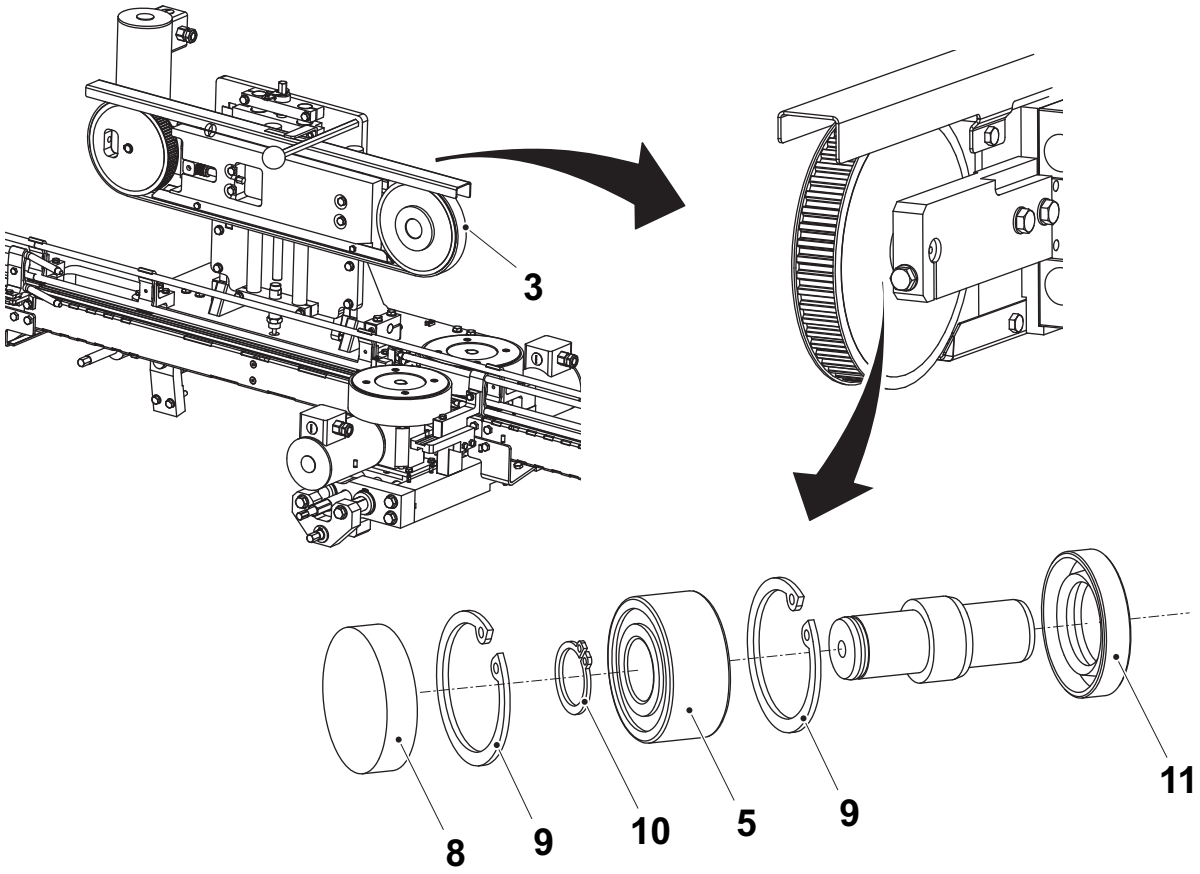

3 Timing belt
8 Seal cover
9 Retaining ring
10 Retaining ring
11 Seal ring

1.1.4.2-2 Wheel - Change Parts

Machine Status	Main Switch OFF Air Valve OFF
SPC Reference	2924673

a) Loosen the screws (1) and the setting screw (2).

b) Remove the timing belt (3).

c) Loosen the screw (4) and remove the pulley (5) from the bracket (6).

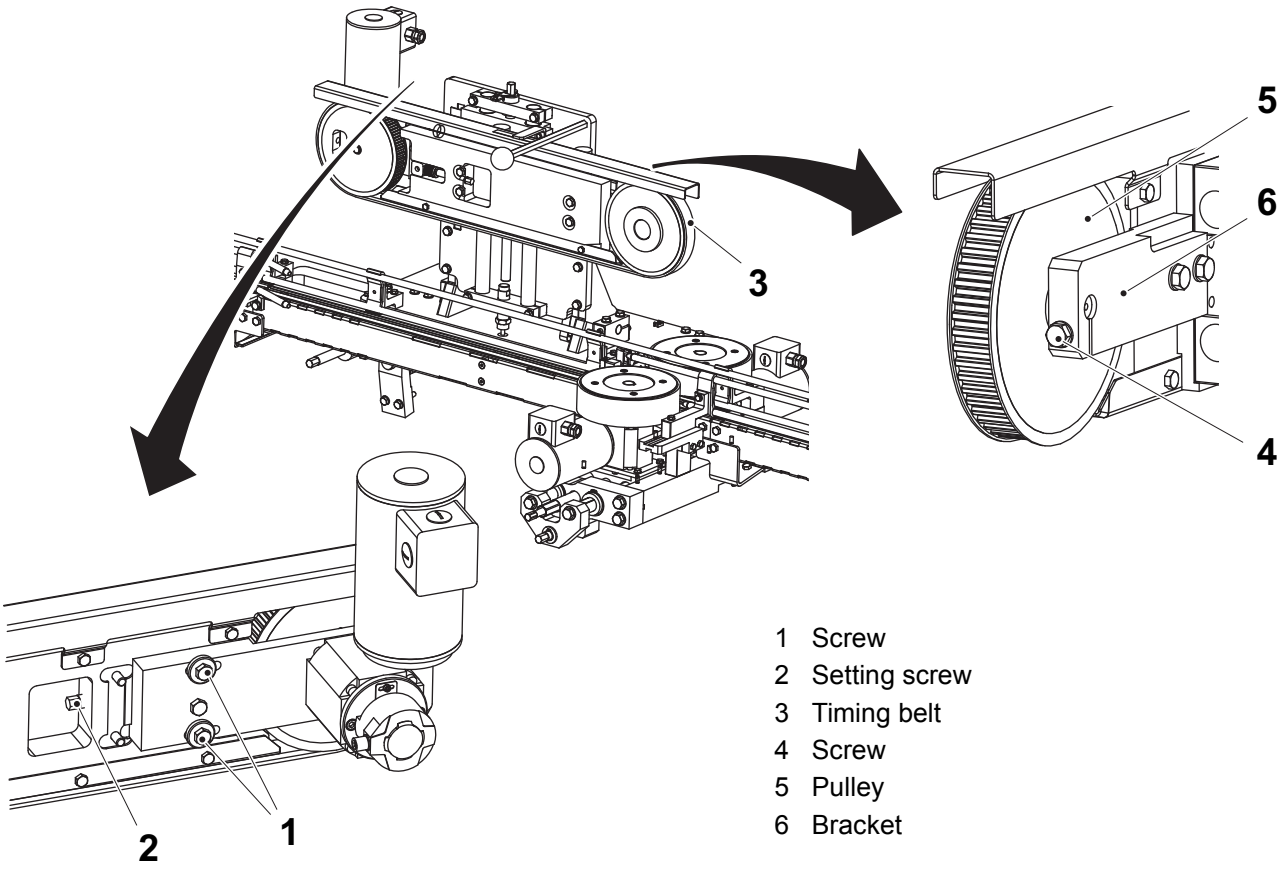

1 Screw
2 Setting screw
3 Timing belt
4 Screw
5 Pulley
6 Bracket

(Cont'd)

(Cont'd)

d) Use a screwdriver or compressed air to remove the seal cover (7).

e) Change the seal cover (7), the retaining rings (8) and (9), the ball bearing (10), and the seal ring (11).

f) Assemble in the reverse order.

g) Set the timing belt tension, see 1.1.4.1-3 Support Belt - Set Timing Belt Tension.

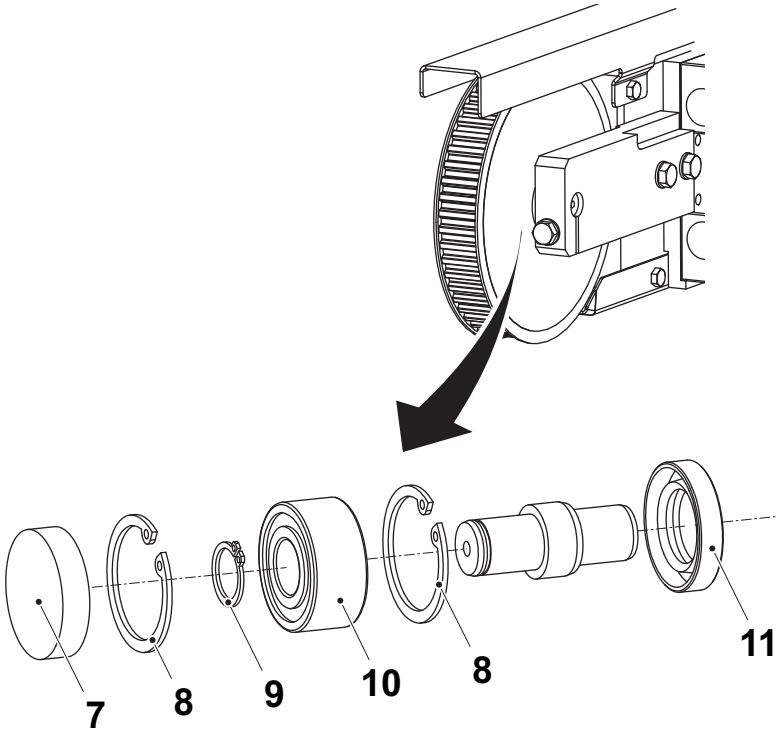

7 Seal cover
8 Retaining ring
9 Retaining ring
10 Ball bearing
11 Seal ring

1.1.5 Height Adjustment

1.1.5-1 Height Adjustment - Set Height

Machine Status	Main Switch OFF Air Valve OFF
SPC Reference	2929774

a) Put a package (1) under the top support (2) for reference.

b) Adjust the top support upwards or downwards with the adjusting screw (3).

c) Set the height of the top support to the package height minus 1 to 2 mm, or set the value of the scale (4) according to Section 12.1 Guideline Settings.

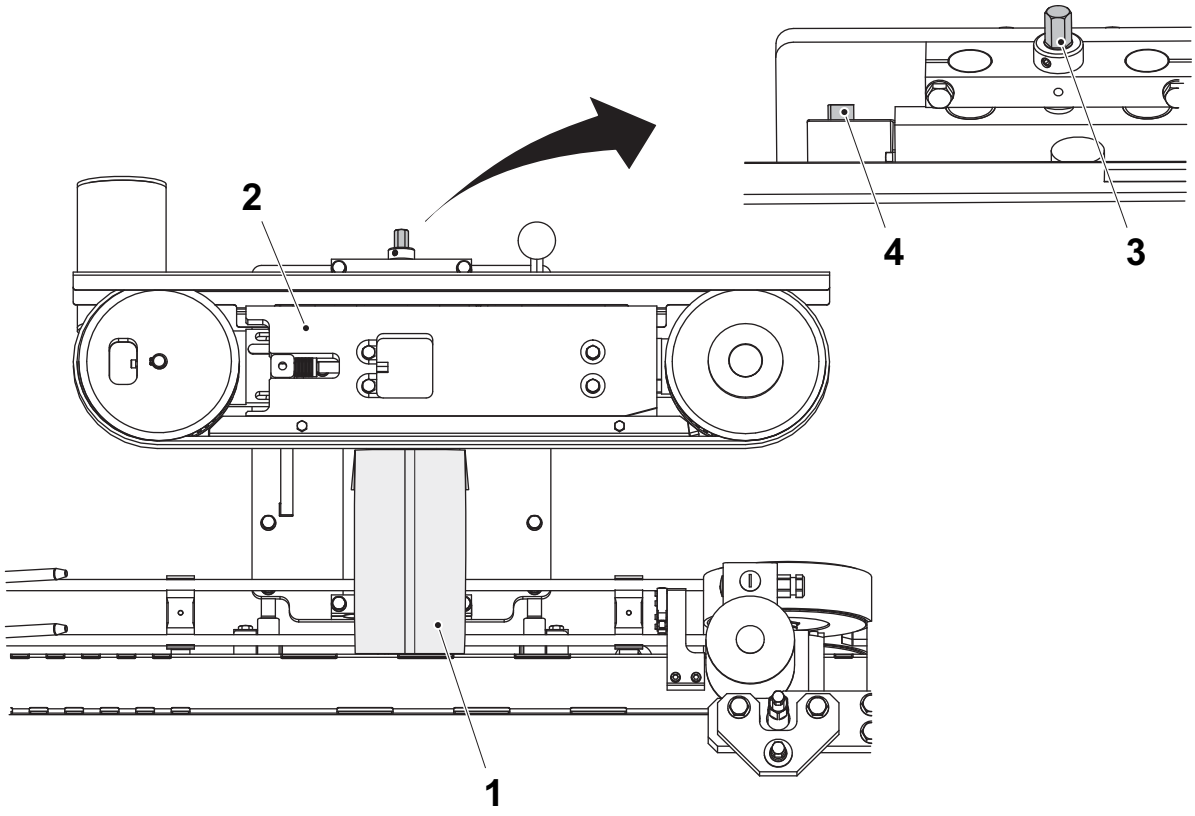

1 Package
2 Top support
3 Adjusting screw
4 Scale

1.1.5-2 Height Adjustment - Check Shock Absorber

Machine Status	Main Switch OFF Air Valve OFF
SPC Reference	2929774

Check the shock absorber (1) for wear or damage. Check that the shock absorber is damping the top support properly. Change if necessary, see 1.1.5-3 Height Adjustment - Change Shock Absorber.

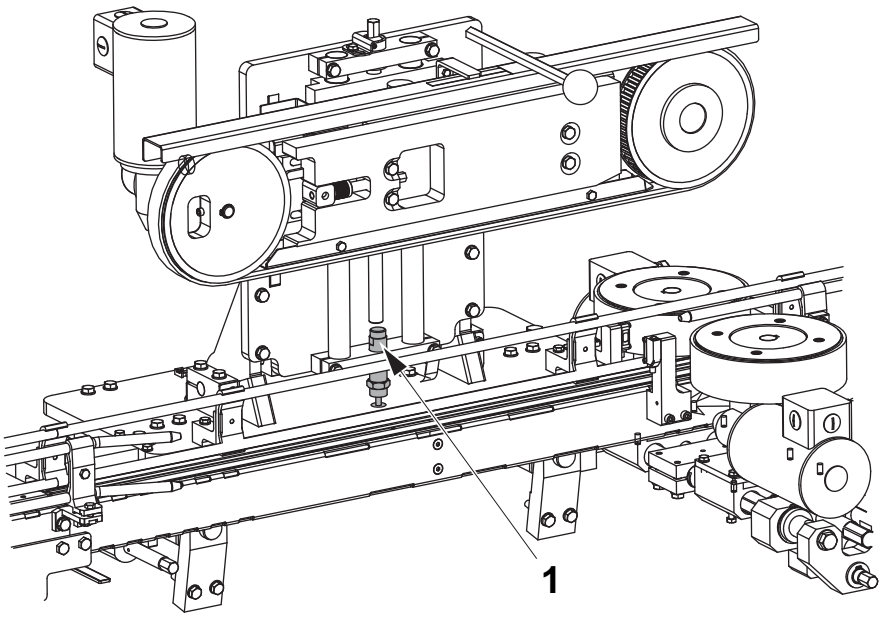

1 Shock absorber

1.1.5-3 Height Adjustment - Change Shock Absorber

Machine Status	Main Switch OFF Air Valve OFF
SPC Reference	2929774

a) Use the handle (1) to move the top support (2) out of the way according to the illustration below.

b) Loosen the nut (3).

c) Pull the shock absorber (4) downwards through the hole.

d) Change the shock absorber.

e) Assemble in the reverse order.

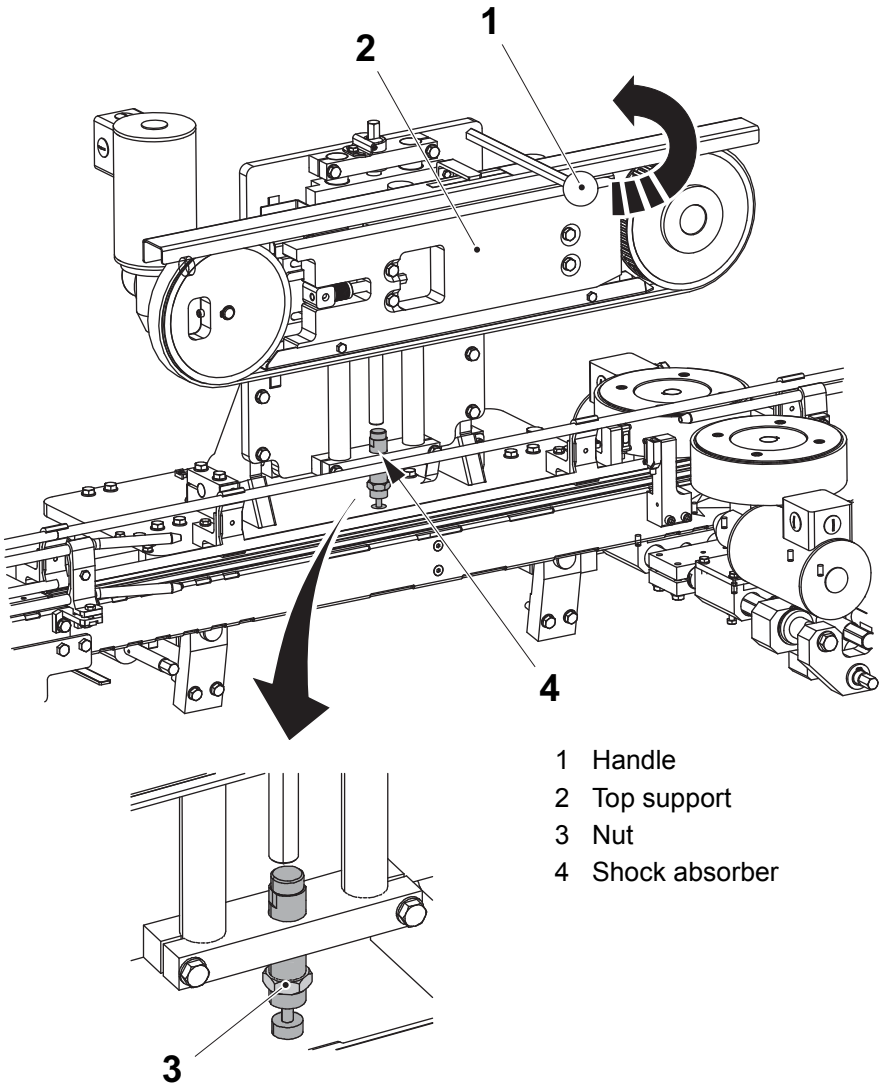

1 Handle
2 Top support
3 Nut
4 Shock absorber

1.2 Conveyor Section TCA

SPC Reference	663302

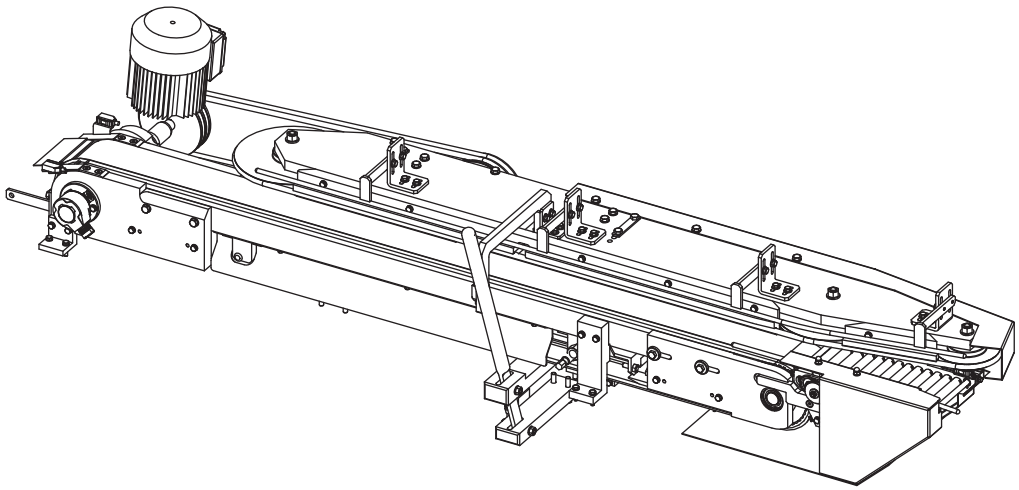

1.2.1 Conveyor

1.2.1-1 Conveyor - Check Belt Tension

Machine Status	Main Switch OFF Air valve OFF
SPC Reference	2933980

Check the tension of the conveyor belt (1) by lifting it on the middle of the conveyor. It should be easy to lift the conveyor belt (1) the distance A. Use a light force when checking.

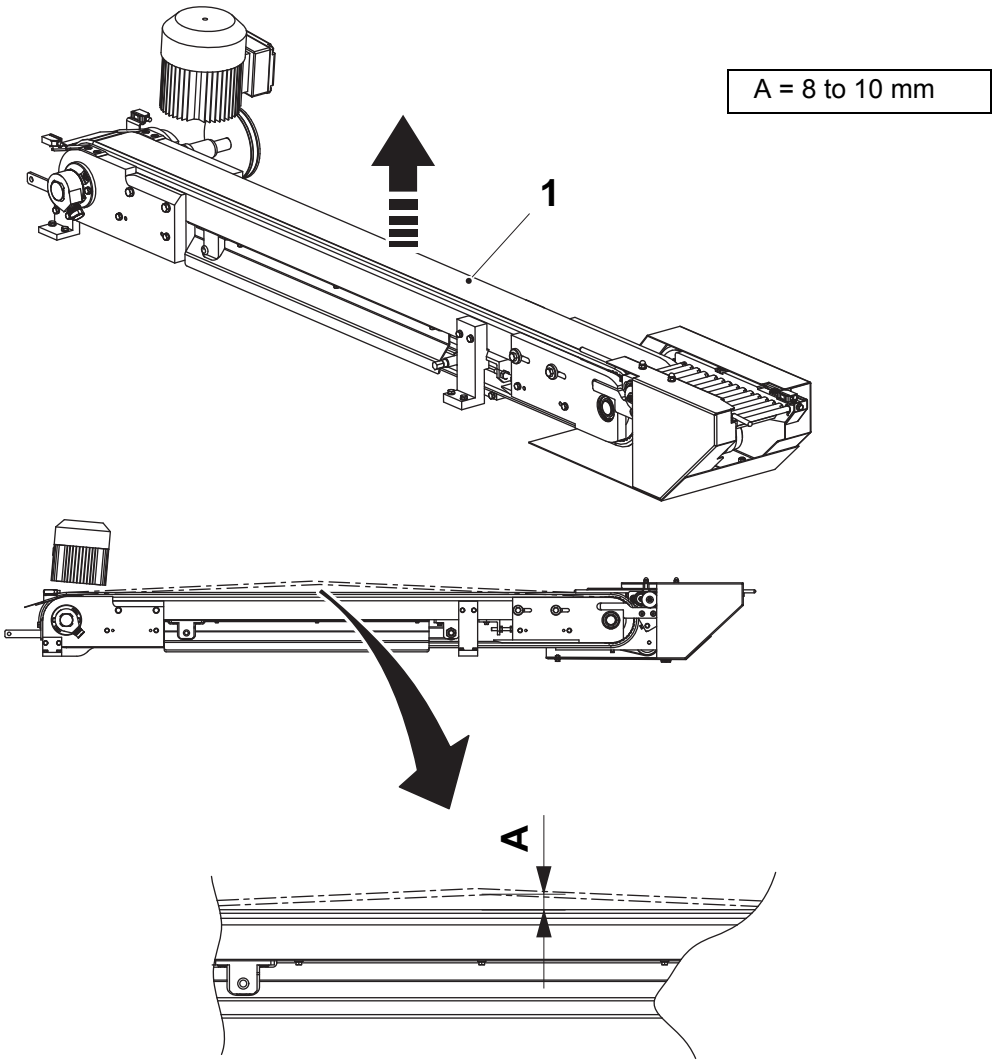

1 Conveyor belt

1.2.1-2 Conveyor - Set

Machine Status	Main Switch OFF Air valve OFF
SPC Reference	2933980

a) Loosen the screws (1).

b) Loosen the nuts (2) and adjust the tension of the conveyor belt (3) with the screws (4).

c) Tighten the nuts (2) and the screws (1).

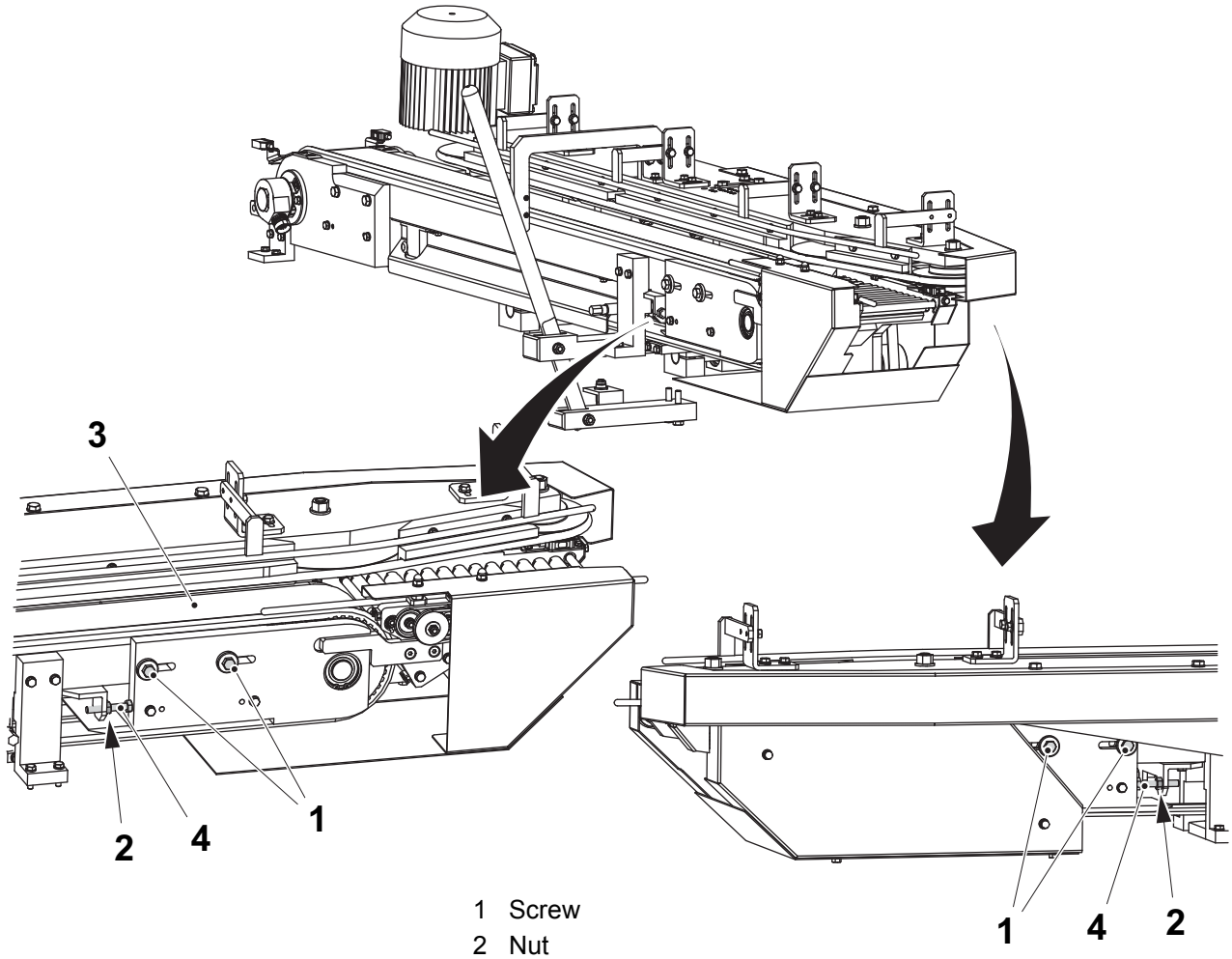

1 Screw
2 Nut
3 Conveyor belt
4 Screw

(Cont'd)

(Cont'd)

d) Remove the protective casing (5).
e) Loosen the screws (6) and adjust the tension of the drive belt (7)
f) Tighten the screws (6).
g) Assemble the protective casing (5).

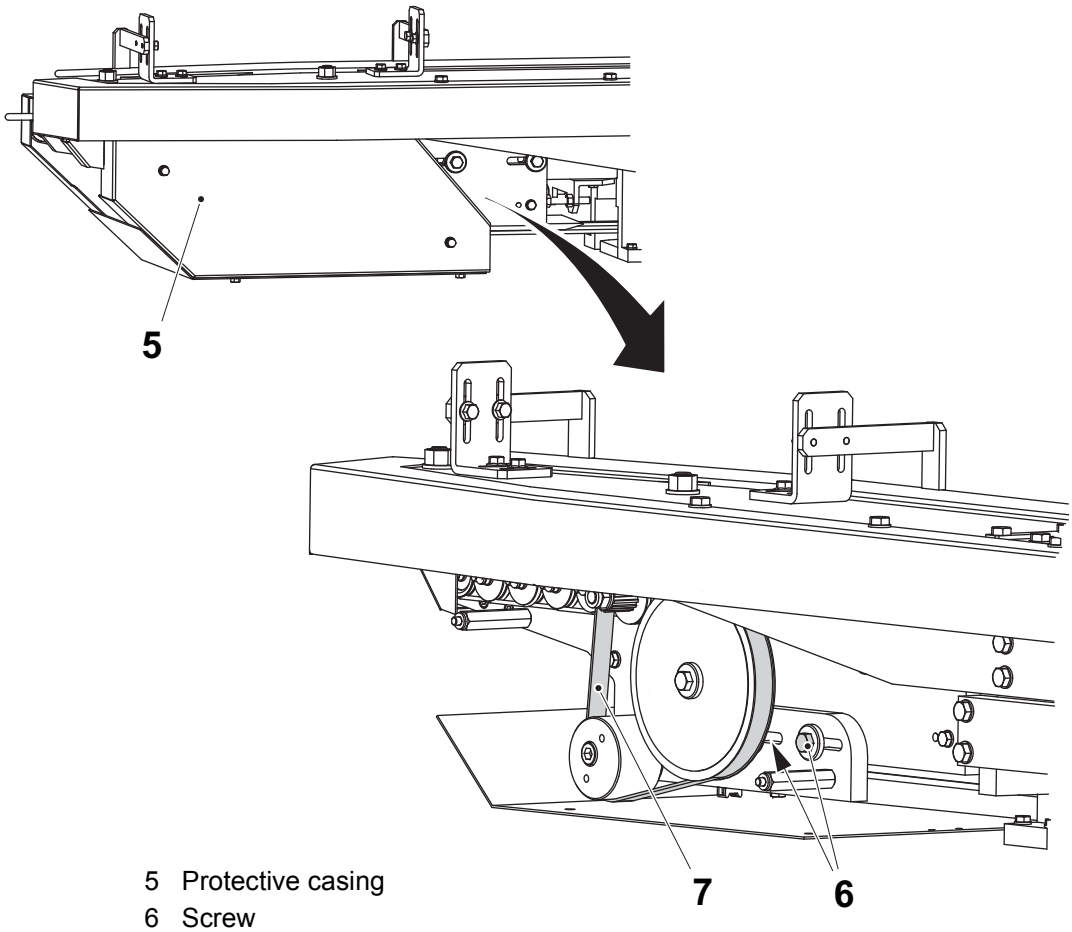

5 Protective casing
6 Screw
7 Drive belt

1.2.1.1 Drive and End Unit

1.2.1.1-1 Drive and End Unit - Change Ball Bearings

Machine Status	Main Switch OFF Air valve OFF
SPC Reference	2933965

a) Loosen the tension of the timing belt (1) by loosening the screws (2) and the screws (3).

a) Disconnect the encoder (4).

b) Remove the screws (5) and the bracket (6).

c) Remove the screws (7) and the slide plate (8).

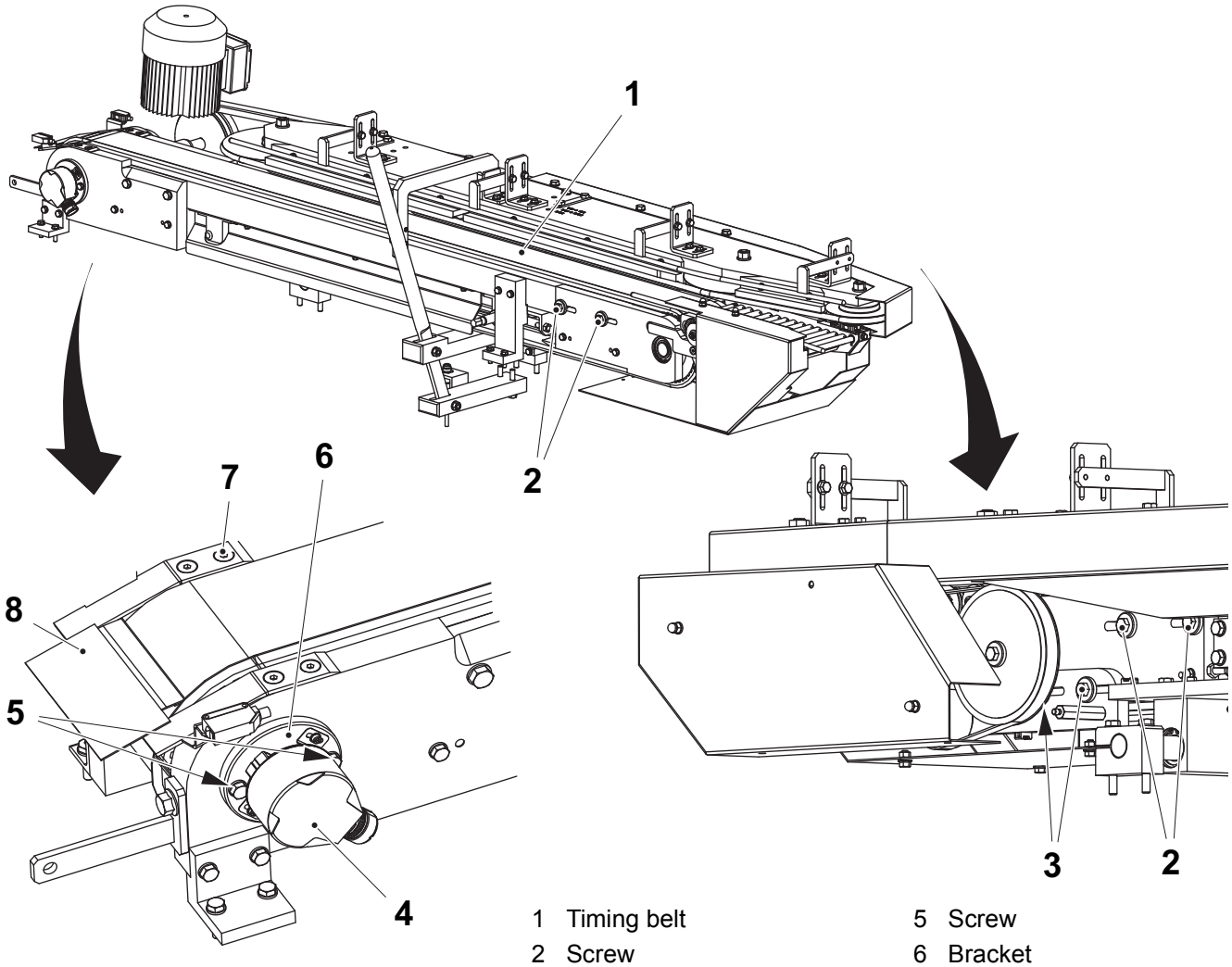

1 Timing belt
2 Screw
3 Screw
4 Encoder
5 Screw
6 Bracket
7 Screw (4 pieces)
8 Slide plate

(Cont'd)

(Cont'd)

d) Remove the screw (9).
e) Remove the screws (10)
f) Remove the screws (11) and the bracket (12).
g) Remove the retaining rings (13) and (14).
h) Change the ball bearing (15).

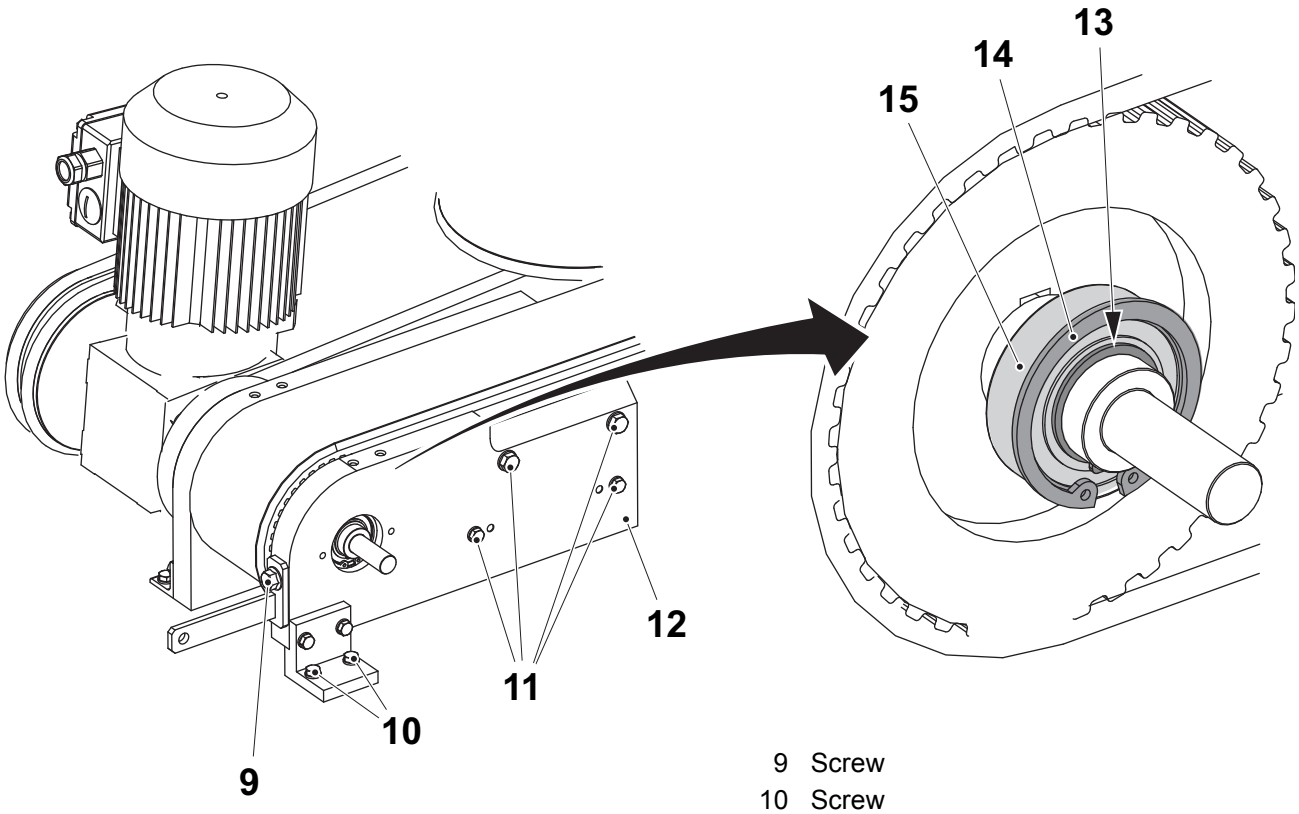

9 Screw
10 Screw
11 Screw
12 Bracket
13 Retaining ring
14 Retaining ring
15 Ball bearing

(Cont'd)

(Cont'd)

i) Remove the belts (16).
j) Remove the screw (17) and the wheel (18).
k) Remove the screws (19) and remove the motor unit (20).
l) Remove the screws (21).

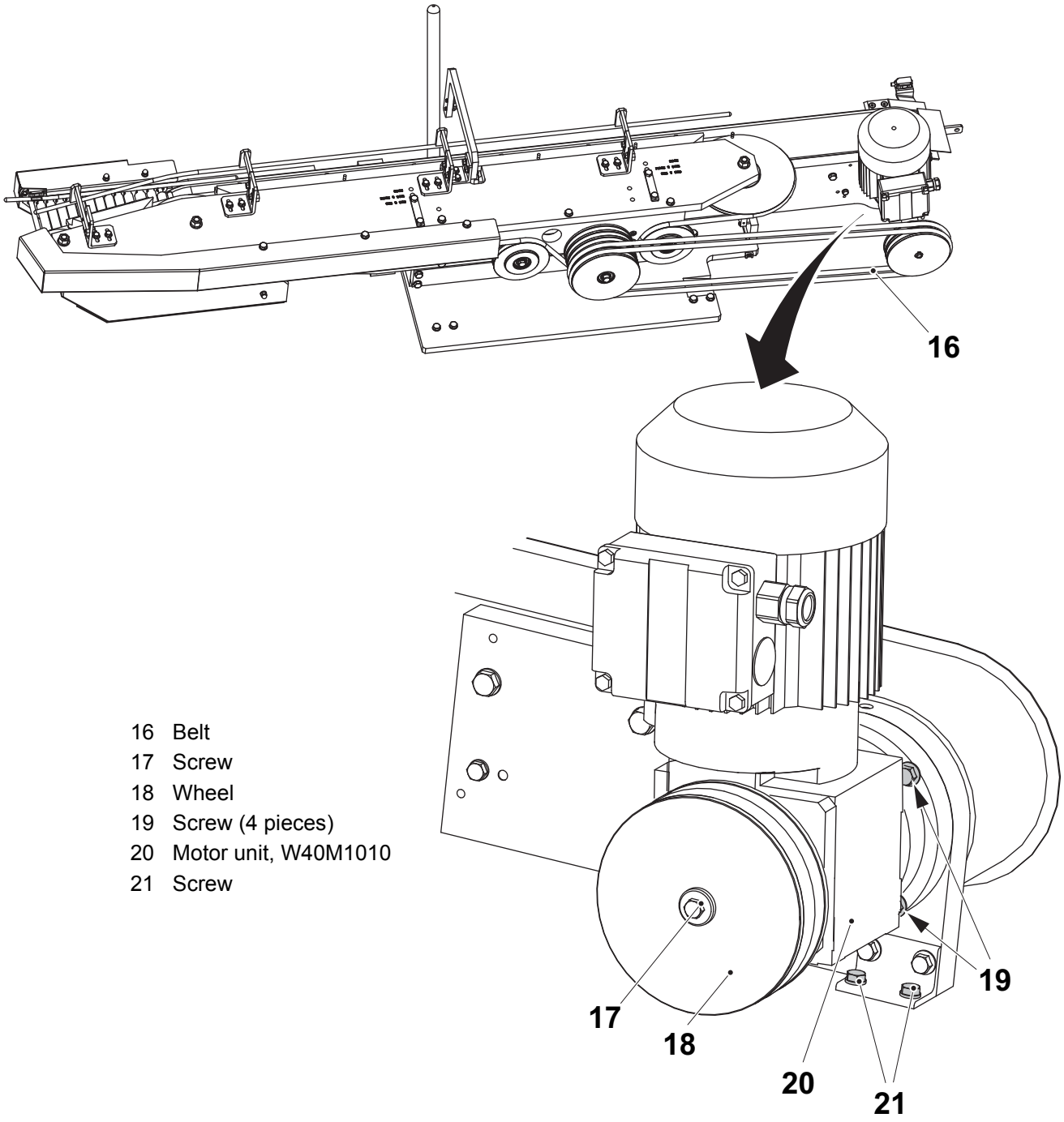

16 Belt
17 Screw
18 Wheel
19 Screw (4 pieces)
20 Motor unit, W40M1010
21 Screw

(Cont'd)

(Cont'd)

m) Remove the retaining ring (22).

n) Remove the screws (23) and the bracket (24).

o) Change the ball bearing (25).

p) Assemble in the reverse order.

Note! Be careful when assembling the encoder.

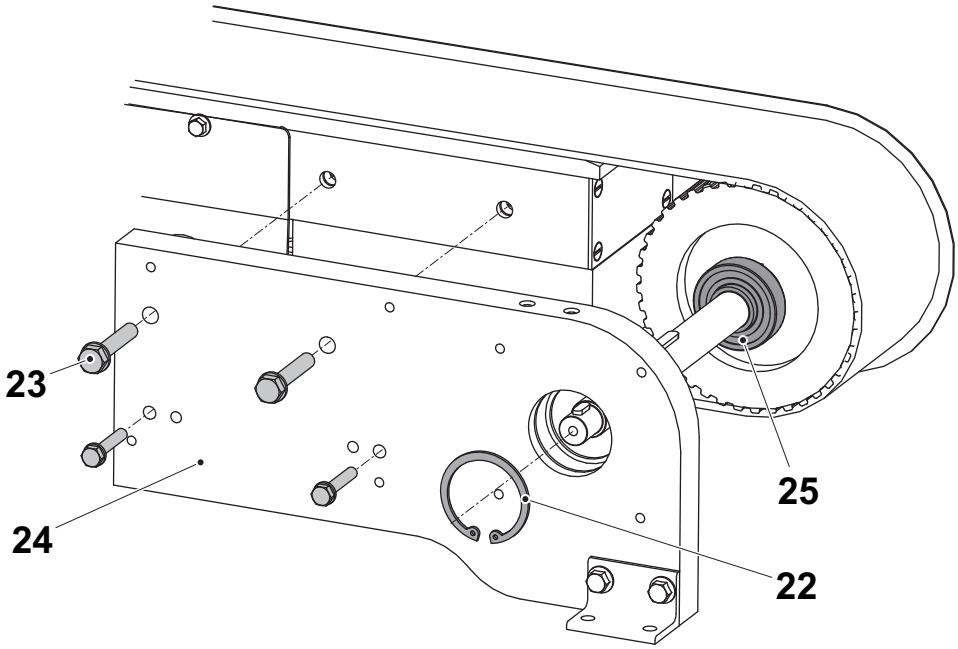

22 Retaining ring
23 Screw (4 pieces)
24 Bracket
25 Ball bearing

1.2.1.2 Conveyor

1.2.1.2-1 Conveyor - Check Drive Belts

Machine Status	Main Switch OFF Air valve OFF
SPC Reference	2957680

a) Remove the protective casings (1).

b) Check the drive belts (2) and the timing belt (3) for wear or damage. Change if necessary.

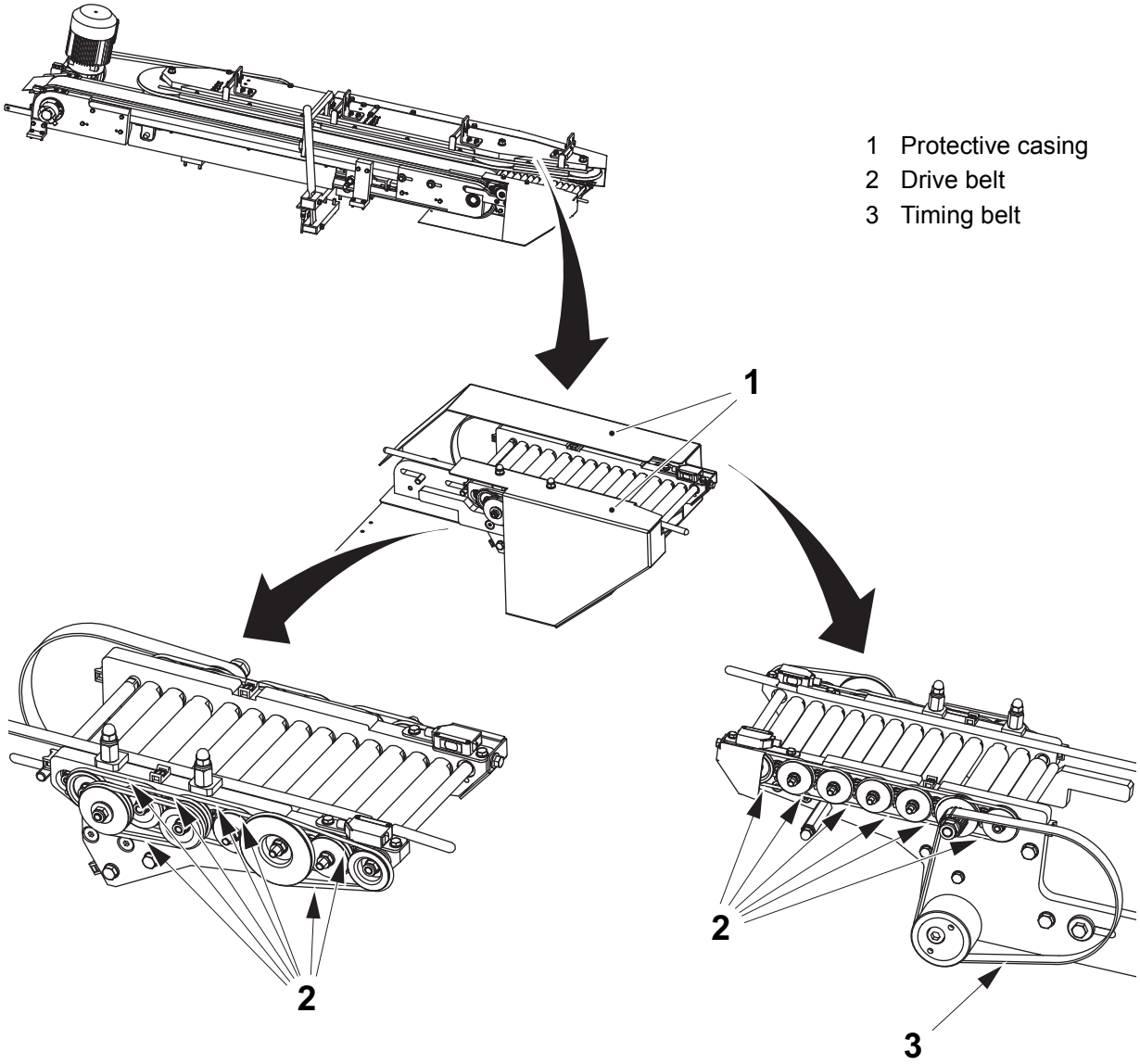

1 Protective casing
2 Drive belt
3 Timing belt

1.2.1.2-2 Conveyor - Change Drive Belts

Machine Status	Main Switch OFF Air valve OFF
SPC Reference	2957680

a) Remove the protective casings (1).

b) Loosen the screws (2) and remove the timing belt (3).

c) Change the drive belts (4) and the timing belt (3).

d) Set the tension of the timing belt (3) and tighten the screws (2).

e) Assemble the protective casing (1).

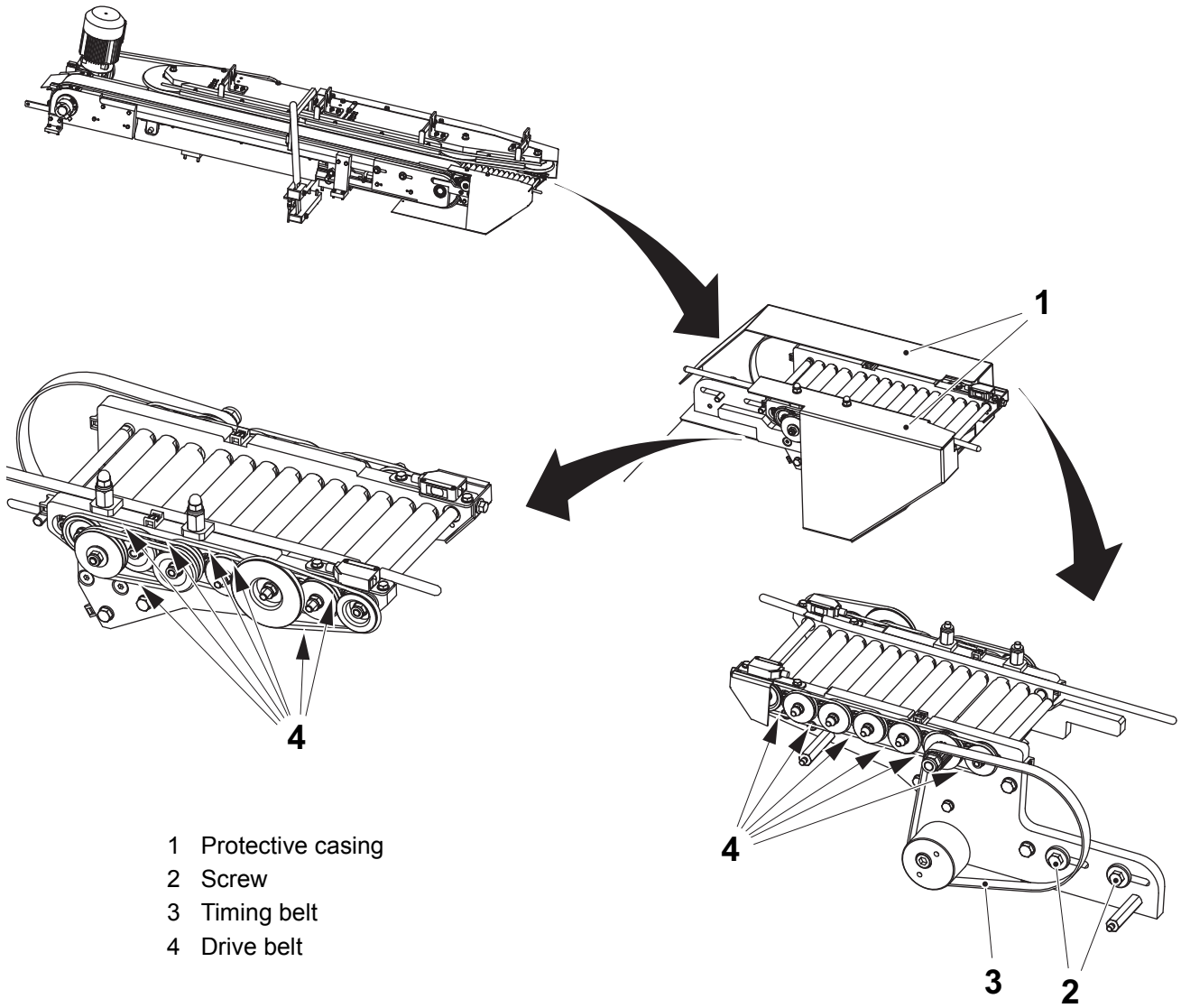

1 Protective casing
2 Screw
3 Timing belt
4 Drive belt

1.2.1.2-3 Conveyor - Check Ball Bearings

Machine Status	Main Switch OFF Air valve OFF
SPC Reference	2957680

a) Remove the protective casings (1) and remove the drive belts (2).

b) Check for play in the ball bearings (3) and (4) on the conveyor. Change if necessary, see 1.2.1.2-4 Conveyor - Change Ball Bearings.

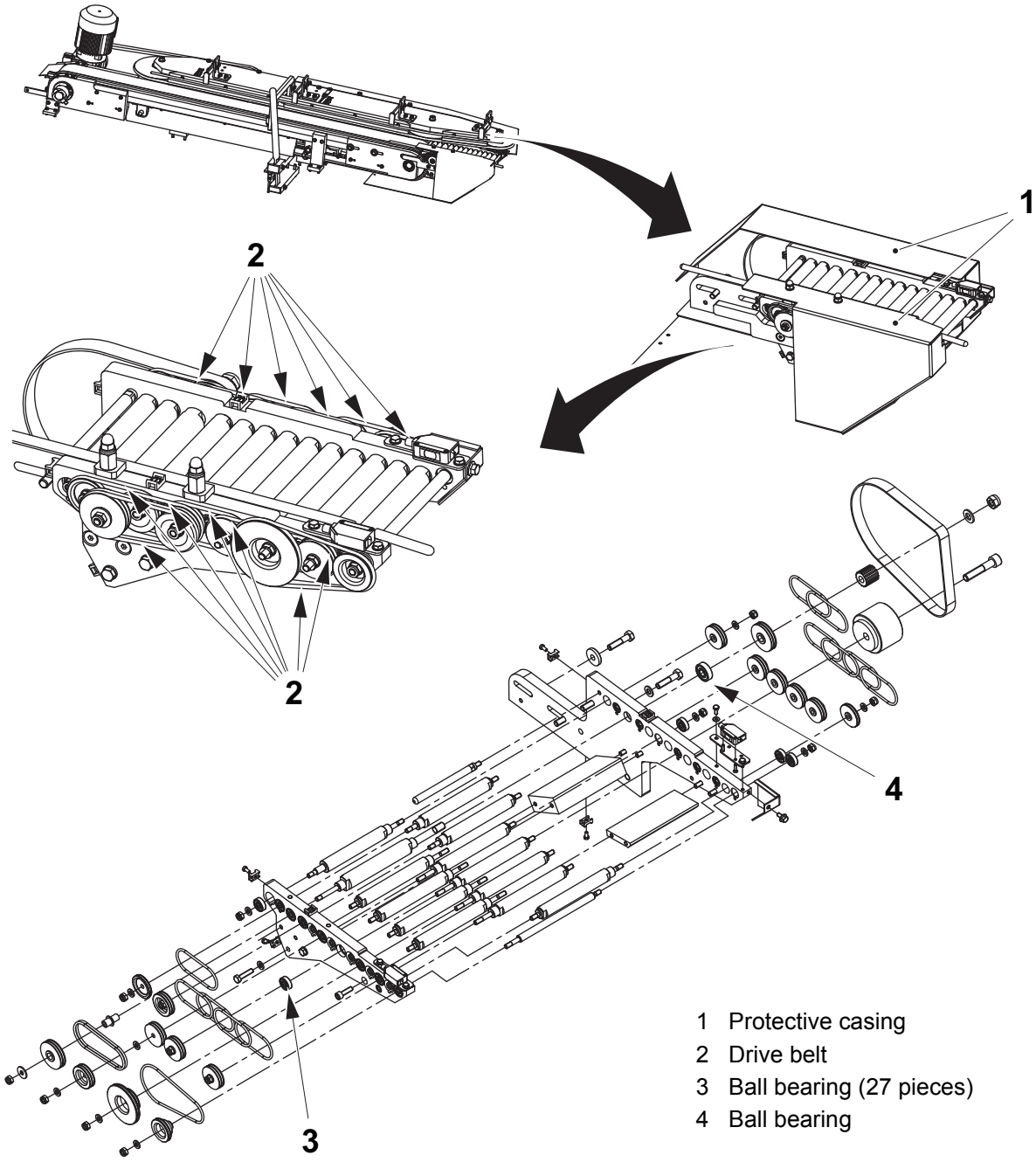

1 Protective casing
2 Drive belt
3 Ball bearing (27 pieces)
4 Ball bearing

1.2.1.2-4 Conveyor - Change Ball Bearings

Machine Status	Main Switch OFF Air valve OFF
SPC Reference	2957680

a) Remove the protective casings (1).

b) Loosen the screws (2) and remove the timing belt (3).

c) Remove the drive belts (4).

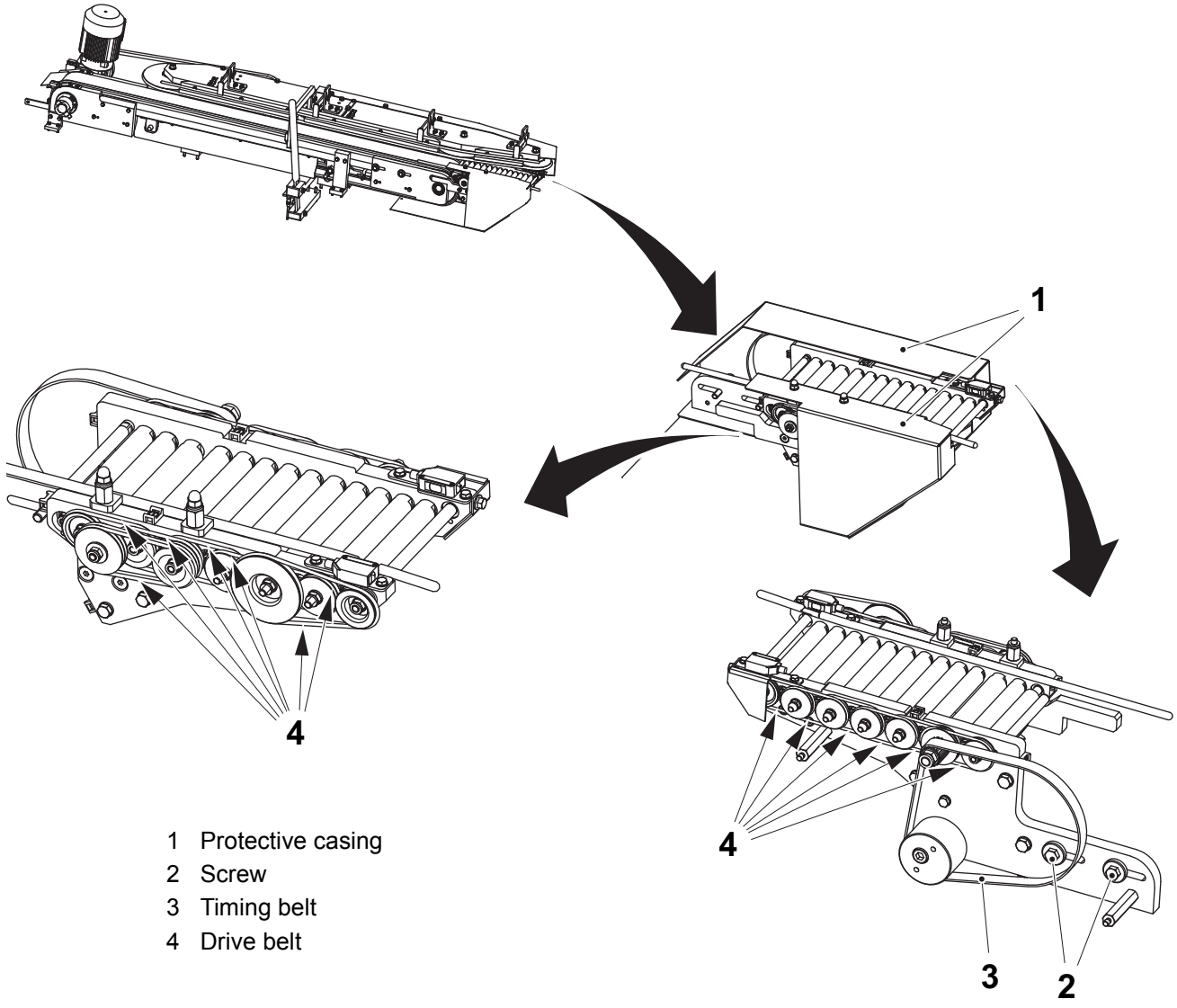

1 Protective casing
2 Screw
3 Timing belt
4 Drive belt

(Cont'd)

(Cont'd)

d) Remove the drive wheels (5).
e) Change the ball bearings (6) and (7).
f) Assemble in the reverse order.

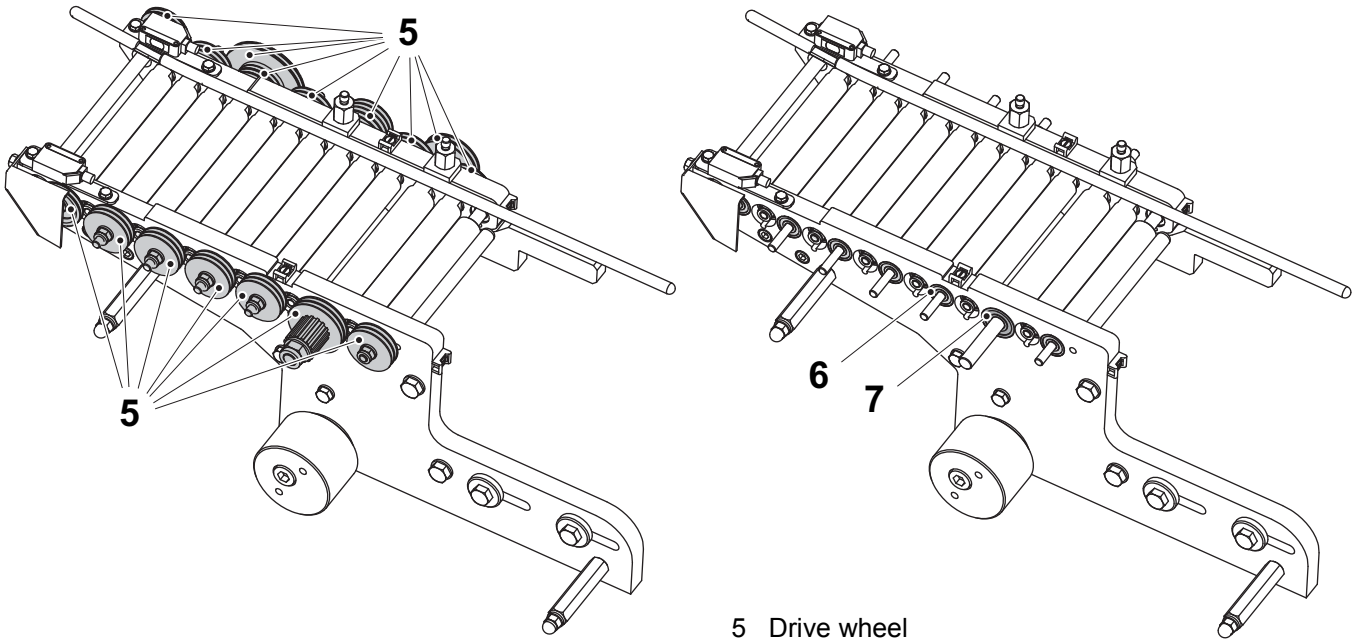

5 Drive wheel
6 Ball bearing (27 pieces)
7 Ball bearing

1.2.1.3 Belt Conveyor, Infeed

1.2.1.3-1 Belt Conveyor, Infeed - Check Timing Belt

Machine Status	Main Switch OFF Air valve OFF
SPC Reference	2957690

Check the condition of the timing belt (1). Change if necessary, see 1.2.1.3-2 Belt Conveyor, Infeed - Change Timing Belt.

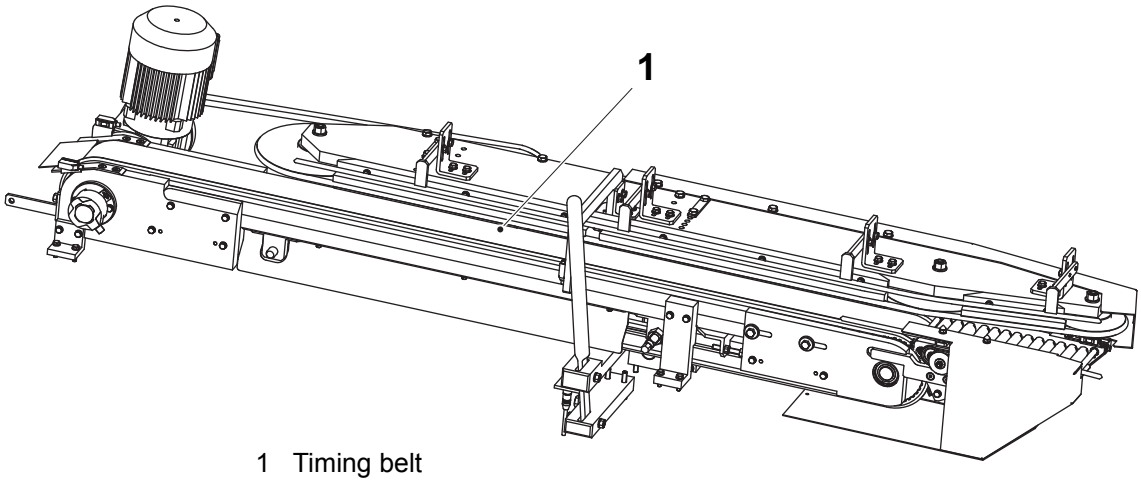

1 Timing belt

1.2.1.3-2 Belt Conveyor, Infeed - Change Timing Belt

Machine Status	Main Switch OFF Air valve OFF
SPC Reference	2957690

a) Release the tension on the timing belt, see item a) in Procedure 1.2.1.1-1 Drive and End Unit - Change Ball Bearings.

b) Loosen the bracket (1) by removing the screws (1).

c) Loosen the bracket (3) by removing the screws (4).

d) Remove the screws (5) and the slide plate (6).

e) Disconnect the sensor (7).

f) Disconnect the cable connection from the encoder (8).

g) Loosen the bracket (9) by removing the screw (10).

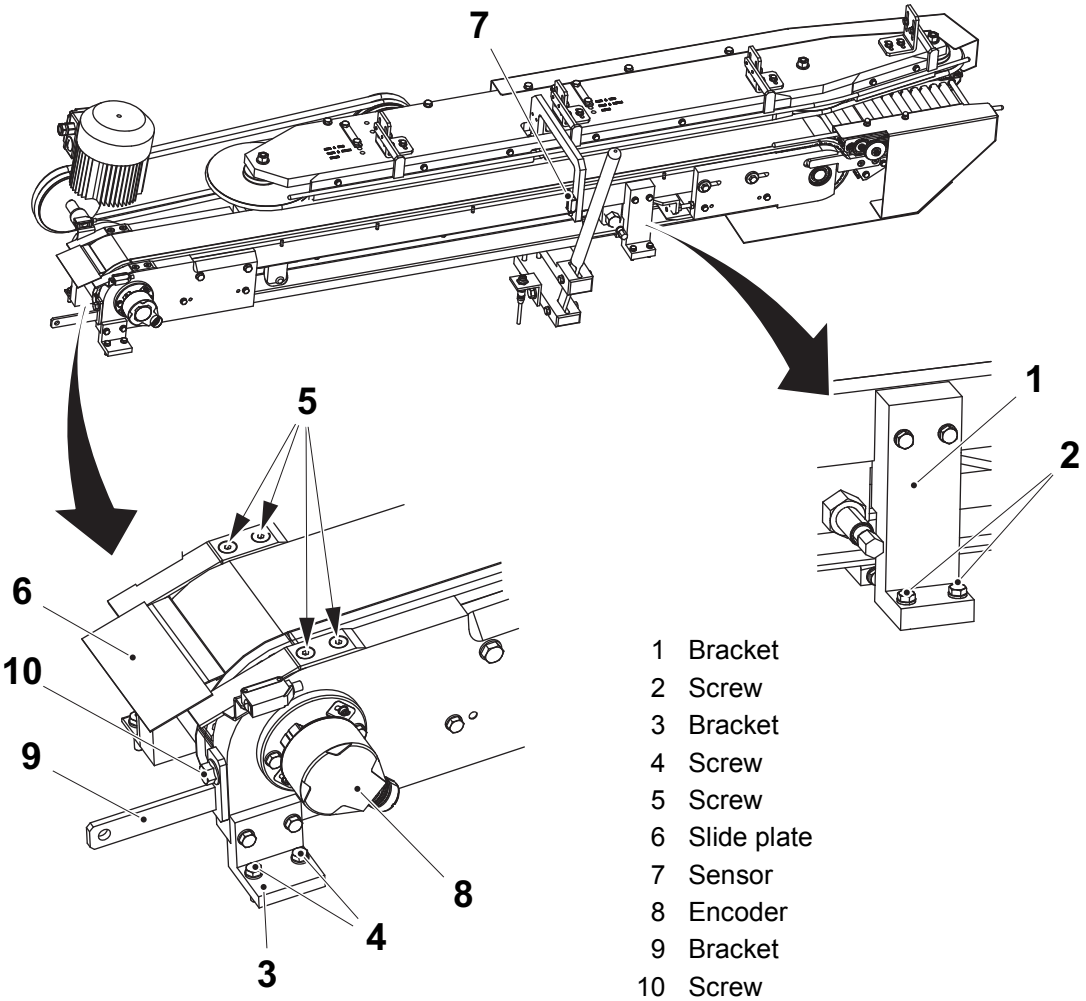

1 Bracket
2 Screw
3 Bracket
4 Screw
5 Screw
6 Slide plate
7 Sensor
8 Encoder
9 Bracket
10 Screw

(Cont'd)

(Cont'd)

h) Remove the conveyor (11), see item b) to e) in Procedure 1.2.1.3-4 Belt Conveyor, Infeed - Change Ball Bearings.

i) Move the applicator unit outwards, see 2-4 Applicator Unit - Set Height (TCA), item g) to j). Note the value of the scale.

j) Change the timing belt (12).

k) Adjust the applicator unit back.

l) Assemble in the reverse order.

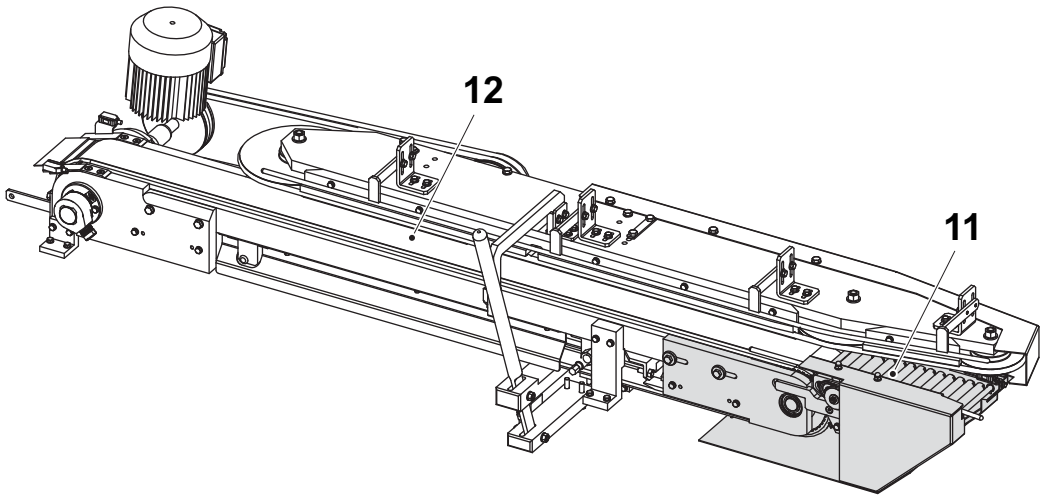

11 Conveyor
12 Timing belt

1.2.1.3-3 Belt Conveyor, Infeed - Check Ball Bearings

Machine Status	Main Switch OFF Air valve OFF
SPC Reference	2957690

a) Release the tension on the timing belt (1) by loosening the screws (2) and the screws (3).

b) Check for play in the ball bearings (4).

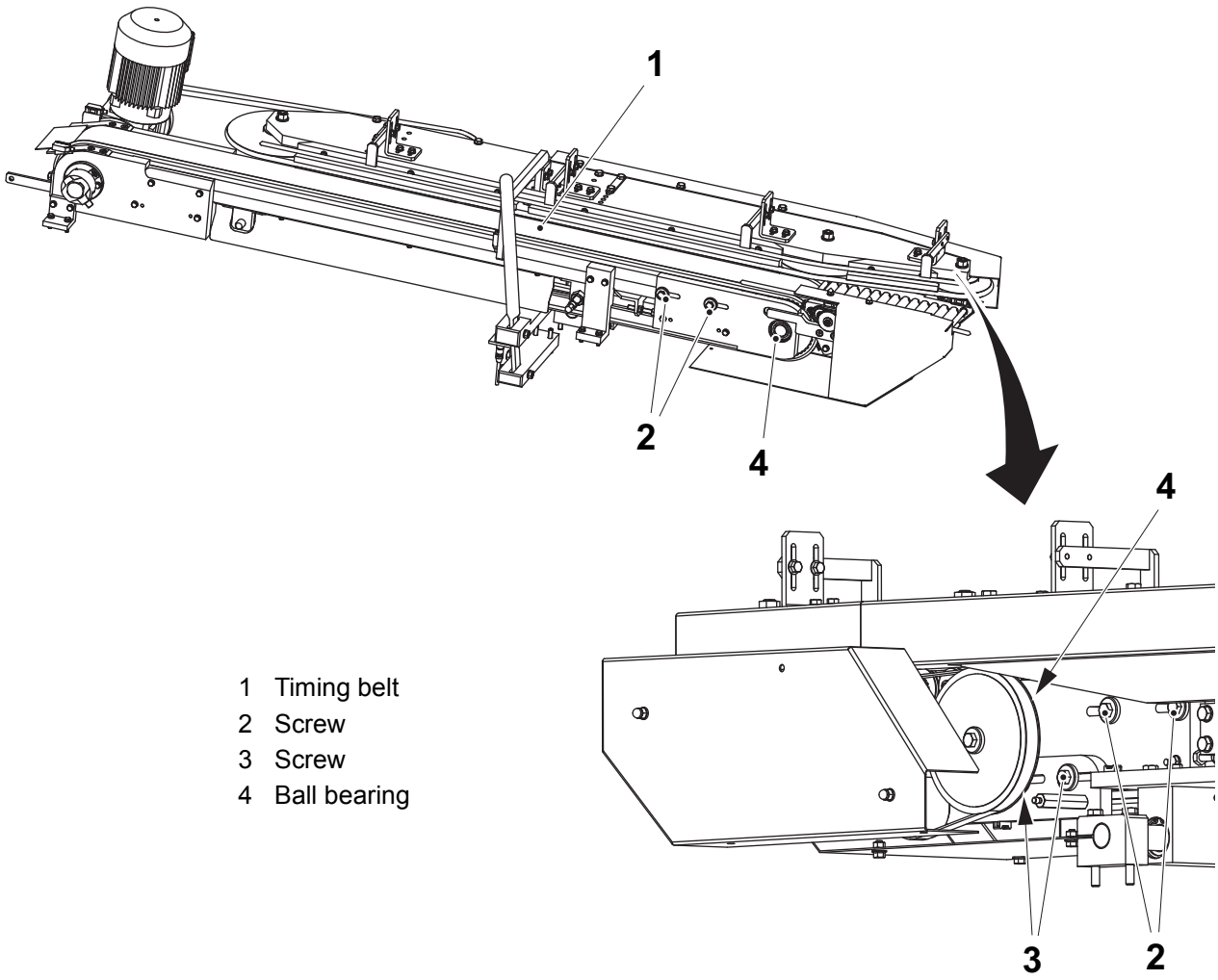

1 Timing belt
2 Screw
3 Screw
4 Ball bearing

1.2.1.3-4 Belt Conveyor, Infeed - Change Ball Bearings

Machine Status	Main Switch OFF Air valve OFF
SPC Reference	2957690

a) Loosen the tension of the timing belt (1) by loosening the screws (2).

b) Remove the screws (3).

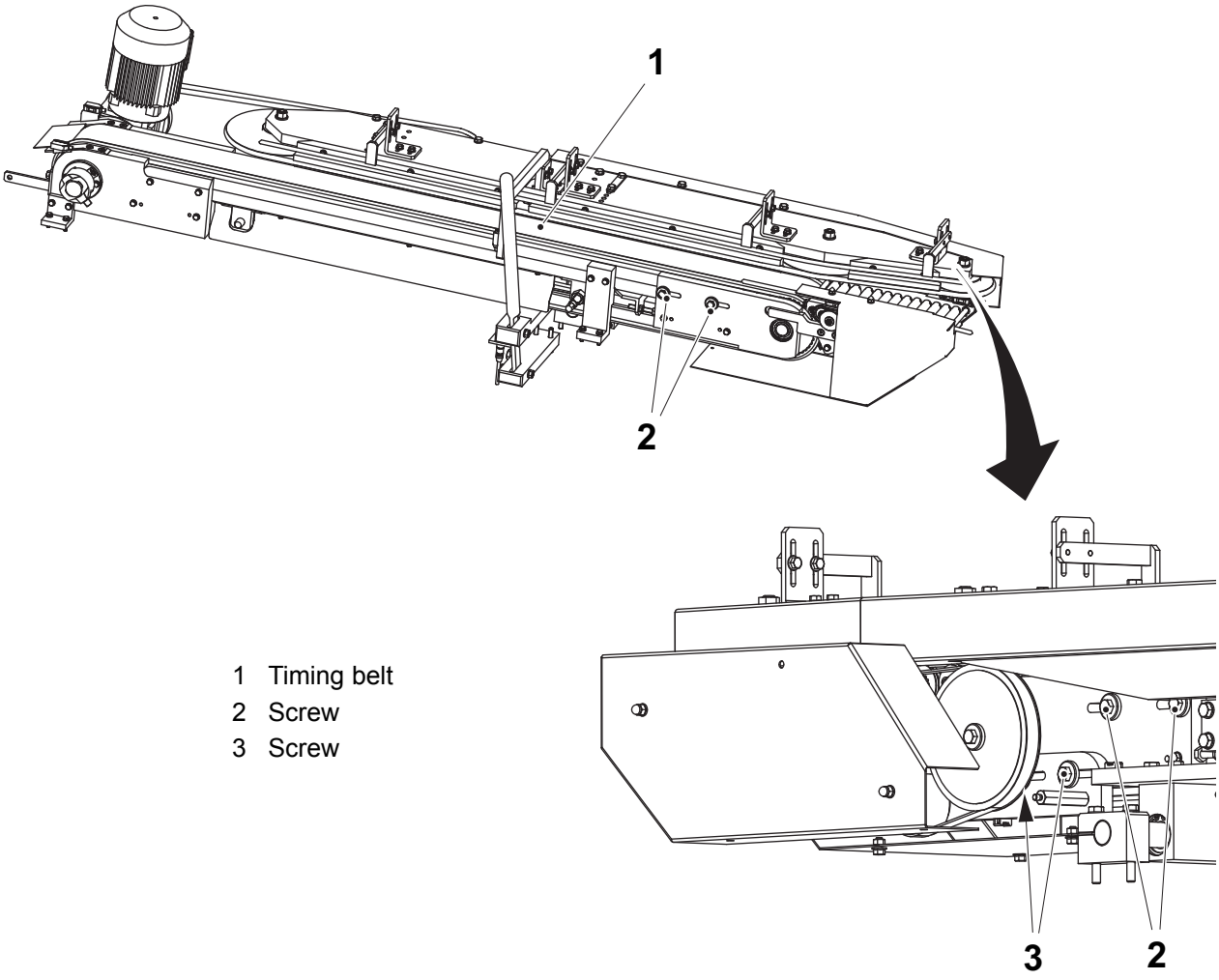

1 Timing belt
2 Screw
3 Screw

(Cont'd)

(Cont'd)

c) Loosen the screw (4) on the tension roller (5) to release the tension on the timing belt (6).

d) Remove the timing belt (6), the screw (7) and the wheel (8).

e) Remove the screws (9) and the conveyor (10).

f) Remove the retaining rings (11)

g) Remove the bracket (12).

h) Remove the grub screw (13).

i) Remove the shaft (14).

j) Change the ball bearings (15).

k) Assemble in the reverse order.

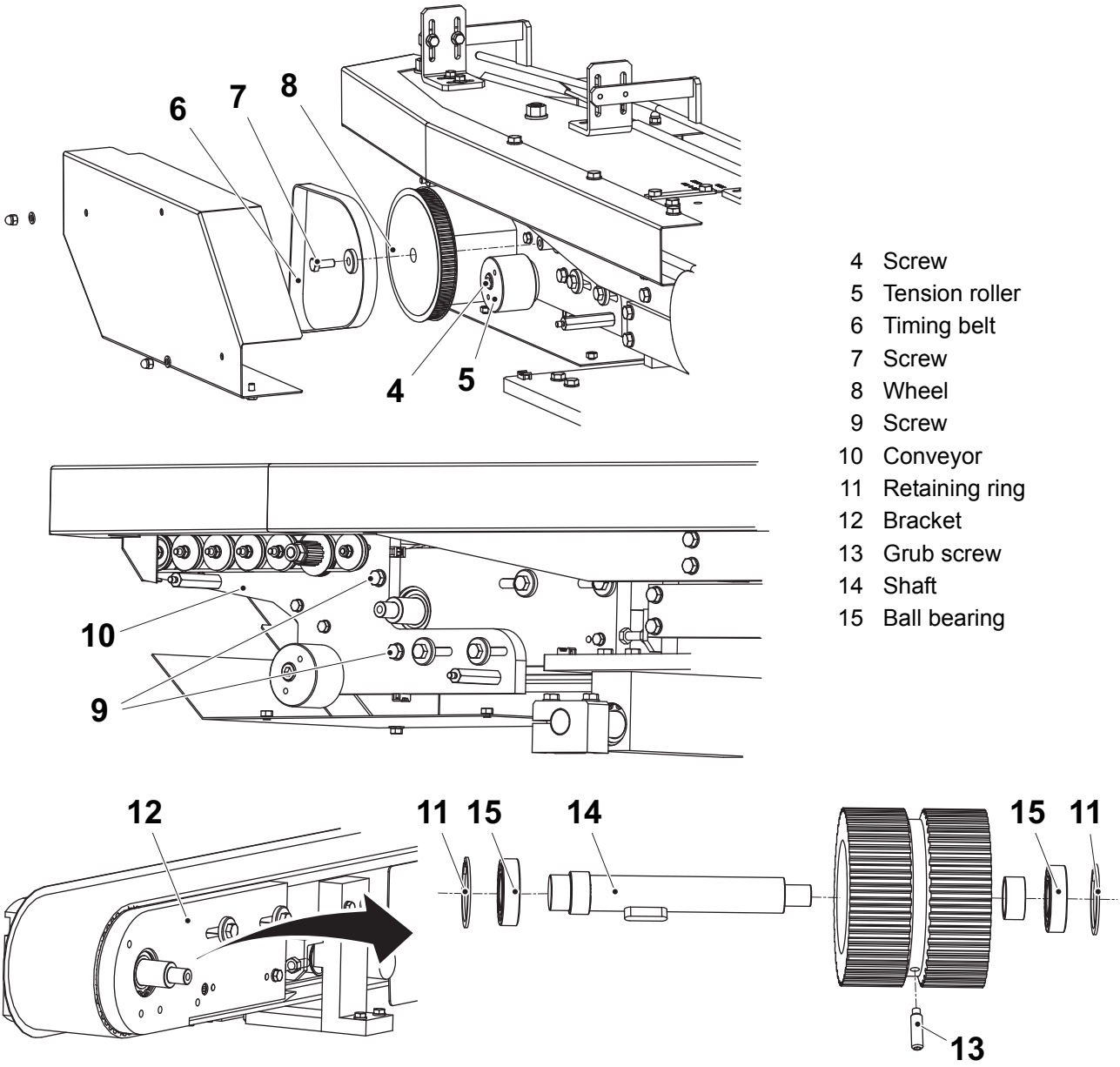

4 Screw
5 Tension roller
6 Timing belt
7 Screw
8 Wheel
9 Screw
10 Conveyor
11 Retaining ring
12 Bracket
13 Grub screw
14 Shaft
15 Ball bearing

1.2.2 Package Transfer

1.2.2-1 Package Transfer - Set

Machine Status	Main Switch OFF Air valve OFF
SPC Reference	2926070

a) Loosen the screws (1).

b) Set the position of the package transfer (2). Choose the hole pairs (3) for the current package type, according to the marks on the plate.

c) Tighten the screws (1).

d) Put two packages (4) on the timing belt against the edge. Push the side adjuster (5) forward to set the package transfer in its production position.

e) Adjust the position of the package transfer by loosening the nut (6) and turning the adjusting screw (7). The support belt (8) is to gently touch the packages.

f) Tighten the nut (6).

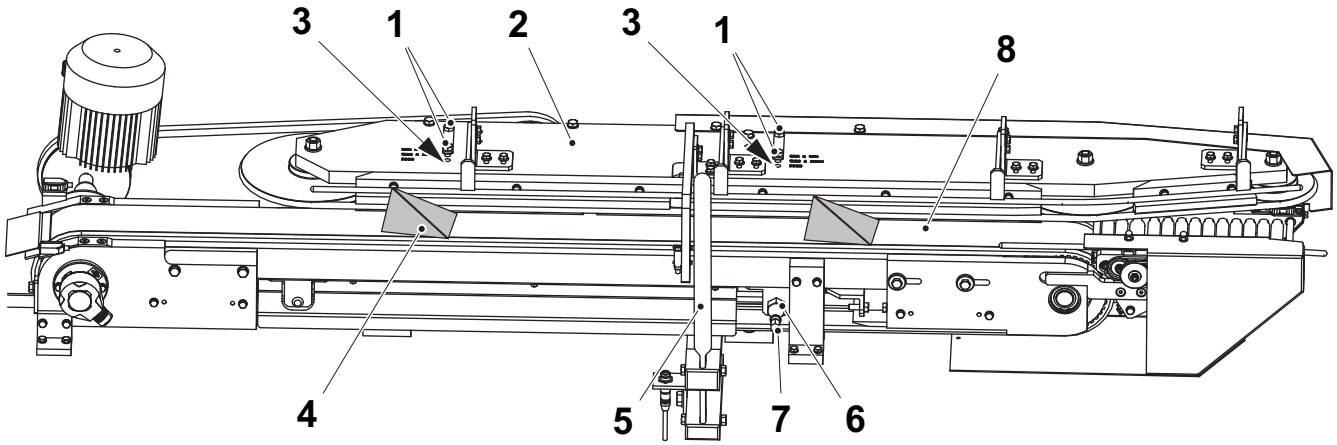

1 Screw (4 pieces)
2 Package transfer
3 Hole pair
4 Package
5 Side adjuster
6 Nut
7 Adjusting screw
8 Support belt

(Cont'd)

(Cont'd)

g) Loosen the screws (9) and set the height distance A between the steering rail (10) and the conveyor belt (11) according to the table below. Tighten the screws.

h) Loosen the screws (12). Adjust the steering rail (10). The steering rail is to gently touch the packages.

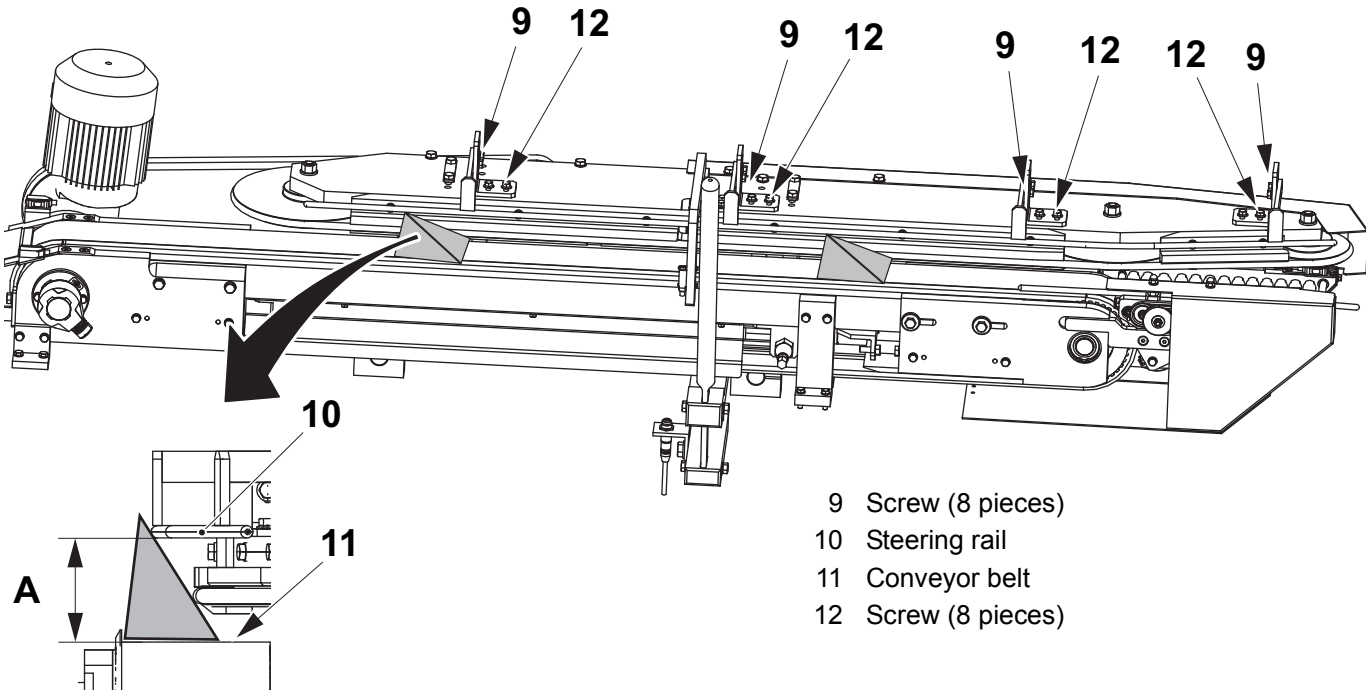

9 Screw (8 pieces)
10 Steering rail
11 Conveyor belt
12 Screw (8 pieces)

Package type	A
65S	46 mm
110S	61 mm
150S	66 mm
200M	71 mm
200B	76 mm

(Cont'd)

(Cont'd)

i) Make sure that the drive belt (8) and the belts (13) are parallel with the package transfer. Change grooves on the pulley (14) if necessary.

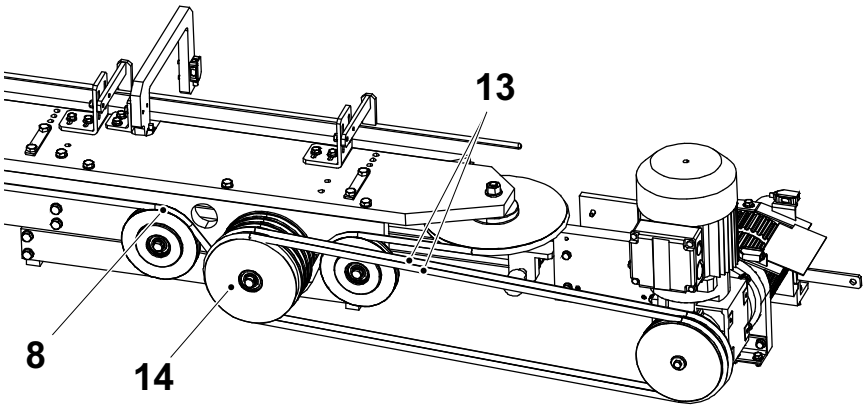

8 Drive belt
13 Belt
14 Pulley

1.2.2-2 Package Transfer - Check Ball Bearings

Machine Status	Main Switch OFF Air valve OFF
SPC Reference	2926070

a) Loosen the belts (1) and the drive belt (2).

b) Turn the drive wheels (3) by hand to check for play in the ball bearings. Change if necessary, see 1.2.2-3 Package Transfer - Change Ball Bearings.

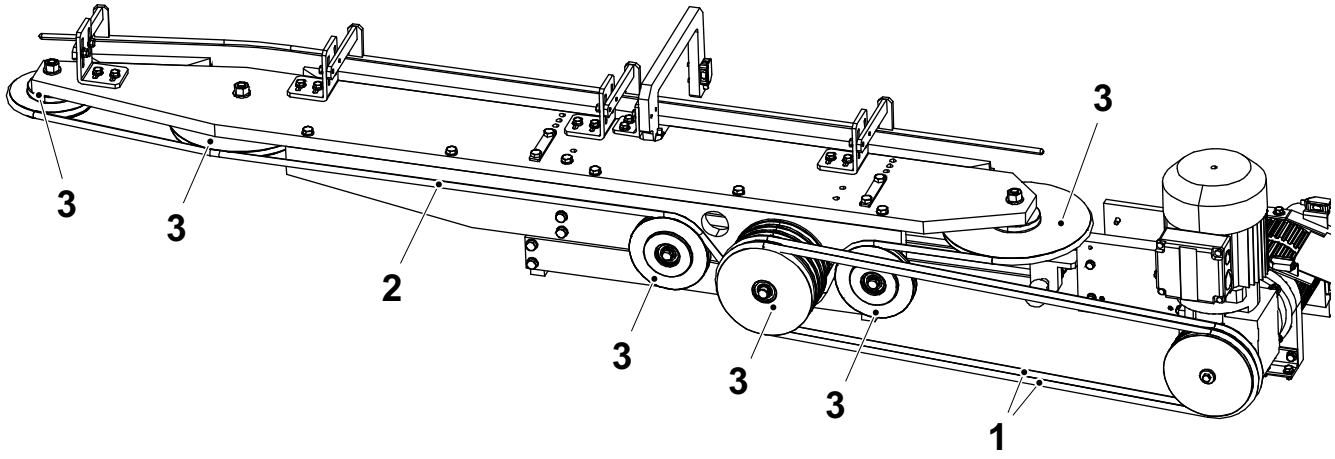

1 Belt
2 Drive belt
3 Drive wheel

1.2.2-3 Package Transfer - Change Ball Bearings

Machine Status	Main Switch OFF Air valve OFF
SPC Reference	2926070

a) Disconnect the photocell (1).

b) Remove the belts (2) and the drive belt (3).

c) Remove the screws (4).

d) Remove the package transfer unit from the machine and put it on a workbench to change the ball bearings.

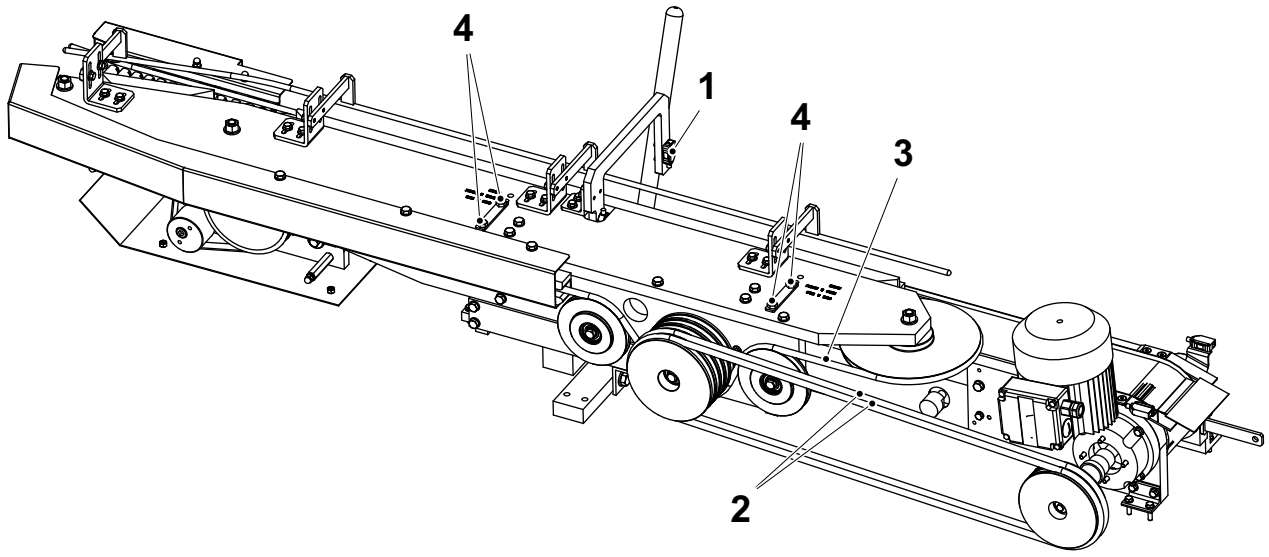

1 Photocell, W30B2016
2 Belt
3 Drive belt
4 Screw

(Cont'd)

(Cont'd)

e) Remove the retaining rings (5).
f) Pull out the drive wheels (6) with the shafts.
g) Remove the retaining rings (7).
h) Change the ball bearings (8).
i) Assemble in the reverse order.

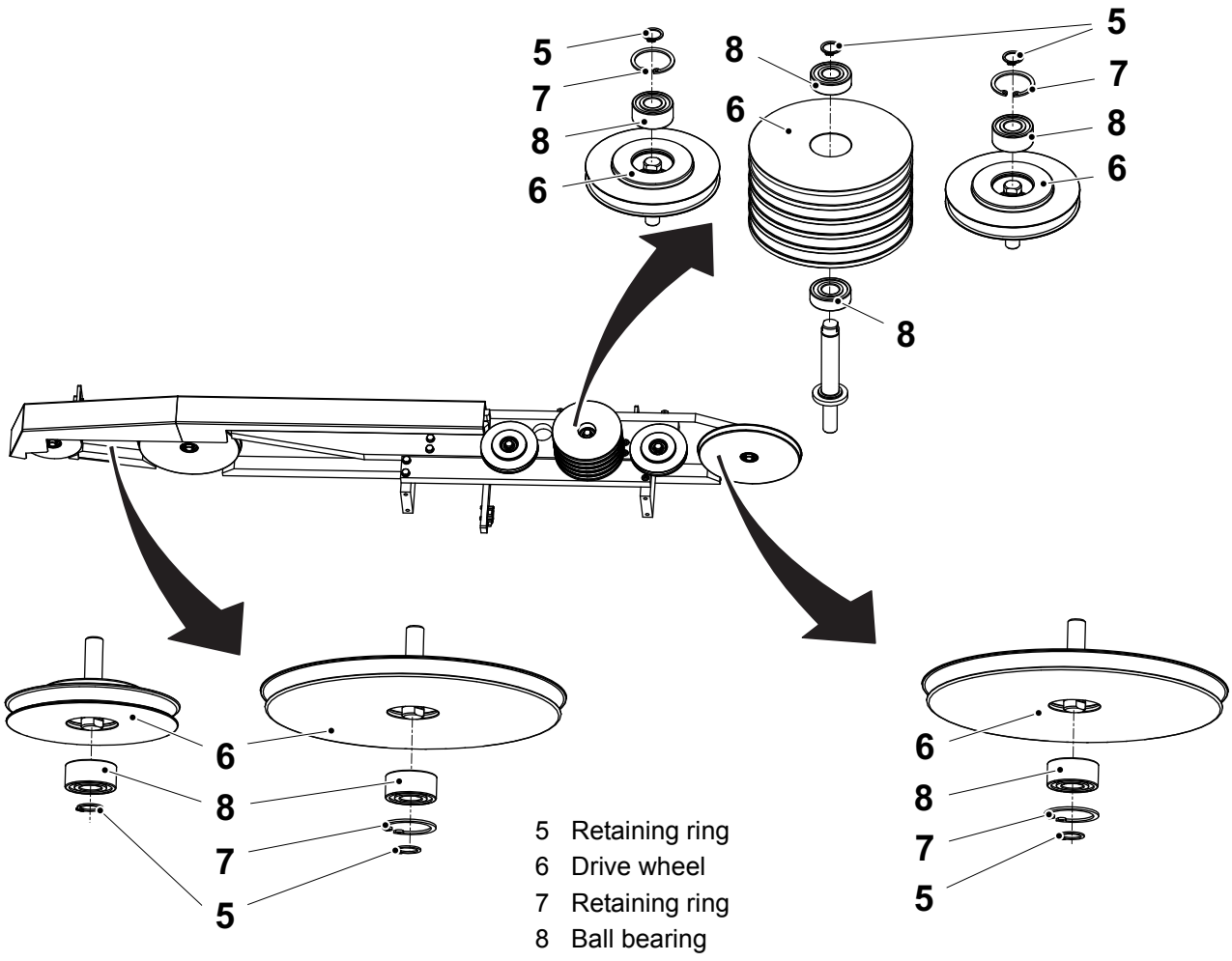

5 Retaining ring
6 Drive wheel
7 Retaining ring
8 Ball bearing

1.2.2-4 Package Transfer - Check Belts

Machine Status	Main Switch OFF Air valve OFF
SPC Reference	2926070

Check the condition of the belts (1) and the drive belt (2). Change if necessary, see 1.2.2-5 Package Transfer - Change Belts.

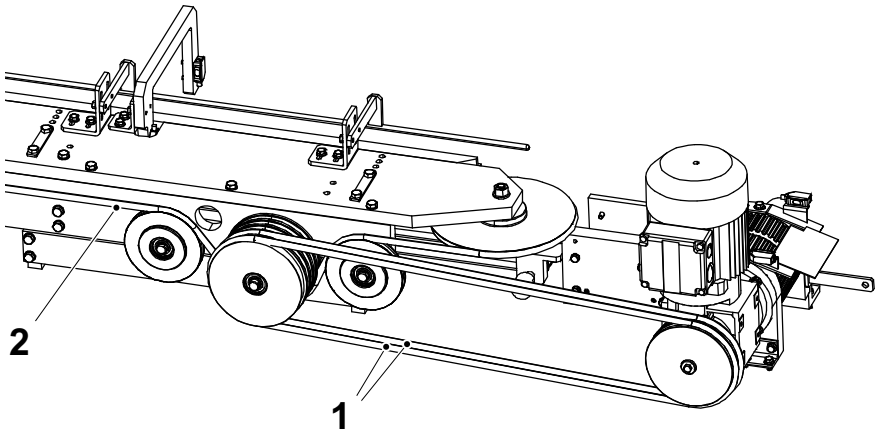

1 Belt
2 Drive belt

1.2.2-5 Package Transfer - Change Belts

Machine Status	Main Switch OFF Air valve OFF
SPC Reference	2926070

Change the belts (1) and the drive belt (2). Pull the old belts off and assemble the new belts.

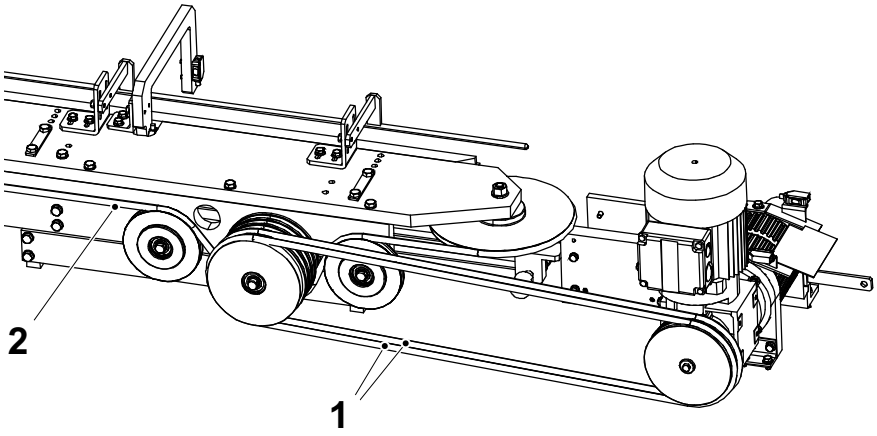

1 Belt
2 Drive belt

1.2.3 Adjustment Plate

1.2.3-1 Adjustment Plate - Set Cylinder

Machine Status	Main Switch OFF Air valve OFF
SPC Reference	2926075

Adjust the position of the cylinder (1) by turning the nut (2).

Note! The cylinder must not be set in its maximum position.

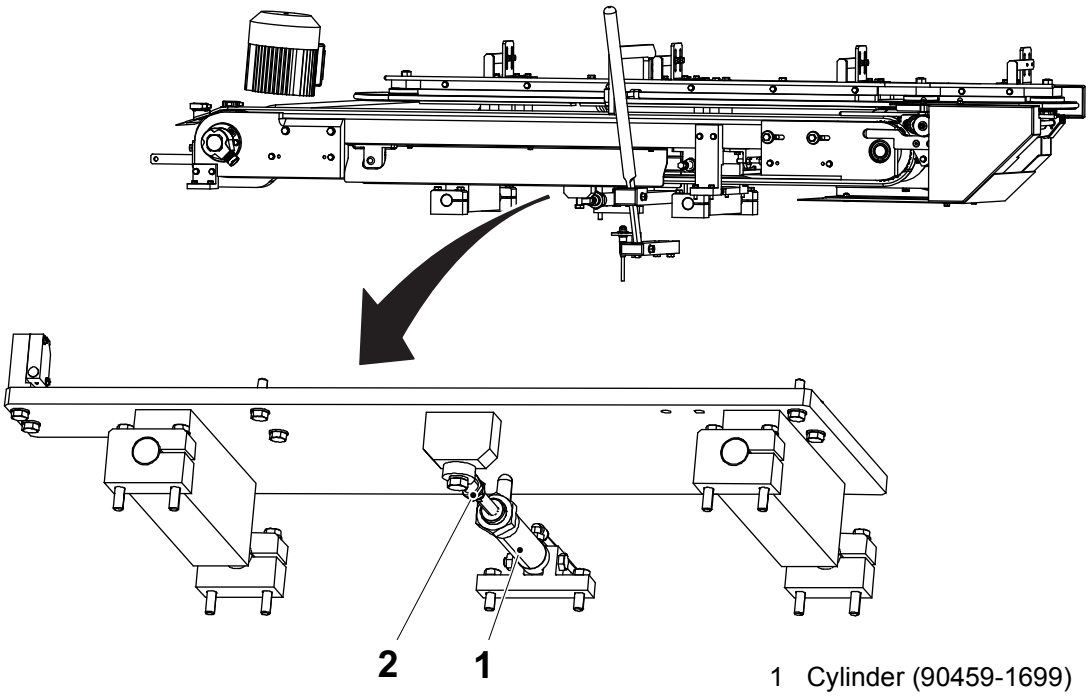

1 Cylinder (90459-1699)
2 Nut

1.2.3-2 Adjustment Plate - Check Cylinder

Machine Status	Main Switch OFF Air valve OFF
SPC Reference	2926075

Check that the cylinder (1) works properly. Change if necessary, see 1.2.3-3 Adjustment Plate - Change Cylinder.

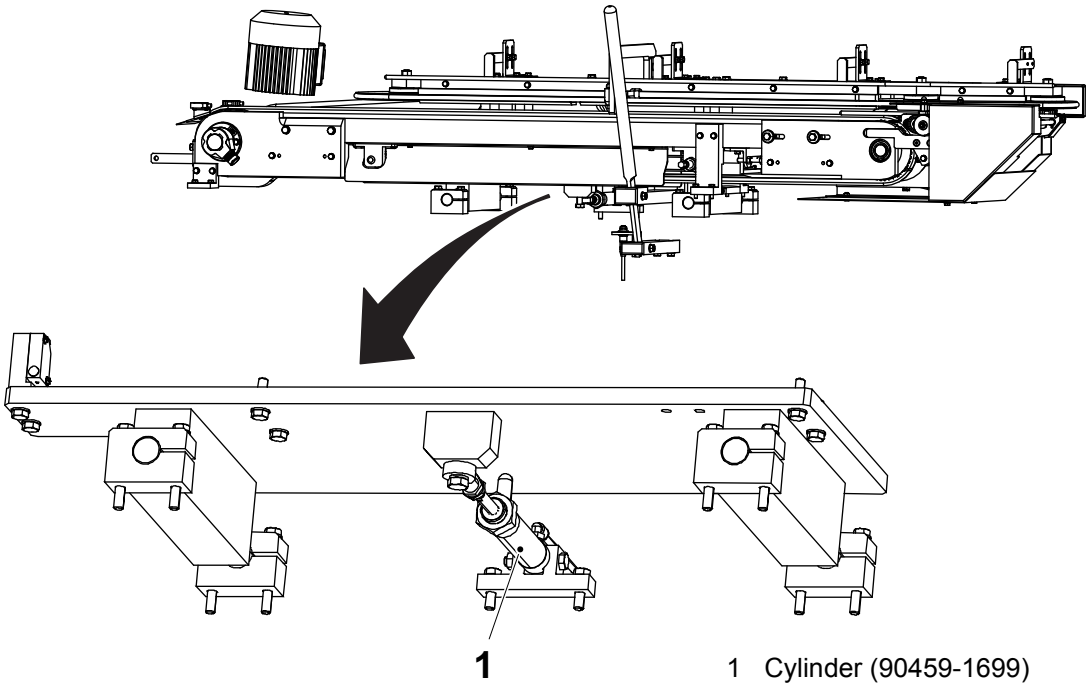

1 Cylinder (90459-1699)

1.2.3-3 Adjustment Plate - Change Cylinder

Machine Status	Main Switch OFF Air valve OFF
SPC Reference	2926075

a) Remove the screw (1).

b) Remove the screws (2).

c) Change the cylinder (3).

d) Assemble in the reverse order.

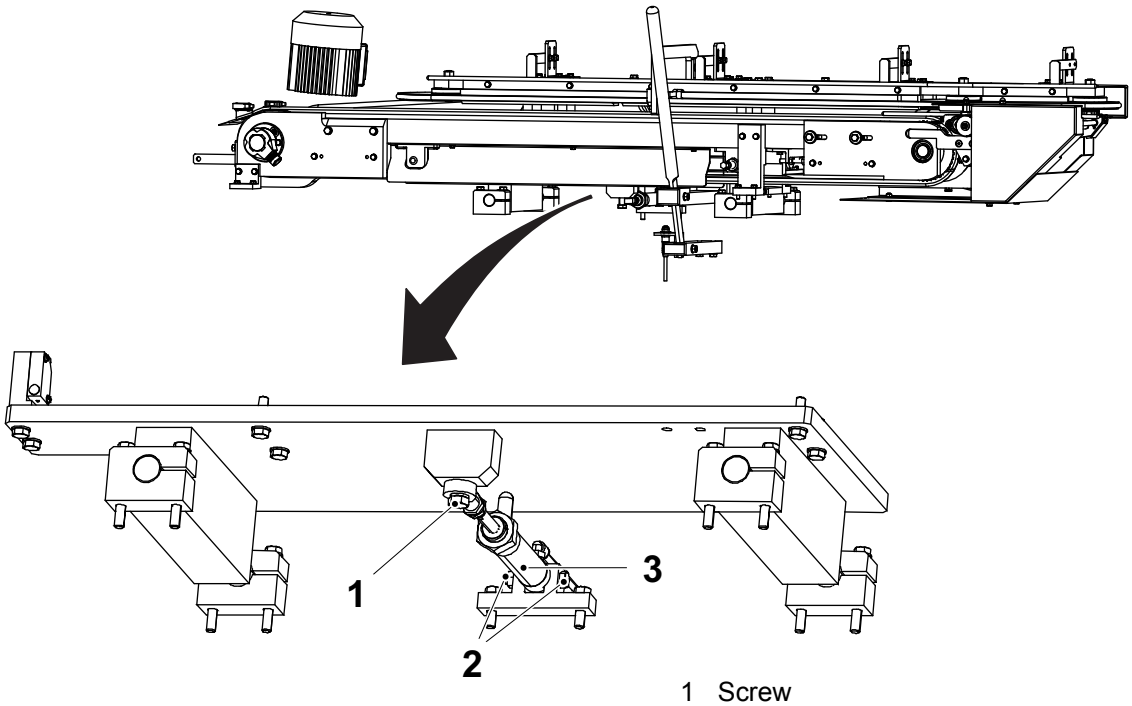

1 Screw
2 Screw
3 Cylinder (90459-1699)

1.2.4 Side Adjuster

1.2.4-1 Side Adjuster - No Procedure Described

SPC Reference	2957705

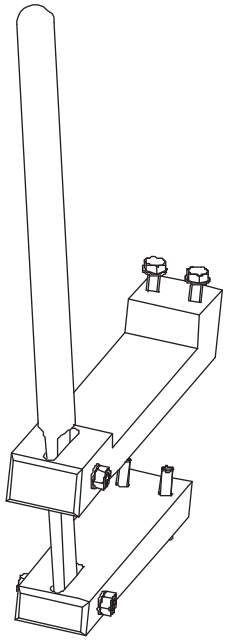

1.2.5 Cable

1.2.5-1 Cable - No Procedure Described

SPC Reference	2992430

1.3 Conveyor TWA

SPC Reference	3060300

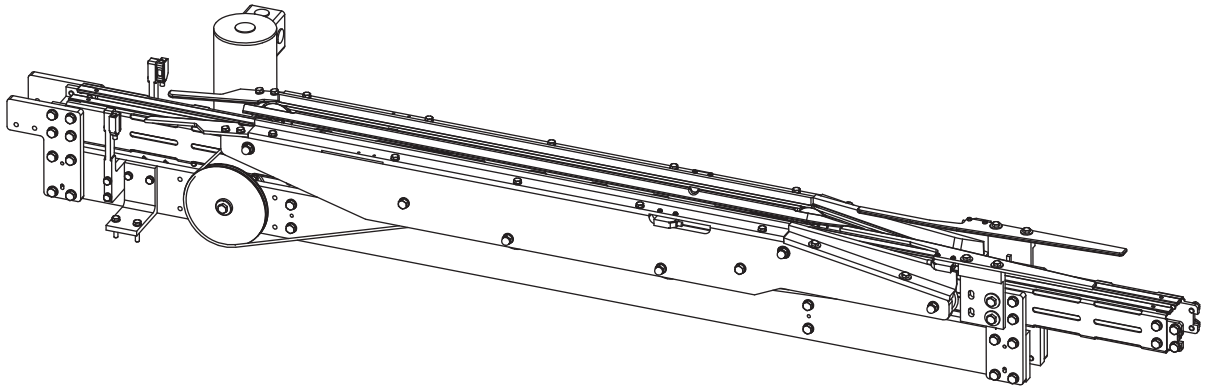

1.3-1 Conveyor - Set Package Size

Machine Status	Main Switch OFF Air valve OFF
SPC Reference	3060300

a) Loosen the nuts (1).

b) Move the plates (2) so that the spacers (3) are positioned in the correct holes (4) or (5). Use the upper holes (4) for 125 ml packages and the lower holes (5) for 200 ml packages.

c) Tighten the nuts (1) slightly.

d) Put a package (6) on the conveyor.

e) Fine tune the height by rotating the eccentric shafts (7). The package should have a horizontal area for the machine to apply the straw on.

f) Tighten the nuts (1).

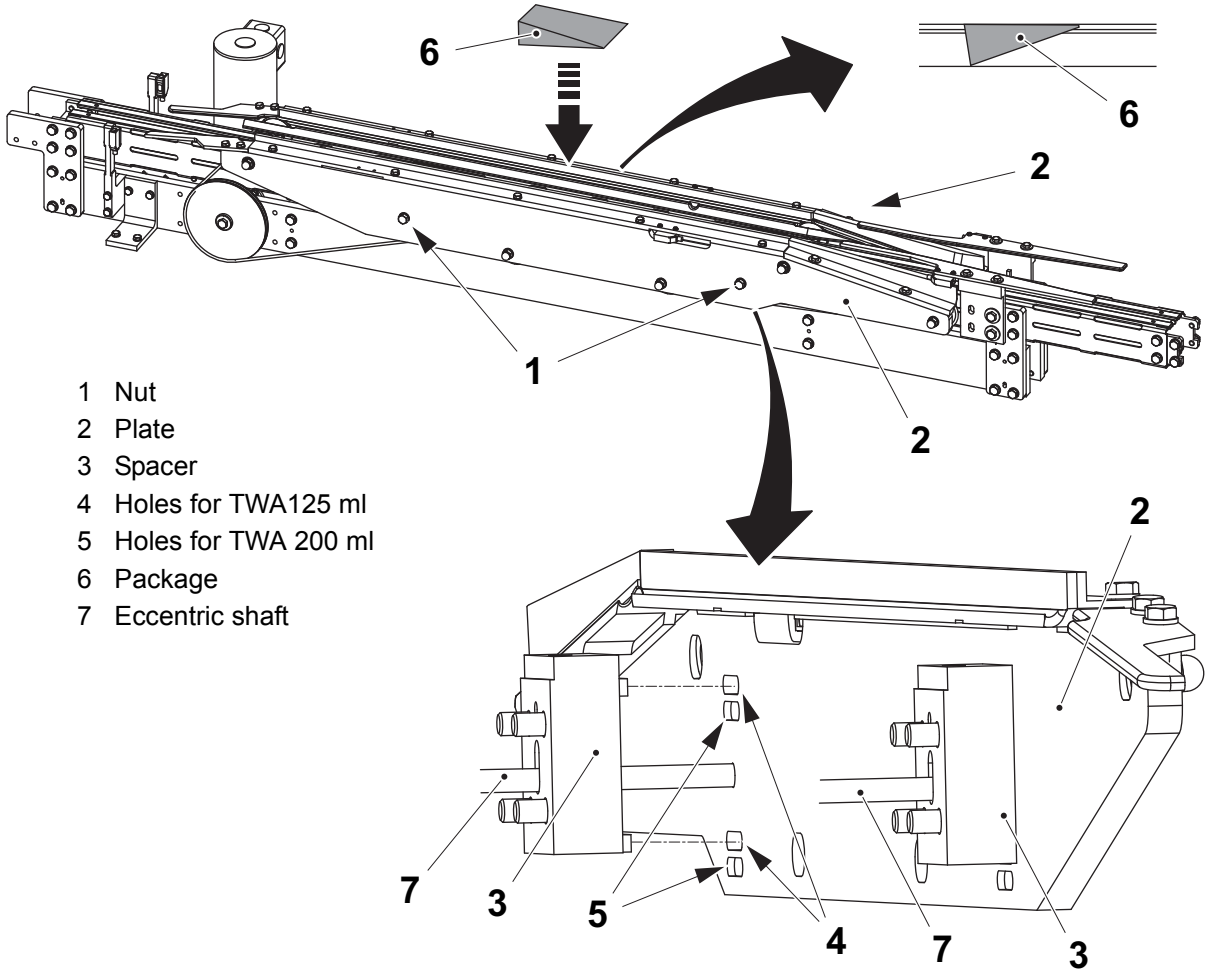

1 Nut
2 Plate
3 Spacer
4 Holes for TWA125 ml
5 Holes for TWA 200 ml
6 Package
7 Eccentric shaft

(Cont'd)

(Cont'd)

g) Put the package (6) between the infeed guides (8) on the conveyor.

h) Loosen the screws (9) to adjust the height of the infeed guides (8).

i) Set the height of the infeed guides so that they are aligned with the package.

j) Tighten the screws (9)

k) Loosen the screws (10).

l) Set the infeed guides (8) so that there is a distance A on each side of the package (6).

m) Tighten the screws (10).

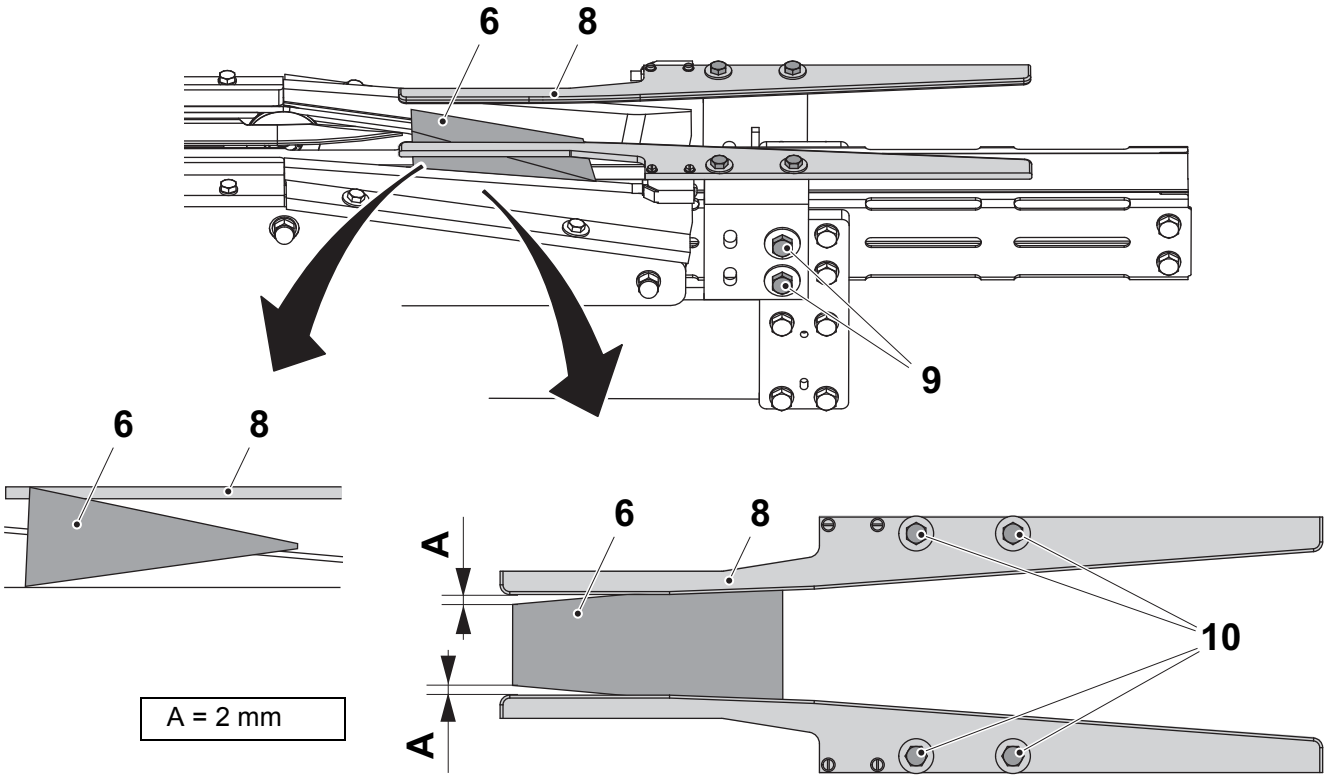

6 Package
8 Infeed guide
9 Screw (4 pieces)
10 Screw

1.3.1 Conveyor Body

1.3.1-1 Conveyor Body - No procedure described

SPC Reference	3060280

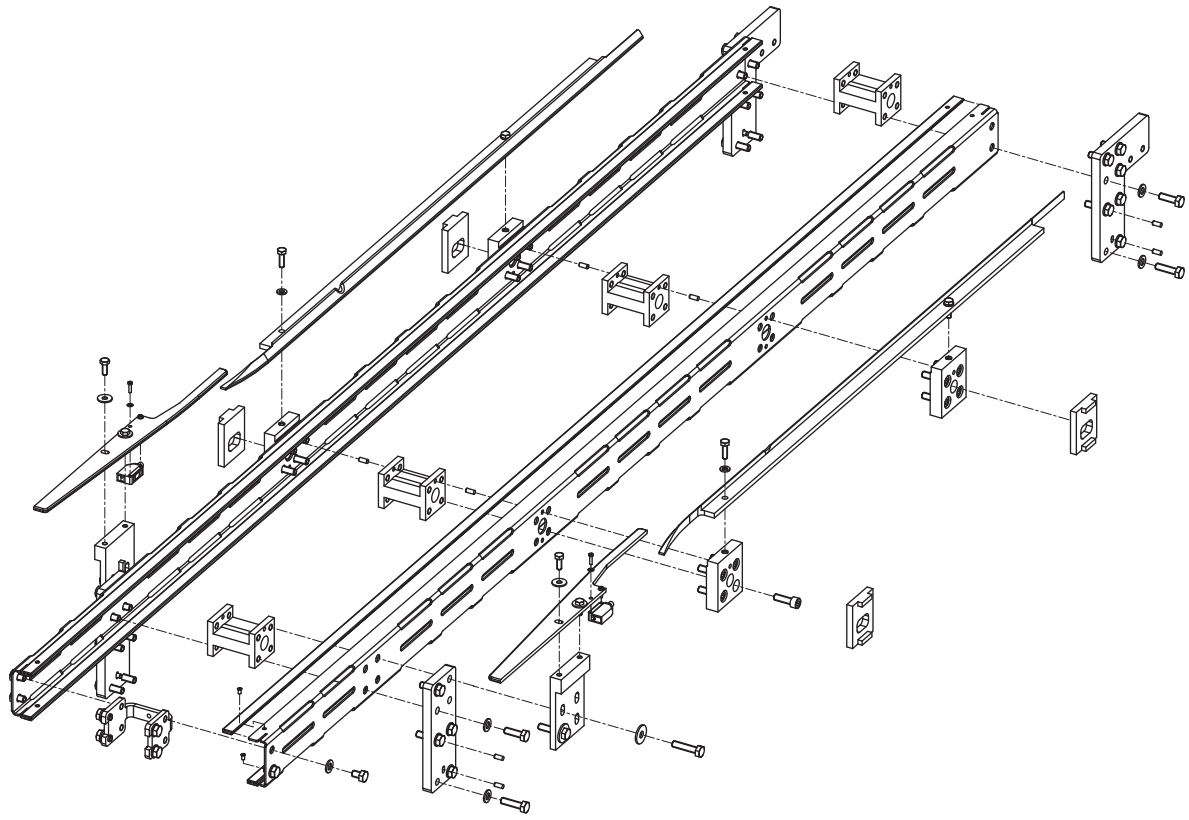

1.3.2 Support Belt

1.3.2-1 Support Belt - Check Ball Bearings and Drive Belts

Machine Status	Main Switch OFF Air valve OFF
SPC Reference	3060290

a) Remove the drive belts (1) from the pulleys

b) Check the ball bearings (2) for wear and play. Change if necessary, see Procedure 1.3.2-2 Support Belt - Change Ball Bearings.

c) Check the drive belts (1) for wear. Change if necessary, see Procedure 1.3.2-3 Support Belt - Change Drive Belts.

d) Put the drive belts (1) back over the pulleys, see the illustration.

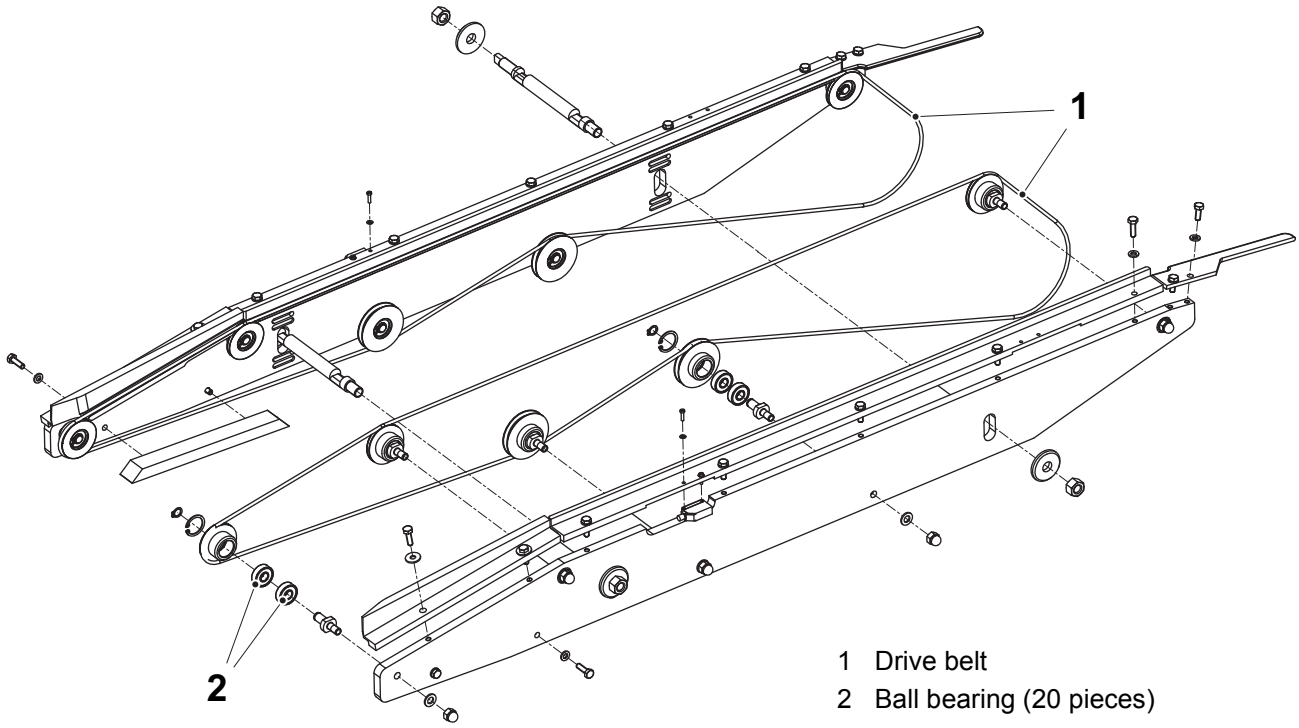

1 Drive belt
2 Ball bearing (20 pieces)

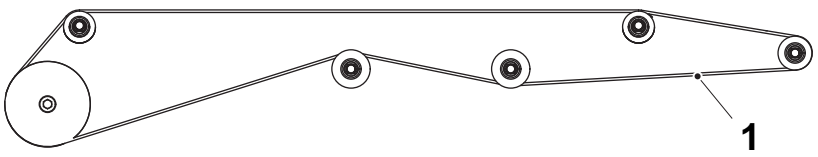

1.3.2-2 Support Belt - Change Ball Bearings

Machine Status	Main Switch OFF Air valve OFF
SPC Reference	3060290

a) Remove the drive belts (1).

b) Remove the nuts (2) and the washers (3).

c) Remove the plates (4).

d) Change the ball bearings (5).

e) Assemble the conveyor in the reverse order. Make sure that the drive belts (1) are installed correctly, see the illustration.

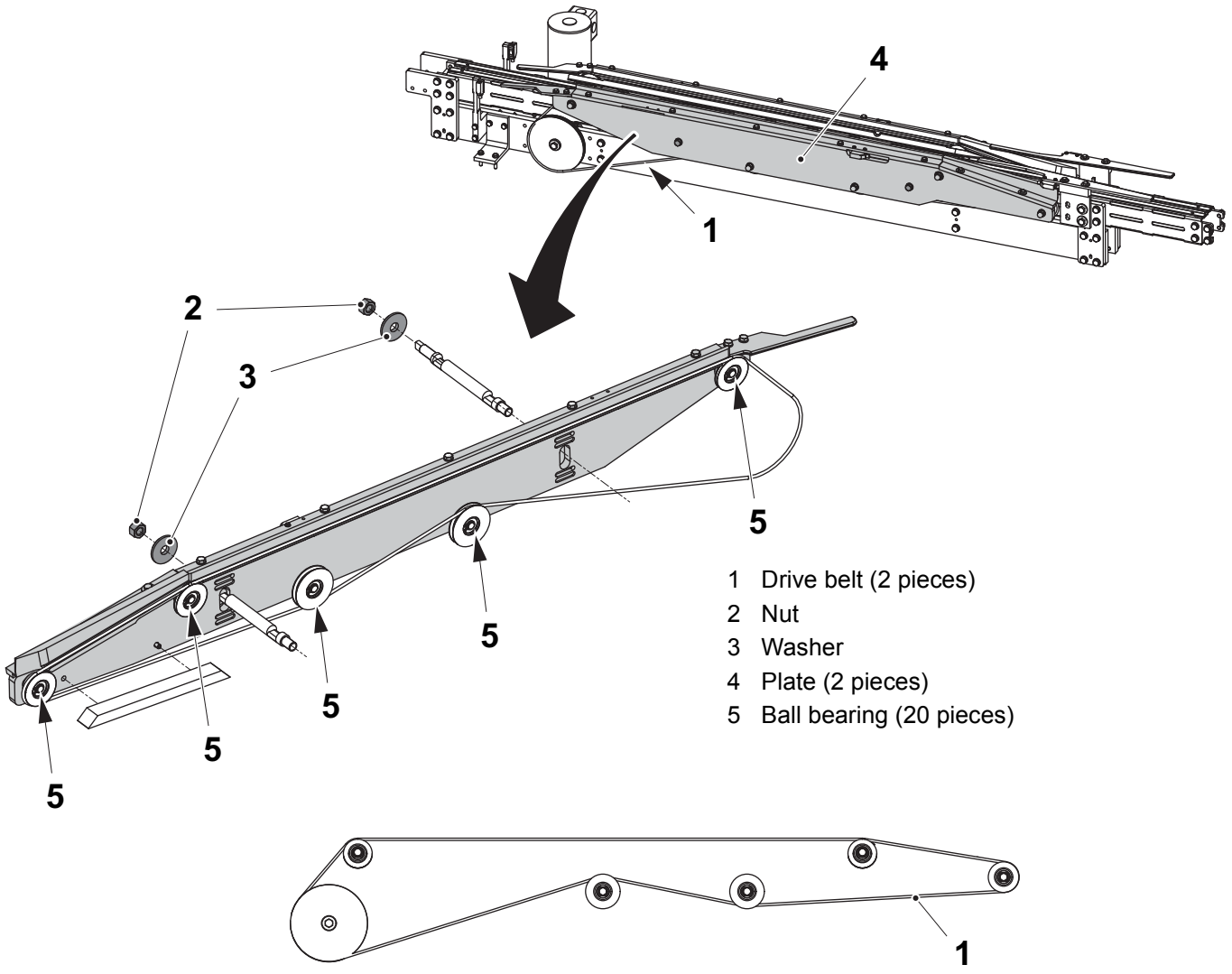

1 Drive belt (2 pieces)
2 Nut
3 Washer
4 Plate (2 pieces)
5 Ball bearing (20 pieces)

1.3.2-3 Support Belt - Change Drive Belts

Machine Status	Main Switch ON Air valve OFF
SPC Reference	3060290

a) Remove the drive belt (1) from the drive wheel (4).

b) Remove the screw (2), the washer (3), the drive wheel (4) and the spacer ring (5).

c) Remove the screws (6) together with the motor unit (7)

d) Change the drive belt (8). Make sure that the drive belt is installed correctly, see the illustration.

e) Assemble in the reverse order.

f) Change the drive belt (1). Make sure that the drive belt is installed correctly, see the illustration.

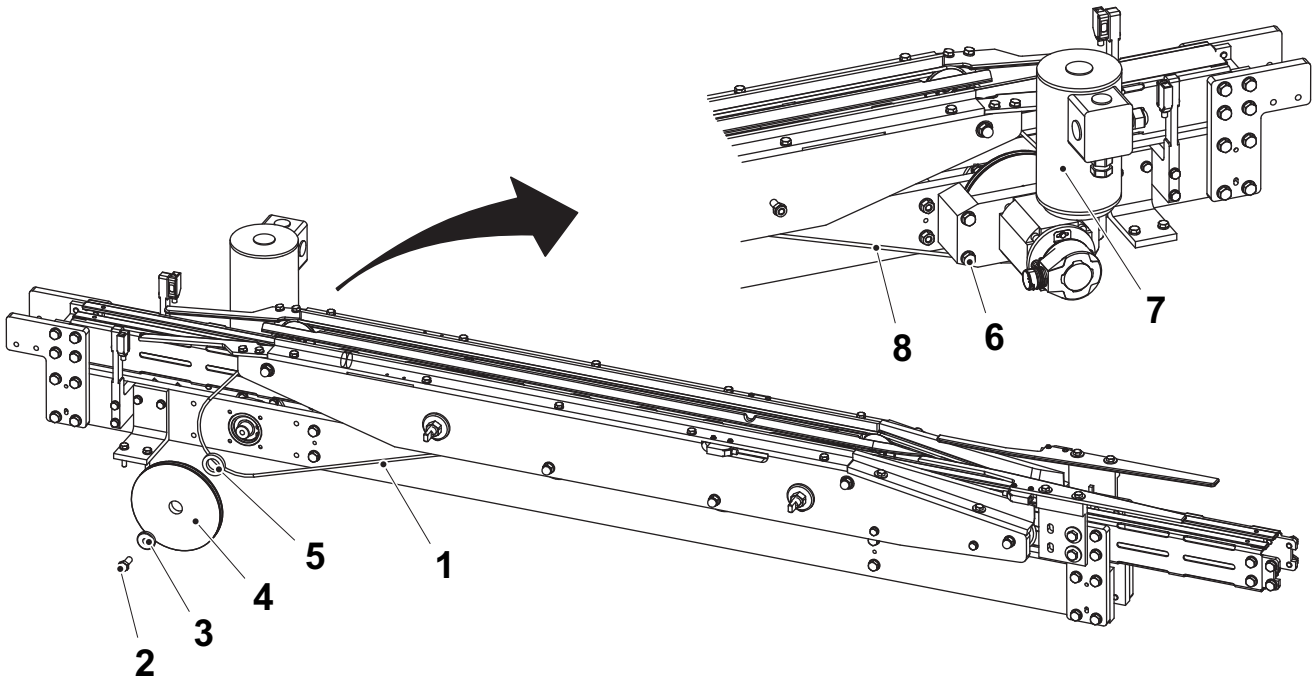

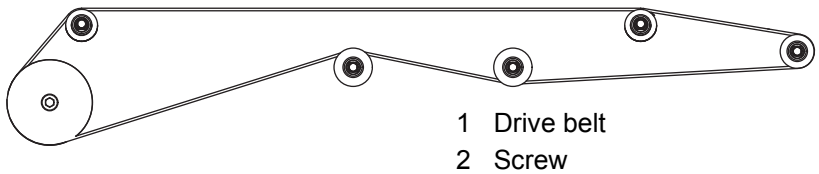

1 Drive belt
2 Screw
3 Washer
4 Drive wheel
5 Spacer ring
6 Screw (4 pieces)
7 Motor unit
8 Drive belt

1.3.3 Drive Wheel

1.3.3-1 Drive Wheel - Check

Machine Status	Main Switch OFF Air valve OFF
SPC Reference	3060310

a) Remove the drive belts (1).

b) Check the ball bearings (2) for wear and play. Change if necessary, see Procedure 1.3.2-2 Support Belt - Change Ball Bearings.

c) Put the drive belts (1) back over the pulleys, see the illustration.

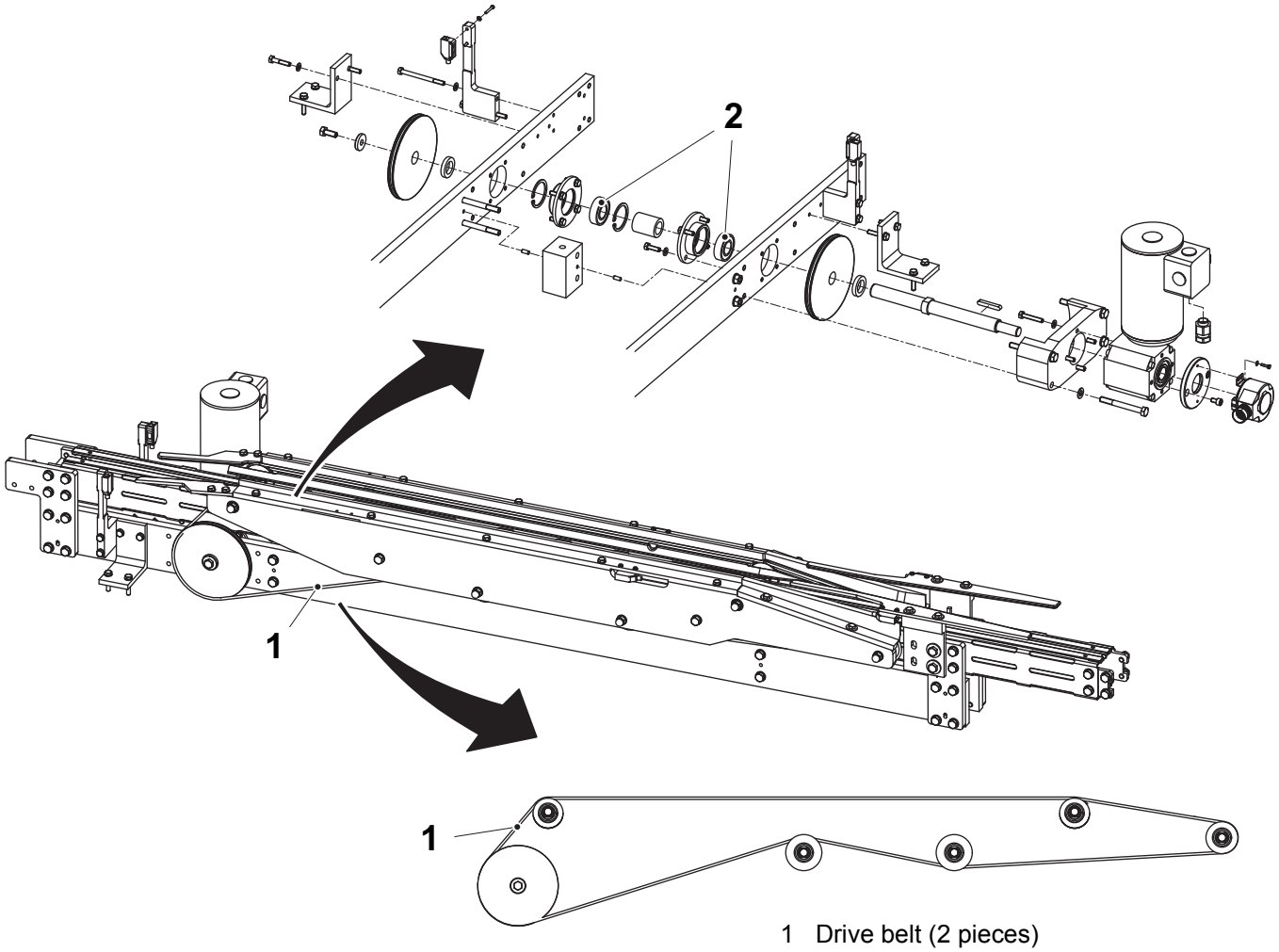

1 Drive belt (2 pieces)
2 Ball bearing

1.3.3-2 Drive Wheel - Change

Machine Status	Main Switch OFF Air valve OFF
SPC Reference	3060310

a) Remove the drive belts (1).
b) Disconnect and remove the encoder (2).
c) Remove the screws (3) and the motor (4)
d) Remove the conveyor chain.
e) Remove the screws (5), (6) and (7).
f) Remove the screw (8) and lift out the whole conveyor section.

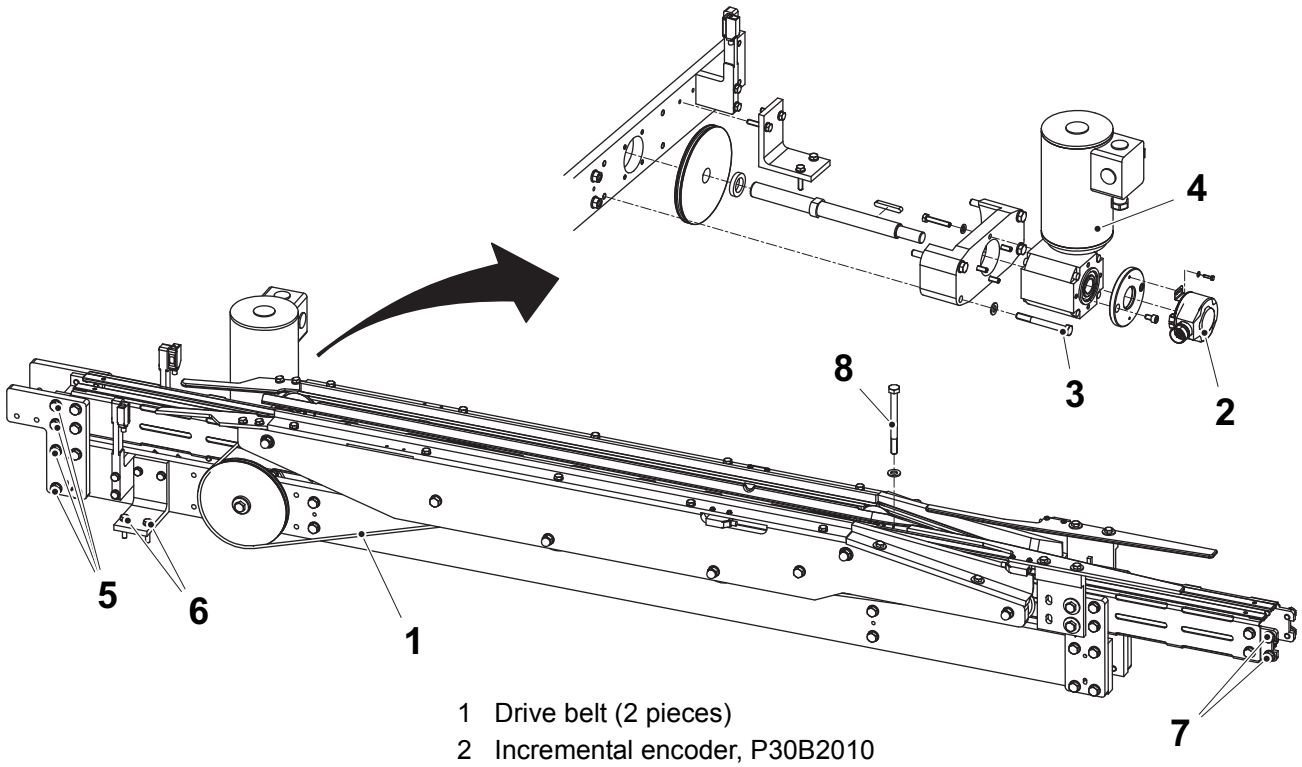

1 Drive belt (2 pieces)
2 Incremental encoder, P30B2010
3 Screw (4 pieces)
4 Worm gear motor, W40M1010
5 Screw (8 pieces)
6 Screw (4 pieces)
7 Screw (4 pieces)
8 Screw

(Cont'd)

(Cont'd)

g) Remove the plates (9).

h) Disassemble the rest of the conveyor and change the ball bearings (10).

i) Assemble the conveyor in the reverse order. Make sure that the drive belts (1) are installed correctly, see the illustration.

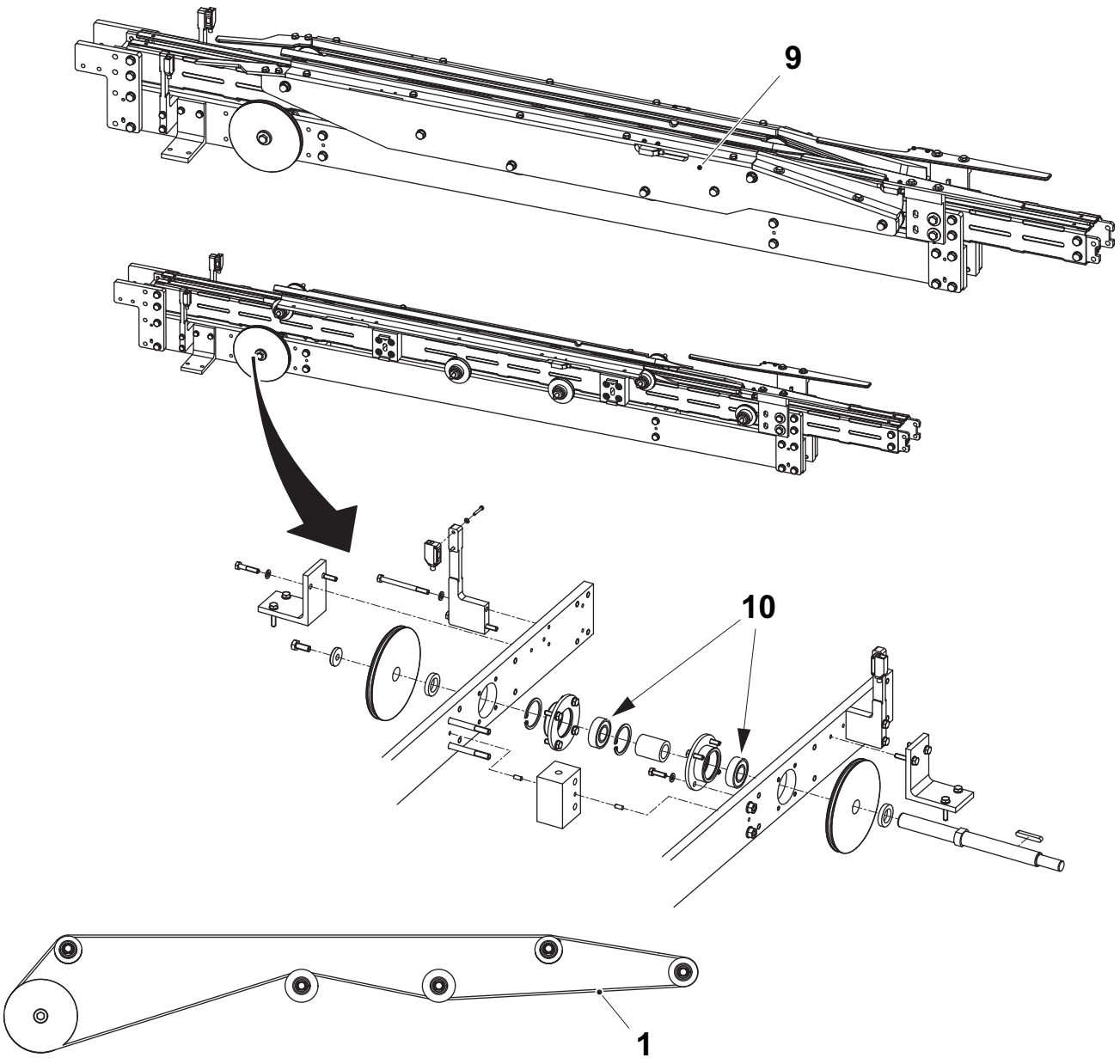

1 Drive belt (2 pieces)
9 Plate
10 Ball bearing

2 Applicator Unit

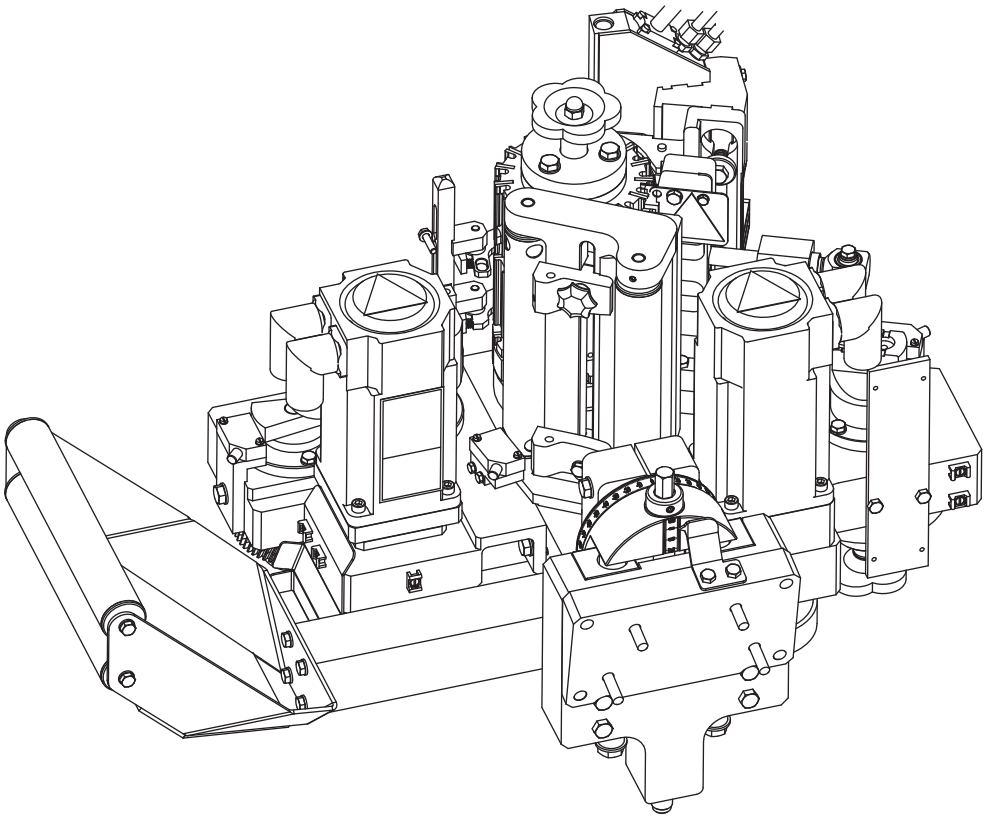

Applicator Unit - Description

SPC Reference	663301

TB/TBA/TPA

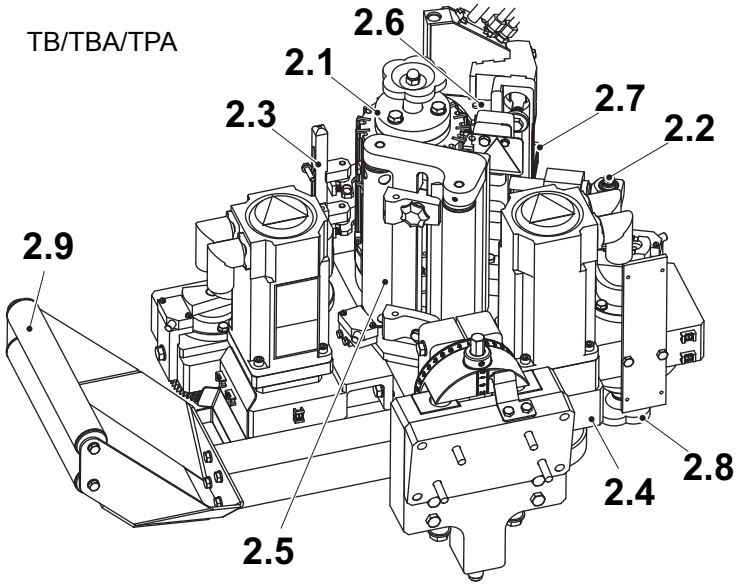

TCA

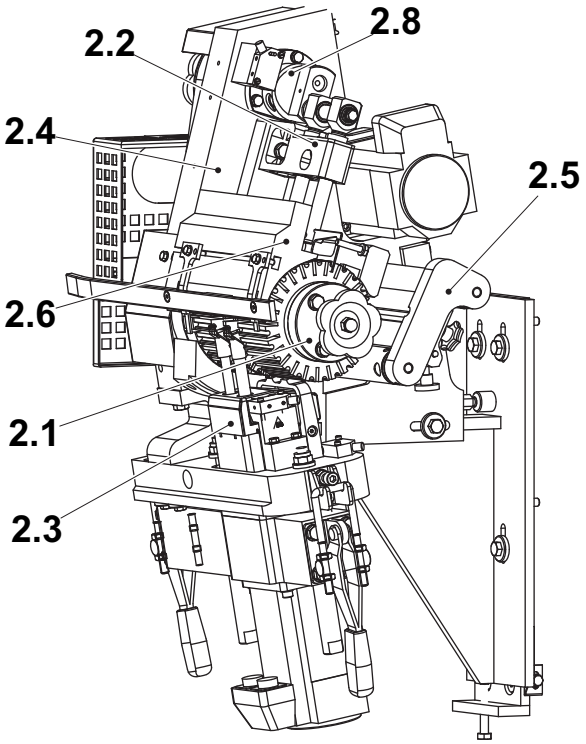

2.1	Feed wheel unit
2.2	Cutting unit
2.3	Squeezer
2.4	Frame
2.5	Ladder band guide
2.6	Guide console
2.7	Spring holder
2.8	Crankshaft
2.9	Guide arm
2.10	Adjustment bracket

TWA

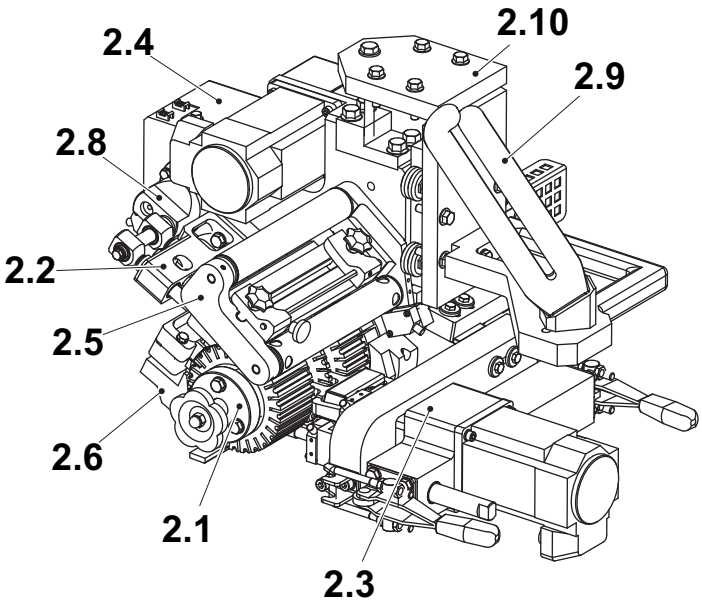

2-1 Applicator Unit - Check . . . . . 2 - 7
2-2 Applicator Unit - Set Angle (TB/TBA/TPA) . . . . 2 - 8
2-3 Applicator Unit - Set Height and Straw Position (TB/TBA) . . . . . 2 - 9
2-4 Applicator Unit - Set Height (TCA) . . . . . 2 - 10
2-5 Applicator Unit - Set (TWA) . . . . . 2 - 12

2.1 Feed Wheel Unit. . . . . 2 - 14

2.1-1 Feed Wheel Unit - Check Parts (TB/TBA/TPA) 2 - 14
2.1-2 Feed Wheel Unit - Check Parts (TCA) . . . . . 2 - 20
2.1-3 Feed Wheel Unit - Check Parts (TWA) . . . . . 2 - 23
2.1-4 Feed Wheel Unit - Change Parts . . . . . 2 - 26
2.1-5 Feed Wheel Unit - Set . . . . . 2 - 30

2.1.1 Feed Wheel . . . . . 2 - 32

2.1.1-1 Feed Wheel - Change (TB/TBA/TPA) . . . . . 2 - 32
2.1.1-2 Feed Wheel - Change (TCA/TWA) . . . . . 2 - 35

2.2 Cutting Unit . . . . . 2 - 36

2.2-1 Cutting Unit - Check Parts . . . . . 2 - 36
2.2-2 Cutting Unit - Change Parts . . . . . 2 - 39

2.3 Squeezer. . . . . 2 - 40

2.3.1 Crank Housing . . . . . 2 - 40

2.3.1-1 Crank Housing - Check Parts (TB/TBA) . . . . . 2 - 40
2.3.1-2 Crank Housing - Change Parts (TB/TBA) . . . . . 2 - 46
2.3.1-3 Crank Housing - Check Parts (TPA) . . . . . 2 - 52
2.3.1-4 Crank Housing - Change Parts (TPA) . . . . . 2 - 53

2.3.2 Drive Motor . . . . . 2 - 57

2.3.2-1 Drive Motor - No Procedure Described . . . . . 2 - 57

2.3.3 Pressure Arm . . . . . 2 - 58

2.3.3-1 Pressure Arm - Check Parts (TB/TBA) . . . . . 2 - 58
2.3.3-2 Pressure Arm - Change Parts (TB/TBA) . . . . . 2 - 59
2.3.3-3 Pressure Arm - Set Height (TB/TBA) . . . . . 2 - 60
2.3.3-4 Pressure Arm - Check (TPA) . . . . . 2 - 61
2.3.3-5 Pressure Arm - Change (TPA) . . . . . 2 - 62

2.3.3-6 Pressure Arm - Set Height (TPA) . . . . . 2 - 63
2.3.3-7 Pressure Arm - Set Override (TB/TBA/TPA) . . 2 - 64
2.3.4 Pressure Unit . . . . . 2 - 68
2.3.4-1 Pressure Unit - Set (TCA) . . . . . 2 - 68
2.3.4-2 Pressure Unit - Set (TWA) . . . . . 2 - 69
2.3.4-3 Pressure Unit - Straw in Feed Wheel (TCA/TWA) . . . . . 2 - 70
2.3.5 Lock Holder . . . . . 2 - 71
2.3.5-1 Lock Holder - Set Gun Holder (TCA) . . . . . 2 - 71
2.3.5-2 Lock Holder - Set Gun Holder (TWA) . . . . . 2 - 72
2.4 Frame . . . . . 2 - 73
2.4.1 Frame Housing . . . . . 2 - 73
2.4.1-1 Frame Housing - Check Timing Belt (TB/TBA/TPA) . . . . . 2 - 73
2.4.1-2 Frame Housing - Check Timing Belt (TCA/TWA) . . . . . 2 - 76
2.4.1-3 Frame Housing - Change Timing Belt . . . . . 2 - 77
2.4.2 Belt Tensioner . . . . . 2 - 82
2.4.2-1 Belt Tensioner - Check Parts . . . . . 2 - 82
2.4.2-2 Belt Tensioner - Change Parts . . . . . 2 - 88
2.5 Ladder Band Guide . . . . . 2 - 90
2.5-1 Ladder Band Guide - Set TB/TBA/TPA . . . . . 2 - 90
2.5-2 Ladder Band Guide - Set (TCA/TWA) . . . . . 2 - 91
2.6 Guide Console . . . . . 2 - 92
2.6-1 Guide Console - Change Guide Arms (TB/TBA/TPA) . . . . . 2 - 92
2.6-2 Guide Console - Set Gun Holder (TB/TBA/TPA) . . . . . 2 - 94
2.6-3 Guide Console - Set (TCA/TWA) . . . . . 2 - 95
2.6-4 Guide Console - Set Straw not in Position Sensor (TB/TBA/TPA) . . . . . 2 - 96
2.7 Spring Holder . . . . . 2 - 100
2.7-1 Spring Holder - Check Parts (TB/TBA) . . . . . 2 - 100
2.7-2 Spring Holder - Change Compression Springs

(TB/TBA/TPA) . . . . . 2 - 101
2.7-3 Spring Holder - Change Leaf Spring (TB/TBA/TPA) . . . . . 2 - 103
2.7-4 Spring Holder - Set Leaf Spring (TB/TBA/TPA) . . . . . 2 - 105

2.8 Crankshaft . . . . . 2 - 106

2.8-1 Crankshaft - Check Parts . . . . . 2 - 106
2.8-2 Crankshaft - Change Parts . . . . . 2 - 113

2.9 Guide Arm . . . . . 2 - 115

2.9-1 Guide Arm - No procedure described . . . . . 2 - 115

This page intentionally left blank

2-1 Applicator Unit - Check

Machine Status	Main Switch OFF Air Valve OFF
SPC Reference	663301

Check the resistance in the applicator unit by turning the stellar knob (1) to the left, as indicated in the illustrations below. It should be possible to turn it by hand without difficulties.

TB/TBA

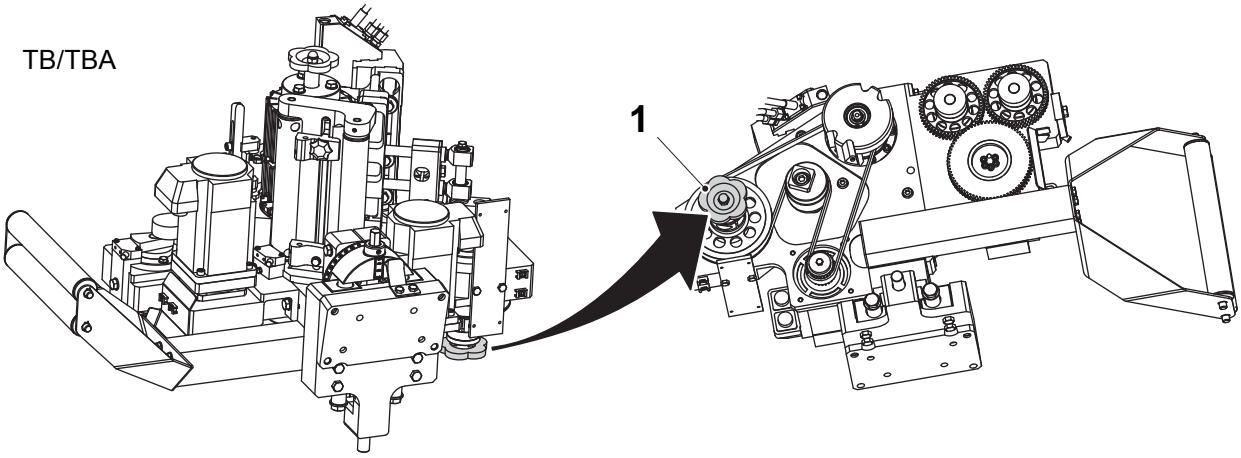

1 Stellar knob

TCA

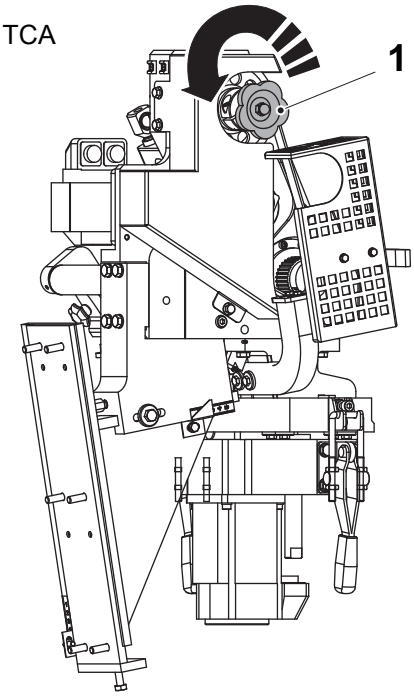

TWA

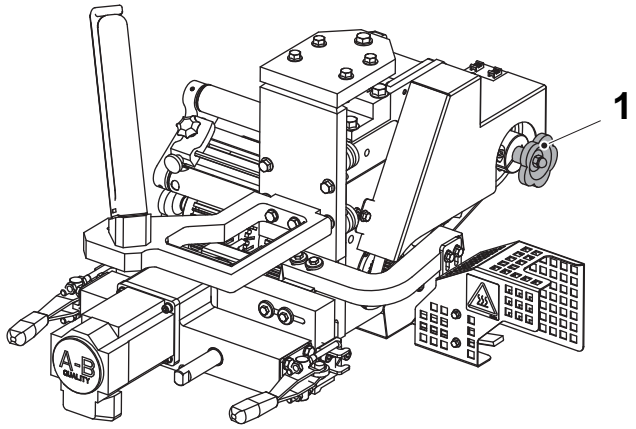

2-2 Applicator Unit - Set Angle (TB/TBA/TPA)

Machine Status	Main Switch OFF Air Valve OFF
SPC Reference	663301

Note! This is only a guideline setting. For finer adjustment of the straw angle, operate the machine and run packages through the machine. Check the angle and adjust accordingly.

a) Loosen the screw (1), and turn the applicator unit to the angle chosen in the recipe on the TPOP. Use the scale (2) to set the value. The angle can also be read in Section 12.1 Guideline Settings.

b) Tighten the screw (1).

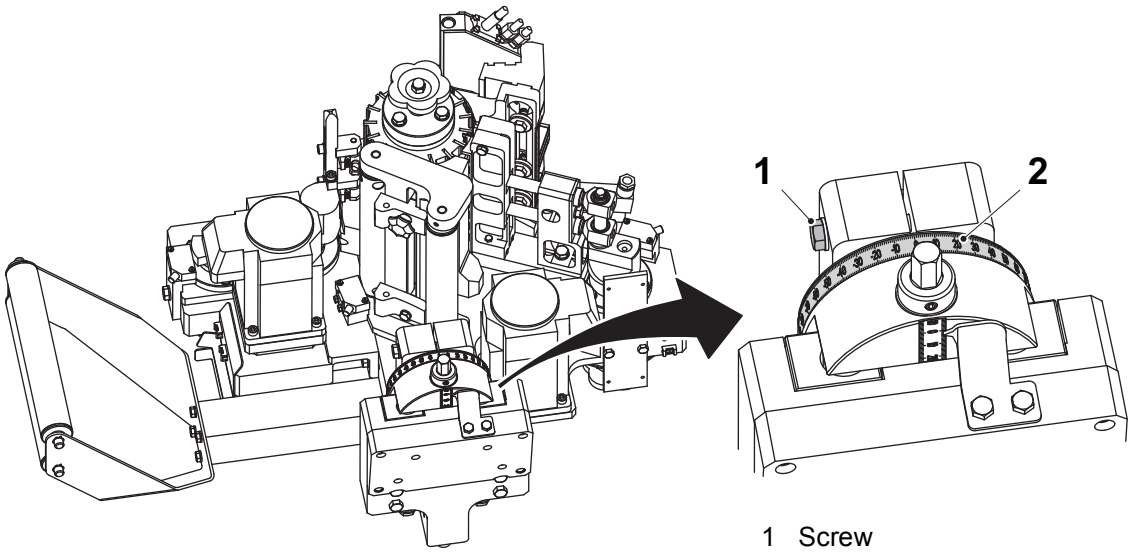

1 Screw
2 Scale

2-3 Applicator Unit - Set Height and Straw Position (TB/ TBA)

Machine Status	Main Switch OFF Air Valve OFF
SPC Reference	663301

Note! This is only a guideline setting. For finer adjustments of the straw height, operate the machine and run packages through the machine. Check the height and adjust accordingly.

a) Set the height of the straw position on the package by turning the adjusting screw (1). Use the scale (2) to set the value, according to table in Section 12.1 Guideline Settings.

b) If possible, set the height of the straw so that the straw foil does not go outside the package bottom.

c) The height distance Y must be the same at the top and at the bottom of the package, see the illustration below.

d) To adjust the horizontal distance X of the straw, use the Straw Position function on the TPOP, see Section 2.8 Setting Menu in the Operation Manual belonging to the machine. The distance X must be the same on both sides of the straw, see the illustration below.

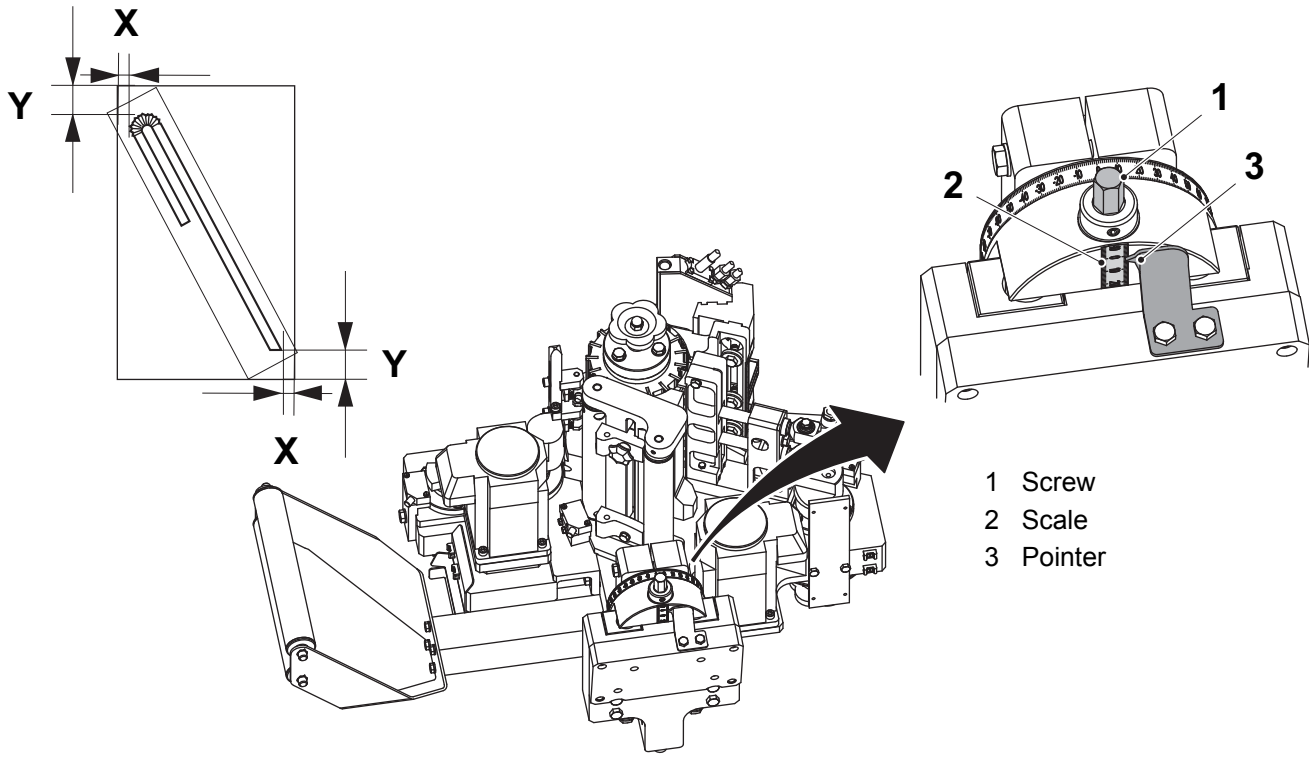

2-4 Applicator Unit - Set Height (TCA)

Machine Status	Main Switch OFF Air valve OFF
SPC Reference	663301

a) Operate the machine and apply some straws for reference.

b) Read the value on the scale (1).

c) Loosen the screws (2).

d) Adjust the height upwards or downwards with the adjusting screw (3).

e) Tighten the screws (2).

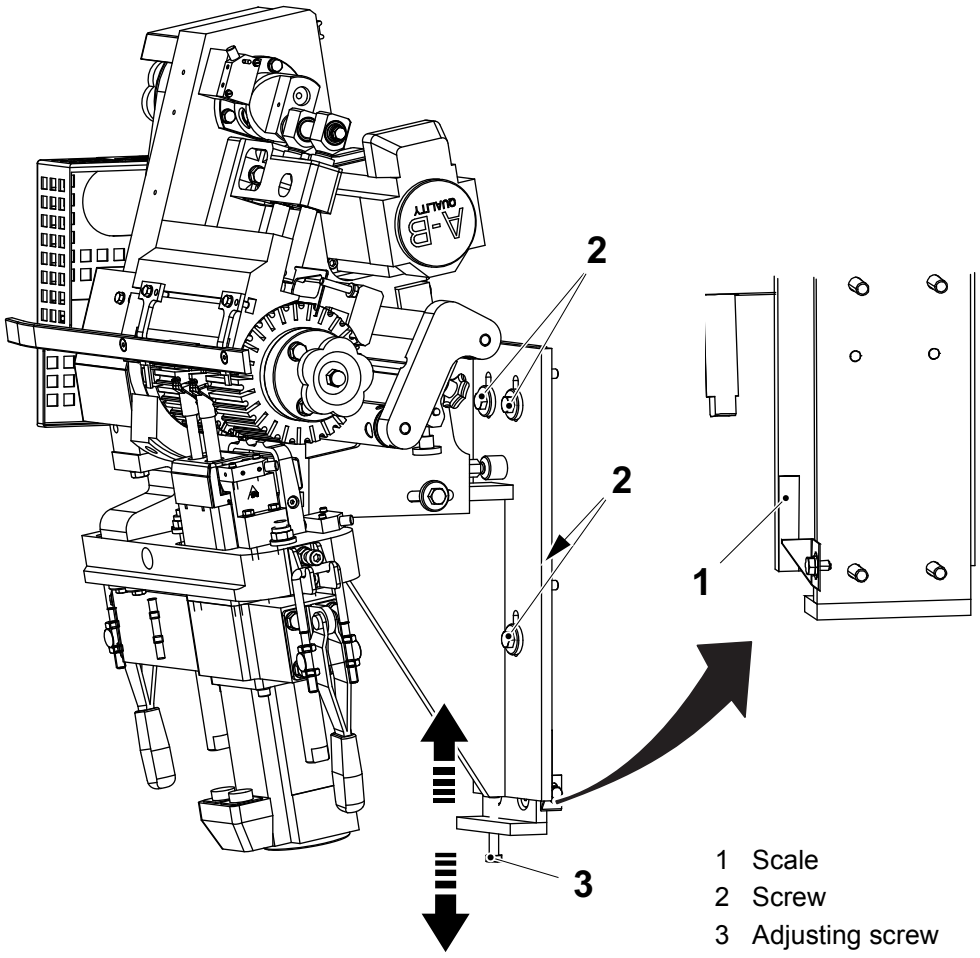

(Cont'd)

(Cont'd)

f) Read the value on the scale (4).

g) Loosen the screws (5).

h) Set the eccentrics (6) in their outer position.

i) Put a package on the conveyor and put a straw between the package and the eccentrics. Set the horizontal depth position by turning the adjusting screw (7). The eccentrics are to press the straw gently against the package, see the illustration below.

j) Tighten the screws (5).

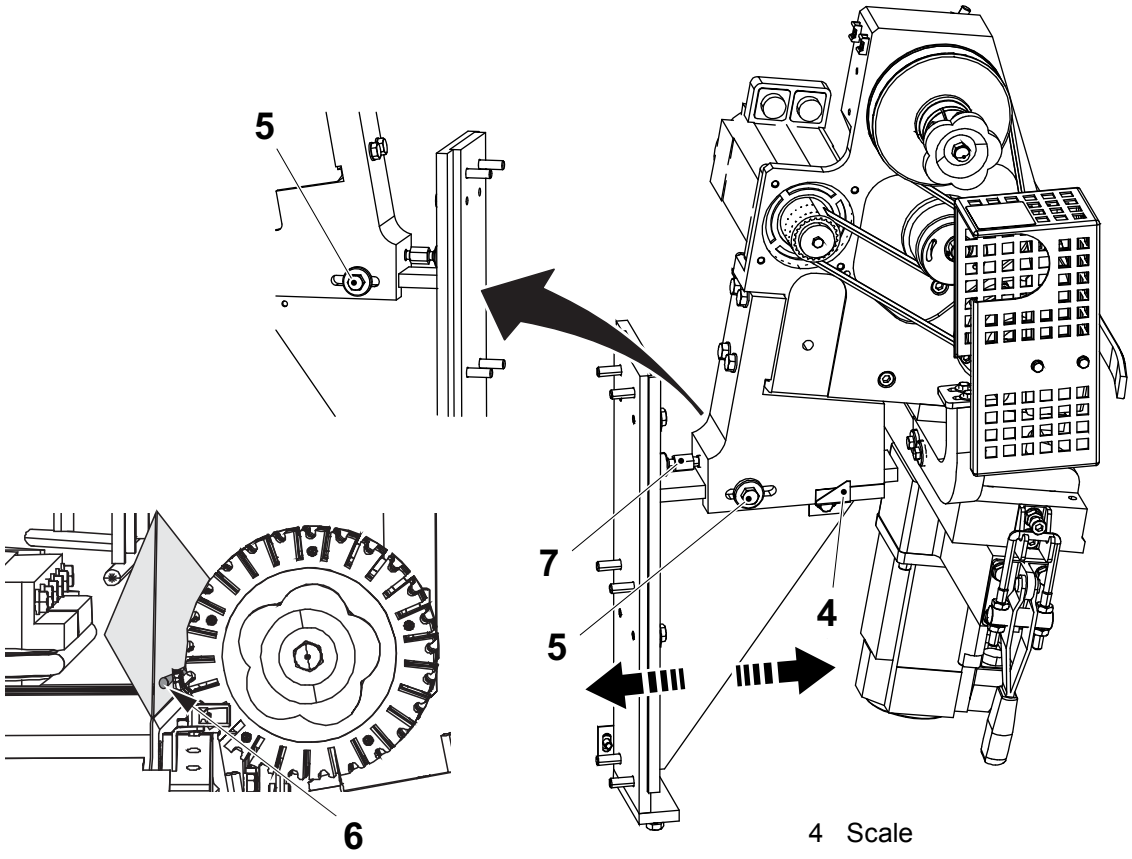

4 Scale
5 Screw
6 Eccentric
7 Adjusting screw

2-5 Applicator Unit - Set (TWA)

Machine Status	Main Switch OFF Air Valve ON
SPC Reference	663301

Height

a) Operate the machine and apply some straws for reference.

b) Loosen the locking handle (1).

c) Loosen the nut (2) and adjust the height with the screws (3) and (4).

d) Set the eccentrics (5) in their outer position.

e) Place a package (6) on the conveyor and check the height. The height is correct when there is just enough space for a straw (7).

f) Tighten the nut (2) and tighten the locking handle (1).

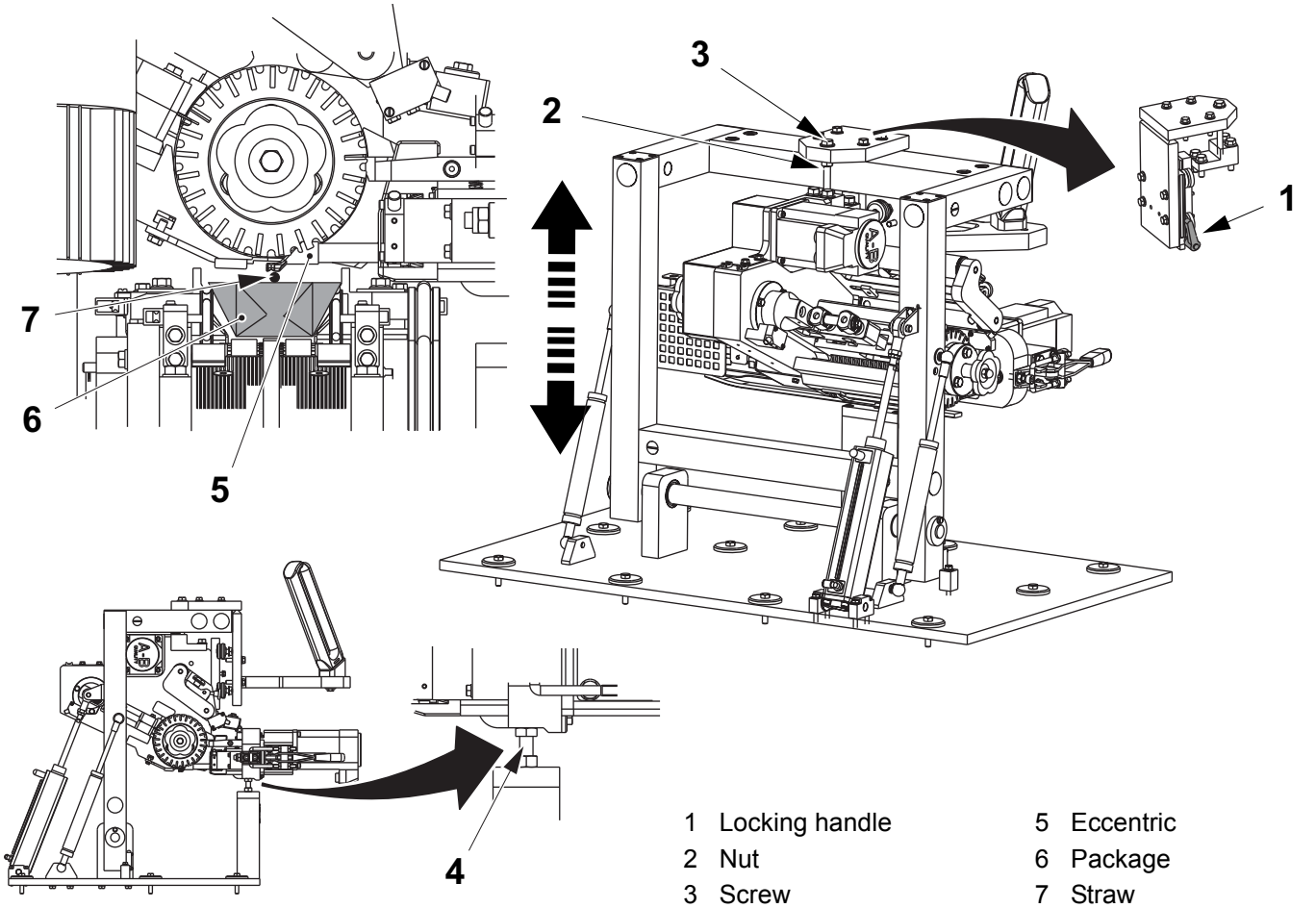

1 Locking handle
2 Nut
3 Screw
4 Screw
5 Eccentric
6 Package
7 Straw

(Cont'd)

(Cont'd)

Sideways position

g) Loosen the screws (8) to set the sideways position of the straw.

h) For the correct position of each straw type, see the illustration below.

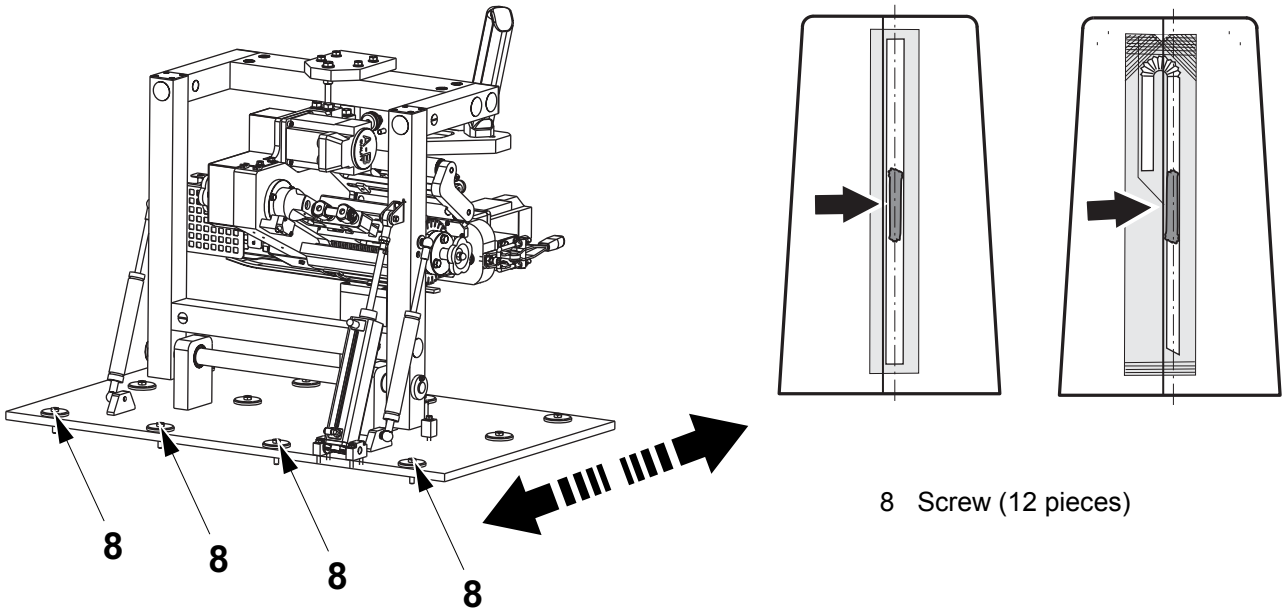

8 Screw (12 pieces)

Inductive sensor

i) Set the inductive sensor (9) to be activated when the lifter (10) is in its upright position.

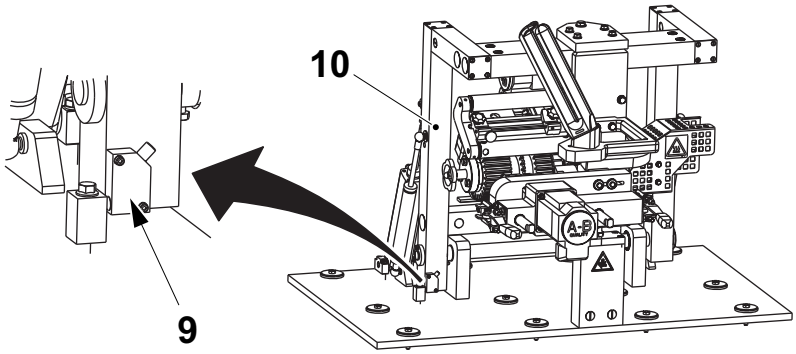

9 Inductive sensor, V40B2060

10 Lifter

2.1 Feed Wheel Unit

2.1-1 Feed Wheel Unit - Check Parts (TB/TBA/TPA)

Machine Status	Main Switch OFF Air Valve OFF
Special Equipment	Template TP No. 2959983
SPC Reference	2929773

WARNING

Burn hazard.

The hotmelt unit can be very hot and there is risk of severe burns. Use caution when working near the hotmelt unit.

a) Turn the bearing housing (1) to move the arms (2) to a position outside the feed wheel slots.

b) Turn the stellar knob (3) until the knife (4) is in its outer position.

c) Turn the stellar knob (5) to the left until the feed wheel (6) is released from the shaft.

d) Press the leaf spring (7) outwards from the feed wheel and pull up the feed wheel.

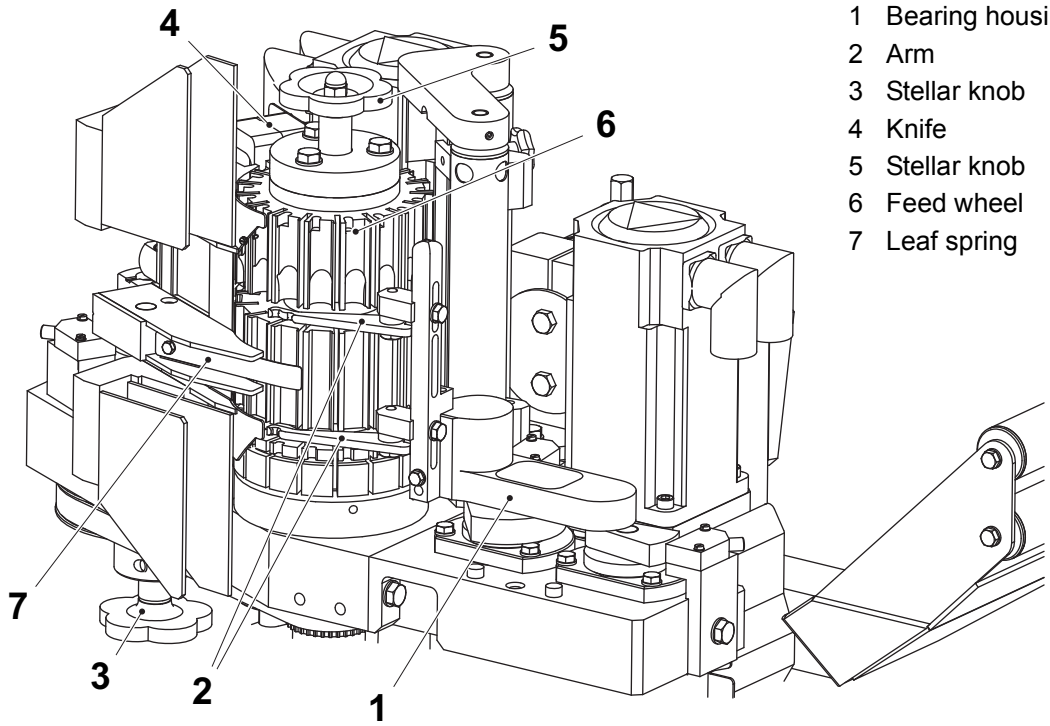

1 Bearing housing
2 Arm
3 Stellar knob
4 Knife
5 Stellar knob
6 Feed wheel
7 Leaf spring

(Cont'd)

(Cont'd)

e) Cut the ladderband.

f) Loosen the screw (8) and rotate the applicator unit approximately 45°, or more if possible, to the left.

g) Tighten the screw (8) again.

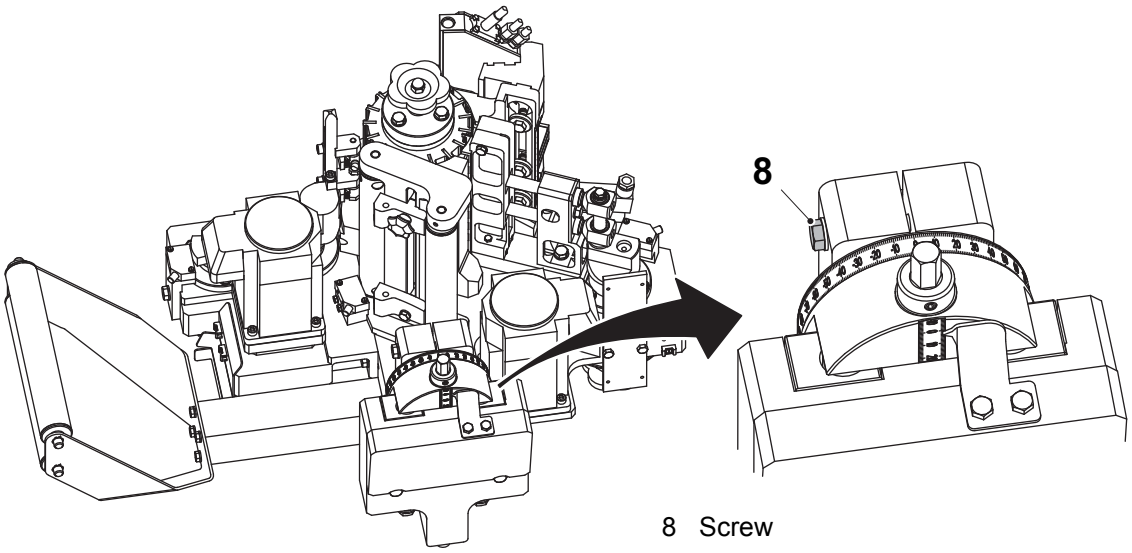

8 Screw

(Cont'd)

(Cont'd)

h) Remove the screws (12) and (13), and remove the guide (14).

i) Assemble the template (9) and remove the screw (10).

j) Remove the template. Remove the screw (11).

CAUTION

Risk of personal injury.

The knife is very sharp. Be careful when working near the knife.

k) Remove the knife holding unit (15).

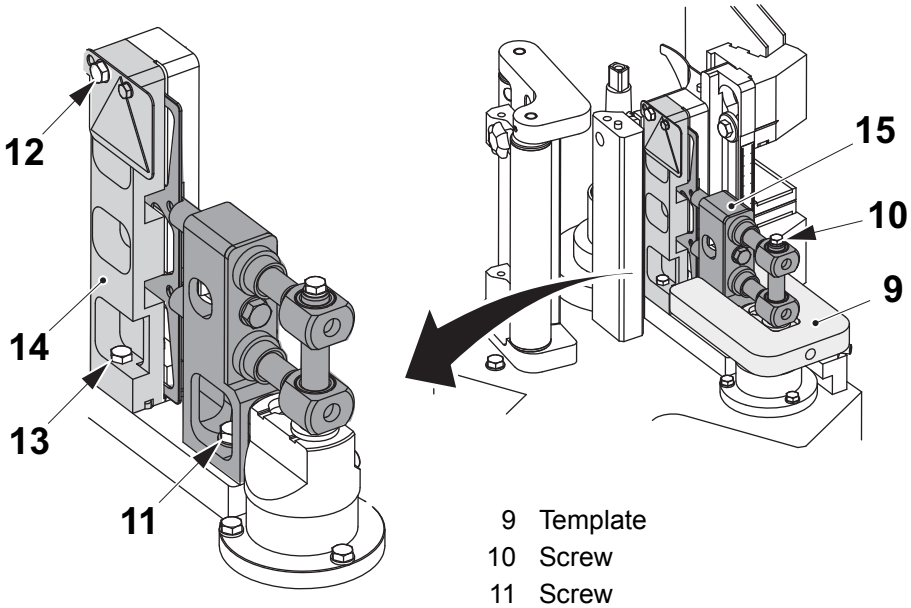

9 Template
10 Screw
11 Screw
12 Screw
13 Screw
14 Guide
15 Knife holding unit

(Cont'd)

(Cont'd)

l) Remove the screw (16) and the guide console (17).

m) Remove the screw (18) and the guide (19)

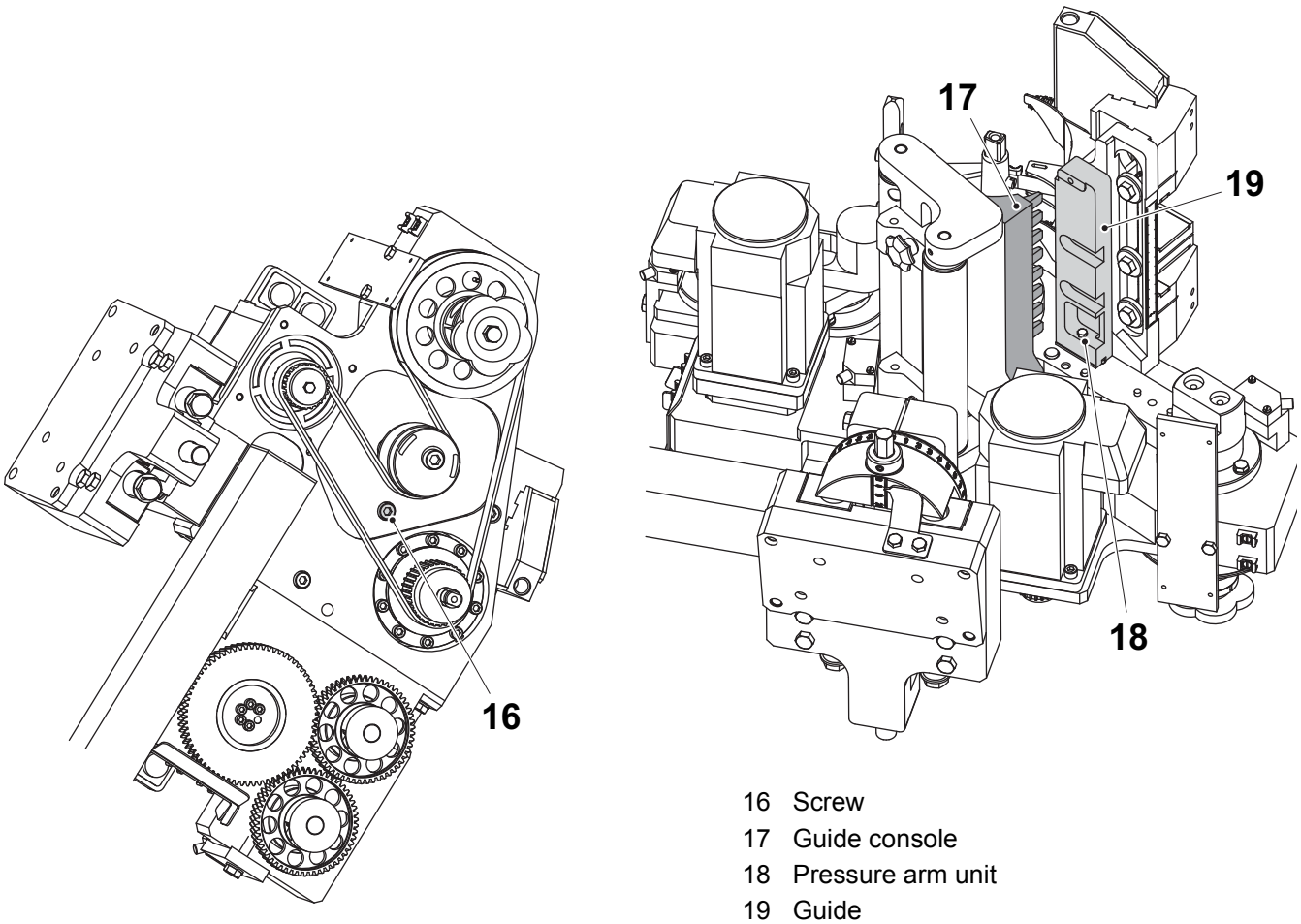

16 Screw
17 Guide console
18 Pressure arm unit
19 Guide

(Cont'd)

(Cont'd)

n) Remove the screws (20) and the pressure arm unit (21).

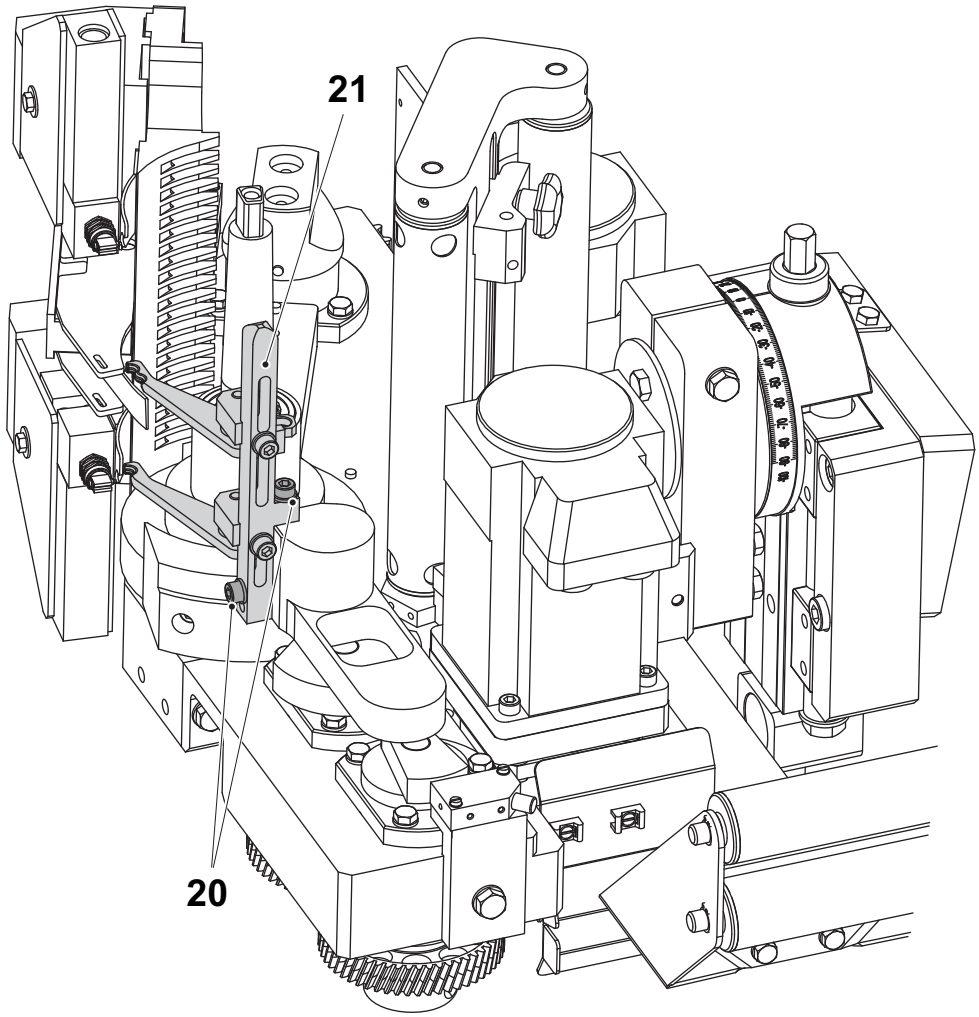

20 Screw
21 Pressure arm unit

(Cont'd)

(Cont'd)

o) Remove the retaining ring (22) and the axle bolt (23).

p) Pull up the arm (24) from the shaft (25).

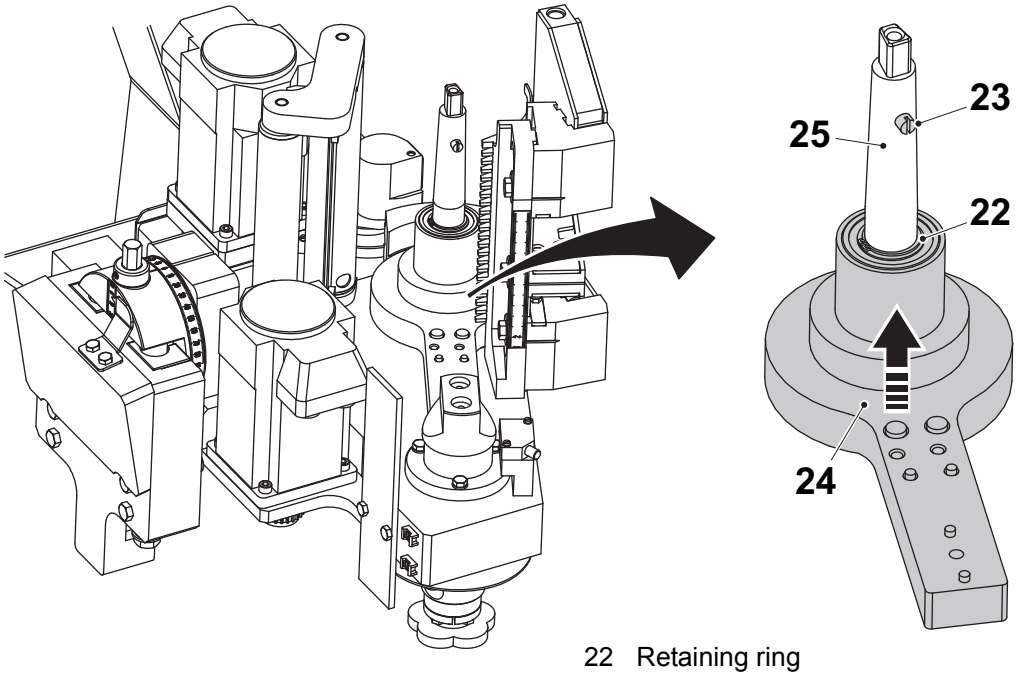

22 Retaining ring
23 Axle bolt
24 Arm
25 Shaft

q) Check the ball bearings (26) and (27) for wear or damage. Change if necessary, see Procedure 2.1-4 Feed Wheel Unit - Change Parts.

r) Assemble in the reverse order.

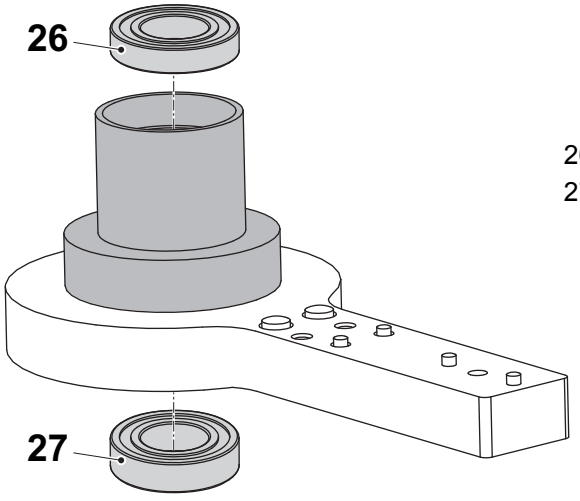

26 Ball bearing
27 Ball bearing

2.1-2 Feed Wheel Unit - Check Parts (TCA)

Machine Status	Main Switch OFF Air Valve OFF
Special Equipment	Template TP No. 2959983
SPC Reference	2929773

a) Lower the pressure unit (1) by turning the quick-locks (2) upwards.

b) Remove the screw (3).

c) Lift up the cutting unit and remove the screws (4). Remove the knife (5).

CAUTION

Risk of personal injury.

The knife is very sharp. Be careful when working near the knife.

d) Turn the stellar knob (6) to the left until the feed wheel unit (7) is released from the shaft.

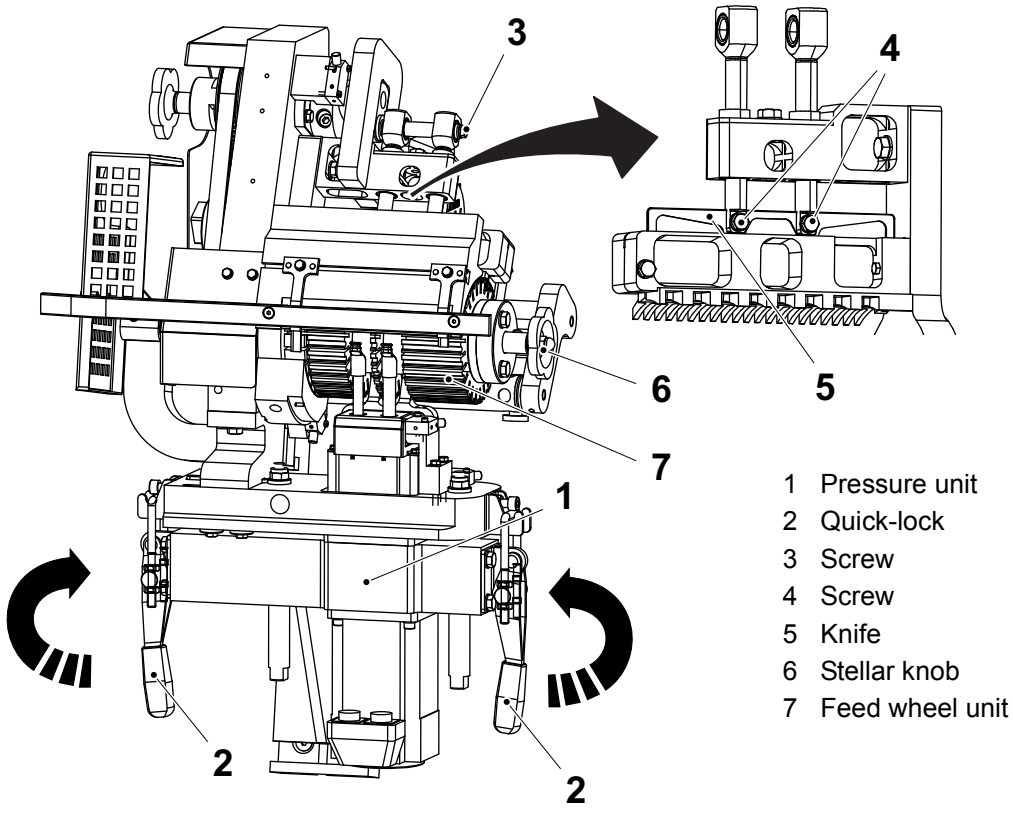

1 Pressure unit
2 Quick-lock
3 Screw
4 Screw
5 Knife
6 Stellar knob
7 Feed wheel unit

(Cont'd)

(Cont'd)

e) Remove the screw (8) and remove the guide (9).

f) Remove the hotmelt gun unit by loosening the screws (10).

WARNING

Burn hazard.

The hotmelt gun and the cover are very hot. Be careful when working near the gun and the cover.

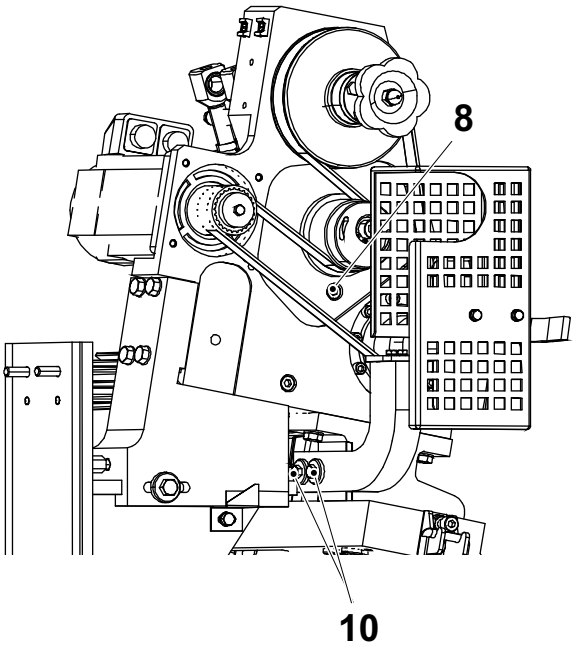

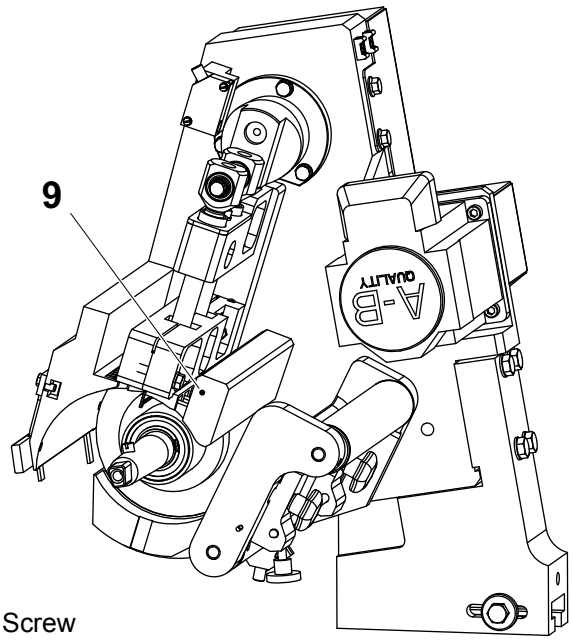

8 Screw
9 Guide
10 Screw

(Cont'd)

(Cont'd)

g) Loosen the screw (11).

h) Turn the belt tensioner 3/4 of a revolution with the hook spanner (12) to release the belt tension. Tighten the screw (11) again.

i) Turn the shaft (13) and check for play in the ball bearings. Change if necessary, see item b) to g) in Procedure 2.1-4 Feed Wheel Unit - Change Parts.

j) Check the axle bolt (14), and the retaining ring (15) for wear or damage. Change if necessary, see item b) to g) in Procedure 2.1-4 Feed Wheel Unit - Change Parts.

k) Assemble in the reverse order.

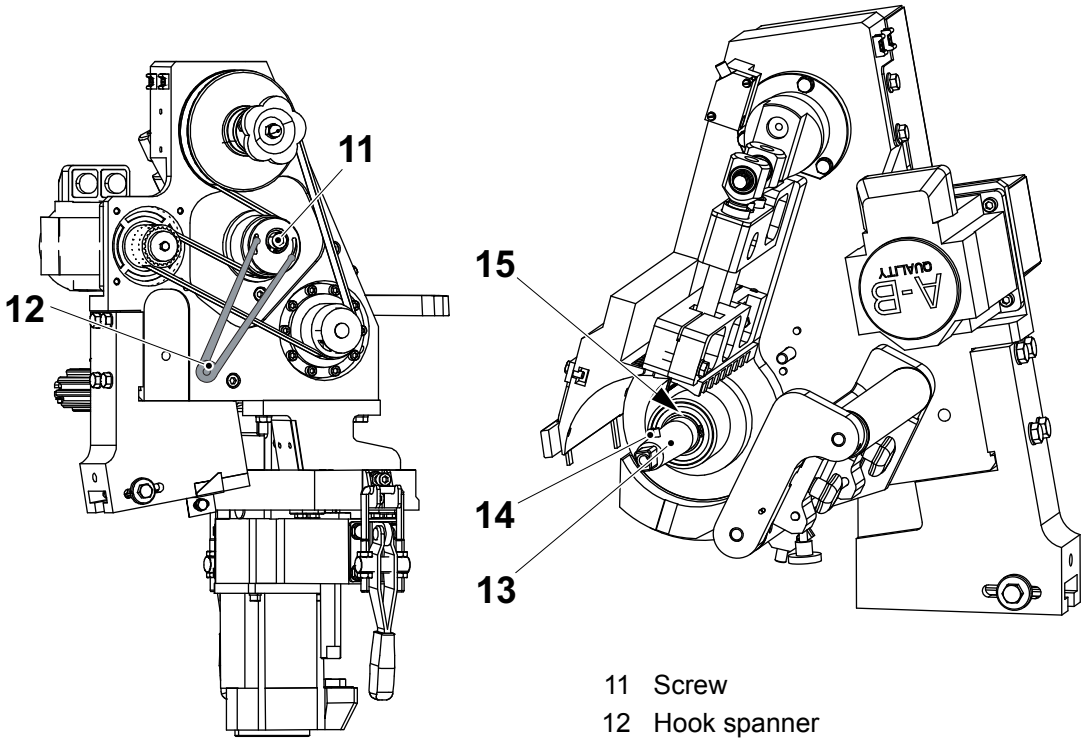

11 Screw
12 Hook spanner
13 Shaft
14 Axle bolt
15 Retaining ring

2.1-3 Feed Wheel Unit - Check Parts (TWA)

Machine Status	Main Switch OFF Air Valve OFF
Special Equipment	Hook Spanner TP No. 90243-0164
SPC Reference	2929773

a) Release the pressure unit (1) by turning the quick-locks (2) forward.

b) Remove the screw (3).

c) Remove the screw (4) and the bracket (5).

CAUTION

Risk of personal injury!

The knife is very sharp. Be careful when working near the knife.

d) Turn the stellar knob (6) to the left until the feed wheel unit (7) is released from the shaft.

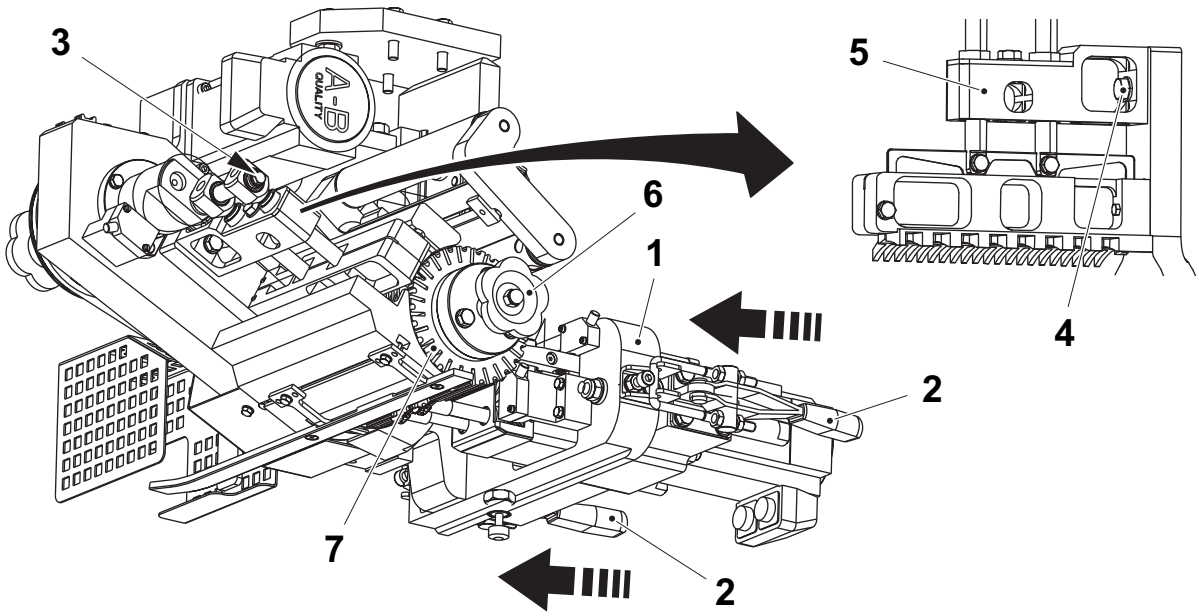

1 Pressure unit
2 Quick-lock
3 Screw
4 Screw
5 Bracket
6 Stellar knob
7 Feed wheel unit

(Cont'd)

(Cont'd)

e) Remove the hotmelt gun by removing the screws (8).

WARNING
Burn hazard.
The hotmelt gun and the gun cover are very hot. Be careful when working near the gun and the cover.

CAUTION
Risk of damage to the equipment.
The nozzle is easily damaged. Handle the nozzle with care when removing the gun module.

f) Remove the covers (9) and (10) by loosening the screws (11) and (12).

g) Remove the screw (13).

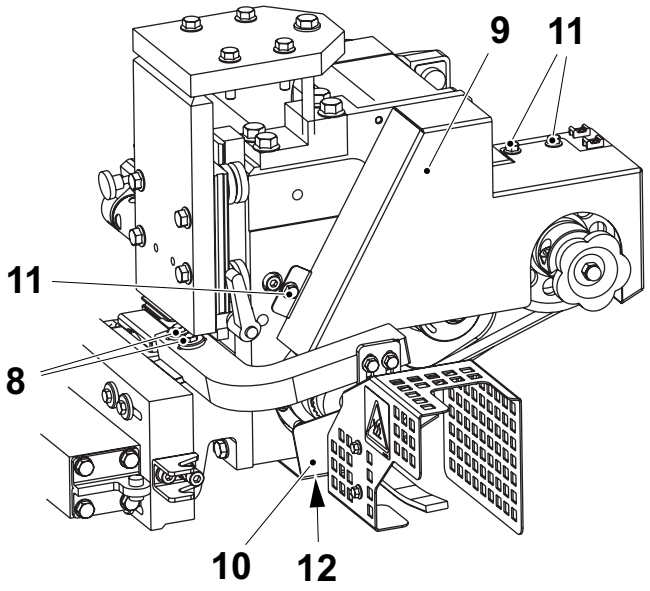

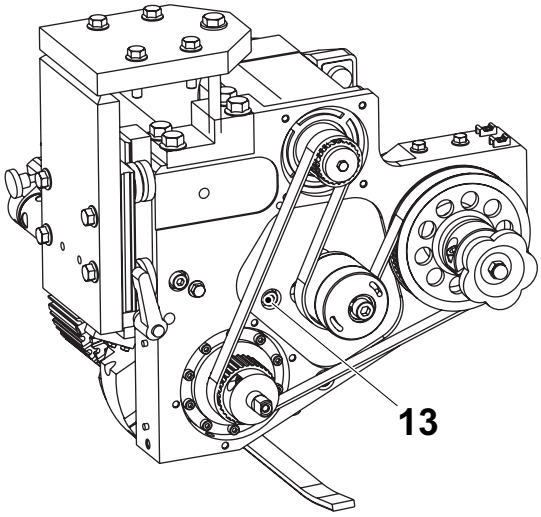

8 Screw
9 Cover
10 Cover
11 Screw
12 Screw
13 Screw

(Cont'd)

(Cont'd)

h) Loosen the screw (14).

i) Turn the belt tensioner 3/4 of a revolution with the hook spanner (15) to release the belt tension. Tighten the screw (14) again.

j) Turn the shaft (16) and check for play in the bearings. Change if necessary, see Procedure 2.1-4 Feed Wheel Unit - Change Parts.

k) Check the axle bolt (17) and the retaining ring (18) for wear or damage. Change if necessary, see procedure 2.1-4 Feed Wheel Unit - Change Parts.

l) Assemble in reverse order.

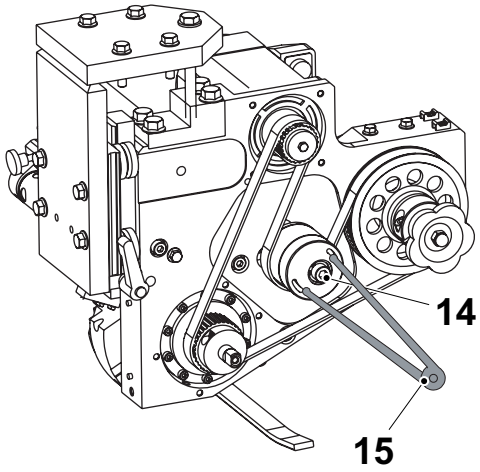

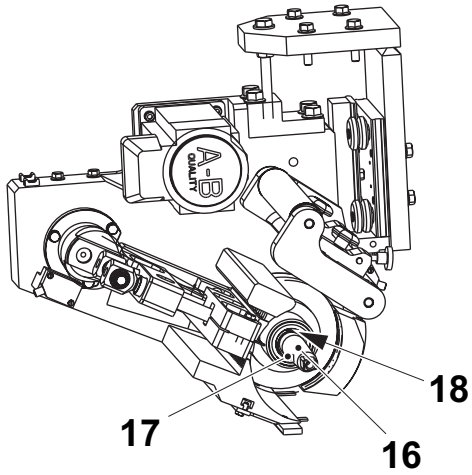

14 Screw
15 Hook spanner
16 Shaft
17 Axle bolt
18 Retaining ring

2.1-4 Feed Wheel Unit - Change Parts

Machine Status	Main Switch OFF Air Valve OFF
Special Equipment	Template TP No. 2959983
SPC Reference	2929773

a) To change the retaining ring (1), the ball bearings (2), and the axle bolt (3)
   - TB/TBA/TPA: perform item a) to p) in Procedure 2.1-1 Feed Wheel Unit - Check Parts (TB/TBA/TPA).
   - TCA: perform item a) to h) in Procedure 2.1-2 Feed Wheel Unit - Check Parts (TCA).
   - TWA: perform item a) to i) in Procedure 2.1-3 Feed Wheel Unit - Check Parts (TWA).

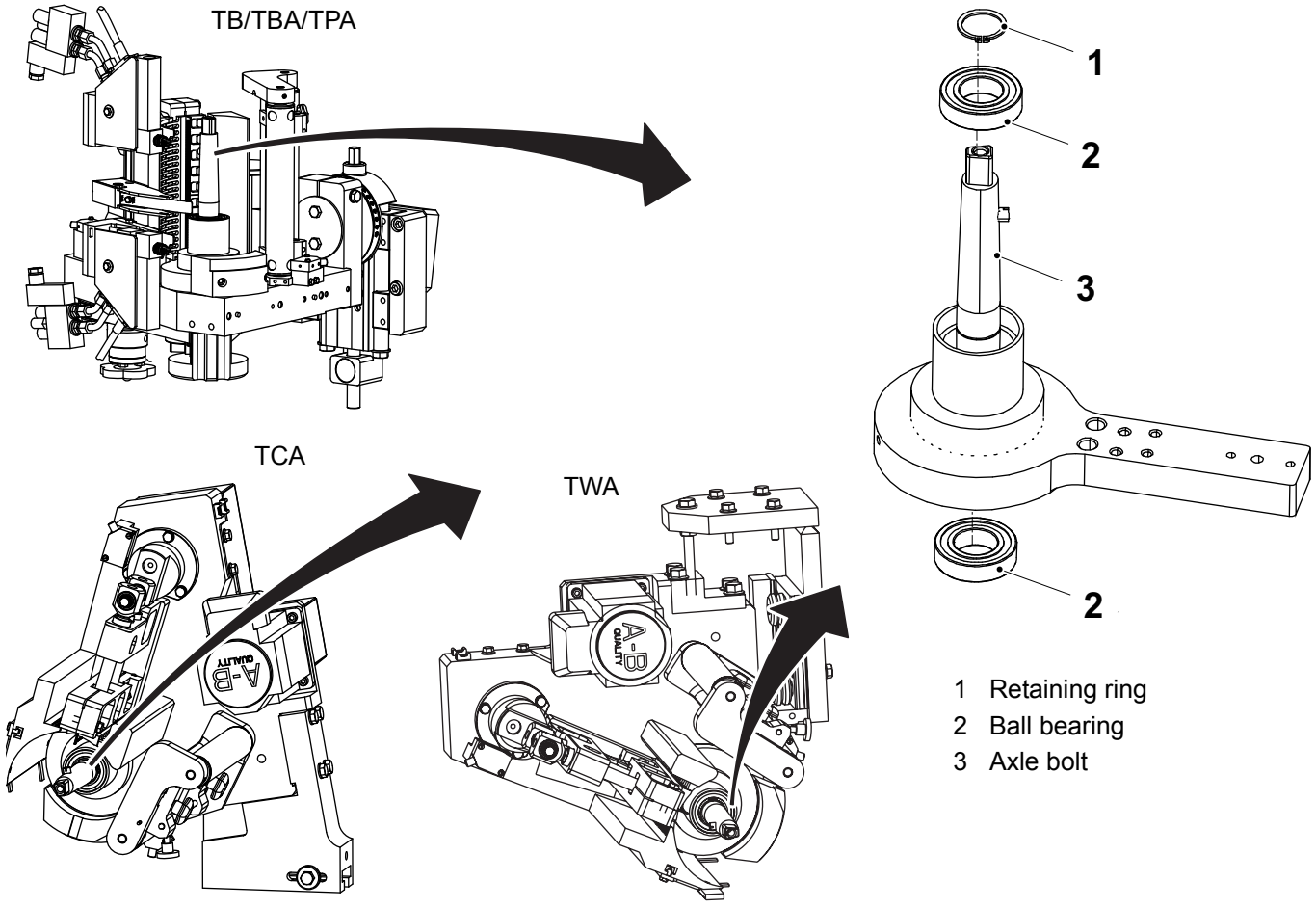

1 Retaining ring
2 Ball bearing
3 Axle bolt

(Cont'd)

(Cont'd)

CAUTION
Risk of personal injury.
The knife is very sharp. Be careful when working near the knife.

b) For TCA/TWA: Remove the screw (4) and the cutting unit (5).

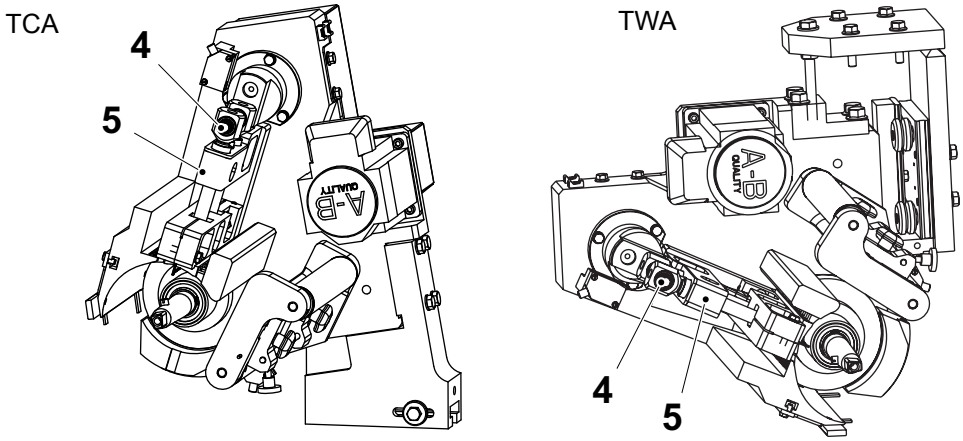

4 Screw
5 Cutting unit

c) For TWA: Remove the screws (6) and (7).

d) For TWA: Remove the ladderband guide (8) and the guide console (9).

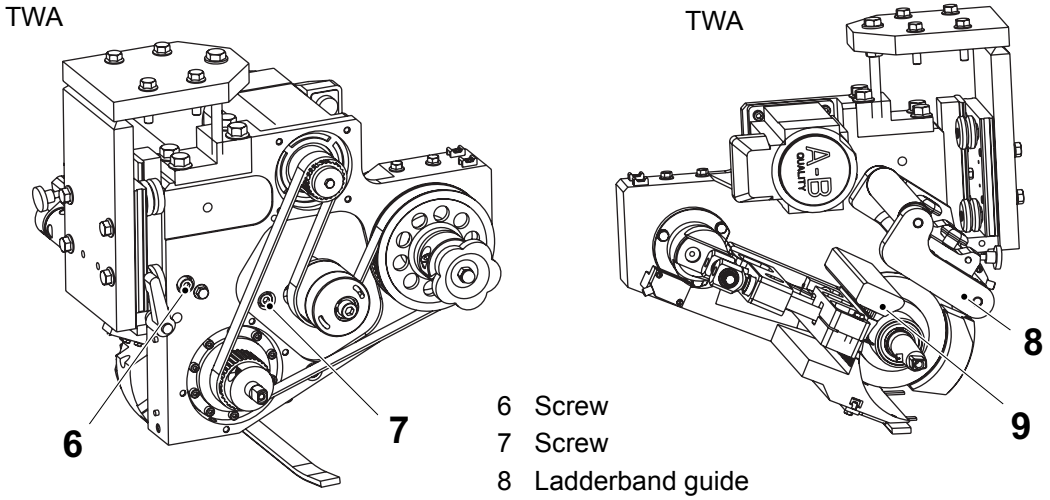

6 Screw
7 Screw
8 Ladderband guide
9 Guide console

(Cont'd)

(Cont'd)

e) For TWA: Remove the screws (10) and (11) and remove the ladderband guides (12) and (13).

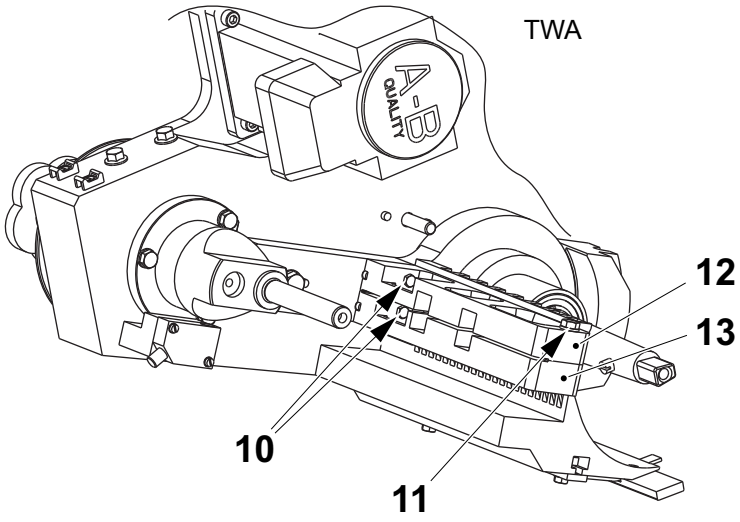

10 Screw
11 Screw
12 Ladderband guide
13 Ladderband guide

f) For TWA: Remove the screw (14) to the guide console (15).

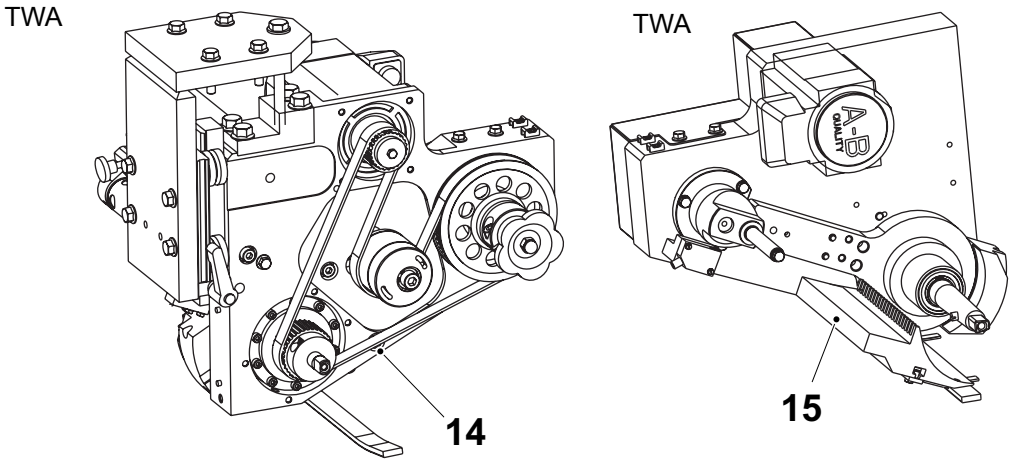

14 Screw
15 Guide console

(Cont'd)

(Cont'd)

g) Change the retaining ring (1), and the axle bolt (3) if necessary.
h) Use a puller to pull out the ball bearings (2).
i) Press in the new ball bearing.
j) Assemble in the reverse order.

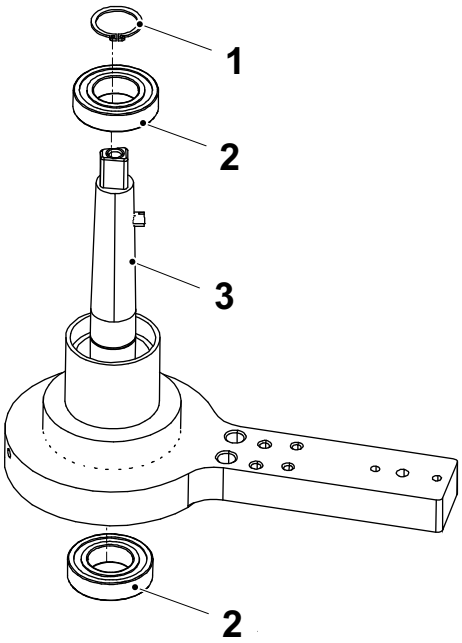

1 Retaining ring
2 Ball bearing
3 Axle bolt

2.1-5 Feed Wheel Unit - Set

Machine Status	Main Switch OFF Air Valve OFF
Special Equipment	Template TP No. 2959983
SPC Reference	2929773

a) Loosen the screws (1).

b) Turn the stellar knob (2) in order to set the knife (3) into the feed wheel slot. If the knife does not fit in the feed wheel slot, turn the feed wheel (4) until the knife fits.

c) Fit the template (5).

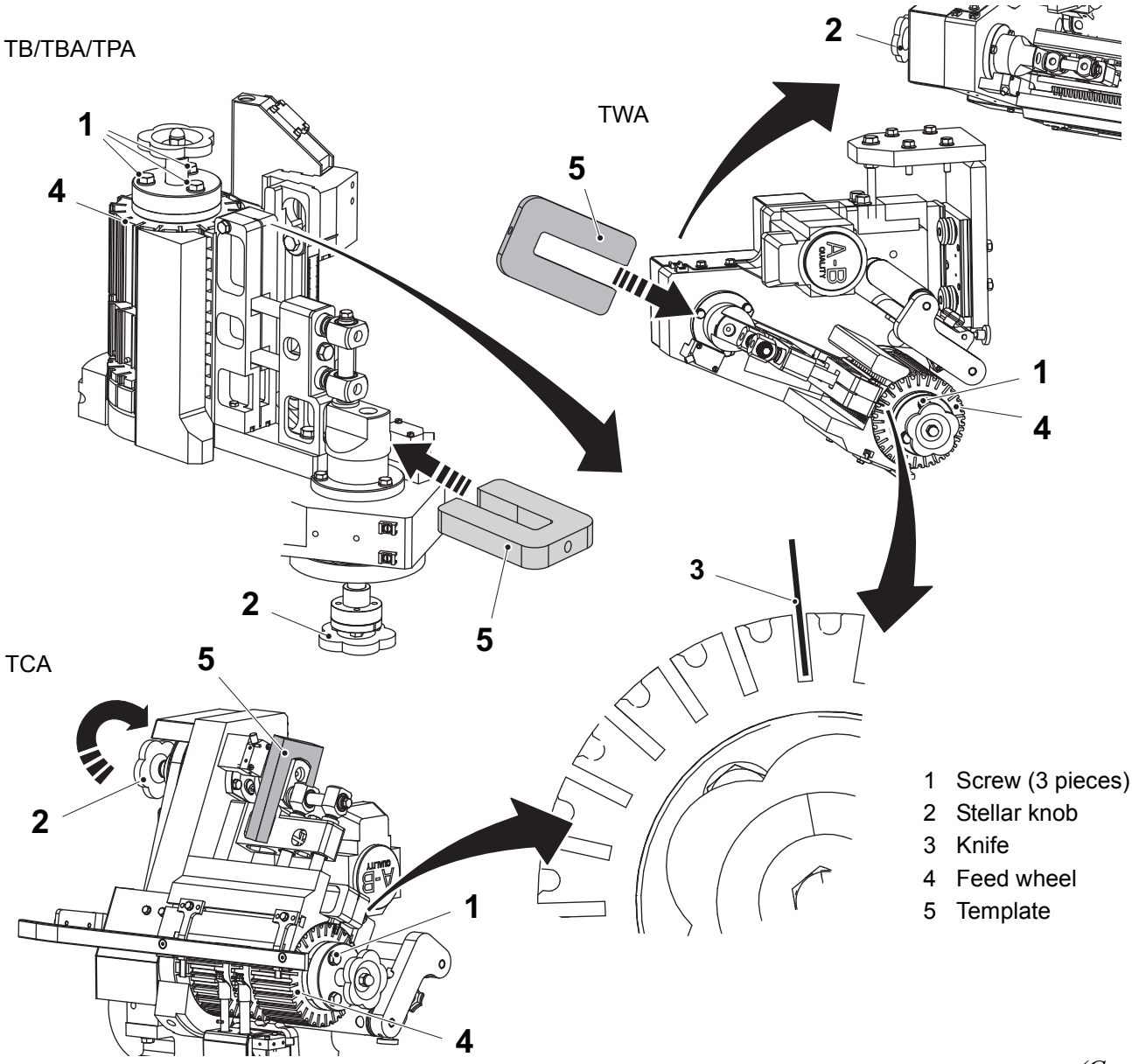

(Cont'd)

(Cont'd)

d) Adjust the feed wheel so that the knife (3) is in the centre of the feed wheel slot.

e) Tighten the screws (1).

f) Remove the template (5).

g) Turn the stellar knob (2). Check that the knife moves without touching the slot edges.

h) Set the pick position, see Procedure 7.2.2-2 Maintenance - Set Pick Position (TB/TBA/TPA) for TB/TBA/TPA or Procedure 7.2.2-3 Maintenance - Set Pick Position (TCA/TWA) for TCA/TWA.

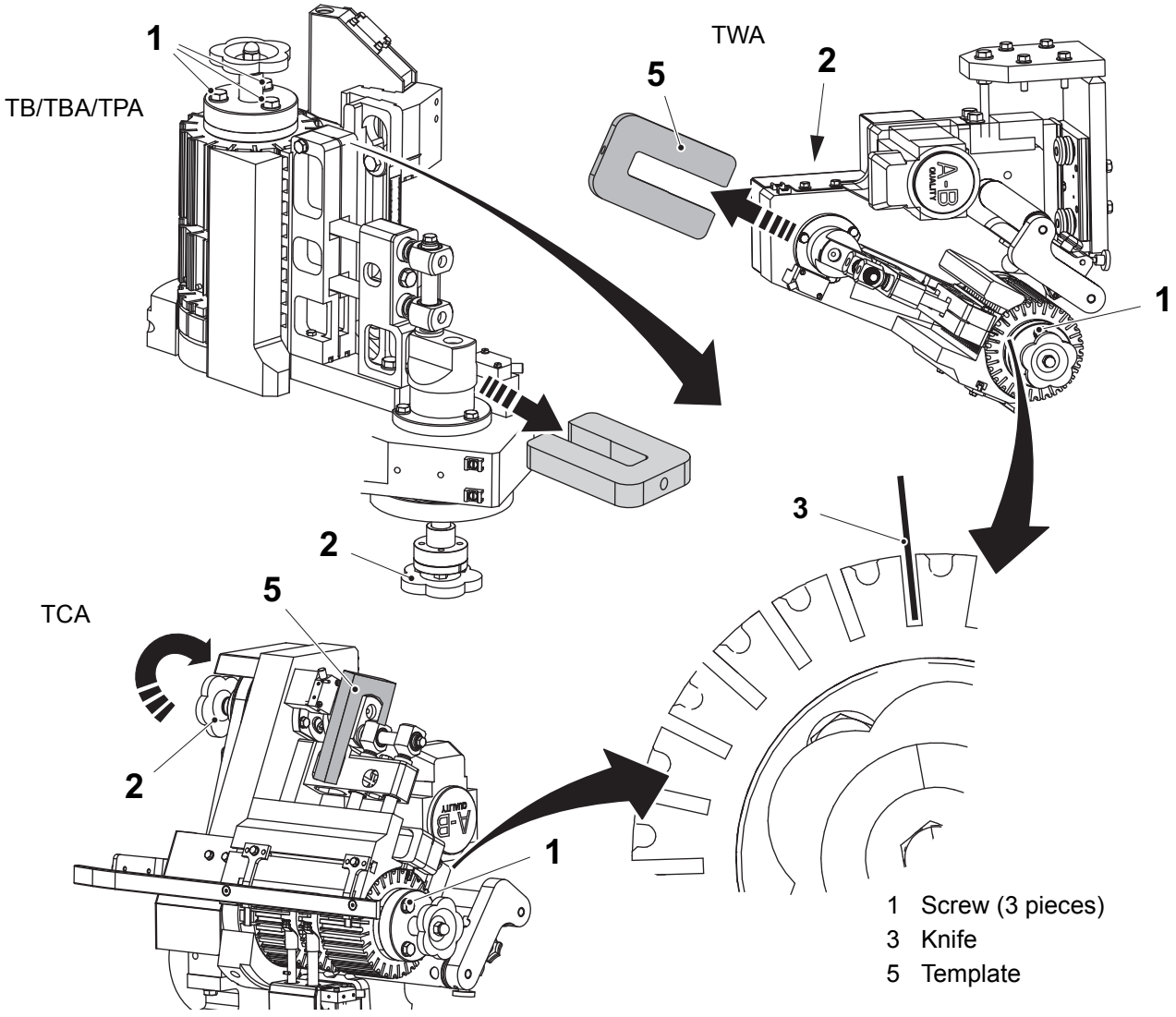

2.1.1 Feed Wheel

2.1.1-1 Feed Wheel - Change (TB/TBA/TPA)

Machine Status	Main Switch OFF Air Valve OFF
SPC Reference	2829443

Note! The illustrations show how to set the TB/TBA variant. The procedure is the same for TPA.

a) Turn the bearing housing (1) to move the pressure arms (2) to a position outside the feed wheel slots.

b) Turn the stellar knob (3) until the knife (4) is in its outer position.

c) Fit the template (5)

d) Loosen the screws (6).

e) Turn the stellar knob (7) to the left until the feed wheel (8) is released from the shaft.

f) Press the leaf spring (9) outwards from the wheel and pull up the feed wheel.

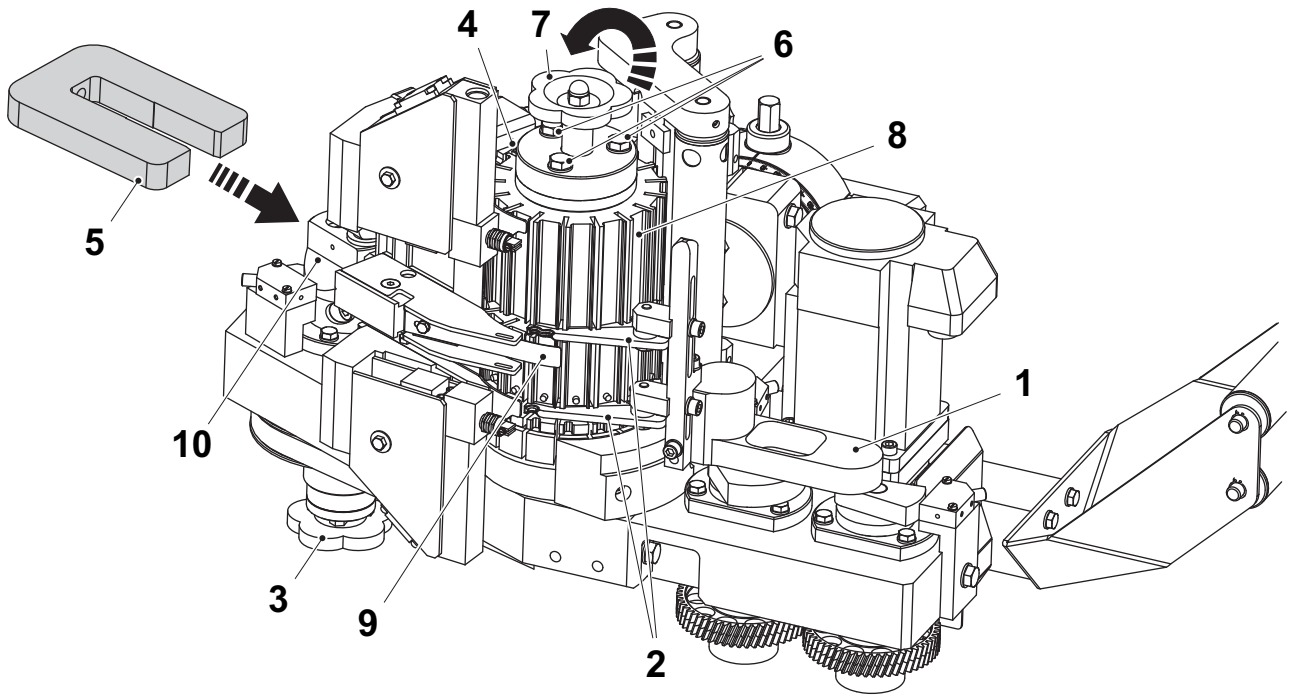

1 Bearing housing
2 Pressure arm
3 Stellar knob
4 Knife
5 Template
6 Screw
7 Stellar knob
8 Feed wheel
9 Leaf spring

(Cont'd)

(Cont'd)

g) Remove the screws (6) and pull out the centre parts from the feed wheel.

h) Lift the centre parts into the new feed wheel and fit the screws (6) in position. Tighten the screws loosely by hand.

i) Lift the feed wheel unit back into the machine.

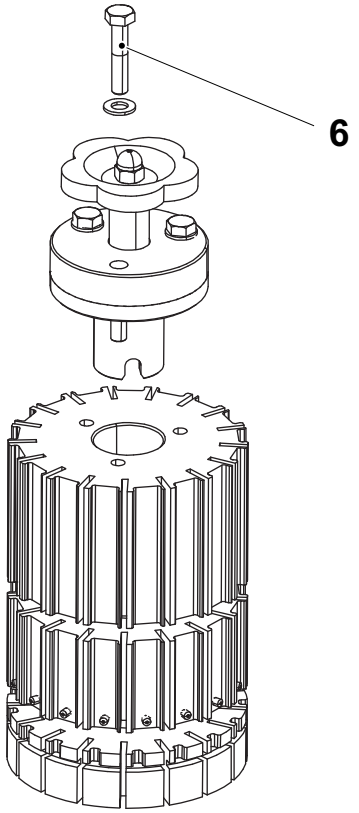

6 Screw (3 pieces)

(Cont'd)

(Cont'd)

j) Tighten the stellar knob (7) until the feed wheel (8) fits in its correct position.

k) Adjust the feed wheel so that the knife (4) is in the centre of the slot.

l) Fit the template (5).

m) Tighten the screws (6) and remove the template (5).

n) Turn the feed wheel by hand to check that the knife moves without touching the slot edges. Use the stellar knob (3).

o) Adjust the pressure arms (2), see Section 2.2-1 Cutting Unit - Check Parts.

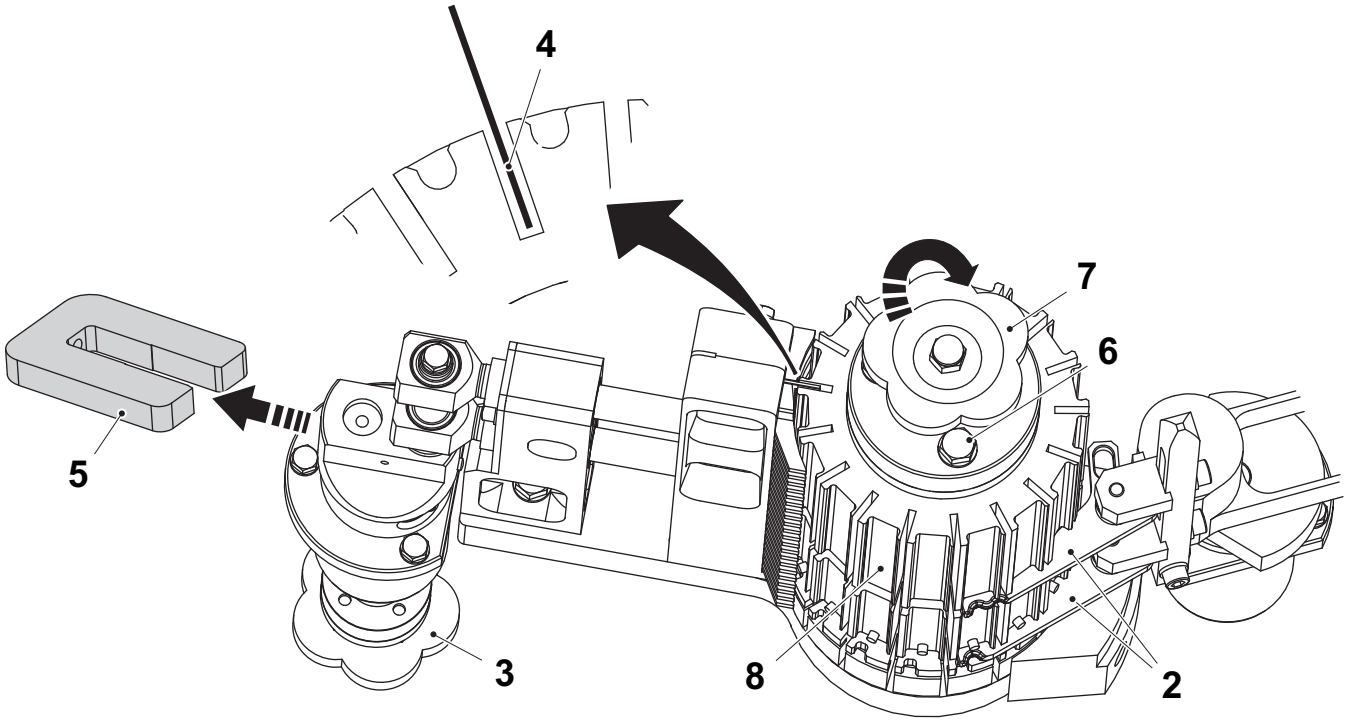

2 Pressure arm
3 Stellar knob
4 Knife
5 Template
6 Screw (3 pieces)
7 Stellar knob
8 Feed wheel

2.1.1-2 Feed Wheel - Change (TCA/TWA)

Machine Status	Main Switch OFF Air Valve OFF
Special Equipment	Template TP No. 2959983
SPC Reference	2829443

a) Release the pressure unit (1) by pulling the quick-locks (2).

b) Turn the stellar knob (3) until the knife (4) is in its outer position.

c) Turn the stellar knob (5) to the left until the feed wheel unit (6) is released from the shaft.

d) Change the feed wheel unit.

e) Assemble in the reverse order.

f) Turn the quick-locks (2) back to tighten the pressure unit.

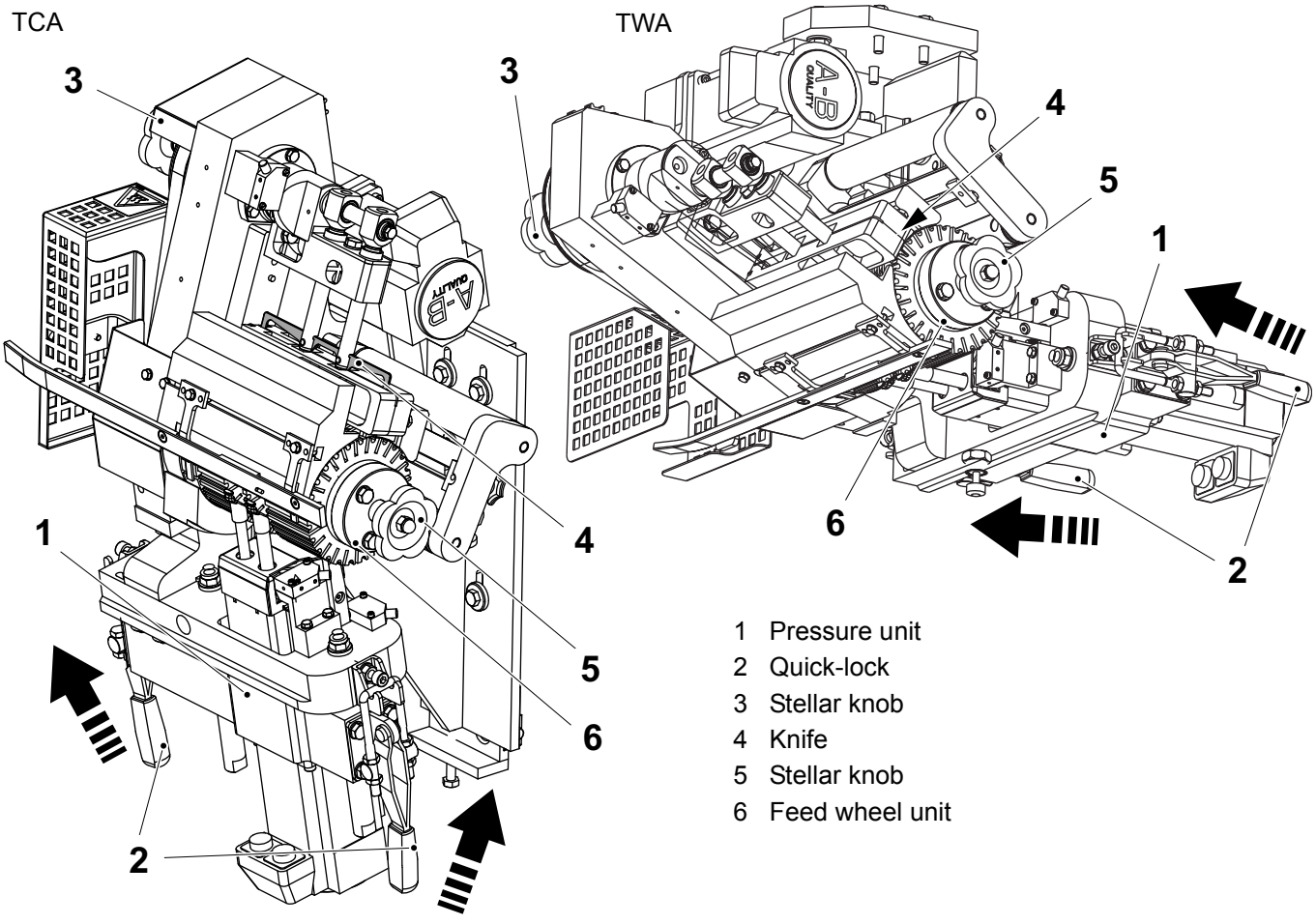

1 Pressure unit
2 Quick-lock
3 Stellar knob
4 Knife
5 Stellar knob
6 Feed wheel unit

2.2 Cutting Unit

2.2-1 Cutting Unit - Check Parts

Machine Status	Main Switch OFF Air Valve OFF
SPC Reference	2829431

CAUTION

Risk of personal injury.

The knife is very sharp. Be careful when working near the knife.

a) Check that the knife cuts the straws satisfactorily. If not, turn the stellar knob (1) until the knife (2) is in its outer position.

b) Assemble the template (3).

c) Remove the screw (4).

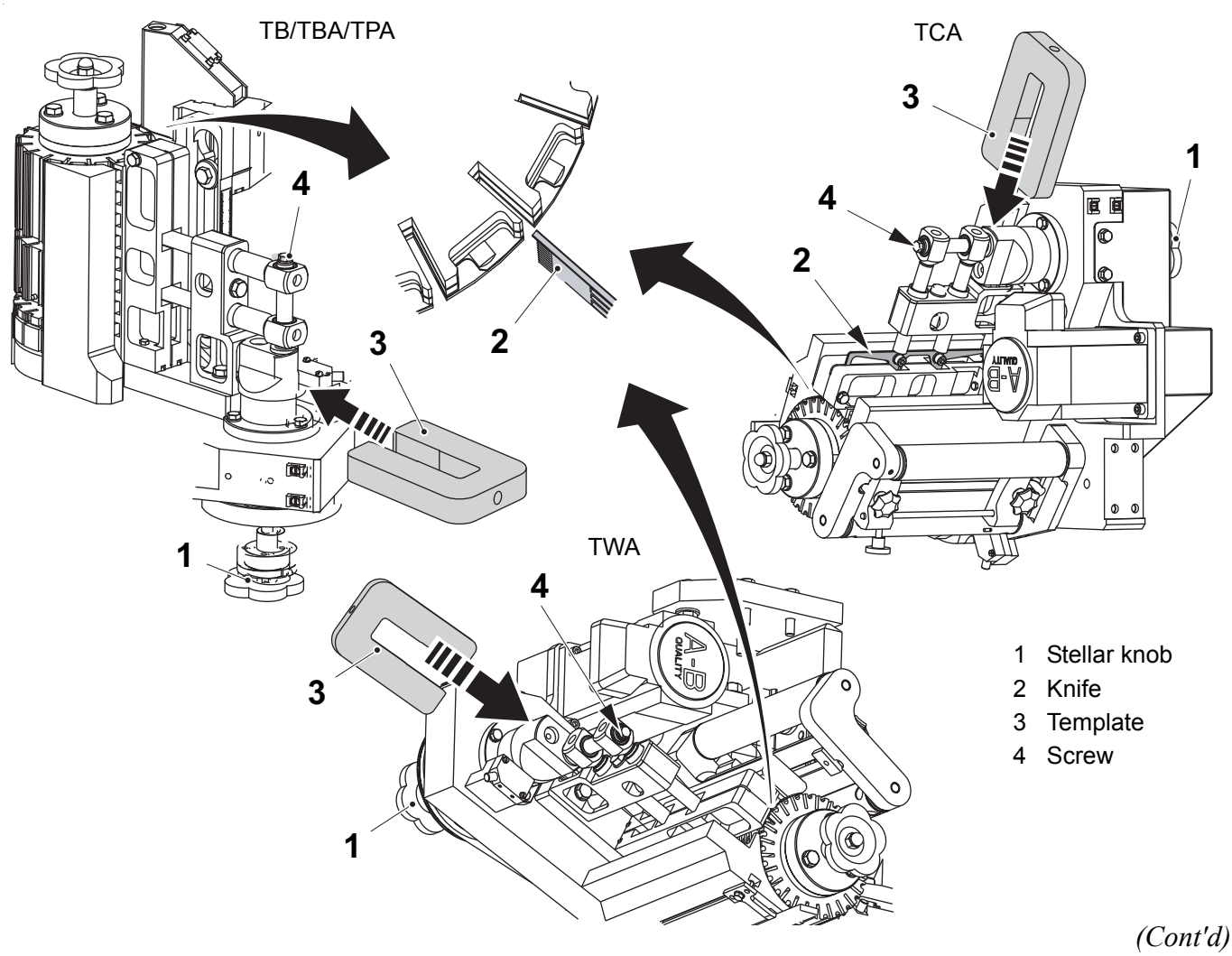

(Cont'd)

(Cont'd)

d) Remove the template (3) and remove the screw (5).
e) Remove the knife holder (6).
f) Check the knife (2) for wear or damage. Change if necessary.
g) Remove the screws (7) and remove the knife.

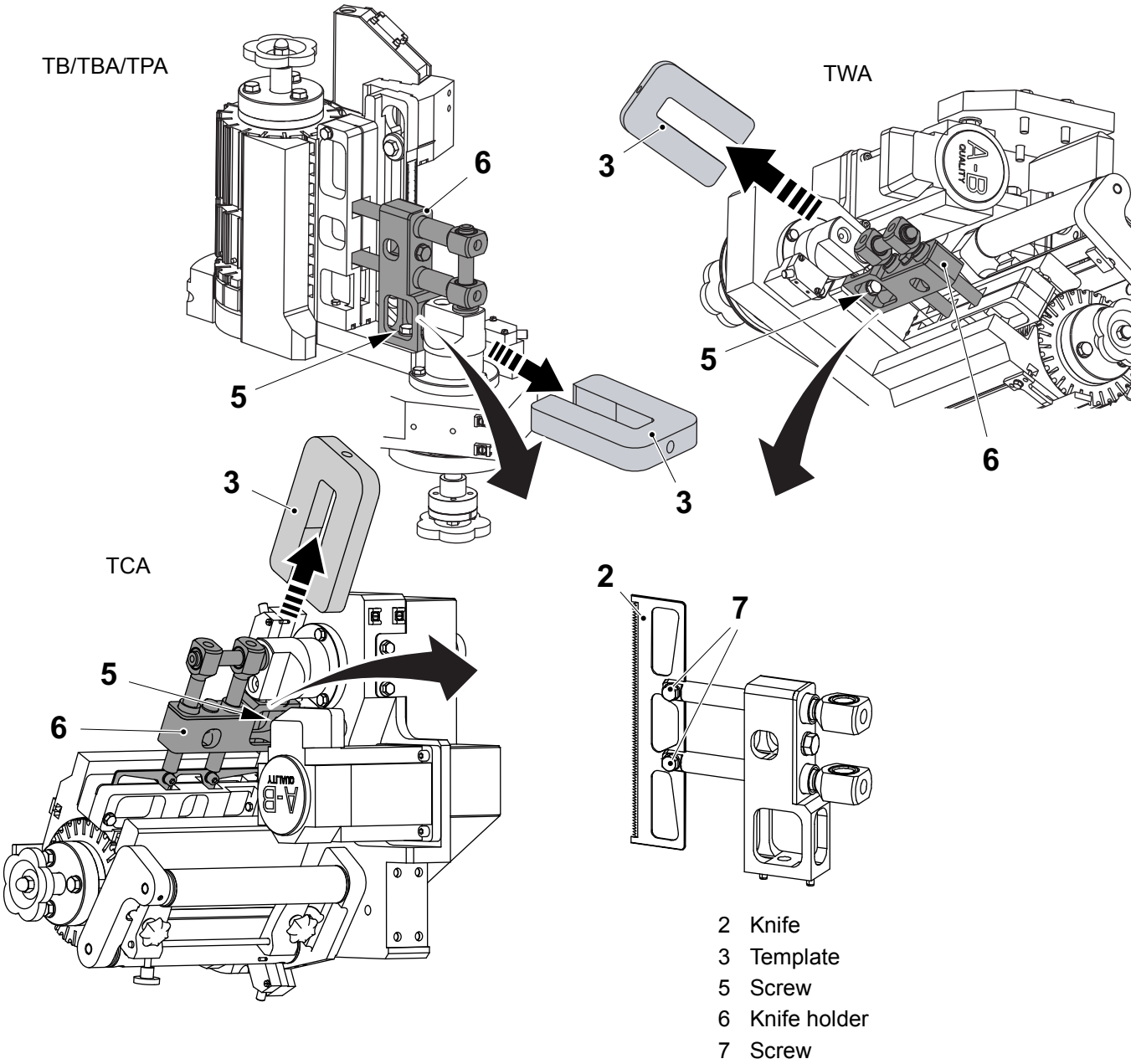

2 Knife
3 Template
5 Screw
6 Knife holder
7 Screw

(Cont'd)

(Cont'd)

h) Remove the screw (8) and the clamping plate (9).

i) Check the bearing bushings (10), the shafts (11) and the guide bushings (12) for wear or damage. Change if necessary. See 2.2-2 Cutting Unit - Change Parts.

j) Assemble in the reverse order.

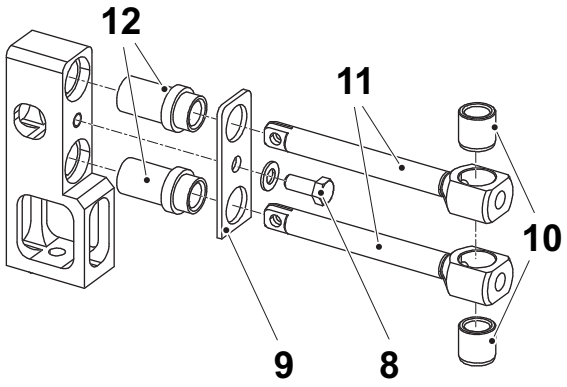

8 Screw
9 Clamping plate
10 Bearing bushing
11 Shaft
12 Guide bushing

2.2-2 Cutting Unit - Change Parts

Machine Status	Main Switch OFF Air Valve OFF
SPC Reference	2829431

CAUTION

Risk of personal injury.

The knife is very sharp. Be careful when working near the knife.

a) Perform item a) to g) in Procedure 2.2-1 Cutting Unit - Check Parts.

b) Remove the shafts (1) from the bracket (2).

c) Remove the screw (3) and the clamping plate (4).

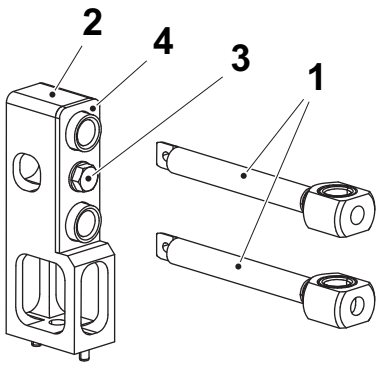

1 Shaft
2 Bracket
3 Screw
4 Clamping plate

d) Press out the guide bushings (5) from the bracket (2).

e) Press out the bearing bushings (6) from the shafts (1).

f) Press in new guide bushings and bearing bushings.

g) Assemble in the reverse order.

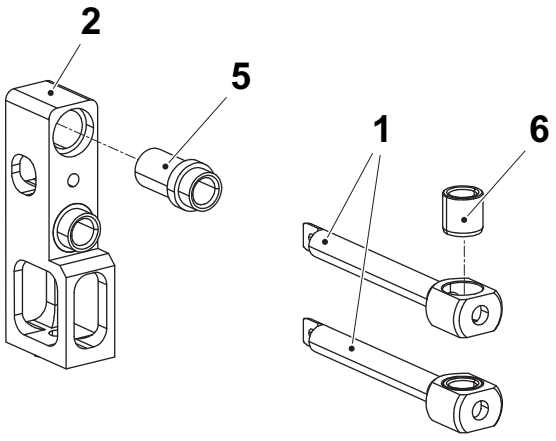

1 Shaft
2 Bracket
5 Guide bushing (2 pieces)
6 Bearing bushing (2 pieces)

2.3 Squeezer

2.3.1 Crank Housing

2.3.1-1 Crank Housing - Check Parts (TB/TBA)

Machine Status	Main Switch OFF Air Valve OFF
Special Equipment	Template TP No. 3013617
SPC Reference	2829432

a) Turn the bearing housing (1) to move the pressure arms (2) to a position outside the feed wheel slots.

b) Remove the screws (3) and remove the pressure arm unit (4).

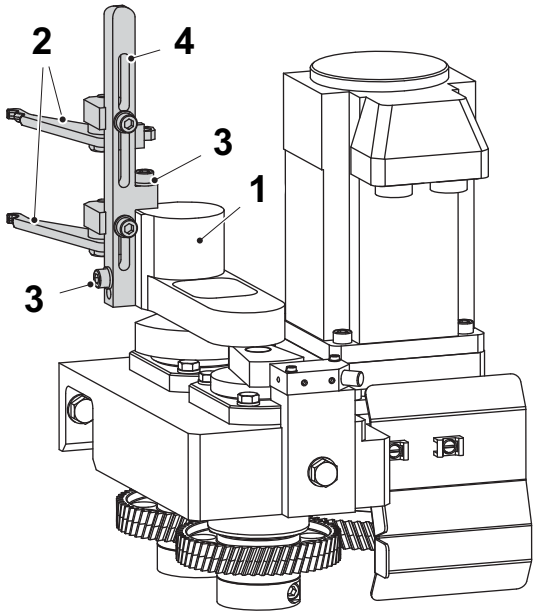

1 Bearing housing
2 Pressure arm
3 Screw
4 Pressure arm unit

(Cont'd)

(Cont'd)

c) Loosen the screws (5) and remove the clamping elements (6).

d) Remove the gear wheels (7).

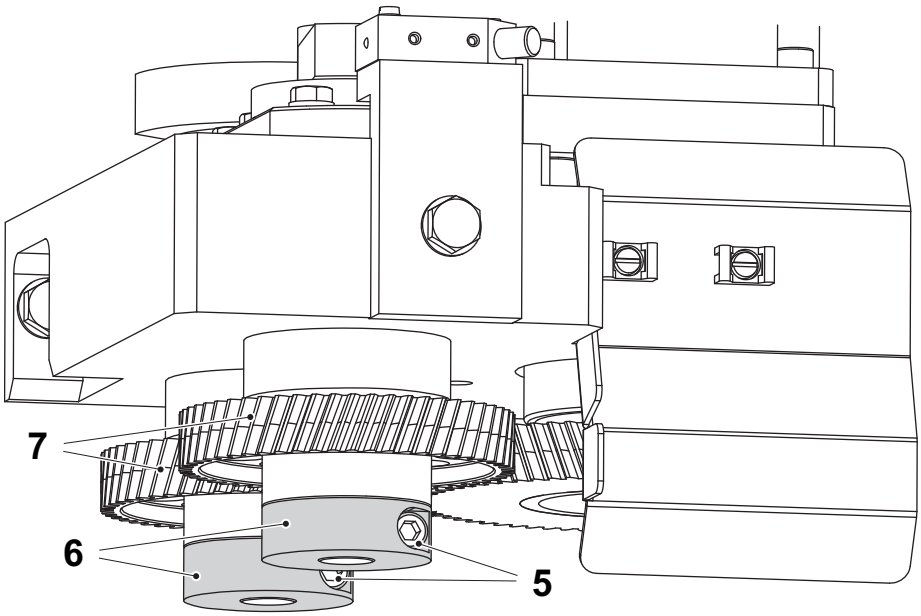

5 Screw
6 Clamping element
7 Gear wheel

e) Use a pair of 90º bent internal retaining ring pliers to loosen the retaining rings (8) and remove the bearing housing.

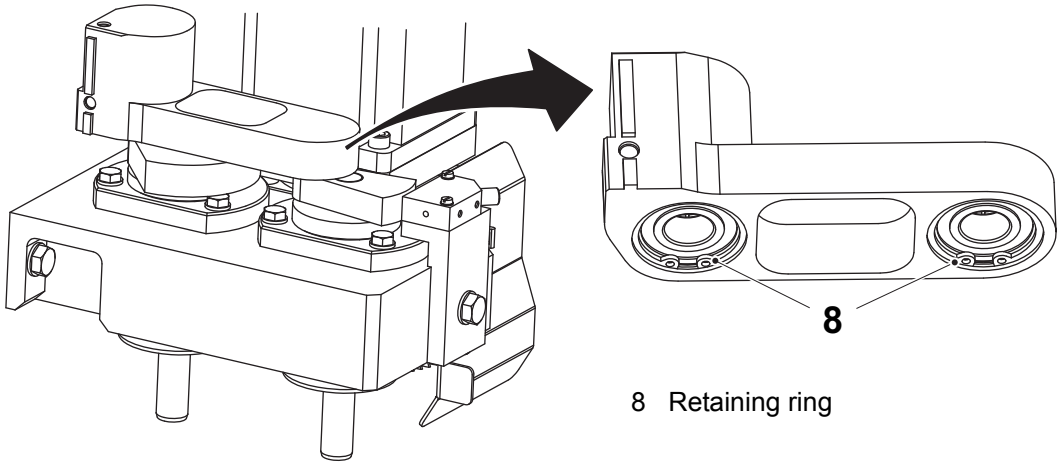

8 Retaining ring

(Cont'd)

(Cont'd)

f) Check the O-ring (9).

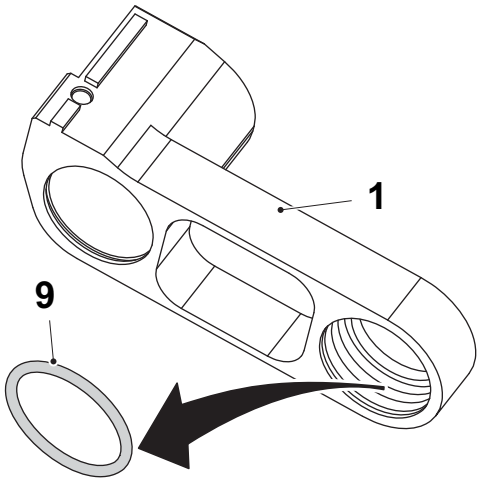

9 O-ring

g) Check the ball bearings (10) and (11) on the crank shaft (12) and the ball bearing (13) on the rocker arm (14) for wear or damage. Change if necessary, see 2.3.1-2 Crank Housing - Change Parts (TB/TBA).

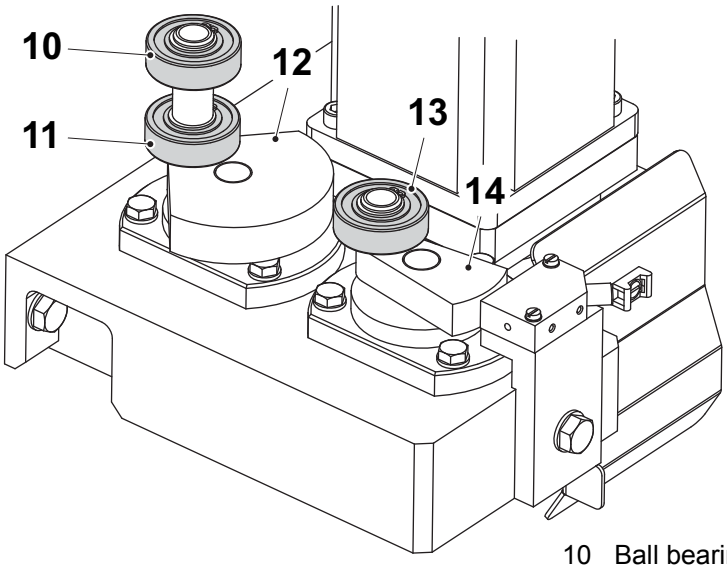

10 Ball bearing
11 Ball bearing
12 Crank shaft
13 Ball bearing
14 Rocker arm

(Cont'd)

(Cont'd)

h) Remove the screw (15) and the switch bracket (16).

i) Remove the screws (17) from the bearing sleeve (18).

j) Remove the screws (19) from the bearing sleeve (20)

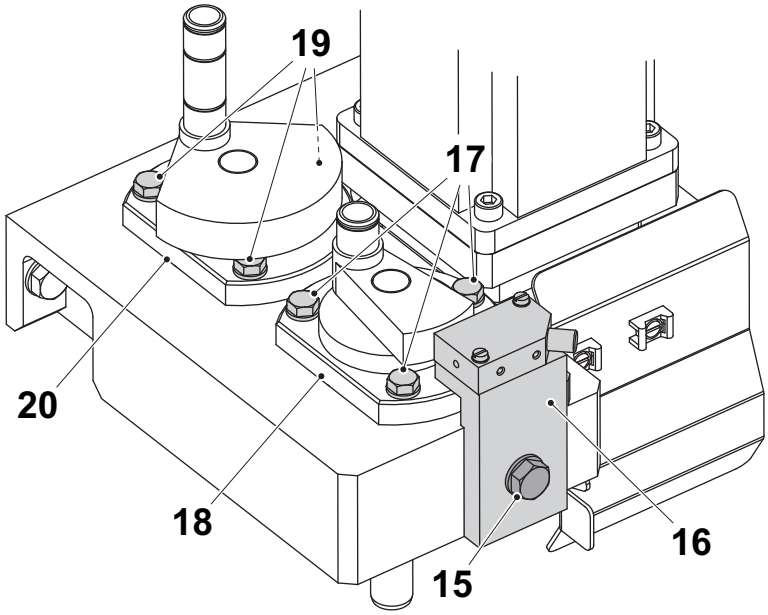

15 Screw
16 Switch bracket
17 Screw
18 Bearing sleeve
19 Screw
20 Bearing sleeve

k) Remove the nuts (21).

l) Remove the locking washers (22).

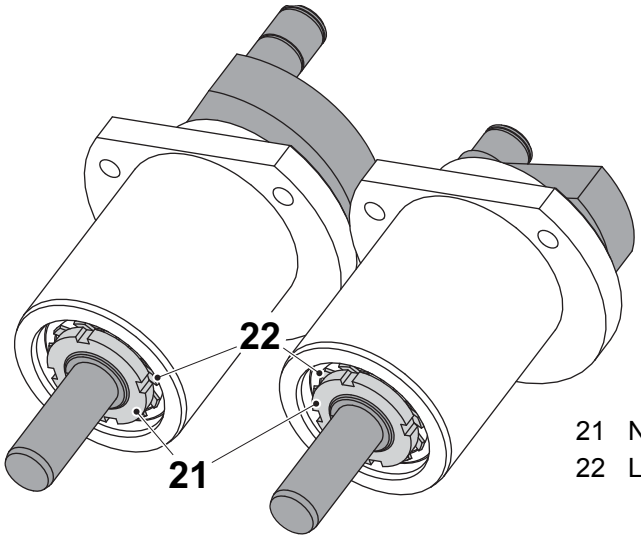

21 Nut
22 Locking washer

(Cont'd)

(Cont'd)

m) Press out the crank shafts (23).

n) Check the ball bearings (24).

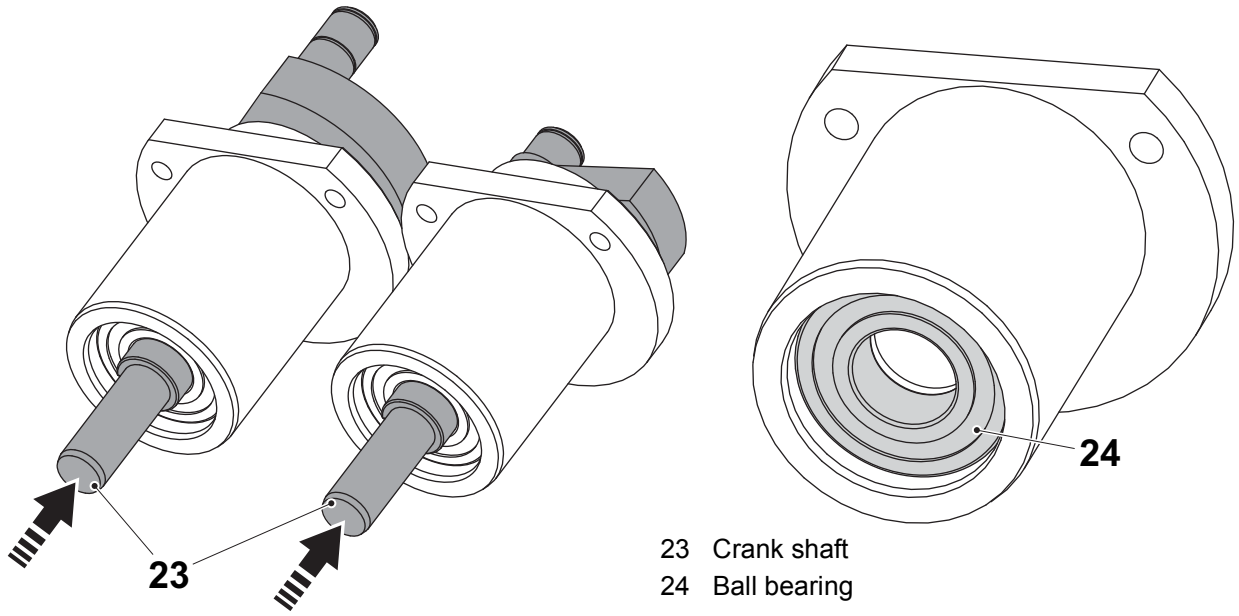

23 Crank shaft
24 Ball bearing

o) Remove the sealing ring (25).

p) Check the ball bearing (26).

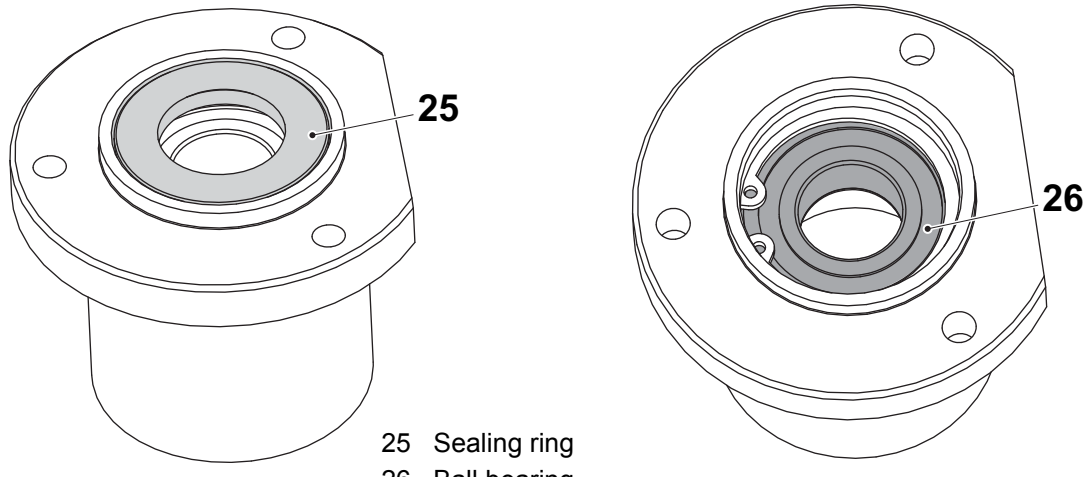

25 Sealing ring
26 Ball bearing

(Cont'd)

(Cont'd)

q) Assemble in the reverse order.

Note! At reassembly; use the template (29) for guidance, then tighten the clamping elements (6).

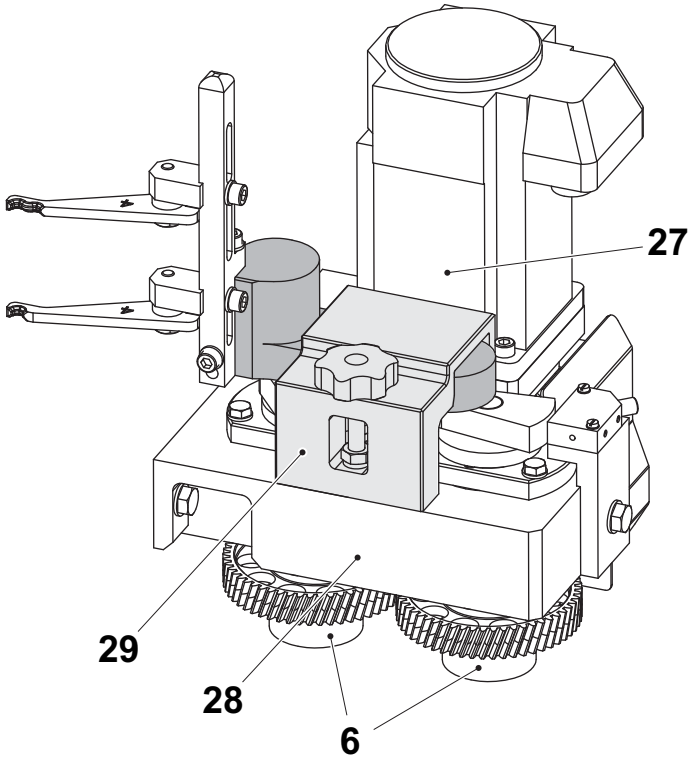

6 Clamping element
27 Motor, W30M1020
28 Frame section
29 Template

2.3.1-2 Crank Housing - Change Parts (TB/TBA)

Machine Status	Main Switch OFF Air Valve OFF
Special Equipment	Template TP No. 3013617
SPC Reference	2829432

a) Turn the bearing housing (1) to move the pressure arms (2) to a position outside the feed wheel slots.

b) Remove the screws (3) and remove the pressure arm unit (4).

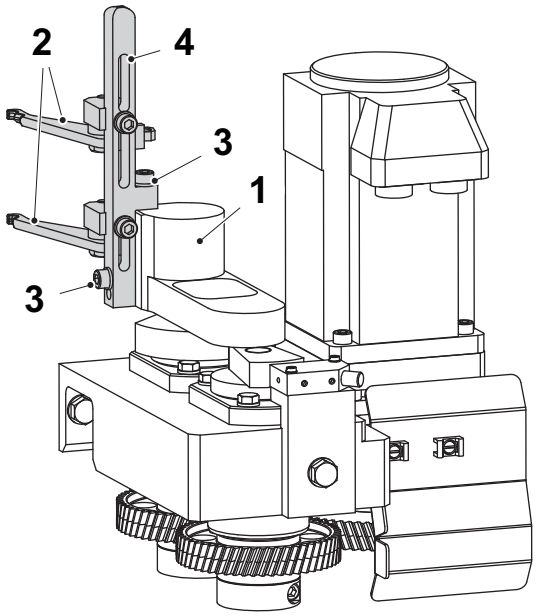

1 Bearing housing
2 Pressure arm
3 Screw
4 Pressure arm unit

(Cont'd)

(Cont'd)

c) Loosen the screws (5) and remove the clamping elements (6).

CAUTION
Possible machine damage
At reassembly, tighten the screws (5) with a torque of 5 Nm.

d) Remove the gear wheels (7).

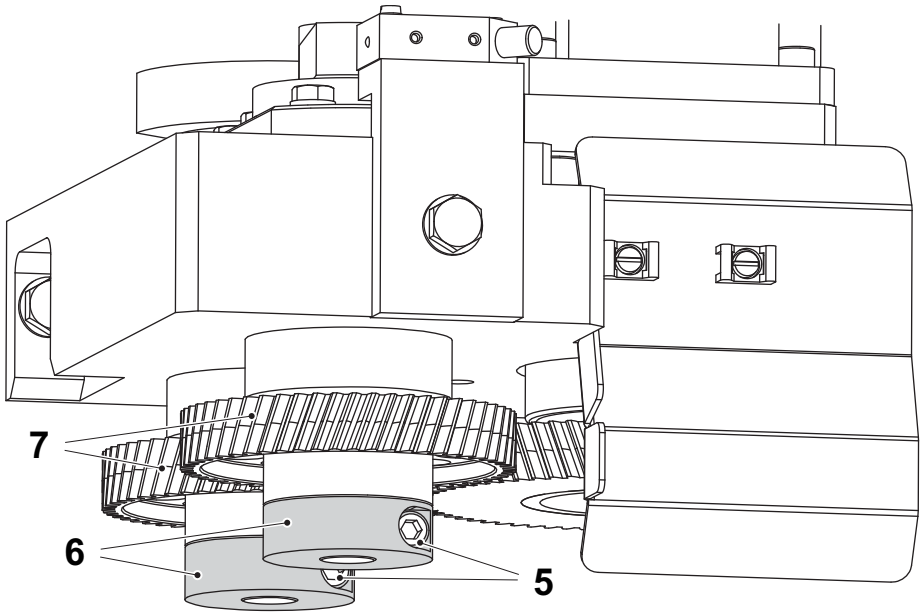

5 Screw
6 Clamping element
7 Gear wheel

e) Use a pair of 90º bent internal retaining ring pliers to loosen the retaining rings (8) and remove the bearing housing.

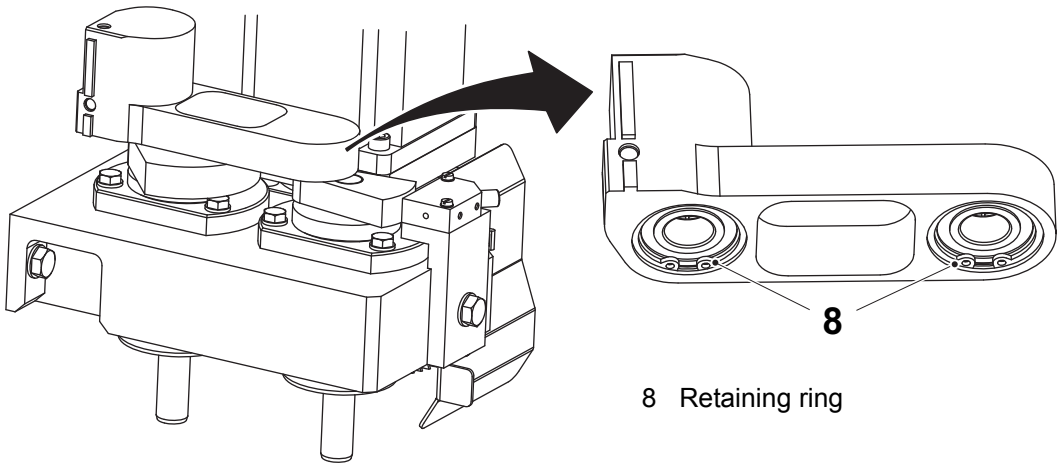

8 Retaining ring

(Cont'd)

(Cont'd)

f) Change the O-ring (9).

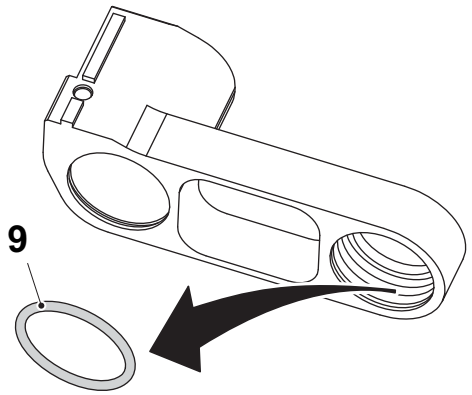

9 O-ring

g) Remove the locking ring (10).

CAUTION
Risk of damage to equipment.
Use a puller to remove the ball bearings.

h) Remove the ball bearing (11) from the crank shaft (12).

i) Remove the locking ring (13).

j) Remove the ball bearing (14) from the rocker arm (15).

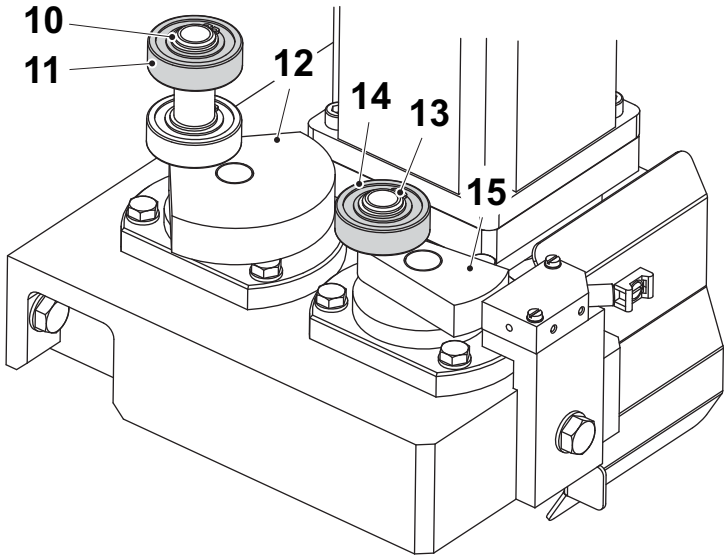

10 Locking ring
11 Ball bearing
12 Crank shaft
13 Locking ring
14 Ball bearing
15 Rocker arm

(Cont'd)

(Cont'd)

k) Remove the locking rings (16) and (17).

l) Remove the ball bearing (18).

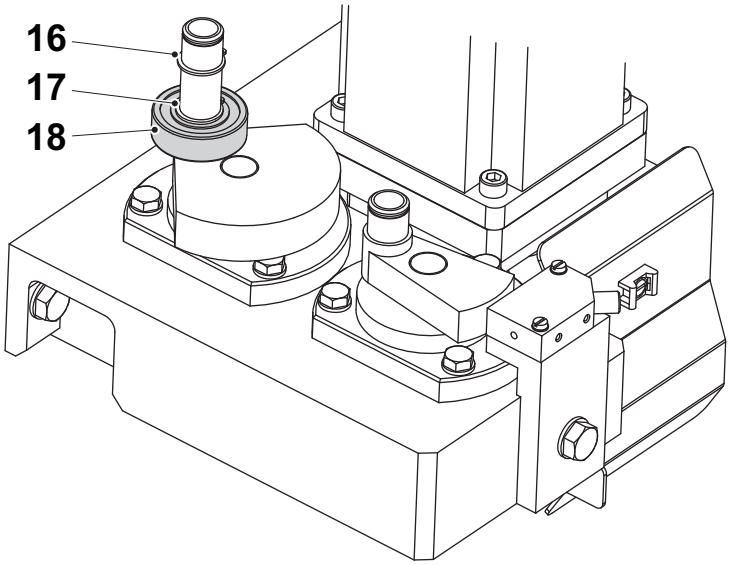

16 Locking ring
17 Locking ring
18 Ball bearing

m) Remove the screw (19) and the switch bracket (20).

n) Remove the screws (21) from the bearing sleeve (22).

o) Remove the screws (23) from the bearing sleeve (24).

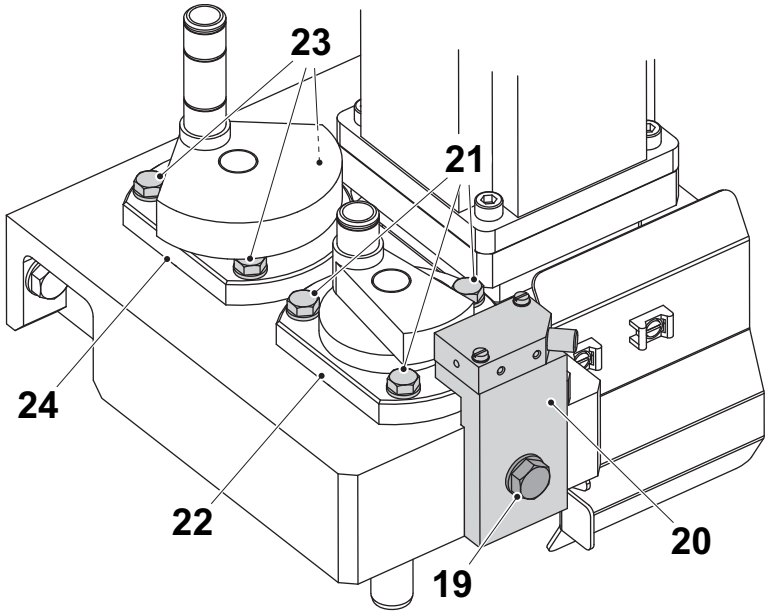

19 Screw
20 Switch bracket
21 Screw
22 Bearing sleeve
23 Screw
24 Bearing sleeve

(Cont'd)

(Cont'd)

p) Remove the nuts (25).

q) Remove the locking washers (26).

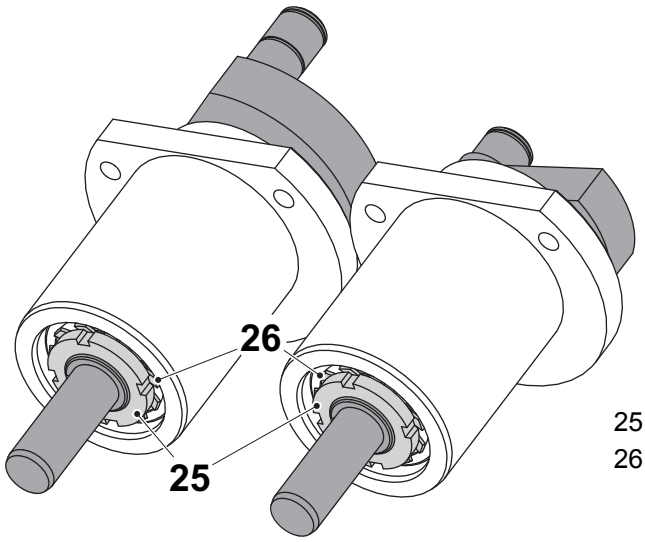

25 Nut
26 Locking washer

r) Press out the crank shafts (27).

s) Remove the ball bearings (28) and the sleeves (29) from the bearing sleeves (22) and (24).

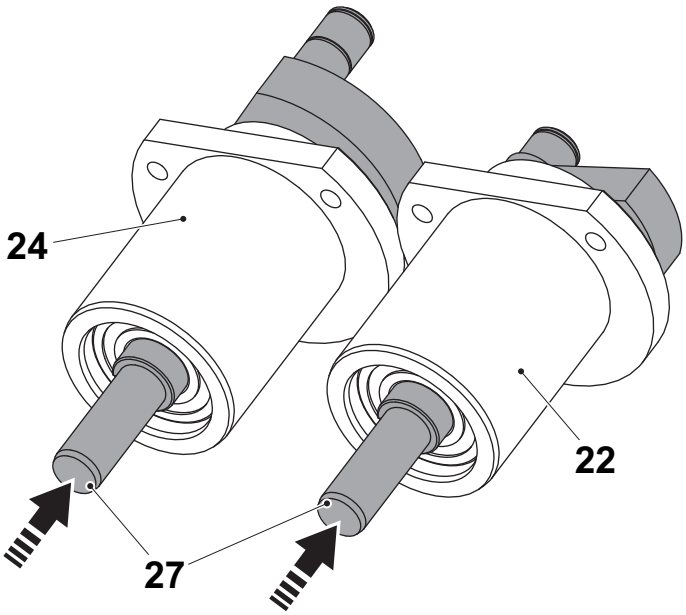

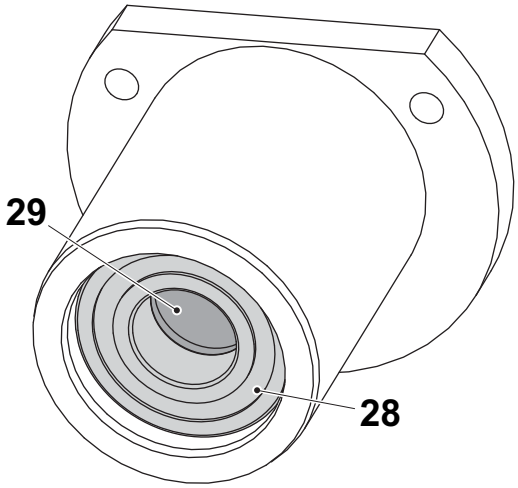

22 Bearing sleeve
24 Bearing sleeve
27 crank shaft
28 Ball bearing (2 pieces)
29 Sleeve

(Cont'd)

(Cont'd)

t) Remove the sealing rings (30) from each bearing sleeve.

u) Remove the locking rings (31).

v) Remove the ball bearings (32).

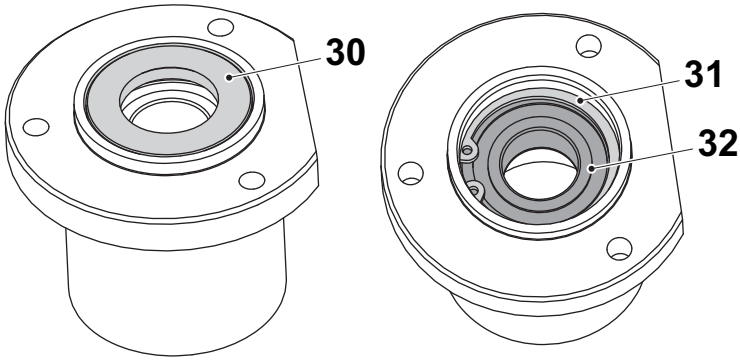

30 Sealing ring (2 pieces)
31 Locking ring (2 pieces)
32 Ball bearing (2 pieces)

CAUTION
Risk of damage to equipment.
The ball bearings must be pressed onto the shafts. Use appropriate equipment.

w) Change all worn parts and assemble in the reverse order.

Note! At reassembly, use the template (35) for guidance, then tighten the clamping elements (6).

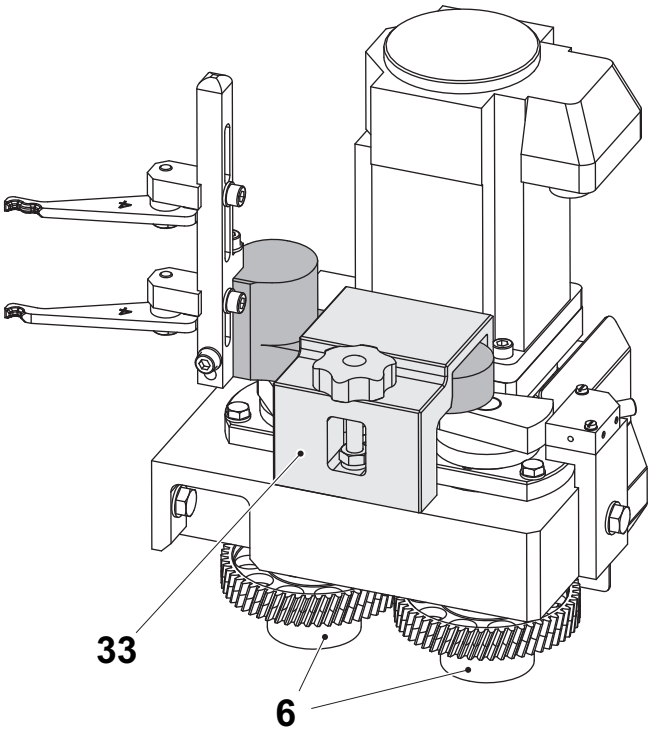

6 Clamping element
33 Template

2.3.1-3 Crank Housing - Check Parts (TPA)

Machine Status	Main Switch OFF Air Valve OFF
SPC Reference	2952607

a) Turn the bearing housing (1) to move the pressure arms (2) to a position outside the feed wheel slots.

b) Remove the screws (3) and remove the pressure arm unit (4).

c) Use a pair of 90º bent internal retaining ring pliers to loosen the retaining rings (5) and remove the bearing housing (1).

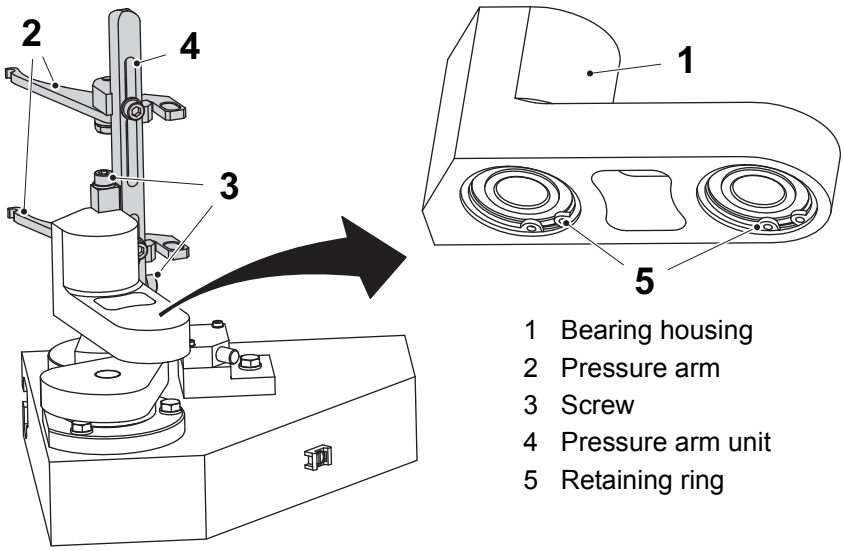

1 Bearing housing
2 Pressure arm
3 Screw
4 Pressure arm unit
5 Retaining ring

d) Check the ball bearings (6), (7) on the crank shaft (8) and the ball bearing (9) on the rocker arm (10) for wear or damage. Change if necessary, see 2.3.1-4 Crank Housing - Change Parts (TPA).

e) Assemble in the reverse order.

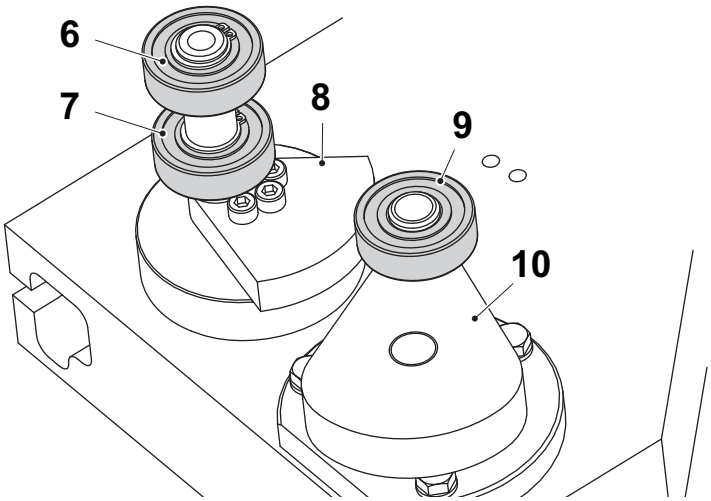

6 Ball bearing
7 Ball bearing
8 Crank shaft
9 Ball bearing
10 Rocker arm

2.3.1-4 Crank Housing - Change Parts (TPA)

Machine Status	Main Switch OFF Air Valve OFF
SPC Reference	2952607

a) Turn the bearing housing (1) to move the pressure arms (2) to a position outside the feed wheel slots.

b) Remove the screws (3) and remove the pressure arm unit (4).

c) Use a pair of 90º bent internal retaining ring pliers to loosen the retaining rings (5) and remove the bearing housing (1).

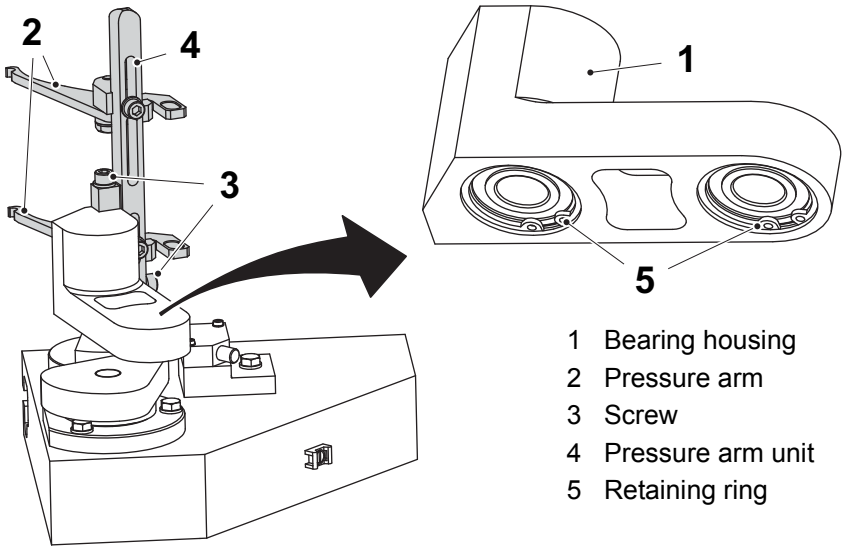

1 Bearing housing
2 Pressure arm
3 Screw
4 Pressure arm unit
5 Retaining ring

d) Remove the retaining ring (10) and pull up the ball bearing (6) from the crank shaft (7).

e) Pull up the ball bearing (8) from the rocker arm (9).

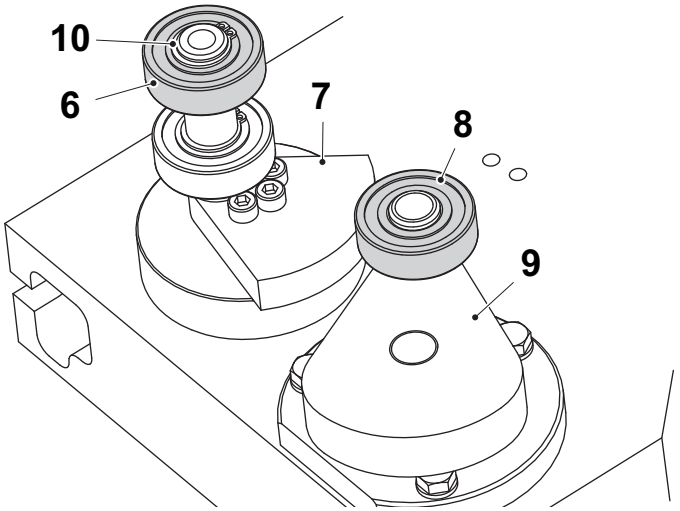

6 Ball bearing
7 Crank shaft
8 Ball bearing
9 Rocker arm
10 Retaining ring

(Cont'd)

(Cont'd)

f) Remove the retaining rings (11) and (12).

g) Pull up the ball bearing (13) from the crank shaft.

h) Remove the screws (14) from the bearing sleeve (15).

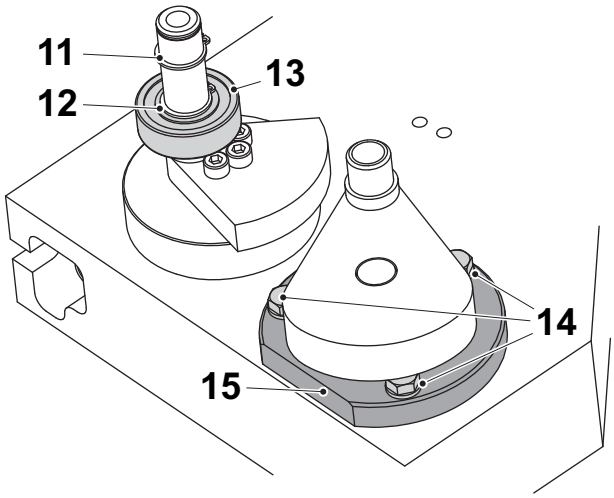

11 Retaining ring
12 Retaining ring
13 Ball bearing
14 Screw
15 Bearing sleeve

i) Remove the nut (16) and the lock washer (17).

j) Remove the rocker arm (9) from the bearing sleeve (15) by pressing up the rocker arm shaft (9:1).

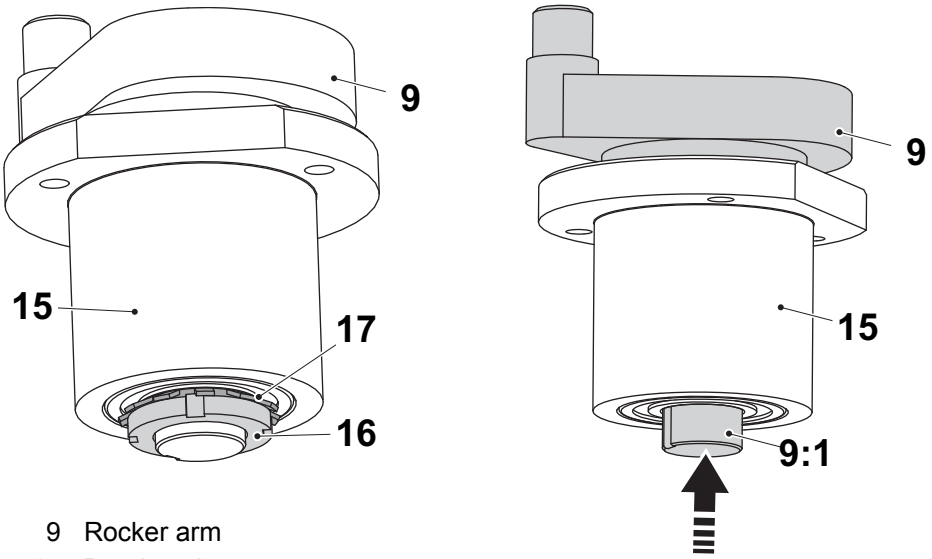

9 Rocker arm
15 Bearing sleeve
16 Nut
17 Lock washer

(Cont'd)

(Cont'd)

k) Remove the ball bearing (18) and the sleeve (19) from the bearing sleeve.

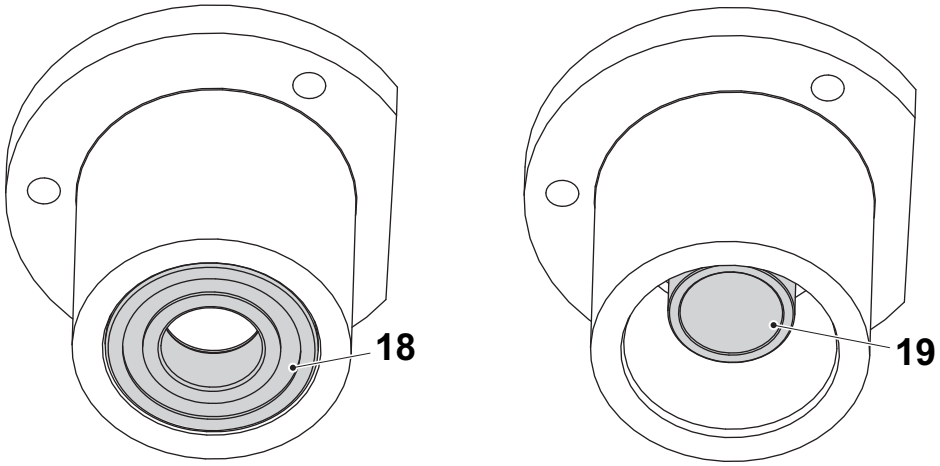

18 Ball bearing
19 Sleeve

l) Remove the sealing ring (20) from the bearing sleeve (15).

m) Remove the retaining ring (21) and remove the ball bearing (22).

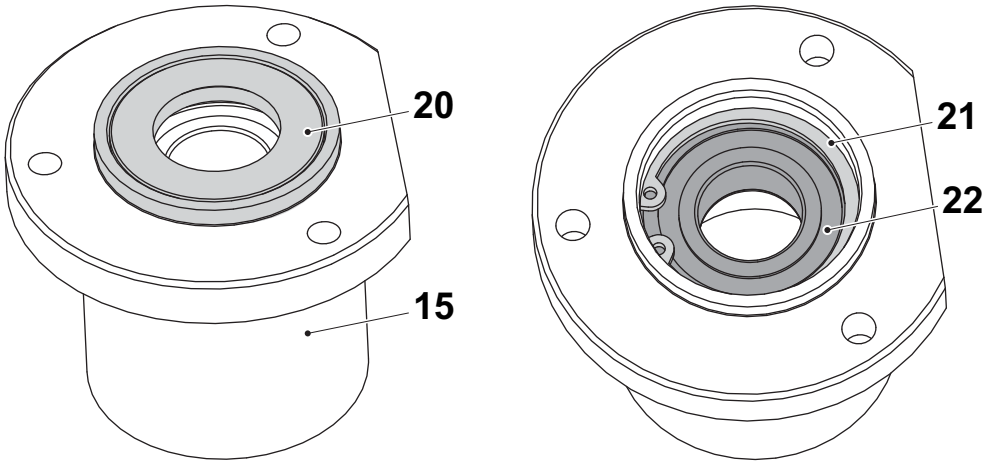

15 Bearing sleeve
20 Sealing ring
21 Retaining ring
22 Ball bearing

(Cont'd)

(Cont'd)

n) Change all worn parts and assemble in the reverse order. The illustration below shows an exploded view of the bearing sleeve.

CAUTION
Risk of damage to equipment.
The ball bearings must be pressed onto the shafts. Use appropriate equipment.

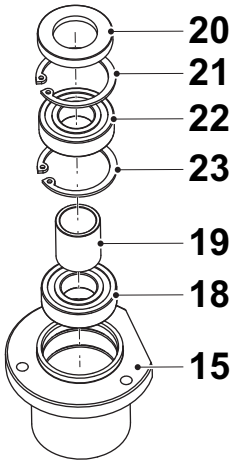

15 Bearing sleeve
18 Ball bearing
19 Sleeve
20 Sealing ring
21 Ball bearing
23 Retaining ring

2.3.2 Drive Motor

2.3.2-1 Drive Motor - No Procedure Described

SPC Reference	2829439 valid for TB/TBA 2983879 valid for TPA 90459-2579 valid for TCA/TWA

TB/TBA

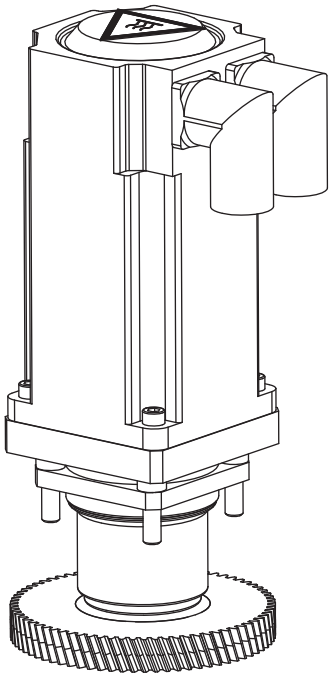

TPA

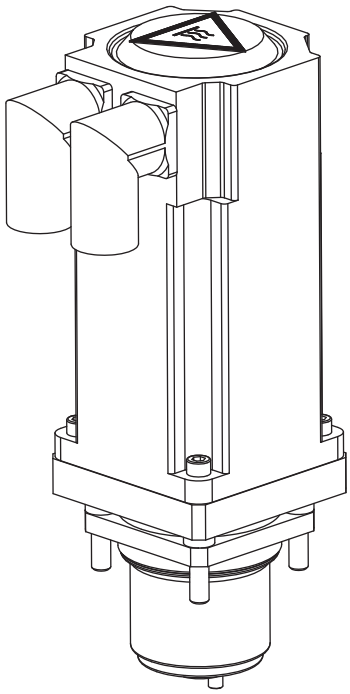

TCA/TWA

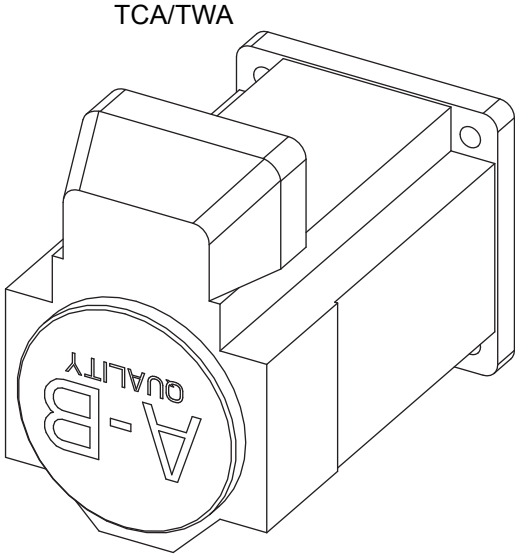

2.3.3 Pressure Arm

2.3.3-1 Pressure Arm - Check Parts (TB/TBA)

Machine Status	Main Switch OFF Air Valve OFF
SPC Reference	3013387

a) Turn the bearing housing (1) to move the pressure arms (2) to a position outside the feed wheel slots.

b) Remove the pressure arms (2) by removing the screws (3).

c) Remove the screws (4).

d) Check the flange bushings (5), the compression springs (6), and the brackets (7) for wear or damage. Change if necessary, see 2.3.3-2 Pressure Arm - Change Parts (TB/TBA).

e) Assemble the parts, see item c) to e) in Section 2.3.3-3 Pressure Arm - Set Height (TB/TBA)

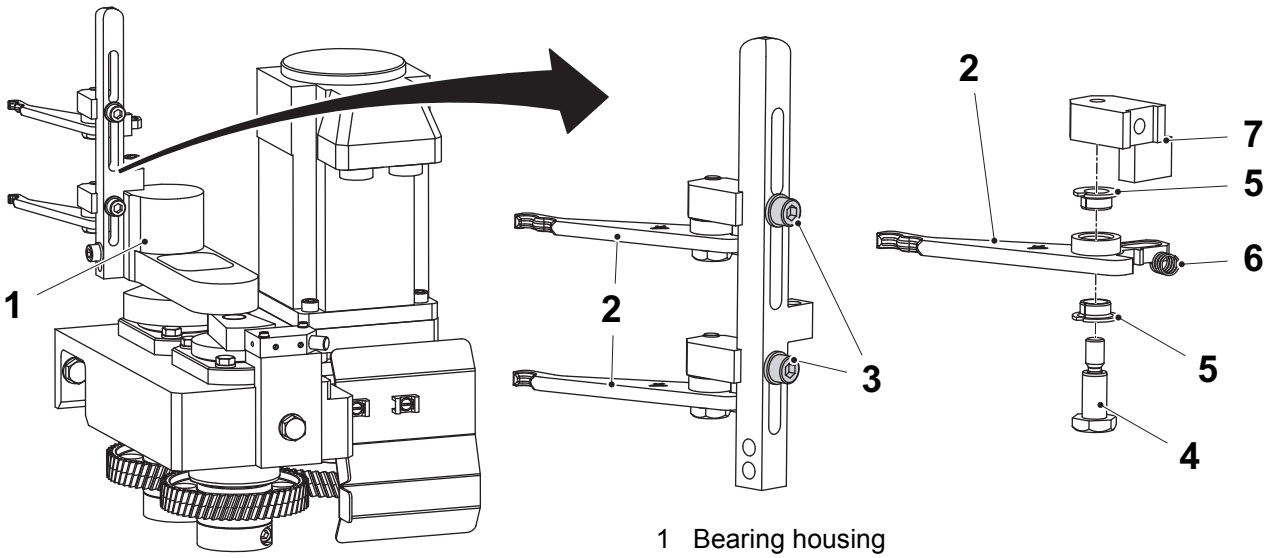

1 Bearing housing
2 Pressure arm
3 Screw
4 Screw (2 pieces)
5 Flange bushing (4 pieces)
6 Compression spring (2 pieces)
7 Bracket

2.3.3-2 Pressure Arm - Change Parts (TB/TBA)

Machine Status	Main Switch OFF Air Valve OFF
SPC Reference	3013387

a) Turn the bearing housing (1) to move the pressure arms (2) to a position outside the feed wheel slots.

b) Remove the pressure arms (2) by removing the screws (3).

c) Remove the screws (4).

d) Use a screwdriver or a similar tool to remove the old flange bushings (5).

e) Press in the new flange bushings in the pressure arms.

f) Replace the compression springs (6) with new ones.

g) Assemble in the reverse order.

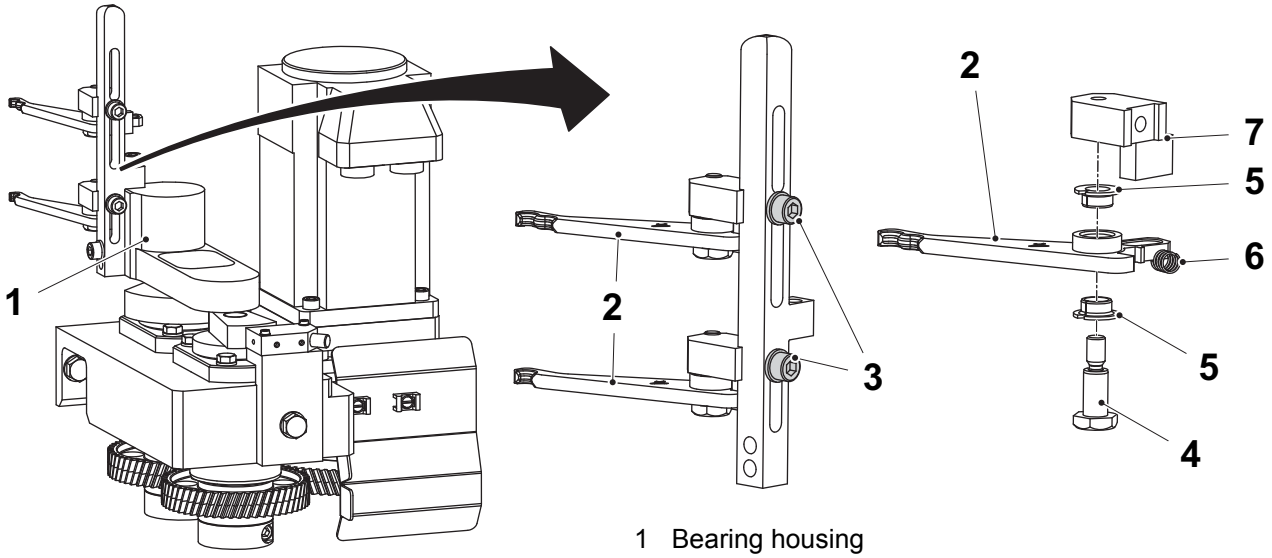

1 Bearing housing
2 Pressure arm
3 Screw
4 Screw (2pieces)
5 Flange bushing (4 pieces)
6 Compression spring (2 pieces)
7 Bracket (2 pieces)

2.3.3-3 Pressure Arm - Set Height (TB/TBA)

Machine Status	Main Switch OFF Air Valve OFF
SPC Reference	3013387

a) Turn the bearing housing (1) to move the arms (2) to a position outside the feed wheel slots.

b) Loosen the screws (3).

c) Set the height of the arms as illustrated below.

d) Tighten the screws (3).

e) Turn the bearing housing (1) a few revolutions to check that the arms can move without touching the sides of the feed wheel.

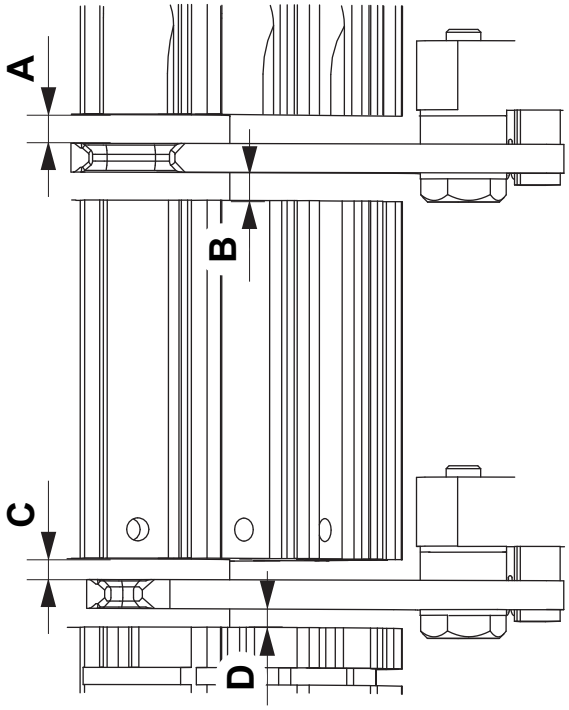

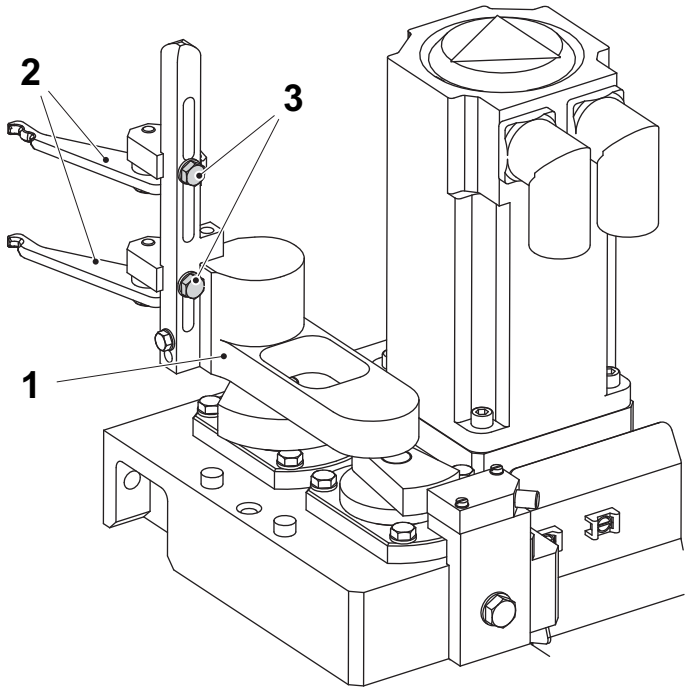

Straw type	Top to the left	Top to the right
U-straw	A = B, C = D	B = 1 to 2 mm, C = D
S-straw	A = B, C = D	A = B, C = D
T-straw	A = B, C = D	A = B, C = 1 to 2 mm

1 Bearing housing
2 Arm
3 Screw

2.3.3-4 Pressure Arm - Check (TPA)

Machine Status	Main Switch OFF Air Valve OFF
SPC Reference	3013886

a) Turn the bearing housing (1) to move the pressure arms (2) to a position outside the feed wheel slots.

b) Remove the pressure arms (2) by removing the screws (3).

c) Remove the screw (4) and check the flange bushings (5), the springs (6) and the brackets (7) for wear and damage. Change if necessary.

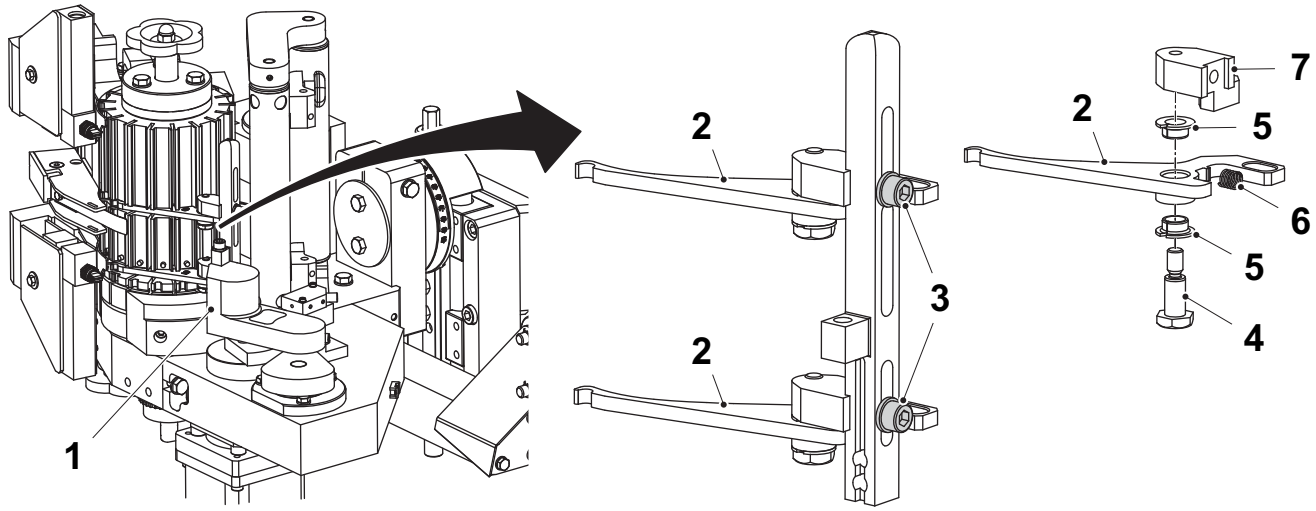

1 Bearing housing
2 Pressure arm
3 Screw
4 Screw
5 Flange bushing
6 Spring
7 Bracket

2.3.3-5 Pressure Arm - Change (TPA)

Machine Status	Main Switch OFF Air Valve OFF
SPC Reference	3013886

a) Turn the bearing housing (1) to move the pressure arms (2) to a position outside the feed wheel slots.

b) Remove the pressure arms (2) by removing the screws (3).

c) Remove the screws (4).

d) Use a screwdriver or a similar tool to remove the old flange bushings (5).

e) Press in the new flange bushings in the pressure arms.

f) Replace the compression springs (6) with new ones.

g) Assemble in the reverse order.

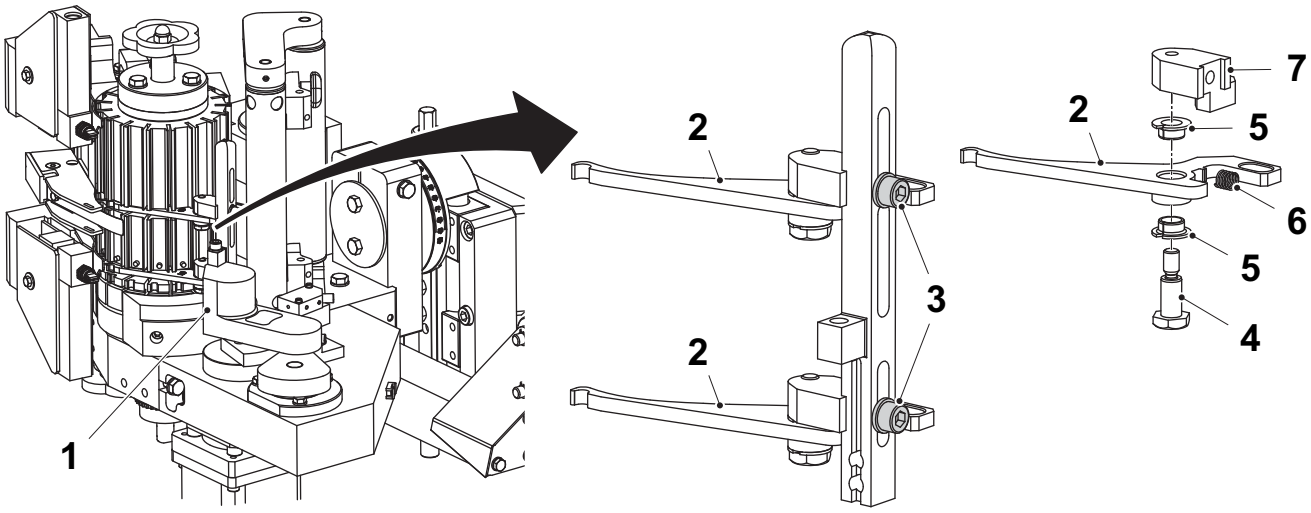

1 Bearing housing
2 Pressure arm
3 Screw
4 Screw
5 Flange bushing
6 Spring
7 Bracket

2.3.3-6 Pressure Arm - Set Height (TPA)

Machine Status	Main Switch OFF Air Valve OFF
SPC Reference	3013886

a) Turn the bearing housing (1) to move the pressure arms (2) to a position outside the feed wheel slots.

b) Adjust the height of the pressure arms with the screws (3). Set the height of the pressure arms in the centre of the feed wheel slots.

c) Tighten the screws (3).

d) Turn the bearing housing (1) a few revolutions to check that the pressure arms can move without touching the sides of the feed wheel.

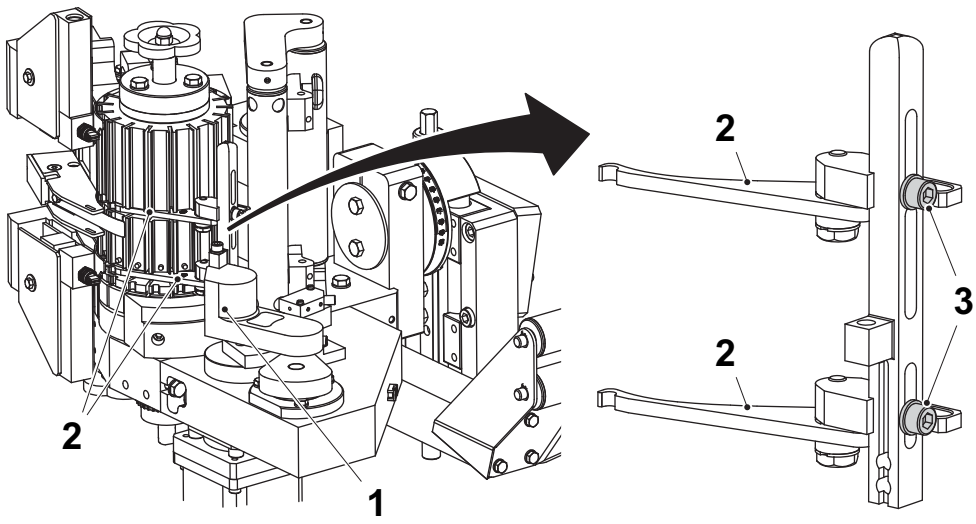

1 Bearing housing
2 Pressure arm
3 Screw

2.3.3-7 Pressure Arm - Set Override (TB/TBA/TPA)

Machine Status	Main Switch OFF Air Valve OFF
Special Equipment	Template TP No. 3013391 for TB/TBA Template TP No. 3013902 for TPA
SPC Reference	3013387 valid for TB/TBA 3013886 valid for TPA

a) Attach the lever (1) to the upper pressure arm (2) by using the screw (3) and the washer (4).

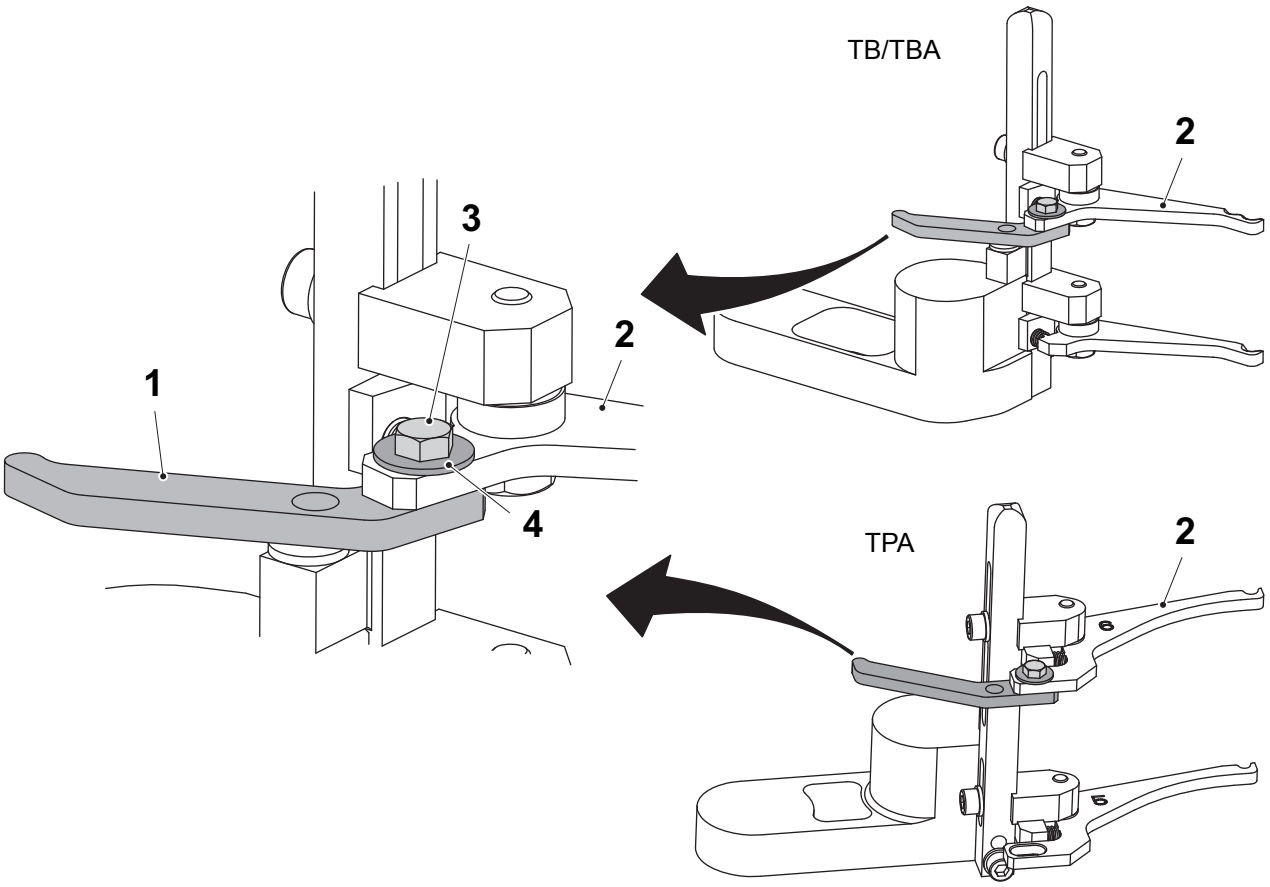

1 Lever
2 Pressure arm
3 Screw
4 Washer

(Cont'd)

(Cont'd)

b) Attach the preassembled template (5) onto the bearing housing (6). Use the screw (7) to fixate the template.

TB/TBA

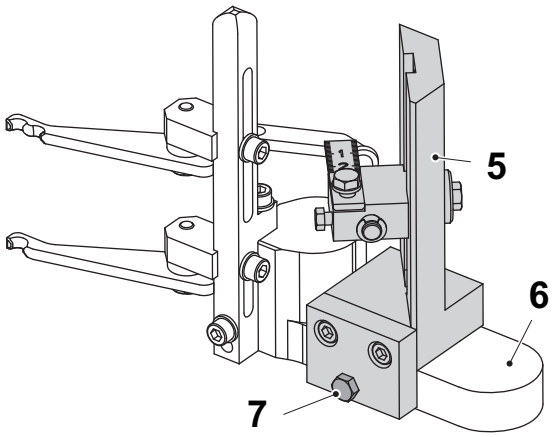

TPA

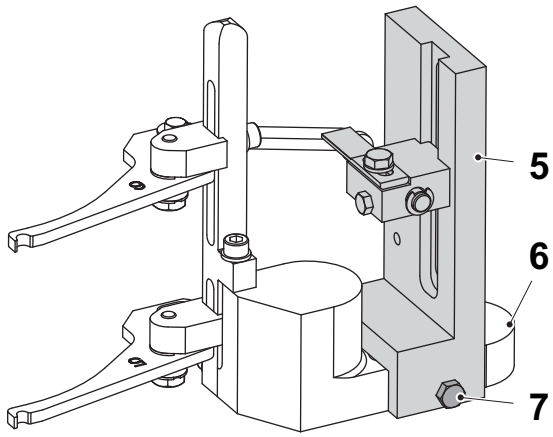

5 Template
6 Bearing housing
7 Screw

(Cont'd)

(Cont'd)

c) Loosen the screw (8) to adjust the height of the pin (9).

d) Tighten the screw (8) when the lever (1) and the pin (9) are at the same height.

e) Move the pin (9) until it touches the lever (1).

f) Loosen the screw (10) and move the scale (11) until it is aligned with the pin (9).

g) Tighten the screw (10) and make sure that the screw (12) is not tightened.

h) Run a few packages at low speed.

i) Check the maximum override on the scale (11).

j) Repeat item h) to i) a few times to get an average override.

k) Remove the lever and the template.

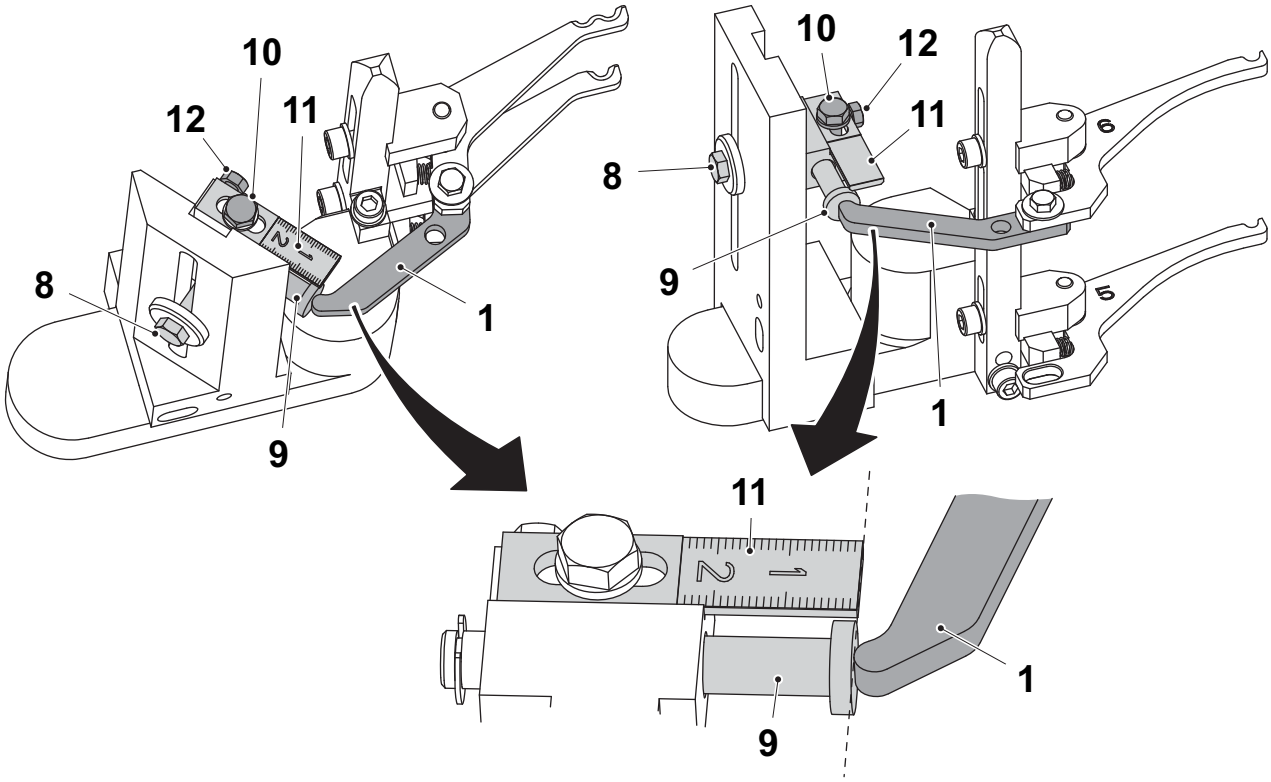

1 Lever
8 Screw
9 Pin
10 Screw
11 Scale
12 Screw

(Cont'd)

(Cont'd)

l) Crank the height adjustment with the shaft (13) to set the measured override. Check the scale (14) at the plate (15) and adjust accordingly. The override should be two to four millimetres.

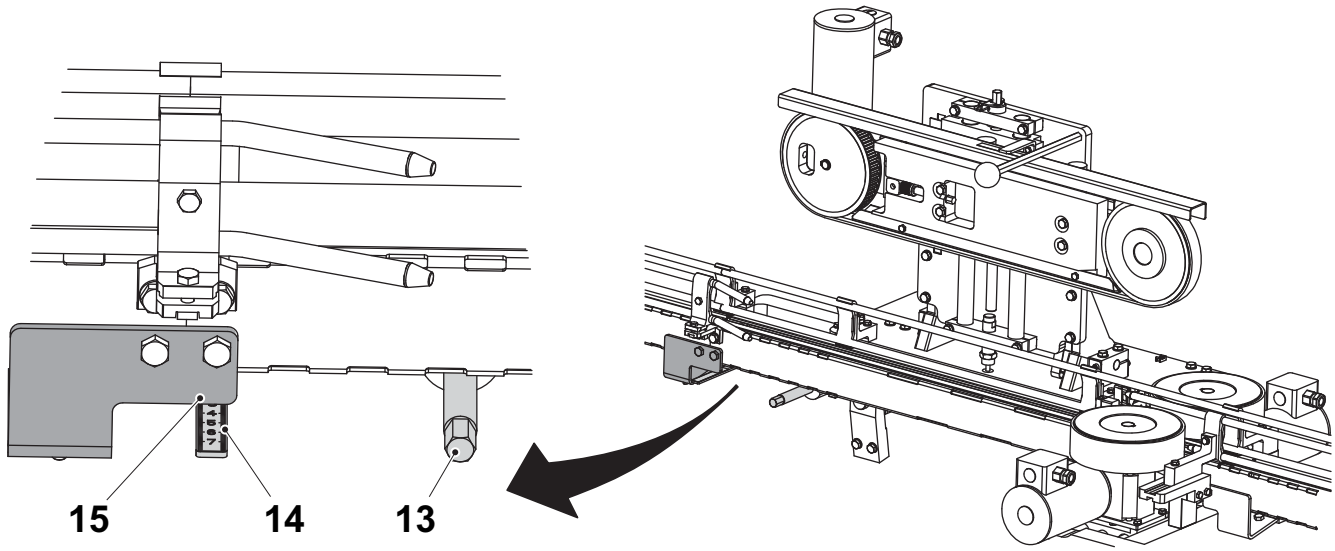

13 Shaft
14 Scale
15 Plate

2.3.4 Pressure Unit

2.3.4-1 Pressure Unit - Set (TCA)

Machine Status	Main Switch ON Air Valve ON
SPC Reference	2948250

Note! Set pick position first, see Section 7.2.2-3 Maintenance - Set Pick Position (TCA/TWA).

a) The height position of the eccentrics (1) must agree with the feed wheel slot (2), see the illustration below. Turn the eccentric by hand to check the position.

Note! Do not turn the feed wheel by hand.

b) Loosen the nuts (3). Keep hold of the shafts (4).

c) Adjust the height of the pressure unit. Make sure that the height is equal on both sides.

d) Tighten the nuts (3).

e) Adjust the quick-locks (5).

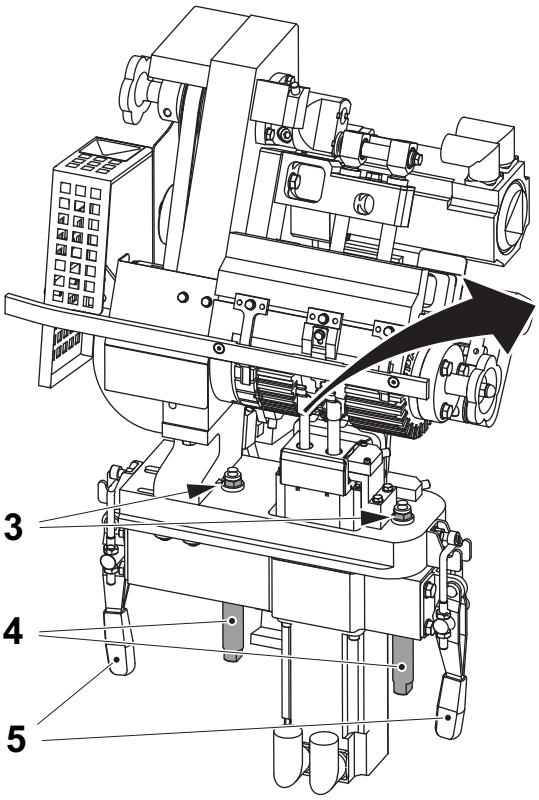

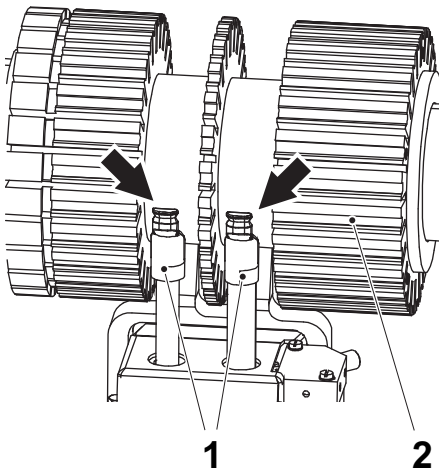

1 Eccentric
2 Feed wheel slot
3 Nut
4 Shaft
5 Quick-lock

2.3.4-2 Pressure Unit - Set (TWA)

Machine Status	Main Switch ON Air Valve ON
SPC Reference	2948250

Note! Set pick position first, see Section 7.2.2-3 Maintenance - Set Pick Position (TCA/TWA).

a) The height position of the eccentric (1) must agree with the feed wheel slot (2), see illustration below. Turn the eccentric (1) by hand to check the position.

Note! Do not turn the feed wheel (3) by hand.

b) Loosen the quick-locks (4) and pull back the pressure unit (5).

c) Loosen the nuts (6). Keep hold of the shafts (7).

d) Adjust the height of the pressure unit (5). Make sure that the height is equal on booth sides.

e) Tighten the nuts (6).

f) Adjust and lock the quick-locks (4).

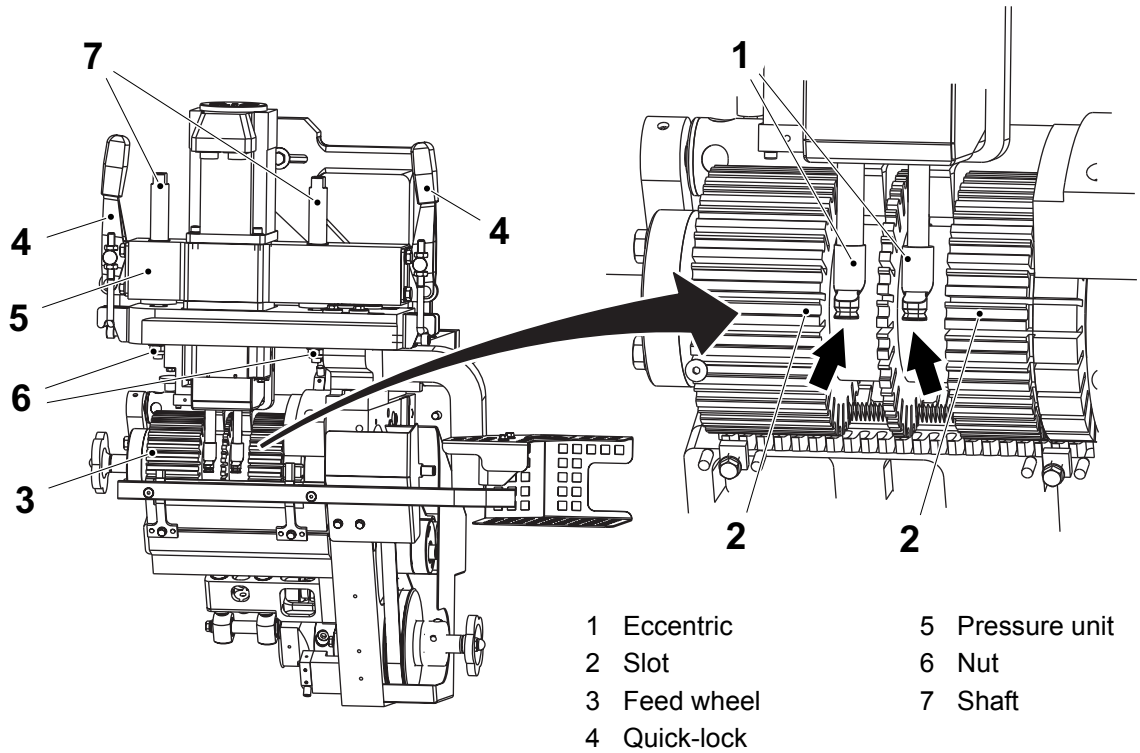

1 Eccentric
2 Slot
3 Feed wheel
4 Quick-lock
5 Pressure unit
6 Nut
7 Shaft

2.3.4-3 Pressure Unit - Straw in Feed Wheel (TCA/TWA)

Machine Status	Main Switch OFF Air Valve OFF
SPC Reference	2948250

Sometimes, a straw or similar blocks the groove in the feed wheel where the knife cuts the ladderband. This means that an alarm called “straw in feed wheel” is triggered.

a) Release the pressure unit (1) by turning the quick-locks (2) outwards.

b) Turn the stellar knob (3) until the knife (4) is in its outer position.

c) Turn the stellar knob (5) to the left until the feed wheel unit (6) is released from the shaft.

d) Remove any straws or loose things that may have caused the alarm.

e) Assemble in the reverse order.

f) Pull back the quick-locks (2) to tighten the pressure unit.

g) Reset the alarm on the TPOP.

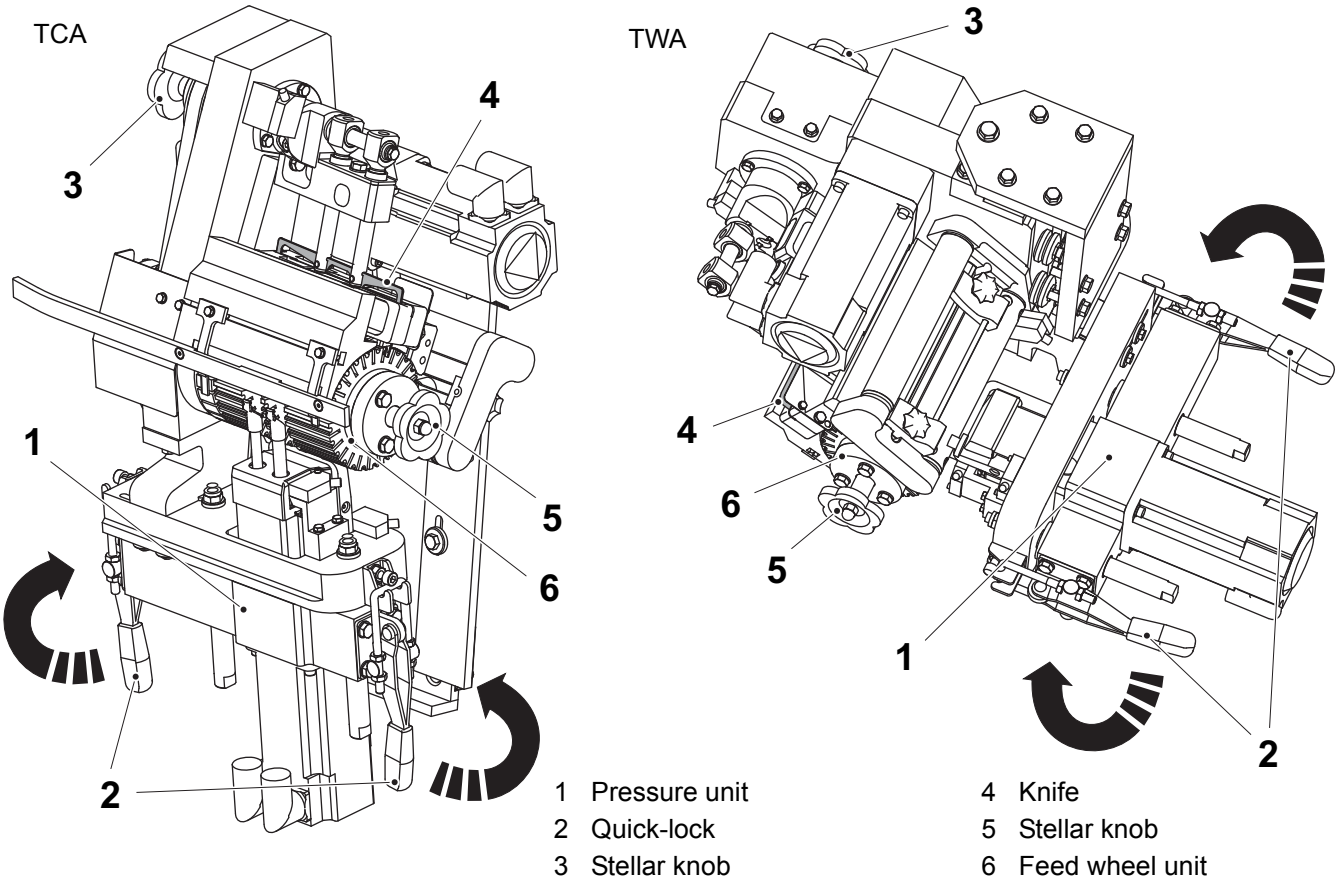

1 Pressure unit
2 Quick-lock
3 Stellar knob
4 Knife
5 Stellar knob
6 Feed wheel unit

2.3.5 Lock Holder

2.3.5-1 Lock Holder - Set Gun Holder (TCA)

Machine Status	Main Switch OFF Air Valve OFF
SPC Reference	2948255

WARNING

Burn Hazard.

The hotmelt gun and the protective cover can be very hot. Be careful when working near the hotmelt gun and the cover.

a) Adjust the height of the hotmelt gun holder by loosening the screws (1). The height must match the height of the straw on the package.

b) Tighten the screws (1).

c) Adjust the horizontal depth position of the hotmelt gun holder by loosening the screws (2). The distance between the hotmelt nozzle tip and the package should be approximately 3 mm.

d) Tighten the screws (2).

e) Check the clearance between the hotmelt nozzle tip and the package.

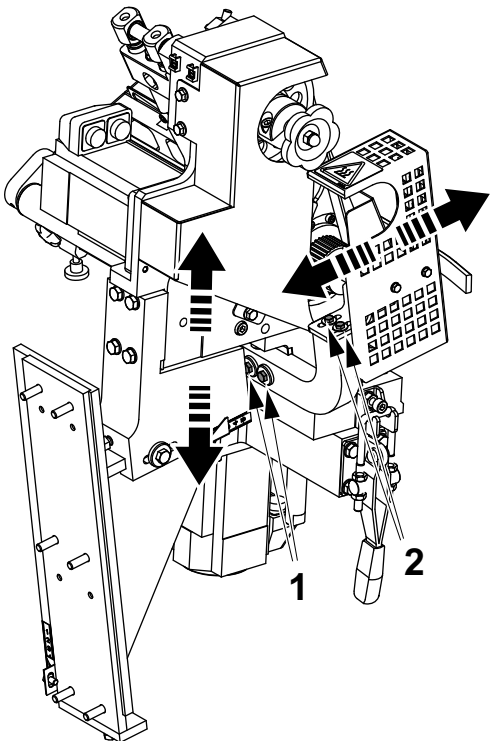

1 Screw
2 Screw

2.3.5-2 Lock Holder - Set Gun Holder (TWA)

Machine Status	Main Switch OFF Air Valve OFF
SPC Reference	2948255

WARNING

Burn hazard.

The hotmelt gun and the protective cover can be very hot. Be careful when working near the hotmelt gun and the cover.

a) Adjust the height of the hotmelt gun (1) by loosening the screws (2). The position must match the position of the straw on the package. See figure below.

b) Tighten the screw (2).

c) Adjust the height position of the hotmelt gun (1) by loosening the screws (3). The distance between the hotmelt nozzle tip and the package should be approximately 3 mm.

d) Tighten the screws (3).

e) Check the clearance between the hotmelt nozzle tip and the package.

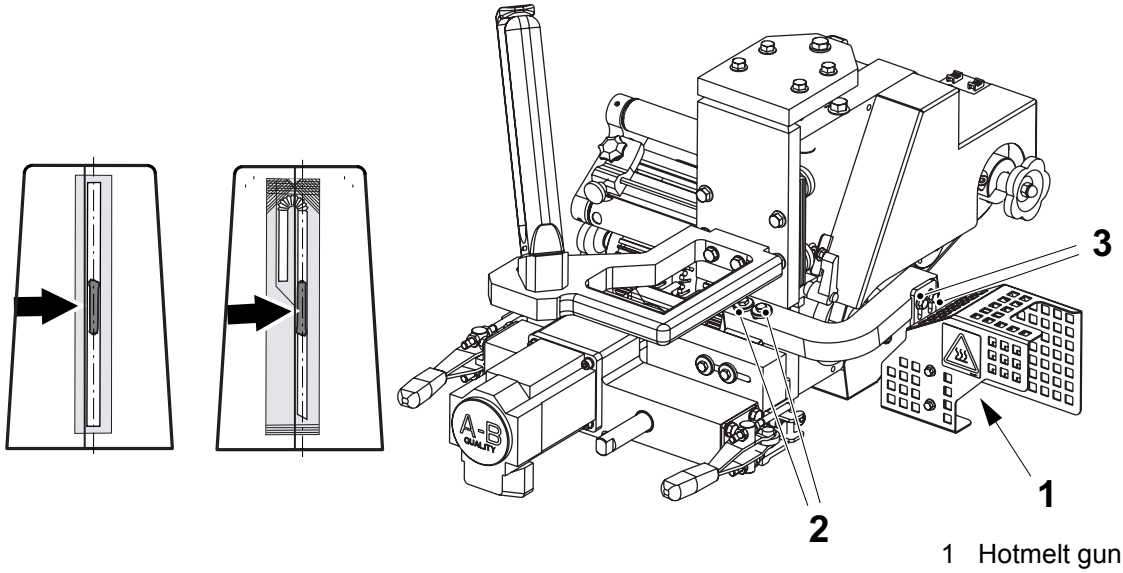

1 Hotmelt gun
2 Screw
3 Screw

2.4 Frame

SPC Reference	2913343

2.4.1 Frame Housing

2.4.1-1 Frame Housing - Check Timing Belt (TB/TBA/TPA)

Machine Status	Main Switch OFF Air Valve OFF
Special Equipment	Hook Spanner TP No. 90243-0164 Template TP No. 2959983
SPC Reference	2829433

WARNING

Burn Hazard.

The hotmelt unit can be very hot and there is risk of severe burns. Use caution when working near the hotmelt unit.

a) Turn the stellar knob (1) to move the knife (2) to a position inside the feed wheel.

b) Assemble the template (3).

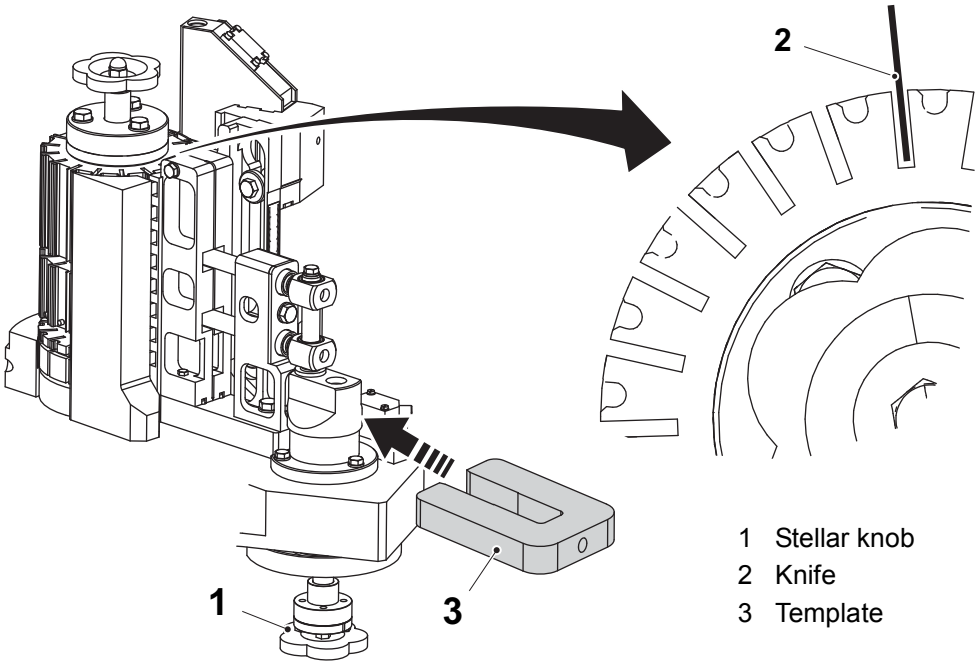

1 Stellar knob
2 Knife
3 Template

(Cont'd)

(Cont'd)

c) Loosen the screw (4) and rotate the applicator unit approximately 45° to the left. Cut the ladder band before turning.

Note! Remember the angle position, see the scale (5).

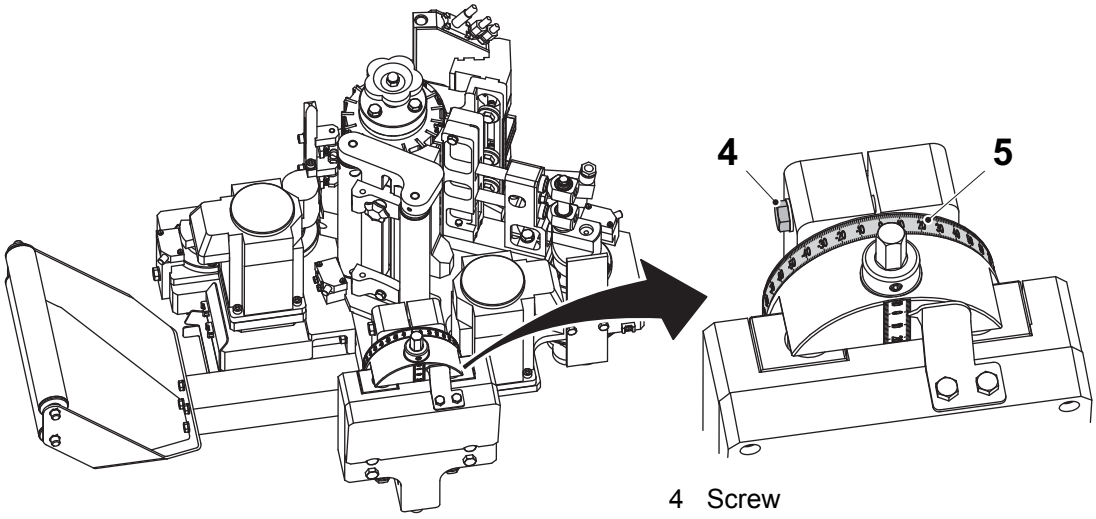

4 Screw
5 Scale

d) Check the timing belt (6) for wear or damage. Change if necessary, see 2.4.1-3 Frame Housing - Change Timing Belt.

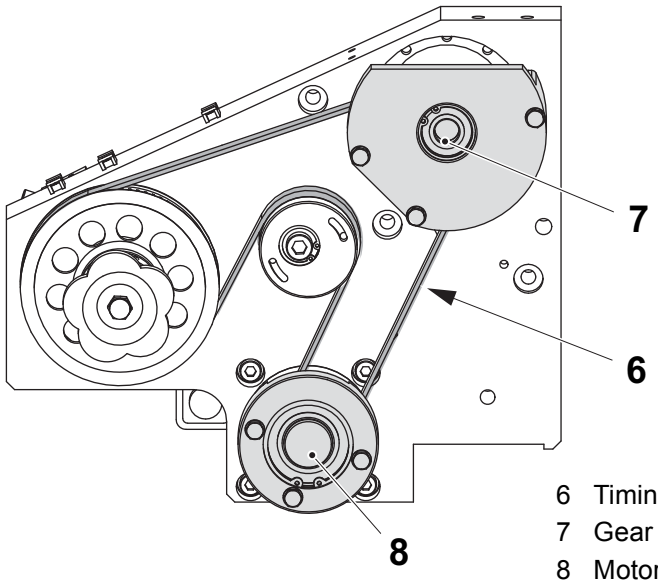

6 Timing belt
7 Gear box
8 Motor

(Cont'd)

(Cont'd)

e) Turn the applicator unit back. Check the scale (5) to set the same angle as before.

f) Tighten the screw (4).

g) Remove the template.

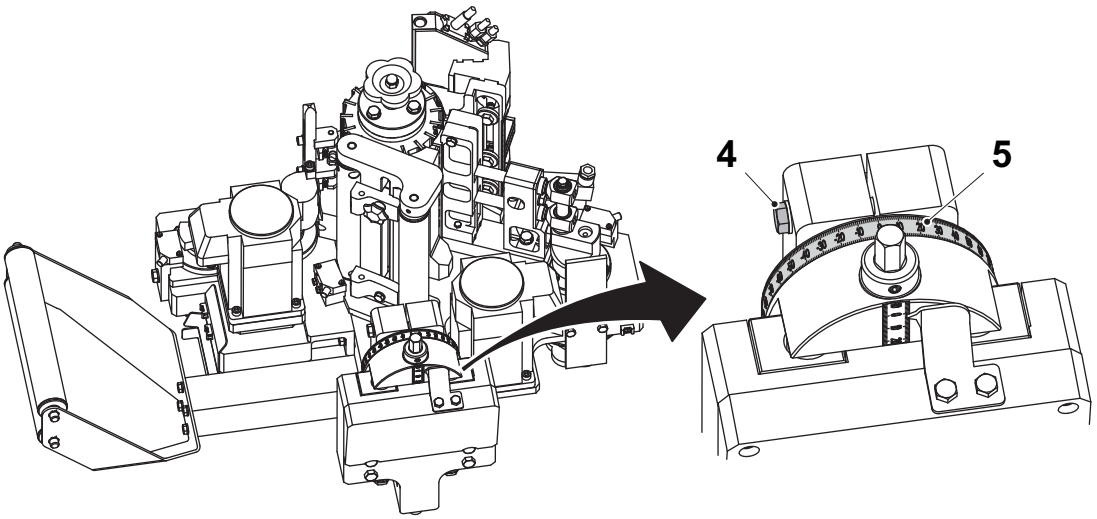

4 Screw
5 Scale

2.4.1-2 Frame Housing - Check Timing Belt (TCA/TWA)

Machine Status	Main Switch OFF Air Valve OFF
SPC Reference	2829433

a) Remove the screws (1) and remove the protective cover (2)

b) Check the timing belt (3) for wear or damage. Change if necessary, see Procedure 2.4.1-3 Frame Housing - Change Timing Belt.

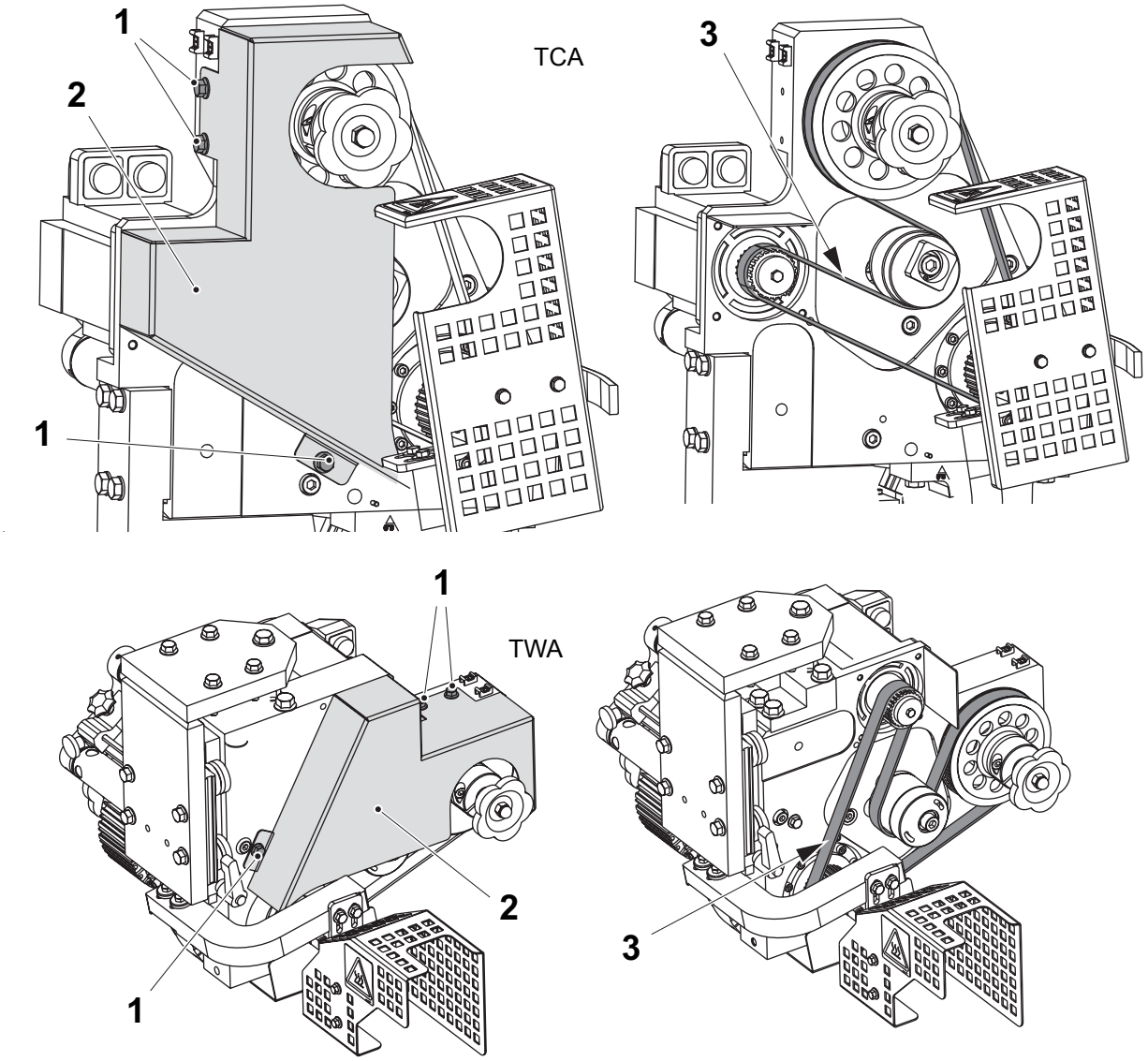

1 Screw
2 Protective cover
3 Timing belt

2.4.1-3 Frame Housing - Change Timing Belt

Machine Status	Main Switch OFF Air Valve OFF
Special Equipment	Hook Spanner TP No. 90243-0164 Template TP No. 2959983
SPC Reference	2829433

WARNING

Burn Hazard.

The hotmelt unit can be very hot and there is risk of severe burns. Use caution when working near the hotmelt unit.

a) Turn the stellar knob (1) until the template (2) fits. The knife (3) should be positioned inside the feed wheel.

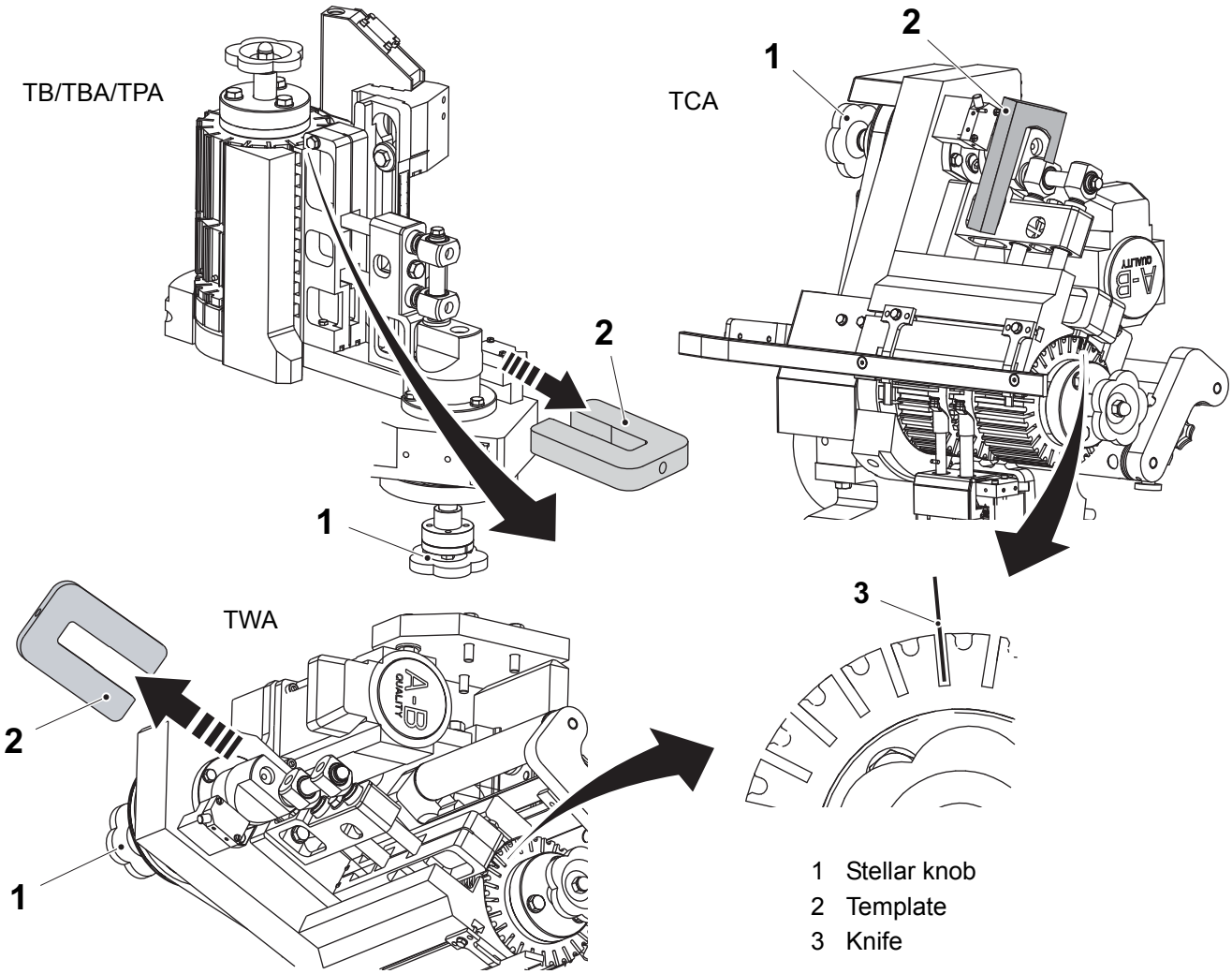

1 Stellar knob
2 Template
3 Knife

(Cont'd)

(Cont'd)

b) For TB/TBA: Loosen the screw (4) and rotate the applicator unit approximately 45° to the left. Cut the ladder band before turning.

Note! Remember the angle position, see the scale (5).

c) For TCA/TWA: Remove the hotmelt gun unit (6) by removing the screws (7).

CAUTION
Risk of damage to the equipment.
The nozzle is easily damaged. Handle the nozzle with care when removing the gun module.

d) For TCA/TWA: Remove the screws (8) and the protective cover (9).

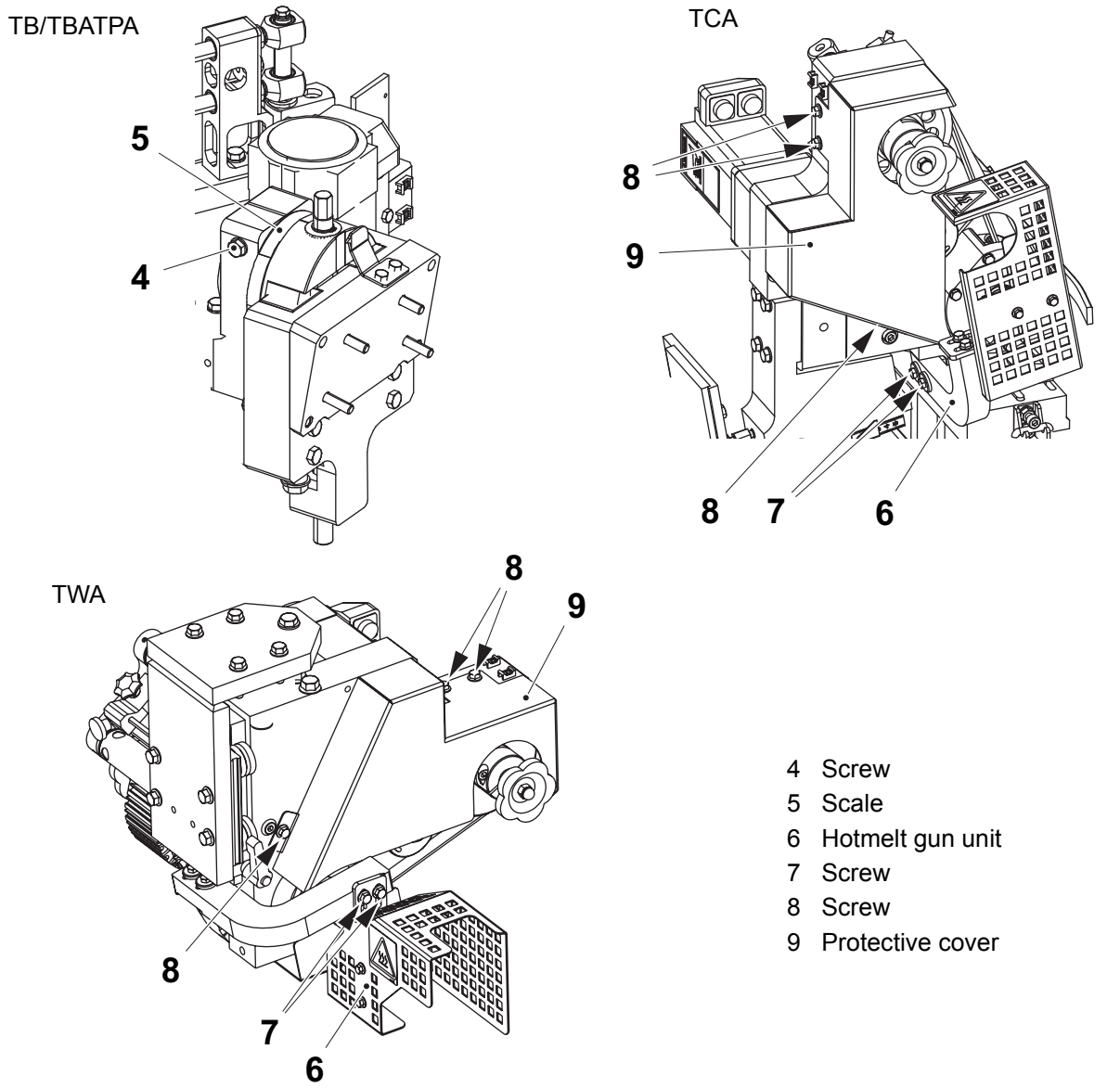

4 Screw
5 Scale
6 Hotmelt gun unit
7 Screw
8 Screw
9 Protective cover

(Cont'd)

(Cont'd)

e) Loosen the screw (10) on the belt tensioner (11).

f) Turn the belt tensioner 3/4 of a revolution to the right to release the belt tension. Use a hook spanner (12).

g) Tighten the screw (10).

h) Remove the screws (13) and the bearing holder (14)

i) Remove the screws (15) and the axle support (16).

j) Remove the timing belt (17).

k) Put the new timing belt over the pulleys.

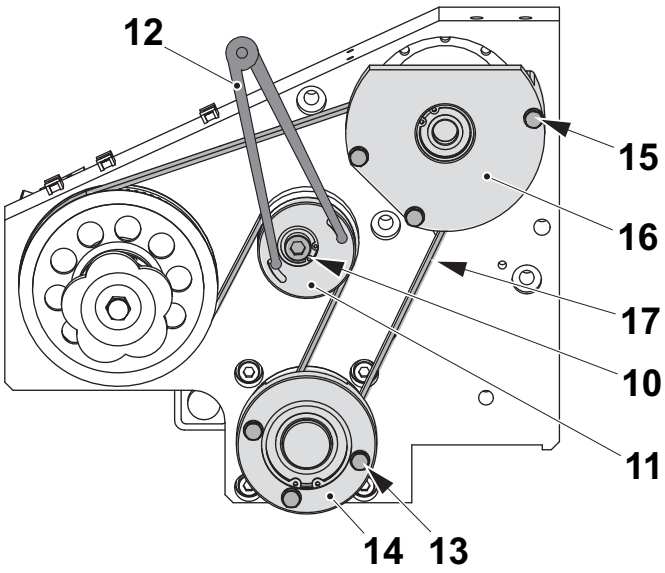

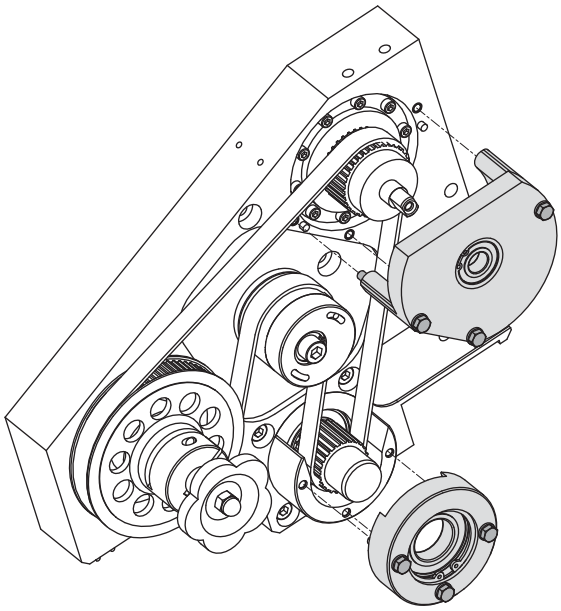

10 Screw
11 Belt tensioner
12 Hook spanner
13 Screw (3 pieces)
14 Bearing holder
15 Screw (3 pieces)
16 Axle support
17 Timing belt

(Cont'd)

(Cont'd)

l) Check that the belt is properly positioned over all the pulleys.

m) Attach the bearing holder (14) with the screws (13).

n) Attach the axle support (16) with the screws (15).

o) Loosen the screw (10).

p) Tighten the screw (10) again.

q) Remove the template (2) and turn the stellar knob (1) approximately five revolutions to even out the tension of the belt.

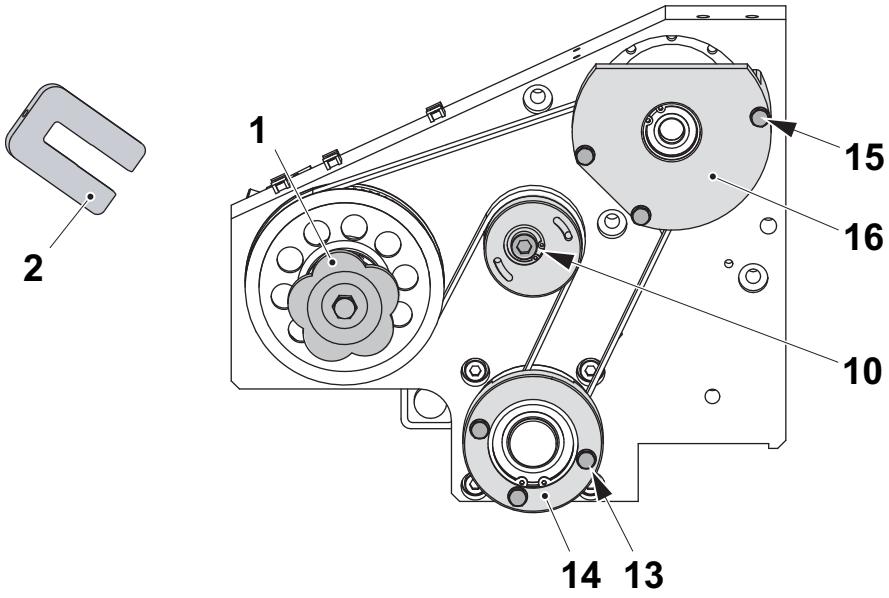

1 Stellar knob
2 Template
10 Screw
13 Screw (3 pieces)
14 Bearing holder
15 Screw (3 pieces)
16 Axle support

(Cont'd)

(Cont'd)

r) For TB/TBA/TPA: Turn the applicator unit back. Make sure that the scale (5) has the same value as before and tighten the screw (4).

s) Check that the knife is in the centre of the feed wheel slot. If not, adjust the feed wheel unit, see 2.1-5 Feed Wheel Unit - Set.

t) For TCA/TWA: Attach the protective cover (9) with the screws (8).

u) Set the pick position, see Procedure 7.2.2-2 Maintenance - Set Pick Position (TB/TBA/TPA) for TB/TBA/TPA, Procedure 7.2.2-3 Maintenance - Set Pick Position (TCA/TWA) for TCA/TWA.

TB/TBATPA

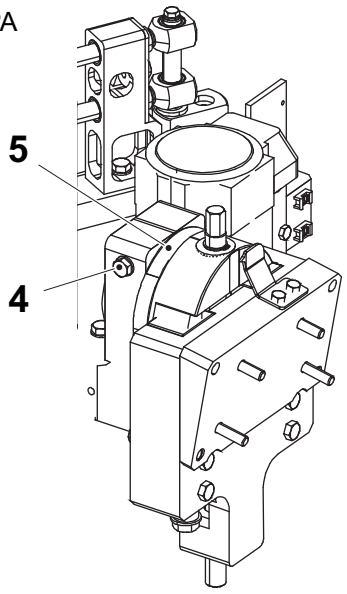

TCA

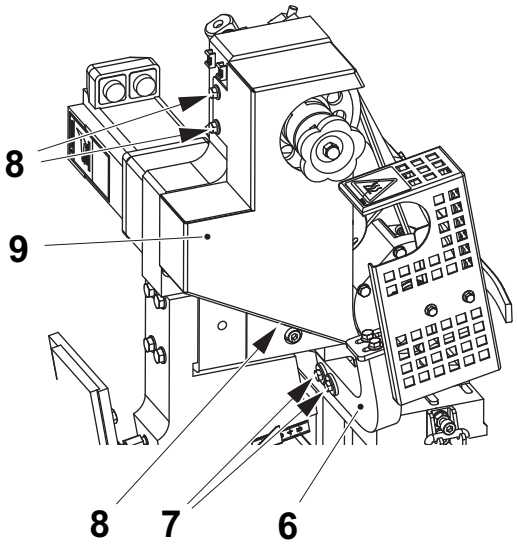

TWA

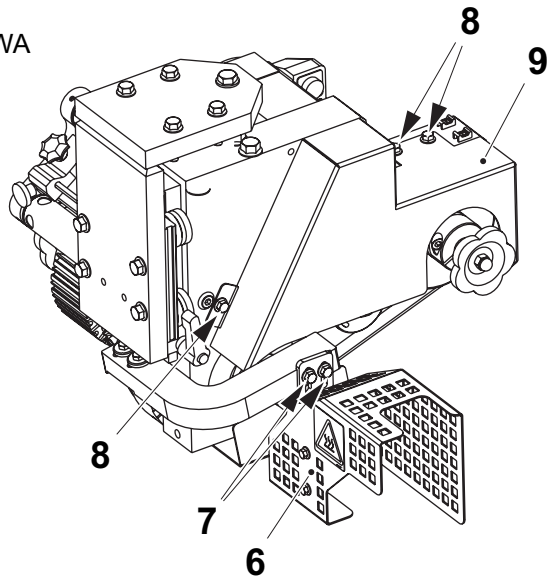

4 Screw
5 Scale
6 Hotmelt gun unit
7 Screw
8 Screw
9 Protective cover

2.4.2 Belt Tensioner

2.4.2-1 Belt Tensioner - Check Parts

Machine Status	Main Switch OFF Air Valve OFF
Special Equipment	Hook spanner TP No. 90243-0164 Template TP No. 2959983
SPC Reference	3022735

WARNING

Burn hazard.

The hotmelt guns can be very hot. Use caution when working near the hotmelt guns.

a) Turn the stellar knob (1) until the template (2) fits. The knife (3) should be positioned inside the feed wheel slot.

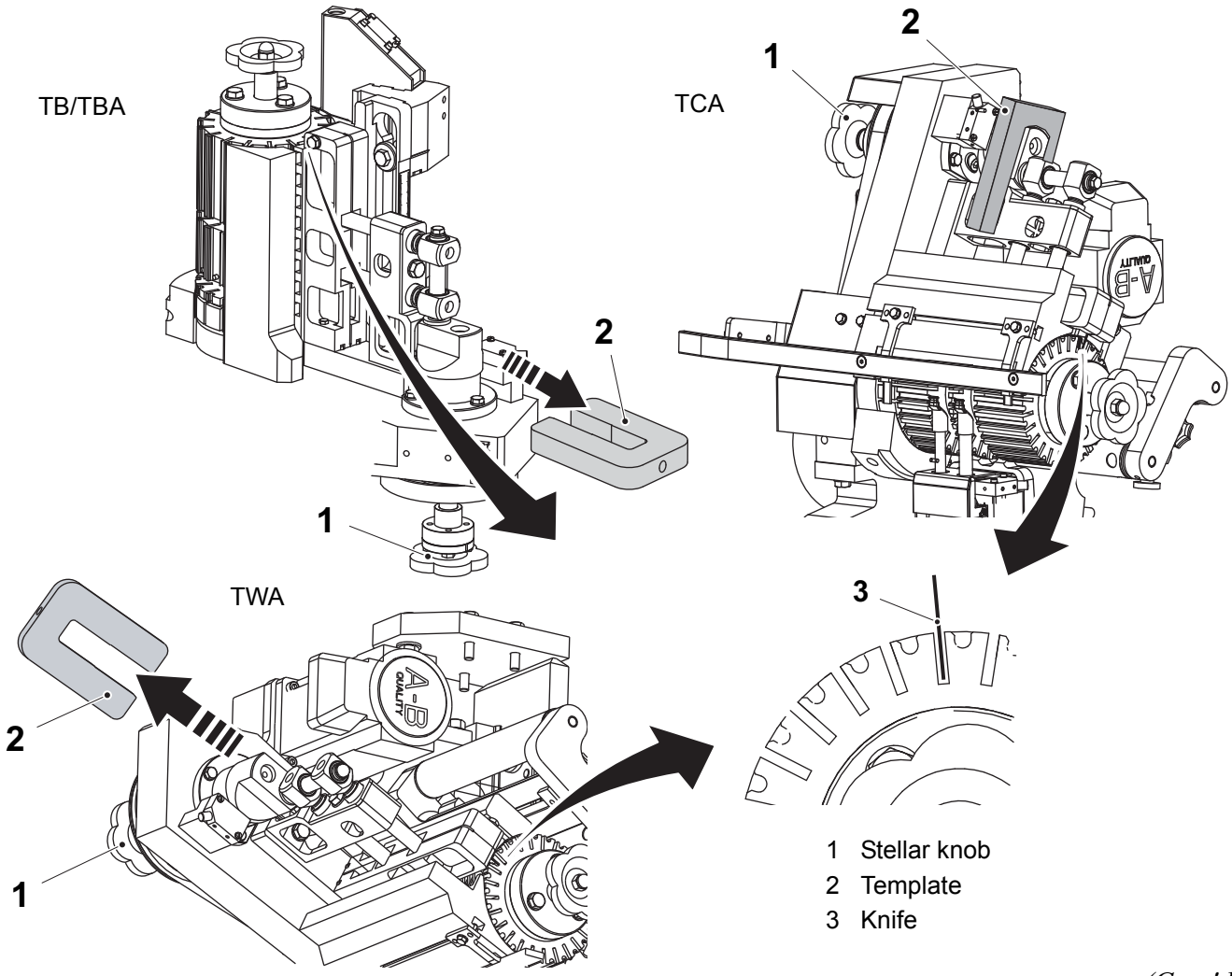

(Cont'd)

(Cont'd)

b) For TB/TBA: Loosen the screw (4) and rotate the applicator unit approximately 45° to the left. Cut the ladder band before turning.

Note! Remember the angle position, see the scale (5).

c) For TCA/TWA: Remove the hotmelt gun unit (6) by removing the screws (7).

CAUTION
Risk of damage to the equipment.
The nozzle is easily damaged. Handle the nozzle with care when removing the gun module.

d) For TCA/TWA: Remove the screws (8) and the protective cover (9).

TB/TBATPA

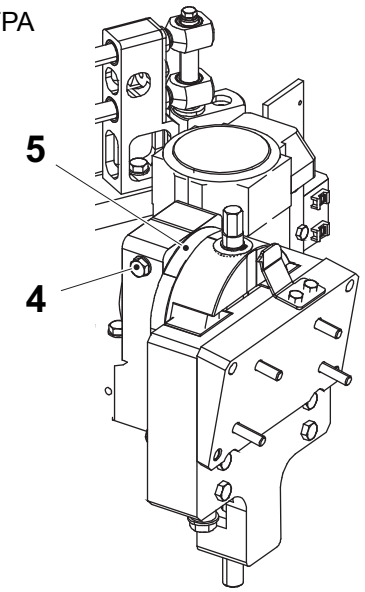

TCA

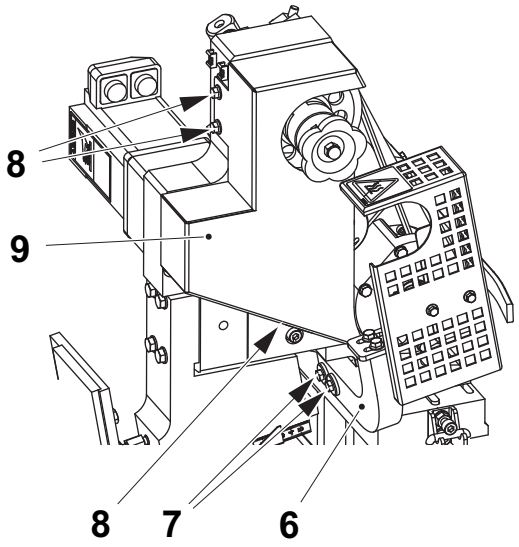

TWA

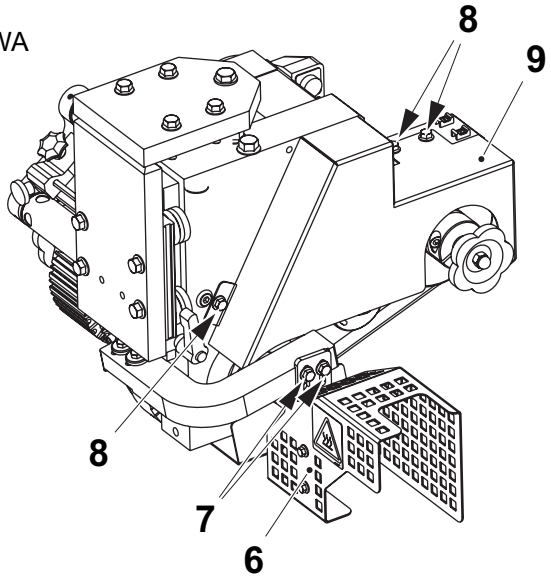

4 Screw
5 Scale
6 Hotmelt gun unit
7 Screw
8 Screw
9 Protective cover

(Cont'd)

(Cont'd)

e) Loosen the screw (10) on the belt tensioner (11).

f) Turn the belt tensioner 3/4 of a revolution to the right to release the belt tension. Use a hook spanner (12).

g) Tighten the screw (10).

h) Remove the timing belt (13).

i) Remove the screw (10) and the belt tensioner (11).

j) Check the turn spring (11) and the screw (10) for wear or damage. Change if necessary, see 2.4.2-2 Belt Tensioner - Change Parts.

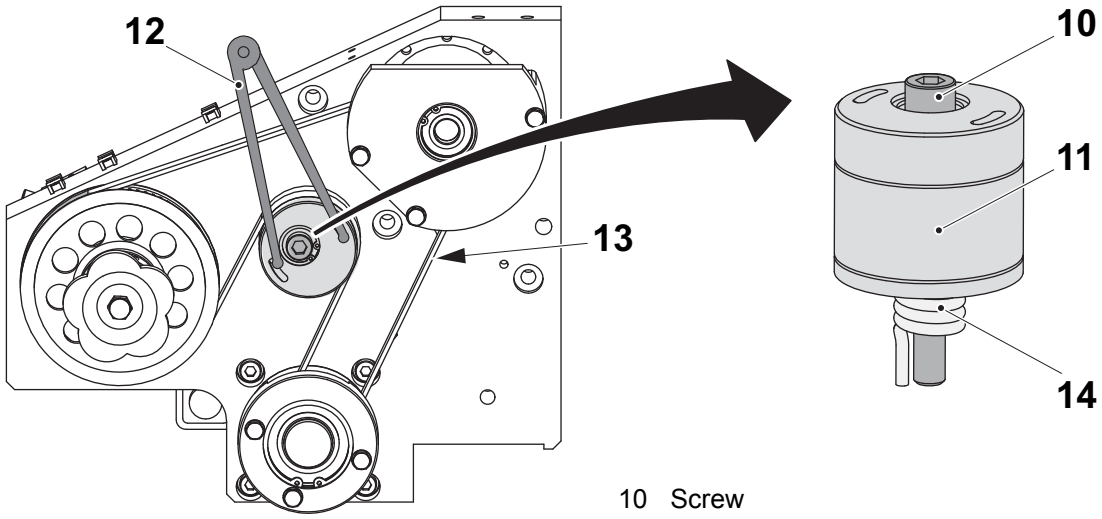

10 Screw
11 Belt tensioner
12 Hook spanner
13 Timing belt
14 Turn spring

(Cont'd)

(Cont'd)

k) Remove the lid (15).

l) Check the ball bearing (16), the retaining rings (17), and the thrust ball bearing (18) for wear or damage. Change if necessary, see 2.4.2-2 Belt Tensioner - Change Parts.

m) Put the lid (15) back on the belt tensioner.

n) Put the belt tensioner into place with the screw (10), but without yet tightening the screw. Use the hole (19) for S- and T-straws, and the hole (20) for U-straws.

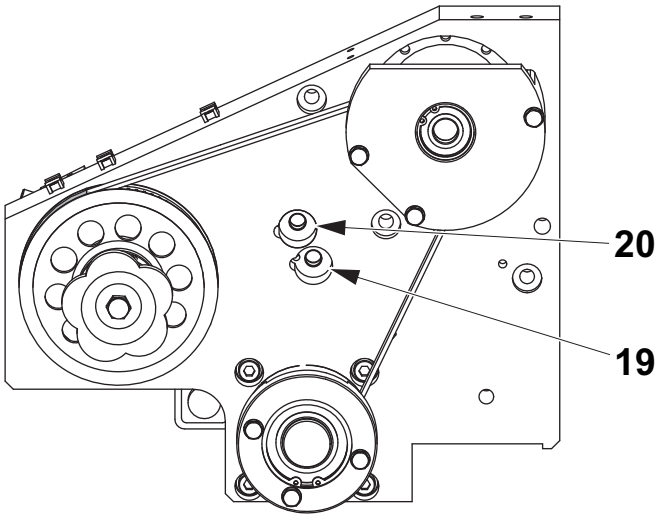

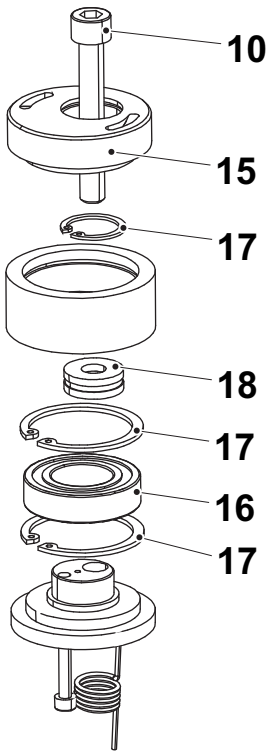

10 Screw
15 Lid
16 Ball bearing
17 Retaining ring
18 Thrust ball bearing
19 Hole S/T-15
20 Hole U-22

(Cont'd)

(Cont'd)

o) Put the timing belt over the pulleys.

p) Turn the belt tensioner 3/4 of a revolution with the hook spanner (12).

q) Tighten the screw (10) on the belt tensioner.

r) Remove the template (2) and turn the stellar knob (1) approximately five revolutions to even out the tension of the belt.

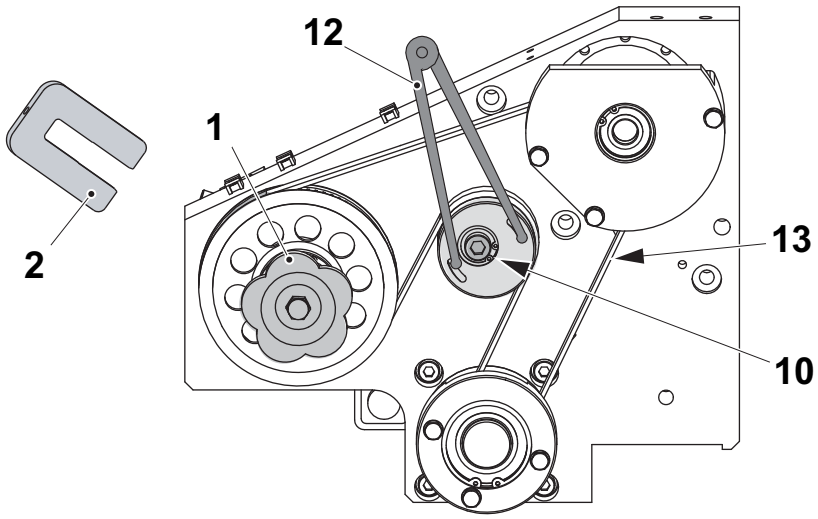

1 Stellar knob
10 Screw
12 Hook spanner
13 Timing belt

(Cont'd)

(Cont'd)

s) For TB/TBA/TPA: Turn the applicator unit back. Make sure that the scale (5) has the same value as before and tighten the screw (4).

t) Check that the knife is in the centre of the feed wheel slot. If not, adjust the feed wheel unit, see 2.1-5 Feed Wheel Unit - Set.

u) For TCA/TWA: Attach the protective cover (9) with the screws (8).

v) Set the pick position, see Procedure 7.2.2-2 Maintenance - Set Pick Position (TB/TBA/TPA) for TB/TBA/TPA, Procedure 7.2.2-3 Maintenance - Set Pick Position (TCA/TWA) for TCA/TWA.

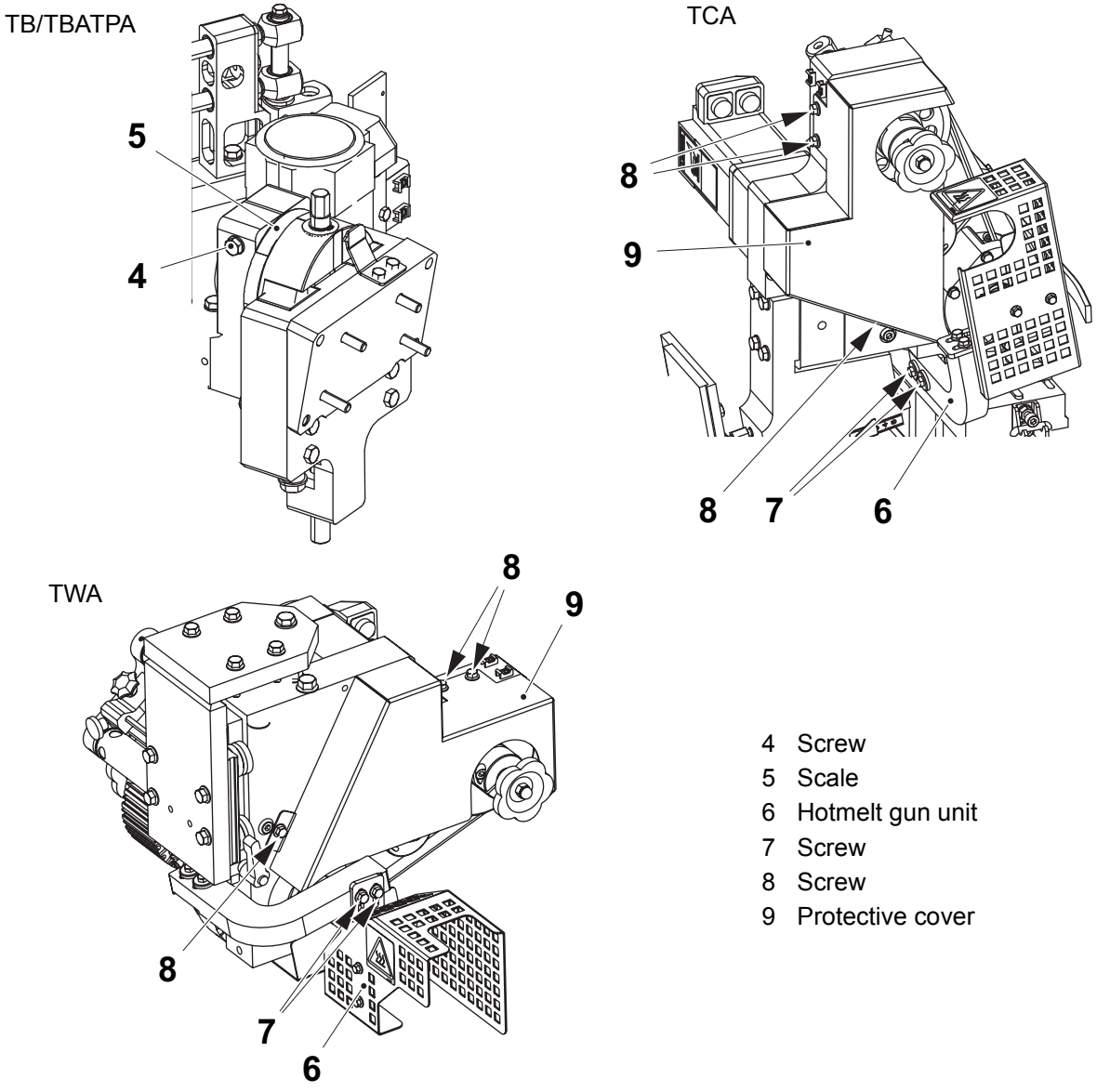

4 Screw
5 Scale
6 Hotmelt gun unit
7 Screw
8 Screw
9 Protective cover

2.4.2-2 Belt Tensioner - Change Parts

Machine Status	Main Switch OFF Air Valve OFF
Special Equipment	Hook spanner TP No. 90243-0164 Template TP No. 2959983
SPC Reference	3022735

WARNING

Burn hazard.

The hotmelt guns can be very hot. Use caution when working near the hotmelt guns.

CAUTION

Risk of damage to equipment.

The nozzles are easily damaged. Handle the nozzles with care when removing the gun modules.

a) To change parts, perform items a) to i) in Section 2.4.2-1 Belt Tensioner - Check Parts.

(Cont'd)

(Cont'd)

b) Change the turn spring (1) and the screw (2).

c) Remove the lid (3).

d) Change the retaining rings (4), the ball bearing (5), and the thrust ball bearing (6).

e) To assemble the belt tensioner, perform items m) to v) in Section 2.4.2-1 Belt Tensioner - Check Parts.

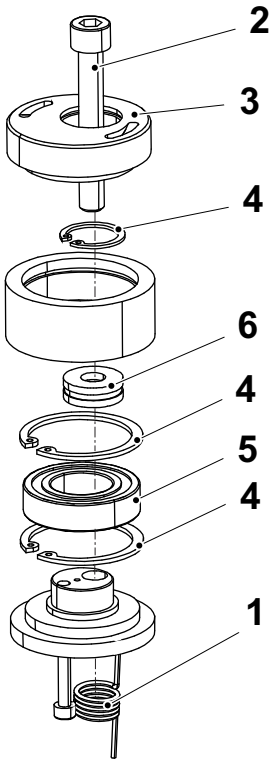

1 Turn spring
2 Screw
3 Lid
4 Retaining ring (3 pieces)
5 Ball bearing
6 Thrust ball bearing

2.5 Ladder Band Guide

2.5-1 Ladder Band Guide - Set TB/TBA/TPA

Machine Status	Main Switch OFF Air Valve OFF
SPC Reference	2987398

a) Place the straw (1) so it touches the lower bracket (2).

b) Loosen the star handle (3) and adjust the height of the bracket (4) according to distance A.

c) Tighten the star handle (3).

A = 1 to 2 mm

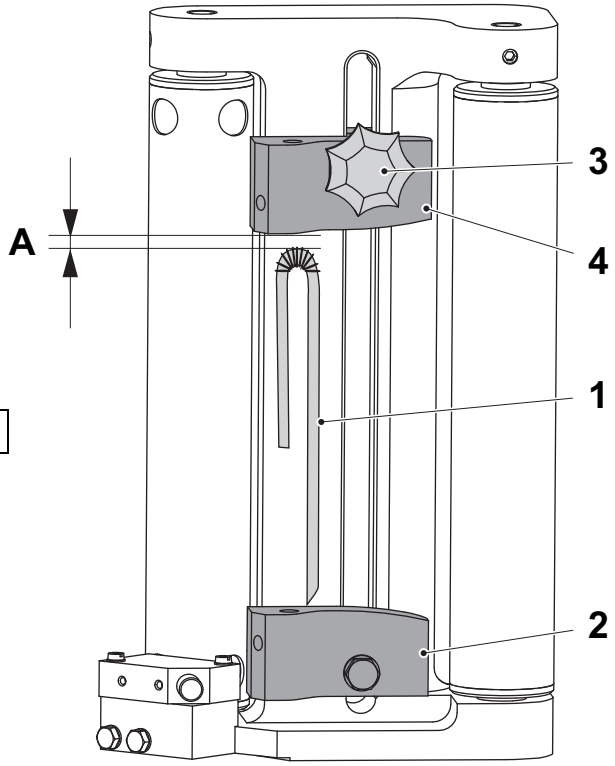

1 Straw
2 Bracket
3 Star handle
4 Bracket

2.5-2 Ladder Band Guide - Set (TCA/TWA)

Machine Status	Main Switch OFF Air Valve OFF
SPC Reference	2987398

a) Put a ladder band in the ladder band guide.

b) Loosen the star handles (1) and (2).

c) Set the distance between the brackets (4) and (5). The distance A between the bracket and the straw is to be approximately 1 mm.

d) Tighten the star handles (1) and (2).

e) Loosen the knob (3).

f) Set the distance B so that the straw is positioned on the feed wheel according to the illustration below. See Chapter 12.1 Guideline Settings for values of the distance B.

– For the U-straw: Make sure that the short end of the U-straw is supported by the middle part of the feed wheel.

g) Tighten the knob (3).

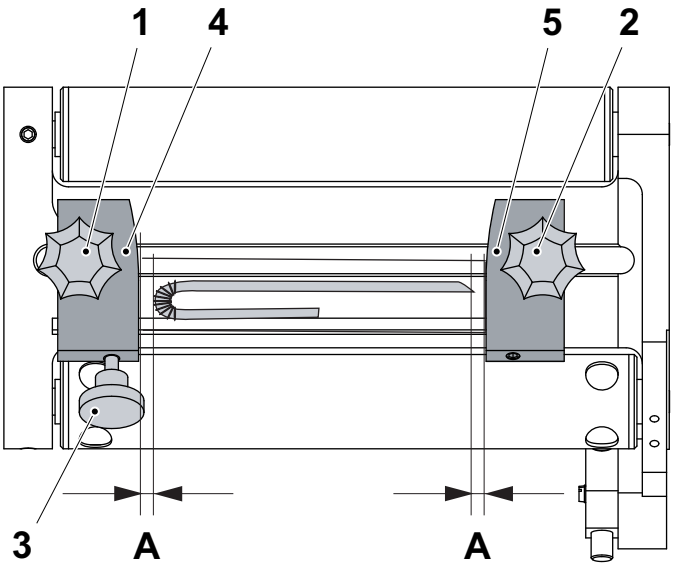

1 Star handle
2 Star handle
3 Knob
4 Bracket
5 Bracket

A = 1 mm

U-straw

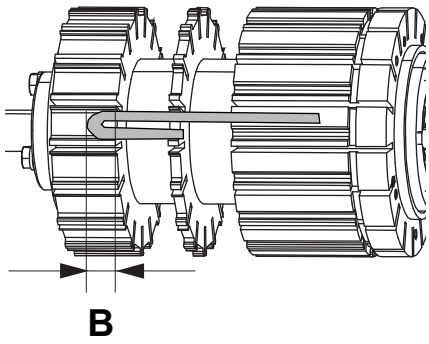

S/T-straw

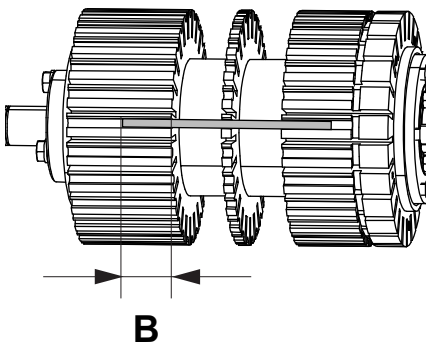

2.6 Guide Console

2.6-1 Guide Console - Change Guide Arms (TB/TBA/TPA)

Machine Status	Main Switch OFF Air Valve OFF
SPC Reference	2829435 valid for TB/TBA/TPA

WARNING

Burn hazard.

The hotmelt guns can be very hot. Use caution when working near the hotmelt guns.

CAUTION

Risk of damage to equipment.

The nozzles are easily damaged. Handle the nozzles with care when removing the gun holders.

Note! Remember the positions of the gun holders (2) and (8), and the spring holder (6), see the scale (4).

a) Loosen the screw (1).

b) Slide the gun holder (2) through the hole (3).

c) Loosen the screw (5).

d) Slide the spring holder (6) through the hole (3).

e) Loosen the screw (7).

f) Slide the gun holder (8) through the hole (3).

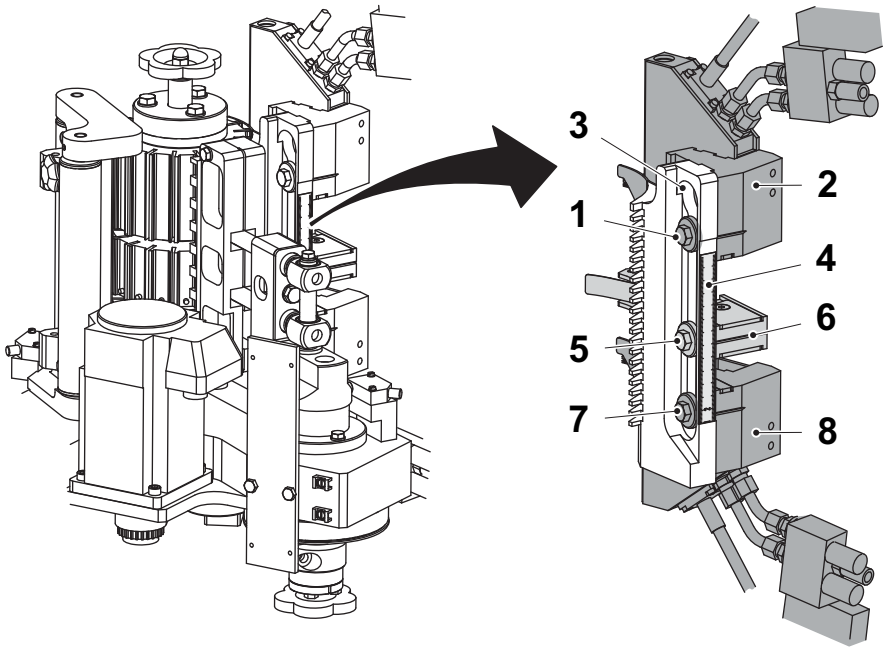

1 Screw
2 Gun holder
3 Hole
4 Scale
5 Screw
6 Spring holder
7 Screw
8 Gun holder

(Cont'd)

(Cont'd)

g) Remove the screw (9) and change the guide arm (10).
h) Remove the screw (11) and change the guide arm (12).
i) Assemble in the reverse order.

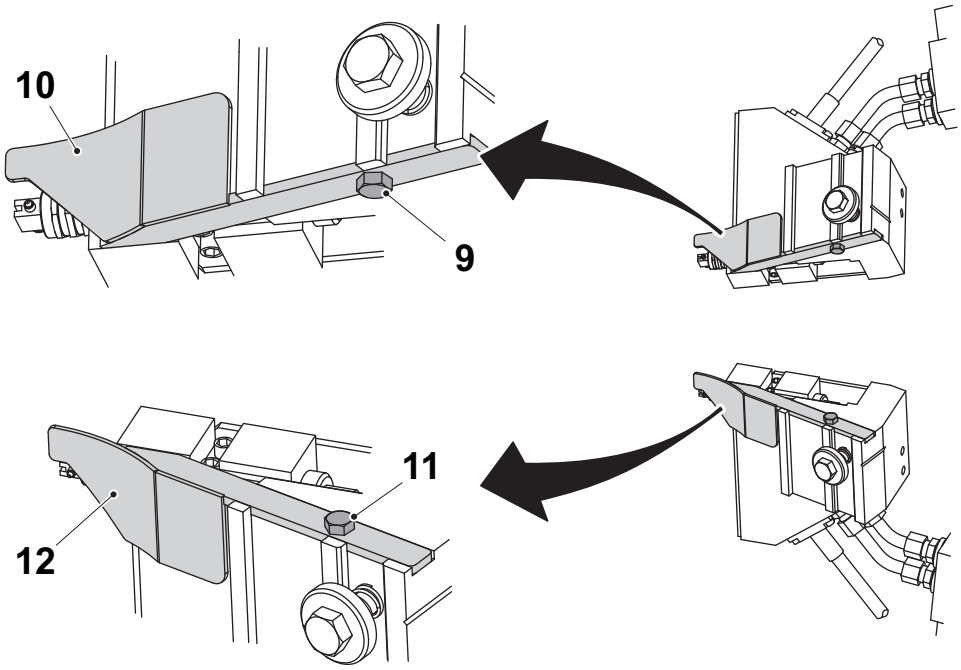

9 Screw
10 Guide arm
11 Screw
12 Guide arm

2.6-2 Guide Console - Set Gun Holder (TB/TBA/TPA)

To set the position of the gun holders, see 3.2.1-3 Hotmelt Gun - Set Gun Holder (TB/TBA/TPA).

2.6-3 Guide Console - Set (TCA/TWA)

Machine Status	Main Switch OFF Air valve OFF
SPC Reference	2957700 valid for TCA/TWA

a) Loosen the screws (1).

b) Adjust the distance between the holders (2). Make sure the holders hold on the plastic foil, but not on the straw. See figure below.

c) Tighten the screws (1).

d) Loosen the screw (3) to adjust the horizontal position of the finger (4). It should be positioned over the centre part of the feed wheel.

e) Tighten the screw (3).

f) Set the pick position, see Procedure 7.2.2-3 Maintenance - Set Pick Position (TCA/TWA).

g) Loosen the screw (5) to adjust the vertical position of the finger (4). It should hold on the plastic foil, but not on the straw.

h) Tighten the screw (5).

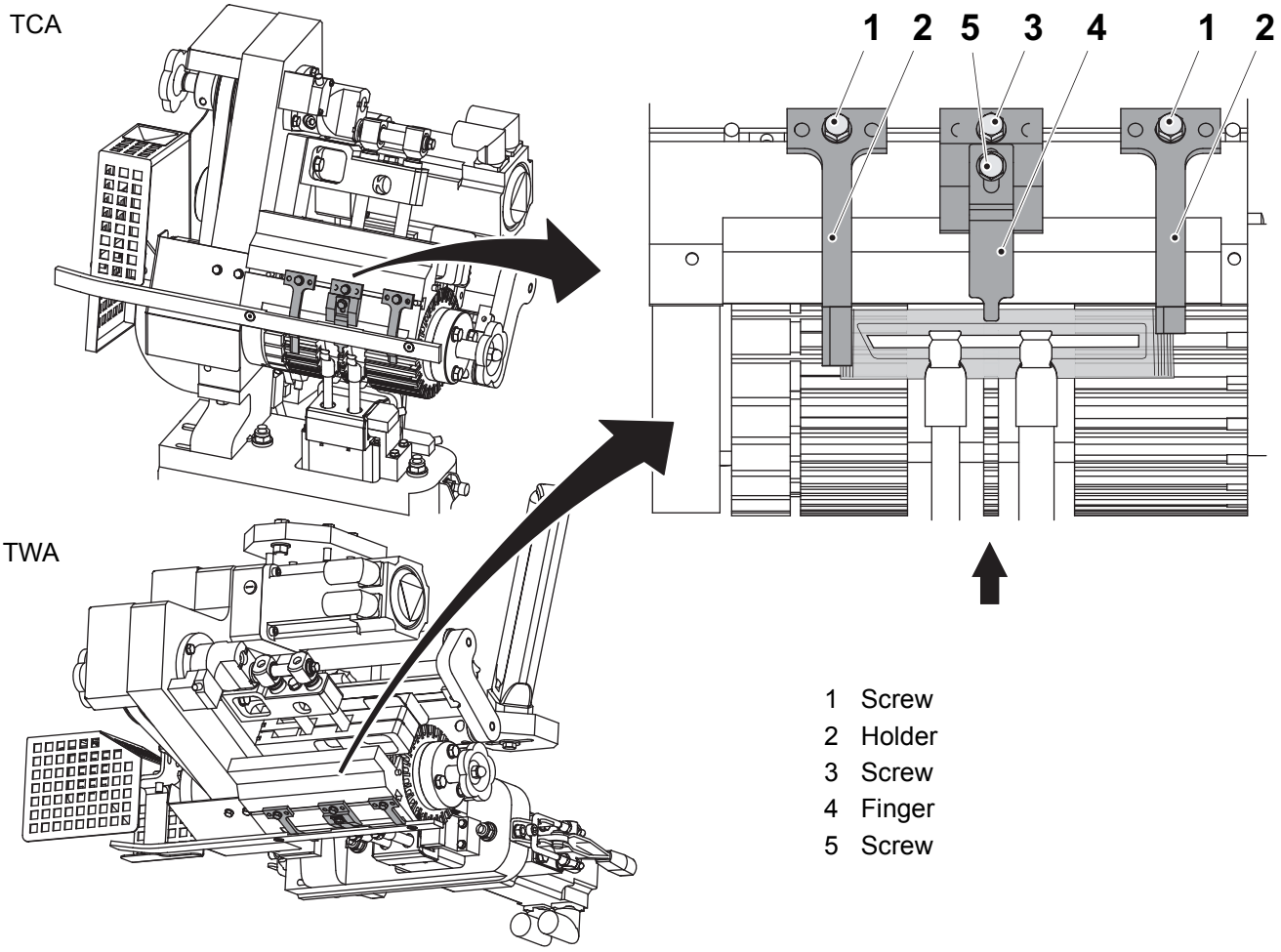

2.6-4 Guide Console - Set Straw not in Position Sensor (TB/TBA/TPA)

Machine Status	Main Switch ON Air valve OFF
SPC Reference	2829435 valid for TB/TBA/TPA

Note! The Straw not in position sensor is not enabled at machine delivery.

a) Remove the feed wheel, see Section 2.1-1 Feed Wheel Unit - Check Parts (TB/TBA/TPA), item a) to d).

b) Make sure that nothing is blocking the light from the fibre sensor head (1).

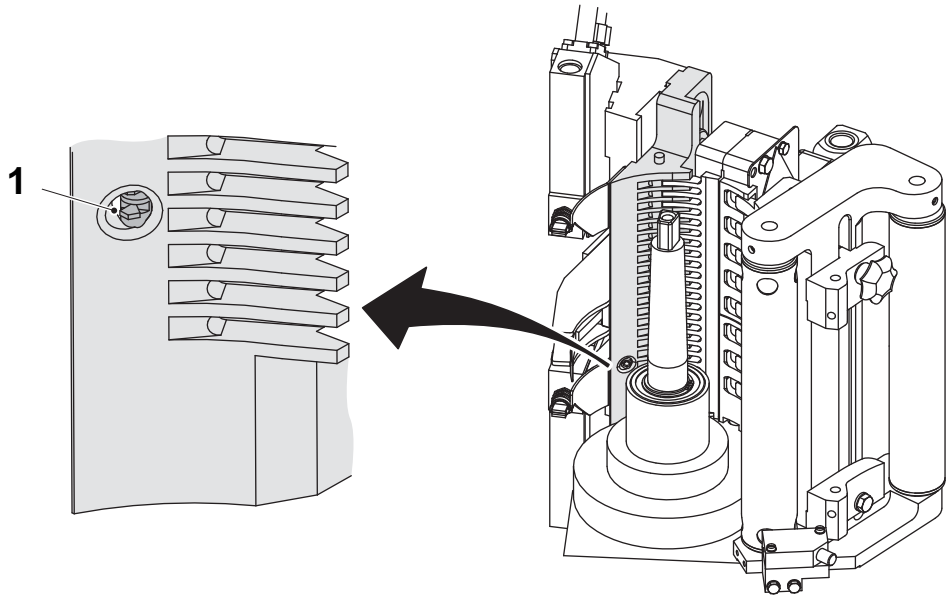

1 Fibre sensor head

(Cont'd)

(Cont'd)

c) Open the lid of the amplifier (2).

d) Release the lock (3) on the fibres (4) and make sure that the fibres are pushed all the way to the bottom in the amplifier, then lock it again.

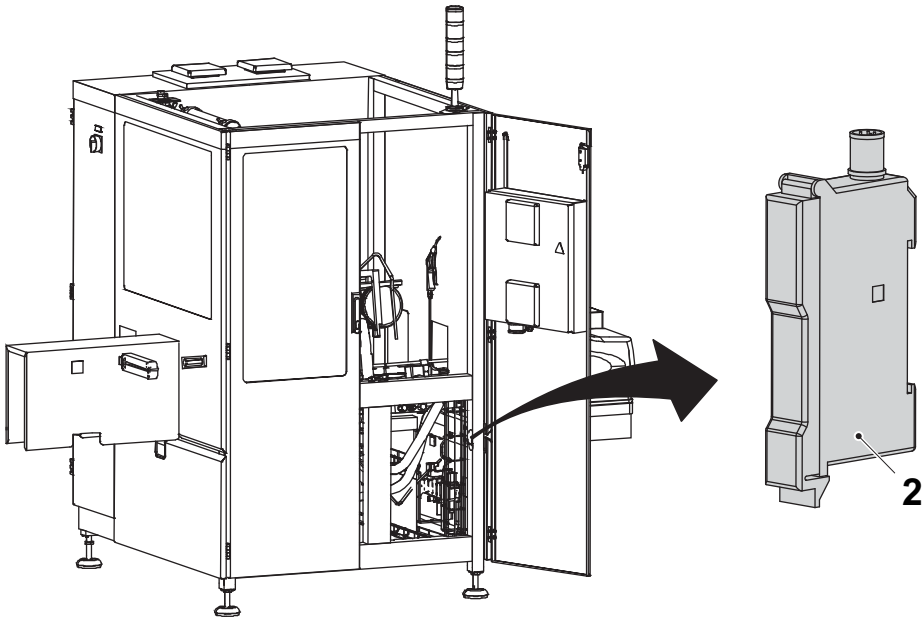

2 Amplifier
3 Lock
4 Fibre

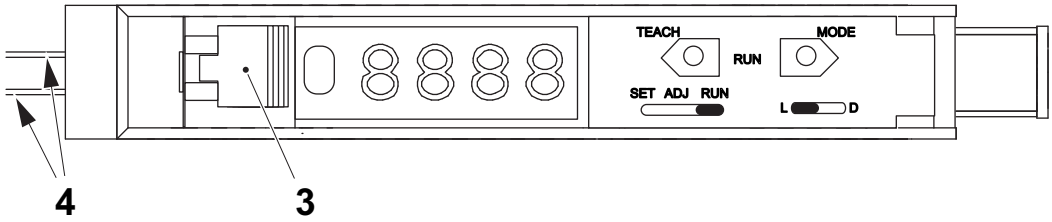

(Cont'd)

(Cont'd)

e) Put the amplifier in RUN mode (5), and L mode (6).

f) Press the TEACH button (7) until the 0 value is set.

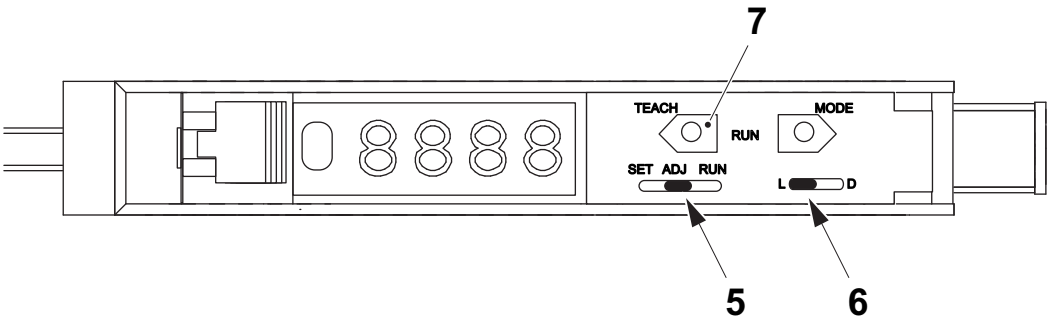

5 RUN mode
6 L mode
7 TEACH button

Note! Always set the threshold after setting the 0 value.

g) After setting the 0 value it is important to adjust the threshold of the amplifier. Switch the amplifier to ADJ mode (8).

h) Use the TEACH button (7) and the MODE button (9) to set the threshold to 1100. Make sure it is not -1100 (minus).

Note! The threshold value may have to be adjusted to a lower value when running with transparent straws.

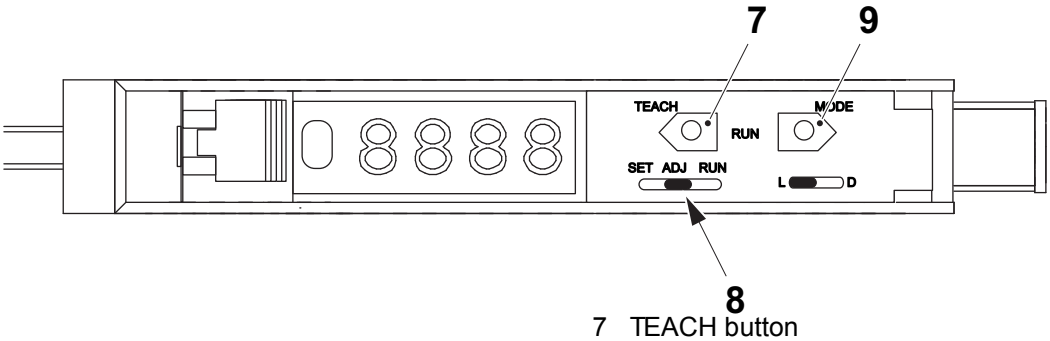

7 TEACH button
8 ADJ mode
9 MODE button

(Cont'd)

(Cont'd)

i) Set the amplifier back to RUN mode (10).

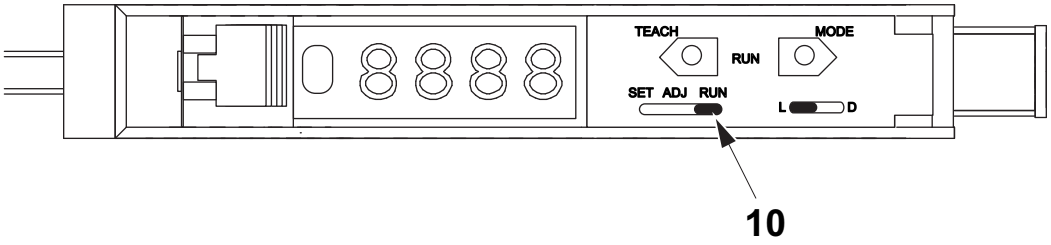

10 RUN mode

j) Assemble the feed wheel and the ladderband again.

k) Turn the feed wheel by hand to have straws pass by the light of the sensor. Now the Operation indicator should be lit when the level is 1100 and higher. When the straw is directly in front of the fibre sensor head the value on the amplifier should be close to 4000.

l) For the alarm on the SA30 it is important that the pick position is correctly set, see Procedure 7.2.2-2 Maintenance - Set Pick Position (TB/TBA/TPA).

2.7 Spring Holder

2.7-1 Spring Holder - Check Parts (TB/TBA)

Machine Status	Main Switch OFF Air Valve OFF
SPC Reference	2923353 valid for TB/TBA

a) Check that there is no residue on the leaf spring (1) or in between the surfaces of the spring holder (2) and the spring bracket (3). Clean if necessary.

b) Check the compression springs (4) by pressing on the leaf spring (1), that it moves in an elastic way. Change if necessary, see 2.7-2 Spring Holder - Change Compression Springs (TB/TBA/TPA).

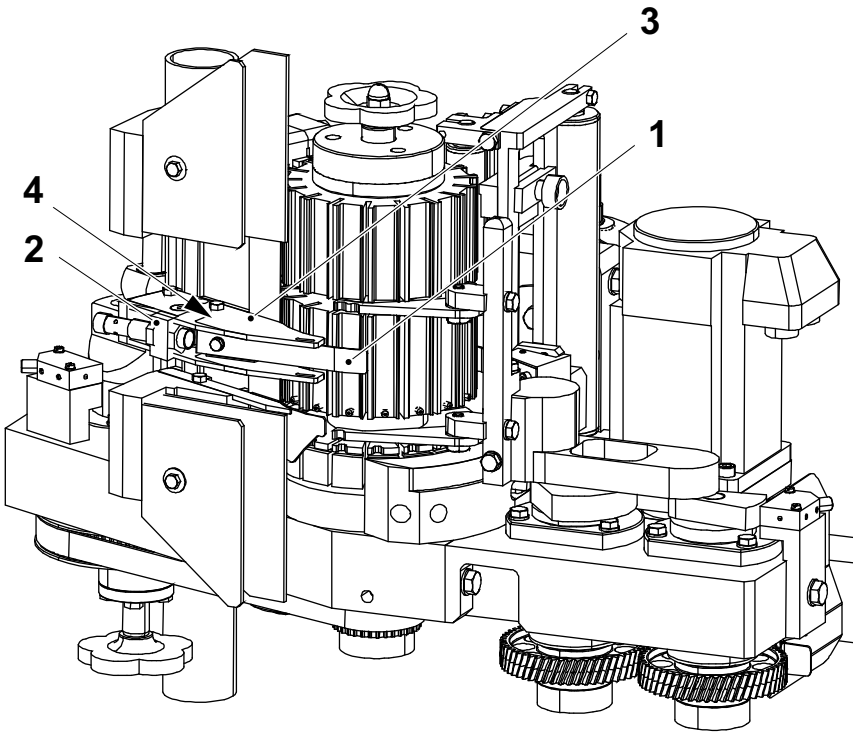

1 Leaf spring
2 Spring holder
3 Spring bracket
4 Compression spring (2 pieces)

2.7-2 Spring Holder - Change Compression Springs (TB/TBA/TPA)

Machine Status	Main Switch OFF Air Valve OFF
SPC Reference	2923353 valid for TB/TBA/TPA

WARNING

Burn hazard.

The hotmelt guns can be very hot. Use caution when working near the hotmelt guns.

a) Remove the hose from the holder.

CAUTION

Risk of damage to equipment.

The nozzles are easily damaged. Handle the nozzles with care when removing the gun holders.

Note! Remember the positions of the gun holder, and the spring holder, see the scale (4).

b) Loosen the screw (1), slide the gun holder (2) upwards and pull the screw out of the hole (3).

c) Loosen the screw (5), slide the spring holder (6) upwards and pull the screw out of the hole (3).

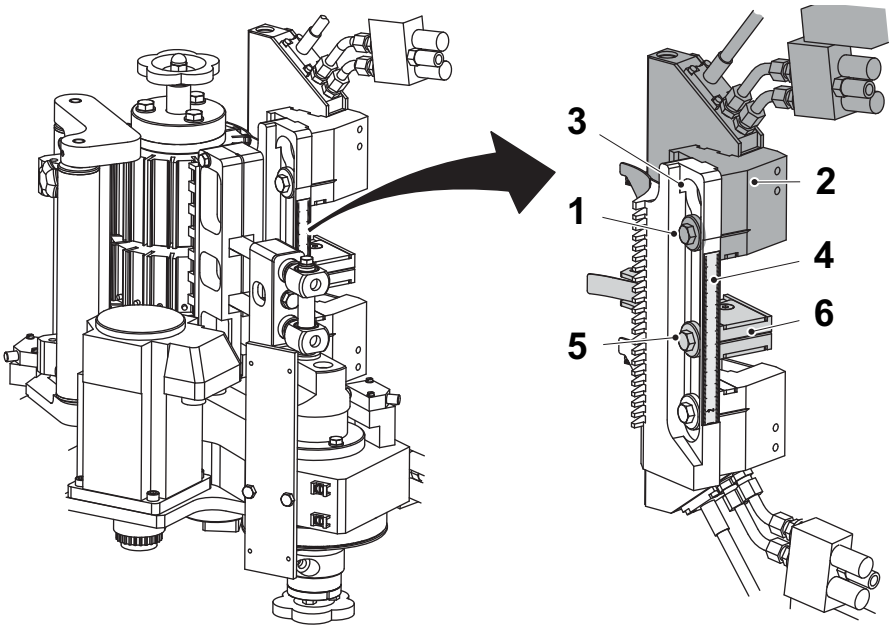

1 Screw
2 Gun holder
3 Hole
4 Scale
5 Screw
6 Spring holder

(Cont'd)

(Cont'd)

d) Remove the screws (7) and the guide arms (8) and (9) from the spring holder (6).

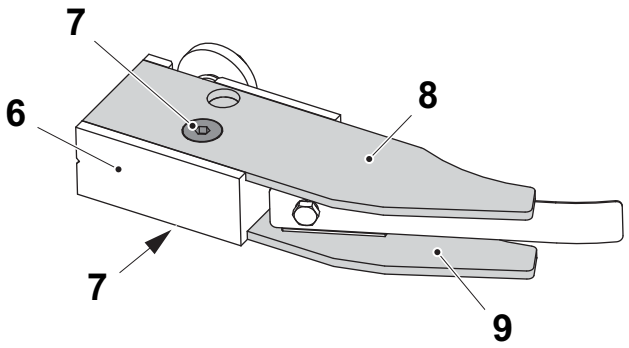

6 Spring holder
7 Screw
8 Guide arm
9 Guide arm

e) Use a mandrel to release the parallel pin (10) from the spring bracket (11).

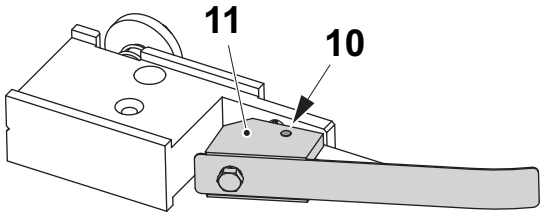

10 Parallel pin
11 Spring bracket

f) Change the compression springs (12).

- For TB/TBA, use the compression springs 90600-7711.
- For TPA, use the compression springs 536204-0000.

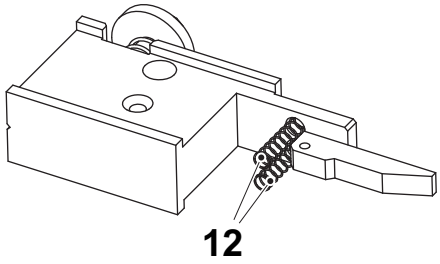

12 Compression spring

g) Assemble in the reverse order.

2.7-3 Spring Holder - Change Leaf Spring (TB/TBA/TPA)

Machine Status	Main Switch OFF Air Valve OFF
SPC Reference	2923353 valid for TB/TBA/TPA

WARNING

Burn hazard.

The hotmelt guns can be very hot. Use caution when working near the hotmelt guns.

a) Remove the hose from the holder.

CAUTION

Risk of damage to equipment.

The nozzles are easily damaged. Handle the nozzles with care when removing the gun holders.

Note! Remember the positions of the gun holder, and the spring holder, see the scale (4).

b) Loosen the screw (1), slide the gun holder (2) upwards and pull the screw out of the hole (3).

c) Loosen the screw (5), slide the spring holder (6) upwards and pull the screw out of the hole (3).

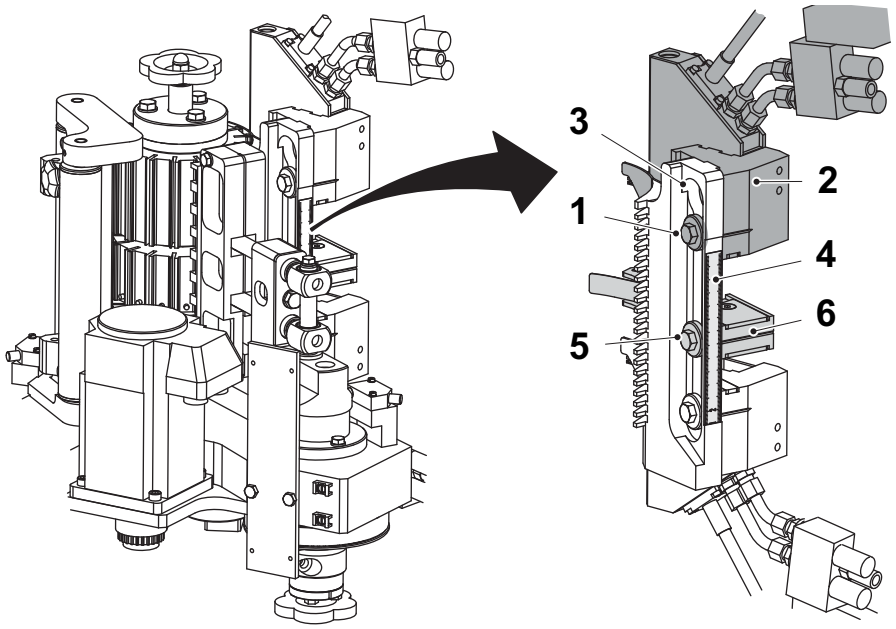

1 Screw
2 Gun holder
3 Hole
4 Scale
5 Screw
6 Spring holder

(Cont'd)

(Cont'd)

d) Remove the screws (7) and the guide arms (8) and (9) from the spring holder (6).

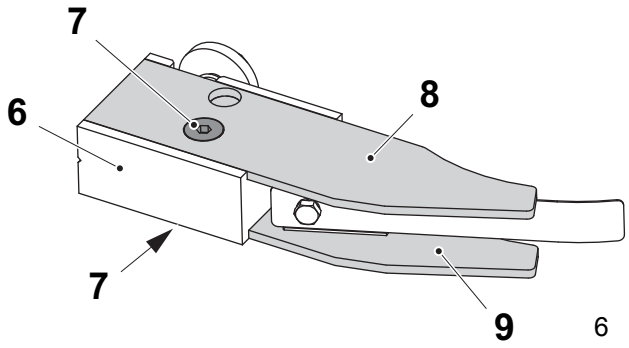

6 Spring holder
7 Screw
8 Guide arm
9 Guide arm

e) Remove the screw (10) and change the leaf spring (11).

f) Reassemble in the reverse order.

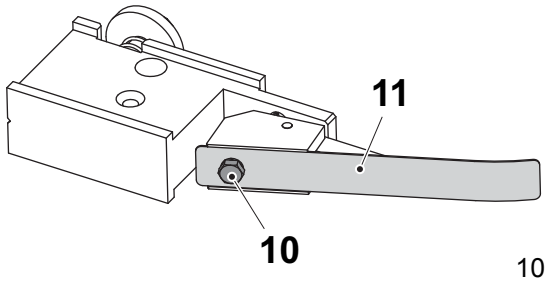

10 Screw
11 Leaf spring

2.7-4 Spring Holder - Set Leaf Spring (TB/TBA/TPA)

Machine Status	Main Switch OFF Air Valve OFF
SPC Reference	2923353 valid for TB/TBA/TPA

Note! The illustrations show how to set the TB/TBA variant. The procedure is the same for TPA.

a) Loosen the screw (1).

b) Move the spring holder (2) to set the height of the leaf spring (3). Set the height on the scale (4) according to the table in Section 12.1 Guideline Settings. The leaf spring (3) should be positioned between the pressure arms (5).

Note! When running with U-straws (7), the leaf spring should hold the U-straw bend.

c) Tighten the screw (1).

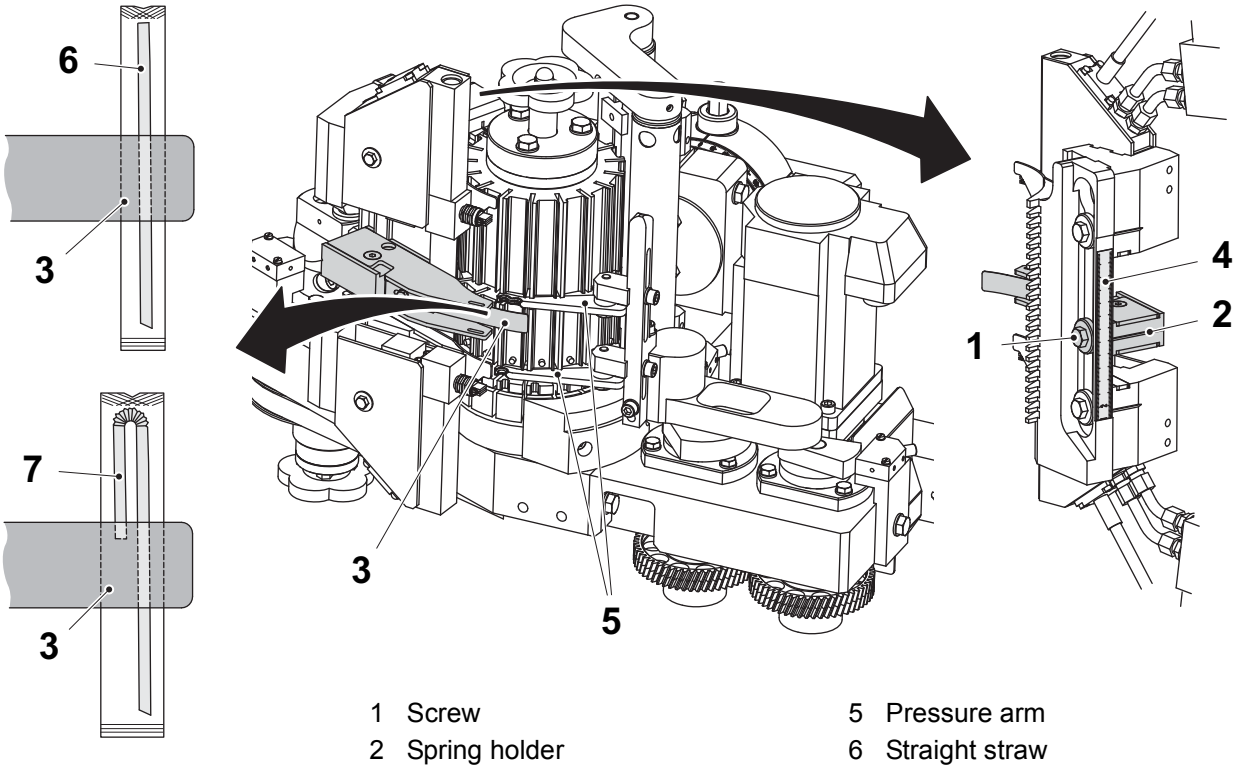

1 Screw
2 Spring holder
3 Leaf spring
4 Scale
5 Pressure arm
6 Straight straw
7 U-straw

2.8 Crankshaft

2.8-1 Crankshaft - Check Parts

Machine Status	Main Switch OFF Air Valve OFF
Special Equipment	Hook spanner TP No. 90243-0164
SPC Reference	2829436

a) Turn the stellar knob (1) until the knife (2) is in its outer position.

b) Assemble the template (3).

c) Remove the screw (4).

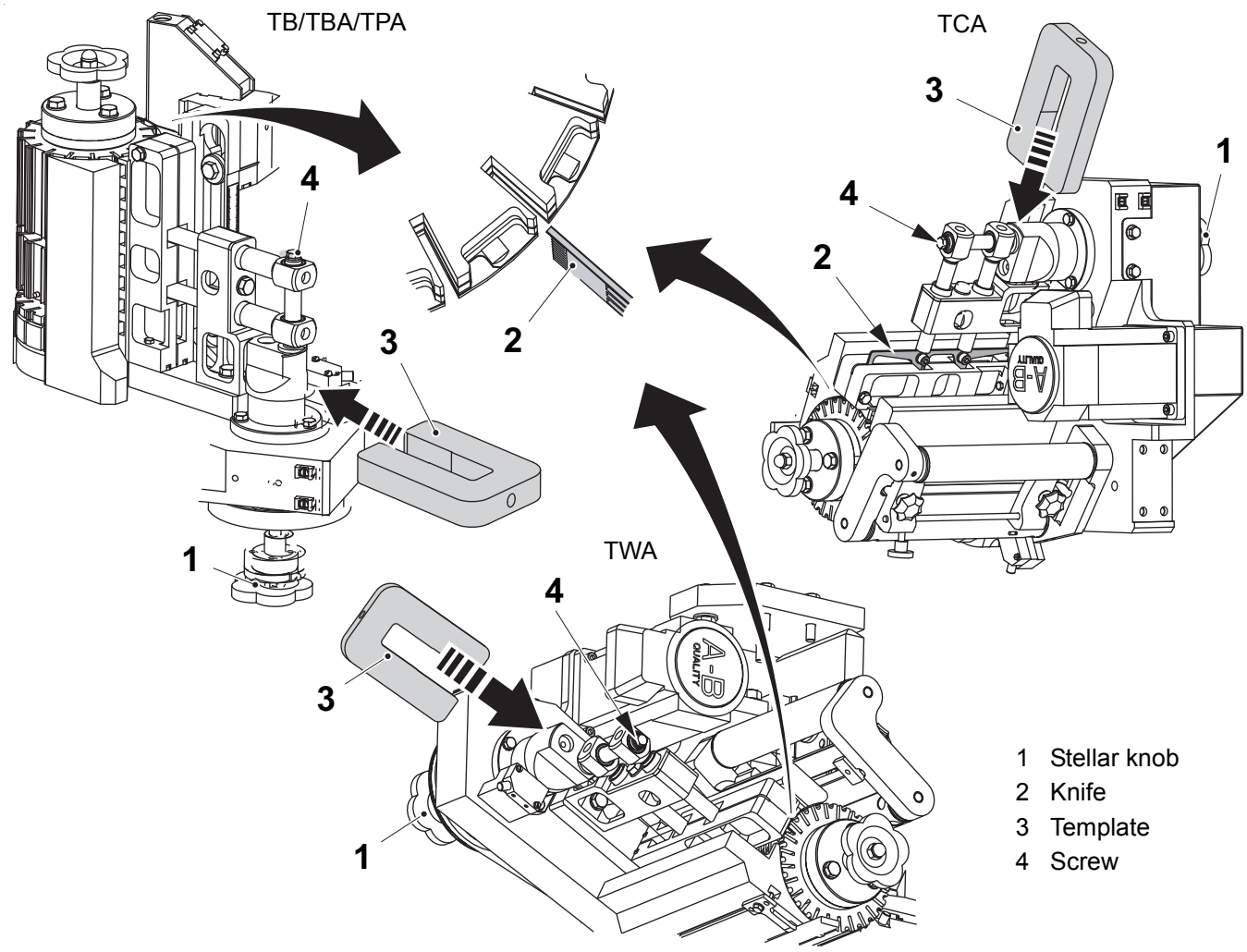

(Cont'd)

(Cont'd)

d) Remove the template (3) and remove the screw (5).

CAUTION
Risk of personal injury.
The knife (2) is very sharp. Be careful when working near the knife.

e) Remove the knife holder (6).

f) Remove the screws (7) and remove the knife.

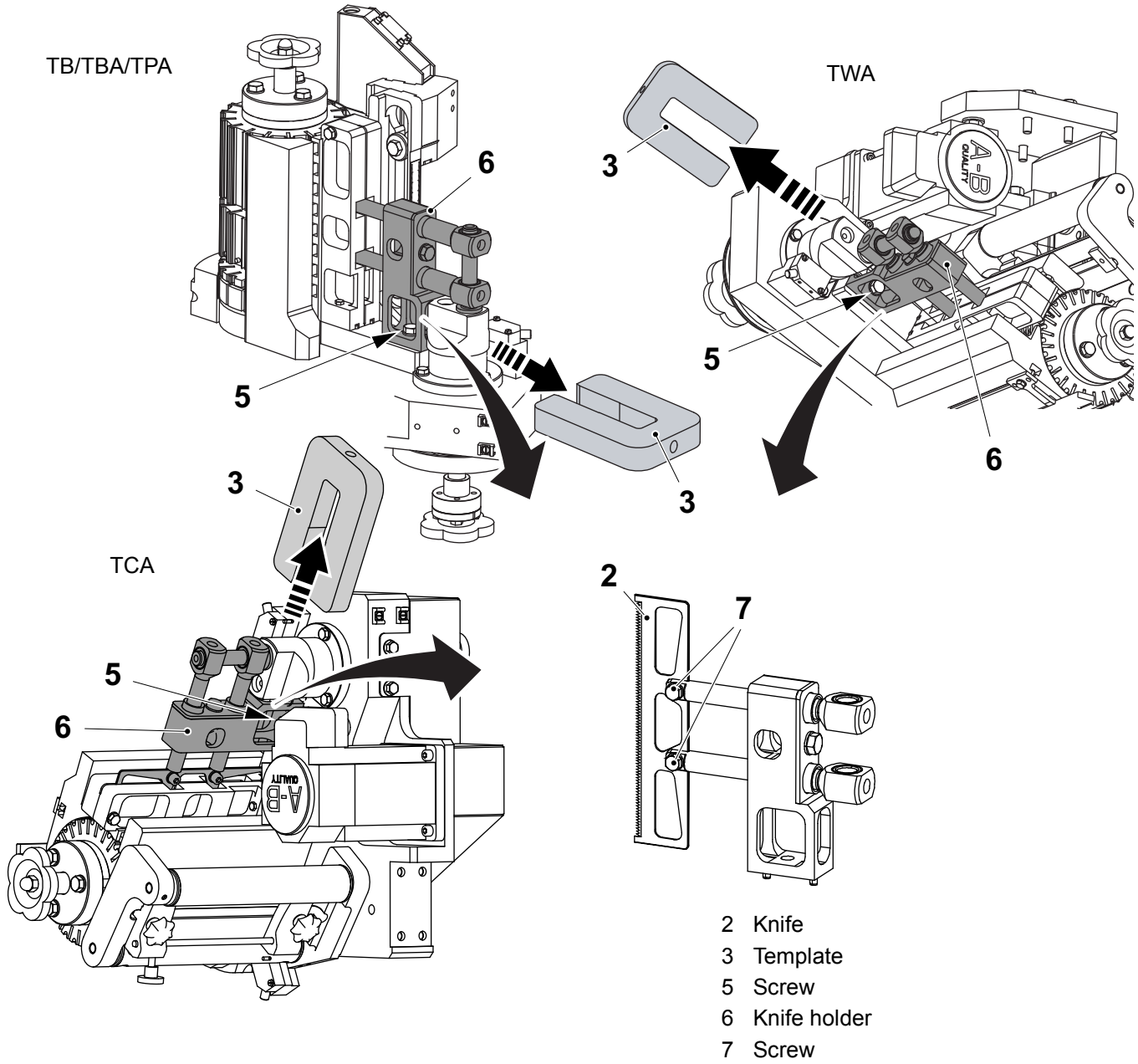

2 Knife
3 Template
5 Screw
6 Knife holder
7 Screw

(Cont'd)

(Cont'd)

g) Remove the screws (8) and the inductive switch (9).

h) Remove the screw (10) and the switch bracket (11).

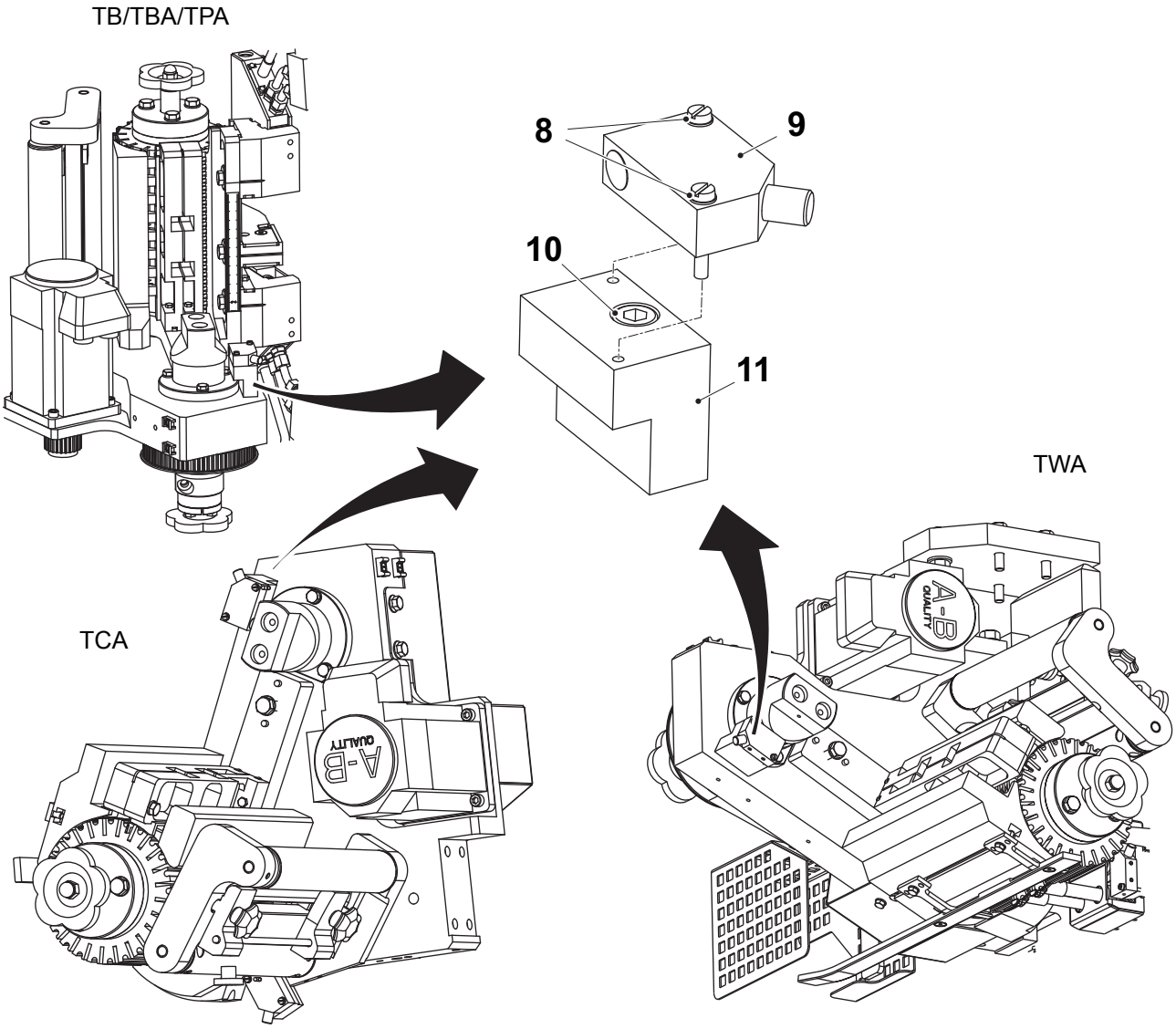

8 Screw
9 Inductive switch
10 Screw
11 Switch bracket

(Cont'd)

(Cont'd)

i) For TB/TBA/TPA: Loosen the screw (11) and rotate the applicator unit approximately 45° to the left. Cut the ladder band before turning.

Note! Remember the angle position, see the scale (13).

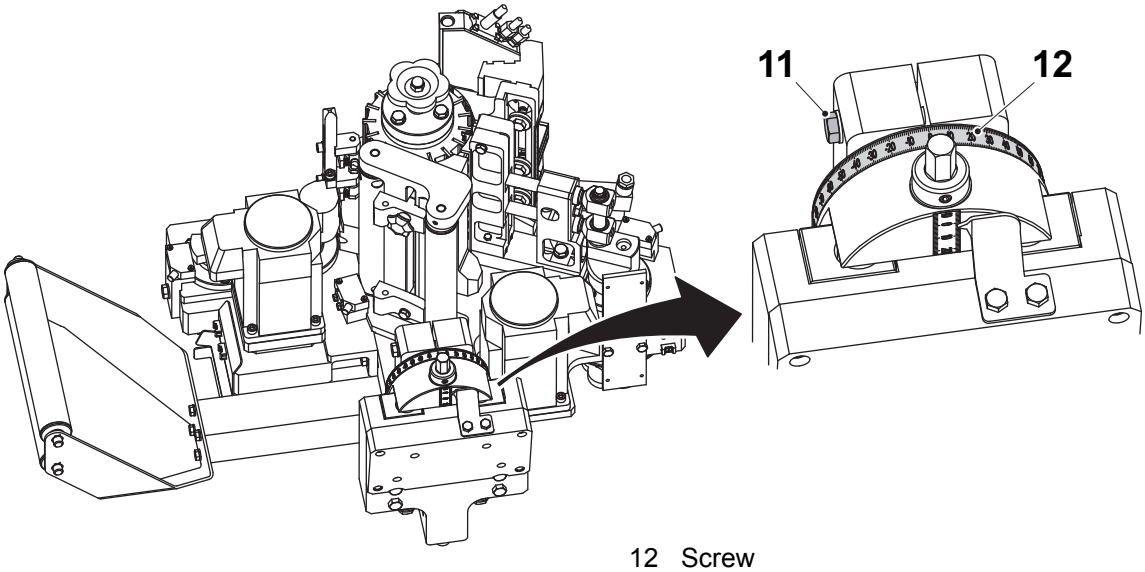

12 Screw
13 Scale

(Cont'd)

(Cont'd)

j) Loosen the screw (14) and the eccentric (15).

TB/TBA/TPA

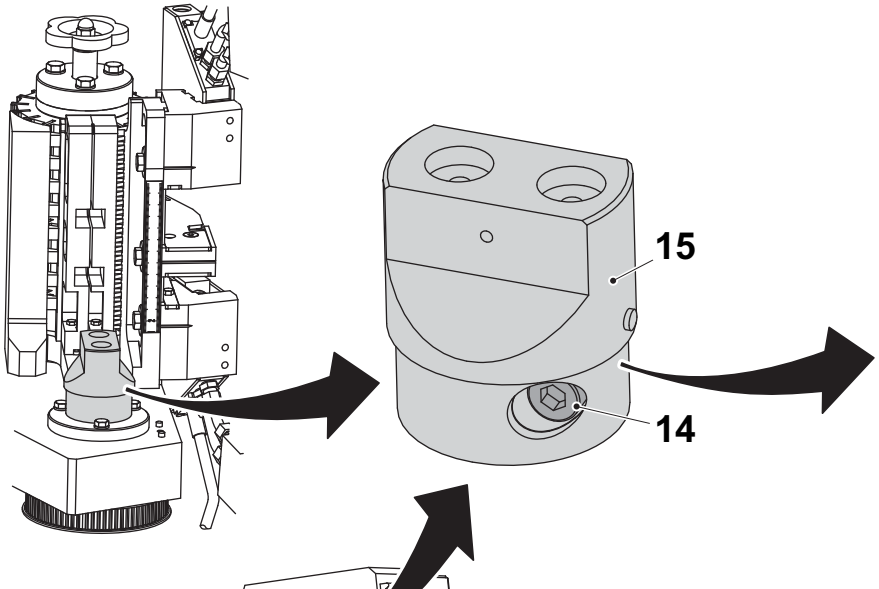

TCA

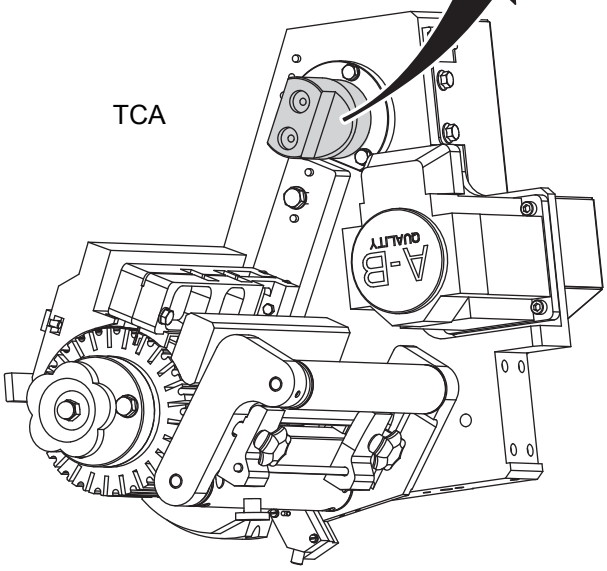

TWA

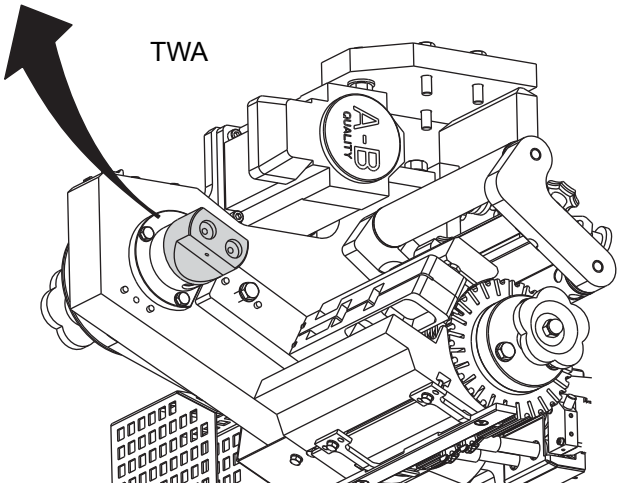

4 Screw
14 Screw
15 Eccentric
16 Screw
17 Clamping ring
18 Parallel pin
19 Axle pin
20 Washer

(Cont'd)

(Cont'd)

k) Perform item c) to j) in Section 2.4.1-3 Frame Housing - Change Timing Belt.

l) Remove the seal ring (21).

m) Remove the retaining ring (22).

n) Knock out the shaft (23). Use a nylon hammer or similar tool to avoid damaging the shaft.

TB/TBA/TPA

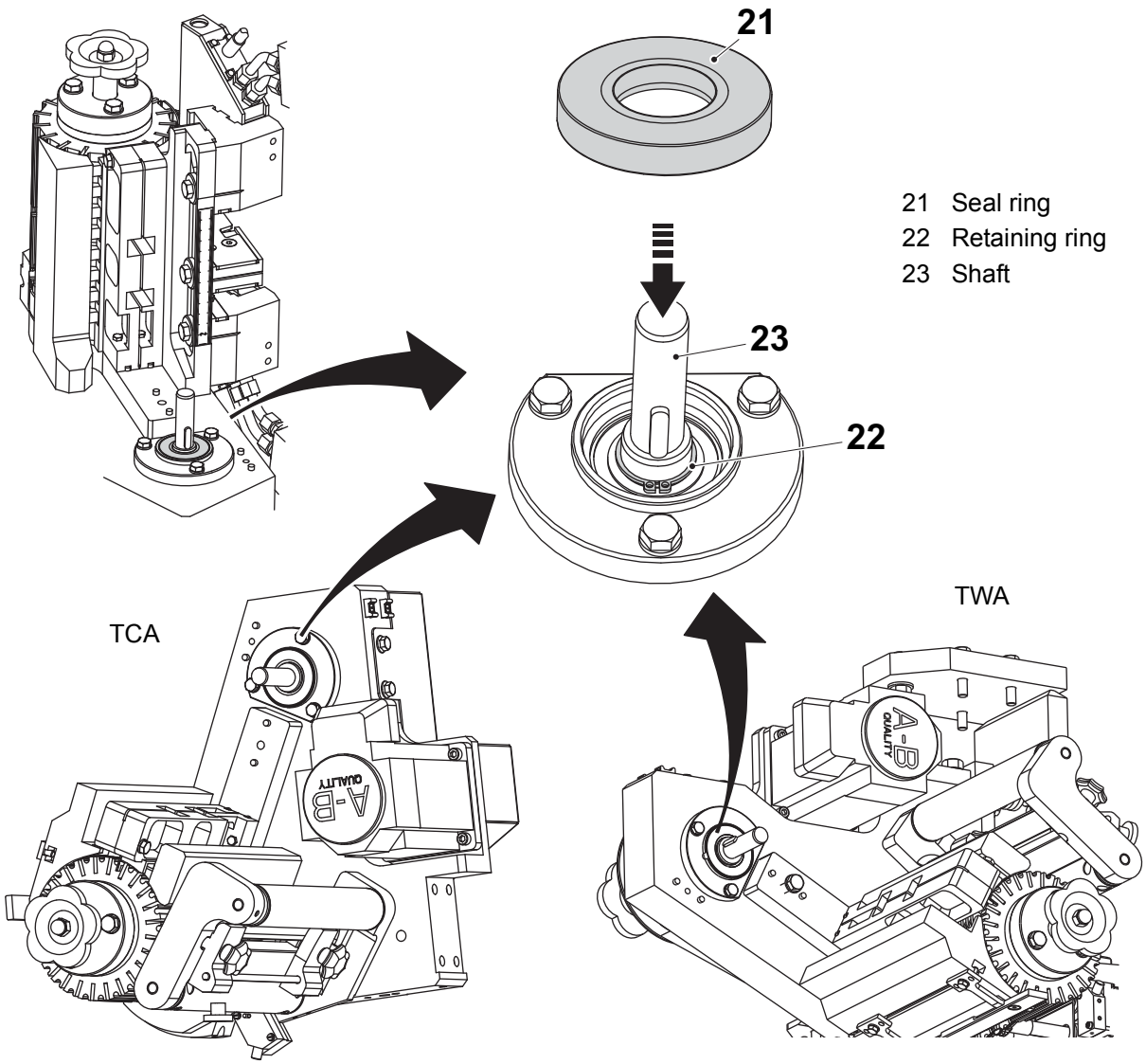

21 Seal ring
22 Retaining ring
23 Shaft

(Cont'd)

(Cont'd)

o) Check the ball bearings (24) and (25). Change if necessary, see 2.8-2 Crankshaft - Change Parts.

p) Assemble in the reverse order.

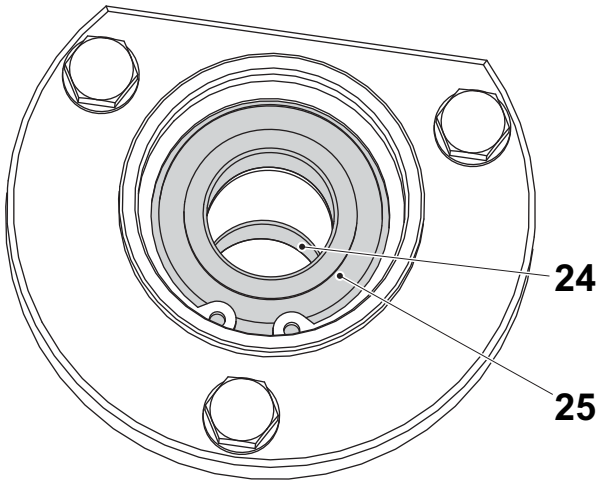

24 Ball bearing
25 Ball bearing

2.8-2 Crankshaft - Change Parts

Machine Status	Main Switch OFF Air Valve OFF
SPC Reference	2829436

a) Perform item a) to n) in procedure 2.8-1 Crankshaft - Check Parts.

CAUTION
Risk of damage to equipment.
Use a puller to remove the ball bearings.

b) Remove the screws (1).
c) Lift out the bearing sleeve (2).
d) Remove the retaining ring (3).
e) Change the ball bearings (4) and (5).

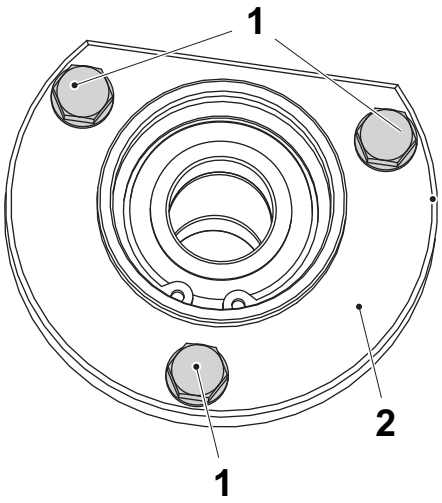

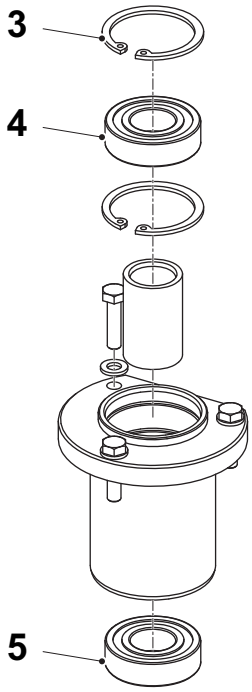

1 Screw
2 Bearing sleeve
3 Retaining ring
4 Ball bearing
5 Ball bearing

(Cont'd)

(Cont'd)

f) Remove the cap nut (6) and the stellar knob (7).

g) Loosen the screw (8) and remove the pulley (9)

h) Change the keys (10) and (11) if necessary.

i) Replace the pulley (9) if necessary.

CAUTION
Risk of damage to equipment.
The ball bearings must be pressed onto the shafts. Use appropriate equipment.

j) Assemble in the reverse order.

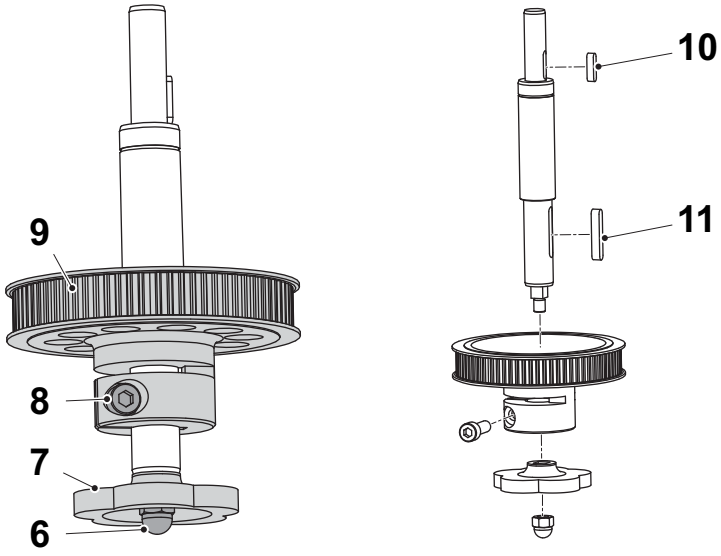

6 Cap nut
7 Stellar knob
8 Screw
9 Pulley
10 Key
11 Key

2.9 Guide Arm

2.9-1 Guide Arm - No procedure described

(TB/TBA/TPA/TWA)

Machine Status	Main Switch OFF Air Valve OFF
SPC Reference	2829442 valid for TB/TBA/TPA 2948240 valid for TWA

TB/TBA/TPA

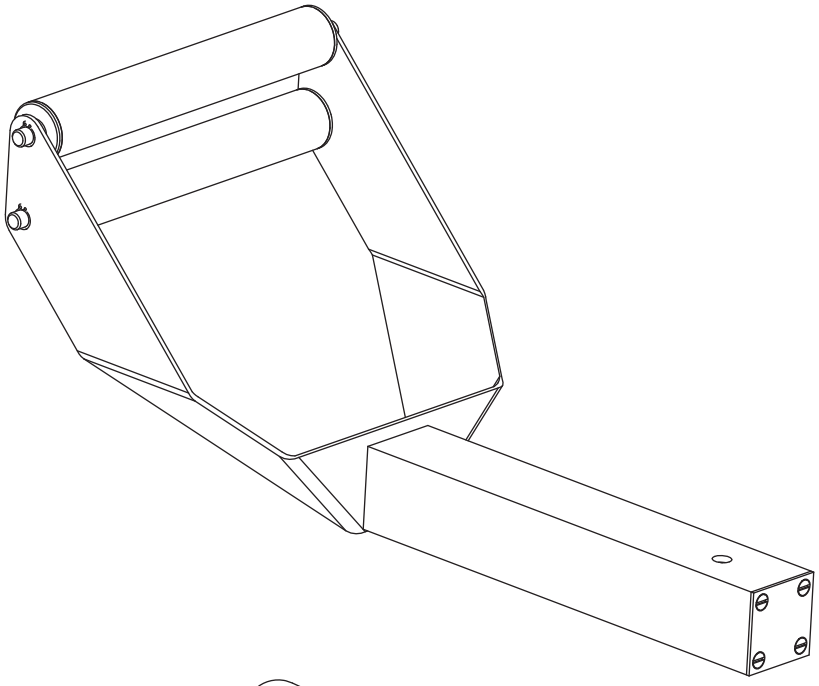

TWA

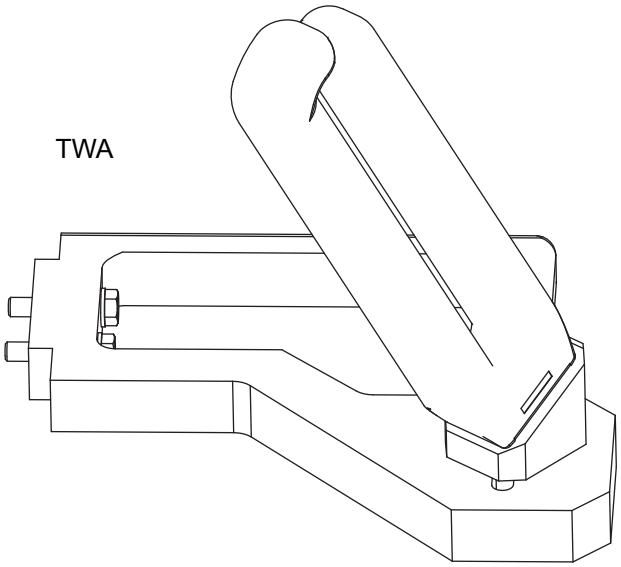

This page intentionally left blank

3 Hotmelt Equipment

Hotmelt Equipment - Description

SPC Reference	663303

TB/TBA/TPA

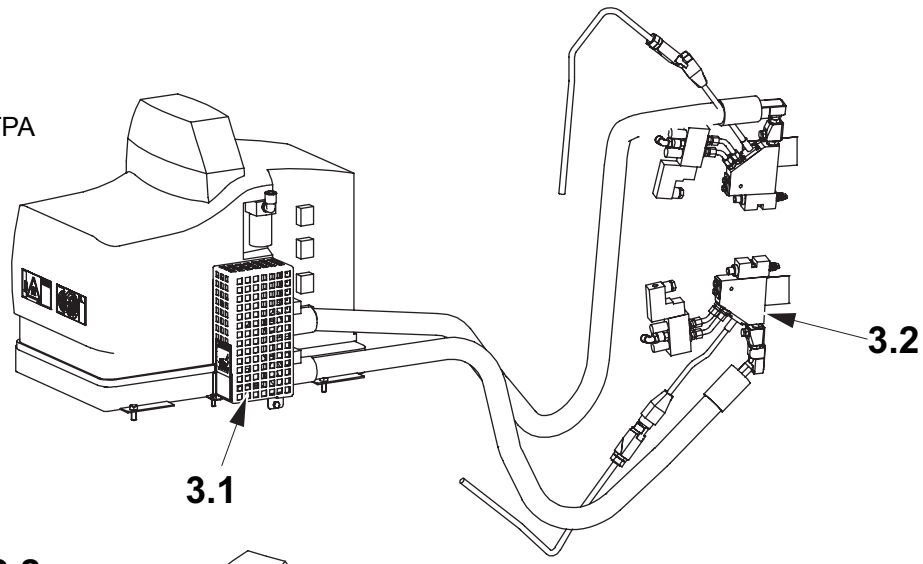

TCA

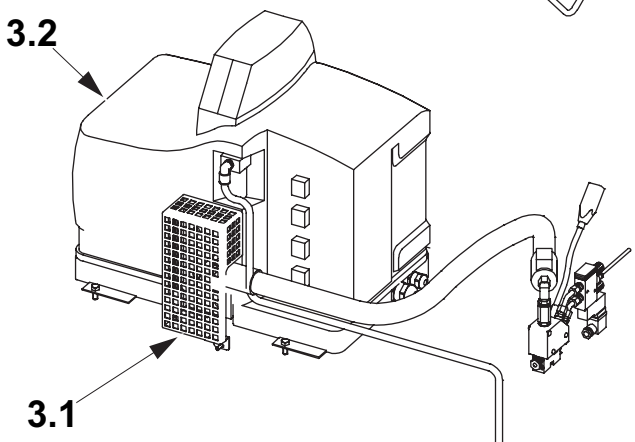

TWA

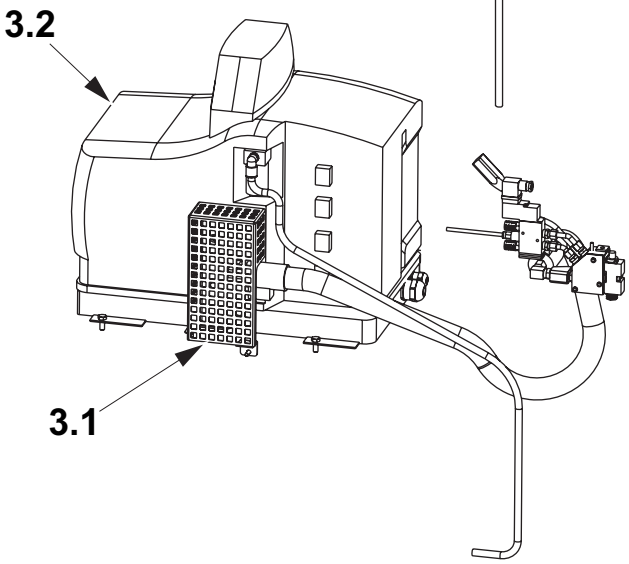

3.1 Hotmelt Equipment Miscellaneous

3.2 Hotmelt Equipment Nordson

3.1 Hotmelt Equipment Miscellaneous . . . . . 3 - 5

3.1-1 Hotmelt Equipment Miscellaneous - No Procedure Described . . . . . 3 - 5

3.2 Hotmelt Equipment Nordson . . . . . 3 - 6

3.2-1 Hotmelt Equipment Nordson - Set Hotmelt Unit . 3 - 6

3.2-2 Hotmelt Equipment Nordson - Change Adhesive . . . . . 3 - 14

3.2-3 Hotmelt Equipment Nordson - Bleed System (TB/TBA/TPA) . . . . . 3 - 16

3.2-4 Hotmelt Equipment Nordson - Bleed System (TCA/TWA) . . . . . 3 - 20

3.2-5 Hotmelt Equipment Nordson - Hotmelt Unit, F2 Alarm . . . . . 3 - 22

3.2-6 Hotmelt Equipment Nordson - Check Hose . . . . 3 - 23

3.2-7 Hotmelt Equipment Nordson - Clean Nozzle . . 3 - 24

3.2-8 Hotmelt Equipment Nordson - Change Nozzle (TB/TBA/TPA) . . . . . 3 - 25

3.2-9 Hotmelt Equipment - Change Nozzle (TCA/TWA) . . . . . 3 - 26

3.2-10 Hotmelt Equipment Nordson - Change Filter . . 3 - 27

3.2.1 Hotmelt Gun . . . . . 3 - 30

3.2.1-1 Hotmelt Gun - Change Gun Module . . . . . 3 - 30

3.2.1-2 Hotmelt Gun - Change Solenoid Valve . . . . . 3 - 32

3.2.1-3 Hotmelt Gun - Set Gun Holder (TB/TBA/TPA) 3 - 33

This page intentionally left blank

3.1 Hotmelt Equipment Miscellaneous

3.1-1 Hotmelt Equipment Miscellaneous - No Procedure Described

Machine Status	Main Switch ON Air Valve ON
SPC Reference	2864776

3.2 Hotmelt Equipment Nordson

3.2-1 Hotmelt Equipment Nordson - Set Hotmelt Unit

Machine Status	Main Switch ON Air Valve ON
Consumables	12.4.1 Hotmelt
SPC Reference	2892717 - valid for TB/TBA/TPA 2863510 - valid for TCA/TWA

WARNING

Burn hazard.

During heating and production the hotmelt unit gets hot. Do not touch the hotmelt unit and beware of the trapped heat inside the unit when service is performed.

Make sure that there is adhesive in the tank (1) and switch ON (2) the hotmelt unit.
For recommended type of adhesive, see the Operation Manual (OM).

Note! The colour of the adhesive should be light yellow. If the adhesive has become brown, exchange it. To obtain a prolonged lifetime of the adhesive, the temperature can be decreased during longer production stops.

Tip! When connecting hoses, always use port 1 (3). The port position is stamped on the face of the manifold.

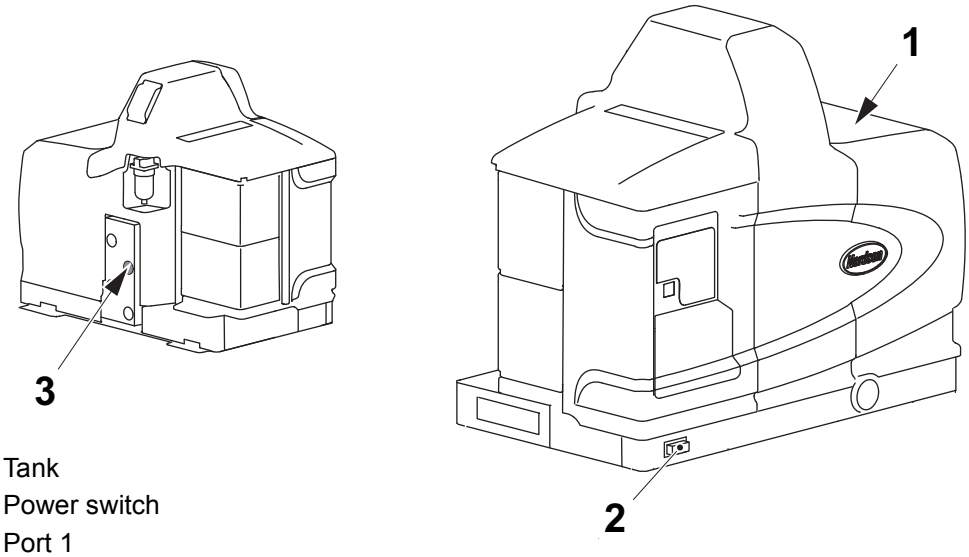

1 Tank
2 Power switch
3 Port 1

(Cont'd)

(Cont'd)

Operator Panel Overview

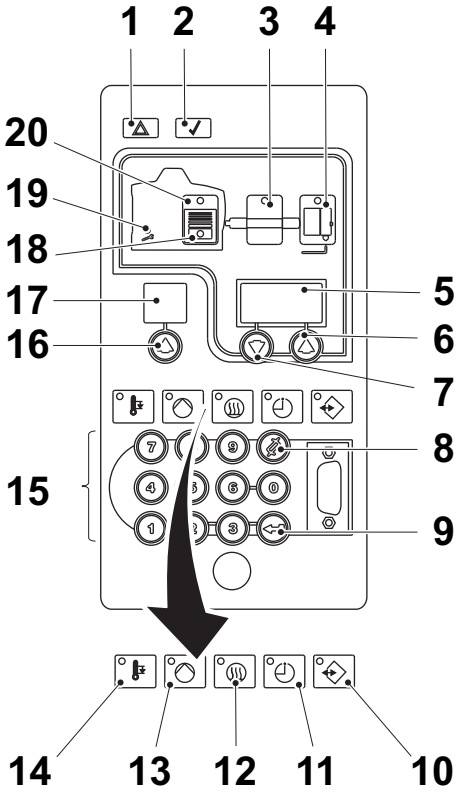

1 Fault LED
2 Ready LED
3 Hose-key
4 Gun-key
5 Multipurpose display
6 Up-key for multipurpose display
7 Down-key for multipurpose display
8 Clear/Reset-key
9 Enter-key
10 Setup-key
11 Seven day clock key
12 Heater-key
13 Pump-key
14 Standby-key
15 Keypad
16 Up-key for selector display
17 Selector display
18 Low level LED
19 Service LED
20 Tank-key

Note! For further information read the Nordson Pro Blue Adhesive Melters Manual. The manual, in english, is included with the delivery from Tetra Pak. The Hotmelt equipment chapter in this manual only deals with what is specific for this machine.

(Cont'd)

(Cont'd)

Parameter Settings

Parameter	Function	Description	Setting
4	System-ready time delay	Allows you to set the amount of additional time for adhesive to melt after all zones have reached their setpoint temperatures.	0 minutes
20	Celsius/Fahrenheit	Allows you to display temperature measurements in Celsius or Fahrenheit. 0 = Celsius 1 = Fahrenheit	Celsius
21	Over temperature set-point	Allows you to specify the maximum temperature. The features 1 to 3 can reach before the system initiates a fault condition.	15° C
22	Under temperature delta	The number of degrees that the temperature of any component can decrease from its set-point temperature before an under temperature fault (F2) occurs.	5° C
40	Standard output 1	Ready and Pump is on	2
41	Standard output 2	Low level	4

(Cont'd)

(Cont'd)

Set the parameters as follows:

a) Press SETUP (10). The selector display (17) will start flashing. Use UP (6) (or keypad (15)) to select parameter and confirm with ENTER (9).

b) The multipurpose display (5) starts flashing. Use UP (6), or DOWN (7) (or use the keypad (15)) to select required value and confirm with ENTER (9).

Tip! If the setting is unadjustable the display is password protected! For further information read Nordson Pro Blue Adhesive Melters Manual, chapter 4, “Enter the Melter Password”.

c) When the selector display shows next parameter and setting, either continue with next parameter or exit by pressing SETUP (10) twice.

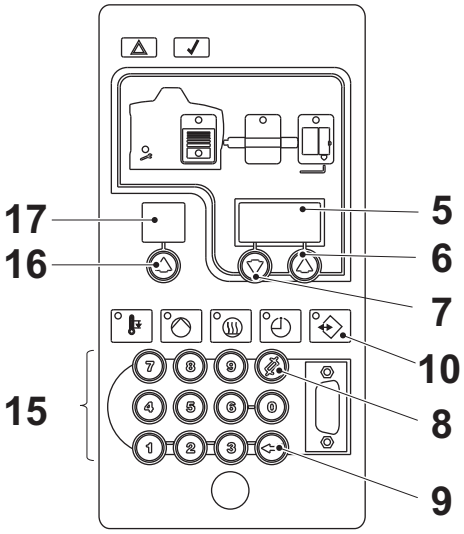

5 Multipurpose display
6 UP
7 DOWN
8 Clear/Reset-key
9 ENTER
10 SETUP
15 Keypad
16 UP
17 Selector display

(Cont'd)

(Cont'd)

Tank, Hoses, and Guns Temperature

There are different settings for different types of adhesive.

Too high temperature will make the adhesive deteriorate quicker, resulting in reduced quality.

Too low temperature results in threads of adhesive, and decreased cooling-off time.

(Cont'd)

(Cont'd)

Set the temperature of the tank as follows:

a) Press tank-key (20) for 3 seconds.

b) The digit “1” appears flashing in selector display (17). If the digit “0” appears, press UP (6) (or keypad (15)) for selector display until digit “1” appears. Confirm the choice by pressing ENTER (9).

c) Then the Multipurpose display (5) starts flashing. Press the multipurpose display DOWN (7) or UP (6) (or keypad (15)) to enter the required value.

d) Confirm the setting by pressing ENTER (9).

e) Exit by pressing SETUP (10) twice.

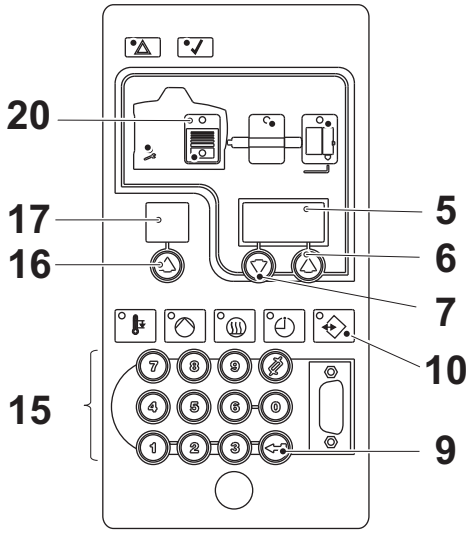

5 Multipurpose display
6 UP
7 DOWN
9 ENTER
10 SETUP
15 Keypad
16 UP
17 Selector display
20 Tank-key

Position	Button	Description	Setting
20	Tank-key	Allows you to specify the tank setpoint temperature	See Chapter 10 Technical Data in the OM.

(Cont'd)

(Cont'd)

Note! Remember to set **all** hoses and guns.

Set the temperature of the hoses and guns as follows:

a) Press hose-key (3) or gun-key (4) for 3 seconds.

b) The digit "1" appears flashing in selector display (17). Press UP (16) (or keypad (15)) for selector display until digit 0 appears. Confirm the choice by pressing ENTER (9).

c) Then the Multipurpose display (5) starts flashing. Press the multipurpose display DOWN (7) or UP (6) (or keypad (15)) to enter the required value. Confirm the setting by pressing ENTER (9).

d) Exit by pressing the SETUP (10) twice.

e) Press heater-key (12) to heat up the hotmelt unit.

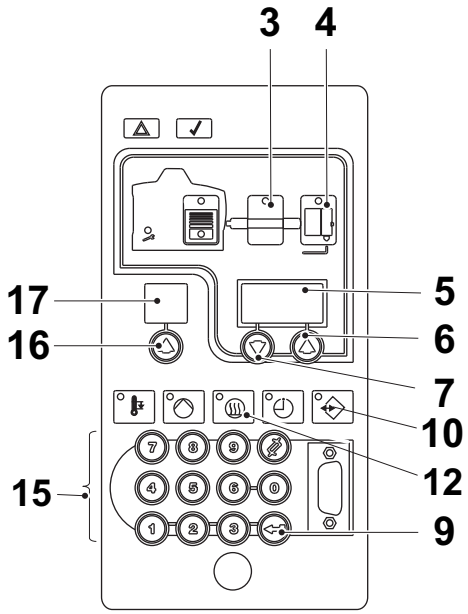

3 Hose-key
4 Gun-key
5 Multipurpose display
6 UP
7 DOWN
9 ENTER
10 SETUP
12 Heater-key
15 Keypad
16 UP
17 Selector display

Position	Button	Description	Setting
3	Hose-key	Allows you to specify the hose setpoint temperature	See Chapter 10 Technical Data in the OM.
4	Gun-key	Allows you to specify the gun setpoint temperature	

(Cont'd)

(Cont'd)

Air Pressure

Pressure	Unit	Value TB/TBA/TPA	Value TCA/TWA
Hotmelt unit	MPa	0.3*	0.3*
* Basic setting			

Note! The values are also stated in the OM.

Set the air pressures as follows:

a) Set the pressure on the hotmelt unit to 0.3 MPa by turning the pressure regulator screw (1) on the hotmelt unit. The pressure is stated on the manometer (2)

b) To set the hotmelt gun pressure, see Procedure 6.1-1 Air Supply - Set Air Pressure.

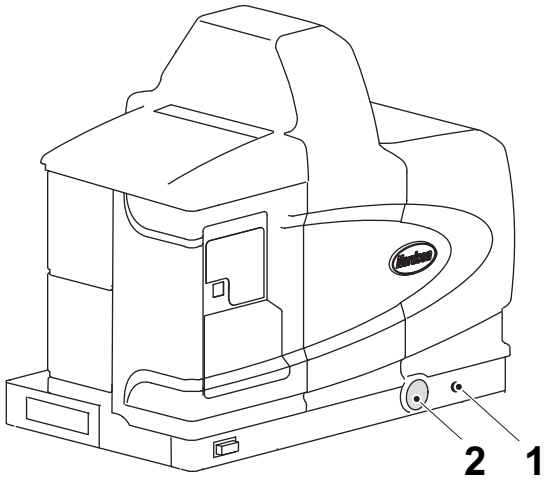

1 Regulator screw
2 Manometer
3 Pressure gauge
4 Manometer

3.2-2 Hotmelt Equipment Nordson - Change Adhesive

Machine Status	Main Switch ON Air Valve ON
Consumables	12.4.1 Hotmelt
SPC Reference	2892717 - valid for TB/TBA/TPA 2863510 - valid for TCA/TWA

Note! The machine must be preheated before the work can start.

WARNING

Risk of burns.

Hot adhesive. Wear safety goggles, protective gloves, and other protective clothing to avoid injuries from adhesive pouring out. During tank drainage never touch the drain shut!

A splash guard is needed in front of the drain shut when the tank is almost empty because the last adhesive can splash.

a) Step up the machine to step 2; AIR ON.

(Cont'd)

(Cont'd)

b) Lower the pressure to 0 bar (0 MPa) by turning the screw (1).

c) Put a container under the drain shut (2).

d) Pull down the drain shut (2).

e) Open the drain valve (3) by slowly turning it to the left.

f) Raise the pressure gently by turning the screw (1) until the remaining adhesive flows out.

g) Empty the tank.

h) Close the drain valve (3), clean and pull up the drain shut (2). Fill the tank (4) with adhesive.

i) Set the pressure back to the same value as before, see the table on page 3-13.

To bleed the system, see 3.2-3 Hotmelt Equipment Nordson - Bleed System (TB/TBA/TPA).

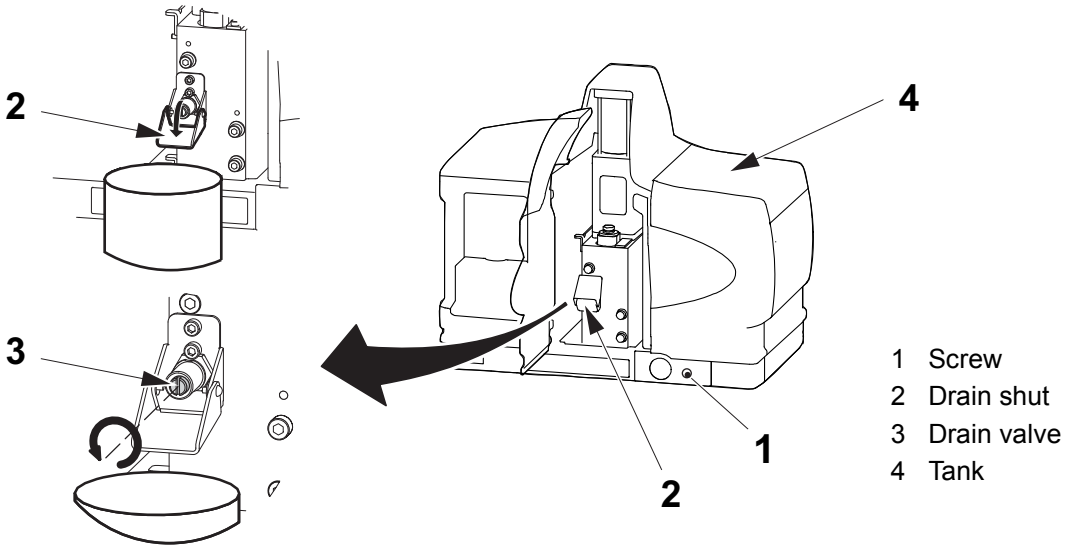

3.2-3 Hotmelt Equipment Nordson - Bleed System (TB/TBA/TPA)

Machine Status	Main Switch ON Air Valve ON
Special Equipment	Waste pipe TP no. 3046523
SPC Reference	2892717 - valid for TB/TBA/TPA

Note! The machine must be preheated, and the guns have reached operating temperature.

WARNING

Burn hazard.

Risk of personal injury. Wear safety glasses, protective gloves, and other protective clothing to avoid injuries from adhesive pouring out through the nozzles.

a) Turn the bearing housing (1) to move the pressure arms (2) to a position outside the feed wheel slots.

b) Turn the stellar knob (3) until the knife (4) is in its outer position.

c) Turn the stellar knob (5) to the left until the feed wheel (6) is released from the shaft.

d) Press the leaf spring (7) outwards from the feed wheel and pull up the feed wheel.

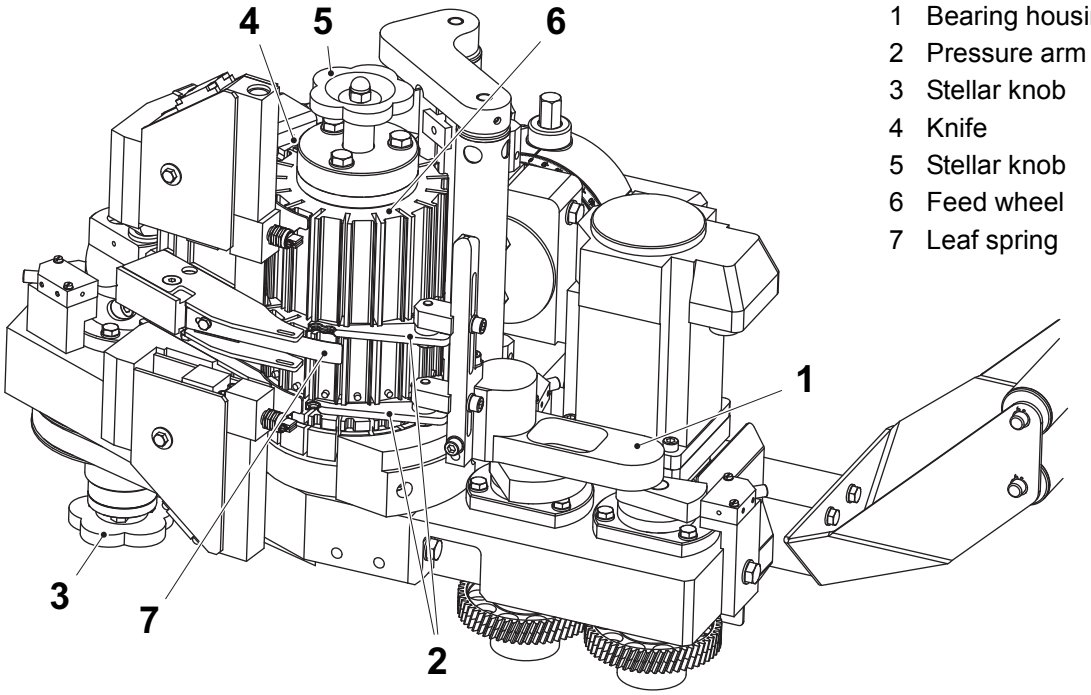

1 Bearing housing
2 Pressure arm
3 Stellar knob
4 Knife
5 Stellar knob
6 Feed wheel
7 Leaf spring

(Cont'd)

(Cont'd)

e) Loosen the screw (8) and rotate the applicator unit to 0°.

Note! Remember the angle position, see the scale (9).

f) Tighten the screw (8) again.

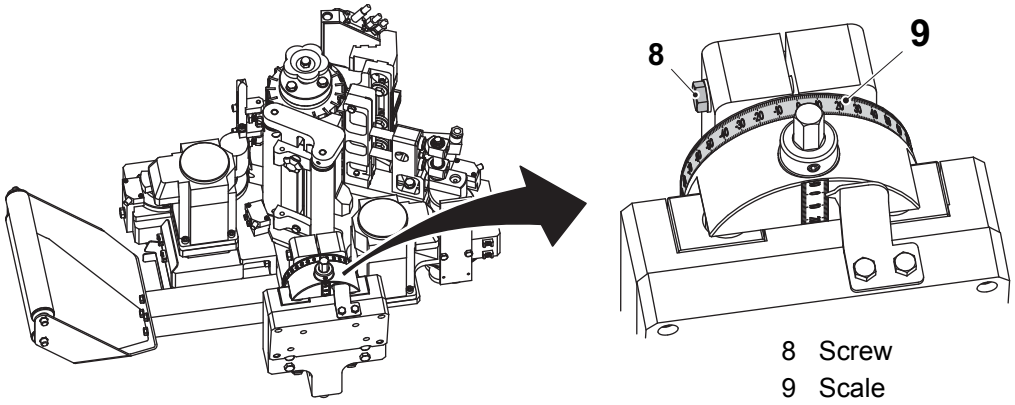

8 Screw
9 Scale

Note! Remember the positions of the hotmelt guns, and the spring holder.

g) Loosen the screw (10) and remove the upper hotmelt gun (11) from the guide console (12).

h) Loosen the screw (13) and remove the spring holder (14) from the guide console (12).

i) Put the upper hotmelt gun (11) back. It should be positioned as far up as possible on the guide console (12).

j) Tighten the screw (10).

k) Loosen the screw (15) and move the lower hotmelt gun (16) as tight to the upper hotmelt gun as possible.

l) Tighten the screw (15).

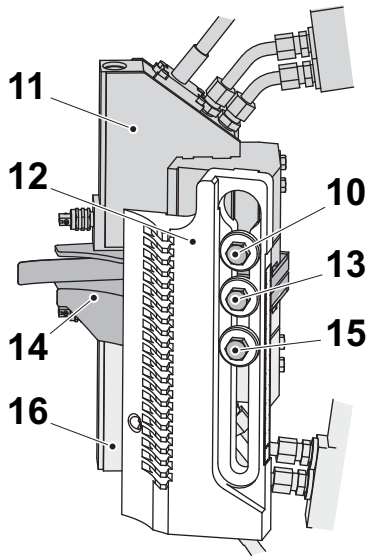

10 Screw
11 Hotmelt gun
12 Guide console
13 Screw
14 Spring holder
15 Screw
16 Hotmelt gun

(Cont'd)

(Cont'd)

m) Move the pressure arms (2) out of the way and press down the waste pipe (17). Hang the waste pipe on the shaft (18).

n) Check that the opening in the waste pipe is directed towards the nozzles (19) so that the adhesive is shot into the waste pipe.

o) Put a disposable container under the machine for the adhesive to run into.

p) Close the doors to the machine.

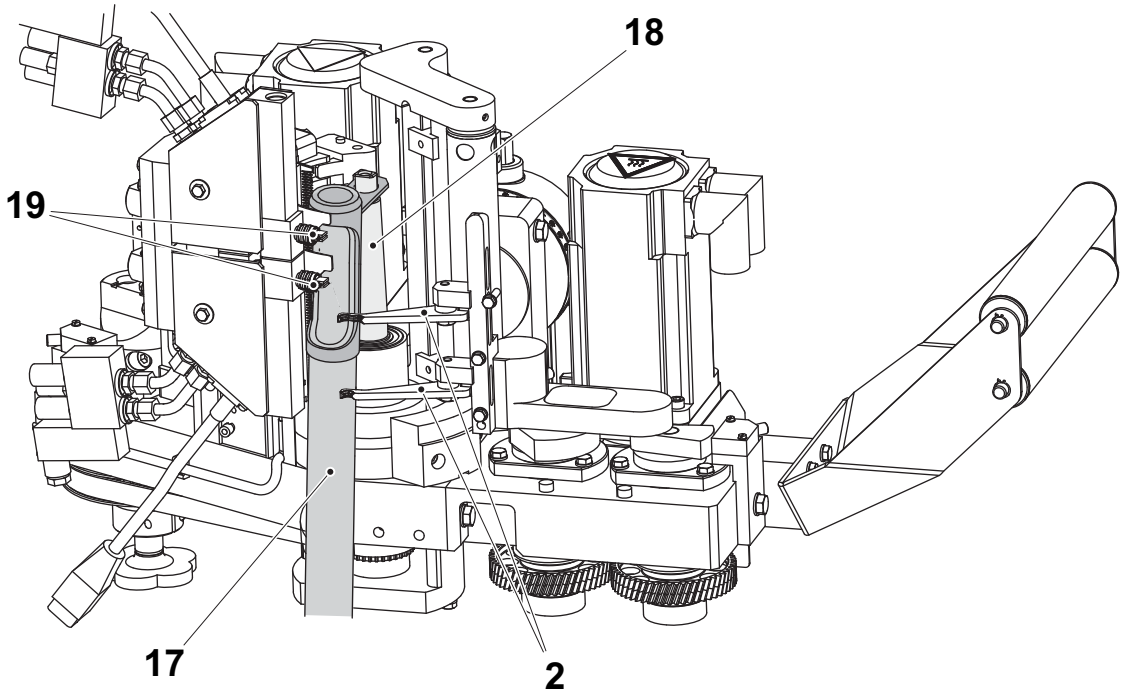

2 Pressure arm
17 Waste pipe
18 Shaft
19 Nozzle

(Cont'd)

(Cont'd)

q) Log on as a technician or higher, see Procedure 7.1-2 HMI User Management - Log On as a User.

r) Press the MAINTENANCE button (20) on the TPOP.

s) In the apply unit maintenance window, press the hotmelt bleed symbol (21).

t) Press the SELECT button (22).

u) Press the STEP UP button (23).

v) Press the CONFIRMATION button (24).

w) The machine will empty the hotmelt hoses for one minute. Press the DESELECT button (25) to abort earlier.

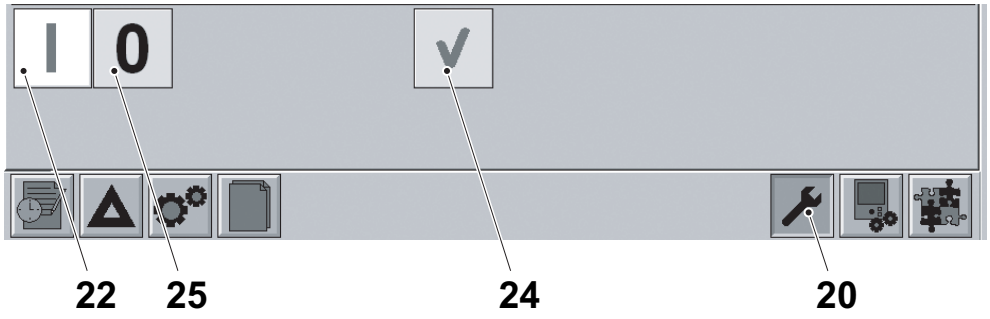

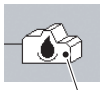

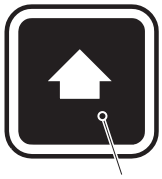

20 MAINTENANCE
21 Hotmelt bleed symbol
22 SELECT
23 STEP UP
24 CONFIRMATION
25 DESELECT

x) Remove the disposable container when the adhesive has stopped running.

y) Remove the waste pipe from the shaft.

z) Assemble in the reverse order.

aa) Wait until the adhesive in the waste pipe has cooled down and solidified, then bend the waste pipe to loosen the remaining adhesive and pull it out.

3.2-4 Hotmelt Equipment Nordson - Bleed System (TCA/TWA)

Machine Status	Main Switch ON Air Valve ON
SPC Reference	2863510 - valid for TCA/TWA

Note! The machine must be preheated, and the hotmelt gun have reached its operating temperature.

WARNING

Burn hazard.

The hotmelt gun and the cover are very hot. Be careful when working near the gun and the cover.

CAUTION

Risk of damage to the equipment.

The nozzle is easily damaged. Handle the nozzle with care when removing the gun module.

a) Note the position of the hotmelt gun (1).

b) Put a disposable container on the floor inside the machine. The container should be able to hold at least 0.5 l hotmelt.

c) Remove the screws (2) and put the hotmelt gun into the disposable container.

TCA

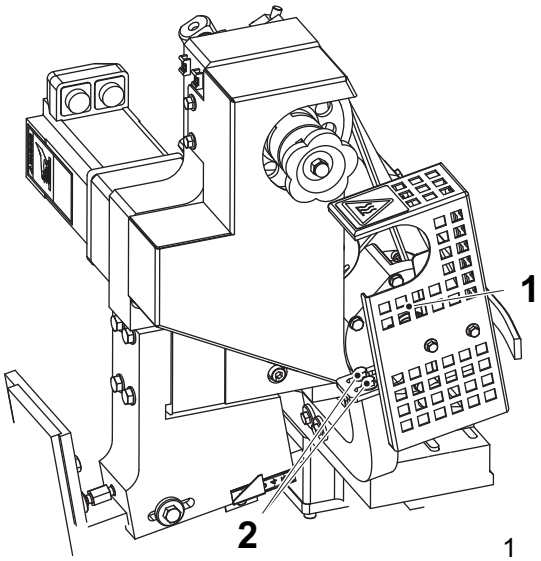

TWA

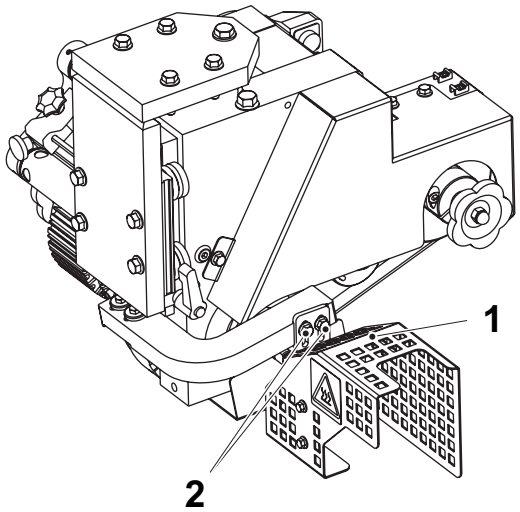

1 Hotmelt gun
2 Screw

(Cont'd)

(Cont'd)

d) Close the doors to the machine.

e) Press the MAINTENANCE button (3) on the TPOP.

f) In the apply unit maintenance window, press the hotmelt bleed symbol (4).

g) Press the SELECT button (5).

h) Press the STEP UP button (6).

i) Press the CONFIRMATION button (7).

j) The machine will empty the hotmelt hoses for one minute. Press the DESELECT button (8) to abort earlier.

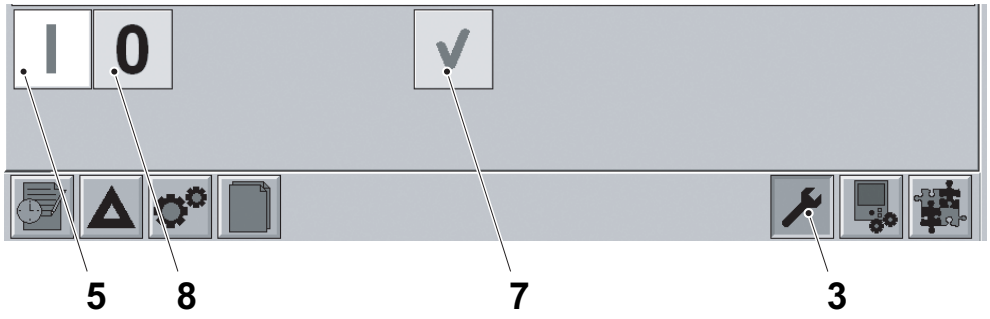

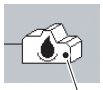

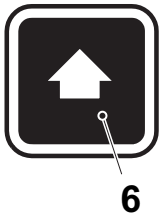

3 MAINTENANCE
4 Hotmelt bleed symbol
5 SELECT
6 STEP UP
7 CONFIRMATION
8 DESELECT

k) Assemble in the reverse order.

l) Remove the disposable container.

3.2-5 Hotmelt Equipment Nordson - Hotmelt Unit, F2 Alarm

Machine Status	Main Switch Air Valve
SPC Reference	2892717 - valid for TB/TBA/TPA 2863510 - valid for TCA/TWA

If the guns are cooled down an alarm called "**F2**" locks the hotmelt unit. The hotmelt unit needs to be reset and reheated.

a) Press the clear/reset-key (1).

b) Press the heater-key (2).

c) The hotmelt unit starts to heat up.

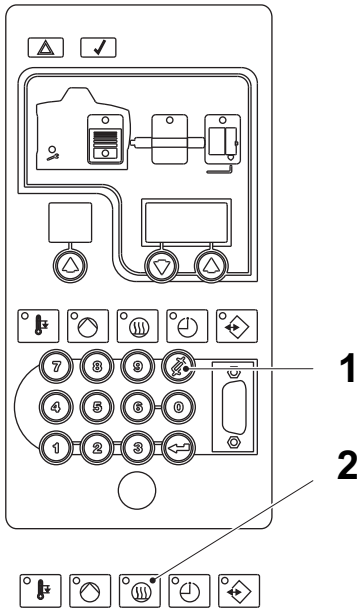

1 Clear/Reset-key
2 Heater-key

3.2-6 Hotmelt Equipment Nordson - Check Hose

Machine Status	Main Switch OFF Air Valve OFF
SPC Reference	2892717- valid for TB/TBA/TPA 2863510 - valid for TCA/TWA

WARNING

Burn hazard.

Risk of personal injury. Wear safety glasses, protective gloves, and other protective clothing to avoid injuries from adhesive pouring out.

a) Check the hoses (arrows) for wear and the connections for leakage.

b) If required, replace or tighten the hose connections.

TB/TBA/TPA

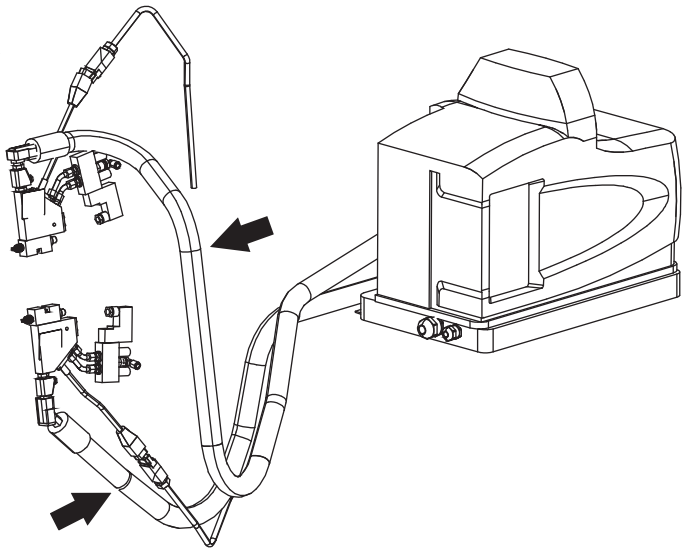

TCA

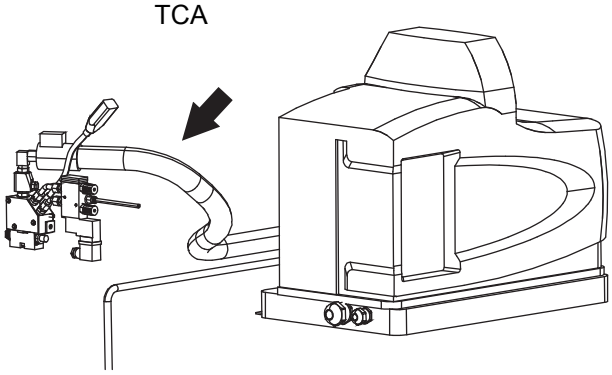

TWA

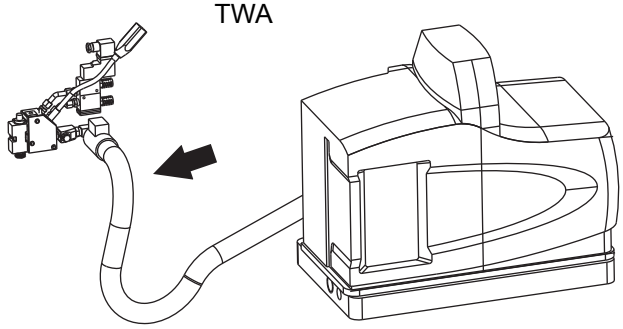

3.2-7 Hotmelt Equipment Nordson - Clean Nozzle

Machine Status	Main Switch OFF Air Valve OFF
SPC Reference	2892717- valid for TB/TBA/TPA 2863510 - valid for TCA/TWA

WARNING

Burn hazard.

Hot adhesive and hot equipment. Wear safety glasses and protective gloves to avoid injuries from adhesive pouring out. Let the hotmelt gun cool off before performing any work on it.

a) Reduce the air pressure to zero, see 6.1-1 Air Supply - Set Air Pressure.

b) For TB/TBA/TPA: Position the hotmelt guns on the brackets (1).

c) Clean the nozzle (arrow) from hotmelt remains.

To clean the nozzles (arrows), see instructions in the Nordson Pro Blue Adhesive Melters Manual.

Note! When reducing the pump air pressure to zero (0), follow the instruction 6.1-1 Air Supply - Set Air Pressure.

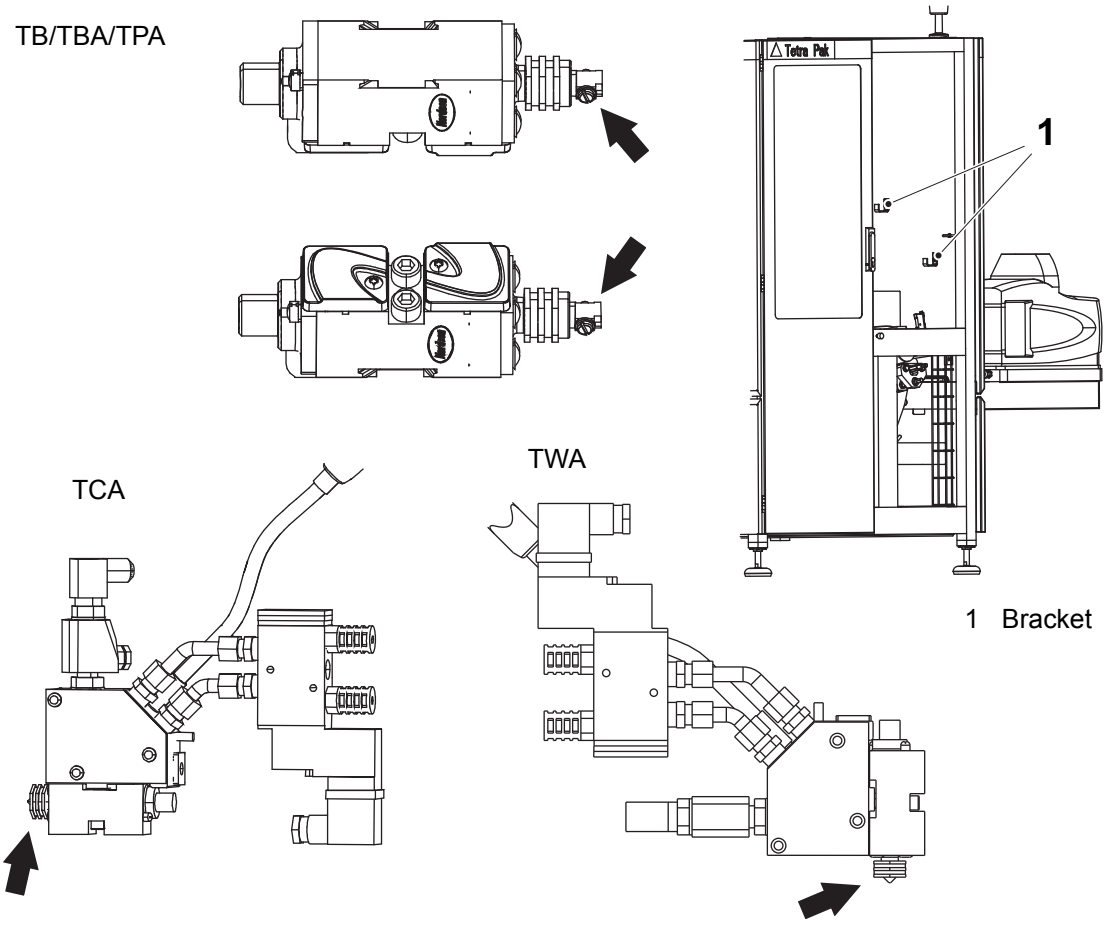

1 Bracket

3.2-8 Hotmelt Equipment Nordson - Change Nozzle (TB/TBA/TPA)

Machine Status	Main Switch OFF Air Valve OFF
SPC Reference	2892717 - valid for TB/TBA/TPA

To change the nozzles (arrows), see instructions in the Nordson Pro Blue Adhesive Melters Manual.

Note! When reducing the pump air pressure to zero (0), follow the instruction 6.1-1 Air Supply - Set Air Pressure.

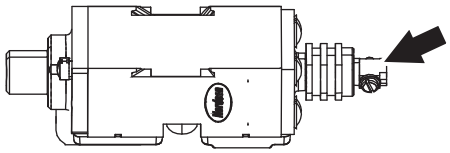

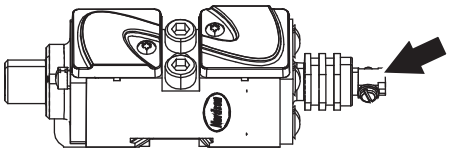

3.2-9 Hotmelt Equipment - Change Nozzle (TCA/TWA)

Machine Status	Main Switch OFF Air valve OFF
SPC Reference	2863510 - valid for TCA/TWA

WARNING

Burn hazard.

Hot adhesive and hot equipment. Wear safety glasses and protective gloves to avoid injuries from adhesive pouring out. Let the hotmelt gun cool off before performing any work on it.

a) Reduce the air pressure to zero, see 6.1-1 Air Supply - Set Air Pressure.

b) Remove the hotmelt gun cover (1).

c) Change the nozzle (2).

d) Assemble the cover.

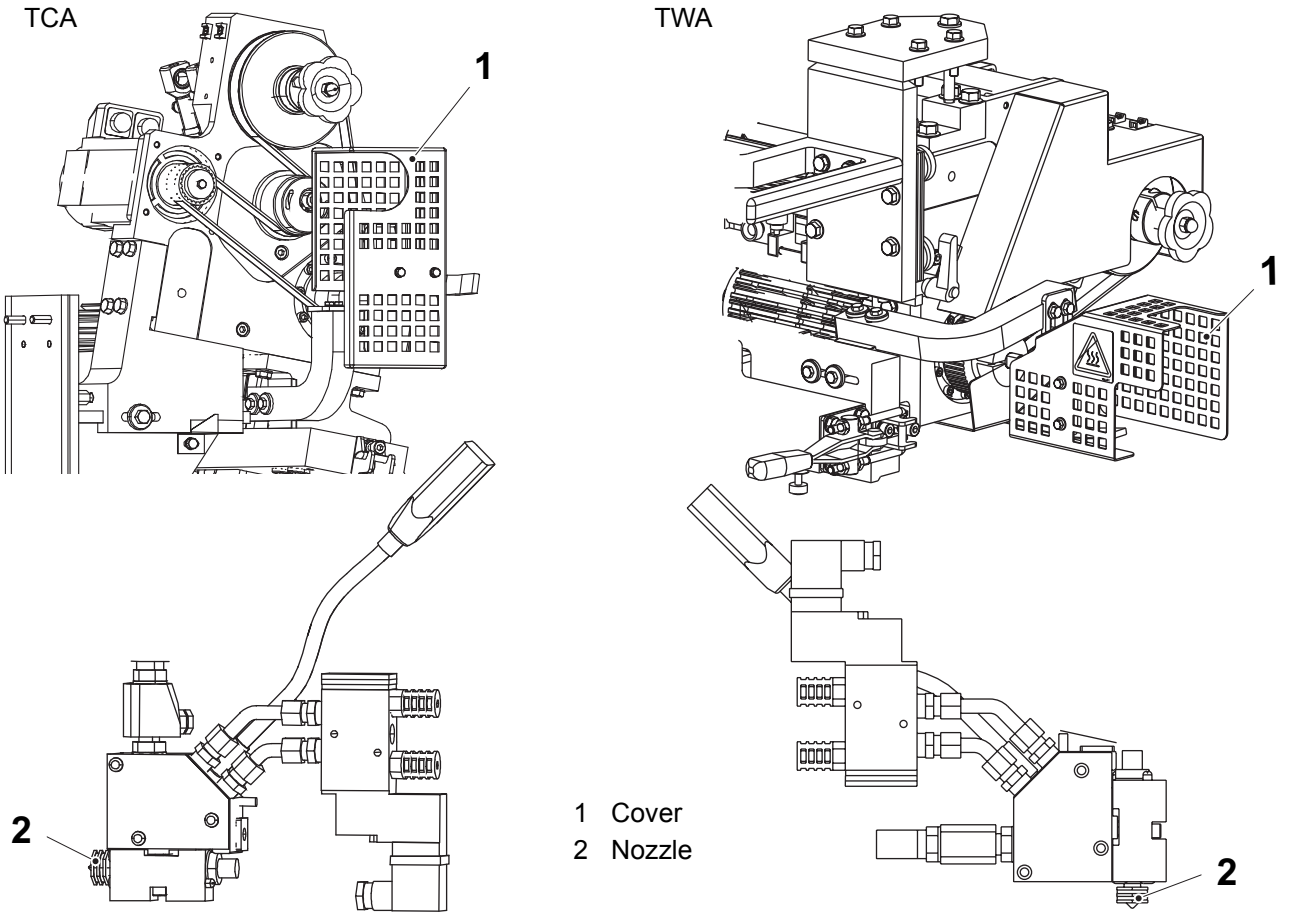

1 Cover
2 Nozzle

3.2-10 Hotmelt Equipment Nordson - Change Filter

Machine Status	Main Switch ON Air Valve ON
SPC Reference	2892717 - valid for TB/TBA/TPA 2863510 - valid for TCA/TWA

WARNING

Burn hazard.

Risk of personal injury. Wear safety glasses, protective gloves, and other protective clothing to avoid injuries from adhesive pouring out.

To change the filters, do the following:

a) Press the pump-key (1) to stop the pump.

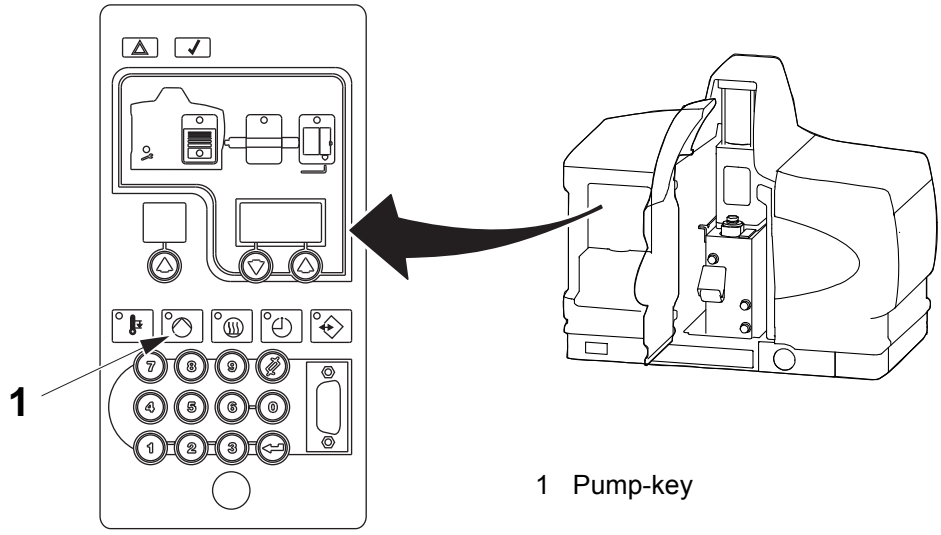

1 Pump-key

(Cont'd)

(Cont'd)

b) Use an 8 mm allen key, wrench to the left, to loosen the nut (2) and then properly dispose the old filter.

c) Before fitting the new filter, check that the O-ring (3) is in good condition. Tighten the nut (2) to 4.5 Nm.

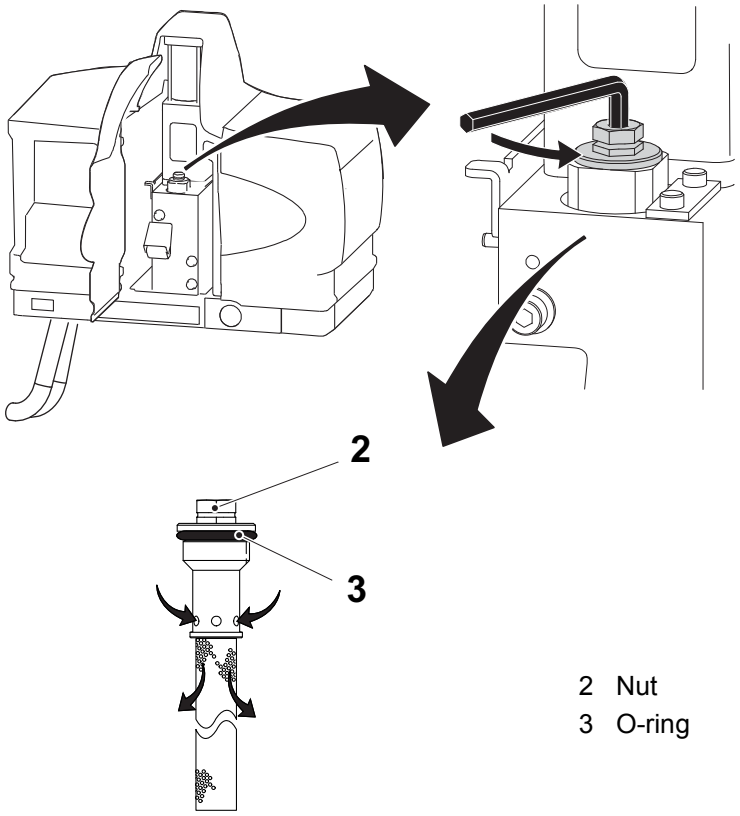

2 Nut
3 O-ring

(Cont'd)

(Cont'd)

d) On the hoses; loosen the nut (4) to dismantle the filter (5).
e) Change and insert the filter (5). Tighten the nut (4).
f) Press the pump-key (1) to start the pump.

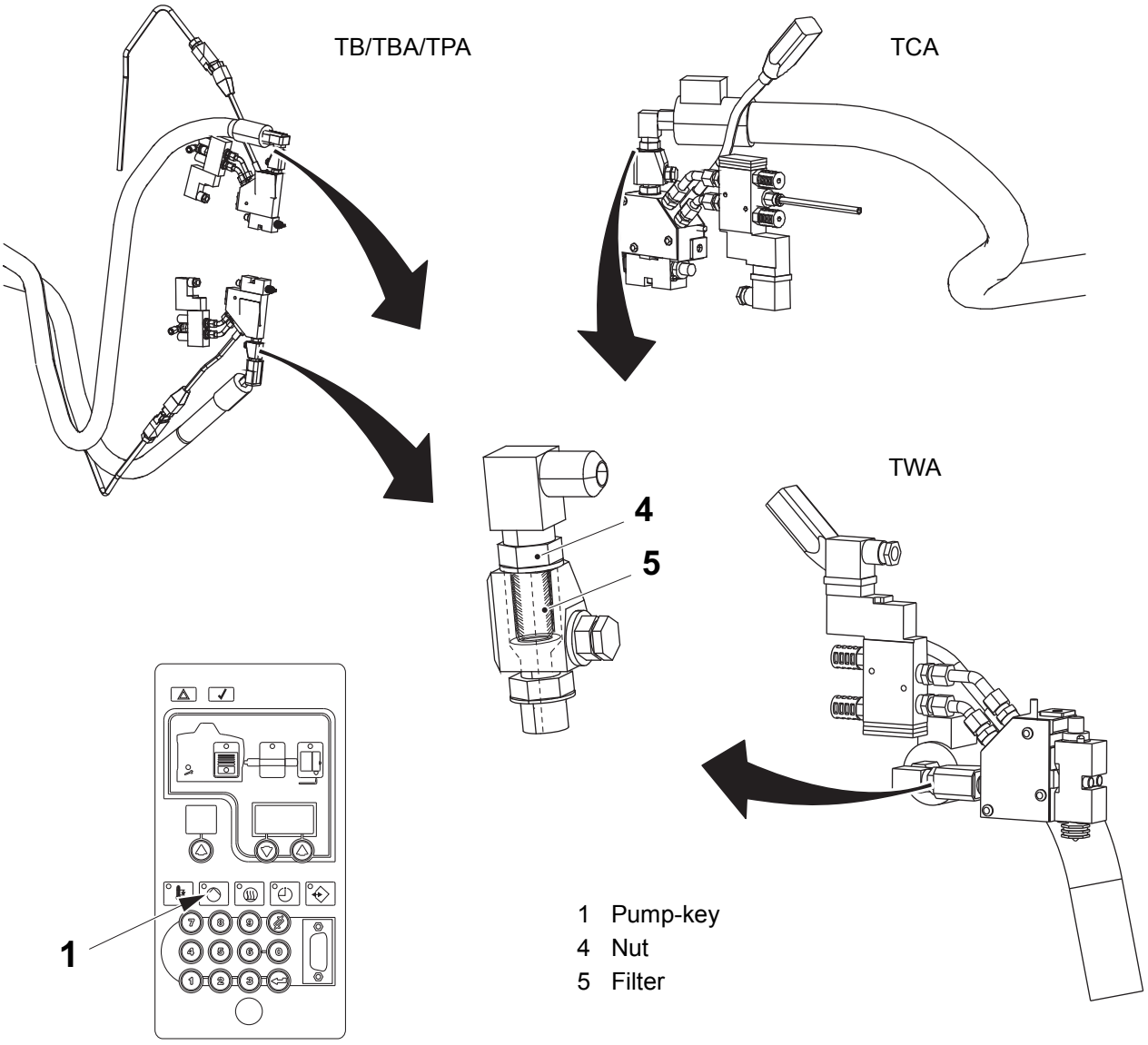

1 Pump-key
4 Nut
5 Filter

3.2.1 Hotmelt Gun

3.2.1-1 Hotmelt Gun - Change Gun Module

Machine Status	Main Switch ON Air Valve ON
SPC Reference	90600-2959 - valid for TB/TBA/TPA 90459-6475 - valid for TCA/TWA

Note! The machine must be preheated, and the guns have reached operating temperature. Set the pump air pressure to zero.

WARNING

Burn hazard.

Risk of personal injury. Wear safety glasses, protective gloves, and other protective clothing to avoid injuries from adhesive pouring out.

To change the module, do the following:

a) Press the pump-key (1) to stop the pump.

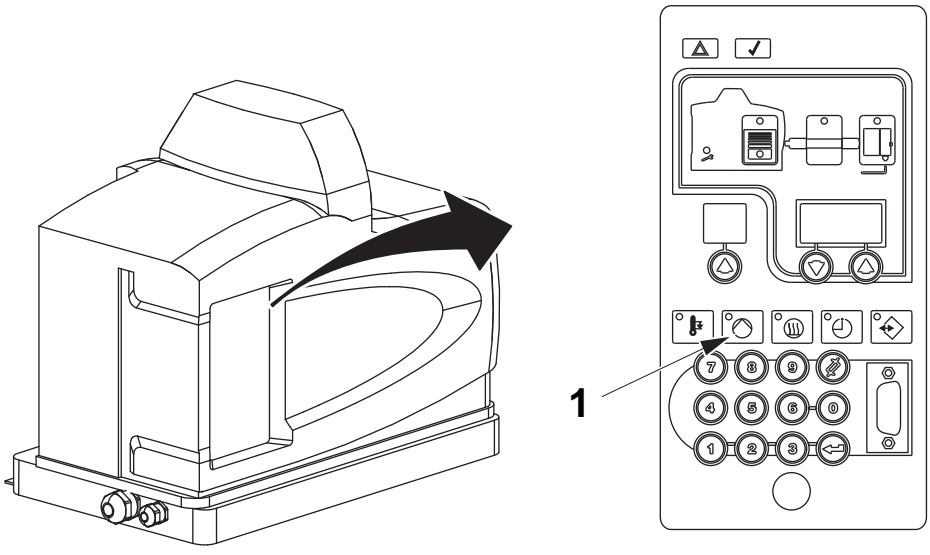

1 Pump-key

(Cont'd)

(Cont'd)

b) Remove the module (2) and/or (3). Use allen key 5/32''.

c) Carefully wipe the contact surface with a dry cloth to remove any hotmelt waste.

d) Change the module.

e) Press the pump-key (1) to start the pump.

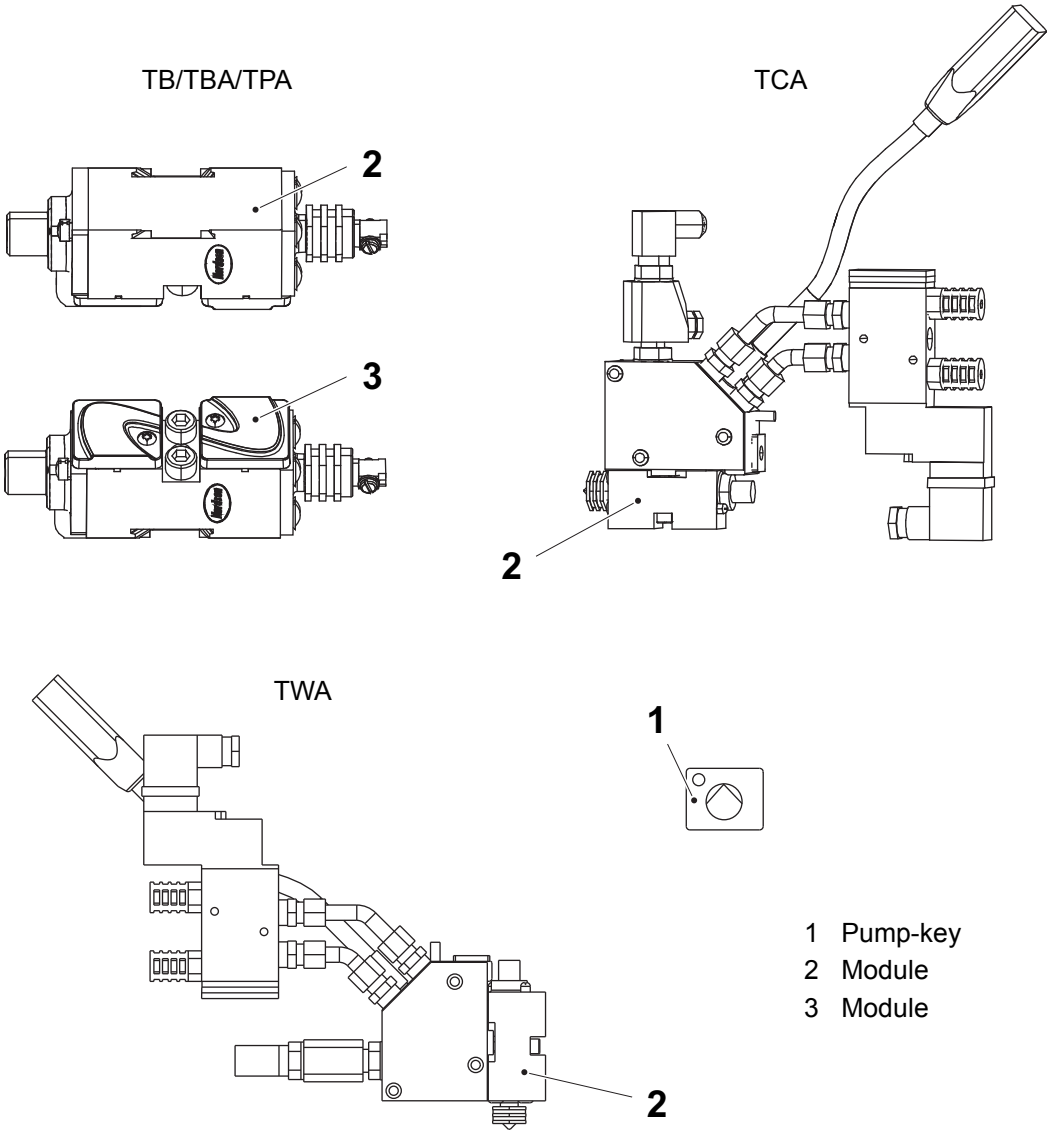

3.2.1-2 Hotmelt Gun - Change Solenoid Valve

Machine Status	Main Switch OFF Air Valve OFF
SPC Reference	90600-2959- valid for TB/TBA/TPA 90459-6475 - valid for TCA

WARNING

Burn hazard.

Risk of personal injury. Wear safety glasses, protective gloves, and other protective clothing to avoid injuries from adhesive pouring out.

Change the solenoid valves (arrows).

TB/TBA/TPA

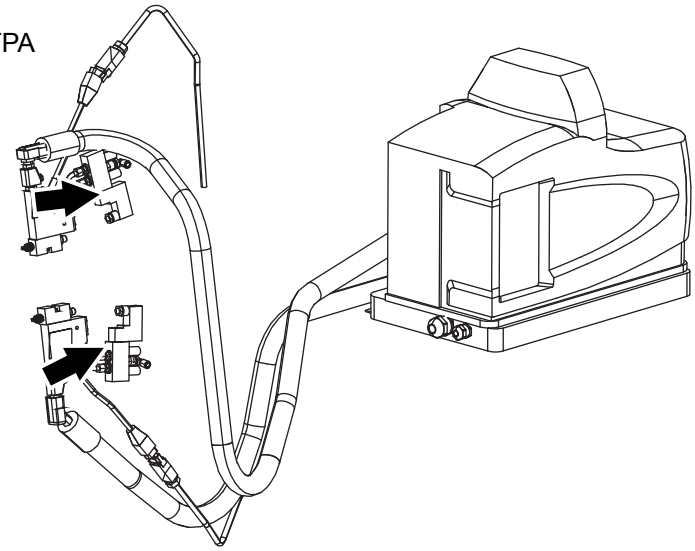

TWA

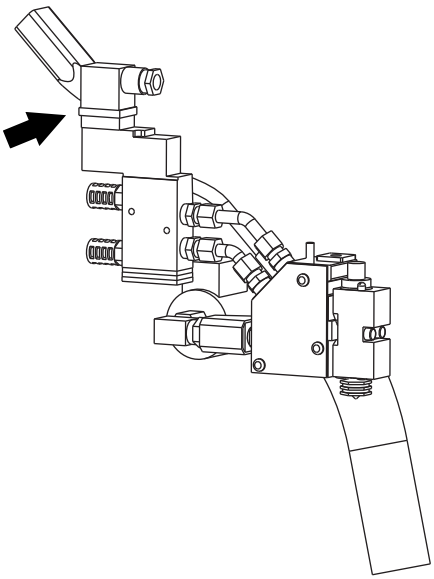

TCA

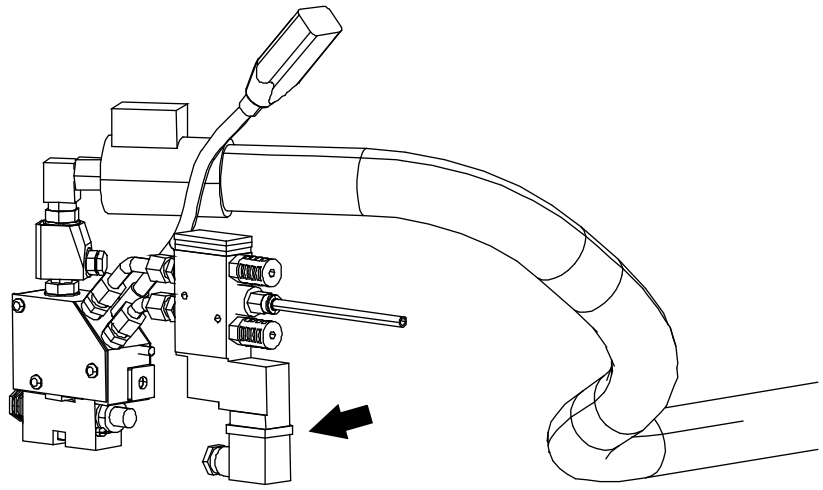

3.2.1-3 Hotmelt Gun - Set Gun Holder (TB/TBA/TPA)

Machine Status	Main Switch ON Air Valve ON

WARNING

Burn hazard.

Risk of personal injury. The hotmelt guns are hot. Be careful when handling the gun holder.

Lower Dot Position

a) Loosen the screw (1).

b) Move the lower gun holder (2). Set the value according to Section 12.1 Guideline Settings.

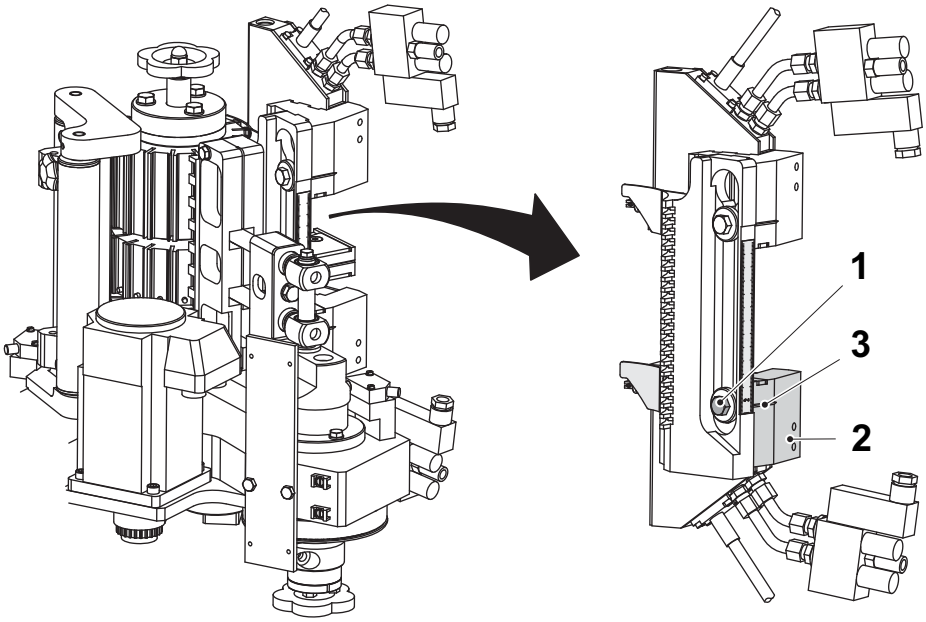

1 Screw
2 Gun holder
3 Scale mark

(Cont'd)

(Cont'd)

c) Check that the nozzle (4) does not shoot adhesive on the guide arm (5).

d) Set the nozzle at the angle A. If the angle is zero, adhesive will splash back on the nozzle and the guide arm.

e) To adjust the nozzle, loosen it with a wrench. Adjust the nozzle with a screwdriver. Hold the nozzle with the screwdriver to keep it in its position, and tighten the inner part of the nozzle with the wrench.

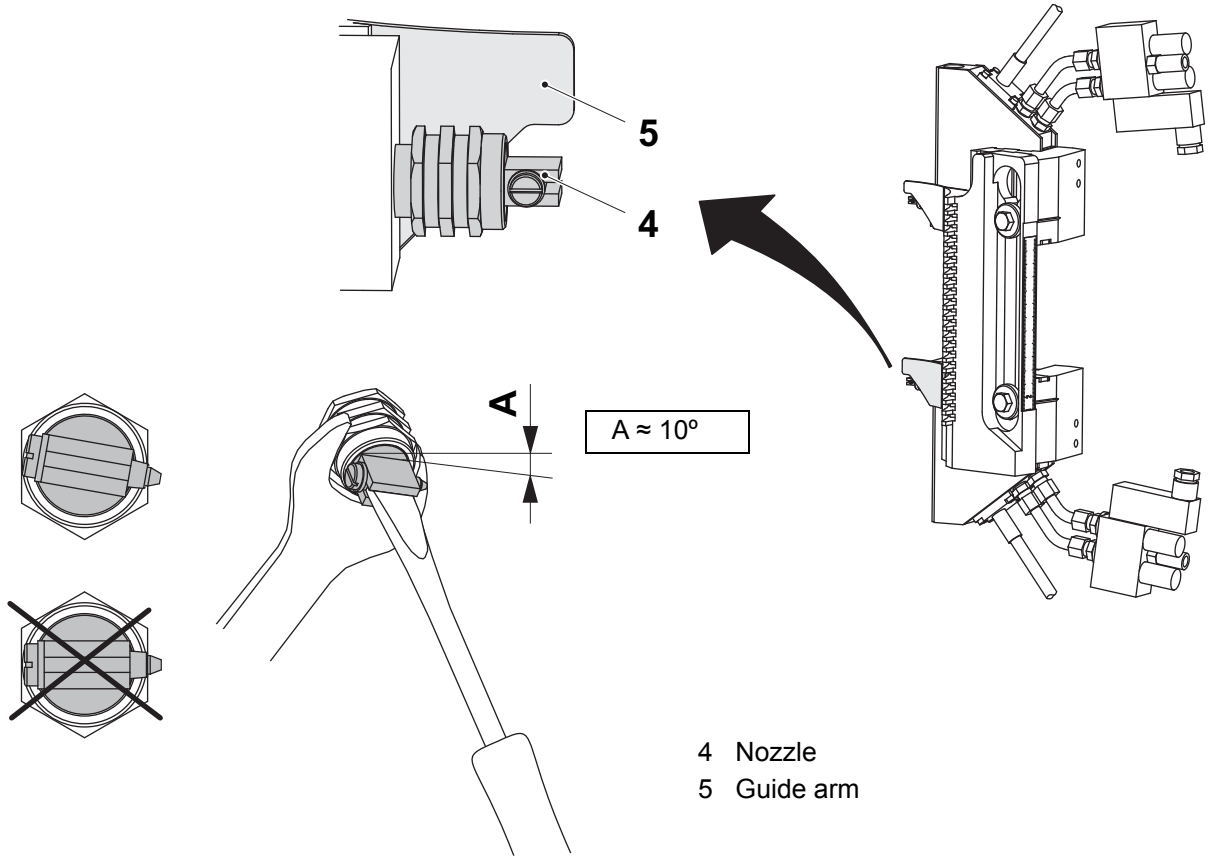

4 Nozzle
5 Guide arm

(Cont'd)

(Cont'd)

Upper Dot Position

f) Loosen the screw (6).

g) Move the upper gun holder (7) upwards/downwards. Set the value of the scale mark (8) according to Section 12.1 Guideline Settings.

h) Check that the nozzle (9) does not shoot adhesive on the guide arm (10). Adjust the nozzle if necessary, see item e).

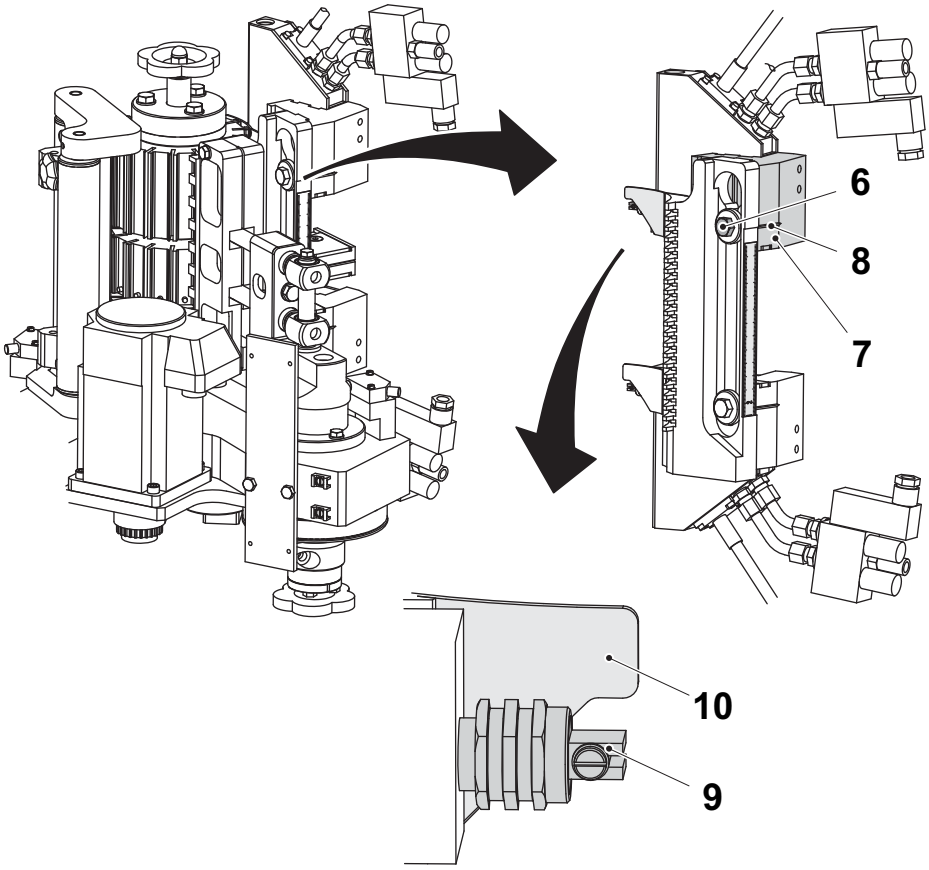

6 Screw
7 Gun holder
8 Scale mark
9 Nozzle
10 Guide arm

i) Operate the machine. Check that the hotmelt dots (11) are deposited on the straw according to the illustrations below.

S/T-Straw (TB/TBA)
Check the **A** measure. The dots should be equally positioned from the package edges.

S/T-Straw (TPA)
The upper hotmelt dot should be positioned as close to the top of the straw as possible. The lower hotmelt dot should be positioned as low on the straw as possible, but not over the cut area.

U-Straw (TB/TBA)
The upper dot should be positioned on the straw bend, see the illustration below.

Note! Make sure that the nozzles (4) and (9) do not apply glue where the arms (12) pick the straw.

Note! Horizontal adjustments of the straw position can be made in the TPOP.

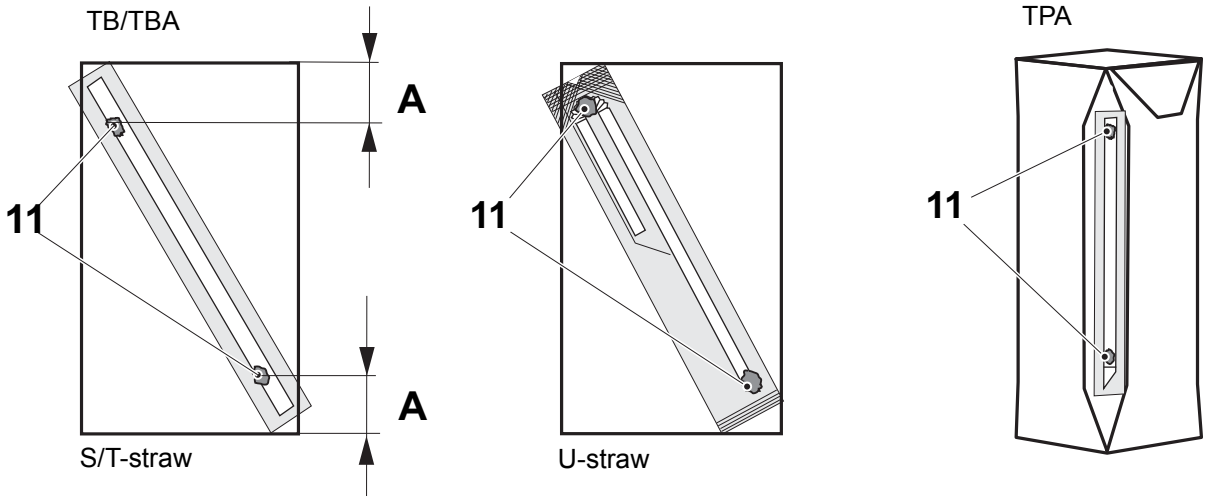

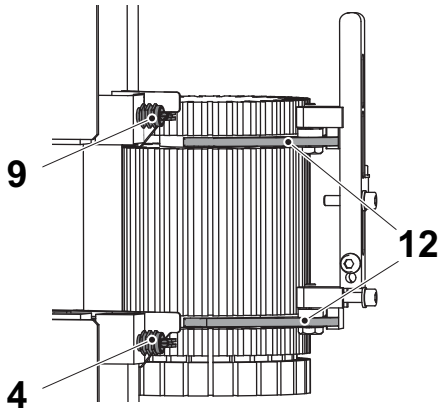

4 Nozzle
9 Nozzle
11 Hotmelt dot
12 Arm

4 Machine Body

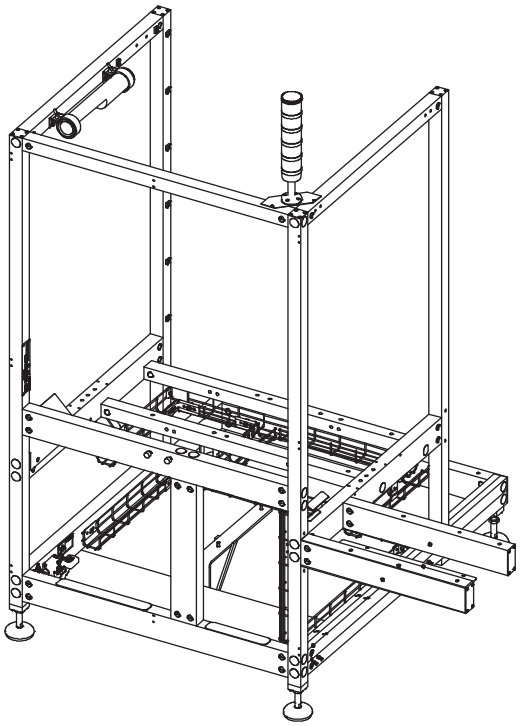

Machine Body - Description

SPC Reference	663304

TB/TBA/TPA

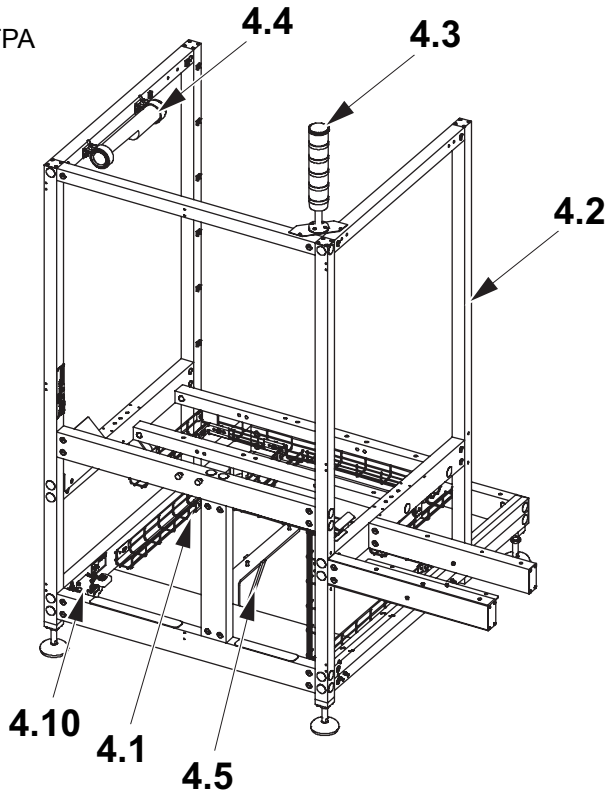

TCA

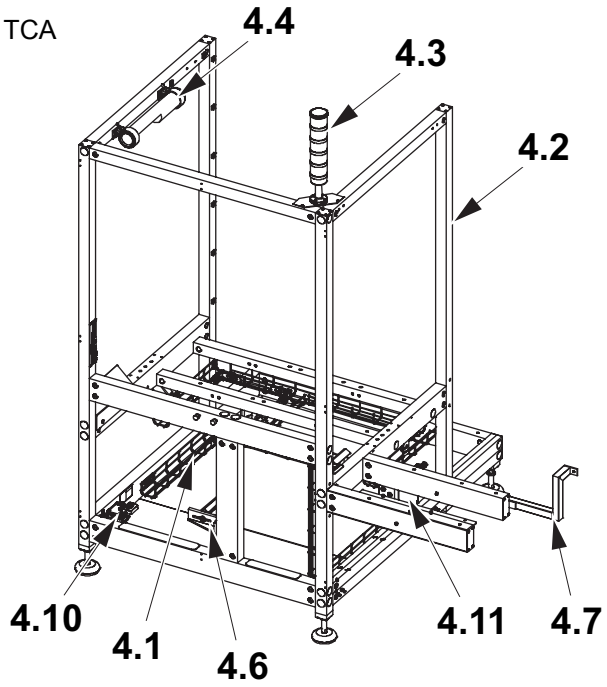

TWA

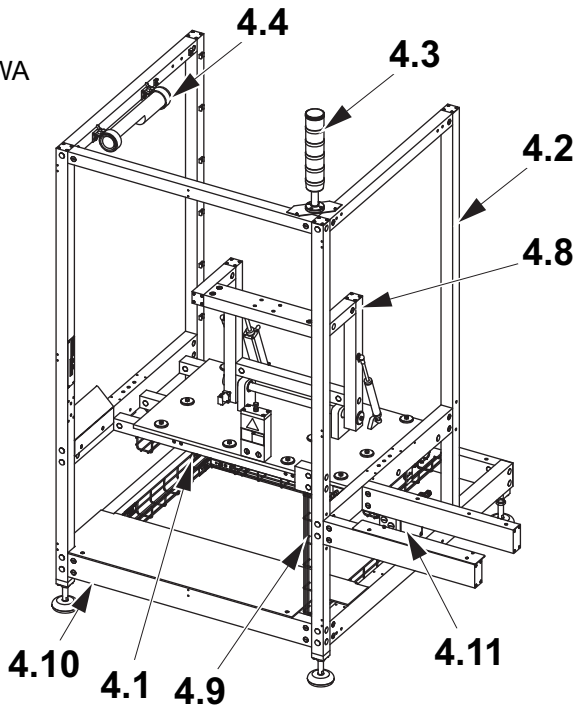

4.1 Cable duct
4.2 Machine body
4.3 Warning lamp
4.4 Light fixture
4.5 Vibration damper (TB/TBA/TPA)
4.6 Guide arm (TCA)
4.7 Bracket (TCA)
4.8 Adjustment plate (TWA)
4.9 Cable (TWA)
4.10 Connector
4.11 Connection box (TCA/TWA)

4.1 Cable Duct . . . . . 4 - 5

4.1-1 Cable Duct - No Procedure Described . . . . . 4 - 5

4.2 Machine Body . . . . . 4 - 6

4.2-1 Machine Body - No Procedure Described . . . . . 4 - 6

4.3 Warning Lamp . . . . . 4 - 7

4.3-1 Warning Lamp - No Procedure Described . . . . . 4 - 7

4.4 Light Fixture . . . . . 4 - 8

4.4-1 Light Fixture - No Procedure Described . . . . . 4 - 8

4.5 Vibration Damper . . . . . 4 - 9

4.5-1 Vibration Damper - No Procedure Described (TB/TBA/TPA) . . . . . 4 - 9

4.6 Guide Arm . . . . . 4 - 10

4.6-1 Guide Arm - Set (TCA) . . . . . 4 - 10

4.7 Bracket . . . . . 4 - 11

4.7-1 Bracket - No Procedure Described (TCA) . . . . . 4 - 11

4.8 Adjustment Plate . . . . . 4 - 12

4.8-1 Adjustment Plate - Check Parts (TWA) . . . . . 4 - 12

4.8-2 Adjustment Plate - Change Ball Bearings (TWA) . . . . . 4 - 13

4.8-3 Adjustment plate - Set (TWA) . . . . . 4 - 14

4.9 Cable . . . . . 4 - 15

4.9-1 Cable - No Procedure Described . . . . . 4 - 15

4.10 Connector . . . . . 4 - 16

4.10-1 Connector - No Procedure Described . . . . . 4 - 16

4.11 Connection Box . . . . . 4 - 17

4.11-1 Connection Box - No Procedure Described (TCA/TWA) . . . . . 4 - 17

This page intentionally left blank

4.1 Cable Duct

4.1-1 Cable Duct - No Procedure Described

SPC Reference	2843700

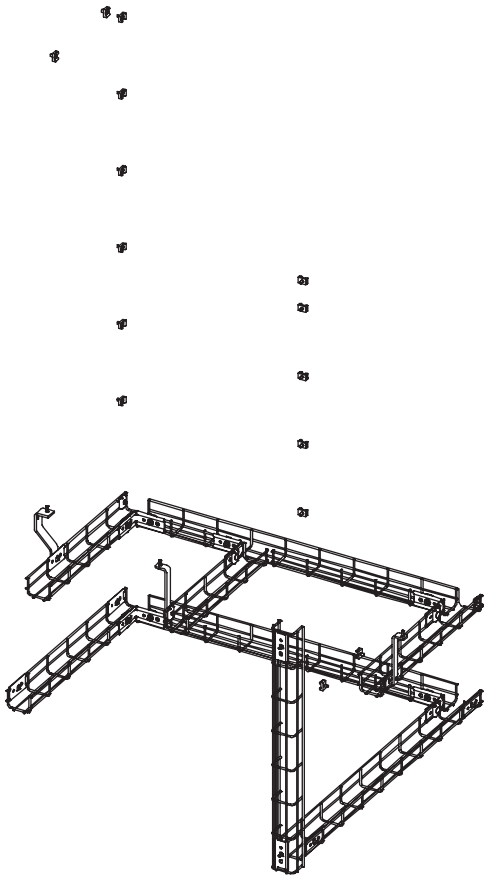

4.2 Machine Body

4.2-1 Machine Body - No Procedure Described

SPC Reference	2788657 - Valid for TB/TBA/TCA/TPA 3023560 - Valid for TWA

TB/TBA/TCA/TPA

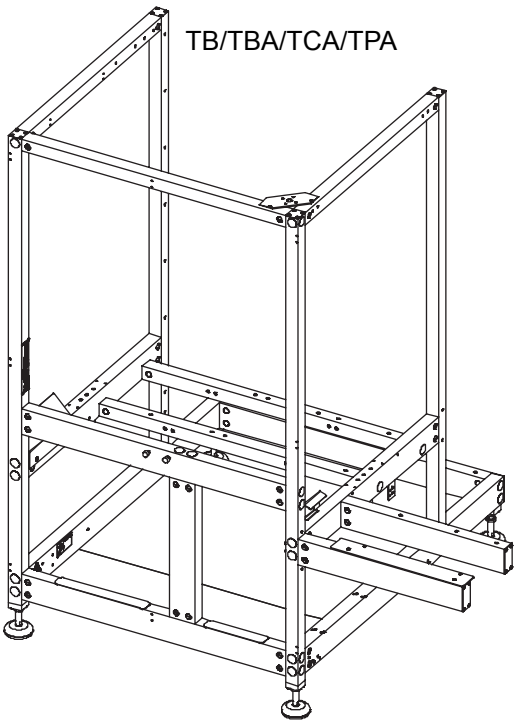

TWA

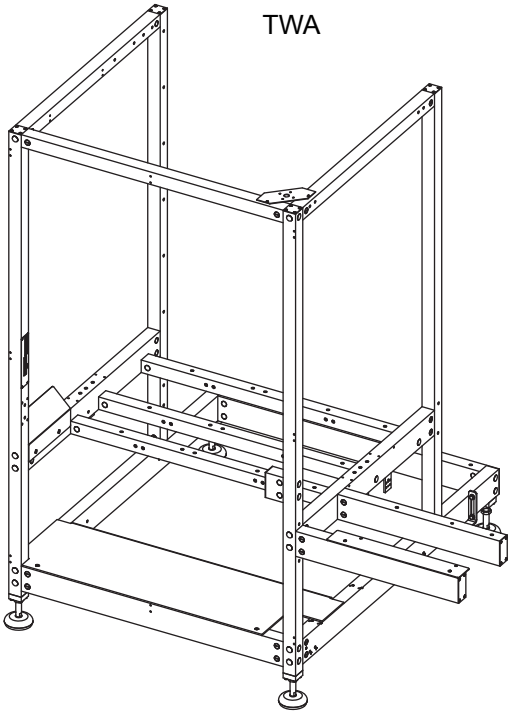

4.3 Warning Lamp

4.3-1 Warning Lamp - No Procedure Described

SPC Reference	581689

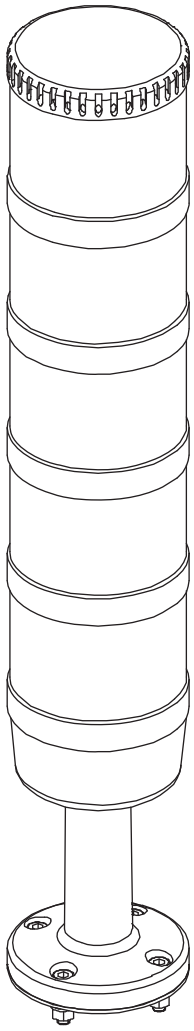

4.4 Light Fixture

4.4-1 Light Fixture - No Procedure Described

SPC Reference	2901717

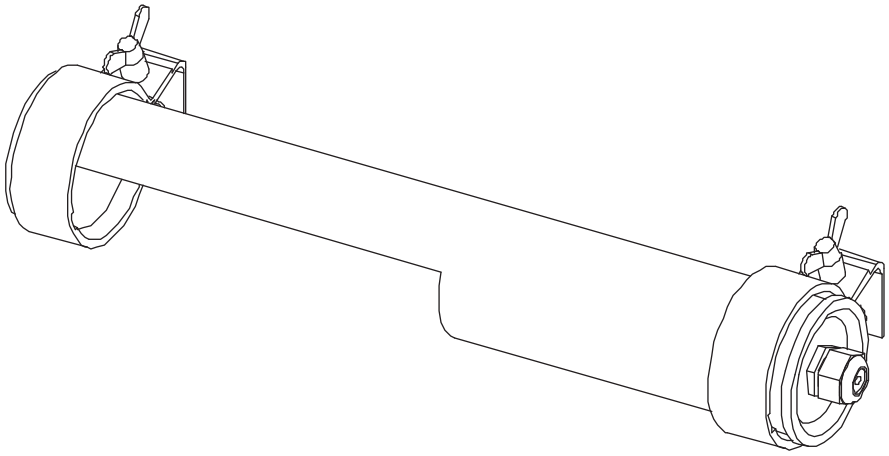

4.5 Vibration Damper

4.5-1 Vibration Damper - No Procedure Described (TB/TBA/TPA)

SPC Reference	2946861 - Valid for TB/TBA/TPA

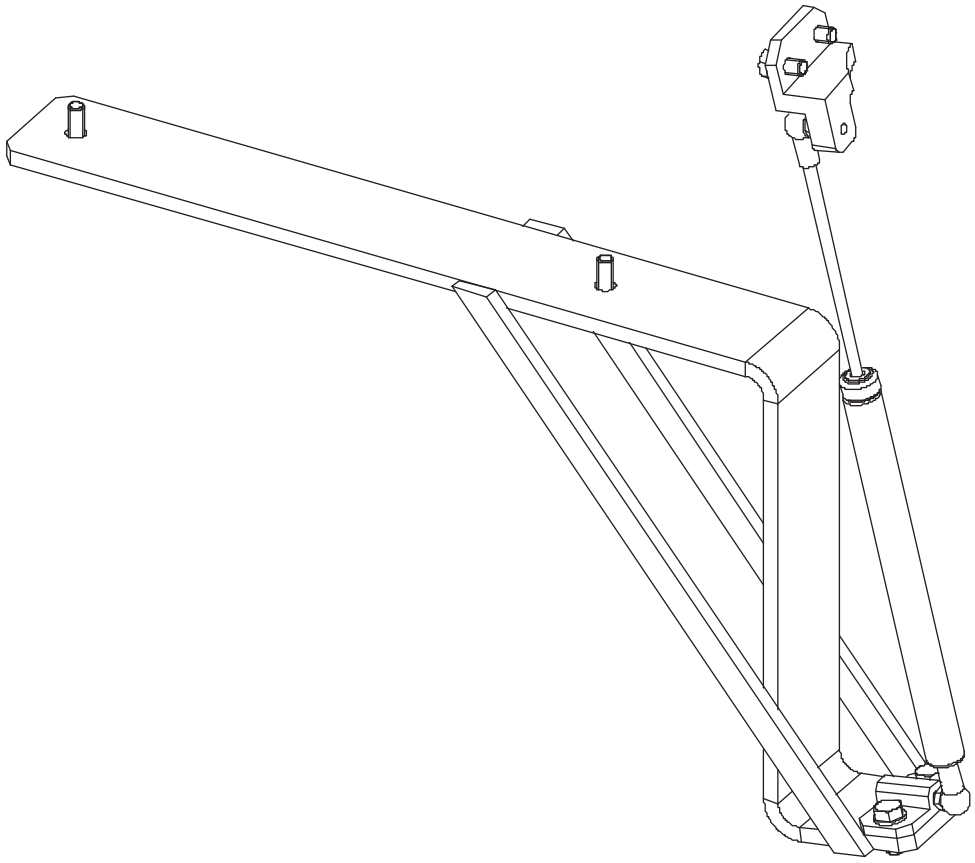

4.6 Guide Arm

4.6-1 Guide Arm - Set (TCA)

Machine Status	Main Switch OFF Air valve OFF
SPC Reference	2948240 - Valid for TCA

a) Loosen the screw (1).

b) Set the guide arm (2) so that it is aligned with the centre of the ladder band (arrow).

c) Tighten the screw (1).

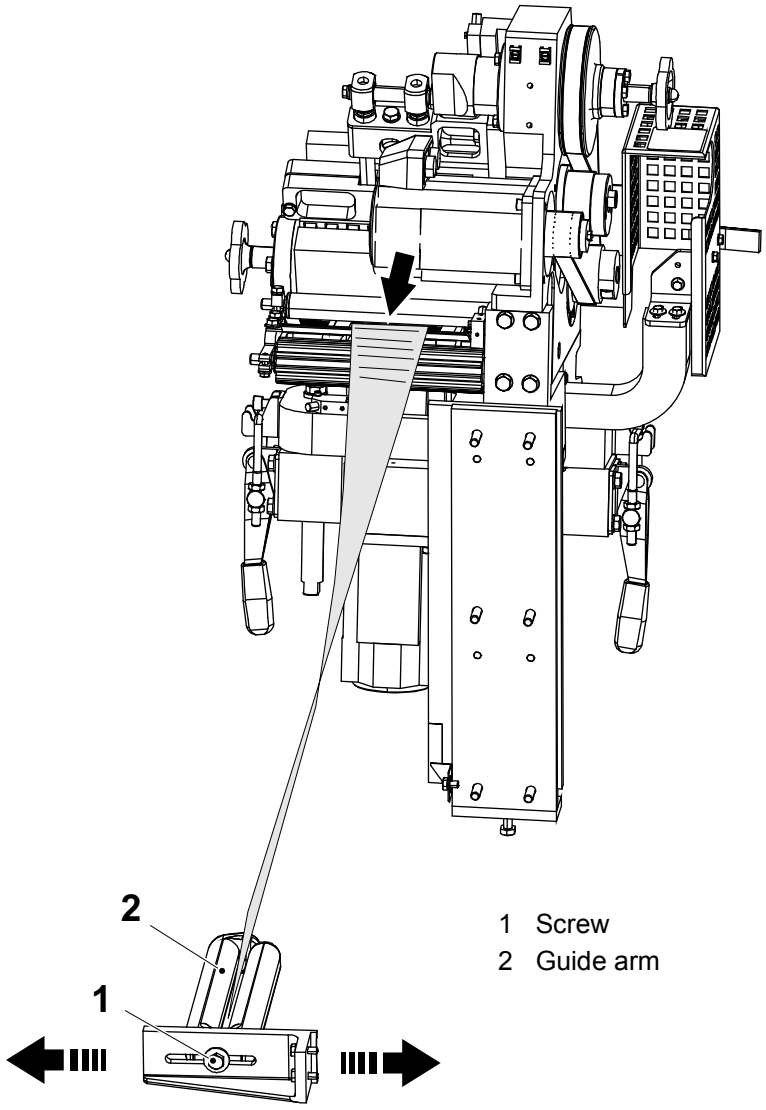

4.7 Bracket

4.7-1 Bracket - No Procedure Described (TCA)

SPC Reference	2957740 - Valid for TCA

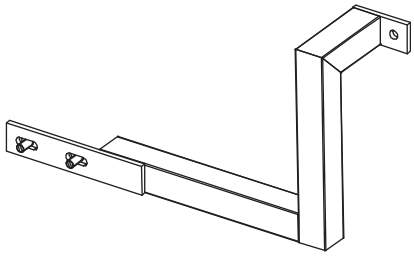

4.8 Adjustment Plate

4.8-1 Adjustment Plate - Check Parts (TWA)

Machine Status	Main Switch OFF Air Valve OFF
SPC Reference	2926050 - Valid for TWA

a) Loosen the cylinder (1) from the lifter (2).

b) Check the ball bearings (3) for wear and play.

c) Check the function of the gas springs (4).

d) Check the function of the inductive switch (5).

e) Change parts if necessary.

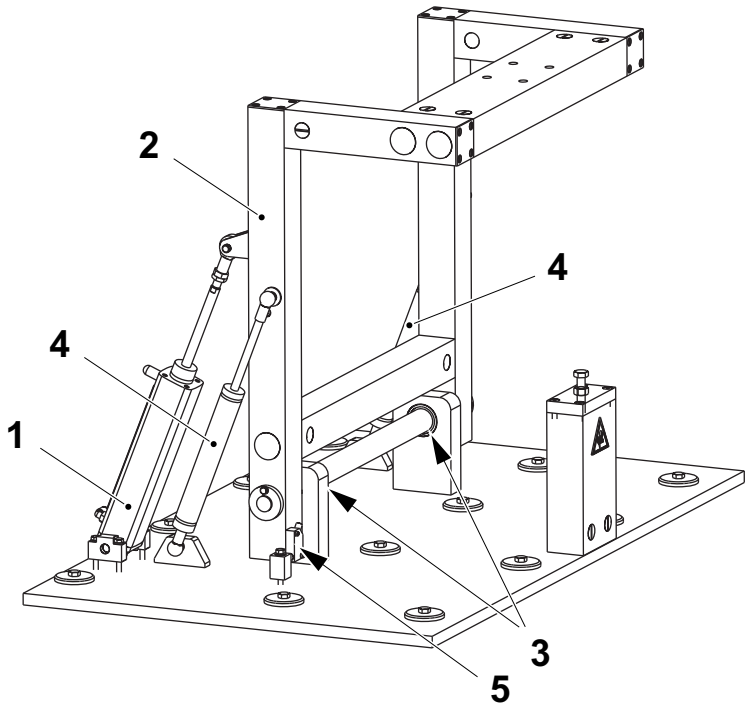

1 Cylinder
2 Lifter
3 Ball bearing
4 Gas spring
5 Inductive switch

4.8-2 Adjustment Plate - Change Ball Bearings (TWA)

Machine Status	Main Switch OFF Air Valve OFF
SPC Reference	2926050 - Valid for TWA

a) Loosen the cylinder (1) and the gas springs (2) from the lifter (3).

b) Remove the inductive switch (4).

c) Remove the screws (5), loosen the screw (6) and pull out the shaft (7).

d) Remove the lifter (3).

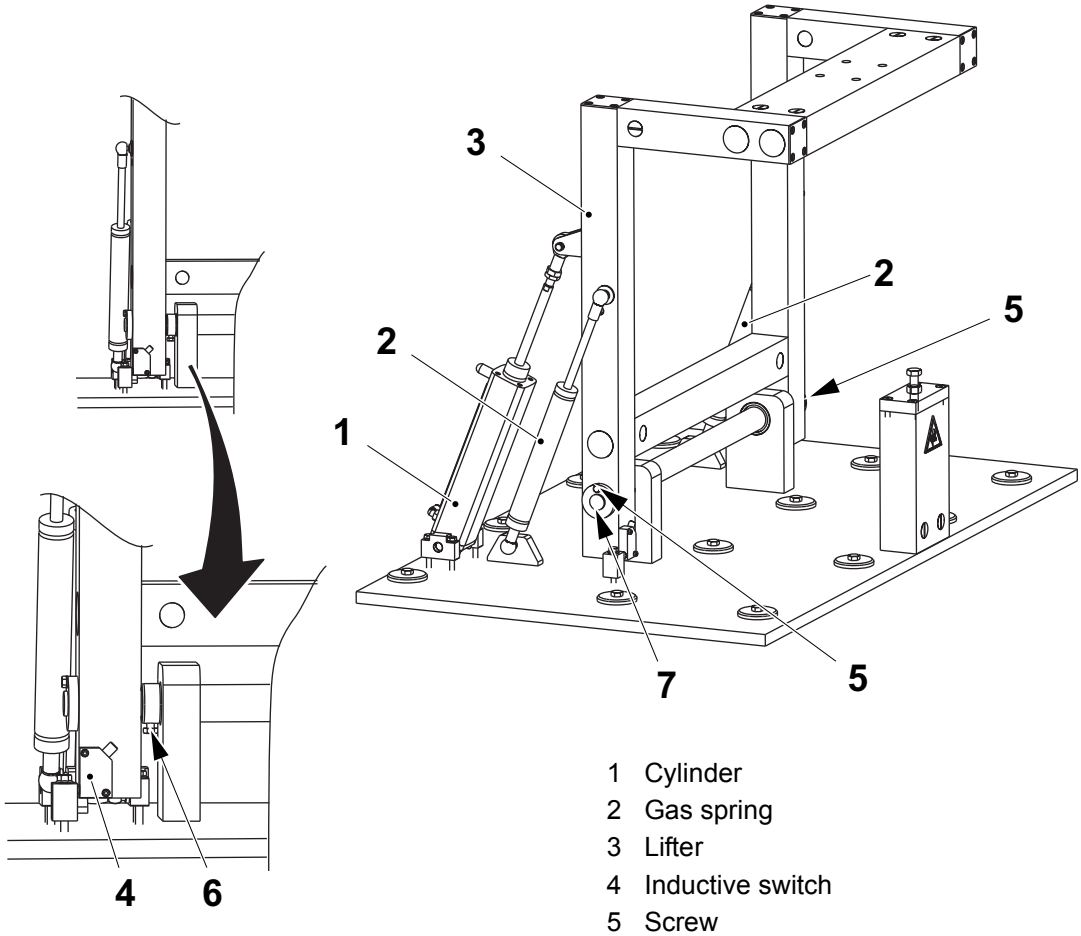

1 Cylinder
2 Gas spring
3 Lifter
4 Inductive switch
5 Screw
6 Screw
7 Shaft

(Cont'd)

(Cont'd)

e) Remove the spacers (8), (9) and (10).

f) Change the ball bearings (11) and assemble in reverse order.

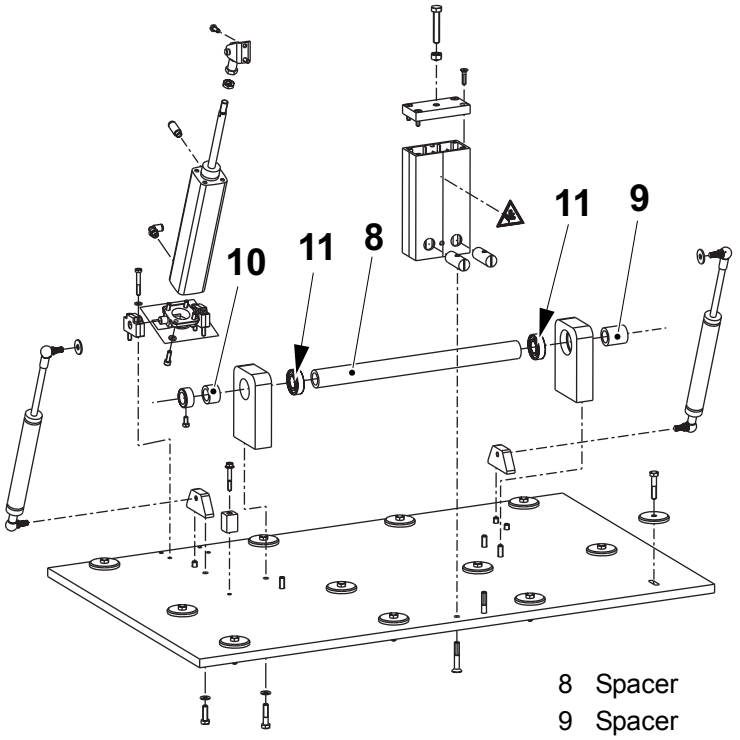

8 Spacer
9 Spacer
10 Spacer
11 Ball bearing

4.8-3 Adjustment plate - Set (TWA)

Machine Status	Main Switch OFF Air Valve OFF
SPC Reference	2926050 - Valid for TWA

For settings see Section 2-5 Applicator Unit - Set (TWA).

4.9 Cable

4.9-1 Cable - No Procedure Described

SPC Reference	2992430

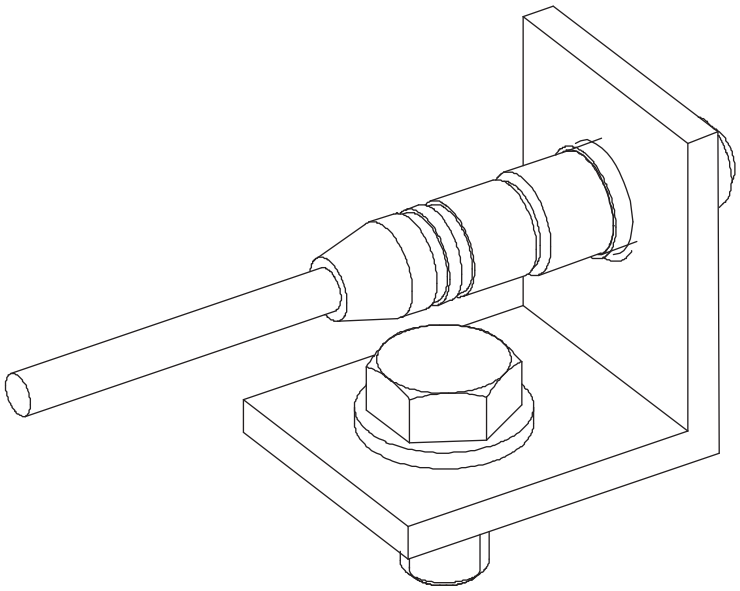

4.10 Connector

4.10-1 Connector - No Procedure Described

SPC Reference	2913340

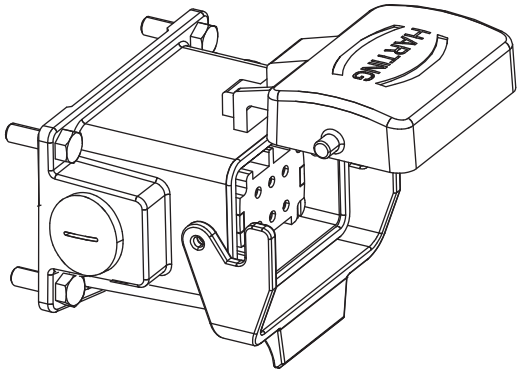

4.11 Connection Box

4.11-1 Connection Box - No Procedure Described (TCA/TWA)

SPC Reference	2992470 - Valid for TCA

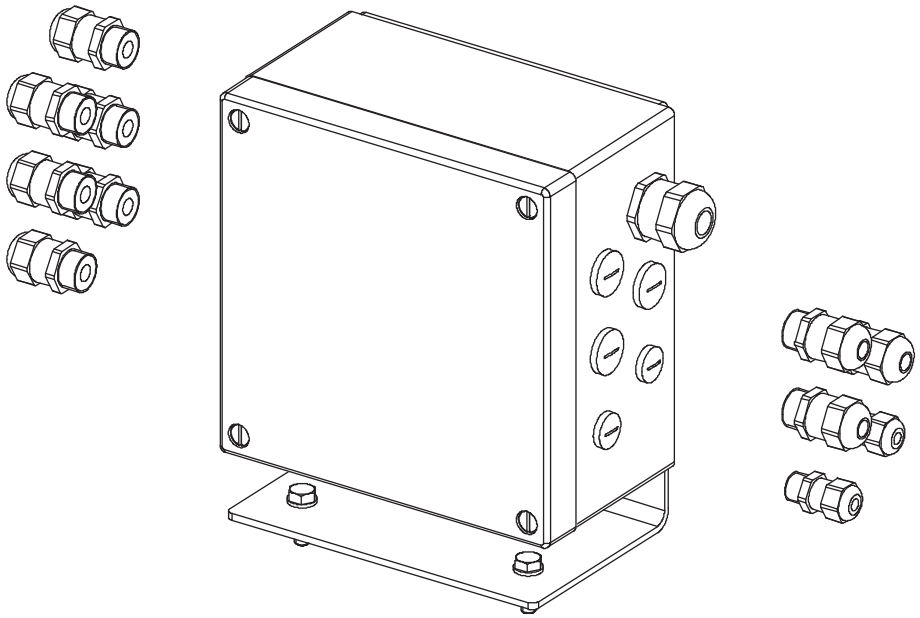

This page intentionally left blank

5 Machine Covering

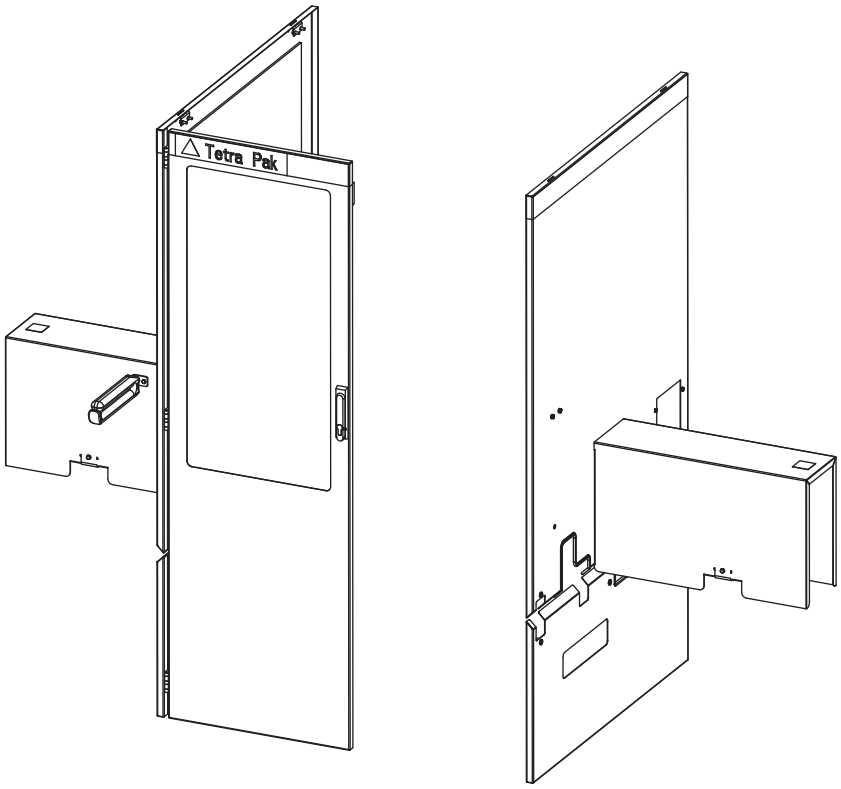

Machine Covering - Description

SPC Reference	663305

TB/TBA/TPA

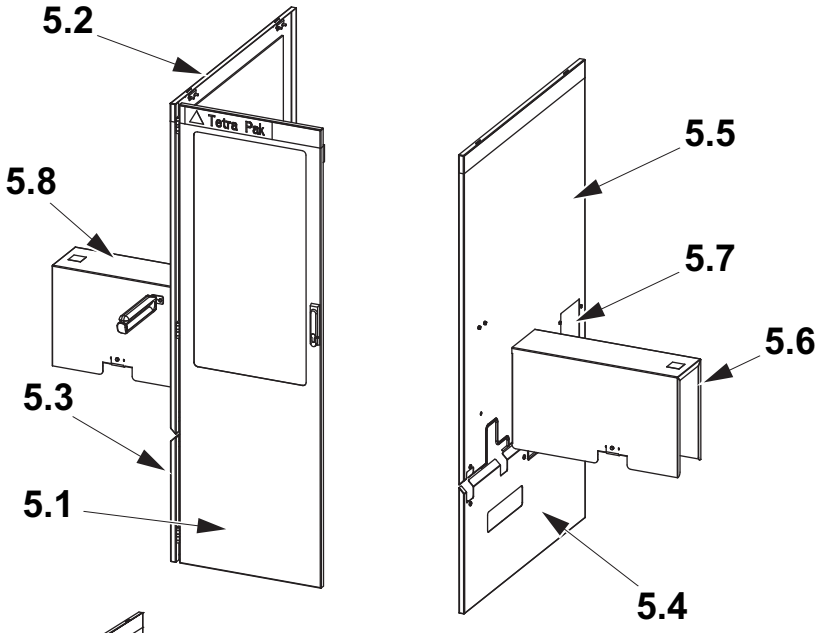

TCA

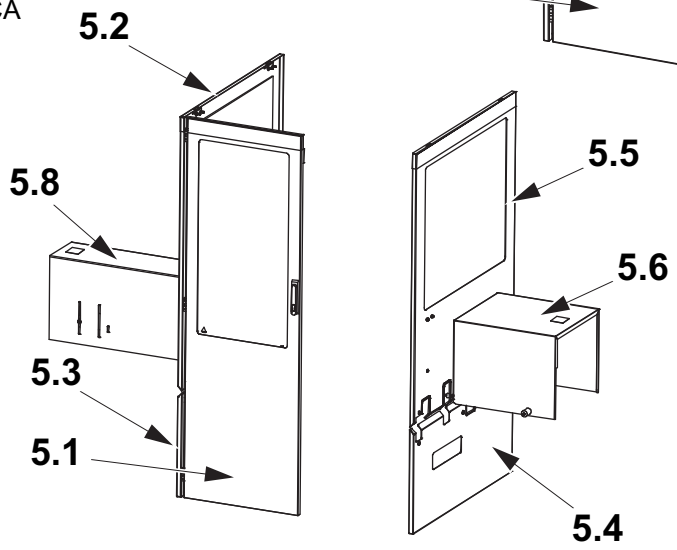

TWA

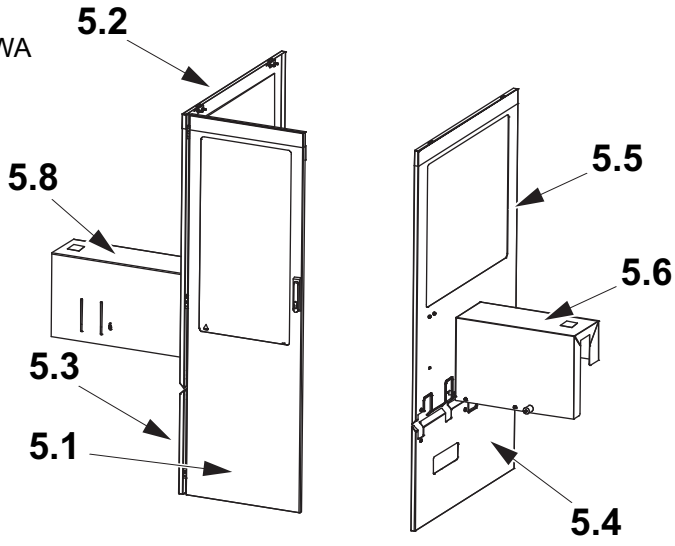

5.1 Glass Door
5.2 Covering panel
5.3 Covering panel
5.4 Covering panel
5.5 Covering panel
5.6 Tunnel
5.7 Covering panel (TB/TBA/TPA)
5.8 Tunnel

5.1 Glass Door . . . . . 5 - 5

5.1-1 Glass Door - No Procedure Described . . . . . 5 - 5

5.2 Covering panel. . . . . 5 - 6

5.2-1 Covering panel - No Procedure Described . . . . . 5 - 6

5.3 Covering panel. . . . . 5 - 7

5.3-1 Covering panel - No Procedure Described . . . . . 5 - 7

5.4 Covering panel. . . . . 5 - 8

5.4-1 Covering panel - No Procedure Described . . . . . 5 - 8

5.5 Covering panel. . . . . 5 - 9

5.5-1 Covering panel - No Procedure Described . . . . . 5 - 9

5.6 Tunnel . . . . . 5 - 10

5.6-1 Tunnel - No Procedure Described . . . . . 5 - 10

5.7 Covering panel. . . . . 5 - 11

5.7-1 Covering panel - No Procedure Described (TB/TBA/TPA) . . . . . 5 - 11

5.8 Tunnel . . . . . 5 - 12

5.8-1 Tunnel - No Procedure Described . . . . . 5 - 12

This page intentionally left blank

5.1 Glass Door

5.1-1 Glass Door - No Procedure Described

Machine Status	Main Switch ON Air Valve ON
SPC Reference	2839815

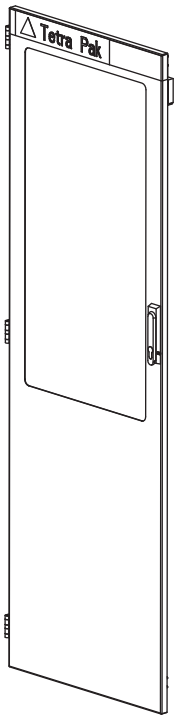

5.2 Covering panel

5.2-1 Covering panel - No Procedure Described

Machine Status	Main Switch ON Air Valve ON
SPC Reference	2839820 - Valid for TB/TBA/TPA 2957710 - Valid for TCA/TWA

TB/TBA/TPA

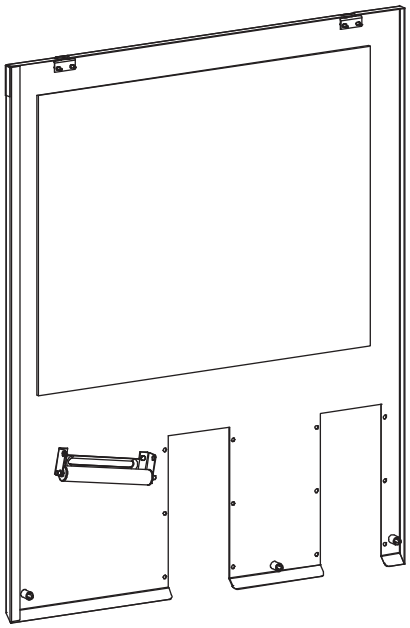

TCA/TWA

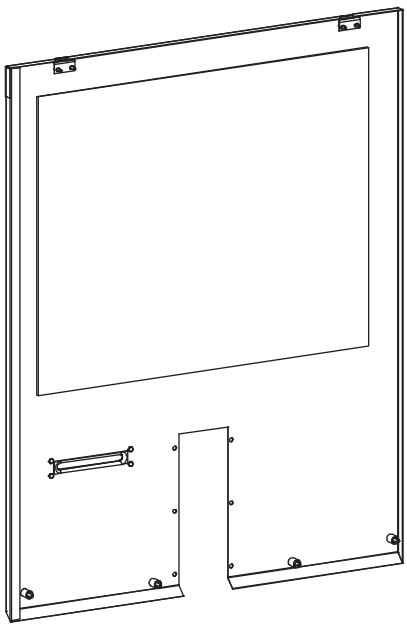

5.3 Covering panel

5.3-1 Covering panel - No Procedure Described

Machine Status	Main Switch ON Air Valve ON
SPC Reference	2840888

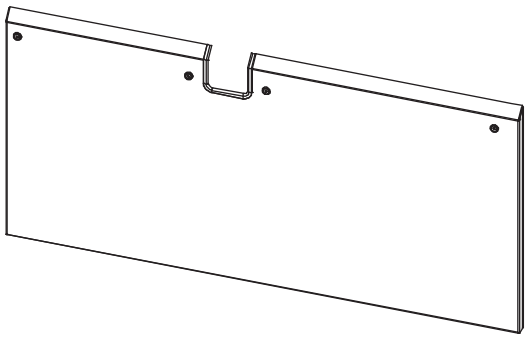

5.4 Covering panel

5.4-1 Covering panel - No Procedure Described

Machine Status	Main Switch ON Air Valve ON
SPC Reference	2840890

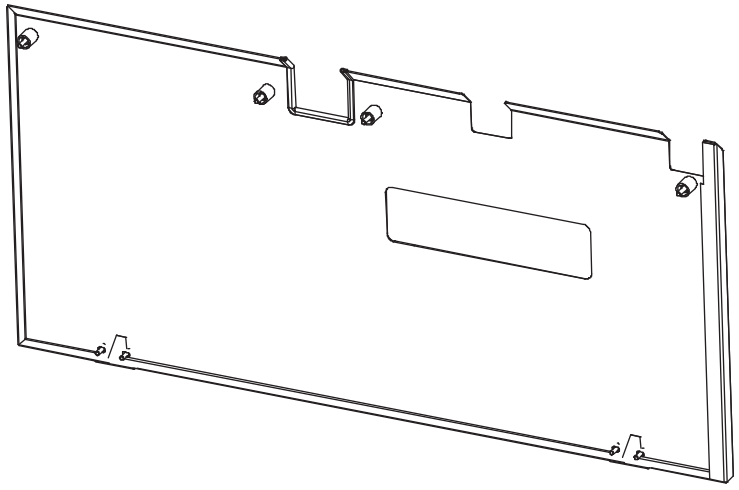

5.5 Covering panel

5.5-1 Covering panel - No Procedure Described

Machine Status	Main Switch ON Air Valve ON
SPC Reference	2840892 - Valid for TB/TBA/TPA 2957720 - Valid for TCA/TWA

TB/TBA/TPA

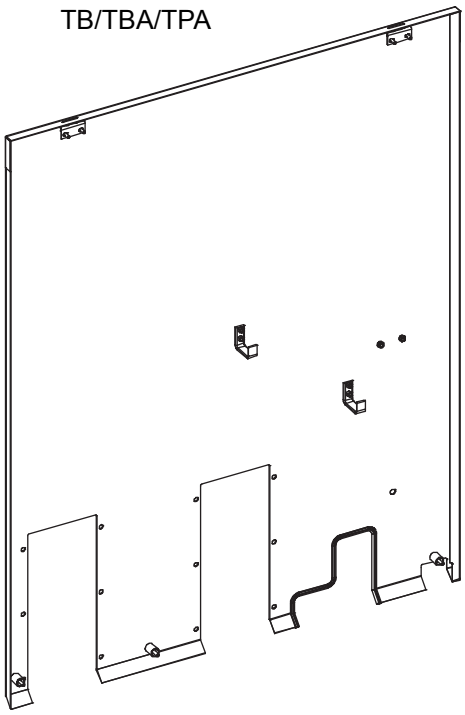

TCA/TWA

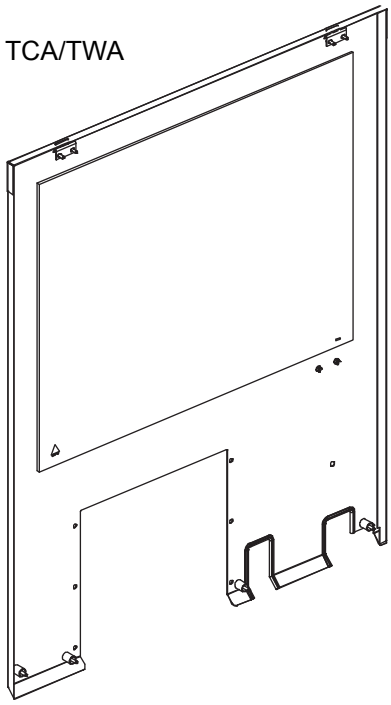

5.6 Tunnel

5.6-1 Tunnel - No Procedure Described

Machine Status	Main Switch ON Air Valve ON
SPC Reference	2885383 - Valid for TB/TBA/TPA 2934020 - Valid for TCA/TWA

TB/TBA/TPA

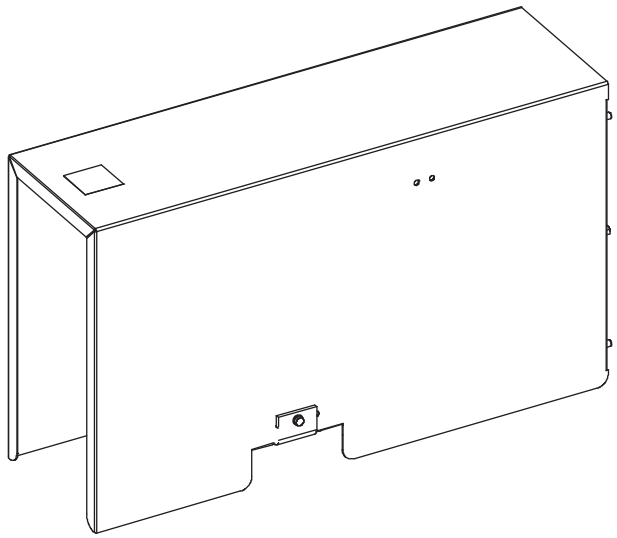

TCA

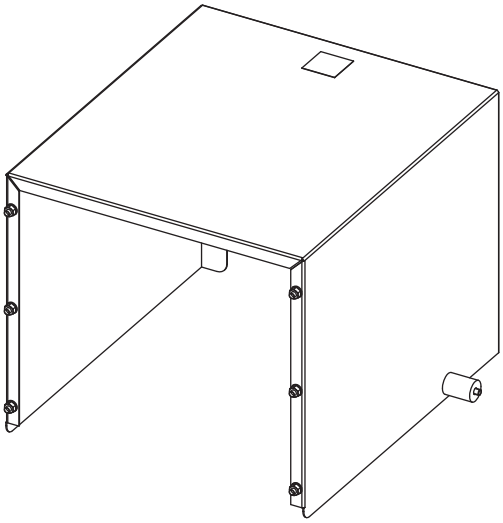

TWA

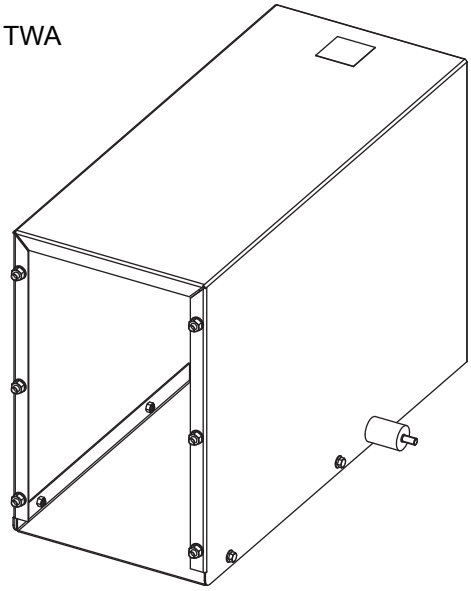

5.7 Covering panel

5.7-1 Covering panel - No Procedure Described (TB/TBA/TPA)

Machine Status	Main Switch ON Air Valve ON
SPC Reference	2941199 - Valid for TB/TBA/TPA, straight infeed/ discharge

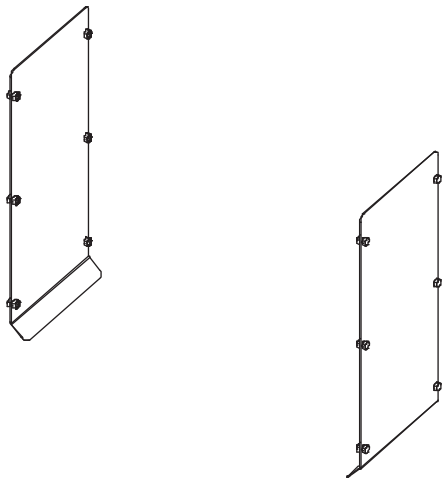

5.8 Tunnel

5.8-1 Tunnel - No Procedure Described

Machine Status	Main Switch ON Air Valve ON
SPC Reference	2946723 - Valid for TB/TBA/TPA 2934010 - Valid for TCA/TWA

TB/TBA/TPA

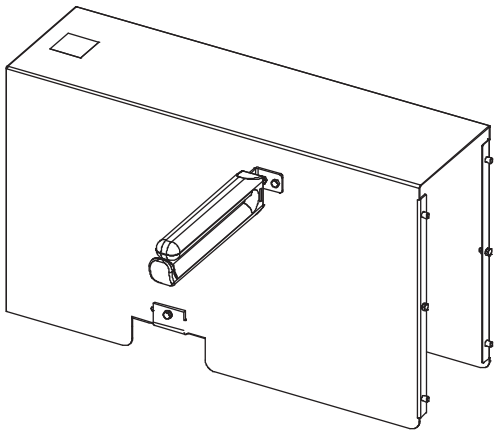

TCA

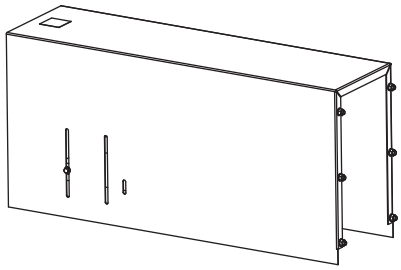

TWA

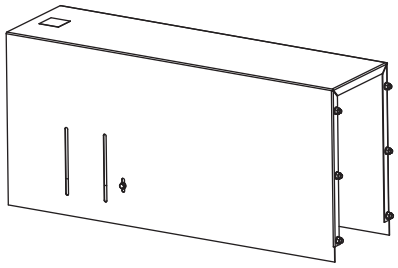

6 Air Equipment

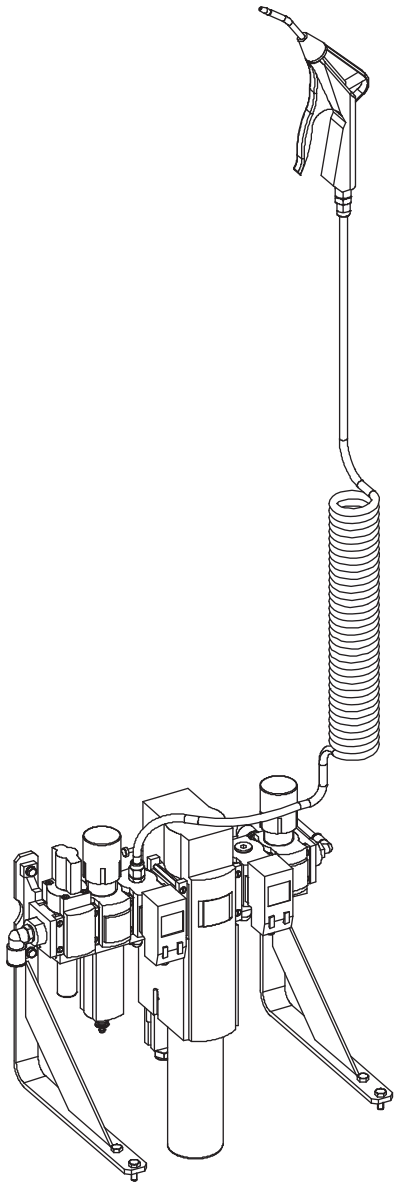

Air Equipment - Description

SPC Reference	663306

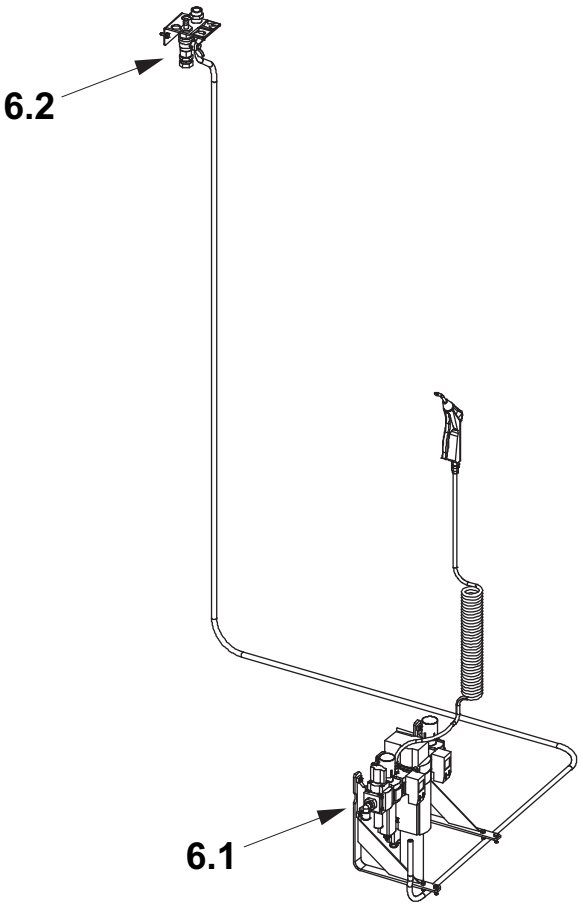

6.1 Air supply
6.2 Main pipe

6.1 Air Supply . . . . . 6 - 5

6.1-1 Air Supply - Set Air Pressure . . . . . 6 - 5

6.1-2 Air Supply - Reduce Air Pressure . . . . . 6 - 6

6.1-3 Air Supply - Clean Filter Regulator . . . . . 6 - 7

6.1-4 Air Supply - Set Pressure Sensor . . . . . 6 - 9

6.2 Main Pipe . . . . . 6 - 13

6.2-1 Main Pipe - No Procedure Described . . . . . 6 - 13

6.3 Pneumatic diagram . . . . . 6 - 14

This page intentionally left blank

6.1 Air Supply

6.1-1 Air Supply - Set Air Pressure

Machine Status	Main Switch ON Air Valve ON
SPC Reference	2839813

a) Open the shut off valve (1) by turning it to the left.

Note! In the illustration the valve is closed.

b) Set the working pressure, see the table. Use the knob (2) on the regulator (3). The pressure is displayed on the manometer (4).

c) Set the hotmelt gun pressure, see the table. Use the knob (6) on the regulator (7). The pressure is displayed on the manometer (8).

Note! The pressure sensor (5) is related to the working pressure and the pressure sensor (9) is related to the hotmelt gun pressure, see Procedure 6.1-4 Air Supply - Set Pressure Sensor

Pressure	**TB/TBA/TPA**	**TCA/TWA**
Working pressure	0.55 MPa (5.5 bar)	0.55 MPa (5.5 bar)
Hotmelt gun	0.4 to 0.45 MPa (4 to 4.5 bar)	0.35 MPa (3.5 bar)

Note! The values are also stated in the OM.

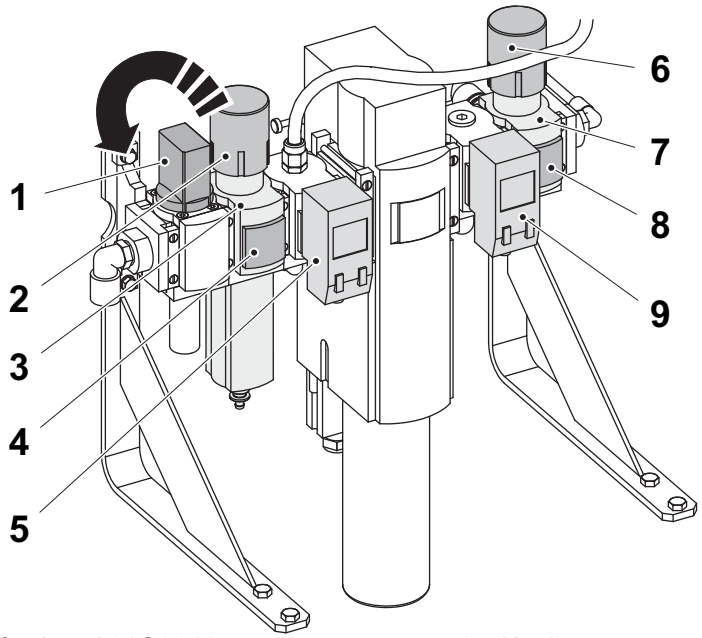

1 Shut off valve, A01Q3010
2 Knob
3 Filter regulator, A01K3020
4 Manometer
5 Pressure sensor, F09B2032
6 Knob
7 Regulator, A01K3030
8 Manometer
9 Pressure sensor, F09B2032

6.1-2 Air Supply - Reduce Air Pressure

Machine Status	Main Switch ON Air Valve ON
SPC Reference	2839813

a) Close the shut-off valve (1) by turning it to the right.

Note! In the illustration the shut off valve is closed.

b) Check that the air pressure is zero on the manometer (2) on the regulator (3).

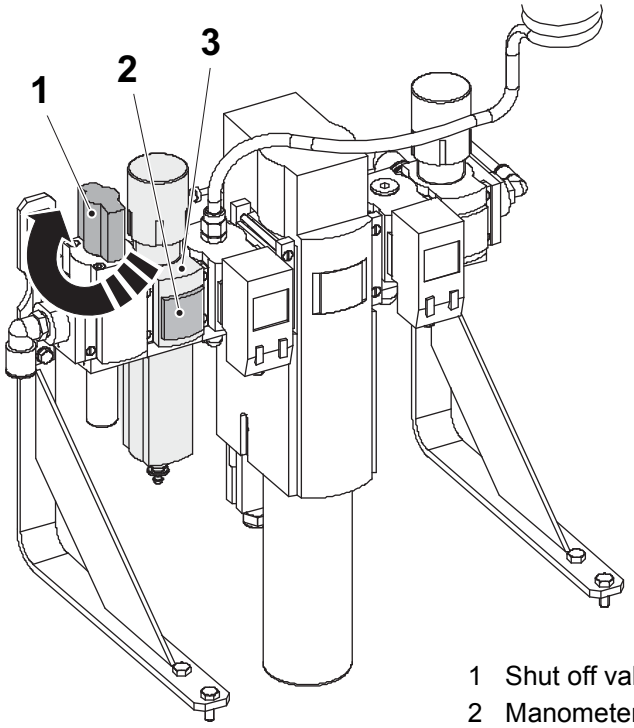

1 Shut off valve, A01Q3010
2 Manometer
3 Filter regulator, A01K3020

6.1-3 Air Supply - Clean Filter Regulator

Machine Status	Main Switch ON Air Valve OFF
SPC Reference	2839813

WARNING

Risk of injuries.

The system must be depressurized before cleaning. For more information see Chapter ii Safety Precautions.

a) Shut off the air supply, see Procedure 6.1-2 Air Supply - Reduce Air Pressure.

b) Press the button (1) downwards.

c) Turn the filter bowl (2) to the left and pull it gentle downwards.

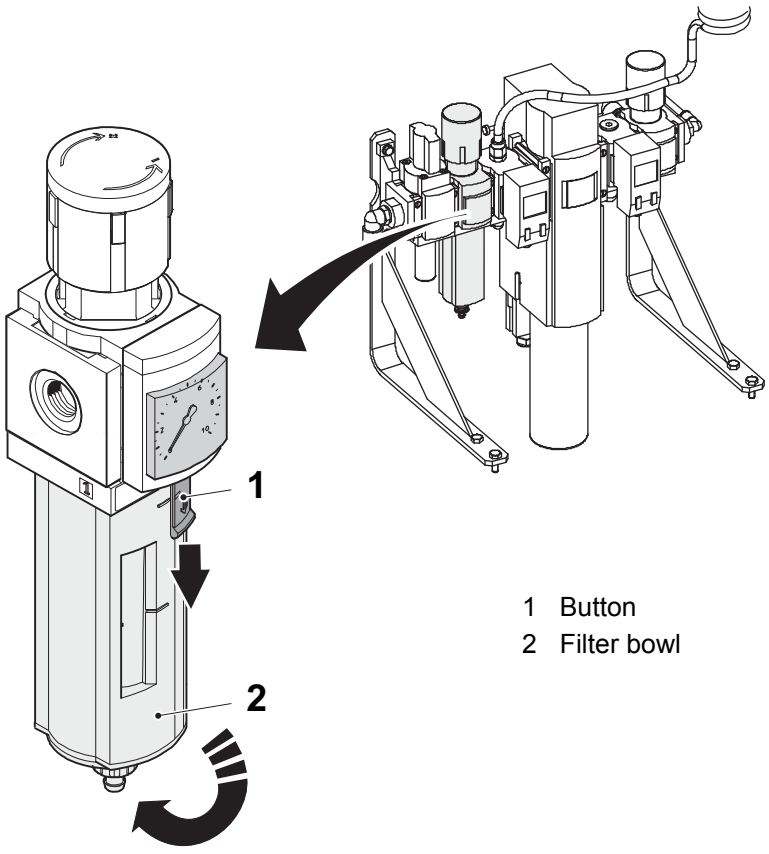

1 Button
2 Filter bowl

(Cont'd)

(Cont'd)

d) Turn the separating plate (3) to the left.

e) Remove the separating plate (3) and the filter cartridge (4).

Note! A cleaned filter get clogged much quicker than a new filter. It is recommended to change the filter instead of cleaning it.

f) Change the filter cartridge (4) or clean it with water (maximum + 60°C), soup suds or petroleum ether (free of compounds).

Note! Only hold the clean filter in the lower end!

g) Reinstall the separating plate (3).

WARNING

Risk of personal injury.
The filter bowl must be turned fully to the right into the body before pressurizing the unit.

h) Reinstall the filter bowl (2). Make sure that the locking pin (5) points towards the large recess (6) in the housing.

i) Turn the filter bowl (2) to the right until a clicking sound is heard.

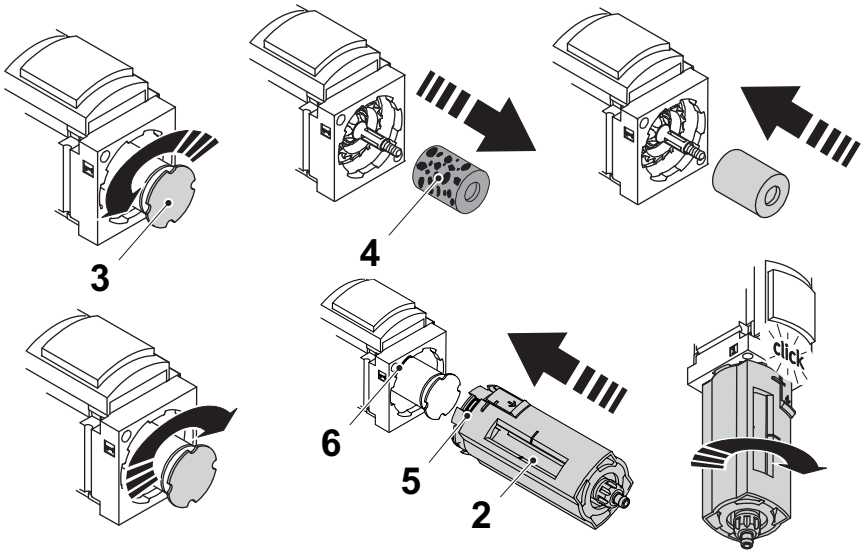

2 Filter bowl
3 Separating plate
4 Filter cartridge
5 Locking pin
6 Large recess

6.1-4 Air Supply - Set Pressure Sensor

Machine Status	Main Switch ON Air Valve ON
SPC Reference	2839813

Set the pressure sensors (1) and (2) according to the table.

SP min (Lower switching pressure)	3.8 bar
SP max (Upper switching pressure)	6 bar
HY (Hysteresis)	0.2 bar

Note! In the illustration the shut off valve is closed.

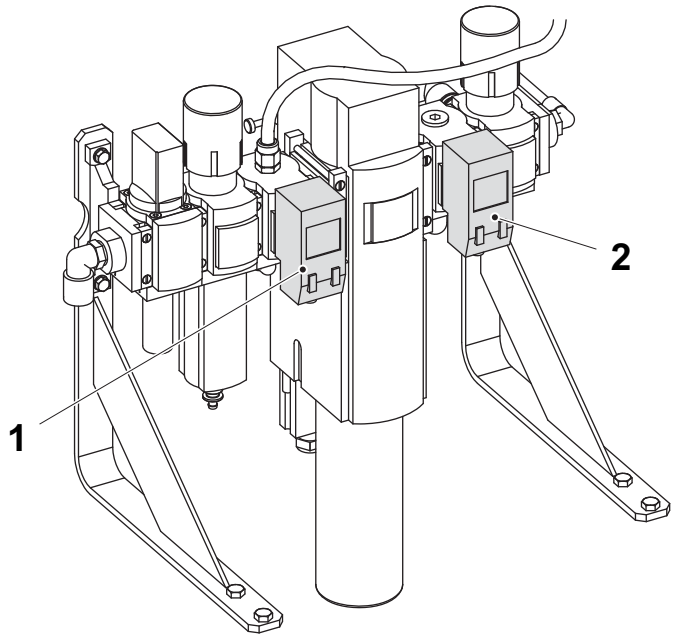

1 Pressure sensor, F09B2032
2 Pressure sensor, F09B2032

(Cont'd)

(Cont'd)

Check Values

Press the UP button (3) repeatedly to check the set values. Compare with the values in the table above.If the settings are correct nothing more needs to be done.

Factory Reset

To perform a factory reset, follow these steps:

a) Turn off the power supply by disconnecting the power cable from the pressure sensor.

b) Press UP (3), DOWN (4) and EDIT (5) at the same time. Use a pointed object to press the EDIT button (5).

c) Turn on the power again by connecting the power cable to the pressure sensor.

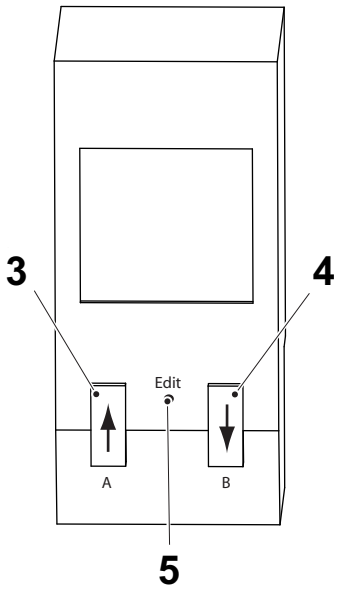

3 UP
4 DOWN
5 EDIT

(Cont'd)

(Cont'd)

Edit Values

a) Press the EDIT button (5) with a pointed object.

b) Switching output A, Out A (6), will flash. Check that the unit is set to bar in the lower part of the display.

c) Confirm with the EDIT button (5).

d) Press the UP button (3) until **window comparator** (8) is selected. The flashing symbol shows what is selected.

e) Confirm with the EDIT button (5).

f) Lower switching pressure, SP min (9), will flash.

g) Press the UP button (3) or the DOWN button (4) to change the value.

h) Confirm with the EDIT button (5).

i) Upper switching pressure, SP max (10), will flash.

j) Press the UP button (3) or the DOWN button (4) to change the value.

k) Confirm with the EDIT button (5).

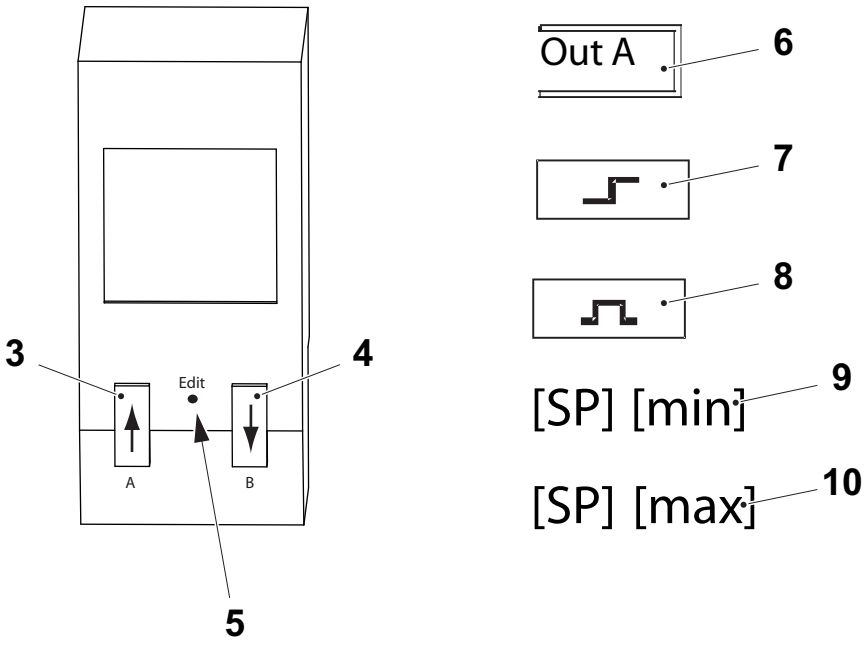

3 UP
4 DOWN
5 EDIT
6 Out A
7 Threshold comparator
8 Window comparator
9 SP min
10 SP max

(Cont'd)

(Cont'd)

l) Hysteresis, HY (11), will flash.

m) Press the UP button (3) or the DOWN button (4) to change the value.

n) Confirm with the EDIT button (5).

o) Normally open contact, NO (12), or normally closed contact, NC (13) will flash.

p) Select **NO** (12). Press the UP button (3) to change.

q) Confirm with the EDIT button (5). The pressure sensor will return to the main menu.

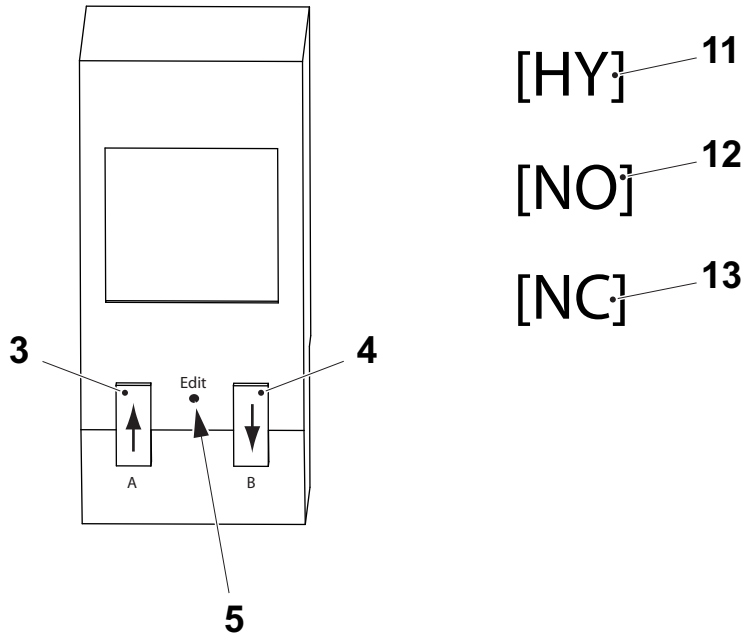

3	UP	11	HY
4	DOWN	12	NO
5	EDIT	13	NC

6.2 Main Pipe

6.2-1 Main Pipe - No Procedure Described

SPC Reference	2941716

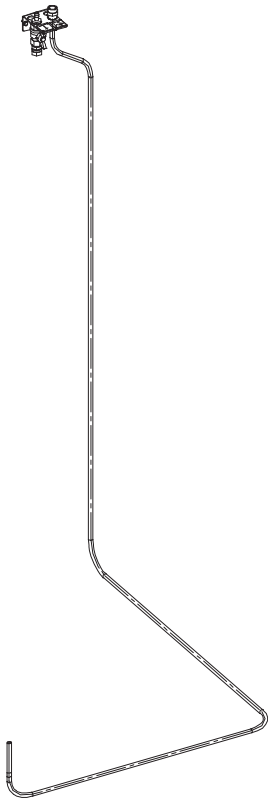

6.3 Pneumatic diagram

TB/TBA/TPA

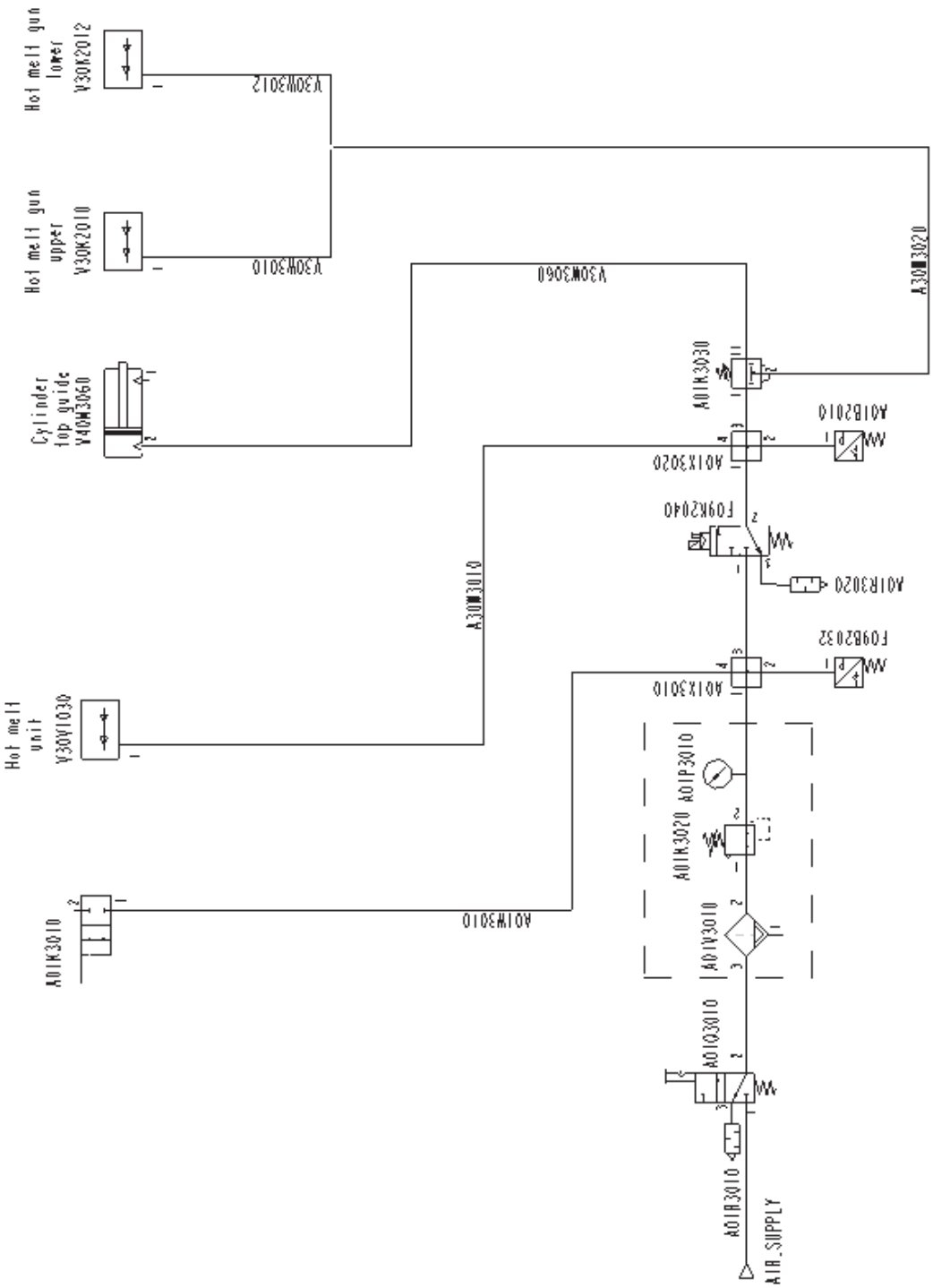

(Cont'd)

(Cont'd)

TCA/TWA

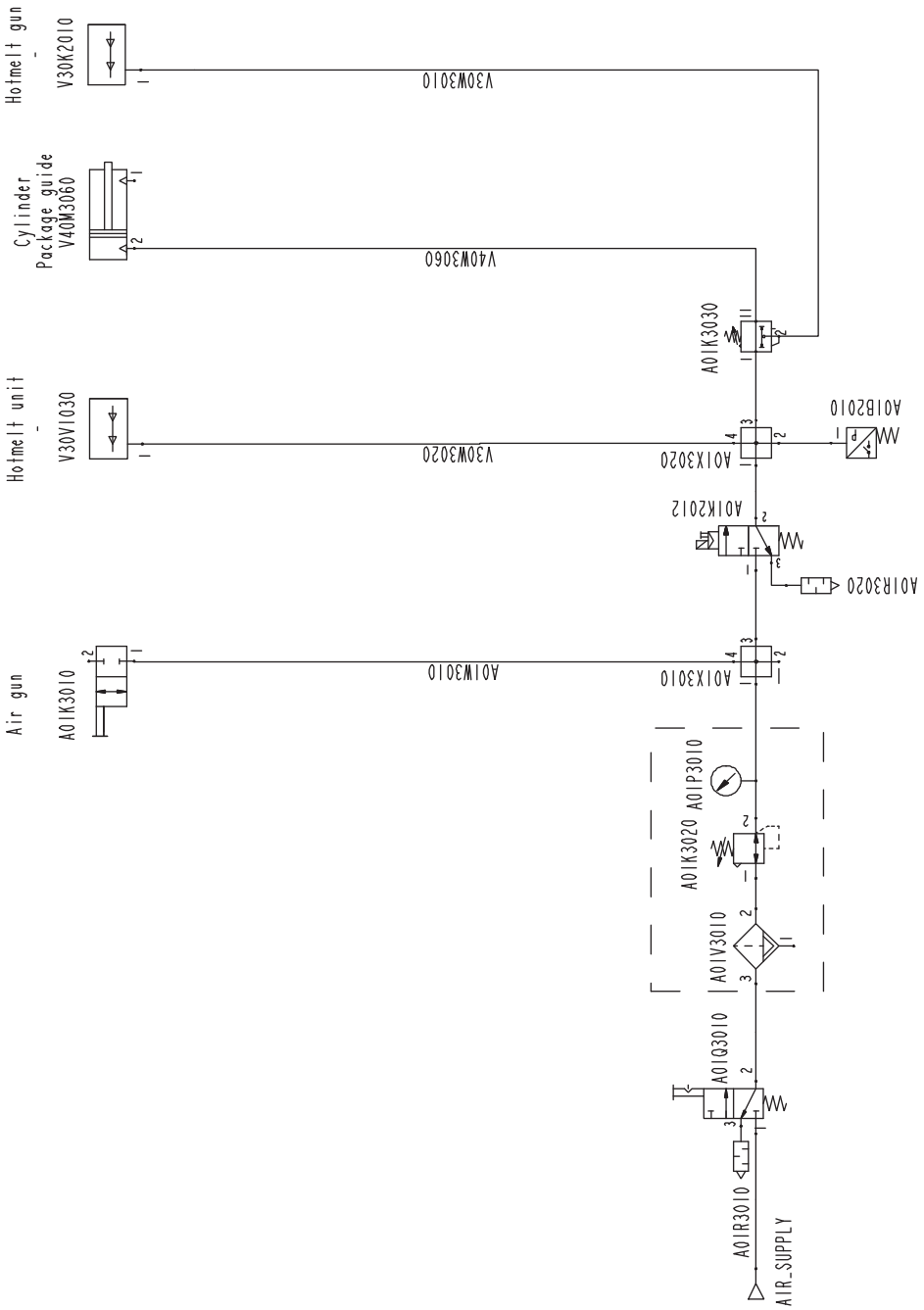

This page intentionally left blank

7 TPOP HMI

TPOP HMI - Description

SPC Reference	663307

7.1 HMI User Management . . . . . 7 - 5

7.1-1 HMI User Management - Description . . . . . 7 - 5

7.1-2 HMI User Management - Log On as a User . . . . 7 - 7

7.2 TPOP Control Panel . . . . . 7 - 10

7.2.1 Recipes . . . . . 7 - 10

7.2.1-1 Recipes - Set Recipe . . . . . 7 - 10

7.2.2 Maintenance . . . . . 7 - 15

7.2.2-1 Maintenance - Set Apply Unit . . . . . 7 - 15

7.2.2-2 Maintenance - Set Pick Position (TB/TBA/TPA) 7 - 20

7.2.2-3 Maintenance - Set Pick Position (TCA/TWA) . . 7 - 25

7.2.2-4 Maintenance - Set Discharge Unit . . . . . 7 - 31

7.2.2-5 Maintenance - Set Infeed Unit Parameters . . . . . 7 - 32

7.2.2-6 Maintenance - Set Conveyor Unit Parameters (TB/TBA/TPA) . . . . . 7 - 33

7.2.2-7 Maintenance - Set Main Conveyor Unit (TCA/TWA) . . . . . 7 - 37

7.2.3 Setup . . . . . 7 - 38

7.2.3-1 Setup - Add Language . . . . . 7 - 38

7.2.3-2 Setup - Start-Up Language Setup . . . . . 7 - 39

7.2.3-3 Setup - Change User Settings . . . . . 7 - 42

7.2.3-4 Setup - Check Diagnostic . . . . . 7 - 43

7.2.3-5 Setup - Shut Down HMI . . . . . 7 - 44

7.2.3-6 Setup - Check/Set IP Address and Subnet Mask Address . . . . . 7 - 46

7.2.3-7 Setup - Delete Application . . . . . 7 - 52

7.2.3-8 Setup - Install HMI Using a CF Card . . . . . 7 - 54

7.2.3-9 Setup - Load Application . . . . . 7 - 55

7.2.3-10 Setup - Disable Screen Saver . . . . . 7 - 57

7.2.3-11 Setup - Download Program Using a PC . . . . . 7 - 60

7.2.3-12 Setup - Load Firmware in HMI . . . . . 7 - 66

7.2.4 Configuration . . . . . 7 - 67

7.2.4-1 Configuration - Change PLMS Communication 7 - 67

7.2.4-2 Configuration - Change Package Type . . . . . 7 - 68

7.2.4-3 Configuration - Set Line Communication . . . . . 7 - 69
7.2.4-4 Configuration - Change Conveyor Specification (TB/TBA/TPA) . . . . . 7 - 70
7.2.4-5 Configuration - Change Infeed Option (TB/TBA/TCA/TPA) . . . . . 7 - 71
7.2.4-6 Configuration - Change Discharge Option (TB/TBA/TCA/TPA) . . . . . 7 - 72
7.2.4-7 Configuration - Change IP Address . . . . . 7 - 73
7.2.4-8 Configuration - Set Second Discharge Unit (Optional Equipment TB/TBA/TPA) . . . . . 7 - 74
7.2.4-9 Configuration - Select Cooling Unit (Optional Equipment) . . . . . 7 - 75

7.1 HMI User Management

7.1-1 HMI User Management - Description

The HMI includes certain sections which have restricted access and are password protected. Access is permitted and defined by the user profile and the password used to log on, see the table below for a description of each of the available user profiles and the corresponding level of access.

For instructions on how to log in, see the Operation Manual (OM).

Note! The default machine operator has no user log on profile or access to the restricted areas of the HMI.

User Profile	User Name	Password	Access Description
TP technician	tptechnician	not provided	Access to: - production control settings and functions - maintenance control settings and functions - create and delete recipes - software installation and configuration - shutdown - diagnostic - full access to the configuration window

(Cont'd)

(Cont'd)

User Profile	User Name	Password	Access Description
Supervisor	supervisor	not provided	Access to: - user administration - production control settings and functions - maintenance control settings and functions - create and delete recipes - software installation and configuration - shutdown - diagnostic - partial access to the configuration window
Technician	technician	custtech	Access to: - production control settings and functions - maintenance control settings and functions - create and delete recipes - software installation and configuration - partial access to the configuration window
Power operator	pwoperator	expertop	Access to: - production control settings and functions
Operator (default user with no log on)	-	-	-

7.1-2 HMI User Management - Log On as a User

This procedure describes how to log on to the HMI and to access the restricted password protected sections of the HMI. The level of access permitted is defined by the user profile, see 7.1-1 HMI User Management - Description.

Note! After 15 minutes of HMI inactivity the user is automatically logged out.

To log on to the HMI proceed as described below:

a) On the HMI, press the SETUP button (1).

b) In the SETUP window, press the USER MANAGEMENT button (2).

c) In the USER MANAGEMENT window, press the LOG ON button (3) to display the LOG IN window (4).

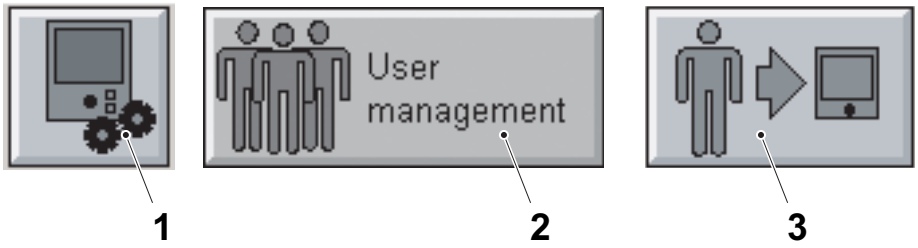

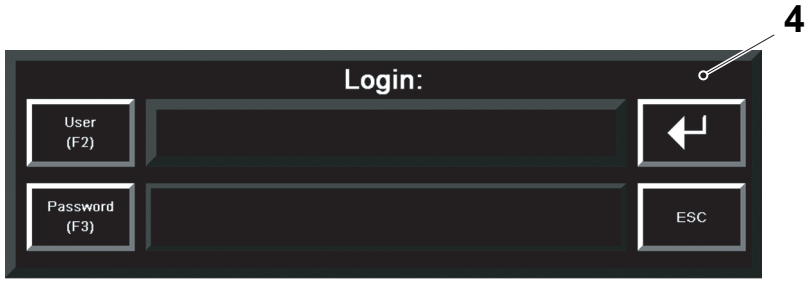

1 SETUP
2 USER MANAGEMENT
3 LOG ON
4 LOG IN

(Cont'd)

(Cont'd)

d) Press the USER button (5) to display the keyboard (6).

e) Use the keyboard (6) to type your user name, then press the ENTER button (7).

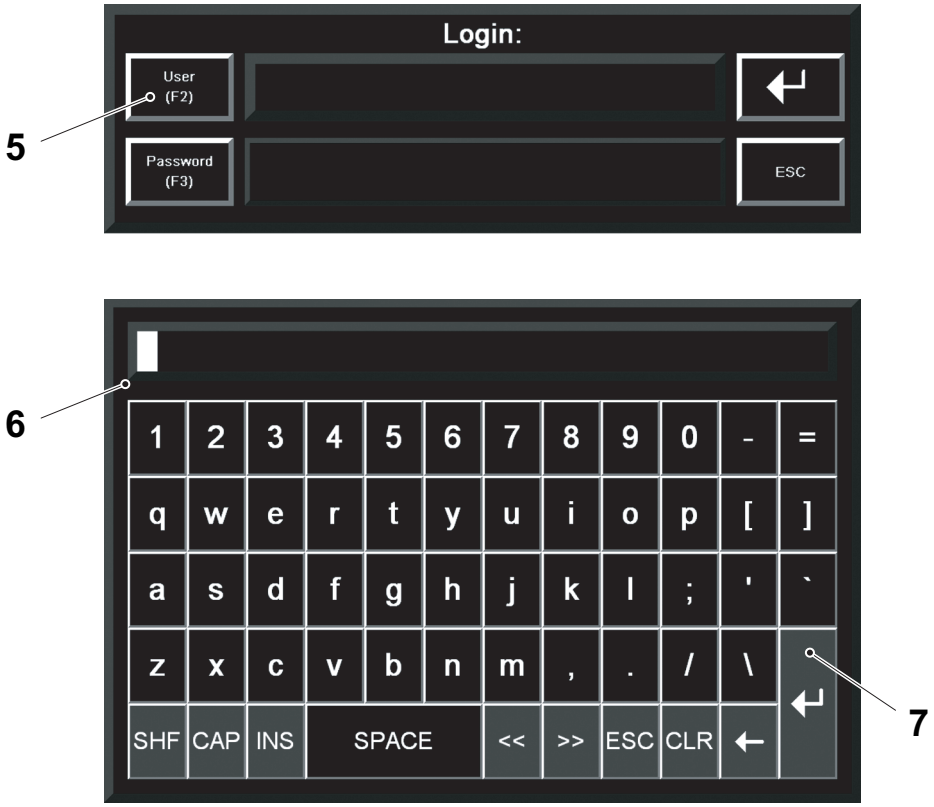

5 USER
6 Keyboard
7 ENTER

(Cont'd)

(Cont'd)

f) Press the PASSWORD button (8) to display the keyboard (6).

g) g) Use the keyboard (6) to type your password, then press the ENTER button (7).

h) Press the ENTER button (9) to confirm the data entry.

The user is now logged on to the HMI with the corresponding level of access.

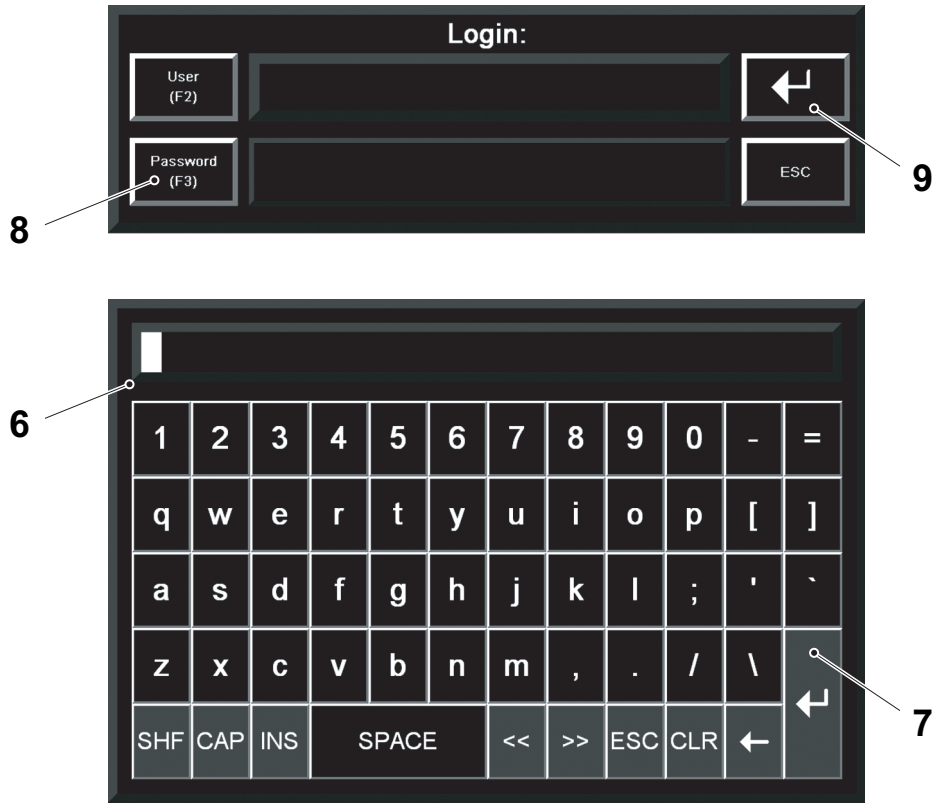

6 Keyboard
7 ENTER
8 PASSWORD
9 ENTER

7.2 TPOP Control Panel

7.2.1 Recipes

7.2.1-1 Recipes - Set Recipe

Machine status	Main Switch ON Air valve ON Machine STEP 0

a) In the button bar, press the RECIPE button (1) to display the recipe window.

b) Press the OPEN button (2) to open an existing recipe or the NEW RECIPE button (3) to create a new recipe.

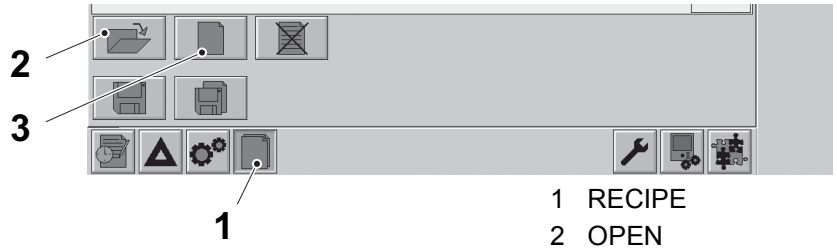

1 RECIPE
2 OPEN
3 NEW RECIPE

Open an Existing Recipe

c) Choose a recipe in the list by using the ARROW buttons (4), and press the CONFIRMATION button (5) to select the recipe. Press the CANCEL button (6) to abort the selection.

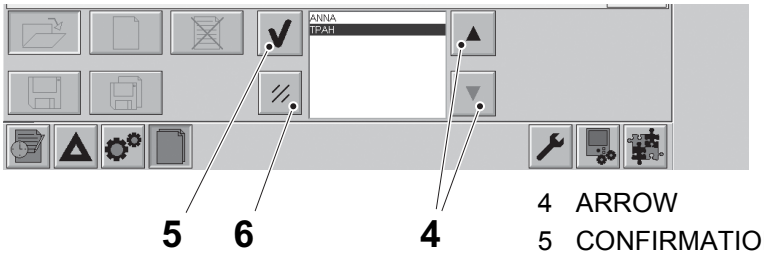

4 ARROW
5 CONFIRMATION
6 CANCEL

(Cont'd)

(Cont'd)

Create a New Recipe

d) Press the NEW RECIPE button (3) to open the recipe window.

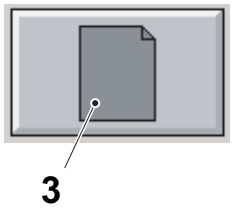

3 NEW RECIPE

e) Press a symbol to change the corresponding setting. The settings that are available are the buttons (7) to (12). If a symbol is coloured grey, the setting is not available.

Note! TB/TBA/TPA: Always select straw application (7), on or off, **and** select straw type (10).

TB/TBA/TPA

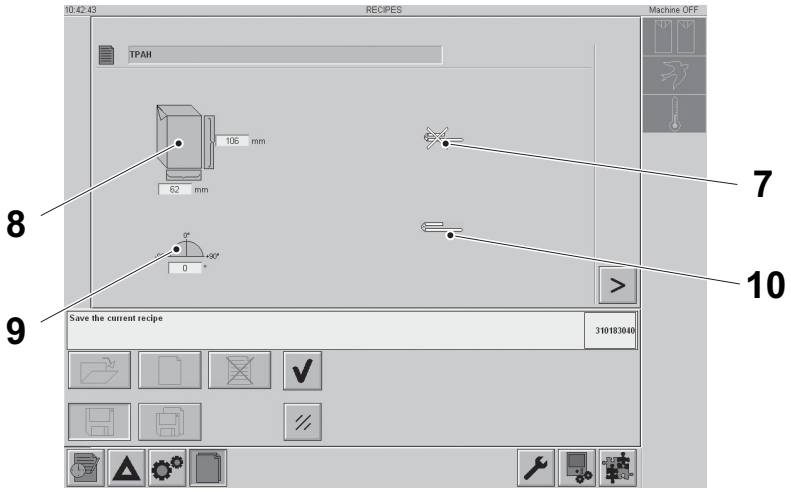

TCA

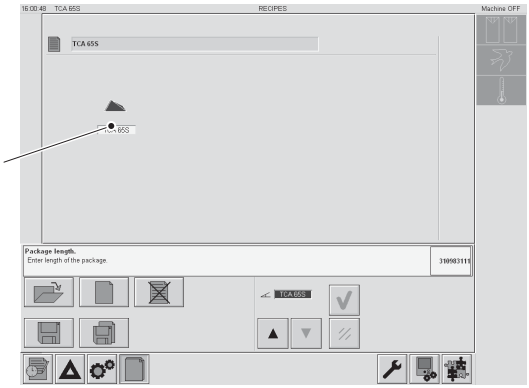

TWA

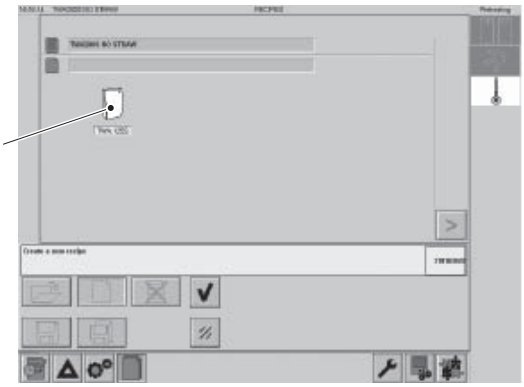

7 Straw application (TB/TBA/TPA)
8 Package size (TB/TBA/TPA)
9 Angle of applicator unit (TB/TBA)
10 Straw type (TB/TBA/TPA)
11 Package size (TCA)
12 Package size (TWA)

(Cont'd)

(Cont'd)

f) Press the CONFIRMATION button (5).

g) Type the recipe name with the keyboard and press ENTER (13).

Note! It is not possible to save more than eight recipes.

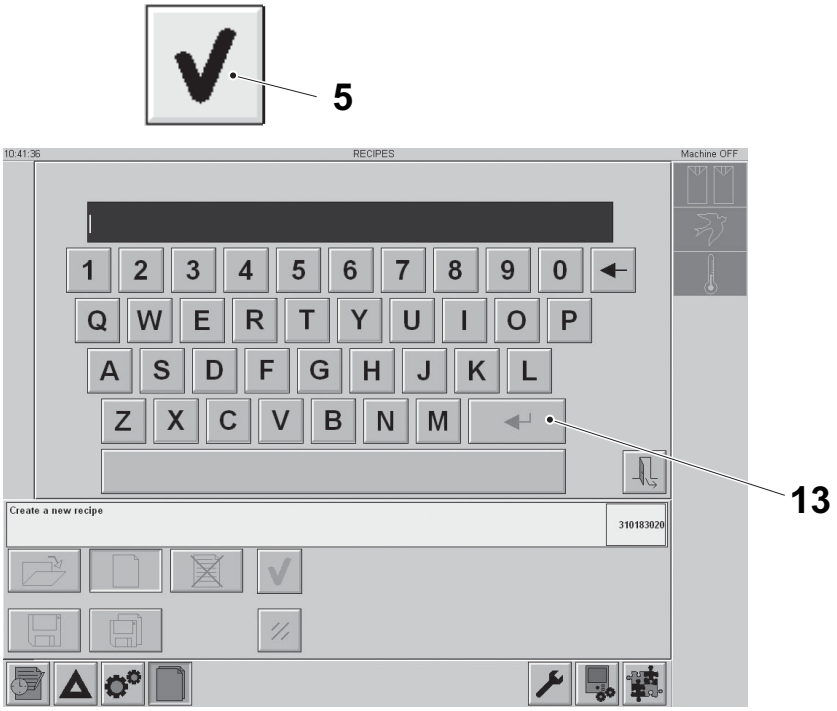

5 CONFIRMATION
13 ENTER

h) Press the NEXT WINDOW button (14) to view the next recipe window.

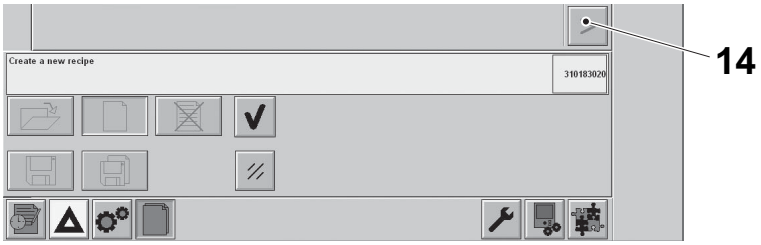

14 NEXT WINDOW

(Cont'd)

(Cont'd)

i) TB/TBA/TPA: Press a symbol to change the corresponding setting. The settings that are available are the buttons (15) to (22) in the illustrations below. If a symbol is grey, the setting is not available.

j) TB/TBA/TPA: Use the KEYPAD (23) or the ARROW buttons (24) to change the settings.

k) TB/TBA/TPA: Press PREVIOUS WINDOW (25) to return to the previous recipe window.

TB/TBA/TPA

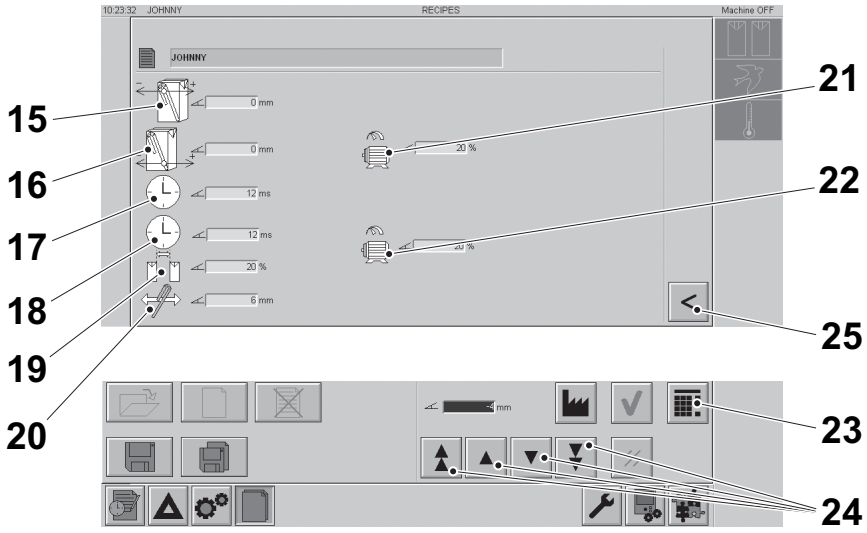

15 Glue position upper
16 Glue position lower
17 Glue duration upper
18 Glue duration lower
19 Gap size
20 Position of straw on package
21 Infeed speed factor
22 Discharge speed factor
23 KEYPAD
24 ARROW
25 PREVIOUS WINDOW

(Cont'd)

(Cont'd)

Unsaved Recipe

When changes have been made to a recipe, the recipe icon (26) shows in the upper left corner of the screen. This means that the recipe needs to be saved before the new settings are activated.

l) Press the RECIPE button (1).

m) Save the recipe according to one of the procedures below.

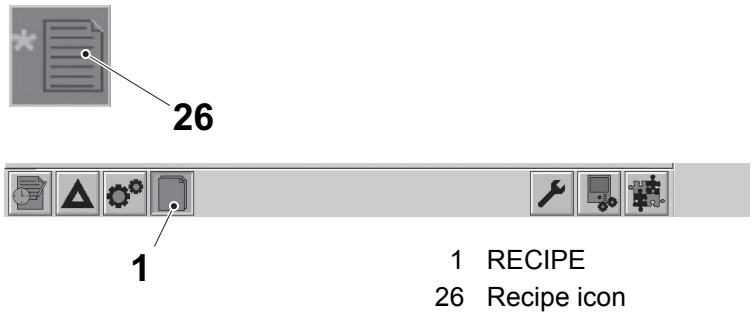

1 RECIPE
26 Recipe icon

Save Current Recipe

n) Press the SAVE button (27) to save the current recipe.

o) Press the CONFIRMATION button (5) to save the current recipe, or press CANCEL (6) to abort the saving.

Save Recipe with New Name

p) Press the SAVE AS button (28) to save the recipe with a new name.

q) Edit the values in the first recipe window, see item e) to f).

r) Type the recipe name with the keyboard and press ENTER.

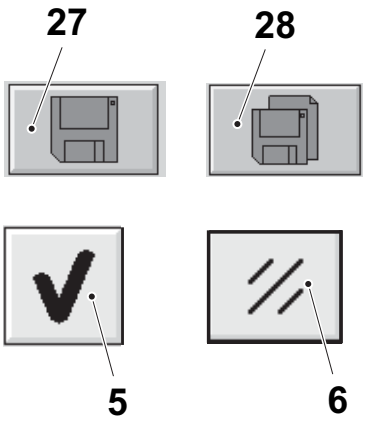

5 CONFIRMATION
6 CANCEL
27 SAVE
28 SAVE AS

7.2.2 Maintenance

7.2.2-1 Maintenance - Set Apply Unit

Machine status	Main Switch ON Air valve ON

a) Log in as a technician on the TPOP.

b) In the button bar, press the MAINTENANCE button (1) to display the maintenance window.

c) Press the APPLY UNIT button (3).

TB/TBA/TPA

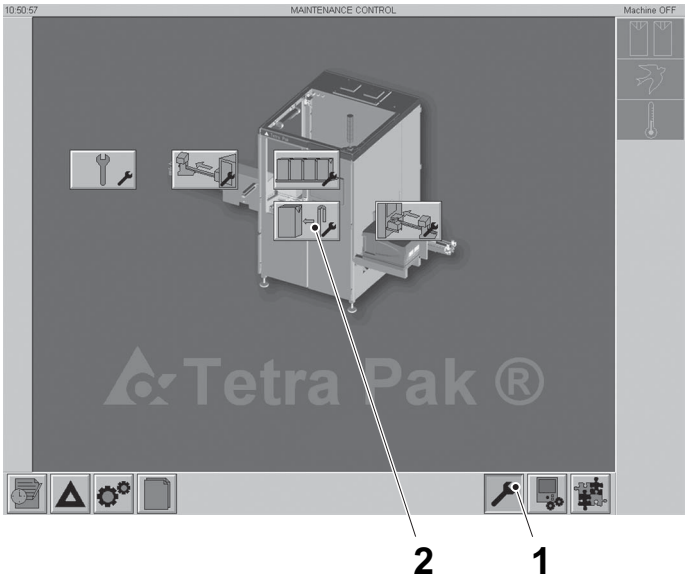

TCA



2

TWA



2

1 MAINTENANCE
2 APPLY UNIT

(Cont'd)

(Cont'd)

TB/TBA/TPA

d) In the apply unit maintenance window it is possible to set the glue duration (3), the glue position (4), the pick position (5), and to bleed hotmelt (6).

e) Press one of the symbols to show the corresponding setting display (7). The setting display looks similar for glue duration and glue position. To set pick position, see Procedure 7.2.2-2 Maintenance - Set Pick Position (TB/TBA/TPA). To bleed hotmelt, see Procedure 3.2-3 Hotmelt Equipment Nordson - Bleed System (TB/TBA/TPA).

f) Use the ARROW buttons (8) to set the desired values.

g) Confirm the setting with the CONFIRMATION button (9).

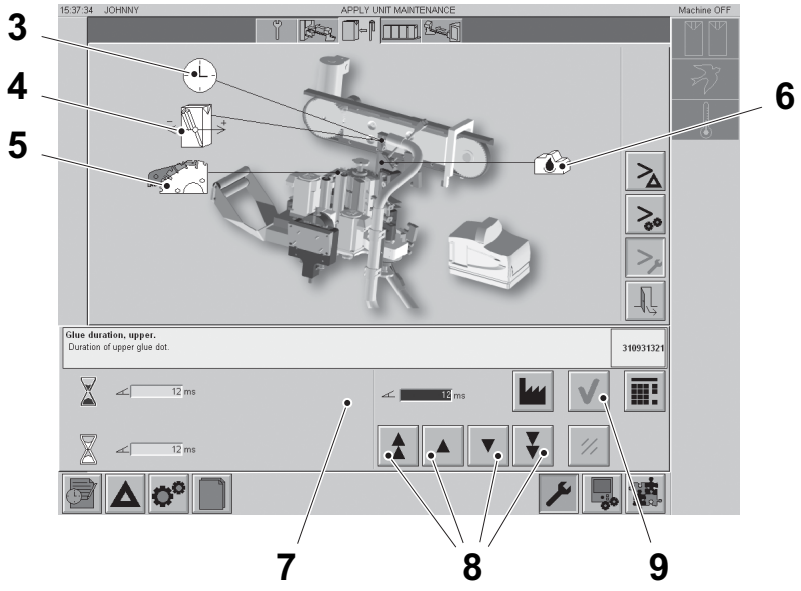

3 Glue duration
4 Glue position
5 Pick position
6 Bleed hotmelt
7 Setting display
8 ARROW
9 CONFIRMATION

(Cont'd)

(Cont'd)

TCA/TWA

h) Press the APPLY UNIT SET button (10) to be able to set the position and the length of the glue.

i) In the apply unit maintenance window it is possible to set the position of straw on package (11) and straw off (12). It is also possible to force hotmelt unit (13).

j) Press one of the symbols to show the corresponding setting display (7). The setting display looks similar for glue duration and glue position. To set pick position, see Procedure 7.2.2-3 Maintenance - Set Pick Position (TCA/TWA).

k) Use the ARROW buttons (8) to set the desired values.

l) Confirm the setting with the CONFIRMATION button (9).

TCA

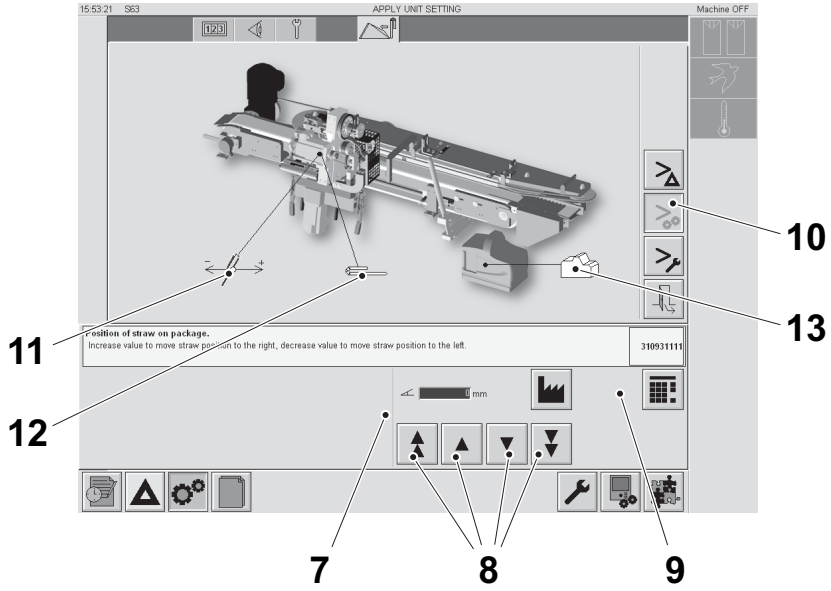

TWA

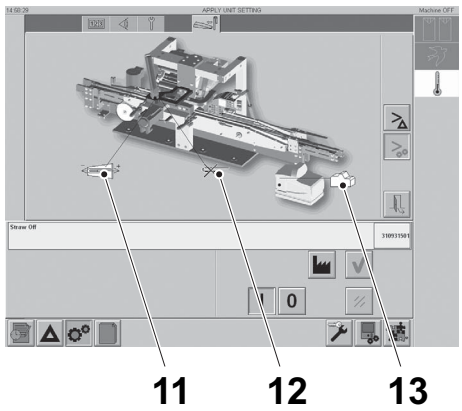

7 Setting display
8 ARROW
9 CONFIRMATION
10 APPLY UNIT SET
11 Position of straw on package
12 Straw off
13 Force hotmelt unit

(Cont'd)

(Cont'd)

m) Press position of straw on package (11) to show the setting display (7) for the straw position.

n) Use the ARROW buttons (8) to set the desired value.

TCA

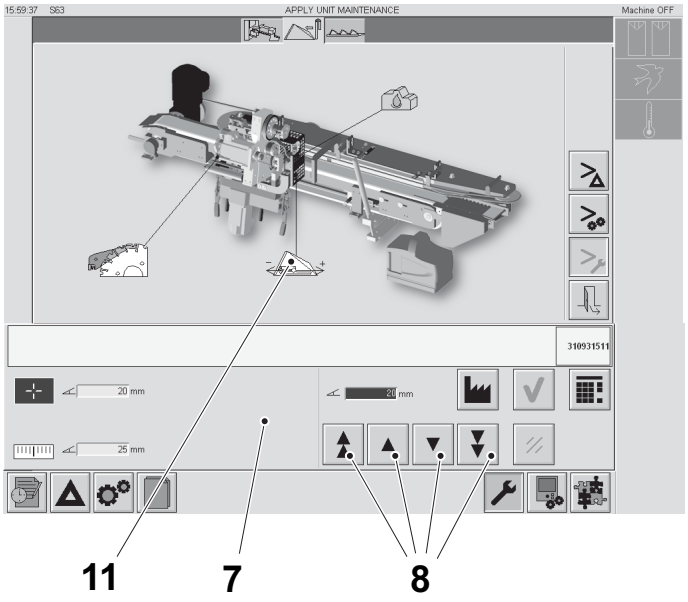

TWA

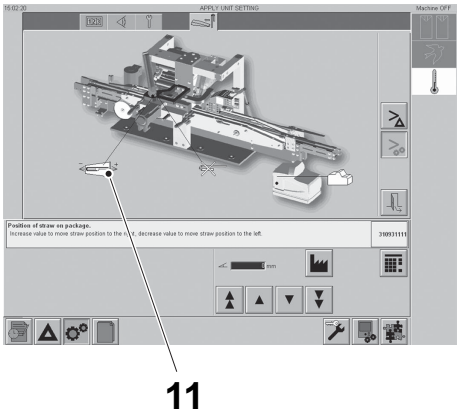

7 Setting display
8 ARROW
11 Position of straw on package

(Cont'd)

(Cont'd)

o) In the apply unit maintenance window it is possible to bleed hotmelt (14), set the glue positions and length on the package (15) and the pick position (16).

p) Press one of the symbols to show the corresponding setting display (7). The setting display looks similar for glue length and glue position. To set pick position, see 7.2.2-3 Maintenance - Set Pick Position (TCA/TWA). To bleed hotmelt, see 3.2-4 Hotmelt Equipment Nordson - Bleed System (TCA/TWA)

q) Use the ARROW buttons (8) to set the desired values.

r) Confirm the setting with the CONFIRMATION button (9).

TCA

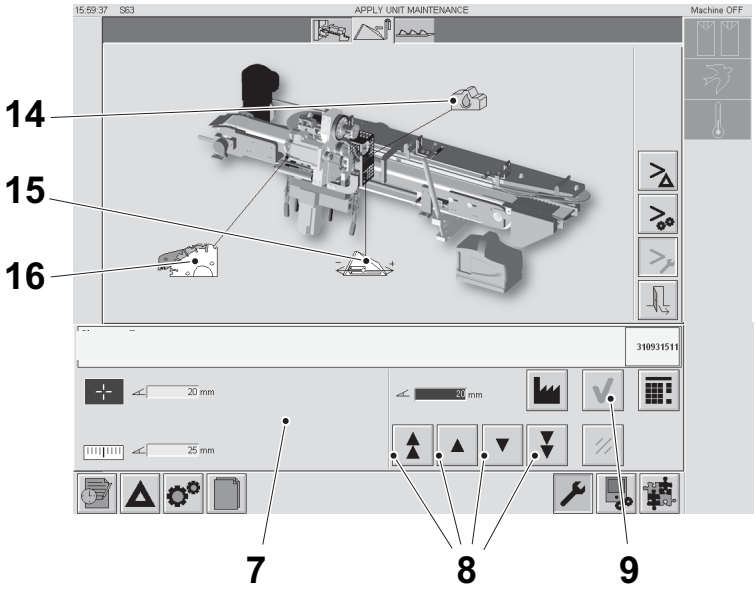

TWA

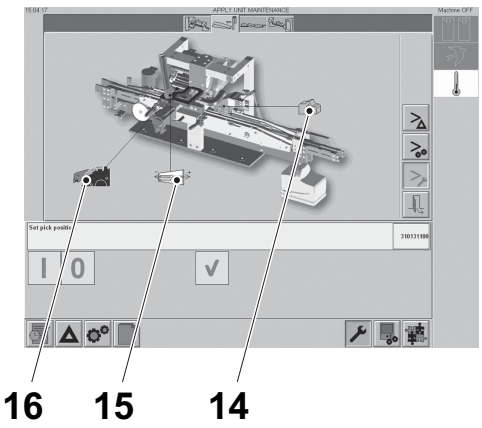

7 Setting display
8 ARROW
9 CONFIRMATION
14 Hotmelt bleed
15 Glue positions and length on the package
16 Pick position

7.2.2-2 Maintenance - Set Pick Position (TB/TBA/TPA)

Machine status	Main Switch ON Air valve ON Machine status PREHEATING
Special Equipment	Templates: TB/TBA: 3013616, 3079346 (pitch 15), 3079347 (pitch 22) TPA: 3013616, 3013622

a) Log in as a technician on the TPOP.

b) In the button bar, press the MAINTENANCE button (1) to display the maintenance window (2).

c) Press the APPLY UNIT button (3).

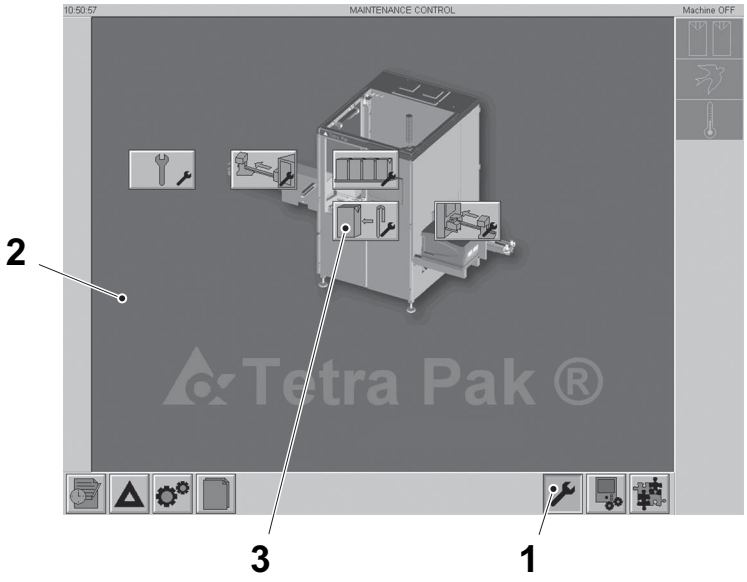

1 MAINTENANCE
2 Maintenance window
3 APPLY UNIT

(Cont'd)

(Cont'd)

d) Press the pick position icon (4).

e) Press the SELECT button (5) and the CONFIRMATION button (6).

f) The feed wheel and the pressure arms will turn to the current pick position. The SELECT button will then turn green.

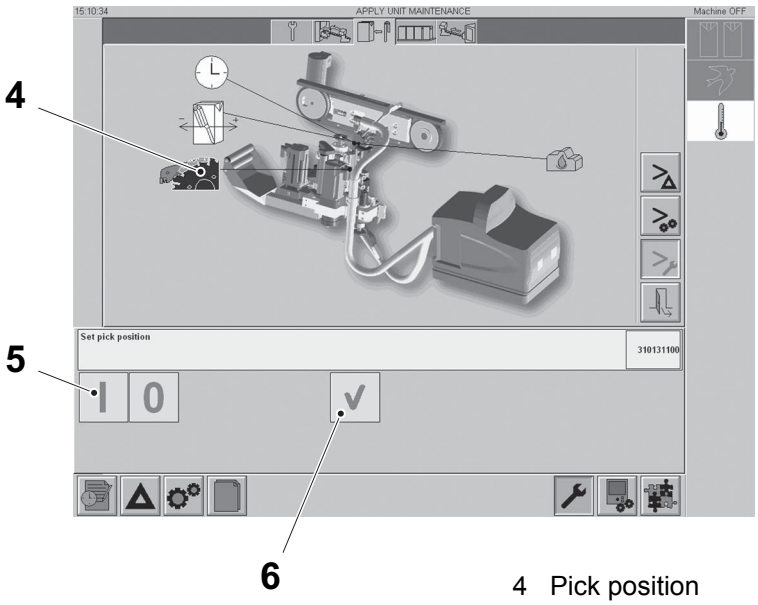

4 Pick position
5 SELECT
6 CONFIRMATION

(Cont'd)

(Cont'd)

g) Open the doors to the machine.

h) Attach the template (7) on the frame section (8) to keep the bearing housing (9) fixed.

TB/TBA

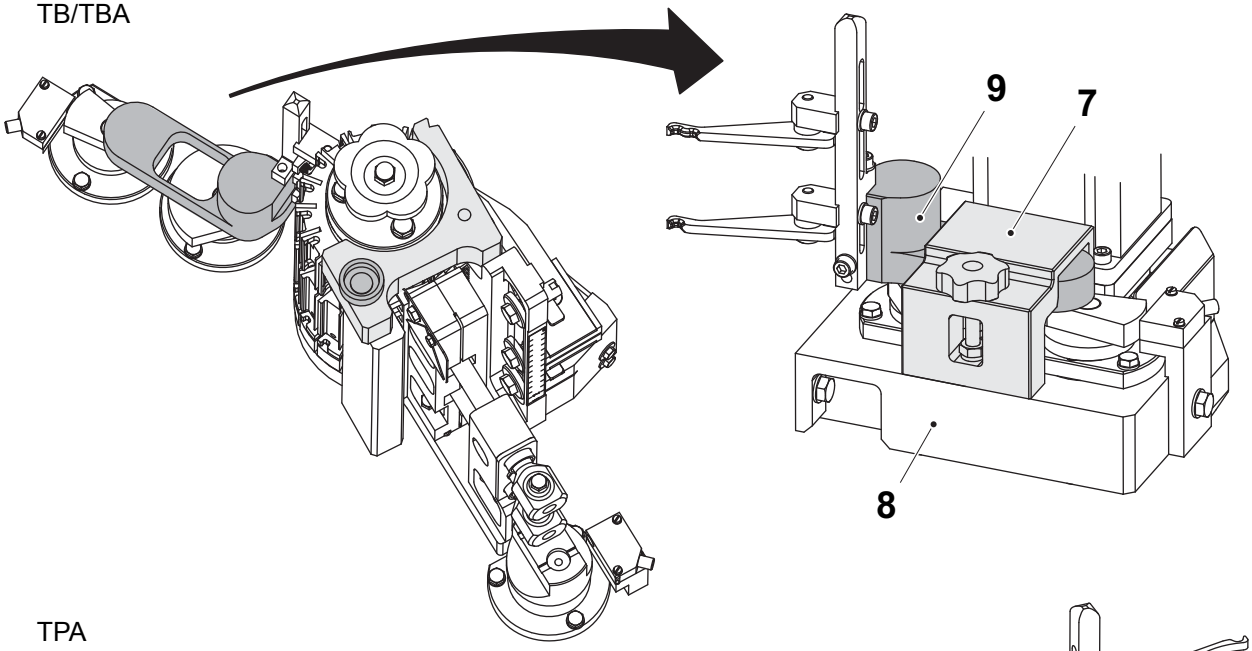

TPA

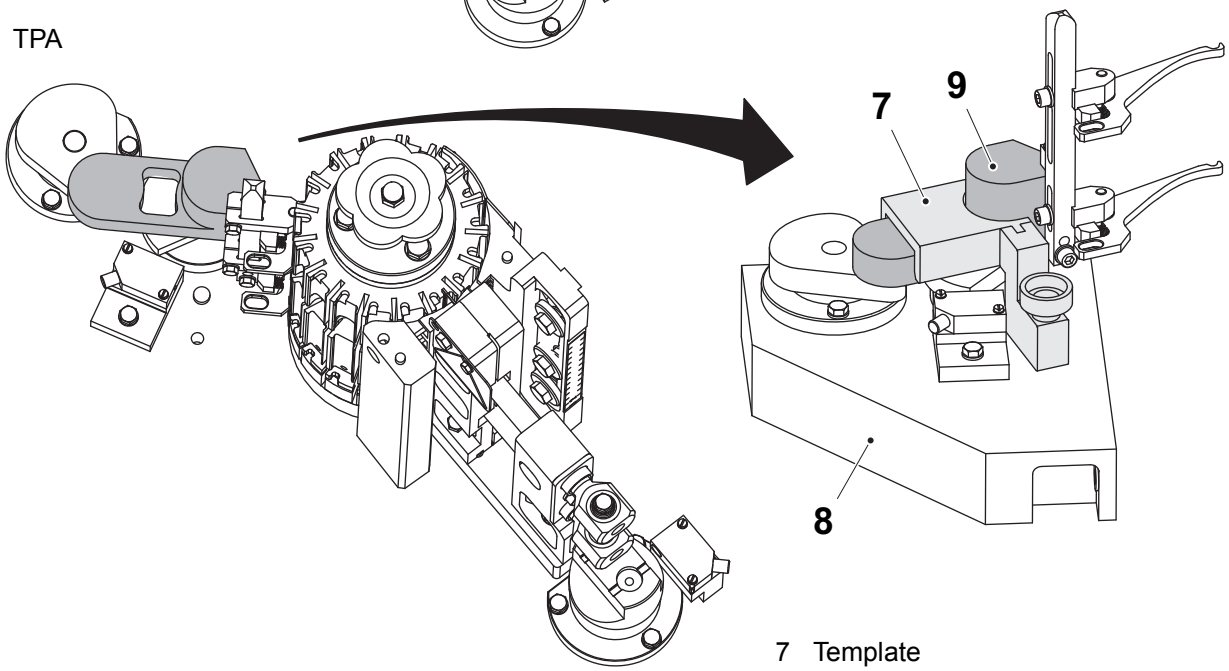

7 Template
8 Frame section
9 Bearing housing

(Cont'd)

(Cont'd)

i) Turn the stellar knob (10) until the position template (11) fits. The pins (12) shall fit in the bushings (13) and the pins (14) in the cavities (15) in the feed wheel. It is also possible to screw the knurled screw (16) into the threaded hole (17) if desired.

CAUTION
Possible equipment damage.
Do not move the stellar knobs once the position template fits in the feed wheel, or the template and the feed wheel will be damaged.

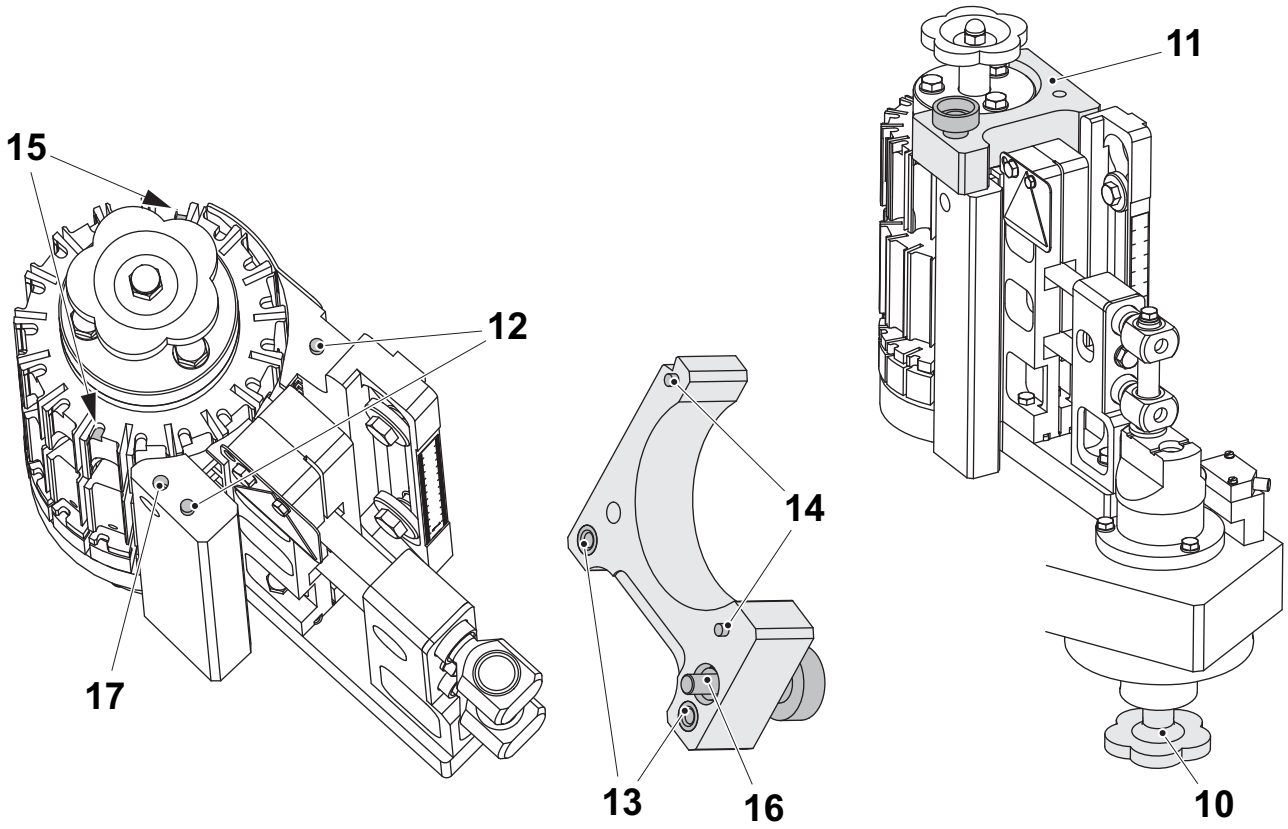

10	Stellar knob	14	Pin
11	Position template	15	Cavity
12	Pin	16	Knurled screw
13	Bushing	17	Threaded hole

(Cont'd)

(Cont'd)

j) Confirm the change by pressing the CONFIRMATION button (6), or just press DESELECT (15) if no change was made.

k) Remove the template.

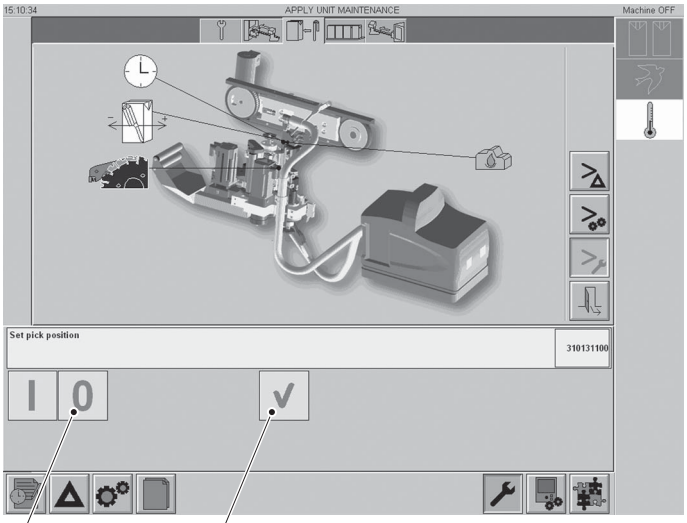

6 CONFIRMATION
18 DESELECT

7.2.2-3 Maintenance - Set Pick Position (TCA/TWA)

Machine status	Main Switch ON Air valve ON Machine status PREHEATING
Special Equipment	Templates: 3079346 (pitch 15), 3079347 (pitch 22)

a) Log in as a technician or higher on the TPOP.

b) In the button bar, press the MAINTENANCE button (1).

c) Press the APPLY UNIT button (2).

d) Step up the machine to PREHEATING.

TCA

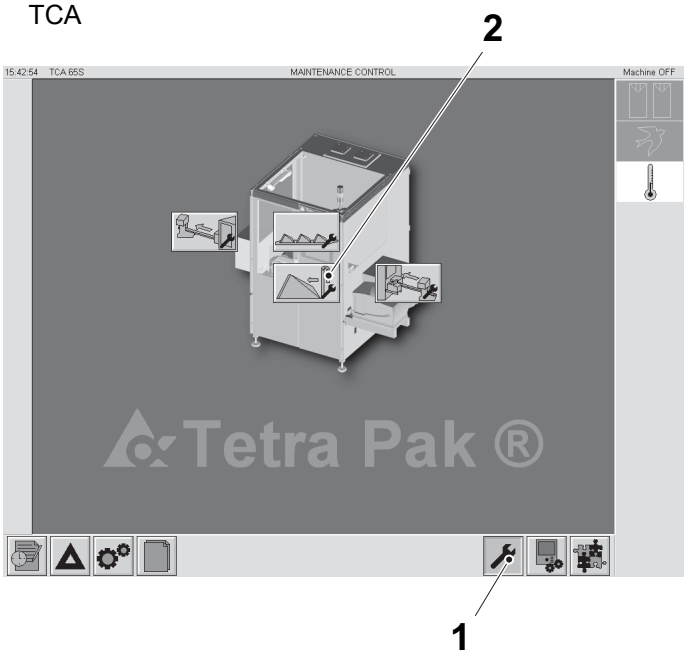

TWA

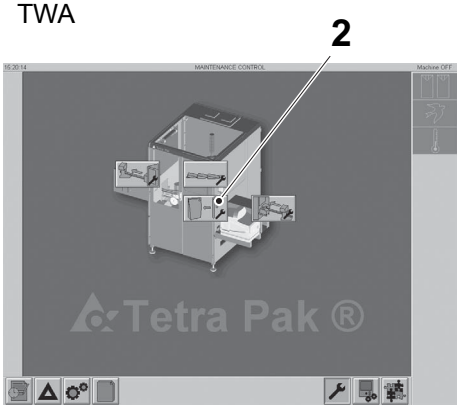

1 MAINTENANCE
2 APPLY UNIT

(Cont'd)

(Cont'd)

e) Press the pick position icon (3).

f) Press the SELECT button (4). A green dot will show on the pick position icon (3).

g) Press the CONFIRMATION button (5).

h) Wait until the feed wheel is in the correct position.

i) Press the SELECT button (4) when it turns green.

j) Open the doors to the machine.

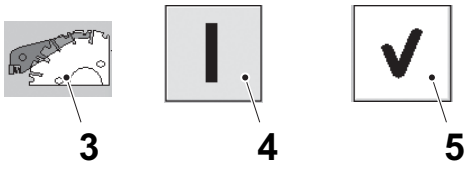

3 Pick Position icon
4 SELECT
5 CONFIRMATION

(Cont'd)

(Cont'd)

Set Pick Position Using a Template

a) Turn the stellar knob (6) until the position template (7) fits. The pins (8) shall fit in the bushings (9) and the pins (10) in the cavities in the feed wheel. It is also possible to screw the knurled screw (11) into the threaded hole (12) if desired.

CAUTION

Possible equipment damage.

Do not move the stellar knobs once the position template fits in the feed wheel, or the template and the feed wheel will be damaged.

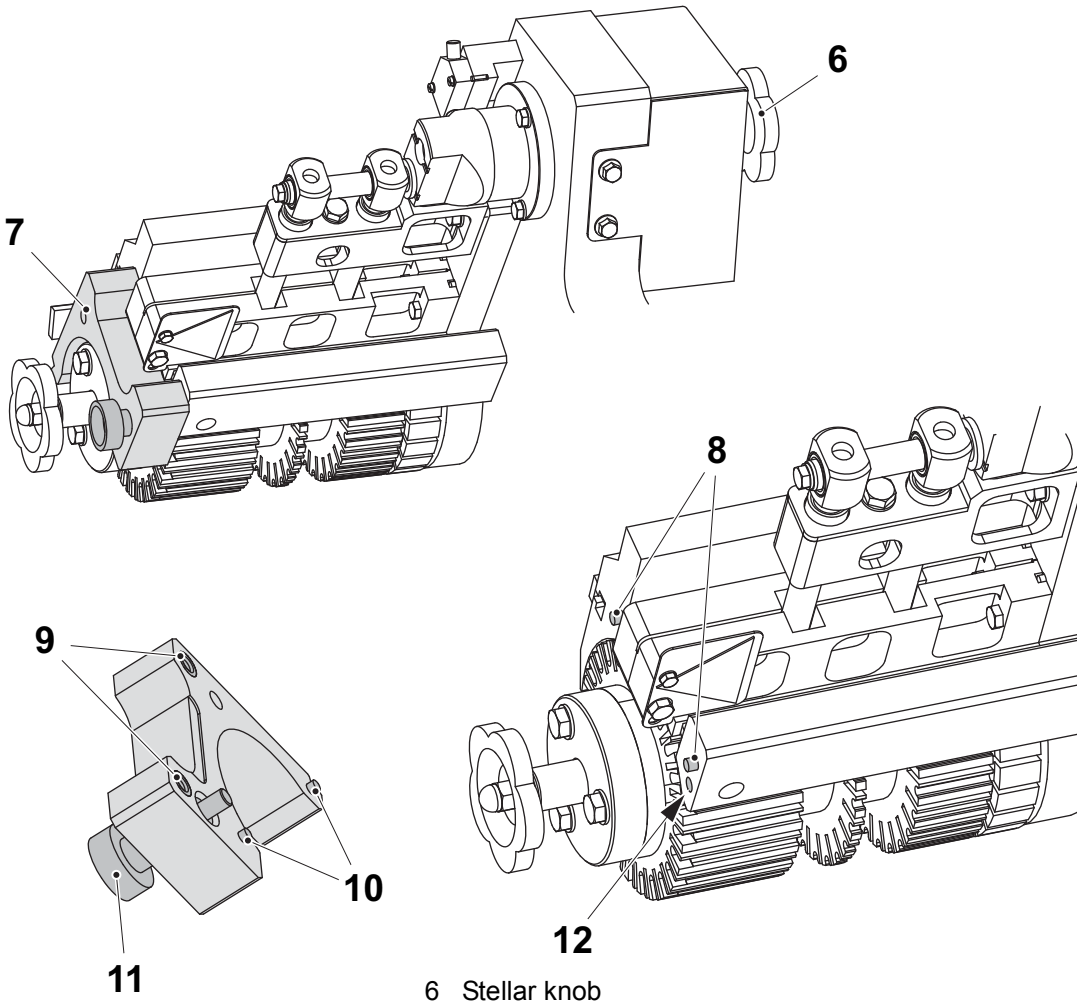

6 Stellar knob
7 Position template
8 Pin
9 Bushing
10 Pin
11 Knurled screw
12 Threaded hole

(Cont'd)

(Cont'd)

b) Confirm the setting by pressing the CONFIRMATION button (5).

c) Remove the template.

d) Close the doors.

e) Press the reset button (13) to restore the safety circuit and wait until the audible alarm has produced a warning signal.

f) Reset the door alarm on the TPOP.

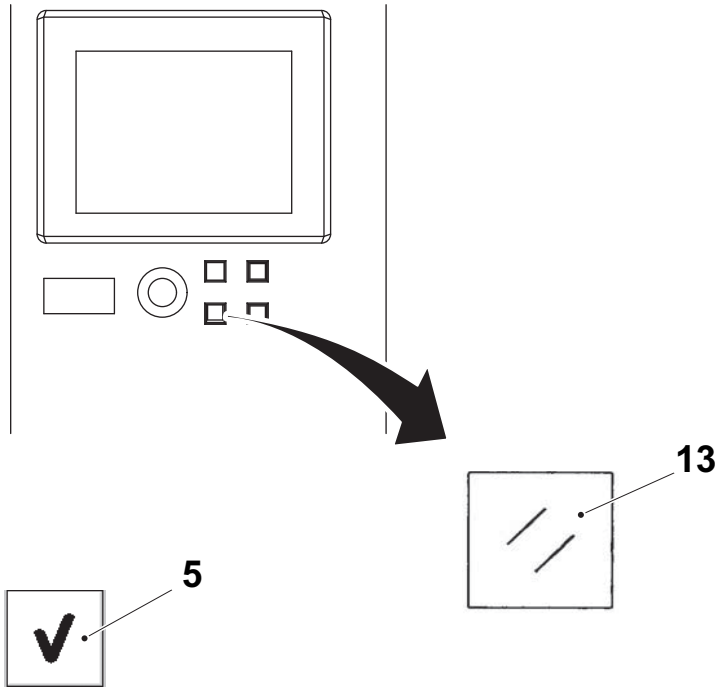

5 CONFIRMATION
13 RESET

(Cont'd)

(Cont'd)

Set Pick Position Without a Template

g) Use the stellar knob (6) to set the feed wheel according to the illustration below. The distance A is a reference measure at application between the edge of the guide console (14) and the side of the feed wheel groove.

TCA

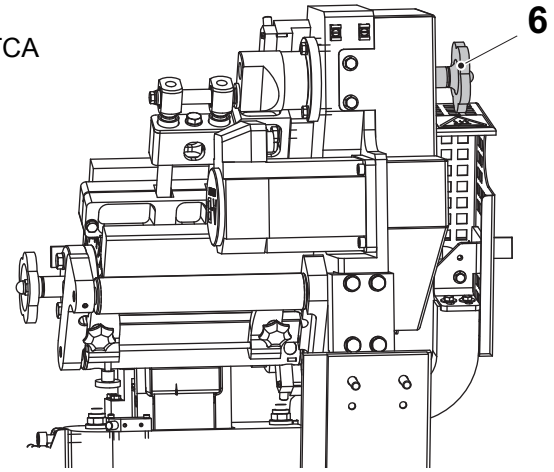

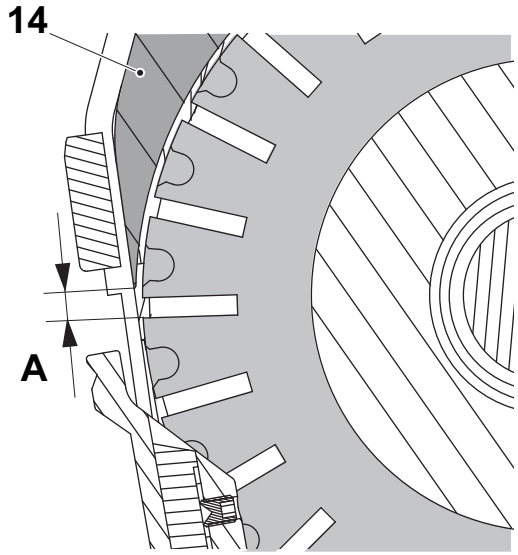

U-straw:	A = 3.1 mm
S-/T-straw:	A = 5.2 mm

6 Stellar knob
14 Guide console

TWA

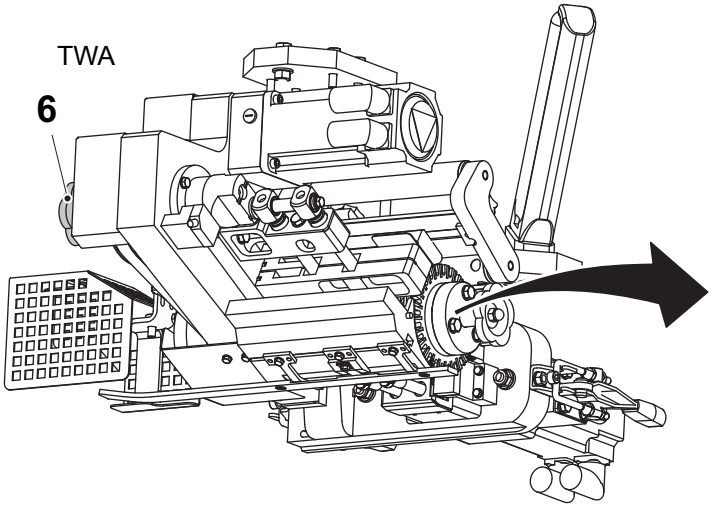

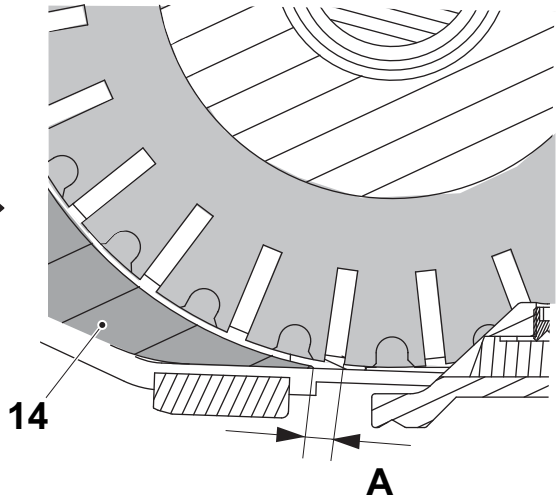

(Cont'd)

(Cont'd)

h) Close the doors.

i) Confirm the setting by pressing the CONFIRMATION button (5).

j) Press the RESET button (13) to restore the safety circuit and wait until the audible alarm has produced a warning signal.

k) Reset the door alarm on the TPOP.

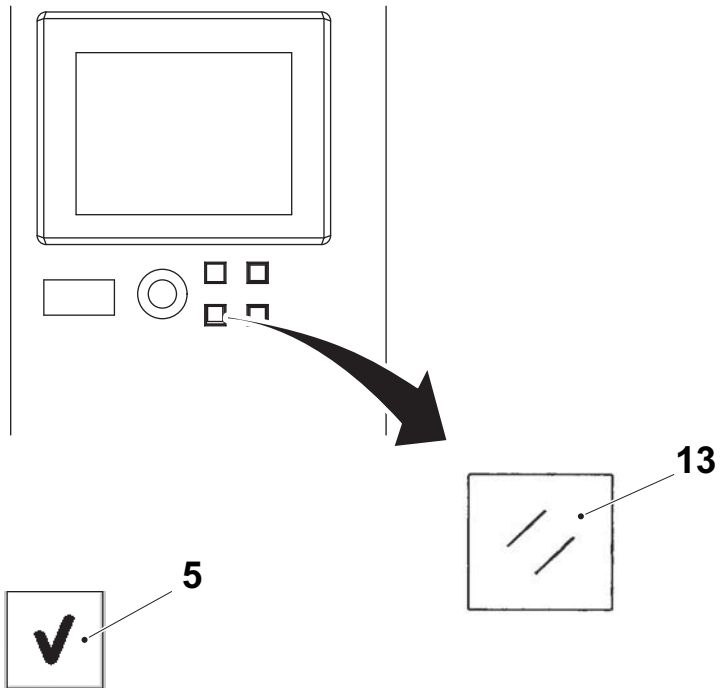

5 CONFIRMATION
13 RESET

7.2.2-4 Maintenance - Set Discharge Unit

Machine status	Main Switch ON Air valve ON Machine status PREHEATING

Note! The Discharge unit must be configured (selected) for the machine (See configuration window). Otherwise this will not be visible.

a) Log in as a technician or higher on the TPOP.

b) In the button bar, press the MAINTENANCE button (1) to display the maintenance window.

c) Press the DISCHARGE UNIT button (2).

d) In the discharge unit maintenance window it is possible to set the discharge conveyor speed (3) and the discharge conveyor length (4).

e) Press one of the symbols to show the corresponding setting display (5).

f) Use the ARROW buttons (6) to set the desired value.

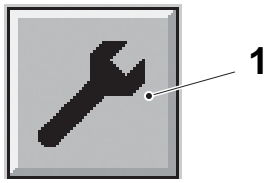

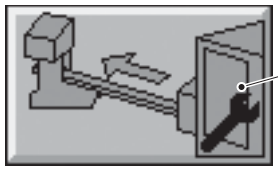

TB/TBA/TPA/TWA

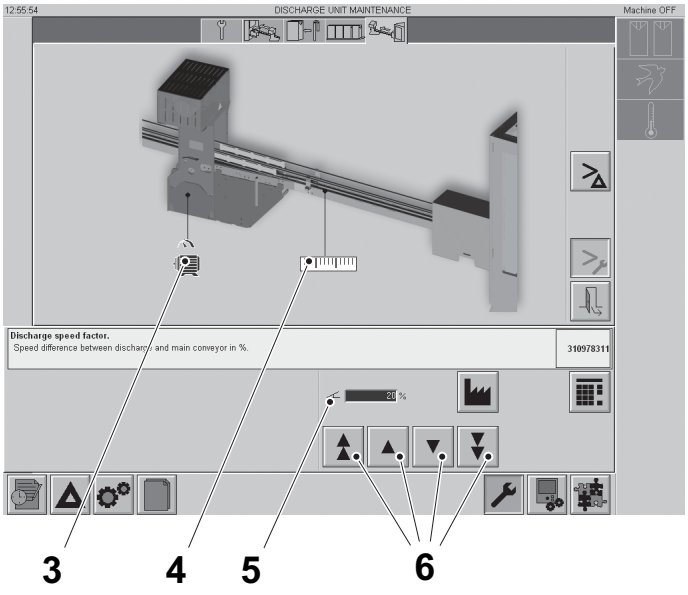

TCA

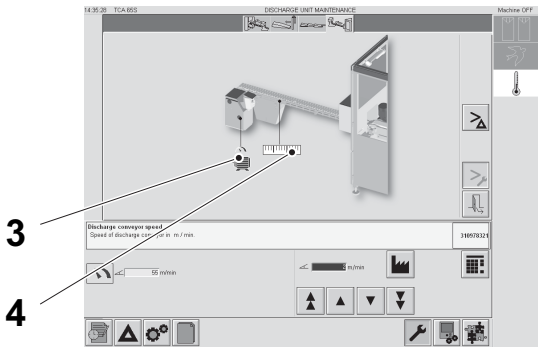

1 MAINTENANCE
2 DISCHARGE UNIT
3 Discharge conveyor speed
4 Discharge conveyor length
5 Setting display
6 ARROW

7.2.2-5 Maintenance - Set Infeed Unit Parameters

Machine status	Main Switch ON Air valve ON Machine status PREHEATING

Note! The Infeed unit must be configured (selected) for the machine (See configuration window). Otherwise this will not be visible.

a) Log in as a technician or higher on the TPOP.

b) In the button bar, press the MAINTENANCE button (1) to display the maintenance window).

c) Press the INFEED UNIT button (2).

d) If the machine is equipped with an infeed conveyor, it is possible to set infeed conveyor speed (3) and the infeed conveyor length (4).

e) Press one of the symbols to show the corresponding setting display (5).

f) Use the ARROW buttons (6) to set the desired value.

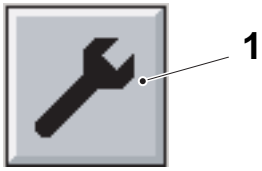

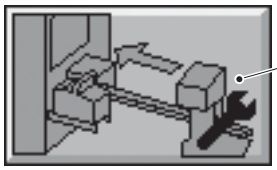

TCA

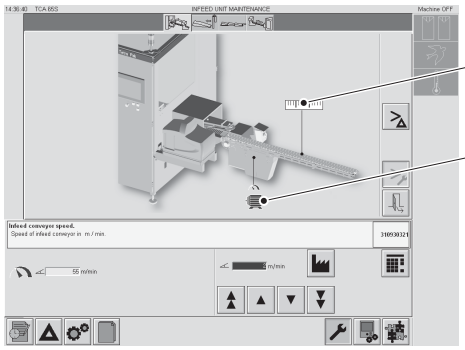

TB/TBA/TPA

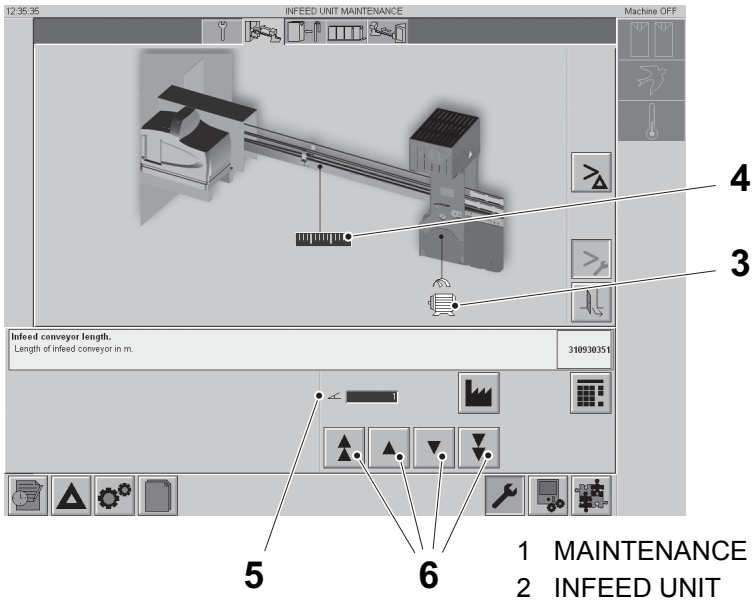

TWA

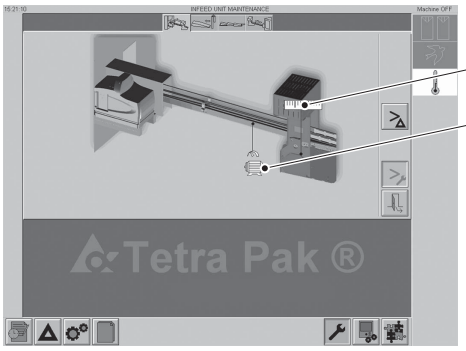

1 MAINTENANCE
2 INFEED UNIT
3 Infeed conveyor speed
4 Infeed conveyor length
5 Setting display
6 ARROW

7.2.2-6 Maintenance - Set Conveyor Unit Parameters (TB/TBA/TPA)

Machine status	Main Switch ON Air valve OFF Machine status PREHEATING

a) Log in as a technician or higher on the TPOP.

b) In the button bar, press the MAINTENANCE button (1) to display the maintenance window.

c) Press the CONVEYOR UNIT button (2).

d) In the package unit maintenance window it is possible to set the speed parameters (3) and the queue alarm activation delay (4). The speed parameter is only set the first time the machine starts.

e) The second queue discharge symbol (5) is available if the machine has been configured for second queue discharge, see 7.2.4-8 Configuration - Set Second Discharge Unit (Optional Equipment TB/TBA/TPA).

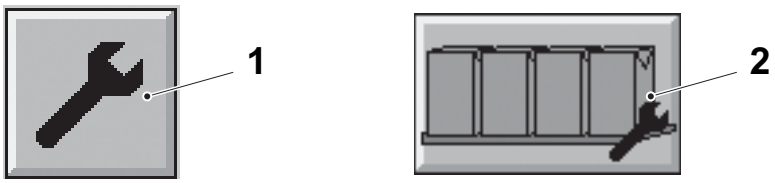

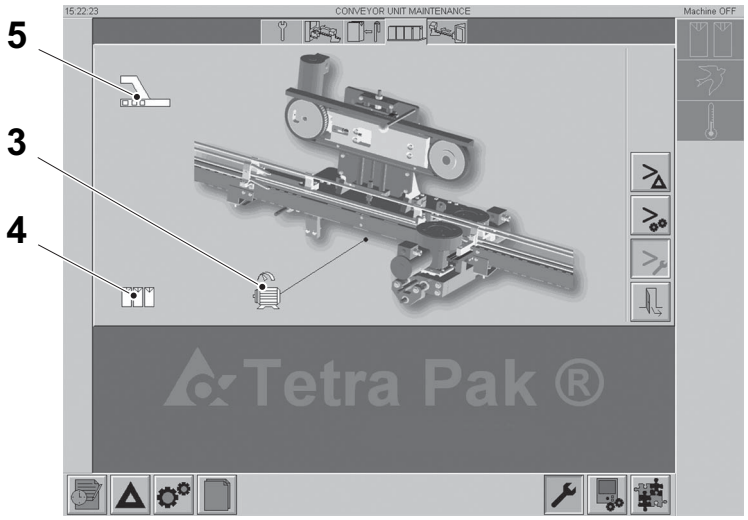

1 MAINTENANCE
2 CONVEYOR UNIT
3 Set speed parameters
4 Queue alarm activation delay
5 Second queue discharge

(Cont'd)

(Cont'd)

Set Speed Parameters

f) Press the set speed parameter icon (3).

g) Press the SELECT button (6).

h) Press the FREQUENCY button (7) to select a value to set.

i) To measure the speed of the main conveyor, use a tachometer.

j) Measure the speed at 10 Hz to 90 Hz, in steps of 10 Hz. Change the frequency (7) with the ARROW buttons (9).

k) Enter the measured speed value for each step on the display (8).

l) Confirm the setting by pressing the NEXT FREQUENCY button (10).

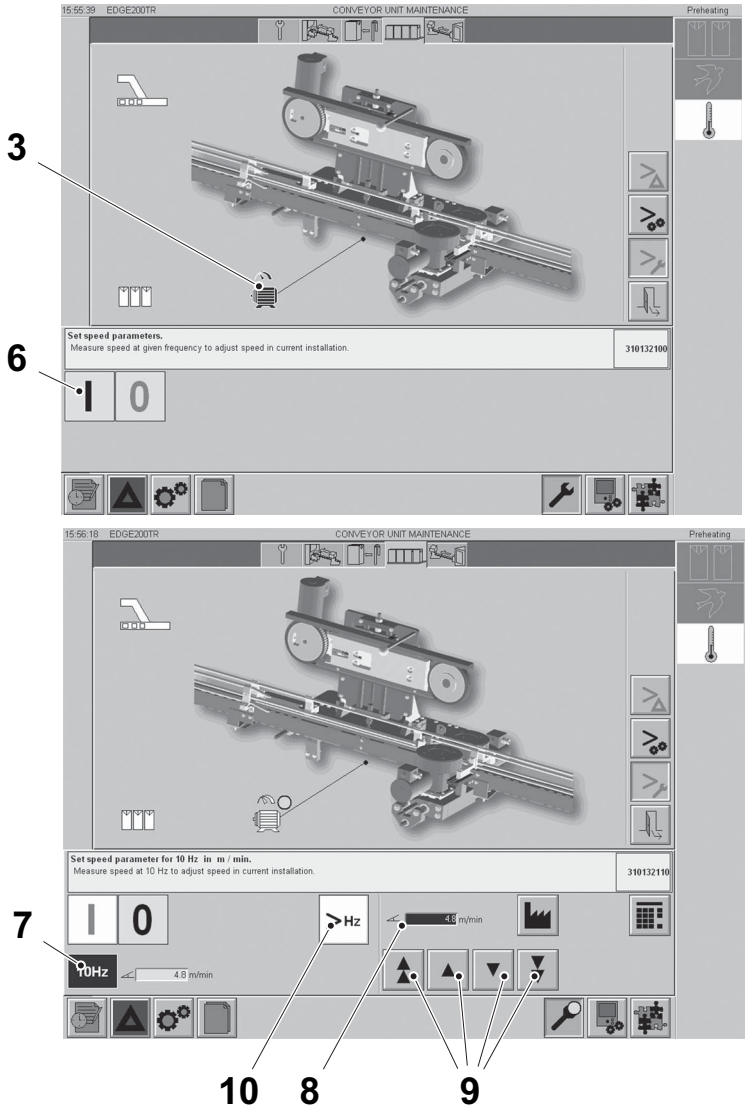

3 Set speed parameters
6 SELECT
7 FREQUENCY
8 Speed of main conveyor
9 ARROW
10 NEXT FREQUENCY

(Cont'd)

(Cont'd)

Set Second Queue Discharge

m) Press the second queue discharge icon (5).

n) Select the position of the gate indicator with the buttons (11) and (12).

o) Press the CONFIRMATION button (13).

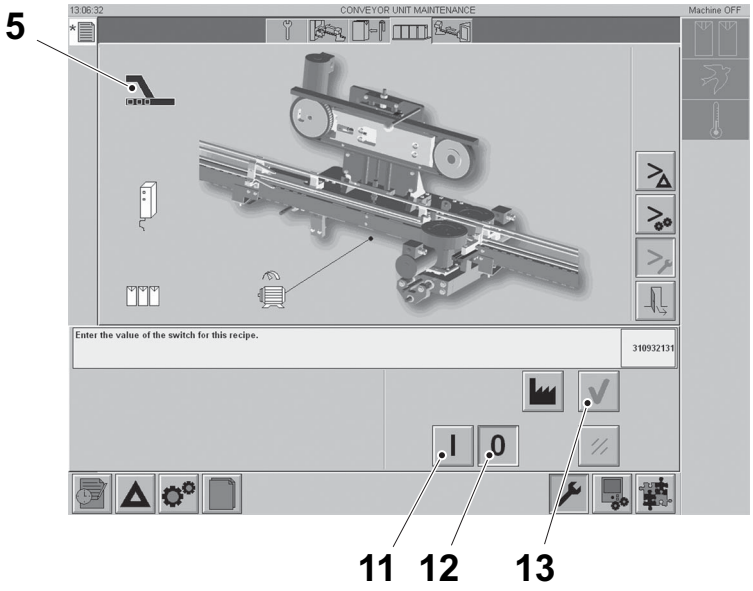

5 Second queue discharge
11 ON
12 OFF
13 CONFIRMATION

(Cont'd)

(Cont'd)

Queue Photocell Selection

Each conveyor on a line with parallel DE interfaces is equipped with a queue photocell. This setting selects the photocell for the current recipe. This setting applies only with LC automation types.

p) Press the queue photocell selection icon (14).

q) Select the appropriate photocell from the list, use the ARROW buttons (15).

r) Press the CONFIRMATION button (13).

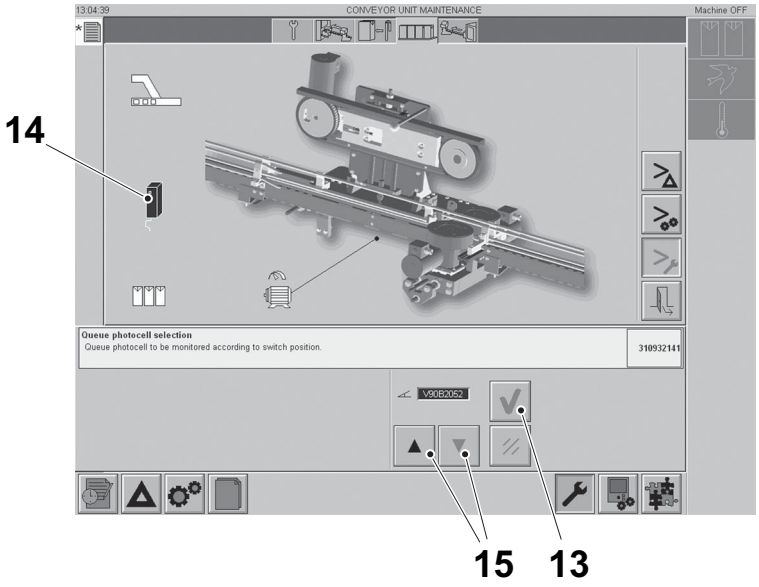

13 CONFIRMATION
14 Queue photocell selection
15 ARROW

7.2.2-7 Maintenance - Set Main Conveyor Unit (TCA/TWA)

Machine status	Main Switch ON Air valve OFF Machine status PREHEATING

a) Log in as a technician or higher on the TPOP.

b) In the button bar, press the MAINTENANCE button (1) to display the maintenance window.

c) Press the MAIN CONVEYOR UNIT button (2).

d) In the package unit maintenance window it is possible to set main conveyor speed (3).

e) Press the icon main conveyor speed (3) to show the setting display (4). Use the ARROW buttons (5) to set the desired value.

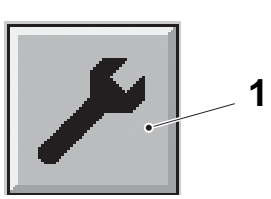

TCA

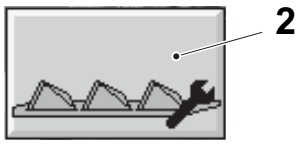

TWA

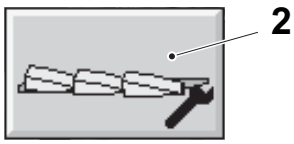

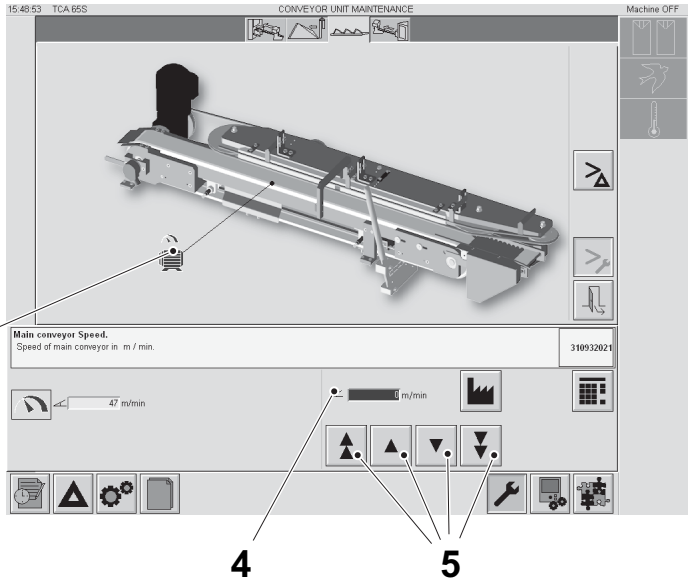

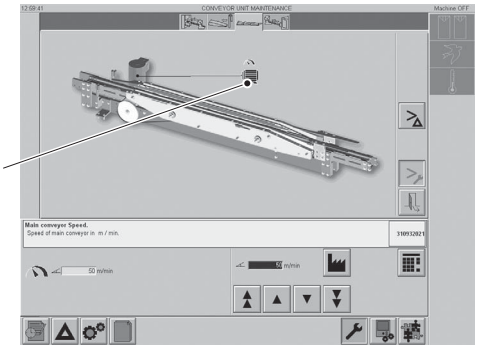

1 MAINTENANCE
2 MAIN CONVEYOR UNIT
3 Main conveyor speed
4 Setting display
5 ARROW

7.2.3 Setup

7.2.3-1 Setup - Add Language

Machine status	Main Switch ON Air valve ON

a) In the button bar, press the SETUP button (1) to display the setup window.

b) Press the LANGUAGE button (2) to add a new language.

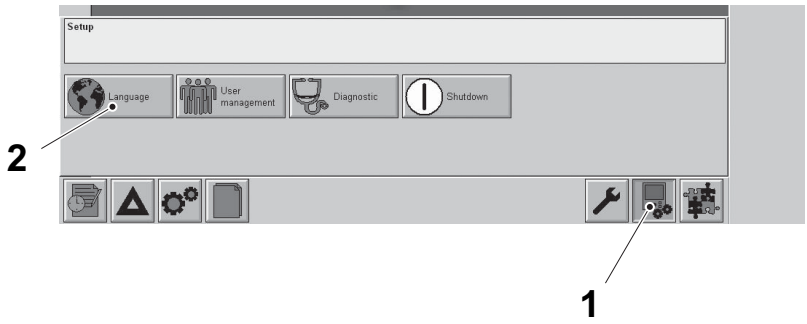

1 SETUP
2 LANGUAGE

c) Press the ADD LANGUAGE button (3) to add a new language.

d) Press one of the grey LANGUAGE buttons that shows on the screen. Keep pressing the button until the language that is to be added shows.

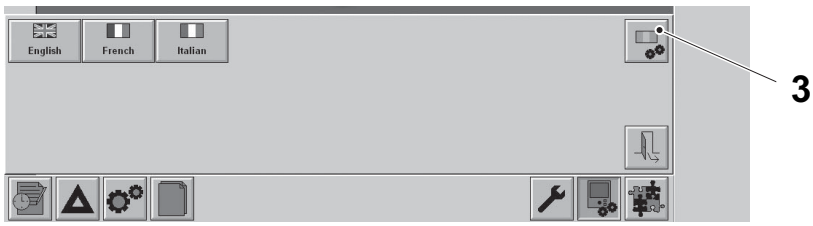

3 ADD LANGUAGE

7.2.3-2 Setup - Start-Up Language Setup

a) Shut down the HMI, see Procedure 7.2.3-5 Setup - Shut Down HMI.

b) Press the APPLICATION SETTINGS button (1) in the configuration window (2).

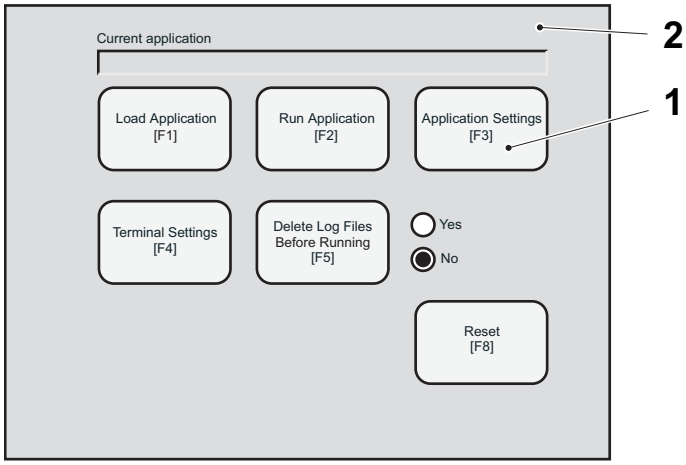

1 APPLICATION SETTINGS
2 Configuration window

c) Press the ARROW buttons (3) to select startup language.

d) Press the ENTER button (4) to confirm.

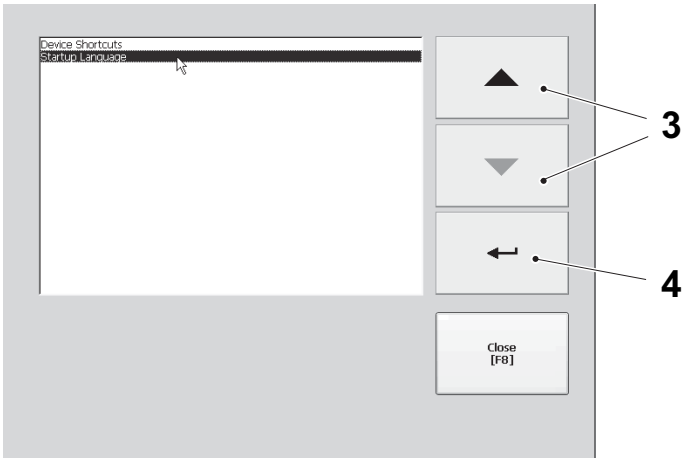

3 ARROW
4 ENTER

(Cont'd)

(Cont'd)

e) Press START IN LAST RUNTIME LANGUAGE (5) to make the HMI select the active language after every reboot.

f) Press the OK button (6) to confirm.

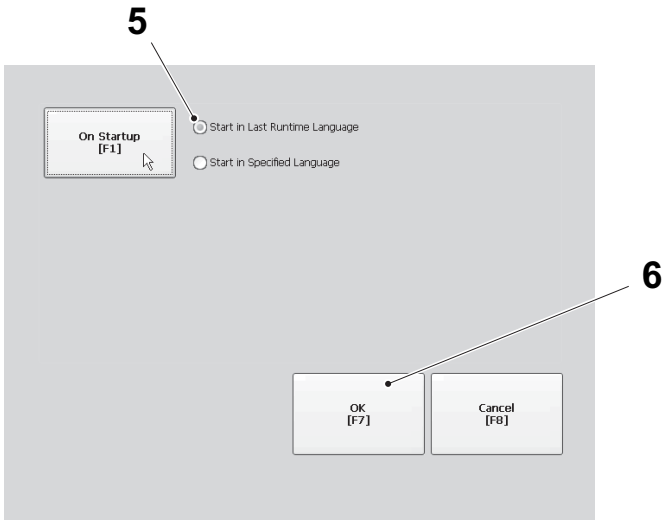

5 START IN LAST RUNTIME LANGUAGE
6 OK

g) Press the CLOSE button (7) to exit.

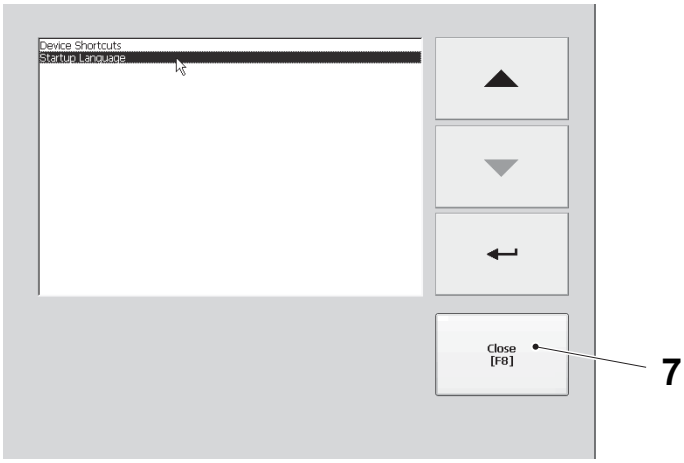

7 CLOSE

(Cont'd)

(Cont'd)

Reboot the HMI

a) Press the RESET button (1) in the configuration window (2).

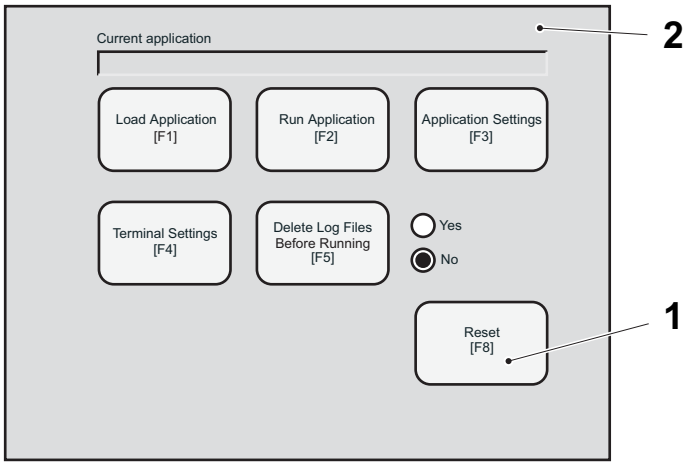

1 RESET
2 Configuration window

b) Press the YES button (3) to confirm.

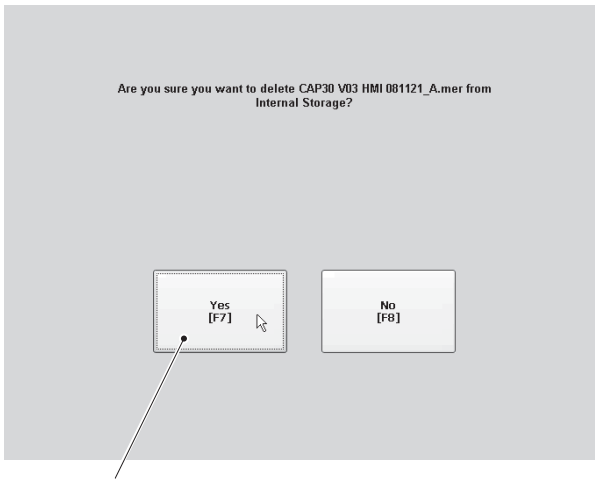

3 YES

7.2.3-3 Setup - Change User Settings

Machine status	Main Switch ON Air valve ON

a) In the button bar, press the SETUP button (1) to display the setup window.

b) Press the USER MANAGEMENT button (2).

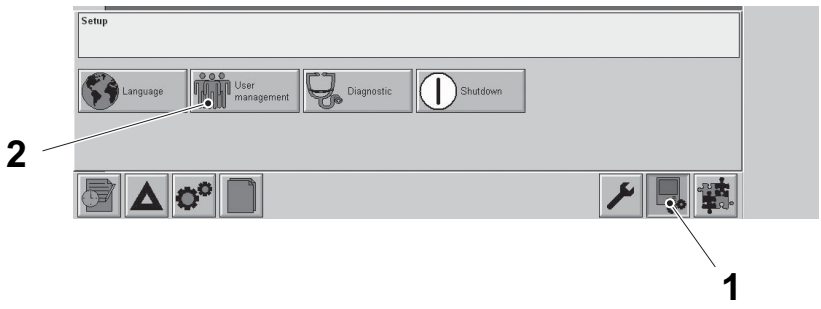

1 SETUP button
2 USER MANAGEMENT button

c) Press the LOG-OUT button (3) to log out, the LOG-IN button (4) to log in, or the CHANGE PASSWORD button (5) to change password (if available).

Note! After 5 minutes of inactivity on the TPOP the user is automatically logged out.

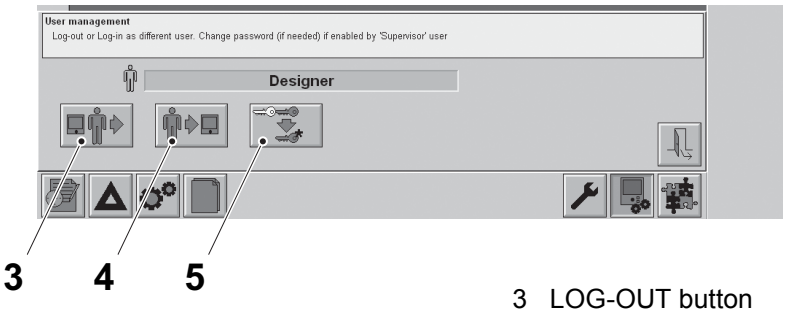

3 LOG-OUT button
4 LOG-IN button
5 CHANGE PASSWORD button

7.2.3-4 Setup - Check Diagnostic

Machine status	Main Switch ON Air valve ON

a) In the button bar, press the SETUP button (1) to display the setup window.

b) Press the DIAGNOSTIC button (2) to display the diagnostic list (3). The list contains all events in the running application and can be useful for troubleshooting.

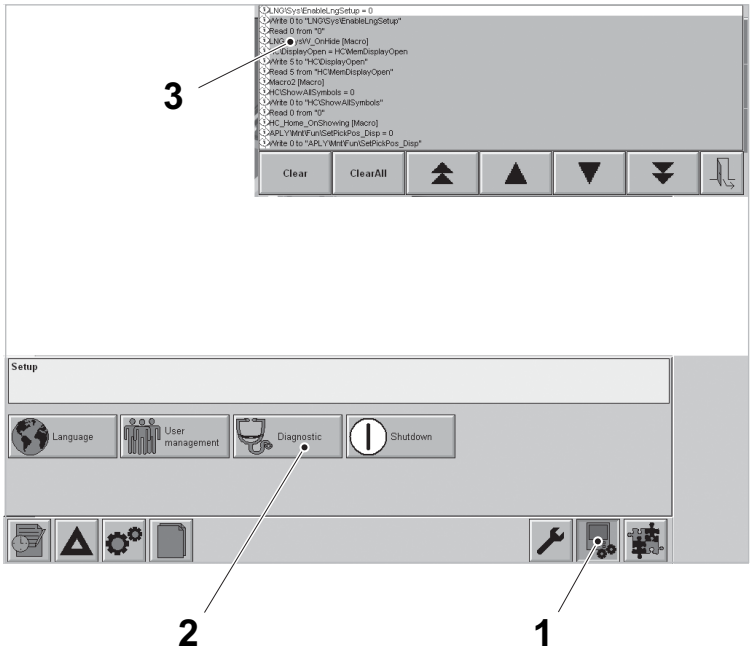

1 SETUP button
2 DIAGNOSTIC button
3 Diagnostic list

7.2.3-5 Setup - Shut Down HMI

Machine status	Main Switch ON Air valve ON

a) In the button bar, press the SETUP button (1) to display the setup window.

b) Press the SHUT DOWN button (2) to shut down the control panel.

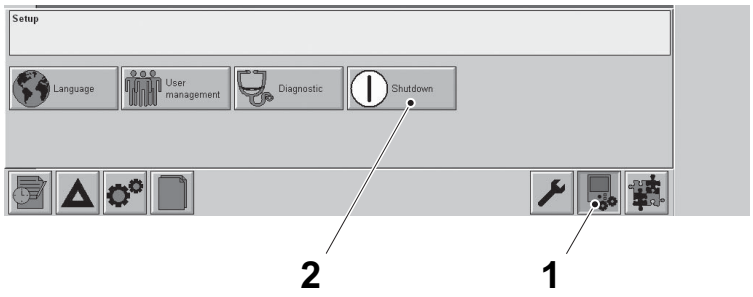

1 SETUP button
2 SHUT DOWN button

c) Press the CONFIRMATION button (3) to shut down, or the CANCEL button (4) to cancel.

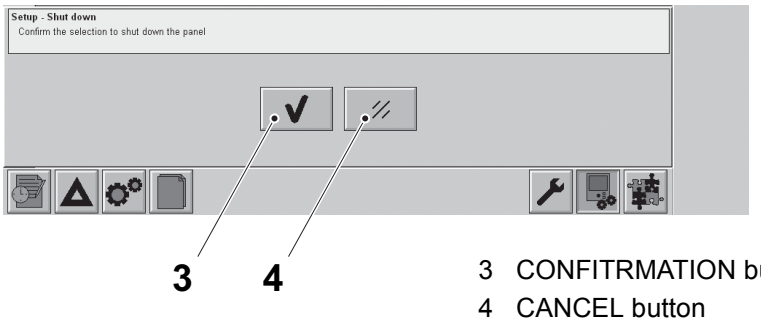

3 CONFITRMATION button
4 CANCEL button

(Cont'd)

(Cont'd)

d) The configuration screen appears.

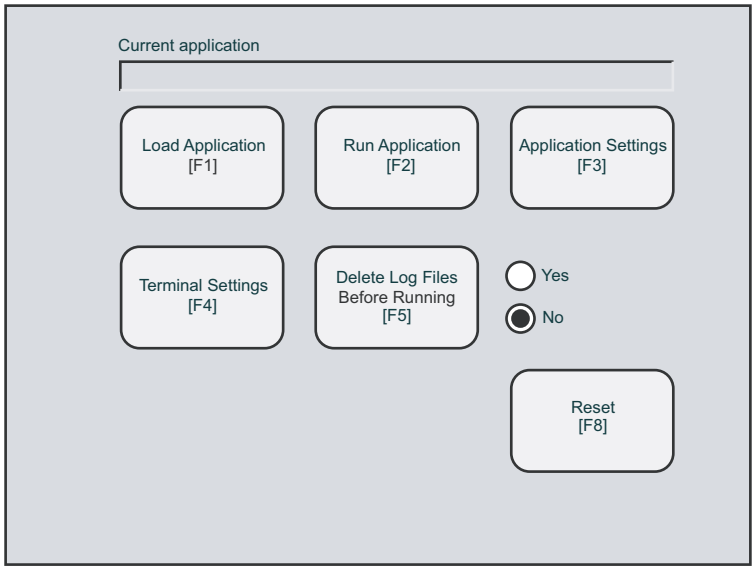

7.2.3-6 Setup - Check/Set IP Address and Subnet Mask Address

Machine Status	Main Switch ON Air valve ON

a) On the HMI, log on as “tptechnician” or “supervisor” or “technician”, see 7.1-2 HMI User Management - Log On as a User.

b) Press the SYSTEM SETUP button (1) and the SHUT DOWN button (2), to display the main window below.

c) In the main window, press the TERMINAL SETTINGS button (3).

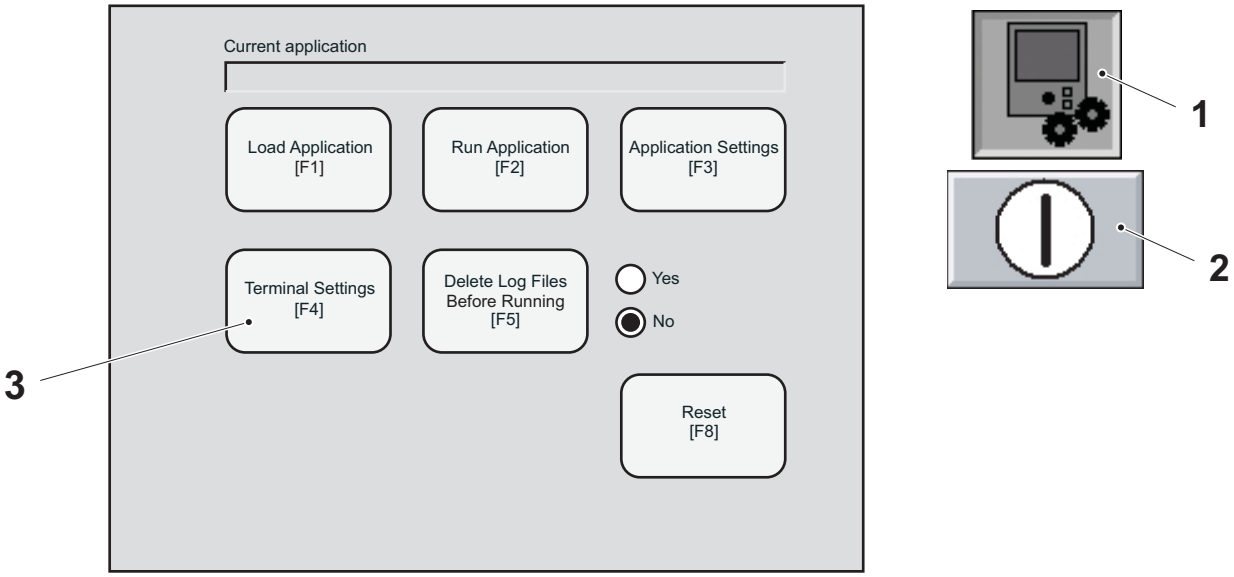

1 SYSTEM SETUP
2 SHUT DOWN
3 TERMINAL SETTINGS

(Cont'd)

(Cont'd)

d) Select Networks and communications (4) and press the ENTER button (5).

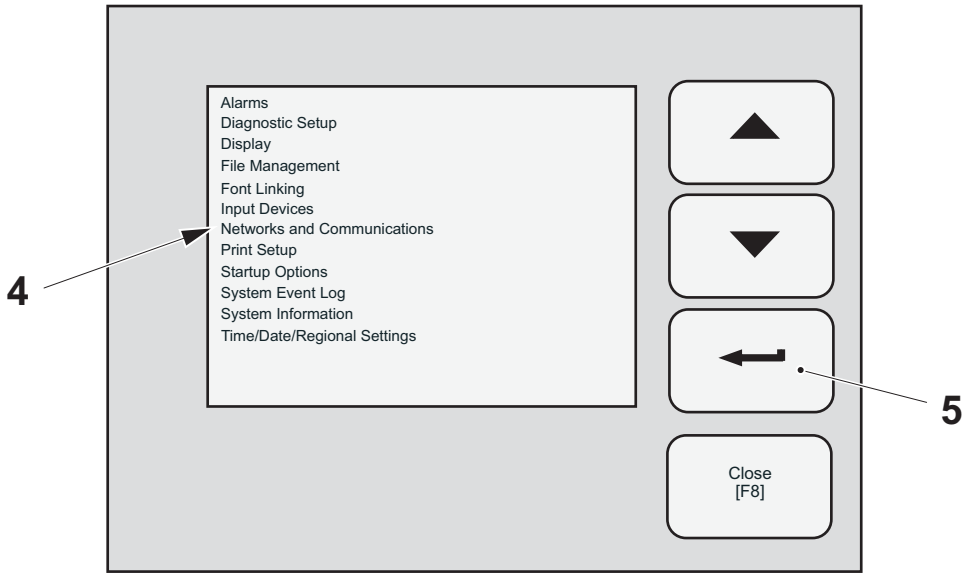

4 Networks and communications
5 ENTER

e) Select Network connections (6) and press the ENTER button (5).

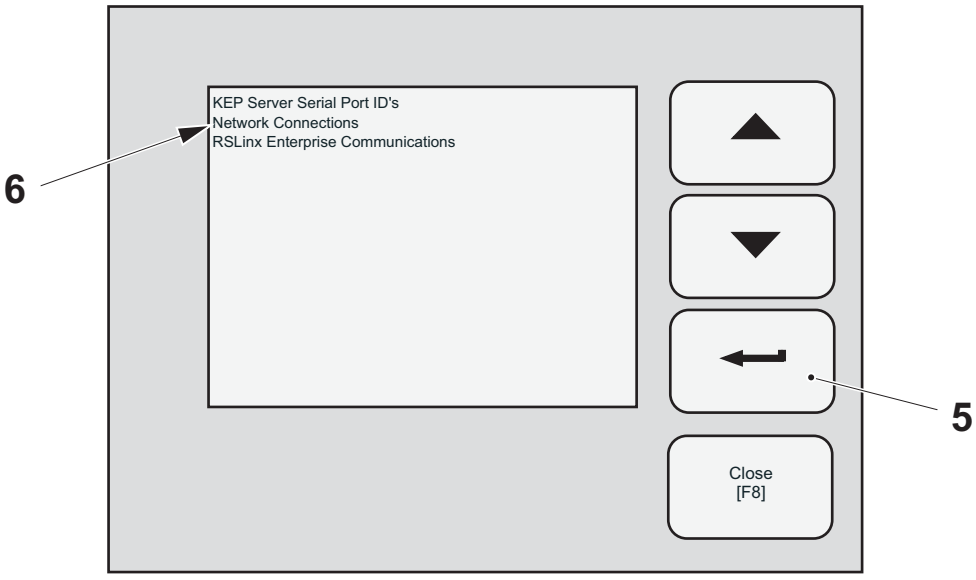

5 ENTER
6 Network connections

(Cont'd)

(Cont'd)

f) Select Network Adapters (7) and press the ENTER button (5).

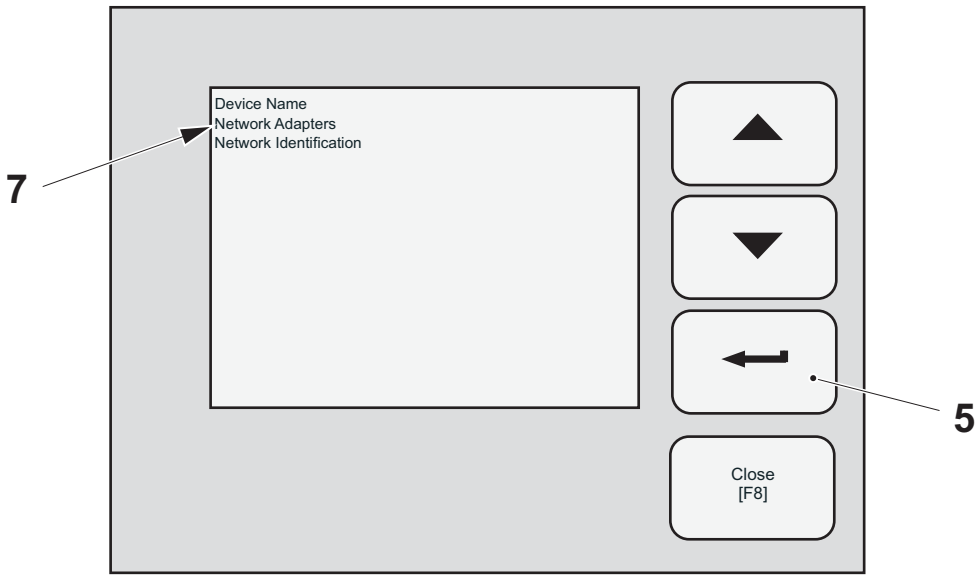

5 ENTER
7 Network Adapter

g) Select Built-in Ethernet Controller (8) and press the IP ADDRESS button (9).

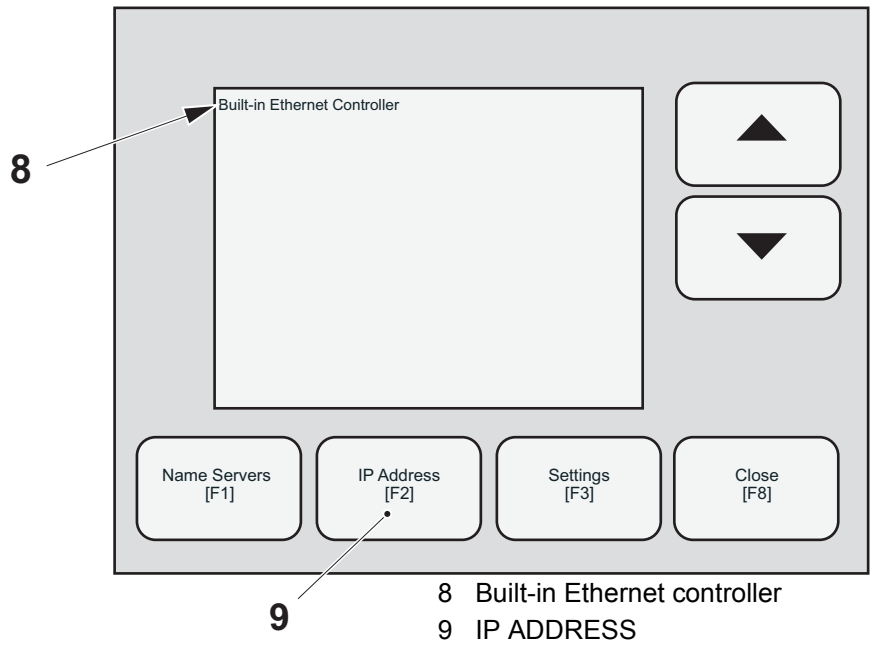

8 Built-in Ethernet controller
9 IP ADDRESS

(Cont'd)

(Cont'd)

h) Press the IP ADDRESS button (10).

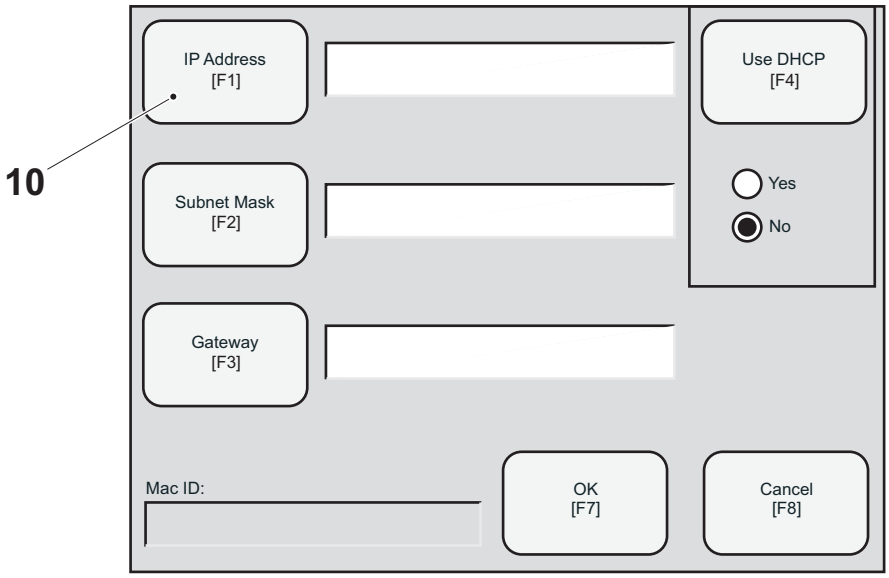

10 IP ADDRESS

i) Use the keyboard (11) and type the PLC IP address, 10.0.4.203, then press the ENTER button (12).

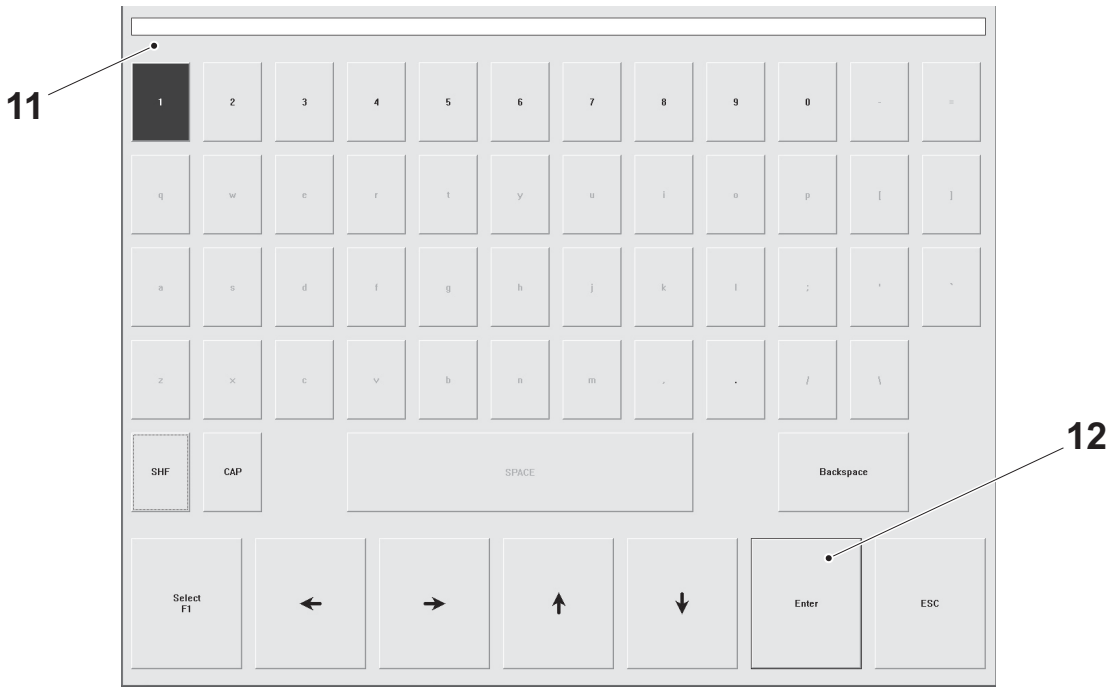

11 Keyboard
12 ENTER

(Cont'd)

(Cont'd)

j) Press the SUBNET MASK button (13).

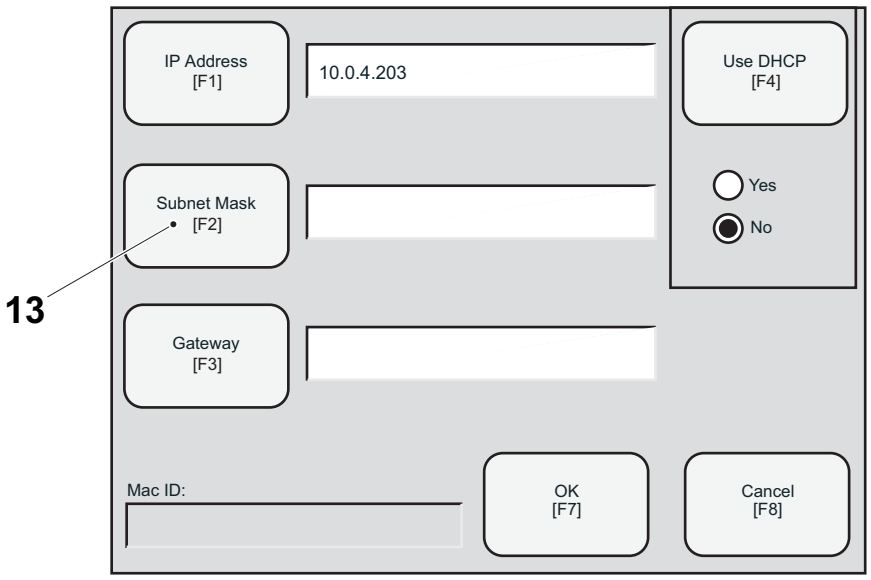

13 SUBNET MASK

k) Use the keyboard (11) and type the subnet mask address, 255.255.0.0, then press the ENTER button (12).

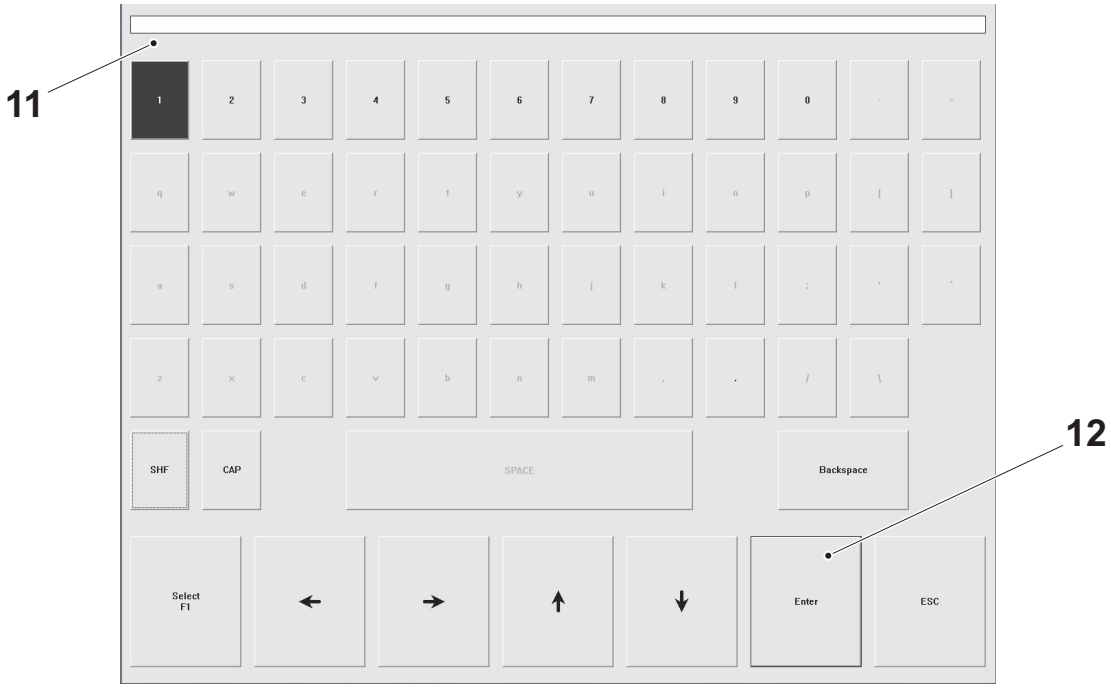

11 Keyboard
12 ENTER

(Cont'd)

(Cont'd)

l) Press the OK button (14).

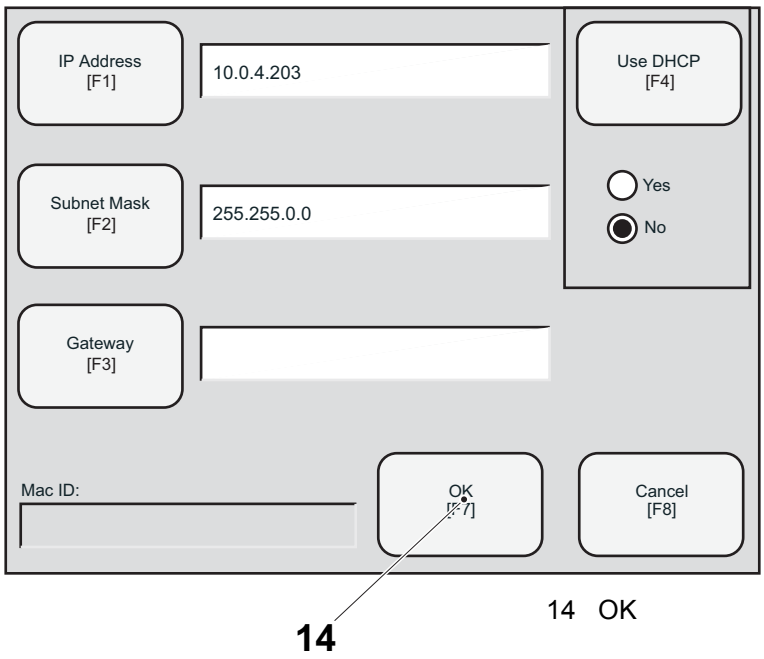

7.2.3-7 Setup - Delete Application

Machine Status	Main Switch ON Air valve ON

a) Shut down the HMI, see Section 7.2.3-5 Setup - Shut Down HMI.

b) Press the TERMINAL SETTINGS button (1).

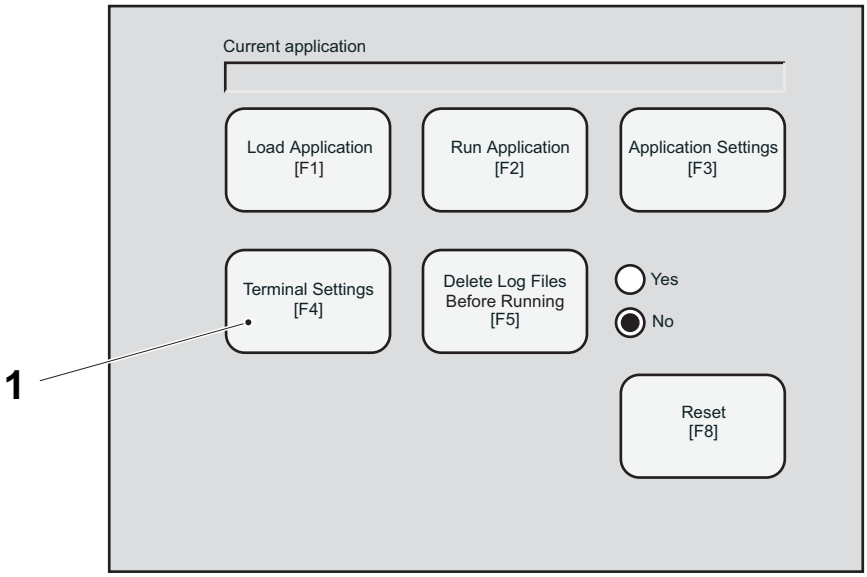

1 TERMINAL SETTINGS

c) Highlight “File management” (2) and press the ENTER button (3).

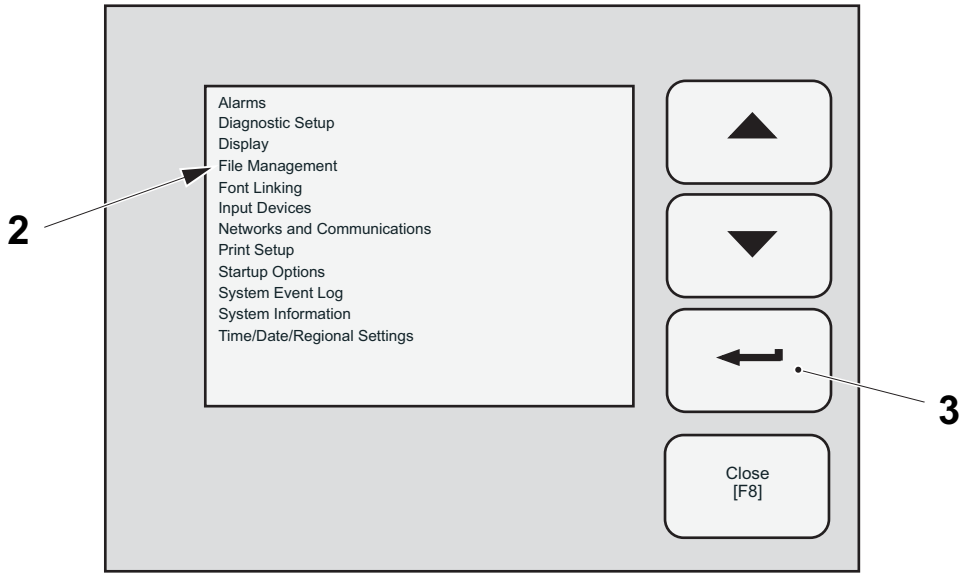

2 File Management
3 ENTER

(Cont'd)

(Cont'd)

d) Highlight “Delete Application” and press the ENTER button.
e) Highlight the file to be deleted and press the DELETE button.
f) Press the YES button to confirm.
g) Repeatedly press the CLOSE button until the main screen appears.

7.2.3-8 Setup - Install HMI Using a CF Card

Machine Status	Main Switch ON Air valve ON
Special Equipment	PC with CD Drive and Compact Flash card reader Compact Flash card Program CD TP No. 3036157-0001

Note! Use a formatted compact flash card.

a) Copy all files in the HMI program folder from the CD to the root of the compact flash card.

b) Delete all projects (*.mer-files) from HMI panel if not empty, see Procedure 7.2.3-7 Setup - Delete Application.

c) Insert the CF card into the HMI panel. Wait for the update to continue. The download of files will start automatically.

d) When the message “Press any key to continue...” appears, the download is finished. Remove the CF card from the HMI panel.

e) Press `File - Close` on the TPOP, or press the “X” in the upper right corner to continue. The panel reboots.

f) Continue with 7.2.3-9 Setup - Load Application.

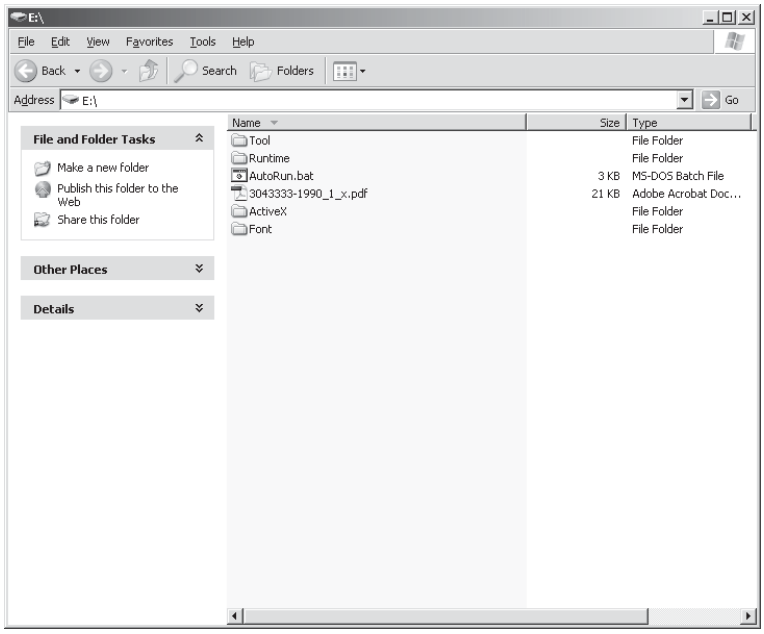

7.2.3-9 Setup - Load Application

Machine Status	Main Switch ON Air valve ON

a) Shut down the HMI, see Section 7.2.3-5 Setup - Shut Down HMI.

b) Press the LOAD APPLICATION button.

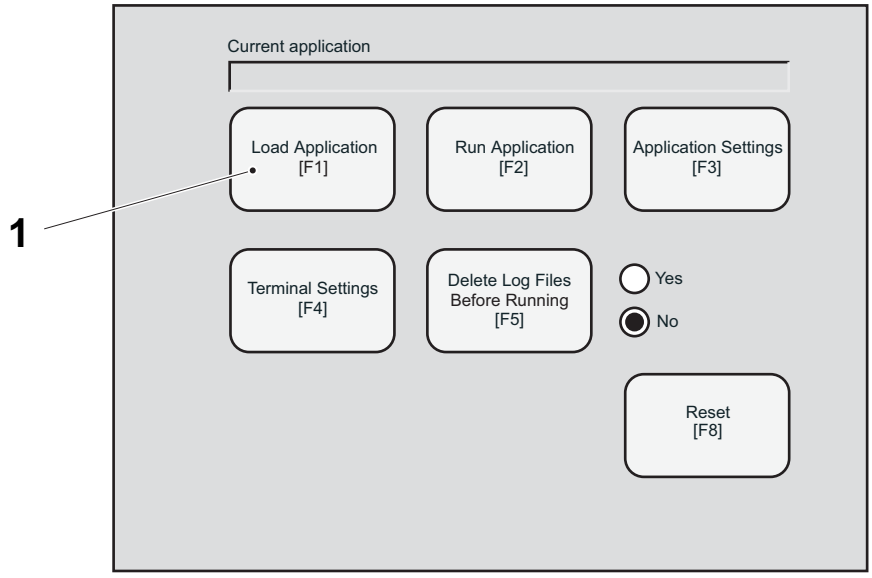

1 LOAD APPLICATION

(Cont'd)

(Cont'd)

c) Highlight the application to be loaded, see the table below, and press the ENTER button.

*_A.mer = Group A		*_B.mer = Group B		*_C.mer = Group C	
English	01	English	01	English	01
Swedish	02	Czech	17	Arabic	21
German	03	Serbian	19	Persian	22
French	04	Croatian	31	Malay	23
Spanish	05	Slovenian	32	Japanese	24
Italian	06	Slovak	33	Simplified Chinese	25
Portuguese	07	Romanian	35	Thai	28
Danish	08	Bulgarian	36	Korean	30
Greek	09	Bosnian	37	Traditional Chinese	53
Finnish	11	Hungarian	52	Vietnamese	54
Polish	18	Macedonian	38		
Dutch	26	Russian	12		
Norwegian	27	Latvian	13		
Icelandic	29	Estonian	14		
Turkish	20	Lithuanian	15		

d) Press the LOAD button.

e) When the message “Do you want to replace the terminal’s current communication configuration with the application’s communication configuration?” appears, press the YES button to confirm.

f) After loading, press the TERMINAL SETTINGS button.

g) Highlight “Startup Options” and press the ENTER button.

h) Highlight “Factory Talk View ME Station Startup” and press the ENTER button.

i) Make sure that “Run Current Application” is selected and press the OK button.

j) Repeatedly press the CLOSE button until the main screen appears.

k) Press the RUN APPLICATION button to start the HMI.

7.2.3-10 Setup - Disable Screen Saver

Machine Status	Main Switch ON Air valve ON

a) If the HMI is running, log on as “tptechnician” or “supervisor” or “technician”, see 7.1-2 HMI User Management - Log On as a User.

b) Press the SYSTEM SETUP button (1) and the SHUT DOWN button (2), to display the main window below.

c) In the configuration window, press the TERMINAL SETTINGS button (3).

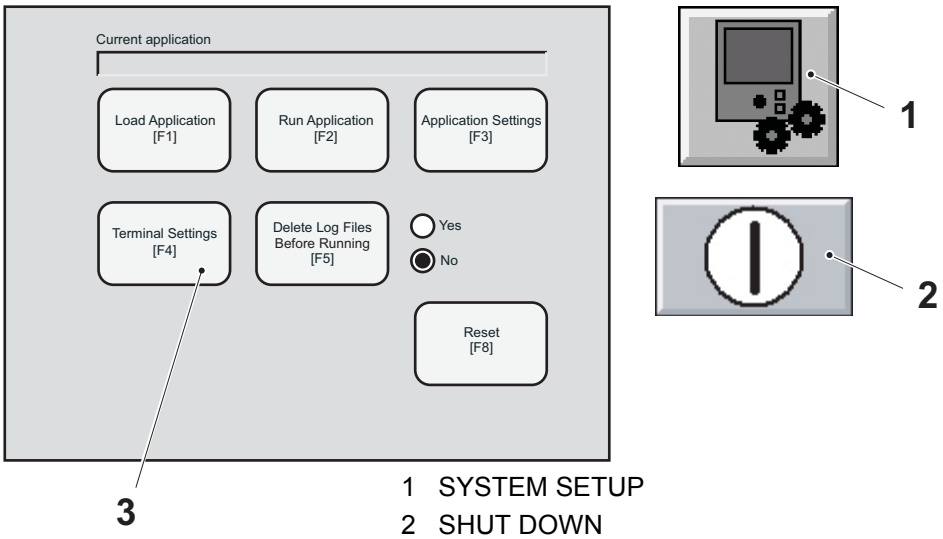

1 SYSTEM SETUP
2 SHUT DOWN
3 TERMINAL SETTINGS

d) Select DISPLAY (4) and press ENTER (5).

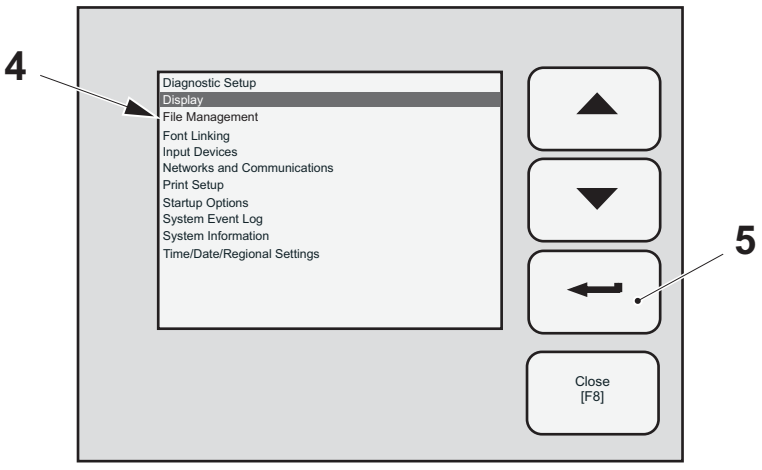

4 DISPLAY
5 ENTER

(Cont'd)

(Cont'd)

e) Select SCREEN SAVER (6) and press ENTER (5).

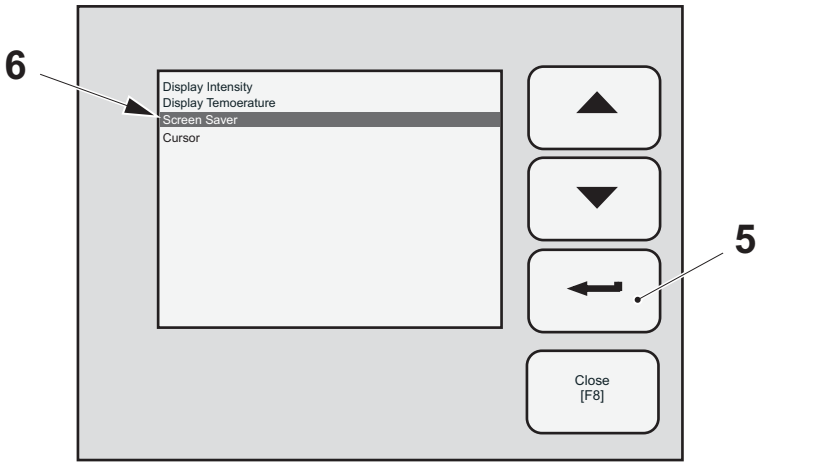

5 ENTER
6 SCREEN SAVER

f) Select DISABLED (7) and press OK (8).

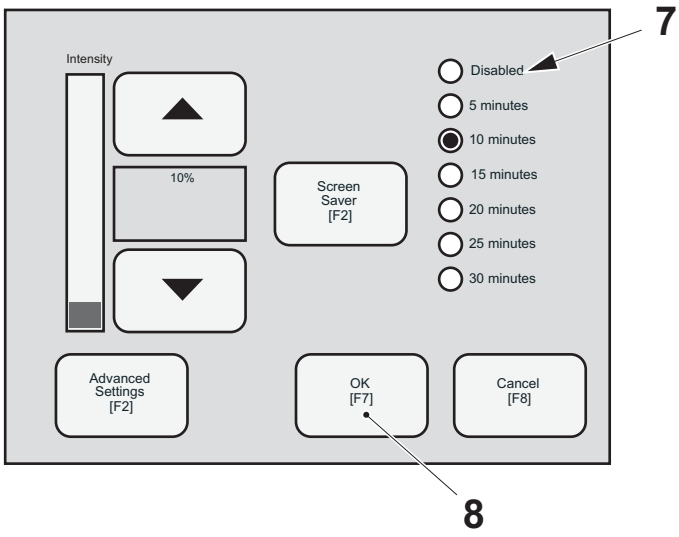

7 DISABLED
8 OK

(Cont'd)

(Cont'd)

g) Press CLOSE (9) two tomes to exit to the MAIN window.

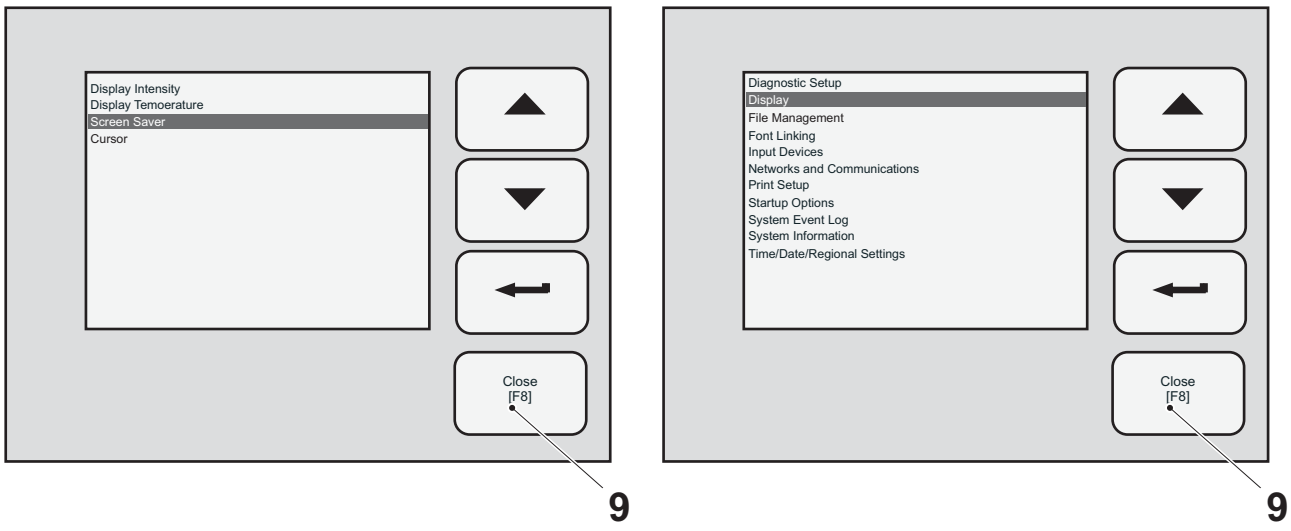

9 CLOSE

h) Select YES (10) on option “Delete log files before running?”.

i) Press the RUN APPLICATION button (11).

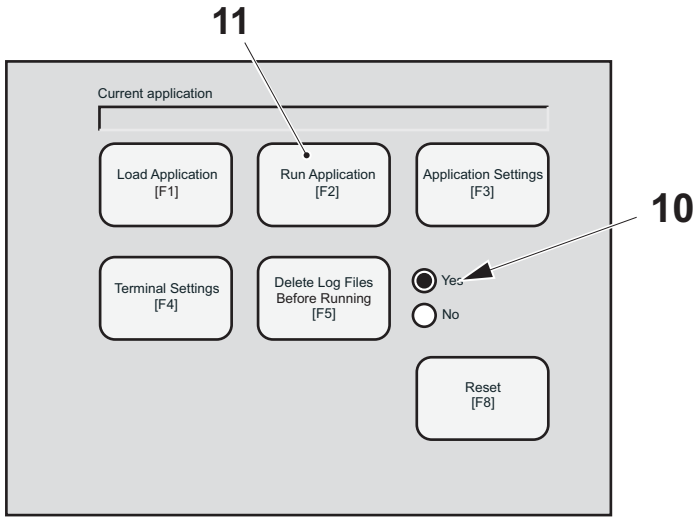

10 YES

11 RUN APPLICATION

7.2.3-11 Setup - Download Program Using a PC

Machine Status	Main Switch ON Air valve ON
Special Equipment	PC with CD Drive Ethernet communication cable Program CD TP No. 3036157-0001

Note! After a program download, the default passwords are reset, see Section 7.1 HMI User Management.

Note! To connect the PLC using an ethernet communication cable, the PC must first be configured for this type of communication.

a) Connect the ethernet communication cable between a vacant connection port on the ethernet switch (1) and the PC (2).

b) Insert the program CD into the PC CD drive.

c) Browse to the CD drive and copy the program file included in the folder 3043333-1001, to the PC desktop.

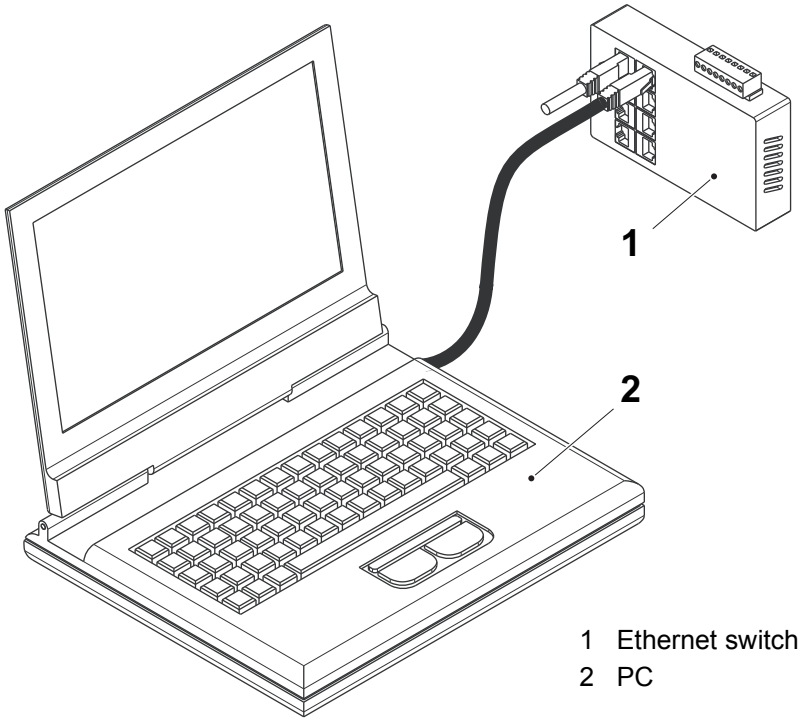

1 Ethernet switch
2 PC

(Cont'd)

(Cont'd)

d) Open the START menu (3) on the PC, then select PROGRAMS (4), ROCKWELL SOFTWARE (5), FACTORY TALK VIEW (6), TOOLS (7) and then the ME TRANSFER UTILITY (8).

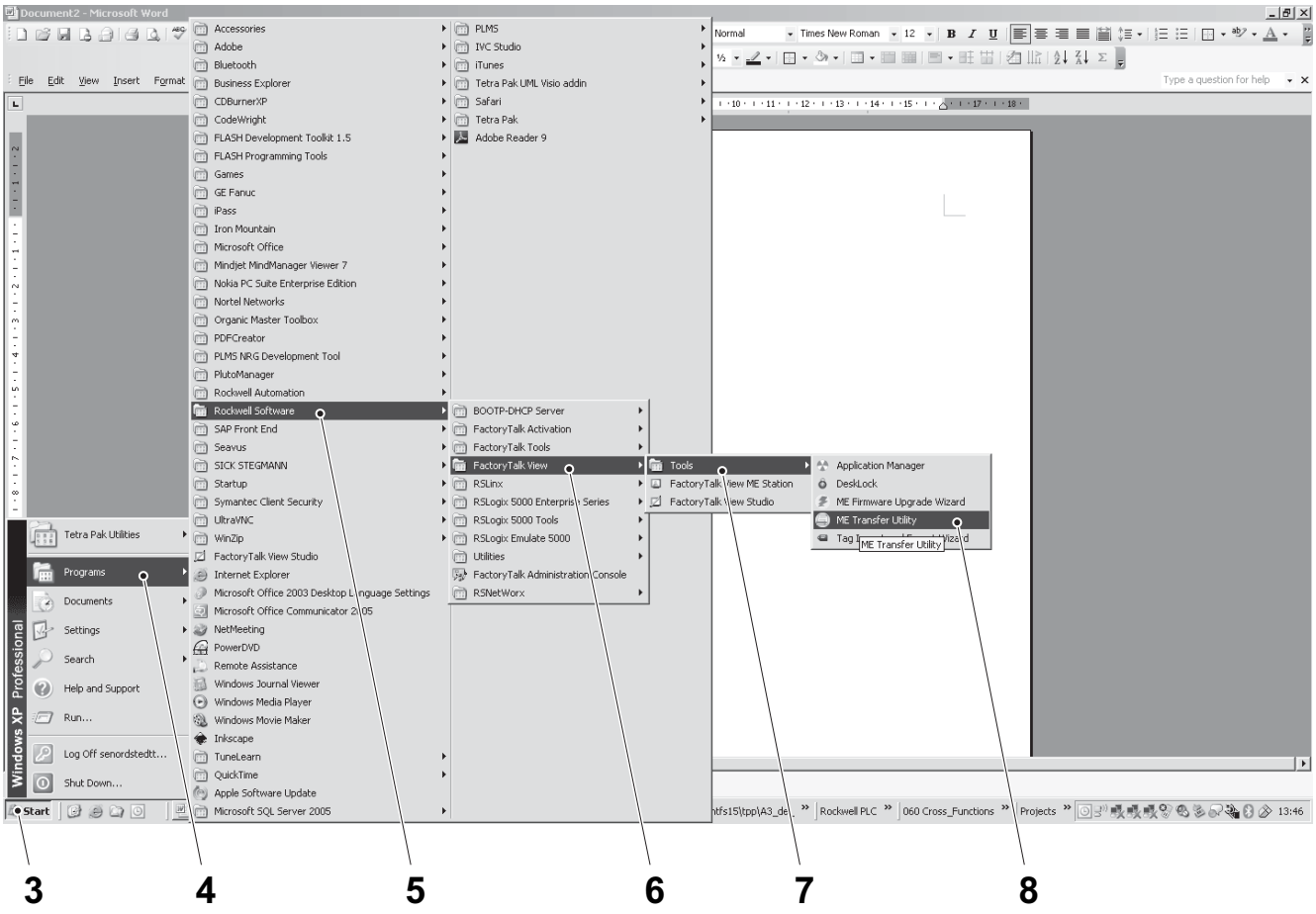

3 START menu
4 PROGRAMS
5 ROCKWELL SOFTWARE
6 FACTORY TALK VIEW
7 TOOLS
8 ME TRANSFER UTILITY

(Cont'd)

(Cont'd)

e) In the TRANSFER UTILITY window (9), select the DOWNLOAD tab (10).

f) Select the correct DESTINATION TERMINAL (11).

g) Select the BROWSE button (12).

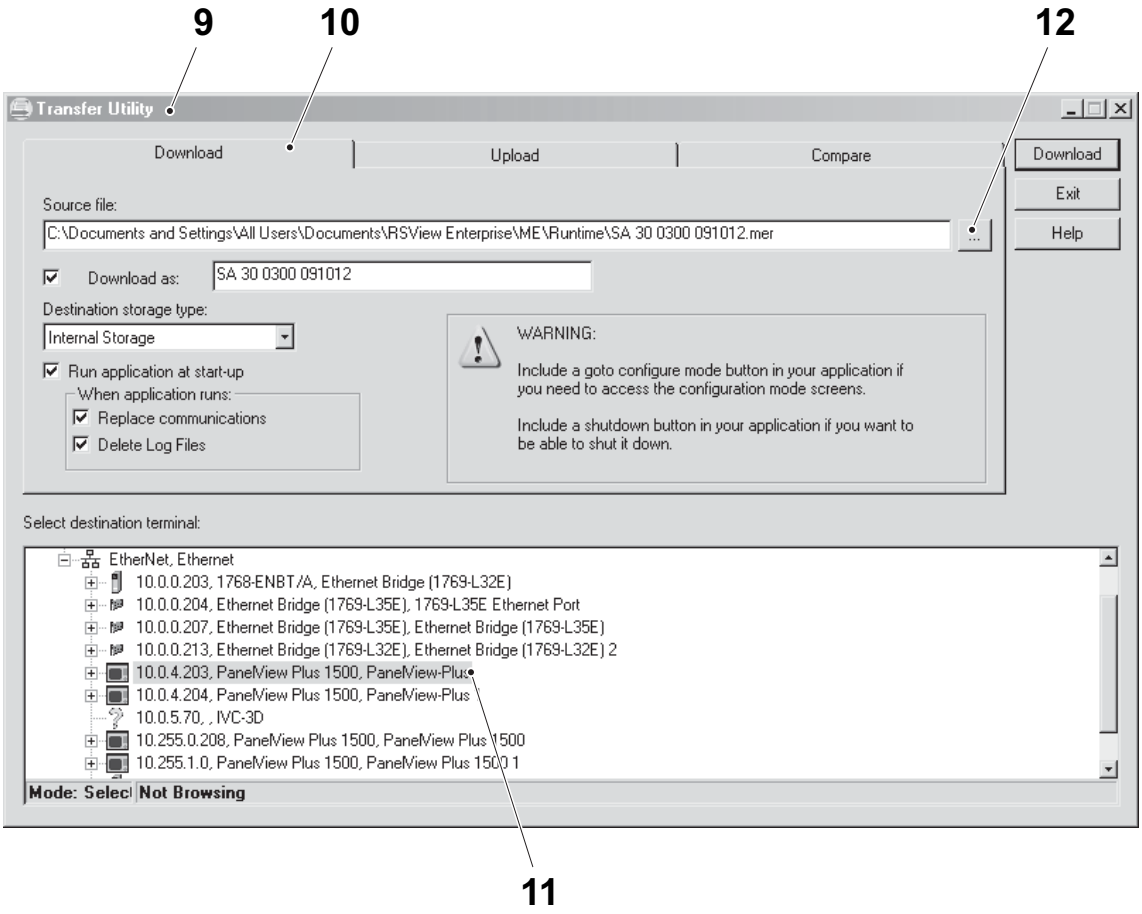

9 TRANSFER UTILITY window
10 DOWNLOAD
11 DESTINATION TERMINAL
12 BROWSE

(Cont'd)

(Cont'd)

h) Browse and select the program file (13), then select the OPEN button (14).

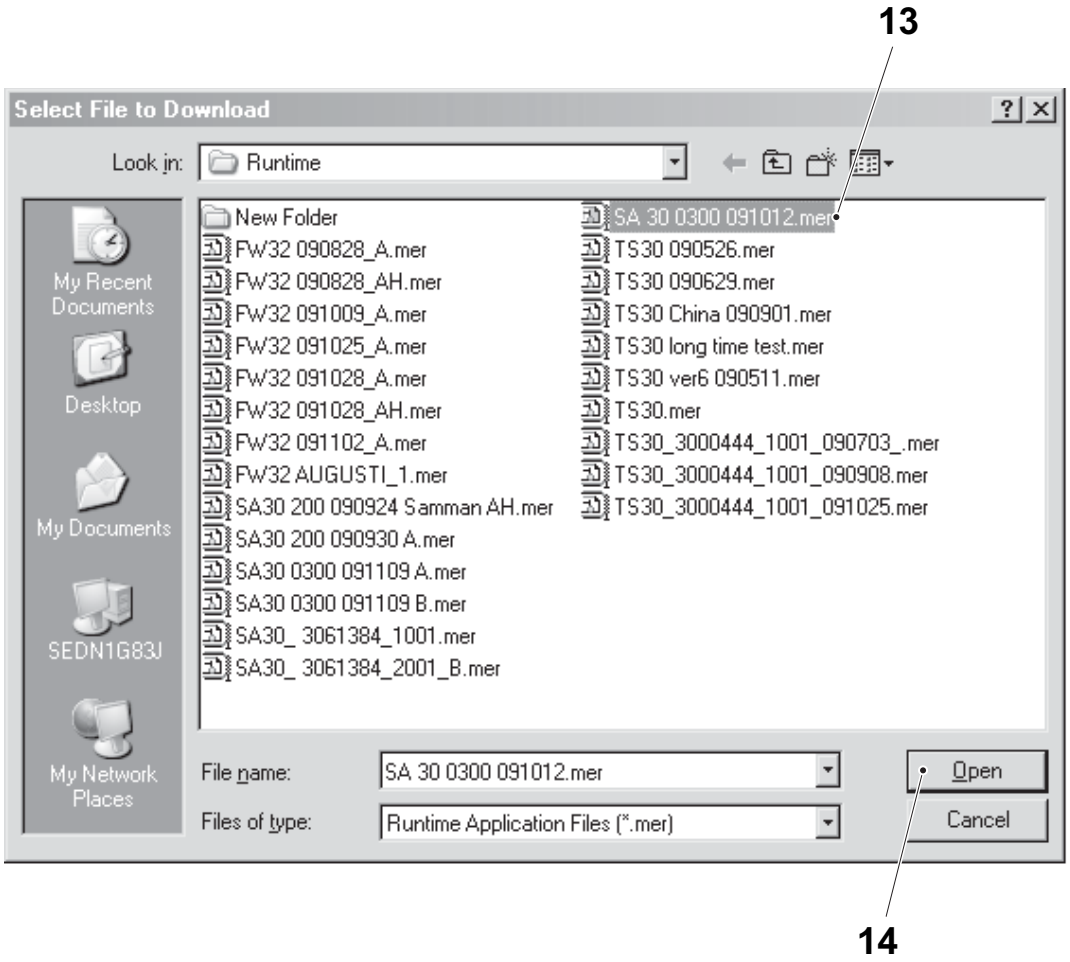

13 Program file
14 OPEN

(Cont'd)

(Cont'd)

i) In the TRANSFER UTILITY window (9), make sure that all checkboxes (15) are selected.

j) Select the DOWNLOAD button (16).

k) Select the YES button if the dialogue box appears.

l) When the DOWNLOADING window (18) appears, wait until the downloading process is completed.

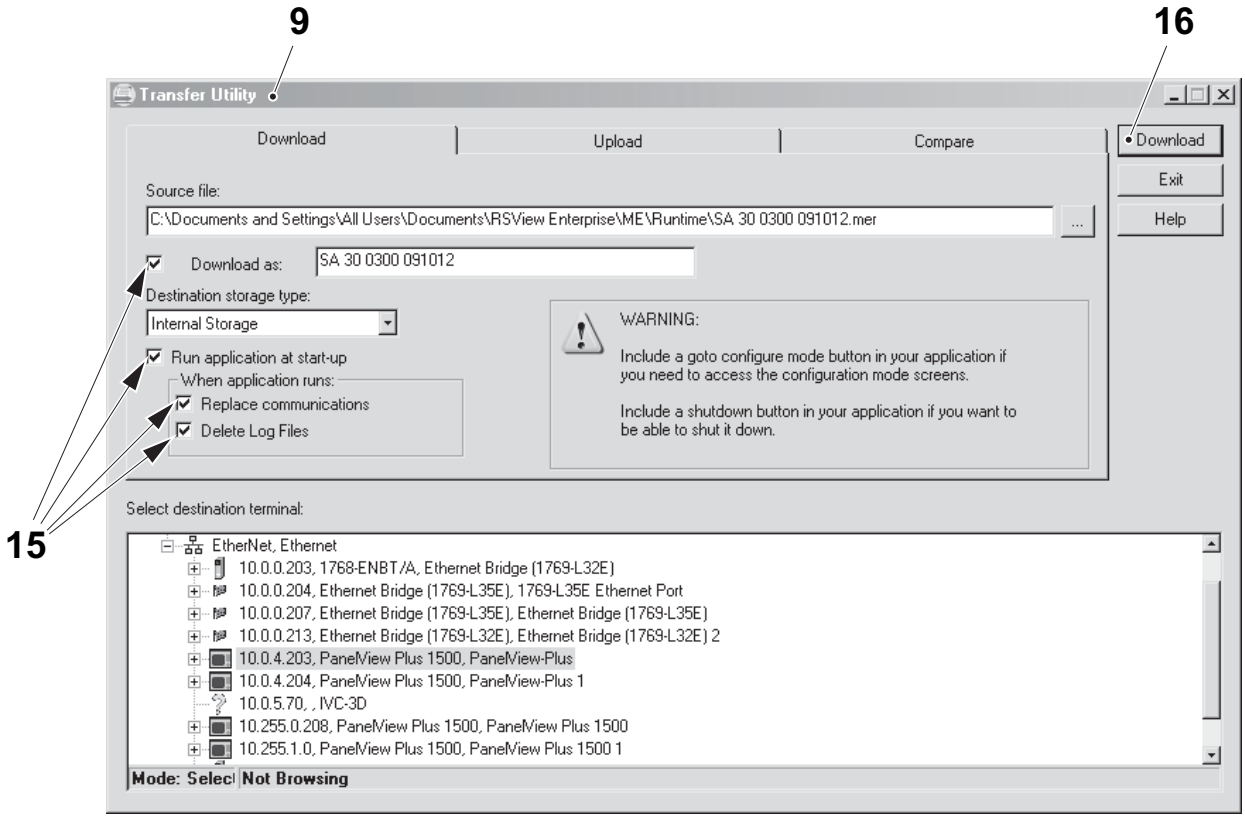

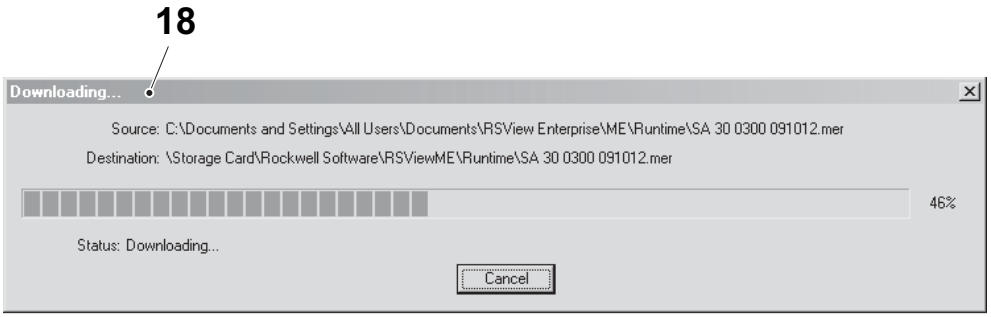

9 TRANSFER UTILITY window
15 Checkbox
16 DOWNLOAD
17 YES (not in illustration)
18 DOWNLOADING window

(Cont'd)

(Cont'd)

m) When the TRANSFER UTILITY window (19) appears, the download procedure is completed, then select the OK button (20) to go back to the main window.

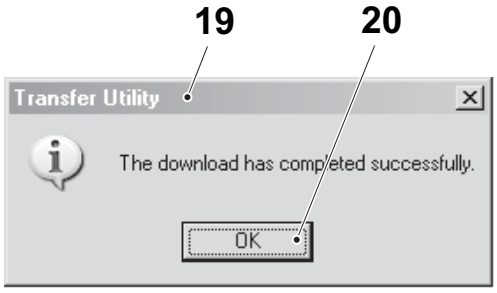

19 TRANSFER UTILITY window
20 OK

7.2.3-12 Setup - Load Firmware in HMI

Machine Status	Main Switch ON Air valve ON
Special Equipment	PC with CD Drive and Compact Flash card reader Compact Flash card Program CD TP No. 3036157-0001

Note! Use a formatted compact flash card.

a) Identify the correct firmware revision to be flashed and copy it from the CD to the compact flash card.

Ref.	**Name**	**Firmware**
A08A2010	Operator Panel 15"+, 2711P-T15C4D2-TP	5.00.06

b) Shut down the HMI, see Procedure 7.2.3-5 Setup - Shut Down HMI.

c) Delete all projects (*.mer-files) from the HMI panel if not empty, see Procedure 7.2.3-7 Setup - Delete Application.

d) Insert the compact flash card at the back of the HMI panel and wait for the upgrade window to pop up.

e) Press the UPGRADE button.

f) Press the YES button.

g) The update will run for a few minutes and the HMI panel will reboot.

h) Follow the instructions on the HMI panel to calibrate the touch sensor area. Use a soft pointy object. When done, tap anywhere on the screen within 30 seconds to keep the setting, otherwise the calibration will be discarded.

i) Wait for the upgrade to complete.

j) Remove the compact flash card.

k) Press EXIT.

l) The panel reboots.

m) Set the IP address of the panel to 10.0.4.203, see Procedure 7.2.3-6 Setup - Check/Set IP Address and Subnet Mask Address.

7.2.4 Configuration

7.2.4-1 Configuration - Change PLMS Communication

Machine status	Main Switch ON Air valve ON

Note! The illustration shows the TB/TBA/TPA variant. The procedure is the same for TCA/TWA.

a) In the button bar, press the CONFIGURATION button (1) to display the configuration window.

b) Press the PLMS symbol (2) to change the communication type (3).

c) Use the ARROW buttons (4) to change the communication type (3) according to the current type of filling machine.

d) Confirm the setting with the CONFIRMATION button (5) or press the CANCEL button (6) to abort.

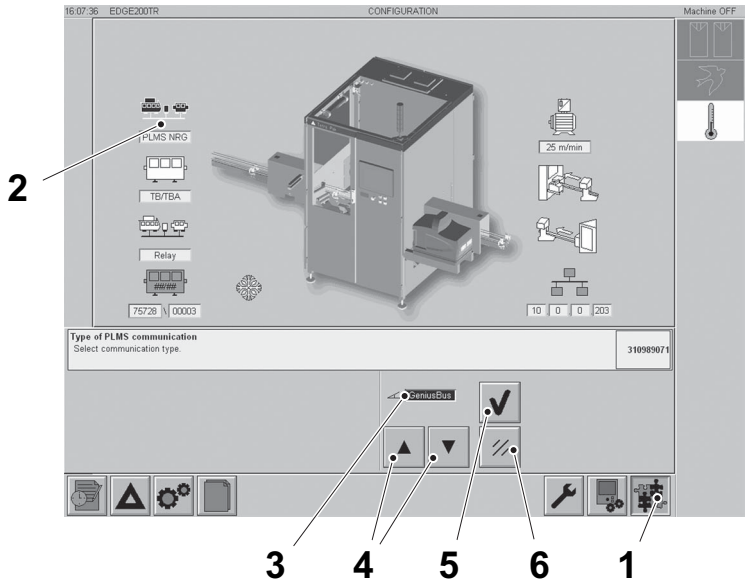

1 CONFIGURATION
2 PLMS
3 Communication type
4 ARROW
5 CONFIRMATION
6 CANCEL

7.2.4-2 Configuration - Change Package Type

Machine status	Main Switch ON Machine OFF

Note! The illustration shows the TB/TBA/TPA variant. The procedure is the same for TCA/TWA.

a) In the button bar, press the CONFIGURATION button (1) to display the configuration window.

b) Press type of package handling (2) to change the package type (3).

c) Use the ARROW buttons (4) to change the package type (3).

d) Confirm the setting with the CONFIRMATION button (5) or press the CANCEL button (6) to abort.

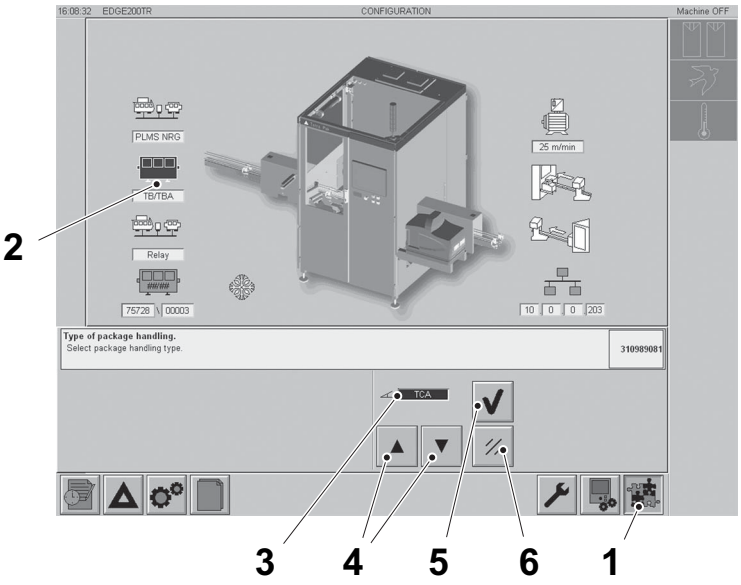

1 CONFIGURATION
2 Type of package handling
3 Package type
4 ARROW
5 CONFIRMATION
6 CANCEL

7.2.4-3 Configuration - Set Line Communication

Machine status	Main Switch ON Machine OFF

Note! The illustration shows the TB/TBA/TPA variant. The procedure is the same for TCA/TWA.

a) In the button bar, press the CONFIGURATION button (1) to display the configuration window.

b) Press the line communication symbol (2).

c) Choose type of line communication (3) if the machine uses photocells, relays, or other.

d) Use the ARROW buttons (4) to change the type of line communication (3).

e) Confirm the setting with the CONFIRMATION button (5) or press the CANCEL button (6) to abort.

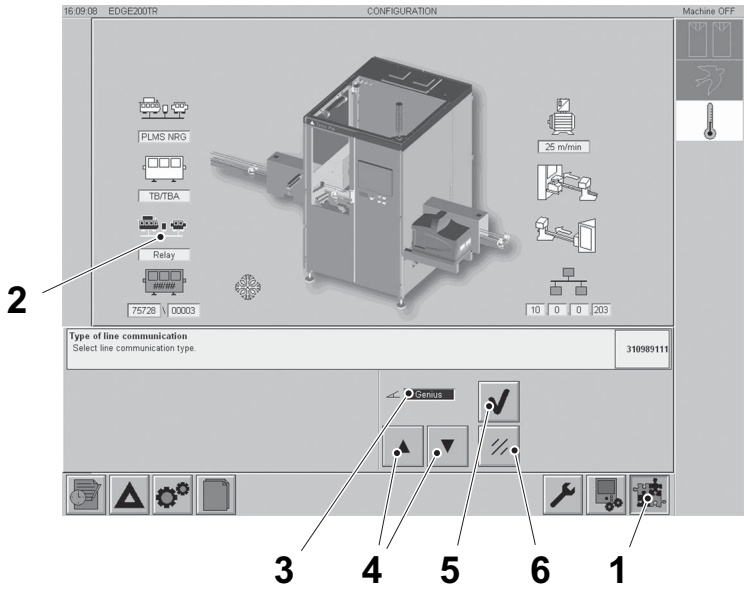

1 CONFIGURATION
2 Line communication
3 Type of line communication
4 ARROW
5 CONFIRMATION
6 CANCEL

7.2.4-4 Configuration - Change Conveyor Specification (TB/TBA/TPA)

Machine status	Main Switch ON Air valve ON

a) In the button bar, press the CONFIGURATION button (1) to display the configuration window.

b) Press the conveyor handling symbol (2).

c) Use the ARROW buttons (3) to set Conveyor configuration.
Refer to PC23 specification:
   - 15 m/min for flex speed
   - 33 and 39 m/min for high speed

d) Confirm the setting with the CONFIRMATION button (5) or press the CANCEL button (6) to abort.

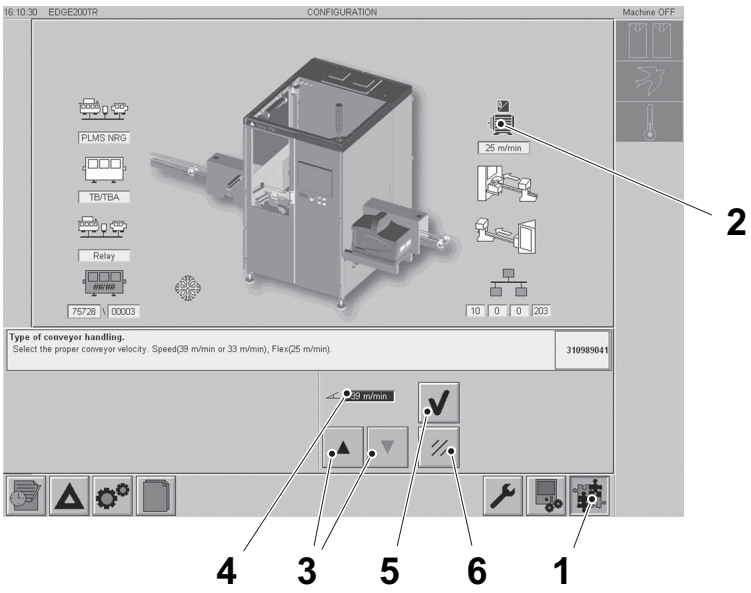

1 CONFIGURATION
2 Conveyor handling
3 ARROW
4 Conveyor velocity
5 CONFIRMATION
6 CANCEL

7.2.4-5 Configuration - Change Infeed Option (TB/TBA/TCA/TPA)

Machine status	Main Switch ON Machine OFF

Note! The illustration shows the TB/TBA/TPA variant. The procedure is the same for TCA.

a) In the button bar, press the CONFIGURATION button (1) to display the configuration window.

b) Press the infeed option symbol (2).

c) Select or deselect infeed option with the SELECT button (3) or the DESELECT button (4).

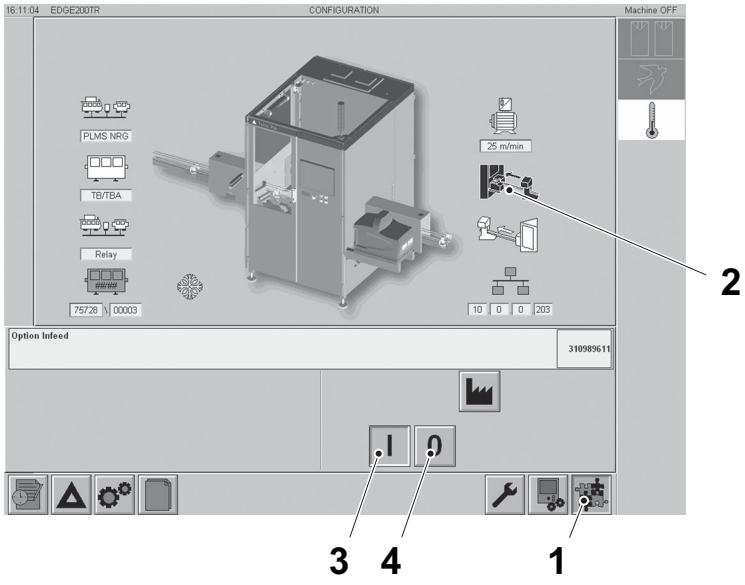

1 CONFIGURATION
2 Infeed option
3 SELECT
4 DESELECT

7.2.4-6 Configuration - Change Discharge Option (TB/TBA/TCA/TPA)

Machine status	Main Switch ON Machine OFF

Note! The illustration shows the TB/TBA/TPA variant. The procedure is the same for TCA.

a) In the button bar, press the CONFIGURATION button (1) to display the configuration window.

b) Press the discharge option symbol (2).

c) Select or deselect discharge option with the SELECT button (3) or the DESELECT button (4).

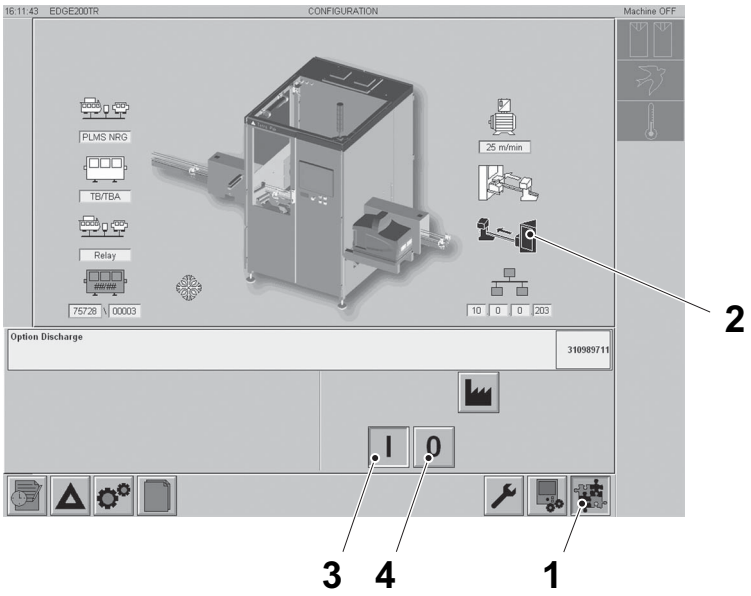

1 CONFIGURATION
2 Discharge option
3 SELECT
4 DESELECT

7.2.4-7 Configuration - Change IP Address

Machine status	Main Switch ON Machine OFF

Note! The illustration shows the TB/TBA/TPA variant. The procedure is the same for TCA/TWA.

a) In the button bar, press the CONFIGURATION button (1) to display the configuration window.

b) Press the IP address symbol (2).

c) To change the IP address, choose one of the FIELD buttons (3) to (6). The FIELD 1-button (3) corresponds to address part 1 (7), The FIELD 2-button (4) corresponds to address part 2 (8), and so on.

d) To set the value (11) use the ARROW buttons (12) or the KEYPAD button (13).

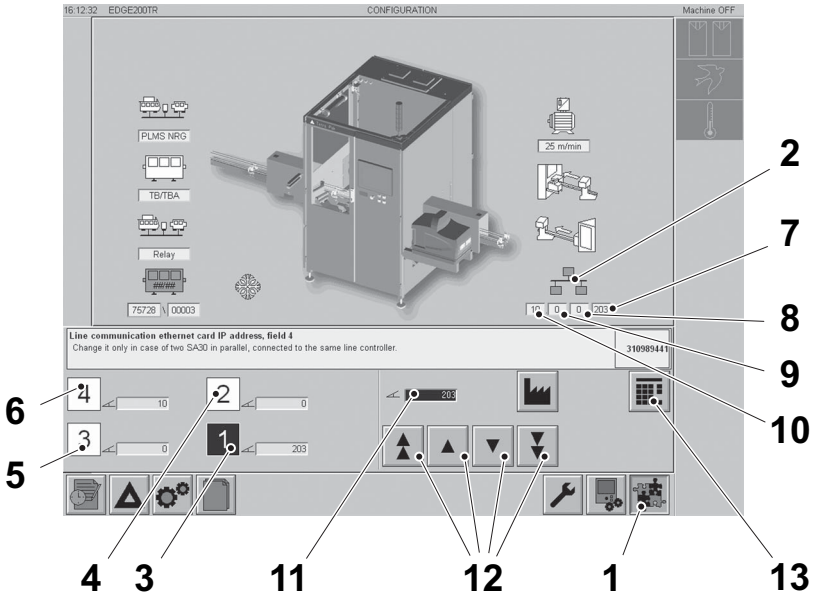

1 CONFIGURATION
2 IP address
3 FIELD 1
4 FIELD 2
5 FIELD 3
6 FIELD 4
7 Address part 1
8 Address part 2
9 Address part 3
10 Address part 4
11 Value
12 ARROW
13 KEYPAD

7.2.4-8 Configuration - Set Second Discharge Unit (Optional Equipment TB/TBA/TPA)

Machine status	Main Switch ON Machine OFF

With Line Controller

Note! SA30 must be configured for Line Controller.

a) In the button bar, press the CONFIGURATION button (1) to display the configuration window.

b) Press the second discharge unit symbol (2).

c) Select enable with the SELECT button (3) or disable with the DESELECT button (4).

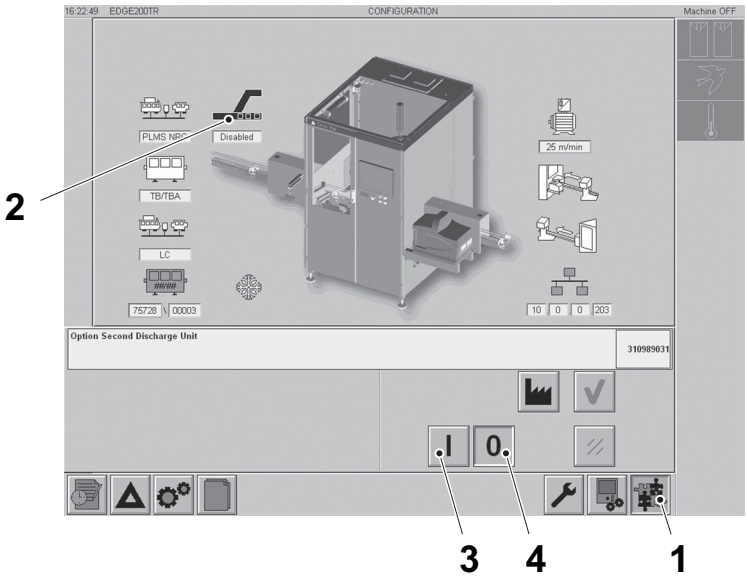

1 CONFIGURATION
2 Second discharge unit
3 SELECT
4 DESELECT

7.2.4-9 Configuration - Select Cooling Unit (Optional Equipment)

Machine status	Main Switch ON Machine OFF

a) In the button bar, press the CONFIGURATION button (1) to display the configuration window.

b) Press the cooling unit symbol (2).

c) Select option cooling unit with the SELECT button (3) or deselect with the DESELECT button (4).

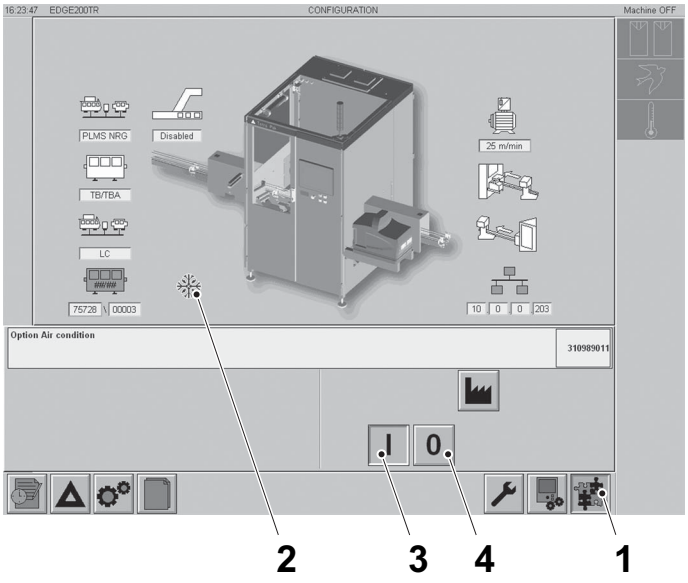

1 CONFIGURATION
2 Cooling unit
3 SELECT
4 DESELECT

This page intentionally left blank

8 Electrical Cabinet

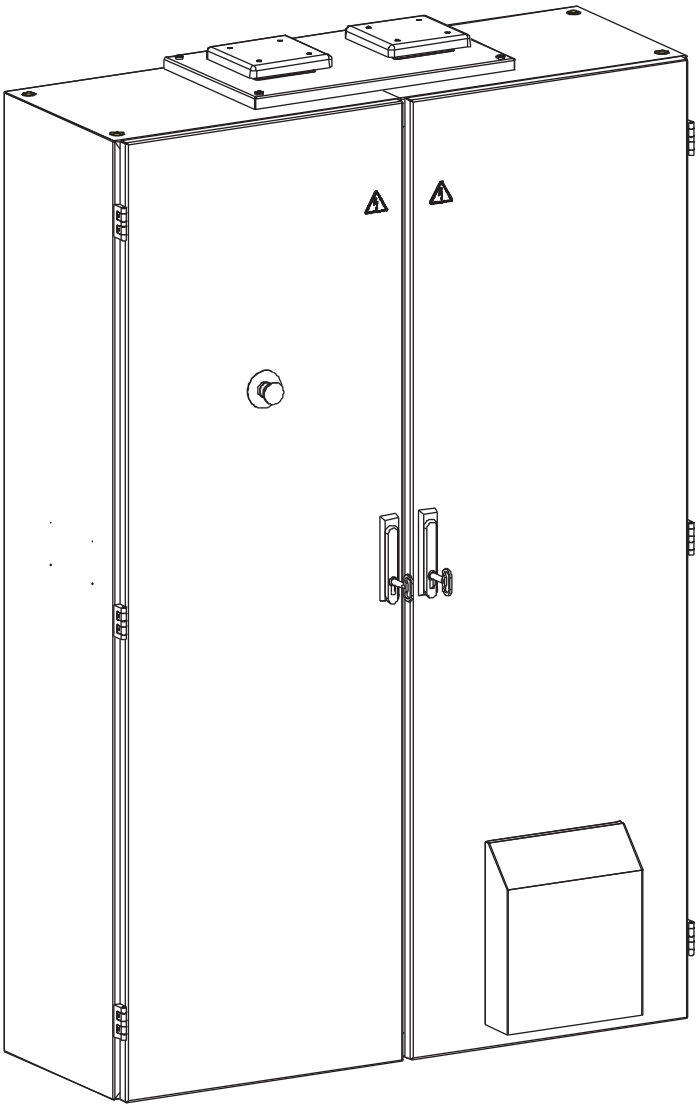

Electrical Cabinet - Description

SPC Reference	663308

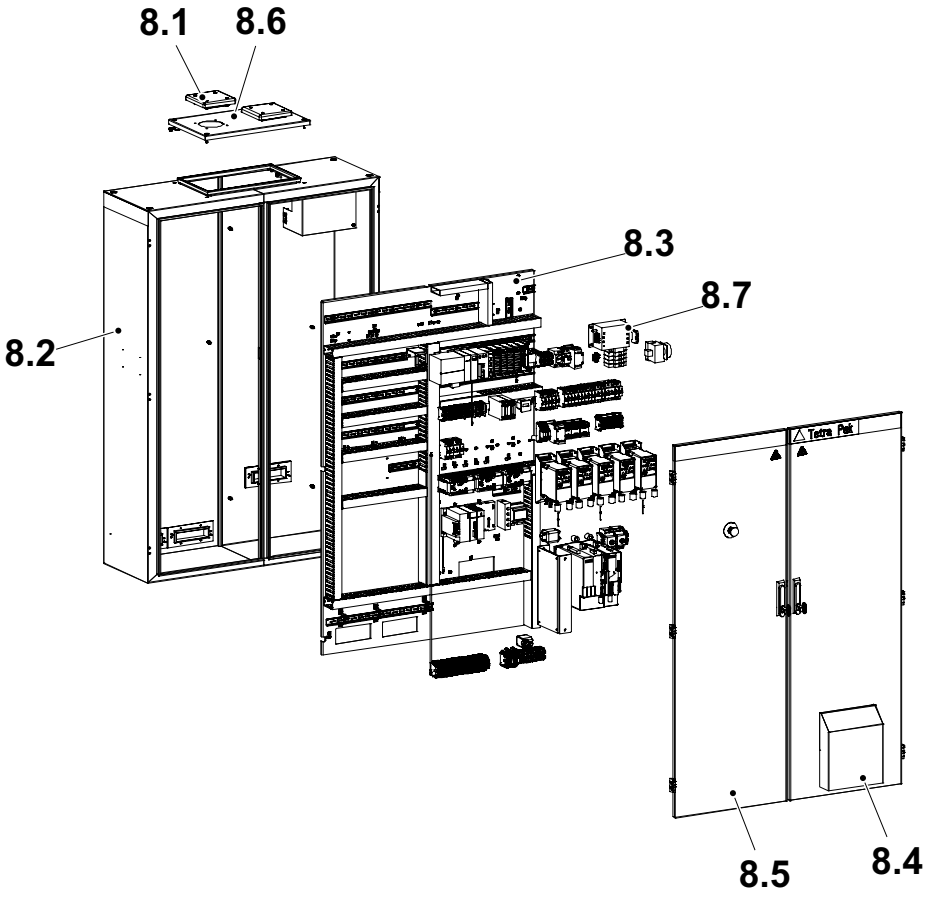

8.1 Cooling air outlet
8.2 Electrical cabinet
8.3 Mounting plate
8.4 El-cabinet door
8.5 El-cabinet door
8.6 Cover
8.7 Electric materials

8.1 Cooling Air Outlet . . . . . 8 - 5

8.1-1 Cooling Air Outlet - No Procedure Described . . . 8 - 5

8.2 Electrical Cabinet . . . . . 8 - 6

8.2-1 Electrical Cabinet - No Procedure Described . . . 8 - 6

8.3 Mounting Plate . . . . . 8 - 7

8.3-1 Mounting Plate- No Procedure Described . . . . . 8 - 7

8.4 El-Cabinet Door . . . . . 8 - 8

8.4-1 El-Cabinet Door - Check Filter Fan . . . . . 8 - 8

8.5 El-Cabinet Door . . . . . 8 - 9

8.5-1 El-Cabinet Door - No Procedure Described . . . . . 8 - 9

8.6 Cover . . . . . 8 - 10

8.6-1 Cover - No Procedure Described . . . . . 8 - 10

8.7 Electric Materials . . . . . 8 - 11

8.7.1 Electrical Materials . . . . . 8 - 11

8.7.1-1 Electrical Materials - Change Fuse on Surge Protection Device . . . . . 8 - 11

8.7.1-2 Electrical Materials - Check Residual Current Device . . . . . 8 - 13

8.7.1-3 Electrical Materials - Reset Fuse in Miniature Circuit Breaker . . . . . 8 - 14

8.7.1-4 Electrical Materials - Description of Variable Frequency Drive . . . . . 8 - 15

8.7.1-5 Electrical Materials - Set Variable Frequency Drive . . . . . 8 - 16

8.7.1-6 Electrical Materials - Variable Frequency Drive Fault Codes . . . . . 8 - 18

8.7.1-7 Electrical Materials - Set Overload Protection (TB/TBA/TPA) . . . . . 8 - 21

8.7.1-8 Electrical Materials - Set Sercos Communication on Servo Amplifier . . . . . 8 - 22

8.7.1-9 Set Node Address on Servo Amplifier . . . . . 8 - 23

8.7.1-10 Electrical Materials - Servo Amplifier Error Codes . . . . . 8 - 24

8.7.1-11 Electrical Materials - Change Fuse in PLC Power Supply . . . . . 8 - 33
8.7.1-12 Electrical Materials - Description of PLC SM2 8 - 34
8.7.1-13 Electrical Materials - Set Switches at PLC SM2 8 - 35
8.7.1-14 Electrical Materials - Set DIP Switch on SNP Converter . . . . . 8 - 36
8.7.1-15 Electrical Materials - Electrical Connection of SNP Converter . . . . . 8 - 37
8.7.1-16 Electrical Materials - Description of Safety System . . . . . 8 - 39
8.7.1-17 Electrical Materials - Set Address after Replacing an ID-FIX in Safety System . . . . . 8 - 40
8.7.1-18 Electrical Materials - Change Baud Rate, Error Code E26 in Safety System . . . . . 8 - 43
8.7.1-19 Electrical Materials - Change a Safety PLC in an Existing Application Afterwards in Safety System . . . . . 8 - 44
8.7.1-20 Electrical Materials - Download Program from a PC to a Safety PLC . . . . . 8 - 46
8.7.1-21 Electrical Materials - Safety System Error Codes . . . . . 8 - 49
8.7.1-22 Electrical Materials - Download PLC Program . 8 - 50
8.7.1-23 Electrical Materials - Load Firmware in PLC and Servo . . . . . 8 - 60
8.7.1-24 Electrical Materials - Check Photocell . . . . . 8 - 65
8.7.1-25 Electrical Materials - Set Photocell Sensitivity . 8 - 66
8.7.1-26 Electrical Materials - Set IP Address . . . . . 8 - 67
8.7.1-27 Electrical Materials - GE Fanuc Download Program (Line Communication Genius) . . . . . 8 - 70
8.7.1-28 Electrical Materials - GE Fanuc Download DeviceNet File (Line Communication Genius) . 8 - 78

8.8 Safety Control . . . . . 8 - 79

8.8-1 Safeguard - Proof Test . . . . . 8 - 79
8.8-2 Emergency Stop - Proof Test . . . . . 8 - 81
8.8-3 Safe-Off Servo - Proof Test . . . . . 8 - 84

8.1 Cooling Air Outlet

8.1-1 Cooling Air Outlet - No Procedure Described

SPC Reference	599749

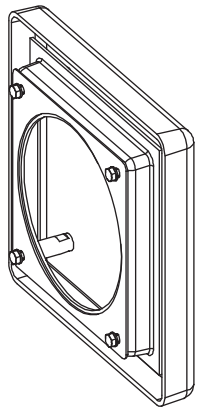

8.2 Electrical Cabinet

8.2-1 Electrical Cabinet - No Procedure Described

SPC Reference	2844515

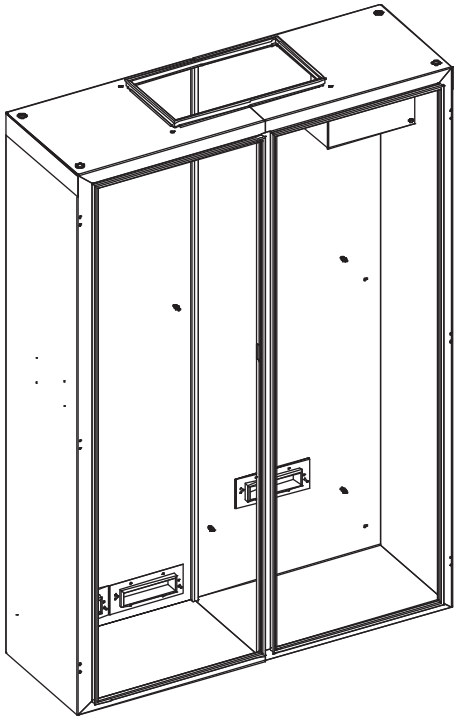

8.3 Mounting Plate

8.3-1 Mounting Plate- No Procedure Described

SPC Reference	2844517

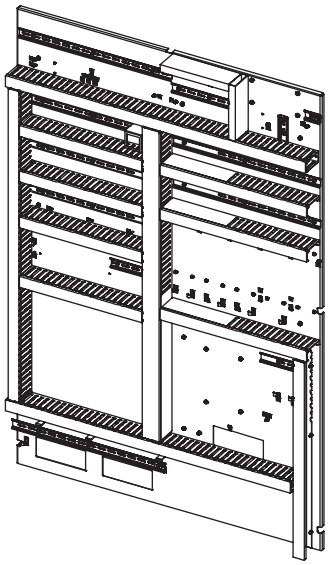

8.4 El-Cabinet Door

8.4-1 El-Cabinet Door - Check Filter Fan

Machine Status	Production
SPC Reference	2844518

Check while the filter fan (1) is running, that it is running without any noise from worn parts. Change if necessary.

Note! The door has no filter fan if the machine is equipped with a cooling unit.

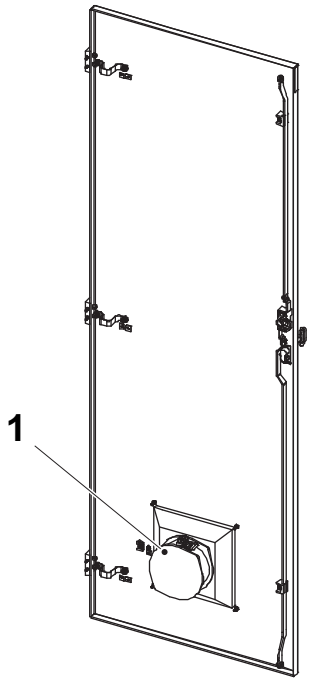

1 Filter fan

8.5 El-Cabinet Door

8.5-1 El-Cabinet Door - No Procedure Described

SPC Reference	2844519

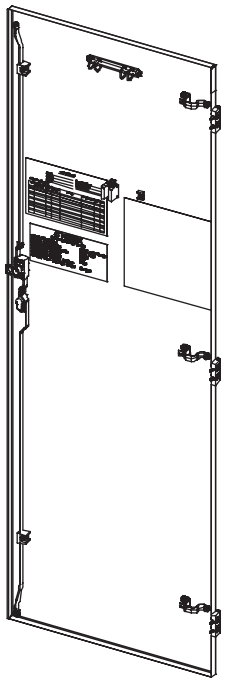

8.6 Cover

8.6-1 Cover - No Procedure Described

SPC Reference	2858602

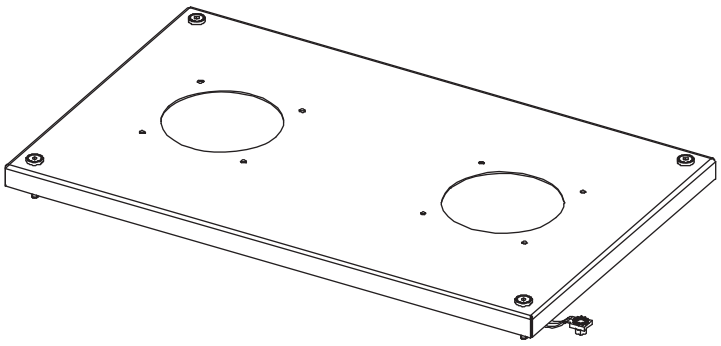

8.7 Electric Materials

SPC Reference	2913341

8.7.1 Electrical Materials

8.7.1-1 Electrical Materials - Change Fuse on Surge Protection Device

Machine Status	Main Switch OFF Air valve ON
SPC Reference	90600-7487

When one or more of the phases are subject to an overvoltage, the corresponding fuse on the surge protection device (1) will trip to protect the electronics, without breaking the power supply. This is indicated by the surge protection tripped alarm (2) on the TPOP.

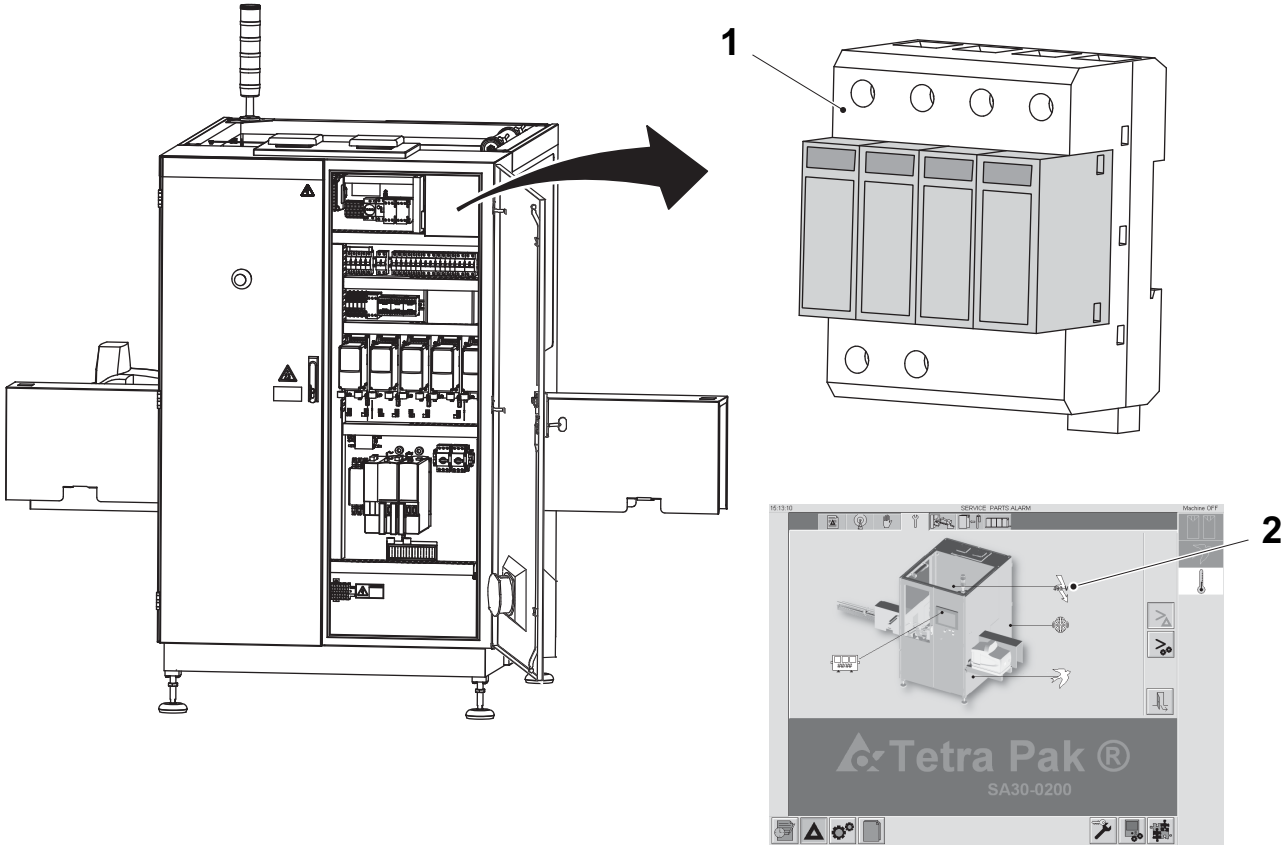

1 Surge protection device, A01F0001
2 Surge protection tripped alarm

(Cont'd)

(Cont'd)

When a fuse has tripped, the colour in its indication window (3) will change from green to red. The fuse must be replaced for the protection to work.

a) Remove the protective cover (4). Check the colour in the indication window (3).

b) Change all tripped fuses (5).

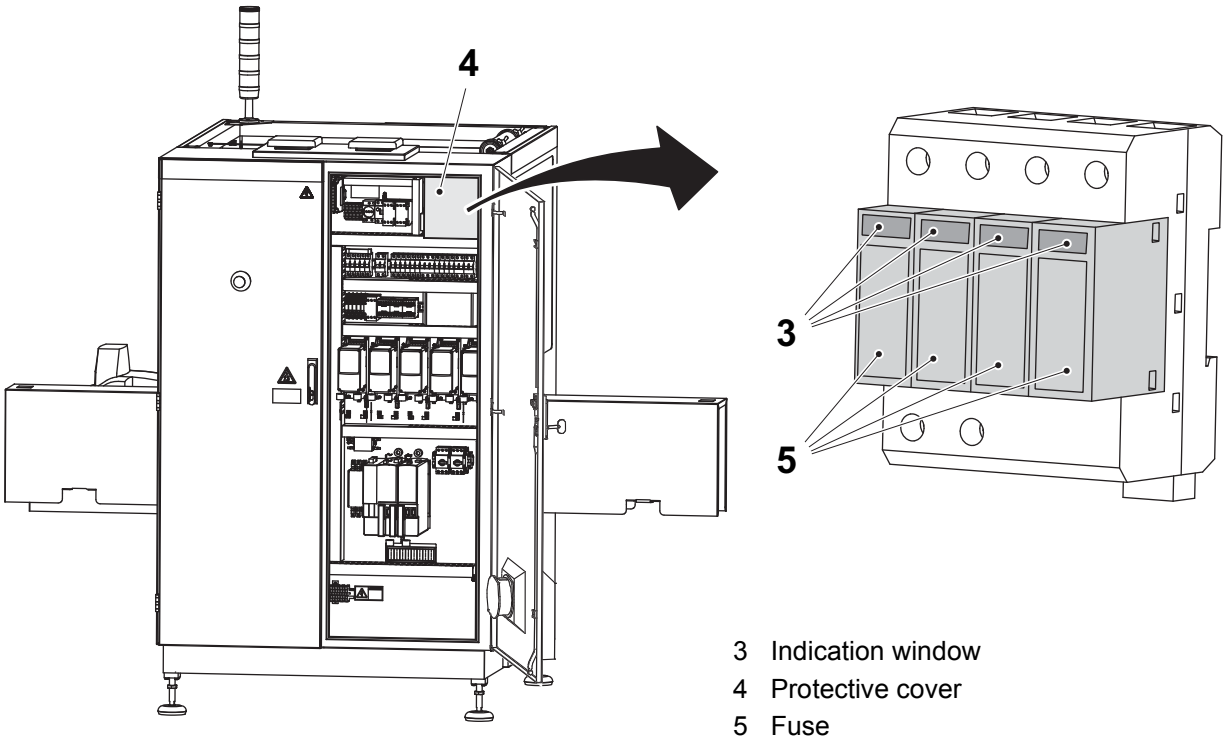

3 Indication window
4 Protective cover
5 Fuse

8.7.1-2 Electrical Materials - Check Residual Current Device

Machine Status	Main Switch OFF Air Valve ON
SPC Reference	90459-5811,

DANGER

Hazardous voltage.
Electrical shock will cause death or serious injury. Change the residual current device (1) if it does not trip immediately.

Note! Test the function of the residual current device (1) by using the test button (2) monthly. The residual current device must always be tested before using the socket outlet (3).

a) Make sure that the switch (4) is in position ON (5).

b) Press the test button (2).

c) The residual current device must trip immediately; the switch will jump to position OFF (6).

d) Turn back the switch to position ON (5).

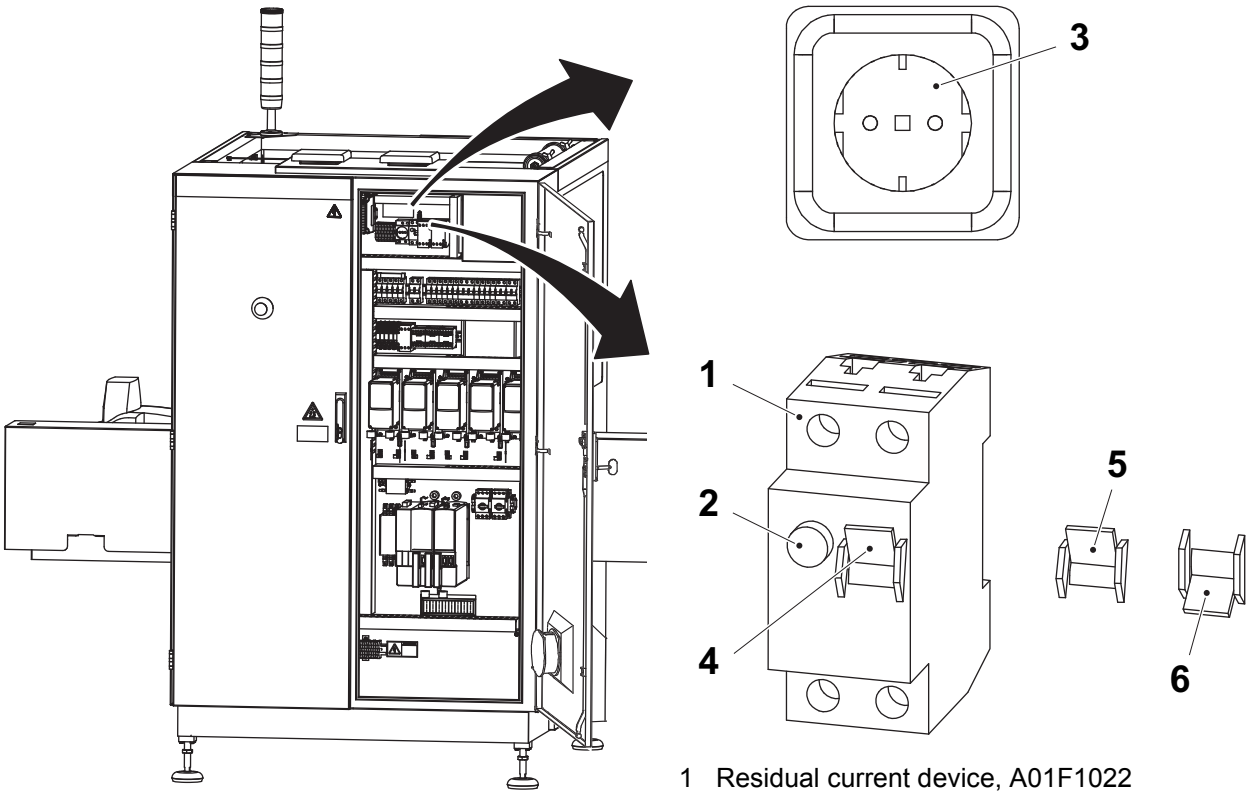

1 Residual current device, A01F1022
2 Test button
3 Socket outlet, A01X1020
4 Switch
5 Switch, position ON
6 Switch, position OFF

8.7.1-3 Electrical Materials - Reset Fuse in Miniature Circuit Breaker

Machine Status	Main Switch OFF Air valve ON
SPC Reference	351416, 354000, 354001, 354002

a) The fuse is tripped when the switch (1) is pointing downwards.

b) Turn back the switch to position ON (2).

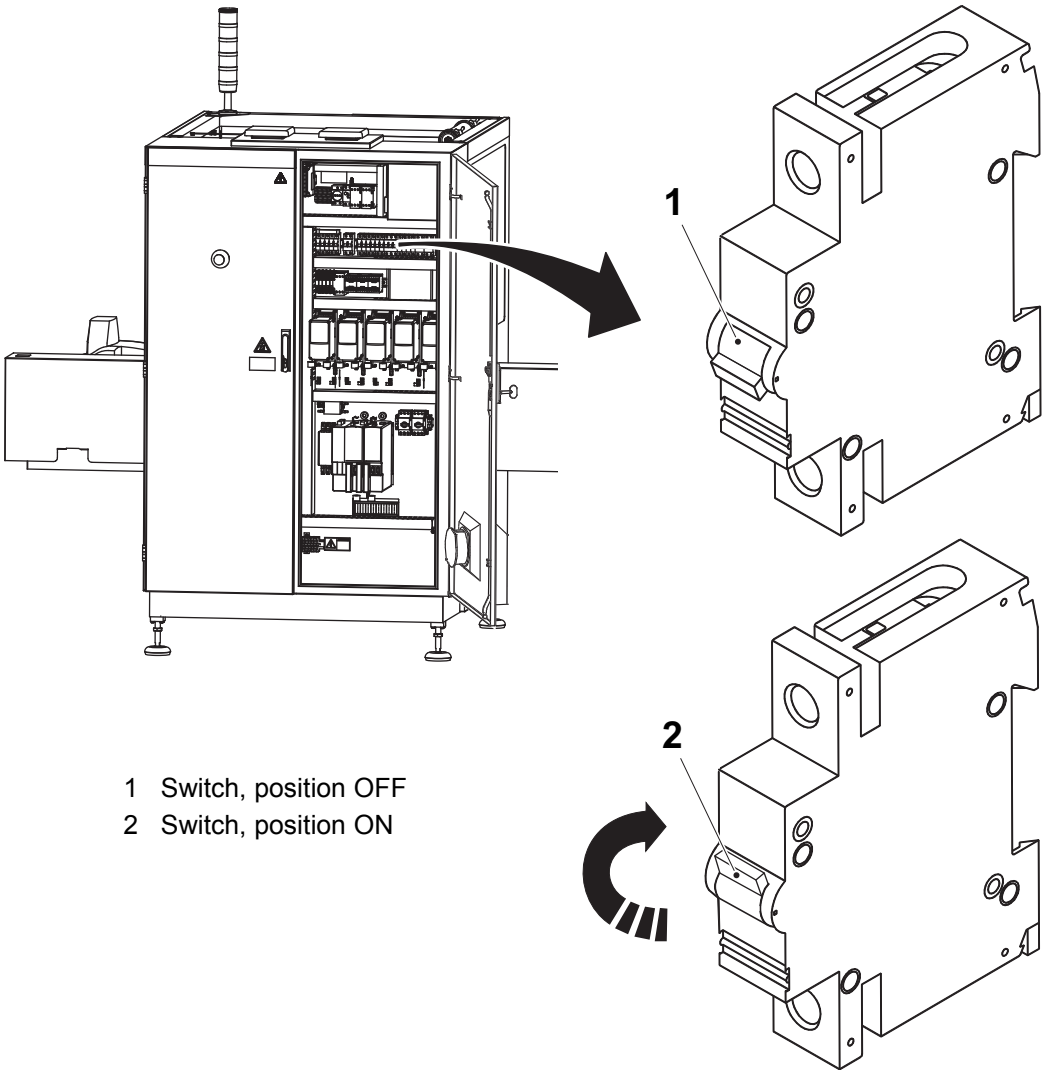

1 Switch, position OFF
2 Switch, position ON

8.7.1-4 Electrical Materials - Description of Variable Frequency Drive

SPC Reference	90459-3449, 90459-3450

Controls

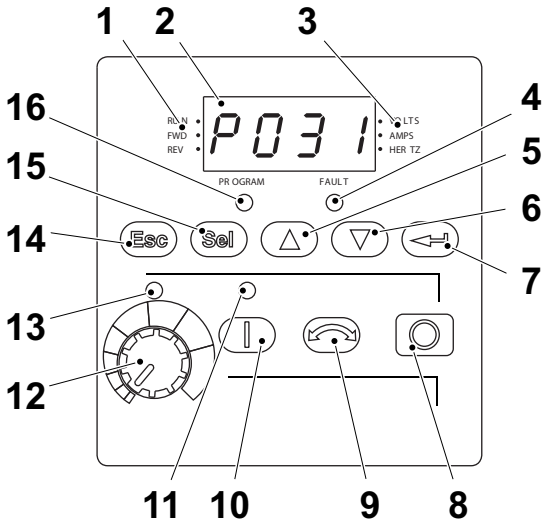

1 Running / Direction status LEDs
2 Display
3 Unit LEDs
4 Error status LED
5 Up / Increase frequency button
6 Down / Decrease frequency button
7 Enter button
8 Stop / Reset button
9 Reverse button
10 Start button
11 Start button status LED
12 Potentiometer
13 Potentiometer status LED
14 Escape button
15 Select button
16 Program status LED

8.7.1-5 Electrical Materials - Set Variable Frequency Drive

Machine Status	PREHEATING
SPC Reference	90459-3449, 90459-3450

If the variable frequency drives is replaced, make sure to set the Parameter Values in the Advanced Program Group (A), according to the table Variable Frequency Drive Settings.

When the machine is stepped up the PLC automatically sets all other parameters to the variable frequency drives.

Set

a) Make sure the Sink/Source DIP switch (1) is set to SRC.

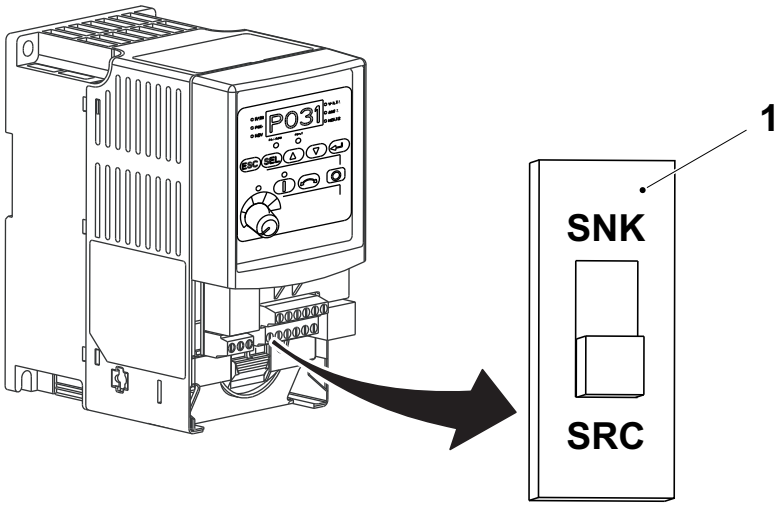

1 Sink/Source DIP switch

(Cont'd)

(Cont'd)

b) Press the ESC button (6) twice.The display (2) shows a letter and three digits, with the letter flashing. There are three parameter groups: **D** (display group), **P** (basic program group), and **A** (advanced program group).

c) Press the UP button (3) or the DOWN button (4) until the parameter group A is displayed. Press the ENTER button (5) to select that group.

d) Press the UP button or the DOWN button to select a parameter to set.

e) Press the ENTER button to view the current value of the selected parameter.

f) Press the UP button or the DOWN button to change the value of the parameter.

g) Press ENTER button to confirm and set the new value, or press the ESCAPE button (6) to leave the value unchanged and return to item d).

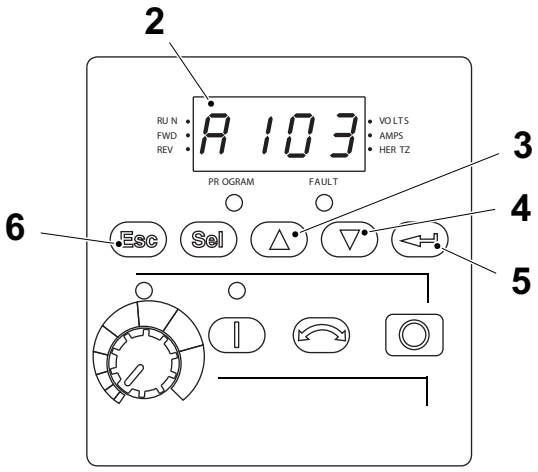

2 Display
3 UP / Increase frequency button
4 DOWN / Decrease frequency button
5 ENTER button
6 ESCAPE button

Variable Frequency Drive Settings

Variable Frequency Drive	Parameter		
	A103 (Baud Rate)	**A104 (Node Address)**	**P036 (Start Source)**
W10T1010	4	10	5
W90T1010 (only TB, TBA, TCA, TPA)	4	30	5
W40T1010	4	20	5
W40T1020 (only TB, TBA, TPA, TWA)	4	21	5
W40T1030 (only TB, TBA, TPA)	4	22	5

8.7.1-6 Electrical Materials - Variable Frequency Drive Fault Codes

SPC Reference	2844513

In the event of a fault, the converter switches off and a fault code appears on the display.

Fault Code	Cause	Description	Action
F2	Auxiliary input	Auxiliary input interlock is open.	Check remote wiring. Verify communications programming for intentional fault.
F3	Power Loss	DC bus voltage remained below 85% of nominal.	Check the incoming AC line for low voltage or line power interruption. Check input fuses.
F4	UnderVoltage	DC bus voltage fell below the minimum value.	Check the incoming AC line for low voltage or line power interruption.
F5	OverVoltage	DC bus voltage exceeded maximum value.	Check the AC line for high line voltage or transient conditions. Bus overvoltage can also be caused by motor regeneration. Extend the decel time or install dynamic brake option.
F6	Motor Stalled	Drive is unable to accelerate motor.	Increase P039 - A067 (Accel Time x) or reduce load so drive output current does not exceed the current set by parameter A089 (Current Limit 1).
F7	Motor Overload	Internal electronic overload trip.	An excessive motor load exists. Reduce load so drive output current does not exceed the current set by parameter P033 (Motor OL Current). Verify A084 (Boost Select) setting.
F8	Heatsink OvrTmp	Heatsink temperature exceeds a predefined value.	Check for blocked or dirty heat sink fins. Verify that ambient temperature has not exceeded 40° C (104° F) for IP 30/NEMA 1/UL Type 1 installations or 50° C (122°F) for IP20/Open type installations. Check the fan.
F12	HW OverCurrent	The drive output current has exceeded the hardware current limit.	Check programming. Check for excess load, improper A084 (Boost Select) setting, DC brake volts set too high or other causes of excess current.

Fault Code	Cause	Description	Action
F13	Ground Fault	A current path to earth ground has been detected at one or more of the drive output terminals.	Check the motor and external wiring to the drive output terminals for a grounded condition.
F29	Analog Input Loss	An analog input is configured to fault on signal loss. A signal loss has occurred. Configure with A122 (Analog In Loss).	Check parameters. Check for broken/loose connections at inputs.
F33	Auto Rstrt Tries	Drive unsuccessfully attempted to reset a fault and resume running for the programmed number of A092 (Auto Rstrt Tries).	Correct the cause of the fault and reset manually.
F38	Phase U to ground	A phase to ground fault has been detected between the drive and motor in this phase.	Check the wiring between the drive and motor. Check motor for grounded phase. Replace drive if fault can not be corrected.
F39	Phase V to ground		
F40	Phase W to ground		
F41	Phase UV Short	Excessive current has been detected between these two output terminals.	Check the motor and drive output terminal wiring for a shorted condition. Replace drive if fault can not be corrected.
F42	Phase UW Short		
F43	Phase VW Short		
F48	Params Defaulted	The drive was commanded to write default values to EEPROM.	Clear the fault or cycle power to the drive. Program the drive parameters as needed.
F63	SW OverCurrent	Programmed A098 (SW Current Trip) has been exceeded.	Check load requirements and A098 (SW Current Trip) setting.
F64	Drive Overload	Drive rating of 150% for 1 minute or 200% for 3 seconds has been exceeded.	Reduce load or extend Accel Time.

Fault Code	Cause	Description	Action
F70	Power Unit	Failure has been detected in the drive power section.	Cycle power. Replace drive if fault cannot be cleared.
F71	Net Loss	The communication network has faulted.	Cycle power. Check communications cabling. Check network adapter setting. Check external network status.
F80	SVC Autotune	The autotune function was either cancelled by the user or failed.	Restart procedure.
F81	Comm Loss	RS485 (DSI) port stopped communicating.	If adapter was not intentionally disconnected, check wiring to the port. Replace wiring, port expander, adapters or complete drive as required. Check connection. An adapter was intentionally disconnected. Turn off using A105 (Comm Loss Action).
F100	Parameter Checksum	The checksum read from the board does not match the checksum calculated.	Set P041 (Reset To Defaults) to option 1 “Reset Defaults”.
F122	I/O Board Fail	Failure has been detected in the drive control and I/O section.	Cycle power. Replace drive if fault cannot be cleared.

8.7.1-7 Electrical Materials - Set Overload Protection (TB/TBA/TPA)

Machine Status	Main Switch OFF Air Valve ON
SPC Reference	90459-5323

Set the overload protections (1) and (2) according to the fuse panel label (3) inside the electrical cabinet door.

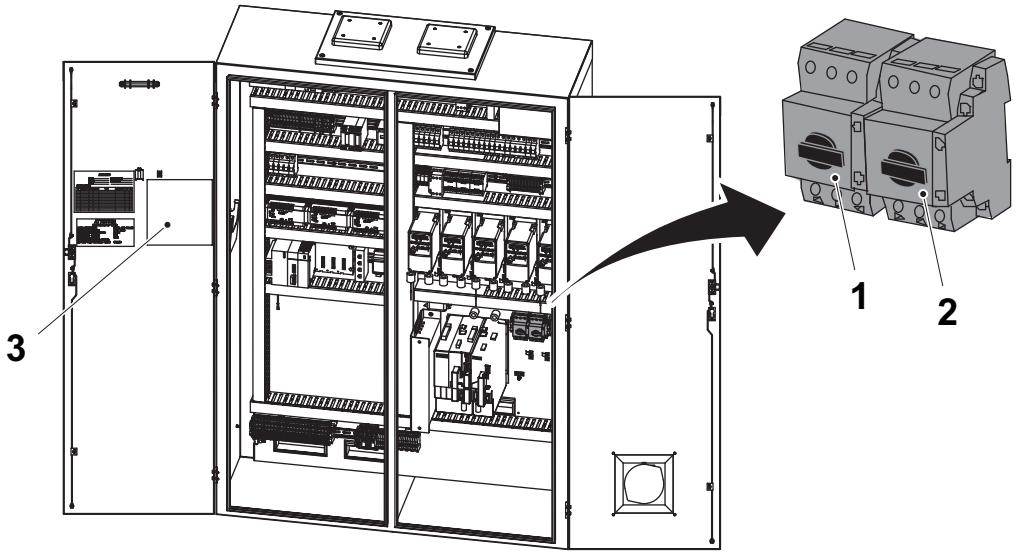

1 Overload Protection W40F1032
2 Overload Protection W40F1034
3 Fuse panel label

8.7.1-8 Electrical Materials - Set Sercos Communication on Servo Amplifier

Machine Status	Main Switch OFF Air Valve ON
SPC Reference	2844513

Set the DIP switches for sercos baud rate according to the illustration below.

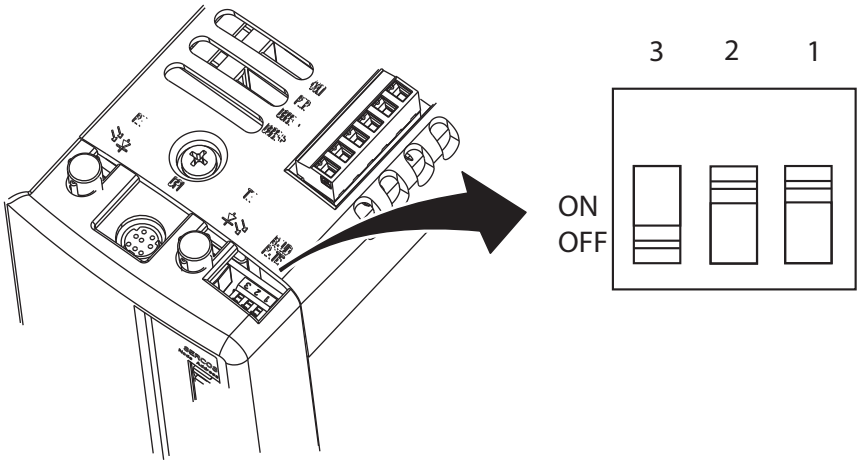

8.7.1-9 Set Node Address on Servo Amplifier

Machine Status	Main Switch OFF Air Valve ON
SPC Reference	2844513

Set the node address to 01 by pressing the plus switches (1) and/or the minus switches (2).

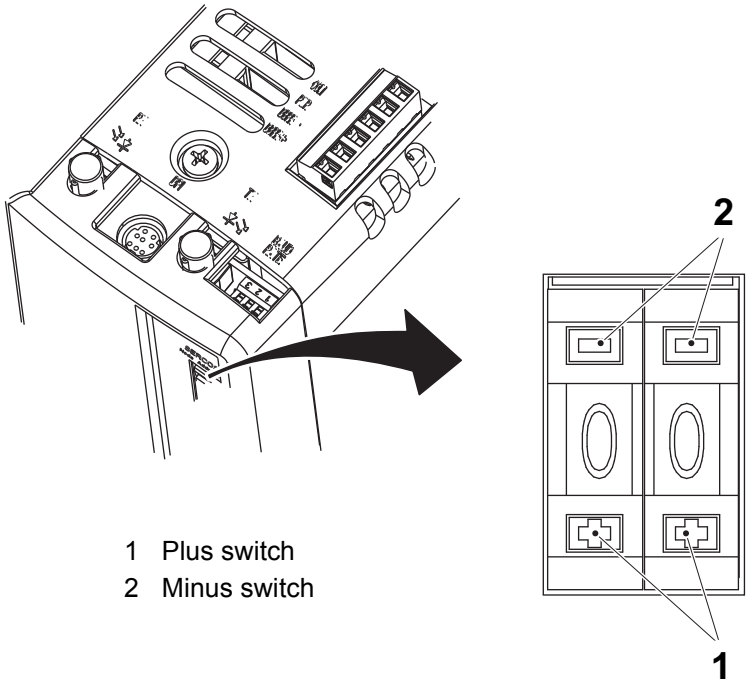

1 Plus switch
2 Minus switch

8.7.1-10 Electrical Materials - Servo Amplifier Error Codes

Machine Status	Main Switch ON Air Valve ON
SPC Reference	2844513

If the Logic Power LED is ON and the Status LED is flashing “E” followed by a two-digit error code, one digit at a time, the servo amplifier has an error. See the table below to resolve problems when an assigned error code or a problematic symptom (no error code) is encountered.

Error Codes Status LED

Error code	Fault Message **RSLogix** (HIM)	Problem or symptom	Possible cause(s)	Action/Solution
		Power (PWR) indicator not ON	No AC power or auxiliary logic power.	Verify power AC power is applied to the Kinetix 6000 system.
			Internal power supply malfunction.	Call your Rockwell Automation sales representative to return module for repair.
		Motor jumps when first enabled	Motor wiring error.	- Check motor wiring. - Run Hookup test in RSLogix 5000 software.
			Incorrect motor chosen.	Verify the proper motor is selected.
		Digital I/O not working correctly	I/O power supply disconnected.	Verify connections and I/O power source.
00	**BusUndervoltage Fault** (Blown fuse)	A blown fuse was detected on the inverter PCB	Blown fuse.	Call your Rockell Automation sales representative to return module for repair.
04	**MotorOvertemp Fault** (Motor Overtemp)	Motor thermal switch tripped	- High motor ambient temperature and/or - Excessive current	- Operate within (not above) the continuous torque rating for the ambient temperature (40°C maximum). - Lower ambient temperature, increase motor cooling.
			Motor wiring error.	Check motor wiring at MF connector on the IAM/AM.
			Incorrect motor selection.	Verify the proper motor has been selected.

Error code	Fault Message RSLogix (HIM)	Problem or symptom	Possible cause(s)	Action/Solution
05	**DriveOvercurrent Fault** (Power Fault)	Self-protection of the Intelligent Power Module (IPM) is indicating a major power related fault condition	Motor cables shorted.	Verify continuity of motor power cable and connector.
			Motor winding shorted internally.	Disconnect motor power cables from the motor. If the motor is difficult to turn by hand, it may need to be replaced.
			Kinetix 6000 temperature too high.	- Check for clogged vents or defective fan. - Ensure cooling is not restricted by insufficient space around the unit.
			Operation above continuous power rating and/or product environment ratings.	- Verify ambient temperature is not too high. - Operate within the continuous power rating. - Reduce acceleration rates.
			Kinetix 6000 has a short circuit, overcurrent, or failed component.	Remove all power and motor connections, and perform a continuity check from the DC bus to the U, V, and W motor outputs. If a continuity exists, check for wire fibers between terminals, or send drive in for repair.
06	**HardOvertravel Fault** (+/- Hard Overtravel)	Axis moved beyond the physical limits in the positive/ negative direction	Dedicated overtravel input is inactive.	- Check wiring. - Verify motion profile. - Verify axis configuration in software.
07	**MotorFeedback Fault** (Motor Feedback Loss)	The feedback wiring is open, shorted or missing.		- Check motor encoder wiring. - Run Hookup test in PSLogix 5000 software.

Error code	Fault Message RSLogix (HIM)	Problem or symptom	Possible cause(s)	Action/Solution
09	**BusUndervoltage Fault** (Bus Undervoltage)	With three-phase power present, the DC bus voltage is below limits	- DC bus voltage for 460 V system is below 275 V - DC bus voltage for 230 V system is below 137 V	- Verify voltage level of the incoming AC power. - Check AC power source for glitches or line drop. - Install an uninterruptible power supply (UPS) on your AC input.
		DC bus voltage fell below the undervoltage limit while an axis on the follower power rail was enabled		Disable follower axis before removing power.
10	**Drive Overvoltage Fault** (Bus Overvoltage)	The DC bus voltage is above limits	Excessive regeneration of power. When the motor is driven by an external mechanical power source, it may regenerate too much peak energy through the drive power supply. The system faults to save itself from an overload.	- Change the deceleration or motion profile. - Use a larger system (motor and Kinetix 6000 drive). - Install shunt module.
			- DC bus voltage for 460 V system is over 820 V - DC bus voltage for 230 V system is over 410 V	Verify input is within specifications.
11	**MotFeedback Fault** (Illegal Hall State)	State of Hall feedback is incorrect	Bad connections.	- Verify the Hall wiring. - Verify 5 V power supply to the encoder.
16	**SoftOvertravel Fault** (+/- Software Overtravel)	Axis position exceeded maximum software setting		- Verify motion profile. - Verify overtravel settings are appropriate.

Error code	Fault Message **RSLogix** (HIM)	Problem or symptom	Possible cause(s)	Action/Solution
18	**OverSpeedFault** (Overspeed Fault)	Motor speed has exceeded 150% of maximum rated speed.The 100% trip point is dictated by the lesser of the user velocity limits or the motor rated base speed		- Check cables for noise. - Check tuning.
19	**PositionError Fault** (Follow Error)	Position error limit was exceeded		- Increase the feed forward gain. - Increase following error limit or time. - Check position loop tuning. - Verify sizing of system. - Verify mechanical integrity of system within specification limits.
20	**MotFeedback Fault** (Mtr Fdbk AQB)	Motor Encoder State Error	The motor encoder encountered an illegal transition.	- Use shielded cables with twisted pair wires. - Route the feedback away from potential noise sources. - Check the system grounds. - Replace the motor/encoder.
21	**AuxFeedback Fault** (Aux Feedback Comm)	Communication was not established with an intelligent encoder		Verify auxiliary encoder wiring.
30	**MotFeedback Fault** (Motor Feedback Comm)	Communication was not established with an intelligent encoder		- Verify motor selection. - Verify the motor supports automatic identification. - Verify motor encoder wiring.

Error code	Fault Message **RSLogix** (HIM)	Problem or symptom	Possible cause(s)	Action/Solution
34	**GroundShortFault** (Ground Fault)	Excessive ground current in the converter was detected	Wiring error.	- Check motor power wiring. - Check input power wiring.
			Motor internal ground short.	Replace motor.
			Internal malfunction.	Disconnect motor power cable from drive and enable drive with current limit set to 0. If fault remains, call sales representative. If fault clears, then a wiring error or motor internal problem exists.
			Ground control power terminal (applies to 230 V systems only).	- Remove ground from control power input. - Source control power from three-phase input power. - Add isolation transformer for control power.
35	**DriveUnder-voltage Fault** (Pre-charge Fault)	Converter pre-charge cycle failed	Low AC input voltage.	Check input AC voltage on all phases.
			Internal malfunctioin.	Call your sales representative.
36	**DriveOvertemp Fault** (System Overtemperature)	Converter thermal switch tripped	Excessive heat exists in the power circuitry.	- Reduce acceleration rates. - Reduce duty cycle (ON/OFF) of commanded motion. - Increase time permitted for motion. - Use larger Kinetix 6000 converter. - Check for clogged vents or defective fan. - Make sure cooling is not restricted by insufficient space around the unit.
37	**PowerPhaseLoss Fault** (Phase Loss Fit)	- One or more phases of the input AC power is missing. - Axis was enabled when main (three-phase) power was removed. - Common bus follower axis was enabled when DC bus power was removed.		- Check input AC voltage on all phases. - Disable axis before removing power.
38	**SERCOSFault** (SERCOS Ring Flt)	The SERCOS ring is not active after being active and operational	Cable disconnected.	Check that fiber-optic cable is present and connected properly.

Error code	Fault Message **RSLogix** (HIM)	Problem or symptom	Possible cause(s)	Action/Solution
39	**DriveHardFault** (Self Sense Flt)	Self-sensing Commutation Startup Error	Motion required for self-sensing startup commutation was obstructed.	- Verify that there are no impediments to motion at startup, such as hard limits. - Increase self-sensing current if high friction or load conditions exist. - Check motor or encoder wiring using wiring diagnostics.
43	**DriveEnableInput Fault** (Drive Enable Flt)	Missing Drive Enable Input Signal	- An attempt was made to enable the axis through software while the Drive Enable hardware input was inactive. - The Drive Enable input transitioned from active to inactive while the axis was enabled.	- Disable the Drive Enable Input fault. - Verify that Drive Enable hardware input is active whenever the drive is enabled through software.
49	**DriveHardFault** (Safe-off HW Flt)	Safe-off function mismatch. Drive will not allow motion.	- Loose wiring at SO connector. - Cable/header not seated properly in SO connector. - Safe-off circuit missing +24V DC.	- Verify wire terminations, cable/header connections, and +24V. - Reset error and run proof test. - If error persists, return the drive to Rockwell Automation.
50	**SERCOSFault** (SERCOS Same ADDR)	Duplicate node address detected on SERCOS ring		Verify that each SERCOS drive is assigned a unique node address.
54	**DriveHardFault** (Ifbk HW Fault)	Current feedback hardware fault detected		Replace the module.
60	**DriveHardFault** (Unknown Axis)	Illegal ID bits detected		Replace the module.
61	**AuxFeedback Fault** (Aux Fdbk AQB)	Auxiliary Encoder State Error	The auxiliary encoder encountered an illegal transition.	- Use shielded cables with twisted pair wires. - Route the feedback away from potential noise sources. - Check the system grounds. - Replace the motor/encoder.

Error code	Fault Message **RSLogix** (HIM)	Problem or symptom	Possible cause(s)	Action/Solution
62	**AuxFeedback Fault** (Aux Fdbk Loss)	The feedback wiring is open, shorted, or missing		Check the motor feedback cable connectors/wiring to the IAM/AM and motor.
63	**AuxFeedback Noise** (Aux Fdbk Noise)	Noise on auxiliary feedback cable	Recommended grounding, per installation instructions, has not been followed.	- Verify grounding. - Route feedback cable away from noise sources. - Refer to System Design for Control of Electrical Noise Reference Manual, publication GMC-RM001.
64	**MotorFeedback Noise** (Mtr Fdbk Noise)	Noise on motor feedback cable		
65	**No Fault Message (condition indicated by on-screen message)** (Hookup Fault)	Hookup procedure failed	Motor or feedback device malfunction.	- Check motor power/feedback wiring. - Refer to on-screen message for resolution.
66	**No Fault Message (condition indicated by on-screen message)** (Atune Flt)	Autotune procedure failed	Motor or feedback device malfunction.	- Check motor power/feedback wiring. - Refer to on-screen message for resolution. - Perform Hookup in RSLogix 5000 software. - Consult RSLogix 5000 help screen.
67	**DriveHardFault** (Task init)	Operating system failed	Software initialization fault detected due to hardware failure.	- Cycle power. - If fault persists, replace module.
68	**DriveHardFault** (SCANport Comm)	DPI communication failed	The DPI device or cable is faulty.	Check DPI connections.
69	**DriveHardFault** (Objects Init)	Non-volatile memory is corrupt due to control board hardware failure		Load default parameters, save to non-volatile memory, and recycle power or reset the drive.
70	**DriveHardFault** (NV Mem Init)	Non-volatile memory is corrupt due to control board software error.		Load default parameters, save to non-volatile me ory, and recycle power or reset the drive.

Error code	Fault Message **RSLogix** (HIM)	Problem or symptom	Possible cause(s)	Action/Solution
71	**DriveHardFault** (Memory Init)	RAM or Flash memory validation failure		- Cycle power. - If fault persists, replace module.
72	**DriveOvertemp Fault** (Drive Overtemp)	Inverter thermal switch tripped	The fan on the IAM or an AM failed.	Replace the failed module.
			The cabinet ambient temperature is above rating.	Check the cabinet temperature.
			The machine duty cycle requires an RMS current exceeding the continuous rating of the controller.	Change the command profile to reduce speed or increase time.
			The airflow access to the Kinetix 6000 system is limited or blocked.	Check airflow and re-route cables away from the Kinetix 6000 system.
73	**Communicate** (Backplane Comm)	Power rail CAN communications failed.		Check module for proper mount.
		Power rail connection shorted or open.		Check power rail and module for foreign objects.
74	**DriveOvercurrent Fault** (Bus OverCurrent)	DC link current exceeds rating	Motor or transmission malfunction.	- Check for proper motor sizing. - Check/replace transmission device. - Check/replace motor.
			IAM not properly sized.	- Check for proper IAM sizing. - Install larger kW rated IAM.
75	**DriveOvervoltage Fault** (Shunt Time Out)	The IAM, AM, or SM has exceeded its shunt resistor continuous rating		- Use a properly sized shunt or modify duty cycle of the application. - System uses internal shunt and requires external shunt for additional capacity.
76	**DriveHardFault** (CAN Init)	DPI hardware initialization fault detected	Control board hardware failure.	- Reset System. - If fault persists, replace system module.

Error code	Fault Message **RSLogix** (HIM)	Problem or symptom	Possible cause(s)	Action/Solution
77	**DriveHardFault** (Module Mismatch)	Either 230V AM is installed on power rail with 460V IAM, or 460V AM is installed on power rail with 230V IAM		Replace mismatched module.
78	**DriveHardFault** (SERCOS Init)	Control hardware fault detected		- Cycle power. - If fault persists, replace module.
79	**DriveOvervoltage** Fault (Shunt Module Flt)	Shunt module temperature fault LED indicator is steady red		Refer to Temperature Fault LED Indicator on page 154.
		Shunt module shunt fault LED indicator is steady red		Refer to Shunt Fault LED Indicator on page 154.
		Module missing from power rail		- Install missing module on power rail. - Fill empty slot with slot filler module.
80	**DriveHardFault** (CPLD Flt)	Control hardware fault detected		Replace module.
81	**DriveHardFault** (Common Bus Flt)	Follower IAM detected AC input power being applied		Remove ac input power connections from follower IAM.
90	**DriveHardFault** (Pre-charge Timeout Flt)	Pre-charge resistor power exceeds the resistor rating.		Allow resistor to cool.
All others	RESERVED			Call your local Rockwell Automation sales representative.

8.7.1-11 Electrical Materials - Change Fuse in PLC Power Supply

Machine Status	Main Switch OFF Air Valve ON
Consumable	Fine-Wire fuse 3.15A
SPC Reference	2844513

a) Remove Compact I/O system power and correct the conditions causing the short circuit.

b) Remove fuse housing cover (1). Place a slotted screwdriver under the tab (2) to remove.

c) Remove the front access fuse. Use a fuse puller or similar device to remove the fuse. Use care so that the printed circuit board and surrounding electronics are not damaged.

d) Replace the front access fuse. Centre the replacement fuse over the fuse clip and press down. If a tool is used to press the fuse in place, apply pressure to the metal end caps only, not the centre of the fuse.

e) Assemble the fuse housing cover.

f) Restore Compact I/O system power.

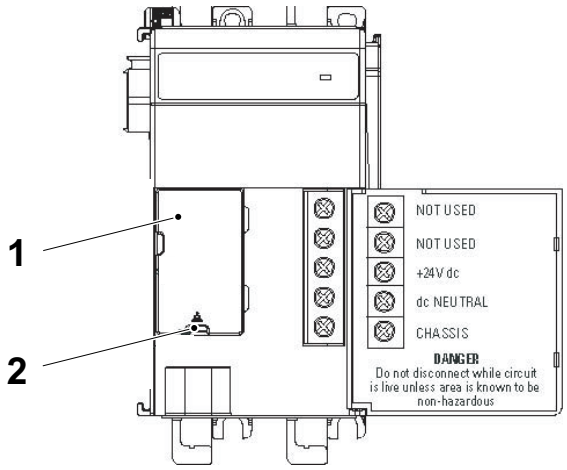

1 Fuse housing cover
2 Tab

8.7.1-12 Electrical Materials - Description of PLC SM2

Machine Status	Main Switch ON Air Valve ON
SPC Reference	2844513

The SM2 module has four status indicators. They can be viewed on the front of the module.

Note! For TCA: CH 2 of the status indicator is flashing red.

Status	Cause	Corrective Action
Off	The module is not powered. The channel is not connected to a DSI-supported drive. The channel is operating in Modbus RTU Master mode, but is not transmitting.	• Apply power to the module. • Apply power to the DSI-supported drive. • Connect the module channel to the drive using a communications cable.
Flashing red	In Single mode, the channel is not receiving communication from the drive. In Multi-Drive mode, the channel is not receiving communication from one or more configured drives.	• Verify that the 22-RJ45CBL-C* communications cable is securely connected and not damaged. Replace cable if necessary. • Verify the setting for the DSI I/O Cfg x parameter. • Verify the settings for the Drv x Addr x parameters. • Verify the settings for the node address and data rZte parameters in the drive. • Cycle power to the drive.
Flashing green	The channel is properly connected and is communicating with the drive, but is not sending I/O to the drive. The channel is operating in Modbus RTU Master mode, and is transmitting.	No action required.
Solid green	The channel is properly connected and is communicating with the drive, and is sending I/O to the drive.	No action required.

Module

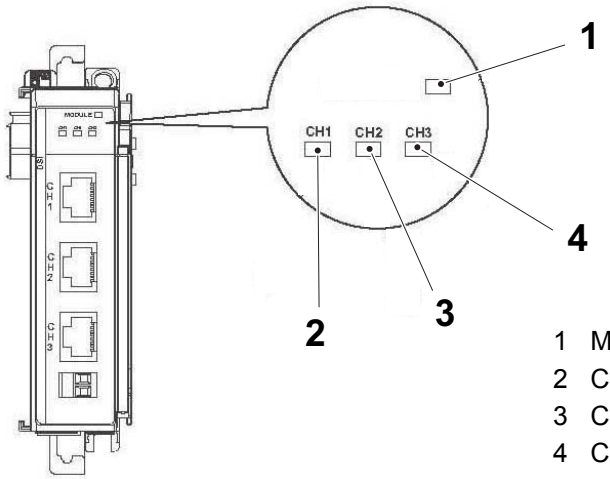

1 Module status
2 Channel 1 status
3 Channel 2 status
4 Channel 3 status

8.7.1-13 Electrical Materials - Set Switches at PLC SM2

Machine Status	Main Switch OFF Air Valve ON
SPC Reference	2844513

CAUTION
Before inserting or removing modules you must be electrostatically discharged.
Note! When handling the card, hold it by the card edges. Do not touch the solder side or component side.

The switches set Configuration Mode and Single/Multi-Drive Operation.

Set the switches at Controller position (CONT) and Multi-Drive operation position (5X), see the illustration below.

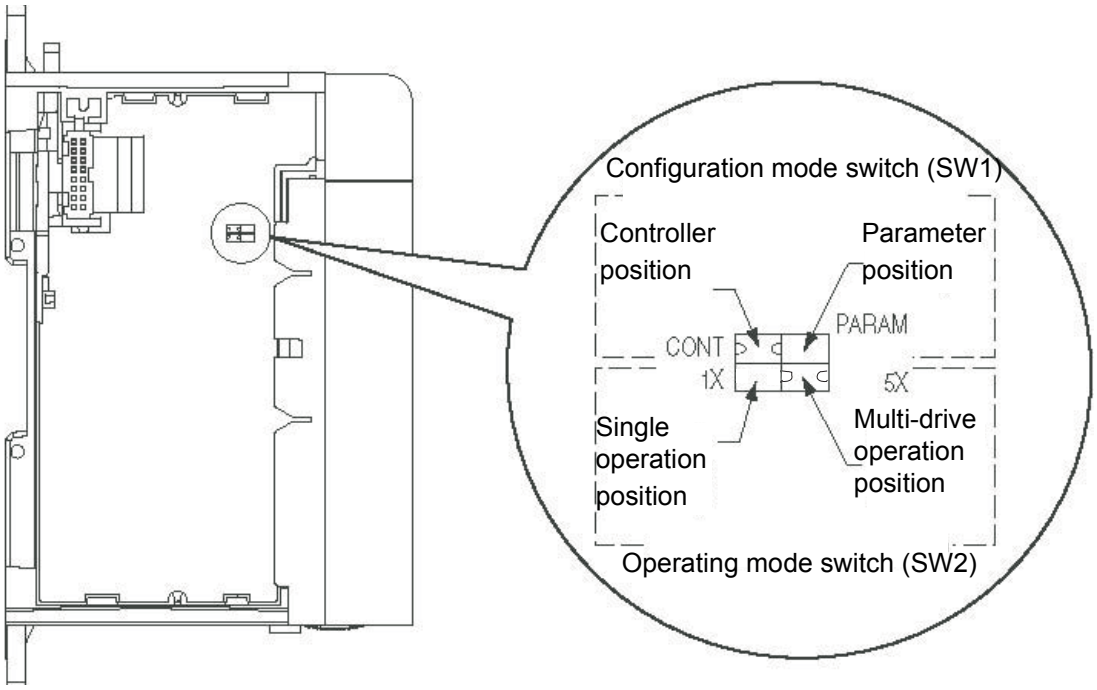

8.7.1-14 Electrical Materials - Set DIP Switch on SNP Converter

Machine Status	Main Switch OFF Air Valve ON
SPC Reference	2844513

Set the 4 bit DIP switches (1), the 8 bit DIP switches (2), and the term switch (3) according to the table below.

4 Bit DIP Switch	**Position**
1	1
2	1
3	0
4	0
8 Bit DIP Switch	**Position**
1	Not used
2	1
3	Not used
4	1
5	Not used
6	Not used
7	Not used
8	1
Term switch	Off

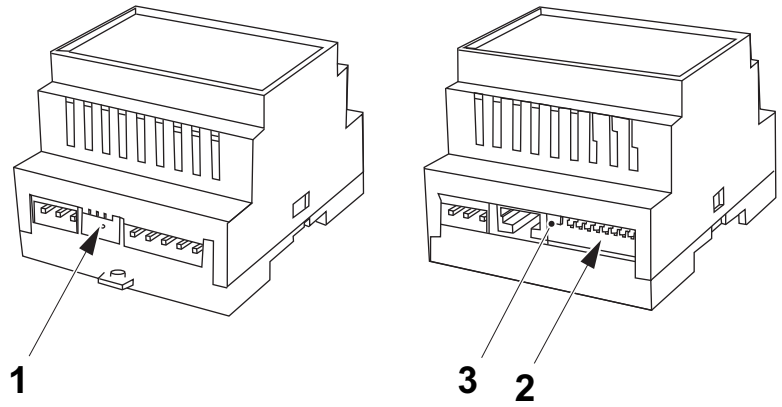

1 4 bit DIP switch
2 8 bit DIP switch
3 Term switch

8.7.1-15 Electrical Materials - Electrical Connection of SNP Converter

Machine Status	Main Switch OFF Air Valve ON
SPC Reference	2844513

Connect the SNP converter according to the table on the following page.

(Cont'd)

Connect the SNP converter according to the table below.

SNP - DF1		GE-Fanuc Series 90 PLC				Flexbox (Filling machine)		
COM2 RS-422		RS-422 Serial port pin				COM4		
Pin number	Signal name	Pin number	Signal name	Description	Note	Pin number	Signal name	Cable, colour
x	x	6	RTS (A)	Request To Send	connect with pin 15			
x	x	8	CTS (B')	Clear To Send	connect with pin 14			
1	Receive, inverting	10	RD (A')	Receive Data		5		Brown
2	Receive, non-inverting	11	RD (B')	Receive Data		4		White
3	Transmit, inverting	12	SD (A)	Send Data		9		Yellow
4	Transmit, non-inverting	13	SD (B)	Send Data		8		Green
x	x	14	RTS (B)	Request To Send	connect with pin 8			
x	x	15	CTS (A')	Clear To Send	connect with pin 6			
5	Shield	1	Shield			connect to chassis	Shield	

8.7.1-16 Electrical Materials - Description of Safety System

Machine Status	Main Switch OFF Air Valve ON
SPC Reference	2844513

All safety devices like doors and emergency stop buttons are connected by two channels, one constant +24V DC and one pulse shaped voltage from the safety PLCs (1). Both channels have to be opened and closed at the same time to allow the system to reset, however it is enough that one channel is open to make the system trip.

The system monitors the contactors that will be turned off when the system trips. If a “feedback” circuit is not OK after the system has tripped it is not possible to reset.

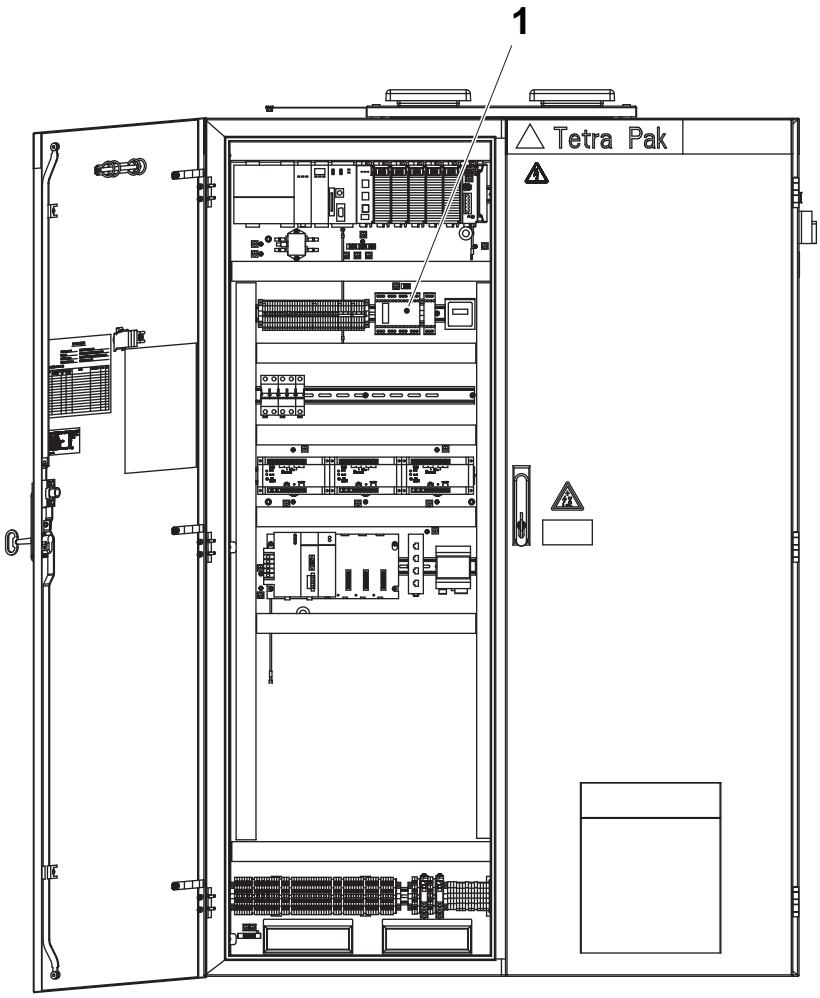

1 Safety PLC

8.7.1-17 Electrical Materials - Set Address after Replacing an ID-FIX in Safety System

Machine status	Main Switch ON Air Valve ON
Special Equipment	PC with software Pluto Manager Pluto Programming Cable TP No. 90459-6033 or USB cable TP No.90602-3870
SPC Reference	2913341

If one of the ID-fix has been replaced the address has to be set. There is a function for programmable identifier circuits IDFIX-RW.

Note! All settings in the Safety System must be performed by skilled personnel only.

a) From the Tools menu select `Write ID circuit` (1).

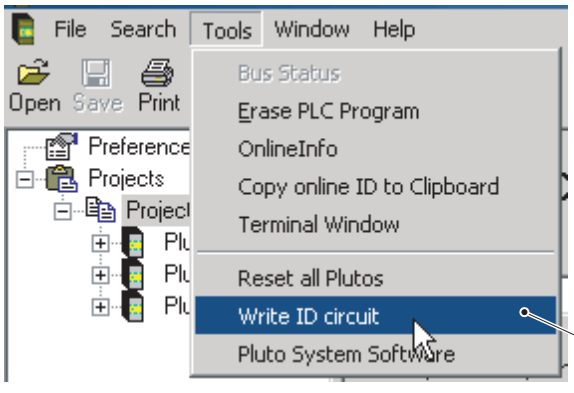

1 Write ID circuit

(Cont'd)

(Cont'd)

b) If the ID number is not in the `ID number` field (2), write the ID number 1100F09F2010 in the `ID number` field (2).

CAUTION
Irreversible action.
By selection of the `Erase protect ID` checkbox (3) the circuit can never be changed again. Do not use this feature.

c) Press the `WRITE ID CIRCUIT` button (4).

d) Confirm that the Id-fix address has been written by pressing the `OK` button (5).

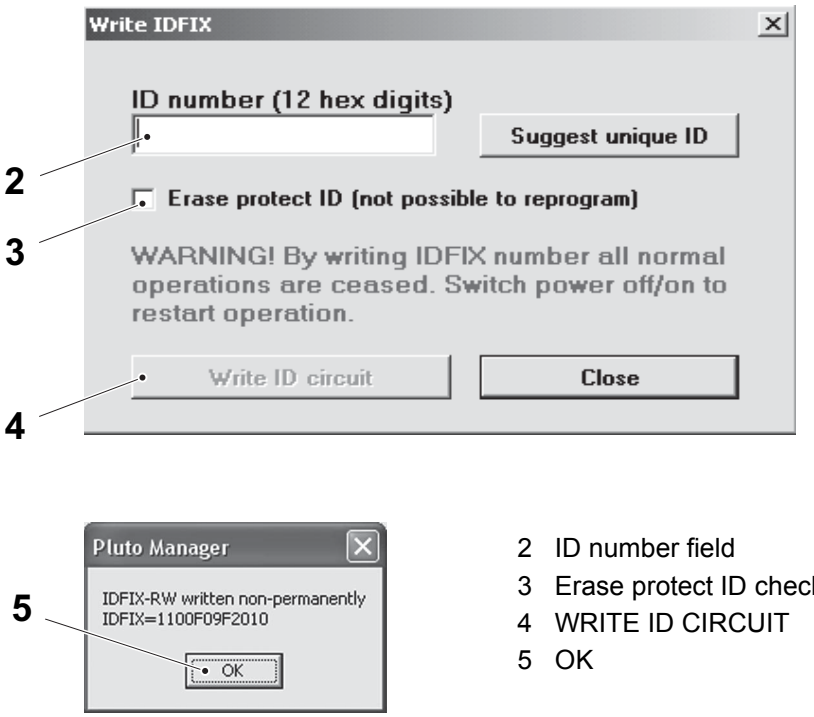

2 ID number field
3 Erase protect ID checkbox
4 WRITE ID CIRCUIT
5 OK

(Cont'd)

(Cont'd)

The Pluto will now set an alarm because of the changed address.

Remove Firmware Alarms

The Pluto firmware has several status alarms (see Hardware manual). Many of those alarms can be reset via the Pluto Manager when PC is connected to Pluto.

a) Start the `Pluto Manager` and connect communication cable between PC and Pluto.

b) From the `Tools` menu select `Reset all Plutos` (6).

c) Press the `YES` button (7) to confirm that you want to set all Plutos.

Note! All Plutos connected on the bus will be reset during this function.

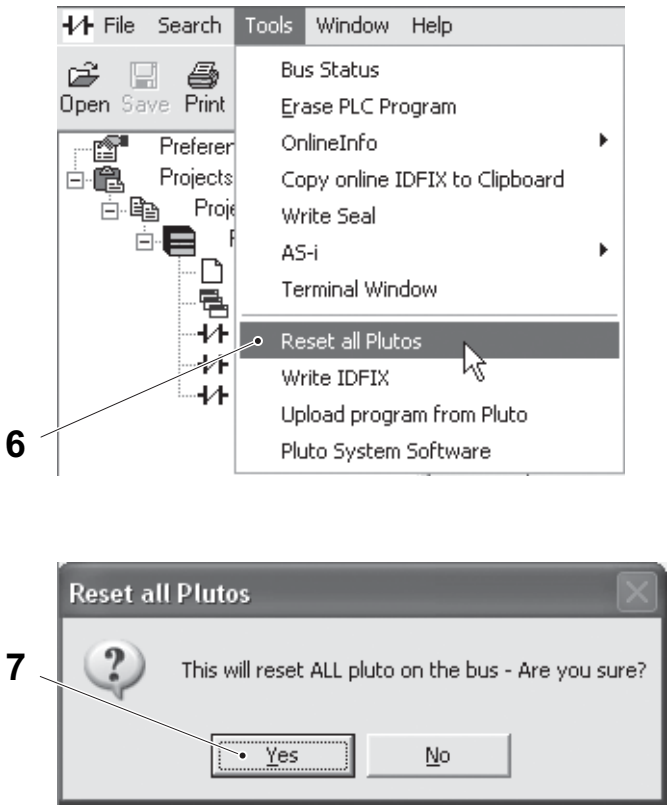

6 Reset all Plutos
7 YES

8.7.1-18 Electrical Materials - Change Baud Rate, Error Code E26 in Safety System

Machine status	Main Switch ON Air Valve ON
Special Equipment	PC with software Pluto Manager Pluto Programming Cable TP No. 90459-6033 or USB cable TP No.90602-3870
SPC Reference	2913341

A safety PLC unit can not change baud rate during operation. If a unit is loaded with a program with new baud rate, it will continue with the old baud rate and indicate error code E26. The error code E26 indicates that a unit is running with another baud rate than it is programmed for.

Note! All changes in the Safety System must be performed by skilled personnel only.

Change baud rate by reboot the computer:

- Reboot by Power On/Off, or
- via Pluto Manager by selecting the `Tools` menu and then select `Reset all Plutos` (1).

If a safety PLC that is empty of program (error code E20) is loaded with a program it will also indicate error code E26 and has to be rebooted in order to start with the programmed baud rate.

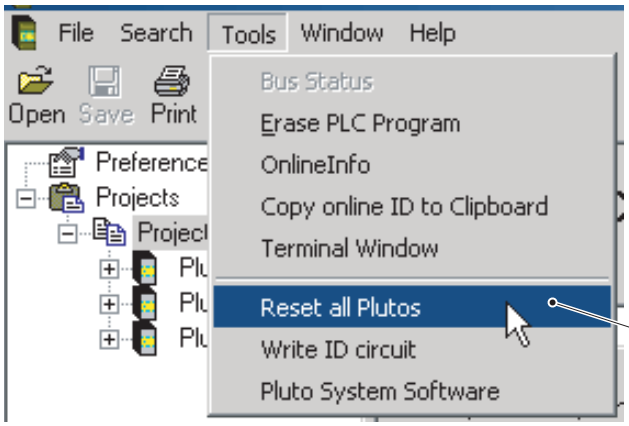

1 Reset all Plutos

8.7.1-19 Electrical Materials - Change a Safety PLC in an Existing Application Afterwards in Safety System

Machine Status	Main Switch OFF Air Valve ON
SPC Reference	90600-2045

Note! All changes in the Safety System must be performed by skilled personnel only.

When safety PLC units are loaded with program for several units, the units check each other so they have exactly the same version of the program. By mismatch they do not accept each others I/O.

If a unit belonging to a program project is connected to the bus afterwards, two situations can appear depending on what PLC program the system is loaded with:

1) The new safety PLC is empty of PLC program (message code Er20) and is fitted with correct ID-fix circuit.

   Recommended method:

   The new safety PLC can be programmed by using self-programming without a PC.

   a) Press the ‘K’-button (1) in the in the safety PLC front panel for two seconds.

   b) The display (2) flashes ‘L’ which indicates that the system is ready for self programming.

   c) Press the ‘K’-button (1) one more time.

   d) The program load is started indicated by a steady ‘L’ on the display (2).

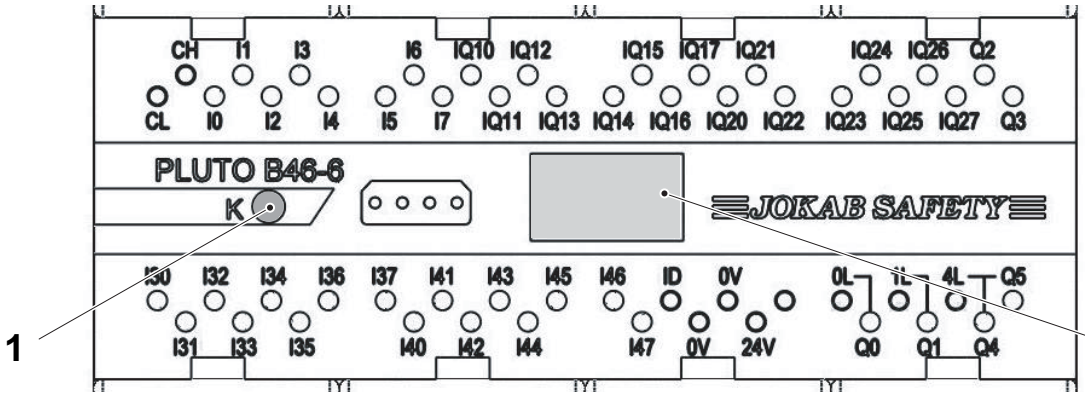

1 K button
2 Display

(Cont'd)

(Cont'd)

Not recommended method:

The new safety PLC can be loaded with a program through a new download from the PC to any safety PLC in the same program project, see 8.7.1-20 Electrical Materials - Download Program from a PC to a Safety PLC.

2) The new safety PLC is fitted with correct ID-fix circuit but loaded with wrong version of the program.

   By connection all units of the project will give error code E27 because they detect units belonging to their own program project, but with mismatching program as the new unit has the wrong version installed. The units will run the PLC program, but will not accept I/Os in safety PLC units with a mismatching program. By a new download to any of the units in the project, all of them will be updated with the same version.

8.7.1-20 Electrical Materials - Download Program from a PC to a Safety PLC

Machine Status	Main Switch ON Air Valve ON
Special Equipment	PC with software Pluto Manager (download from http://www.jokabsafety.com/) Pluto Programming Cable TP No. 90459-6033 or USB cable TP No.90602-3870
SPC Reference	2844513

Note! All changes in the Safety System must be performed by authorized personnel only.

a) Press the DOWN button (1) in the tool bar.

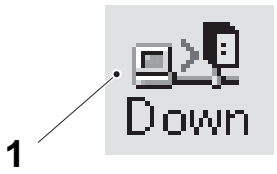

1 DOWN button

b) If the unit is not loaded with a password, a dialogue box appears asking for a new password.

c) Type the password "abc80" in the password field (2).

d) Confirm the password in the confirm password field (3) and click the OK button (4).

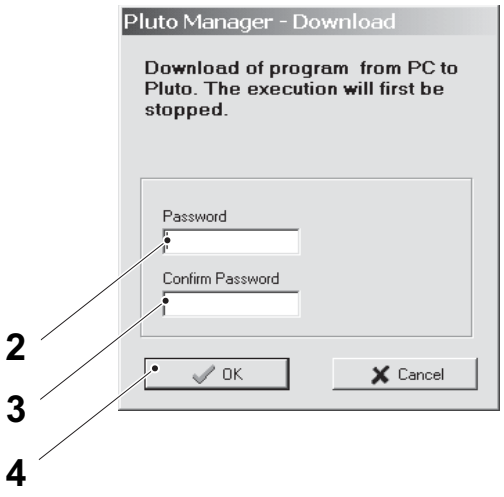

2 Password field
3 Confirm Password field
4 OK button

(Cont'd)

(Cont'd)

e) If the unit is loaded with a password, a dialogue box appears asking for the password.

f) Type the password "`abc80`" in the password field (5).

g) Click the OK button (6).



5 Password field
6 OK button

- If the fault message "`Couldn't establish connection..`" appears there is no connection at all.
- If the fault message "`Connection time out..`" appears the communication is interrupted.

  If any of these two fault messages appears check that the communication cable is correctly connected.

h) If everything is OK a dialogue box appears telling that the file is downloaded together with the question whether execution of program shall be started or not.

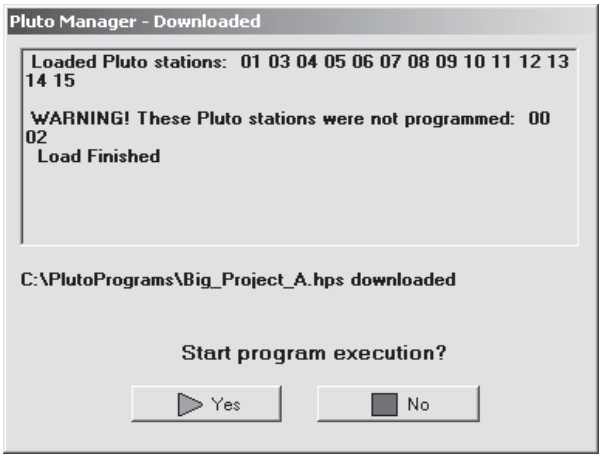

(Cont'd)

(Cont'd)

i) Click the YES button (7).

j) If the NO button (8) is selected it is possible to start execution by pressing the ONLINE button (9) and then START button (10).

Note! A warning is given if the program project is for several safety PLC stations and all stations are not connected to the bus.

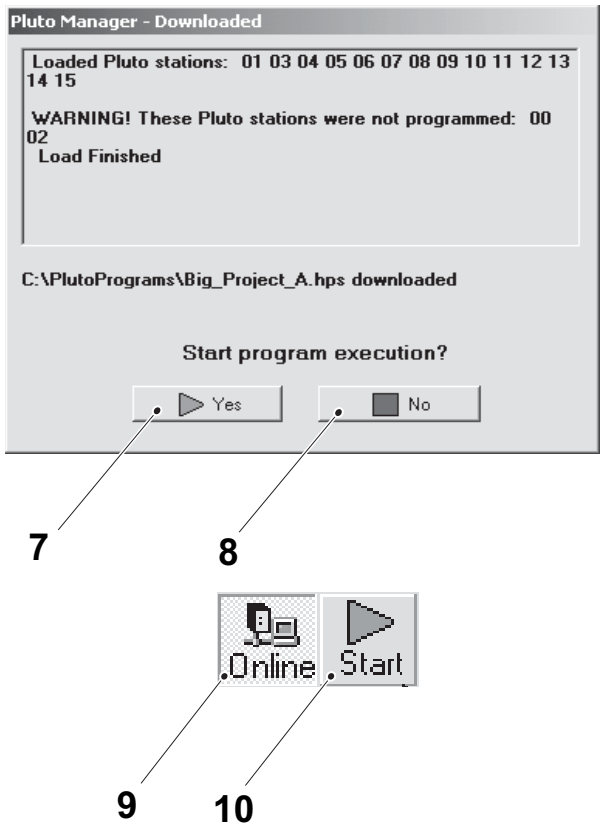

7 YES
8 NO
9 ONLINE
10 START

8.7.1-21 Electrical Materials - Safety System Error Codes

Machine Status	Main Switch ON Air Valve ON
SPC Reference	2844513

If an error occurs in the safety PLC, a user error code appears on the display (1).

Code	Description	I/O	Remark
00	One channel missing	I0, I1	Emergency stop
01	Two channel fault	I0, I1	Emergency Stop
12	Constant reset	IQ12	Reset
31	Air valve fault	I31	Safety valve did not pass self test
46	Missing feedback	I46	Emergency stop, L12
47	Missing feedback	I47	Door circuit, L13

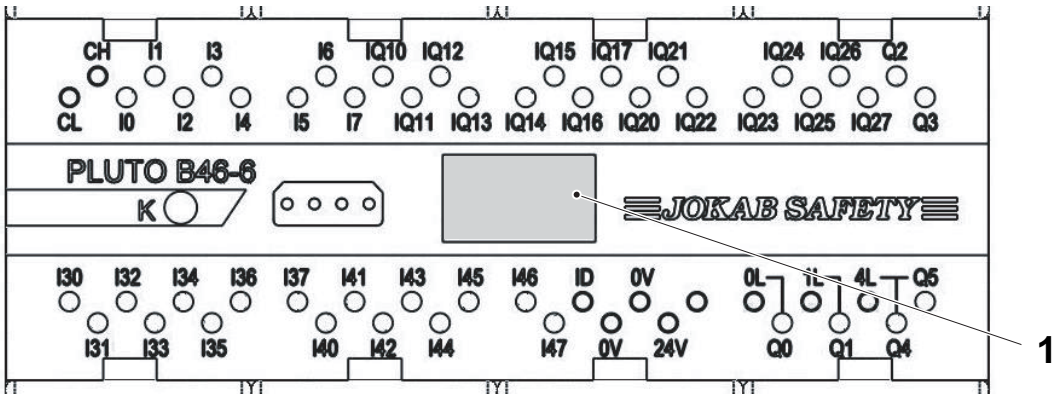

1 Display

8.7.1-22 Electrical Materials - Download PLC Program

Machine Status	Main Switch ON Air Valve ON
Special Equipment	PC with CD drive, software RSLogix 5000 and RSLinx installed. Ethernet communication cable

Note! To connect to the PLC using an ethernet communication cable, the PC must first be configured for this type of communication.

a) Connect the ethernet communication cable between a vacant connection port on the ethernet switch (1) and the PC (2).

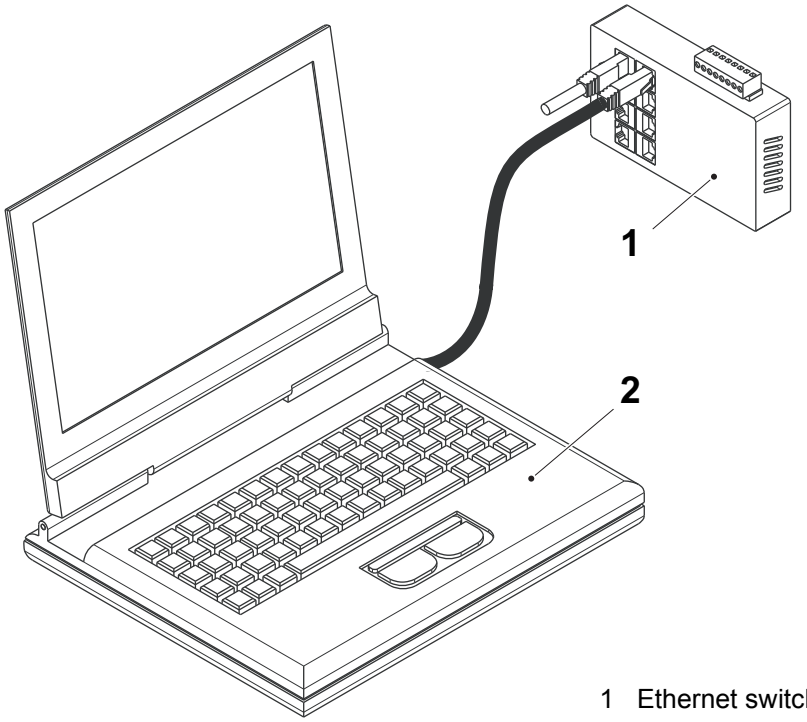

1 Ethernet switch, A03K2110
2 PC

(Cont'd)

(Cont'd)

b) Make sure the mains power switch is ON and the machine is at STEP 0.

c) Insert the PLC program CD into the PC CD drive.

d) Browse to the CD drive and copy the compressed program folder to the PC desktop and extract the program file with the format *.ADC.

e) Double click on the program file to automatically start the RSLogix program and open the program file.

f) Use the COMMUNICATIONS menu (3) in RSLogix and select GO ONLINE (4).

g) If the program:
– matches the program in the PLC Processor, an online connection will be established without any further messages. A download is not necessary.
– does not match the program in the PLC Processor, the CONNECTED TO GO ONLINE window (5) will appear.

h) Select the DOWNLOAD button (6).

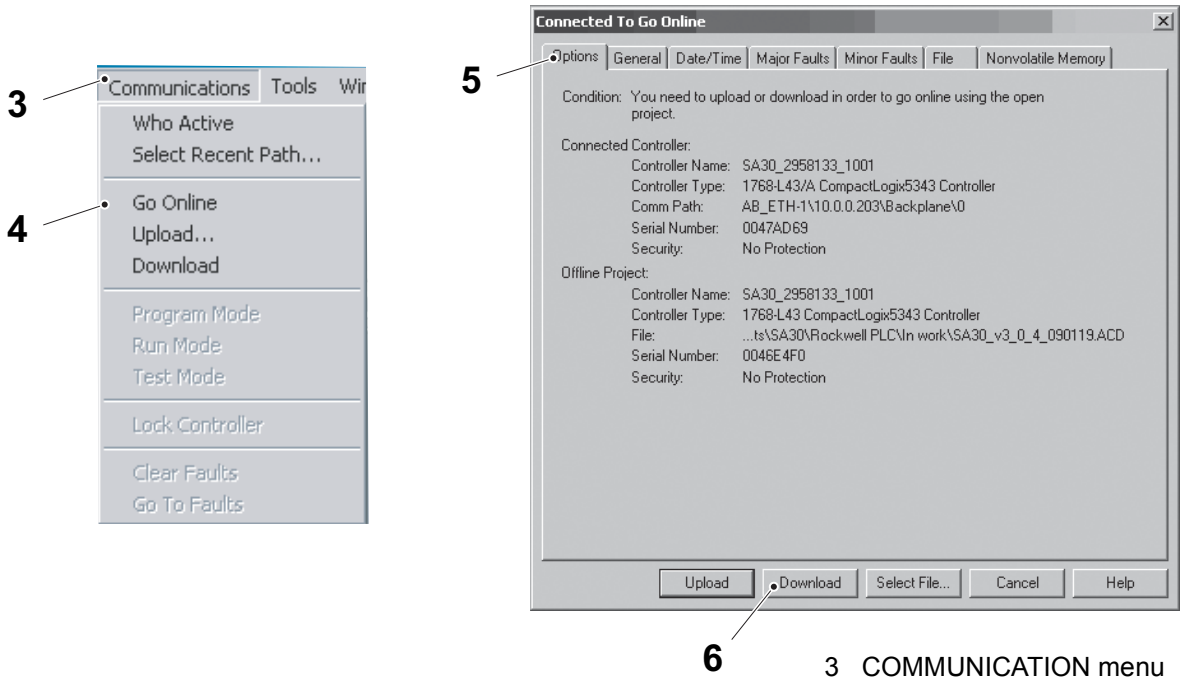

3 COMMUNICATION menu
4 GO ONLINE
5 CONNECTED TO GO ONLINE window
6 DOWNLOAD

(Cont'd)

(Cont'd)

i) In the DOWNLOAD window (7), select the DOWNLOAD button (8).

Note! All the values and settings in the PLC Processor will be replaced with those from the downloaded program.

j) When the download is complete the dialogue box (9) appears. Press the YES button (10) to put the PLC in RUN mode.

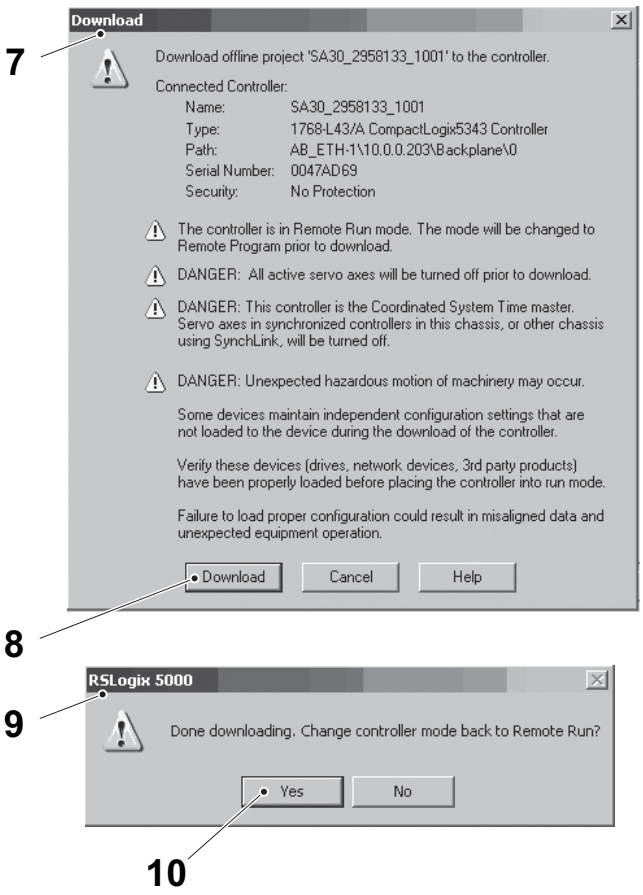

7 DOWNLOAD window
8 DOWNLOAD
9 Dialogue box
10 YES

(Cont'd)

(Cont'd)

k) If the download is to:

- an existing PLC, cycle the PLC power supply to force the PLC to store the PLC program to the Compact Flash card. The download procedure is complete
- a replacement PLC controller continue with the procedure below to set the nonvolatile memory.

Set Nonvolatile Memory

a) Select the COMMUNICATION menu (1) and then select GO ONLINE (2).

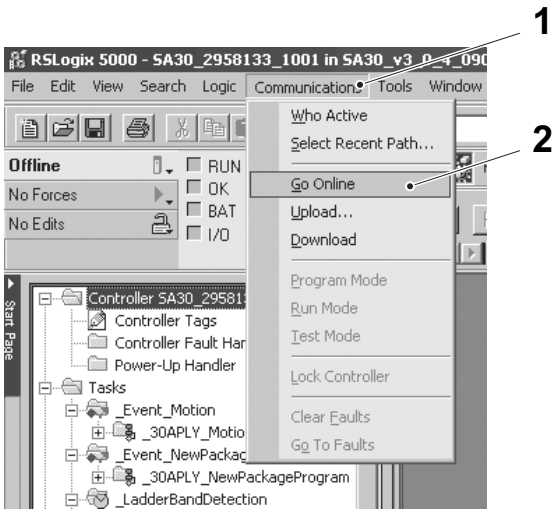

1 COMMUNICATION menu
2 GO ONLINE

(Cont'd)

(Cont'd)

b) b) Select the COMMUNICATION menu (1), then select PROGRAM MODE (3).

c) When the RSLOGIX box (4) appears, select the YES button (5) to put the PLC in PROGRAM mode.

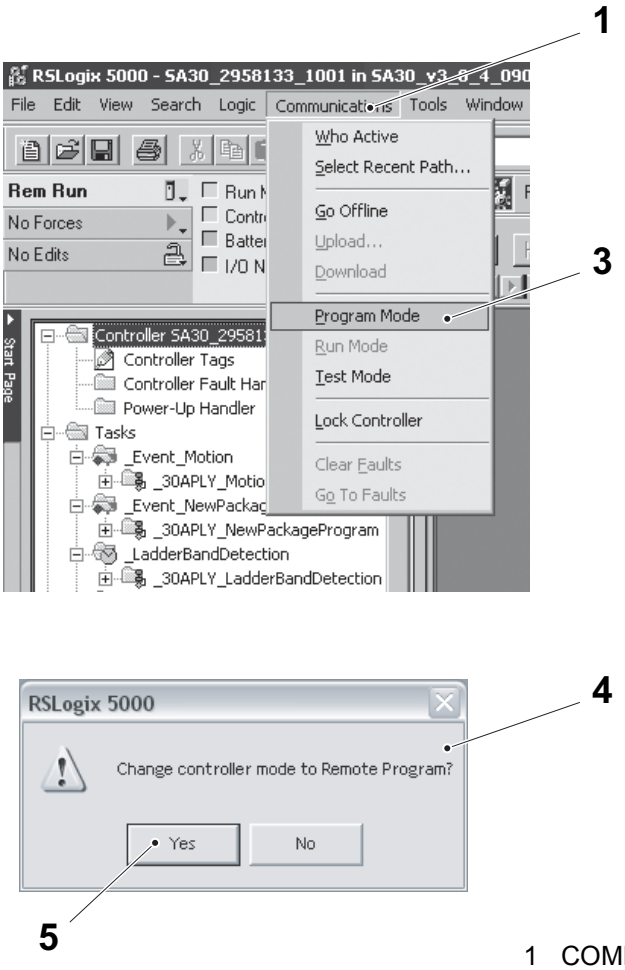

1 COMMUNICATION menu
3 PROGRAM MODE
4 RSLOGIX box
5 YES

(Cont'd)

(Cont'd)

d) In the RSLOGIX 5000 window (6), select the CONTROLLER PROPERTIES button (7). The CONTROLLER PROPERTIES window (8) opens.

e) Select the NONVOLATILE MEMORY tab (9).

f) Select the LOAD/STORE button (10).

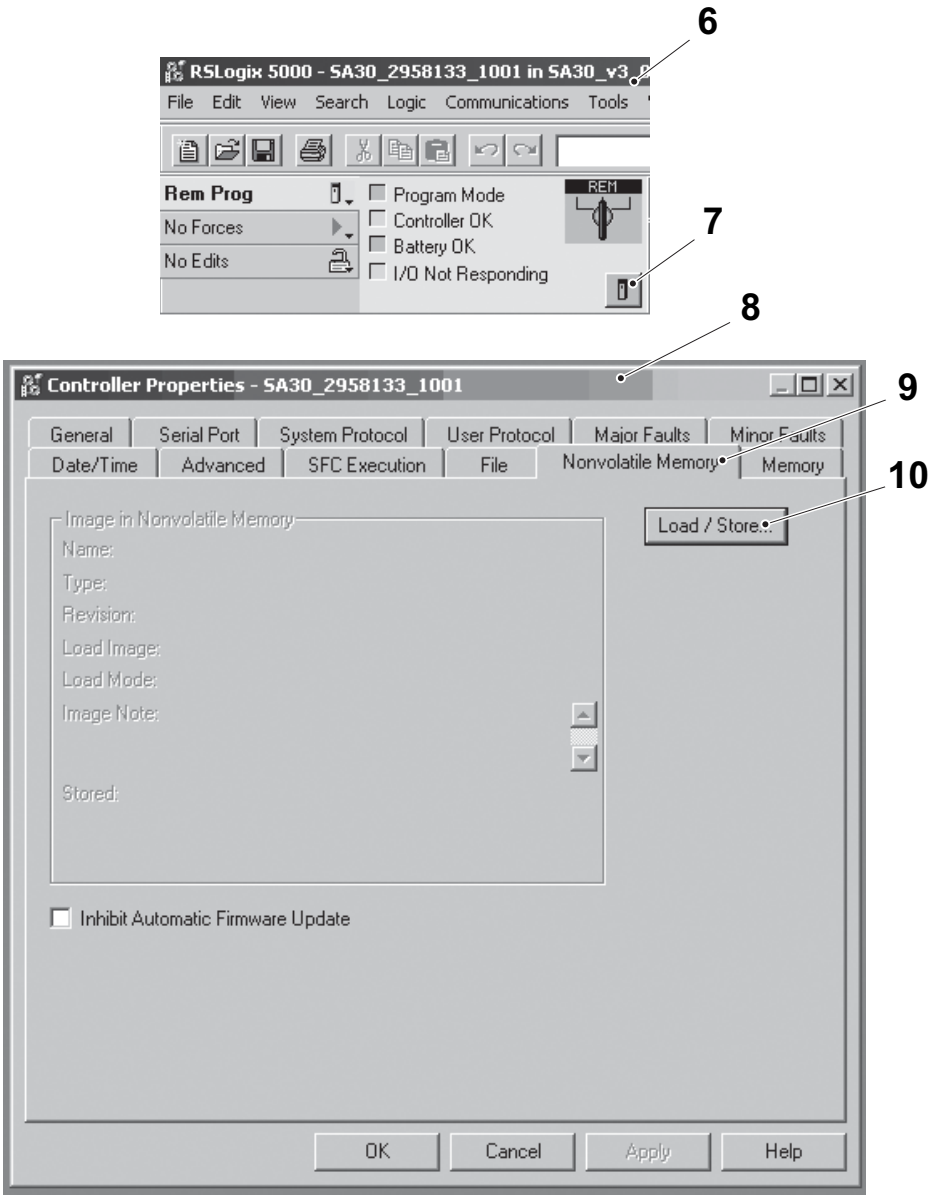

6 RSLOGIX 5000 window
7 CONTROLLER PROPERTIES
8 CONTROLLER PROPERTIES window
9 NONVOLATILE MEMORY tab
10 LOAD/STORE

(Cont'd)

(Cont'd)

g) In the NONVOLATILE MEMORY LOAD/STORE window (11), select ON CORRUPT MEMORY (12) from the drop down list of the LOAD IMAGE option (13).

h) In the NONVOLATILE MEMORY LOAD/STORE window (11), select PROGRAM (REMOTE ONLY) (14) from the drop down list of the LOAD MODE option (15).

i) Select the STORE button (16).

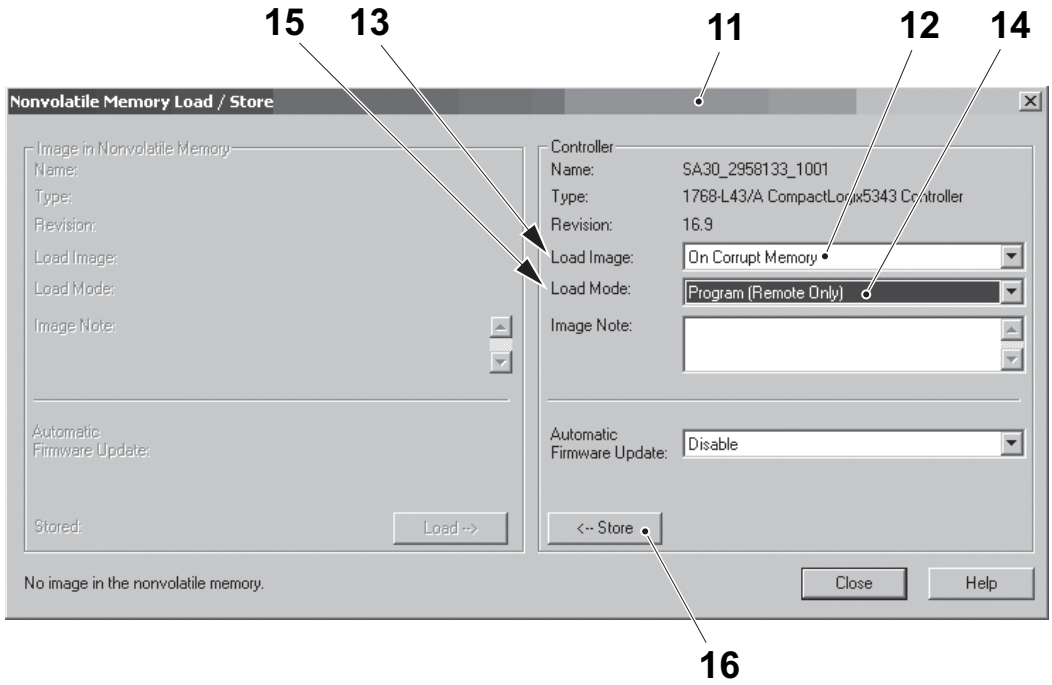

11 NONVOLATILE MEMORY LOAD/STORE window
12 ON CORRUPT memory
13 LOAD IMAGE option
14 PROGRAM (REMOTE ONLY)
15 LOAD MODE option
16 STORE

(Cont'd)

(Cont'd)

j) Select the YES button (17) to confirm the store.

k) During the process a dialogue box indicates that the store is in progress, select the OK button (18).

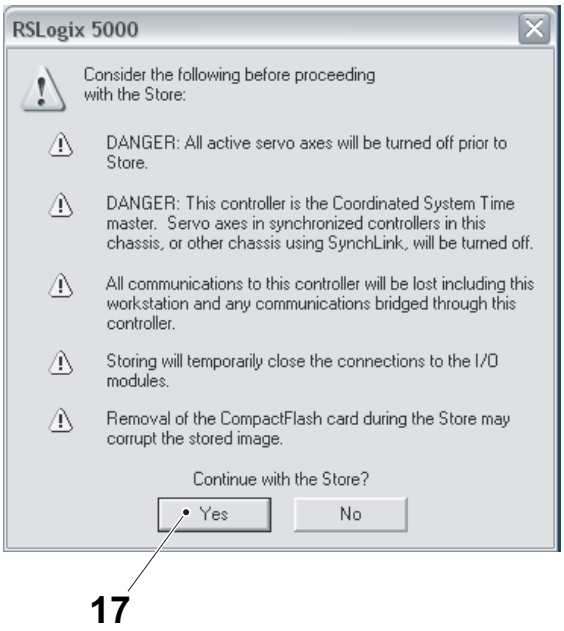

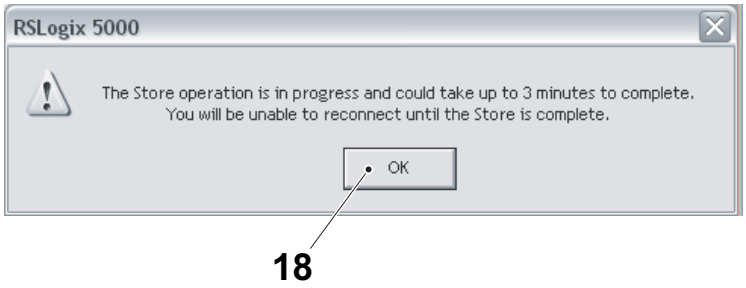

17 YES
18 OK

(Cont'd)

(Cont'd)

l) Select the OK button (19) to close the CONTROLLER PROPERTIES window (8).

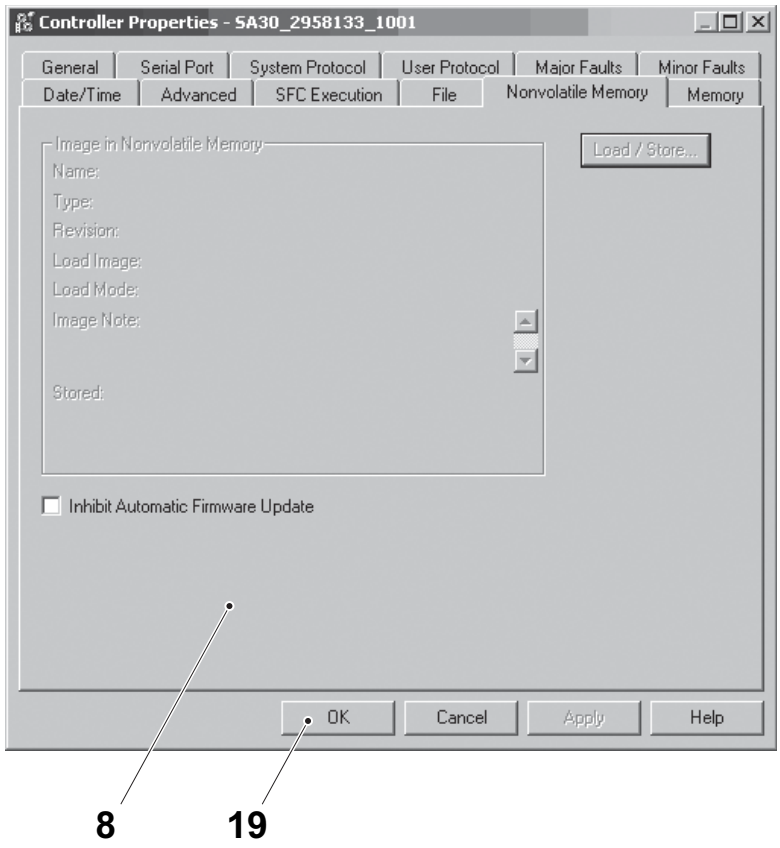

8 CONTROLLER PROPERTIES window
19 OK

(Cont'd)

(Cont'd)

m) Select the COMMUNICATION menu (1) and then select GO ONLINE (2).

n) Select the COMMUNICATION menu (1), then select RUN mode (20) to put the PLC in RUN mode.

o) When the RSLOGIX box (21) appears, select the YES button (22).

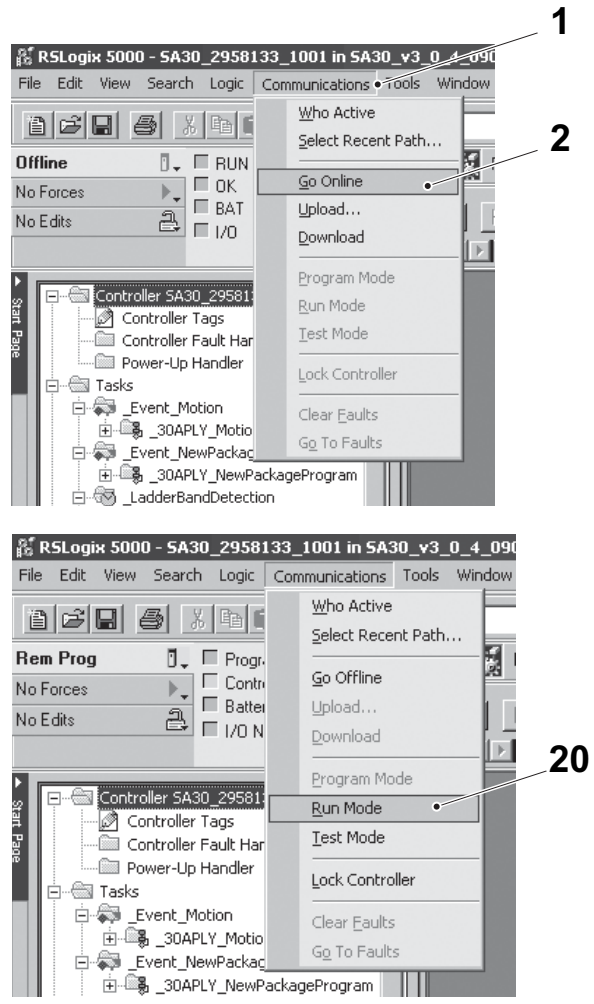

1 Communication menu
2 Go online
20 RUN mode
21 RSLOGIX box
22 YES

8.7.1-23 Electrical Materials - Load Firmware in PLC and Servo

Machine Status	Main Switch ON Air Valve ON
Special Equipment	PC with CD drive Ethernet communication cable
SPC Reference	2844513

CAUTION
Risk of damage to the equipment.
If a Firm Ware update is interrupted, by a power loss on the machine, or if the communication fails between the device and the PC, the PLC Processor will be corrupted and must be sent for repair.

Note! The following procedure is valid for all PLC rack mounted or distributed modules requiring firmware.

Use the table below to identify the correct firmware revision for the module to be flashed.

Ref.	Name	Firmware
A03K2010	Processor L43, Series B, 1768-L43/B	16.23
A03K2012	Sercos Motion Module 4-Axis, 1768-M04SE/	16.20
A03K2014	Ethernet /IP Bridge Module, 1768-ENBT/A	1.003
A03K2016	PLC DSI /Modbus Commun. Mod., 1769-SM2/A	NA
A03K2018	Dig Inp. Mod.16 PTS Fast, 1769-IQ16F SerA	Not to be changed
A03K2020	Dig Inp. Mod.16 PTS Fast, 1769-IQ16F SerA	Not to be changed
A03K2022	Dig Inp. Mod.16 PTS Fast, 1769-IQ16F SerA	Not to be changed

(Cont'd)

(Cont'd)

Ref.	Name	Firmware
A03K2024	Digit. Out. Mod. 16 P ESCP, 1769-OB16P	Not to be changed
A03K2026	Digit. Out. Mod. 16 P ESCP, 1769-OB16P	Not to be changed
A03K2028	Digit. Out. Mod. 16 P ESCP, 1769-OB16P	Not to be changed
A03K2028	PLC Right End Cap/Terminator, 1769-ECR	NA
A03K2029 Only with Genius as line automation.	DeviceNet Scanner, 1769-SDN Series B	3.10
W30T1010	Axis Mod. w. PS, 2094-BC01-M01-S Series B	1.113
W30T1020	Axis Mod. Kinetix 6000, 2094-BM01-S Ser.B	1.113
F09K2010	Safety PLC, PLUTO B46-6 20-070-15	NA

(Cont'd)

(Cont'd)

a) Open the start menu on the PC and select PROGRAMS (1), FLASH PROGRAMMING TOOLS (2) and CONTROL FLASH (3).

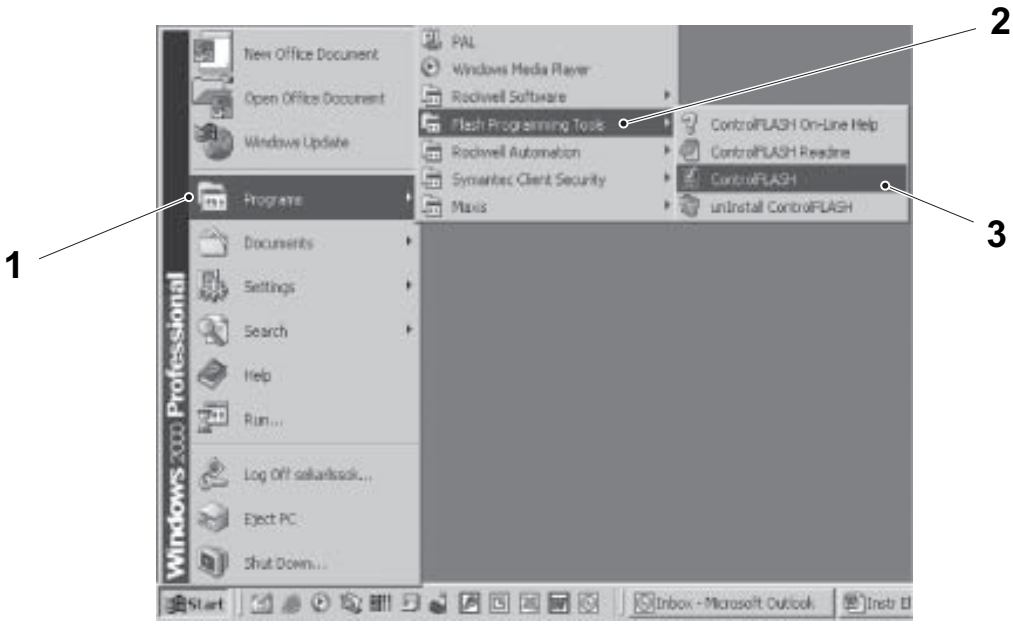

1 PROGRAMS
2 FLASH PROGRAMMING TOOLS
3 CONTROL FLASH

b) Press NEXT (4) when the Control flash program window appears.

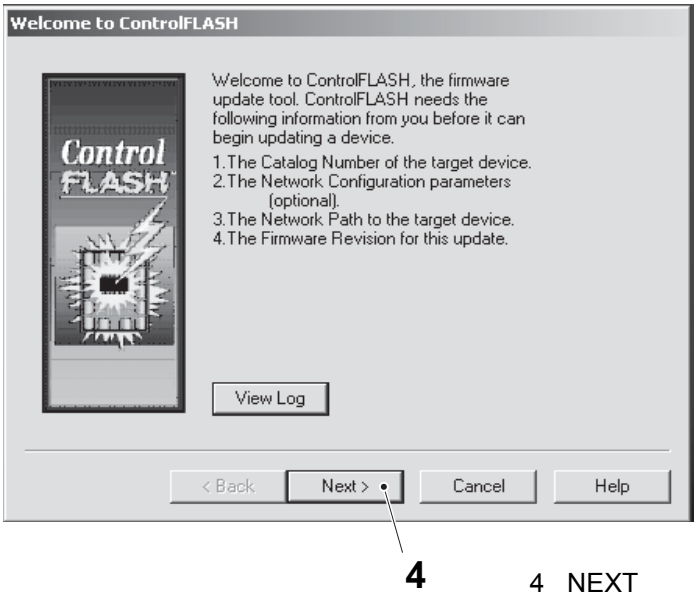

4 NEXT

(Cont'd)

(Cont'd)

c) Select the catalogue number of the target device and press NEXT (4).

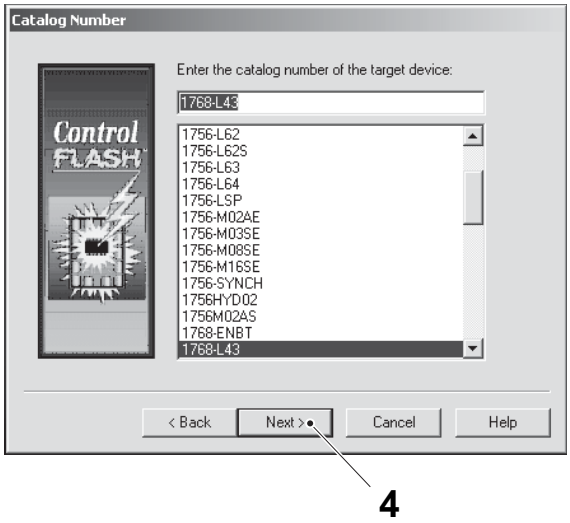

4 NEXT

d) Select the network path (5), (6), (7), (8) or (9) to the target device.

e) Press the OK button (10).

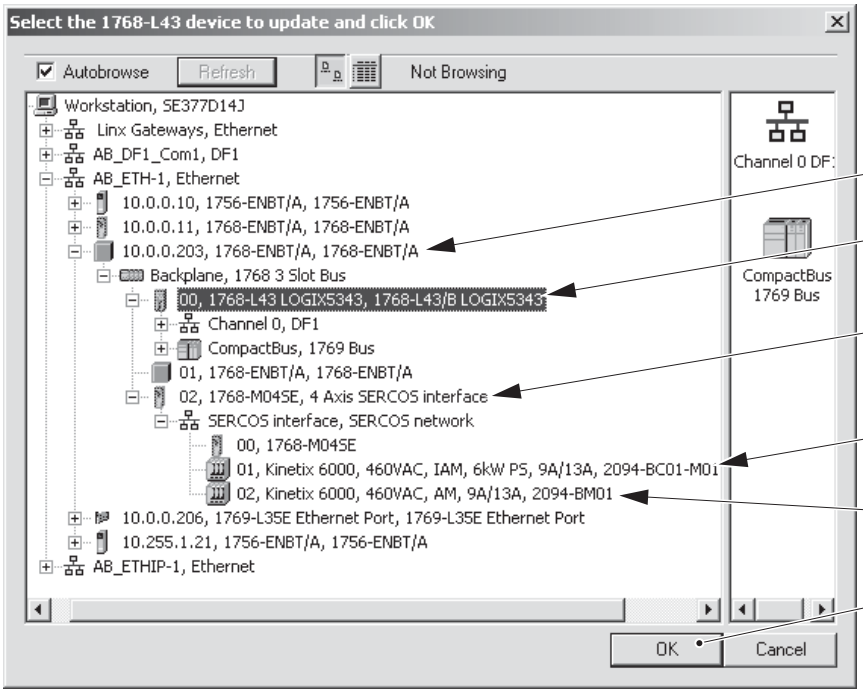

5 Network path for A03K2014
6 Network path for A03K2010
7 Network path for A03K2012
8 Network path for W30T1010
9 Network path for W30T1020
10 OK

(Cont'd)

(Cont'd)

f) Select the firmware revision and press NEXT (4).

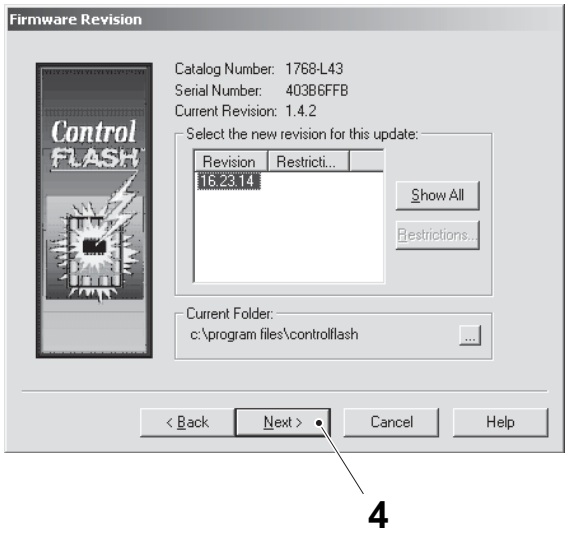

4 NEXT

8.7.1-24 Electrical Materials - Check Photocell

Machine Status	Main Switch ON Air Valve ON
SPC Reference	2844513

a) Check the photocell (1) by closing the signal, the orange light (2) should light. Change if necessary.

b) Clean the photocell with a cloth.

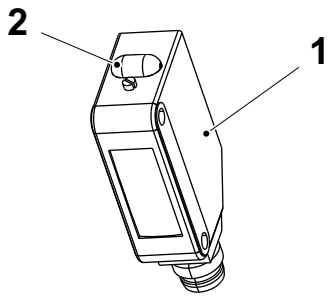

1 Photocell
2 Orange light

8.7.1-25 Electrical Materials - Set Photocell Sensitivity

Machine Status	Main Switch ON Air Valve ON
SPC Reference	2844513

a) Line up the photocell.

b) Set the distance adjuster (1) to position max until a click sound occurs.

c) Place the object to be detected at the desired position in front of the photocell.

d) Turn the distance adjuster (1) towards position min until only the stability indicator LED (2) is lit.

e) Turn the distance adjuster (1) towards position max until both the operation indicator LED (3) and the stability indicator LED (2) are lit.

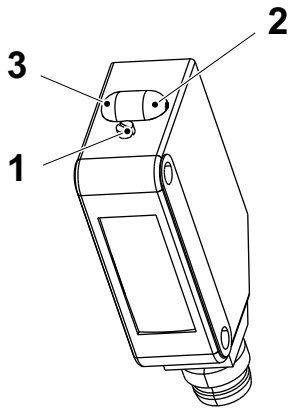

1 Distance adjuster
2 Stability indicator LED (green)
3 Operation indicator LED (orange)

8.7.1-26 Electrical Materials - Set IP Address

Machine Status	Main Switch ON Air Valve ON
Special Equipment	Ethernet communication cable Rockwell program BootP/DHCP
SPC Reference	2844513

If the Ethernet /IP Bridge Module (1) has been replaced, the IP address needs to be set.

a) Connect the Ethernet cable from the PC to the ethernet module (1), and disable any PC firewall.

b) Start the program BootP/DHCP server and wait for the NETWORK SETTING window (2) to appear. It only appears the first time the program is run.

c) FIRST TIME: Enter 255.255.0.0. in the SUBNET MASK field (3) and press the OK button (4).

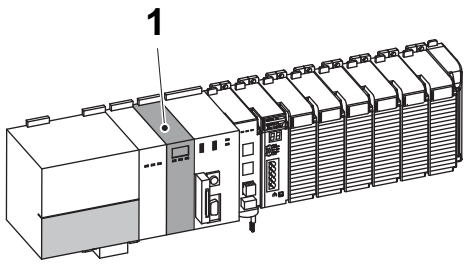

1 Ethernet /IP Bridge Module, A03K2014
2 Network Setting window
3 Subnet Mask field
4 OK

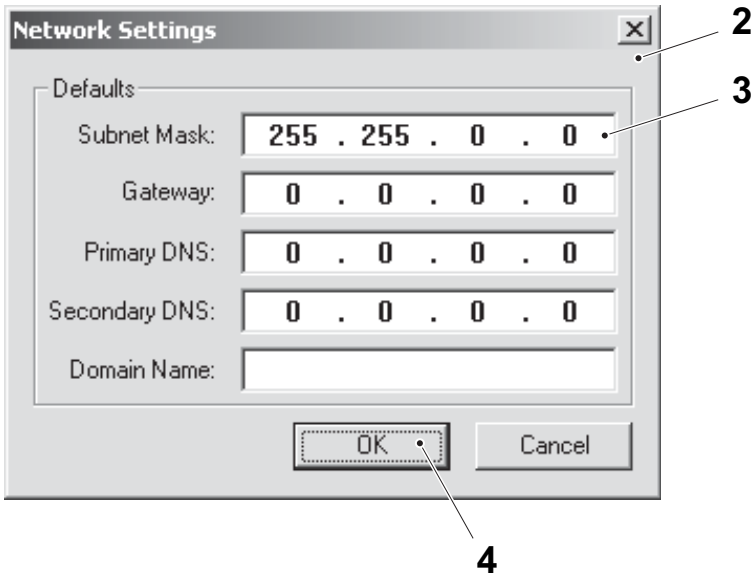

(Cont'd)

(Cont'd)

d) Mark one of the entries of the type BootP (5) and click the ADD TO RELATION LIST button (6).

e) Enter the PLC IP address (7); 10.0.0.203, in the pop up window and press the OK button (4). The entry is copied to the relation list (8).

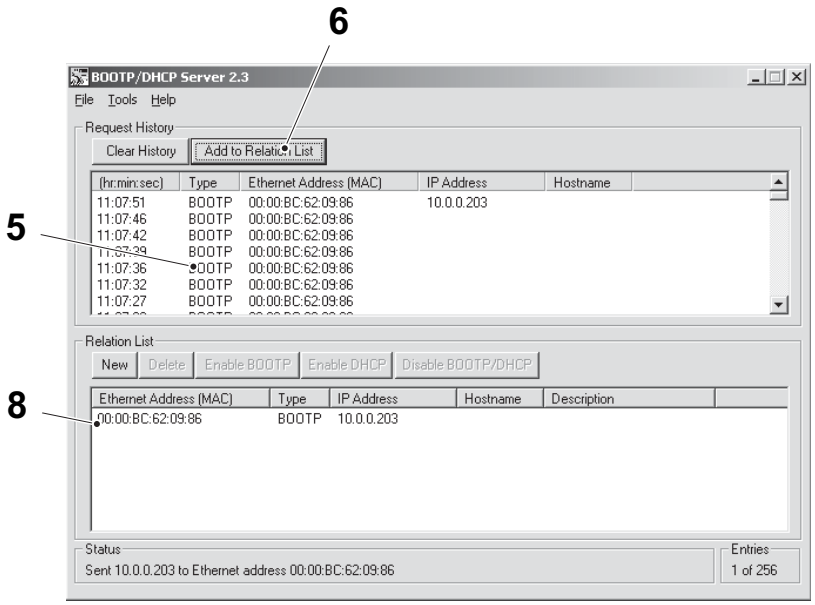

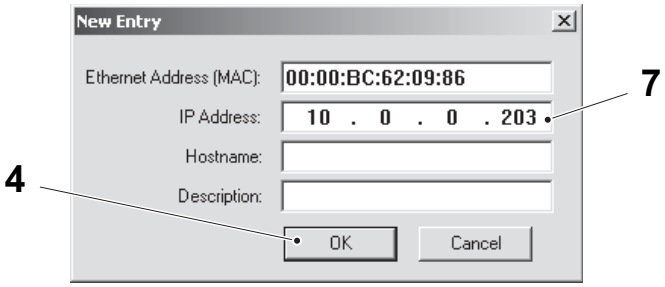

4 OK
5 BootP
6 ADD TO RELATION LIST
7 IP address
8 Relation list

(Cont'd)

(Cont'd)

f) If the message “Sent 10.0.0.203 to Ethernet address.....” appears in the status bar (9) and the IP address (10) is visible in the request history window (11), the IP address is set. If not, repeat the procedure from item b).

g) Press the Disable BOOTP/DHCP button (12).

h) Close the BootP/DHCP and choose save changes NO.

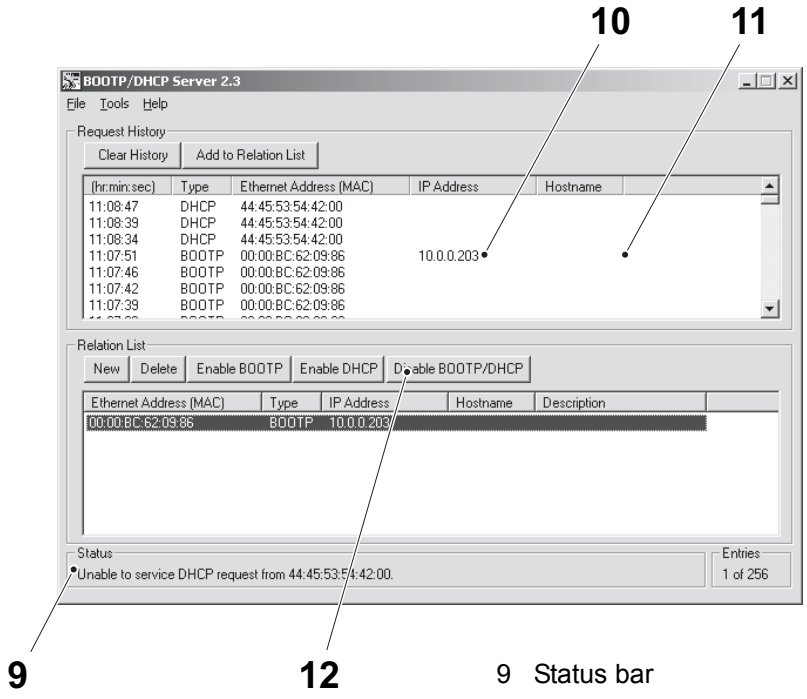

9 Status bar
10 IP address
11 Request history window
12 BOOTP/DHCP

8.7.1-27 Electrical Materials - GE Fanuc Download Program (Line Communication Genius)

Machine Status	Main Switch ON Air Valve OFF
Special Equipment	Serial communication cable TP No. 90031-300 PC with CD drive and Proficy Machine Edition Program CD TP No. 3036157-00XX
SPC Reference	2844513

a) Start the PROFICY MACHINE EDITION automation software tool.

b) In the NEW/OPEN window select the CANCEL button.

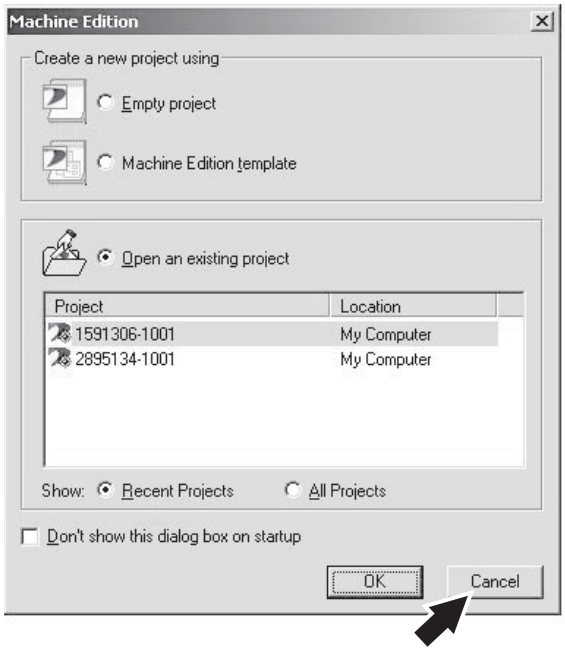

(Cont'd)

(Cont'd)

c) Insert the program CD into the PC CD drive.

d) Select the MANAGER tab in the NAVIGATOR window.

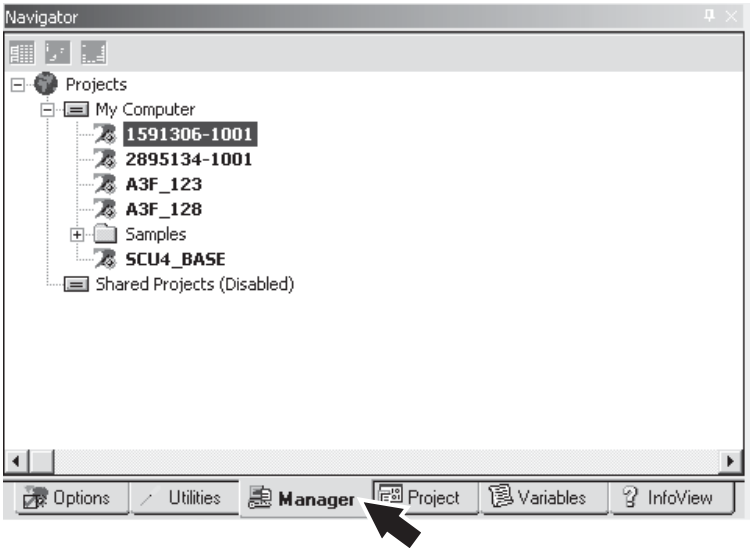

e) From the FILE menu, select RESTORE PROJECT.

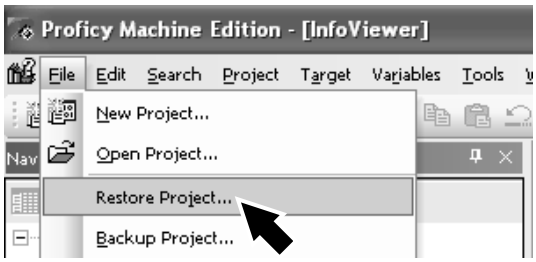

f) Browse to the CD drive and select the program file 1591XXX-100X.zip.

g) Select the OPEN button.

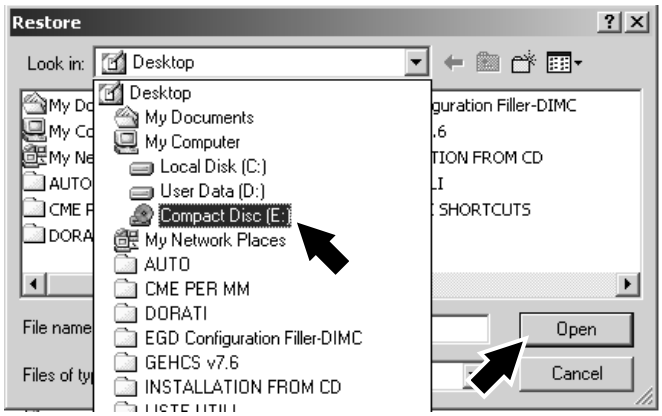

(Cont'd)

(Cont'd)

h) Right click the PC mouse on the required program in the menu tree and select OPEN.

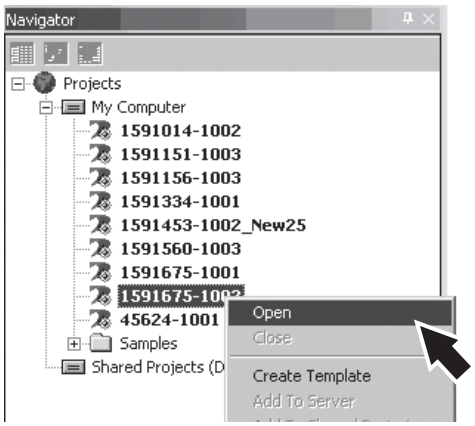

i) Connect the serial communication cable between the PLC controller (1) and the PC (2).

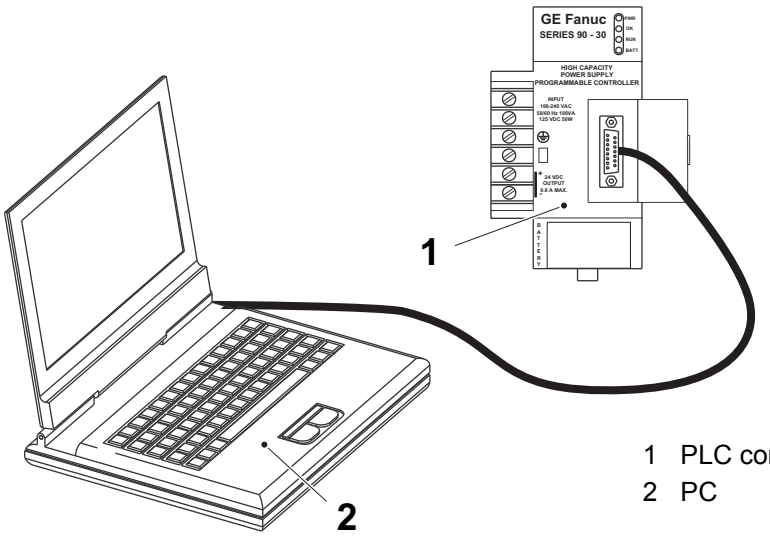

1 PLC controller
2 PC

(Cont'd)

(Cont'd)

j) Select 1591XXX-100X in the NAVIGATOR window.

k) Right click the PC mouse on the selection and select PROPERTIES.

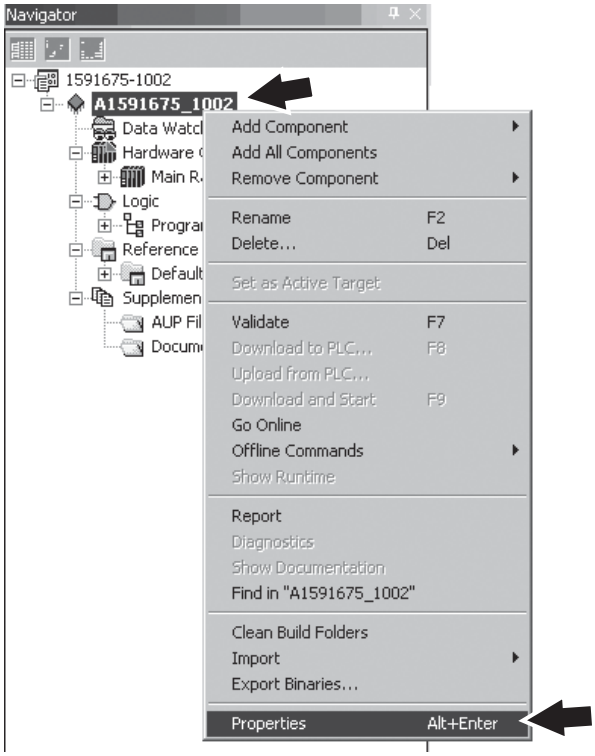

l) Select COM1 in the PHYSICAL PORT field.

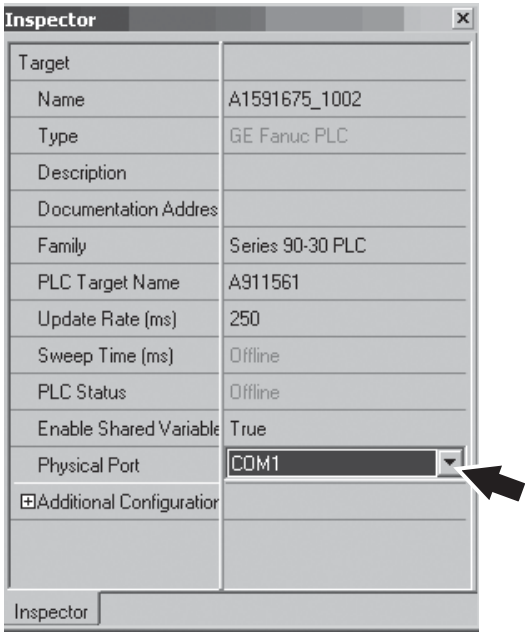

(Cont'd)

(Cont'd)

m) Click the ONLINE/OFFLINE button.

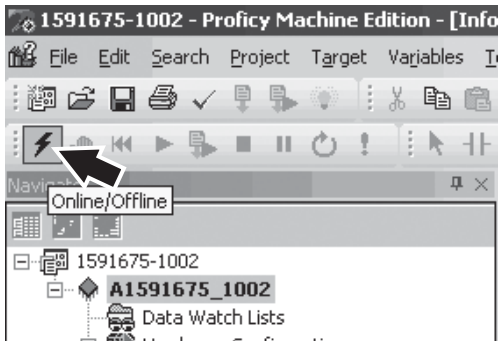

n) If an error message appears, check the communication connection and repeat item m).



o) When communication has been established a confirmation message is displayed.

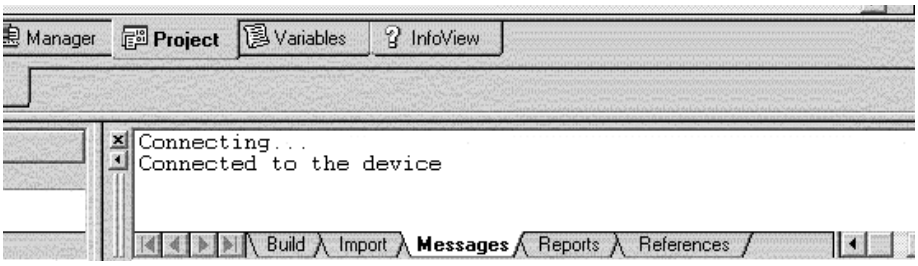

(Cont'd)

(Cont'd)

p) Select the HAND button to switch the communication mode and then stop the PLC by selecting the STOP button.

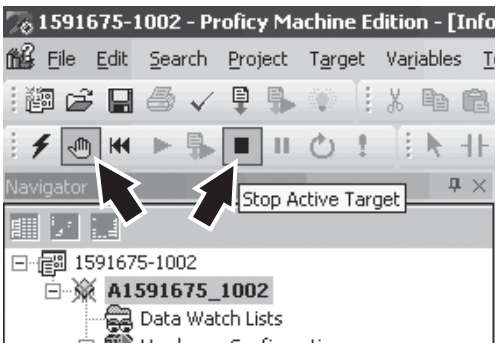

q) Select the OUTPUTS DISABLED radio button in the STOP PLC window and select the OK button.

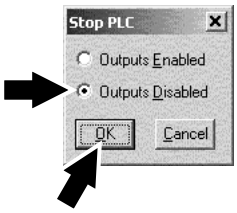

r) When the PLC has been stopped a confirmation message is displayed.



(Cont'd)

(Cont'd)

s) Press F9.

t) In the DOWNLOAD TO PLC window, make sure that the OPTIONS are selected as indicated in the illustration and select the OK button.

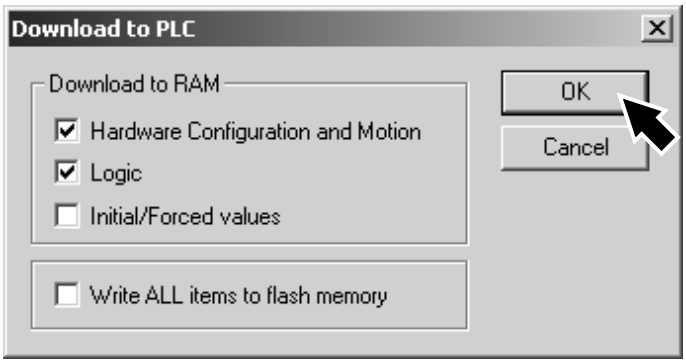

u) When the download is complete a confirmation message is displayed.

v) Select the OUTPUTS ENABLED radio button in the START PLC window and select the OK button.

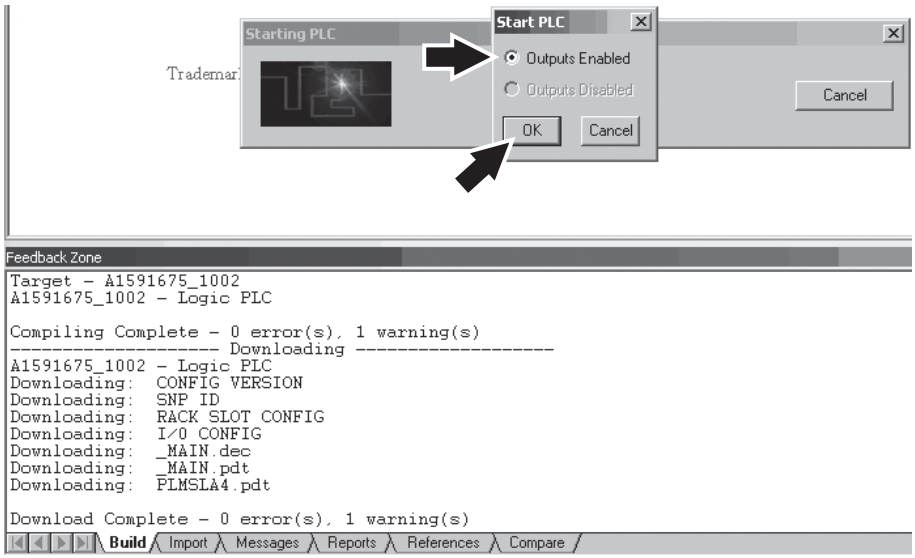

(Cont'd)

(Cont'd)

w) Select the ONLINE/OFFLINE button to go offline.

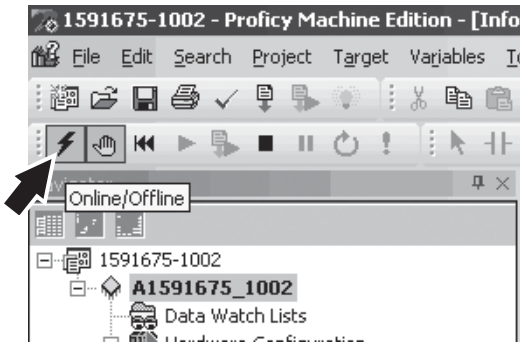

x) Disconnect the communication cable between the PLC and the PC.

y) From the FILE menu select CLOSE PROJECT.

8.7.1-28 Electrical Materials - GE Fanuc Download DeviceNet File (Line Communication Genius)

Machine Status	Main Switch ON Air Valve OFF
Special Equipment	Serial communication cable TP No. 90031-300 PC with CD drive and Proficy Machine Edition Program CD TP No. 3036157-00XX
SPC Reference	2844513

a) Open an empty RSNetWorx.

b) Go online.

c) Set the node address on the scanner to 00.

d) Open the configuration file (.dnt).

e) Download to the scanner.

f) Select `Tools - Node Commissioning`.

g) Browse in the tree and select the scanner.

h) Press OK

i) Cycle power to PLC-rack.

8.8 Safety Control

8.8-1 Safeguard - Proof Test

Machine Status	Main Switch ON Air Valve ON

A manual check that the interlocking guards and other safeguarding means are in place and operational shall be performed regularly on a monthly basis.

The location of the movable guard is indicated with an arrow in the illustration below.

Each regular safeguarding test shall be accomplished by:

a) Identify the safety PLC (1) and the safety time relay (2) in the electrical cabinet.

b) Make sure that the machine is stopped in AIR ON mode and that there are no packages.

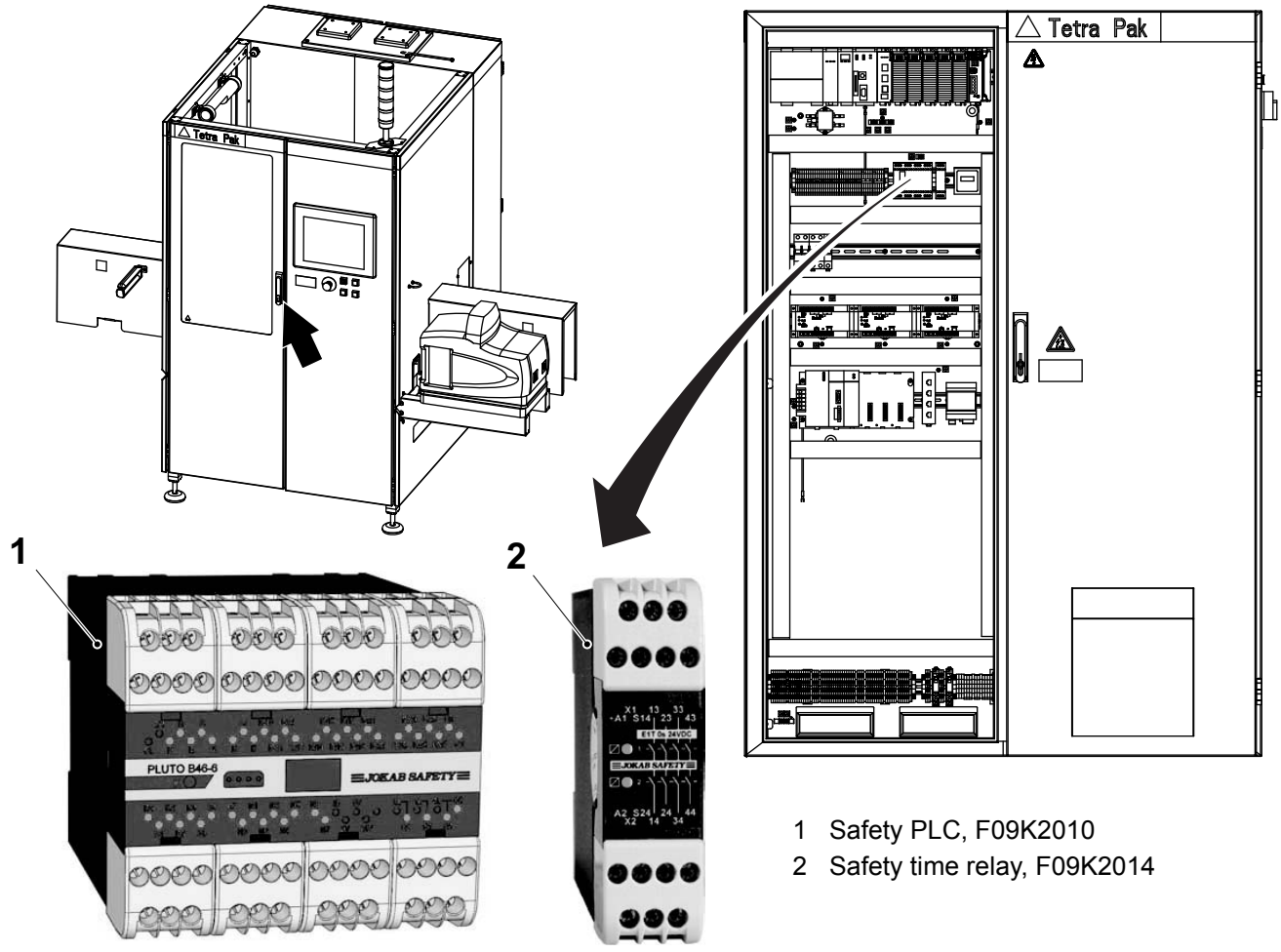

1 Safety PLC, F09K2010
2 Safety time relay, F09K2014

(Cont'd)

(Cont'd)

c) Open the door where the safeguard is located.

d) Make sure that the safety PLC (1) and the safety time relay (2) are tripped. On the safety PLC (1) this is indicated by the LED IQ11 (3) that should not be lit. On the safety time relay (2) neither of the LEDs (4) or (5) shall be lit.

e) Try to start the machine with the safeguard tripped. Check that the machine does not start and check that the safety time relay (2) stays tripped.

f) Close the door where the safeguard is located.

g) Make sure that the LED IQ11 (3) is lit. The LEDs (4) and (5) will not be lit until the machine is reset.

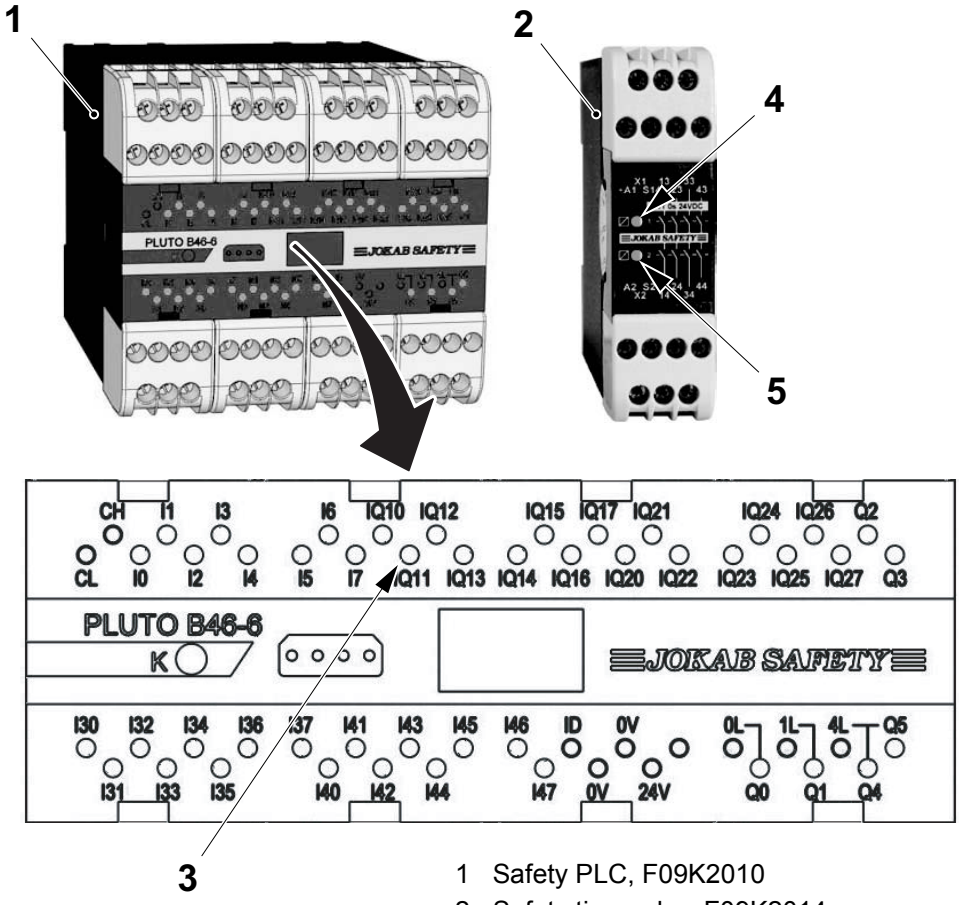

1 Safety PLC, F09K2010
2 Safety time relay, F09K2014
3 LED IQ11
4 LED A1
5 LED A2

8.8-2 Emergency Stop - Proof Test

Machine Status	Main Switch ON Air Valve ON

A manual check that selected EMERGENCY STOP buttons are in place and operational shall be performed regularly, preferably on a monthly basis.

The selection of EMERGENCY STOP buttons to be tested each month shall be in such way that all EMERGENCY STOP buttons are checked once a year.

Note! For any external EMERGENCY STOP buttons connected to the SA30, see the documentation belonging to that equipment.

The location of each EMERGENCY STOP button is shown by an arrow in the illustration below.

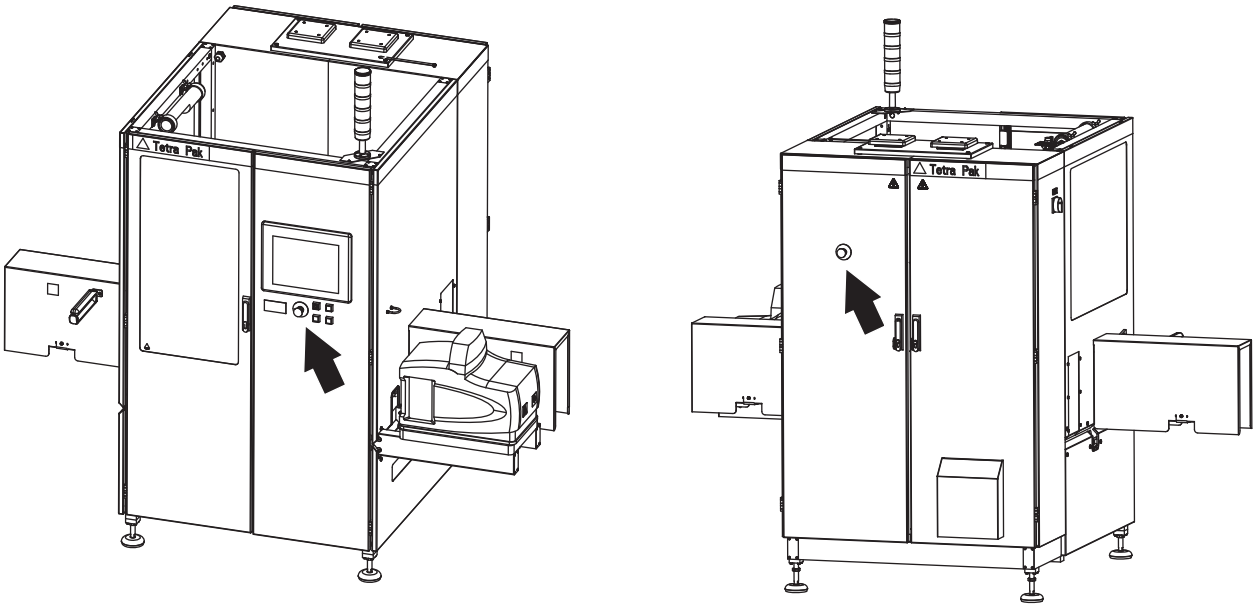

(Cont'd)

(Cont'd)

Each regular emergency stop test shall be accomplished by:

a) Identify the safety PLC (1) and the safety time relay (2) in the electrical cabinet, see item a) in Procedure 8.8-1 Safeguard - Proof Test.

b) Make sure that the machine is stopped in AIR ON mode and that there are no packages.

c) Push the first of the selected EMERGENCY STOP buttons and make sure that the safety PLC (1) and the safety time relay (2) are tripped. On the safety PLC (1) this is indicated by the LEDs I0 (3) and I1 (4) that shall be off. On the safety time relay (2) both LEDs (5) and (6) shall be off.

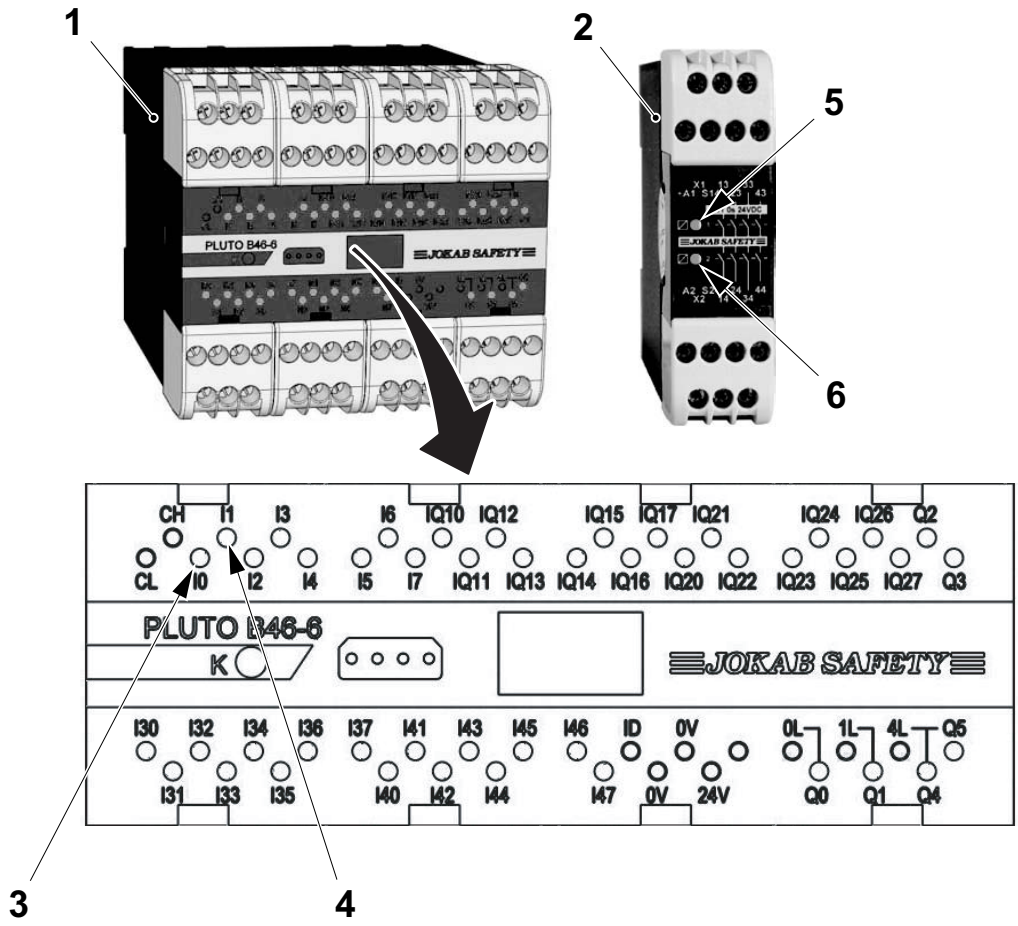

1 Safety PLC, F09K2010
2 Safety time relay, F09K2014
3 LED I0
4 LED I1
5 LED
6 LED

(Cont'd)

(Cont'd)

d) Try to start the machine with the EMERGENCY STOP button latched (in pushed in position). Check that the machine does not start and check that the safety relay (2) stays tripped.

e) Reset the emergency stop and make sure that the LEDs I0 (3) and I1 (4) are lit. The LEDs (5) and (6) will not be lit until the machine is reset.

f) Try to start the machine with the EMERGENCY STOP button unlatched (in pulled out position). Check that the machine does not start.

g) Continue with the next EMERGENCY STOP button. Push the EMERGENCY STOP button and check that the LEDs I0 (3) and I1 (4) are off.

h) Pull out the EMERGENCY STOP button and make sure that the LEDs I0 (3) and I1 (4) are lit.

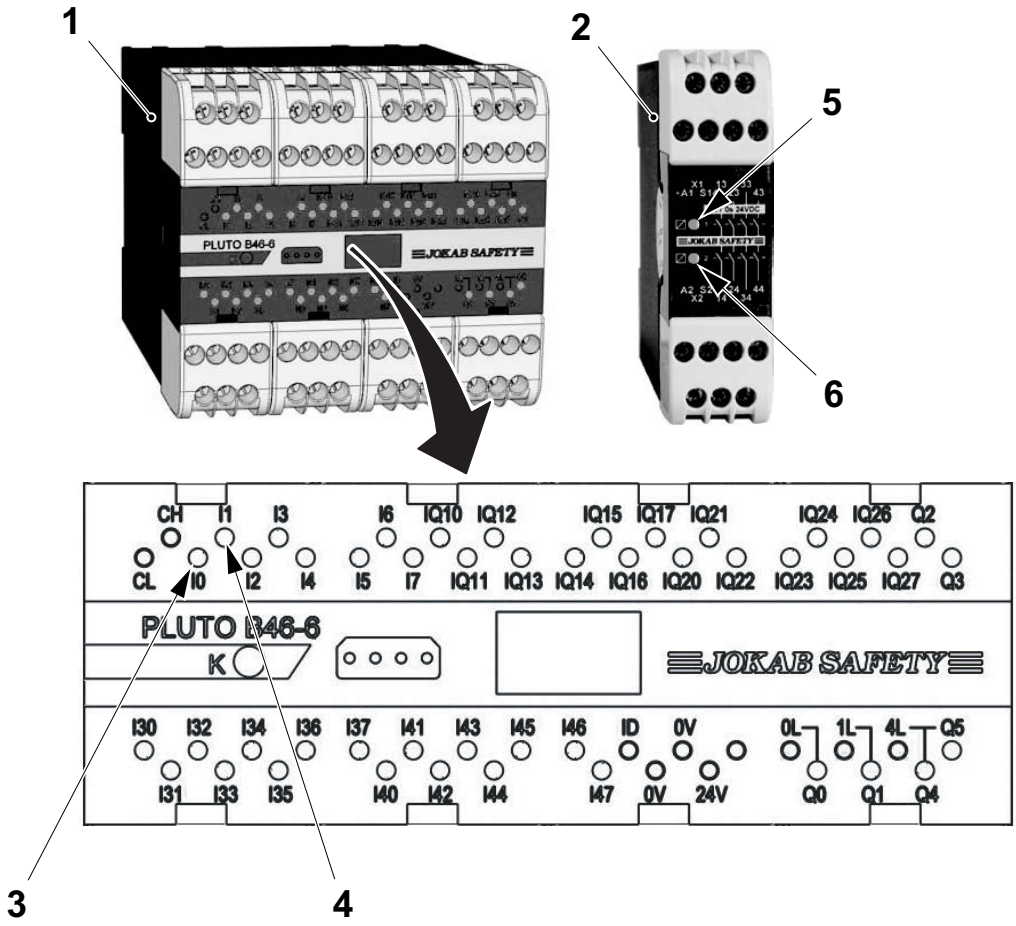

1 Safety PLC, F09K2010
2 Safety time relay, F09K2014
3 LED I0
4 LED I1
5 LED
6 LED

8.8-3 Safe-Off Servo - Proof Test

Machine Status	Main Switch ON Air Valve ON

a) Identify the safety PLC (1) and the safety time relay (2) in the electrical cabinet, see item a) in Procedure 8.8-1 Safeguard - Proof Test.

b) Make sure that the machine is stopped in STEP 0 mode and that there are no packages.

c) Check that the LED I47 (3) is lit.

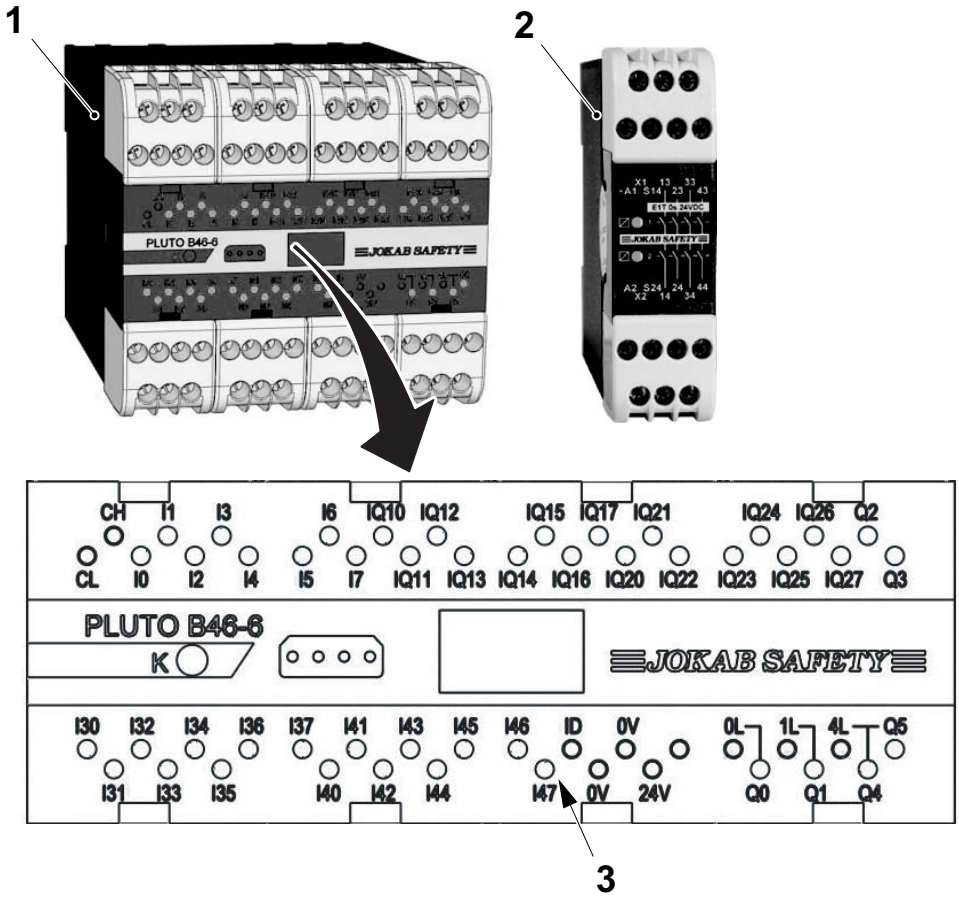

1 Safety PLC, F09K2010
2 Safety time relay, F09K2014
3 LED I47

(Cont'd)

(Cont'd)

d) Check that status 4 is displayed on the servo displays (4).

e) Select a recipe without straw on the TPOP. Step up the machine to PREHEATING and then to AIR ON. Now the LED I47 (3) on the safety PLC should not be lit.

f) Loosen the two cables to connection 14 (5) on the safety time relay (2).

g) Check that status E49 is displayed on the servo displays (4). This means that the drive not will allow motion. For more information regarding the error, see Procedure 8.7.1-10 Electrical Materials - Servo Amplifier Error Codes.

h) Connect the cables to connection 14 (5) on the safety time relay.

i) Reset the machine with the main switch.

j) Repeat item b) to i) with the cables to connection 24 (6).

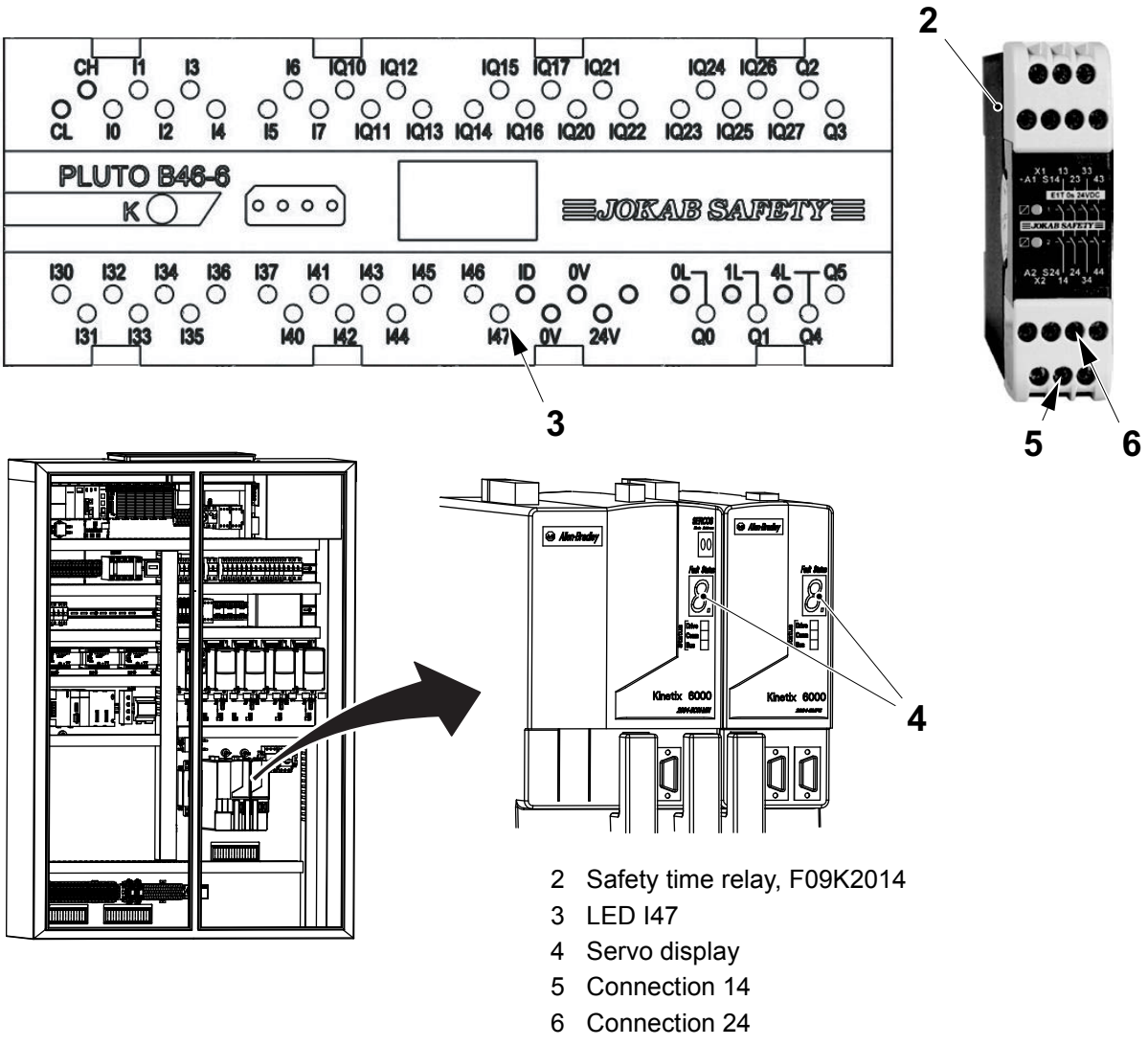

2 Safety time relay, F09K2014
3 LED I47
4 Servo display
5 Connection 14
6 Connection 24

This page intentionally left blank

9 Electric Equipment

Electric Equipment - Description

SPC Reference	663309

9.1 Electrical Document . . . . . 9 - 5

9.1-1 Electrical Document - No Procedure Described . 9 - 5

9.2 Software CD . . . . . 9 - 6

9.2-1 Software CD - No Procedure Described . . . . . 9 - 6

This page intentionally left blank

9.1 Electrical Document

9.1-1 Electrical Document - No Procedure Described

Machine Status	Main Switch ON Air Valve ON
SPC Reference	2958794

9.2 Software CD

9.2-1 Software CD - No Procedure Described

Machine Status	Main Switch ON Air Valve ON
SPC Reference	3036157

10 Regular Accessories

Regular Accessories - Description

SPC Reference	663310

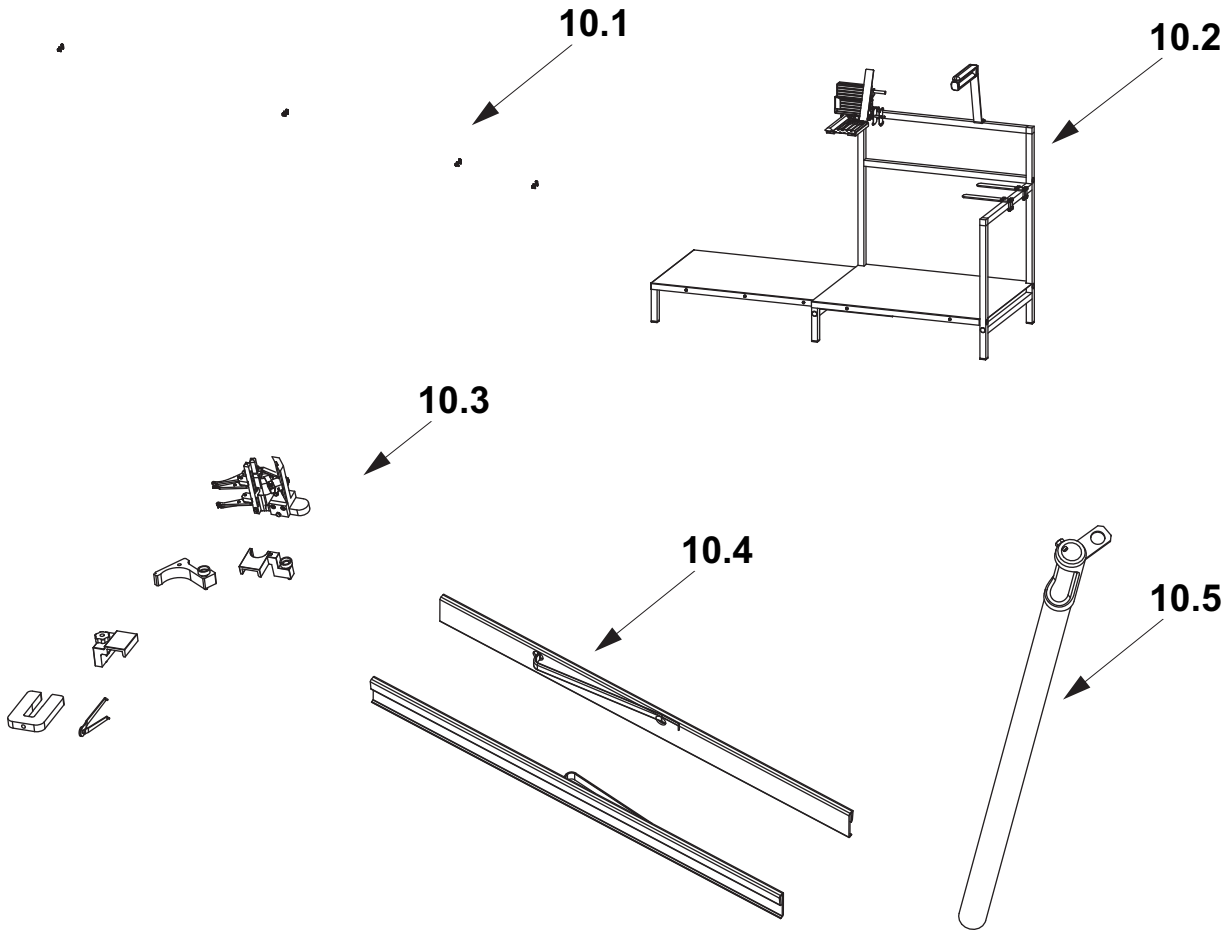

10.1	Photocell unit (TB/TBA/TPA)
10.2	Straw magazine
10.3	Tools and templates
10.4	Package aligner (TWA)
10.5	Waste pipe

10.1 Photocell Unit . . . . . 10 - 5

10.1-1 Photocell Unit - No Procedure Described (TB/TBA/TPA) . . . . . 10 - 5

10.2 Straw Magazine . . . . . 10 - 6

10.2-1 Straw Magazine - No Procedure Described . . . . 10 - 6

10.3 Tools and Templates . . . . . 10 - 7

10.3.1 Template . . . . . 10 - 7

10.3.1-1 Template - No Procedure Described (TPA) . . . . 10 - 7

10.3.2 Template . . . . . 10 - 7

10.3.2-1 Template - No Procedure Described (TB/TBA) 10 - 7

10.3.3 Template . . . . . 10 - 8

10.3.3-1 Template - No Procedure Described (TPA) . . . . 10 - 8

10.3.4 Template . . . . . 10 - 8

10.3.4-1 Template - No Procedure Described (TB/TBA) 10 - 8

10.3.5 Position Template . . . . . 10 - 9

10.3.5-1 Position Template - No Procedure Described . . 10 - 9

10.3.6 Tools and Templates . . . . . 10 - 10

10.3.6.1 Hook Spanner. . . . . 10 - 10

10.3.6.1-1 Hook Spanner - No Procedure Described . . . . 10 - 10

10.3.6.2 Setting Template . . . . . 10 - 10

10.3.6.2-1 Setting Template- No Procedure Described . . . 10 - 10

10.4 Package Aligner. . . . . 10 - 11

10.4-1 Package Aligner - No Procedure Described (TWA) . . . . . 10 - 11

10.5 Waste Pipe . . . . . 10 - 12

10.5-1 Waste Pipe - No Procedure Described . . . . . 10 - 12

This page intentionally left blank

10.1 Photocell Unit

10.1-1 Photocell Unit - No Procedure Described (TB/TBA/TPA)

Machine Status	Main Switch ON Air Valve ON
SPC Reference	2909952 - Valid for TB/TBA/TPA

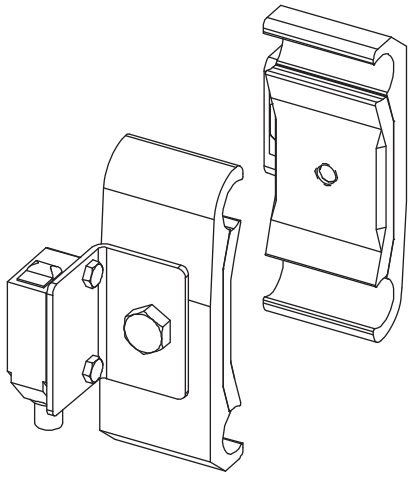

10.2 Straw Magazine

10.2-1 Straw Magazine - No Procedure Described

Machine Status	Main Switch ON Air Valve ON
SPC Reference	2923344

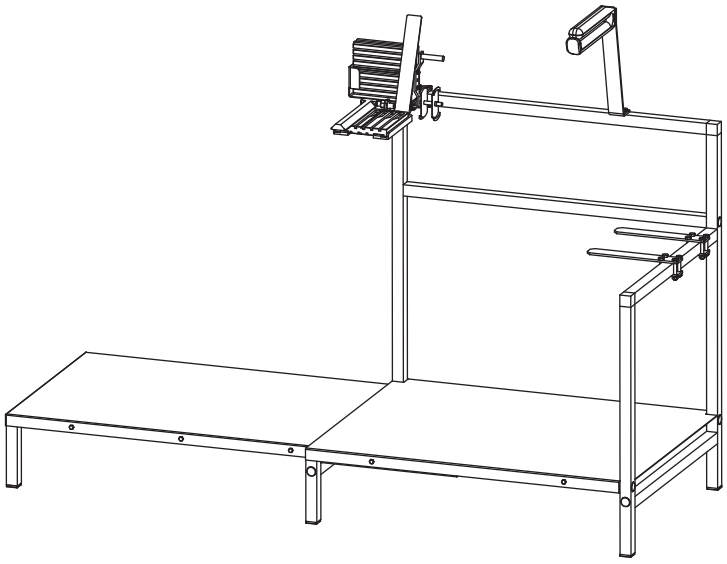

10.3 Tools and Templates

SPC Reference	2957779

10.3.1 Template

10.3.1-1 Template - No Procedure Described (TPA)

SPC Reference	3013619

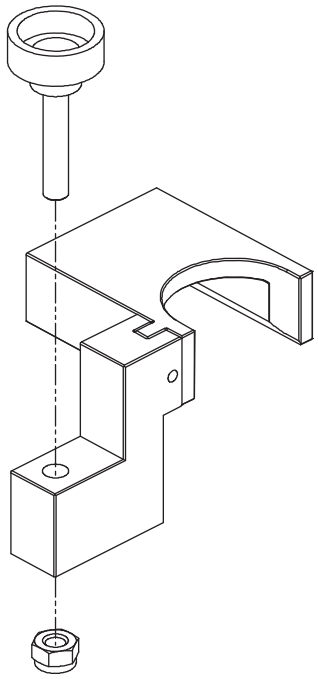

10.3.2 Template

10.3.2-1 Template - No Procedure Described (TB/TBA)

SPC Reference	3013391 - Valid for TB/TBA

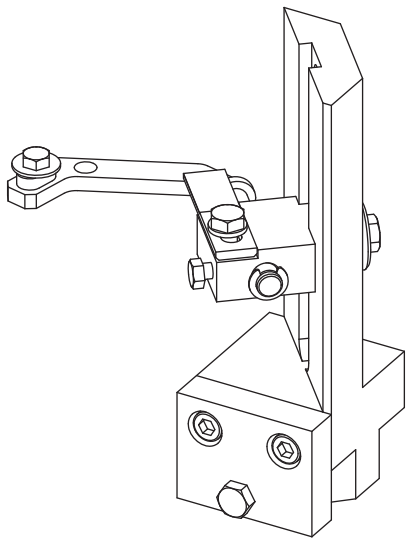

10.3.3 Template

10.3.3-1 Template - No Procedure Described (TPA)

SPC Reference	3013902 - Valid for TPA

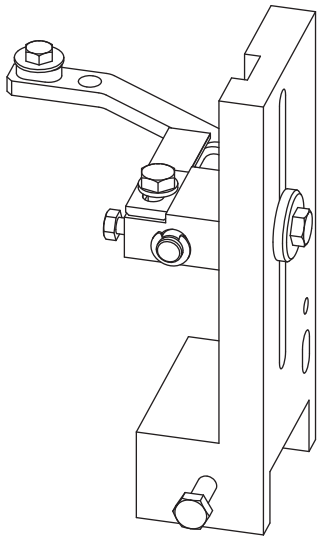

10.3.4 Template

10.3.4-1 Template - No Procedure Described (TB/TBA)

SPC Reference	3013617

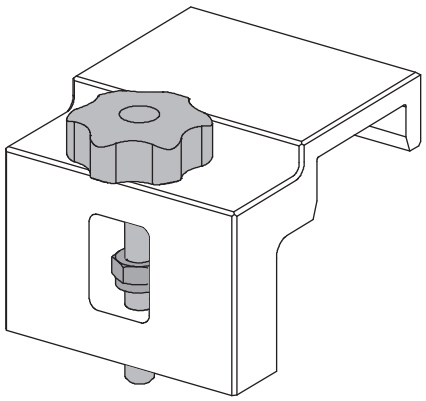

10.3.5 Position Template

10.3.5-1 Position Template - No Procedure Described

SPC Reference	3057744

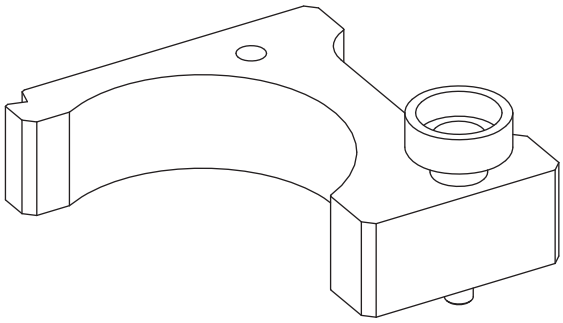

10.3.6 Tools and Templates

SPC Reference	3022574

10.3.6.1 Hook Spanner

10.3.6.1-1 Hook Spanner - No Procedure Described

SPC Reference	90243-0164

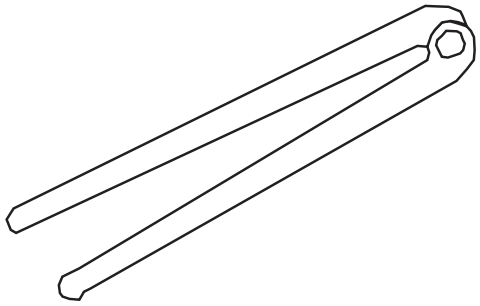

10.3.6.2 Setting Template

10.3.6.2-1 Setting Template- No Procedure Described

SPC Reference	2959983-0000

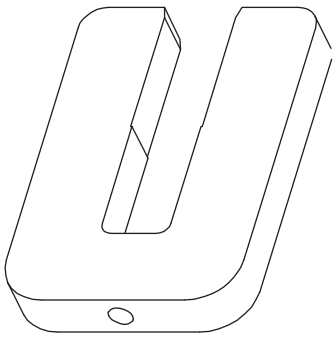

10.4 Package Aligner

10.4-1 Package Aligner - No Procedure Described (TWA)

SPC Reference	3023570 - Valid for TWA

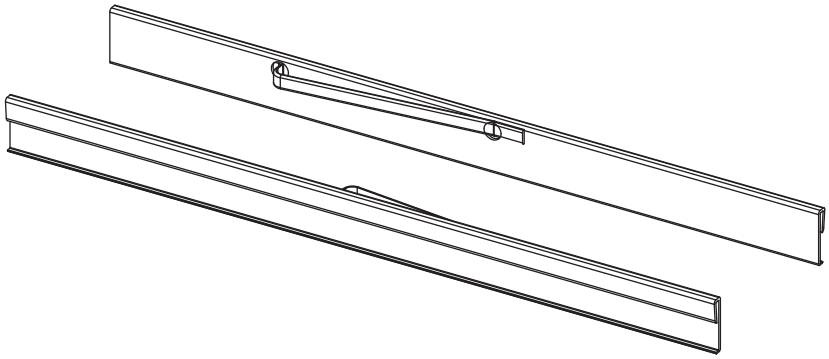

10.5 Waste Pipe

10.5-1 Waste Pipe - No Procedure Described

SPC Reference	3046523

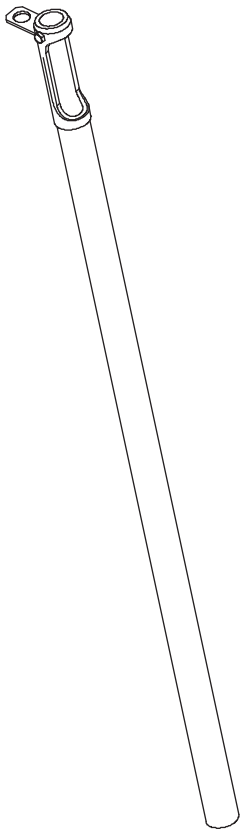

11 Optional Equipment

Optional Equipment - Description

Optional Equipment	663311

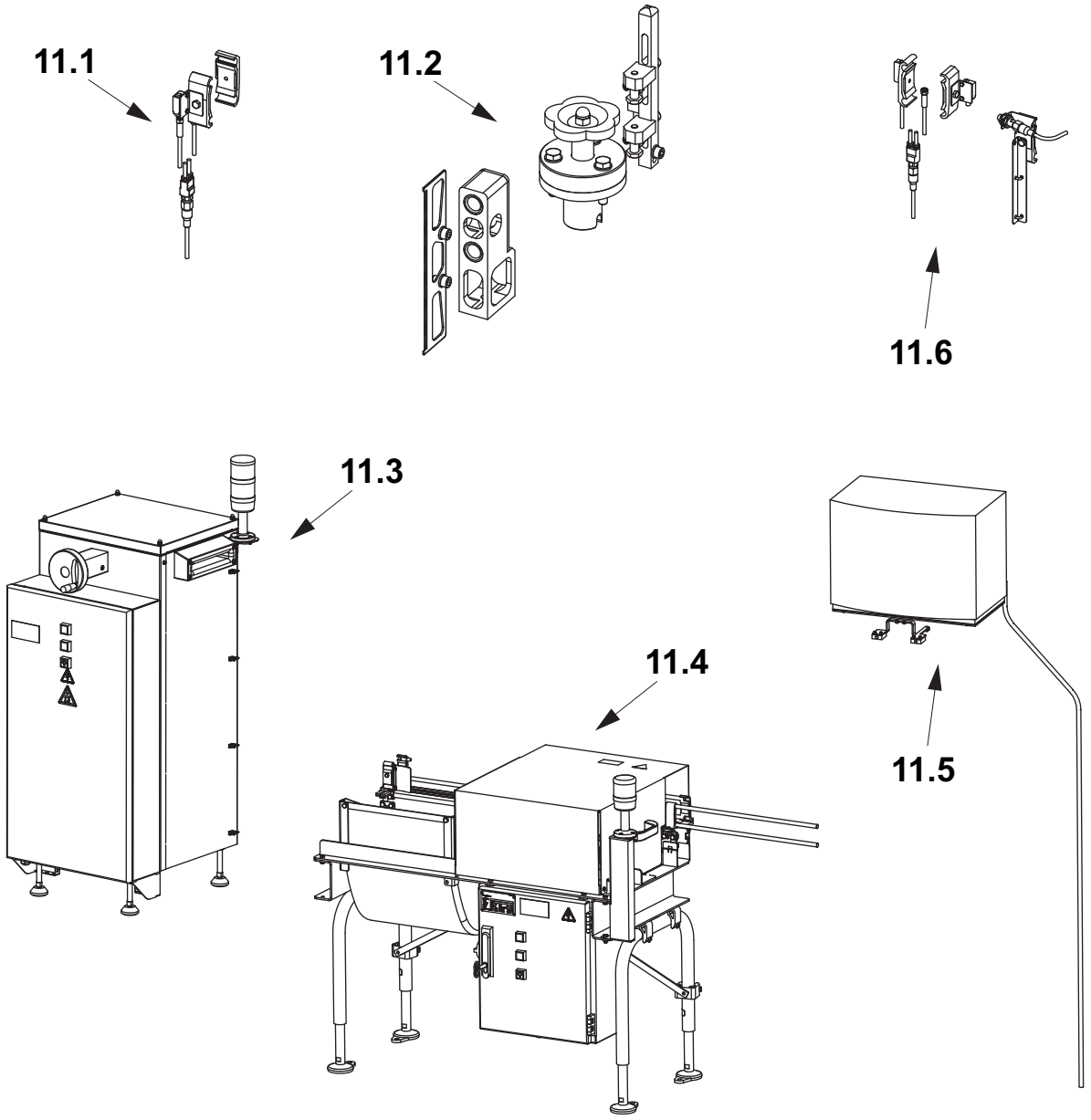

11.1	Photocell unit
11.2	Quick change
11.3	Bent Foil Treater
11.4	Straw Detector 30
11.5	Cooling unit
11.6	Second Discharge Unit

11.1 Photocell Unit (TB/TBA/TPA) . . . . . 11 - 5

11.1-1 Photocell Unit - No Procedure Described . . . . . 11 - 5

11.2 Quick Change (TB/TBA/TPA) . . . . . 11 - 6

11.2.1 Feed Wheel . . . . . 11 - 6

11.2.1-1 Feed Wheel - Assemble . . . . . 11 - 6

11.2.2 Cutting Unit. . . . . 11 - 7

11.2.2-1 Cutting Unit - Assemble . . . . . 11 - 7

11.2.3 Pressure Arm . . . . . 11 - 8

11.2.3-1 Pressure Arm - Assemble . . . . . 11 - 8

11.3 Bent Foil Treater . . . . . 11 - 9

11.3.1 Heater . . . . . 11 - 9

11.3.1-1 Heater - Clean . . . . . 11 - 9

11.3.1.1 Roller Unit. . . . . 11 - 11

11.3.1.1-1 Roller Unit - Check Bushings . . . . . 11 - 11

11.3.1.1-2 Roller Unit - Change Bushings . . . . . 11 - 12

11.3.1.1-3 Roller Unit - Change Roller Chain . . . . . 11 - 16

11.3.1.1-4 Roller Unit - Check Wheel . . . . . 11 - 18

11.3.1.1-5 Roller Unit - Change Wheel . . . . . 11 - 19

11.3.1.1-6 Roller Unit - Check Hand Wheel . . . . . 11 - 20

11.3.1.1-7 Roller Unit - Change Hand Wheel . . . . . 11 - 21

11.3.1.2 Bending Roller . . . . . 11 - 22

11.3.1.2-1 Bending Roller - Check Bushings . . . . . 11 - 22

11.3.1.2-2 Bending Roller - Check Rollers . . . . . 11 - 23

11.3.2 Electrical Cabinet . . . . . 11 - 24

11.3.2.1 Electrical Cabinet. . . . . 11 - 24

11.3.2.1-1 Electrical Cabinet - Change Temperature Controller . . . . . 11 - 24

11.3.2.1-2 Electrical Cabinet - Set Temperature Controller 11 - 25

11.3.2.1-3 Electrical Cabinet - Change Thermocouple . . . 11 - 36

11.3.2.1-4 Electrical Cabinet - Change Heating Element . 11 - 37

11.3.2.1-5 Electrical Cabinet - Set Relays . . . . . 11 - 38

11.3.3 Motor Unit . . . . . 11 - 39

11.3.3-1 Motor Unit - Change Fan . . . . . 11 - 39
11.3.4 Warning Lamp . . . . . 11 - 40
11.2.4-1 Warning Lamp - Error Handling . . . . . 11 - 40
11.4 Straw Detector 30 (TB/TBA) . . . . . 11 - 41
11.4.1 Conveyor Section . . . . . 11 - 41
11.4.1.1 Brake . . . . . 11 - 41
11.4.1.1-1 Brake - Check Parts . . . . . 11 - 41
11.4.1.1-2 Brake - Set . . . . . 11 - 43
11.4.2 Detector . . . . . 11 - 44
11.4.2.1 Detector . . . . . 11 - 44
11.4.2.1-1 Detector - Install Software Updates . . . . . 11 - 44
11.4.2.1-2 Detector - Set Vision System . . . . . 11 - 47
11.4.2.1-3 Detector - Clean Vision System . . . . . 11 - 52
11.4.3 Ejector . . . . . 11 - 53
11.4.3.1 Pneumatic Unit . . . . . 11 - 53
11.4.3.1-1 Air Nozzle - Set . . . . . 11 - 53
11.4.4 Electrical Cabinet . . . . . 11 - 54
11.4.4.1 Electrical Cabinet . . . . . 11 - 54
11.4.4.1-1 Electrical Cabinet - Change Filter . . . . . 11 - 54
11.4.4.2 Assembly Plate . . . . . 11 - 55
11.4.4.2-1 Assembly Plate - Set Time Relay . . . . . 11 - 55
11.5 Cooling Unit . . . . . 11 - 56
11.5-1 Cooling Unit - Set Temperature . . . . . 11 - 56
11.5-2 Cooling Unit - Error Handling . . . . . 11 - 57
11.6 Second Discharge Unit . . . . . 11 - 60
11.6-1 Second Discharge Unit - No Procedure Described . . . . . 11 - 60

11.1 Photocell Unit (TB/TBA/TPA)

11.1-1 Photocell Unit - No Procedure Described

SPC Reference	2943553-0100 - Valid for TB/TBA/TPA

To be placed directly on upstream DE controlled conveyor. It is used to start the infeed conveyor.

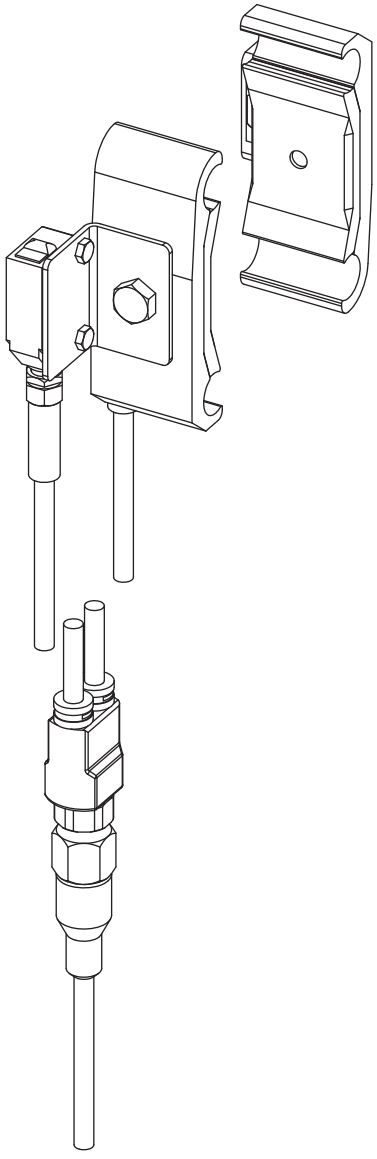

11.2 Quick Change (TB/TBA/TPA)

SPC Reference	3025775 - Valid for TB/TBA/TPA

11.2.1 Feed Wheel

11.2.1-1 Feed Wheel - Assemble

SPC Reference	2960584

Prepare the feed wheel quick change kit by assemble the variant feed wheel to the quick change parts by the screws (1).

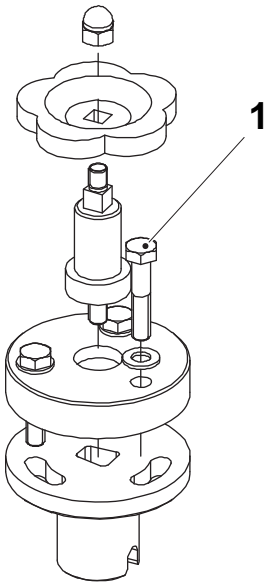

1 Screw (3 pieces)

11.2.2 Cutting Unit

11.2.2-1 Cutting Unit - Assemble

SPC Reference	3025777

Prepare the cutting unit quick change kit by assemble the variant cutting unit shafts to the quick change parts by the arrows in the illustration below.

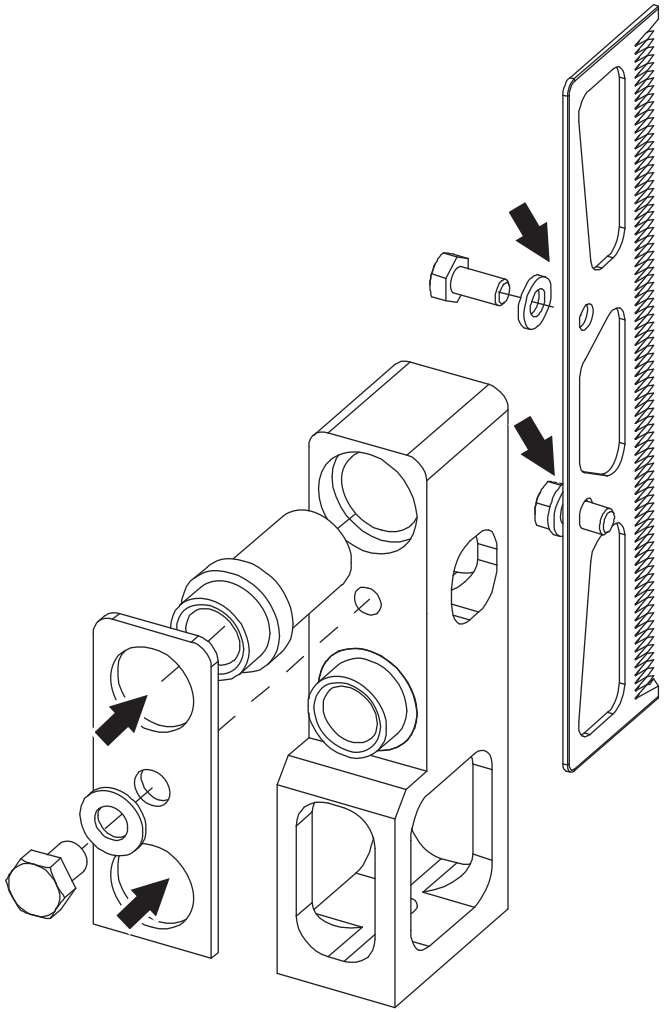

11.2.3 Pressure Arm

11.2.3-1 Pressure Arm - Assemble

SPC Reference	3025778

Prepare the quick change pressure arm kit:

Assemble the variant pressure arms to the quick change parts with the screws (1).

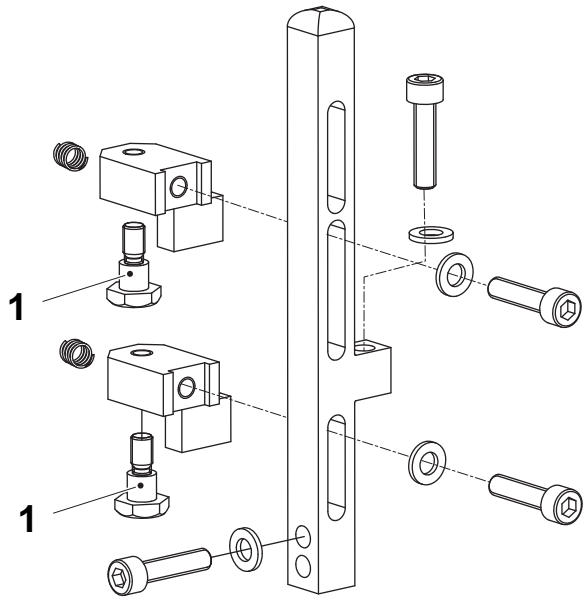

1 Screw

11.3 Bent Foil Treater

SPC Reference	2643050

11.3.1 Heater

11.3.1-1 Heater - Clean

Machine Status	Main Switch OFF
SPC Reference	2643060

a) Loosen the screws (1).

b) Remove the reel holder (2) and the rollers (3).

c) Loosen the screw (4).

d) Remove the angle (5) and the rollers (6).

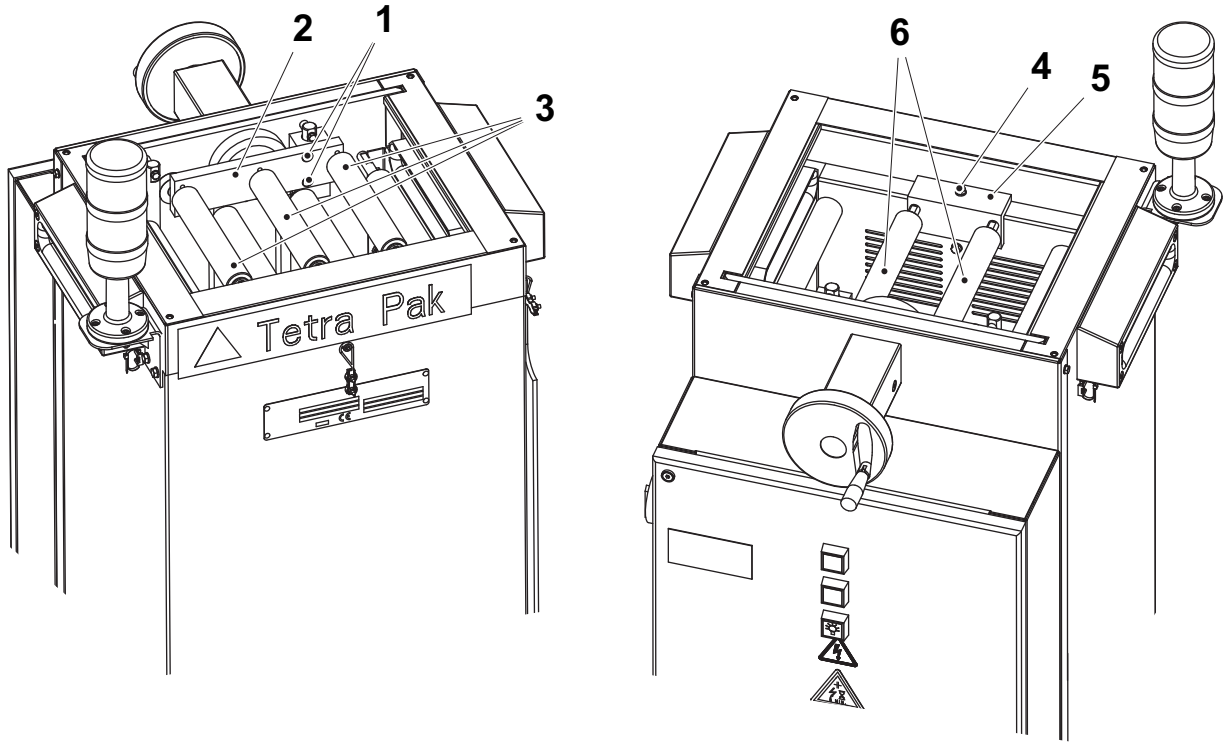

1 Screw
2 Reel holder
3 Roller
4 Screw
5 Angle
6 Roller

(Cont'd)

(Cont'd)

e) Remove any loose straws.

f) Remove the screws (7).

g) Remove the plate (8) from the heater and rinse the plate thoroughly with water.

h) Clean the heater with a cloth to remove dust and soil.

i) Assemble in the reverse order.

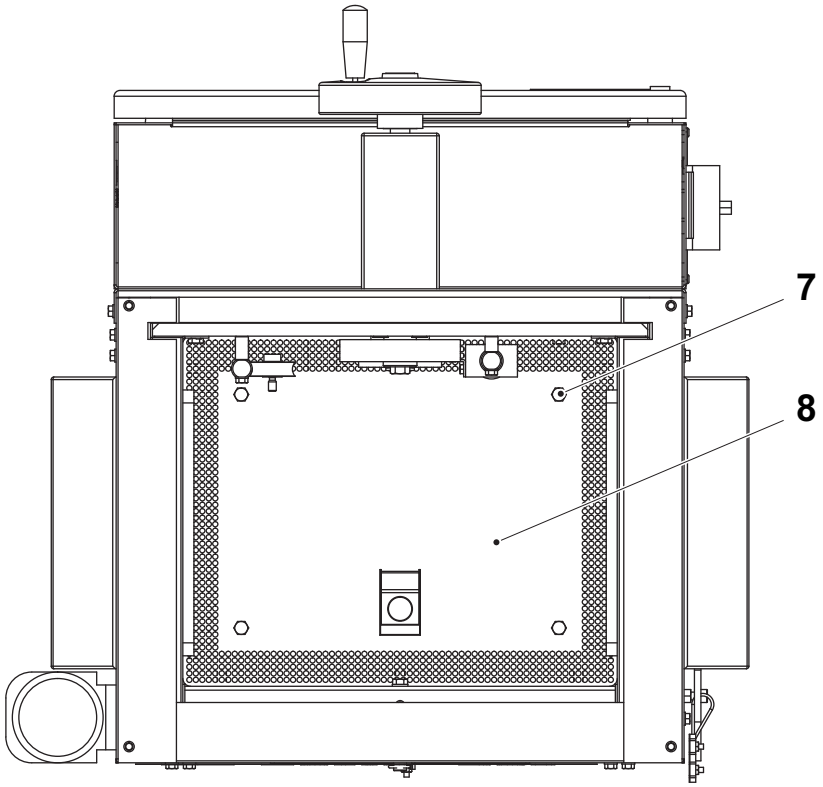

7 Screw (4 pieces)
8 Plate

11.3.1.1 Roller Unit

11.3.1.1-1 Roller Unit - Check Bushings

Machine Status	Main Switch OFF
SPC Reference	2960755

Check the bushings by cranking the hand wheel (1). Change if necessary, see 11.3.1.1-2 Roller Unit - Change Bushings.

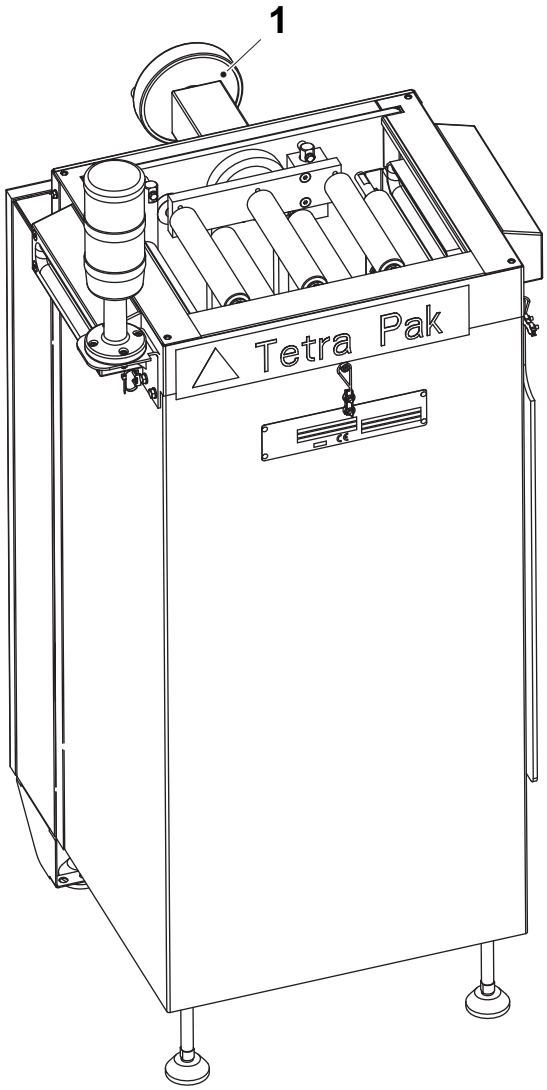

1 Hand wheel

11.3.1.1-2 Roller Unit - Change Bushings

Machine Status	Main Switch OFF
SPC Reference	2960755

a) Loosen the screws (1).

b) Remove the reel holder (2).

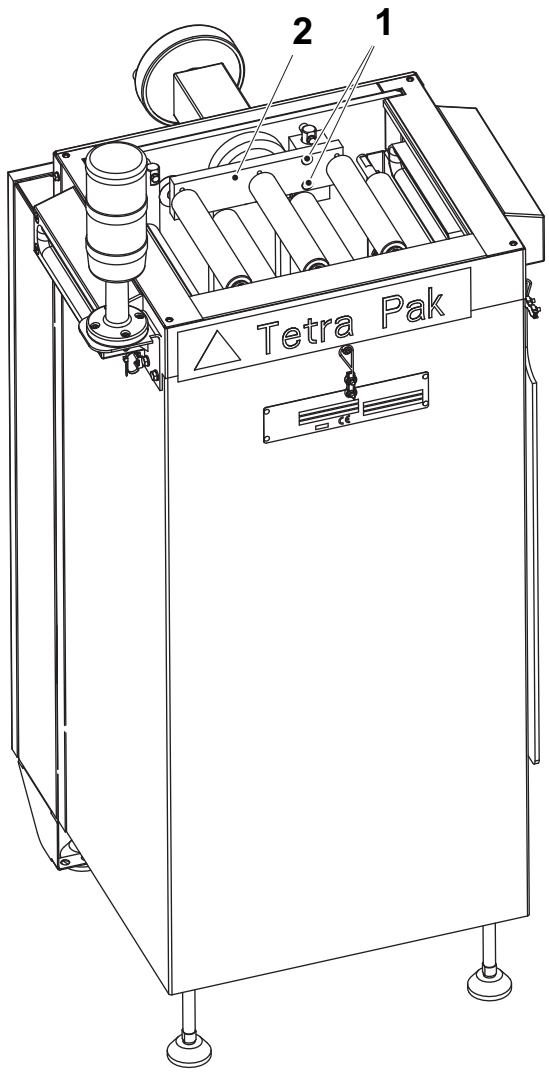

1 Screw
2 Reel holder

(Cont'd)

(Cont'd)

c) Loosen the screws (3).
d) Remove the screw (4) and the bracket (5).
e) Change the bushings (6).
f) Assemble the bracket (5) and the screw (4).

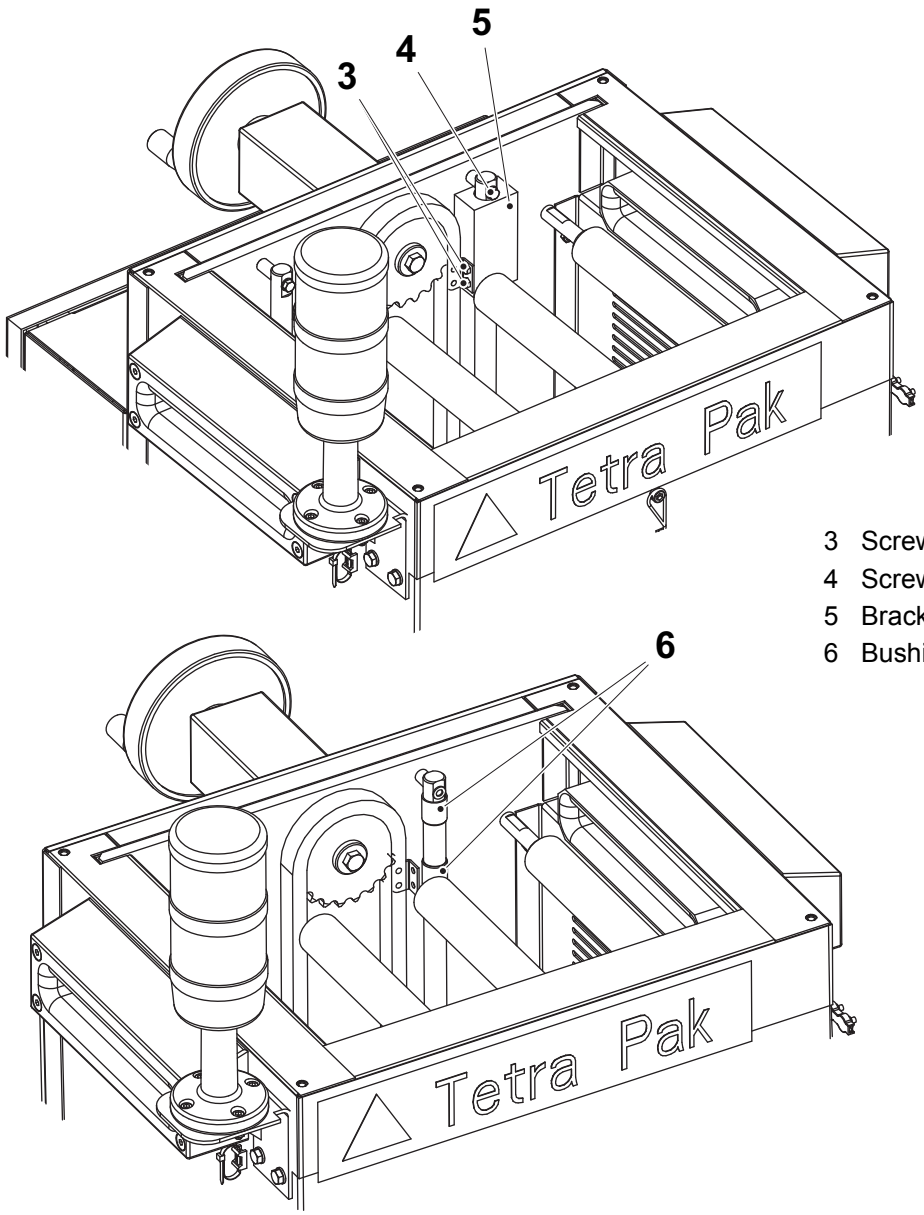

3 Screw
4 Screw
5 Bracket
6 Bushing

(Cont'd)

(Cont'd)

g) Loosen the screw (7).
h) Remove the sprocket (8) and the roller chain (9).
i) Remove the screws (10) and disassemble the hand wheel unit.
j) Remove the hand wheel (11) and remove the plastic cover (12).
k) Remove the retaining ring (13).
l) Change the flange bushings (14).

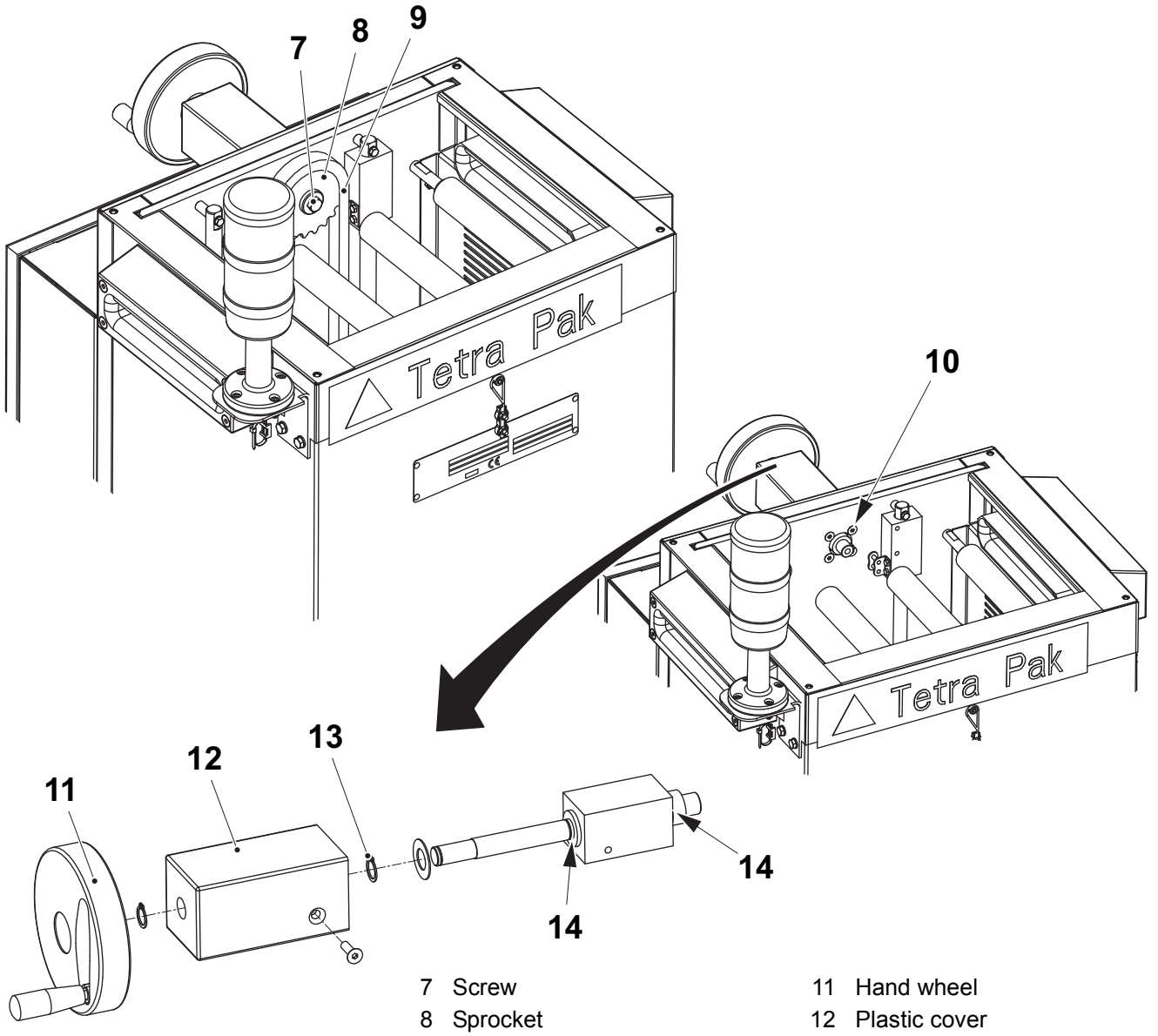

7	Screw	11	Hand wheel
8	Sprocket	12	Plastic cover
9	Roller chain	13	Retaining ring
10	Screw (4 pieces)	14	Flange bushing

(Cont'd)

(Cont'd)

m) Remove the sprocket (15).
n) Change the flange bushing (16).
o) Assemble in the reverse order.

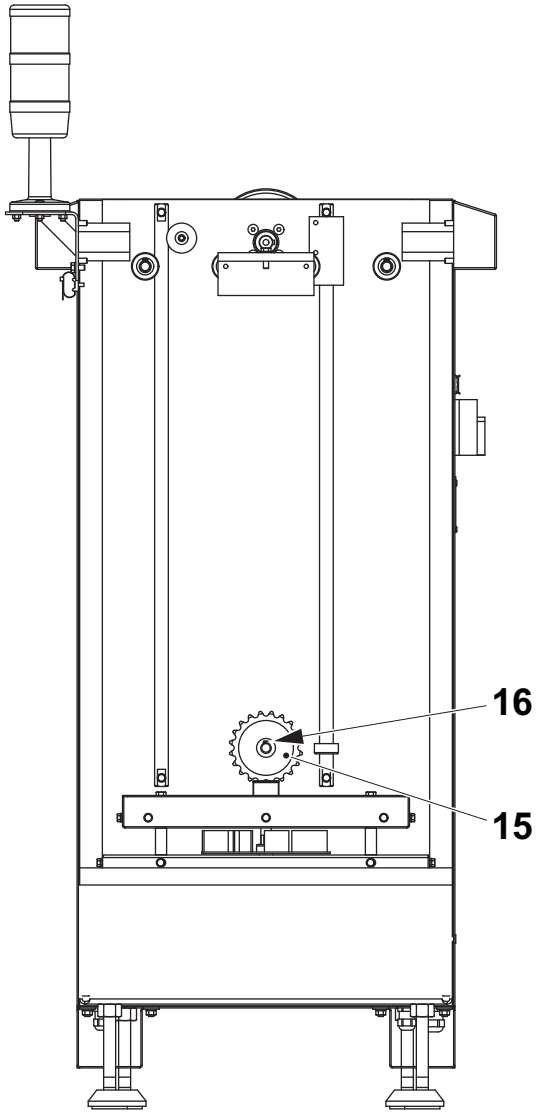

15 Sprocket
16 Flange bushing

11.3.1.1-3 Roller Unit - Change Roller Chain

Machine Status	Main Switch OFF
SPC Reference	2960755

a) Loosen the screws (1).

b) Remove the reel holder (2).

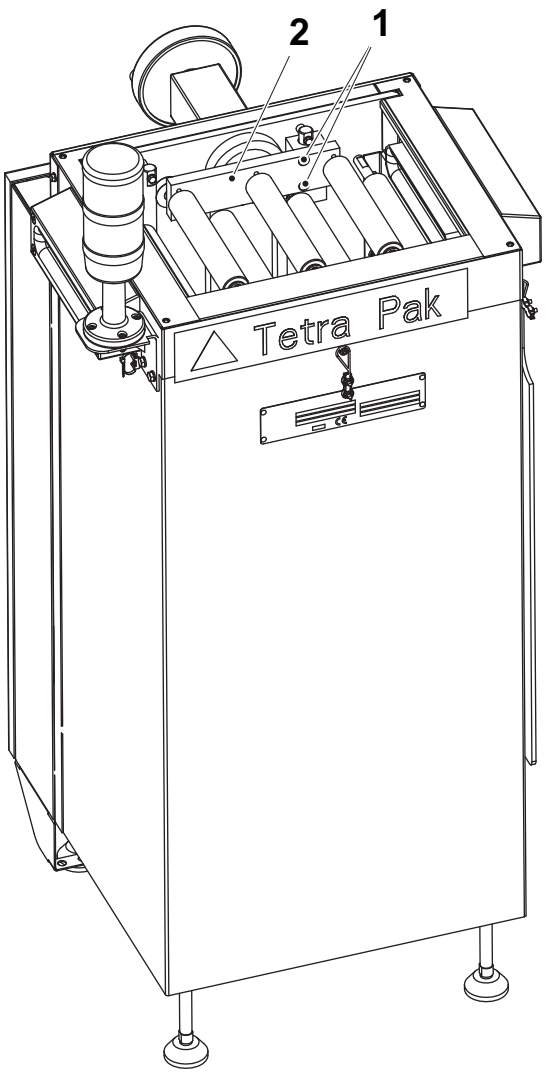

1 Screw
2 Reel holder

(Cont'd)

(Cont'd)

c) Loosen the screws (3).
d) Loosen the screw (4) and remove the sprocket (5).
e) Change the roller chain (6).
f) Assemble in the reverse order.

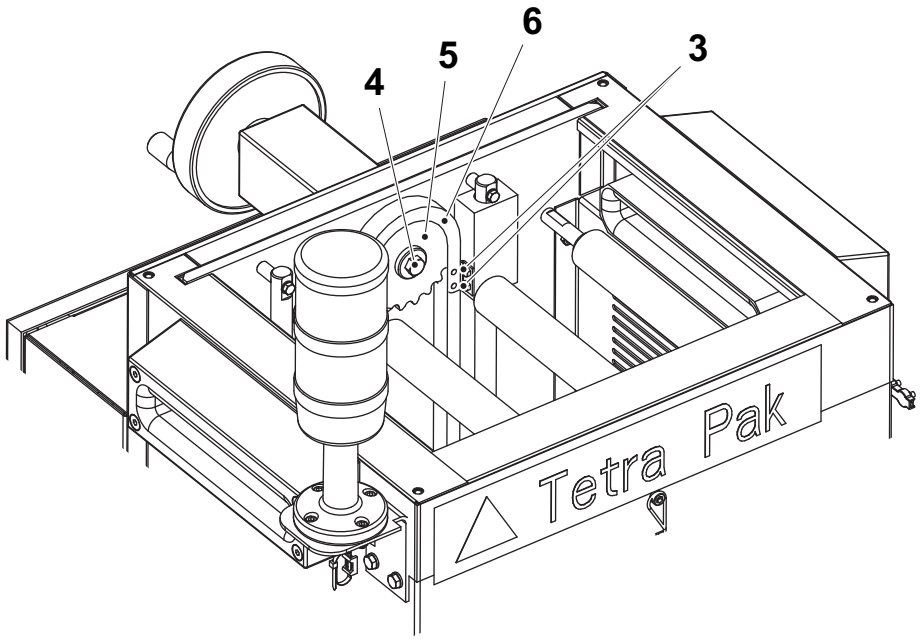

3 Screw (2 pieces)
4 Screw
5 Sprocket
6 Roller chain

11.3.1.1-4 Roller Unit - Check Wheel

Machine Status	Main Switch OFF
SPC Reference	2751388

a) Check the wheel (1) for wear and damage. Change if necessary.

b) Clean the heater, see Procedure 11.3.1-1 Heater - Clean.

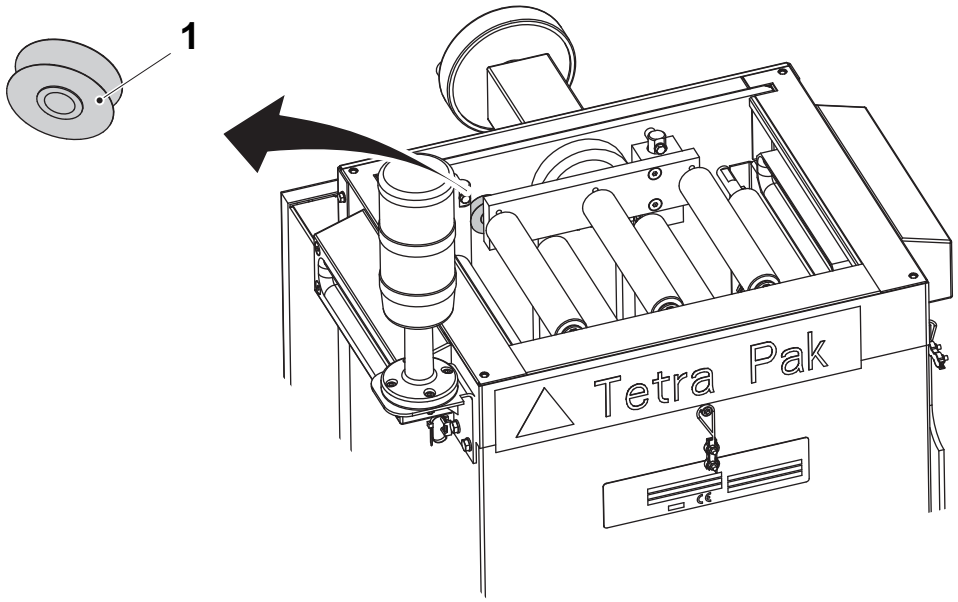

1 Wheel

11.3.1.1-5 Roller Unit - Change Wheel

Machine Status	Main Switch OFF
SPC Reference	2751388

a) Loosen the screws (1).

b) Remove the reel holder (2).

c) Remove the screw (3) and change the wheel (4).

d) Assemble in the reverse order.

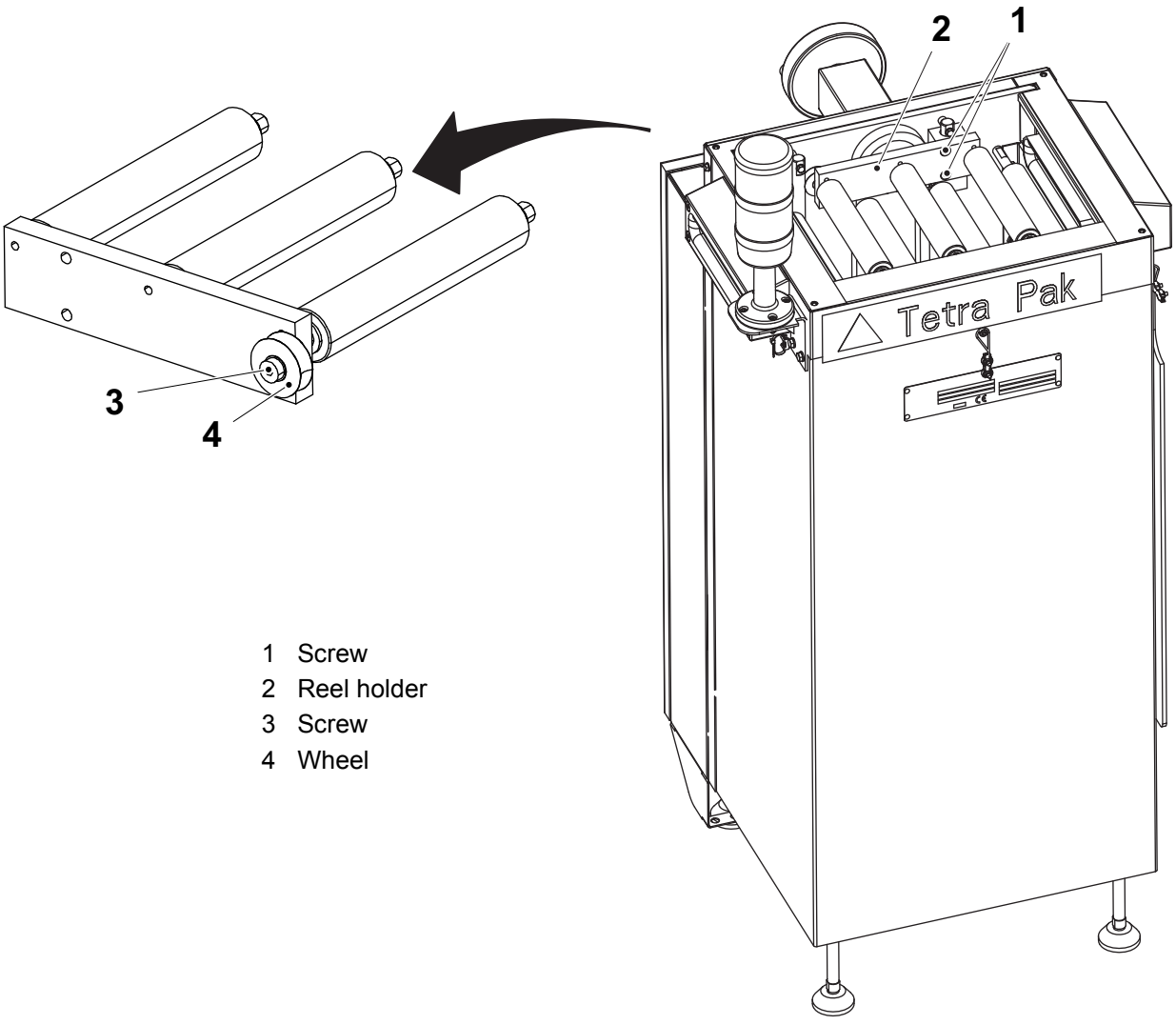

1 Screw
2 Reel holder
3 Screw
4 Wheel

11.3.1.1-6 Roller Unit - Check Hand Wheel

Machine Status	Main Switch OFF
SPC Reference	2751388

Check the hand wheel (1) for wear or damage. Change if necessary, see Procedure 11.3.1.1-7 Roller Unit - Change Hand Wheel.

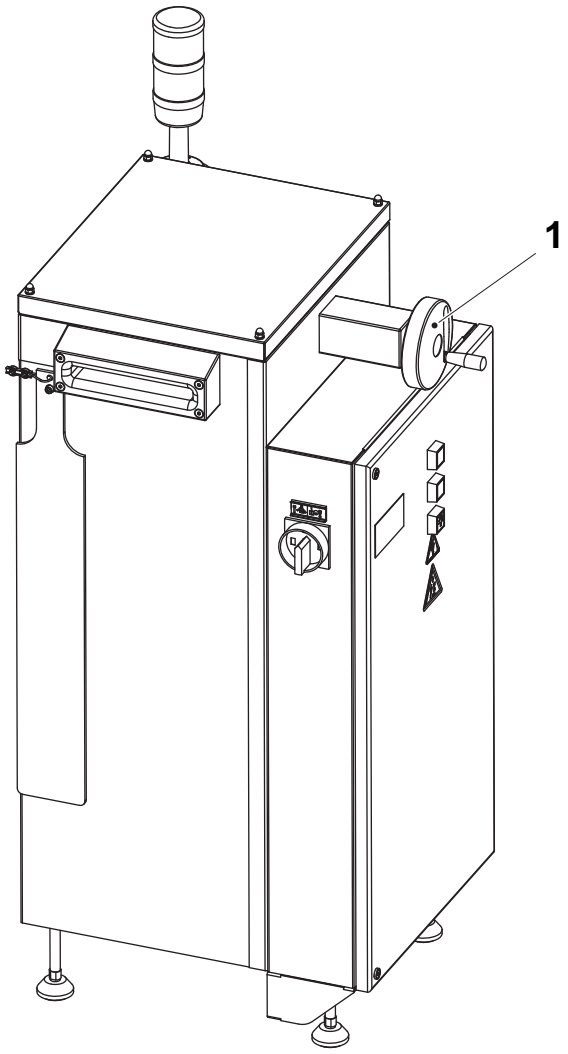

1 Hand wheel

11.3.1.1-7 Roller Unit - Change Hand Wheel

Machine Status	Main Switch OFF
SPC Reference	90600-1941

a) Remove the lid (1) and remove the retaining ring (2) inside.

b) Change the hand wheel (3).

c) Assemble in the reverse order.

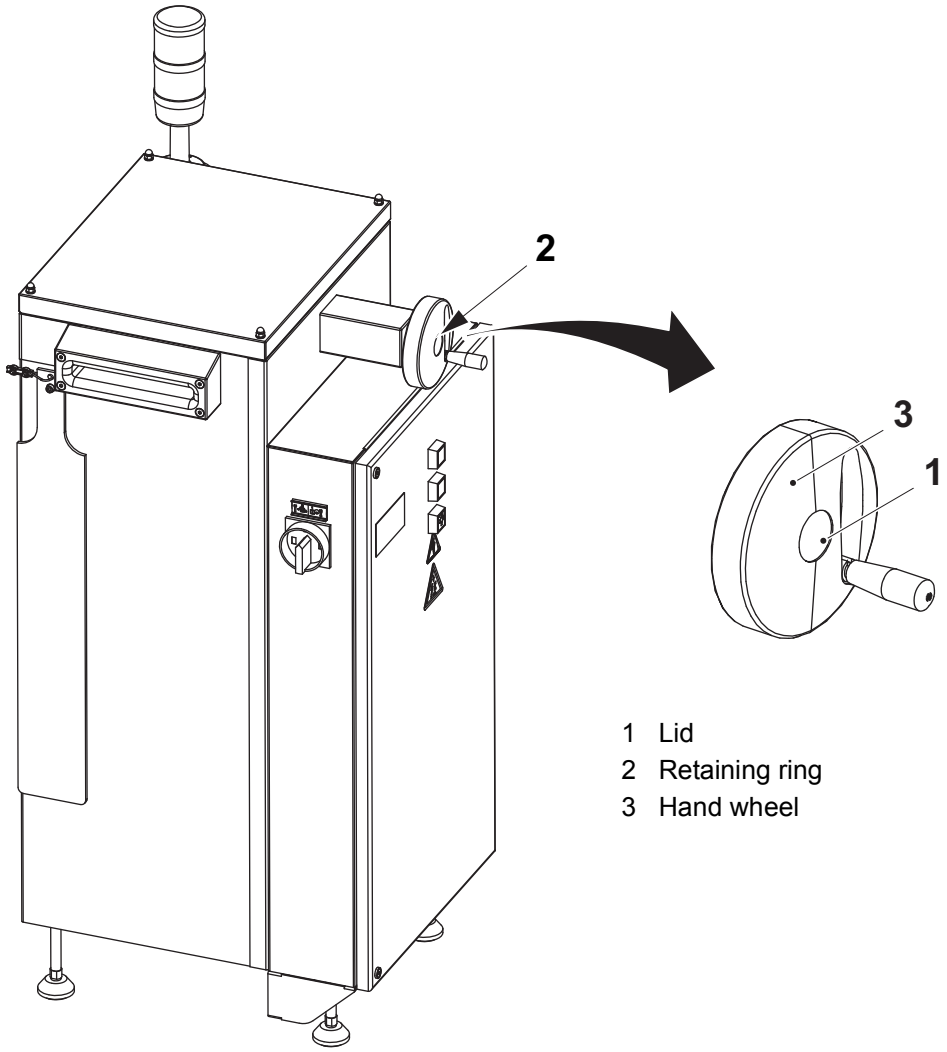

1 Lid
2 Retaining ring
3 Hand wheel

11.3.1.2 Bending Roller

11.3.1.2-1 Bending Roller - Check Bushings

Machine Status	Main Switch OFF
SPC Reference	2643065, 2643066, 2789703

a) Check the bushings (1) on the bending rollers (2) for wear and damage. Change them if necessary.

b) Clean the heater, see Procedure 11.3.1-1 Heater - Clean.

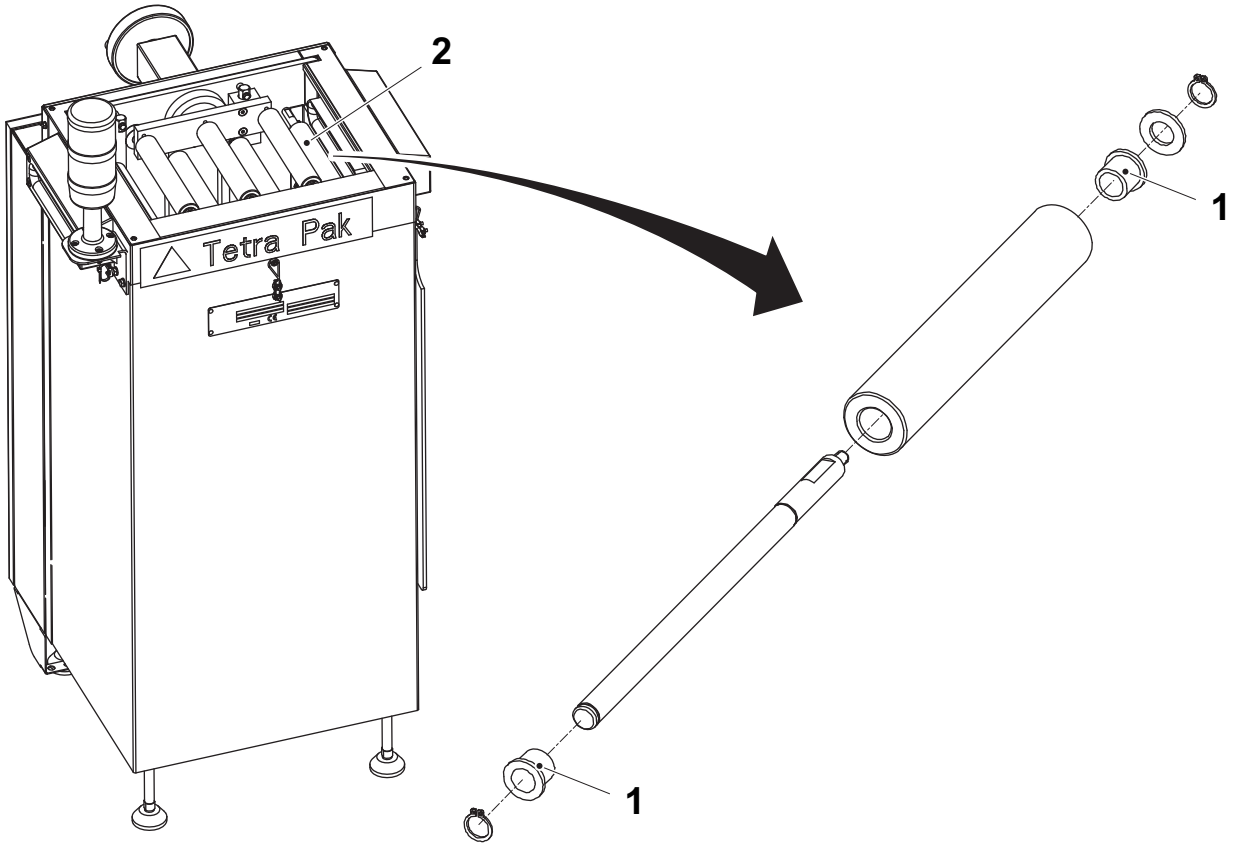

1 Bushing (14 pieces)
2 Bending roller (7 pieces)

11.3.1.2-2 Bending Roller - Check Rollers

Machine Status	Main Switch OFF
SPC Reference	2643065, 2643066, 2789703

a) Check the bending rollers (1) for wear and damage. Change them if necessary.

b) Clean the heater, see Procedure 11.3.1-1 Heater - Clean.

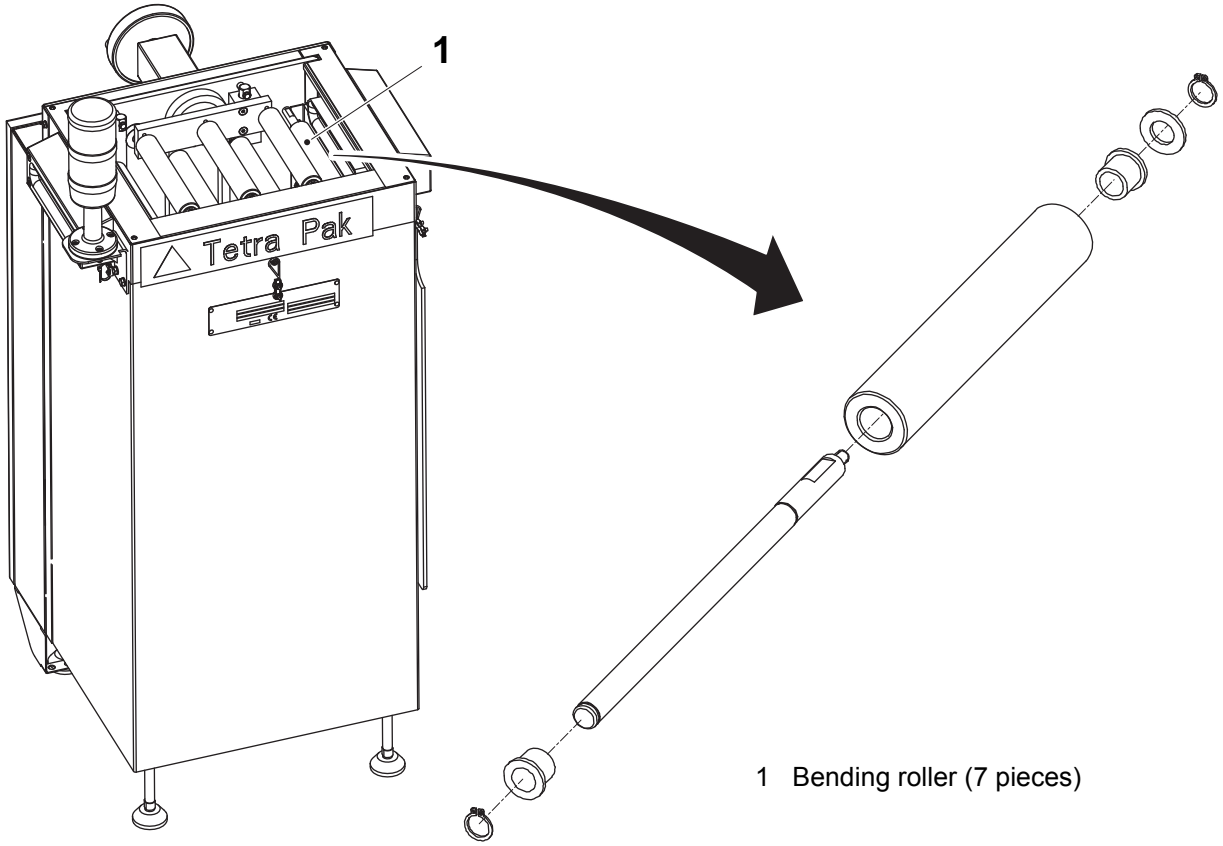

1 Bending roller (7 pieces)

11.3.2 Electrical Cabinet

11.3.2.1 Electrical Cabinet

11.3.2.1-1 Electrical Cabinet - Change Temperature Controller

Machine Status	Main Switch OFF
SPC Reference	2727159

a) Remove the holder (1) with the temperature controller (2) from the electrical cabinet.

b) Change the temperature controller.

c) Mount the bracket with the new temperature controller in the electrical cabinet.

d) Set the temperature controller, see Procedure 11.3.2.1-2 Electrical Cabinet - Set Temperature Controller.

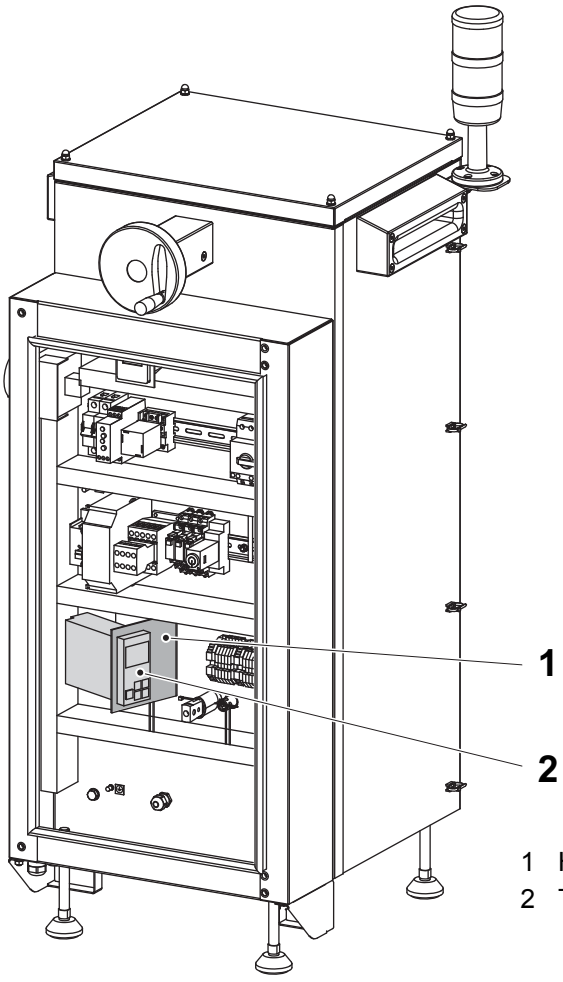

1 Holder
2 Temperature controller

11.3.2.1-2 Electrical Cabinet - Set Temperature Controller

Machine Status	Main Switch ON
SPC Reference	2727159

After switching on the power supply, the controller starts with the first level: operating level.

The display shows the current temperature (4), and the set-point value (5).

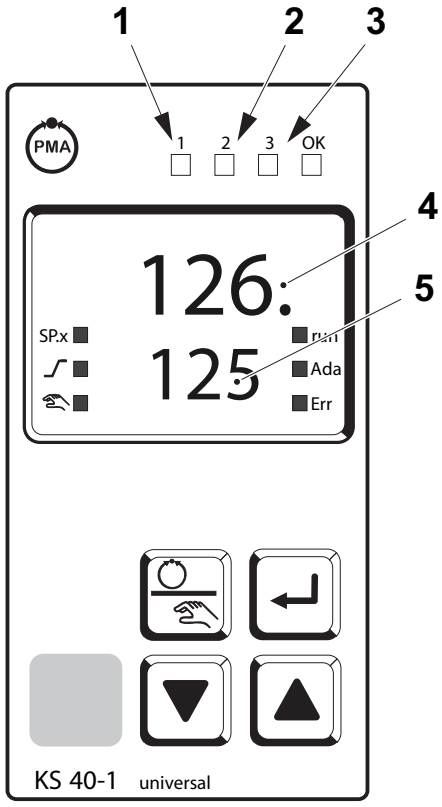

1 Alarm
2 Fan
3 Heating
4 Display (current temperature)
5 Set-point, controller output

(Cont'd)

(Cont'd)

Set the values/parameters as follows:

a) For access to the safety switches, the controller must be withdrawn from the housing. Squeeze the top and bottom of the front bezel between thumb and forefinger and pull the controller firmly from the housing, see the illustration below.

b) Set the safety switch (Loc) (6) in closed position.

c) Press the MENU button (7) for three seconds to step to the parameter level.

d) Set the parameters, see Procedure Set Parameters.

e) Press the DECREASE button (8) once for transition to the configuration level.

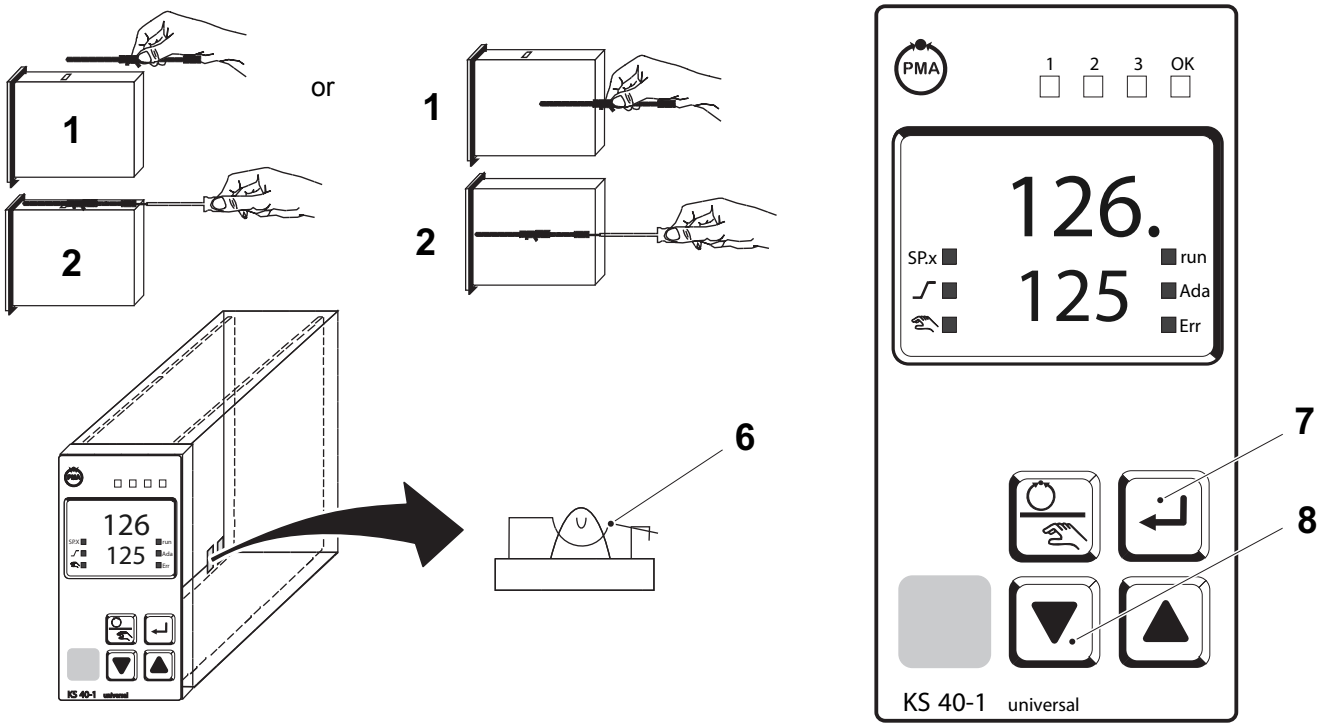

6 Safety switch (Loc)
7 MENU button
8 DECREASE button

(Cont'd)

(Cont'd)

f) Set the configurations, see Procedure Set Configurations.

g) When all settings are correct, wait for 30 seconds and the temperature controller returns to the operating level automatically.

h) Set the safety switch (Loc) (6) in open position. This means that the configuration and parameter settings are locked and not accessible for changes.

i) Assemble the temperature controller in the housing again.

j) Before pressing STEP UP on the Bent Foil Treater, check the set-point value on the display (5). The set-point value can be adjusted by pressing the increase and the decrease buttons, even if the safety switch is open.

Note! The set-point value can never exceed the value set in the parameter list.

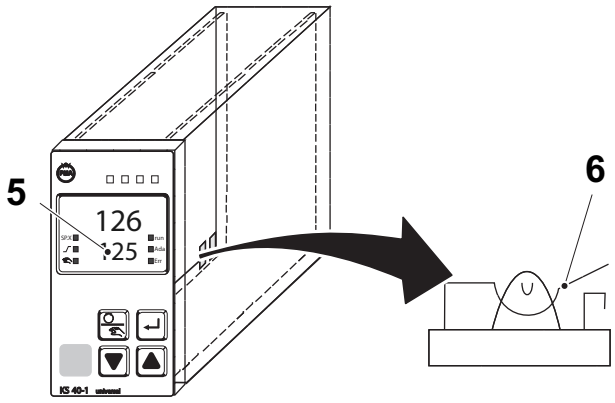

5 Set Point
6 Safety switch (Loc)

(Cont'd)

(Cont'd)

Set Parameters

Set the parameters of the temperature controller according to the parameter table.

Adjustments:

- The parameters can be adjusted by the DECREASE and the INCREASE buttons (8) and (9).
- Transition to the next parameter is done by pressing the MENU button (7).
- After the last configuration of a group, donE is displayed and followed by automatic change to the next group.
- Return to the beginning of a group is done by pressing the MENU button for 3 seconds.
- If no keypress is executed for 30 seconds., the controller returns to the process value and setpoint display (Time Out = 30 seconds).

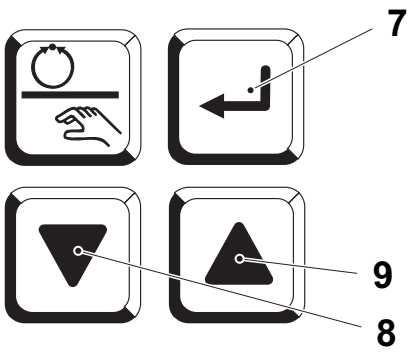

7 MENU button
8 DECREASE button
9 INCREASE button

(Cont'd)

(Cont'd)

Parameter Table

Name	Description	Value
Cntr		
Pb1	Proportional band 1/2 (heating) in phys. dimensions (e.g. °C)	8
ti1	Integral action time 1 (heating) [s]	50
td1	Derivative action time 1 (heating) [s]	50
t1	Minimal cycle duration 1/2 (heating/cooling) [s]. The minimum impulse is 1/4 x t1/t2	10
t2		10
SEtP		
SP.Hi[a)]	**Set-point limit high for Weff**	**100**
SP.2	Set-point 2.	5
Lim		
L.1	Lower limit 1	-5
H.1	Upper limit 1	5
HYS.1	Hysteresis limit 1	5
L.2	Lower limit 2	OFF
H.2	Upper limit 2	50
HYS.2	Hysteresis limit 2	0

a) The set-point value can also be set when the safety switch is in open position, by pressing the increase and the decrease buttons. However, the temperature can never exceed the set-point value set in the parameter level (safety switch in closed position).

(Cont'd)

(Cont'd)

Set Configurations

Set the configurations of the temperature controller according to the configuration table.

Adjustments:

- The configurations can be adjusted by means of the DECREASE and the INCREASE buttons (8) and (9).
- Transition to the next configuration is by pressing the MENU button (7).
- After the last configuration of a group, donE is displayed and followed by automatic change to the next group.
- Return to the beginning of a group is by pressing the menu button for 3 seconds.

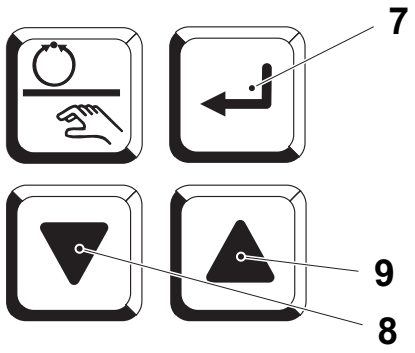

7 MENU button
8 DECREASE button
9 INCREASE button

(Cont'd)

(Cont'd)

Configuration Table

Name	Description	Value
Cntr		
rnG.H	X100 (high limit range of control)	150
InP.1		
S.tYP	Sensor type selection	2
InP.2		
I.Fnc	Function selection of INP2	0
Lim		
Fnc. 1	Function of limit 1	1
Src. 1	Source of limit 1	1
Fnc. 2	Function of limit 2	1
Src. 2	Source of limit 2	0
Fnc. 3	Function of limit 3	0
Out.1		
O.Act	Method of operation of output OUT1	1
Y.1	Controller output Y1	0
Lim.1	Limit 1/2/3 signal	1
Lim.2	Limit 1/2/3 signal	0
Out.2		
O.Act	Method of operation of output OUT2	0
Y.1	Controller output Y1	0
Lim.1	Limit 1/2/3 signal	0
Lim.2	Limit 1/2/3 signal	1
Out.3		
O.Act	Method of operation of output OUT3 (only visible when O.TYP=0)	0
Y.1	Controller output Y1/Y2 (only visible when O.TYP=0)	1

Lim.1	Limit 1/2/3 signal (only visible when O.TYP=0)	0
Lim.2	Limit 1/2/3 signal (only visible when O.TYP=0)	0
FAi.1	INP1/ INP2 error (only visible when O.TYP=0)	0
FAi.2		
LOGI		
SP.2	Switching to second setpoint SP.2	2
di.Fn	Function of digital inputs (valid for all inputs)	1
othr		
FrEq	**50 Hz**	**0**
	60 hz	**1**
ICof	**Block controller off** (only visible with BlueControl!)	1

Error Signals

With one or several errors, the extended operating level always starts with the error list. Signalling an actual entry in the error list (alarm, error) is done by the Err LED in the display. To reach the error list press the MENU button twice.

Err LED status	Signification	Action
Blink (Status 2)	Alarm due to existing error	- Determine the error type in the error list via the error number - Change to Status 1 after error removal
Lit (Status 1)	Error removed, alarm not knowledged	- Acknowledge the alarm in the error list by pressing the INCREASE or DECREASE button - The alarm entry is deleted (Status 0)
Off (Status 0)	No error, all alarm entries deleted	- Not visible except when acknowledging

In case of an error, an error signal is displayed on the display. The error signal is displayed until the error is acknowledged, or until its cause has been eliminated.

(Cont'd)

(Cont'd)

The following error signals can be displayed.

Error	Description	Cause	Action
E.1	Internal error, cannot be removed	- for example defective EEPROM	- Contact PMA service - Return unit to our factory
E.2	Internal error, can be reset	- for example EMC trouble	- Keep measurement and power supply cables in separate runs - Ensure that interference suppression of contactors is provided
E.4	Hardware error	- Code number and hardware are not identical	- Contact PMA service - Elektronic-/Optioncard must be exchanged
FbF.1	Sensor break INP1	- Sensor defective - Faulty cabling	- Replace INP1 sensor - Check INP1 connection
Sht.1	Short circuit INP1	- Sensor defective - Faulty cabling	- Replace sensor INP1 - Check INP1 connection
POL.1	INP1 polarity error	- Faulty cabling	- Reverse INP1 polarity
FbF.2	Sensor break INP2	- Sensor defective - Faulty cabling	- Replace INP2 sensor - Check INP2 connection
Sht.2	Short circuit INP2	- Sensor defective - Faulty cabling	- Replace sensor INP2 - Check INP2 connection
POL.2	INP2 polarity error	- Faulty cabling	- Reverse INP2 polarity
HCA	Heating current alarm (HCA)	- Heating current circuit interrupted, I< HC.A or I> HC.A (dependent of configuration) - Heater band defective	- Check heating current circuit - If necessary, replace heater band
SSr	Heating current short circuit (SSR)	- Current flow in heating circuit with controller off - SSR defective	- Check heating current circuit - If necessary, replace solid-state relay
LooP	Control loop alarm (LOOP)	- Input signal defective or not connected correctly - Output not connected correctly	- Check heating or cooling circuit - Check sensor and replace it, if necessary - Check controller and switching device

AdA.H	Self-tuning heating alarm (ADAH)	- See Self-tuning heating error status	- See Self-tuning heating error status
AdA.C	Self-tuning heating alarm cooling (ADAC)	- See Self-tuning cooling error status	- See Self-tuning cooling error status
LiM.1	Stored limit alarm 1	- adjusted limit value 1 exceeded	- Check process
LiM.2	Stored limit alarm 2	- adjusted limit value 2 exceeded	- Check process
LiM.3	Stored limit alarm 3	- adjusted limit value 3 exceeded	- Check process
Inf.1	Time limit value message	- adjusted number of operating hours reached	- Application-specific
Inf.2	Duty cycle message (digital outputs)	- adjusted number of duty cycles reached	- Application-specific

In case of problem with the temperature controller, check all connections. Change the temperature regulator if required, see Procedure 11.3.2.1-1 Electrical Cabinet - Change Temperature Controller.

11.3.2.1-3 Electrical Cabinet - Change Thermocouple

Machine Status	Main Switch OFF
SPC Reference	2727159

Change the thermocouple (1).

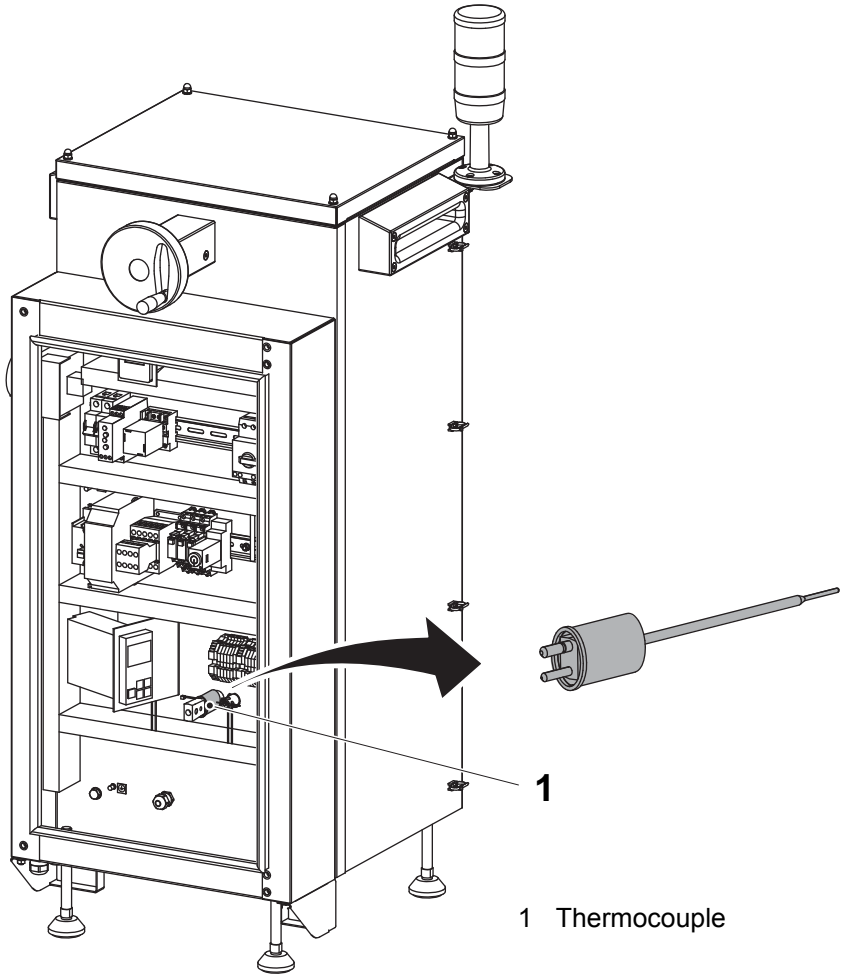

1 Thermocouple

11.3.2.1-4 Electrical Cabinet - Change Heating Element

Machine Status	Main Switch OFF
SPC Reference	2727159

Change the heating elements (1).

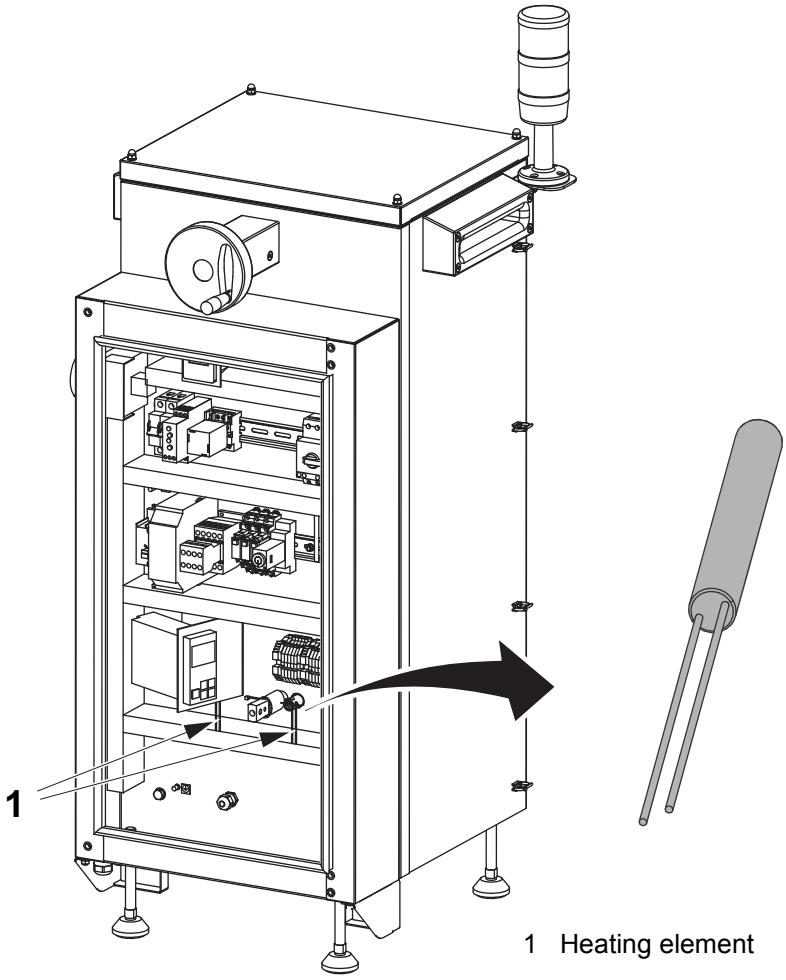

1 Heating element

11.3.2.1-5 Electrical Cabinet - Set Relays

Machine Status	Main Switch ON
SPC Reference	2727159

a) Set the switches on the time relay (1) according to the illustration below. The settings should be 10 seconds and mode on-delay.

b) Set the time adjuster (2) to 2 seconds.

c) Set the current control relay (3) to UNDER CURRENT and WITH MEMORY, according to the illustration below.

Note! If the yellow warning lamp lights and only one of the LEDs (6) lights - check the heating elements. Change heating element if necessary, see Procedure 11.3.2.1-4 Electrical Cabinet - Change Heating Element. Press STEP DOWN and then press STEP UP to restart the heating process.

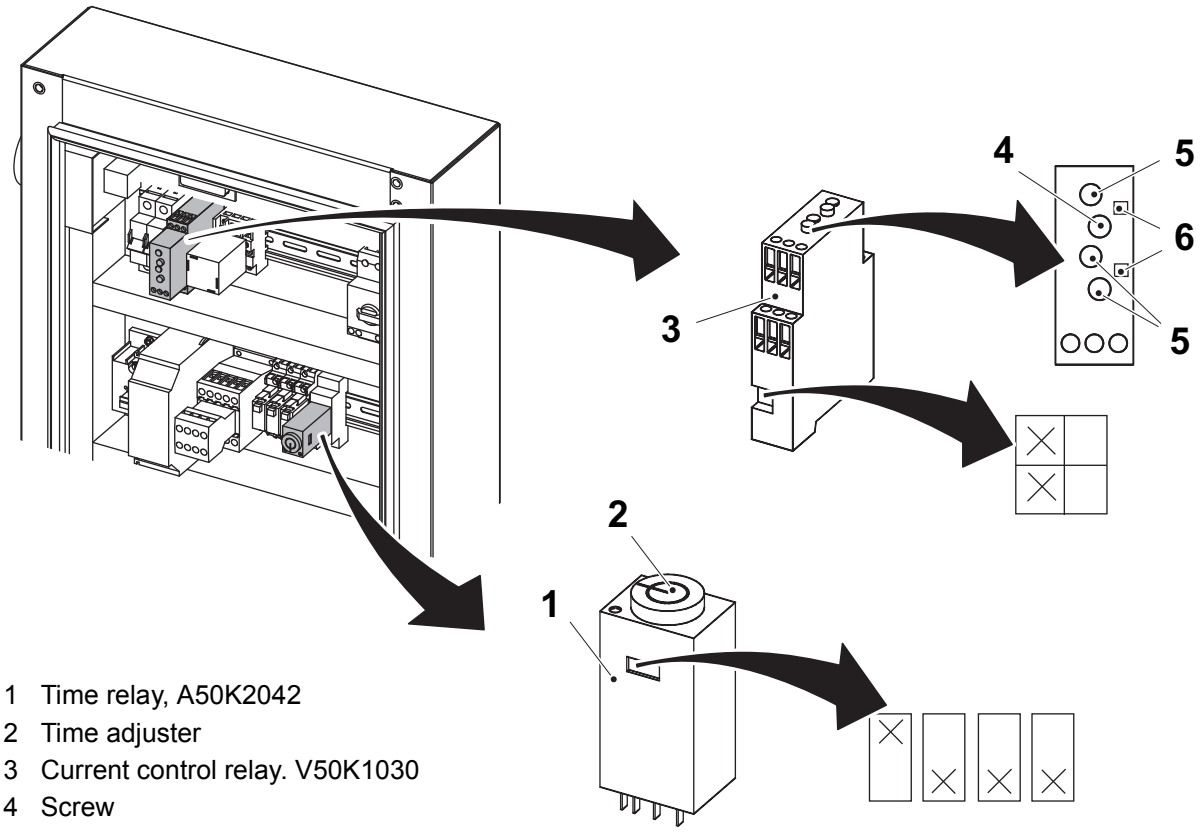

1 Time relay, A50K2042
2 Time adjuster
3 Current control relay. V50K1030
4 Screw
5 Screw
6 LED

11.3.3 Motor Unit

11.3.3-1 Motor Unit - Change Fan

Machine Status	Main Switch OFF
SPC Reference	2751400

a) Remove the screws (1) and the cover (2).

b) Remove the screws (3) and the motor unit (4).

c) Change the fan (5).

d) Assemble in the reverse order.

Note! The fan rotates counter-clockwise, as indicated by the arrows in the illustration below.

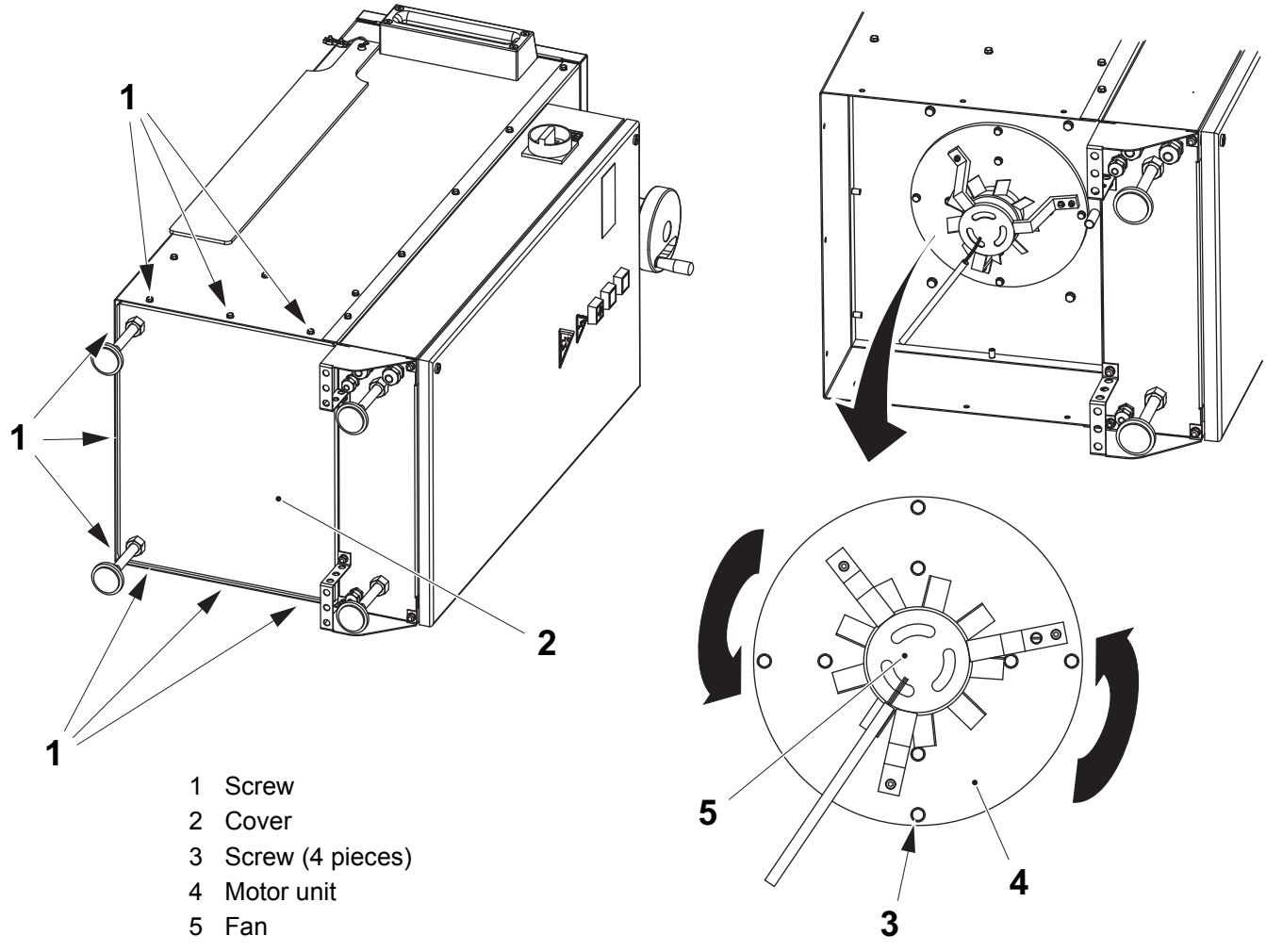

1 Screw
2 Cover
3 Screw (4 pieces)
4 Motor unit
5 Fan

11.3.4 Warning Lamp

11.2.4-1 Warning Lamp - Error Handling

Warning lamp status	Possible cause(s)	Action
Yellow light	The temperature within the machine has not reached the running temperature. The machine is not ready to run.	Wait. It takes approximately 30 minutes for the BFT to reach its running temperature.
	The overload protection (1) in the electrical cabinet has tripped.	Switch the overload protection (1) to position ON.
	The current control relay (2) in the electrical cabinet has tripped. Possible reason may be that one of the heating elements is not working.	Step down the machine to reset the alarm. If the alarm still does not go out, replace the heating element, see procedure 11.3.2.1-4 Electrical Cabinet - Change Heating Element
Green light	The temperature within the machine has reached the running temperature. This means that the machine is ready to run.	

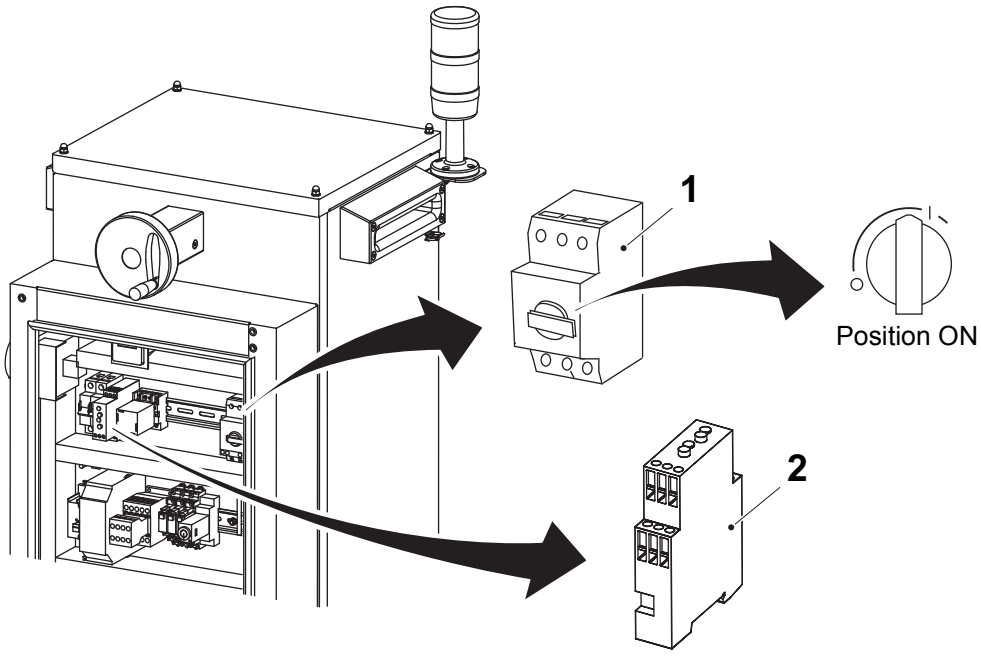

1 Overload protection, Q50F1020
2 Current control relay, V50K1030

11.4 Straw Detector 30 (TB/TBA)

SPC Reference	663550 - Valid for TB/TBA

11.4.1 Conveyor Section

11.4.1.1 Brake

11.4.1.1-1 Brake - Check Parts

Machine Status	Main Switch OFF
SPC Reference	2912690

CAUTION

Risk of entanglement.

The power supply disconnector (main switch) does not control the conveyor going through the Straw Detector 30. The power supply disconnector (main switch) on the conveyor drive unit must be turned off and secured with a lock before any maintenance.

Note! The key to the lock must be removed by the technician and retained in his/her possession until all work is completed.

a) Remove the cover (1).

b) Remove the protection (2).

c) Remove the cover (3).

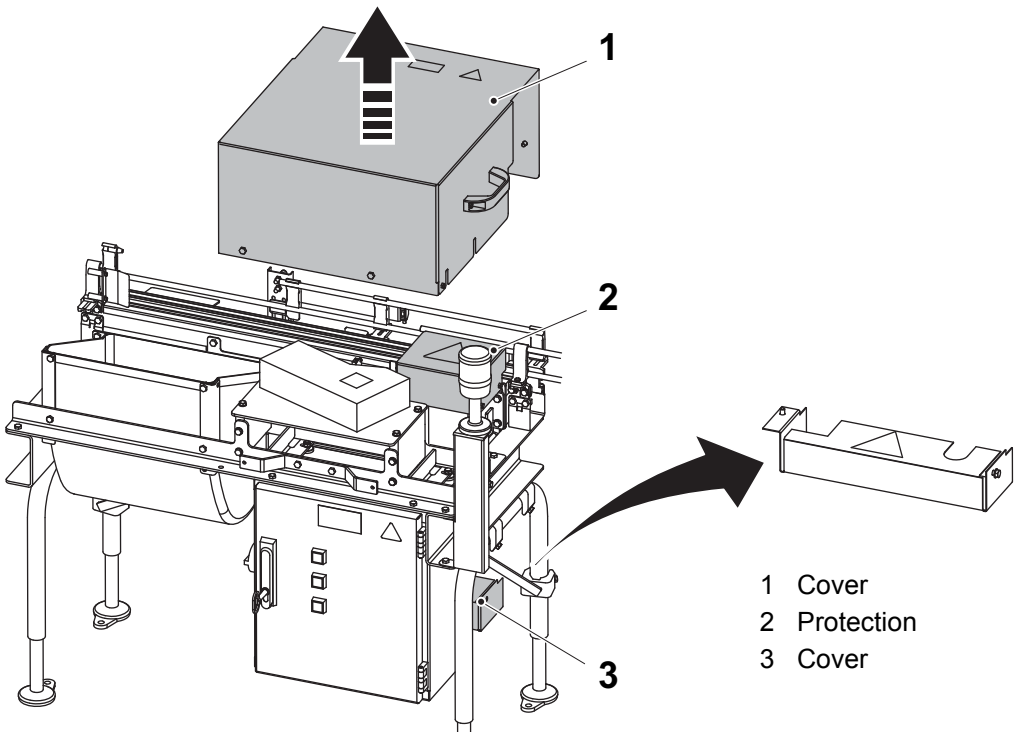

(Cont'd)

(Cont'd)

d) Check the counter wheel (4), the ball bearings (5), and the toothed pulley (6) for wear and damage, change if necessary.

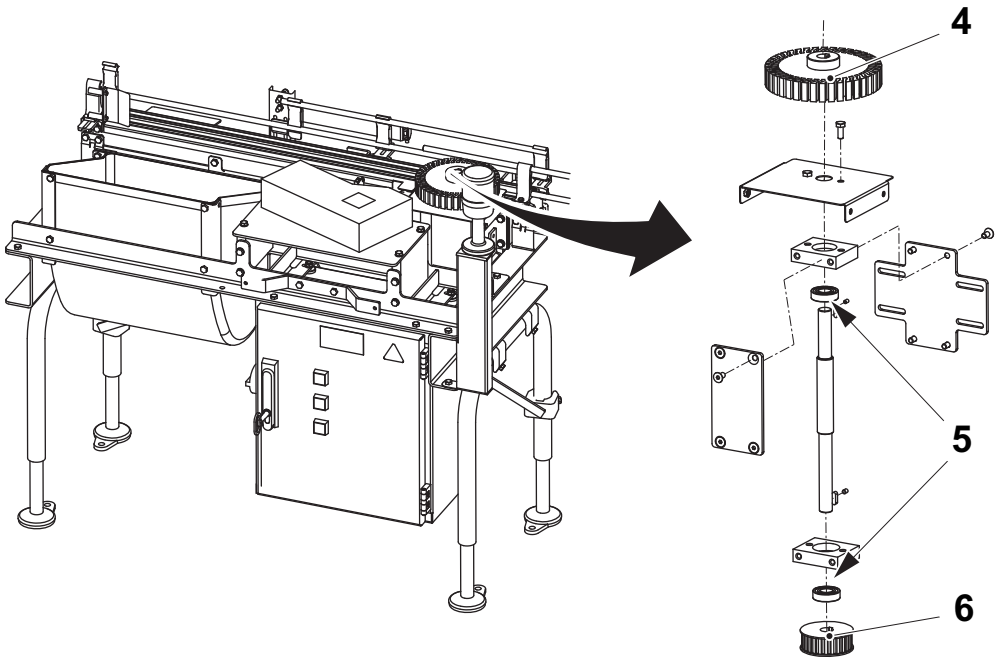

4 Counter wheel
5 Ball bearing
6 Toothed pulley

11.4.1.1-2 Brake - Set

Machine Status	Main Switch OFF
SPC Reference	2912690

a) Adjust the rails opposite to the counter wheel so that there is approximately 1 cm gap between every package when they have passed the wheel.

Note! The gap should be present also for packages without straw.

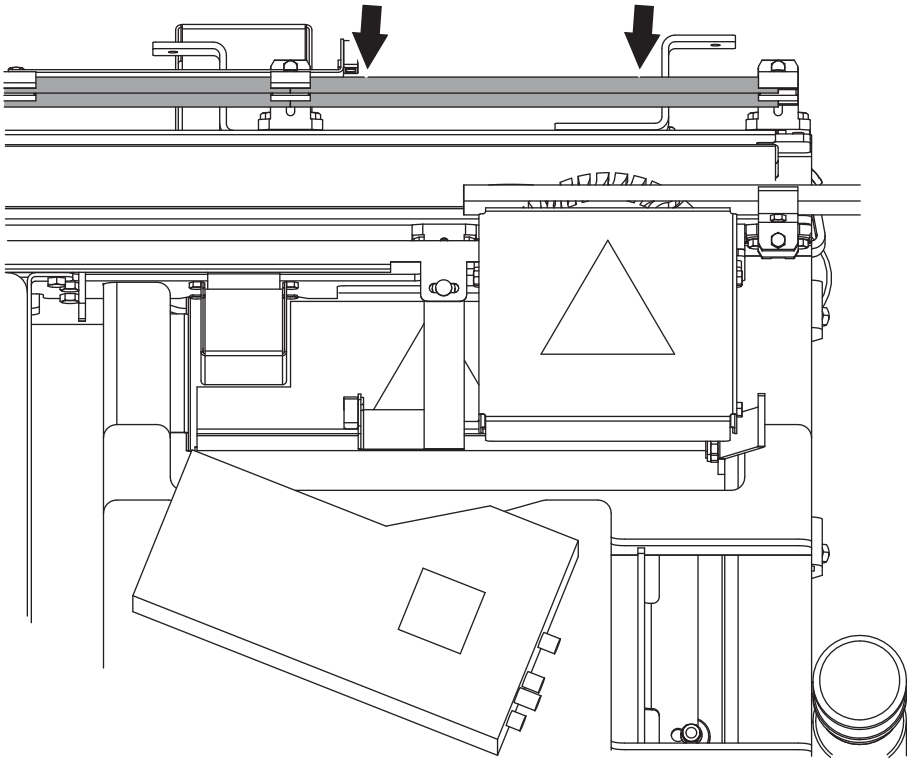

11.4.2 Detector

11.4.2.1 Detector

11.4.2.1-1 Detector - Install Software Updates

Machine Status	Main Switch ON
SPC Reference	2933650

Note! If the ambient temperature exceeds approximately 40ºC the camera will switch off. This is to protect the laser from overheating.

a) Remove the cover (1).

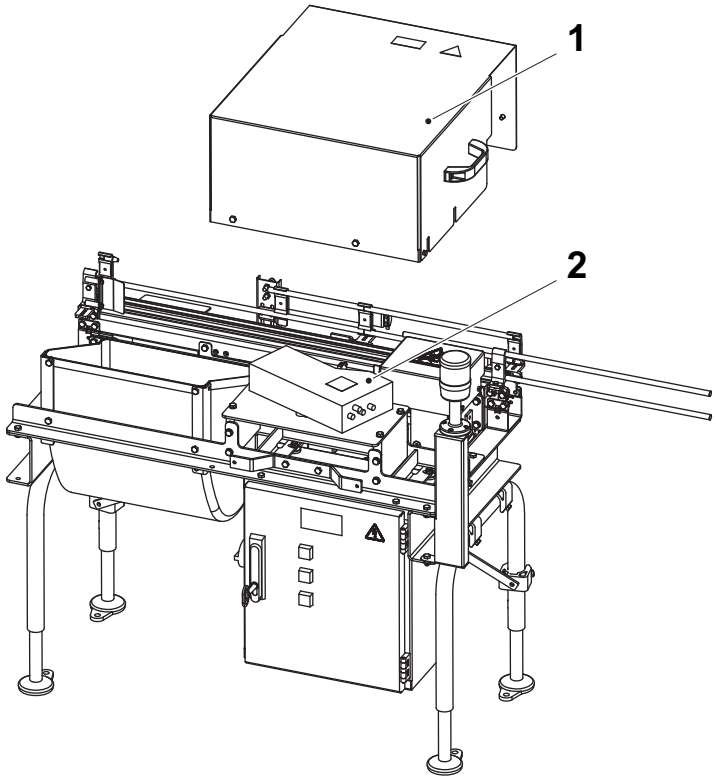

1 Cover
2 Vision camera

(Cont'd)

(Cont'd)

b) Locate the file zip-file on the Software CD under IVC Camera Field Updater.

c) Extract the files to a location on your computer.

d) Disable (or configure) the firewall on your computer to allow IVC Camera Field Updater to communicate with the camera.

e) Connect the camera to the computer through an Ethernet switch.

f) Browse to the location where the files were extracted and double-click StartFieldUpdater.bat.

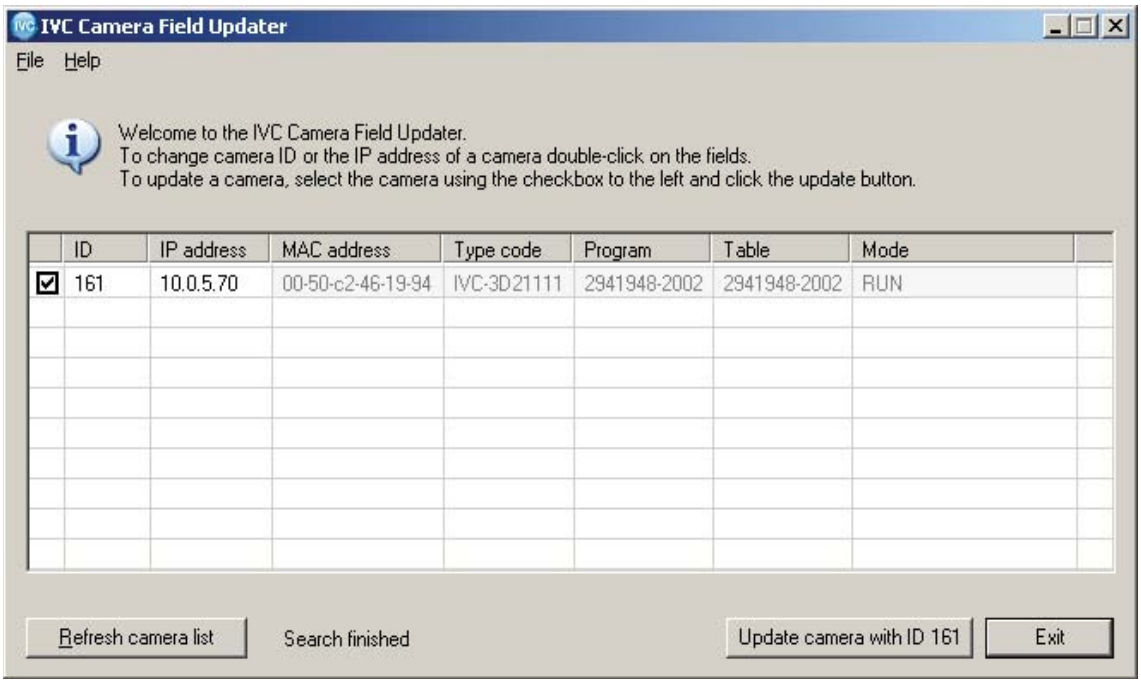

(Cont'd)

(Cont'd)

g) Change the network settings on the computer so that it is on the same subnet as the camera. The IP address on the camera can be seen in the IVC Camera Field Updater (the subnet mask should be 255.255.0.0).

h) Make sure the camera you want to update is selected. This is done by checking the box in the first column.

i) Press the Update button.

j) The progress of the update is shown. This may take several minutes.

Note! It is important not to disconnect the camera during update. If disconnected, the camera might need to be sent to repair.

k) When the update is complete, a message is shown.

l) Attach the cover (1).

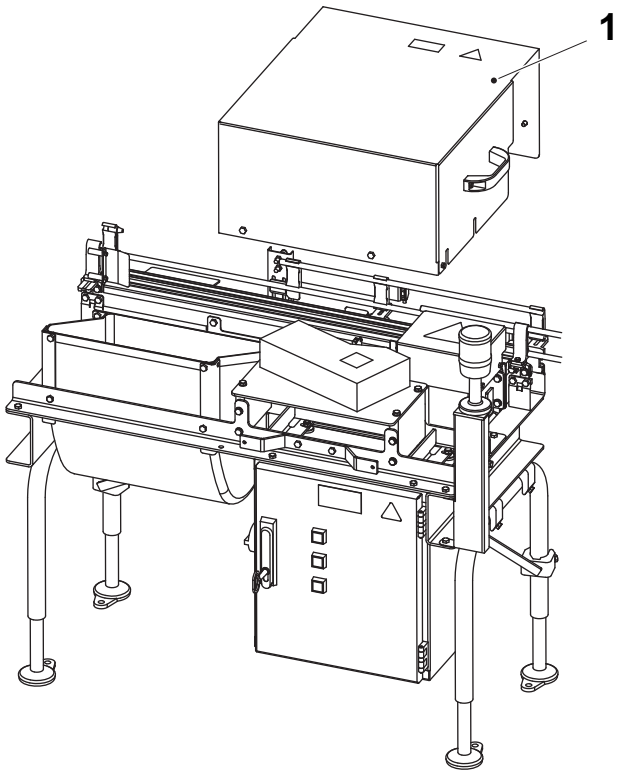

1 Cover

11.4.2.1-2 Detector - Set Vision System

Machine Status	Main Switch ON
SPC Reference	2933650

Note! If the ambient temperature exceeds approximately 40ºC the camera will switch off. This is to protect the laser from overheating.

a) Remove the cover (1).

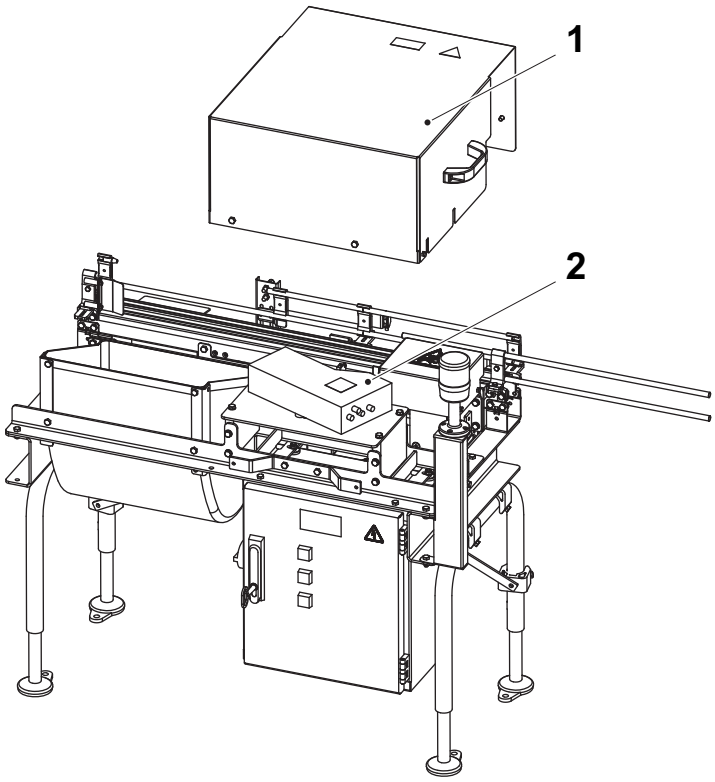

1 Cover
2 Vision camera

(Cont'd)

(Cont'd)

b) Make sure the computer and the camera is on the same subnet. This is already done if you have completed step g).

c) Open an Internet explorer window and type http://xxx.xxx.xxx.xxx/status.html in the address field, where xxx.xxx.xxx.xxx corresponds to the IP address assigned to the camera. The camera IP address can be seen (and changed) in the IVC Camera Field Updater.

d) In the web interface, press the “Tune” button.

Set Package width

e) Enter package width corresponding to the package being produced.

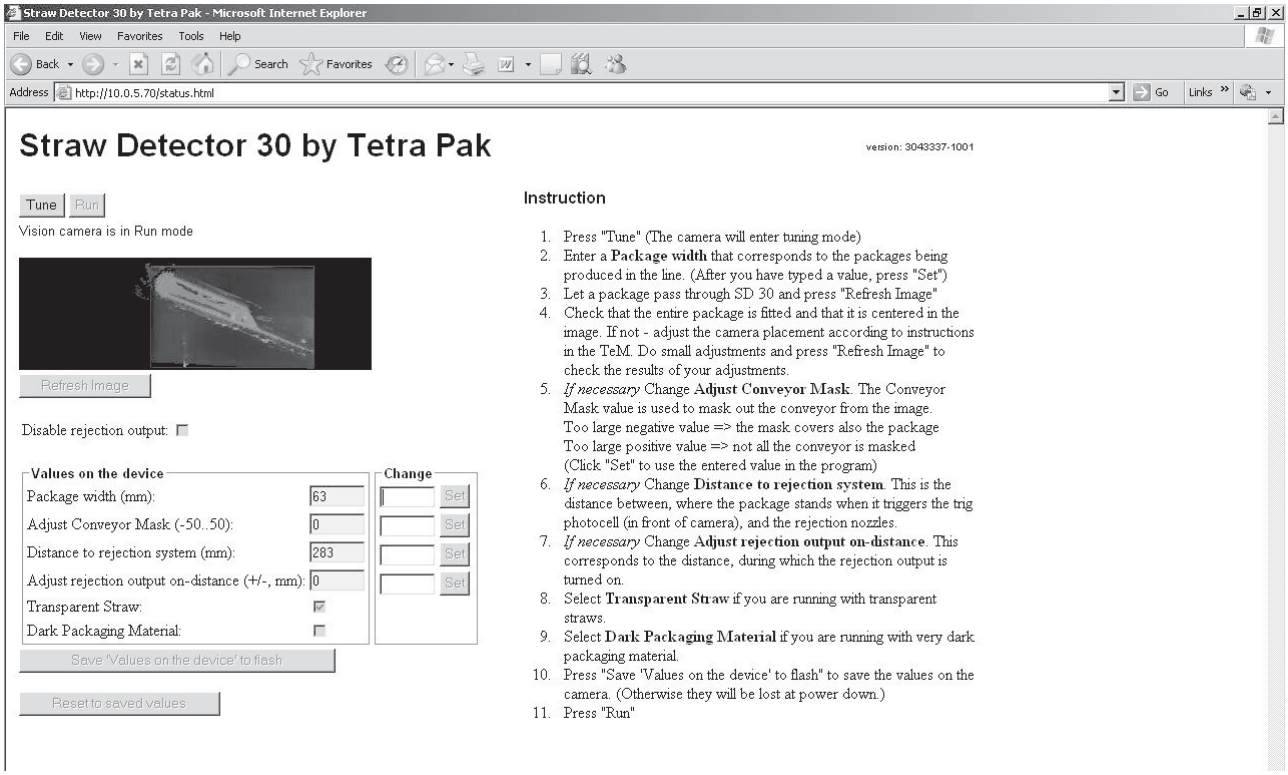

(Cont'd)

(Cont'd)

f) Write the width in the “Change” column and press the “Set” button.

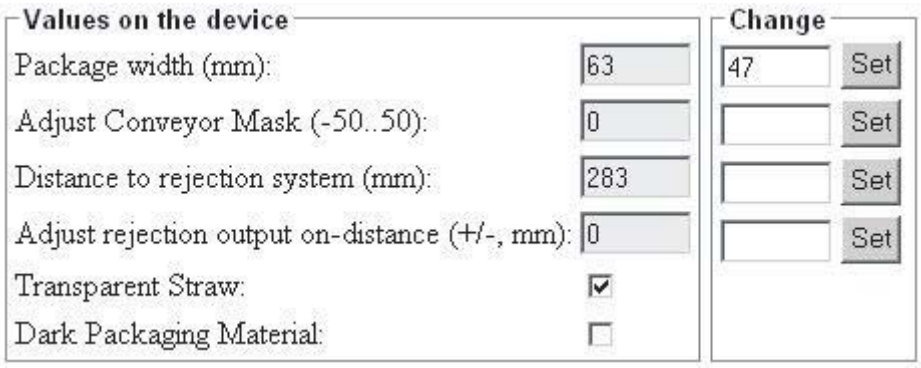

Set Camera Angle

g) Let one, or several, packages pass through SD30 and press “Refresh Image” (alternatively keyboard key F5). The package that just passed through SD30 shall be shown in the image.

h) Loosen the screws to adjust the camera angle until the package is in the centre of the image. Make small adjustments. Repeat step g) to see the results of your adjustments.

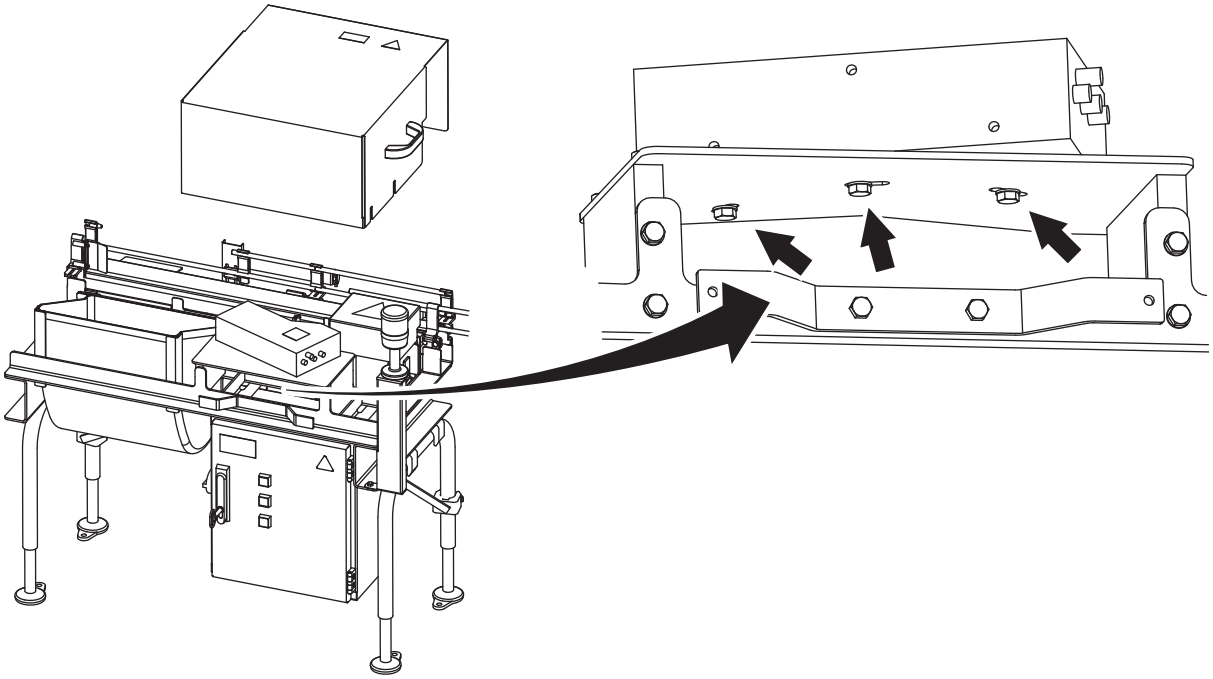

(Cont'd)

(Cont'd)

Set Conveyor Mask

The conveyor mask is a "black box" used to remove the conveyor from the image. Too low value will remove also parts of the package. Too high value will reveal parts of the conveyor.

i) If there is a bright line going through the image beneath the package (to the right in the image). The “Conveyor Mask” has to be changed. (This is done the same way as for the “Package width”.) A positive value moves the mask to the right; a negative value moves it to the left.

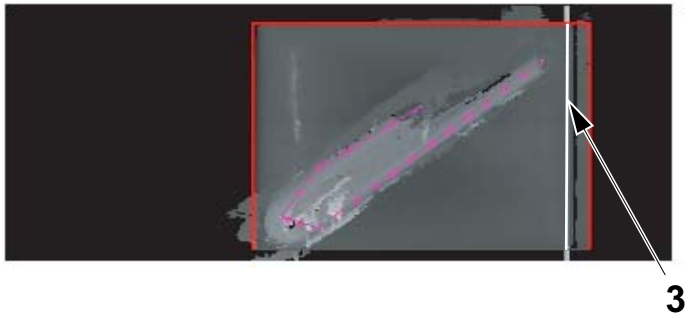

3 Bright line

Set Distance to Rejection System

This specifies the distance between the position of the trig photocell to the rejection nozzles.

Set Rejection Output on-Distance

This specifies the distance, during which the rejection output is turned on.

If this needs to be changed, follow the same procedure described for Package Width.

Transparent Straws

Select this if transparent straws are used.

Dark Packaging Material

Select this if really dark packaging material is used.

(Cont'd)

(Cont'd)

j) If this needs to be changed, follow the same procedure described for Package Width.

k) When all settings have been completed, press the “Save ‘Values on the device’ to flash” button. Otherwise the settings will be lost at power down. If it is the first time the camera is used, perform the save even if no values were changed.

l) Press the “Run” button.

m) Attach the cover (1).

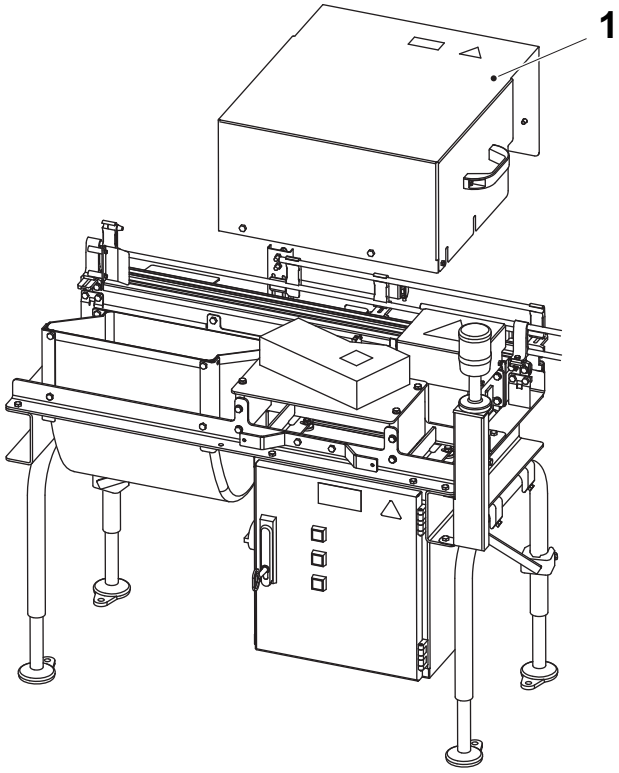

1 Cover

11.4.2.1-3 Detector - Clean Vision System

Machine Status	Main Switch OFF
SPC Reference	2933650

a) Remove the cover (1).

b) Gently clean the lens (2) on the vision camera (3) with a piece of soft cloth.

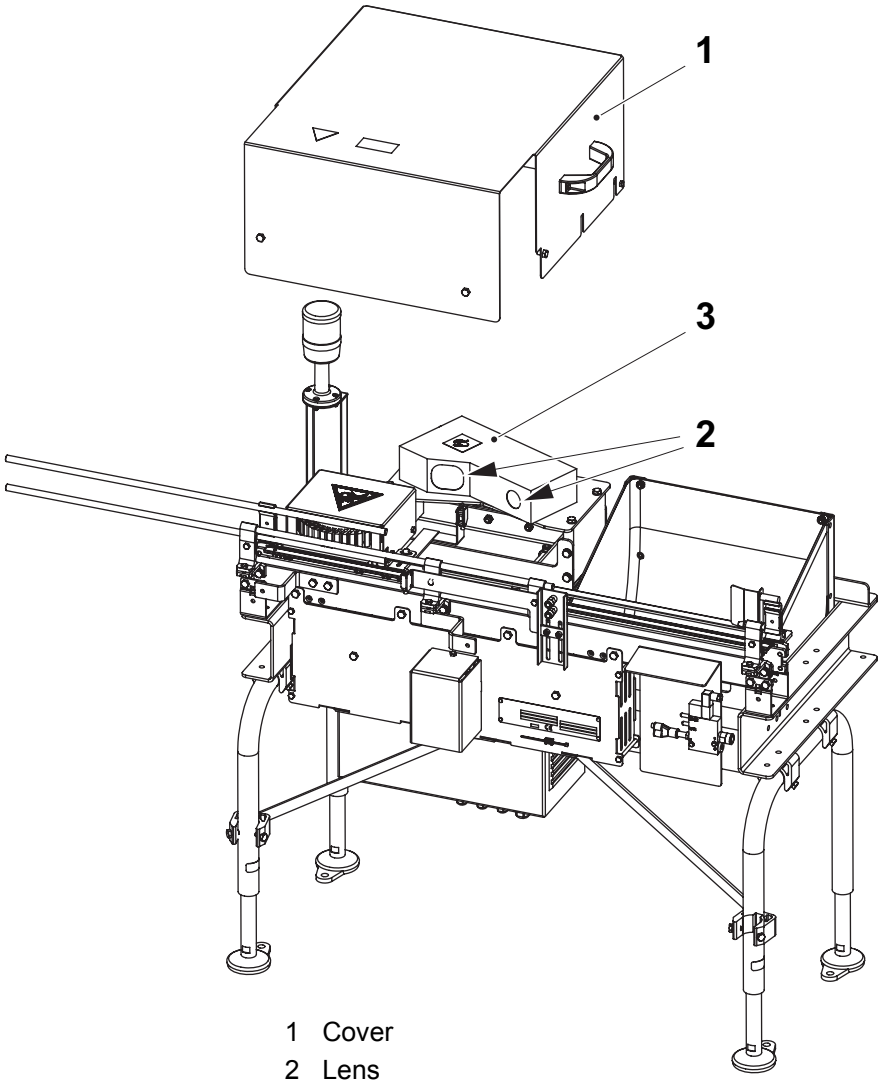

1 Cover
2 Lens
3 Vision camera

11.4.3 Ejector

11.4.3.1 Pneumatic Unit

11.4.3.1-1 Air Nozzle - Set

Machine Status	Main Switch OFF
SPC Reference	2904907

Adjust the height of the air nozzles so the upper nozzle is approximately 10 mm below the top of the package.

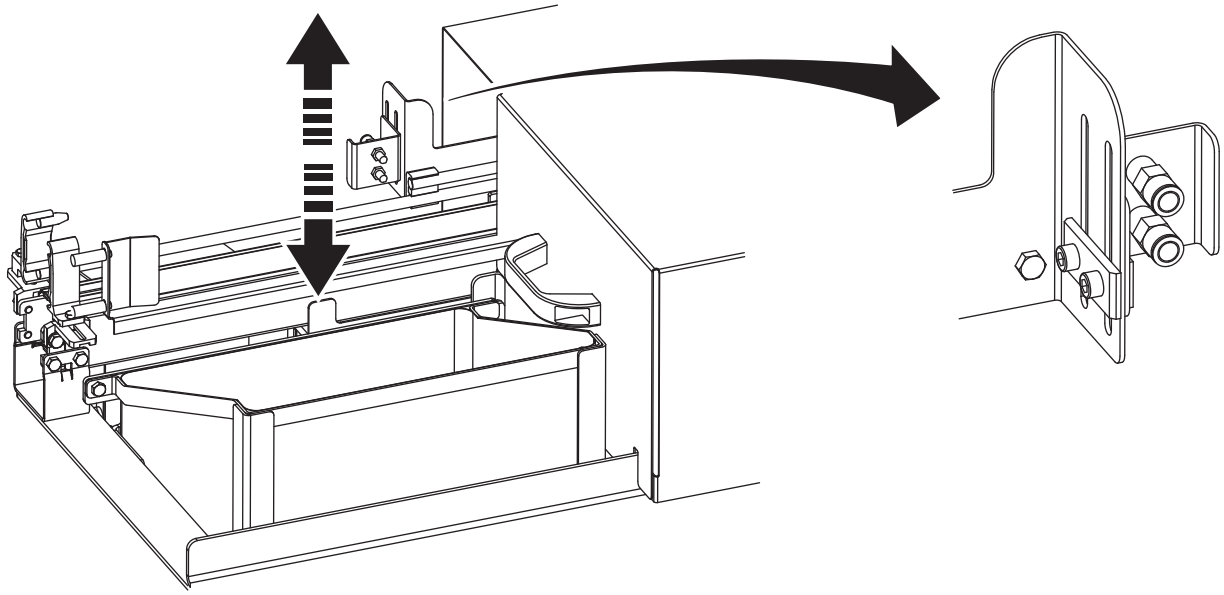

11.4.4 Electrical Cabinet

11.4.4.1 Electrical Cabinet

11.4.4.1-1 Electrical Cabinet - Change Filter

Machine Status	Main Switch OFF
SPC Reference	2933850

a) Open the grids (1) and change the filters (2).

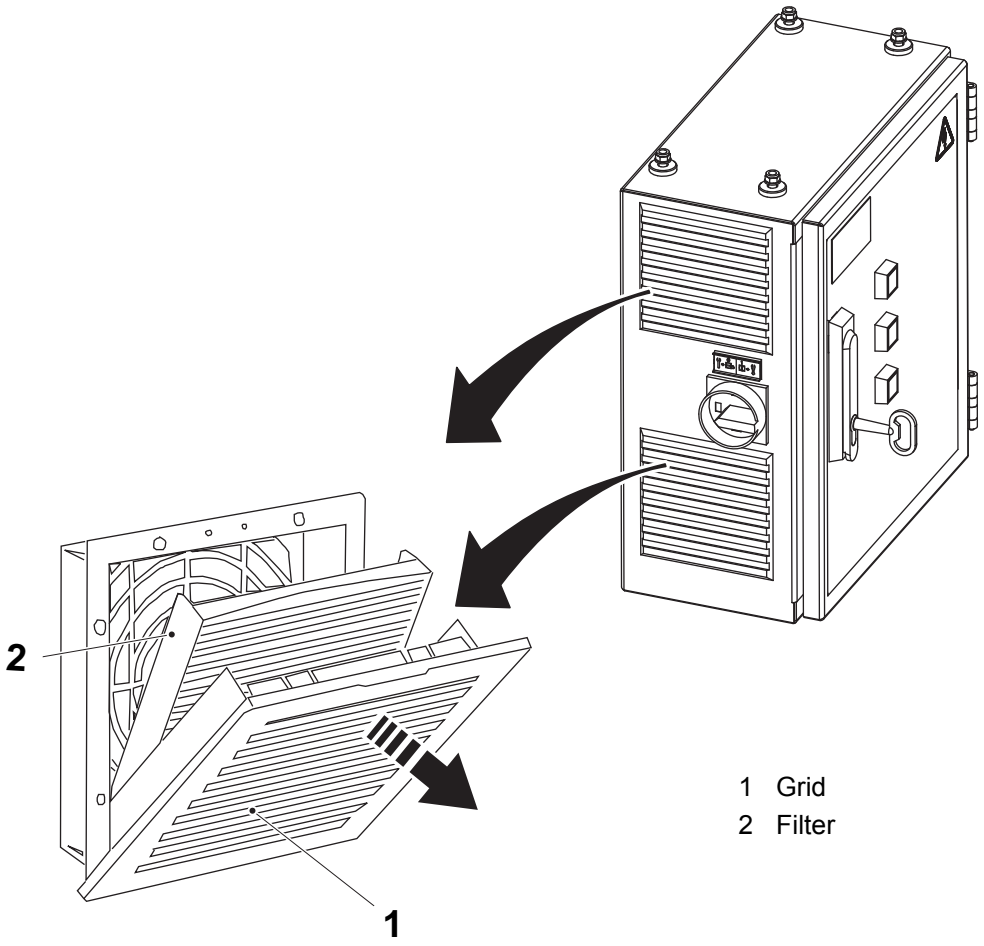

1 Grid
2 Filter

11.4.4.2 Assembly Plate

11.4.4.2-1 Assembly Plate - Set Time Relay

Machine Status	Main Switch OFF
SPC Reference	2939110

a) Set the switches on the time relay (1) according to the illustration below. The setting should be 10 seconds and mode on-delay.

b) Set the time adjuster (2) to 2 seconds.

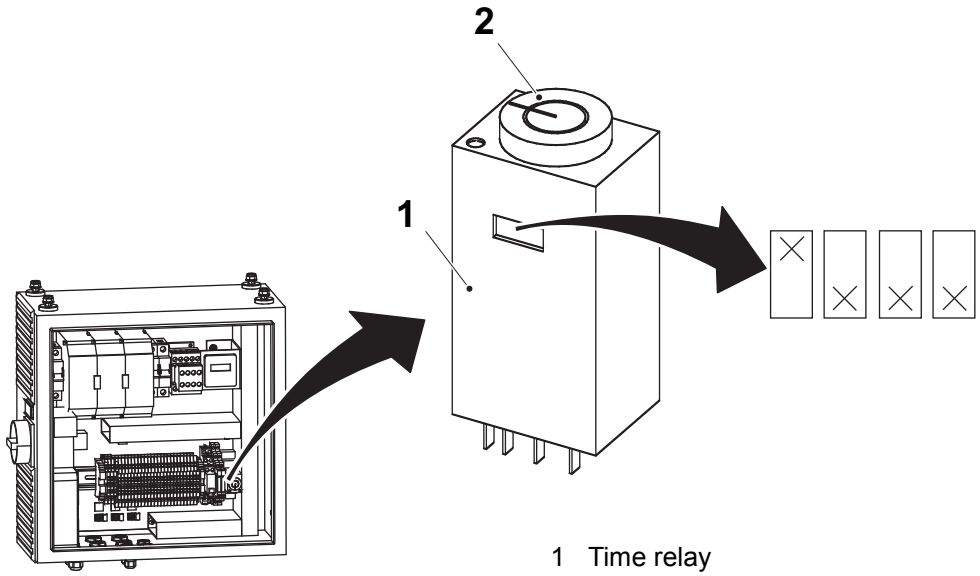

1 Time relay
2 Time adjuster

11.5 Cooling Unit

11.5-1 Cooling Unit - Set Temperature

Machine Status	Main Switch OFF
SPC Reference	3039857

a) Remove the louvred grille (1).

b) Release the display lock from behind and pull it slightly forward.

c) Carefully raise the trim panel (2) by using your thumb or a flat screwdriver, and remove it.

d) Use a flat screwdriver to change the temperature setting (3). Set the temperature to 35°C.

e) Carefully push the trim panel onto the display until it snaps into place.

f) Push the display back into the louvred grille (1).

g) Attach the louvred grille to the cooling unit.

The cooling unit operates automatically after switching on the power supply.

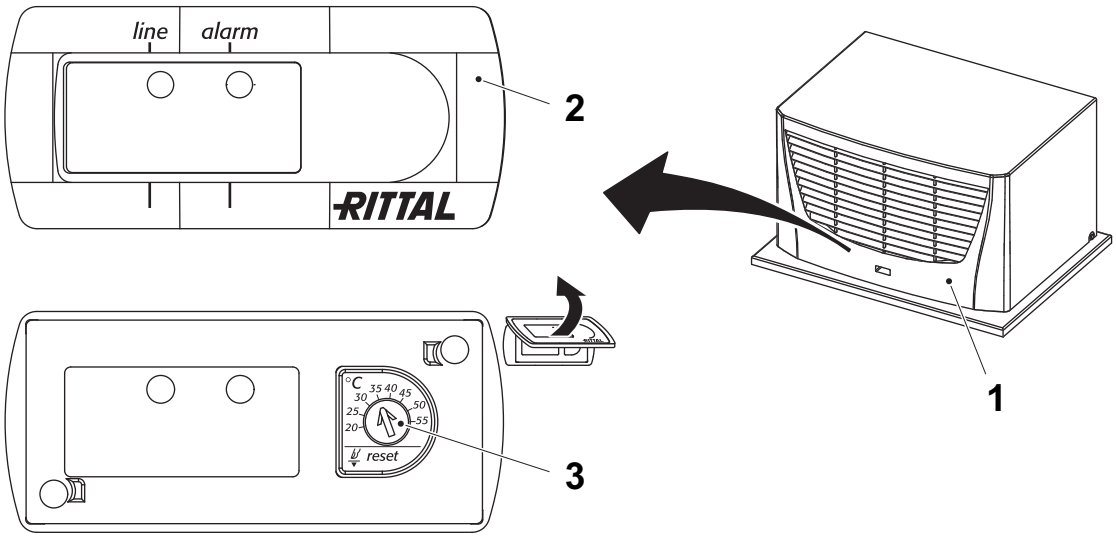

1 Louvred grilled
2 Trim panel
3 Temperature setting

11.5-2 Cooling Unit - Error Handling

Machine Status	Main Switch OFF
SPC Reference	3039857

a) The basic controller (1) on the cooling unit supervises and regulates the cooling system. The green LED (2) and the red LED (3) shows the status of the cooling system.

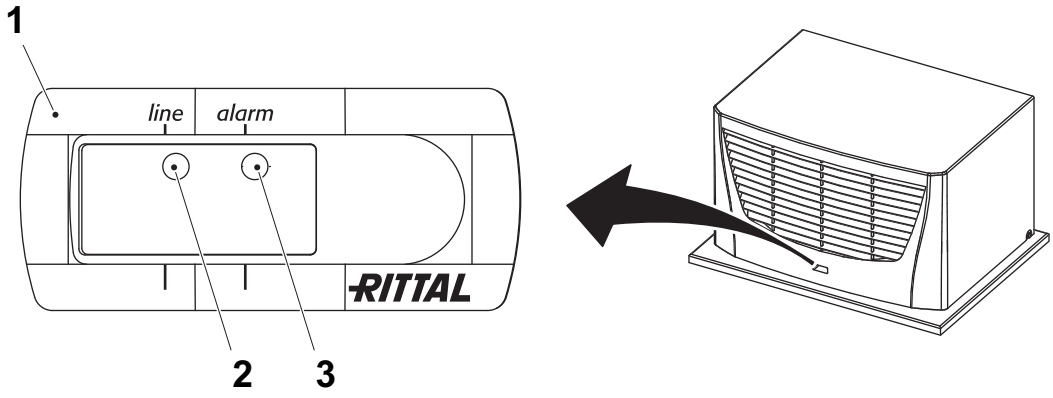

1 Basic controller
2 Green LED
3 Red LED

(Cont'd)

(Cont'd)

Green LED (2)	Status	Action
Steady	Normal	-
Flashing	Open door alarm. The cooling system is shutting off after 15 seconds.	Close the door to the electrical cabinet. Check the position of the door limit switches (4) and (5)

Red LED (3)	Status	Action
Steady	Alarm for too high temperature inside the electrical cabinet.	Check the temperature setting. Check the condenser and clean if necessary. Check the filter mat and replace if necessary. Check the heat loss to be dissipated – it must not exceed the useful cooling output of the cooling unit.
Flashing	High pressure alarm in the cooling circulation.	Check the temperature setting. Check the condenser and clean if necessary. Check the filter mat and replace if necessary. Check the heat loss to be dissipated – it must not exceed the useful cooling output of the cooling unit. Reset the Basic controller manually after rectifying the fault, see Basic Controller - Reset

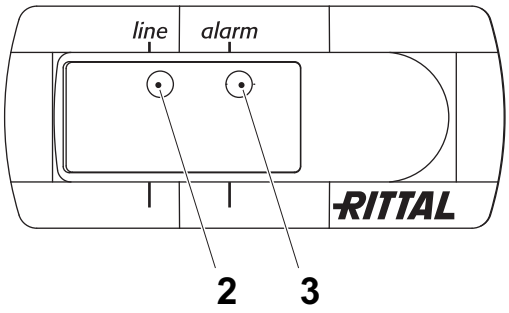

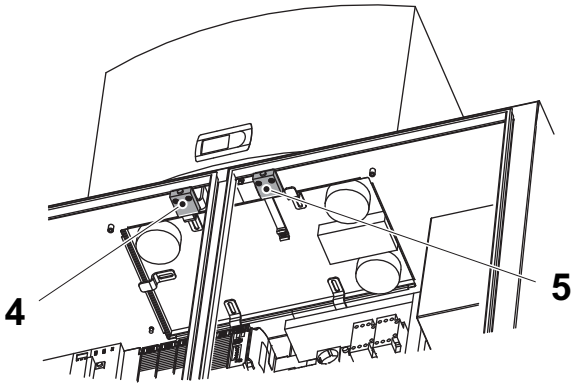

2 Green LED
3 Red LED
4 Limit switch, E01Q2015
5 Limit switch, E01Q2017

(Cont'd)

(Cont'd)

Basic Controller - Reset

b) Remove the louvred grille (6).

c) Release the display lock from behind and pull it slightly forward.

d) Carefully raise the trim panel (7) by using your thumb or a flat screwdriver, and remove it.

e) Press the RESET button (8) for at least three seconds.

f) Carefully push the trim panel onto the display until it snaps into place.

g) Push the display back into the louvred grille.

h) Attach the louvred grille to the cooling unit.

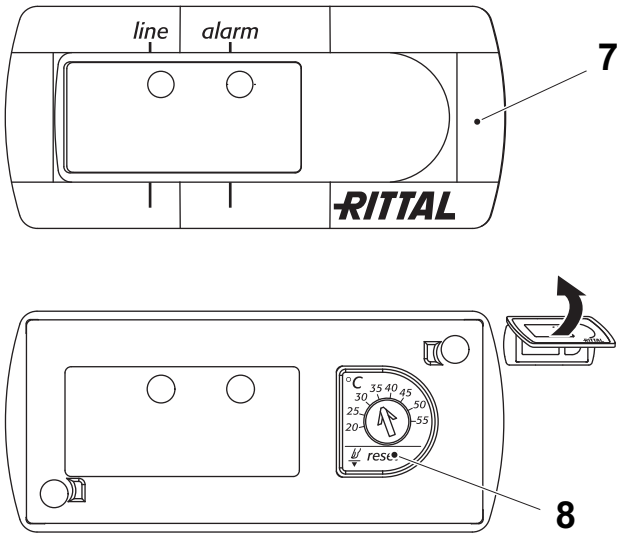

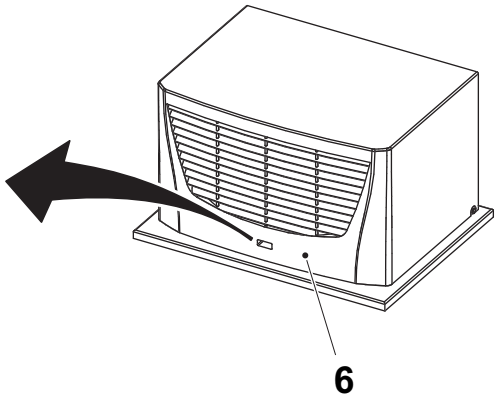

6 Louvred grille
7 Trim panel
8 RESET button

11.6 Second Discharge Unit

11.6-1 Second Discharge Unit - No Procedure Described

Machine Status	Main Switch OFF
SPC Reference	3088860

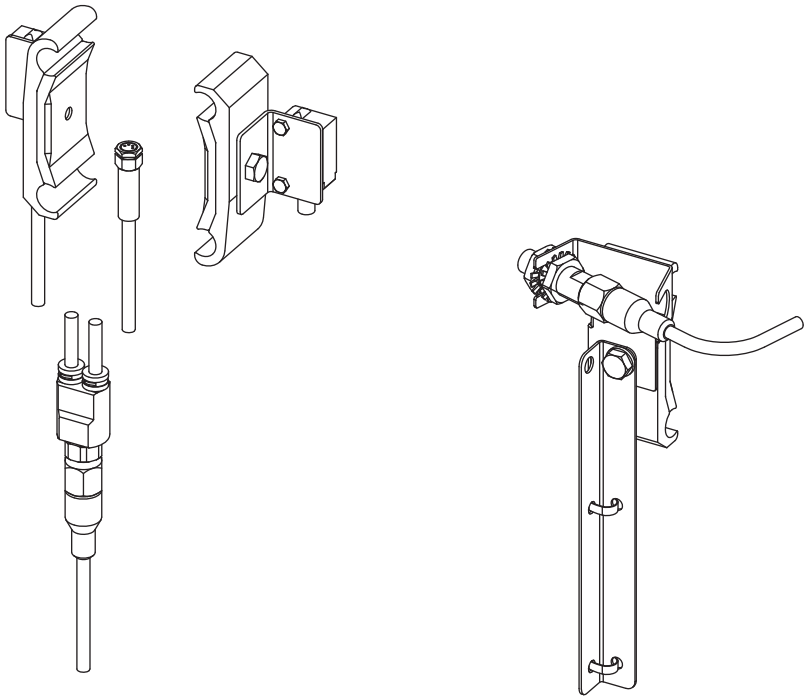

12 General

General - Description

This chapter includes general guideline settings.

12.1 Guideline Settings . . . . . 12 - 5

TB/TBA . . . . . 12 - 5

TPA . . . . . 12 - 6

TCA . . . . . 12 - 7

TWA . . . . . 12 - 7

12.2 Conversion . . . . . 12 - 8

12.2-1 Change Straw Length/Diameter (TB/TBA/TPA) 12 - 8

12.2-2 Change Straw Type (TB/TBA/TPA) . . . . . 12 - 10

11.2-3 Change Straw Type (TCA/TWA) . . . . . 12 - 18

12.3 Setting Sequence . . . . . 12 - 28

TB/TBA/TPA . . . . . 12 - 28

TCA . . . . . 12 - 29

TWA . . . . . 12 - 29

12.4 Consumables . . . . . 12 - 30

12.4.1 Hotmelt . . . . . 12 - 30

This page intentionally left blank

12.1 Guideline Settings

TB/TBA

Package type		200S		200B	
Straw type		U-1654		U-1455	
Package size		84x63		120x50	
Straw direction		Top Right	Top Left	Top Right	Top Left
Setting	**Procedure**	**Value**	**Value**	**Value**	**Value**
Applicator unit angle	2-2 Applicator Unit - Set Angle (TB/TBA/TPA)	23° right	15° left	38° right	31° left
Applicator unit height	2-3 Applicator Unit - Set Height and Straw Position (TB/TBA)	-	-	-	-
Leaf spring	2.7-4 Spring Holder - Set Leaf Spring (TB/TBA/TPA)	65 mm	65 mm	57 mm	47 mm
Support rails	1.1.1.1-1 Support Rail - Set (TB/TBA/TPA)	package width + 5 mm on each side	package width + 5 mm on each side	package width + 5 mm on each side	package width + 5 mm on each side
Belt brake	1.1.2-3 Belt Brake - Set				
Adjustment plate override	1.1.3-1 Adjustment Plate - No Procedure Described				
Top support height	1.1.5-1 Height Adjustment - Set Height	137 mm	137 mm	85 mm	85 mm
Gun holder upper	3.2.1-3 Hotmelt Gun - Set Gun Holder (TB/TBA/TPA)	105 mm	105 mm	90 mm	75 mm
Gun holder lower	3.2.1-3 Hotmelt Gun - Set Gun Holder (TB/TBA/TPA)	21 mm	15 mm	10 mm	8 mm

TPA

Package type		125Sq			
Straw type		T			
Package size					
Straw direction		Vertical			
Setting	**Procedure**	**Value**			
Applicator unit angle	2-2 Applicator Unit - Set Angle (TB/TBA/TPA)	0°	0°	0°	0°
Applicator unit height	2-3 Applicator Unit - Set Height and Straw Position (TB/TBA)	-			
Leaf spring	2.7-4 Spring Holder - Set Leaf Spring (TB/TBA/TPA)	65 mm			
Support rails	1.1.1.1-1 Support Rail - Set (TB/TBA/TPA)	package width + 5 mm			
Belt brake	1.1.2-3 Belt Brake - Set	package width - 2 mm			
Adjustment plate override	1.1.3-1 Adjustment Plate - No Procedure Described				
Top support height	1.1.5-1 Height Adjustment - Set Height				
Gun holder upper	3.2.1-3 Hotmelt Gun - Set Gun Holder (TB/TBA/TPA)				
Gun holder lower	3.2.1-3 Hotmelt Gun - Set Gun Holder (TB/TBA/TPA)				

TCA

Straw type			S	T	U
Setting	**Procedure**	**Straw length**			
Ladder band guide	2.5-2 Ladder Band Guide - Set (TCA/TWA)	80 mm	B = 10 mm	-	-
		100 mm	B = 15 mm	-	-
		120 mm	B = 25 mm	-	-
		145 mm	-	-	B = 12 mm
		150 mm	-	B = 10 mm	-
		165 mm	-	-	B = 12 mm

TWA

Straw type			S	T	U
Setting	**Procedure**	**Straw length**			
Ladder band guide	2.5-2 Ladder Band Guide - Set (TCA/TWA)	145 mm	-	-	B = 12 mm
		150 mm	-	B = 10 mm	-
		165 mm	-	-	B = 12 mm
		190 mm	-	B = 15 mm	-

12.2 Conversion

12.2-1 Change Straw Length/Diameter (TB/TBA/TPA)

Machine Status	Main Switch OFF Air Valve OFF
SPC Reference	663301

Note! The illustrations show the TB/TBA variant. The procedure is the same for TPA.

a) Turn the bearing housing (1) to move the arms (2) to a position outside the feed wheel slots.

b) Remove the screws (3) and the pressure arm (4).

c) Turn the stellar knob (5) until the knife (6) is in its outer position.

d) Fit the template (7).

e) Turn the stellar knob (8) to the left until the feed wheel (9) is released from the shaft.

f) Press the leaf spring (10) outwards from the wheel and pull up the feed wheel.

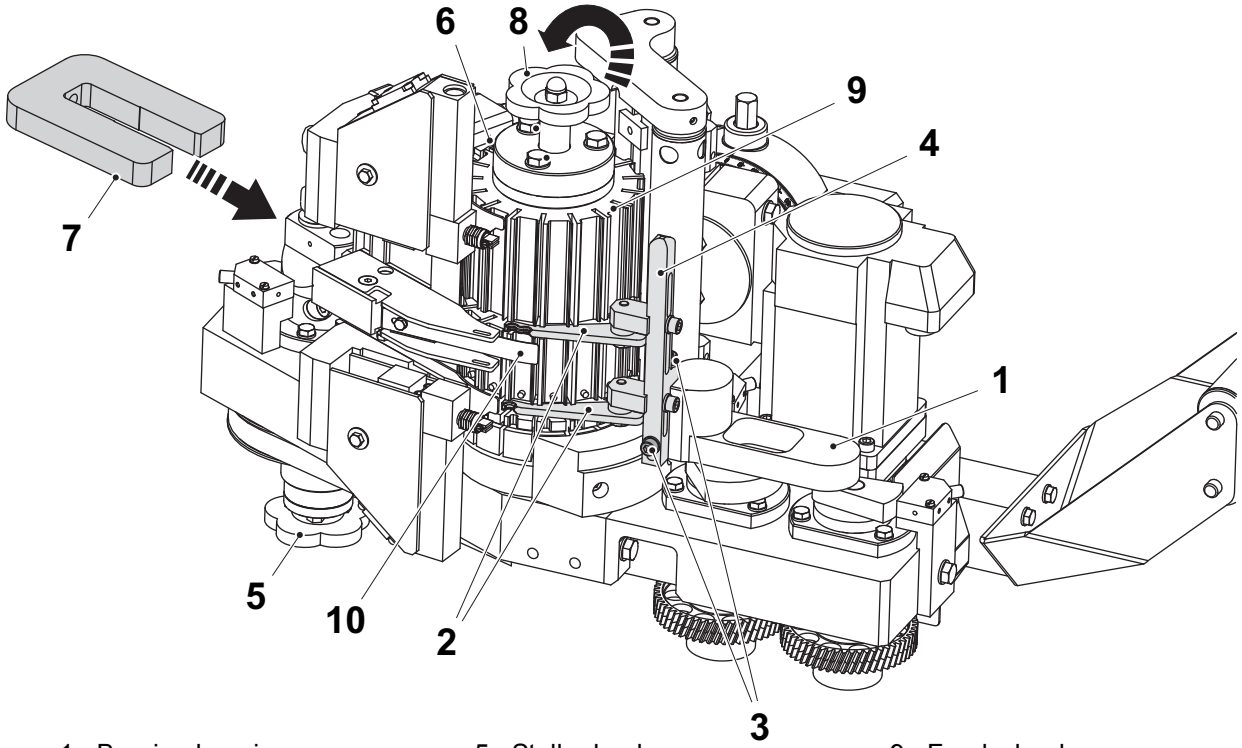

1 Bearing housing
2 Arm
3 Screw
4 Pressure arm
5 Stellar knob
6 Knife
7 Template
8 Stellar knob
9 Feed wheel
10 Leaf spring

(Cont'd)

(Cont'd)

g) Press the leaf spring (10) outwards and lift in the new feed wheel (9).

h) When the feed wheel is in its correct position, tighten the stellar knob (8)

i) Put the pressure arm (4) back and tighten the screws (3).

j) Adjust the pressure arm if necessary, see Procedure 2.3.3-3 Pressure Arm - Set Height (TB/TBA).

k) Remove the template (7).

l) Set the feed wheel if necessary, see Procedure 2.1-5 Feed Wheel Unit - Set.

m) Set the pick position if necessary, see Procedure 7.2.2-2 Maintenance - Set Pick Position (TB/TBA/TPA).

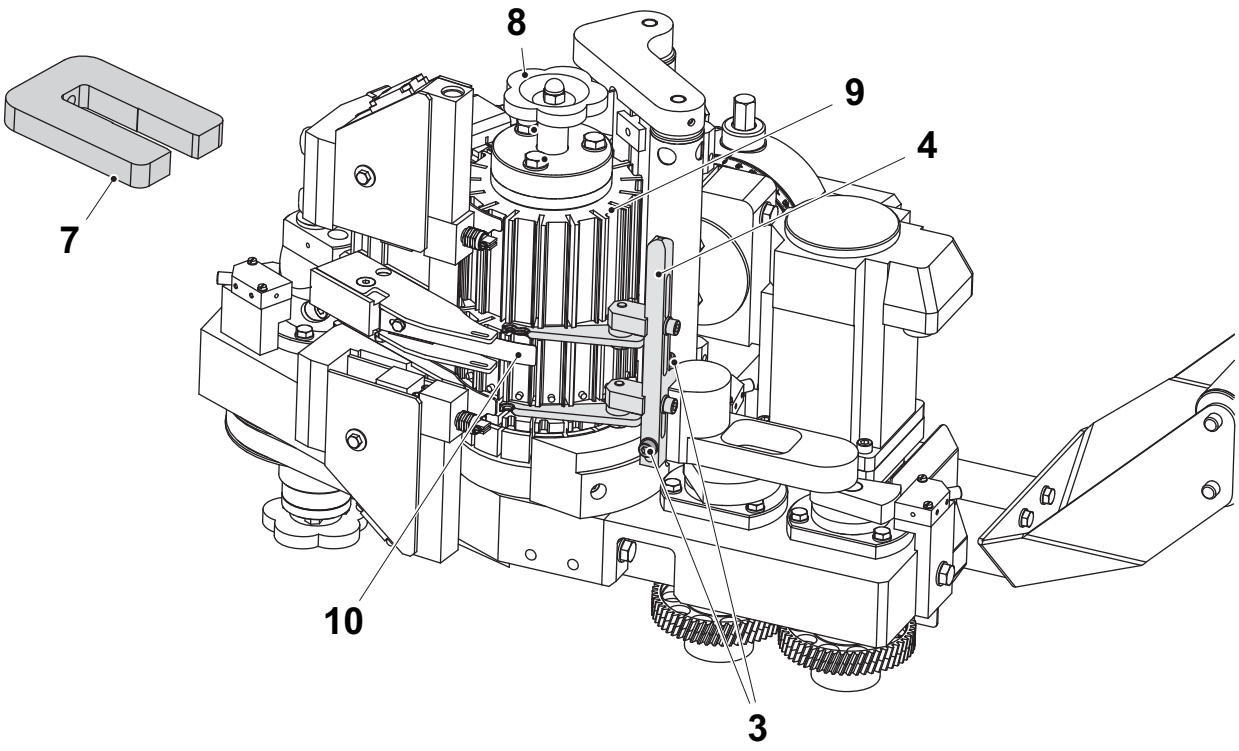

3	Screw	8	Stellar knob
4	Pressure arm	9	Feed wheel
7	Template	10	Leaf spring

12.2-2 Change Straw Type (TB/TBA/TPA)

Machine Status	Main Switch OFF Air Valve OFF
Special Equipment	Dynamometric wrench
SPC Reference	663301

Note! The illustrations show how to set the TB/TBA variant. The procedure is the same for TPA.

Remove Feed Wheel

a) Turn the bearing housing (1) to move the arms (2) to a position outside the feed wheel slots.

b) Remove the screws (3) and the pressure arm (4).

c) Turn the stellar knob (5) until the knife (6) is in its outer position.

d) Fit the template (7).

e) Turn the stellar knob (8) to the left until the feed wheel (9) is released from the shaft.

f) Press the leaf spring (10) outwards from the wheel and pull up the feed wheel.

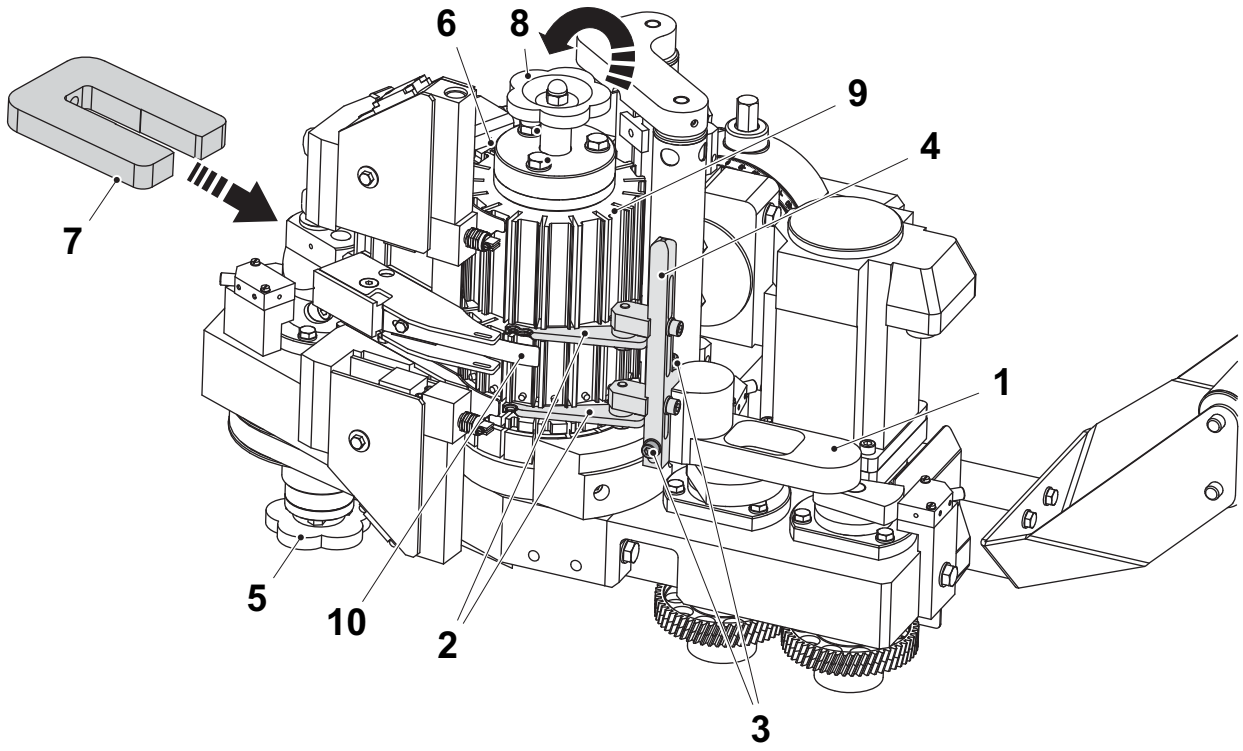

1 Bearing housing
2 Arm
3 Screw
4 Pressure arm
5 Stellar knob
6 Knife
7 Template
8 Stellar knob
9 Feed wheel
10 Leaf spring

(Cont'd)

(Cont'd)

Change Knife Holder Unit

CAUTION

Risk of personal injury.
The knife is very sharp. Be careful when working near the knife.

g) Remove the screw (11).
h) Remove the template (7).
i) Remove the screw (12).
j) Remove the knife holder unit (13).
k) Install the new knife holder unit. Use the hole marked S/T for S- and T-straws and use the hole marked with a U for U-straws in the eccentric (14).
l) Tighten the screw (12).
m) Make sure that the knife is in its outer position and fit the template (7).
n) Tighten the screw (11).

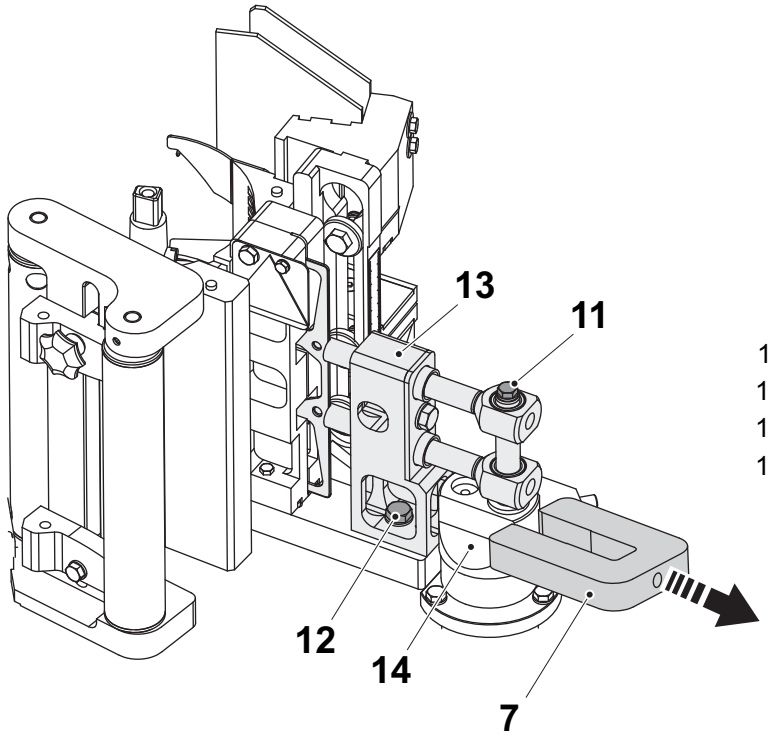

7 Template
11 Screw
12 Screw
13 Knife holder unit
14 Eccentric

(Cont'd)

(Cont'd)

Change Clamping Element

WARNING

Burn Hazard.

The hotmelt unit can be very hot and there is risk of severe burns. Use caution when working near the hotmelt unit.

Tip! Loosen the screw (15) and rotate the applicator unit approximately 45° to the left. Cut the ladder band before turning. Remember the angle position, see the scale (16).

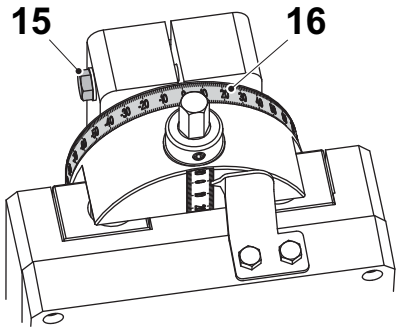

15 Screw
16 Scale

o) Loosen the screw (17) on the belt tensioner (18).

p) Turn the belt tensioner to the right to release the belt tension. Use a hook spanner (19) and tighten the screw (17).

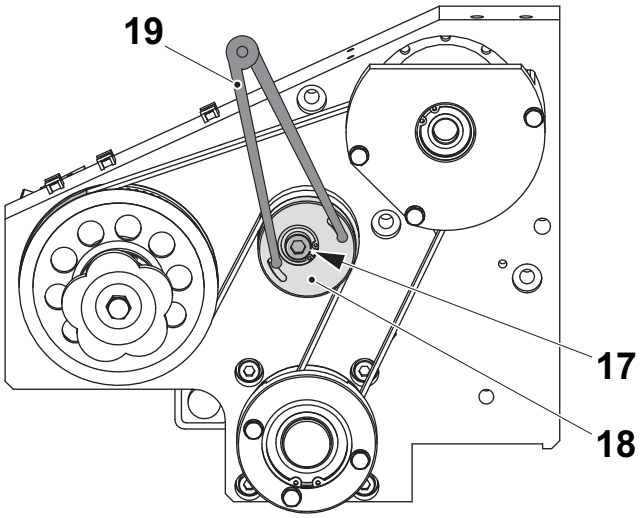

17 Screw
18 Belt tensioner
19 Hook spanner

(Cont'd)

(Cont'd)

q) Remove the screws (20) and the bearing holder (21)

r) Remove the screws (22) and the axle support (23).

s) Remove the timing belt (24).

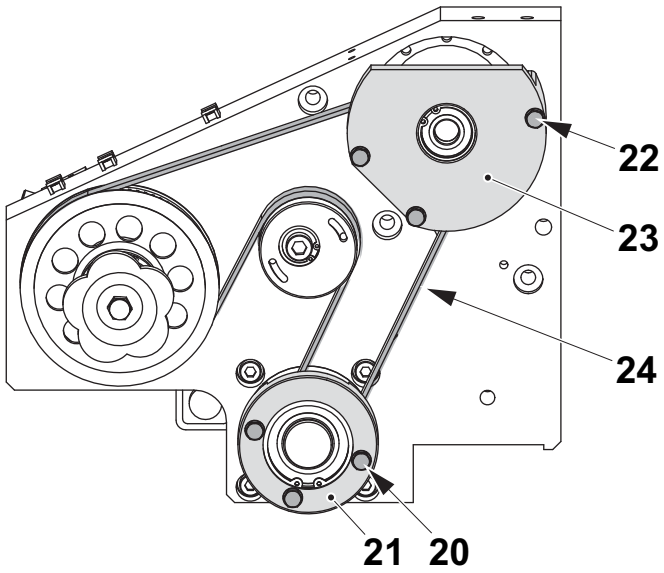

20 Screw (3 pieces)
21 Bearing holder
22 Screw (3 pieces)
23 Axle support
24 Timing belt

t) Loosen the screw (25) and remove the clamping element (26) and the pulley (27) from the shaft.

u) Put the clamping element (26) on the pulley (27).
   - For S- and T-straws use the pulley 2829491
   - For U-straws use the pulley 2864774

v) Put the clamping element (26) and the pulley (27) on the shaft.

w) Tighten the screw (25) to a torque of 5 Nm. Use a dynamometric wrench. Do not overtighten the clamping element.

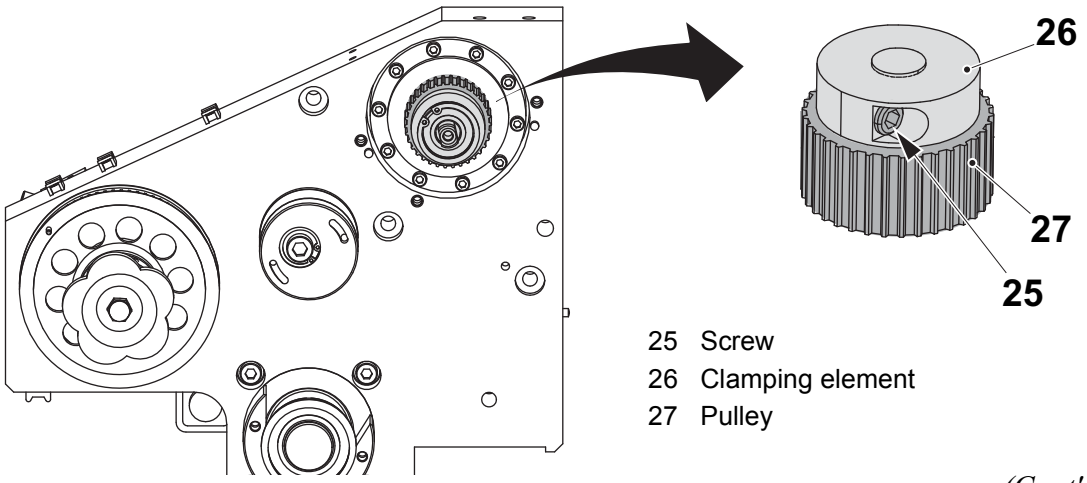

25 Screw
26 Clamping element
27 Pulley

(Cont'd)

(Cont'd)

Move Belt Tensioner

x) Loosen the screw (17) entirely and pull it out together with the belt tensioner (18) and the turn spring (28).

y) Move the loosened parts to the hole (29) stamped with S/T-15 for S- or T-straws, or to the hole (30) stamped with U-22 for U-straws. Do not tighten the screw yet.

z) Turn the belt tensioner to the right to release the belt tension and tighten the screw (17). Use a hook spanner for the belt tensioner.

Install Timing Belt

aa) Put the timing belt over the pulleys.

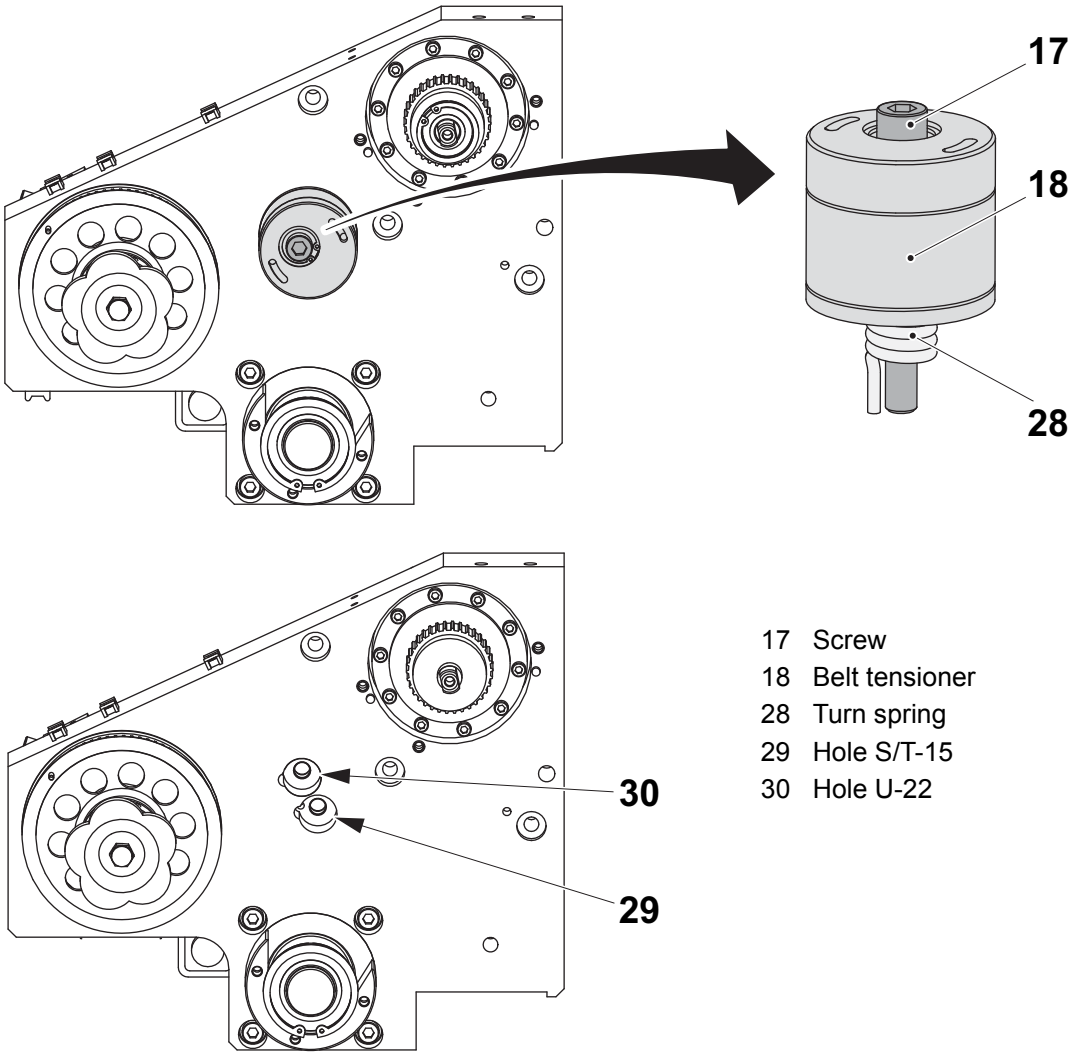

17 Screw
18 Belt tensioner
28 Turn spring
29 Hole S/T-15
30 Hole U-22

(Cont'd)

(Cont'd)

ab) Check that the timing belt is properly positioned over all the pulleys.

ac) Attach the bearing holder (21) with the screws (20).

ad) Attach the axle support (23) with the screws (22).

ae) Loosen the screw (17) so that the belt tensioner tightens the timing belt.

CAUTION

Risk of personal injury.

The knife is very sharp. Be careful when working near the knife.

af) Remove the template (7) and turn the stellar knob (1) approximately five revolutions to even out the tension of the timing belt.

ag) Tighten the screw (17) again.

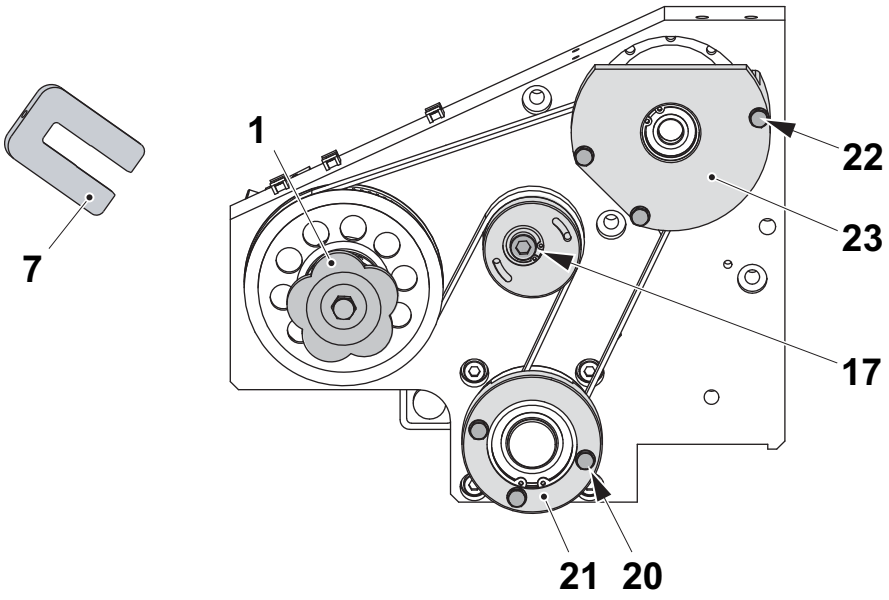

1 Stellar knob
7 Template
17 Screw
20 Screw (3 pieces)
21 Bearing holder
22 Screw (3 pieces)
23 Axle support

(Cont'd)

(Cont'd)

ah) Turn the applicator unit back. Make sure that the scale (16) has the same value as before and tighten the screw (15). When switching to a different type of package, the angle needs to be set again, see Procedure 2-2 Applicator Unit - Set Angle (TB/TBA/TPA).

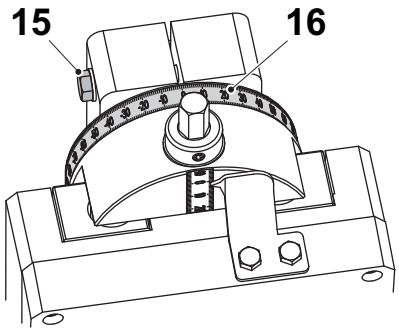

15 Screw
16 Scale

Install Feed Wheel

ai) Turn the stellar knob (5) until the knife (6) is in its outer position.

aj) Fit the template (7).

ak) Press the leaf spring (10) outwards and lift in the new feed wheel.

al) When the feed wheel is in its correct position, tighten the stellar knob (8).

am) Check that the knife goes into the centre of the feed wheel slot. If not, adjust the feed wheel unit, see 2.1-5 Feed Wheel Unit - Set.

Install Pressure Arm

an) Put on the correct pressure arm (4) and tighten the screws (3).

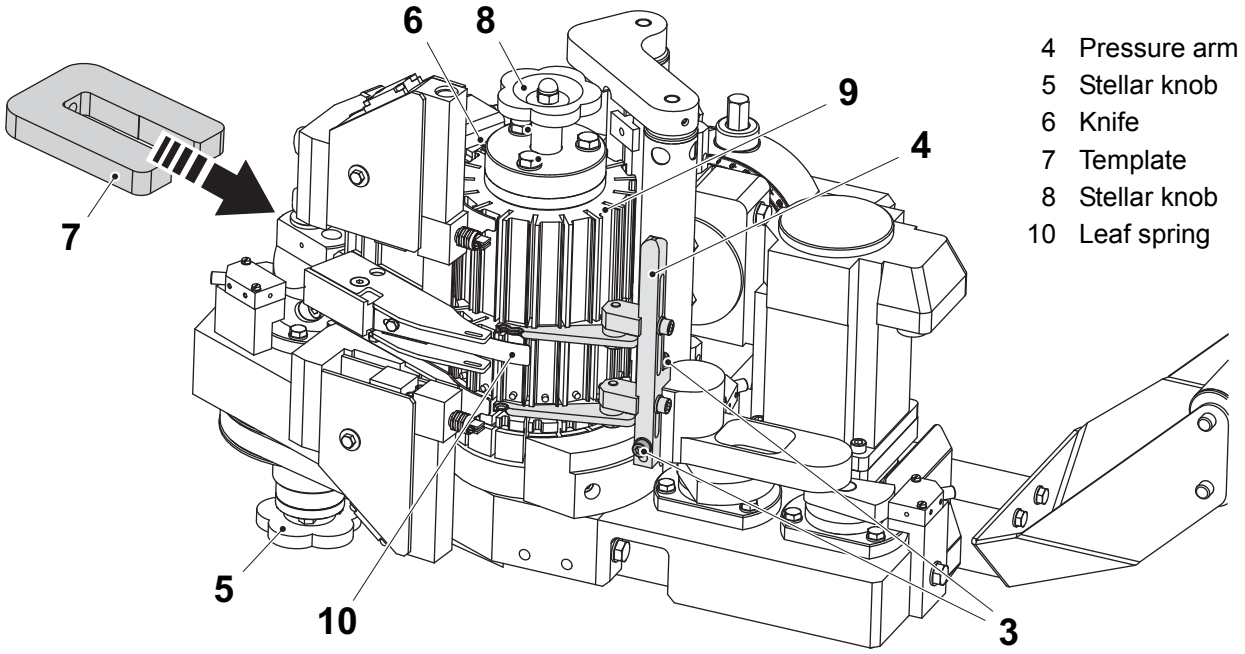

4 Pressure arm
5 Stellar knob
6 Knife
7 Template
8 Stellar knob
10 Leaf spring

(Cont'd)

(Cont'd)

ao) Remove the template (7).

ap) Adjust the pressure arm, see Section 2.3.3-3 Pressure Arm - Set Height (TB/TBA).

aq) Set the pick position, see Procedure 7.2.2-2 Maintenance - Set Pick Position (TB/TBA/TPA) for TB/TBA/TPA.

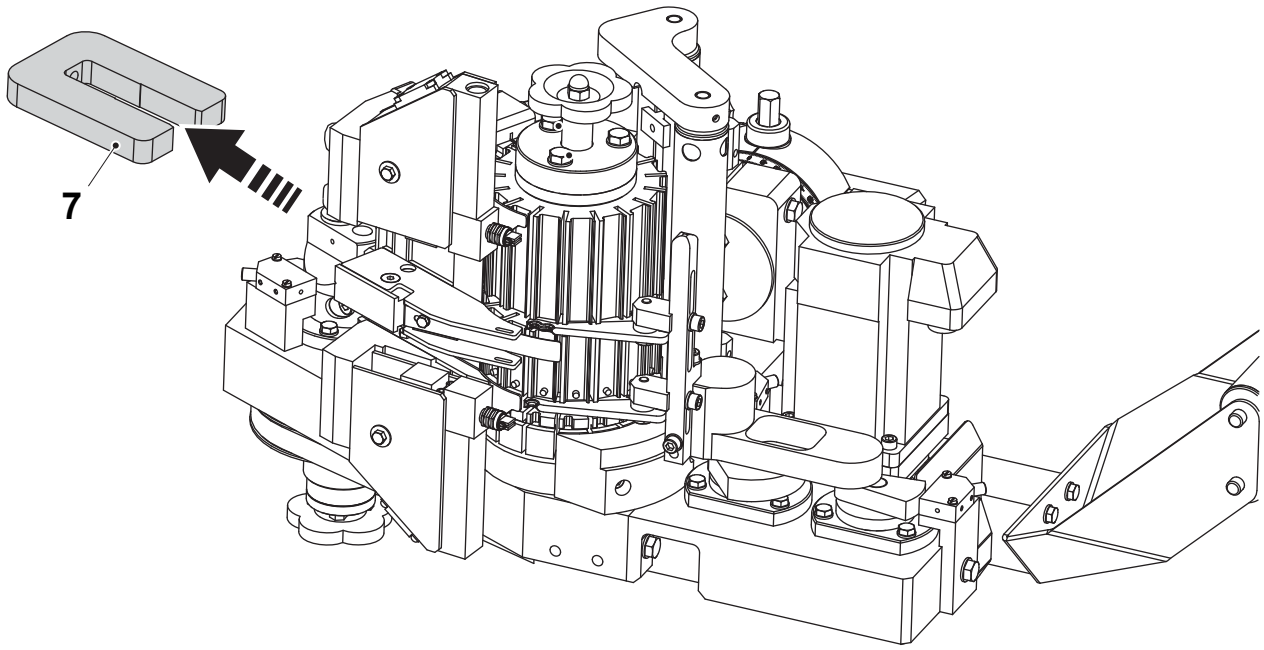

7 Template

11.2-3 Change Straw Type (TCA/TWA)

Machine Status	Main Switch OFF Air valve OFF
Special Equipment	Hook spanner TP No. 90243-0164
SPC Reference	663301

a) Release the squeezer (1) by pulling the quick-locks (2).

b) Turn the stellar knob (3) until the knife (4) is in its outer position.

c) Turn the stellar knob (5) to the left until the feed wheel unit (6) is released from the shaft.

d) Remove the feed wheel unit (6).

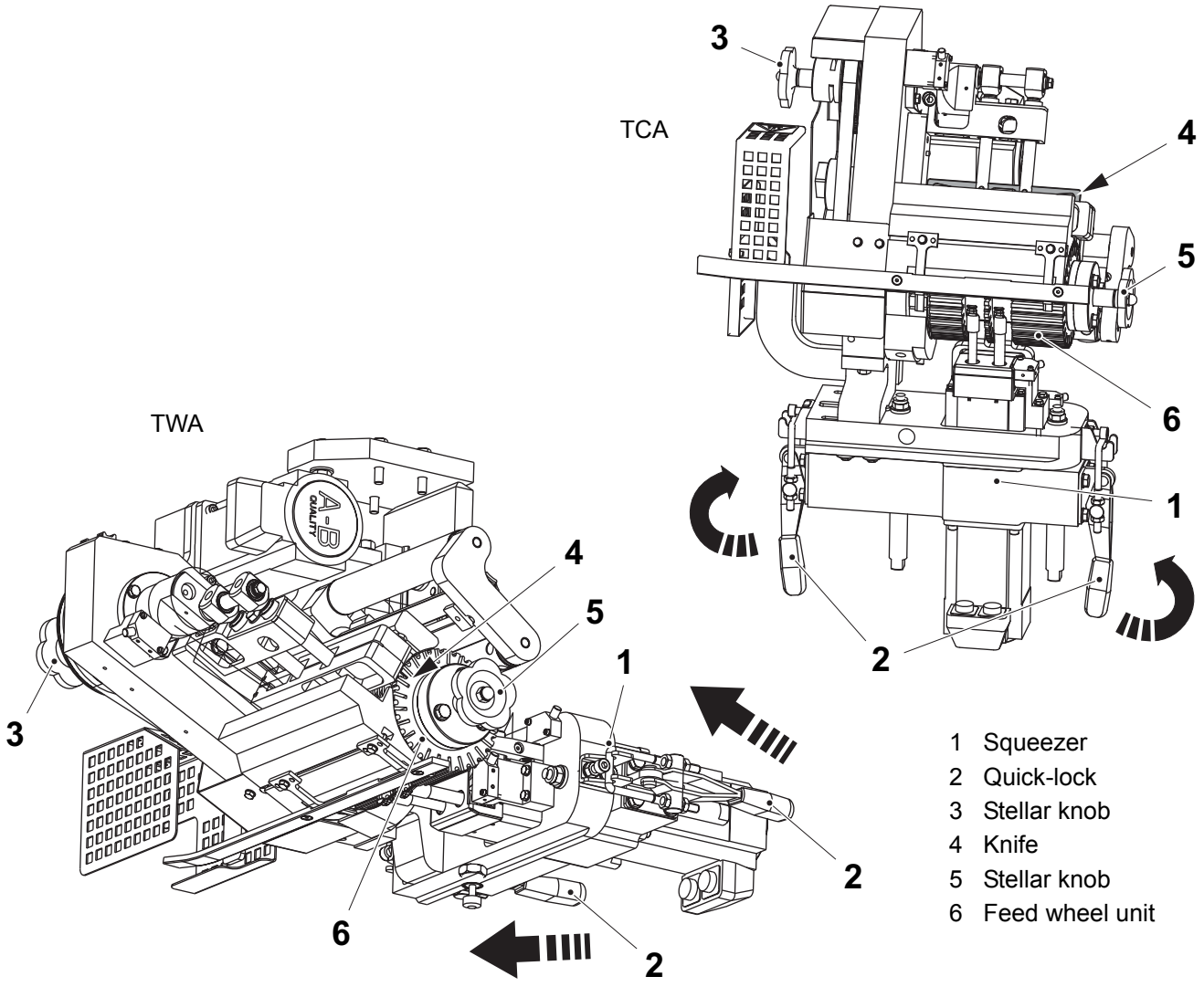

(Cont'd)

(Cont'd)

e) Loosen the screws (7).

f) Prepare the new feed wheel unit by assembling the feed wheel (8) with the stellar knob (5).

g) Tighten the screws (7).

h) Remove the hotmelt gun unit (9) by removing the screws (10).

WARNING

Burn hazard.

The hotmelt gun and the gun cover are very hot. Be careful when working near the gun and the cover.

i) Remove the covers (11) by loosening the screws (12) and (13).

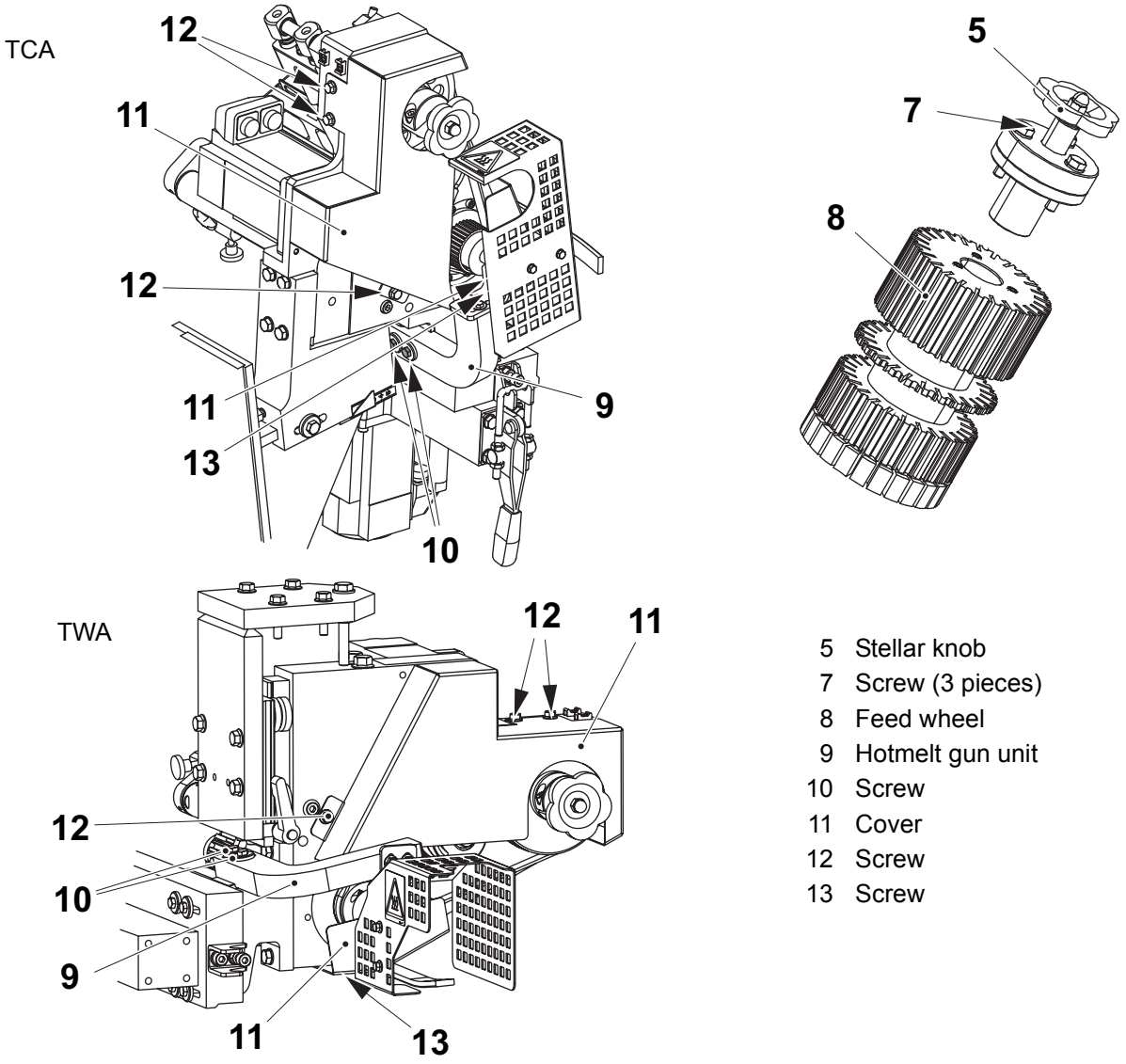

5 Stellar knob
7 Screw (3 pieces)
8 Feed wheel
9 Hotmelt gun unit
10 Screw
11 Cover
12 Screw
13 Screw

(Cont'd)

(Cont'd)

j) Loosen the screw (14) on the belt tensioner (15).

k) Turn the belt tensioner 3/4 of a revolution to the right to release the belt tension. Use a hook spanner (16).

Note! Turning the belt tensioner more than 3/4 of a revolution will destroy the torsion spring.

l) Tighten the screw (15).

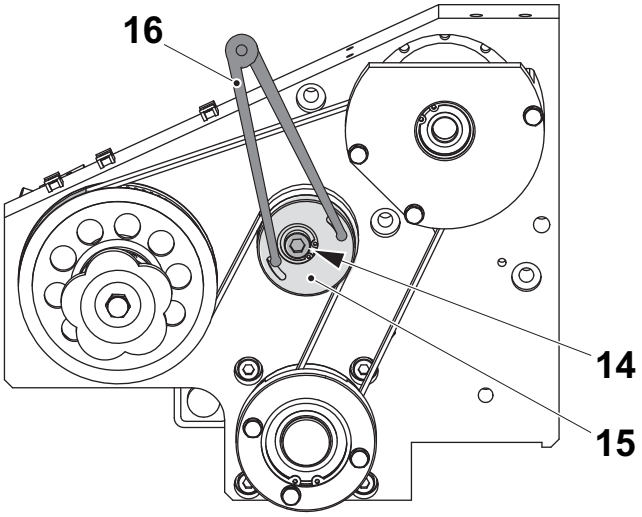

14 Screw
15 Belt tensioner
16 Hook spanner

m) Remove the screws (17) and the bearing holder (18)

n) Remove the screws (19) and the axle support (20).

o) Remove the timing belt (21).

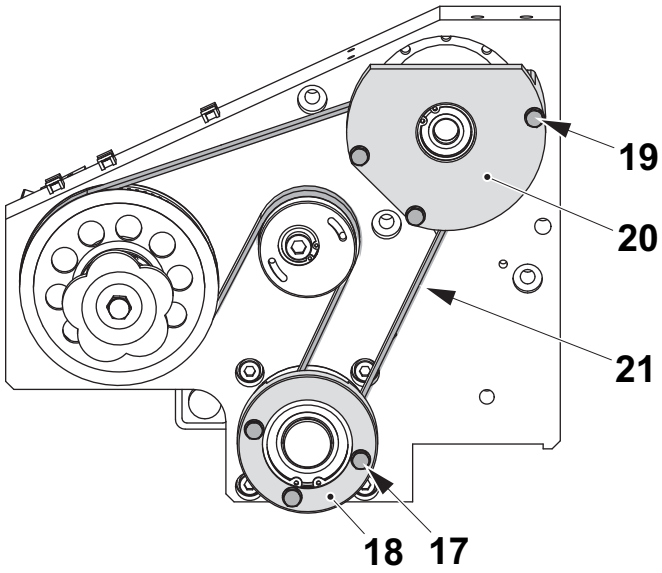

17 Screw (3 pieces)
18 Bearing holder
19 Screw (3 pieces)
20 Axle support
21 Timing belt

(Cont'd)

(Cont'd)

p) Loosen the screw (22) and remove the clamping element (23).

q) Change the pulley (24).

r) Put the clamping element (23) on the new pulley (24) and tighten the screw (22) with a torque of 5 Nm.

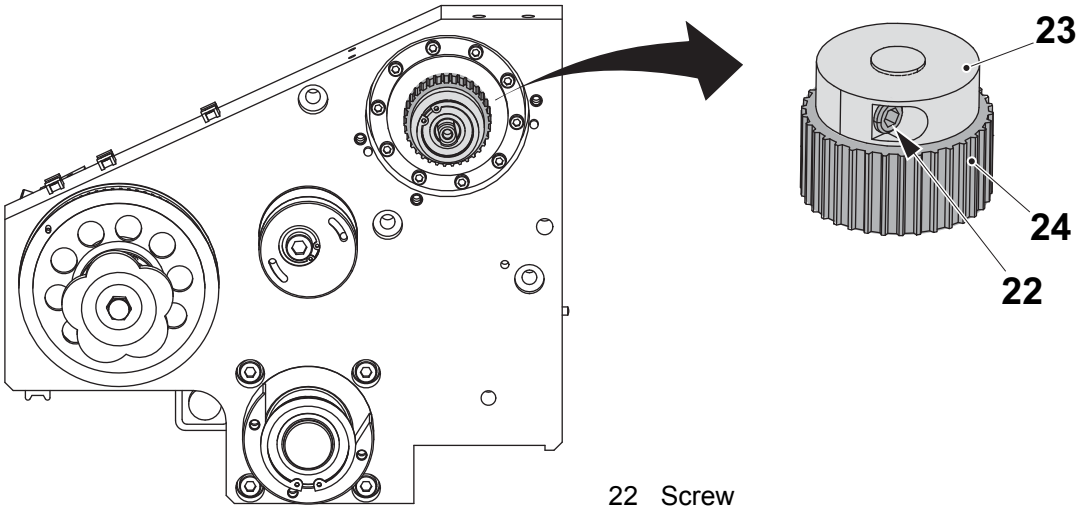

22 Screw
23 Clamping element
24 Pulley

(Cont'd)

(Cont'd)

s) Remove the screw (14) together with the belt tensioner (15) and the turn spring (25) in the appropriate hole (arrow), according to the straw type marking beside the hole. Do not tighten the screw yet.

t) Turn the belt tensioner 3/4 of a revolution to the right to release the belt tension. Use a hook spanner (16).

Note! Turning the belt tensioner more than 3/4 of a revolution will destroy the torsion spring.

u) Tighten the screw (14).

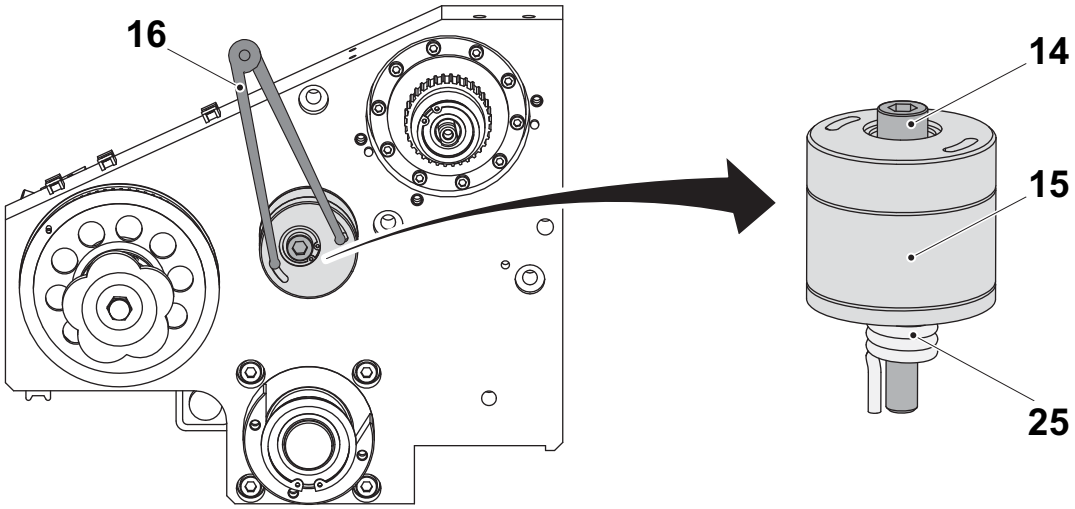

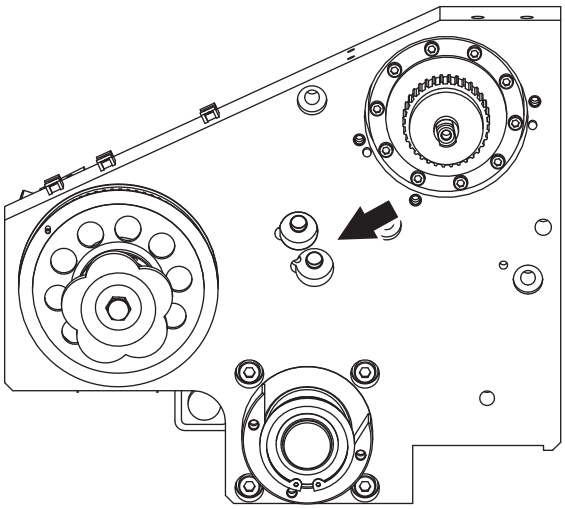

14 Screw
15 Belt tensioner
16 Hook spanner
25 Turn spring

(Cont'd)

(Cont'd)

v) Put the timing belt (21) over the pulleys.
w) Check that the timing belt is properly positioned over all the pulleys.
x) Attach the bearing holder (18) with the screws (17).
y) Attach the axle support (20) with the screws (19).
z) Loosen the screw (14).
aa) Tighten the screw (14) again.
ab) Attach the covers (11) and the hotmelt gun unit (9).

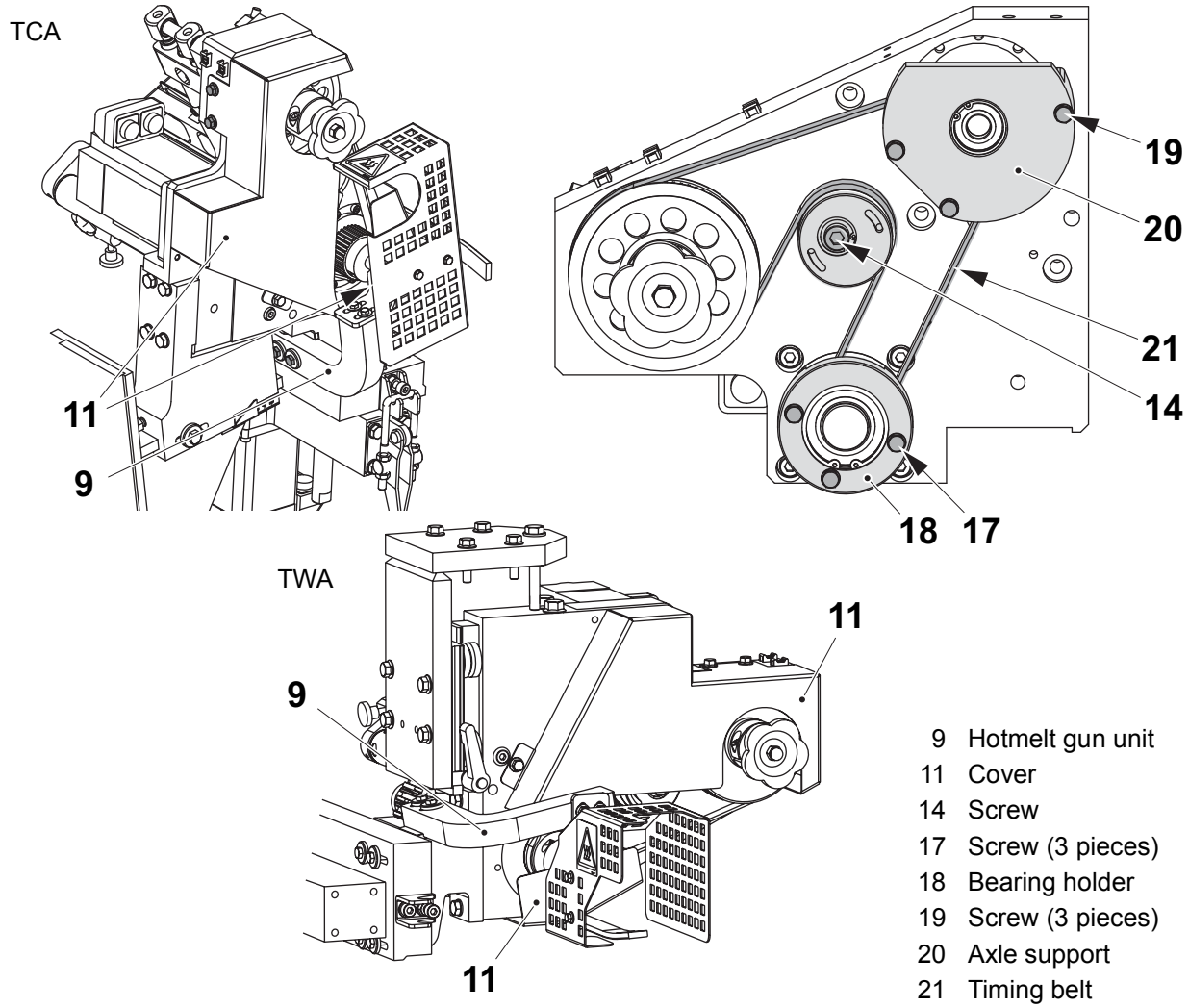

9 Hotmelt gun unit
11 Cover
14 Screw
17 Screw (3 pieces)
18 Bearing holder
19 Screw (3 pieces)
20 Axle support
21 Timing belt

(Cont'd)

(Cont'd)

ac) Remove the screw (26).

ad) Lift up the cutting unit and remove the screws (27) and the knife (4).

CAUTION

Risk of personal injury.

The knife is very sharp. Be careful when working near the knife.

ae) Pull out the axle pin (28) with the shafts (29).

af) Change the shafts (29) and place the axle pin (28) in the appropriate hole, according to the marking on the eccentric (30).

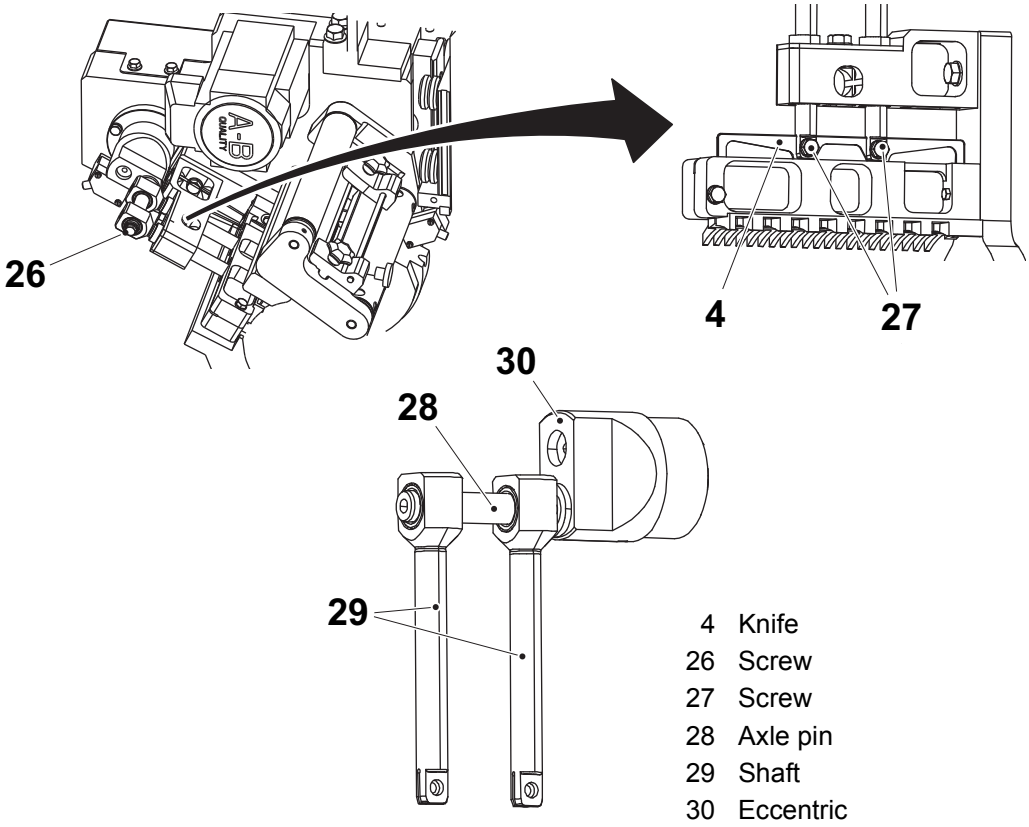

(Cont'd)

(Cont'd)

ag) Secure the squeezer (1) by pulling the quick-locks (2) back.

ah) Loosen the screws (31) on the eccentrics (32), and change the eccentrics.

Note! Do not overtighten the screws.

ai) Assemble the knife and the feed wheel unit. Perform 2.1-5 Feed Wheel Unit - Set.

aj) Loosen the screws (33) on the guide console and move the holders (34) to the sides.

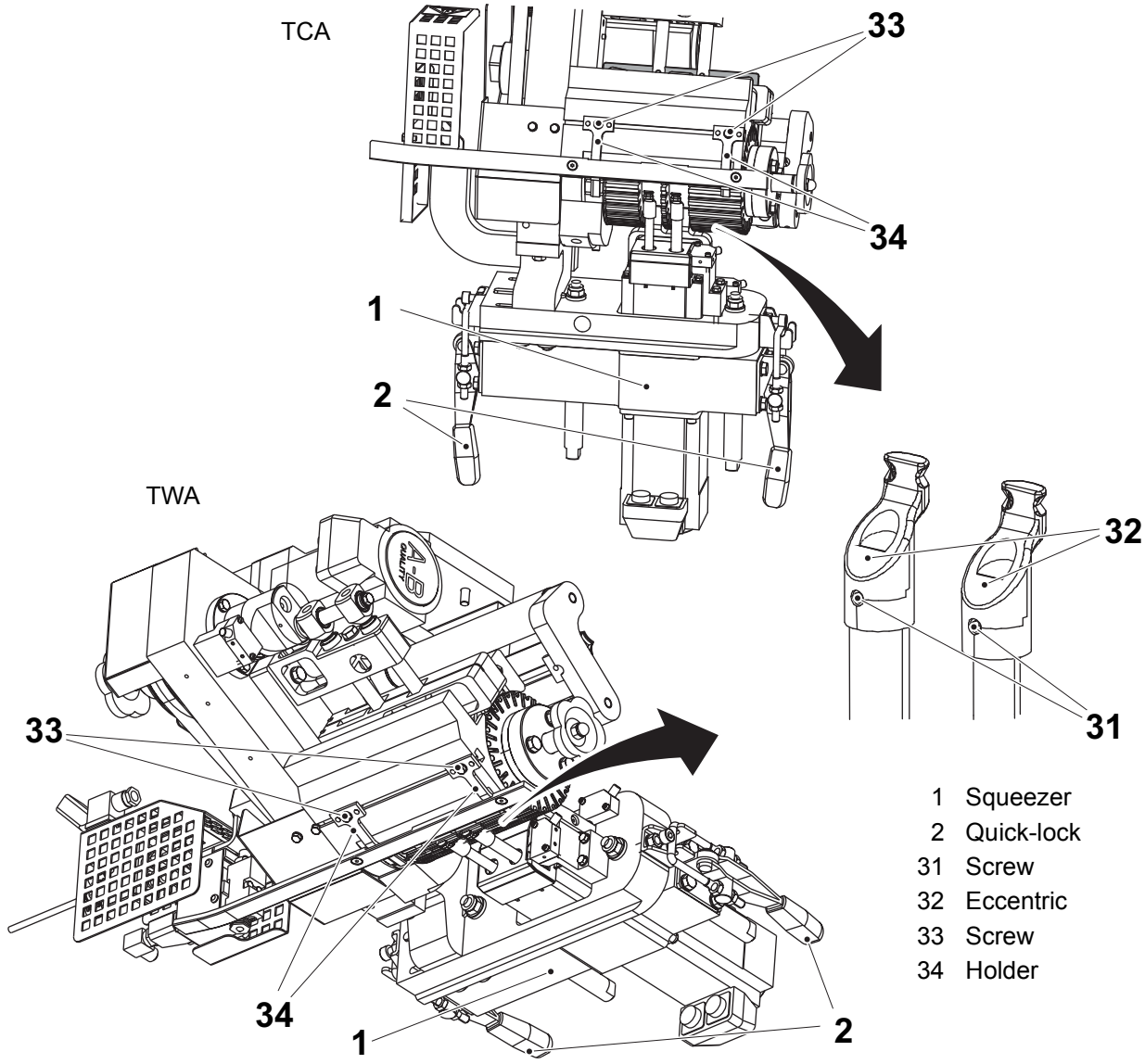

(Cont'd)

(Cont'd)

ak) Set the eccentrics by loosening the screws (35) and adjust the position of the squeezer (1). The eccentrics (32) are to be centred in the feed wheel slots.

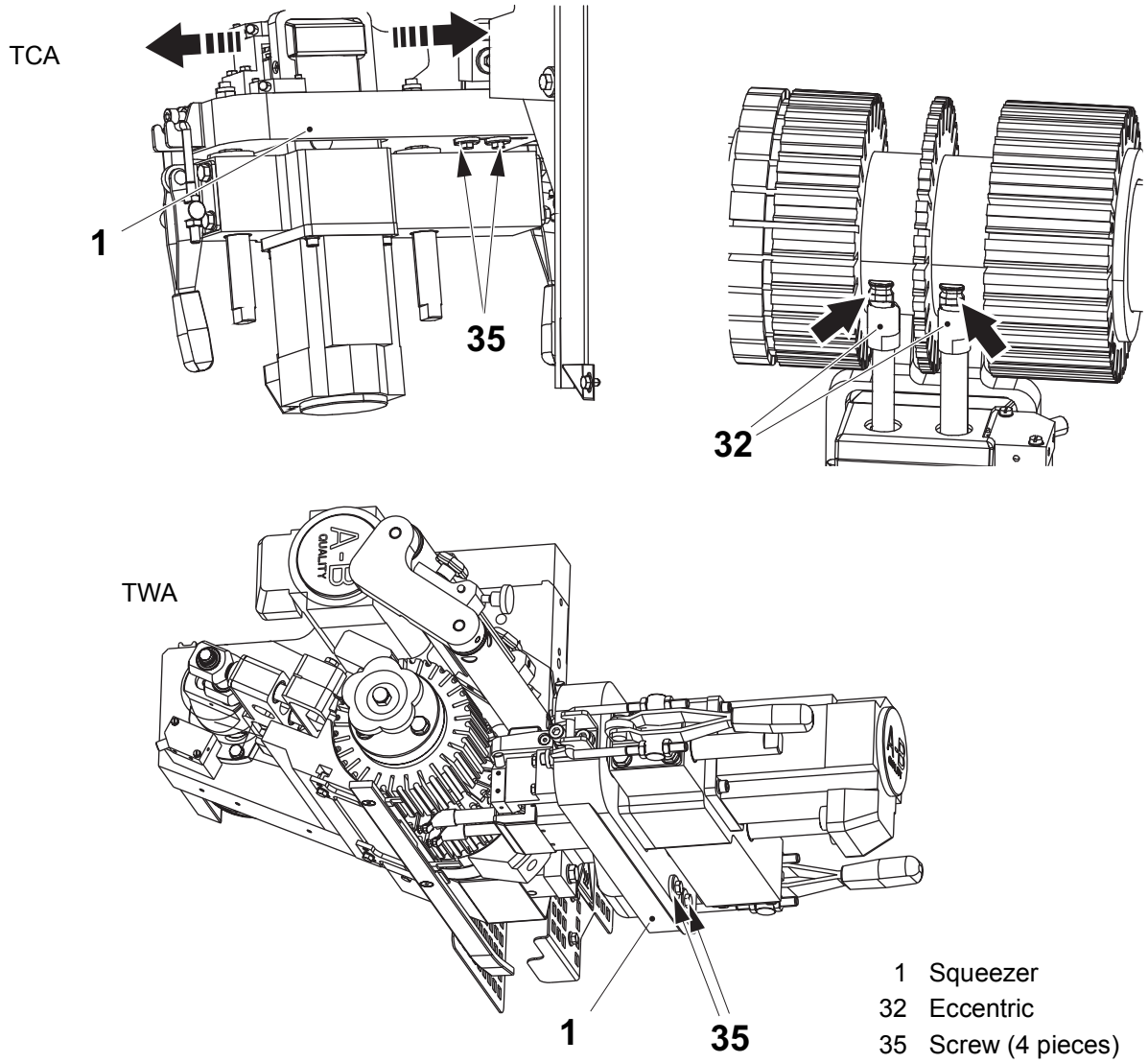

(Cont'd)

(Cont'd)

al) Tighten the screws (33). Check that the height of the eccentrics slots agree with the feed wheel slot (36), see the illustration below. If not, perform Procedure 2.3.4-1 Pressure Unit - Set (TCA) or 2.3.4-2 Pressure Unit - Set (TWA).

am) Set the holders (34) according to Procedure 2.6-3 Guide Console - Set (TCA/TWA).

an) Assemble in reverse order.

ao) Change recipe on the TPOP.

ap) Check the straw position and the hotmelt string position.

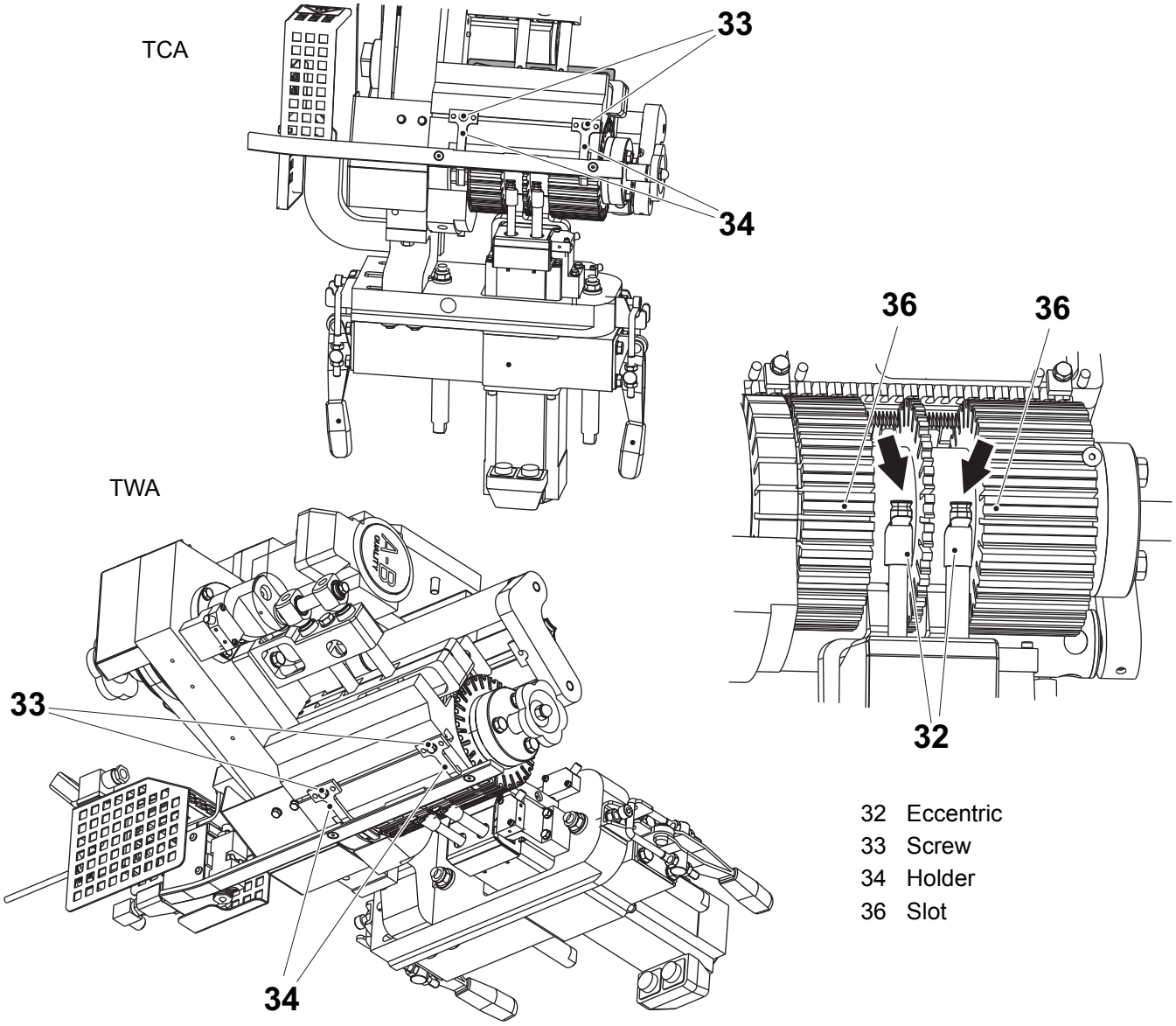

32 Eccentric
33 Screw
34 Holder
36 Slot

12.3 Setting Sequence

TB/TBA/TPA

a) Synchronize the top support versus the conveyor chain speed:
7.2.2-6 Maintenance - Set Conveyor Unit Parameters (TB/TBA/TPA)

b) Feed wheel set:
2.1-5 Feed Wheel Unit - Set

c) Set ladder band guide:
2.5-1 Ladder Band Guide - Set TB/TBA/TPA

d) Set pressure arms:
2.3.3-3 Pressure Arm - Set Height (TB/TBA)
2.3.3-6 Pressure Arm - Set Height (TPA)

e) Set pick-position:
7.2.2-2 Maintenance - Set Pick Position (TB/TBA/TPA)

f) Set the height of the top support:
1.1.5-1 Height Adjustment - Set Height

g)) Set tension of timing belt top support:
1.1.4.1-3 Support Belt - Set Timing Belt Tension

h) Set the belt brakes:
1.1.2-3 Belt Brake - Set

i) Set the override:
2.3.3-7 Pressure Arm - Set Override (TB/TBA/TPA)

j) Set the hotmelt guns height:
3.2.1-3 Hotmelt Gun - Set Gun Holder (TB/TBA/TPA)

k) Set leaf spring:
2.7-4 Spring Holder - Set Leaf Spring (TB/TBA/TPA)

l) Set height and angle of applicator unit:
2-3 Applicator Unit - Set Height and Straw Position (TB/TBA)

TCA

a) Set Conveyor:
1.2.1-2 Conveyor - Set

b) Set Package Transfer:
1.2.2-1 Package Transfer - Set

c) Apply Unit Maintenance:
7.2.2-1 Maintenance - Set Apply Unit

d) Set Applicator:
2-4 Applicator Unit - Set Height (TCA)

e) Set Ladder Band Guide:
2.5-2 Ladder Band Guide - Set (TCA/TWA)

f) Set Pick Position:
7.2.2-3 Maintenance - Set Pick Position (TCA/TWA)

g) Set Guide Console:
2.6-3 Guide Console - Set (TCA/TWA)

TWA

a) Set Conveyor:
1.3-1 Conveyor - Set Package Size

b) Apply Unit Maintenance:
7.2.2-1 Maintenance - Set Apply Unit

c) Set Applicator:
2-5 Applicator Unit - Set (TWA)

d) Set Ladder Band Guide:
2.5-2 Ladder Band Guide - Set (TCA/TWA)

e) Set Pick Position:
7.2.2-3 Maintenance - Set Pick Position (TCA/TWA)

f) Set Guide Console:
2.6-3 Guide Console - Set (TCA/TWA)

12.4 Consumables

12.4.1 Hotmelt

Required Hotmelt	Ambient temperature	Tank temperature	Hose temperature	Gun temperature
Jowat UniStraw 256.05 TP No. 90602-0252	5-40ºC	~150º	~155º	~160º
Straw-Lok TP No. 90459-1042	5-30ºC	~155º	~160º	~165º

A

Adjustment Plate - Change Ball Bearings (TWA) . . . . . 4 - 13
Adjustment Plate - Change Cylinder . . . . . 1 - 55
Adjustment Plate - Check Cylinder . . . . . 1 - 54
Adjustment Plate - Check Parts (TWA) . . . . . 4 - 12
Adjustment Plate - No Procedure Described . 1 - 14
Adjustment plate - Set (TWA) . . . . . 4 - 14
Adjustment Plate - Set Cylinder . . . . . 1 - 53
Air Nozzle - Set . . . . . 11 - 53
Air Supply - Clean Filter Regulator . . . . . 6 - 7
Air Supply - Reduce Air Pressure . . . . . 6 - 6
Air Supply - Set Air Pressure . . . . . 6 - 5
Air Supply - Set Pressure Sensor . . . . . 6 - 9
Applicator Unit - Check . . . . . 2 - 7
Applicator Unit - Set (TWA) . . . . . 2 - 12
Applicator Unit - Set Angle (TB/TBA/TPA) . . . . 2 - 8
Applicator Unit - Set Height (TCA) . . . . . 2 - 10
Applicator Unit - Set Height and Straw Position (TB/TBA) . . . . . 2 - 9
Assembly Plate - Set Time Relay . . . . . 11 - 55

B

Belt Brake - Change Timing Belt . . . . . 1 - 11
Belt Brake - Check Timing Belt . . . . . 1 - 10
Belt Brake - Set . . . . . 1 - 12
Belt Conveyor, Infeed - Change Ball Bearings 1 - 43
Belt Conveyor, Infeed - Change Timing Belt . 1 - 40
Belt Conveyor, Infeed - Check Ball Bearings . 1 - 42
Belt Conveyor, Infeed - Check Timing Belt . . 1 - 39
Belt Tensioner - Change Parts . . . . . 2 - 88
Belt Tensioner - Check Parts . . . . . 2 - 82
Bending Roller - Check Bushings . . . . . 11 - 22
Bending Roller - Check Rollers . . . . . 11 - 23
Bracket - No Procedure Described (TCA) . . . 4 - 11
Brake - Check Parts . . . . . 11 - 41
Brake - Set . . . . . 11 - 43

C

Cable - No Procedure Described . . . . 1 - 56, 4 - 15
Cable Duct - No Procedure Described . . . . . 4 - 5
Change Straw Length/Diameter (TB/TBA/TPA) . . . . . 12 - 8
Change Straw Type (TB/TBA/TPA) . . . . . 12 - 10
Change Straw Type (TCA/TWA) . . . . . 12 - 18
Configuration - Change Conveyor Specification (TB/TBA/TPA) . . . . . 7 - 70
Configuration - Change Discharge Option (TB/TBA/TCA/TPA) . . . . . 7 - 72
Configuration - Change Infeed Option (TB/TBA/TCA/TPA) . . . . . 7 - 71
Configuration - Change IP Address . . . . . 7 - 73
Configuration - Change Package Type . . . . . 7 - 68
Configuration - Change PLMS Communication . . . . . 7 - 67
Configuration - Select Cooling Unit (Optional Equipment) . . . . . 7 - 75
Configuration - Set Line Communication . . . . 7 - 69
Configuration - Set Second Discharge Unit (Optional Equipment TB/TBA/TPA) . . . . . 7 - 74
Connection Box - No Procedure Described (TCA/TWA) . . . . . 4 - 17
Connector - No Procedure Described . . . . . 4 - 16
Conveyor - Change Ball Bearings . . . . . 1 - 37
Conveyor - Change Drive Belts . . . . . 1 - 35
Conveyor - Check Ball Bearings . . . . . 1 - 36
Conveyor - Check Belt Tension . . . . . 1 - 27
Conveyor - Check Drive Belts . . . . . 1 - 34
Conveyor - Set . . . . . 1 - 28
Conveyor - Set Package Size . . . . . 1 - 58
Conveyor Body - No procedure described . . . 1 - 60
Cooling Air Outlet - No Procedure Described . . 8 - 5
Cooling Unit - Error Handling . . . . . 11 - 57
Cooling Unit - Set Temperature . . . . . 11 - 56
Cover - No Procedure Described . . . . . 8 - 10
Covering panel - No Procedure Described . . . . . 5 - 6, 5 - 7, 5 - 8, 5 - 9
Covering panel - No Procedure Described (TB/TBA/TPA) . . . . . 5 - 11
Crank Housing - Change Parts (TB/TBA) . . . . 2 - 46
Crank Housing - Change Parts (TPA) . . . . . 2 - 53
Crank Housing - Check Parts (TB/TBA) . . . . . 2 - 40

Crank Housing - Check Parts (TPA) . . . . . 2 - 52
Crankshaft - Change Parts . . . . . 2 - 113
Crankshaft - Check Parts . . . . . 2 - 106
Cutting Unit - Assemble . . . . . 11 - 7
Cutting Unit - Change Parts . . . . . 2 - 39
Cutting Unit - Check Parts . . . . . 2 - 36

D

Detector - Clean Vision System . . . . . 11 - 52
Detector - Install Software Updates . . . . . 11 - 44
Detector - Set Vision System . . . . . 11 - 47
Drive and End Unit - Change Ball Bearings . . 1 - 30
Drive Motor - No Procedure Described . . . . . 2 - 57
Drive Wheel - Change . . . . . 1 - 65
Drive Wheel - Check . . . . . 1 - 64

E

El-Cabinet Door - Check Filter Fan . . . . . 8 - 8
El-Cabinet Door - No Procedure Described . . . 8 - 9
Electrical Cabinet - Change Filter . . . . . 11 - 54
Electrical Cabinet - Change Heating Element 11 - 37
Electrical Cabinet - Change Temperature Controller . . . . . 11 - 24
Electrical Cabinet - Change Thermocouple . 11 - 36
Electrical Cabinet - No Procedure Described . . 8 - 6
Electrical Cabinet - Set Relays . . . . . 11 - 38
Electrical Cabinet - Set Temperature Controller . . . . . 11 - 25
Electrical Document - No Procedure Described 9 - 5
Electrical Materials - Change a Safety PLC in an Existing Application Afterwards in Safety System . . . . . 8 - 44
Electrical Materials - Change Baud Rate, Error Code E26 in Safety System . . . . . 8 - 43
Electrical Materials - Change Fuse in PLC Power Supply . . . . . 8 - 33
Electrical Materials - Change Fuse on Surge Protection Device . . . . . 8 - 11
Electrical Materials - Check Photocell . . . . . 8 - 65
Electrical Materials - Check Residual Current Device . . . . . 8 - 13
Electrical Materials - Description of PLC SM2 8 - 34
Electrical Materials - Description of Safety System . . . . . 8 - 39
Electrical Materials - Description of Variable Frequency Drive . . . . . 8 - 15
Electrical Materials - Download PLC Program 8 - 50
Electrical Materials - Download Program from a PC to a Safety PLC . . . . . 8 - 46
Electrical Materials - Electrical Connection of SNP Converter . . . . . 8 - 37
Electrical Materials - GE Fanuc Download DeviceNet File (Line Communication Genius) 8 - 78
Electrical Materials - GE Fanuc Download Program (Line Communication Genius) . . . . . 8 - 70
Electrical Materials - Load Firmware in PLC and Servo . . . . . 8 - 60
Electrical Materials - Reset Fuse in Miniature Circuit Breaker . . . . . 8 - 14
Electrical Materials - Safety System Error Codes . . . . . 8 - 49
Electrical Materials - Servo Amplifier Error Codes . . . . . 8 - 24
Electrical Materials - Set Address after Replacing an ID-FIX in Safety System . . . . . 8 - 40
Electrical Materials - Set DIP Switch on SNP Converter . . . . . 8 - 36
Electrical Materials - Set IP Address . . . . . 8 - 67
Electrical Materials - Set Overload Protection (TB/TBA/TPA) . . . . . 8 - 21
Electrical Materials - Set Photocell Sensitivity . 8 - 66
Electrical Materials - Set Sercos Communication on Servo Amplifier . . . . . 8 - 22
Electrical Materials - Set Switches at PLC SM2 . . . . . 8 - 35
Electrical Materials - Set Variable Frequency Drive . . . . . 8 - 16
Electrical Materials - Variable Frequency Drive Fault Codes . . . . . 8 - 18
Emergency Stop - Proof Test . . . . . 8 - 81

F

Feed Wheel - Assemble . . . . . 11 - 6
Feed Wheel - Change (TB/TBA/TPA) . . . . . 2 - 32
Feed Wheel - Change (TCA/TWA) . . . . . 2 - 35
Feed Wheel Unit - Change Parts . . . . . 2 - 26
Feed Wheel Unit - Check Parts (TB/TBA/TPA) 2 - 14

Feed Wheel Unit - Check Parts (TCA) . . . . . 2 - 20
Feed Wheel Unit - Check Parts (TWA) . . . . . 2 - 23
Feed Wheel Unit - Set . . . . . 2 - 30
Frame Housing - Change Timing Belt . . . . . 2 - 77
Frame Housing - Check Timing Belt (TB/TBA/TPA) . . . . . 2 - 73
Frame Housing - Check Timing Belt (TCA/TWA) . . . . . 2 - 76

G

Glass Door - No Procedure Described . . . . . 5 - 5
Guide Arm - No procedure described . . . . . 2 - 115
Guide Arm - Set (TCA) . . . . . 4 - 10
Guide Console - Change Guide Arms (TB/TBA/TPA) . . . . . 2 - 92
Guide Console - Set Gun Holder (TB/TBA/TPA) . . . . . 2 - 94
Guide Console - Set Straw not in Position Sensor (TB/TBA/TPA) . . . . . 2 - 96
Guide Console - Set (TCA/TWA) . . . . . 2 - 95

H

Heater - Clean . . . . . 11 - 9
Height Adjustment - Change Shock Absorber 1 - 25
Height Adjustment - Check Shock Absorber . 1 - 24
Height Adjustment - Set Height . . . . . 1 - 23
HMI User Management - Description . . . . . 7 - 5
HMI User Management - Log On as a User . . 7 - 7
Hook Spanner - No Procedure Described . . 10 - 10
Hotmelt Equipment - Change Nozzle (TCA/TWA) . . . . . 3 - 26
Hotmelt Equipment Miscellaneous - No Procedure Described . . . . . 3 - 5
Hotmelt Equipment Nordson - Bleed System (TB/TBA/TPA) . . . . . 3 - 16
Hotmelt Equipment Nordson - Bleed System (TCA/TWA) . . . . . 3 - 20
Hotmelt Equipment Nordson - Change Adhesive . . . . . 3 - 14
Hotmelt Equipment Nordson - Change Filter . 3 - 27
Hotmelt Equipment Nordson - Change Nozzle (TB/TBA/TPA) . . . . . 3 - 25
Hotmelt Equipment Nordson - Check Hose . . 3 - 23
Hotmelt Equipment Nordson - Clean Nozzle . 3 - 24
Hotmelt Equipment Nordson - Hotmelt Unit, F2 Alarm . . . . . 3 - 22
Hotmelt Equipment Nordson - Set Hotmelt Unit 3 - 6
Hotmelt Gun - Change Gun Module . . . . . 3 - 30
Hotmelt Gun - Change Solenoid Valve . . . . . 3 - 32
Hotmelt Gun - Set Gun Holder (TB/TBA/TPA) 3 - 33

L

Ladder Band Guide - Set (TCA/TWA) . . . . . 2 - 91
Ladder Band Guide - Set TB/TBA/TPA . . . . . 2 - 90
Light Fixture - No Procedure Described . . . . . 4 - 8
Lock Holder - Set Gun Holder (TCA) . . . . . 2 - 71
Lock Holder - Set Gun Holder (TWA) . . . . . 2 - 72

M

Machine Body - No Procedure Described . . . . . 4 - 6
Main Pipe - No Procedure Described . . . . . 6 - 13
Maintenance - Set Apply Unit . . . . . 7 - 15
Maintenance - Set Conveyor Unit Parameters (TB/TBA/TPA) . . . . . 7 - 33
Maintenance - Set Discharge Unit . . . . . 7 - 31
Maintenance - Set Infeed Unit Parameters . . . 7 - 32
Maintenance - Set Main Conveyor Unit (TCA/TWA) . . . . . 7 - 37
Maintenance - Set Pick Position (TB/TBA/TPA) . . . . . 7 - 20
Maintenance - Set Pick Position (TCA/TWA) . 7 - 25
Motor Unit - Change Fan . . . . . 11 - 39
Mounting Plate- No Procedure Described . . . . . 8 - 7

P

Package Aligner - No Procedure Described (TWA) . . . . . 10 - 11
Package Transfer - Change Ball Bearings . . . 1 - 49
Package Transfer - Change Belts . . . . . 1 - 52
Package Transfer - Check Ball Bearings . . . . 1 - 48
Package Transfer - Check Belts . . . . . 1 - 51
Package Transfer - Set . . . . . 1 - 45

Photocell Unit - No Procedure Described . . . 11 - 5
Photocell Unit - No Procedure Described (TB/TBA/TPA) . . . . . 10 - 5
Position Template - No Procedure Described 10 - 9
Pressure Arm - Assemble . . . . . 11 - 8
Pressure Arm - Change Parts (TB/TBA) . . . . 2 - 59
Pressure Arm - Change (TPA) . . . . . 2 - 62
Pressure Arm - Check Parts (TB/TBA) . . . . . 2 - 58
Pressure Arm - Check (TPA) . . . . . 2 - 61
Pressure Arm - Set Height (TB/TBA) . . . . . 2 - 60
Pressure Arm - Set Height (TPA) . . . . . 2 - 63
Pressure Arm - Set Override (TB/TBA/TPA) . 2 - 64
Pressure Unit - Set (TCA) . . . . . 2 - 68
Pressure Unit - Set (TWA) . . . . . 2 - 69
Pressure Unit - Straw in Feed Wheel (TCA/TWA) . . . . . 2 - 70

R

Recipes - Set Recipe . . . . . 7 - 10
Roller Unit - Change Bushings . . . . . 11 - 12
Roller Unit - Change Hand Wheel . . . . . 11 - 21
Roller Unit - Change Roller Chain . . . . . 11 - 16
Roller Unit - Change Wheel . . . . . 11 - 19
Roller Unit - Check Bushings . . . . . 11 - 11
Roller Unit - Check Hand Wheel . . . . . 11 - 20
Roller Unit - Check Wheel . . . . . 11 - 18

S

Safeguard - Proof Test . . . . . 8 - 79
Safe-Off Servo - Proof Test . . . . . 8 - 84
Second Discharge Unit - No Procedure Described . . . . . 11 - 60
Set Node Address on Servo Amplifier . . . . . 8 - 23
Setting Template- No Procedure Described 10 - 10
Setup - Add Language . . . . . 7 - 38
Setup - Change User Settings . . . . . 7 - 42
Setup - Check Diagnostic . . . . . 7 - 43
Setup - Check/Set IP Address and Subnet Mask Address . . . . . 7 - 46
Setup - Delete Application . . . . . 7 - 52
Setup - Disable Screen Saver . . . . . 7 - 57
Setup - Download Program Using a PC . . . . . 7 - 60
Setup - Install HMI Using a CF Card . . . . . 7 - 54
Setup - Load Application . . . . . 7 - 55
Setup - Load Firmware in HMI . . . . . 7 - 66
Setup - Shut Down HMI . . . . . 7 - 44
Setup - Start-Up Language Setup . . . . . 7 - 39
Side Adjuster - No Procedure Described . . . . 1 - 56
Software CD - No Procedure Described . . . . . 9 - 6
Spring Holder - Change Compression Springs (TB/TBA/TPA) . . . . . 2 - 101
Spring Holder - Change Leaf Spring (TB/TBA/TPA) . . . . . 2 - 103
Spring Holder - Check Parts (TB/TBA) . . . . . 2 - 100
Spring Holder - Set Leaf Spring (TB/TBA/TPA) . . . . . 2 - 105
Straw Magazine - No Procedure Described . . 10 - 6
Support Belt - Change Ball Bearings . . . . . 1 - 62
Support Belt - Change Drive Belts . . . . . 1 - 63
Support Belt - Change Timing Belt . . . . . 1 - 17
Support Belt - Check Ball Bearings and Drive Belts . . . . . 1 - 61
Support Belt - Check Timing Belt . . . . . 1 - 16
Support Belt - Set Timing Belt Tension . . . . . 1 - 18
Support Rail - Set (TB/TBA/TPA) . . . . . 1 - 6

T

Template - No Procedure Described (TB/TBA) . . . . . 10 - 7, 10 - 8
Template - No Procedure Described (TPA) . 10 - 7, ... 10 - 8
Top Support - Set Horizontal Position . . . . . 1 - 15
Tunnel - No Procedure Described . . . . 5 - 10, 5 - 12

V

Vibration Damper - No Procedure Described (TB/TBA/TPA) . . . . . 4 - 9

W

Warning Lamp - Error Handling . . . . . 11 - 40

Warning Lamp - No Procedure Described . . . . 4 - 7
Waste Pipe - No Procedure Described . . . . 10 - 12
Wheel - Change Parts . . . . . 1 - 21
Wheel - Check Parts . . . . . 1 - 19


Tetra Pak

__Note!__ This page is generated __automatically__.
using the __variable definitions__ made in the __front page__ file!

Straw Applicator 30 by Tetra Pak
663350-0300
Issue 2010-06 Doc. No. MM-3039535-0105

Straw Applicator 30 by Tetra Pak 1(2)
663350-0300
Issue 2010-06 Doc. No. MM-3039535-0105

Straw Applicator 30 by Tetra Pak
663350-0300
Issue 2010-06 Doc. No. MM-3039535-0105

Straw Applicator 30 by Tetra Pak 1(2)
663350-0300
Issue 2010-06 Doc. No. MM-3039535-0105

Straw Applicator 30 by Tetra Pak
663350-0300
Issue 2010-06 Doc. No. MM-3039535-0105

Straw Applicator 30 by Tetra Pak 1(2)
663350-0300
Issue 2010-06 Doc. No. MM-3039535-0105

Straw Applicator 30 by Tetra Pak
663350-0300
Issue 2010-06 Doc. No. MM-3039535-0105

Straw Applicator 30 by Tetra Pak 1(2)
663350-0300
Issue 2010-06 Doc. No. MM-3039535-0105

Straw Applicator 30 by Tetra Pak
663350-0300
Issue 2010-06 Doc. No. MM-3039535-0105

Straw Applicator 30 by Tetra Pak 2(2)
663350-0300
Issue 2010-06 Doc. No. MM-3039535-0105

Straw Applicator 30 by Tetra Pak
663350-0300
Issue 2010-06 Doc. No. MM-3039535-0105

Straw Applicator 30 by Tetra Pak 2(2)
663350-0300
Issue 2010-06 Doc. No. MM-3039535-0105

Straw Applicator 30 by Tetra Pak
663350-0300
Issue 2010-06 Doc. No. MM-3039535-0105

Straw Applicator 30 by Tetra Pak 2(2)
663350-0300
Issue 2010-06 Doc. No. MM-3039535-0105

Straw Applicator 30 by Tetra Pak
663350-0300
Issue 2010-06 Doc. No. MM-3039535-0105

Straw Applicator 30 by Tetra Pak 2(2)
663350-0300
Issue 2010-06 Doc. No. MM-3039535-0105

40 mm Full width ***Note!*** *This page is generated* ***automatically****.*
using the ***variable definitions*** *made in the* ***front page*** *file!*

Straw Applicator 30 by Tetra Pak
663350-0300

Issue 2010-06 Doc. No. MM-3039535-0105

Straw Applicator 30 by Tetra Pak 1(2)
663350-0300

Issue 2010-06 Doc. No. MM-3039535-0105

Straw Applicator 30 by Tetra Pak
663350-0300

Issue 2010-06 Doc. No. MM-3039535-0105

Straw Applicator 30 by Tetra Pak 1(2)
663350-0300

Issue 2010-06 Doc. No. MM-3039535-0105

Straw Applicator 30 by Tetra Pak
663350-0300

Issue 2010-06 Doc. No. MM-3039535-0105

Straw Applicator 30 by Tetra Pak 1(2)
663350-0300

Issue 2010-06 Doc. No. MM-3039535-0105

Straw Applicator 30 by Tetra Pak
663350-0300

Issue 2010-06 Doc. No. MM-3039535-0105

Straw Applicator 30 by Tetra Pak 2(2)
663350-0300

Issue 2010-06 Doc. No. MM-3039535-0105

Straw Applicator 30 by Tetra Pak
663350-0300

Issue 2010-06 Doc. No. MM-3039535-0105

Straw Applicator 30 by Tetra Pak 2(2)
663350-0300

Issue 2010-06 Doc. No. MM-3039535-0105

Straw Applicator 30 by Tetra Pak
663350-0300

Issue 2010-06 Doc. No. MM-3039535-0105

Straw Applicator 30 by Tetra Pak 2(2)
663350-0300

Issue 2010-06 Doc. No. MM-3039535-0105