SPC

Spare Parts Catalogue

Straw Applicator 30 by Tetra Pak

663350-0300

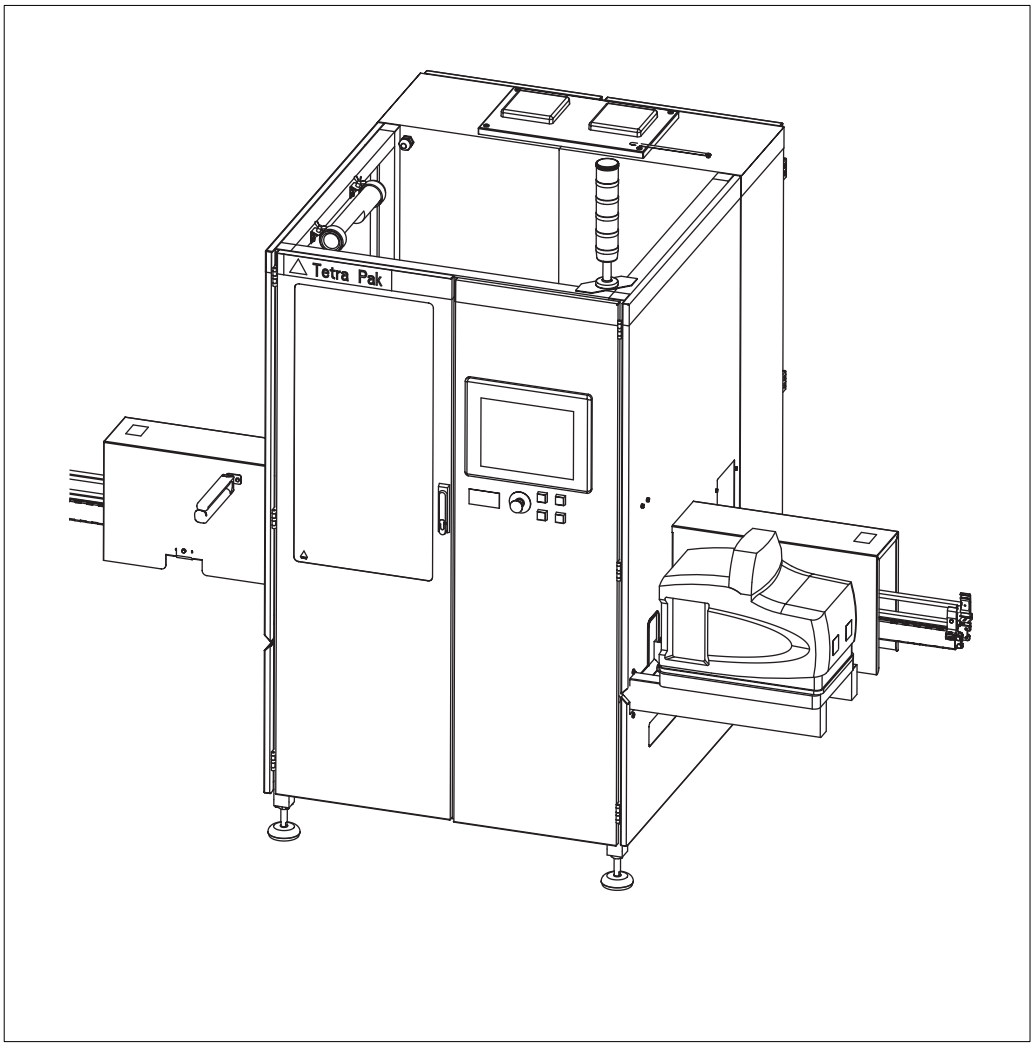

Tetra Pak

Doc. No: SPC-3039538-0104

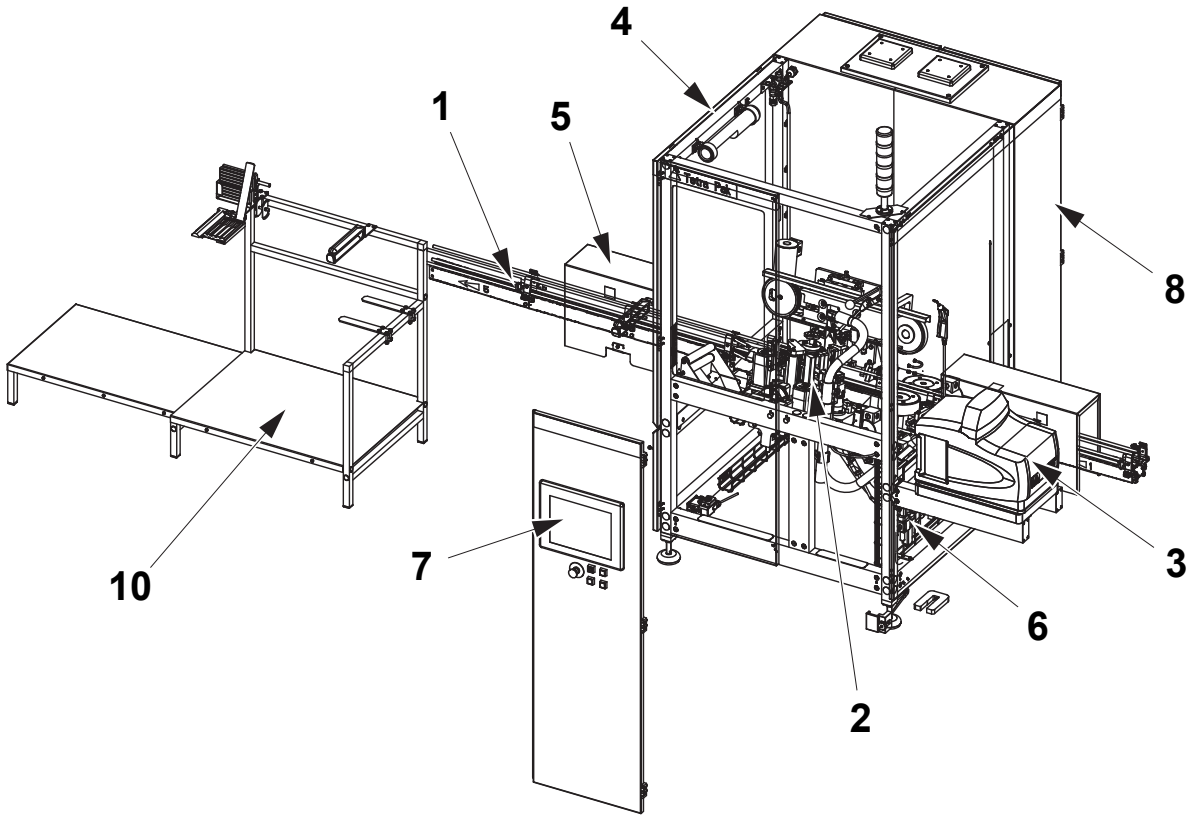

The position numbers in the illustration correspond with the chapter numbers listed on the next page.

Copyright © 2010 Tetra Pak Group

All rights reserved. No part of this document may be reproduced or copied in any form or by any means without written permission from Tetra Pak Packaging Solutions AB.

Tetra Pak and all Tetra Pak products are trademarks belonging to the Tetra Pak Group.

The content of this manual is in accordance with the design and construction of the machine or equipment at the time of publishing. Tetra Pak reserves the right to introduce design modifications without prior notice.

This document was produced by:

Tetra Pak Packaging Solutions AB
Ruben Rausings gata
221 86 Lund
SWEDEN

Additional copies can be ordered from Tetra Pak. When ordering additional copies, always provide the document number.

Doc. No. SPC-3039538-0104

Issue 2010-03

This document is valid from:

Series No/Machine No Sign.

SPC

Spare Parts Catalogue

Straw Applicator 30 by Tetra Pak
663350-0300

Machine or equipment configurations that this catalogue is valid for are described on the next page.

i Introduction

1 Conveyor Section

2 Applicator Unit

3 Hotmelt Equipment

4 Machine Body

5 Machine Covering

6 Air Equipment

7 TPOP HMI

8 Electrical Cabinet

9 Electric Equipment

10 Regular Accessories

11 Optional Equipment

ii Part Number Index

iii Alphabetical Index

iv Ref. Des. Parts Index

Doc. No: SPC-3039538-0104

Issue 2010-03

Tetra Pak

Tetra Pak Packaging Solutions

Valid for:

Name	Drawing Specification and Development Step	Additional Information
Straw Applicator 30 by Tetra Pak	663350-0300	Package Shape: - Tetra Brik, TB - Tetra Brik Aseptic, TBA - Tetra Classic Aseptic, TCA - Tetra Prisma Aseptic, TPA - Tetra Wedge Aseptic, TWA

Mandatory Equipment:

Name	Drawing Specification and Development Step	Additional Information
Bent Foil Treater	2643050-0400	Mandatory for TB/TBA speed lines
Straw Detector 30	663550-0300	Mandatory for TB/TBA speed lines
Package Orientation Controller	2976909-0100	Mandatory for TCA lines
Rejecting Unit	3010247-0100	Mandatory for TCA/TWA lines

Optional Equipment:

Name	Drawing Specification and Development Step	Additional Information
Photocell Unit	2943553-0100	Valid for TB/TBA/TPA
Quick Change	3025775-0200	Valid for TB/TBA/TPA
Bent Foil Treater	2643050-0400	Valid for all machine variants
Straw Detector 30	663550-0300	Valid for TB/TBA
Cooling Unit	3039857-0100	Valid for all machine variants
Second Discharge Unit	3088860-0100	Valid for TB/TBA/TPA

Update Log for Doc. No. SPC-3039538-0104

This table shows all changes made to this catalogue, including installed rebuilding kits, added or removed pages.

Date	Installed Kit	Added Pages (Doc. No.)	Removed Pages	Signature

Date	Installed Kit	Added Pages (Doc. No.)	Removed Pages	Signature

i Introduction

en About the Introduction Chapter
This chapter contains basic information about this catalogue and related Tetra Pak equipment.

bg За уводната глава
Тази глава съдържа основна информация за този каталог и приложимото Tetra Pak оборудване.

cs O kapitole Úvod
Tato kapitola obsahuje základní informace o této příručce a souvisejícím zařízení Tetra Pak.

da Om indledningen
Kapitlet indeholder grundlæggende oplysninger om dette katalog og tilhørende Tetra Pak-udstyr.

de Über das Einleitungskapitel
Diese Kapitel enthält grundlegende Informationen über diesen Katalog und die zugehörige Tetra Pak-Ausrüstung

el Σχετικά με το Κεφάλαιο 'Εισαγωγή'
Αυτό το κεφάλαιο περιέχει βασικές πληροφορίες για τον παρόντα κατάλογο και τον σχετικό εξοπλισμό της Tetra Pak.

es Acerca del capítulo Introducción
Este capítulo contiene información básica sobre este catálogo y el equipo Tetra Pak relacionado.

et Sissejuhatava peatüki kohta
See peatükk sisaldab teavet käesoleva kataloogi ja sellega seonduva Tetra Paki seadme kohta.

fi Tietoja Johdanto-luvusta
Tässä luvussa on perustietoja tästä luettelosta ja Tetra Pak -laitteesta.

fr À propos du chapitre Introduction
Ce chapitre contient les informations de base à propos de ce catalogue et de l'équipement Tetra Pak concerné.

hu A Bevezetés fejezetről
Ez a fejezet alapvető információkat tartalmaz a katalógusról és a hozzá tartozó Tetra Pak berendezésről.

is Um inngangskaflann
Þessi kafli inniheldur grundvallarupplýsingar um þennan vörulista og tengdan Tetra Pak búnað.

it Informazioni sul capitolo Introduzione
Questo capitolo contiene informazioni generali sul presente catalogo e sulla relativa macchina Tetra Pak.

lt Apie įvadinį skyrių
Šiame skyriuje pateikta pagrindinė informacija apie šį katalogą ir su juo susijusią "Tetra Pak" įrangą.

lv Par Ievada nodaļu
Šī nodaļa ietver galveno informāciju par šo katalogu un saistītajām Tetra Pak iekārtām.

nl Over de inleiding
Dit hoofdstuk bevat basisinformatie omtrent deze catalogus en aanverwante Tetra Pak-installatie.

no Om kapitlet Introduksjon
Dette kapitlet inneholder grunnleggende informasjon om denne katalogen og relatert Tetra Pak-utstyr.

pl Informacje na temat rozdziału wprowadzającego
Rozdział wprowadzający zawiera podstawowe informacje dotyczące niniejszego katalogu i związanej z nim maszyny Tetra Pak.

pt Acerca do Capítulo de Introdução
Este capítulo contém informações básicas sobre este catálogo e os equipamentos relacionados da Tetra Pak.

ro Despre capitolul introductiv
Acest capitol conține informații de bază despre acest catalog și despre echipamentul Tetra Pak corelat.

sk O kapitole Úvod
Táto kapitola obsahuje základné informácie o tomto návode a informácie súvisiace so zariadením Tetra Pak.

sl O uvodnem poglavju
To poglavje vsebuje osnovne informacije o tem katalogu in opremi Tetra Pak.

sv Om inledningskapitlet
Det här kapitlet innehåller grundläggande information om katalogen och Tetra Pak-utrustningen.

Introduction

Illustrations . . . . . i - 5
English Text . . . . . i - 7

Увод

Илюстрации . . . . . i - 5
Текст на български език . . . . . i -11

Úvod

Obrázky . . . . . i -5
Český text . . . . . i - 15

Indledning

Illustrationer . . . . . i - 5
Dansk tekst . . . . . i - 19

Einleitung

Abbildungen . . . . . i - 5
Deutscher Text . . . . . i - 23

Εισαγωγή

Εικόνες . . . . . i - 5
Ελληνικό Κείμενο . . . . . i - 27

Introducción

Ilustraciones . . . . . i - 5
Texto en español . . . . . i - 31

Sissejuhatus

Joonised . . . . . i - 5
Eestikeelne tekst . . . . . i - 35

Johdanto

Kuvat . . . . . i - 5
Suomenkielinen teksti . . . . . i - 39

Introduction

Illustrations . . . . . i - 5
Texte français . . . . . i - 43

Bevezetés

Ábrák . . . . . i - 5
Magyar szöveg . . . . . i - 47

Inngangur

Skýringarmyndir . . . . . i - 5
Íslenskur texti . . . . . i - 51

Introduzione

Figure . . . . . i - 5
Testo in italiano . . . . . i - 55

Įvadas

Paveikslėliai . . . . . i - 5
Lietuviškas tekstas . . . . . i - 59

Ievads

Ilustrācijas . . . . . i - 5
Teksts latviešu valodā . . . . . i - 63

Inleiding

Afbeeldingen . . . . . i - 5
Nederlands tekst . . . . . i - 67

Introduksjon

Illustrasjoner . . . . . i - 5
Norsk tekst . . . . . i - 71

Wprowadzenie

Rysunki . . . . . i - 5
Tekst polski . . . . . i - 75

Introdução

Ilustrações . . . . . i - 5
Texto em português . . . . . i - 79

Introducere

Ilustrații . . . . . i - 5
Text în limba română . . . . . i - 83

Úvod

Ilustrácie . . . . . i – 5
Slovenský text . . . . . i - 87

Uvod

Slike . . . . . i - 5
Slovensko besedilo . . . . . i - 91

Inledning

Bilder . . . . . i - 5
Svensk text . . . . . i - 95

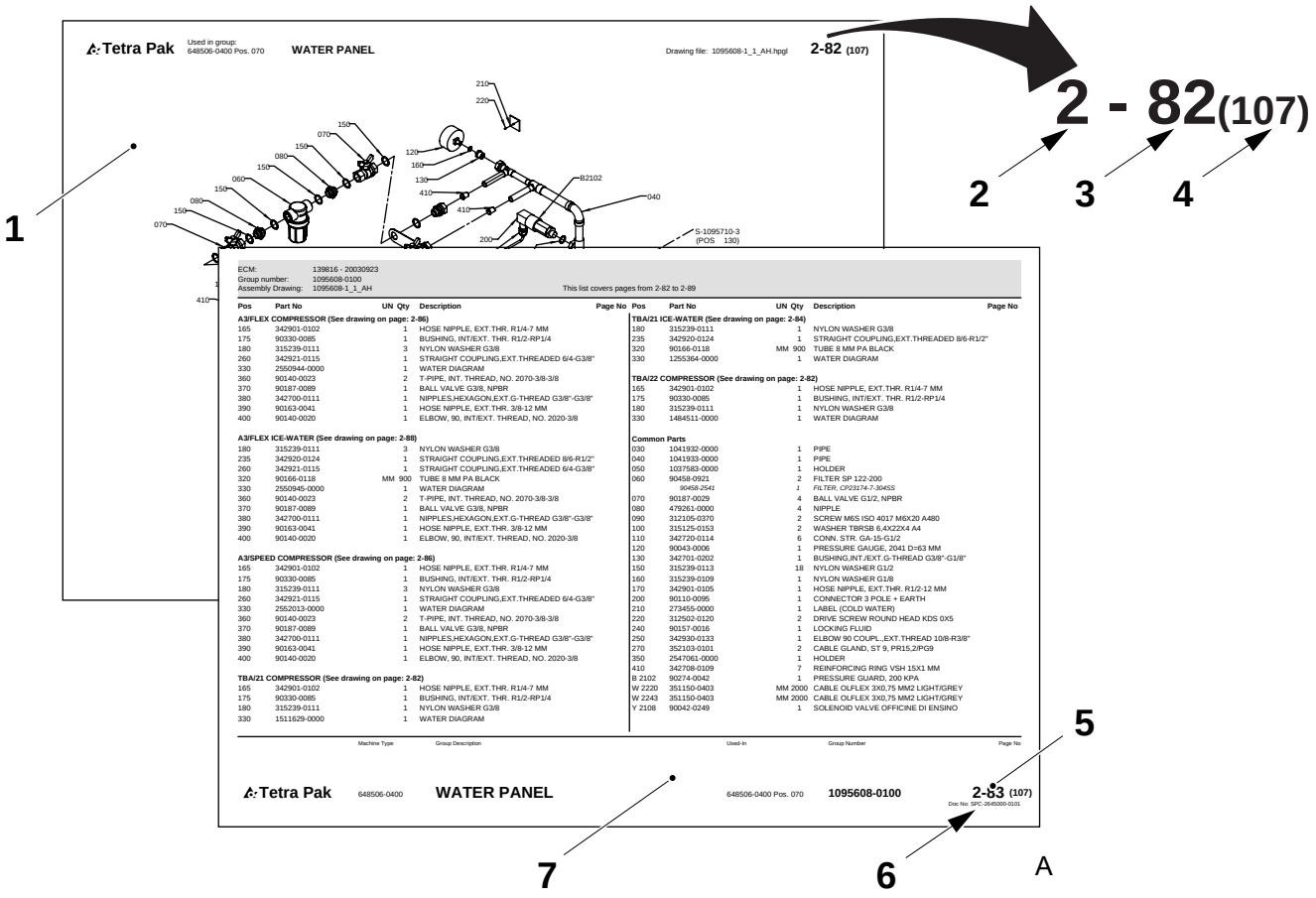
Tetra Pak
Used in group: 648506-0400 Pos. 070
WATER PANEL
Drawing file: 1095608-1_1_AH.hpgl
2-82 (107)
2 - 82(107)
1
2
3
4
5
6
7
A
ECM: 139816 - 20030923
Group number: 1095608-0100
Assembly Drawing: 1095608-1_1_AH
This list covers pages from 2-82 to 2-89
Tetra Pak
648506-0400
WATER PANEL
648506-0400 Pos. 070
1095608-0100
2-83 (107)

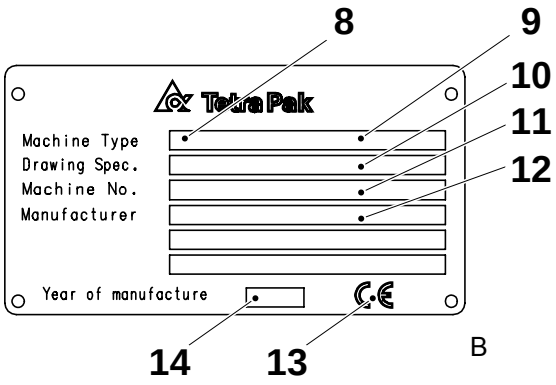
8
9
10
11
12
Tetra Pak
Machine Type
Drawing Spec.
Machine No.
Manufacturer
Year of manufacture
14
13
B

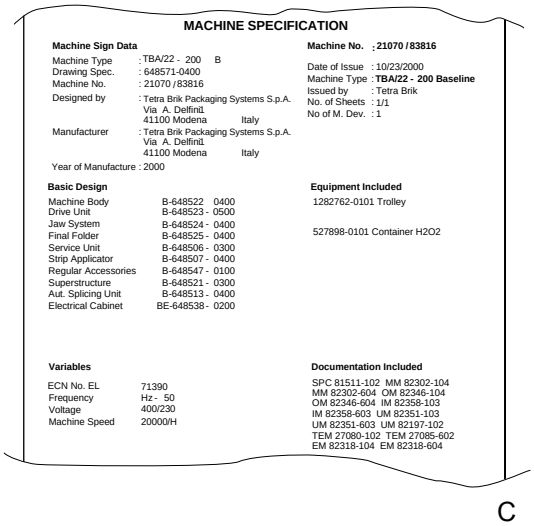
MACHINE SPECIFICATION
Machine Sign Data
Machine Type : TBA/22 - 200 B
Drawing Spec. : 648571-0400
Machine No. : 21070 / 83816
Designed by : Tetra Brik Packaging Systems S.p.A. Via A. Delfini1 41100 Modena Italy
Manufacturer : Tetra Brik Packaging Systems S.p.A. Via A. Delfini1 41100 Modena Italy
Year of Manufacture : 2000
Machine No. ; 21070 / 83816
Date of Issue : 10/23/2000
Machine Type : TBA/22 - 200 Baseline
Issued by : Tetra Brik
No. of Sheets : 1/1
No of M. Dev. : 1
Basic Design
Machine Body B-648522 0400
Drive Unit B-648523 - 0500
Jaw System B-648524 - 0400
Final Folder B-648525 - 0400
Service Unit B-648506 - 0300
Strip Applicator B-648507 - 0400
Regular Accessories B-648547 - 0100
Superstructure B-648521 - 0300
Aut. Splicing Unit B-648513 - 0400
Electrical Cabinet BE-648538 - 0200
Equipment Included
1282762-0101 Trolley
527898-0101 Container H2O2
Variables
ECN No. EL 71390
Frequency Hz - 50
Voltage 400/230
Machine Speed 20000/H
Documentation Included
SPC 81511-102 MM 82302-104
MM 82302-604 OM 82346-104
OM 82346-604 IM 82358-103
IM 82358-603 UM 82351-103
UM 82351-603 UM 82197-102
TEM 27080-102 TEM 27085-602
EM 82318-104 EM 82318-604
C

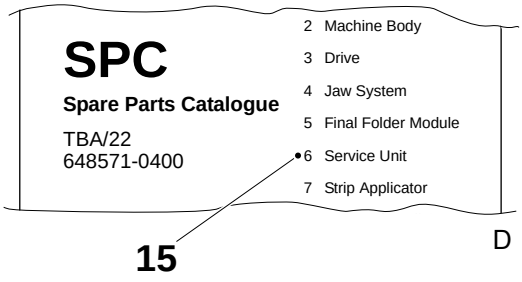
SPC
Spare Parts Catalogue
TBA/22
648571-0400
2 Machine Body
3 Drive
4 Jaw System
5 Final Folder Module
6 Service Unit
7 Strip Applicator
15
D

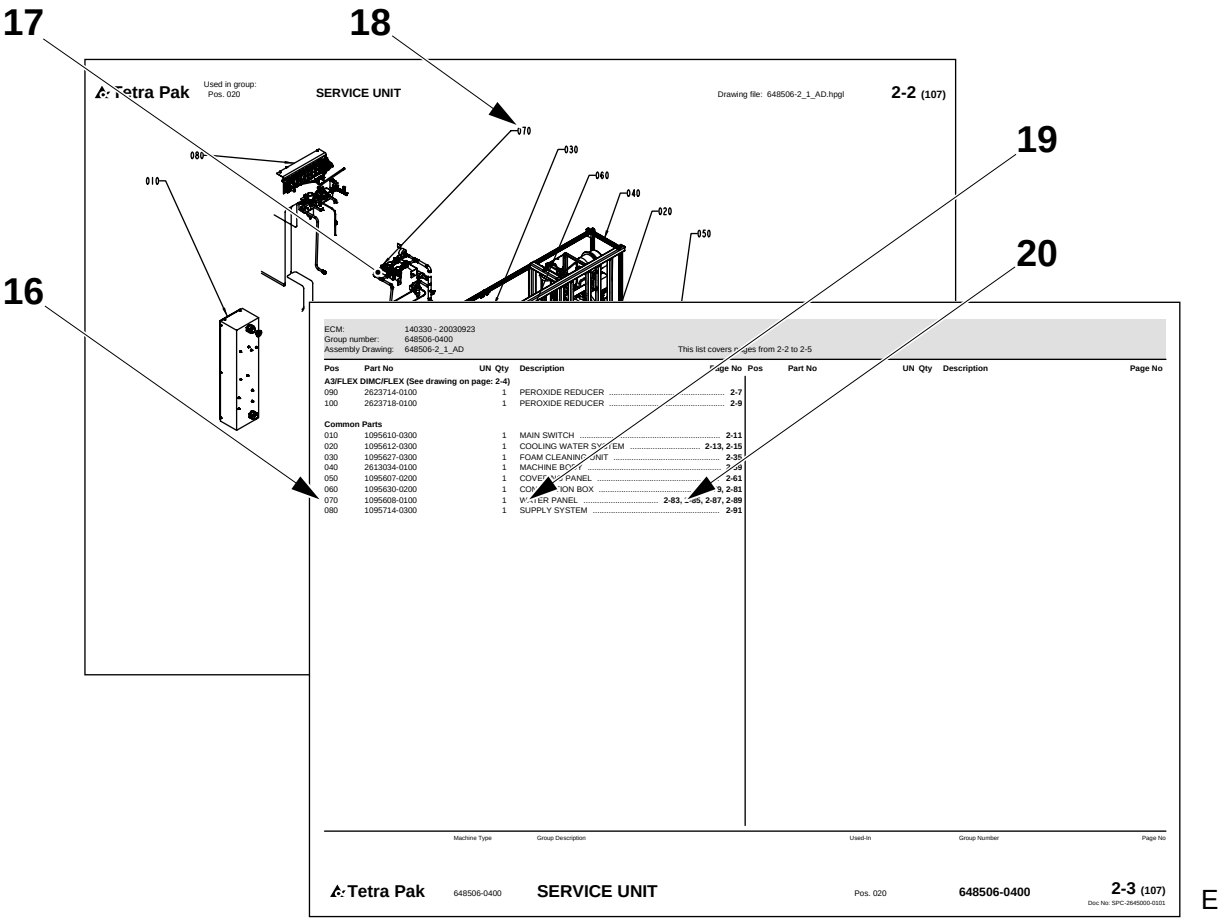
17
18
19
20
16
Tetra Pak
Used in group:
Pos. 020
SERVICE UNIT
Drawing file: 648506-2_1_AD.hpgl
2-2 (107)
070
030
080
060
010
040
020
050
ECM: 140330 - 20030923
Group number: 648506-0400
Assembly Drawing: 648506-2_1_AD
This list covers pages from 2-2 to 2-5
Pos Part No UN Qty Description Page No
A3/FLEX DIMC/FLEX (See drawing on page: 2-4)
090 2623714-0100 1 PEROXIDE REDUCER 2-7
100 2623718-0100 1 PEROXIDE REDUCER 2-9
Common Parts
010 1095610-0300 1 MAIN SWITCH 2-11
020 1095612-0300 1 COOLING WATER SYSTEM 2-13, 2-15
030 1095627-0300 1 FOAM CLEANING UNIT 2-35
040 2613034-0100 1 MACHINE BODY 2-39
050 1095607-0200 1 COVERING PANEL 2-61
060 1095630-0200 1 CONNECTION BOX 2-79, 2-81
070 1095608-0100 1 WATER PANEL 2-83, 2-85, 2-87, 2-89
080 1095714-0300 1 SUPPLY SYSTEM 2-91
Pos Part No UN Qty Description Page No
Machine Type Group Description Used-In Group Number Page No
Tetra Pak 648506-0400 SERVICE UNIT Pos. 020 648506-0400 2-3 (107)
Doc No: SPC-2645000-0101
E

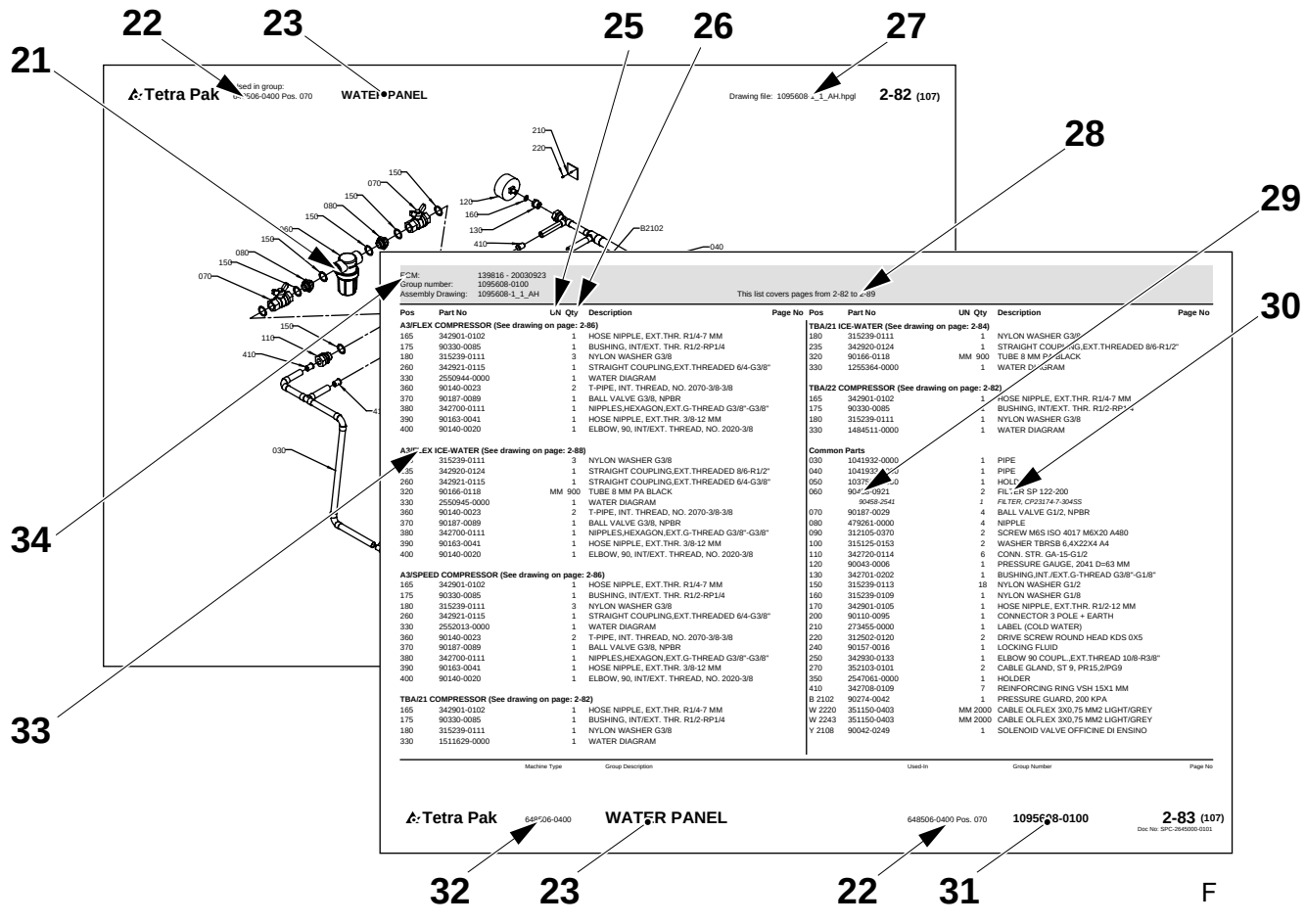
22
23
25
26
27
21
28
29
30
34
33
Tetra Pak
Used in group:
Pos. 070
WATER PANEL
Drawing file: 1095608-1_1_AH.hpgl
2-82 (107)
210
220
150
070
080
150
150
080
150
070
120
160
130
410
B2102
040
030
110
410
ECM: 139816 - 20030923
Group number: 1095608-0100
Assembly Drawing: 1095608-1_1_AH
This list covers pages from 2-82 to 2-89
Pos Part No UN Qty Description Page No
A3/FLEX COMPRESSOR (See drawing on page: 2-86)
165 342901-0102 1 HOSE NIPPLE, EXT.THR. R1/4-7 MM
175 90330-0085 1 BUSHING, INT/EXT. THR. R1/2-RP1/4
180 315239-0111 3 NYLON WASHER G3/8
260 342921-0115 1 STRAIGHT COUPLING,EXT.THREADED 6/4-G3/8"
330 2550944-0000 1 WATER DIAGRAM
360 90140-0023 2 T-PIPE, INT. THREAD, NO. 2070-3/8-3/8
370 90187-0089 1 BALL VALVE G3/8, NPBR
380 342700-0111 1 NIPPLES,HEXAGON,EXT.G-THREAD G3/8"-G3/8"
390 90163-0041 1 HOSE NIPPLE, EXT.THR. 3/8-12 MM
400 90140-0020 1 ELBOW, 90, INT/EXT. THREAD, NO. 2020-3/8
A3/FLEX ICE-WATER (See drawing on page: 2-88)
235 315239-0111 3 NYLON WASHER G3/8
235 342920-0124 1 STRAIGHT COUPLING,EXT.THREADED 8/6-R1/2"
260 342921-0115 1 STRAIGHT COUPLING,EXT.THREADED 6/4-G3/8"
320 90166-0118 MM 900 TUBE 8 MM PA BLACK
330 2550945-0000 1 WATER DIAGRAM
360 90140-0023 2 T-PIPE, INT. THREAD, NO. 2070-3/8-3/8
370 90187-0089 1 BALL VALVE G3/8, NPBR
380 342700-0111 1 NIPPLES,HEXAGON,EXT.G-THREAD G3/8"-G3/8"
390 90163-0041 1 HOSE NIPPLE, EXT.THR. 3/8-12 MM
400 90140-0020 1 ELBOW, 90, INT/EXT. THREAD, NO. 2020-3/8
A3/SPEED COMPRESSOR (See drawing on page: 2-86)
165 342901-0102 1 HOSE NIPPLE, EXT.THR. R1/4-7 MM
175 90330-0085 1 BUSHING, INT/EXT. THR. R1/2-RP1/4
180 315239-0111 3 NYLON WASHER G3/8
260 342921-0115 1 STRAIGHT COUPLING,EXT.THREADED 6/4-G3/8"
330 2552013-0000 1 WATER DIAGRAM
360 90140-0023 2 T-PIPE, INT. THREAD, NO. 2070-3/8-3/8
370 90187-0089 1 BALL VALVE G3/8, NPBR
380 342700-0111 1 NIPPLES,HEXAGON,EXT.G-THREAD G3/8"-G3/8"
390 90163-0041 1 HOSE NIPPLE, EXT.THR. 3/8-12 MM
400 90140-0020 1 ELBOW, 90, INT/EXT. THREAD, NO. 2020-3/8
TBA/21 COMPRESSOR (See drawing on page: 2-82)
165 342901-0102 1 HOSE NIPPLE, EXT.THR. R1/4-7 MM
175 90330-0085 1 BUSHING, INT/EXT. THR. R1/2-RP1/4
180 315239-0111 1 NYLON WASHER G3/8
330 1511629-0000 1 WATER DIAGRAM
TBA/21 ICE-WATER (See drawing on page: 2-84)
180 315239-0111 1 NYLON WASHER G3/8
235 342920-0124 1 STRAIGHT COUPLING,EXT.THREADED 8/6-R1/2"
320 90166-0118 MM 900 TUBE 8 MM PA BLACK
330 1255364-0000 1 WATER DIAGRAM
TBA/22 COMPRESSOR (See drawing on page: 2-82)
165 342901-0102 1 HOSE NIPPLE, EXT.THR. R1/4-7 MM
175 90330-0085 1 BUSHING, INT/EXT. THR. R1/2-RP1/4
180 315239-0111 1 NYLON WASHER G3/8
330 1484511-0000 1 WATER DIAGRAM
Common Parts
030 1041932-0000 1 PIPE
040 1041933-0000 1 PIPE
050 1037[illegible]-0000 1 HOLDER
060 90458-0921 2 FILTER SP 122-200
90458-2541 FILTER, CP23174-7-304SS
070 90187-0029 4 BALL VALVE G1/2, NPBR
080 479261-0000 4 NIPPLE
090 312105-0370 2 SCREW M6S ISO 4017 M6X20 A480
100 315125-0153 2 WASHER TBRSB 6,4X22X4 A4
110 342720-0114 6 CONN. STR. GA-15-G1/2
120 90043-0006 1 PRESSURE GAUGE, 2041 D=63 MM
130 342701-0202 1 BUSHING,INT./EXT.G-THREAD G3/8"-G1/8"
150 315239-0113 18 NYLON WASHER G1/2
160 315239-0109 1 NYLON WASHER G1/8
170 342901-0105 1 HOSE NIPPLE, EXT.THR. R1/2-12 MM
200 90110-0095 1 CONNECTOR 3 POLE + EARTH
210 273455-0000 1 LABEL (COLD WATER)
220 312502-0120 2 DRIVE SCREW ROUND HEAD KDS 0X5
240 90157-0016 1 LOCKING FLUID
250 342930-0133 1 ELBOW 90 COUPL.,EXT.THREAD 10/8-R3/8"
270 352103-0101 2 CABLE GLAND, ST 9, PR15,2/PG9
350 2547061-0000 1 HOLDER
410 342708-0109 7 REINFORCING RING VSH 15X1 MM
B 2102 90274-0042 1 PRESSURE GUARD, 200 KPA
W 2220 351150-0403 MM 2000 CABLE OLFLEX 3X0,75 MM2 LIGHT/GREY
W 2243 351150-0403 MM 2000 CABLE OLFLEX 3X0,75 MM2 LIGHT/GREY
Y 2108 90042-0249 1 SOLENOID VALVE OFFICINE DI ENSINO
Pos Part No UN Qty Description Page No
Machine Type Group Description Used-In Group Number Page No
Tetra Pak 648506-0400 WATER PANEL 648506-0400 Pos. 070 1095608-0100 2-83 (107)
Doc No: SPC-2645000-0101
32 23 22 31
F

Introduction

Manual Information

Tetra Pak recommends reading all delivered manuals carefully. Make sure that the delivered manuals are available to personnel who operate or maintain the equipment.

It is important to keep this catalogue for the lifetime of the equipment and to pass the catalogue on to any subsequent holder or user.

Tetra Pak will not be held responsible for any damage to the equipment caused by not following the instructions given in the manuals that accompany this equipment.

Delivered Manuals

Manuals delivered with this equipment may include

- CM
  The Conversion Manual provides technicians with information on converting the equipment between different production modes.
- EM
  The Electrical Manual provides technicians with information about the equipment's electrical system.
- IM
  The Installation Manual provides technicians with information required to safely install the equipment.
- MM
  The Maintenance Manual provides technicians with information on maintaining the equipment.
- OM
  The Operation Manual manual provides the operator with information on handling and operating the equipment before, during, and after production.
- SPC
  The Spare Parts Catalogue provides the information necessary to order spare parts from Tetra Pak
- TeM
  The Technical Manual
  - provides technicians with information required to safely install the equipment
  - provides technicians with information on maintaining the equipment
  - provides technicians with information about the machine's/ equipment's electrical system
  - provides the information necessary to order spare parts from Tetra Pak.

Page Layout

Refer to the illustration (A) on page i-5: The main pages in a Spare Parts Catalogue consist of an illustration page (1) and a corresponding list page (7). The page number (5) is shown in the header of an illustration page and in the footer of a list page. The document number (6) is shown in the footer of a list page.

Page Numbering

Refer to the illustration (A) on page i-5: A page number (5) has three parts:

- chapter number (2)
- consecutive page number within the chapter (3)
- total number of pages in the chapter (4)

Machine Introduction

Manufacturer

For the manufacturer's name and address, see the second page of this catalogue.

Service

To order spare parts for this machine, or to report problems associated with operating this machine, contact the nearest Tetra Pak office.

Contact the Liaison with other inquiries, comments, or suggestions for improvement regarding the equipment and its documentation.

Identification

CE Classification

This equipment complies with the basic health and safety regulations of the European Economic Area (EEA).

Machine Plate

The illustration (B) on page i-5 shows an example of a machine plate. An illustration of the valid machine plate and its location on the equipment is shown in the Introduction chapter of the manuals delivered with this equipment. The machine plate contains the data listed below, needed when contacting Tetra Pak concerning this specific equipment.

- Machine type (8)
- Volume (9)
- Drawing specifications (10)
- Machine serial number (11)
- Manufacturer (12)
- CE mark (13)
- Year of manufacture (14)

The illustration (C) on page i-5 shows an example of a machine specification. Make sure that the equipment data listed in the front pages of this manual corresponds to the machine plate data and the machine specification.

How to Use This Spare Parts Catalogue

Locate a Spare Part Number

a) Refer to the illustration (D) on page i-5: Go to the chapter number (15) indicated beside the main group that contains the part you want to locate.

Items b) and c) refer to the illustration (E) on page i-6.

b) On the main group illustration, look for the machine subgroup (17) that contains the part or subgroup you are looking for. Note the position number (18) and go to the list page that follows the illustration.

c) Look for the position number/reference designation (16) or the subgroup name (19). Go to the corresponding page number (20) listed in the right-hand column. Tetra Pak has chosen to always use the function oriented structure for reference designation. The prefix indicating function oriented structure (=) is not shown in the reference designation.

Items d) and e) refer to the illustration (F) on page i-6.

d) Locate the part (21) that you are looking for on the subgroup illustration and note the part's position number.

e) The part number (29) and part description (30) are listed beside the position number on the list page.

Information Listed in a Spare Parts Catalogue

The list below refers to the illustration (F) on page i-6. A Spare Parts Catalogue contains the following information about groups, subgroups, and spare parts for the equipment:

- Group structure reference (22). Indicates the next higher group in the equipment list structure.
- Group name (23)
- Unit of measure (25)
- Quantity (26)
- Assembly drawing number (27)
- List page range (28). Included if there are multiple pages in the group illustration or list.
- Part or subgroup number (29)
- Subgroup name or part description (30)
- Group number (31)
- Equipment number (32)
- Group information heading (33). Indicates if the section below the heading is for a specific machine variant or if it is a list of common parts. If a list has more than one variant and each variant has its own assembly drawing, a page reference to the variant's assembly drawing is shown.
- Internal information (34)

Увод

Информация за ръководството

Tetra Pak Ви препоръчва да прочетете внимателно всички доставени ръководства. Проверете дали доставените ръководства са достъпни за служителите, които поддържат или работят с оборудването.

Важно е да запазите този каталог през целия живот на оборудването и да го предадете на трети лица, които ще използват или съхраняват оборудването.

Tetra Pak не може да бъде държана под отговорност за щети върху оборудването, причинени от неспазване на даденте инструкции в ръководствата, които съпровождат оборудването.

Доставени ръководства

Ръководствата, доставени с това оборудване, могат да включват

- CM
  Ръководството за приспособяване осигурява на техническите лица информация за приспособяването на оборудване към различни производствени режими.
- EM
  Електрическото ръководство осигурява на техническите лица информация за електрическата система на оборудването.
- IM
  Ръководството за инсталиране предоставя на техническите лица информацията, която е необходима за безопасно инсталиране на оборудването.
- MM
  Ръководството за поддръжка предоставя на техническите лица информация относно поддържането на оборудването.
- OM
  Ръководството за операции предоставя на операторите информация за това, как да боравят и функционират с оборудването преди, по време на и след производство.
- SPC
  Каталогът с резервни части предоставя необходимата информация за поръчка на резервни части от Tetra Pak
- TeM
  Техническото ръководство
  - предоставя на техническите лица необходимата информация за безопасно инсталиране на оборудването
  - предоставя на техническите лица информация за поддръжка на оборудването
  - предоставя на техническите лица информация за електрическата система на машината/оборудването
  - предоставя необходимата информация за поръчка на резервни части от Tetra Pak.

Формат на страниците

Разгледайте илюстрация (A) на страница i-5: Главните страници в Каталога с резервни части се състоят от страница с илюстрация (1) и прилежаща страница със списък (7). Номерът на страницата (5) е посочен в горната част на страницата с илюстрация и в долната част на страницата със списъка. Номерът на документа (6) е показан в долната част на страницата със списъка.

Номериране на страници

Разгледайте илюстрация (A) на страница i-5: Един номер на страница (5) има три части:

- номер на глава (2)
- последователен номер на страница в една глава (3)
- общ брой страници в главата (4)

Машини Увод

Производител

Вижте втората страница на този каталог, за да проверите името и адреса на производителя.

Обслужване

За да поръчате резервни части за тази машина или да докладвате за проблеми, свързани с работата с тази машина, се свържете с най-близкия офис на Tetra Pak.

Свържете се с отдела за контакти с клиенти за други запитвания, коментари и предложения за подобрение по отношение на оборудването и прилежащата му документация.

Идентификация

Класификация на ЦЕ

Това оборудване отговаря на основните наредби, свързани с опазване на здравето и безопасността на Европейската Икономическа Общност (ЕИО).

Табелка на машина

Илюстрация (B) на страница i-5 показва пример с табелка на машина. В уводната глава на ръководствата, доставени с това оборудване, е показана илюстрация с валидната табелка на машината и нейното положение върху оборудването. Табелката на машината съдържа посочените по-долу данни, които Ви трябват, когато се свързвате с Tetra Pak относно това специфично оборудване.

- Тип машина (8)
- Обем (9)
- Спесификации за чертане (10)
- Сериен номер на машината (11)
- Производител (12)
- CE печат (13)
- Година на производство (14)

Илюстрация (C) на страница i-5 показва пример със спесификация за машина. Проверете дали данните за оборудването, изброени на предните страници в това ръководство отговарят на данните от табелката на машината и на спесификацията на машината.

Как да използвате този Каталог за резервни части

Намерете Номер на резервна част

a) Разгледайте илюстрация (D) на страница i-5: Отидете в глава номер (15) посочена до главната група, която съдържа частта, която искате да намерите.

Артикули b) и c) се отнасят до илюстрация (E) на страница i-6.

b) На главната обща илюстрация вижте подгрупата на машината (17), която съдържа частта или подгрупата, която търсите. Намерете номера на позицията (18) и отворете на страницата със списъка, която е след илюстрацията.

c) Намерете номера на позицията/референцията (16) или името на подгрупата (19). Отворете съответстващия номер на страница (20) в дясната колона. Tetra Pak е избрала да използва винаги функционално-ориентирана структура при обозначаване на референциите. Префиксът, който показва функционално-ориентирана структура (=) не е посочен в обозначаването на референциите.

Артикули d) и e) се отнасят до илюстрация (F) на страница i-6.

d) Намерете частта (21), която търсите в илюстрацията на подгрупата и запомнете номера на частта.

e) Номерът на частта (29) и описанието на частта (30) са изброени до номера на позицията на страницата със списъка.

Изброена информация в Каталога с резервни части

По-долу посоченият списък се отнася до илюстрация (F) на страница i-6. Каталогът с резервни части съдържа следната информация за групи, подгрупи и резервни части за оборудването:

- Референция за структурата (22). Показва следващата по-голяма група в структурата със списъка на оборудването.
- Име на група (23)
- Единица мярка (25)
- Количество (26)
- Номер за монтажен чертеж (27)
- Обхват на страницата със списък (28). Включен, ако има няколко страници в илюстрацията на групата или списъка.
- Номер на част или подгрупа (29)
- Име на подгрупа или описание на част (30)
- Номер на група (31)
- Номер на оборудване (32)
- Референция за информацията за групата (33). Показва дали частта под заглавието е за специфична версия на машината или е списък с общи части. Ако един списък има повече от един вариант и всеки вариант има собствен монтажен чертеж, се показва референцията на страницата към монтажния чертеж на варианта.
- Вътрешна информация (34)

Úvod

Informace o manuálu

Tetra Pak doporučuje, abyste si pozorně přečetli všechny dodané příručky. Přesvědčte se, že dodané manuály jsou k dispozici personálu, který obsluhuje nebo provádí údržbu zařízení.

Je důležité ponechat si tuto příručku po celou dobu životnosti zařízení a předat ho jakémukoliv následujícímu vlastníkovi nebo uživateli.

Tetra Pak nebude odpovídat za žádné škody zařízení, způsobené nedodržováním pokynů uvedených v této příručce.

Dodané příručky

Příručky dodané s tímto zařízením mohou obsahovat

- CM
  Konverzní manuál (CM) poskytuje technikům informace o konverzi zařízení mezi různými výrobními režimy.
- EM
  Elektrický manuál (EM) poskytuje technikům informace o elektrickém systému tohoto zařízení.
- IM
  Instalační manuál (IM) poskytuje technikům informace potřebné k bezpečné instalaci zařízení.
- MM
  Údržbový manuál (MM) poskytuje technikům informace o údržbě tohoto zařízení.
- OM
  Provozní manuál (OM) poskytuje operátorovi informace o manipulaci s tímto zařízením a provozu před, během a po výrobě.
- SPC
  Katalog náhradních dílů (SPC) poskytuje informace potřebné pro objednávání náhradních dílů od společnosti Tetra Pak
- TeM
  Technický manuál
  - poskytuje technikům informace potřebné k bezpečné instalaci tohoto zařízení
  - poskytuje technikům informace o údržbě tohoto zařízení
  - poskytuje technikům informace o elektrickém systému tohoto zařízení
  - poskytuje informace potřebné pro objednávání náhradních dílů od společnosti Tetra Pak

Rozvržení stránky

Viz obrázek (A) na straně i-5: Hlavní strany Katalogu náhradních dílů obsahují stranu s obrázky (1) a odpovídající stranu seznamu (7). Číslo strany (5) je uvedeno v záhlaví strany s obrázky a v zápatí strany seznamu. Číslo dokumentu (6) je uvedeno v zápatí strany seznamu.

Číslování stran

Viz obrázek (A) na straně i-5: Číslo strany (5) sestává ze tří částí:

- číslo kapitoly (2)
- pořadové číslo strany (3) v kapitole
- celkový počet stránek (4) v kapitole

Úvod ke stroji

Výrobce

Název a adresa výrobce je uvedena na druhé straně tohoto katalogu.

Servis

Chcete-li objednat náhradní díly nebo ohlásit problémy související s provozem tohoto stroje, kontaktujte nejbližší kancelář Tetra Pak.

S dalšími dotazy, připomínkami nebo náměty na vylepšení ohledně zařízení a této dokumentace se obracejte na kontaktní osobu.

Identifikace

Klasifikace CE

Toto zařízení splňuje základní zdravotní a bezpečnostní předpisy Evropského hospodářského prostoru (EEA).

Štítek na stroji

Obrázek (B) na straně i-5 znázorňuje příklad štítku na stroji. Obrázek platného štítku na stroji a jeho umístění na zařízení je uveden v příručkách dodaných s tímto strojem v kapitole Úvod. Na štítku jsou uvedeny údaje potřebné při kontaktování společnosti Tetra Pak, týkající se tohoto specifického zařízení.

- Typ stroje (8)
- Objem (9)
- Výkresové specifikace (10)
- Výrobní číslo stroje (11)
- Výrobce (12)
- Označení CE (13)
- Rok výroby (14)

Obrázek (C) na straně i-5 zobrazuje příklad specifikace stroje. Přesvědčte se, že údaje o zařízení uvedená v seznamu na předních stranách tohoto manuálu odpovídají údajům štítku na stroji a specifikaci stroje.

Jak používat tento Katalog náhradních dílů

Vyhledejte číslo náhradního dílu

a) Viz obrázek (D) na straně i-5: Přejděte na číslo kapitoly (15) uvedené vedle hlavní skupiny, která obsahuje hledaný díl.

Položky b) a c) odkazují na obrázek (E) na straně i-6.

b) Na vyobrazení hlavní skupiny vyhledejte strojní podskupinu (17), která obsahuje hledaný díl nebo podskupinu. Poznamenejte si číslo pozice (18) a přejděte na stranu seznamu vyplývající z obrázku.

c) Vyhledejte číslo pozice/označení odkazu (16) nebo název podskupiny (19). Přejděte na odpovídající číslo strany (20) v seznamu v pravém sloupci. Tetra Pak zvolil pro označování odkazu používat vždy uspořádání orientované na funkci. Prefix indikující uspořádání orientované na funkci (=) není uveden v označení odkazu.

Položky d) a e) odkazují na obrázek (F) na straně i-6.

d) Vyhledejte díl (21), který hledáte na vyobrazení podskupiny a poznamenejte si číslo pozice dílu.

e) Číslo dílu (29) a popis dílu (30) jsou uvedeny v seznamu vedle čísla pozice na straně seznamu.

Informace uvedené v seznamu v Katalogu náhradních dílů

Níže uvedený seznam odkazuje na obrázek (F) na straně i-6. Katalog náhradních dílů obsahuje následující informace o skupinách, podskupinách a náhradních dílech pro toto zařízení:

- Odkaz na uspořádání skupiny (22). Indikuje další vyšší skupinu v uspořádání seznamu zařízení.
- Název skupiny (23)
- Měrná jednotka (25)
- Množství (26)
- Číslo montážního výkresu (27)
- Rozsah stran seznamu (28). Včetně toho, zda existuje více stran v obrázku skupiny nebo seznamu.
- Díl nebo číslo podskupiny (29)
- Název podskupiny nebo popis dílu (30)
- Číslo skupiny (31)
- Číslo zařízení (32)
- Záhlaví informace o skupině (33). Indikuje, že oddíl pod záhlavím je pro specifickou variantu stroje nebo jde-li o seznam běžných dílů. Jestliže seznam obsahuje více než jednu variantu a každá varianta má svůj vlastní montážní výkres, pak je uveden odkaz na stranu montážního výkresu této varianty.
- Interní informace (34)

Indledning

Oplysninger om manualen

Tetra Pak anbefaler, at alle leverede manualer læses omhyggeligt. Sørg for, at de udleverede manualer er til rådighed for personale, som arbejder med eller vedligeholder udstyret.

Det er vigtigt at opbevare dette katalog hele udstyrets levetid og give kataloget videre til eventuelt kommende ejere eller brugere.

Tetra Pak kan ikke holdes ansvarlig for eventuel beskadigelse af udstyr, der opstår, fordi instruktionerne i manualerne til dette udstyr ikke følges.

Udleverede manualer

De manualer, der leveres sammen med dette udstyr, kan omfatte

- CM
  Denne konverteringsmanual forsyner teknikere med oplysninger om konvertering af udstyret mellem forskellige produktionstilstande.
- EM
  Denne elektriske manual forsyner teknikere med informationer om udstyrets elektriske system.
- IM
  Denne installationsmanual forsyner teknikere med nødvendig information i forbindelse med sikker installation af udstyret.
- MM
  Denne vedligeholdelsesmanual forsyner teknikere med information om vedligeholdelse af udstyret.
- OM
  Denne betjeningsmanual giver operatøren oplysninger om betjening af udstyret før, under og efter produktion.
- SPC
  Denne reservedelskatalog indeholder oplysninger, der er nødvendig for at bestille reservedele fra Tetra Pak
- TeM
  Den tekniske manual
  – forsyner teknikere med information, der er nødvendig for en sikker installation af udstyret.
  – forsyner teknikere med information om vedligeholdelse af udstyret.
  – forsyner teknikere med information om maskinens/udstyrets elektriske system.
  – indeholder de informationer, der er nødvendige for at kunne bestille reservedele fra Tetra Pak.

Sidelayout

Se illustration (A) på side i-5: Hovedsiderne i et reservedelskatalog består af en illustrationsside (1) og en tilsvarende listeside (7). Sidenummeret (5) vises i sidehovedet på en illlustrationsside og i sidefoden på en listeside. Dokumentnummeret (6) vises i sidefoden på en listeside.

Sidenummerering

Se illustrationen (A) på side i-5: Et sidenummer (5) har tre dele:

- kapitelnummer (2)
- fortløbende sidenummer i kapitlet (3)
- samlet sideantal i kapitlet (4)

Præsentation af maskinen

Producent

Producentens navn og adresse findes på side to i dette katalog.

Service

Kontakt nærmeste Tetra Pak-kontor for at bestille reservedele eller rapportere problemer i forbindelse med betjening af denne maskine.

Henvendelse til vores kontaktperson med andre forespørgsler, kommentarer eller forslag til forbedring angående udstyr og dokumentation.

Identificering

CE-klassificering

Dette udstyr lever op til de grundlæggende regulativer for sundhed og sikkerhed indenfor den Europæiske Økonomiske Samarbejdsområde (EØS).

Maskinskilt

Illustrationen (B) på side i-5 viser et eksempel på et maskinskilt.
En illustration af et gyldigt maskinskilt og dets placering på udstyret er vist i indledningskapitlet i de manualer, der leveres med dette udstyr. Maskinskiltet indeholder nedennævnte data. Disse er nødvendige ved kontakt med Tetra Pak vedrørende dette specifikke udstyr.

- Maskintype (8)
- Volumen (9)
- Tegningsspecifikationer (10)
- Maskinens serienummer (11)
- Producent (12)
- CE-mærke (13)
- Produktionsår (14)

Illustrationen (C) på side i-5 viser et eksempel på en maskinspecifikation. Kontroller, at de udstyrsdata, der er anført på de første sider i denne manual, svarer til maskinskiltsdataene og maskinspecifikationen.

Sådan bruges dette reservedelskatalog.

Find et reservedelsnummer

a) Se illustrationen (D) på side i-5: Gå til kapitelnummeret (15), der er angivet ved siden af hovedgruppen, der indeholder den del, der ønskes fundet.

Punkterne b) og c) refererer til illustrationen (E) på side i-6.

b) I hovedgruppeillustrationen skal man se efter maskinundergruppen (17), som indeholder den del eller undergruppe, der søges. Bemærk placeringsnummeret (18), og gå til listesiden, som følger illustrationen.

c) Se efter placeringsnummeret/henvisningsbetegnelse (16) eller undergruppens navn (19). Gå til det tilsvarende sidenummer (20) angivet i den højre kolonne. Tetra Pak har valgt altid at anvende den funktionsorienterede struktur til henvisningsbetegnelse. Præfikset angiver funktionsorienteret struktur (=) ikke vist i henvisningsbetegnelsen.

Punkterne d) og e) refererer til illustrationen (F) på side i-6.

d) Find den del (21), du søger i undergruppeillustrationen, og notér delens placeringsnummer.

e) Reservedelsnummeret (29) og -beskrivelsen (30) er angivet ved siden af placeringsnummeret på listesiden.

Informationer der er angivet i et reservedelskatalog

Listen nedenfor refererer til illustrationen (F) på side i-6. Et reservedelskatalog indeholder følgende informationer om grupper, undergrupper og reservedele til udstyret:

- Gruppestrukturreference (22). Angiver næste overordnede gruppe i udstyrslistestrukturen.
- Gruppenavn (23)
- Måleenhed (25)
- Antal (26)
- Samletegningsnummer (27)
- Listens sideområde (28). Er angivet, hvis gruppeillustrationen eller -listen inkluderer mange sider.
- Del- eller undergruppenummer (29)
- Undergruppens navn eller delsbeskrivelse (30)
- Gruppenummer (31)
- Udstyrsnummer (32)
- Overskrift for gruppeinformation (33). Angiver, om afsnittet under overskriften er for en specifik maskinvariant, eller om det er en liste over fælles dele. Hvis en liste har mere end én variant, og hver variant har sin egen samletegning, vises en sidereference til variantens samletegning.
- Intern information (34)

Einleitung

Informationen über das Handbuch

Tetra Pak empfiehlt, alle mitgelieferten Handbücher sorgfältig durchzulesen. Stellen Sie sicher, dass die Handbücher dem Personal, das die Ausrüstung betreibt oder wartet, zur Verfügung steht.

Es ist wichtig, dass Sie diesen Katalog für die gesamte Lebensdauer der Ausrüstung vorliegen haben und einem etwaigen Nachbesitzer oder -betreiber übergeben.

Tetra Pak haftet nicht für Schäden an der Ausrüstung, die aufgrund von Nichtbeachtung der Anweisungen aus den Handbüchern, die mit diesem Gerät geliefert werden, entstehen.

Gelieferte Handbücher

Die Handbücher, die mit dieser Ausrüstung geliefert wird, können Folgendes beinhalten

- CM
  Das Umbauhandbuch gibt den Technikern Informationen über den Umbau der Ausrüstung zwischen verschiedenen Produktionsweisen.
- EM
  Das Elektrohandbuch gibt den Technikern Informationen zum Elektrosystem der Ausrüstung.
- IM
  Das Installationshandbuch gibt den Technikern Informationen für die sichere Installation der Ausrüstung.
- MM
  Das Wartungshandbuch gibt den Technikern Informationen für die Wartung der Ausrüstung.
- OM
  Das Betriebshandbuch gibt dem Bediener Informationen über die Bedienung und den Betrieb der Ausrüstung vor, während und nach der Produktion.
- SPC
  Der Ersatzteilkatalog liefert die Informationen, die für die Bestellung von Ersatzteilen bei Tetra Pak erforderlich sind.
- TeM
  Das technische Handbuch
  - gibt den Technikern Informationen für die sichere Installation der Ausrüstung
  - gibt den Technikern Informationen für die Wartung der Ausrüstung
  - gibt den Techniker Informationen zum Elektrosystem der Ausrüstung/der Maschine
  - liefert die Informationen, die für die Bestellung von Ersatzteilen bei Tetra Pak erforderlich sind.

Seitenlayout

Bezugnahme auf Abbildung (A) auf Seite i-5: Die Hauptseiten in einem Ersatzteilkatalog bestehen aus einer Abbildungsseite (1) und einer entsprechenden Listenseite (7). Die Seitennummer (5) wird in der Kopfzeile einer Abbildungsseite und in der Fußzeile einer Listenseite aufgeführt. Die Dokumentennummer (6) wird in der Fußzeile einer Listenseite aufgeführt.

Seitennummerierung

Bezugnahme auf Abbildung (A) auf Seite i-5: Eine Seitennummer (5) besteht aus drei Teilen:

- Kapitelnummer (2)
- Fortlaufende Seitennummer innerhalb des Kapitels (3)
- Gesamtzahl der Seiten im Kapitel (4)

Einführung zur Maschine

Hersteller

Bitte entnehmen Sie den Namen und die Adresse des Herstellers der zweiten Seite dieses Katalogs.

Service

Zur Bestellung von Ersatzteilen für diese Maschine oder um Probleme im Zusammenhang mit dem Betrieb dieser Maschine zu melden, wenden Sie sich bitte an das nächstgelegene Büro von Tetra Pak.

Wenden Sie sich bei anderen Anfragen, Kommentaren oder Verbesserungsvorschlägen mit Bezug auf die Ausrüstung und seine Dokumentation an die Verbindungsstelle.

Identifizierung

CE-Klassifizierung

Diese Ausrüstung erfüllt die wesentlichen Anforderungen des Europäischen Wirtschaftsraum (EWR) für Gesundheitsschutz und die Sicherheit.

Maschinenschild

Die Abbildung (B) auf Seite i-5 zeigt ein Beispiel eines Maschinenschilds. Die Abbildung eines gültigen Maschinenschildes und seine Position auf der Ausrüstung wird im Einleitungskapitel der mit dieser Ausrüstung gelieferten Handbücher gezeigt. Das Maschinenschild enthält die Daten, die erforderlich sind, wenn Sie sich bezüglich dieser speziallen Ausrüstung an Tetra Pak wenden.

- Maschinentyp (8)
- Volumen (9)
- Zeichnungsspezifikationen (10)
- Seriennummer der Maschine (11)
- Hersteller (12)
- CE-Zeichen (13)
- Baujahr (14)

Die Abbildung (C) auf Seite i-5 zeigt ein Beispiel einer Maschinenspezifikation. Stellen Sie sicher, dass die Ausrüstungsdaten, die in den vorderen Seiten dieses Handbuchs aufgelistet sind, mit den Maschinenschilddaten und der Maschinenspezifikation übereinstimmen.

Benutzung dieses Ersatzteilkatalogs

Finden einer Ersatzteilnummer

a) Bezugnahme auf Abbildung (D) auf Seite i-5: Weiter zur Kapitel nummer (15), die neben der Hauptgruppe angegeben ist, die das entsprechende Teil enthält.

Die Positionen b) und c) beziehen sich auf die Abbildung (E) auf Seite i-6.

b) Suchen Sie auf der Hauptgruppenillustration nach der Maschinen-Untergruppe (17), die das gesuchte Teil oder die Untergruppe enthält. Notieren Sie die Positionsnummer (18) und gehen Sie dann zur Listenseite, die der Abbildung folgt.

c) Suchen Sie nach der Positionsnummer/Referenzbezeichnung (16) oder dem Namen der Untergruppe (19). Gehen Sie zur entsprechenden Seitennummer (20), die in der rechten Spalte aufgelistet ist. Tetra Pak hat sich dazu entschieden, stets eine funktionsorientierte Struktur für die Referenzbezeichnung zu verwenden. Die vorangestellte Kennzeichnung, welche die funktionsorientierte Struktur angibt (=), wird in der Referenzbezeichnung nicht angezeigt.

Die Positionen d) und e) beziehen sich auf die Abbildung (F) auf Seite i-6.

d) Finden Sie das gesuchte Teil (21) auf der Abbildung der Untergruppe und notieren Sie die Positionsnummer des Teils.

e) Die Teilenummer (29) und die Teilebeschreibung (30) werden neben der Positionsnummer auf der Listenseite aufgelistet.

In einem Ersatzteilkatalog aufgelistete Informationen

Die folgende Liste bezieht sich auf die Abbildung (F) auf Seite i-6. Ein Ersatzteilkatalog enthält folgende Informationen über Gruppen, Untergruppen und Ersatzteile für die Ausrüstung:

- Gruppenstrukturreferenz (22). Sie gibt die nächst höhere Gruppe in der Ausrüstungslistenstruktur an.
- Gruppenname (23)
- Maßeinheit (25)
- Menge (26)
- Nummer der Zusammenbauzeichnung (27)
- Listenseitenbereich (28). Enthalten, wenn es mehrere Seiten in der Gruppenabbildung oder Liste gibt.
- Teile- oder Untergruppennummer (29)
- Untergruppenname oder Teilebeschreibung (30)
- Gruppennummer (31)
- Ausrüstungsnummer (32)
- Gruppeninformationsüberschrift (33). Gibt an, ob sich der Abschnitt unter der Überschrift auf eine spezifische Maschinenvariante bezieht oder ob es sich um eine Liste der allgemeinen Teile handelt. Wenn eine Liste mehr als eine Variante hat und jede Variante über eine eigene Zusammenbauzeichnung verfügt, wird eine Seitenreferenz zur Zusammenbauzeichnung angezeigt.
- Interne Informationen (34)

Εισαγωγή

Πληροφορίες για το Εγχειρίδιο

Η Tetra Pak σάς συνιστά να διαβάζετε προσεκτικά όλα τα παρεχόμενα εγχειρίδια. Εξασφαλίζετε ότι όλα τα παρεχόμενα εγχειρίδια διατίθενται στο προσωπικό που χειρίζεται ή συντηρεί τον εξοπλισμό.

Είναι σημαντικό να διατηρείτε αυτό τον κατάλογο καθ' όλη τη διάρκεια ζωής του εξοπλισμού καθώς και να παραδίδετε τον κατάλογο στον τυχόν επόμενο ιδιοκτήτη ή χρήστη του εξοπλισμού.

Η Tetra Pak δεν πρόκειται να αναλάβει καμία ευθύνη για οποιαδήποτε ζημιά που μπορεί να προκληθεί στον εξοπλισμό εξαιτίας της μη τήρησης των οδηγιών οι οποίες παρέχονται στα εγχειρίδια που συνοδεύουν αυτό τον εξοπλισμό.

Παρεχόμενα Εγχειρίδια

Στα εγχειρίδια που παρέχονται μαζί μ' αυτό τον εξοπλισμό, μπορεί να περιλαμβάνονται τα εξής:

- CM
  Αυτό το Εγχειρίδιο Μετατροπής παρέχει στους τεχνικούς πληροφορίες για τη μετατροπή του εξοπλισμού μεταξύ των διάφορων λειτουργιών παραγωγής.
- EM
  Αυτό το Ηλεκτρικό Εγχειρίδιο παρέχει στους τεχνικούς πληροφορίες για το ηλεκτρικό σύστημα του εξοπλισμού.
- IM
  Αυτό το Εγχειρίδιο Εγκατάστασης παρέχει στους τεχνικούς τις απαιτούμενες πληροφορίες για την ασφαλή εγκατάσταση του εξοπλισμού.
- MM
  Αυτό το Εγχειρίδιο Συντήρησης παρέχει στους τεχνικούς πληροφορίες για τη συντήρηση του εξοπλισμού.
- OM
  Αυτό το Εγχειρίδιο Χειρισμού παρέχει στο χειριστή πληροφορίες για το χειρισμό και τη λειτουργία του εξοπλισμού πριν, κατά τη διάρκεια και μετά την παραγωγή.
- SPC
  Αυτός ο Κατάλογος Ανταλλακτικών παρέχει τις απαραίτητες πληροφορίες για την παραγγελία ανταλλακτικών από την Tetra Pak.
- TeM
  Το Τεχνικό Εγχειρίδιο
  - παρέχει στους τεχνικούς τις απαιτούμενες πληροφορίες για την ασφαλή εγκατάσταση του εξοπλισμού
  - παρέχει στους τεχνικούς πληροφορίες για τη συντήρηση του εξοπλισμού
  - παρέχει στους τεχνικούς πληροφορίες για το ηλεκτρικό σύστημα του εξοπλισμού/μηχανής
  - παρέχει τις απαραίτητες πληροφορίες για την παραγγελία ανταλλακτικών από την Tetra Pak.

Διάταξη Σελίδων

Ανατρέξτε στην εικόν (A) της σελίδας i-5: Οι κύριες σελίδες ενός Καταλόγου Ανταλλακτικών αποτελούνται από μία εικονογραφημένη σελίδα (1) και από μία αντίστοιχη σελίδα λίστας (7). Ο αριθμός σελίδας (5) εμφανίζεται στην κεφαλίδα μιας εικονογραφημένης σελίδας και στο υποσέλιδο μιας σελίδας λίστας. Ο αριθμός εγγράφου (6) εμφανίζεται στο υποσέλιδο μιας σελίδας λίστας.

Αρίθμηση Σελίδων

Ανατρέξτε στην εικόνα (A) της σελίδας i-5: Ένας αριθμός σελίδας (5) αποτελείται από τα εξής τρία μέρη:

- αριθμός κεφαλαίου (2)
- αύξων αριθμός σελίδας του κεφαλαίου (3)
- συνολικός αριθμός σελίδων του κεφαλαίου (4)

Παρουσίαση Μηχανής

Κατασκευαστής

Για το όνομα και τη διεύθυνση του κατασκευαστή, ανατρέξτε στη δεύτερη σελίδα αυτού του καταλόγου.

Τεχνική Εξυπηρέτηση

Για να παραγγείλετε ανταλλακτικά για τη συγκεκριμένη μηχανή ή για να αναφέρετε προβλήματα που σχετίζονται με τη λειτουργία αυτής της μηχανής, επικοινωνήστε με το πλησιέστερο γραφείο της Tetra Pak.

Εάν έχετε άλλου είδους ερωτήσεις, σχόλια ή προτάσεις βελτίωσης σχετικά με τον εξοπλισμό και την έγγραφη τεκμηρίωσή του, επικοινωνήστε με το Τμήμα Σχέσεων.

Στοιχεία Ταυτότητας

Σήμανση CE

Αυτός ο εξοπλισμός συμμορφώνεται με τους βασικούς κανονισμούς υγείας και ασφάλειας του Ευρωπαϊκού Οικονομικού Χώρου (ΕΟΧ).

Πινακίδα Αναγνώρισης Μηχανής

Η εικόνα (B) της σελίδας i-5 δείχνει ένα παράδειγμα μιας πινακίδας αναγνώρισης μηχανής.
Μια εικόνα που δείχνει την ενδεδειγμένη μορφή και θέση της πινακίδας αναγνώρισης μηχανής στον εξοπλισμό, παρουσιάζεται στο κεφάλαιο 'Εισαγωγή' των εγχειριδίων που παρέχονται μ' αυτόν τον εξοπλισμό.
Η πινακίδα αναγνώρισης μηχανής αναγράφει τα δεδομένα που παρατίθενται στη συνέχεια, τα οποία είναι απαραίτητα όταν επικοινωνείτε με την Tetra Pak για θέματα που αφορούν αυτό το συγκεκριμένο εξοπλισμό.

- Τύπος μηχανής (8)
- Χωρητικότητα (9)
- Στοιχεία σχεδίου (10)
- Αριθμός σειράς μηχανής (11)
- Κατασκευαστής (12)
- Σήμανση CE (13)
- Έτος κατασκευής (14)

Η εικόνα (Γ) της σελίδας i-5 δείχνει ένα παράδειγμα τεχνικών χαρακτηριστικών μηχανής. Βεβαιωθείτε ότι τα δεδομένα εξοπλισμού που παρατίθενται στις πρώτες σελίδες αυτού του εγχειριδίου συμφωνούν με τα δεδομένα της πινακίδας αναγνώρισης μηχανής και των τεχνικών χαρακτηριστικών μηχανής.

Πώς Χρησιμοποιείται Αυτός ο Κατάλογος Ανταλλακτικών

Εύρεση ενός Αριθμού Ανταλλακτικού

a) Ανατρέξτε στην εικόνα (Δ) της σελίδας i-5: Πηγαίνετε στον αριθμό κεφαλαίου (15) που υποδεικνύεται δίπλα από την κύρια ομάδα της μηχανής η οποία περιλαμβάνει το εξάρτημα που θέλετε να βρείτε.

Τα βήματα b) και c) αναφέρονται στην εικόνα (Ε) της σελίδας i-6.

b) Στην εικόνα της κύριας ομάδας μηχανής, αναζητήστε την υποομάδα μηχανής (17) η οποία περιλαμβάνει το εξάρτημα ή την υποομάδα που αναζητάτε. Σημειώστε τον αριθμό θέσης (18) και πηγαίνετε στη σελίδα λίστας που ακολουθεί την εικόνα.

c) Αναζητήστε τον αριθμό θέσης/ονομασία αναφοράς (16) ή το όνομα υποομάδας (19). Πηγαίνετε στον αντίστοιχο αριθμό σελίδας (20) που αναγράφεται στη δεξιά στήλη. Η Tetra Pak έχει επιλέξει να χρησιμοποιεί πάντα δομή ονομασίας αναφοράς με βάση τη λειτουργία. Το πρόθεμα που υποδεικνύει τη δομή με βάση τη λειτουργία (=) δε φαίνεται στο διάγραμμα αναφοράς.

Τα βήματα d) και e) αναφέρονται στην εικόνα (ΣΤ) της σελίδας i-6.

d) Βρείτε το εξάρτημα (21) που αναζητάτε στην εικόνα υποομάδας μηχανής και σημειώστε τον αριθμό θέσης του εξαρτήματος.

e) Ο αριθμός του εξαρτήματος (29) και η περιγραφή του εξαρτήματος (30) παρατίθενται δίπλα στον αριθμό θέσης στη σελίδα λίστας.

Πληροφορίες που Περιέχονται σε έναν Κατάλογο Ανταλλακτικών

Η λίστα που ακολουθεί αναφέρεται στην εικόνα (F) της σελίδας i-6. Ένας Κατάλογος Ανταλλακτικών περιέχει τις παρακάτω πληροφορίες σχετικά με τις ομάδες, τις υποομάδες και τα ανταλλακτικά του εξοπλισμού:

- Αναφορά δομής ομάδας (22). Υποδηλώνει την επόμενη μεγαλύτερη ομάδα στη δομή λίστας του εξοπλισμού.
- Όνομα ομάδας (23)
- Μονάδα μέτρησης (25)
- Ποσότητα (26)
- Αριθμός σχεδίου συγκροτήματος (27)
- Περιοχή σελίδων λίστας (28). Περιλαμβάνεται εφόσον η εικόνα ή η λίστα μιας ομάδας εκτίθεται σε περισσότερες από μία σελίδες.
- Αριθμός εξαρτήματος ή υποομάδας (29)
- Αριθμός υποομάδας ή περιγραφή εξαρτήματος (30)
- Αριθμός ομάδας (31)
- Αριθμός εξοπλισμού (32)
- Επικεφαλίδα πληροφοριών ομάδας (33). Υποδεικνύει εάν η ενότητα κάτω από την επικεφαλίδα αφορά μια συγκεκριμένη παραλλαγή μηχανής ή αποτελεί μια λίστα κοινών εξαρτημάτων. Σε περίπτωση που μια λίστα περιέχει περισσότερες από μία παραλλαγές και κάθε παραλλαγή έχει ξεχωριστό σχέδιο συγκροτήματος, εμφανίζεται μια παραπομπή προς τη σελίδα όπου βρίσκεται το σχέδιο συγκροτήματος της παραλλαγής.
- Εσωτερικές πληροφορίες (34)

Introducción

Información sobre el manual

Tetra Pak recomienda leer atentamente todos los manuales suministrados. Asegúrese de que los manuales están disponibles para el personal que opera o mantiene el equipo.

Es importante conservar este catálogo durante la vida útil del equipo, así como facilitárselo a cualquier propietario o usuario posterior.

Tetra Pak no se responsabilizará de daños en el equipo por no seguir las instrucciones proporcionadas en los manuales que acompañan este equipo.

Manuales entregados

Los manuales entregados con este equipo pueden incluir:

- CM
  El Manual de conversión proporciona a los técnicos información sobre cómo convertir el equipo a diferentes modos de producción.
- EM
  El Manual eléctrico proporciona a los técnicos información sobre el sistema eléctrico del equipo.
- IM
  El Manual de instalación proporciona a los técnicos la información necesaria para instalar el equipo de manera segura.
- MM
  El Manual de mantenimiento proporciona a los técnicos información sobre el mantenimiento del equipo.
- OM
  El Manual de funcionamiento proporciona al operador información sobre el manejo y el funcionamiento del equipo antes, durante y después de la producción.
- SPC
  El Catálogo de recambios proporciona la información necesaria para pedir las piezas de recambio a Tetra Pak.
- TeM
  El Manual técnico
  - proporciona a los técnicos la información necesaria para instalar de manera segura el equipo
  - proporciona a los técnicos información sobre el mantenimiento del equipo
  - proporciona a los técnicos información sobre el sistema eléctrico de la máquina/equipo
  - proporciona la información necesaria para pedir las piezas de recambio a Tetra Pak.

Organización de las páginas

Consultar la ilustración (A) en la página i-5: Las páginas principales en un Catálogo de recambios se componen de una página de ilustración (1) y una página de lista correspondiente (7). El número de la página (5) se muestra en el encabezado de una página de ilustración y en el pie de página de una página de lista. El número del documento (6) se muestra en el pie de página de una página de lista.

Numeración de las páginas

Consulte la ilustración (A) en la página i-5: Un número de página (5) consta de tres partes:

- número de capítulo (2)
- número de página consecutivo dentro del capítulo (3)
- número total de páginas del capítulo (4)

Introducción a la máquina

Fabricante

Para obtener el nombre y la dirección del fabricante, véase la segunda página de este catálogo.

Servicio

Para pedir recambios para esta máquina o informar de problemas asociados con el funcionamiento de la misma, póngase en contacto con la oficina de Tetra Pak más cercana.

Póngase en contacto con el representante para otras consultas, comentarios o consejos sobre mejoras referidos al equipo y su documentación.

Identificación

Clasificación de la CE

Este equipo cumple con la normativa básica sobre salud y seguridad del Espacio Económico Europeo (EEE).

Placa de máquina

La ilustración (B) en la página i-5 muestra un ejemplo de una placa de máquina.
En el capítulo Introducción de los manuales entregados con este equipo, se muestra una ilustración de la placa de máquina válida y su ubicación en el equipo. La placa de máquina contiene los datos que se enumeran a continuación, requeridos al ponerse en contacto con Tetra Pak en relación con este equipo específico.

- Tipo de máquina (8)
- Volumen (9)
- Especificaciones de plano (10)
- Número de serie de la máquina (11)
- Fabricante (12)
- Marca de la CE (13)
- Año de fabricación (14)

La ilustración (C) en la página i-5 muestra un ejemplo de especificación de la máquina. Asegúrese de que los datos de equipo que se enumeran en las páginas de la cubierta de este manual corresponden a los datos de la placa y las especificaciones de la máquina.

Cómo utilizar este Catálogo de recambios

Localizar un número de recambio

a) Consulte la ilustración (D) en la página i-5: Vaya al número de capítulo (15) indicado junto al grupo principal que contiene la pieza que desea localizar.

Los puntos b) y c) hacen referencia a la ilustración (E) en la página i-6.

b) En la ilustración del grupo principal, busque el subgrupo de la máquina (17) que contiene la pieza o el subgrupo que busca. Anote el número de posición (18) y vaya a la página de lista que sigue a la ilustración.

c) Busque el número de posición/denominación de referencia (16) o el nombre del subgrupo (19). Vaya al número de página correspondiente (20) que aparece en la columna de la derecha. Tetra Pak ha elegido utilizar siempre la estructura orientada a la función para la denominación de referencia. El prefijo que indica la estructura orientada a la función (=) no aparece en la denominación de referencia.

Los puntos d) y e) hacen referencia a la ilustración (F) en la página i-6.

d) Localice la pieza (21) que busca en la ilustración del subgrupo y anote el número de posición de la pieza.

e) El número de pieza (29) y la descripción de la misma (30) aparecen junto al número de posición en la página de lista.

Información que contiene un Catálogo de recambios

La lista que aparece a continuación hace referencia a la ilustración (F) en la página i-6. Un Catálogo de recambios contiene la siguiente información sobre grupos, subgrupos y recambios para el equipo:

- Referencia de estructura de grupo (22). Indica el siguiente grupo más alto en la estructura de lista del equipo.
- Nombre del grupo (23)
- Unidad de medida (25)
- Cantidad (26)
- Número de dibujo del conjunto (27)
- Intervalo de página de lista (28). Incluido si hay varias páginas en la ilustración o lista de grupo.
- Número de pieza o subgrupo (29)
- Nombre de subgrupo o descripción de pieza (30)
- Número de grupo (31)
- Número de equipo (32)
- Encabezado de información de grupo (33). Indica si la sección que aparece debajo del encabezado corresponde a una variante específica de la máquina o si es una lista de piezas comunes. Si la lista tiene más de una variante y cada variante tiene su propio dibujo de conjunto, se muestra una referencia de página al dibujo de conjunto de la variante.
- Información interna (34)

Sissejuhatus

Juhendi teave

Tetra Pak soovitab kõik juhendid hoolikalt läbi lugeda. Kontrollige, et juhendid oleksid seadmetega töötavatele ja neid hooldavatele isikutele kättesaadavad.

Kataloog tuleb seadme kasutusaja vältel alles hoida ning järgmisele omanikule või kasutajale edasi anda.

Tetra Pak ei vastuta seadme vigastuste eest, mis on tekkinud seadmega kaasnevate juhendite mittejärgimise tõttu.

Kaasaolevad juhendid

Seadmega kaasasolevad juhendid võivad sisaldada järgmist:

- CM
  Ümberseadistusjuhend annab tehnikutele teavet seadme ümber seadistamise kohta eri tootmisrežiimide korral.
- EM
  Elektrijuhend annab tehnikutele informatsiooni seadme elektrisüsteemi kohta.
- IM
  Paigaldusjuhend annab tehnikutele vajalikku teavet seadme ohutu paigaldamise kohta.
- MM
  Hooldusjuhend annab tehnikutele teavet seadme hoolduse kohta.
- OM
  Kasutusjuhend annab operaatorile teavet seadme käsitsemise ja kasutamise kohta enne tootmist, selle ajal ja pärast seda.
- SPC
  Varuosade kataloog annab vajalikku teavet Tetra Pakilt varuosade tellimiseks
- TeM
  Tehniline juhend
  - annab tehnikutele vajalikku teavet seadme ohutuks paigaldamiseks
  - annab tehnikutele teavet seadme hooldamise kohta
  - annab tehnikutele teavet masina/seadme elektrisüsteemi kohta
  - annab vajalikku teavet Tetra Pakilt varuosade tellimiseks.

Lehekülje kujundus

Vt joonist (A) lk i-5: Varuosade kataloogi põhilehtedeks on jooniste lehekülg (1) ja vastav loeteluleht (7). Lehekülje number (5) on toodud joonistelehe päises ja loetelulehe jaluses. Dokumendi number (6) on toodud loetelulehe jaluses.

Lehekülje nummerdus

Vt joonist (A) lk i-5: Lehekülje number (5) koosneb kolmest osast:

- peatüki number (2)
- järgneva lehekülje number (3) peatükis
- lehekülgede koguarv peatükis (4)

Sissejuhatus masina kohta

Tootja

Tootja nimi ja aadress on toodud kataloogi teisel lehel.

Teenindus

Masina varuosade tellimiseks või masina kasutamisega seonduvate probleemide teatamiseks võtke ühendust lähima Tetra Pak kontoriga.

Seadme ja dokumendiga seonduvate küsimuste, kommentaaride ja parandusettepanekute puhul võtke ühendust ettevõtte esindajaga.

Identifikatsioon

CE klassifikatsioon

Seade on kooskõlas Euroopa Majanduspiirkonna (EEA) tervishoiu- ja ohutusnõuetega.

Masina andmeplaat

Joonisel (B) leheküljel i-5 on kujutatud masina andmeplaati. Masina andmeplaadi joonis ja selle asukoht seadmel on toodud seadmega kaasasoleva juhendi sissejuhatavas peatükis. Masina andmeplaadil on toodud allpool loetletud andmed, mida vajate antud konkreetse seadmega seoses Tetra Paki poole pöördudes.

- Masina tüüp (8)
- Maht (9)
- Joonisspetsifikatsioonid (10)
- Masina seerianumber (11)
- Tootja (12)
- CE tähis (13)
- Tootmisaasta (14)

Joonisel (C) leheküljel i-5 on kujutatud näide masina spetsifikatsioonist. Veenduge, et juhendi esimestel lehekülgedel toodud andmed seadme kohta vastavad masina andmesildil olevatele andmetele ja masina spetsifikatsioonile.

Kuidas varuosade kataloogi kasutada

Leidke varuosa number

a) Vt joonist (D) lk i-5: Leidke peatükk, mille number (15) on toodud selle põhirühma juures, mis sisaldab otsitavat varuosa.

Punktid b) ja c) viitavad joonisele (E) lk i-6.

b) Põhirühma joonisel leidke masina alamrühm (17), mis sisaldab otsitavat osa või alamrühma. Leidke positsiooninumber (18) ja avage joonisele järgnev loeteluleht.

c) Leidke positsiooninumber/viite tähis (16) või alamgrupi nimetus (19). Avage parempoolses veerus loetletud vastav lehekülje number (20). Tetra Pak on valinud viite tähise puhul alatiseks kasutamiseks funktsioonile suunatud struktuuri. Funktsioonile suunatud struktuuri prefiks (=) pole viite tähises näidatud.

Punktid d) ja e) viitavad jooniselerefer (F) lk i-6.

d) Leidke otsitav osa (21) alamrühma joonisel ja seejärel osa positsioonnumber.

e) Osa number (29) ja osa kirjeldus (30) on toodud loetelulehel positsioonnumbri kõrval.

Varuosade kataloogis toodud teave

Allpool toodud loetelui viitab joonisele (F) lk i-6. Varuosade kataloog sisaldab järgmist teavet seadme rühmade, alamrühmade ja varuosade kohta:

- Rühmastruktuuri viide (22). Märgib seadme loetelu struktuuris järgmist kõrgemat rühma.
- Rühma nimetus (23)
- Mõõtühik (25)
- Kogus (26)
- Koostejoonise number (27)
- Loetelu lehekülgede vahemik (28). Kaasatud kui rühma joonised või loetelu on toodud mitmel lehel.
- Osa või alamrühma number (29)
- Alamrühma nimetus või osa kirjeldus (30)
- Rühma number (31)
- Seadme number (32)
- Rühma teabe pealkiri (33). Näitab, kas pealkirja all toodud jaotis on konkreetse masinavariandi kohta või on tegemist tavaliste varuosade loeteluga. Kui loetelus on toodud rohkem kui üks variant ja iga variandi jaoks on oma koostejoonis, esitatakse viide selle variandi koostejoonise leheküljele.
- Siseteave (34)

Johdanto

Tietoja käsikirjasta

Tetra Pak suosittelee kaikkien toimitettavien oppaiden lukemista huolellisesti. Varmista, että toimitetut oppaat ovat laitetta käyttävän tai huoltavan henkilökunnan saatavilla.

Tämä luettelo on säilytettävä laitteen käyttöiän ajan ja toimitettava edelleen mahdolliselle seuraavalle omistajalle tai käyttäjälle.

Tetra Pak ei vastaa laitevaurioista, jotka aiheutuvat laitteen mukana tulevissa oppaissa annettujen ohjeiden noudattamatta jättämisestä.

Toimitettavat ohjeet

Tämän laitteen mukana toimitettaviin ohjeisiin kuuluvat:

- CM
  Muunnoskirjassa on teknikoille tarkoitettuja ohjeita laitteiston muuttamisesta eri tuotantotiloihin.
- EM
  Sähkökirjassa on teknikoille tarkoitettuja tietoja laitteen sähköjärjestelmästä.
- IM
  Asennuskäsikirjassa on teknikoille tarkoitettuja tietoja, jotka tarvitaan laitteen turvallista asentamista varten.
- MM
  Huoltokäsikirjassa on teknikoille tarkoitettuja tietoja tämän laitteen huoltamisesta.
- OM
  Käyttäjän käsikirjassa on käyttäjälle tarkoitettuja tietoja laitteen käsittelystä ja käyttämisestä ennen tuotantoa, tuotannon aikana ja sen jälkeen.
- SPC
  Varaosaluettelossa on tietoja, joita tarvitaan varaosien tilaamiseen Tetra Pakilta.
- TeM
  Tekninen käsikirja
  - sisältää teknikoille tarkoitettuja tietoja, joita tarvitaan laitteen turvallista asentamista varten
  - sisältää teknikoille tarkoitettuja tietoja laitteen huoltamisesta
  - sisältää teknikoille tarkoitettuja tietoja koneen/laitteen sähköjärjestelmästä
  - sisältää tietoja, joita tarvitaan varaosien tilaamiseen Tetra Pakilta.

Sivujen asettelu

Katso kuva (A) sivulla i-5: Varaosaluettelon pääsivut koostuvat kuvasivusta (1) ja sitä vastaavasta luettelosivusta (7). Sivunumero (5) näytetään kuvasivun ylätunnisteessa ja luettelosivun alatunnisteessa. Asiakirjan numero (6) näytetään luettelosivun alatunnisteessa.

Sivunumerointi

Katso kuva (A) sivulla i-5: Sivunumerossa (5) on kolme osaa:

- luvun numero (2)
- perättäinen sivunumero (3) luvun sisällä
- luvun kokonaissivumäärä (4).

Koneen esittely

Valmistaja

Valmistajan nimi ja osoite on ilmoitettu tämän luettelon toisella sivulla.

Huolto

Jos haluat tilata tähän koneeseen varaosia tai jos tämän koneen käytössä ilmenee ongelmia, jotka haluat raportoida, ota yhteyttä lähimpään Tetra Pakin toimistoon.

Jos sinulla on muuta kysyttävää, huomautettavaa tai ehdotuksia ja sen asiakirjoja koskevista parannuksista, ota yhteys yhteyshenkilöön.

Tunnistetiedot

CE-luokitus

Tämä laite vastaa Euroopan talousalueen (ETA) terveyttä ja turvallisuutta koskevia perusvaatimuksia.

Koneen tyyppikilpi

Kuvassa (B) sivulla i-5 on esimerkki koneen tyyppikilvestä. Voimassa olevan tyyppikilven kuva ja sen sijainti koneessa käy ilmi laitteiston mukana tulleiden ohjeiden Johdanto-luvusta. Tyyppikilvessä on tarvitsemasi Tetra Pakin voimassa olevat yhteystiedot, kun on kyseessä tämä nimenomainen laite.

- Konetyyppi (8)
- Tilavuus (9)
- Piirustuserittely (10)
- Koneen sarjanumero (11)
- Valmistaja (12)
- CE-merkki (13)
- Valmistusvuosi (14)

Kuvassa (C) sivulla i-5 on esimerkki koneen erittelystä. Varmista, että tämän ohjeen etusivuilla ilmoitetut laitetiedot vastaavat tyyppikilven ja kone-erittelyn tietoja.

Tämän varaosaluettelon käyttäminen

Etsi varaosan numero

a) Katso kuva (D) sivulla i-5: Siirry lukuun (15), joka on ilmoitettu etsittävän osan pääryhmän vieressä.

Kohdat b) ja c) viittaavat kuvaan (E) sivulla i-6.

b) Etsi pääryhmän kuvasta koneen alaryhmä (17), joka sisältää etsimäsi osan tai alaryhmän. Merkitse muistiin paikkanumero (18) ja siirry luettelosivulle, joka seuraa kuvaa.

c) Etsi paikkanumero (16) tai alaryhmän nimi (19). Siirry vastaavalle sivunumerolle (20), joka on ilmoitettu oikeassa sarakkeessa. Tetra Pak on päättänyt aina noudattaa toimintoperusteista rakennetta viitemerkinnöissä. Viitemerkinnässä ei esitetä toimintoperusteisen rakenteen osoittavaa etuliitettä (=).

Kohdat d) ja e) viittaavat kuvaan (F) sivulla i-6.

d) Hae etsittävä osa (21) alaryhmän kuvasta ja merkitse osan paikkanumero muistiin.

e) Osanumero (29) ja osan kuvaus (30) on annettu paikkanumeron vieressä luettelosivulla.

Varaosaluettelossa olevat tiedot

Alla oleva luettelo viittaa kuvaan (F) sivulla i-6. Varaosaluettelo sisältää seuraavat tiedot ryhmistä, alaryhmistä ja laitteen varaosista:

- Ryhmärakenneviite (22). Osoittaa seuraavaksi ylemmän ryhmän laiteluettelorakenteessa.
- Ryhmän nimi (23)
- Mittayksikkö (25)
- Määrä (26)
- Kokoonpanopiirustuksen numero (27)
- Luettelon sivualue (28). Tämä on mukana, jos ryhmäkuvassa tai luettelossa on useita sivuja.
- Osan tai alaryhmän numero (29)
- Alaryhmän nimi tai osan kuvaus (30)
- Ryhmän numero (31)
- Laitteen numero (32)
- Ryhmätietojen otsikko (33). Osoittaa, koskeeko alla oleva osio tiettyä koneversiota vai onko kyseessä yhteisten osien luettelo. Jos luettelolla on useampi kuin yksi versio ja kullakin versiolla on oma kokoonpanopiirustuksensa, näytetään version kokoonpanopiirustuksen sivuviittaus.
- Sisäiset tiedot (34)

Introduction

Informations sur ce manuel

Tetra Pak recommande de lire attentivement tous les manuels remis. S'assurer que ceux-ci sont accessibles au personnel d'exploitation et de maintenance de l'équipement.

Il est important de conserver ce catalogue pendant la durée de vie de l'équipement et de le transmettre à tout détenteur ou à tout utilisateur ultérieur de l'équipement.

Tetra Pak ne pourra être tenu responsable d'aucun dommage causé à l'équipement suite au non respect des instructions fournies dans les manuels remis avec cet équipement.

Manuels remis

Les manuels remis avec cet équipement peuvent comprendre

- CM
  Le Manuel de Conversion contient les informations destinées aux techniciens pour la conversion de l'équipement en vue des différents modes de production.
- EM
  Le Manuel Electrique fournit aux techniciens des informations sur le système électrique de l'équipement.
- IM
  Le Manuel d'Installation fournit les informations nécessaires aux techniciens pour installer l'équipement en toute sécurité.
- MM
  Le Manuel d'Entretien contient les informations nécessaires aux techniciens pour la maintenance de l'équipement.
- OM
  Le Manuel d'Utilisation fournit à l'opérateur les informations nécessaires à la manutention et à l'exploitation de l'équipement, avant, pendant et après la production.
- SPC
  Le Catalogue des Pièces de Rechange contient les informations permettant de commander des pièces de rechange auprès de Tetra Pak
- TeM
  Le Manuel Technique
  - contient les informations nécessaires aux techniciens pour installer l'équipement en toute sécurité.
  - contient les informations nécessaires aux techniciens pour la maintenance de l'équipement.
  - fournit aux techniciens des informations sur le système électrique de la machine/de l'équipement.
  - fournit les informations permettant de commander des pièces de rechange auprès de Tetra Pak.

Mise en page

Reportez-vous au schéma (A) page i-5 : Dans un catalogue de Pièces de Rechange, les pages principales sont les pages de schémas (1) et les pages de listes correspondantes (7). Le numéro de page (5) est indiqué en en-tête sur une page de schéma et en bas de page sur une page de liste. Le numéro de document (6) est indiqué au bas d'une page de liste.

Numérotation des pages

Reportez-vous au schéma (A) page i-5 : Un numéro de page (5) se compose de trois éléments :

- numéro du chapitre (2)
- numéro de page séquentiel à l'intérieur du chapitre (3)
- nombre total de pages du chapitre (4)

Présentation de la machine

Fabricant

Les nom et adresse du fabricant sont donnés en deuxième page de ce catalogue.

Assistance technique

Pour commander des pièces de rechange pour cette machine ou signaler un problème lié à son fonctionnement, contactez l'agence Tetra Pak la plus proche.

Contactez le responsable de liaison pour tout autre renseignement, commentaire ou suggestion d'amélioration relatifs à l'équipement et à sa documentation.

Identification

Certification CE

Cet équipement est conforme aux réglementations essentielles en matière d'hygiène et de sécurité de l'Espace économique européen (EEE).

Plaque signalétique de la machine

Le schéma (B) de la page i-5 reproduit un exemple de plaque signalétique de la machine.
Le chapitre Introduction des manuels remis avec cet équipement comprend une reproduction de la plaque signalétique valide de la machine et indique son emplacement sur l'équipement. La plaque comporte les caractéristiques indiquées ci-dessous, nécessaires pour prendre contact avec Tetra Pak à propos de cet équipement spécifique.

- Type de la machine (8)
- Volume (9)
- Caractéristiques schéma (10)
- Numéro de série de la machine (11)
- Fabricant (12)
- Marquage CE (13)
- Année de fabrication (14)

Le schéma (C) de la page i-5 reproduit un exemple de plaque signalétique de la machine. Assurez-vous que les données relatives à l'équipement qui se trouvent au début de ce manuel correspondent bien aux données figurant sur la plaque signalétique de la machine et à ses spécifications.

Comment utiliser ce Catalogue des Pièces de Rechange

Trouver un numéro de pièce de rechange

a) Reportez-vous au schéma (D) page i-5 : Allez au numéro de chapitre (15) indiqué à côté du groupe principal contenant la pièce que vous recherchez.

Les éléments b) et c) se rapportent au schéma (E) de la page i-6.

b) Sur le schéma du groupe principal, recherchez le sous-groupe de la machine (17) contenant la pièce ou le sous-groupe que vous recherchez. Notez le numéro de position (18) et reportez-vous à la page de liste suivant le schéma.

c) Recherchez le numéro de position/la désignation de référence (16) ou le nom du sous-groupe (19). Allez au numéro de page correspondant (20) figurant dans la liste de la colonne de droite. Tetra Pak a pris le parti de toujours utiliser la structure de la fonction pour la désignation de la référence. Le préfixe indiquant la structure de la fonction (=) ne figure pas dans la désignation de la référence.

Les éléments d) et e) se rapportent au schéma (F) de la page i-6.

d) Repérez la pièce (21) que vous recherchez dans le schéma du sous-groupe et notez le numéro de position de la pièce.

e) Le numéro de la pièce (29) et sa description (30) figurent à côté du numéro de position sur la page de liste.

Informations données dans un Catalogue de Pièces de Rechange

La liste ci-dessous se rapporte au schéma (F) de la page i-6. Un Catalogue de Pièces de Rechange contient les informations suivantes concernant les groupes, sous-groupes et pièces de rechange de l'équipement :

- Référence de structure de groupe (22). Indique le groupe immédiatement supérieur dans la structure de liste de l'équipement.
- Nom du groupe (23)
- Unité de mesure (25)
- Quantité (26)
- Numéro de plan de montage (27)
- Groupe de pages de liste (28). Indiqué si la liste ou l'illustration du groupe comporte plusieurs pages.
- Numéro de pièce ou de sous-groupe (29)
- Nom du sous-groupe ou description de la pièce (30)
- Numéro de groupe (31)
- Numéro de l'équipement (32)
- Titre information du groupe (33) Indique si la section en-dessous du titre est destinée à une variante spécifique de la machine ou s'il s'agit d'une liste de pièces communes. Si une liste comprend plus d'une variante et que chaque variante a son propre plan de montage, une référence de page est donnée pour le plan de montage de la variante.
- Information interne (34)

Bevezetés

Kézikönyvre vonatkozó információk

A Tetra Pak javasolja, hogy az összes kapott kézikönyvet gondosan olvassa el. Gondoskodjon róla, hogy a kézikönyvek a berendezést üzemeltető és karbantartó személyzet számára elérhetők legyenek.

Fontos, hogy megőrizzék ezt a katalógust a berendezés élettartama alatt, és átadják a következő tulajdonosoknak és felhasználóknak.

A Tetra Pak nem vállal felelősséget a berendezés semmilyen megrongálódása esetén, ha nem követték a berendezéshez tartozó kézikönyvekben leírt utasításokat.

Szállított kézikönyvek

A berendezéssel szállított kézikönyvek az alábbiak lehetnek

- CM
  Az Átállási kézikönyv a műszaki szakemberek számára a berendezés különböző gyártási módjai közötti átállásra vonatkozó információkat tartalmaz.
- EM
  A Villamossági kézikönyv a berendezés elektronikai rendszerére vonatkozó információkat szolgáltat a műszaki szakemberek részére.
- IM
  Az Üzembe helyezési kézikönyv a berendezés biztonságos üzembe helyezésére vonatkozó információkat biztosít a technikai szakemberek részére.
- MM
  A Karbantartási kézikönyv a berendezés karbantartására vonatkozó információkat biztosít a technikai szakemberek részére.
- OM
  Az Üzemeltetési kézikönyv az üzemeltető személyzetnek szolgáltat a berendezés kezelésére és üzemeltetésére, a feldolgozás előtti, közbeni és utáni teendőkre vonatkozó információkat.
- SPC
  A Tartalékalkatrész-katalógus információt biztosít a pótalkatrészek Tetra Pak-tól történő megrendeléséhez.
- TeM
  A Technikai kézikönyv
  – a berendezés biztonságos üzembe helyezésére vonatkozó információkat biztosít a technikai szakemberek részére.
  – a berendezés karbantartására vonatkozó információkat biztosít a technikai szakemberek részére.
  – a gép/berendezés elektromos rendszerére vonatkotó információkat szolgáltat a technikai szakemberek számára.
  – információkat biztosít a pótalkatrészek Tetra Pak-tól történő megrendeléséhez.

Oldalelrendezés

Tekintse meg az i-5 oldalon lévő (A) ábrát: A Tartalékalkatrész-katalógus főoldalai egy rajzoldalból (1) és egy hozzá tartozó listaoldalból (7) állnak. Az oldalszám (5) a rajzoldal fejlécében és a listaoldal láblécében látható. A dokumentum száma (6) a listaoldal láblécében jelenik meg.

Oldalszámozás

Tekintse meg az i-5 oldalon lévő (A) ábrát: Az oldalszám (5) három részből áll:

- fejezetszám (2)
- folyamatos oldalszám (3) a fejezeten belül
- összes oldalszám (4) a fejezeten belül.

Bevezetés

Gyártó

A gyártó neve és címe a katalógus második oldalán található.

Szerviz

A gép valamely pótalkatrészének megrendelése vagy a berendezés működésével kapcsolatos zavarok bejelentése végett forduljon a legközelebbi Tetra Pak képviselethez.

Bármilyen más, a berendezésre illetve a dokumentációra vonatkozó kérdéseivel, megjegyzéseivel vagy javaslataival forduljon területi képviselőjéhez.

Azonosítás

CE besorolás

Ez a berendezés megfelel az Európai Gazdasági Régió (EEA) alapvető egészségügyi és biztonsági előírásainak.

Gépcímke

A(z) i-5 oldalon található (B) ábra a gépcímke egy példáját mutatja be. Egy érvényes gépcímkét és megfelelő elhelyezését ábrázoló rajz látható a berendezéssel szállított kézikönyv Bevezetés fejezetében. A gépcímke azokat az alább felsorolt adatokat tartalmazza, amelyek a Tetra Pak-kal történő, a berendezésre vonatkozó kommunikációhoz szükségesek.

- Géptípus (8)
- Térfogat (9)
- Tervrajzok (10)
- A gép sorozatszáma (11)
- Gyártó (12)
- CE jelzés (13)
- Gyártási év (14)

A(z) i-5 oldalon található (C) ábra a gép műszaki specifikációjának egy példáját mutatja be. Győződjön meg róla, hogy a kézikönyv első lapjain közölt berendezésadatok megegyeznek a gép adattábláján és a gép műszaki leírásában megjelenő információkkal.

A Tartalékalkatrész-katalógus használata

A tartalékalkatrész számának kikeresése

a) Tekintse meg a(z) i-5 oldalon lévő (D) ábrát: Lapozzon a keresett alkatrészt tartalmazó főcsoport mellett feltüntetett (15) számú fejezetre.

A b) és c) elemek az i-6 oldalon található ábrára vonatkoznak.

b) A főcsoport-ábrán keresse meg azt az alcsoportot (17), amelyik a keresett alkatrészt vagy alcsoportot tartalmazza. Jegyezze meg a pozíciószámot (18), majd lapozzon az ábrát követő listaoldalra.

c) Keresse meg a lejegyzett pozíciószámot/hivatkozási megjelölést (16) vagy a keresett alcsoport nevét (19). Lapozzon a jobb oldali oszlopban feltüntetett számú (20) oldalra. A Tetra Pak a hivatkozási jelöléseket mindig funkció-orientált struktúra alapján végzi el. Az előtaggal jelölt funkció-orientált struktúra (=) nem jelenik meg a hivatkozási jelölésben.

A d) és e) elemek az i-6 oldalon található (F) ábrára vonatkoznak.

d) Az alcsoport ábrán keresse meg a kívánt alkatrészt (21), és jegyezze meg az alkatrész pozíciószámát.

e) Az alkatrész száma (29) és leírása (30) a listaoldalon, a pozíciószám mellett látható.

A Tartalékalkatrész-katalógusban megtalálható információk

Az alábbi lista az i-6 oldalon található (F) ábrára vonatkozik.
A Tartalékalkatrész-katalógus a következő, csoportokra, alcsoportokra és pótalkatrészekre vonatkozó adatokat tartalmazza:

- Csoportstruktúra-hivatkozás (22). A berendezés listás struktúrájában közvetlenül az aktuális csoport fölött álló csoportot jelöli.
- Csoportnév (23)
- Mértékegység (25)
- Mennyiség (26)
- Összeszerelési rajzszám (27)
- Lista oldaltartománya (28). Abban az esetben jelenik meg, ha a csoport ábrája vagy listája többoldalas.
- Alkatrész vagy alcsoport száma (29)
- Alcsoport neve vagy alkatrész leírása (30)
- Csoportszám (31)
- Berendezésszám (32)
- Csoportinformáció fejléce (33). Azt mutatja, hogy a fejléc után következő rész egy speciális gépváltozatra vonatkozik vagy az általános pótalkatrészek listája. Ha a listának több változata van, és mindegyikhez saját összeszerelési rajz tartozik, az illető összeszerelési rajz oldalhivatkozása is megjelenik.
- Belső információ (34)

Inngangur

Upplýsingar um handbók

Tetra Pak mælir með því að allar handbækur sem afhentar eru séu lesnar vandlega. Gætið þess að afhentar handbækur séu tiltækar fyrir starfsfólk sem vinnur við eða viðheldur tækjabúnaðinum.

Það er mikilvægt að halda upp á þennan vörulista allan líftíma tækjabúnaðarins og að láta síðari eiganda eða notanda hafa vörulistann.

Ekki er hægt að gera Tetra Pak ábyrgt fyrir neinum skemmdum sem verða á tækjabúnaðinum vegna þess að ekki er farið eftir leiðbeiningunum í þeim handbókum sem fylgja tækjabúnaðinum.

Afhentar handbækur

Handbækur sem afhentar eru með þessum tækjabúnaði geta verið

- CM
  Breytingahandbók, sem veitir tæknimönnum upplýsingar um breytingar á tækjabúnaðinum milli mismunandi framleiðsluhama.
- EM
  Rafmagnshandbók, sem veitir tæknimönnum upplýsingar um rafkerfi tækjabúnaðarins.
- IM
  Uppsetningarhandbók, sem veitir tæknimönnum nauðsynlegar upplýsingar til að setja tækjabúnaðinn upp á öruggan hátt.
- MM
  Viðhaldshandbók, sem eitir tæknimönnum upplýsingar um viðhald tækjabúnaðarins.
- OM
  Notkunarhandbók, sem veitir stjórnandanum upplýsingar um meðhöndlun og notkun tækjabúnaðarins, fyrir, eftir og meðan á framleiðslu stendur.
- SPC
  Varahlutavörulisti, sem veitir nauðsynlegar upplýsingar til pöntunar varahluta frá Tetra Pak.
- TeM
  Tæknihandbók
  - sem veitir tæknimönnum nauðsynlegar upplýsingar til að setja tækjabúnaðinn upp á öruggan hátt
  - sem veitir tæknimönnum upplýsingar um viðhald tækjabúnaðarins
  - sem veitir tæknimönnum upplýsingar um rafkerfi vélarinnar/ tækjabúnaðarins
  - sem veitir nauðsynlegar upplýsingar til pöntunar varahluta frá Tetra Pak.

Umbrot

Sjá skýringarmynd (A) á síðu i-5: Aðalsíðurnar í Varahlutavörulistanum samanstanda af skýringarsíðu (1) og samsvarandi listasíðu (7). Síðunúmerið (5) er sýnt í haus síðunnar með skýringarmyndinni og í fæti listasíðunnar. Skjalnúmerið (6) er sýnt í fæti listasíðunnar.

Númerun síðu

Sjá skýringarmynd (A) á síðu i-5: Síðunúmer (5) er í þremur hlutum:

- kaflanúmer (2)
- samfellt síðunúmer innan kaflans (3)
- heildarfjölda blaðsíðna í kaflanum (4)

Kynning á vél

Framleiðandi

Fyrir nafn og heimilisfang framleiðanda, sjá síðu tvö í þessum vörulista.

Þjónusta

Til að panta varahluti fyrir þessa vél, eða til að tilkynna vandamál sem tengjast notkun þessarar vélar, skal hafa samband við næstu Tetra Pak skrifstofu.

Hafðu samband við Samskiptatengsl með aðrar fyrirspurnir, athugasemdir eða uppástungur varðandi tækjabúnaðinn og fylgiskjöl hans.

Kennsl

CE flokkun

Þessi tækjabúnaður er í samræmi við grundvallar heilbrigðis- og öryggisreglugerðir á Evrópska efnahags svæðinu (EES).

Nafnplata

Skýringarmynd (B) á síðu i-5 sýnir dæmi um nafnplötu.
Skýringarmynd af gildri nafnplötu og staðsetningu hennar á tækjabúnaðinum er sýnd í Inngangskafla handbókanna sem afhentar eru með þessum tækjabúnaði. Á nafnplötunni eru upplýsingarnar sem taldar eru upp hér að neðan, sem þörf er á þegar haft er samband við Tetra Pak varðandi þennan tiltekna tækjabúnað.

- Vélartegund (8)
- Fjöldi (9)
- Teikniupplýsingar (10)
- Raðnúmer vélar (11)
- Framleiðandi (12)
- CE merki (13)
- Framleiðsluár (14)

Skýringarmynd (C) á síðu i-5 sýnir dæmi um tæknilýsingu vélar. Gættu þess að upplýsingar um tækjabúnað sem talinn er upp á fremstu síðum þessarar handbóka samsvari upplýsingum á nafnplötu og tæknilýsingu vélar.

Hvernig nota á þennan Varahlutavörulista

Finndu varahlutarnúmer

a) Sjá skýringarmynd (D) á síðu i-5: Farðu í kaflanúmerið (15) sem gefið er til kynna við hlið aðalflokksins sem inniheldur hlutinn sem þú vilt finna.

Atriði b) og c) vísa til skýringarmyndar (E) á síðu i-6:

b) Á skýringarmynd aðalflokksins skaltu leita að undirflokki (17) vélarinnar, sem inniheldur hlutinn eða undirflokkinn sem þú ert að leita að. Taktu eftir stöðunúmerinu (18) og farðu á listasíðuna sem fylgir skýringarmyndinni.

c) Leitaðu að stöðunúmeri/tilvísunartitli (16) eða heiti undirflokksins (19). Farðu á samsvarandi síðunúmer (20) sem sýnt er í hægri dálkinum. Tetra Pak hefur kosið að nota alltaf sérhæfða skipan fyrir tilvísunartitla. Forskeytið sem gefur til kynna sérhæfða skipan (=) er ekki sýnt í tilvísunartitlinum.

Atriði d) og e) vísa til skýringarmyndar (F) á síðu i-6:

d) Finndu hlutinn (21) sem þú ert að leita að á undirflokksskýringarmyndinni og taktu eftir stöðunúmeri hlutarins.

e) Hlutarnúmerið (29) og lýsing hlutar (30) eru skráð hjá stöðunúmerinu á listasíðunni.

Upplýsingar skráðar í Varahlutavörulista

Listinn að neðan vísar til skýringarmyndar (F) á síðu i-6: Varahlutavörulisti inniheldur eftirfarandi upplýsingar um flokka, undirflokka og varahluti fyrir tækjabúnaðinn:

- Tilvísun flokkaskipunar (22). Gefur til kynna næsta flokk fyrir ofan í listaskipan tækjabúnaðarins.
- Heiti flokks (23)
- Mælieining (25)
- Magn (26)
- Númer samsetningarteikningar (27)
- Röð listasíðu (28). Fylgir með ef það eru margar blaðsíður í skýringarmynd eða lista flokksins.
- Númer hlutar eða undirflokks (29)
- Heiti undirflokks eða lýsing hlutar (30)
- Númer flokks (31)
- Númer tækjabúnaðar (32)
- Fyrirsögn flokkaskipunar (33). Gefur til kynna ef kaflinn fyrir neðan fyrirsögnina er fyrir sérstakt afbrigði vélar eða ef hann er listi yfir algenga hluti. Ef listi er með meira en eitt afbrigði og hvert afbrigði á sína eigin samsetningarteikningu, er sýnd blaðsíðutilvísun til samsetningarteikningar afbrigðisins.
- Innri upplýsingar (34)

Introduzione

Informazioni sul manuale

Tetra Pak consiglia di leggere con attenzione tutti i manuali forniti in dotazione. Assicurarsi che tutti i manuali in dotazione siano disponibili per il personale addetto al funzionamento o alla manutenzione della macchina.

È importante conservare il presente catalogo per tutta la durata della macchina e consegnarlo al successivo proprietario o utilizzatore.

Tetra Pak non sarà da ritenersi responsabile per eventuali danni alla macchina causati dal mancato rispetto delle istruzioni fornite nei manuali che accompagnano questa macchina.

Manuali in dotazione

I manuali consegnati con la presente macchina possono comprendere:

- CM (Manuale di conversione)
  Questo manuale fornisce ai tecnici le informazioni necessarie per la conversione della macchina da una modalità di produzione a un'altra.
- EM (Manuale elettrico)
  Questo manuale fornisce ai tecnici informazioni sull'impianto elettrico della macchina.
- IM (Manuale d'installazione)
  Questo manuale fornisce ai tecnici le informazioni necessarie per installare in sicurezza la macchina.
- MM (Manuale di manutenzione)
  Questo manuale fornisce ai tecnici le informazioni sulla manutenzione della macchina.
- OM (Manuale operativo)
  Questo manuale fornisce all'operatore le informazioni sull'utilizzo e il funzionamento della macchina prima, durante e dopo la produzione.
- SPC (Catalogo dei pezzi di ricambio)
  Questo catalogo fornisce le informazioni necessarie per ordinare i pezzi di ricambio a Tetra Pak.
- TeM (Manuale tecnico)
  Questo manuale:
  - fornisce ai tecnici le informazioni necessarie per installare in sicurezza la macchina
  - fornisce ai tecnici le informazioni sulla manutenzione della macchina
  - fornisce ai tecnici informazioni sull'impianto elettrico della macchina
  - fornisce le informazioni necessarie per ordinare i pezzi di ricambio a Tetra Pak.

Schema delle pagine

Consultare la figura (A) a pagina i-5: Le pagine principali di un Catalogo dei pezzi di ricambio sono costituite da una pagina con la figura (1) e una pagina elenco corrispondente (7). Il numero di pagina (5) è indicato nell'intestazione delle pagine con le figure e nel piè di pagina delle pagine elenco. Il codice del documento (6) è indicato nel piè di pagina delle pagine elenco.

Numerazione delle pagine

Consultare la figura (A) a pagina i-5: Il numero di pagina (5) è suddiviso in tre parti:

- numero del capitolo (2)
- numero progressivo di pagina all'interno del capitolo (3)
- numero totale di pagine nel capitolo (4)

Introduzione alla macchina

Fabbricante

Il nome e l'indirizzo del fabbricante sono riportati sulla seconda pagina del presente catalogo.

Assistenza

Per ordinare i pezzi di ricambio per questa macchina oppure per riferire problemi associati al funzionamento della macchina, contattare l'ufficio Tetra Pak più vicino.

Per tutte le altre richieste, commenti o suggerimenti per eventuali miglioramenti da apportare alla macchina e alla relativa documentazione, contattare il responsabile di collegamento.

Identificazione

Classificazione CE

Questa macchina è conforme alle principali norme sanitarie e di sicurezza dell'Area Economica Europea (EEA).

Targhetta della macchina

La figura (B) a pagina i-5 mostra un esempio di targhetta della macchina. Il capitolo Introduzione di tutti i manuali consegnati con la presente macchina contiene invece la figura della targhetta della macchina valida e la sua posizione sulla macchina. La targhetta riporta i dati elencati qui sotto, che sono necessari per contattare Tetra Pak in relazione a questa macchina specifica.

- Tipo di macchina (8)
- Volume (9)
- Specifiche disegno (10)
- Numero di matricola della macchina (11)
- Fabbricante (12)
- Marchio CE (13)
- Anno di fabbricazione (14)

La figura (C) a pagina i-5 mostra un esempio delle specifiche di una macchina. Verificare che i dati relativi alla macchina elencati nelle pagine iniziali del presente manuale corrispondano ai dati riportati sulla targhetta della macchina e nelle specifiche della macchina.

Come usare questo Catalogo dei pezzi di ricambio

Individuare il numero del pezzo di ricambio

a) Consultare la figura (D) a pagina i-5: andare al numero del capitolo (15) indicato accanto al gruppo principale che contiene il pezzo che si desidera individuare.

I punti b) e c) fanno riferimento alla figura (E) a pagina i-6.

b) Nella figura del gruppo principale, identificare il sottogruppo della macchina (17) che contiene il pezzo o il sottogruppo cercato. Annotare il numero di posizione (18) e andare alla pagina elenco che segue la figura.

c) Identificare il numero di posizione/l'indicazione di riferimento (16) o il nome del sottogruppo (19). Andare al numero di pagina corrispondente (20) indicato nella colonna di destra. Per le indicazioni di riferimento, Tetra Pak ha scelto di usare sempre la struttura "function-oriented". Il prefisso che indica la struttura "function-oriented" (=) non è mostrato nell'indicazione di riferimento.

I punti d) e e) fanno riferimento alla figura (F) a pagina i-6.

d) Individuare il pezzo (21) cercato sulla figura del sottogruppo e annotare il numero di posizione del pezzo.

e) Il numero del pezzo (29) e la descrizione del pezzo (30) sono indicati accanto al numero di posizione sulla pagina elenco.

Informazioni contenute nel Catalogo dei pezzi di ricambio

L'elenco seguente fa riferimento alla figura (F) a pagina i-6. Il Catalogo dei pezzi di ricambio contiene le seguenti informazioni sui gruppi, i sottogruppi e i pezzi di ricambio della macchina:

- Riferimento struttura gruppo (22). Indica il gruppo superiore successivo nella struttura elenco della macchina.
- Nome gruppo (23)
- Unità di misura (25)
- Quantità (26)
- Numero disegno di assemblaggio (27)
- Intervallo delle pagine elenco (28). Questa informazione è presente se la figura o l'elenco relativi al gruppo occupano più di una pagina del manuale.
- Numero pezzo o sottogruppo (29)
- Nome sottogruppo o descrizione pezzo (30)
- Numero gruppo (31)
- Numero macchina (32)
- Intestazione informazioni gruppo (33). Indica se la sezione che segue l'intestazione si riferisce a una variante di macchina specifica oppure se si tratta di un elenco di parti comuni. Se un elenco contiene più di una variante ed esiste un disegno di assemblaggio specifico per ogni variante, viene fornito il riferimento alla pagina in cui è mostrato il disegno di assemblaggio relativo alla variante.
- Informazioni interne (34)

Įvadas

Informacija apie instrukciją

"Tetra Pak" rekomenduoja atidžiai perskaityti visas pateiktas instrukcijas. Pasirūpinkite, kad instrukcijos būtų prieinamos darbuotojams, kurie eksploatuoja arba prižiūri įrangą.

Svarbu šį katalogą išsaugoti visą įrangos tarnavimo laiką ir perduoti jį kitam įrangos savininkui arba naudotojui.

"Tetra Pak" neprisiima atsakomybės už įrangos sugadinimą, jei nesilaikoma nurodymų, pateiktų prie šios įrangos pridedamuose kataloguose.

Pateikiamos instrukcijos

Su šia įranga pateikiamose instrukcijose gali būti

- CM
  Transformacijos instrukcija, suteikianti technikams informaciją apie įrangos transformavimą skirtingiems gamybos režimams.
- EM
  Elektrinės dalies instrukcija, suteikianti technikams informaciją apie įrangos elektros sistemą.
- IM
  Įrengimo instrukcija, suteikianti technikams informaciją, reikalingą norint saugiai sumontuoti įrangą.
- MM
  Techninės priežiūros instrukcija, suteikianti technikams informaciją apie įrangos priežiūrą.
- OM
  Eksploatavimo instrukcijos paskirtis yra suteikti informaciją operatoriui, kaip naudoti ir valdyti įrangą prieš gamybos procesą, jo metu ir po jo.
- SPC
  Atsarginių dalių katalogas, kuriame yra informacija, reikalinga atsarginėms dalims iš "Tetra Pak" užsakyti
- TeM
  Techninė instrukcija
  – suteikia technikams informaciją, reikalingą saugiai sumontuoti įrangą
  – suteikia technikams informaciją apie įrangos priežiūrą
  – suteikia technikams informaciją apie įrangos elektros sistemą
  – suteikia informaciją, reikalingą užsakyti iš "Tetra Pak" atsargines dalis

Puslapių išdėstymas

Žr. paveikslėlį (A) puslapyje i-5. Pagrindiniai atsarginių dalių katalogo puslapiai sudaryti iš paveikslėlio puslapio (1) ir atitinkamo sąrašo puslapio (7). Puslapio numeris (5) nurodomas paveikslėlio puslapio viršuje ir sąrašo puslapio apačioje. Dokumento numeris (6) nurodomas sąrašo puslapio apačioje.

Puslapių numeravimas

Žr. iliustraciją (A) puslapyje i-5. Puslapio numerį (5) sudaro trys dalys:

- skyriaus numeris (2)
- puslapio eilės numeris (3) skyriuje
- bendras puslapių skaičius (4) skyriuje

Įrenginio pristatymas

Gamintojas

Gamintojo pavadinimas ir adresas pateikti antrajame šio katalogo puslapyje.

Aptarnavimas

Jei reikia šiai įrangai užsakyti atsarginių dalių arba pranešti apie jos eksploatavimo nesklandumus, kreipkitės į artimiausią "Tetra Pak" biurą.

Su kitais klausimais, pastabomis ar įrangos ir jos dokumentacijos tobulinimo pasiūlymais kreipkitės į savo kontaktinį asmenį.

Identifikavimas

CE klasifikacija

Šis įrenginys atitinka esminius Europos ekonominės erdvės (EEE) sveikatos ir saugumo reikalavimus.

Vardinė plokštelė

Puslapyje i-5 pateiktame paveikslėlyje (B) parodytas įrangos vardinės plokštelės pavyzdys.
Atitinkamos įrangos vardinė plokštelė ir jos vieta ant įrangos parodoma su šia įranga pateikiamų instrukcijų įvade. Įrangos vardinėje plokštelėje pateikiami žemiau nurodyti duomenys, kurie reikalingi kreipiantis į "Tetra Pak" dėl konkretaus įrenginio.

- Mašinos tipas (8)
- Tomas (9)
- Brėžinių specifikacijos (10)
- Įrangos serijos numeris (11)
- Gamintojas (12)
- CE ženklas (13)
- Pagaminimo metai (14)

Paveikslėlyje (C) puslapyje i-5 parodytas įrangos specifikacijos pavyzdys. Patikrinkite, ar šios instrukcijos pirmuosiuose puslapiuose nurodyti duomenys atitinka duomenis vardinėje plokštelėje ir įrangos specifikaciją.

Kaip naudotis atsarginių dalių katalogu

Atsarginės dalies numerio suradimas

a) Žr. iliustraciją (D) puslapyje i-5. Atsiverskite skyrių (15), nurodytą šalia pagrindinio mazgo, kuriame yra jūsų ieškoma dalis.

Punktai b) ir c) atitinka paveikslėlį (E) puslapyje i-6.

b) Pagrindinio mazgo paveikslėlyje suraskite smulkesnį įrangos mazgą (17), kuriame yra jūsų ieškoma dalis arba mazgas. Pasižiūrėkite pozicijos numerį (18) ir suraskite jį toliau pateiktame sąraše.

c) Suraskite pozicijos numerį/pavadinimą (16) arba smulkesnio mazgo pavadinimą (19). Atsiverskite dešiniajame stulpelyje nurodytą puslapį (20). "Tetra Pak" nusprendė pavadinimuose visada naudoti paskirtį atitinkančią struktūrą. Pavadinimuose nepateikiamas paskirtį atitinkančios struktūros prefiksas (=).

Punktai d) ir e) atitinka paveikslėlį (F) puslapyje i-6.

d) Suraskite ieškomą dalį (21) smulkesnio mazgo paveikslėlyje ir pasižiūrėkite dalies pozicijos numerį.

e) Dalies numeris (29) ir dalies aprašymas (30) sąrašo puslapyje nurodyti šalia pozicijos numerio.

Atsarginių dalių kataloge pateikiama informacija

Žemiau pateiktas sąrašas atitinka paveikslėlį (F) puslapyje i-6. Atsarginių dalių kataloge apie įrangos mazgus, smulkesnius mazgus ir atsargines dalis pateikiama tokia informacija:

- Struktūrinė mazgo nuoroda (22). Nurodo stambesnį mazgą įrangos sąrašo struktūroje.
- Mazgo pavadinimas (23)
- Matavimo vienetai (25)
- Kiekis (26)
- Surinkimo brėžinio numeris (27)
- Sąrašo puslapių intervalas (28) Pateikiamas, jei mazgo paveikslėlis arba sąrašas užima kelis puslapius.
- Dalies arba smulkesnio mazgo numeris (29)
- Smulkesnio mazgo arba dalies aprašymas (30)
- Mazgo numeris (31)
- Įrangos numeris (32)
- Informacijos apie mazgą puslapio antraštė (33). Nurodo, ar po antrašte pateikta informacija yra specifinio įrangos varianto, ar tai paprastų dalių sąrašas. Jei yra daugiau kaip vienas sąrašo variantas ir kiekvienam variantui yra atskiras surinkimo brėžinys, nurodomas puslapis, kuriame pateiktas konkretaus varianto surinkimo brėžinys.
- Vidinė informacija (34)

Ievads

Informācija par rokasgrāmatu

Tetra Pak iesaka rūpīgi izlasīt visas piegādātās rokasgrāmatas. Jānodrošina, lai piegādātas rokasgrāmatas būtu pieejamas personālam, kas apkalpo iekārtas vai veic to apkopi.

Šo katalogu ir nepieciešams saglabāt visu laiku, kamēr iekārtas tiek izmantotas, un nodot katalogu nākamajam īpašniekam vai lietotājam.

Tetra Pak neatbild par jebkuriem iekārtas bojājumiem, kuri rodas līdz ar iekārtu piegādāto instrukciju neievērošanas rezultātā.

Piegādātas rokasgrāmatas

Līdz ar iekārtu var tikt piegādātas šādas rokasgrāmatas

- CM
  Pārslēgšanas rokasgrāmata sniedz tehniķiem informāciju par iekārtas pārslēgšanu dažādos atšķirīgos ražošanas režīmos.
- EM
  Elektriskās instalācijas rokasgrāmata sniedz tehniķiem informāciju par iekārtas elektriskās instalācijas sistēmu.
- IM
  Uzstādīšanas rokasgrāmata sniedz tehniķiem informāciju, kas nepieciešama drošai iekārtas uzstādīšanai.
- MM
  Apkopes rokasgrāmata sniedz tehniķiem informāciju par iekārtas apkopi.
- OM
  Ekspluatācijas rokasgrāmata sniedz apkalpojošajam personālam informāciju par iekārtas apkalpošanu un ekspluatēšanu pirms darba sākuma, darba laikā un pēc darba beigām.
- SPC
  Rezerves daļu katalogs sniedz informāciju, kas nepieciešama, lai pasūtītu rezerves daļas no Tetra Pak
- TeM
  Tehniskā rokasgrāmata
  - sniedz tehniķiem informāciju, kas nepieciešama drošai iekārtas uzstādīšanai
  - sniedz tehniķiem informāciju par iekārtas apkopi
  - sniedz tehniķiem informāciju par mašīnas/iekārtas elektrisko instalāciju
  - sniedz informāciju, kas nepieciešama, lai pasūtītu rezerves daļas no Tetra Pak.

Lappuses izkārtojums

Skatīt ilustrāciju (A) i-5 lappusē: Galvenās lappuses Rezerves daļu katalogā sastāv no ilustrāciju lapas (1) un atbilstīgās saraksta lapas (7). Lappuses numurs (5) ir norādīts ilustrāciju lapas galvenē un saraksta lapas kājenē. Dokumenta numurs (6) ir norādīts saraksta lapas kājenē.

Lappušu numerācija

Skatīt ilustrāciju (A) lappusē i-5: Lappuses numurs (5) sastāv no trim daļām:

- nodaļas numura (2)
- secīga lappuses numura nodaļas ietvaros (3)
- kopējā lappušu skaita nodaļā (3)

Iepazīstināšana ar iekārtu

Ražotājs

Ražotāja nosaukumu un adresi skatīt šī kataloga otrajā lappusē.

Serviss

Lai pasūtītu rezerves daļas šai mašīnai vai lai ziņotu par problēmām saistībā ar šīs mašīnas ekspluatāciju, sazinieties ar tuvāko Tetra Pak pārstāvniecību.

Ja Jums ir citi jautājumi, piezīmes vai ieteikumi par iekārtas un tās dokumentācijas uzlabošanu, tad lūdzam sazināties ar Sakaru biroju.

Identifikācija

EK klasifikācija

Šī iekārta atbilst galvenajām Eiropas Ekonomiskās Zonas (EEA) regulām, kuras attiecas uz veselību un drošību.

Mašīnas tipa plāksnīte

Ilustrācijā (B) i-5 lappusē ir redzams mašīnas tipa plāksnītes paraugs. Aktuālās mašīnas tipa plāksnīte un tās atrašanās vieta uz iekārtas ir parādīta līdz ar šo iekārtu piegādāto rokasgrāmatu Ievada nodaļā. Mašīnas tipa plāksnīte ietver turpmāk uzskaitīto informāciju, kura ir nepieciešama, sazinoties ar Tetra Pak par šo konkrēto iekārtu.

- Mašīnas tips (8)
- Daudzums (9)
- Rasējuma specifikācijas (10)
- Mašīnas sērijas numurs (11)
- Ražotājs (12)
- CE apzīmējums (13)
- Izgatavošanas gads (14)

Ilustrācijā (C) lappusē i-5 ir parādīts mašīnas specifikācijas paraugs. Pārliecinieties, ka šīs rokasgrāmatas titullapās minētā informācija par iekārtu atbilst tai, kas norādīta uz mašīnas tipa plāksnītes un mašīnas specifikācijā.

Rezerves daļu kataloga lietošana

Vajadzīgās rezerves daļas numura atrašana

a) Skatiet ilustrāciju (D) lappusē i-5: Atrodiet nodaļas numuru (15), kas norādīts līdzās galvenajai grupai, kurā ietilpst Jūsu meklētā rezerves daļa.

Pozīcijas b) un c) skatiet ilustrāciju (E) lappusē i-6.

b) Galvenās grupas ilustrācijā atrodiet mašīnas apakšgrupu (17), kurā ietilpst Jūsu meklētā detaļa vai apakšgrupa. Atzīmējiet pozīcijas numuru (18) un pievērsieties saraksta lappusei, kura seko šai ilustrācijai.

c) Sameklējiet atbilstīgo pozīcijas numuru (16) vai apakšgrupas nosaukumu (19). Pievērsieties atbilstīgajam lappuses numuram (20), kas norādīts ailē pa labi. Tetra Pak norādes apzīmēšanai ir izvēlējies vienmēr izmantot uz funkciju orientētu struktūru. Priedēklis, kas norāda uz funkciju orientētu struktūru (=), norādes apzīmējumā nav parādīts.

Pozīcijas d) un e) skatiet ilustrāciju (F) lappusē i-6.

d) Atrodiet vajadzīgo rezerves daļu (21) apakšgrupas ilustrācijā un atzīmējiet šīs detaļas pozīcijas numuru.

e) Šīs detaļas numurs (29) un apraksts (30) atrodas saraksta lapā līdzās pozīcijas numuram.

Rezerves daļu katalogā sniegtā informācija

Šis saraksts attiecas uz ilustrāciju (F) lappusē i-6. Rezerves daļu katalogs satur šādu informāciju par grupām, apakšgrupām un iekārtas rezerves daļām:

- Grupas struktūras norāde (22). Norāda nākamo augstāko grupu iekārtas saraksta struktūrā.
- Grupas nosaukums (23)
- Mērvienība (25)
- Skaits (26)
- Montāžas rasējuma numurs (27)
- Saraksta lappuses zona (28). Tiek izmantota tad, ja grupas ilustrācija vai saraksts ir uz vairākām lappusēm.
- Daļas vai apakšgrupas numurs (29)
- Apakšgrupas nosaukums vai daļas apraksts (30)
- Grupas numurs (31)
- Iekārtas numurs (32)
- Grupas informācijas iedaļas apzīmējums (33). Norāda, vai iedaļa zem šī apzīmējuma attiecas uz noteiktu mašīnas variantu, vai arī tas ir kopējo rezerves daļu saraksts. Ja sarakstam ir vairāk nekā viens variants un katram variantam ir savs montāžas rasējums, tad tiek dota atsauce uz lappusi, kur atrodams katra varianta montāžas rasējums.
- Iekšējā informācija (34)

Inleiding

Informatiehandboek

Tetra Pak adviseert alle meegeleverde handboeken zorgvuldig te lezen. Controleer of het bedienende of onderhoudspersoneel van de machine de beschikking heeft over de meegeleverde handboeken

Het is belangrijk deze catalogus tijdens de levensduur van de machine te bewaren en de catalogus door te geven aan iedere volgende eigenaar of gebruiker.

Tetra Pak stelt zich niet aansprakelijk voor eventuele schade aan de installatie als gevolg van het niet naleven van de instructies die in de meegeleverde handboeken worden gegeven.

Meegeleverde handboeken

De bij deze installatie meegeleverde handboeken omvatten

- CM
  Het conversiehandboek geeft technici informatie met betrekking tot de ombouw van de installatie tussen verschillende productiemodi.
- EM
  Het elektriciteitshandboek informeerttechnici omtrent het elektrischesysteem van de installatie.
- IM
  Het installatiehandboek informeert technici hoe men de installatie op veilige wijze installeert.
- MM
  Het onderhoudshandboek geeft technici informatie over het onderhoud van de installatie.
- OM
  Het bedieningshandboek informeert de operator betreffende het omgaan met en het bedienen van de installatie voor, tijdens en na de productie.
- SPC
  De reserveonderdelencatalogus geeft de nodige informatie omtrent het bestellen van reserveonderdelen bij Tetra Pak
- TeM
  Het technische handboek
  - informeert technici hoe men de installatie op veilige wijze installeert
  - informeert technici omtrent het onderhoud van de installatie
  - informeert technici omtrent het elektrische systeem van de machine/ installatie
  - informeert over welke informatie men nodig heeft om reserveonderdelen bij Tetra Pak te bestellen.

Pagina layout

Zie afbeelding (A) op pagina i-5: De belangrijkste bladzijden van een reserveonderdelencatalogus bestaan uit een bladzijde met afbeeldingen (1) en een bladzijde met een corresponderende lijst (7). Het bladzijde-nummer (5) is te vinden in de kop van een bladzijde met een afbeelding en in de voetnoot van een lijstbladzijde. Het documentennummer (6) is te vinden in de voetnoot van een lijstbladzijde.

Bladzijdenummering

Zie afbeelding (A) op pagina: i-5: Een bladzijdenummer (5) bestaat uit drie delen:

- hoofdstuknummer (2)
- opeenvolgend bladzijdenummer in het hoofdstuk (3)
- totaal aantal bladzijden in het hoofdstuk (4)

Introductie van de machine

Fabrikant

Zie de tweede bladzijde van deze catalogus voor naam en adres van de fabrikant.

Service

Neem voor het bestellen van reserveonderdelen voor deze machine, of om bedieningsproblemen met betrekking tot deze machine te melden, contact op met de dichtstbijzijnde Tetra Pak vestiging.

Neem contact op met de contactpersoon voor verdere informatie, opmerkingen of suggesties ter verbetering van de installatie en de bijbehorende documentatie.

Identificatie

CE-classificatie

Deze installatie voldoet aan de basisvoorschriften voor gezondheid en veiligheid voor het Europese Economische Gebied (EEG).

Machineplaatje

Afbeelding (B) op bladzijde i-5 toont een voorbeeld van een machineplaatje. Een afbeelding van het geldige machineplaatje en de plaatsing ervan worden getoond in de Inleiding van de handboeken, die bij deze installatie worden meegeleverd. Het machineplaatje bevat onderstaande gegevens, die men nodig heeft wanneer men omtrent de desbetreffende installatie contact opneemt met Tetra Pak.

- Machinetype (8)
- Volume (9)
- Specificatietekeningen (10)
- Serienummer van de machine (11)
- Fabrikant (12)
- CE-markering (13)
- Jaar van fabrikage (14)

Afbeelding (C) op pagina i-5 toont een voorbeeld van een machinespecificatie. Controleer of de gegevens betreffende de installatie op de eerste bladzijden van dit handboek overeenkomen met de gegevens op het machineplaatje en de machinespecificatie.

Gebruik van de reserveonderdelencatalogus

Vinden van het bestelnummer van een reserveonderdeel

a) Zie afbeelding (D) op pagina i-5: Ga naar het hoofdstuknummer (15) dat wordt aangeven naast de hoofdgroep waarin zich het door u gezochte onderdeel bevindt.

Items b) en c) verwijzen naar afbeelding (E) op pagina i-6.

b) Op de afbeelding van de hoofdgroep zoekt u de machinesubgroep (17), die het gezochte onderdeel of de gezochte subgroep bevat. Noteer het positienummer (18) en ga naar de lijstbladzijde die op de afbeelding volgt.

c) Zoek naar het positienummer/de referentie (16) of de subgroep-naam (19). Ga naar de corresponderende bladzijde (20) die in de rechterkolom staat vermeld. Tetra Pak heeft voor de benoeming van de referenties gekozen voor de functiegeoriënteerde structuur. De prefixaanduidende functiegeoriënteerde structuur (=) wordt niet in de referentie getoond.

Items d) en e) verwijzen naar afbeelding (F) op pagina i-6.

d) Zoek het gewenste deel (21) op de subgroepafbeelding en noteer het positienummer van het onderdeel.

e) Het bestelnummer (29) en de omschrijving (30) van het onderdeel staan naast het positienummer op de lijstbladzijde.

Informatie die in een reserveonderdelencatalogus wordt gegeven

De onderstaande lijst verwijst naar afbeelding (F) op bladzijde i-6. Een reserveonderdelencatalogus bevat de volgende informatie over groepen, subgroepen en reserveronderdelen voor de installatie:

- Referentie groepstructuur (22). Geeft de volgende hogere groep in de lijststructuur van de installatie aan.
- Groepsnaam (23)
- Meeteenheid (25)
- Hoeveelheid (26)
- Nummer montagetekening (27)
- Lijst bladzijdenreeks (28). Wordt vermeld wanneer er meerdere bladzijden in de groepsafbeelding of -lijst voorkomen.
- Deel- of subgroepnummer (29)
- Subgroepnaam of onderdeelbeschrijving (30)
- Groepsnummer (31)
- Machinenummer (32)
- Titel groepsinformatie (33). Geeft aan of het gedeelte onder de titel voor een specifieke machinesoort is of dat het een lijst met gebruikelijke onderdelen is. Indien een lijst meer dan één type bevat en ieder type zijn eigen montagetekening heeft, wordt een bladzijdereferentie getoond voor de montagetekening van het type.
- Interne informatie (34)

Introduksjon

Informasjon om manualen

Tetra Pak anbefaler at du leser nøye gjennom alle leverte manualer. Sørg for at manualene er tilgjengelige for alle som betjener eller vedlikeholder utstyret.

Det er viktig at du tar vare på denne katalogen under hele levetiden til utstyret og at du gir den videre til eventuelle nye eiere eller brukere.

Tetra Pak vil ikke være ansvarlig for skader på utstyret som oppstår fordi brukeren ikke følger instruksjonene i manualene som følger med utstyret.

Leverte manualer

Manualene som leveres med dette utstyret, kan inkludere

- CM
  Konverteringsmanualen gir teknikere informasjon om hvordan de konverterer utstyret mellom ulike produksjonsmodi.
- EM
  Den elektriske manualen gir teknikere informasjon om utstyrets elektriske system.
- IM
  Installasjonsmanualen gir teknikere informasjon som kreves for å kunne installere utstyret på en sikker måte.
- MM
  Vedlikeholdsmanualen gir teknikere informasjon om vedlikehold av utstyret.
- OM
  Driftsmanualen gir operatøren informasjon om hvordan han håndterer og bruker utstyret før, under og etter produksjon.
- SPC
  Reservedelskatalogen inneholder informasjon som du trenger for å bestille reservedeler fra Tetra Pak
- TeM
  Den tekniske manualen
  – gir teknikere informasjon om sikker installasjon av utstyret
  – gir teknikere informasjon om vedlikehold av utstyret
  – gir teknikere informasjon om maskinens/utstyrets elektriske system
  – inneholder informasjon som du trenger for å bestille reservedeler fra Tetra Pak.

Sideoppsett

Se illustrasjonen (A) på side i-5: Hovedsidene i reservedelskatalogen består av en illustrasjonsside (1) og en korresponderende listeside (7). Sidenummeret (5) vises i topteksten på illustrasjonssiden og i bunnteksten på listesiden. Dokumentnummeret (6) vises i bunnteksten på listesiden.

Sidenummerering

Se illustrasjonen (A) på side i-5: Et sidenummer (5) består av tre deler:

- kapittelnummer (2)
- etterfølgende sidenummer i kapitlet (3)
- det totale antall sider i kapitlet (4)

Introduksjon av maskinen

Produsent

Hvis du ønsker produsentens navn og adresse, kan du se side to i denne katalogen.

Service

Når du skal bestille reservedeler til denne maskinen eller rapportere problemer forbundet med driften av denne maskinen, må du kontakte ditt nærmeste Tetra Pak-kontor.

Når det gjelder andre forespørsler, kommentarer eller forslag til forbedringer av utstyret og dets dokumentasjon, kan du ta kontakt med din kontaktperson.

Identifisering

CE-klassifisering

Dette utstyret er i overensstemmelse med de grunnleggende helse- og sikkerhetsforskriftene i Det europeiske økonomiske samarbeidsområdet (EØS).

Maskinplate

Illustrasjonen (B) på side i-5 viser et eksempel på en maskinplate.
En illustrasjon av en gyldig maskinplate og hvor denne er plassert på utstyret, er vist i introduksjonskapitlet i manualene som følger med dette utstyret. Maskinplaten inneholder nedenstående data, som du trenger når du skal kontakte Tetra Pak angående dette bestemte utstyret.

- Maskintype (8)
- Volum (9)
- Tegningsspesifikasjoner (10)
- Maskin-serienummer (11)
- Produsent (12)
- CE-merke (13)
- Produksjonsår (14)

Illustrasjonen (C) på side i-5 viser et eksempel på en maskinspesifikasjon. Sørg for at utstyrsdataene som står oppført foran i denne manualen, samsvarer med dataene på maskinplaten og maskinspesifikasjonen.

Hvordan bruke denne reservedelskatalogen

Finn et reservedelsnummer

a) Se illustrasjonen (D) på side i-5: Gå til kapittelnummeret (15) som er angitt ved siden av hovedgruppen som inneholder delen du vil finne.

Punkt b) og c) viser til illustrasjonen (E) på side i-6.

b) På hovedgruppeillustrasjonen ser du etter maskinundergruppen (17) som inneholder delen eller undergruppen du ser etter. Merk deg posisjonsnummeret (18), og gå til listesiden som kommer etter illustrasjonen.

c) Se etter posisjonsnummeret/referansebetegnelsen (16) eller undergruppenavnet (19). Gå til det korresponderende sidenummeret (20) som står oppført i høyre kolonne. Tetra Pak har valgt å alltid bruke den funksjonsorienterte inndelingen for referansebetegnelse. Prefiksen som angir funksjonsorientert inndeling (=), er ikke vist i referansebetegnelsen.

Punkt d) og e) viser til illustrasjonen (F) på side i-6.

d) Finn delen (21) du ser etter på undergruppeillustrasjonen, og merk deg delens posisjonsnummer.

e) Delenummeret (29) og delebeskrivelsen (30) finner du ved siden av posisjonsnummeret på listesiden.

Informasjon i en reservedelskatalog

Listen nedenfor viser til illustrasjonen (F) på side i-6. En reservedelskatalog inneholder følgende informasjon om grupper, undergrupper og reservedeler for utstyret:

- Gruppeinndelingsreferanse (22). Angir den neste gruppen opp i inndelingen av utstyrslisten.
- Gruppenavn (23)
- Målenhet (25)
- Antall (26)
- Tegningsnummer (27)
- Listesideområde (28). Inkludert hvis det er flere sider i gruppe-illustrasjonen eller listen.
- Dele- eller undergruppenummer (29)
- Undergruppenavn eller delebeskrivelse (30)
- Gruppenummer (31)
- Utstyrsnummer (32)
- Gruppeinformasjonsoverskrift (33). Angir om avsnittet under overskriften er for en bestemt maskinvariant eller om det er en liste over vanlige deler. Hvis en liste har flere varianter og hver variant har sin egen sammenstillingstegning, vises det en sidereferanse til variantens sammenstillingstegning.
- Intern informasjon (34)

Wprowadzenie

Informacje na temat instrukcji

Firma Tetra Pak zaleca dokładne przeczytanie wszystkich dostarczonych instrukcji. Należy upewnić się, że dostarczone instrukcje są dostępne dla personelu, który obsługuje lub konserwuje maszynę.

Należy przechowywać ten katalog przez cały okres użytkowania maszyny i przekazać go kolejnemu właścicielowi lub użytkownikowi.

Firma Tetra Pak nie będzie ponosić odpowiedzialności za jakiekolwiek uszkodzenia maszyny spowodowane niestosowaniem się do zaleceń zawartych w instrukcjach dostarczonych z maszyną.

Dostarczone instrukcje

W skład dokumentacji dostarczonej z maszyną wchodzą:

- Instrukcja konwersji (CM)
  W tej instrukcji zawarte są informacje dotyczące dostosowania maszyny do różnych trybów produkcji.
- Instrukcja dotycząca wyposażenia elektrycznego (EM)
  W tej instrukcji zawarte są informacje dotyczące układu elektrycznego maszyny.
- Instrukcja instalacji (IM)
  W tej instrukcji zawarte są informacje niezbędne do bezpiecznego zainstalowania maszyny.
- Instrukcja konserwacji (MM)
  W tej instrukcji zawarte są informacje dotyczące konserwacji maszyny.
- Instrukcja obsługi (OM)
  W tej instrukcji zawarte są informacje dotyczące obsługi maszyny przed rozpoczęciem produkcji, w jej trakcie oraz po jej zakończeniu.
- Katalog części zamiennych (SPC)
  W katalogu zawarte są informacje dotyczące zamawiania części zamiennych w firmie Tetra Pak.
- Instrukcja techniczna (TeM)
  Instrukcja techniczna zawiera informacje:
  - dotyczące bezpiecznego instalowania maszyny,
  - dotyczące konserwacji maszyny,
  - dotyczące układu elektrycznego maszyny,
  - dotyczące zamawiania części zamiennych w firmie Tetra Pak.

Układ strony

Patrz rysunek (A) na stronie i-5: Główne strony w Katalogu części zamiennych składają się ze strony zawierającej rysunek (1) i odpowiadającej jej strony zawierającej listę (7). Numer strony (5) znajduje się w nagłówku strony zawierającej rysunek i w stopce strony zawierającej listę. Numer dokumentu (6) znajduje się w stopce strony zawierającej listę.

Numeracja stron

Patrz rysunek (A) na stronie i-5: Numer strony (5) składa się z trzech części:

- numeru rozdziału (2),
- kolejnego numeru strony w rozdziale (3),
- całkowitej liczby stron w rozdziale (4).

Ogólne informacje o maszynie

Producent

Nazwę i adres producenta można znaleźć na drugiej stronie niniejszego katalogu.

Serwis

Aby zamówić części zapasowe do tej maszyny lub zgłosić problemy związane z jej pracą, należy skontaktować się z najbliższym biurem Tetra Pak.

Można kontaktować się także w przypadku innych zapytań, uwag lub sugestii dotyczących udoskonalenia urządzenia i dokumentacji.

Identyfikacja

Klasyfikacja CE

Maszyna spełnia podstawowe wymogi z zakresu bezpieczeństwa i ochrony zdrowia obowiązujące w Europejskiej Strefie Ekonomicznej (EEA).

Tabliczka znamionowa

Na rysunku (B), znajdującym się na stronie i-5, pokazano przykładową tabliczkę znamionową.
Rysunek prawidłowej tabliczki znamionowej oraz jej umiejscowienie na maszynie pokazano w rozdziale Wprowadzenie zawartym w instrukcjach dostarczonych z maszyną. Tabliczka znamionowa zawiera następujące dane potrzebne w przypadku kontaktowania się z firmą Tetra Pak w sprawie dotyczącej danej maszyny:

- typ maszyny (8),
- objętość (9),
- specyfikacje rysunkowe (10),
- numer seryjny maszyny (11),
- nazwę producenta (12),
- oznaczenie CE (13),
- rok produkcji (14).

Na rysunku (C) zamieszczonym na stronie i-5 pokazano przykład specyfikacji maszyny. Należy sprawdzić, czy dane dotyczące maszyny przedstawione na pierwszej stronie tej instrukcji odpowiadają danym zawartym na tabliczce znamionowej maszyny oraz specyfikacji maszyny.

Jak korzystać z niniejszego Katalogu części zamiennych

Należy odnaleźć numer części zamiennej

a) Zapoznaj się z rysunkiem (D) na stronie i-5: przejdź do numeru rozdziału (15) pokazanego obok głównej grupy zawierającej część, którą chcesz odszukać.

Punkty b) i c) odnoszą się do rysunku (E) na stronie i-6.

b) Na rysunku grupy głównej odszukaj podgrupę maszyny (17), która zawiera odpowiednią część lub podgrupę, której szukasz. Zanotuj numer pozycji (18) i przejdź do strony z listą odpowiadającą rysunkowi.

c) Odszukaj numer pozycji/oznaczenie odnośnika (16) lub nazwę podgrupy (19). Przejdź do odpowiedniego numeru strony (20) podanego w kolumnie umieszczonej po prawej stronie. Firma Tetra Pak w przypadku oznaczenia odnośnika korzysta ze struktury ukierunkowanej na funkcję. Przedrostek wskazujący strukturę ukierunkowaną na funkcję (=) nie jest pokazany w oznaczeniu odnośnika.

Punkty d) i e) odnoszą się do rysunku (F) na stronie i-6.

d) Na rysunku podgrupyodszukaj odpowiednią część (21) i zanotuj numer pozycji części.

e) Numer części (29) oraz jej opis (30) podano na stronie zawierającej listę obok numeru pozycji.

Informacje zawarte w Katalogu części zamiennych

Poniższa lista odnosi się do rysunku (F), znajdującego się na stronie i-6. Katalog części zamiennych zawiera następujące informacje o grupach, podgrupach oraz częściach zamiennych maszyny:

- Odnośnik struktury grup (22). Wskazuje następną wyższą grupę zawartą w strukturze listy maszyny.
- Nazwa grupy (23).
- Jednostka miary (25).
- Liczba (26).
- Numer rysunku złożeniowego (27).
- Zakres stron zawierających listę (28). Podany w przypadku występowania wielu stron zawierających rysunek grupy lub listę.
- Numer części lub podgrupy (29).
- Nazwa podgrupy lub opis części (30).
- Numer grupy (31).
- Numer maszyny (32).
- Nagłówek informacyjny grupy (33). Wskazuje, czy sekcja umieszczona pod nagłówkiem dotyczy określonego wariantu maszyny, czy też jest to lista wspólna dla wszystkich wariantów. Jeśli lista występuje w wielu wariantach i dla każdego z nich dostępny jest osobny rysunek złożeniowy, podany jest odnośnik strony do rysunku złożeniowego dla danego wariantu.
- Informacje wewnętrzne (34).

Introdução

Informações sobre o Manual

A Tetra Pak recomenda que leia atentamente todos os manuais incluídos. Certifique-se de que os manuais incluídos estão disponíveis para o pessoal que utiliza ou faz a manutenção do equipamento.

É importante que mantenha este catálogo durante toda a vida útil do equipamento, devendo ainda ser fornecido a quaisquer proprietários e operadores subsequentes do mesmo.

A Tetra Pak não será responsável por quaisquer danos no equipamento provocados pelo não seguimento das instruções fornecidas nos manuais que acompanham este equipamento.

Manuais Fornecidos

Os manuais fornecidos com este equipamento podem incluir

- CM
  O Manual de Conversão (Conversion Manual) fornece aos técnicos informações sobre a conversão do equipamento entre modos de produção diferentes.
- EM
  O Manual Eléctrico (Electrical Manual) fornece aos técnicos informações sobre o sistema eléctrico do equipamento.
- IM
  O Manual de Instalação (Installation Manual) fornece aos técnicos as informações necessárias à instalação do equipamento em segurança.
- MM
  O Manual de Manutenção (Maintenance Manual) fornece aos técnicos informações sobre como realizar a manutenção do equipamento.
- OM
  O Manual de Funcionamento (Operation Manual) fornece ao operador informações sobre o manuseamento e funcionamento do equipamento antes, durante e após a produção.
- SPC
  O Spare Parts Catalogue (Catálogo das Peças Sobressalentes) fornece as informações necessárias para encomendar peças sobressalentes à Tetra Pak
- TeM
  O Manual Técnico (Technical Manual)
  - fornece aos técnicos as informações necessárias à instalação do equipamento em segurança
  - fornece aos técnicos informações sobre a manutenção do equipamento
  - fornece aos técnicos informações sobre o sistema eléctrico da máquina/equipamento
  - fornece as informações necessárias para encomendar peças sobressalentes à Tetra Pak.

Desenho da Página

Consulte a ilustração (A) na página i-5: As páginas principais num Catálogo de Peças Sobressalentes são constituídas por uma página de ilustração (1) e uma página de lista correspondente (7). O número de página (5) é apresentado no cabeçalho de uma página de ilustração e no rodapé de uma página de lista. O número do documento (6) é apresentado no rodapé de uma página de lista.

Numeração das Páginas

Consulte a ilustração (A) na página i-5: Um número de página (5) tem três partes:

- número do capítulo (2)
- número das páginas consecutivas dentro do capítulo (3)
- número de páginas total no capítulo (4)

Introdução da Máquina

Fabricante

Quanto ao nome e endereço do fabricante, consulte a segunda página deste catálogo.

Manutenção

Para encomendar peças sobressalentes para esta máquina ou para apresentar relatórios de problemas associados com o funcionamento desta máquina, contacte os escritórios mais próximos da Tetra Pak.

Contacte a Ligação com outras questões, comentários ou sugestões para melhoria referentes ao equipamento e à sua documentação.

Identificação

Classificação da CE

Este equipamento está em conformidade com as regulamentações básicas da saúde e segurança da Área Económica Europeia (AEE).

Chapa de Identificação da Máquina

A ilustração (B) na página i-5 mostra um exemplo de uma chapa de identificação da máquina.
No capítulo Introdução dos manuais entregues com este equipamento é apresentada uma ilustração da chapa de identificação válida da máquina e a sua localização no equipamento. A chapa de identificação da máquina contém os dados listados em baixo, necessários quando contactar a Tetra Pak em relação a este equipamento específico.

- Tipo de máquina (8)
- Volume (9)
- Especificações do desenho (10)
- Número de série da máquina (11)
- Fabricante (12)
- Marca da CE (13)
- Ano de fabricação (14)

A ilustração (C) na página i-5 mostra um exemplo de uma especificação da máquina. Certifique-se de que os dados do equipamento listados nas primeiras páginas deste manual correspondem aos dados indicados na chapa de identificação da máquina e às especificações da máquina.

Como utilizar este Catálogo de Peças Sobressalentes

Localize o Número da Peça Sobressalente

a) Consulte a ilustração (D) na página i-5: Vá para o número do capítulo (15) indicado no grupo principal que contém a peça que pretende localizar.

Os itens b) e c) referem-se à ilustração (E) na página i-6:

b) Na ilustração do grupo principal, procure o subgrupo da máquina (17) que contém a peça ou o subgrupo que procura. Tome nota do número de posição (18) e vá para a página de lista a seguir à ilustração.

c) Procure o número de posição/designação de referência (16) ou o nome do subgrupo (19). Vá para o número de página correspondente (20) indicado na coluna do lado direito. A Tetra Pak preferiu utilizar sempre a estrutura orientada para a função como designação de referência. O prefixo que inicia a estrutura orientada para a função (=) não está indicada na designação de referência.

Os itens d) e e) referem-se à ilustração (F) na página i-6:

d) Localize a peça (21) que procura na ilustração do subgrupo e tome nota do número de posição da peça.

e) O número de peça (29) e a descrição da peça (30) são apresentados ao lado do número da posição na página de lista.

Informações listadas num Catálogo de Peças Sobressalentes

A lista em baixo refere-se à ilustração (F) na página i-6: Um Catálogo de Peças Sobressalentes contém as seguintes informações sobre grupos, subgrupos e peças sobressalentes para o equipamento:

- Referência da estrutura do grupo (22). Indica o grupo mais elevado seguinte na estrutura da lista do equipamento.
- Nome do grupo (23)
- Unidade de medida (25)
- Quantidade (26)
- Número de série do conjunto (27)
- Intervalo de páginas da lista (28). Incluído se existirem várias páginas na ilustração ou na lista do grupo.
- Número de peça ou subgrupo (29)
- Nome do subgrupo ou descrição da peça (30)
- Número do grupo (31)
- Número do equipamento (32)
- Cabeçalho das informações do grupo (33). Indica se a secção em baixo do cabeçalho é de uma variante específica da máquina ou se é uma lista de peças comuns. Se uma lista tiver mais de uma variante e cada variante tiver o seu próprio desenho de conjunto, é apresentada uma referência de página ao desenho do conjunto da variante.
- Informações internas (34)

Introducere

Informații despre manual

Tetra Pak recomandă citirea cu atenție a tuturor manualelor livrate. Asigurați-vă că manualele livrate sunt puse la îndemâna personalului care exploatează sau întreține echipamentul.

Este important să păstrați acest catalog pe întreaga durată de viață a echipamentului și să transmiteți catalogul deținătorilor sau utilizatorilor ulteriori.

Tetra Pak nu va fi răspunzător pentru niciun defect al echipamentului cauzat prin nerespectarea instrucțiunilor date în manualele care însoțesc acest echipament.

Manuale livrate

Manualele livrate cu acest echipament pot include

- CM
  Manualul de conversie furnizează tehnicienilor informații despre conversia echipamentului între diferite moduri de producție.
- EM
  Manualul electric furnizează tehnicienilor informații despre sistemul electric al echipamentului.
- IM
  Manualul de instalare furnizează tehnicienilor informații necesare pentru instalarea în siguranță a echipamentului.
- MM
  Manualul de întreținere furnizează tehnicienilor informații cu privire la întreținerea echipamentului.
- OM
  Manualul de exploatare pune la dispoziție operatorilor informații despre manevrarea și exploatarea echipamentului înainte, în timpul și după producție.
- SPC
  Catalogul pieselor de schimb furnizează informații necesare pentru comandarea pieselor de schimb de la Tetra Pak.
- TeM
  Manualul tehnic
  – furnizează tehnicienilor informații necesare pentru instalarea în siguranță a echipamentului
  – furnizează tehnicienilor informații necesare cu privire la întreținerea echipamentului
  – furnizează tehnicienilor informații despre sistemul electric al mașinii/echipamentului
  – furnizează informații necesare pentru comandarea pieselor de schimb de la Tetra Pak.

Configurația paginilor

Examinați ilustrația (A) de pe pagina i-5: Paginile principale dintr-un catalog de piese de schimb constau dintr-o pagină de ilustrare (1) și o pagină de liste corespunzătoare (7). Numărul paginii (5) apare în antetul unei pagini de ilustrare și în subsolul unei pagini de liste. Numărul documentului (6) apare în subsolul unei pagini de liste.

Numerotarea paginilor

Examinați ilustrația (A) de la pagina i-5: Un număr de pagină (5) are trei părți:

- numărul capitolului (2)
- numărul paginii consecutive din cadrul capitolului (3)
- număr total de pagini din capitol (4)

Prezentare introductivă a mașinii

Producător

Pentru numele și adresa producătorului, consultați pagina a doua a acestui catalog.

Service

Pentru comandarea pieselor de schimb pentru această mașină sau pentru a raporta problemele asociate cu exploatarea acestei mașini, contactați cel mai apropiat birou Tetra Pak.

Contactați Liaison cu privire la alte întrebări, comentarii sau sugestii legate de îmbunătățirea echipamentului și a documentației acestuia.

Identificare

Clasificare CE

Acest echipament este fabricat în conformitate cu reglementările de bază cu privire la sănătate și siguranță din Zona economică europeană (EEA).

Plăcuța mașinii

Ilustrația (B) de la pagina i-5 arată un exemplu al unei plăcuțe de mașină. O ilustrație a plăcuței valide a mașinii și a poziției acesteia pe echipament este arătată în capitolul introductiv al manualelor livrate împreună cu acest echipament. Plăcuța mașinii conține datele listate mai jos, necesare în cazul în care contactați Tetra Pak în legătură cu acest echipament specific.

- Tip mașină (8)
- Volum (9)
- Specificații de desen (10)
- Număr de serie al mașinii (11)
- Producător (12)
- Marcaj CE (13)
- Anul fabricației (14)

Ilustrația (C) de la pagina i-5 arată un exemplu al unei specificații de mașină. Asigurați-vă că datele specifice echipamentului, listate în paginile din față ale acestui manual, corespund cu datele de pe plăcuța mașinii și cu specificațiile mașinii.

Cum se utilizează acest catalog de piese de schimb

Localizarea unui număr de piesă de schimb

a) Examinați ilustrația (D) de la pagina i-5: Treceți la numărul de capitol (15) indicat lângă grupa principală care conține piesa pe care doriți să o localizați.

Articolele b) și c) se referă la ilustrația (E) de la pagina i-6.

b) Pe ilustrația grupei principale, căutați subgrupa aferentă mașinii (17) care conține piesa sau subgrupa pe care o căutați. Notați numărul poziției (18) și treceți la pagina de liste care urmează după ilustrație.

c) Căutați numărul poziției/marcarea de referință (16) sau numele subgrupei (19). Treceți la numărul de pagină corespunzător (20) listat în coloana din partea dreaptă. Tetra Pak a optat ca întotdeauna să utilizeze structura orientată pe funcție pentru marcarea de referință. Prefixul care indică structura orientată pe funcție (=) nu este arătat în marcarea de referință.

Articolele d) și e) se referă la ilustrația (F) de la pagina i-6.

d) Localizați piesa (21) pe care o căutați pe ilustrația subgrupei și notați numărul de poziție al piesei.

e) Numărul piesei (29) și descrierea piesei (30) sunt listate lângă numărul de poziție de pe pagina de liste.

Informațiile listate într-un catalog de piese de schimb

Lista de mai jos se referă la ilustrația (F) de la pagina i-6. Un catalog de piese de schimb conține următoarele informații despre grupe, subgrupe și piese de schimb pentru echipament:

- Referința despre structura grupelor (22). Indică următoarea grupă superioară din structura de liste a echipamentului.
- Numele grupei (23)
- Unitatea de măsură (25)
- Cantitatea (26)
- Numărul de desen de ansamblu (27)
- Intervalul de pagini de liste (28). Inclus dacă există mai multe pagini în ilustrația sau lista grupei.
- Numărul piesei sau al subgrupei (29)
- Numele subgrupei sau descrierea piesei (30)
- Numărul grupei (31)
- Numărul echipamentului (32)
- Antet cu informații despre grupă (33). Indică dacă secțiunea de sub antet se referă la o anumită variantă de mașină sau este o listă de piese comune. Dacă o listă are mai multe variante și fiecare variantă are propriul său desen de ansamblu, este arătată o referință de pagină pentru desenul de ansamblu al variantei.
- Informații interne (34)

Úvod

Informácie o návode

Spoločnosť Tetra Pak odporúča, starostlivo si prečítať všetky dodané návody. Dbajte, aby pracovníci, obsluhujúci zariadenie alebo zabezpečujúci jeho údržbu, mali vždy dodané návody k dispozícii.

Je dôležité, aby bol tento katalóg k dispozícii počas celého času životnosti zariadenia, a aby sa katalóg dostal aj k jeho prípadnému ďalšiemu držiteľovi alebo používateľovi.

Spoločnosť Tetra Pak nepreberá zodpovednosť za akékoľvek poškodenie zariadenia spôsobené nedodržaním pokynov uvedených v návodoch dodávaných s týmto zariadením.

Dodané návody

S týmto zariadením vám mohli byť dodané nasledujúce návody:

- CM
  Návod na prestavovanie poskytuje technikom informácie o prestavovaní zariadenia do rôznych výrobných režimov.
- EM
  Elektrotechnický návod poskytujetechnikom informácie o elektrickom systéme zariadenia.
- IM
  Návod na inštaláciu poskytuje technikom informácie potrebné na bezpečnú inštaláciu zariadenia.
- MM
  Návod na údržbu poskytujetechnikom informácie o údržbe zariadenia.
- OM
  Návod na obsluhu poskytuje obsluhe informácie o zaobchádzaní a obsluhe zariadenia pred, počas a po prevádzke.
- SPC
  Katalóg náhradných dielcov poskytuje informácie potrebné na objednávanie náhradných dielcov od spoločnosti Tetra Pak
- TeM
  Technický návod
  - poskytuje technikom informácie potrebné na bezpečnú inštaláciu zariadenia
  - poskytuje technikom informácie o údržbe zariadenia
  - poskytuje technikom informácie o elektrickom systéme stroja/ zariadenia
  - poskytuje informácie potrebné na objednávanie náhradných dielcov od spoločnosti Tetra Pak.

Rozloženie strany

Pozri ilustráciu (A) na strane i-5: Hlavné strany Katalógu náhradných dielcov obsahujú stránku s ilustráciami (1) a príslušnú stranu so zoznamom (7). Číslo strany (5) sa uvádza v záhlaví na strane s ilustráciami a v päte strany so zoznamom. Číslo dokumentu (6) sa uvádza v päte strany so zoznamom.

Číslovanie strán

Pozri ilustráciu (A) na strane i-5: Číslo strany (5) má tri časti:

- číslo kapitoly (2)
- poradové číslo strany v rámci kapitoly (3)
- celkový počet strán v kapitole (4)

Základné informácie o stroji

Výrobca

Meno a adresa výrobcu sa uvádza na druhej strane tohto katalógu.

Servis

Pri objednávaní náhradných dielcov pre tento stroj alebo na nahlasovanie problémov súvisiacich s prevádzkou tohto stroja sa obráťte na najbližšie zastúpenie spoločnosti Tetra Pak.

S ostatnými otázkami, pripomienkami a podnetmi na vylepšenie stroja alebo zariadenia a jeho dokumentácie sa obracajte na kontaktnú osobu.

Identifikácia

Klasifikácia CE

Toto zariadenie spĺňa základné predpisy o ochrane zdravia a bezpečnosti Európskeho hospodárskeho priestoru (EEA).

Typový štítok stroja

Na ilustrácii (B) na strane i-5 uvádzame príklad typového štítku. Ilustrácia platného typového štítku stroja a jeho umiestnenia na zariadení sa uvádza v kapitole Úvod v návodoch, dodaných s týmto zariadením. Typový štítok obsahuje dolu údaje uvedené, potrebné pri kontaktoch so spoločnosťou Tetra Pak ohľadom tohto špecifického zariadenia.

- Typ stroja (8)
- Objem (9)
- Údaje o výkrese (10)
- Výrobné číslo stroja (11)
- Výrobca (12)
- Značka CE (13)
- Rok výroby (14)

Ilustrácia (C) na strane i-5 zobrazuje príklad špecifikácie stroja. Presvedčite sa, že údaje zariadenia uvedené na predných stranách tohto návodu zodpovedajú údajom na typovom štítku a v špecifikácii stroja.

Ako sa tento Katalóg náhradných dielcov používa

Vyhľadanie čísla náhradného dielca

a) Pozri ilustráciu (D) na strane i-5: Prejdite na číslo kapitoly (15) uvedené vedľa hlavnej skupiny obsahujúcej dielec, ktorý chcete vyhľadať.

Položky b) a c) odkazujú na ilustráciu (E) na strane i-6.

b) Na ilustrácii hlavnej skupiny hľadajte podskupinu stroja (17), ktorý obsahuje dielec alebo podskupinu, ktorú hľadáte. Poznamenajte si číslo položky (18) a prejdite stranu so zoznamom nasledujúcu po ilustrácii.

c) Vyhľadajte číslo položky/referenčné označenie (16) alebo názov podskupiny (19). Prejdite na príslušné číslo strany (20) uvedené v zozname v pravom stĺpci. Spoločnosť Tetra Pak sa rozhodla vždy používať funkčne zameranú štruktúru na referenčné označovanie. Predčíslie udávajúce funkčne orientovanú štruktúra (=) sa v referenčnom označení nezobrazuje.

Položky d) a e) odkazujú na ilustráciu (F) na strane i-6.

d) Nájdite dielec (21), ktorý hľadáte, na ilustrácii podskupiny a poznamenajte si číslo položky daného dielca.

e) Číslo dielca (29) a popis dielca (30) sa uvádza vedľa čísla položky na stránke so zoznamom.

Informácie uvádzané v Katalógu náhradných dielcov

Dolu uvedený zoznam odkazuje na ilustráciu (F) na strane i-6. Katalóg náhradných dielcov obsahuje nasledujúce informácia o skupinách, podskupinách a náhradných dielcov zariadenia:

- Referenčná štruktúrna skupina (22). Označuje najbližšiu vyššiu skupinu v štruktúre zoznamu zariadenia.
- Názobv skupiny (23)
- Jednotka merania (25)
- Množstvo (26)
- Číslo výkresu celkovej zostavy (27)
- Rozsah strán zoznamu (28). Uvádza sa, ak má ilustrácia alebo zoznam skupiny viac strán.
- Číslo dielca alebo podskupiny (29)
- Názov podskupiny alebo popis dielca (30)
- Číslo skupiny (31)
- Číslo zariadenia (32)
- Záhlavie informácií o skupine (33). Uvádza, či je časť nasledujúca pod záhlavím určená pre špecifický variant stroja, alebo či ide o zoznam spoločných dielcov. Ak má zoznam viac ako jeden variant a každý z variantov má vlastný výkres celkovej zostavy, uvádza sa odkaz na stranu s výkresom zostavy daného variantu.
- Interné informácie (34)

Uvod

Informacije o priročnikih

Tetra Pak priporoča, da natančno preberete vse priložene priročnike. Osebje, ki upravlja in vzdržuje opremo mora imeti dostop do priloženih priročnikov.

Katalog hranite v celotnem času uporabe opreme. V primeru, ko opremo pridobi drug imetnik ali uporabnik, mu obenem izročite tudi katalog.

Podjetje Tetra Pak ne prevzema odgovornosti za poškodbe na opremi, ki nastanejo zaradi neupoštevanja navodil iz priročnikov, ki so priloženi opremi.

Priloženi priročniki

Priročniki, ki so priloženi tej opremi, lahko vključujejo

- Priročnik za zamenjavo (CM)
  V tem priročniku so podatki, ki tehnikom omogočajo izvesti zamenjavo opreme med različnimi načini proizvodnje.
- Elektrotehnični priročnik (EM)
  Priročnik vsebuje podatke za tehnike o električnem sistemu opreme.
- Priročnik za montažo (IM)
  Priročnik vsebuje podatke, ki jih tehniki potrebujejo za varno montažo opreme.
- Priročnik za vzdrževanje (MM)
  Priročnik vsebuje podatke za tehnike o vzdrževanju opreme.
- Priročnik za obratovanje (OM)
  Priročnik je namenjen informiranju za pravilno rokovanje in upravljanje s strojem pred, med in po proizvodnem postopku.
- Katalog nadomestnih delov (SPC)
  Katalog vsebuje potrebne podatke za naročilo nadomestnih delov pri podjetju Tetra Pak.
- Tehnični priročnik (TeM)
  Priročnik
  - vsebuje podatke, ki jih tehniki potrebujejo za varno montažo opreme;
  - vsebuje podatke za tehnike o vzdrževanju opreme;
  - vsebuje podatke za tehnike o električnem sistemu stroja/opreme;
  - vsebuje potrebne podatke za naročilo nadomestnih delov pri podjetju Tetra Pak.

Postavitev strani

Poglejte sliko (A) na strani i-5: Glavne strani v Katalogu nadomestnih delov sestavljata stran s sliko (1) in ustrezna stran s seznamom (7). Številka strani (5) je prikazana na vrhu strani s sliko in na dnu strani s seznamom. Številka dokumenta (6) je prikazana na dnu strani s seznamom.

Številčenje strani

Oglejte si sliko (A) na strani i-5: Številka strani (5) ima tri dele:

- številko poglavja (2);
- zaporedno številko strani v poglavju (3);
- število vseh strani v poglavju (4).

Predstavitev stroja

Proizvajalec

Ime in naslov proizvajalca najdete na drugi strani kataloga.

Servisiranje

Za naročanje nadomestnih delov za stroj ter za sporočanje motenj pri delovanju stroja se obrnite na najbližjo servisno službo podjetja Tetra Pak.

V primeru drugih zahtev, komentarjev, predlogov za izboljšavo opreme ali dokumentacije se obrnite na odgovorno osebo.

Identifikacijska oznaka

CE-klasifikacija

Oprema je izdelana v skladu z osnovnimi zdravstvenimi in varnostnimi predpisi Evropskega gospodarskega prostora (EGS).

Napisna ploščica

Slika (B) na strani i-5 prikazuje primer napisne ploščice.
Sliko veljavne napisne ploščice in njeno mesto na opremi najdete v uvodnem poglavju priloženih priročnikov. Ploščica vsebuje spodaj navedene podatke, ki jih potrebujete, ko se v zvezi z določeno opremo obrnete na podjetje Tetra Pak:

- tip stroja (8);
- prostornino (9);
- specifikacije risbe (10);
- serijsko številko stroja (11);
- proizvajalca (12);
- oznako CE (13);
- leto izdelave (14).

Slika (C) na strani i-5 prikazuje primer specifikacije stroja. Podatki o opremi, navedeni na prvih straneh tega priročnika, se morajo ujemati s podatki o stroju, navedenimi na napisni ploščici in v specifikacijah.

Uporaba Kataloga nadomestnih delov

Iskanje številke nadomestnega dela

a) Oglejte si sliko (D) na strani i-5: Poiščite številko poglavja (15), navedeno poleg glavne skupine, ki vsebuje iskani del.

Točki b) in c) se nanašata na sliko (E) na strani i-6.

b) Na sliki glavne skupine poiščite podskupino stroja (17), ki vsebuje iskani del ali podskupino. Zapomnite si pozicijsko številko (18) in poiščite stran s seznamom, ki pripada sliki.

c) Poiščite pozicijsko številko/referenčno oznako (16) ali ime podskupine (19). Pojdite na stran (20), navedeno v desnem stolpcu. Tetra Pak za referenčno označevanje vedno uporablja funkcijsko strukturo. Predpona, ki označuje funkcijsko strukturo (=), ni prikazana v referenčni oznaki.

Točki d) in e) se nanašata na sliko (F) na strani i-6.

d) Na sliki podskupine poiščite del (21), ki ga iščete, in si zapomnite njegovo pozicijsko številko.

e) Številka (29) in opis dela (30) sta navedena poleg pozicijske številke na strani s seznamom.

Informacije v Katalogu nadomestnih delov

Spodnji seznam se nanaša na sliko (F) na strani i-6. Katalog nadomestnih delov vsebuje naslednje informacije o skupinah, podskupinah in nadomestnih delih za opremo:

- referenco strukture skupine (22); Označuje naslednjo višjo skupino v strukturi seznamov opreme.
- ime skupine (23);
- mersko enoto (25);
- količino (26);
- številko sestavne risbe (27);
- število strani seznama (28); Če je slika ali seznam skupine sestavljen iz več strani.
- številko dela ali podskupine (29);
- ime podskupine ali opis dela (30);
- številko skupine (31);
- številko opreme (32);
- naslov z informacijami o skupini (33). Označuje, ali je razdelek pod naslovom namenjen specifični izvedbi stroja ali gre za seznam skupnih delov. Če ima seznam več izvedb in če ima vsaka od njih svojo sestavno risbo, je ob vsaki izvedbi navedena referenčna stran s sestavno risbo.
- interne informacije (34).

Inledning

Information om manualen

Tetra Pak rekommenderar att alla manualer läses noggrant. Se till att manualerna är tillgängliga för personalen som använder eller underhåller utrustningen.

Det är viktigt att denna katalog behålls under utrustningens livslängd, och att den överlämnas till varje efterföljande innehavare eller användare av utrustningen.

Tetra Pak tar inte ansvar för någon skada på utrustningen som orsakats av att instruktionerna i medföljande manualer inte har följts.

Medföljande manualer

Följande manualer kan levereras tillsammans med utrustningen:

- CM
  Konverteringsmanualen (CM) innehåller information för tekniker om hur man konverterar utrustningen mellan olika produktionslägen.
- EM
  Den elektriska manualen (EM) innehåller information för tekniker om utrustningens elektriska system.
- IM
  Installationsmanualen (IM) innehåller information för tekniker om hur utrustningen installeras på ett säkert sätt.
- MM
  Underhållsmanualen (MM) innehåller information för tekniker om hur utrustningen underhålls.
- OM
  Driftsmanualen (OM) innehåller information för operatören om hur utrustningen ska hanteras före, under och efter produktion.
- SPC
  Reservdelskatalogen (SPC) innehåller den information som behövs för att beställa reservdelar från Tetra Pak.
- TeM
  Den tekniska manualen (TeM)
  - innehåller information för tekniker om hur utrustningen installeras på ett säkert sätt.
  - innehåller information för tekniker om hur utrustningen underhålls.
  - innehåller information för tekniker om maskinens/utrustningens elektriska system.
  - innehåller den information som behövs för att beställa reservdelar från Tetra Pak.

Sidlayout

Se bild (A) på sidan i-5: Huvudsidorna i reservdelskatalogen består av en bildsida (1) och en motsvarande listsida (7). Sidnumret (5) visas i sidhuvudet på bildsidan och i sidfoten på listsidan. Dokumentnumret (6) visas i sidfoten på listsidan.

Sidnumrering

Se bild (A) på sidan i-5: Ett sidnummer (5) består av tre delar:

- kapitlets nummer (2)
- löpande sidnummer inom kapitlet (3)
- totalt sidantal i kapitlet (4)

Introduktion till maskinen

Tillverkare

Tillverkarens namn och adress finns på sidan 2 i katalogen.

Service

För att beställa reservdelar till denna maskin eller för att rapportera problem som uppstått i samband med driften kontaktar du närmaste Tetra Pak-kontor.

Om du har andra frågor, kommentarer eller förslag till förbättringar av utrustningen och dokumentationen vänder du dig till din kontaktperson på Tetra Pak.

Identifiering

CE-märkning

Denna utrustning överensstämmer med den grundläggande hälso- och säkerhetslagstiftningen inom Europeiska ekonomiska samarbetsområdet (EES).

Maskinskylt

Bild (B) på sidan i-5 visar ett exempel på en maskinskylt.
En bild på giltig maskinskylt och dess placering på utrustningen visas i inledningskapitlet som medföljer utrustningen. Skylten innehåller de uppgifter som listas nedan och som behövs vid kontakt med Tetra Pak angående utrustningen.

- Maskintyp (8)
- Volym (9)
- Ritningsspecifikationer (10)
- Maskinnummer (11)
- Tillverkare (12)
- CE-märkning (13)
- Tillverkningsår (14)

Bild (C) på sidan i-5 visar ett exempel på en maskinspecifikation. Kontrollera att informationen om utrustningen som listas på de första sidorna i manualen motsvarar informationen på maskinskylten och i maskinspecifikationen.

Använda reservdelskatalogen

Hitta ett reservdelsnummer

a) Se bild (D) på sidan i-5: Gå till kapitelnumret (15) som står vid sidan om huvudgruppen som innehåller den del du vill hitta.

Punkt b) och c) hänvisar till bild (E) på sidan i-6.

b) På huvudgruppsbilden letar du efter den maskinundergrupp (17) som innehåller delen eller undergruppen du letar efter. Notera positionsnumret (18) och gå till listsidan som anges efter bilden.

c) Leta efter positionsnumret/referensbeteckningen (16) eller undergruppsnamnet (19). Gå till motsvarande sidnummer (20) som listas i den högra kolumnen. Tetra Pak har valt allt alltid använda en funktionsorienterad struktur för referensbeteckningarna. Prefixet för funktionsorienterad struktur (=) visas inte i referensbeteckningen.

Punkt d) och e) hänvisar till bild (F) på sidan i-6.

d) Leta reda på delen (21) i undergruppsbilden och notera delens positionsnummer.

e) Reservdelsnumret (29) och reservdelsbeskrivningen (30) står bredvid positionsnumret på listsidan.

Information i reservdelskatalogen

Listan nedan hänvisar till bild (F) på sidan i-6. Reservdelskatalogen innehåller följande information om grupper, undergrupper och reservdelar för utrustningen:

- Gruppstrukturreferens (22). Anger nästa högre grupp i utrustningslistans struktur.
- Gruppnamn (23)
- Måttenhet (25)
- Kvantitet (26)
- Monteringsritningsnummer (27)
- Listsideintervall (28). Anges om det finns flera sidor i gruppbilden eller grupplistan.
- Reservdels- eller undergruppsnummer (29)
- Undergruppsnamn eller reservdelsbeskrivning (30)
- Gruppnummer (31)
- Utrustningsnummer (32)
- Gruppinformationsrubrik (33). Anger om avsnittet under rubriken gäller en viss maskinvariant eller om det är en lista över allmänna delar. Om en lista har fler än en variant och varje variant har sin egen monteringsritning visas en sidhänvisning till variantens monteringsritning.
- Intern information (34)

SPC
Spare Parts Catalogue

CONVEYOR SECTION

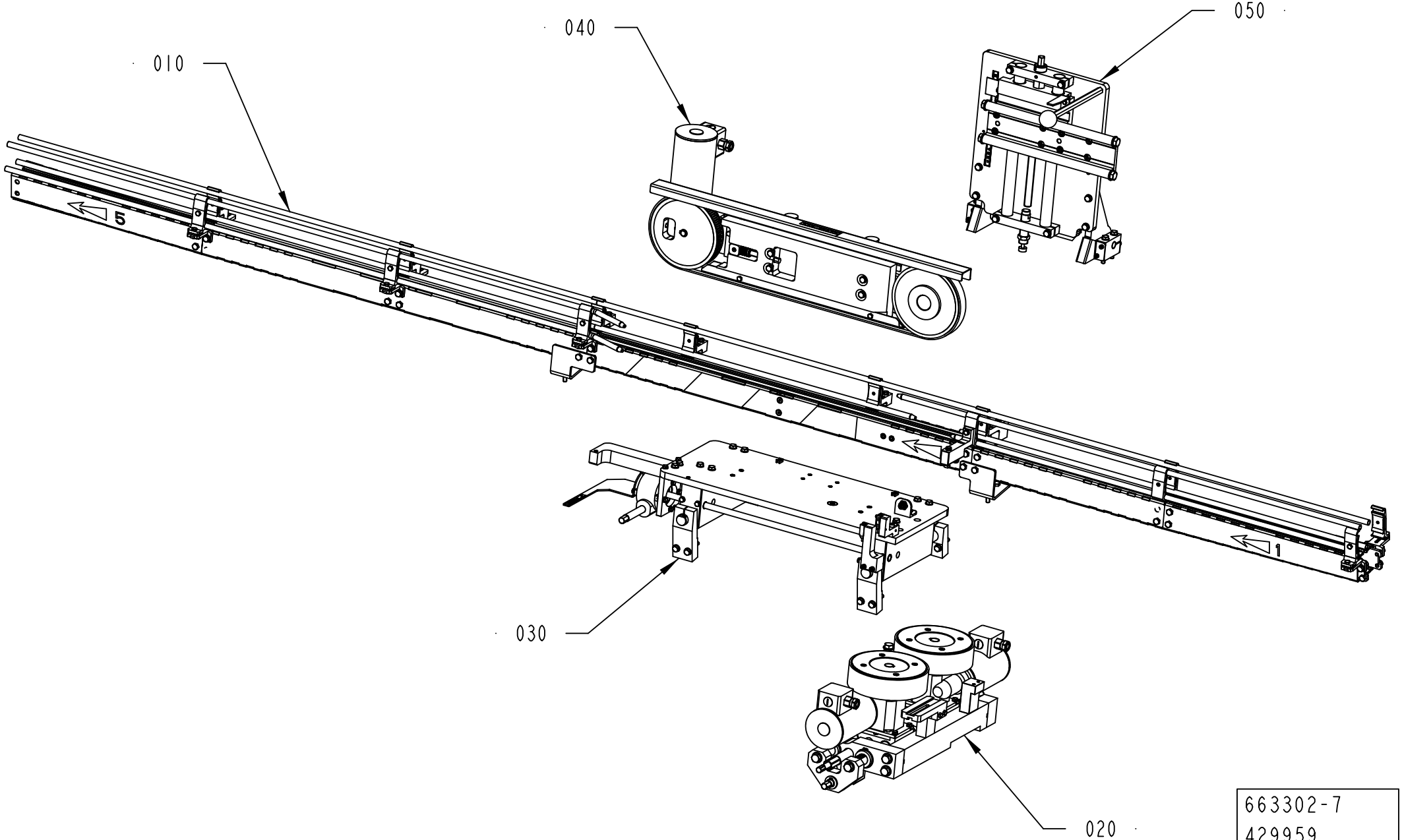

663302-7
429959

ECM: 436837 - 20100222
Group number: 663302-0300
Assembly Drawing: 663302-7_1_AC

This list covers pages from 1-2 to 1-9

Pos	Part No	UN	Qty	Description	Page No
TBA, TB (See drawing on page: 1-2)					
010	2793903-0300		1	CONVEYOR	**1-11, 1-13**
020	3008046-0200		1	BELT BRAKE	**1-53**
030	2829416-0200		1	ADJUSTMENT PLATE	**1-55**
040	2924675-0300		1	TOP SUPPORT	**1-61**
050	2929774-0300		1	HEIGHT ADJUSTMENT	**1-73**
TCA (See drawing on page: 1-6)					
010	2933980-0200		1	CONVEYOR	**1-75**
020	2926070-0100		1	PACKAGE TRANSFER	**1-87**
030	2926075-0100		1	ADJUSTMENT PLATE	**1-89**
040	2957705-0100		1	SIDE ADJUSTER	**1-91**
060	2992430-0100		1	CABLE	**1-93, 4-33**
TPA (See drawing on page: 1-4)					
010	2793903-0300		1	CONVEYOR	**1-11, 1-13**
020	3008046-0200		1	BELT BRAKE	**1-53**
030	2829416-0200		1	ADJUSTMENT PLATE	**1-55**
040	2924675-0300		1	TOP SUPPORT	**1-61**
050	2929774-0300		1	HEIGHT ADJUSTMENT	**1-73**
TWA (See drawing on page: 1-8)					
010	2992500-0100		1	CONVEYOR	**1-95**

Pos	Part No	UN	Qty	Description	Page No

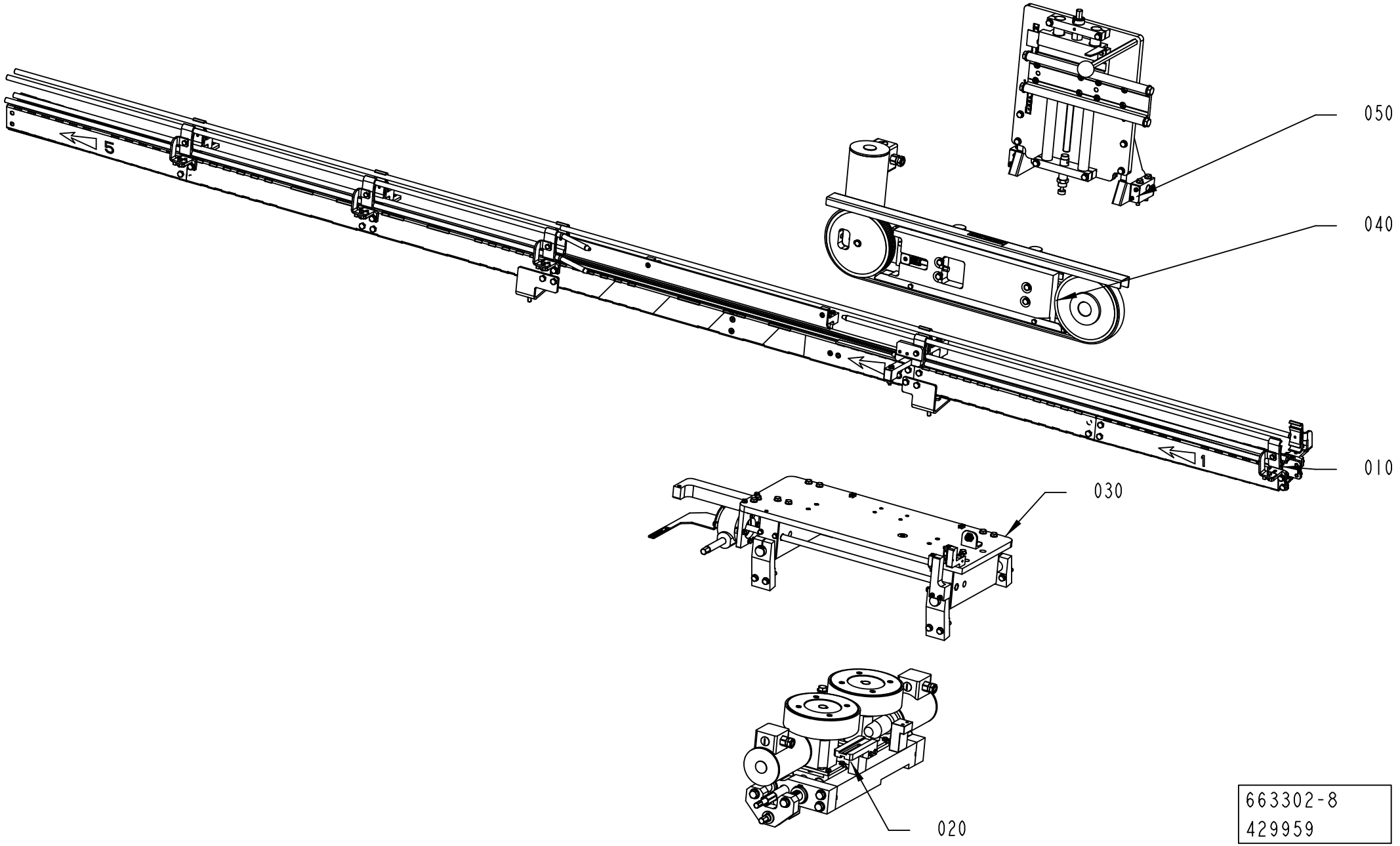

663302-8
429959

ECM: 436837 - 20100222
Group number: 663302-0300
Assembly Drawing: 663302-8_1_AC

This list covers pages from 1-2 to 1-9

Pos	Part No	UN	Qty	Description	Page No
TBA, TB (See drawing on page: 1-2)					
010	2793903-0300		1	CONVEYOR	**1-11, 1-13**
020	3008046-0200		1	BELT BRAKE	**1-53**
030	2829416-0200		1	ADJUSTMENT PLATE	**1-55**
040	2924675-0300		1	TOP SUPPORT	**1-61**
050	2929774-0300		1	HEIGHT ADJUSTMENT	**1-73**
TCA (See drawing on page: 1-6)					
010	2933980-0200		1	CONVEYOR	**1-75**
020	2926070-0100		1	PACKAGE TRANSFER	**1-87**
030	2926075-0100		1	ADJUSTMENT PLATE	**1-89**
040	2957705-0100		1	SIDE ADJUSTER	**1-91**
060	2992430-0100		1	CABLE	**1-93, 4-33**
TPA (See drawing on page: 1-4)					
010	2793903-0300		1	CONVEYOR	**1-11, 1-13**
020	3008046-0200		1	BELT BRAKE	**1-53**
030	2829416-0200		1	ADJUSTMENT PLATE	**1-55**
040	2924675-0300		1	TOP SUPPORT	**1-61**
050	2929774-0300		1	HEIGHT ADJUSTMENT	**1-73**
TWA (See drawing on page: 1-8)					
010	2992500-0100		1	CONVEYOR	**1-95**

Pos	Part No	UN	Qty	Description	Page No

CONVEYOR SECTION

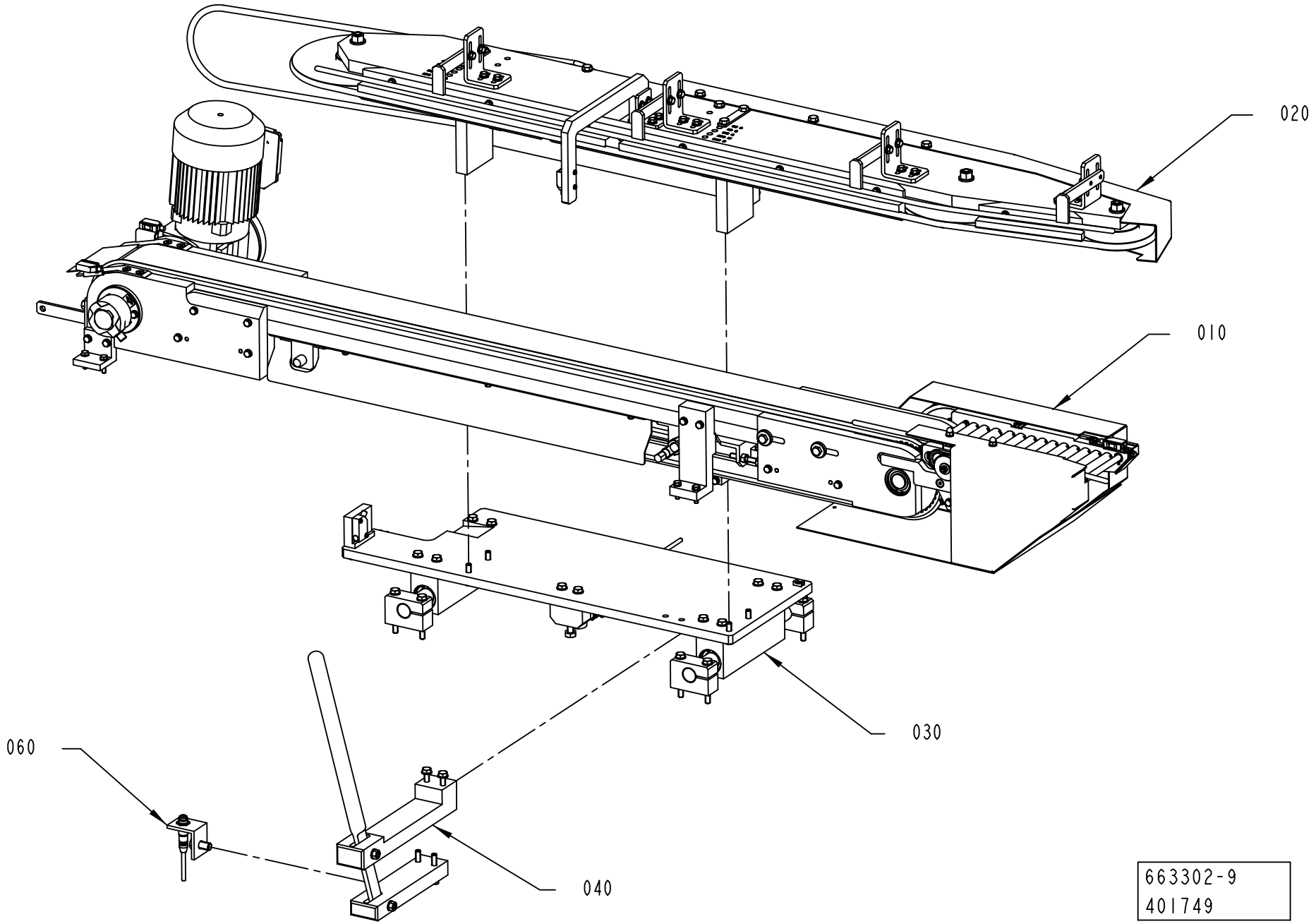

ECM: 436837 - 20100222
Group number: 663302-0300
Assembly Drawing: 663302-9_1_AA

This list covers pages from 1-2 to 1-9

Pos	Part No	UN	Qty	Description	Page No
TBA, TB (See drawing on page: 1-2)					
010	2793903-0300		1	CONVEYOR	**1-11, 1-13**
020	3008046-0200		1	BELT BRAKE	**1-53**
030	2829416-0200		1	ADJUSTMENT PLATE	**1-55**
040	2924675-0300		1	TOP SUPPORT	**1-61**
050	2929774-0300		1	HEIGHT ADJUSTMENT	**1-73**
TCA (See drawing on page: 1-6)					
010	2933980-0200		1	CONVEYOR	**1-75**
020	2926070-0100		1	PACKAGE TRANSFER	**1-87**
030	2926075-0100		1	ADJUSTMENT PLATE	**1-89**
040	2957705-0100		1	SIDE ADJUSTER	**1-91**
060	2992430-0100		1	CABLE	**1-93, 4-33**
TPA (See drawing on page: 1-4)					
010	2793903-0300		1	CONVEYOR	**1-11, 1-13**
020	3008046-0200		1	BELT BRAKE	**1-53**
030	2829416-0200		1	ADJUSTMENT PLATE	**1-55**
040	2924675-0300		1	TOP SUPPORT	**1-61**
050	2929774-0300		1	HEIGHT ADJUSTMENT	**1-73**
TWA (See drawing on page: 1-8)					
010	2992500-0100		1	CONVEYOR	**1-95**

Pos	Part No	UN	Qty	Description	Page No

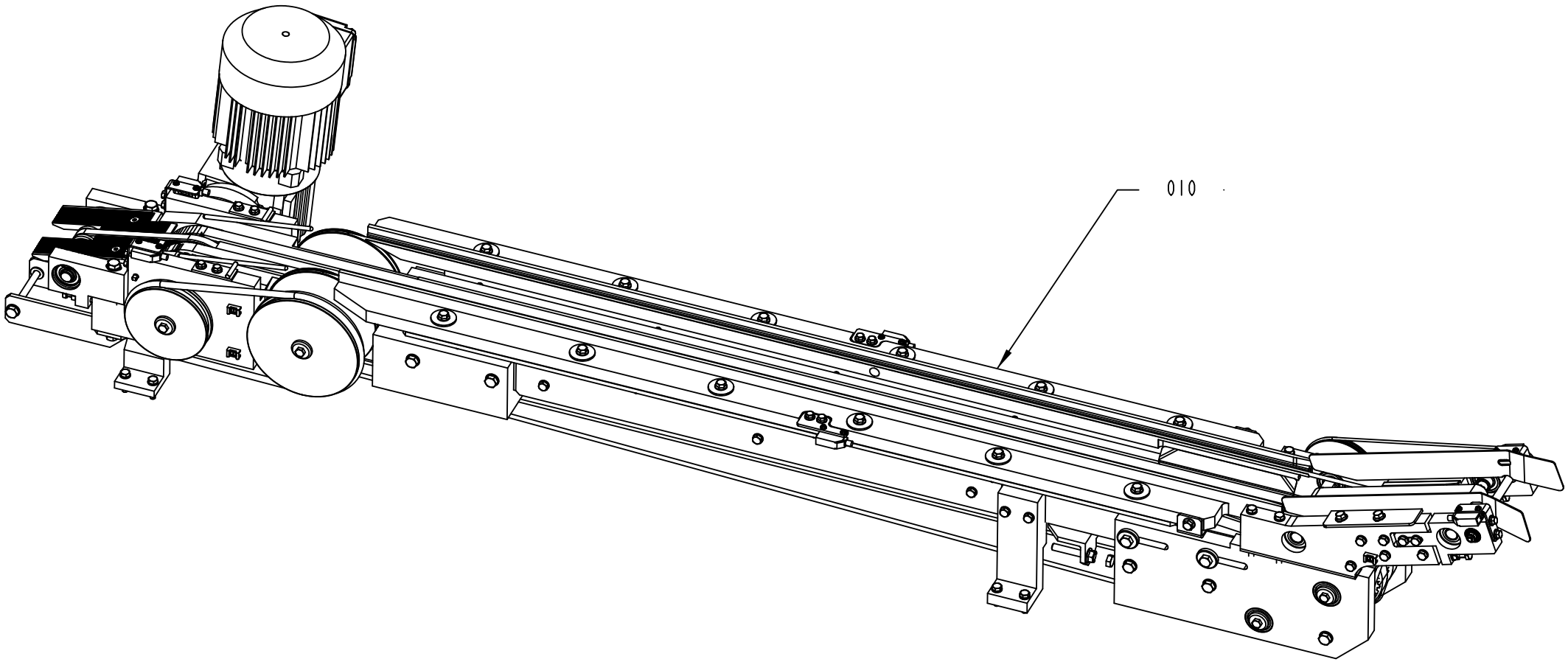

663302-10
401749

ECM: 436837 - 20100222
Group number: 663302-0300
Assembly Drawing: 663302-10_1_AA

This list covers pages from 1-2 to 1-9

Pos	Part No	UN	Qty	Description	Page No
TBA, TB (See drawing on page: 1-2)					
010	2793903-0300		1	CONVEYOR	**1-11, 1-13**
020	3008046-0200		1	BELT BRAKE	**1-53**
030	2829416-0200		1	ADJUSTMENT PLATE	**1-55**
040	2924675-0300		1	TOP SUPPORT	**1-61**
050	2929774-0300		1	HEIGHT ADJUSTMENT	**1-73**
TCA (See drawing on page: 1-6)					
010	2933980-0200		1	CONVEYOR	**1-75**
020	2926070-0100		1	PACKAGE TRANSFER	**1-87**
030	2926075-0100		1	ADJUSTMENT PLATE	**1-89**
040	2957705-0100		1	SIDE ADJUSTER	**1-91**
060	2992430-0100		1	CABLE	**1-93, 4-33**
TPA (See drawing on page: 1-4)					
010	2793903-0300		1	CONVEYOR	**1-11, 1-13**
020	3008046-0200		1	BELT BRAKE	**1-53**
030	2829416-0200		1	ADJUSTMENT PLATE	**1-55**
040	2924675-0300		1	TOP SUPPORT	**1-61**
050	2929774-0300		1	HEIGHT ADJUSTMENT	**1-73**
TWA (See drawing on page: 1-8)					
010	2992500-0100		1	CONVEYOR	**1-95**

Pos	Part No	UN	Qty	Description	Page No

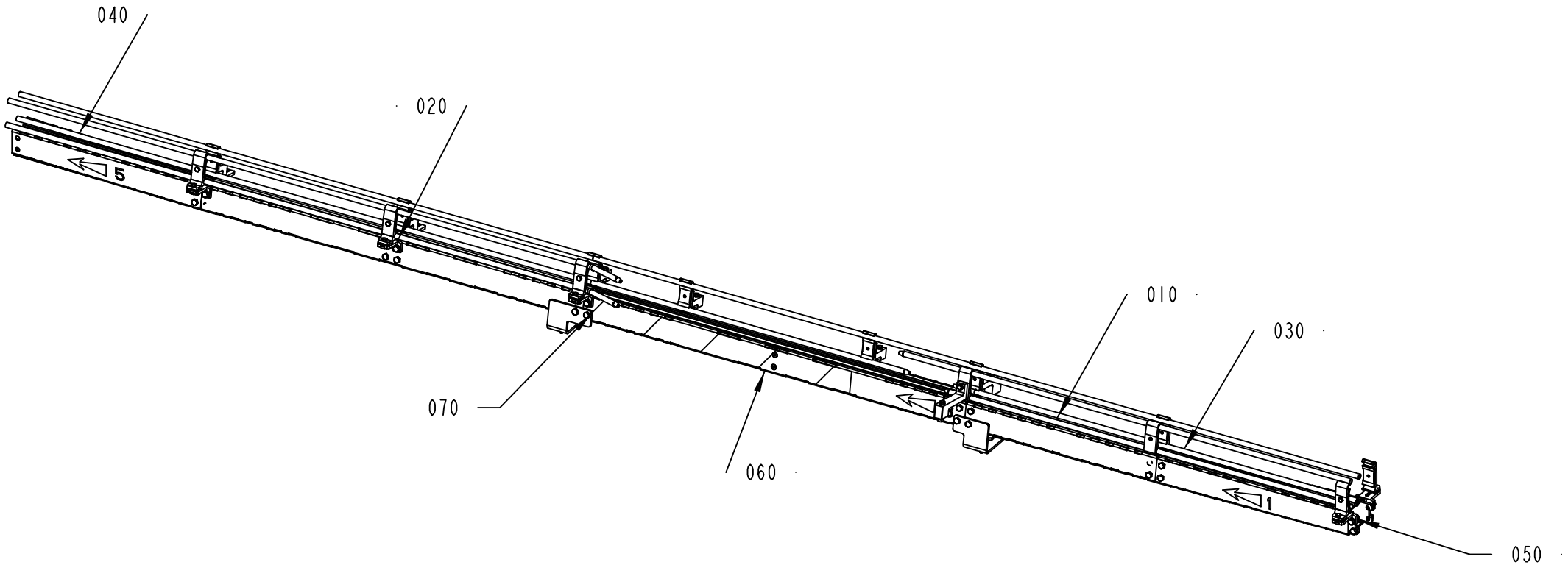

2793903-4
401749

ECM: 405036 - 20090630
Group number: 2793903-0300
Assembly Drawing: 2793903-4_1_AA

This list covers pages from 1-10 to 1-13

Pos	Part No	UN	Qty	Description	Page No
TBA, TB (See drawing on page: 1-10)					
050	2845848-0300		1	SUPPORT RAIL	**1-15**
TPA (See drawing on page: 1-12)					
050	3013606-0200		1	SUPPORT RAIL	**1-27**
Common Parts					
010	2561273-0102		1	CONVEYOR BODY	**1-41**
020	2561273-0103		1	CONVEYOR BODY	**1-43**
030	2835380-0100		1	CONVEYOR BODY	**1-45**
040	2835381-0100		1	CONVEYOR	**1-47**
060	2901712-0100		1	CONVEYOR BODY	**1-49**
070	3013605-0200		1	CONVEYOR SUPPORT	**1-51**

Pos	Part No	UN	Qty	Description	Page No

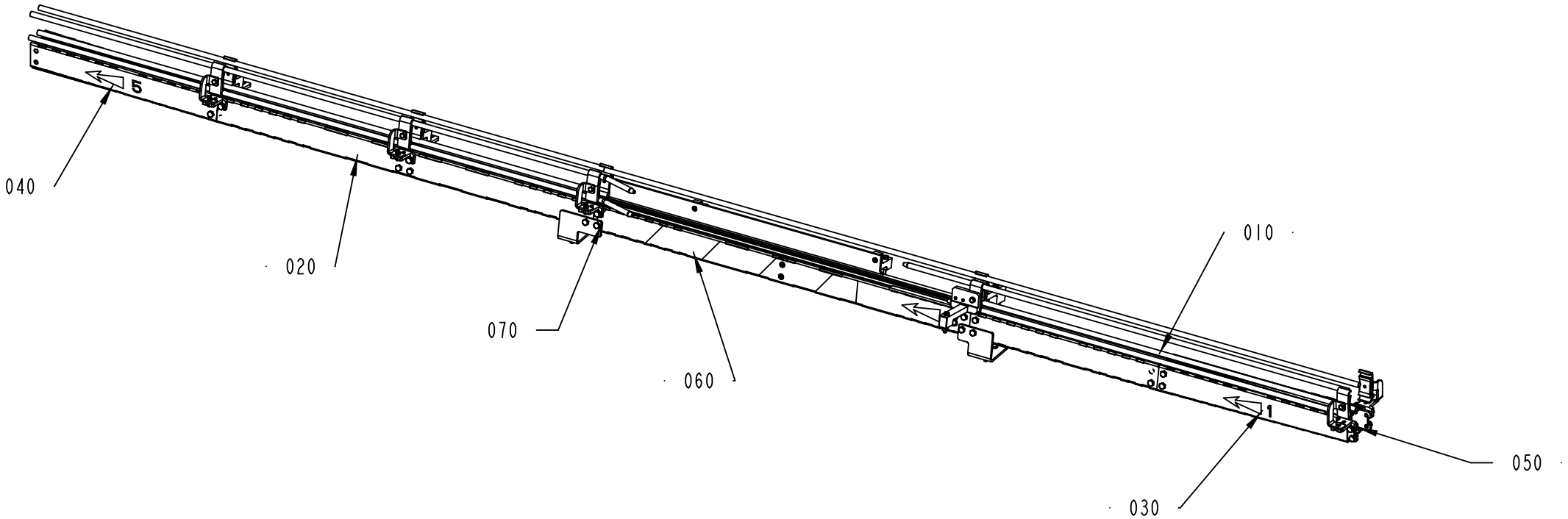

2793903-5
401749

ECM: 405036 - 20090630
Group number: 2793903-0300
Assembly Drawing: 2793903-5_1_AA

This list covers pages from 1-10 to 1-13

Pos	Part No	UN	Qty	Description	Page No
TBA, TB (See drawing on page: 1-10)					
050	2845848-0300		1	SUPPORT RAIL	**1-15**
TPA (See drawing on page: 1-12)					
050	3013606-0200		1	SUPPORT RAIL	**1-27**
Common Parts					
010	2561273-0102		1	CONVEYOR BODY	**1-41**
020	2561273-0103		1	CONVEYOR BODY	**1-43**
030	2835380-0100		1	CONVEYOR BODY	**1-45**
040	2835381-0100		1	CONVEYOR	**1-47**
060	2901712-0100		1	CONVEYOR BODY	**1-49**
070	3013605-0200		1	CONVEYOR SUPPORT	**1-51**

Pos	Part No	UN	Qty	Description	Page No

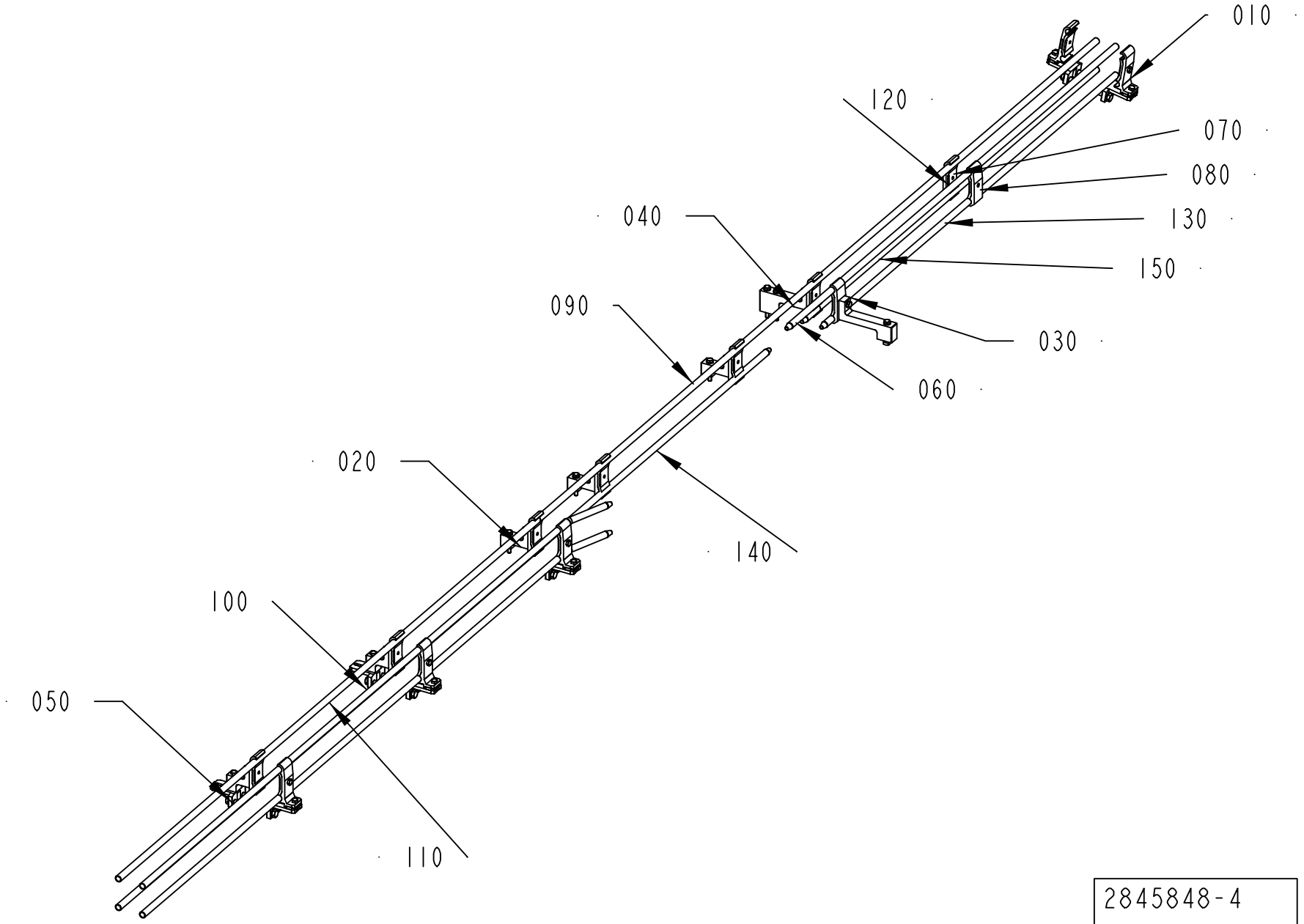

2845848-4
401749

ECM: 413444 - 20090903
Group number: 2845848-0300
Assembly Drawing: 2845848-4_1_AA

Pos	Part No	UN	Qty	Description	Page No
-					
010	1550743-0200		5	RAIL HOLDER	**1-17, 11-65**
020	3003437-0200		3	RAIL HOLDER	**1-19**
030	3003439-0200		1	RAIL HOLDER	**1-21**
040	3003441-0200		1	RAIL HOLDER	**1-23**
050	3003450-0200		2	RAIL HOLDER	**1-25**
060	540169-0000		6	DOWEL	
070	1366727-0000		2	CLAMP	
080	1366750-0000		2	HOLDER	
090	2845855-0000		1	PIPE	
100	2845856-0000		2	PIPE	
110	2845857-0000		2	PIPE	
120	2845862-0000		1	PIPE	
130	3003457-0000		2	PIPE	
140	3003458-0000		1	PIPE	

Pos	Part No	UN	Qty	Description	Page No

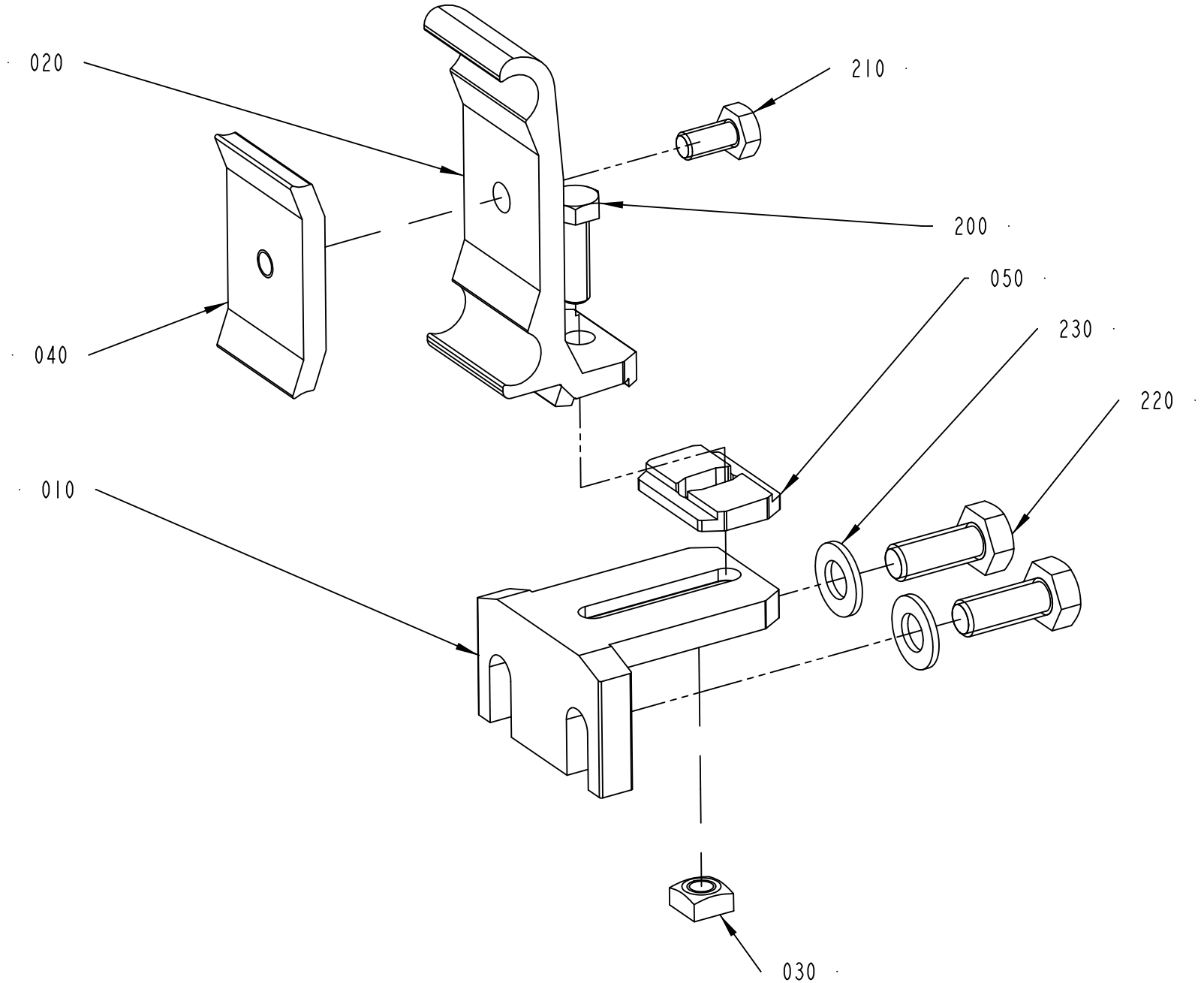

1550743-2
206934

ECM: 429045 - 20091201
Group number: 1550743-0200
Assembly Drawing: 1550743-2_1_AA

Pos	Part No	UN	Qty	Description	Page No
-					
010	1550772-0000		1	HOLDER	
020	2699437-0000		1	RAIL HOLDER	
030	1359565-0000		1	NUT	
040	1366727-0000		1	CLAMP	
050	2699436-0000		1	SPACER	
200	312105-0370		1	SCREW M6S ISO 4017 M6X20 A480	
210	312105-0366		1	SCREW M6S ISO 4017 M6X12 A480	
220	312105-0451		2	SCREW M6S ISO 4017 M8X20 A480	
230	315105-0165		2	WASHER BRB 8,4X16 RFR	

Pos	Part No	UN	Qty	Description	Page No

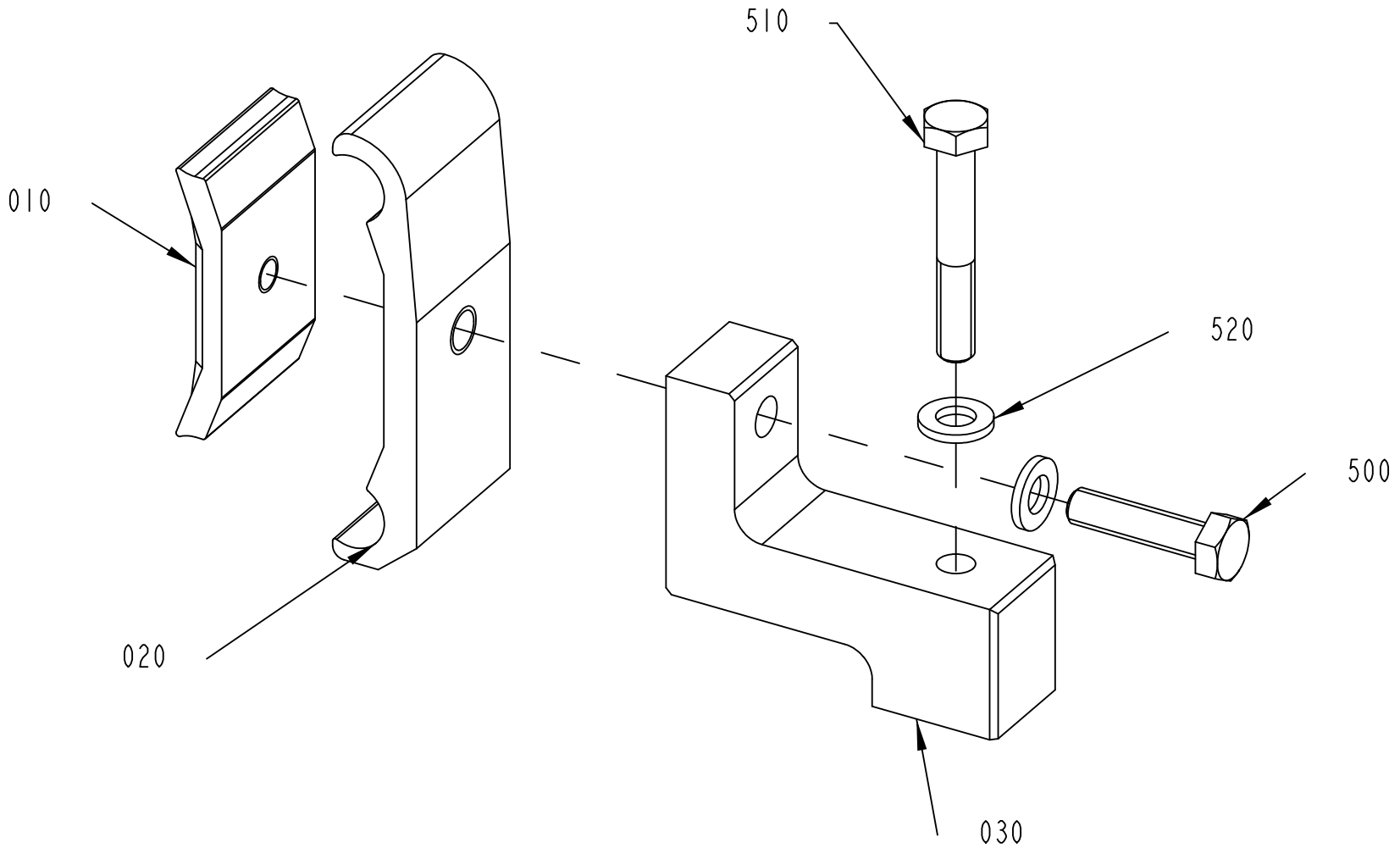

3003437-2
401749

ECM: 405041 - 20090630
Group number: 3003437-0200
Assembly Drawing: 3003437-2_1_AA

Pos	Part No	UN	Qty	Description	Page No
-					
010	1366727-0000		1	CLAMP	
020	1366750-0000		1	HOLDER	
030	3003431-0000		1	HOLDER	
500	312105-0372		1	SCREW M6S ISO 4017 M6X25 A480	
510	312105-0378		1	SCREW M6S ISO 4014 M6X40 A480	
520	315105-0153		2	WASHER BRB 6,4X12 RFR	

Pos	Part No	UN	Qty	Description	Page No

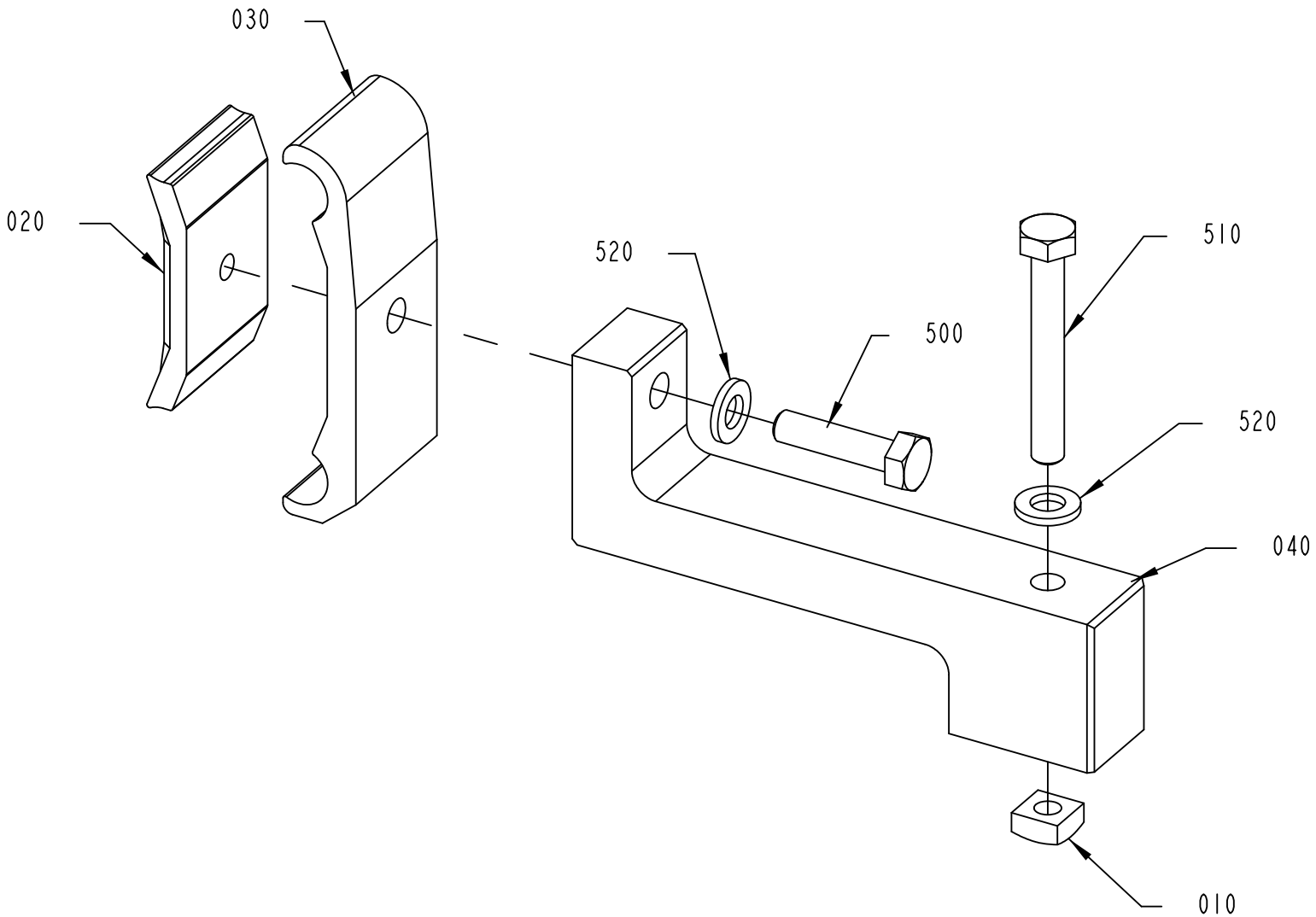

3003439-2
401749

ECM: 405038 - 20090630
Group number: 3003439-0200
Assembly Drawing: 3003439-2_1_AA

Pos	Part No	UN	Qty	Description	Page No
-					
010	1359565-0000		1	NUT	
020	1366727-0000		1	CLAMP	
030	1366750-0000		1	HOLDER	
040	3003440-0000		1	HOLDER	
500	312105-0372		1	SCREW M6S ISO 4017 M6X25 A480	
510	312105-0379		1	SCREW M6S ISO 4014 M6X45 A480	
520	312105-0153		2	SCREW EN 10642 MF6S M5X25 A480	

Pos	Part No	UN	Qty	Description	Page No

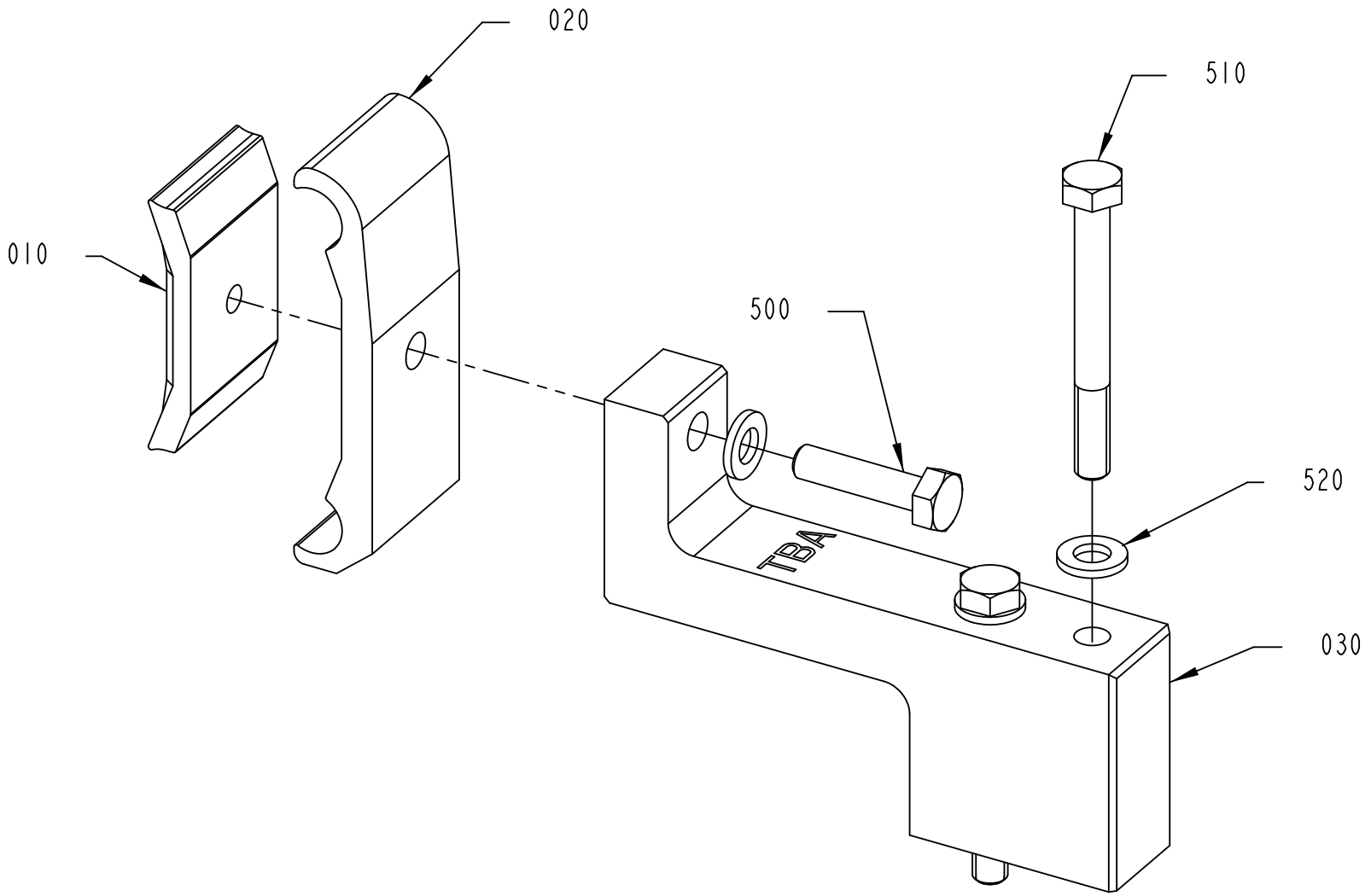

3003441-2
422084

ECM: 428777 - 20091221
Group number: 3003441-0200
Assembly Drawing: 3003441-2_1_AB

Pos	Part No	UN	Qty	Description	Page No
-					
010	1366727-0000		1	CLAMP	
020	1366750-0000		1	HOLDER	
030	3003433-0000		1	HOLDER	
500	312105-0372		1	SCREW M6S ISO 4017 M6X25 A480	
510	312105-0381		2	SCREW M6S ISO 4014 M6X55 A480	
520	315105-0153		3	WASHER BRB 6,4X12 RFR	

Pos	Part No	UN	Qty	Description	Page No

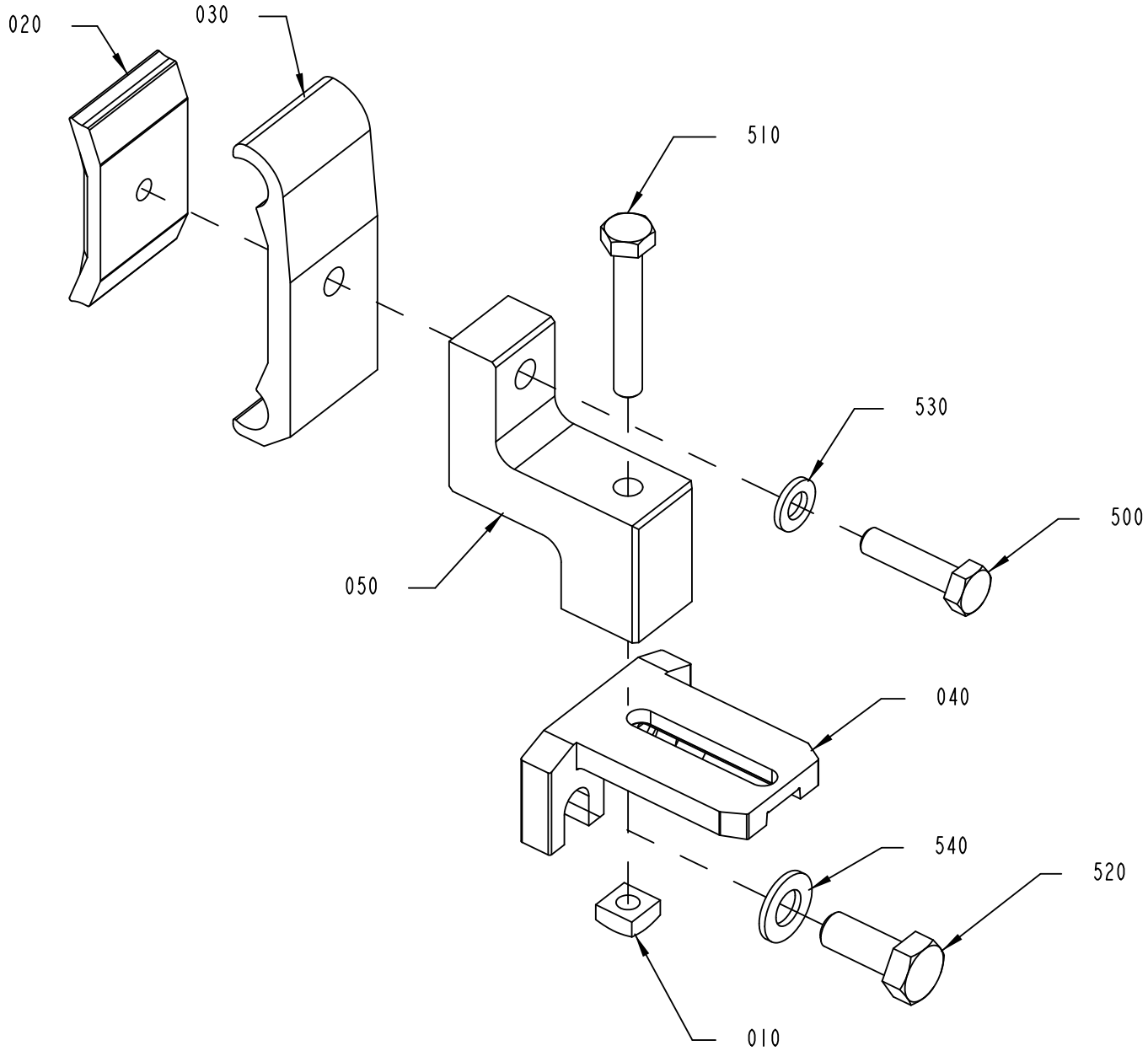

3003450-2
401749

ECM: 405040 - 20090630
Group number: 3003450-0200
Assembly Drawing: 3003450-2_1_AA

Pos	Part No	UN	Qty	Description	Page No
-					
010	1359565-0000		1	NUT	
020	1366727-0000		1	CLAMP	
030	1366750-0000		1	HOLDER	
040	1550772-0000		1	HOLDER	
050	3003438-0000		1	HOLDER	
500	312105-0372		1	SCREW M6S ISO 4017 M6X25 A480	
510	312105-0378		1	SCREW M6S ISO 4014 M6X40 A480	
520	312105-0451		2	SCREW M6S ISO 4017 M8X20 A480	
530	315105-0153		1	WASHER BRB 6,4X12 RFR	
540	315105-0165		2	WASHER BRB 8,4X16 RFR	

Pos	Part No	UN	Qty	Description	Page No

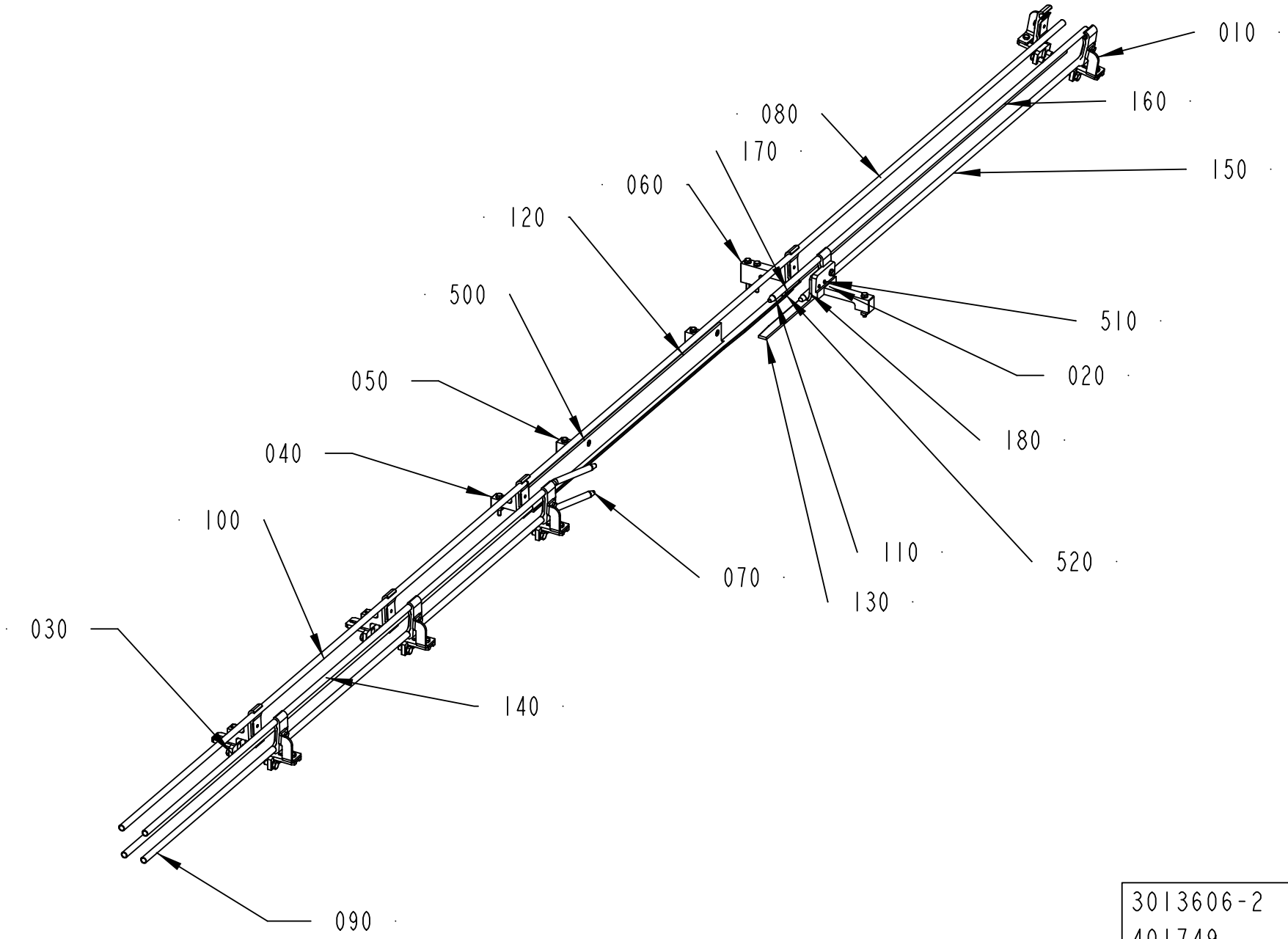

3013606-2
401749

ECM: 405042 - 20090630
Group number: 3013606-0200
Assembly Drawing: 3013606-2_1_AA

Pos	Part No	UN	Qty	Description	Page No
-					
010	2999197-0100		5	RAIL HOLDER	**1-29**
020	3003446-0200		1	RAIL HOLDER	**1-31**
030	3025773-0200		2	RAIL HOLDER	**1-33**
040	3013603-0200		1	RAIL HOLDER	**1-35**
050	3013608-0200		2	RAIL HOLDER	**1-37**
060	3013610-0200		1	RAIL HOLDER	**1-39**
070	540169-0000		3	DOWEL	
080	2845855-0000		1	PIPE	
090	2845856-0000		2	PIPE	
100	2845857-0000		1	PIPE	
110	2845862-0000		1	PIPE	
120	3003448-0000		1	STEERING RAIL	
130	3003451-0000		1	STEERING RAIL	
140	3003456-0000		1	PIPE	
150	3003461-0000		1	PIPE	
160	3003462-0000		1	PIPE	
170	3025781-0000		1	END SECTION	
180	3025776-0000		1	END SECTION	
500	312155-0329		2	SCREW DIN 7991 MF6S M5X16 A4 70	
510	312155-0368		2	SCREW DIN 7991 MF6S M6X16 A4 70	
520	312155-0291		2	SCREW DIN 7991 MF6S M4X12 A4 70	

Pos	Part No	UN	Qty	Description	Page No

RAIL HOLDER

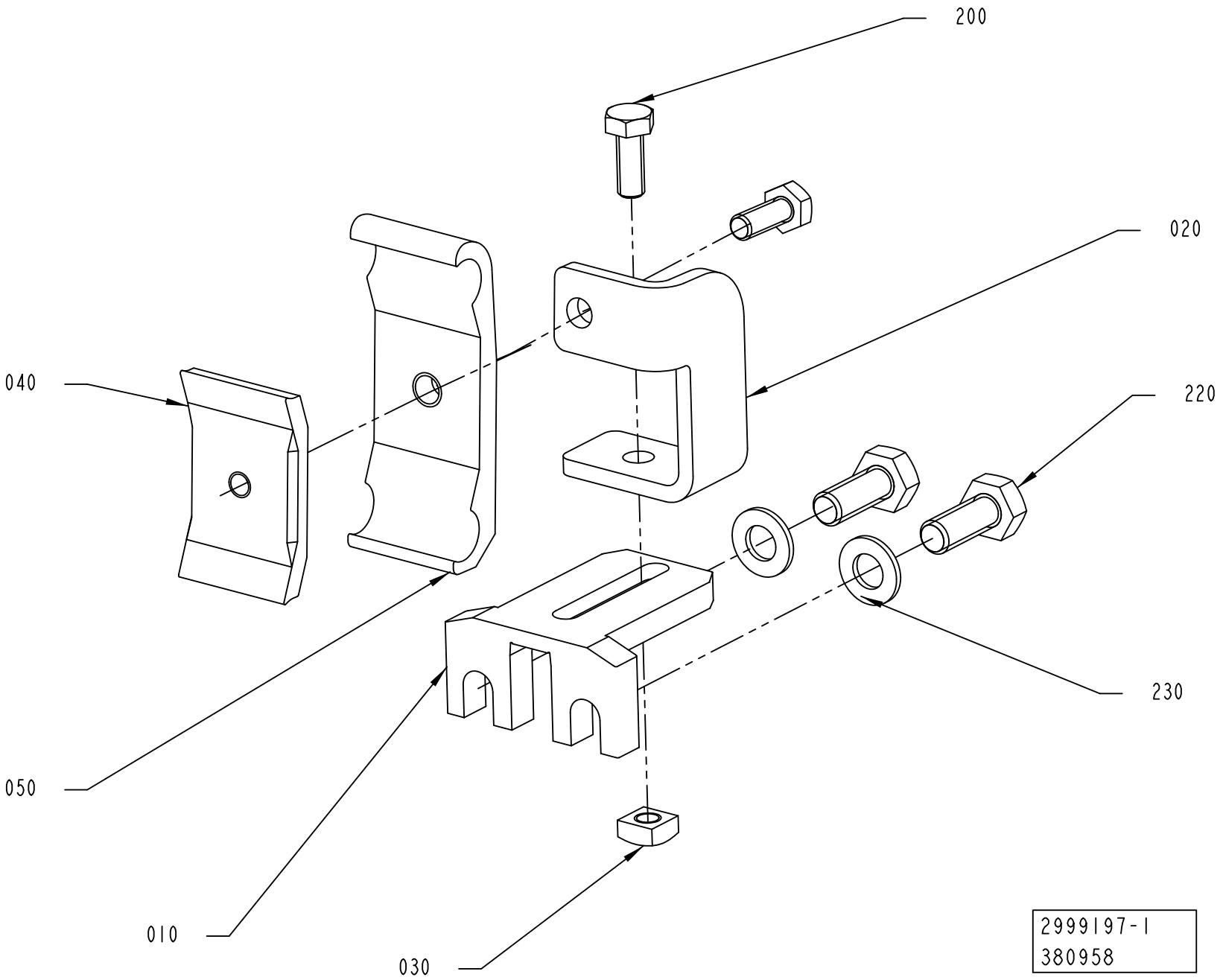

ECM: 436838 - 20100222
Group number: 2999197-0100
Assembly Drawing: 2999197-1_1_AA

Pos	Part No	UN	Qty	Description	Page No
-					
010	1550772-0000		1	HOLDER	
020	2998006-0000		1	RAIL HOLDER	
030	1359565-0000		1	NUT	
040	1366727-0000		1	CLAMP	
050	1366750-0000		1	HOLDER	
200	312105-0368		2	SCREW M6S ISO 4017 M6X16 A480	
220	312105-0451		2	SCREW M6S ISO 4017 M8X20 A480	
230	315105-0165		2	WASHER BRB 8,4X16 RFR	

Pos	Part No	UN	Qty	Description	Page No

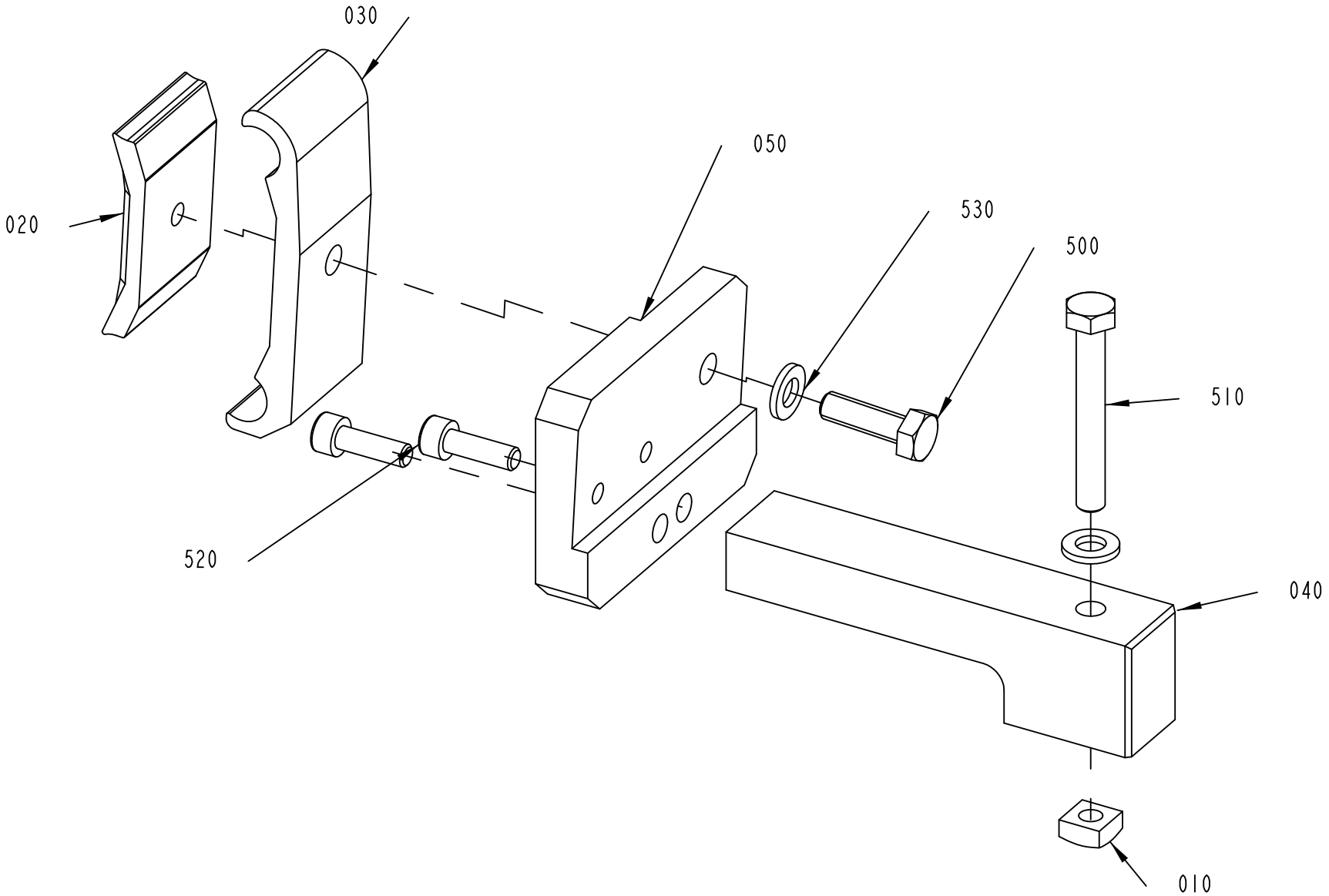

3003446-2
401749

ECM: 405043 - 20090630
Group number: 3003446-0200
Assembly Drawing: 3003446-2_1_AA

Pos	Part No	UN	Qty	Description	Page No
-					
010	1359565-0000		1	NUT	
020	1366727-0000		1	CLAMP	
030	1366750-0000		1	HOLDER	
040	3003447-0000		1	BRACKET	
050	3003463-0000		1	BRACKET	
500	312105-0370		1	SCREW M6S ISO 4017 M6X20 A480	
510	312105-0379		1	SCREW M6S ISO 4014 M6X45 A480	
520	312115-0329		2	SCREW ISO4762 M5X16 A4 80	
530	315105-0153		2	WASHER BRB 6,4X12 RFR	

Pos	Part No	UN	Qty	Description	Page No

RAIL HOLDER

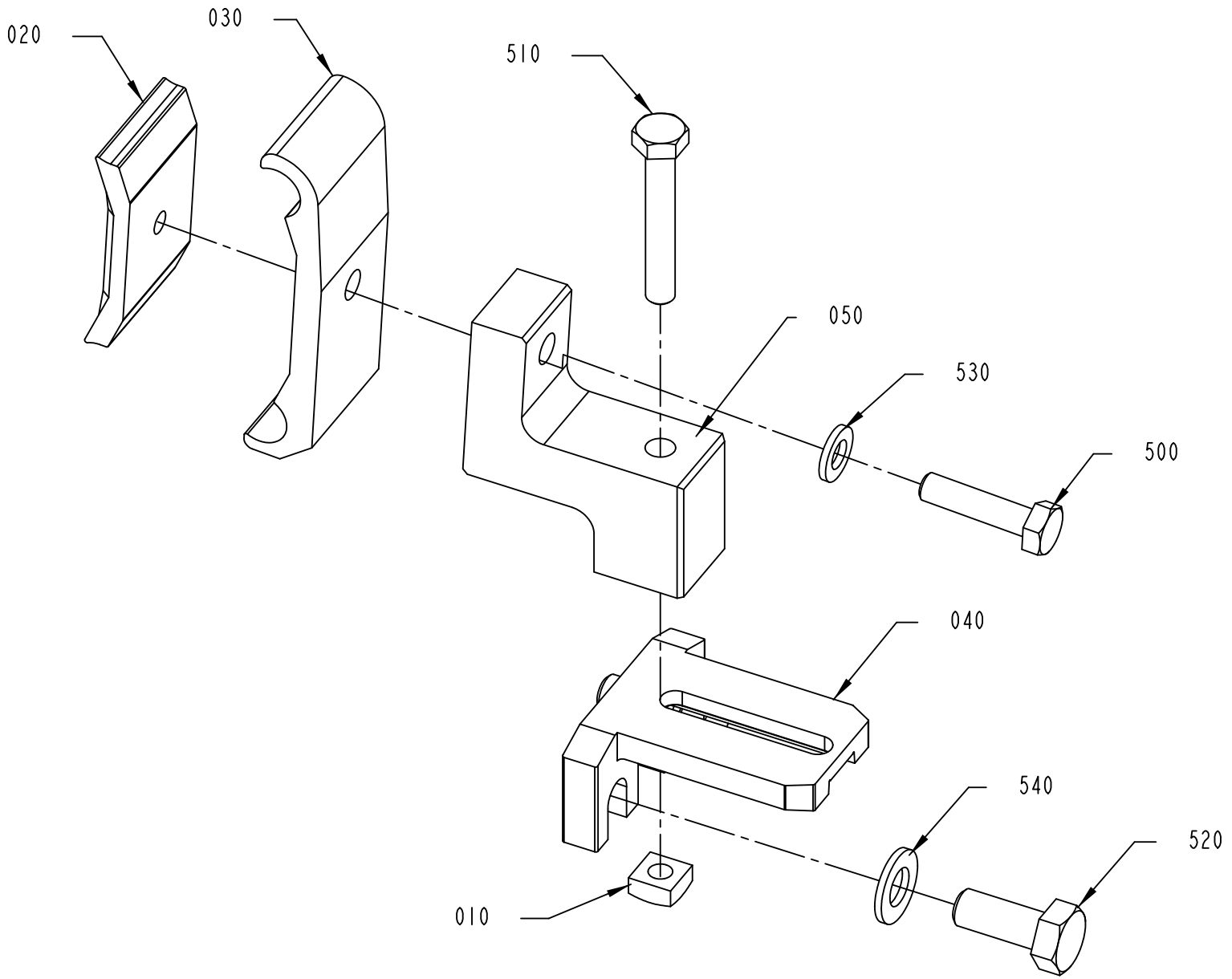

3025773-2
401749

ECM: 405044 - 20090630
Group number: 3025773-0200
Assembly Drawing: 3025773-2_1_AA

Pos	Part No	UN	Qty	Description	Page No
-					
010	1359565-0000		1	NUT	
020	1366727-0000		1	CLAMP	
030	1366750-0000		1	HOLDER	
040	1550772-0000		1	HOLDER	
050	3013602-0000		1	HOLDER	
500	312105-0372		1	SCREW M6S ISO 4017 M6X25 A480	
510	312105-0378		1	SCREW M6S ISO 4014 M6X40 A480	
520	312105-0451		2	SCREW M6S ISO 4017 M8X20 A480	
530	315105-0153		1	WASHER BRB 6,4X12 RFR	
540	315105-0165		2	WASHER BRB 8,4X16 RFR	

Pos	Part No	UN	Qty	Description	Page No

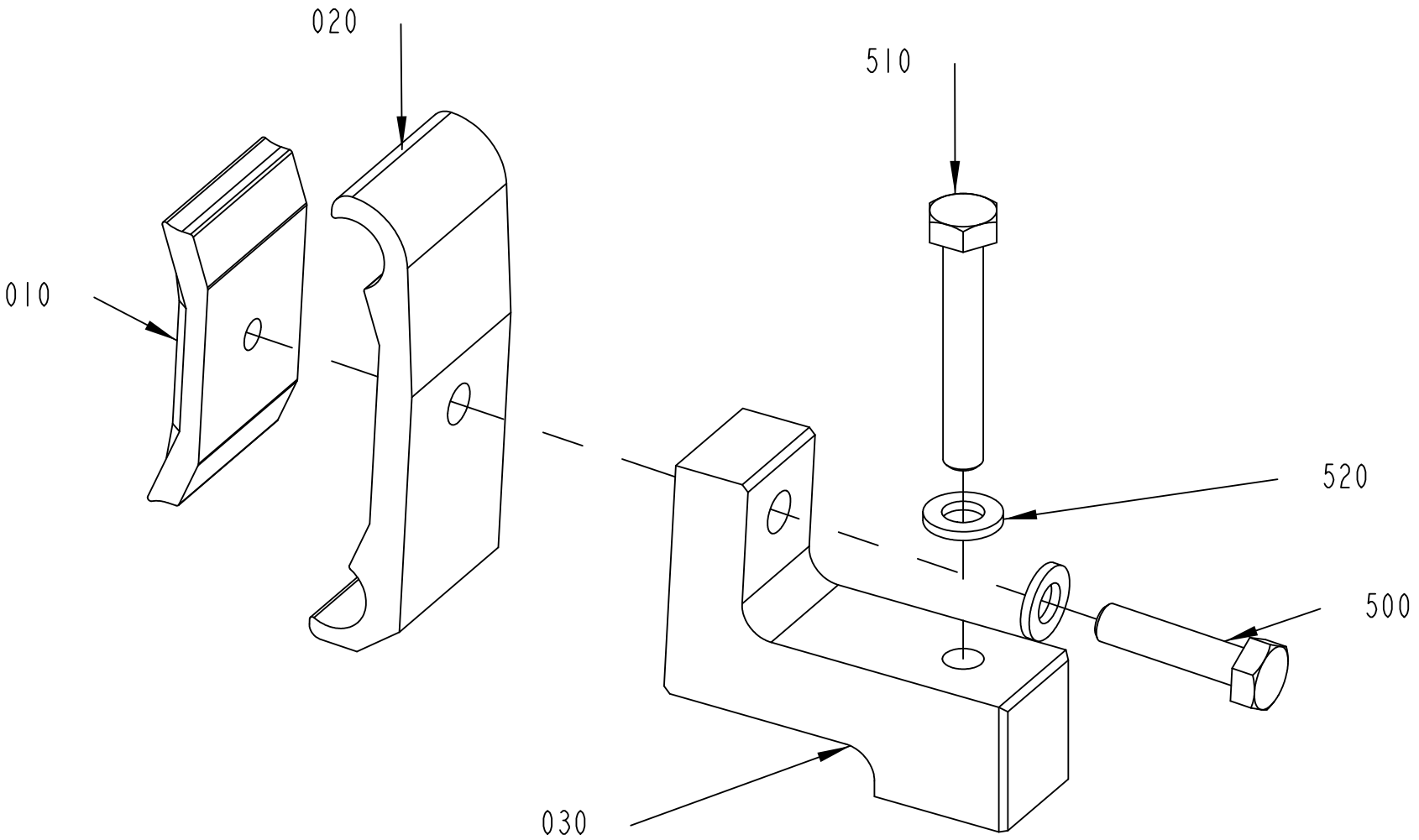

3013603-2
401749

ECM: 405045 - 20090630
Group number: 3013603-0200
Assembly Drawing: 3013603-2_1_AA

Pos	Part No	UN	Qty	Description	Page No
-					
010	1366727-0000		1	CLAMP	
020	1366750-0000		1	HOLDER	
030	3013604-0000		1	HOLDER	
500	312105-0372		1	SCREW M6S ISO 4017 M6X25 A480	
510	312105-0378		1	SCREW M6S ISO 4014 M6X40 A480	
520	315105-0153		2	WASHER BRB 6,4X12 RFR	

Pos	Part No	UN	Qty	Description	Page No

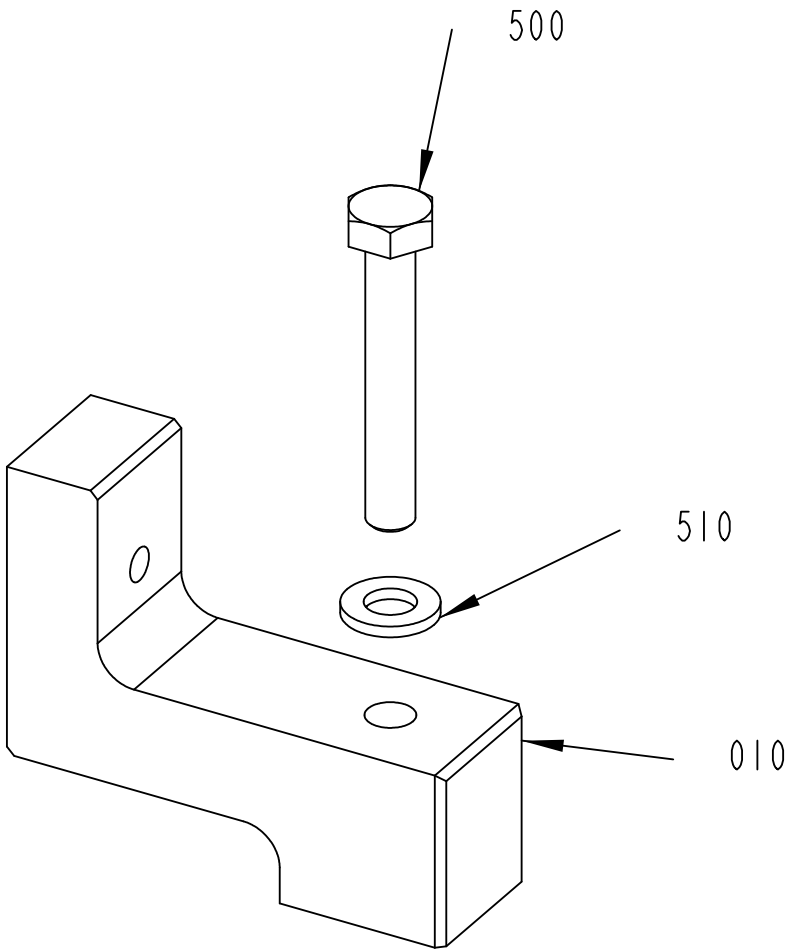

3013608-2
401749

ECM: 405046 - 20090630
Group number: 3013608-0200
Assembly Drawing: 3013608-2_1_AA

Pos	Part No	UN	Qty	Description	Page No
-					
010	3013611-0000		1	HOLDER	
500	312105-0378		1	SCREW M6S ISO 4014 M6X40 A480	
510	315105-0153		1	WASHER BRB 6,4X12 RFR	

Pos	Part No	UN	Qty	Description	Page No

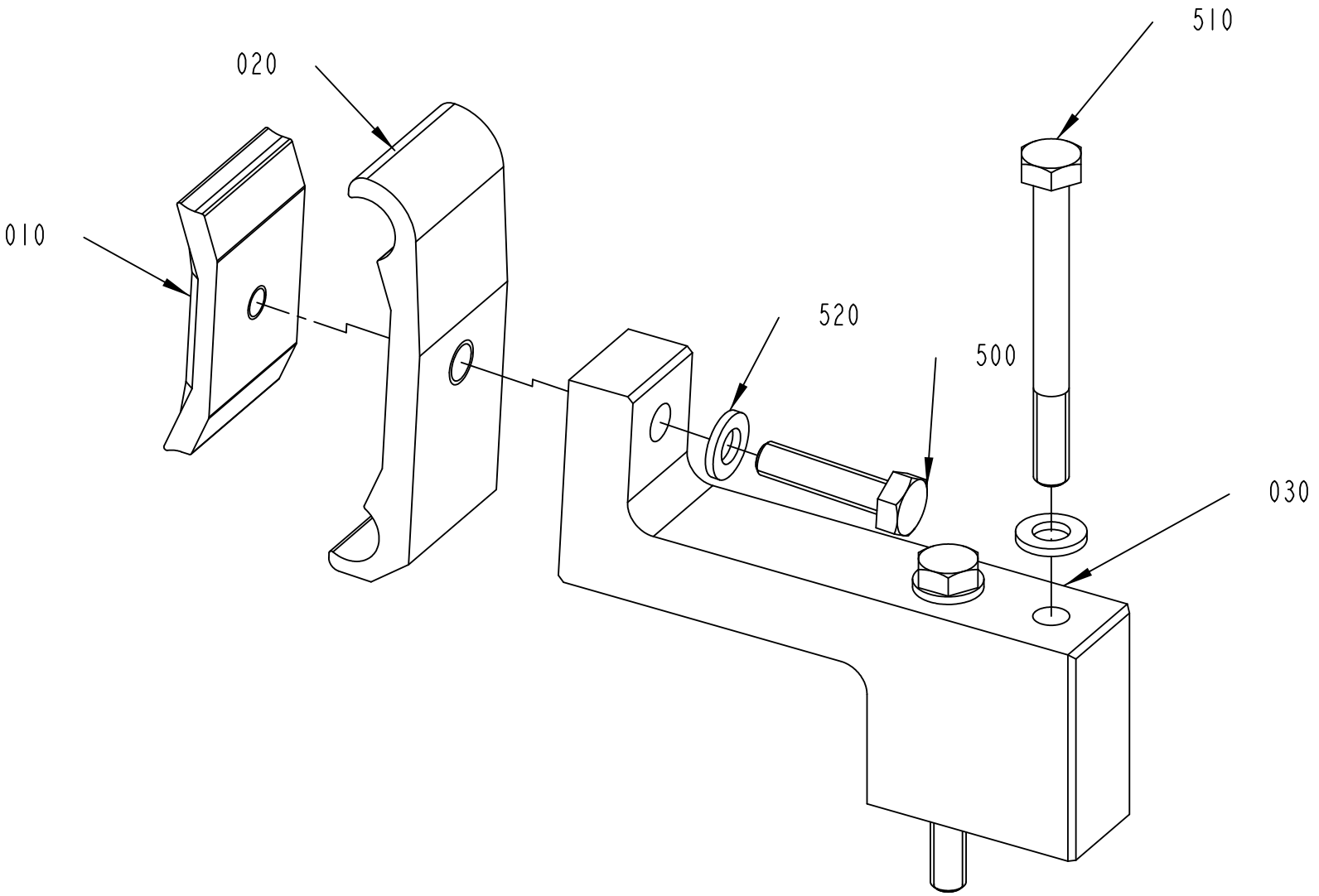

3013610-2
401749

ECM: 405047 - 20090630
Group number: 3013610-0200
Assembly Drawing: 3013610-2_1_AA

Pos	Part No	UN	Qty	Description	Page No
-					
010	1366727-0000		1	CLAMP	
020	1366750-0000		1	HOLDER	
030	3013609-0000		1	HOLDER	
500	312105-0372		1	SCREW M6S ISO 4017 M6X25 A480	
510	312105-0382		2	SCREW M6S ISO 4014 M6X60 A480	
520	315105-0153		3	WASHER BRB 6,4X12 RFR	

Pos	Part No	UN	Qty	Description	Page No

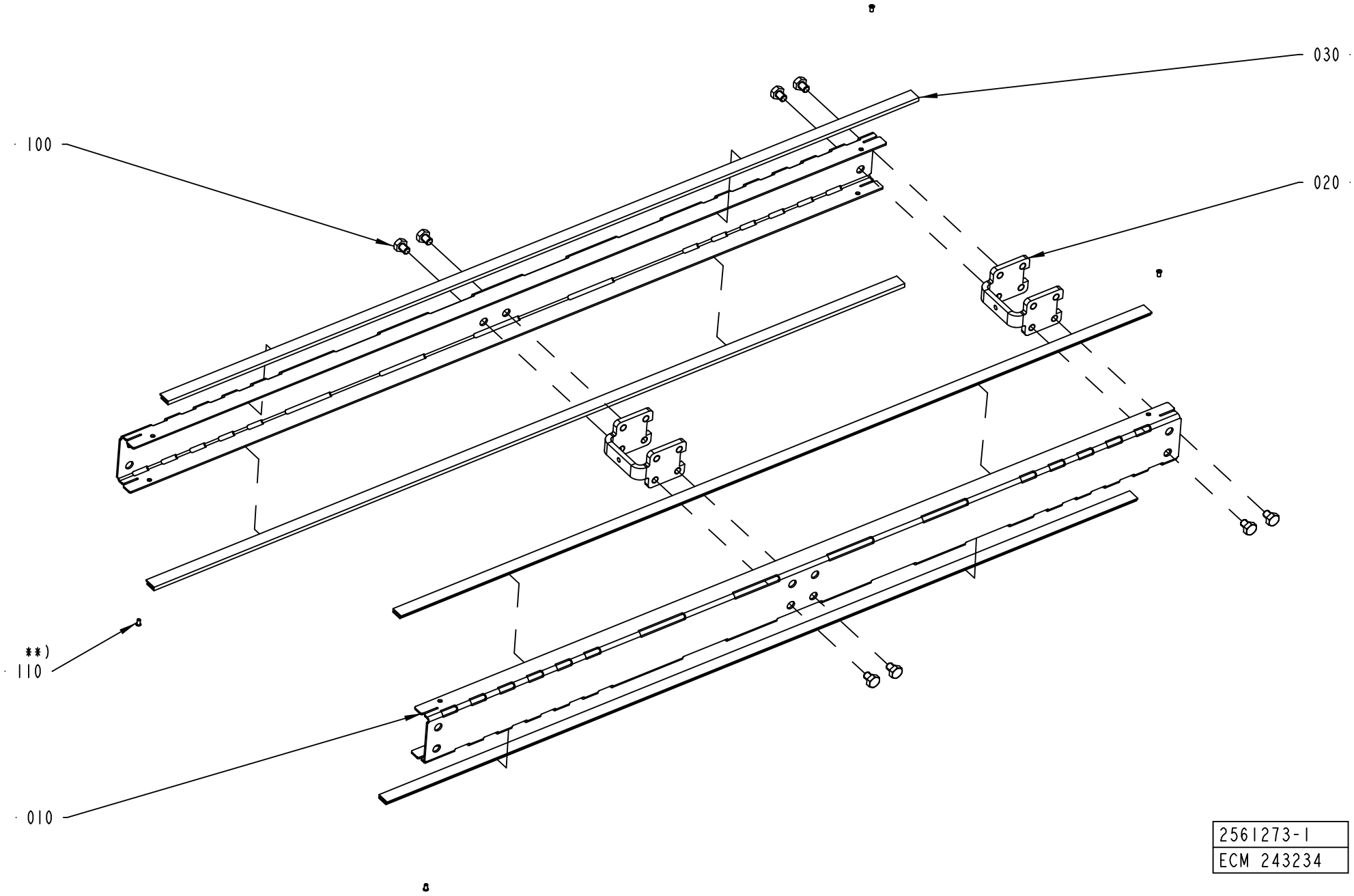
030
100
020
**)
110
010
2561273-1
ECM 243234

ECM: 380958 -
Group number: 2561273-0102
Assembly Drawing: 2561273-1_1_AF

Pos	Part No	UN	Qty	Description	Page No
L 0250					
020	2561206-0000		1	SPACER	
100	90459-4735		4	SCREW M6S ISO 4017 M8X10 A480	
L 0500					
010	1550695-0002		2	SIDE PLATE	
020	2561206-0000		1	SPACER	
030	1550595-4960		4	SLIDING STRIP	
100	90459-4735		4	SCREW M6S ISO 4017 M8X10 A480	
Common Parts					
010	1550695-0003		2	SIDE PLATE	
020	2561206-0000		2	SPACER	
030	1550595-9960		4	SLIDING STRIP	
100	90459-4735		8	SCREW M6S ISO 4017 M8X10 A480	
110	90600-6183		6	TUBULAR RIVET 3,5X6,2	

Pos	Part No	UN	Qty	Description	Page No

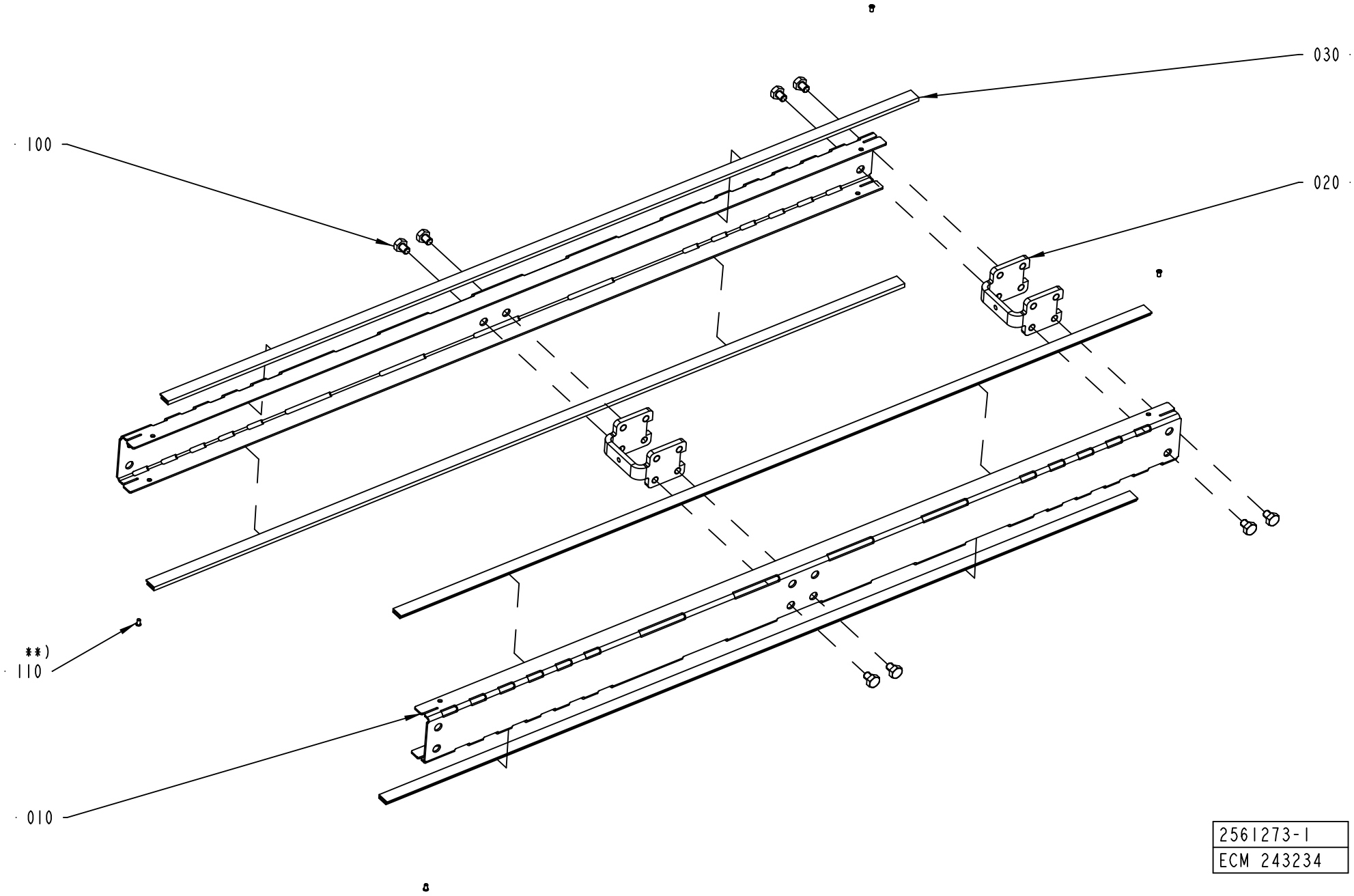
030
100
020
**)
110
010
2561273-1
ECM 243234

ECM: 380958 -
Group number: 2561273-0103
Assembly Drawing: 2561273-1_1_AF

Pos	Part No	UN	Qty	Description	Page No
L 1000					
010	1550695-0003		2	SIDE PLATE	
020	2561206-0000		2	SPACER	
030	1550595-9960		4	SLIDING STRIP	
100	90459-4735		8	SCREW M6S ISO 4017 M8X10 A480	
Common Parts					
010	1550695-0002		2	SIDE PLATE	
020	2561206-0000		1	SPACER	
030	1550595-4960		4	SLIDING STRIP	
100	90459-4735		4	SCREW M6S ISO 4017 M8X10 A480	
110	90600-6183		6	TUBULAR RIVET 3,5X6,2	

Pos	Part No	UN	Qty	Description	Page No

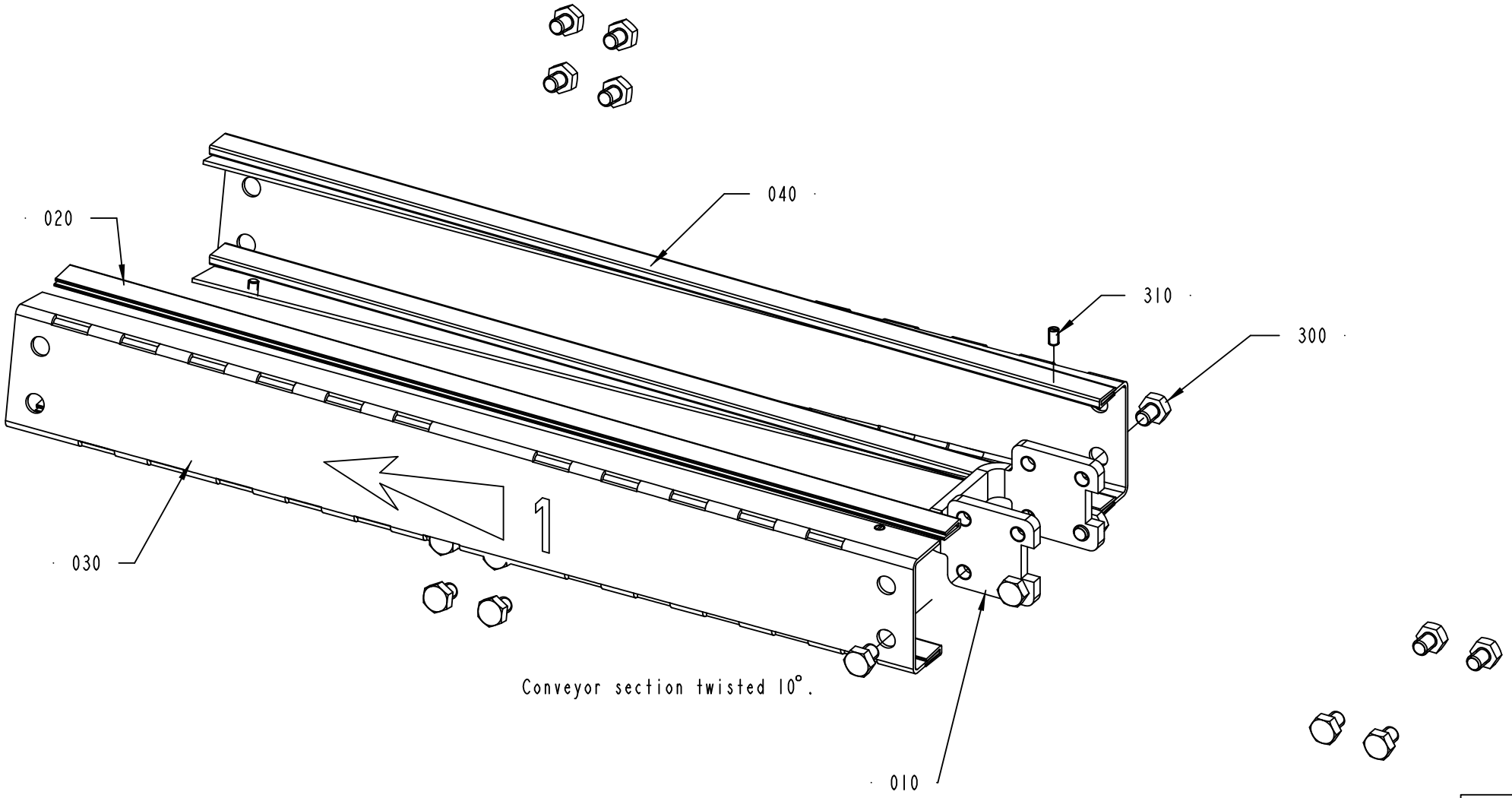

2835380-1
380417

ECM: 387467 - 20090409
Group number: 2835380-0100
Assembly Drawing: 2835380-1_1_AB

Pos	Part No	UN	Qty	Description	Page No
-					
010	2561206-0000		1	SPACER	
020	2699305-0496		4	SLIDING STRIP	
030	2799922-0000		1	SIDE PLATE	
040	2799923-0000		1	SIDE PLATE	
300	90459-4735		16	SCREW M6S ISO 4017 M8X10 A480	
310	90459-7293		4	SET SCREW DIN 551M5X8 PA66	

Pos	Part No	UN	Qty	Description	Page No

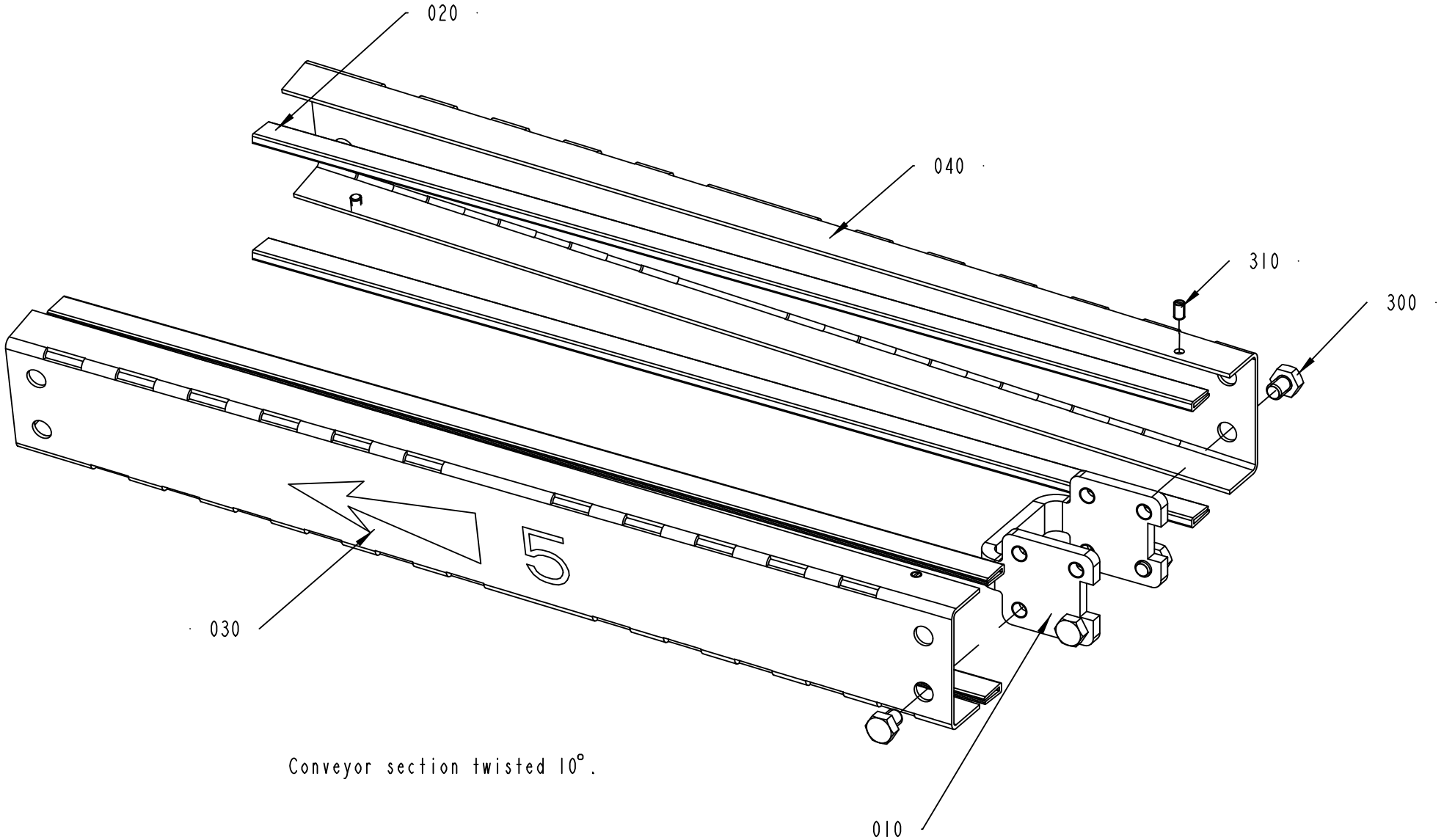

2835381-1
380417

ECM: 387831 - 20090409
Group number: 2835381-0100
Assembly Drawing: 2835381-1_1_AB

Pos	Part No	UN	Qty	Description	Page No
-					
010	2561206-0000		1	SPACER	
020	2699305-0496		4	SLIDING STRIP	
030	2799924-0000		1	SIDE PLATE	
040	2804855-0000		1	SIDE PLATE	
300	90459-4735		4	SCREW M6S ISO 4017 M8X10 A480	
310	90459-7293		4	SET SCREW DIN 551M5X8 PA66	

Pos	Part No	UN	Qty	Description	Page No

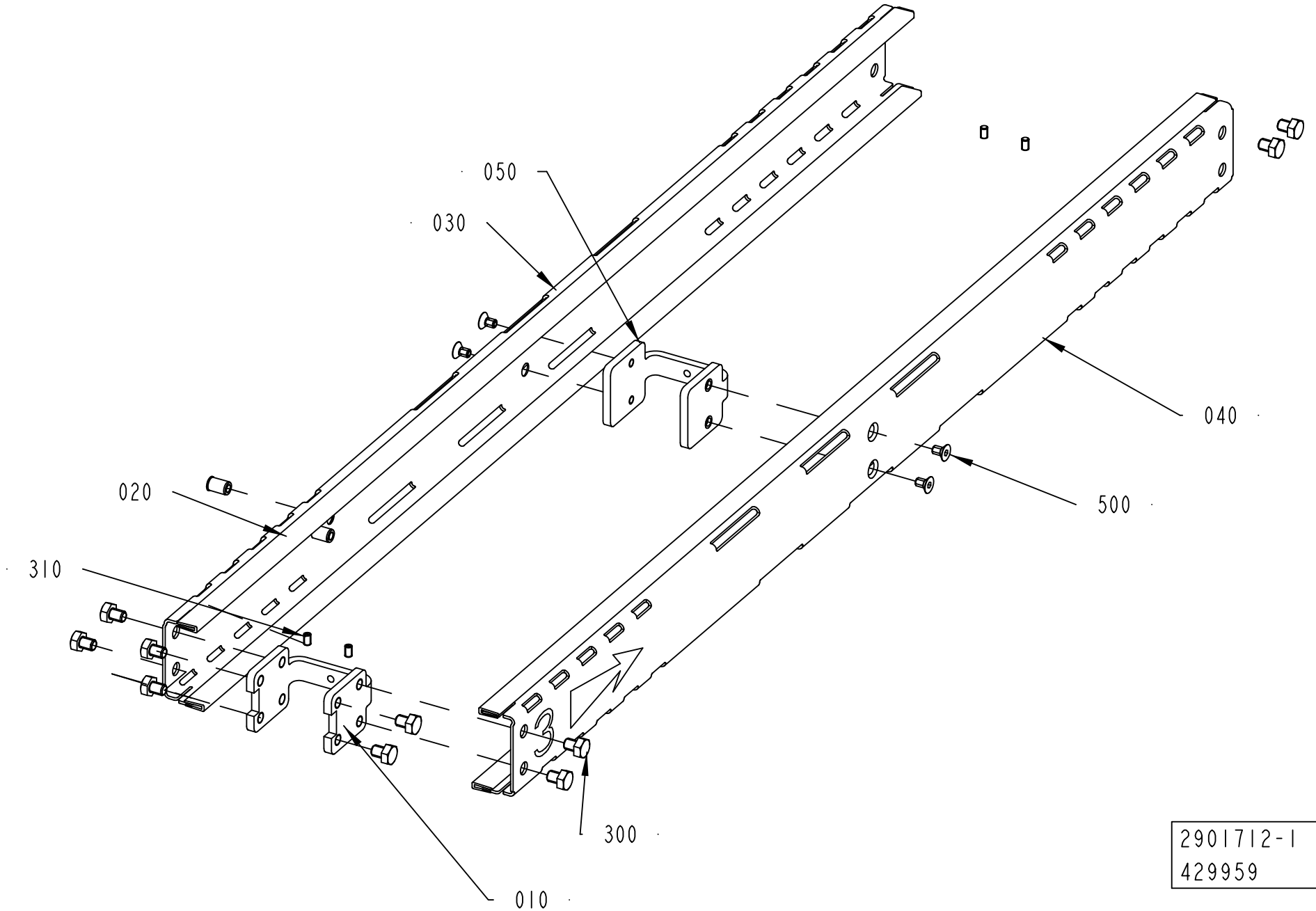
050
030
040
020
500
310
300
010
2901712-1
429959

ECM: 436839 - 20100222
Group number: 2901712-0100
Assembly Drawing: 2901712-1_1_AC

Pos	Part No	UN	Qty	Description	Page No
-					
010	2561206-0000		1	SPACER	
020	2699305-0996		4	SLIDING STRIP	
030	3090945-0000		1	SIDE PLATE	
040	2901714-0000		1	SIDE PLATE	
050	3013613-0000		1	SPACER	
300	90459-4735		10	SCREW M6S ISO 4017 M8X10 A480	
310	90459-7293		4	SET SCREW DIN 551M5X8 PA66	
500	312155-0364		4	SCREW DIN 7991 MF6S M6X10 A4 70	
510	312928-0104		2	RIVET NUT M6, CLAMP. LENGTH 0,7 - 3,0	

Pos	Part No	UN	Qty	Description	Page No

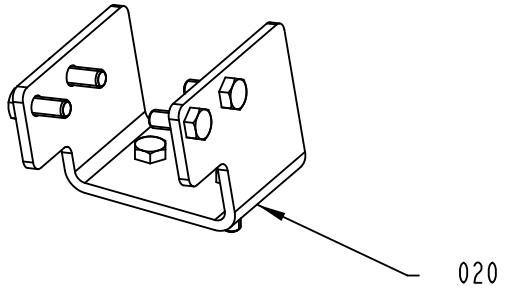

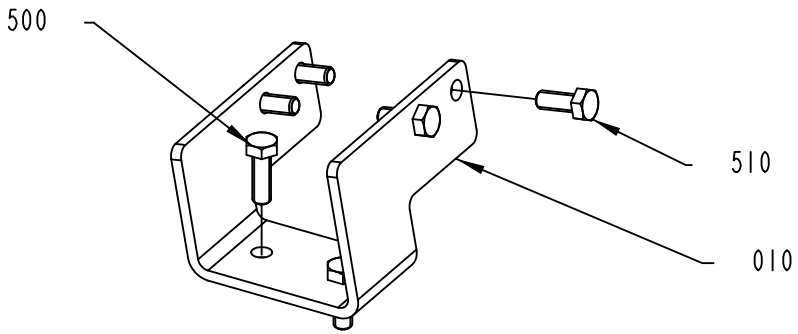

3013605-2
429959

ECM: 436840 - 20100222
Group number: 3013605-0200
Assembly Drawing: 3013605-2_1_AB

Pos	Part No	UN	Qty	Description	Page No
-					
010	2885387-0000		1	BRACKET	
020	2885388-0000		1	BRACKET	
500	312105-0453		4	SCREW M6S ISO 4017 M8X25 A480	
510	312105-0451		8	SCREW M6S ISO 4017 M8X20 A480	

Pos	Part No	UN	Qty	Description	Page No

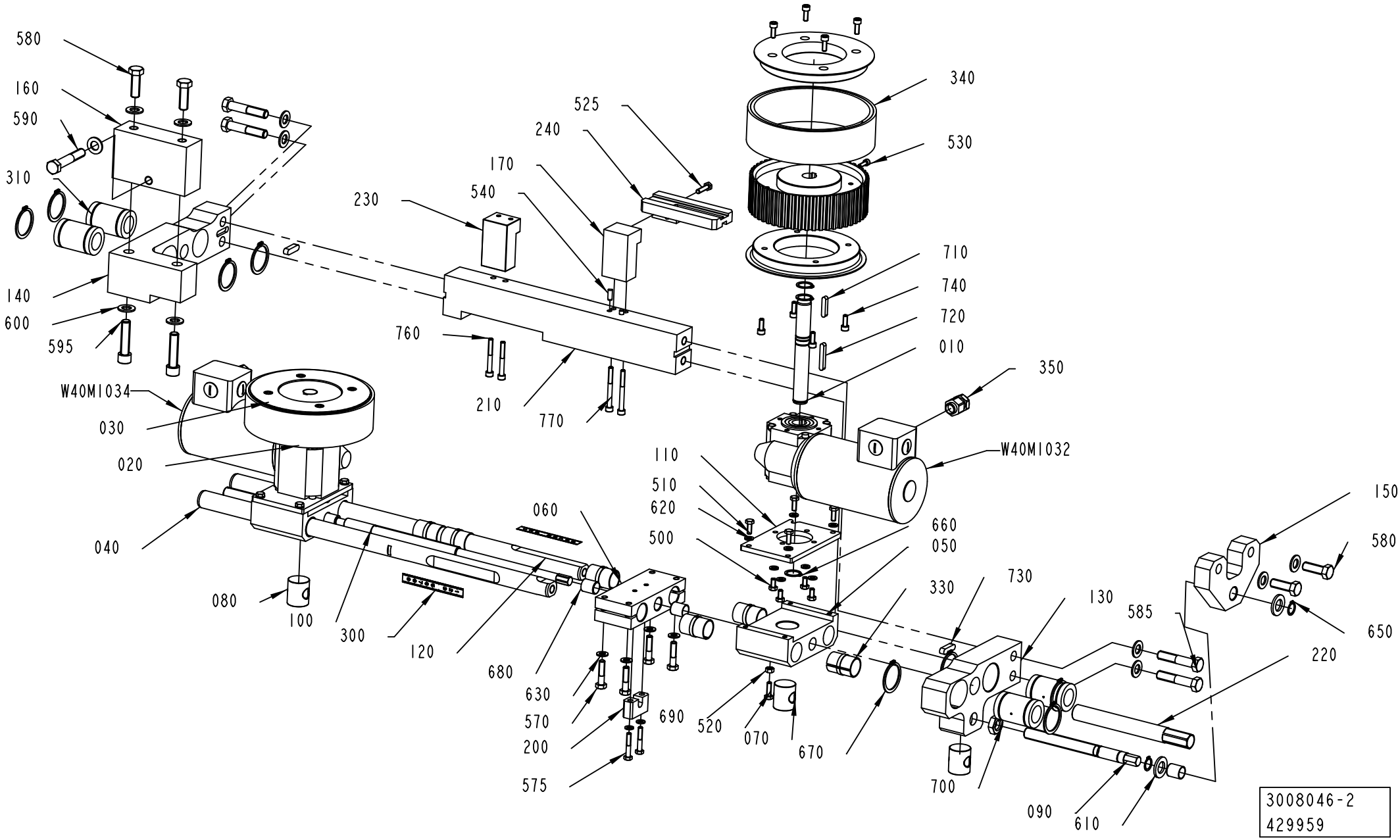
580
160
590
310
140
600
595
W40M1034
030
020
040
080
100
300
120
680
630
570
200
575
690
520
070
670
700
090
610
060
110
510
620
500
660
050
330
730
130
585
150
580
650
220
340
530
525
240
170
540
230
760
210
770
710
740
720
010
350
W40M1032
3008046-2
429959

ECM: 436841 - 20100222
Group number: 3008046-0200
Assembly Drawing: 3008046-2_1_AD

Pos	Part No	UN	Qty	Description	Page No
-					
010	3009429-0000		2	SHAFT	
020	3009430-0000		2	TOOTHED PULLEY	
030	3009432-0000		4	GABLE PLATE	
040	3008047-0000		1	SHAFT	
050	3008048-0000		2	BEARING HOUSING	
060	3008049-0000		1	BRACKET	
070	3008051-0000		2	ADJUSTING NUT	
080	3008050-0000		1	ADJUSTING NUT	
090	3008052-0000		1	ADJUSTING SCREW	
100	3008053-0000		1	ADJUSTING SCREW	
110	3008054-0000		2	MOUNTING SHEET	
120	3008055-0000		1	SHAFT	
130	3008056-0000		1	SUPPORT	
140	3008057-0000		1	FRAME	
150	3008058-0000		1	PLATE	
160	3008059-0000		1	SPACER	
170	3008060-0000		1	BRACKET	
180	90458-0953		4	LINEAR BUSHING 25X40X58	
200	3008063-0000		1	LOCK	
210	3008064-0000		1	FRAME	
220	3008065-0000		1	LOCK NUT	
230	3025780-0000		1	BRACKET	
240	3003432-0000		1	BRACKET	
300	90458-2779		2	SCALE , 0-1000MM ADHESIVE	
310	90458-0953		4	LINEAR BUSHING 25X40X58	
330	90600-7526		8	BUSHING INSERT, JUM-02-25	
340	90600-7607		2	TIMING BELT 50T10/530 PU	
350	90459-2953		2	GLAND, EXTENDED WITH INSERT, M16X1,5	
500	312105-0366		8	SCREW M6S ISO 4017 M6X12 A480	
510	312105-0368		8	SCREW M6S ISO 4017 M6X16 A480	
520	312105-0370		1	SCREW M6S ISO 4017 M6X20 A480	
525	312105-0372		2	SCREW M6S ISO 4017 M6X25 A480	
530	312115-0327		2	Z3REW ISO4762 M5X12 A4 80	
540	311103-0351		2	PARALLEL PIN ISO 2338 6M6X16 A1	
570	312105-0457		4	CREW M6S ISO 4014 M8X35 A480	
575	312105-0376		2	SCREW M6S ISO 4014 M6X35 A480	
580	312105-0538		4	SCREW M6S ISO 4017 M12X35 A480	
585	312105-0544		4	SCREW M6S ISO 4014 M12X60 A480	
590	312105-0546		1	SCREW M6S ISO 4014 M12X70 A480	
595	312115-0542		2	SCREW ISO4762 M12X50 A4 80	
600	315105-0178		11	WASHER BRB 13X24 RFR	
610	315106-0186		2	WASHER ISO 7089-16-200 HV A4	
620	315105-0153		20	WASHER BRB 6,4X12 RFR	
630	315105-0165		4	WASHER BRB 8,4X16 RFR	
650	315751-0113		2	RETAINING RING FOR SHAFT DIN 471 16 SS	
660	315751-0116		6	RETAINING RING FOR SHAFT DIN 471 20 SS	
670	315751-0127		8	RETAINING RING FOR SHAFT DIN 471 40 SS	
680	321133-0224		3	BUSHING IGLIDUR G 16X18X20	
690	312605-0316		1	HEXAGON NUT, M6M M6 A280	
700	312625-0324		1	HEXAGON THIN NUT, EN 24035 ML6M M16 A4	
710	315705-0236		2	PARALLEL KEY W. ROUND ENDS 6X6X30 MM	
720	315705-0239		2	PARALLEL KEY W. ROUND ENDS 6X6X40 MM	
730	315705-0267		2	PARALLEL KEY W. ROUND ENDS 8X7X30 MM	
740	312115-0368		16	SCREW ISO4762 M6X16 A4 80	
760	312115-0380		2	SCREW ISO4762 M6X50 A4 80	
770	312115-0382		2	SCREW ISO4762 M6X60 A4 80	
W40M1032	90600-3210		1	GEARS, WORM MOTOR D9582/SC401-H/1600117	
W40M1034	90600-3210		1	GEARS, WORM MOTOR D9582/SC401-H/1600117	

Machine Type	Group Description	Used-In	Group Number	Page No

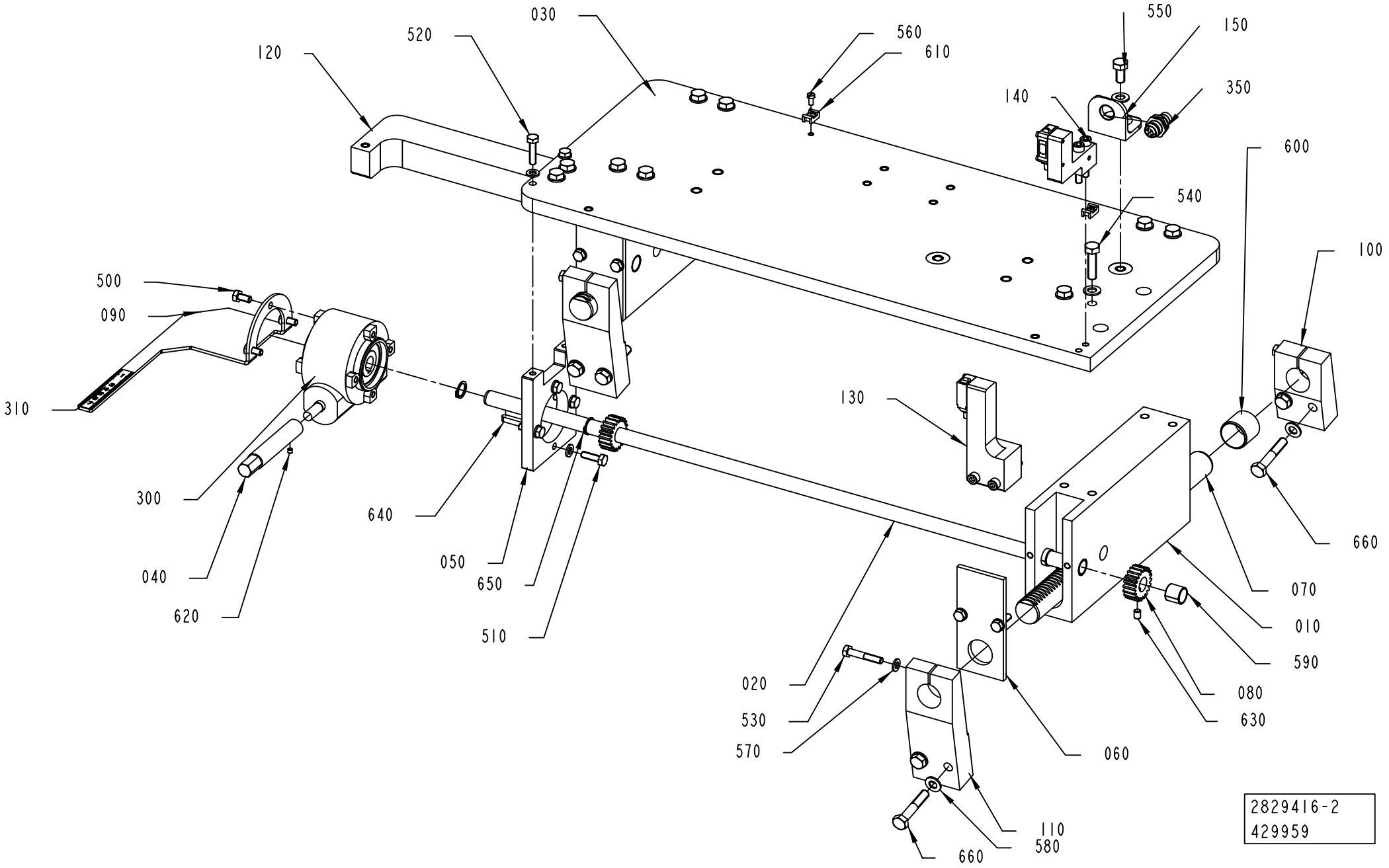
030
520
120
560
610
550
150
350
140
600
540
100
500
090
310
130
300
640
050
650
510
040
620
660
070
010
590
080
630
020
530
570
060
110
580
660
2829416-2
429959

ECM: 436842 - 20100222
Group number: 2829416-0200
Assembly Drawing: 2829416-2_1_AD

Pos	Part No	UN	Qty	Description	Page No
-					
010	2811516-0000		2	BRACKET	
020	2811518-0000		1	SHAFT	
030	2829402-0000		1	PLATE	
040	2835378-0000		1	SHAFT	
050	2835382-0000		1	MOUNTING SHEET	
060	2835390-0000		2	LID	
070	2845859-0000		2	RACK GEAR	
080	2845860-0000		2	GEAR WHEEL	
090	2859418-0000		1	SCALE POINTER	
100	2901721-0000		2	BRACKET	
110	2913339-0000		2	BRACKET	
120	3003436-0000		1	BRACKET	
130	3013643-0100		1	PHOTOCELL UNIT	**1-57**
140	3013644-0100		1	PHOTOCELL UNIT	**1-59**
300	90056-0174		1	WORM GEAR VF 30 P1 70 HS B3	
310	90458-2779		1	SCALE , 0-1000MM ADHESIVE	
500	312105-0366		3	SCREW M6S ISO 4017 M6X12 A480	
510	312105-0370		8	SCREW M6S ISO 4017 M6X20 A480	
520	312105-0372		2	SCREW M6S ISO 4017 M6X25 A480	
530	312105-0376		4	SCREW M6S ISO 4014 M6X35 A480	
540	312105-0455		10	SCREW M6S ISO 4017 M8X30 A480	
560	312125-0287		2	SCREW ISO 1207 M4X8 A4	
570	315105-0153		14	WASHER BRB 6,4X12 RFR	
580	315105-0165		18	WASHER BRB 8,4X16 RFR	
590	90600-4289		4	BEAR. BUSH. WITHOUT FL, 14X16X15 MM	
600	321133-0300		4	BUSHING IGLIDUR G 25X28X25	
610	352113-0205		2	ANCHOR PLATES FOR STRIPS, TYPE TM2S8-C10	
620	312318-0283		1	SCREW ISO4029 M4X4 A4	
630	312318-0362		2	SCREW ISO4029 M6X8 A4	
640	315705-0202		1	PARALLEL KEY W ROUND ENDS 5X5X25MM	
650	315751-0111		2	RETAINING RING FOR SHAFT DIN 471 14 SS	
660	312105-0460		8	SCREW M6S ISO 4014 M8X45 A480	

Pos	Part No	UN	Qty	Description	Page No

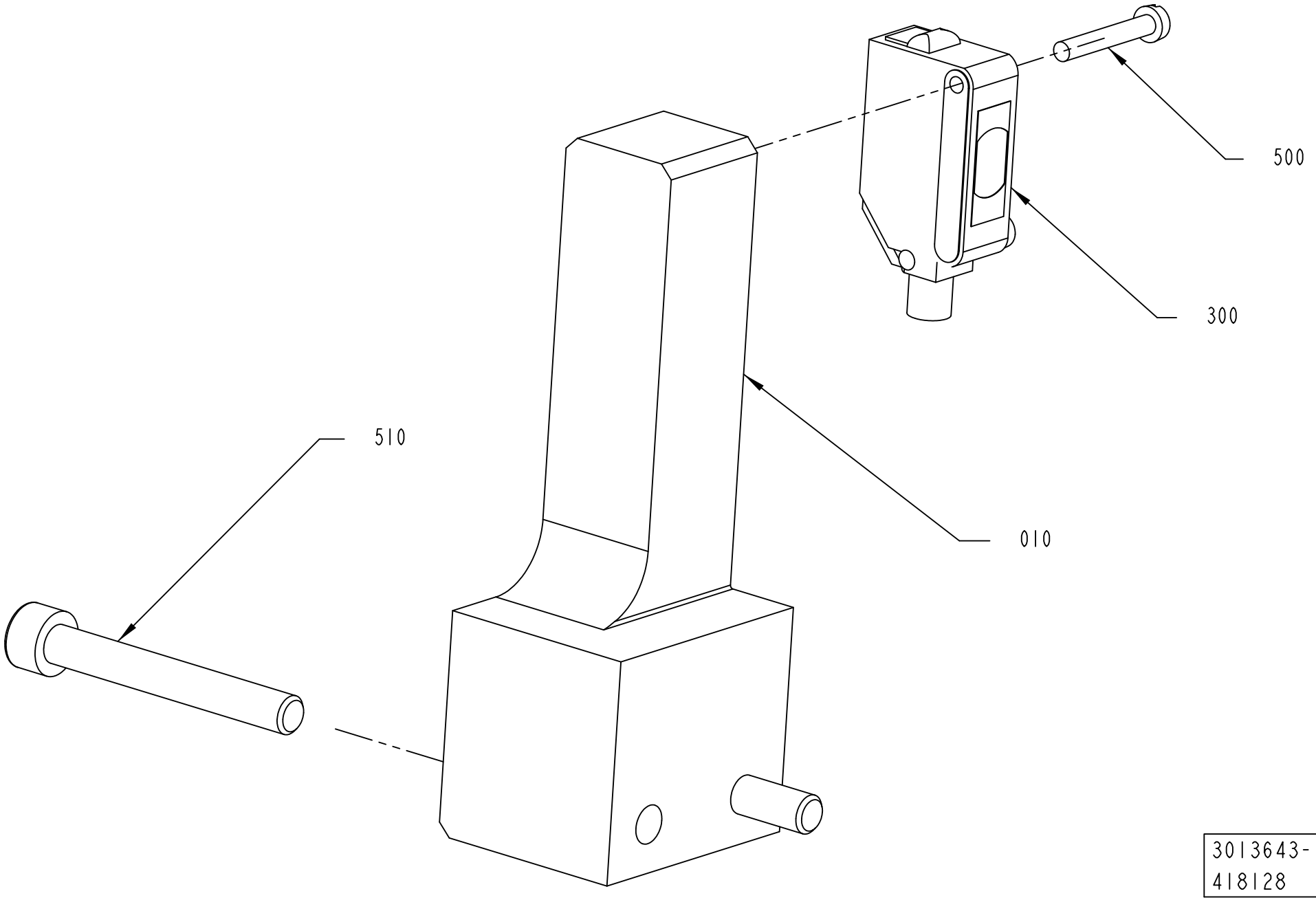

3013643-1
418128

ECM: 436843 - 20100222
Group number: 3013643-0100
Assembly Drawing: 3013643-1_1_AA

Pos	Part No	UN	Qty	Description	Page No
-					
010	3025789-0000		1	BRACKET	
300	90459-7273		1	PHOTOCELL E3Z-T81C-G0SR D-CN	
500	312125-0230		2	SCREW ISO 1207 M3X20 A4	
510	312115-0379		2	SCREW ISO4762 M6X45 A4 80	

Pos	Part No	UN	Qty	Description	Page No

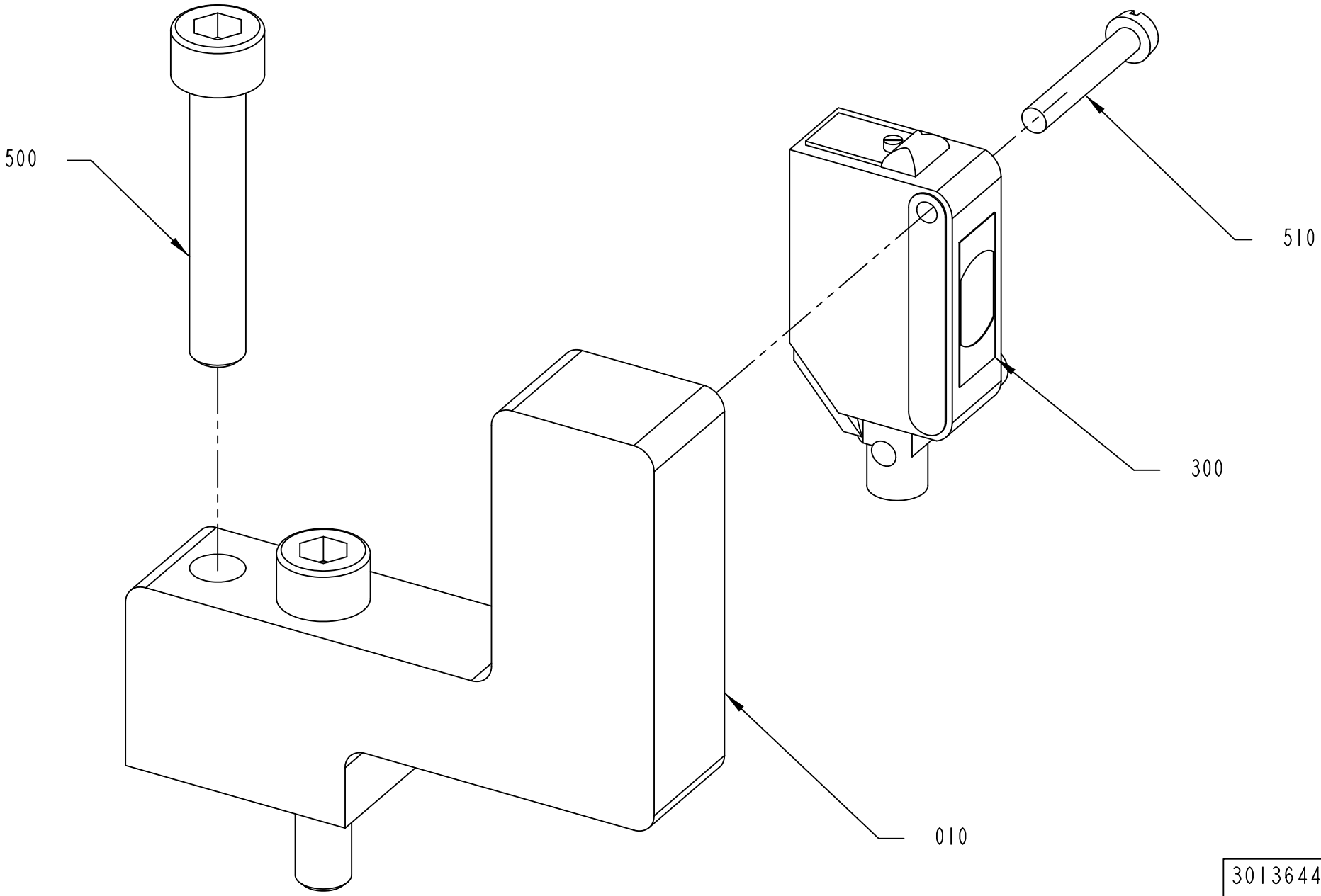
500
510
300
010
3013644-1
418128

ECM: 436844 - 20100222
Group number: 3013644-0100
Assembly Drawing: 3013644-1_1_AA

Pos	Part No	UN	Qty	Description	Page No
-					
010	3025788-0000		1	BRACKET	
300	90459-7274		1	PHOTOCELL E3Z-T81C-G0SR L-CN	
500	312125-0230		2	SCREW ISO 1207 M3X20 A4	
510	312115-0376		2	SCREW ISO4762 M6X35 A4 80	

Pos	Part No	UN	Qty	Description	Page No

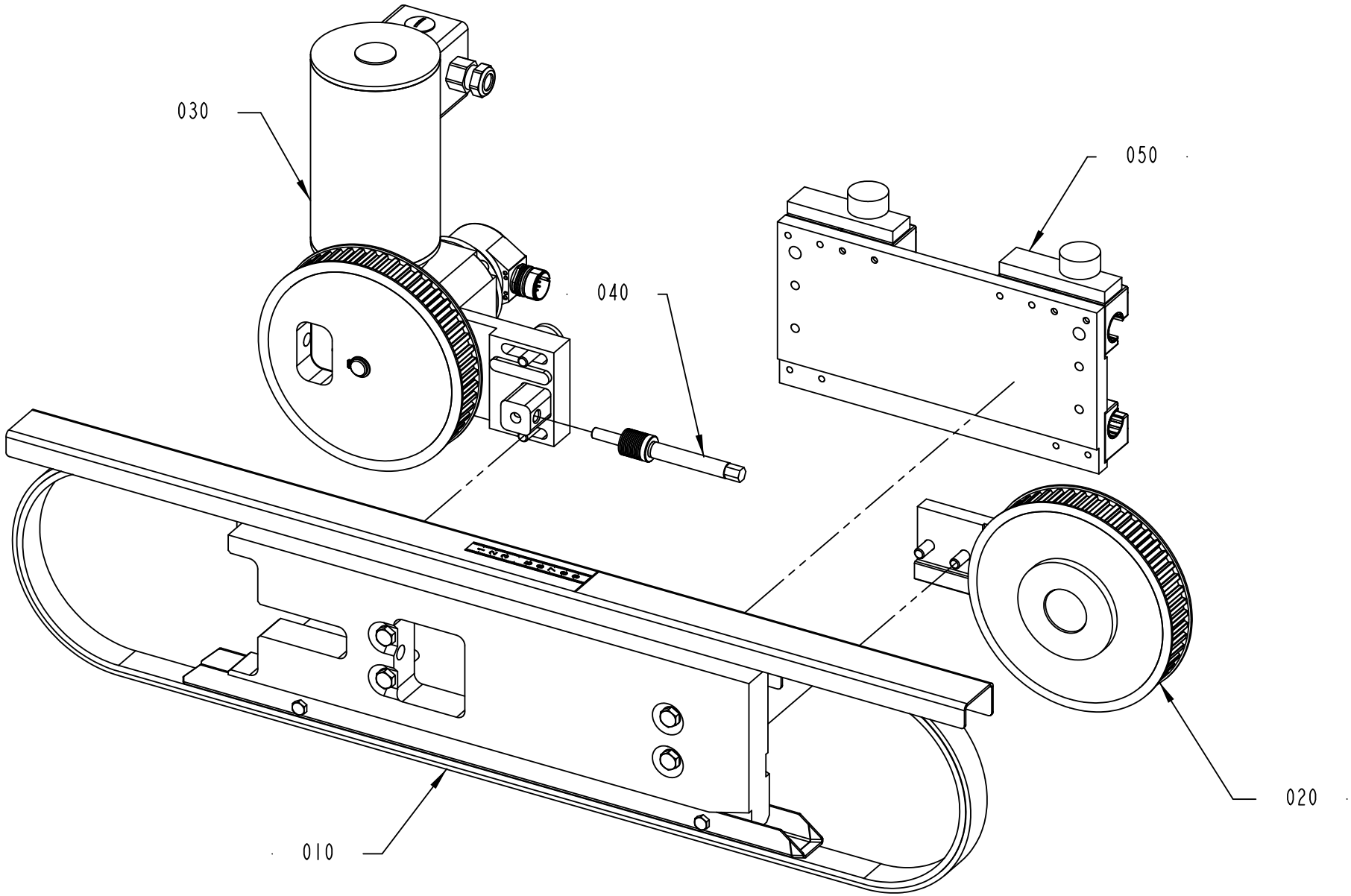

2924675-3
418128

ECM: 418820 - 20091016
Group number: 2924675-0300
Assembly Drawing: 2924675-3_1_AA

Pos	Part No	UN	Qty	Description	Page No
-					
010	2737080-0300		1	SUPPORT BELT	**1-63**
020	2924673-0300		1	WHEEL	**1-65**
030	2924674-0300		1	DRIVE WHEEL	**1-67**
040	3013627-0100		1	SETTING SCREW	**1-69**
050	3025794-0100		1	SLIDE PLATE	**1-71**

Pos	Part No	UN	Qty	Description	Page No

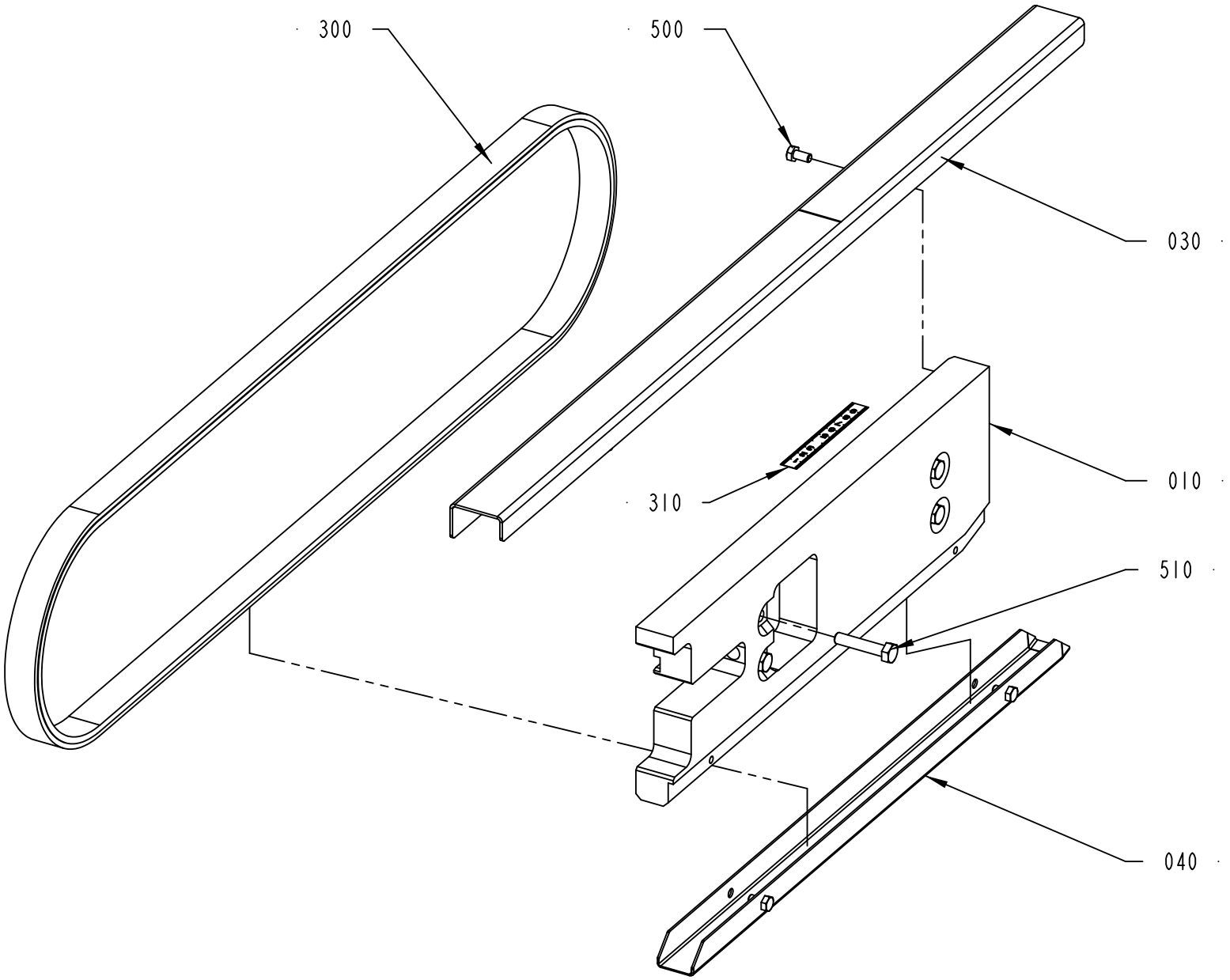

2737080-2
418128

ECM: 418821 - 20091016
Group number: 2737080-0300
Assembly Drawing: 2737080-2_1_AA

Pos	Part No	UN	Qty	Description	Page No
-					
010	3025817-0000		1	MOUNTING SHEET	
030	3025818-0000		1	HEAD PLATE	
040	3025816-0000		1	SLIDE SHEET	
300	90600-7712		1	TIMING BELT 25T10/1790 PU	
500	312105-0366		6	SCREW M6S ISO 4017 M6X12 A480	
510	312105-0459		4	SCREW M6S ISO 4014 M8X40 A480	

Pos	Part No	UN	Qty	Description	Page No

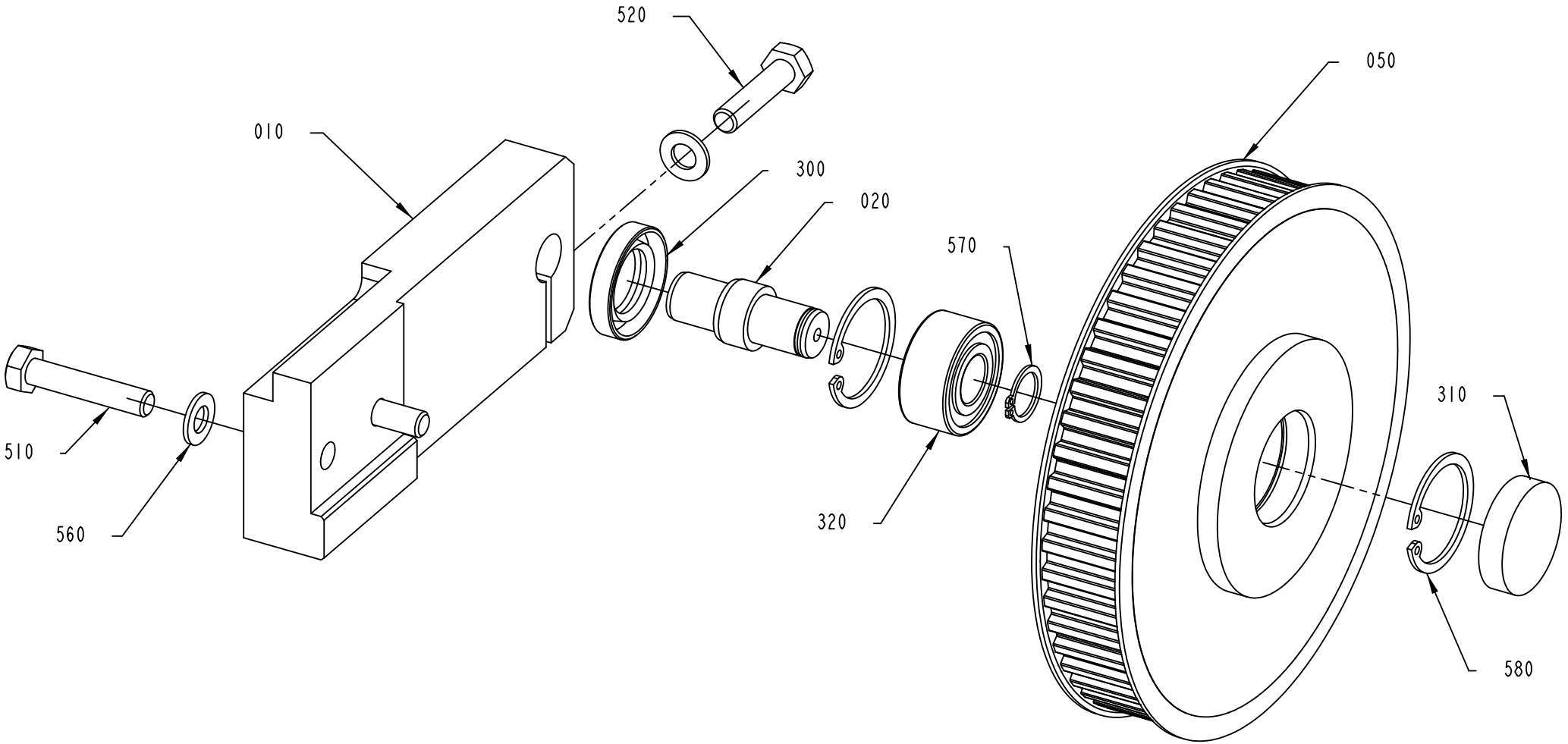
520
050
010
300
020
570
310
510
560
320
580
2924673-3
418128

ECM: 436845 - 20100222
Group number: 2924673-0300
Assembly Drawing: 2924673-3_1_AA

Pos	Part No	UN	Qty	Description	Page No
-					
010	3025822-0000		1	BRACKET	
020	2797698-0000		1	SHAFT	
050	2867565-0000		1	PULLEY	
300	90091-0303		1	RADIAL SEAL 20X35X7 MM DUST LIP	
310	90091-0323		1	SEAL COVER 35X8 MM	
320	90459-2676		1	ANG. BALL BEAR 15/35X15,9	
510	312105-0459		2	SCREW M6S ISO 4014 M8X40 A480	
520	312109-0457		1	SCREW M6S ISO 4017 M8X35 A480	
560	315105-0165		3	WASHER BRB 8,4X16 RFR	
570	315751-0112		1	RETAINING RING FOR SHAFT DIN 471 15 SS	
580	315753-0124		2	RETAINING RING FOR BORE DIN 472 35 A2	

Pos	Part No	UN	Qty	Description	Page No

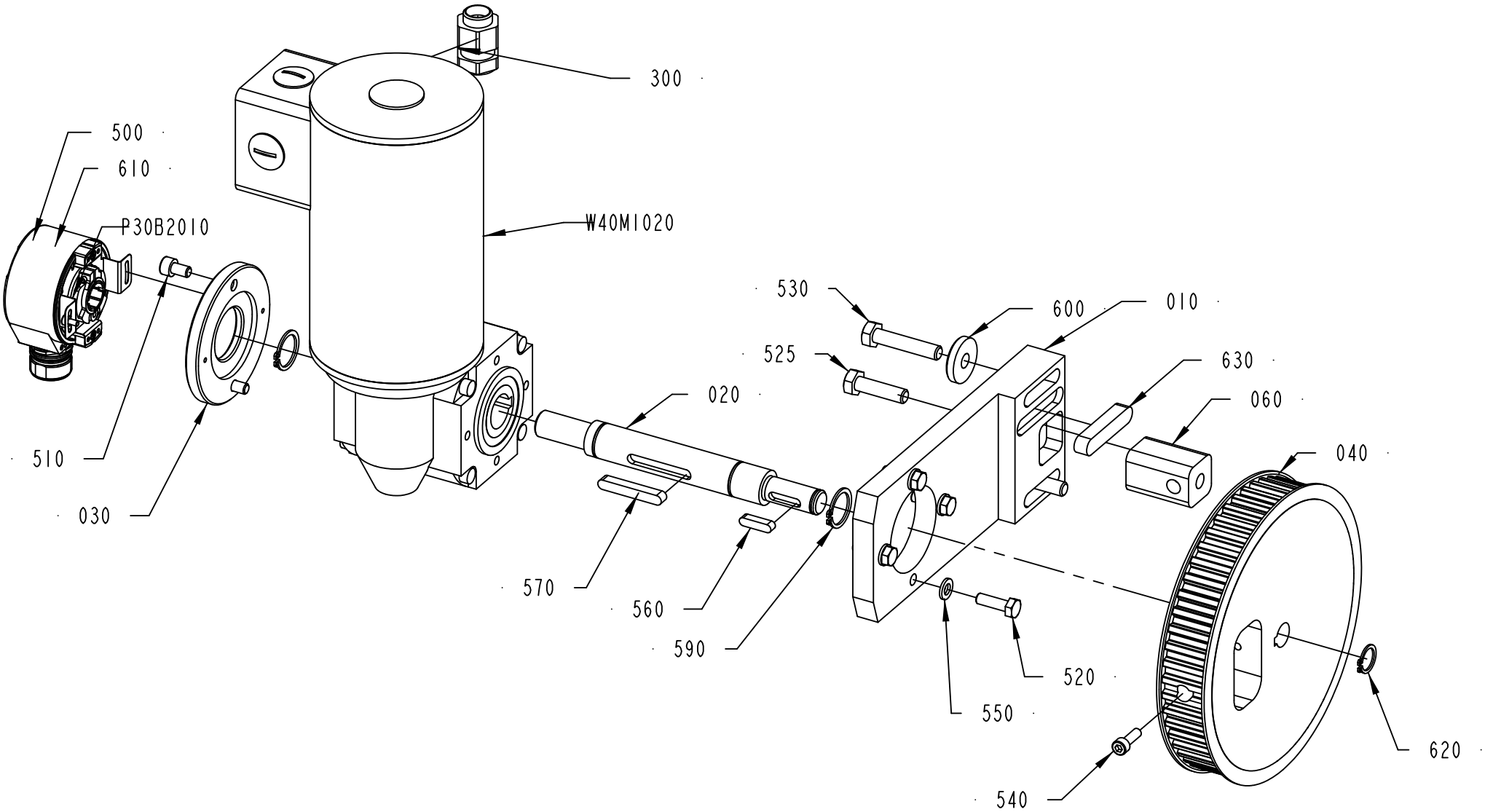

2924674-3
437809

ECM: 439906 - 20100223
Group number: 2924674-0300
Assembly Drawing: 2924674-3_1_AB

Pos	Part No	UN	Qty	Description	Page No
-					
010	3025821-0000		1	HOLDER	
020	2999221-0000		1	SHAFT	
030	2999220-0000		1	PLATE	
040	2941712-0000		1	PULLEY	
060	2987408-0000		1	BRACKET	
300	90459-2953		1	GLAND, EXTENDED WITH INSERT, M16X1,5	
500	312115-0220		2	SCREW ISO4762 M3X6 A4 80	
510	312115-0364		2	SCREW ISO4762 M6X10 A4 80	
520	312105-0370		4	SCREW M6S ISO 4017 M6X20 A480	
525	312105-0455		1	SCREW M6S ISO 4017 M8X30 A480	
530	312105-0459		2	SCREW M6S ISO 4014 M8X40 A480	
540	312115-0329		1	SCREW ISO4762 M5X16 A4 80	
550	315105-0153		4	WASHER BRB 6,4X12 RFR	
560	315705-0201		1	PARALLEL KEY W. ROUND ENDS 5X5X20 MM	
570	315705-0239		1	PARALLEL KEY W. ROUND ENDS 6X6X40 MM	
590	315751-0116		2	RETAINING RING FOR SHAFT DIN 471 20 SS	
600	315125-0165		2	WASHER TBRSB 8,4X26X5 A4	
610	315103-0124		2	WASHER, BRB, 3,2/6,H=0,5 NI PL BR	
620	315751-0111		1	RETAINING RING FOR SHAFT DIN 471 14 SS	
P30B2010	90600-5297		1	INCREMENTAL ENCODER, DFS60A-BHAA65536	
W40M1020	90600-3210		1	GEARS, WORM MOTOR D9582/SC401-H/1600117	

Pos	Part No	UN	Qty	Description	Page No

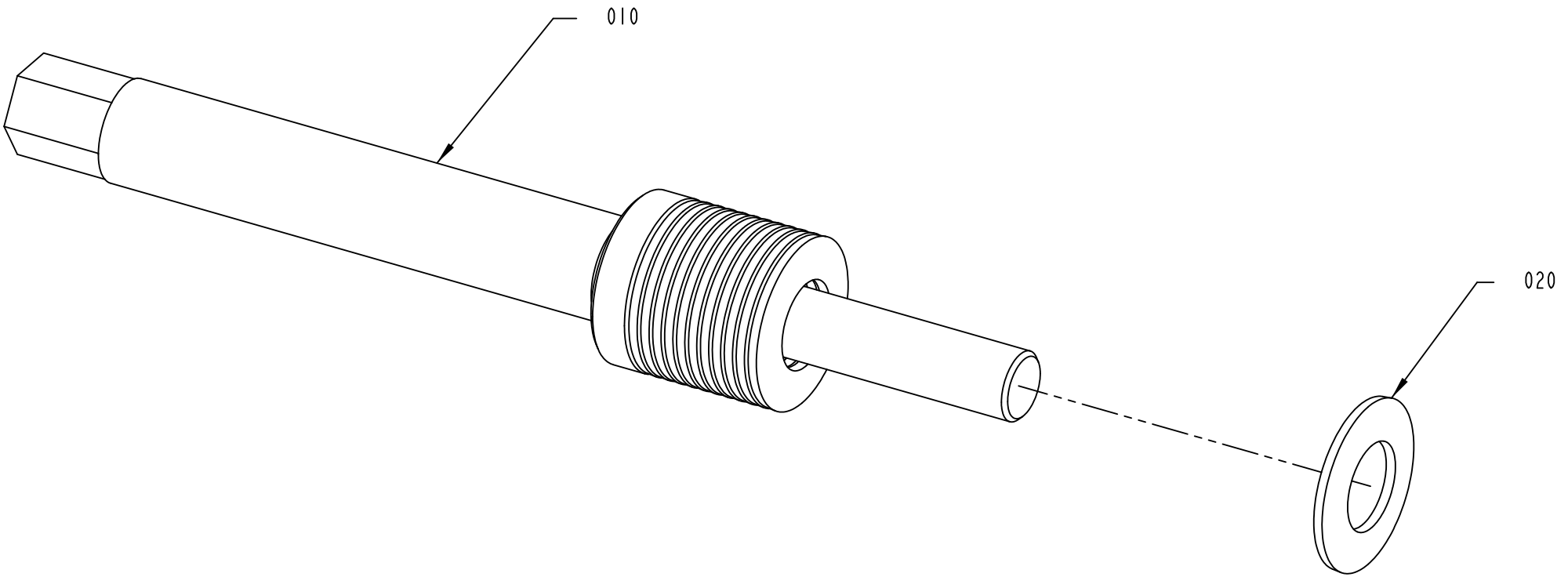

3013627-1
418128

ECM: 418824 - 20091016
Group number: 3013627-0100
Assembly Drawing: 3013627-1_1_AA

Pos	Part No	UN	Qty	Description	Page No
-					
010	3013626-0000		1	SETTING SCREW	
020	3025797-0000		12	DISC SPRING	

Pos	Part No	UN	Qty	Description	Page No

Machine Type | Group Description | Used-In | Group Number | Page No

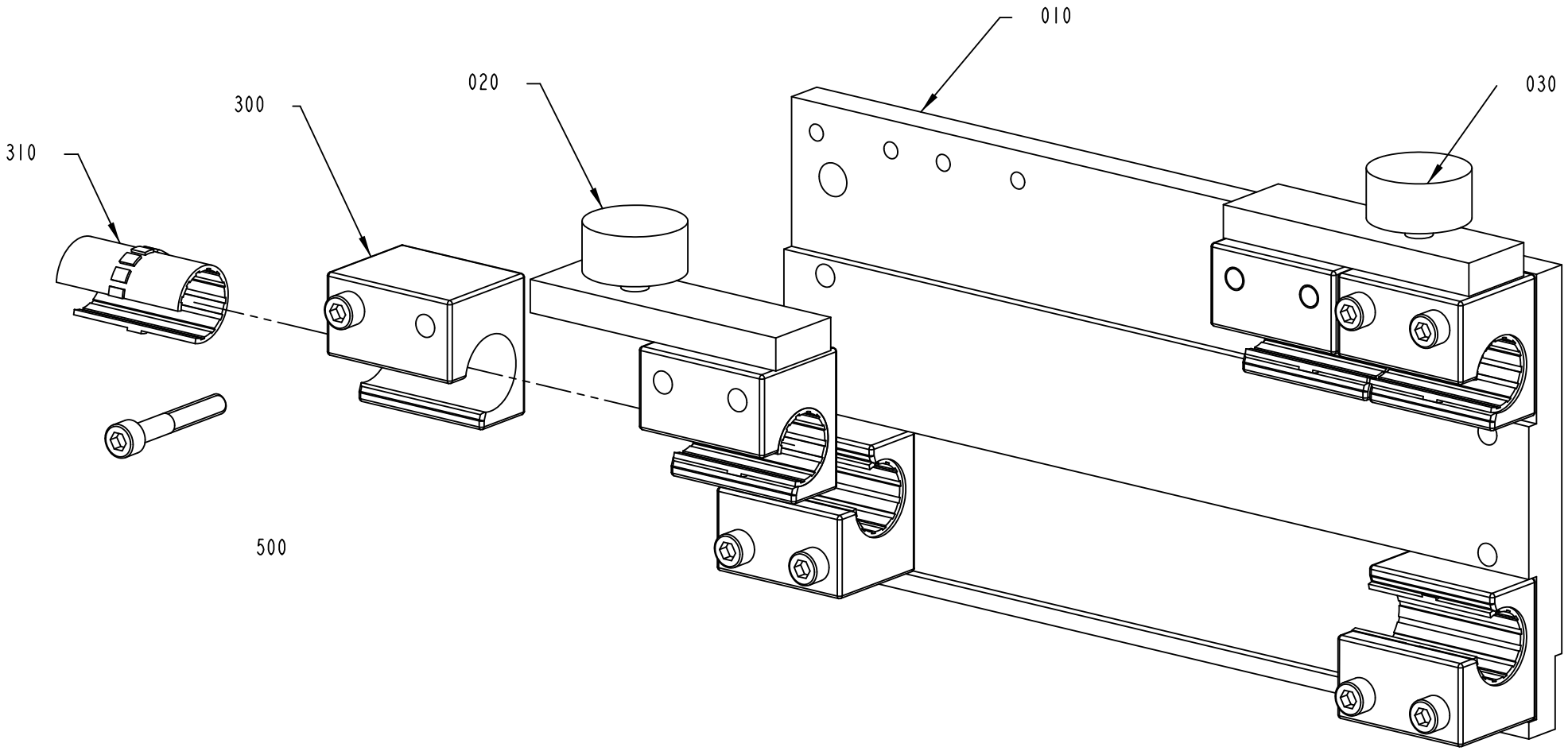

3025794-1
429959

ECM: 436847 - 20100222
Group number: 3025794-0100
Assembly Drawing: 3025794-1_1_AB

Pos	Part No	UN	Qty	Description	Page No
-					
010	3025795-0000		1	PLATE	
020	3025796-0000		2	CLAMPING PLATE	
030	3088862-0000		1	CLAMPING PLATE	
300	90600-0429		4	SLIDER, WM-01-20	
310	90600-0431		6	BUSHING INSERT, J200UMO-01-20	
500	312115-0378		8	SCREW ISO4762 M6X40 A4 80	

Pos	Part No	UN	Qty	Description	Page No

HEIGHT ADJUSTMENT

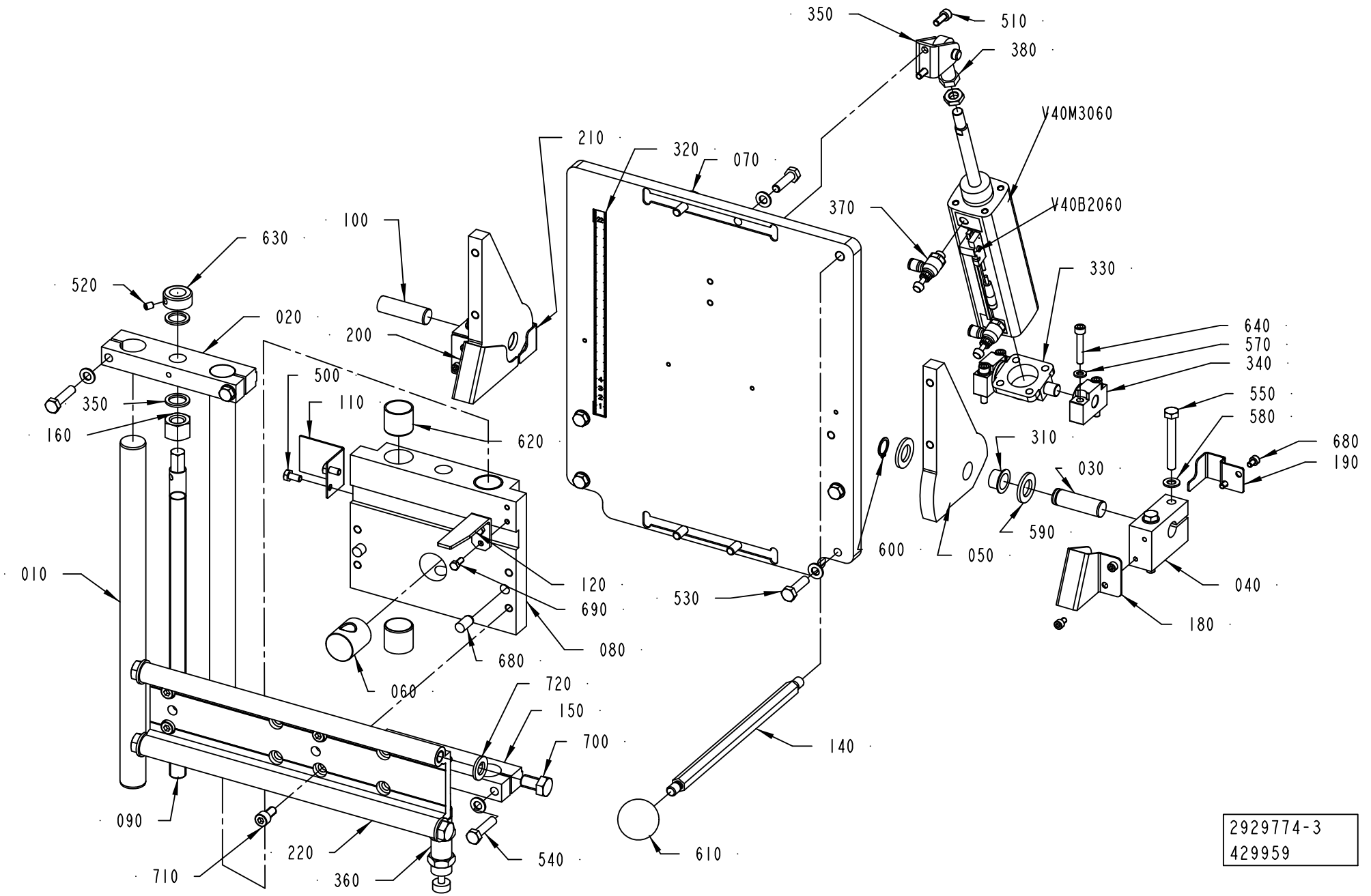

ECM: 436848 - 20100222
Group number: 2929774-0300
Assembly Drawing: 2929774-3_1_AC

Pos	Part No	UN	Qty	Description	Page No
-					
010	2829412-0000		2	SHAFT	
020	2829413-0000		1	BRACKET	
030	2829417-0000		1	SHAFT	
040	2829418-0000		2	BRACKET	
050	3022572-0000		2	PLATE	
060	2835350-0000		1	ADJUSTING NUT	
070	3022573-0000		1	MOUNTING PLATE	
080	3025819-0000		1	BRACKET	
090	3090946-0000		1	ADJUSTING SCREW	
100	2835365-0000		1	SHAFT	
110	3025820-0000		1	SCALE POINTER	
120	3025787-0000		1	BRACKET	
140	2901716-0000		1	BAR	
150	2941713-0000		1	BRACKET	
170	3012784-0000		1	ANGLE BRACKET	
180	3012790-0000		1	PROTECTION PLATE	
190	3012792-0000		1	PROTECTION PLATE	
200	3012793-0000		1	PROTECTION PLATE	
210	3022571-0000		1	PROTECTION PLATE	
220	3025793-0000		1	GUIDE RAIL	
300	90115-0134		1	ROD END, ID=10 MM, M10X1,25	
310	90240-0325		2	FLANGE BUSHING, 16X18X12 MM	
320	90459-0580		1	BRACKET, PIVOT MOUNTING CRZNG-32	
330	90459-0580		1	BRACKET, PIVOT MOUNTING CRZNG-32	
340	90459-0584		2	BEARING BRACKET CRLNZG-32	
350	90459-5949		1	REAR CLEVIS FOOT MOUNTING , CRLBN-32	
360	90600-4444		1	SCHOCK ABSORBER, MC 225 MH2+PP 225+KM20X	
370	90459-7116		2	THROTTLE CHECK VALVE, G1/8", MANUAL,4	
380	90600-2904		1	EARTH BRAID, 250/16/8,5	
390	90600-1559		1	PANEL FEED THROUGH, FWD5 54218	
500	312105-0366		2	SCREW M6S ISO 4017 M6X12 A480	
510	312115-0368		2	SCREW ISO4762 M6X16 A4 80	
520	312318-0362		1	SCREW ISO4029 M6X8 A4	
530	312105-0455		8	SCREW M6S ISO 4017 M8X30 A480	
540	312105-0457		4	CREW M6S ISO 4014 M8X35 A480	
550	312105-0463		4	SCREW M6S ISO 4014 M8X60 A480	
570	315105-0153		4	WASHER BRB 6,4X12 RFR	
580	315105-0165		16	WASHER BRB 8,4X16 RFR	
590	315106-0186		3	WASHER ISO 7089-16-200 HV A4	
600	315751-0113		2	RETAINING RING FOR SHAFT DIN 471 16 SS	
610	318800-0106		1	HANDLE,SPHERICAL KNOB,INT.THRE,D.40-M10	
620	321133-0300		4	BUSHING IGLIDUR G 25X28X25	
630	315741-0112		1	RETAINING RING DIN 705 A2 16	
640	312115-0376		4	SCREW ISO4762 M6X35 A4 80	
660	312105-0449		2	SCREW M6S ISO 4017 M8X16 A480	
670	315106-0165		2	WASHER ISO 7089-8-200 HV A4	
680	312115-0323		8	SCREW ISO4762 M5X8 A4 80	
680	311103-0454		2	PARALLEL PIN ISO 2338 10M6X20 A1	
690	312105-0327		2	SCREW M6S ISO 4017 M5X12 A480	
700	312105-0532		4	SCREW M6S ISO 4017 M12X20 A480	
710	312115-0449		4	SCREW ISO4762 M8X16 A4 80	
720	315106-0178		4	WASHER ISO 7089-12-200 HV A4	
V40B2060	90459-2392		1	PROX.SENSOR SMT-C1-PS-24V-K0,3-M8-SA	
V40M3060	90459-6273		1	DOUBLE ACTING, PROFILE,CYL 32-80	

Machine Type	Group Description	Used-In	Group Number	Page No

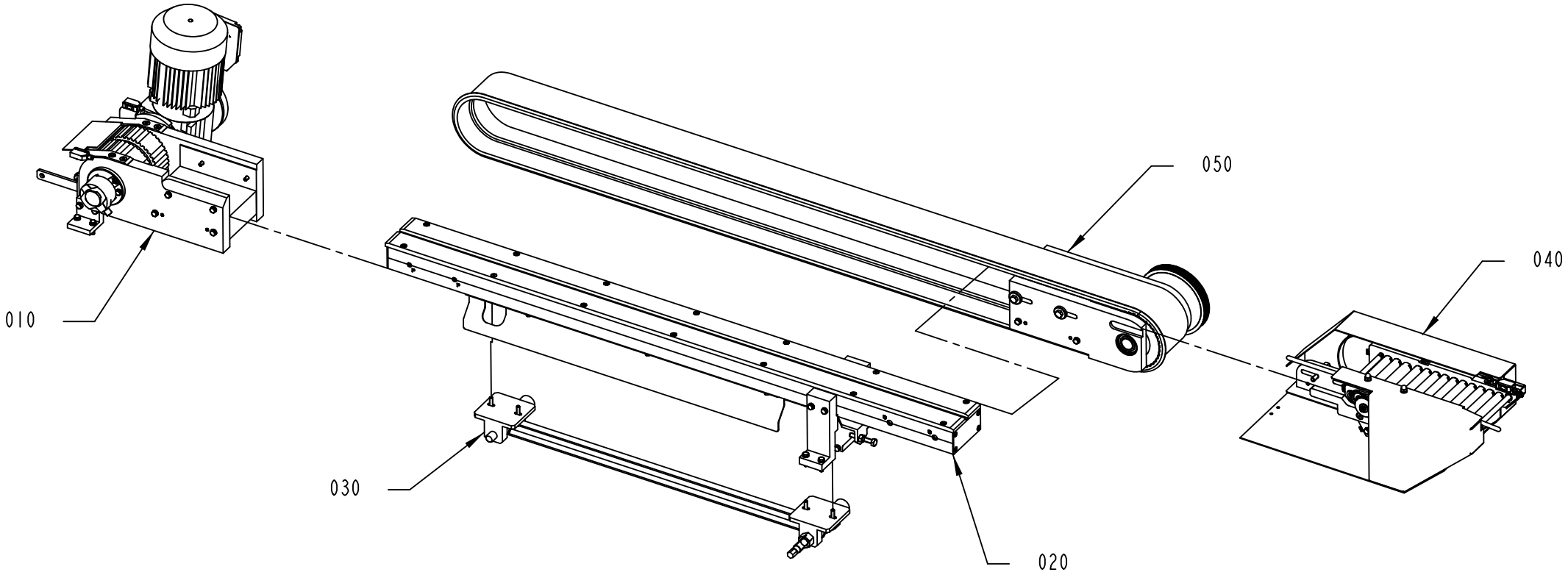

2933980-2
380417

ECM: 393399 - 20090409
Group number: 2933980-0200
Assembly Drawing: 2933980-2_1_AA

Pos	Part No	UN	Qty	Description	Page No
-					
010	2933965-0100		1	DRIVE AND END UNIT	**1-77**
020	2933970-0100		1	CONVEYOR BODY	**1-79**
030	2933990-0100		1	ADJUSTER	**1-81**
040	2957680-0200		1	CONVEYOR	**1-83**
050	2957690-0200		1	BELT CONVEYOR, INFEED	**1-85**

Pos	Part No	UN	Qty	Description	Page No

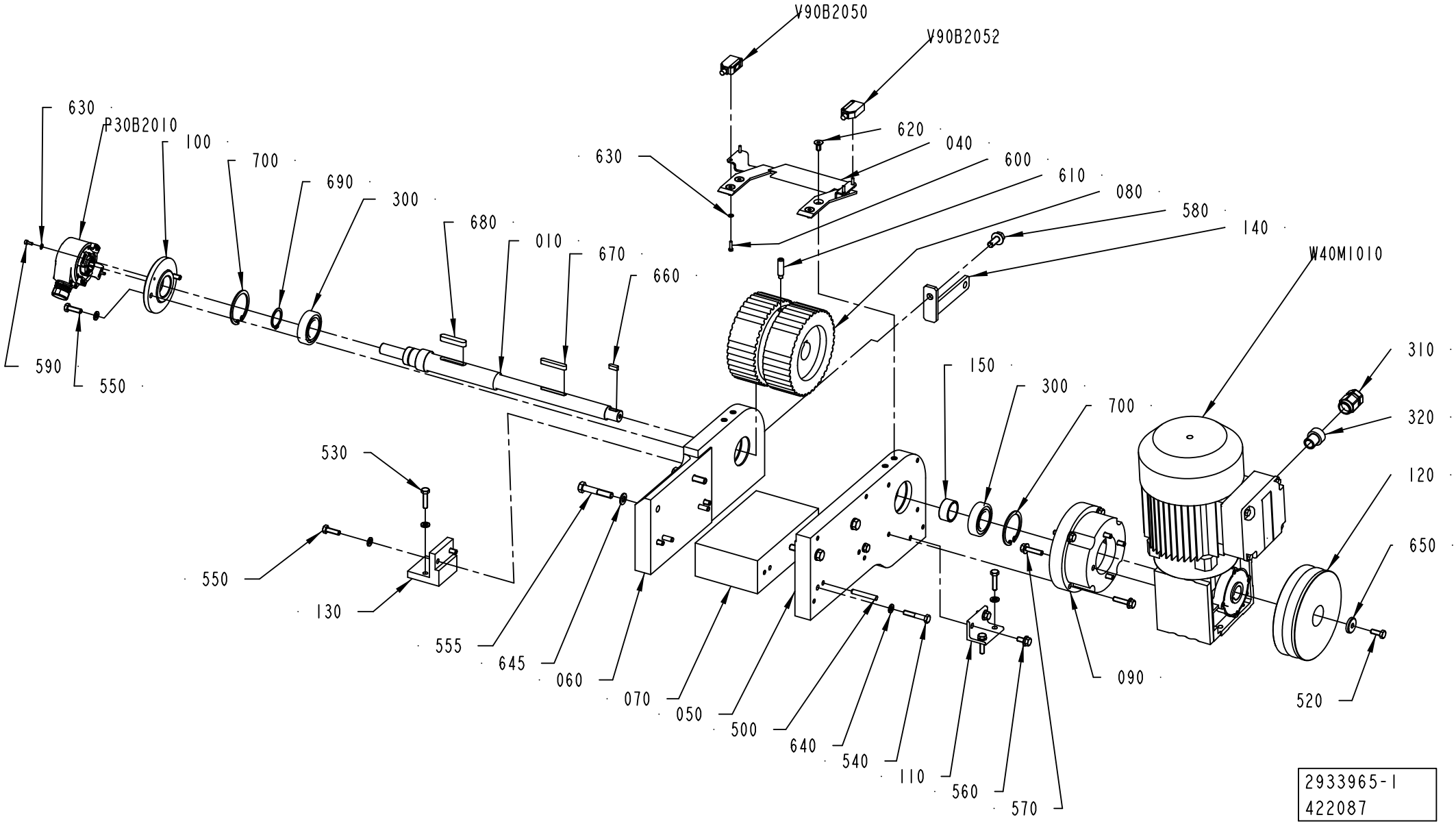
V90B2050
V90B2052
630
P30B2010
100
700
690
300
680
010
670
660
630
620
040
600
610
080
580
140
W40M1010
590
550
530
550
130
555
645
060
070
050
500
640
540
110
560
570
150
300
700
310
320
120
650
090
520
2933965-1
422087

ECM: 436849 - 20100222
Group number: 2933965-0100
Assembly Drawing: 2933965-1_1_AE

Pos	Part No	UN	Qty	Description	Page No
-					
010	3023596-0000		1	SHAFT	
040	2916047-0000		1	SLIDE PLATE	
050	2926027-0000		1	BRACKET	
060	2926028-0000		1	BRACKET	
070	2926029-0000		1	SPACER BLOCK	
080	2933958-0000		1	TIMING BELT PULLEY	
090	2933964-0000		1	BRACKET	
100	2992498-0000		1	BRACKET	
110	2933969-0000		1	BRACKET	
120	2934013-0000		1	PULLEY	
130	2957713-0000		1	BRACKET	
140	2957719-0000		1	BRACKET	
150	3023594-0000		1	SPACER SLEEVE	
300	90600-0140		2	BALL BEARING 25/47X12	
310	90458-0438		1	GLAND, EXTENDED WITH INSERT, M20X1,5	
320	90459-3668		1	REDUCER M20/M16	
500	311103-0361		4	PARALLEL PIN ISO 2338 6M6X40 A1	
520	312105-0368		1	SCREW M6S ISO 4017 M6X16 A480	
530	312105-0372		4	SCREW M6S ISO 4017 M6X25 A480	
540	312105-0376		4	SCREW M6S ISO 4014 M6X35 A480	
550	312105-0370		4	SCREW M6S ISO 4017 M6X20 A480	
555	312105-0460		4	SCREW M6S ISO 4014 M8X45 A480	
560	312108-0366		2	SCREW EN 1665 TYPE F M6X12 A270	
570	312108-0372		8	SCREW EN 1665 TYPE F M6X25 A270	
580	312108-0451		1	SCREW EN 1665 TYPE F M8X20 A270	
590	312115-0222		2	SCREW ISO4762 M3X8 A4 80	
600	312125-0226		4	SCREW ISO 1207 M3X12 A4	
610	312311-0455		1	SCREW ISO4028 M8X30 FZB	
620	312155-0366		4	SCREW DIN 7991 MF6S M6X12 A4 70	
630	315106-0124		6	WASHER ISO 7089-3-200 HV A4	
640	315106-0153		12	WASHER ISO 7089-6-200 HV A4	
645	315106-0165		4	WASHER ISO 7089-8-200 HV A4	
650	315125-0153		1	WASHER TBRSB 6,4X22X4 A4	
660	315705-0198		1	PARALLEL KEY W. ROUND ENDS 5X5X14 MM	
670	315705-0239		1	PARALLEL KEY W. ROUND ENDS 6X6X40 MM	
680	315705-0270		1	PARALLEL KEY W. ROUND ENDS 8X7X40 MM	
690	315751-0119		1	RETAINING RING FOR SHAFT DIN 471 25 SS	
700	315753-0130		2	RETAINING RING FOR BORE DIN 472 47 A2	
P30B2010	90600-5297		1	INCREMENTAL ENCODER, DFS60A-BHAA65536	
V90B2050	90459-7273		1	PHOTOCELL E3Z-T81C-G0SR D-CN	
V90B2052	90459-7274		1	PHOTOCELL E3Z-T81C-G0SR L-CN	
W40M1010	90600-5064		1	GEARS, WORM MOTOR WA 20 DT71 D4	

Machine Type	Group Description	Used-In	Group Number	Page No

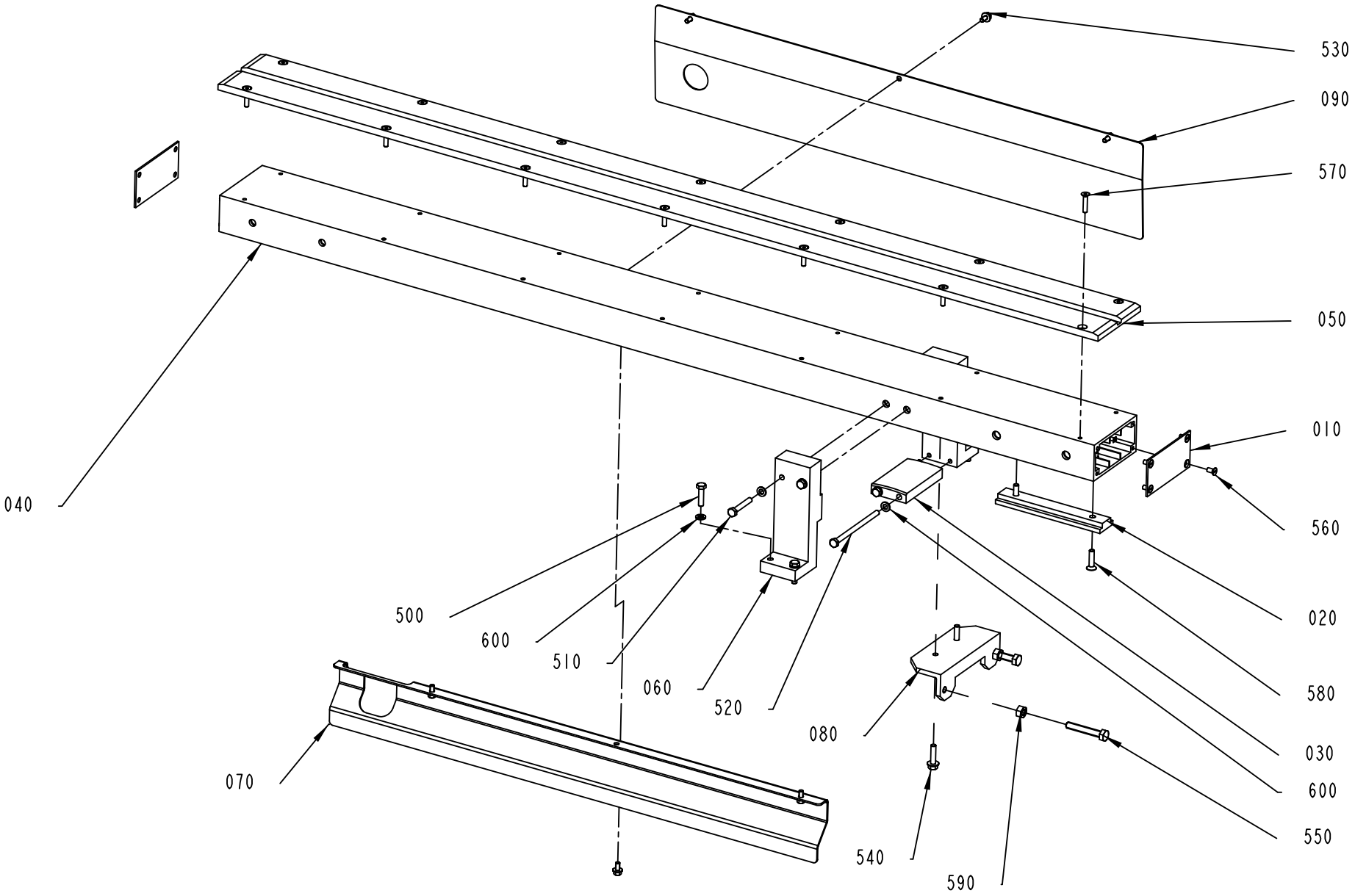
530
090
570
050
010
560
020
580
030
600
550
590
540
080
520
060
510
600
500
070
040
2933970-1
380417

ECM: 436850 - 20100222
Group number: 2933970-0100
Assembly Drawing: 2933970-1_1_AB

Pos	Part No	UN	Qty	Description	Page No
-					
010	556603-0000		2	COVER PLATE	
020	2904836-0000		1	ADJUSTMENT BRACKET	
030	2904856-0000		1	SUPPORT	
040	2933962-0000		1	PROFILE 50X100	
050	2933963-0000		1	SLIDE RAIL	
060	2948161-0000		2	BRACKET	
070	2948162-0000		1	PROTECTION PLATE	
080	2957679-0000		1	FASTENING BRACKET	
090	2992469-0000		10	PROTECTION PLATE	
500	312105-0372		4	SCREW M6S ISO 4017 M6X25 A480	
510	312105-0378		4	SCREW M6S ISO 4014 M6X40 A480	
520	312105-0390		2	SCREW M6S ISO 4014 M6X100 A480	
530	312108-0325		6	SCREW EN 1665 TYPE F M5X10 A270	
540	312108-0372		2	SCREW EN 1665 TYPE F M6X25 A270	
550	312109-0461		2	SCREW M6S ISO 4017 M8X50 A480	
560	312145-0325		8	SCREW ISO 2009 MFS M5X10 A4	
570	312155-0333		14	SCREW DIN 7991 MF6S M5X25 A4 70	
580	312155-0372		2	SCREW DIN 7991 MF6S M6X25 A4 70	
590	312605-0318		2	HEXAGON NUT, M6M M8 A280	
600	315106-0153		10	WASHER ISO 7089-6-200 HV A4	

Pos	Part No	UN	Qty	Description	Page No

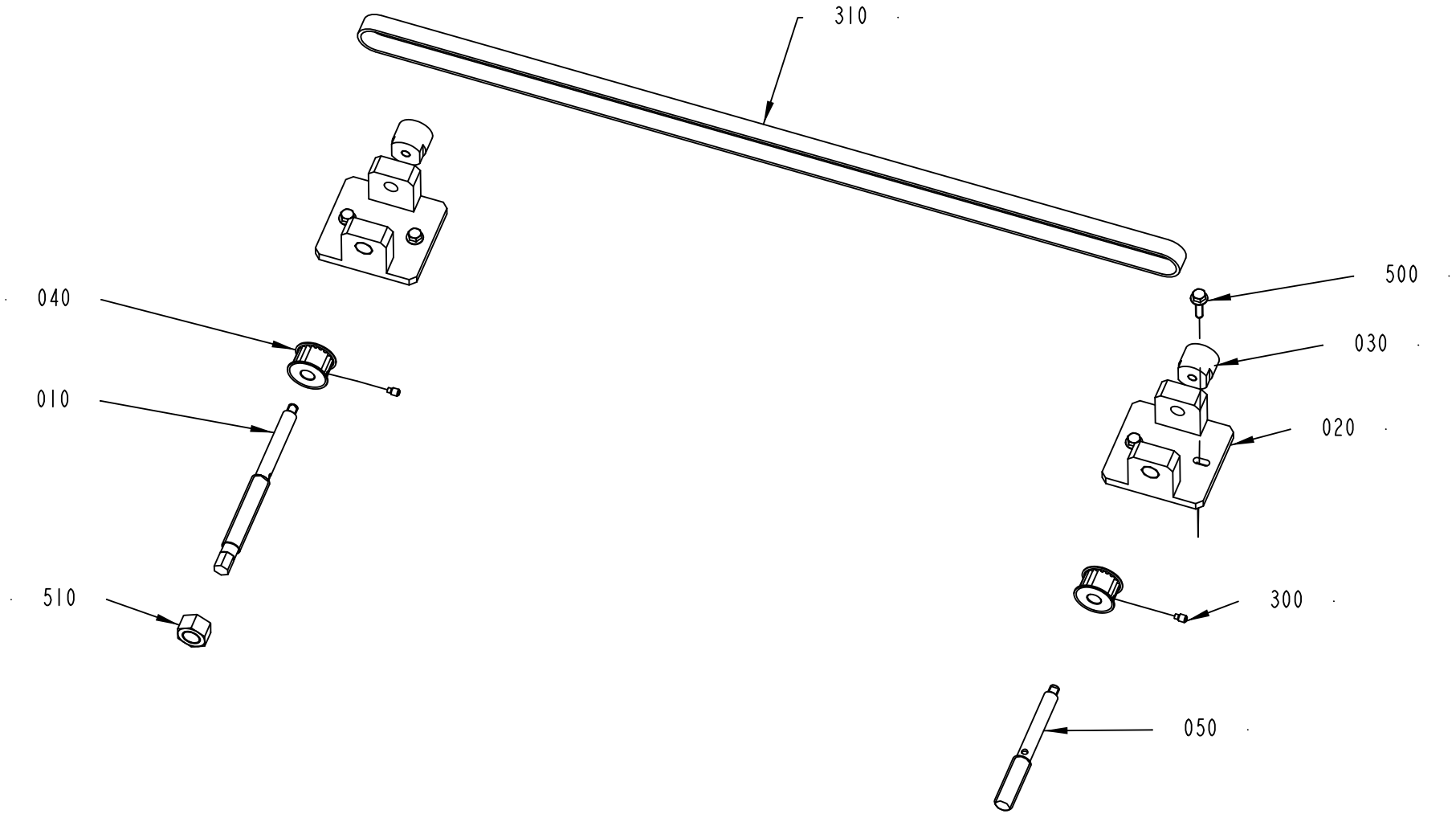

2933990-1
344491

ECM: 436851 - 20100222
Group number: 2933990-0100
Assembly Drawing: 2933990-1_1_AA

Pos	Part No	UN	Qty	Description	Page No
-					
010	2926058-0000		1	ADJUSTING SCREW	
020	2933986-0000		2	SCREW HOLDER	
030	2934005-0000		2	THRUST WASHER	
040	2934006-0000		2	TOOTHED PULLEY	
050	2982627-0000		1	ADJUSTING SCREW	
300	90287-0154		2	SCREW, SOCK.SET DOGPOINT M6X10	
310	90600-5067		1	TIMING BELT 16T5/1500 PU	
500	312108-0372		4	SCREW EN 1665 TYPE F M6X25 A270	
510	312607-0324		1	HEXAGON NUT, EN 24032 M6M M16 A480	

Pos	Part No	UN	Qty	Description	Page No

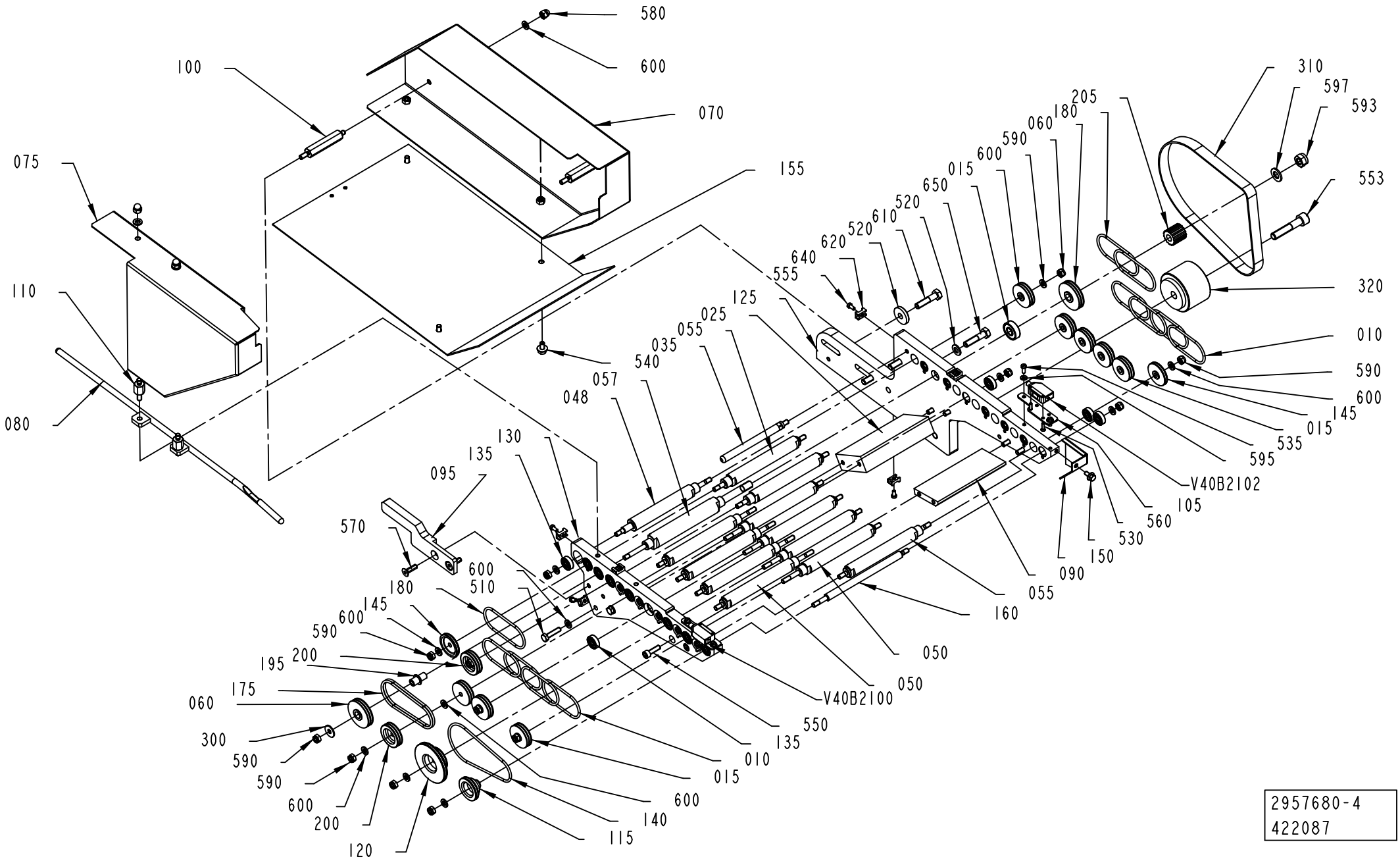

2957680-4
422087

ECM: 436852 - 20100222
Group number: 2957680-0200
Assembly Drawing: 2957680-4_1_AC

Pos	Part No	UN	Qty	Description	Page No
-					
010	2925998-0000		8	DRIVE BELT	
015	2926082-0000		8	DRIVE WHEEL	
025	3023535-0000		1	SPACER ELEMENT	
035	2957687-0000		1	SUPPORT ROD	
048	2992502-0000		1	SUPPORT ROLLER	
050	2992503-0000		8	SUPPORT ROLLER	
055	2992505-0000		3	DRIVE ROLLER	
057	2992508-0000		1	SUPPORT ROLLER	
060	3023532-0000		2	DRIVE WHEEL	
070	2957704-0000		1	PROTECTIVE CASING	
075	3023542-0000		1	PROTECTIVE CASING	
080	2957711-0000		1	RULING GUIDE	
090	2957714-0000		1	SPACER ELEMENT	
095	2957715-0000		1	GUIDE LUG	
100	2957718-0000		2	SPACER PIN	
105	2992491-0000		2	PHOTOCELL BRACKET	
110	2957729-0000		2	SPACER PIN	
115	2957761-0000		1	DRIVE WHEEL	
120	2957762-0000		1	DRIVE WHEEL	
125	2992506-0000		1	SIDE PLATE	
130	2992507-0000		1	SIDE PLATE	
135	90601-9790		27	BALL BEARING, 6X19X6 MM	
140	2957768-0000		1	DRIVE BELT	
145	2957769-0000		2	DRIVE WHEEL	
150	2957772-0000		1	PROTECTION	
155	2957773-0000		1	PROTECTION PLATE	
160	2992504-0000		1	DRIVE ROLLER	
175	3023536-0000		2	DRIVE BELT	
180	3023539-0000		3	DRIVE BELT	
195	3023531-0000		1	SPACER SLEEVE	
200	2992480-0000		2	DRIVE WHEEL	
205	2992509-0000		1	TOOTHED PULLEY	
300	90005-0060		1	WASHER PLAIN, RBS 6,4/M6)/18,H=1,5	
310	90417-0082		1	TIMING BELT 16T5/610 PU	
320	90458-0220		1	TENSION ROLLER, M40/60-0-M EXCENTRIC	
510	312105-0372		4	SCREW M6S ISO 4017 M6X25 A480	
520	312105-0457		4	CREW M6S ISO 4014 M8X35 A480	
530	312108-0325		1	SCREW EN 1665 TYPE F M5X10 A270	
535	312125-0289		4	SCREW ISO 1207 M4X10 A4	
540	312108-0364		3	SCREW EN 1665 TYPE F M6X10 A270	
550	312115-0370		4	SCREW ISO4762 M6X20 A4 80	
553	312115-0501		1	SCREW ISO4762 M10X50 A4 80	
555	312125-0287		6	SCREW ISO 1207 M4X8 A4	
560	312155-0226		4	SCREW DIN 7991 MF6S M3X12 A4 70	
570	312155-0370		2	SCREW DIN 7991 MF6S M6X20 A4 70	
580	312705-0316		4	NUT HEX. DOMED CAP MHM-6 M6 A280	
590	312812-0316		27	HEXAGON NUT, NY-LOCK M6 A480	
593	312812-0320		1	HEXAGON NUT, NY-LOCK M10 A480	
595	315106-0136		4	WASHER ISO 7089-4-200 HV A4	
597	315106-0173		1	WASHER ISO 7089-10-200 HV A4	
600	315106-0153		35	WASHER ISO 7089-6-200 HV A4	
610	315106-0165		2	WASHER ISO 7089-8-200 HV A4	
620	315125-0165		2	WASHER TBRSB 8,4X26X5 A4	
640	352113-0205		6	ANCHOR PLATES FOR STRIPS, TYPE TM2S8-C10	
650	90214-0231		1	BALL BEARING 10/26X8	
V40B2100	90459-7273		1	PHOTOCELL E3Z-T81C-G0SR D-CN	
V40B2102	90459-7274		1	PHOTOCELL E3Z-T81C-G0SR L-CN	

Machine Type	Group Description	Used-In	Group Number	Page No

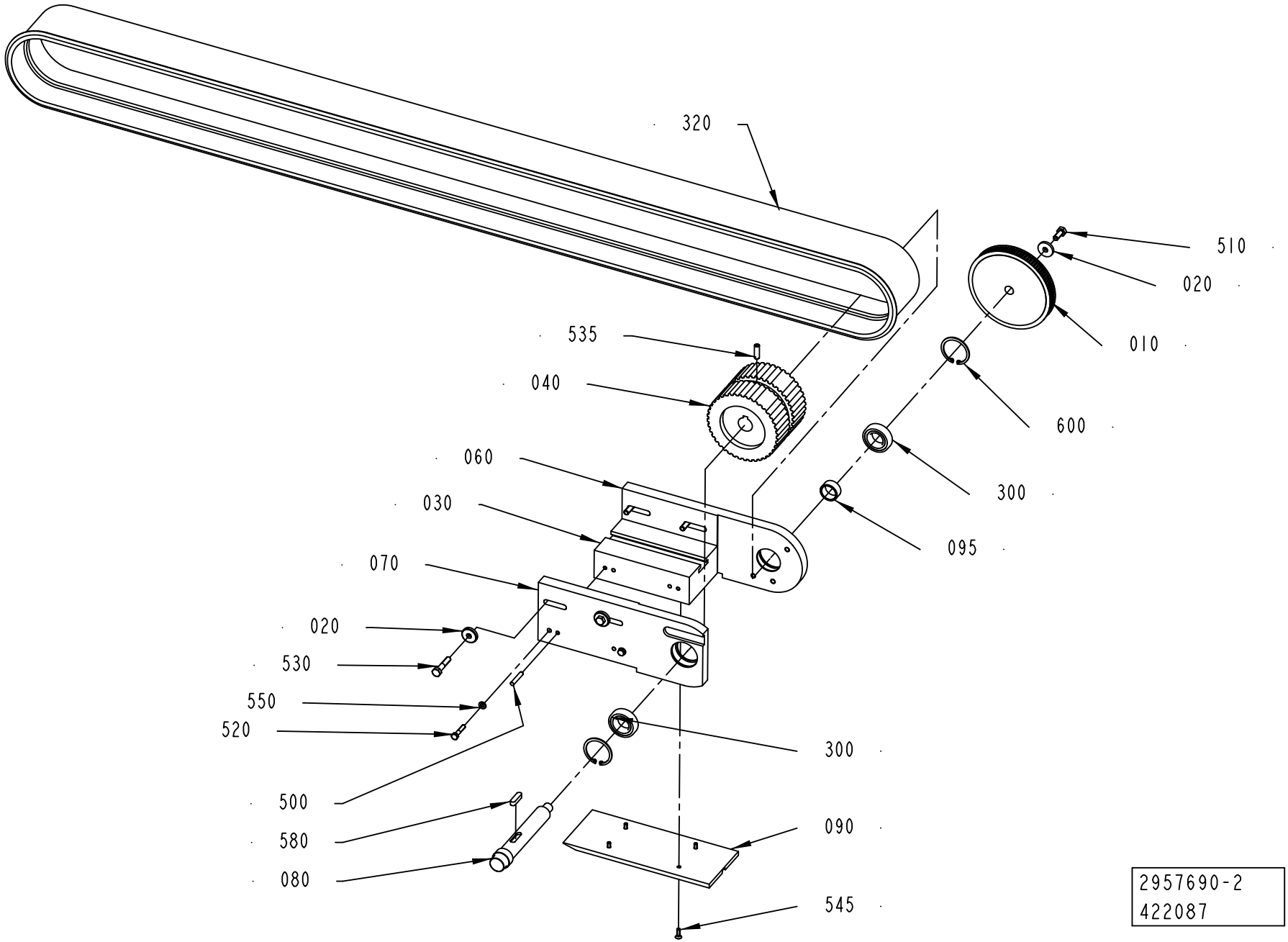
320
510
020
010
535
040
600
060
300
030
095
070
020
530
550
520
300
500
090
580
080
545
2957690-2
422087

ECM: 435921 - 20100222
Group number: 2957690-0200
Assembly Drawing: 2957690-2_1_AC

Pos	Part No	UN	Qty	Description	Page No
-					
010	2992510-0000		1	TOOTHED PULLEY	
020	315125-0165		1	WASHER TBRSB 8,4X26X5 A4	
030	2933956-0000		1	SPACER BLOCK	
040	2933958-0000		1	TIMING BELT PULLEY	
060	2957695-0000		1	BRACKET	
070	2957696-0000		1	BRACKET	
080	3023593-0000		1	SHAFT	
090	3023563-0000		1	SLIDE RAIL	
095	3023594-0000		1	SPACER SLEEVE	
300	90600-0140		2	BALL BEARING 25/47X12	
320	90600-5069		1	TIMING BELT 100ATK10/3280 PU	
500	311103-0359		4	PARALLEL PIN ISO 2338 6M6X35 A1	
510	312105-0451		1	SCREW M6S ISO 4017 M8X20 A480	
520	312105-0374		3	SCREW M6S ISO 4014 M6X30 A480	
530	312105-0459		4	SCREW M6S ISO 4014 M8X40 A480	
535	312318-0453		1	SCREW ISO4029 M8X25 A4	
540	312115-0372		1	SCREW ISO4762 M6X25 A4 80	
545	312155-0329		4	SCREW DIN 7991 MF6S M5X16 A4 70	
550	315105-0153		3	WASHER BRB 6,4X12 RFR	
560	315125-0165		4	WASHER TBRSB 8,4X26X5 A4	
580	315705-0267		1	PARALLEL KEY W. ROUND ENDS 8X7X30 MM	
600	315753-0130		2	RETAINING RING FOR BORE DIN 472 47 A2	

Pos	Part No	UN	Qty	Description	Page No

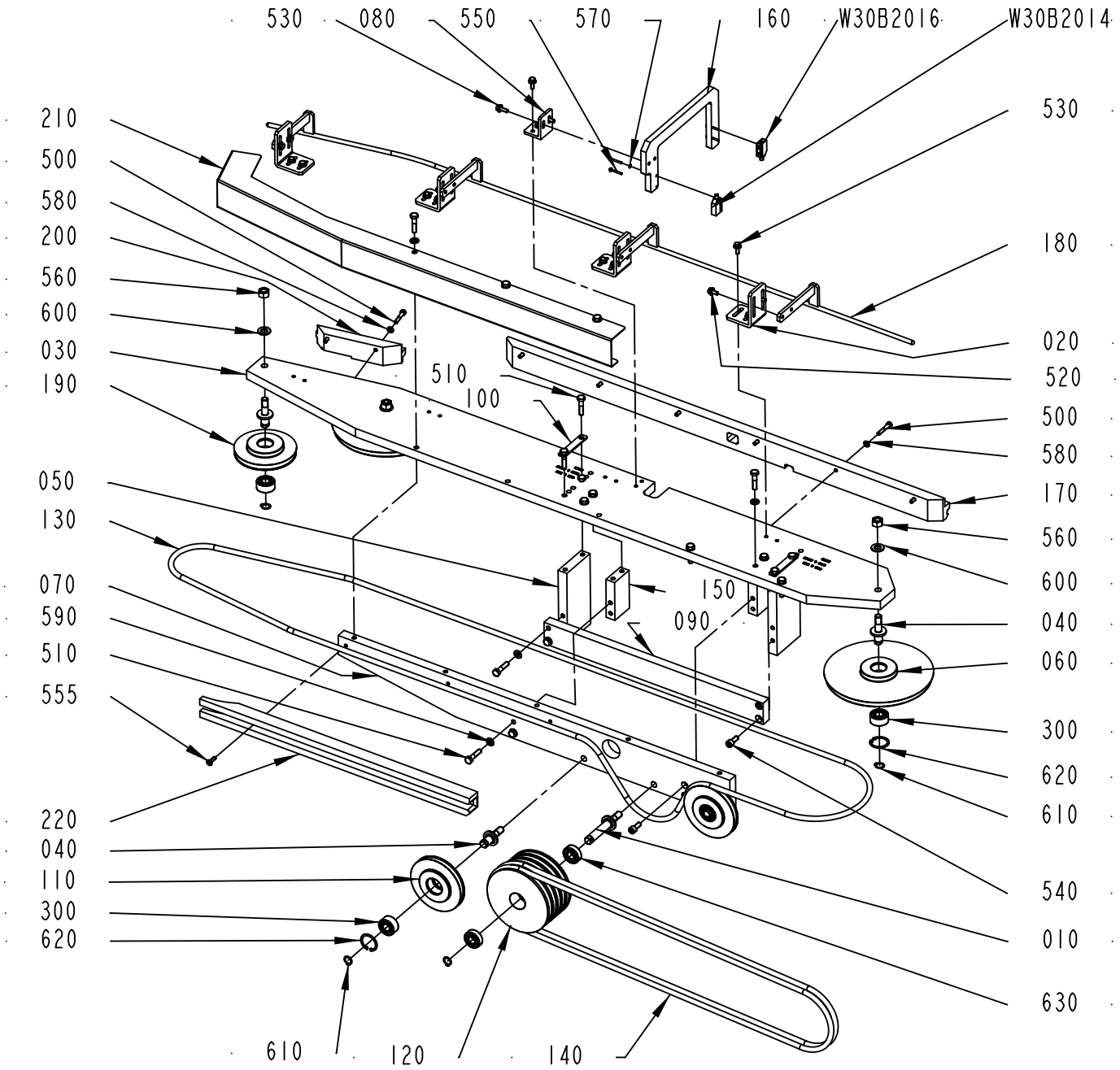

2926070-1
422087

ECM: 436854 - 20100222
Group number: 2926070-0100
Assembly Drawing: 2926070-1_1_AB

Pos	Part No	UN	Qty	Description	Page No
-					
010	2926048-0000		1	AXLE PIN	
020	2926051-0000		4	BRACKET	
030	2926052-0000		1	MOUNTING SHEET	
040	2926054-0000		5	AXLE PIN	
050	2926056-0000		2	LOCATING PIECE	
060	2926059-0000		2	PULLEY	
070	2926063-0000		1	AXLE SUPPORT	
080	2926066-0000		1	ANGLE BRACKET	
090	2926068-0000		1	CROSS BAR	
100	2926071-0000		2	COVER DISC	
110	2933971-0000		2	PULLEY	
120	2933972-0000		1	PULLEY	
130	2933973-0000		1	DRIVE BELT	
140	2933974-0000		2	BELT	
150	2933979-0000		2	LOCATING PIECE	
160	2934009-0000		1	BRACKET	
170	2934016-0000		1	SLIDE RAIL	
180	2934021-0000		1	STEERING	
190	2934027-0000		1	PULLEY	
200	2957727-0000		1	SLIDE RAIL	
210	2982599-0000		1	PROTECTIVE CASING	
220	3023616-0000		1	SLIDE RAIL	
300	90459-2676		5	ANG. BALL BEAR 15/35X15,9	
500	312105-0376		8	SCREW M6S ISO 4014 M6X35 A480	
510	312105-0457		18	CREW M6S ISO 4014 M8X35 A480	
520	312108-0366		8	SCREW EN 1665 TYPE F M6X12 A270	
530	312108-0368		12	SCREW EN 1665 TYPE F M6X16 A270	
540	312115-0451		4	SCREW ISO4762 M8X20 A4 80	
550	312125-0232		4	SCREW ISO 1207 M3X25 A4	
555	312155-0370		3	SCREW DIN 7991 MF6S M6X20 A4 70	
560	312607-0322		6	HEXAGON NUT, EN 24032 M6M M12 A480	
570	315106-0124		4	WASHER ISO 7089-3-200 HV A4	
580	315106-0153		8	WASHER ISO 7089-6-200 HV A4	
590	315106-0165		13	WASHER ISO 7089-8-200 HV A4	
600	315106-0178		6	WASHER ISO 7089-12-200 HV A4	
610	315751-0112		6	RETAINING RING FOR SHAFT DIN 471 15 SS	
620	315753-0124		4	RETAINING RING FOR BORE DIN 472 35 A2	
630	321313-0102		2	BALL BEARING 15/35X11	
W30B2014	90459-7273		1	PHOTOCELL E3Z-T81C-G0SR D-CN	
W30B2016	90459-7274		1	PHOTOCELL E3Z-T81C-G0SR L-CN	

Pos	Part No	UN	Qty	Description	Page No

Machine Type | Group Description | Used-In | Group Number | Page No

ADJUSTMENT PLATE

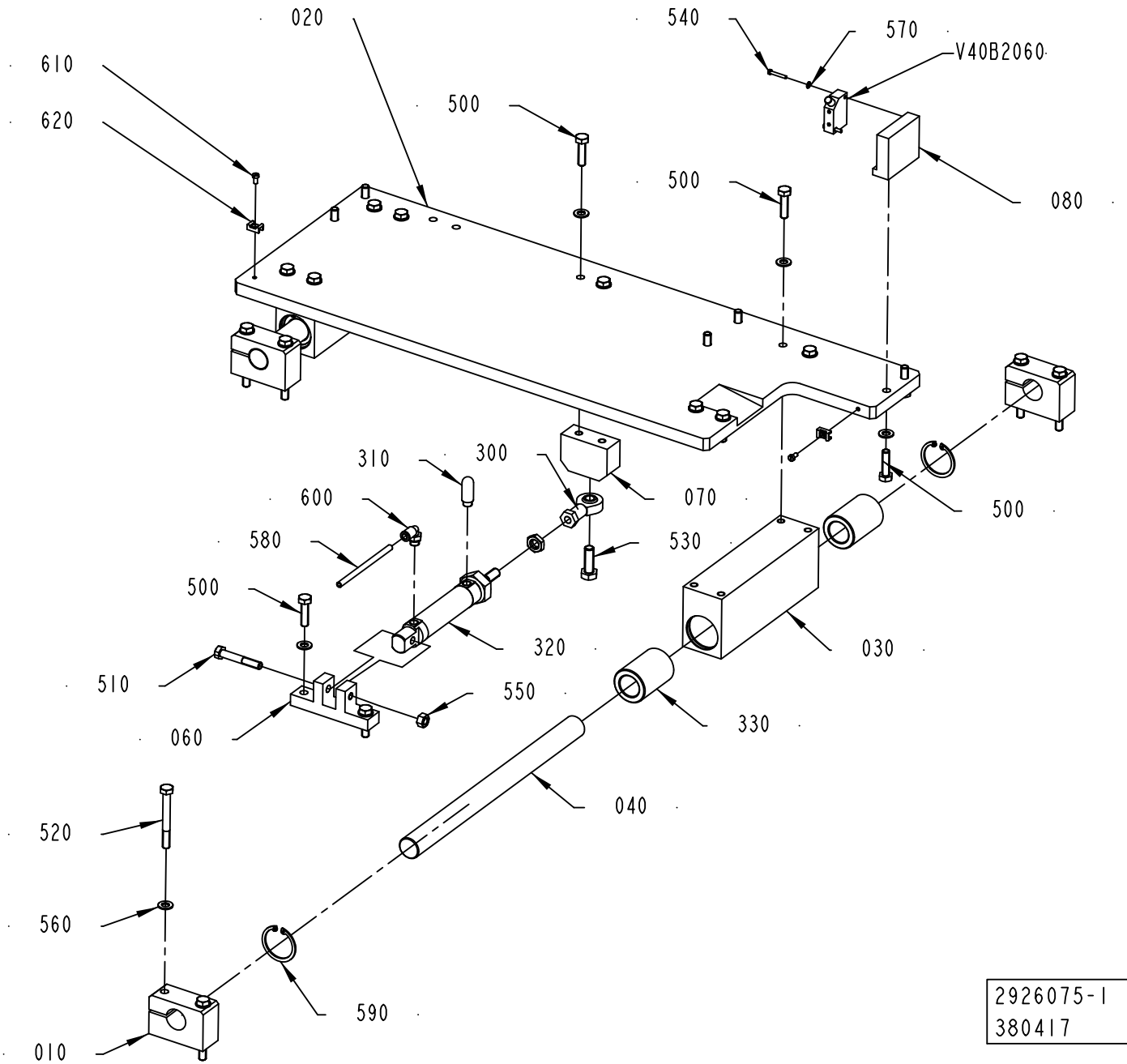

ECM: 436855 - 20100222
Group number: 2926075-0100
Assembly Drawing: 2926075-1_1_AB

Pos	Part No	UN	Qty	Description	Page No
-					
010	2829403-0000		4	BRACKET	
020	2926061-0000		1	PLATE	
030	2926062-0000		2	BEARING HOLDER	
040	2933948-0000		2	RUNNER ROD	
060	2933976-0000		1	CYLINDER BRACKET	
070	2933977-0000		1	CYLINDER BRACKET	
080	2933978-0000		1	STOP LUG	
300	90115-0134		1	ROD END, ID=10 MM, M10X1,25	
310	90328-0047		1	SILENCER G1/8"	
320	90459-1699		1	DOUBLE ACTING, MINI-ISO, CYL 25-50	
330	90600-5061		4	BUSHING, 25X40X58 MM	
500	312105-0455		19	SCREW M6S ISO 4017 M8X30 A480	
510	312105-0461		1	SCREW M6S ISO 4014 M8X50 A480	
520	312105-0465		8	SCREW M6S ISO 4014 M8X70 A480	
530	312105-0495		1	SCREW M6S ISO 4017 M10X30 A480	
540	312125-0230		2	SCREW ISO 1207 M3X20 A4	
550	312607-0318		1	HEXAGON NUT, EN 24032 M6M M8 A480	
560	315105-0165		27	WASHER BRB 8,4X16 RFR	
570	315106-0124		2	WASHER ISO 7089-3-200 HV A4	
580	315400-0001	M	3	TUBE PUN-H-6X1-BL	
590	315753-0127		4	RETAINING RING FOR BORE DIN 472 40 A2	
600	350002-0006		1	PUSH-IN L-FITTING QSL-F-G1/8-6	
610	312125-0287		2	SCREW ISO 1207 M4X8 A4	
620	352113-0205		2	ANCHOR PLATES FOR STRIPS, TYPE TM2S8-C10	
V40B2060	90459-2409		1	INDUCTIVE SENSOR IN5230	

Pos	Part No	UN	Qty	Description	Page No

SIDE ADJUSTER

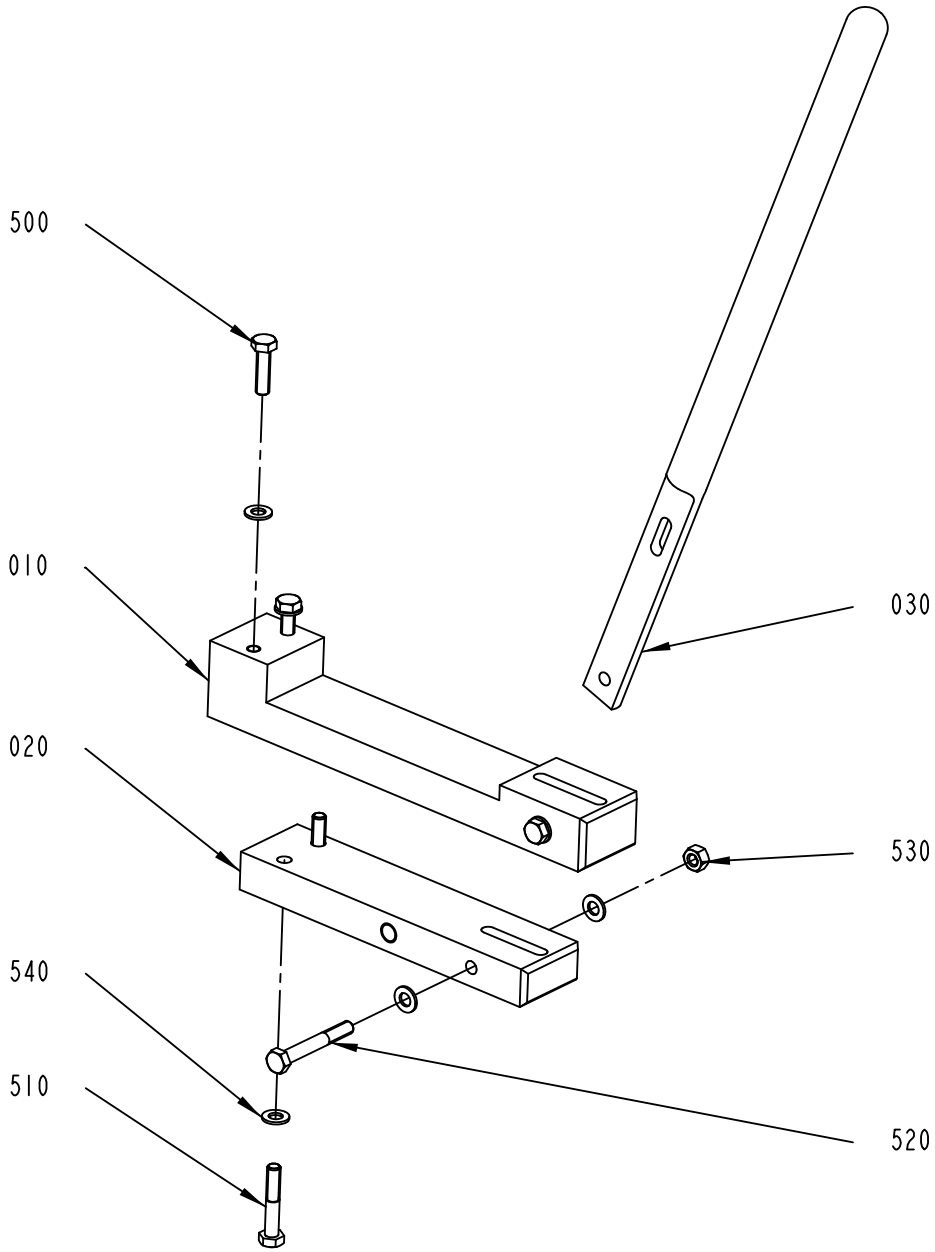

2957705-1
380417

ECM: 390376 - 20090409
Group number: 2957705-0100
Assembly Drawing: 2957705-1_1_AB

Pos	Part No	UN	Qty	Description	Page No
-					
010	2957698-0000		1	CONNECTION LINK	
020	2957699-0000		1	LINK ATTACHMENT	
030	2957703-0000		1	LEVER BAR	
500	312105-0455		2	SCREW M6S ISO 4017 M8X30 A480	
510	312105-0460		2	SCREW M6S ISO 4014 M8X45 A480	
520	312105-0463		2	SCREW M6S ISO 4014 M8X60 A480	
530	312605-0318		2	HEXAGON NUT, M6M M8 A280	
540	315105-0165		8	WASHER BRB 8,4X16 RFR	

Pos	Part No	UN	Qty	Description	Page No

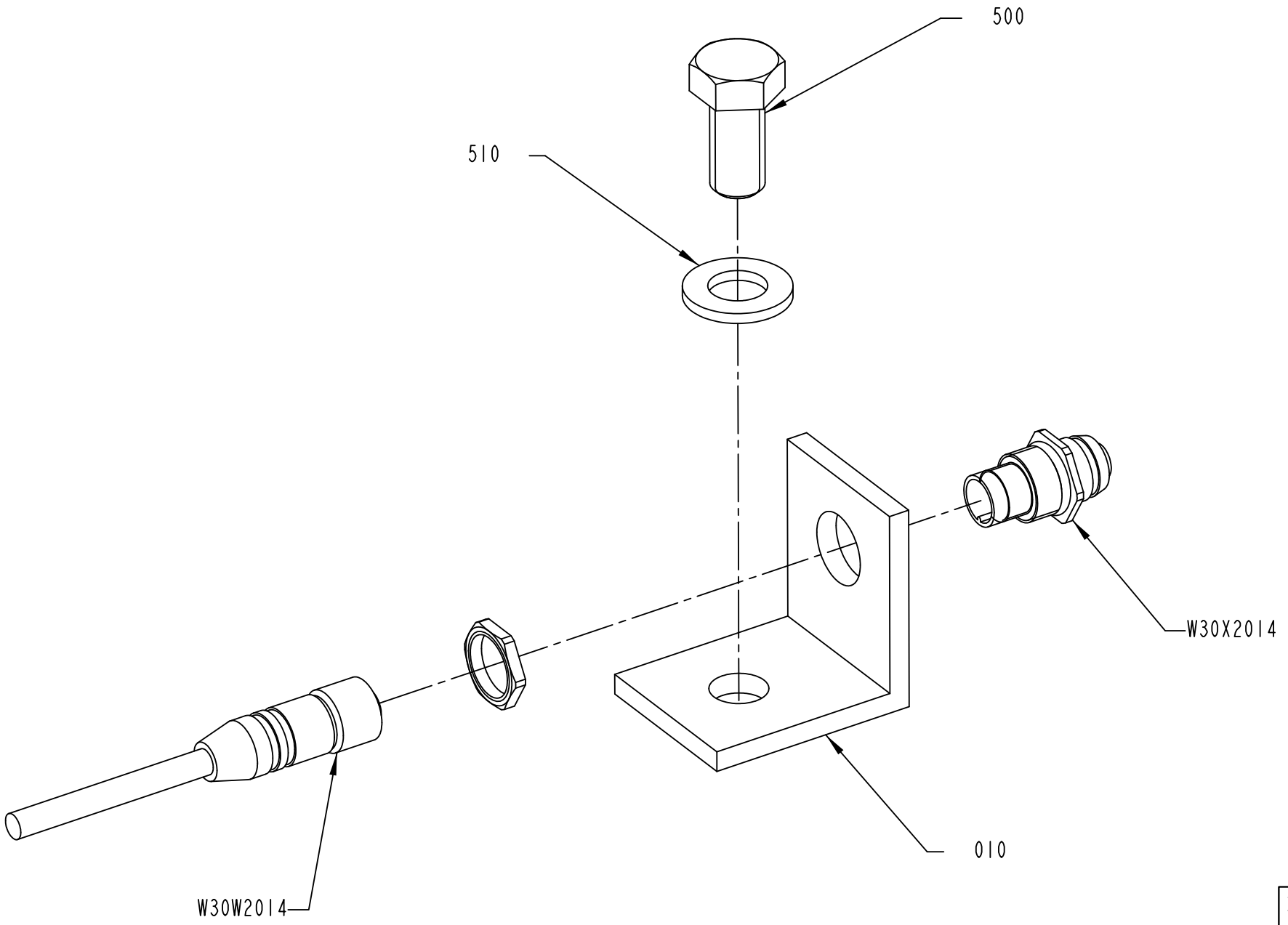

2992430-1
380417

ECM: 402583 - 20090612
Group number: 2992430-0100
Assembly Drawing: 2992430-1_1_AA

Pos	Part No	UN	Qty	Description	Page No
TCA					
500	312105-0534		1	SCREW M6S ISO 4017 M12X25 A480	
510	315106-0178		1	WASHER ISO 7089-12-200 HV A4	
TWA					
500	312105-0372		1	SCREW M6S ISO 4017 M6X25 A480	
510	90005-0060		1	WASHER PLAIN, RBS 6,4/M6)/18,H=1,5	
Common Parts					
010	3009992-0000		1	BRACKET	
300	90600-1559		1	PANEL FEED THROUGH, FWD5 54218	
310	90600-1768		1	ACTUATOR/SENSOR CABLE RKTS 5-298/5M	

Pos	Part No	UN	Qty	Description	Page No

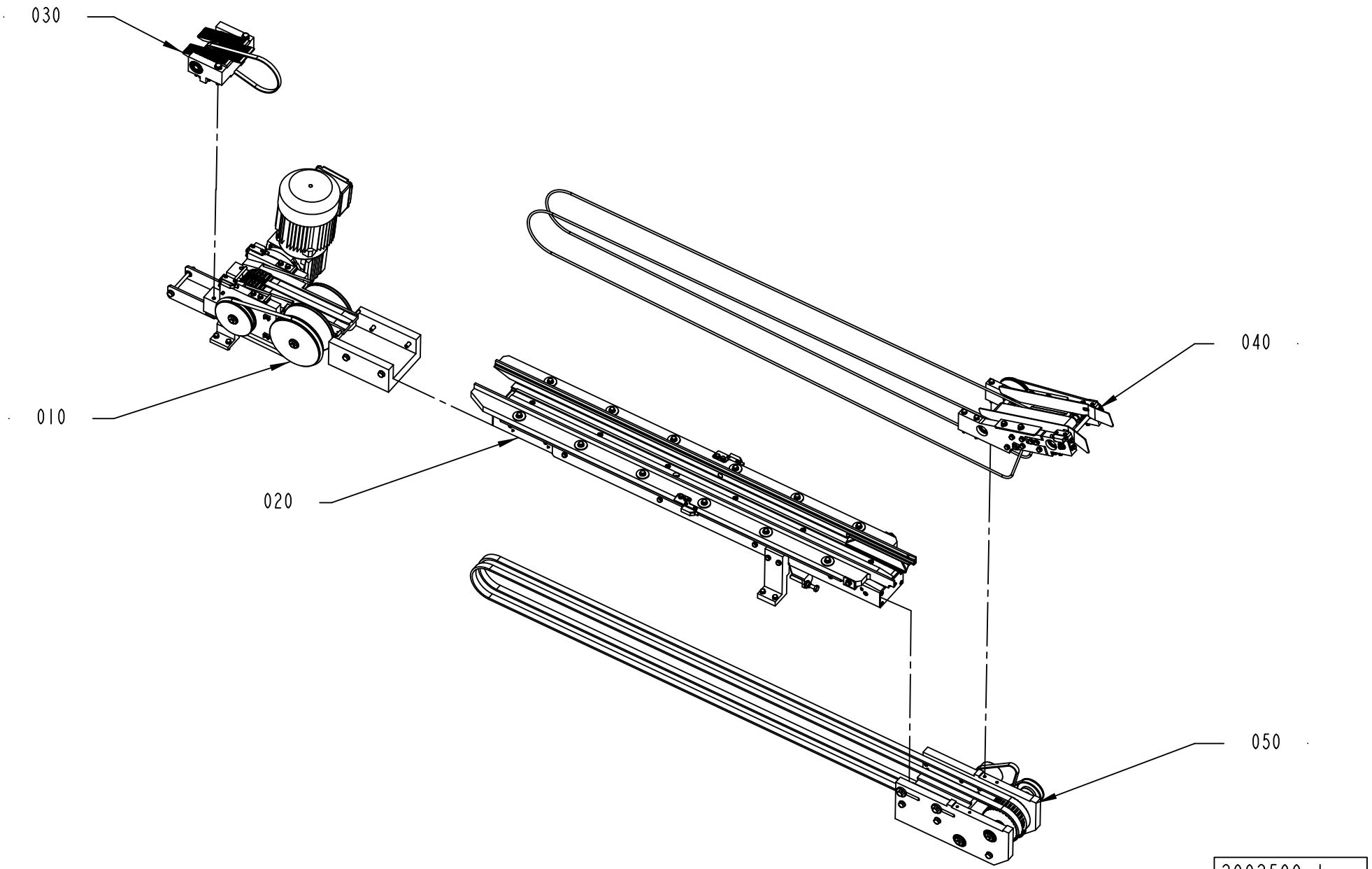
030
010
020
040
050
2992500-1
395833

ECM: 399425 - 20090612
Group number: 2992500-0100
Assembly Drawing: 2992500-1_1_AA

Pos	Part No	UN	Qty	Description	Page No
-					
010	2948215-0100		1	BELT CONVEYOR, OUTFEED	**1-97**
020	2948230-0100		1	CONVEYOR BODY	**1-99**
030	3023540-0100		1	OUT FEED	**1-101**
040	3023550-0100		1	INFEED SECTION	**1-103**
050	3023555-0100		1	BELT UNIT	**1-105**

Pos	Part No	UN	Qty	Description	Page No

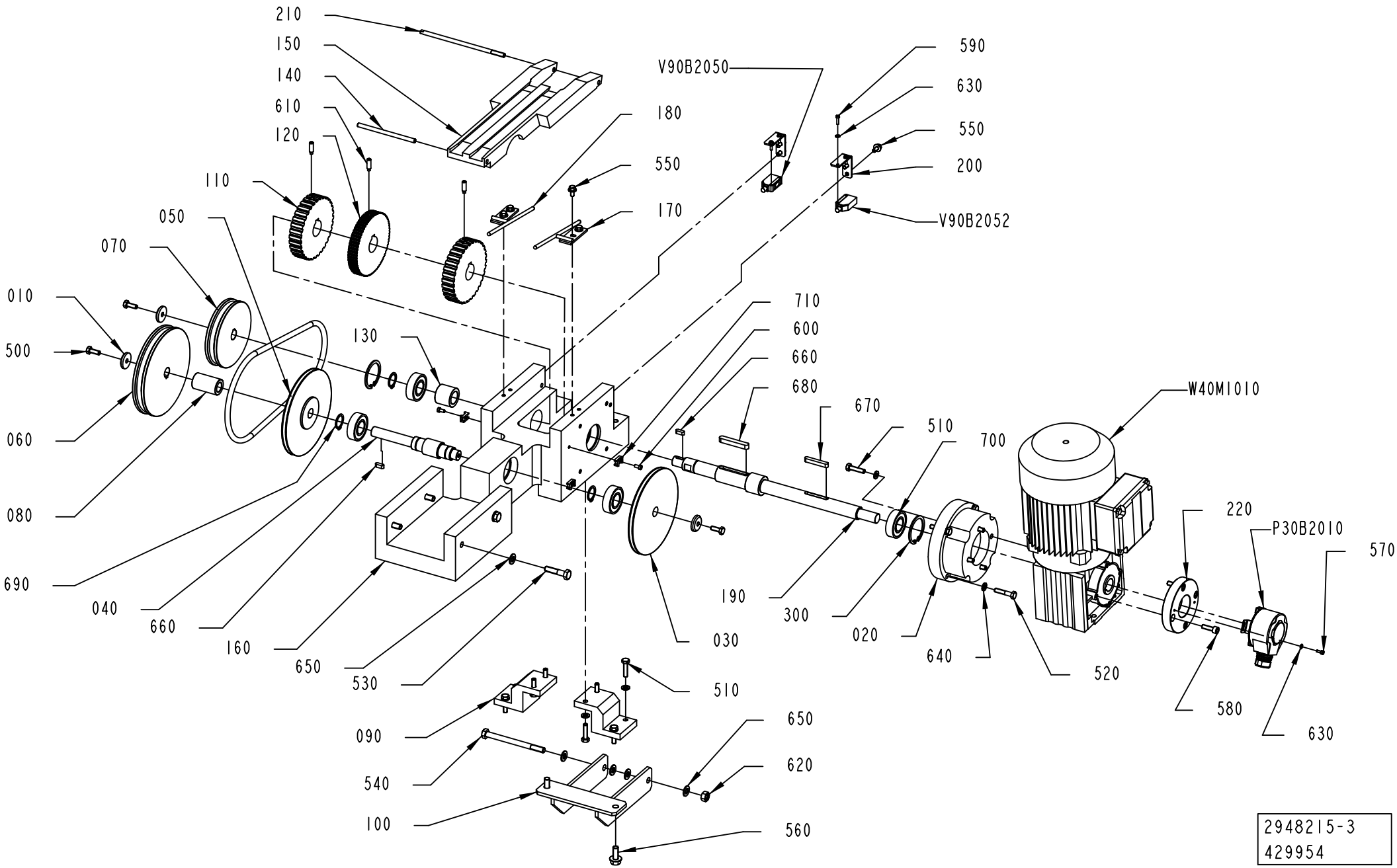
210
150
140
610
120
110
050
070
010
500
060
080
690
040
660
160
650
530
130
V90B2050
180
550
170
590
630
550
200
V90B2052
710
600
660
680
670
510
700
W40M1010
220
P30B2010
570
190
300
020
640
520
580
630
030
510
650
620
560
090
540
100
2948215-3
429954

ECM: 435922 - 20100222
Group number: 2948215-0100
Assembly Drawing: 2948215-3_1_AC

Pos	Part No	UN	Qty	Description	Page No
-					
010	2933942-0000		3	WASHER	
020	2933964-0000		1	BRACKET	
030	2948184-0000		2	DRIVE WHEEL	
040	2948187-0000		1	SHAFT	
050	2948223-0000		1	DRIVE BELT	
060	2948241-0000		1	PULLEY	
070	3060321-0000		1	PULLEY	
080	2957742-0000		1	SPACER SLEEVE	
090	2957744-0000		2	BRACKET	
100	2992442-0000		1	BRACKET	
110	2992464-0000		2	TIMING BELT PULLEY	
120	2992465-0000		1	TIMING BELT PULLEY	
130	3023528-0000		1	SPACER SLEEVE	
140	3023530-0000		1	PIN	
150	3023534-0000		1	COVER SLIP	
160	3023545-0000		1	MOTOR BRACKET	
170	3023546-0000		1	SUPPORT	
180	3023547-0000		1	SUPPORT	
190	3023551-0000		1	SHAFT	
200	3023552-0000		2	PHOTOCELL BRACKET	
210	3023553-0000		1	PIN	
220	3023568-0000		1	BRACKET	
300	90141-0020		2	RETAINING RING FOR BORE DIN 472 42 A2	
500	312105-0368		3	SCREW M6S ISO 4017 M6X16 A480	
510	312105-0372		12	SCREW M6S ISO 4017 M6X25 A480	
520	312105-0374		4	SCREW M6S ISO 4014 M6X30 A480	
530	312105-0457		4	CREW M6S ISO 4014 M8X35 A480	
540	312105-0471		1	SCREW M6S ISO 4014 M8X100 A480	
550	312108-0325		8	SCREW EN 1665 TYPE F M5X10 A270	
560	312108-0451		2	SCREW EN 1665 TYPE F M8X20 A270	
570	312115-0222		2	SCREW ISO4762 M3X8 A4 80	
580	312115-0370		4	SCREW ISO4762 M6X20 A4 80	
590	312125-0226		4	SCREW ISO 1207 M3X12 A4	
600	312125-0287		4	SCREW ISO 1207 M4X8 A4	
610	312311-0370		3	SCREW ISO4028 M6X20 FZB	
620	312605-0318		1	HEXAGON NUT, M6M M8 A280	
630	315106-0124		6	WASHER ISO 7089-3-200 HV A4	
640	315106-0153		16	WASHER ISO 7089-6-200 HV A4	
650	315106-0165		8	WASHER ISO 7089-8-200 HV A4	
660	315705-0198		2	PARALLEL KEY W. ROUND ENDS 5X5X14 MM	
670	315705-0239		1	PARALLEL KEY W. ROUND ENDS 6X6X40 MM	
680	315705-0272		1	PARALLEL KEY W. ROUND ENDS 8X7X50 MM	
690	315751-0116		3	RETAINING RING FOR SHAFT DIN 471 20 SS	
700	90214-0095		4	BALL BEARING 20/42X12	
710	352113-0205		4	ANCHOR PLATES FOR STRIPS, TYPE TM2S8-C10	
P30B2010	90600-5297		1	INCREMENTAL ENCODER, DFS60A-BHAA65536	
V90B2050	90459-7274		1	PHOTOCELL E3Z-T81C-G0SR L-CN	
V90B2052	90459-7273		1	PHOTOCELL E3Z-T81C-G0SR D-CN	
W40M1010	90600-5064		1	GEARS, WORM MOTOR WA 20 DT71 D4	

Machine Type	Group Description	Used-In	Group Number	Page No

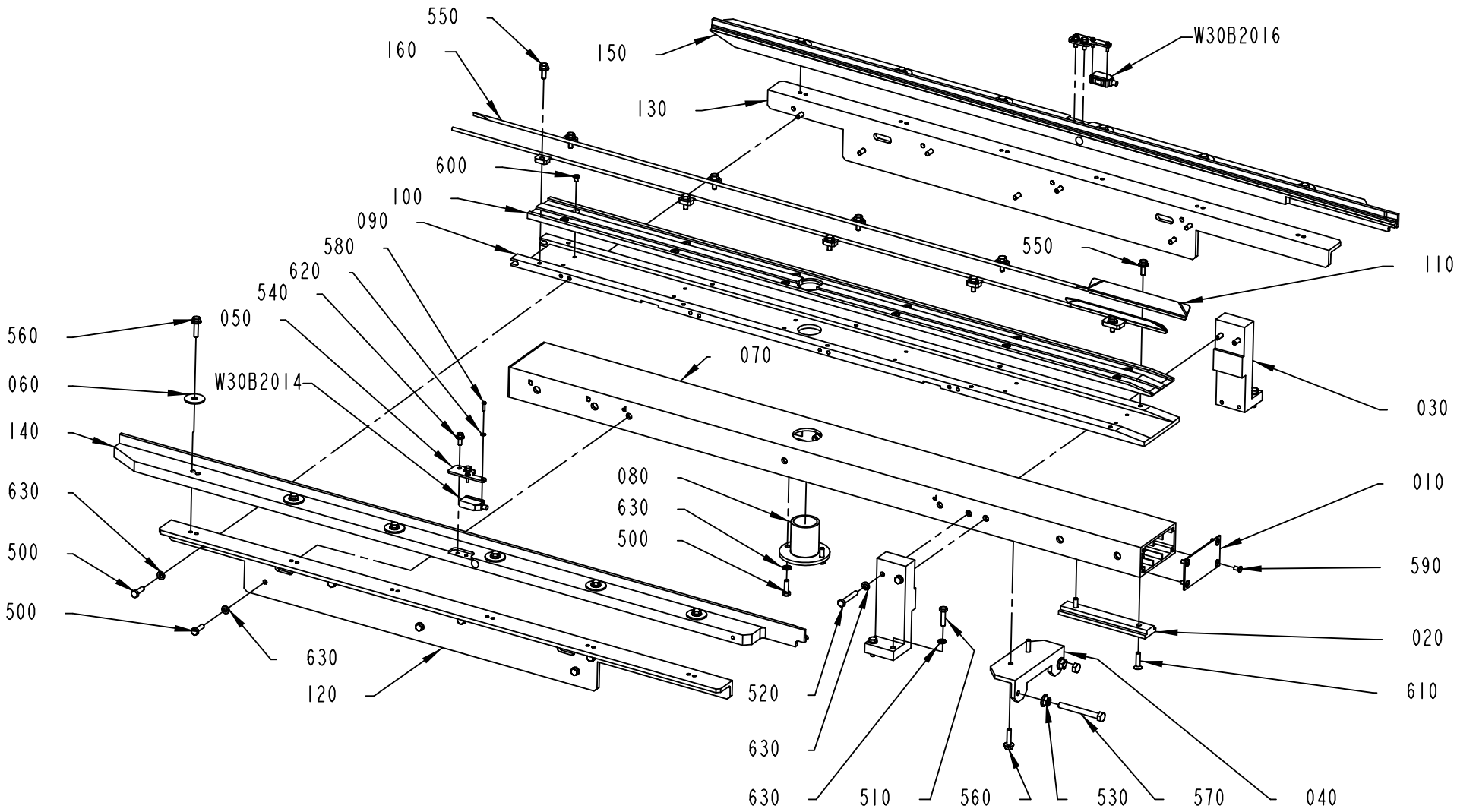

2948230-2
429954

ECM: 435923 - 20100222
Group number: 2948230-0100
Assembly Drawing: 2948230-2_1_AC

Pos	Part No	UN	Qty	Description	Page No
-					
010	556603-0000		2	COVER PLATE	
020	2904836-0000		1	ADJUSTMENT BRACKET	
030	2948161-0000		2	BRACKET	
040	2957679-0000		1	FASTENING BRACKET	
050	2982616-0000		2	BRACKET	
060	2992436-0000		12	COVER DISC	
070	3023611-0000		1	PROFILE 50X100	
080	3023612-0000		1	COMPRESSION GLAND	
090	3023548-0000		1	GUIDE HOLDER	
100	3023549-0000		1	BELT SUPPORT	
110	3060323-0000		2	RULING GUIDE	
120	3023557-0000		1	FASTENING BRACKET	
130	3023558-0000		1	FASTENING BRACKET	
140	3023559-0000		1	STEERING RAIL	
150	3023561-0000		1	STEERING RAIL	
160	3060322-0000		2	RULING GUIDE	
500	312105-0370		16	SCREW M6S ISO 4017 M6X20 A480	
510	312105-0372		4	SCREW M6S ISO 4017 M6X25 A480	
520	312105-0378		4	SCREW M6S ISO 4014 M6X40 A480	
530	312106-0318		2	SERRATED FLANGE NUT ISO 4161 M8 A4	
540	312108-0327		4	SCREW EN 1665 TYPE F M5X12 A270	
550	312108-0368		10	SCREW EN 1665 TYPE F M6X16 A270	
560	312108-0372		14	SCREW EN 1665 TYPE F M6X25 A270	
570	312109-0465		2	SCREW M6S ISO 4017 M8X70 A480	
580	312125-0226		4	SCREW ISO 1207 M3X12 A4	
590	312145-0325		8	SCREW ISO 2009 MFS M5X10 A4	
600	312155-0323		12	SCREW DIN 7991 MF6S M5X8 A4 70	
610	312155-0372		2	SCREW DIN 7991 MF6S M6X25 A4 70	
620	315106-0124		4	WASHER ISO 7089-3-200 HV A4	
630	315106-0153		24	WASHER ISO 7089-6-200 HV A4	
WB30B2016	90459-7274		1	PHOTOCELL E3Z-T81C-G0SR L-CN	
W30B22014	90459-7273		1	PHOTOCELL E3Z-T81C-G0SR D-CN	

Pos	Part No	UN	Qty	Description	Page No

Machine Type	Group Description	Used-In	Group Number	Page No

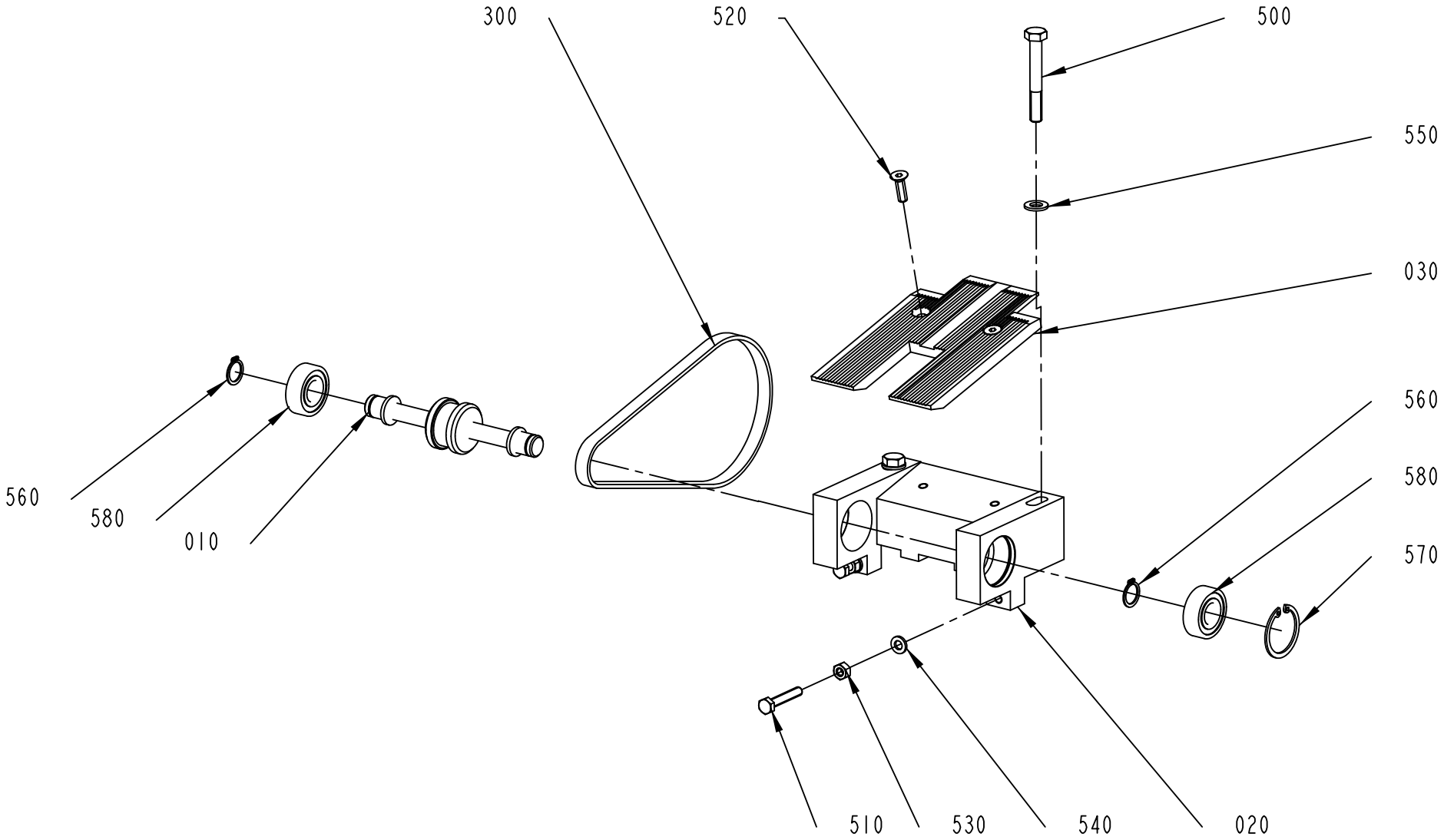

3023540-1
395833

ECM: 436858 - 20100222
Group number: 3023540-0100
Assembly Drawing: 3023540-1_1_AA

Pos	Part No	UN	Qty	Description	Page No
-					
010	2992458-0000		1	BENDING ROLLER	
020	2992461-0000		1	BENDING ROLLER BRACKET	
030	3023543-0000		1	SLIDE PLATE	
300	90459-3796		1	TIMING BELT 10AT5/500 PU	
500	312105-0463		2	SCREW M6S ISO 4014 M8X60 A480	
510	312109-0376		2	SCREW M6S ISO 4017 M6X35 A480	
520	312155-0370		2	SCREW DIN 7991 MF6S M6X20 A4 70	
530	312605-0316		2	HEXAGON NUT, M6M M6 A280	
540	315106-0153		2	WASHER ISO 7089-6-200 HV A4	
550	315106-0165		2	WASHER ISO 7089-8-200 HV A4	
560	315751-0112		2	RETAINING RING FOR SHAFT DIN 471 15 SS	
570	315753-0124		1	RETAINING RING FOR BORE DIN 472 35 A2	
580	321313-0102		2	BALL BEARING 15/35X11	

Pos	Part No	UN	Qty	Description	Page No

INFEED SECTION

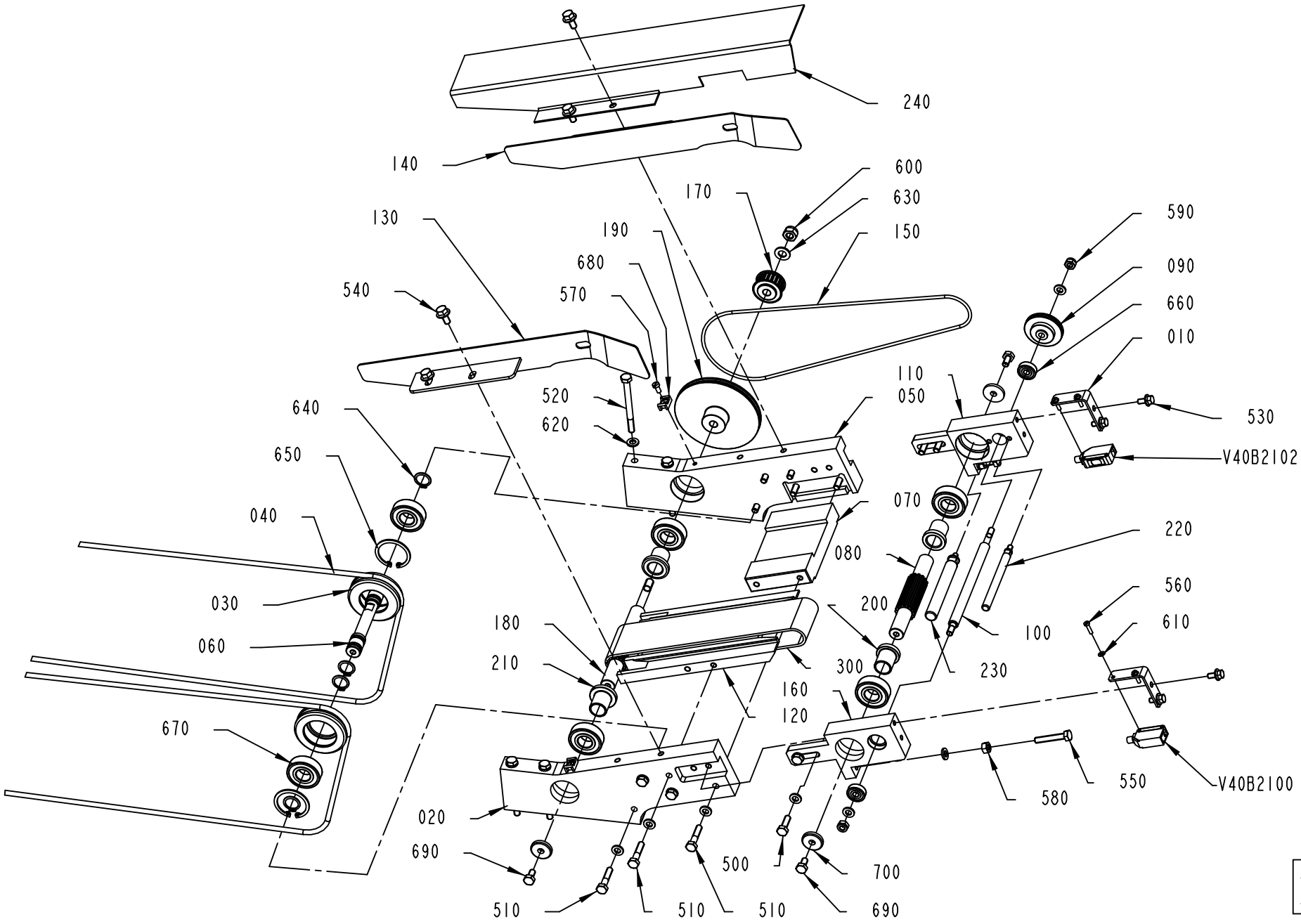

3023550-1
422087

ECM: 435924 - 20100222
Group number: 3023550-0100
Assembly Drawing: 3023550-1_1_AB

Pos	Part No	UN	Qty	Description	Page No
-					
010	2957752-0000		2	PHOTOCELL BRACKET	
020	2982635-0000		1	GABLE PLATE	
030	2982636-0000		2	PULLEY	
040	2992411-0000		2	DRIVE BELT	
050	2992415-0000		1	GABLE PLATE	
060	2992418-0000		1	SHAFT	
070	2992425-0000		1	SPACER PLATE	
080	3023601-0000		1	TOOTHED PULLEY	
090	2992475-0000		1	DRIVE WHEEL	
100	2992476-0000		1	DRIVE ROLLER	
110	2992478-0000		1	BEARING HOLDER	
120	2992481-0000		1	STEERING	
130	2992482-0000		1	HEAD PLATE	
140	2992483-0000		1	HEAD PLATE	
150	2992484-0000		1	DRIVE BELT	
160	2992485-0000		1	BEARING HOLDER	
170	3023571-0000		1	TOOTHED PULLEY	
180	3023602-0000		1	TOOTHED PULLEY	
190	3023578-0000		1	DRIVE WHEEL	
200	3023603-0000		2	GUIDE SLEEVE	
210	3023607-0000		2	GUIDE SLEEVE	
220	3023621-0000		1	SUPPORT ROD	
230	3023622-0000		1	SUPPORT ROD	
240	3023623-0000		1	PROTECTION	
300	90601-1046		1	TIMING BELT 50AT5/480 PU	
500	312105-0370		4	SCREW M6S ISO 4017 M6X20 A480	
510	312105-0374		10	SCREW M6S ISO 4014 M6X30 A480	
520	312105-0384		4	SCREW M6S ISO 4014 M6X70 A480	
530	312108-0325		4	SCREW EN 1665 TYPE F M5X10 A270	
540	312108-0366		4	SCREW EN 1665 TYPE F M6X12 A270	
550	312109-0376		2	SCREW M6S ISO 4017 M6X35 A480	
560	312125-0226		4	SCREW ISO 1207 M3X12 A4	
570	312125-0287		2	SCREW ISO 1207 M4X8 A4	
580	312605-0316		2	HEXAGON NUT, M6M M6 A280	
590	312812-0316		2	HEXAGON NUT, NY-LOCK M6 A480	
600	312812-0318		1	HEXAGON NUT, NY-LOCK M8 A480	
610	315106-0124		4	WASHER ISO 7089-3-200 HV A4	
620	315106-0153		22	WASHER ISO 7089-6-200 HV A4	
630	315106-0165		1	WASHER ISO 7089-8-200 HV A4	
640	315751-0112		4	RETAINING RING FOR SHAFT DIN 471 15 SS	
650	315753-0124		2	RETAINING RING FOR BORE DIN 472 35 A2	
660	90601-9790		2	BALL BEARING, 6X19X6 MM	
670	90458-1704		6	BALL BEARING 15/35X11	
680	352113-0205		2	ANCHOR PLATES FOR STRIPS, TYPE TM2S8-C10	
690	312105-0366		3	SCREW M6S ISO 4017 M6X12 A480	
700	315125-0153		3	WASHER TBRSB 6,4X22X4 A4	
V40B2100	90459-7274		1	PHOTOCELL E3Z-T81C-G0SR L-CN	
V40B2102	90459-7273		1	PHOTOCELL E3Z-T81C-G0SR D-CN	

Machine Type | Group Description | Used-In | Group Number | Page No

BELT UNIT

Drawing file: 3023555-1_1_AC.hpgl

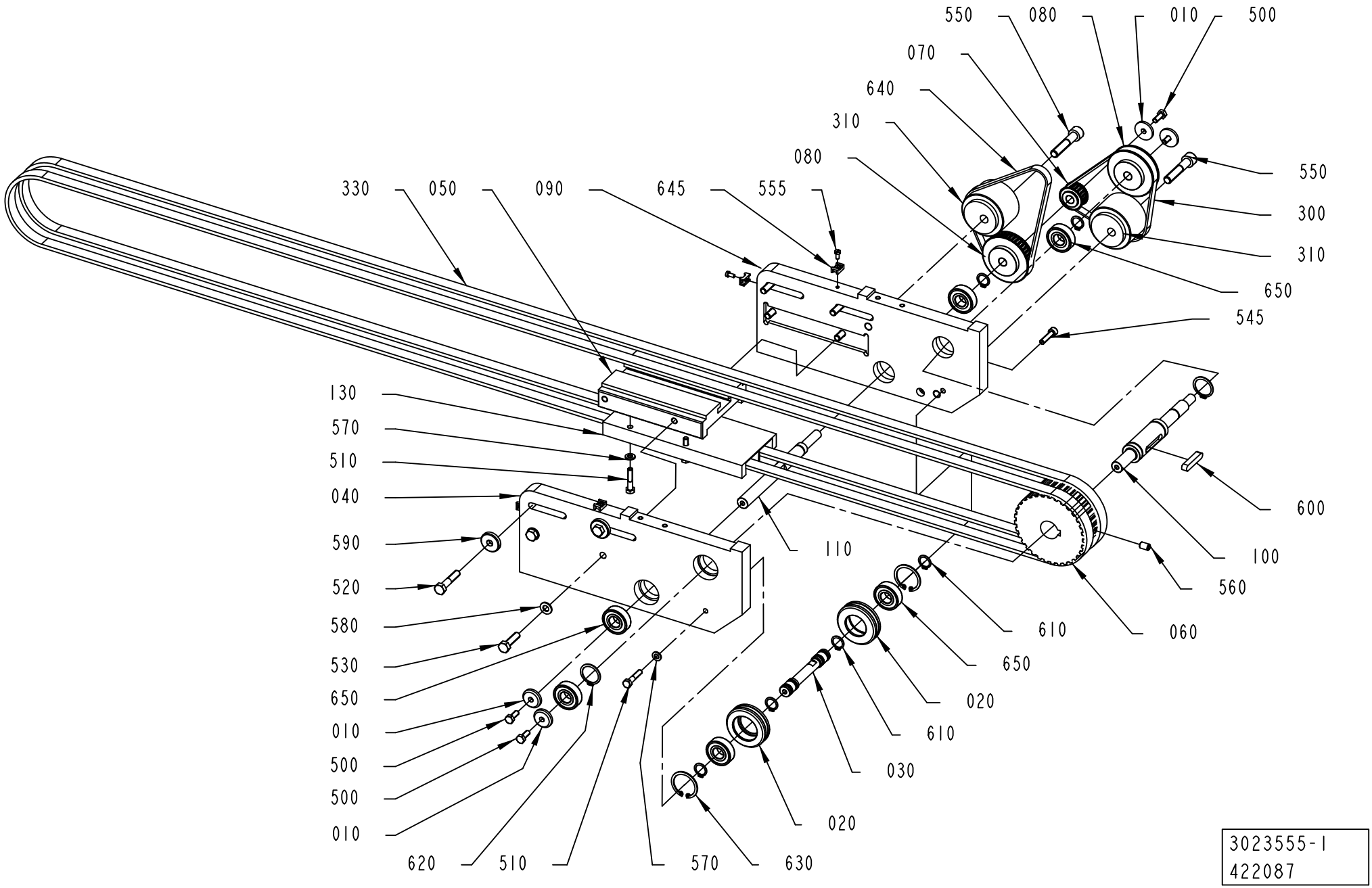

3023555-1
422087

ECM: 436860 - 20100222
Group number: 3023555-0100
Assembly Drawing: 3023555-1_1_AC

Pos	Part No	UN	Qty	Description	Page No
-					
010	2933942-0000		4	WASHER	
020	2982636-0000		2	PULLEY	
030	2992418-0000		1	SHAFT	
040	2992421-0000		1	BRACKET	
050	2992423-0000		1	SPACER BLOCK	
060	2992446-0000		1	TIMING BELT PULLEY	
070	3023569-0000		1	TOOTHED PULLEY	
080	3023572-0000		2	TOOTHED PULLEY	
090	3023573-0000		1	BRACKET	
100	3023574-0000		1	SHAFT	
110	3023576-0000		1	SHAFT	
130	3023581-0000		1	STEERING	
300	318161-0123		1	TIMING BELT 10T5/420 PU	
310	90458-0220		2	TENSION ROLLER, M40/60-0-M EXCENTRIC	
330	90601-1047		2	TIMING BELT 16AT10/3220 PU	
500	312105-0368		4	SCREW M6S ISO 4017 M6X16 A480	
510	312105-0374		5	SCREW M6S ISO 4014 M6X30 A480	
520	312105-0459		4	SCREW M6S ISO 4014 M8X40 A480	
530	312105-0455		4	SCREW M6S ISO 4017 M8X30 A480	
545	312115-0372		1	SCREW ISO4762 M6X25 A4 80	
550	312115-0501		2	SCREW ISO4762 M10X50 A4 80	
555	312125-0287		4	SCREW ISO 1207 M4X8 A4	
560	312311-0370		1	SCREW ISO4028 M6X20 FZB	
570	315106-0153		5	WASHER ISO 7089-6-200 HV A4	
580	315106-0165		4	WASHER ISO 7089-8-200 HV A4	
590	315125-0165		4	WASHER TBRSB 8,4X26X5 A4	
600	315705-0270		1	PARALLEL KEY W. ROUND ENDS 8X7X40 MM	
610	315751-0112		6	RETAINING RING FOR SHAFT DIN 471 15 SS	
620	315751-0119		2	RETAINING RING FOR SHAFT DIN 471 25 SS	
630	315753-0124		2	RETAINING RING FOR BORE DIN 472 35 A2	
640	318161-0125		1	TIMING BELT 10T5/455 PU	
645	352113-0205		4	ANCHOR PLATES FOR STRIPS, TYPE TM2S8-C10	
650	90458-1704		6	BALL BEARING 15/35X11	

Pos	Part No	UN	Qty	Description	Page No

Tetra Pak

SPC
Spare Parts Catalogue

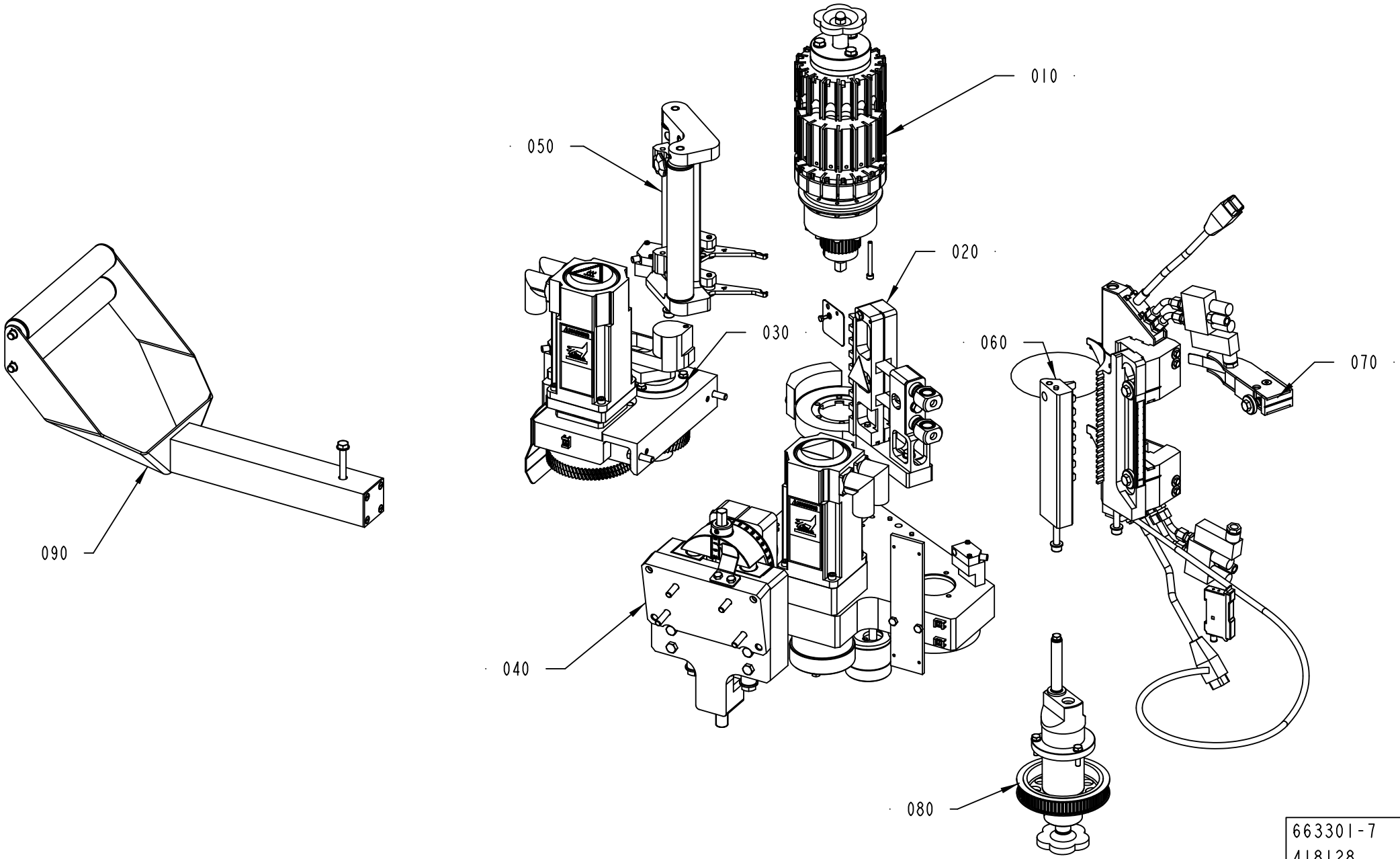
010
020
030
040
050
060
070
080
090
663301-7
418128

Pos	Part No	UN	Qty	Description	Page No
TBA, TB (See drawing on page: 2-2)					
030	2929771-0200		1	SQUEEZER	**2-11**
060	2829435-0100		1	GUIDE CONSOLE	**2-19**
070	2923353-0200		1	SPRING HOLDER	**2-21**
090	2829442-0100		1	GUIDE ARM	**2-23**
TCA (See drawing on page: 2-6)					
030	2934000-0200		1	SQUEEZER	**2-25, 2-27**
060	2957700-0100		1	GUIDE CONSOLE	**2-35**
TPA (See drawing on page: 2-4)					
030	2954304-0200		1	SQUEEZER	**2-37**
060	2829435-0100		1	GUIDE CONSOLE	**2-19**
070	2923353-0200		1	SPRING HOLDER	**2-21**
090	2829442-0100		1	GUIDE ARM	**2-23**
TWA (See drawing on page: 2-8)					
030	2934000-0200		1	SQUEEZER	**2-25, 2-27**
060	2957700-0100		1	GUIDE CONSOLE	**2-35**
090	2948195-0100		1	ADJUSTMENT BRACKET	**2-45**
100	2948240-0100		1	GUIDE ARM	**2-47, 2-49, 4-13, 4-15**
Common Parts					
010	2929773-0100		1	FEED WHEEL UNIT	**2-51**
020	2829431-0200		1	CUTTING UNIT	**2-57**
040	2913343-0300		1	FRAME	**2-59, 2-61, 2-63**
050	2987398-0100		1	LADDER BAND GUIDE	**2-79, 2-81**
080	2829436-0200		1	CRANK SHAFT	**2-83**

Pos	Part No	UN	Qty	Description	Page No

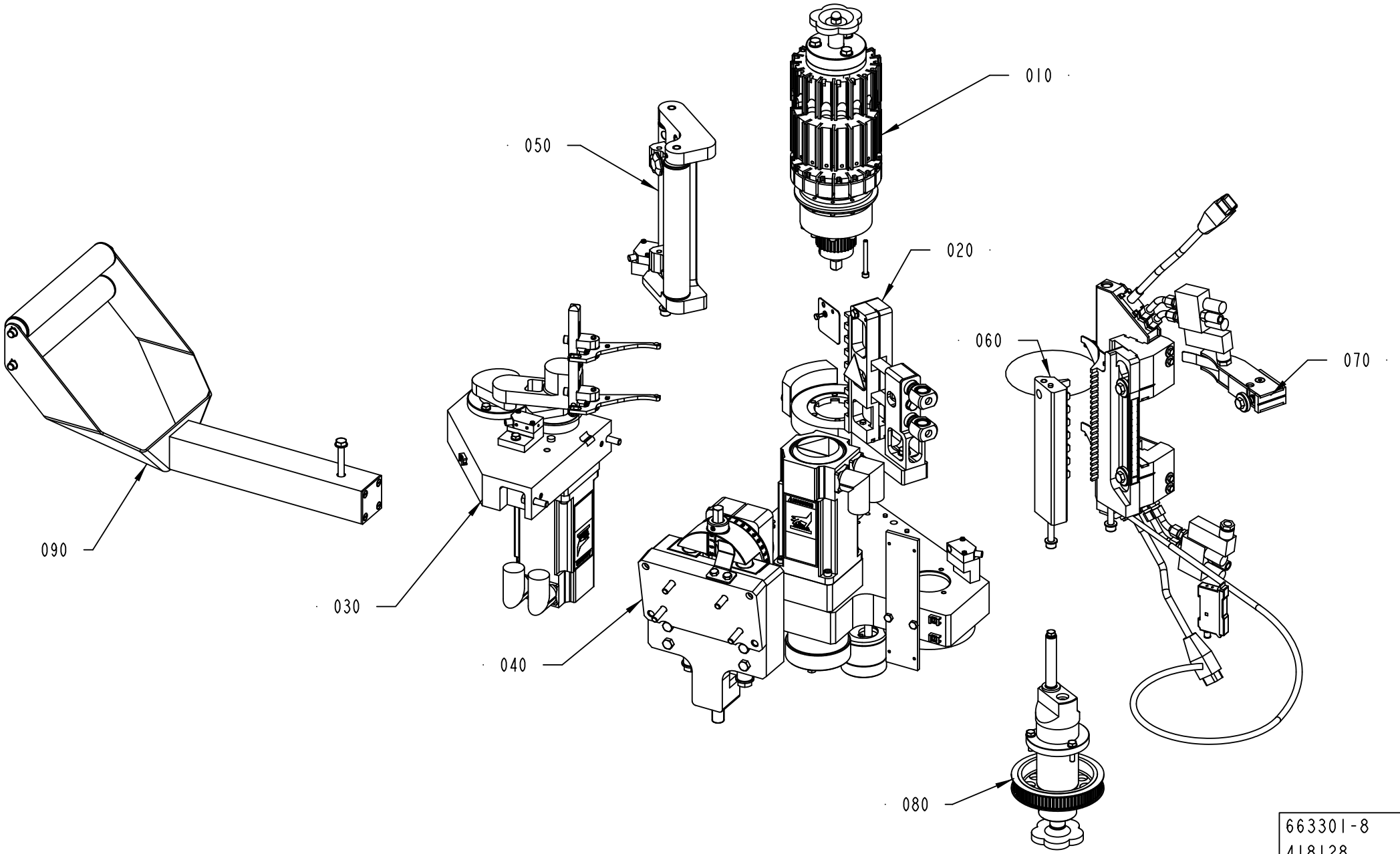
010
020
030
040
050
060
070
080
090
663301-8
418128

Pos	Part No	UN	Qty	Description	Page No
TBA, TB (See drawing on page: 2-2)					
030	2929771-0200		1	SQUEEZER	**2-11**
060	2829435-0100		1	GUIDE CONSOLE	**2-19**
070	2923353-0200		1	SPRING HOLDER	**2-21**
090	2829442-0100		1	GUIDE ARM	**2-23**
TCA (See drawing on page: 2-6)					
030	2934000-0200		1	SQUEEZER	**2-25, 2-27**
060	2957700-0100		1	GUIDE CONSOLE	**2-35**
TPA (See drawing on page: 2-4)					
030	2954304-0200		1	SQUEEZER	**2-37**
060	2829435-0100		1	GUIDE CONSOLE	**2-19**
070	2923353-0200		1	SPRING HOLDER	**2-21**
090	2829442-0100		1	GUIDE ARM	**2-23**
TWA (See drawing on page: 2-8)					
030	2934000-0200		1	SQUEEZER	**2-25, 2-27**
060	2957700-0100		1	GUIDE CONSOLE	**2-35**
090	2948195-0100		1	ADJUSTMENT BRACKET	**2-45**
100	2948240-0100		1	GUIDE ARM	**2-47, 2-49, 4-13, 4-15**
Common Parts					
010	2929773-0100		1	FEED WHEEL UNIT	**2-51**
020	2829431-0200		1	CUTTING UNIT	**2-57**
040	2913343-0300		1	FRAME	**2-59, 2-61, 2-63**
050	2987398-0100		1	LADDER BAND GUIDE	**2-79, 2-81**
080	2829436-0200		1	CRANK SHAFT	**2-83**

Pos	Part No	UN	Qty	Description	Page No

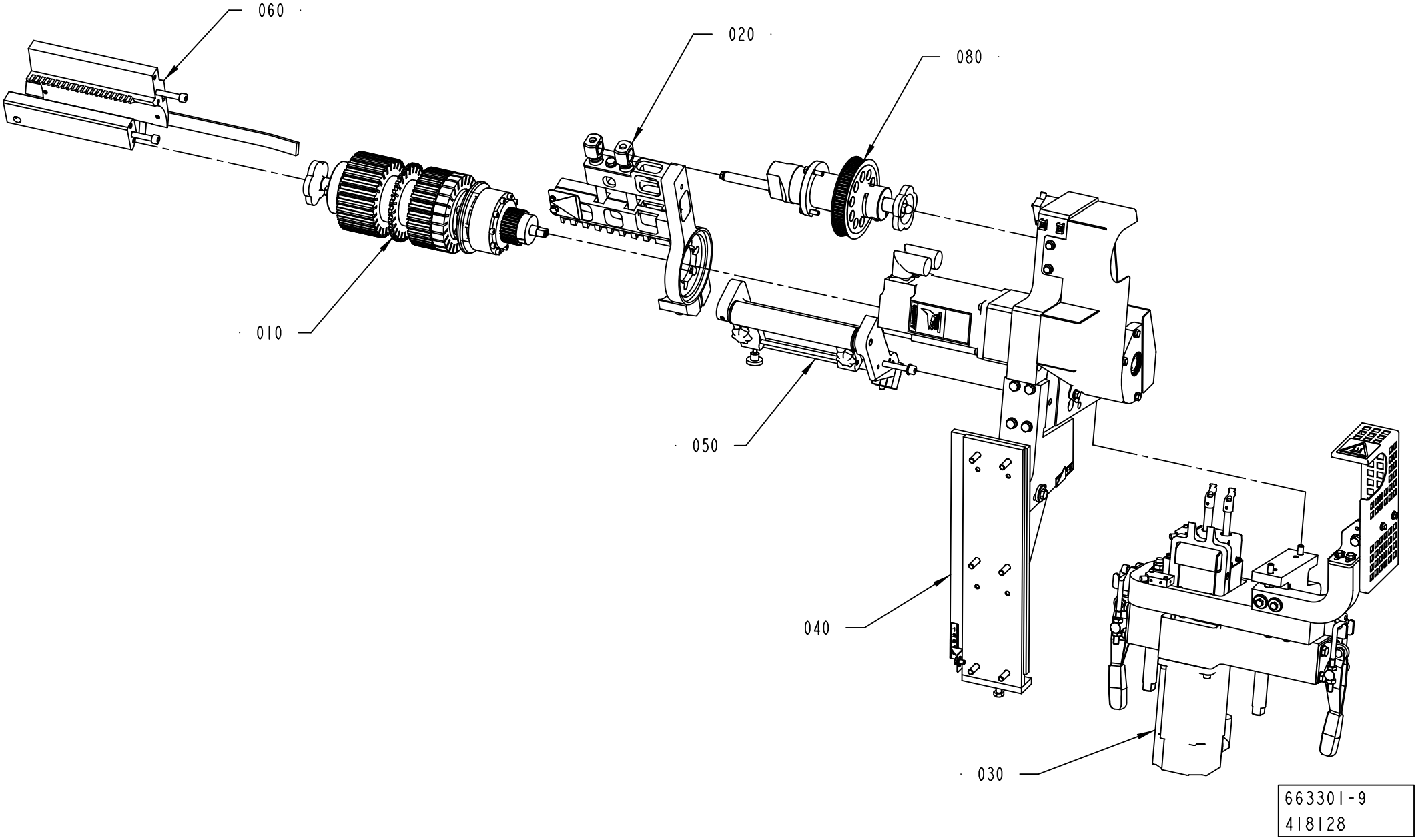
060
020
080
010
050
040
030
663301-9
418128

Pos	Part No	UN	Qty	Description	Page No
TBA, TB (See drawing on page: 2-2)					
030	2929771-0200		1	SQUEEZER	**2-11**
060	2829435-0100		1	GUIDE CONSOLE	**2-19**
070	2923353-0200		1	SPRING HOLDER	**2-21**
090	2829442-0100		1	GUIDE ARM	**2-23**
TCA (See drawing on page: 2-6)					
030	2934000-0200		1	SQUEEZER	**2-25, 2-27**
060	2957700-0100		1	GUIDE CONSOLE	**2-35**
TPA (See drawing on page: 2-4)					
030	2954304-0200		1	SQUEEZER	**2-37**
060	2829435-0100		1	GUIDE CONSOLE	**2-19**
070	2923353-0200		1	SPRING HOLDER	**2-21**
090	2829442-0100		1	GUIDE ARM	**2-23**
TWA (See drawing on page: 2-8)					
030	2934000-0200		1	SQUEEZER	**2-25, 2-27**
060	2957700-0100		1	GUIDE CONSOLE	**2-35**
090	2948195-0100		1	ADJUSTMENT BRACKET	**2-45**
100	2948240-0100		1	GUIDE ARM	**2-47, 2-49, 4-13, 4-15**
Common Parts					
010	2929773-0100		1	FEED WHEEL UNIT	**2-51**
020	2829431-0200		1	CUTTING UNIT	**2-57**
040	2913343-0300		1	FRAME	**2-59, 2-61, 2-63**
050	2987398-0100		1	LADDER BAND GUIDE	**2-79, 2-81**
080	2829436-0200		1	CRANK SHAFT	**2-83**

Pos	Part No	UN	Qty	Description	Page No

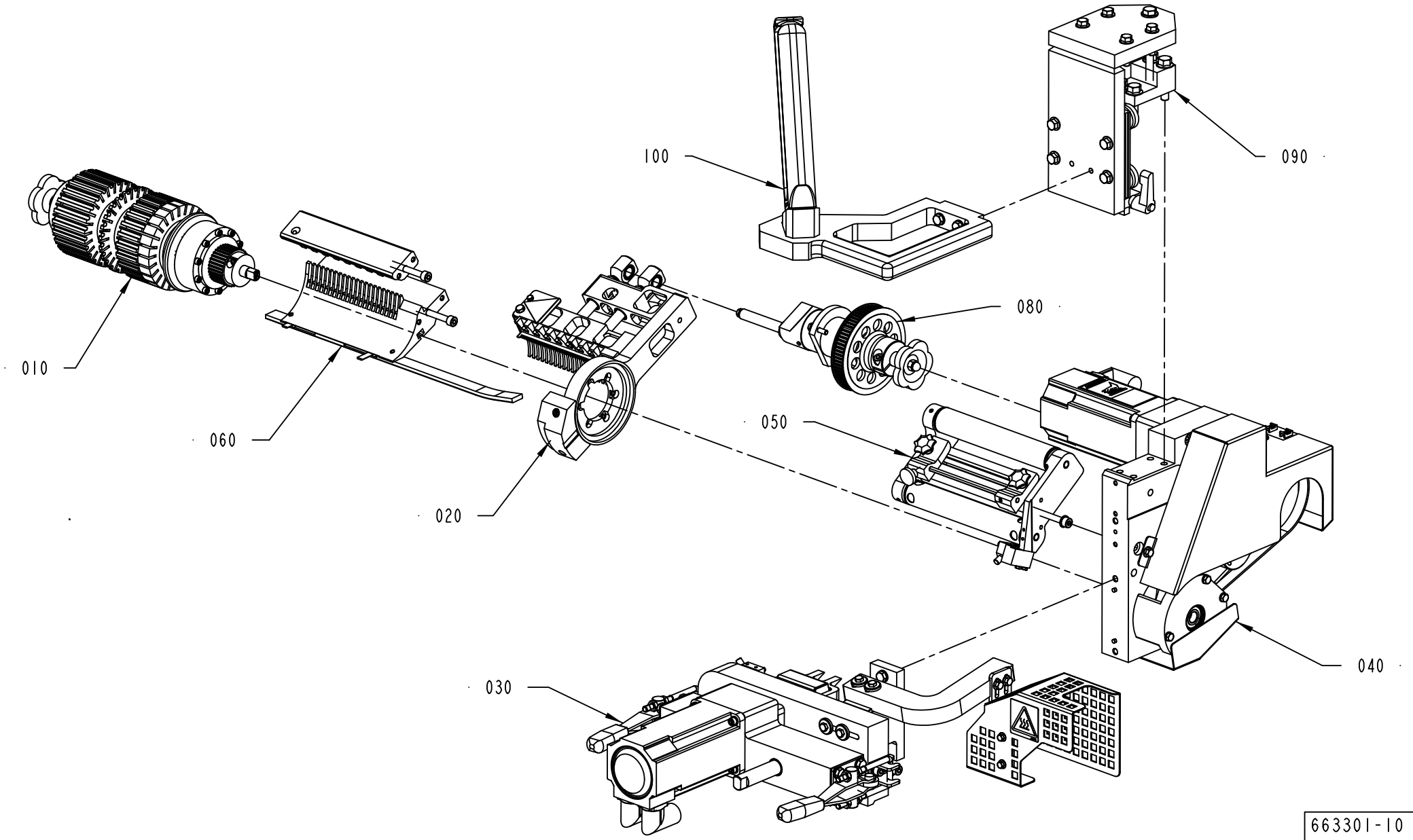
100
090
080
010
060
050
020
040
030
663301-10
418128

Pos	Part No	UN	Qty	Description	Page No
TBA, TB (See drawing on page: 2-2)					
030	2929771-0200		1	SQUEEZER	**2-11**
060	2829435-0100		1	GUIDE CONSOLE	**2-19**
070	2923353-0200		1	SPRING HOLDER	**2-21**
090	2829442-0100		1	GUIDE ARM	**2-23**
TCA (See drawing on page: 2-6)					
030	2934000-0200		1	SQUEEZER	**2-25, 2-27**
060	2957700-0100		1	GUIDE CONSOLE	**2-35**
TPA (See drawing on page: 2-4)					
030	2954304-0200		1	SQUEEZER	**2-37**
060	2829435-0100		1	GUIDE CONSOLE	**2-19**
070	2923353-0200		1	SPRING HOLDER	**2-21**
090	2829442-0100		1	GUIDE ARM	**2-23**
TWA (See drawing on page: 2-8)					
030	2934000-0200		1	SQUEEZER	**2-25, 2-27**
060	2957700-0100		1	GUIDE CONSOLE	**2-35**
090	2948195-0100		1	ADJUSTMENT BRACKET	**2-45**
100	2948240-0100		1	GUIDE ARM	**2-47, 2-49, 4-13, 4-15**
Common Parts					
010	2929773-0100		1	FEED WHEEL UNIT	**2-51**
020	2829431-0200		1	CUTTING UNIT	**2-57**
040	2913343-0300		1	FRAME	**2-59, 2-61, 2-63**
050	2987398-0100		1	LADDER BAND GUIDE	**2-79, 2-81**
080	2829436-0200		1	CRANK SHAFT	**2-83**

Pos	Part No	UN	Qty	Description	Page No

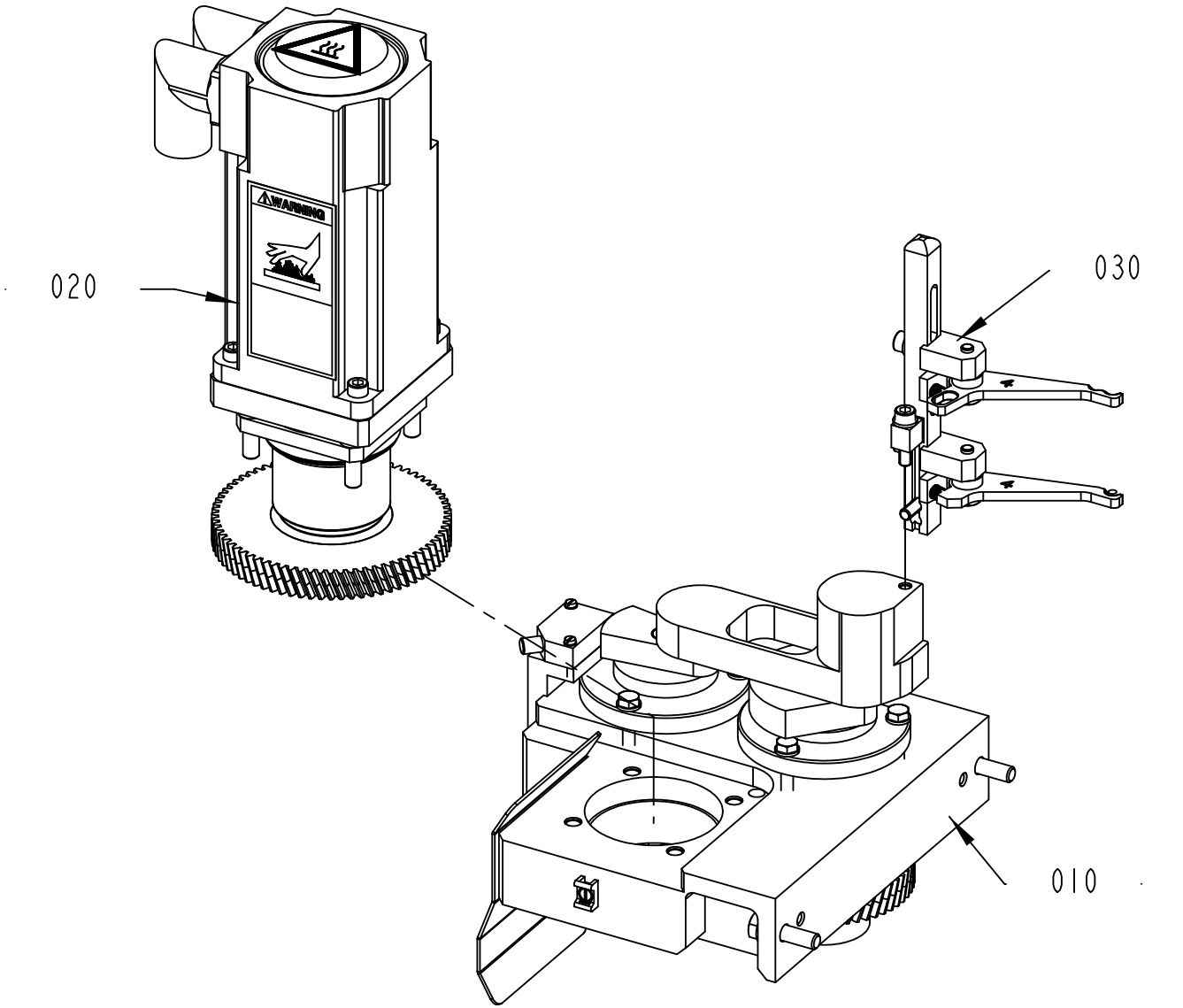

2929771-2
418128

ECM: 436903 - 20100222
Group number: 2929771-0200
Assembly Drawing: 2929771-2_1_AA

Pos	Part No	UN	Qty	Description	Page No
-					
010	2829432-0100		1	CRANK HOUSING	**2-13**
020	2829439-0200		1	DRIVE MOTOR	**2-15**
030	3013387-0100		1	PRESSURE ARM	**2-17**

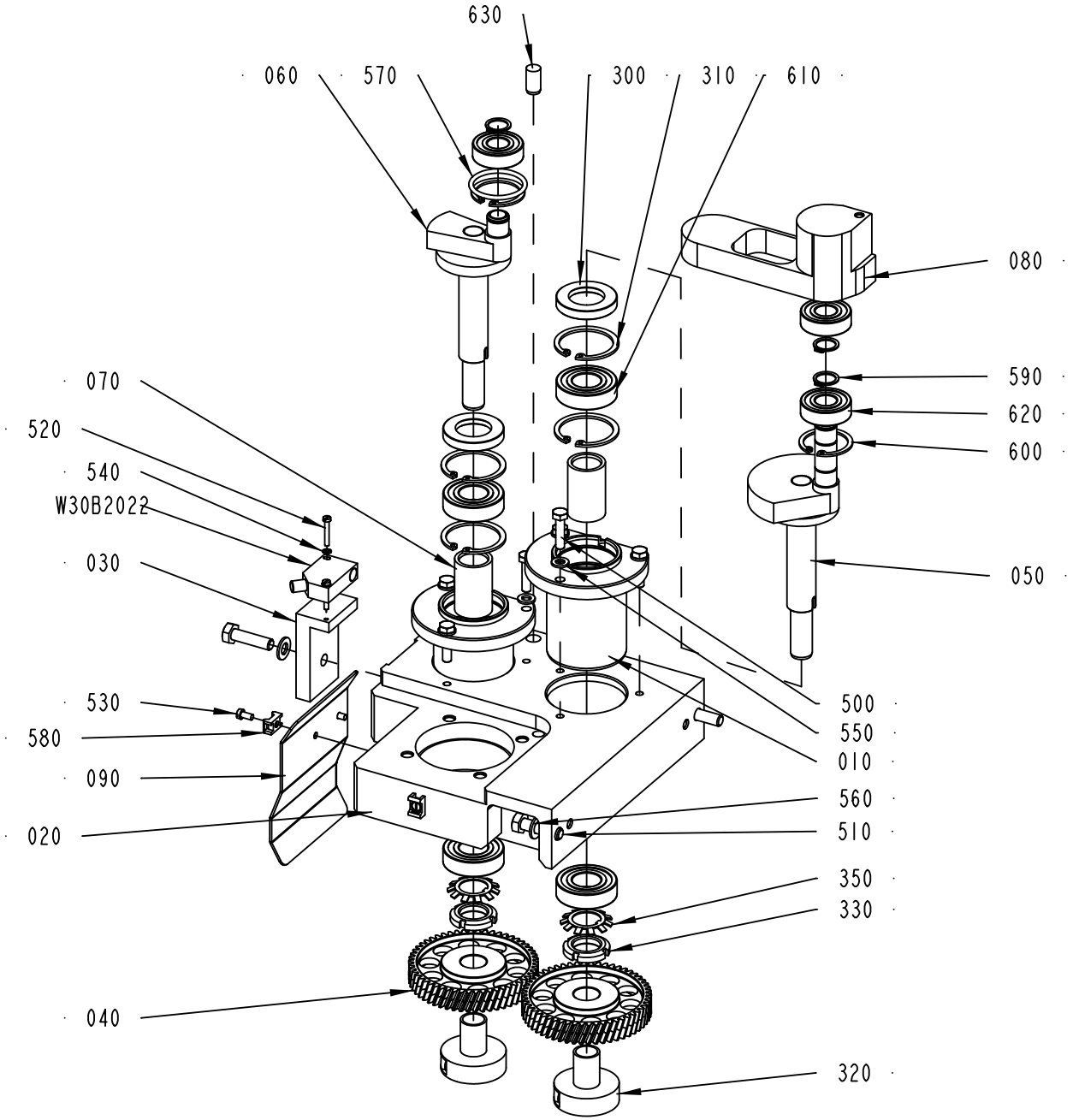

2829432-1
406756

ECM: 436864 - 20100222
Group number: 2829432-0100
Assembly Drawing: 2829432-1_1_AC

Pos	Part No	UN	Qty	Description	Page No
-					
010	2848826-0000		2	BEARING SLEEVE	
020	2848844-0000		1	FRAME SECTION	
030	2848846-0000		1	SWITCH BRACKET	
040	2856559-0000		2	GEAR WHEEL	
050	2856560-0000		1	CRANK SHAFT	
060	2856561-0000		1	CRANK SHAFT	
070	2856562-0000		2	SPACER SLEEVE	
080	2910475-0000		1	BEARING HOUSING	
090	2946730-0000		1	PLATE	
300	90091-0322		2	RADIAL SEAL 25X42X7 MM DUST LIP	
310	90141-0020		4	RETAINING RING FOR BORE DIN 472 42 A2	
320	90458-1814		2	CLAMPING ELEMENT WITH SLEEVE, 15X18 MM	
330	90600-1766		2	NUT ROUND WITH SLOTS M20X1 SS	
350	90600-4710		2	LOCK WASHER MB 4 D=20 H=1 SS	
500	312105-0372		6	SCREW M6S ISO 4017 M6X25 A480	
510	312105-0455		3	SCREW M6S ISO 4017 M8X30 A480	
520	312125-0230		2	SCREW ISO 1207 M3X20 A4	
530	312125-0287		3	SCREW ISO 1207 M4X8 A4	
540	315105-0124		2	WASHER BRB 3,2X6 RFR	
550	315105-0153		6	WASHER BRB 6,4X12 RFR	
560	315105-0165		3	WASHER BRB 8,4X16 RFR	
570	315204-0221		1	O-RING 34,2X3 MM	
580	352113-0205		3	ANCHOR PLATES FOR STRIPS, TYPE TM2S8-C10	
590	315751-0112		4	RETAINING RING FOR SHAFT DIN 471 15 SS	
600	315753-0124		2	RETAINING RING FOR BORE DIN 472 35 A2	
610	321308-0204		4	BALL BEARING 20/42X12	
620	321313-0102		3	BALL BEARING 15/35X11	
630	311103-0454		2	PARALLEL PIN ISO 2338 10M6X20 A1	
W30B2022	90459-2409		1	INDUCTIVE SENSOR IN5230	

Pos	Part No	UN	Qty	Description	Page No

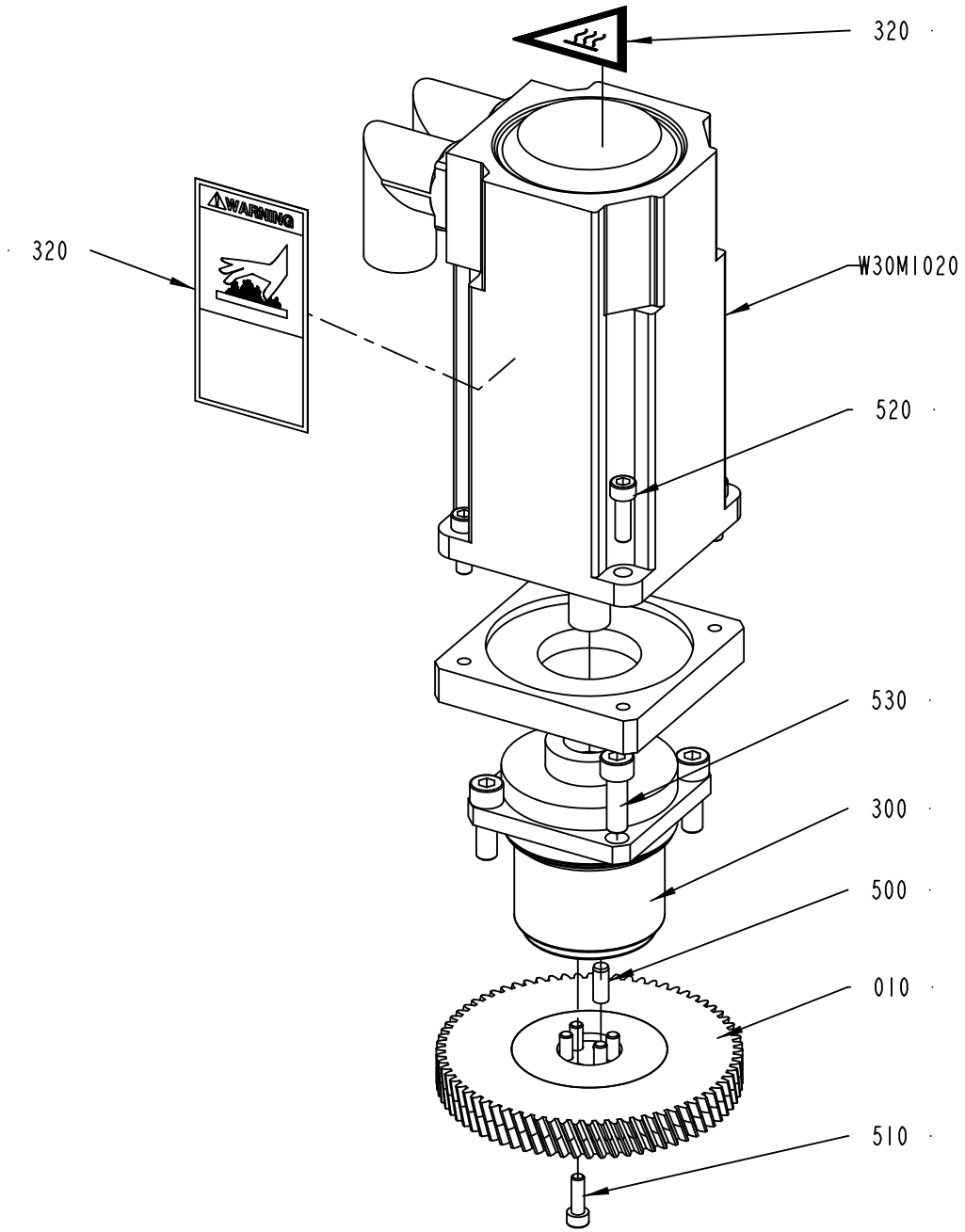

2829439-2
418128

ECM: 436865 - 20100222
Group number: 2829439-0200
Assembly Drawing: 2829439-2_1_AA

Pos	Part No	UN	Qty	Description	Page No
ANSI					
320	359725-0117		1	WARNING SIGN ANSI (V), HOT SURFACE	
ISO					
320	359705-0007		1	WARNING SIGN ISO, HOT SURFACE	
Common Parts					
010	2856558-0000		1	GEAR WHEEL	
300	90600-1765		1	GEARS, PLANETARY LPB+ 070-M01-3-111/MPL-	
500	311103-0351		1	PARALLEL PIN ISO 2338 6M6X16 A1	
510	312115-0329		5	SCREW ISO4762 M5X16 A4 80	
520	312115-0370		4	SCREW ISO4762 M6X20 A4 80	
530	312115-0453		4	SCREW ISO4762 M8X25 A4 80	
W30M1020	90601-5151		1	SERVO MOTOR MPL-B330P-SJ72AA SERIES A	

Pos	Part No	UN	Qty	Description	Page No

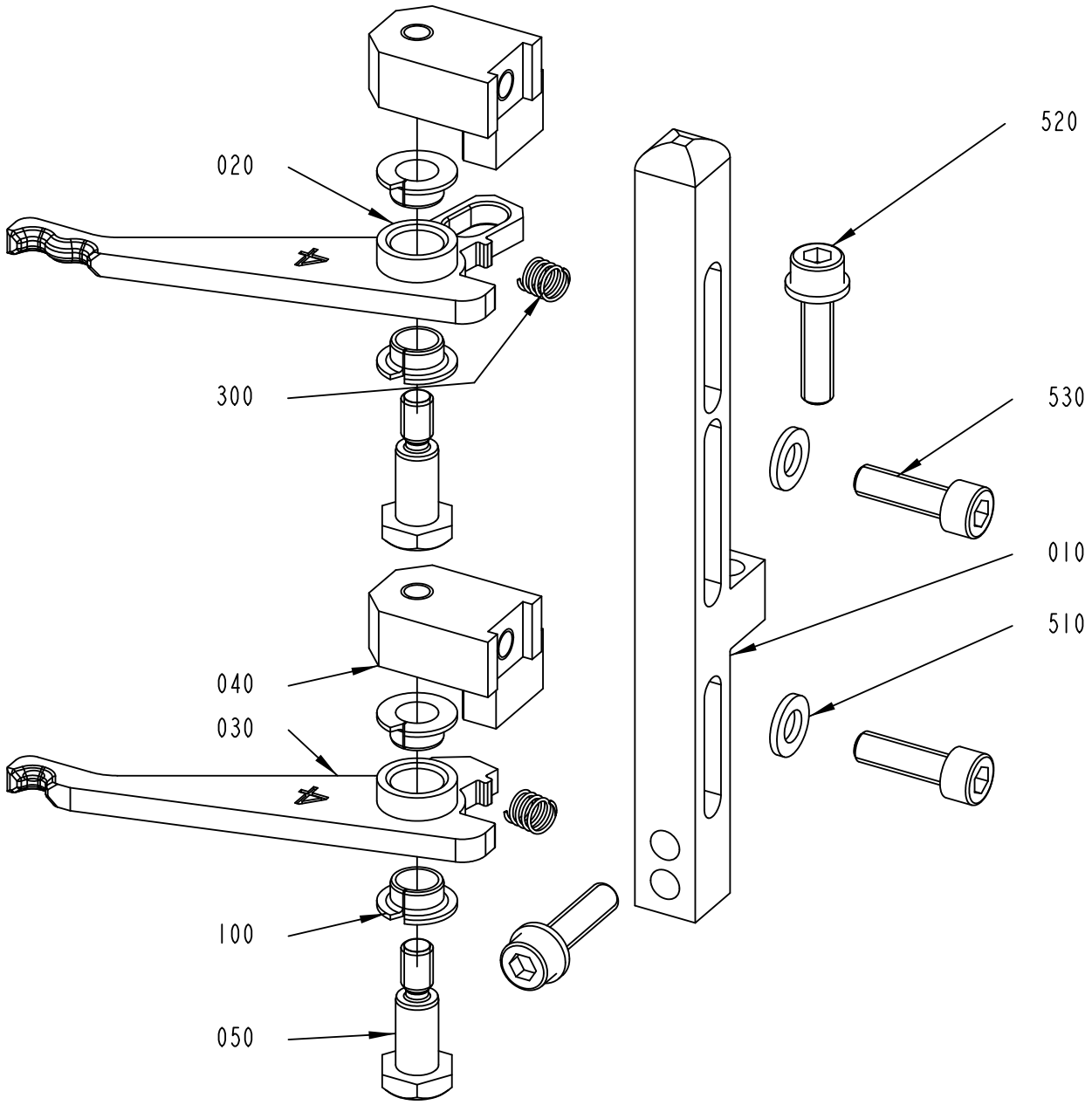

3013387-1
406756

ECM: 436866 - 20100222
Group number: 3013387-0100
Assembly Drawing: 3013387-1_1_AB

Pos	Part No	UN	Qty	Description	Page No
S-STRAW3					
020	3013563-0000		1	ARM	
030	3013639-0000		1	ARM	
S-STRAW4					
020	3013642-0000		1	ARM	
030	3013639-0000		1	ARM	
S-STRAW5					
020	3013564-0000		1	ARM	
030	3013638-0000		1	ARM	
T-STRAW4/5					
020	3013564-0000		1	ARM	
030	3013639-0000		1	ARM	
T-STRAW5/6					
020	3013562-0000		1	ARM	
030	3013638-0000		1	ARM	
U-STRAW4					
020	3013642-0000		1	ARM	
030	3013639-0000		1	ARM	
U-STRAW5					
020	3013565-0000		1	ARM	
030	3013638-0000		1	ARM	
Common Parts					
010	2910474-0000		1	POST	
040	3013390-0000		2	BRACKET	
050	3013399-0000		2	SCREW	
100	321161-0098		4	FLANGE BUSHING, 8X10X5, 5 MM	
300	90600-1851		2	COMP. SPRING 5896, 0,63X6,93X11,5	
510	315105-0153		4	WASHER BRB 6,4X12 RFR	
520	312115-0372		2	SCREW ISO4762 M6X25 A4 80	
530	312115-0370		2	SCREW ISO4762 M6X20 A4 80	

Pos	Part No	UN	Qty	Description	Page No

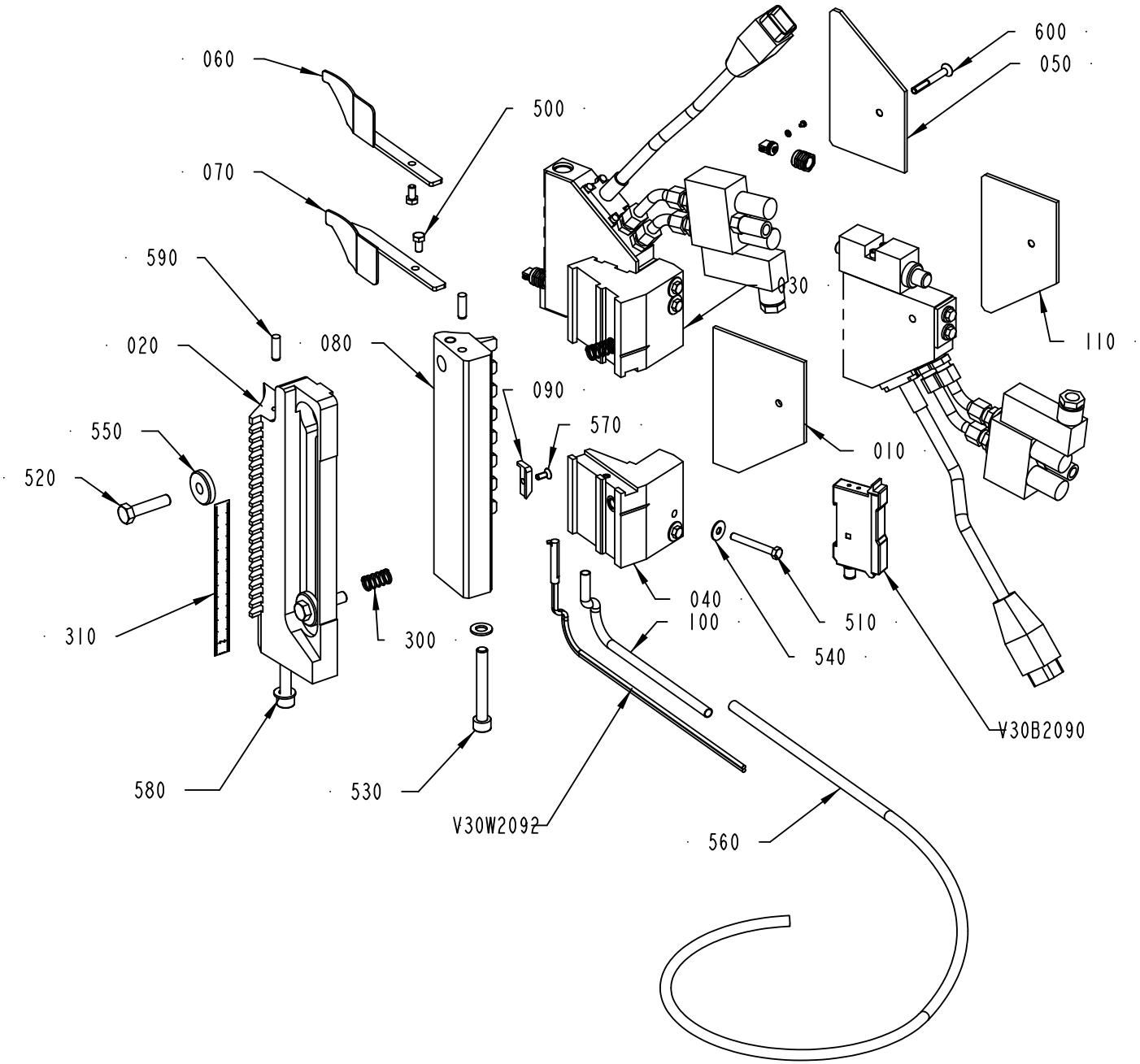

2829435-1
429959

ECM: 436871 - 20100222
Group number: 2829435-0100
Assembly Drawing: 2829435-1_1_AE

Pos	Part No	UN	Qty	Description	Page No
-					
010	2848835-0000		2	INSULATING PLATE	
020	2848852-0000		1	GUIDE CONSOLE	
030	2848854-0000		1	GUN HOLDER	
040	2848855-0000		1	GUN HOLDER	
050	2848856-0000		1	INSULATING PLATE	
060	2848857-0000		1	GUIDE ARM	
070	2848858-0000		1	GUIDE ARM	
080	2848849-0000		1	GUIDE CONSOLE	
090	2987393-0000		1	BRACKET	
100	3013625-0000		1	CABLE PROTECTION	
110	3077120-0000		1	INSULATING PLATE	
300	90458-2082		2	COMP. SPRING SF-TF 1X9X20 SS 2331-06	
310	90458-2780		1	SCALE ,1000-0 MM ADHESIVE	
500	312105-0325		2	SCREW M6S ISO 4017 M5X10 A480	
510	312105-0339		4	SCREW M6S ISO 4014 M5X40 A480	
520	312105-0457		2	CREW M6S ISO 4014 M8X35 A480	
530	312115-0463		2	SCREW ISO4762 M8X60 A4 80	
540	315125-0146		4	WASHER TBRSB 5.3X15X1 A4	
550	315125-0165		2	WASHER TBRSB 8,4X26X5 A4	
560	315300-0004	MM	1000	TUBE, 8 MM PE BLUE	
570	312155-0289		1	SCREW DIN 7991 MF6S M4X10 A4 70	
580	315103-0165		2	WASHER PLAIN, BRB, 8,4/16,H=1,5 NIPL BR	
590	311103-0353		2	PARALLEL PIN ISO 2338 6M6X20 A1	
600	312155-0339		2	SCREW DIN 7991 MF6S M5X40 A4 70	
V30B2090	90458-0970		1	AMPLIFIER UNIT, E3X-DA44V	
V30W2092	90232-0116		1	FIBRE E3F-R2B4	

Pos	Part No	UN	Qty	Description	Page No

SPRING HOLDER

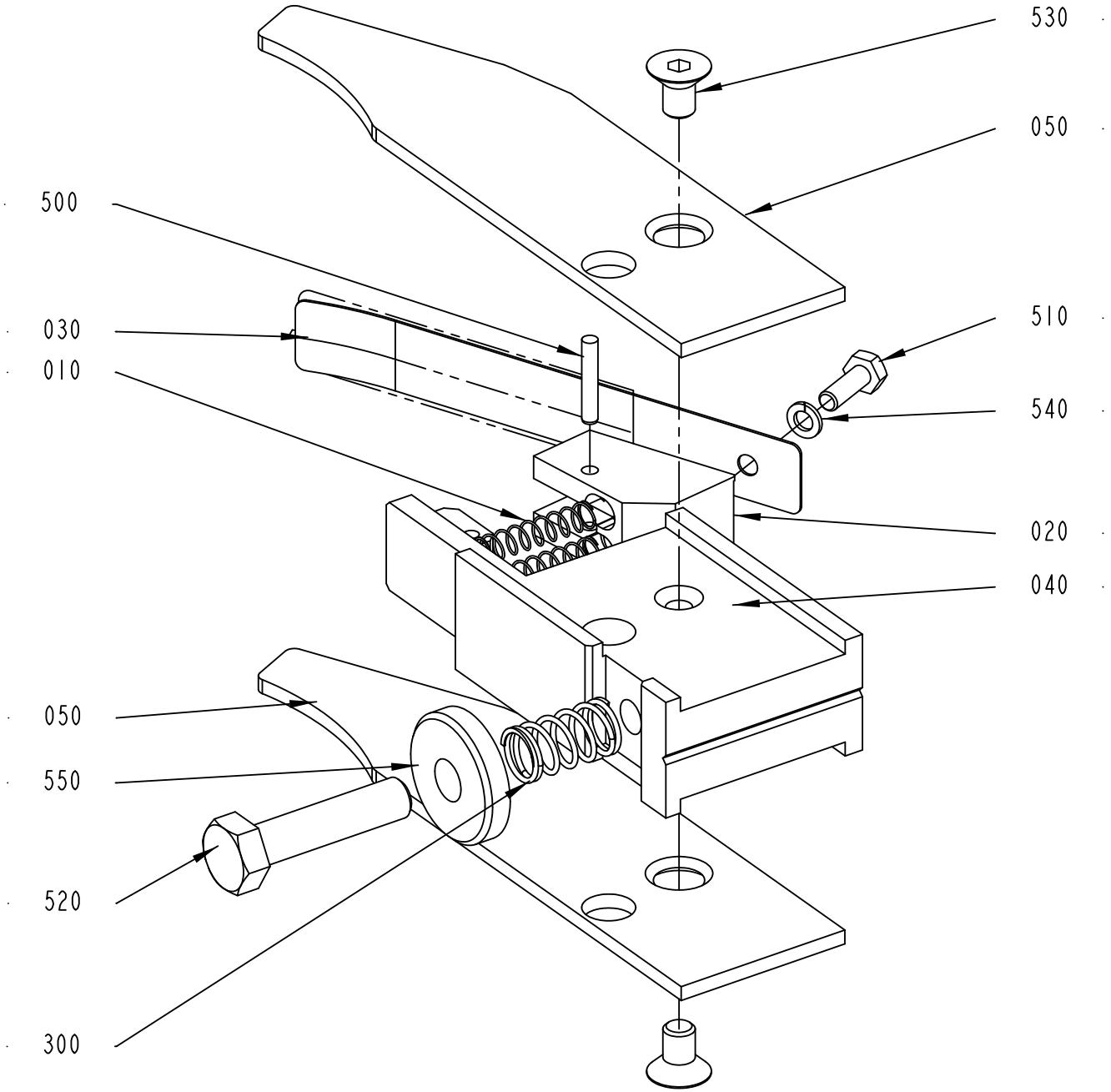

2923353-3
422084

ECM: 436872 - 20100222
Group number: 2923353-0200
Assembly Drawing: 2923353-3_1_AB

Pos	Part No	UN	Qty	Description	Page No
TBA, TB					
010	90600-7711		2	COMP. SPRING 21280, 0,5X6X30	
TPA					
010	536204-0000		2	COMPRESSION SPRING	
Common Parts					
020	2848840-0000		1	SPRING BRACKET	
030	2848842-0000		1	LEAF SPRING	
040	2923354-0000		1	SPRING HOLDER	
050	2923358-0000		2	GUIDE ARM	
300	90458-2082		1	COMP. SPRING SF-TF 1X9X20 SS 2331-06	
500	311102-0237		1	PARALLEL PIN ISO 2338 3M6X18 ST	
510	312105-0291		1	SCREW M6S ISO 4017 M4X12 A470	
520	312105-0457		1	CREW M6S ISO 4014 M8X35 A480	
530	312155-0364		2	SCREW DIN 7991 MF6S M6X10 A4 70	
540	315105-0136		1	WASHER BRB 4,3X8 RFR	
550	315125-0165		1	WASHER TBRSB 8,4X26X5 A4	

Pos	Part No	UN	Qty	Description	Page No

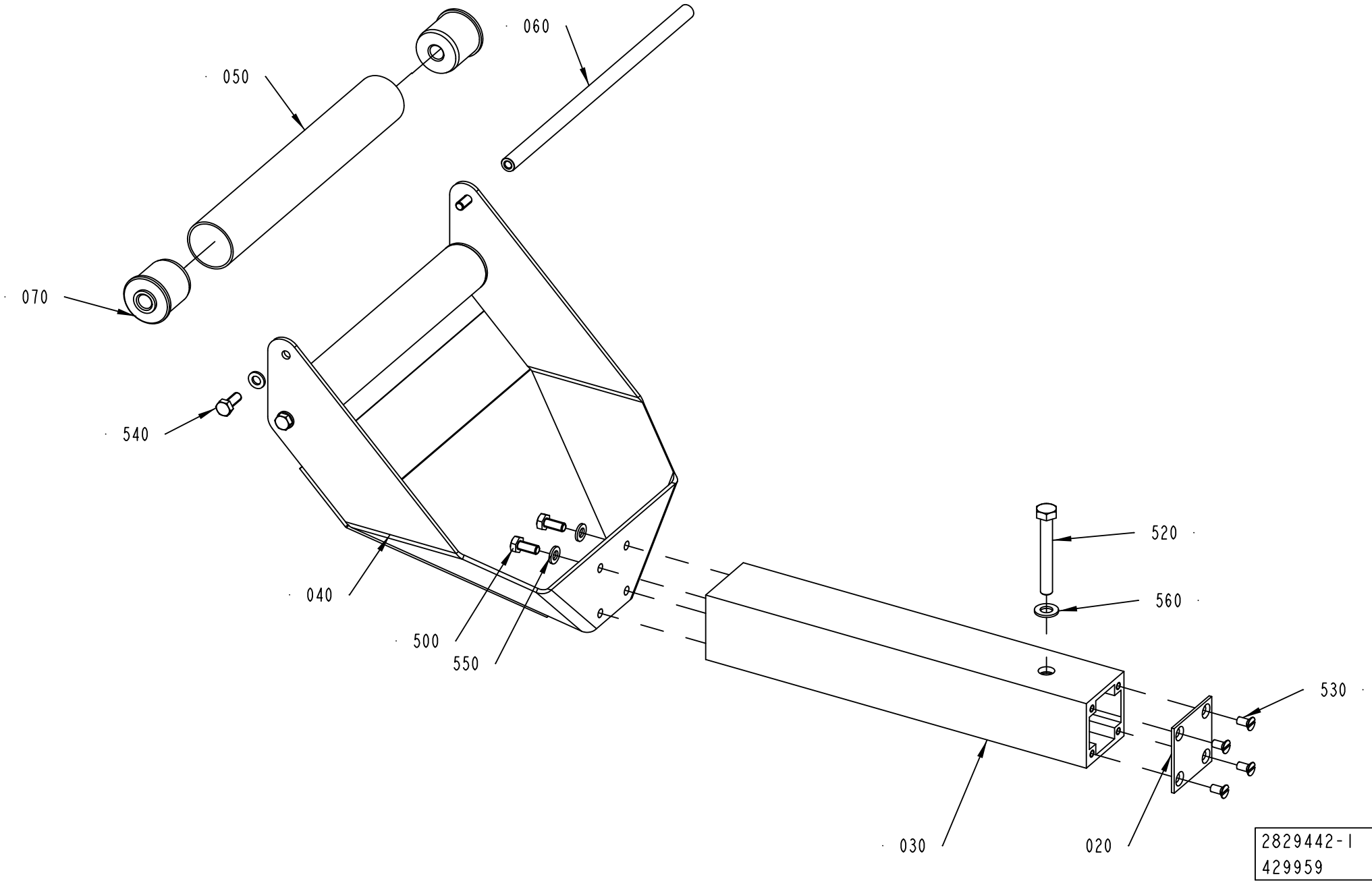
060
050
070
540
040
500
550
520
560
530
030
020
2829442-1
429959

ECM: 436879 - 20100222
Group number: 2829442-0100
Assembly Drawing: 2829442-1_1_AB

Pos	Part No	UN	Qty	Description	Page No
-					
020	556604-0000		1	COVER PLATE	
030	2856565-0000		1	PROFILE 50X50	
040	3073655-0000		1	BRACKET	
050	2935827-0000		2	PIPE	
060	3088864-0000		2	SHAFT	
070	2935834-0000		4	END SECTION	
300	90141-0016		4	RETAINING RING FOR SHAFT DIN 471 10 SS	
500	312105-0367		4	SCREW M6S ISO 4017 M6X14 A480	
520	312105-0463		1	SCREW M6S ISO 4014 M8X60 A480	
530	312145-0325		4	SCREW ISO 2009 MFS M5X10 A4	
550	315105-0153		8	WASHER BRB 6,4X12 RFR	
560	315105-0165		1	WASHER BRB 8,4X16 RFR	

Pos	Part No	UN	Qty	Description	Page No

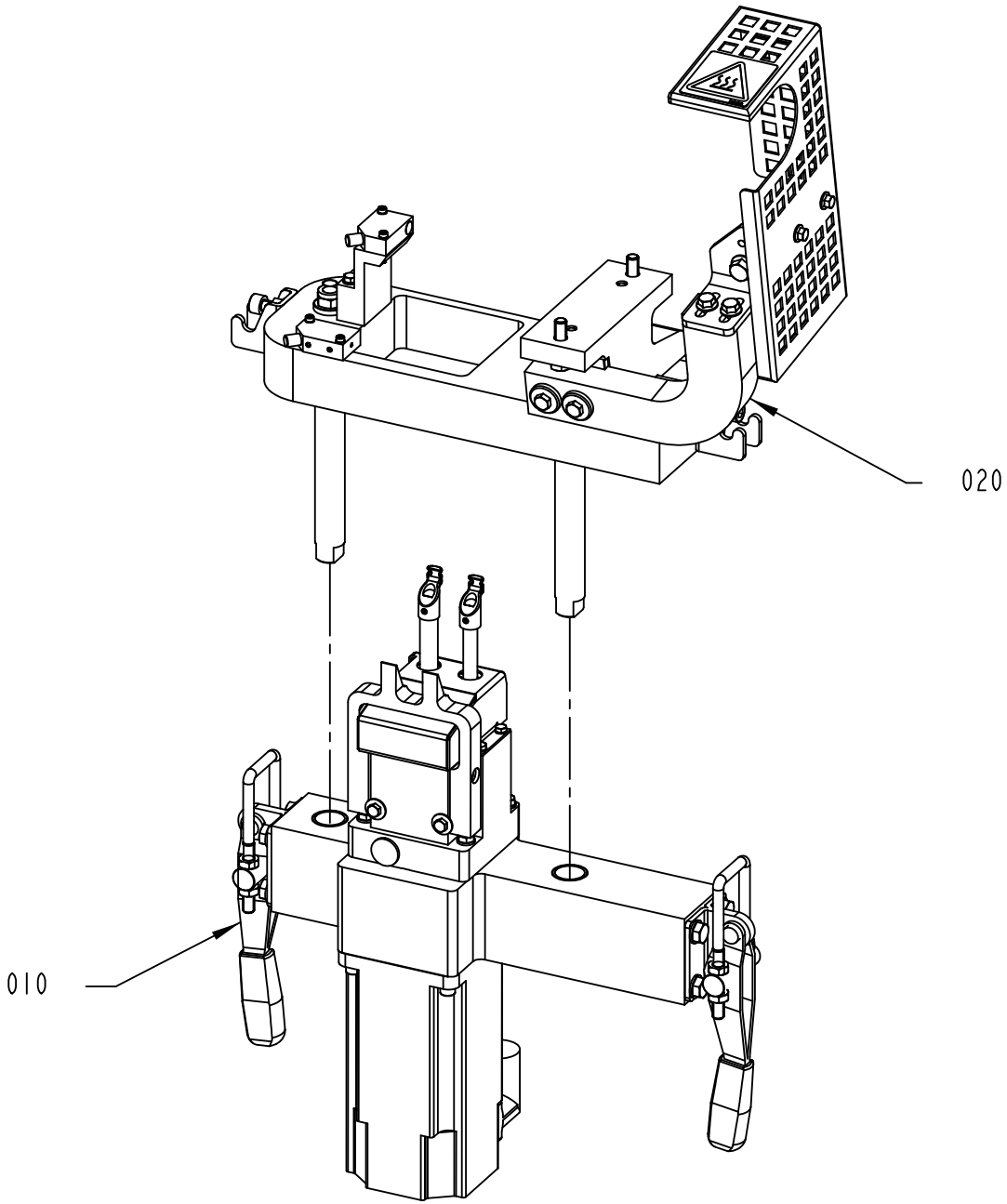

2934000-3
418128

ECM: 419014 - 20091016
Group number: 2934000-0200
Assembly Drawing: 2934000-3_1_AA

This list covers pages from 2-24 to 2-27

Pos	Part No	UN	Qty	Description	Page No
-					
010	2948250-0200		1	PRESSURE UNIT	**2-29**
020	2948255-0100		1	LOCK HOLDER	**2-31, 2-33**

Pos	Part No	UN	Qty	Description	Page No

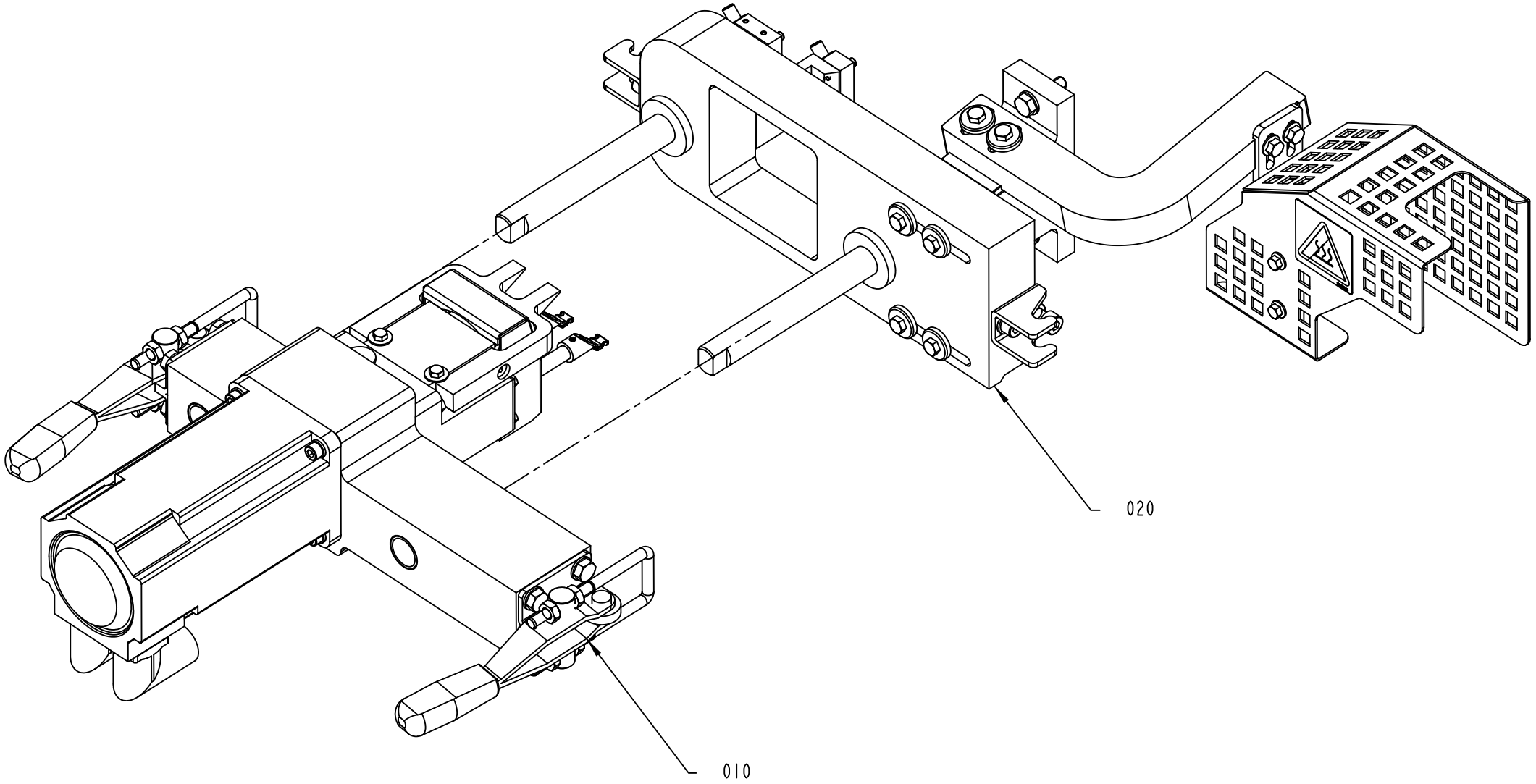

2934000-4
418128

ECM: 419014 - 20091016
Group number: 2934000-0200
Assembly Drawing: 2934000-4_1_AA

This list covers pages from 2-24 to 2-27

Pos	Part No	UN	Qty	Description	Page No
-					
010	2948250-0200		1	PRESSURE UNIT	**2-29**
020	2948255-0100		1	LOCK HOLDER	**2-31, 2-33**

Pos	Part No	UN	Qty	Description	Page No

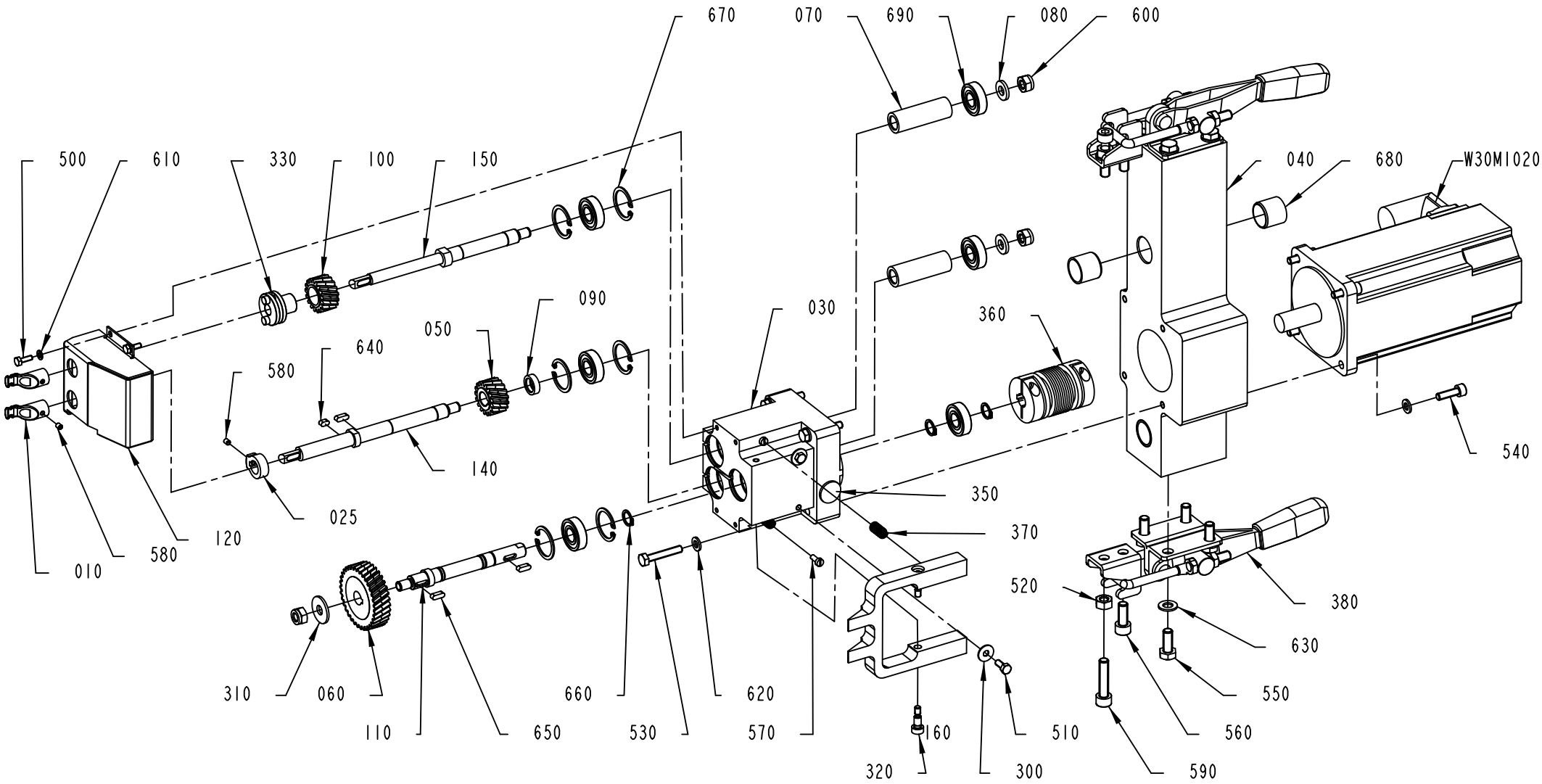

2948250-2
418128

ECM: 436874 - 20100222
Group number: 2948250-0200
Assembly Drawing: 2948250-2_1_AA

Pos	Part No	UN	Qty	Description	Page No
S-STRAW, T-STRAW (See drawing on page: 2-28)					
010	2863517-0000		2	ECCENTRIC	
U-STRAW (See drawing on page: 2-28)					
010	2939679-0000		2	ECCENTRIC	
Common Parts					
025	2863493-0000		1	FLAG	
030	2904764-0000		1	BEARING HOUSING	
040	2904765-0000		1	HOUSE	
050	2916011-0000		1	GEAR WHEEL	
060	2916012-0000		1	GEAR WHEEL	
070	2916017-0000		2	SPACER SLEEVE	
080	2916021-0000		2	WASHER	
090	2916022-0000		1	SPACER SLEEVE	
100	2916024-0000		1	GEAR WHEEL	
110	2916039-0000		1	SHAFT	
120	2934028-0000		1	COVER	
140	2939676-0000		1	SHAFT	
150	2939677-0000		1	SHAFT	
160	2957682-0000		1	FORK	
300	90005-0114		2	WASHER PLAIN ROUND 5,3(M5)/15, H=1	
310	90005-0116		1	WASHER PLAIN ROUND 8,4(M8)/24, H=2	
320	90459-1906		2	SCREW, HEX.SOCK.HEAD SHOULD. M5X10	
330	90458-2068		1	CLAMPING ELEMENT WITH SLEEVE, 3/8"X16 MM	
350	90459-7245		1	PLUG, BLIND, PLASTIC GPN300F11	
360	90600-0439		1	BELLOW COUPLING, 12X16 MM	
370	90600-1092		2	COMP. SPRING D21550, 0,63X8,63X16	
380	90600-5062		2	CLAMPING ELEMENT, GN 851-700-T2-N1	
500	312105-0291		4	SCREW M6S ISO 4017 M4X12 A470	
510	312105-0327		2	SCREW M6S ISO 4017 M5X12 A480	
520	312605-0318		2	HEXAGON NUT, M6M M8 A280	
530	312109-0376		4	SCREW M6S ISO 4017 M6X35 A480	
540	312115-0370		4	SCREW ISO4762 M6X20 A4 80	
550	312105-0451		8	SCREW M6S ISO 4017 M8X20 A480	
560	312115-0451		2	SCREW ISO4762 M8X20 A4 80	
570	312125-0289		2	SCREW ISO 1207 M4X10 A4	
580	312318-0284		3	SCREW ISO4029 M4X5 A4	
590	312115-0457		2	SCREW ISO4762 M8X35 A4 80	
600	312812-0318		3	HEXAGON NUT, NY-LOCK M8 A480	
610	315105-0136		4	WASHER BRB 4,3X8 RFR	
620	315105-0153		8	WASHER BRB 6,4X12 RFR	
630	315105-0165		12	WASHER BRB 8,4X16 RFR	
640	315705-0164		1	PARALLEL KEY W. ROUND ENDS 4X4X8 MM	
650	315705-0166		3	PARAPARALLEL KEY W. ROUND ENDS 4X4X12 MM	
660	315751-0109		3	RETAINING RING FOR SHAFT DIN 471 12 SS	
670	315753-0121		6	RETAINING RING FOR BORE DIN 472 28 A2	
680	321133-0260		4	BUSHING IGLIDUR G 20X23X20	
690	321308-0201		6	BALL BEARING 12/28X8	
W30M1020	90601-5151		1	SERVO MOTOR MPL-B330P-SJ72AA SERIES A	

Machine Type	Group Description	Used-In	Group Number	Page No

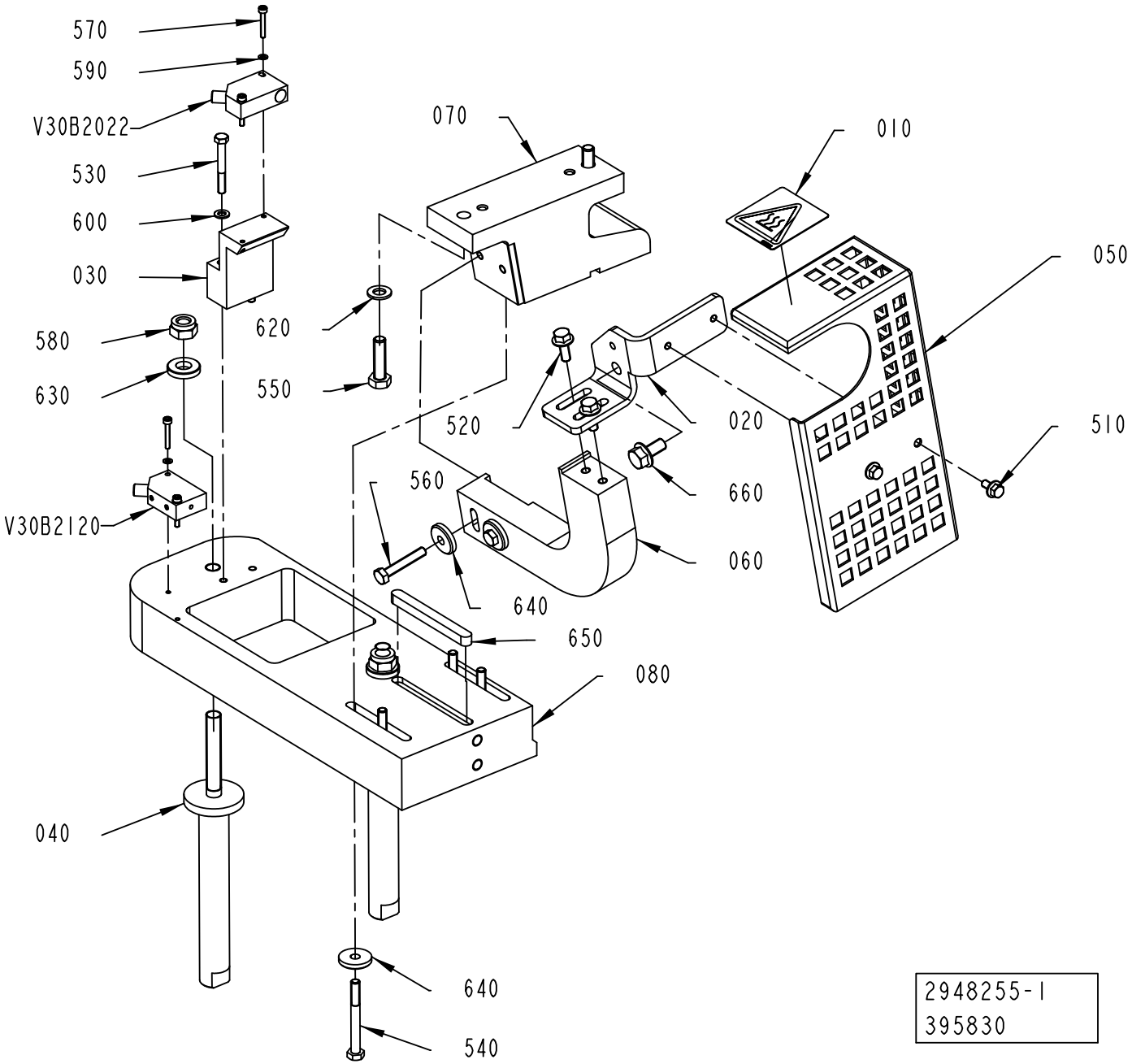

2948255-1
395830

ECM: 436875 - 20100222
Group number: 2948255-0100
Assembly Drawing: 2948255-1_1_AC

This list covers pages from 2-30 to 2-33

Pos	Part No	UN	Qty	Description	Page No
TCA ANSI (See drawing on pages: 2-30)					
010	359725-0117		1	WARNING SIGN ANSI (V), HOT SURFACE	
050	2939673-0000		1	COVER	
060	2939674-0000		1	BRACKET	
TCA ISO (See drawing on page: 2-30)					
010	1128853-0000		1	CAUTION SIGN	
050	2939673-0000		1	COVER	
060	2939674-0000		1	BRACKET	
TWA ANSI (See drawing on pages: 2-32)					
010	359725-0116		1	WARNING SIGN ANSI (H), HOT SURFACE	
050	2982623-0000		1	COVER	
060	2982619-0000		1	ARM	
TWA ISO (See drawing on page: 2-32)					
010	1128853-0000		1	CAUTION SIGN	
050	2982623-0000		1	COVER	
060	2982619-0000		1	ARM	
Common Parts					
020	2863518-0000		1	BRACKET	
030	2934029-0000		1	BRACKET	
040	2939672-0000		2	SHAFT	
070	2939675-0000		1	BRACKET	
080	2939678-0000		1	BRACKET	
510	312105-0327		2	SCREW M6S ISO 4017 M5X12 A480	
520	312108-0368		2	SCREW EN 1665 TYPE F M6X16 A270	
530	312105-0339		2	SCREW M6S ISO 4014 M5X40 A480	
540	312105-0381		4	SCREW M6S ISO 4014 M6X55 A480	
550	312105-0455		2	SCREW M6S ISO 4017 M8X30 A480	
560	312109-0376		2	SCREW M6S ISO 4017 M6X35 A480	
570	312115-0230		4	SCREW ISO4762 M3X20 A4 80	
580	312812-0320		2	HEXAGON NUT, NY-LOCK M10 A480	
590	315105-0124		4	WASHER BRB 3,2X6 RFR	
600	315105-0146		2	WASHER BRB 5,3X10 RFR	
610	315105-0153		1	WASHER BRB 6,4X12 RFR	
620	315106-0165		2	WASHER ISO 7089-8-200 HV A4	
630	315115-0173		2	WASHER PLAIN, TBRB 10,5/22 H=4	
640	315125-0153		6	WASHER TBRSB 6,4X22X4 A4	
650	315705-0277		1	PARALLEL KEY W. ROUND ENDS 8X7X80 MM	
660	312108-0449		1	SCREW EN 1665 TYPE F M8X16 A270	
V30B2022	90459-2409		1	INDUCTIVE SENSOR IN5230	
V30B2120	90459-2409		1	INDUCTIVE SENSOR IN5230	

Pos	Part No	UN	Qty	Description	Page No

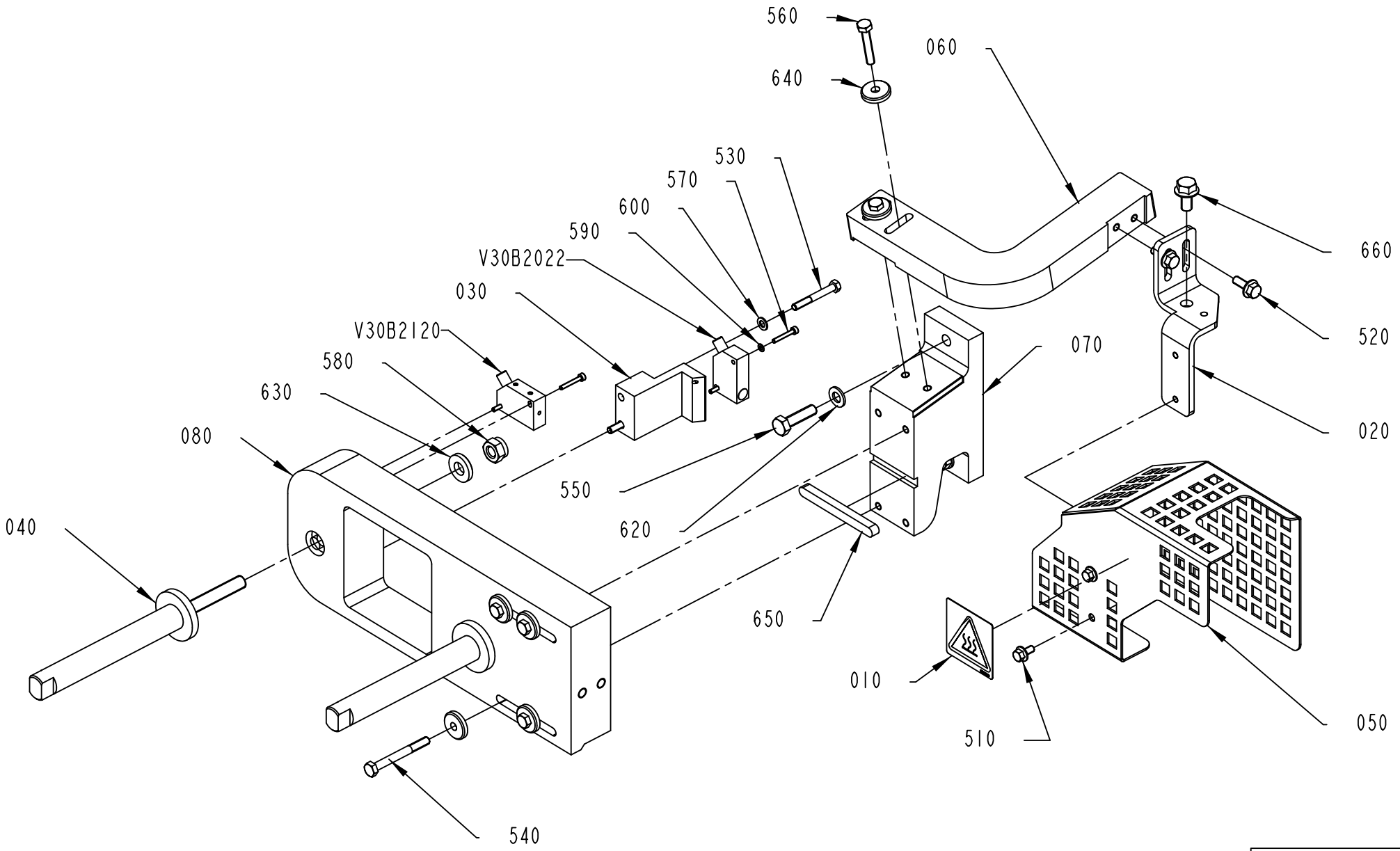

2948255-2
395830

Pos	Part No	UN	Qty	Description	Page No
TCA ANSI (See drawing on pages: 2-30)					
010	359725-0117		1	WARNING SIGN ANSI (V), HOT SURFACE	
050	2939673-0000		1	COVER	
060	2939674-0000		1	BRACKET	
TCA ISO (See drawing on page: 2-30)					
010	1128853-0000		1	CAUTION SIGN	
050	2939673-0000		1	COVER	
060	2939674-0000		1	BRACKET	
TWA ANSI (See drawing on pages: 2-32)					
010	359725-0116		1	WARNING SIGN ANSI (H), HOT SURFACE	
050	2982623-0000		1	COVER	
060	2982619-0000		1	ARM	
TWA ISO (See drawing on page: 2-32)					
010	1128853-0000		1	CAUTION SIGN	
050	2982623-0000		1	COVER	
060	2982619-0000		1	ARM	
Common Parts					
020	2863518-0000		1	BRACKET	
030	2934029-0000		1	BRACKET	
040	2939672-0000		2	SHAFT	
070	2939675-0000		1	BRACKET	
080	2939678-0000		1	BRACKET	
510	312105-0327		2	SCREW M6S ISO 4017 M5X12 A480	
520	312108-0368		2	SCREW EN 1665 TYPE F M6X16 A270	
530	312105-0339		2	SCREW M6S ISO 4014 M5X40 A480	
540	312105-0381		4	SCREW M6S ISO 4014 M6X55 A480	
550	312105-0455		2	SCREW M6S ISO 4017 M8X30 A480	
560	312109-0376		2	SCREW M6S ISO 4017 M6X35 A480	
570	312115-0230		4	SCREW ISO4762 M3X20 A4 80	
580	312812-0320		2	HEXAGON NUT, NY-LOCK M10 A480	
590	315105-0124		4	WASHER BRB 3,2X6 RFR	
600	315105-0146		2	WASHER BRB 5,3X10 RFR	
610	315105-0153		1	WASHER BRB 6,4X12 RFR	
620	315106-0165		2	WASHER ISO 7089-8-200 HV A4	
630	315115-0173		2	WASHER PLAIN, TBRB 10,5/22 H=4	
640	315125-0153		6	WASHER TBRSB 6,4X22X4 A4	
650	315705-0277		1	PARALLEL KEY W. ROUND ENDS 8X7X80 MM	
660	312108-0449		1	SCREW EN 1665 TYPE F M8X16 A270	
V30B2022	90459-2409		1	INDUCTIVE SENSOR IN5230	
V30B2120	90459-2409		1	INDUCTIVE SENSOR IN5230	

Pos	Part No	UN	Qty	Description	Page No

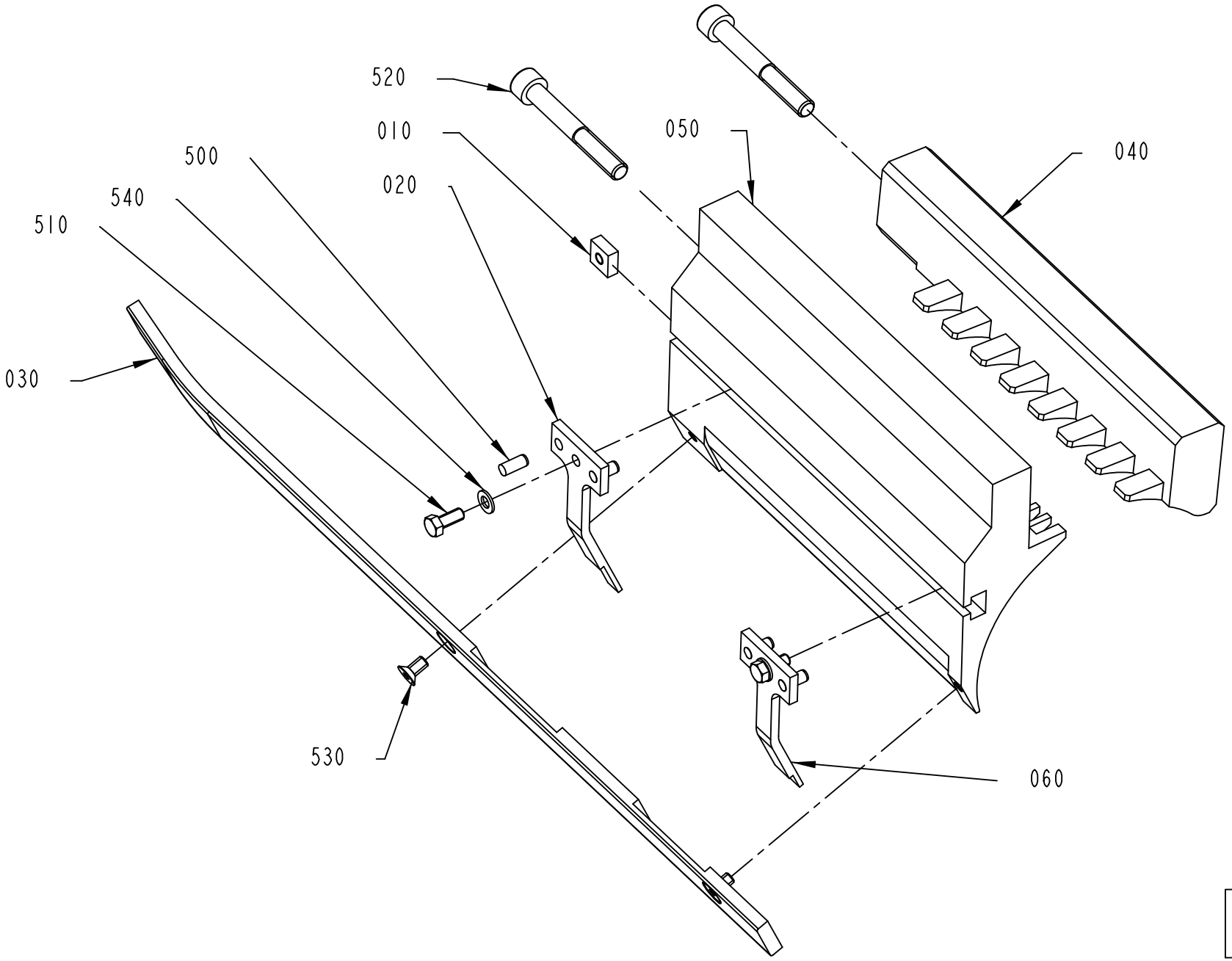

2957700-1
377812

ECM: 436878 - 20100222
Group number: 2957700-0100
Assembly Drawing: 2957700-1_1_AB

Pos	Part No	UN	Qty	Description	Page No
TCA					
030	2916036-0000		1	GUIDE	
530	312155-0325		2	SCREW DIN 7991 MF6S M5X10 A4 70	
Common Parts					
010	2863512-0000		2	NUT	
020	2863513-0000		5	HOLDER	
040	2848849-0000		1	GUIDE CONSOLE	
050	2992501-0000		1	HOLDER	
050	2948234-0000		1	GUIDE CONSOLE	
500	311103-0306		4	PARALLEL PIN ISO 2338 5M6X12 A1	
510	312105-0327		2	SCREW M6S ISO 4017 M5X12 A480	
520	312115-0463		2	SCREW ISO4762 M8X60 A4 80	
540	315105-0146		2	WASHER BRB 5,3X10 RFR	

Pos	Part No	UN	Qty	Description	Page No

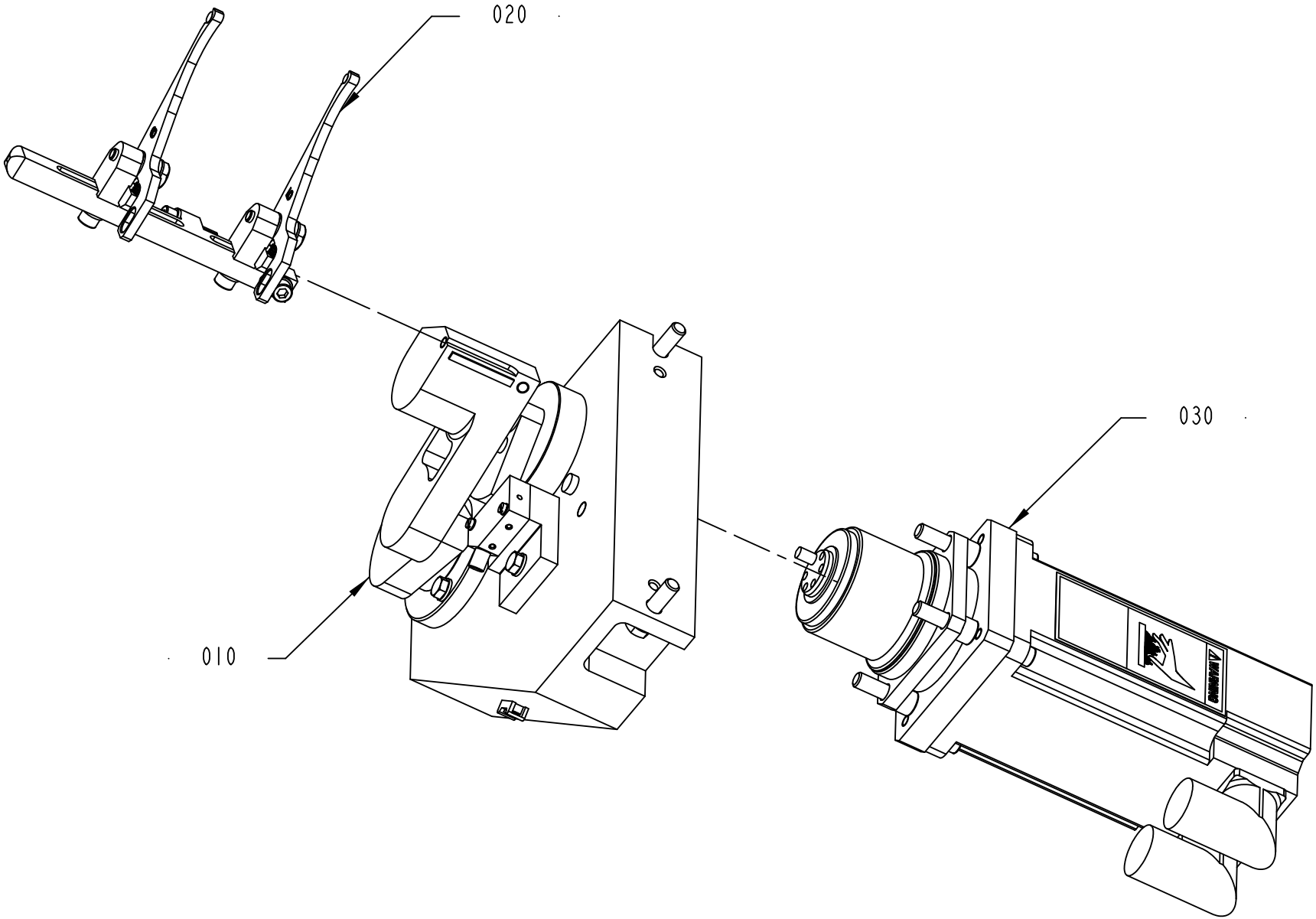

2954304-2
418128

ECM: 436974 - 20100222
Group number: 2954304-0200
Assembly Drawing: 2954304-2_1_AA

Pos	Part No	UN	Qty	Description	Page No
-					
010	2952607-0100		1	CRANK HOUSING	**2-39**
020	3013886-0100		1	PRESSURE ARM	**2-41**
030	2983879-0200		1	DRIVE MOTOR	**2-43**

Pos	Part No	UN	Qty	Description	Page No

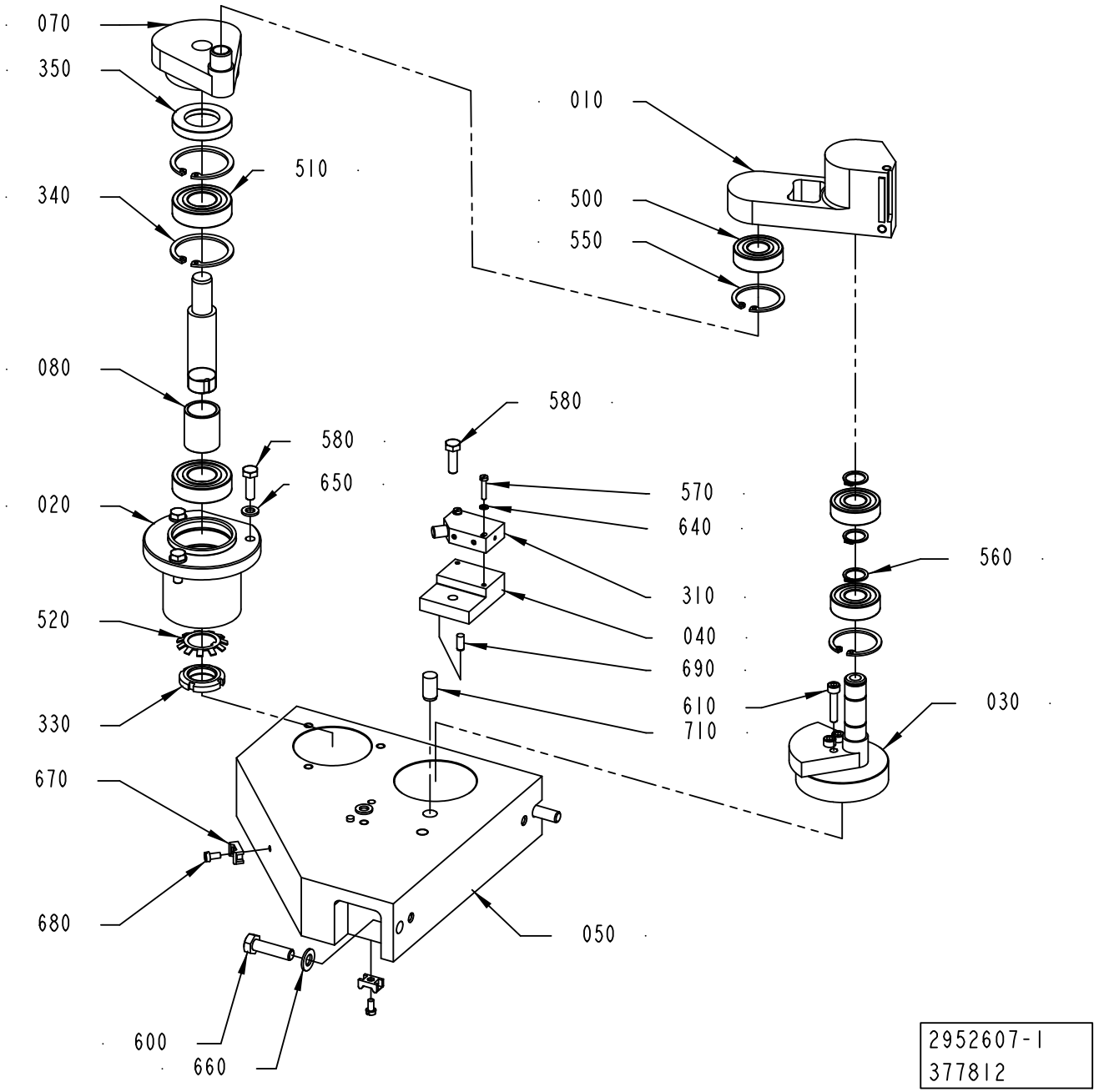
070
350
340
080
020
520
330
670
680
600
660
510
580
650
010
500
550
580
570
640
310
040
690
610
710
560
030
050
2952607-1
377812

ECM: 436880 - 20100222
Group number: 2952607-0100
Assembly Drawing: 2952607-1_1_AA

Pos	Part No	UN	Qty	Description	Page No
-					
010	2952611-0000		1	BEARING HOUSING	
020	2952614-0000		1	BEARING SLEEVE	
030	2952613-0000		1	CRANK SHAFT	
040	2954244-0000		1	SWITCH BRACKET	
050	2952615-0000		1	FRAME SECTION	
070	2952612-0000		1	ROCKER ARM	
080	2952616-0000		1	SLEEVE	
310	90459-2409		1	INDUCTIVE SENSOR IN5230	
330	90600-1766		1	NUT ROUND WITH SLOTS M20X1 SS	
340	90141-0020		2	RETAINING RING FOR BORE DIN 472 42 A2	
350	90091-0322		1	RADIAL SEAL 25X42X7 MM DUST LIP	
500	321313-0102		3	BALL BEARING 15/35X11	
510	321308-0204		2	BALL BEARING 20/42X12	
520	315410-0104		1	LOCK WASHER MB 4 D=20 H=1	
550	315753-0124		2	RETAINING RING FOR BORE DIN 472 35 A2	
560	315751-0112		3	RETAINING RING FOR SHAFT DIN 471 15 SS	
570	312125-0228		2	SCREW ISO 1207 M3X16 A4	
580	312105-0370		3	SCREW M6S ISO 4017 M6X20 A480	
600	312105-0455		2	SCREW M6S ISO 4017 M8X30 A480	
610	312115-0333		3	SCREW ISO4762 M5X25 A4 80	
640	315105-0124		2	WASHER BRB 3,2X6 RFR	
650	315105-0153		3	WASHER BRB 6,4X12 RFR	
660	315105-0165		2	WASHER BRB 8,4X16 RFR	
670	352113-0205		5	ANCHOR PLATES FOR STRIPS, TYPE TM2S8-C10	
680	312125-0287		5	SCREW ISO 1207 M4X8 A4	
690	311103-0306		2	PARALLEL PIN ISO 2338 5M6X12 A1	
700	312105-0370		1	SCREW M6S ISO 4017 M6X20 A480	
710	311103-0454		1	PARALLEL PIN ISO 2338 10M6X20 A1	

Pos	Part No	UN	Qty	Description	Page No

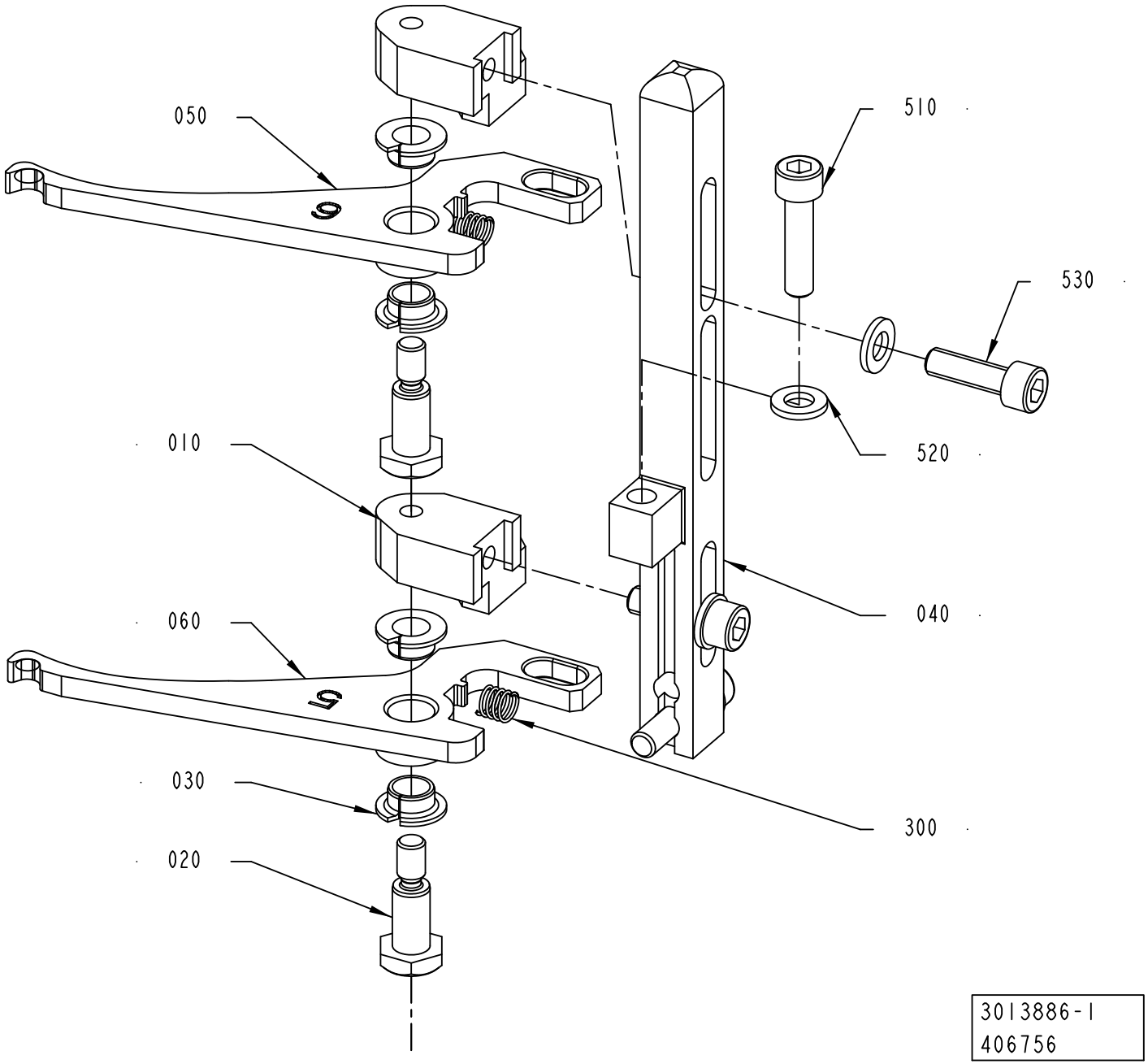
050
510
530
010
520
040
060
030
300
020
3013886-1
406756

ECM: 436881 - 20100222
Group number: 3013886-0100
Assembly Drawing: 3013886-1_1_AB

Pos	Part No	UN	Qty	Description	Page No
T-STRAW4/5					
050	3013889-0000		1	ARM	
060	3013640-0000		1	ARM	
T-STRAW5/6					
050	3013888-0000		1	ARM	
060	3013889-0000		1	ARM	
Common Parts					
010	3013887-0000		2	BRACKET	
020	3013399-0000		2	SCREW	
030	321161-0098		4	FLANGE BUSHING, 8X10X5, 5 MM	
040	2910474-0000		1	POST	
300	90600-1851		2	COMP. SPRING 5896, 0,63X6,93X11,5	
510	312115-0372		2	SCREW ISO4762 M6X25 A4 80	
520	315105-0153		4	WASHER BRB 6,4X12 RFR	
530	312115-0370		2	SCREW ISO4762 M6X20 A4 80	

Pos	Part No	UN	Qty	Description	Page No

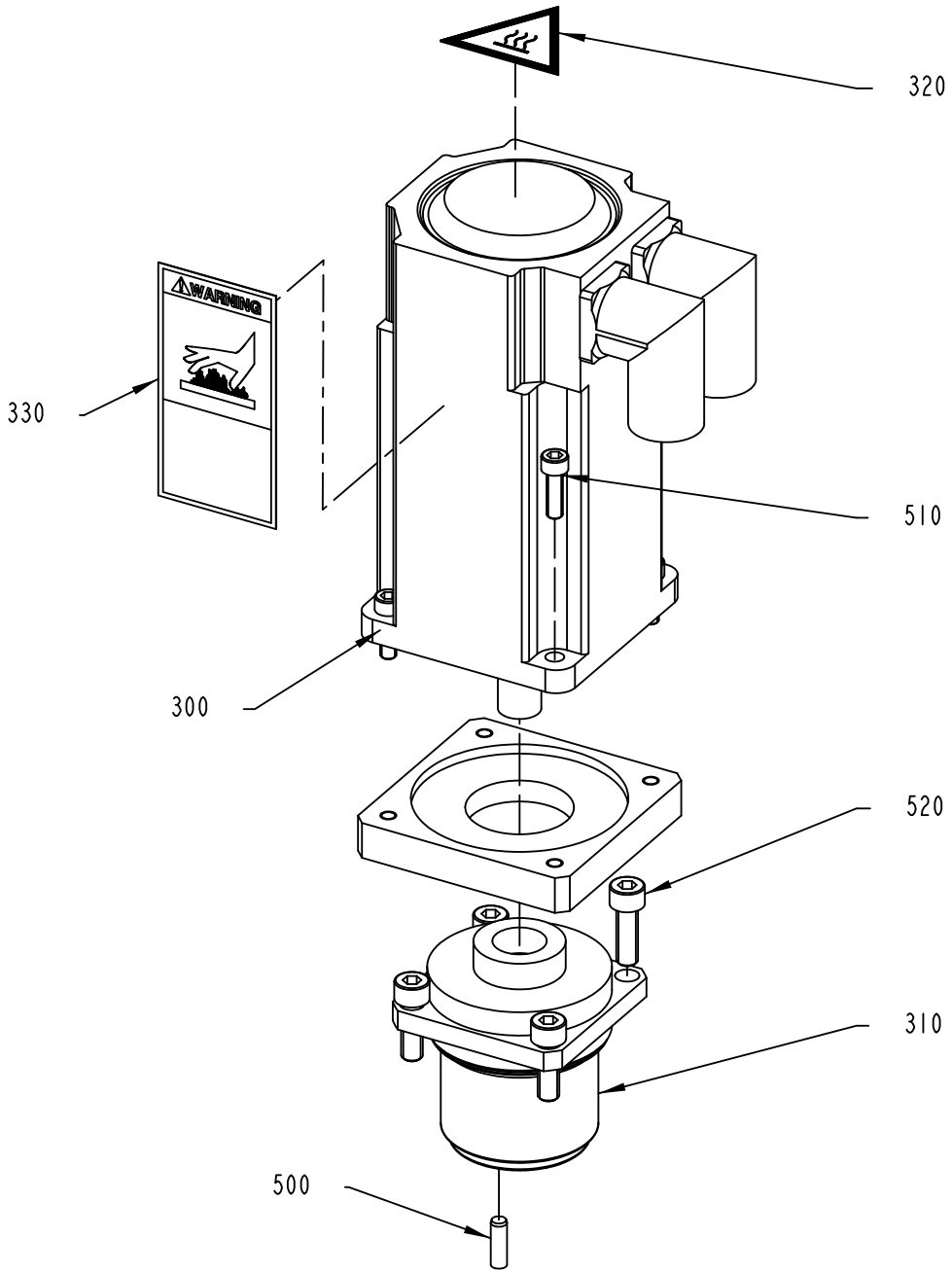

2983879-2
418128

ECM: 436882 - 20100222
Group number: 2983879-0200
Assembly Drawing: 2983879-2_1_AA

Pos	Part No	UN	Qty	Description	Page No
ANSI					
320	359725-0117		1	WARNING SIGN ANSI (V), HOT SURFACE	
ISO					
320	359705-0007		1	WARNING SIGN ISO, HOT SURFACE	
Common Parts					
310	90600-1765		1	GEARS, PLANETARY LPB+ 070-M01-3-111/MPL-	
500	311103-0353		1	PARALLEL PIN ISO 2338 6M6X20 A1	
510	312115-0370		4	SCREW ISO4762 M6X20 A4 80	
520	312115-0453		4	SCREW ISO4762 M8X25 A4 80	
W30M1020	90601-5151		1	SERVO MOTOR MPL-B330P-SJ72AA SERIES A	

Pos	Part No	UN	Qty	Description	Page No

ADJUSTMENT BRACKET

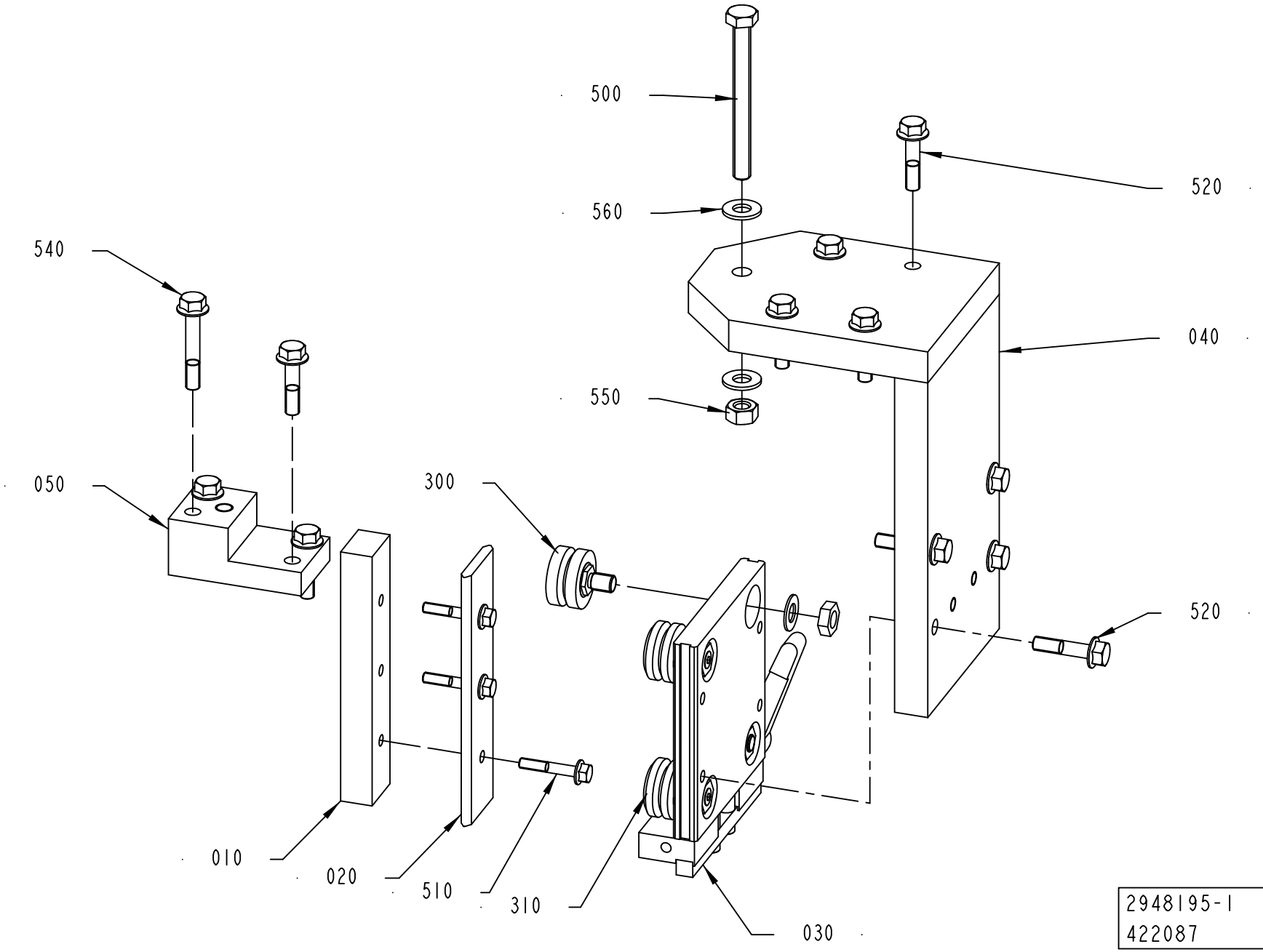

ECM: 436883 - 20100222
Group number: 2948195-0100
Assembly Drawing: 2948195-1_1_AB

Pos	Part No	UN	Qty	Description	Page No
-					
010	2916061-0000		1	SPACER BLOCK	
020	2916074-0000		1	GUIDE RAIL	
030	90601-0767		1	CARRIAGE, SSCPM44125B+SSBK44	
040	2948191-0000		1	ANGLE BRACKET	
050	2948199-0000		1	SPACER PIECE	
300	90458-2072		2	IDLER ROLLER,CONCENTRIC SSRSJ-34-C-DR-NS	
310	90459-1402		2	IDLER ROLLER, SS SJ 34 E DR NS	
500	90287-0359		1	SCREW M6S ISO 4017 M10X100 A480	
510	312108-0376		3	SCREW EN 1665 TYPE F M6X35 A270	
520	312108-0457		10	SCREW EN 1665 TYPE F M8X35 A270	
540	312108-0461		2	SCREW EN 1665 TYPE F M8X50 A270	
550	312605-0320		1	HEXAGON NUT, M6M M10 A280	
560	315105-0173		2	WASHER BRB 10,5X22 RFR	

Pos	Part No	UN	Qty	Description	Page No

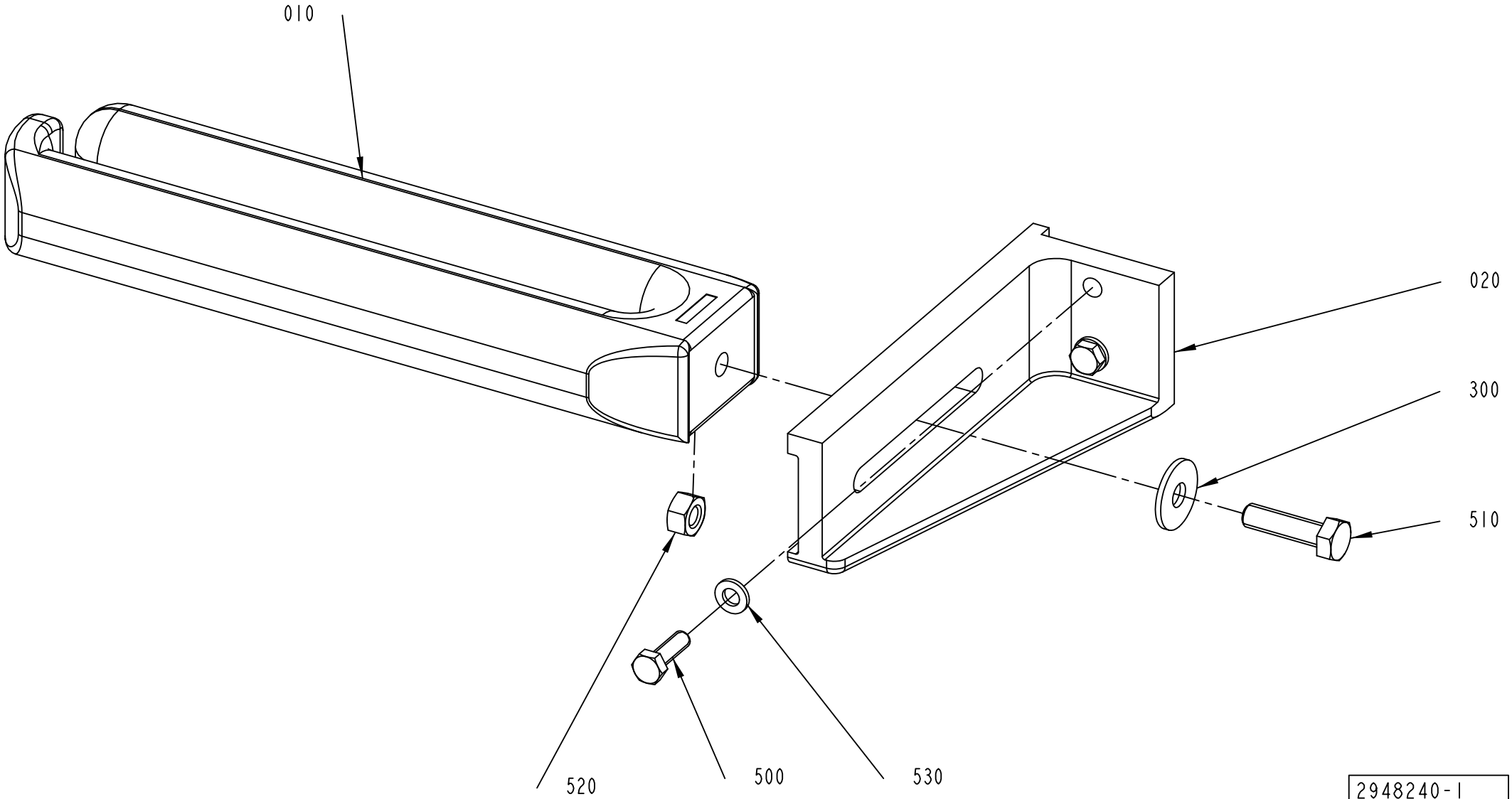
010
020
300
510
520
500
530
2948240-1
350551

ECM: 398093 - 20090613
Group number: 2948240-0100
Assembly Drawing: 2948240-1_1_AA

This list covers pages from 2-46 to 2-49

Pos	Part No	UN	Qty	Description	Page No
TCA (See drawing on pages: 2-46, 4-12)					
020	2948232-0000		1	BRACKET	
500	312105-0370		2	SCREW M6S ISO 4017 M6X20 A480	
510	312105-0455		1	SCREW M6S ISO 4017 M8X30 A480	
530	315106-0153		2	WASHER ISO 7089-6-200 HV A4	
TWA (See drawing on pages: 2-48, 4-14)					
020	2957736-0000		1	BRACKET	
030	2982598-0000		1	WEDGE	
500	312109-0459		3	SCREW M6S ISO 4017 M8X40 A480	
510	312115-0459		1	SCREW ISO4762 M8X40 A4 80	
530	315106-0165		3	WASHER ISO 7089-8-200 HV A4	
Common Parts					
010	556386-0000		1	STEERING	
300	90005-0116		1	WASHER PLAIN ROUND 8,4(M8)/24, H=2	
520	312605-0318		1	HEXAGON NUT, M6M M8 A280	

Pos	Part No	UN	Qty	Description	Page No

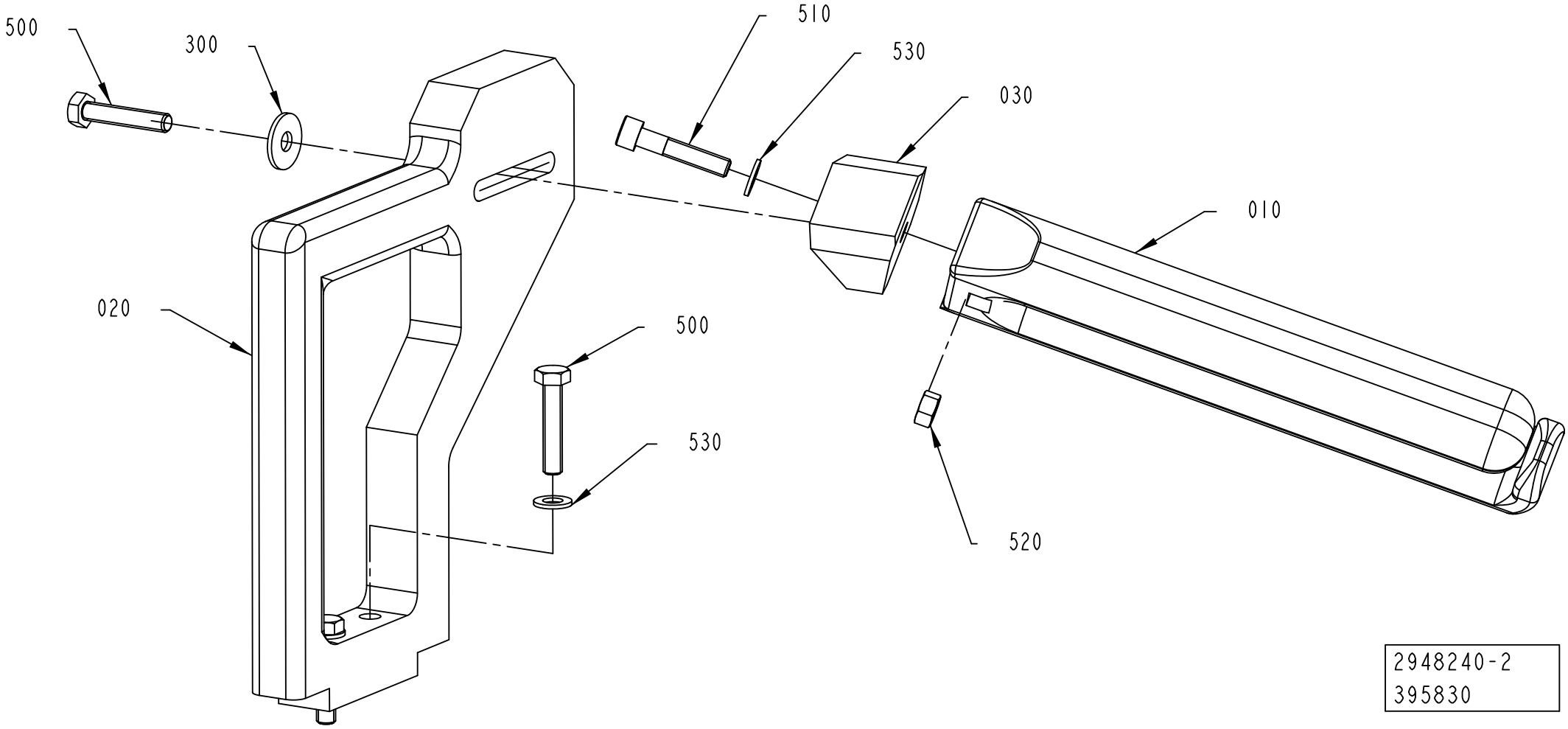

2948240-2
395830

ECM: 398093 - 20090613
Group number: 2948240-0100
Assembly Drawing: 2948240-2_1_AA

This list covers pages from 2-46 to 2-49

Pos	Part No	UN	Qty	Description	Page No
TCA (See drawing on pages: 2-46, 4-12)					
020	2948232-0000		1	BRACKET	
500	312105-0370		2	SCREW M6S ISO 4017 M6X20 A480	
510	312105-0455		1	SCREW M6S ISO 4017 M8X30 A480	
530	315106-0153		2	WASHER ISO 7089-6-200 HV A4	
TWA (See drawing on pages: 2-48, 4-14)					
020	2957736-0000		1	BRACKET	
030	2982598-0000		1	WEDGE	
500	312109-0459		3	SCREW M6S ISO 4017 M8X40 A480	
510	312115-0459		1	SCREW ISO4762 M8X40 A4 80	
530	315106-0165		3	WASHER ISO 7089-8-200 HV A4	
Common Parts					
010	556386-0000		1	STEERING	
300	90005-0116		1	WASHER PLAIN ROUND 8,4(M8)/24, H=2	
520	312605-0318		1	HEXAGON NUT, M6M M8 A280	

Pos	Part No	UN	Qty	Description	Page No

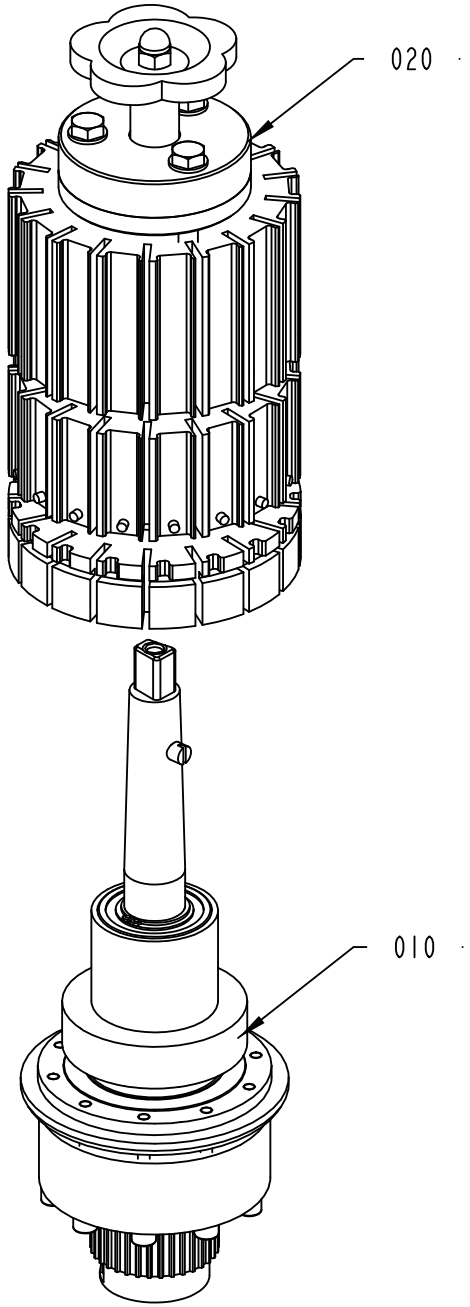

2929773-1
354939

ECM: 398090 - 20090613
Group number: 2929773-0100
Assembly Drawing: 2929773-1_1_AB

Pos	Part No	UN	Qty	Description	Page No
-					
010	2829430-0100		1	FEED SHAFT	**2-53**
020	2829443-0100		1	FEED WHEEL	**2-55**

Pos	Part No	UN	Qty	Description	Page No

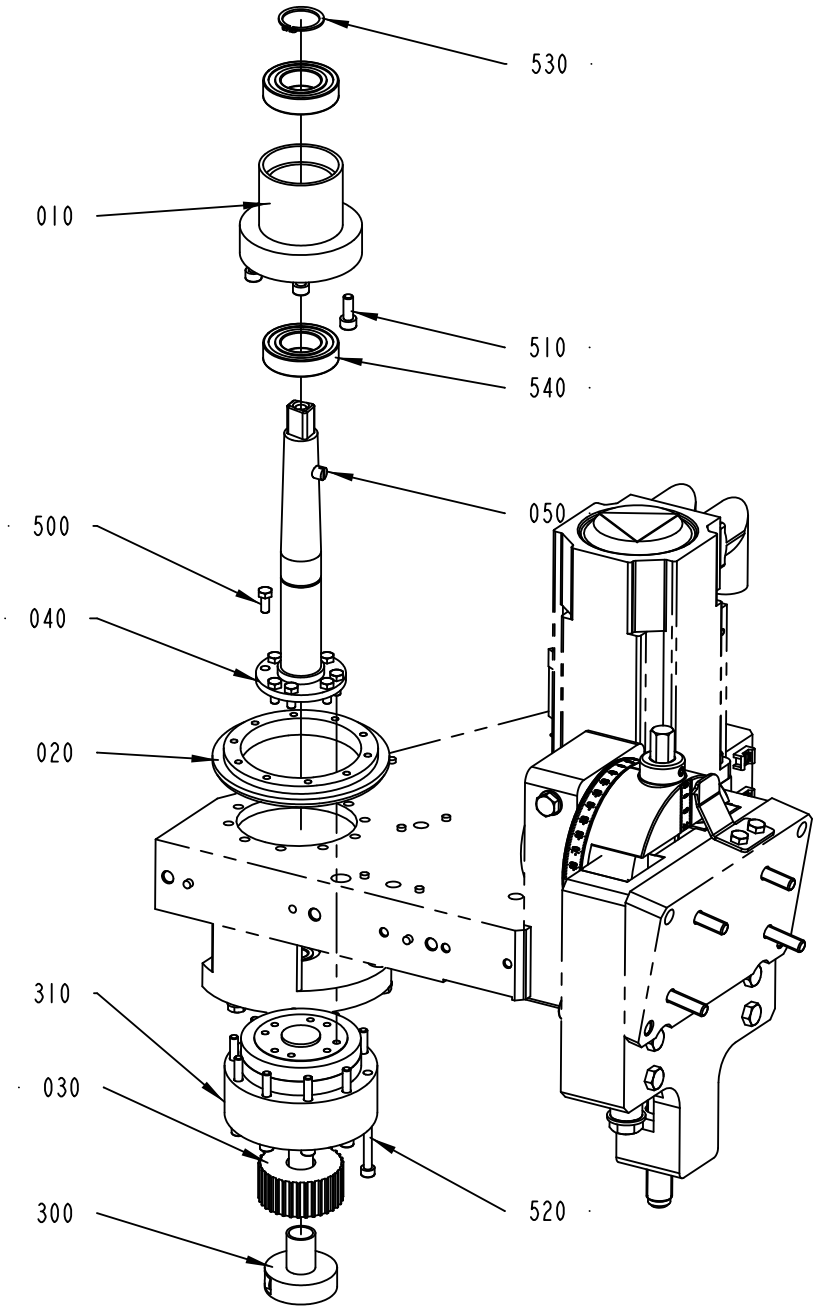

2829430-1
437809

ECM: 439944 - 20100223
Group number: 2829430-0100
Assembly Drawing: 2829430-1_1_AC

Pos	Part No	UN	Qty	Description	Page No
Straw Pitch 15					
030	2829491-0000		1	PULLEY	
Straw Pitch 22					
030	2864774-0000		1	PULLEY	
Common Parts					
010	2848823-0000		1	BEARING HUB	
020	2848827-0000		1	RING	
040	2950969-0000		1	SHAFT	
050	2959332-0000		1	AXLE BOLT	
300	90458-1814		1	CLAMPING ELEMENT WITH SLEEVE, 15X18 MM	
310	90600-1155		1	GEARS, PLANETARY TS 80-I-E-E15 P-092 070	
500	312105-0327		8	SCREW M6S ISO 4017 M5X12 A480	
510	312115-0368		6	SCREW ISO4762 M6X16 A4 80	
520	312115-0341		10	SCREW ISO4762 M5X50 A4 80	
530	315751-0119		1	RETAINING RING FOR SHAFT DIN 471 25 SS	
540	321308-0205		2	BALL BEARING 25/47X12	

Pos	Part No	UN	Qty	Description	Page No

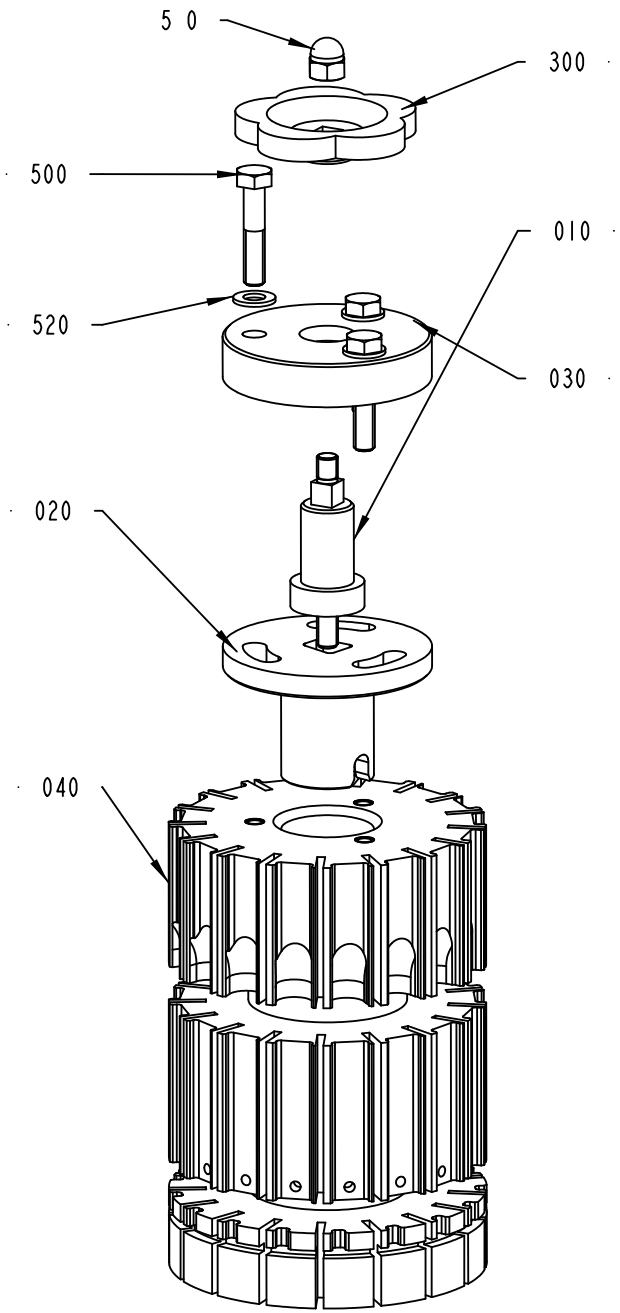

2829443-1
377812

ECM: 436862 - 20100222
Group number: 2829443-0100
Assembly Drawing: 2829443-1_1_AC

Pos	Part No	UN	Qty	Description	Page No
TB U5-180, TBA U5-180					
040	3013650-0000		1	FEED WHEEL	
TCA S4-80, TCA S4-100, TCA S4-120, TWA S4-100					
040	2957734-0000		1	FEED WHEEL	
TCA S5-100, TCA S5-120					
040	2957735-0000		1	FEED WHEEL	
TCA T5/6-150, TWA T5/6-150, TWA T5/6-190					
040	2957733-0000		1	FEED WHEEL	
TCA U4-145, TCA U4-165, TWA U4-180, TWA U4-145					
040	2957737-0000		1	FEED WHEEL	
TCA U5-145, TCA U5-165, TWA U5-145, TWA U5-180, TWA U5-185					
040	2957738-0000		1	FEED WHEEL	
TB S3-100, TBA S3-100					
040	3025806-0000		1	FEED WHEEL	
TB S3-120, TBA S3-120					
040	3025805-0000		1	FEED WHEEL	
TB S4-100, TBA S4-100					
040	3025802-0000		1	FEED WHEEL	
TB S4-120, TBA S4-120					
040	2959367-0000		1	FEED WHEEL	
TB S5-100, TBA S5-100					
040	3025804-0000		1	FEED WHEEL	
TB S5-120, TBA S5-120					
040	3025803-0000		1	FEED WHEEL	
TB T4/5-120, TBA T4/5-120, TPA T4/5-120					
040	3003423-0000		1	FEED WHEEL	
TB T5/6-125, TBA T5/6-125, TPA T5/6-125					
040	3003424-0000		1	FEED WHEEL	
TB T5/6-150, TBA T5/6-150, TPA T5/6-150					
040	3003425-0000		1	FEED WHEEL	
TB T5/6-190, TBA T5/6-190, TPA T5/6-190					
040	3003426-0000		1	FEED WHEEL	
TB U4-125, TBA U4-125					
040	3003415-0000		1	FEED WHEEL	
TB U4-145, TBA U4-145					
040	2987403-0000		1	FEED WHEEL	
TB U4-165, TBA U4-165					
040	2987404-0000		1	FEED WHEEL	
TB U4-180, TBA U4-180					
040	3088861-0000		1	FEED WHEEL	
TB U5-145, TBA U5-145					
040	3003427-0000		1	FEED WHEEL	
TB U5-165, TBA U5-165					
040	2987432-0000		1	FEED WHEEL	
Common Parts					
010	2864773-0000		1	SHAFT	
020	2950968-0000		1	FLANGE	
030	2950971-0000		1	FLANGE	
300	90051-0079		1	KNOB, SQUARE HOLE, NO. 8306 1304	
500	312105-0459		3	SCREW M6S ISO 4014 M8X40 A480	
510	312705-0318		1	NUT HEX. DOMED CAP MHM-6 M8 A280	
520	315105-0165		3	WASHER BRB 8,4X16 RFR	

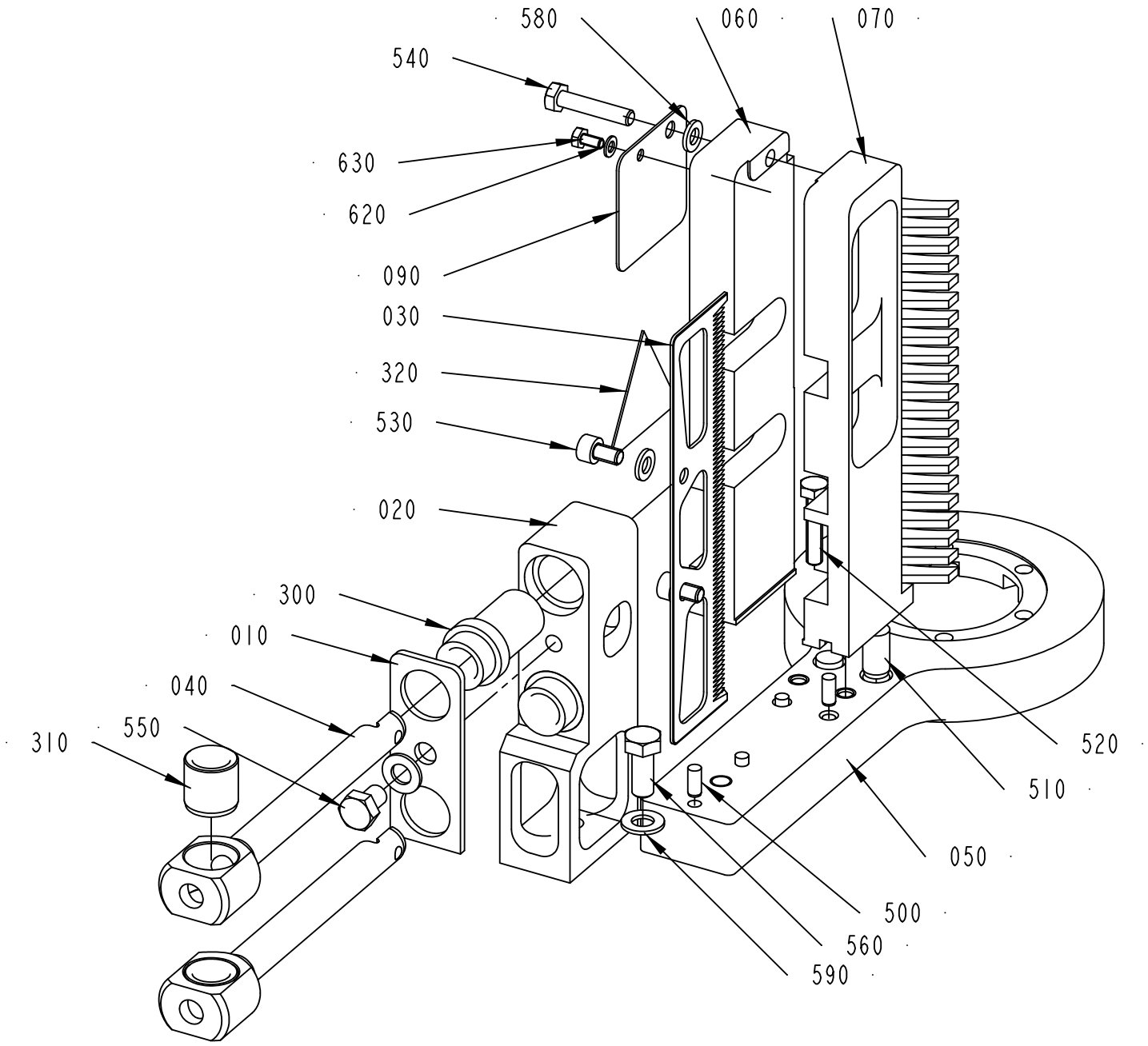

2829431-2
437809

ECM: 439908 - 20100223
Group number: 2829431-0200
Assembly Drawing: 2829431-2_1_AD

Pos	Part No	UN	Qty	Description	Page No
ANSI					
090	3025786-0000		1	PLATE	
300	90459-3212		1	WARNING SIGN ANSI (H) CUTTING OF FINGERS	
ISO					
090	3025785-0000		1	PLATE	
300	90459-3211		1	WARNING SIGN ISO, CUTTING OF FINGERS	
S-STRAW PITCH15, T-STRAW PITCH15					
040	2829489-0000		2	SHAFT	
310	90600-3958		2	BEAR. BUSH. WITHOUT FL, 14X20X20 MM	
U-STRAW PITCH22					
040	2856539-0000		2	SHAFT	
310	90600-3958		2	BEAR. BUSH. WITHOUT FL, 14X20X20 MM	
Common Parts					
010	2737088-0000		1	CLAMPING PLATE	
020	2829426-0000		1	BRACKET	
030	2856537-0000		1	KNIFE	
050	2924689-0000		1	ARM	
060	2924690-0000		1	GUIDE	
070	2924691-0000		1	GUIDE	
300	90600-3957		2	GUIDE BUSHING, 14X20X45	
500	311103-0306		4	PARALLEL PIN ISO 2338 5M6X12 A1	
510	311103-0454		2	PARALLEL PIN ISO 2338 10M6X20 A1	
520	312109-0374		2	SCREW M6S ISO 4017 M6X30 A480	
530	312115-0364		2	SCREW ISO4762 M6X10 A4 80	
540	312105-0374		1	SCREW M6S ISO 4014 M6X30 A480	
550	312105-0447		1	SCREW M6S ISO 4017 M8X12 A480	
560	312105-0451		1	SCREW M6S ISO 4017 M8X20 A480	
580	315105-0153		3	WASHER BRB 6,4X12 RFR	
590	315105-0165		2	WASHER BRB 8,4X16 RFR	
620	315105-0136		1	WASHER BRB 4,3X8 RFR	
630	312105-0287		1	SCREW M6S ISO 4017 M4X8 A470	

Pos	Part No	UN	Qty	Description	Page No

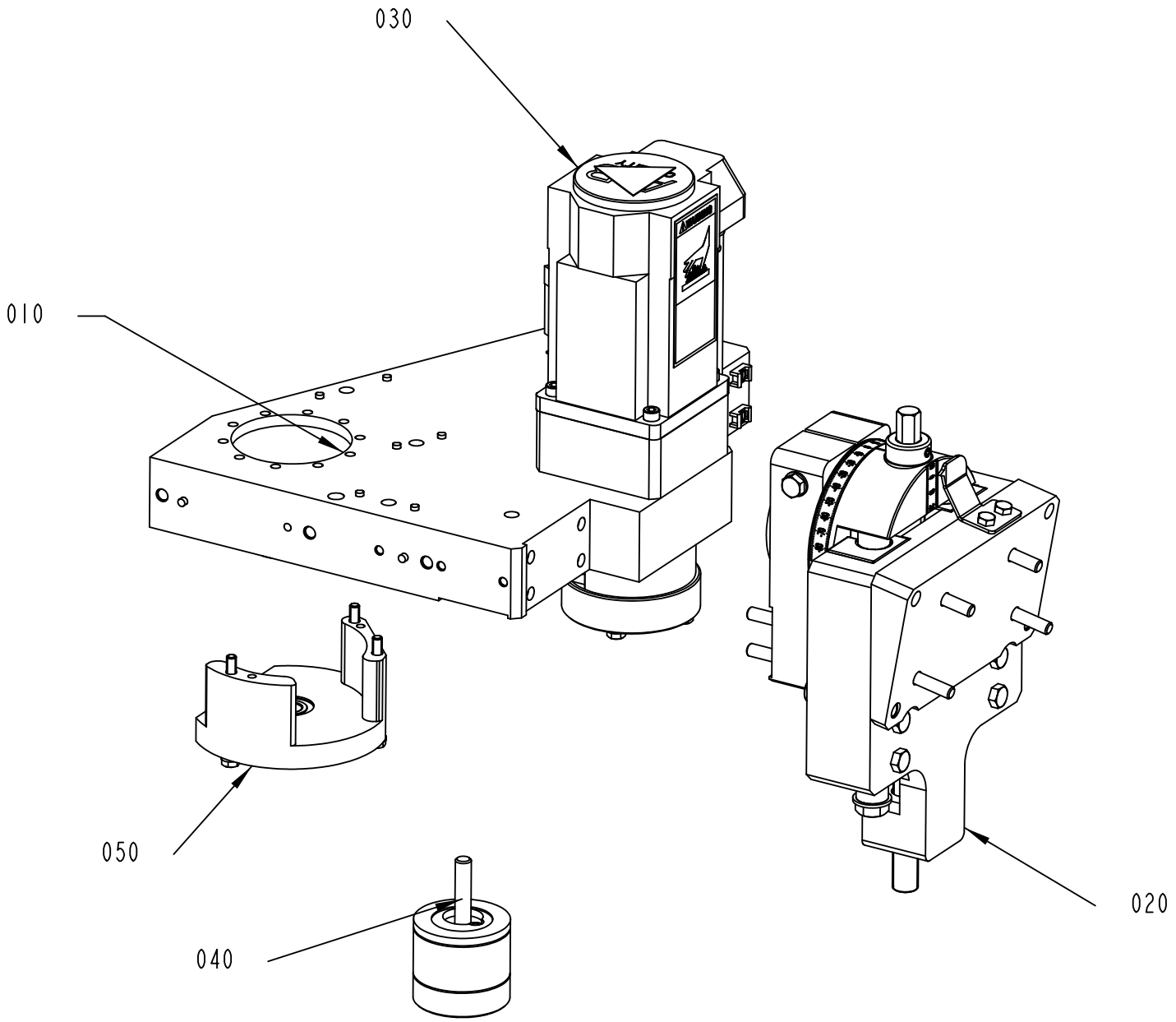

2913343-6
401749

ECM: 428254 - 20091221
Group number: 2913343-0300
Assembly Drawing: 2913343-6_1_AA

This list covers pages from 2-58 to 2-63

Pos	Part No	UN	Qty	Description	Page No
TBA, TB, TPA (See drawing on page: 2-58)					
020	2829438-0100		1	ADJUSTMENT BRACKET	**2-65**
TCA (See drawing on page: 2-60)					
020	2893440-0100		1	ADJUSTMENT BRACKET	**2-67**
Common Parts					
010	2829433-0300		1	FRAME HOUSING	**2-69, 2-71**
030	3013623-0100		1	DRIVE MOTOR	**2-73**
040	3022735-0100		1	BELT TENSIONER	**2-75**
050	3025784-0100		1	AXLE SUPPORT	**2-77**

Pos	Part No	UN	Qty	Description	Page No

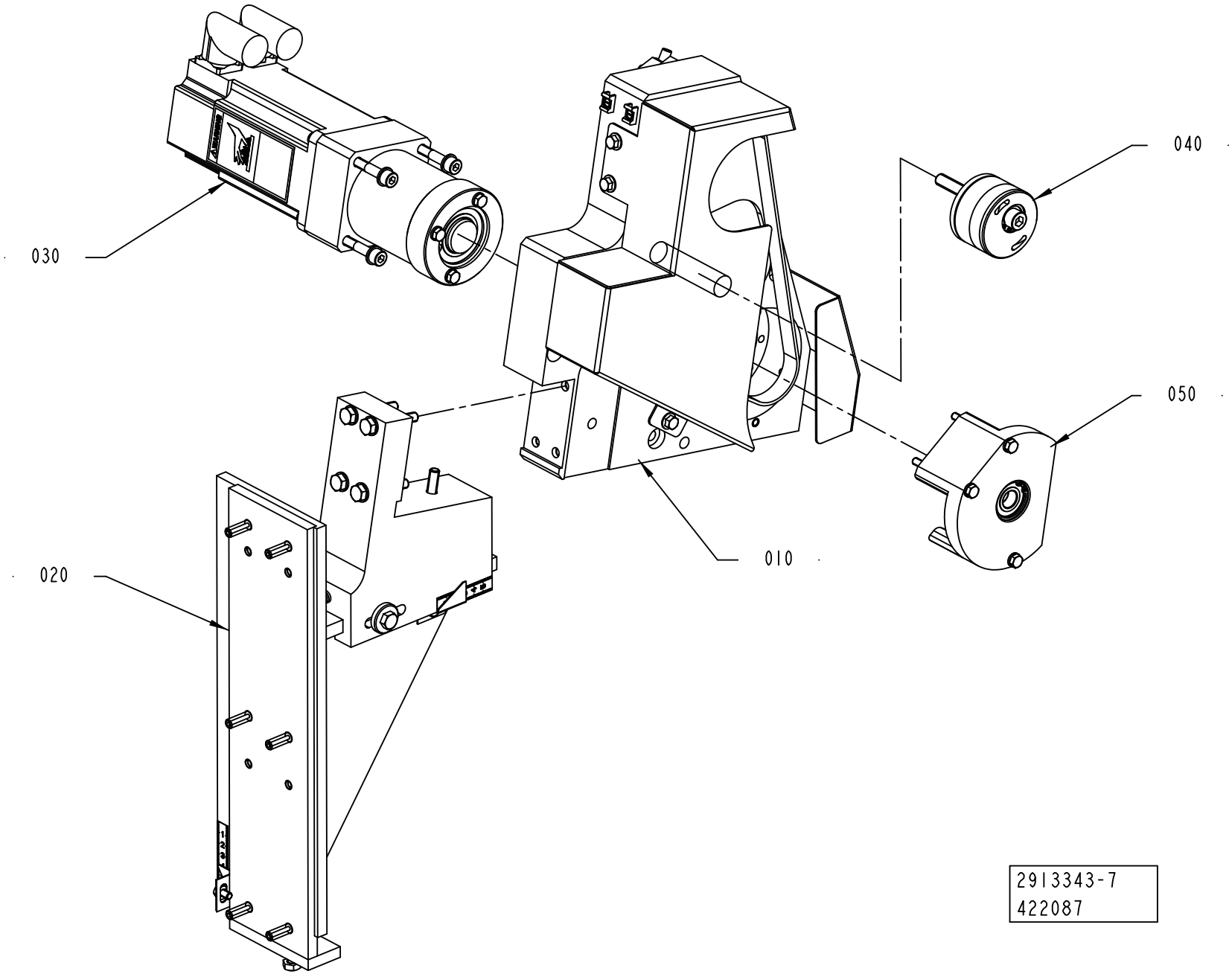
030
040
050
010
020
2913343-7
422087

ECM: 428254 - 20091221
Group number: 2913343-0300
Assembly Drawing: 2913343-7_1_AB

This list covers pages from 2-58 to 2-63

Pos	Part No	UN	Qty	Description	Page No
TBA, TB, TPA (See drawing on page: 2-58)					
020	2829438-0100		1	ADJUSTMENT BRACKET	**2-65**
TCA (See drawing on page: 2-60)					
020	2893440-0100		1	ADJUSTMENT BRACKET	**2-67**
Common Parts					
010	2829433-0300		1	FRAME HOUSING	**2-69, 2-71**
030	3013623-0100		1	DRIVE MOTOR	**2-73**
040	3022735-0100		1	BELT TENSIONER	**2-75**
050	3025784-0100		1	AXLE SUPPORT	**2-77**

Pos	Part No	UN	Qty	Description	Page No

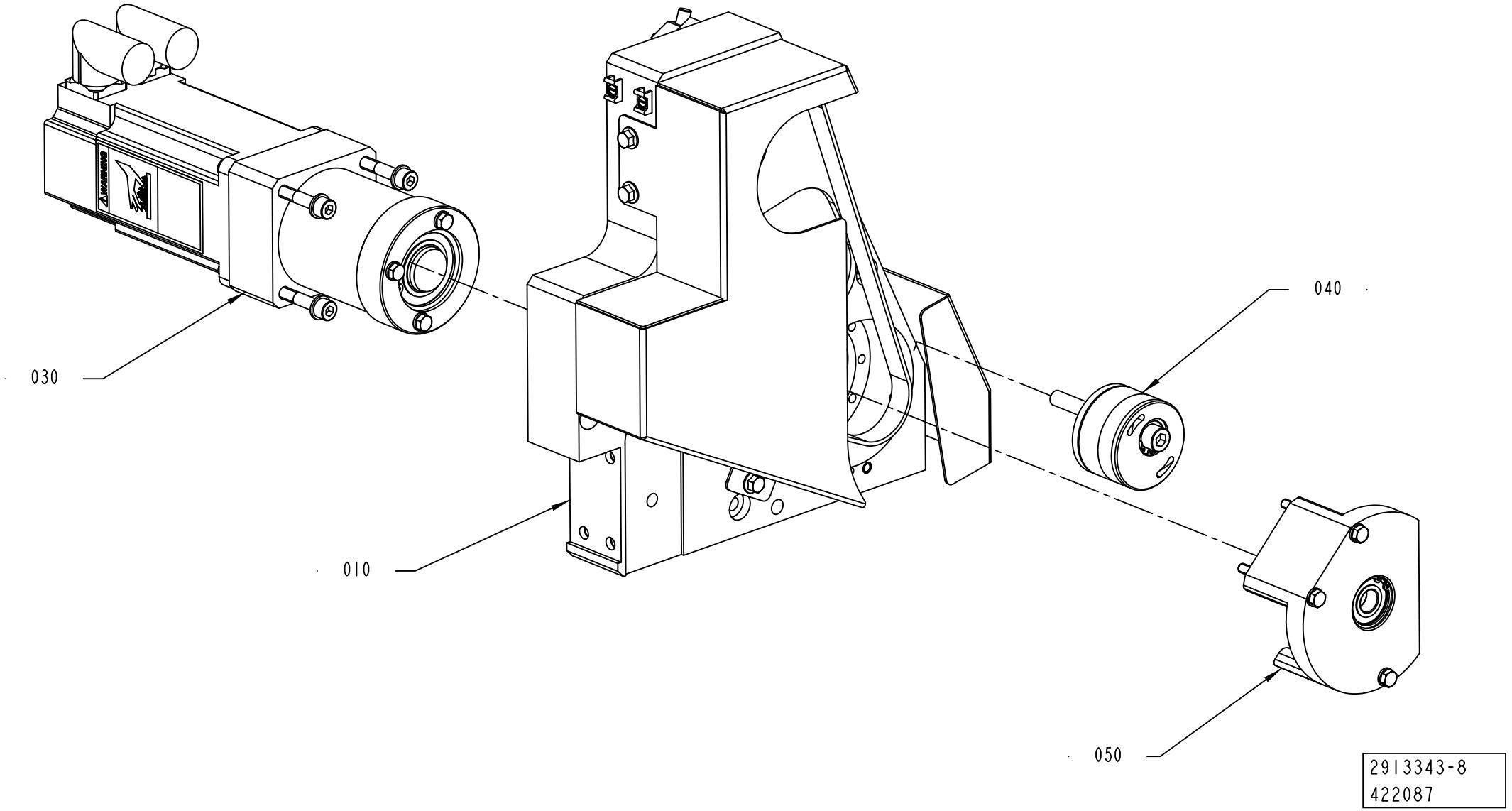
030
010
040
050
2913343-8
422087

ECM: 428254 - 20091221
Group number: 2913343-0300
Assembly Drawing: 2913343-8_1_AC

This list covers pages from 2-58 to 2-63

Pos	Part No	UN	Qty	Description	Page No
TBA, TB, TPA (See drawing on page: 2-58)					
020	2829438-0100		1	ADJUSTMENT BRACKET	**2-65**
TCA (See drawing on page: 2-60)					
020	2893440-0100		1	ADJUSTMENT BRACKET	**2-67**
Common Parts					
010	2829433-0300		1	FRAME HOUSING	**2-69, 2-71**
030	3013623-0100		1	DRIVE MOTOR	**2-73**
040	3022735-0100		1	BELT TENSIONER	**2-75**
050	3025784-0100		1	AXLE SUPPORT	**2-77**

Pos	Part No	UN	Qty	Description	Page No

ADJUSTMENT BRACKET

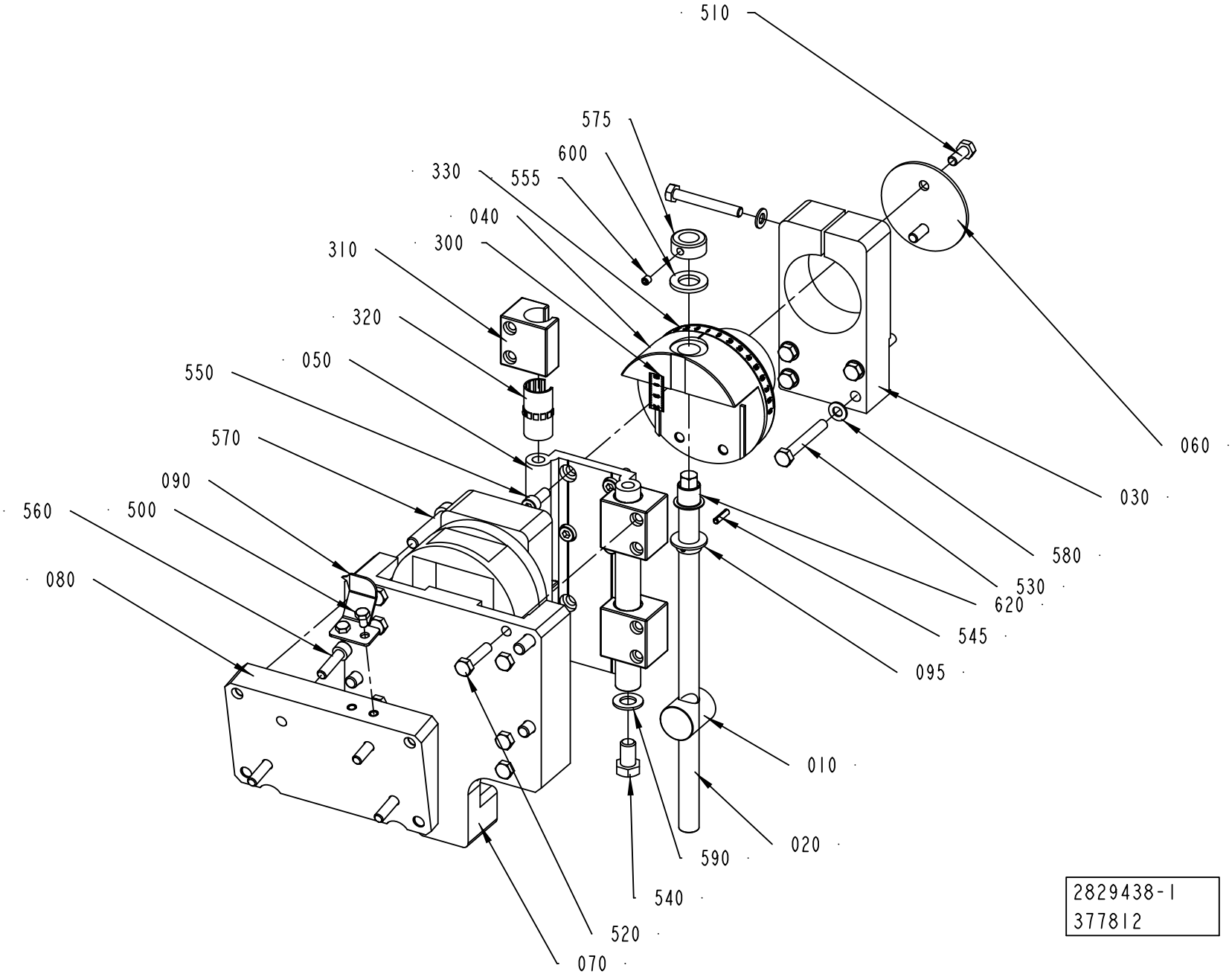

ECM: 391064 - 20090409
Group number: 2829438-0100
Assembly Drawing: 2829438-1_1_AB

Pos	Part No	UN	Qty	Description	Page No
-					
010	2835350-0000		1	ADJUSTING NUT	
020	3012788-0000		1	ADJUSTING SCREW	
030	2848828-0000		1	CLAMP BLOCK	
040	2848829-0000		1	PIVOT AXLE	
050	2848830-0000		1	GUIDE RAIL	
060	2848831-0000		1	END WASHER	
070	2848832-0000		1	BEARING PLATE	
080	2885386-0000		1	BRACKET	
090	2946729-0000		1	POINTER	
095	3012787-0000		1	RETAINING RING	
300	90600-3713		1	SCALE, 90600-3713	
310	90600-0429		4	SLIDER, WM-01-20	
320	90600-0431		4	BUSHING INSERT, J200UMO-01-20	
330	90600-3713		1	SCALE, 90600-3713	
500	312105-0364		2	SCREW M6S ISO 4017 M6X10 A480	
510	312105-0451		2	SCREW M6S ISO 4017 M8X20 A480	
520	312105-0457		8	CREW M6S ISO 4014 M8X35 A480	
530	312105-0463		5	SCREW M6S ISO 4014 M8X60 A480	
540	312105-0532		2	SCREW M6S ISO 4017 M12X20 A480	
545	311112-0255		1	SPRING PIN, ISO 8752 4X18-C	
550	312115-0451		4	SCREW ISO4762 M8X20 A4 80	
555	312318-0360		1	SCREW ISO4029 M6X6 A4	
560	312115-0455		4	SCREW ISO4762 M8X30 A4 80	
570	312115-0501		4	SCREW ISO4762 M10X50 A4 80	
575	315741-0112		1	RETAINING RING DIN 705 A2 16	
580	315105-0165		5	WASHER BRB 8,4X16 RFR	
590	315105-0178		2	WASHER BRB 13X24 RFR	
600	315106-0186		1	WASHER ISO 7089-16-200 HV A4	
620	321154-0221		1	FLANGE BUSHING, 16X18X17 MM	

Pos	Part No	UN	Qty	Description	Page No

ADJUSTMENT BRACKET

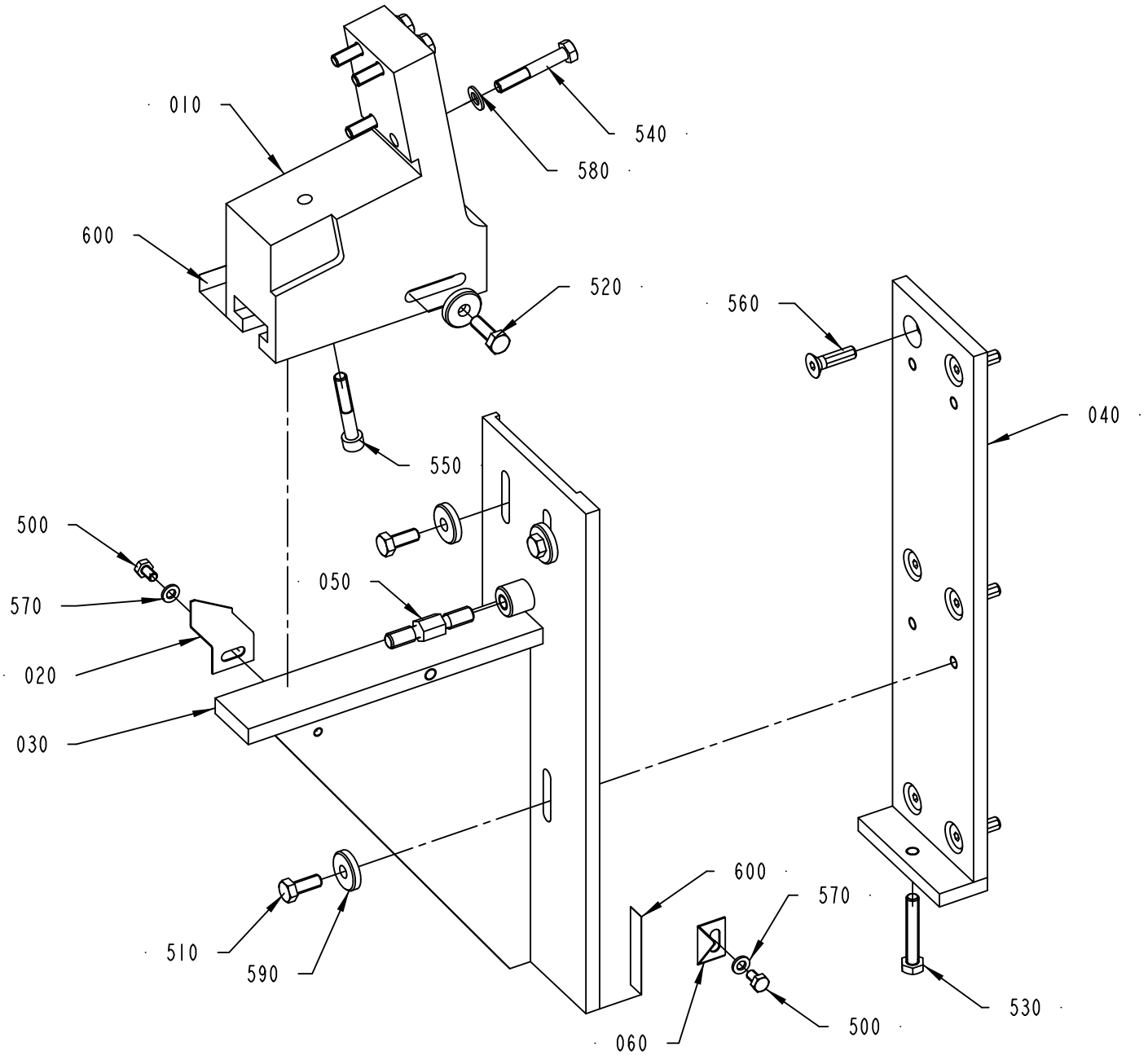

ECM: 390149 - 20090409
Group number: 2893440-0100
Assembly Drawing: 2893440-1_1_AB

Pos	Part No	UN	Qty	Description	Page No
-					
010	2893442-0000		1	ANGLE BRACKET	
020	2893443-0000		1	SCALE POINTER	
030	2893444-0000		1	ADJUSTMENT BRACKET	
040	2893445-0000		1	SPACER PIECE	
050	2904847-0000		1	ADJUSTING SCREW	
060	2904848-0000		1	SCALE POINTER	
500	312105-0364		2	SCREW M6S ISO 4017 M6X10 A480	
510	312105-0451		4	SCREW M6S ISO 4017 M8X20 A480	
520	312105-0453		2	SCREW M6S ISO 4017 M8X25 A480	
530	312109-0461		1	SCREW M6S ISO 4017 M8X50 A480	
540	312105-0461		4	SCREW M6S ISO 4014 M8X50 A480	
550	312115-0461		1	SCREW ISO4762 M8X50 A4 80	
560	312155-0455		6	SCREW DIN 7991 MF6S M8X30 A4 70	
570	315105-0153		2	WASHER BRB 6,4X12 RFR	
580	315105-0165		4	WASHER BRB 8,4X16 RFR	
590	315125-0165		6	WASHER TBRSB 8,4X26X5 A4	
600	90458-2779		2	SCALE , 0-1000MM ADHESIVE	

Pos	Part No	UN	Qty	Description	Page No

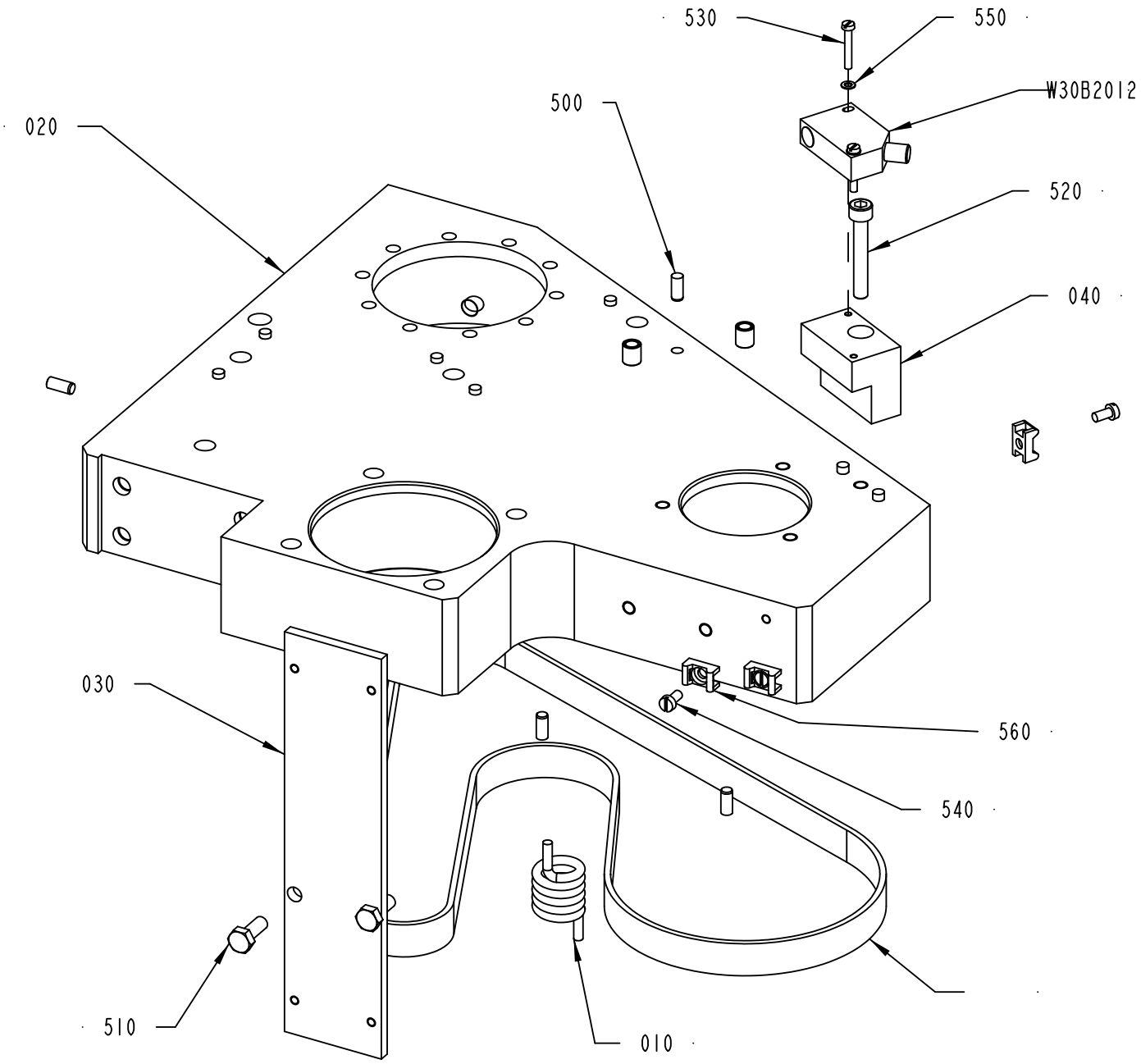

2829433-5
401749

ECM: 436867 - 20100222
Group number: 2829433-0300
Assembly Drawing: 2829433-5_1_AA

This list covers pages from 2-68 to 2-71

Pos	Part No	UN	Qty	Description	Page No
TBA, TB, TPA (See drawing on page: 2-68)					
030	2848834-0000		1	HOSE HOLDER	
510	312105-0368		2	SCREW M6S ISO 4017 M6X16 A480	
540	312125-0287		5	SCREW ISO 1207 M4X8 A4	
560	352113-0205		5	ANCHOR PLATES FOR STRIPS, TYPE TM2S8-C10	
TWA, TCA (See drawing on page: 2-70)					
050	3023599-0000		1	COVER	
060	2992499-0000		1	PROTECTIVE CASING	
505	312105-0327		2	SCREW M6S ISO 4017 M5X12 A480	
515	312108-0364		3	SCREW EN 1665 TYPE F M6X10 A270	
540	312125-0287		2	SCREW ISO 1207 M4X8 A4	
560	352113-0205		2	ANCHOR PLATES FOR STRIPS, TYPE TM2S8-C10	
570	315105-0146		2	WASHER BRB 5,3X10 RFR	
Common Parts					
010	2848861-0000		1	TORSION SPRING	
020	3039847-0000		1	FRAME	
040	2856544-0000		1	BRACKET	
300	90417-0417		1	TIMING BELT 16AT5/1075 PU	
500	311103-0306		12	PARALLEL PIN ISO 2338 5M6X12 A1	
520	312115-0378		1	SCREW ISO4762 M6X40 A4 80	
530	312125-0230		2	SCREW ISO 1207 M3X20 A4	
550	315105-0124		2	WASHER BRB 3,2X6 RFR	
W30B2012	90459-2409		1	INDUCTIVE SENSOR IN5230	

Pos	Part No	UN	Qty	Description	Page No

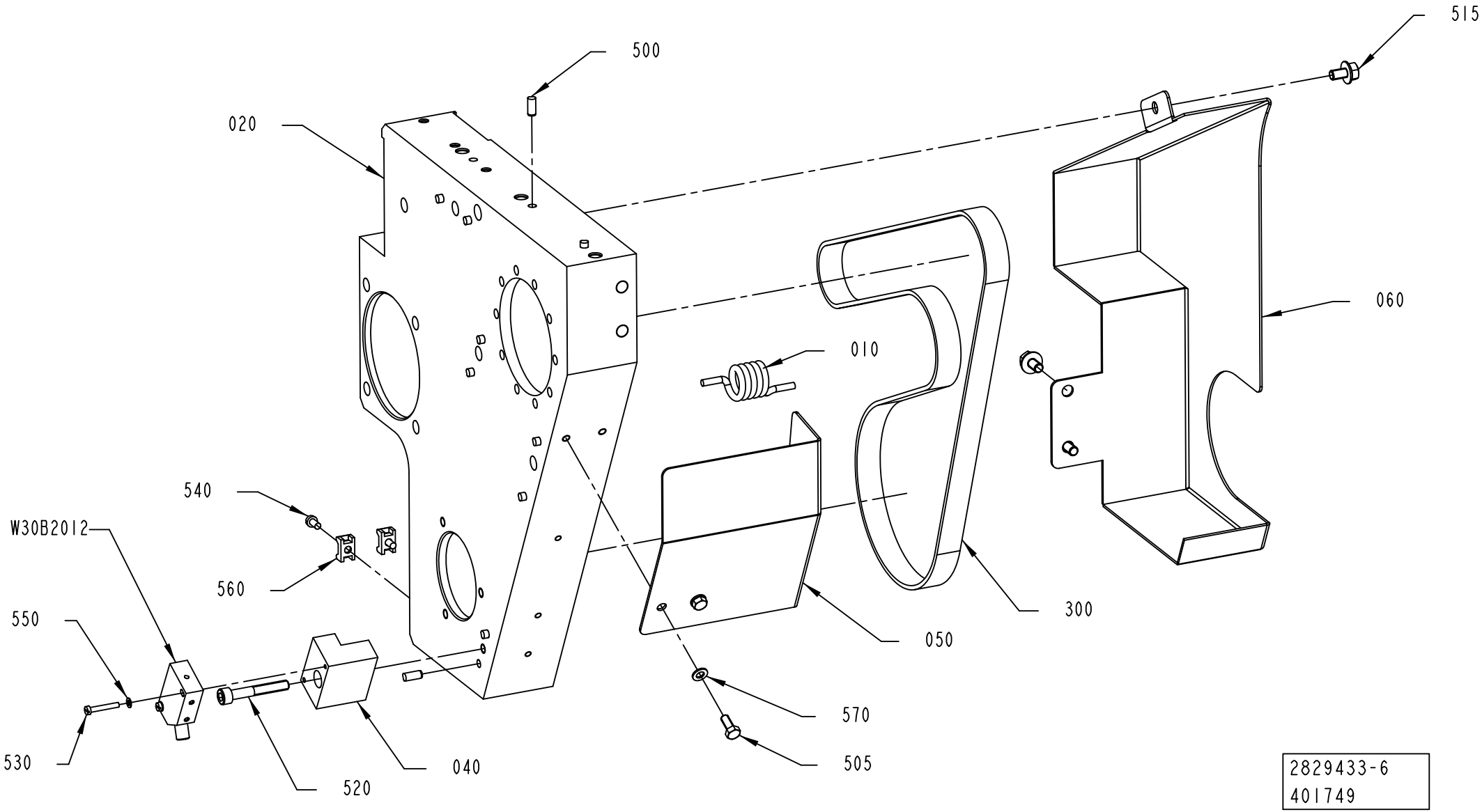
515
500
020
060
010
540
W30B2012
560
550
300
050
570
530
520
040
505
2829433-6
401749

ECM: 436867 - 20100222
Group number: 2829433-0300
Assembly Drawing: 2829433-6_1_AA

This list covers pages from 2-68 to 2-71

Pos	Part No	UN	Qty	Description	Page No
TBA, TB, TPA (See drawing on page: 2-68)					
030	2848834-0000		1	HOSE HOLDER	
510	312105-0368		2	SCREW M6S ISO 4017 M6X16 A480	
540	312125-0287		5	SCREW ISO 1207 M4X8 A4	
560	352113-0205		5	ANCHOR PLATES FOR STRIPS, TYPE TM2S8-C10	
TWA, TCA (See drawing on page: 2-70)					
050	3023599-0000		1	COVER	
060	2992499-0000		1	PROTECTIVE CASING	
505	312105-0327		2	SCREW M6S ISO 4017 M5X12 A480	
515	312108-0364		3	SCREW EN 1665 TYPE F M6X10 A270	
540	312125-0287		2	SCREW ISO 1207 M4X8 A4	
560	352113-0205		2	ANCHOR PLATES FOR STRIPS, TYPE TM2S8-C10	
570	315105-0146		2	WASHER BRB 5,3X10 RFR	
Common Parts					
010	2848861-0000		1	TORSION SPRING	
020	3039847-0000		1	FRAME	
040	2856544-0000		1	BRACKET	
300	90417-0417		1	TIMING BELT 16AT5/1075 PU	
500	311103-0306		12	PARALLEL PIN ISO 2338 5M6X12 A1	
520	312115-0378		1	SCREW ISO4762 M6X40 A4 80	
530	312125-0230		2	SCREW ISO 1207 M3X20 A4	
550	315105-0124		2	WASHER BRB 3,2X6 RFR	
W30B2012	90459-2409		1	INDUCTIVE SENSOR IN5230	

Pos	Part No	UN	Qty	Description	Page No

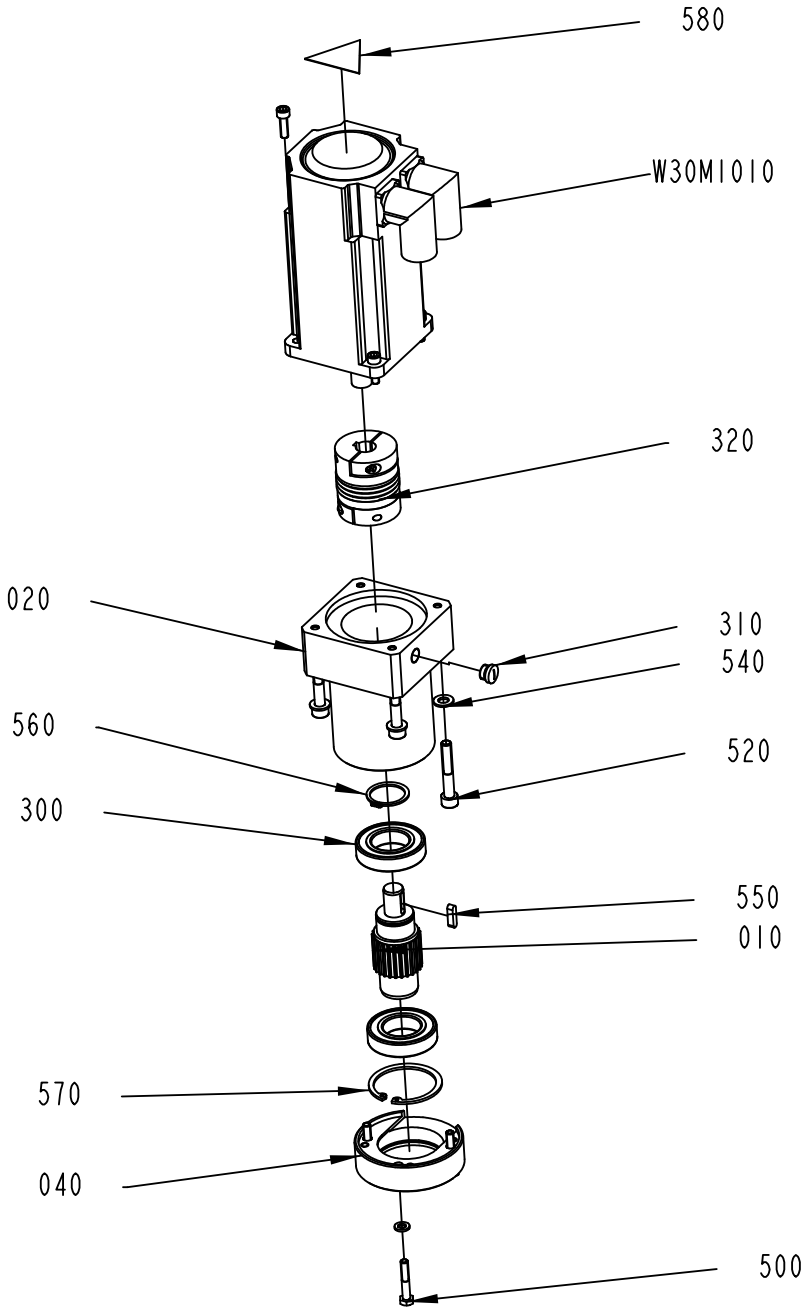

3013623-1
429959

ECM: 436870 - 20100222
Group number: 3013623-0100
Assembly Drawing: 3013623-1_1_AD

Pos	Part No	UN	Qty	Description	Page No
ANSI					
580	359725-0117		1	WARNING SIGN ANSI (V), HOT SURFACE	
ISO					
580	359705-0007		1	WARNING SIGN ISO, HOT SURFACE	
Common Parts					
010	3025807-0000		1	PULLEY	
020	3025808-0000		1	BEARING SLEEVE	
040	3025810-0000		1	BEARING HOLDER	
300	90214-0127		2	BALL BEARING 30/55X13	
310	90458-1306		1	BLIND PLUG CIRCULAR, M12X1,5 514GFK/212	
320	90602-4967		1	BELLOW COUPLING, 16X16 MM	
500	312105-0376		3	SCREW M6S ISO 4014 M6X35 A480	
520	312115-0461		4	SCREW ISO4762 M8X50 A4 80	
540	315106-0165		4	WASHER ISO 7089-8-200 HV A4	
550	315705-0201		1	PARALLEL KEY W. ROUND ENDS 5X5X20 MM	
560	315751-0122		1	RETAINING RING FOR SHAFT DIN 471 30 SS	
570	315753-0133		1	RETAINING RING FOR BORE DIN 472 55 A2	
W30M1010	90601-5151		1	SERVO MOTOR MPL-B330P-SJ72AA SERIES A	

Pos	Part No	UN	Qty	Description	Page No

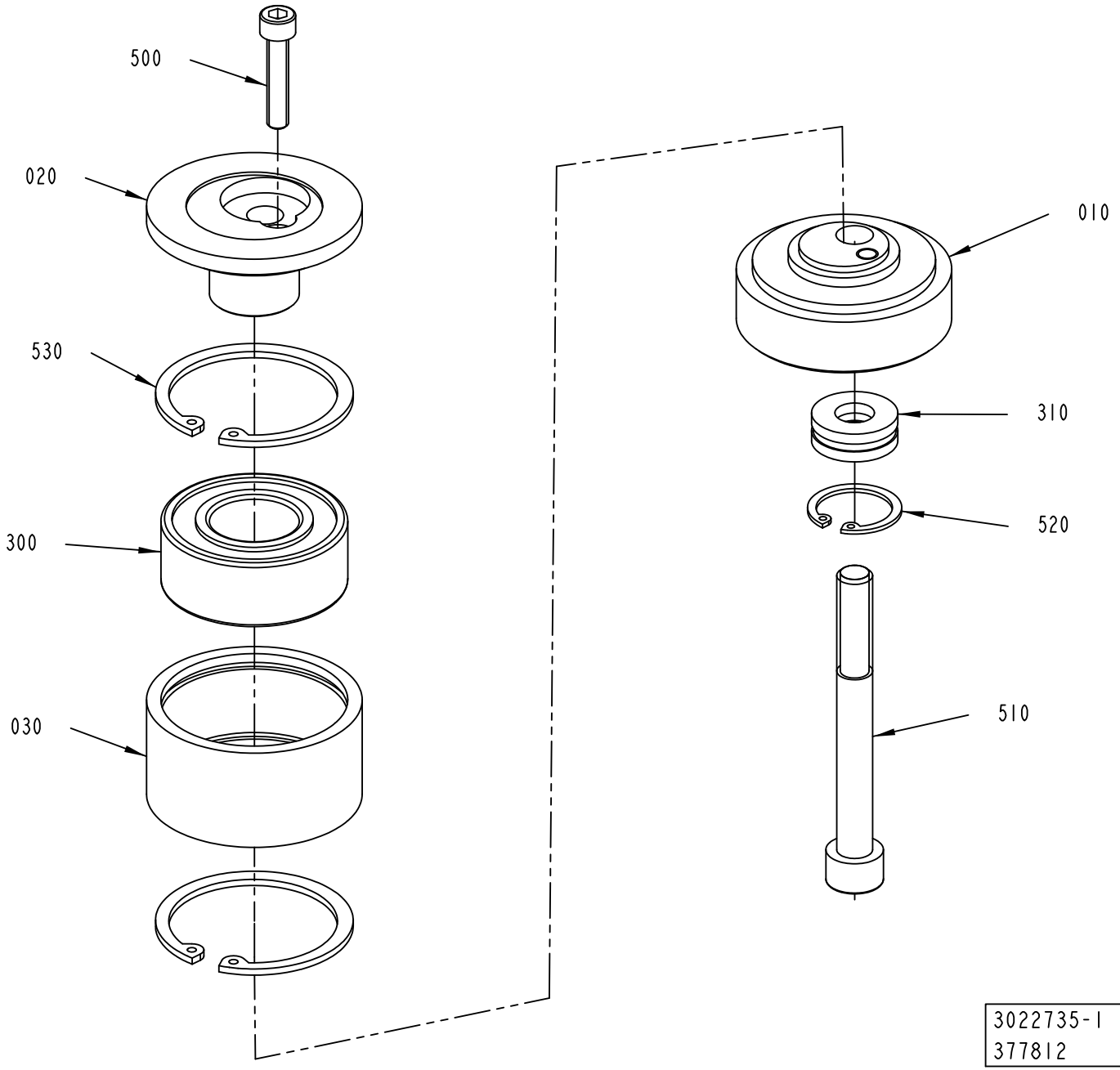
500
020
530
300
030
010
310
520
510
3022735-1
377812

ECM: 436868 - 20100222
Group number: 3022735-0100
Assembly Drawing: 3022735-1_1_AA

Pos	Part No	UN	Qty	Description	Page No
-					
010	3013624-0000		1	LID	
020	3022717-0000		1	BEARING HOLDER	
030	3022738-0000		1	BEARING SLEEVE	
300	90458-1880		1	ANG. BALL BEAR 25/52X20,6	
310	90600-4713		1	THRUST BALL BEARING, 10X24X9 MM	
500	312115-0374		1	SCREW ISO4762 M6X30 A4 80	
510	312115-0509		1	SCREW ISO4762 M10X90 A4 80	
520	315753-0119		1	RETAINING RING FOR BORE DIN 472 25 A2	
530	315753-0132		2	RETAINING RING FOR BORE DIN 472 52 A2	

Pos	Part No	UN	Qty	Description	Page No

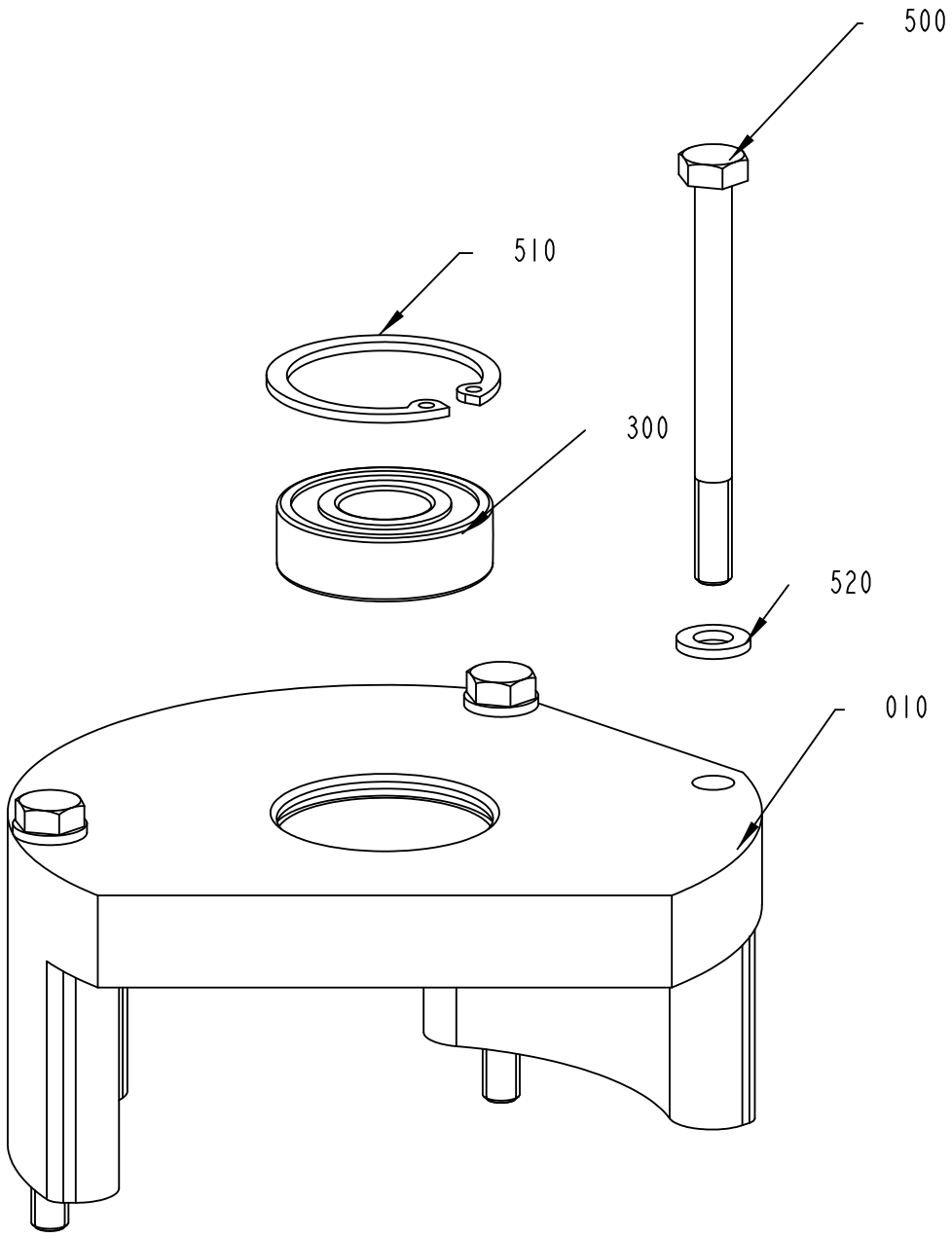

3025784-1
401749

ECM: 436869 - 20100222
Group number: 3025784-0100
Assembly Drawing: 3025784-1_1_AA

Pos	Part No	UN	Qty	Description	Page No
-					
010	2992495-0000		1	BEARING HOUSING	
300	90458-1704		1	BALL BEARING 15/35X11	
500	312105-0384		3	SCREW M6S ISO 4014 M6X70 A480	
510	315752-0124		1	RETAINING RING FOR BORE DIN 472 35 ST	
520	315106-0153		3	WASHER ISO 7089-6-200 HV A4	

Pos	Part No	UN	Qty	Description	Page No

LADDER BAND GUIDE

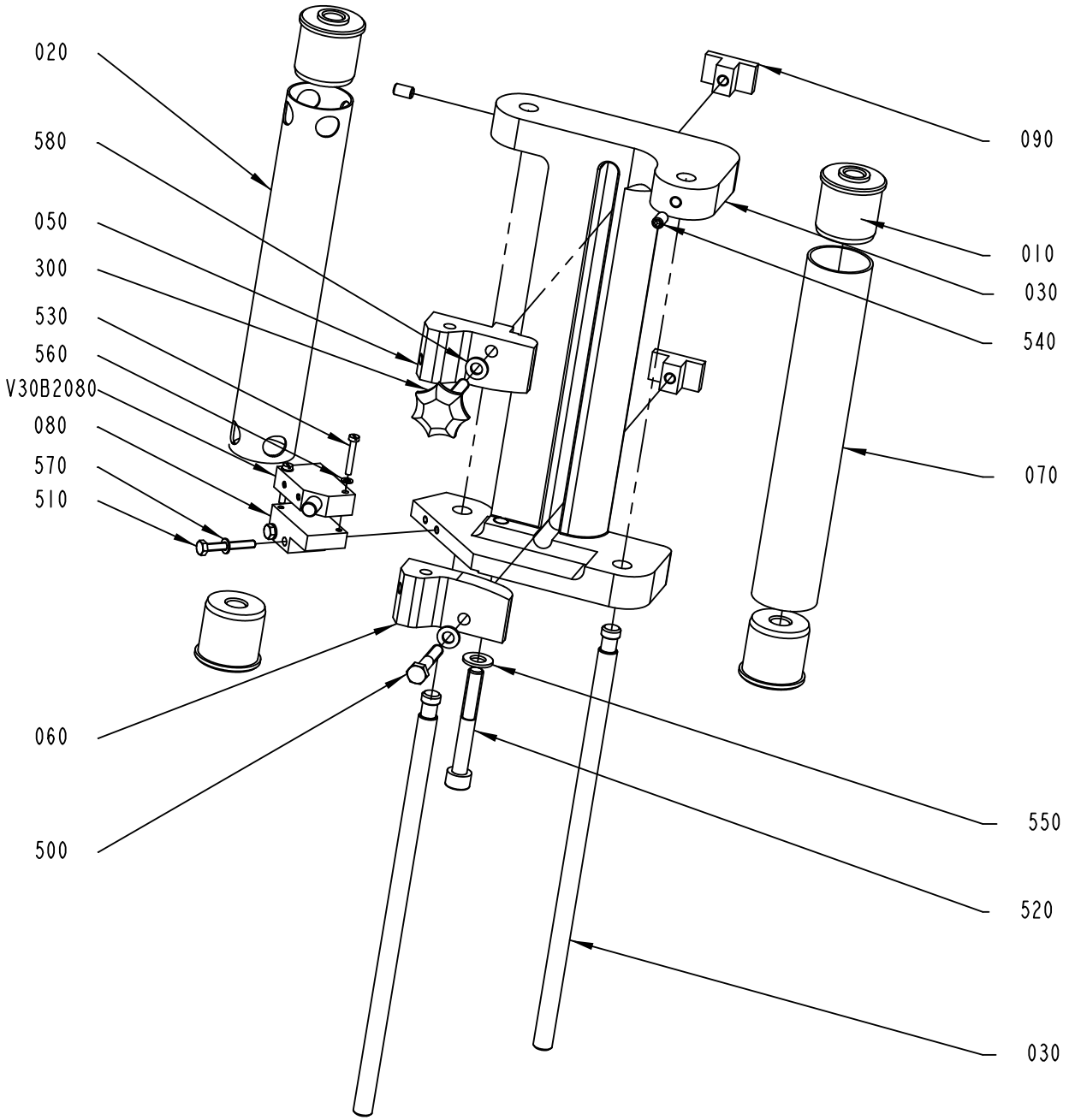

2987398-1
429959

ECM: 436876 - 20100222
Group number: 2987398-0100
Assembly Drawing: 2987398-1_1_AB

This list covers pages from 2-78 to 2-81

Pos	Part No	UN	Qty	Description	Page No
TBA, TB, TPA (See drawing on page: 2-78)					
300	90051-0090		1	KNOB, EXTERNAL THREAD. NO. WN 450GS	
500	312101-0376		1	SCREW M6S M6X35 FZB	
540	312318-0364		2	SCREW ISO4029 M6X10 A4	
TWA, TCA (See drawing on page: 2-80)					
100	2992494-0000		1	SHAFT	
300	90051-0090		2	KNOB, EXTERNAL THREAD. NO. WN 450GS	
320	90457-0935		1	KNOB, ADJUST.HI.EXT.THREAD, NO 6N20P04	
540	312318-0364		3	SCREW ISO4029 M6X10 A4	
Common Parts					
010	2935834-0000		4	END SECTION	
020	3013615-0000		1	PIPE	
030	2987397-0000		1	BRACKET	
040	2987399-0000		2	SHAFT	
050	2987400-0000		1	BRACKET	
060	2987401-0000		1	BRACKET	
070	2987431-0000		1	PIPE	
080	2992492-0000		1	SWITCH BRACKET	
090	2992493-0000		2	BRACKET	
510	312105-0299		2	SCREW M6S ISO 4017 M4X30 A470	
520	312111-0463		1	SCREW HEX.SOCK.HD.MC6S-TT 8X60 88 FZB	
530	312125-0230		2	SCREW ISO 1207 M3X20 A4	
550	315103-0165		1	WASHER PLAIN, BRB, 8,4/16,H=1,5 NIPL BR	
560	315105-0124		2	WASHER BRB 3,2X6 RFR	
570	315105-0136		2	WASHER BRB 4,3X8 RFR	
580	315105-0153		2	WASHER BRB 6,4X12 RFR	
V30B2080	90459-2409		1	INDUCTIVE SENSOR IN5230	

Pos	Part No	UN	Qty	Description	Page No

LADDER BAND GUIDE

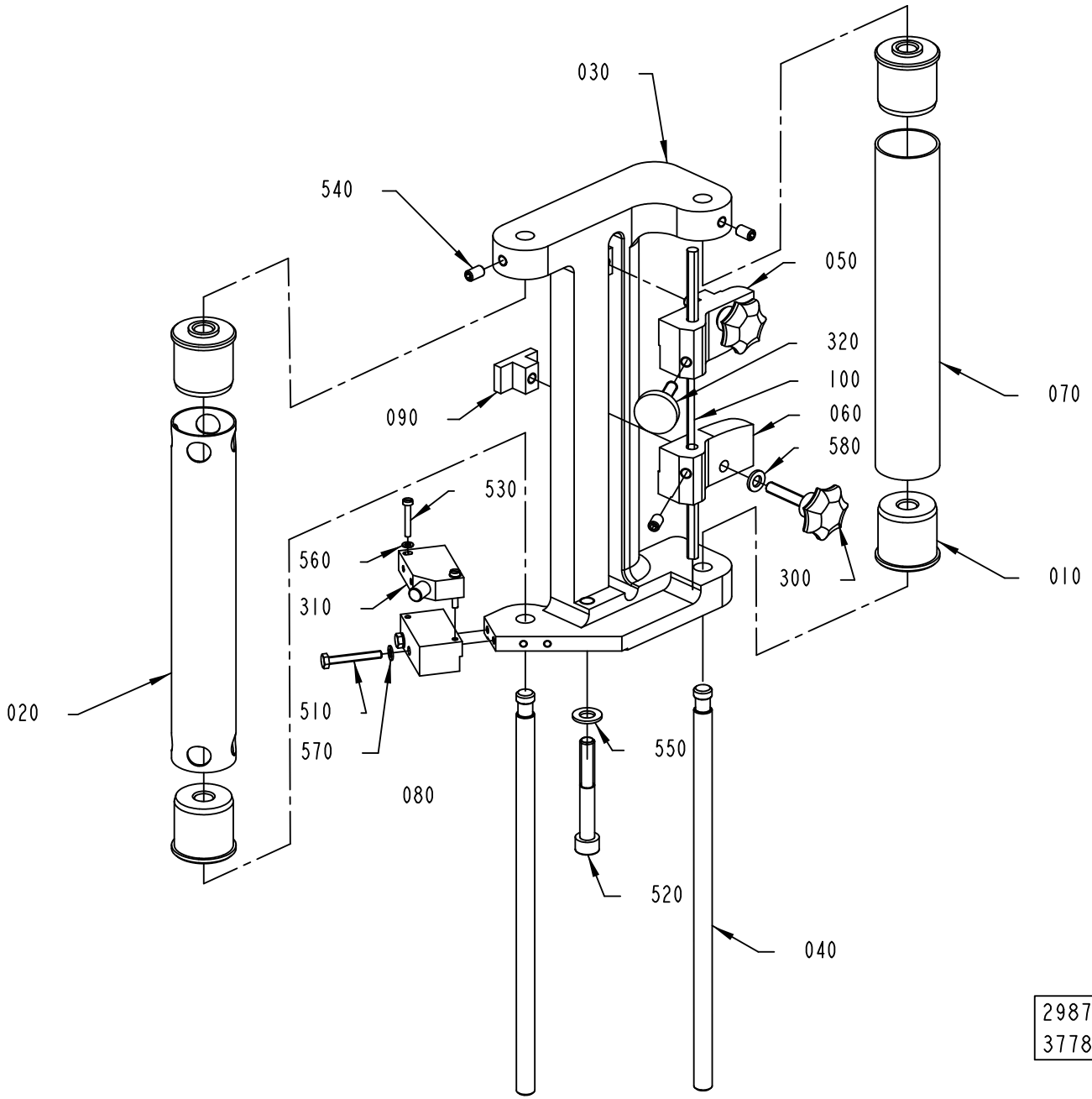

ECM: 436876 - 20100222
Group number: 2987398-0100
Assembly Drawing: 2987398-2_1_AA

This list covers pages from 2-78 to 2-81

Pos	Part No	UN	Qty	Description	Page No
TBA, TB, TPA (See drawing on page: 2-78)					
300	90051-0090		1	KNOB, EXTERNAL THREAD. NO. WN 450GS	
500	312101-0376		1	SCREW M6S M6X35 FZB	
540	312318-0364		2	SCREW ISO4029 M6X10 A4	
TWA, TCA (See drawing on page: 2-80)					
100	2992494-0000		1	SHAFT	
300	90051-0090		2	KNOB, EXTERNAL THREAD. NO. WN 450GS	
320	90457-0935		1	KNOB, ADJUST.HI.EXT.THREAD, NO 6N20P04	
540	312318-0364		3	SCREW ISO4029 M6X10 A4	
Common Parts					
010	2935834-0000		4	END SECTION	
020	3013615-0000		1	PIPE	
030	2987397-0000		1	BRACKET	
040	2987399-0000		2	SHAFT	
050	2987400-0000		1	BRACKET	
060	2987401-0000		1	BRACKET	
070	2987431-0000		1	PIPE	
080	2992492-0000		1	SWITCH BRACKET	
090	2992493-0000		2	BRACKET	
510	312105-0299		2	SCREW M6S ISO 4017 M4X30 A470	
520	312111-0463		1	SCREW HEX.SOCK.HD.MC6S-TT 8X60 88 FZB	
530	312125-0230		2	SCREW ISO 1207 M3X20 A4	
550	315103-0165		1	WASHER PLAIN, BRB, 8,4/16,H=1,5 NIPL BR	
560	315105-0124		2	WASHER BRB 3,2X6 RFR	
570	315105-0136		2	WASHER BRB 4,3X8 RFR	
580	315105-0153		2	WASHER BRB 6,4X12 RFR	
V30B2080	90459-2409		1	INDUCTIVE SENSOR IN5230	

Pos	Part No	UN	Qty	Description	Page No

CRANK SHAFT

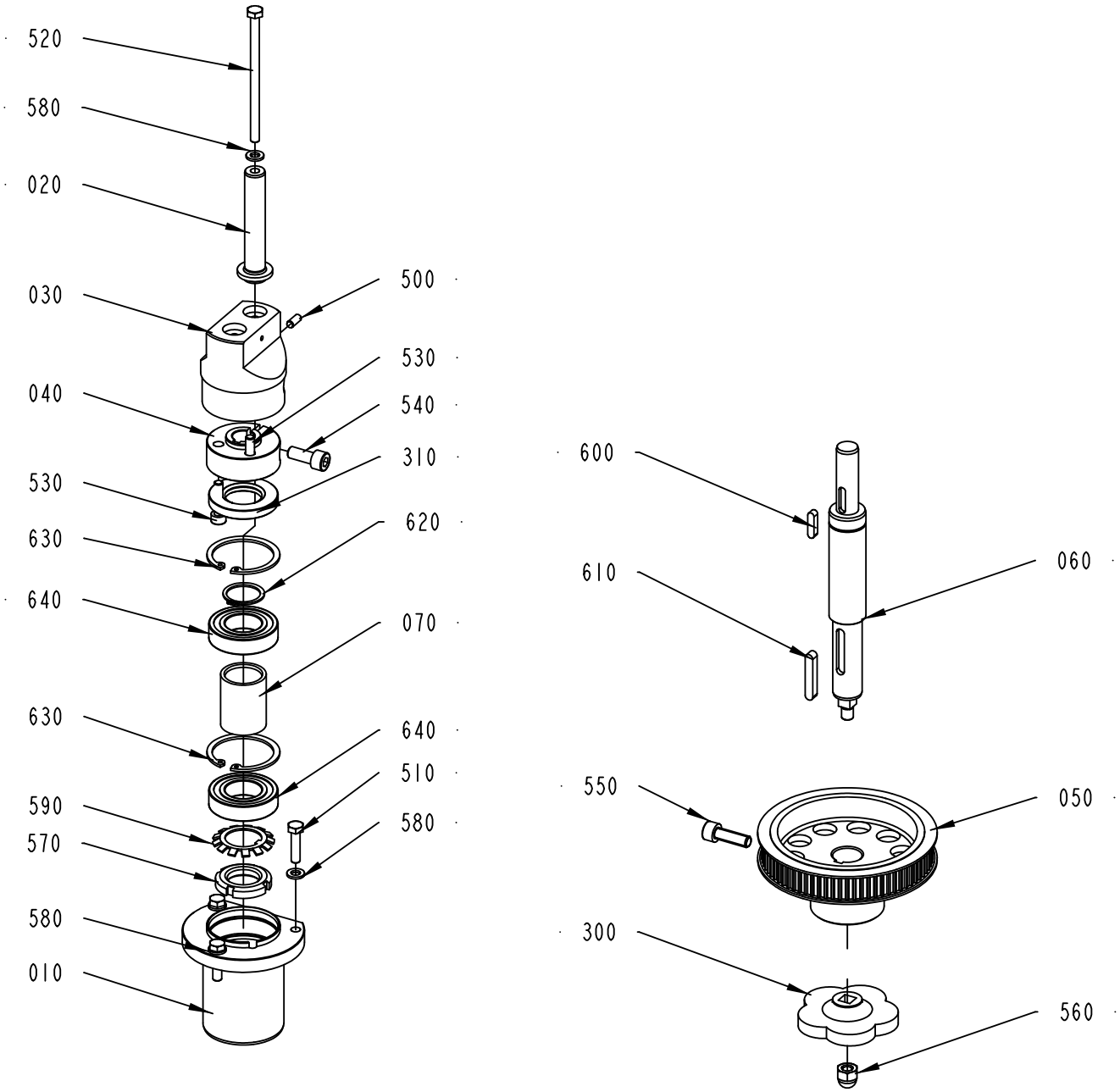

2829436-2
377812

ECM: 436873 - 20100222
Group number: 2829436-0200
Assembly Drawing: 2829436-2_1_AA

Pos	Part No	UN	Qty	Description	Page No
-					
010	3013631-0000		1	BEARING SLEEVE	
020	2856540-0000		1	AXLE PIN	
030	3013632-0000		1	ECCENTRIC	
040	3013634-0000		1	CLAMPING RING	
050	3013633-0000		1	PULLEY	
060	3013635-0000		1	SHAFT	
070	3013620-0000		1	SPACER SLEEVE	
300	90051-0079		1	KNOB, SQUARE HOLE, NO. 8306 1304	
310	90091-0148		1	RADIAL SEAL 25X47X7 MM DUST LIP	
500	311103-0306		1	PARALLEL PIN ISO 2338 5M6X12 A1	
510	312105-0372		3	SCREW M6S ISO 4017 M6X25 A480	
520	312105-0390		1	SCREW M6S ISO 4014 M6X100 A480	
530	312115-0372		2	SCREW ISO4762 M6X25 A4 80	
540	312115-0451		1	SCREW ISO4762 M8X20 A4 80	
550	312115-0453		1	SCREW ISO4762 M8X25 A4 80	
560	312705-0318		1	NUT HEX. DOMED CAP MHM-6 M8 A280	
570	312805-0105		1	NUT ROUND WITH SLOTS M25X1,5 FE	
580	315105-0153		4	WASHER BRB 6,4X12 RFR	
590	315410-0105		1	LOCK WASHER MB 5 D=25 H=1,25	
600	315701-0201		1	PARALLEL KEY W. ROUND ENDS 5X5X20 MM	
610	315705-0238		1	PARALL KEY W. ROUND ENDS 6X6X36 MM	
620	315751-0119		1	RETAINING RING FOR SHAFT DIN 471 25 SS	
630	315753-0130		2	RETAINING RING FOR BORE DIN 472 47 A2	
640	321308-0205		2	BALL BEARING 25/47X12	

Pos	Part No	UN	Qty	Description	Page No

Tetra Pak

SPC
Spare Parts Catalogue

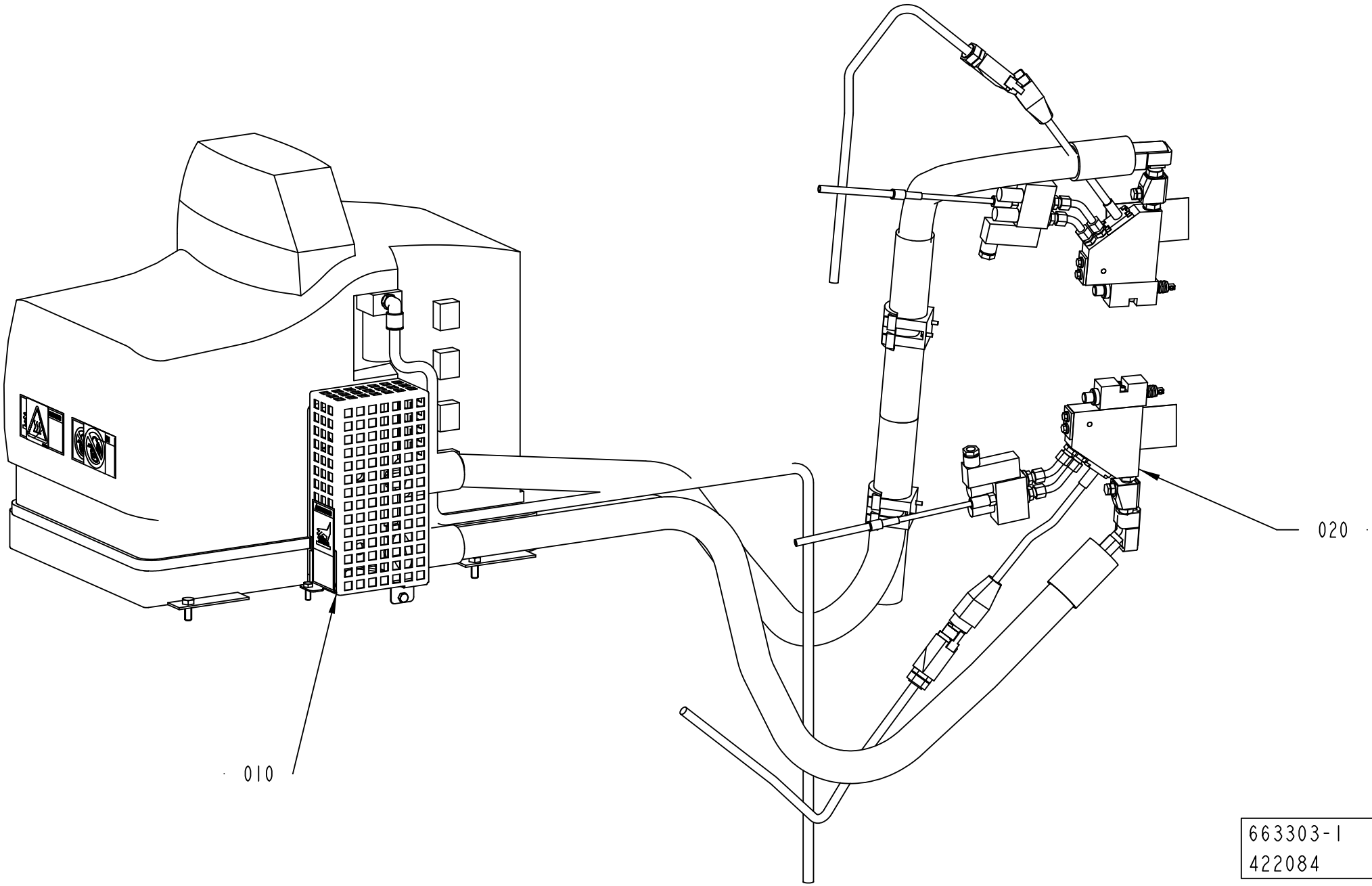
010
020
663303-1
422084

ECM: 428785 - 20091221
Group number: 663303-0100
Assembly Drawing: 663303-1_1_AB

This list covers pages from 3-2 to 3-7

Pos	Part No	UN	Qty	Description	Page No
TBA, TB, TPA (See drawing on page: 3-2)					
020	2892717-0100		1	HOTMELT EQUIPMENT NORDSON	**3-9**
TCA (See drawing on page: 3-4)					
020	2863510-0100		1	HOTMELT EQUIPMENT NORDSON	**3-11, 3-13**
TWA (See drawing on page: 3-6)					
020	2863510-0100		1	HOTMELT EQUIPMENT NORDSON	**3-11, 3-13**
Common Parts					
010	2864776-0100		1	HOTMELT EQUIPMENT MISCELLANEOUS	**3-15, 3-17**

Pos	Part No	UN	Qty	Description	Page No

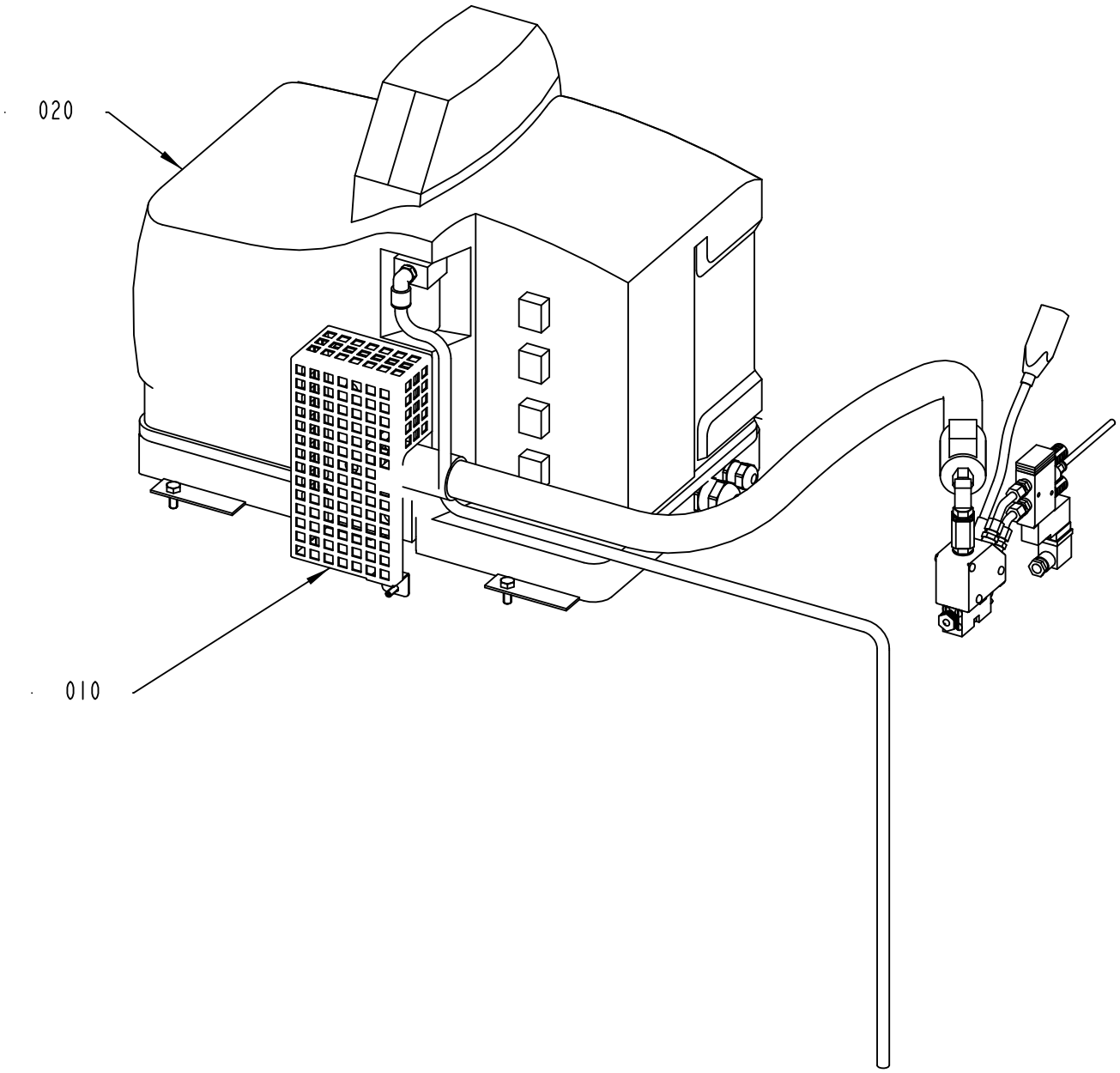

663303-2
355722

ECM: 428785 - 20091221
Group number: 663303-0100
Assembly Drawing: 663303-2_1_AA

This list covers pages from 3-2 to 3-7

Pos	Part No	UN	Qty	Description	Page No
TBA, TB, TPA (See drawing on page: 3-2)					
020	2892717-0100		1	HOTMELT EQUIPMENT NORDSON	**3-9**
TCA (See drawing on page: 3-4)					
020	2863510-0100		1	HOTMELT EQUIPMENT NORDSON	**3-11, 3-13**
TWA (See drawing on page: 3-6)					
020	2863510-0100		1	HOTMELT EQUIPMENT NORDSON	**3-11, 3-13**
Common Parts					
010	2864776-0100		1	HOTMELT EQUIPMENT MISCELLANEOUS	**3-15, 3-17**

Pos	Part No	UN	Qty	Description	Page No

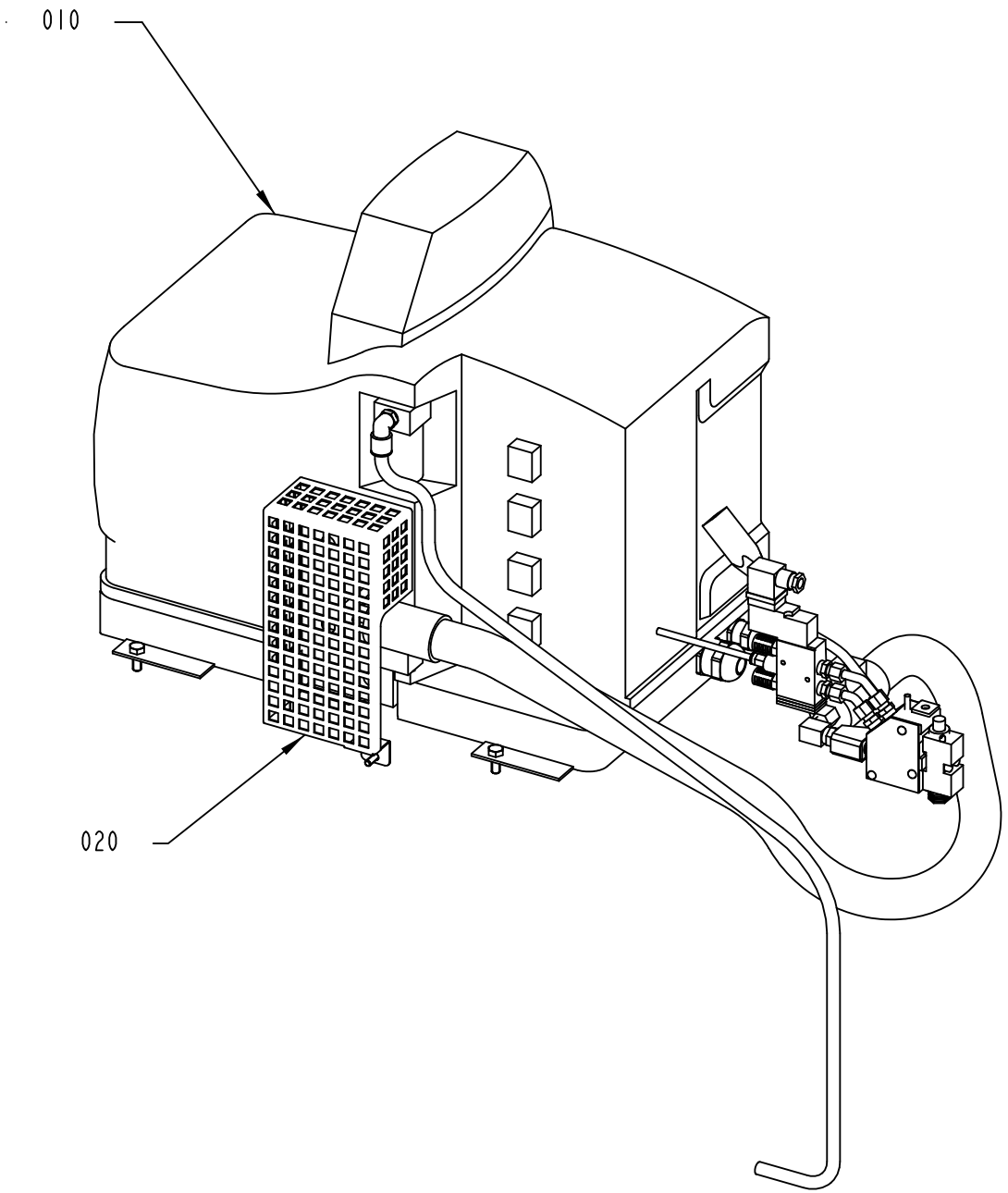

663303-3
395837

ECM: 428785 - 20091221
Group number: 663303-0100
Assembly Drawing: 663303-3_1_AA

This list covers pages from 3-2 to 3-7

Pos	Part No	UN	Qty	Description	Page No
TBA, TB, TPA (See drawing on page: 3-2)					
020	2892717-0100		1	HOTMELT EQUIPMENT NORDSON	**3-9**
TCA (See drawing on page: 3-4)					
020	2863510-0100		1	HOTMELT EQUIPMENT NORDSON	**3-11, 3-13**
TWA (See drawing on page: 3-6)					
020	2863510-0100		1	HOTMELT EQUIPMENT NORDSON	**3-11, 3-13**
Common Parts					
010	2864776-0100		1	HOTMELT EQUIPMENT MISCELLANEOUS	**3-15, 3-17**

Pos	Part No	UN	Qty	Description	Page No

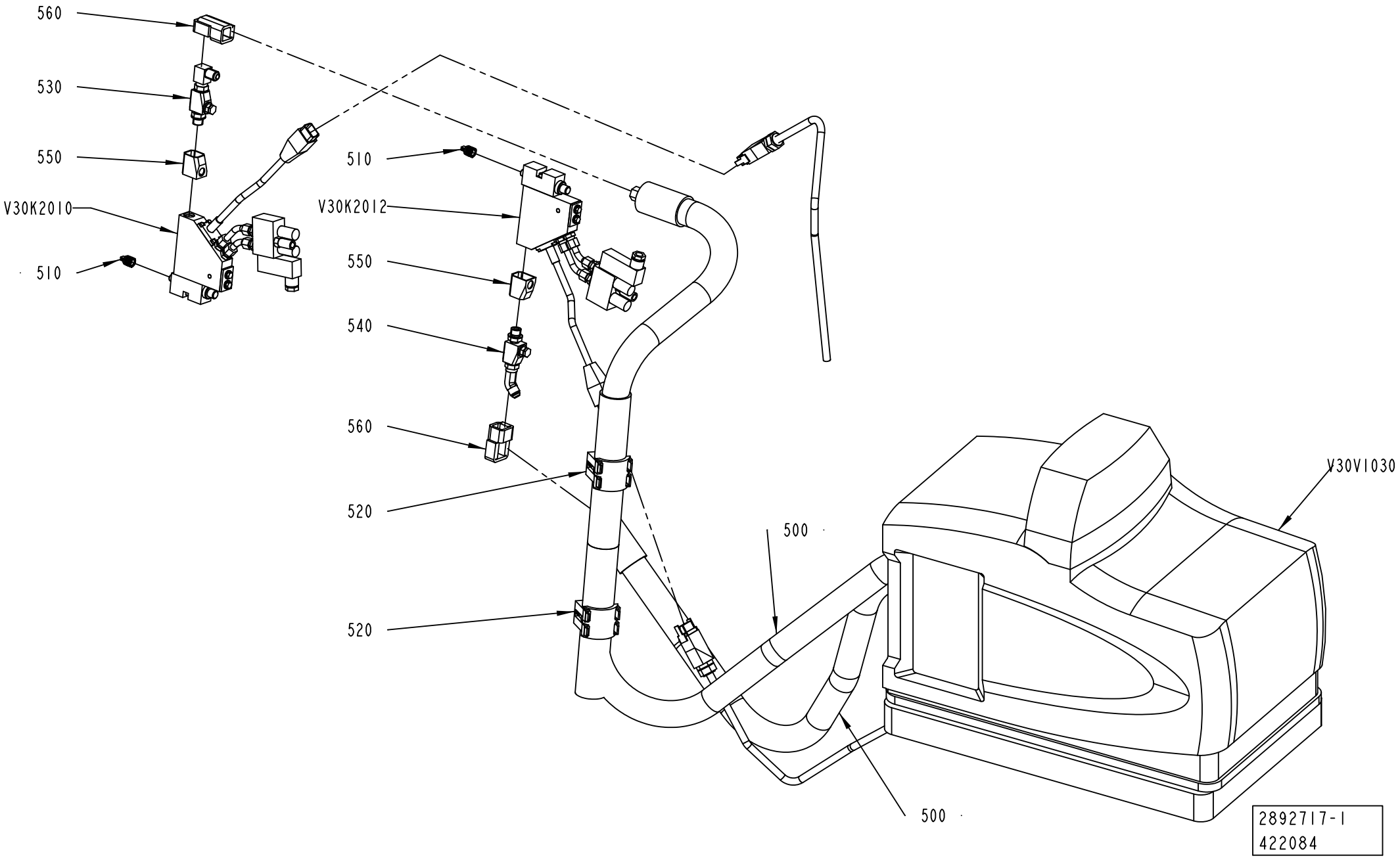
560
530
550
V30K2010
510
510
V30K2012
550
540
560
520
520
500
500
V30V1030
2892717-1
422084

ECM: 436885 - 20100222
Group number: 2892717-0100
Assembly Drawing: 2892717-1_1_AC

Pos	Part No	UN	Qty	Description	Page No
-					
500	90439-0212		2	274792 HOSE	
510	90439-0264		2	HOT MELT NOZZLE, 3/8UNF	
520	90439-0295		2	SERVICE KIT, NO. 111940	
530	90458-2566		1	FILTER 90 DEGREES 100 MESH, 1007231	
	90458-2567		*1*	*FILTER INSERT 100 MESH, 1007373*	
540	90459-2364		1	FILTER, 10077234	
	90458-2567		*1*	*FILTER INSERT 100 MESH, 1007373*	
550	90600-0547		2	SATURN IN-LINE FILTER JACKET, #1056296	
560	90600-3956		2	HEAT INSULATION, #1081862	
V30K2010	90600-2959		1	HOT MELT GUN, #1071630	
	90601-3750		*2*	*TWIN HOT MELT GUN, #1022376*	
	90459-6329		*1*	*GUN MODULE SOLIDBLUE A #1052927*	
	90459-6327		*1*	*SOLENOID VALVE, #1053894*	
	90459-6332		*1*	*SILENCER, #1058058*	
	90042-0392		*1*	*CONTACT 2 POLE + EARTH*	
	90439-0206		*1*	*CABLE*	
V30K2012	90600-2959		1	HOT MELT GUN, #1071630	
	90601-3750		*2*	*TWIN HOT MELT GUN, #1022376*	
	90459-6329		*1*	*GUN MODULE SOLIDBLUE A #1052927*	
	90459-6327		*1*	*SOLENOID VALVE, #1053894*	
	90459-6332		*1*	*SILENCER, #1058058*	
	90042-0392		*1*	*CONTACT 2 POLE + EARTH*	
	90439-0206		*1*	*CABLE*	
V30V1030	90459-1991		1	HOT MELT UNIT, #1022230	
	90459-1979		*1*	*THERMOSTAT SERV. KIT(P4,P7,P10) #1028321*	
	90459-1978		*1*	*RTD SERVICE KIT (P4,P7,P10) #1028320*	
	90459-1977		*1*	*WELDMENT, TANK, P4 #1051033*	
	90459-1976		*1*	*OPER. PANEL/ENCL.SERV.KIT(P4/7)#1028326*	
	90459-1975		*1*	*CPU CONT.BOARD SERV.KIT(P4/7/10)#1028325*	
	90459-1974		*1*	*FUSE KIT,MAIN CIRC.B.(P4/7/10),#1028329*	
	90459-1973		*1*	*MAIN CIRC.BOARD SERV.KIT(P4,P7),#1028322*	
	90459-1972		*1*	*FUSE KIT,HOSE/GUN (P4,P7,P10)),#1028331*	
	90459-1971		*1*	*HOSE/GUN MODULE KIT(P4,P7,P10),#1028328*	
	90439-0241		*1*	*ANGLE NIPPLE*	
	90459-1980		*1*	*MANIFOLD ASSEMBLY, 4-HOSE #1064651*	
	90459-1981		*1*	*MANIFOLD SERVICE KIT (P4,P7,P10)#1028309*	
	90459-1982		*1*	*AUTO. PR. DIS. VALVE (P4/7/10)#1028308*	
	90459-1983		*1*	*HEATER-BLOCK KIT, #1064649*	
	90459-1984		*1*	*PUMP ASS. SERV. KIT (P4/7/10) #102830*	
	90459-1985		*1*	*PUMP SERVICE KIT (P4,P7,P10) #1028304*	
	90459-1986		*1*	*REPL. SATURN® FILTER, 100 MESH #1028305*	
	90459-1987		*1*	*PNEUM. PANEL ASS. (P4/7/10) #1028307*	
	90459-1988		*1*	*COV.,FRAME,SUBBASE MOUNT.PL.(P4)#1021661*	
	90459-1989		*1*	*COVERS,FRAME,CHASSIS, P4 #1021660*	

Machine Type	Group Description	Used-In	Group Number	Page No

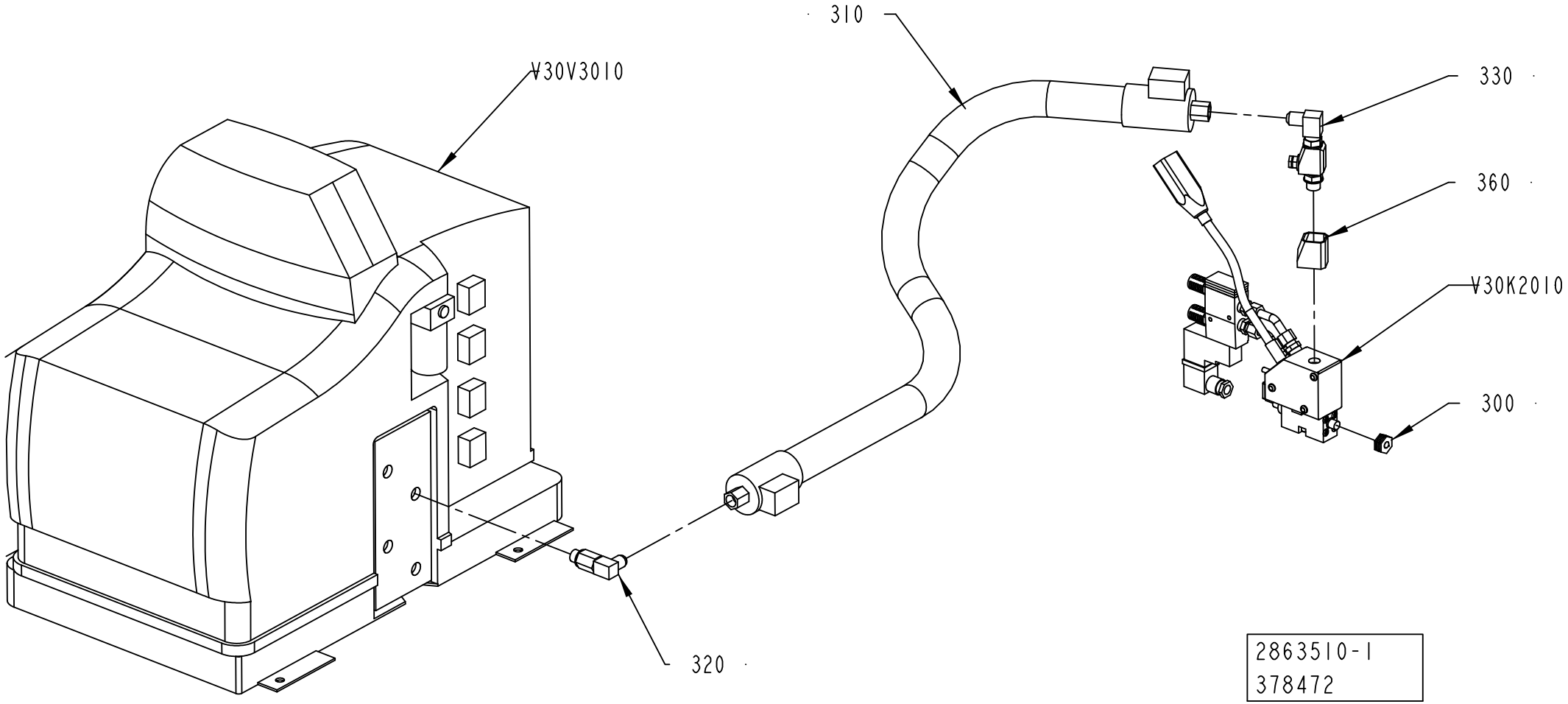
310
V30V3010
330
360
V30K2010
300
320
2863510-1
378472

Pos	Part No	UN	Qty	Description	Page No
-					
300	90439-0155		1	PRECISION NOZZLE SATURN 322012	
310	90439-0209		1	HOSE	
320	90439-0241		1	ANGLE NIPPLE	
330	90458-2566		1	FILTER 90 DEGREES 100 MESH, 1007231	
	90458-2567		*1*	*FILTER INSERT 100 MESH, 1007373*	
360	90600-0547		1	SATURN IN-LINE FILTER JACKET, #1056296	
V30K2010	90459-6475		1	HOT MELT GUN, SOLIDBLUE A #8505768	
	90439-0206		*1*	*CABLE*	
	90459-6327		*1*	*SOLENOID VALVE, #1053894*	
	90459-6332		*1*	*SILENCER, #1058058*	
	90042-0392		*1*	*CONTACT 2 POLE + EARTH*	
	90459-6329		*1*	*GUN MODULE SOLIDBLUE A #1052927*	
	90459-6476		*1*	*HEATER, HTR, CRTG, 147W, 240V*	
V30V3010	90459-1991		1	HOT MELT UNIT, #1022230	
	90459-1979		*1*	*THERMOSTAT SERV. KIT(P4,P7,P10) #1028321*	
	90459-1978		*1*	*RTD SERVICE KIT (P4,P7,P10) #1028320*	
	90459-1977		*1*	*WELDMENT, TANK, P4 #1051033*	
	90459-1976		*1*	*OPER. PANEL/ENCL.SERV.KIT(P4/7)#1028326*	
	90459-1975		*1*	*CPU CONT.BOARD SERV.KIT(P4/7/10)#1028325*	
	90459-1974		*1*	*FUSE KIT,MAIN CIRC.B.(P4/7/10),#1028329*	
	90459-1973		*1*	*MAIN CIRC.BOARD SERV.KIT(P4,P7),#1028322*	
	90459-1972		*1*	*FUSE KIT,HOSE/GUN (P4,P7,P10)),#1028331*	
	90459-1971		*1*	*HOSE/GUN MODULE KIT(P4,P7,P10),#1028328*	
	90439-0241		*1*	*ANGLE NIPPLE*	
	90459-1980		*1*	*MANIFOLD ASSEMBLY, 4-HOSE #1064651*	
	90459-1981		*1*	*MANIFOLD SERVICE KIT (P4,P7,P10)#1028309*	
	90459-1982		*1*	*AUTO. PR. DIS. VALVE (P4/7/10)#1028308*	
	90459-1983		*1*	*HEATER-BLOCK KIT, #1064649*	
	90459-1984		*1*	*PUMP ASS. SERV. KIT (P4/7/10) #102830*	
	90459-1985		*1*	*PUMP SERVICE KIT (P4,P7,P10) #1028304*	
	90459-1986		*1*	*REPL. SATURN® FILTER, 100 MESH #1028305*	
	90459-1987		*1*	*PNEUM. PANEL ASS. (P4/7/10) #1028307*	
	90459-1988		*1*	*COV.,FRAME,SUBBASE MOUNT.PL.(P4)#1021661*	
	90459-1989		*1*	*COVERS,FRAME,CHASSIS, P4 #1021660*	

Pos	Part No	UN	Qty	Description	Page No

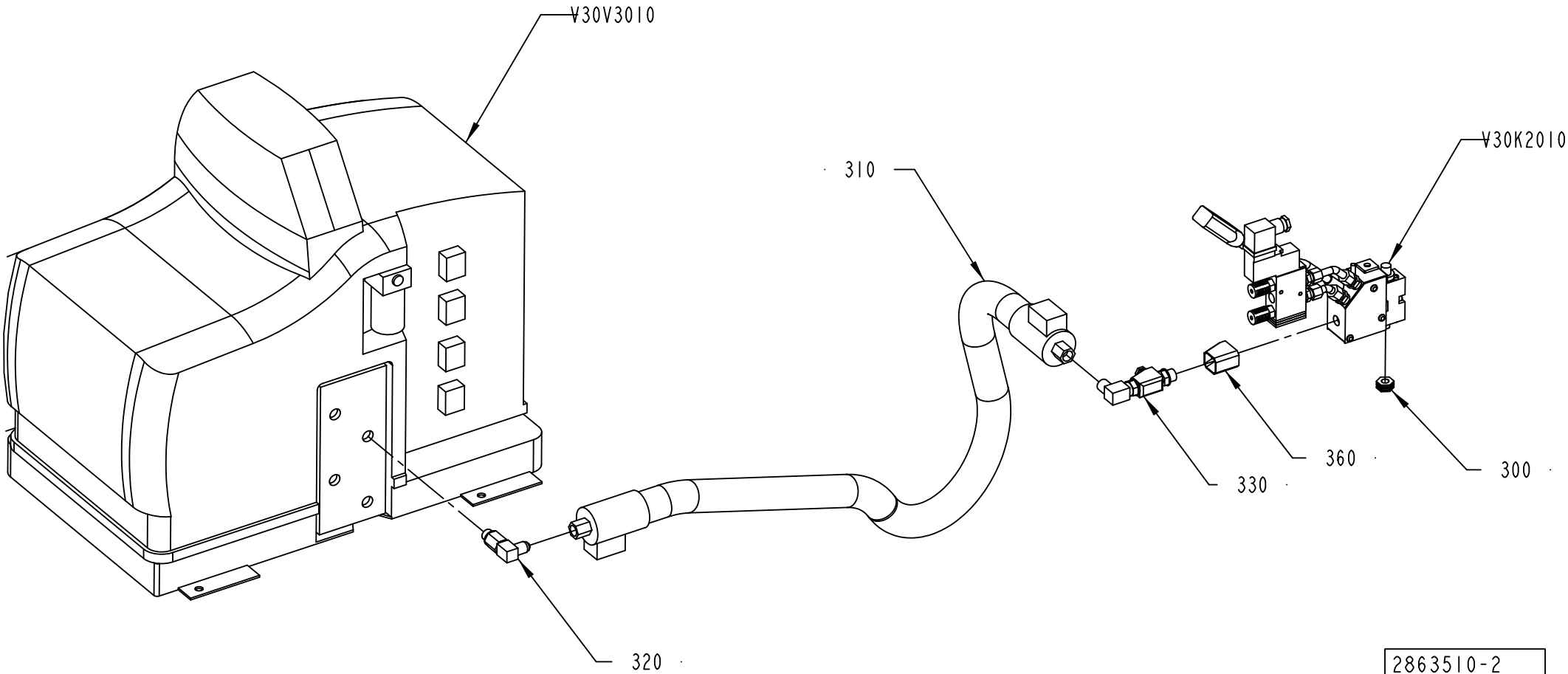
V30V3010
310
V30K2010
360
330
300
320
2863510-2
395837

ECM: 436886 - 20100222
Group number: 2863510-0100
Assembly Drawing: 2863510-2_1_AA

This list covers pages from 3-10 to 3-13

Pos	Part No	UN	Qty	Description	Page No
-					
300	90439-0155		1	PRECISION NOZZLE SATURN 322012	
310	90439-0209		1	HOSE	
320	90439-0241		1	ANGLE NIPPLE	
330	90458-2566		1	FILTER 90 DEGREES 100 MESH, 1007231	
	90458-2567		*1*	*FILTER INSERT 100 MESH, 1007373*	
360	90600-0547		1	SATURN IN-LINE FILTER JACKET, #1056296	
V30K2010	90459-6475		1	HOT MELT GUN, SOLIDBLUE A #8505768	
	90439-0206		*1*	*CABLE*	
	90459-6327		*1*	*SOLENOID VALVE, #1053894*	
	90459-6332		*1*	*SILENCER, #1058058*	
	90042-0392		*1*	*CONTACT 2 POLE + EARTH*	
	90459-6329		*1*	*GUN MODULE SOLIDBLUE A #1052927*	
	90459-6476		*1*	*HEATER, HTR, CRTG, 147W, 240V*	
V30V3010	90459-1991		1	HOT MELT UNIT, #1022230	
	90459-1979		*1*	*THERMOSTAT SERV. KIT(P4,P7,P10) #1028321*	
	90459-1978		*1*	*RTD SERVICE KIT (P4,P7,P10) #1028320*	
	90459-1977		*1*	*WELDMENT, TANK, P4 #1051033*	
	90459-1976		*1*	*OPER. PANEL/ENCL.SERV.KIT(P4/7)#1028326*	
	90459-1975		*1*	*CPU CONT.BOARD SERV.KIT(P4/7/10)#1028325*	
	90459-1974		*1*	*FUSE KIT,MAIN CIRC.B.(P4/7/10),#1028329*	
	90459-1973		*1*	*MAIN CIRC.BOARD SERV.KIT(P4,P7),#1028322*	
	90459-1972		*1*	*FUSE KIT,HOSE/GUN (P4,P7,P10)),#1028331*	
	90459-1971		*1*	*HOSE/GUN MODULE KIT(P4,P7,P10),#1028328*	
	90439-0241		*1*	*ANGLE NIPPLE*	
	90459-1980		*1*	*MANIFOLD ASSEMBLY, 4-HOSE #1064651*	
	90459-1981		*1*	*MANIFOLD SERVICE KIT (P4,P7,P10)#1028309*	
	90459-1982		*1*	*AUTO. PR. DIS. VALVE (P4/7/10)#1028308*	
	90459-1983		*1*	*HEATER-BLOCK KIT, #1064649*	
	90459-1984		*1*	*PUMP ASS. SERV. KIT (P4/7/10) #102830*	
	90459-1985		*1*	*PUMP SERVICE KIT (P4,P7,P10) #1028304*	
	90459-1986		*1*	*REPL. SATURN® FILTER, 100 MESH #1028305*	
	90459-1987		*1*	*PNEUM. PANEL ASS. (P4/7/10) #1028307*	
	90459-1988		*1*	*COV.,FRAME,SUBBASE MOUNT.PL.(P4)#1021661*	
	90459-1989		*1*	*COVERS,FRAME,CHASSIS, P4 #1021660*	

Pos	Part No	UN	Qty	Description	Page No

Machine Type | Group Description | Used-In | Group Number | Page No

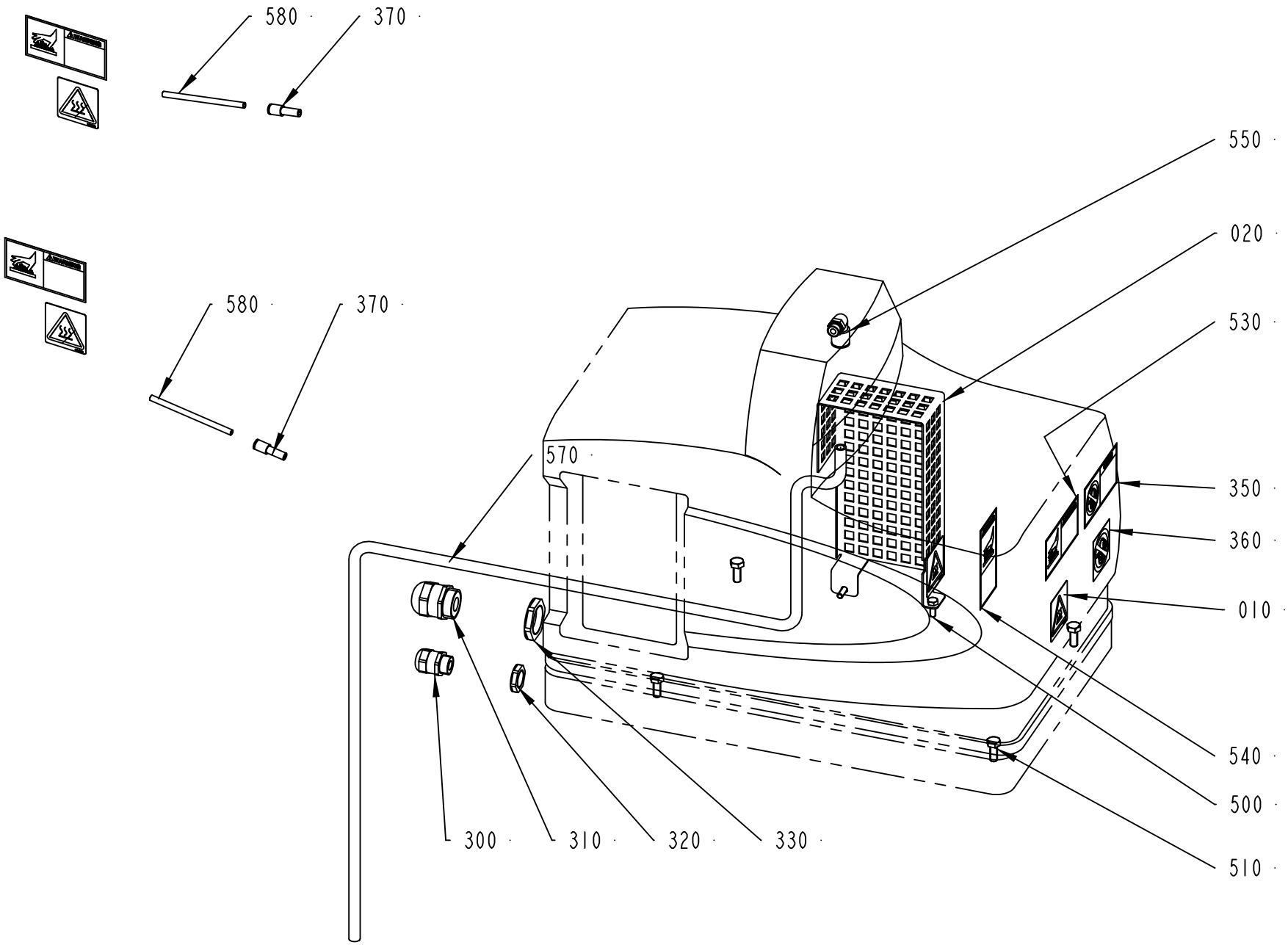

2864776-1
429959

ECM: 436884 - 20100222
Group number: 2864776-0100
Assembly Drawing: 2864776-1_1_AC

This list covers pages from 3-14 to 3-17

Pos	Part No	UN	Qty	Description	Page No
TBA ANSI, TB ANSI, TPA ANSI (See drawing on page: 3-14)					
350	90459-2232		1	WARNING SIGN ANSI (H), DO NOT WASH	
370	350006-0003		2	PUSH-IN FITTING QS-F-8H-6	
530	359725-0116		3	WARNING SIGN ANSI (H), HOT SURFACE	
540	359725-0117		1	WARNING SIGN ANSI (V), HOT SURFACE	
580	315400-0001	M	0.5	TUBE PUN-H-6X1-BL	
TBA ISO, TB ISO, TPA ISO (See drawing on page: 3-14)					
010	1128853-0000		4	CAUTION SIGN	
360	90459-2265		1	PROHIBITION SIGN ISO, DO NOT WASH	
370	350006-0003		2	PUSH-IN FITTING QS-F-8H-6	
580	315400-0001	M	0.5	TUBE PUN-H-6X1-BL	
TCA ANSI (See drawing on page: 3-16)					
350	90459-2232		1	WARNING SIGN ANSI (H), DO NOT WASH	
530	359725-0116		2	WARNING SIGN ANSI (H), HOT SURFACE	
560	315400-0004	M	3	TUBE PUN-H-8X1,25-BL	
575	350008-0006		1	PUSH-IN FITTING QSF-F-G1/4-8	
TCA ISO (See drawing on page: 3-16)					
010	1128853-0000		2	CAUTION SIGN	
360	90459-2265		1	PROHIBITION SIGN ISO, DO NOT WASH	
560	315400-0004	M	3	TUBE PUN-H-8X1,25-BL	
575	350008-0006		1	PUSH-IN FITTING QSF-F-G1/4-8	
TWA ANSI (See drawing on page: 3-16)					
350	90459-2232		1	WARNING SIGN ANSI (H), DO NOT WASH	
530	359725-0116		2	WARNING SIGN ANSI (H), HOT SURFACE	
575	350008-0006		1	PUSH-IN FITTING QSF-F-G1/4-8	
TWA ISO (See drawing on page: 3-16)					
010	1128853-0000		2	CAUTION SIGN	
360	90459-2265		1	PROHIBITION SIGN ISO, DO NOT WASH	
575	350008-0006		1	PUSH-IN FITTING QSF-F-G1/4-8	
Common Parts					
020	2864777-0000		1	COVER	
300	90458-0315		1	CABLE GLAND, M20X1,5, NO.5311 1120	
310	90458-0317		1	CABLE GLAND, M32X1,5, NO.5311 1140	
320	90458-0323		1	NUT, M20X1,5	
330	90458-0325		1	NUT, M32X1,5	
500	312105-0368		2	SCREW M6S ISO 4017 M6X16 A480	
510	312105-0451		4	SCREW M6S ISO 4017 M8X20 A480	
550	350002-0011		1	PUSH-IN L-FITTING QSL-F-G1/4-12	
570	315400-0010	M	0.9	TUBE PUN-H-12X2-BL	

Pos	Part No	UN	Qty	Description	Page No

Machine Type | Group Description | Used-In | Group Number | Page No

HOTMELT EQUIPMENT MISCELLANEOUS

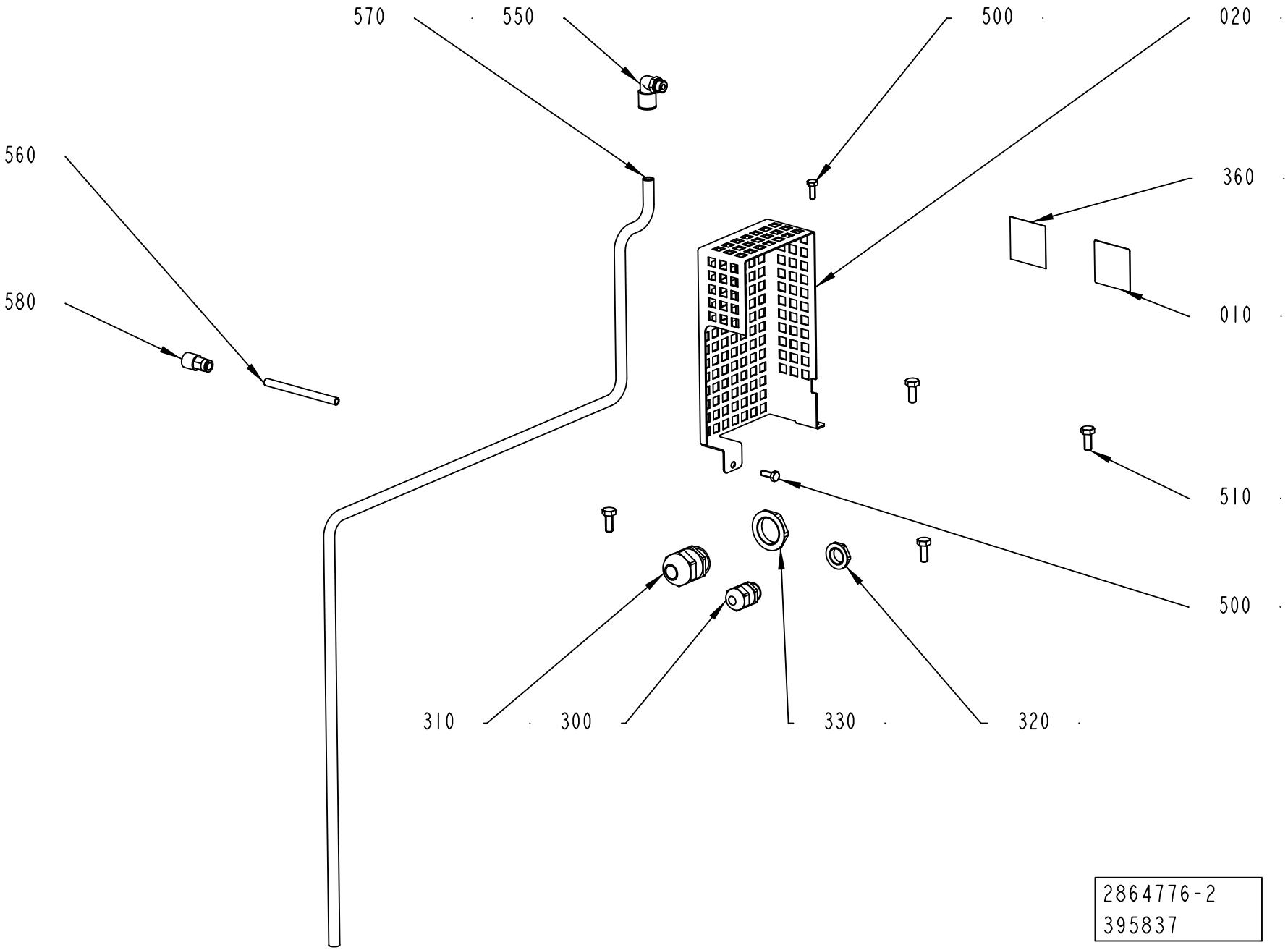

ECM: 436884 - 20100222
Group number: 2864776-0100
Assembly Drawing: 2864776-2_1_AC

This list covers pages from 3-14 to 3-17

Pos	Part No	UN	Qty	Description	Page No
TBA ANSI, TB ANSI, TPA ANSI (See drawing on page: 3-14)					
350	90459-2232		1	WARNING SIGN ANSI (H), DO NOT WASH	
370	350006-0003		2	PUSH-IN FITTING QS-F-8H-6	
530	359725-0116		3	WARNING SIGN ANSI (H), HOT SURFACE	
540	359725-0117		1	WARNING SIGN ANSI (V), HOT SURFACE	
580	315400-0001	M	0.5	TUBE PUN-H-6X1-BL	
TBA ISO, TB ISO, TPA ISO (See drawing on page: 3-14)					
010	1128853-0000		4	CAUTION SIGN	
360	90459-2265		1	PROHIBITION SIGN ISO, DO NOT WASH	
370	350006-0003		2	PUSH-IN FITTING QS-F-8H-6	
580	315400-0001	M	0.5	TUBE PUN-H-6X1-BL	
TCA ANSI (See drawing on page: 3-16)					
350	90459-2232		1	WARNING SIGN ANSI (H), DO NOT WASH	
530	359725-0116		2	WARNING SIGN ANSI (H), HOT SURFACE	
560	315400-0004	M	3	TUBE PUN-H-8X1,25-BL	
575	350008-0006		1	PUSH-IN FITTING QSF-F-G1/4-8	
TCA ISO (See drawing on page: 3-16)					
010	1128853-0000		2	CAUTION SIGN	
360	90459-2265		1	PROHIBITION SIGN ISO, DO NOT WASH	
560	315400-0004	M	3	TUBE PUN-H-8X1,25-BL	
575	350008-0006		1	PUSH-IN FITTING QSF-F-G1/4-8	
TWA ANSI (See drawing on page: 3-16)					
350	90459-2232		1	WARNING SIGN ANSI (H), DO NOT WASH	
530	359725-0116		2	WARNING SIGN ANSI (H), HOT SURFACE	
575	350008-0006		1	PUSH-IN FITTING QSF-F-G1/4-8	
TWA ISO (See drawing on page: 3-16)					
010	1128853-0000		2	CAUTION SIGN	
360	90459-2265		1	PROHIBITION SIGN ISO, DO NOT WASH	
575	350008-0006		1	PUSH-IN FITTING QSF-F-G1/4-8	
Common Parts					
020	2864777-0000		1	COVER	
300	90458-0315		1	CABLE GLAND, M20X1,5, NO.5311 1120	
310	90458-0317		1	CABLE GLAND, M32X1,5, NO.5311 1140	
320	90458-0323		1	NUT, M20X1,5	
330	90458-0325		1	NUT, M32X1,5	
500	312105-0368		2	SCREW M6S ISO 4017 M6X16 A480	
510	312105-0451		4	SCREW M6S ISO 4017 M8X20 A480	
550	350002-0011		1	PUSH-IN L-FITTING QSL-F-G1/4-12	
570	315400-0010	M	0.9	TUBE PUN-H-12X2-BL	

Pos	Part No	UN	Qty	Description	Page No

Machine Type | Group Description | Used-In | Group Number | Page No

Tetra Pak

SPC
Spare Parts Catalogue

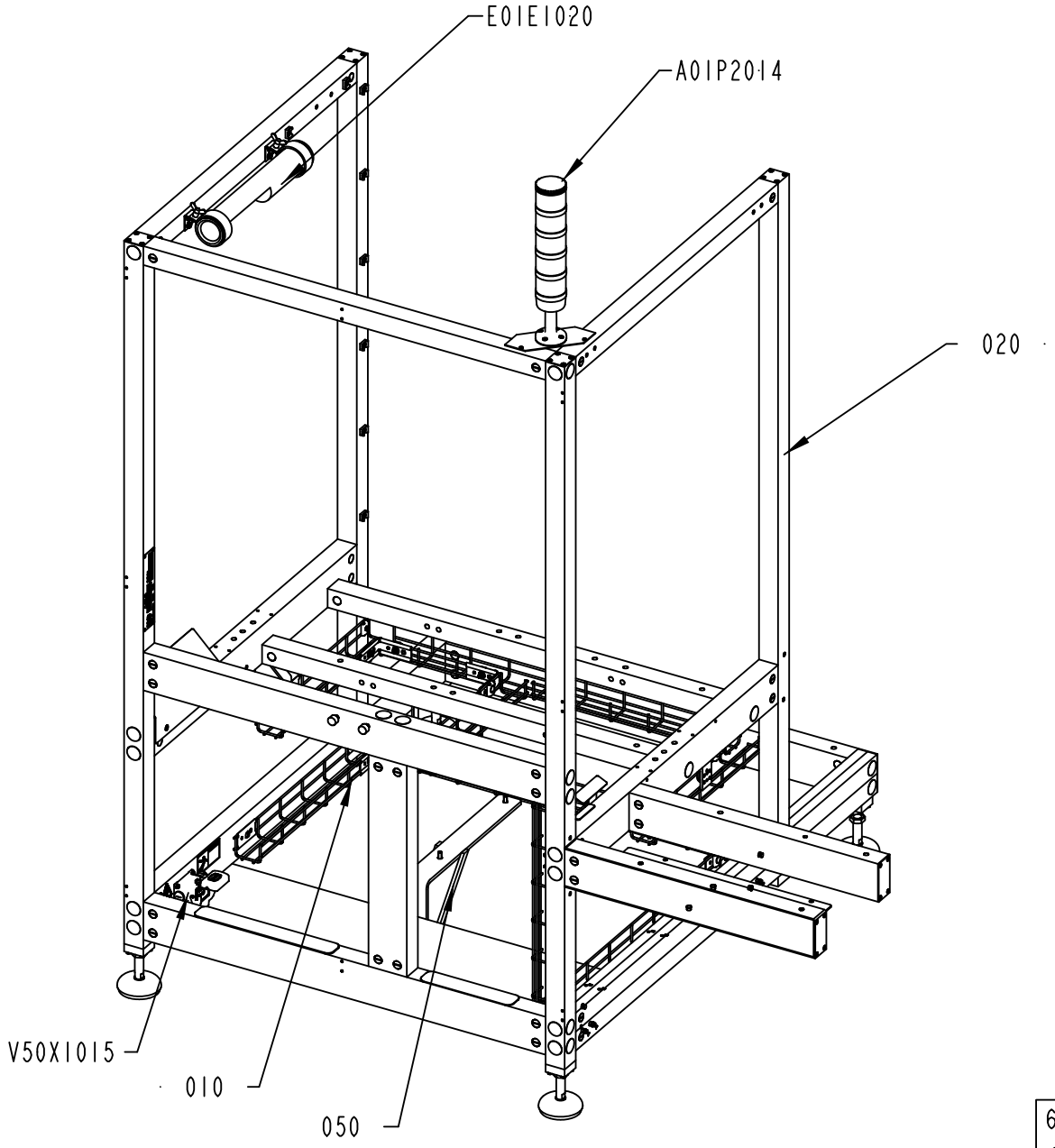

663304-6
401749

ECM: 406000 - 20090630
Group number: 663304-0300
Assembly Drawing: 663304-6_1_AA

This list covers pages from 4-2 to 4-7

Pos	Part No	UN	Qty	Description	Page No
TBA, TB, TPA (See drawing on page: 4-2)					
020	2788657-0300		1	MACHINE BODY	**4-9**
050	2946861-0200		1	VIBRATION DAMPER	**4-11**
TCA (See drawing on page: 4-4)					
020	2788657-0300		1	MACHINE BODY	**4-9**
060	2948240-0100		1	GUIDE ARM	**2-47, 2-49, 4-13, 4-15**
070	2957740-0100		1	BRACKET	**4-17**
A10X2000	2992470-0100		1	CONNECTION BOX	**4-19**
TWA (See drawing on page: 4-6)					
020	3023560-0100		1	MACHINE BODY	**4-25**
080	2926050-0100		1	ADJUSTMENT PLATE	**4-27**
090	2992430-0100		1	CABLE	**1-93, 4-33**
Common Parts					
010	2843700-0100		1	CABLE DUCT	**4-35**
A01P2014	581689-0700		1	WARNING LAMP	**4-37**
E01E1020	2901717-0100		1	LIGHT FIXTURE	**4-39**
V50X1015	2913340-0100		1	CONNECTOR	**4-41**

Pos	Part No	UN	Qty	Description	Page No

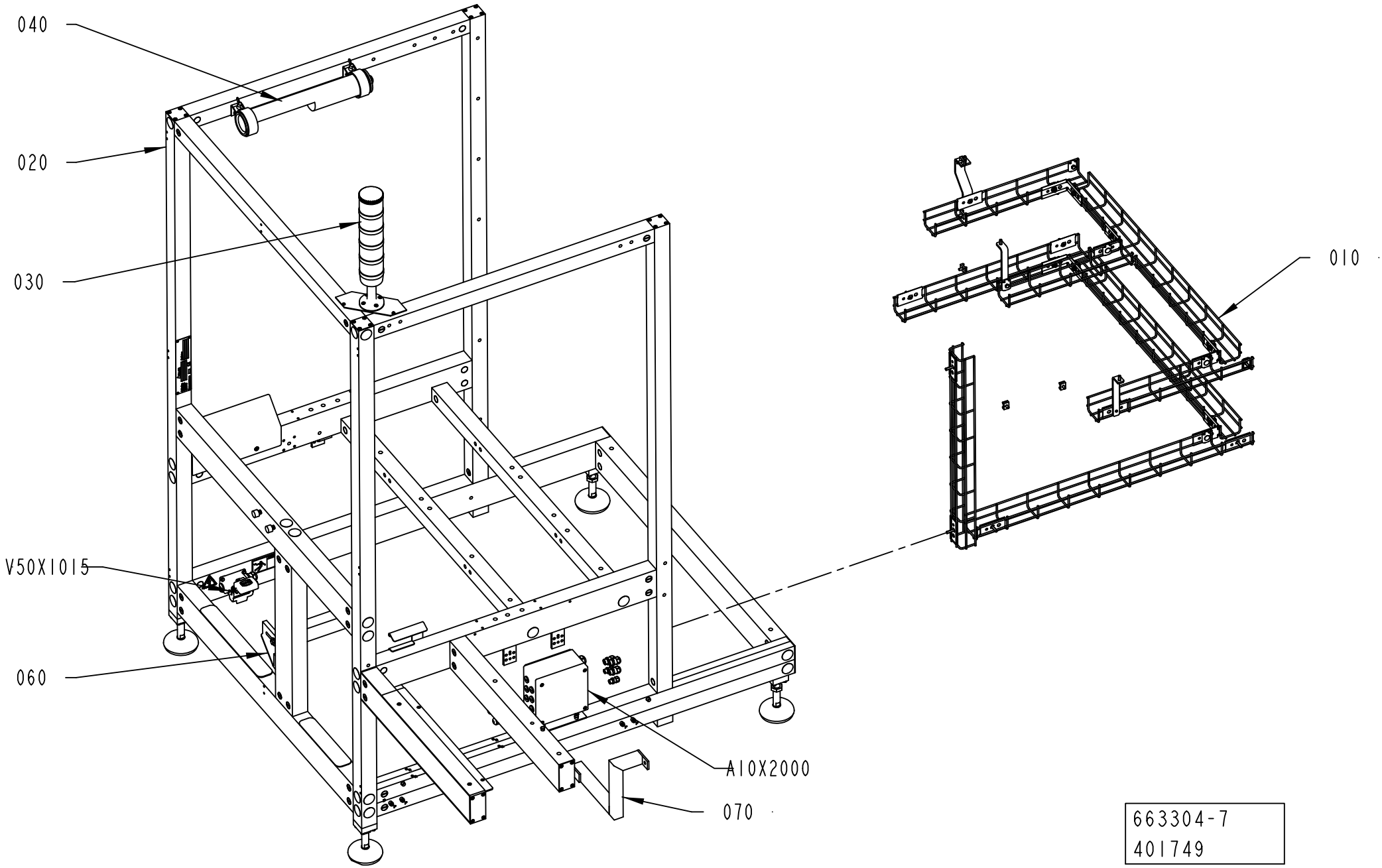

663304-7
401749

ECM: 406000 - 20090630
Group number: 663304-0300
Assembly Drawing: 663304-7_1_AA

This list covers pages from 4-2 to 4-7

Pos	Part No	UN	Qty	Description	Page No
TBA, TB, TPA (See drawing on page: 4-2)					
020	2788657-0300		1	MACHINE BODY	**4-9**
050	2946861-0200		1	VIBRATION DAMPER	**4-11**
TCA (See drawing on page: 4-4)					
020	2788657-0300		1	MACHINE BODY	**4-9**
060	2948240-0100		1	GUIDE ARM	**2-47, 2-49, 4-13, 4-15**
070	2957740-0100		1	BRACKET	**4-17**
A10X2000	2992470-0100		1	CONNECTION BOX	**4-19**
TWA (See drawing on page: 4-6)					
020	3023560-0100		1	MACHINE BODY	**4-25**
080	2926050-0100		1	ADJUSTMENT PLATE	**4-27**
090	2992430-0100		1	CABLE	**1-93, 4-33**
Common Parts					
010	2843700-0100		1	CABLE DUCT	**4-35**
A01P2014	581689-0700		1	WARNING LAMP	**4-37**
E01E1020	2901717-0100		1	LIGHT FIXTURE	**4-39**
V50X1015	2913340-0100		1	CONNECTOR	**4-41**

Pos	Part No	UN	Qty	Description	Page No

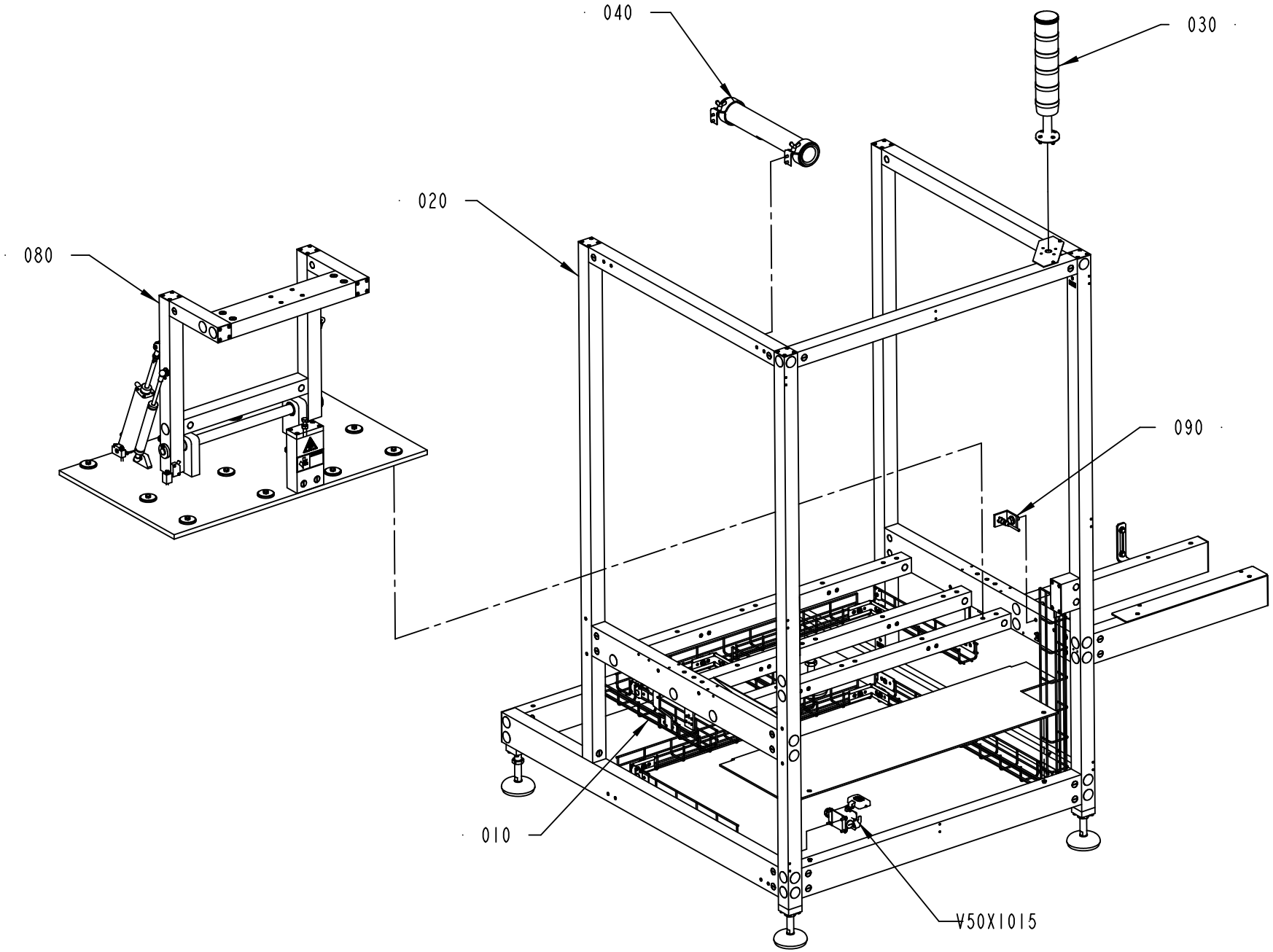

663304-8
401749

ECM: 406000 - 20090630
Group number: 663304-0300
Assembly Drawing: 663304-8_1_AA

This list covers pages from 4-2 to 4-7

Pos	Part No	UN	Qty	Description	Page No
TBA, TB, TPA (See drawing on page: 4-2)					
020	2788657-0300		1	MACHINE BODY	**4-9**
050	2946861-0200		1	VIBRATION DAMPER	**4-11**
TCA (See drawing on page: 4-4)					
020	2788657-0300		1	MACHINE BODY	**4-9**
060	2948240-0100		1	GUIDE ARM	**2-47, 2-49, 4-13, 4-15**
070	2957740-0100		1	BRACKET	**4-17**
A10X2000	2992470-0100		1	CONNECTION BOX	**4-19**
TWA (See drawing on page: 4-6)					
020	3023560-0100		1	MACHINE BODY	**4-25**
080	2926050-0100		1	ADJUSTMENT PLATE	**4-27**
090	2992430-0100		1	CABLE	**1-93, 4-33**
Common Parts					
010	2843700-0100		1	CABLE DUCT	**4-35**
A01P2014	581689-0700		1	WARNING LAMP	**4-37**
E01E1020	2901717-0100		1	LIGHT FIXTURE	**4-39**
V50X1015	2913340-0100		1	CONNECTOR	**4-41**

Pos	Part No	UN	Qty	Description	Page No

MACHINE BODY

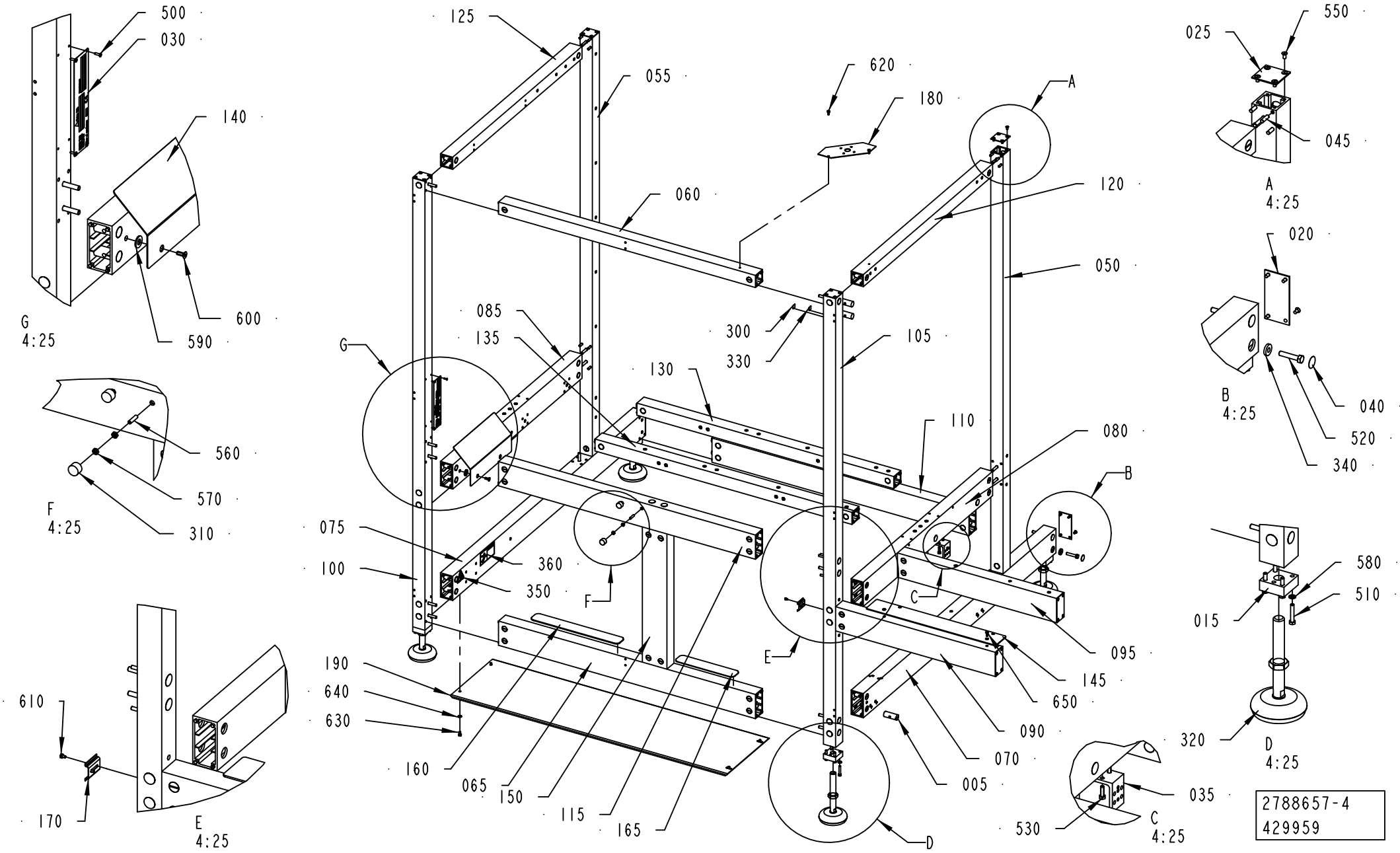

ECM: 436887 - 20100222
Group number: 2788657-0300
Assembly Drawing: 2788657-4_1_AC

Pos	Part No	UN	Qty	Description	Page No
-					
005	486268-0000		44	NUT	
015	556601-0000		4	BRACKET	
020	556603-0000		4	COVER PLATE	
025	556604-0000		4	COVER PLATE	
030	580923-0000		1	MACHINE SIGN CE	
035	975884-0000		3	BRACKET	
040	1021933-0000		44	COVER TAPE	
045	1065410-0000		112	SLOTTED PIN	
050	2752867-0000		1	PROFILE 50X50	
055	2752868-0000		1	PROFILE 50X50	
060	2752869-0000		1	PROFILE 50X50	
065	2752890-0000		1	PROFILE 50X100	
070	3039849-0000		1	PROFILE 50X100	
075	2752893-0000		1	PROFILE 50X100	
080	2752895-0000		1	PROFILE 50X100	
085	2752896-0000		1	PROFILE 50X100	
090	2752901-0000		1	PROFILE 50X100	
095	2752902-0000		1	PROFILE 50X100	
100	2752903-0000		1	PROFILE 50X50	
105	2752904-0000		1	PROFILE 50X50	
110	2818263-0000		1	PROFILE 50X100	
115	2833867-0000		1	PROFILE 50X100	
120	2833872-0000		1	PROFILE 50X50	
125	2833873-0000		1	PROFILE 50X50	
130	2833876-0000		1	PROFILE 50X50	
135	2839812-0000		1	PROFILE 50X50	
140	2858603-0000		1	PLATE	
145	2885390-0000		1	PLATE	
150	2893441-0000		1	PROFILE 50X100	
160	1103299-0000		1	NON-SKID	
165	1103300-0000		1	NON-SKID	
170	3012794-0000		1	RAIL	
180	1189303-0000		1	MOUNTING SHEET	
190	3039860-0000		1	BOTTOM PANEL	
300	90194-0152		3	SIGN, EARTH	
310	90347-0011		2	VIBRATION DAMPER MEGI 781056	
320	90458-1508		4	FLOOR PLATE, DAMPER, M105-20-160	
330	90459-2928		3	LABEL 60417-2-IEC-5020, COMM. REF. POT.	
340	90600-5066		44	WASHER DIN7349 8,4X21X4 A4	
350	359705-0015		1	WARNING SIGN ISO, RISK OF ELECTRIC SHOCK	
360	359715-0100		1	WARNING SIGN ANSI (H), ELECTRIC SHOCK	
500	311521-0144		4	RIVET, BLANK 3,2X10	
510	312105-0376		16	SCREW M6S ISO 4014 M6X35 A480	
520	312105-0459		44	SCREW M6S ISO 4014 M8X40 A480	
530	312105-0370		6	SCREW M6S ISO 4017 M6X20 A480	
550	312145-0325		32	SCREW ISO 2009 MFS M5X10 A4	
560	312318-0372		2	SCREW ISO4029 M6X25 A4	
570	312625-0316		4	HEXAGON THIN NUT, EN 24035 ML6M M6 A4	
580	315105-0153		16	WASHER BRB 6,4X12 RFR	
590	315105-0173		2	WASHER BRB 10,5X22 RFR	
600	312155-0368		2	SCREW DIN 7991 MF6S M6X16 A4 70	
610	312105-0285		2	SCREW M6S ISO 4017 M4X6 A470	
620	312105-0325		2	SCREW M6S ISO 4017 M5X10 A480	
630	312105-0364		4	SCREW M6S ISO 4017 M6X10 A480	
640	315106-0153		4	WASHER ISO 7089-6-200 HV A4	
650	312155-0329		2	SCREW DIN 7991 MF6S M5X16 A4 70	

Machine Type | Group Description | Used-In | Group Number | Page No

VIBRATION DAMPER

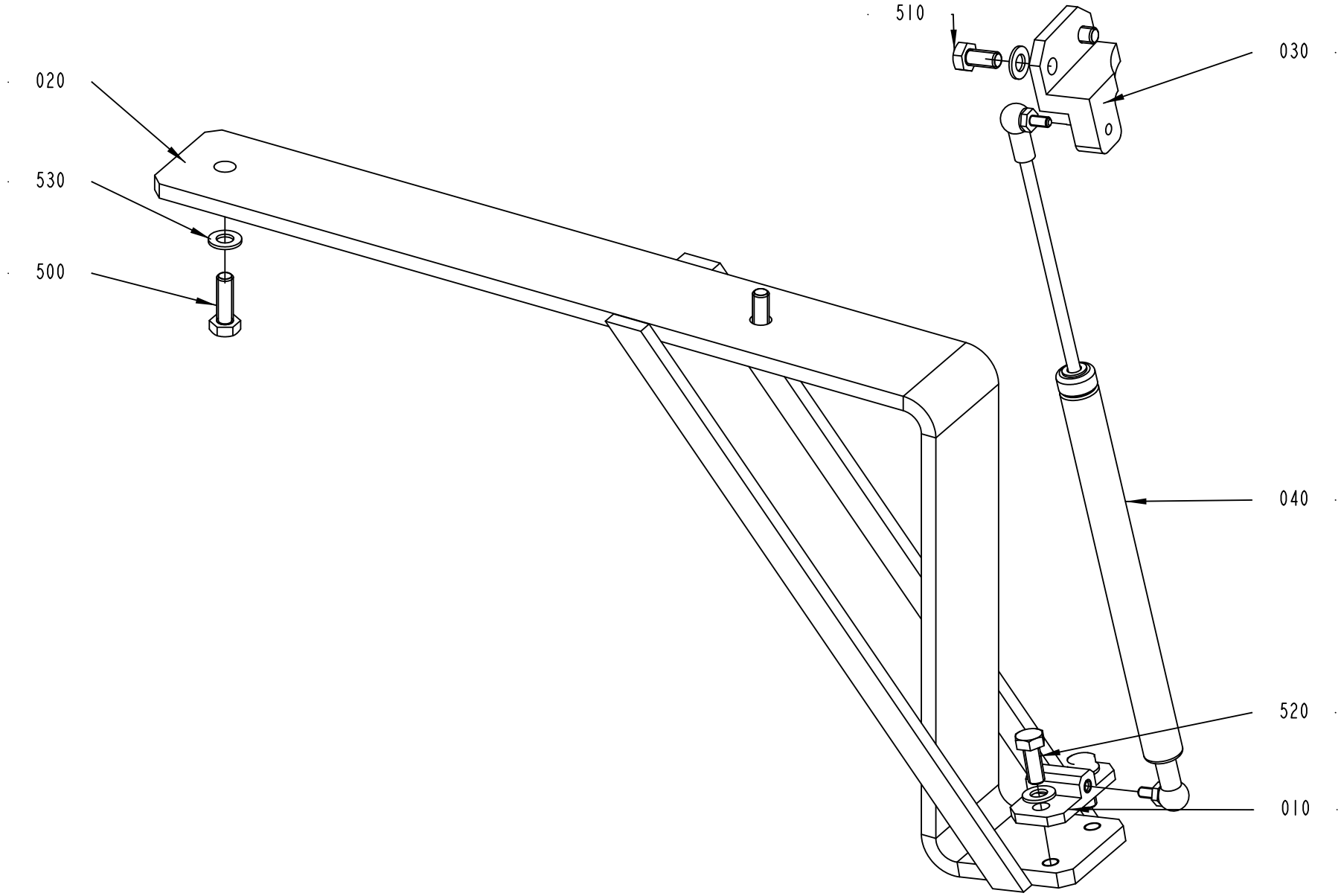

ECM: 436890 - 20100222
Group number: 2946861-0200
Assembly Drawing: 2946861-2_1_AA

Pos	Part No	UN	Qty	Description	Page No
-					
010	2939699-0000		1	BRACKET	
020	2946859-0000		1	BRACKET	
030	2950974-0000		1	BRACKET	
040	90600-6092		1	GAS SPRING Z6-19 120 0 384 WG22 WG22 200	
500	312101-0453		2	SCREW M6S M8X25 FZB	
510	312105-0449		2	SCREW M6S ISO 4017 M8X16 A480	
520	312105-0451		2	SCREW M6S ISO 4017 M8X20 A480	
530	315105-0165		6	WASHER BRB 8,4X16 RFR	

Pos	Part No	UN	Qty	Description	Page No

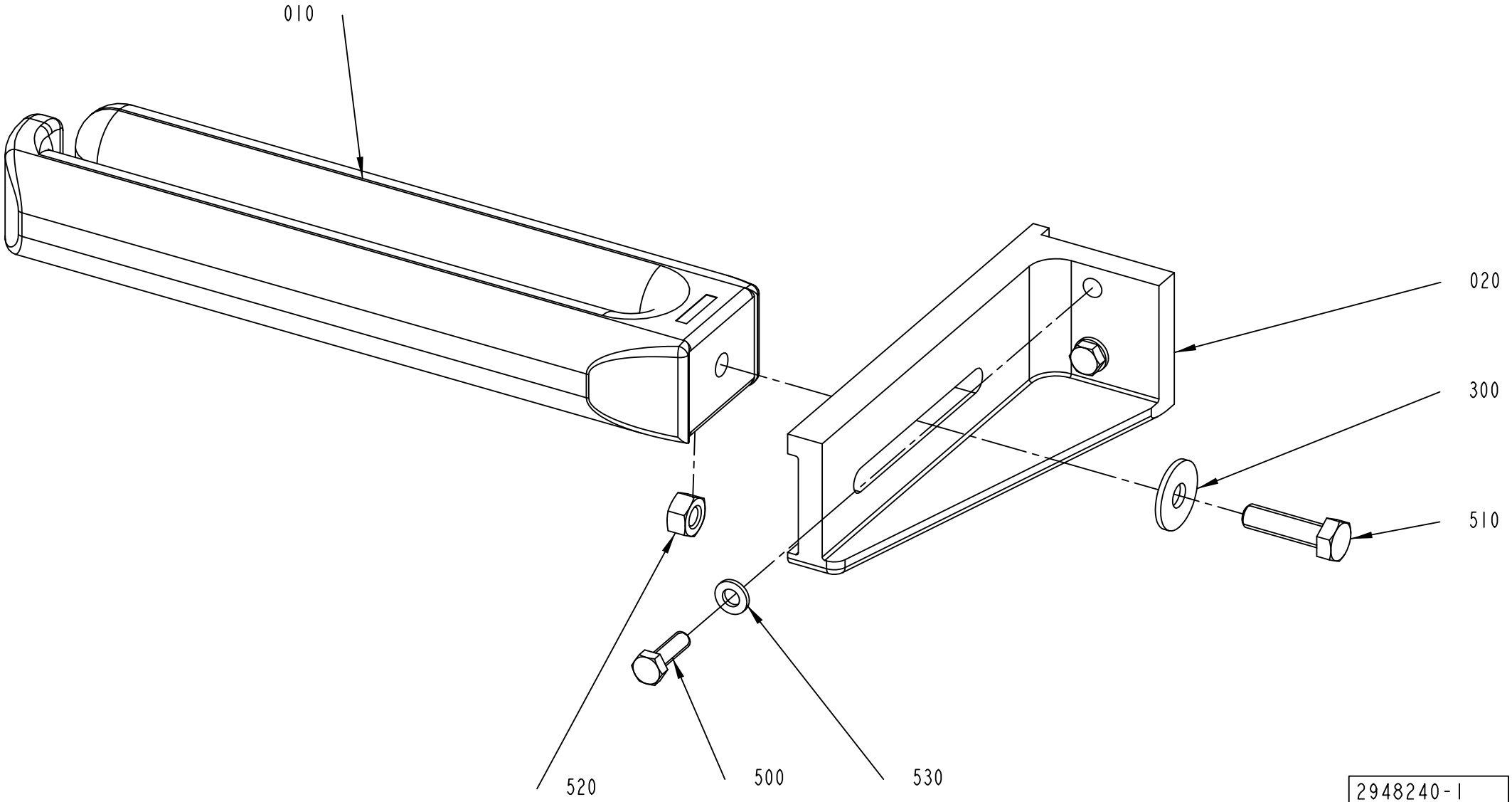
010
020
300
510
520
500
530
2948240-1
350551

ECM: 398093 - 20090613
Group number: 2948240-0100
Assembly Drawing: 2948240-1_1_AA

This list covers pages from 4-12 to 4-15

Pos	Part No	UN	Qty	Description	Page No
TCA (See drawing on pages: 2-46, 4-12)					
020	2948232-0000		1	BRACKET	
500	312105-0370		2	SCREW M6S ISO 4017 M6X20 A480	
510	312105-0455		1	SCREW M6S ISO 4017 M8X30 A480	
530	315106-0153		2	WASHER ISO 7089-6-200 HV A4	
TWA (See drawing on pages: 2-48, 4-14)					
020	2957736-0000		1	BRACKET	
030	2982598-0000		1	WEDGE	
500	312109-0459		3	SCREW M6S ISO 4017 M8X40 A480	
510	312115-0459		1	SCREW ISO4762 M8X40 A4 80	
530	315106-0165		3	WASHER ISO 7089-8-200 HV A4	
Common Parts					
010	556386-0000		1	STEERING	
300	90005-0116		1	WASHER PLAIN ROUND 8,4(M8)/24, H=2	
520	312605-0318		1	HEXAGON NUT, M6M M8 A280	

Pos	Part No	UN	Qty	Description	Page No

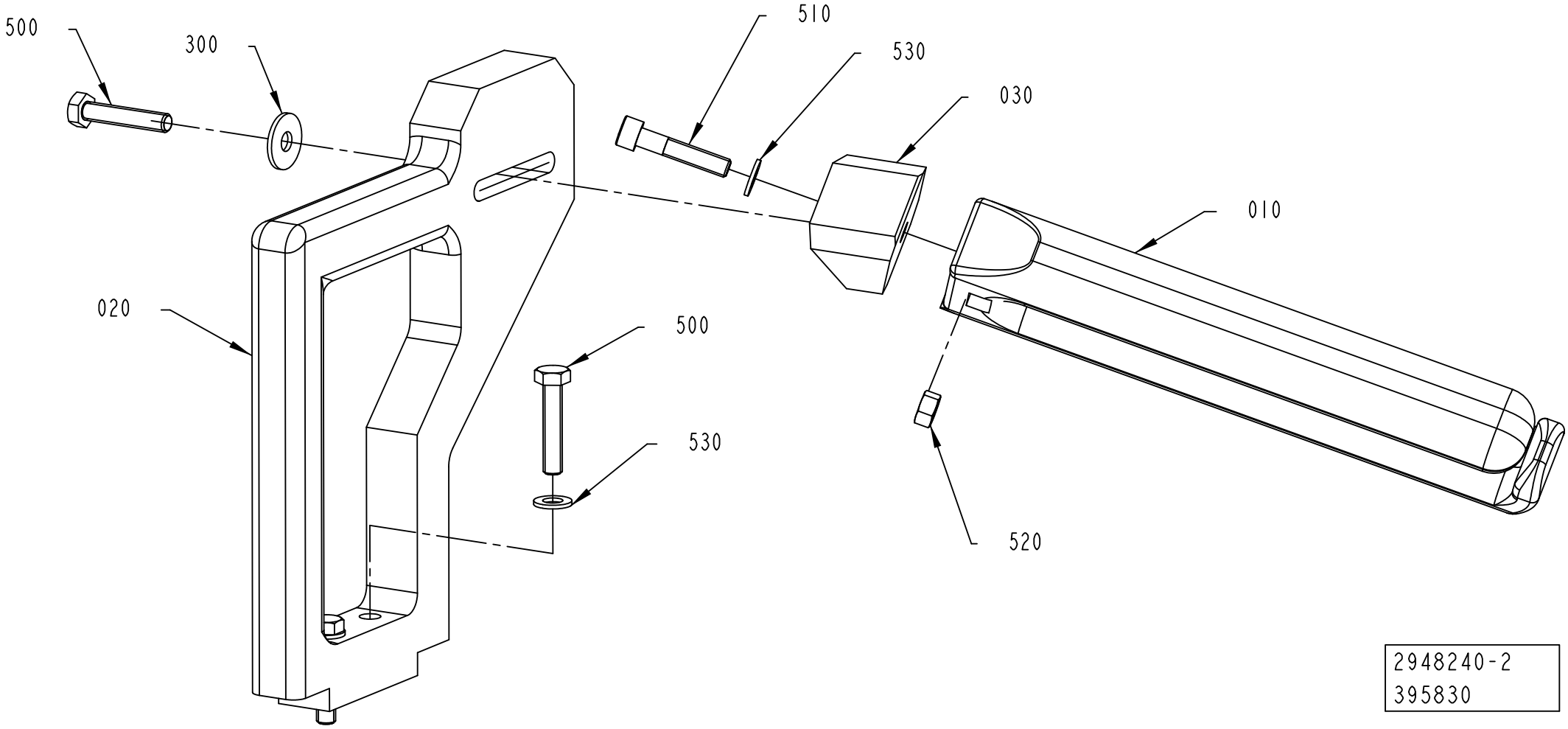
500
300
510
530
030
010
020
500
530
520
2948240-2
395830

ECM: 398093 - 20090613
Group number: 2948240-0100
Assembly Drawing: 2948240-2_1_AA

This list covers pages from 4-12 to 4-15

Pos	Part No	UN	Qty	Description	Page No
TCA (See drawing on pages: 2-46, 4-12)					
020	2948232-0000		1	BRACKET	
500	312105-0370		2	SCREW M6S ISO 4017 M6X20 A480	
510	312105-0455		1	SCREW M6S ISO 4017 M8X30 A480	
530	315106-0153		2	WASHER ISO 7089-6-200 HV A4	
TWA (See drawing on pages: 2-48, 4-14)					
020	2957736-0000		1	BRACKET	
030	2982598-0000		1	WEDGE	
500	312109-0459		3	SCREW M6S ISO 4017 M8X40 A480	
510	312115-0459		1	SCREW ISO4762 M8X40 A4 80	
530	315106-0165		3	WASHER ISO 7089-8-200 HV A4	
Common Parts					
010	556386-0000		1	STEERING	
300	90005-0116		1	WASHER PLAIN ROUND 8,4(M8)/24, H=2	
520	312605-0318		1	HEXAGON NUT, M6M M8 A280	

Pos	Part No	UN	Qty	Description	Page No

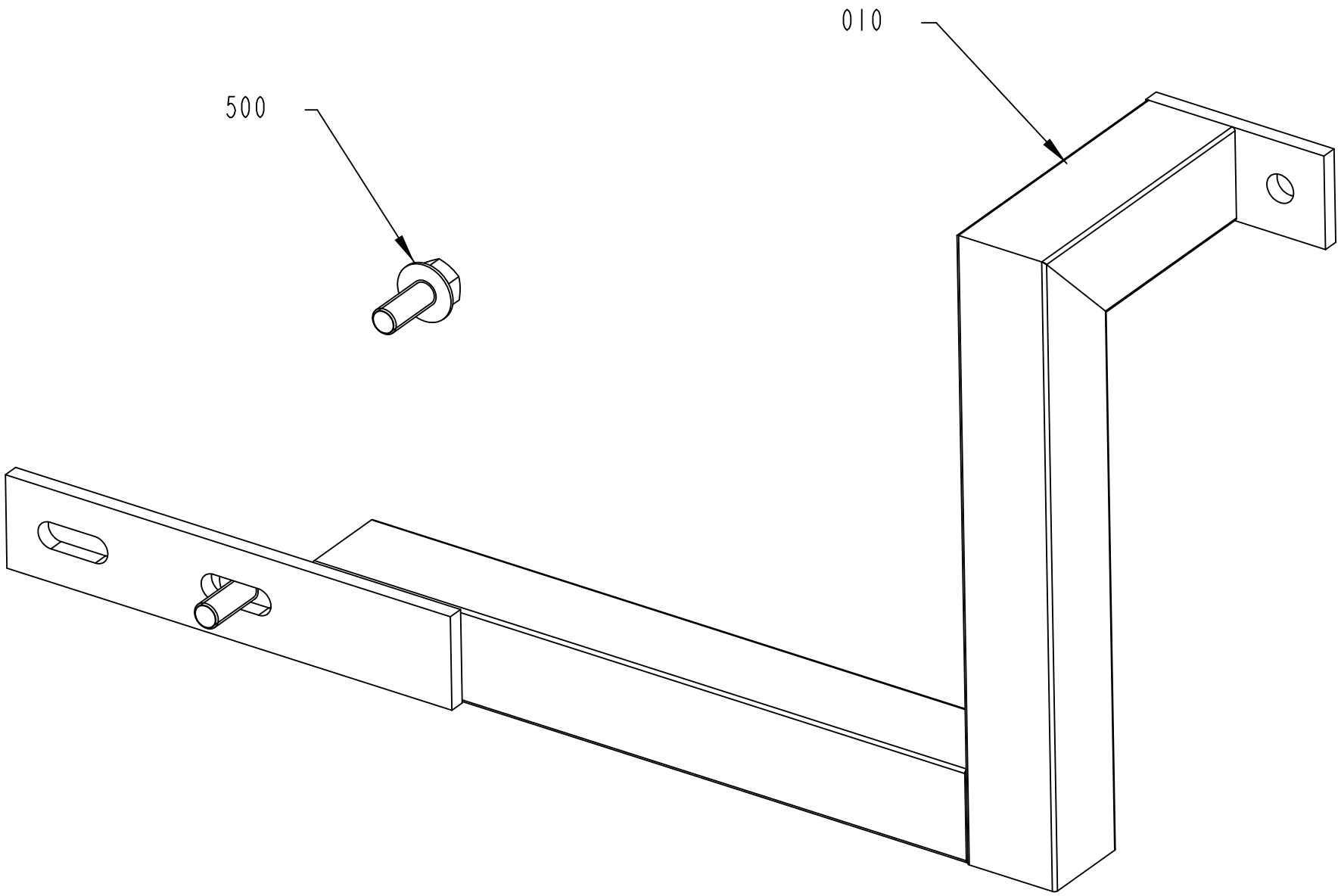

2957740-1
378472

ECM: 389593 - 20090409
Group number: 2957740-0100
Assembly Drawing: 2957740-1_1_AB

Pos	Part No	UN	Qty	Description	Page No
-					
010	2957721-0000		1	BRACKET	
500	312108-0451		2	SCREW EN 1665 TYPE F M8X20 A270	

Pos	Part No	UN	Qty	Description	Page No

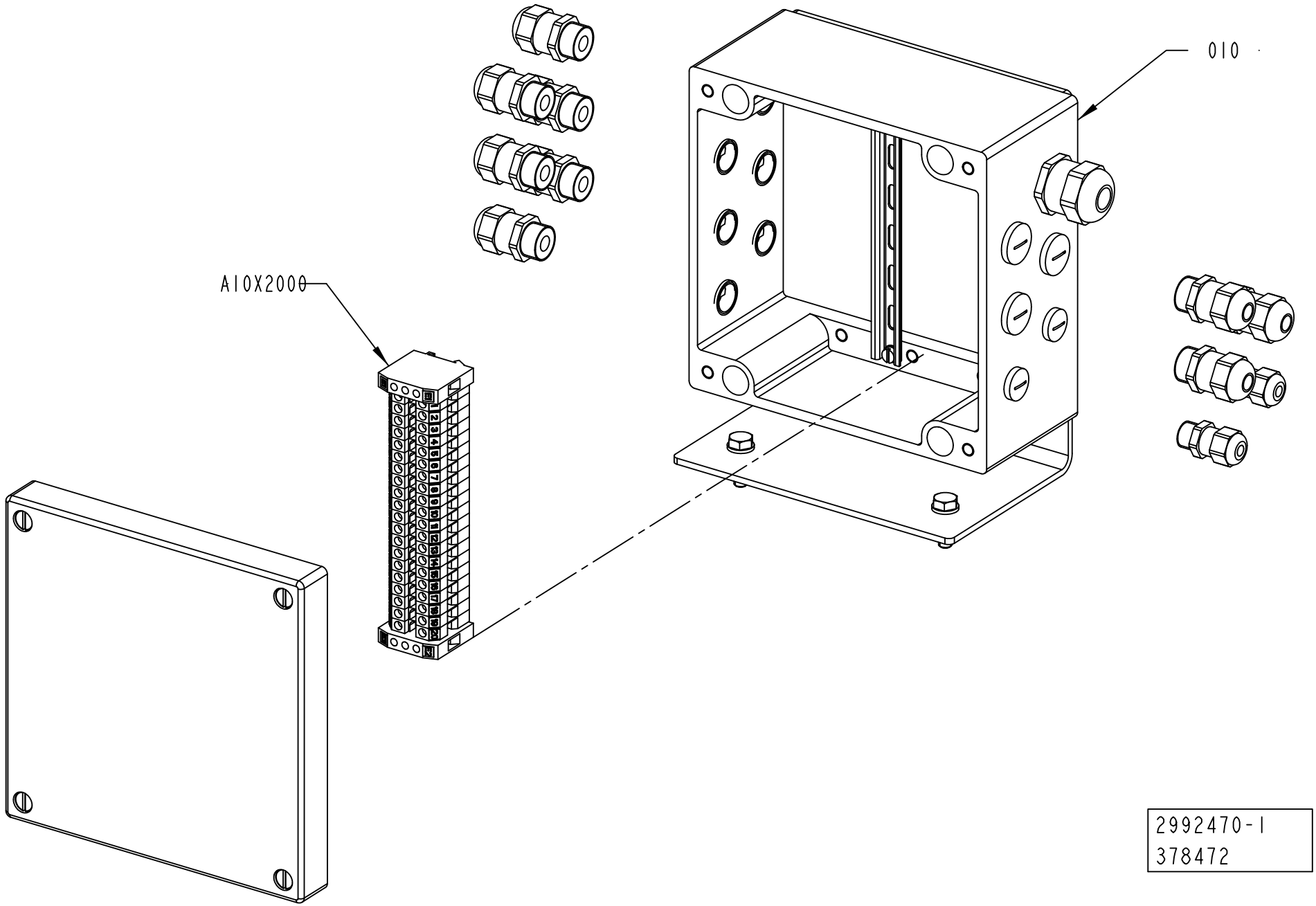
010
A10X2000
2992470-1
378472

ECM: 389594 - 20090409
Group number: 2992470-0100
Assembly Drawing: 2992470-1_1_AA

Pos	Part No	UN	Qty	Description	Page No
-					
010	2992440-0100		1	CONNECTION BOX	**4-21**
A10X2000	2992460-0100		1	CONNECTOR	**4-23**

Pos	Part No	UN	Qty	Description	Page No

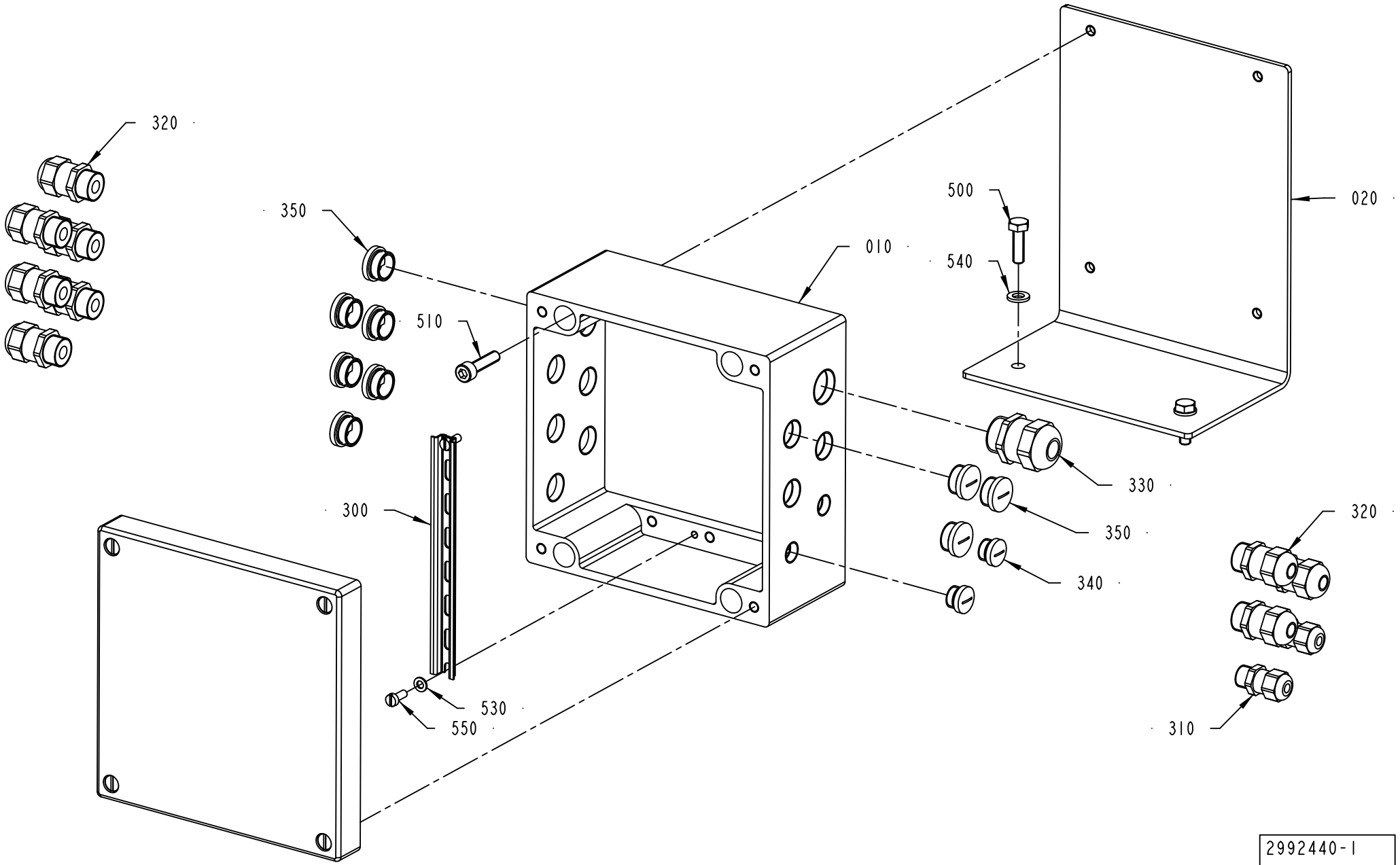
320
350
510
010
500
540
020
330
350
340
300
530
550
320
310
2992440-1
378472

ECM: 390094 - 20090409
Group number: 2992440-0100
Assembly Drawing: 2992440-1_1_AA

Pos	Part No	UN	Qty	Description	Page No
-					
010	2992496-0000		1	CONNECTION BOX	
020	2992497-0000		1	BRACKET	
310	90458-0305		2	CABLE GLAND, M12X1,5, NO.5311 1000	
320	90458-0306		9	CABLE GLAND, M16X1,5, NO.5311 1010	
330	90458-0307		1	CABLE GLAND, M20X1,5, NO.5311 1020	
340	90458-1306		2	BLIND PLUG CIRCULAR, M12X1,5 514GFK/212	
350	90458-1307		9	BLIND PLUG CIRCULAR, M16X1,5 514GFK/216	
500	312105-0370		2	SCREW M6S ISO 4017 M6X20 A480	
510	312111-0372		4	SCREW HEX.SOCK.HD.MC6S-TT 6X25 88 FZB	
530	315105-0136		2	WASHER BRB 4,3X8 RFR	
540	315105-0153		2	WASHER BRB 6,4X12 RFR	
550	312105-0289		2	SCREW M6S H4X10 A4 70 ISO4017/DIN933	

Pos	Part No	UN	Qty	Description	Page No

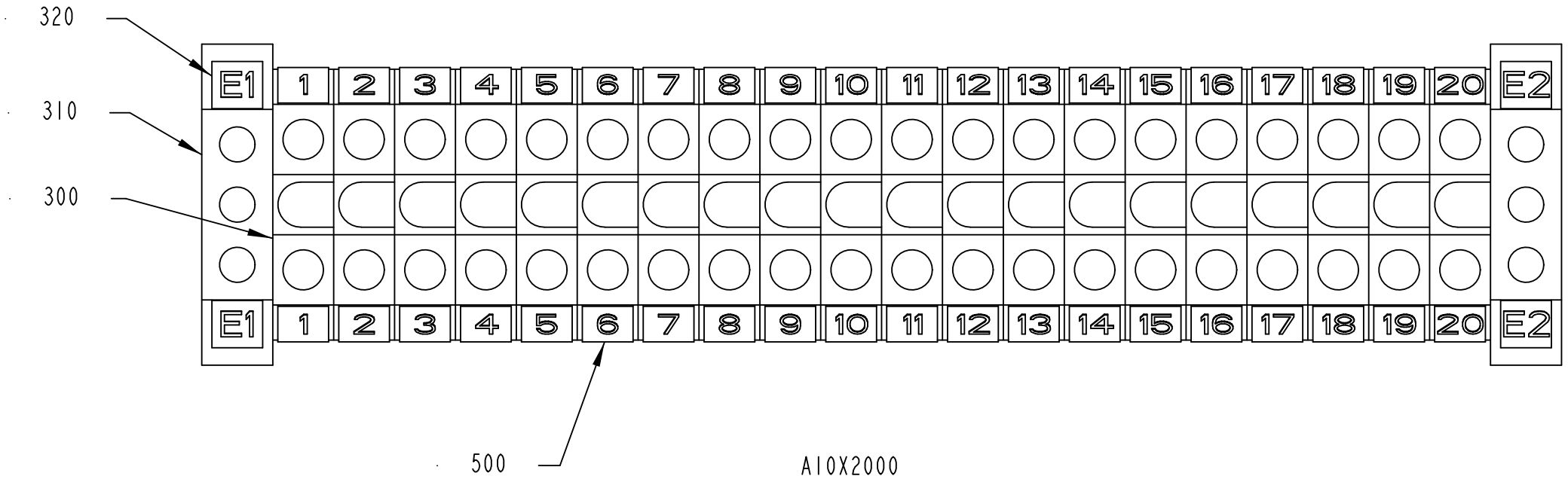

2992460-1
378472

ECM: 390087 - 20090409
Group number: 2992460-0100
Assembly Drawing: 2992460-1_1_AA

Pos	Part No	UN	Qty	Description	Page No
-					
300	90077-0079		20	FEED THROUGH TERMINAL, 02943.6	
310	90135-0026		2	EARTH TERMINAL, 3802.6	
320	90459-0606		2	MARKING PLATES 5-FW E1-E50	
500	359011-0807		2	MARKING PLATES 5-FW 1-50	

Pos	Part No	UN	Qty	Description	Page No

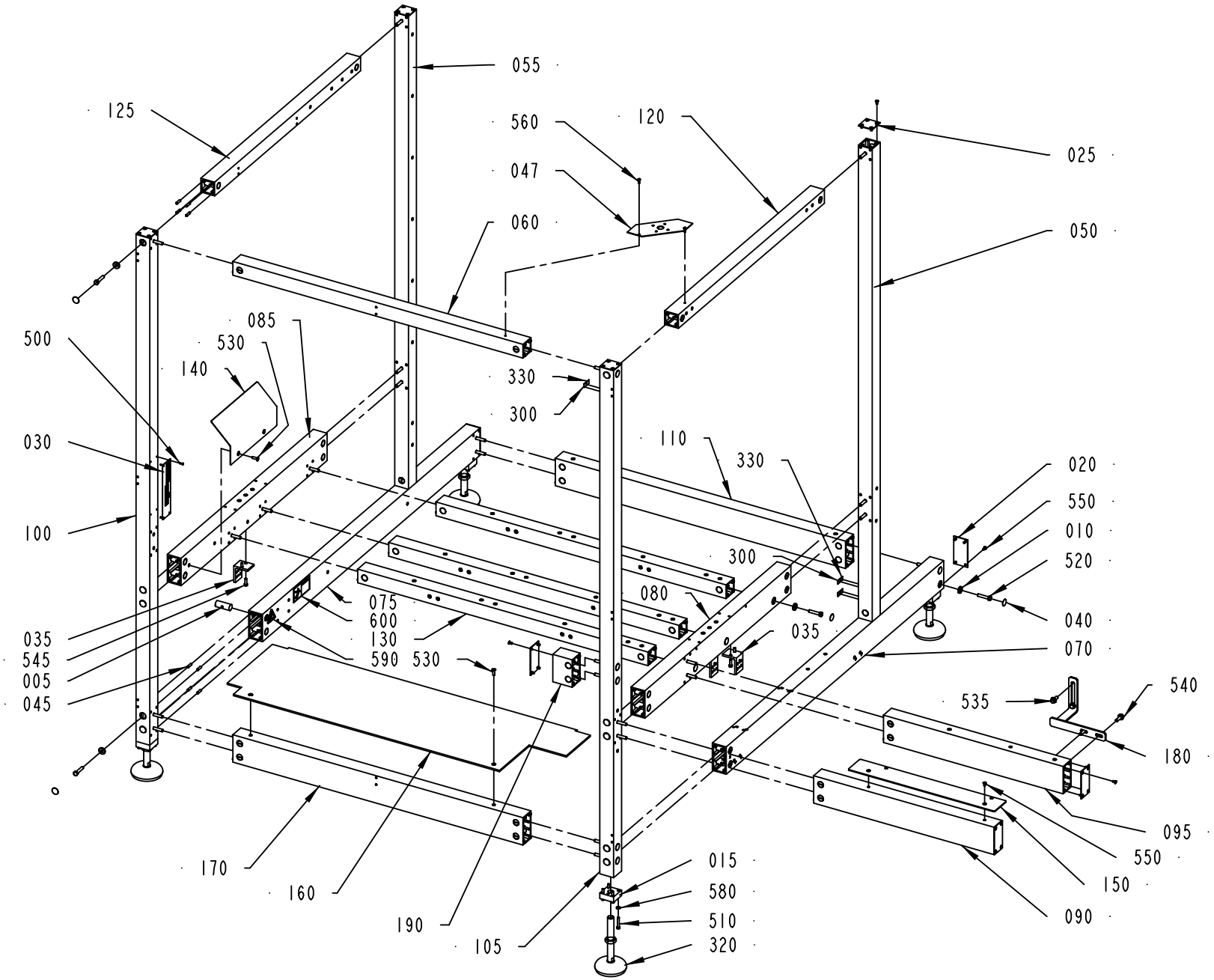

3023560-2
422087

ECM: 428258 - 20091221
Group number: 3023560-0100
Assembly Drawing: 3023560-2_1_AB

Pos	Part No	UN	Qty	Description	Page No
-					
005	486268-0000		40	NUT	
010	90600-5066		40	WASHER DIN7349 8,4X21X4 A4	
015	556601-0000		4	BRACKET	
020	556603-0000		5	COVER PLATE	
025	556604-0000		4	COVER PLATE	
030	580923-0000		1	MACHINE SIGN CE	
035	975884-0000		3	BRACKET	
040	1021933-0000		42	COVER TAPE	
045	1065410-0000		108	SLOTTED PIN	
050	2752867-0000		1	PROFILE 50X50	
055	2752868-0000		1	PROFILE 50X50	
060	2752869-0000		1	PROFILE 50X50	
070	2752891-0000		1	PROFILE 50X100	
075	2752893-0000		1	PROFILE 50X100	
080	2752895-0000		1	PROFILE 50X100	
085	2752896-0000		1	PROFILE 50X100	
090	2752901-0000		1	PROFILE 50X100	
095	2752902-0000		1	PROFILE 50X100	
100	2752903-0000		1	PROFILE 50X50	
105	2752904-0000		1	PROFILE 50X50	
110	2818263-0000		1	PROFILE 50X100	
120	2833872-0000		1	PROFILE 50X50	
125	2833873-0000		1	PROFILE 50X50	
130	2839812-0000		3	PROFILE 50X50	
140	2858603-0000		1	PLATE	
150	2885390-0000		1	PLATE	
160	2957756-0000		1	BOTTOM PANEL	
170	2957757-0000		1	PROFILE 50X100	
180	2992441-0000		1	BRACKET	
190	3023589-0000		1	PROFILE 50X100	
300	90194-0152		2	SIGN, EARTH	
320	90458-1508		4	FLOOR PLATE, DAMPER, M105-20-160	
330	90459-2928		2	LABEL 60417-2-IEC-5020, COMM. REF. POT.	
500	311521-0144		4	RIVET, BLANK 3,2X10	
510	312105-0376		16	SCREW M6S ISO 4014 M6X35 A480	
520	312105-0459		40	SCREW M6S ISO 4014 M8X40 A480	
530	312155-0370		4	SCREW DIN 7991 MF6S M6X20 A4 70	
535	312108-0451		2	SCREW EN 1665 TYPE F M8X20 A270	
540	312108-0453		2	SCREW EN 1665 TYPE F M8X25 A270	
545	312105-0370		6	SCREW M6S ISO 4017 M6X20 A480	
550	312145-0325		38	SCREW ISO 2009 MFS M5X10 A4	
580	315105-0153		16	WASHER BRB 6,4X12 RFR	
590	359705-0015		1	WARNING SIGN ISO, RISK OF ELECTRIC SHOCK	
600	359715-0100		1	WARNING SIGN ANSI (H), ELECTRIC SHOCK	

Machine Type Group Description Used-In Group Number Page No

ADJUSTMENT PLATE

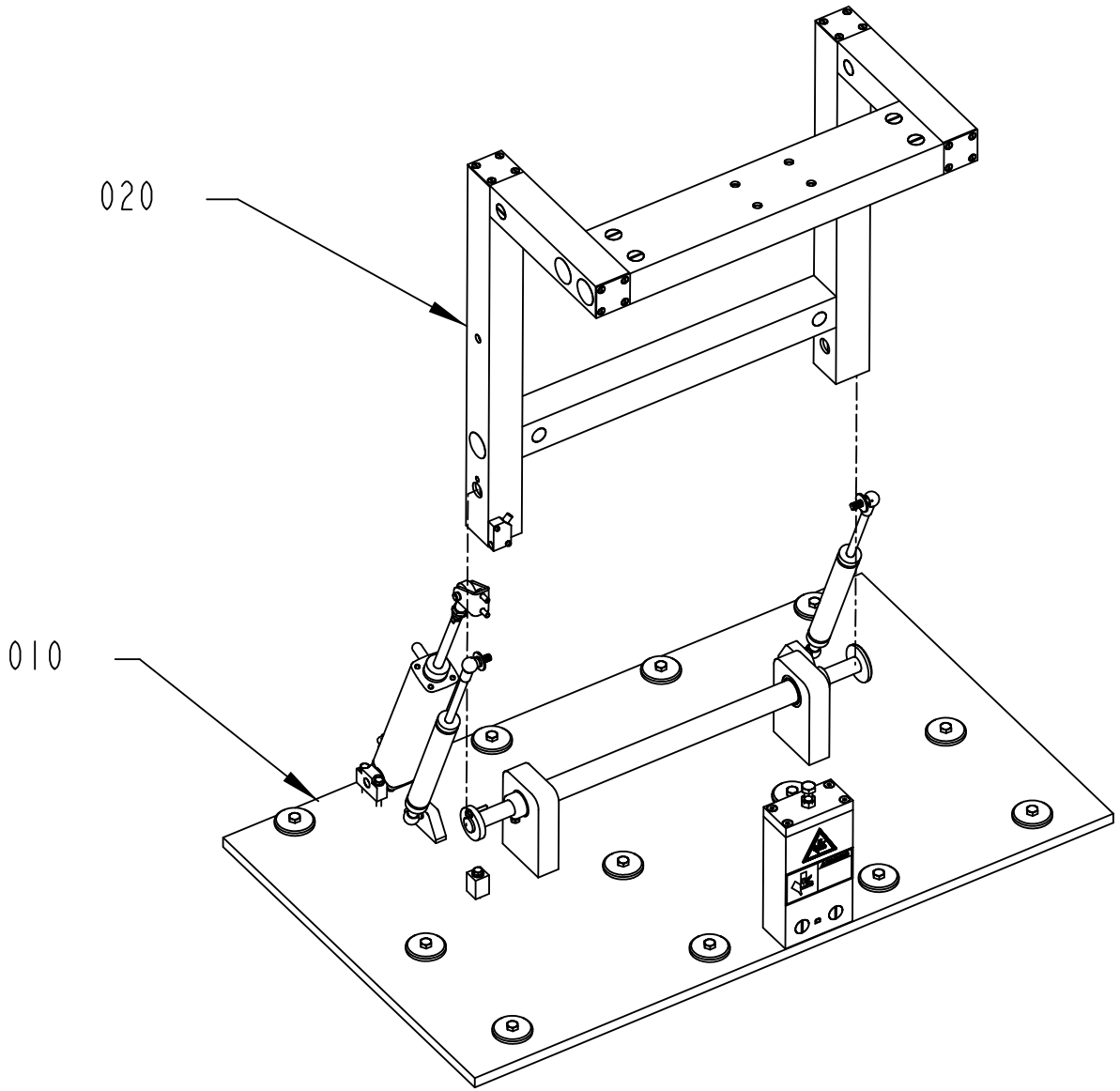

2926050-1
395837

ECM: 402585 - 20090612
Group number: 2926050-0100
Assembly Drawing: 2926050-1_1_AA

Pos	Part No	UN	Qty	Description	Page No
-					
010	2926040-0100		1	ADJUSTMENT PLATE	**4-29**
020	2934030-0100		1	LIFTER	**4-31**

Pos	Part No	UN	Qty	Description	Page No

ADJUSTMENT PLATE

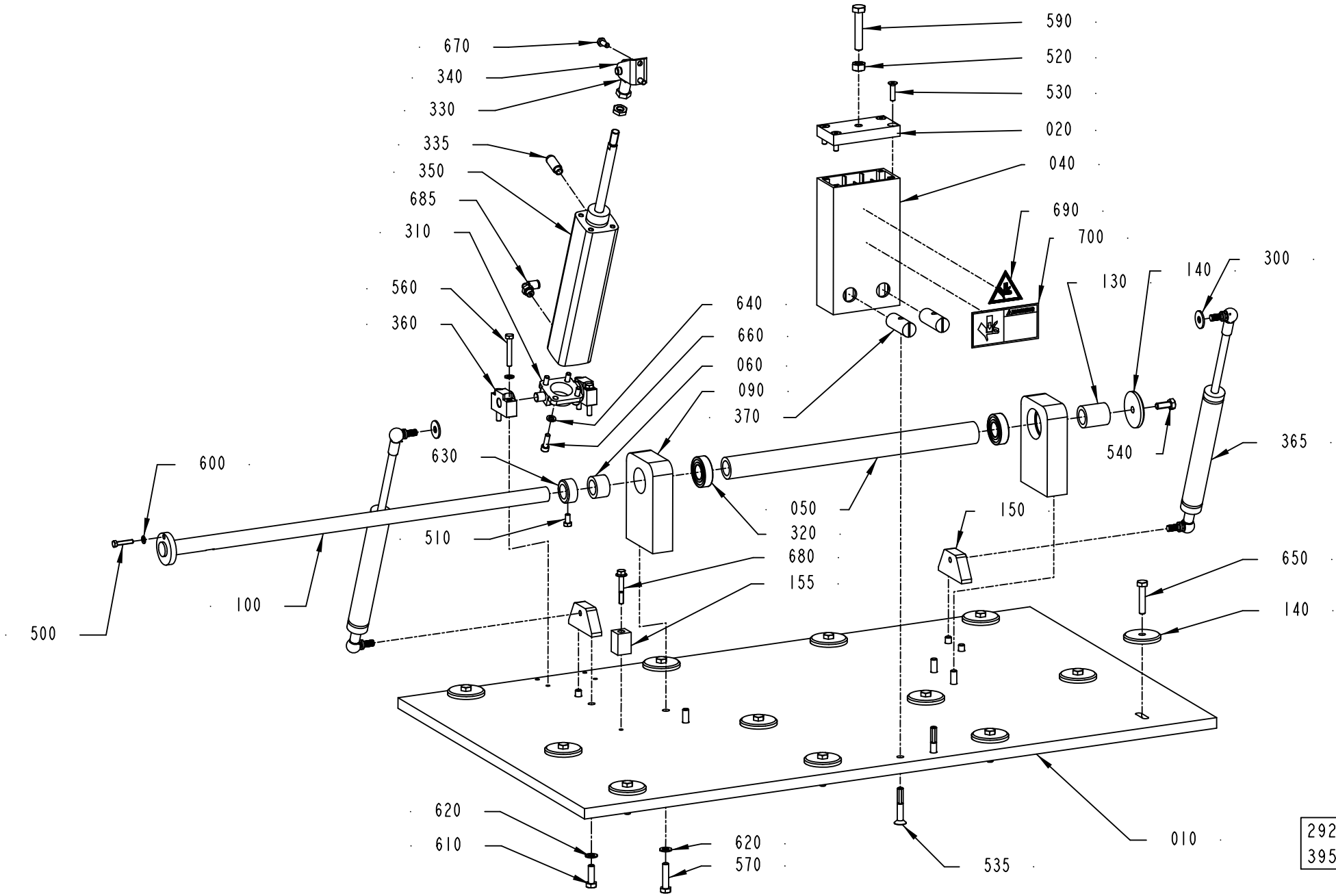

2926040-1
395837

ECM: 436891 - 20100222
Group number: 2926040-0100
Assembly Drawing: 2926040-1_1_AA

Pos	Part No	UN	Qty	Description	Page No
-					
010	2948206-0000		1	BOTTOM PLATE	
020	3023588-0000		1	LID	
040	3023587-0000		1	PROFILE 50X100	
050	2948207-0000		1	SPACER	
060	2948208-0000		1	SPACER	
090	2916062-0000		2	BEARING BRACKET	
100	2916063-0000		1	SHAFT	
130	2916068-0000		1	SPACER	
140	2916069-0000		13	WASHER	
150	2916076-0000		2	BRACKET	
155	3023584-0000		1	LUG	
300	90005-0116		2	WASHER PLAIN ROUND 8,4(M8)/24, H=2	
310	90459-0580		1	BRACKET, PIVOT MOUNTING CRZNG-32	
320	90214-0225		2	BALL BEAR. 20/42X12 SOLID OIL	
330	90115-0134		1	ROD END, ID=10 MM, M10X1,25	
335	90328-0047		1	SILENCER G1/8"	
340	90459-5949		1	REAR CLEVIS FOOT MOUNTING , CRLBN-32	
350	90459-5067		1	DOUBLE ACTING, PROFILE,CYL 32-135	
360	90459-0584		2	BEARING BRACKET CRLNZG-32	
365	90601-1006		2	GAS SPRING	
370	486268-0000		2	NUT	
500	312105-0333		1	SCREW M6S ISO 4017 M5X25 A480	
510	312105-0366		1	SCREW M6S ISO 4017 M6X12 A480	
520	312605-0320		1	HEXAGON NUT, M6M M10 A280	
530	312155-0372		4	SCREW DIN 7991 MF6S M6X25 A4 70	
535	312155-0461		2	SCREW DIN 7991 MF6S M8X50A4 70	
540	312105-0451		1	SCREW M6S ISO 4017 M8X20 A480	
560	312105-0378		4	SCREW M6S ISO 4014 M6X40 A480	
570	312105-0457		4	CREW M6S ISO 4014 M8X35 A480	
590	312104-0502		1	SCREW M6S M10X55H FZB	
600	315105-0146		1	WASHER BRB 5,3X10 RFR	
610	312105-0453		4	SCREW M6S ISO 4017 M8X25 A480	
620	315105-0165		8	WASHER BRB 8,4X16 RFR	
630	315741-0116		1	RETAINING RING DIN 705 A2 20	
640	315105-0153		8	WASHER BRB 6,4X12 RFR	
650	312105-0459		12	SCREW M6S ISO 4014 M8X40 A480	
660	312115-0370		4	SCREW ISO4762 M6X20 A4 80	
670	312105-0368		2	SCREW M6S ISO 4017 M6X16 A480	
680	312108-0378		1	SCREW EN 1665 TYPE F M6X40 A270	
685	350002-0006		1	PUSH-IN L-FITTING QSL-F-G1/8-6	
690	359705-0005		1	WARNING SIGN ISO, MOVING PART	
700	359725-0108		1	WARNING SIGN ANSI (H), MOVING PART	

Machine Type	Group Description	Used-In	Group Number	Page No

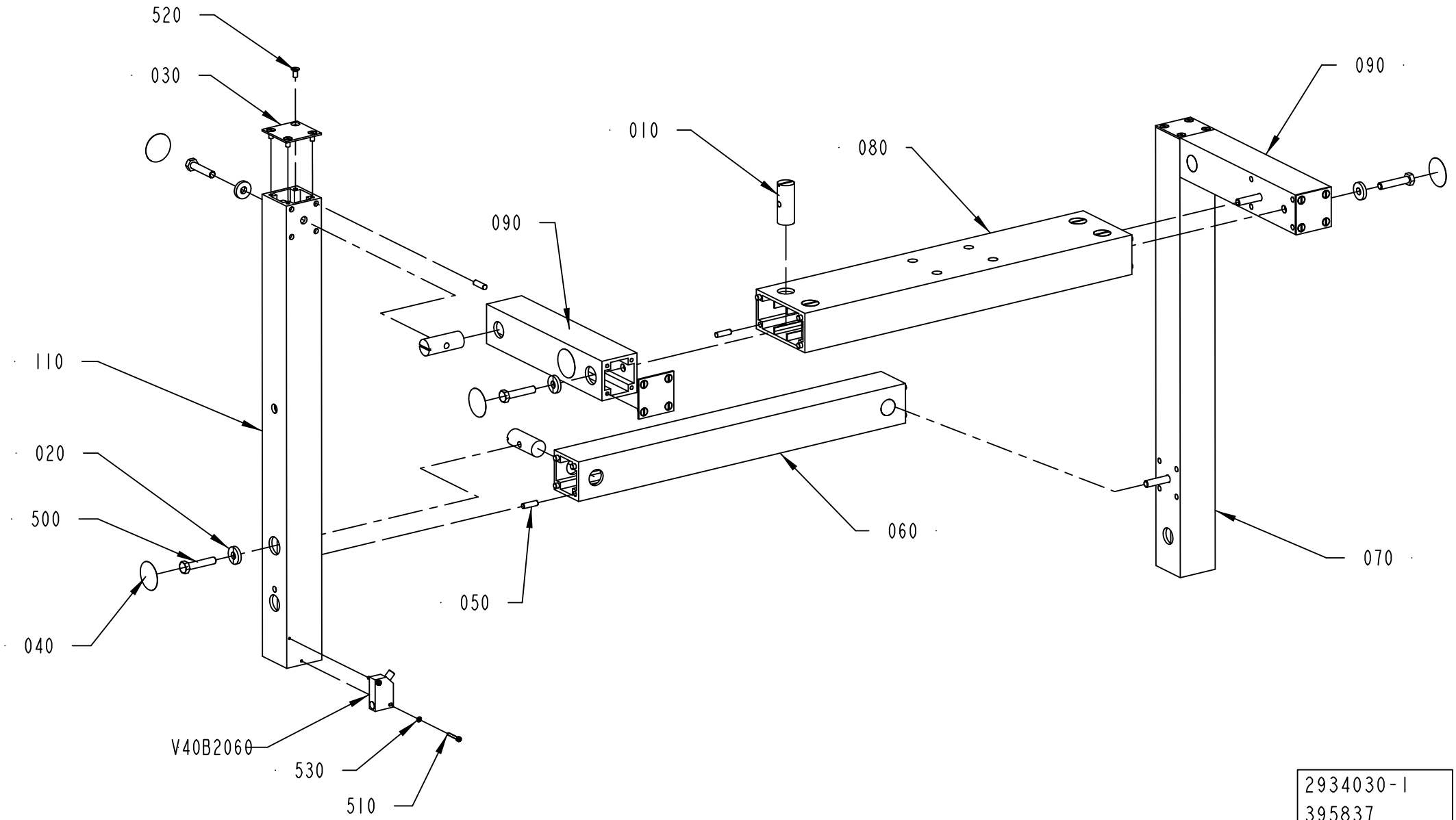

2934030-1
395837

ECM: 402584 - 20090612
Group number: 2934030-0100
Assembly Drawing: 2934030-1_1_AA

Pos	Part No	UN	Qty	Description	Page No
-					
010	486268-0000		8	NUT	
020	90600-5066		8	WASHER DIN7349 8,4X21X4 A4	
030	556604-0000		4	COVER PLATE	
050	1065410-0000		24	SLOTTED PIN	
060	2948192-0000		1	PROFILE 50X50	
070	2948193-0000		1	PROFILE 50X50	
080	2948194-0000		1	PROFILE 50X100	
090	2948196-0000		2	PROFILE 50X50	
110	2948198-0000		1	PROFILE 50X50	
500	312105-0459		8	SCREW M6S ISO 4014 M8X40 A480	
510	312115-0230		2	SCREW ISO4762 M3X20 A4 80	
520	312145-0325		16	SCREW ISO 2009 MFS M5X10 A4	
530	315105-0124		2	WASHER BRB 3,2X6 RFR	
V40B2060	90459-2409		1	INDUCTIVE SENSOR IN5230	

Pos	Part No	UN	Qty	Description	Page No

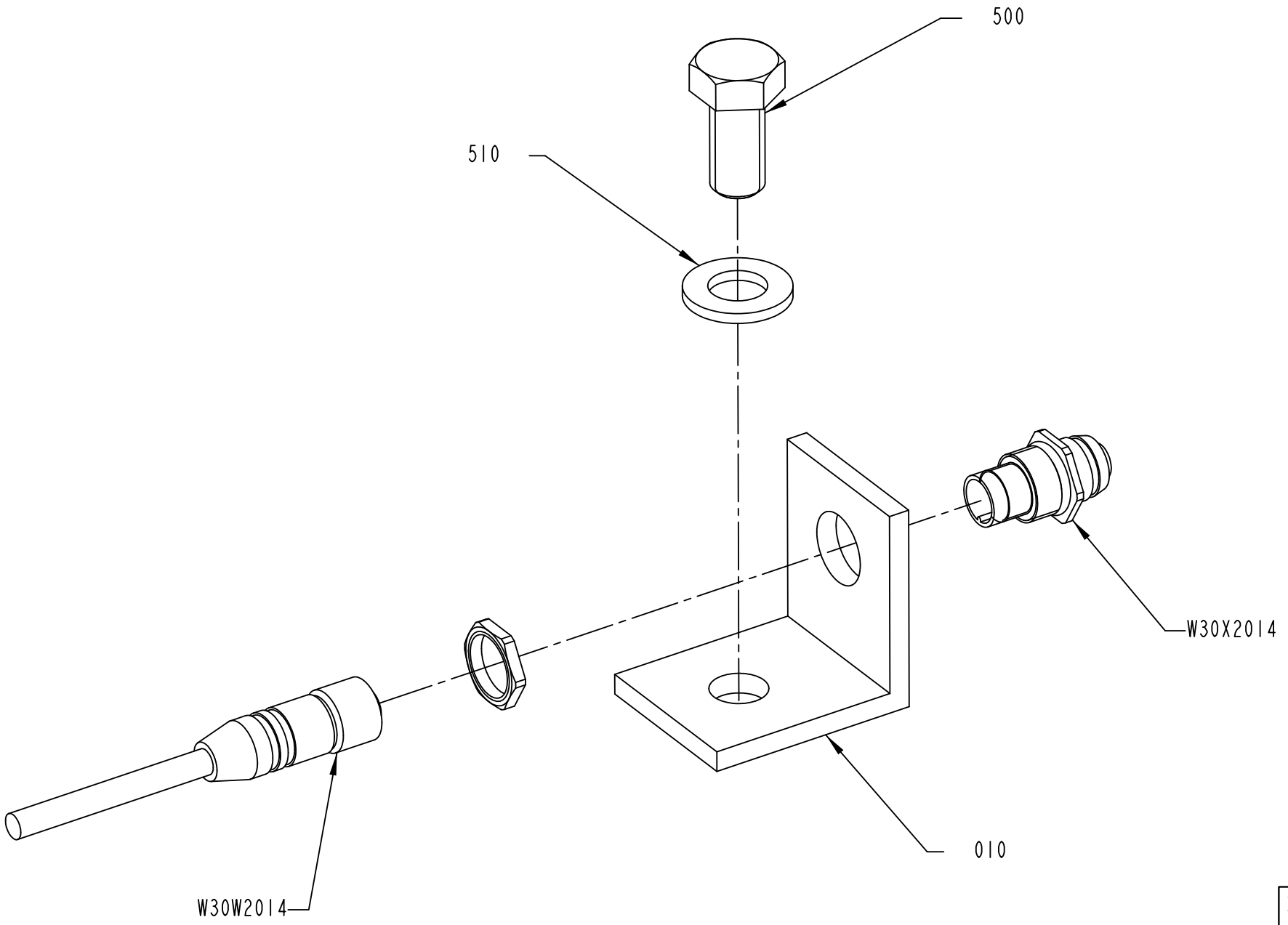

2992430-1
380417

ECM: 402583 - 20090612
Group number: 2992430-0100
Assembly Drawing: 2992430-1_1_AA

Pos	Part No	UN	Qty	Description	Page No
TCA					
500	312105-0534		1	SCREW M6S ISO 4017 M12X25 A480	
510	315106-0178		1	WASHER ISO 7089-12-200 HV A4	
TWA					
500	312105-0372		1	SCREW M6S ISO 4017 M6X25 A480	
510	90005-0060		1	WASHER PLAIN, RBS 6,4/M6)/18,H=1,5	
Common Parts					
010	3009992-0000		1	BRACKET	
300	90600-1559		1	PANEL FEED THROUGH, FWD5 54218	
310	90600-1768		1	ACTUATOR/SENSOR CABLE RKTS 5-298/5M	

Pos	Part No	UN	Qty	Description	Page No

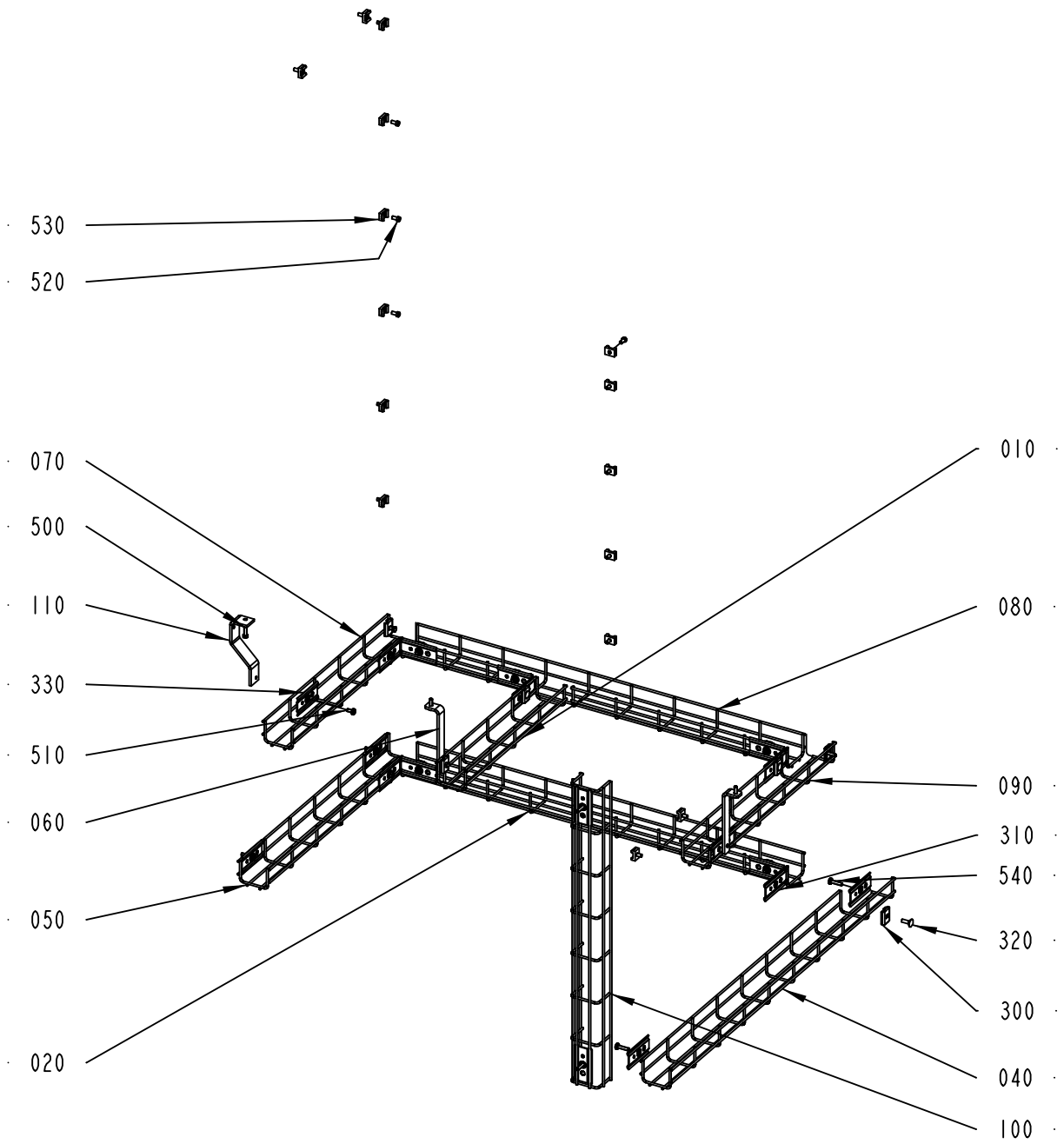

2843700-1
378472

ECM: 388266 - 20090409
Group number: 2843700-0100
Assembly Drawing: 2843700-1_1_AB

Pos	Part No	UN	Qty	Description	Page No
-					
010	2843699-0000		1	CABLE TRENCH	
020	2843703-0000		1	CABLE TRENCH	
040	2843706-0000		1	CABLE TRENCH	
050	2843708-0000		1	CABLE TRENCH	
060	2909945-0000		2	SUPPORT	
070	2909947-0000		1	CABLE TRENCH	
080	2909948-0000		1	CABLE TRENCH	
090	2909949-0000		1	CABLE TRENCH	
100	2909950-0000		1	CABLE TRENCH	
110	2946726-0000		1	BRACKET	
300	90181-0183		15	CABLE DUCT, FITTING, B2	
310	90181-0186		5	CABLE DUCT, ELBOW BRACKET, B27	
320	90181-0314		10	CABLE TRENCH PARTS	
330	90459-2701		8	CABLE DUCT, FITTING, B1	
500	312105-0370		6	SCREW M6S ISO 4017 M6X20 A480	
510	312113-0366		2	SERRATED COMBI TORX SCREW M6X12 A2	
520	312125-0366		16	SCREW ISO 1207 M6X12 A4	
530	352113-0204		16	ANCHOR PLATES FOR STRIPS, TYPE TM3S25-M	
540	312113-0372		6	SERRATED COMBI TORX SCREW M6X25 A2	

Pos	Part No	UN	Qty	Description	Page No

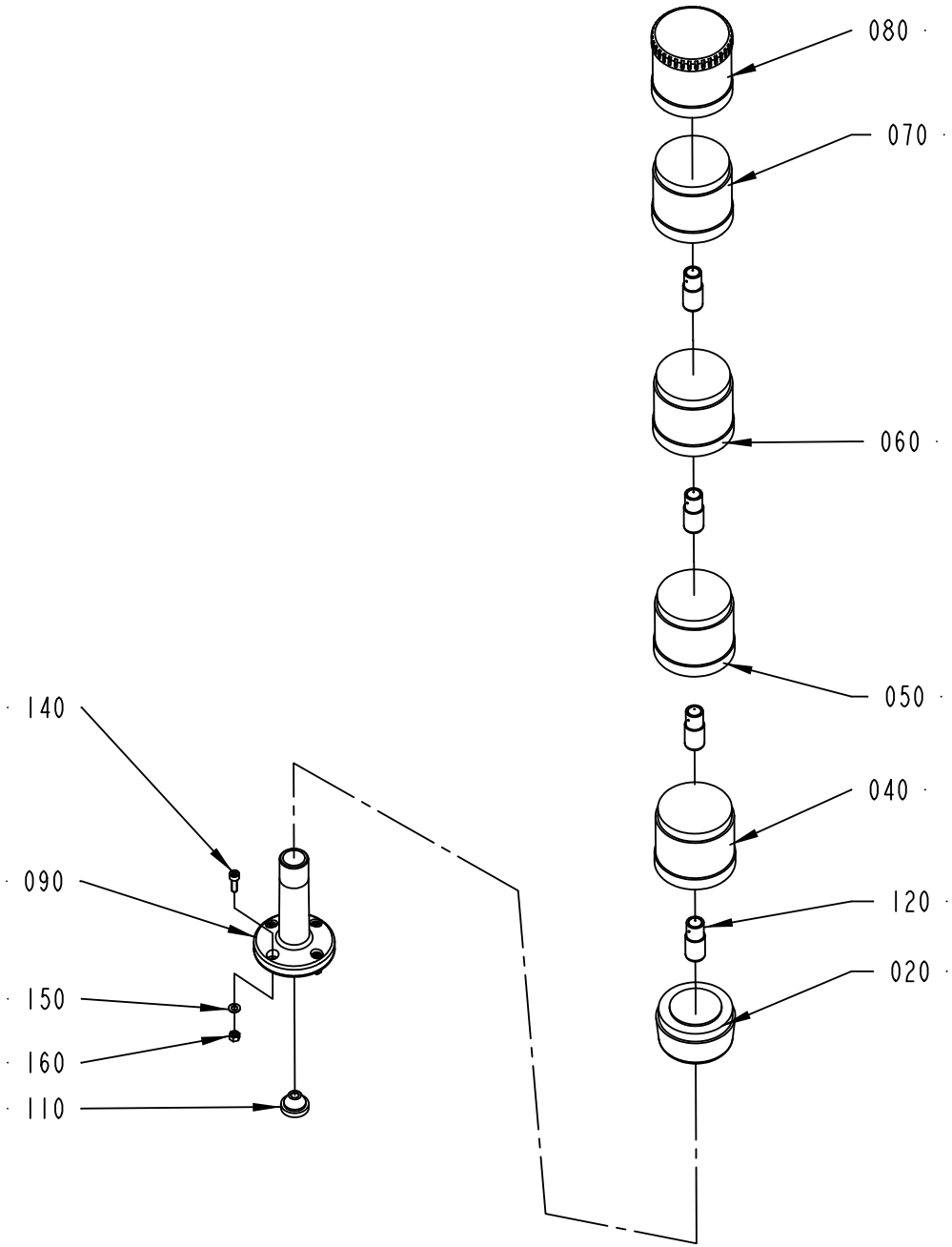

581689-7
360144

ECM: 436888 - 20100222
Group number: 581689-0700
Assembly Drawing: 581689-7_1_AA

Pos	Part No	UN	Qty	Description	Page No
-					
020	90458-0292		1	BASE, KT70-1001	
040	90458-0296		1	LIGHT ELEMENT, GREEN, KL70-401G	
050	90458-0295		1	LIGHT ELEMENT, BLUE, KL70-401L	
060	90458-0294		1	LIGHT ELEMENT, YELLOW, KL70-401Y	
070	90458-0293		1	LIGHT ELEMENT, RED, KL70-401R	
080	90600-4603		1	HORN, KB70-3001	
090	90458-0297		1	BASE W. TUBE 110 MM, PSD-S ME BT 110	
110	90015-0023		1	LEAD-IN, TET7-10, E-1458019	
120	90036-0068		4	BULB 5W 24V, SL-L24 205348	
140	312115-0329		4	SCREW ISO4762 M5X16 A4 80	
150	315105-0146		8	WASHER BRB 5,3X10 RFR	
160	312605-0314		4	HEXAGON NUT, M6M M5 A280	

Pos	Part No	UN	Qty	Description	Page No

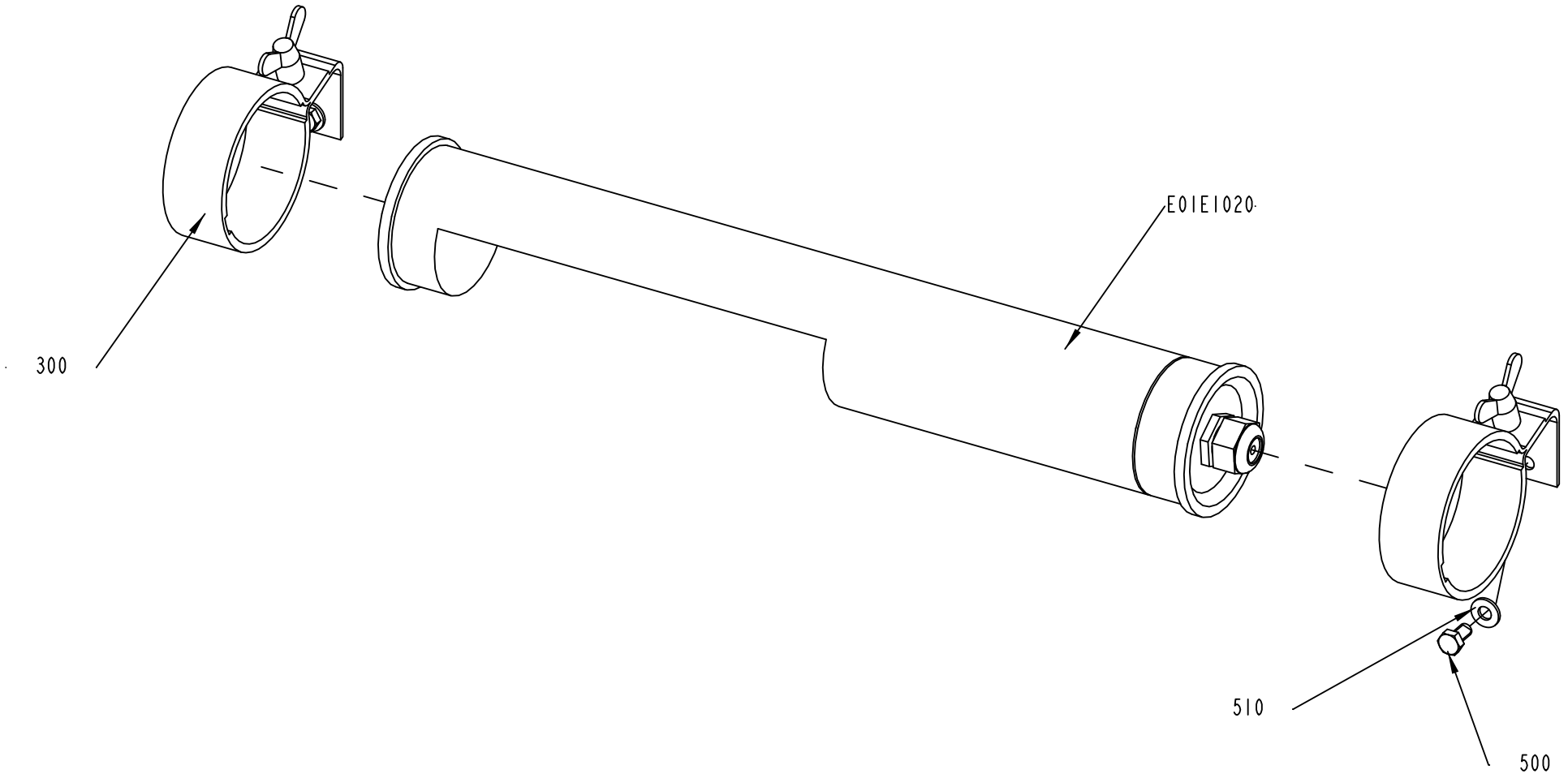
300
E01E1020
510
500
2901717-1
317553

ECM: 436889 - 20100222
Group number: 2901717-0100
Assembly Drawing: 2901717-1_1_AA

Pos	Part No	UN	Qty	Description	Page No
-					
300	90164-0303		2	LIGHT FIXTURE, BRACKET 70MM	
500	312105-0366		4	SCREW M6S ISO 4017 M6X12 A480	
510	315105-0156		4	WASHER BRB 6,7X14 RFR	
E01E1020	90164-0015		1	LIGHT FIXTURE, RL70CV-111 / 230V 50HZ	
	92297-0301		*1*	*STARTER 4-65W S\10, E 8219023*	
	90297-0007		*1*	*FLUORESCENT TUBE, PLS 11*	

Pos	Part No	UN	Qty	Description	Page No

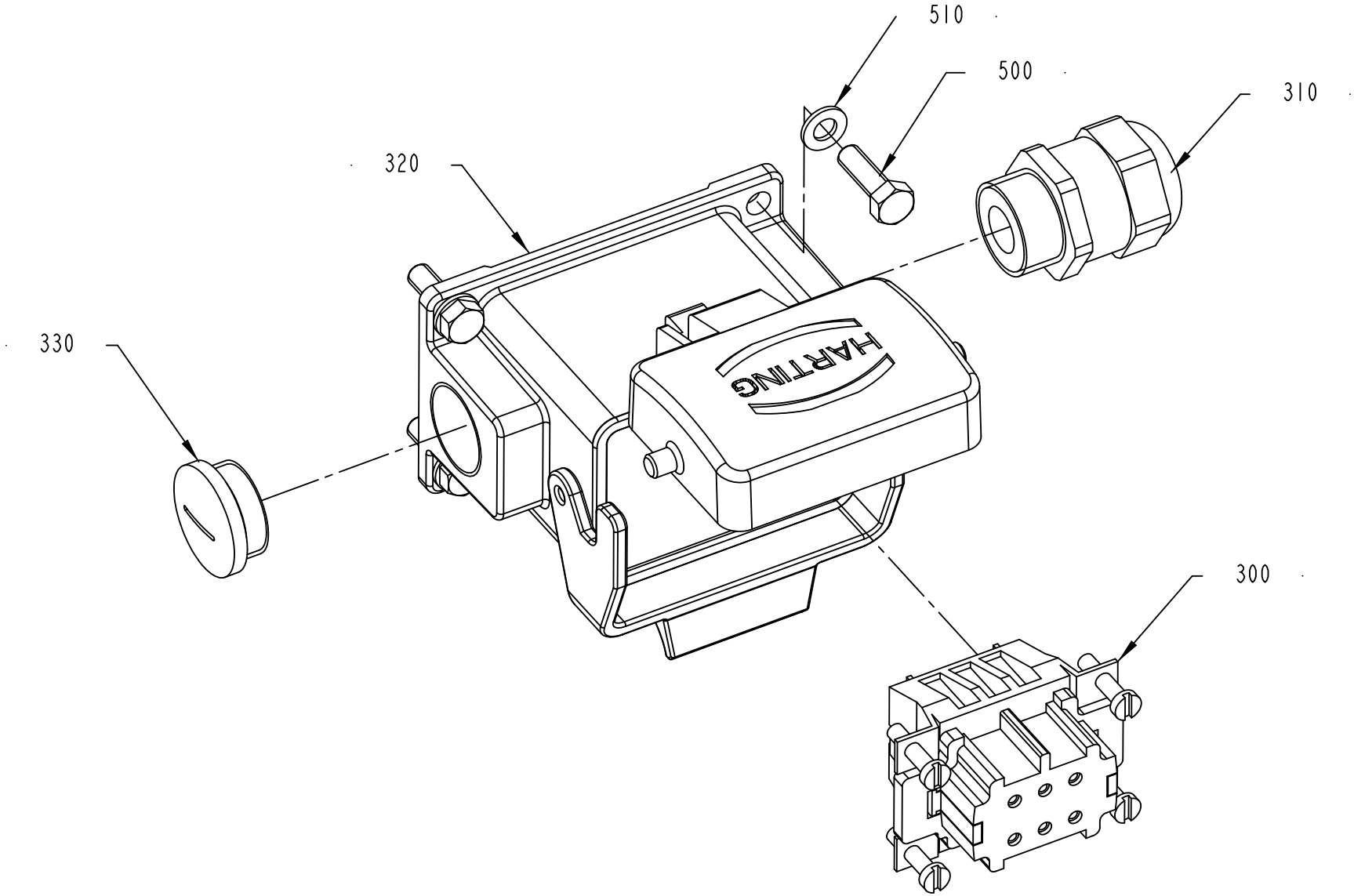

V50X1015

2913340-1
378472

ECM: 388262 - 20090409
Group number: 2913340-0100
Assembly Drawing: 2913340-1_1_AB

Pos	Part No	UN	Qty	Description	Page No
-					
300	90110-0053		1	FEMALE INSERT HAN 6 E 09 33 006 2701	
310	90458-0315		1	CABLE GLAND, M20X1,5, NO.5311 1120	
320	90600-2071		1	HOUSING 6B SURF MOUNT, 19 30 006 2295	
330	90458-1308		1	BLIND PLUG CIRCULAR, M20X1,5 514GFK/220	
500	312105-0329		4	SCREW M6S ISO 4017 M5X16 A480	
510	315105-0146		4	WASHER BRB 5,3X10 RFR	

Pos	Part No	UN	Qty	Description	Page No

Tetra Pak

SPC
Spare Parts Catalogue

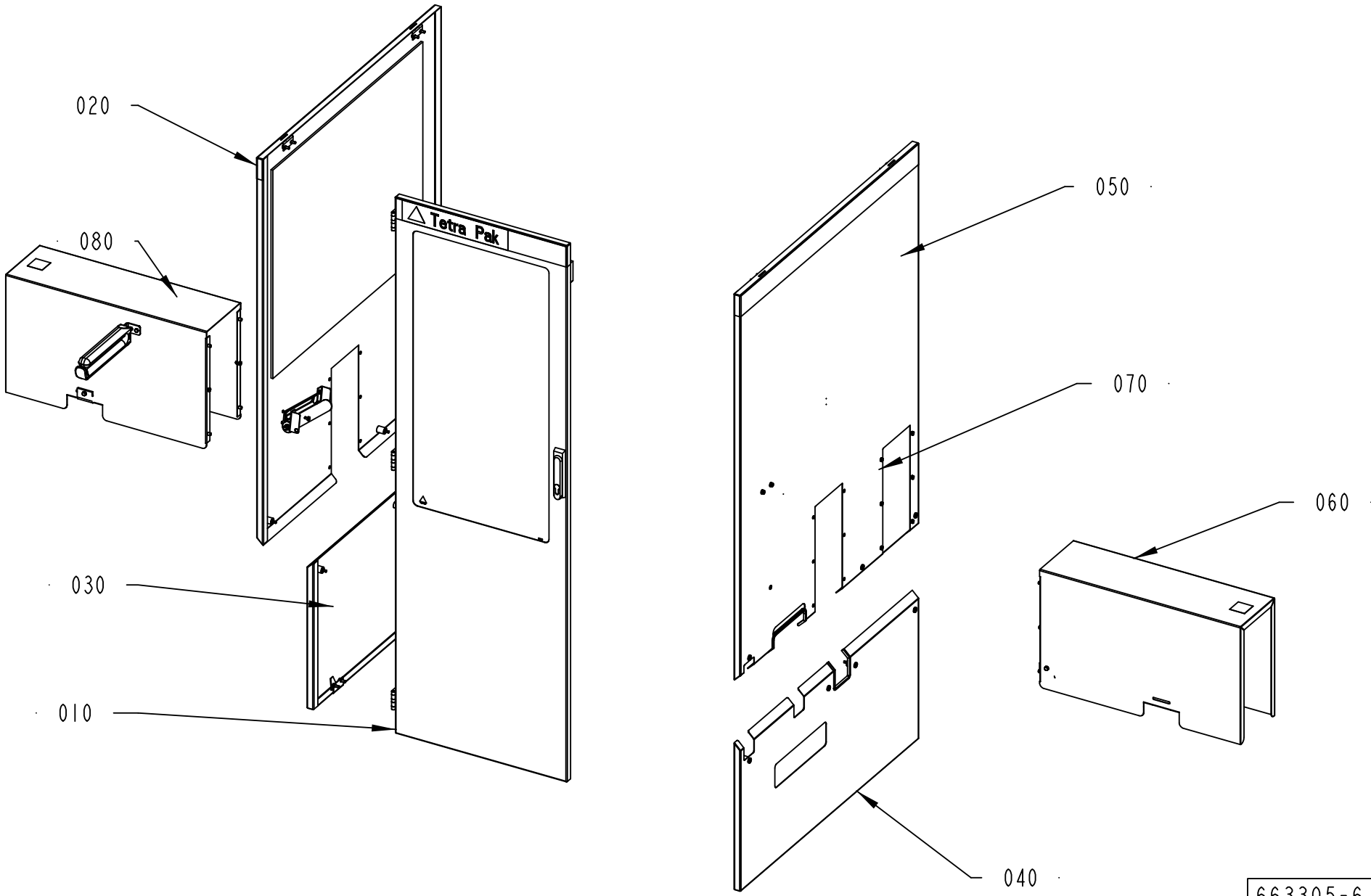
020
080
030
010
050
070
060
040
Tetra Pak
663305-6
429959

Pos	Part No	UN	Qty	Description	Page No
TBA STRAIGHT INFEED, TB STRAIGHT INFEED, TBA STRAIGHT OUTFEED, TB STRAIGHT OUTFEED, TPA STRAIGHT INFEED, TPA STRAIGHT OUTFEED (See drawing on page: 5-2)					
020	2839820-0100		1	COVERING PANEL	**5-9**
050	2840892-0100		1	COVERING PANEL	**5-11**
060	3073180-0100		1	TUNNEL	**5-13**
070	2941199-0100		2	COVERING PANEL	**5-15**
080	2946723-0100		1	TUNNEL	**5-17**
TBA U-OUTFEED, TB U-OUTFEED, TBA U-INFEED, TB U-INFEED, TPA U-INFEED, TPA U-OUTFEED (See drawing on page: 5-2)					
020	2839820-0100		1	COVERING PANEL	**5-9**
050	2840892-0100		1	COVERING PANEL	**5-11**
060	3073180-0100		1	TUNNEL	**5-13**
060	2885383-0100		2	TUNNEL	**5-19**
080	2946723-0100		1	TUNNEL	**5-17**
TCA STRAIGHT INFEED, TCA STRAIGHT OUTFEED (See drawing on page: 5-4)					
020	2957710-0100		1	COVERING PANEL	**5-21**
050	2957720-0100		1	COVERING PANEL	**5-23**
060	2934020-0100		1	TUNNEL	**5-25, 5-27**
080	2934010-0100		1	TUNNEL	**5-29, 5-31**
TWA STRAIGHT OUTFEED, TWA STRAIGHT INFEED (See drawing on page: 5-6)					
020	2957710-0100		1	COVERING PANEL	**5-21**
050	2957720-0100		1	COVERING PANEL	**5-23**
060	2934020-0100		1	TUNNEL	**5-25, 5-27**
080	2934010-0100		1	TUNNEL	**5-29, 5-31**
Common Parts					
010	2839815-0200		1	GLASS DOOR	**5-33**
030	2840888-0100		1	COVERING PANEL	**5-35**
040	2840890-0200		1	COVERING PANEL	**5-37**

Pos	Part No	UN	Qty	Description	Page No

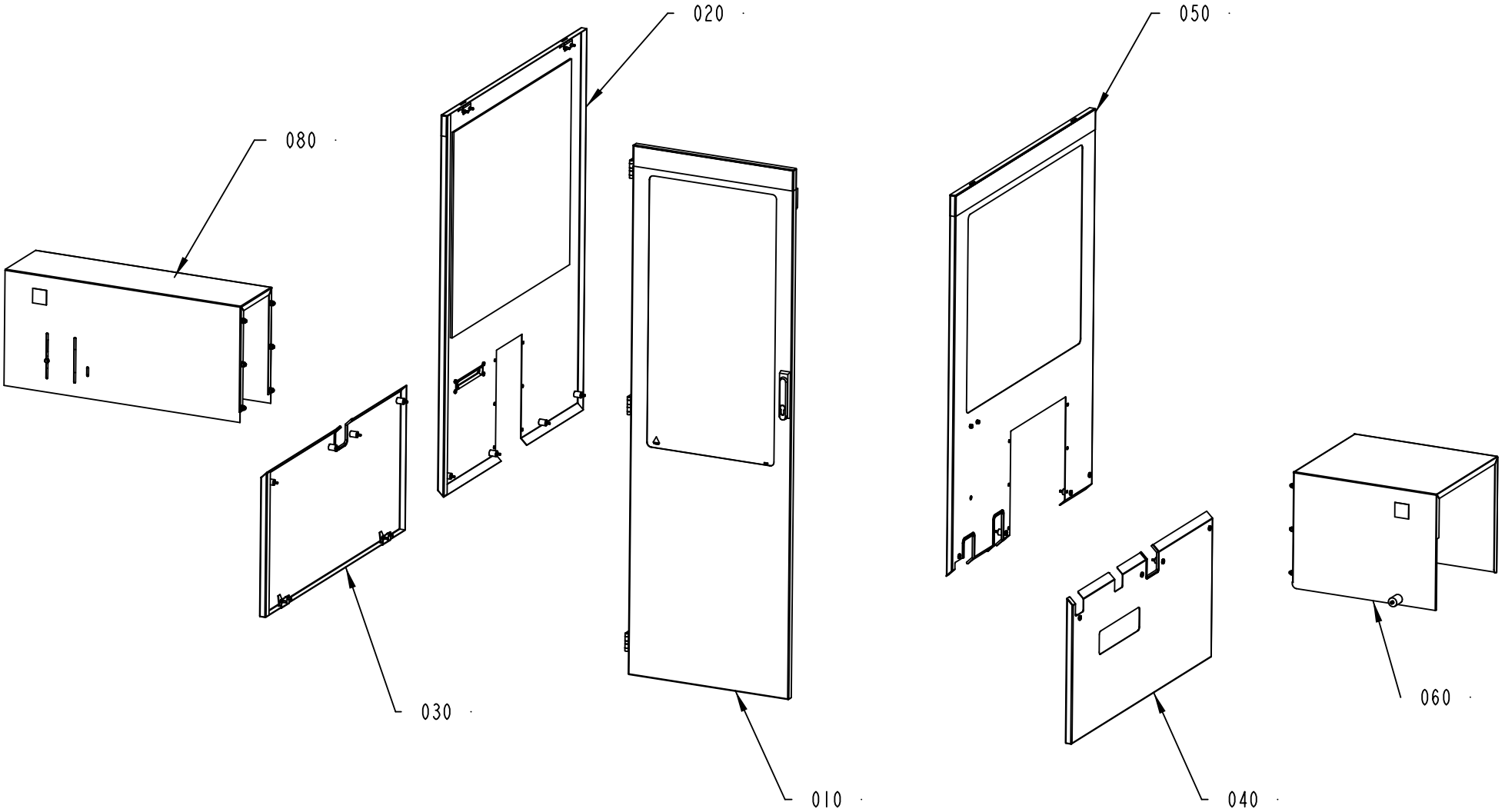

663305-7
401749

Pos	Part No	UN	Qty	Description	Page No
TBA STRAIGHT INFEED, TB STRAIGHT INFEED, TBA STRAIGHT OUTFEED, TB STRAIGHT OUTFEED, TPA STRAIGHT INFEED, TPA STRAIGHT OUTFEED (See drawing on page: 5-2)					
020	2839820-0100		1	COVERING PANEL	**5-9**
050	2840892-0100		1	COVERING PANEL	**5-11**
060	3073180-0100		1	TUNNEL	**5-13**
070	2941199-0100		2	COVERING PANEL	**5-15**
080	2946723-0100		1	TUNNEL	**5-17**
TBA U-OUTFEED, TB U-OUTFEED, TBA U-INFEED, TB U-INFEED, TPA U-INFEED, TPA U-OUTFEED (See drawing on page: 5-2)					
020	2839820-0100		1	COVERING PANEL	**5-9**
050	2840892-0100		1	COVERING PANEL	**5-11**
060	3073180-0100		1	TUNNEL	**5-13**
060	2885383-0100		2	TUNNEL	**5-19**
080	2946723-0100		1	TUNNEL	**5-17**
TCA STRAIGHT INFEED, TCA STRAIGHT OUTFEED (See drawing on page: 5-4)					
020	2957710-0100		1	COVERING PANEL	**5-21**
050	2957720-0100		1	COVERING PANEL	**5-23**
060	2934020-0100		1	TUNNEL	**5-25, 5-27**
080	2934010-0100		1	TUNNEL	**5-29, 5-31**
TWA STRAIGHT OUTFEED, TWA STRAIGHT INFEED (See drawing on page: 5-6)					
020	2957710-0100		1	COVERING PANEL	**5-21**
050	2957720-0100		1	COVERING PANEL	**5-23**
060	2934020-0100		1	TUNNEL	**5-25, 5-27**
080	2934010-0100		1	TUNNEL	**5-29, 5-31**
Common Parts					
010	2839815-0200		1	GLASS DOOR	**5-33**
030	2840888-0100		1	COVERING PANEL	**5-35**
040	2840890-0200		1	COVERING PANEL	**5-37**

Pos	Part No	UN	Qty	Description	Page No

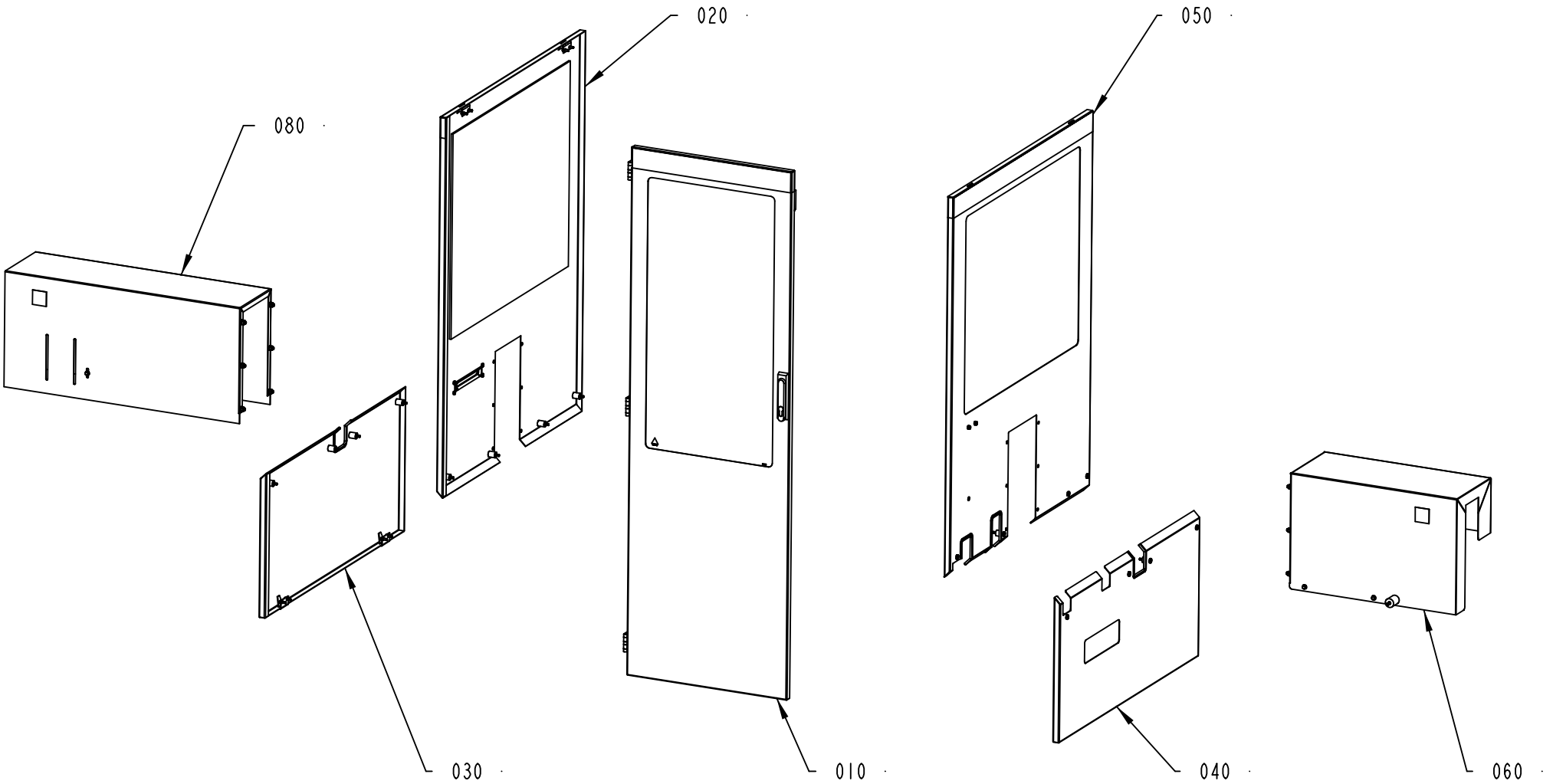

663305-8
401749

Pos	Part No	UN	Qty	Description	Page No
TBA STRAIGHT INFEED, TB STRAIGHT INFEED, TBA STRAIGHT OUTFEED, TB STRAIGHT OUTFEED, TPA STRAIGHT INFEED, TPA STRAIGHT OUTFEED (See drawing on page: 5-2)					
020	2839820-0100		1	COVERING PANEL	**5-9**
050	2840892-0100		1	COVERING PANEL	**5-11**
060	3073180-0100		1	TUNNEL	**5-13**
070	2941199-0100		2	COVERING PANEL	**5-15**
080	2946723-0100		1	TUNNEL	**5-17**
TBA U-OUTFEED, TB U-OUTFEED, TBA U-INFEED, TB U-INFEED, TPA U-INFEED, TPA U-OUTFEED (See drawing on page: 5-2)					
020	2839820-0100		1	COVERING PANEL	**5-9**
050	2840892-0100		1	COVERING PANEL	**5-11**
060	3073180-0100		1	TUNNEL	**5-13**
060	2885383-0100		2	TUNNEL	**5-19**
080	2946723-0100		1	TUNNEL	**5-17**
TCA STRAIGHT INFEED, TCA STRAIGHT OUTFEED (See drawing on page: 5-4)					
020	2957710-0100		1	COVERING PANEL	**5-21**
050	2957720-0100		1	COVERING PANEL	**5-23**
060	2934020-0100		1	TUNNEL	**5-25, 5-27**
080	2934010-0100		1	TUNNEL	**5-29, 5-31**
TWA STRAIGHT OUTFEED, TWA STRAIGHT INFEED (See drawing on page: 5-6)					
020	2957710-0100		1	COVERING PANEL	**5-21**
050	2957720-0100		1	COVERING PANEL	**5-23**
060	2934020-0100		1	TUNNEL	**5-25, 5-27**
080	2934010-0100		1	TUNNEL	**5-29, 5-31**
Common Parts					
010	2839815-0200		1	GLASS DOOR	**5-33**
030	2840888-0100		1	COVERING PANEL	**5-35**
040	2840890-0200		1	COVERING PANEL	**5-37**

Pos	Part No	UN	Qty	Description	Page No

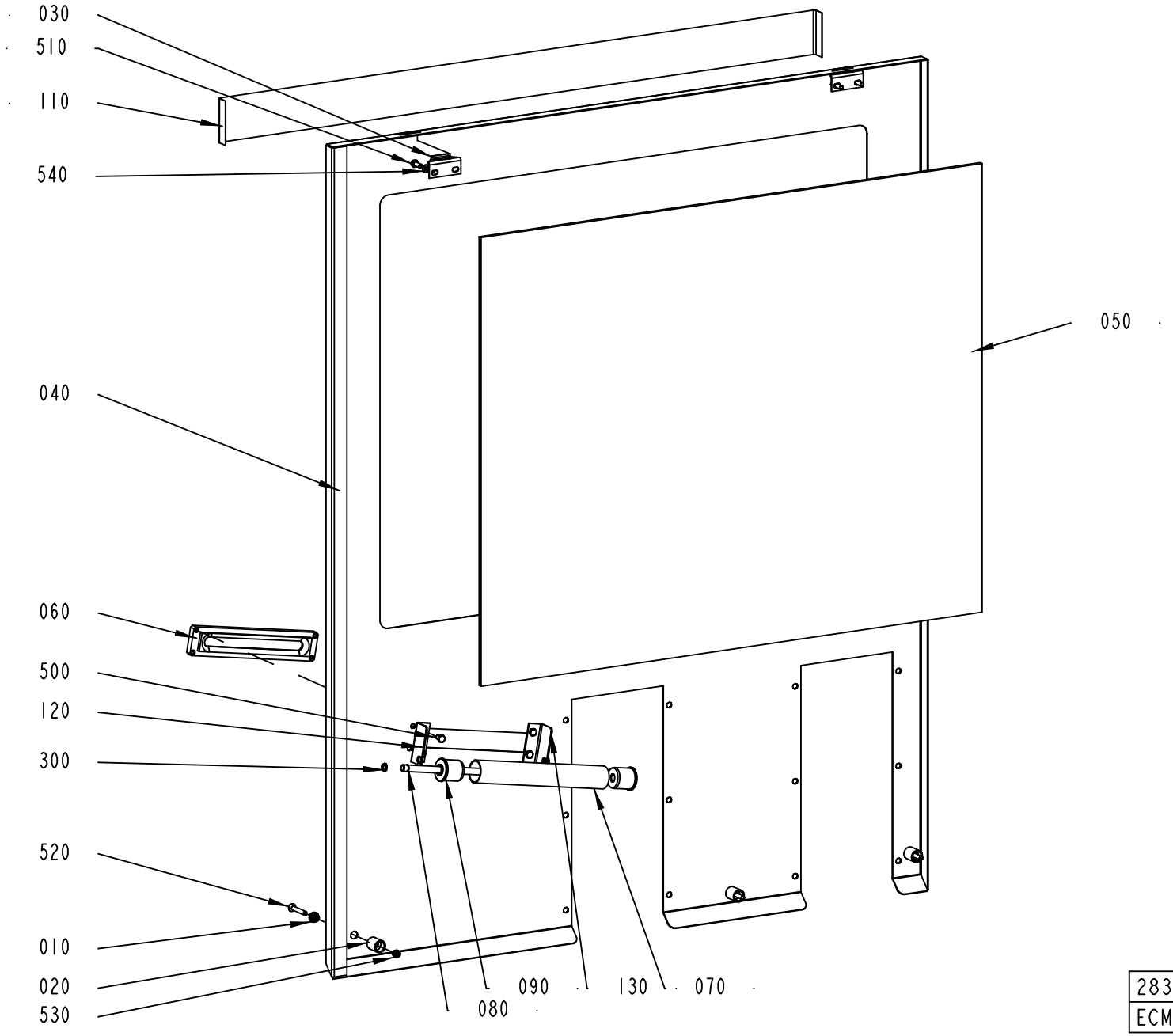

2839820-1
ECM 378472

ECM: 436893 - 20100222
Group number: 2839820-0100
Assembly Drawing: 2839820-1_1_AB

Pos	Part No	UN	Qty	Description	Page No
-					
010	578196-0000		3	SLEEVE	
020	578197-0000		3	SPACER	
030	1030767-0000		2	CATCH	
040	2839821-0000		1	PROTECTIVE COVER	
050	2840887-0000		1	GLASS	
060	2850070-0000		1	GUIDE	
070	2935827-0000		1	PIPE	
080	2935828-0000		1	SHAFT	
090	2935834-0000		2	END SECTION	
110	2939688-0000		1	TAPE	
120	3012895-0000		1	BRACKET	
130	3012896-0000		1	BRACKET	
300	90141-0016		2	RETAINING RING FOR SHAFT DIN 471 10 SS	
310	90157-0041	L	1	SEALING COMPOUND, RHODORSEAL 5651	
500	312105-0364		4	SCREW M6S ISO 4017 M6X10 A480	
510	312105-0368		4	SCREW M6S ISO 4017 M6X16 A480	
520	312155-0378		3	SCREW DIN 7991 MF6S M6X40 A4 70	
530	312812-0316		2	HEXAGON NUT, NY-LOCK M6 A480	
540	315105-0153		4	WASHER BRB 6,4X12 RFR	

Pos	Part No	UN	Qty	Description	Page No

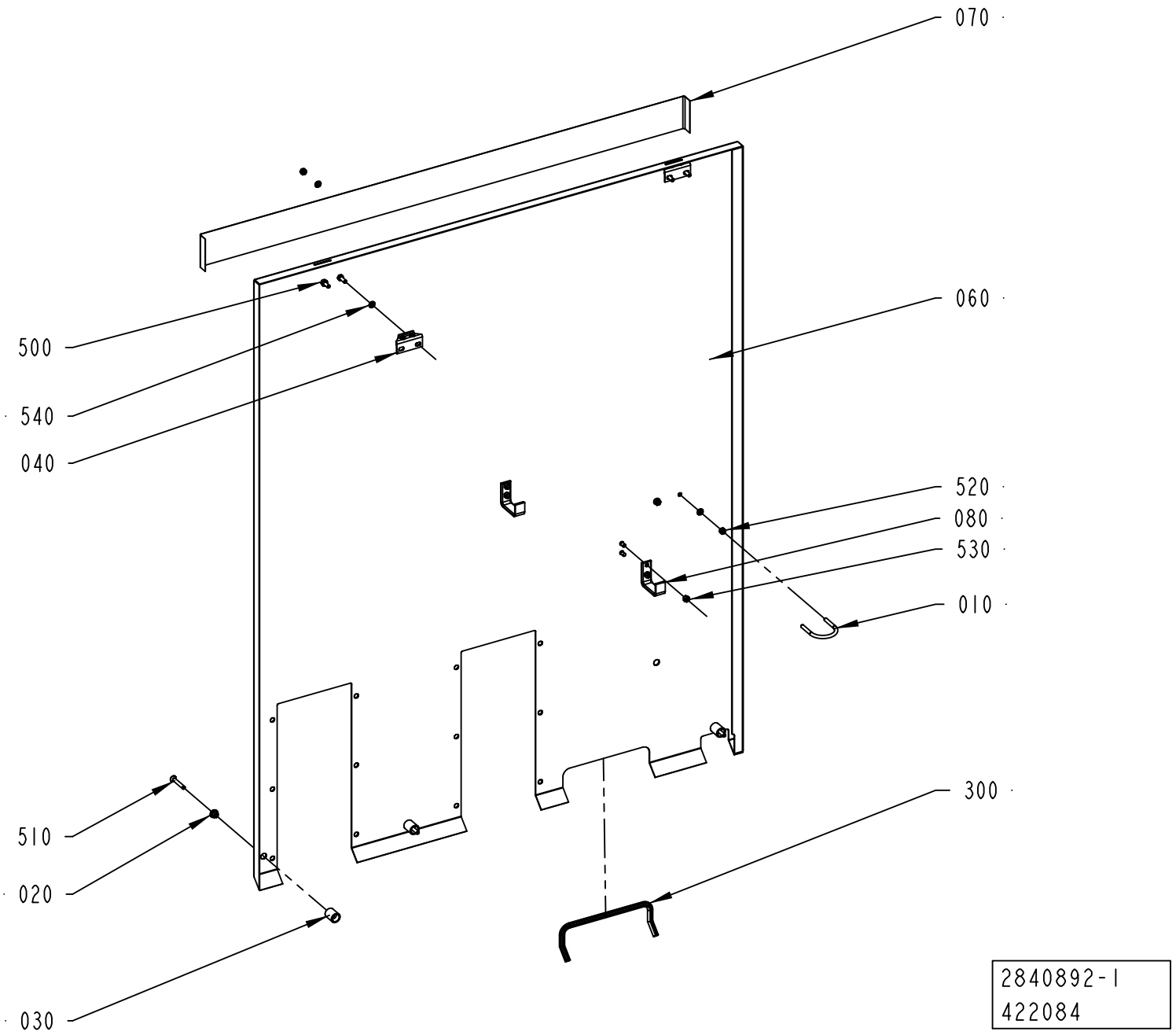
070
060
500
540
040
520
080
530
010
510
020
030
300
2840892-1
422084

ECM: 428789 - 20091221
Group number: 2840892-0100
Assembly Drawing: 2840892-1_1_AD

Pos	Part No	UN	Qty	Description	Page No
-					
010	531616-0000		1	HOLDER	
020	578196-0000		3	SLEEVE	
030	578197-0000		3	SPACER	
040	1030767-0000		2	CATCH	
060	2840893-0000		1	PROTECTIVE COVER	
070	2939688-0000		1	TAPE	
080	3009775-0000		2	BRACKET	
300	90143-0060	MM	400	EDGE STRIP 9,5X6,3MM BLACK PVC	
500	312105-0368		4	SCREW M6S ISO 4017 M6X16 A480	
510	312155-0378		3	SCREW DIN 7991 MF6S M6X40 A4 70	
520	312605-0316		4	HEXAGON NUT, M6M M6 A280	
530	312607-0316		4	HEXAGON NUT, EN 24032 M6M M6 A480	
540	315105-0153		8	WASHER BRB 6,4X12 RFR	

Pos	Part No	UN	Qty	Description	Page No

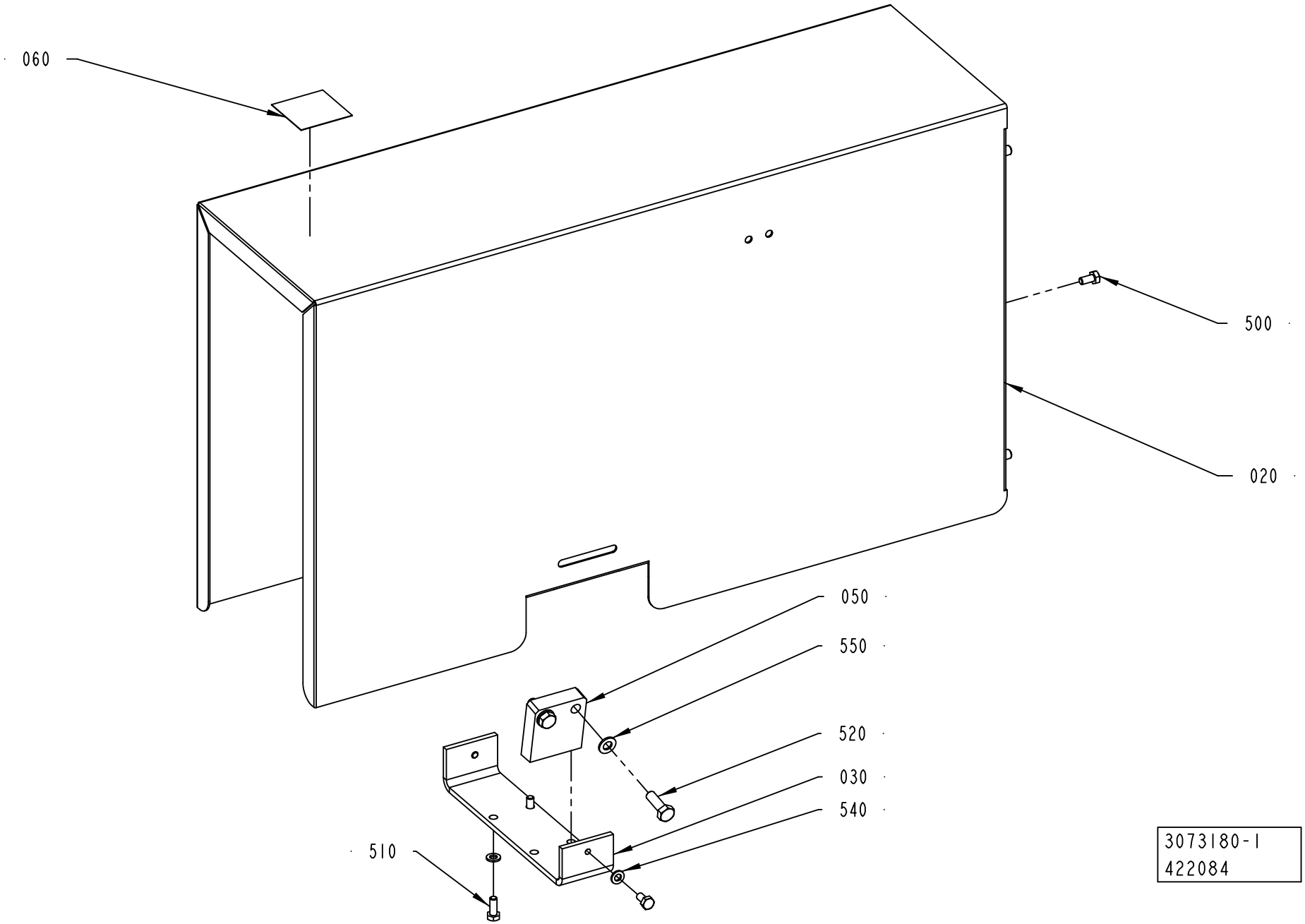
060
500
020
050
550
520
030
540
510
3073180-1
422084

ECM: 428792 - 20091221
Group number: 3073180-0100
Assembly Drawing: 3073180-1_1_AA

Pos	Part No	UN	Qty	Description	Page No
ANSI					
060	90600-4040		1	CAUTION SIGN ANSI (H), DO NOT REACH IN	
ISO					
060	90459-7584		1	PROHOBITION SIGN ISO, DO NOT REACH IN	
Common Parts					
020	2904939-0000		1	PROTECTION PLATE	
030	2904940-0000		1	BRACKET	
050	2904941-0000		1	PLATE	
500	312105-0366		4	SCREW M6S ISO 4017 M6X12 A480	
510	312105-0368		2	SCREW M6S ISO 4017 M6X16 A480	
520	312105-0453		2	SCREW M6S ISO 4017 M8X25 A480	
540	315105-0153		4	WASHER BRB 6,4X12 RFR	
550	315105-0165		2	WASHER BRB 8,4X16 RFR	

Pos	Part No	UN	Qty	Description	Page No

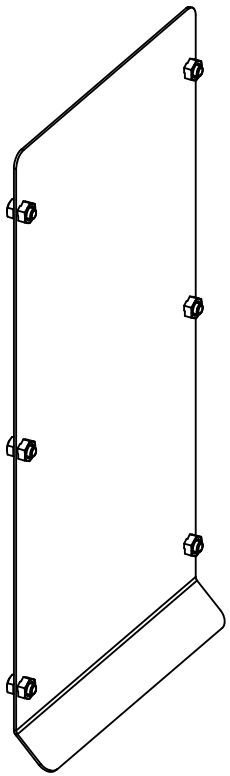

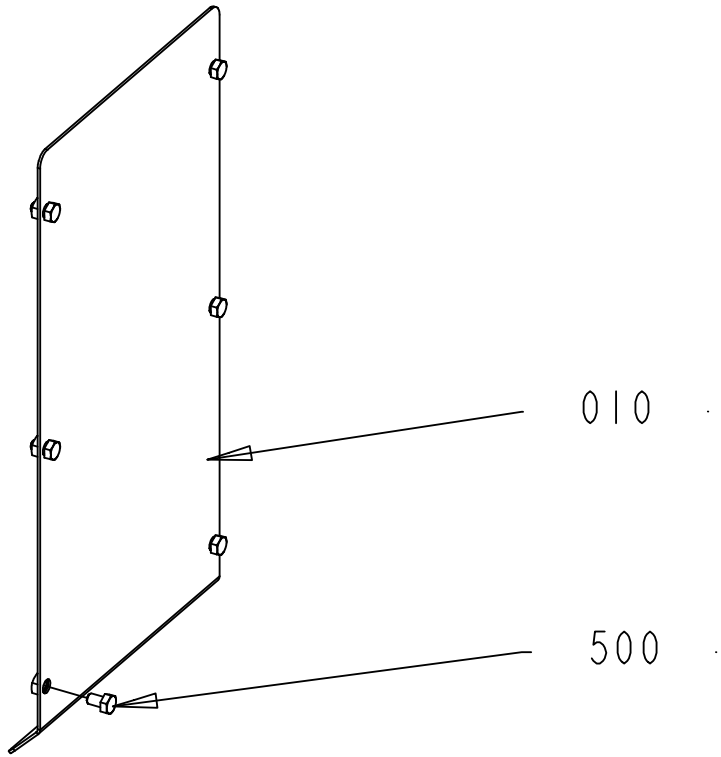

2941199-1
378472

ECM: 388271 - 20090409
Group number: 2941199-0100
Assembly Drawing: 2941199-1_1_AB

Pos	Part No	UN	Qty	Description	Page No
-					
010	2840886-0000		2	COVER PLATE	
500	312105-0364		12	SCREW M6S ISO 4017 M6X10 A480	

Pos	Part No	UN	Qty	Description	Page No

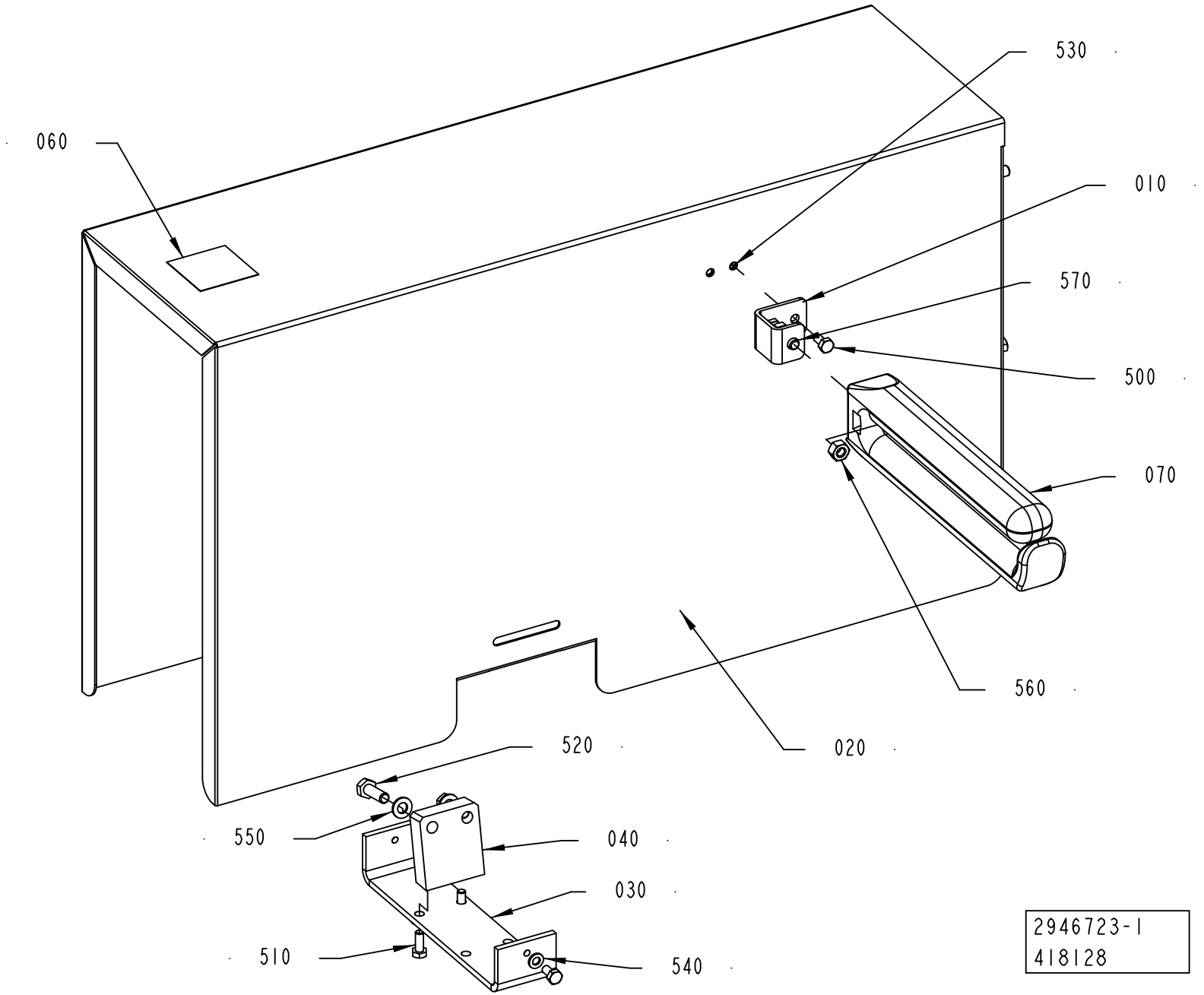
530
060
010
570
500
070
560
020
520
550
040
030
510
540
2946723-1
418128

ECM: 428791 - 20091221
Group number: 2946723-0100
Assembly Drawing: 2946723-1_1_AB

Pos	Part No	UN	Qty	Description	Page No
FINAL DEST. CANADA, FINAL DEST. USA					
060	90600-4040		1	CAUTION SIGN ANSI (H), DO NOT REACH IN	
OTHER COUNTRIES NOT USA/CANADA					
060	90459-7584		1	PROHOBITION SIGN ISO, DO NOT REACH IN	
Common Parts					
010	2850074-0000		1	BRACKET	
020	2904939-0000		1	PROTECTION PLATE	
030	2904940-0000		1	BRACKET	
040	2904941-0000		1	PLATE	
070	556386-0000		1	STEERING	
500	312105-0366		6	SCREW M6S ISO 4017 M6X12 A480	
510	312105-0368		2	SCREW M6S ISO 4017 M6X16 A480	
520	312105-0453		2	SCREW M6S ISO 4017 M8X25 A480	
530	312605-0316		2	HEXAGON NUT, M6M M6 A280	
540	315105-0153		4	WASHER BRB 6,4X12 RFR	
550	315105-0165		2	WASHER BRB 8,4X16 RFR	
560	312605-0318		1	HEXAGON NUT, M6M M8 A280	
570	312105-0451		1	SCREW M6S ISO 4017 M8X20 A480	

Pos	Part No	UN	Qty	Description	Page No

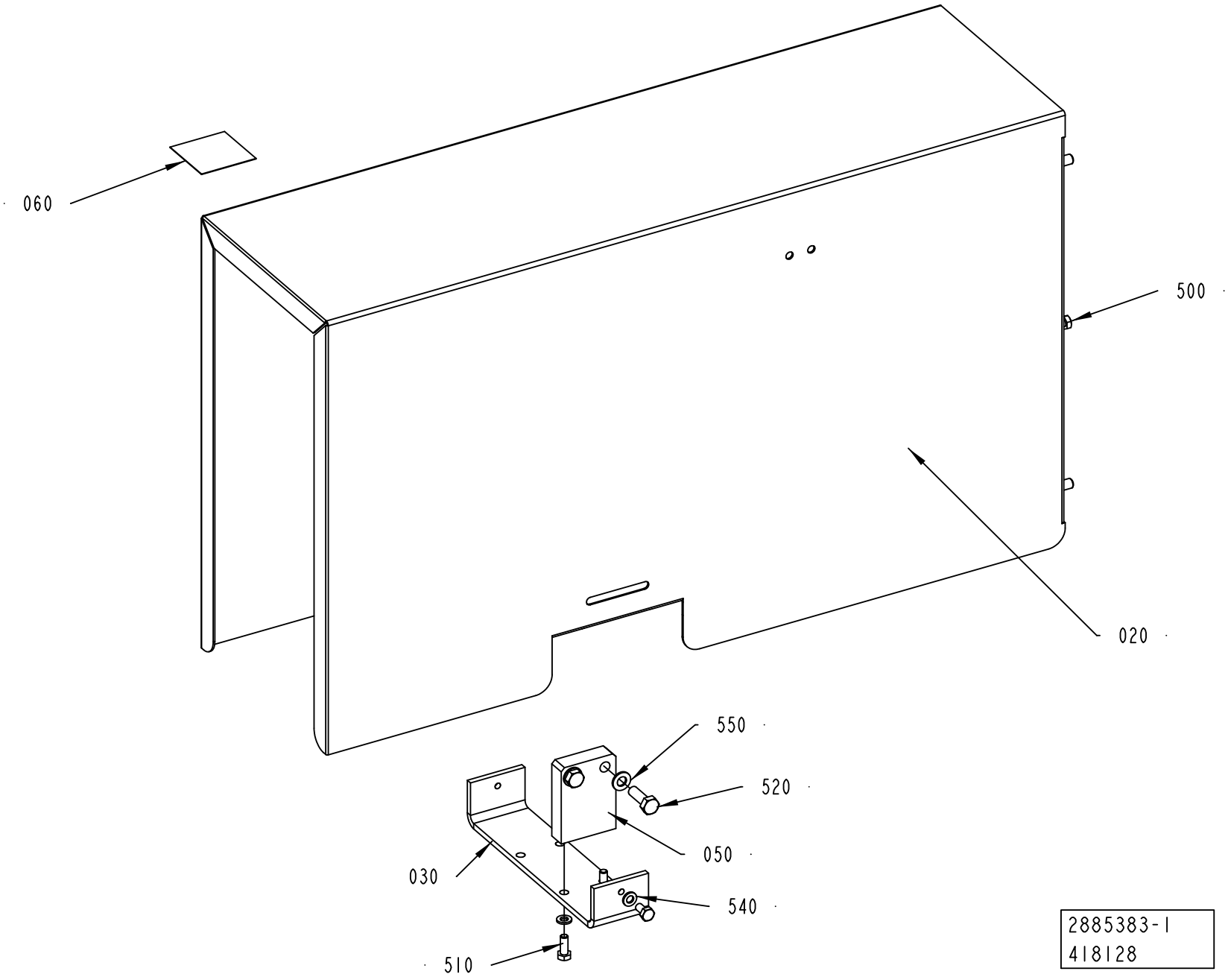
060
500
020
550
520
050
030
540
510
2885383-1
418128

ECM: 428790 - 20091221
Group number: 2885383-0100
Assembly Drawing: 2885383-1_1_AB

Pos	Part No	UN	Qty	Description	Page No
ANSI					
060	90600-4040		1	CAUTION SIGN ANSI (H), DO NOT REACH IN	
ISO					
060	90459-7584		1	PROHOBITION SIGN ISO, DO NOT REACH IN	
Common Parts					
020	2904939-0000		1	PROTECTION PLATE	
030	2904940-0000		1	BRACKET	
050	2904942-0000		1	PLATE	
500	312105-0366		4	SCREW M6S ISO 4017 M6X12 A480	
510	312105-0368		2	SCREW M6S ISO 4017 M6X16 A480	
520	312105-0453		2	SCREW M6S ISO 4017 M8X25 A480	
540	315105-0153		4	WASHER BRB 6,4X12 RFR	
550	315105-0165		2	WASHER BRB 8,4X16 RFR	

Pos	Part No	UN	Qty	Description	Page No

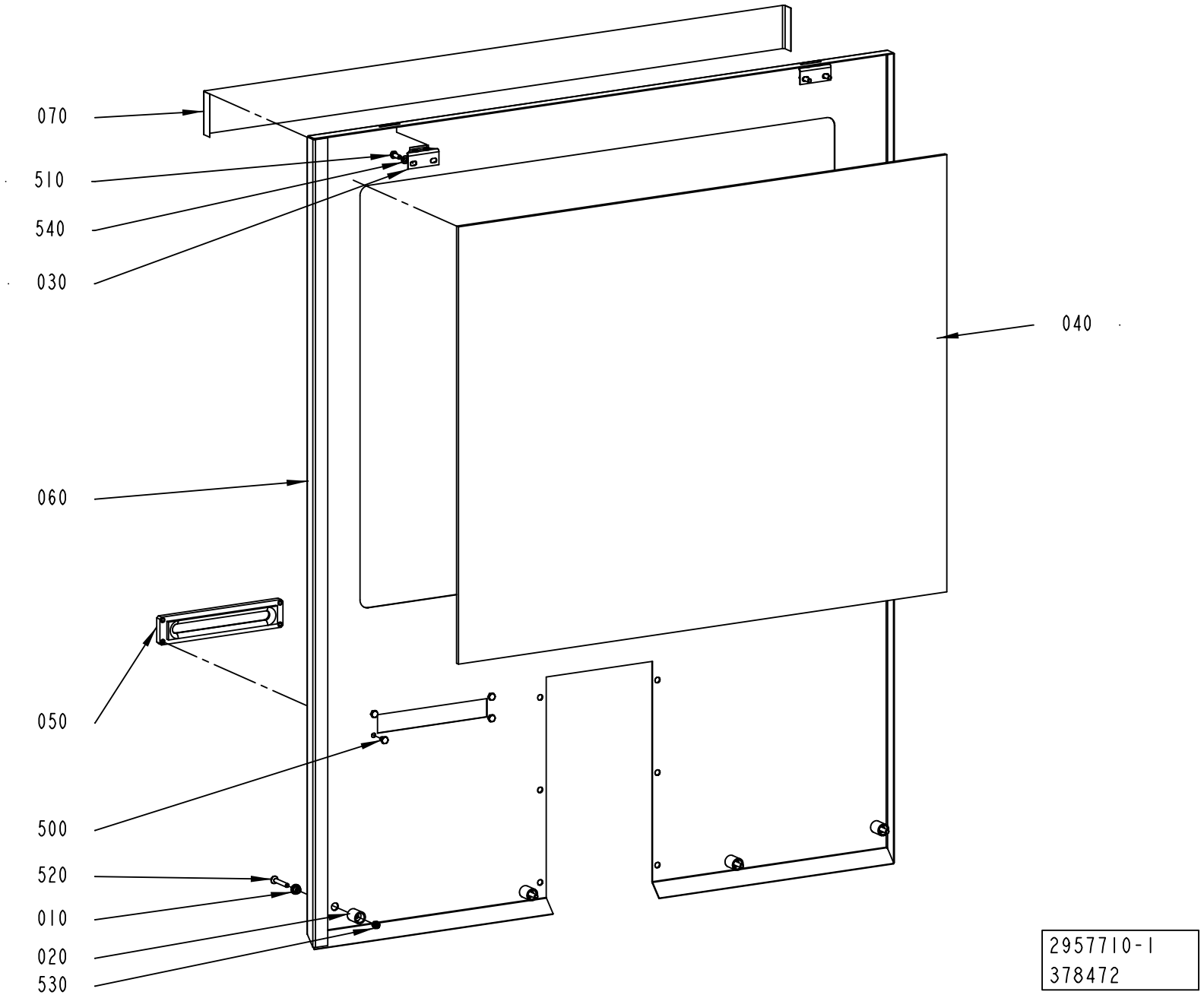
070
510
540
030
040
060
050
500
520
010
020
530
2957710-1
378472

ECM: 389590 - 20090409
Group number: 2957710-0100
Assembly Drawing: 2957710-1_1_AB

Pos	Part No	UN	Qty	Description	Page No
-					
010	578196-0000		4	SLEEVE	
020	578197-0000		4	SPACER	
030	1030767-0000		2	CATCH	
040	2840887-0000		1	GLASS	
050	2850070-0000		1	GUIDE	
060	2926031-0000		1	PROTECTION PLATE	
070	2939688-0000		1	TAPE	
300	90157-0041	L	1	SEALING COMPOUND, RHODORSEAL 5651	
500	312105-0362		4	SCREW M6S ISO 4017 M6X8 A480	
510	312105-0368		4	SCREW M6S ISO 4017 M6X16 A480	
520	312155-0378		4	SCREW DIN 7991 MF6S M6X40 A4 70	
530	312812-0316		4	HEXAGON NUT, NY-LOCK M6 A480	
540	315105-0153		4	WASHER BRB 6,4X12 RFR	

Pos	Part No	UN	Qty	Description	Page No

COVERING PANEL

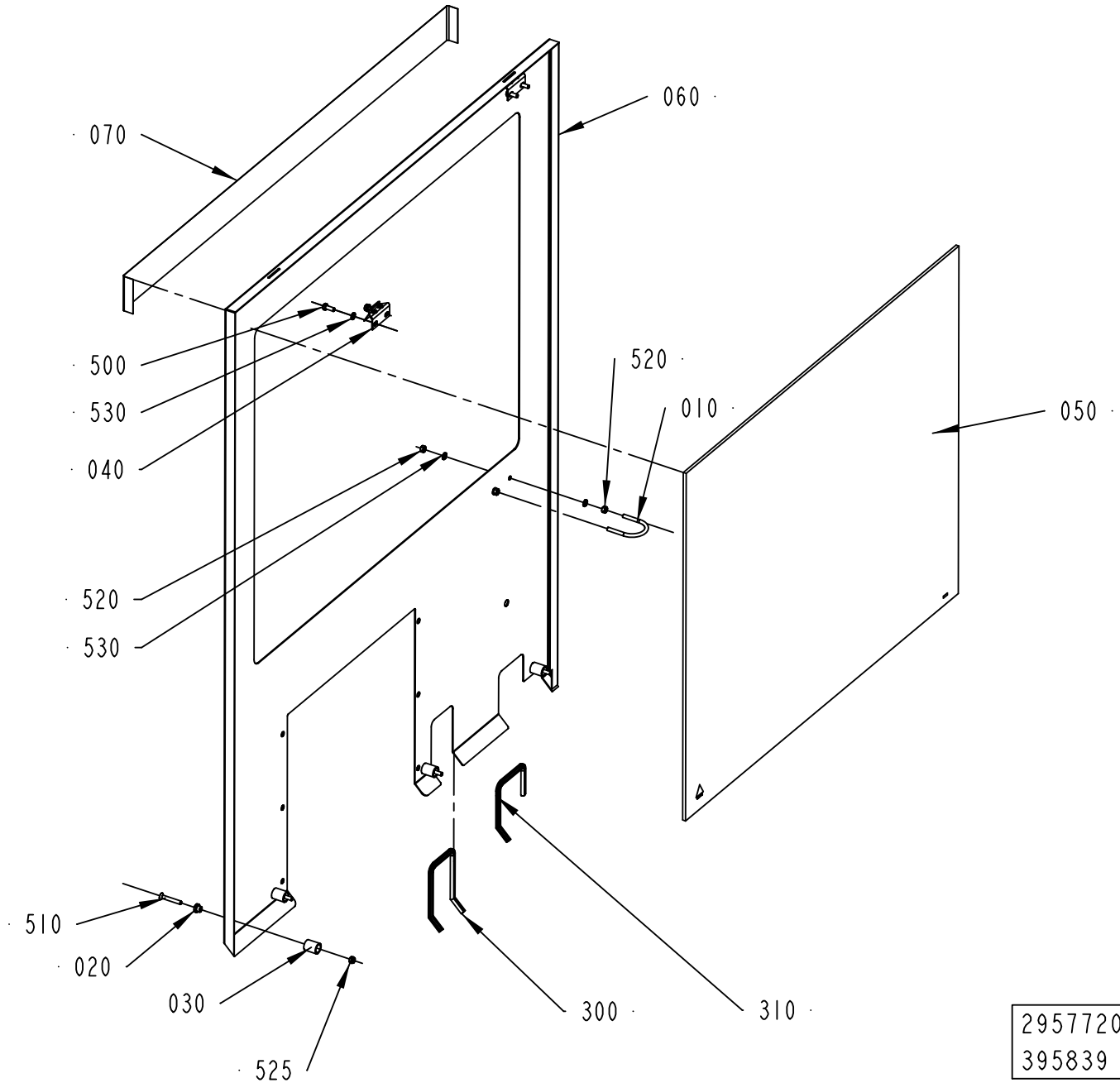

2957720-1
395839

ECM: 402724 - 20090612
Group number: 2957720-0100
Assembly Drawing: 2957720-1_1_AC

Pos	Part No	UN	Qty	Description	Page No
TCA					
060	2926032-0000		1	PROTECTION PLATE	
TWA					
060	2992437-0000		1	PROTECTION PLATE	
Common Parts					
010	531616-0000		1	HOLDER	
020	578196-0000		4	SLEEVE	
030	578197-0000		4	SPACER	
040	1030767-0000		2	CATCH	
050	2840887-0000		1	GLASS	
070	2939688-0000		1	TAPE	
300	90143-0060	M	0.45	EDGE STRIP 9,5X6,3MM BLACK PVC	
310	90143-0060	M	0.25	EDGE STRIP 9,5X6,3MM BLACK PVC	
500	312105-0368		4	SCREW M6S ISO 4017 M6X16 A480	
510	312155-0378		4	SCREW DIN 7991 MF6S M6X40 A4 70	
520	312812-0316		4	HEXAGON NUT, NY-LOCK M6 A480	
525	312812-0316		4	HEXAGON NUT, NY-LOCK M6 A480	
530	315105-0153		8	WASHER BRB 6,4X12 RFR	

Pos	Part No	UN	Qty	Description	Page No

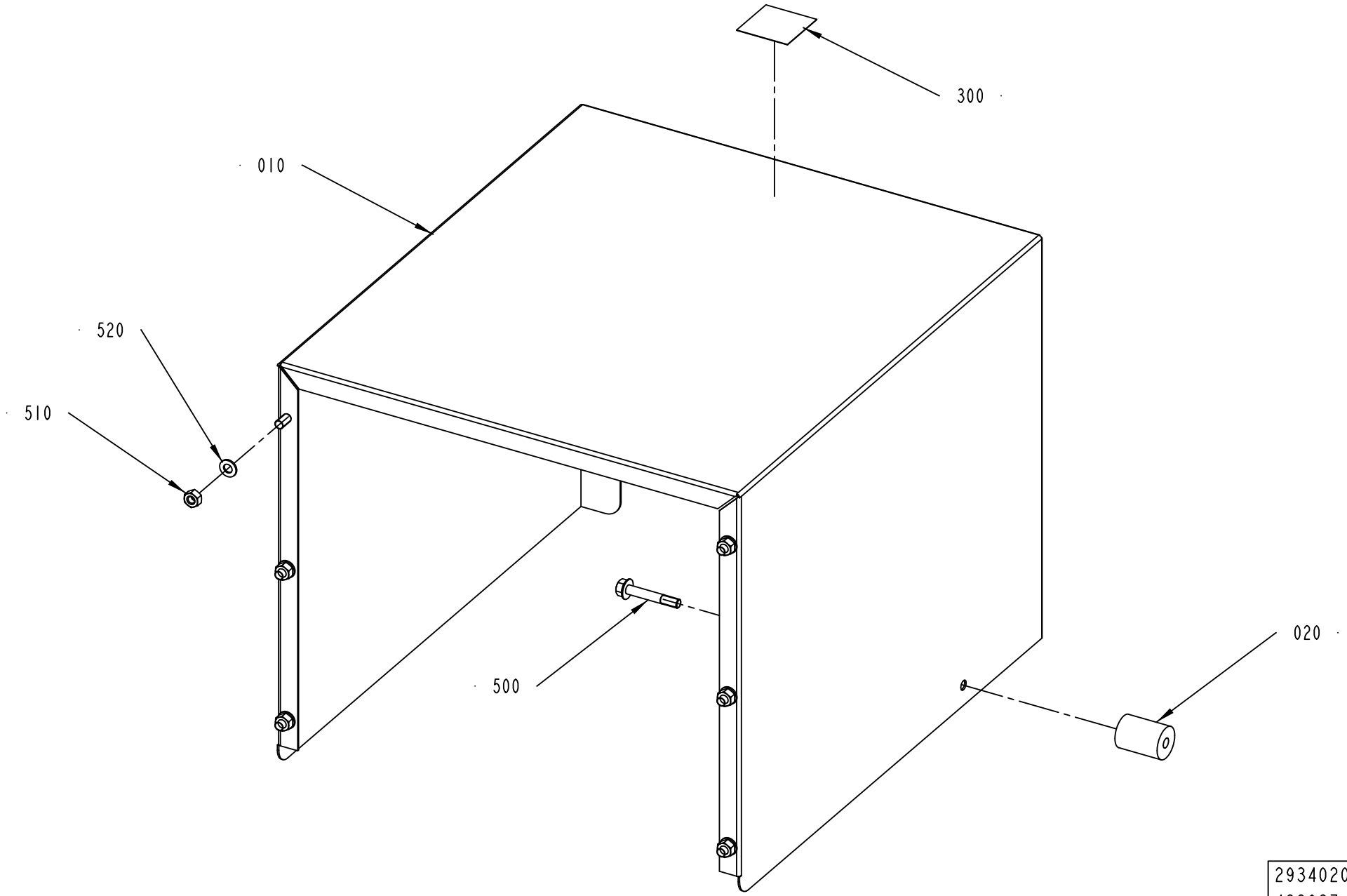
300
010
520
510
500
020
2934020-1
422087

ECM: 428259 - 20091221
Group number: 2934020-0100
Assembly Drawing: 2934020-1_1_AB

This list covers pages from 5-24 to 5-27

Pos	Part No	UN	Qty	Description	Page No
TCA ANSI (See drawing on page: 5-24)					
010	2934023-0000		1	PROTECTION PLATE	
300	90600-4040		1	CAUTION SIGN ANSI (H), DO NOT REACH IN	
TCA ISO (See drawing on page: 5-24)					
010	2934023-0000		1	PROTECTION PLATE	
300	90459-7584		1	PROHOBITION SIGN ISO, DO NOT REACH IN	
TWA ANSI (See drawing on page: 5-26)					
010	2992438-0000		1	PROTECTION PLATE	
030	2992439-0000		1	PROTECTION PLATE	
300	90600-4040		1	CAUTION SIGN ANSI (H), DO NOT REACH IN	
530	312108-0364		4	SCREW EN 1665 TYPE F M6X10 A270	
TWA ISO (See drawing on page: 5-26)					
010	2992438-0000		1	PROTECTION PLATE	
030	2992439-0000		1	PROTECTION PLATE	
300	90459-7584		1	PROHOBITION SIGN ISO, DO NOT REACH IN	
530	312108-0364		4	SCREW EN 1665 TYPE F M6X10 A270	
Common Parts					
020	2957739-0000		1	SPACER SLEEVE	
500	312108-0463		1	SCREW EN 1665 TYPE F M8X60 A270	
510	312605-0318		6	HEXAGON NUT, M6M M8 A280	
520	315105-0165		6	WASHER BRB 8,4X16 RFR	

Pos	Part No	UN	Qty	Description	Page No

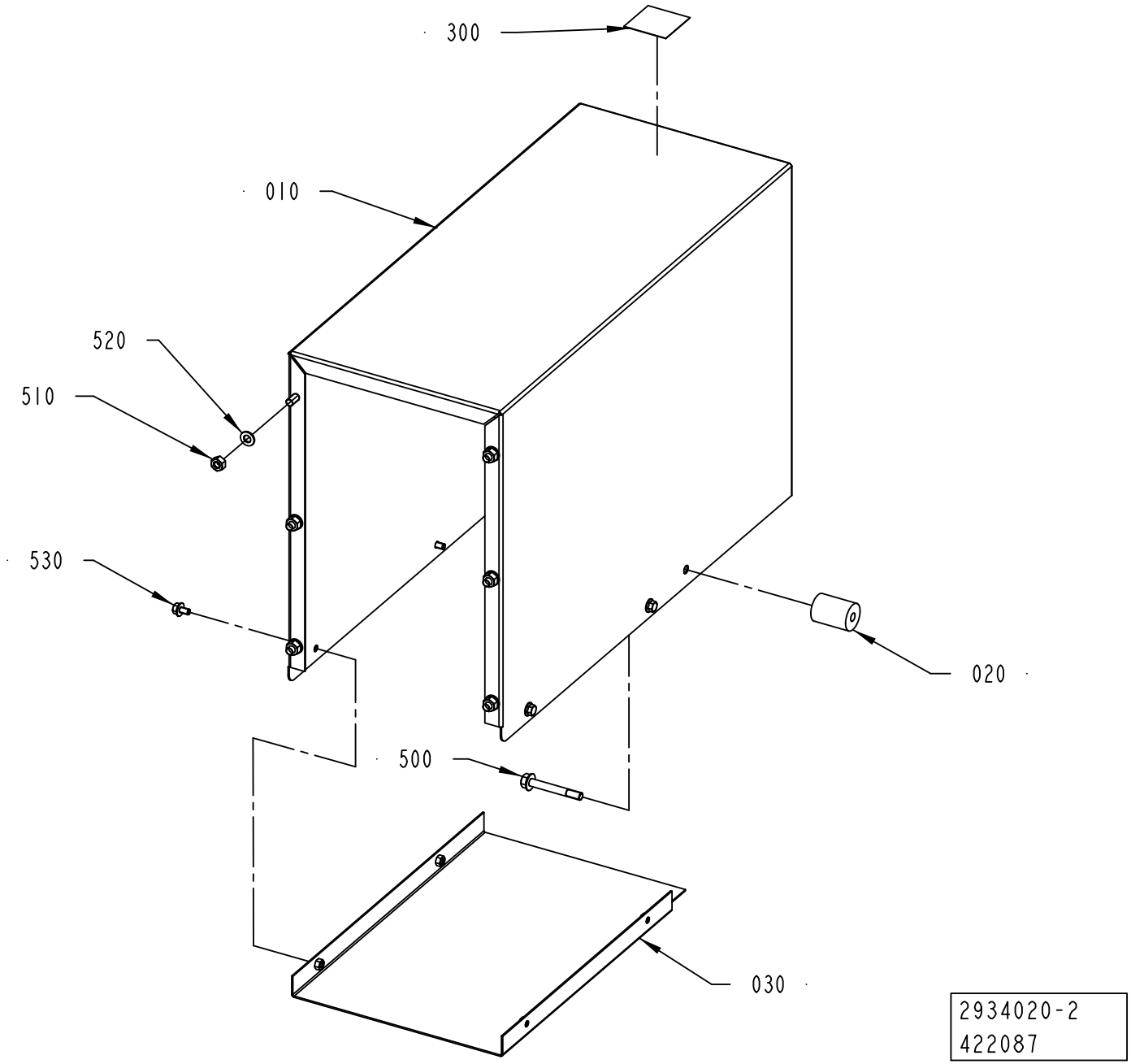
300
010
520
510
530
020
500
030
2934020-2
422087

Pos	Part No	UN	Qty	Description	Page No
TCA ANSI (See drawing on page: 5-24)					
010	2934023-0000		1	PROTECTION PLATE	
300	90600-4040		1	CAUTION SIGN ANSI (H), DO NOT REACH IN	
TCA ISO (See drawing on page: 5-24)					
010	2934023-0000		1	PROTECTION PLATE	
300	90459-7584		1	PROHOBITION SIGN ISO, DO NOT REACH IN	
TWA ANSI (See drawing on page: 5-26)					
010	2992438-0000		1	PROTECTION PLATE	
030	2992439-0000		1	PROTECTION PLATE	
300	90600-4040		1	CAUTION SIGN ANSI (H), DO NOT REACH IN	
530	312108-0364		4	SCREW EN 1665 TYPE F M6X10 A270	
TWA ISO (See drawing on page: 5-26)					
010	2992438-0000		1	PROTECTION PLATE	
030	2992439-0000		1	PROTECTION PLATE	
300	90459-7584		1	PROHOBITION SIGN ISO, DO NOT REACH IN	
530	312108-0364		4	SCREW EN 1665 TYPE F M6X10 A270	
Common Parts					
020	2957739-0000		1	SPACER SLEEVE	
500	312108-0463		1	SCREW EN 1665 TYPE F M8X60 A270	
510	312605-0318		6	HEXAGON NUT, M6M M8 A280	
520	315105-0165		6	WASHER BRB 8,4X16 RFR	

Pos	Part No	UN	Qty	Description	Page No

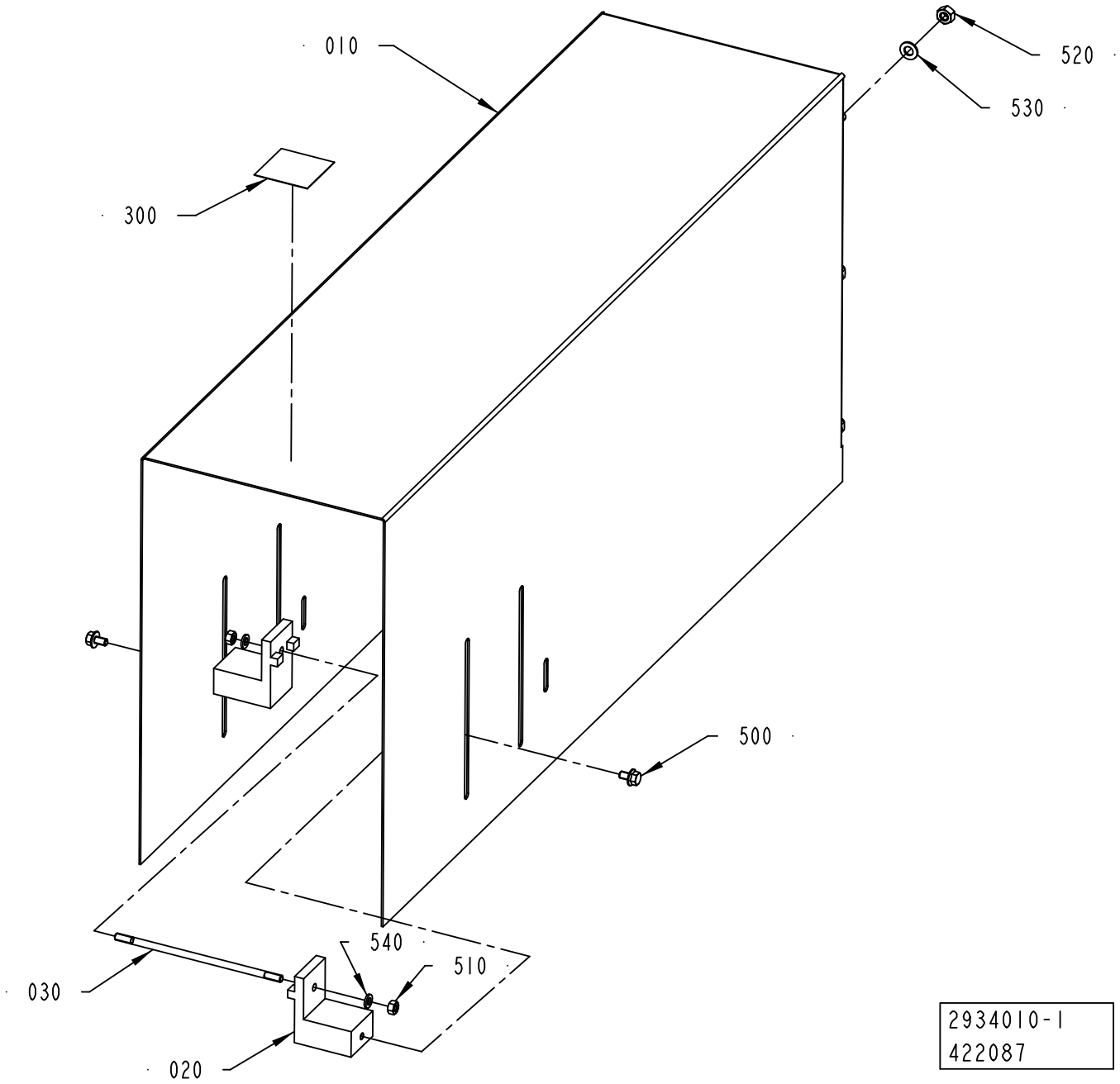
010
520
530
300
500
540
510
030
020
2934010-1
422087

ECM: 428260 - 20091221
Group number: 2934010-0100
Assembly Drawing: 2934010-1_1_AC

This list covers pages from 5-28 to 5-31

Pos	Part No	UN	Qty	Description	Page No
TCA ANSI (See drawing on page: 5-28)					
020	2982612-0000		2	SPACER ELEMENT	
030	2982617-0000		1	STUD BOLT	
300	90600-4040		1	CAUTION SIGN ANSI (H), DO NOT REACH IN	
510	312605-0316		2	HEXAGON NUT, M6M M6 A280	
540	315106-0153		2	WASHER ISO 7089-6-200 HV A4	
TCA ISO (See drawing on page: 5-28)					
020	2982612-0000		2	SPACER ELEMENT	
030	2982617-0000		1	STUD BOLT	
300	90459-7584		1	PROHOBITION SIGN ISO, DO NOT REACH IN	
510	312605-0316		2	HEXAGON NUT, M6M M6 A280	
540	315106-0153		2	WASHER ISO 7089-6-200 HV A4	
TWA ANSI (See drawing on page: 5-30)					
020	3060319-0000		2	SPACER ELEMENT	
300	90600-4040		1	CAUTION SIGN ANSI (H), DO NOT REACH IN	
550	312108-0451		4	SCREW EN 1665 TYPE F M8X20 A270	
TWA ISO (See drawing on page: 5-30)					
020	3060319-0000		2	SPACER ELEMENT	
300	90459-7584		1	PROHOBITION SIGN ISO, DO NOT REACH IN	
550	312108-0451		4	SCREW EN 1665 TYPE F M8X20 A270	
Common Parts					
010	2934025-0000		1	PROTECTION PLATE	
500	312108-0364		2	SCREW EN 1665 TYPE F M6X10 A270	
520	312605-0318		6	HEXAGON NUT, M6M M8 A280	
530	315105-0165		6	WASHER BRB 8,4X16 RFR	

Pos	Part No	UN	Qty	Description	Page No

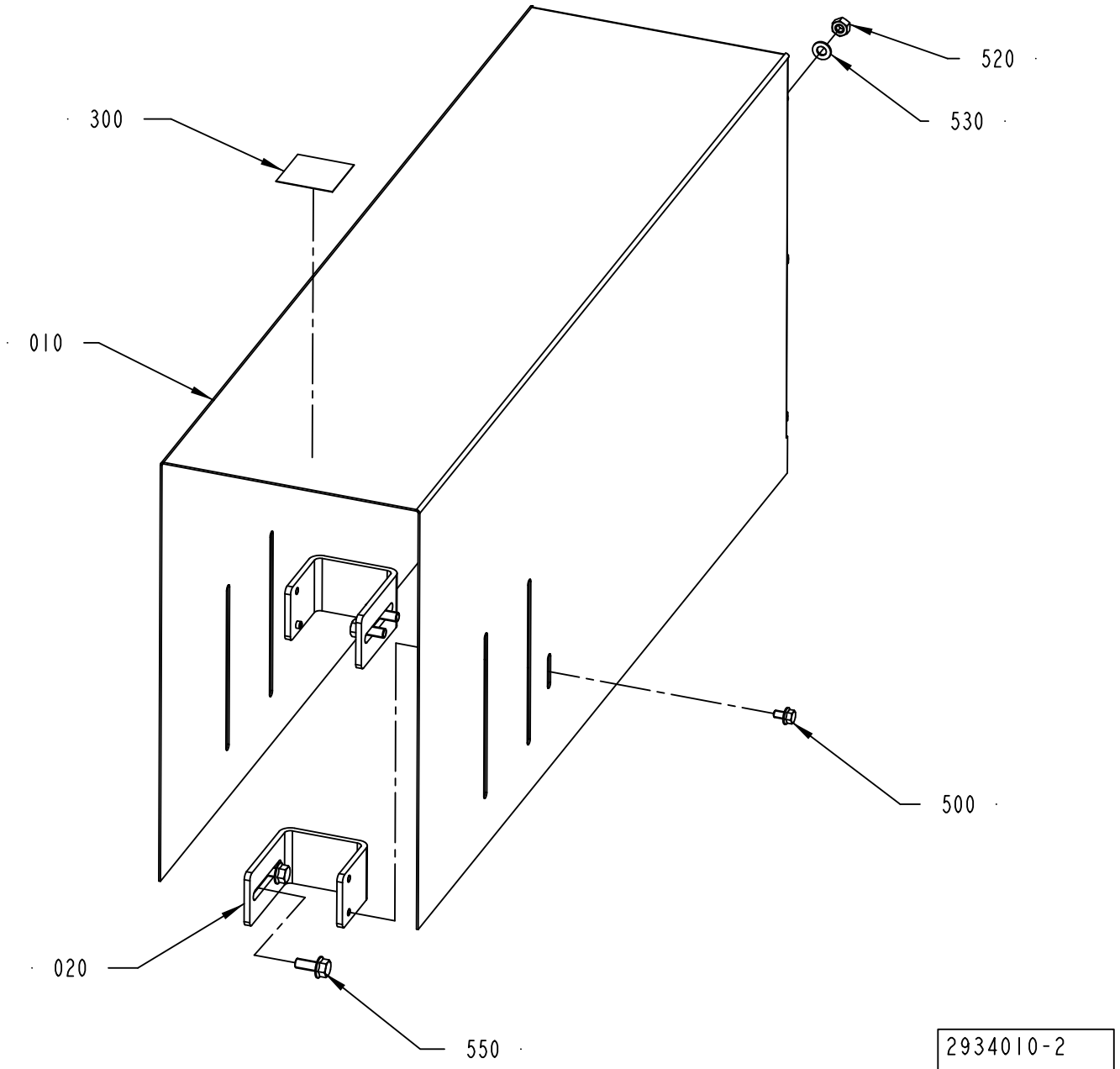
520
530
300
010
500
020
550
2934010-2
422087

ECM: 428260 - 20091221
Group number: 2934010-0100
Assembly Drawing: 2934010-2_1_AB

This list covers pages from 5-28 to 5-31

Pos	Part No	UN	Qty	Description	Page No
TCA ANSI (See drawing on page: 5-28)					
020	2982612-0000		2	SPACER ELEMENT	
030	2982617-0000		1	STUD BOLT	
300	90600-4040		1	CAUTION SIGN ANSI (H), DO NOT REACH IN	
510	312605-0316		2	HEXAGON NUT, M6M M6 A280	
540	315106-0153		2	WASHER ISO 7089-6-200 HV A4	
TCA ISO (See drawing on page: 5-28)					
020	2982612-0000		2	SPACER ELEMENT	
030	2982617-0000		1	STUD BOLT	
300	90459-7584		1	PROHOBITION SIGN ISO, DO NOT REACH IN	
510	312605-0316		2	HEXAGON NUT, M6M M6 A280	
540	315106-0153		2	WASHER ISO 7089-6-200 HV A4	
TWA ANSI (See drawing on page: 5-30)					
020	3060319-0000		2	SPACER ELEMENT	
300	90600-4040		1	CAUTION SIGN ANSI (H), DO NOT REACH IN	
550	312108-0451		4	SCREW EN 1665 TYPE F M8X20 A270	
TWA ISO (See drawing on page: 5-30)					
020	3060319-0000		2	SPACER ELEMENT	
300	90459-7584		1	PROHOBITION SIGN ISO, DO NOT REACH IN	
550	312108-0451		4	SCREW EN 1665 TYPE F M8X20 A270	
Common Parts					
010	2934025-0000		1	PROTECTION PLATE	
500	312108-0364		2	SCREW EN 1665 TYPE F M6X10 A270	
520	312605-0318		6	HEXAGON NUT, M6M M8 A280	
530	315105-0165		6	WASHER BRB 8,4X16 RFR	

Pos	Part No	UN	Qty	Description	Page No

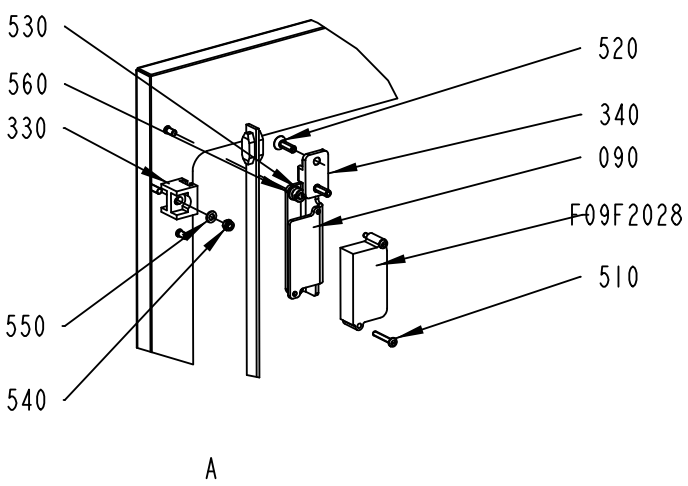

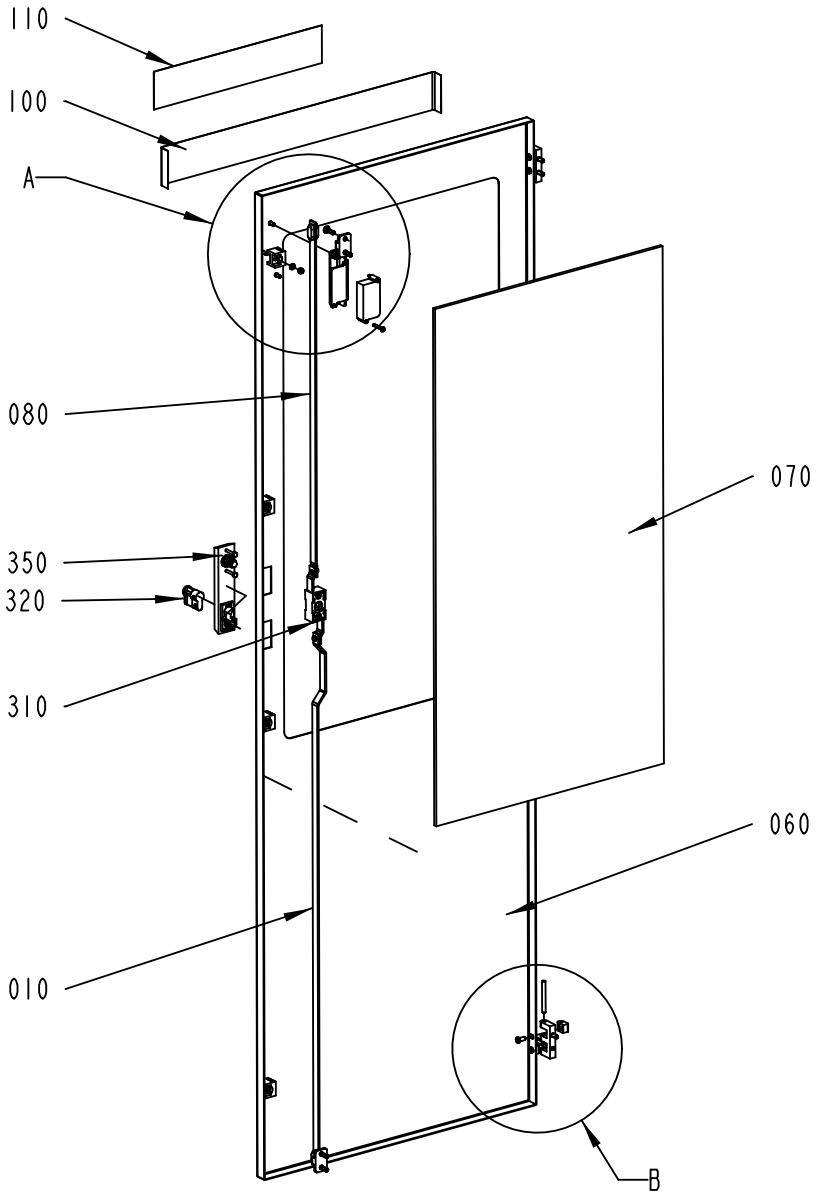

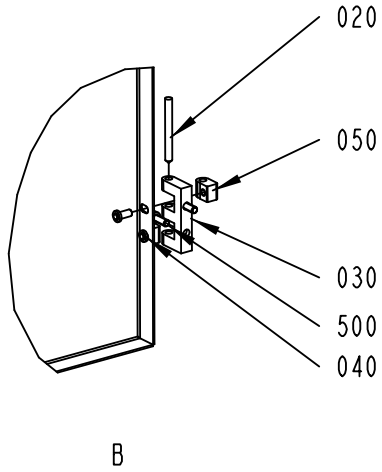

2839815-2
ECM 401749

ECM: 428788 - 20091221
Group number: 2839815-0200
Assembly Drawing: 2839815-2_1_AA

Pos	Part No	UN	Qty	Description	Page No
-					
010	975889-0017		1	STRUT	
020	988685-0000		3	PIN	
030	1035792-0000		3	E-HINGE	
040	1129767-0000		6	SCREW	
050	1129770-0000		6	BLOCKING PIECE	
060	2839816-0000		1	DOOR	
070	2839817-0000		1	GLASS	
080	2839818-0000		1	STRUT	
090	3039854-0000		1	BRACKET	
100	2939684-0000		1	TAPE	
110	1021990-0000		1	SIGN 356X70MM HOUSE MARK TEXT TETRA PAK	
300	90157-0041	L		SEALING COMPOUND, RHODORSEAL 5651	
310	90237-0123		1	LOCK, 1121-U10C	
320	90237-0128		1	LOCK CYLINDER, 1109-SU125	
330	90237-0144		4	GUIDE, 1121-SU540	
340	90237-0147		2	LOCKING LUG, NO. 1121-53-0P	
350	90237-0175		1	TURNING HANDLE, 1125-U185-0A	
500	312115-0368		6	SCREW ISO4762 M6X16 A4 80	
510	90459-4165		2	SAFETY SCREW, 20-053-43 SM4X25	
520	312155-0370		4	SCREW DIN 7991 MF6S M6X20 A4 70	
530	90459-2658		2	SLOTTED ROUND NUT DIN 546 M6	
540	312812-0314		4	HEXAGON NUT, NY-LOCK M5 A480	
550	315105-0146		4	WASHER BRB 5,3X10 RFR	
560	315105-0153		2	WASHER BRB 6,4X12 RFR	
F09F2028	90459-4089		1	SAFETY SENSOR NON-CONTACT EVA E	

Pos	Part No	UN	Qty	Description	Page No

Machine Type | Group Description | Used-In | Group Number | Page No

COVERING PANEL

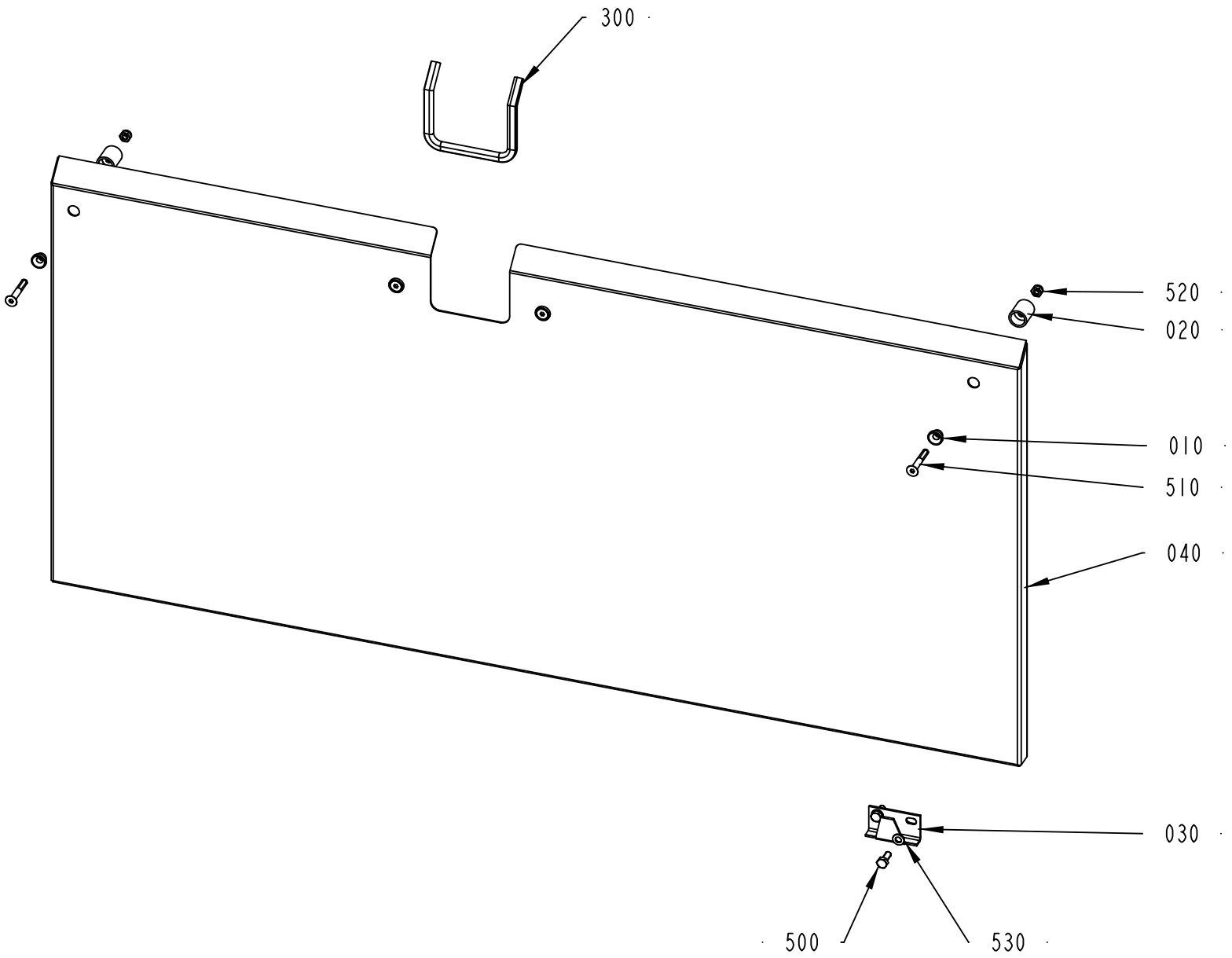

2840888-1
378472

ECM: 388264 - 20090409
Group number: 2840888-0100
Assembly Drawing: 2840888-1_1_AB

Pos	Part No	UN	Qty	Description	Page No
-					
010	578196-0000		4	SLEEVE	
020	578197-0000		4	SPACER	
030	975887-0000		2	CATCH	
040	2840889-0000		1	PROTECTION PLATE	
300	90143-0060	MM	300	EDGE STRIP 9,5X6,3MM BLACK PVC	
500	312105-0368		4	SCREW M6S ISO 4017 M6X16 A480	
510	312155-0378		4	SCREW DIN 7991 MF6S M6X40 A4 70	
520	312812-0316		4	HEXAGON NUT, NY-LOCK M6 A480	
530	315105-0153		4	WASHER BRB 6,4X12 RFR	

Pos	Part No	UN	Qty	Description	Page No

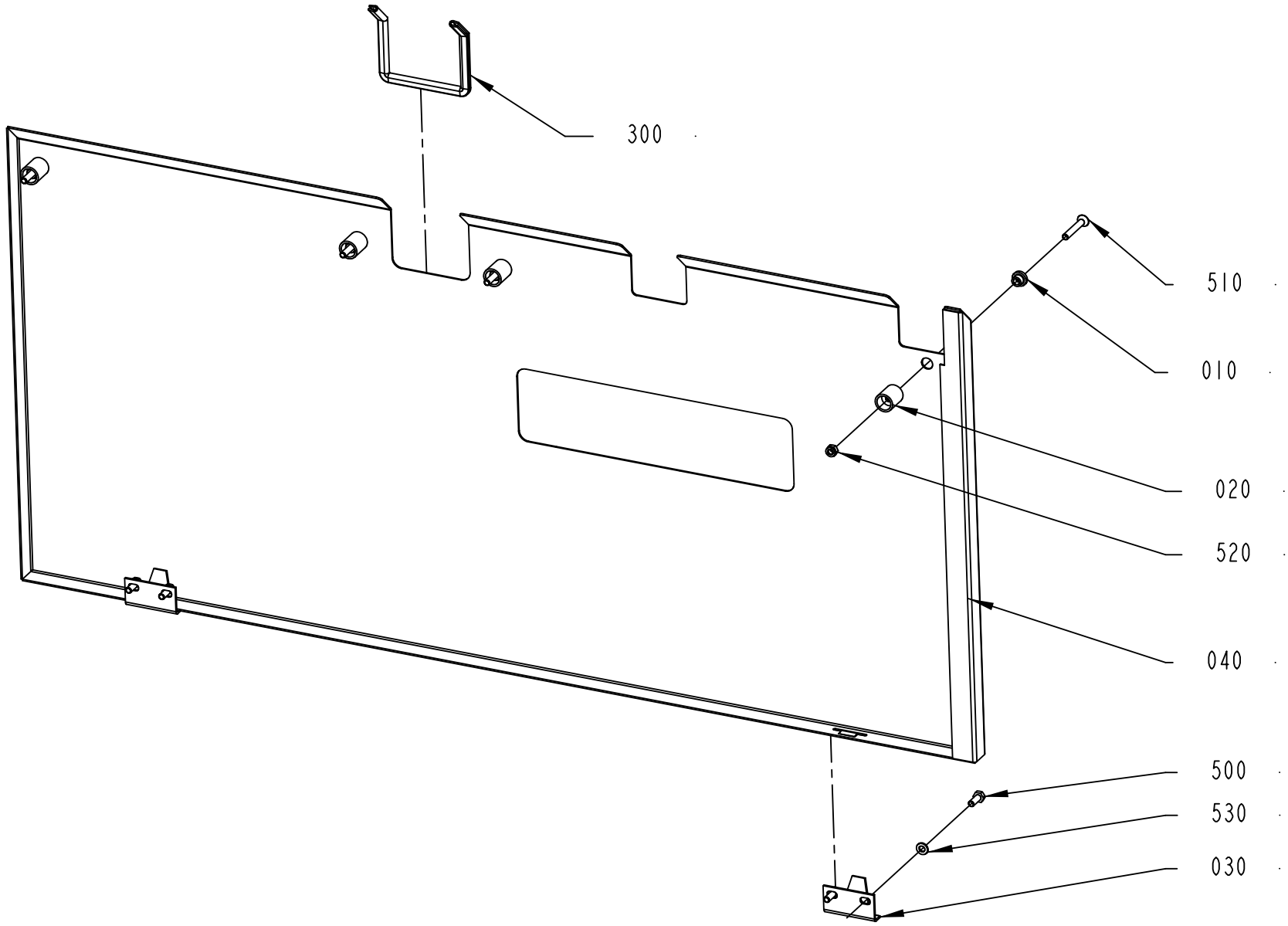

2840890-2
ECM 401749

ECM: 405758 - 20090630
Group number: 2840890-0200
Assembly Drawing: 2840890-2_1_AA

Pos	Part No	UN	Qty	Description	Page No
-					
010	578196-0000		4	SLEEVE	
020	578197-0000		4	SPACER	
030	975887-0000		2	CATCH	
040	3039846-0000		1	PROTECTION PLATE	
300	90143-0060	MM	300	EDGE STRIP 9,5X6,3MM BLACK PVC	
500	312105-0368		4	SCREW M6S ISO 4017 M6X16 A480	
510	312155-0378		4	SCREW DIN 7991 MF6S M6X40 A4 70	
530	312812-0316		4	HEXAGON NUT, NY-LOCK M6 A480	
540	315105-0153		4	WASHER BRB 6,4X12 RFR	

Pos	Part No	UN	Qty	Description	Page No

Tetra Pak

SPC
Spare Parts Catalogue

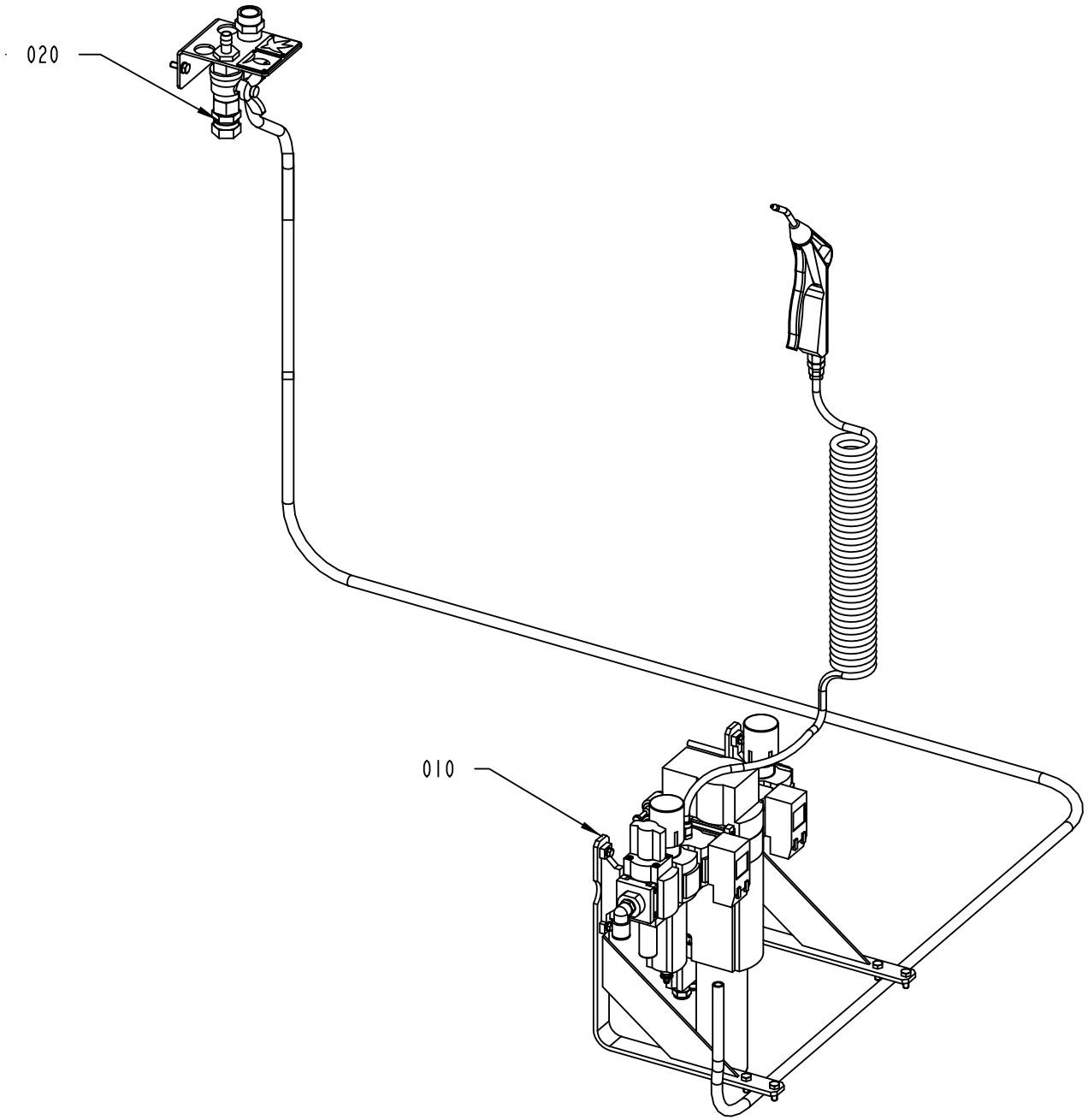

663306-2
401749

ECM: 405810 - 20090630
Group number: 663306-0200
Assembly Drawing: 663306-2_1_AA

Pos	Part No	UN	Qty	Description	Page No
-					
010	2839813-0200		1	AIR SUPPLY	**6-5**
020	2941716-0100		1	MAIN PIPE	**6-7**

Pos	Part No	UN	Qty	Description	Page No

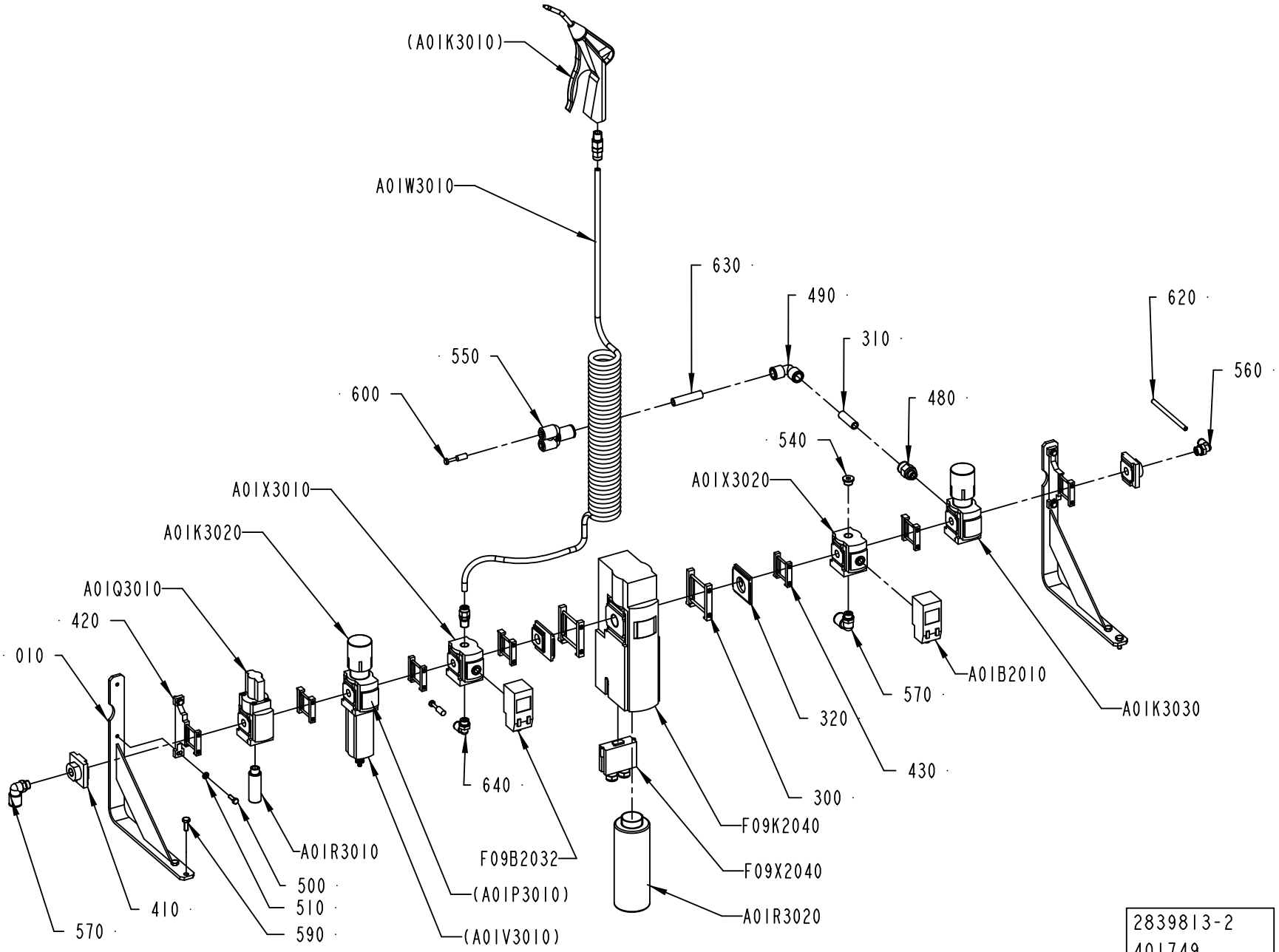
(A01K3010)
A01W3010
630
490
620
310
560
550
480
600
540
A01X3010
A01X3020
A01K3020
A01Q3010
420
010
A01B2010
570
A01K3030
320
430
640
300
F09K2040
A01R3010
F09B2032
F09X2040
500
(A01P3010)
410
510
A01R3020
570
590
(A01V3010)
2839813-2
401749

ECM: 436894 - 20100222
Group number: 2839813-0200
Assembly Drawing: 2839813-2_1_AA

Pos	Part No	UN	Qty	Description	Page No
TBA, TB, TPA					
020	3039844-0000		1	PNEUMATIC DIAGRAM	
600	350006-0001		1	PUSH-IN FITTING QS-F-6H-4	
TWA, TCA					
020	2957745-0000		1	PNEUMATIC DIAGRAM	
600	350006-0001		2	PUSH-IN FITTING QS-F-6H-4	
Common Parts					
010	3039843-0000		2	BRACKET	
300	90459-1859		2	BRACKET, MS6-MV	
	90459-4787		*1*	*SENSOR BRACKET WSM-12-J-M5*	
310	315400-0010	MM	50	TUBE PUN-H-12X2-BL	
320	90600-4317		2	MODULE CONNECTOR, MS4-6-AMV	
410	90459-2246		2	END PLATE, MS4-AGB	
420	90459-2247		2	BRACKET, MS4-WP	
430	90459-2248		5	BRACKET, MS4-MV	
480	350001-0011		1	PUSH-IN FITTING QS-F-G1/4-12	
490	350004-0005		1	PUSH-IN L-FITTING QSL-F-12	
500	312105-0329		4	SCREW M6S ISO 4017 M5X16 A480	
510	315106-0146		4	WASHER ISO 7089-5-200 HV A4	
540	342713-0210		1	PLUG, EXT THREAD HEX SOCKET	
550	90459-6065		1	Y-FITTING QSY-12-8	
560	350002-0008		1	PUSH-IN L-FITTING QSL-F-G1/4-6	
570	350002-0011		2	PUSH-IN L-FITTING QSL-F-G1/4-12	
590	312105-0368		4	SCREW M6S ISO 4017 M6X16 A480	
620	315400-0001	MM	2000	TUBE PUN-H-6X1-BL	
630	315400-0010	MM	50	TUBE PUN-H-12X2-BL	
640	350002-0009		1	PUSH-IN L-FITTING QSL-F-G1/4-8	
A01B2010	90458-2730		1	PRESSURE SENS. SDE1-D10-G2-R18-C-P1-M8	
A01K3020	90459-2339		1	FILTER REGULATOR, MS4-LFR-1/4-D7-ERV-AS	
	90459-3814		*1*	*FILTER CARTRIDGE, MS4-LFP-E*	
A01K3030	90459-2242		1	REGULATOR, MS4-LRB-1/4-D7-AS	
A01Q3010	90459-2337		1	SHUT OFF VALVE, MS4-EM1-1/4	
A01R3010	90328-0013		1	SILENCER U-1/4, 2316	
A01R3020	90601-1586		1	SILENCER G1"	
A01W3010	90458-1740		1	AIR GUN ASSEMBLY, CEJN 199589668	
A01X3010	90459-3000		1	DISTRIBUTOR, MS4-FRM-1/4-A8	
A01X3020	90459-3000		1	DISTRIBUTOR, MS4-FRM-1/4-A8	
F09B2032	90458-2730		1	PRESSURE SENS. SDE1-D10-G2-R18-C-P1-M8	
F09K2040	90601-1126		1	SAFETY VALVE, MS6-SV-1/2-D-10V24-AG	
F09X2040	90601-1168		1	SOCKET CONNECTOR, NECA-S1G9-P9-MP3	

Pos	Part No	UN	Qty	Description	Page No

Machine Type | Group Description | Used-In | Group Number | Page No

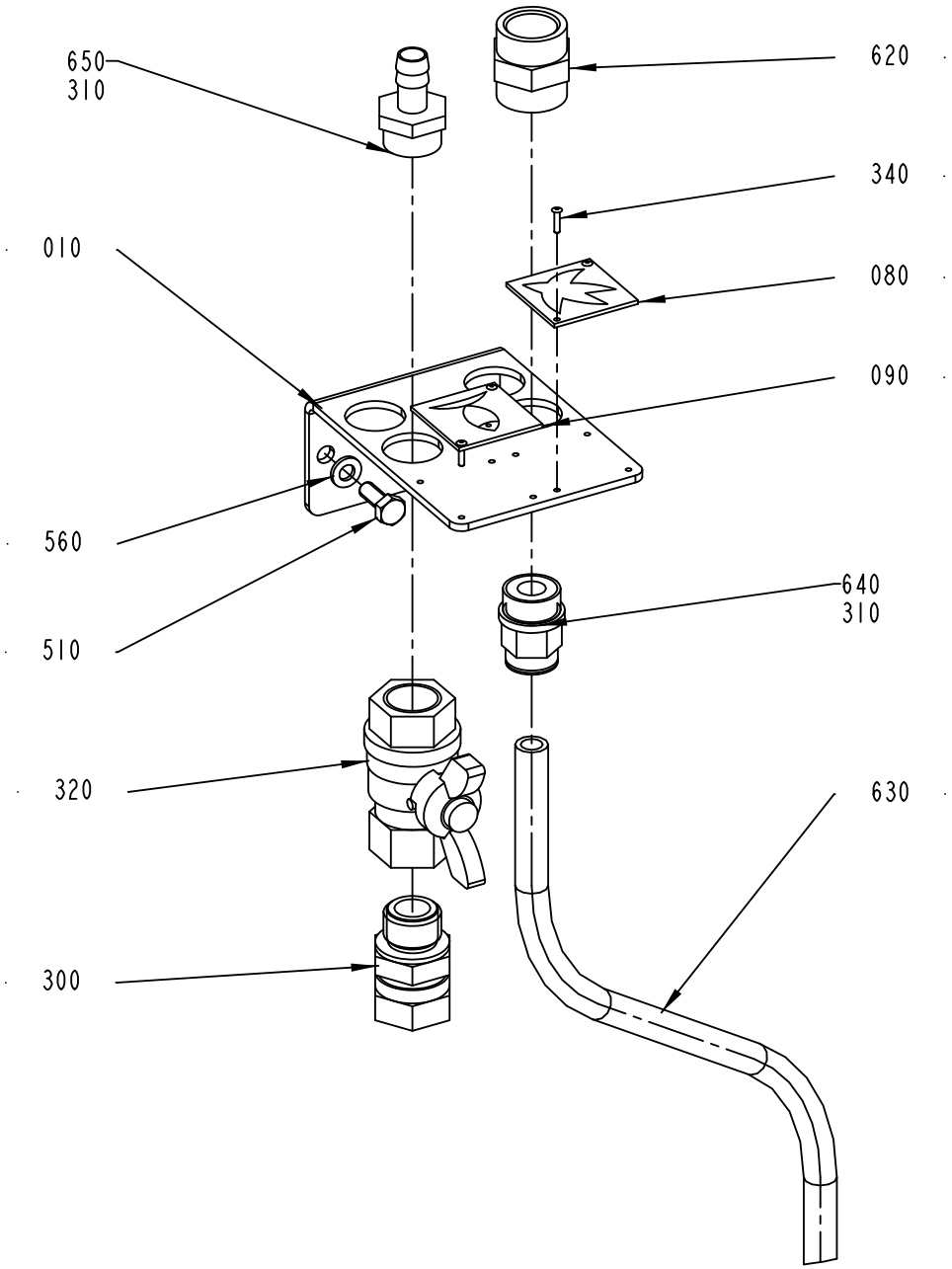

2941716-1
388950

ECM: 389586 - 20090409
Group number: 2941716-0100
Assembly Drawing: 2941716-1_1_AB

Pos	Part No	UN	Qty	Description	Page No
-					
010	2565207-0000		1	BRACKET	
080	273458-0000		1	SIGN, AIR	
090	273455-0000		1	SIGN, COLD WATER	
300	90030-0188		1	CONN. STR. GA-15-G1/2	
310	90157-0037	ML	5	THREAD SEALANT LOCTITE 542	
320	90187-0029		1	BALL VALVE G1/2, NPBR	
340	90457-0105		4	BLANK RIVET 2X9	
510	312105-0368		2	SCREW M6S ISO 4017 M6X16 A480	
560	315105-0153		2	WASHER BRB 6,4X12 RFR	
620	342707-0113		1	SLEEVE, INT. THREAD, NO. 2543-1/2	
630	315400-0010	MM	4000	TUBE PUN-H-12X2-BL	
640	350001-0016		1	PUSH-IN FITTING QS-F-G1/2-12	
650	342901-0105		1	HOSE NIPPLE, EXT.THR. R1/2-12 MM	

Pos	Part No	UN	Qty	Description	Page No

Tetra Pak

SPC
Spare Parts Catalogue

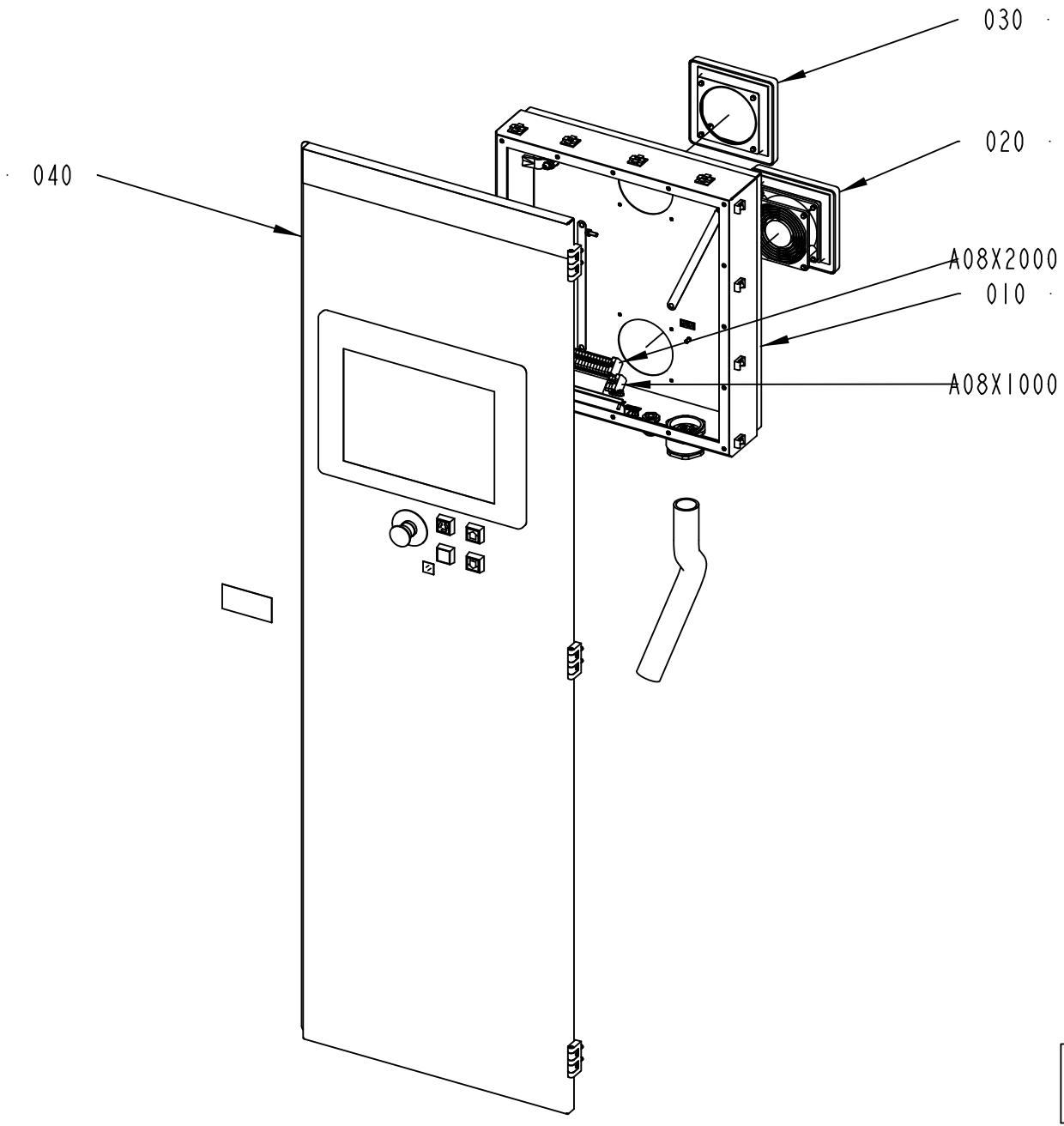

663307-2
399387

ECM: 399390 - 20090630
Group number: 663307-0200
Assembly Drawing: 663307-2_1_AA

Pos	Part No	UN	Qty	Description	Page No
-					
010	2859681-0100		1	CONNECTION BOX	**7-5**
020	2582040-0100		1	COOLING AIR INTAKE	**7-7**
030	599749-0100		1	COOLING AIR OUTLET	**7-9, 8-63**
040	2846737-0200		1	DOOR	**7-11**
A08X1000	2892718-0100		1	TERMINAL	**7-13**
A08X2000	2892719-0100		1	TERMINAL	**7-15**

Pos	Part No	UN	Qty	Description	Page No

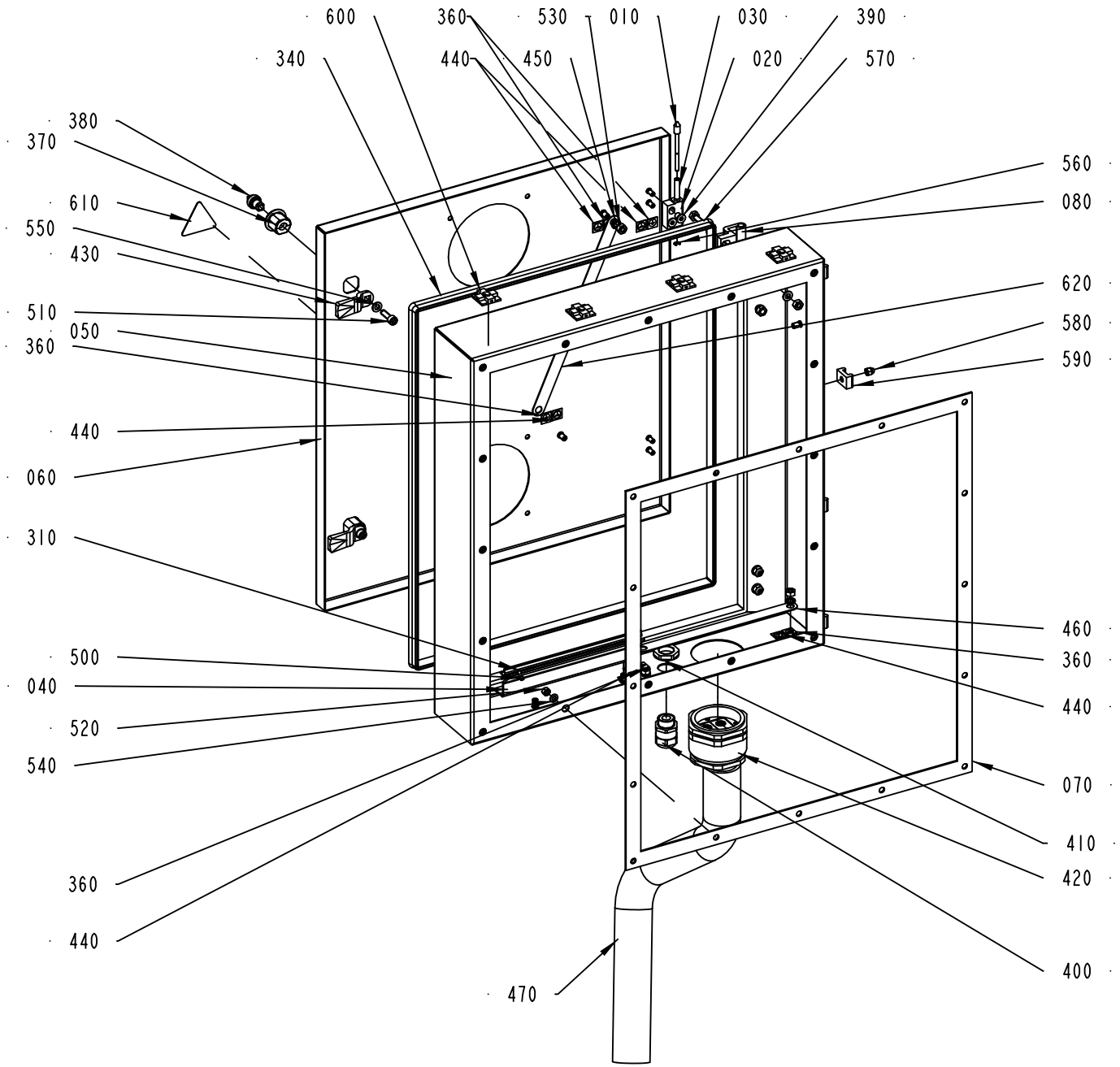

2859681-1
317616

ECM: 436895 - 20100222
Group number: 2859681-0100
Assembly Drawing: 2859681-1_1_AA

Pos	Part No	UN	Qty	Description	Page No
FINAL DEST. CANADA, FINAL DEST. USA					
610	359715-0100		1	WARNING SIGN ANSI (H), ELECTRIC SHOCK	
OTHER COUNTRIES NOT USA/CANADA					
610	359705-0015		1	WARNING SIGN ISO, RISK OF ELECTRIC SHOCK	
Common Parts					
010	959656-0000		2	COTTER	
020	959657-0000		2	HINGE FLANGE	
030	959658-0000		2	SPRING	
040	2557494-0000		1	BRACKET	
050	2859680-0000		1	PROTECTIVE COVER	
060	2859682-0000		1	COVER	
070	2860891-0000		1	RUBBER GASKET	
080	975880-0000		2	HINGE FLANGE	
310	90077-0328	MM	185	RAIL TS15/5	
340	90143-0057	MM	1790	STRIP EMKA 1011-05 21X11MM	
360	90194-0152		5	SIGN, EARTH	
370	90237-0142		2	LOCK HOUSING, 1000-U45	
380	90237-0202		2	LOCK, INSERT SQUARE,1000-U2 8 MM	
390	90287-0205		4	SCREW	
400	90458-0315		1	CABLE GLAND, M20X1,5, NO.5311 1120	
410	90458-0323		1	NUT, M20X1,5	
420	90458-1150		1	CABLE GLAND, RG M63/4	
430	90459-1292		2	LOCK CAM, 1000-50 GH 18	
440	90459-2928		5	LABEL 60417-2-IEC-5020, COMM. REF. POT.	
450	90062-0015		4	LOCK WASHER SERRAT.EXT.GEAR,6,4/11 H=0,7	
460	90458-1869		1	EMC EARTH BRAID, 16MM2 L=200MM	
470	90024-0062	MM	1000	CABLE PROTECTION, 40MM	
500	312105-0291		2	SCREW M6S ISO 4017 M4X12 A470	
510	312115-0370		2	SCREW ISO4762 M6X20 A4 80	
520	312605-0314		16	HEXAGON NUT, M6M M5 A280	
530	312605-0316		10	HEXAGON NUT, M6M M6 A280	
540	315105-0146		16	WASHER BRB 5,3X10 RFR	
550	315105-0153		12	WASHER BRB 6,4X12 RFR	
560	315755-0105		2	RETAINING RING SHAFT DIN 6799 3,2 A2	
570	312105-0370		4	SCREW M6S ISO 4017 M6X20 A480	
580	312705-0314		4	NUT HEX. DOMED CAP MHM-6 M5 A280	
590	352113-0204		4	ANCHOR PLATES FOR STRIPS, TYPE TM3S25-M	
600	352113-0206		4	ANCHOR PLATES FOR STRIPS, TYPE ABM100-AT	
620	90600-2904		1	EARTH BRAID, 250/16/8,5	

Pos	Part No	UN	Qty	Description	Page No

Machine Type | Group Description | Used-In | Group Number | Page No

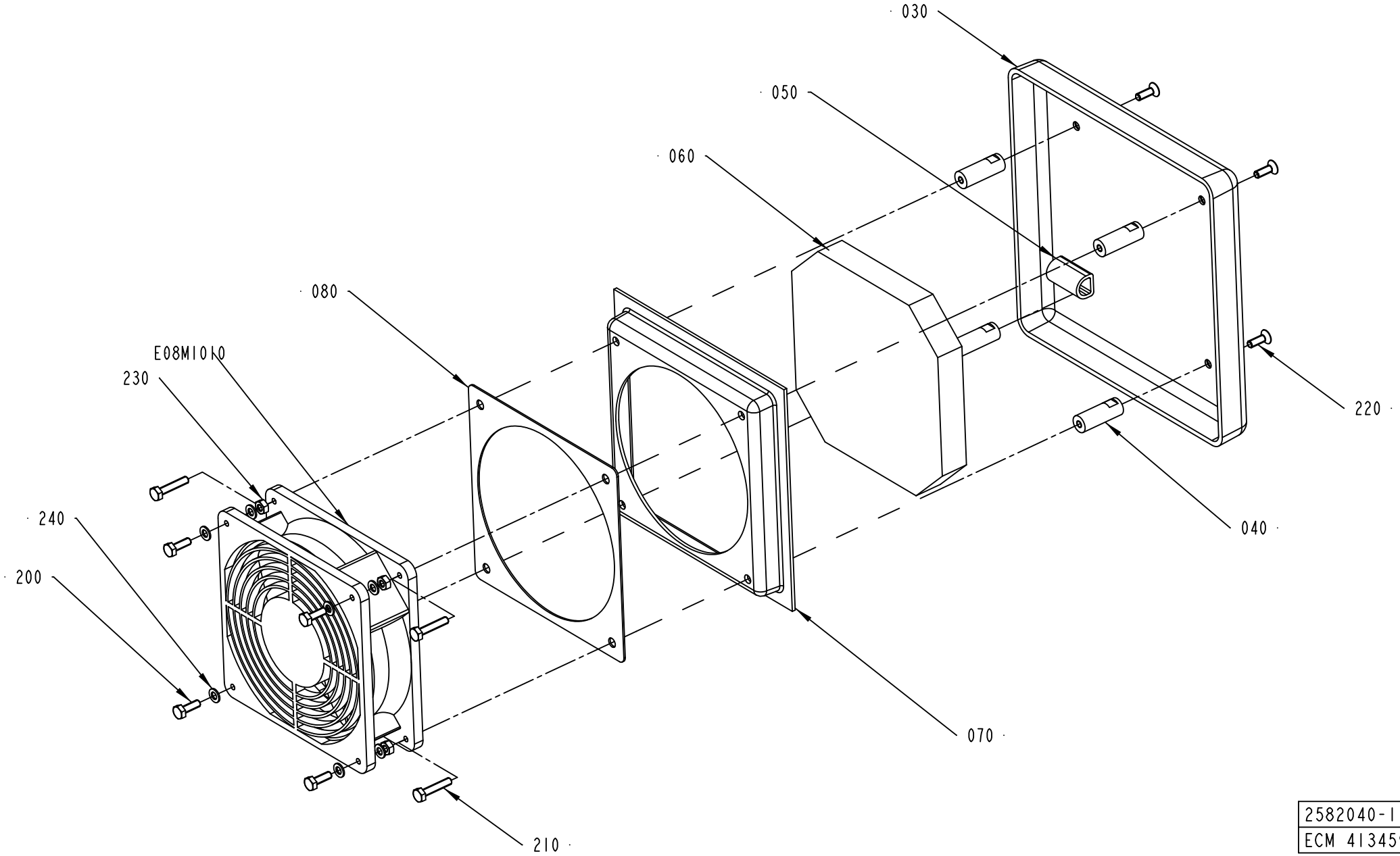

2582040-1
ECM 413459

ECM: 414562 - 20090914
Group number: 2582040-0100
Assembly Drawing: 2582040-1_1_AB

Pos	Part No	UN	Qty	Description	Page No
-					
030	599752-0000		1	COVER	
040	599753-0000		4	SPACER	
050	599760-0000		1	SPACER	
060	599750-0000		1	FILTER	
070	599751-0000		1	INSERT	
080	599755-0000		1	GASKET	
200	312105-0291		4	SCREW M6S ISO 4017 M4X12 A470	
210	312105-0295		4	SCREW M6S ISO 4017 M4X20 A470	
220	312155-0291		4	SCREW DIN 7991 MF6S M4X12 A4 70	
230	312605-0312		4	HEXAGON NUT, M6M M4 A280	
240	315105-0136		8	WASHER BRB 4,3X8 RFR	
E08M1010	90264-0032		1	FAN, 4656N+LZ30+LZ 120,220V 50HZ	

Pos	Part No	UN	Qty	Description	Page No

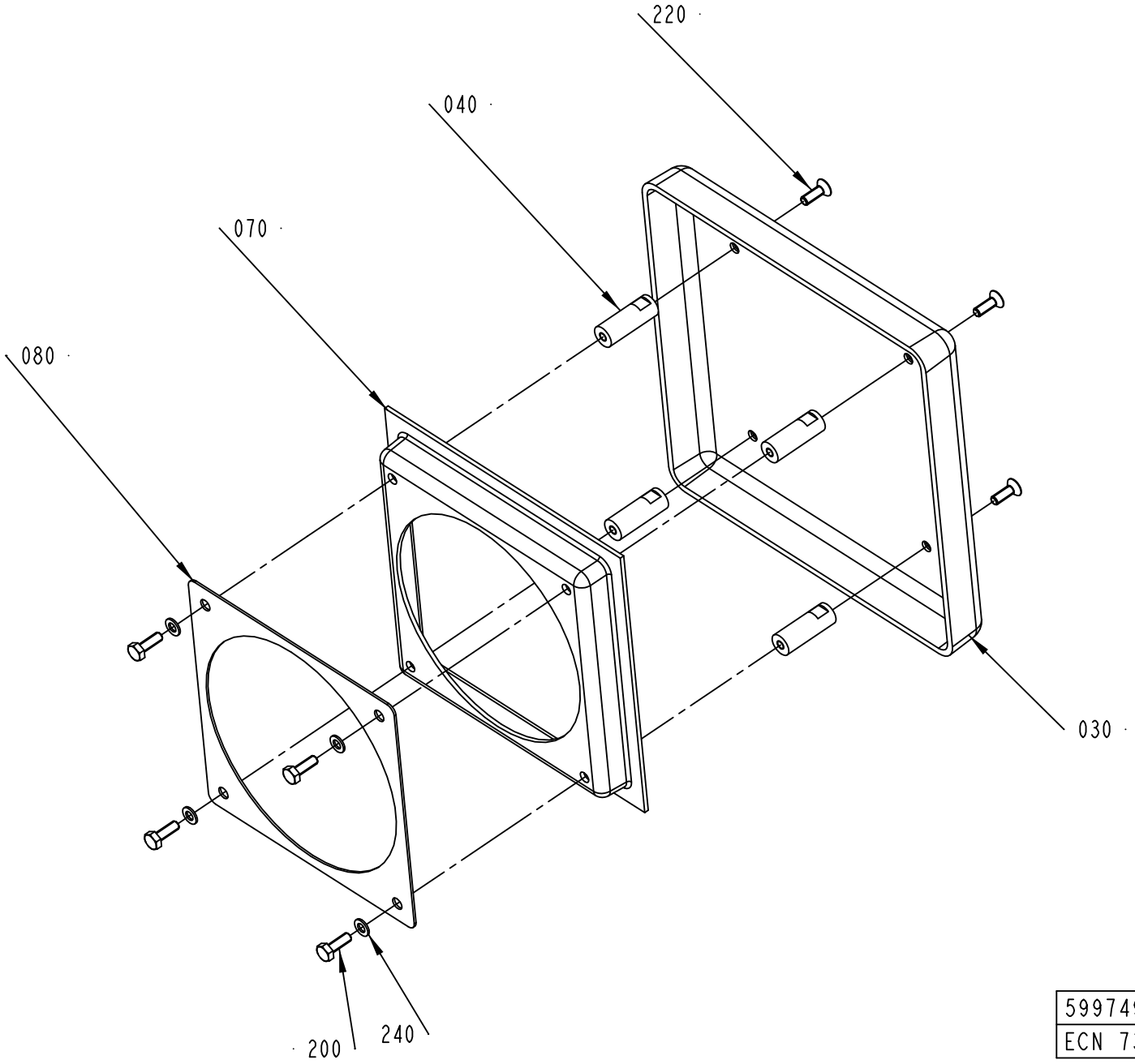

599749-1
ECN 73648

ECM: 436896 - 20100222
Group number: 599749-0100
Assembly Drawing: 599749-1_1_AB

Pos	Part No	UN	Qty	Description	Page No
-					
030	599752-0000		1	COVER	
040	599753-0000		4	SPACER	
070	599751-0000		1	INSERT	
080	599755-0000		1	GASKET	
200	312105-0291		4	SCREW M6S ISO 4017 M4X12 A470	
220	312155-0291		4	SCREW DIN 7991 MF6S M4X12 A4 70	
240	315105-0136		4	WASHER BRB 4,3X8 RFR	

Pos	Part No	UN	Qty	Description	Page No

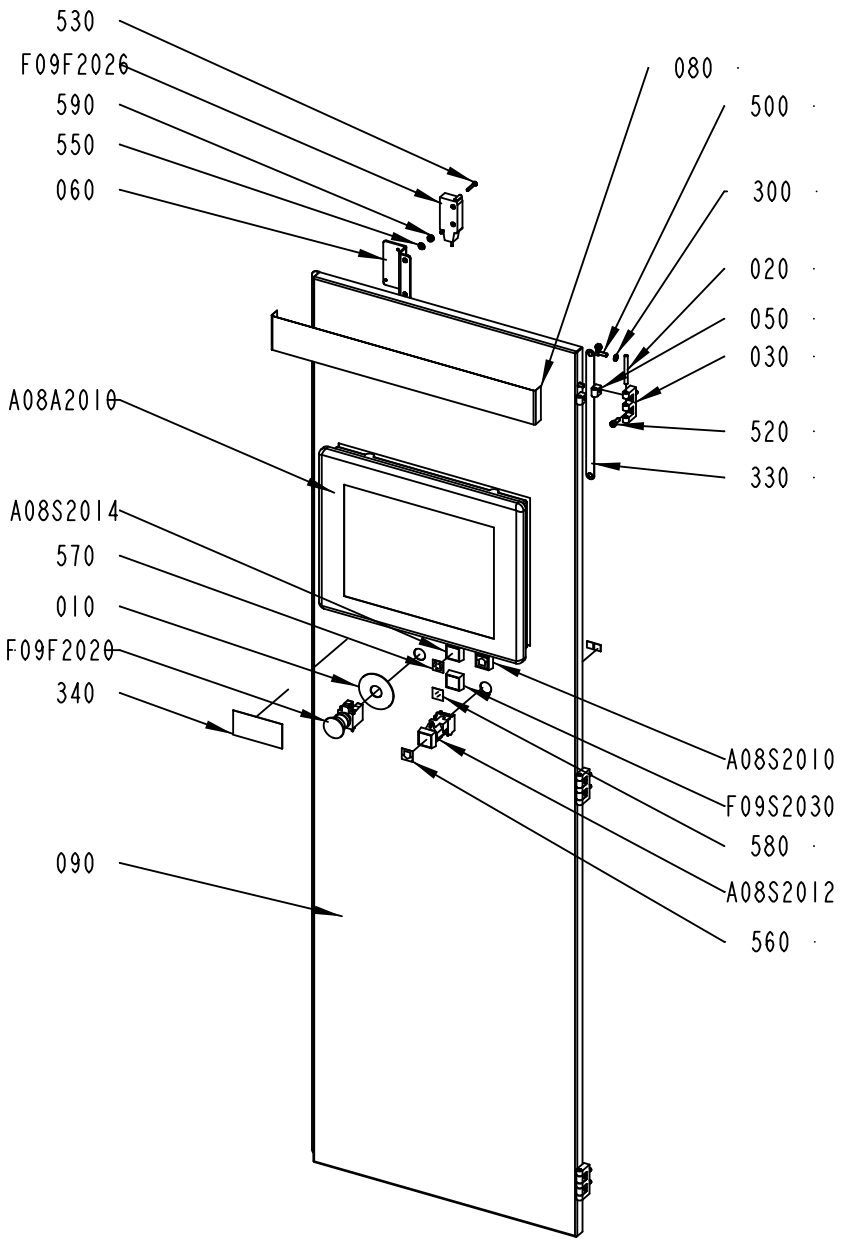

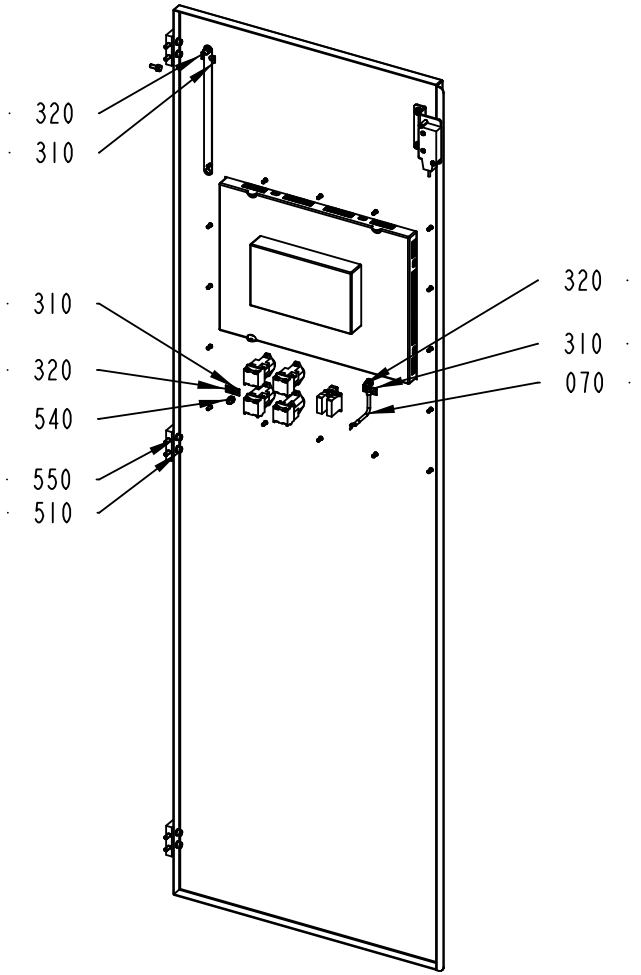

2846737-2
399387

ECM: 436897 - 20100222
Group number: 2846737-0200
Assembly Drawing: 2846737-2_1_AA

Pos	Part No	UN	Qty	Description	Page No
FINAL DEST. CANADA, FINAL DEST. USA					
340	90600-5233		1	WARNING SIGN ANSI (H), READ MANUAL, AUTO	
OTHER COUNTRIES NOT USA/CANADA					
340	90600-5235		1	MANDATORY ACTION SIGN ISO, READ MANUAL	
Common Parts					
010	486826-0001		1	SIGN "EMERGENCY STOP"	
020	988685-0000		3	PIN	
030	1035792-0000		3	E-HINGE	
050	1129770-0000		6	BLOCKING PIECE	
060	3039855-0000		1	BRACKET	
070	2937123-0000		1	EARTH WIRE	
080	2939685-0000		1	TAPE	
090	3034240-0000		1	DOOR	
300	90062-0015		4	LOCK WASHER SERRAT.EXT.GEAR,6,4/11 H=0,7	
310	90194-0152		3	SIGN, EARTH	
320	90459-2928		3	LABEL 60417-2-IEC-5020, COMM. REF. POT.	
330	90600-2904		1	EARTH BRAID, 250/16/8,5	
500	312105-0368		1	SCREW M6S ISO 4017 M6X16 A480	
510	312115-0366		6	SCREW ISO4762 M6X12 A4 80	
520	312115-0368		6	SCREW ISO4762 M6X16 A4 80	
530	90459-4165		2	SAFETY SCREW, 20-053-43 SM4X25	
540	312605-0316		3	HEXAGON NUT, M6M M6 A280	
550	315105-0153		8	WASHER BRB 6,4X12 RFR	
560	359301-0001		2	BUTTON SIGN, UP	
570	359301-0090		1	BUTTON SIGN, INCHING	
580	359301-0504		1	BUTTON SIGN, RESET	
590	90459-2658		2	SLOTTED ROUND NUT DIN 546 M6	
A08A2010	90600-0980		1	OPERATOR PANEL 15"+, 2711P-T15C4D2-TP	
A08S2010	90064-0082		1	PUSH BUTTON, WHITE	
	90036-0057		*1*	*LIGHT BULB, BA9S 28V*	
A08S2012	90064-0082		1	PUSH BUTTON, WHITE	
	90036-0057		*1*	*LIGHT BULB, BA9S 28V*	
A08S2014	90064-0082		1	PUSH BUTTON, WHITE	
	90036-0057		*1*	*LIGHT BULB, BA9S 28V*	
F09F2020	90458-1651		1	EMERGENCY STOP, ZB4-BS-844 ZB4-BZ-104	
F09F2026	90459-6961		1	SAFETY SENSOR, NON CONT. ADAM-E M12 0,5M	
F09R2030	90038-0021		1	DIODE, 1A 800V	
F09S2030	90064-0082		1	PUSH BUTTON, WHITE	
	90036-0057		*1*	*LIGHT BULB, BA9S 28V*	

Pos	Part No	UN	Qty	Description	Page No

Machine Type	Group Description	Used-In	Group Number	Page No

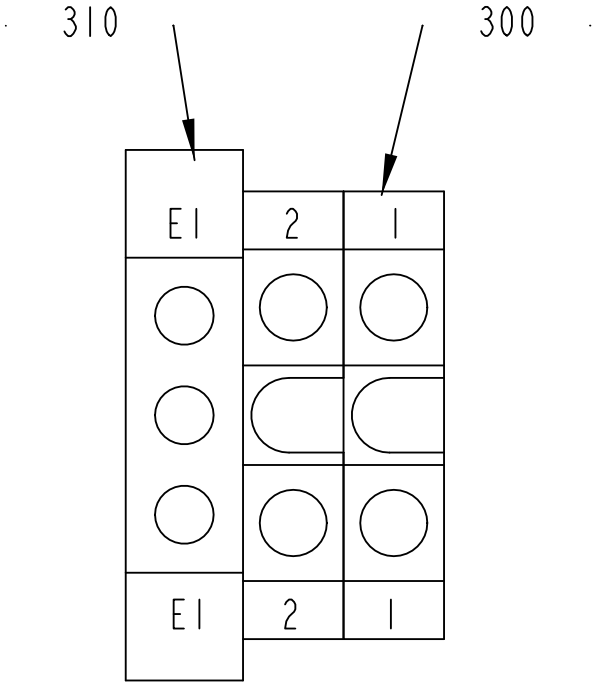

A08X1000

2892718-1
317616

ECM: 335020 - 20080303
Group number: 2892718-0100
Assembly Drawing: 2892718-1_1_AA

Pos	Part No	UN	Qty	Description	Page No
-					
300	90077-0079		2	FEED THROUGH TERMINAL, 02943.6	
310	90135-0026		1	EARTH TERMINAL, 3802.6	

Pos	Part No	UN	Qty	Description	Page No

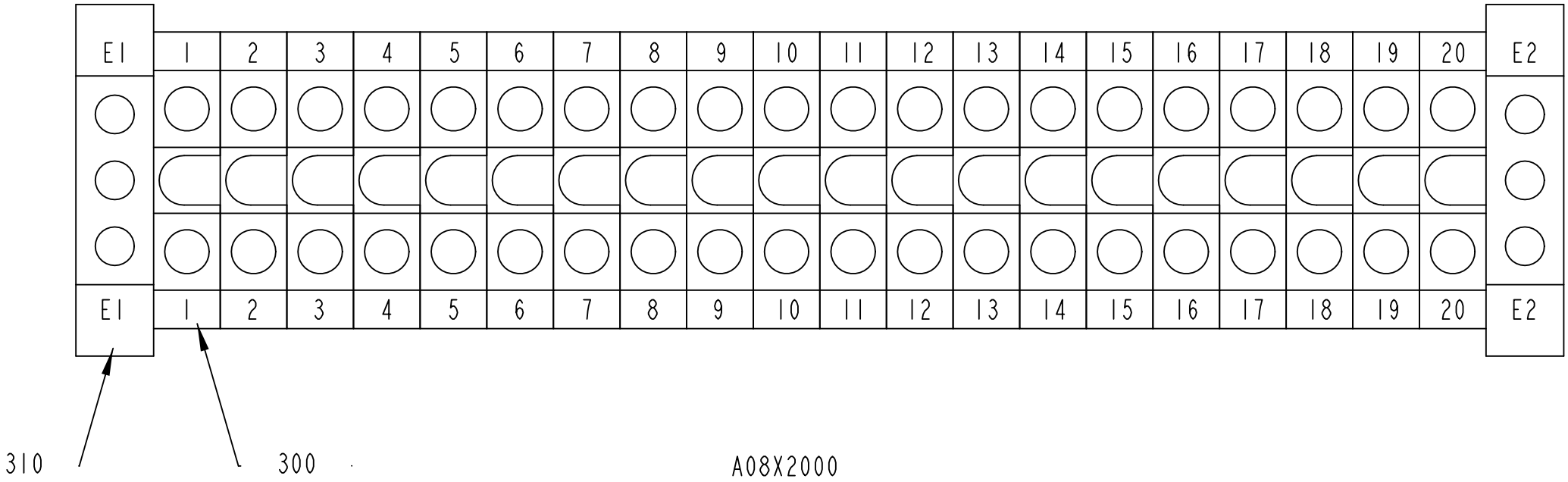

2892719-1
317616

ECM: 335021 - 20080303
Group number: 2892719-0100
Assembly Drawing: 2892719-1_1_AA

Pos	Part No	UN	Qty	Description	Page No
-					
300	90077-0079		20	FEED THROUGH TERMINAL, 02943.6	
310	90135-0026		2	EARTH TERMINAL, 3802.6	

Pos	Part No	UN	Qty	Description	Page No

Tetra Pak

SPC
Spare Parts Catalogue

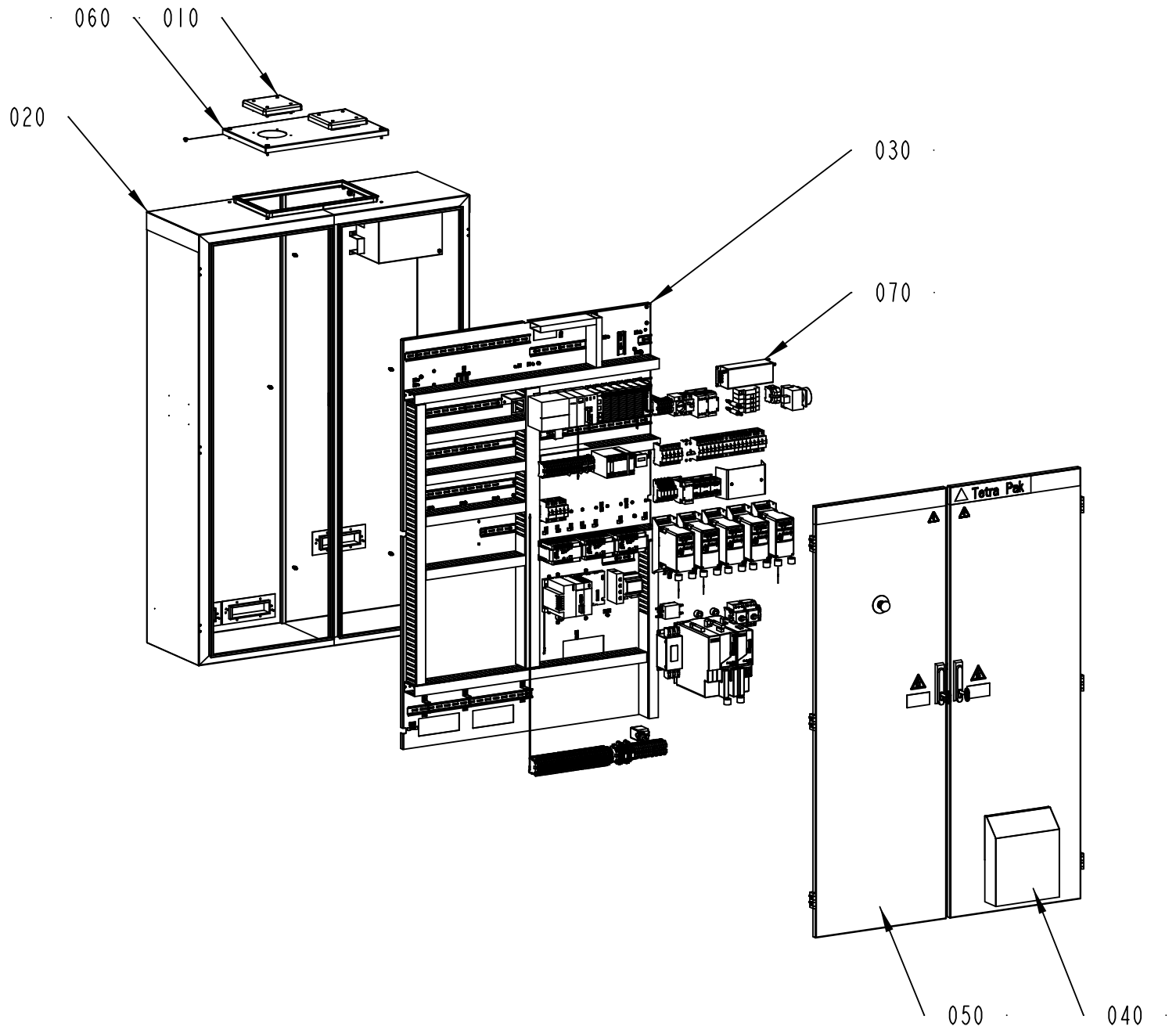

663308-3
399387

Pos	Part No	UN	Qty	Description	Page No
Coolsystem Fianal destination other countries not USA/CANADA (See drawing on page: 8-4)					
070	2913341-0300		1	ELECTRIC MATERIALS	**8-7**
Coolsystem and Final destination USA, Coolsystem and Final destination CANADA (See drawing on page: 8-4)					
070	3053564-0100		1	ELECTRIC MATERIALS	**8-53**
No Coolsystem Final Destination other countries not USA/CANADA (See drawing on page: 8-2)					
010	599749-0100		2	COOLING AIR OUTLET	**7-9, 8-63**
060	2858602-0100		1	COVER	**8-65**
070	2913341-0300		1	ELECTRIC MATERIALS	**8-7**
No Coolsystem and Final destination USA, No Coolsystem and Final destination CANADA (See drawing on page: 8-2)					
010	599749-0100		2	COOLING AIR OUTLET	**7-9, 8-63**
060	2858602-0100		1	COVER	**8-65**
070	3053564-0100		1	ELECTRIC MATERIALS	**8-53**
Common Parts					
020	2844515-0200		1	ELECTRICAL CABINET	**8-67**
030	2844517-0200		1	MOUNTING PLATE	**8-69, 8-71**
040	2844518-0200		1	EL-CABINET DOOR	**8-73, 8-75**
050	2844519-0200		1	EL-CABINET DOOR	**8-77**

Pos	Part No	UN	Qty	Description	Page No

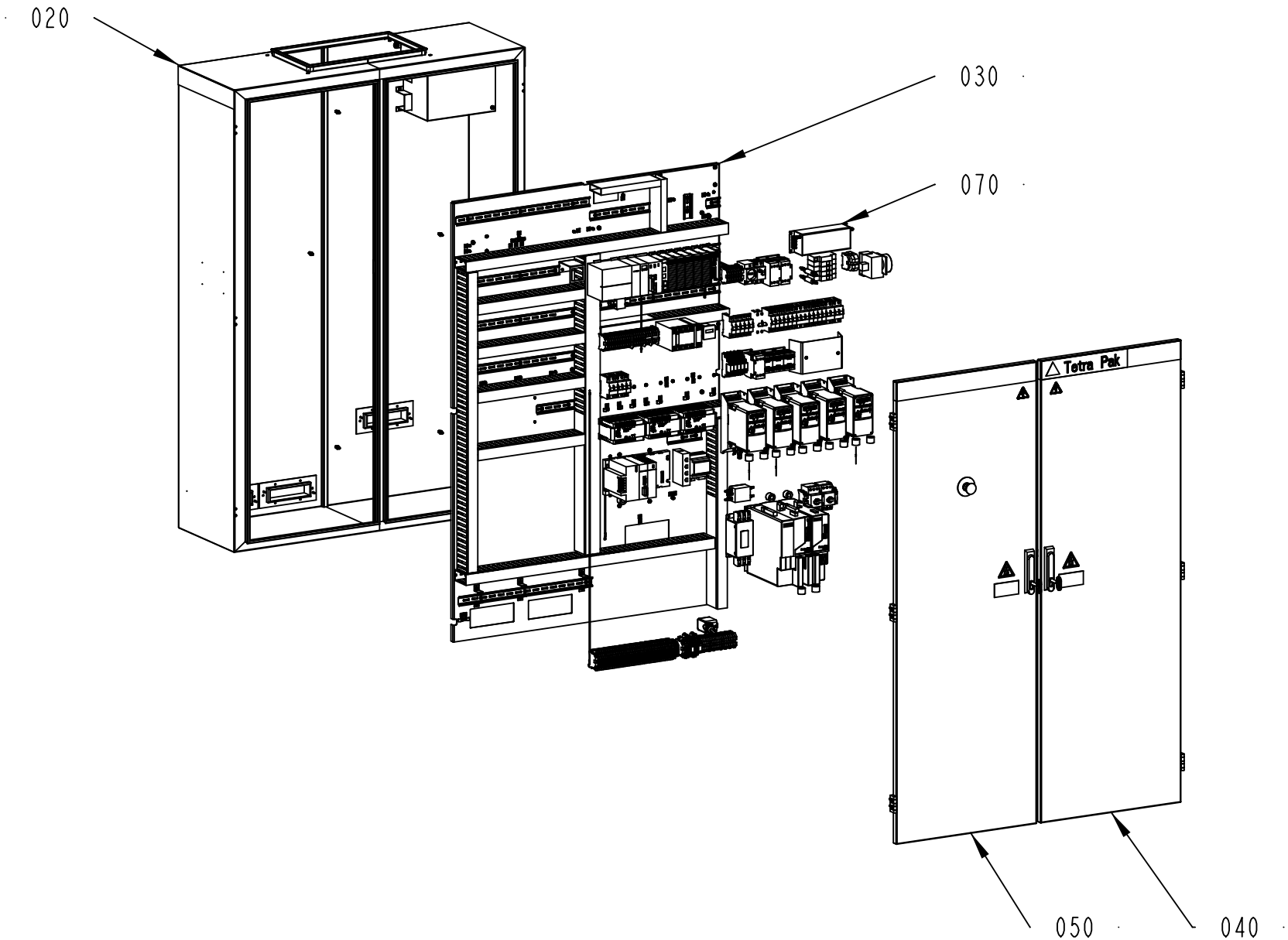

663308-4
399387

Pos	Part No	UN	Qty	Description	Page No
Coolsystem Fianal destination other countries not USA/CANADA (See drawing on page: 8-4)					
070	2913341-0300		1	ELECTRIC MATERIALS	**8-7**
Coolsystem and Final destination USA, Coolsystem and Final destination CANADA (See drawing on page: 8-4)					
070	3053564-0100		1	ELECTRIC MATERIALS	**8-53**
No Coolsystem Final Destination other countries not USA/CANADA (See drawing on page: 8-2)					
010	599749-0100		2	COOLING AIR OUTLET	**7-9, 8-63**
060	2858602-0100		1	COVER	**8-65**
070	2913341-0300		1	ELECTRIC MATERIALS	**8-7**
No Coolsystem and Final destination USA, No Coolsystem and Final destination CANADA (See drawing on page: 8-2)					
010	599749-0100		2	COOLING AIR OUTLET	**7-9, 8-63**
060	2858602-0100		1	COVER	**8-65**
070	3053564-0100		1	ELECTRIC MATERIALS	**8-53**
Common Parts					
020	2844515-0200		1	ELECTRICAL CABINET	**8-67**
030	2844517-0200		1	MOUNTING PLATE	**8-69, 8-71**
040	2844518-0200		1	EL-CABINET DOOR	**8-73, 8-75**
050	2844519-0200		1	EL-CABINET DOOR	**8-77**

Pos	Part No	UN	Qty	Description	Page No

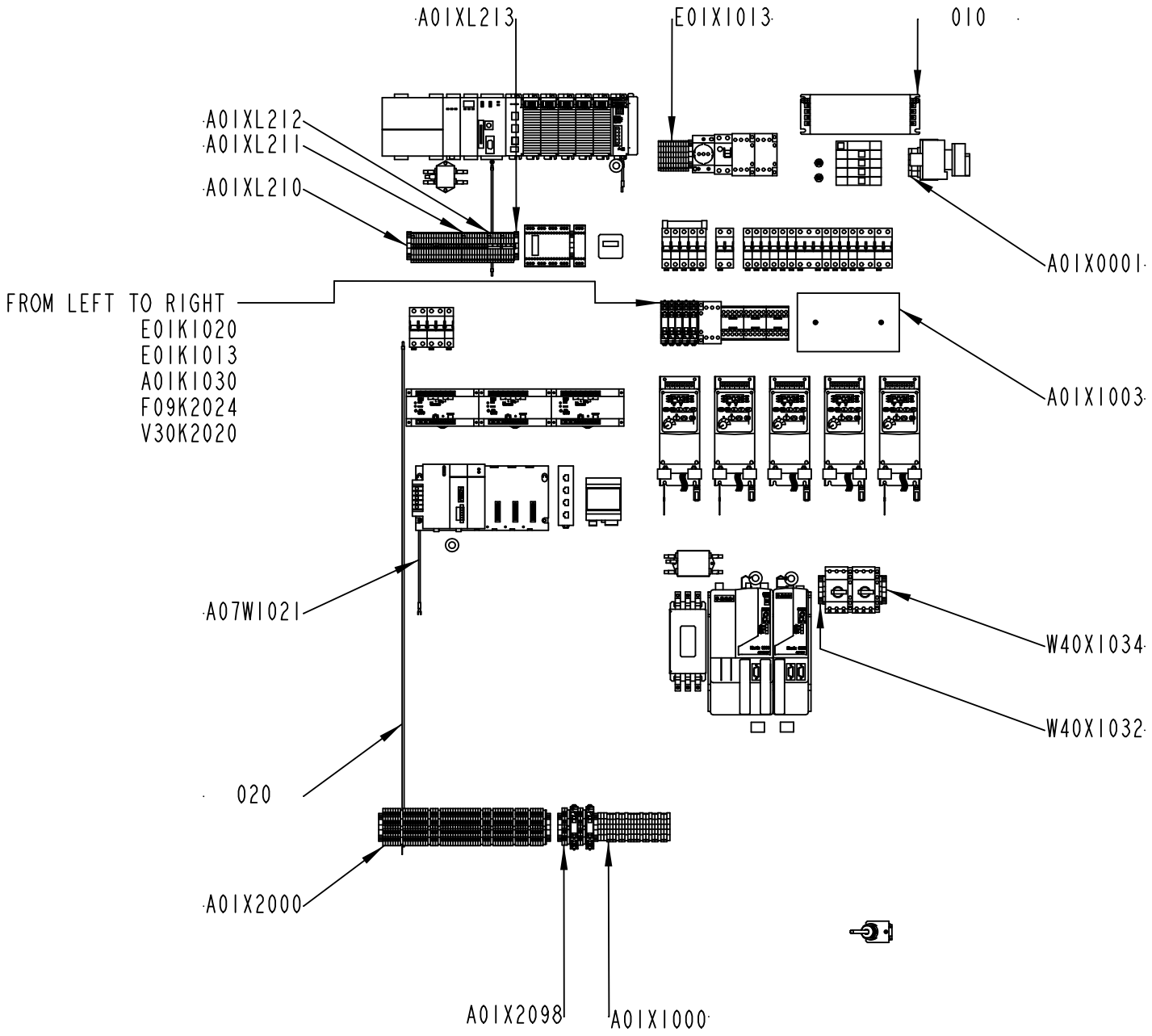

2913341-3
399387

ECM: 414561 - 20090914
Group number: 2913341-0300
Assembly Drawing: 2913341-3_1_AA

Pos	Part No	UN	Qty	Description	Page No
TBA, TB, TPA					
W40X1032	2884591-0100		1	TERMINAL	**8-9**
W40X1034	2884593-0100		1	TERMINAL	**8-11**
TB LINE COMMUNICATION GENIUS, TBA LINE COMMUNICATION GENIUS, TPA LINE COMMUNICATION GENIUS					
A07W1021	1368508-0101		1	WIRE	**8-13**
Common Parts					
010	2844513-0300		1	ELECTRICAL MATERIALS	**8-15, 8-17, 8-19**
020	2954533-0200		1	CABLE SET	**8-21**
A01K1030	2901720-0100		1	RELAY	**8-23**
A01XL210	2872298-0100		1	TERMINAL	**8-25**
A01XL211	2872299-0100		1	TERMINAL	**8-27**
A01XL212	2872318-0100		1	TERMINAL	**8-29**
A01XL213	2872319-0100		1	TERMINAL	**8-31**
A01X0001	2884592-0200		1	TERMINAL	**8-33**
A01X1000	2896524-0100		1	TERMINAL	**8-35**
A01X1003	2884594-0200		1	TERMINAL	**8-37**
A01X2000	2872337-0200		1	TERMINAL	**8-39**
A01X2098	2884589-0100		1	TERMINAL	**8-41**
E01K1013	2901718-0100		1	RELAY	**8-43**
E01K1020	2901719-0100		1	RELAY	**8-45**
E01X1013	2872336-0100		1	TERMINAL	**8-47**
F09K2024	3034241-0100		1	RELAY	**8-49**
V30K2020	3034242-0100		1	RELAY	**8-51**

Pos	Part No	UN	Qty	Description	Page No

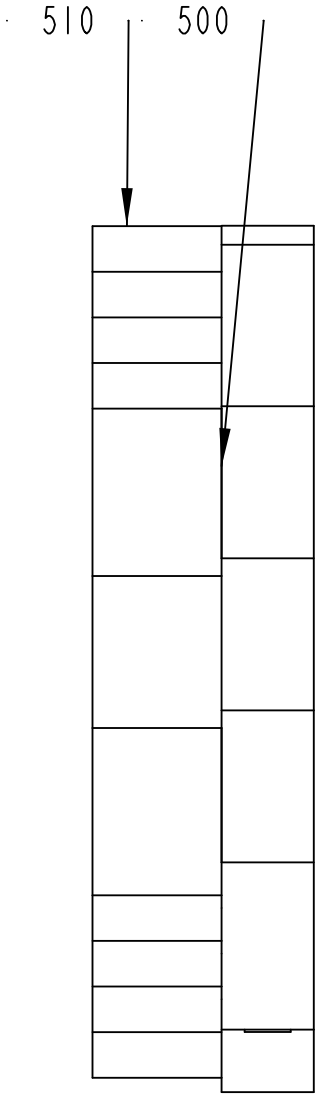

W40X1032

2884591-1
306801

ECM: 436909 - 20100222
Group number: 2884591-0100
Assembly Drawing: 2884591-1_1_AA

Pos	Part No	UN	Qty	Description	Page No
-					
500	353021-0213		1	FEED THROUGH TERMINAL, 10201.0	
510	353031-0203		1	END SUPPORT, WEW 35/2	

Pos	Part No	UN	Qty	Description	Page No

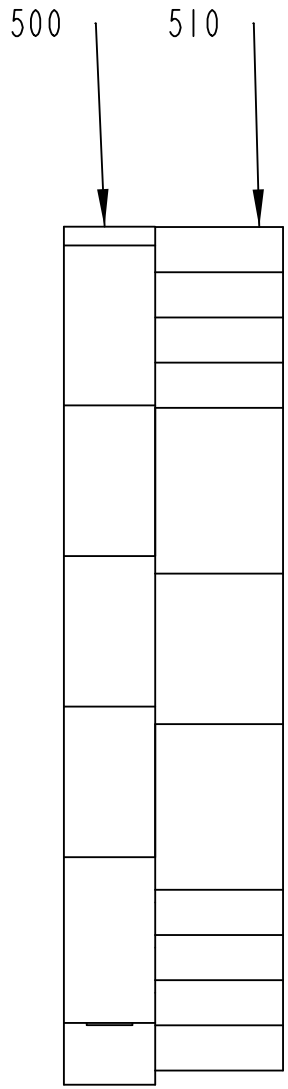

W40X1034

2884593-1
306801

ECM: 436911 - 20100222
Group number: 2884593-0100
Assembly Drawing: 2884593-1_1_AA

Pos	Part No	UN	Qty	Description	Page No
-					
500	353021-0213		1	FEED THROUGH TERMINAL, 10201.0	
510	353031-0203		1	END SUPPORT, WEW 35/2	

Pos	Part No	UN	Qty	Description	Page No

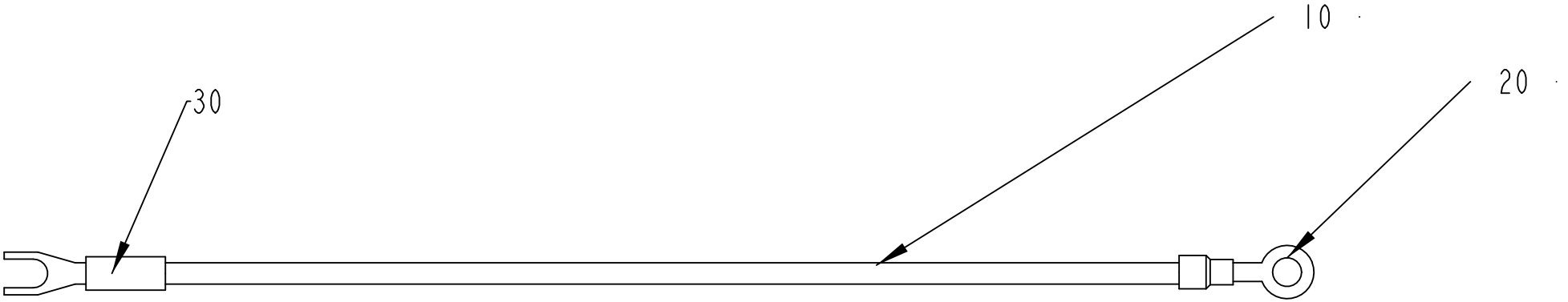

1368508-1
ECN 94176

ECM: 436908 - 20100222
Group number: 1368508-0101
Assembly Drawing: 1368508-1_1_AA

Pos	Part No	UN	Qty	Description	Page No
-					
10	1556781-0000		1	CABLE	
20	353101-0120		1	CABLE SHOE 0,5-1,5MM2 M4 RED	
30	353103-0120		1	CABLE SHOE 1,25 MM² RED	

Pos	Part No	UN	Qty	Description	Page No

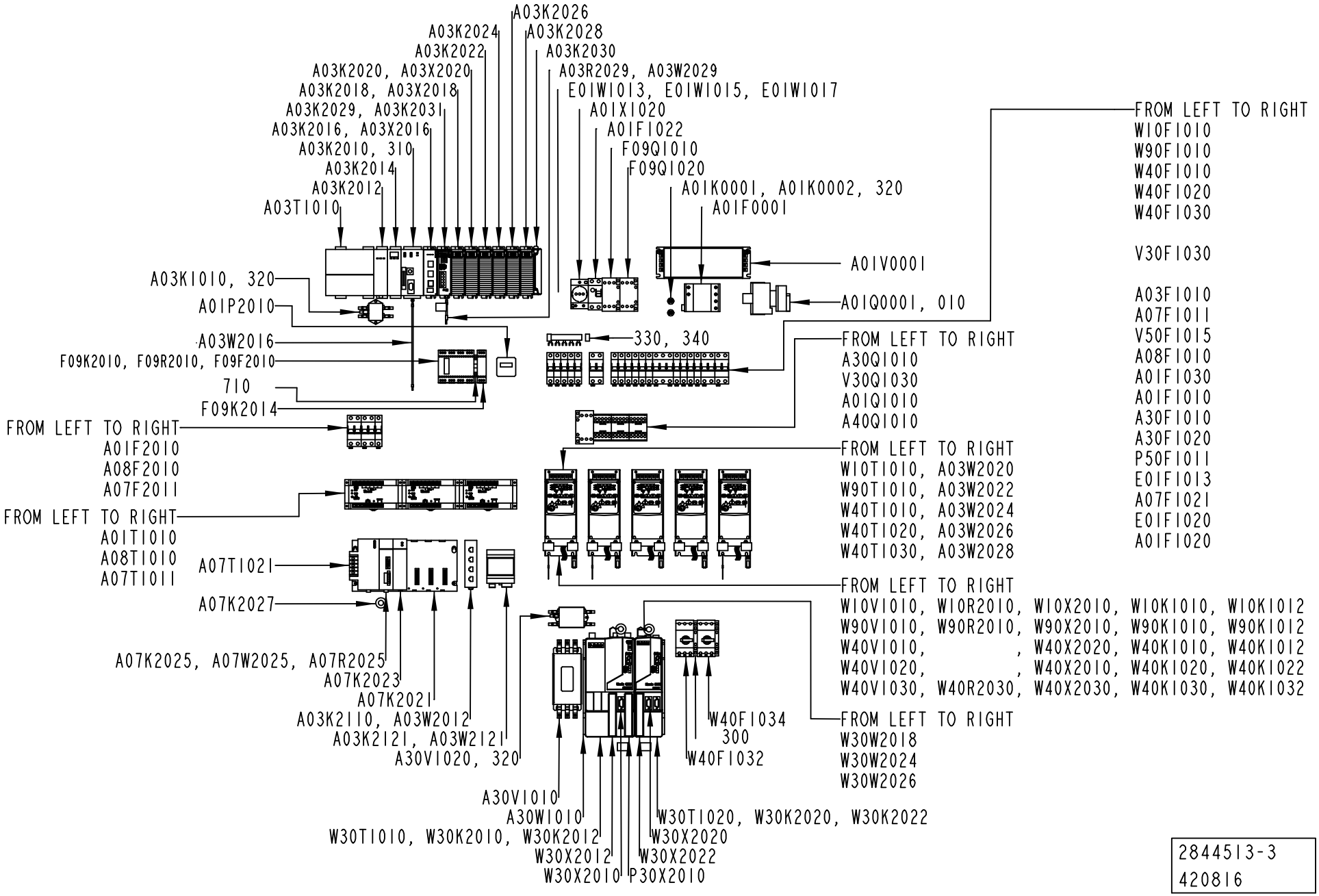

2844513-3
420816

ECM: 428644 - 20091221
Group number: 2844513-0300
Assembly Drawing: 2844513-3_1_AC

This list covers pages from 8-14 to 8-19

Pos	Part No	UN	Qty	Description	Page No
TBA, TB, TPA					
300	90259-0313		2	AUXILIARY CONTACT, NHI21-PKZ0	
A03K2029	90600-4896		1	RESERVE MOD., 1769-ARM/A	
A03W2024	90220-0183	M	0.5	SCR. CABLE 2X0,34MM2	
A03W2026	90220-0183	M	0.5	SCR. CABLE 2X0,34MM2	
W40F1032	90459-5323		1	OVERLOAD PROTECTION, PKZM0-1	
W40F1034	90459-5323		1	OVERLOAD PROTECTION, PKZM0-1	
W40K1020	90600-5249		1	FERRITE, B64290L616X38	
W40K1022	90600-5249		1	FERRITE, B64290L616X38	
W40K1030	90600-5249		1	FERRITE, B64290L616X38	
W40K1032	90600-5249		1	FERRITE, B64290L616X38	
W40T1020	90459-3449		1	VARIABLE FREQUENCY DRIVE 22A-A2P3N104	
W40T1030	90459-3450		1	VARIABLE FREQUENCY DRIVE 22A-A4P5N104	
W40V1020	90459-3460		1	FOOTPRINT FILTER 22-RF010-AL	
W40V1030	90459-3460		1	FOOTPRINT FILTER 22-RF010-AL	
W40X2020	90459-6470		1	CONNECTOR RJ45 TER. BL., AK-U0-RJ45-TB2P	
	90459-2523		*2*	*OPEN STYLE TERMINATOR, 1485A-C2*	
W40X2030	90459-6470		1	CONNECTOR RJ45 TER. BL., AK-U0-RJ45-TB2P	
	90459-2523		*2*	*OPEN STYLE TERMINATOR, 1485A-C2*	
TB LINE COMMUNICATION GENIUS, TBA LINE COMMUNICATION GENIUS, TPA LINE COMMUNICATION GENIUS					
A07F2011	354000-0020		1	MINIATURE CIRCUIT BREAKER, FAZ-C2/1	
A03K2029	90459-2483		1	DEVICENET SCANNER, 1769-SDN SERIES B	
A03K2031	90600-5249		1	FERRITE, B64290L616X38	
A07K2021	90031-0070		1	CPU313, INTEGRATED IN 5-SLOT BASEPLATE	
A07K2023	90031-0078		1	GENIUS BUS CONTROLLER	
A07K2025	90459-4234		1	DEVICENET SLAVE MODULE	
A07K2027	90600-5249		1	FERRITE, B64290L616X38	
A03R2029	90459-1297		1	RESISTANCE FIXED, 120 OHM, 0,25 W	
A07R2025	90459-1297		1	RESISTANCE FIXED, 120 OHM, 0,25 W	
A07T1011	90459-4245		1	POWER SUPPLY UNIT 230VAC/24VDC 3,75A	
A07T1021	90031-0068		1	PLC, POWER SUPPLY	
	90031-0301		*1*	*SPARE BATTERY CPU PCM 2PCS*	
	352551-0134		*1*	*FINE-WIRE FUSE 2 A SLOW,5X20MM*	
A03W2029	578874-0000		1	HF BRAIDED WIRE 1,6 MM2	
TB LINE COMMUNICATION SNP, TBA LINE COMMUNICATION SNP, TCA LINE COMMUNICATION SNP, TPA LINE COMMUNICATION SNP, TWA LINE COMMUNICATION SNP					
A03K2029	90600-4896		1	RESERVE MOD., 1769-ARM/A	
A03K2121	90459-4235		1	SNP TO DF1 GATEWAY, 0220 1166 01 REV B	
A03W2121	90600-0850		1	CABLE, SNP-DF1 GATEWAY	
TWA, TCA					
A03K2029	90600-4896		1	RESERVE MOD., 1769-ARM/A	

Pos	Part No	UN	Qty	Description	Page No
Common Parts					
010	3041490-0000		1	TURNING HANDLE	
310	90459-3145		1	FLASH MEMORY 64MBYTE, 1784-CF64	
320	90459-3352		14	FLAT PIN SOCKET, 6,3X0,8	
330	90600-3691	M	0.5	COMMONING BUSBAR, 3-P 63A	
340	90600-3898		4	END CAP, Z-GV-10/2+3P	
500	351160-0102		1	WIRE AWM 1X0,75 MM2 DARKBLUE	
510	351160-0104	M	1	WIRE AWM 1X1,5 MM2 DARKBLUE	
520	351161-0104	M	1	WIRE AWM 1X1,5 MM2 LIGHTBLUE	
530	351161-0105	M	1	WIRE AWM 1X2,5 MM2 LIGHTBLUE	
540	351162-0102	M	1	WIRE AWM 1X0,75 MM2 YELLOW-GREEN	
550	351162-0104	M	1	WIRE AWM 1X1,5 MM2 YELLOW-GREEN	
560	351162-0105	M	1	WIRE AWM 1X2,5 MM2 YELLOW-GREEN	
570	351162-0106	M	1	WIRE AWM 1X4 MM2 YELLOW-GREEN	
580	351162-0108	M	1	WIRE AWM 1X10 MM2 YELLOW-GREEN	
590	351162-0110	M	1	WIRE AWM 1X25 MM2 YELLOW-GREEN	
600	351164-0104	M	1	WIRE AWM 1X1,5 MM2 BLACK	
610	351164-0105	M	1	WIRE AWM 1X2,5 MM2 BLACK	
620	351164-0106	M	1	WIRE AWM 1X4 MM2 BLACK	
630	353001-0113		1	END SLEEVE 0,75MM2	
640	353001-0114		1	END SLEEVE 1,50 MM2	
650	353001-0115		1	END SLEEVE 2,5/14	
660	353001-0117		1	END SLEEVE H4.0/20 GREY	
670	353001-0120		1	END SLEEVE H 10/28	
680	353210-0075		1	END SLEEVE, TWIN COLL, 0,75 MM2	
690	353210-0150		1	END SLEEVE, TWIN COLL, 1,5 MM2	
700	353210-0250		1	END SLEEVE, TWIN COLL, 2,5 MM2	
710	353031-0203		1	END SUPPORT, WEW 35/2	
720	353104-0176		1	CABLE SHOE, RING UNINS., YAV 25 M 8	
A01F0001	90600-7487		1	SURGE PROTECTION DEV., VAL-MS 230/3+1 FM	
	90600-7488		*1*	*SURGE PROTECTION DEV., SP, VAL-MS 230 ST*	
	90600-7489		*1*	*SURGE PROTECTION DEV., SP, F-MS 12 ST*	
A01F1010	354000-0020		1	MINIATURE CIRCUIT BREAKER, FAZ-C2/1	
A01F1020	354001-0060		1	MINIATURE CIRCUIT BREAKER, FAZ-C6/2	
A01F1022	90459-5811		1	RESIDUAL CURRENT DEVICE, FI-25/2/003-A	
A01F1030	354000-0040		1	MINIATURE CIRCUIT BREAKER, FAZ-C4/1	
A01F2010	354001-0020		1	MINIATURE CIRCUIT BREAKER, FAZ-C2/2	
A03F1010	354000-0060		1	MINIATURE CIRCUIT BREAKER, FAZ-C6/1	
A07F1011	354000-0020		1	MINIATURE CIRCUIT BREAKER, FAZ-C2/1	
A07F1021	354000-0020		1	MINIATURE CIRCUIT BREAKER, FAZ-C2/1	
A08F1010	354000-0060		1	MINIATURE CIRCUIT BREAKER, FAZ-C6/1	
A08F2010	354001-0040		1	MINIATURE CIRCUIT BREAKER, FAZ-C4/2	

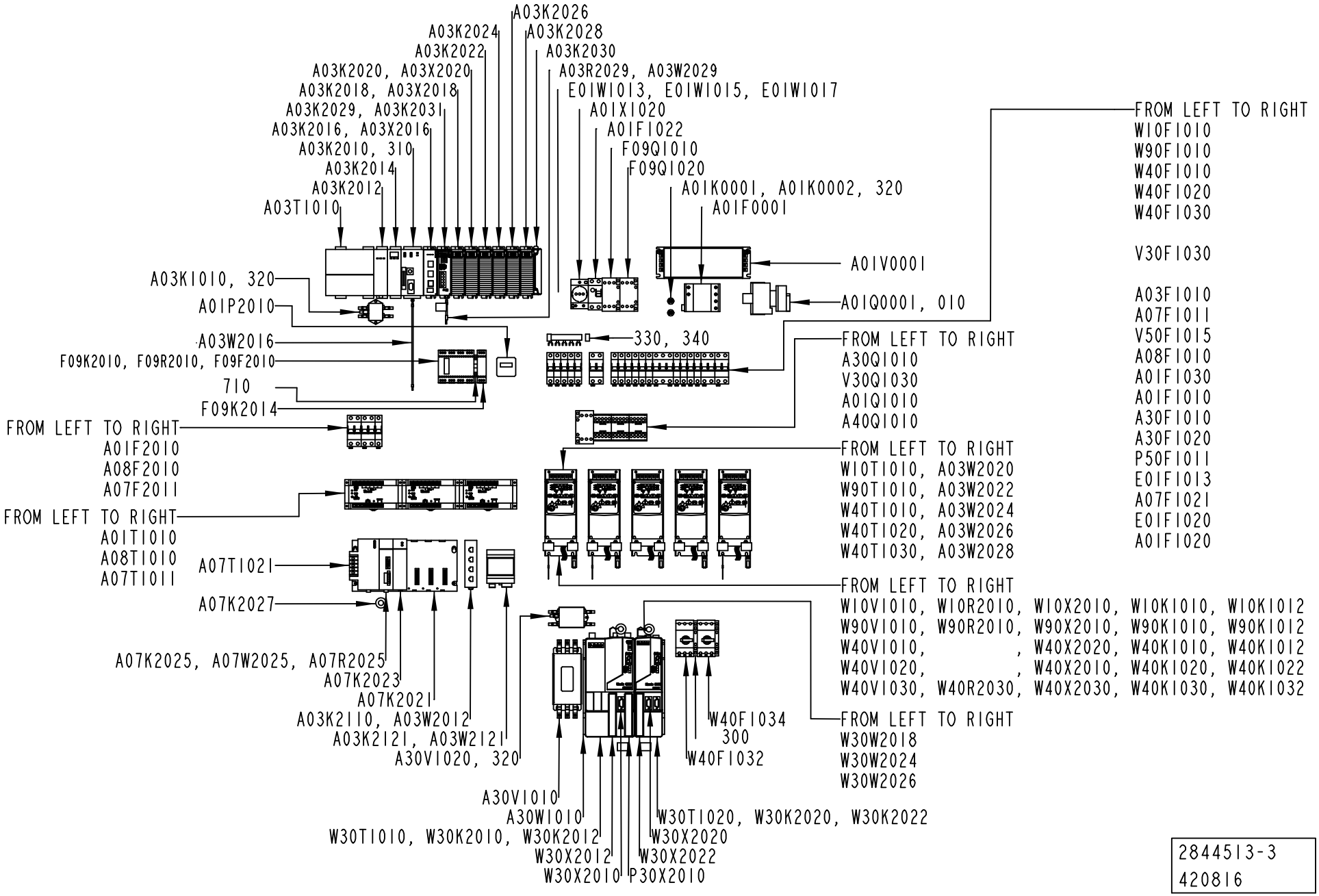

2844513-3
420816

Pos	Part No	UN	Qty	Description	Page No
Common Parts (Cont'd)					
A30F1010	354002-0100		1	IMINIATURE CIRCUIT BREAKER, FAZ-C10/3	
A30F1020	354000-0040		1	MINIATURE CIRCUIT BREAKER, FAZ-C4/1	
A01K0001	90600-5266		1	FEED THROUGH FILTER, B85321A2502W160	
A01K0002	90600-5266		1	FEED THROUGH FILTER, B85321A2502W160	
A03K1010	90600-5250		1	LINE FILTER, B84111FB30	
A03K2010	90600-9746		1	PROCESSOR L43, SERIES B, 1768-L43/B	
A03K2012	90600-1349		1	SERCOS MOTION MODULE 4-AXIS, 1768-M04SE/	
A03K2014	90600-1348		1	ETHERNET /IP BRIDGE MODULE, 1768-ENBT/A	
A03K2016	90459-6553		1	PLC DSI /MODBUS COMMUN. MOD., 1769-SM2/A	
A03K2018	90459-2473		1	DIG INP. MOD.16 PTS FAST,1769-IQ16F SERA	
A03K2020	90459-2473		1	DIG INP. MOD.16 PTS FAST,1769-IQ16F SERA	
A03K2022	90459-2473		1	DIG INP. MOD.16 PTS FAST,1769-IQ16F SERA	
A03K2024	90459-2476		1	DIGIT. OUT. MOD. 16 P ESCP, 1769-OB16P	
A03K2026	90459-2476		1	DIGIT. OUT. MOD. 16 P ESCP, 1769-OB16P	
A03K2028	90459-2476		1	DIGIT. OUT. MOD. 16 P ESCP, 1769-OB16P	
A03K2030	90459-2491		1	PLC RIGHT END CAP/TERMINATOR, 1769-ECR	
A03K2110	90600-1847		1	ETHERNET SWITCH, FL SWITCH SFN 5TX	
A01P2010	90178-0007		1	HOUR COUNTER, BG 40,17-1 12-48VDC	
A01Q0001	90111-0132		1	MAIN SWITCH P1-25/EA/SVB-SW/N/HI11/H-P14	
A01Q1010	90459-5440		1	CONTACTOR 4KW 24VDC, DILM9-01	
A30Q1010	90459-5441		1	CONTACTOR 7,5KW 24VDC, DILM17-01	
A40Q1010	90459-5440		1	CONTACTOR 4KW 24VDC, DILM9-01	
A01T1010	90459-4245		1	POWER SUPPLY UNIT 230VAC/24VDC 3,75A	
A03T1010	90600-1347		1	POWER SUPPLY 120/240 VAC, 1768-PA3/A	
A08T1010	90459-4245		1	POWER SUPPLY UNIT 230VAC/24VDC 3,75A	
A01V0001	90600-5260		1	LINE FILTER, B84144A16R120	
A30V1010	90600-5258		1	LINE FILTER, B84143A35R106	
A30V1020	90600-5252		1	LINE FILTER, B84113HB30	
A03W2012	351501-0010		1	ETHERNET PATCH CABLE, FL CAT5 PATCH 1,0	
A03W2016	2855106-0000		1	COPPER BRAID	
A03W2020	90220-0183	M	3	SCR. CABLE 2X0,34MM2	
A03W2022	90220-0183	M	3	SCR. CABLE 2X0,34MM2	
A03W2028	90220-0183	M	3	SCR. CABLE 2X0,34MM2	
A30W1010	90459-5189		1	SLIM POW. RAIL, KINETIX, 2 AX, 2094-PRS2	
A01X1020	90459-3845		1	POWER SOCKET, Z-SD230	
A03X2016	90459-6470		1	CONNECTOR RJ45 TER. BL., AK-U0-RJ45-TB2P	
	90459-2523		*2*	*OPEN STYLE TERMINATOR, 1485A-C2*	
A03X2018	90459-6470		1	CONNECTOR RJ45 TER. BL., AK-U0-RJ45-TB2P	
	90459-2523		*2*	*OPEN STYLE TERMINATOR, 1485A-C2*	
A03X2020	90459-6470		1	CONNECTOR RJ45 TER. BL., AK-U0-RJ45-TB2P	
	90459-2523		*2*	*OPEN STYLE TERMINATOR, 1485A-C2*	
E01F1013	354000-0100		1	MINIATURE CIRCUIT BREAKER, FAZ-C10/1	
E01F1020	354001-0020		1	MINIATURE CIRCUIT BREAKER, FAZ-C2/2	
F09F2010	90459-4891		1	PROGR. IDENTIFIER ID-FIX RW, 20-070-21	
F09K2010	90600-2045		1	SAFETY PLC, PLUTO B46-6 20-070-15	
F09K2014	90459-2291		1	SAFETY TIME RELAY, E1T-0.5S-24VDC	
F09Q1010	90459-5441		1	CONTACTOR 7,5KW 24VDC, DILM17-01	
F09Q1020	90459-5441		1	CONTACTOR 7,5KW 24VDC, DILM17-01	
F09R2010	90459-1297		1	RESISTANCE FIXED, 120 OHM, 0,25 W	
F09W2010	90600-6081	M	2	CABLE, UNITRONIC BUS CAN 1X2X0,5 UL/CSA	
P50F1011	354000-0100		1	MINIATURE CIRCUIT BREAKER, FAZ-C10/1	
P30X2010	90459-6679		1	CONN 15 P FEM, AUX. FEEDB,2090-K6CK-D15F	
V30F1030	354001-0100		1	MINIATURE CIRCUIT BREAKER, FAZ-C10/2	
V50F1015	351416-0100		1	MINIATURE CIRC. BREAK., FAZ -D10 1-POLE	
V30Q1030	90459-5440		1	CONTACTOR 4KW 24VDC, DILM9-01	
W10F1010	354000-0160		1	MINIATURE CIRCUIT BREAKER, FAZ-C16/1	
W40F1010	354000-0160		1	MINIATURE CIRCUIT BREAKER, FAZ-C16/1	
W40F1020	354000-0100		1	MINIATURE CIRCUIT BREAKER, FAZ-C10/1	
W40F1030	354000-0160		1	MINIATURE CIRCUIT BREAKER, FAZ-C16/1	
W90F1010	354000-0160		1	MINIATURE CIRCUIT BREAKER, FAZ-C16/1	
W10K1010	90600-5249		1	FERRITE, B64290L616X38	
W10K1012	90600-5249		1	FERRITE, B64290L616X38	
W30K2010	90600-5249		1	FERRITE, B64290L616X38	
W30K2012	90600-5249		1	FERRITE, B64290L616X38	
W30K2020	90600-5249		1	FERRITE, B64290L616X38	
W30K2022	90600-5249		1	FERRITE, B64290L616X38	
W40K1010	90600-5249		1	FERRITE, B64290L616X38	
W40K1012	90600-5249		1	FERRITE, B64290L616X38	
W90K1010	90600-5249		1	FERRITE, B64290L616X38	
W90K1012	90600-5249		1	FERRITE, B64290L616X38	
W10R2010	90459-1297		1	RESISTANCE FIXED, 120 OHM, 0,25 W	
W40R2030	90459-1297		1	RESISTANCE FIXED, 120 OHM, 0,25 W	
W90R2010	90459-1297		1	RESISTANCE FIXED, 120 OHM, 0,25 W	
W10T1010	90459-3450		1	VARIABLE FREQUENCY DRIVE 22A-A4P5N104	
W30T1010	90600-5211		1	AXIS MOD. W. PS,2094-BC01-M01-S SERIES B	
W30T1020	90600-5214		1	AXIS MOD. KINETIX 6000,2094-BM01-S SER.B	
W40T1010	90459-3450		1	VARIABLE FREQUENCY DRIVE 22A-A4P5N104	
W90T1010	90459-3450		1	VARIABLE FREQUENCY DRIVE 22A-A4P5N104	
W10V1010	90459-3460		1	FOOTPRINT FILTER 22-RF010-AL	
W40V1010	90459-3460		1	FOOTPRINT FILTER 22-RF010-AL	
W90V1010	90459-3460		1	FOOTPRINT FILTER 22-RF010-AL	
W30W2018	90459-2540		1	SERCOS CABLE 3.0M, 2090-SCEP3-0	
W30W2024	90459-2536		1	SERCOS CABLE 0.1M, 2090-SCEP0-1	

Machine Type Group Description Used-In Group Number Page No

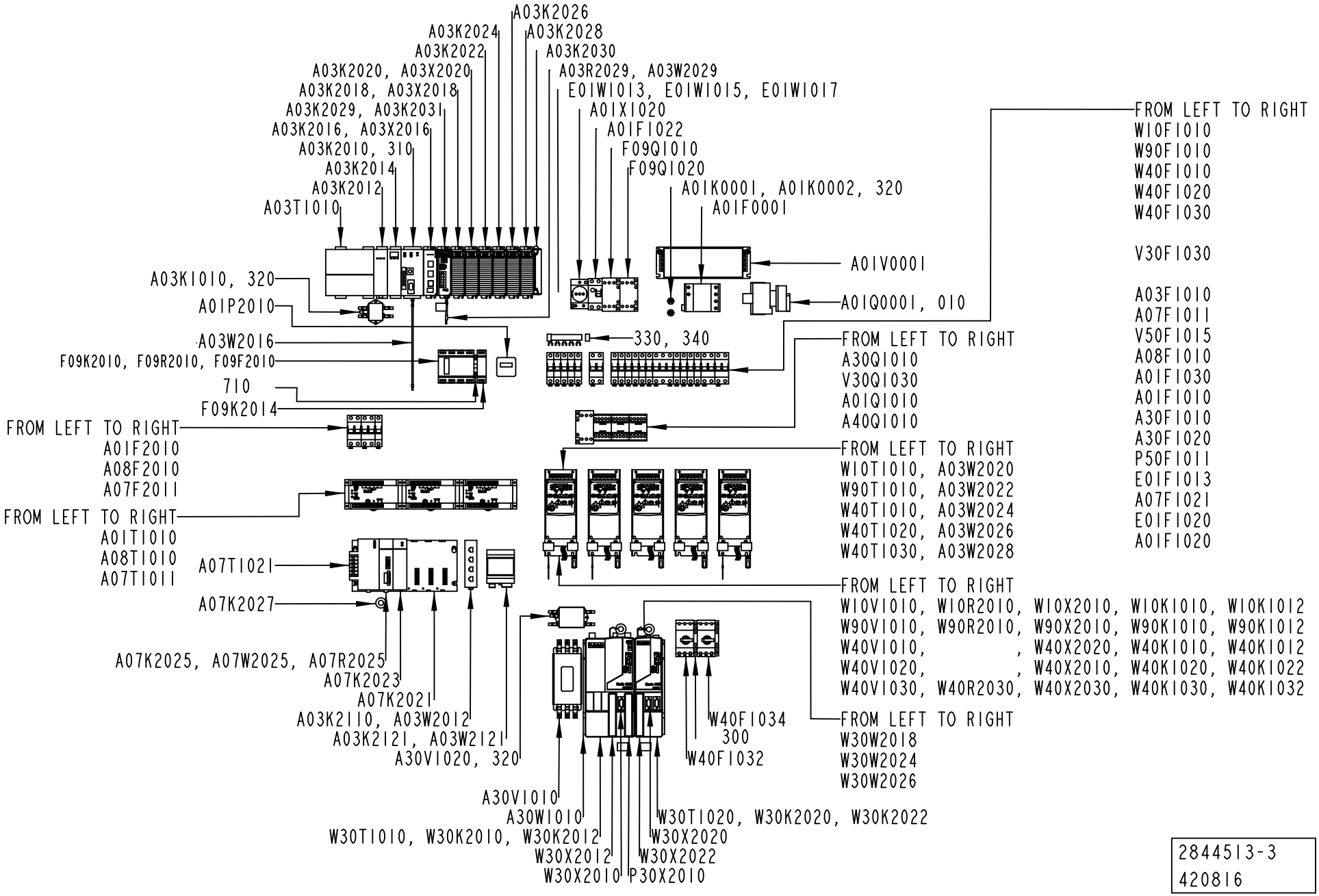

2844513-3
420816

Pos	Part No	UN	Qty	Description	Page No
Common Parts (Cont'd)					
W30W2026	90459-2540		1	SERCOS CABLE 3.0M, 2090-SCEP3-0	
W10X2010	90459-6470		1	CONNECTOR RJ45 TER. BL., AK-U0-RJ45-TB2P	
	90459-2523		*2*	*OPEN STYLE TERMINATOR, 1485A-C2*	
W30X2010	90459-2551		1	CONNECTOR, MOTOR FEEDBACK 15 PIN MALE	
W30X2012	90459-2550		1	I/O CONNECTOR 26 PIN MALE, 2090-K6CK-D26	
W30X2020	90459-2551		1	CONNECTOR, MOTOR FEEDBACK 15 PIN MALE	
W30X2022	90459-2550		1	I/O CONNECTOR 26 PIN MALE, 2090-K6CK-D26	
W40X2010	90459-6470		1	CONNECTOR RJ45 TER. BL., AK-U0-RJ45-TB2P	
	90459-2523		*2*	*OPEN STYLE TERMINATOR, 1485A-C2*	
W90X2010	90459-6470		1	CONNECTOR RJ45 TER. BL., AK-U0-RJ45-TB2P	
	90459-2523		*2*	*OPEN STYLE TERMINATOR, 1485A-C2*	

Pos	Part No	UN	Qty	Description	Page No

This page is intentionally left blank.

ECM: 436912 - 20100222
Group number: 2954533-0200
Assembly Drawing:

Pos	Part No	UN	Qty	Description	Page No
TBA, TB, TPA					
P50W1011	351150-0412	M	10	CABLE OLFLEX 3X1,5 MM2 LIGHT/GREY	
P50W2011	351150-0406	M	10	CABLE OLFLEX 7X0,75 MM2 LIGHT/GREY	
V30W2012	351150-0403	M	3	CABLE OLFLEX 3X0,75 MM2 LIGHT/GREY	
V30W2080	351304-0050		1	ACTUATOR/SENSOR CABLE RKMWVN 3-224/5M	
V30W2090	351305-0050		1	ACTUATOR/SENSOR CABLE PRKMV 4-07/5M	
V40W2030	351309-0100		1	ACTUATOR/SENSOR CABLE PRKT 4-07/10M	
V40W2032	90459-6586		1	ACT/SENS.Y-CABLE, ASBN 2-PRKMV 4-07/0,6M	
V40W2040	351309-0100		1	ACTUATOR/SENSOR CABLE PRKT 4-07/10M	
V40W2042	90459-6586		1	ACT/SENS.Y-CABLE, ASBN 2-PRKMV 4-07/0,6M	
V40W2070	351309-0100		1	ACTUATOR/SENSOR CABLE PRKT 4-07/10M	
V40W2072	90459-6586		1	ACT/SENS.Y-CABLE, ASBN 2-PRKMV 4-07/0,6M	
W30W2022	351304-0050		1	ACTUATOR/SENSOR CABLE RKMWVN 3-224/5M	
W40W1020	90220-0104	M	3	SCR. CABLE 4X1,5MM2	
W40W1032	90220-0104	M	3.5	SCR. CABLE 4X1,5MM2	
W40W1034	90220-0104	M	3.5	SCR. CABLE 4X1,5MM2	
TCA					
A10W2000	351150-0406	M	3	CABLE OLFLEX 7X0,75 MM2 LIGHT/GREY	
A90W9901	2992449-0000		1	CABLE WITH CONNECTOR	
	90600-0778	*M*	*50*	*CABLE, ETHERNET FL CAT5 HEAVY*	
	90600-0788		*2*	*CONNECTOR RJ45, VS-08-RJ45-5-Q/IP20*	
V30W2080	351303-0050		1	ACTUATOR/SENSOR CABLE RKMVN 3-224/5M	
V30W2120	351303-0050		1	ACTUATOR/SENSOR CABLE RKMVN 3-224/5M	
V40W2100	351309-0100		1	ACTUATOR/SENSOR CABLE PRKT 4-07/10M	
V40W2102	90459-6586		1	ACT/SENS.Y-CABLE, ASBN 2-PRKMV 4-07/0,6M	
W30W2022	351303-0050		1	ACTUATOR/SENSOR CABLE RKMVN 3-224/5M	
TWA					
V30W2080	351304-0050		1	ACTUATOR/SENSOR CABLE RKMWVN 3-224/5M	
V30W2120	351304-0050		1	ACTUATOR/SENSOR CABLE RKMWVN 3-224/5M	
V40W2100	351309-0100		1	ACTUATOR/SENSOR CABLE PRKT 4-07/10M	
V40W2102	90459-6586		1	ACT/SENS.Y-CABLE, ASBN 2-PRKMV 4-07/0,6M	
W30W2022	351303-0050		1	ACTUATOR/SENSOR CABLE RKMVN 3-224/5M	
Common Parts					
A01W1999	3025918-0000		1	COPPER BRAID	
A01W2010	351303-0050		1	ACTUATOR/SENSOR CABLE RKMVN 3-224/5M	
A01W2012	90458-2837		1	PLUG SOCKET, KMEB-1-24-5-LED	
A01W2014	351150-0406	M	4.5	CABLE OLFLEX 7X0,75 MM2 LIGHT/GREY	
A08W2010	351150-0431	M	4	CABLE OLFLEX 2X0,75 MM2 LIGHT/GREY	
A08W2012	351150-0424	M	4	CABLE OLFLEX 18X0,75 MM2 LIGHT/GREY	
A08W2020	351501-0050		1	ETHERNET PATCH CABLE, FL CAT5 PATCH 5,0	
E01W1020	351150-0412	M	4	CABLE OLFLEX 3X1,5 MM2 LIGHT/GREY	
E08W1010	351150-0403	M	3.5	CABLE OLFLEX 3X0,75 MM2 LIGHT/GREY	
F09W2026	90459-4252		1	CABLE M12-C101, 20-056-10	
F09W2032	351303-0050		1	ACTUATOR/SENSOR CABLE RKMVN 3-224/5M	
F09W2040	90600-5930	M	2	CABLE C9 1M, 20-057-15	
F09W2042	3041925-0000		1	EARTH WIRE	
P30W2010	90459-6604		1	LABLE SICK DOL-2312-G 05MMA3	
V30W1030	351150-0413	M	3.5	CABLE OLFLEX 4GX1,5 MM2 LIGHT/GREY	
V30W2010	351150-0403	M	3	CABLE OLFLEX 3X0,75 MM2 LIGHT/GREY	
V30W2030	351150-0404	M	3.5	CABLE OLFLEX 4X0,75 MM2 LIGHT/GREY	
V40W2060	351303-0050		1	ACTUATOR/SENSOR CABLE RKMVN 3-224/5M	
V50W1015	351150-0417	M	2.5	CABLE OLFLEX 3X2,5 MM2 LIGHT/GREY	
V90W2050	351309-0100		1	ACTUATOR/SENSOR CABLE PRKT 4-07/10M	
V90W2052	90459-6586		1	ACT/SENS.Y-CABLE, ASBN 2-PRKMV 4-07/0,6M	
W10W1010	90220-0104	M	10	SCR. CABLE 4X1,5MM2	
W10W1012	90220-0104	M	1	SCR. CABLE 4X1,5MM2	
W30W1010	90600-3293		1	MOTOR POWER CABLE 2090-XXNPMF-16S09	
W30W1020	90600-3293		1	MOTOR POWER CABLE 2090-XXNPMF-16S09	
W30W2010	90600-3294		1	MOTOR FEEDBACK CABLE 2090-XXNFMF-S09/C	
W30W2012	351304-0050		1	ACTUATOR/SENSOR CABLE RKMWVN 3-224/5M	
W30W2014	90600-1768		1	ACTUATOR/SENSOR CABLE RKTS 5-298/5M	
W30W2016	90459-6586		1	ACT/SENS.Y-CABLE, ASBN 2-PRKMV 4-07/0,6M	
W30W2020	90600-3294		1	MOTOR FEEDBACK CABLE 2090-XXNFMF-S09/C	
W40W1010	90220-0104	M	10	SCR. CABLE 4X1,5MM2	
W40W1012	90220-0104	M	1	SCR. CABLE 4X1,5MM2	
W40W1030	90220-0104	M	1	SCR. CABLE 4X1,5MM2	
W90W1010	90220-0104	M	10	SCR. CABLE 4X1,5MM2	
W90W1012	90220-0104	M	1	SCR. CABLE 4X1,5MM2	

Machine Type	Group Description	Used-In	Group Number	Page No

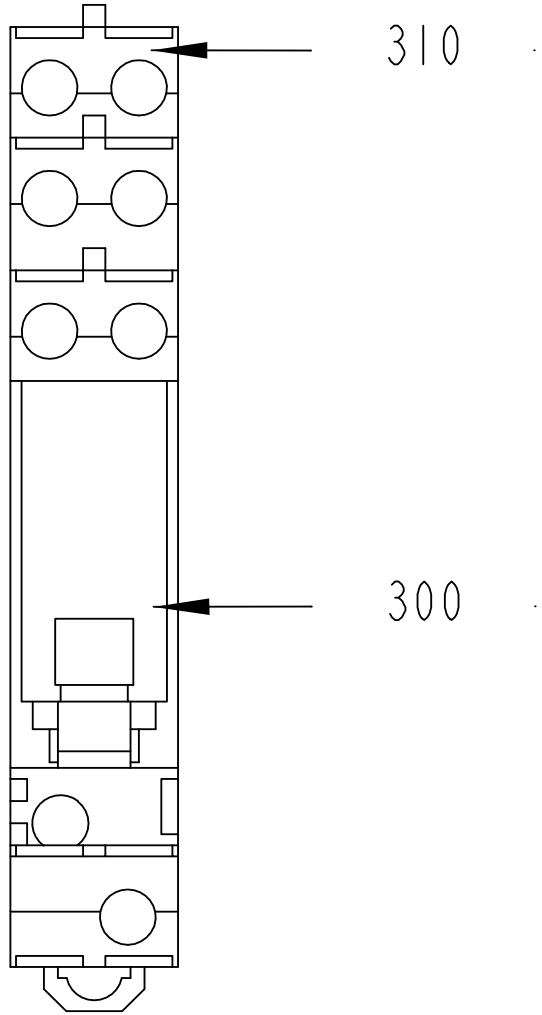

A01K1030

2901720-1
306801

ECM: 326782 - 20080303
Group number: 2901720-0100
Assembly Drawing: 2901720-1_1_AA

Pos	Part No	UN	Qty	Description	Page No
-					
300	90119-0108		1	RELAY OMRON G2R-2-SNI-24DC	
	90129-0018		*1*	*BASE, P2RF-08-E*	
310	90129-0018		1	BASE, P2RF-08-E	

Pos	Part No	UN	Qty	Description	Page No

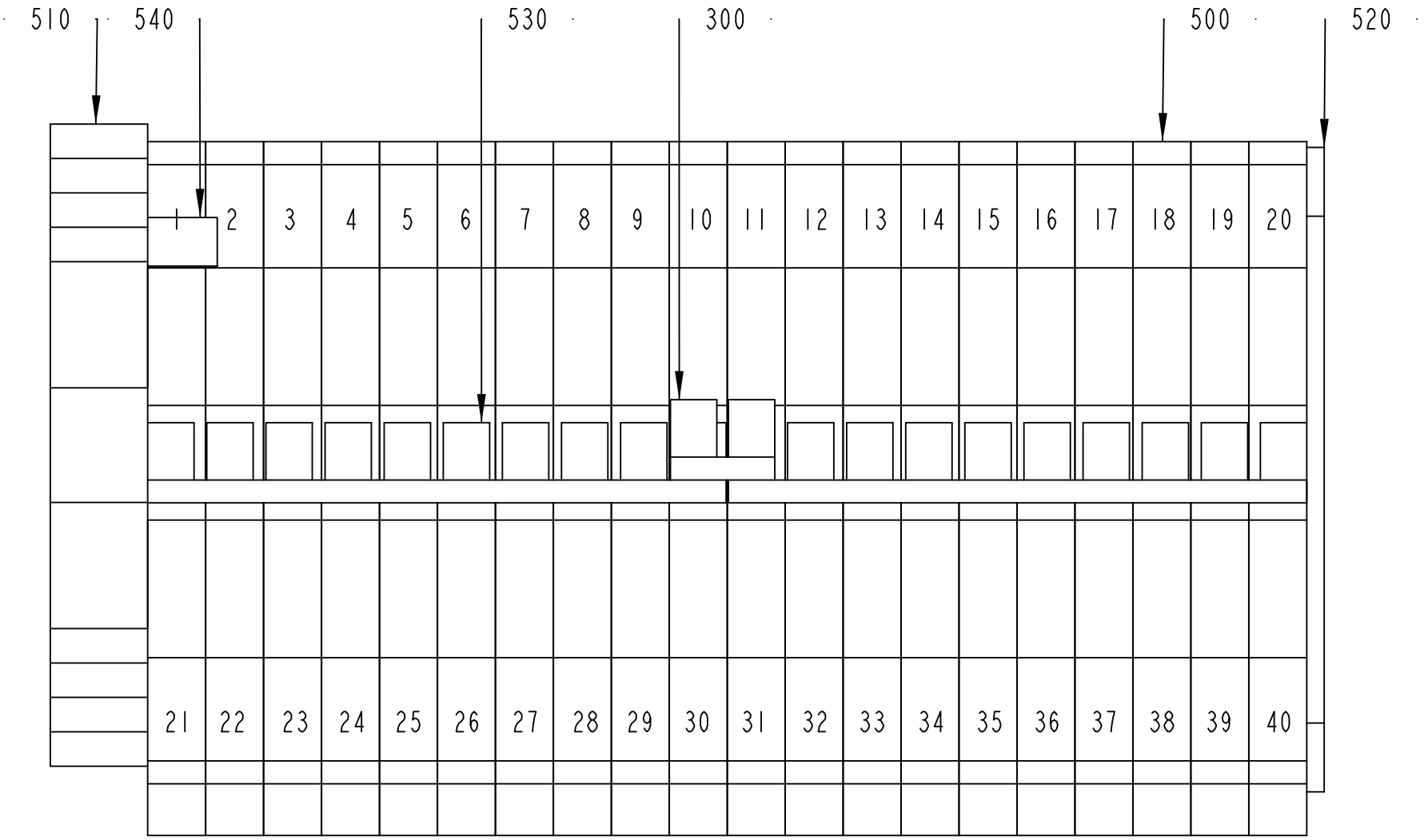

A01XL2010

2872298-1
306801

ECM: 436918 - 20100222
Group number: 2872298-0100
Assembly Drawing: 2872298-1_1_AA

Pos	Part No	UN	Qty	Description	Page No
-					
300	90459-1811		1	BRIDGE CONNECTOR WQV 2,5/2, 105366	
500	353021-0212		20	FEED THROUGH TERMINAL, 10200.0	
510	353031-0203		1	END SUPPORT, WEW 35/2	
520	353033-0105		1	PARTITITION, 10501.0	
530	353034-0030		2	BRIDGE CONNECTOR WQV 2,5/10, 10544.6	
540	359011-0821		1	SET OF SIGNS 6-FW 1-50	

Pos	Part No	UN	Qty	Description	Page No

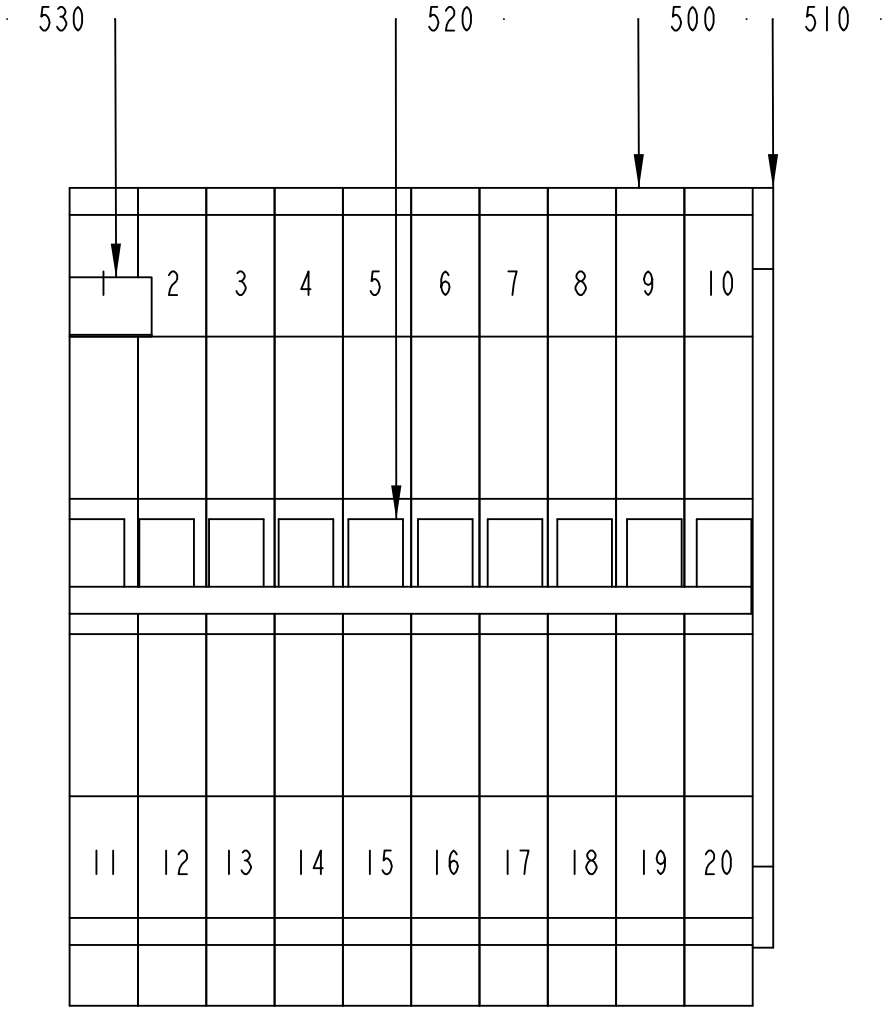

A01XL2011

2872299-1
306801

ECM: 436919 - 20100222
Group number: 2872299-0100
Assembly Drawing: 2872299-1_1_AA

Pos	Part No	UN	Qty	Description	Page No
-					
500	353021-0212		10	FEED THROUGH TERMINAL, 10200.0	
510	353033-0105		1	PARTITITION, 10501.0	
520	353034-0030		1	BRIDGE CONNECTOR WQV 2,5/10, 10544.6	
530	359011-0821		1	SET OF SIGNS 6-FW 1-50	

Pos	Part No	UN	Qty	Description	Page No

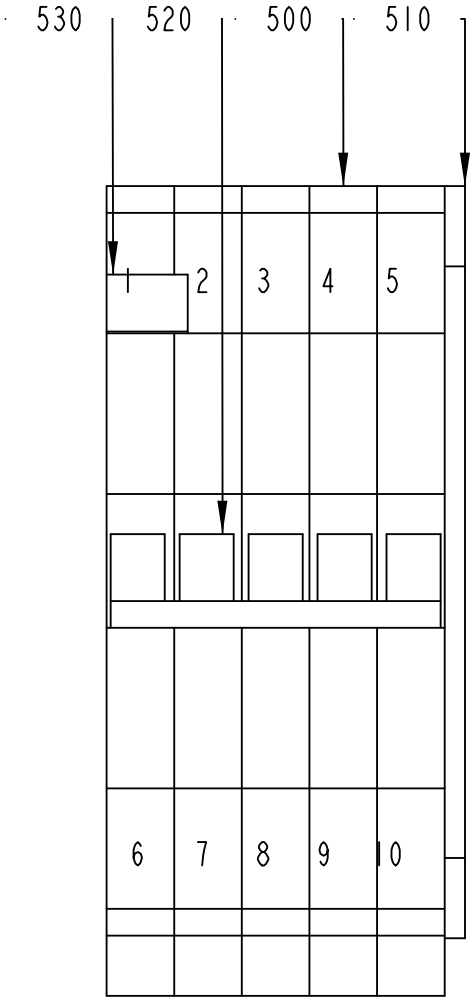

A01XL2012

2872318-1
413459

ECM: 436920 - 20100222
Group number: 2872318-0100
Assembly Drawing: 2872318-1_1_AB

Pos	Part No	UN	Qty	Description	Page No
-					
500	353021-0212		5	FEED THROUGH TERMINAL, 10200.0	
510	353033-0105		1	PARTITITION, 10501.0	
520	353034-0030		1	BRIDGE CONNECTOR WQV 2,5/10, 10544.6	
530	359011-0821		1	SET OF SIGNS 6-FW 1-50	

Pos	Part No	UN	Qty	Description	Page No

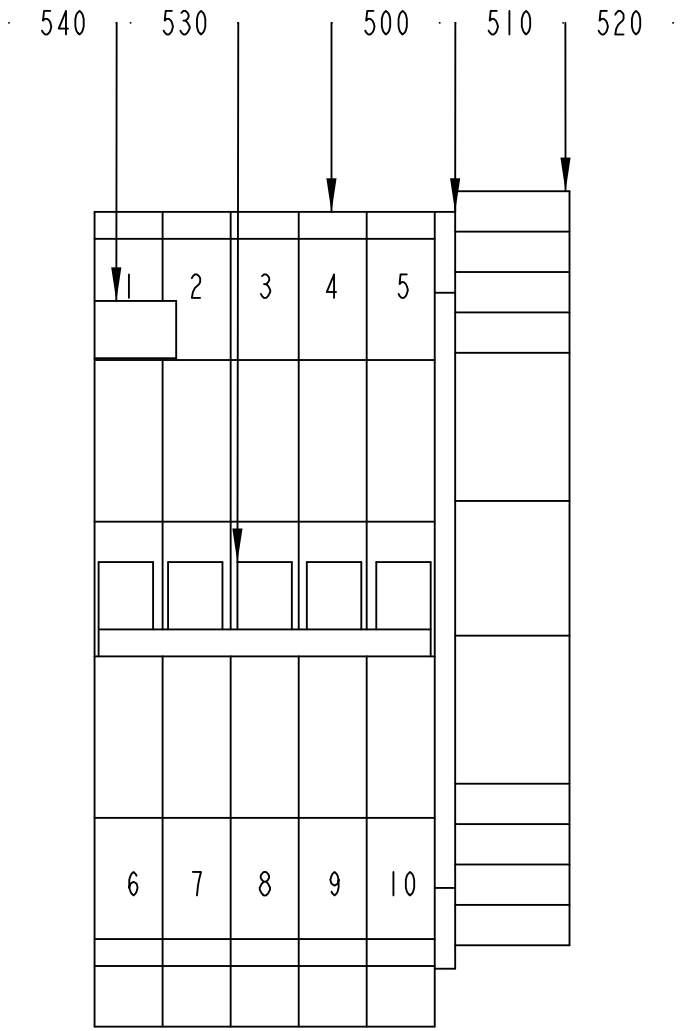

A01XL2013

2872319-1
413459

ECM: 436921 - 20100222
Group number: 2872319-0100
Assembly Drawing: 2872319-1_1_AB

Pos	Part No	UN	Qty	Description	Page No
-					
500	353021-0212		5	FEED THROUGH TERMINAL, 10200.0	
510	353033-0105		1	PARTITITION, 10501.0	
520	353031-0203		1	END SUPPORT, WEW 35/2	
530	353034-0030		1	BRIDGE CONNECTOR WQV 2,5/10, 10544.6	
540	359011-0821		1	SET OF SIGNS 6-FW 1-50	

Pos	Part No	UN	Qty	Description	Page No

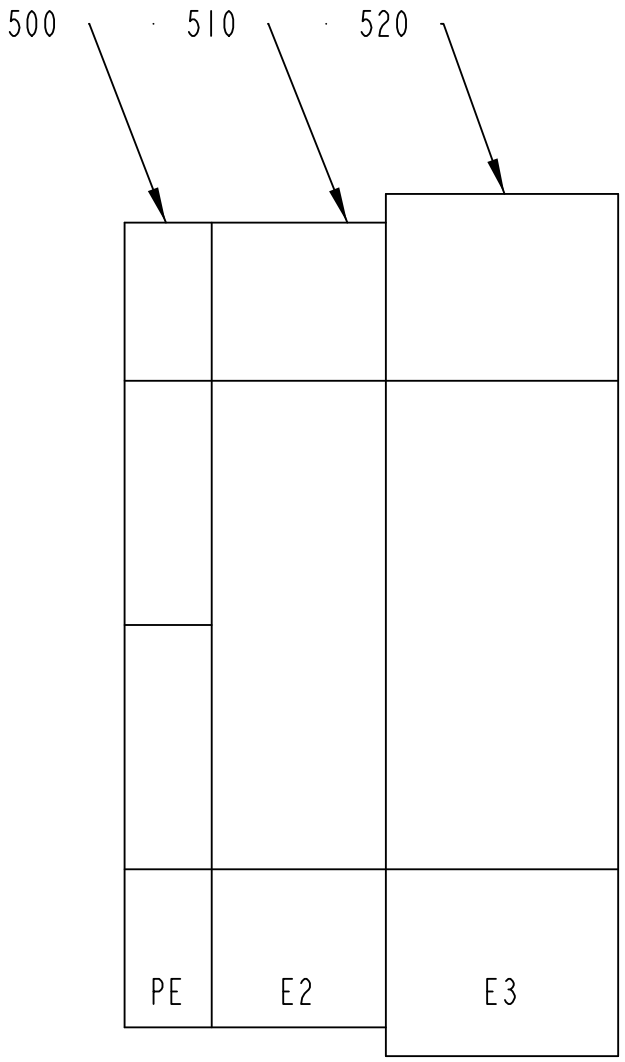

A01X0001

2884592-2
399387

ECM: 436913 - 20100222
Group number: 2884592-0200
Assembly Drawing: 2884592-2_1_AA

Pos	Part No	UN	Qty	Description	Page No
-					
500	353024-0205		1	EARTH TERMINAL, 1010.1	
510	353024-0208		1	EARTH TERMINAL, 1010.4	
520	353024-0209		1	EARTH TERMINAL, 1010.5	

Pos	Part No	UN	Qty	Description	Page No

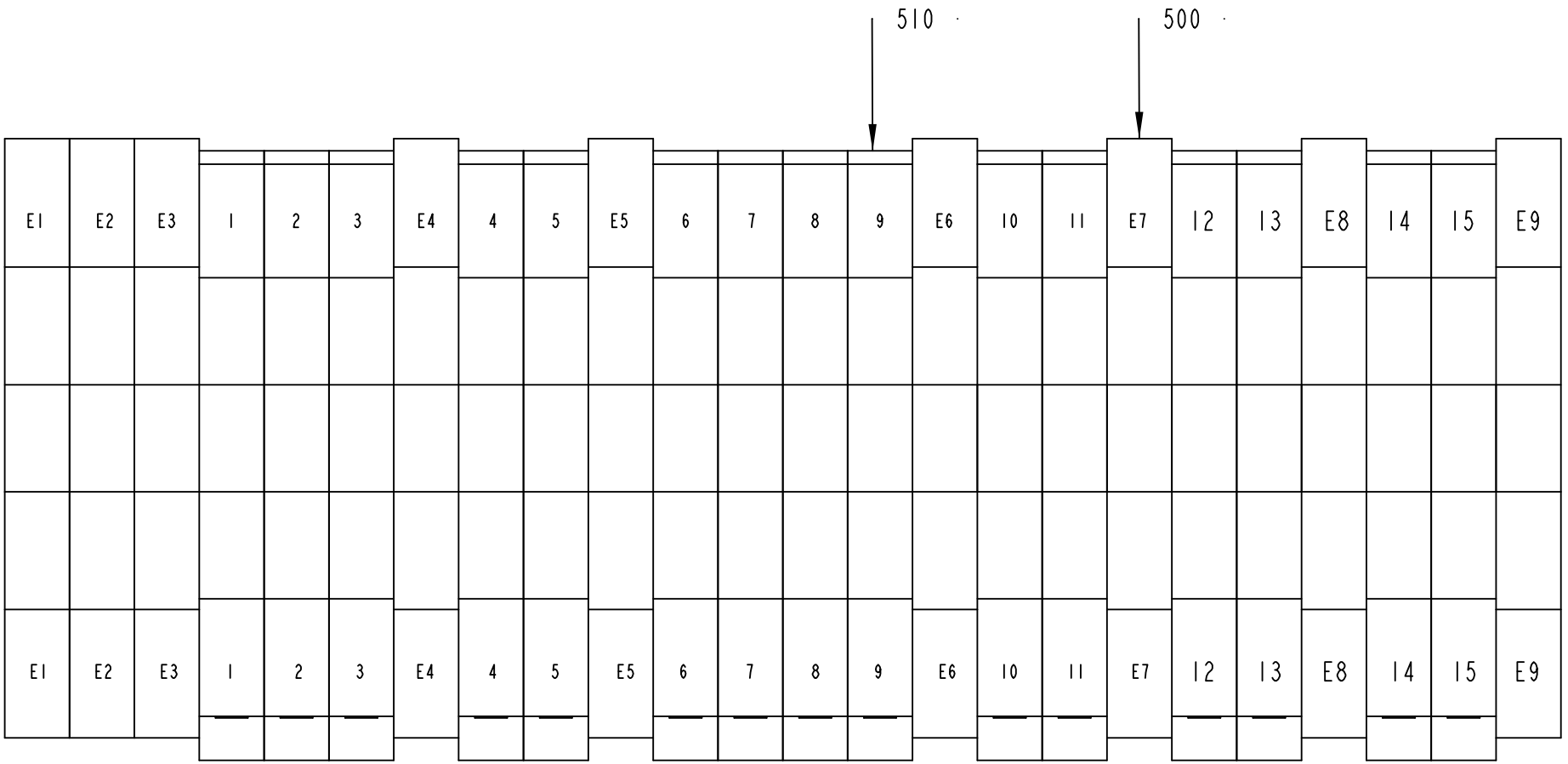

A01X1000

2896524-1
306801

ECM: 436914 - 20100222
Group number: 2896524-0100
Assembly Drawing: 2896524-1_1_AA

Pos	Part No	UN	Qty	Description	Page No
-					
500	353024-0205		9	EARTH TERMINAL, 1010.1	
510	353021-0213		15	FEED THROUGH TERMINAL, 10201.0	

Pos	Part No	UN	Qty	Description	Page No

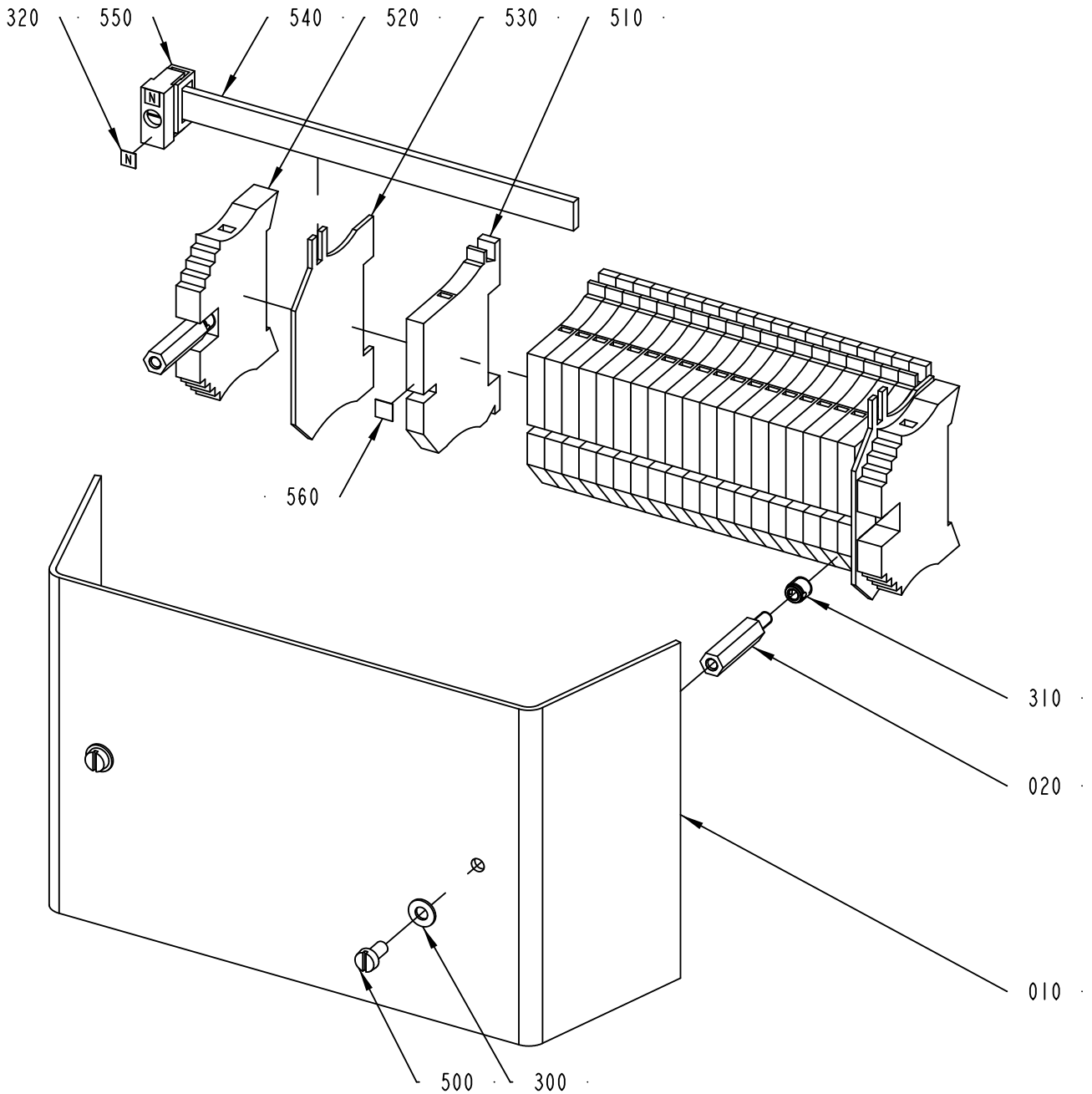

2884594-2
399387

ECM: 436915 - 20100222
Group number: 2884594-0200
Assembly Drawing: 2884594-2_1_AA

Pos	Part No	UN	Qty	Description	Page No
-					
010	3034237-0000		1	COVER	
020	570482-0000		2	SPACER	
300	90005-0064		2	WASHER PL.RND.NYL.4,3/9, H=0,8	
310	90459-6477		2	THREADED INSERTS, BUSHING, M4	
320	90600-0719		2	MARKING PLATES DEK 5 GW N	
500	312125-0287		2	SCREW ISO 1207 M4X8 A4	
510	353022-0002		20	NEUTRAL TERMINAL, 10107.8	
520	353031-0203		2	END SUPPORT, WEW 35/2	
530	353033-0104		2	END PLATE, 10502.8	
540	353041-0001	MM	150	BUS BAR RAIL 10X3MM SSCH	
550	353041-0104		1	CLAMPING YOKE, PZB 4 K	
560	359011-0821		1	SET OF SIGNS 6-FW 1-50	

Pos	Part No	UN	Qty	Description	Page No

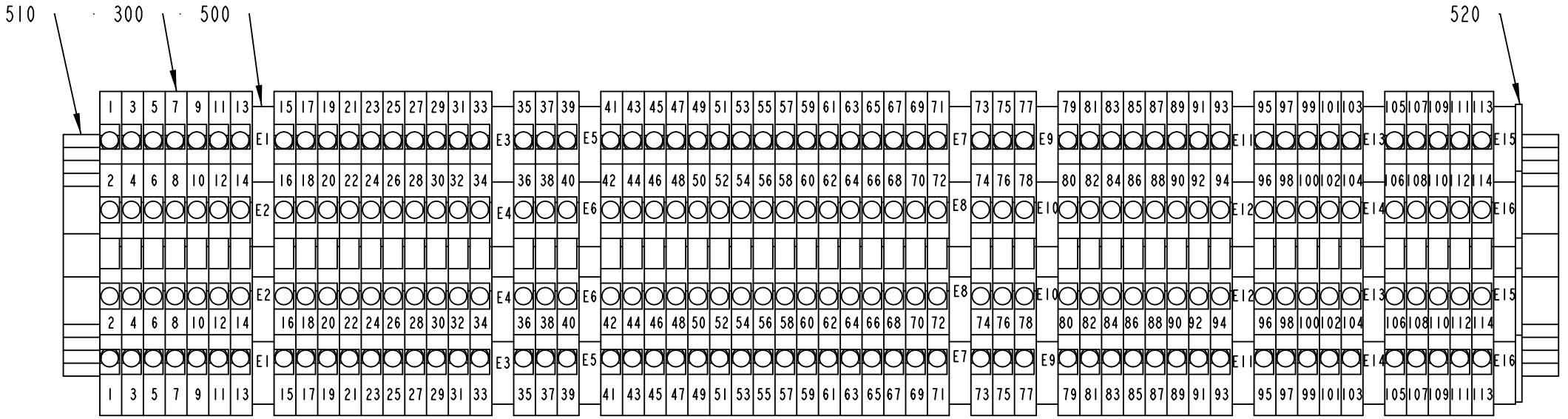

A01X2000

2872337-2
399387

ECM: 436916 - 20100222
Group number: 2872337-0200
Assembly Drawing: 2872337-2_1_AA

Pos	Part No	UN	Qty	Description	Page No
-					
300	90077-0113		57	FEED THROUGH TERMINAL, 10-00102150-1	
500	353024-0212		8	EARTH TERMINAL, 10363.0	
510	353031-0203		2	END SUPPORT, WEW 35/2	
520	353032-0009		1	END PLATE, WAP FOR WDK	

Pos	Part No	UN	Qty	Description	Page No

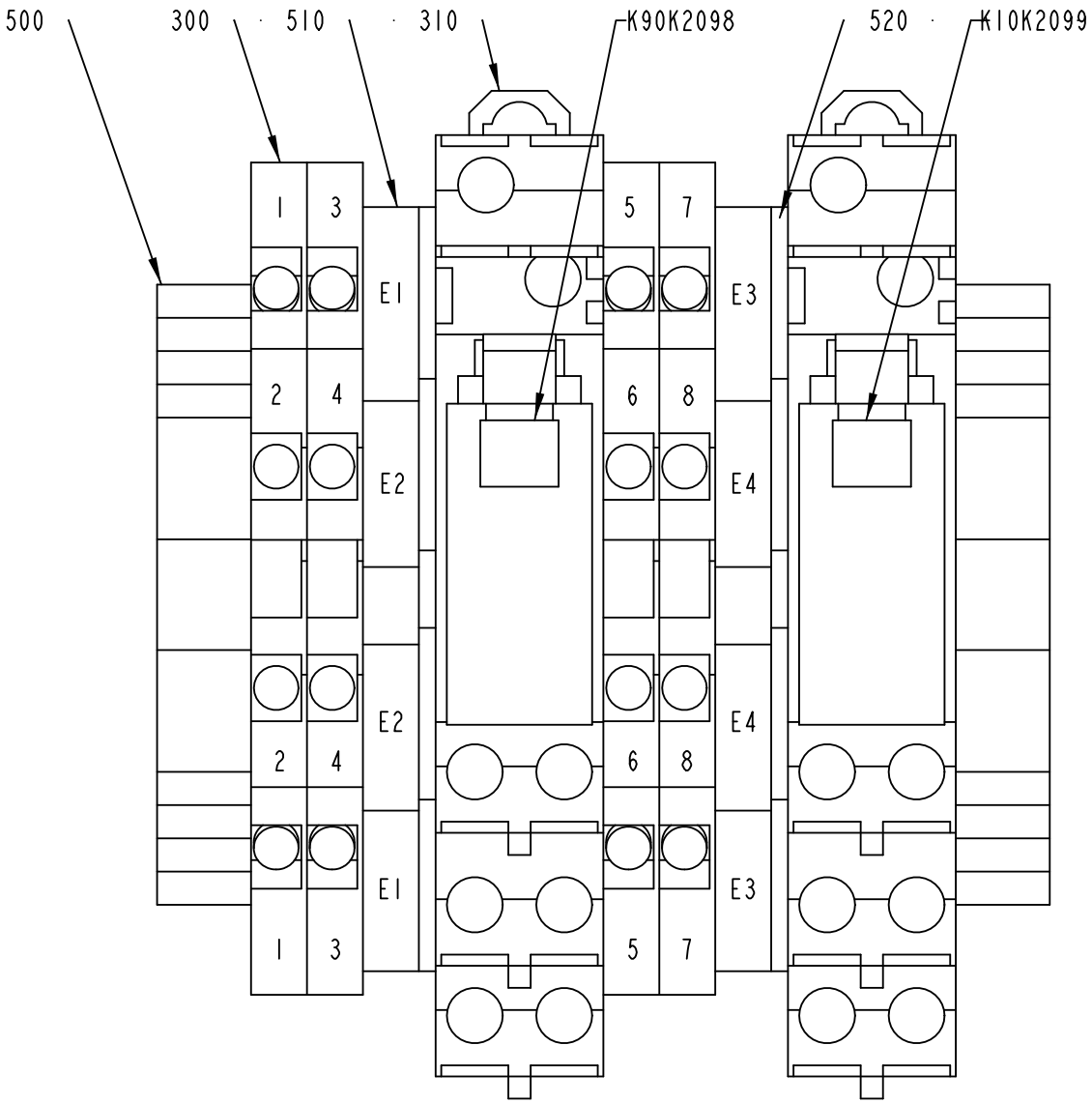

A01X2098

2884589-1
399387

ECM: 436917 - 20100222
Group number: 2884589-0100
Assembly Drawing: 2884589-1_1_AB

Pos	Part No	UN	Qty	Description	Page No
-					
300	90077-0113		4	FEED THROUGH TERMINAL, 10-00102150-1	
310	90129-0018		2	BASE, P2RF-08-E	
500	353031-0203		2	END SUPPORT, WEW 35/2	
510	353024-0212		2	EARTH TERMINAL, 10363.0	
520	353032-0009		2	END PLATE, WAP FOR WDK	
K10K2099	90119-0108		1	RELAY OMRON G2R-2-SNI-24DC	
	90129-0018		*1*	*BASE, P2RF-08-E*	
K90K2098	90119-0108		1	RELAY OMRON G2R-2-SNI-24DC	
	90129-0018		*1*	*BASE, P2RF-08-E*	

Pos	Part No	UN	Qty	Description	Page No

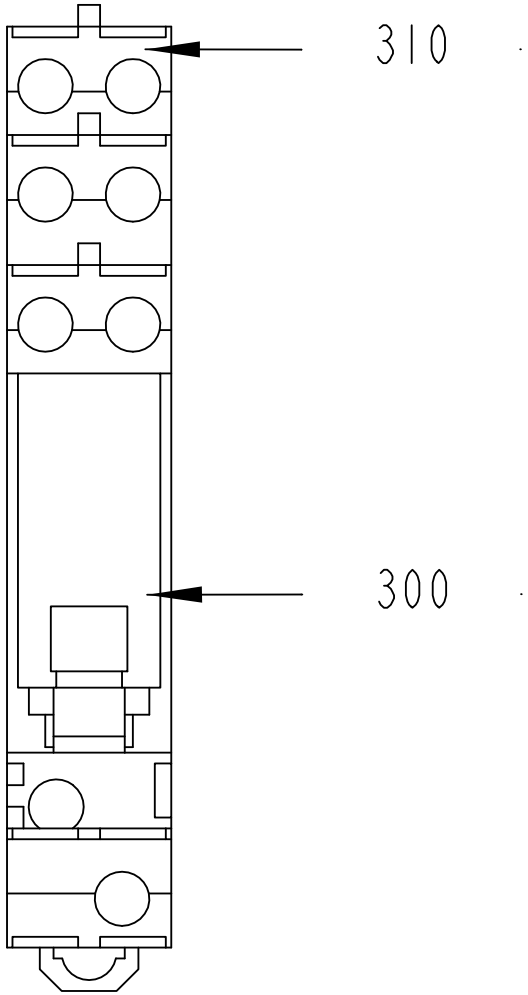

E01K1013

2901718-1
306801

ECM: 326784 - 20080303
Group number: 2901718-0100
Assembly Drawing: 2901718-1_1_AA

Pos	Part No	UN	Qty	Description	Page No
-					
300	90119-0108		1	RELAY OMRON G2R-2-SNI-24DC	
	90129-0018		*1*	*BASE, P2RF-08-E*	
310	90129-0018		1	BASE, P2RF-08-E	

Pos	Part No	UN	Qty	Description	Page No

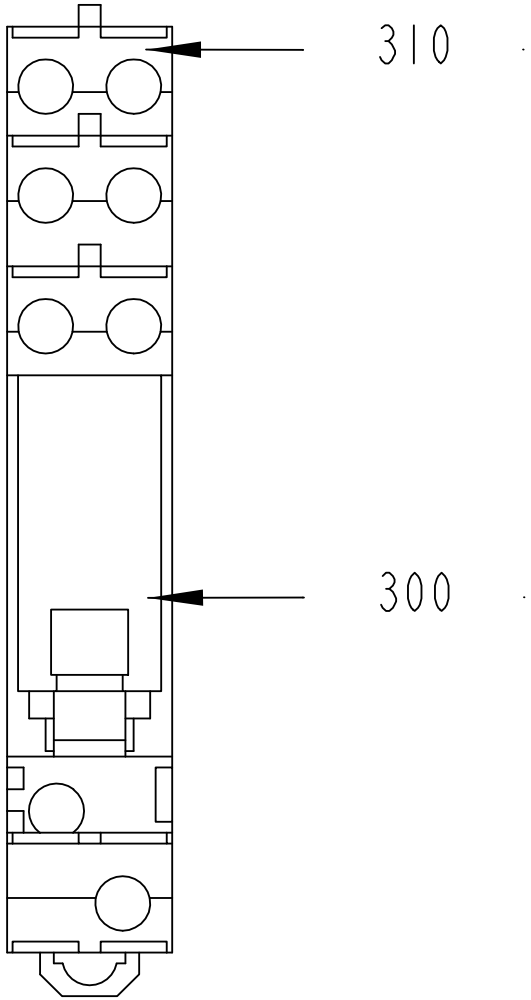

E01K1020

2901719-1
306801

ECM: 326783 - 20080303
Group number: 2901719-0100
Assembly Drawing: 2901719-1_1_AA

Pos	Part No	UN	Qty	Description	Page No
-					
300	90119-0108		1	RELAY OMRON G2R-2-SNI-24DC	
	90129-0018		*1*	*BASE, P2RF-08-E*	
310	90129-0018		1	BASE, P2RF-08-E	

Pos	Part No	UN	Qty	Description	Page No

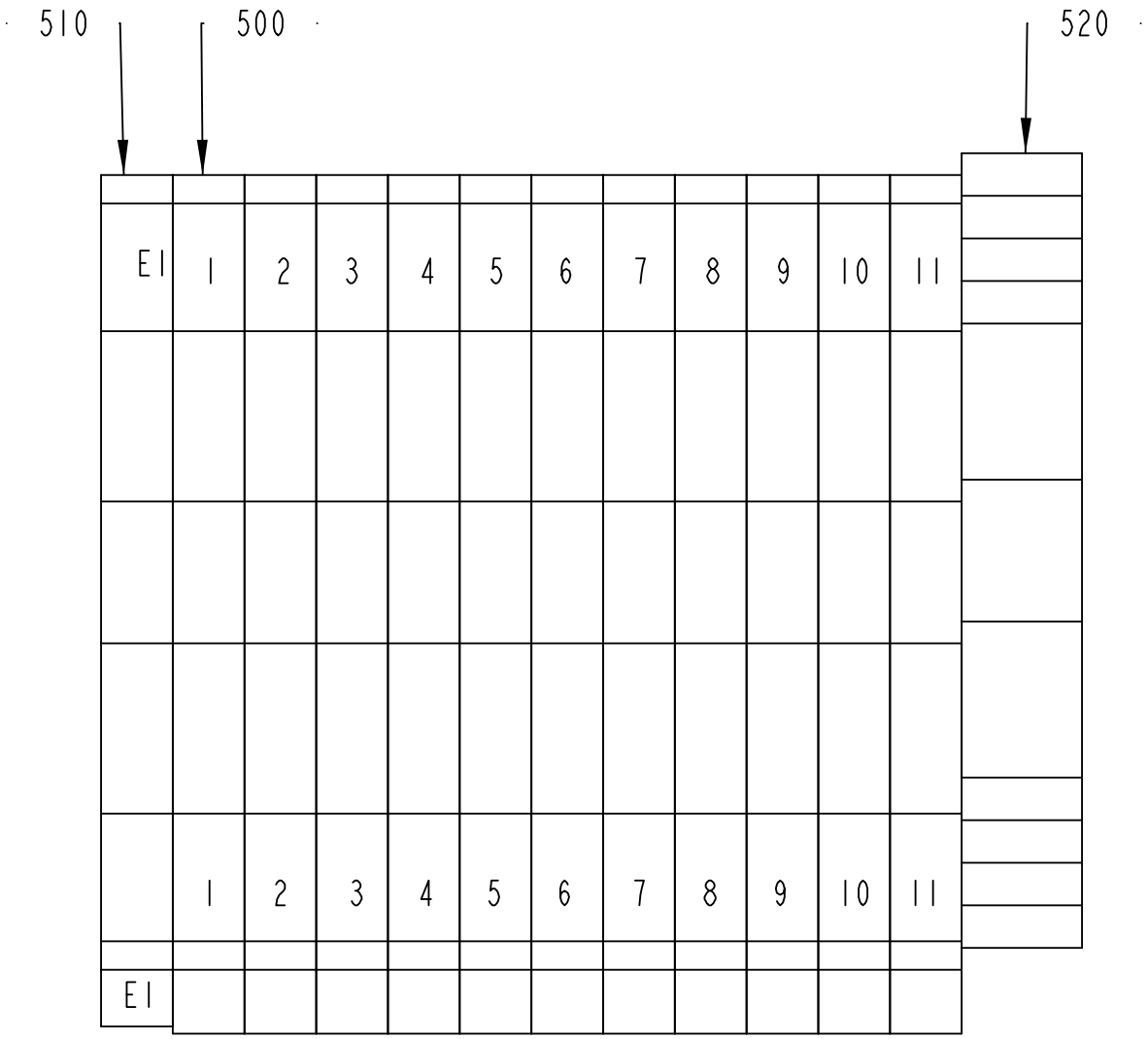

E01X1013

2872336-1
306801

ECM: 436922 - 20100222
Group number: 2872336-0100
Assembly Drawing: 2872336-1_1_AA

Pos	Part No	UN	Qty	Description	Page No
-					
500	353021-0212		11	FEED THROUGH TERMINAL, 10200.0	
510	353024-0204		1	EARTH TERMINAL WPE 2,5	
520	353031-0203		1	END SUPPORT, WEW 35/2	

Pos	Part No	UN	Qty	Description	Page No

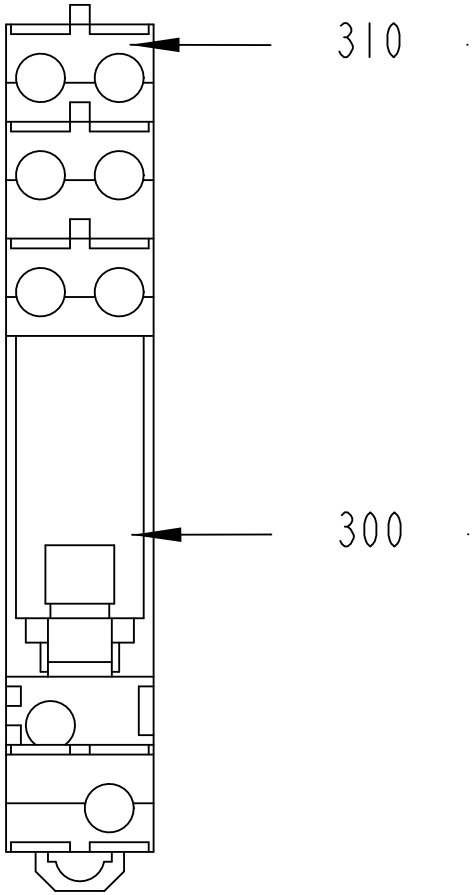

F09K2024

3034241-1
399387

ECM: 436925 - 20100222
Group number: 3034241-0100
Assembly Drawing: 3034241-1_1_AA

Pos	Part No	UN	Qty	Description	Page No
-					
300	90119-0108		1	RELAY OMRON G2R-2-SNI-24DC	
	90129-0018		*1*	*BASE, P2RF-08-E*	
310	90129-0018		1	BASE, P2RF-08-E	

Pos	Part No	UN	Qty	Description	Page No

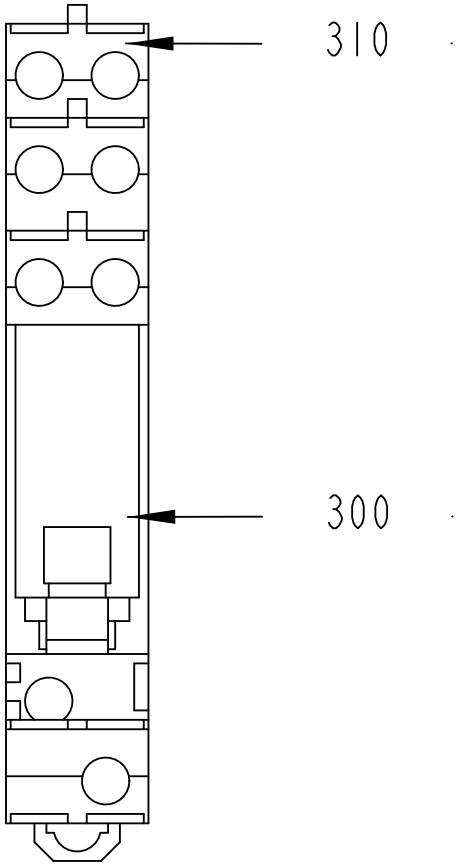

V30K2020

3034242-1
399387

ECM: 436924 - 20100222
Group number: 3034242-0100
Assembly Drawing: 3034242-1_1_AA

Pos	Part No	UN	Qty	Description	Page No
-					
300	90119-0108		1	RELAY OMRON G2R-2-SNI-24DC	
	90129-0018		*1*	*BASE, P2RF-08-E*	
310	90129-0018		1	BASE, P2RF-08-E	

Pos	Part No	UN	Qty	Description	Page No

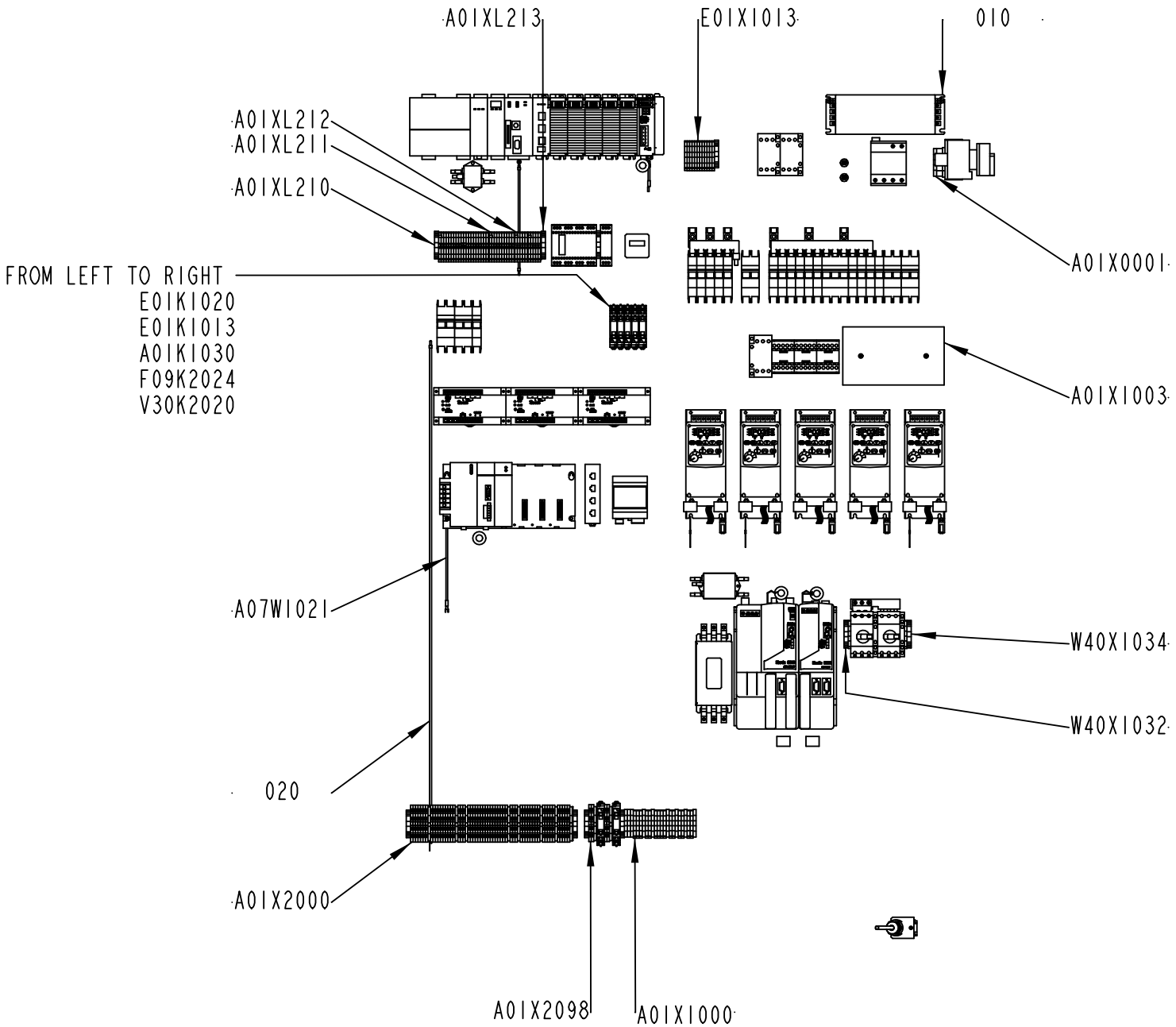

3053564-1
413459

ECM: 416340 - 20090914
Group number: 3053564-0100
Assembly Drawing: 3053564-1_1_AA

Pos	Part No	UN	Qty	Description	Page No
TBA, TB, TPA					
W40X1032	2884591-0100		1	TERMINAL	**8-9**
W40X1034	2884593-0100		1	TERMINAL	**8-11**
TB LINE COMMUNICATION GENIUS, TBA LINE COMMUNICATION GENIUS, TPA LINE COMMUNICATION GENIUS					
A07W1021	1368508-0101		1	WIRE	**8-13**
Common Parts					
010	3053565-0100		1	ELECTRICAL MATERIALS	**8-55, 8-57, 8-59**
020	3053566-0100		1	CABLE SET	**8-61**
A01K1030	2901720-0100		1	RELAY	**8-23**
A01XL210	2872298-0100		1	TERMINAL	**8-25**
A01XL211	2872299-0100		1	TERMINAL	**8-27**
A01XL212	2872318-0100		1	TERMINAL	**8-29**
A01XL213	2872319-0100		1	TERMINAL	**8-31**
A01X0001	2884592-0200		1	TERMINAL	**8-33**
A01X1000	2896524-0100		1	TERMINAL	**8-35**
A01X1003	2884594-0200		1	TERMINAL	**8-37**
A01X2000	2872337-0200		1	TERMINAL	**8-39**
A01X2098	2884589-0100		1	TERMINAL	**8-41**
E01K1013	2901718-0100		1	RELAY	**8-43**
E01K1020	2901719-0100		1	RELAY	**8-45**
E01X1013	2872336-0100		1	TERMINAL	**8-47**
F09K2024	3034241-0100		1	RELAY	**8-49**
V30K2020	3034242-0100		1	RELAY	**8-51**

Pos	Part No	UN	Qty	Description	Page No

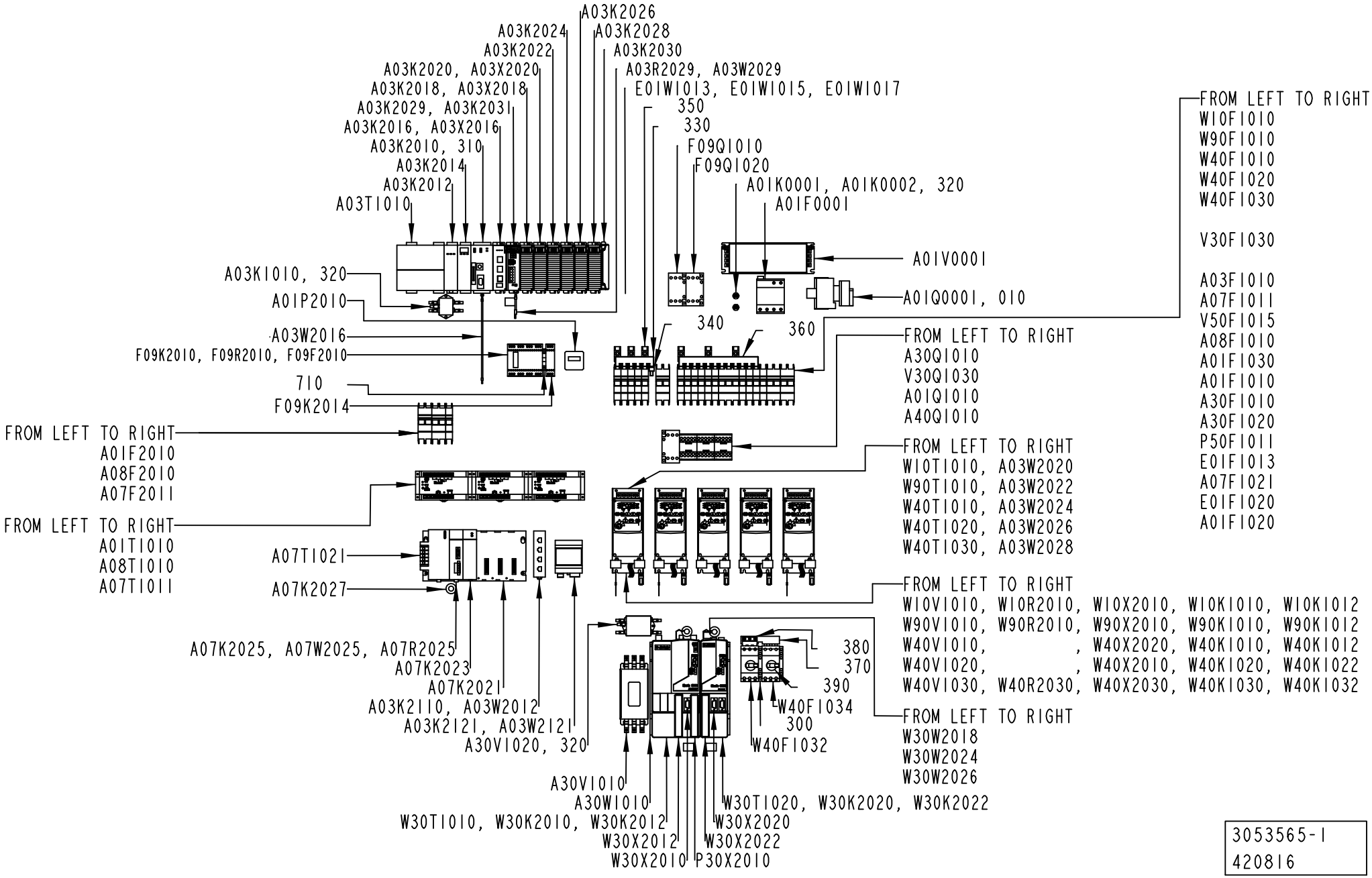

3053565-1
420816

ECM: 428646 - 20091221
Group number: 3053565-0100
Assembly Drawing: 3053565-1_1_AB

This list covers pages from 8-54 to 8-59

Pos	Part No	UN	Qty	Description	Page No
TBA, TB, TPA					
300	90259-0313		2	AUXILIARY CONTACT, NHI21-PKZ0	
A03K2029	90600-4896		1	RESERVE MOD., 1769-ARM/A	
A03W2024	90220-0183	M	0.5	SCR. CABLE 2X0,34MM2	
A03W2026	90220-0183	M	0.5	SCR. CABLE 2X0,34MM2	
W40F1032	90459-5323		1	OVERLOAD PROTECTION, PKZM0-1	
W40F1034	90459-5323		1	OVERLOAD PROTECTION, PKZM0-1	
W40K1020	90600-5249		1	FERRITE, B64290L616X38	
W40K1022	90600-5249		1	FERRITE, B64290L616X38	
W40K1030	90600-5249		1	FERRITE, B64290L616X38	
W40K1032	90600-5249		1	FERRITE, B64290L616X38	
W40T1020	90459-3449		1	VARIABLE FREQUENCY DRIVE 22A-A2P3N104	
W40T1030	90459-3450		1	VARIABLE FREQUENCY DRIVE 22A-A4P5N104	
W40V1020	90459-3460		1	FOOTPRINT FILTER 22-RF010-AL	
W40V1030	90459-3460		1	FOOTPRINT FILTER 22-RF010-AL	
W40X2020	90459-6470		1	CONNECTOR RJ45 TER. BL., AK-U0-RJ45-TB2P	
	90459-2523		*2*	*OPEN STYLE TERMINATOR, 1485A-C2*	
W40X2030	90459-6470		1	CONNECTOR RJ45 TER. BL., AK-U0-RJ45-TB2P	
	90459-2523		*2*	*OPEN STYLE TERMINATOR, 1485A-C2*	
TB LINE COMMUNICATION GENIUS, TBA LINE COMMUNICATION GENIUS, TPA LINE COMMUNICATION GENIUS					
A07F2011	315744-0020		1	MINIATURE CIRCUIT BREAKER, FAZ-C2/1-NA	
A03K2029	90459-2483		1	DEVICENET SCANNER, 1769-SDN SERIES B	
A03K2031	90600-5249		1	FERRITE, B64290L616X38	
A07K2021	90031-0070		1	CPU313, INTEGRATED IN 5-SLOT BASEPLATE	
A07K2023	90031-0078		1	GENIUS BUS CONTROLLER	
A07K2025	90459-4234		1	DEVICENET SLAVE MODULE	
A07K2027	90600-5249		1	FERRITE, B64290L616X38	
A03R2029	90459-1297		1	RESISTANCE FIXED, 120 OHM, 0,25 W	
A07R2025	90459-1297		1	RESISTANCE FIXED, 120 OHM, 0,25 W	
A07T1011	90459-4245		1	POWER SUPPLY UNIT 230VAC/24VDC 3,75A	
A07T1021	90031-0068		1	PLC, POWER SUPPLY	
	90031-0301		*1*	*SPARE BATTERY CPU PCM 2PCS*	
	352551-0134		*1*	*FINE-WIRE FUSE 2 A SLOW,5X20MM*	
A03W2029	578874-0000		1	HF BRAIDED WIRE 1,6 MM2	
TB LINE COMMUNICATION SNP, TBA LINE COMMUNICATION SNP, TCA LINE COMMUNICATION SNP, TPA LINE COMMUNICATION SNP, TWA LINE COMMUNICATION SNP					
A03K2029	90600-4896		1	RESERVE MOD., 1769-ARM/A	
A03K2121	90459-4235		1	SNP TO DF1 GATEWAY, 0220 1166 01 REV B	
A03W2121	90600-0850		1	CABLE, SNP-DF1 GATEWAY	
TWA, TCA					
A03K2029	90600-4896		1	RESERVE MOD., 1769-ARM/A	

Pos	Part No	UN	Qty	Description	Page No
Common Parts					
010	3041490-0000		1	TURNING HANDLE	
310	90459-3145		1	FLASH MEMORY 64MBYTE, 1784-CF64	
320	90459-3352		14	FLAT PIN SOCKET, 6,3X0,8	
330	90600-5524		1	BUSBAR, Z-SV/UL-16/3P-3TE/6 104898	
340	90600-5527		1	BUSBAR COVER, ZV-BS-UL 104904	
350	90600-5528		6	EXTENSION TERMINAL, Z-EK/35/UL 104901	
360	90600-5525		1	BUSBAR, Z-SV/UL-16/3P-3TE/12 104899	
370	90259-0315		1	BUSBAR, B3.1/2-PKZ0	
380	90600-1461		1	INCOMING TERMINAL, BK25/3-PKZ0-E	
390	90600-5989		2	LOCK HANDLE, AK-PKZ0	
500	351160-0102		1	WIRE AWM 1X0,75 MM2 DARKBLUE	
510	351160-0104	M	1	WIRE AWM 1X1,5 MM2 DARKBLUE	
520	351161-0104	M	1	WIRE AWM 1X1,5 MM2 LIGHTBLUE	
530	351161-0105	M	1	WIRE AWM 1X2,5 MM2 LIGHTBLUE	
540	351162-0102	M	1	WIRE AWM 1X0,75 MM2 YELLOW-GREEN	
550	351162-0104	M	1	WIRE AWM 1X1,5 MM2 YELLOW-GREEN	
560	351162-0105	M	1	WIRE AWM 1X2,5 MM2 YELLOW-GREEN	
570	351162-0106	M	1	WIRE AWM 1X4 MM2 YELLOW-GREEN	
580	351162-0108	M	1	WIRE AWM 1X10 MM2 YELLOW-GREEN	
590	351162-0110	M	1	WIRE AWM 1X25 MM2 YELLOW-GREEN	
600	351164-0104	M	1	WIRE AWM 1X1,5 MM2 BLACK	
610	351164-0105	M	1	WIRE AWM 1X2,5 MM2 BLACK	
620	351164-0106	M	1	WIRE AWM 1X4 MM2 BLACK	
630	353001-0113		1	END SLEEVE 0,75MM2	
640	353001-0114		1	END SLEEVE 1,50 MM2	
650	353001-0115		1	END SLEEVE 2,5/14	
660	353001-0117		1	END SLEEVE H4.0/20 GREY	
670	353001-0120		1	END SLEEVE H 10/28	
680	353210-0075		1	END SLEEVE, TWIN COLL, 0,75 MM2	
690	353210-0150		1	END SLEEVE, TWIN COLL, 1,5 MM2	
700	353210-0250		1	END SLEEVE, TWIN COLL, 2,5 MM2	
710	353031-0203		1	END SUPPORT, WEW 35/2	
720	353104-0176		1	CABLE SHOE, RING UNINS., YAV 25 M 8	
A01F0001	90600-7487		1	SURGE PROTECTION DEV., VAL-MS 230/3+1 FM	
	90600-7488		*1*	*SURGE PROTECTION DEV., SP, VAL-MS 230 ST*	
	90600-7489		*1*	*SURGE PROTECTION DEV., SP, F-MS 12 ST*	
A01F1010	315744-0020		1	MINIATURE CIRCUIT BREAKER, FAZ-C2/1-NA	
A01F1020	315745-0060		1	MINIATURE CIRCUIT BREAKER, FAZ-C6/2-NA	
A01F1030	315744-0040		1	MINIATURE CIRCUIT BREAKER, FAZ-C4/1-NA	
A01F2010	315745-0020		1	MINIATURE CIRCUIT BREAKER, FAZ-C2/2-NA	
A03F1010	315744-0060		1	MINIATURE CIRCUIT BREAKER, FAZ-C6/1-NA	

Machine Type | Group Description | Used-In | Group Number | Page No

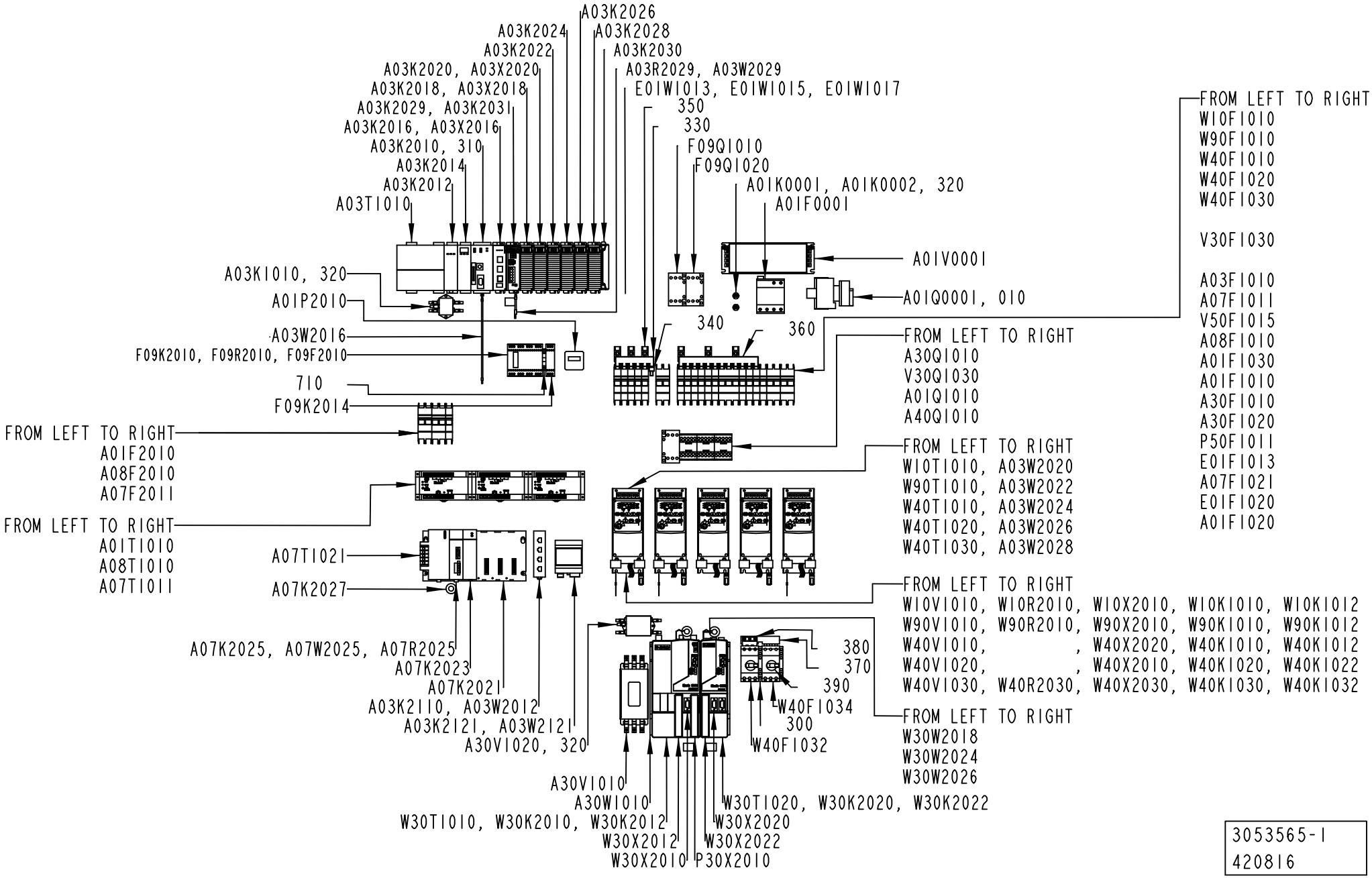

3053565-1
420816

ECM: 428646 - 20091221
Group number: 3053565-0100
Assembly Drawing: 3053565-1_1_AB

This list covers pages from 8-54 to 8-59

Pos	Part No	UN	Qty	Description	Page No
Common Parts (Cont'd)					
A07F1011	315744-0020		1	MINIATURE CIRCUIT BREAKER, FAZ-C2/1-NA	
A07F1021	315744-0020		1	MINIATURE CIRCUIT BREAKER, FAZ-C2/1-NA	
A08F1010	315744-0060		1	MINIATURE CIRCUIT BREAKER, FAZ-C6/1-NA	
A08F2010	315745-0040		1	MINIATURE CIRCUIT BREAKER, FAZ-C4/2-NA	
A30F1010	315746-0100		1	MINIATURE CIRCUIT BREAKER, FAZ-C10/3-NA	
A30F1020	315744-0040		1	MINIATURE CIRCUIT BREAKER, FAZ-C4/1-NA	
A01K0001	90600-5266		1	FEED THROUGH FILTER, B85321A2502W160	
A01K0002	90600-5266		1	FEED THROUGH FILTER, B85321A2502W160	
A03K1010	90600-5250		1	LINE FILTER, B84111FB30	
A03K2010	90600-9746		1	PROCESSOR L43, SERIES B, 1768-L43/B	
A03K2012	90600-1349		1	SERCOS MOTION MODULE 4-AXIS, 1768-M04SE/	
A03K2014	90600-1348		1	ETHERNET /IP BRIDGE MODULE, 1768-ENBT/A	
A03K2016	90459-6553		1	PLC DSI /MODBUS COMMUN. MOD., 1769-SM2/A	
A03K2018	90459-2473		1	DIG INP. MOD.16 PTS FAST,1769-IQ16F SERA	
A03K2020	90459-2473		1	DIG INP. MOD.16 PTS FAST,1769-IQ16F SERA	
A03K2022	90459-2473		1	DIG INP. MOD.16 PTS FAST,1769-IQ16F SERA	
A03K2024	90459-2476		1	DIGIT. OUT. MOD. 16 P ESCP, 1769-OB16P	
A03K2026	90459-2476		1	DIGIT. OUT. MOD. 16 P ESCP, 1769-OB16P	
A03K2028	90459-2476		1	DIGIT. OUT. MOD. 16 P ESCP, 1769-OB16P	
A03K2030	90459-2491		1	PLC RIGHT END CAP/TERMINATOR, 1769-ECR	
A03K2110	90600-1847		1	ETHERNET SWITCH, FL SWITCH SFN 5TX	
A01P2010	90178-0007		1	HOUR COUNTER, BG 40,17-1 12-48VDC	
A01Q0001	90111-0132		1	MAIN SWITCH P1-25/EA/SVB-SW/N/HI11/H-P14	
A01Q1010	90459-5440		1	CONTACTOR 4KW 24VDC, DILM9-01	
A30Q1010	90459-5441		1	CONTACTOR 7,5KW 24VDC, DILM17-01	
A40Q1010	90459-5440		1	CONTACTOR 4KW 24VDC, DILM9-01	
A01T1010	90459-4245		1	POWER SUPPLY UNIT 230VAC/24VDC 3,75A	
A03T1010	90600-1347		1	POWER SUPPLY 120/240 VAC, 1768-PA3/A	
A08T1010	90459-4245		1	POWER SUPPLY UNIT 230VAC/24VDC 3,75A	
A01V0001	90600-5260		1	LINE FILTER, B84144A16R120	
A30V1010	90600-5258		1	LINE FILTER, B84143A35R106	
A30V1020	90600-5252		1	LINE FILTER, B84113HB30	
A03W2012	351501-0010		1	ETHERNET PATCH CABLE, FL CAT5 PATCH 1,0	
A03W2016	2855106-0000		1	COPPER BRAID	
A03W2020	90220-0183	M	3	SCR. CABLE 2X0,34MM2	
A03W2022	90220-0183	M	3	SCR. CABLE 2X0,34MM2	
A03W2028	90220-0183	M	3	SCR. CABLE 2X0,34MM2	
A30W1010	90459-5189		1	SLIM POW. RAIL, KINETIX, 2 AX, 2094-PRS2	
A03X2016	90459-6470		1	CONNECTOR RJ45 TER. BL., AK-U0-RJ45-TB2P	
	90459-2523		*2*	*OPEN STYLE TERMINATOR, 1485A-C2*	
A03X2018	90459-6470		1	CONNECTOR RJ45 TER. BL., AK-U0-RJ45-TB2P	
A03X2020	90459-6470		1	CONNECTOR RJ45 TER. BL., AK-U0-RJ45-TB2P	
	90459-2523		*2*	*OPEN STYLE TERMINATOR, 1485A-C2*	
E01F1013	315744-0100		1	MINIATURE CIRCUIT BREAKER, FAZ-C10/1-NA	
E01F1020	315745-0020		1	MINIATURE CIRCUIT BREAKER, FAZ-C2/2-NA	
F09F2010	90459-4891		1	PROGR. IDENTIFIER ID-FIX RW, 20-070-21	
F09K2010	90600-2045		1	SAFETY PLC, PLUTO B46-6 20-070-15	
F09K2014	90459-2291		1	SAFETY TIME RELAY, E1T-0.5S-24VDC	
F09Q1010	90459-5441		1	CONTACTOR 7,5KW 24VDC, DILM17-01	
F09Q1020	90459-5441		1	CONTACTOR 7,5KW 24VDC, DILM17-01	
F09R2010	90459-1297		1	RESISTANCE FIXED, 120 OHM, 0,25 W	
F09W2010	90600-6081	M	2	CABLE, UNITRONIC BUS CAN 1X2X0,5 UL/CSA	
P50F1011	315744-0100		1	MINIATURE CIRCUIT BREAKER, FAZ-C10/1-NA	
P30X2010	90459-6679		1	CONN 15 P FEM, AUX. FEEDB,2090-K6CK-D15F	
V30F1030	315745-0100		1	MINIATURE CIRCUIT BREAKER, FAZ-C10/2-NA	
V50F1015	315747-0100		1	MINIATURE CIRCUIT BREAKER, FAZ-D10/1-NA	
V30Q1030	90459-5440		1	CONTACTOR 4KW 24VDC, DILM9-01	
W10F1010	315744-0160		1	MINIATURE CIRCUIT BREAKER, FAZ-C16/1-NA	
W40F1010	315744-0160		1	MINIATURE CIRCUIT BREAKER, FAZ-C16/1-NA	
W40F1020	315744-0100		1	MINIATURE CIRCUIT BREAKER, FAZ-C10/1-NA	
W40F1030	315744-0160		1	MINIATURE CIRCUIT BREAKER, FAZ-C16/1-NA	
W90F1010	315744-0160		1	MINIATURE CIRCUIT BREAKER, FAZ-C16/1-NA	
W10K1010	90600-5249		1	FERRITE, B64290L616X38	
W10K1012	90600-5249		1	FERRITE, B64290L616X38	
W30K2010	90600-5249		1	FERRITE, B64290L616X38	
W30K2012	90600-5249		1	FERRITE, B64290L616X38	
W30K2020	90600-5249		1	FERRITE, B64290L616X38	
W30K2022	90600-5249		1	FERRITE, B64290L616X38	
W40K1010	90600-5249		1	FERRITE, B64290L616X38	
W40K1012	90600-5249		1	FERRITE, B64290L616X38	
W90K1010	90600-5249		1	FERRITE, B64290L616X38	
W90K1012	90600-5249		1	FERRITE, B64290L616X38	
W10R2010	90459-1297		1	RESISTANCE FIXED, 120 OHM, 0,25 W	
W40R2030	90459-1297		1	RESISTANCE FIXED, 120 OHM, 0,25 W	
W90R2010	90459-1297		1	RESISTANCE FIXED, 120 OHM, 0,25 W	
W10T1010	90459-3450		1	VARIABLE FREQUENCY DRIVE 22A-A4P5N104	
W30T1010	90600-5211		1	AXIS MOD. W. PS,2094-BC01-M01-S SERIES B	
W30T1020	90600-5214		1	AXIS MOD. KINETIX 6000,2094-BM01-S SER.B	
W40T1010	90459-3450		1	VARIABLE FREQUENCY DRIVE 22A-A4P5N104	
W90T1010	90459-3450		1	VARIABLE FREQUENCY DRIVE 22A-A4P5N104	
W10V1010	90459-3460		1	FOOTPRINT FILTER 22-RF010-AL	
W40V1010	90459-3460		1	FOOTPRINT FILTER 22-RF010-AL	

Machine Type | Group Description | Used-In | Group Number | Page No

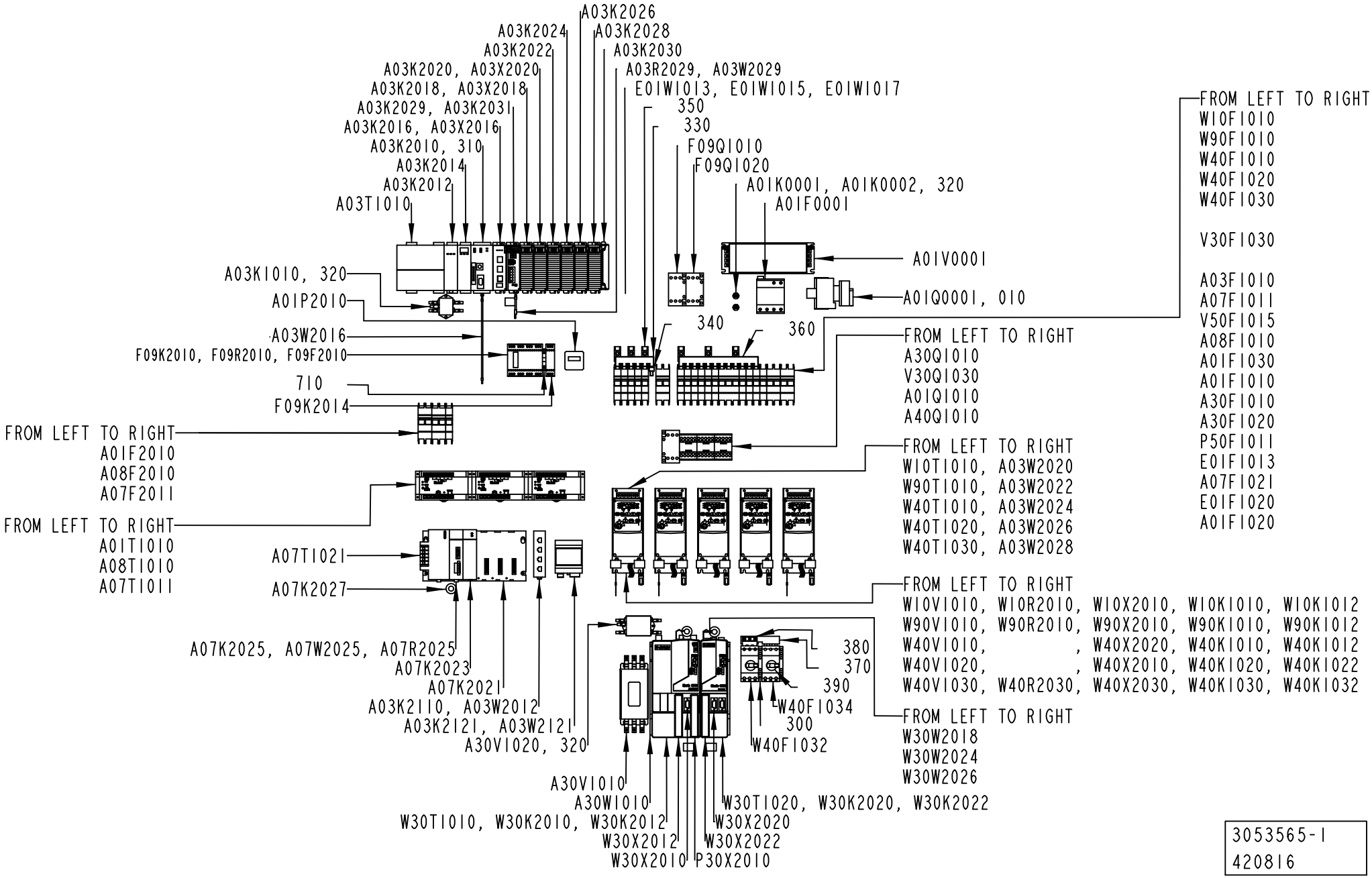
A03K2026
A03K2024
A03K2028
A03K2022
A03K2030
A03K2020, A03X2020
A03R2029, A03W2029
A03K2018, A03X2018
E01W1013, E01W1015, E01W1017
A03K2029, A03K2031
350
A03K2016, A03X2016
330
A03K2010, 310
F09Q1010
A03K2014
F09Q1020
A03K2012
A01K0001, A01K0002, 320
A03T1010
A01F0001
A01V0001
A03K1010, 320
A01Q0001, 010
A01P2010
340
360
A03W2016
F09K2010, F09R2010, F09F2010
710
F09K2014
FROM LEFT TO RIGHT
A01F2010
A08F2010
A07F2011
FROM LEFT TO RIGHT
A01T1010
A08T1010
A07T1011
A07T1021
A07K2027
A07K2025, A07W2025, A07R2025
A07K2023
A07K2021
A03K2110, A03W2012
A03K2121, A03W2121
A30V1020, 320
A30V1010
A30W1010
W30T1010, W30K2010, W30K2012
W30X2012
W30X2010
P30X2010
W30T1020, W30K2020, W30K2022
W30X2020
W30X2022
380
370
390
W40F1034
300
W40F1032
FROM LEFT TO RIGHT
A30Q1010
V30Q1030
A01Q1010
A40Q1010
FROM LEFT TO RIGHT
W10T1010, A03W2020
W90T1010, A03W2022
W40T1010, A03W2024
W40T1020, A03W2026
W40T1030, A03W2028
FROM LEFT TO RIGHT
W10V1010, W10R2010, W10X2010, W10K1010, W10K1012
W90V1010, W90R2010, W90X2010, W90K1010, W90K1012
W40V1010, , W40X2020, W40K1010, W40K1012
W40V1020, , W40X2010, W40K1020, W40K1022
W40V1030, W40R2030, W40X2030, W40K1030, W40K1032
FROM LEFT TO RIGHT
W30W2018
W30W2024
W30W2026
FROM LEFT TO RIGHT
W10F1010
W90F1010
W40F1010
W40F1020
W40F1030
V30F1030
A03F1010
A07F1011
V50F1015
A08F1010
A01F1030
A01F1010
A30F1010
A30F1020
P50F1011
E01F1013
A07F1021
E01F1020
A01F1020
3053565-1
420816

Pos	Part No	UN	Qty	Description	Page No
Common Parts (Cont'd)					
W90V1010	90459-3460		1	FOOTPRINT FILTER 22-RF010-AL	
W30W2018	90459-2540		1	SERCOS CABLE 3.0M, 2090-SCEP3-0	
W30W2024	90459-2536		1	SERCOS CABLE 0.1M, 2090-SCEP0-1	
W30W2026	90459-2540		1	SERCOS CABLE 3.0M, 2090-SCEP3-0	
W10X2010	90459-6470		1	CONNECTOR RJ45 TER. BL., AK-U0-RJ45-TB2P	
	90459-2523		*2*	*OPEN STYLE TERMINATOR, 1485A-C2*	
W30X2010	90459-2551		1	CONNECTOR, MOTOR FEEDBACK 15 PIN MALE	
W30X2012	90459-2550		1	I/O CONNECTOR 26 PIN MALE, 2090-K6CK-D26	
W30X2020	90459-2551		1	CONNECTOR, MOTOR FEEDBACK 15 PIN MALE	
W30X2022	90459-2550		1	I/O CONNECTOR 26 PIN MALE, 2090-K6CK-D26	
W40X2010	90459-6470		1	CONNECTOR RJ45 TER. BL., AK-U0-RJ45-TB2P	
	90459-2523		*2*	*OPEN STYLE TERMINATOR, 1485A-C2*	
W90X2010	90459-6470		1	CONNECTOR RJ45 TER. BL., AK-U0-RJ45-TB2P	
	90459-2523		*2*	*OPEN STYLE TERMINATOR, 1485A-C2*	

Pos	Part No	UN	Qty	Description	Page No

This page is intentionally left blank.

ECM: 428647 - 20091221
Group number: 3053566-0100
Assembly Drawing:

Pos	Part No	UN	Qty	Description	Page No
TBA, TB, TPA					
E01W1020	351150-0412	M	4	CABLE OLFLEX 3X1,5 MM2 LIGHT/GREY	
P50W1011	351150-0412	M	10	CABLE OLFLEX 3X1,5 MM2 LIGHT/GREY	
P50W2011	351150-0406	M	10	CABLE OLFLEX 7X0,75 MM2 LIGHT/GREY	
V30W2012	351150-0403	M	3	CABLE OLFLEX 3X0,75 MM2 LIGHT/GREY	
V30W2080	351304-0050		1	ACTUATOR/SENSOR CABLE RKMWVN 3-224/5M	
V30W2090	351305-0050		1	ACTUATOR/SENSOR CABLE PRKMV 4-07/5M	
V40W2030	351309-0100		1	ACTUATOR/SENSOR CABLE PRKT 4-07/10M	
V40W2032	90459-6586		1	ACT/SENS.Y-CABLE, ASBN 2-PRKMV 4-07/0,6M	
V40W2040	351309-0100		1	ACTUATOR/SENSOR CABLE PRKT 4-07/10M	
V40W2042	90459-6586		1	ACT/SENS.Y-CABLE, ASBN 2-PRKMV 4-07/0,6M	
V40W2070	351309-0100		1	ACTUATOR/SENSOR CABLE PRKT 4-07/10M	
V40W2072	90459-6586		1	ACT/SENS.Y-CABLE, ASBN 2-PRKMV 4-07/0,6M	
W30W2022	351304-0050		1	ACTUATOR/SENSOR CABLE RKMWVN 3-224/5M	
TCA					
A10W2000	351150-0406	M	3	CABLE OLFLEX 7X0,75 MM2 LIGHT/GREY	
A90W9901	2992449-0000		1	CABLE WITH CONNECTOR	
	90600-0778	*M*	*50*	*CABLE, ETHERNET FL CAT5 HEAVY*	
	90600-0788		*2*	*CONNECTOR RJ45, VS-08-RJ45-5-Q/IP20*	
E01W1020	351150-0412	M	4	CABLE OLFLEX 3X1,5 MM2 LIGHT/GREY	
V30W2080	351303-0050		1	ACTUATOR/SENSOR CABLE RKMVN 3-224/5M	
V30W2120	351303-0050		1	ACTUATOR/SENSOR CABLE RKMVN 3-224/5M	
V40W2100	351309-0100		1	ACTUATOR/SENSOR CABLE PRKT 4-07/10M	
V40W2102	90459-6586		1	ACT/SENS.Y-CABLE, ASBN 2-PRKMV 4-07/0,6M	
W30W2022	351303-0050		1	ACTUATOR/SENSOR CABLE RKMVN 3-224/5M	
TWA					
E01W1020	351150-0412	M	4	CABLE OLFLEX 3X1,5 MM2 LIGHT/GREY	
V30W2080	351304-0050		1	ACTUATOR/SENSOR CABLE RKMWVN 3-224/5M	
V30W2120	351304-0050		1	ACTUATOR/SENSOR CABLE RKMWVN 3-224/5M	
V40W2100	351309-0100		1	ACTUATOR/SENSOR CABLE PRKT 4-07/10M	
V40W2102	90459-6586		1	ACT/SENS.Y-CABLE, ASBN 2-PRKMV 4-07/0,6M	
W30W2022	351303-0050		1	ACTUATOR/SENSOR CABLE RKMVN 3-224/5M	
Common Parts					
A01W1999	3025918-0000		1	COPPER BRAID	
A01W2010	351303-0050		1	ACTUATOR/SENSOR CABLE RKMVN 3-224/5M	
A01W2012	90458-2837		1	PLUG SOCKET, KMEB-1-24-5-LED	
A01W2014	351150-0406	M	4.5	CABLE OLFLEX 7X0,75 MM2 LIGHT/GREY	
A08W2010	351150-0431	M	4	CABLE OLFLEX 2X0,75 MM2 LIGHT/GREY	
A08W2012	351150-0424	M	4	CABLE OLFLEX 18X0,75 MM2 LIGHT/GREY	
A08W2020	351501-0050		1	ETHERNET PATCH CABLE, FL CAT5 PATCH 5,0	
E08W1010	351150-0403	M	3.5	CABLE OLFLEX 3X0,75 MM2 LIGHT/GREY	
F09W2026	90459-4252		1	CABLE M12-C101, 20-056-10	
F09W2032	351303-0050		1	ACTUATOR/SENSOR CABLE RKMVN 3-224/5M	
F09W2040	90600-5930	M	2	CABLE C9 1M, 20-057-15	
F09W2042	3041925-0000		1	EARTH WIRE	
P30W2010	90459-6604		1	LABLE SICK DOL-2312-G 05MMA3	
V30W1030	351150-0413	M	3.5	CABLE OLFLEX 4GX1,5 MM2 LIGHT/GREY	
V30W2010	351150-0403	M	3	CABLE OLFLEX 3X0,75 MM2 LIGHT/GREY	
V30W2030	351150-0404	M	3.5	CABLE OLFLEX 4X0,75 MM2 LIGHT/GREY	
V40W2060	351303-0050		1	ACTUATOR/SENSOR CABLE RKMVN 3-224/5M	
V50W1015	351150-0417	M	2.5	CABLE OLFLEX 3X2,5 MM2 LIGHT/GREY	
V90W2050	351309-0100		1	ACTUATOR/SENSOR CABLE PRKT 4-07/10M	
V90W2052	90459-6586		1	ACT/SENS.Y-CABLE, ASBN 2-PRKMV 4-07/0,6M	
W10W1010	315756-0009	M	10	ÖLFLEX CONTROL TM CY 4G1,5, 281604CY	
W10W1012	315756-0009	M	1	ÖLFLEX CONTROL TM CY 4G1,5, 281604CY	
W30W1010	90600-3293		1	MOTOR POWER CABLE 2090-XXNPMF-16S09	
W30W1020	90600-3293		1	MOTOR POWER CABLE 2090-XXNPMF-16S09	
W30W2010	90600-3294		1	MOTOR FEEDBACK CABLE 2090-XXNFMF-S09/C	
W30W2012	351304-0050		1	ACTUATOR/SENSOR CABLE RKMWVN 3-224/5M	
W30W2014	90600-1768		1	ACTUATOR/SENSOR CABLE RKTS 5-298/5M	
W30W2016	90459-6586		1	ACT/SENS.Y-CABLE, ASBN 2-PRKMV 4-07/0,6M	
W30W2020	90600-3294		1	MOTOR FEEDBACK CABLE 2090-XXNFMF-S09/C	
W40W1010	315756-0009	M	10	ÖLFLEX CONTROL TM CY 4G1,5, 281604CY	
W40W1012	315756-0009	M	1	ÖLFLEX CONTROL TM CY 4G1,5, 281604CY	
W40W1020	315756-0009	M	3	ÖLFLEX CONTROL TM CY 4G1,5, 281604CY	
W40W1030	315756-0009	M	1	ÖLFLEX CONTROL TM CY 4G1,5, 281604CY	
W40W1032	315756-0009	M	3.5	ÖLFLEX CONTROL TM CY 4G1,5, 281604CY	
W40W1034	315756-0009	M	3.5	ÖLFLEX CONTROL TM CY 4G1,5, 281604CY	
W90W1010	315756-0009	M	10	ÖLFLEX CONTROL TM CY 4G1,5, 281604CY	
W90W1012	315756-0009	M	1	ÖLFLEX CONTROL TM CY 4G1,5, 281604CY	

Machine Type	Group Description	Used-In	Group Number	Page No

COOLING AIR OUTLET

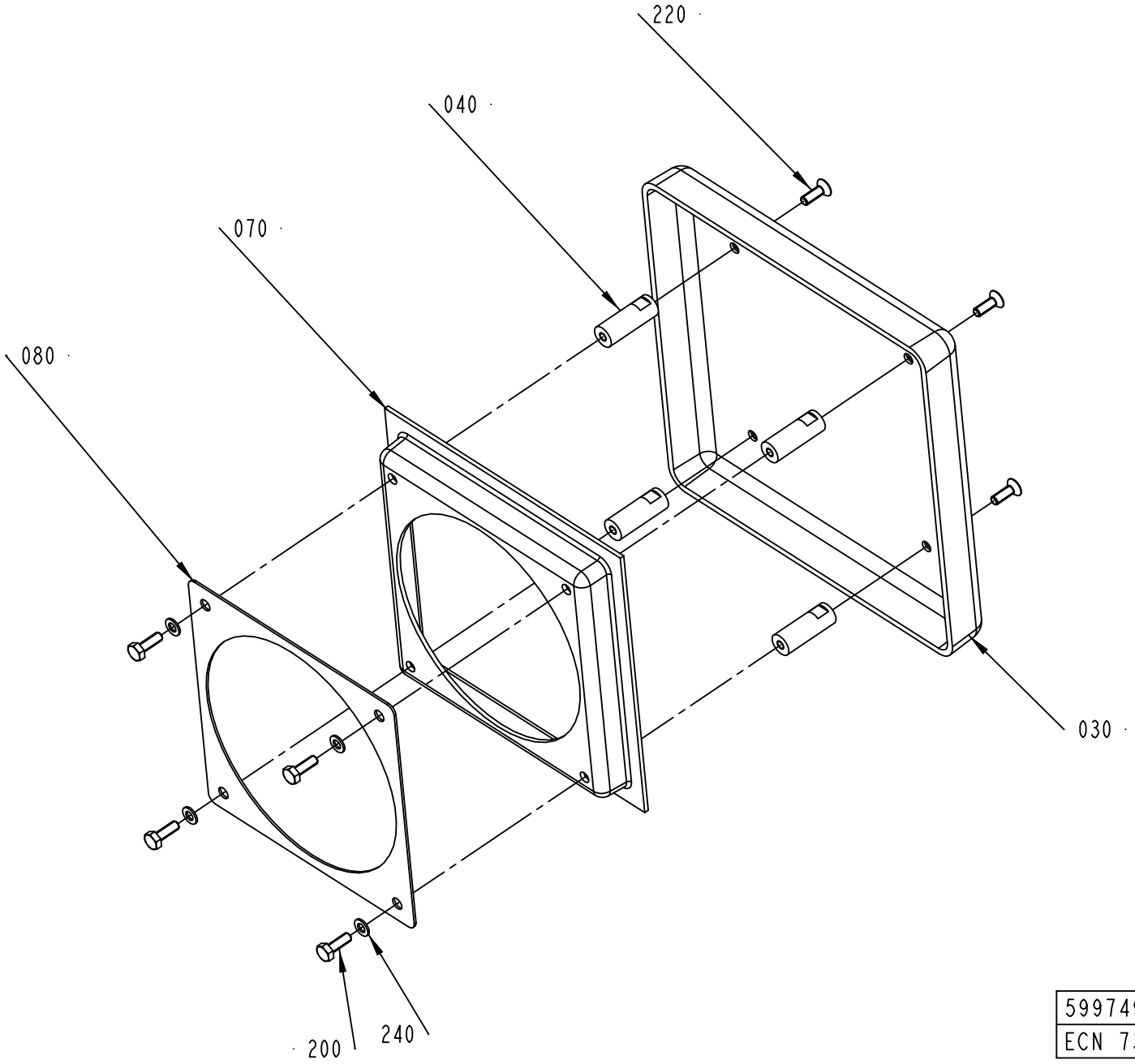

599749-1
ECN 73648

ECM: 436896 - 20100222
Group number: 599749-0100
Assembly Drawing: 599749-1_1_AB

Pos	Part No	UN	Qty	Description	Page No
-					
030	599752-0000		1	COVER	
040	599753-0000		4	SPACER	
070	599751-0000		1	INSERT	
080	599755-0000		1	GASKET	
200	312105-0291		4	SCREW M6S ISO 4017 M4X12 A470	
220	312155-0291		4	SCREW DIN 7991 MF6S M4X12 A4 70	
240	315105-0136		4	WASHER BRB 4,3X8 RFR	

Pos	Part No	UN	Qty	Description	Page No

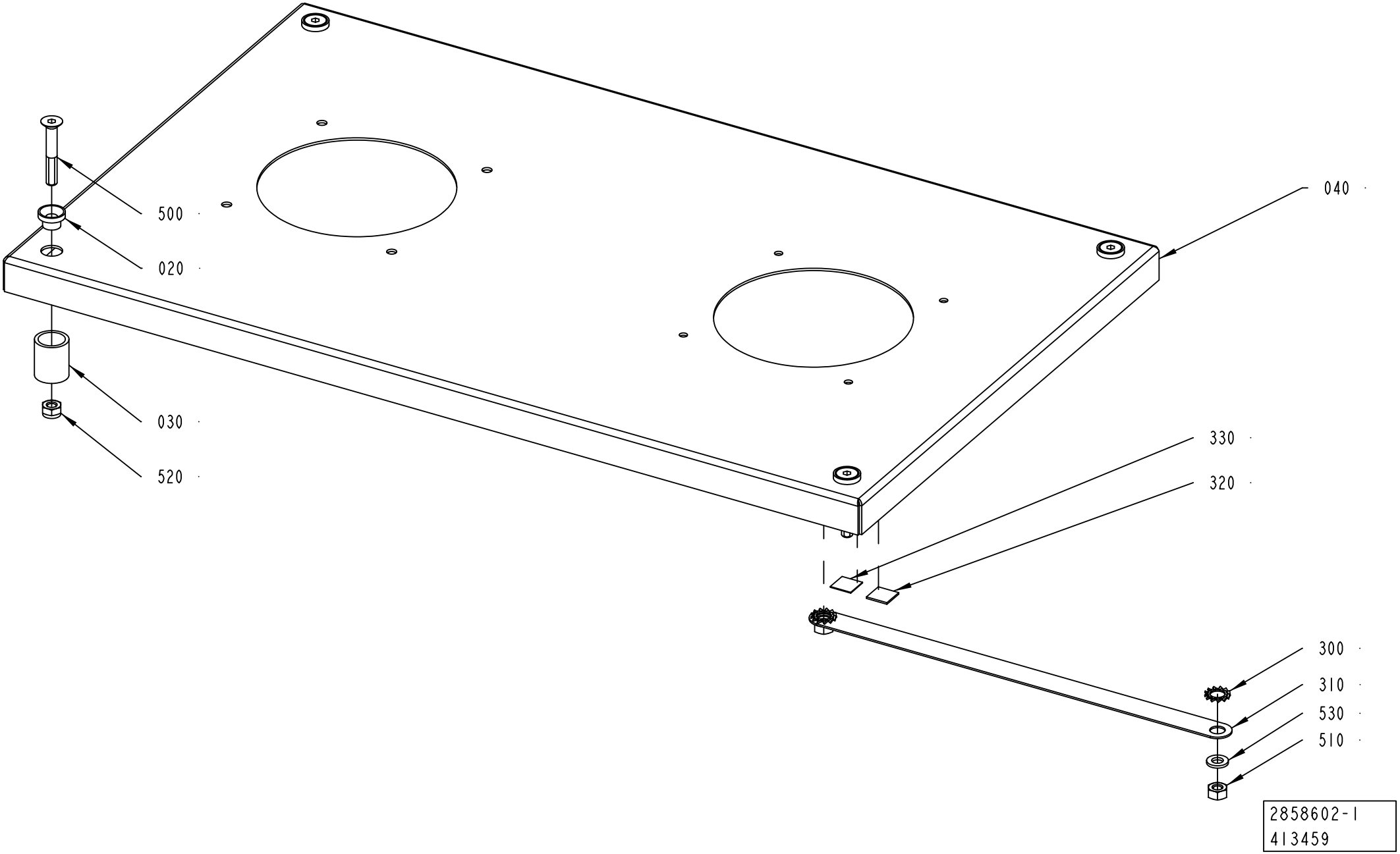
500
020
030
520
040
330
320
300
310
530
510
2858602-1
413459

ECM: 416128 - 20090914
Group number: 2858602-0100
Assembly Drawing: 2858602-1_1_AC

Pos	Part No	UN	Qty	Description	Page No
-					
020	578196-0000		4	SLEEVE	
030	578197-0000		4	SPACER	
040	2858601-0000		1	COVER	
300	90062-0016		2	LOCK WASHER SERRAT.EXT.GEAR,8,4/15 H=0,8	
310	90600-2904		1	EARTH BRAID, 250/16/8,5	
320	90194-0152		1	SIGN, EARTH	
330	90459-2928		1	LABEL 60417-2-IEC-5020, COMM. REF. POT.	
500	312155-0378		4	SCREW DIN 7991 MF6S M6X40 A4 70	
510	312605-0316		2	HEXAGON NUT, M6M M6 A280	
520	312812-0316		4	HEXAGON NUT, NY-LOCK M6 A480	
530	315101-0153		2	WASHER PLAIN, BRB, 6,4/12 H=1,5	

Pos	Part No	UN	Qty	Description	Page No

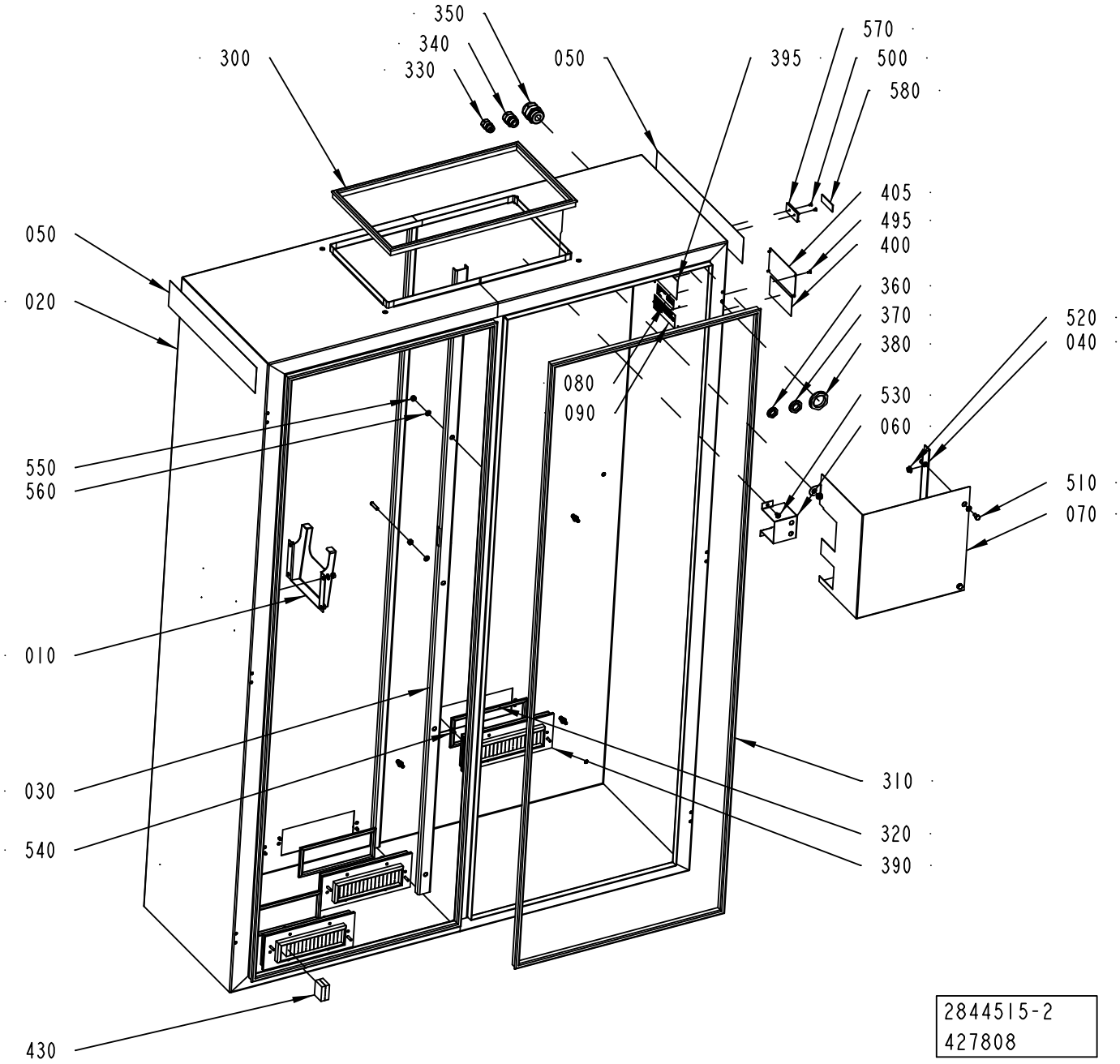
350
340
330
300
050
395
570
500
580
405
495
400
360
370
380
530
060
520
040
510
070
050
020
080
090
550
560
010
030
540
430
310
320
390
2844515-2
427808

ECM: 436904 - 20100222
Group number: 2844515-0200
Assembly Drawing: 2844515-2_1_AD

Pos	Part No	UN	Qty	Description	Page No
FINAL DEST. CANADA, FINAL DEST. USA					
020	3034235-0000		1	EL-CABINET CHASSIE	
080	3056162-0000		1	SIGN	
090	3056165-0000		1	SIGN	
400	90600-5233		1	WARNING SIGN ANSI (H), READ MANUAL, AUTO	
405	3041940-0000		1	ELECTRICAL EQUIPMENT LABEL	
OTHER COUNTRIES NOT USA/CANADA					
020	3060154-0000		1	EL-CABINET CHASSIE	
395	90600-5235		1	MANDATORY ACTION SIGN ISO, READ MANUAL	
Common Parts					
010	2837851-0000		1	CD BOX	
030	2870316-0000		1	PLATE	
040	2937532-0000		1	BRACKET	
050	2939687-0000		2	TAPE	
060	3034238-0000		1	PROTECTIVE COVER	
070	3034239-0000		1	PROTECTIVE COVER	
300	90143-0057	MM	1480	STRIP EMKA 1011-05 21X11MM	
310	90143-0057	MM	4400	STRIP EMKA 1011-05 21X11MM	
320	90143-0060	MM	520	EDGE STRIP 9,5X6,3MM BLACK PVC	
330	90458-0306		1	CABLE GLAND, M16X1,5, NO.5311 1010	
340	90458-0307		1	CABLE GLAND, M20X1,5, NO.5311 1020	
350	90458-0309		1	CABLE GLAND, M32X1,5, NO.5311 1040	
360	90458-0322		1	NUT, M16X1,5	
370	90458-0323		1	NUT, M20X1,5	
380	90458-0325		1	NUT, M32X1,5	
390	90458-2343		3	FRAME CF 16	
410	90458-1306		1	BLIND PLUG CIRCULAR, M12X1,5 514GFK/212	
420	90458-1308		1	BLIND PLUG CIRCULAR, M20X1,5 514GFK/220	
430	90458-1174		28	MULTI DIAMETER MODULE, CM 20W40	
495	311521-0142		4	RIVET, BLANK 3,2X6	
500	311521-0143		2	RIVET, BLANK 3,2X8	
510	312105-0366		2	SCREW M6S ISO 4017 M6X12 A480	
520	312107-0316		3	HEXAGON FLANGE NUT ISO 4161 M6 A2	
530	312113-0323		2	SERRATED COMBI TORX SCREW M5X8 A2	
540	312115-0325		6	SCREW ISO4762 M5X10 A4 80	
550	312605-0316		18	HEXAGON NUT, M6M M6 A280	
560	315105-0153		20	WASHER BRB 6,4X12 RFR	
570	359240-0100		1	SIGN HOLDER FOR 359240-0001	
580	359241-0803		1	SIGN: "SUPPLY DISCONNECTING DEVICE"	

Pos	Part No	UN	Qty	Description	Page No

MOUNTING PLATE

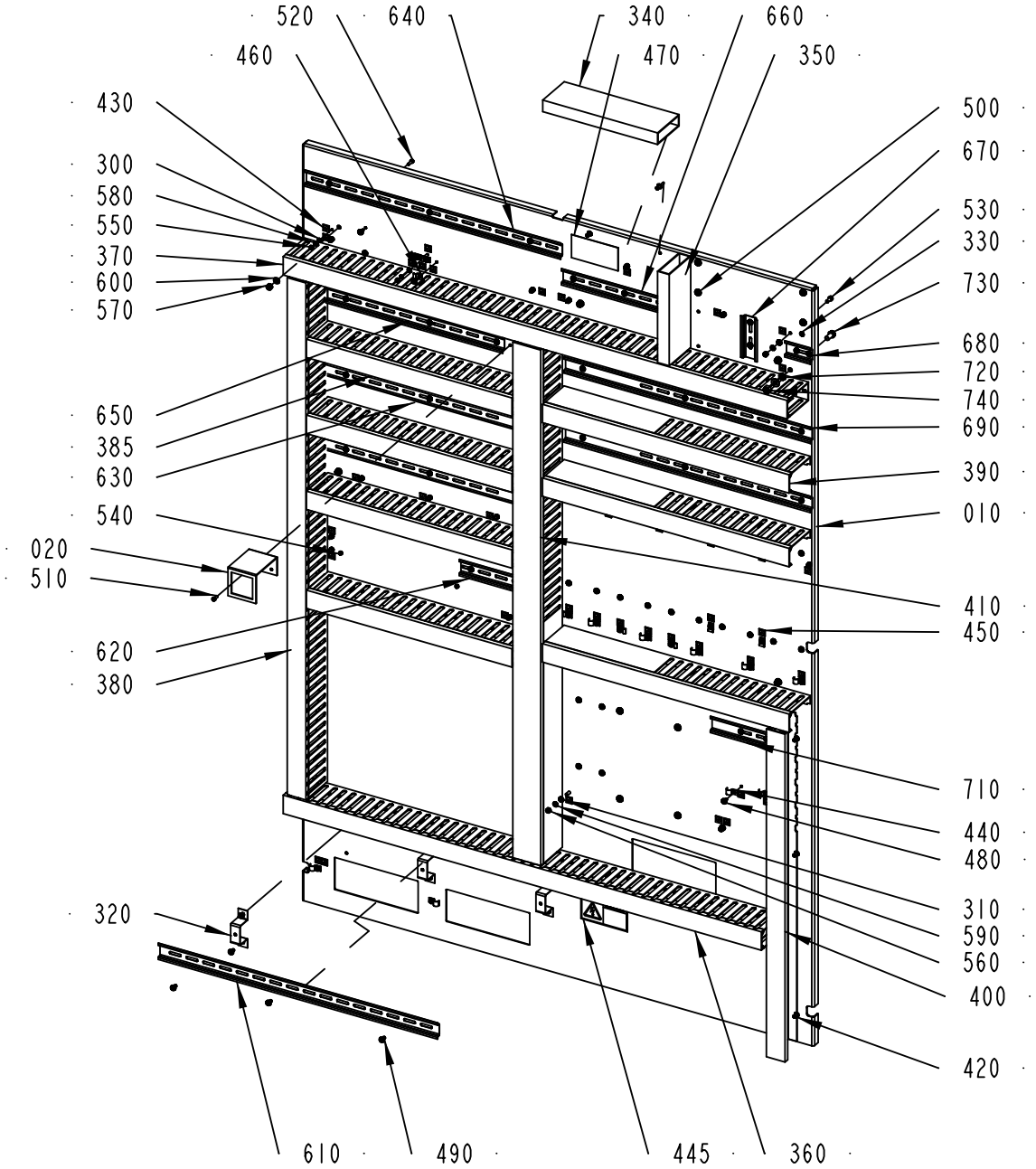

2844517-2
429959

ECM: 436905 - 20100222
Group number: 2844517-0200
Assembly Drawing: 2844517-2_1_AC

This list covers pages from 8-68 to 8-71

Pos	Part No	UN	Qty	Description	Page No
FINAL DEST. CANADA, FINAL DEST. USA (See drawing on page: 8-68)					
010	3050588-0000		1	MOUNTING PLATE	
405	90181-0053	MM	662	CABLE DUCT 40X80MM	
445	90458-2634		1	WARNING SIGN ANSI (H), EXTERNAL VOLTAGE	
450	90459-2928		22	LABEL 60417-2-IEC-5020, COMM. REF. POT.	
460	90459-6646		9	CABLE CLIPS, D=4 MM	
470	90600-5233		1	WARNING SIGN ANSI (H), READ MANUAL, AUTO	
480	312113-0287		22	SERRATED COMBI TORX SCREW M4X8 A2	
OTHER COUNTRIES NOT USA/CANADA (See drawing on page: 8-70)					
010	3034236-0000		1	MOUNTING PLATE	
400	90181-0053	MM	712	CABLE DUCT 40X80MM	
450	90459-2928		22	LABEL 60417-2-IEC-5020, COMM. REF. POT.	
460	90459-6646		9	CABLE CLIPS, D=4 MM	
470	90600-5235		1	MANDATORY ACTION SIGN ISO, READ MANUAL	
480	312113-0287		22	SERRATED COMBI TORX SCREW M4X8 A2	
Common Parts					
020	583570-0000		1	BRACKET	
300	90062-0059		23	LOCK WASKER SERRAT.EXT.GEAR,4,3/8 H=0,5	
310	90062-0060		4	LOCK WASHER 5,3/10 H=0,6 FZB	
320	90077-0310		3	BRACKET, TSTR, 10-0099003-1	
330	90111-0344		1	SIGN, PE, GREEN/YELLOW	
340	90181-0052	MM	247	CABLE DUCT 25X80MM	
350	90181-0052	MM	198	CABLE DUCT 25X80MM	
360	90181-0053	MM	1028	CABLE DUCT 40X80MM	
370	90181-0053	MM	1083	CABLE DUCT 40X80MM	
380	90181-0053	MM	1123	CABLE DUCT 40X80MM	
385	90181-0053	MM	442	CABLE DUCT 40X80MM	
390	90181-0053	MM	530	CABLE DUCT 40X80MM	
410	90181-0054	MM	1120	CABLE DUCT 60X80MM	
420	90181-0088		51	PLASTIC RIVET, PR 52314	
430	90194-0152		23	SIGN, EARTH	
440	90458-0721		9	PIPE CLIP FOR TUBE D=8 MMSZ 2367080	
490	312113-0323		61	SERRATED COMBI TORX SCREW M5X8 A2	
500	312113-0366		8	SERRATED COMBI TORX SCREW M6X12 A2	
510	312121-0289		2	SCREW ISO 1207 M4X10 4.8-5.8 Z.PL.	
520	312121-0291		22	SCREW ISO 1207 M4X12 4.8-5.8 Z.PL.	
530	312121-0327		3	SCREW ISO 1207 M5X12 4.8-5.8 Z.PL.	
540	312125-0285		4	SCREW ISO 1207 M4X6 A4	
550	312605-0312		22	HEXAGON NUT, M6M M4 A280	
560	312605-0314		3	HEXAGON NUT, M6M M5 A280	
570	312605-0316		9	HEXAGON NUT, M6M M6 A280	
580	315105-0136		22	WASHER BRB 4,3X8 RFR	
590	315105-0146		3	WASHER BRB 5,3X10 RFR	
600	315105-0153		9	WASHER BRB 6,4X12 RFR	
610	353042-0004	MM	600	RAIL TS 35/7,5	
620	353042-0004	MM	155	RAIL TS 35/7,5	
630	353042-0004	MM	442	RAIL TS 35/7,5	
640	353042-0004	MM	550	RAIL TS 35/7,5	
650	353042-0004	MM	380	RAIL TS 35/7,5	
660	353042-0004	MM	245	RAIL TS 35/7,5	
670	353042-0004	MM	90	RAIL TS 35/7,5	
680	353042-0004	MM	55	RAIL TS 35/7,5	
690	353042-0004	MM	530	RAIL TS 35/7,5	
700	353042-0004	MM	530	RAIL TS 35/7,5	
710	353042-0004	MM	140	RAIL TS 35/7,5	
720	90062-0016		1	LOCK WASHER SERRAT.EXT.GEAR,8,4/15 H=0,8	
730	312125-0449		1	SCREW ISO 1207 M8X16 A4	
740	312605-0318		1	HEXAGON NUT, M6M M8 A280	
750	315106-0165		1	WASHER ISO 7089-8-200 HV A4	

Machine Type | Group Description | Used-In | Group Number | Page No

MOUNTING PLATE

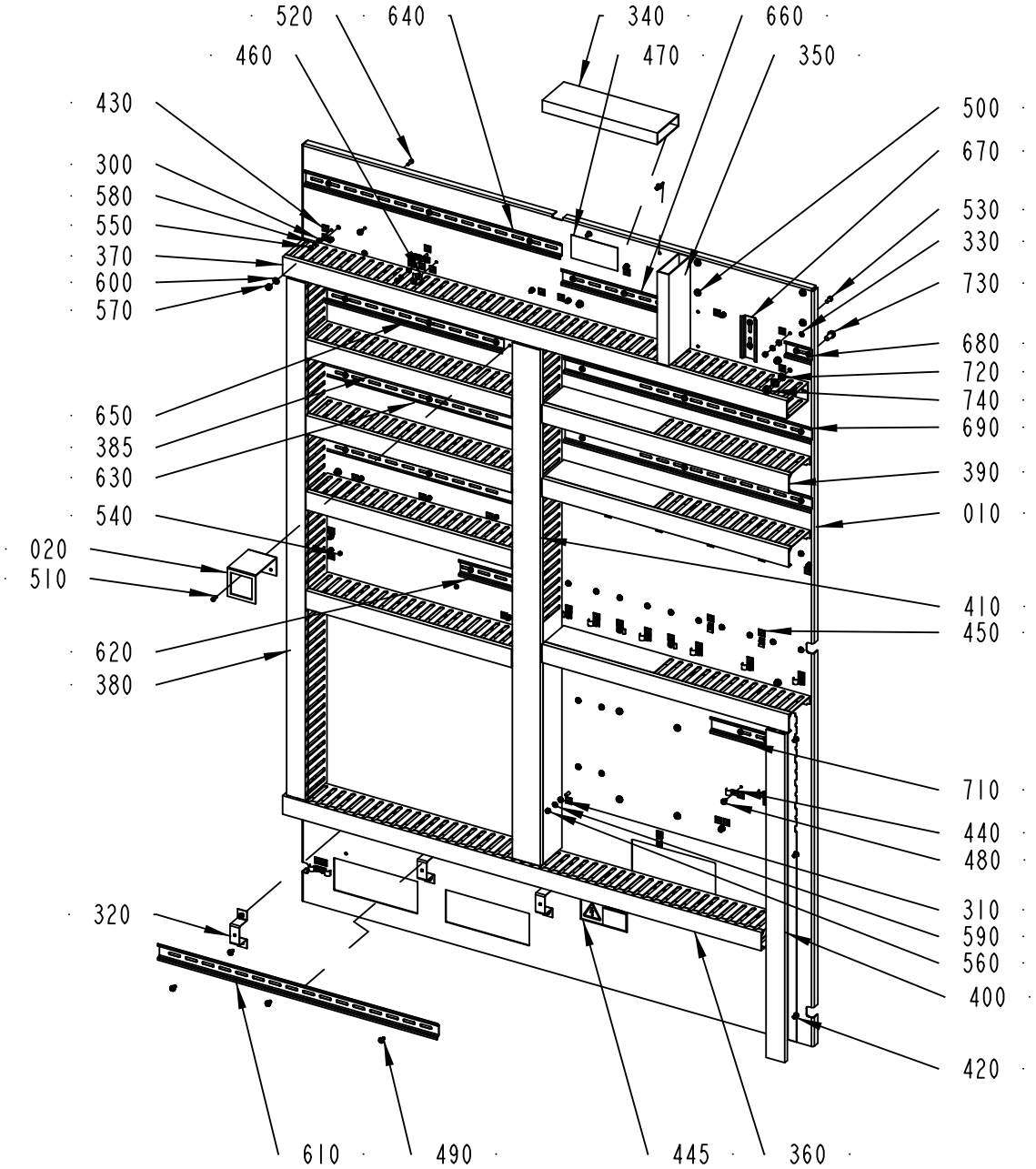

2844517-2
413459

ECM: 436905 - 20100222
Group number: 2844517-0200
Assembly Drawing: 2844517-2_1_AB

This list covers pages from 8-68 to 8-71

Pos	Part No	UN	Qty	Description	Page No
FINAL DEST. CANADA, FINAL DEST. USA (See drawing on page: 8-68)					
010	3050588-0000		1	MOUNTING PLATE	
405	90181-0053	MM	662	CABLE DUCT 40X80MM	
445	90458-2634		1	WARNING SIGN ANSI (H), EXTERNAL VOLTAGE	
450	90459-2928		22	LABEL 60417-2-IEC-5020, COMM. REF. POT.	
460	90459-6646		9	CABLE CLIPS, D=4 MM	
470	90600-5233		1	WARNING SIGN ANSI (H), READ MANUAL, AUTO	
480	312113-0287		22	SERRATED COMBI TORX SCREW M4X8 A2	
OTHER COUNTRIES NOT USA/CANADA (See drawing on page: 8-70)					
010	3034236-0000		1	MOUNTING PLATE	
400	90181-0053	MM	712	CABLE DUCT 40X80MM	
450	90459-2928		22	LABEL 60417-2-IEC-5020, COMM. REF. POT.	
460	90459-6646		9	CABLE CLIPS, D=4 MM	
470	90600-5235		1	MANDATORY ACTION SIGN ISO, READ MANUAL	
480	312113-0287		22	SERRATED COMBI TORX SCREW M4X8 A2	
Common Parts					
020	583570-0000		1	BRACKET	
300	90062-0059		23	LOCK WASKER SERRAT.EXT.GEAR,4,3/8 H=0,5	
310	90062-0060		4	LOCK WASHER 5,3/10 H=0,6 FZB	
320	90077-0310		3	BRACKET, TSTR, 10-0099003-1	
330	90111-0344		1	SIGN, PE, GREEN/YELLOW	
340	90181-0052	MM	247	CABLE DUCT 25X80MM	
350	90181-0052	MM	198	CABLE DUCT 25X80MM	
360	90181-0053	MM	1028	CABLE DUCT 40X80MM	
370	90181-0053	MM	1083	CABLE DUCT 40X80MM	
380	90181-0053	MM	1123	CABLE DUCT 40X80MM	
385	90181-0053	MM	442	CABLE DUCT 40X80MM	
390	90181-0053	MM	530	CABLE DUCT 40X80MM	
410	90181-0054	MM	1120	CABLE DUCT 60X80MM	
420	90181-0088		51	PLASTIC RIVET, PR 52314	
430	90194-0152		23	SIGN, EARTH	
440	90458-0721		9	PIPE CLIP FOR TUBE D=8 MMSZ 2367080	
490	312113-0323		61	SERRATED COMBI TORX SCREW M5X8 A2	
500	312113-0366		8	SERRATED COMBI TORX SCREW M6X12 A2	
510	312121-0289		2	SCREW ISO 1207 M4X10 4.8-5.8 Z.PL.	
520	312121-0291		22	SCREW ISO 1207 M4X12 4.8-5.8 Z.PL.	
530	312121-0327		3	SCREW ISO 1207 M5X12 4.8-5.8 Z.PL.	
540	312125-0285		4	SCREW ISO 1207 M4X6 A4	
550	312605-0312		22	HEXAGON NUT, M6M M4 A280	
560	312605-0314		3	HEXAGON NUT, M6M M5 A280	
570	312605-0316		9	HEXAGON NUT, M6M M6 A280	
580	315105-0136		22	WASHER BRB 4,3X8 RFR	
590	315105-0146		3	WASHER BRB 5,3X10 RFR	
600	315105-0153		9	WASHER BRB 6,4X12 RFR	
610	353042-0004	MM	600	RAIL TS 35/7,5	
620	353042-0004	MM	155	RAIL TS 35/7,5	
630	353042-0004	MM	442	RAIL TS 35/7,5	
640	353042-0004	MM	550	RAIL TS 35/7,5	
650	353042-0004	MM	380	RAIL TS 35/7,5	
660	353042-0004	MM	245	RAIL TS 35/7,5	
670	353042-0004	MM	90	RAIL TS 35/7,5	
680	353042-0004	MM	55	RAIL TS 35/7,5	
690	353042-0004	MM	530	RAIL TS 35/7,5	
700	353042-0004	MM	530	RAIL TS 35/7,5	
710	353042-0004	MM	140	RAIL TS 35/7,5	
720	90062-0016		1	LOCK WASHER SERRAT.EXT.GEAR,8,4/15 H=0,8	
730	312125-0449		1	SCREW ISO 1207 M8X16 A4	
740	312605-0318		1	HEXAGON NUT, M6M M8 A280	
750	315106-0165		1	WASHER ISO 7089-8-200 HV A4	

Machine Type | Group Description | Used-In | Group Number | Page No

EL-CABINET DOOR

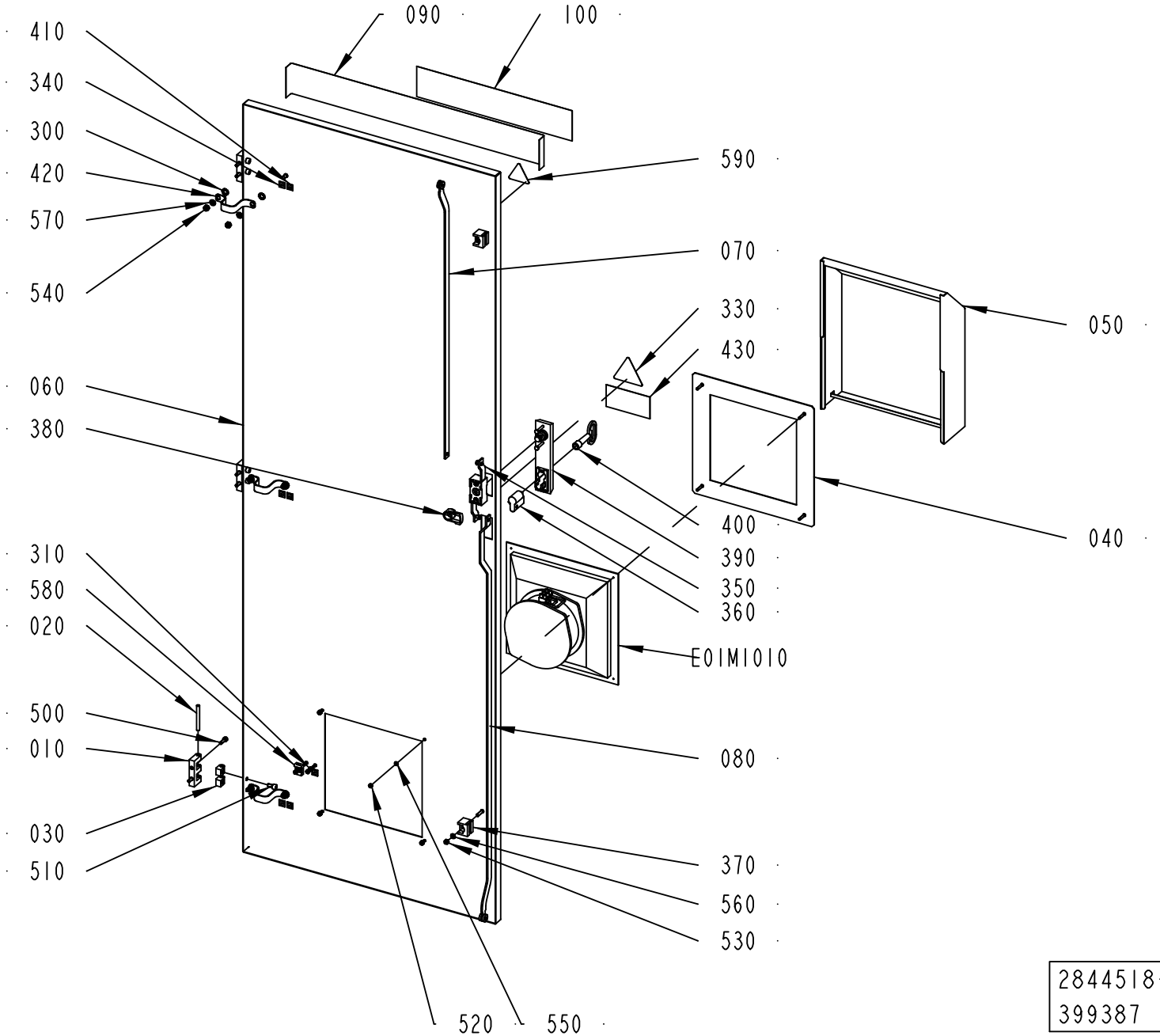

2844518-2
399387

Pos	Part No	UN	Qty	Description	Page No
Coolsystem Fianal destination other countries not USA/CANADA (See drawing on page: 8-74)					
060	3034243-0000		1	DOOR	
330	90194-0118		1	SIGN, RESIDUAL VOLTAGE, WAIT 5 MIN.	
340	90194-0152		3	SIGN, EARTH	
430	90600-5235		1	MANDATORY ACTION SIGN ISO, READ MANUAL	
590	359705-0015		1	WARNING SIGN ISO, RISK OF ELECTRIC SHOCK	
Coolsystem and Final destination USA, Coolsystem and Final destination CANADA (See drawing on page: 8-74)					
060	3034243-0000		1	DOOR	
330	90459-6087		1	DANGER SIGN ANSI (H), HAZARDOUS RESIDUAL	
340	90194-0152		3	SIGN, EARTH	
430	90600-5233		1	WARNING SIGN ANSI (H), READ MANUAL, AUTO	
590	359715-0100		1	WARNING SIGN ANSI (H), ELECTRIC SHOCK	
No Coolsystem Final Destination other countries not USA/CANADA (See drawing on page: 8-72)					
040	2693488-0000		1	PLATE	
050	2694881-0000		1	COVER	
060	2846736-0000		1	DOOR	
310	90062-0059		1	LOCK WASKER SERRAT.EXT.GEAR,4,3/8 H=0,5	
330	90194-0118		1	SIGN, RESIDUAL VOLTAGE, WAIT 5 MIN.	
340	90194-0152		4	SIGN, EARTH	
430	90600-5235		1	MANDATORY ACTION SIGN ISO, READ MANUAL	
520	312605-0312		6	HEXAGON NUT, M6M M4 A280	
550	315105-0136		4	WASHER BRB 4,3X8 RFR	
580	352113-0204		1	ANCHOR PLATES FOR STRIPS, TYPE TM3S25-M	
590	359705-0015		1	WARNING SIGN ISO, RISK OF ELECTRIC SHOCK	
E01M1010	90459-5877		1	FILTER FAN SK 3325.107	
	90459-5879		*1*	*OUTLET FILTER, SK3325.207*	
	90600-6094		*1*	*FILTER, SK 3172.100*	
No Coolsystem and Final destination USA, No Coolsystem and Final destination CANADA (See drawing on page: 8-72)					
040	2693488-0000		1	PLATE	
050	2694881-0000		1	COVER	
060	2846736-0000		1	DOOR	
310	90062-0059		1	LOCK WASKER SERRAT.EXT.GEAR,4,3/8 H=0,5	
330	90459-6087		1	DANGER SIGN ANSI (H), HAZARDOUS RESIDUAL	
340	90194-0152		4	SIGN, EARTH	
430	90600-5233		1	WARNING SIGN ANSI (H), READ MANUAL, AUTO	
520	312605-0312		6	HEXAGON NUT, M6M M4 A280	
550	315105-0136		4	WASHER BRB 4,3X8 RFR	
580	352113-0204		1	ANCHOR PLATES FOR STRIPS, TYPE TM3S25-M	
590	359715-0100		1	WARNING SIGN ANSI (H), ELECTRIC SHOCK	
E01M1010	90459-5877		1	FILTER FAN SK 3325.107	
	90459-5879		*1*	*OUTLET FILTER, SK3325.207*	
	90600-6094		*1*	*FILTER, SK 3172.100*	
Common Parts					
010	1035792-0000		3	E-HINGE	
020	1035793-0000		3	PIN	
030	1035794-0000		6	BLOCKING PIECE	
070	2858604-0000		1	STRUT	
080	2859679-0000		1	STRUT	
090	2939686-0000		1	TAPE	
100	1021990-0000		1	SIGN 356X70MM HOUSE MARK TEXT TETRA PAK	
300	90062-0016		6	LOCK WASHER SERRAT.EXT.GEAR,8,4/15 H=0,8	
350	90237-0123		1	LOCK, 1121-U10C	
360	90237-0129		1	LOCK CYLINDER, 1109-U6	
370	90237-0144		2	GUIDE, 1121-SU540	
380	90237-0165		1	LATCH	
390	90237-0175		1	TURNING HANDLE, 1125-U185-0A	
400	90237-0324		1	KEY, 1104-02 FOR SQUARE 8 MM	
410	90459-2928		3	LABEL 60417-2-IEC-5020, COMM. REF. POT.	
420	90600-2904		3	EARTH BRAID, 250/16/8,5	
500	312115-0329		6	SCREW ISO4762 M5X16 A4 80	
510	312115-0366		6	SCREW ISO4762 M6X12 A4 80	
530	312812-0314		2	HEXAGON NUT, NY-LOCK M5 A480	
540	312812-0316		6	HEXAGON NUT, NY-LOCK M6 A480	
560	315105-0146		2	WASHER BRB 5,3X10 RFR	
570	315105-0153		6	WASHER BRB 6,4X12 RFR	

Machine Type | Group Description | Used-In | Group Number | Page No

EL-CABINET DOOR

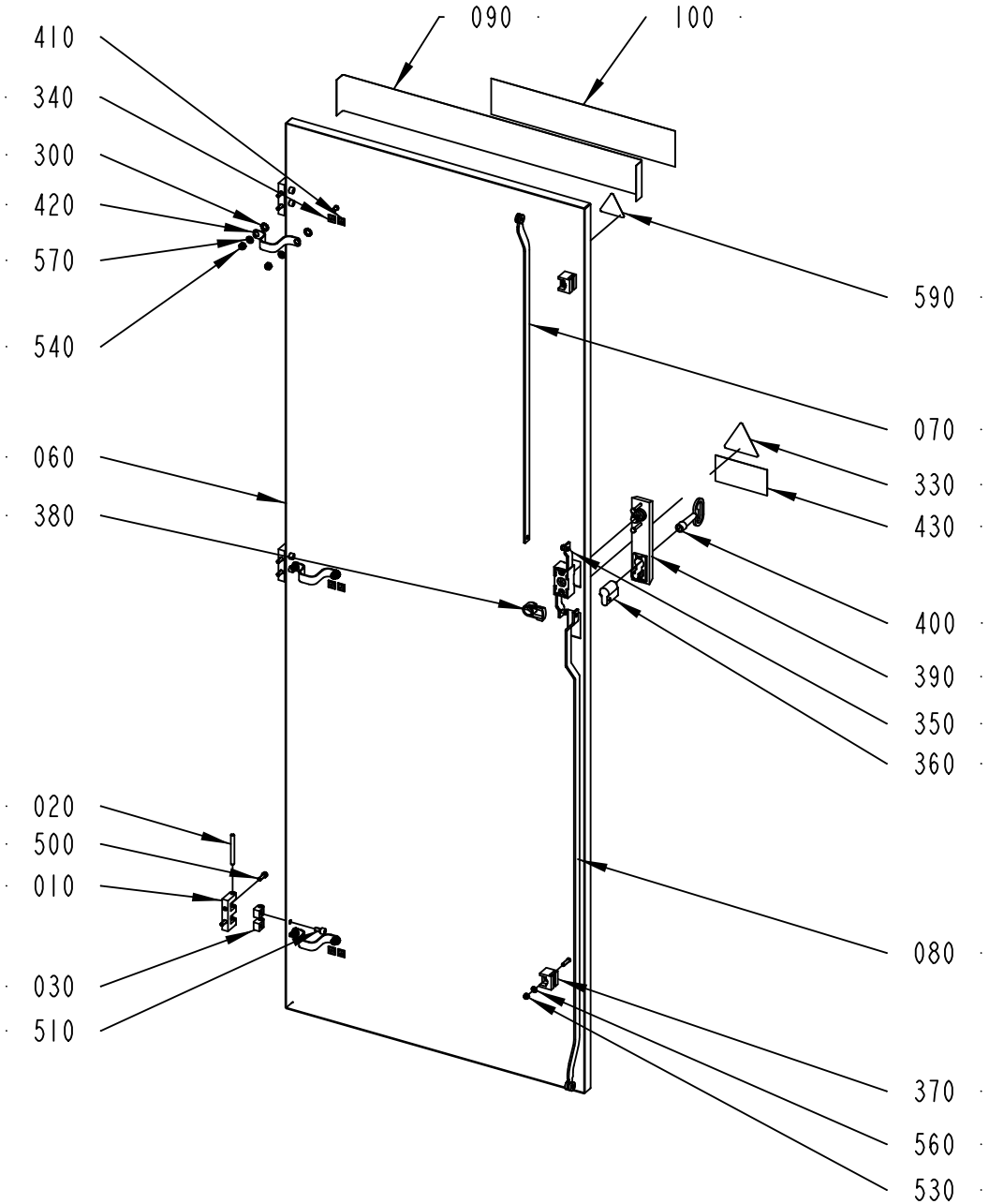

2844518-3
399387

ECM: 436906 - 20100222
Group number: 2844518-0200
Assembly Drawing: 2844518-3_1_AA

This list covers pages from 8-72 to 8-75

Pos	Part No	UN	Qty	Description	Page No
Coolsystem Fianal destination other countries not USA/CANADA (See drawing on page: 8-74)					
060	3034243-0000		1	DOOR	
330	90194-0118		1	SIGN, RESIDUAL VOLTAGE, WAIT 5 MIN.	
340	90194-0152		3	SIGN, EARTH	
430	90600-5235		1	MANDATORY ACTION SIGN ISO, READ MANUAL	
590	359705-0015		1	WARNING SIGN ISO, RISK OF ELECTRIC SHOCK	
Coolsystem and Final destination USA, Coolsystem and Final destination CANADA (See drawing on page: 8-74)					
060	3034243-0000		1	DOOR	
330	90459-6087		1	DANGER SIGN ANSI (H), HAZARDOUS RESIDUAL	
340	90194-0152		3	SIGN, EARTH	
430	90600-5233		1	WARNING SIGN ANSI (H), READ MANUAL, AUTO	
590	359715-0100		1	WARNING SIGN ANSI (H), ELECTRIC SHOCK	
No Coolsystem Final Destination other countries not USA/CANADA (See drawing on page: 8-72)					
040	2693488-0000		1	PLATE	
050	2694881-0000		1	COVER	
060	2846736-0000		1	DOOR	
310	90062-0059		1	LOCK WASKER SERRAT.EXT.GEAR,4,3/8 H=0,5	
330	90194-0118		1	SIGN, RESIDUAL VOLTAGE, WAIT 5 MIN.	
340	90194-0152		4	SIGN, EARTH	
430	90600-5235		1	MANDATORY ACTION SIGN ISO, READ MANUAL	
520	312605-0312		6	HEXAGON NUT, M6M M4 A280	
550	315105-0136		4	WASHER BRB 4,3X8 RFR	
580	352113-0204		1	ANCHOR PLATES FOR STRIPS, TYPE TM3S25-M	
590	359705-0015		1	WARNING SIGN ISO, RISK OF ELECTRIC SHOCK	
E01M1010	90459-5877		1	FILTER FAN SK 3325.107	
	90459-5879		*1*	*OUTLET FILTER, SK3325.207*	
	90600-6094		*1*	*FILTER, SK 3172.100*	
No Coolsystem and Final destination USA, No Coolsystem and Final destination CANADA (See drawing on page: 8-72)					
040	2693488-0000		1	PLATE	
050	2694881-0000		1	COVER	
060	2846736-0000		1	DOOR	
310	90062-0059		1	LOCK WASKER SERRAT.EXT.GEAR,4,3/8 H=0,5	
330	90459-6087		1	DANGER SIGN ANSI (H), HAZARDOUS RESIDUAL	
340	90194-0152		4	SIGN, EARTH	
430	90600-5233		1	WARNING SIGN ANSI (H), READ MANUAL, AUTO	
520	312605-0312		6	HEXAGON NUT, M6M M4 A280	
550	315105-0136		4	WASHER BRB 4,3X8 RFR	
580	352113-0204		1	ANCHOR PLATES FOR STRIPS, TYPE TM3S25-M	
590	359715-0100		1	WARNING SIGN ANSI (H), ELECTRIC SHOCK	
E01M1010	90459-5877		1	FILTER FAN SK 3325.107	
	90459-5879		*1*	*OUTLET FILTER, SK3325.207*	
	90600-6094		*1*	*FILTER, SK 3172.100*	
Common Parts					
010	1035792-0000		3	E-HINGE	
020	1035793-0000		3	PIN	
030	1035794-0000		6	BLOCKING PIECE	
070	2858604-0000		1	STRUT	
080	2859679-0000		1	STRUT	
090	2939686-0000		1	TAPE	
100	1021990-0000		1	SIGN 356X70MM HOUSE MARK TEXT TETRA PAK	
300	90062-0016		6	LOCK WASHER SERRAT.EXT.GEAR,8,4/15 H=0,8	
350	90237-0123		1	LOCK, 1121-U10C	
360	90237-0129		1	LOCK CYLINDER, 1109-U6	
370	90237-0144		2	GUIDE, 1121-SU540	
380	90237-0165		1	LATCH	
390	90237-0175		1	TURNING HANDLE, 1125-U185-0A	
400	90237-0324		1	KEY, 1104-02 FOR SQUARE 8 MM	
410	90459-2928		3	LABEL 60417-2-IEC-5020, COMM. REF. POT.	
420	90600-2904		3	EARTH BRAID, 250/16/8,5	
500	312115-0329		6	SCREW ISO4762 M5X16 A4 80	
510	312115-0366		6	SCREW ISO4762 M6X12 A4 80	
530	312812-0314		2	HEXAGON NUT, NY-LOCK M5 A480	
540	312812-0316		6	HEXAGON NUT, NY-LOCK M6 A480	
560	315105-0146		2	WASHER BRB 5,3X10 RFR	
570	315105-0153		6	WASHER BRB 6,4X12 RFR	

Machine Type	Group Description	Used-In	Group Number	Page No

EL-CABINET DOOR

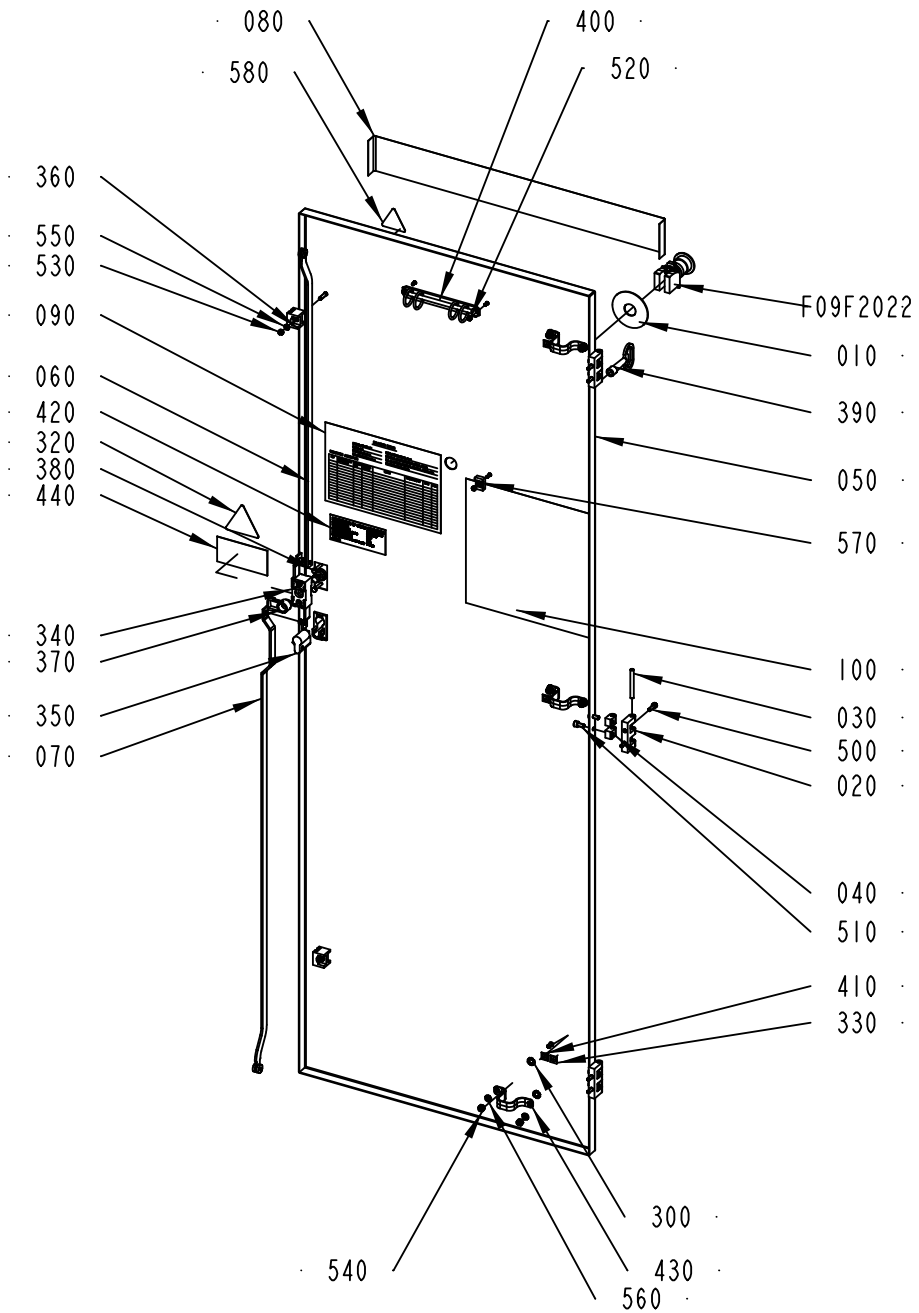

2844519-2
399387

ECM: 436907 - 20100222
Group number: 2844519-0200
Assembly Drawing: 2844519-2_1_AA

Pos	Part No	UN	Qty	Description	Page No
FINAL DEST. CANADA, FINAL DEST. USA					
090	3041938-0000		1	DELIVERED DESIGN	
320	90459-6087		1	DANGER SIGN ANSI (H), HAZARDOUS RESIDUAL	
440	90600-5233		1	WARNING SIGN ANSI (H), READ MANUAL, AUTO	
580	359715-0100		1	WARNING SIGN ANSI (H), ELECTRIC SHOCK	
OTHER COUNTRIES NOT USA/CANADA					
090	3034244-0000		1	DELIVERED DESIGN	
320	90194-0118		1	SIGN, RESIDUAL VOLTAGE, WAIT 5 MIN.	
440	90600-5235		1	MANDATORY ACTION SIGN ISO, READ MANUAL	
580	359705-0015		1	WARNING SIGN ISO, RISK OF ELECTRIC SHOCK	
Common Parts					
010	486826-0001		1	SIGN "EMERGENCY STOP"	
020	1035792-0000		3	E-HINGE	
030	1035793-0000		3	PIN	
040	1035794-0000		6	BLOCKING PIECE	
050	2846735-0000		1	DOOR	
060	2858604-0000		1	STRUT	
070	2858605-0000		1	STRUT	
080	2939686-0000		1	TAPE	
100	3034245-0000		1	FUSE PANEL LABEL	
300	90062-0016		6	LOCK WASHER SERRAT.EXT.GEAR,8,4/15 H=0,8	
330	90194-0152		3	SIGN, EARTH	
340	90237-0123		1	LOCK, 1121-U10C	
350	90237-0129		1	LOCK CYLINDER, 1109-U6	
360	90237-0144		2	GUIDE, 1121-SU540	
370	90237-0165		1	LATCH	
380	90237-0175		1	TURNING HANDLE, 1125-U185-0A	
390	90237-0324		1	KEY, 1104-02 FOR SQUARE 8 MM	
400	90243-0169		1	BINDER CLIP, DIAM.29 MM, NO. 4670819	
410	90459-2928		3	LABEL 60417-2-IEC-5020, COMM. REF. POT.	
420	90459-7229		1	IDENTIF. OF SINGLE CONDUCTORS, TEMPLATE	
430	90600-2904		3	EARTH BRAID, 250/16/8,5	
500	312115-0329		6	SCREW ISO4762 M5X16 A4 80	
510	312115-0366		6	SCREW ISO4762 M6X12 A4 80	
520	312605-0312		3	HEXAGON NUT, M6M M4 A280	
530	312812-0314		2	HEXAGON NUT, NY-LOCK M5 A480	
540	312812-0316		6	HEXAGON NUT, NY-LOCK M6 A480	
550	315105-0146		2	WASHER BRB 5,3X10 RFR	
560	315105-0153		6	WASHER BRB 6,4X12 RFR	
570	352113-0204		1	ANCHOR PLATES FOR STRIPS, TYPE TM3S25-M	
F09F2022	90458-1651		1	EMERGENCY STOP, ZB4-BS-844 ZB4-BZ-104	

Pos	Part No	UN	Qty	Description	Page No

Machine Type | Group Description | Used-In | Group Number | Page No

Tetra Pak

SPC
Spare Parts Catalogue

This page is intentionally left blank.

ECM: 435016 - 20100222
Group number: 663309-0300
Assembly Drawing:

Pos	Part No	UN	Qty	Description	Page No
-					
010	2958794-0300		1	ELECTRICAL DOCUMENT	
020	3036157-0003		1	SOFTWARE CD	

Pos	Part No	UN	Qty	Description	Page No

Tetra Pak

SPC
Spare Parts Catalogue

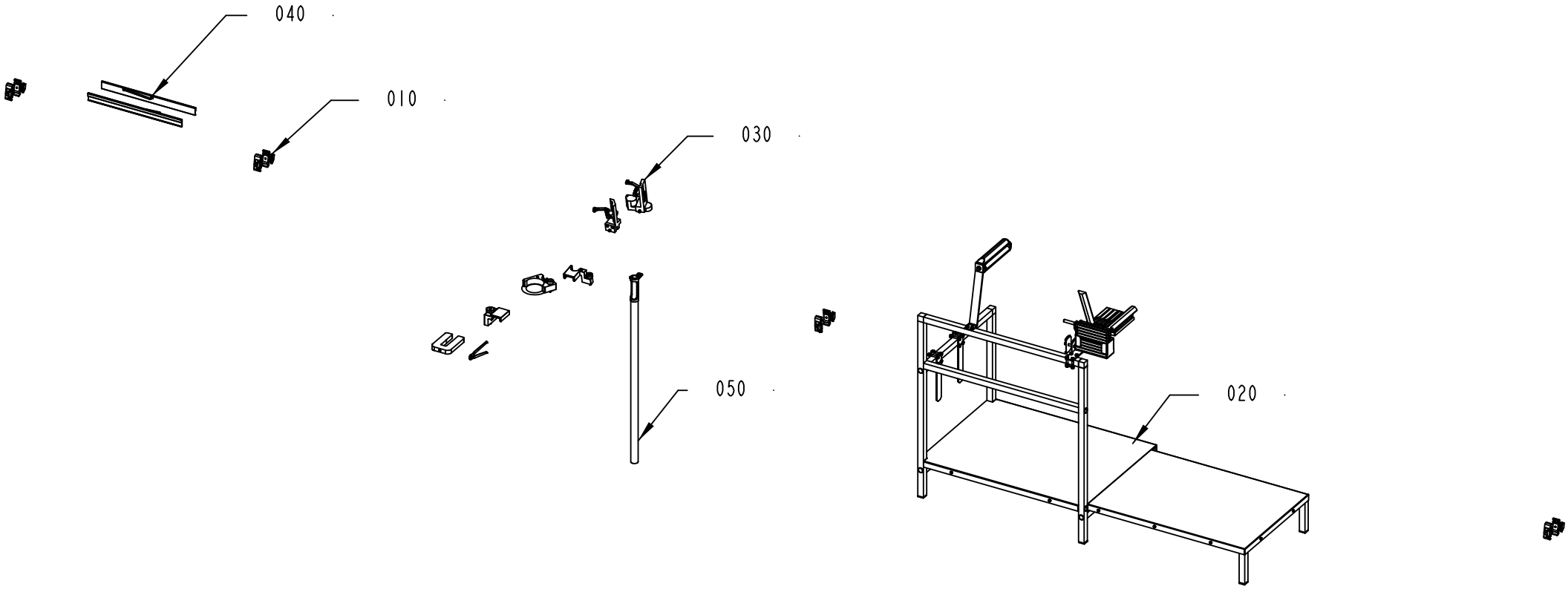

663310-4
429959

ECM: 439910 - 20100223
Group number: 663310-0300
Assembly Drawing: 663310-4_1_AC

Pos	Part No	UN	Qty	Description	Page No
TBA, TB, TPA					
010	2909952-0100		1	PHOTOCELL UNIT	**10-5**
TWA					
040	3023570-0100		1	PACKAGE ALIGNER	**10-7**
Common Parts					
	3039848-0000		1	SET OF SIGNS	
	3040946-0000		1	CABLE MARKING	
020	2923344-0100		1	STRAW MAGAZINE	**10-9**
030	2957779-0200		1	TOOLS AND TEMPLATES	**10-21**
050	3046523-0100		1	WASTE PIPE	**10-35**

Pos	Part No	UN	Qty	Description	Page No

Machine Type | Group Description | Used-In | Group Number | Page No

PHOTOCELL UNIT

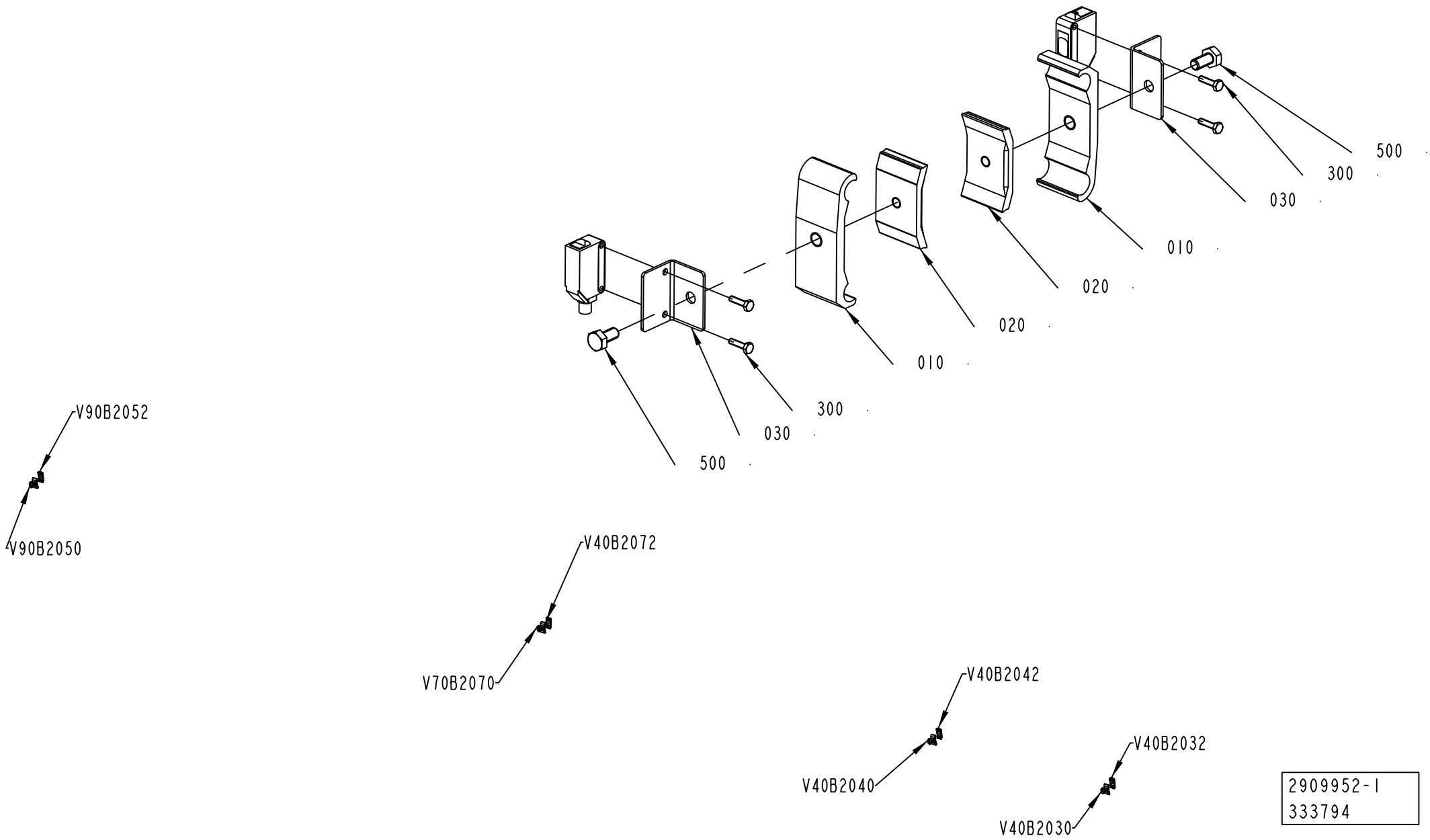

2909952-1
333794

ECM: 390749 - 20090409
Group number: 2909952-0100
Assembly Drawing: 2909952-1_1_AA

Pos	Part No	UN	Qty	Description	Page No
-					
010	1366750-0000		8	HOLDER	
020	1366727-0000		8	CLAMP	
030	2892716-0000		8	BRACKET	
300	90287-0175		16	SCREW M6S M3X12 A480	
500	312105-0366		8	SCREW M6S ISO 4017 M6X12 A480	
V40B2030	90459-7273		1	PHOTOCELL E3Z-T81C-G0SR D-CN	
V40B2032	90459-7274		1	PHOTOCELL E3Z-T81C-G0SR L-CN	
V40B2040	90459-7273		1	PHOTOCELL E3Z-T81C-G0SR D-CN	
V40B2042	90459-7274		1	PHOTOCELL E3Z-T81C-G0SR L-CN	
V40B2070	90459-7273		1	PHOTOCELL E3Z-T81C-G0SR D-CN	
V40B2072	90459-7274		1	PHOTOCELL E3Z-T81C-G0SR L-CN	
V90B2050	90459-7273		1	PHOTOCELL E3Z-T81C-G0SR D-CN	
V90B2052	90459-7274		1	PHOTOCELL E3Z-T81C-G0SR L-CN	

Pos	Part No	UN	Qty	Description	Page No

PACKAGE ALIGNER

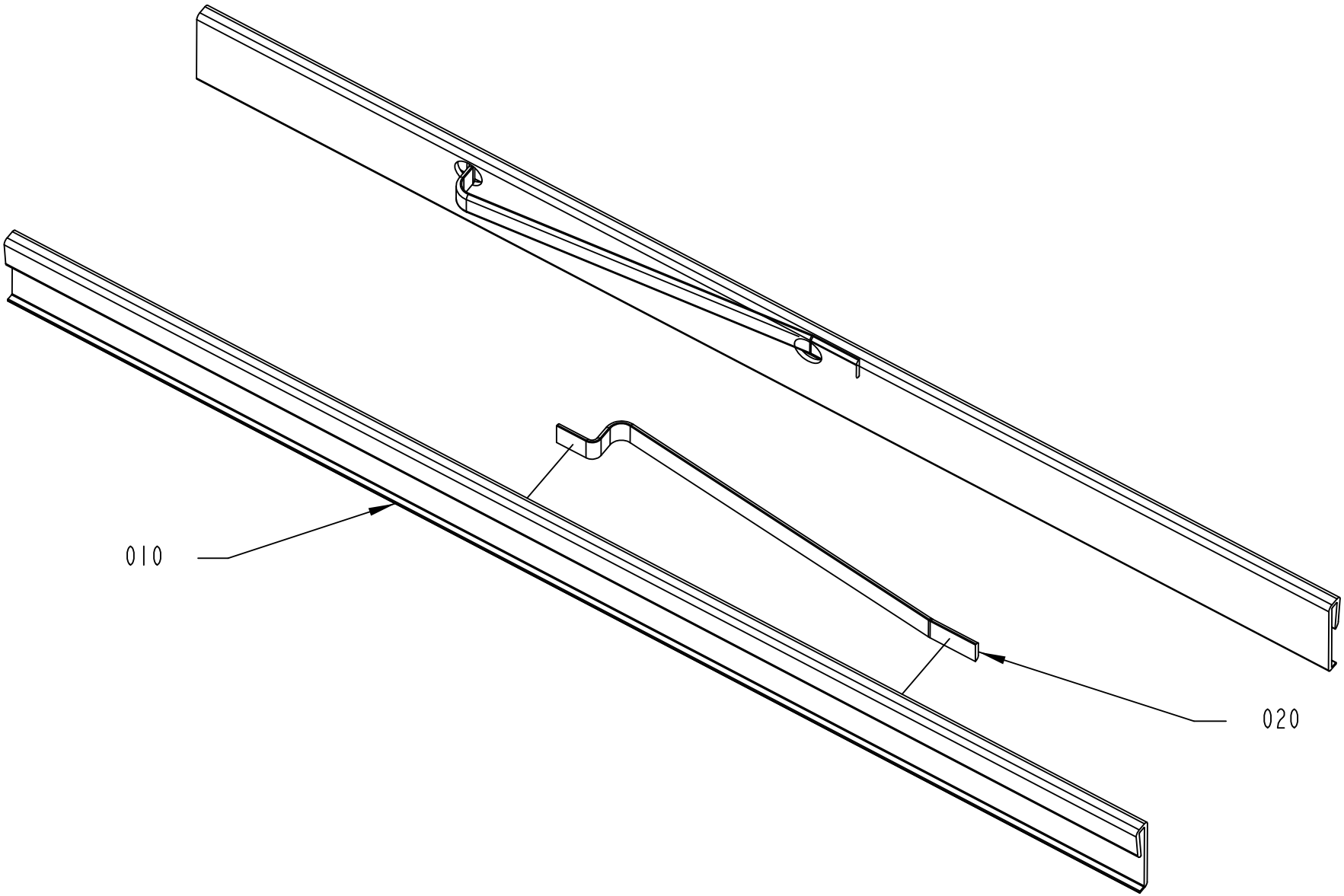

3023570-1
395841

ECM: 402771 - 20090612
Group number: 3023570-0100
Assembly Drawing: 3023570-1_1_AA

Pos	Part No	UN	Qty	Description	Page No
-					
010	3023591-0000		2	STRIP	
020	3023592-0000		2	RULING GUIDE	

Pos	Part No	UN	Qty	Description	Page No

Machine Type | Group Description | Used-In | Group Number | Page No

STRAW MAGAZINE

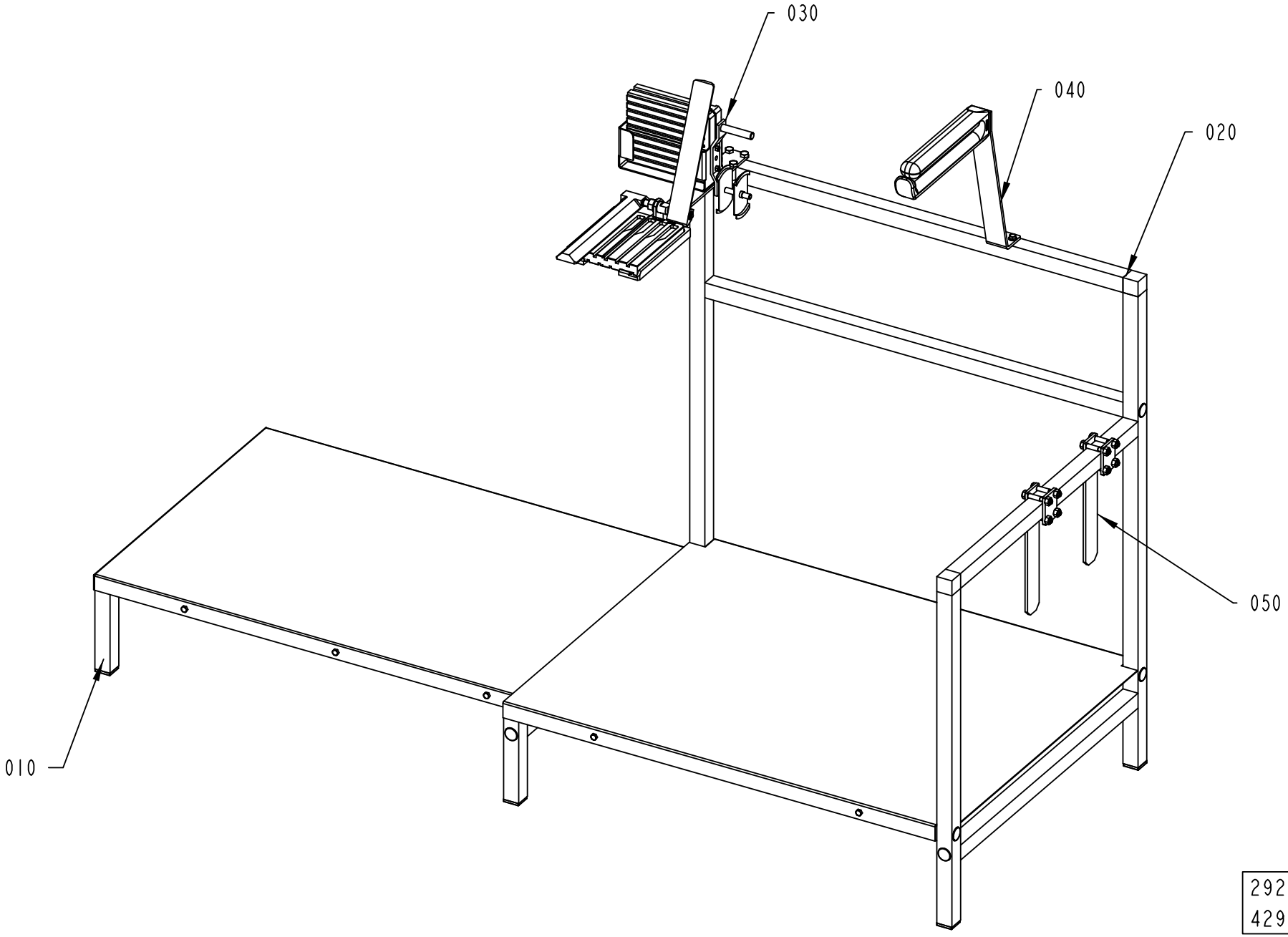

ECM: 436927 - 20100222
Group number: 2923344-0100
Assembly Drawing: 2923344-1_1_AB

Pos	Part No	UN	Qty	Description	Page No
-					
010	2923342-0100		1	FRAME	**10-11**
020	2923343-0100		1	FRAME	**10-13**
030	2946135-0100		1	SPLICING TABLE	**10-15**
040	2946720-0100		1	GUIDE	**10-17**
050	2946724-0100		2	HOLDER	**10-19**

Pos	Part No	UN	Qty	Description	Page No

Machine Type | Group Description | Used-In | Group Number | Page No

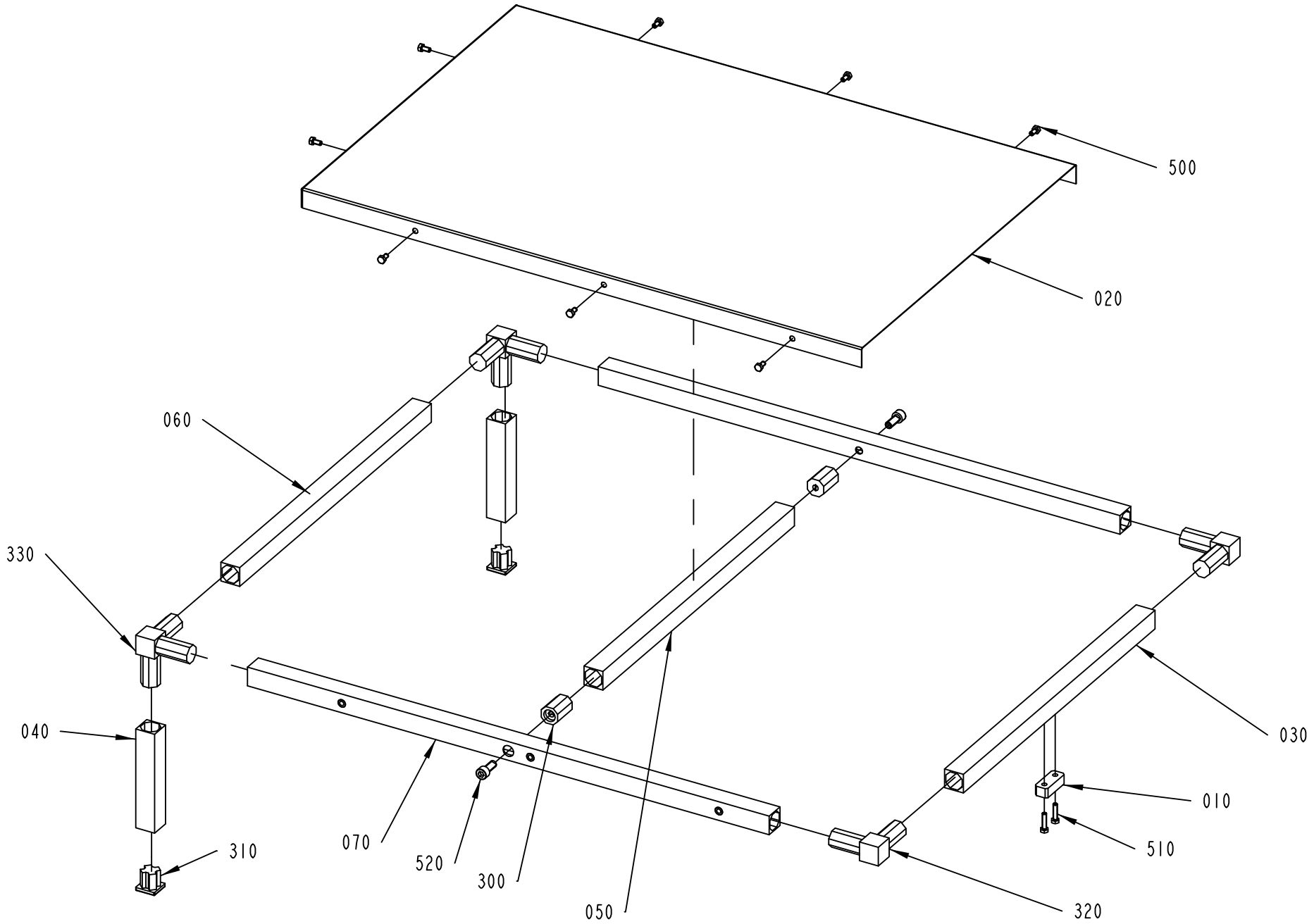
500
020
060
330
040
310
070
520
300
050
320
510
010
030

ECM: 344517 - 20080303
Group number: 2923342-0100
Assembly Drawing: 2923342-1_1_AA

Pos	Part No	UN	Qty	Description	Page No
-					
010	2923320-0000		1	BLOCKING PIECE	
020	2923319-0000		1	PLATE	
030	2923333-0000		1	PROFILE	
040	2923334-0000		2	PROFILE	
050	2923345-0000		1	PROFILE	
060	2946738-0000		1	PROFILE	
070	2946739-0000		2	PROFILE	
300	90458-0692		2	JOINT, THREAD.CONN. 30 MM, NO 851.008.95	
310	90458-0693		2	PLASTIC FOOT 30 MM, NO 856.211.95	
320	90458-0694		2	ELBOW JOINT 2T 30 MM, NO 851.012.95	
330	90600-4352		2	JOINT 3TV 30MM, 851 014 92	
500	312105-0366		8	SCREW M6S ISO 4017 M6X12 A480	
510	312105-0372		2	SCREW M6S ISO 4017 M6X25 A480	
520	312115-0493		2	SCREW ISO4762 M10X25 A4 80	

Pos	Part No	UN	Qty	Description	Page No

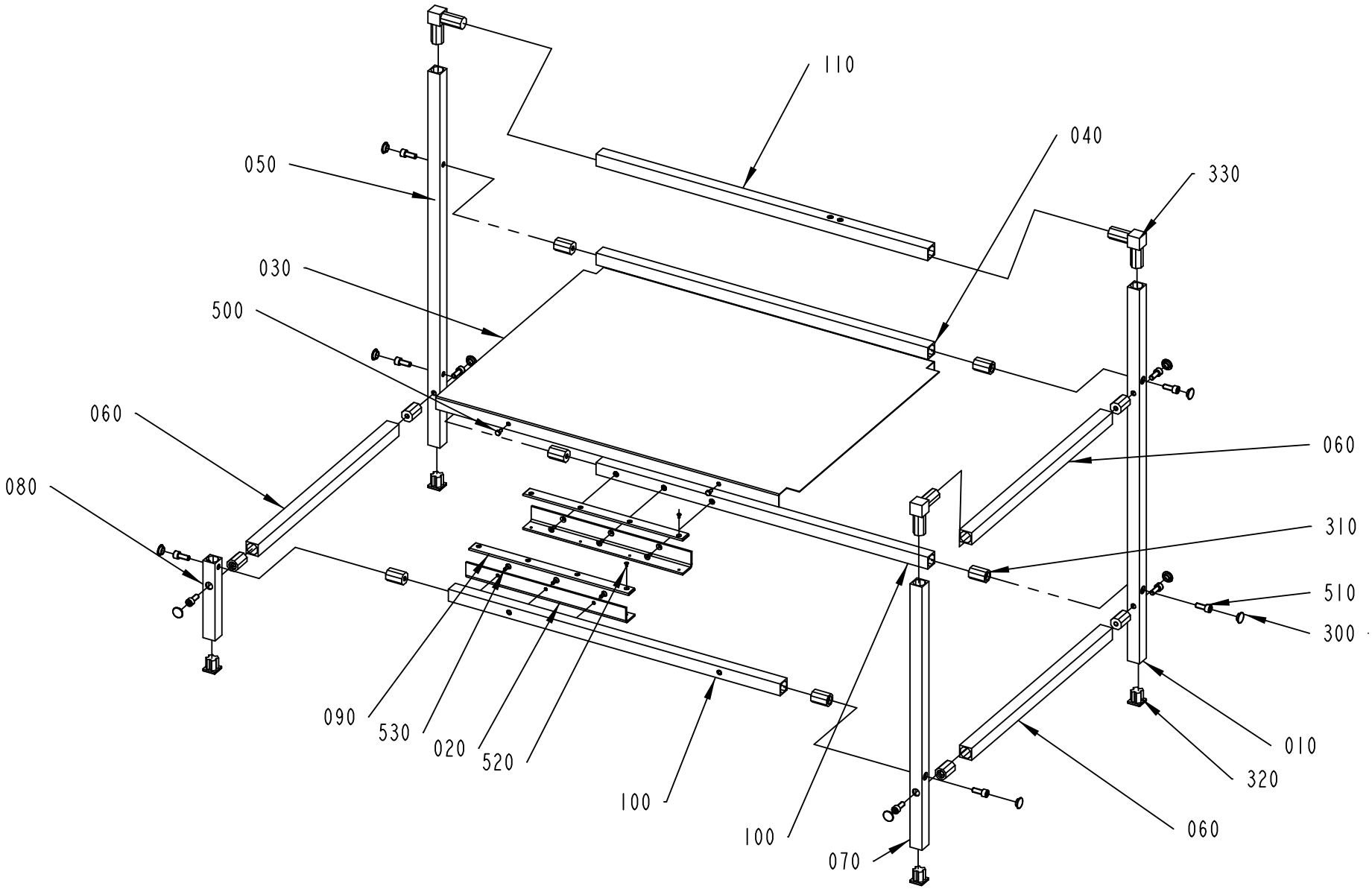

2923343-1
429959

ECM: 436928 - 20100222
Group number: 2923343-0100
Assembly Drawing: 2923343-1_1_AB

Pos	Part No	UN	Qty	Description	Page No
-					
010	2923007-0000		1	PROFILE	
020	2923019-0000		2	ANGLE	
030	2923329-0000		1	PLATE	
040	2923335-0000		1	PROFILE	
050	2923336-0000		1	PROFILE	
060	2923338-0000		3	PROFILE	
070	2923339-0000		1	PROFILE	
080	2923341-0000		1	PROFILE	
090	2923347-0000		2	SLIDING STRIP	
100	2946740-0000		2	PROFILE	
110	2958719-0000		1	PROFILE	
300	90458-0498		11	PLUG, BLIND, PLASTIC PLUG B24, 5/17	
310	90458-0692		11	JOINT, THREAD.CONN. 30 MM, NO 851.008.95	
320	90458-0693		4	PLASTIC FOOT 30 MM, NO 856.211.95	
330	90458-0694		3	ELBOW JOINT 2T 30 MM, NO 851.012.95	
500	312105-0366		4	SCREW M6S ISO 4017 M6X12 A480	
510	312115-0493		11	SCREW ISO4762 M10X25 A4 80	
520	312155-0287		8	SCREW DIN 7991 MF6S M4X8 A4 70	
530	312155-0368		6	SCREW DIN 7991 MF6S M6X16 A4 70	

Pos	Part No	UN	Qty	Description	Page No

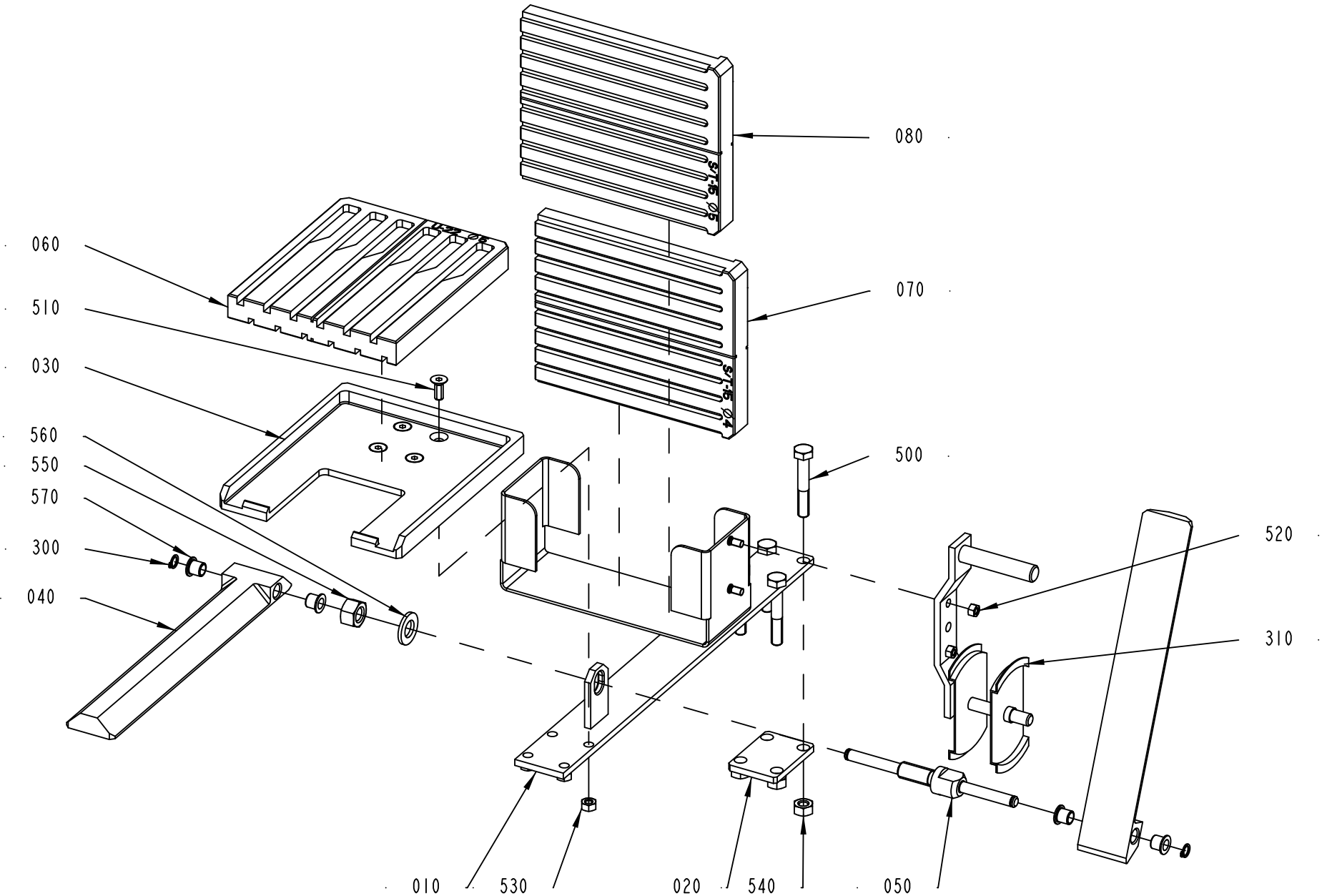
080
070
060
510
030
560
550
570
300
040
500
520
310
010
530
020
540
050
2946135-1
422084

ECM: 436929 - 20100222
Group number: 2946135-0100
Assembly Drawing: 2946135-1_1_AC

Pos	Part No	UN	Qty	Description	Page No
-					
010	2946144-0000		1	CANTILEVER	
020	2946722-0000		1	PLATE	
030	2946136-0000		1	HOLDER	
040	2946141-0000		2	PRESSURE PLATE	
050	2946142-0000		1	SHAFT	
060	2946137-0000		1	PLATE	
070	2946138-0000		1	PLATE	
080	2959850-0000		1	PLATE	
300	90141-0015		2	RETAINING RING FOR SHAFT DIN 471 8 SS	
310	90256-0001		1	TAPE SUPPLY HOLDER, TYPE 2000	
500	312105-0461		4	SCREW M6S ISO 4014 M8X50 A480	
510	312155-0368		4	SCREW DIN 7991 MF6S M6X16 A4 70	
520	312605-0314		2	HEXAGON NUT, M6M M5 A280	
530	312605-0316		4	HEXAGON NUT, M6M M6 A280	
540	312605-0318		4	HEXAGON NUT, M6M M8 A280	
550	312605-0322		1	HEXAGON NUT, M6M M12 A280	
560	315106-0178		1	WASHER ISO 7089-12-200 HV A4	
570	321153-0102		4	FLANGE BUSHING, 8X10X10 MM	

Pos	Part No	UN	Qty	Description	Page No

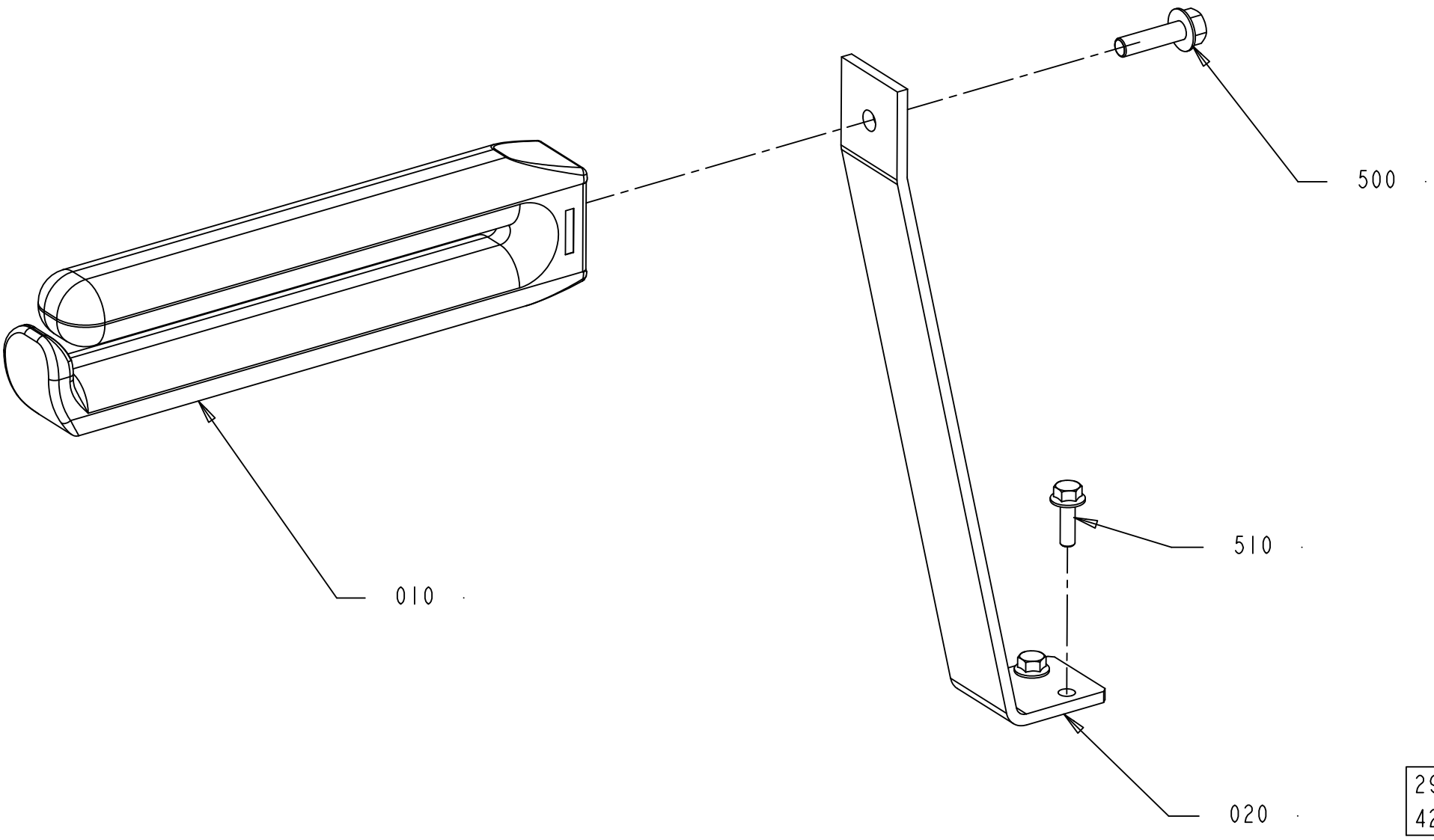
500
010
510
020
2946720-1
422087

ECM: 428262 - 20091221
Group number: 2946720-0100
Assembly Drawing: 2946720-1_1_AB

Pos	Part No	UN	Qty	Description	Page No
-					
010	556386-0000		1	STEERING	
020	2946721-0000		1	CANTILEVER	
500	312108-0455		1	SCREW EN 1665 TYPE F M8X30 A270	
510	312108-0370		2	SCREW EN 1665 TYPE F M6X20 A270	

Pos	Part No	UN	Qty	Description	Page No

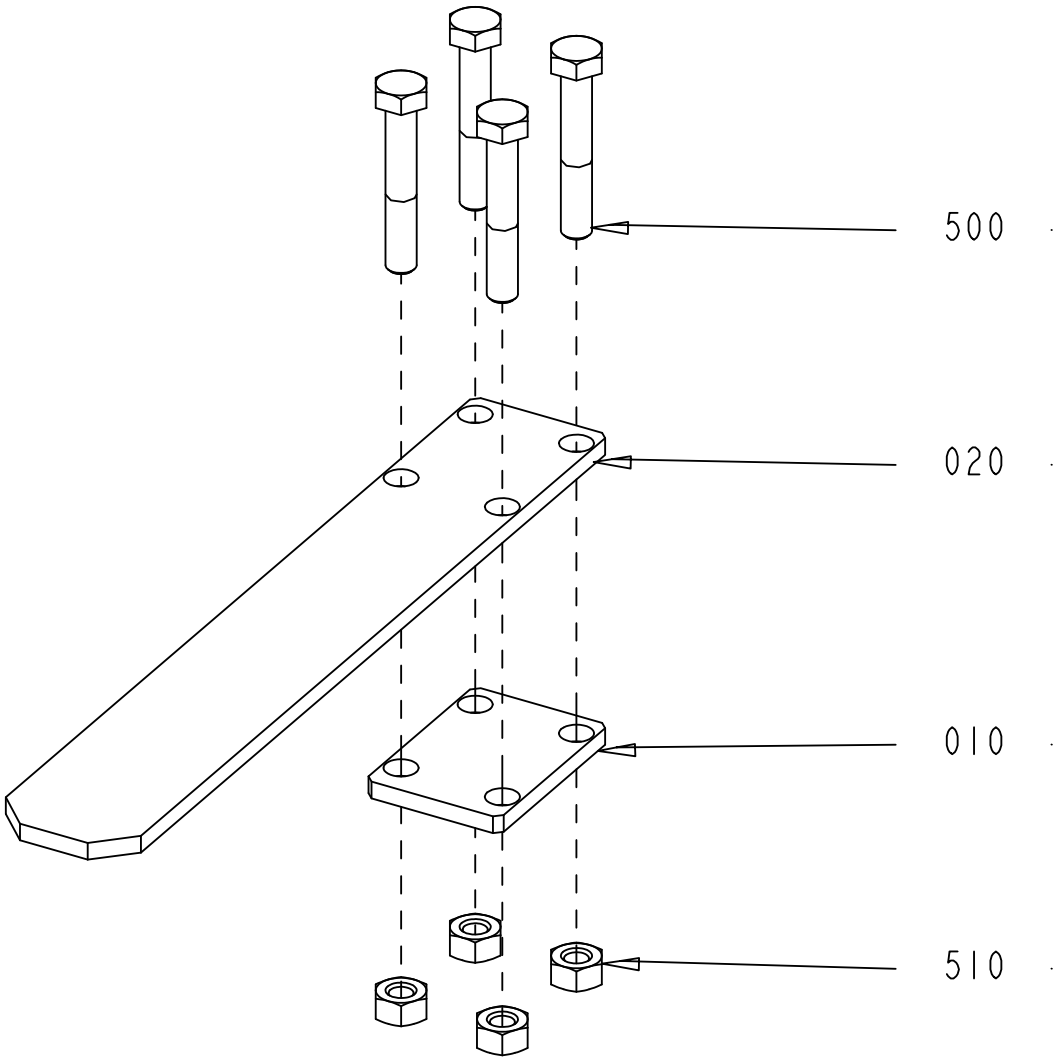

2946724-1
344517

ECM: 344517 - 20080303
Group number: 2946724-0100
Assembly Drawing: 2946724-1_1_AA

Pos	Part No	UN	Qty	Description	Page No
-					
010	2946722-0000		1	PLATE	
020	2946725-0000		1	CANTILEVER	
500	312105-0461		4	SCREW M6S ISO 4014 M8X50 A480	
510	312605-0318		4	HEXAGON NUT, M6M M8 A280	

Pos	Part No	UN	Qty	Description	Page No

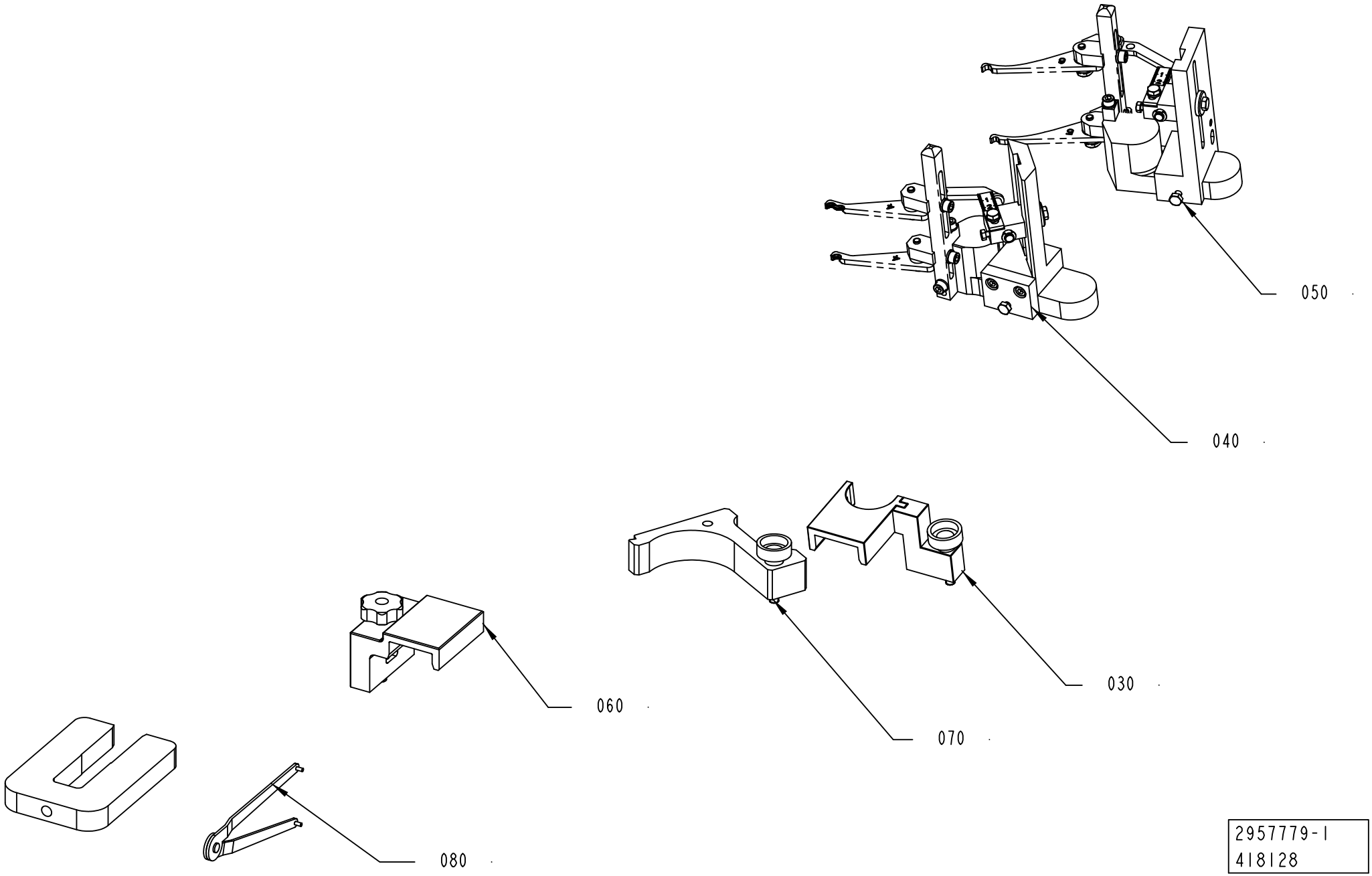

2957779-1
418128

ECM: 419018 - 20091016
Group number: 2957779-0200
Assembly Drawing: 2957779-1_1_AB

Pos	Part No	UN	Qty	Description	Page No
TBA, TB					
040	3013391-0100		1	TEMPLATE	**10-23**
060	3013617-0100		1	TEMPLATE	**10-25**
TPA					
030	3013619-0100		1	TEMPLATE	**10-27**
050	3013902-0100		1	TEMPLATE	**10-29**
Common Parts					
070	3057744-0100		1	POSITION TEMPLATE	**10-31**
080	3022574-0100		1	TOOLS AND TEMPLATES	**10-33**

Pos	Part No	UN	Qty	Description	Page No

POS 020 SHOULD BE LUBRICATED
FOR SMOOTH OPERATION.

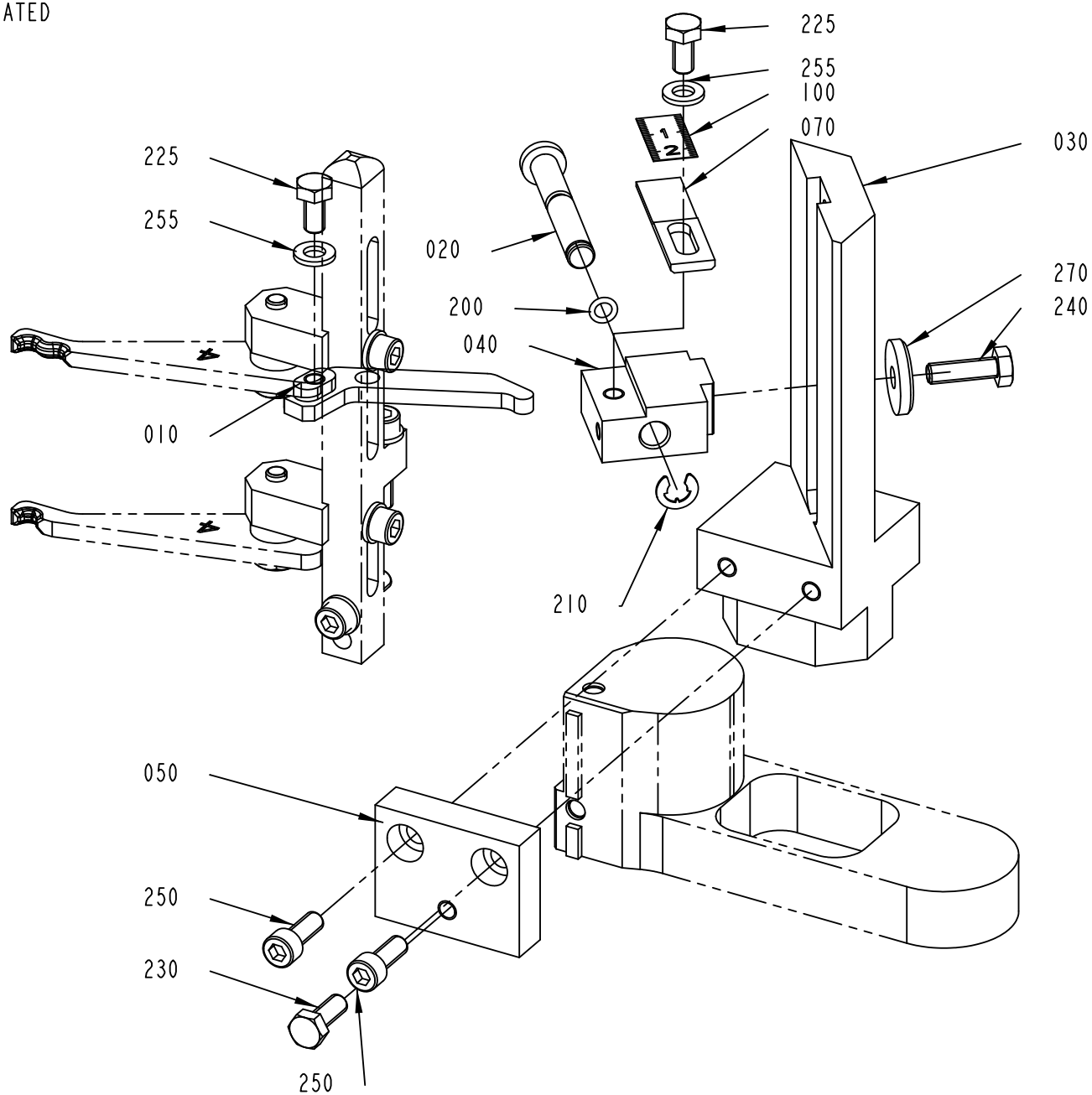

3013391-1
422084

ECM: 436930 - 20100222
Group number: 3013391-0100
Assembly Drawing: 3013391-1_1_AB

Pos	Part No	UN	Qty	Description	Page No
-					
010	3013392-0000		1	LEVER	
020	3013393-0000		1	PIN	
030	3013394-0000		1	SUPPORT	
040	3013395-0000		1	GUIDE	
050	3013396-0000		1	PLATE	
070	3013462-0000		1	BAR	
100	90458-2779		1	SCALE , 0-1000MM ADHESIVE	
200	315202-0103		1	O-RING 5,1X1,6 MM	
210	315755-0108		1	RETAINING RING SHAFT DIN 6799 6 A2	
225	312105-0366		2	SCREW M6S ISO 4017 M6X12 A480	
230	312105-0368		1	SCREW M6S ISO 4017 M6X16 A480	
240	312105-0370		1	SCREW M6S ISO 4017 M6X20 A480	
250	312115-0368		2	SCREW ISO4762 M6X16 A4 80	
255	315105-0153		2	WASHER BRB 6,4X12 RFR	
270	315125-0153		1	WASHER TBRSB 6,4X22X4 A4	

Pos	Part No	UN	Qty	Description	Page No

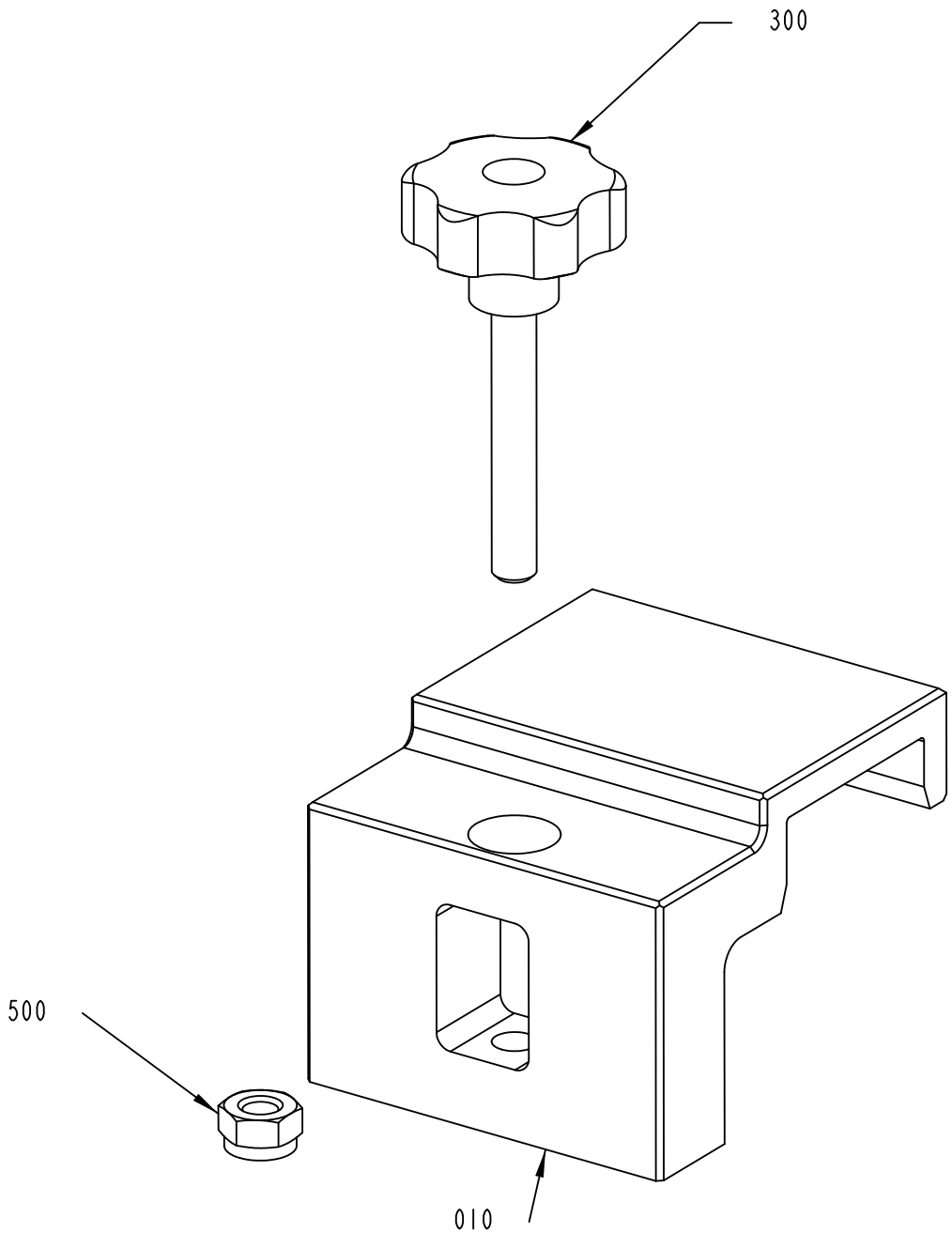

3013617-1
377812

ECM: 393825 - 20090409
Group number: 3013617-0100
Assembly Drawing: 3013617-1_1_AA

Pos	Part No	UN	Qty	Description	Page No
-					
010	3013616-0000		1	TEMPLATE	
300	90459-6510		1	KNOB, ,EXTERNAL THREAD. GN6336.4 40-M8X5	
500	312812-0318		1	HEXAGON NUT, NY-LOCK M8 A480	

Pos	Part No	UN	Qty	Description	Page No

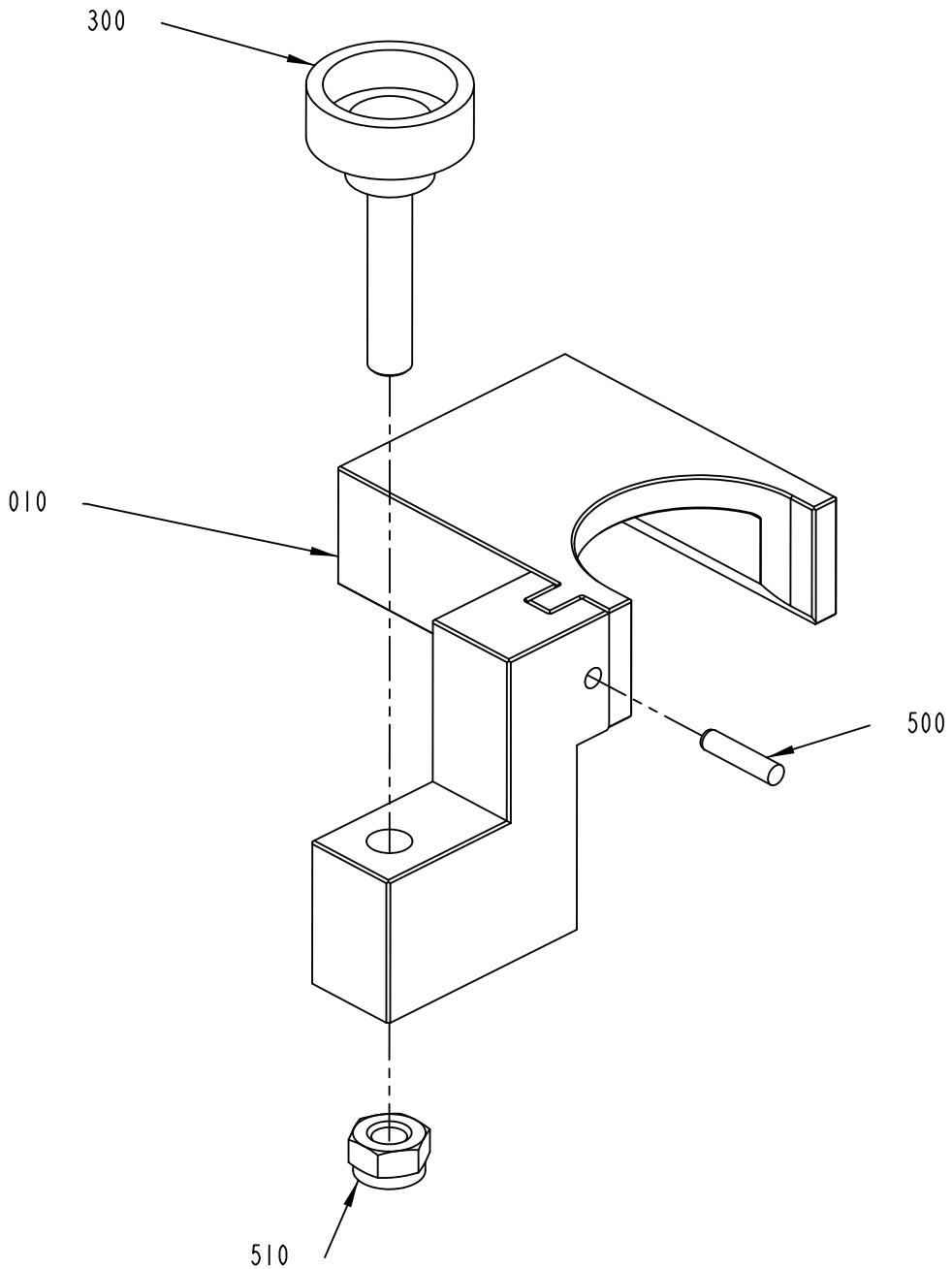

3013619-1
377812

ECM: 392472 - 20090409
Group number: 3013619-0100
Assembly Drawing: 3013619-1_1_AA

Pos	Part No	UN	Qty	Description	Page No
-					
010	3013622-0000		1	TEMPLATE	
300	90287-0358		1	KNURLED SCREW	
500	311103-0271		1	PARALLEL PIN ISO 2338 4M6X18 A1	
510	312812-0318		1	HEXAGON NUT, NY-LOCK M8 A480	

Pos	Part No	UN	Qty	Description	Page No

POS 030 SHOULD BE LUBRICATED
FOR SMOOTH OPERATION.

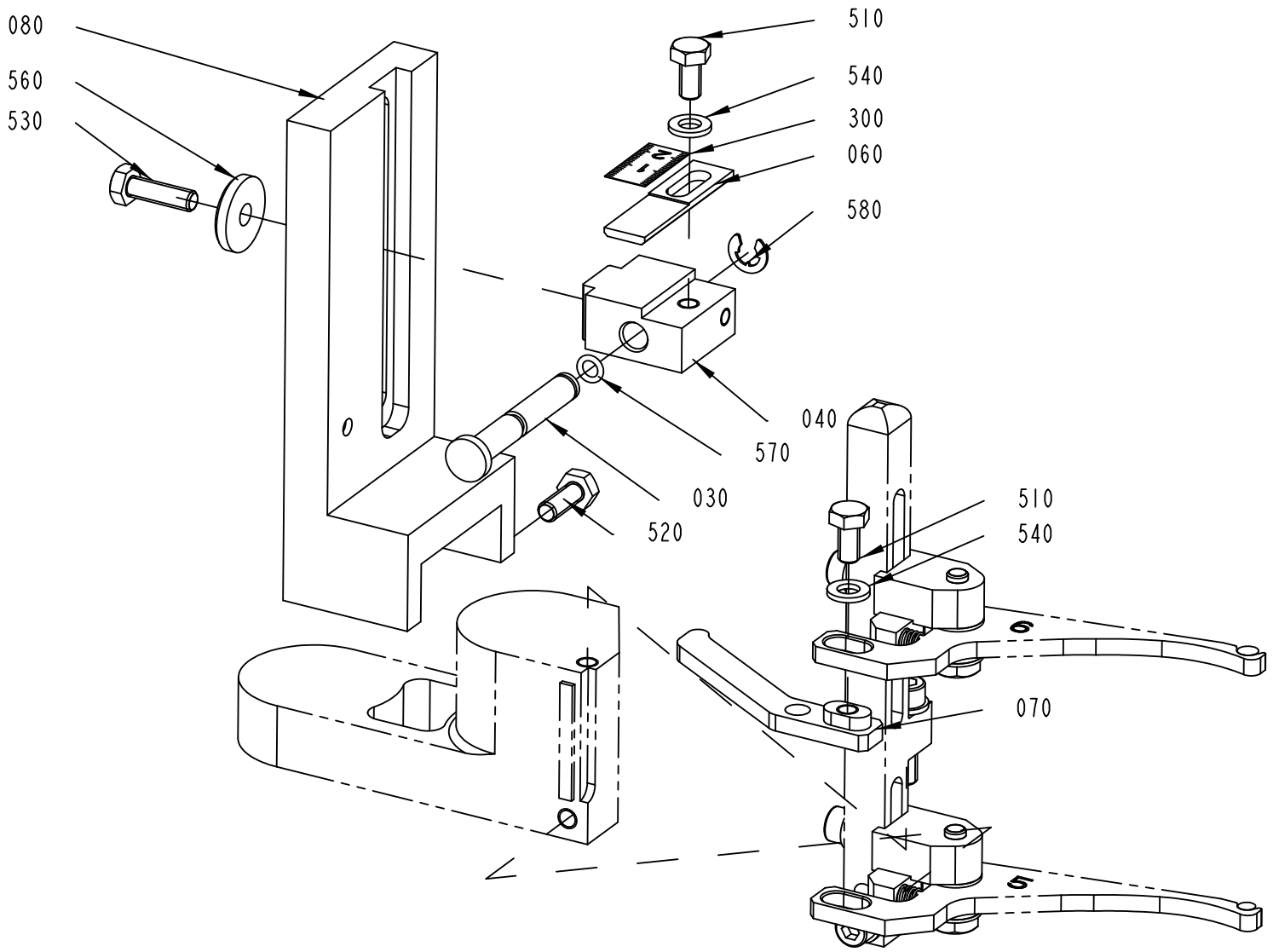

3013902-1
422084

ECM: 436931 - 20100222
Group number: 3013902-0100
Assembly Drawing: 3013902-1_1_AB

Pos	Part No	UN	Qty	Description	Page No
-					
030	3013393-0000		1	PIN	
040	3013395-0000		1	GUIDE	
060	3013462-0000		1	BAR	
070	3013903-0000		1	LEVER	
080	3013904-0000		1	SUPPORT	
300	90458-2779		1	SCALE , 0-1000MM ADHESIVE	
510	312105-0366		2	SCREW M6S ISO 4017 M6X12 A480	
520	312105-0368		1	SCREW M6S ISO 4017 M6X16 A480	
530	312105-0370		1	SCREW M6S ISO 4017 M6X20 A480	
540	315105-0153		2	WASHER BRB 6,4X12 RFR	
560	315125-0153		1	WASHER TBRSB 6,4X22X4 A4	
570	315202-0103		1	O-RING 5,1X1,6 MM	
580	315755-0108		1	RETAINING RING SHAFT DIN 6799 6 A2	

Pos	Part No	UN	Qty	Description	Page No

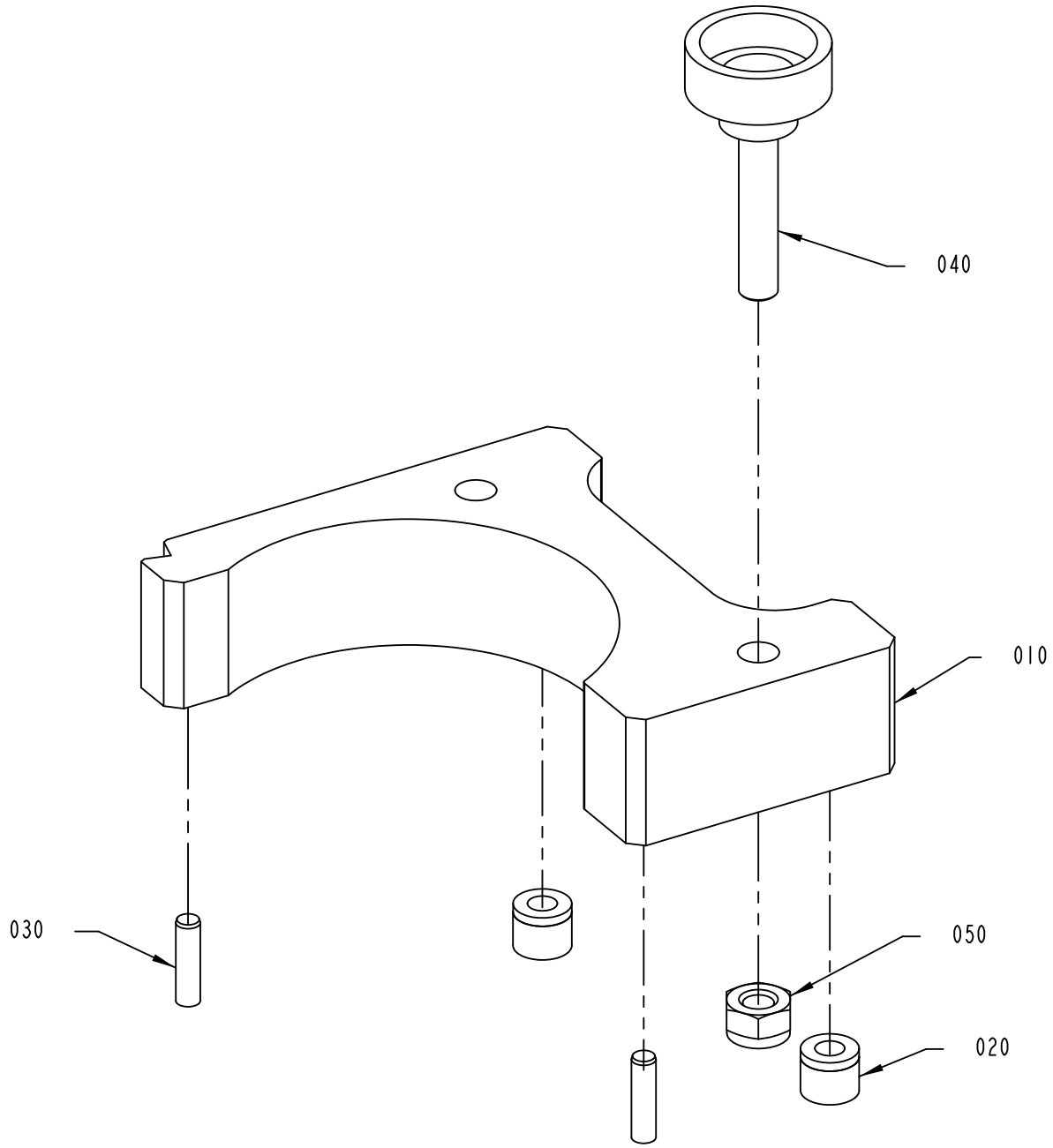

3057744-1
429959

ECM: 436932 - 20100222
Group number: 3057744-0100
Assembly Drawing: 3057744-1_1_AB

Pos	Part No	UN	Qty	Description	Page No
Pitch 15 mm					
010	3079346-0000		1	POSITION TEMPLATE	
Pitch 22 mm					
010	3079347-0000		1	POSITION TEMPLATE	
Common Parts					
020	90240-0336		2	BEARING BUSHING W/O FL, 6,10X12X10 MM	
030	311103-0310		2	PARALLEL PIN ISO 2338 5M6X20 A1	
040	90287-0358		1	KNURLED SCREW	
050	312812-0318		1	HEXAGON NUT, NY-LOCK M8 A480	

Pos	Part No	UN	Qty	Description	Page No

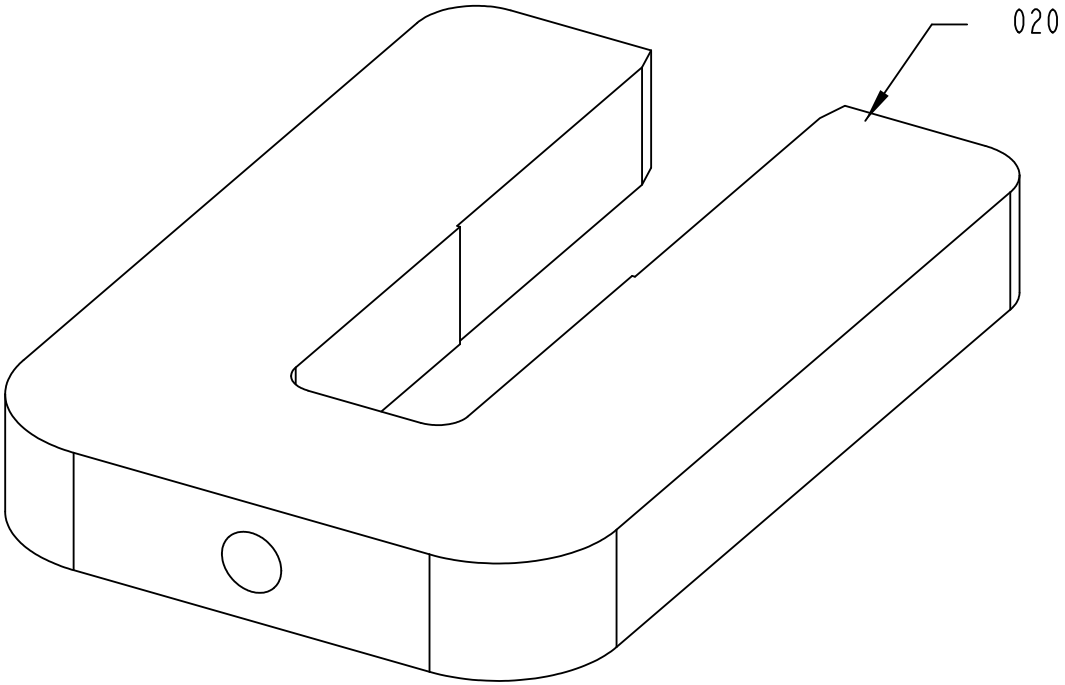

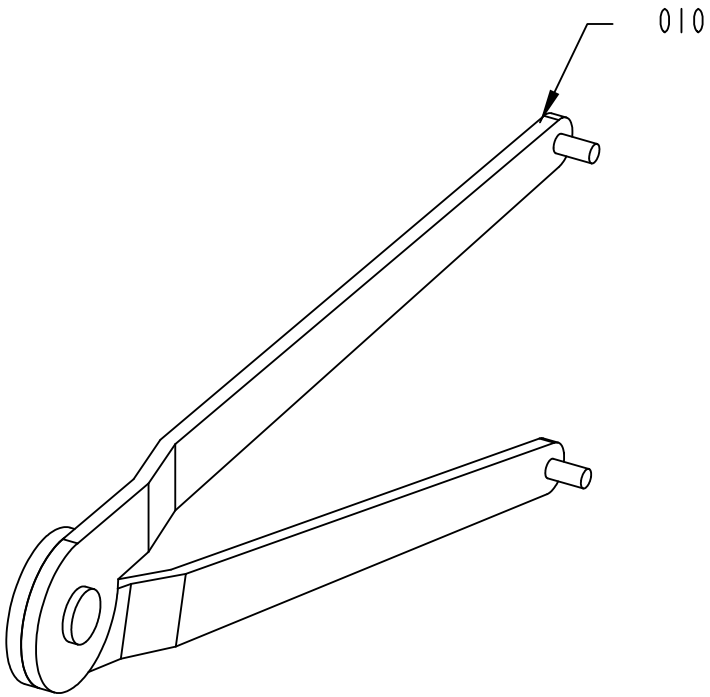

3022574-1
377812

ECM: 393826 - 20090409
Group number: 3022574-0100
Assembly Drawing: 3022574-1_1_AA

Pos	Part No	UN	Qty	Description	Page No
-					
010	90243-0164		1	HOOK SPANNER ADJUST.DIA.4	
020	2959983-0000		1	SETTING TEMPLATE	

Pos	Part No	UN	Qty	Description	Page No

WASTE PIPE

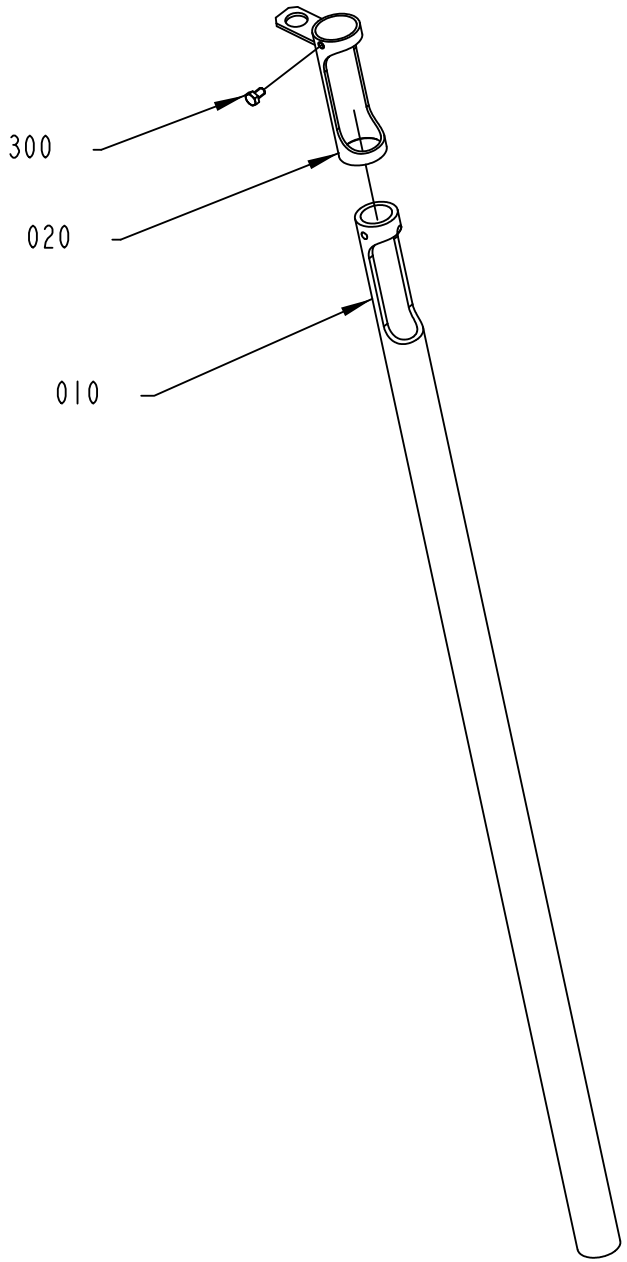

3046523-1
418128

ECM: 436933 - 20100222
Group number: 3046523-0100
Assembly Drawing: 3046523-1_1_AA

Pos	Part No	UN	Qty	Description	Page No
-					
010	3046522-0000		1	HOSE	
020	3046521-0000		1	HOSE HOLDER	
300	312105-0364		1	SCREW M6S ISO 4017 M6X10 A480	

Pos	Part No	UN	Qty	Description	Page No

Tetra Pak

SPC
Spare Parts Catalogue

This page is intentionally left blank.

ECM: 436934 - 20100222
Group number: 663311-0300
Assembly Drawing:

Pos	Part No	UN	Qty	Description	Page No
-					
010	2943553-0100		1	PHOTOCELL UNIT	**11-5**
020	3025775-0200		1	QUICK CHANGE	**11-7**
030	2643050-0400		1	BENT FOIL TREATER	**11-15**
040	663550-0300		1	STRAW DETECTOR 30	**11-53**
050	3039857-0100		1	COOLING UNIT	**11-127**
060	3088860-0100		1	SECOND DISCHARGE UNIT	**11-129**

Pos	Part No	UN	Qty	Description	Page No

PHOTOCELL UNIT

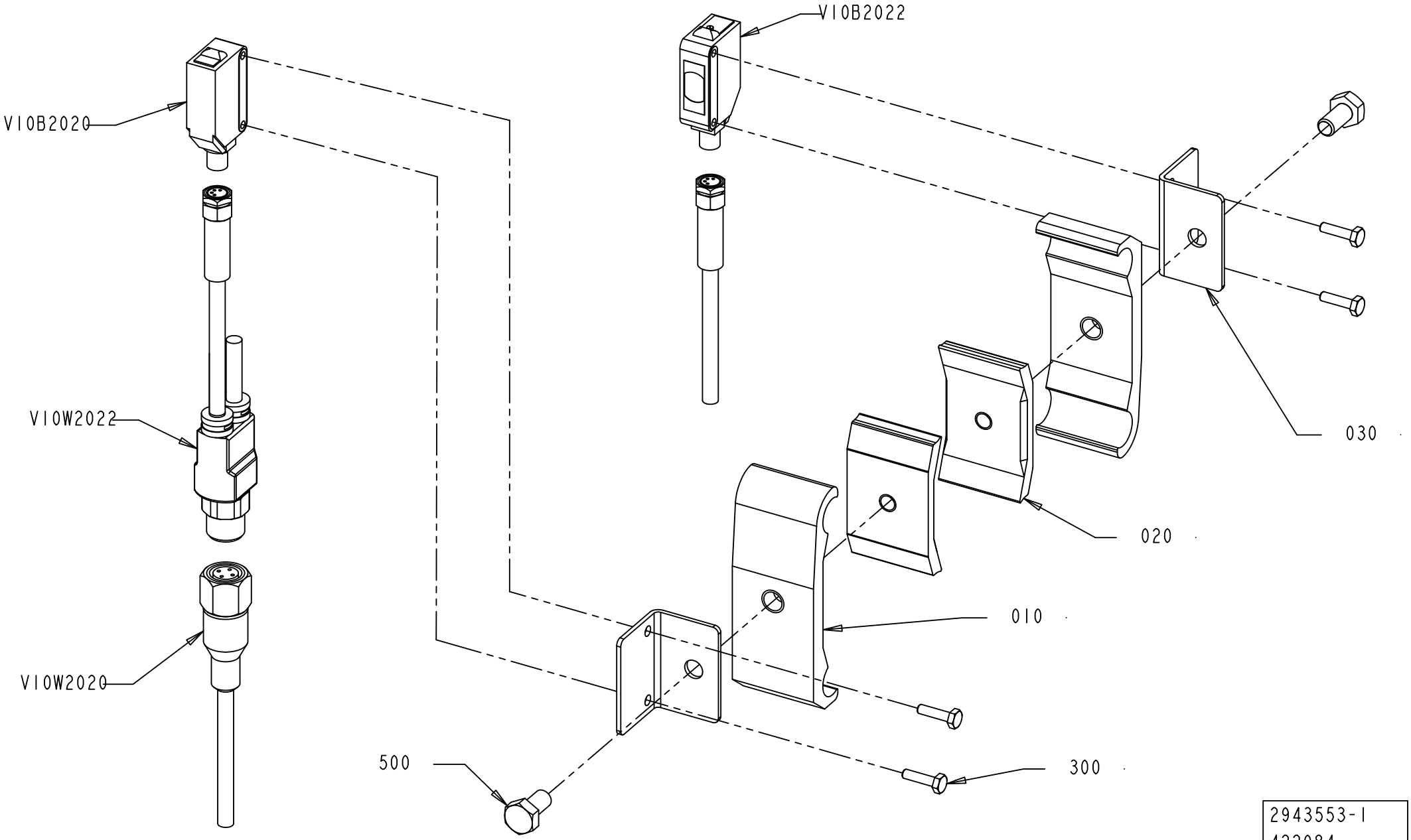

2943553-1
422084

ECM: 428962 - 20091221
Group number: 2943553-0100
Assembly Drawing: 2943553-1_1_AB

Pos	Part No	UN	Qty	Description	Page No
-					
010	1366750-0000		2	HOLDER	
020	1366727-0000		2	CLAMP	
030	2892716-0000		2	BRACKET	
300	90287-0175		4	SCREW M6S M3X12 A480	
500	312105-0366		2	SCREW M6S ISO 4017 M6X12 A480	
V10B2020	90459-7273		1	PHOTOCELL E3Z-T81C-G0SR D-CN	
V10B2022	90459-7274		1	PHOTOCELL E3Z-T81C-G0SR L-CN	
V10W2020	351309-0100		1	ACTUATOR/SENSOR CABLE PRKT 4-07/10M	
V10W2022	90459-6586		1	ACT/SENS.Y-CABLE, ASBN 2-PRKMV 4-07/0,6M	

Pos	Part No	UN	Qty	Description	Page No

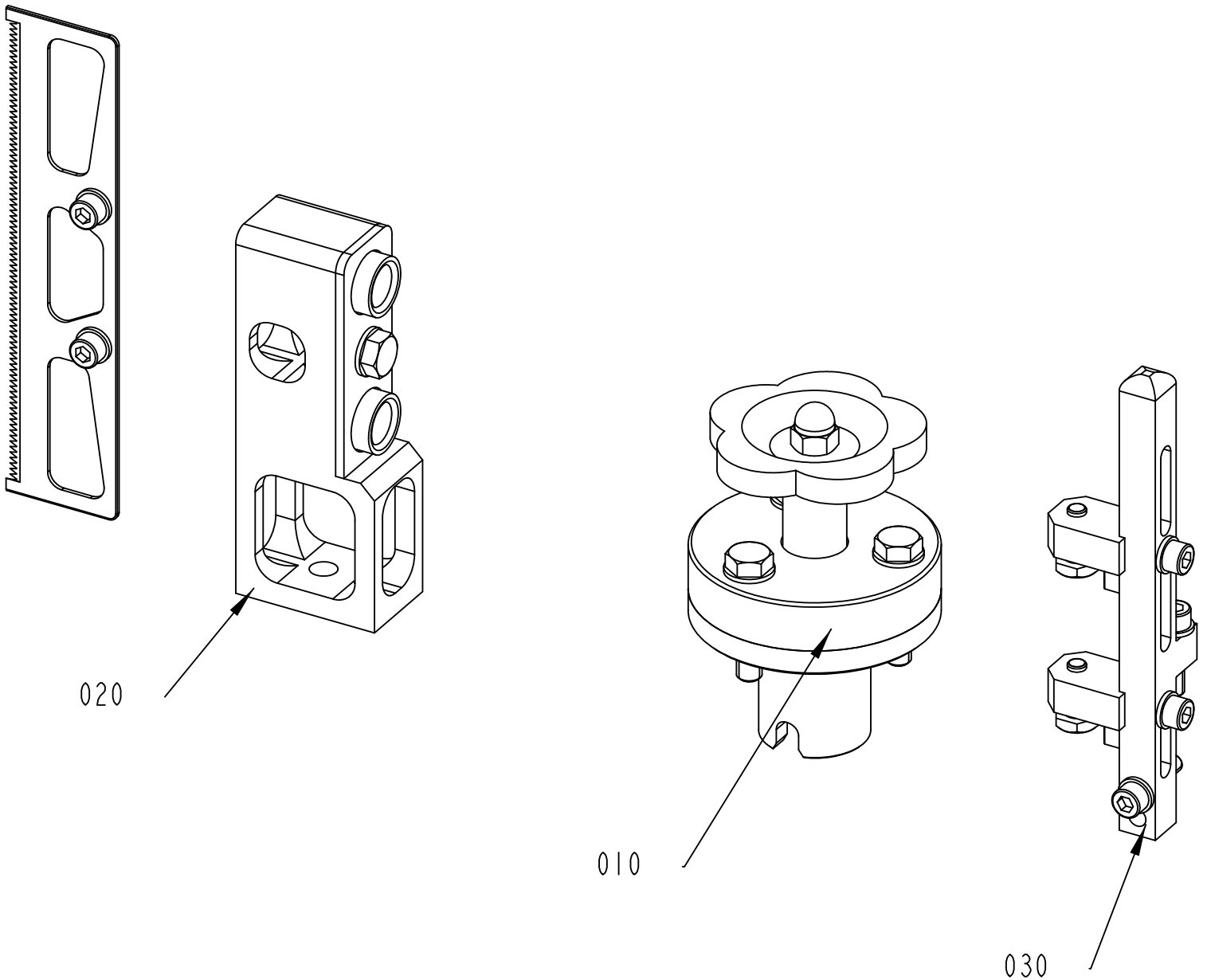

3025775-1
377812

ECM: 393677 - 20090409
Group number: 3025775-0200
Assembly Drawing: 3025775-1_1_AA

Pos	Part No	UN	Qty	Description	Page No
-					
010	2960584-0100		1	FEED WHEEL	**11-9**
020	3025777-0100		1	CUTTING UNIT	**11-11**
030	3025778-0100		1	PRESSURE ARM	**11-13**

Pos	Part No	UN	Qty	Description	Page No

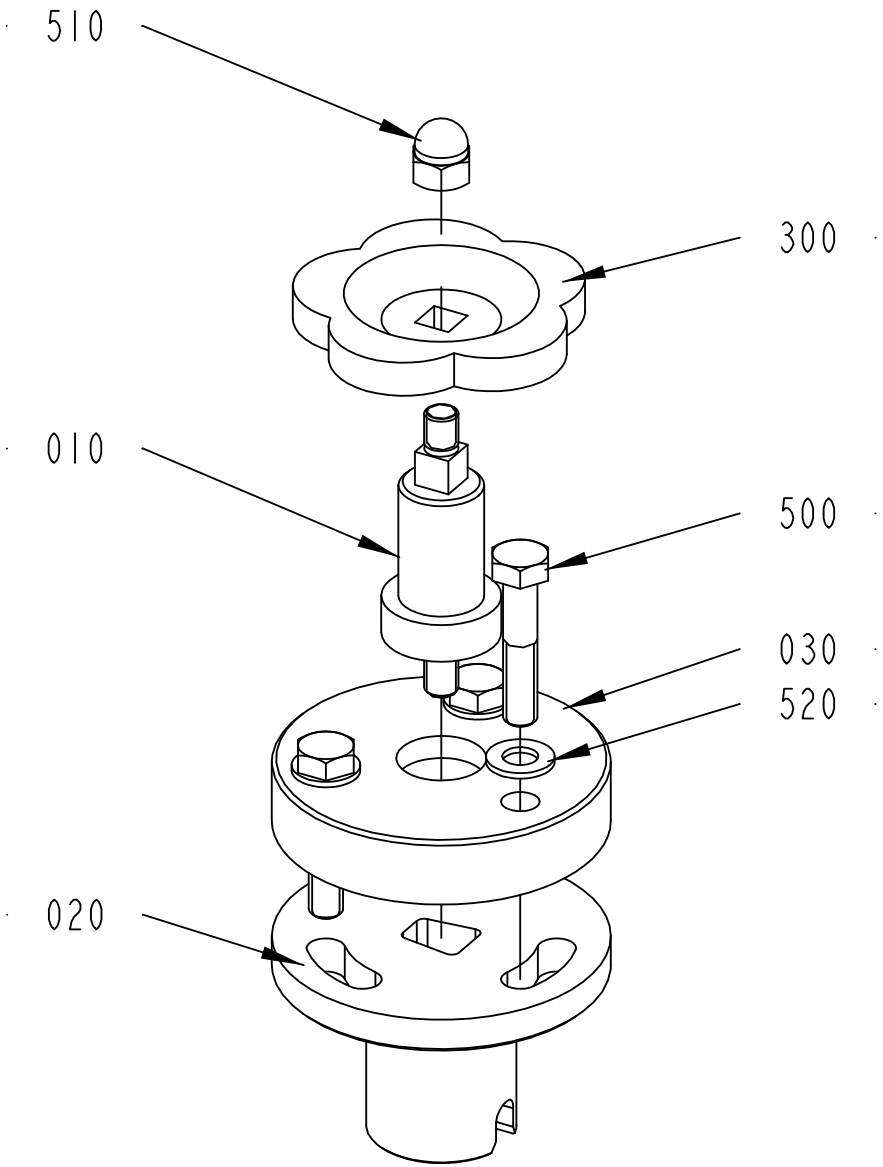

2960584-1
306806

ECM: 436938 - 20100222
Group number: 2960584-0100
Assembly Drawing: 2960584-1_1_AA

Pos	Part No	UN	Qty	Description	Page No
-					
010	2864773-0000		1	SHAFT	
020	2950968-0000		1	FLANGE	
030	2950971-0000		1	FLANGE	
300	90051-0079		1	KNOB, SQUARE HOLE, NO. 8306 1304	
500	312105-0459		3	SCREW M6S ISO 4014 M8X40 A480	
510	312705-0318		1	NUT HEX. DOMED CAP MHM-6 M8 A280	
520	315105-0165		3	WASHER BRB 8,4X16 RFR	

Pos	Part No	UN	Qty	Description	Page No

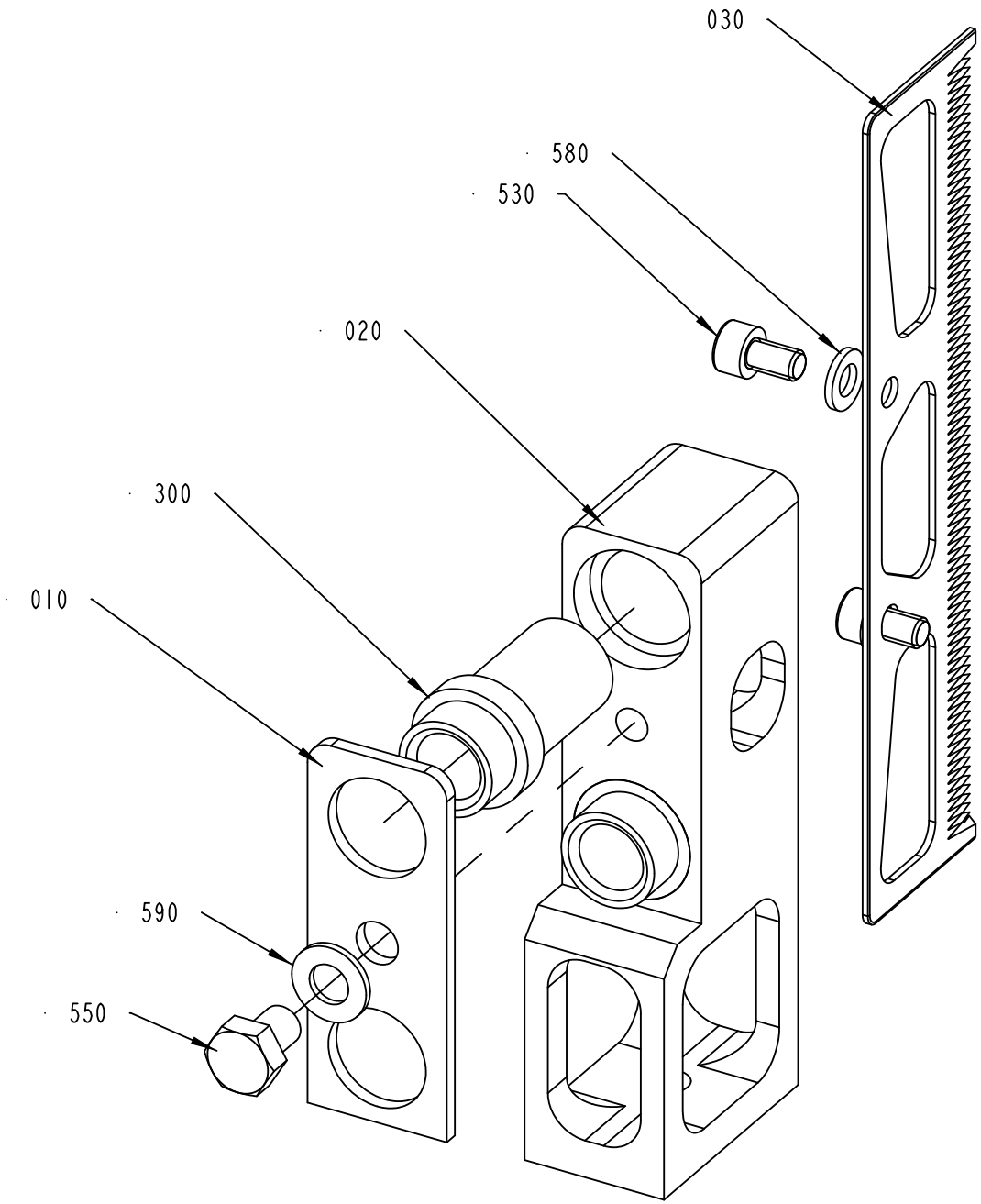

3025777-1
377812

ECM: 436939 - 20100222
Group number: 3025777-0100
Assembly Drawing: 3025777-1_1_AA

Pos	Part No	UN	Qty	Description	Page No
-					
010	2737088-0000		1	CLAMPING PLATE	
020	2829426-0000		1	BRACKET	
030	2856537-0000		1	KNIFE	
300	90600-3957		2	GUIDE BUSHING, 14X20X45	
530	312115-0364		2	SCREW ISO4762 M6X10 A4 80	
550	312105-0447		1	SCREW M6S ISO 4017 M8X12 A480	
580	315105-0153		2	WASHER BRB 6,4X12 RFR	
590	315105-0165		1	WASHER BRB 8,4X16 RFR	

Pos	Part No	UN	Qty	Description	Page No

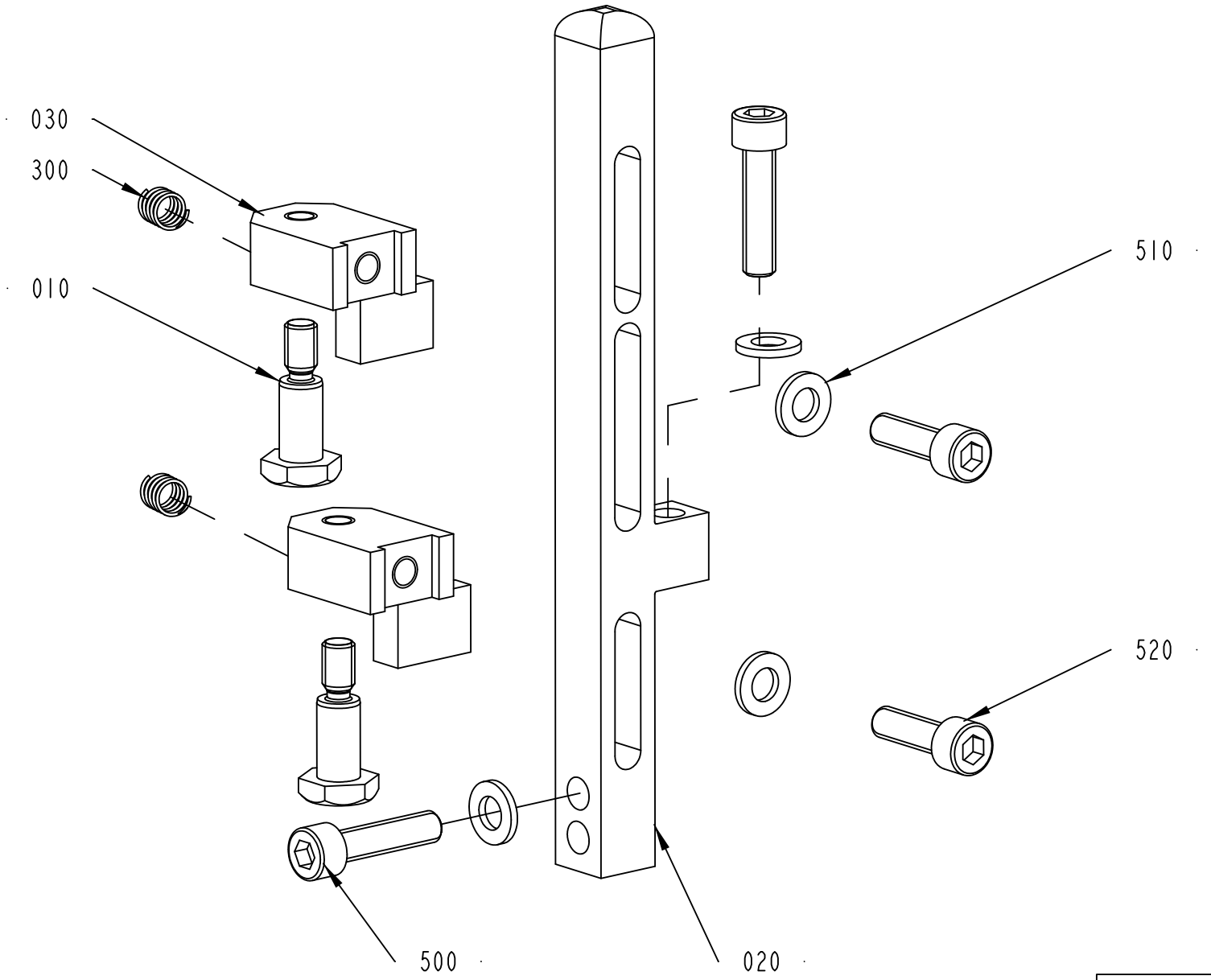

3025778-1
406756

ECM: 436940 - 20100222
Group number: 3025778-0100
Assembly Drawing: 3025778-1_1_AB

Pos	Part No	UN	Qty	Description	Page No
-					
010	3013399-0000		2	SCREW	
020	2910474-0000		1	POST	
030	3013390-0000		2	BRACKET	
300	90600-1851		2	COMP. SPRING 5896, 0,63X6,93X11,5	
500	312115-0372		2	SCREW ISO4762 M6X25 A4 80	
510	315105-0153		4	WASHER BRB 6,4X12 RFR	
520	312115-0370		2	SCREW ISO4762 M6X20 A4 80	

Pos	Part No	UN	Qty	Description	Page No

BENT FOIL TREATER

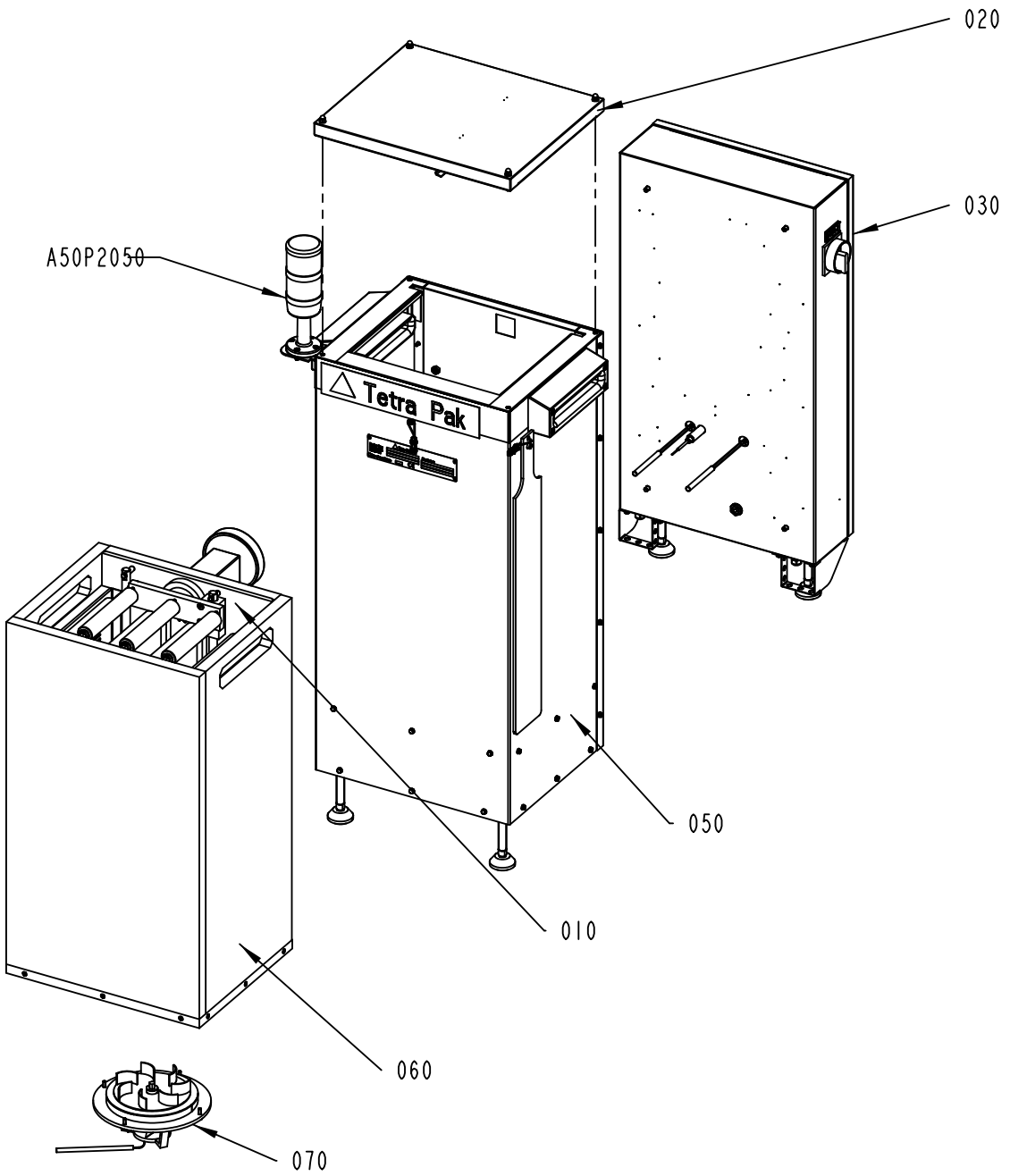

2643050-4
ECM 399387

ECM: 406445 - 20090630
Group number: 2643050-0400
Assembly Drawing: 2643050-4_1_AA

Pos	Part No	UN	Qty	Description	Page No
-					
010	2643060-0300		1	HEATER	**11-17**
020	2643074-0300		1	LID	**11-29**
030	2703954-0400		1	ELECTRICAL CABINET	**11-31**
050	2703960-0300		1	COVER	**11-45**
060	2727163-0200		1	INSULATION	**11-47**
070	2751400-0300		1	MOTOR UNIT	**11-49**
A50P2050	2998253-0100		1	WARNING LAMP	**11-51**

Pos	Part No	UN	Qty	Description	Page No

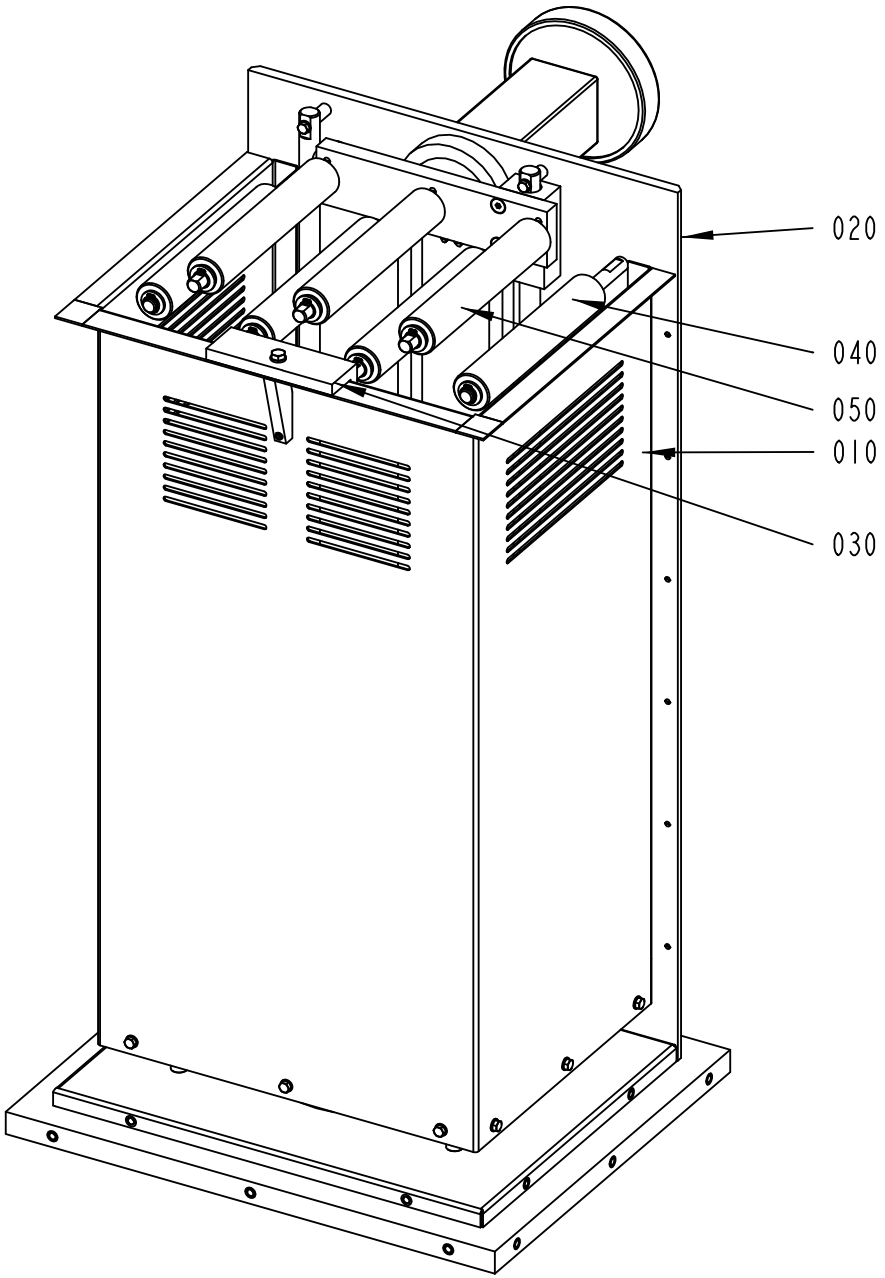

2643060-3
ECM 349879

ECM: 352482 - 20090330
Group number: 2643060-0300
Assembly Drawing: 2643060-3_1_AA

Pos	Part No	UN	Qty	Description	Page No
-					
010	2966824-0100		1	HEATING CHAMBER	**11-19**
020	2960755-0100		1	ROLLER UNIT	**11-21**
030	2789703-0200		1	BENDING ROLLER	**11-23**
040	2643065-0200		2	BENDING ROLLER	**11-25**
050	2643066-0200		3	BENDING ROLLER	**11-27**

Pos	Part No	UN	Qty	Description	Page No

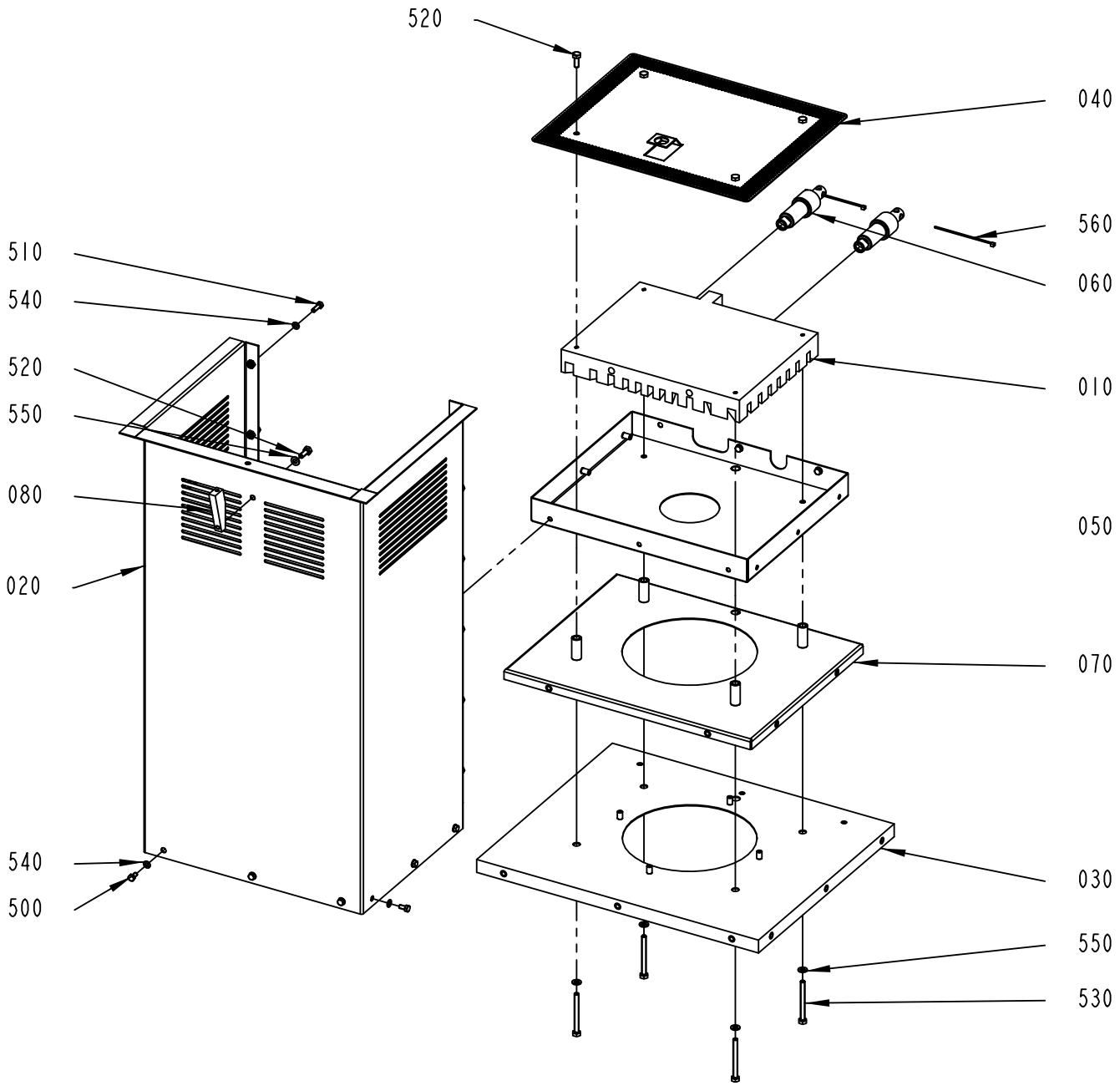

2966824-1
349879

ECM: 436941 - 20100222
Group number: 2966824-0100
Assembly Drawing: 2966824-1_1_AA

Pos	Part No	UN	Qty	Description	Page No
-					
010	2966826-0000		1	ELEMENT PLATE	
020	2960738-0000		1	PLATE	
030	2966828-0000		1	COVER PLATE	
040	2966829-0000		1	PLATE	
050	2966831-0000		1	BOTTOM PLATE	
060	2643064-0000		2	INSULATING PLATE	
070	2966830-0000		1	PLATE	
080	2970402-0000		1	SUPPORT	
500	312105-0325		15	SCREW M6S ISO 4017 M5X10 A480	
510	312105-0329		12	SCREW M6S ISO 4017 M5X16 A480	
520	312105-0368		5	SCREW M6S ISO 4017 M6X16 A480	
530	312109-0382		4	SCREW M6S ISO 4017 M6X60 A480	
540	315105-0146		27	WASHER BRB 5,3X10 RFR	
550	315105-0153		5	WASHER BRB 6,4X12 RFR	
560	352113-0101		2	CABLE TIE, BLACK 92X2,5 MM	

Pos	Part No	UN	Qty	Description	Page No

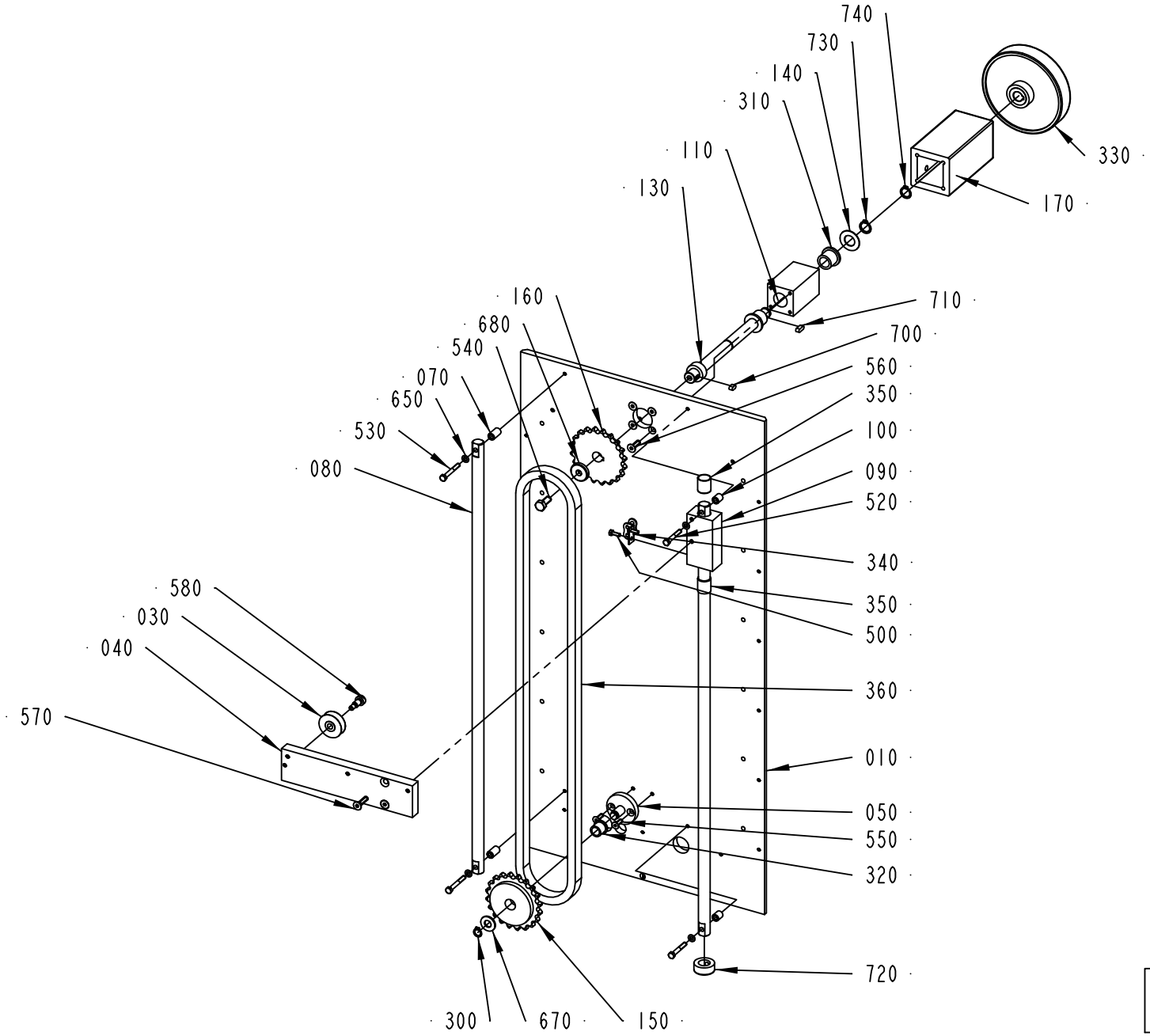

2960755-1
346426

ECM: 436942 - 20100222
Group number: 2960755-0100
Assembly Drawing: 2960755-1_1_AA

Pos	Part No	UN	Qty	Description	Page No
-					
010	2960747-0000		1	BACK PLATE	
030	2751388-0000		1	WHEEL	
040	2960735-0000		1	REEL HOLDER	
050	2960742-0000		1	BRACKET	
070	2960745-0000		2	SPACER	
080	2960746-0000		2	ROD	
090	2960748-0000		1	BRACKET	
100	2960749-0000		2	SPACER	
110	2960750-0000		1	BRACKET	
130	2960751-0000		1	SHAFT	
140	2960752-0000		1	WASHER	
150	2960753-0000		1	SPROCKET	
160	2960754-0000		1	SPROCKET	
170	2970401-0000		1	PLASTIC COVER	
300	90141-0016		1	RETAINING RING FOR SHAFT DIN 471 10 SS	
310	90240-0146		2	FLANGE BUSHING, 15X21X20 MM	
320	90240-0184		1	FLANGE BUSHING, 12X16X15 MM	
330	90600-1941		1	HAND WHEEL, VDS.125+IR A-14-K	
340	90288-0311		1	LINK	
350	321133-0224		2	BUSHING IGLIDUR G 16X18X20	
360	318212-0112		1	ROLLER CHAIN, SINGLE 1/2 -112,SS	
500	312105-0291		2	SCREW M6S ISO 4017 M4X12 A470	
520	312105-0337		2	SCREW M6S ISO 4014 M5X35 A480	
530	312105-0339		2	SCREW M6S ISO 4014 M5X40 A480	
540	312105-0451		1	SCREW M6S ISO 4017 M8X20 A480	
550	312155-0329		2	SCREW DIN 7991 MF6S M5X16 A4 70	
560	312155-0370		5	SCREW DIN 7991 MF6S M6X20 A4 70	
570	312155-0372		2	SCREW DIN 7991 MF6S M6X25 A4 70	
580	312180-0447		1	SCREW ISO7379 H8X12	
650	315105-0146		4	WASHER BRB 5,3X10 RFR	
670	315105-0173		1	WASHER BRB 10,5X22 RFR	
680	315125-0165		1	WASHER TBRSB 8,4X26X5 A4	
700	315705-0196		1	PARALLEL KEY W.ROUND ENDS 5X5X10	
710	315705-0198		1	PARALLEL KEY W. ROUND ENDS 5X5X14 MM	
720	315741-0112		1	RETAINING RING DIN 705 A2 16	
730	315750-0112		1	RETAINING RING SHAFT DIN 471 ST 15	
740	315751-0111		1	RETAINING RING FOR SHAFT DIN 471 14 SS	

Pos	Part No	UN	Qty	Description	Page No

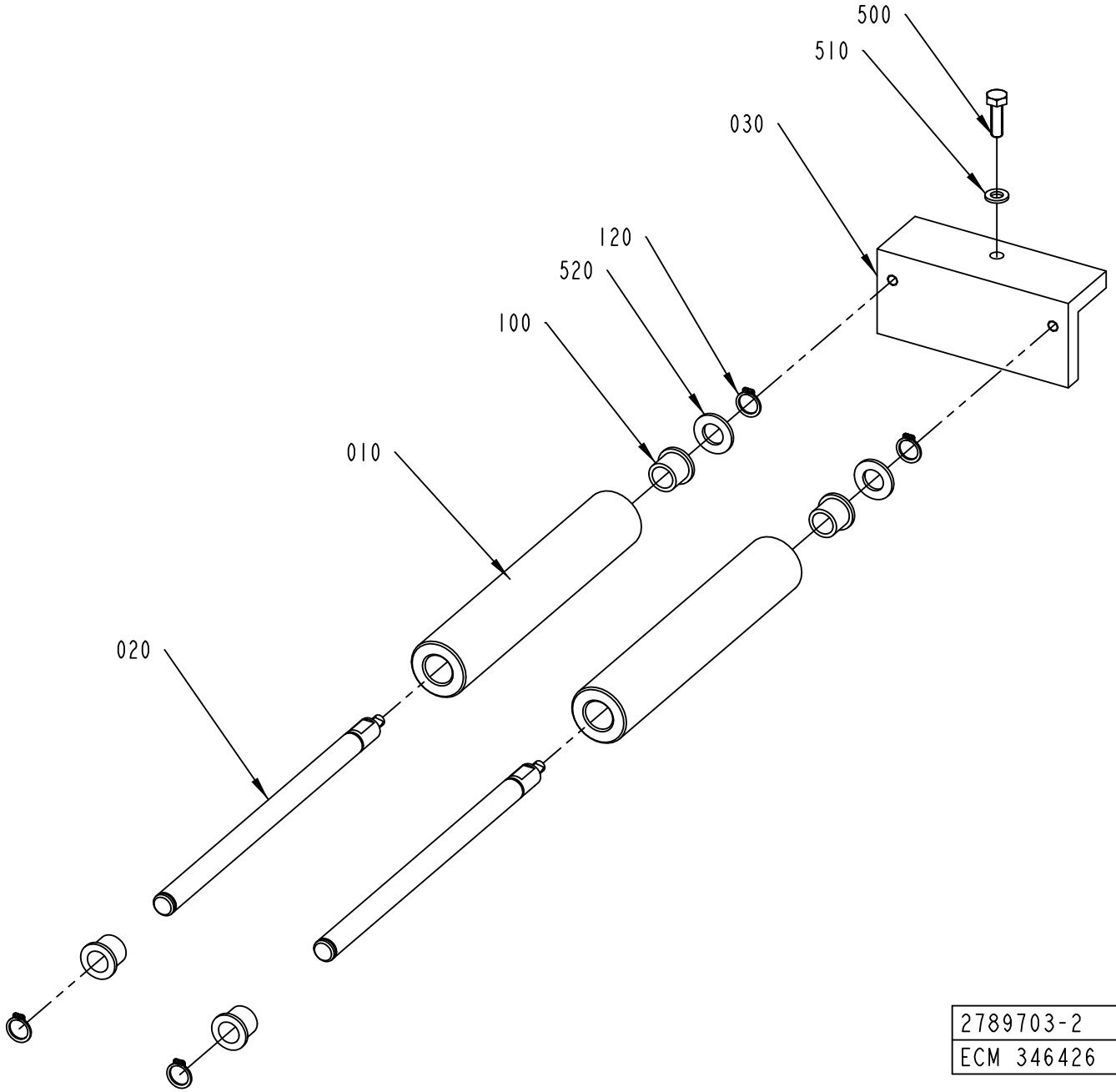
500
510
030
120
520
100
010
020
2789703-2
ECM 346426

ECM: 436943 - 20100222
Group number: 2789703-0200
Assembly Drawing: 2789703-2_1_AA

Pos	Part No	UN	Qty	Description	Page No
-					
010	2643052-0000		2	ROLL	
020	2966832-0000		2	SHAFT	
030	2960733-0000		1	ANGLE	
100	90240-0184		4	FLANGE BUSHING, 12X16X15 MM	
120	315750-0109		4	RETAINING RING SHAFT DIN 471 ST 12	
500	312105-0370		1	SCREW M6S ISO 4017 M6X20 A480	
510	315105-0153		1	WASHER BRB 6,4X12 RFR	
520	315101-0176		2	WASHER PLAIN, BRB, 12/22 H=2	

Pos	Part No	UN	Qty	Description	Page No

BENDING ROLLER

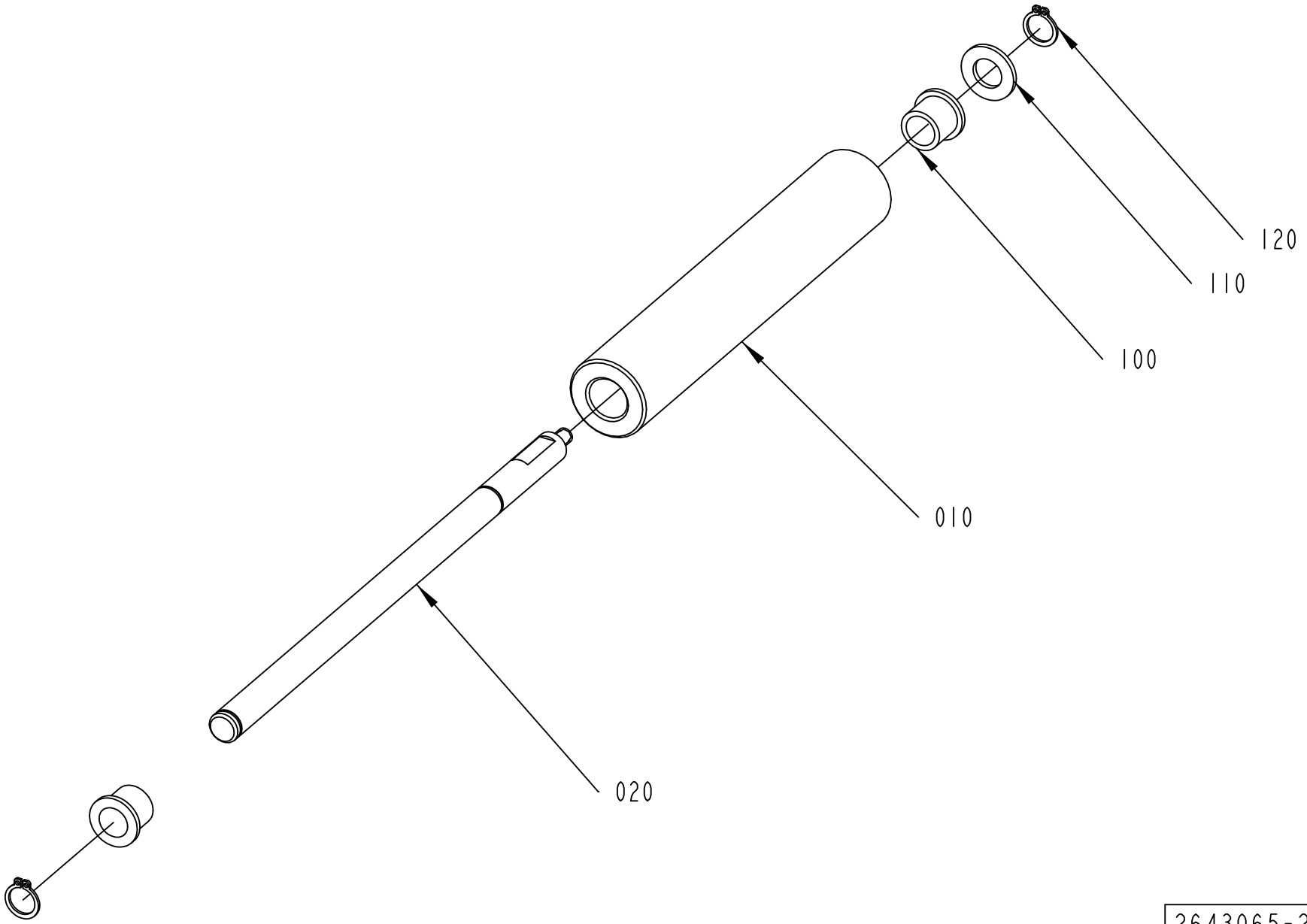

2643065-2
ECM 346426

ECM: 436944 - 20100222
Group number: 2643065-0200
Assembly Drawing: 2643065-2_1_AA

Pos	Part No	UN	Qty	Description	Page No
-					
010	2643052-0000		1	ROLL	
020	2643053-0000		1	SHAFT	
100	90240-0184		2	FLANGE BUSHING, 12X16X15 MM	
110	315101-0176		1	WASHER PLAIN, BRB, 12/22 H=2	
120	315750-0109		2	RETAINING RING SHAFT DIN 471 ST 12	

Pos	Part No	UN	Qty	Description	Page No

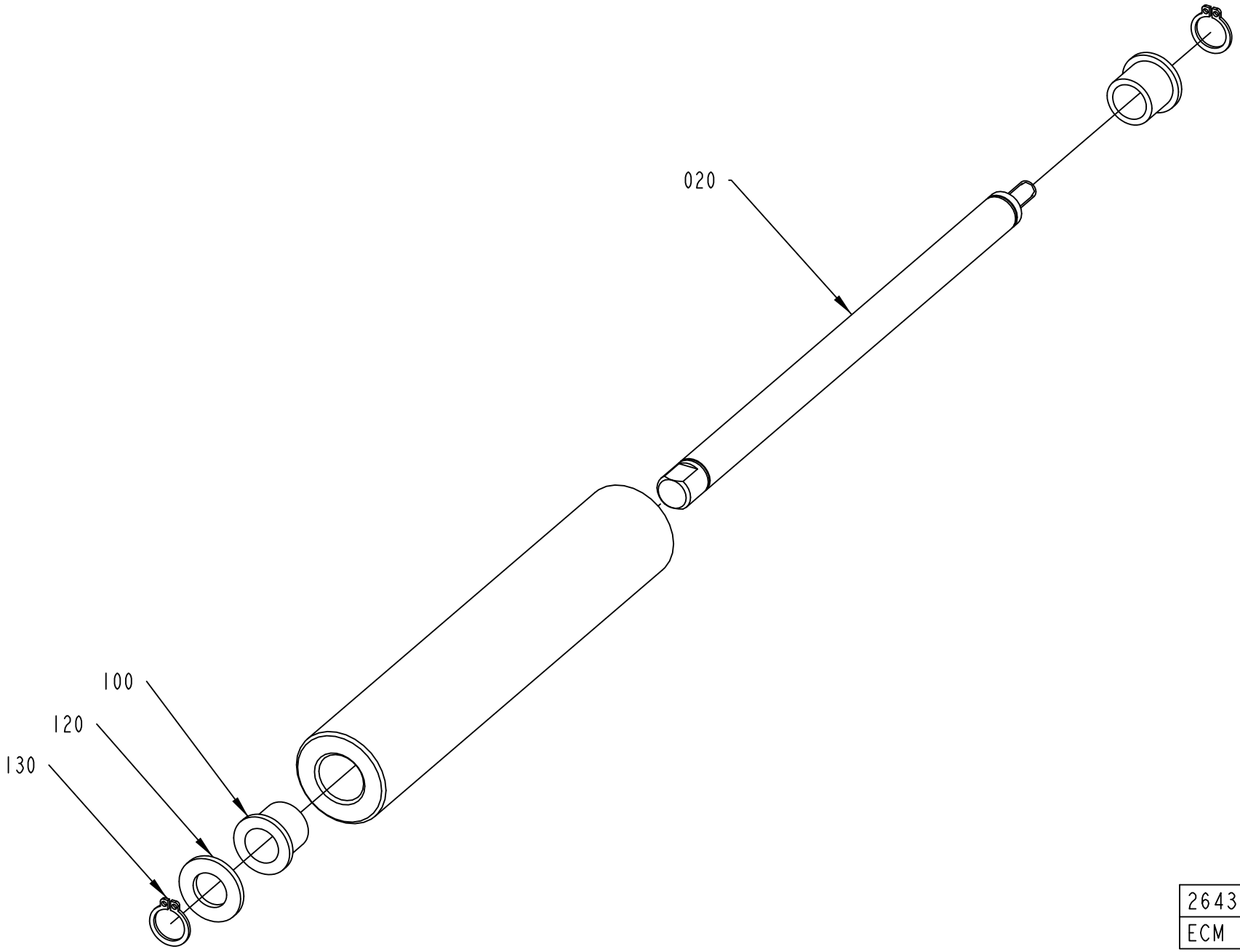

2643066-2
ECM 346426

ECM: 436945 - 20100222
Group number: 2643066-0200
Assembly Drawing: 2643066-2_1_AA

Pos	Part No	UN	Qty	Description	Page No
-					
010	2643052-0000		1	ROLL	
020	2966822-0000		1	SHAFT	
100	90240-0184		2	FLANGE BUSHING, 12X16X15 MM	
120	315101-0176		1	WASHER PLAIN, BRB, 12/22 H=2	
130	315750-0109		2	RETAINING RING SHAFT DIN 471 ST 12	

Pos	Part No	UN	Qty	Description	Page No

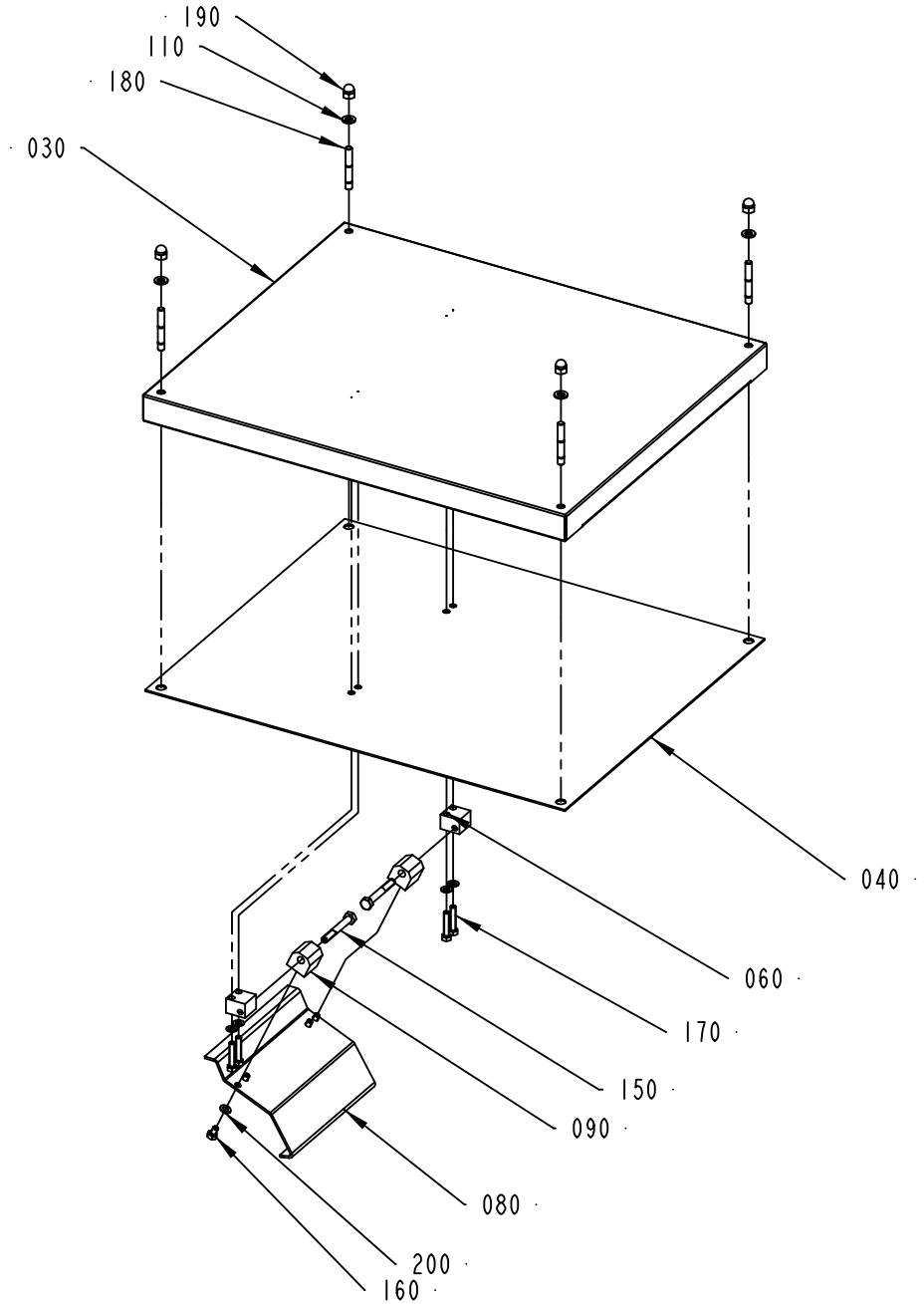

2643074-3
ECM 349879

ECM: 352484 - 20090330
Group number: 2643074-0300
Assembly Drawing: 2643074-3_1_AA

Pos	Part No	UN	Qty	Description	Page No
-					
030	2966823-0000		1	COVER	
040	2966834-0000		1	COVER	
060	2751398-0000		2	HOLDER	
080	2789753-0000		1	HOLDER	
090	2816699-0000		2	ANGLE	
110	315105-0153		4	WASHER BRB 6,4X12 RFR	
150	312105-0379		2	SCREW M6S ISO 4014 M6X45 A480	
160	312105-0323		4	SCREW M6S ISO 4017 M5X8 A480	
170	312105-0333		4	SCREW M6S ISO 4017 M5X25 A480	
180	312303-0380		4	SCREW DIN 938 PS M6X35 A4 80	
190	312705-0316		4	NUT HEX. DOMED CAP MHM-6 M6 A280	
200	315105-0146		8	WASHER BRB 5,3X10 RFR	

Pos	Part No	UN	Qty	Description	Page No

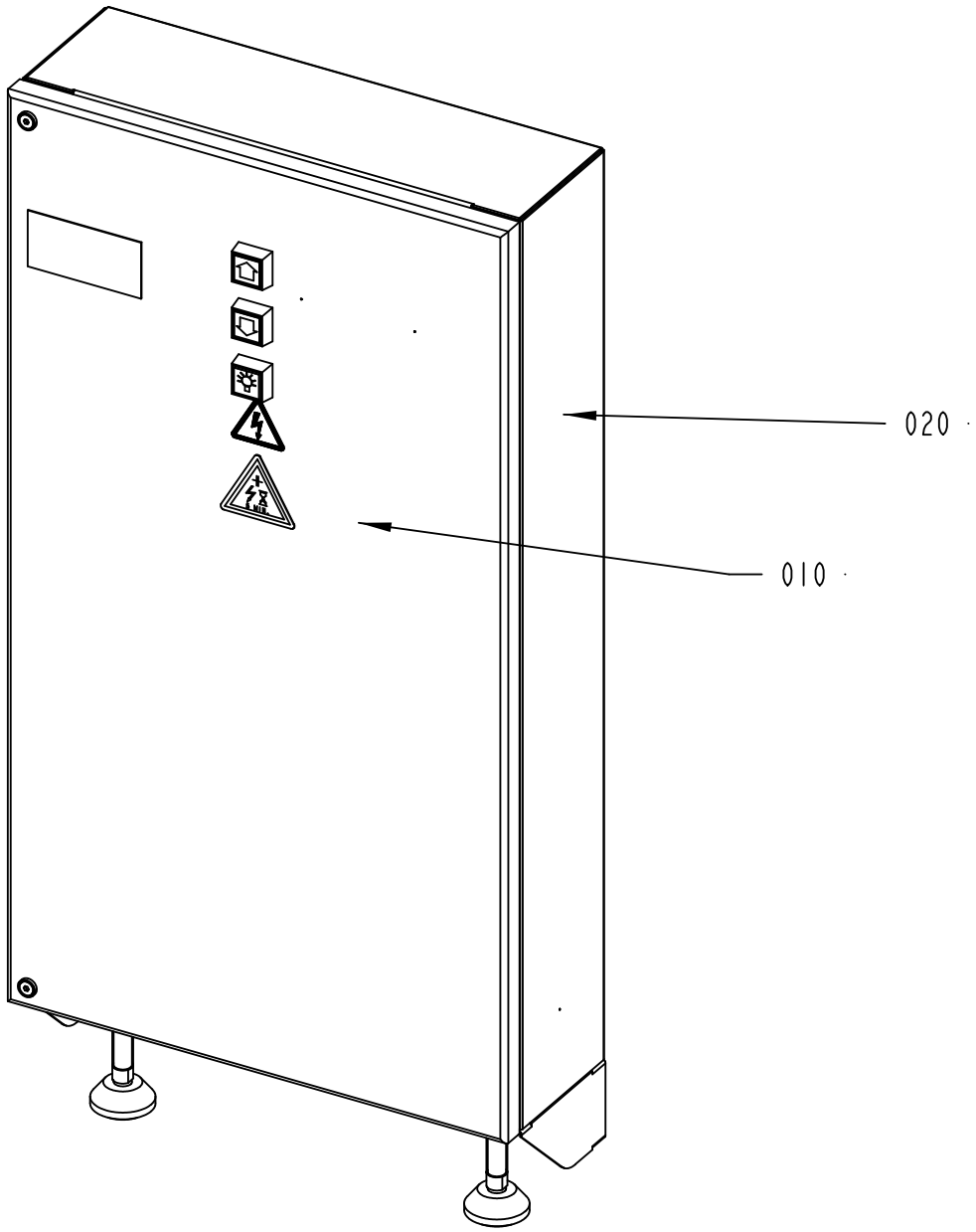

2703954-4
399387

ECM: 405013 - 20090630
Group number: 2703954-0400
Assembly Drawing: 2703954-4_1_AA

Pos	Part No	UN	Qty	Description	Page No
-					
010	2727158-0300		1	DOOR	**11-33**
020	2727159-0400		1	ELECTRICAL CABINET	**11-35, 11-37**
100	2738775-0300		1	ELECTRICAL DOCUMENT	
110	2740229-0200		1	MACHINE	**11-41**

Pos	Part No	UN	Qty	Description	Page No

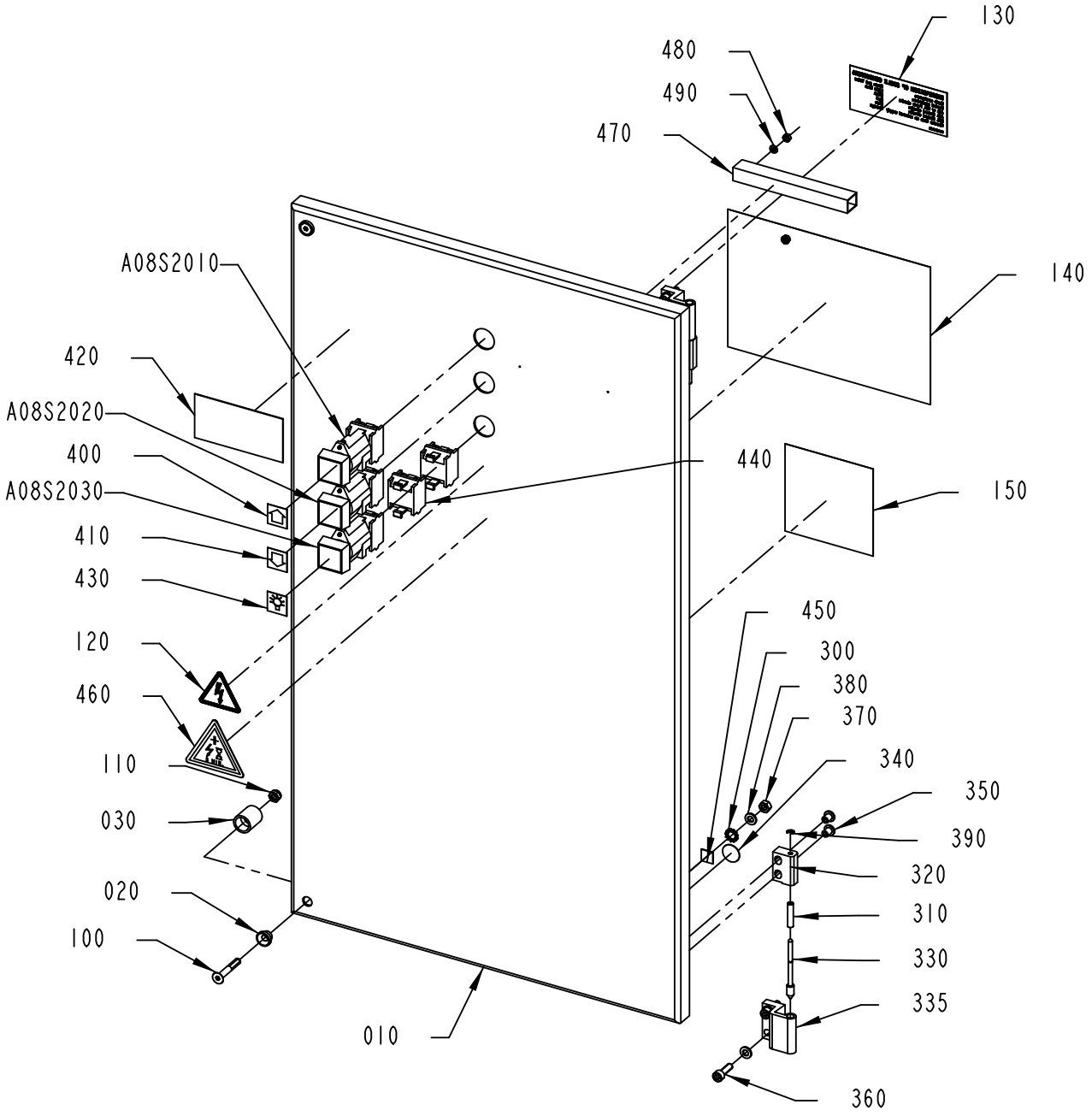

2727158-3
399387

ECM: 436946 - 20100222
Group number: 2727158-0300
Assembly Drawing: 2727158-3_1_AA

Pos	Part No	UN	Qty	Description	Page No
FINAL DEST. CANADA, FINAL DEST. USA					
120	359715-0100		1	WARNING SIGN ANSI (H), ELECTRIC SHOCK	
140	3041943-0000		1	DELIVERED DESIGN	
420	90600-5233		1	WARNING SIGN ANSI (H), READ MANUAL, AUTO	
460	90459-6087		1	DANGER SIGN ANSI (H), HAZARDOUS RESIDUAL	
OTHER COUNTRIES NOT USA/CANADA					
120	359705-0015		1	WARNING SIGN ISO, RISK OF ELECTRIC SHOCK	
140	3041493-0000		1	DELIVERED DESIGN	
420	90600-5235		1	MANDATORY ACTION SIGN ISO, READ MANUAL	
460	90194-0118		1	SIGN, RESIDUAL VOLTAGE, WAIT 5 MIN.	
Common Parts					
010	3041489-0000		1	HATCH	
020	578196-0000		2	SLEEVE	
030	578197-0000		2	SPACER	
100	312155-0378		2	SCREW DIN 7991 MF6S M6X40 A4 70	
110	312812-0316		2	HEXAGON NUT, NY-LOCK M6 A480	
130	90459-7229		1	IDENTIF. OF SINGLE CONDUCTORS, TEMPLATE	
150	3041492-0000		1	FUSE PANEL LABEL	
300	90062-0016		1	LOCK WASHER SERRAT.EXT.GEAR,8,4/15 H=0,8	
310	959658-0000		2	SPRING	
320	959657-0000		2	HINGE FLANGE	
330	959656-0000		2	COTTER	
335	975880-0000		2	HINGE FLANGE	
340	90194-0164		1	SIGN, FRAME/CHASSIS WITHIN CIRCLE	
350	90287-0205		4	SCREW	
360	312115-0370		4	SCREW ISO4762 M6X20 A4 80	
370	312605-0316		1	HEXAGON NUT, M6M M6 A280	
380	315105-0153		5	WASHER BRB 6,4X12 RFR	
390	315755-0105		2	RETAINING RING SHAFT DIN 6799 3,2 A2	
400	359301-0001		1	BUTTON SIGN, UP	
410	359301-0005		1	BUTTON SIGN, DOWN	
430	359301-0130		1	BUTTON SIGN, LAMP TEST	
440	90458-0151		2	CONTACT BLOCK, 704.901.3	
450	90194-0152		1	SIGN, EARTH	
470	90181-0033	MM	130	CABLE DUCT 15X18MM	
480	312605-0312		2	HEXAGON NUT, M6M M4 A280	
490	315105-0136		2	WASHER BRB 4,3X8 RFR	
A08S2010	90064-0082		1	PUSH BUTTON, WHITE	
	90036-0057		*1*	*LIGHT BULB, BA9S 28V*	
A08S2020	90064-0082		1	PUSH BUTTON, WHITE	
	90036-0057		*1*	*LIGHT BULB, BA9S 28V*	
A08S2030	90064-0082		1	PUSH BUTTON, WHITE	
	90036-0057		*1*	*LIGHT BULB, BA9S 28V*	

Machine Type | Group Description | Used-In | Group Number | Page No

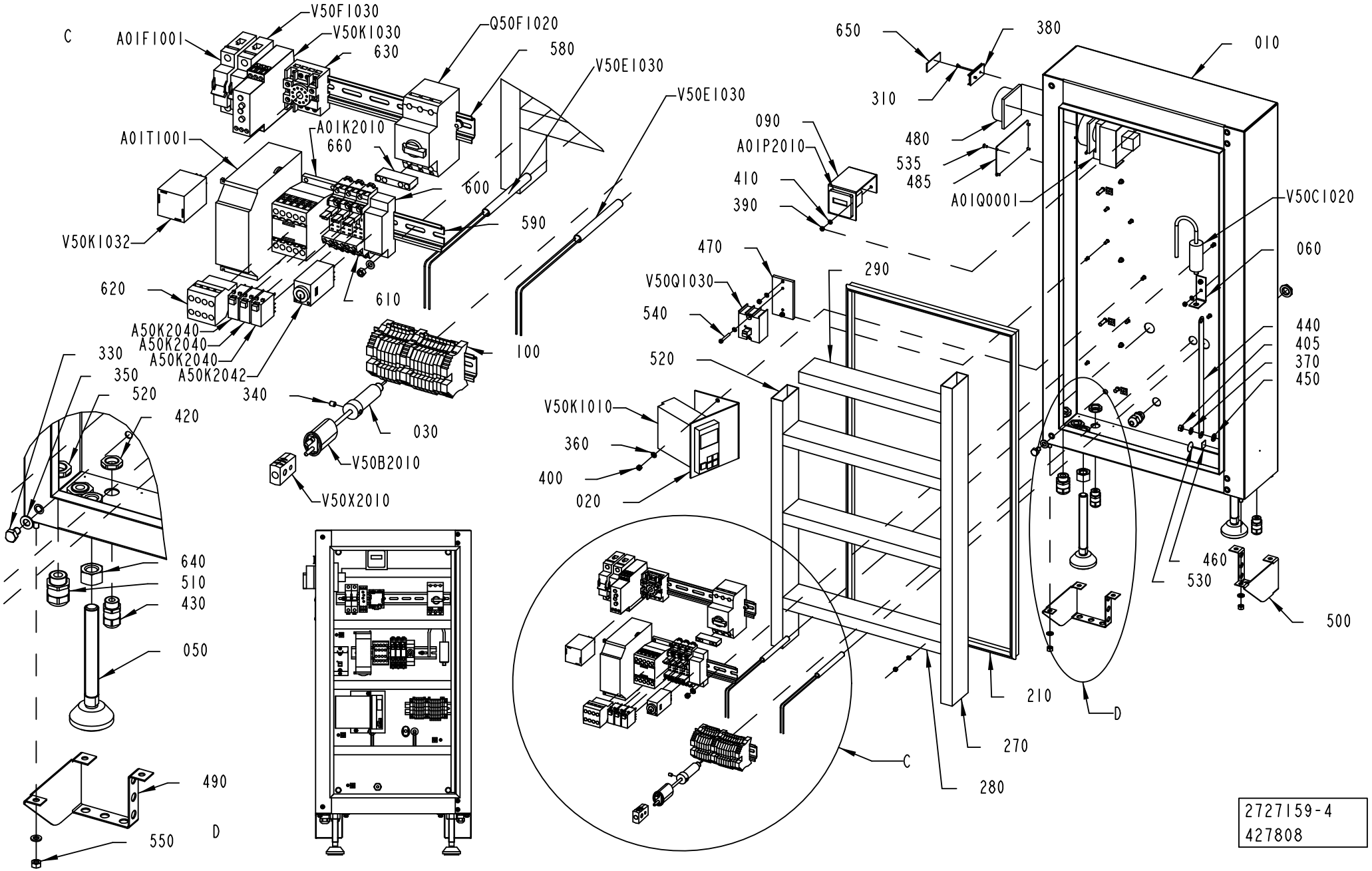

2727159-4
427808

ECM: 436947 - 20100222
Group number: 2727159-0400
Assembly Drawing: 2727159-4_1_AC

This list covers pages from 11-34 to 11-37

Pos	Part No	UN	Qty	Description	Page No
FINAL DEST. CANADA, FINAL DEST. USA (See drawing on page: 11-36)					
010	3038249-0000		1	ELECTRICAL CABINET	
110	3056164-0000		1	SIGN	
120	3056167-0000		1	SIGN	
485	3041942-0000		1	ELECTRICAL EQUIPMENT LABEL	
A01F1001	315744-0020		1	MINIATURE CIRCUIT BREAKER, FAZ-C2/1-NA	
V50F1030	315744-0100		1	MINIATURE CIRCUIT BREAKER, FAZ-C10/1-NA	
OTHER COUNTRIES NOT USA/CANADA (See drawing on page: 11-34)					
010	3060155-0000		1	ELECTRICAL CABINET	
A01F1001	354000-0020		1	MINIATURE CIRCUIT BREAKER, FAZ-C2/1	
V50F1030	354000-0100		1	MINIATURE CIRCUIT BREAKER, FAZ-C10/1	
Common Parts					
020	3042372-0000		1	HOLDER	
030	2727153-0000		1	COVER	
050	2789989-0000		2	FOOT PLATE	
060	2812585-0000		1	HOLDER	
090	583570-0000		1	BRACKET	
100	2727161-0300		1	TERMINAL	**11-39**
210	90143-0057	MM	2150	STRIP EMKA 1011-05 21X11MM	
270	90181-0044	MM	700	CABLE DUCT 25X60MM	
280	90181-0044	MM	345	CABLE DUCT 25X60MM	
290	90181-0044	MM	310	CABLE DUCT 25X60MM	
310	311520-0329		2	RIVET, BLANK 2,4X8	
330	312105-0447		4	SCREW M6S ISO 4017 M8X12 A480	
340	312318-0321		1	SCREW ISO4029 M5X6 A4	
350	315105-0165		4	WASHER BRB 8,4X16 RFR	
360	315105-0146		8	WASHER BRB 5,3X10 RFR	
370	315105-0153		1	WASHER BRB 6,4X12 RFR	
380	359240-0100		1	SIGN HOLDER FOR 359240-0001	
390	312605-0312		14	HEXAGON NUT, M6M M4 A280	
400	312605-0314		8	HEXAGON NUT, M6M M5 A280	
405	312605-0316		1	HEXAGON NUT, M6M M6 A280	
410	315105-0136		16	WASHER BRB 4,3X8 RFR	
420	90458-0322		3	NUT, M16X1,5	
430	90458-0306		3	CABLE GLAND, M16X1,5, NO.5311 1010	
440	90600-2904		1	EARTH BRAID, 250/16/8,5	
450	90062-0016		1	LOCK WASHER SERRAT.EXT.GEAR,8,4/15 H=0,8	
460	90194-0152		6	SIGN, EARTH	
470	3038250-0000		1	BRACKET	
480	3041490-0000		1	TURNING HANDLE	
490	3042370-0000		1	PROTECTION	
500	3042371-0000		1	PROTECTION	
510	90458-0307		2	CABLE GLAND, M20X1,5, NO.5311 1020	
520	90458-0323		2	NUT, M20X1,5	
520	90181-0044	MM	545	CABLE DUCT 25X60MM	
530	90194-0164		1	SIGN, FRAME/CHASSIS WITHIN CIRCLE	
535	311523-0142		4	BLIND RIVET ISO 15983 -3.2X6 A2/A2	
540	312125-0299		2	SCREW ISO 1207 M4X30 A4	
550	312601-0316		6	HEXAGON NUT, DIN 934 M6 8 FZB	
580	353042-0004	MM	323	RAIL TS 35/7,5	
590	353042-0004	MM	240	RAIL TS 35/7,5	
600	90129-0017		1	SOCKET, PYF08A-E	
610	90129-0018		3	BASE, P2RF-08-E	
620	90459-5315		1	AUXILIARY CONTACTS, DILM32-XHI22	
630	90600-8786		1	SOCKET, PF113A-E	
640	312605-0324		2	HEXAGON NUT, M6M M16 A280	
650	359241-0803		1	SIGN: "SUPPLY DISCONNECTING DEVICE"	
660	90600-1649		1	AUXILARY CONTACTS, NHI-E-11-PKZ0	
670	90458-1308		2	BLIND PLUG CIRCULAR, M20X1,5 514GFK/220	
A01K2010	90459-5308		1	CONTACTOR 4KW 24VDC, DILM9-10	
A50K2020	90119-0108		1	RELAY OMRON G2R-2-SNI-24DC	
	90129-0018		*1*	*BASE, P2RF-08-E*	
A50K2030	90119-0108		1	RELAY OMRON G2R-2-SNI-24DC	
	90129-0018		*1*	*BASE, P2RF-08-E*	
A50K2040	90119-0108		1	RELAY OMRON G2R-2-SNI-24DC	
	90129-0018		*1*	*BASE, P2RF-08-E*	
A50K2042	90458-0143		1	TIME RELAY H3YN-2 24VDC	
A01P2010	90178-0007		1	HOUR COUNTER, BG 40,17-1 12-48VDC	
A01Q0001	90111-0132		1	MAIN SWITCH P1-25/EA/SVB-SW/N/HI11/H-P14	
A01T1001	90459-4807		1	POWER SUPPLY UNIT 100-240 VAC/24VDC2,5A	
Q50F1020	90459-5320		1	OVERLOAD PROTECTION, PKZM0-0,25	
V50B2010	90326-0037		1	THERMOCOUPLE, CR-AL PREM.G	
V50C1020	90600-0986		1	CAPACITOR, UL 1UF 450V 25X57 M8	
V50E1030	90459-7170		1	HEATING ELEMENT 280W 240V	
V50E1032	90459-7170		1	HEATING ELEMENT 280W 240V	
V50K1010	90600-6032		1	TEMPERATURE CONTROLLER, KS50	
V50K1030	90459-0690		1	CURRENT CONTROL RELAY, 84 871 034	
V50K1032	3042373-0000		1	RELAY	
V50Q1030	90600-0946		1	SOLID STATE RELAY, 3RF2050-1AA04	
V50X2010	90326-0020		1	PLUG, FEMALE YELLOW CR-AL	

Machine Type | Group Description | Used-In | Group Number | Page No

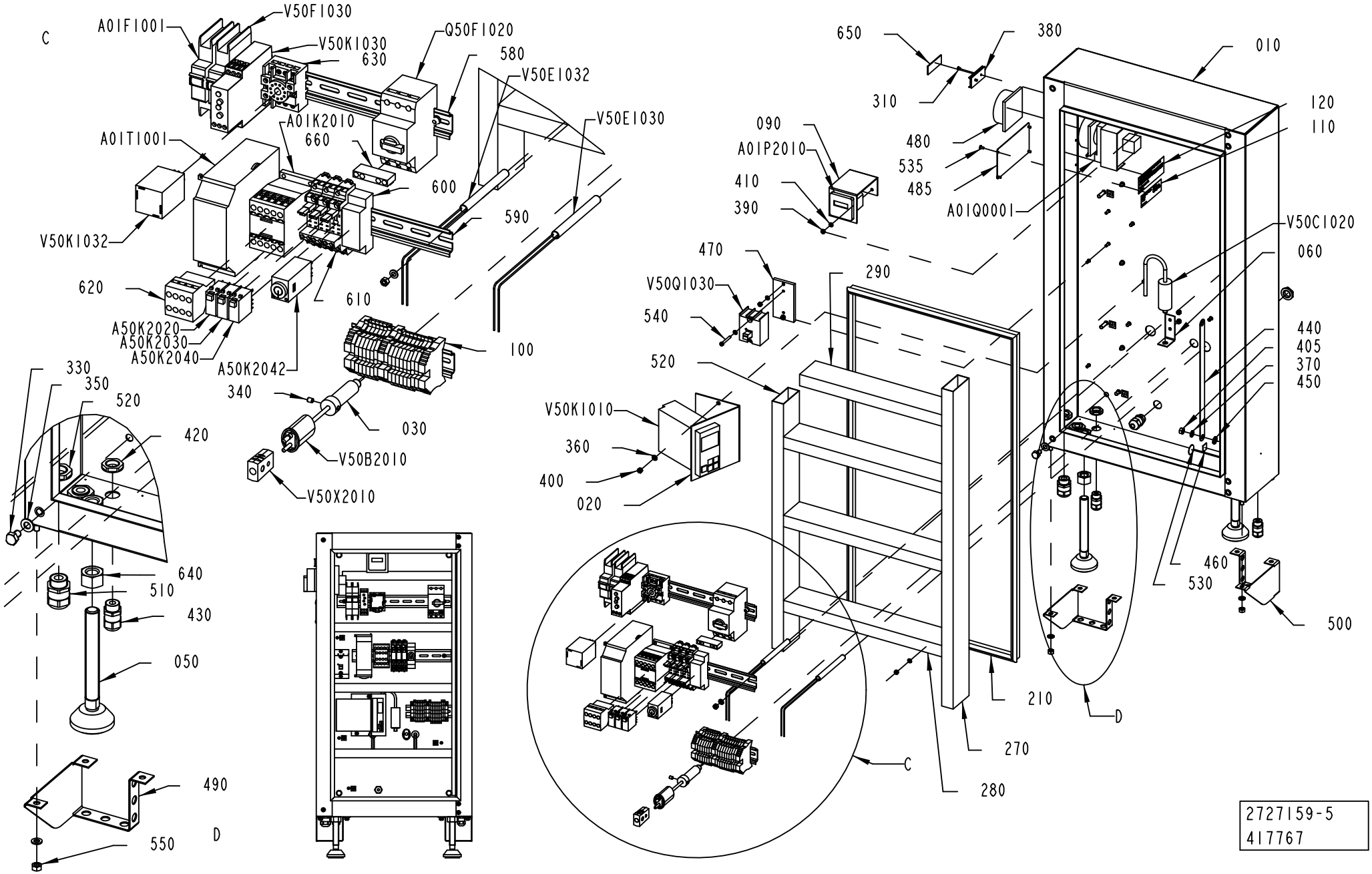
A01F1001
V50F1030
V50K1030
630
Q50F1020
580
V50E1032
V50E1030
A01K2010
660
A01T1001
600
590
V50K1032
620
610
A50K2020
A50K2030
A50K2040
A50K2042
100
340
030
V50B2010
V50X2010
330
350
520
420
640
510
430
050
490
550
D
C
650
380
010
310
120
110
090
A01P2010
480
535
485
410
390
A01Q0001
V50C1020
060
470
290
V50Q1030
540
520
440
405
370
450
V50K1010
360
400
020
460
530
500
210
270
280
D
C
2727159-5
417767

ECM: 436947 - 20100222
Group number: 2727159-0400
Assembly Drawing: 2727159-5_1_AB

This list covers pages from 11-34 to 11-37

Pos	Part No	UN	Qty	Description	Page No
FINAL DEST. CANADA, FINAL DEST. USA (See drawing on page: 11-36)					
010	3038249-0000		1	ELECTRICAL CABINET	
110	3056164-0000		1	SIGN	
120	3056167-0000		1	SIGN	
485	3041942-0000		1	ELECTRICAL EQUIPMENT LABEL	
A01F1001	315744-0020		1	MINIATURE CIRCUIT BREAKER, FAZ-C2/1-NA	
V50F1030	315744-0100		1	MINIATURE CIRCUIT BREAKER, FAZ-C10/1-NA	
OTHER COUNTRIES NOT USA/CANADA (See drawing on page: 11-34)					
010	3060155-0000		1	ELECTRICAL CABINET	
A01F1001	354000-0020		1	MINIATURE CIRCUIT BREAKER, FAZ-C2/1	
V50F1030	354000-0100		1	MINIATURE CIRCUIT BREAKER, FAZ-C10/1	
Common Parts					
020	3042372-0000		1	HOLDER	
030	2727153-0000		1	COVER	
050	2789989-0000		2	FOOT PLATE	
060	2812585-0000		1	HOLDER	
090	583570-0000		1	BRACKET	
100	2727161-0300		1	TERMINAL	**11-39**
210	90143-0057	MM	2150	STRIP EMKA 1011-05 21X11MM	
270	90181-0044	MM	700	CABLE DUCT 25X60MM	
280	90181-0044	MM	345	CABLE DUCT 25X60MM	
290	90181-0044	MM	310	CABLE DUCT 25X60MM	
310	311520-0329		2	RIVET, BLANK 2,4X8	
330	312105-0447		4	SCREW M6S ISO 4017 M8X12 A480	
340	312318-0321		1	SCREW ISO4029 M5X6 A4	
350	315105-0165		4	WASHER BRB 8,4X16 RFR	
360	315105-0146		8	WASHER BRB 5,3X10 RFR	
370	315105-0153		1	WASHER BRB 6,4X12 RFR	
380	359240-0100		1	SIGN HOLDER FOR 359240-0001	
390	312605-0312		14	HEXAGON NUT, M6M M4 A280	
400	312605-0314		8	HEXAGON NUT, M6M M5 A280	
405	312605-0316		1	HEXAGON NUT, M6M M6 A280	
410	315105-0136		16	WASHER BRB 4,3X8 RFR	
420	90458-0322		3	NUT, M16X1,5	
430	90458-0306		3	CABLE GLAND, M16X1,5, NO.5311 1010	
440	90600-2904		1	EARTH BRAID, 250/16/8,5	
450	90062-0016		1	LOCK WASHER SERRAT.EXT.GEAR,8,4/15 H=0,8	
460	90194-0152		6	SIGN, EARTH	
470	3038250-0000		1	BRACKET	
480	3041490-0000		1	TURNING HANDLE	
490	3042370-0000		1	PROTECTION	
500	3042371-0000		1	PROTECTION	
510	90458-0307		2	CABLE GLAND, M20X1,5, NO.5311 1020	
520	90458-0323		2	NUT, M20X1,5	
520	90181-0044	MM	545	CABLE DUCT 25X60MM	
530	90194-0164		1	SIGN, FRAME/CHASSIS WITHIN CIRCLE	
535	311523-0142		4	BLIND RIVET ISO 15983 -3.2X6 A2/A2	
540	312125-0299		2	SCREW ISO 1207 M4X30 A4	
550	312601-0316		6	HEXAGON NUT, DIN 934 M6 8 FZB	
580	353042-0004	MM	323	RAIL TS 35/7,5	
590	353042-0004	MM	240	RAIL TS 35/7,5	
600	90129-0017		1	SOCKET, PYF08A-E	
610	90129-0018		3	BASE, P2RF-08-E	
620	90459-5315		1	AUXILIARY CONTACTS, DILM32-XHI22	
630	90600-8786		1	SOCKET, PF113A-E	
640	312605-0324		2	HEXAGON NUT, M6M M16 A280	
650	359241-0803		1	SIGN: "SUPPLY DISCONNECTING DEVICE"	
660	90600-1649		1	AUXILARY CONTACTS, NHI-E-11-PKZ0	
670	90458-1308		2	BLIND PLUG CIRCULAR, M20X1,5 514GFK/220	
A01K2010	90459-5308		1	CONTACTOR 4KW 24VDC, DILM9-10	
A50K2020	90119-0108		1	RELAY OMRON G2R-2-SNI-24DC	
	90129-0018		*1*	*BASE, P2RF-08-E*	
A50K2030	90119-0108		1	RELAY OMRON G2R-2-SNI-24DC	
	90129-0018		*1*	*BASE, P2RF-08-E*	
A50K2040	90119-0108		1	RELAY OMRON G2R-2-SNI-24DC	
	90129-0018		*1*	*BASE, P2RF-08-E*	
A50K2042	90458-0143		1	TIME RELAY H3YN-2 24VDC	
A01P2010	90178-0007		1	HOUR COUNTER, BG 40,17-1 12-48VDC	
A01Q0001	90111-0132		1	MAIN SWITCH P1-25/EA/SVB-SW/N/HI11/H-P14	
A01T1001	90459-4807		1	POWER SUPPLY UNIT 100-240 VAC/24VDC2,5A	
Q50F1020	90459-5320		1	OVERLOAD PROTECTION, PKZM0-0,25	
V50B2010	90326-0037		1	THERMOCOUPLE, CR-AL PREM.G	
V50C1020	90600-0986		1	CAPACITOR, UL 1UF 450V 25X57 M8	
V50E1030	90459-7170		1	HEATING ELEMENT 280W 240V	
V50E1032	90459-7170		1	HEATING ELEMENT 280W 240V	
V50K1010	90600-6032		1	TEMPERATURE CONTROLLER, KS50	
V50K1030	90459-0690		1	CURRENT CONTROL RELAY, 84 871 034	
V50K1032	3042373-0000		1	RELAY	
V50Q1030	90600-0946		1	SOLID STATE RELAY, 3RF2050-1AA04	
V50X2010	90326-0020		1	PLUG, FEMALE YELLOW CR-AL	

Machine Type | Group Description | Used-In | Group Number | Page No

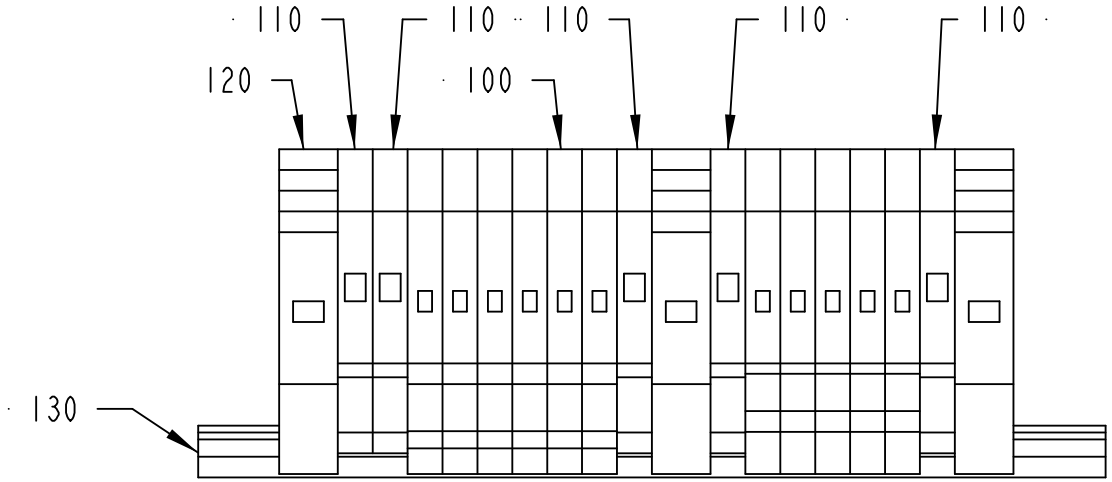

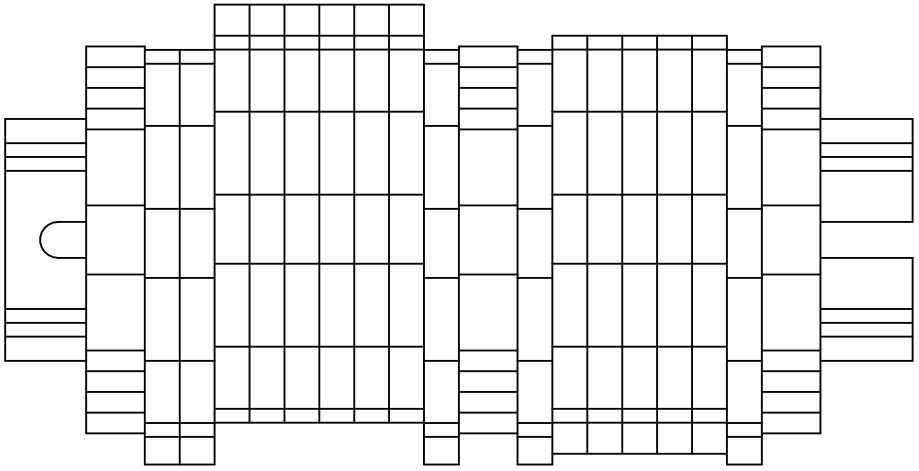

2727161-3
399387

ECM: 405017 - 20090630
Group number: 2727161-0300
Assembly Drawing: 2727161-3_1_AA

Pos	Part No	UN	Qty	Description	Page No
-					
100	353021-0212		11	FEED THROUGH TERMINAL, 10200.0	
110	353024-0204		5	EARTH TERMINAL WPE 2,5	
120	353031-0203		3	END SUPPORT, WEW 35/2	
130	353042-0004	MM	130	RAIL TS 35/7,5	

Pos	Part No	UN	Qty	Description	Page No

This page is intentionally left blank.

ECM: 436948 - 20100222
Group number: 2740229-0200
Assembly Drawing:

Pos	Part No	UN	Qty	Description	Page No
-					
A50W2050	351150-0404	M	1.5	CABLE OLFLEX 4X0,75 MM2 LIGHT/GREY	
V50W1017	2955400-0200		1	CABLE CONNECTION	**11-43**
V50W1020	2984837-0000		1	CABLE	
V50W2010	90220-0034	M	1	THERMOCABLE TEX/SITW-20F-KX 2X0,5MM2	

Pos	Part No	UN	Qty	Description	Page No

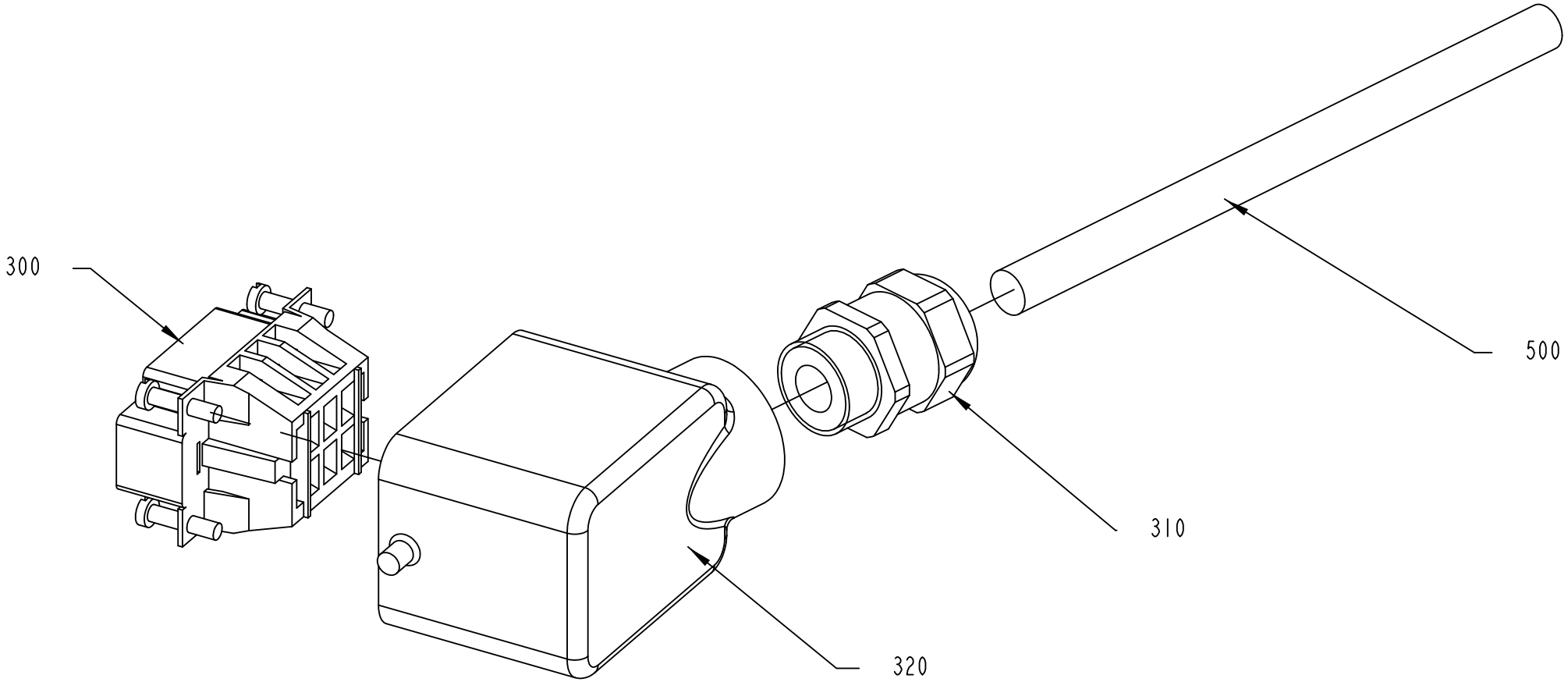

V50W1017

2955400-2
399387

ECM: 436949 - 20100222
Group number: 2955400-0200
Assembly Drawing: 2955400-2_1_AA

Pos	Part No	UN	Qty	Description	Page No
-					
300	90110-0052		1	MALE INSERT HAN 6E 09 33 006 2601	
310	90458-0307		1	CABLE GLAND, M20X1,5, NO.5311 1020	
320	90459-1458		1	HOOD HAN 6 E 19 30 006 1540	
500	351150-0417	M	3	CABLE OLFLEX 3X2,5 MM2 LIGHT/GREY	

Pos	Part No	UN	Qty	Description	Page No

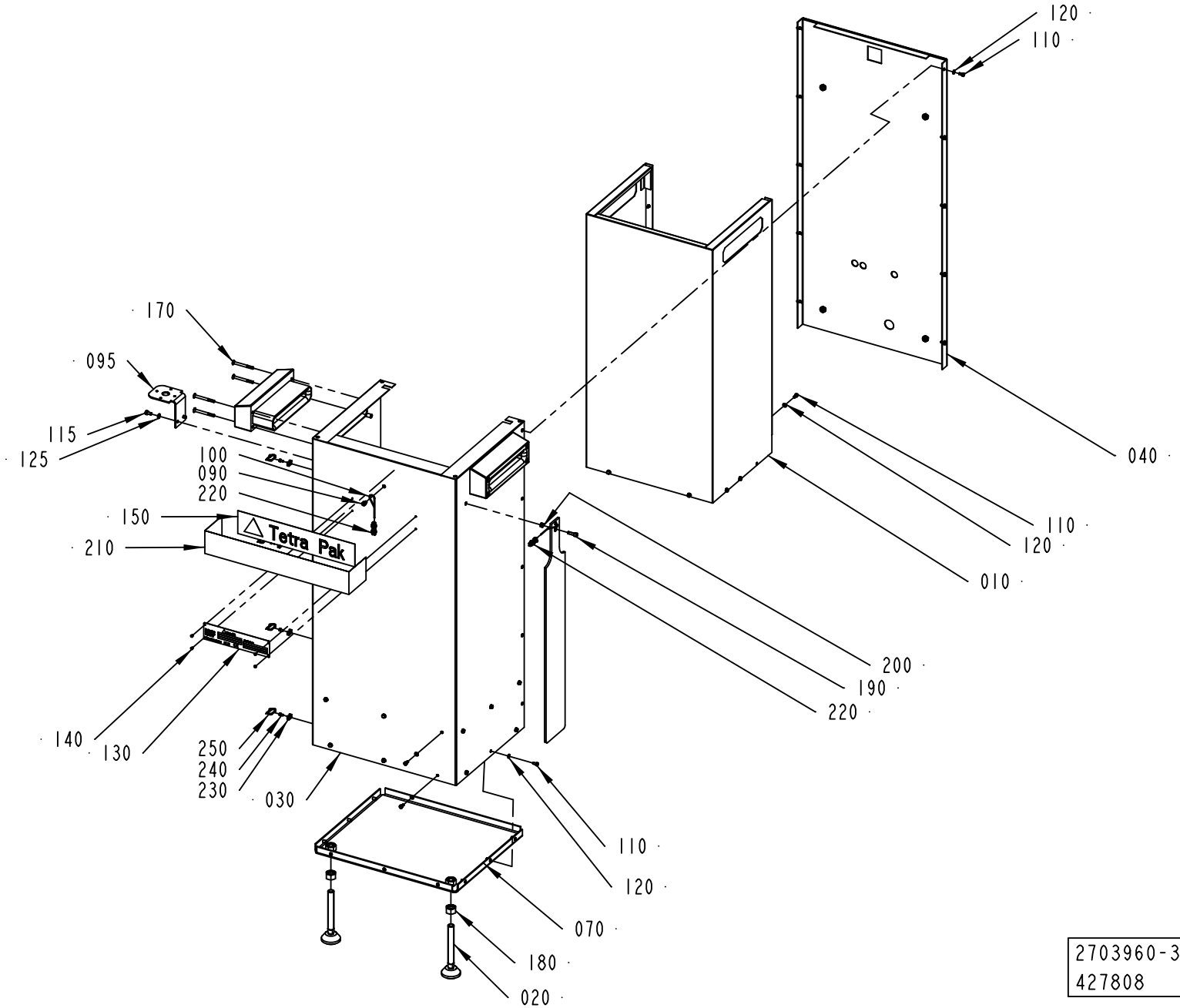

2703960-3
427808

ECM: 436950 - 20100222
Group number: 2703960-0300
Assembly Drawing: 2703960-3_1_AB

Pos	Part No	UN	Qty	Description	Page No
FINAL DEST. CANADA					
130	2805942-0000		1	MACHINE SIGN	
OTHER COUNTRIES					
130	580923-0000		1	MACHINE SIGN CE	
Common Parts					
010	2960729-0000		1	COVER	
020	2789989-0000		2	FOOT PLATE	
030	2960730-0000		1	OUTER COVER	
040	2960731-0000		1	OUTER COVER	
050	2789990-0000		1	PLATE	
060	2703955-0000		2	GUIDE	
070	2966836-0000		1	PLATE	
090	2812586-0000		1	SCREW	
095	2998251-0000		1	BRACKET	
100	2812601-0000		2	WIRE	
110	312105-0325		46	SCREW M6S ISO 4017 M5X10 A480	
115	312105-0366		2	SCREW M6S ISO 4017 M6X12 A480	
120	315106-0146		46	WASHER ISO 7089-5-200 HV A4	
125	315105-0153		2	WASHER BRB 6,4X12 RFR	
140	311520-0329		4	RIVET, BLANK 2,4X8	
150	1021990-0000		1	SIGN 356X70MM HOUSE MARK TEXT TETRA PAK	
170	312155-0382		8	SCREW DIN 7991 MF6S M6X60 A4 70	
180	312605-0324		2	HEXAGON NUT, M6M M16 A280	
190	312115-0370		1	SCREW ISO4762 M6X20 A4 80	
200	312605-0316		1	HEXAGON NUT, M6M M6 A280	
210	1021991-0000		1	STRIPE TETRA PAK BLUE B=70MM, ROLL L=25M	
220	90211-0003		2	WIRE LOCK 2 MM, 3422-R	
230	352113-0205		2	ANCHOR PLATES FOR STRIPS, TYPE TM2S8-C10	
240	312125-0287		2	SCREW ISO 1207 M4X8 A4	
250	352113-0101		2	CABLE TIE, BLACK 92X2,5 MM	

Pos	Part No	UN	Qty	Description	Page No

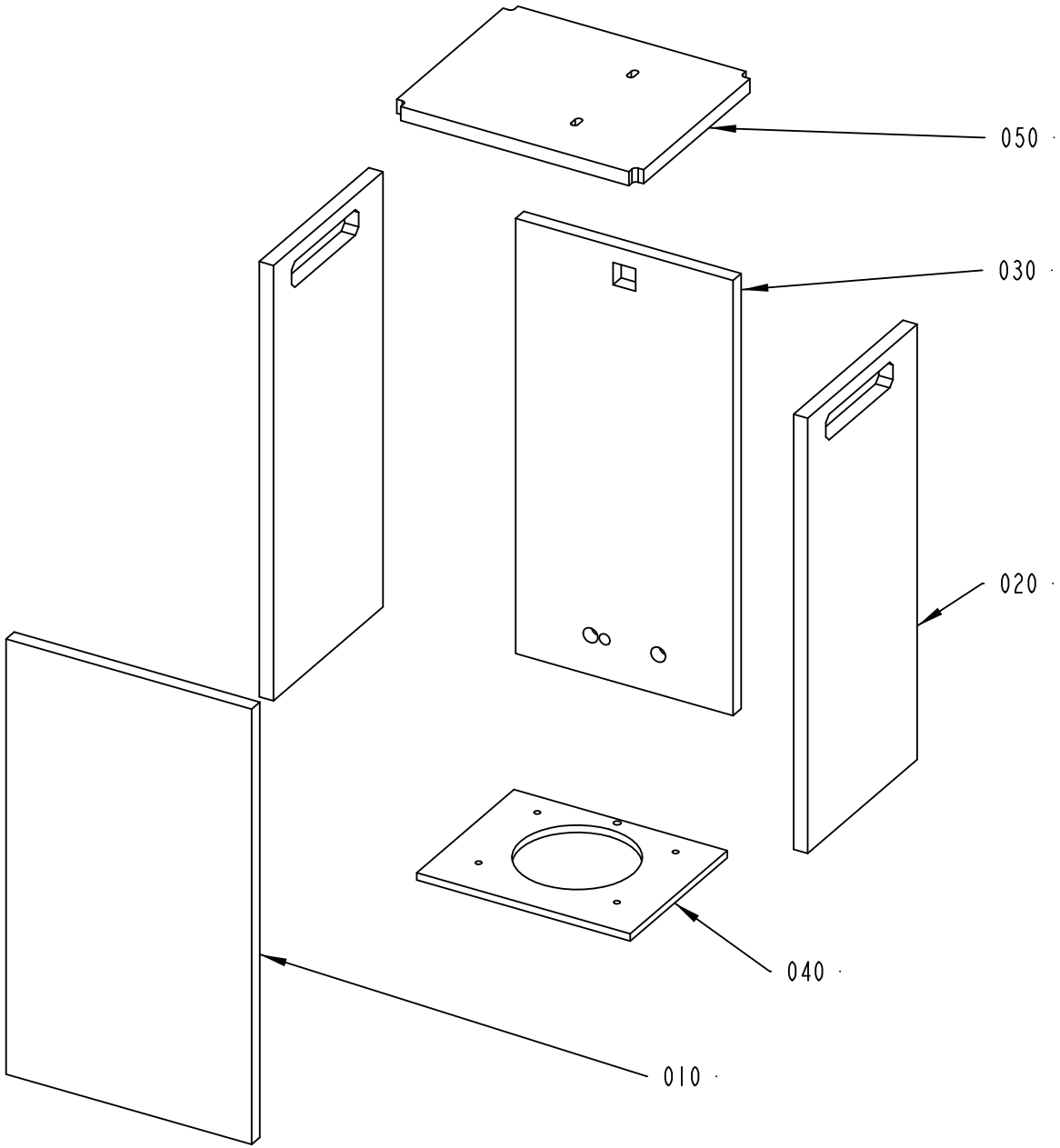

2727163-2
346426

ECM: 436951 - 20100222
Group number: 2727163-0200
Assembly Drawing: 2727163-2_1_AA

Pos	Part No	UN	Qty	Description	Page No
-					
010	2960726-0000		1	INSULATION	
020	2960727-0000		2	INSULATION	
030	2960728-0000		1	INSULATION	
040	2970398-0000		1	INSULATION	
050	2970399-0000		1	INSULATION	

Pos	Part No	UN	Qty	Description	Page No

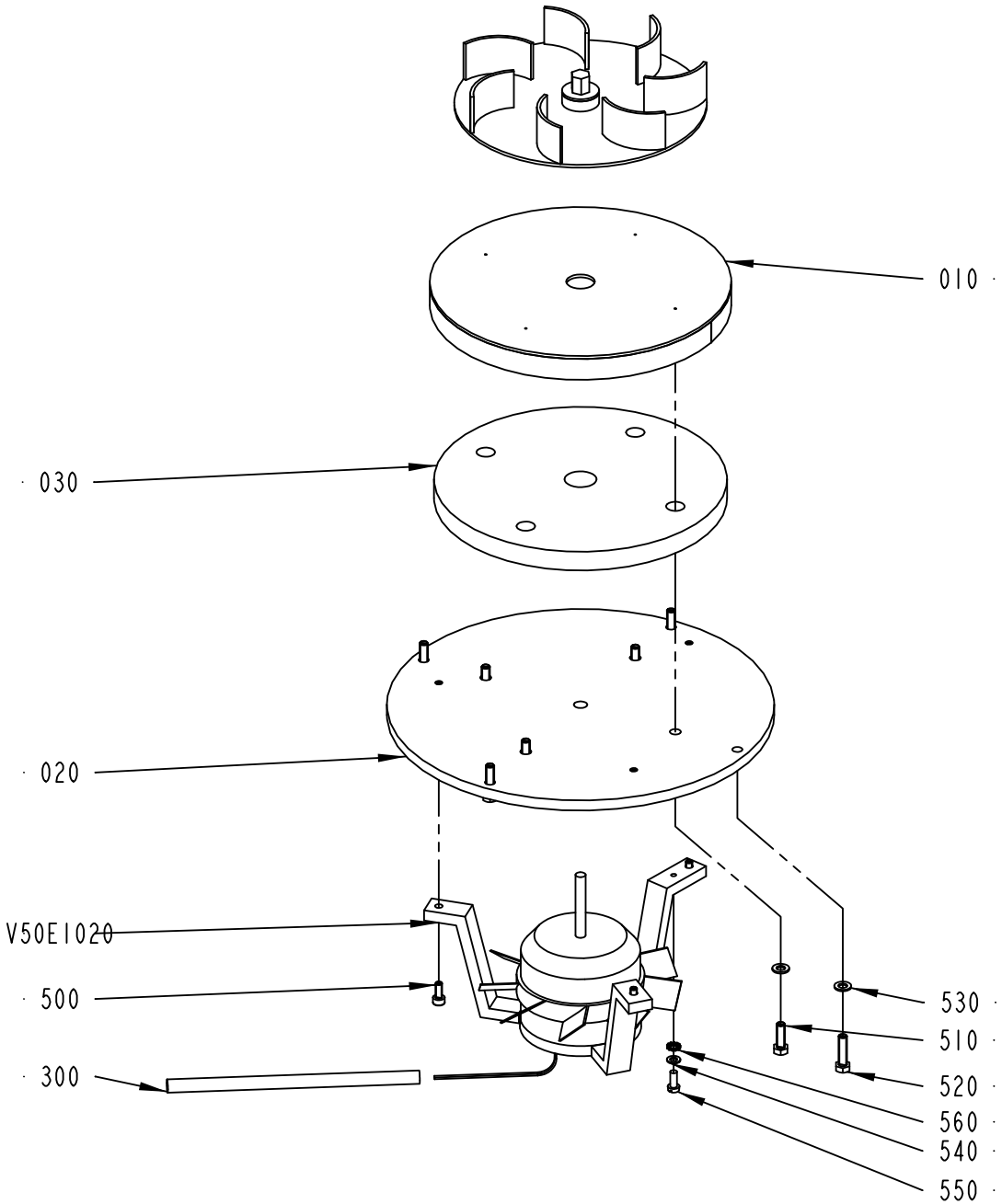

2751400-3
351774

ECM: 436952 - 20100222
Group number: 2751400-0300
Assembly Drawing: 2751400-3_1_AA

Pos	Part No	UN	Qty	Description	Page No
-					
010	2751399-0000		1	PLATE	
020	2751401-0000		1	PLATE	
030	2789964-0000		1	INSULATION	
500	312115-0289		3	SCREW ISO4762 M4X10 A4 80	
510	312105-0329		4	SCREW M6S ISO 4017 M5X16 A480	
520	312105-0331		4	SCREW M6S ISO 4017 M5X20 A480	
530	315105-0146		8	WASHER BRB 5,3X10 RFR	
540	315105-0136		1	WASHER BRB 4,3X8 RFR	
550	312121-0289		1	SCREW ISO 1207 M4X10 4.8-5.8 Z.PL.	
560	90062-0039		1	LOCK WASHER SERRAT.INT.GEAR,4,3/8 H=0,5	
V50E1020	90600-0985		1	FAN, R2E150-AG52-09	

Pos	Part No	UN	Qty	Description	Page No

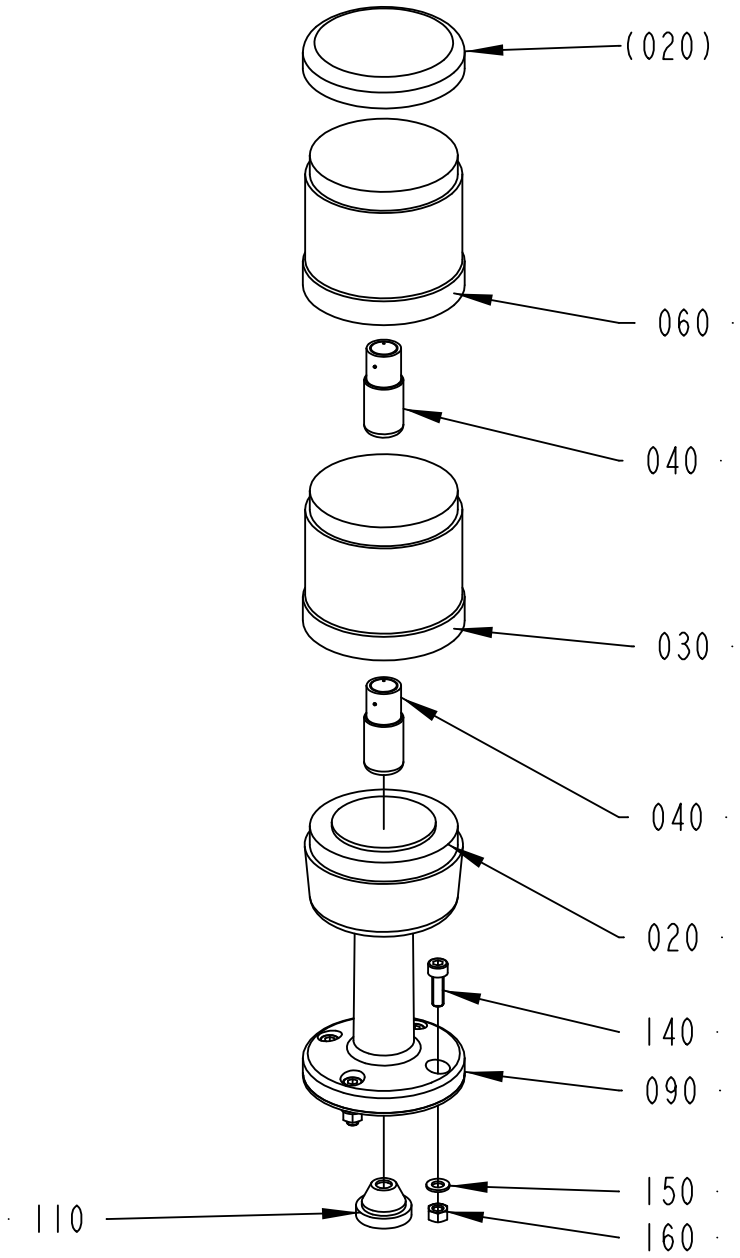

2998253-1
351774

ECM: 436953 - 20100222
Group number: 2998253-0100
Assembly Drawing: 2998253-1_1_AA

Pos	Part No	UN	Qty	Description	Page No
-					
020	90458-0292		1	TERMINAL ELEMENT, PSD-S CE-TM SCREW/W	
030	90458-0296		1	LIGHT ELEMENT, GREEN, PSD-S OE GN/W	
040	90036-0068		2	BULB 5W 24V, SL-L24 205348	
060	90458-0294		1	LIGHT ELEMENT, YELLOW, PSD-S OE YE/W	
090	90458-0297		1	BASE W. TUBE 110 MM, PSD-S ME BT 110	
110	90015-0023		1	LEAD-IN, TET7-10, E-1458019	
140	312115-0329		4	SCREW ISO4762 M5X16 A4 80	
150	315105-0146		8	WASHER BRB 5,3X10 RFR	
160	312605-0314		4	HEXAGON NUT, M6M M5 A280	

Pos	Part No	UN	Qty	Description	Page No

STRAW DETECTOR 30

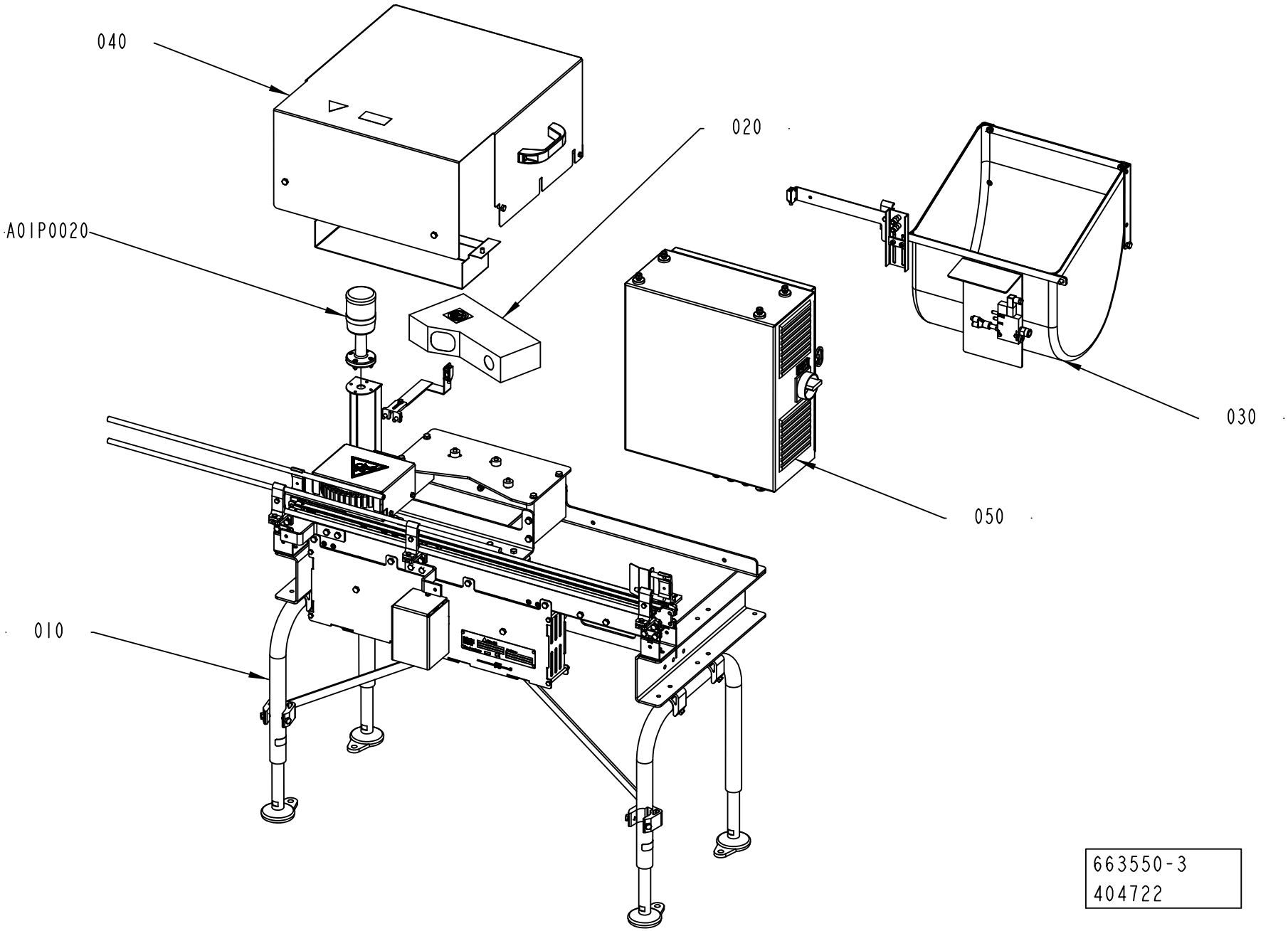

ECM: 406202 - 20090630
Group number: 663550-0300
Assembly Drawing: 663550-3_1_AA

Pos	Part No	UN	Qty	Description	Page No
-					
010	663501-0200		1	CONVEYOR SECTION	**11-55**
020	663502-0200		1	DETECTOR	**11-81**
030	663503-0100		1	EJECTOR	**11-87**
040	663504-0100		1	COVERS	**11-93**
050	663505-0300		1	ELECTRICAL CABINET	**11-99**
060	663506-0300		1	ELECTRIC EQUIPMENT	**11-119**
070	663507-0200		1	REGULAR ACCESSORIES	**11-121**
A01P0020	3034248-0100		1	WARNING LAMP	**11-125**

Pos	Part No	UN	Qty	Description	Page No

CONVEYOR SECTION

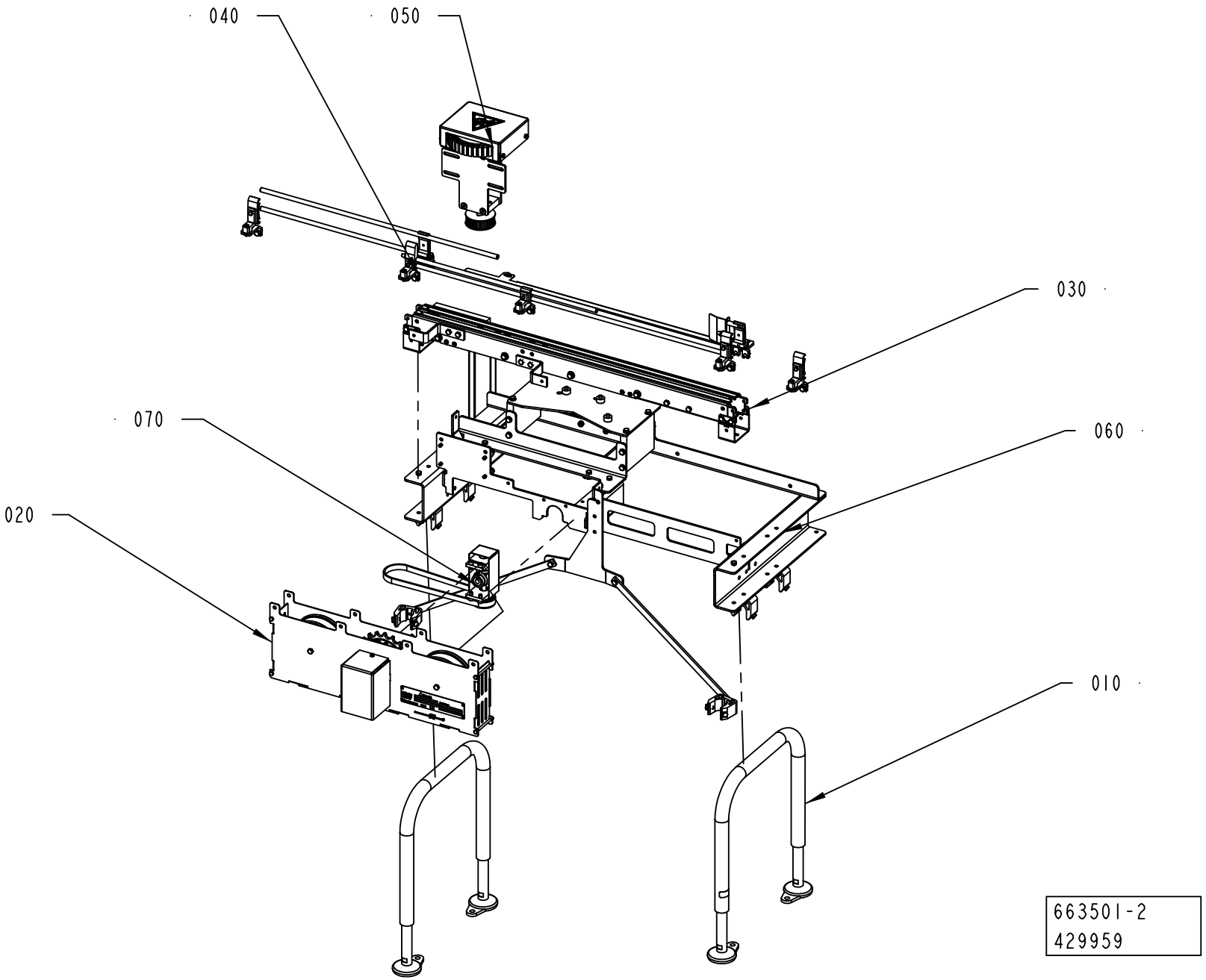

ECM: 436954 - 20100222
Group number: 663501-0200
Assembly Drawing: 663501-2_1_AB

Pos	Part No	UN	Qty	Description	Page No
-					
010	2807604-0100		2	LEG,CONVEYOR	**11-57**
020	2875165-0100		1	CONVEYOR BODY	**11-59**
030	2904906-0100		1	CONVEYOR BODY	**11-61**
040	2904908-0200		1	RAILING KIT	**11-63**
050	2912690-0200		1	BRAKE	**11-75**
060	2925061-0100		1	FRAME	**11-77**
070	2995765-0100		1	BEVEL GEAR	**11-79**

Pos	Part No	UN	Qty	Description	Page No

LEG,CONVEYOR

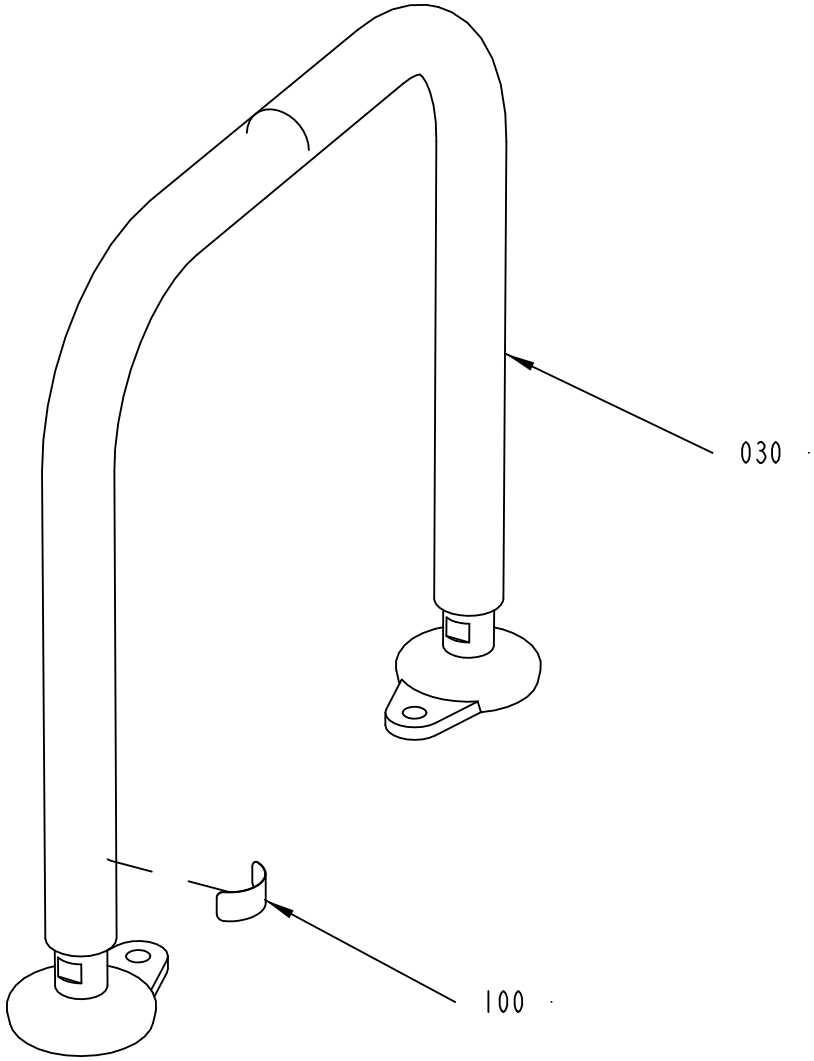

2807604-1
272451

ECM: 272451 - 20060922
Group number: 2807604-0100
Assembly Drawing: 2807604-1_1_AA

Pos	Part No	UN	Qty	Description	Page No
-					
030	2807614-0000		1	LEG,CONVEYOR	
100	1086870-0000		1	SIGN	

Pos	Part No	UN	Qty	Description	Page No

CONVEYOR BODY

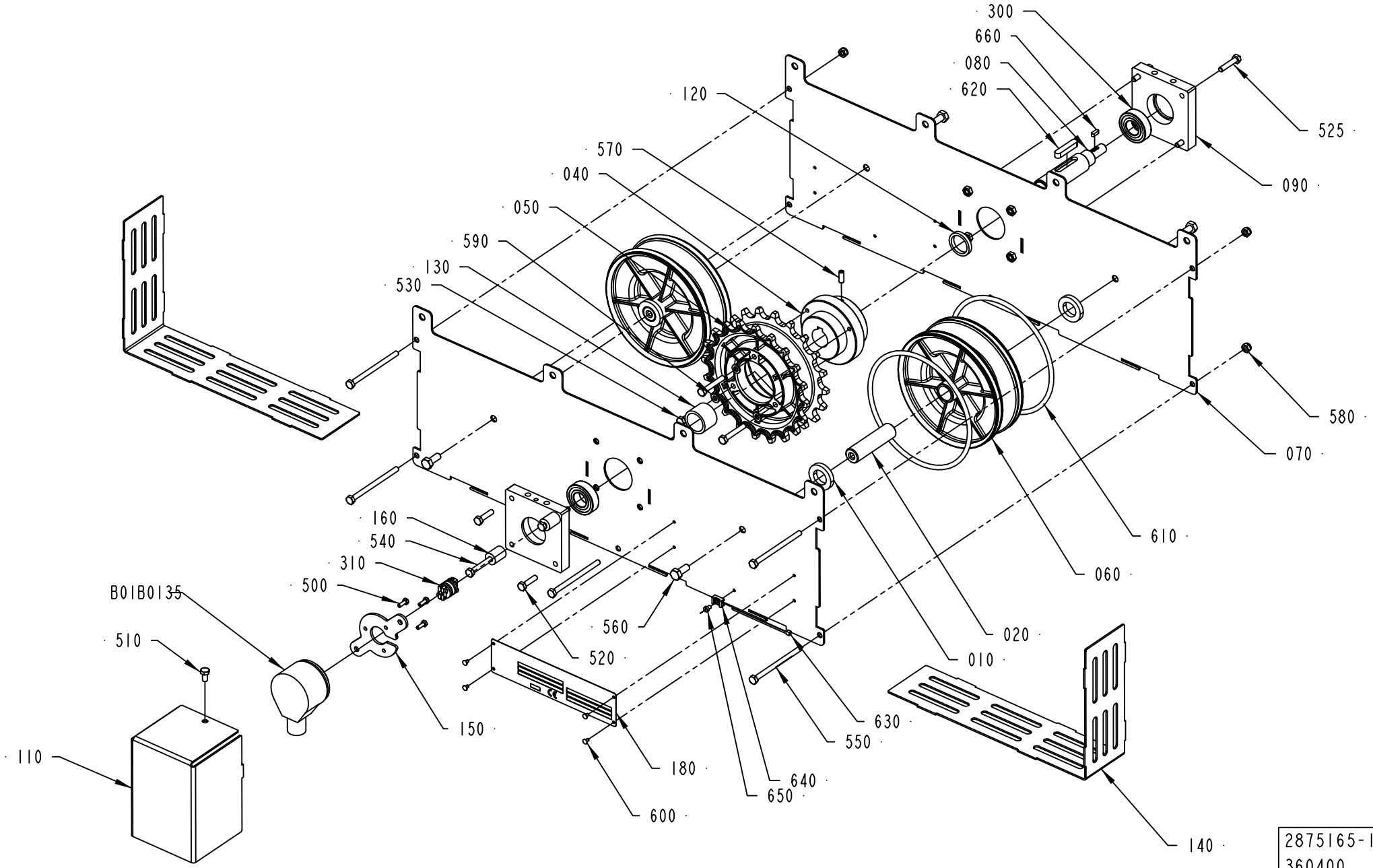

ECM: 436955 - 20100222
Group number: 2875165-0100
Assembly Drawing: 2875165-1_1_AE

Pos	Part No	UN	Qty	Description	Page No
-					
010	2561226-0000		4	SPACER	
020	2561227-0001		2	SHAFT	
040	2590154-0000		1	HUB	
050	2656676-0000		1	SPROCKET	
060	2656679-0000		2	WHEEL	
070	2875167-0000		2	SIDE PLATE	
080	2995759-0000		1	SHAFT	
090	3003108-0000		2	BEARING HOUSING	
110	2933654-0000		1	COVER	
120	2876306-0001		1	SPACER	
130	2876306-0002		1	SPACER	
140	2876307-0000		2	PROTECTION	
150	2876310-0000		1	PLATE	
160	2876311-0000		2	SPACER	
170	2935053-0000		1	TOOTHED PULLEY	
180	580923-0000		1	MACHINE SIGN CE	
300	90214-0225		2	BALL BEAR. 20/42X12 SOLID OIL	
310	90458-0962		1	FLEXIBLE COUPLING, 6X6 MM	
500	312105-0291		3	SCREW M6S ISO 4017 M4X12 A470	
510	312105-0366		2	SCREW M6S ISO 4017 M6X12 A480	
520	312105-0372		4	SCREW M6S ISO 4017 M6X25 A480	
525	312105-0374		2	SCREW M6S ISO 4014 M6X30 A480	
530	312105-0378		3	SCREW M6S ISO 4014 M6X40 A480	
540	312105-0380		2	SCREW M6S ISO 4014 M6X50 A480	
550	312105-0388		5	SCREW M6S ISO 4014 M6X90 A480	
560	312105-0451		4	SCREW M6S ISO 4017 M8X20 A480	
565	312318-0362		1	SCREW ISO4029 M6X8 A4	
570	312318-0368		1	SCREW ISO4029 M6X16 A4	
580	312812-0316		5	HEXAGON NUT, NY-LOCK M6 A480	
590	315105-0153		3	WASHER BRB 6,4X12 RFR	
600	311521-0142		4	RIVET, BLANK 3,2X6	
610	315202-0246		4	O-RING 144,3X5,7 MM	
615	315701-0232		1	PARALLEL KEY W. ROUND ENDS 6X6X20 MM	
620	315705-0270		1	PARALLEL KEY W. ROUND ENDS 8X7X40 MM	
630	352113-0101		1	CABLE TIE, BLACK 92X2,5 MM	
640	352113-0205		1	ANCHOR PLATES FOR STRIPS, TYPE TM2S8-C10	
650	312125-0285		1	SCREW ISO 1207 M4X6 A4	
660	315705-0166		1	PARAPARALLEL KEY W. ROUND ENDS 4X4X12 MM	
B01B0135	90600-3004		1	INCREMENTAL ENC., DGS60-A1A10000,1032277	

Pos	Part No	UN	Qty	Description	Page No

Machine Type | Group Description | Used-In | Group Number | Page No

CONVEYOR BODY

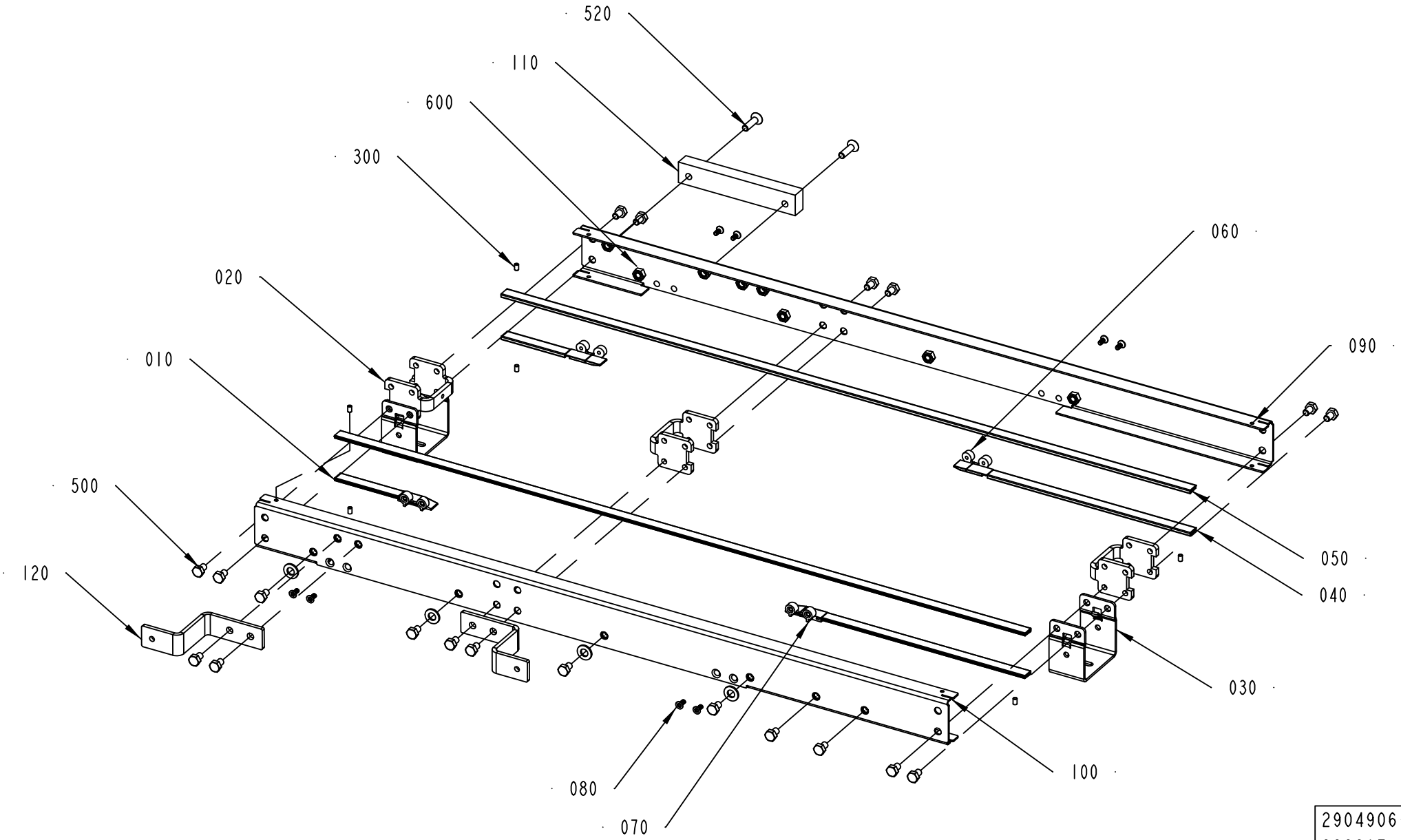

2904906-1
332897

ECM: 333610 - 20071218
Group number: 2904906-0100
Assembly Drawing: 2904906-1_1_AB

Pos	Part No	UN	Qty	Description	Page No
-					
010	2699305-0092		2	SLIDING STRIP	
020	2561206-0000		3	SPACER	
030	2656556-0000		2	BRACKET FOR LEG PC23	
040	2699305-0292		2	SLIDING STRIP	
050	2699305-0996		2	SLIDING STRIP	
060	2807804-0000		2	GUIDE	
070	2807805-0000		2	GUIDE	
080	2845550-0000		8	SCREW	
090	2912684-0000		1	SIDE PLATE	
100	2912685-0000		1	SIDE PLATE	
110	2912688-0000		1	BRACKET	
120	2935058-0000		2	BRACKET	
300	90459-7293		6	SET SCREW DIN 551M5X8 PA66	
500	312105-0447		24	SCREW M6S ISO 4017 M8X12 A480	
520	312155-0455		2	SCREW DIN 7991 MF6S M8X30 A4 70	
600	315106-0173		8	WASHER ISO 7089-10-200 HV A4	

Pos	Part No	UN	Qty	Description	Page No

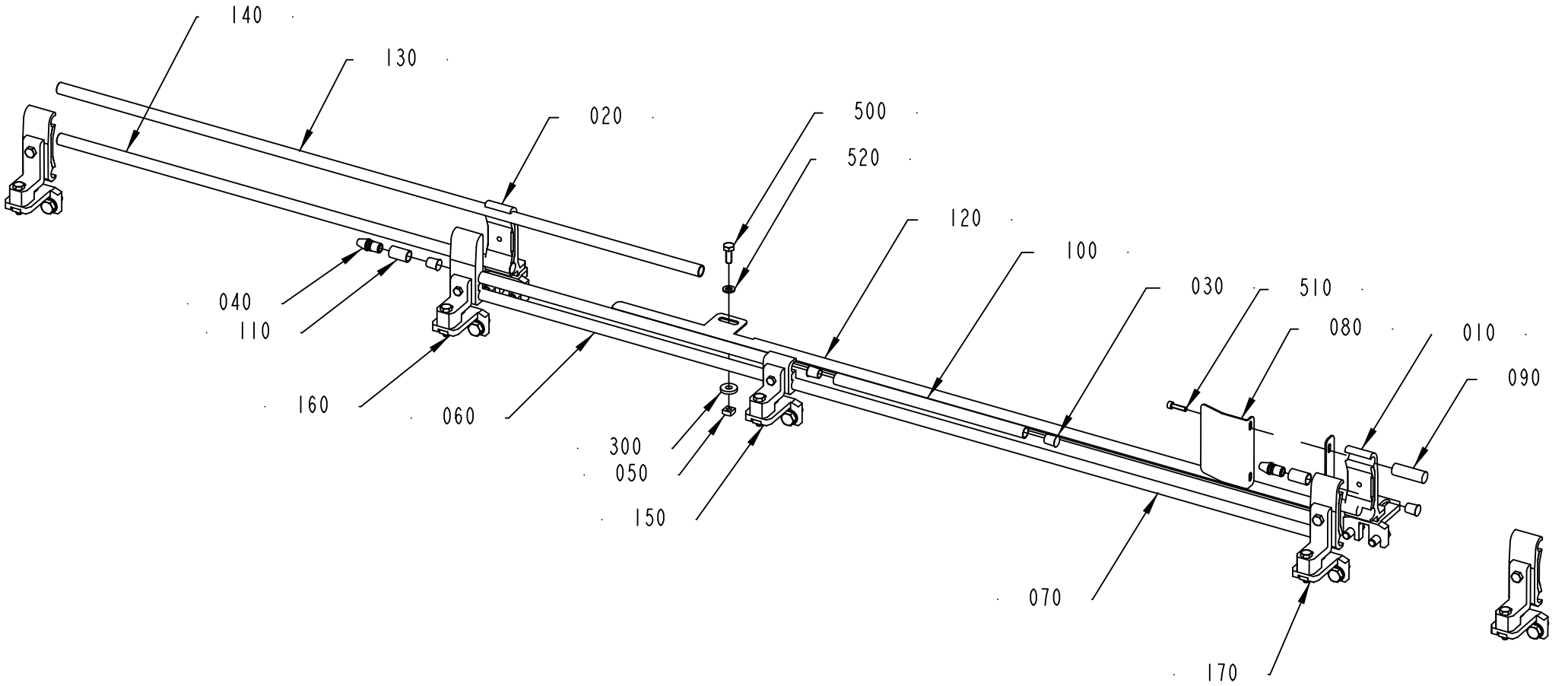

2904908-2
429959

ECM: 436956 - 20100222
Group number: 2904908-0200
Assembly Drawing: 2904908-2_1_AB

Pos	Part No	UN	Qty	Description	Page No
-					
010	1550743-0200		1	RAIL HOLDER	**1-17, 11-65**
020	2978811-0100		1	RAIL HOLDER	**11-67**
030	484701-0000		14	SHUTTER	
040	540169-0000		2	DOWEL	
050	1359565-0000		1	NUT	
060	2936706-0000		2	PIPE	
070	2936707-0000		1	PIPE	
080	2994538-0000		1	BRACKET	
090	2994544-0000		2	RAILING	
100	3004369-0000		1	RAILING	
110	3004370-0000		2	RAILING	
120	3014095-0000		1	BRACKET	
130	3014096-0000		1	PIPE	
140	3041932-0000		1	RAILING	
150	3060161-0100		1	RAIL HOLDER	**11-69**
160	3060162-0100		1	RAIL HOLDER	**11-71**
170	3060164-0100		3	RAIL HOLDER	**11-73**
300	90459-7441		1	WASHER PLAIN, DIN 7349, 6,4/17 H=3	
500	312105-0366		1	SCREW M6S ISO 4017 M6X12 A480	
510	312115-0293		2	SCREW ISO4762 M4X16 A4 80	
520	315106-0153		1	WASHER ISO 7089-6-200 HV A4	

Pos	Part No	UN	Qty	Description	Page No

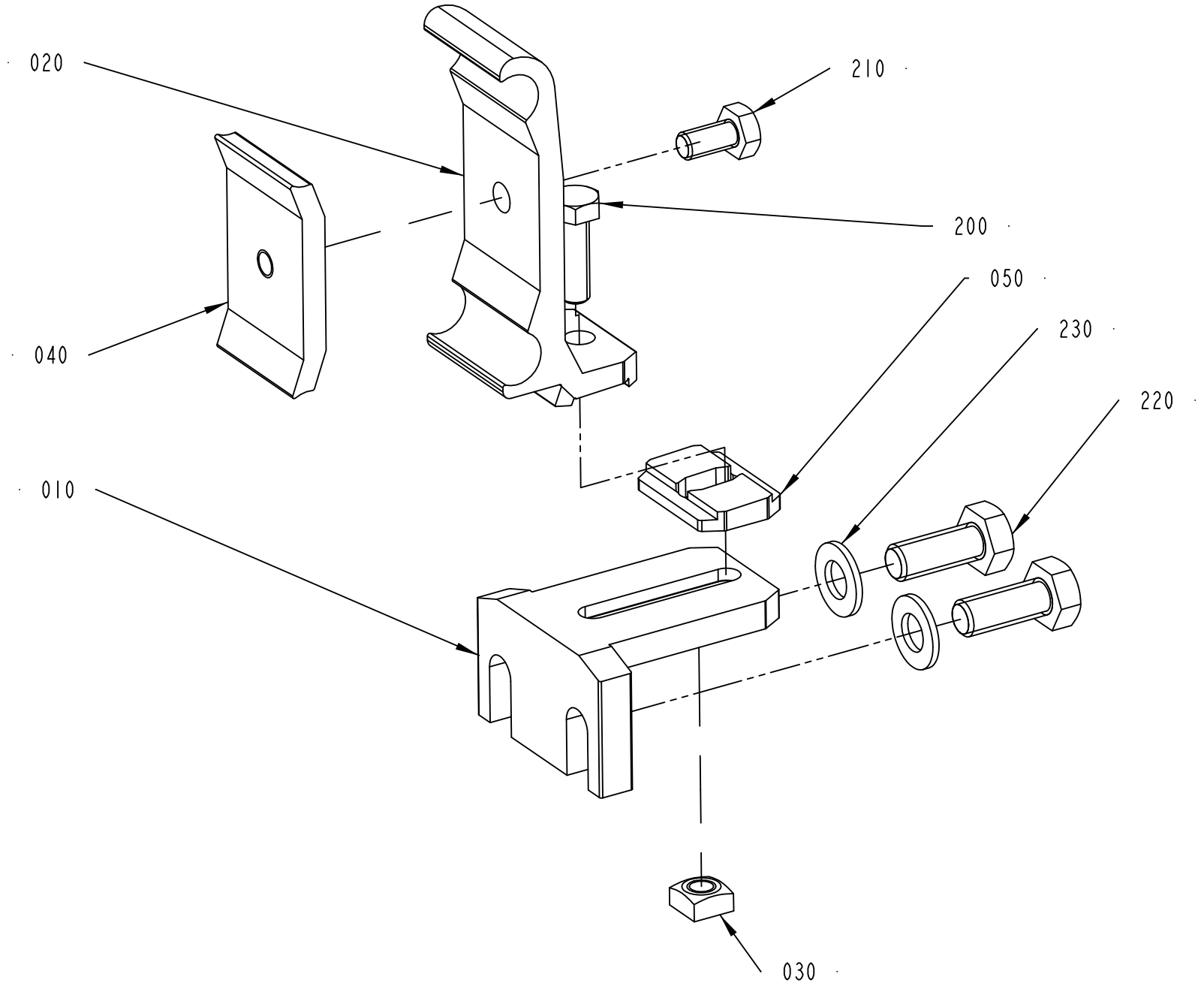
020
210
200
050
230
220
040
010
030
1550743-2
206934

ECM: 429045 - 20091201
Group number: 1550743-0200
Assembly Drawing: 1550743-2_1_AA

Pos	Part No	UN	Qty	Description	Page No
-					
010	1550772-0000		1	HOLDER	
020	2699437-0000		1	RAIL HOLDER	
030	1359565-0000		1	NUT	
040	1366727-0000		1	CLAMP	
050	2699436-0000		1	SPACER	
200	312105-0370		1	SCREW M6S ISO 4017 M6X20 A480	
210	312105-0366		1	SCREW M6S ISO 4017 M6X12 A480	
220	312105-0451		2	SCREW M6S ISO 4017 M8X20 A480	
230	315105-0165		2	WASHER BRB 8,4X16 RFR	

Pos	Part No	UN	Qty	Description	Page No

RAIL HOLDER

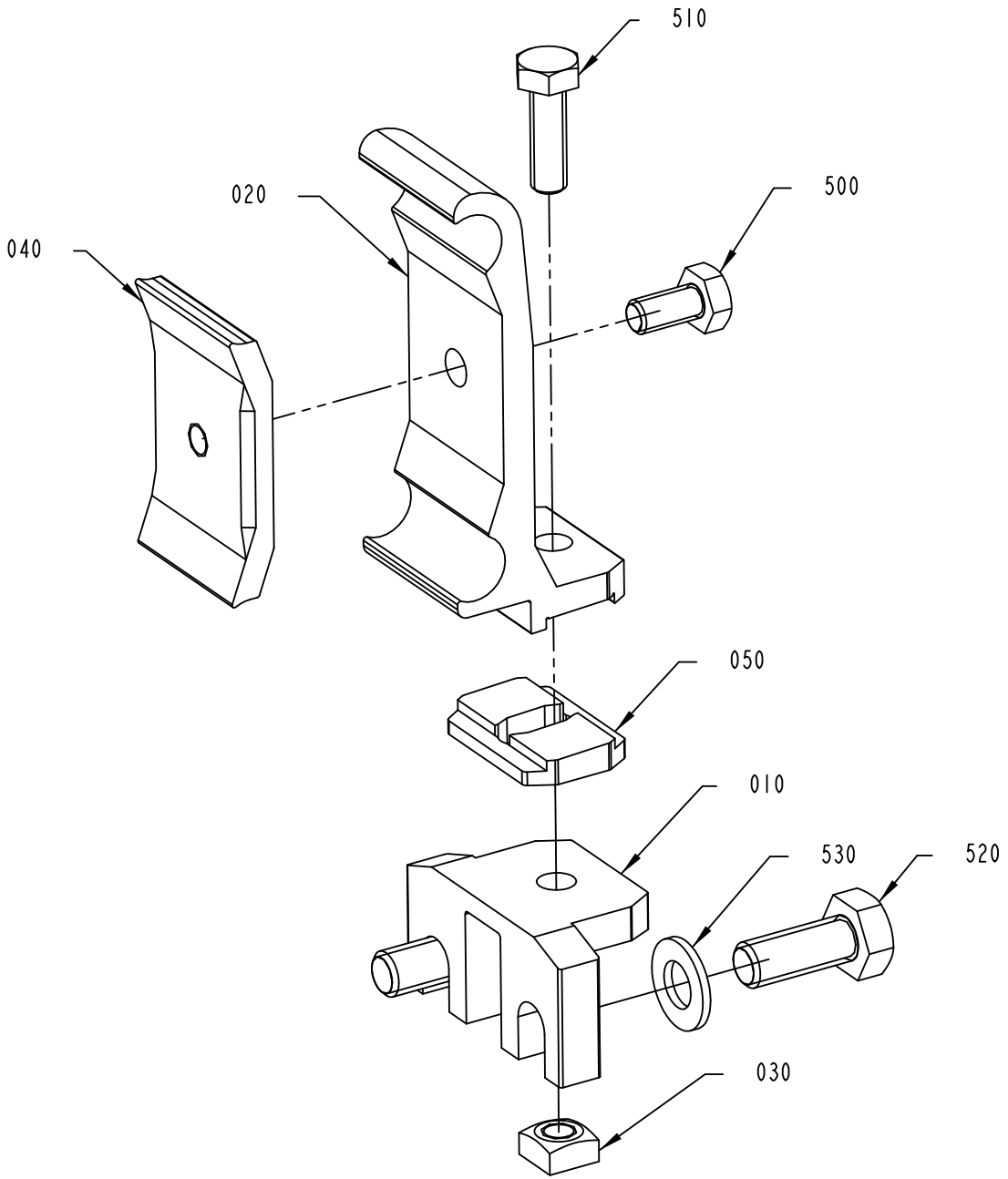

2978811-1
375285

ECM: 436960 - 20100222
Group number: 2978811-0100
Assembly Drawing: 2978811-1_1_AA

Pos	Part No	UN	Qty	Description	Page No
-					
010	2978810-0000		1	HOLDER	
020	2699437-0000		1	RAIL HOLDER	
030	1359565-0000		1	NUT	
040	1366727-0000		1	CLAMP	
050	2699436-0000		1	SPACER	
500	312105-0366		1	SCREW M6S ISO 4017 M6X12 A480	
510	312105-0370		1	SCREW M6S ISO 4017 M6X20 A480	
520	312105-0451		2	SCREW M6S ISO 4017 M8X20 A480	
530	315105-0165		2	WASHER BRB 8,4X16 RFR	

Pos	Part No	UN	Qty	Description	Page No

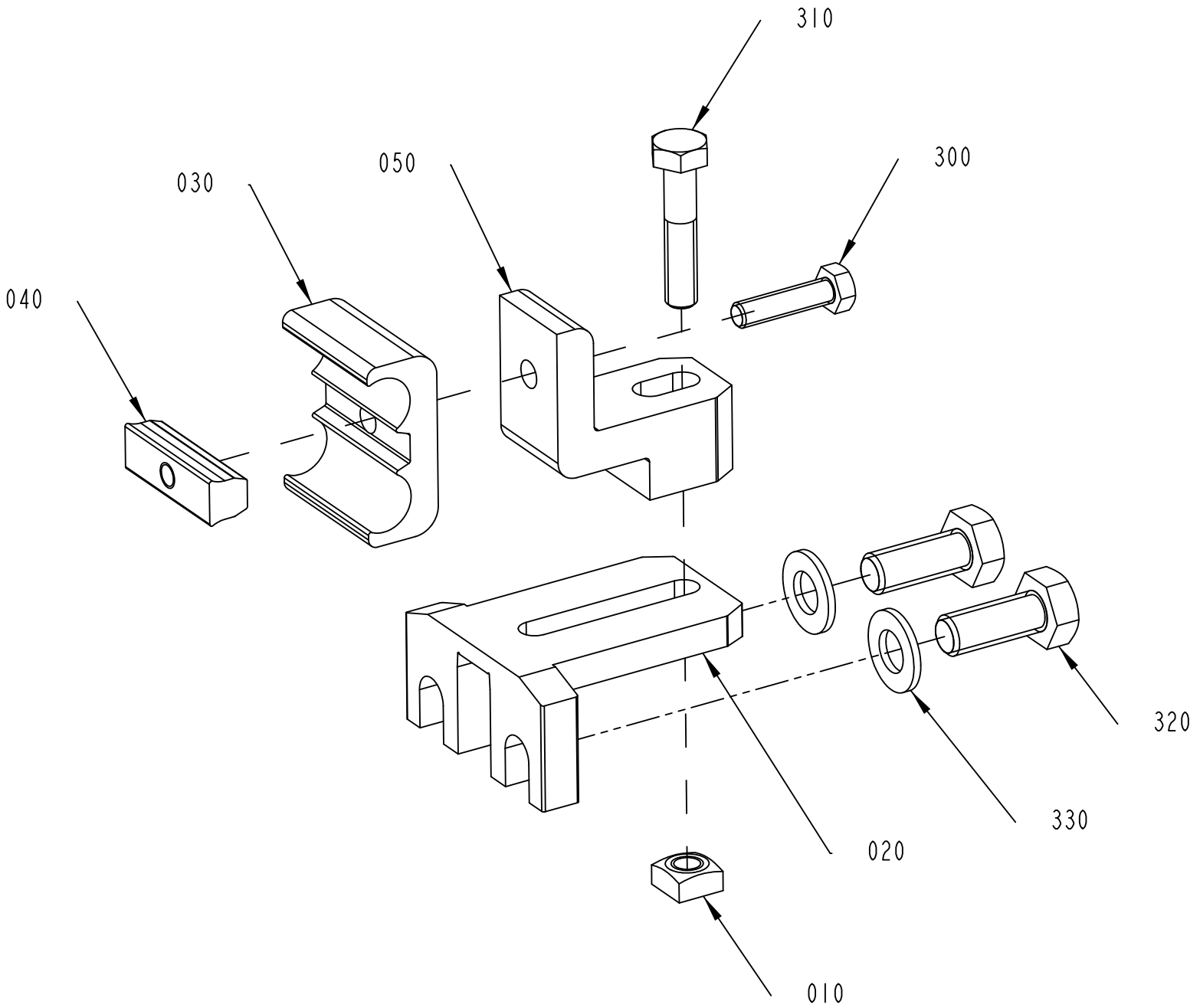

3060161-1
429959

ECM: 436957 - 20100222
Group number: 3060161-0100
Assembly Drawing: 3060161-1_1_AA

Pos	Part No	UN	Qty	Description	Page No
-					
010	1359565-0000		1	NUT	
020	1550772-0000		1	HOLDER	
030	3060159-0000		1	RAIL HOLDER	
040	3060160-0000		1	CLAMP	
050	3060163-0000		1	BRACKET	
300	312105-0331		1	SCREW M6S ISO 4017 M5X20 A480	
310	312105-0374		1	SCREW M6S ISO 4014 M6X30 A480	
320	312105-0451		2	SCREW M6S ISO 4017 M8X20 A480	
330	315105-0165		2	WASHER BRB 8,4X16 RFR	

Pos	Part No	UN	Qty	Description	Page No

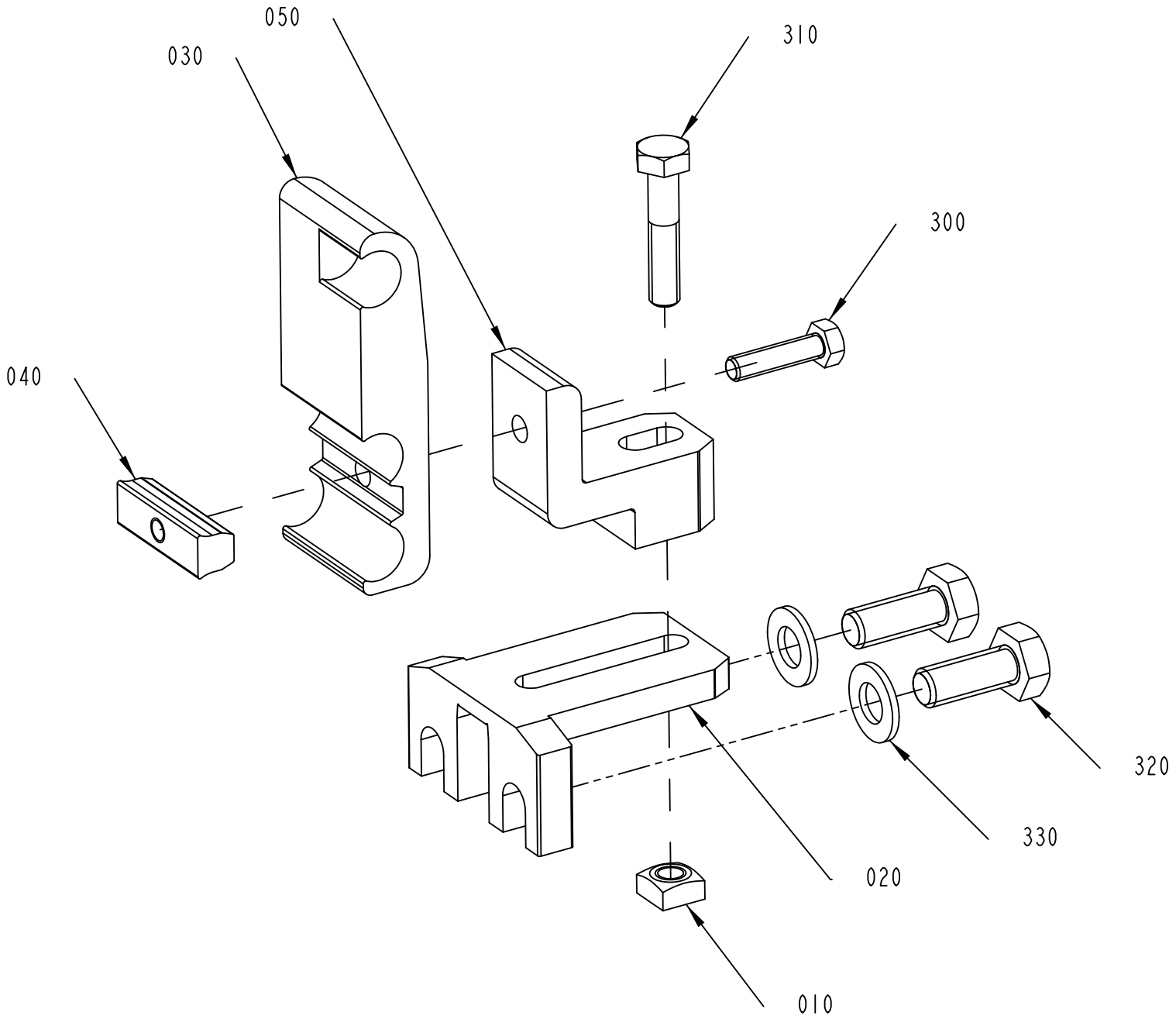

3060162-1
429959

ECM: 436958 - 20100222
Group number: 3060162-0100
Assembly Drawing: 3060162-1_1_AA

Pos	Part No	UN	Qty	Description	Page No
-					
010	1359565-0000		1	NUT	
020	1550772-0000		1	HOLDER	
030	3060158-0000		1	RAIL HOLDER	
040	3060160-0000		1	CLAMP	
050	3060163-0000		1	BRACKET	
300	312105-0331		1	SCREW M6S ISO 4017 M5X20 A480	
310	312105-0374		1	SCREW M6S ISO 4014 M6X30 A480	
320	312105-0451		2	SCREW M6S ISO 4017 M8X20 A480	
330	315105-0165		2	WASHER BRB 8,4X16 RFR	

Pos	Part No	UN	Qty	Description	Page No

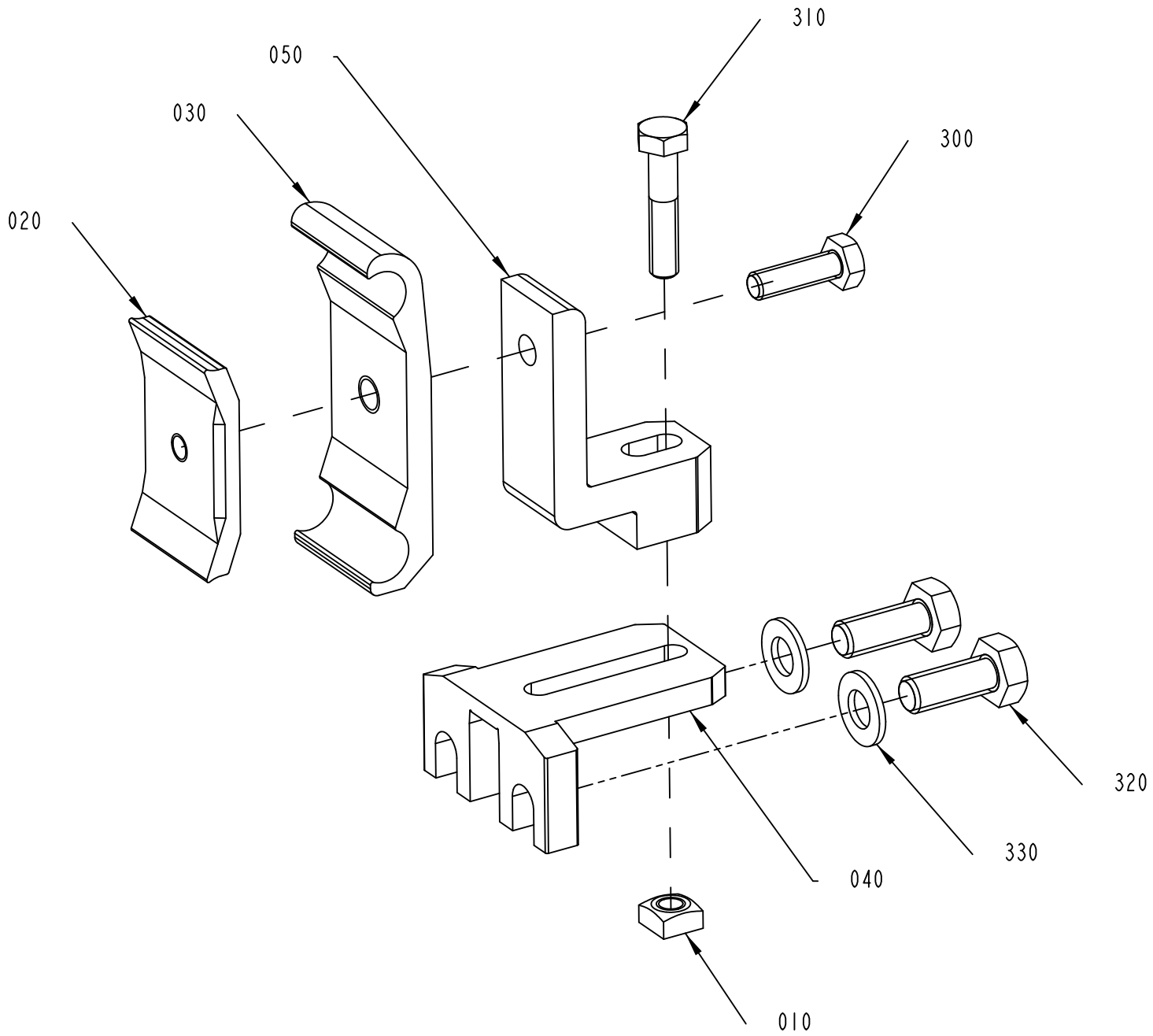

3060164-1
429959

ECM: 436959 - 20100222
Group number: 3060164-0100
Assembly Drawing: 3060164-1_1_AA

Pos	Part No	UN	Qty	Description	Page No
-					
010	1359565-0000		1	NUT	
020	1366727-0000		1	CLAMP	
030	1366750-0000		1	HOLDER	
040	1550772-0000		1	HOLDER	
050	3060165-0000		1	BRACKET	
300	312105-0370		1	SCREW M6S ISO 4017 M6X20 A480	
310	312105-0374		1	SCREW M6S ISO 4014 M6X30 A480	
320	312105-0451		2	SCREW M6S ISO 4017 M8X20 A480	
330	315105-0165		2	WASHER BRB 8,4X16 RFR	

Pos	Part No	UN	Qty	Description	Page No

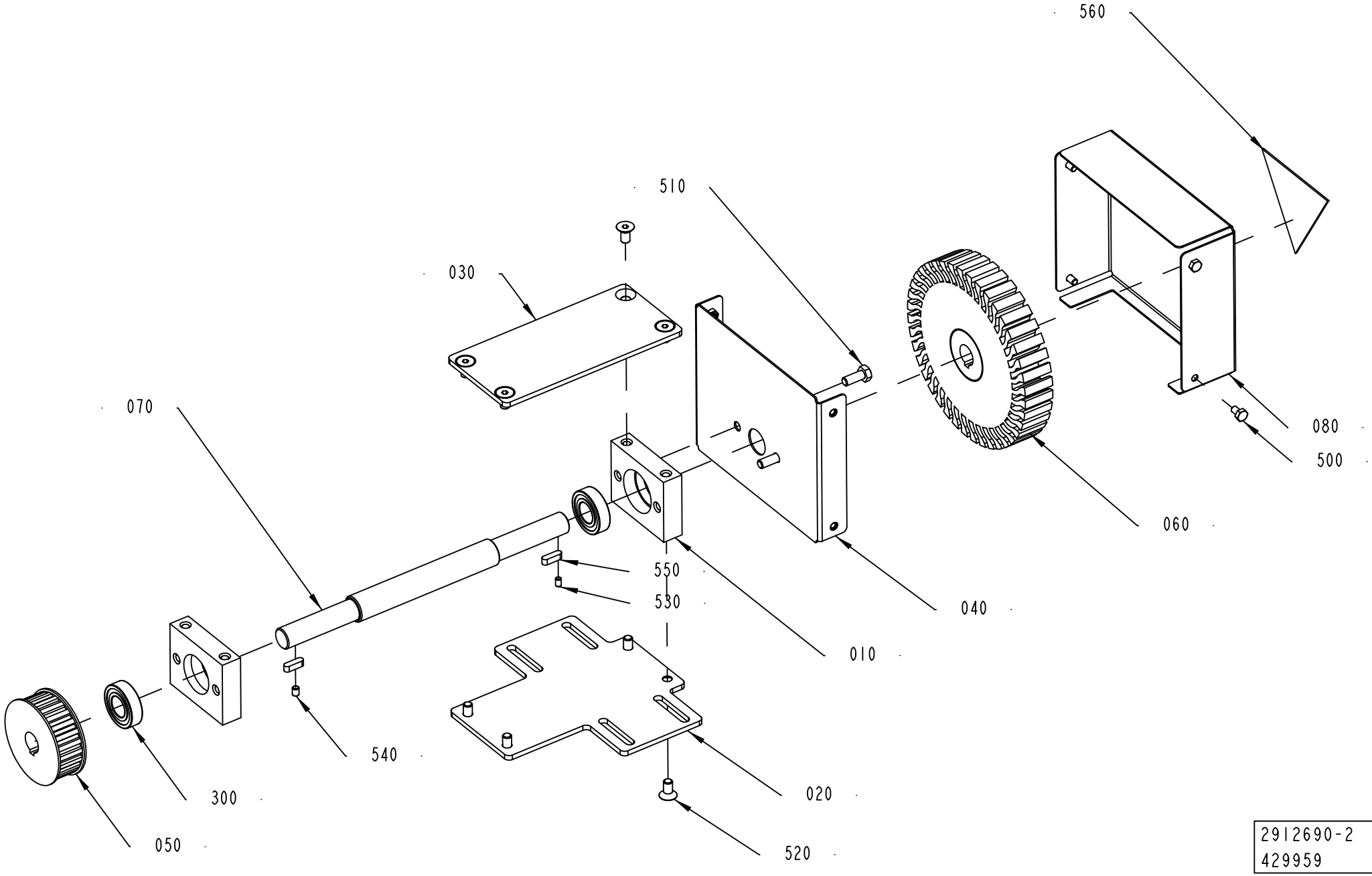

2912690-2
429959

ECM: 436961 - 20100222
Group number: 2912690-0200
Assembly Drawing: 2912690-2_1_AB

Pos	Part No	UN	Qty	Description	Page No
OTHER COUNTRIES NOT USA/CANADA, FINAL DEST. CANADA					
560	359705-0002		1	WARNING SIGN ISO, ENTANGLEMENT	
FINAL DEST. USA					
560	359725-0100		1	WARNING SIGN ANSI (H), ENTANGLEMENT	
Common Parts					
010	2912691-0000		2	BEARING HOUSING	
020	3041929-0000		1	PLATE	
030	3041930-0000		1	PLATE	
040	3041934-0000		1	PROTECTION	
050	2935054-0000		1	TOOTHED PULLEY	
060	2993867-0000		1	COUNTER WHEEL	
070	3041931-0000		1	SHAFT	
080	3041933-0000		1	PROTECTION	
300	90214-0225		2	BALL BEAR. 20/42X12 SOLID OIL	
500	312105-0364		4	SCREW M6S ISO 4017 M6X10 A480	
510	312105-0451		2	SCREW M6S ISO 4017 M8X20 A480	
520	312155-0449		8	SCREW DIN 7991 MF6S M8X16 A4 70	
530	312318-0323		1	SCREW ISO4029 M5X8 A4	
540	312318-0362		1	SCREW ISO4029 M6X8 A4	
550	315701-0232		2	PARALLEL KEY W. ROUND ENDS 6X6X20 MM	

Pos	Part No	UN	Qty	Description	Page No

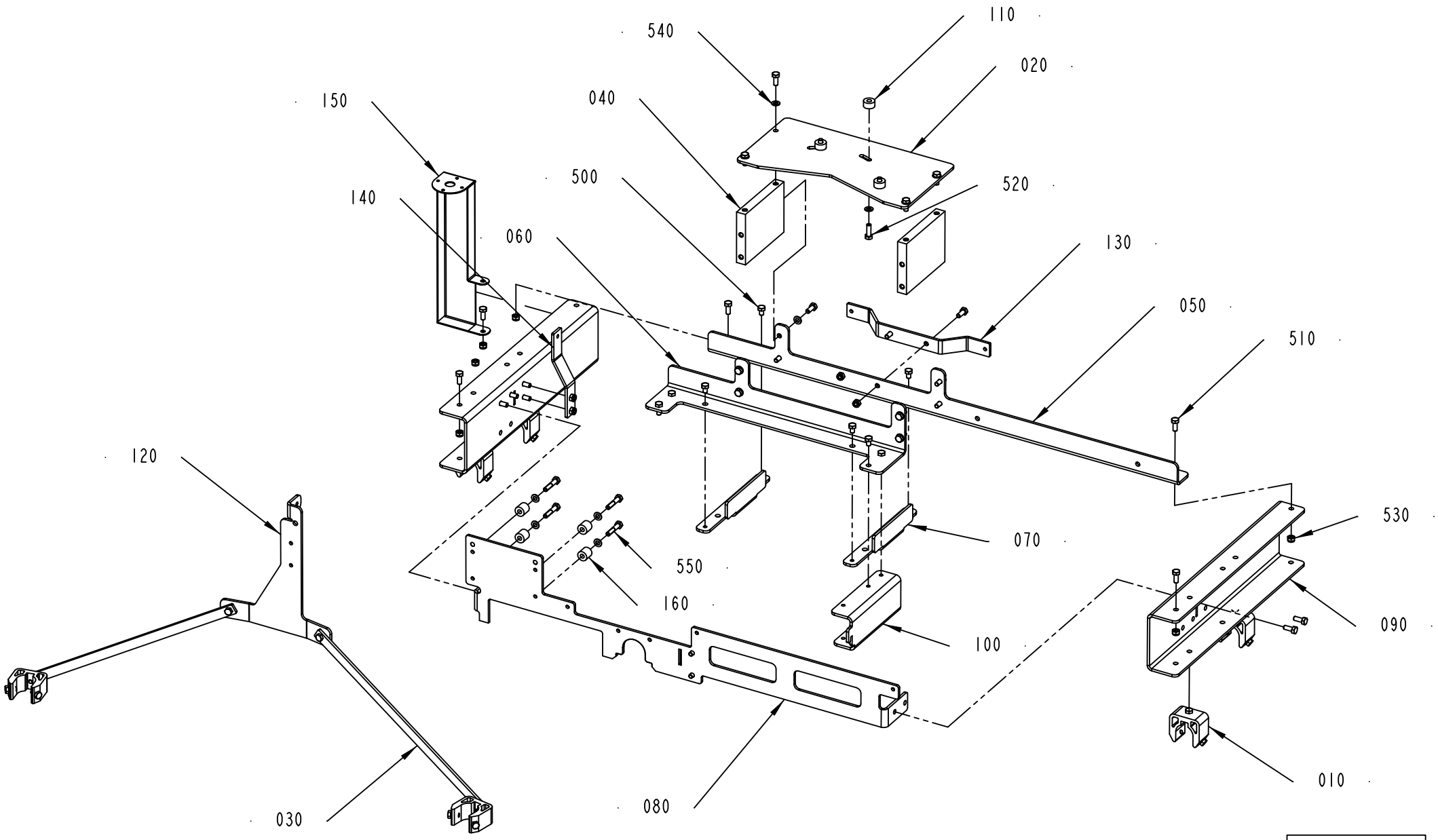

2925061-1
429959

ECM: 436962 - 20100222
Group number: 2925061-0100
Assembly Drawing: 2925061-1_1_AE

Pos	Part No	UN	Qty	Description	Page No
-					
010	2807592-0000		6	MULTI BRACKET SINGLE	
020	3041928-0000		1	PLATE	
030	2918406-0000		2	CROSS BAR	
040	2925062-0000		2	FASTENING PLATE	
050	2986376-0000		1	BEAM	
060	2986377-0000		1	BEAM	
070	2933645-0000		2	BRACKET	
080	2933646-0000		1	MOUNTING PLATE	
090	2933647-0000		2	BEAM	
100	2933653-0000		1	BEAM	
110	2933843-0000		3	SPACER	
120	2935056-0000		1	BRACKET	
130	2935057-0000		1	BRACKET	
140	2935059-0000		1	BRACKET	
150	3034249-0000		1	BRACKET	
160	3041927-0000		4	SPACER	
500	312105-0447		8	SCREW M6S ISO 4017 M8X12 A480	
510	312105-0451		29	SCREW M6S ISO 4017 M8X20 A480	
520	312105-0453		3	SCREW M6S ISO 4017 M8X25 A480	
530	312812-0318		17	HEXAGON NUT, NY-LOCK M8 A480	
540	315105-0165		19	WASHER BRB 8,4X16 RFR	
550	312105-0459		4	SCREW M6S ISO 4014 M8X40 A480	

Pos	Part No	UN	Qty	Description	Page No

BEVEL GEAR

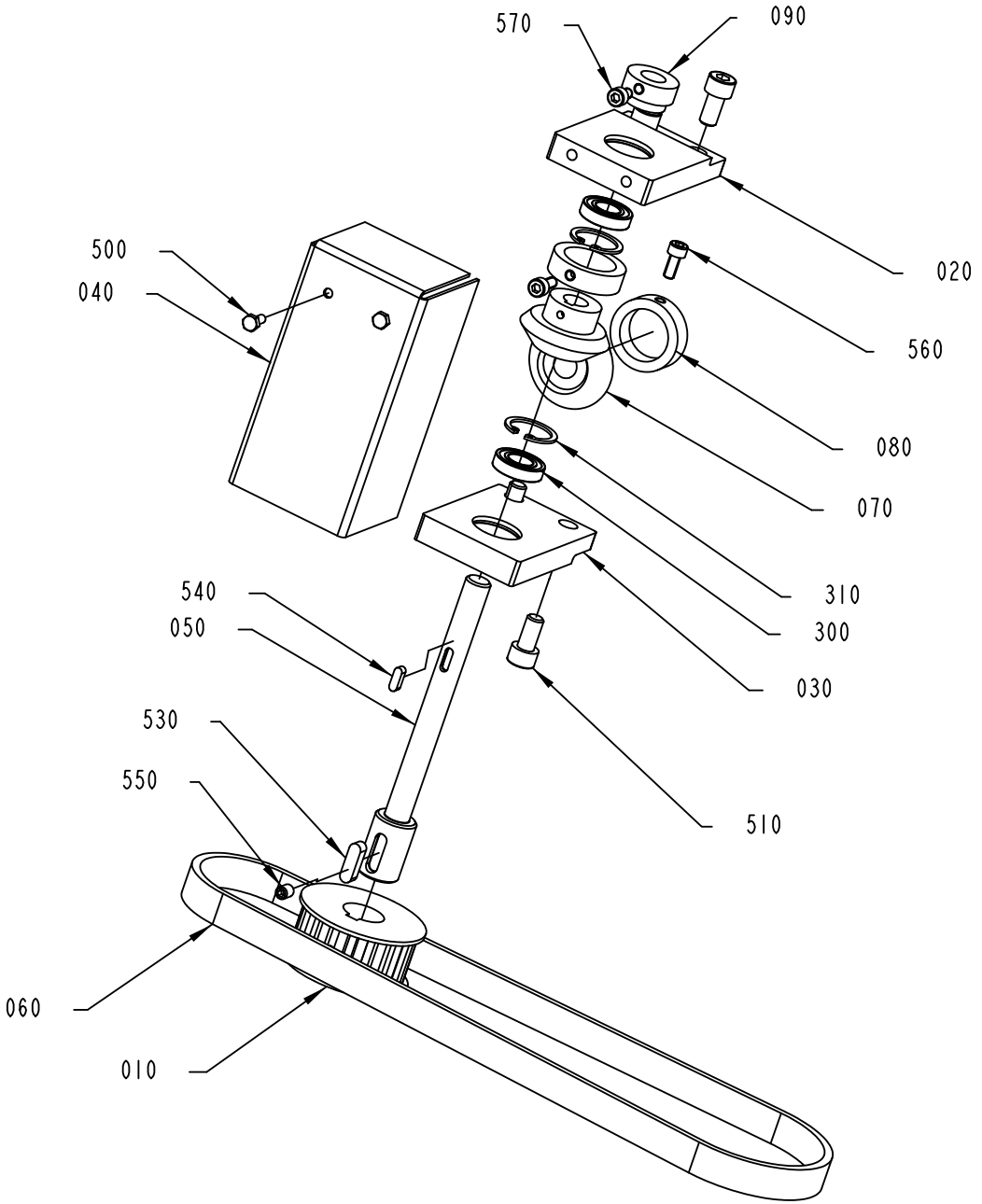

2995765-1
361041

ECM: 436963 - 20100222
Group number: 2995765-0100
Assembly Drawing: 2995765-1_1_AB

Pos	Part No	UN	Qty	Description	Page No
-					
010	2935053-0000		1	TOOTHED PULLEY	
020	2995756-0000		1	BEARING HOUSING	
030	2995757-0000		1	BEARING HOUSING	
040	2995758-0000		1	COVER	
050	2995760-0000		1	SHAFT	
060	2995762-0000		1	TIMING BELT	
070	2995764-0000		1	CONICAL GEAR	
080	3003527-0000		2	RETAINING RING	
090	3003832-0000		1	RETAINING RING	
300	90214-0181		2	BALL BEARING 12/24X6	
310	90458-2071		2	RETAINING RING FOR BORE DIN 472 24 A2	
500	312105-0325		2	SCREW M6S ISO 4017 M5X10 A480	
510	312115-0449		4	SCREW ISO4762 M8X16 A4 80	
520	312318-0283		1	SCREW ISO4029 M4X4 A4	
530	315701-0232		1	PARALLEL KEY W. ROUND ENDS 6X6X20 MM	
540	315705-0166		1	PARAPARALLEL KEY W. ROUND ENDS 4X4X12 MM	
550	312318-0362		1	SCREW ISO4029 M6X8 A4	
560	312115-0327		2	Z3REW ISO4762 M5X12 A4 80	
570	312115-0323		1	SCREW ISO4762 M5X8 A4 80	

Pos	Part No	UN	Qty	Description	Page No

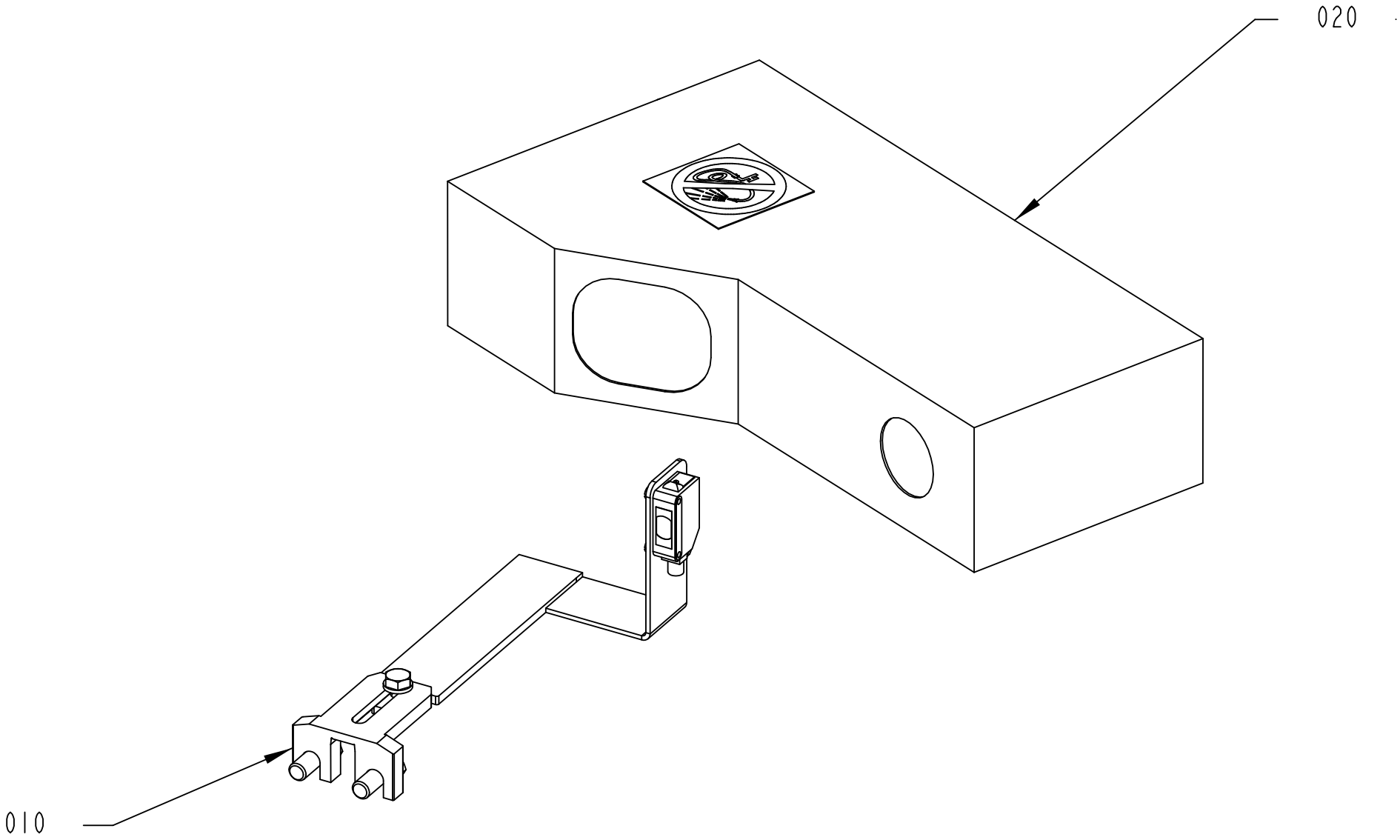

663502-2
361041

ECM: 385696 - 20090303
Group number: 663502-0200
Assembly Drawing: 663502-2_1_AA

Pos	Part No	UN	Qty	Description	Page No
-					
010	2918410-0200		1	PHOTOCELL UNIT	**11-83**
020	2933650-0100		1	DETECTOR	**11-85**

Pos	Part No	UN	Qty	Description	Page No

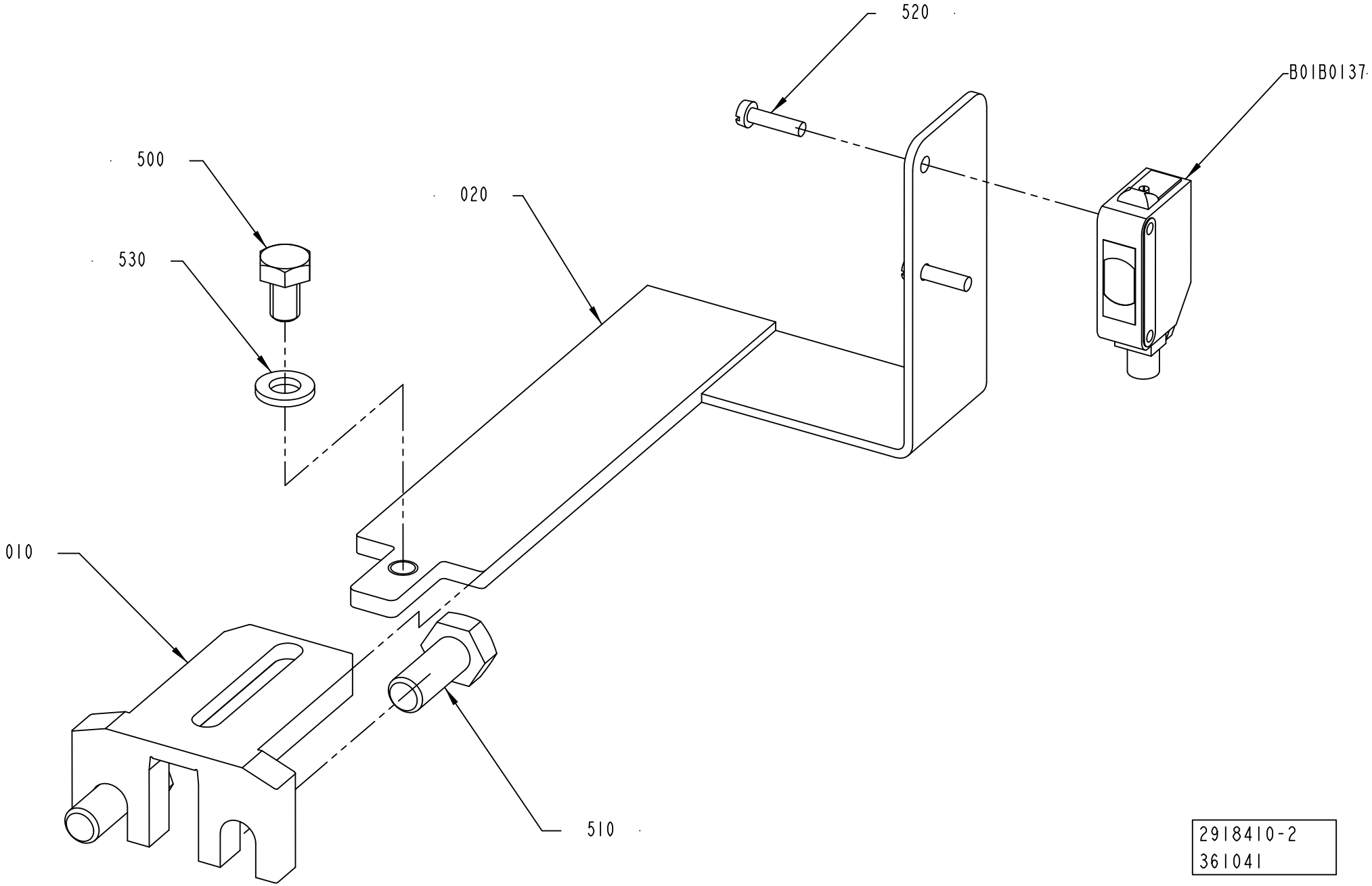

2918410-2
361041

ECM: 436964 - 20100222
Group number: 2918410-0200
Assembly Drawing: 2918410-2_1_AA

Pos	Part No	UN	Qty	Description	Page No
-					
010	1550772-0000		1	HOLDER	
020	2979544-0000		1	BRACKET	
500	312105-0364		1	SCREW M6S ISO 4017 M6X10 A480	
510	312105-0451		2	SCREW M6S ISO 4017 M8X20 A480	
520	312121-0226		2	SCREW ISO 1207 M3X12 4.8-5.8 Z.PL.	
530	315106-0153		1	WASHER ISO 7089-6-200 HV A4	
B01B0137	90459-7274		1	PHOTOCELL E3Z-T81C-G0SR L-CN	

Pos	Part No	UN	Qty	Description	Page No

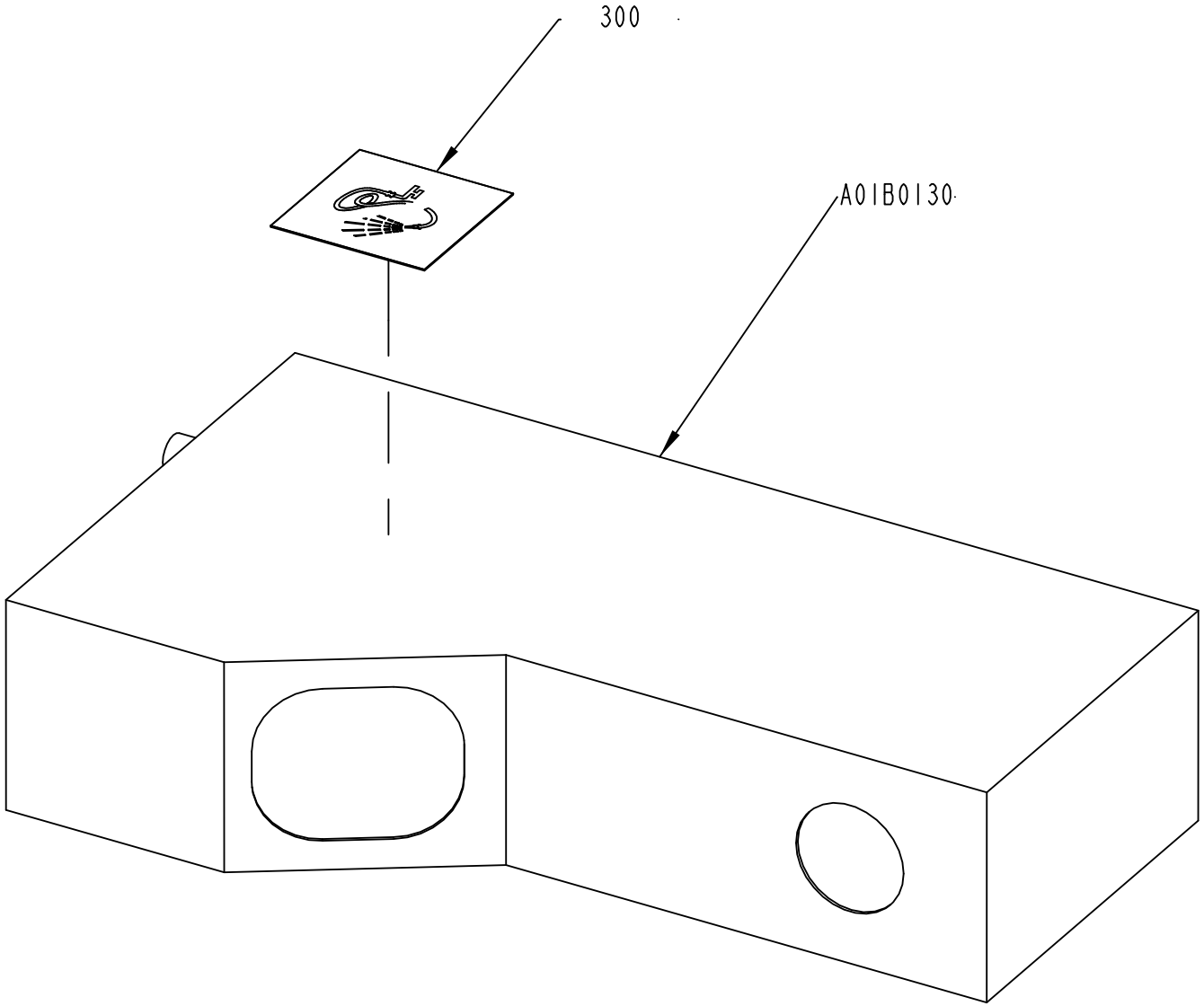

2933650-1
332897

ECM: 436965 - 20100222
Group number: 2933650-0100
Assembly Drawing: 2933650-1_1_AA

Pos	Part No	UN	Qty	Description	Page No
OTHER COUNTRIES NOT USA/CANADA, FINAL DEST. CANADA					
300	90459-2265		1	PROHIBITION SIGN ISO, DO NOT WASH	
FINAL DEST. USA					
300	90459-2232		1	WARNING SIGN ANSI (H), DO NOT WASH	
Common Parts					
A01B0130	90600-3655		1	VISION SYSTEM, IVC-3D21111, 1027538	

Pos	Part No	UN	Qty	Description	Page No

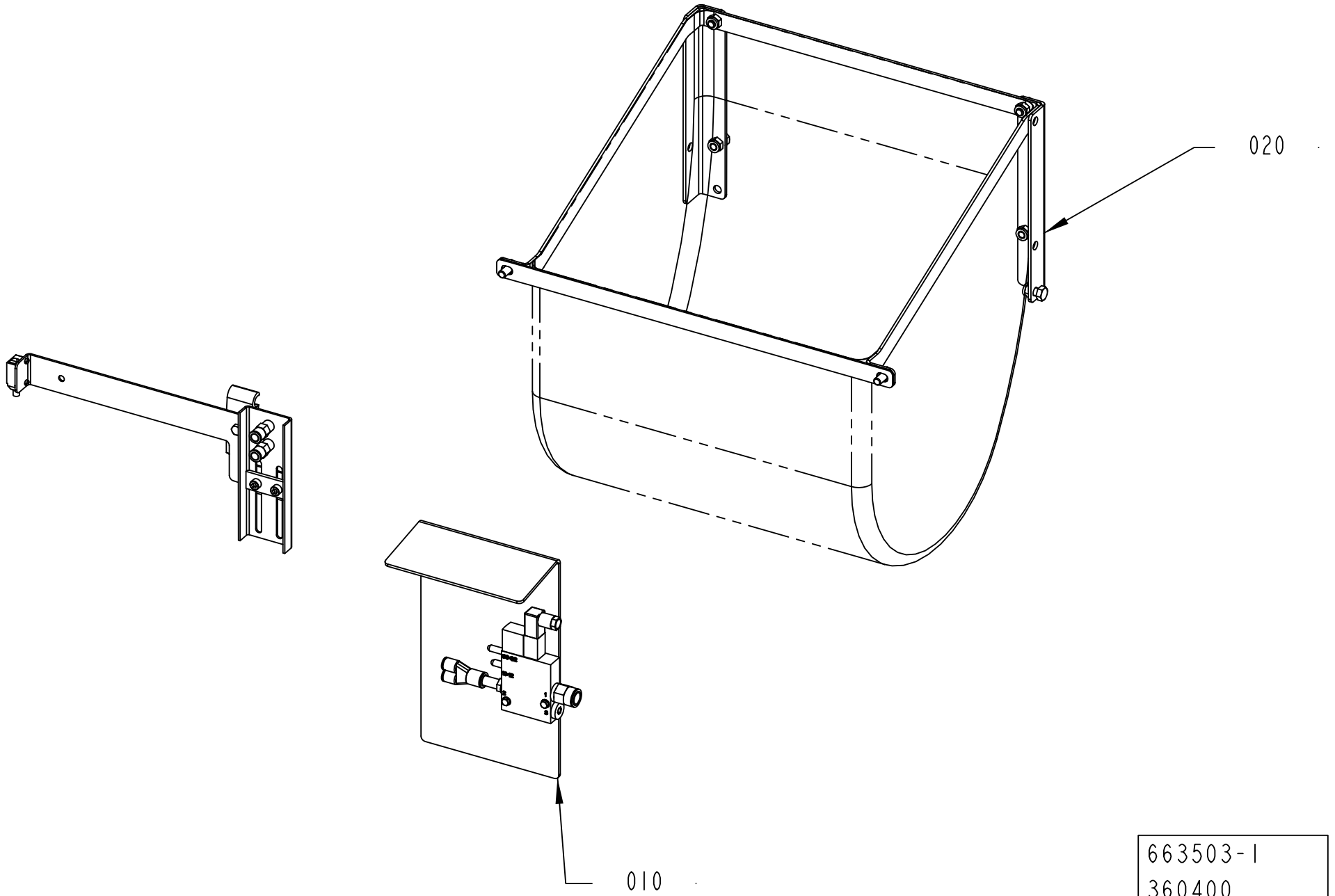

663503-1
360400

ECM: 384712 - 20090303
Group number: 663503-0100
Assembly Drawing: 663503-1_1_AB

Pos	Part No	UN	Qty	Description	Page No
-					
010	2904907-0100		1	PNEUMATIC UNIT	**11-89**
020	2912689-0100		1	BASKET	**11-91**

Pos	Part No	UN	Qty	Description	Page No

PNEUMATIC UNIT

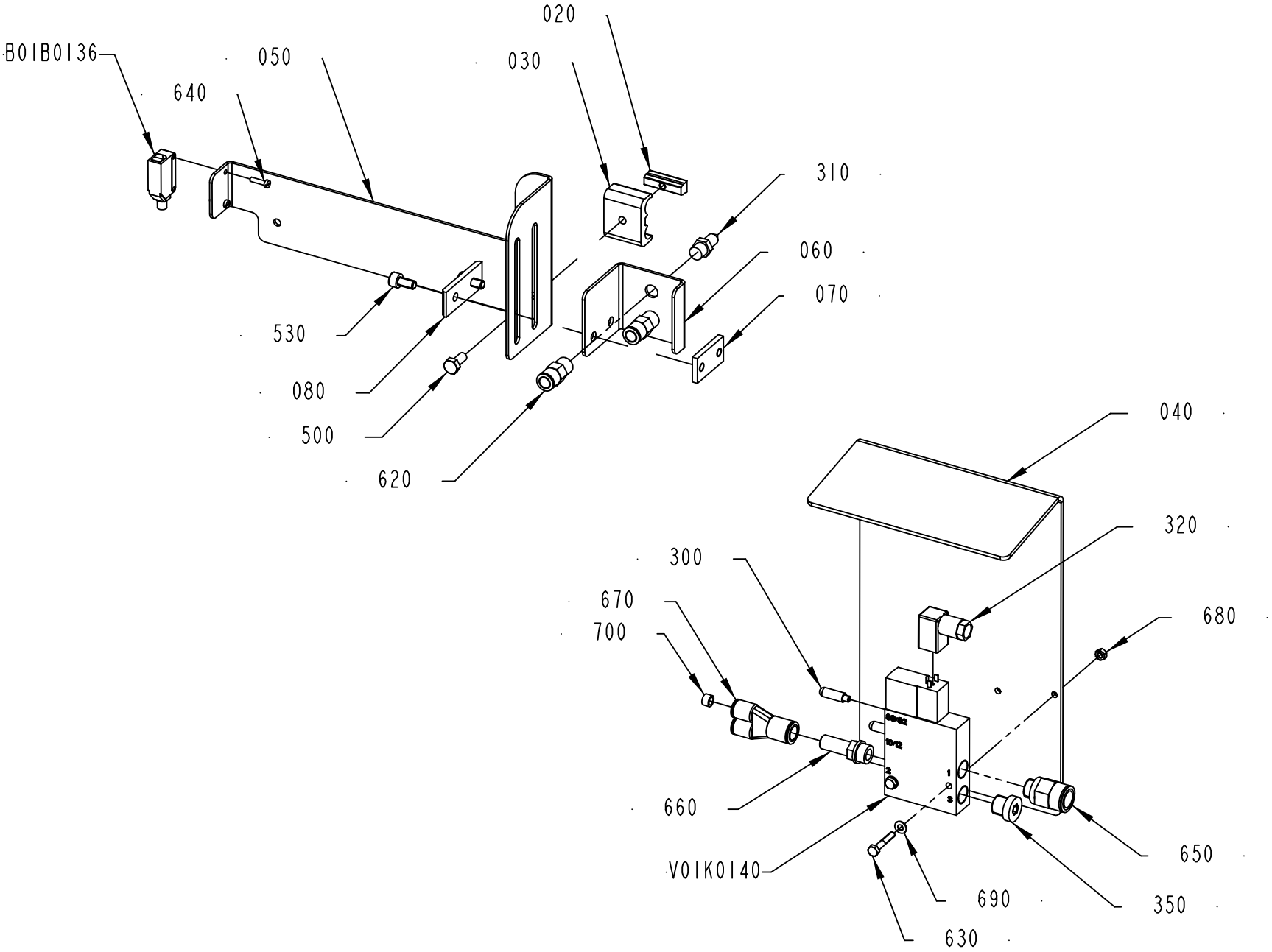

2904907-1
429959

ECM: 436966 - 20100222
Group number: 2904907-0100
Assembly Drawing: 2904907-1_1_AE

Pos	Part No	UN	Qty	Description	Page No
-					
020	3060160-0000		1	CLAMP	
030	3060159-0000		1	RAIL HOLDER	
040	2925071-0000		1	MOUNTING PLATE	
050	3060166-0000		1	BRACKET	
060	3060167-0000		1	BRACKET	
070	3004371-0000		1	LOCK NUT	
080	3004372-0000		1	SPACER BLOCK	
300	90328-0029		2	SILENCER M5	
310	90424-0087		2	AIR NOZZLE	
320	90458-2837		1	PLUG SOCKET, KMEB-1-24-5-LED	
350	90600-1167		1	PLUG, EXT. R-THREAD, R1/4	
500	312101-0367		1	SCREW M6S M6X14 FZB	
530	312115-0366		2	SCREW ISO4762 M6X12 A4 80	
620	350008-0005		2	PUSH-IN FITTING QSF-F-G1/8-8	
630	312105-0297		2	SCREW M6S ISO 4017 M4X25 A470	
640	312121-0226		2	SCREW ISO 1207 M3X12 4.8-5.8 Z.PL.	
650	350001-0011		1	PUSH-IN FITTING QS-F-G1/4-12	
660	350014-0010		1	FITTING QS-F-G1/4-10H	
670	350015-0006		1	Y-FITTING QSY-F-10-8	
680	312607-0312		2	HEXAGON NUT, EN 24032 M6M M4 A480	
690	315106-0136		2	WASHER ISO 7089-4-200 HV A4	
700	315400-0004	MM	1000	TUBE PUN-H-8X1,25-BL	
B01B0136	90459-7273		1	PHOTOCELL E3Z-T81C-G0SR D-CN	
V01K0140	90600-5813		1	SOLENOID VALVE, CPE18-M1H-3GL-1/4	

Pos	Part No	UN	Qty	Description	Page No

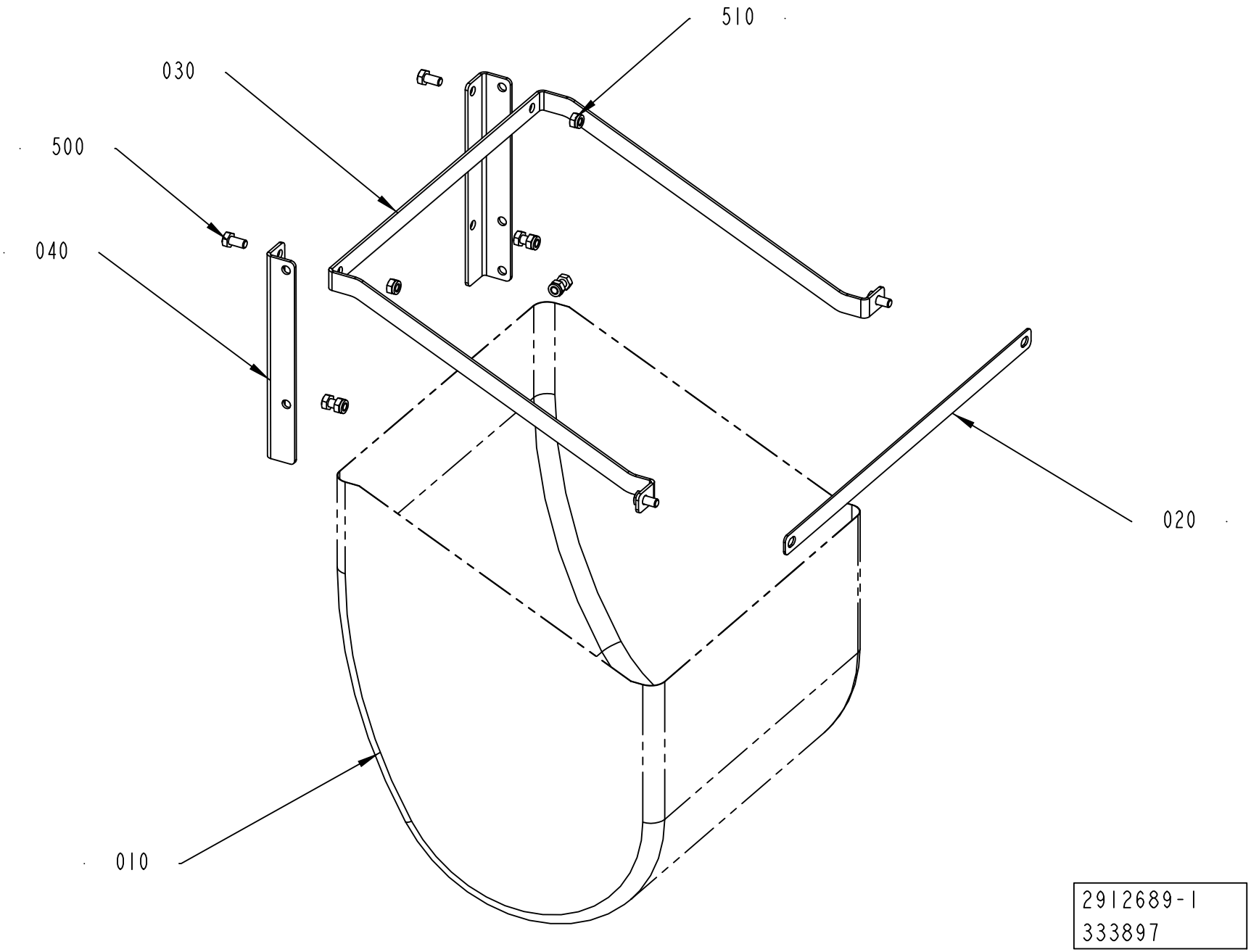
510
030
500
040
020
010
2912689-1
333897

ECM: 333601 - 20071218
Group number: 2912689-0100
Assembly Drawing: 2912689-1_1_AA

Pos	Part No	UN	Qty	Description	Page No
-					
010	2918411-0000		1	NET	
020	2915045-0000		1	PLATE	
030	2915053-0000		1	CANTILEVER	
040	2915054-0000		2	STRUT	
500	312105-0449		7	SCREW M6S ISO 4017 M8X16 A480	
510	312812-0318		5	HEXAGON NUT, NY-LOCK M8 A480	

Pos	Part No	UN	Qty	Description	Page No

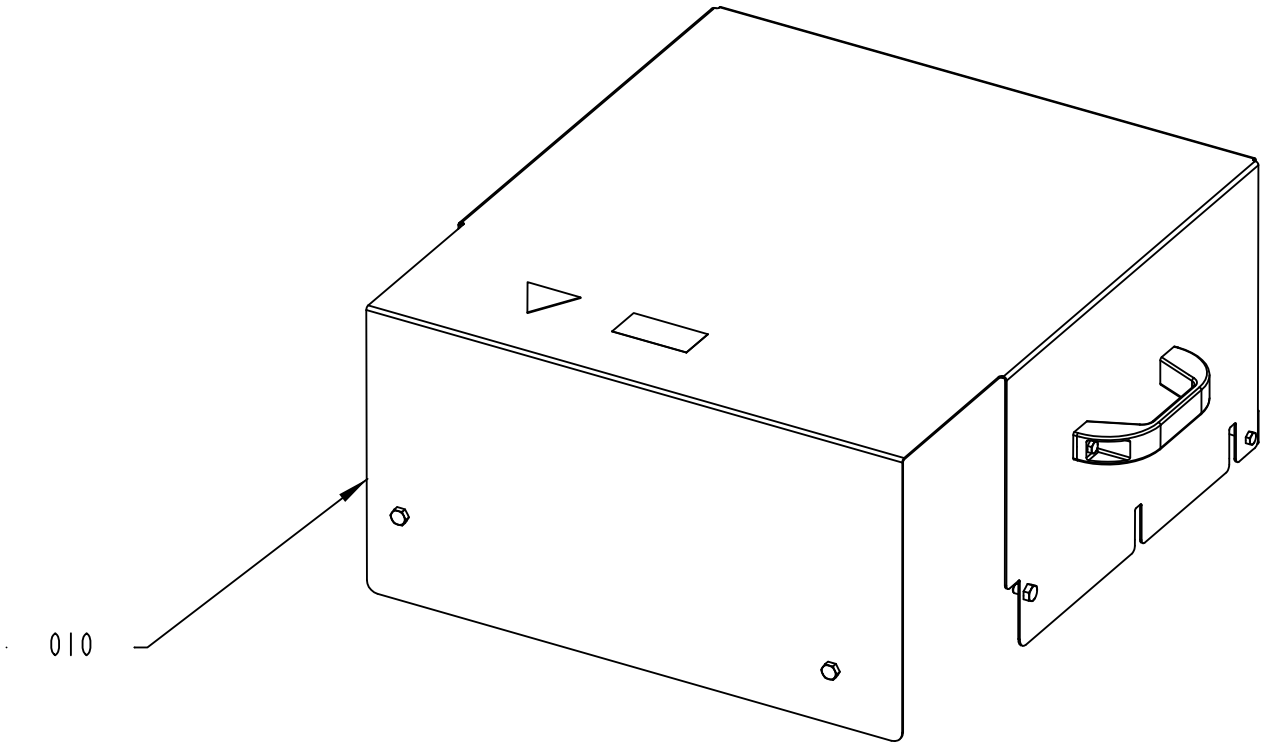

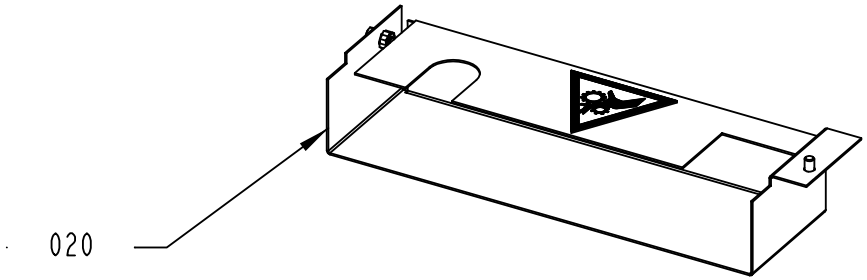

663504-1
360400

ECM: 384713 - 20090303
Group number: 663504-0100
Assembly Drawing: 663504-1_1_AB

Pos	Part No	UN	Qty	Description	Page No
-					
010	2933845-0100		1	COVER	**11-95**
020	2997841-0100		1	COVER	**11-97**

Pos	Part No	UN	Qty	Description	Page No

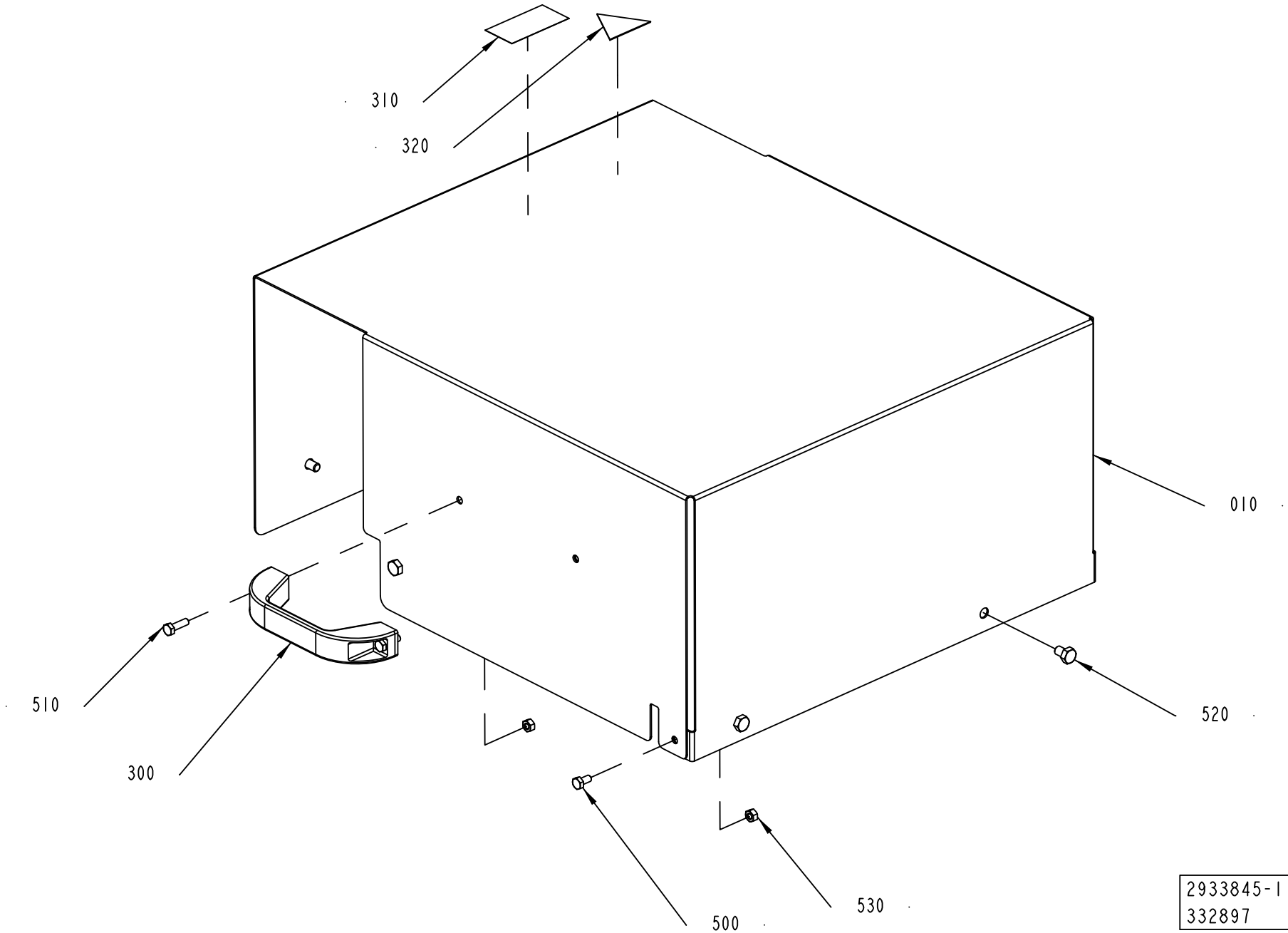
310
320
010
510
520
300
500
530
2933845-1
332897

ECM: 418349 - 20091009
Group number: 2933845-0100
Assembly Drawing: 2933845-1_1_AB

Pos	Part No	UN	Qty	Description	Page No
OTHER COUNTRIES NOT USA/CANADA, FINAL DEST. CANADA					
310	90459-3898		1	WARNING SIGN ISO, LASER RADIATION	
320	90459-7545		1	WARNING SIGN ISO, AUTOMATIC START	
FINAL DEST. USA					
310	90459-3899		1	WARNING SIGN ANSI (V), LASER RADIATION	
320	90459-7544		1	CAUTION SIGN ANSI (H), AUTOMATIC START	
Common Parts					
010	2924303-0000		1	COVER	
300	90458-0805		2	HANDLE VERSION #2 NO. 1095-19	
500	312105-0366		2	SCREW M6S ISO 4017 M6X12 A480	
510	312105-0370		4	SCREW M6S ISO 4017 M6X20 A480	
520	312105-0447		6	SCREW M6S ISO 4017 M8X12 A480	
530	312605-0316		6	HEXAGON NUT, M6M M6 A280	

Pos	Part No	UN	Qty	Description	Page No

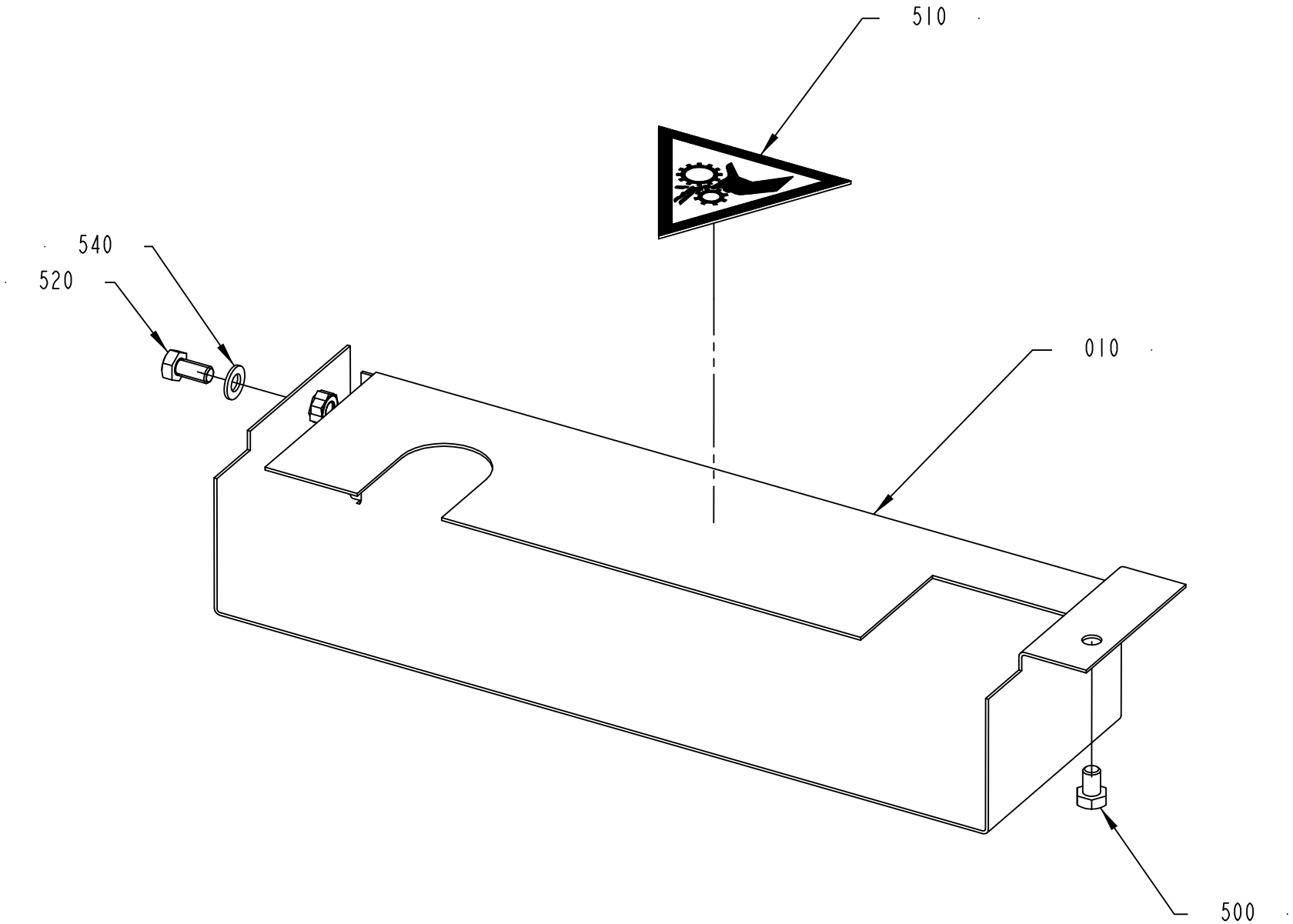

2997841-1
375285

ECM: 418351 - 20091009
Group number: 2997841-0100
Assembly Drawing: 2997841-1_1_AA

Pos	Part No	UN	Qty	Description	Page No
OTHER COUNTRIES NOT USA/CANADA, FINAL DEST. CANADA					
510	359705-0002		1	WARNING SIGN ISO, ENTANGLEMENT	
FINAL DEST. USA					
510	359725-0100		1	WARNING SIGN ANSI (H), ENTANGLEMENT	
Common Parts					
010	2995763-0000		1	COVER	
500	312105-0447		1	SCREW M6S ISO 4017 M8X12 A480	
520	312105-0449		1	SCREW M6S ISO 4017 M8X16 A480	
530	312607-0318		1	HEXAGON NUT, EN 24032 M6M M8 A480	
540	315105-0165		1	WASHER BRB 8,4X16 RFR	

Pos	Part No	UN	Qty	Description	Page No

ELECTRICAL CABINET

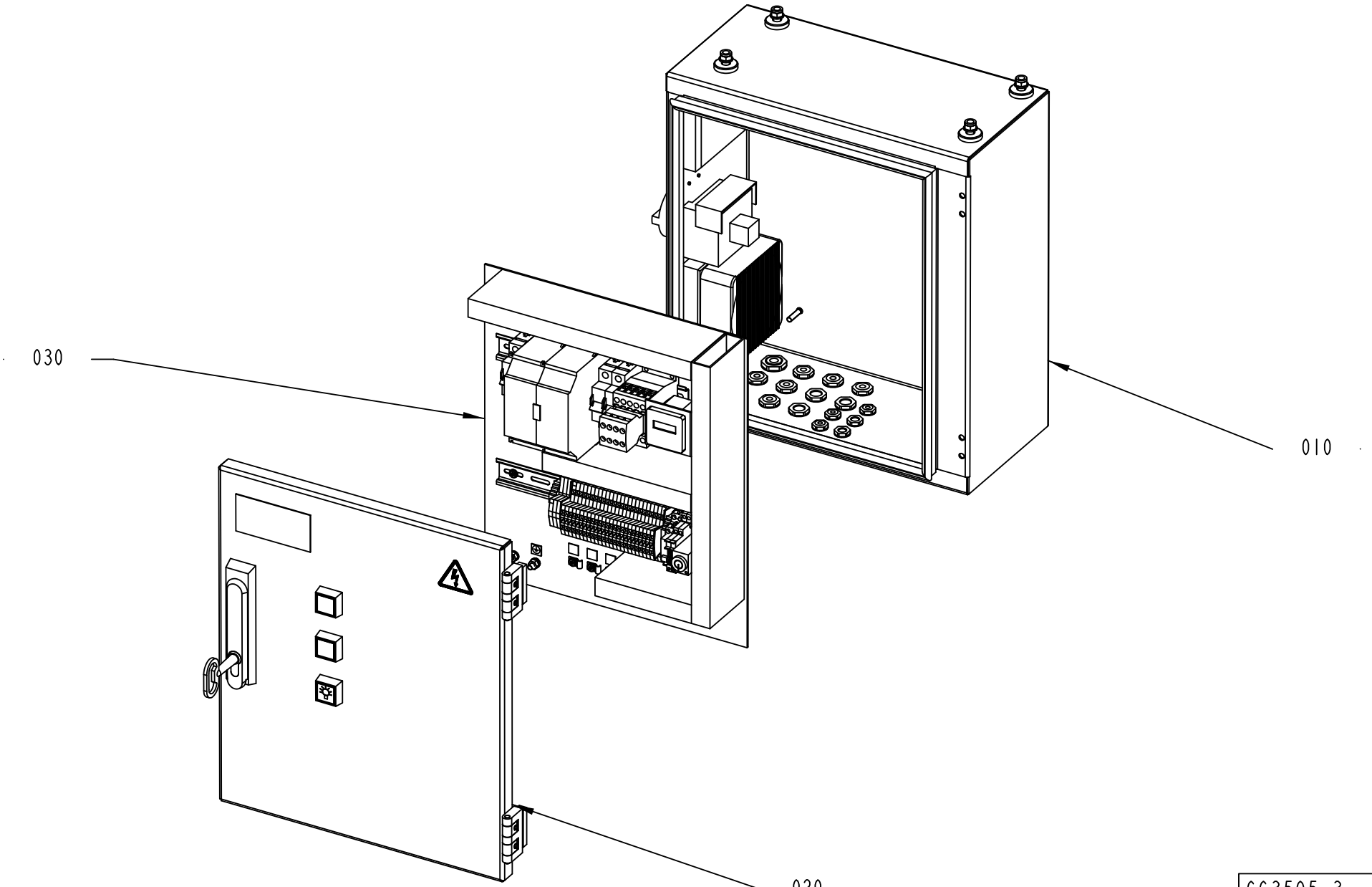

663505-3
404722

ECM: 406203 - 20090630
Group number: 663505-0300
Assembly Drawing: 663505-3_1_AA

Pos	Part No	UN	Qty	Description	Page No
-					
010	2933850-0300		1	ELECTRICAL CABINET	**11-101**
020	2939105-0300		1	EL-CABINET DOOR	**11-103**
030	2939110-0300		1	ASSEMBLY PLATE	**11-105, 11-107**
040	2939106-0300		1	MACHINE	**11-115**

Pos	Part No	UN	Qty	Description	Page No

ELECTRICAL CABINET

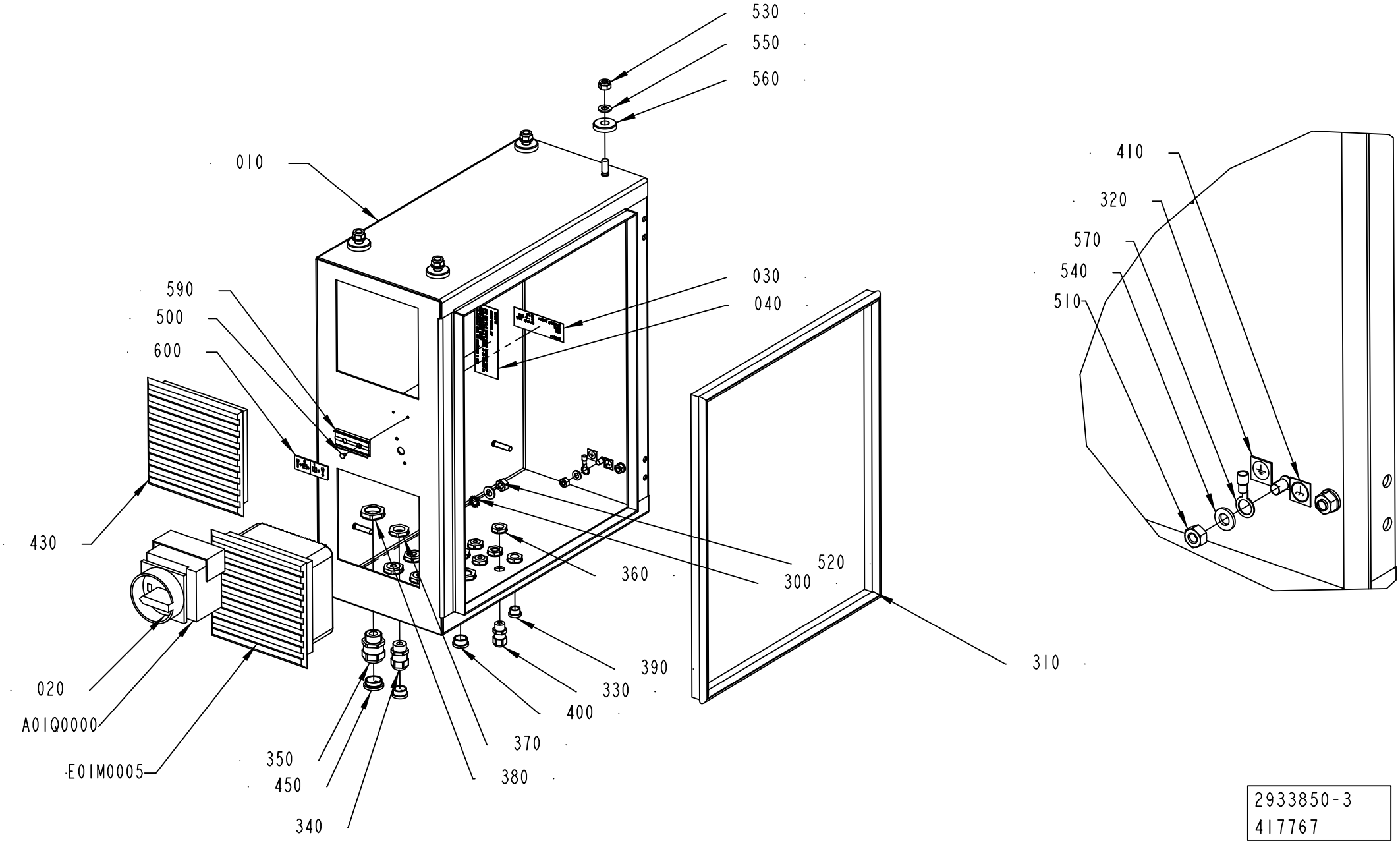

2933850-3
417767

ECM: 436967 - 20100222
Group number: 2933850-0300
Assembly Drawing: 2933850-3_1_AC

Pos	Part No	UN	Qty	Description	Page No
FINAL DEST. CANADA, FINAL DEST. USA					
030	3056163-0000		1	SIGN	
040	3056166-0000		1	SIGN	
Common Parts					
010	3034246-0000		1	CABINET	
020	3041490-0000		1	TURNING HANDLE	
300	90062-0016		1	LOCK WASHER SERRAT.EXT.GEAR,8,4/15 H=0,8	
310	90143-0057	MM	1500	STRIP EMKA 1011-05 21X11MM	
320	90194-0152		2	SIGN, EARTH	
330	90458-0305		3	CABLE GLAND, M12X1,5, NO.5311 1000	
340	90458-0306		6	CABLE GLAND, M16X1,5, NO.5311 1010	
350	90458-0307		1	CABLE GLAND, M20X1,5, NO.5311 1020	
360	90458-0321		5	NUT, M12X1,5	
370	90458-0322		9	NUT, M16X1,5	
380	90458-0323		1	NUT, M20X1,5	
390	90458-1306		2	BLIND PLUG CIRCULAR, M12X1,5 514GFK/212	
400	90458-1307		4	BLIND PLUG CIRCULAR, M16X1,5 514GFK/216	
410	90459-2928		1	LABEL 60417-2-IEC-5020, COMM. REF. POT.	
430	90503-3779		1	EXHAUST FILTERS PFA2000 IP54	
440	90458-1308		1	BLIND PLUG CIRCULAR, M20X1,5 514GFK/220	
500	311521-0143		2	RIVET, BLANK 3,2X8	
510	312605-0316		2	HEXAGON NUT, M6M M6 A280	
520	312605-0318		1	HEXAGON NUT, M6M M8 A280	
530	312810-0318		4	HEXAGON NUT, NY-LOCK M8 FZB	
540	315105-0153		2	WASHER BRB 6,4X12 RFR	
550	315105-0165		5	WASHER BRB 8,4X16 RFR	
560	315125-0173		4	WASHER TBRSB 10,5X28X6 A4	
570	353101-0134		1	CABLE SHOE 1,5-2,5MM2 M8 BLUE	
580	353102-0176		1	CABLE SHOE, RING INS., YAEV 25 M8	
590	359240-0100		1	SIGN HOLDER FOR 359240-0001	
600	359241-0803		1	SIGN: "SUPPLY DISCONNECTING DEVICE"	
A01Q0000	90111-0132		1	MAIN SWITCH P1-25/EA/SVB-SW/N/HI11/H-P14	
E01M0005	90503-3773		1	FILTER FAN PF2000 IP54 230V AC	
	90503-3782		*1*	*FILTER PF/PFA2000 5 PCS*	

Pos	Part No	UN	Qty	Description	Page No

Machine Type | Group Description | Used-In | Group Number | Page No

EL-CABINET DOOR

Drawing file: 2939105-3_1_AB.hpgl

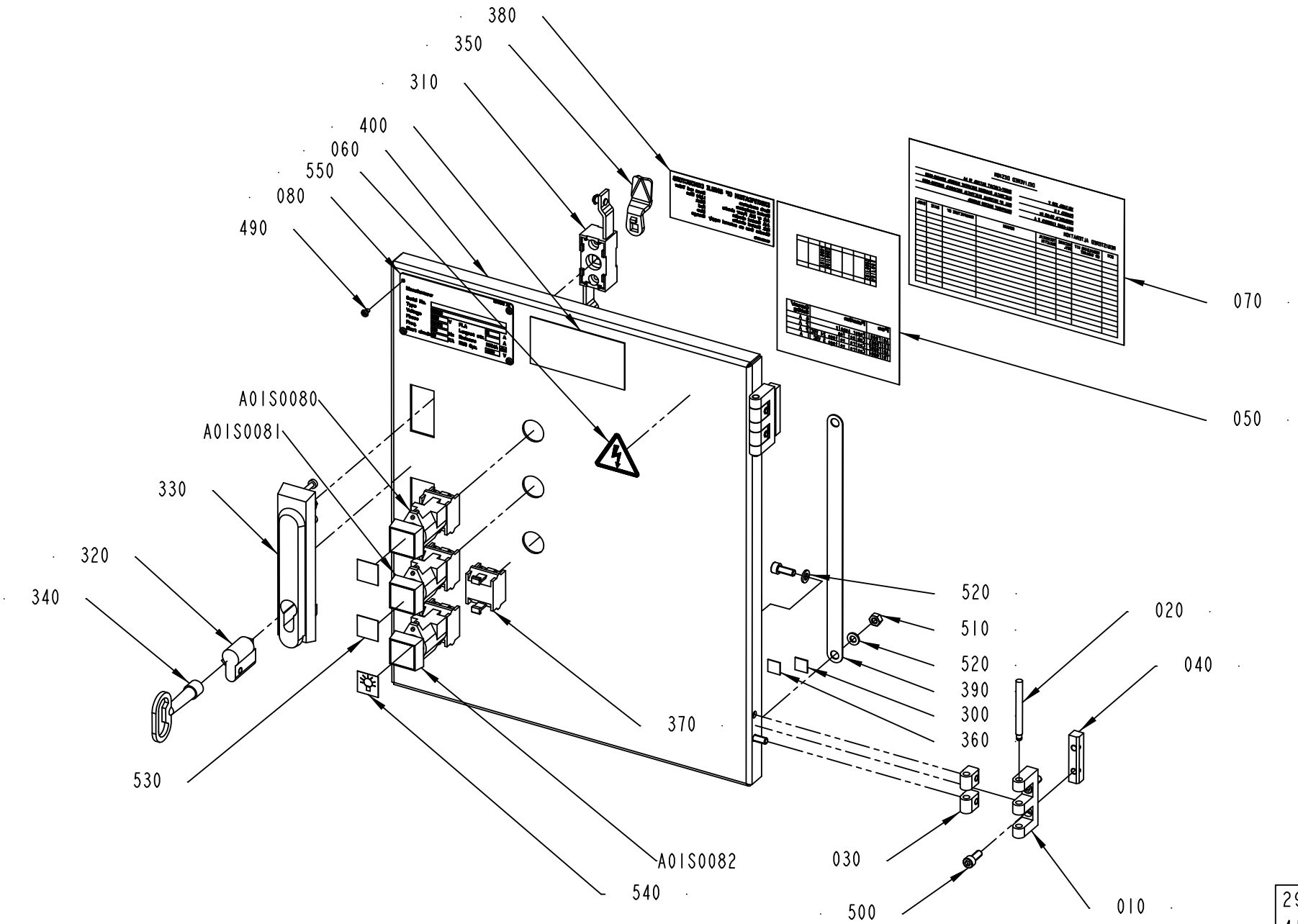

2939105-3
413459

ECM: 436968 - 20100222
Group number: 2939105-0300
Assembly Drawing: 2939105-3_1_AB

Pos	Part No	UN	Qty	Description	Page No
FINAL DEST. CANADA, FINAL DEST. USA					
060	3041926-0000		1	DOOR	
070	3041939-0000		1	DELIVERED DESIGN	
080	3041941-0000		1	ELECTRICAL EQUIPMENT LABEL	
400	90600-5233		1	WARNING SIGN ANSI (H), READ MANUAL, AUTO	
550	359715-0100		1	WARNING SIGN ANSI (H), ELECTRIC SHOCK	
OTHER COUNTRIES NOT USA/CANADA					
060	3060168-0000		1	DOOR	
070	3034247-0000		1	DELIVERED DESIGN	
400	90600-5235		1	MANDATORY ACTION SIGN ISO, READ MANUAL	
550	359705-0015		1	WARNING SIGN ISO, RISK OF ELECTRIC SHOCK	
Common Parts					
010	1035792-0000		2	E-HINGE	
020	1036329-0000		2	PIN	
030	1129770-0000		4	BLOCKING PIECE	
040	2773708-0000		2	NUT WASHER	
050	3041937-0000		1	FUSE PANEL LABEL	
300	90194-0152		1	SIGN, EARTH	
310	90237-0123		1	LOCK, 1121-U10C	
320	90237-0129		1	LOCK CYLINDER, 1109-U6	
330	90237-0175		1	TURNING HANDLE, 1125-U185-0A	
340	90237-0324		1	KEY, 1104-02 FOR SQUARE 8 MM	
350	90237-0342		1	LOCKING CATCH	
360	90459-2928		1	LABEL 60417-2-IEC-5020, COMM. REF. POT.	
370	90458-0151		1	CONTACT BLOCK, 704.901.3	
380	90459-7229		1	IDENTIF. OF SINGLE CONDUCTORS, TEMPLATE	
390	90600-2904		1	EARTH BRAID, 250/16/8,5	
490	311523-0142		4	BLIND RIVET ISO 15983 -3.2X6 A2/A2	
500	312115-0368		8	SCREW ISO4762 M6X16 A4 80	
510	312605-0316		1	HEXAGON NUT, M6M M6 A280	
520	315105-0153		5	WASHER BRB 6,4X12 RFR	
530	359301-0001		2	BUTTON SIGN, UP	
540	359301-0130		1	BUTTON SIGN, LAMP TEST	
A01S0080	90064-0082		1	PUSH BUTTON, WHITE	
	90036-0057		*1*	*LIGHT BULB, BA9S 28V*	
A01S0081	90064-0082		1	PUSH BUTTON, WHITE	
	90036-0057		*1*	*LIGHT BULB, BA9S 28V*	
A01S0082	90064-0082		1	PUSH BUTTON, WHITE	
	90036-0057		*1*	*LIGHT BULB, BA9S 28V*	

Pos	Part No	UN	Qty	Description	Page No

ASSEMBLY PLATE

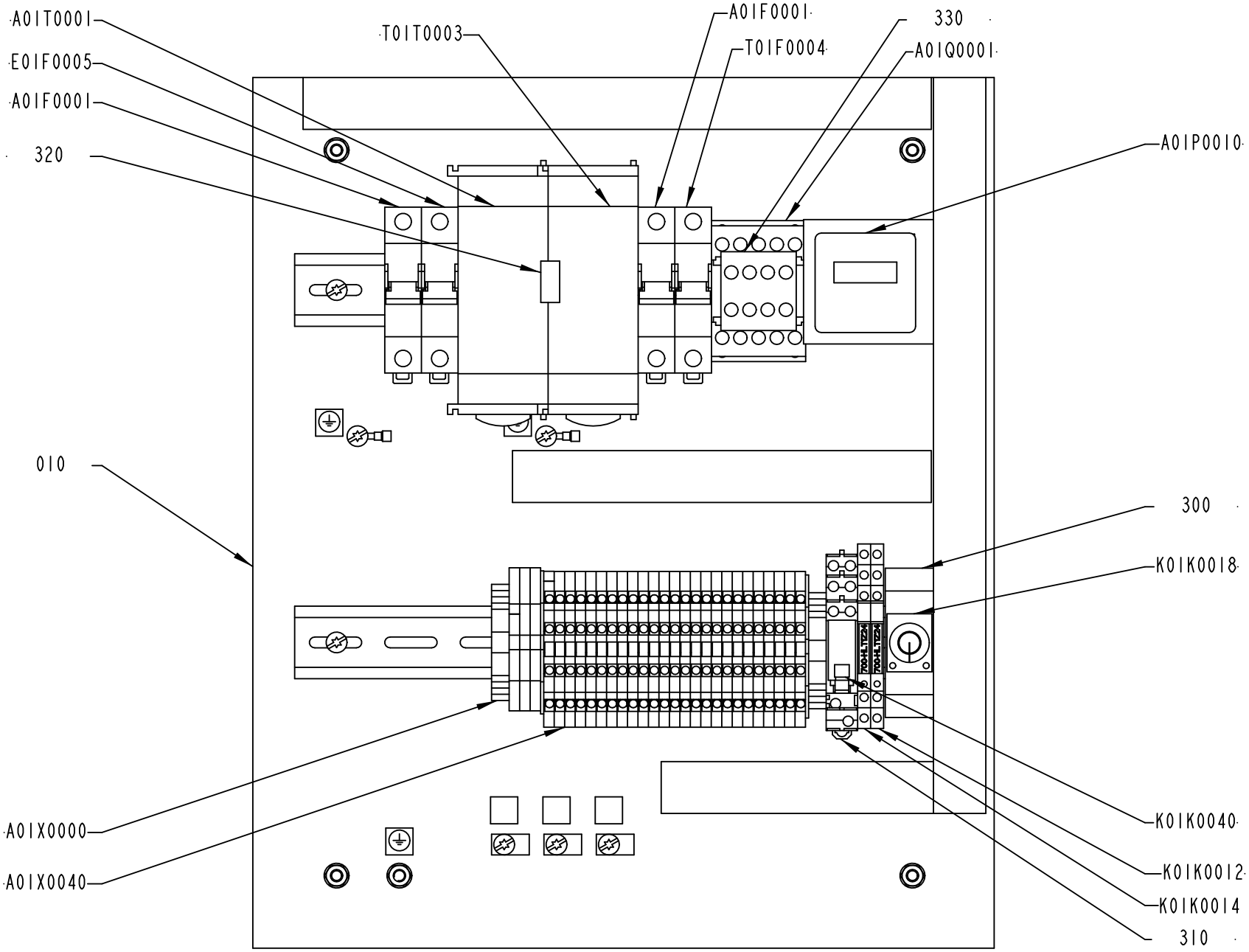

2939110-3
404722

Pos	Part No	UN	Qty	Description	Page No
FINAL DEST. CANADA, FINAL DEST. USA (See drawing on page: 11-106)					
A01F0001	315744-0040		1	MINIATURE CIRCUIT BREAKER, FAZ-C4/1-NA	
A01F0002	315744-0040		1	MINIATURE CIRCUIT BREAKER, FAZ-C4/1-NA	
E01F0005	315744-0020		1	MINIATURE CIRCUIT BREAKER, FAZ-C2/1-NA	
T01F0004	315744-0010		1	MINIATURE CIRCUIT BREAKER, FAZ-C1/1-NA	
OTHER COUNTRIES NOT USA/CANADA (See drawing on page: 11-104)					
A01F0001	354000-0040		1	MINIATURE CIRCUIT BREAKER, FAZ-C4/1	
A01F0002	354000-0040		1	MINIATURE CIRCUIT BREAKER, FAZ-C4/1	
E01F0005	354000-0020		1	MINIATURE CIRCUIT BREAKER, FAZ-C2/1	
T01F0004	354000-0010		1	MINIATURE CIRCUIT BREAKER, FAZ-C1/1	
Common Parts					
010	2935060-0200		1	ASSEMBLY PLATE	**11-109**
300	90129-0017		1	SOCKET, PYF08A-E	
310	90129-0018		1	BASE, P2RF-08-E	
320	90458-2905		1	CONNECTOR S8T-BUS02 BUS LINE CONNECTOR	
330	90459-6852		1	AUXILIARY CONTACT, DILA-XHI22	
A01P0010	90178-0007		1	HOUR COUNTER, BG 40,17-1 12-48VDC	
A01Q0001	90459-5440		1	CONTACTOR 4KW 24VDC, DILM9-01	
A01T0001	90459-4807		1	POWER SUPPLY UNIT 100-240 VAC/24VDC2,5A	
A01X0000	2936703-0200		1	TERMINAL	**11-111**
A01X0040	2936702-0200		1	TERMINAL	**11-113**
K01K0012	90600-1211		1	TERMINAL BLOCK RELAY, 700-HLT1Z24	
K01K0014	90600-1211		1	TERMINAL BLOCK RELAY, 700-HLT1Z24	
K01K0018	90458-0143		1	TIME RELAY H3YN-2 24VDC	
K01K0040	90119-0108		1	RELAY OMRON G2R-2-SNI-24DC	
	90129-0018		*1*	*BASE, P2RF-08-E*	
T01T0003	90459-2569		1	POWER SUPPLY UNIT 100-240VAC/5VDC 5A	

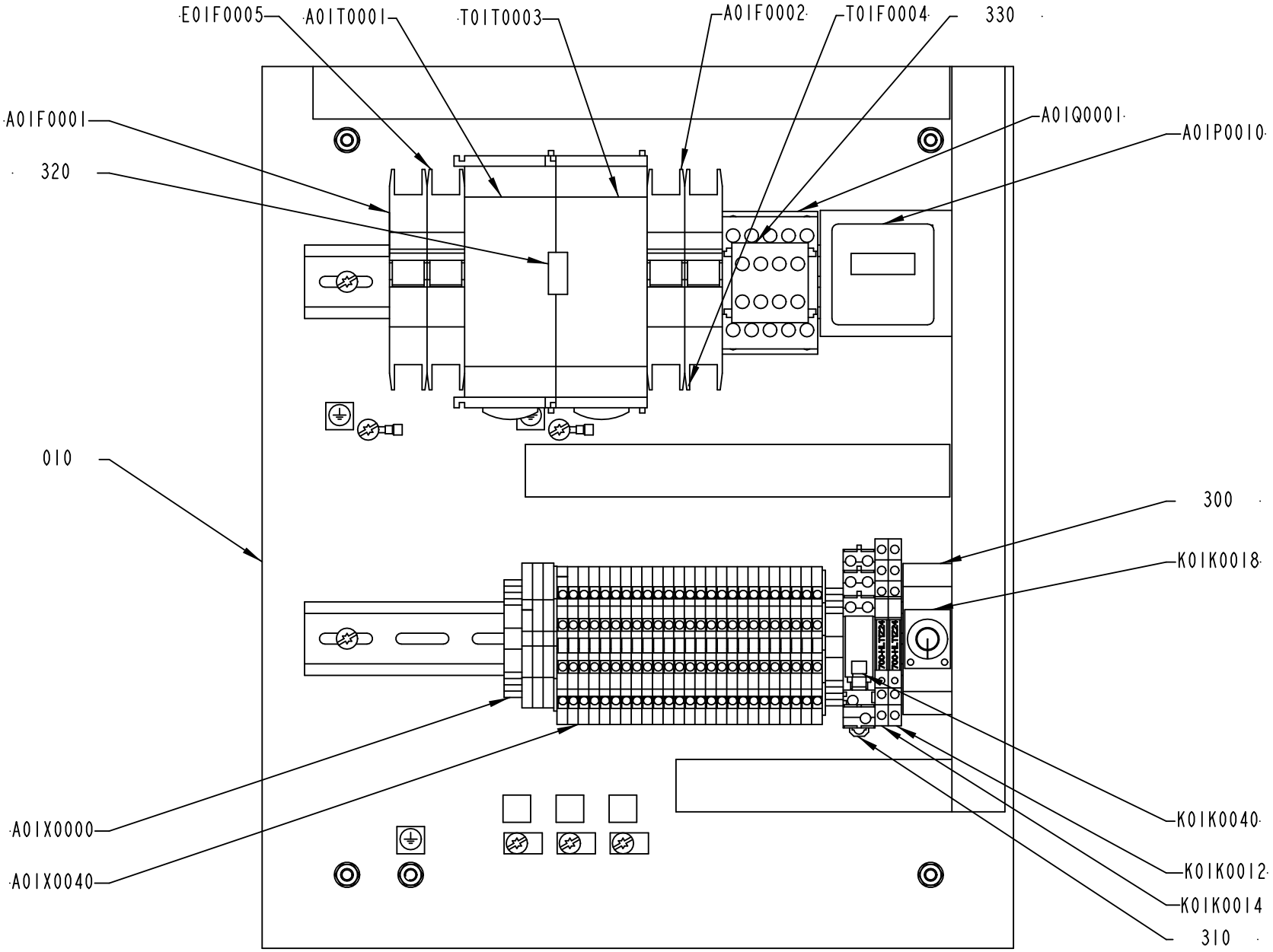

2939110-4
413459

Pos	Part No	UN	Qty	Description	Page No
FINAL DEST. CANADA, FINAL DEST. USA (See drawing on page: 11-106)					
A01F0001	315744-0040		1	MINIATURE CIRCUIT BREAKER, FAZ-C4/1-NA	
A01F0002	315744-0040		1	MINIATURE CIRCUIT BREAKER, FAZ-C4/1-NA	
E01F0005	315744-0020		1	MINIATURE CIRCUIT BREAKER, FAZ-C2/1-NA	
T01F0004	315744-0010		1	MINIATURE CIRCUIT BREAKER, FAZ-C1/1-NA	
OTHER COUNTRIES NOT USA/CANADA (See drawing on page: 11-104)					
A01F0001	354000-0040		1	MINIATURE CIRCUIT BREAKER, FAZ-C4/1	
A01F0002	354000-0040		1	MINIATURE CIRCUIT BREAKER, FAZ-C4/1	
E01F0005	354000-0020		1	MINIATURE CIRCUIT BREAKER, FAZ-C2/1	
T01F0004	354000-0010		1	MINIATURE CIRCUIT BREAKER, FAZ-C1/1	
Common Parts					
010	2935060-0200		1	ASSEMBLY PLATE	**11-109**
300	90129-0017		1	SOCKET, PYF08A-E	
310	90129-0018		1	BASE, P2RF-08-E	
320	90458-2905		1	CONNECTOR S8T-BUS02 BUS LINE CONNECTOR	
330	90459-6852		1	AUXILIARY CONTACT, DILA-XHI22	
A01P0010	90178-0007		1	HOUR COUNTER, BG 40,17-1 12-48VDC	
A01Q0001	90459-5440		1	CONTACTOR 4KW 24VDC, DILM9-01	
A01T0001	90459-4807		1	POWER SUPPLY UNIT 100-240 VAC/24VDC2,5A	
A01X0000	2936703-0200		1	TERMINAL	**11-111**
A01X0040	2936702-0200		1	TERMINAL	**11-113**
K01K0012	90600-1211		1	TERMINAL BLOCK RELAY, 700-HLT1Z24	
K01K0014	90600-1211		1	TERMINAL BLOCK RELAY, 700-HLT1Z24	
K01K0018	90458-0143		1	TIME RELAY H3YN-2 24VDC	
K01K0040	90119-0108		1	RELAY OMRON G2R-2-SNI-24DC	
	90129-0018		*1*	*BASE, P2RF-08-E*	
T01T0003	90459-2569		1	POWER SUPPLY UNIT 100-240VAC/5VDC 5A	

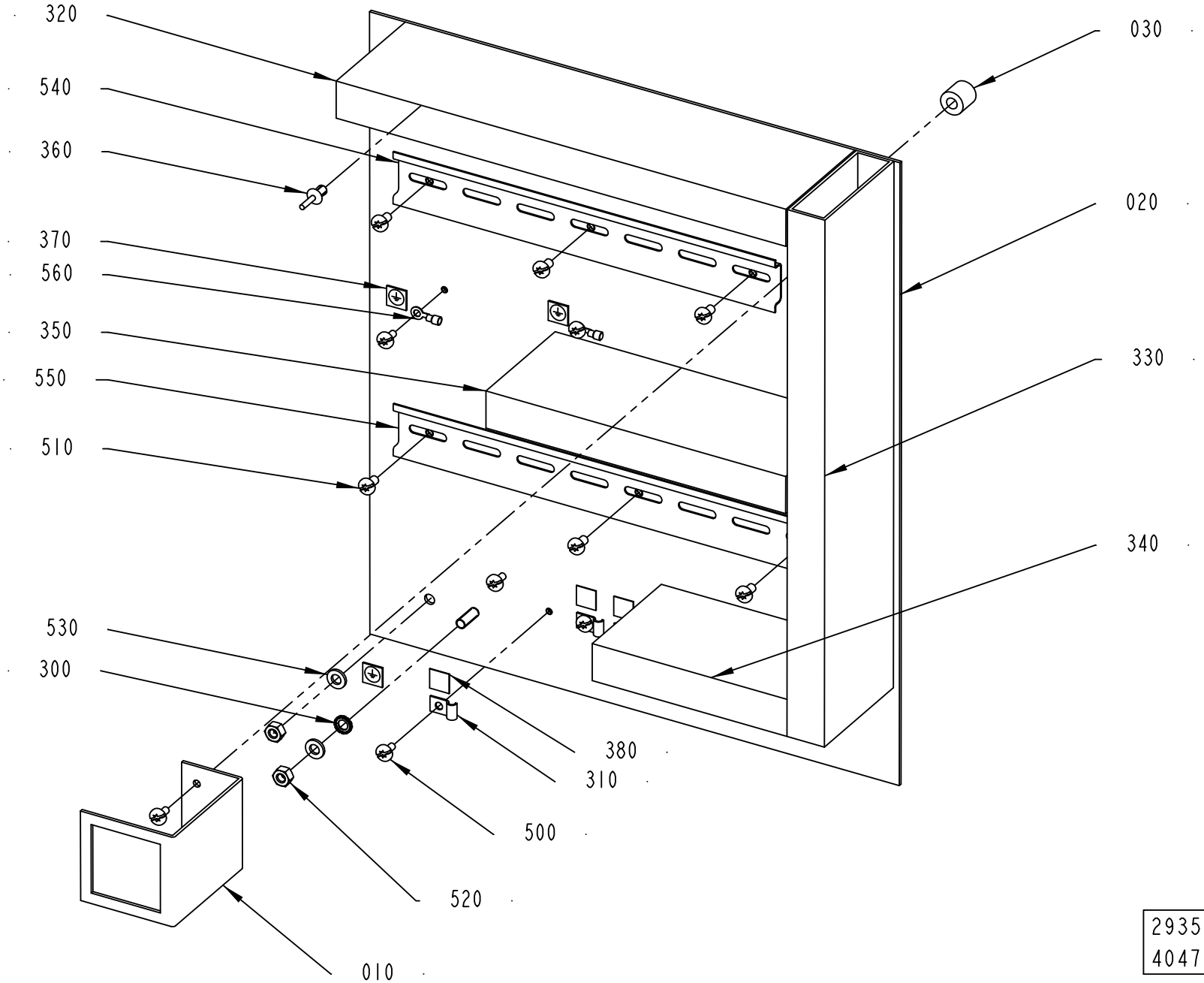
320
540
360
370
560
350
550
510
530
300
030
020
330
340
380
310
500
520
010
2935060-2
404722

ECM: 436970 - 20100222
Group number: 2935060-0200
Assembly Drawing: 2935060-2_1_AB

Pos	Part No	UN	Qty	Description	Page No
-					
010	583570-0000		1	BRACKET	
020	3016914-0000		1	MOUNTING PLATE	
030	3016915-0000		4	SPACER	
300	90062-0015		1	LOCK WASHER SERRAT.EXT.GEAR,6,4/11 H=0,7	
310	90165-0003		3	PIPE CLIP FOR TUBE D=4 MM	
320	90181-0052	MM	300	CABLE DUCT 25X80MM	
330	90181-0052	MM	355	CABLE DUCT 25X80MM	
340	90181-0052	MM	130	CABLE DUCT 25X80MM	
350	90181-0052	MM	202	CABLE DUCT 25X80MM	
360	90181-0088		10	PLASTIC RIVET, PR 52314	
370	90194-0152		3	SIGN, EARTH	
380	90459-2928		3	LABEL 60417-2-IEC-5020, COMM. REF. POT.	
500	312113-0287		7	SERRATED COMBI TORX SCREW M4X8 A2	
510	312113-0323		6	SERRATED COMBI TORX SCREW M5X8 A2	
520	312605-0316		5	HEXAGON NUT, M6M M6 A280	
530	315106-0153		5	WASHER ISO 7089-6-200 HV A4	
540	353042-0004	MM	255	RAIL TS 35/7,5	
550	353042-0004	MM	305	RAIL TS 35/7,5	
560	353101-0120		2	CABLE SHOE 0,5-1,5MM2 M4 RED	
570	353102-0161		1	CABLE SHOE, RING INS., YAEV 10 M6	

Pos	Part No	UN	Qty	Description	Page No

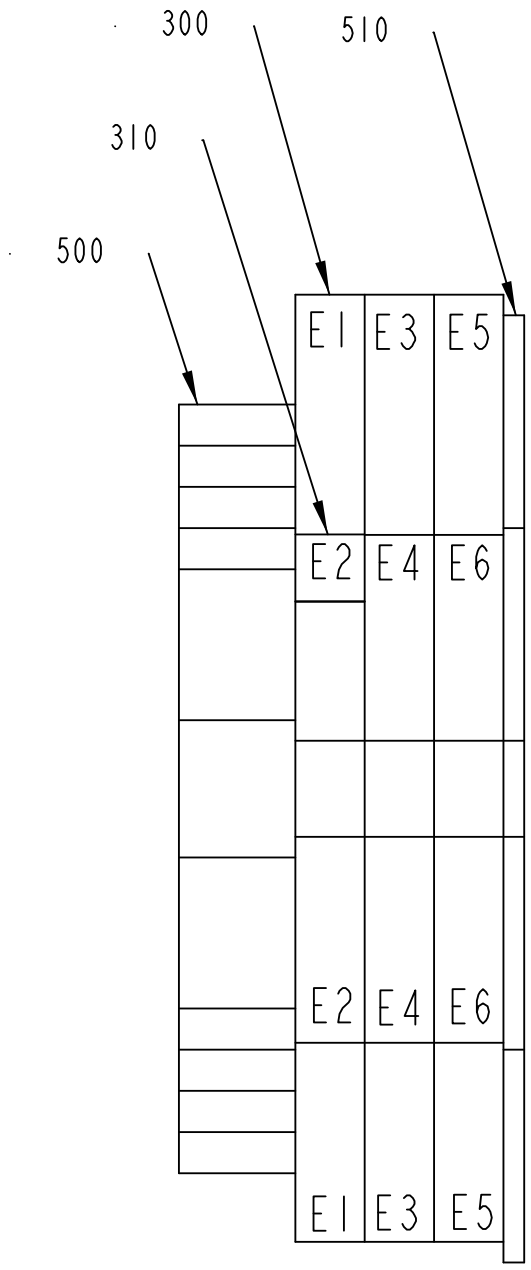

2936703-2
404722

ECM: 407290 - 20090630
Group number: 2936703-0200
Assembly Drawing: 2936703-2_1_AB

Pos	Part No	UN	Qty	Description	Page No
-					
300	353024-0212		3	EARTH TERMINAL, 10363.0	
310	90459-0606		1	MARKING PLATES 5-FW E1-E50	
500	353031-0203		1	END SUPPORT, WEW 35/2	
510	353032-0009		1	END PLATE, WAP FOR WDK	

Pos	Part No	UN	Qty	Description	Page No

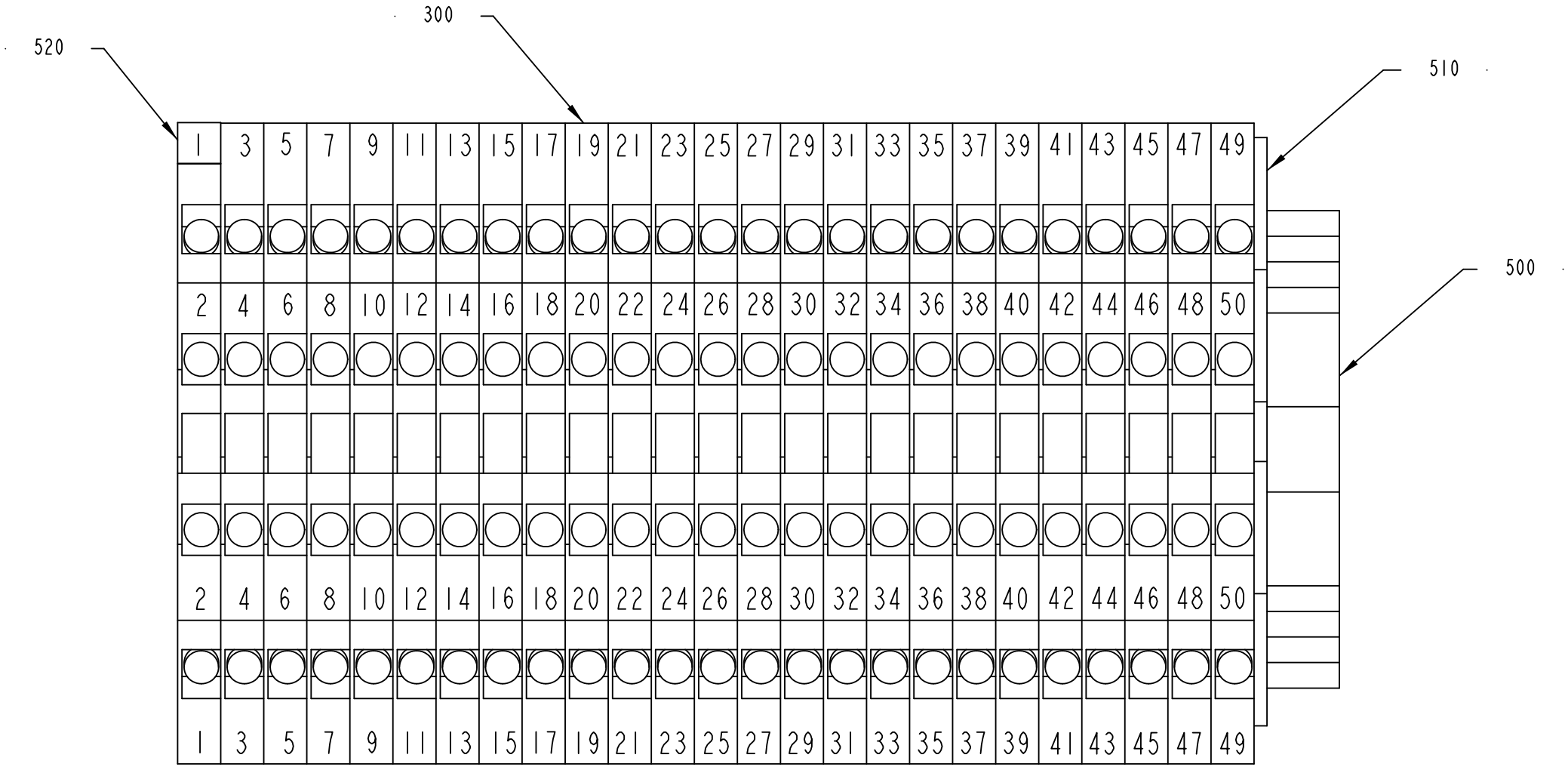

2936702-2
361041

ECM: 361118 - 20090303
Group number: 2936702-0200
Assembly Drawing: 2936702-2_1_AA

Pos	Part No	UN	Qty	Description	Page No
-					
300	90077-0113		25	FEED THROUGH TERMINAL, 10-00102150-1	
500	353031-0203		1	END SUPPORT, WEW 35/2	
510	353032-0009		1	END PLATE, WAP FOR WDK	
520	359011-0807		1	MARKING PLATES 5-FW 1-50	

Pos	Part No	UN	Qty	Description	Page No

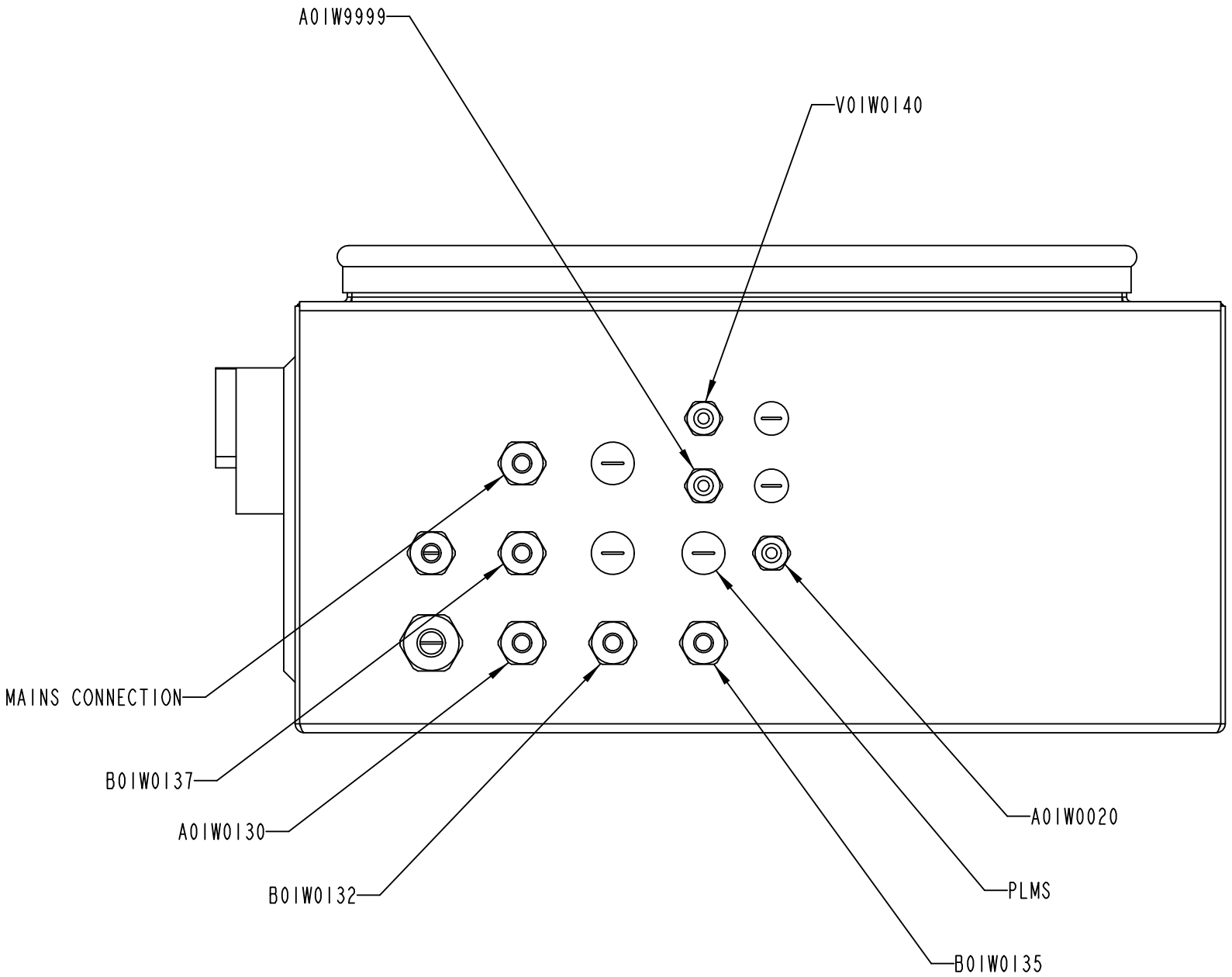

2939106-3
404722

ECM: 406208 - 20090630
Group number: 2939106-0300
Assembly Drawing: 2939106-3_1_AA

Pos	Part No	UN	Qty	Description	Page No
-					
A01W0020	351150-0403	M	3	CABLE OLFLEX 3X0,75 MM2 LIGHT/GREY	
A01W0130	90600-4187		1	CABLE, SICK DOL-1208-G02MA	
A01W9999	2939102-0100		1	CABLE	**11-117**
B01W0132	90600-4186		1	CABLE, SICK DOL-1205-G05MX	
B01W0135	90459-6604		1	LABLE SICK DOL-2312-G 05MMA3	
B01W0136	90459-6586		1	ACT/SENS.Y-CABLE, ASBN 2-PRKMV 4-07/0,6M	
B01W0137	351309-0050		1	'ACTUATOR/SENSOR CABLE PRKT 4-07/5M	
V01W0140	90458-2837		1	PLUG SOCKET, KMEB-1-24-5-LED	

Pos	Part No	UN	Qty	Description	Page No

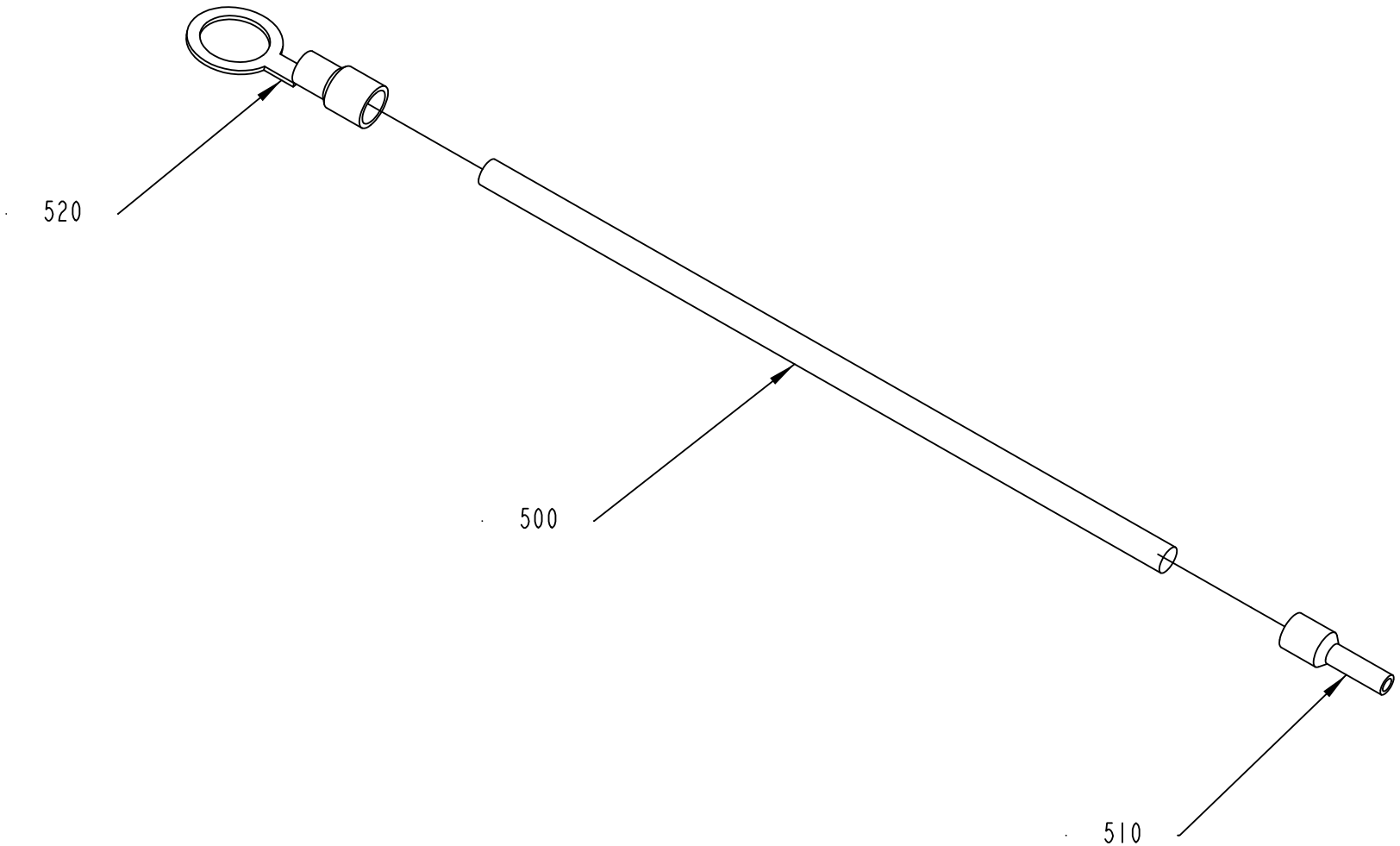

2939102-1
332897

ECM: 384783 - 20090303
Group number: 2939102-0100
Assembly Drawing: 2939102-1_1_AA

Pos	Part No	UN	Qty	Description	Page No
-					
500	351162-0104	M	1.1	WIRE AWM 1X1,5 MM2 YELLOW-GREEN	
510	353001-0114		1	END SLEEVE 1,50 MM2	
520	353101-0134		1	CABLE SHOE 1,5-2,5MM2 M8 BLUE	

Pos	Part No	UN	Qty	Description	Page No

This page is intentionally left blank.

ECM: 406209 - 20090630
Group number: 663506-0300
Assembly Drawing:

Pos	Part No	UN	Qty	Description	Page No
-					
010	2982985-0200		1	ELECTRICAL DOCUMENT	
020	3036161-0001		1	SOFTWARE CD	

Pos	Part No	UN	Qty	Description	Page No

This page is intentionally left blank.

ECM: 407291 - 20090630
Group number: 663507-0200
Assembly Drawing:

Pos	Part No	UN	Qty	Description	Page No
-					
010	2984257-0000		1	SET OF SIGNS	
020	3013895-0100		1	CABLE	**11-123**

Pos	Part No	UN	Qty	Description	Page No

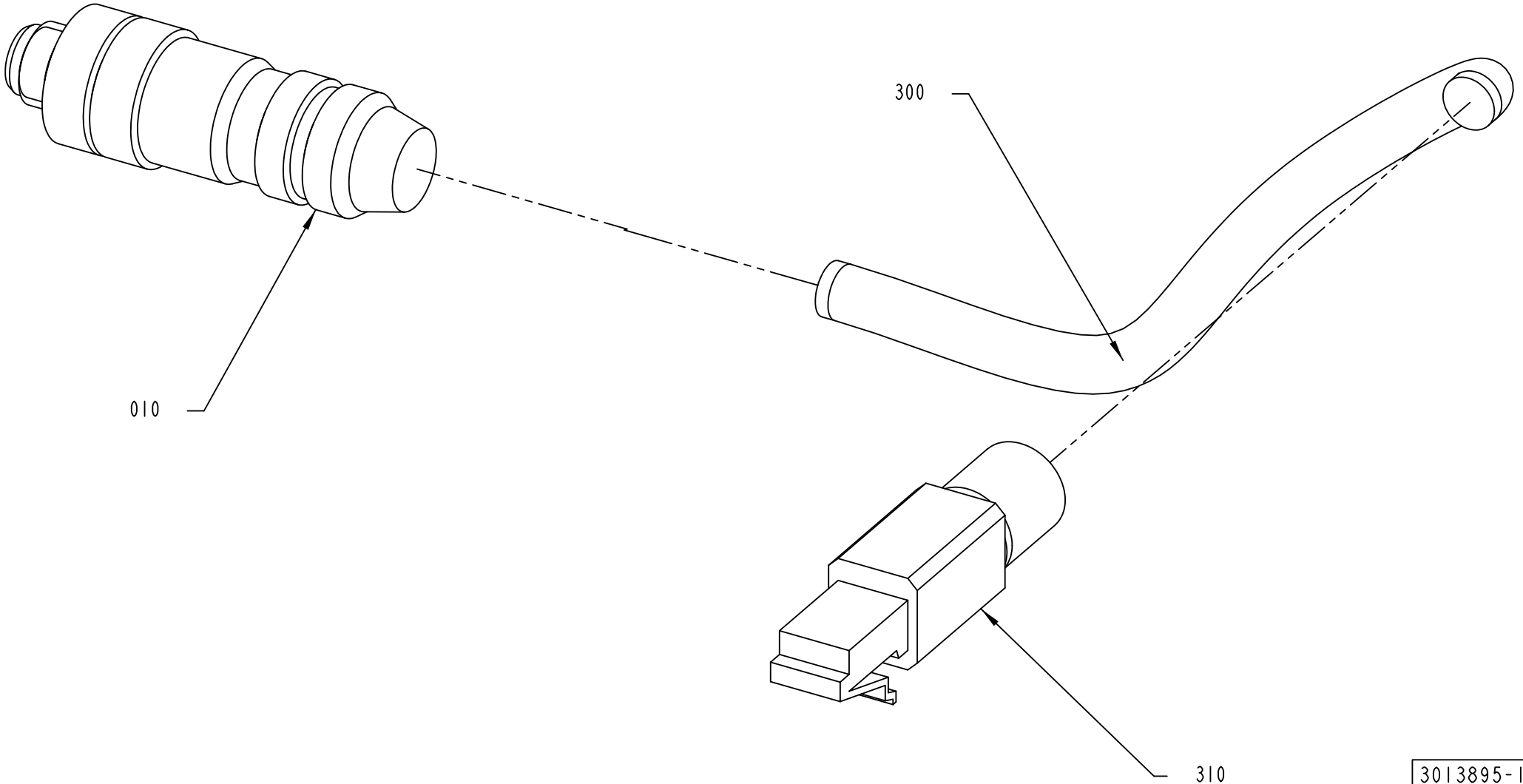
300
010
310
3013895-1
361041

ECM: 436971 - 20100222
Group number: 3013895-0100
Assembly Drawing: 3013895-1_1_AA

Pos	Part No	UN	Qty	Description	Page No
-					
010	2959304-0000		1	CONTACT	
300	90600-0778	M	2	CABLE, ETHERNET FL CAT5 HEAVY	
310	90600-0788		1	CONNECTOR RJ45, VS-08-RJ45-5-Q/IP20	

Pos	Part No	UN	Qty	Description	Page No

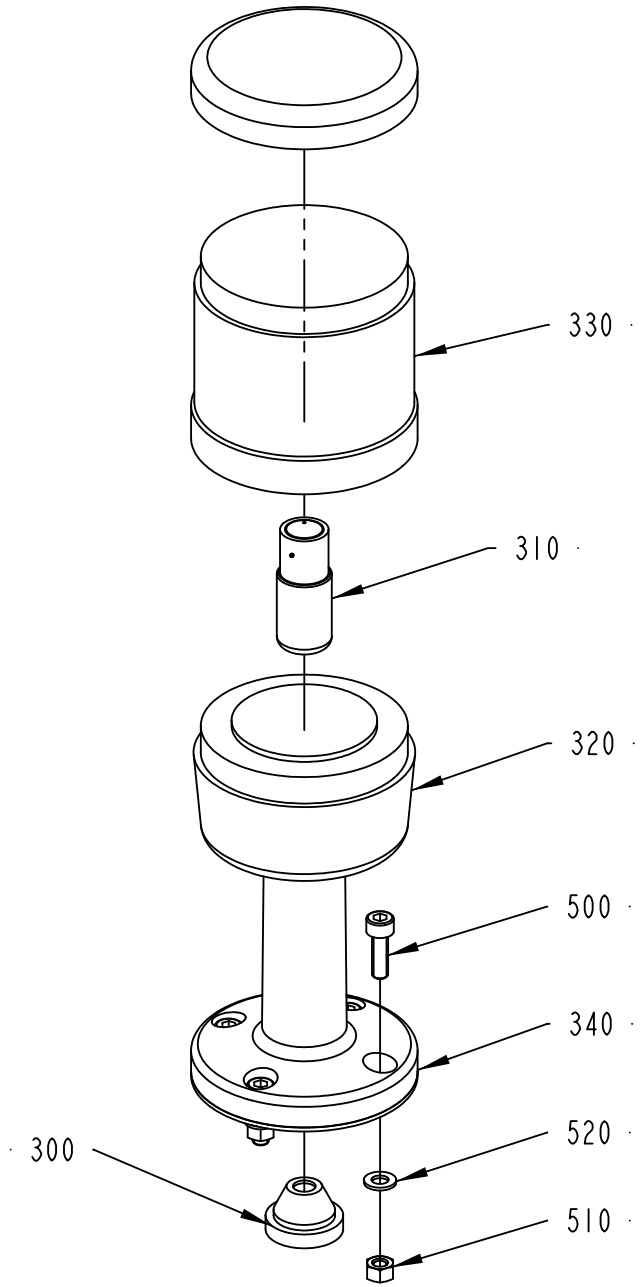

3034248-1
404722

ECM: 436972 - 20100222
Group number: 3034248-0100
Assembly Drawing: 3034248-1_1_AA

Pos	Part No	UN	Qty	Description	Page No
-					
300	90015-0023		1	LEAD-IN, TET7-10, E-1458019	
310	90036-0068		1	BULB 5W 24V, SL-L24 205348	
320	90458-0292		1	TERMINAL ELEMENT, PSD-S CE-TM SCREW/W	
330	90458-0296		1	LIGHT ELEMENT, GREEN, PSD-S OE GN/W	
340	90458-0297		1	BASE W. TUBE 110 MM, PSD-S ME BT 110	
500	312115-0329		4	SCREW ISO4762 M5X16 A4 80	
510	312605-0314		4	HEXAGON NUT, M6M M5 A280	
520	315105-0146		8	WASHER BRB 5,3X10 RFR	

Pos	Part No	UN	Qty	Description	Page No

COOLING UNIT

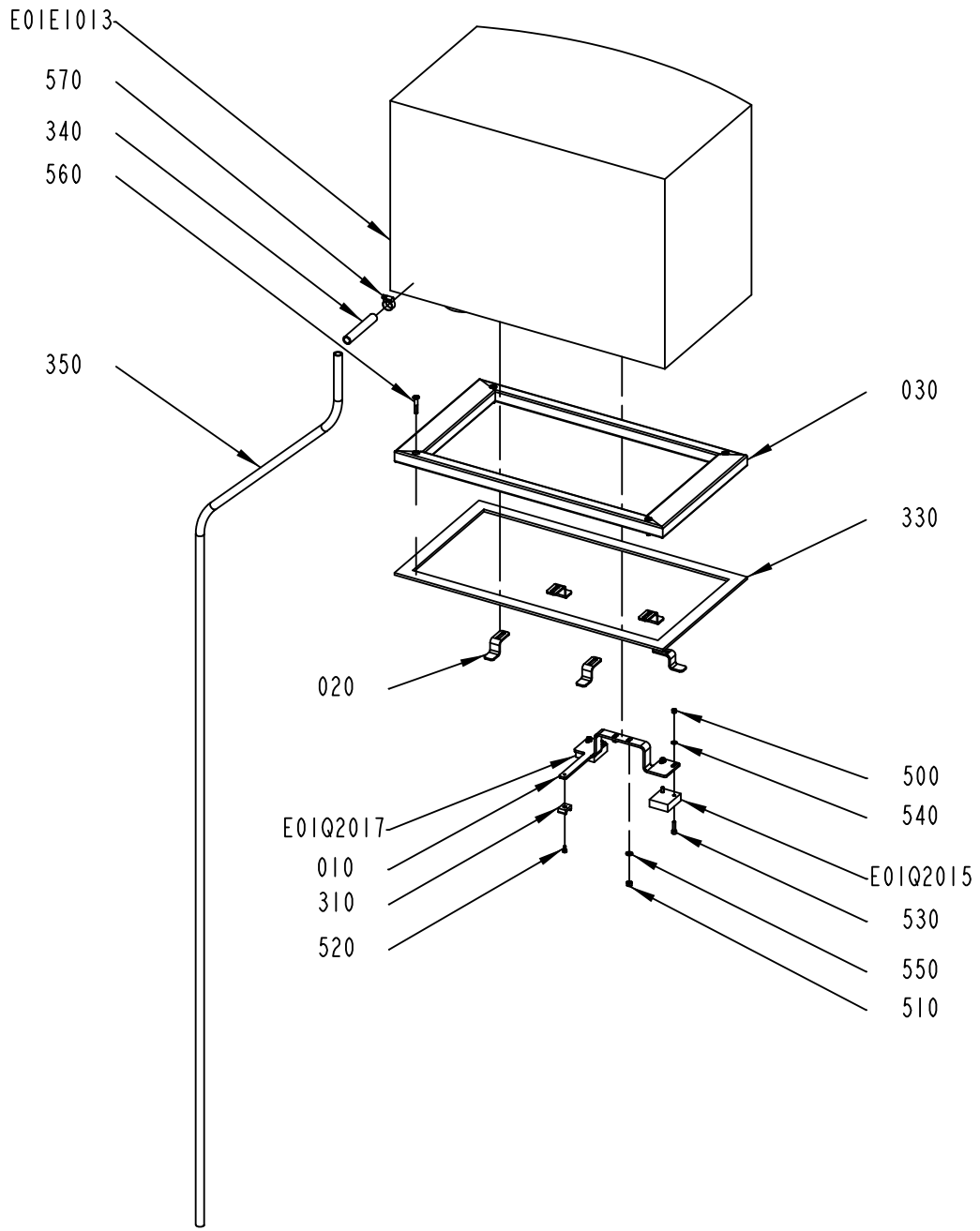

3039857-1
429959

ECM: 436549 - 20100223
Group number: 3039857-0100
Assembly Drawing: 3039857-1_1_AE

Pos	Part No	UN	Qty	Description	Page No
-					
010	3039858-0000		1	BRACKET	
020	3039859-0000		5	FASTENING BRACKET	
030	3060152-0000		1	FRAME	
310	352113-0204		1	ANCHOR PLATES FOR STRIPS, TYPE TM3S25-M	
330	90459-3281	MM	1700	FOAM RUBBER STRIP, 842140 RAU-SIK 8014 1	
340	90459-6690	MM	100	HOSE PVC, 12/16 MM	
350	90459-6690	MM	2300	HOSE PVC, 12/16 MM	
500	312605-0314		4	HEXAGON NUT, M6M M5 A280	
510	312605-0316		2	HEXAGON NUT, M6M M6 A280	
520	312115-0287		1	SCREW ISO4762 M4X8 A4 80	
530	312115-0331		4	SCREW ISO4762 M5X20 A4 80	
540	315106-0146		4	WASHER ISO 7089-5-200 HV A4	
550	315106-0153		2	WASHER ISO 7089-6-200 HV A4	
560	312155-0376		4	SCREW DIN 7991 MF6S M6X35 A4 70	
570	342991-0102		1	HOSE CLIP,WORM DRIVE TYPE (13)-20	
580	90153-0023		1	ADHESIVE, SILICON 251470 TUB 90CC(UN1993	
725	90153-0023		1	ADHESIVE, SILICON 251470 TUB 90CC(UN1993	
E01E1013	3039856-0000		1	COOLING UNIT	
E01Q2015	90600-6907		1	LIMIT SW. D4C-1301 5M	
E01Q2017	90600-6907		1	LIMIT SW. D4C-1301 5M	

Pos	Part No	UN	Qty	Description	Page No

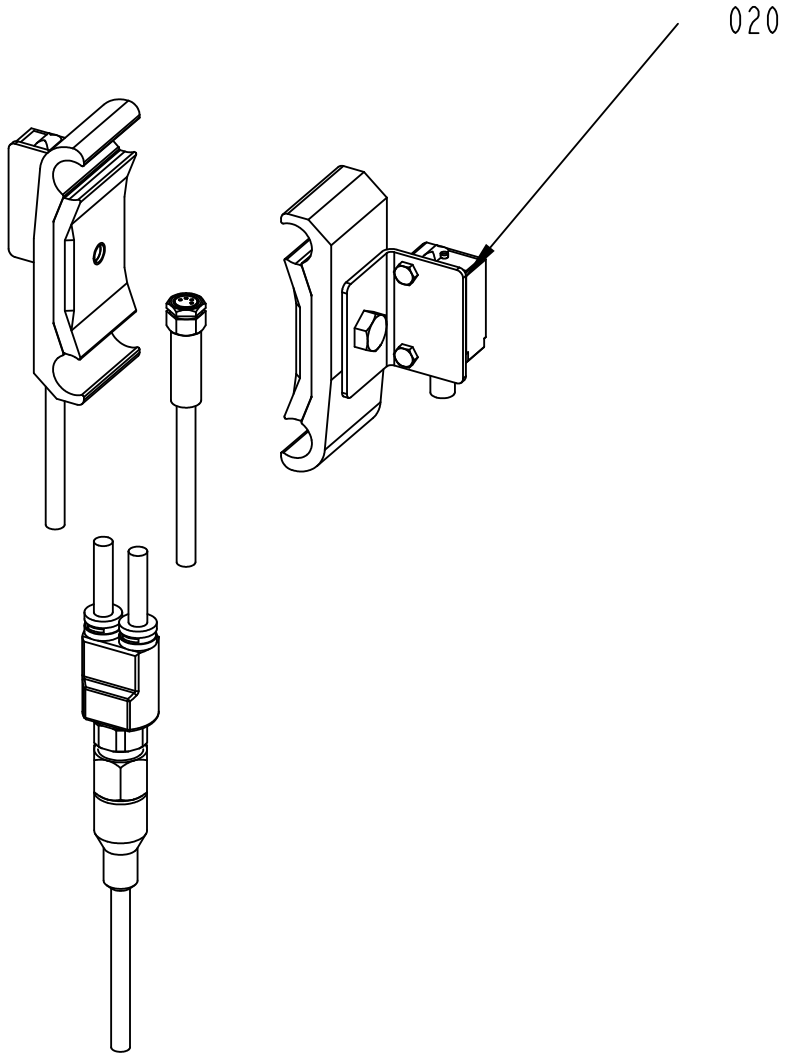

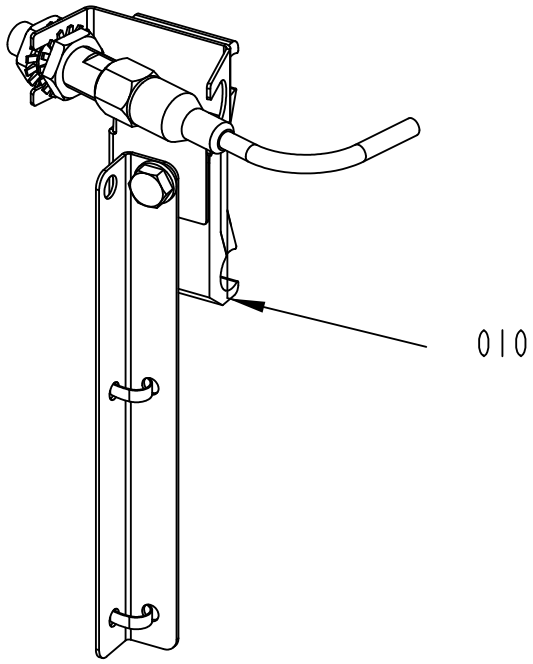

3088860-1
429959

ECM: 436935 - 20100222
Group number: 3088860-0100
Assembly Drawing: 3088860-1_1_AA

Pos	Part No	UN	Qty	Description	Page No
-					
010	3088852-0100		1	GATE INDICATION	**11-131**
020	3073660-0100		1	PHOTOCELL UNIT	**11-133**

Pos	Part No	UN	Qty	Description	Page No

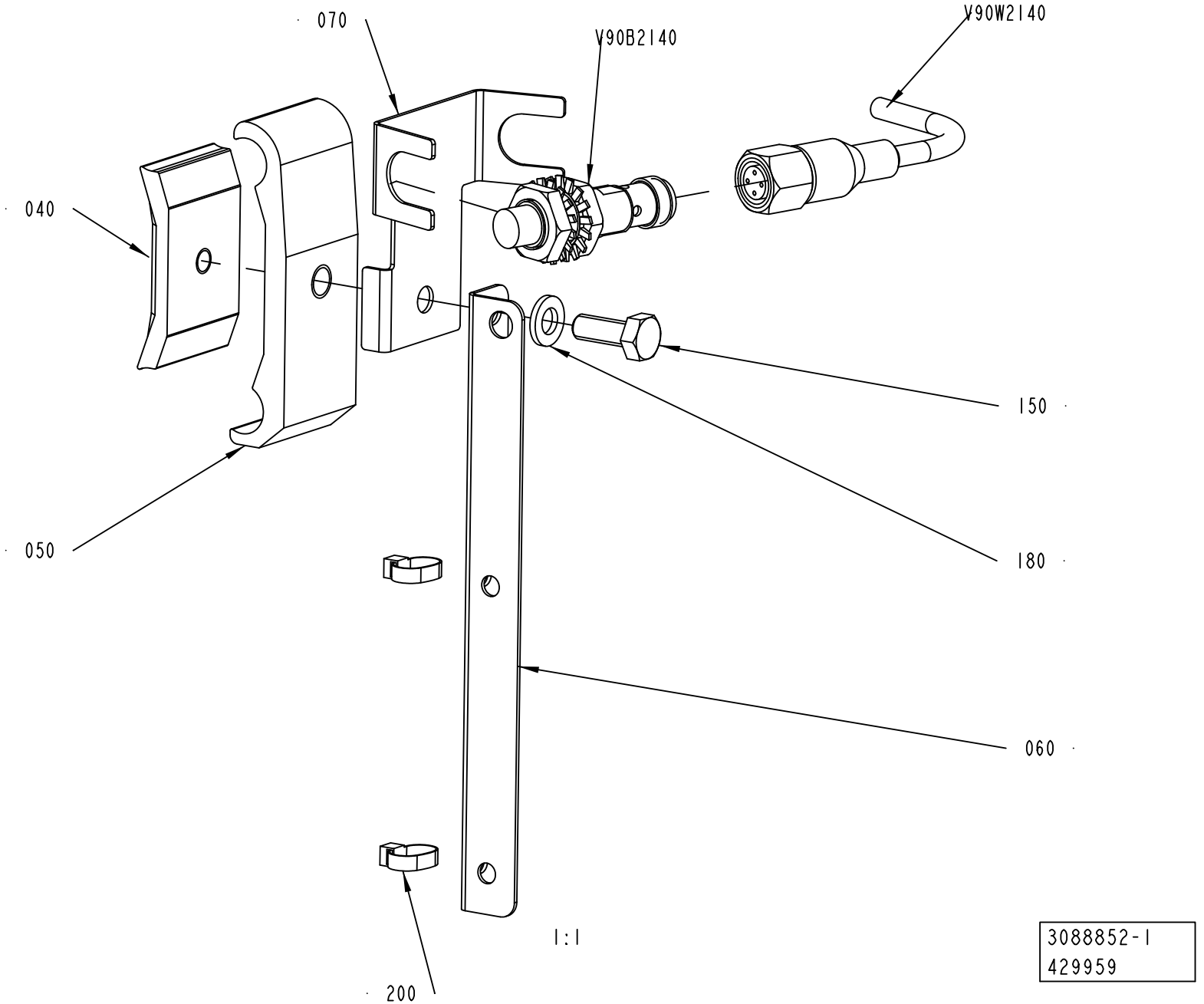
070
V90B2140
V90W2140
040
150
050
180
060
200
1:1
3088852-1
429959

ECM: 436936 - 20100222
Group number: 3088852-0100
Assembly Drawing: 3088852-1_1_AA

Pos	Part No	UN	Qty	Description	Page No
-					
040	1366727-0000		1	CLAMP	
050	1366750-0000		1	HOLDER	
060	2989228-0000		1	CABLE DUCT	
070	2855899-0000		1	BRACKET	
080	3073659-0000		1	SET OF SIGNS	
150	312105-0368		1	SCREW M6S ISO 4017 M6X16 A480	
180	315105-0153		1	WASHER BRB 6,4X12 RFR	
V90B2140	90459-4177		1	PROX.SWITCH E2A-M12KN08-M1-B1	
V90W2140	351309-0100		1	ACTUATOR/SENSOR CABLE PRKT 4-07/10M	

Pos	Part No	UN	Qty	Description	Page No

PHOTOCELL UNIT

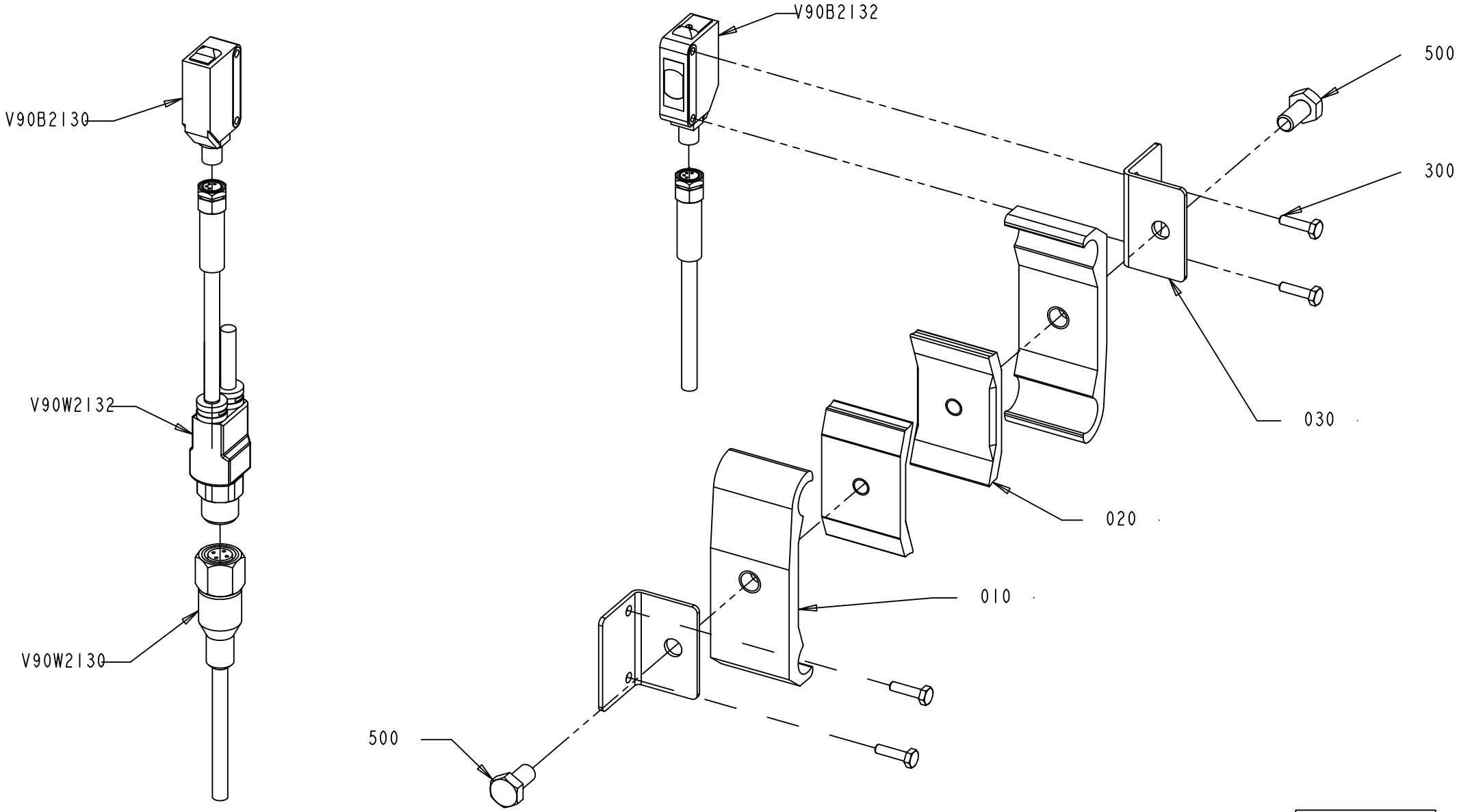

ECM: 436937 - 20100222
Group number: 3073660-0100
Assembly Drawing: 3073660-1_1_AA

Pos	Part No	UN	Qty	Description	Page No
-					
010	1366750-0000		2	HOLDER	
020	1366727-0000		2	CLAMP	
030	2892716-0000		2	BRACKET	
040	3073658-0000		1	SET OF SIGNS	
300	90287-0175		4	SCREW M6S M3X12 A480	
500	312105-0366		2	SCREW M6S ISO 4017 M6X12 A480	
V90B2130	90459-7273		1	PHOTOCELL E3Z-T81C-G0SR D-CN	
V90B2132	90459-7274		1	PHOTOCELL E3Z-T81C-G0SR L-CN	
V90W2130	351309-0100		1	ACTUATOR/SENSOR CABLE PRKT 4-07/10M	
V90W2132	90459-6586		1	ACT/SENS.Y-CABLE, ASBN 2-PRKMV 4-07/0,6M	

Pos	Part No	UN	Qty	Description	Page No

Tetra Pak

SPC
Spare Parts Catalogue

Part No	Description	Page No
90005-0060	WASHER PLAIN, RBS 6,4/M6)/18,H=1,5	1-83, 1-93, 4-33
90005-0064	WASHER PL.RND.NYL.4,3/9, H=0,8	8-37
90005-0114	WASHER PLAIN ROUND 5,3(M5)/15, H=1	2-29
90005-0116	WASHER PLAIN ROUND 8,4(M8)/24, H=2	2-29, 2-47, 2-49, 4-13, 4-15, 4-29
90015-0023	LEAD-IN, TET7-10, E-1458019	4-37, 11-51, 11-125
90024-0062	CABLE PROTECTION, 40MM	7-5
90030-0188	CONN. STR. GA-15-G1/2	6-7
90031-0068	PLC, POWER SUPPLY	8-15, 8-17, 8-19, 8-55, 8-57, 8-59
90031-0070	CPU313, INTEGRATED IN 5-SLOT BASEPLATE	8-15, 8-17, 8-19, 8-55, 8-57, 8-59
90031-0078	GENIUS BUS CONTROLLER	8-15, 8-17, 8-19, 8-55, 8-57, 8-59
90036-0068	BULB 5W 24V, SL-L24 205348	4-37, 11-51, 11-125
90038-0021	DIODE, 1A 800V	7-11
90051-0079	KNOB, SQUARE HOLE, NO. 8306 1304	2-55, 2-83, 11-9
90051-0090	KNOB, EXTERNAL THREAD. NO. WN 450GS	2-79, 2-81
90056-0174	WORM GEAR VF 30 P1 70 HS B3	1-55
90062-0015	LOCK WASHER SERRAT.EXT.GEAR,6,4/11 H=0,7	7-5, 7-11, 11-109
90062-0016	LOCK WASHER SERRAT.EXT.GEAR,8,4/15 H=0,8	8-65, 8-69, 8-71, 8-73, 8-75, 8-77, 11-33, 11-35, 11-37, 11-101
90062-0039	LOCK WASHER SERRAT.INT.GEAR,4,3/8 H=0,5	11-49
90062-0059	LOCK WASKER SERRAT.EXT.GEAR,4,3/8 H=0,5	8-69, 8-71, 8-73, 8-75
90062-0060	LOCK WASHER 5,3/10 H=0,6 FZB	8-69, 8-71
90064-0082	PUSH BUTTON, WHITE	7-11, 11-33, 11-103
90077-0079	FEED THROUGH TERMINAL, 02943.6	4-23, 7-13, 7-15
90077-0113	FEED THROUGH TERMINAL, 10-00102150-1	8-39, 8-41, 11-113
90077-0310	BRACKET, TSTR, 10-0099003-1	8-69, 8-71
90077-0328	RAIL TS15/5	7-5
90091-0148	RADIAL SEAL 25X47X7 MM DUST LIP	2-83
90091-0303	RADIAL SEAL 20X35X7 MM DUST LIP	1-65
90091-0322	RADIAL SEAL 25X42X7 MM DUST LIP	2-13, 2-39
90091-0323	SEAL COVER 35X8 MM	1-65
90110-0052	MALE INSERT HAN 6E 09 33 006 2601	11-43
90110-0053	FEMALE INSERT HAN 6 E 09 33 006 2701	4-41
90111-0132	MAIN SWITCH P1-25/EA/SVB-SW/N/HI11/H-P14	8-15, 8-17, 8-19, 8-55, 8-57, 8-59, 11-35, 11-37, 11-101
90111-0344	SIGN, PE, GREEN/YELLOW	8-69, 8-71
90115-0134	ROD END, ID=10 MM, M10X1,25	1-73, 1-89, 4-29
90119-0108	RELAY OMRON G2R-2-SNI-24DC	8-23, 8-41, 8-43, 8-45, 8-49, 8-51, 11-35, 11-37, 11-105, 11-107
90129-0017	SOCKET, PYF08A-E	11-35, 11-37, 11-105, 11-107
90129-0018	BASE, P2RF-08-E	8-23, 8-41, 8-43, 8-45, 8-49, 8-51, 11-35, 11-37, 11-105, 11-107
90135-0026	EARTH TERMINAL, 3802.6	4-23, 7-13, 7-15
90141-0015	RETAINING RING FOR SHAFT DIN 471 8 SS	10-15
90141-0016	RETAINING RING FOR SHAFT DIN 471 10 SS	2-23, 5-9, 11-21
90141-0020	RETAINING RING FOR BORE DIN 472 42 A2	1-97, 2-13, 2-39
90143-0057	STRIP EMKA 1011-05 21X11MM	7-5, 8-67, 11-35, 11-37, 11-101
90143-0060	EDGE STRIP 9,5X6,3MM BLACK PVC	5-11, 5-23, 5-35, 5-37, 8-67
90153-0023	ADHESIVE, SILICON 251470 TUB 90CC(UN1993	11-127
90157-0037	THREAD SEALANT LOCTITE 542	6-7
90157-0041	SEALING COMPOUND, RHODORSEAL 5651	5-9, 5-21, 5-33
90164-0015	LIGHT FIXTURE, RL70CV-111 / 230V 50HZ	4-39
90164-0303	LIGHT FIXTURE, BRACKET 70MM	4-39
90165-0003	PIPE CLIP FOR TUBE D=4 MM	11-109
90178-0007	HOUR COUNTER, BG 40,17-1 12-48VDC	8-15, 8-17, 8-19, 8-55, 8-57, 8-59, 11-35, 11-37, 11-105, 11-107
90181-0033	CABLE DUCT 15X18MM	11-33
90181-0044	CABLE DUCT 25X60MM	11-35, 11-37
90181-0052	CABLE DUCT 25X80MM	8-69, 8-71, 11-109
90181-0053	CABLE DUCT 40X80MM	8-69, 8-71
90181-0054	CABLE DUCT 60X80MM	8-69, 8-71
90181-0088	PLASTIC RIVET, PR 52314	8-69, 8-71, 11-109
90181-0183	CABLE DUCT, FITTING, B2	4-35
90181-0186	CABLE DUCT, ELBOW BRACKET, B27	4-35
90181-0314	CABLE TRENCH PARTS	4-35
90187-0029	BALL VALVE G1/2, NPBR	6-7
90194-0118	SIGN, RESIDUAL VOLTAGE, WAIT 5 MIN.	8-73, 8-75, 8-77, 11-33
90194-0152	SIGN, EARTH	4-9, 4-25, 7-5, 7-11, 8-65, 8-69, 8-71, 8-73, 8-75, 8-77, 11-33, 11-35, 11-37, 11-101, 11-103, 11-109
90194-0164	SIGN, FRAME/CHASSIS WITHIN CIRCLE	11-33, 11-35, 11-37
90211-0003	WIRE LOCK 2 MM, 3422-R	11-45
90214-0095	BALL BEARING 20/42X12	1-97
90214-0127	BALL BEARING 30/55X13	2-73
90214-0181	BALL BEARING 12/24X6	11-79
90214-0225	BALL BEAR. 20/42X12 SOLID OIL	4-29, 11-59, 11-75
90214-0231	BALL BEARING 10/26X8	1-83
90220-0034	THERMOCABLE TEX/SITW-20F-KX 2X0,5MM2	11-41
90220-0104	SCR. CABLE 4X1,5MM2	8-21
90220-0183	SCR. CABLE 2X0,34MM2	8-15, 8-17, 8-19, 8-55, 8-57, 8-59
90232-0116	FIBRE E3F-R2B4	2-19
90237-0123	LOCK, 1121-U10C	5-33, 8-73, 8-75, 8-77, 11-103
90237-0128	LOCK CYLINDER, 1109-SU125	5-33
90237-0129	LOCK CYLINDER, 1109-U6	8-73, 8-75, 8-77, 11-103
90237-0142	LOCK HOUSING, 1000-U45	7-5
90237-0144	GUIDE, 1121-SU540	5-33, 8-73, 8-75, 8-77
90237-0147	LOCKING LUG, NO. 1121-53-0P	5-33
90237-0165	LATCH	8-73, 8-75, 8-77

Part No	Description	Page No
90237-0175	TURNING HANDLE, 1125-U185-0A	5-33, 8-73, 8-75, 8-77, 11-103
90237-0202	LOCK, INSERT SQUARE,1000-U2 8 MM	7-5
90237-0324	KEY, 1104-02 FOR SQUARE 8 MM	8-73, 8-75, 8-77, 11-103
90237-0342	LOCKING CATCH	11-103
90240-0146	FLANGE BUSHING, 15X21X20 MM	11-21
90240-0184	FLANGE BUSHING, 12X16X15 MM	11-21, 11-23, 11-25, 11-27
90240-0325	FLANGE BUSHING, 16X18X12 MM	1-73
90240-0336	BEARING BUSHING W/O FL, 6,10X12X10 MM	10-31
90243-0164	HOOK SPANNER ADJUST.DIA.4	10-33
90243-0169	BINDER CLIP, DIAM.29 MM, NO. 4670819	8-77
90256-0001	TAPE SUPPLY HOLDER, TYPE 2000	10-15
90259-0313	AUXILIARY CONTACT, NHI21-PKZ0	8-15, 8-17, 8-19, 8-55, 8-57, 8-59
90259-0315	BUSBAR, B3.1/2-PKZ0	8-55, 8-57, 8-59
90264-0032	FAN, 4656N+LZ30+LZ 120,220V 50HZ	7-7
90287-0154	SCREW, SOCK.SET DOGPOINT M6X10	1-81
90287-0175	SCREW M6S M3X12 A480	10-5, 11-5, 11-133
90287-0205	SCREW	7-5, 11-33
90287-0358	KNURLED SCREW	10-27, 10-31
90287-0359	SCREW M6S ISO 4017 M10X100 A480	2-45
90288-0311	LINK	11-21
90326-0020	PLUG, FEMALE YELLOW CR-AL	11-35, 11-37
90326-0037	THERMOCOUPLE, CR-AL PREM.G	11-35, 11-37
90328-0013	SILENCER U-1/4, 2316	6-5
90328-0029	SILENCER M5	11-89
90328-0047	SILENCER G1/8"	1-89, 4-29
90347-0011	VIBRATION DAMPER MEGI 781056	4-9
90417-0082	TIMING BELT 16T5/610 PU	1-83
90417-0417	TIMING BELT 16AT5/1075 PU	2-69, 2-71
90424-0087	AIR NOZZLE	11-89
90439-0155	PRECISION NOZZLE SATURN 322012	3-11, 3-13
90439-0209	HOSE	3-11, 3-13
90439-0212	274792 HOSE	3-9
90439-0241	ANGLE NIPPLE	3-11, 3-13
90439-0264	HOT MELT NOZZLE, 3/8UNF	3-9
90439-0295	SERVICE KIT, NO. 111940	3-9
90457-0105	BLANK RIVET 2X9	6-7
90457-0935	KNOB, ADJUST.HI.EXT.THREAD, NO 6N20P04	2-79, 2-81
90458-0143	TIME RELAY H3YN-2 24VDC	11-35, 11-37, 11-105, 11-107
90458-0151	CONTACT BLOCK, 704.901.3	11-33, 11-103
90458-0220	TENSION ROLLER, M40/60-0-M EXCENTRIC	1-83, 1-105
90458-0292	BASE, KT70-1001	4-37, 11-51, 11-125
90458-0293	LIGHT ELEMENT, RED, KL70-401R	4-37
90458-0294	LIGHT ELEMENT, YELLOW, KL70-401Y	4-37, 11-51
90458-0295	LIGHT ELEMENT, BLUE, KL70-401L	4-37
90458-0296	LIGHT ELEMENT, GREEN, KL70-401G	4-37, 11-51, 11-125
90458-0297	BASE W. TUBE 110 MM, PSD-S ME BT 110	4-37, 11-51, 11-125
90458-0305	CABLE GLAND, M12X1,5, NO.5311 1000	4-21, 11-101
90458-0306	CABLE GLAND, M16X1,5, NO.5311 1010	4-21, 8-67, 11-35, 11-37, 11-101
90458-0307	CABLE GLAND, M20X1,5, NO.5311 1020	4-21, 8-67, 11-35, 11-37, 11-43, 11-101
90458-0309	CABLE GLAND, M32X1,5, NO.5311 1040	8-67
90458-0315	CABLE GLAND, M20X1,5, NO.5311 1120	3-15, 3-17, 4-41, 7-5
90458-0317	CABLE GLAND, M32X1,5, NO.5311 1140	3-15, 3-17
90458-0321	NUT, M12X1,5	11-101
90458-0322	NUT, M16X1,5	8-67, 11-35, 11-37, 11-101
90458-0323	NUT, M20X1,5	3-15, 3-17, 7-5, 8-67, 11-35, 11-37, 11-101
90458-0325	NUT, M32X1,5	3-15, 3-17, 8-67
90458-0438	GLAND, EXTENDED WITH INSERT, M20X1,5	1-77
90458-0498	PLUG, BLIND, PLASTIC PLUG B24, 5/17	10-13
90458-0692	JOINT, THREAD.CONN. 30 MM, NO 851.008.95	10-11, 10-13
90458-0693	PLASTIC FOOT 30 MM, NO 856.211.95	10-11, 10-13
90458-0694	ELBOW JOINT 2T 30 MM, NO 851.012.95	10-11, 10-13
90458-0721	PIPE CLIP FOR TUBE D=8 MMSZ 2367080	8-69, 8-71
90458-0805	HANDLE VERSION #2 NO. 1095-19	11-95
90458-0953	LINEAR BUSHING 25X40X58	1-53
90458-0962	FLEXIBLE COUPLING, 6X6 MM	11-59
90458-0970	AMPLIFIER UNIT, E3X-DA44V	2-19
90458-1150	CABLE GLAND, RG M63/4	7-5
90458-1174	MULTI DIAMETER MODULE, CM 20W40	8-67
90458-1306	BLIND PLUG CIRCULAR, M12X1,5 514GFK/212	2-73, 4-21, 8-67, 11-101
90458-1307	BLIND PLUG CIRCULAR, M16X1,5 514GFK/216	4-21, 11-101
90458-1308	BLIND PLUG CIRCULAR, M20X1,5 514GFK/220	4-41, 8-67, 11-35, 11-37, 11-101
90458-1508	FLOOR PLATE, DAMPER, M105-20-160	4-9, 4-25
90458-1651	EMERGENCY STOP, ZB4-BS-844 ZB4-BZ-104	7-11, 8-77
90458-1704	BALL BEARING 15/35X11	1-103, 1-105, 2-77
90458-1740	AIR GUN ASSEMBLY, CEJN 199589668	6-5
90458-1814	CLAMPING ELEMENT WITH SLEEVE, 15X18 MM	2-13, 2-53
90458-1869	EMC EARTH BRAID, 16MM2 L=200MM	7-5
90458-1880	ANG. BALL BEAR 25/52X20,6	2-75
90458-2068	CLAMPING ELEMENT WITH SLEEVE, 3/8"X16 MM	2-29
90458-2071	RETAINING RING FOR BORE DIN 472 24 A2	11-79
90458-2072	IDLER ROLLER,CONCENTRIC SSRSJ-34-C-DR-NS	2-45
90458-2082	COMP. SPRING SF-TF 1X9X20 SS 2331-06	2-19, 2-21
90458-2343	FRAME CF 16	8-67
90458-2566	FILTER 90 DEGREES 100 MESH, 1007231	3-9, 3-11, 3-13

Part No	Description	Page No
90458-2634	WARNING SIGN ANSI (H), EXTERNAL VOLTAGE	8-69, 8-71
90458-2730	PRESSURE SENS. SDE1-D10-G2-R18-C-P1-M8	6-5
90458-2779	SCALE , 0-1000MM ADHESIVE	1-53, 1-55, 2-67, 10-23, 10-29
90458-2780	SCALE ,1000-0 MM ADHESIVE	2-19
90458-2837	PLUG SOCKET, KMEB-1-24-5-LED	8-21, 8-61, 11-89, 11-115
90458-2905	CONNECTOR S8T-BUS02 BUS LINE CONNECTOR	11-105, 11-107
90459-0580	BRACKET, PIVOT MOUNTING CRZNG-32	1-73, 4-29
90459-0584	BEARING BRACKET CRLNZG-32	1-73, 4-29
90459-0606	MARKING PLATES 5-FW E1-E50	4-23, 11-111
90459-0690	CURRENT CONTROL RELAY, 84 871 034	11-35, 11-37
90459-1292	LOCK CAM, 1000-50 GH 18	7-5
90459-1297	RESISTANCE FIXED, 120 OHM, 0,25 W	8-15, 8-17, 8-19, 8-55, 8-57, 8-59
90459-1402	IDLER ROLLER, SS SJ 34 E DR NS	2-45
90459-1458	HOOD HAN 6 E 19 30 006 1540	11-43
90459-1699	DOUBLE ACTING, MINI-ISO, CYL 25-50	1-89
90459-1811	BRIDGE CONNECTOR WQV 2,5/2, 105366	8-25
90459-1859	BRACKET, MS6-MV	6-5
90459-1906	SCREW, HEX.SOCK.HEAD SHOULD. M5X10	2-29
90459-1991	HOT MELT UNIT, #1022230	3-9, 3-11, 3-13
90459-2232	WARNING SIGN ANSI (H), DO NOT WASH	3-15, 3-17, 11-85
90459-2242	REGULATOR, MS4-LRB-1/4-D7-AS	6-5
90459-2246	END PLATE, MS4-AGB	6-5
90459-2247	BRACKET, MS4-WP	6-5
90459-2248	BRACKET, MS4-MV	6-5
90459-2265	PROHIBITION SIGN ISO, DO NOT WASH	3-15, 3-17, 11-85
90459-2291	SAFETY TIME RELAY, E1T-0.5S-24VDC	8-15, 8-17, 8-19, 8-55, 8-57, 8-59
90459-2337	SHUT OFF VALVE, MS4-EM1-1/4	6-5
90459-2339	FILTER REGULATOR, MS4-LFR-1/4-D7-ERV-AS	6-5
90459-2364	FILTER, 10077234	3-9
90459-2392	PROX.SENSOR SMT-C1-PS-24V-K0,3-M8-SA	1-73
90459-2409	INDUCTIVE SENSOR IN5230	1-89, 2-13, 2-31, 2-33, 2-39, 2-69, 2-71, 2-79, 2-81, 4-31
90459-2473	DIG INP. MOD.16 PTS FAST,1769-IQ16F SERA	8-15, 8-17, 8-19, 8-55, 8-57, 8-59
90459-2476	DIGIT. OUT. MOD. 16 P ESCP, 1769-OB16P	8-15, 8-17, 8-19, 8-55, 8-57, 8-59
90459-2483	DEVICENET SCANNER, 1769-SDN SERIES B	8-15, 8-17, 8-19, 8-55, 8-57, 8-59
90459-2491	PLC RIGHT END CAP/TERMINATOR, 1769-ECR	8-15, 8-17, 8-19, 8-55, 8-57, 8-59
90459-2536	SERCOS CABLE 0.1M, 2090-SCEP0-1	8-15, 8-17, 8-19, 8-55, 8-57, 8-59
90459-2540	SERCOS CABLE 3.0M, 2090-SCEP3-0	8-15, 8-17, 8-19, 8-55, 8-57, 8-59
90459-2550	I/O CONNECTOR 26 PIN MALE, 2090-K6CK-D26	8-15, 8-17, 8-19, 8-55, 8-57, 8-59
90459-2551	CONNECTOR, MOTOR FEEDBACK 15 PIN MALE	8-15, 8-17, 8-19, 8-55, 8-57, 8-59
90459-2569	POWER SUPPLY UNIT 100-240VAC/5VDC 5A	11-105, 11-107
90459-2658	SLOTTED ROUND NUT DIN 546 M6	5-33, 7-11
90459-2676	ANG. BALL BEAR 15/35X15,9	1-65, 1-87
90459-2701	CABLE DUCT, FITTING, B1	4-35
90459-2928	LABEL 60417-2-IEC-5020, COMM. REF. POT.	4-9, 4-25, 7-5, 7-11, 8-65, 8-69, 8-71, 8-73, 8-75, 8-77, 11-101, 11-103, 11-109
90459-2953	GLAND, EXTENDED WITH INSERT, M16X1,5	1-53, 1-67
90459-3000	DISTRIBUTOR, MS4-FRM-1/4-A8	6-5
90459-3145	FLASH MEMORY 64MBYTE, 1784-CF64	8-15, 8-17, 8-19, 8-55, 8-57, 8-59
90459-3211	WARNING SIGN ISO, CUTTING OF FINGERS	2-57
90459-3212	WARNING SIGN ANSI (H) CUTTING OF FINGERS	2-57
90459-3281	FOAM RUBBER STRIP, 842140 RAU-SIK 8014 1	11-127
90459-3352	FLAT PIN SOCKET, 6,3X0,8	8-15, 8-17, 8-19, 8-55, 8-57, 8-59
90459-3449	VARIABLE FREQUENCY DRIVE 22A-A2P3N104	8-15, 8-17, 8-19, 8-55, 8-57, 8-59
90459-3450	VARIABLE FREQUENCY DRIVE 22A-A4P5N104	8-15, 8-17, 8-19, 8-55, 8-57, 8-59
90459-3460	FOOTPRINT FILTER 22-RF010-AL	8-15, 8-17, 8-19, 8-55, 8-57, 8-59
90459-3668	REDUCER M20/M16	1-77
90459-3796	TIMING BELT 10AT5/500 PU	1-101
90459-3845	POWER SOCKET, Z-SD230	8-15, 8-17, 8-19
90459-3898	WARNING SIGN ISO, LASER RADIATION	11-95
90459-3899	WARNING SIGN ANSI (V), LASER RADIATION	11-95
90459-4089	SAFETY SENSOR NON-CONTACT EVA E	5-33
90459-4165	SAFETY SCREW, 20-053-43 SM4X25	5-33, 7-11
90459-4177	PROX.SWITCH E2A-M12KN08-M1-B1	11-131
90459-4234	DEVICENET SLAVE MODULE	8-15, 8-17, 8-19, 8-55, 8-57, 8-59
90459-4235	SNP TO DF1 GATEWAY, 0220 1166 01 REV B	8-15, 8-17, 8-19, 8-55, 8-57, 8-59
90459-4245	POWER SUPPLY UNIT 230VAC/24VDC 3,75A	8-15, 8-17, 8-19, 8-55, 8-57, 8-59
90459-4252	CABLE M12-C101, 20-056-10	8-21, 8-61
90459-4735	SCREW M6S ISO 4017 M8X10 A480	1-41, 1-43, 1-45, 1-47, 1-49
90459-4807	POWER SUPPLY UNIT 100-240 VAC/24VDC2,5A	11-35, 11-37, 11-105, 11-107
90459-4891	PROGR. IDENTIFIER ID-FIX RW, 20-070-21	8-15, 8-17, 8-19, 8-55, 8-57, 8-59
90459-5067	DOUBLE ACTING, PROFILE,CYL 32-135	4-29
90459-5189	SLIM POW. RAIL, KINETIX, 2 AX, 2094-PRS2	8-15, 8-17, 8-19, 8-55, 8-57, 8-59
90459-5308	CONTACTOR 4KW 24VDC, DILM9-10	11-35, 11-37
90459-5315	AUXILIARY CONTACTS, DILM32-XHI22	11-35, 11-37
90459-5320	OVERLOAD PROTECTION, PKZM0-0,25	11-35, 11-37
90459-5323	OVERLOAD PROTECTION, PKZM0-1	8-15, 8-17, 8-19, 8-55, 8-57, 8-59
90459-5440	CONTACTOR 4KW 24VDC, DILM9-01	8-15, 8-17, 8-19, 8-55, 8-57, 8-59, 11-105, 11-107
90459-5441	CONTACTOR 7,5KW 24VDC, DILM17-01	8-15, 8-17, 8-19, 8-55, 8-57, 8-59
90459-5811	RESIDUAL CURRENT DEVICE, FI-25/2/003-A	8-15, 8-17, 8-19
90459-5877	FILTER FAN SK 3325.107	8-73, 8-75
90459-5949	REAR CLEVIS FOOT MOUNTING , CRLBN-32	1-73, 4-29
90459-6065	Y-FITTING QSY-12-8	6-5
90459-6087	DANGER SIGN ANSI (H), HAZARDOUS RESIDUAL	8-73, 8-75, 8-77, 11-33
90459-6273	DOUBLE ACTING, PROFILE,CYL 32-80	1-73

Part No	Description	Page No
90459-6470	CONNECTOR RJ45 TER. BL., AK-U0-RJ45-TB2P	8-15, 8-17, 8-19, 8-55, 8-57, 8-59
90459-6475	HOT MELT GUN, SOLIDBLUE A #8505768	3-11, 3-13
90459-6477	THREADED INSERTS, BUSHING, M4	8-37
90459-6510	KNOB, ,EXTERNAL THREAD. GN6336.4 40-M8X5	10-25
90459-6553	PLC DSI /MODBUS COMMUN. MOD., 1769-SM2/A	8-15, 8-17, 8-19, 8-55, 8-57, 8-59
90459-6586	ACT/SENS.Y-CABLE, ASBN 2-PRKMV 4-07/0,6M	8-21, 8-61, 11-5, 11-115, 11-133
90459-6604	LABLE SICK DOL-2312-G 05MMA3	8-21, 8-61, 11-115
90459-6646	CABLE CLIPS, D=4 MM	8-69, 8-71
90459-6679	CONN 15 P FEM, AUX. FEEDB,2090-K6CK-D15F	8-15, 8-17, 8-19, 8-55, 8-57, 8-59
90459-6690	HOSE PVC, 12/16 MM	11-127
90459-6852	AUXILIARY CONTACT, DILA-XHI22	11-105, 11-107
90459-6961	SAFETY SENSOR, NON CONT. ADAM-E M12 0,5M	7-11
90459-7116	THROTTLE CHECK VALVE, G1/8", MANUAL,4	1-73
90459-7170	HEATING ELEMENT 280W 240V	11-35, 11-37
90459-7229	IDENTIF. OF SINGLE CONDUCTORS, TEMPLATE	8-77, 11-33, 11-103
90459-7245	PLUG, BLIND, PLASTIC GPN300F11	2-29
90459-7273	PHOTOCELL E3Z-T81C-G0SR 1-57,	1-77, 1-83, 1-87, 1-97, 1-99, 1-103, 10-5, 11-5, 11-89, 11-133
90459-7274	PHOTOCELL E3Z-T81C-G0SR 1-59,	1-77, 1-83, 1-87, 1-97, 1-99, 1-103, 10-5, 11-5, 11-83, 11-133
90459-7293	SET SCREW DIN 551M5X8 PA66	1-45, 1-47, 1-49, 11-61
90459-7441	WASHER PLAIN, DIN 7349, 6,4/17 H=3	11-63
90459-7544	CAUTION SIGN ANSI (H), AUTOMATIC START	11-95
90459-7545	WARNING SIGN ISO, AUTOMATIC START	11-95
90459-7584	PROHOBITION SIGN ISO, DO NOT REACH IN	5-13, 5-17, 5-19, 5-25, 5-27, 5-29, 5-31
90503-3773	FILTER FAN PF2000 IP54 230V AC	11-101
90503-3779	EXHAUST FILTERS PFA2000 IP54	11-101
90600-0140	BALL BEARING 25/47X12	1-77, 1-85
90600-0429	SLIDER, WM-01-20	1-71, 2-65
90600-0431	BUSHING INSERT, J200UMO-01-20	1-71, 2-65
90600-0439	BELLOW COUPLING, 12X16 MM	2-29
90600-0547	SATURN IN-LINE FILTER JACKET, #1056296	3-9, 3-11, 3-13
90600-0719	MARKING PLATES DEK 5 GW N	8-37
90600-0778	CABLE, ETHERNET FL CAT5 HEAVY	11-123
90600-0788	CONNECTOR RJ45, VS-08-RJ45-5-Q/IP20	11-123
90600-0850	CABLE, SNP-DF1 GATEWAY	8-15, 8-17, 8-19, 8-55, 8-57, 8-59
90600-0946	SOLID STATE RELAY, 3RF2050-1AA04	11-35, 11-37
90600-0980	OPERATOR PANEL 15"+, 2711P-T15C4D2-TP	7-11
90600-0985	FAN, R2E150-AG52-09	11-49
90600-0986	CAPACITOR, UL 1UF 450V 25X57 M8	11-35, 11-37
90600-1092	COMP. SPRING D21550, 0,63X8,63X16	2-29
90600-1155	GEARS, PLANETARY TS 80-I-E-E15 P-092 070	2-53
90600-1167	PLUG, EXT. R-THREAD, R1/4	11-89
90600-1211	TERMINAL BLOCK RELAY, 700-HLT1Z24	11-105, 11-107
90600-1347	POWER SUPPLY 120/240 VAC, 1768-PA3/A	8-15, 8-17, 8-19, 8-55, 8-57, 8-59
90600-1348	ETHERNET /IP BRIDGE MODULE, 1768-ENBT/A	8-15, 8-17, 8-19, 8-55, 8-57, 8-59
90600-1349	SERCOS MOTION MODULE 4-AXIS, 1768-M04SE/	8-15, 8-17, 8-19, 8-55, 8-57, 8-59
90600-1461	INCOMING TERMINAL, BK25/3-PKZ0-E	8-55, 8-57, 8-59
90600-1559	PANEL FEED THROUGH, FWD5 54218	1-73, 1-93, 4-33
90600-1649	AUXILARY CONTACTS, NHI-E-11-PKZ0	11-35, 11-37
90600-1765	GEARS, PLANETARY LPB+ 070-M01-3-111/MPL-	2-15, 2-43
90600-1766	NUT ROUND WITH SLOTS M20X1 SS	2-13, 2-39
90600-1768	ACTUATOR/SENSOR CABLE RKTS 5-298/5M	1-93, 4-33, 8-21, 8-61
90600-1847	ETHERNET SWITCH, FL SWITCH SFN 5TX	8-15, 8-17, 8-19, 8-55, 8-57, 8-59
90600-1851	COMP. SPRING 5896, 0,63X6,93X11,5	2-17, 2-41, 11-13
90600-1941	HAND WHEEL, VDS.125+IR A-14-K	11-21
90600-2045	SAFETY PLC, PLUTO B46-6 20-070-15	8-15, 8-17, 8-19, 8-55, 8-57, 8-59
90600-2071	HOUSING 6B SURF MOUNT, 19 30 006 2295	4-41
90600-2904	EARTH BRAID, 250/16/8,5	1-73, 7-5, 7-11, 8-65, 8-73, 8-75, 8-77, 11-35, 11-37, 11-103
90600-2959	HOT MELT GUN, #1071630	3-9
90600-3004	INCREMENTAL ENC., DGS60-A1A10000,1032277	11-59
90600-3210	GEARS, WORM MOTOR D9582/SC401-H/1600117	1-53, 1-67
90600-3293	MOTOR POWER CABLE 2090-XXNPMF-16S09	8-21, 8-61
90600-3294	MOTOR FEEDBACK CABLE 2090-XXNFMF-S09/C	8-21, 8-61
90600-3655	VISION SYSTEM, IVC-3D21111, 1027538	11-85
90600-3691	COMMONING BUSBAR, 3-P 63A	8-15, 8-17, 8-19
90600-3713	SCALE, 90600-3713	2-65
90600-3898	END CAP, Z-GV-10/2+3P	8-15, 8-17, 8-19
90600-3956	HEAT INSULATION, #1081862	3-9
90600-3957	GUIDE BUSHING, 14X20X45	2-57, 11-11
90600-3958	BEAR. BUSH. WITHOUT FL, 14X20X20 MM	2-57
90600-4040	CAUTION SIGN ANSI (H), DO NOT REACH IN	5-13, 5-17, 5-19, 5-25, 5-27, 5-29, 5-31
90600-4186	CABLE, SICK DOL-1205-G05MX	11-115
90600-4187	CABLE, SICK DOL-1208-G02MA	11-115
90600-4289	BEAR. BUSH. WITHOUT FL, 14X16X15 MM	1-55
90600-4317	MODULE CONNECTOR, MS4-6-AMV	6-5
90600-4352	JOINT 3TV 30MM, 851 014 92	10-11
90600-4444	SCHOCK ABSORBER, MC 225 MH2+PP 225+KM20X	1-73
90600-4603	HORN, KB70-3001	4-37
90600-4710	LOCK WASHER MB 4 D=20 H=1 SS	2-13
90600-4713	THRUST BALL BEARING, 10X24X9 MM	2-75
90600-4896	RESERVE MOD., 1769-ARM/A	8-15, 8-17, 8-19, 8-55, 8-57, 8-59
90600-5061	BUSHING, 25X40X58 MM	1-89
90600-5062	CLAMPING ELEMENT, GN 851-700-T2-N1	2-29
90600-5064	GEARS, WORM MOTOR WA 20 DT71 D4	1-77, 1-97
90600-5066	WASHER DIN7349 8,4X21X4 A4	4-9, 4-25, 4-31

Part No	Description	Page No
90600-5067	TIMING BELT 16T5/1500 PU	1-81
90600-5069	TIMING BELT 100ATK10/3280 PU	1-85
90600-5211	AXIS MOD. W. PS,2094-BC01-M01-S SERIES B	8-15, 8-17, 8-19, 8-55, 8-57, 8-59
90600-5214	AXIS MOD. KINETIX 6000,2094-BM01-S SER.B	8-15, 8-17, 8-19, 8-55, 8-57, 8-59
90600-5233	WARNING SIGN ANSI (H), READ MANUAL, AUTO	7-11, 8-67, 8-69, 8-71, 8-73, 8-75, 8-77, 11-33, 11-103
90600-5235	MANDATORY ACTION SIGN ISO, READ MANUAL	7-11, 8-67, 8-69, 8-71, 8-73, 8-75, 8-77, 11-33, 11-103
90600-5249	FERRITE, B64290L616X38	8-15, 8-17, 8-19, 8-55, 8-57, 8-59
90600-5250	LINE FILTER, B84111FB30	8-15, 8-17, 8-19, 8-55, 8-57, 8-59
90600-5252	LINE FILTER, B84113HB30	8-15, 8-17, 8-19, 8-55, 8-57, 8-59
90600-5258	LINE FILTER, B84143A35R106	8-15, 8-17, 8-19, 8-55, 8-57, 8-59
90600-5260	LINE FILTER, B84144A16R120	8-15, 8-17, 8-19, 8-55, 8-57, 8-59
90600-5266	FEED THROUGH FILTER, B85321A2502W160	8-15, 8-17, 8-19, 8-55, 8-57, 8-59
90600-5297	INCREMENTAL ENCODER, DFS60A-BHAA65536	1-67, 1-77, 1-97
90600-5524	BUSBAR, Z-SV/UL-16/3P-3TE/6 104898	8-55, 8-57, 8-59
90600-5525	BUSBAR, Z-SV/UL-16/3P-3TE/12 104899	8-55, 8-57, 8-59
90600-5527	BUSBAR COVER, ZV-BS-UL 104904	8-55, 8-57, 8-59
90600-5528	EXTENSION TERMINAL, Z-EK/35/UL 104901	8-55, 8-57, 8-59
90600-5813	SOLENOID VALVE, CPE18-M1H-3GL-1/4	11-89
90600-5930	CABLE C9 1M, 20-057-15	8-21, 8-61
90600-5989	LOCK HANDLE, AK-PKZ0	8-55, 8-57, 8-59
90600-6032	TEMPERATURE CONTROLLER, KS50	11-35, 11-37
90600-6081	CABLE, UNITRONIC BUS CAN 1X2X0,5 UL/CSA	8-15, 8-17, 8-19, 8-55, 8-57, 8-59
90600-6092	GAS SPRING Z6-19 120 0 384 WG22 WG22 200	4-11
90600-6183	TUBULAR RIVET 3,5X6,2	1-41, 1-43
90600-6907	LIMIT SW. D4C-1301 5M	11-127
90600-7487	SURGE PROTECTION DEV., VAL-MS 230/3+1 FM	8-15, 8-17, 8-19, 8-55, 8-57, 8-59
90600-7526	BUSHING INSERT, JUM-02-25	1-53
90600-7607	TIMING BELT 50T10/530 PU	1-53
90600-7711	COMP. SPRING 21280, 0,5X6X30	2-21
90600-7712	TIMING BELT 25T10/1790 PU	1-63
90600-8786	SOCKET, PF113A-E	11-35, 11-37
90600-9746	PROCESSOR L43, SERIES B, 1768-L43/B	8-15, 8-17, 8-19, 8-55, 8-57, 8-59
90601-0767	CARRIAGE, SSCPM44125B+SSBK44	2-45
90601-1006	GAS SPRING	4-29
90601-1046	TIMING BELT 50AT5/480 PU	1-103
90601-1047	TIMING BELT 16AT10/3220 PU	1-105
90601-1126	SAFETY VALVE, MS6-SV-1/2-D-10V24-AG	6-5
90601-1168	SOCKET CONNECTOR, NECA-S1G9-P9-MP3	6-5
90601-1586	SILENCER G1"	6-5
90601-5151	SERVO MOTOR MPL-B330P-SJ72AA SERIES A	2-15, 2-29, 2-43, 2-73
90601-9790	BALL BEARING, 6X19X6 MM	1-83, 1-103
90602-4967	BELLOW COUPLING, 16X16 MM	2-73
273455-0000	SIGN, COLD WATER	6-7
273458-0000	SIGN, AIR	6-7
311102-0237	PARALLEL PIN ISO 2338 3M6X18 ST	2-21
311103-0271	PARALLEL PIN ISO 2338 4M6X18 A1	10-27
311103-0306	PARALLEL PIN ISO 2338 5M6X12 A1	2-35, 2-39, 2-57, 2-69, 2-71, 2-83
311103-0310	PARALLEL PIN ISO 2338 5M6X20 A1	10-31
311103-0351	PARALLEL PIN ISO 2338 6M6X16 A1	1-53, 2-15
311103-0353	PARALLEL PIN ISO 2338 6M6X20 A1	2-19, 2-43
311103-0359	PARALLEL PIN ISO 2338 6M6X35 A1	1-85
311103-0361	PARALLEL PIN ISO 2338 6M6X40 A1	1-77
311103-0454	PARALLEL PIN ISO 2338 10M6X20 A1	1-73, 2-13, 2-39, 2-57
311112-0255	SPRING PIN, ISO 8752 4X18-C	2-65
311520-0329	RIVET, BLANK 2,4X8	11-35, 11-37, 11-45
311521-0142	RIVET, BLANK 3,2X6	8-67, 11-59
311521-0143	RIVET, BLANK 3,2X8	8-67, 11-101
311521-0144	RIVET, BLANK 3,2X10	4-9, 4-25
311523-0142	BLIND RIVET ISO 15983 -3.2X6 A2/A2	11-35, 11-37, 11-103
312101-0367	SCREW M6S M6X14 FZB	11-89
312101-0376	SCREW M6S M6X35 FZB	2-79, 2-81
312101-0453	SCREW M6S M8X25 FZB	4-11
312104-0502	SCREW M6S M10X55H FZB	4-29
312105-0153	SCREW EN 10642 MF6S M5X25 A480	1-21
312105-0285	SCREW M6S ISO 4017 M4X6 A470	4-9
312105-0287	SCREW M6S ISO 4017 M4X8 A470	2-57
312105-0289	SCREW M6S H4X10 A4 70 ISO4017/DIN933	4-21
312105-0291	SCREW M6S ISO 4017 M4X12 A470	2-21, 2-29, 7-5, 7-7, 7-9, 8-63, 11-21, 11-59
312105-0295	SCREW M6S ISO 4017 M4X20 A470	7-7
312105-0297	SCREW M6S ISO 4017 M4X25 A470	11-89
312105-0299	SCREW M6S ISO 4017 M4X30 A470	2-79, 2-81
312105-0323	SCREW M6S ISO 4017 M5X8 A480	11-29
312105-0325	SCREW M6S ISO 4017 M5X10 A480	2-19, 4-9, 11-19, 11-45, 11-79
312105-0327	SCREW M6S ISO 4017 M5X12 A480	1-73, 2-29, 2-31, 2-33, 2-35, 2-53, 2-69, 2-71
312105-0329	SCREW M6S ISO 4017 M5X16 A480	4-41, 6-5, 11-19, 11-49
312105-0331	SCREW M6S ISO 4017 M5X20 A480	11-49, 11-69, 11-71
312105-0333	SCREW M6S ISO 4017 M5X25 A480	4-29, 11-29
312105-0337	SCREW M6S ISO 4014 M5X35 A480	11-21
312105-0339	SCREW M6S ISO 4014 M5X40 A480	2-19, 2-31, 2-33, 11-21
312105-0362	SCREW M6S ISO 4017 M6X8 A480	5-21
312105-0364	SCREW M6S ISO 4017 M6X10 A480	2-65, 2-67, 4-9, 5-9, 5-15, 10-35, 11-75, 11-83
312105-0366	SCREW M6S ISO 4017 M6X12 A480	1-17, 1-53, 1-55, 1-63, 1-73, 1-103, 4-29, 4-39, 5-13, 5-17

Part No	Description	Page No
	5-19, 8-67, 10-5, 10-11, 10-13, 10-23, 10-29, 11-5, 11-45, 11-59, 11-63, 11-65, 11-67, 11-95, 11-133	
312105-0367 ..	SCREW M6S ISO 4017 M6X14 A480	2-23
312105-0368 ..	SCREW M6S ISO 4017 M6X16 A480	1-29, 1-53, 1-77, 1-97, 1-105, 2-69, 2-71, 3-15, 3-17, 4-29
		5-9, 5-11, 5-13, 5-17, 5-19, 5-21, 5-23, 5-35, 5-37, 6-5, 6-7, 7-11, 10-23, 10-29, 11-19, 11-131
312105-0370 ..	SCREW M6S ISO 4017 M6X20 A480	1-17, 1-31, 1-53, 1-55, 1-67, 1-77, 1-99, 1-103, 2-39, 2-47
		2-49, 4-9, 4-13, 4-15, 4-21, 4-25, 4-35, 7-5, 10-23, 10-29, 11-23, 11-65, 11-67, 11-73, 11-95
312105-0372 ..	SCREW M6S ISO 4017 M6X25 A480	1-19, 1-21, 1-23, 1-25, 1-33, 1-35, 1-39, 1-53, 1-55, 1-77
		1-79, 1-83, 1-93, 1-97, 1-99, 2-13, 2-83, 4-33, 10-11, 11-59
312105-0374 ..	SCREW M6S ISO 4014 M6X30 A480	1-85, 1-97, 1-103, 1-105, 2-57, 11-59, 11-69, 11-71, 11-73
312105-0376 ..	SCREW M6S ISO 4014 M6X35 A480	1-53, 1-55, 1-77, 1-87, 2-73, 4-9, 4-25
312105-0378 ..	SCREW M6S ISO 4014 M6X40 A480	1-19, 1-25, 1-33, 1-35, 1-37, 1-79, 1-99, 4-29, 11-59
312105-0379 ..	SCREW M6S ISO 4014 M6X45 A480	1-21, 1-31, 11-29
312105-0380 ..	SCREW M6S ISO 4014 M6X50 A480	11-59
312105-0381 ..	SCREW M6S ISO 4014 M6X55 A480	1-23, 2-31, 2-33
312105-0382 ..	SCREW M6S ISO 4014 M6X60 A480	1-39
312105-0384 ..	SCREW M6S ISO 4014 M6X70 A480	1-103, 2-77
312105-0388 ..	SCREW M6S ISO 4014 M6X90 A480	11-59
312105-0390 ..	SCREW M6S ISO 4014 M6X100 A480	1-79, 2-83
312105-0447 ..	SCREW M6S ISO 4017 M8X12 A480	2-57, 11-11, 11-35, 11-37, 11-61, 11-77, 11-95, 11-97
312105-0449 ..	SCREW M6S ISO 4017 M8X16 A480	1-73, 4-11, 11-91, 11-97
312105-0451 ..	SCREW M6S ISO 4017 M8X20 A480	1-17, 1-25, 1-29, 1-33, 1-51, 1-85, 2-29, 2-57, 2-65, 2-67
		3-15, 3-17, 4-11, 4-29, 5-17, 11-21, 11-59, 11-65, 11-67, 11-69, 11-71, 11-73, 11-75, 11-77, 11-83
312105-0453 ..	SCREW M6S ISO 4017 M8X25 A480	1-51, 2-67, 4-29, 5-13, 5-17, 5-19, 11-77
312105-0455 ..	SCREW M6S ISO 4017 M8X30 A480	1-55, 1-67, 1-73, 1-89, 1-91, 1-105, 2-13, 2-31, 2-33, 2-39
		2-47, 2-49, 4-13, 4-15
312105-0457 ..	CREW M6S ISO 4014 M8X35 A480	1-53, 1-73, 1-83, 1-87, 1-97, 2-19, 2-21, 2-65, 4-29
312105-0459 ..	SCREW M6S ISO 4014 M8X40 A480	1-63, 1-65, 1-67, 1-85, 1-105, 2-55, 4-9, 4-25, 4-29, 4-31
		11-9, 11-77
312105-0460 ..	SCREW M6S ISO 4014 M8X45 A480	1-55, 1-77, 1-91
312105-0461 ..	SCREW M6S ISO 4014 M8X50 A480	1-89, 2-67, 10-15, 10-19
312105-0463 ..	SCREW M6S ISO 4014 M8X60 A480	1-73, 1-91, 1-101, 2-23, 2-65
312105-0465 ..	SCREW M6S ISO 4014 M8X70 A480	1-89
312105-0471 ..	SCREW M6S ISO 4014 M8X100 A480	1-97
312105-0495 ..	SCREW M6S ISO 4017 M10X30 A480	1-89
312105-0532 ..	SCREW M6S ISO 4017 M12X20 A480	1-73, 2-65
312105-0534 ..	SCREW M6S ISO 4017 M12X25 A480	1-93, 4-33
312105-0538 ..	SCREW M6S ISO 4017 M12X35 A480	1-53
312105-0544 ..	SCREW M6S ISO 4014 M12X60 A480	1-53
312105-0546 ..	SCREW M6S ISO 4014 M12X70 A480	1-53
312106-0318 ..	SERRATED FLANGE NUT ISO 4161 M8 A4	1-99
312107-0316 ..	HEXAGON FLANGE NUT ISO 4161 M6 A2	8-67
312108-0325 ..	SCREW EN 1665 TYPE F M5X10 A270	1-79, 1-83, 1-97, 1-103
312108-0327 ..	SCREW EN 1665 TYPE F M5X12 A270	1-99
312108-0364 ..	SCREW EN 1665 TYPE F M6X10 A270	1-83, 2-69, 2-71, 5-25, 5-27, 5-29, 5-31
312108-0366 ..	SCREW EN 1665 TYPE F M6X12 A270	1-77, 1-87, 1-103
312108-0368 ..	SCREW EN 1665 TYPE F M6X16 A270	1-87, 1-99, 2-31, 2-33
312108-0370 ..	SCREW EN 1665 TYPE F M6X20 A270	10-17
312108-0372 ..	SCREW EN 1665 TYPE F M6X25 A270	1-77, 1-79, 1-81, 1-99
312108-0376 ..	SCREW EN 1665 TYPE F M6X35 A270	2-45
312108-0378 ..	SCREW EN 1665 TYPE F M6X40 A270	4-29
312108-0449 ..	SCREW EN 1665 TYPE F M8X16 A270	2-31, 2-33
312108-0451 ..	SCREW EN 1665 TYPE F M8X20 A270	1-77, 1-97, 4-17, 4-25, 5-29, 5-31
312108-0453 ..	SCREW EN 1665 TYPE F M8X25 A270	4-25
312108-0455 ..	SCREW EN 1665 TYPE F M8X30 A270	10-17
312108-0457 ..	SCREW EN 1665 TYPE F M8X35 A270	2-45
312108-0461 ..	SCREW EN 1665 TYPE F M8X50 A270	2-45
312108-0463 ..	SCREW EN 1665 TYPE F M8X60 A270	5-25, 5-27
312109-0374 ..	SCREW M6S ISO 4017 M6X30 A480	2-57
312109-0376 ..	SCREW M6S ISO 4017 M6X35 A480	1-101, 1-103, 2-29, 2-31, 2-33
312109-0382 ..	SCREW M6S ISO 4017 M6X60 A480	11-19
312109-0457 ..	SCREW M6S ISO 4017 M8X35 A480	1-65
312109-0459 ..	SCREW M6S ISO 4017 M8X40 A480	2-47, 2-49, 4-13, 4-15
312109-0461 ..	SCREW M6S ISO 4017 M8X50 A480	1-79, 2-67
312109-0465 ..	SCREW M6S ISO 4017 M8X70 A480	1-99
312111-0372 ..	SCREW HEX.SOCK.HD.MC6S-TT 6X25 88 FZB	4-21
312111-0463 ..	SCREW HEX.SOCK.HD.MC6S-TT 8X60 88 FZB	2-79, 2-81
312113-0287 ..	SERRATED COMBI TORX SCREW M4X8 A2	8-69, 8-71, 11-109
312113-0323 ..	SERRATED COMBI TORX SCREW M5X8 A2	8-67, 8-69, 8-71, 11-109
312113-0366 ..	SERRATED COMBI TORX SCREW M6X12 A2	4-35, 8-69, 8-71
312113-0372 ..	SERRATED COMBI TORX SCREW M6X25 A2	4-35
312115-0220 ..	SCREW ISO4762 M3X6 A4 80	1-67
312115-0222 ..	SCREW ISO4762 M3X8 A4 80	1-77, 1-97
312115-0230 ..	SCREW ISO4762 M3X20 A4 80	2-31, 2-33, 4-31
312115-0287 ..	SCREW ISO4762 M4X8 A4 80	11-127
312115-0289 ..	SCREW ISO4762 M4X10 A4 80	11-49
312115-0293 ..	SCREW ISO4762 M4X16 A4 80	11-63
312115-0323 ..	SCREW ISO4762 M5X8 A4 80	1-73, 11-79
312115-0325 ..	SCREW ISO4762 M5X10 A4 80	8-67
312115-0327 ..	Z3REW ISO4762 M5X12 A4 80	1-53, 11-79
312115-0329 ..	SCREW ISO4762 M5X16 A4 80	1-31, 1-67, 2-15, 4-37, 8-73, 8-75, 8-77, 11-51, 11-125
312115-0331 ..	SCREW ISO4762 M5X20 A4 80	11-127
312115-0333 ..	SCREW ISO4762 M5X25 A4 80	2-39
312115-0341 ..	SCREW ISO4762 M5X50 A4 80	2-53
312115-0364 ..	SCREW ISO4762 M6X10 A4 80	1-67, 2-57, 11-11

Part No	Description	Page No
312115-0366 ..	SCREW ISO4762 M6X12 A4 80	7-11, 8-73, 8-75, 8-77, 11-89
312115-0368 ..	SCREW ISO4762 M6X16 A4 80	1-53, 1-73, 2-53, 5-33, 7-11, 10-23, 11-103
312115-0370 ..	SCREW ISO4762 M6X20 A4 80	1-83, 1-97, 2-15, 2-17, 2-29, 2-41, 2-43, 4-29, 7-5, 11-13, 11-33, 11-45
312115-0372 ..	SCREW ISO4762 M6X25 A4 80	1-85, 1-105, 2-17, 2-41, 2-83, 11-13
312115-0374 ..	SCREW ISO4762 M6X30 A4 80	2-75
312115-0376 ..	SCREW ISO4762 M6X35 A4 80	1-59, 1-73
312115-0378 ..	SCREW ISO4762 M6X40 A4 80	1-71, 2-69, 2-71
312115-0379 ..	SCREW ISO4762 M6X45 A4 80	1-57
312115-0380 ..	SCREW ISO4762 M6X50 A4 80	1-53
312115-0382 ..	SCREW ISO4762 M6X60 A4 80	1-53
312115-0449 ..	SCREW ISO4762 M8X16 A4 80	1-73, 11-79
312115-0451 ..	SCREW ISO4762 M8X20 A4 80	1-87, 2-29, 2-65, 2-83
312115-0453 ..	SCREW ISO4762 M8X25 A4 80	2-15, 2-43, 2-83
312115-0455 ..	SCREW ISO4762 M8X30 A4 80	2-65
312115-0457 ..	SCREW ISO4762 M8X35 A4 80	2-29
312115-0459 ..	SCREW ISO4762 M8X40 A4 80	2-47, 2-49, 4-13, 4-15
312115-0461 ..	SCREW ISO4762 M8X50 A4 80	2-67, 2-73
312115-0463 ..	SCREW ISO4762 M8X60 A4 80	2-19, 2-35
312115-0493 ..	SCREW ISO4762 M10X25 A4 80	10-11, 10-13
312115-0501 ..	SCREW ISO4762 M10X50 A4 80	1-83, 1-105, 2-65
312115-0509 ..	SCREW ISO4762 M10X90 A4 80	2-75
312115-0542 ..	SCREW ISO4762 M12X50 A4 80	1-53
312121-0226 ..	SCREW ISO 1207 M3X12 4.8-5.8 Z.PL.	11-83, 11-89
312121-0289 ..	SCREW ISO 1207 M4X10 4.8-5.8 Z.PL.	8-69, 8-71, 11-49
312121-0291 ..	SCREW ISO 1207 M4X12 4.8-5.8 Z.PL.	8-69, 8-71
312121-0327 ..	SCREW ISO 1207 M5X12 4.8-5.8 Z.PL.	8-69, 8-71
312125-0226 ..	SCREW ISO 1207 M3X12 A4	1-77, 1-97, 1-99, 1-103
312125-0228 ..	SCREW ISO 1207 M3X16 A4	2-39
312125-0230 ..	SCREW ISO 1207 M3X20 A4	1-57, 1-59, 1-89, 2-13, 2-69, 2-71, 2-79, 2-81
312125-0232 ..	SCREW ISO 1207 M3X25 A4	1-87
312125-0285 ..	SCREW ISO 1207 M4X6 A4	8-69, 8-71, 11-59
312125-0287 ..	SCREW ISO 1207 M4X8 A4	1-55, 1-83, 1-89, 1-97, 1-103, 1-105, 2-13, 2-39, 2-69, 2-71, 8-37, 11-45
312125-0289 ..	SCREW ISO 1207 M4X10 A4	1-83, 2-29
312125-0299 ..	SCREW ISO 1207 M4X30 A4	11-35, 11-37
312125-0366 ..	SCREW ISO 1207 M6X12 A4	4-35
312125-0449 ..	SCREW ISO 1207 M8X16 A4	8-69, 8-71
312145-0325 ..	SCREW ISO 2009 MFS M5X10 A4	1-79, 1-99, 2-23, 4-9, 4-25, 4-31
312155-0226 ..	SCREW DIN 7991 MF6S M3X12 A4 70	1-83
312155-0287 ..	SCREW DIN 7991 MF6S M4X8 A4 70	10-13
312155-0289 ..	SCREW DIN 7991 MF6S M4X10 A4 70	2-19
312155-0291 ..	SCREW DIN 7991 MF6S M4X12 A4 70	1-27, 7-7, 7-9, 8-63
312155-0323 ..	SCREW DIN 7991 MF6S M5X8 A4 70	1-99
312155-0325 ..	SCREW DIN 7991 MF6S M5X10 A4 70	2-35
312155-0329 ..	SCREW DIN 7991 MF6S M5X16 A4 70	1-27, 1-85, 4-9, 11-21
312155-0333 ..	SCREW DIN 7991 MF6S M5X25 A4 70	1-79
312155-0339 ..	SCREW DIN 7991 MF6S M5X40 A4 70	2-19
312155-0364 ..	SCREW DIN 7991 MF6S M6X10 A4 70	1-49, 2-21
312155-0366 ..	SCREW DIN 7991 MF6S M6X12 A4 70	1-77
312155-0368 ..	SCREW DIN 7991 MF6S M6X16 A4 70	1-27, 4-9, 10-13, 10-15
312155-0370 ..	SCREW DIN 7991 MF6S M6X20 A4 70	1-83, 1-87, 1-101, 4-25, 5-33, 11-21
312155-0372 ..	SCREW DIN 7991 MF6S M6X25 A4 70	1-79, 1-99, 4-29, 11-21
312155-0376 ..	SCREW DIN 7991 MF6S M6X35 A4 70	11-127
312155-0378 ..	SCREW DIN 7991 MF6S M6X40 A4 70	5-9, 5-11, 5-21, 5-23, 5-35, 5-37, 8-65, 11-33
312155-0382 ..	SCREW DIN 7991 MF6S M6X60 A4 70	11-45
312155-0449 ..	SCREW DIN 7991 MF6S M8X16 A4 70	11-75
312155-0455 ..	SCREW DIN 7991 MF6S M8X30 A4 70	2-67, 11-61
312155-0461 ..	SCREW DIN 7991 MF6S M8X50A4 70	4-29
312180-0447 ..	SCREW ISO7379 H8X12	11-21
312303-0380 ..	SCREW DIN 938 PS M6X35 A4 80	11-29
312311-0370 ..	SCREW ISO4028 M6X20 FZB	1-97, 1-105
312311-0455 ..	SCREW ISO4028 M8X30 FZB	1-77
312318-0283 ..	SCREW ISO4029 M4X4 A4	1-55, 11-79
312318-0284 ..	SCREW ISO4029 M4X5 A4	2-29
312318-0321 ..	SCREW ISO4029 M5X6 A4	11-35, 11-37
312318-0323 ..	SCREW ISO4029 M5X8 A4	11-75
312318-0360 ..	SCREW ISO4029 M6X6 A4	2-65
312318-0362 ..	SCREW ISO4029 M6X8 A4	1-55, 1-73, 11-59, 11-75, 11-79
312318-0364 ..	SCREW ISO4029 M6X10 A4	2-79, 2-81
312318-0368 ..	SCREW ISO4029 M6X16 A4	11-59
312318-0372 ..	SCREW ISO4029 M6X25 A4	4-9
312318-0453 ..	SCREW ISO4029 M8X25 A4	1-85
312601-0316 ..	HEXAGON NUT, DIN 934 M6 8 FZB	11-35, 11-37
312605-0312 ..	HEXAGON NUT, M6M M4 A280	7-7, 8-69, 8-71, 8-73, 8-75, 8-77, 11-33, 11-35, 11-37
312605-0314 ..	HEXAGON NUT, M6M M5 A280	4-37, 7-5, 8-69, 8-71, 10-15, 11-35, 11-37, 11-51, 11-125, 11-127
312605-0316 ..	HEXAGON NUT, M6M M6 A280	1-53, 1-101, 1-103, 5-11, 5-17, 5-29, 5-31, 7-5, 7-11, 8-65, 8-67, 8-69, 8-71, 10-15, 11-33, 11-35, 11-37, 11-45, 11-95, 11-101, 11-103, 11-109, 11-127
312605-0318 ..	HEXAGON NUT, M6M M8 A280	1-79, 1-91, 1-97, 2-29, 2-47, 2-49, 4-13, 4-15, 5-17, 5-25, 5-27, 5-29, 5-31, 8-69, 8-71, 10-15, 10-19, 11-101
312605-0320 ..	HEXAGON NUT, M6M M10 A280	2-45, 4-29
312605-0322 ..	HEXAGON NUT, M6M M12 A280	10-15
312605-0324 ..	HEXAGON NUT, M6M M16 A280	11-35, 11-37, 11-45
312607-0312 ..	HEXAGON NUT, EN 24032 M6M M4 A480	11-89
312607-0316 ..	HEXAGON NUT, EN 24032 M6M M6 A480	5-11
312607-0318 ..	HEXAGON NUT, EN 24032 M6M M8 A480	1-89, 11-97

Part No	Description	Page No
312607-0322	HEXAGON NUT, EN 24032 M6M M12 A480	1-87
312607-0324	HEXAGON NUT, EN 24032 M6M M16 A480	1-81
312625-0316	HEXAGON THIN NUT, EN 24035 ML6M M6 A4	4-9
312625-0324	HEXAGON THIN NUT, EN 24035 ML6M M16 A4	1-53
312705-0314	NUT HEX. DOMED CAP MHM-6 M5 A280	7-5
312705-0316	NUT HEX. DOMED CAP MHM-6 M6 A280	1-83, 11-29
312705-0318	NUT HEX. DOMED CAP MHM-6 M8 A280	2-55, 2-83, 11-9
312805-0105	NUT ROUND WITH SLOTS M25X1,5 FE	2-83
312810-0318	HEXAGON NUT, NY-LOCK M8 FZB	11-101
312812-0314	HEXAGON NUT, NY-LOCK M5 A480	5-33, 8-73, 8-75, 8-77
312812-0316	HEXAGON NUT, NY-LOCK M6 A480	1-83, 1-103, 5-9, 5-21, 5-23, 5-35, 5-37, 8-65, 8-73, 8-75, 8-77, 11-33, 11-59
312812-0318	HEXAGON NUT, NY-LOCK M8 A480	1-103, 2-29, 10-25, 10-27, 10-31, 11-77, 11-91
312812-0320	HEXAGON NUT, NY-LOCK M10 A480	1-83, 2-31, 2-33
312928-0104	RIVET NUT M6, CLAMP. LENGTH 0,7 - 3,0	1-49
315101-0153	WASHER PLAIN, BRB, 6,4/12 H=1,5	8-65
315101-0176	WASHER PLAIN, BRB, 12/22 H=2	11-23, 11-25, 11-27
315103-0124	WASHER, BRB, 3,2/6,H=0,5 NI PL BR	1-67
315103-0165	WASHER PLAIN, BRB, 8,4/16,H=1,5 NIPL BR	2-19, 2-79, 2-81
315105-0124	WASHER BRB 3,2X6 RFR	2-13, 2-31, 2-33, 2-39, 2-69, 2-71, 2-79, 2-81, 4-31
315105-0136	WASHER BRB 4,3X8 RFR	2-21, 2-29, 2-57, 2-79, 2-81, 4-21, 7-7, 7-9, 8-63, 8-69, 8-71, 8-73, 8-75, 11-33, 11-35, 11-37, 11-49
315105-0146	WASHER BRB 5,3X10 RFR	2-31, 2-33, 2-35, 2-69, 2-71, 4-29, 4-37, 4-41, 5-33, 7-5, 8-69, 8-71, 8-73, 8-75, 8-77, 11-19, 11-21, 11-29, 11-35, 11-37, 11-49, 11-51, 11-125
315105-0153	WASHER BRB 6,4X12 RFR	1-19, 1-23, 1-25, 1-31, 1-33, 1-35, 1-37, 1-39, 1-53, 1-55, 1-67, 1-73, 1-85, 2-13, 2-17, 2-23, 2-29, 2-31, 2-33, 2-39, 2-41, 2-57, 2-67, 2-79, 2-81, 2-83, 4-9, 4-21, 4-25, 4-29, 5-9, 5-11, 5-13, 5-17, 5-19, 5-21, 5-23, 5-33, 5-35, 5-37, 6-7, 7-5, 7-11, 8-67, 8-69, 8-71, 8-73, 8-75, 8-77, 10-23, 10-29, 11-11, 11-13, 11-19, 11-23, 11-29, 11-33, 11-35, 11-37, 11-45, 11-59, 11-101, 11-103, 11-131
315105-0156	WASHER BRB 6,7X14 RFR	4-39
315105-0165	WASHER BRB 8,4X16 RFR	1-17, 1-25, 1-29, 1-33, 1-53, 1-55, 1-65, 1-73, 1-89, 1-91, 2-13, 2-23, 2-29, 2-39, 2-55, 2-57, 2-65, 2-67, 4-11, 4-29, 5-13, 5-17, 5-19, 5-25, 5-27, 5-29, 5-31, 11-9, 11-11, 11-35, 11-37, 11-65, 11-67, 11-69, 11-71, 11-73, 11-77, 11-97, 11-101
315105-0173	WASHER BRB 10,5X22 RFR	2-45, 4-9, 11-21
315105-0178	WASHER BRB 13X24 RFR	1-53, 2-65
315106-0124	WASHER ISO 7089-3-200 HV A4	1-77, 1-87, 1-89, 1-97, 1-99, 1-103
315106-0136	WASHER ISO 7089-4-200 HV A4	1-83, 11-89
315106-0146	WASHER ISO 7089-5-200 HV A4	6-5, 11-45, 11-127
315106-0153	WASHER ISO 7089-6-200 HV A4	1-77, 1-79, 1-83, 1-87, 1-97, 1-99, 1-101, 1-103, 1-105, 2-47, 2-49, 2-77, 4-9, 4-13, 4-15, 5-29, 5-31, 11-63, 11-83, 11-109, 11-127
315106-0165	WASHER ISO 7089-8-200 HV A4	1-73, 1-77, 1-83, 1-87, 1-97, 1-101, 1-103, 1-105, 2-31, 2-33, 2-47, 2-49, 2-73, 4-13, 4-15, 8-69, 8-71
315106-0173	WASHER ISO 7089-10-200 HV A4	1-83, 11-61
315106-0178	WASHER ISO 7089-12-200 HV A4	1-73, 1-87, 1-93, 4-33, 10-15
315106-0186	WASHER ISO 7089-16-200 HV A4	1-53, 1-73, 2-65
315115-0173	WASHER PLAIN, TBRB 10,5/22 H=4	2-31, 2-33
315125-0146	WASHER TBRSB 5.3X15X1 A4	2-19
315125-0153	WASHER TBRSB 6,4X22X4 A4	1-77, 1-103, 2-31, 2-33, 10-23, 10-29
315125-0165	WASHER TBRSB 8,4X26X5 A4	1-67, 1-83, 1-85, 1-105, 2-19, 2-21, 2-67, 11-21
315125-0173	WASHER TBRSB 10,5X28X6 A4	11-101
315202-0103	O-RING 5,1X1,6 MM	10-23, 10-29
315202-0246	O-RING 144,3X5,7 MM	11-59
315204-0221	O-RING 34,2X3 MM	2-13
315300-0004	TUBE, 8 MM PE BLUE	2-19
315400-0001	TUBE PUN-H-6X1-BL	1-89, 3-15, 3-17, 6-5
315400-0004	TUBE PUN-H-8X1,25-BL	3-15, 3-17, 11-89
315400-0010	TUBE PUN-H-12X2-BL	3-15, 3-17, 6-5, 6-7
315410-0104	LOCK WASHER MB 4 D=20 H=1	2-39
315410-0105	LOCK WASHER MB 5 D=25 H=1,25	2-83
315701-0201	PARALLEL KEY W. ROUND ENDS 5X5X20 MM	2-83
315701-0232	PARALLEL KEY W. ROUND ENDS 6X6X20 MM	11-59, 11-75, 11-79
315705-0164	PARALLEL KEY W. ROUND ENDS 4X4X8 MM	2-29
315705-0166	PARAPARALLEL KEY W. ROUND ENDS 4X4X12 MM	2-29, 11-59, 11-79
315705-0196	PARALLEL KEY W.ROUND ENDS 5X5X10	11-21
315705-0198	PARALLEL KEY W. ROUND ENDS 5X5X14 MM	1-77, 1-97, 11-21
315705-0201	PARALLEL KEY W. ROUND ENDS 5X5X20 MM	1-67, 2-73
315705-0202	PARALLEL KEY W ROUND ENDS 5X5X25MM	1-55
315705-0236	PARALLEL KEY W. ROUND ENDS 6X6X30 MM	1-53
315705-0238	PARALL KEY W. ROUND ENDS 6X6X36 MM	2-83
315705-0239	PARALLEL KEY W. ROUND ENDS 6X6X40 MM	1-53, 1-67, 1-77, 1-97
315705-0267	PARALLEL KEY W. ROUND ENDS 8X7X30 MM	1-53, 1-85
315705-0270	PARALLEL KEY W. ROUND ENDS 8X7X40 MM	1-77, 1-105, 11-59
315705-0272	PARALLEL KEY W. ROUND ENDS 8X7X50 MM	1-97
315705-0277	PARALLEL KEY W. ROUND ENDS 8X7X80 MM	2-31, 2-33
315741-0112	RETAINING RING DIN 705 A2 16	1-73, 2-65, 11-21
315741-0116	RETAINING RING DIN 705 A2 20	4-29
315744-0010	MINIATURE CIRCUIT BREAKER, FAZ-C1/1-NA	11-105, 11-107
315744-0020	MINIATURE CIRCUIT BREAKER, FAZ-C2/1-NA	8-55, 8-57, 8-59, 11-35, 11-37, 11-105, 11-107
315744-0040	MINIATURE CIRCUIT BREAKER, FAZ-C4/1-NA	8-55, 8-57, 8-59, 11-105, 11-107
315744-0060	MINIATURE CIRCUIT BREAKER, FAZ-C6/1-NA	8-55, 8-57, 8-59
315744-0100	MINIATURE CIRCUIT BREAKER, FAZ-C10/1-NA	8-55, 8-57, 8-59, 11-35, 11-37
315744-0160	MINIATURE CIRCUIT BREAKER, FAZ-C16/1-NA	8-55, 8-57, 8-59
315745-0020	MINIATURE CIRCUIT BREAKER, FAZ-C2/2-NA	8-55, 8-57, 8-59
315745-0040	MINIATURE CIRCUIT BREAKER, FAZ-C4/2-NA	8-55, 8-57, 8-59

Part No	Description	Page No
315745-0060 ..	MINIATURE CIRCUIT BREAKER, FAZ-C6/2-NA	8-55, 8-57, 8-59
315745-0100 ..	MINIATURE CIRCUIT BREAKER, FAZ-C10/2-NA	8-55, 8-57, 8-59
315746-0100 ..	MINIATURE CIRCUIT BREAKER, FAZ-C10/3-NA	8-55, 8-57, 8-59
315747-0100 ..	MINIATURE CIRCUIT BREAKER, FAZ-D10/1-NA	8-55, 8-57, 8-59
315750-0109 ..	RETAINING RING SHAFT DIN 471 ST 12	11-23, 11-25, 11-27
315750-0112 ..	RETAINING RING SHAFT DIN 471 ST 15	11-21
315751-0109 ..	RETAINING RING FOR SHAFT DIN 471 12 SS	2-29
315751-0111 ..	RETAINING RING FOR SHAFT DIN 471 14 SS	1-55, 1-67, 11-21
315751-0112 ..	RETAINING RING FOR SHAFT DIN 471 15 SS	1-65, 1-87, 1-101, 1-103, 1-105, 2-13, 2-39
315751-0113 ..	RETAINING RING FOR SHAFT DIN 471 16 SS	1-53, 1-73
315751-0116 ..	RETAINING RING FOR SHAFT DIN 471 20 SS	1-53, 1-67, 1-97
315751-0119 ..	RETAINING RING FOR SHAFT DIN 471 25 SS	1-77, 1-105, 2-53, 2-83
315751-0122 ..	RETAINING RING FOR SHAFT DIN 471 30 SS	2-73
315751-0127 ..	RETAINING RING FOR SHAFT DIN 471 40 SS	1-53
315752-0124 ..	RETAINING RING FOR BORE DIN 472 35 ST	2-77
315753-0119 ..	RETAINING RING FOR BORE DIN 472 25 A2	2-75
315753-0121 ..	RETAINING RING FOR BORE DIN 472 28 A2	2-29
315753-0124 ..	RETAINING RING FOR BORE DIN 472 35 A2	1-65, 1-87, 1-101, 1-103, 1-105, 2-13, 2-39
315753-0127 ..	RETAINING RING FOR BORE DIN 472 40 A2	1-89
315753-0130 ..	RETAINING RING FOR BORE DIN 472 47 A2	1-77, 1-85, 2-83
315753-0132 ..	RETAINING RING FOR BORE DIN 472 52 A2	2-75
315753-0133 ..	RETAINING RING FOR BORE DIN 472 55 A2	2-73
315755-0105 ..	RETAINING RING SHAFT DIN 6799 3,2 A2	7-5, 11-33
315755-0108 ..	RETAINING RING SHAFT DIN 6799 6 A2	10-23, 10-29
315756-0009 ..	ÖLFLEX CONTROL TM CY 4G1,5, 281604CY	8-61
318161-0123 ..	TIMING BELT 10T5/420 PU	1-105
318161-0125 ..	TIMING BELT 10T5/455 PU	1-105
318212-0112 ..	ROLLER CHAIN, SINGLE 1/2 -112,SS	11-21
318800-0106 ..	HANDLE,SPHERICAL KNOB,INT.THRE,D.40-M10	1-73
321133-0224 ..	BUSHING IGLIDUR G 16X18X20	1-53, 11-21
321133-0260 ..	BUSHING IGLIDUR G 20X23X20	2-29
321133-0300 ..	BUSHING IGLIDUR G 25X28X25	1-55, 1-73
321153-0102 ..	FLANGE BUSHING, 8X10X10 MM	10-15
321154-0221 ..	FLANGE BUSHING, 16X18X17 MM	2-65
321161-0098 ..	FLANGE BUSHING, 8X10X5, 5 MM	2-17, 2-41
321308-0201 ..	BALL BEARING 12/28X8	2-29
321308-0204 ..	BALL BEARING 20/42X12	2-13, 2-39
321308-0205 ..	BALL BEARING 25/47X12	2-53, 2-83
321313-0102 ..	BALL BEARING 15/35X11	1-87, 1-101, 2-13, 2-39
342707-0113 ..	SLEEVE, INT. THREAD, NO. 2543-1/2	6-7
342713-0210 ..	PLUG, EXT THREAD HEX SOCKET	6-5
342901-0105 ..	HOSE NIPPLE, EXT.THR. R1/2-12 MM	6-7
342991-0102 ..	HOSE CLIP,WORM DRIVE TYPE (13)-20	11-127
350001-0011 ..	PUSH-IN FITTING QS-F-G1/4-12	6-5, 11-89
350001-0016 ..	PUSH-IN FITTING QS-F-G1/2-12	6-7
350002-0006 ..	PUSH-IN L-FITTING QSL-F-G1/8-6	1-89, 4-29
350002-0008 ..	PUSH-IN L-FITTING QSL-F-G1/4-6	6-5
350002-0009 ..	PUSH-IN L-FITTING QSL-F-G1/4-8	6-5
350002-0011 ..	PUSH-IN L-FITTING QSL-F-G1/4-12	3-15, 3-17, 6-5
350004-0005 ..	PUSH-IN L-FITTING QSL-F-12	6-5
350006-0001 ..	PUSH-IN FITTING QS-F-6H-4	6-5
350006-0003 ..	PUSH-IN FITTING QS-F-8H-6	3-15, 3-17
350008-0005 ..	PUSH-IN FITTING QSF-F-G1/8-8	11-89
350008-0006 ..	PUSH-IN FITTING QSF-F-G1/4-8	3-15, 3-17
350014-0010 ..	FITTING QS-F-G1/4-10H	11-89
350015-0006 ..	Y-FITTING QSY-F-10-8	11-89
351150-0403 ..	CABLE OLFLEX 3X0,75 MM2 LIGHT/GREY	8-21, 8-61, 11-115
351150-0404 ..	CABLE OLFLEX 4X0,75 MM2 LIGHT/GREY	8-21, 8-61, 11-41
351150-0406 ..	CABLE OLFLEX 7X0,75 MM2 LIGHT/GREY	8-21, 8-61
351150-0412 ..	CABLE OLFLEX 3X1,5 MM2 LIGHT/GREY	8-21, 8-61
351150-0413 ..	CABLE OLFLEX 4GX1,5 MM2 LIGHT/GREY	8-21, 8-61
351150-0417 ..	CABLE OLFLEX 3X2,5 MM2 LIGHT/GREY	8-21, 8-61, 11-43
351150-0424 ..	CABLE OLFLEX 18X0,75 MM2 LIGHT/GREY	8-21, 8-61
351150-0431 ..	CABLE OLFLEX 2X0,75 MM2 LIGHT/GREY	8-21, 8-61
351160-0102 ..	WIRE AWM 1X0,75 MM2 DARKBLUE	8-15, 8-17, 8-19, 8-55, 8-57, 8-59
351160-0104 ..	WIRE AWM 1X1,5 MM2 DARKBLUE	8-15, 8-17, 8-19, 8-55, 8-57, 8-59
351161-0104 ..	WIRE AWM 1X1,5 MM2 LIGHTBLUE	8-15, 8-17, 8-19, 8-55, 8-57, 8-59
351161-0105 ..	WIRE AWM 1X2,5 MM2 LIGHTBLUE	8-15, 8-17, 8-19, 8-55, 8-57, 8-59
351162-0102 ..	WIRE AWM 1X0,75 MM2 YELLOW-GREEN	8-15, 8-17, 8-19, 8-55, 8-57, 8-59
351162-0104 ..	WIRE AWM 1X1,5 MM2 YELLOW-GREEN	8-15, 8-17, 8-19, 8-55, 8-57, 8-59, 11-117
351162-0105 ..	WIRE AWM 1X2,5 MM2 YELLOW-GREEN	8-15, 8-17, 8-19, 8-55, 8-57, 8-59
351162-0106 ..	WIRE AWM 1X4 MM2 YELLOW-GREEN	8-15, 8-17, 8-19, 8-55, 8-57, 8-59
351162-0108 ..	WIRE AWM 1X10 MM2 YELLOW-GREEN	8-15, 8-17, 8-19, 8-55, 8-57, 8-59
351162-0110 ..	WIRE AWM 1X25 MM2 YELLOW-GREEN	8-15, 8-17, 8-19, 8-55, 8-57, 8-59
351164-0104 ..	WIRE AWM 1X1,5 MM2 BLACK	8-15, 8-17, 8-19, 8-55, 8-57, 8-59
351164-0105 ..	WIRE AWM 1X2,5 MM2 BLACK	8-15, 8-17, 8-19, 8-55, 8-57, 8-59
351164-0106 ..	WIRE AWM 1X4 MM2 BLACK	8-15, 8-17, 8-19, 8-55, 8-57, 8-59
351303-0050 ..	ACTUATOR/SENSOR CABLE RKMVN 3-224/5M	8-21, 8-61
351304-0050 ..	ACTUATOR/SENSOR CABLE RKMWVN 3-224/5M	8-21, 8-61
351305-0050 ..	ACTUATOR/SENSOR CABLE PRKMV 4-07/5M	8-21, 8-61
351309-0050 ..	'ACTUATOR/SENSOR CABLE PRKT 4-07/5M	11-115
351309-0100 ..	ACTUATOR/SENSOR CABLE PRKT 4-07/10M	8-21, 8-61, 11-5, 11-131, 11-133
351416-0100 ..	MINIATURE CIRC. BREAK., FAZ -D10 1-POLE	8-15, 8-17, 8-19
351501-0010 ..	ETHERNET PATCH CABLE, FL CAT5 PATCH 1,0	8-15, 8-17, 8-19, 8-55, 8-57, 8-59

Part No	Description	Page No
351501-0050 ..	ETHERNET PATCH CABLE, FL CAT5 PATCH 5,0	8-21, 8-61
352113-0101 ..	CABLE TIE, BLACK 92X2,5 MM	11-19, 11-45, 11-59
352113-0204 ..	ANCHOR PLATES FOR STRIPS, TYPE TM3S25-M	4-35, 7-5, 8-73, 8-75, 8-77, 11-127
352113-0205 ..	ANCHOR PLATES FOR STRIPS, TYPE TM2S8-C10	1-55, 1-83, 1-89, 1-97, 1-103, 1-105, 2-13, 2-39, 2-69, 2-71, 11-45, 11-59
352113-0206 ..	ANCHOR PLATES FOR STRIPS, TYPE ABM100-AT	7-5
353001-0113 ..	END SLEEVE 0,75MM2	8-15, 8-17, 8-19, 8-55, 8-57, 8-59
353001-0114 ..	END SLEEVE 1,50 MM2	8-15, 8-17, 8-19, 8-55, 8-57, 8-59, 11-117
353001-0115 ..	END SLEEVE 2,5/14	8-15, 8-17, 8-19, 8-55, 8-57, 8-59
353001-0117 ..	END SLEEVE H4.0/20 GREY	8-15, 8-17, 8-19, 8-55, 8-57, 8-59
353001-0120 ..	END SLEEVE H 10/28	8-15, 8-17, 8-19, 8-55, 8-57, 8-59
353021-0212 ..	FEED THROUGH TERMINAL, 10200.0	8-25, 8-27, 8-29, 8-31, 8-47, 11-39
353021-0213 ..	FEED THROUGH TERMINAL, 10201.0	8-9, 8-11, 8-35
353022-0002 ..	NEUTRAL TERMINAL, 10107.8	8-37
353024-0204 ..	EARTH TERMINAL WPE 2,5	8-47, 11-39
353024-0205 ..	EARTH TERMINAL, 1010.1	8-33, 8-35
353024-0208 ..	EARTH TERMINAL, 1010.4	8-33
353024-0209 ..	EARTH TERMINAL, 1010.5	8-33
353024-0212 ..	EARTH TERMINAL, 10363.0	8-39, 8-41, 11-111
353031-0203 ..	END SUPPORT, WEW 35/2	8-9, 8-11, 8-15, 8-17, 8-19, 8-25, 8-31, 8-37, 8-39, 8-41, 8-47, 8-55, 8-57, 8-59, 11-39, 11-111, 11-113
353032-0009 ..	END PLATE, WAP FOR WDK	8-39, 8-41, 11-111, 11-113
353033-0104 ..	END PLATE, 10502.8	8-37
353033-0105 ..	PARTITITION, 10501.0	8-25, 8-27, 8-29, 8-31
353034-0030 ..	BRIDGE CONNECTOR WQV 2,5/10, 10544.6	8-25, 8-27, 8-29, 8-31
353041-0001 ..	BUS BAR RAIL 10X3MM SSCH	8-37
353041-0104 ..	CLAMPING YOKE, PZB 4 K	8-37
353042-0004 ..	RAIL TS 35/7,5	8-69, 8-71, 11-35, 11-37, 11-39, 11-109
353101-0120 ..	CABLE SHOE 0,5-1,5MM2 M4 RED	8-13, 11-109
353101-0134 ..	CABLE SHOE 1,5-2,5MM2 M8 BLUE	11-101, 11-117
353102-0161 ..	CABLE SHOE, RING INS., YAEV 10 M6	11-109
353102-0176 ..	CABLE SHOE, RING INS., YAEV 25 M8	11-101
353103-0120 ..	CABLE SHOE 1,25 MM² RED	8-13
353104-0176 ..	CABLE SHOE, RING UNINS., YAV 25 M 8	8-15, 8-17, 8-19, 8-55, 8-57, 8-59
353210-0075 ..	END SLEEVE, TWIN COLL, 0,75 MM2	8-15, 8-17, 8-19, 8-55, 8-57, 8-59
353210-0150 ..	END SLEEVE, TWIN COLL, 1,5 MM2	8-15, 8-17, 8-19, 8-55, 8-57, 8-59
353210-0250 ..	END SLEEVE, TWIN COLL, 2,5 MM2	8-15, 8-17, 8-19, 8-55, 8-57, 8-59
354000-0010 ..	MINIATURE CIRCUIT BREAKER, FAZ-C1/1	11-105, 11-107
354000-0020 ..	MINIATURE CIRCUIT BREAKER, FAZ-C2/1	8-15, 8-17, 8-19, 11-35, 11-37, 11-105, 11-107
354000-0040 ..	MINIATURE CIRCUIT BREAKER, FAZ-C4/1	8-15, 8-17, 8-19, 11-105, 11-107
354000-0060 ..	MINIATURE CIRCUIT BREAKER, FAZ-C6/1	8-15, 8-17, 8-19
354000-0100 ..	MINIATURE CIRCUIT BREAKER, FAZ-C10/1	8-15, 8-17, 8-19, 11-35, 11-37
354000-0160 ..	MINIATURE CIRCUIT BREAKER, FAZ-C16/1	8-15, 8-17, 8-19
354001-0020 ..	MINIATURE CIRCUIT BREAKER, FAZ-C2/2	8-15, 8-17, 8-19
354001-0040 ..	MINIATURE CIRCUIT BREAKER, FAZ-C4/2	8-15, 8-17, 8-19
354001-0060 ..	MINIATURE CIRCUIT BREAKER, FAZ-C6/2	8-15, 8-17, 8-19
354001-0100 ..	MINIATURE CIRCUIT BREAKER, FAZ-C10/2	8-15, 8-17, 8-19
354002-0100 ..	IMINIATURE CIRCUIT BREAKER, FAZ-C10/3	8-15, 8-17, 8-19
359011-0807 ..	MARKING PLATES 5-FW 1-50	4-23, 11-113
359011-0821 ..	SET OF SIGNS 6-FW 1-50	8-25, 8-27, 8-29, 8-31, 8-37
359240-0100 ..	SIGN HOLDER FOR 359240-0001	8-67, 11-35, 11-37, 11-101
359241-0803 ..	SIGN: "SUPPLY DISCONNECTING DEVICE"	8-67, 11-35, 11-37, 11-101
359301-0001 ..	BUTTON SIGN, UP	7-11, 11-33, 11-103
359301-0005 ..	BUTTON SIGN, DOWN	11-33
359301-0090 ..	BUTTON SIGN, INCHING	7-11
359301-0130 ..	BUTTON SIGN, LAMP TEST	11-33, 11-103
359301-0504 ..	BUTTON SIGN, RESET	7-11
359705-0002 ..	WARNING SIGN ISO, ENTANGLEMENT	11-75, 11-97
359705-0005 ..	WARNING SIGN ISO, MOVING PART	4-29
359705-0007 ..	WARNING SIGN ISO, HOT SURFACE	2-15, 2-43, 2-73
359705-0015 ..	WARNING SIGN ISO, RISK OF ELECTRIC SHOCK	4-9, 4-25, 7-5, 8-73, 8-75, 8-77, 11-33, 11-103
359715-0100 ..	WARNING SIGN ANSI (H), ELECTRIC SHOCK	4-9, 4-25, 7-5, 8-73, 8-75, 8-77, 11-33, 11-103
359725-0100 ..	WARNING SIGN ANSI (H), ENTANGLEMENT	11-75, 11-97
359725-0108 ..	WARNING SIGN ANSI (H), MOVING PART	4-29
359725-0116 ..	WARNING SIGN ANSI (H), HOT SURFACE	2-31, 2-33, 3-15, 3-17
359725-0117 ..	WARNING SIGN ANSI (V), HOT SURFACE	2-15, 2-31, 2-33, 2-43, 2-73, 3-15, 3-17
484701-0000 ..	SHUTTER	11-63
486268-0000 ..	NUT	4-9, 4-25, 4-29, 4-31
486826-0001 ..	SIGN "EMERGENCY STOP"	7-11, 8-77
531616-0000 ..	HOLDER	5-11, 5-23
536204-0000 ..	COMPRESSION SPRING	2-21
540169-0000 ..	DOWEL	1-15, 1-27, 11-63
556386-0000 ..	STEERING	2-47, 2-49, 4-13, 4-15, 5-17, 10-17
556601-0000 ..	BRACKET	4-9, 4-25
556603-0000 ..	COVER PLATE	1-79, 1-99, 4-9, 4-25
556604-0000 ..	COVER PLATE	2-23, 4-9, 4-25, 4-31
570482-0000 ..	SPACER	8-37
578196-0000 ..	SLEEVE	5-9, 5-11, 5-21, 5-23, 5-35, 5-37, 8-65, 11-33
578197-0000 ..	SPACER	5-9, 5-11, 5-21, 5-23, 5-35, 5-37, 8-65, 11-33
578874-0000 ..	HF BRAIDED WIRE 1,6 MM2	8-15, 8-17, 8-19, 8-55, 8-57, 8-59
580923-0000 ..	MACHINE SIGN CE	4-9, 4-25, 11-45, 11-59
581689-0700 ..	WARNING LAMP	4-3, 4-5, 4-7
583570-0000 ..	BRACKET	8-69, 8-71, 11-35, 11-37, 11-109
599749-0100 ..	COOLING AIR OUTLET	7-3, 8-3, 8-5

Part No	Description	Page No
599750-0000 ..	FILTER	7-7
599751-0000 ..	INSERT	7-7, 7-9, 8-63
599752-0000 ..	COVER	7-7, 7-9, 8-63
599753-0000 ..	SPACER	7-7, 7-9, 8-63
599755-0000 ..	GASKET	7-7, 7-9, 8-63
599760-0000 ..	SPACER	7-7
663501-0200 ..	CONVEYOR SECTION	11-53
663502-0200 ..	DETECTOR	11-53
663503-0100 ..	EJECTOR	11-53
663504-0100 ..	COVERS	11-53
663505-0300 ..	ELECTRICAL CABINET	11-53
663506-0300 ..	ELECTRIC EQUIPMENT	11-53
663507-0200 ..	REGULAR ACCESSORIES	11-53
663550-0300 ..	STRAW DETECTOR 30	11-3
959656-0000 ..	COTTER	7-5, 11-33
959657-0000 ..	HINGE FLANGE	7-5, 11-33
959658-0000 ..	SPRING	7-5, 11-33
975880-0000 ..	HINGE FLANGE	7-5, 11-33
975884-0000 ..	BRACKET	4-9, 4-25
975887-0000 ..	CATCH	5-35, 5-37
975889-0017 ..	STRUT	5-33
988685-0000 ..	PIN	5-33, 7-11
1021933-0000 .	COVER TAPE	4-9, 4-25
1021990-0000 .	SIGN 356X70MM HOUSE MARK TEXT TETRA PAK	5-33, 8-73, 8-75, 11-45
1021991-0000 .	STRIPE TETRA PAK BLUE B=70MM, ROLL L=25M	11-45
1030767-0000 .	CATCH	5-9, 5-11, 5-21, 5-23
1035792-0000 .	E-HINGE	5-33, 7-11, 8-73, 8-75, 8-77, 11-103
1035793-0000 .	PIN	8-73, 8-75, 8-77
1035794-0000 .	BLOCKING PIECE	8-73, 8-75, 8-77
1036329-0000 .	PIN	11-103
1065410-0000 .	SLOTTED PIN	4-9, 4-25, 4-31
1086870-0000 .	SIGN	11-57
1103299-0000 .	NON-SKID	4-9
1103300-0000 .	NON-SKID	4-9
1128853-0000 .	CAUTION SIGN	2-31, 2-33, 3-15, 3-17
1129767-0000 .	SCREW	5-33
1129770-0000 .	BLOCKING PIECE	5-33, 7-11, 11-103
1189303-0000 .	MOUNTING SHEET	4-9
1359565-0000 .	NUT	1-17, 1-21, 1-25, 1-29, 1-31, 1-33, 11-63, 11-65, 11-67, 11-69, 11-71, 11-73
1366727-0000 .	CLAMP	1-15, 1-17, 1-19, 1-21, 1-23, 1-25, 1-29, 1-31, 1-33, 1-35, 1-39, 10-5, 11-5, 11-65, 11-67, 11-73, 11-131, 11-133
1366750-0000 .	HOLDER	1-15, 1-19, 1-21, 1-23, 1-25, 1-29, 1-31, 1-33, 1-35, 1-39, 10-5, 11-5, 11-73, 11-131, 11-133

Part No	Description	Page No
1368508-0101 .	WIRE	8-7, 8-53
1550595-4960 .	SLIDING STRIP	1-41, 1-43
1550595-9960 .	SLIDING STRIP	1-41, 1-43
1550695-0002 .	SIDE PLATE	1-41, 1-43
1550695-0003 .	SIDE PLATE	1-41, 1-43
1550743-0200 .	RAIL HOLDER	1-15, 11-63
1550772-0000 .	HOLDER	1-17, 1-25, 1-29, 1-33, 11-65, 11-69, 11-71, 11-73, 11-83
1556781-0000 .	CABLE	8-13
2557494-0000 .	BRACKET	7-5
2561206-0000 .	SPACER	1-41, 1-43, 1-45, 1-47, 1-49, 11-61
2561226-0000 .	SPACER	11-59
2561227-0001 .	SHAFT	11-59
2561273-0102 .	CONVEYOR BODY	1-11, 1-13
2561273-0103 .	CONVEYOR BODY	1-11, 1-13
2565207-0000 .	BRACKET	6-7
2582040-0100 .	COOLING AIR INTAKE	7-3
2590154-0000 .	HUB	11-59
2643050-0400 .	BENT FOIL TREATER	11-3
2643052-0000 .	ROLL	11-23, 11-25, 11-27
2643053-0000 .	SHAFT	11-25
2643060-0300 .	HEATER	11-15
2643064-0000 .	INSULATING PLATE	11-19
2643065-0200 .	BENDING ROLLER	11-17
2643066-0200 .	BENDING ROLLER	11-17
2643074-0300 .	LID	11-15
2656556-0000 .	BRACKET FOR LEG PC23	11-61
2656676-0000 .	SPROCKET	11-59
2656679-0000 .	WHEEL	11-59
2693488-0000 .	PLATE	8-73, 8-75
2694881-0000 .	COVER	8-73, 8-75
2699305-0092 .	SLIDING STRIP	11-61
2699305-0292 .	SLIDING STRIP	11-61
2699305-0496 .	SLIDING STRIP	1-45, 1-47
2699305-0996 .	SLIDING STRIP	1-49, 11-61
2699436-0000 .	SPACER	1-17, 11-65, 11-67
2699437-0000 .	RAIL HOLDER	1-17, 11-65, 11-67
2703954-0400 .	ELECTRICAL CABINET	11-15
2703955-0000 .	GUIDE	11-45
2703960-0300 .	COVER	11-15
2727153-0000 .	COVER	11-35, 11-37
2727158-0300 .	DOOR	11-31
2727159-0400 .	ELECTRICAL CABINET	11-31

Part No	Description	Page No
2727161-0300	.TERMINAL	11-35, 11-37
2727163-0200	.INSULATION	11-15
2737080-0300	.SUPPORT BELT	1-61
2737088-0000	.CLAMPING PLATE	2-57, 11-11
2738775-0300	.ELECTRICAL DOCUMENT	11-31
2740229-0200	.MACHINE	11-31
2751388-0000	.WHEEL	11-21
2751398-0000	.HOLDER	11-29
2751399-0000	.PLATE	11-49
2751400-0300	.MOTOR UNIT	11-15
2751401-0000	.PLATE	11-49
2752867-0000	.PROFILE 50X50	4-9, 4-25
2752868-0000	.PROFILE 50X50	4-9, 4-25
2752869-0000	.PROFILE 50X50	4-9, 4-25
2752890-0000	.PROFILE 50X100	4-9
2752891-0000	.PROFILE 50X100	4-25
2752893-0000	.PROFILE 50X100	4-9, 4-25
2752895-0000	.PROFILE 50X100	4-9, 4-25
2752896-0000	.PROFILE 50X100	4-9, 4-25
2752901-0000	.PROFILE 50X100	4-9, 4-25
2752902-0000	.PROFILE 50X100	4-9, 4-25
2752903-0000	.PROFILE 50X50	4-9, 4-25
2752904-0000	.PROFILE 50X50	4-9, 4-25
2773708-0000	.NUT WASHER	11-103
2788657-0300	.MACHINE BODY	4-3, 4-5, 4-7
2789703-0200	.BENDING ROLLER	11-17
2789753-0000	.HOLDER	11-29
2789964-0000	.INSULATION	11-49
2789989-0000	.FOOT PLATE	11-35, 11-37, 11-45
2789990-0000	.PLATE	11-45
2793903-0300	.CONVEYOR	1-3, 1-5, 1-7, 1-9
2797698-0000	.SHAFT	1-65
2799922-0000	.SIDE PLATE	1-45
2799923-0000	.SIDE PLATE	1-45
2799924-0000	.SIDE PLATE	1-47
2804855-0000	.SIDE PLATE	1-47
2805942-0000	.MACHINE SIGN	11-45
2807592-0000	.MULTI BRACKET SINGLE	11-77
2807604-0100	.LEG,CONVEYOR	11-55
2807614-0000	.LEG,CONVEYOR	11-57
2807804-0000	.GUIDE	11-61
2807805-0000	.GUIDE	11-61
2811516-0000	.BRACKET	1-55
2811518-0000	.SHAFT	1-55
2812585-0000	.HOLDER	11-35, 11-37
2812586-0000	.SCREW	11-45
2812601-0000	.WIRE	11-45
2816699-0000	.ANGLE	11-29
2818263-0000	.PROFILE 50X100	4-9, 4-25
2829402-0000	.PLATE	1-55
2829403-0000	.BRACKET	1-89
2829412-0000	.SHAFT	1-73
2829413-0000	.BRACKET	1-73
2829416-0200	.ADJUSTMENT PLATE	1-3, 1-5, 1-7, 1-9
2829417-0000	.SHAFT	1-73
2829418-0000	.BRACKET	1-73
2829426-0000	.BRACKET	2-57, 11-11
2829430-0100	.FEED SHAFT	2-51
2829431-0200	.CUTTING UNIT	2-3, 2-5, 2-7, 2-9
2829432-0100	.CRANK HOUSING	2-11
2829433-0300	.FRAME HOUSING	2-59, 2-61, 2-63
2829435-0100	.GUIDE CONSOLE	2-3, 2-5, 2-7, 2-9
2829436-0200	.CRANK SHAFT	2-3, 2-5, 2-7, 2-9
2829438-0100	.ADJUSTMENT BRACKET	2-59, 2-61, 2-63
2829439-0200	.DRIVE MOTOR	2-11
2829442-0100	.GUIDE ARM	2-3, 2-5, 2-7, 2-9
2829443-0100	.FEED WHEEL	2-51
2829489-0000	.SHAFT	2-57
2829491-0000	.PULLEY	2-53
2833867-0000	.PROFILE 50X100	4-9
2833872-0000	.PROFILE 50X50	4-9, 4-25
2833873-0000	.PROFILE 50X50	4-9, 4-25
2833876-0000	.PROFILE 50X50	4-9
2835350-0000	.ADJUSTING NUT	1-73, 2-65
2835365-0000	.SHAFT	1-73
2835378-0000	.SHAFT	1-55
2835380-0100	.CONVEYOR BODY	1-11, 1-13
2835381-0100	.CONVEYOR	1-11, 1-13
2835382-0000	.MOUNTING SHEET	1-55
2835390-0000	.LID	1-55
2837851-0000	.CD BOX	8-67
2839812-0000	.PROFILE 50X50	4-9, 4-25
2839813-0200	.AIR SUPPLY	6-3
2839815-0200	.GLASS DOOR	5-3, 5-5, 5-7

Machine Type Group Description Page No

Part No	Description	Page No
2839816-0000	.DOOR	5-33
2839817-0000	.GLASS	5-33
2839818-0000	.STRUT	5-33
2839820-0100	.COVERING PANEL	5-3, 5-5, 5-7
2839821-0000	.PROTECTIVE COVER	5-9
2840886-0000	.COVER PLATE	5-15
2840887-0000	.GLASS	5-9, 5-21, 5-23
2840888-0100	.COVERING PANEL	5-3, 5-5, 5-7
2840889-0000	.PROTECTION PLATE	5-35
2840890-0200	.COVERING PANEL	5-3, 5-5, 5-7
2840892-0100	.COVERING PANEL	5-3, 5-5, 5-7
2840893-0000	.PROTECTIVE COVER	5-11
2843699-0000	.CABLE TRENCH	4-35
2843700-0100	.CABLE DUCT	4-3, 4-5, 4-7
2843703-0000	.CABLE TRENCH	4-35
2843706-0000	.CABLE TRENCH	4-35
2843708-0000	.CABLE TRENCH	4-35
2844513-0300	.ELECTRICAL MATERIALS	8-7
2844515-0200	.ELECTRICAL CABINET	8-3, 8-5
2844517-0200	.MOUNTING PLATE	8-3, 8-5
2844518-0200	.EL-CABINET DOOR	8-3, 8-5
2844519-0200	.EL-CABINET DOOR	8-3, 8-5
2845550-0000	.SCREW	11-61
2845848-0300	.SUPPORT RAIL	1-11, 1-13
2845855-0000	.PIPE	1-15, 1-27
2845856-0000	.PIPE	1-15, 1-27
2845857-0000	.PIPE	1-15, 1-27
2845859-0000	.RACK GEAR	1-55
2845860-0000	.GEAR WHEEL	1-55
2845862-0000	.PIPE	1-15, 1-27
2846735-0000	.DOOR	8-77
2846736-0000	.DOOR	8-73, 8-75
2846737-0200	.DOOR	7-3
2848823-0000	.BEARING HUB	2-53
2848826-0000	.BEARING SLEEVE	2-13
2848827-0000	.RING	2-53
2848828-0000	.CLAMP BLOCK	2-65
2848829-0000	.PIVOT AXLE	2-65
2848830-0000	.GUIDE RAIL	2-65
2848831-0000	.END WASHER	2-65
2848832-0000	.BEARING PLATE	2-65
2848834-0000	.HOSE HOLDER	2-69, 2-71
2848835-0000	.INSULATING PLATE	2-19
2848840-0000	.SPRING BRACKET	2-21
2848842-0000	.LEAF SPRING	2-21
2848844-0000	.FRAME SECTION	2-13
2848846-0000	.SWITCH BRACKET	2-13
2848849-0000	.GUIDE CONSOLE	2-19, 2-35
2848852-0000	.GUIDE CONSOLE	2-19
2848854-0000	.GUN HOLDER	2-19
2848855-0000	.GUN HOLDER	2-19
2848856-0000	.INSULATING PLATE	2-19
2848857-0000	.GUIDE ARM	2-19
2848858-0000	.GUIDE ARM	2-19
2848861-0000	.TORSION SPRING	2-69, 2-71
2850070-0000	.GUIDE	5-9, 5-21
2850074-0000	.BRACKET	5-17
2855106-0000	.COPPER BRAID	8-15, 8-17, 8-19, 8-55, 8-57, 8-59
2855899-0000	.BRACKET	11-131
2856537-0000	.KNIFE	2-57, 11-11
2856539-0000	.SHAFT	2-57
2856540-0000	.AXLE PIN	2-83
2856544-0000	.BRACKET	2-69, 2-71
2856558-0000	.GEAR WHEEL	2-15
2856559-0000	.GEAR WHEEL	2-13
2856560-0000	.CRANK SHAFT	2-13
2856561-0000	.CRANK SHAFT	2-13
2856562-0000	.SPACER SLEEVE	2-13
2856565-0000	.PROFILE 50X50	2-23
2858601-0000	.COVER	8-65
2858602-0100	.COVER	8-3, 8-5
2858603-0000	.PLATE	4-9, 4-25
2858604-0000	.STRUT	8-73, 8-75, 8-77
2858605-0000	.STRUT	8-77
2859418-0000	.SCALE POINTER	1-55
2859679-0000	.STRUT	8-73, 8-75
2859680-0000	.PROTECTIVE COVER	7-5
2859681-0100	.CONNECTION BOX	7-3
2859682-0000	.COVER	7-5
2860891-0000	.RUBBER GASKET	7-5
2863493-0000	.FLAG	2-29
2863510-0100	.HOTMELT EQUIPMENT NORDSON	3-3, 3-5, 3-7
2863512-0000	.NUT	2-35
2863513-0000	.HOLDER	2-35

Part No	Description	Page No
2863517-0000	.ECCENTRIC	2-29
2863518-0000	.BRACKET	2-31, 2-33
2864773-0000	.SHAFT	2-55, 11-9
2864774-0000	.PULLEY	2-53
2864776-0100	.HOTMELT EQUIPMENT MISCELLANEOUS	3-3, 3-5, 3-7
2864777-0000	.COVER	3-15, 3-17
2867565-0000	.PULLEY	1-65
2870316-0000	.PLATE	8-67
2872298-0100	.TERMINAL	8-7, 8-53
2872299-0100	.TERMINAL	8-7, 8-53
2872318-0100	.TERMINAL	8-7, 8-53
2872319-0100	.TERMINAL	8-7, 8-53
2872336-0100	.TERMINAL	8-7, 8-53
2872337-0200	.TERMINAL	8-7, 8-53
2875165-0100	.CONVEYOR BODY	11-55
2875167-0000	.SIDE PLATE	11-59
2876306-0001	.SPACER	11-59
2876306-0002	.SPACER	11-59
2876307-0000	.PROTECTION	11-59
2876310-0000	.PLATE	11-59
2876311-0000	.SPACER	11-59
2884589-0100	.TERMINAL	8-7, 8-53
2884591-0100	.TERMINAL	8-7, 8-53
2884592-0200	.TERMINAL	8-7, 8-53
2884593-0100	.TERMINAL	8-7, 8-53
2884594-0200	.TERMINAL	8-7, 8-53
2885383-0100	.TUNNEL	5-3, 5-5, 5-7
2885386-0000	.BRACKET	2-65
2885387-0000	.BRACKET	1-51
2885388-0000	.BRACKET	1-51
2885390-0000	.PLATE	4-9, 4-25
2892716-0000	.BRACKET	10-5, 11-5, 11-133
2892717-0100	.HOTMELT EQUIPMENT NORDSON	3-3, 3-5, 3-7
2892718-0100	.TERMINAL	7-3
2892719-0100	.TERMINAL	7-3
2893440-0100	.ADJUSTMENT BRACKET	2-59, 2-61, 2-63
2893441-0000	.PROFILE 50X100	4-9
2893442-0000	.ANGLE BRACKET	2-67
2893443-0000	.SCALE POINTER	2-67
2893444-0000	.ADJUSTMENT BRACKET	2-67
2893445-0000	.SPACER PIECE	2-67
2896524-0100	.TERMINAL	8-7, 8-53
2901712-0100	.CONVEYOR BODY	1-11, 1-13
2901714-0000	.SIDE PLATE	1-49
2901716-0000	.BAR	1-73
2901717-0100	.LIGHT FIXTURE	4-3, 4-5, 4-7
2901718-0100	.RELAY	8-7, 8-53
2901719-0100	.RELAY	8-7, 8-53
2901720-0100	.RELAY	8-7, 8-53
2901721-0000	.BRACKET	1-55
2904764-0000	.BEARING HOUSING	2-29
2904765-0000	.HOUSE	2-29
2904836-0000	.ADJUSTMENT BRACKET	1-79, 1-99
2904847-0000	.ADJUSTING SCREW	2-67
2904848-0000	.SCALE POINTER	2-67
2904856-0000	.SUPPORT	1-79
2904906-0100	.CONVEYOR BODY	11-55
2904907-0100	.PNEUMATIC UNIT	11-87
2904908-0200	.RAILING KIT	11-55
2904939-0000	.PROTECTION PLATE	5-13, 5-17, 5-19
2904940-0000	.BRACKET	5-13, 5-17, 5-19
2904941-0000	.PLATE	5-13, 5-17
2904942-0000	.PLATE	5-19
2909945-0000	.SUPPORT	4-35
2909947-0000	.CABLE TRENCH	4-35
2909948-0000	.CABLE TRENCH	4-35
2909949-0000	.CABLE TRENCH	4-35
2909950-0000	.CABLE TRENCH	4-35
2909952-0100	.PHOTOCELL UNIT	10-3
2910474-0000	.POST	2-17, 2-41, 11-13
2910475-0000	.BEARING HOUSING	2-13
2912684-0000	.SIDE PLATE	11-61
2912685-0000	.SIDE PLATE	11-61
2912688-0000	.BRACKET	11-61
2912689-0100	.BASKET	11-87
2912690-0200	.BRAKE	11-55
2912691-0000	.BEARING HOUSING	11-75
2913339-0000	.BRACKET	1-55
2913340-0100	.CONNECTOR	4-3, 4-5, 4-7
2913341-0300	.ELECTRIC MATERIALS	8-3, 8-5
2913343-0300	.FRAME	2-3, 2-5, 2-7, 2-9
2915045-0000	.PLATE	11-91
2915053-0000	.CANTILEVER	11-91
2915054-0000	.STRUT	11-91

Part No	Description	Page No
2916011-0000	.GEAR WHEEL	2-29
2916012-0000	.GEAR WHEEL	2-29
2916017-0000	.SPACER SLEEVE	2-29
2916021-0000	.WASHER	2-29
2916022-0000	.SPACER SLEEVE	2-29
2916024-0000	.GEAR WHEEL	2-29
2916036-0000	.GUIDE	2-35
2916039-0000	.SHAFT	2-29
2916047-0000	.SLIDE PLATE	1-77
2916061-0000	.SPACER BLOCK	2-45
2916062-0000	.BEARING BRACKET	4-29
2916063-0000	.SHAFT	4-29
2916068-0000	.SPACER	4-29
2916069-0000	.WASHER	4-29
2916074-0000	.GUIDE RAIL	2-45
2916076-0000	.BRACKET	4-29
2918406-0000	.CROSS BAR	11-77
2918410-0200	.PHOTOCELL UNIT	11-81
2918411-0000	.NET	11-91
2923007-0000	.PROFILE	10-13
2923019-0000	.ANGLE	10-13
2923319-0000	.PLATE	10-11
2923320-0000	.BLOCKING PIECE	10-11
2923329-0000	.PLATE	10-13
2923333-0000	.PROFILE	10-11
2923334-0000	.PROFILE	10-11
2923335-0000	.PROFILE	10-13
2923336-0000	.PROFILE	10-13
2923338-0000	.PROFILE	10-13
2923339-0000	.PROFILE	10-13
2923341-0000	.PROFILE	10-13
2923342-0100	.FRAME	10-9
2923343-0100	.FRAME	10-9
2923344-0100	.STRAW MAGAZINE	10-3
2923345-0000	.PROFILE	10-11
2923347-0000	.SLIDING STRIP	10-13
2923353-0200	.SPRING HOLDER	2-3, 2-5, 2-7, 2-9
2923354-0000	.SPRING HOLDER	2-21
2923358-0000	.GUIDE ARM	2-21
2924303-0000	.COVER	11-95
2924673-0300	.WHEEL	1-61
2924674-0300	.DRIVE WHEEL	1-61
2924675-0300	.TOP SUPPORT	1-3, 1-5, 1-7, 1-9
2924689-0000	.ARM	2-57
2924690-0000	.GUIDE	2-57
2924691-0000	.GUIDE	2-57
2925061-0100	.FRAME	11-55
2925062-0000	.FASTENING PLATE	11-77
2925071-0000	.MOUNTING PLATE	11-89
2925998-0000	.DRIVE BELT	1-83
2926027-0000	.BRACKET	1-77
2926028-0000	.BRACKET	1-77
2926029-0000	.SPACER BLOCK	1-77
2926031-0000	.PROTECTION PLATE	5-21
2926032-0000	.PROTECTION PLATE	5-23
2926040-0100	.ADJUSTMENT PLATE	4-27
2926048-0000	.AXLE PIN	1-87
2926050-0100	.ADJUSTMENT PLATE	4-3, 4-5, 4-7
2926051-0000	.BRACKET	1-87
2926052-0000	.MOUNTING SHEET	1-87
2926054-0000	.AXLE PIN	1-87
2926056-0000	.LOCATING PIECE	1-87
2926058-0000	.ADJUSTING SCREW	1-81
2926059-0000	.PULLEY	1-87
2926061-0000	.PLATE	1-89
2926062-0000	.BEARING HOLDER	1-89
2926063-0000	.AXLE SUPPORT	1-87
2926066-0000	.ANGLE BRACKET	1-87
2926068-0000	.CROSS BAR	1-87
2926070-0100	.PACKAGE TRANSFER	1-3, 1-5, 1-7, 1-9
2926071-0000	.COVER DISC	1-87
2926075-0100	.ADJUSTMENT PLATE	1-3, 1-5, 1-7, 1-9
2926082-0000	.DRIVE WHEEL	1-83
2929771-0200	.SQUEEZER	2-3, 2-5, 2-7, 2-9
2929773-0100	.FEED WHEEL UNIT	2-3, 2-5, 2-7, 2-9
2929774-0300	.HEIGHT ADJUSTMENT	1-3, 1-5, 1-7, 1-9
2933645-0000	.BRACKET	11-77
2933646-0000	.MOUNTING PLATE	11-77
2933647-0000	.BEAM	11-77
2933650-0100	.DETECTOR	11-81
2933653-0000	.BEAM	11-77
2933654-0000	.COVER	11-59
2933843-0000	.SPACER	11-77
2933845-0100	.COVER	11-93

Part No	Description	Page No
2933850-0300	.ELECTRICAL CABINET	11-99
2933942-0000	.WASHER	1-97, 1-105
2933948-0000	.RUNNER ROD	1-89
2933956-0000	.SPACER BLOCK	1-85
2933958-0000	.TIMING BELT PULLEY	1-77, 1-85
2933962-0000	.PROFILE 50X100	1-79
2933963-0000	.SLIDE RAIL	1-79
2933964-0000	.BRACKET	1-77, 1-97
2933965-0100	.DRIVE AND END UNIT	1-75
2933969-0000	.BRACKET	1-77
2933970-0100	.CONVEYOR BODY	1-75
2933971-0000	.PULLEY	1-87
2933972-0000	.PULLEY	1-87
2933973-0000	.DRIVE BELT	1-87
2933974-0000	.BELT	1-87
2933976-0000	.CYLINDER BRACKET	1-89
2933977-0000	.CYLINDER BRACKET	1-89
2933978-0000	.STOP LUG	1-89
2933979-0000	.LOCATING PIECE	1-87
2933980-0200	.CONVEYOR	1-3, 1-5, 1-7, 1-9
2933986-0000	.SCREW HOLDER	1-81
2933990-0100	.ADJUSTER	1-75
2934000-0200	.SQUEEZER	2-3, 2-5, 2-7, 2-9
2934005-0000	.THRUST WASHER	1-81
2934006-0000	.TOOTHED PULLEY	1-81
2934009-0000	.BRACKET	1-87
2934010-0100	.TUNNEL	5-3, 5-5, 5-7
2934013-0000	.PULLEY	1-77
2934016-0000	.SLIDE RAIL	1-87
2934020-0100	.TUNNEL	5-3, 5-5, 5-7
2934021-0000	.STEERING	1-87
2934023-0000	.PROTECTION PLATE	5-25, 5-27
2934025-0000	.PROTECTION PLATE	5-29, 5-31
2934027-0000	.PULLEY	1-87
2934028-0000	.COVER	2-29
2934029-0000	.BRACKET	2-31, 2-33
2934030-0100	.LIFTER	4-27
2935053-0000	.TOOTHED PULLEY	11-59, 11-79
2935054-0000	.TOOTHED PULLEY	11-75
2935056-0000	.BRACKET	11-77
2935057-0000	.BRACKET	11-77
2935058-0000	.BRACKET	11-61
2935059-0000	.BRACKET	11-77
2935060-0200	.ASSEMBLY PLATE	11-105, 11-107
2935827-0000	.PIPE	2-23, 5-9
2935828-0000	.SHAFT	5-9
2935834-0000	.END SECTION	2-23, 2-79, 2-81, 5-9
2936702-0200	.TERMINAL	11-105, 11-107
2936703-0200	.TERMINAL	11-105, 11-107
2936706-0000	.PIPE	11-63
2936707-0000	.PIPE	11-63
2937123-0000	.EARTH WIRE	7-11
2937532-0000	.BRACKET	8-67
2939102-0100	.CABLE	11-115
2939105-0300	.EL-CABINET DOOR	11-99
2939106-0300	.MACHINE	11-99
2939110-0300	.ASSEMBLY PLATE	11-99
2939672-0000	.SHAFT	2-31, 2-33
2939673-0000	.COVER	2-31, 2-33
2939674-0000	.BRACKET	2-31, 2-33
2939675-0000	.BRACKET	2-31, 2-33
2939676-0000	.SHAFT	2-29
2939677-0000	.SHAFT	2-29
2939678-0000	.BRACKET	2-31, 2-33
2939679-0000	.ECCENTRIC	2-29
2939684-0000	.TAPE	5-33
2939685-0000	.TAPE	7-11
2939686-0000	.TAPE	8-73, 8-75, 8-77
2939687-0000	.TAPE	8-67
2939688-0000	.TAPE	5-9, 5-11, 5-21, 5-23
2939699-0000	.BRACKET	4-11
2941199-0100	.COVERING PANEL	5-3, 5-5, 5-7
2941712-0000	.PULLEY	1-67
2941713-0000	.BRACKET	1-73
2941716-0100	.MAIN PIPE	6-3
2943553-0100	.PHOTOCELL UNIT	11-3
2946135-0100	.SPLICING TABLE	10-9
2946136-0000	.HOLDER	10-15
2946137-0000	.PLATE	10-15
2946138-0000	.PLATE	10-15
2946141-0000	.PRESSURE PLATE	10-15
2946142-0000	.SHAFT	10-15
2946144-0000	.CANTILEVER	10-15
2946720-0100	.GUIDE	10-9

Part No	Description	Page No
2946721-0000	.CANTILEVER	10-17
2946722-0000	.PLATE	10-15, 10-19
2946723-0100	.TUNNEL	5-3, 5-5, 5-7
2946724-0100	.HOLDER	10-9
2946725-0000	.CANTILEVER	10-19
2946726-0000	.BRACKET	4-35
2946729-0000	.POINTER	2-65
2946730-0000	.PLATE	2-13
2946738-0000	.PROFILE	10-11
2946739-0000	.PROFILE	10-11
2946740-0000	.PROFILE	10-13
2946859-0000	.BRACKET	4-11
2946861-0200	.VIBRATION DAMPER	4-3, 4-5, 4-7
2948161-0000	.BRACKET	1-79, 1-99
2948162-0000	.PROTECTION PLATE	1-79
2948184-0000	.DRIVE WHEEL	1-97
2948187-0000	.SHAFT	1-97
2948191-0000	.ANGLE BRACKET	2-45
2948192-0000	.PROFILE 50X50	4-31
2948193-0000	.PROFILE 50X50	4-31
2948194-0000	.PROFILE 50X100	4-31
2948195-0100	.ADJUSTMENT BRACKET	2-3, 2-5, 2-7, 2-9
2948196-0000	.PROFILE 50X50	4-31
2948198-0000	.PROFILE 50X50	4-31
2948199-0000	.SPACER PIECE	2-45
2948206-0000	.BOTTOM PLATE	4-29
2948207-0000	.SPACER	4-29
2948208-0000	.SPACER	4-29
2948215-0100	.BELT CONVEYOR, OUTFEED	1-95
2948223-0000	.DRIVE BELT	1-97
2948230-0100	.CONVEYOR BODY	1-95
2948232-0000	.BRACKET	2-47, 2-49, 4-13, 4-15
2948234-0000	.GUIDE CONSOLE	2-35
2948240-0100	.GUIDE ARM	2-3, 2-5, 2-7, 2-9, 4-3, 4-5, 4-7
2948241-0000	.PULLEY	1-97
2948250-0200	.PRESSURE UNIT	2-25, 2-27
2948255-0100	.LOCK HOLDER	2-25, 2-27
2950968-0000	.FLANGE	2-55, 11-9
2950969-0000	.SHAFT	2-53
2950971-0000	.FLANGE	2-55, 11-9
2950974-0000	.BRACKET	4-11
2952607-0100	.CRANK HOUSING	2-37
2952611-0000	.BEARING HOUSING	2-39
2952612-0000	.ROCKER ARM	2-39
2952613-0000	.CRANK SHAFT	2-39
2952614-0000	.BEARING SLEEVE	2-39
2952615-0000	.FRAME SECTION	2-39
2952616-0000	.SLEEVE	2-39
2954244-0000	.SWITCH BRACKET	2-39
2954304-0200	.SQUEEZER	2-3, 2-5, 2-7, 2-9
2954533-0200	.CABLE SET	8-7
2955400-0200	.CABLE CONNECTION	11-41
2957679-0000	.FASTENING BRACKET	1-79, 1-99
2957680-0200	.CONVEYOR	1-75
2957682-0000	.FORK	2-29
2957687-0000	.SUPPORT ROD	1-83
2957690-0200	.BELT CONVEYOR, INFEED	1-75
2957695-0000	.BRACKET	1-85
2957696-0000	.BRACKET	1-85
2957698-0000	.CONNECTION LINK	1-91
2957699-0000	.LINK ATTACHMENT	1-91
2957700-0100	.GUIDE CONSOLE	2-3, 2-5, 2-7, 2-9
2957703-0000	.LEVER BAR	1-91
2957704-0000	.PROTECTIVE CASING	1-83
2957705-0100	.SIDE ADJUSTER	1-3, 1-5, 1-7, 1-9
2957710-0100	.COVERING PANEL	5-3, 5-5, 5-7
2957711-0000	.RULING GUIDE	1-83
2957713-0000	.BRACKET	1-77
2957714-0000	.SPACER ELEMENT	1-83
2957715-0000	.GUIDE LUG	1-83
2957718-0000	.SPACER PIN	1-83
2957719-0000	.BRACKET	1-77
2957720-0100	.COVERING PANEL	5-3, 5-5, 5-7
2957721-0000	.BRACKET	4-17
2957727-0000	.SLIDE RAIL	1-87
2957729-0000	.SPACER PIN	1-83
2957733-0000	.FEED WHEEL	2-55
2957734-0000	.FEED WHEEL	2-55
2957735-0000	.FEED WHEEL	2-55
2957736-0000	.BRACKET	2-47, 2-49, 4-13, 4-15
2957737-0000	.FEED WHEEL	2-55
2957738-0000	.FEED WHEEL	2-55
2957739-0000	.SPACER SLEEVE	5-25, 5-27
2957740-0100	.BRACKET	4-3, 4-5, 4-7

Part No	Description	Page No
2957742-0000	.SPACER SLEEVE	1-97
2957744-0000	.BRACKET	1-97
2957745-0000	.PNEUMATIC DIAGRAM	6-5
2957752-0000	.PHOTOCELL BRACKET	1-103
2957756-0000	.BOTTOM PANEL	4-25
2957757-0000	.PROFILE 50X100	4-25
2957761-0000	.DRIVE WHEEL	1-83
2957762-0000	.DRIVE WHEEL	1-83
2957768-0000	.DRIVE BELT	1-83
2957769-0000	.DRIVE WHEEL	1-83
2957772-0000	.PROTECTION	1-83
2957773-0000	.PROTECTION PLATE	1-83
2957779-0200	.TOOLS AND TEMPLATES	10-3
2958719-0000	.PROFILE	10-13
2958794-0300	.ELECTRICAL DOCUMENT	9-3
2959304-0000	.CONTACT	11-123
2959332-0000	.AXLE BOLT	2-53
2959367-0000	.FEED WHEEL	2-55
2959850-0000	.PLATE	10-15
2959983-0000	.SETTING TEMPLATE	10-33
2960584-0100	.FEED WHEEL	11-7
2960726-0000	.INSULATION	11-47
2960727-0000	.INSULATION	11-47
2960728-0000	.INSULATION	11-47
2960729-0000	.COVER	11-45
2960730-0000	.OUTER COVER	11-45
2960731-0000	.OUTER COVER	11-45
2960733-0000	.ANGLE	11-23
2960735-0000	.REEL HOLDER	11-21
2960738-0000	.PLATE	11-19
2960742-0000	.BRACKET	11-21
2960745-0000	.SPACER	11-21
2960746-0000	.ROD	11-21
2960747-0000	.BACK PLATE	11-21
2960748-0000	.BRACKET	11-21
2960749-0000	.SPACER	11-21
2960750-0000	.BRACKET	11-21
2960751-0000	.SHAFT	11-21
2960752-0000	.WASHER	11-21
2960753-0000	.SPROCKET	11-21
2960754-0000	.SPROCKET	11-21
2960755-0100	.ROLLER UNIT	11-17
2966822-0000	.SHAFT	11-27
2966823-0000	.COVER	11-29
2966824-0100	.HEATING CHAMBER	11-17
2966826-0000	.ELEMENT PLATE	11-19
2966828-0000	.COVER PLATE	11-19
2966829-0000	.PLATE	11-19
2966830-0000	.PLATE	11-19
2966831-0000	.BOTTOM PLATE	11-19
2966832-0000	.SHAFT	11-23
2966834-0000	.COVER	11-29
2966836-0000	.PLATE	11-45
2970398-0000	.INSULATION	11-47
2970399-0000	.INSULATION	11-47
2970401-0000	.PLASTIC COVER	11-21
2970402-0000	.SUPPORT	11-19
2978810-0000	.HOLDER	11-67
2978811-0100	.RAIL HOLDER	11-63
2979544-0000	.BRACKET	11-83
2982598-0000	.WEDGE	2-47, 2-49, 4-13, 4-15
2982599-0000	.PROTECTIVE CASING	1-87
2982612-0000	.SPACER ELEMENT	5-29, 5-31
2982616-0000	.BRACKET	1-99
2982617-0000	.STUD BOLT	5-29, 5-31
2982619-0000	.ARM	2-31, 2-33
2982623-0000	.COVER	2-31, 2-33
2982627-0000	.ADJUSTING SCREW	1-81
2982635-0000	.GABLE PLATE	1-103
2982636-0000	.PULLEY	1-103, 1-105
2982985-0200	.ELECTRICAL DOCUMENT	11-119
2983879-0200	.DRIVE MOTOR	2-37
2984257-0000	.SET OF SIGNS	11-121
2984837-0000	.CABLE	11-41
2986376-0000	.BEAM	11-77
2986377-0000	.BEAM	11-77
2987393-0000	.BRACKET	2-19
2987397-0000	.BRACKET	2-79, 2-81
2987398-0100	.LADDER BAND GUIDE	2-3, 2-5, 2-7, 2-9
2987399-0000	.SHAFT	2-79, 2-81
2987400-0000	.BRACKET	2-79, 2-81
2987401-0000	.BRACKET	2-79, 2-81
2987403-0000	.FEED WHEEL	2-55
2987404-0000	.FEED WHEEL	2-55

Part No	Description	Page No
2987408-0000	.BRACKET	1-67
2987431-0000	.PIPE	2-79, 2-81
2987432-0000	.FEED WHEEL	2-55
2989228-0000	.CABLE DUCT	11-131
2992411-0000	.DRIVE BELT	1-103
2992415-0000	.GABLE PLATE	1-103
2992418-0000	.SHAFT	1-103, 1-105
2992421-0000	.BRACKET	1-105
2992423-0000	.SPACER BLOCK	1-105
2992425-0000	.SPACER PLATE	1-103
2992430-0100	.CABLE	1-3, 1-5, 1-7, 1-9, 4-3, 4-5, 4-7
2992436-0000	.COVER DISC	1-99
2992437-0000	.PROTECTION PLATE	5-23
2992438-0000	.PROTECTION PLATE	5-25, 5-27
2992439-0000	.PROTECTION PLATE	5-25, 5-27
2992440-0100	.CONNECTION BOX	4-19
2992441-0000	.BRACKET	4-25
2992442-0000	.BRACKET	1-97
2992446-0000	.TIMING BELT PULLEY	1-105
2992449-0000	.CABLE WITH CONNECTOR	8-21, 8-61
2992458-0000	.BENDING ROLLER	1-101
2992460-0100	.CONNECTOR	4-19
2992461-0000	.BENDING ROLLER BRACKET	1-101
2992464-0000	.TIMING BELT PULLEY	1-97
2992465-0000	.TIMING BELT PULLEY	1-97
2992469-0000	.PROTECTION PLATE	1-79
2992470-0100	.CONNECTION BOX	4-3, 4-5, 4-7
2992475-0000	.DRIVE WHEEL	1-103
2992476-0000	.DRIVE ROLLER	1-103
2992478-0000	.BEARING HOLDER	1-103
2992480-0000	.DRIVE WHEEL	1-83
2992481-0000	.STEERING	1-103
2992482-0000	.HEAD PLATE	1-103
2992483-0000	.HEAD PLATE	1-103
2992484-0000	.DRIVE BELT	1-103
2992485-0000	.BEARING HOLDER	1-103
2992491-0000	.PHOTOCELL BRACKET	1-83
2992492-0000	.SWITCH BRACKET	2-79, 2-81
2992493-0000	.BRACKET	2-79, 2-81
2992494-0000	.SHAFT	2-79, 2-81
2992495-0000	.BEARING HOUSING	2-77
2992496-0000	.CONNECTION BOX	4-21
2992497-0000	.BRACKET	4-21
2992498-0000	.BRACKET	1-77
2992499-0000	.PROTECTIVE CASING	2-69, 2-71
2992500-0100	.CONVEYOR	1-3, 1-5, 1-7, 1-9
2992501-0000	.HOLDER	2-35
2992502-0000	.SUPPORT ROLLER	1-83
2992503-0000	.SUPPORT ROLLER	1-83
2992504-0000	.DRIVE ROLLER	1-83
2992505-0000	.DRIVE ROLLER	1-83
2992506-0000	.SIDE PLATE	1-83
2992507-0000	.SIDE PLATE	1-83
2992508-0000	.SUPPORT ROLLER	1-83
2992509-0000	.TOOTHED PULLEY	1-83
2992510-0000	.TOOTHED PULLEY	1-85
2993867-0000	.COUNTER WHEEL	11-75
2994538-0000	.BRACKET	11-63
2994544-0000	.RAILING	11-63
2995756-0000	.BEARING HOUSING	11-79
2995757-0000	.BEARING HOUSING	11-79
2995758-0000	.COVER	11-79
2995759-0000	.SHAFT	11-59
2995760-0000	.SHAFT	11-79
2995762-0000	.TIMING BELT	11-79
2995763-0000	.COVER	11-97
2995764-0000	.CONICAL GEAR	11-79
2995765-0100	.BEVEL GEAR	11-55
2997841-0100	.COVER	11-93
2998006-0000	.RAIL HOLDER	1-29
2998251-0000	.BRACKET	11-45
2998253-0100	.WARNING LAMP	11-15
2999197-0100	.RAIL HOLDER	1-27
2999220-0000	.PLATE	1-67
2999221-0000	.SHAFT	1-67
3003108-0000	.BEARING HOUSING	11-59
3003415-0000	.FEED WHEEL	2-55
3003423-0000	.FEED WHEEL	2-55
3003424-0000	.FEED WHEEL	2-55
3003425-0000	.FEED WHEEL	2-55
3003426-0000	.FEED WHEEL	2-55
3003427-0000	.FEED WHEEL	2-55
3003431-0000	.HOLDER	1-19
3003432-0000	.BRACKET	1-53

Part No	Description	Page No
3003433-0000	.HOLDER	1-23
3003436-0000	.BRACKET	1-55
3003437-0200	.RAIL HOLDER	1-15
3003438-0000	.HOLDER	1-25
3003439-0200	.RAIL HOLDER	1-15
3003440-0000	.HOLDER	1-21
3003441-0200	.RAIL HOLDER	1-15
3003446-0200	.RAIL HOLDER	1-27
3003447-0000	.BRACKET	1-31
3003448-0000	.STEERING RAIL	1-27
3003450-0200	.RAIL HOLDER	1-15
3003451-0000	.STEERING RAIL	1-27
3003456-0000	.PIPE	1-27
3003457-0000	.PIPE	1-15
3003458-0000	.PIPE	1-15
3003461-0000	.PIPE	1-27
3003462-0000	.PIPE	1-27
3003463-0000	.BRACKET	1-31
3003527-0000	.RETAINING RING	11-79
3003832-0000	.RETAINING RING	11-79
3004369-0000	.RAILING	11-63
3004370-0000	.RAILING	11-63
3004371-0000	.LOCK NUT	11-89
3004372-0000	.SPACER BLOCK	11-89
3008046-0200	.BELT BRAKE	1-3, 1-5, 1-7, 1-9
3008047-0000	.SHAFT	1-53
3008048-0000	.BEARING HOUSING	1-53
3008049-0000	.BRACKET	1-53
3008050-0000	.ADJUSTING NUT	1-53
3008051-0000	.ADJUSTING NUT	1-53
3008052-0000	.ADJUSTING SCREW	1-53
3008053-0000	.ADJUSTING SCREW	1-53
3008054-0000	.MOUNTING SHEET	1-53
3008055-0000	.SHAFT	1-53
3008056-0000	.SUPPORT	1-53
3008057-0000	.FRAME	1-53
3008058-0000	.PLATE	1-53
3008059-0000	.SPACER	1-53
3008060-0000	.BRACKET	1-53
3008063-0000	.LOCK	1-53
3008064-0000	.FRAME	1-53
3008065-0000	.LOCK NUT	1-53
3009429-0000	.SHAFT	1-53
3009430-0000	.TOOTHED PULLEY	1-53
3009432-0000	.GABLE PLATE	1-53
3009775-0000	.BRACKET	5-11
3009992-0000	.BRACKET	1-93, 4-33
3012784-0000	.ANGLE BRACKET	1-73
3012787-0000	.RETAINING RING	2-65
3012788-0000	.ADJUSTING SCREW	2-65
3012790-0000	.PROTECTION PLATE	1-73
3012792-0000	.PROTECTION PLATE	1-73
3012793-0000	.PROTECTION PLATE	1-73
3012794-0000	.RAIL	4-9
3012895-0000	.BRACKET	5-9
3012896-0000	.BRACKET	5-9
3013387-0100	.PRESSURE ARM	2-11
3013390-0000	.BRACKET	2-17, 11-13
3013391-0100	.TEMPLATE	10-21
3013392-0000	.LEVER	10-23
3013393-0000	.PIN	10-23, 10-29
3013394-0000	.SUPPORT	10-23
3013395-0000	.GUIDE	10-23, 10-29
3013396-0000	.PLATE	10-23
3013399-0000	.SCREW	2-17, 2-41, 11-13
3013462-0000	.BAR	10-23, 10-29
3013562-0000	.ARM	2-17
3013563-0000	.ARM	2-17
3013564-0000	.ARM	2-17
3013565-0000	.ARM	2-17
3013602-0000	.HOLDER	1-33
3013603-0200	.RAIL HOLDER	1-27
3013604-0000	.HOLDER	1-35
3013605-0200	.CONVEYOR SUPPORT	1-11, 1-13
3013606-0200	.SUPPORT RAIL	1-11, 1-13
3013608-0200	.RAIL HOLDER	1-27
3013609-0000	.HOLDER	1-39
3013610-0200	.RAIL HOLDER	1-27
3013611-0000	.HOLDER	1-37
3013613-0000	.SPACER	1-49
3013615-0000	.PIPE	2-79, 2-81
3013616-0000	.TEMPLATE	10-25
3013617-0100	.TEMPLATE	10-21
3013619-0100	.TEMPLATE	10-21

Part No	Description	Page No
3013620-0000	.SPACER SLEEVE	2-83
3013622-0000	.TEMPLATE	10-27
3013623-0100	.DRIVE MOTOR	2-59, 2-61, 2-63
3013624-0000	.LID	2-75
3013625-0000	.CABLE PROTECTION	2-19
3013626-0000	.SETTING SCREW	1-69
3013627-0100	.SETTING SCREW	1-61
3013631-0000	.BEARING SLEEVE	2-83
3013632-0000	.ECCENTRIC	2-83
3013633-0000	.PULLEY	2-83
3013634-0000	.CLAMPING RING	2-83
3013635-0000	.SHAFT	2-83
3013638-0000	.ARM	2-17
3013639-0000	.ARM	2-17
3013640-0000	.ARM	2-41
3013642-0000	.ARM	2-17
3013643-0100	.PHOTOCELL UNIT	1-55
3013644-0100	.PHOTOCELL UNIT	1-55
3013650-0000	.FEED WHEEL	2-55
3013886-0100	.PRESSURE ARM	2-37
3013887-0000	.BRACKET	2-41
3013888-0000	.ARM	2-41
3013889-0000	.ARM	2-41
3013895-0100	.CABLE	11-121
3013902-0100	.TEMPLATE	10-21
3013903-0000	.LEVER	10-29
3013904-0000	.SUPPORT	10-29
3014095-0000	.BRACKET	11-63
3014096-0000	.PIPE	11-63
3016914-0000	.MOUNTING PLATE	11-109
3016915-0000	.SPACER	11-109
3022571-0000	.PROTECTION PLATE	1-73
3022572-0000	.PLATE	1-73
3022573-0000	.MOUNTING PLATE	1-73
3022574-0100	.TOOLS AND TEMPLATES	10-21
3022717-0000	.BEARING HOLDER	2-75
3022735-0100	.BELT TENSIONER	2-59, 2-61, 2-63
3022738-0000	.BEARING SLEEVE	2-75
3023528-0000	.SPACER SLEEVE	1-97
3023530-0000	.PIN	1-97
3023531-0000	.SPACER SLEEVE	1-83
3023532-0000	.DRIVE WHEEL	1-83
3023534-0000	.COVER SLIP	1-97
3023535-0000	.SPACER ELEMENT	1-83
3023536-0000	.DRIVE BELT	1-83
3023539-0000	.DRIVE BELT	1-83
3023540-0100	.OUT FEED	1-95
3023542-0000	.PROTECTIVE CASING	1-83
3023543-0000	.SLIDE PLATE	1-101
3023545-0000	.MOTOR BRACKET	1-97
3023546-0000	.SUPPORT	1-97
3023547-0000	.SUPPORT	1-97
3023548-0000	.GUIDE HOLDER	1-99
3023549-0000	.BELT SUPPORT	1-99
3023550-0100	.INFEED SECTION	1-95
3023551-0000	.SHAFT	1-97
3023552-0000	.PHOTOCELL BRACKET	1-97
3023553-0000	.PIN	1-97
3023555-0100	.BELT UNIT	1-95
3023557-0000	.FASTENING BRACKET	1-99
3023558-0000	.FASTENING BRACKET	1-99
3023559-0000	.STEERING RAIL	1-99
3023560-0100	.MACHINE BODY	4-3, 4-5, 4-7
3023561-0000	.STEERING RAIL	1-99
3023563-0000	.SLIDE RAIL	1-85
3023568-0000	.BRACKET	1-97
3023569-0000	.TOOTHED PULLEY	1-105
3023570-0100	.PACKAGE ALIGNER	10-3
3023571-0000	.TOOTHED PULLEY	1-103
3023572-0000	.TOOTHED PULLEY	1-105
3023573-0000	.BRACKET	1-105
3023574-0000	.SHAFT	1-105
3023576-0000	.SHAFT	1-105
3023578-0000	.DRIVE WHEEL	1-103
3023581-0000	.STEERING	1-105
3023584-0000	.LUG	4-29
3023587-0000	.PROFILE 50X100	4-29
3023588-0000	.LID	4-29
3023589-0000	.PROFILE 50X100	4-25
3023591-0000	.STRIP	10-7
3023592-0000	.RULING GUIDE	10-7
3023593-0000	.SHAFT	1-85
3023594-0000	.SPACER SLEEVE	1-77, 1-85
3023596-0000	.SHAFT	1-77

Part No	Description	Page No
3023599-0000	.COVER	2-69, 2-71
3023601-0000	.TOOTHED PULLEY	1-103
3023602-0000	.TOOTHED PULLEY	1-103
3023603-0000	.GUIDE SLEEVE	1-103
3023607-0000	.GUIDE SLEEVE	1-103
3023611-0000	.PROFILE 50X100	1-99
3023612-0000	.COMPRESSION GLAND	1-99
3023616-0000	.SLIDE RAIL	1-87
3023621-0000	.SUPPORT ROD	1-103
3023622-0000	.SUPPORT ROD	1-103
3023623-0000	.PROTECTION	1-103
3025773-0200	.RAIL HOLDER	1-27
3025775-0200	.QUICK CHANGE	11-3
3025776-0000	.END SECTION	1-27
3025777-0100	.CUTTING UNIT	11-7
3025778-0100	.PRESSURE ARM	11-7
3025780-0000	.BRACKET	1-53
3025781-0000	.END SECTION	1-27
3025784-0100	.AXLE SUPPORT	2-59, 2-61, 2-63
3025785-0000	.PLATE	2-57
3025786-0000	.PLATE	2-57
3025787-0000	.BRACKET	1-73
3025788-0000	.BRACKET	1-59
3025789-0000	.BRACKET	1-57
3025793-0000	.GUIDE RAIL	1-73
3025794-0100	.SLIDE PLATE	1-61
3025795-0000	.PLATE	1-71
3025796-0000	.CLAMPING PLATE	1-71
3025797-0000	.DISC SPRING	1-69
3025802-0000	.FEED WHEEL	2-55
3025803-0000	.FEED WHEEL	2-55
3025804-0000	.FEED WHEEL	2-55
3025805-0000	.FEED WHEEL	2-55
3025806-0000	.FEED WHEEL	2-55
3025807-0000	.PULLEY	2-73
3025808-0000	.BEARING SLEEVE	2-73
3025810-0000	.BEARING HOLDER	2-73
3025816-0000	.SLIDE SHEET	1-63
3025817-0000	.MOUNTING SHEET	1-63
3025818-0000	.HEAD PLATE	1-63
3025819-0000	.BRACKET	1-73
3025820-0000	.SCALE POINTER	1-73
3025821-0000	.HOLDER	1-67
3025822-0000	.BRACKET	1-65
3025918-0000	.COPPER BRAID	8-21, 8-61
3034235-0000	.EL-CABINET CHASSIE	8-67
3034236-0000	.MOUNTING PLATE	8-69, 8-71
3034237-0000	.COVER	8-37
3034238-0000	.PROTECTIVE COVER	8-67
3034239-0000	.PROTECTIVE COVER	8-67
3034240-0000	.DOOR	7-11
3034241-0100	.RELAY	8-7, 8-53
3034242-0100	.RELAY	8-7, 8-53
3034243-0000	.DOOR	8-73, 8-75
3034244-0000	.DELIVERED DESIGN	8-77
3034245-0000	.FUSE PANEL LABEL	8-77
3034246-0000	.CABINET	11-101
3034247-0000	.DELIVERED DESIGN	11-103
3034248-0100	.WARNING LAMP	11-53
3034249-0000	.BRACKET	11-77
3036157-0003	.SOFTWARE CD	9-3
3036161-0001	.SOFTWARE CD	11-119
3038249-0000	.ELECTRICAL CABINET	11-35, 11-37
3038250-0000	.BRACKET	11-35, 11-37
3039843-0000	.BRACKET	6-5
3039844-0000	.PNEUMATIC DIAGRAM	6-5
3039846-0000	.PROTECTION PLATE	5-37
3039847-0000	.FRAME	2-69, 2-71
3039848-0000	.SET OF SIGNS	10-3
3039849-0000	.PROFILE 50X100	4-9
3039854-0000	.BRACKET	5-33
3039855-0000	.BRACKET	7-11
3039856-0000	.COOLING UNIT	11-127
3039857-0100	.COOLING UNIT	11-3
3039858-0000	.BRACKET	11-127
3039859-0000	.FASTENING BRACKET	11-127
3039860-0000	.BOTTOM PANEL	4-9
3040946-0000	.CABLE MARKING	10-3
3041489-0000	.HATCH	11-33
3041490-0000	.TURNING HANDLE	8-15, 8-17, 8-19, 8-55, 8-57, 8-59, 11-35, 11-37, 11-101
3041492-0000	.FUSE PANEL LABEL	11-33
3041493-0000	.DELIVERED DESIGN	11-33
3041925-0000	.EARTH WIRE	8-21, 8-61
3041926-0000	.DOOR	11-103

Part No	Description	Page No
3041927-0000	.SPACER	11-77
3041928-0000	.PLATE	11-77
3041929-0000	.PLATE	11-75
3041930-0000	.PLATE	11-75
3041931-0000	.SHAFT	11-75
3041932-0000	.RAILING	11-63
3041933-0000	.PROTECTION	11-75
3041934-0000	.PROTECTION	11-75
3041937-0000	.FUSE PANEL LABEL	11-103
3041938-0000	.DELIVERED DESIGN	8-77
3041939-0000	.DELIVERED DESIGN	11-103
3041940-0000	.ELECTRICAL EQUIPMENT LABEL	8-67
3041941-0000	.ELECTRICAL EQUIPMENT LABEL	11-103
3041942-0000	.ELECTRICAL EQUIPMENT LABEL	11-35, 11-37
3041943-0000	.DELIVERED DESIGN	11-33
3042370-0000	.PROTECTION	11-35, 11-37
3042371-0000	.PROTECTION	11-35, 11-37
3042372-0000	.HOLDER	11-35, 11-37
3042373-0000	.RELAY	11-35, 11-37
3046521-0000	.HOSE HOLDER	10-35
3046522-0000	.HOSE	10-35
3046523-0100	.WASTE PIPE	10-3
3050588-0000	.MOUNTING PLATE	8-69, 8-71
3053564-0100	.ELECTRIC MATERIALS	8-3, 8-5
3053565-0100	.ELECTRICAL MATERIALS	8-53
3053566-0100	.CABLE SET	8-53
3056162-0000	.SIGN	8-67
3056163-0000	.SIGN	11-101
3056164-0000	.SIGN	11-35, 11-37
3056165-0000	.SIGN	8-67
3056166-0000	.SIGN	11-101
3056167-0000	.SIGN	11-35, 11-37
3057744-0100	.POSITION TEMPLATE	10-21
3060152-0000	.FRAME	11-127
3060154-0000	.EL-CABINET CHASSIE	8-67
3060155-0000	.ELECTRICAL CABINET	11-35, 11-37
3060158-0000	.RAIL HOLDER	11-71
3060159-0000	.RAIL HOLDER	11-69, 11-89
3060160-0000	.CLAMP	11-69, 11-71, 11-89
3060161-0100	.RAIL HOLDER	11-63
3060162-0100	.RAIL HOLDER	11-63
3060163-0000	.BRACKET	11-69, 11-71
3060164-0100	.RAIL HOLDER	11-63
3060165-0000	.BRACKET	11-73
3060166-0000	.BRACKET	11-89
3060167-0000	.BRACKET	11-89
3060168-0000	.DOOR	11-103
3060319-0000	.SPACER ELEMENT	5-29, 5-31
3060321-0000	.PULLEY	1-97
3060322-0000	.RULING GUIDE	1-99
3060323-0000	.RULING GUIDE	1-99
3073180-0100	.TUNNEL	5-3, 5-5, 5-7
3073655-0000	.BRACKET	2-23
3073658-0000	.SET OF SIGNS	11-133
3073659-0000	.SET OF SIGNS	11-131
3073660-0100	.PHOTOCELL UNIT	11-129
3077120-0000	.INSULATING PLATE	2-19
3079346-0000	.POSITION TEMPLATE	10-31
3079347-0000	.POSITION TEMPLATE	10-31
3088852-0100	.GATE INDICATION	11-129
3088860-0100	.SECOND DISCHARGE UNIT	11-3
3088861-0000	.FEED WHEEL	2-55
3088862-0000	.CLAMPING PLATE	1-71
3088864-0000	.SHAFT	2-23
3090945-0000	.SIDE PLATE	1-49
3090946-0000	.ADJUSTING SCREW	1-73

Part No	Description	Page No	Part No	Description	Page No

Machine Type	Group Description	Page No

Tetra Pak

SPC
Spare Parts Catalogue

Part No	Description	Page No
351309-0050 ..	'ACTUATOR/SENSOR CABLE PRKT 4-07/5M	11-115
90439-0212	274792 HOSE	3-9
90459-6586	ACT/SENS.Y-CABLE, ASBN 2-PRKMV 4-07/0,6M	8-21, 8-61, 11-5, 11-115, 11-133
351305-0050 ..	ACTUATOR/SENSOR CABLE PRKMV 4-07/5M	8-21, 8-61
351309-0100 ..	ACTUATOR/SENSOR CABLE PRKT 4-07/10M	8-21, 8-61, 11-5, 11-131, 11-133
351303-0050 ..	ACTUATOR/SENSOR CABLE RKMVN 3-224/5M	8-21, 8-61
351304-0050 ..	ACTUATOR/SENSOR CABLE RKMWVN 3-224/5M	8-21, 8-61
90600-1768	ACTUATOR/SENSOR CABLE RKTS 5-298/5M	1-93, 4-33, 8-21, 8-61
90153-0023	ADHESIVE, SILICON 251470 TUB 90CC(UN1993	11-127
2933990-0100 .	ADJUSTER	1-75
2835350-0000 .	ADJUSTING NUT	1-73, 2-65
3008050-0000 .	ADJUSTING NUT	1-53
3008051-0000 .	ADJUSTING NUT	1-53
2904847-0000 .	ADJUSTING SCREW	2-67
2926058-0000 .	ADJUSTING SCREW	1-81
2982627-0000 .	ADJUSTING SCREW	1-81
3008052-0000 .	ADJUSTING SCREW	1-53
3008053-0000 .	ADJUSTING SCREW	1-53
3012788-0000 .	ADJUSTING SCREW	2-65
3090946-0000 .	ADJUSTING SCREW	1-73
2829438-0100 .	ADJUSTMENT BRACKET	2-59, 2-61, 2-63
2893440-0100 .	ADJUSTMENT BRACKET	2-59, 2-61, 2-63
2893444-0000 .	ADJUSTMENT BRACKET	2-67
2904836-0000 .	ADJUSTMENT BRACKET	1-79, 1-99
2948195-0100 .	ADJUSTMENT BRACKET	2-3, 2-5, 2-7, 2-9
2829416-0200 .	ADJUSTMENT PLATE	1-3, 1-5, 1-7, 1-9
2926040-0100 .	ADJUSTMENT PLATE	4-27
2926050-0100 .	ADJUSTMENT PLATE	4-3, 4-5, 4-7
2926075-0100 .	ADJUSTMENT PLATE	1-3, 1-5, 1-7, 1-9
90458-1740	AIR GUN ASSEMBLY, CEJN 199589668	6-5
90424-0087	AIR NOZZLE	11-89
2839813-0200 .	AIR SUPPLY	6-3
90458-0970	AMPLIFIER UNIT, E3X-DA44V	2-19
352113-0206 ..	ANCHOR PLATES FOR STRIPS, TYPE ABM100-AT	7-5
352113-0205 ..	ANCHOR PLATES FOR STRIPS, TYPE TM2S8-C10	1-55, 1-83, 1-89, 1-97, 1-103, 1-105, 2-13, 2-39, 2-69, 2-71, 11-45, 11-59
352113-0204 ..	ANCHOR PLATES FOR STRIPS, TYPE TM3S25-M	4-35, 7-5, 8-73, 8-75, 8-77, 11-127
90459-2676	ANG. BALL BEAR 15/35X15,9	1-65, 1-87
90458-1880	ANG. BALL BEAR 25/52X20,6	2-75
2816699-0000 .	ANGLE	11-29
2923019-0000 .	ANGLE	10-13
2960733-0000 .	ANGLE	11-23
2893442-0000 .	ANGLE BRACKET	2-67
2926066-0000 .	ANGLE BRACKET	1-87
2948191-0000 .	ANGLE BRACKET	2-45
3012784-0000 .	ANGLE BRACKET	1-73
90439-0241	ANGLE NIPPLE	3-11, 3-13
2924689-0000 .	ARM	2-57
2982619-0000 .	ARM	2-31, 2-33
3013562-0000 .	ARM	2-17
3013563-0000 .	ARM	2-17
3013564-0000 .	ARM	2-17
3013565-0000 .	ARM	2-17
3013638-0000 .	ARM	2-17
3013639-0000 .	ARM	2-17
3013640-0000 .	ARM	2-41
3013642-0000 .	ARM	2-17
3013888-0000 .	ARM	2-41
3013889-0000 .	ARM	2-41
2935060-0200 .	ASSEMBLY PLATE	11-105, 11-107
2939110-0300 .	ASSEMBLY PLATE	11-99
90600-1649	AUXILARY CONTACTS, NHI-E-11-PKZ0	11-35, 11-37
90459-6852	AUXILIARY CONTACT, DILA-XHI22	11-105, 11-107
90259-0313	AUXILIARY CONTACT, NHI21-PKZ0	8-15, 8-17, 8-19, 8-55, 8-57, 8-59
90459-5315	AUXILIARY CONTACTS, DILM32-XHI22	11-35, 11-37
90600-5214	AXIS MOD. KINETIX 6000,2094-BM01-S SER.B	8-15, 8-17, 8-19, 8-55, 8-57, 8-59
90600-5211	AXIS MOD. W. PS,2094-BC01-M01-S SERIES B	8-15, 8-17, 8-19, 8-55, 8-57, 8-59
2959332-0000 .	AXLE BOLT	2-53
2856540-0000 .	AXLE PIN	2-83
2926048-0000 .	AXLE PIN	1-87
2926054-0000 .	AXLE PIN	1-87
2926063-0000 .	AXLE SUPPORT	1-87
3025784-0100 .	AXLE SUPPORT	2-59, 2-61, 2-63
2960747-0000 .	BACK PLATE	11-21
90214-0225	BALL BEAR. 20/42X12 SOLID OIL	4-29, 11-59, 11-75
90214-0231	BALL BEARING 10/26X8	1-83
90214-0181	BALL BEARING 12/24X6	11-79
321308-0201 ..	BALL BEARING 12/28X8	2-29
90458-1704	BALL BEARING 15/35X11	1-103, 1-105, 2-77
321313-0102 ..	BALL BEARING 15/35X11	1-87, 1-101, 2-13, 2-39
90214-0095	BALL BEARING 20/42X12	1-97
321308-0204 ..	BALL BEARING 20/42X12	2-13, 2-39
90600-0140	BALL BEARING 25/47X12	1-77, 1-85
321308-0205 ..	BALL BEARING 25/47X12	2-53, 2-83

Part No	Description	Page No
90214-0127	BALL BEARING 30/55X13	2-73
90601-9790	BALL BEARING, 6X19X6 MM	1-83, 1-103
90187-0029	BALL VALVE G1/2, NPBR	6-7
2901716-0000 .	BAR	1-73
3013462-0000 .	BAR	10-23, 10-29
90458-0297	BASE W. TUBE 110 MM, PSD-S ME BT 110	4-37, 11-51, 11-125
90458-0292	BASE, KT70-1001	4-37
90129-0018	BASE, P2RF-08-E	8-23, 8-41, 8-43, 8-45, 8-49, 8-51, 11-35, 11-37, 11-105, 11-107
2912689-0100 .	BASKET	11-87
2933647-0000 .	BEAM	11-77
2933653-0000 .	BEAM	11-77
2986376-0000 .	BEAM	11-77
2986377-0000 .	BEAM	11-77
90600-4289	BEAR. BUSH. WITHOUT FL, 14X16X15 MM	1-55
90600-3958	BEAR. BUSH. WITHOUT FL, 14X20X20 MM	2-57
2916062-0000 .	BEARING BRACKET	4-29
90459-0584	BEARING BRACKET CRLNZG-32	1-73, 4-29
90240-0336	BEARING BUSHING W/O FL, 6,10X12X10 MM	10-31
2926062-0000 .	BEARING HOLDER	1-89
2992478-0000 .	BEARING HOLDER	1-103
2992485-0000 .	BEARING HOLDER	1-103
3022717-0000 .	BEARING HOLDER	2-75
3025810-0000 .	BEARING HOLDER	2-73
2904764-0000 .	BEARING HOUSING	2-29
2910475-0000 .	BEARING HOUSING	2-13
2912691-0000 .	BEARING HOUSING	11-75
2952611-0000 .	BEARING HOUSING	2-39
2992495-0000 .	BEARING HOUSING	2-77
2995756-0000 .	BEARING HOUSING	11-79
2995757-0000 .	BEARING HOUSING	11-79
3003108-0000 .	BEARING HOUSING	11-59
3008048-0000 .	BEARING HOUSING	1-53
2848823-0000 .	BEARING HUB	2-53
2848832-0000 .	BEARING PLATE	2-65
2848826-0000 .	BEARING SLEEVE	2-13
2952614-0000 .	BEARING SLEEVE	2-39
3013631-0000 .	BEARING SLEEVE	2-83
3022738-0000 .	BEARING SLEEVE	2-75
3025808-0000 .	BEARING SLEEVE	2-73
90600-0439	BELLOW COUPLING, 12X16 MM	2-29
90602-4967	BELLOW COUPLING, 16X16 MM	2-73
2933974-0000 .	BELT	1-87
3008046-0200 .	BELT BRAKE	1-3, 1-5, 1-7, 1-9
2957690-0200 .	BELT CONVEYOR, INFEED	1-75
2948215-0100 .	BELT CONVEYOR, OUTFEED	1-95
3023549-0000 .	BELT SUPPORT	1-99
3022735-0100 .	BELT TENSIONER	2-59, 2-61, 2-63
3023555-0100 .	BELT UNIT	1-95
2643065-0200 .	BENDING ROLLER	11-17
2643066-0200 .	BENDING ROLLER	11-17
2789703-0200 .	BENDING ROLLER	11-17
2992458-0000 .	BENDING ROLLER	1-101
2992461-0000 .	BENDING ROLLER BRACKET	1-101
2643050-0400 .	BENT FOIL TREATER	11-3
2995765-0100 .	BEVEL GEAR	11-55
90243-0169	BINDER CLIP, DIAM.29 MM, NO. 4670819	8-77
90457-0105	BLANK RIVET 2X9	6-7
90458-1306	BLIND PLUG CIRCULAR, M12X1,5 514GFK/212	2-73, 4-21, 8-67, 11-101
90458-1307	BLIND PLUG CIRCULAR, M16X1,5 514GFK/216	4-21, 11-101
90458-1308	BLIND PLUG CIRCULAR, M20X1,5 514GFK/220	4-41, 8-67, 11-35, 11-37, 11-101
311523-0142 ..	BLIND RIVET ISO 15983 -3.2X6 A2/A2	11-35, 11-37, 11-103
1035794-0000 .	BLOCKING PIECE	8-73, 8-75, 8-77
1129770-0000 .	BLOCKING PIECE	5-33, 7-11, 11-103
2923320-0000 .	BLOCKING PIECE	10-11
2957756-0000 .	BOTTOM PANEL	4-25
3039860-0000 .	BOTTOM PANEL	4-9
2948206-0000 .	BOTTOM PLATE	4-29
2966831-0000 .	BOTTOM PLATE	11-19
556601-0000 ..	BRACKET	4-9, 4-25
583570-0000 ..	BRACKET	8-69, 8-71, 11-35, 11-37, 11-109
975884-0000 ..	BRACKET	4-9, 4-25
2557494-0000 .	BRACKET	7-5
2565207-0000 .	BRACKET	6-7
2811516-0000 .	BRACKET	1-55
2829403-0000 .	BRACKET	1-89
2829413-0000 .	BRACKET	1-73
2829418-0000 .	BRACKET	1-73
2829426-0000 .	BRACKET	2-57, 11-11
2850074-0000 .	BRACKET	5-17
2855899-0000 .	BRACKET	11-131
2856544-0000 .	BRACKET	2-69, 2-71
2863518-0000 .	BRACKET	2-31, 2-33
2885386-0000 .	BRACKET	2-65
2885387-0000 .	BRACKET	1-51

Part No	Description	Page No
2885388-0000	.BRACKET	1-51
2892716-0000	.BRACKET	10-5, 11-5, 11-133
2901721-0000	.BRACKET	1-55
2904940-0000	.BRACKET	5-13, 5-17, 5-19
2912688-0000	.BRACKET	11-61
2913339-0000	.BRACKET	1-55
2916076-0000	.BRACKET	4-29
2926027-0000	.BRACKET	1-77
2926028-0000	.BRACKET	1-77
2926051-0000	.BRACKET	1-87
2933645-0000	.BRACKET	11-77
2933964-0000	.BRACKET	1-77, 1-97
2933969-0000	.BRACKET	1-77
2934009-0000	.BRACKET	1-87
2934029-0000	.BRACKET	2-31, 2-33
2935056-0000	.BRACKET	11-77
2935057-0000	.BRACKET	11-77
2935058-0000	.BRACKET	11-61
2935059-0000	.BRACKET	11-77
2937532-0000	.BRACKET	8-67
2939674-0000	.BRACKET	2-31, 2-33
2939675-0000	.BRACKET	2-31, 2-33
2939678-0000	.BRACKET	2-31, 2-33
2939699-0000	.BRACKET	4-11
2941713-0000	.BRACKET	1-73
2946726-0000	.BRACKET	4-35
2946859-0000	.BRACKET	4-11
2948161-0000	.BRACKET	1-79, 1-99
2948232-0000	.BRACKET	2-47, 2-49, 4-13, 4-15
2950974-0000	.BRACKET	4-11
2957695-0000	.BRACKET	1-85
2957696-0000	.BRACKET	1-85
2957713-0000	.BRACKET	1-77
2957719-0000	.BRACKET	1-77
2957721-0000	.BRACKET	4-17
2957736-0000	.BRACKET	2-47, 2-49, 4-13, 4-15
2957740-0100	.BRACKET	4-3, 4-5, 4-7
2957744-0000	.BRACKET	1-97
2960742-0000	.BRACKET	11-21
2960748-0000	.BRACKET	11-21
2960750-0000	.BRACKET	11-21
2979544-0000	.BRACKET	11-83
2982616-0000	.BRACKET	1-99
2987393-0000	.BRACKET	2-19
2987397-0000	.BRACKET	2-79, 2-81
2987400-0000	.BRACKET	2-79, 2-81
2987401-0000	.BRACKET	2-79, 2-81
2987408-0000	.BRACKET	1-67
2992421-0000	.BRACKET	1-105
2992441-0000	.BRACKET	4-25
2992442-0000	.BRACKET	1-97
2992493-0000	.BRACKET	2-79, 2-81
2992497-0000	.BRACKET	4-21
2992498-0000	.BRACKET	1-77
2994538-0000	.BRACKET	11-63
2998251-0000	.BRACKET	11-45
3003432-0000	.BRACKET	1-53
3003436-0000	.BRACKET	1-55
3003447-0000	.BRACKET	1-31
3003463-0000	.BRACKET	1-31
3008049-0000	.BRACKET	1-53
3008060-0000	.BRACKET	1-53
3009775-0000	.BRACKET	5-11
3009992-0000	.BRACKET	1-93, 4-33
3012895-0000	.BRACKET	5-9
3012896-0000	.BRACKET	5-9
3013390-0000	.BRACKET	2-17, 11-13
3013887-0000	.BRACKET	2-41
3014095-0000	.BRACKET	11-63
3023568-0000	.BRACKET	1-97
3023573-0000	.BRACKET	1-105
3025780-0000	.BRACKET	1-53
3025787-0000	.BRACKET	1-73
3025788-0000	.BRACKET	1-59
3025789-0000	.BRACKET	1-57
3025819-0000	.BRACKET	1-73
3025822-0000	.BRACKET	1-65
3034249-0000	.BRACKET	11-77
3038250-0000	.BRACKET	11-35, 11-37
3039843-0000	.BRACKET	6-5
3039854-0000	.BRACKET	5-33
3039855-0000	.BRACKET	7-11
3039858-0000	.BRACKET	11-127
3060163-0000	.BRACKET	11-69, 11-71

Part No	Description	Page No
3060165-0000	.BRACKET	11-73
3060166-0000	.BRACKET	11-89
3060167-0000	.BRACKET	11-89
3073655-0000	.BRACKET	2-23
2656556-0000	.BRACKET FOR LEG PC23	11-61
90459-2248	.... BRACKET, MS4-MV	6-5
90459-2247	.... BRACKET, MS4-WP	6-5
90459-1859	.... BRACKET, MS6-MV	6-5
90459-0580	.... BRACKET, PIVOT MOUNTING CRZNG-32	1-73, 4-29
90077-0310	.... BRACKET, TSTR, 10-0099003-1	8-69, 8-71
2912690-0200	.BRAKE	11-55
353034-0030	.. BRIDGE CONNECTOR WQV 2,5/10, 10544.6	8-25, 8-27, 8-29, 8-31
90459-1811	.... BRIDGE CONNECTOR WQV 2,5/2, 105366	8-25
90036-0068	.... BULB 5W 24V, SL-L24 205348	4-37, 11-51, 11-125
353041-0001	.. BUS BAR RAIL 10X3MM SSCH	8-37
90600-5527	.... BUSBAR COVER, ZV-BS-UL 104904	8-55, 8-57, 8-59
90259-0315	.... BUSBAR, B3.1/2-PKZ0	8-55, 8-57, 8-59
90600-5525	.... BUSBAR, Z-SV/UL-16/3P-3TE/12 104899	8-55, 8-57, 8-59
90600-5524	.... BUSBAR, Z-SV/UL-16/3P-3TE/6 104898	8-55, 8-57, 8-59
321133-0224	.. BUSHING IGLIDUR G 16X18X20	1-53, 11-21
321133-0260	.. BUSHING IGLIDUR G 20X23X20	2-29
321133-0300	.. BUSHING IGLIDUR G 25X28X25	1-55, 1-73
90600-0431	.... BUSHING INSERT, J200UMO-01-20	1-71, 2-65
90600-7526	.... BUSHING INSERT, JUM-02-25	1-53
90600-5061	.... BUSHING, 25X40X58 MM	1-89
359301-0005	.. BUTTON SIGN, DOWN	11-33
359301-0090	.. BUTTON SIGN, INCHING	7-11
359301-0130	.. BUTTON SIGN, LAMP TEST	11-33, 11-103
359301-0504	.. BUTTON SIGN, RESET	7-11
359301-0001	.. BUTTON SIGN, UP	7-11, 11-33, 11-103
3034246-0000	.CABINET	11-101
1556781-0000	.CABLE	8-13
2939102-0100	.CABLE	11-115
2984837-0000	.CABLE	11-41
2992430-0100	.CABLE	1-3, 1-5, 1-7, 1-9, 4-3, 4-5, 4-7
3013895-0100	.CABLE	11-121
90600-5930	.... CABLE C9 1M, 20-057-15	8-21, 8-61
90459-6646	.... CABLE CLIPS, D=4 MM	8-69, 8-71
2955400-0200	.CABLE CONNECTION	11-41
2843700-0100	.CABLE DUCT	4-3, 4-5, 4-7
2989228-0000	.CABLE DUCT	11-131
90181-0033	.... CABLE DUCT 15X18MM	11-33
90181-0044	.... CABLE DUCT 25X60MM	11-35, 11-37
90181-0052	.... CABLE DUCT 25X80MM	8-69, 8-71, 11-109
90181-0053	.... CABLE DUCT 40X80MM	8-69, 8-71
90181-0054	.... CABLE DUCT 60X80MM	8-69, 8-71
90181-0186	.... CABLE DUCT, ELBOW BRACKET, B27	4-35
90459-2701	.... CABLE DUCT, FITTING, B1	4-35
90181-0183	.... CABLE DUCT, FITTING, B2	4-35
90458-0305	.... CABLE GLAND, M12X1,5, NO.5311 1000	4-21, 11-101
90458-0306	.... CABLE GLAND, M16X1,5, NO.5311 1010	4-21, 8-67, 11-35, 11-37, 11-101
90458-0307	.... CABLE GLAND, M20X1,5, NO.5311 1020	4-21, 8-67, 11-35, 11-37, 11-43, 11-101
90458-0315	.... CABLE GLAND, M20X1,5, NO.5311 1120	3-15, 3-17, 4-41, 7-5
90458-0309	.... CABLE GLAND, M32X1,5, NO.5311 1040	8-67
90458-0317	.... CABLE GLAND, M32X1,5, NO.5311 1140	3-15, 3-17
90458-1150	.... CABLE GLAND, RG M63/4	7-5
90459-4252	.... CABLE M12-C101, 20-056-10	8-21, 8-61
3040946-0000	.CABLE MARKING	10-3
351150-0424	.. CABLE OLFLEX 18X0,75 MM2 LIGHT/GREY	8-21, 8-61
351150-0431	.. CABLE OLFLEX 2X0,75 MM2 LIGHT/GREY	8-21, 8-61
351150-0403	.. CABLE OLFLEX 3X0,75 MM2 LIGHT/GREY	8-21, 8-61, 11-115
351150-0412	.. CABLE OLFLEX 3X1,5 MM2 LIGHT/GREY	8-21, 8-61
351150-0417	.. CABLE OLFLEX 3X2,5 MM2 LIGHT/GREY	8-21, 8-61, 11-43
351150-0413	.. CABLE OLFLEX 4GX1,5 MM2 LIGHT/GREY	8-21, 8-61
351150-0404	.. CABLE OLFLEX 4X0,75 MM2 LIGHT/GREY	8-21, 8-61, 11-41
351150-0406	.. CABLE OLFLEX 7X0,75 MM2 LIGHT/GREY	8-21, 8-61
3013625-0000	.CABLE PROTECTION	2-19
90024-0062	.... CABLE PROTECTION, 40MM	7-5
2954533-0200	.CABLE SET	8-7
3053566-0100	.CABLE SET	8-53
353101-0120	.. CABLE SHOE 0,5-1,5MM2 M4 RED	8-13, 11-109
353103-0120	.. CABLE SHOE 1,25 MM² RED	8-13
353101-0134	.. CABLE SHOE 1,5-2,5MM2 M8 BLUE	11-101, 11-117
353102-0161	.. CABLE SHOE, RING INS., YAEV 10 M6	11-109
353102-0176	.. CABLE SHOE, RING INS., YAEV 25 M8	11-101
353104-0176	.. CABLE SHOE, RING UNINS., YAV 25 M 8	8-15, 8-17, 8-19, 8-55, 8-57, 8-59
352113-0101	.. CABLE TIE, BLACK 92X2,5 MM	11-19, 11-45, 11-59
2843699-0000	.CABLE TRENCH	4-35
2843703-0000	.CABLE TRENCH	4-35
2843706-0000	.CABLE TRENCH	4-35
2843708-0000	.CABLE TRENCH	4-35
2909947-0000	.CABLE TRENCH	4-35
2909948-0000	.CABLE TRENCH	4-35
2909949-0000	.CABLE TRENCH	4-35

Part No	Description	Page No
2909950-0000	CABLE TRENCH	4-35
90181-0314	CABLE TRENCH PARTS	4-35
2992449-0000	CABLE WITH CONNECTOR	8-21, 8-61
90600-0778	CABLE, ETHERNET FL CAT5 HEAVY	11-123
90600-4186	CABLE, SICK DOL-1205-G05MX	11-115
90600-4187	CABLE, SICK DOL-1208-G02MA	11-115
90600-0850	CABLE, SNP-DF1 GATEWAY	8-15, 8-17, 8-19, 8-55, 8-57, 8-59
90600-6081	CABLE, UNITRONIC BUS CAN 1X2X0,5 UL/CSA	8-15, 8-17, 8-19, 8-55, 8-57, 8-59
2915053-0000	CANTILEVER	11-91
2946144-0000	CANTILEVER	10-15
2946721-0000	CANTILEVER	10-17
2946725-0000	CANTILEVER	10-19
90600-0986	CAPACITOR, UL 1UF 450V 25X57 M8	11-35, 11-37
90601-0767	CARRIAGE, SSCPM44125B+SSBK44	2-45
975887-0000	CATCH	5-35, 5-37
1030767-0000	CATCH	5-9, 5-11, 5-21, 5-23
1128853-0000	CAUTION SIGN	2-31, 2-33, 3-15, 3-17
90459-7544	CAUTION SIGN ANSI (H), AUTOMATIC START	11-95
90600-4040	CAUTION SIGN ANSI (H), DO NOT REACH IN	5-13, 5-17, 5-19, 5-25, 5-27, 5-29, 5-31
2837851-0000	CD BOX	8-67
1366727-0000	CLAMP	1-15, 1-17, 1-19, 1-21, 1-23, 1-25, 1-29, 1-31, 1-33, 1-35, 1-39, 10-5, 11-5, 11-65, 11-67, 11-73, 11-131, 11-133
3060160-0000	CLAMP	11-69, 11-71, 11-89
2848828-0000	CLAMP BLOCK	2-65
90458-1814	CLAMPING ELEMENT WITH SLEEVE, 15X18 MM	2-13, 2-53
90458-2068	CLAMPING ELEMENT WITH SLEEVE, 3/8"X16 MM	2-29
90600-5062	CLAMPING ELEMENT, GN 851-700-T2-N1	2-29
2737088-0000	CLAMPING PLATE	2-57, 11-11
3025796-0000	CLAMPING PLATE	1-71
3088862-0000	CLAMPING PLATE	1-71
3013634-0000	CLAMPING RING	2-83
353041-0104	CLAMPING YOKE, PZB 4 K	8-37
90600-3691	COMMONING BUSBAR, 3-P 63A	8-15, 8-17, 8-19
90600-7711	COMP. SPRING 21280, 0,5X6X30	2-21
90600-1851	COMP. SPRING 5896, 0,63X6,93X11,5	2-17, 2-41, 11-13
90600-1092	COMP. SPRING D21550, 0,63X8,63X16	2-29
90458-2082	COMP. SPRING SF-TF 1X9X20 SS 2331-06	2-19, 2-21
3023612-0000	COMPRESSION GLAND	1-99
536204-0000	COMPRESSION SPRING	2-21
2995764-0000	CONICAL GEAR	11-79
90459-6679	CONN 15 P FEM, AUX. FEEDB,2090-K6CK-D15F	8-15, 8-17, 8-19, 8-55, 8-57, 8-59
90030-0188	CONN. STR. GA-15-G1/2	6-7
2859681-0100	CONNECTION BOX	7-3
2992440-0100	CONNECTION BOX	4-19
2992470-0100	CONNECTION BOX	4-3, 4-5, 4-7
2992496-0000	CONNECTION BOX	4-21
2957698-0000	CONNECTION LINK	1-91
2913340-0100	CONNECTOR	4-3, 4-5, 4-7
2992460-0100	CONNECTOR	4-19
90459-6470	CONNECTOR RJ45 TER. BL., AK-U0-RJ45-TB2P	8-15, 8-17, 8-19, 8-55, 8-57, 8-59
90600-0788	CONNECTOR RJ45, VS-08-RJ45-5-Q/IP20	11-123
90458-2905	CONNECTOR S8T-BUS02 BUS LINE CONNECTOR	11-105, 11-107
90459-2551	CONNECTOR, MOTOR FEEDBACK 15 PIN MALE	8-15, 8-17, 8-19, 8-55, 8-57, 8-59
2959304-0000	CONTACT	11-123
90458-0151	CONTACT BLOCK, 704.901.3	11-33, 11-103
90459-5440	CONTACTOR 4KW 24VDC, DILM9-01	8-15, 8-17, 8-19, 8-55, 8-57, 8-59, 11-105, 11-107
90459-5308	CONTACTOR 4KW 24VDC, DILM9-10	11-35, 11-37
90459-5441	CONTACTOR 7,5KW 24VDC, DILM17-01	8-15, 8-17, 8-19, 8-55, 8-57, 8-59
2793903-0300	CONVEYOR	1-3, 1-5, 1-7, 1-9
2835381-0100	CONVEYOR	1-11, 1-13
2933980-0200	CONVEYOR	1-3, 1-5, 1-7, 1-9
2957680-0200	CONVEYOR	1-75
2992500-0100	CONVEYOR	1-3, 1-5, 1-7, 1-9
2561273-0102	CONVEYOR BODY	1-11, 1-13
2561273-0103	CONVEYOR BODY	1-11, 1-13
2835380-0100	CONVEYOR BODY	1-11, 1-13
2875165-0100	CONVEYOR BODY	11-55
2901712-0100	CONVEYOR BODY	1-11, 1-13
2904906-0100	CONVEYOR BODY	11-55
2933970-0100	CONVEYOR BODY	1-75
2948230-0100	CONVEYOR BODY	1-95
663501-0200	CONVEYOR SECTION	11-53
3013605-0200	CONVEYOR SUPPORT	1-11, 1-13
2582040-0100	COOLING AIR INTAKE	7-3
599749-0100	COOLING AIR OUTLET	7-3, 8-3, 8-5
3039856-0000	COOLING UNIT	11-127
3039857-0100	COOLING UNIT	11-3
2855106-0000	COPPER BRAID	8-15, 8-17, 8-19, 8-55, 8-57, 8-59
3025918-0000	COPPER BRAID	8-21, 8-61
959656-0000	COTTER	7-5, 11-33
2993867-0000	COUNTER WHEEL	11-75
599752-0000	COVER	7-7, 7-9, 8-63
2694881-0000	COVER	8-73, 8-75
2703960-0300	COVER	11-15

Part No	Description	Page No
2727153-0000	.COVER	11-35, 11-37
2858601-0000	.COVER	8-65
2858602-0100	.COVER	8-3, 8-5
2859682-0000	.COVER	7-5
2864777-0000	.COVER	3-15, 3-17
2924303-0000	.COVER	11-95
2933654-0000	.COVER	11-59
2933845-0100	.COVER	11-93
2934028-0000	.COVER	2-29
2939673-0000	.COVER	2-31, 2-33
2960729-0000	.COVER	11-45
2966823-0000	.COVER	11-29
2966834-0000	.COVER	11-29
2982623-0000	.COVER	2-31, 2-33
2995758-0000	.COVER	11-79
2995763-0000	.COVER	11-97
2997841-0100	.COVER	11-93
3023599-0000	.COVER	2-69, 2-71
3034237-0000	.COVER	8-37
2926071-0000	.COVER DISC	1-87
2992436-0000	.COVER DISC	1-99
556603-0000	.. COVER PLATE	1-79, 1-99, 4-9, 4-25
556604-0000	.. COVER PLATE	2-23, 4-9, 4-25, 4-31
2840886-0000	.COVER PLATE	5-15
2966828-0000	.COVER PLATE	11-19
3023534-0000	.COVER SLIP	1-97
1021933-0000	.COVER TAPE	4-9, 4-25
2839820-0100	.COVERING PANEL	5-3, 5-5, 5-7
2840888-0100	.COVERING PANEL	5-3, 5-5, 5-7
2840890-0200	.COVERING PANEL	5-3, 5-5, 5-7
2840892-0100	.COVERING PANEL	5-3, 5-5, 5-7
2941199-0100	.COVERING PANEL	5-3, 5-5, 5-7
2957710-0100	.COVERING PANEL	5-3, 5-5, 5-7
2957720-0100	.COVERING PANEL	5-3, 5-5, 5-7
663504-0100	.. COVERS	11-53
90031-0070	.... CPU313, INTEGRATED IN 5-SLOT BASEPLATE	8-15, 8-17, 8-19, 8-55, 8-57, 8-59
2829432-0100	.CRANK HOUSING	2-11
2952607-0100	.CRANK HOUSING	2-37
2829436-0200	.CRANK SHAFT	2-3, 2-5, 2-7, 2-9
2856560-0000	.CRANK SHAFT	2-13
2856561-0000	.CRANK SHAFT	2-13
2952613-0000	.CRANK SHAFT	2-39
312105-0457	.. CREW M6S ISO 4014 M8X35 A480	1-53, 1-73, 1-83, 1-87, 1-97, 2-19, 2-21, 2-65, 4-29
2918406-0000	.CROSS BAR	11-77
2926068-0000	.CROSS BAR	1-87
90459-0690	.... CURRENT CONTROL RELAY, 84 871 034	11-35, 11-37
2829431-0200	.CUTTING UNIT	2-3, 2-5, 2-7, 2-9
3025777-0100	.CUTTING UNIT	11-7
2933976-0000	.CYLINDER BRACKET	1-89
2933977-0000	.CYLINDER BRACKET	1-89
90459-6087	.... DANGER SIGN ANSI (H), HAZARDOUS RESIDUAL	8-73, 8-75, 8-77, 11-33
3034244-0000	.DELIVERED DESIGN	8-77
3034247-0000	.DELIVERED DESIGN	11-103
3041493-0000	.DELIVERED DESIGN	11-33
3041938-0000	.DELIVERED DESIGN	8-77
3041939-0000	.DELIVERED DESIGN	11-103
3041943-0000	.DELIVERED DESIGN	11-33
663502-0200	.. DETECTOR	11-53
2933650-0100	.DETECTOR	11-81
90459-2483	.... DEVICENET SCANNER, 1769-SDN SERIES B	8-15, 8-17, 8-19, 8-55, 8-57, 8-59
90459-4234	.... DEVICENET SLAVE MODULE	8-15, 8-17, 8-19, 8-55, 8-57, 8-59
90459-2473	.... DIG INP. MOD.16 PTS FAST,1769-IQ16F SERA	8-15, 8-17, 8-19, 8-55, 8-57, 8-59
90459-2476	.... DIGIT. OUT. MOD. 16 P ESCP, 1769-OB16P	8-15, 8-17, 8-19, 8-55, 8-57, 8-59
90038-0021	.... DIODE, 1A 800V	7-11
3025797-0000	.DISC SPRING	1-69
90459-3000	.... DISTRIBUTOR, MS4-FRM-1/4-A8	6-5
2727158-0300	.DOOR	11-31
2839816-0000	.DOOR	5-33
2846735-0000	.DOOR	8-77
2846736-0000	.DOOR	8-73, 8-75
2846737-0200	.DOOR	7-3
3034240-0000	.DOOR	7-11
3034243-0000	.DOOR	8-73, 8-75
3041926-0000	.DOOR	11-103
3060168-0000	.DOOR	11-103
90459-1699	.... DOUBLE ACTING, MINI-ISO, CYL 25-50	1-89
90459-5067	.... DOUBLE ACTING, PROFILE,CYL 32-135	4-29
90459-6273	.... DOUBLE ACTING, PROFILE,CYL 32-80	1-73
540169-0000	.. DOWEL	1-15, 1-27, 11-63
2933965-0100	.DRIVE AND END UNIT	1-75
2925998-0000	.DRIVE BELT	1-83
2933973-0000	.DRIVE BELT	1-87
2948223-0000	.DRIVE BELT	1-97
2957768-0000	.DRIVE BELT	1-83

Part No	Description	Page No
2992411-0000	.DRIVE BELT	1-103
2992484-0000	.DRIVE BELT	1-103
3023536-0000	.DRIVE BELT	1-83
3023539-0000	.DRIVE BELT	1-83
2829439-0200	.DRIVE MOTOR	2-11
2983879-0200	.DRIVE MOTOR	2-37
3013623-0100	.DRIVE MOTOR	2-59, 2-61, 2-63
2992476-0000	.DRIVE ROLLER	1-103
2992504-0000	.DRIVE ROLLER	1-83
2992505-0000	.DRIVE ROLLER	1-83
2924674-0300	.DRIVE WHEEL	1-61
2926082-0000	.DRIVE WHEEL	1-83
2948184-0000	.DRIVE WHEEL	1-97
2957761-0000	.DRIVE WHEEL	1-83
2957762-0000	.DRIVE WHEEL	1-83
2957769-0000	.DRIVE WHEEL	1-83
2992475-0000	.DRIVE WHEEL	1-103
2992480-0000	.DRIVE WHEEL	1-83
3023532-0000	.DRIVE WHEEL	1-83
3023578-0000	.DRIVE WHEEL	1-103
1035792-0000	.E-HINGE	5-33, 7-11, 8-73, 8-75, 8-77, 11-103
90600-2904	.... EARTH BRAID, 250/16/8,5	1-73, 7-5, 7-11, 8-65, 8-73, 8-75, 8-77, 11-35, 11-37, 11-103
353024-0204	.. EARTH TERMINAL WPE 2,5	8-47, 11-39
353024-0205	.. EARTH TERMINAL, 1010.1	8-33, 8-35
353024-0208	.. EARTH TERMINAL, 1010.4	8-33
353024-0209	.. EARTH TERMINAL, 1010.5	8-33
353024-0212	.. EARTH TERMINAL, 10363.0	8-39, 8-41, 11-111
90135-0026	.... EARTH TERMINAL, 3802.6	4-23, 7-13, 7-15
2937123-0000	.EARTH WIRE	7-11
3041925-0000	.EARTH WIRE	8-21, 8-61
2863517-0000	.ECCENTRIC	2-29
2939679-0000	.ECCENTRIC	2-29
3013632-0000	.ECCENTRIC	2-83
90143-0060	.... EDGE STRIP 9,5X6,3MM BLACK PVC	5-11, 5-23, 5-35, 5-37, 8-67
663503-0100	.. EJECTOR	11-53
3034235-0000	.EL-CABINET CHASSIE	8-67
3060154-0000	.EL-CABINET CHASSIE	8-67
2844518-0200	.EL-CABINET DOOR	8-3, 8-5
2844519-0200	.EL-CABINET DOOR	8-3, 8-5
2939105-0300	.EL-CABINET DOOR	11-99
90458-0694	.... ELBOW JOINT 2T 30 MM, NO 851.012.95	10-11, 10-13
663506-0300	.. ELECTRIC EQUIPMENT	11-53
2913341-0300	.ELECTRIC MATERIALS	8-3, 8-5
3053564-0100	.ELECTRIC MATERIALS	8-3, 8-5
663505-0300	.. ELECTRICAL CABINET	11-53
2703954-0400	.ELECTRICAL CABINET	11-15
2727159-0400	.ELECTRICAL CABINET	11-31
2844515-0200	.ELECTRICAL CABINET	8-3, 8-5
2933850-0300	.ELECTRICAL CABINET	11-99
3038249-0000	.ELECTRICAL CABINET	11-35, 11-37
3060155-0000	.ELECTRICAL CABINET	11-35, 11-37
2738775-0300	.ELECTRICAL DOCUMENT	11-31
2958794-0300	.ELECTRICAL DOCUMENT	9-3
2982985-0200	.ELECTRICAL DOCUMENT	11-119
3041940-0000	.ELECTRICAL EQUIPMENT LABEL	8-67
3041941-0000	.ELECTRICAL EQUIPMENT LABEL	11-103
3041942-0000	.ELECTRICAL EQUIPMENT LABEL	11-35, 11-37
2844513-0300	.ELECTRICAL MATERIALS	8-7
3053565-0100	.ELECTRICAL MATERIALS	8-53
2966826-0000	.ELEMENT PLATE	11-19
90458-1869	.... EMC EARTH BRAID, 16MM2 L=200MM	7-5
90458-1651	.... EMERGENCY STOP, ZB4-BS-844 ZB4-BZ-104	7-11, 8-77
90600-3898	.... END CAP, Z-GV-10/2+3P	8-15, 8-17, 8-19
353033-0104	.. END PLATE, 10502.8	8-37
90459-2246	.... END PLATE, MS4-AGB	6-5
353032-0009	.. END PLATE, WAP FOR WDK	8-39, 8-41, 11-111, 11-113
2935834-0000	.END SECTION	2-23, 2-79, 2-81, 5-9
3025776-0000	.END SECTION	1-27
3025781-0000	.END SECTION	1-27
353001-0113	.. END SLEEVE 0,75MM2	8-15, 8-17, 8-19, 8-55, 8-57, 8-59
353001-0114	.. END SLEEVE 1,50 MM2	8-15, 8-17, 8-19, 8-55, 8-57, 8-59, 11-117
353001-0115	.. END SLEEVE 2,5/14	8-15, 8-17, 8-19, 8-55, 8-57, 8-59
353001-0120	.. END SLEEVE H 10/28	8-15, 8-17, 8-19, 8-55, 8-57, 8-59
353001-0117	.. END SLEEVE H4.0/20 GREY	8-15, 8-17, 8-19, 8-55, 8-57, 8-59
353210-0075	.. END SLEEVE, TWIN COLL, 0,75 MM2	8-15, 8-17, 8-19, 8-55, 8-57, 8-59
353210-0150	.. END SLEEVE, TWIN COLL, 1,5 MM2	8-15, 8-17, 8-19, 8-55, 8-57, 8-59
353210-0250	.. END SLEEVE, TWIN COLL, 2,5 MM2	8-15, 8-17, 8-19, 8-55, 8-57, 8-59
353031-0203	.. END SUPPORT, WEW 35/2	8-9, 8-11, 8-15, 8-17, 8-19, 8-25, 8-31, 8-37, 8-39, 8-41, 8-47, 8-55, 8-57, 8-59, 11-39, 11-111, 11-113
2848831-0000	.END WASHER	2-65
90600-1348	.... ETHERNET /IP BRIDGE MODULE, 1768-ENBT/A	8-15, 8-17, 8-19, 8-55, 8-57, 8-59
351501-0010	.. ETHERNET PATCH CABLE, FL CAT5 PATCH 1,0	8-15, 8-17, 8-19, 8-55, 8-57, 8-59
351501-0050	.. ETHERNET PATCH CABLE, FL CAT5 PATCH 5,0	8-21, 8-61
90600-1847	.... ETHERNET SWITCH, FL SWITCH SFN 5TX	8-15, 8-17, 8-19, 8-55, 8-57, 8-59

Part No	Description	Page No
90503-3779	EXHAUST FILTERS PFA2000 IP54	11-101
90600-5528	EXTENSION TERMINAL, Z-EK/35/UL 104901	8-55, 8-57, 8-59
90264-0032	FAN, 4656N+LZ30+LZ 120,220V 50HZ	7-7
90600-0985	FAN, R2E150-AG52-09	11-49
2957679-0000 .	FASTENING BRACKET	1-79, 1-99
3023557-0000 .	FASTENING BRACKET	1-99
3023558-0000 .	FASTENING BRACKET	1-99
3039859-0000 .	FASTENING BRACKET	11-127
2925062-0000 .	FASTENING PLATE	11-77
2829430-0100 .	FEED SHAFT	2-51
90600-5266	FEED THROUGH FILTER, B85321A2502W160	8-15, 8-17, 8-19, 8-55, 8-57, 8-59
90077-0079	FEED THROUGH TERMINAL, 02943.6	4-23, 7-13, 7-15
90077-0113	FEED THROUGH TERMINAL, 10-00102150-1	8-39, 8-41, 11-113
353021-0212 ..	FEED THROUGH TERMINAL, 10200.0	8-25, 8-27, 8-29, 8-31, 8-47, 11-39
353021-0213 ..	FEED THROUGH TERMINAL, 10201.0	8-9, 8-11, 8-35
2829443-0100 .	FEED WHEEL	2-51
2957733-0000 .	FEED WHEEL	2-55
2957734-0000 .	FEED WHEEL	2-55
2957735-0000 .	FEED WHEEL	2-55
2957737-0000 .	FEED WHEEL	2-55
2957738-0000 .	FEED WHEEL	2-55
2959367-0000 .	FEED WHEEL	2-55
2960584-0100 .	FEED WHEEL	11-7
2987403-0000 .	FEED WHEEL	2-55
2987404-0000 .	FEED WHEEL	2-55
2987432-0000 .	FEED WHEEL	2-55
3003415-0000 .	FEED WHEEL	2-55
3003423-0000 .	FEED WHEEL	2-55
3003424-0000 .	FEED WHEEL	2-55
3003425-0000 .	FEED WHEEL	2-55
3003426-0000 .	FEED WHEEL	2-55
3003427-0000 .	FEED WHEEL	2-55
3013650-0000 .	FEED WHEEL	2-55
3025802-0000 .	FEED WHEEL	2-55
3025803-0000 .	FEED WHEEL	2-55
3025804-0000 .	FEED WHEEL	2-55
3025805-0000 .	FEED WHEEL	2-55
3025806-0000 .	FEED WHEEL	2-55
3088861-0000 .	FEED WHEEL	2-55
2929773-0100 .	FEED WHEEL UNIT	2-3, 2-5, 2-7, 2-9
90110-0053	FEMALE INSERT HAN 6 E 09 33 006 2701	4-41
90600-5249	FERRITE, B64290L616X38	8-15, 8-17, 8-19, 8-55, 8-57, 8-59
90232-0116	FIBRE E3F-R2B4	2-19
599750-0000 ..	FILTER	7-7
90458-2566	FILTER 90 DEGREES 100 MESH, 1007231	3-9, 3-11, 3-13
90503-3773	FILTER FAN PF2000 IP54 230V AC	11-101
90459-5877	FILTER FAN SK 3325.107	8-73, 8-75
90459-2339	FILTER REGULATOR, MS4-LFR-1/4-D7-ERV-AS	6-5
90459-2364	FILTER, 10077234	3-9
350014-0010 ..	FITTING QS-F-G1/4-10H	11-89
2863493-0000 .	FLAG	2-29
2950968-0000 .	FLANGE	2-55, 11-9
2950971-0000 .	FLANGE	2-55, 11-9
90240-0184	FLANGE BUSHING, 12X16X15 MM	11-21, 11-23, 11-25, 11-27
90240-0146	FLANGE BUSHING, 15X21X20 MM	11-21
90240-0325	FLANGE BUSHING, 16X18X12 MM	1-73
321154-0221 ..	FLANGE BUSHING, 16X18X17 MM	2-65
321153-0102 ..	FLANGE BUSHING, 8X10X10 MM	10-15
321161-0098 ..	FLANGE BUSHING, 8X10X5, 5 MM	2-17, 2-41
90459-3145	FLASH MEMORY 64MBYTE, 1784-CF64	8-15, 8-17, 8-19, 8-55, 8-57, 8-59
90459-3352	FLAT PIN SOCKET, 6,3X0,8	8-15, 8-17, 8-19, 8-55, 8-57, 8-59
90458-0962	FLEXIBLE COUPLING, 6X6 MM	11-59
90458-1508	FLOOR PLATE, DAMPER, M105-20-160	4-9, 4-25
90459-3281	FOAM RUBBER STRIP, 842140 RAU-SIK 8014 1	11-127
2789989-0000 .	FOOT PLATE	11-35, 11-37, 11-45
90459-3460	FOOTPRINT FILTER 22-RF010-AL	8-15, 8-17, 8-19, 8-55, 8-57, 8-59
2957682-0000 .	FORK	2-29
2913343-0300 .	FRAME	2-3, 2-5, 2-7, 2-9
2923342-0100 .	FRAME	10-9
2923343-0100 .	FRAME	10-9
2925061-0100 .	FRAME	11-55
3008057-0000 .	FRAME	1-53
3008064-0000 .	FRAME	1-53
3039847-0000 .	FRAME	2-69, 2-71
3060152-0000 .	FRAME	11-127
90458-2343	FRAME CF 16	8-67
2829433-0300 .	FRAME HOUSING	2-59, 2-61, 2-63
2848844-0000 .	FRAME SECTION	2-13
2952615-0000 .	FRAME SECTION	2-39
3034245-0000 .	FUSE PANEL LABEL	8-77
3041492-0000 .	FUSE PANEL LABEL	11-33
3041937-0000 .	FUSE PANEL LABEL	11-103
2982635-0000 .	GABLE PLATE	1-103
2992415-0000 .	GABLE PLATE	1-103

Part No	Description	Page No
3009432-0000	.GABLE PLATE	1-53
90601-1006	.... GAS SPRING	4-29
90600-6092	.... GAS SPRING Z6-19 120 0 384 WG22 WG22 200	4-11
599755-0000	.. GASKET	7-7, 7-9, 8-63
3088852-0100	.GATE INDICATION	11-129
2845860-0000	.GEAR WHEEL	1-55
2856558-0000	.GEAR WHEEL	2-15
2856559-0000	.GEAR WHEEL	2-13
2916011-0000	.GEAR WHEEL	2-29
2916012-0000	.GEAR WHEEL	2-29
2916024-0000	.GEAR WHEEL	2-29
90600-1765	.... GEARS, PLANETARY LPB+ 070-M01-3-111/MPL-	2-15, 2-43
90600-1155	.... GEARS, PLANETARY TS 80-I-E-E15 P-092 070	2-53
90600-3210	.... GEARS, WORM MOTOR D9582/SC401-H/1600117	1-53, 1-67
90600-5064	.... GEARS, WORM MOTOR WA 20 DT71 D4	1-77, 1-97
90031-0078	.... GENIUS BUS CONTROLLER	8-15, 8-17, 8-19, 8-55, 8-57, 8-59
90459-2953	.... GLAND, EXTENDED WITH INSERT, M16X1,5	1-53, 1-67
90458-0438	.... GLAND, EXTENDED WITH INSERT, M20X1,5	1-77
2839817-0000	.GLASS	5-33
2840887-0000	.GLASS	5-9, 5-21, 5-23
2839815-0200	.GLASS DOOR	5-3, 5-5, 5-7
2703955-0000	.GUIDE	11-45
2807804-0000	.GUIDE	11-61
2807805-0000	.GUIDE	11-61
2850070-0000	.GUIDE	5-9, 5-21
2916036-0000	.GUIDE	2-35
2924690-0000	.GUIDE	2-57
2924691-0000	.GUIDE	2-57
2946720-0100	.GUIDE	10-9
3013395-0000	.GUIDE	10-23, 10-29
2829442-0100	.GUIDE ARM	2-3, 2-5, 2-7, 2-9
2848857-0000	.GUIDE ARM	2-19
2848858-0000	.GUIDE ARM	2-19
2923358-0000	.GUIDE ARM	2-21
2948240-0100	.GUIDE ARM	2-3, 2-5, 2-7, 2-9, 4-3, 4-5, 4-7
90600-3957	.... GUIDE BUSHING, 14X20X45	2-57, 11-11
2829435-0100	.GUIDE CONSOLE	2-3, 2-5, 2-7, 2-9
2848849-0000	.GUIDE CONSOLE	2-19, 2-35
2848852-0000	.GUIDE CONSOLE	2-19
2948234-0000	.GUIDE CONSOLE	2-35
2957700-0100	.GUIDE CONSOLE	2-3, 2-5, 2-7, 2-9
3023548-0000	.GUIDE HOLDER	1-99
2957715-0000	.GUIDE LUG	1-83
2848830-0000	.GUIDE RAIL	2-65
2916074-0000	.GUIDE RAIL	2-45
3025793-0000	.GUIDE RAIL	1-73
3023603-0000	.GUIDE SLEEVE	1-103
3023607-0000	.GUIDE SLEEVE	1-103
90237-0144	.... GUIDE, 1121-SU540	5-33, 8-73, 8-75, 8-77
2848854-0000	.GUN HOLDER	2-19
2848855-0000	.GUN HOLDER	2-19
90600-1941	.... HAND WHEEL, VDS.125+IR A-14-K	11-21
90458-0805	.... HANDLE VERSION #2 NO. 1095-19	11-95
318800-0106	.. HANDLE,SPHERICAL KNOB,INT.THRE,D.40-M10	1-73
3041489-0000	.HATCH	11-33
2992482-0000	.HEAD PLATE	1-103
2992483-0000	.HEAD PLATE	1-103
3025818-0000	.HEAD PLATE	1-63
90600-3956	.... HEAT INSULATION, #1081862	3-9
2643060-0300	.HEATER	11-15
2966824-0100	.HEATING CHAMBER	11-17
90459-7170	.... HEATING ELEMENT 280W 240V	11-35, 11-37
2929774-0300	.HEIGHT ADJUSTMENT	1-3, 1-5, 1-7, 1-9
312107-0316	.. HEXAGON FLANGE NUT ISO 4161 M6 A2	8-67
312601-0316	.. HEXAGON NUT, DIN 934 M6 8 FZB	11-35, 11-37
312607-0322	.. HEXAGON NUT, EN 24032 M6M M12 A480	1-87
312607-0324	.. HEXAGON NUT, EN 24032 M6M M16 A480	1-81
312607-0312	.. HEXAGON NUT, EN 24032 M6M M4 A480	11-89
312607-0316	.. HEXAGON NUT, EN 24032 M6M M6 A480	5-11
312607-0318	.. HEXAGON NUT, EN 24032 M6M M8 A480	1-89, 11-97
312605-0320	.. HEXAGON NUT, M6M M10 A280	2-45, 4-29
312605-0322	.. HEXAGON NUT, M6M M12 A280	10-15
312605-0324	.. HEXAGON NUT, M6M M16 A280	11-35, 11-37, 11-45
312605-0312	.. HEXAGON NUT, M6M M4 A280	7-7, 8-69, 8-71, 8-73, 8-75, 8-77, 11-33, 11-35, 11-37
312605-0314	.. HEXAGON NUT, M6M M5 A280	4-37, 7-5, 8-69, 8-71, 10-15, 11-35, 11-37, 11-51, 11-125, 11-127
312605-0316	.. HEXAGON NUT, M6M M6 A280	1-53, 1-101, 1-103, 5-11, 5-17, 5-29, 5-31, 7-5, 7-11, 8-65, 8-67, 8-69, 8-71, 10-15, 11-33, 11-35, 11-37, 11-45, 11-95, 11-101, 11-103, 11-109, 11-127
312605-0318	.. HEXAGON NUT, M6M M8 A280	1-79, 1-91, 1-97, 2-29, 2-47, 2-49, 4-13, 4-15, 5-17, 5-25, 5-27, 5-29, 5-31, 8-69, 8-71, 10-15, 10-19, 11-101
312812-0320	.. HEXAGON NUT, NY-LOCK M10 A480	1-83, 2-31, 2-33
312812-0314	.. HEXAGON NUT, NY-LOCK M5 A480	5-33, 8-73, 8-75, 8-77
312812-0316	.. HEXAGON NUT, NY-LOCK M6 A480	1-83, 1-103, 5-9, 5-21, 5-23, 5-35, 5-37, 8-65, 8-73, 8-75, 8-77, 11-33, 11-59
312812-0318	.. HEXAGON NUT, NY-LOCK M8 A480	1-103, 2-29, 10-25, 10-27, 10-31, 11-77, 11-91

Part No	Description	Page No
312810-0318 ..	HEXAGON NUT, NY-LOCK M8 FZB	11-101
312625-0324 ..	HEXAGON THIN NUT, EN 24035 ML6M M16 A4	1-53
312625-0316 ..	HEXAGON THIN NUT, EN 24035 ML6M M6 A4	4-9
578874-0000 ..	HF BRAIDED WIRE 1,6 MM2	8-15, 8-17, 8-19, 8-55, 8-57, 8-59
959657-0000 ..	HINGE FLANGE	7-5, 11-33
975880-0000 ..	HINGE FLANGE	7-5, 11-33
531616-0000 ..	HOLDER	5-11, 5-23
1366750-0000 .	HOLDER	8-15, 1-19, 1-21, 1-23, 1-25, 1-29, 1-31, 1-33, 1-35, 1-39, 10-5, 11-5, 11-73, 11-131, 11-133
1550772-0000 .	HOLDER	1-17, 1-25, 1-29, 1-33, 11-65, 11-69, 11-71, 11-73, 11-83
2751398-0000 .	HOLDER	11-29
2789753-0000 .	HOLDER	11-29
2812585-0000 .	HOLDER	11-35, 11-37
2863513-0000 .	HOLDER	2-35
2946136-0000 .	HOLDER	10-15
2946724-0100 .	HOLDER	10-9
2978810-0000 .	HOLDER	11-67
2992501-0000 .	HOLDER	2-35
3003431-0000 .	HOLDER	1-19
3003433-0000 .	HOLDER	1-23
3003438-0000 .	HOLDER	1-25
3003440-0000 .	HOLDER	1-21
3013602-0000 .	HOLDER	1-33
3013604-0000 .	HOLDER	1-35
3013609-0000 .	HOLDER	1-39
3013611-0000 .	HOLDER	1-37
3025821-0000 .	HOLDER	1-67
3042372-0000 .	HOLDER	11-35, 11-37
90459-1458	HOOD HAN 6 E 19 30 006 1540	11-43
90243-0164	HOOK SPANNER ADJUST.DIA.4	10-33
90600-4603	HORN, KB70-3001	4-37
90439-0209	HOSE	3-11, 3-13
3046522-0000 .	HOSE	10-35
342991-0102 ..	HOSE CLIP,WORM DRIVE TYPE (13)-20	11-127
2848834-0000 .	HOSE HOLDER	2-69, 2-71
3046521-0000 .	HOSE HOLDER	10-35
342901-0105 ..	HOSE NIPPLE, EXT.THR. R1/2-12 MM	6-7
90459-6690	HOSE PVC, 12/16 MM	11-127
90600-2959	HOT MELT GUN, #1071630	3-9
90459-6475	HOT MELT GUN, SOLIDBLUE A #8505768	3-11, 3-13
90439-0264	HOT MELT NOZZLE, 3/8UNF	3-9
90459-1991	HOT MELT UNIT, #1022230	3-9, 3-11, 3-13
2864776-0100 .	HOTMELT EQUIPMENT MISCELLANEOUS	3-3, 3-5, 3-7
2863510-0100 .	HOTMELT EQUIPMENT NORDSON	3-3, 3-5, 3-7
2892717-0100 .	HOTMELT EQUIPMENT NORDSON	3-3, 3-5, 3-7
90178-0007	HOUR COUNTER, BG 40,17-1 12-48VDC	8-15, 8-17, 8-19, 8-55, 8-57, 8-59, 11-35, 11-37, 11-105, 11-107
2904765-0000 .	HOUSE	2-29
90600-2071	HOUSING 6B SURF MOUNT, 19 30 006 2295	4-41
2590154-0000 .	HUB	11-59
90459-2550	I/O CONNECTOR 26 PIN MALE, 2090-K6CK-D26	8-15, 8-17, 8-19, 8-55, 8-57, 8-59
90459-7229	IDENTIF. OF SINGLE CONDUCTORS, TEMPLATE	8-77, 11-33, 11-103
90459-1402	IDLER ROLLER, SS SJ 34 E DR NS	2-45
90458-2072	IDLER ROLLER,CONCENTRIC SSRSJ-34-C-DR-NS	2-45
354002-0100 ..	IMINIATURE CIRCUIT BREAKER, FAZ-C10/3	8-15, 8-17, 8-19
90600-1461	INCOMING TERMINAL, BK25/3-PKZ0-E	8-55, 8-57, 8-59
90600-3004	INCREMENTAL ENC., DGS60-A1A10000,1032277	11-59
90600-5297	INCREMENTAL ENCODER, DFS60A-BHAA65536	1-67, 1-77, 1-97
90459-2409	INDUCTIVE SENSOR IN5230	1-89, 2-13, 2-31, 2-33, 2-39, 2-69, 2-71, 2-79, 2-81, 4-31
3023550-0100 .	INFEED SECTION	1-95
599751-0000 ..	INSERT	7-7, 7-9, 8-63
2643064-0000 .	INSULATING PLATE	11-19
2848835-0000 .	INSULATING PLATE	2-19
2848856-0000 .	INSULATING PLATE	2-19
3077120-0000 .	INSULATING PLATE	2-19
2727163-0200 .	INSULATION	11-15
2789964-0000 .	INSULATION	11-49
2960726-0000 .	INSULATION	11-47
2960727-0000 .	INSULATION	11-47
2960728-0000 .	INSULATION	11-47
2970398-0000 .	INSULATION	11-47
2970399-0000 .	INSULATION	11-47
90600-4352	JOINT 3TV 30MM, 851 014 92	10-11
90458-0692	JOINT, THREAD.CONN. 30 MM, NO 851.008.95	10-11, 10-13
90237-0324	KEY, 1104-02 FOR SQUARE 8 MM	8-73, 8-75, 8-77, 11-103
2856537-0000 .	KNIFE	2-57, 11-11
90459-6510	KNOB, ,EXTERNAL THREAD. GN6336.4 40-M8X5	10-25
90457-0935	KNOB, ADJUST.HI.EXT.THREAD, NO 6N20P04	2-79, 2-81
90051-0090	KNOB, EXTERNAL THREAD. NO. WN 450GS	2-79, 2-81
90051-0079	KNOB, SQUARE HOLE, NO. 8306 1304	2-55, 2-83, 11-9
90287-0358	KNURLED SCREW	10-27, 10-31
90459-2928	LABEL 60417-2-IEC-5020, COMM. REF. POT.	4-9, 4-25, 7-5, 7-11, 8-65, 8-69, 8-71, 8-73, 8-75, 8-77, 11-101, 11-103, 11-109
90459-6604	LABLE SICK DOL-2312-G 05MMA3	8-21, 8-61, 11-115
2987398-0100 .	LADDER BAND GUIDE	2-3, 2-5, 2-7, 2-9

Part No	Description	Page No
90237-0165	LATCH	8-73, 8-75, 8-77
90015-0023	LEAD-IN, TET7-10, E-1458019	4-37, 11-51, 11-125
2848842-0000 .	LEAF SPRING	2-21
2807604-0100 .	LEG,CONVEYOR	11-55
2807614-0000 .	LEG,CONVEYOR	11-57
3013392-0000 .	LEVER	10-23
3013903-0000 .	LEVER	10-29
2957703-0000 .	LEVER BAR	1-91
2643074-0300 .	LID	11-15
2835390-0000 .	LID	1-55
3013624-0000 .	LID	2-75
3023588-0000 .	LID	4-29
2934030-0100 .	LIFTER	4-27
90458-0295	LIGHT ELEMENT, BLUE, KL70-401L	4-37
90458-0296	LIGHT ELEMENT, GREEN, KL70-401G	4-37, 11-51, 11-125
90458-0293	LIGHT ELEMENT, RED, KL70-401R	4-37
90458-0294	LIGHT ELEMENT, YELLOW, KL70-401Y	4-37, 11-51
2901717-0100 .	LIGHT FIXTURE	4-3, 4-5, 4-7
90164-0303	LIGHT FIXTURE, BRACKET 70MM	4-39
90164-0015	LIGHT FIXTURE, RL70CV-111 / 230V 50HZ	4-39
90600-6907	LIMIT SW. D4C-1301 5M	11-127
90600-5250	LINE FILTER, B84111FB30	8-15, 8-17, 8-19, 8-55, 8-57, 8-59
90600-5252	LINE FILTER, B84113HB30	8-15, 8-17, 8-19, 8-55, 8-57, 8-59
90600-5258	LINE FILTER, B84143A35R106	8-15, 8-17, 8-19, 8-55, 8-57, 8-59
90600-5260	LINE FILTER, B84144A16R120	8-15, 8-17, 8-19, 8-55, 8-57, 8-59
90458-0953	LINEAR BUSHING 25X40X58	1-53
90288-0311	LINK	11-21
2957699-0000 .	LINK ATTACHMENT	1-91
2926056-0000 .	LOCATING PIECE	1-87
2933979-0000 .	LOCATING PIECE	1-87
3008063-0000 .	LOCK	1-53
90459-1292	LOCK CAM, 1000-50 GH 18	7-5
90237-0128	LOCK CYLINDER, 1109-SU125	5-33
90237-0129	LOCK CYLINDER, 1109-U6	8-73, 8-75, 8-77, 11-103
90600-5989	LOCK HANDLE, AK-PKZ0	8-55, 8-57, 8-59
2948255-0100 .	LOCK HOLDER	2-25, 2-27
90237-0142	LOCK HOUSING, 1000-U45	7-5
3004371-0000 .	LOCK NUT	11-89
3008065-0000 .	LOCK NUT	1-53
90062-0060	LOCK WASHER 5,3/10 H=0,6 FZB	8-69, 8-71
315410-0104 ..	LOCK WASHER MB 4 D=20 H=1	2-39
90600-4710	LOCK WASHER MB 4 D=20 H=1 SS	2-13
315410-0105 ..	LOCK WASHER MB 5 D=25 H=1,25	2-83
90062-0015	LOCK WASHER SERRAT.EXT.GEAR,6,4/11 H=0,7	7-5, 7-11, 11-109
90062-0016	LOCK WASHER SERRAT.EXT.GEAR,8,4/15 H=0,8	8-65, 8-69, 8-71, 8-73, 8-75, 8-77, 11-33, 11-35, 11-37, 11-101
90062-0039	LOCK WASHER SERRAT.INT.GEAR,4,3/8 H=0,5	11-49
90062-0059	LOCK WASKER SERRAT.EXT.GEAR,4,3/8 H=0,5	8-69, 8-71, 8-73, 8-75
90237-0123	LOCK, 1121-U10C	5-33, 8-73, 8-75, 8-77, 11-103
90237-0202	LOCK, INSERT SQUARE,1000-U2 8 MM	7-5
90237-0342	LOCKING CATCH	11-103
90237-0147	LOCKING LUG, NO. 1121-53-0P	5-33
3023584-0000 .	LUG	4-29
2740229-0200 .	MACHINE	11-31
2939106-0300 .	MACHINE	11-99
2788657-0300 .	MACHINE BODY	4-3, 4-5, 4-7
3023560-0100 .	MACHINE BODY	4-3, 4-5, 4-7
2805942-0000 .	MACHINE SIGN	11-45
580923-0000 ..	MACHINE SIGN CE	4-9, 4-25, 11-45, 11-59
2941716-0100 .	MAIN PIPE	6-3
90111-0132	MAIN SWITCH P1-25/EA/SVB-SW/N/HI11/H-P14	8-15, 8-17, 8-19, 8-55, 8-57, 8-59, 11-35, 11-37, 11-101
90110-0052	MALE INSERT HAN 6E 09 33 006 2601	11-43
90600-5235	MANDATORY ACTION SIGN ISO, READ MANUAL	7-11, 8-67, 8-69, 8-71, 8-73, 8-75, 8-77, 11-33, 11-103
359011-0807 ..	MARKING PLATES 5-FW 1-50	4-23, 11-113
90459-0606	MARKING PLATES 5-FW E1-E50	4-23, 11-111
90600-0719	MARKING PLATES DEK 5 GW N	8-37
351416-0100 ..	MINIATURE CIRC. BREAK., FAZ -D10 1-POLE	8-15, 8-17, 8-19
354000-0010 ..	MINIATURE CIRCUIT BREAKER, FAZ-C1/1	11-105, 11-107
315744-0010 ..	MINIATURE CIRCUIT BREAKER, FAZ-C1/1-NA	11-105, 11-107
354000-0100 ..	MINIATURE CIRCUIT BREAKER, FAZ-C10/1	8-15, 8-17, 8-19, 11-35, 11-37
315744-0100 ..	MINIATURE CIRCUIT BREAKER, FAZ-C10/1-NA	8-55, 8-57, 8-59, 11-35, 11-37
354001-0100 ..	MINIATURE CIRCUIT BREAKER, FAZ-C10/2	8-15, 8-17, 8-19
315745-0100 ..	MINIATURE CIRCUIT BREAKER, FAZ-C10/2-NA	8-55, 8-57, 8-59
315746-0100 ..	MINIATURE CIRCUIT BREAKER, FAZ-C10/3-NA	8-55, 8-57, 8-59
354000-0160 ..	MINIATURE CIRCUIT BREAKER, FAZ-C16/1	8-15, 8-17, 8-19
315744-0160 ..	MINIATURE CIRCUIT BREAKER, FAZ-C16/1-NA	8-55, 8-57, 8-59
354000-0020 ..	MINIATURE CIRCUIT BREAKER, FAZ-C2/1	8-15, 8-17, 8-19, 11-35, 11-37, 11-105, 11-107
315744-0020 ..	MINIATURE CIRCUIT BREAKER, FAZ-C2/1-NA	8-55, 8-57, 8-59, 11-35, 11-37, 11-105, 11-107
354001-0020 ..	MINIATURE CIRCUIT BREAKER, FAZ-C2/2	8-15, 8-17, 8-19
315745-0020 ..	MINIATURE CIRCUIT BREAKER, FAZ-C2/2-NA	8-55, 8-57, 8-59
354000-0040 ..	MINIATURE CIRCUIT BREAKER, FAZ-C4/1	8-15, 8-17, 8-19, 11-105, 11-107
315744-0040 ..	MINIATURE CIRCUIT BREAKER, FAZ-C4/1-NA	8-55, 8-57, 8-59, 11-105, 11-107

Part No	Description	Page No
354001-0040 ..	MINIATURE CIRCUIT BREAKER, FAZ-C4/2	8-15, 8-17, 8-19
315745-0040 ..	MINIATURE CIRCUIT BREAKER, FAZ-C4/2-NA	8-55, 8-57, 8-59
354000-0060 ..	MINIATURE CIRCUIT BREAKER, FAZ-C6/1	8-15, 8-17, 8-19
315744-0060 ..	MINIATURE CIRCUIT BREAKER, FAZ-C6/1-NA	8-55, 8-57, 8-59
354001-0060 ..	MINIATURE CIRCUIT BREAKER, FAZ-C6/2	8-15, 8-17, 8-19
315745-0060 ..	MINIATURE CIRCUIT BREAKER, FAZ-C6/2-NA	8-55, 8-57, 8-59
315747-0100 ..	MINIATURE CIRCUIT BREAKER, FAZ-D10/1-NA	8-55, 8-57, 8-59
90600-4317	MODULE CONNECTOR, MS4-6-AMV	6-5
3023545-0000 .	MOTOR BRACKET	1-97
90600-3294	MOTOR FEEDBACK CABLE 2090-XXNFMF-S09/C	8-21, 8-61
90600-3293	MOTOR POWER CABLE 2090-XXNPMF-16S09	8-21, 8-61
2751400-0300 .	MOTOR UNIT	11-15
2844517-0200 .	MOUNTING PLATE	8-3, 8-5
2925071-0000 .	MOUNTING PLATE	11-89
2933646-0000 .	MOUNTING PLATE	11-77
3016914-0000 .	MOUNTING PLATE	11-109
3022573-0000 .	MOUNTING PLATE	1-73
3034236-0000 .	MOUNTING PLATE	8-69, 8-71
3050588-0000 .	MOUNTING PLATE	8-69, 8-71
1189303-0000 .	MOUNTING SHEET	4-9
2835382-0000 .	MOUNTING SHEET	1-55
2926052-0000 .	MOUNTING SHEET	1-87
3008054-0000 .	MOUNTING SHEET	1-53
3025817-0000 .	MOUNTING SHEET	1-63
2807592-0000 .	MULTI BRACKET SINGLE	11-77
90458-1174	MULTI DIAMETER MODULE, CM 20W40	8-67
2918411-0000 .	NET	11-91
353022-0002 ..	NEUTRAL TERMINAL, 10107.8	8-37
1103299-0000 .	NON-SKID	4-9
1103300-0000 .	NON-SKID	4-9
486268-0000 ..	NUT	4-9, 4-25, 4-29, 4-31
1359565-0000 .	NUT	1-17, 1-21, 1-25, 1-29, 1-31, 1-33, 11-63, 11-65, 11-67, 11-69, 11-71, 11-73
2863512-0000 .	NUT	2-35
312705-0314 ..	NUT HEX. DOMED CAP MHM-6 M5 A280	7-5
312705-0316 ..	NUT HEX. DOMED CAP MHM-6 M6 A280	1-83, 11-29
312705-0318 ..	NUT HEX. DOMED CAP MHM-6 M8 A280	2-55, 2-83, 11-9
90600-1766	NUT ROUND WITH SLOTS M20X1 SS	2-13, 2-39
312805-0105 ..	NUT ROUND WITH SLOTS M25X1,5 FE	2-83
2773708-0000 .	NUT WASHER	11-103
90458-0321	NUT, M12X1,5	11-101
90458-0322	NUT, M16X1,5	8-67, 11-35, 11-37, 11-101
90458-0323	NUT, M20X1,5	3-15, 3-17, 7-5, 8-67, 11-35, 11-37, 11-101
90458-0325	NUT, M32X1,5	3-15, 3-17, 8-67
315202-0246 ..	O-RING 144,3X5,7 MM	11-59
315204-0221 ..	O-RING 34,2X3 MM	2-13
315202-0103 ..	O-RING 5,1X1,6 MM	10-23, 10-29
90600-0980	OPERATOR PANEL 15"+, 2711P-T15C4D2-TP	7-11
3023540-0100 .	OUT FEED	1-95
2960730-0000 .	OUTER COVER	11-45
2960731-0000 .	OUTER COVER	11-45
90459-5320	OVERLOAD PROTECTION, PKZM0-0,25	11-35, 11-37
90459-5323	OVERLOAD PROTECTION, PKZM0-1	8-15, 8-17, 8-19, 8-55, 8-57, 8-59
3023570-0100 .	PACKAGE ALIGNER	10-3
2926070-0100 .	PACKAGE TRANSFER	1-3, 1-5, 1-7, 1-9
90600-1559	PANEL FEED THROUGH, FWD5 54218	1-73, 1-93, 4-33
315705-0238 ..	PARALL KEY W. ROUND ENDS 6X6X36 MM	2-83
315705-0202 ..	PARALLEL KEY W ROUND ENDS 5X5X25MM	1-55
315705-0164 ..	PARALLEL KEY W. ROUND ENDS 4X4X8 MM	2-29
315705-0198 ..	PARALLEL KEY W. ROUND ENDS 5X5X14 MM	1-77, 1-97, 11-21
315701-0201 ..	PARALLEL KEY W. ROUND ENDS 5X5X20 MM	2-83
315705-0201 ..	PARALLEL KEY W. ROUND ENDS 5X5X20 MM	1-67, 2-73
315701-0232 ..	PARALLEL KEY W. ROUND ENDS 6X6X20 MM	11-59, 11-75, 11-79
315705-0236 ..	PARALLEL KEY W. ROUND ENDS 6X6X30 MM	1-53
315705-0239 ..	PARALLEL KEY W. ROUND ENDS 6X6X40 MM	1-53, 1-67, 1-77, 1-97
315705-0267 ..	PARALLEL KEY W. ROUND ENDS 8X7X30 MM	1-53, 1-85
315705-0270 ..	PARALLEL KEY W. ROUND ENDS 8X7X40 MM	1-77, 1-105, 11-59
315705-0272 ..	PARALLEL KEY W. ROUND ENDS 8X7X50 MM	1-97
315705-0277 ..	PARALLEL KEY W. ROUND ENDS 8X7X80 MM	2-31, 2-33
315705-0196 ..	PARALLEL KEY W.ROUND ENDS 5X5X10	11-21
311103-0454 ..	PARALLEL PIN ISO 2338 10M6X20 A1	1-73, 2-13, 2-39, 2-57
311102-0237 ..	PARALLEL PIN ISO 2338 3M6X18 ST	2-21
311103-0271 ..	PARALLEL PIN ISO 2338 4M6X18 A1	10-27
311103-0306 ..	PARALLEL PIN ISO 2338 5M6X12 A1	2-35, 2-39, 2-57, 2-69, 2-71, 2-83
311103-0310 ..	PARALLEL PIN ISO 2338 5M6X20 A1	10-31
311103-0351 ..	PARALLEL PIN ISO 2338 6M6X16 A1	1-53, 2-15
311103-0353 ..	PARALLEL PIN ISO 2338 6M6X20 A1	2-19, 2-43
311103-0359 ..	PARALLEL PIN ISO 2338 6M6X35 A1	1-85
311103-0361 ..	PARALLEL PIN ISO 2338 6M6X40 A1	1-77
315705-0166 ..	PARAPARALLEL KEY W. ROUND ENDS 4X4X12 MM	2-29, 11-59, 11-79
353033-0105 ..	PARTITITION, 10501.0	8-25, 8-27, 8-29, 8-31
2957752-0000 .	PHOTOCELL BRACKET	1-103
2992491-0000 .	PHOTOCELL BRACKET	1-83
3023552-0000 .	PHOTOCELL BRACKET	1-97
90459-7273	PHOTOCELL E3Z-T81C-G0SR D-CN	1-57, 1-77, 1-83, 1-87, 1-97, 1-99, 1-103, 10-5, 11-5

Part No	Description	Page No
	.....	11-89, 11-133
90459-7274	PHOTOCELL E3Z-T81C-G0SR 1-59,	1-77, 1-83, 1-87, 1-97, 1-99, 1-103, 10-5, 11-5, 11-83, 11-133
2909952-0100 .	PHOTOCELL UNIT	10-3
2918410-0200 .	PHOTOCELL UNIT	11-81
2943553-0100 .	PHOTOCELL UNIT	11-3
3013643-0100 .	PHOTOCELL UNIT	1-55
3013644-0100 .	PHOTOCELL UNIT	1-55
3073660-0100 .	PHOTOCELL UNIT	11-129
988685-0000 ..	PIN	5-33, 7-11
1035793-0000 .	PIN	8-73, 8-75, 8-77
1036329-0000 .	PIN	11-103
3013393-0000 .	PIN	10-23, 10-29
3023530-0000 .	PIN	1-97
3023553-0000 .	PIN	1-97
2845855-0000 .	PIPE	1-15, 1-27
2845856-0000 .	PIPE	1-15, 1-27
2845857-0000 .	PIPE	1-15, 1-27
2845862-0000 .	PIPE	1-15, 1-27
2935827-0000 .	PIPE	2-23, 5-9
2936706-0000 .	PIPE	11-63
2936707-0000 .	PIPE	11-63
2987431-0000 .	PIPE	2-79, 2-81
3003456-0000 .	PIPE	1-27
3003457-0000 .	PIPE	1-15
3003458-0000 .	PIPE	1-15
3003461-0000 .	PIPE	1-27
3003462-0000 .	PIPE	1-27
3013615-0000 .	PIPE	2-79, 2-81
3014096-0000 .	PIPE	11-63
90165-0003	PIPE CLIP FOR TUBE D=4 MM	11-109
90458-0721	PIPE CLIP FOR TUBE D=8 MMSZ 2367080	8-69, 8-71
2848829-0000 .	PIVOT AXLE	2-65
2970401-0000 .	PLASTIC COVER	11-21
90458-0693	PLASTIC FOOT 30 MM, NO 856.211.95	10-11, 10-13
90181-0088	PLASTIC RIVET, PR 52314	8-69, 8-71, 11-109
2693488-0000 .	PLATE	8-73, 8-75
2751399-0000 .	PLATE	11-49
2751401-0000 .	PLATE	11-49
2789990-0000 .	PLATE	11-45
2829402-0000 .	PLATE	1-55
2858603-0000 .	PLATE	4-9, 4-25
2870316-0000 .	PLATE	8-67
2876310-0000 .	PLATE	11-59
2885390-0000 .	PLATE	4-9, 4-25
2904941-0000 .	PLATE	5-13, 5-17
2904942-0000 .	PLATE	5-19
2915045-0000 .	PLATE	11-91
2923319-0000 .	PLATE	10-11
2923329-0000 .	PLATE	10-13
2926061-0000 .	PLATE	1-89
2946137-0000 .	PLATE	10-15
2946138-0000 .	PLATE	10-15
2946722-0000 .	PLATE	10-15, 10-19
2946730-0000 .	PLATE	2-13
2959850-0000 .	PLATE	10-15
2960738-0000 .	PLATE	11-19
2966829-0000 .	PLATE	11-19
2966830-0000 .	PLATE	11-19
2966836-0000 .	PLATE	11-45
2999220-0000 .	PLATE	1-67
3008058-0000 .	PLATE	1-53
3013396-0000 .	PLATE	10-23
3022572-0000 .	PLATE	1-73
3025785-0000 .	PLATE	2-57
3025786-0000 .	PLATE	2-57
3025795-0000 .	PLATE	1-71
3041928-0000 .	PLATE	11-77
3041929-0000 .	PLATE	11-75
3041930-0000 .	PLATE	11-75
90459-6553	PLC DSI /MODBUS COMMUN. MOD., 1769-SM2/A	8-15, 8-17, 8-19, 8-55, 8-57, 8-59
90459-2491	PLC RIGHT END CAP/TERMINATOR, 1769-ECR	8-15, 8-17, 8-19, 8-55, 8-57, 8-59
90031-0068	PLC, POWER SUPPLY	8-15, 8-17, 8-19, 8-55, 8-57, 8-59
90458-2837	PLUG SOCKET, KMEB-1-24-5-LED	8-21, 8-61, 11-89, 11-115
90459-7245	PLUG, BLIND, PLASTIC GPN300F11	2-29
90458-0498	PLUG, BLIND, PLASTIC PLUG B24, 5/17	10-13
342713-0210 ..	PLUG, EXT THREAD HEX SOCKET	6-5
90600-1167	PLUG, EXT. R-THREAD, R1/4	11-89
90326-0020	PLUG, FEMALE YELLOW CR-AL	11-35, 11-37
2957745-0000 .	PNEUMATIC DIAGRAM	6-5
3039844-0000 .	PNEUMATIC DIAGRAM	6-5
2904907-0100 .	PNEUMATIC UNIT	11-87
2946729-0000 .	POINTER	2-65
3057744-0100 .	POSITION TEMPLATE	10-21

Part No	Description	Page No
3079346-0000	.POSITION TEMPLATE	10-31
3079347-0000	.POSITION TEMPLATE	10-31
2910474-0000	.POST	2-17, 2-41, 11-13
90459-3845	.... POWER SOCKET, Z-SD230	8-15, 8-17, 8-19
90600-1347	.... POWER SUPPLY 120/240 VAC, 1768-PA3/A	8-15, 8-17, 8-19, 8-55, 8-57, 8-59
90459-4807	.... POWER SUPPLY UNIT 100-240 VAC/24VDC2,5A	11-35, 11-37, 11-105, 11-107
90459-2569	.... POWER SUPPLY UNIT 100-240VAC/5VDC 5A	11-105, 11-107
90459-4245	.... POWER SUPPLY UNIT 230VAC/24VDC 3,75A	8-15, 8-17, 8-19, 8-55, 8-57, 8-59
90439-0155	.... PRECISION NOZZLE SATURN 322012	3-11, 3-13
3013387-0100	.PRESSURE ARM	2-11
3013886-0100	.PRESSURE ARM	2-37
3025778-0100	.PRESSURE ARM	11-7
2946141-0000	.PRESSURE PLATE	10-15
90458-2730	.... PRESSURE SENS. SDE1-D10-G2-R18-C-P1-M8	6-5
2948250-0200	.PRESSURE UNIT	2-25, 2-27
90600-9746	.... PROCESSOR L43, SERIES B, 1768-L43/B	8-15, 8-17, 8-19, 8-55, 8-57, 8-59
2923007-0000	.PROFILE	10-13
2923333-0000	.PROFILE	10-11
2923334-0000	.PROFILE	10-11
2923335-0000	.PROFILE	10-13
2923336-0000	.PROFILE	10-13
2923338-0000	.PROFILE	10-13
2923339-0000	.PROFILE	10-13
2923341-0000	.PROFILE	10-13
2923345-0000	.PROFILE	10-11
2946738-0000	.PROFILE	10-11
2946739-0000	.PROFILE	10-11
2946740-0000	.PROFILE	10-13
2958719-0000	.PROFILE	10-13
2752890-0000	.PROFILE 50X100	4-9
2752891-0000	.PROFILE 50X100	4-25
2752893-0000	.PROFILE 50X100	4-9, 4-25
2752895-0000	.PROFILE 50X100	4-9, 4-25
2752896-0000	.PROFILE 50X100	4-9, 4-25
2752901-0000	.PROFILE 50X100	4-9, 4-25
2752902-0000	.PROFILE 50X100	4-9, 4-25
2818263-0000	.PROFILE 50X100	4-9, 4-25
2833867-0000	.PROFILE 50X100	4-9
2893441-0000	.PROFILE 50X100	4-9
2933962-0000	.PROFILE 50X100	1-79
2948194-0000	.PROFILE 50X100	4-31
2957757-0000	.PROFILE 50X100	4-25
3023587-0000	.PROFILE 50X100	4-29
3023589-0000	.PROFILE 50X100	4-25
3023611-0000	.PROFILE 50X100	1-99
3039849-0000	.PROFILE 50X100	4-9
2752867-0000	.PROFILE 50X50	4-9, 4-25
2752868-0000	.PROFILE 50X50	4-9, 4-25
2752869-0000	.PROFILE 50X50	4-9, 4-25
2752903-0000	.PROFILE 50X50	4-9, 4-25
2752904-0000	.PROFILE 50X50	4-9, 4-25
2833872-0000	.PROFILE 50X50	4-9, 4-25
2833873-0000	.PROFILE 50X50	4-9, 4-25
2833876-0000	.PROFILE 50X50	4-9
2839812-0000	.PROFILE 50X50	4-9, 4-25
2856565-0000	.PROFILE 50X50	2-23
2948192-0000	.PROFILE 50X50	4-31
2948193-0000	.PROFILE 50X50	4-31
2948196-0000	.PROFILE 50X50	4-31
2948198-0000	.PROFILE 50X50	4-31
90459-4891	.... PROGR. IDENTIFIER ID-FIX RW, 20-070-21	8-15, 8-17, 8-19, 8-55, 8-57, 8-59
90459-2265	.... PROHIBITION SIGN ISO, DO NOT WASH	3-15, 3-17, 11-85
90459-7584	.... PROHOBITION SIGN ISO, DO NOT REACH IN	5-13, 5-17, 5-19, 5-25, 5-27, 5-29, 5-31
2876307-0000	.PROTECTION	11-59
2957772-0000	.PROTECTION	1-83
3023623-0000	.PROTECTION	1-103
3041933-0000	.PROTECTION	11-75
3041934-0000	.PROTECTION	11-75
3042370-0000	.PROTECTION	11-35, 11-37
3042371-0000	.PROTECTION	11-35, 11-37
2840889-0000	.PROTECTION PLATE	5-35
2904939-0000	.PROTECTION PLATE	5-13, 5-17, 5-19
2926031-0000	.PROTECTION PLATE	5-21
2926032-0000	.PROTECTION PLATE	5-23
2934023-0000	.PROTECTION PLATE	5-25, 5-27
2934025-0000	.PROTECTION PLATE	5-29, 5-31
2948162-0000	.PROTECTION PLATE	1-79
2957773-0000	.PROTECTION PLATE	1-83
2992437-0000	.PROTECTION PLATE	5-23
2992438-0000	.PROTECTION PLATE	5-25, 5-27
2992439-0000	.PROTECTION PLATE	5-25, 5-27
2992469-0000	.PROTECTION PLATE	1-79
3012790-0000	.PROTECTION PLATE	1-73
3012792-0000	.PROTECTION PLATE	1-73

Part No	Description	Page No
3012793-0000	.PROTECTION PLATE	1-73
3022571-0000	.PROTECTION PLATE	1-73
3039846-0000	.PROTECTION PLATE	5-37
2957704-0000	.PROTECTIVE CASING	1-83
2982599-0000	.PROTECTIVE CASING	1-87
2992499-0000	.PROTECTIVE CASING	2-69, 2-71
3023542-0000	.PROTECTIVE CASING	1-83
2839821-0000	.PROTECTIVE COVER	5-9
2840893-0000	.PROTECTIVE COVER	5-11
2859680-0000	.PROTECTIVE COVER	7-5
3034238-0000	.PROTECTIVE COVER	8-67
3034239-0000	.PROTECTIVE COVER	8-67
90459-2392	.... PROX.SENSOR SMT-C1-PS-24V-K0,3-M8-SA	1-73
90459-4177	.... PROX.SWITCH E2A-M12KN08-M1-B1	11-131
2829491-0000	.PULLEY	2-53
2864774-0000	.PULLEY	2-53
2867565-0000	.PULLEY	1-65
2926059-0000	.PULLEY	1-87
2933971-0000	.PULLEY	1-87
2933972-0000	.PULLEY	1-87
2934013-0000	.PULLEY	1-77
2934027-0000	.PULLEY	1-87
2941712-0000	.PULLEY	1-67
2948241-0000	.PULLEY	1-97
2982636-0000	.PULLEY	1-103, 1-105
3013633-0000	.PULLEY	2-83
3025807-0000	.PULLEY	2-73
3060321-0000	.PULLEY	1-97
90064-0082	.... PUSH BUTTON, WHITE	7-11, 11-33, 11-103
350006-0001	.. PUSH-IN FITTING QS-F-6H-4	6-5
350006-0003	.. PUSH-IN FITTING QS-F-8H-6	3-15, 3-17
350001-0016	.. PUSH-IN FITTING QS-F-G1/2-12	6-7
350001-0011	.. PUSH-IN FITTING QS-F-G1/4-12	6-5, 11-89
350008-0006	.. PUSH-IN FITTING QSF-F-G1/4-8	3-15, 3-17
350008-0005	.. PUSH-IN FITTING QSF-F-G1/8-8	11-89
350004-0005	.. PUSH-IN L-FITTING QSL-F-12	6-5
350002-0011	.. PUSH-IN L-FITTING QSL-F-G1/4-12	3-15, 3-17, 6-5
350002-0008	.. PUSH-IN L-FITTING QSL-F-G1/4-6	6-5
350002-0009	.. PUSH-IN L-FITTING QSL-F-G1/4-8	6-5
350002-0006	.. PUSH-IN L-FITTING QSL-F-G1/8-6	1-89, 4-29
3025775-0200	.QUICK CHANGE	11-3
2845859-0000	.RACK GEAR	1-55
90091-0303	.... RADIAL SEAL 20X35X7 MM DUST LIP	1-65
90091-0322	.... RADIAL SEAL 25X42X7 MM DUST LIP	2-13, 2-39
90091-0148	.... RADIAL SEAL 25X47X7 MM DUST LIP	2-83
3012794-0000	.RAIL	4-9
1550743-0200	.RAIL HOLDER	1-15, 11-63
2699437-0000	.RAIL HOLDER	1-17, 11-65, 11-67
2978811-0100	.RAIL HOLDER	11-63
2998006-0000	.RAIL HOLDER	1-29
2999197-0100	.RAIL HOLDER	1-27
3003437-0200	.RAIL HOLDER	1-15
3003439-0200	.RAIL HOLDER	1-15
3003441-0200	.RAIL HOLDER	1-15
3003446-0200	.RAIL HOLDER	1-27
3003450-0200	.RAIL HOLDER	1-15
3013603-0200	.RAIL HOLDER	1-27
3013608-0200	.RAIL HOLDER	1-27
3013610-0200	.RAIL HOLDER	1-27
3025773-0200	.RAIL HOLDER	1-27
3060158-0000	.RAIL HOLDER	11-71
3060159-0000	.RAIL HOLDER	11-69, 11-89
3060161-0100	.RAIL HOLDER	11-63
3060162-0100	.RAIL HOLDER	11-63
3060164-0100	.RAIL HOLDER	11-63
353042-0004	.. RAIL TS 35/7,5	8-69, 8-71, 11-35, 11-37, 11-39, 11-109
90077-0328	.... RAIL TS15/5	7-5
2994544-0000	.RAILING	11-63
3004369-0000	.RAILING	11-63
3004370-0000	.RAILING	11-63
3041932-0000	.RAILING	11-63
2904908-0200	.RAILING KIT	11-55
90459-5949	.... REAR CLEVIS FOOT MOUNTING , CRLBN-32	1-73, 4-29
90459-3668	.... REDUCER M20/M16	1-77
2960735-0000	.REEL HOLDER	11-21
663507-0200	.. REGULAR ACCESSORIES	11-53
90459-2242	.... REGULATOR, MS4-LRB-1/4-D7-AS	6-5
2901718-0100	.RELAY	8-7, 8-53
2901719-0100	.RELAY	8-7, 8-53
2901720-0100	.RELAY	8-7, 8-53
3034241-0100	.RELAY	8-7, 8-53
3034242-0100	.RELAY	8-7, 8-53
3042373-0000	.RELAY	11-35, 11-37
90119-0108	.... RELAY OMRON G2R-2-SNI-24DC	8-23, 8-41, 8-43, 8-45, 8-49, 8-51, 11-35, 11-37, 11-105, 11-107

Part No	Description	Page No
90600-4896	RESERVE MOD., 1769-ARM/A	8-15, 8-17, 8-19, 8-55, 8-57, 8-59
90459-5811	RESIDUAL CURRENT DEVICE, FI-25/2/003-A	8-15, 8-17, 8-19
90459-1297	RESISTANCE FIXED, 120 OHM, 0,25 W	8-15, 8-17, 8-19, 8-55, 8-57, 8-59
3003527-0000 .	RETAINING RING	11-79
3003832-0000 .	RETAINING RING	11-79
3012787-0000 .	RETAINING RING	2-65
315741-0112 ..	RETAINING RING DIN 705 A2 16	1-73, 2-65, 11-21
315741-0116 ..	RETAINING RING DIN 705 A2 20	4-29
90458-2071	RETAINING RING FOR BORE DIN 472 24 A2	11-79
315753-0119 ..	RETAINING RING FOR BORE DIN 472 25 A2	2-75
315753-0121 ..	RETAINING RING FOR BORE DIN 472 28 A2	2-29
315753-0124 ..	RETAINING RING FOR BORE DIN 472 35 A2	1-65, 1-87, 1-101, 1-103, 1-105, 2-13, 2-39
315752-0124 ..	RETAINING RING FOR BORE DIN 472 35 ST	2-77
315753-0127 ..	RETAINING RING FOR BORE DIN 472 40 A2	1-89
90141-0020	RETAINING RING FOR BORE DIN 472 42 A2	1-97, 2-13, 2-39
315753-0130 ..	RETAINING RING FOR BORE DIN 472 47 A2	1-77, 1-85, 2-83
315753-0132 ..	RETAINING RING FOR BORE DIN 472 52 A2	2-75
315753-0133 ..	RETAINING RING FOR BORE DIN 472 55 A2	2-73
90141-0016	RETAINING RING FOR SHAFT DIN 471 10 SS	2-23, 5-9, 11-21
315751-0109 ..	RETAINING RING FOR SHAFT DIN 471 12 SS	2-29
315751-0111 ..	RETAINING RING FOR SHAFT DIN 471 14 SS	1-55, 1-67, 11-21
315751-0112 ..	RETAINING RING FOR SHAFT DIN 471 15 SS	1-65, 1-87, 1-101, 1-103, 1-105, 2-13, 2-39
315751-0113 ..	RETAINING RING FOR SHAFT DIN 471 16 SS	1-53, 1-73
315751-0116 ..	RETAINING RING FOR SHAFT DIN 471 20 SS	1-53, 1-67, 1-97
315751-0119 ..	RETAINING RING FOR SHAFT DIN 471 25 SS	1-77, 1-105, 2-53, 2-83
315751-0122 ..	RETAINING RING FOR SHAFT DIN 471 30 SS	2-73
315751-0127 ..	RETAINING RING FOR SHAFT DIN 471 40 SS	1-53
90141-0015	RETAINING RING FOR SHAFT DIN 471 8 SS	10-15
315750-0109 ..	RETAINING RING SHAFT DIN 471 ST 12	11-23, 11-25, 11-27
315750-0112 ..	RETAINING RING SHAFT DIN 471 ST 15	11-21
315755-0105 ..	RETAINING RING SHAFT DIN 6799 3,2 A2	7-5, 11-33
315755-0108 ..	RETAINING RING SHAFT DIN 6799 6 A2	10-23, 10-29
2848827-0000 .	RING	2-53
312928-0104 ..	RIVET NUT M6, CLAMP. LENGTH 0,7 - 3,0	1-49
311520-0329 ..	RIVET, BLANK 2,4X8	11-35, 11-37, 11-45
311521-0144 ..	RIVET, BLANK 3,2X10	4-9, 4-25
311521-0142 ..	RIVET, BLANK 3,2X6	8-67, 11-59
311521-0143 ..	RIVET, BLANK 3,2X8	8-67, 11-101
2952612-0000 .	ROCKER ARM	2-39
2960746-0000 .	ROD	11-21
90115-0134	ROD END, ID=10 MM, M10X1,25	1-73, 1-89, 4-29
2643052-0000 .	ROLL	11-23, 11-25, 11-27
318212-0112 ..	ROLLER CHAIN, SINGLE 1/2 -112,SS	11-21
2960755-0100 .	ROLLER UNIT	11-17
2860891-0000 .	RUBBER GASKET	7-5
2957711-0000 .	RULING GUIDE	1-83
3023592-0000 .	RULING GUIDE	10-7
3060322-0000 .	RULING GUIDE	1-99
3060323-0000 .	RULING GUIDE	1-99
2933948-0000 .	RUNNER ROD	1-89
90600-2045	SAFETY PLC, PLUTO B46-6 20-070-15	8-15, 8-17, 8-19, 8-55, 8-57, 8-59
90459-4165	SAFETY SCREW, 20-053-43 SM4X25	5-33, 7-11
90459-4089	SAFETY SENSOR NON-CONTACT EVA E	5-33
90459-6961	SAFETY SENSOR, NON CONT. ADAM-E M12 0,5M	7-11
90459-2291	SAFETY TIME RELAY, E1T-0.5S-24VDC	8-15, 8-17, 8-19, 8-55, 8-57, 8-59
90601-1126	SAFETY VALVE, MS6-SV-1/2-D-10V24-AG	6-5
90600-0547	SATURN IN-LINE FILTER JACKET, #1056296	3-9, 3-11, 3-13
90458-2779	SCALE , 0-1000MM ADHESIVE	1-53, 1-55, 2-67, 10-23, 10-29
90458-2780	SCALE ,1000-0 MM ADHESIVE	2-19
2859418-0000 .	SCALE POINTER	1-55
2893443-0000 .	SCALE POINTER	2-67
2904848-0000 .	SCALE POINTER	2-67
3025820-0000 .	SCALE POINTER	1-73
90600-3713	SCALE, 90600-3713	2-65
90600-4444	SCHOCK ABSORBER, MC 225 MH2+PP 225+KM20X	1-73
90220-0183	SCR. CABLE 2X0,34MM2	8-15, 8-17, 8-19, 8-55, 8-57, 8-59
90220-0104	SCR. CABLE 4X1,5MM2	8-21
90287-0205	SCREW	7-5, 11-33
1129767-0000 .	SCREW	5-33
2812586-0000 .	SCREW	11-45
2845550-0000 .	SCREW	11-61
3013399-0000 .	SCREW	2-17, 2-41, 11-13
312155-0226 ..	SCREW DIN 7991 MF6S M3X12 A4 70	1-83
312155-0289 ..	SCREW DIN 7991 MF6S M4X10 A4 70	2-19
312155-0291 ..	SCREW DIN 7991 MF6S M4X12 A4 70	1-27, 7-7, 7-9, 8-63
312155-0287 ..	SCREW DIN 7991 MF6S M4X8 A4 70	10-13
312155-0325 ..	SCREW DIN 7991 MF6S M5X10 A4 70	2-35
312155-0329 ..	SCREW DIN 7991 MF6S M5X16 A4 70	1-27, 1-85, 4-9, 11-21
312155-0333 ..	SCREW DIN 7991 MF6S M5X25 A4 70	1-79
312155-0339 ..	SCREW DIN 7991 MF6S M5X40 A4 70	2-19
312155-0323 ..	SCREW DIN 7991 MF6S M5X8 A4 70	1-99
312155-0364 ..	SCREW DIN 7991 MF6S M6X10 A4 70	1-49, 2-21
312155-0366 ..	SCREW DIN 7991 MF6S M6X12 A4 70	1-77
312155-0368 ..	SCREW DIN 7991 MF6S M6X16 A4 70	1-27, 4-9, 10-13, 10-15

Part No	Description	Page No
312155-0370 ..	SCREW DIN 7991 MF6S M6X20 A4 70	1-83, 1-87, 1-101, 4-25, 5-33, 11-21
312155-0372 ..	SCREW DIN 7991 MF6S M6X25 A4 70	1-79, 1-99, 4-29, 11-21
312155-0376 ..	SCREW DIN 7991 MF6S M6X35 A4 70	11-127
312155-0378 ..	SCREW DIN 7991 MF6S M6X40 A4 70	5-9, 5-11, 5-21, 5-23, 5-35, 5-37, 8-65, 11-33
312155-0382 ..	SCREW DIN 7991 MF6S M6X60 A4 70	11-45
312155-0449 ..	SCREW DIN 7991 MF6S M8X16 A4 70	11-75
312155-0455 ..	SCREW DIN 7991 MF6S M8X30 A4 70	2-67, 11-61
312155-0461 ..	SCREW DIN 7991 MF6S M8X50A4 70	4-29
312303-0380 ..	SCREW DIN 938 PS M6X35 A4 80	11-29
312105-0153 ..	SCREW EN 10642 MF6S M5X25 A480	1-21
312108-0325 ..	SCREW EN 1665 TYPE F M5X10 A270	1-79, 1-83, 1-97, 1-103
312108-0327 ..	SCREW EN 1665 TYPE F M5X12 A270	1-99
312108-0364 ..	SCREW EN 1665 TYPE F M6X10 A270	1-83, 2-69, 2-71, 5-25, 5-27, 5-29, 5-31
312108-0366 ..	SCREW EN 1665 TYPE F M6X12 A270	1-77, 1-87, 1-103
312108-0368 ..	SCREW EN 1665 TYPE F M6X16 A270	1-87, 1-99, 2-31, 2-33
312108-0370 ..	SCREW EN 1665 TYPE F M6X20 A270	10-17
312108-0372 ..	SCREW EN 1665 TYPE F M6X25 A270	1-77, 1-79, 1-81, 1-99
312108-0376 ..	SCREW EN 1665 TYPE F M6X35 A270	2-45
312108-0378 ..	SCREW EN 1665 TYPE F M6X40 A270	4-29
312108-0449 ..	SCREW EN 1665 TYPE F M8X16 A270	2-31, 2-33
312108-0451 ..	SCREW EN 1665 TYPE F M8X20 A270	1-77, 1-97, 4-17, 4-25, 5-29, 5-31
312108-0453 ..	SCREW EN 1665 TYPE F M8X25 A270	4-25
312108-0455 ..	SCREW EN 1665 TYPE F M8X30 A270	10-17
312108-0457 ..	SCREW EN 1665 TYPE F M8X35 A270	2-45
312108-0461 ..	SCREW EN 1665 TYPE F M8X50 A270	2-45
312108-0463 ..	SCREW EN 1665 TYPE F M8X60 A270	5-25, 5-27
312111-0372 ..	SCREW HEX.SOCK.HD.MC6S-TT 6X25 88 FZB	4-21
312111-0463 ..	SCREW HEX.SOCK.HD.MC6S-TT 8X60 88 FZB	2-79, 2-81
2933986-0000 ..	SCREW HOLDER	1-81
312121-0226 ..	SCREW ISO 1207 M3X12 4.8-5.8 Z.PL.	11-83, 11-89
312125-0226 ..	SCREW ISO 1207 M3X12 A4	1-77, 1-97, 1-99, 1-103
312125-0228 ..	SCREW ISO 1207 M3X16 A4	2-39
312125-0230 ..	SCREW ISO 1207 M3X20 A4	1-57, 1-59, 1-89, 2-13, 2-69, 2-71, 2-79, 2-81
312125-0232 ..	SCREW ISO 1207 M3X25 A4	1-87
312121-0289 ..	SCREW ISO 1207 M4X10 4.8-5.8 Z.PL.	8-69, 8-71, 11-49
312125-0289 ..	SCREW ISO 1207 M4X10 A4	1-83, 2-29
312121-0291 ..	SCREW ISO 1207 M4X12 4.8-5.8 Z.PL.	8-69, 8-71
312125-0299 ..	SCREW ISO 1207 M4X30 A4	11-35, 11-37
312125-0285 ..	SCREW ISO 1207 M4X6 A4	8-69, 8-71, 11-59
312125-0287 ..	SCREW ISO 1207 M4X8 A4	1-55, 1-83, 1-89, 1-97, 1-103, 1-105, 2-13, 2-39, 2-69, 2-71, 8-37, 11-45
312121-0327 ..	SCREW ISO 1207 M5X12 4.8-5.8 Z.PL.	8-69, 8-71
312125-0366 ..	SCREW ISO 1207 M6X12 A4	4-35
312125-0449 ..	SCREW ISO 1207 M8X16 A4	8-69, 8-71
312145-0325 ..	SCREW ISO 2009 MFS M5X10 A4	1-79, 1-99, 2-23, 4-9, 4-25, 4-31
312311-0370 ..	SCREW ISO4028 M6X20 FZB	1-97, 1-105
312311-0455 ..	SCREW ISO4028 M8X30 FZB	1-77
312318-0283 ..	SCREW ISO4029 M4X4 A4	1-55, 11-79
312318-0284 ..	SCREW ISO4029 M4X5 A4	2-29
312318-0321 ..	SCREW ISO4029 M5X6 A4	11-35, 11-37
312318-0323 ..	SCREW ISO4029 M5X8 A4	11-75
312318-0364 ..	SCREW ISO4029 M6X10 A4	2-79, 2-81
312318-0368 ..	SCREW ISO4029 M6X16 A4	11-59
312318-0372 ..	SCREW ISO4029 M6X25 A4	4-9
312318-0360 ..	SCREW ISO4029 M6X6 A4	2-65
312318-0362 ..	SCREW ISO4029 M6X8 A4	1-55, 1-73, 11-59, 11-75, 11-79
312318-0453 ..	SCREW ISO4029 M8X25 A4	1-85
312115-0493 ..	SCREW ISO4762 M10X25 A4 80	10-11, 10-13
312115-0501 ..	SCREW ISO4762 M10X50 A4 80	1-83, 1-105, 2-65
312115-0509 ..	SCREW ISO4762 M10X90 A4 80	2-75
312115-0542 ..	SCREW ISO4762 M12X50 A4 80	1-53
312115-0230 ..	SCREW ISO4762 M3X20 A4 80	2-31, 2-33, 4-31
312115-0220 ..	SCREW ISO4762 M3X6 A4 80	1-67
312115-0222 ..	SCREW ISO4762 M3X8 A4 80	1-77, 1-97
312115-0289 ..	SCREW ISO4762 M4X10 A4 80	11-49
312115-0293 ..	SCREW ISO4762 M4X16 A4 80	11-63
312115-0287 ..	SCREW ISO4762 M4X8 A4 80	11-127
312115-0325 ..	SCREW ISO4762 M5X10 A4 80	8-67
312115-0329 ..	SCREW ISO4762 M5X16 A4 80	1-31, 1-67, 2-15, 4-37, 8-73, 8-75, 8-77, 11-51, 11-125
312115-0331 ..	SCREW ISO4762 M5X20 A4 80	11-127
312115-0333 ..	SCREW ISO4762 M5X25 A4 80	2-39
312115-0341 ..	SCREW ISO4762 M5X50 A4 80	2-53
312115-0323 ..	SCREW ISO4762 M5X8 A4 80	1-73, 11-79
312115-0364 ..	SCREW ISO4762 M6X10 A4 80	1-67, 2-57, 11-11
312115-0366 ..	SCREW ISO4762 M6X12 A4 80	7-11, 8-73, 8-75, 8-77, 11-89
312115-0368 ..	SCREW ISO4762 M6X16 A4 80	1-53, 1-73, 2-53, 5-33, 7-11, 10-23, 11-103
312115-0370 ..	SCREW ISO4762 M6X20 A4 80	1-83, 1-97, 2-15, 2-17, 2-29, 2-41, 2-43, 4-29, 7-5, 11-13, 11-33, 11-45
312115-0372 ..	SCREW ISO4762 M6X25 A4 80	1-85, 1-105, 2-17, 2-41, 2-83, 11-13
312115-0374 ..	SCREW ISO4762 M6X30 A4 80	2-75
312115-0376 ..	SCREW ISO4762 M6X35 A4 80	1-59, 1-73
312115-0378 ..	SCREW ISO4762 M6X40 A4 80	1-71, 2-69, 2-71
312115-0379 ..	SCREW ISO4762 M6X45 A4 80	1-57
312115-0380 ..	SCREW ISO4762 M6X50 A4 80	1-53
312115-0382 ..	SCREW ISO4762 M6X60 A4 80	1-53
312115-0449 ..	SCREW ISO4762 M8X16 A4 80	1-73, 11-79

Part No	Description	Page No
312115-0451 ..	SCREW ISO4762 M8X20 A4 80	1-87, 2-29, 2-65, 2-83
312115-0453 ..	SCREW ISO4762 M8X25 A4 80	2-15, 2-43, 2-83
312115-0455 ..	SCREW ISO4762 M8X30 A4 80	2-65
312115-0457 ..	SCREW ISO4762 M8X35 A4 80	2-29
312115-0459 ..	SCREW ISO4762 M8X40 A4 80	2-47, 2-49, 4-13, 4-15
312115-0461 ..	SCREW ISO4762 M8X50 A4 80	2-67, 2-73
312115-0463 ..	SCREW ISO4762 M8X60 A4 80	2-19, 2-35
312180-0447 ..	SCREW ISO7379 H8X12	11-21
312105-0289 ..	SCREW M6S H4X10 A4 70 ISO4017/DIN933	4-21
312105-0544 ..	SCREW M6S ISO 4014 M12X60 A480	1-53
312105-0546 ..	SCREW M6S ISO 4014 M12X70 A480	1-53
312105-0337 ..	SCREW M6S ISO 4014 M5X35 A480	11-21
312105-0339 ..	SCREW M6S ISO 4014 M5X40 A480	2-19, 2-31, 2-33, 11-21
312105-0390 ..	SCREW M6S ISO 4014 M6X100 A480	1-79, 2-83
312105-0374 ..	SCREW M6S ISO 4014 M6X30 A480	1-85, 1-97, 1-103, 1-105, 2-57, 11-59, 11-69, 11-71, 11-73
312105-0376 ..	SCREW M6S ISO 4014 M6X35 A480	1-53, 1-55, 1-77, 1-87, 2-73, 4-9, 4-25
312105-0378 ..	SCREW M6S ISO 4014 M6X40 A480	1-19, 1-25, 1-33, 1-35, 1-37, 1-79, 1-99, 4-29, 11-59
312105-0379 ..	SCREW M6S ISO 4014 M6X45 A480	1-21, 1-31, 11-29
312105-0380 ..	SCREW M6S ISO 4014 M6X50 A480	11-59
312105-0381 ..	SCREW M6S ISO 4014 M6X55 A480	1-23, 2-31, 2-33
312105-0382 ..	SCREW M6S ISO 4014 M6X60 A480	1-39
312105-0384 ..	SCREW M6S ISO 4014 M6X70 A480	1-103, 2-77
312105-0388 ..	SCREW M6S ISO 4014 M6X90 A480	11-59
312105-0471 ..	SCREW M6S ISO 4014 M8X100 A480	1-97
312105-0459 ..	SCREW M6S ISO 4014 M8X40 A480	1-63, 1-65, 1-67, 1-85, 1-105, 2-55, 4-9, 4-25, 4-29, 4-31, 11-9, 11-77
312105-0460 ..	SCREW M6S ISO 4014 M8X45 A480	1-55, 1-77, 1-91
312105-0461 ..	SCREW M6S ISO 4014 M8X50 A480	1-89, 2-67, 10-15, 10-19
312105-0463 ..	SCREW M6S ISO 4014 M8X60 A480	1-73, 1-91, 1-101, 2-23, 2-65
312105-0465 ..	SCREW M6S ISO 4014 M8X70 A480	1-89
90287-0359	SCREW M6S ISO 4017 M10X100 A480	2-45
312105-0495 ..	SCREW M6S ISO 4017 M10X30 A480	1-89
312105-0532 ..	SCREW M6S ISO 4017 M12X20 A480	1-73, 2-65
312105-0534 ..	SCREW M6S ISO 4017 M12X25 A480	1-93, 4-33
312105-0538 ..	SCREW M6S ISO 4017 M12X35 A480	1-53
312105-0291 ..	SCREW M6S ISO 4017 M4X12 A470	2-21, 2-29, 7-5, 7-7, 7-9, 8-63, 11-21, 11-59
312105-0295 ..	SCREW M6S ISO 4017 M4X20 A470	7-7
312105-0297 ..	SCREW M6S ISO 4017 M4X25 A470	11-89
312105-0299 ..	SCREW M6S ISO 4017 M4X30 A470	2-79, 2-81
312105-0285 ..	SCREW M6S ISO 4017 M4X6 A470	4-9
312105-0287 ..	SCREW M6S ISO 4017 M4X8 A470	2-57
312105-0325 ..	SCREW M6S ISO 4017 M5X10 A480	2-19, 4-9, 11-19, 11-45, 11-79
312105-0327 ..	SCREW M6S ISO 4017 M5X12 A480	1-73, 2-29, 2-31, 2-33, 2-35, 2-53, 2-69, 2-71
312105-0329 ..	SCREW M6S ISO 4017 M5X16 A480	4-41, 6-5, 11-19, 11-49
312105-0331 ..	SCREW M6S ISO 4017 M5X20 A480	11-49, 11-69, 11-71
312105-0333 ..	SCREW M6S ISO 4017 M5X25 A480	4-29, 11-29
312105-0323 ..	SCREW M6S ISO 4017 M5X8 A480	11-29
312105-0364 ..	SCREW M6S ISO 4017 M6X10 A480	2-65, 2-67, 4-9, 5-9, 5-15, 10-35, 11-75, 11-83
312105-0366 ..	SCREW M6S ISO 4017 M6X12 A480	1-17, 1-53, 1-55, 1-63, 1-73, 1-103, 4-29, 4-39, 5-13, 5-17, 5-19, 8-67, 10-5, 10-11, 10-13, 10-23, 10-29, 11-5, 11-45, 11-59, 11-63, 11-65, 11-67, 11-95, 11-133
312105-0367 ..	SCREW M6S ISO 4017 M6X14 A480	2-23
312105-0368 ..	SCREW M6S ISO 4017 M6X16 A480	1-29, 1-53, 1-77, 1-97, 1-105, 2-69, 2-71, 3-15, 3-17, 4-29, 5-9, 5-11, 5-13, 5-17, 5-19, 5-21, 5-23, 5-35, 5-37, 6-5, 6-7, 7-11, 10-23, 10-29, 11-19, 11-131
312105-0370 ..	SCREW M6S ISO 4017 M6X20 A480	1-17, 1-31, 1-53, 1-55, 1-67, 1-77, 1-99, 1-103, 2-39, 2-47, 2-49, 4-9, 4-13, 4-15, 4-21, 4-25, 4-35, 7-5, 10-23, 10-29, 11-23, 11-65, 11-67, 11-73, 11-95
312105-0372 ..	SCREW M6S ISO 4017 M6X25 A480	1-19, 1-21, 1-23, 1-25, 1-33, 1-35, 1-39, 1-53, 1-55, 1-77, 1-79, 1-83, 1-93, 1-97, 1-99, 2-13, 2-83, 4-33, 10-11, 11-59
312109-0374 ..	SCREW M6S ISO 4017 M6X30 A480	2-57
312109-0376 ..	SCREW M6S ISO 4017 M6X35 A480	1-101, 1-103, 2-29, 2-31, 2-33
312109-0382 ..	SCREW M6S ISO 4017 M6X60 A480	11-19
312105-0362 ..	SCREW M6S ISO 4017 M6X8 A480	5-21
90459-4735	SCREW M6S ISO 4017 M8X10 A480	1-41, 1-43, 1-45, 1-47, 1-49
312105-0447 ..	SCREW M6S ISO 4017 M8X12 A480	2-57, 11-11, 11-35, 11-37, 11-61, 11-77, 11-95, 11-97
312105-0449 ..	SCREW M6S ISO 4017 M8X16 A480	1-73, 4-11, 11-91, 11-97
312105-0451 ..	SCREW M6S ISO 4017 M8X20 A480	1-17, 1-25, 1-29, 1-33, 1-51, 1-85, 2-29, 2-57, 2-65, 2-67, 3-15, 3-17, 4-11, 4-29, 5-17, 11-21, 11-59, 11-65, 11-67, 11-69, 11-71, 11-73, 11-75, 11-77, 11-83
312105-0453 ..	SCREW M6S ISO 4017 M8X25 A480	1-51, 2-67, 4-29, 5-13, 5-17, 5-19, 11-77
312105-0455 ..	SCREW M6S ISO 4017 M8X30 A480	1-55, 1-67, 1-73, 1-89, 1-91, 1-105, 2-13, 2-31, 2-33, 2-39, 2-47, 2-49, 4-13, 4-15
312109-0457 ..	SCREW M6S ISO 4017 M8X35 A480	1-65
312109-0459 ..	SCREW M6S ISO 4017 M8X40 A480	2-47, 2-49, 4-13, 4-15
312109-0461 ..	SCREW M6S ISO 4017 M8X50 A480	1-79, 2-67
312109-0465 ..	SCREW M6S ISO 4017 M8X70 A480	1-99
312104-0502 ..	SCREW M6S M10X55H FZB	4-29
90287-0175	SCREW M6S M3X12 A480	10-5, 11-5, 11-133
312101-0367 ..	SCREW M6S M6X14 FZB	11-89
312101-0376 ..	SCREW M6S M6X35 FZB	2-79, 2-81
312101-0453 ..	SCREW M6S M8X25 FZB	4-11
90459-1906	SCREW, HEX.SOCK.HEAD SHOULD. M5X10	2-29
90287-0154	SCREW, SOCK.SET DOGPOINT M6X10	1-81
90091-0323	SEAL COVER 35X8 MM	1-65
90157-0041	SEALING COMPOUND, RHODORSEAL 5651	5-9, 5-21, 5-33
3088860-0100 .	SECOND DISCHARGE UNIT	11-3
90459-2536	SERCOS CABLE 0.1M, 2090-SCEP0-1	8-15, 8-17, 8-19, 8-55, 8-57, 8-59

Part No	Description	Page No
90459-2540	SERCOS CABLE 3.0M, 2090-SCEP3-0	8-15, 8-17, 8-19, 8-55, 8-57, 8-59
90600-1349	SERCOS MOTION MODULE 4-AXIS, 1768-M04SE/	8-15, 8-17, 8-19, 8-55, 8-57, 8-59
312113-0287 ..	SERRATED COMBI TORX SCREW M4X8 A2	8-69, 8-71, 11-109
312113-0323 ..	SERRATED COMBI TORX SCREW M5X8 A2	8-67, 8-69, 8-71, 11-109
312113-0366 ..	SERRATED COMBI TORX SCREW M6X12 A2	4-35, 8-69, 8-71
312113-0372 ..	SERRATED COMBI TORX SCREW M6X25 A2	4-35
312106-0318 ..	SERRATED FLANGE NUT ISO 4161 M8 A4	1-99
90439-0295	SERVICE KIT, NO. 111940	3-9
90601-5151	SERVO MOTOR MPL-B330P-SJ72AA SERIES A	2-15, 2-29, 2-43, 2-73
2984257-0000 .	SET OF SIGNS	11-121
3039848-0000 .	SET OF SIGNS	10-3
3073658-0000 .	SET OF SIGNS	11-133
3073659-0000 .	SET OF SIGNS	11-131
359011-0821 ..	SET OF SIGNS 6-FW 1-50	8-25, 8-27, 8-29, 8-31, 8-37
90459-7293	SET SCREW DIN 551M5X8 PA66	1-45, 1-47, 1-49, 11-61
3013626-0000 .	SETTING SCREW	1-69
3013627-0100 .	SETTING SCREW	1-61
2959983-0000 .	SETTING TEMPLATE	10-33
2561227-0001 .	SHAFT	11-59
2643053-0000 .	SHAFT	11-25
2797698-0000 .	SHAFT	1-65
2811518-0000 .	SHAFT	1-55
2829412-0000 .	SHAFT	1-73
2829417-0000 .	SHAFT	1-73
2829489-0000 .	SHAFT	2-57
2835365-0000 .	SHAFT	1-73
2835378-0000 .	SHAFT	1-55
2856539-0000 .	SHAFT	2-57
2864773-0000 .	SHAFT	2-55, 11-9
2916039-0000 .	SHAFT	2-29
2916063-0000 .	SHAFT	4-29
2935828-0000 .	SHAFT	5-9
2939672-0000 .	SHAFT	2-31, 2-33
2939676-0000 .	SHAFT	2-29
2939677-0000 .	SHAFT	2-29
2946142-0000 .	SHAFT	10-15
2948187-0000 .	SHAFT	1-97
2950969-0000 .	SHAFT	2-53
2960751-0000 .	SHAFT	11-21
2966822-0000 .	SHAFT	11-27
2966832-0000 .	SHAFT	11-23
2987399-0000 .	SHAFT	2-79, 2-81
2992418-0000 .	SHAFT	1-103, 1-105
2992494-0000 .	SHAFT	2-79, 2-81
2995759-0000 .	SHAFT	11-59
2995760-0000 .	SHAFT	11-79
2999221-0000 .	SHAFT	1-67
3008047-0000 .	SHAFT	1-53
3008055-0000 .	SHAFT	1-53
3009429-0000 .	SHAFT	1-53
3013635-0000 .	SHAFT	2-83
3023551-0000 .	SHAFT	1-97
3023574-0000 .	SHAFT	1-105
3023576-0000 .	SHAFT	1-105
3023593-0000 .	SHAFT	1-85
3023596-0000 .	SHAFT	1-77
3041931-0000 .	SHAFT	11-75
3088864-0000 .	SHAFT	2-23
90459-2337	SHUT OFF VALVE, MS4-EM1-1/4	6-5
484701-0000 ..	SHUTTER	11-63
2957705-0100 .	SIDE ADJUSTER	1-3, 1-5, 1-7, 1-9
1550695-0002 .	SIDE PLATE	1-41, 1-43
1550695-0003 .	SIDE PLATE	1-41, 1-43
2799922-0000 .	SIDE PLATE	1-45
2799923-0000 .	SIDE PLATE	1-45
2799924-0000 .	SIDE PLATE	1-47
2804855-0000 .	SIDE PLATE	1-47
2875167-0000 .	SIDE PLATE	11-59
2901714-0000 .	SIDE PLATE	1-49
2912684-0000 .	SIDE PLATE	11-61
2912685-0000 .	SIDE PLATE	11-61
2992506-0000 .	SIDE PLATE	1-83
2992507-0000 .	SIDE PLATE	1-83
3090945-0000 .	SIDE PLATE	1-49
1086870-0000 .	SIGN	11-57
3056162-0000 .	SIGN	8-67
3056163-0000 .	SIGN	11-101
3056164-0000 .	SIGN	11-35, 11-37
3056165-0000 .	SIGN	8-67
3056166-0000 .	SIGN	11-101
3056167-0000 .	SIGN	11-35, 11-37
486826-0001 ..	SIGN "EMERGENCY STOP"	7-11, 8-77
1021990-0000 .	SIGN 356X70MM HOUSE MARK TEXT TETRA PAK	5-33, 8-73, 8-75, 11-45
359240-0100 ..	SIGN HOLDER FOR 359240-0001	8-67, 11-35, 11-37, 11-101

Part No	Description	Page No
273458-0000 ..	SIGN, AIR	6-7
273455-0000 ..	SIGN, COLD WATER	6-7
90194-0152	SIGN, EARTH	4-9, 4-25, 7-5, 7-11, 8-65, 8-69, 8-71, 8-73, 8-75, 8-77, 11-33, 11-35, 11-37, 11-101, 11-103, 11-109
90194-0164	SIGN, FRAME/CHASSIS WITHIN CIRCLE	11-33, 11-35, 11-37
90111-0344	SIGN, PE, GREEN/YELLOW	8-69, 8-71
90194-0118	SIGN, RESIDUAL VOLTAGE, WAIT 5 MIN.	8-73, 8-75, 8-77, 11-33
359241-0803 ..	SIGN: "SUPPLY DISCONNECTING DEVICE"	8-67, 11-35, 11-37, 11-101
90601-1586	SILENCER G1"	6-5
90328-0047	SILENCER G1/8"	1-89, 4-29
90328-0029	SILENCER M5	11-89
90328-0013	SILENCER U-1/4, 2316	6-5
578196-0000 ..	SLEEVE	5-9, 5-11, 5-21, 5-23, 5-35, 5-37, 8-65, 11-33
2952616-0000 .	SLEEVE	2-39
342707-0113 ..	SLEEVE, INT. THREAD, NO. 2543-1/2	6-7
2916047-0000 .	SLIDE PLATE	1-77
3023543-0000 .	SLIDE PLATE	1-101
3025794-0100 .	SLIDE PLATE	1-61
2933963-0000 .	SLIDE RAIL	1-79
2934016-0000 .	SLIDE RAIL	1-87
2957727-0000 .	SLIDE RAIL	1-87
3023563-0000 .	SLIDE RAIL	1-85
3023616-0000 .	SLIDE RAIL	1-87
3025816-0000 .	SLIDE SHEET	1-63
90600-0429	SLIDER, WM-01-20	1-71, 2-65
1550595-4960 .	SLIDING STRIP	1-41, 1-43
1550595-9960 .	SLIDING STRIP	1-41, 1-43
2699305-0092 .	SLIDING STRIP	11-61
2699305-0292 .	SLIDING STRIP	11-61
2699305-0496 .	SLIDING STRIP	1-45, 1-47
2699305-0996 .	SLIDING STRIP	1-49, 11-61
2923347-0000 .	SLIDING STRIP	10-13
90459-5189	SLIM POW. RAIL, KINETIX, 2 AX, 2094-PRS2	8-15, 8-17, 8-19, 8-55, 8-57, 8-59
1065410-0000 .	SLOTTED PIN	4-9, 4-25, 4-31
90459-2658	SLOTTED ROUND NUT DIN 546 M6	5-33, 7-11
90459-4235	SNP TO DF1 GATEWAY, 0220 1166 01 REV B	8-15, 8-17, 8-19, 8-55, 8-57, 8-59
90601-1168	SOCKET CONNECTOR, NECA-S1G9-P9-MP3	6-5
90600-8786	SOCKET, PF113A-E	11-35, 11-37
90129-0017	SOCKET, PYF08A-E	11-35, 11-37, 11-105, 11-107
3036157-0003 .	SOFTWARE CD	9-3
3036161-0001 .	SOFTWARE CD	11-119
90600-5813	SOLENOID VALVE, CPE18-M1H-3GL-1/4	11-89
90600-0946	SOLID STATE RELAY, 3RF2050-1AA04	11-35, 11-37
570482-0000 ..	SPACER	8-37
578197-0000 ..	SPACER	5-9, 5-11, 5-21, 5-23, 5-35, 5-37, 8-65, 11-33
599753-0000 ..	SPACER	7-7, 7-9, 8-63
599760-0000 ..	SPACER	7-7
2561206-0000 .	SPACER	1-41, 1-43, 1-45, 1-47, 1-49, 11-61
2561226-0000 .	SPACER	11-59
2699436-0000 .	SPACER	1-17, 11-65, 11-67
2876306-0001 .	SPACER	11-59
2876306-0002 .	SPACER	11-59
2876311-0000 .	SPACER	11-59
2916068-0000 .	SPACER	4-29
2933843-0000 .	SPACER	11-77
2948207-0000 .	SPACER	4-29
2948208-0000 .	SPACER	4-29
2960745-0000 .	SPACER	11-21
2960749-0000 .	SPACER	11-21
3008059-0000 .	SPACER	1-53
3013613-0000 .	SPACER	1-49
3016915-0000 .	SPACER	11-109
3041927-0000 .	SPACER	11-77
2916061-0000 .	SPACER BLOCK	2-45
2926029-0000 .	SPACER BLOCK	1-77
2933956-0000 .	SPACER BLOCK	1-85
2992423-0000 .	SPACER BLOCK	1-105
3004372-0000 .	SPACER BLOCK	11-89
2957714-0000 .	SPACER ELEMENT	1-83
2982612-0000 .	SPACER ELEMENT	5-29, 5-31
3023535-0000 .	SPACER ELEMENT	1-83
3060319-0000 .	SPACER ELEMENT	5-29, 5-31
2893445-0000 .	SPACER PIECE	2-67
2948199-0000 .	SPACER PIECE	2-45
2957718-0000 .	SPACER PIN	1-83
2957729-0000 .	SPACER PIN	1-83
2992425-0000 .	SPACER PLATE	1-103
2856562-0000 .	SPACER SLEEVE	2-13
2916017-0000 .	SPACER SLEEVE	2-29
2916022-0000 .	SPACER SLEEVE	2-29
2957739-0000 .	SPACER SLEEVE	5-25, 5-27
2957742-0000 .	SPACER SLEEVE	1-97
3013620-0000 .	SPACER SLEEVE	2-83
3023528-0000 .	SPACER SLEEVE	1-97

Part No	Description	Page No
3023531-0000	.SPACER SLEEVE	1-83
3023594-0000	.SPACER SLEEVE	1-77, 1-85
2946135-0100	.SPLICING TABLE	10-9
959658-0000	.. SPRING	7-5, 11-33
2848840-0000	.SPRING BRACKET	2-21
2923353-0200	.SPRING HOLDER	2-3, 2-5, 2-7, 2-9
2923354-0000	.SPRING HOLDER	2-21
311112-0255	.. SPRING PIN, ISO 8752 4X18-C	2-65
2656676-0000	.SPROCKET	11-59
2960753-0000	.SPROCKET	11-21
2960754-0000	.SPROCKET	11-21
2929771-0200	.SQUEEZER	2-3, 2-5, 2-7, 2-9
2934000-0200	.SQUEEZER	2-3, 2-5, 2-7, 2-9
2954304-0200	.SQUEEZER	2-3, 2-5, 2-7, 2-9
556386-0000	.. STEERING	2-47, 2-49, 4-13, 4-15, 5-17, 10-17
2934021-0000	.STEERING	1-87
2992481-0000	.STEERING	1-103
3023581-0000	.STEERING	1-105
3003448-0000	.STEERING RAIL	1-27
3003451-0000	.STEERING RAIL	1-27
3023559-0000	.STEERING RAIL	1-99
3023561-0000	.STEERING RAIL	1-99
2933978-0000	.STOP LUG	1-89
663550-0300	.. STRAW DETECTOR 30	11-3
2923344-0100	.STRAW MAGAZINE	10-3
3023591-0000	.STRIP	10-7
90143-0057	.... STRIP EMKA 1011-05 21X11MM	7-5, 8-67, 11-35, 11-37, 11-101
1021991-0000	.STRIPE TETRA PAK BLUE B=70MM, ROLL L=25M	11-45
975889-0017	.. STRUT	5-33
2839818-0000	.STRUT	5-33
2858604-0000	.STRUT	8-73, 8-75, 8-77
2858605-0000	.STRUT	8-77
2859679-0000	.STRUT	8-73, 8-75
2915054-0000	.STRUT	11-91
2982617-0000	.STUD BOLT	5-29, 5-31
2904856-0000	.SUPPORT	1-79
2909945-0000	.SUPPORT	4-35
2970402-0000	.SUPPORT	11-19
3008056-0000	.SUPPORT	1-53
3013394-0000	.SUPPORT	10-23
3013904-0000	.SUPPORT	10-29
3023546-0000	.SUPPORT	1-97
3023547-0000	.SUPPORT	1-97
2737080-0300	.SUPPORT BELT	1-61
2845848-0300	.SUPPORT RAIL	1-11, 1-13
3013606-0200	.SUPPORT RAIL	1-11, 1-13
2957687-0000	.SUPPORT ROD	1-83
3023621-0000	.SUPPORT ROD	1-103
3023622-0000	.SUPPORT ROD	1-103
2992502-0000	.SUPPORT ROLLER	1-83
2992503-0000	.SUPPORT ROLLER	1-83
2992508-0000	.SUPPORT ROLLER	1-83
90600-7487	.... SURGE PROTECTION DEV., VAL-MS 230/3+1 FM	8-15, 8-17, 8-19, 8-55, 8-57, 8-59
2848846-0000	.SWITCH BRACKET	2-13
2954244-0000	.SWITCH BRACKET	2-39
2992492-0000	.SWITCH BRACKET	2-79, 2-81
2939684-0000	.TAPE	5-33
2939685-0000	.TAPE	7-11
2939686-0000	.TAPE	8-73, 8-75, 8-77
2939687-0000	.TAPE	8-67
2939688-0000	.TAPE	5-9, 5-11, 5-21, 5-23
90256-0001	.... TAPE SUPPLY HOLDER, TYPE 2000	10-15
90600-6032	.... TEMPERATURE CONTROLLER, KS50	11-35, 11-37
3013391-0100	.TEMPLATE	10-21
3013616-0000	.TEMPLATE	10-25
3013617-0100	.TEMPLATE	10-21
3013619-0100	.TEMPLATE	10-21
3013622-0000	.TEMPLATE	10-27
3013902-0100	.TEMPLATE	10-21
90458-0220	.... TENSION ROLLER, M40/60-0-M EXCENTRIC	1-83, 1-105
2727161-0300	.TERMINAL	11-35, 11-37
2872298-0100	.TERMINAL	8-7, 8-53
2872299-0100	.TERMINAL	8-7, 8-53
2872318-0100	.TERMINAL	8-7, 8-53
2872319-0100	.TERMINAL	8-7, 8-53
2872336-0100	.TERMINAL	8-7, 8-53
2872337-0200	.TERMINAL	8-7, 8-53
2884589-0100	.TERMINAL	8-7, 8-53
2884591-0100	.TERMINAL	8-7, 8-53
2884592-0200	.TERMINAL	8-7, 8-53
2884593-0100	.TERMINAL	8-7, 8-53
2884594-0200	.TERMINAL	8-7, 8-53
2892718-0100	.TERMINAL	7-3
2892719-0100	.TERMINAL	7-3

Part No	Description	Page No
2896524-0100	.TERMINAL	8-7, 8-53
2936702-0200	.TERMINAL	11-105, 11-107
2936703-0200	.TERMINAL	11-105, 11-107
90600-1211	.... TERMINAL BLOCK RELAY, 700-HLT1Z24	11-105, 11-107
90458-0292	.... TERMINAL ELEMENT, PSD-S CE-TM SCREW/W	11-51, 11-125
90220-0034	.... THERMOCABLE TEX/SITW-20F-KX 2X0,5MM2	11-41
90326-0037	.... THERMOCOUPLE, CR-AL PREM.G	11-35, 11-37
90157-0037	.... THREAD SEALANT LOCTITE 542	6-7
90459-6477	.... THREADED INSERTS, BUSHING, M4	8-37
90459-7116	.... THROTTLE CHECK VALVE, G1/8", MANUAL,4	1-73
90600-4713	.... THRUST BALL BEARING, 10X24X9 MM	2-75
2934005-0000	.THRUST WASHER	1-81
90458-0143	.... TIME RELAY H3YN-2 24VDC	11-35, 11-37, 11-105, 11-107
2995762-0000	.TIMING BELT	11-79
90600-5069	.... TIMING BELT 100ATK10/3280 PU	1-85
90459-3796	.... TIMING BELT 10AT5/500 PU	1-101
318161-0123	.. TIMING BELT 10T5/420 PU	1-105
318161-0125	.. TIMING BELT 10T5/455 PU	1-105
90601-1047	.... TIMING BELT 16AT10/3220 PU	1-105
90417-0417	.... TIMING BELT 16AT5/1075 PU	2-69, 2-71
90600-5067	.... TIMING BELT 16T5/1500 PU	1-81
90417-0082	.... TIMING BELT 16T5/610 PU	1-83
90600-7712	.... TIMING BELT 25T10/1790 PU	1-63
90601-1046	.... TIMING BELT 50AT5/480 PU	1-103
90600-7607	.... TIMING BELT 50T10/530 PU	1-53
2933958-0000	.TIMING BELT PULLEY	1-77, 1-85
2992446-0000	.TIMING BELT PULLEY	1-105
2992464-0000	.TIMING BELT PULLEY	1-97
2992465-0000	.TIMING BELT PULLEY	1-97
2957779-0200	.TOOLS AND TEMPLATES	10-3
3022574-0100	.TOOLS AND TEMPLATES	10-21
2934006-0000	.TOOTHED PULLEY	1-81
2935053-0000	.TOOTHED PULLEY	11-59, 11-79
2935054-0000	.TOOTHED PULLEY	11-75
2992509-0000	.TOOTHED PULLEY	1-83
2992510-0000	.TOOTHED PULLEY	1-85
3009430-0000	.TOOTHED PULLEY	1-53
3023569-0000	.TOOTHED PULLEY	1-105
3023571-0000	.TOOTHED PULLEY	1-103
3023572-0000	.TOOTHED PULLEY	1-105
3023601-0000	.TOOTHED PULLEY	1-103
3023602-0000	.TOOTHED PULLEY	1-103
2924675-0300	.TOP SUPPORT	1-3, 1-5, 1-7, 1-9
2848861-0000	.TORSION SPRING	2-69, 2-71
315400-0010	.. TUBE PUN-H-12X2-BL	3-15, 3-17, 6-5, 6-7
315400-0001	.. TUBE PUN-H-6X1-BL	1-89, 3-15, 3-17, 6-5
315400-0004	.. TUBE PUN-H-8X1,25-BL	3-15, 3-17, 11-89
315300-0004	.. TUBE, 8 MM PE BLUE	2-19
90600-6183	.... TUBULAR RIVET 3,5X6,2	1-41, 1-43
2885383-0100	.TUNNEL	5-3, 5-5, 5-7
2934010-0100	.TUNNEL	5-3, 5-5, 5-7
2934020-0100	.TUNNEL	5-3, 5-5, 5-7
2946723-0100	.TUNNEL	5-3, 5-5, 5-7
3073180-0100	.TUNNEL	5-3, 5-5, 5-7
3041490-0000	.TURNING HANDLE	8-15, 8-17, 8-19, 8-55, 8-57, 8-59, 11-35, 11-37, 11-101
90237-0175	.... TURNING HANDLE, 1125-U185-0A	5-33, 8-73, 8-75, 8-77, 11-103
90459-3449	.... VARIABLE FREQUENCY DRIVE 22A-A2P3N104	8-15, 8-17, 8-19, 8-55, 8-57, 8-59
90459-3450	.... VARIABLE FREQUENCY DRIVE 22A-A4P5N104	8-15, 8-17, 8-19, 8-55, 8-57, 8-59
2946861-0200	.VIBRATION DAMPER	4-3, 4-5, 4-7
90347-0011	.... VIBRATION DAMPER MEGI 781056	4-9
90600-3655	.... VISION SYSTEM, IVC-3D21111, 1027538	11-85
581689-0700	.. WARNING LAMP	4-3, 4-5, 4-7
2998253-0100	.WARNING LAMP	11-15
3034248-0100	.WARNING LAMP	11-53
90459-3212	.... WARNING SIGN ANSI (H) CUTTING OF FINGERS	2-57
90459-2232	.... WARNING SIGN ANSI (H), DO NOT WASH	3-15, 3-17, 11-85
359715-0100	.. WARNING SIGN ANSI (H), ELECTRIC SHOCK	4-9, 4-25, 7-5, 8-73, 8-75, 8-77, 11-33, 11-103
359725-0100	.. WARNING SIGN ANSI (H), ENTANGLEMENT	11-75, 11-97
90458-2634	.... WARNING SIGN ANSI (H), EXTERNAL VOLTAGE	8-69, 8-71
359725-0116	.. WARNING SIGN ANSI (H), HOT SURFACE	2-31, 2-33, 3-15, 3-17
359725-0108	.. WARNING SIGN ANSI (H), MOVING PART	4-29
90600-5233	.... WARNING SIGN ANSI (H), READ MANUAL, AUTO	7-11, 8-67, 8-69, 8-71, 8-73, 8-75, 8-77, 11-33, 11-103
359725-0117	.. WARNING SIGN ANSI (V), HOT SURFACE	2-15, 2-31, 2-33, 2-43, 2-73, 3-15, 3-17
90459-3899	.... WARNING SIGN ANSI (V), LASER RADIATION	11-95
90459-7545	.... WARNING SIGN ISO, AUTOMATIC START	11-95
90459-3211	.... WARNING SIGN ISO, CUTTING OF FINGERS	2-57
359705-0002	.. WARNING SIGN ISO, ENTANGLEMENT	11-75, 11-97
359705-0007	.. WARNING SIGN ISO, HOT SURFACE	2-15, 2-43, 2-73
90459-3898	.... WARNING SIGN ISO, LASER RADIATION	11-95
359705-0005	.. WARNING SIGN ISO, MOVING PART	4-29
359705-0015	.. WARNING SIGN ISO, RISK OF ELECTRIC SHOCK	4-9, 4-25, 7-5, 8-73, 8-75, 8-77, 11-33, 11-103
2916021-0000	.WASHER	2-29
2916069-0000	.WASHER	4-29

Part No	Description	Page No
2933942-0000	WASHER	1-97, 1-105
2960752-0000	WASHER	11-21
315105-0173 ..	WASHER BRB 10,5X22 RFR	2-45, 4-9, 11-21
315105-0178 ..	WASHER BRB 13X24 RFR	1-53, 2-65
315105-0124 ..	WASHER BRB 3,2X6 RFR	2-13, 2-31, 2-33, 2-39, 2-69, 2-71, 2-79, 2-81, 4-31
315105-0136 ..	WASHER BRB 4,3X8 RFR	2-21, 2-29, 2-57, 2-79, 2-81, 4-21, 7-7, 7-9, 8-63, 8-69, 8-71, 8-73 8-75, 11-33, 11-35, 11-37, 11-49
315105-0146 ..	WASHER BRB 5,3X10 RFR	2-31, 2-33, 2-35, 2-69, 2-71, 4-29, 4-37, 4-41, 5-33, 7-5, 8-69, 8-71 8-73, 8-75, 8-77, 11-19, 11-21, 11-29, 11-35, 11-37, 11-49, 11-51, 11-125
315105-0153 ..	WASHER BRB 6,4X12 RFR	1-19, 1-23, 1-25, 1-31, 1-33, 1-35, 1-37, 1-39, 1-53, 1-55, 1-67, 1-73 1-85, 2-13, 2-17, 2-23, 2-29, 2-31, 2-33, 2-39, 2-41, 2-57, 2-67, 2-79, 2-81, 2-83, 4-9, 4-21, 4-25 4-29, 5-9, 5-11, 5-13, 5-17, 5-19, 5-21, 5-23, 5-33, 5-35, 5-37, 6-7, 7-5, 7-11, 8-67, 8-69, 8-71, 8-73 8-75, 8-77, 10-23, 10-29, 11-11, 11-13, 11-19, 11-23, 11-29, 11-33, 11-35, 11-37, 11-45, 11-59 11-101, 11-103, 11-131
315105-0156 ..	WASHER BRB 6,7X14 RFR	4-39
315105-0165 ..	WASHER BRB 8,4X16 RFR	1-17, 1-25, 1-29, 1-33, 1-53, 1-55, 1-65, 1-73, 1-89, 1-91, 2-13, 2-23 2-29, 2-39, 2-55, 2-57, 2-65, 2-67, 4-11, 4-29, 5-13, 5-17, 5-19, 5-25, 5-27, 5-29, 5-31, 11-9, 11-11 11-35, 11-37, 11-65, 11-67, 11-69, 11-71, 11-73, 11-77, 11-97, 11-101
90600-5066	WASHER DIN7349 8,4X21X4 A4	4-9, 4-25, 4-31
315106-0173 ..	WASHER ISO 7089-10-200 HV A4	1-83, 11-61
315106-0178 ..	WASHER ISO 7089-12-200 HV A4	1-73, 1-87, 1-93, 4-33, 10-15
315106-0186 ..	WASHER ISO 7089-16-200 HV A4	1-53, 1-73, 2-65
315106-0124 ..	WASHER ISO 7089-3-200 HV A4	1-77, 1-87, 1-89, 1-97, 1-99, 1-103
315106-0136 ..	WASHER ISO 7089-4-200 HV A4	1-83, 11-89
315106-0146 ..	WASHER ISO 7089-5-200 HV A4	6-5, 11-45, 11-127
315106-0153 ..	WASHER ISO 7089-6-200 HV A4	1-77, 1-79, 1-83, 1-87, 1-97, 1-99, 1-101, 1-103, 1-105, 2-47 2-49, 2-77, 4-9, 4-13, 4-15, 5-29, 5-31, 11-63, 11-83, 11-109, 11-127
315106-0165 ..	WASHER ISO 7089-8-200 HV A4	1-73, 1-77, 1-83, 1-87, 1-97, 1-101, 1-103, 1-105, 2-31, 2-33 2-47, 2-49, 2-73, 4-13, 4-15, 8-69, 8-71
90005-0064	WASHER PL.RND.NYL.4,3/9, H=0,8	8-37
90005-0114	WASHER PLAIN ROUND 5,3(M5)/15, H=1	2-29
90005-0116	WASHER PLAIN ROUND 8,4(M8)/24, H=2	2-29, 2-47, 2-49, 4-13, 4-15, 4-29
315101-0176 ..	WASHER PLAIN, BRB, 12/22 H=2	11-23, 11-25, 11-27
315101-0153 ..	WASHER PLAIN, BRB, 6,4/12 H=1,5	8-65
315103-0165 ..	WASHER PLAIN, BRB, 8,4/16,H=1,5 NIPL BR	2-19, 2-79, 2-81
90459-7441	WASHER PLAIN, DIN 7349, 6,4/17 H=3	11-63
90005-0060	WASHER PLAIN, RBS 6,4/M6)/18,H=1,5	1-83, 1-93, 4-33
315115-0173 ..	WASHER PLAIN, TBRB 10,5/22 H=4	2-31, 2-33
315125-0173 ..	WASHER TBRSB 10,5X28X6 A4	11-101
315125-0146 ..	WASHER TBRSB 5.3X15X1 A4	2-19
315125-0153 ..	WASHER TBRSB 6,4X22X4 A4	1-77, 1-103, 2-31, 2-33, 10-23, 10-29
315125-0165 ..	WASHER TBRSB 8,4X26X5 A4	1-67, 1-83, 1-85, 1-105, 2-19, 2-21, 2-67, 11-21
315103-0124 ..	WASHER, BRB, 3,2/6,H=0,5 NI PL BR	1-67
3046523-0100	WASTE PIPE	10-3
2982598-0000	WEDGE	2-47, 2-49, 4-13, 4-15
2656679-0000	WHEEL	11-59
2751388-0000	WHEEL	11-21
2924673-0300	WHEEL	1-61
1368508-0101	WIRE	8-7, 8-53
2812601-0000	WIRE	11-45
351160-0102 ..	WIRE AWM 1X0,75 MM2 DARKBLUE	8-15, 8-17, 8-19, 8-55, 8-57, 8-59
351162-0102 ..	WIRE AWM 1X0,75 MM2 YELLOW-GREEN	8-15, 8-17, 8-19, 8-55, 8-57, 8-59
351164-0104 ..	WIRE AWM 1X1,5 MM2 BLACK	8-15, 8-17, 8-19, 8-55, 8-57, 8-59
351160-0104 ..	WIRE AWM 1X1,5 MM2 DARKBLUE	8-15, 8-17, 8-19, 8-55, 8-57, 8-59
351161-0104 ..	WIRE AWM 1X1,5 MM2 LIGHTBLUE	8-15, 8-17, 8-19, 8-55, 8-57, 8-59
351162-0104 ..	WIRE AWM 1X1,5 MM2 YELLOW-GREEN	8-15, 8-17, 8-19, 8-55, 8-57, 8-59, 11-117
351162-0108 ..	WIRE AWM 1X10 MM2 YELLOW-GREEN	8-15, 8-17, 8-19, 8-55, 8-57, 8-59
351164-0105 ..	WIRE AWM 1X2,5 MM2 BLACK	8-15, 8-17, 8-19, 8-55, 8-57, 8-59
351161-0105 ..	WIRE AWM 1X2,5 MM2 LIGHTBLUE	8-15, 8-17, 8-19, 8-55, 8-57, 8-59
351162-0105 ..	WIRE AWM 1X2,5 MM2 YELLOW-GREEN	8-15, 8-17, 8-19, 8-55, 8-57, 8-59
351162-0110 ..	WIRE AWM 1X25 MM2 YELLOW-GREEN	8-15, 8-17, 8-19, 8-55, 8-57, 8-59
351164-0106 ..	WIRE AWM 1X4 MM2 BLACK	8-15, 8-17, 8-19, 8-55, 8-57, 8-59
351162-0106 ..	WIRE AWM 1X4 MM2 YELLOW-GREEN	8-15, 8-17, 8-19, 8-55, 8-57, 8-59
90211-0003	WIRE LOCK 2 MM, 3422-R	11-45
90056-0174	WORM GEAR VF 30 P1 70 HS B3	1-55
90459-6065	Y-FITTING QSY-12-8	6-5
350015-0006 ..	Y-FITTING QSY-F-10-8	11-89
312115-0327 ..	Z3REW ISO4762 M5X12 A4 80	1-53, 11-79
315756-0009 ..	ÖLFLEX CONTROL TM CY 4G1,5, 281604CY	8-61

Part No	Description	Page No	Part No	Description	Page No

Machine Type	Group Description	Page No

Tetra Pak

SPC
Spare Parts Catalogue

Pos	Part No	Description	Page No
A			
A08A2010	90600-0980	OPERATOR PANEL 15"+, 2711P-T15C4D2-TP	7-11
B			
A01B0130	90600-3655	VISION SYSTEM, IVC-3D21111, 1027538	11-85
A01B2010	90458-2730	PRESSURE SENS. SDE1-D10-G2-R18-C-P1-M8	6-5
B01B0135	90600-3004	INCREMENTAL ENC., DGS60-A1A10000,1032277	11-59
B01B0136	90459-7273	PHOTOCELL E3Z-T81C-G0SR D-CN	11-89
B01B0137	90459-7274	PHOTOCELL E3Z-T81C-G0SR L-CN	11-83
F09B2032	90458-2730	PRESSURE SENS. SDE1-D10-G2-R18-C-P1-M8	6-5
P30B2010	90600-5297	INCREMENTAL ENCODER, DFS60A-BHAA65536	1-67, 1-97
V10B2020	90459-7273	PHOTOCELL E3Z-T81C-G0SR D-CN	11-5
V10B2022	90459-7274	PHOTOCELL E3Z-T81C-G0SR L-CN	11-5
V30B2022	90459-2409	INDUCTIVE SENSOR IN5230	2-31, 2-33
V30B2080	90459-2409	INDUCTIVE SENSOR IN5230	2-79, 2-81
V30B2090	90458-0970	AMPLIFIER UNIT, E3X-DA44V	2-19
V30B2120	90459-2409	INDUCTIVE SENSOR IN5230	2-31, 2-33
V40B2030	90459-7273	PHOTOCELL E3Z-T81C-G0SR D-CN	10-5
V40B2032	90459-7274	PHOTOCELL E3Z-T81C-G0SR L-CN	10-5
V40B2040	90459-7273	PHOTOCELL E3Z-T81C-G0SR D-CN	10-5
V40B2042	90459-7274	PHOTOCELL E3Z-T81C-G0SR L-CN	10-5
V40B2060	90459-2392	PROX.SENSOR SMT-C1-PS-24V-K0,3-M8-SA	1-73
V40B2060	90459-2409	INDUCTIVE SENSOR IN5230	1-89, 4-31
V40B2070	90459-7273	PHOTOCELL E3Z-T81C-G0SR D-CN	10-5
V40B2072	90459-7274	PHOTOCELL E3Z-T81C-G0SR L-CN	10-5
V40B2100	90459-7273	PHOTOCELL E3Z-T81C-G0SR D-CN	1-83
V40B2100	90459-7274	PHOTOCELL E3Z-T81C-G0SR L-CN	1-103
V40B2102	90459-7273	PHOTOCELL E3Z-T81C-G0SR D-CN	1-103
V40B2102	90459-7274	PHOTOCELL E3Z-T81C-G0SR L-CN	1-83
V50B2010	90326-0037	THERMOCOUPLE, CR-AL PREM.G	11-35, 11-37
V90B2050	90459-7273	PHOTOCELL E3Z-T81C-G0SR D-CN	1-77, 10-5
V90B2050	90459-7274	PHOTOCELL E3Z-T81C-G0SR L-CN	1-97
V90B2052	90459-7273	PHOTOCELL E3Z-T81C-G0SR D-CN	1-97
V90B2052	90459-7274	PHOTOCELL E3Z-T81C-G0SR L-CN	1-77, 10-5
V90B2130	90459-7273	PHOTOCELL E3Z-T81C-G0SR D-CN	11-133
V90B2132	90459-7274	PHOTOCELL E3Z-T81C-G0SR L-CN	11-133
V90B2140	90459-4177	PROX.SWITCH E2A-M12KN08-M1-B1	11-131
W30B2012	90459-2409	INDUCTIVE SENSOR IN5230	2-69, 2-71
W30B2014	90459-7273	PHOTOCELL E3Z-T81C-G0SR D-CN	1-87
W30B2016	90459-7274	PHOTOCELL E3Z-T81C-G0SR L-CN	1-87
W30B2022	90459-2409	INDUCTIVE SENSOR IN5230	2-13
C			
V50C1020	90600-0986	CAPACITOR, UL 1UF 450V 25X57 M8	11-35, 11-37

Pos	Part No	Description	Page No
E			
E01E1013	3039856-0000	COOLING UNIT	11-127
E01E1020	90164-0015	LIGHT FIXTURE, RL70CV-111 / 230V 50HZ	4-39
E01E1020	2901717-0100	LIGHT FIXTURE	4-3, 4-5, 4-7
V50E1020	90600-0985	FAN, R2E150-AG52-09	11-49
V50E1030	90459-7170	HEATING ELEMENT 280W 240V	11-35, 11-37
V50E1032	90459-7170	HEATING ELEMENT 280W 240V	11-35, 11-37
F			
A01F0001	90600-7487	SURGE PROTECTION DEV., VAL-MS 230/3+1 FM	8-15, 8-17, 8-19, 8-55, 8-57, 8-59
A01F0001	315744-0040	MINIATURE CIRCUIT BREAKER, FAZ-C4/1-NA	11-105, 11-107
A01F0001	354000-0040	MINIATURE CIRCUIT BREAKER, FAZ-C4/1	11-105, 11-107
A01F0002	315744-0040	MINIATURE CIRCUIT BREAKER, FAZ-C4/1-NA	11-105, 11-107
A01F0002	354000-0040	MINIATURE CIRCUIT BREAKER, FAZ-C4/1	11-105, 11-107
A01F1001	315744-0020	MINIATURE CIRCUIT BREAKER, FAZ-C2/1-NA	11-35, 11-37
A01F1001	354000-0020	MINIATURE CIRCUIT BREAKER, FAZ-C2/1	11-35, 11-37
A01F1010	315744-0020	MINIATURE CIRCUIT BREAKER, FAZ-C2/1-NA	8-55, 8-57, 8-59
A01F1010	354000-0020	MINIATURE CIRCUIT BREAKER, FAZ-C2/1	8-15, 8-17, 8-19
A01F1020	315745-0060	MINIATURE CIRCUIT BREAKER, FAZ-C6/2-NA	8-55, 8-57, 8-59
A01F1020	354001-0060	MINIATURE CIRCUIT BREAKER, FAZ-C6/2	8-15, 8-17, 8-19
A01F1022	90459-5811	RESIDUAL CURRENT DEVICE, FI-25/2/003-A	8-15, 8-17, 8-19
A01F1030	315744-0040	MINIATURE CIRCUIT BREAKER, FAZ-C4/1-NA	8-55, 8-57, 8-59
A01F1030	354000-0040	MINIATURE CIRCUIT BREAKER, FAZ-C4/1	8-15, 8-17, 8-19
A01F2010	315745-0020	MINIATURE CIRCUIT BREAKER, FAZ-C2/2-NA	8-55, 8-57, 8-59
A01F2010	354001-0020	MINIATURE CIRCUIT BREAKER, FAZ-C2/2	8-15, 8-17, 8-19
A03F1010	315744-0060	MINIATURE CIRCUIT BREAKER, FAZ-C6/1-NA	8-55, 8-57, 8-59
A03F1010	354000-0060	MINIATURE CIRCUIT BREAKER, FAZ-C6/1	8-15, 8-17, 8-19
A07F1011	315744-0020	MINIATURE CIRCUIT BREAKER, FAZ-C2/1-NA	8-55, 8-57, 8-59
A07F1011	354000-0020	MINIATURE CIRCUIT BREAKER, FAZ-C2/1	8-15, 8-17, 8-19
A07F1021	315744-0020	MINIATURE CIRCUIT BREAKER, FAZ-C2/1-NA	8-55, 8-57, 8-59
A07F1021	354000-0020	MINIATURE CIRCUIT BREAKER, FAZ-C2/1	8-15, 8-17, 8-19
A07F2011	315744-0020	MINIATURE CIRCUIT BREAKER, FAZ-C2/1-NA	8-55, 8-57, 8-59
A07F2011	354000-0020	MINIATURE CIRCUIT BREAKER, FAZ-C2/1	8-15, 8-17, 8-19
A08F1010	315744-0060	MINIATURE CIRCUIT BREAKER, FAZ-C6/1-NA	8-55, 8-57, 8-59
A08F1010	354000-0060	MINIATURE CIRCUIT BREAKER, FAZ-C6/1	8-15, 8-17, 8-19
A08F2010	315745-0040	MINIATURE CIRCUIT BREAKER, FAZ-C4/2-NA	8-55, 8-57, 8-59
A08F2010	354001-0040	MINIATURE CIRCUIT BREAKER, FAZ-C4/2	8-15, 8-17, 8-19
A30F1010	315746-0100	MINIATURE CIRCUIT BREAKER, FAZ-C10/3-NA	8-55, 8-57, 8-59
A30F1010	354002-0100	IMINIATURE CIRCUIT BREAKER, FAZ-C10/3	8-15, 8-17, 8-19
A30F1020	315744-0040	MINIATURE CIRCUIT BREAKER, FAZ-C4/1-NA	8-55, 8-57, 8-59
A30F1020	354000-0040	MINIATURE CIRCUIT BREAKER, FAZ-C4/1	8-15, 8-17, 8-19
E01F0005	315744-0020	MINIATURE CIRCUIT BREAKER, FAZ-C2/1-NA	11-105, 11-107
E01F0005	354000-0020	MINIATURE CIRCUIT BREAKER, FAZ-C2/1	11-105, 11-107

Pos	Part No	Description	Page No
F			
E01F1013	315744-0100	MINIATURE CIRCUIT BREAKER, FAZ-C10/1-NA	8-55, 8-57, 8-59
E01F1013	354000-0100	MINIATURE CIRCUIT BREAKER, FAZ-C10/1	8-15, 8-17, 8-19
E01F1020	315745-0020	MINIATURE CIRCUIT BREAKER, FAZ-C2/2-NA	8-55, 8-57, 8-59
E01F1020	354001-0020	MINIATURE CIRCUIT BREAKER, FAZ-C2/2	8-15, 8-17, 8-19
F09F2010	90459-4891	PROGR. IDENTIFIER ID-FIX RW, 20-070-21	8-15, 8-17, 8-19, 8-55, 8-57, 8-59
F09F2020	90458-1651	EMERGENCY STOP, ZB4-BS-844 ZB4-BZ-104	7-11
F09F2022	90458-1651	EMERGENCY STOP, ZB4-BS-844 ZB4-BZ-104	8-77
F09F2026	90459-6961	SAFETY SENSOR, NON CONT. ADAM-E M12 0,5M	7-11
F09F2028	90459-4089	SAFETY SENSOR NON-CONTACT EVA E	5-33
P50F1011	315744-0100	MINIATURE CIRCUIT BREAKER, FAZ-C10/1-NA	8-55, 8-57, 8-59
P50F1011	354000-0100	MINIATURE CIRCUIT BREAKER, FAZ-C10/1	8-15, 8-17, 8-19
Q50F1020	90459-5320	OVERLOAD PROTECTION, PKZM0-0,25	11-35, 11-37
T01F0004	315744-0010	MINIATURE CIRCUIT BREAKER, FAZ-C1/1-NA	11-105, 11-107
T01F0004	354000-0010	MINIATURE CIRCUIT BREAKER, FAZ-C1/1	11-105, 11-107
V30F1030	315745-0100	MINIATURE CIRCUIT BREAKER, FAZ-C10/2-NA	8-55, 8-57, 8-59
V30F1030	354001-0100	MINIATURE CIRCUIT BREAKER, FAZ-C10/2	8-15, 8-17, 8-19
V50F1015	315747-0100	MINIATURE CIRCUIT BREAKER, FAZ-D10/1-NA	8-55, 8-57, 8-59
V50F1015	351416-0100	MINIATURE CIRC. BREAK., FAZ -D10 1-POLE	8-15, 8-17, 8-19
V50F1030	315744-0100	MINIATURE CIRCUIT BREAKER, FAZ-C10/1-NA	11-35, 11-37
V50F1030	354000-0100	MINIATURE CIRCUIT BREAKER, FAZ-C10/1	11-35, 11-37
W10F1010	315744-0160	MINIATURE CIRCUIT BREAKER, FAZ-C16/1-NA	8-55, 8-57, 8-59
W10F1010	354000-0160	MINIATURE CIRCUIT BREAKER, FAZ-C16/1	8-15, 8-17, 8-19
W40F1010	315744-0160	MINIATURE CIRCUIT BREAKER, FAZ-C16/1-NA	8-55, 8-57, 8-59
W40F1010	354000-0160	MINIATURE CIRCUIT BREAKER, FAZ-C16/1	8-15, 8-17, 8-19
W40F1020	315744-0100	MINIATURE CIRCUIT BREAKER, FAZ-C10/1-NA	8-55, 8-57, 8-59
W40F1020	354000-0100	MINIATURE CIRCUIT BREAKER, FAZ-C10/1	8-15, 8-17, 8-19
W40F1030	315744-0160	MINIATURE CIRCUIT BREAKER, FAZ-C16/1-NA	8-55, 8-57, 8-59
W40F1030	354000-0160	MINIATURE CIRCUIT BREAKER, FAZ-C16/1	8-15, 8-17, 8-19
W40F1032	90459-5323	OVERLOAD PROTECTION, PKZM0-1	8-15, 8-17, 8-19, 8-55, 8-57, 8-59
W40F1034	90459-5323	OVERLOAD PROTECTION, PKZM0-1	8-15, 8-17, 8-19, 8-55, 8-57, 8-59
W90F1010	315744-0160	MINIATURE CIRCUIT BREAKER, FAZ-C16/1-NA	8-55, 8-57, 8-59
W90F1010	354000-0160	MINIATURE CIRCUIT BREAKER, FAZ-C16/1	8-15, 8-17, 8-19
K			
A01K0001	90600-5266	FEED THROUGH FILTER, B85321A2502W160	8-15, 8-17, 8-19, 8-55, 8-57, 8-59
A01K0002	90600-5266	FEED THROUGH FILTER, B85321A2502W160	8-15, 8-17, 8-19, 8-55, 8-57, 8-59
A01K1030	2901720-0100	RELAY	8-7, 8-53
A01K2010	90459-5308	CONTACTOR 4KW 24VDC, DILM9-10	11-35, 11-37
A01K3020	90459-2339	FILTER REGULATOR, MS4-LFR-1/4-D7-ERV-AS	6-5
A01K3030	90459-2242	REGULATOR, MS4-LRB-1/4-D7-AS	6-5
A03K1010	90600-5250	LINE FILTER, B84111FB30	8-15, 8-17, 8-19, 8-55, 8-57, 8-59
A03K2010	90600-9746	PROCESSOR L43, SERIES B, 1768-L43/B	8-15, 8-17, 8-19, 8-55, 8-57, 8-59
A03K2012	90600-1349	SERCOS MOTION MODULE 4-AXIS, 1768-M04SE	8-15, 8-17, 8-19, 8-55, 8-57, 8-59
A03K2014	90600-1348	ETHERNET /IP BRIDGE MODULE, 1768-ENBT/A	8-15, 8-17, 8-19, 8-55, 8-57, 8-59
A03K2016	90459-6553	PLC DSI /MODBUS COMMUN. MOD., 1769-SM2/A	8-15, 8-17, 8-19, 8-55, 8-57, 8-59
A03K2018	90459-2473	DIG INP. MOD.16 PTS FAST,1769-IQ16F SERA	8-15, 8-17, 8-19, 8-55, 8-57, 8-59
A03K2020	90459-2473	DIG INP. MOD.16 PTS FAST,1769-IQ16F SERA	8-15, 8-17, 8-19, 8-55, 8-57, 8-59
A03K2022	90459-2473	DIG INP. MOD.16 PTS FAST,1769-IQ16F SERA	8-15, 8-17, 8-19, 8-55, 8-57, 8-59
A03K2024	90459-2476	DIGIT. OUT. MOD. 16 P ESCP, 1769-OB16P	8-15, 8-17, 8-19, 8-55, 8-57, 8-59
A03K2026	90459-2476	DIGIT. OUT. MOD. 16 P ESCP, 1769-OB16P	8-15, 8-17, 8-19, 8-55, 8-57, 8-59
A03K2028	90459-2476	DIGIT. OUT. MOD. 16 P ESCP, 1769-OB16P	8-15, 8-17, 8-19, 8-55, 8-57, 8-59
A03K2029	90459-2483	DEVICENET SCANNER, 1769-SDN SERIES B	8-15, 8-17, 8-19, 8-55, 8-57, 8-59
A03K2029	90600-4896	RESERVE MOD., 1769-ARM/A	8-15, 8-17, 8-19, 8-55, 8-57, 8-59
A03K2030	90459-2491	PLC RIGHT END CAP/TERMINATOR, 1769-ECR	8-15, 8-17, 8-19, 8-55, 8-57, 8-59
A03K2031	90600-5249	FERRITE, B64290L616X38	8-15, 8-17, 8-19, 8-55, 8-57, 8-59
A03K2110	90600-1847	ETHERNET SWITCH, FL SWITCH SFN 5TX	8-15, 8-17, 8-19, 8-55, 8-57, 8-59
A03K2121	90459-4235	SNP TO DF1 GATEWAY, 0220 1166 01 REV B	8-15, 8-17, 8-19, 8-55, 8-57, 8-59
A07K2021	90031-0070	CPU313, INTEGRATED IN 5-SLOT BASEPLATE	8-15, 8-17, 8-19, 8-55, 8-57, 8-59
A07K2023	90031-0078	GENIUS BUS CONTROLLER	8-15, 8-17, 8-19, 8-55, 8-57, 8-59
A07K2025	90459-4234	DEVICENET SLAVE MODULE	8-15, 8-17, 8-19, 8-55, 8-57, 8-59
A07K2027	90600-5249	FERRITE, B64290L616X38	8-15, 8-17, 8-19, 8-55, 8-57, 8-59
A50K2020	90119-0108	RELAY OMRON G2R-2-SNI-24DC	11-35, 11-37
A50K2030	90119-0108	RELAY OMRON G2R-2-SNI-24DC	11-35, 11-37
A50K2040	90119-0108	RELAY OMRON G2R-2-SNI-24DC	11-35, 11-37
A50K2042	90458-0143	TIME RELAY H3YN-2 24VDC	11-35, 11-37
E01K1013	2901718-0100	RELAY	8-7, 8-53
E01K1020	2901719-0100	RELAY	8-7, 8-53
F09K2010	90600-2045	SAFETY PLC, PLUTO B46-6 20-070-15	8-15, 8-17, 8-19, 8-55, 8-57, 8-59
F09K2014	90459-2291	SAFETY TIME RELAY, E1T-0.5S-24VDC	8-15, 8-17, 8-19, 8-55, 8-57, 8-59
F09K2024	3034241-0100	RELAY	8-7, 8-53
F09K2040	90601-1126	SAFETY VALVE, MS6-SV-1/2-D-10V24-AG	6-5
K01K0012	90600-1211	TERMINAL BLOCK RELAY, 700-HLT1Z24	11-105, 11-107
K01K0014	90600-1211	TERMINAL BLOCK RELAY, 700-HLT1Z24	11-105, 11-107
K01K0018	90458-0143	TIME RELAY H3YN-2 24VDC	11-105, 11-107
K01K0040	90119-0108	RELAY OMRON G2R-2-SNI-24DC	11-105, 11-107
K10K2099	90119-0108	RELAY OMRON G2R-2-SNI-24DC	8-41
K90K2098	90119-0108	RELAY OMRON G2R-2-SNI-24DC	8-41
V01K0140	90600-5813	SOLENOID VALVE, CPE18-M1H-3GL-1/4	11-89
V30K2010	90459-6475	HOT MELT GUN, SOLIDBLUE A #8505768	3-11, 3-13
V30K2010	90600-2959	HOT MELT GUN, #1071630	3-9
V30K2012	90600-2959	HOT MELT GUN, #1071630	3-9
V30K2020	3034242-0100	RELAY	8-7, 8-53
V50K1010	90600-6032	TEMPERATURE CONTROLLER, KS50	11-35, 11-37

Pos	Part No	Description	Page No
K			
V50K1030	90459-0690	CURRENT CONTROL RELAY, 84 871 034	11-35, 11-37
V50K1032	3042373-0000	RELAY	11-35, 11-37
W10K1010	90600-5249	FERRITE, B64290L616X38	8-15, 8-17, 8-19, 8-55, 8-57, 8-59
W10K1012	90600-5249	FERRITE, B64290L616X38	8-15, 8-17, 8-19, 8-55, 8-57, 8-59
W30K2010	90600-5249	FERRITE, B64290L616X38	8-15, 8-17, 8-19, 8-55, 8-57, 8-59
W30K2012	90600-5249	FERRITE, B64290L616X38	8-15, 8-17, 8-19, 8-55, 8-57, 8-59
W30K2020	90600-5249	FERRITE, B64290L616X38	8-15, 8-17, 8-19, 8-55, 8-57, 8-59
W30K2022	90600-5249	FERRITE, B64290L616X38	8-15, 8-17, 8-19, 8-55, 8-57, 8-59
W40K1010	90600-5249	FERRITE, B64290L616X38	8-15, 8-17, 8-19, 8-55, 8-57, 8-59
W40K1012	90600-5249	FERRITE, B64290L616X38	8-15, 8-17, 8-19, 8-55, 8-57, 8-59
W40K1020	90600-5249	FERRITE, B64290L616X38	8-15, 8-17, 8-19, 8-55, 8-57, 8-59
W40K1022	90600-5249	FERRITE, B64290L616X38	8-15, 8-17, 8-19, 8-55, 8-57, 8-59
W40K1030	90600-5249	FERRITE, B64290L616X38	8-15, 8-17, 8-19, 8-55, 8-57, 8-59
W40K1032	90600-5249	FERRITE, B64290L616X38	8-15, 8-17, 8-19, 8-55, 8-57, 8-59
W90K1010	90600-5249	FERRITE, B64290L616X38	8-15, 8-17, 8-19, 8-55, 8-57, 8-59
W90K1012	90600-5249	FERRITE, B64290L616X38	8-15, 8-17, 8-19, 8-55, 8-57, 8-59
M			
E01M0005	90503-3773	FILTER FAN PF2000 IP54 230V AC	11-101
E01M1010	90459-5877	FILTER FAN SK 3325.107	8-73, 8-75
E08M1010	90264-0032	FAN, 4656N+LZ30+LZ 120,220V 50HZ	7-7
V40M3060	90459-6273	DOUBLE ACTING, PROFILE,CYL 32-80	1-73
W30M1010	90601-5151	SERVO MOTOR MPL-B330P-SJ72AA SERIES A	2-73
W30M1020	90601-5151	SERVO MOTOR MPL-B330P-SJ72AA SERIES A	2-15, 2-29, 2-43
W40M1010	90600-5064	GEARS, WORM MOTOR WA 20 DT71 D4	1-77, 1-97
W40M1020	90600-3210	GEARS, WORM MOTOR D9582/SC401-H/1600117	1-67
W40M1032	90600-3210	GEARS, WORM MOTOR D9582/SC401-H/1600117	1-53
P			
P30B2010	90600-5297	INCREMENTAL ENCODER, DFS60A-BHAA65536	1-77
A01P0010	90178-0007	HOUR COUNTER, BG 40,17-1 12-48VDC	11-105, 11-107
A01P0020	3034248-0100	WARNING LAMP	11-53
A01P2010	90178-0007	HOUR COUNTER, BG 40,17-1 12-48VDC	8-15, 8-17, 8-19, 8-55, 8-57, 8-59, 11-35, 11-37
A01P2014	581689-0700	WARNING LAMP	4-3, 4-5, 4-7
A50P2050	2998253-0100	WARNING LAMP	11-15
Q			
A01Q0000	90111-0132	MAIN SWITCH P1-25/EA/SVB-SW/N/HI11/H-P14	11-101
A01Q0001	90111-0132	MAIN SWITCH P1-25/EA/SVB-SW/N/HI11/H-P14	8-15, 8-17, 8-19, 8-55, 8-57, 8-59, 11-35, 11-37
A01Q0001	90459-5440	CONTACTOR 4KW 24VDC, DILM9-01	11-105, 11-107
A01Q1010	90459-5440	CONTACTOR 4KW 24VDC, DILM9-01	8-15, 8-17, 8-19, 8-55, 8-57, 8-59
A01Q3010	90459-2337	SHUT OFF VALVE, MS4-EM1-1/4	6-5
A30Q1010	90459-5441	CONTACTOR 7,5KW 24VDC, DILM17-01	8-15, 8-17, 8-19, 8-55, 8-57, 8-59
A40Q1010	90459-5440	CONTACTOR 4KW 24VDC, DILM9-01	8-15, 8-17, 8-19, 8-55, 8-57, 8-59
E01Q2015	90600-6907	LIMIT SW. D4C-1301 5M	11-127
E01Q2017	90600-6907	LIMIT SW. D4C-1301 5M	11-127
F09Q1010	90459-5441	CONTACTOR 7,5KW 24VDC, DILM17-01	8-15, 8-17, 8-19, 8-55, 8-57, 8-59
F09Q1020	90459-5441	CONTACTOR 7,5KW 24VDC, DILM17-01	8-15, 8-17, 8-19, 8-55, 8-57, 8-59
V30Q1030	90459-5440	CONTACTOR 4KW 24VDC, DILM9-01	8-15, 8-17, 8-19, 8-55, 8-57, 8-59
V50Q1030	90600-0946	SOLID STATE RELAY, 3RF2050-1AA04	11-35, 11-37
R			
A01R3010	90328-0013	SILENCER U-1/4, 2316	6-5
A01R3020	90601-1586	SILENCER G1"	6-5
A03R2029	90459-1297	RESISTANCE FIXED, 120 OHM, 0,25 W	8-15, 8-17, 8-19, 8-55, 8-57, 8-59
A07R2025	90459-1297	RESISTANCE FIXED, 120 OHM, 0,25 W	8-15, 8-17, 8-19, 8-55, 8-57, 8-59
F09R2010	90459-1297	RESISTANCE FIXED, 120 OHM, 0,25 W	8-15, 8-17, 8-19, 8-55, 8-57, 8-59
F09R2030	90038-0021	DIODE, 1A 800V	7-11
W10R2010	90459-1297	RESISTANCE FIXED, 120 OHM, 0,25 W	8-15, 8-17, 8-19, 8-55, 8-57, 8-59
W40R2030	90459-1297	RESISTANCE FIXED, 120 OHM, 0,25 W	8-15, 8-17, 8-19, 8-55, 8-57, 8-59
W90R2010	90459-1297	RESISTANCE FIXED, 120 OHM, 0,25 W	8-15, 8-17, 8-19, 8-55, 8-57, 8-59
S			
A01S0080	90064-0082	PUSH BUTTON, WHITE	11-103
A01S0081	90064-0082	PUSH BUTTON, WHITE	11-103
A01S0082	90064-0082	PUSH BUTTON, WHITE	11-103
A08S2010	90064-0082	PUSH BUTTON, WHITE	7-11, 11-33
A08S2012	90064-0082	PUSH BUTTON, WHITE	7-11
A08S2014	90064-0082	PUSH BUTTON, WHITE	7-11
A08S2020	90064-0082	PUSH BUTTON, WHITE	11-33
A08S2030	90064-0082	PUSH BUTTON, WHITE	11-33
F09S2030	90064-0082	PUSH BUTTON, WHITE	7-11
T			
A01T0001	90459-4807	POWER SUPPLY UNIT 100-240 VAC/24VDC2,5A	11-105, 11-107
A01T1001	90459-4807	POWER SUPPLY UNIT 100-240 VAC/24VDC2,5A	11-35, 11-37
A01T1010	90459-4245	POWER SUPPLY UNIT 230VAC/24VDC 3,75A	8-15, 8-17, 8-19, 8-55, 8-57, 8-59
A03T1010	90600-1347	POWER SUPPLY 120/240 VAC, 1768-PA3/A	8-15, 8-17, 8-19, 8-55, 8-57, 8-59
A07T1011	90459-4245	POWER SUPPLY UNIT 230VAC/24VDC 3,75A	8-15, 8-17, 8-19, 8-55, 8-57, 8-59
A07T1021	90031-0068	PLC, POWER SUPPLY	8-15, 8-17, 8-19, 8-55, 8-57, 8-59
A08T1010	90459-4245	POWER SUPPLY UNIT 230VAC/24VDC 3,75A	8-15, 8-17, 8-19, 8-55, 8-57, 8-59
T01T0003	90459-2569	POWER SUPPLY UNIT 100-240VAC/5VDC 5A	11-105, 11-107
W10T1010	90459-3450	VARIABLE FREQUENCY DRIVE 22A-A4P5N104	8-15, 8-17, 8-19, 8-55, 8-57, 8-59
W30T1010	90600-5211	AXIS MOD. W. PS,2094-BC01-M01-S SERIES B	8-15, 8-17, 8-19, 8-55, 8-57, 8-59
W30T1020	90600-5214	AXIS MOD. KINETIX 6000,2094-BM01-S SER.B	8-15, 8-17, 8-19, 8-55, 8-57, 8-59
W40T1010	90459-3450	VARIABLE FREQUENCY DRIVE 22A-A4P5N104	8-15, 8-17, 8-19, 8-55, 8-57, 8-59

Pos	Part No	Description	Page No
T			
W40T1020	90459-3449	VARIABLE FREQUENCY DRIVE 22A-A2P3N104	8-15, 8-17, 8-19, 8-55, 8-57, 8-59
W40T1030	90459-3450	VARIABLE FREQUENCY DRIVE 22A-A4P5N104	8-15, 8-17, 8-19, 8-55, 8-57, 8-59
W90T1010	90459-3450	VARIABLE FREQUENCY DRIVE 22A-A4P5N104	8-15, 8-17, 8-19, 8-55, 8-57, 8-59
V			
A01V0001	90600-5260	LINE FILTER, B84144A16R120	8-15, 8-17, 8-19, 8-55, 8-57, 8-59
A30V1010	90600-5258	LINE FILTER, B84143A35R106	8-15, 8-17, 8-19, 8-55, 8-57, 8-59
A30V1020	90600-5252	LINE FILTER, B84113HB30	8-15, 8-17, 8-19, 8-55, 8-57, 8-59
V30V1030	90459-1991	HOT MELT UNIT, #1022230	3-9
V30V3010	90459-1991	HOT MELT UNIT, #1022230	3-11, 3-13
W10V1010	90459-3460	FOOTPRINT FILTER 22-RF010-AL	8-15, 8-17, 8-19, 8-55, 8-57, 8-59
W40V1010	90459-3460	FOOTPRINT FILTER 22-RF010-AL	8-15, 8-17, 8-19, 8-55, 8-57, 8-59
W40V1020	90459-3460	FOOTPRINT FILTER 22-RF010-AL	8-15, 8-17, 8-19, 8-55, 8-57, 8-59
W40V1030	90459-3460	FOOTPRINT FILTER 22-RF010-AL	8-15, 8-17, 8-19, 8-55, 8-57, 8-59
W90V1010	90459-3460	FOOTPRINT FILTER 22-RF010-AL	8-15, 8-17, 8-19, 8-55, 8-57, 8-59
W			
W30B22014	90459-7273	PHOTOCELL E3Z-T81C-G0SR D-CN	1-99
WB30B2016	90459-7274	PHOTOCELL E3Z-T81C-G0SR L-CN	1-99
A01W0020	351150-0403	CABLE OLFLEX 3X0,75 MM2 LIGHT/GREY	11-115
A01W0130	90600-4187	CABLE, SICK DOL-1208-G02MA	11-115
A01W1999	3025918-0000	COPPER BRAID	8-21, 8-61
A01W2010	351303-0050	ACTUATOR/SENSOR CABLE RKMVN 3-224/5M	8-21, 8-61
A01W2012	90458-2837	PLUG SOCKET, KMEB-1-24-5-LED	8-21, 8-61
A01W2014	351150-0406	CABLE OLFLEX 7X0,75 MM2 LIGHT/GREY	8-21, 8-61
A01W3010	90458-1740	AIR GUN ASSEMBLY, CEJN 199589668	6-5
A01W9999	2939102-0100	CABLE	11-115
A03W2012	351501-0010	ETHERNET PATCH CABLE, FL CAT5 PATCH 1,0	8-15, 8-17, 8-19, 8-55, 8-57, 8-59
A03W2016	2855106-0000	COPPER BRAID	8-15, 8-17, 8-19, 8-55, 8-57, 8-59
A03W2020	90220-0183	SCR. CABLE 2X0,34MM2	8-15, 8-17, 8-19, 8-55, 8-57, 8-59
A03W2022	90220-0183	SCR. CABLE 2X0,34MM2	8-15, 8-17, 8-19, 8-55, 8-57, 8-59
A03W2024	90220-0183	SCR. CABLE 2X0,34MM2	8-15, 8-17, 8-19, 8-55, 8-57, 8-59
A03W2026	90220-0183	SCR. CABLE 2X0,34MM2	8-15, 8-17, 8-19, 8-55, 8-57, 8-59
A03W2028	90220-0183	SCR. CABLE 2X0,34MM2	8-15, 8-17, 8-19, 8-55, 8-57, 8-59
A03W2029	578874-0000	HF BRAIDED WIRE 1,6 MM2	8-15, 8-17, 8-19, 8-55, 8-57, 8-59
A03W2121	90600-0850	CABLE, SNP-DF1 GATEWAY	8-15, 8-17, 8-19, 8-55, 8-57, 8-59
A07W1021	1368508-0101	WIRE	8-7, 8-53
A08W2010	351150-0431	CABLE OLFLEX 2X0,75 MM2 LIGHT/GREY	8-21, 8-61
A08W2012	351150-0424	CABLE OLFLEX 18X0,75 MM2 LIGHT/GREY	8-21, 8-61
A08W2020	351501-0050	ETHERNET PATCH CABLE, FL CAT5 PATCH 5,0	8-21, 8-61
A10W2000	351150-0406	CABLE OLFLEX 7X0,75 MM2 LIGHT/GREY	8-21, 8-61
A30W1010	90459-5189	SLIM POW. RAIL, KINETIX, 2 AX, 2094-PRS2	8-15, 8-17, 8-19, 8-55, 8-57, 8-59
A50W2050	351150-0404	CABLE OLFLEX 4X0,75 MM2 LIGHT/GREY	11-41
A90W9901	2992449-0000	CABLE WITH CONNECTOR	8-21, 8-61
B01W0132	90600-4186	CABLE, SICK DOL-1205-G05MX	11-115
B01W0135	90459-6604	LABLE SICK DOL-2312-G 05MMA3	11-115
B01W0136	90459-6586	ACT/SENS.Y-CABLE, ASBN 2-PRKMV 4-07/0,6M	11-115
B01W0137	351309-0050	'ACTUATOR/SENSOR CABLE PRKT 4-07/5M	11-115
E01W1020	351150-0412	CABLE OLFLEX 3X1,5 MM2 LIGHT/GREY	8-21, 8-61
E08W1010	351150-0403	CABLE OLFLEX 3X0,75 MM2 LIGHT/GREY	8-21, 8-61
F09W2010	90600-6081	CABLE, UNITRONIC BUS CAN 1X2X0,5 UL/CSA	8-15, 8-17, 8-19, 8-55, 8-57, 8-59
F09W2026	90459-4252	CABLE M12-C101, 20-056-10	8-21, 8-61
F09W2032	351303-0050	ACTUATOR/SENSOR CABLE RKMVN 3-224/5M	8-21, 8-61
F09W2040	90600-5930	CABLE C9 1M, 20-057-15	8-21, 8-61
F09W2042	3041925-0000	EARTH WIRE	8-21, 8-61
P30W2010	90459-6604	LABLE SICK DOL-2312-G 05MMA3	8-21, 8-61
P50W1011	351150-0412	CABLE OLFLEX 3X1,5 MM2 LIGHT/GREY	8-21, 8-61
P50W2011	351150-0406	CABLE OLFLEX 7X0,75 MM2 LIGHT/GREY	8-21, 8-61
V01W0140	90458-2837	PLUG SOCKET, KMEB-1-24-5-LED	11-115
V10W2020	351309-0100	ACTUATOR/SENSOR CABLE PRKT 4-07/10M	11-5
V10W2022	90459-6586	ACT/SENS.Y-CABLE, ASBN 2-PRKMV 4-07/0,6M	11-5
V30W1030	351150-0413	CABLE OLFLEX 4GX1,5 MM2 LIGHT/GREY	8-21, 8-61
V30W2010	351150-0403	CABLE OLFLEX 3X0,75 MM2 LIGHT/GREY	8-21, 8-61
V30W2012	351150-0403	CABLE OLFLEX 3X0,75 MM2 LIGHT/GREY	8-21, 8-61
V30W2030	351150-0404	CABLE OLFLEX 4X0,75 MM2 LIGHT/GREY	8-21, 8-61
V30W2080	351303-0050	ACTUATOR/SENSOR CABLE RKMVN 3-224/5M	8-21, 8-61
V30W2080	351304-0050	ACTUATOR/SENSOR CABLE RKMWVN 3-224/5M	8-21, 8-61
V30W2090	351305-0050	ACTUATOR/SENSOR CABLE PRKMV 4-07/5M	8-21, 8-61
V30W2092	90232-0116	FIBRE E3F-R2B4	2-19
V30W2120	351303-0050	ACTUATOR/SENSOR CABLE RKMVN 3-224/5M	8-21, 8-61
V30W2120	351304-0050	ACTUATOR/SENSOR CABLE RKMWVN 3-224/5M	8-21, 8-61
V40W2030	351309-0100	ACTUATOR/SENSOR CABLE PRKT 4-07/10M	8-21, 8-61
V40W2032	90459-6586	ACT/SENS.Y-CABLE, ASBN 2-PRKMV 4-07/0,6M	8-21, 8-61
V40W2040	351309-0100	ACTUATOR/SENSOR CABLE PRKT 4-07/10M	8-21, 8-61
V40W2042	90459-6586	ACT/SENS.Y-CABLE, ASBN 2-PRKMV 4-07/0,6M	8-21, 8-61
V40W2060	351303-0050	ACTUATOR/SENSOR CABLE RKMVN 3-224/5M	8-21, 8-61
V40W2070	351309-0100	ACTUATOR/SENSOR CABLE PRKT 4-07/10M	8-21, 8-61
V40W2072	90459-6586	ACT/SENS.Y-CABLE, ASBN 2-PRKMV 4-07/0,6M	8-21, 8-61
V40W2100	351309-0100	ACTUATOR/SENSOR CABLE PRKT 4-07/10M	8-21, 8-61
V40W2102	90459-6586	ACT/SENS.Y-CABLE, ASBN 2-PRKMV 4-07/0,6M	8-21, 8-61
V50W1015	351150-0417	CABLE OLFLEX 3X2,5 MM2 LIGHT/GREY	8-21, 8-61
V50W1017	2955400-0200	CABLE CONNECTION	11-41
V50W1020	2984837-0000	CABLE	11-41
V50W2010	90220-0034	THERMOCABLE TEX/SITW-20F-KX 2X0,5MM2	11-41

Pos	Part No	Description	Page No
W			
V90W2050	351309-0100	ACTUATOR/SENSOR CABLE PRKT 4-07/10M	8-21, 8-61
V90W2052	90459-6586	ACT/SENS.Y-CABLE, ASBN 2-PRKMV 4-07/0,6M	8-21, 8-61
V90W2130	351309-0100	ACTUATOR/SENSOR CABLE PRKT 4-07/10M	11-133
V90W2132	90459-6586	ACT/SENS.Y-CABLE, ASBN 2-PRKMV 4-07/0,6M	11-133
V90W2140	351309-0100	ACTUATOR/SENSOR CABLE PRKT 4-07/10M	11-131
W10W1010	90220-0104	SCR. CABLE 4X1,5MM2	8-21
W10W1010	315756-0009	ÖLFLEX CONTROL TM CY 4G1,5, 281604CY	8-61
W10W1012	90220-0104	SCR. CABLE 4X1,5MM2	8-21
W10W1012	315756-0009	ÖLFLEX CONTROL TM CY 4G1,5, 281604CY	8-61
W30W1010	90600-3293	MOTOR POWER CABLE 2090-XXNPMF-16S09	8-21, 8-61
W30W1020	90600-3293	MOTOR POWER CABLE 2090-XXNPMF-16S09	8-21, 8-61
W30W2010	90600-3294	MOTOR FEEDBACK CABLE 2090-XXNFMF-S09/C	8-21, 8-61
W30W2012	351304-0050	ACTUATOR/SENSOR CABLE RKMWVN 3-224/5M	8-21, 8-61
W30W2014	90600-1768	ACTUATOR/SENSOR CABLE RKTS 5-298/5M	8-21, 8-61
W30W2016	90459-6586	ACT/SENS.Y-CABLE, ASBN 2-PRKMV 4-07/0,6M	8-21, 8-61
W30W2018	90459-2540	SERCOS CABLE 3.0M, 2090-SCEP3-0	8-15, 8-17, 8-19, 8-55, 8-57, 8-59
W30W2020	90600-3294	MOTOR FEEDBACK CABLE 2090-XXNFMF-S09/C	8-21, 8-61
W30W2022	351303-0050	ACTUATOR/SENSOR CABLE RKMVN 3-224/5M	8-21, 8-61
W30W2022	351304-0050	ACTUATOR/SENSOR CABLE RKMWVN 3-224/5M	8-21, 8-61
W30W2024	90459-2536	SERCOS CABLE 0.1M, 2090-SCEP0-1	8-15, 8-17, 8-19, 8-55, 8-57, 8-59
W30W2026	90459-2540	SERCOS CABLE 3.0M, 2090-SCEP3-0	8-15, 8-17, 8-19, 8-55, 8-57, 8-59
W40W1010	90220-0104	SCR. CABLE 4X1,5MM2	8-21
W40W1010	315756-0009	ÖLFLEX CONTROL TM CY 4G1,5, 281604CY	8-61
W40W1012	90220-0104	SCR. CABLE 4X1,5MM2	8-21
W40W1012	315756-0009	ÖLFLEX CONTROL TM CY 4G1,5, 281604CY	8-61
W40W1020	90220-0104	SCR. CABLE 4X1,5MM2	8-21
W40W1020	315756-0009	ÖLFLEX CONTROL TM CY 4G1,5, 281604CY	8-61
W40W1030	90220-0104	SCR. CABLE 4X1,5MM2	8-21
W40W1030	315756-0009	ÖLFLEX CONTROL TM CY 4G1,5, 281604CY	8-61
W40W1032	90220-0104	SCR. CABLE 4X1,5MM2	8-21
W40W1032	315756-0009	ÖLFLEX CONTROL TM CY 4G1,5, 281604CY	8-61
W40W1034	90220-0104	SCR. CABLE 4X1,5MM2	8-21
W40W1034	315756-0009	ÖLFLEX CONTROL TM CY 4G1,5, 281604CY	8-61
W90W1010	90220-0104	SCR. CABLE 4X1,5MM2	8-21
W90W1010	315756-0009	ÖLFLEX CONTROL TM CY 4G1,5, 281604CY	8-61
W90W1012	90220-0104	SCR. CABLE 4X1,5MM2	8-21
W90W1012	315756-0009	ÖLFLEX CONTROL TM CY 4G1,5, 281604CY	8-61
X			
A01X0000	2936703-0200	TERMINAL	11-105, 11-107
A01X0001	2884592-0200	TERMINAL	8-7, 8-53
A01X0040	2936702-0200	TERMINAL	11-105, 11-107
A01X1000	2896524-0100	TERMINAL	8-7, 8-53
A01X1003	2884594-0200	TERMINAL	8-7, 8-53
A01X1020	90459-3845	POWER SOCKET, Z-SD230	8-15, 8-17, 8-19
A01X2000	2872337-0200	TERMINAL	8-7, 8-53
A01X2098	2884589-0100	TERMINAL	8-7, 8-53
A01X3010	90459-3000	DISTRIBUTOR, MS4-FRM-1/4-A8	6-5
A01X3020	90459-3000	DISTRIBUTOR, MS4-FRM-1/4-A8	6-5
A03X2016	90459-6470	CONNECTOR RJ45 TER. BL., AK-U0-RJ45-TB2B	8-15, 8-17, 8-19, 8-55, 8-57, 8-59
A03X2018	90459-6470	CONNECTOR RJ45 TER. BL., AK-U0-RJ45-TB2B	8-15, 8-17, 8-19, 8-55, 8-57, 8-59
A03X2020	90459-6470	CONNECTOR RJ45 TER. BL., AK-U0-RJ45-TB2B	8-15, 8-17, 8-19, 8-55, 8-57, 8-59
A08X1000	2892718-0100	TERMINAL	7-3
A08X2000	2892719-0100	TERMINAL	7-3
A10X2000	2992460-0100	CONNECTOR	4-19
A10X2000	2992470-0100	CONNECTION BOX	4-3, 4-5, 4-7
E01X1013	2872336-0100	TERMINAL	8-7, 8-53
F09X2040	90601-1168	SOCKET CONNECTOR, NECA-S1G9-P9-MP3	6-5
P30X2010	90459-6679	CONN 15 P FEM, AUX. FEEDB,2090-K6CK-D15M	8-15, 8-17, 8-19, 8-55, 8-57, 8-59
V50X1015	2913340-0100	CONNECTOR	4-3, 4-5, 4-7
V50X2010	90326-0020	PLUG, FEMALE YELLOW CR-AL	11-35, 11-37
W10X2010	90459-6470	CONNECTOR RJ45 TER. BL., AK-U0-RJ45-TB2B	8-15, 8-17, 8-19, 8-55, 8-57, 8-59
W30X2010	90459-2551	CONNECTOR, MOTOR FEEDBACK 15 PIN MALE	8-15, 8-17, 8-19, 8-55, 8-57, 8-59
W30X2012	90459-2550	I/O CONNECTOR 26 PIN MALE, 2090-K6CK-D26	8-15, 8-17, 8-19, 8-55, 8-57, 8-59
W30X2020	90459-2551	CONNECTOR, MOTOR FEEDBACK 15 PIN MALE	8-15, 8-17, 8-19, 8-55, 8-57, 8-59
W30X2022	90459-2550	I/O CONNECTOR 26 PIN MALE, 2090-K6CK-D26	8-15, 8-17, 8-19, 8-55, 8-57, 8-59
W40X1032	2884591-0100	TERMINAL	8-7, 8-53
W40X1034	2884593-0100	TERMINAL	8-7, 8-53
W40X2010	90459-6470	CONNECTOR RJ45 TER. BL., AK-U0-RJ45-TB2B	8-15, 8-17, 8-19, 8-55, 8-57, 8-59
W40X2020	90459-6470	CONNECTOR RJ45 TER. BL., AK-U0-RJ45-TB2B	8-15, 8-17, 8-19, 8-55, 8-57, 8-59
W40X2030	90459-6470	CONNECTOR RJ45 TER. BL., AK-U0-RJ45-TB2B	8-15, 8-17, 8-19, 8-55, 8-57, 8-59
W90X2010	90459-6470	CONNECTOR RJ45 TER. BL., AK-U0-RJ45-TB2B	8-15, 8-17, 8-19, 8-55, 8-57, 8-59
A01XL210	2872298-0100	TERMINAL	8-7, 8-53
A01XL211	2872299-0100	TERMINAL	8-7, 8-53
A01XL212	2872318-0100	TERMINAL	8-7, 8-53
A01XL213	2872319-0100	TERMINAL	8-7, 8-53

Pos	Part No	Description	Page No	Pos	Part No	Description	Page No

Tetra Pak

SPC binder labels. 40 mm Full width *Note! This page is generated* **automatically.** *using the* **variable definitions** *made in the* **front page** *file!!*

Straw Applicator 30 by Tetra Pak
663350-0300
Issue: 2010-03 Doc No: SPC-3039538-0104

Straw Applicator 30 by Tetra Pak
663350-0300
Issue: 2010-03 Doc No: SPC-3039538-0104

Straw Applicator 30 by Tetra Pak
663350-0300
Issue: 2010-03 Doc No: SPC-3039538-0104

Straw Applicator 30 by Tetra Pak
663350-0300
Issue: 2010-03 Doc No: SPC-3039538-0104

Straw Applicator 30 by Tetra Pak
663350-0300
Issue: 2010-03 Doc No: SPC-3039538-0104

Straw Applicator 30 by Tetra Pak
663350-0300
Issue: 2010-03 Doc No: SPC-3039538-0104

Straw Applicator 30 by Tetra Pak
663350-0300
Issue: 2010-03 Doc No: SPC-3039538-0104

Straw Applicator 30 by Tetra Pak
663350-0300
Issue: 2010-03 Doc No: SPC-3039538-0104

Straw Applicator 30 by Tetra Pak
663350-0300
Issue: 2010-03 Doc No: SPC-3039538-0104

Straw Applicator 30 by Tetra Pak
663350-0300
Issue: 2010-03 Doc No: SPC-3039538-0104

Straw Applicator 30 by Tetra Pak
663350-0300
Issue: 2010-03 Doc No: SPC-3039538-0104

SPC binder labels. 30 mm Half width *Note! This page is generated* **automatically.** *using the* **variable definitions** *made in the* **front page** *file!!*

Straw Applicator 30 by Tetra Pak
663350-0300
Issue: 2010-03 Doc No: SPC-3039538-0104

Straw Applicator 30 by Tetra Pak
663350-0300
Issue: 2010-03 Doc No: SPC-3039538-0104

Straw Applicator 30 by Tetra Pak
663350-0300
Issue: 2010-03 Doc No: SPC-3039538-0104

Straw Applicator 30 by Tetra Pak
663350-0300
Issue: 2010-03 Doc No: SPC-3039538-0104

Straw Applicator 30 by Tetra Pak
663350-0300
Issue: 2010-03 Doc No: SPC-3039538-0104

Straw Applicator 30 by Tetra Pak
663350-0300
Issue: 2010-03 Doc No: SPC-3039538-0104

Straw Applicator 30 by Tetra Pak
663350-0300
Issue: 2010-03 Doc No: SPC-3039538-0104

Straw Applicator 30 by Tetra Pak
663350-0300
Issue: 2010-03 Doc No: SPC-3039538-0104

Straw Applicator 30 by Tetra Pak
663350-0300
Issue: 2010-03 Doc No: SPC-3039538-0104

Straw Applicator 30 by Tetra Pak
663350-0300
Issue: 2010-03 Doc No: SPC-3039538-0104

Straw Applicator 30 by Tetra Pak
663350-0300
Issue: 2010-03 Doc No: SPC-3039538-0104

Straw Applicator 30 by Tetra Pak
663350-0300
Issue: 2010-03 Doc No: SPC-3039538-0104

Straw Applicator 30 by Tetra Pak
663350-0300
Issue: 2010-03 Doc No: SPC-3039538-0104