Binder labels. Full width

Note! This page is generated automatically.

TBA/9 120V->
648152-120V->
Doc No: SPC-87269-1

TBA/9 120V->
648152-120V->
Doc No: SPC-87269-1

TBA/9 120V->
648152-120V->
Doc No: SPC-87269-1

TBA/9 120V->
648152-120V->
Doc No: SPC-87269-1

TBA/9 120V->
648152-120V->
Doc No: SPC-87269-1

TBA/9 120V->
648152-120V->
Doc No: SPC-87269-1

TBA/9 120V->
648152-120V->
No: SPC-87269-1

TBA/9 120V->
648152-120V->
Doc No: SPC-87269-1

SPC 648152-120V==>130V
Tetra Brik Aseptic TBA/9

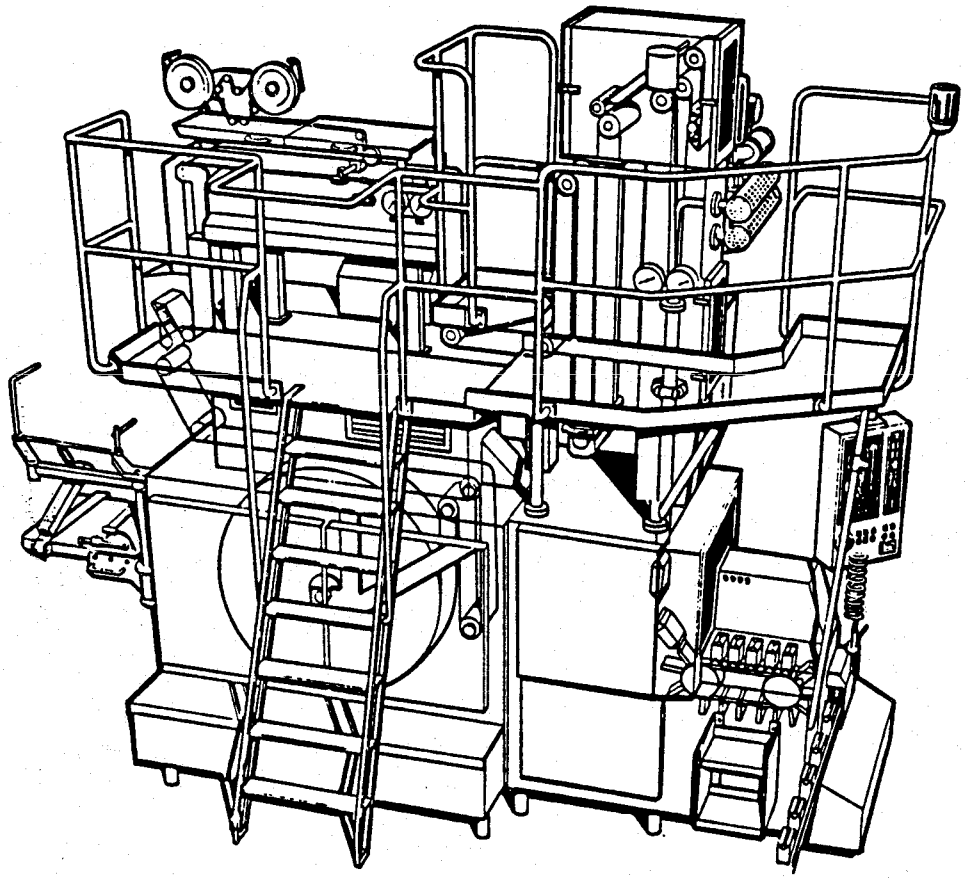

87269-1

©Tetra Pak

Important Info 000
Superstructure 100
Machine Body 200
Drive Unit 300
Jaw System 400
Final Folder 500
Service Unit 600
Strip Applicator 700
Pull Tab Device 800
Ordinary Accessories 900

Machine identification

As in the car industry, we have machine- and group number plates on the machine, to give information about machine type and development status.

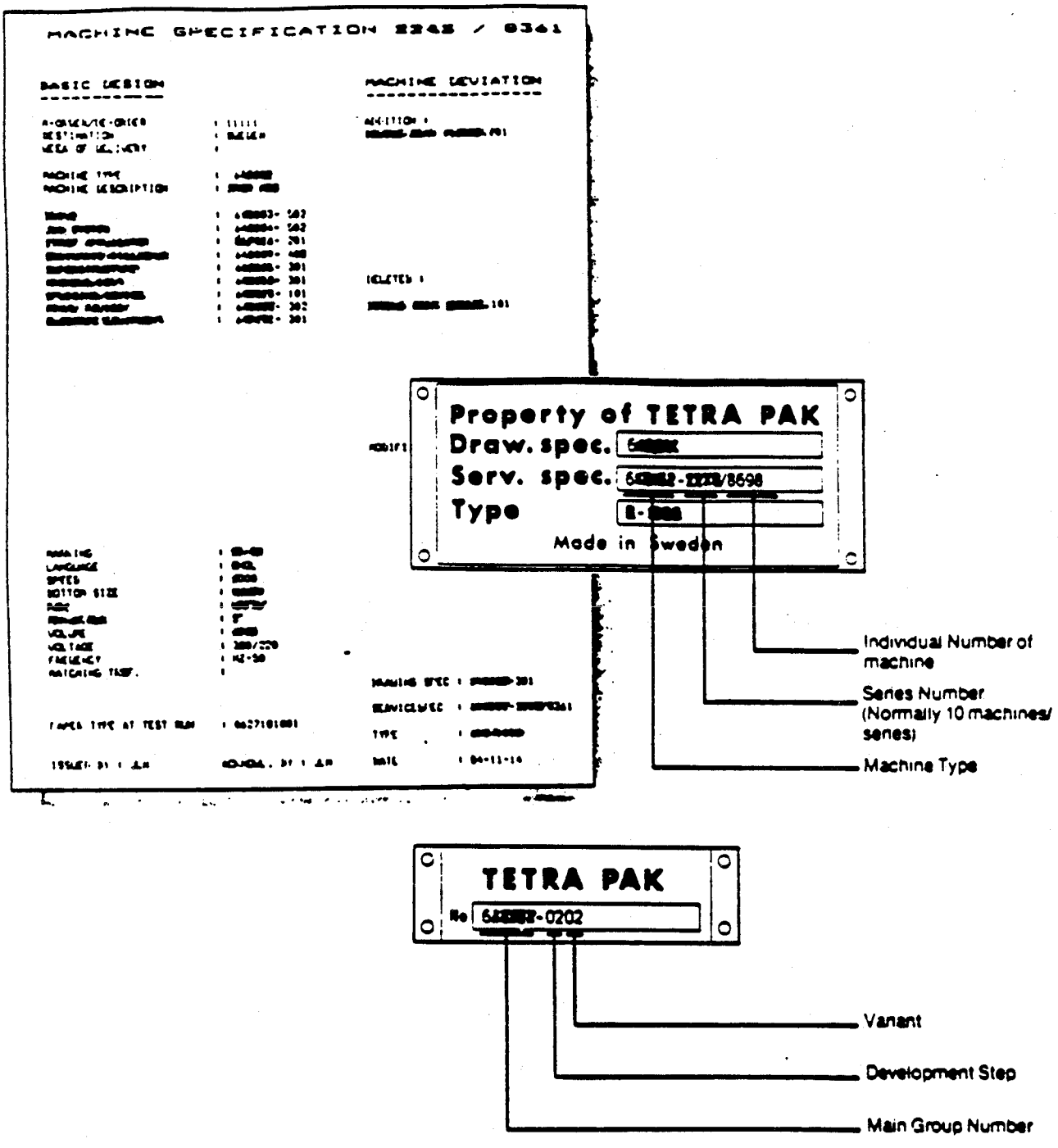

In all communication regarding a machine, it ismost important that both sides are talking about the same thing.As our machines are under continous development,it is impossible for our stores and service engineers to find a correct spare part if the customer orders e.g. "the new version of volume flap". The machine status must be clearly specified utilizing its machine and series numbers. When the machine is delivered,the actual status is fully registered on its machine plates and also in a machine specification sent with the machine. If local rebuildings or modifications are made, corresponding updating has to be made on the machine number plate and machine specification. Alterations are also to be reported to Tetra Pak Service for updating of our computer files.

Introduction to the Catalogue System.

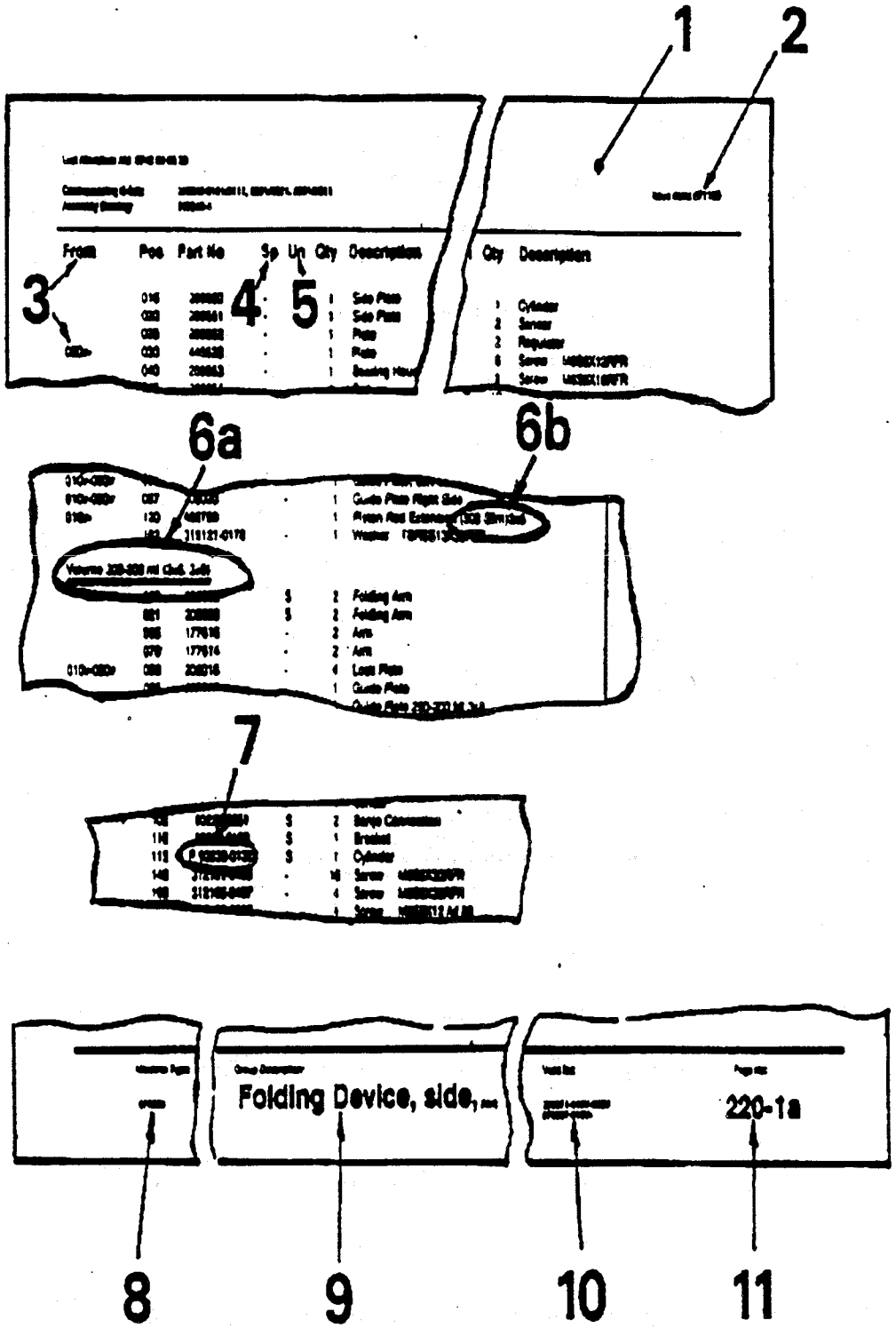

Introduction to the Catalogue System.

1. The *shaded area* on top of the page contains internal information for the Catalogue Group.

2. **Issue Date:** of the page.

3. **From**: indicates the "valid from or for" development step of the main group.

4. **Sp**: Spare Part Code. The appearing codes are:
   U = Start Up Kit
   P = Production Kit
   S = Service Station Kit
   C = Central Store
   (Security Parts)

5. **Un**: Unit Code. e.g. mm, kg etc.

6. a **Variant Headline**. Normally the variants (volumes, package pattern etc) are written in blocks, described by separate headlines.

   b Minor deviations within a variant block can be given as an extended part description.

7. **P-**: in front of a Part Number indicates, that this particular part is a foreign bought part, with own registered spares.These parts are listed in a separate, COMPONENT CATALOGUE.

8. **Machine Type:**. Machine Type(s) for which this page can be used.

9. **Group Description:**. A function description, maybe completed with some minor variant text.

10. **Valid for**: Main Group number(s) with development steps, for which the page can be used.

11. **Page Number**: The first digit indicates **catalogue section**, the second and third digit the **function** in the group. The digits after the dash are **variants or developments** of the page (function).

Note! From now on illustration/text are on facing pages. Before searching any spare part number in the catalogue, MAKESURE that you know your machine status.

SPC 648152
Tetra Brik Aseptic TBA/9

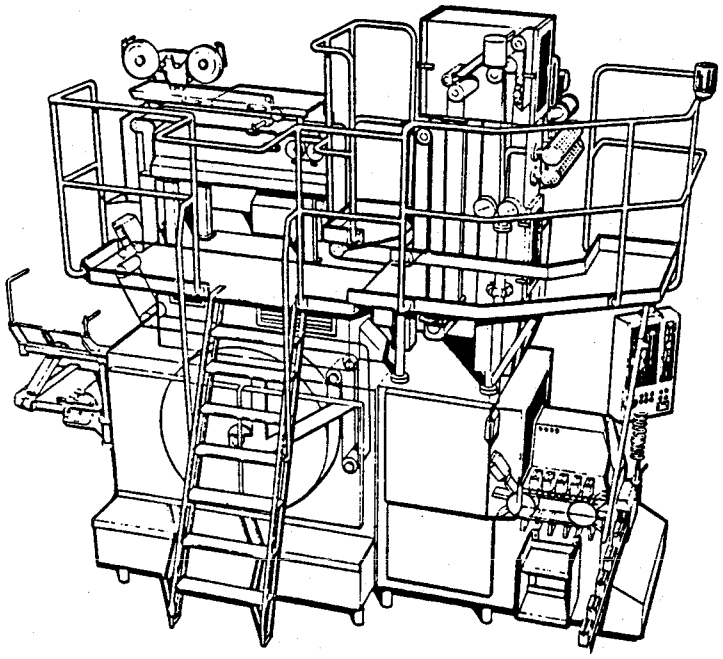

			83	83	83	83	85	85	
Machine specification			648152-020V	648152-030V	648152-040V	648152-050V	648152-100V	648152-110V	648152-120V	648152-130V
Serial number Italy			-	-	20044	20055	20059	20079	20088	
Serial number Sweden			11975	11977	12164	12222	12270	12463	12562	
1	Superstructure	648111-0_0V	2	2	2	3	6	7	8	9
2	Machine body	648102-0_0V	2	3	3	3	6	7	8	9
3	Drive unit	648103-0_0V	2	2	3	3	6	6	7	8
4	Jaw system	648104-0_0V	2	2	2	3	6	7	8	9
5	Final Folder	648105-0_0V	2	2	3	4	6	7	8	9
6	Service Unit	648106-0_0V	2	2	2	2	6	7	8	9
7	Strip applicator	648107-0_0V	2	2	2	2	6	7	8	9
8	Pull Tab Device	648108-0_0V	1	1	1	1	-	-	-	-
8	Pull Tab Device	648118-0_0V	-	-	-	-	6	7	7	8
9	Accessories	648109-0_0V	2	2	2	3	6	7	8	9
	Extra equipment	648119-0_0V	2	2	2	2	6	7	8	9

Group Number Index
648151/52

Date Printed: 901018

Page No	PART NO	LAST AM	DESCRIPTION	GROUP NO
960-2.1	C- 7003-0101	6317 83-11-03	BOBBIN	C- 400865-010V
	C- 7003-0101	6317 83-11-03	BOBBIN	C- 441000-020V 050V
	C- 7003-0101	6317 83-11-03	BOBBIN	C- 547756-010V
511-1.1	CR- 31390-0102	13601 89-11-03	ELEMENT	CR- 256547-020V 030V
	CR- 31390-011V	12952 89-06-14	ELEMENT	CR- 256547-020V 030V
603-1.1	C- 37877-0301	10574 87-10-07	HEATING BLOCK	C- 271699-020V 030V
955-1.5.4	C- 37877-0301	10574 87-10-07	HEATING BLOCK	C- 752046-010V
603-1.2	C- 37894-0101	5061 81-11-06	COUNTER RAIL	C- 271699-020V 030V
955-1.5.5	C- 37894-0101	5061 81-11-06	COUNTER RAIL	C- 752046-010V
	C- 37898-0101	6317 83-11-03	TEARING DEVICE	C- 271699-020V
	BE- 39452-010V	5842 88-04-07	IH EQUIPMENT	CE- 67721-010V
	BE- 39452-0103	5842 88-04-07	IH EQUIPMENT	CE- 68308-010V
	BE- 39452-0103	5842 88-04-07	IH EQUIPMENT	BE- 649205-050V 070V
	BE- 39642-0102	7188 88-09-12	IH-EQUIPMENT	RK- 68874-010V
	CE- 40903-010V	5842 88-04-07	IH EQUIPMENT	CE- 67721-010V
	CE- 40903-0101	5842 88-04-07	IH EQUIPMENT	CE- 68308-010V
	CE- 40903-0101	5842 88-04-07	IH EQUIPMENT	BE- 649205-050V 070V
	RK- 41274-0101	8587 89-01-24	EL-MTRL JAW SYSTEM OVERL.	RK- 456716-010V
	RK- 41275-0101	8588 89-01-24	EL-MTRL JAW SYSTEM OVERL.	RK- 456717-010V
	RK- 41373-010V	10060 89-11-15	ELECTRIC MATERIALS	RK- 43929-010V
	RK- 41373-010V	10060 89-11-15	ELECTRIC MATERIALS	RK- 649320-010V
	RK- 41377-010V	13835 90-02-06	ELECTRIC MATERIALS	RK- 43880-010V
	RK- 41377-0101	13835 90-02-06	ELECTRIC MATERIALS	RK- 649324-010V
	RK- 41378-0101	10106 89-01-23	EL-MTRL JAW SYSTEM OVERL.	RK- 752414-010V
	RK- 41379-0101	10107 89-01-24	EL-MTRL JAW SYSTEM OVERL.	RK- 752412-010V
	RK- 41461-010V	13836 90-02-06	ELECTRIC MATERIALS	RK- 43879-010V
	RK- 41461-0101	13836 90-02-06	ELECTRIC MATERIALS	RK- 649340-010V
	RK- 41474-010V	14354 90-01-18	ELECTRIC MATERIALS	RK- 41475-010V
	RK- 41474-010V	14354 90-01-18	ELECTRIC MATERIALS	RK- 649366-010V
	RK- 41475-010V	11755 89-06-29	ELECTRICAL DOCUMENT	RK- 649366-010V
	RK- 41486-0101	10869 89-01-24	EL-MTRL JAW SYSTEM OVERL.	RK- 752408-010V
	RK- 41510-010V	11772 89-07-06	EL-MATERIAL	RK- 69566-010V
	RK- 41510-010V	11772 89-07-06	EL-MATERIAL	RK- 649369-010V
	RK- 41511-010V	11773 89-07-06	EL-MATERIAL	RK- 69564-010V
	RK- 41511-010V	11773 89-07-06	EL-MATERIAL	RK- 649370-010V
	RK- 41512-010V	11774 89-07-06	EL-MATERIAL	RK- 69565-010V
	RK- 41512-010V	11774 89-07-06	EL-MATERIAL	RK- 649371-010V
	RK- 41534-0101	12256 89-01-23	EL-MTRL JAW SYSTEM OVERL.	RK- 752410-010V
	RK- 41539-010V	14355 90-01-18	ELECTRIC MATERIALS	RK- 41540-010V
	RK- 41539-010V	14355 90-01-18	ELECTRIC MATERIALS	RK- 649392-010V
	RK- 41540-010V	12539 89-06-29	ELECTRICAL DOCUMENT	RK- 649392-010V
	RK- 41544-010V	12324 88-12-22	MATERIAL	RK- 41545-010V
	RK- 41544-0101	12324 88-12-22	MATERIAL	RK- 649389-010V

Page No	PART NO	LAST AM	DESCRIPTION	GROUP NO
	RK- 41545-0101	12324 88-12-22	DOCUMENT	RK- 649389-010V
	RK- 41546-010V	12325 88-12-22	MATERIAL	RK- 41547-010V
	RK- 41546-0101	12325 88-12-22	MATERIAL	RK- 649390-010V
	RK- 41547-0101	12325 88-12-22	DOCUMENT	RK- 649390-010V
	RK- 41548-010V	12326 88-12-22	MATERIAL	RK- 41549-010V
	RK- 41548-0101	12326 88-12-22	MATERIAL	RK- 649391-010V
	RK- 41549-0101	12326 88-12-22	DOCUMENT	RK- 649391-010V
	RK- 41567-010V	13834 90-02-06	ELECTRIC MATERIALS	RK- 41578-010V
	RK- 41567-0101	13834 90-02-06	ELECTRIC MATERIALS	RK- 649308-010V
	CE- 41572-010V	12797 89-04-25	ELECTRIC MATERIALS	CE- 41573-010V
	CE- 41572-010V	12797 89-04-25	ELECTRIC MATERIALS	RK- 649400-010V
	CE- 41573-010V	12797 89-04-25	ELECTRICAL DOCUMENT	RK- 649400-010V
	CE- 41574-010V	12798 89-04-25	ELECTRIC MATERIALS	CE- 41575-010V
	CE- 41574-010V	12798 89-04-25	ELECTRIC MATERIALS	RK- 649401-010V
	CE- 41575-010V	12798 89-04-25	ELECTRICAL DOCUMENT	RK- 649401-010V
	CE- 41576-010V	12799 89-04-25	ELECTRIC MATERIALS	CE- 41577-010V
	CE- 41576-010V	12799 89-04-25	ELECTRIC MATERIALS	RK- 649402-010V
	CE- 41577-010V	12799 89-04-25	ELECTRICAL DOCUMENT	RK- 649402-010V
	RK- 41578-0101	9358 89-08-10	ELECTRICAL DOCUMENT	RK- 649308-010V
	RK- 43879-0101	10566 89-08-08	ELECTRICAL DOCUMENT	RK- 649340-010V
	RK- 43880-0101	10064 89-08-08	ELECTRICAL DOCUMENT	RK- 649324-010V
	RK- 43929-010V	10060 89-11-15	ELECTRICAL DOCUMENT	RK- 649320-010V
	C- 67025-0201	8344 85-10-30	DESIGN CORRECTION LOGIC	CE- 67716-010V
	C- 67025-0201	8344 85-10-30	DESIGN CORRECTION LOGIC	CE- 68128-010V
	C- 67025-0201	8344 85-10-30	DESIGN CORRECTION LOGIC	CE- 68304-010V
	C- 67027-0102	8010 85-06-26	DATACABLE	CE- 68128-010V
	C- 67051-0102	8345 85-10-28	COMPONENT LIST	C- 67027-010V
	C- 67054-0101	8344 85-10-30	COMPONENT LIST	C- 67025-020V
	C- 67054-0201	8099 85-06-26	COMPONENT LIST	C- 67062-010V
	C- 67058-0201	8896 86-07-11	CIRCUIT BOARD	CE- 67716-010V
	C- 67058-0201	8896 86-07-11	CIRCUIT BOARD	CE- 68128-010V
	C- 67058-0201	8896 86-07-11	CIRCUIT BOARD	CE- 68304-010V
208-1.1	C- 67062-010V	8099 85-06-26	POTENTIOMETER	C- 295026-020V
	C- 67062-0201	8897 86-07-11	POTENTIOMETER	CE- 68379-010V
	C- 67062-0201	8897 86-07-11	POTENTIOMETER	C- 295026-030V
	C- 67347-0101	9248 88-03-17	BRAKE	RK- 68874-010V
	CE- 67716-010V	13583 89-09-01	EL-CABINET AB9-050V	CE- 67721-010V
	CE- 67716-0101	13583 89-09-01	EL-CABINET AB9-050V	BE- 649205-050V
	CE- 67718-010V	9622 88-04-07	MACHINE AB9-050V	CE- 67721-010V
	CE- 67718-0101	9622 88-04-07	MACHINE AB9-050V	BE- 649205-050V
	CE- 67719-010V	9622 88-04-07	EQUIPMENT AB9-050V	CE- 67721-010V
	CE- 67719-0101	9622 88-04-07	EQUIPMENT AB9-050V	BE- 649205-050V
	CE- 67720-010V	9622 88-04-07	EXTRA EQUIPMENT AB9-050V	CE- 67721-010V

Page No	PART NO	LAST AM	DESCRIPTION	GROUP NO
	CE- 67720-0101	9622 88-04-07	EXTRA EQUIPMENT AB9-050V	BE- 649205-050V
	CE- 67721-0101	9622 88-04-07	ELECTRICAL DOCUMENT	BE- 649205-050V
	CE- 67722-010V	9622 88-04-07	SPARE PARTS KIT AB9-050V	CE- 67721-010V
	CE- 67722-0101	9622 88-04-07	SPARE PARTS KIT AB9-050V	BE- 649205-050V
	CE- 68128-010V	10860 88-10-18	ELECTRICAL CABINET	CE- 68134-010V
	CE- 68128-0101	10860 88-10-18	ELECTRICAL CABINET	BE- 649204-050V
	CE- 68129-010V	10860 88-10-18	SPARE PART KIT TB/9-050V	CE- 68134-010V
	CE- 68129-0101	10860 88-10-18	SPARE PART KIT TB/9-050V	BE- 649204-050V
	CE- 68131-010V	10860 88-10-18	MACHINE TB/9-050V	CE- 68134-010V
	CE- 68131-0101	10860 88-10-18	MACHINE TB/9-050V	BE- 649204-050V
	CE- 68132-010V	10860 88-10-18	EQUIPMENT TB/9-050V	CE- 68134-010V
	CE- 68132-0101	10860 88-10-18	EQUIPMENT TB/9-050V	BE- 649204-050V
	CE- 68133-010V	10860 88-10-18	EXTRA EQUIPMENT TB/9-050V	CE- 68134-010V
	CE- 68133-010V	10860 88-10-18	EXTRA EQUIPMENT TB/9-050V	BE- 649204-050V
	CE- 68134-0101	10860 88-10-18	EL-DOCUMENT TB/9-050V	BE- 649204-050V
971-1.5	C- 68161-0102	13593 90-06-21	COIL ELEMENT	C- 794092-010V
	RK- 68178-0101	14287 89-12-18	"L.L.F. HEAD SPACE KIT"	C- 752669-010V
	RK- 68179-010V	10822 89-07-04	ELECTRICAL DOCUMENT	RK- 68178-010V
	RK- 68180-010V	10822 89-07-04	ELECTRIC MATERIALS	RK- 68178-010V
	RK- 68180-010V	10822 89-07-04	ELECTRIC MATERIALS	RK- 68179-010V
	RK- 68181-0101	14288 89-12-18	"L.L.F. HEAD SPACE KIT"	C- 752985-010V
	RK- 68182-010V	10823 89-07-04	ELECTRICAL DOCUMENT	RK- 68181-010V
	RK- 68183-010V	10823 89-07-04	ELECTRIC MATERIALS	RK- 68181-010V
	RK- 68183-010V	10823 89-07-04	ELECTRIC MATERIALS	RK- 68182-010V
	CE- 68304-010V	11919 89-05-10	EL-CABINET TBA/9-070V	CE- 68308-010V
	CE- 68304-0101	11919 89-05-10	EL-CABINET TBA/9-070V	BE- 649205-070V
	CE- 68305-010V	11919 89-05-10	SPARE PARTS TBA/9-070V	CE- 68308-010V
	CE- 68305-0101	11919 89-05-10	SPARE PARTS TBA/9-070V	BE- 649205-070V
	CE- 68306-010V	11919 89-05-10	EQUIPMENT TBA/9-070V	CE- 68308-010V
	CE- 68306-0101	11919 89-05-10	EQUIPMENT TBA/9-070V	BE- 649205-070V
	CE- 68307-010V	11919 89-05-10	EXTRA EQUIPMENT TBA9-070V	CE- 68308-010V
	CE- 68307-010V	11919 89-05-10	EXTRA EQUIPMENT TBA9-070V	BE- 649205-070V
	CE- 68308-0101	11919 89-05-10	EL-DOCUMENT TBA/9-070V	BE- 649205-070V
	CE- 68379-010V	11919 89-05-10	CONTROL PANEL TBA/9-070V	CE- 68308-010V
	CE- 68379-0101	11919 89-05-10	CONTROL PANEL TBA/9-070V	BE- 649205-070V
	RK- 68385-0101	11929 89-03-16	"JUMBO REEL"	C- 751796-010V
	RK- 68386-010V	11929 89-03-16	EL-MATERIAL	RK- 68387-010V
	RK- 68386-0101	11929 89-03-16	EL-MATERIAL	RK- 68385-010V
	RK- 68387-0101	11929 89-03-16	EL-DOCUMENT	RK- 68385-010V
	RK- 68407-0101	12066 89-09-22	"LS STRIP SPLICER"	RK- 905397-010V
	RK- 68408-010V	12066 89-09-22	ELECTRIC MATERIALS	RK- 68407-010V
	RK- 68408-010V	12066 89-09-22	ELECTRIC MATERIALS	RK- 68409-010V
	RK- 68409-010V	12066 89-09-22	EL-DOCUMENT	RK- 68407-010V

Page No	PART NO	LAST AM	DESCRIPTION	GROUP NO
965-3	RK- 68721-0101	13838 90-02-09	"HEADSPACE BY INJECTION"	RK- 520096-010V
	RK- 68722-010V	13838 90-02-09	ELECTRIC MATERIALS	RK- 68721-010V
	RK- 68722-010V	13838 90-02-09	ELECTRIC MATERIALS	RK- 68723-010V
	RK- 68723-010V	13838 90-02-09	ELECTRICAL DOCUMENT	RK- 68721-010V
965-3	RK- 68724-0101	13837 90-02-09	"HEADSPACE BY INJECTION"	RK- 520094-010V
	RK- 68725-010V	13837 90-02-09	ELECTRIC MATERIALS	RK- 68726-010V
	RK- 68725-0101	13837 90-02-09	ELECTRIC MATERIALS	RK- 68724-010V
	RK- 68726-0101	13837 90-02-09	ELECTRICAL DOCUMENT	RK- 68724-010V
	RK- 68742-0101	14357 90-01-18	CONVERTIBLE PTS	RK- 547750-020V
	RK- 68743-010V	14357 90-01-18	EL-MATERIAL	RK- 68744-010V
	RK- 68743-0101	14357 90-01-18	EL-MATERIAL	RK- 68742-010V
	RK- 68744-0101	12086 89-06-29	ELECTRICAL DOCUMENT	RK- 68742-010V
	CE- 68780-010V	11919 89-05-10	MACHINE TBA/9-070V	CE- 68308-010V
	CE- 68780-0101	11919 89-05-10	MACHINE TBA/9-070V	BE- 649205-070V
	RK- 68864-0101	14779 90-05-02	"HEAT REDUCTION"	RK- 553820-010V
	RK- 68865-010V	12255 89-07-06	EL-MATERIAL	RK- 68864-010V
	RK- 68865-010V	12255 89-07-06	EL-MATERIAL	RK- 68866-010V
	RK- 68866-010V	14779 90-05-02	EL-DOCUMENT	RK- 68864-010V
	RK- 68873-0101	12260 89-10-11	"SA TO PTS 3"	RK- 547986-010V
	RK- 68874-010V	12260 89-10-11	MATERIAL	RK- 68873-010V
	RK- 68874-010V	12260 89-10-11	MATERIAL	RK- 68875-010V
	RK- 68875-010V	12260 89-10-11	DOCUMENT	RK- 68873-010V
	RK- 68904-0101	12321 89-05-22	"JUMBO REEL"	C- 751796-010V
	RK- 68905-010V	12321 89-05-22	EL-EQUIPMENT	RK- 68906-010V
	RK- 68905-0101	12321 89-05-22	EL-EQUIPMENT	RK- 68904-010V
	RK- 68906-0101	12321 89-05-22	EL-DOCUMENT	RK- 68904-010V
	RK- 68907-0101	12322 89-05-22	"LS STRIP SPLICER"	C- 540028-010V
	RK- 68907-0101	12322 89-05-22	"LS STRIP SPLICER"	RK- 905397-010V
	RK- 68908-010V	13599 89-08-29	ELECTRIC MATERIALS	RK- 68909-010V
	RK- 68908-0101	13599 89-08-29	ELECTRIC MATERIALS	RK- 68907-010V
	RK- 68909-0101	12322 89-05-22	EL-DOCUMENT	RK- 68907-010V
	C- 68917-0101	10472 89-01-25	ANGLE INDICATOR	C- 451348-020V
	RK- 69033-0101	14356 90-01-18	ELECTRIC EQUIPMENT	RK- 547750-020V
	RK- 69073-010V	14356 90-01-18	ELECTRIC MATERIALS	RK- 69033-010V
	RK- 69073-010V	14356 90-01-18	ELECTRIC MATERIALS	RK- 69074-010V
	RK- 69074-010V	12540 89-06-29	ELECTRICAL DOCUMENT	RK- 69033-010V
	RK- 69217-0101	14780 90-05-02	"HEAT REDUCTION"	RK- 553820-010V
	RK- 69218-010V	12789 89-07-06	ELECTRIC MATERIALS	RK- 69217-010V
	RK- 69218-010V	12789 89-07-06	ELECTRIC MATERIALS	RK- 69219-010V
	RK- 69219-010V	14780 90-05-02	ELECTRICAL DOCUMENT	RK- 69217-010V
	RK- 69261-0101	14290 89-12-18	"HOT FOIL DATE UNIT"	RK- 544391-010V
	RK- 69262-010V	14290 89-12-18	ELECTRIC MATERIALS	RK- 69261-010V
	RK- 69262-010V	14290 89-12-18	ELECTRIC MATERIALS	RK- 69263-010V

Page No	PART NO	LAST AM	DESCRIPTION	GROUP NO
	RK- 69263-010V	12838 89-07-06	ELECTRICAL DOCUMENT	RK- 69261-010V
	RK- 69288-0101	14452 90-02-13	QUICK RESTART	RK- 553180-010V
	RK- 69289-010V	12858 89-08-22	ELECTRIC MATERIALS	RK- 69288-010V
	RK- 69289-010V	12858 89-08-22	ELECTRIC MATERIALS	RK- 69290-010V
	RK- 69290-010V	14452 90-02-13	ELECTRICAL DOCUMENT	RK- 69288-010V
	RK- 69345-0101	12907 89-07-06	HOT FOIL DATE UNIT	RK- 544391-010V
	RK- 69346-010V	12907 89-07-06	ELECTRIC MATERIALS	RK- 69345-010V
	RK- 69346-010V	12907 89-07-06	ELECTRIC MATERIALS	RK- 69347-010V
	RK- 69347-010V	12907 89-07-06	ELECTRICAL DOCUMENT	RK- 69345-010V
	RK- 69392-0101	12961 89-07-06	HOT FOIL DATE UNIT	RK- 544391-010V
	RK- 69393-010V	12961 89-07-06	EL MATERIAL	RK- 69392-010V
	RK- 69393-010V	12961 89-07-06	EL MATERIAL	RK- 69394-010V
	RK- 69394-010V	12961 89-07-06	EL DOCUMENT	RK- 69392-010V
	RK- 69395-0101	14289 89-12-18	"HOT FOIL DATE UNIT"	RK- 544391-010V
	RK- 69396-010V	14289 89-12-18	ELECTRICAL MATERIEL	RK- 69395-010V
	RK- 69396-010V	14289 89-12-18	ELECTRICAL MATERIEL	RK- 69397-010V
	RK- 69397-010V	12962 89-07-07	ELECTRICAL DOCUMENT	RK- 69395-010V
	RK- 69458-0101	14254 89-12-07	ELECTRIC EQUIPMENT	RK- 752702-010V
	RK- 69459-010V	13133 89-06-26	ELECTRICAL DOCUMENT	RK- 69458-010V
	RK- 69460-0101	13134 89-06-14	CONSTANT SPRAY VOLUME	RK- 752702-010V
	RK- 69461-010V	13134 89-06-14	ELECTRICAL DOCUMENT	RK- 69460-010V
	RK- 69462-0101	13135 89-06-14	CONSTANT SPRAY VOLUME	RK- 752702-010V
	RK- 69463-010V	13135 89-06-14	ELECTRICAL DOCUMENT	RK- 69462-010V
	RK- 69464-0101	13136 89-06-14	CONSTANT SPRAY VOLUME	RK- 752702-010V
	RK- 69465-010V	13136 89-06-14	ELECTRICAL DOCUMENT	RK- 69464-010V
	RK- 69466-0101	13137 89-06-14	CONSTANT SPRAY VOLUME	RK- 752702-010V
	RK- 69467-010V	13137 89-06-14	ELECTRICAL DOCUMENT	RK- 69466-010V
	RK- 69500-0101	13196 89-08-22	QUICK RESTART	RK- 553180-010V
	RK- 69501-010V	13196 89-08-22	ELECTRIC MATERIALS	RK- 69500-010V
	RK- 69501-010V	13196 89-08-22	ELECTRIC MATERIALS	RK- 69502-010V
	RK- 69502-010V	14166 89-11-14	ELECTRICAL DOCUMENT	RK- 69500-010V
	RK- 69503-0101	13197 89-08-22	QUICK RESTART	RK- 553180-010V
	RK- 69504-010V	13197 89-08-22	ELECTRIC MATERIALS	RK- 69503-010V
	RK- 69504-010V	13197 89-08-22	ELECTRIC MATERIALS	RK- 69505-010V
	RK- 69505-010V	14167 89-11-14	ELECTRICAL DOCUMENT	RK- 69503-010V
	RK- 69506-0101	13198 89-08-22	QUICK RESTART	RK- 553180-010V
	RK- 69507-010V	13198 89-08-22	ELECTRIC MATERIALS	RK- 69506-010V
	RK- 69507-010V	13198 89-08-22	ELECTRIC MATERIALS	RK- 69508-010V
	RK- 69508-010V	14169 89-11-14	ELECTRICAL DOCUMENT	RK- 69506-010V
	RK- 69509-0101	14913 90-05-17	QUICK RESTART	RK- 553180-010V
	RK- 69510-010V	13199 89-11-14	ELECTRIC MATERIALS	RK- 69509-010V
	RK- 69510-010V	13199 89-11-14	ELECTRIC MATERIALS	RK- 69511-010V
	RK- 69511-010V	13199 89-11-14	ELECTRICAL DOCUMENT	RK- 69509-010V
	RK- 69522-0101	13220 89-08-14	CONSTANT SPRAY VOLUME	RK- 752702-010V
	RK- 69523-010V	13220 89-08-14	ELECTRICAL DOCUMENT	RK- 69522-010V
	RK- 69561-0101	14279 89-12-18	QUICK RESTART	RK- 553180-010V
	RK- 69562-010V	13243 89-11-14	ELECTRIC MATERIALS	RK- 69561-010V
	RK- 69562-010V	13243 89-11-14	ELECTRIC MATERIALS	RK- 69563-010V
	RK- 69563-010V	13243 89-11-14	ELECTRICAL DOCUMENT	RK- 69561-010V
	RK- 69564-010V	14339 90-05-02	EL-DOCUMENT	RK- 649370-010V
	RK- 69565-010V	14340 90-05-02	EL-DOCUMENT	RK- 649371-010V
	RK- 69566-010V	11772 89-07-06	EL-DOCUMENT	RK- 649369-010V
941-1	C- 74767-0102	8017 85-07-02	DYNAMOMETER	C- 77092-010V 020V
	C- 74767-0102	8017 85-07-02	DYNAMOMETER	B- 648119-020V 060V
941-1	C- 75466-0201	5374 82-06-11	SETTING TOOL	C- 77092-010V 020V
	C- 75466-0201	5374 82-06-11	SETTING TOOL	B- 648119-020V 060V
941-1	C- 75467-0201	8296 85-10-09	SETTING TOOL CURVES	C- 77092-010V 020V
	C- 75467-0201	8296 85-10-09	SETTING TOOL CURVES	B- 648119-020V 060V
941-1.1.1	C- 75469-0201	5504 82-09-17	SETTING TOOL	C- 76335-010V
941-1.3	C- 75525-020V	8433 85-12-12	TEMPLATE	C- 77092-010V 020V
	C- 75525-020V	8433 85-12-12	TEMPLATE	B- 648119-020V 060V
951-1	C- 75542-0101	5688 83-01-14	LIFTING UNIT	C- 77091-010V 030V
	C- 75542-0101	5688 83-01-14	LIFTING UNIT	B- 648119-020V 060V
	RK- 76123-0101	7193 84-10-29	DRILLING JIG	RK- 76613-010V
941-1	C- 76133-0101	14783 90-05-09	TEMPLATE LS-ELEMENT	C- 77092-010V
	C- 76133-0101	14783 90-05-09	TEMPLATE LS-ELEMENT	RK- 751461-010V
	C- 76133-0201	14783 90-05-09	TEMPLATE LS-ELEMENT	C- 77092-010V
	C- 76133-0301	14783 90-05-09	TEMPLATE LS-ELEMENT	C- 77092-020V
941-1	C- 76175-0101	8296 85-10-09	PULLER	C- 77092-010V 020V
	C- 76175-0101	8296 85-10-09	PULLER	B- 648119-060V
941-1.1	C- 76182-0101			
948-1	C- 76197-0101	9341 86-07-21	JIG	C- 77094-010V
948-1	C- 76200-0101	7948 85-05-24	TRANSPORTER	C- 77094-010V
	C- 76200-0101	7948 85-05-24	TRANSPORTER	B- 648119-060V
941-1.1.1	C- 76291-0101	6457 84-01-09	YOKE	C- 76335-010V
941-1.1	C- 76301-0101	6847 84-05-11	TEMPLATE	C- 76335-010V
941-1.1.1	C- 76304-0101	6457 84-01-09	COMPRESSION SPRING	C- 76335-010V
941-1.1	C- 76333-0101			
941-1.1.1	C- 76335-010V	8433 85-12-12	SETTING TOOL JAW SYSTEM	C- 76600-010V
	C- 76344-0101	7059 84-08-29	TEMPLATE	B- 648119-020V 060V
941-1.2	C- 76350-0101	7560 85-02-19	SETTING TOOL	C- 77092-010V 020V
	C- 76350-0101	7560 85-02-19	SETTING TOOL	B- 648119-020V 060V
941-1.1	C- 76402-0101	12764 89-05-30	TEMPLATE	C- 76600-010V
941-1.1	C- 76407-0101			
941-1.1	C- 76409-0101			
948-1	C- 76411-0101	6847 84-05-11	SETTING TOOL	C- 77094-010V

Page No	PART NO	LAST AM	DESCRIPTION	GROUP NO
	C- 76411-0101	6847 84-05-11	SETTING TOOL	B- 648119-020V 060V
941-1	C- 76416-0101	7278 84-12-14	CLAMP	C- 77092-010V 020V
	C- 76416-0101	7278 84-12-14	CLAMP	B- 648119-020V 060V
948-1	C- 76447-0101	6847 84-05-11	SETTING TOOL	C- 77094-010V
	C- 76447-0101	6847 84-05-11	SETTING TOOL	B- 648119-020V 060V
948-1	C- 76460-0101	7204 84-10-20	SETTING TOOL	C- 77094-010V
	C- 76460-0101	7204 84-10-20	SETTING TOOL	B- 648119-020V 060V
941-1.1	C- 76468-0101	12333 88-12-15	TEMPLATE	C- 76600-010V
941-1.2.1	C- 76470-0101	7383 85-01-22	BAG	C- 76350-010V
	C- 76485-0101	7613 85-03-26	SETTING TOOL	B- 648119-020V
	C- 76490-0101	7522 85-02-20	TEMPLATE TUBE FORMING	B- 648119-020V
948-1	C- 76492-010V	14723 90-05-18	ASSEMBLY JIG	C- 77094-010V
	C- 76492-010V	14723 90-05-18	ASSEMBLY JIG	B- 648119-020V 060V
952-1	C- 76500-0101	7186 84-10-16	LIFTING UNIT	C- 77091-010V 030V
	C- 76500-0101	7186 84-10-16	LIFTING UNIT	B- 648119-060V
952-1	C- 76504-0101	12095 88-07-01	LIFTING UNIT	C- 77091-010V 030V
	C- 76504-0101	12095 88-07-01	LIFTING UNIT	B- 648119-060V
948-1	C- 76580-0101	7204 84-10-20	SETTING TOOL	C- 77094-010V
	C- 76580-0101	7204 84-10-20	SETTING TOOL	B- 648119-020V 060V
941-1.1	C- 76591-0101	7383 85-01-22	BAG	C- 76600-010V
948-1	C- 76592-0101			
941-1.2	C- 76594-0101	10349 87-06-30	SETTING TOOL	C- 76350-010V 020V
941-1	C- 76595-0101	8433 85-12-12	TEMPLATE LS-ELEMENT	C- 77092-010V
	C- 76595-0101	8433 85-12-12	TEMPLATE LS-ELEMENT	B- 648119-060V
	C- 76595-0101	8433 85-12-12	TEMPLATE LS-ELEMENT	RK- 751461-010V
	C- 76595-0201	13140 89-06-13	TEMPLATE LS-ELEMENT	C- 77092-010V
	C- 76595-0301	12856 90-01-29	TEMPLATE LS-ELEMENT	C- 77092-020V
941-1.1	C- 76598-0101			
941-1.1	C- 76600-0101	13991 89-11-16	SETTING TOOL	C- 77092-010V 020V
	C- 76600-0101	13991 89-11-16	SETTING TOOL	B- 648119-020V 060V
941-1.	C- 76606-0101	9341 86-07-21	TEMPLATE LS-ELEMENT	C- 77092-010V
	C- 76606-0101	9341 86-07-21	TEMPLATE LS-ELEMENT	RK- 751461-010V
	C- 76606-0201	13140 89-06-13	TEMPLATE LS-ELEMENT	C- 77092-010V
	C- 76606-0301	12856 90-01-29	TEMPLATE LS-ELEMENT	C- 77092-020V
	RK- 76613-0101	7193 84-10-29	TOOL	RK- 479279-010V
950-1	C- 77091-010V	12645 90-04-19	ACCESSORIES PARTS	B- 648119-070V 090V
941-1	C- 77092-010V	13140 89-06-13	SERVICE PARTS	B- 648119-070V 090V
945-1	C- 77093-010V	8741 86-06-16	TRIMMING PARTS	B- 648119-070V 080V
	C- 77093-020V	14042 90-04-19	TRIMMING PARTS	B- 648119-090V
948-1	C- 77094-010V	14723 90-05-18	PRODUCTION PARTS	B- 648119-070V 090V
909-1	C- 77099-0101	13627 89-08-14	TOOL KIT	B- 648109-070V 090V
941-1	C- 77165-0101	9933 87-02-07	EXTRACTOR	C- 77092-010V 020V
	C- 77165-0101	9933 87-02-07	EXTRACTOR	RK- 456716-010V

Page No	PART NO	LAST AM	DESCRIPTION	GROUP NO
	C- 77165-0101	9933 87-02-07	EXTRACTOR	RK- 456717-010V
	C- 77165-0101	9933 87-02-07	EXTRACTOR	RK- 752408-010V
	C- 77165-0101	9933 87-02-07	EXTRACTOR	RK- 752410-010V
	C- 77165-0101	9933 87-02-07	EXTRACTOR	RK- 752412-010V
	C- 77165-0101	9933 87-02-07	EXTRACTOR	RK- 752414-010V
	C- 155083-0101	7329 84-11-15	PRESSURE PLATE	C- 294763-010V
	C- 155091-0101	4721 80-12-31	HANDLE	C- 294763-010V
	C- 228779-010V	6317 83-11-03	PRINTING WHEEL	C- 256236-020V
	C- 228779-010V	6317 83-11-03	PRINTING WHEEL	C- 272445-020V
955-1.1	C- 229400-060V	13242 89-10-12	UNREELING DEVICE	C- 751796-010V 020V
955-1.2	C- 232781-040V	11776 88-06-14	REVOLVING HEAD	C- 751796-010V 020V
955-1.3	C- 237776-040V	12422 89-05-23	PAPER GUARD	C- 751796-010V 020V
	C- 243068-0101	5054 82-02-18	INDUCTOR	C- 441742-010V
	C- 246357-0101	6317 83-11-03	TERMINAL BLOCK	C- 272765-010V 020V
705-1	C- 246388-0201	4745 81-01-16	PRESSURE ROLLER	B- 648107-020V 090V
	C- 249650-0101	4676 80-11-10	TYPE HOLDER	C- 268665-010V
	C- 250610-0101	8187 85-09-17	CABINET	B- 648109-020V 030V
	C- 255907-020V	6311 83-11-16	CHUTE	B- 648102-020V 030V
	C- 255921-020V	6317 83-11-03	FILLING PIPE	B- 648111-020V 030V
	C- 255921-030V	9284 86-07-02	FILLING PIPE	B- 648111-060V
112-1	C- 255921-040V	14591 90-02-28	LOWER FILLING TUBE	B- 648111-070V 090V
	CR- 255933-020V	7595 85-02-26	STATION CHAIN	B- 648105-020V 040V
	CR- 255933-030V	9584 86-09-08	STATION CHAIN	B- 648105-060V 070V
	C- 255957-020V	6445 84-01-10	LOWER FORMING RING	B- 648111-020V 030V
	C- 255982-020V	7769 85-04-03	FILLING PIPE	B- 648111-020V 030V
	C- 256014-020V	7091 84-09-13	BATH	B- 648111-020V 030V
	C- 256014-030V	10002 87-01-12	BATH	B- 648111-060V 070V
117-1	C- 256014-040V	12844 89-06-13	BATH	B- 648111-080V
	C- 256014-050V	13604 89-11-24	BATH	B- 648111-090V
	C- 256055-0201	7066 84-08-31	HOT AIR ELEMENT	B- 648111-020V 030V
	C- 256055-030V	7596 85-02-26	HOT AIR ELEMENT	B- 648111-060V
	C- 256055-0401	9415 86-10-17	HOT AIR ELEMENT	B- 648111-070V
109-1	C- 256055-050V	9523 86-11-13	HOT AIR ELEMENT	B- 648111-080V
	C- 256055-060V	12181 89-11-22	HOT AIR ELEMENT	B- 648111-090V
	C- 256084-0201	7047 84-08-29	CHANGE-OVER VALVE	B- 648111-020V 070V
127-1	C- 256084-0301	12412 88-12-06	CHANGE-OVER VALVE	B- 648111-080V
	C- 256084-040V	14591 90-02-28	CHANGE-OVER VALVE	B- 648111-090V
	C- 256089-020V	6475 84-02-22	CONDUIT	B- 648111-020V 030V
	C- 256095-0201	9415 86-10-17	HOT AIR ELEMENT	B- 648111-020V 070V
114-1	C- 256095-0301	9523 86-11-13	HOT AIR ELEMENT	B- 648111-080V
	C- 256095-0401	12181 89-11-22	HOT AIR ELEMENT	B- 648111-090V
	C- 256173-020V	7236 84-10-25	WORM GEAR	B- 648103-020V 060V
301-1	C- 256173-030V	10858 87-11-11	WORM GEAR	B- 648103-070V

Page No	PART NO	LAST AM	DESCRIPTION	GROUP NO	
	C- 256173-040V	12577 89-12-06	WORM GEAR	B- 648103-080V	
	C- 256185-0201	6317 83-11-03	SPROCKET	B- 648105-020V	040V
	C- 256197-020V	6317 83-11-03	ARM	B- 648103-020V	030V
	C- 256197-030V	10858 87-11-11	ARM	B- 648103-060V	070V
303-1	C- 256197-0301		ARM		
303-1	C- 256197-0302		ARM		
	C- 256197-040V	12577 89-12-06	ARM	B- 648103-080V	
	C- 256198-020V	6317 83-11-03	LINK ARM	B- 648103-020V	030V
	C- 256198-030V	7890 85-05-15	LINK ARM	B- 648103-060V	
	C- 256199-0201	6317 83-11-03	BELT TENSIONER	B- 648103-020V	060V
306-1	C- 256199-0301	10858 87-11-11	BELT TENSIONER	B- 648103-070V	
	C- 256199-0401	12577 89-12-06	BELT TENSIONER	B- 648103-080V	
	C- 256200-0201	6317 83-11-03	INTERMEDIARY SHAFT	B- 648103-020V	
307-1	C- 256200-0301	6317 83-11-03	INTERMEDIARY SHAFT	B- 648103-030V	080V
	C- 256201-020V	7069 84-08-31	CAM PACK	B- 648103-020V	060V
308-1	C- 256201-030V	12207 88-10-06	CAM PACKAGE TPC	B- 648103-070V	
	C- 256201-040V	12577 89-12-06	CAM PACK	B- 648103-080V	
	C- 256202-020V	7069 84-08-31	CAM PACK	B- 648103-020V	060V
309-1	C- 256202-030V	12207 88-10-06	CAM PACKAGE IH	B- 648103-070V	
	C- 256202-040V	12577 89-12-06	CAM PACKAGE IH	B- 648103-080V	
	C- 256203-0201	6317 83-11-03	DOLLY	B- 648103-020V	030V
310-1	C- 256203-030V	7499 85-02-11	DOLLY	B- 648103-060V	070V
	C- 256203-040V	12577 89-12-06	DOLLY	B- 648103-080V	
	CR- 256204-020V	7595 85-02-26	CUTTING JAW	B- 648104-020V	030V
	CR- 256204-030V	7595 85-02-26	CUTTING JAW	B- 648104-060V	
405-1a/b	CR- 256204-040V	13230 89-06-20	CUTTING JAW RIGHT	B- 648104-070V	080V
	CR- 256204-050V	12578 89-12-06	CUTTING JAW RIGHT	B- 648104-090V	
	CR- 256205-020V	7595 85-02-26	CUTTING JAW	B- 648104-020V	030V
	CR- 256205-030V	7595 85-02-26	CUTTING JAW	B- 648104-060V	
406-1a/b	CR- 256205-040V	13230 89-06-20	CUTTING JAW	B- 648104-070V	080V
	CR- 256205-050V	12578 89-12-06	CUTTING JAW LEFT	B- 648104-090V	
407-1	C- 256206-020V	12500 88-11-16	INTERMITTENT FEED DEVICE	B- 648104-020V	090V
408-1	C- 256207-020V	12500 88-11-16	INTERMITTENT FEED DEVICE	B- 648104-020V	090V
	CR- 256208-020V	7595 85-02-26	KNIFE HOLDER	B- 648104-020V	030V
409-1	CR- 256208-030V	7595 85-02-26	KNIFE HOLDER	B- 648104-060V	090V
410-1	CR- 256209-020V	13607 89-09-04	VOLUME FLAP	B- 648104-020V	080V
	CR- 256209-030V	12578 89-12-06	VOLUME FLAP	B- 648104-090V	
410-1	CR- 256210-020V	13607 89-09-04	VOLUME FLAP	B- 648104-020V	080V
	CR- 256210-030V	12578 89-12-06	VOLUME FLAP	B- 648104-090V	
	CR- 256212-020V	7595 85-02-26	PRESSURE JAW	B- 648104-020V	030V
	CR- 256212-030V	7892 85-05-02	PRESSURE JAW	B- 648104-060V	
412-1	CR- 256212-040V	13607 89-09-04	PRESSURE JAW RIGHT	B- 648104-070V	080V
	CR- 256212-050V	12578 89-12-06	PRESSURE JAW RIGHT	B- 648104-090V	

Page No	PART NO	LAST AM	DESCRIPTION	GROUP NO	
	CR- 256213-020V	7595 85-02-26	PRESSURE JAW	B- 648104-020V	030V
	CR- 256213-030V	7892 85-05-02	PRESSURE JAW	B- 648104-060V	
412-1	CR- 256213-040V	13607 89-09-04	PRESSURE JAW LEFT	B- 648104-070V	080V
	CR- 256213-050V	12578 89-12-06	PRESSURE JAW LEFT	B- 648104-090V	
	CR- 256214-020V	7595 85-02-26	PRESSURE RAIL	B- 648104-020V	070V
403-1	CR- 256214-030V	14291 89-12-19	PRESSURE RAIL	B- 648104-080V	090V
	CR- 256215-020V	7595 85-02-26	PRESSURE RAIL	B- 648104-020V	070V
401-1	CR- 256215-030V	9716 86-10-27	PRESSURE RAIL	B- 648104-080V	090V
	C- 256217-0201	6317 83-11-03	GUIDE	B- 648104-020V	
	C- 256217-0301	7464 85-01-24	GUIDE	B- 648104-030V	
414-1	C- 256217-0401	7033 84-08-08	GUIDE	B- 648104-060V	090V
	C- 256219-020V	6299 83-11-23	TRANSMISSION	B- 648104-020V	030V
415-1	C- 256219-030V	8446 85-11-27	TRANSMISSION RIGHT	B- 648104-060V	090V
	C- 256220-020V	6299 83-11-23	TRANSMISSION	B- 648104-020V	030V
415-1	C- 256220-030V	8446 85-11-27	TRANSMISSION LEFT	B- 648104-060V	090V
402-1	C- 256221-020V	13607 89-09-04	VOLUM CURVE PIECE	B- 648104-020V	090V
404-1	C- 256222-020V	13607 89-09-04	VOLUME CAM PIECE, IH	B- 648104-020V	090V
416-1	C- 256223-020V	9409 86-07-04	SUPPORT ROLLER	B- 648104-020V	080V
	C- 256223-030V	12578 89-12-06	SUPPORT ROLLER	B- 648104-090V	
	C- 256228-0201	6444 84-01-02	BRACKET	B- 648101-020V	090V
	C- 256229-020V	13651 89-11-23	PAPER GUIDE	B- 648101-020V	090V
	C- 256230-020V	6995 84-07-05	FILLING PIPE	B- 648101-020V	060V
	C- 256230-030V	13651 89-11-23	FILLING PIPE	B- 648101-070V	090V
	C- 256232-0201	5329 82-05-24	VALVE	B- 648101-020V	070V
	C- 256232-0301	10542 87-06-23	PRODUCT VALVE	B- 648101-080V	090V
	C- 256233-020V	8297 85-10-15	COLUMN	B- 648101-020V	
	C- 256233-030V	10843 87-11-26	COLUMN	B- 648101-060V	070V
	C- 256233-040V	11814 88-06-01	COLUMN	B- 648101-080V	
	C- 256233-050V	14454 90-02-05	COLUMN	B- 648101-090V	
	C- 256234-020V	7318 84-11-09	BENDING ROLLER	B- 648101-020V	
	C- 256234-030V	12146 88-08-30	BENDING ROLLER	B- 648101-060V	080V
	C- 256234-040V	13651 89-11-23	BENDING ROLLER	B- 648101-090V	
	C- 256236-020V	6698 84-05-02	DATING UNIT	B- 648101-020V	
	C- 256237-020V	6275 83-11-01	HOT AIR ELEMENT	B- 648101-020V	
	C- 256237-030V	7126 84-09-26	HOT AIR ELEMENT	B- 648101-060V	
	C- 256237-040V	9436 86-09-09	HOT AIR ELEMENT	B- 648101-070V	
	C- 256237-050V	12094 88-07-06	HOT AIR ELEMENT LS	B- 648101-080V	
	C- 256237-060V	13651 89-11-23	HOT AIR ELEMENT LS	B- 648101-090V	
	C- 256238-020V	9942 87-01-12	LOWER FORMING RING	B- 648101-020V	060V
	C- 256238-030V	9942 87-01-12	LOWER FORMING RING	B- 648101-070V	
	C- 256238-040V	13651 89-11-23	LOWER FORMING RING	B- 648101-080V	090V
	C- 256239-0201	10003 87-01-12	HOT AIR ELEMENT	B- 648101-020V	070V
	C- 256239-0301	10542 87-06-23	HOT AIR ELEMENT KS	B- 648101-080V	

Page No	PART NO	LAST AM	DESCRIPTION	GROUP NO
	C- 256239-0401	13651 89-11-23	HOT AIR ELEMENT KS	B- 648101-090V
	C- 256272-0201	6317 83-11-03	AXLE	B- 648105-020V 040V
	C- 256358-010V	6317 83-11-03	INK UNIT	C- 256236-020V
	C- 256358-010V	6317 83-11-03	INK UNIT	C- 272445-020V
	C- 256410-0201	6940 84-08-15	INDEXING UNIT	B- 648105-020V 040V
	C- 256410-0301	9585 86-09-11	INDEXING UNIT	B- 648105-060V 070V
505-1	C- 256410-0401	9514 86-11-26	INDEXING UNIT	B- 648105-080V
	C- 256410-0501	14278 90-01-05	INDEXING UNIT	B- 648105-090V
512-1	CR- 256436-020V	8057 85-06-27	PRESSURE DEVICE	B- 648105-020V 060V
	CR- 256436-030V	8482 86-01-08	PRESSURE DEVICE	B- 648105-070V
	CR- 256436-040V	14771 90-04-04	PRESSURE DEVICE	B- 648105-080V
	CR- 256436-050V	14782 90-04-06	PRESSURE DEVICE	B- 648105-090V
506-1	C- 256437-0201	7911 85-06-11	DISC COUPLING	B- 648105-020V 090V
508-1	C- 256438-0201	8267 85-10-14	WORM GEAR	B- 648105-020V 090V
	CR- 256547-020V	7911 85-06-11	ELEMENT	B- 648105-020V 040V
511-1	CR- 256547-030V	13634 90-02-27	ELEMENT	B- 648105-060V 090V
	C- 256555-020V	5932 83-05-10	MACHINE BODY	B- 648102-020V
	C- 256555-030V	6501 84-02-08	MACHINE BODY	B- 648102-030V
206-1	C- 256665-0201	10505 87-06-22	COVER	B- 648102-020V 090V
206-1	C- 256665-0202	10505 87-06-22	COVER	B- 648102-020V 090V
520-1	C- 256674-0201	7344 85-02-12	BOTTOM VALVE	B- 648105-020V 080V
	C- 256674-0301	12530 90-01-05	BOTTOM VALVE	B- 648105-090V
	CR- 256712-020V	8057 85-06-27	RETRIEVER	B- 648105-020V 060V
	CR- 256712-030V	8482 86-01-08	RETRIEVER	B- 648105-070V
510-1	CR- 256712-040V	14771 90-04-04	RETRIEVER	B- 648105-080V
	CR- 256712-050V	14782 90-04-06	RETRIEVER	B- 648105-090V
	C- 256802-0201	6940 84-08-15	SPRINKLER	B- 648105-020V 040V
	C- 256806-0201	6938 84-08-07	CRANK	B- 648103-020V 030V
311-1	C- 256806-0301	7499 85-02-11	CRANK	B- 648103-060V 080V
	C- 256843-0201	6602 84-05-02	MACHINE BODY	B- 648106-020V
	C- 256843-030V	7326 84-12-17	MACHINE BODY	B- 648106-060V 070V
618-1	C- 256843-040V	12104 88-08-17	MACHINE BODY, SERV. UNIT	B- 648106-080V
	C- 256843-050V	14717 90-03-30	MACHINE BODY	B- 648106-090V
	CR- 256844-020V	7595 85-02-26	SHOCK ABSORBER	B- 648104-020V 070V
411-1	CR- 256844-030V	12158 88-09-05	SHOCK ABSORBER	B- 648104-060V 070V
	CR- 256845-020V	7595 85-02-26	SHOCK ABSORBER	B- 648104-020V 030V
411-1	CR- 256845-030V	12158 88-09-05	SHOCK ABSORBER	B- 648104-080V 070V
618-1.5	C- 256873-0201	12427 88-12-06	DOOR	B- 648106-020V 080V
	C- 256873-0401	13806 89-11-22	DOOR	B- 648106-090V
618-1.4	C- 256875-0201	5614 82-12-15	COVER	B- 648106-020V 090V
	C- 256951-0201	6299 83-11-23	YOKE	B- 648104-020V
	C- 256951-0301	6300 84-01-09	YOKE	B- 648104-060V 070V
413-1	C- 256951-0401	8691 86-02-17	YOKE	B- 648104-080V 090V
	C- 256952-0201	6299 83-11-23	YOKE	B- 648104-020V 030V
	C- 256952-0301	6300 84-01-09	YOKE	B- 648104-060V 070V
413-1	C- 256952-0401	8691 86-02-17	YOKE	B- 648104-080V 090V
	C- 256965-020V	7887 85-05-20	IMPULSE TRANSMITTER	B- 648106-020V
701-1	C- 256966-020V	9596 86-09-05	BENDING ROLLER BRACKET	B- 648107-020V 080V
702-1	C- 256967-0201	6317 83-11-03	BENDING ROLLER	B- 648107-020V 080V
	C- 256968-0201	7720 85-04-30	STRIP GUIDE	B- 648107-020V
	C- 256973-020V	6501 84-02-08	TRANSMISSION	B- 648102-020V 030V
203-1	C- 256973-030V	7944 85-05-14	TRANSMISSION	B- 648102-060V 090V
	C- 257075-020V	6668 84-03-29	DOOR	B- 648111-020V 030V
	C- 257075-0251	6669 84-03-21	DOOR	B- 648111-060V 070V
618-1.3	C- 257146-0201	5385 82-07-08	LID	B- 648106-020V 090V
	C- 257166-020V	7235 84-11-01	PAPER GUIDE	B- 648111-020V 030V
	C- 257166-0301	7210 84-10-19	PAPER GUIDE	B- 648111-060V 070V
	C- 257381-0201	6486 84-02-15	CONNECTION BLOCK	B- 648104-020V 030V
417-1	C- 257381-0301	6300 84-01-09	CONNECTION BLOCK	B- 648104-060V 090V
	C- 257382-0201	6486 84-02-15	CONNECTION BLOCK	B- 648104-020V 030V
417-1	C- 257382-0301	6300 84-01-09	CONNECTION BLOCK	B- 648104-060V 090V
708-1	C- 267315-0101	14273 90-02-06	PAPER GUIDE	B- 648107-020V 080V
	C- 268656-0101	5909 83-05-11	MAGAZINE	B- 648108-010V
	C- 268665-0101	5770 83-04-13	DATING UNIT	B- 648108-010V
	C- 269589-0101	5971 83-05-11	BENDING ROLLER	B- 648108-010V
602-1.1	C- 271017-0201	8360 85-10-15	BENDING ROLLER	C- 272404-020V 050V
	C- 271017-0301	11717 89-06-27	BENDING ROLLER	C- 272404-060V
	C- 271089-020V	6441 84-01-18	GUIDE	B- 648105-020V 040V
	C- 271089-030V	8241 85-09-20	GUIDE	B- 648105-060V 070V
	C- 271109-0201	6441 84-01-18	MACHINE BODY	B- 648105-020V 040V
	C- 271113-020V	7911 85-06-11	CLEANING SYSTEM	B- 648105-020V 040V
	C- 271114-0201	7911 85-06-11	COVERING PANEL	B- 648105-020V 040V
526-1	C- 271114-0301	13119 89-06-02	COVERING PANEL	B- 648105-060V 080V
	C- 271114-0401	14278 90-01-05	COVERING PANEL	B- 648105-090V
	C- 271115-0201	6317 83-11-03	PROTECTIVE COVER	B- 648105-020V 040V
521-1	C- 271115-0301	7648 85-03-06	PROTECTIVE COVER	B- 648105-060V 080V
	C- 271115-0401	14278 90-01-05	PROTECTIVE COVER	B- 648105-090V
	C- 271116-0201	6317 83-11-03	ANGLE ENCODER	B- 648105-020V 040V
507-1	C- 271116-0301	12530 90-01-05	ANGULAR TRANSMITTER	B- 648105-060V 090V
	C- 271128-020V	6026 83-07-08	MOTOR	B- 648103-020V
302-1	C- 271128-030V	6938 84-08-07	MOTOR	B- 648103-030V 070V
	C- 271128-040V	12577 89-12-06	MOTOR	B- 648103-080V
609-1.1	C- 271168-0201	7766 85-04-30	BLOCK	C- 256965-020
	C- 271168-0401	13632 89-11-17	BLOCK	C- 751691-010V
	C- 271169-0201	9284 86-07-02	VALVE	B- 648111-020V 070V
128-1	C- 271169-0301	12754 89-06-13	VALVE	B- 648111-080V

Page No	PART NO	LAST AM	DESCRIPTION	GROUP NO	
	C- 271169-0401	12366 89-11-22	VALVE	B- 648111-090V	
	C- 271181-0201	9415 86-10-17	AIR SUPER-HEATER	B- 648111-020V	070V
123-1	C- 271181-0301	12365 89-01-02	AIR SUPER-HEATER	B- 648111-080V	
	C- 271181-0401	12366 89-11-22	AIR SUPER-HEATER	B- 648111-090V	
	C- 271261-020V	5853 83-04-05	CLEANING SYSTEM	C- 271562-020V	
	C- 271261-030V	6197 83-10-13	CLEANING SYSTEM	C- 271562-030V	
	C- 271261-040V	6787 84-05-16	CLEANING SYSTEM	C- 271562-040V	050V
204-1.1	C- 271261-050V	9059 86-05-13	CLEANING SYSTEM	C- 271562-060V	070V
	C- 271274-020V	6445 84-01-10	COMPRESSOR	B- 648111-020V	030V
	C- 271376-020V	7911 85-06-11	CHUTE	B- 648105-020V	040V
	C- 271387-0201	7911 85-06-11	SPRAY GUN	B- 648105-020V	040V
522-1	C- 271387-0301	7122 84-10-31	SPRAY GUN	B- 648105-060V	090V
207-1	C- 271414-0201	6317 83-11-03	AIR JET GUN	B- 648102-020V	090V
	C- 271442-0201	6736 84-05-07	DOOR	B- 648102-020V	030V
205-1	C- 271442-0301	12933 89-04-19	SIDE DOOR LEFT	B- 648102-060V	090V
	C- 271443-0201	6736 84-05-07	DOOR	B- 648102-020V	030V
205-1	C- 271443-0301	10505 87-06-22	SIDE DOOR RIGHT	B- 648102-060V	090V
	C- 271452-0201	9017 86-03-13	PUMP	B- 648106-020V	070V
	C- 271453-0201	9017 86-03-13	LUBRICANT CONTAINER	B- 648106-020V	060V
	C- 271453-0301	9286 86-06-11	LUBRICANT CONTAINER	B- 648106-070V	
602-1.2	C- 271454-0201	6317 83-11-03	CATCH HANDLE	C- 272404-020V	060V
617-1	C- 271468-0201	6317 83-11-03	GUIDE	B- 648106-020V	080V
	C- 271468-0401	13632 89-11-17	GUIDE	B- 648106-090V	
617-1	C- 271469-0201	6317 83-11-03	GUIDE	B- 648106-020V	090V
	C- 271485-020V	6276 83-11-11	AIR NOZZLE	B- 648111-020V	060V
	C- 271485-0301	7532 85-02-14	AIR NOZZLE	B- 648111-070V	090V
	C- 271507-0201	8140 85-08-29	HYDRAULIC SYSTEM	B- 648106-020V	070V
	C- 271513-020V	5916 83-06-01	COVER PLATE	B- 648106-020V	
	C- 271513-030V	9017 86-03-13	COVER PLATE	B- 648106-060V	070V
618-1.6	C- 271513-040V	9018 86-05-13	COVER PLATE	B- 648106-080V	
	C- 271513-050V	14717 90-03-30	COVER PLATE	B- 648106-090V	
	C- 271533-020V	6617 84-02-29	JUNCTION BLOCK	C- 271562-020V	030V
	C- 271533-0301	7345 85-01-24	JUNCTION BLOCK	C- 271562-040V	
	C- 271562-020V	9367 86-06-11	PIPE WORK	B- 648102-020V	
	C- 271562-030V	9367 86-06-11	PIPE WORK	B- 648102-030V	
	C- 271562-040V	9367 86-06-11	PIPE WORK	B- 648102-060V	
	C- 271562-050V	8636 86-01-21	PIPE WORK	B- 648102-070V	
204-1	C- 271562-060V	12270 88-10-20	PIPE WORK MACHINE BODY	B- 648102-080V	
	C- 271562-070V	13920 89-11-20	PIPE WORK MACHINE BODY	B- 648102-090V	
	C- 271569-0201	5507 82-10-13	CABLE TRACK	B- 648106-020V	
	C- 271569-0301	7078 84-09-13	CABLE TRACK	B- 648106-060V	070V
618-1.2	C- 271569-040V	14073 89-11-10	CABLE TRACK	B- 648106-080V	
	C- 271569-050V	13645 90-01-12	CABLE TRACK	B- 648106-090V	

Page No	PART NO	LAST AM	DESCRIPTION	GROUP NO	
	C- 271626-0201	6317 83-11-03	SUSPENSION ARM	C- 271699-020V	
603-1.3	C- 271626-0301	6793 84-05-03	SUSPENSION ARM	C- 271699-030V	
	C- 271635-0201	5374 82-06-11	TRANSPORTER	B- 648119-020V	
953-1	C- 271635-0301	6961 84-06-29	TRANSPORTER	C- 77091-010V	030V
	C- 271635-0301	6961 84-06-29	TRANSPORTER	B- 648119-060V	
	C- 271641-0201	6317 83-11-03	TABLE	C- 271699-020V	
	C- 271641-0202	6317 83-11-03	TABLE	C- 271699-020V	
	C- 271641-0203	6317 83-11-03	TABLE	C- 271699-020V	
955-1.5.6	C- 271641-030V	14369 90-04-24	TABLE	C- 752046-010V	
603-1.4	C- 271641-0301	14369 90-04-24	TABLE	C- 271699-030V	
603-1.6	C- 271641-0302	14369 90-04-24	TABLE	C- 271699-030V	
603-1.7	C- 271641-0303	14369 90-04-24	TABLE	C- 271699-030V	
	C- 271649-020V	12367 88-11-18	GUIDE	B- 648101-020V	080V
	C- 271649-020V	12367 88-11-18	GUIDE	B- 648111-020V	030V
	C- 271649-030V	13651 89-11-23	GUIDE	B- 648101-090V	
	C- 271699-020V	6587 84-02-21	SPLICING DEVICE	B- 648106-020V	
603-1	C- 271699-030V	6793 84-05-03	SPLICING DEVICE	B- 648106-060V	090V
	C- 271790-0201	5145 82-02-12	TRANSMISSION	B- 648106-020V	
615-1	C- 271790-0301	6610 84-02-23	TRANSMISSION	B- 648106-060V	090V
	C- 271791-0201	6317 83-11-03	TRANSMISSION	B- 648106-020V	
615-1	C- 271791-0301	6610 84-02-23	TRANSMISSION	B- 648106-060V	090V
	C- 271804-0201	5329 82-05-24	COVER	B- 648101-020V	
	C- 271804-0301	6959 84-08-17	COVER	B- 648101-060V	
	C- 271804-0401	10843 87-11-26	COVER	B- 648101-070V	090V
	C- 271851-0201	7047 84-08-29	DOOR	B- 648111-020V	070V
	C- 271866-020V	6561 84-02-15	PIPE WORK	B- 648106-020V	
	C- 271866-030V	10111 87-02-06	PIPE WORK SERVICE UNIT	B- 648106-060V	070V
614-1a/b	C- 271866-040V	14073 89-11-10	PIPE WORK	B- 648106-080V	
	C- 271866-050V	14717 90-03-30	PIPE WORK	B- 648106-090V	
	C- 271880-020V	6745 84-04-25	TUBE FLUSHING DEVICE	B- 648111-020V	030V
	C- 271909-020V	6994 84-07-06	VALVE PANEL	B- 648106-020V	
	C- 271909-030V	9286 86-06-11	VALVE PANEL	B- 648106-060V	070V
610-1a/b	C- 271909-040V	9605 86-10-31	VALVE PANEL	B- 648106-080V	
	C- 271909-050V	14717 90-03-30	VALVE PANEL	B- 648106-090V	
	C- 271934-0201	6317 83-11-03	PAPER GUIDE PLATE	C- 272404-020V	040V
602-1.3	C- 271934-0301	10626 87-09-04	PAPER GUIDE PLATE	C- 272404-050V	060V
604-1	C- 271992-0201	6808 84-05-10	PAPER HOLDER	B- 648106-020V	090V
	C- 272004-020V	8271 85-10-14	BENDING ROLLER	B- 648111-020	070V
101-1	C- 272004-0301	8462 85-12-09	BENDING ROLLER	B- 648111-080V	
	C- 272004-0401	14591 90-02-28	BENDING ROLLER	B- 648111-090V	
	C- 272014-020V	6980 84-07-03	WHEEL	B- 648111-020V	030V
	C- 272014-030V	10002 87-01-12	CREASE WHEEL	B- 648111-060V	
				B- 648111-070V	

Page No	PART NO	LAST AM	DESCRIPTION	GROUP NO
115-1	C- 272021-020V	10157 87-02-07	ASEPTIC CHAMBER	B- 648111-020V 030V
	C- 272021-030V	9199 86-05-27	ASEPTIC CHAMBER	B- 648111-060V 070V
	C- 272021-040V	13953 89-11-13	ASEPTIC CHAMBER	B- 648111-080V
	C- 272021-050V	14115 90-03-28	ASEPTIC CHAMBER	B- 648111-090V
	C- 272024-0201	8595 85-12-09	SQUEE-GEE ROLLER	B- 648111-020V 070V
116-1	C- 272024-0301	9523 86-11-13	SQUEE-GEE ROLLER	B- 648111-080V 090V
	C- 272025-020V	8595 85-12-09	AIR KNIFE	B- 648111-020V 070V
118-1	C- 272025-030V	14591 90-02-28	AIR KNIFE	B- 648111-080V 090V
	C- 272028-020V	7091 84-09-13	BENDING ROLLER	B- 648111-020V 030V
	C- 272028-030V	10200 87-02-20	BENDING ROLLER	B- 648111-060V 070V
102-1	C- 272028-040V	13953 89-11-13	BENDING ROLLER	B- 648111-080V
	C- 272028-050V	12861 89-12-11	BENDING ROLLER	B- 648111-090V
	C- 272030-020V	7235 84-11-01	FORMING RING	B- 648111-020V 030V
	C- 272031-020V	7235 84-11-01	CLAMP	B- 648111-020V 030V
602-1.4	C- 272084-0201	7766 85-04-30	STRETCHER	C- 272404-020V 050V
	C- 272084-0301	11717 89-06-27	STRETCHER	C- 272404-060V
	C- 272231-0201	6694 84-04-04	PAPER GUIDE	C- 272404-020V 030V
602-1.5	C- 272231-0301	8101 86-01-16	PAPER GUIDE	C- 272404-040V 050V
	C- 272241-020V	6475 84-02-22	CONDUIT	B- 648111-020V 030V
119-1	C- 272337-0201	9284 86-07-02	VALVE	B- 648111-020V 070V
	C- 272337-0301	11456 88-03-09	VALVE	B- 648111-080V
	C- 272337-0401	12648 89-11-14	VALVE	B- 648111-090V
	C- 272342-020V	6475 84-02-22	CONDUIT	B- 648111-020V
	C- 272343-0201	6317 83-11-03	PRESSURE ROLLER	B- 648107-020V
	C- 272343-030V	6743 84-04-18	PRESSURE ROLLER	B- 648107-060V 070V
706-1	C- 272343-040V	11029 87-11-27	PRESSURE ROLLER	B- 648107-080V
	C- 272343-050V	13966 89-12-04	PRESSURE ROLLER	B- 648107-090V
601-1	C- 272359-0201	7397 85-01-10	BENDING ROLLER	B- 648106-020V 080V
	C- 272359-030V	11717 89-06-27	BENDING ROLLER	B- 648106-090V
	C- 272381-020V	6981 84-06-27	TANK	B- 648106-020V
	C -272381-0301	8730 86-01-27	PEROXIDE TANK	B- 648106-060V 070V
	C- 272404-0201	6609 84-02-21	CARRIAGE	B- 648106-020V
	C- 272404-0301	7397 85-01-10	CARRIAGE	B- 648106-060V
	C- 272404-0401	8101 86-01-16	CARRIAGE	B- 648106-070V
602-1	C- 272404-0501	10626 87-09-04	CARRIAGE	B- 648106-080V
	C- 272404-0601	14366 90-02-26	CARRIAGE	B- 648106-090V
122-1	C- 272407-0201	9415 86-10-17	GENERATOR	B- 648111-020V 090V
	C- 272408-0201	6267 83-11-23	PLATE	B- 648107-020V
	C- 272408-0202	6267 83-11-23	PLATE	B- 648107-020V
	C- 272408-0301	9415 86-10-17	PLATE	B- 648107-060V
				B- 648107-070V
	C- 272408-0302	9415 86-10-17	PLATE	B- 648107-060V
				B- 648107-070V

Page No	PART NO	LAST AM	DESCRIPTION	GROUP NO
709-1	C- 272408-0401	12052 88-09-09	PLATE	B- 648107-080V
	C- 272408-0402	12052 88-09-09	PLATE	B- 648107-080V
	C- 272408-0501	14614 90-03-21	PLATE	B- 648107-090V
	C- 272408-0502	14614 90-03-21	PLATE	B- 648107-090V
	C- 272445-020V	6642 84-04-03	DATING UNIT	B- 648111-020V 030V
602-1.6	C- 272473-0101	6904 84-06-29	BENDING ROLLER	C- 272404-020V 060V
	C- 272508-0101	6317 83-11-03	DOOR	B- 648106-020V
	C- 272560-0201	6317 83-11-03	VALVE	B- 648111-020V
	C- 272560-0301	9437 86-09-05	VALVE	B- 648111-030V 070V
113-1	C- 272560-040V	11023 87-12-14	PRODUCT VALVE	B- 648111-080V
	C- 272560-050V	11914 89-11-14	PRODUCT VALVE	B- 648111-090V
	C- 272623-020V	6317 83-11-03	SPRAY SYSTEM	B- 648111-020V 030V
	C- 272623-0301	8097 85-07-08	SPRAY SYSTEM	B- 648111-060V 070V
121-1	C- 272623-0401	8806 86-02-19	SPRAY SYSTEM	B- 648111-080V
	C- 272623-0501	12648 89-11-14	SPRAY SYSTEM	B- 648111-090V
	C- 272652-0101	6317 83-11-03	CHAIN TENSIONER	B- 648105-020V 040V
	C- 272652-0201	6153 83-11-15	CHAIN TENSIONER	C- 272765-030V
516-1.10	C- 272652-0301	8667 86-02-17	CHAIN TENSIONER	C- 272765-040V 060V
	C- 272765-0101	6441 84-01-18	BRACKET	B- 648105-020V
	C- 272765-0201	7911 85-06-11	BRACKET	B- 648105-030V 040V
	C- 272765-0301	10017 87-01-12	BRACKET	B- 648105-060V
	C- 272765-0401	10017 87-01-12	BRACKET	B- 648105-070V
516-1	C- 272765-0501	12254 88-10-20	BRACKET	B- 648105-080V
	C- 272765-0601	14151 89-11-10	BRACKET	B- 648105-090V
602-1.7	C- 272788-0101	6317 83-11-03	CARRIAGE	C- 272404-020V 060
	C- 272802-0101	5749 83-02-14	PLATFORM	B- 648102-020V 030V
	C- 272825-010V	6736 84-05-07	PLATFORM	B- 648102-020V 030V
	C- 272833-010V	6351 83-12-05	RAILING	B- 648102-020V 030V
	C- 272839-0201	6606 84-04-03	PAPER GUARD	B- 648107-020V
	C- 272839-0202	6606 84-04-03	PAPER GUARD	B- 648107-020V
	C- 272882-0101	6351 83-12-05	RAILING	B- 648102-020V 030V
	C- 276253-0101	5928 83-04-28	BELT TENSIONER	B- 648108-010V
	C- 279809-0101	5762 83-02-24	PANEL	B- 648108-010V
	C- 283600-0101	6158 83-09-29	MAGAZINE	B- 648108-010V
	C- 283602-0101	5909 83-05-11	GABLE	B- 648108-010V
	C- 283602-0102	5909 83-05-11	GABLE	B- 648118-010V
	C- 283604-010V	8452 86-02-11	PRESSURE ROLLER	B- 648108-010V
	C- 283604-0103	8452 86-02-11	PRESSURE ROLLER	C- 283621-010V
813-1.1	C- 283604-0201	14584 90-03-09	PRESSURE ROLLER	C- 456696-010V 030V
807-1	CR- 283605-0101	14584 90-03-09	PULL TAB SEALING UNIT	B- 648118-060V 070V
	CR- 283605-0102	14584 90-03-09	PULL TAB SEALING UNIT	B- 648118-080V
807-1.1	CR- 283606-010V	14584 90-03-09	SEALING JAW PULLTAB	B- 648118-060V 070V
	CR- 283606-020V	14641 90-03-14	SEALING JAW PULLTAB	B- 648118-080V

Page No	PART NO	LAST AM	DESCRIPTION	GROUP NO	
807-1.2	CR- 283607-010V	10738 87-08-21	COUNTER JAW	B- 648118-060V	070V
	CR- 283607-020V	14584 90-03-09	COUNTER JAW	B- 648118-080V	
	C- 283610-0101	8126 85-09-21	PUNCH	B- 648108-010V	
	C- 283611-0101	5909 83-05-11	STRIP GUIDE	B- 648108-010V	
	C- 283611-0101	5909 83-05-11	STRIP GUIDE	B- 648118-010V	
	C- 283612-0103	13824 89-09-28	STRIP SEALER	B- 648108-010V	
806-1	C- 283612-0103	13824 89-09-28	STRIP SEALER	B- 648118-010V	070V
	C- 283612-0201	14859 90-05-23	STRIP SEALER	B- 648118-080V	
	C- 283613-0101	5770 83-04-13	SEALING JAW	B- 648118-010V	
806-1.2b	C- 283614-0101	10637 87-09-02	COUNTER JAW	B- 648118-010V	070V
	C- 283614-020V	12320 89-11-07	COUNTER JAW	B- 648118-080V	
	C- 283617-0101	6066 83-09-06	SEALING UNIT	B- 648108-010V	
	C- 283617-0101	6066 83-09-06	SEALING UNIT	B- 648118-010V	
	C- 283618-0101	5971 83-05-11	FEED DEVICE	B- 648108-010V	
	C- 283618-0101	5971 83-05-11	FEED DEVICE	B- 648118-010V	
808-1	CR- 283618-020V	12939 89-05-19	PULL TAB FEED	B- 648118-060V	
	CR- 283618-020V	12939 89-05-19	PULL TAB FEED	B- 648118-070V	
	C- 283619-0101	10738 87-08-21	BELT TENSIONER	C- 283624-010V	
815-1.1	C- 283619-0101	10738 87-08-21	BELT TENSIONER	C- 456612-010V	
	C- 283620-0101	9023 86-05-23	MAGAZINE	B- 648118-010V	
	C- 283621-0102	9023 86-05-23	PAPER FEED	B- 648118-010V	
	C- 283622-0101	8234 86-01-07	REEL	B- 648108-010V	
	C- 283623-0101	8234 86-01-07	DRIVE ROLLER	B- 648108-010V	
	C- 283623-0102	8234 86-01-07	DRIVE ROLLER	C- 283621-010V	
	C- 283624-0101	8452 86-02-11	BENDING ROLLER	C- 283621-010V	
	C- 283626-0101	6066 83-09-06	UNIT	B- 648118-010V	
816-1	C- 283626-0201	8234 86-01-07	DRIVE UNIT	B- 648118-060V	070V
816-1	C- 283626-0401	14584 90-03-09	DRIVE UNIT	B- 648118-080V	
	C- 283627-0101	8126 85-09-21	DRIVE SHAFT	B- 648108-010V	
	C- 283627-0102	8126 85-09-21	DRIVE SHAFT	B- 648118-010V	
	C- 283628-0101	7877 85-07-15	PAPER MAGAZINE	B- 648118-010V	
	C- 283628-0102	7877 85-07-15	PAPER MAGAZINE	B- 648108-010V	
	C- 283629-0101	5909 83-05-11	ROLLER	B- 648108-010V	
	C- 283629-0101	5909 83-05-11	ROLLER	B- 648118-010V	
817-1.1	C- 283629-0201	12403 89-01-10	ROLLER	C- 552030-010V	
817-1.1	C- 283629-0201	12403 89-01-10	ROLLER	C- 552036-010V	
817-1.1	C- 283629-0201	12403 89-01-10	ROLLER	B- 648118-060V	070V
	C- 283630-0101	5909 83-05-11	ROLLER	B- 648108-010V	
	C- 283630-0101	5909 83-05-11	ROLLER	B- 648118-010V	
817-1.2	C- 283630-0201	8363 86-12-04	ROLLER	C- 283635-010V	
	C- 283631-0101	7753 86-02-06	MACHINE BODY	B- 648118-010V	
	C- 283632-0101	7753 86-02-06	PANEL	B- 648118-010V	
	C- 283633-0101	7753 86-02-06	CONNECTION BOX	B- 648108-010V	

Page No	PART NO	LAST AM	DESCRIPTION	GROUP NO	
	C- 283633-0101	7753 86-02-06	CONNECTION	B- 648118-010V	
817-1	C- 283635-010V	12232 88-09-23	PAPER MAGAZINE	B- 648118-060V	070V
	C- 284873-0101	5909 83-05-11	BOBBIN HOLDER	B- 648108-010V	
903-1	C- 284953-010V	5053 81-12-16	HOSE	B- 648109-020V	070V
	C- 293684-0106	7024 84-10-15	PRINTING WHEEL	C- 456322-010V	
	C- 293684-0106	7024 84-10-15	PRINTING WHEEL	C- 456349-010V	
	C- 293684-0204	13807 89-10-27	PRINTING WHEEL	C- 77091-030V	
	C- 293684-0204	13807 89-10-27	PRINTING WHEEL	C- 456322-020V	030V
	C- 293684-0204	13807 89-10-27	PRINTING WHEEL	C- 456349-020V	
	C- 293684-0204	13807 89-10-27	PRINTING WHEEL	C- 752646-010V	
	C- 293684-0204	13807 89-10-27	PRINTING WHEEL	C- 752914-010V	
	C- 293685-0102	7024 84-10-15	PRINTING WHEEL	C- 456321-010V	
	C- 293685-0102	7024 84-10-15	PRINTING WHEEL	C- 456348-010V	
711-1	C- 293685-0201	10572 87-09-17	PRINTING WHEEL	C- 77091-030V	
	C- 293685-0201	10572 87-09-17	PRINTING WHEEL	C- 456321-020V	030V
	C- 293685-0201	10572 87-09-17	PRINTING WHEEL	C- 456348-020V	
	C- 293685-0201	10572 87-09-17	PRINTING WHEEL	C- 752645-010V	
	C- 293685-0201	10572 87-09-17	PRINTING WHEEL	C- 752913-010V	
	C- 294522-0101	6066 83-09-06	UNIT	B- 648108-010V	
	C- 294658-0101	6066 83-09-06	MACHINE BODY	B- 648108-010V	
	C- 294659-0101	5514 82-10-20	FEED DEVICE	B- 648108-010V	
	C- 294670-0101	11707 88-03-28	BELT TENSIONER	B- 648118-010V	
	CR- 294695-0101	10738 87-08-21	BACK FEEDER	B- 648108-010V	
812-1	CR- 294695-0101	10738 87-08-21	BACK FEEDER	B- 648118-010V	080V
	C- 294715-0101	5762 83-02-24	PANEL	B- 648108-010V	
	C- 294725-0101	6066 83-09-06	GLASS	B- 648118-010V	
	C- 294763-0101	6066 83-09-06	DATING UNIT	B- 648118-010V	
	C- 294767-0101	5770 83-04-13	HEATING JAW	C- 294763-010V	
	C- 294780-0101	6003 83-06-14	COVERING PANEL	B- 648118-010V	
	C- 294785-0101	5591 82-11-18	COVER	B- 648108-010V	
	C- 294786-0101	5841 83-03-15	COVERING PANEL	B- 648108-010V	
	C- 294867-0101	7753 86-02-06	CABLE DUCT	B- 648118-010V	
	C- 294880-0101	5762 83-02-24	BUSBAR	B- 648108-010V	
	C- 294887-0101	6158 83-09-29	SPARE PART KIT	B- 648118-010V	
	C- 294888-0101	6777 84-07-10	SPARE PART KIT	B- 648108-010V	
	C- 294906-0101	5971 83-05-11	BRACKET	B- 648108-010V	
	C- 294906-0101	5971 83-05-11	BRACKET	B- 648118-010V	
	C- 295014-0101	5297 82-05-12	CABLE DUCT	B- 648102-020V	
	C- 295014-0101	5297 82-05-12	CABLE DUCT	B- 648102-030V	
	C- 295026-010V	6317 83-11-03	CONTROL PANEL	B- 648102-020V	030V
	C- 295026-020V	9646 86-10-28	CONTROL PANEL	B- 648102-060V	070V
208-1	C- 295026-030V	10764 88-05-05	CONTROL PANEL	B- 648102-080V	
	C- 295045-020V	6445 84-01-10	PIPE WORK-PNEUMATIC	B- 648111-020V	030V

Page No	PART NO	LAST AM	DESCRIPTION	GROUP NO
	C- 295045-030V	8271 85-10-14	PIPE WORK-PNEUMATIC	B- 648111-060V
	C- 295045-040V	8465 85-12-18	PIPE WORK-PNEUMATIC	B- 648111-070V
134-1	C- 295045-050V	13953 89-11-13	PIPE WORK-PNEUMATIC	B- 648111-080V
	C- 295045-060V	14315 90-01-10	PIPE WORK-PNEUMATIC	B- 648111-090V
	C- 295112-020V	8297 85-10-15	WHEEL	B- 648101-020V 080V
	C- 295188-010V	6317 83-11-03	RAILING	B- 648102-020V 030
524-1	C- 295211-010V	13634 90-02-27	FRAME	B- 648105-020V 090V
509-1	C- 295218-010V	13634 90-02-27	FOLDING BAR	B- 648105-020V 090V
	C- 295256-020V	7533 85-02-18	AIR NOZZLE	B- 648101-020V 060V
	C- 295262-020V	6667 84-03-28	CLEANING PIPE	B- 648109-020V
	C- 295262-030V	6726 84-04-10	CLEANING PIPE	B- 648109-030V
	C- 295262-0401	8082 85-07-11	CLEANING PIPE	B- 648109-060V
901-1	C- 295262-0501	10843 87-11-26	CLEANING PIPE	B- 648109-070V 090V
	C- 295276-020V	12367 88-11-18	BENDING ROLLER	B- 648101-020V 080V
	C- 295305-010V	6736 84-05-07	PLATFORM	B- 648102-020V 030V
	C- 295310-010V	7911 85-06-11	DELIVERY UNIT	B- 648105-020V 030V
	C- 295310-020V	7911 85-06-11	DELIVERY UNIT	B- 648105-040V
	C- 295310-030V	8161 85-08-27	DISCHARGE UNIT	B- 648105-060V
	C- 295310-040V	9585 86-09-11	DISCHARGE UNIT	B- 648105-070V
513-1	C- 295310-050V	12254 88-10-20	DISCHARGE UNIT	B- 648105-080V
	C- 295310-060V	12530 90-01-05	DISCHARGE UNIT	B- 648105-090V
	C- 295359-010V	6255 83-12-12	STATION	B- 648105-020V 040V
611-1	C- 295382-020V	5769 83-03-22	CONNECTION BOX	B- 648106-020V 090V
	C- 295402-020V	13651 89-11-23	FILLING PIPE	B- 648101-020V 070V
	C- 295402-020V		FILLING PIPE	B- 648101-080V 090V
	C- 295441-010V	5436 82-07-16	CONNECTION BOX	C- 271909-020V
	C- 295441-020V	6850 84-05-18	CONNECTION BOX	C- 271909-030V
610-1.1	C- 295441-030V	9123 86-07-22	CONNECTION BOX	C- 271909-040V 050V
	C- 295470-0201	6317 83-11-03	CONNECTION BOX	B- 648111-020V 030V
129-1	C- 295470-0301	7914 85-05-21	CONNECTION BOX	B- 648111-060V 080V
	C- 295470-040V	12180 89-12-01	CONNECTION BOX	B- 648111-090V
	C- 295523-020V	6331 83-11-10	SPARE PART KIT	B- 648104-020V 030V
418-1	C- 295523-030V	14291 89-12-19	START-UP KIT	B- 648104-060V 090V
	C- 295611-0201	6501 84-02-08	CONNECTION BOX	C- 256555-020V 030V
	C- 295667-020V	7093 84-09-14	START-UP KIT	B- 648101-020V 060V
	C- 295667-030V	13651 89-11-23	START-UP KIT	B- 648101-070V 090V
	C- 295668-0201	5756 83-03-04	SPARE PART KIT	B- 648107-020V
713-1	C- 295668-0301	9628 86-10-16	START-UP KIT	B- 648107-060V
				B- 648107-070V
				B- 648107-080V
				B- 648107-090V
	C- 295777-010V	5953 83-06-07	CABLE DUCT	B- 648111-020V 030V
	C- 295778-010V	7937 85-06-03	SPARE PART KIT	B- 648111-020V 030V

Page No	PART NO	LAST AM	DESCRIPTION	GROUP NO
	C- 295778-020V	7937 85-06-03	START-UP KIT	B- 648111-060V
138-1	C- 295778-030V	9415 86-10-17	START-UP KIT	B- 648111-070V 080V
	C- 295778-040V	14591 90-02-28	START-UP KIT	B- 648111-090V
	C- 295835-0101	6501 84-02-08	LIGHT FIXTURE	B- 648102-020V 030V
	C- 295839-0101	5561 82-11-30	CONNECTION BOX	C- 272404-020V 040V
602-1.8	C- 295839-0201	10626 87-09-04	CONNECTION BOX	C- 272404-050V 060V
	C- 295861-0101	6317 83-11-03	FITTING	C- 295835-010V
	C- 295861-0102	6317 83-11-03	FITTING	C- 295835-010V
	C- 295883-010V	6602 84-05-02	SPACER PIECE	C- 256843-020V
	C- 295883-020V	10111 87-02-06	SPACER PIECE	C- 256843-030V
618-1.1	C- 295883-030V	11823 88-05-19	SPACER PIECE	C- 256843-040V
	C- 295883-040V	14366 90-02-26	SPACER PIECE	C- 256843-050V
	C- 295891-0101	6606 84-04-03	STRIP APPLICATOR	B- 648107-020V
	C- 295891-020V	9628 86-10-16	STRIP APPLICATOR	B- 648107-060V 070V
704-1	C- 295891-030V	9785 86-10-23	STRIP APPLICATOR	B- 648107-080V 090V
907-1	C- 295904-010V	6113 83-08-08	CLAMP	B- 648109-020V 060V
	C- 295904-010V		CLAMP	B- 648109-070V 090V
	C- 295971-0101	8657 86-01-11	PAPER REEL TROLLEY	B- 648109-020V 060V
	C- 400865-0101	12765 89-06-12	INDEXING UNIT	C- 400895-010V
960-2.1	C- 400865-0102	12765 89-06-12	INDEXING UNIT	C- 401207-010V
	C- 400865-0102	12765 89-06-12	INDEXING UNIT	C- 556888-010V
	C- 400872-0101	12645 90-04-19	ARM ASSEMBLY	C- 400895-010V
960-2.2	C- 400872-0101	12645 90-04-19	ARM ASSEMBLY	C- 401207-010V
	C- 400872-0101	12645 90-04-19	ARM ASSEMBLY	C- 556888-010V
	C- 400895-0101	11879 88-06-07	LS-EQUIPMENT	C- 540030-010V
960-2	C- 401207-0101	12645 90-04-19	LS-EQUIPMENT	C- 540028-010V
	C- 401207-0102	12645 90-04-19	LS-EQUIPMENT	C- 540028-010V
960-2.3	C- 401419-0101	10631 87-12-29	PIPING ASSEMBLY LS-STRIP	C- 401207-010V
	C- 401419-0101	10631 87-12-29	PIPING ASSEMBLY LS-STRIP	C- 556723-010V
	C- 401419-0101	10631 87-12-29	PIPING ASSEMBLY LS-STRIP	C- 556888-010V
	C- 401419-0101	10631 87-12-29	PIPING ASSEMBLY LS-STRIP	C- 905295-010V
	C- 401439-0101	10632 87-12-29	PIPE ASSEMBLY TBA/9	C- 400895-010V
960-1.3	C- 401439-0101	10632 87-12-29	PIPE ASSEMBLY TBA/9	C- 905296-010V
	C- 434074-0201	7730 85-04-24	INK UNIT	C- 456349-010V
	C- 434074-0202	7730 85-04-24	INK UNIT	C- 456322-010V
712-1a	C- 434074-0301	10576 87-10-07	INK UNIT	C- 456349-020V
712-1b	C- 434074-0301		INK UNIT	
	C- 434074-0302	10576 87-10-07	INK UNIT	C- 77091-030V
				C- 456322-020V
				C- 456322-030V
				C- 752646-010V
				C- 752914-010V
	C- 434774-0201	7730 85-04-24	INK UNIT	C- 456348-010V

Page No	PART NO	LAST AM	DESCRIPTION	GROUP NO
	C- 434774-0202	7730 85-04-24	INK UNIT	C- 456321-010V
	C- 434774-0301	10576 87-10-07	INK UNIT	C- 456348-020V
	C- 434774-0302	10576 87-10-07	INK UNIT	C- 77091-030V
	C- 434774-0302	10576 87-10-07	INK UNIT	C- 456321-020V
	C- 434774-0302	10576 87-10-07	INK UNIT	C- 456321-030V
	C- 434774-0302	10576 87-10-07	INK UNIT	C- 752645-010V
	C- 434774-0302	10576 87-10-07	INK UNIT	C- 752913-010V
	C- 436467-0101	7383 85-01-22	JIG	B- 648119-060V
	P- 440630-0101	12796 89-11-29	VALVE	C- 272560-030V
113-1.1	P- 440630-0201	10455 87-11-11	AP-VALVE	C- 272560-040V 050V
	C- 441000-0201	6454 84-01-10	STRIP HOLDER	B- 648107-020V
	C- 441000-0301	8009 85-06-24	STRIP HOLDER	B- 648107-060V 070V
	C- 441000-0302	8009 85-06-24	STRIP HOLDER	B- 648107-060V 070V
703-1	C- 441000-0401	10819 87-10-10	STRIP HOLDER	B- 648107-080V
	C- 441000-0402	10819 87-10-10	STRIP HOLDER	B- 648107-080V
	C- 441000-0501	14273 90-02-06	STRIP HOLDER	B- 648107-090V
	C- 441000-0502	14273 90-02-06	STRIP HOLDER	B- 648107-090V
	C- 441088-010V	6852 84-05-23	UPPER TUBE SUPPORT	B- 648101-020V 090V
	C- 441092-010V	6852 84-05-23	MIDDLE TUPE SUPPORT	B- 648101-020V 080V
	C- 441092-010V		MIDDLE TUPE SUPPORT	B- 648101-090V
	C- 441102-010V	7533 85-02-18	MOVABLE FORMING RING	B- 648101-020V 080V
	C- 441102-020V	13651 89-11-23	MOVABLE FORMING RING	B- 648101-090V
	C- 441146-0101	5859 83-04-07	ROD	B- 648101-020V 090V
	C- 441271-0101	8241 85-09-20	SAFETY SPROCK	B- 648105-060V
	C- 441271-0201	8667 86-02-17	SAFETY SPROCK	B- 648105-070V
	C- 441304-0101	7382 84-12-06	MOVABLE FORMING RING	B- 648111-020V 030V
105-1	C- 441304-020V	12844 89-06-13	MOVABLE FORMING RING	B- 648111-060V 080V
	C- 441304-030V	12409 89-11-22	MOVABLE FORMING RING	B- 648111-090V
	C- 441307-0101	7382 84-12-06	UPPER TUBE SUPPORT	B- 648111-020V 030V
106-1	C- 441307-020V	12844 89-06-13	UPPER TUBE SUPPORT	B- 648111-060V 080V
	C- 441307-030V	12409 89-11-22	UPPER TUBE SUPPORT	B- 648111-090V
	C- 441486-0101	7382 84-12-06	DIVIDED FORMING RING	B- 648111-020V 030V
	C- 441486-020V	10411 87-04-23	DIVIDED FORMING RING	B- 648111-060V 070V
107-1	C- 441486-030V	12844 89-06-13	DIVIDED FORMING RING	B- 648111-080V
	C- 441486-040V	12409 89-11-22	DIVIDED FORMING RING	B- 648111-090V
	C- 441510-0101	6130 83-09-21	WASTE PIPE	C- 271562-020V 030V
	C- 441510-0102	6130 83-09-21	WASTE PIPE	C- 271562-020V 030V
201-1.1	C- 441534-0101	9085 86-05-18	LIGHT FIXTURE	C- 456100-010V 020V
211-1.1	C- 441535-0102		LIGHT FIXTURE	C- 456457-030V
214-1.1	C- 441535-0102		LIGHT FIXTURE	C- 456458-010V 030V
	C- 441535-0102		LIGHT FIXTURE	C- 751860-010V
968-1a	C- 441535-0102		LIGHT FIXTURE	C- 752960-010V
968-1b	C- 441535-0102		LIGHT FIXTURE	C- 752971-010V

Page No	PART NO	LAST AM	DESCRIPTION	GROUP NO
	C- 441594-0101	8241 85-09-20	TENSION SPROCKET	B- 648105-060V 070V
	C- 441649-0101	6781 84-04-11	BRAKE	C- 256014-030V
523-1	C- 441695-0101	6591 84-02-20	MACHINE BODY	B- 648105-060V 080V
	C- 441695-0201	14151 89-11-10	MACHINE BODY	B- 648105-090V
	C- 441736-0101	6805 84-05-04	ZONE HEATER	B- 648119-020V
	C- 441742-0101	6313 83-12-01	INDUCTOR UNIT	C- 441736-010V
	C- 441765-0101	6329 83-12-06	PLATFORM	B- 648119-020V
516-1.2	C- 441798-0101	6626 84-03-20	ROTOR	C- 272765-030V 060V
519-1.1	C- 441811-0101	6626 84-03-20	ROTOR	C- 456588-010V
	C- 441811-0101		ROTOR	C- 456588-020V 030V
	C- 441821-0101	7911 85-06-11	SAFETY SPROCK	RK- 479279-010V
	C- 441821-0101	7911 85-06-11	SAFETY SPROCK	B- 648105-030V
	C- 441821-0101	7911 85-06-11	SAFETY SPROCK	B- 648105-040V
	C- 441850-0101	7911 85-06-11	CABLE	B- 648105-060V 070V
525-1	C- 441850-0201	10781 88-05-04	CABLE ASSEMBLY	B- 648105-080V
	C- 441850-0301	12530 90-01-05	CABLE ASSEMBLY	B- 648105-090V
	C- 441881-0101	6202 83-10-11	LOCK	B- 648105-020V 040V
941-1.2.1	C- 442080-0101	6018 83-06-13	LASER	C- 76594-010V
941-1.2.1	C- 442089-0101	10395 87-06-30	HOUSE	C- 76594-010V
941-1.2.1	C- 442094-0101	6018 83-06-13	DISPLAY	C- 76594-010V
804-1	CR- 449275-010V	10805 87-09-28	PUNCH	B- 648118-060V 070V
	CR- 449275-0102	10805 87-09-28	PUNCH	B- 648118-010V
830-1	C- 449313-010V	9314 86-09-17	BRACKET FOR DATING UNIT	B- 648118-060V 070V
830-1.1	C- 449314-0101	10407 87-06-10	DATING UNIT	C- 449313-010V
830-1.1.1	C- 449315-0101	6292 84-04-25	PRESSURE PLATE	C- 449314-010V
832-1	C- 449323-010V	13946 89-09-28	BENDING ROLLER, BACK	B- 648118-060V
805-1	C- 449388-010V	7913 85-06-06	STRIP GUIDE	B- 648118-060V 070V
948-1	C- 449969-0101	6514 84-03-22	TOOL	C- 77092-010V 020V
941-1	C- 449969-0101	6514 84-03-22	TOOL	C- 77094-010V
	C- 449969-0101	6514 84-03-22	TOOL	B- 648119-020V 060V
603-1.5	C- 450101-0101	6886 84-06-04	TEARING DEVICE	C- 271699-030V
955-1.5.7	C- 450101-0101	6886 84-06-04	TEARING DEVICE	C- 752046-010V
959-1.1	C- 450125-0102	6751 84-04-18	HEATING DEVICE	C- 441736-010V
	C- 450125-0102	6751 84-04-18	HEATING DEVICE	C- 456953-010V 020V
	C- 450125-0102	6751 84-04-18	HEATING DEVICE	C- 456953-020V
608-1	C- 451348-010V	9440 86-10-01	CONNECTION BOX	B- 648106-070V 080V
525-1.1	C- 451348-0101	9440 86-10-01	CONNECTION BOX	C- 441850-010V 020V
	C- 451348-0201	12530 90-01-05	CONNECTION BOX	C- 441850-030V
	C- 451348-0201	12530 90-01-05	CONNECTION BOX	C- 752784-010V
707-1	C- 456032-010V	8655 86-01-11	STRIP GUIDE	B- 648107-060V 090V
	C- 456100-010V	8456 85-11-26	MACHINE BODY	B- 648102-060V
201-1	C- 456100-020V	10505 87-06-22	MACHINE BODY	B- 648102-070V 090V
515-1	C- 456103-010V	10299 88-05-24	SIDE FEEDER	B- 648105-060V 090V

Page No	PART NO	LAST AM	DESCRIPTION	GROUP NO	
202-1	C- 456180-010V	9109 86-05-18	DROP CHUTE	B- 648102-060V	090V
	C- 456265-0101	6444 84-01-02	TUBE FLUSHING DEVICE	B- 648101-020V	
	C- 456274-010V	9237 86-05-12	AUXILIARY COMPRESSOR	RK- 491404-010V	
	C- 456274-010V	9237 86-05-12	AUXILIARY COMPRESSOR	B- 648110-010V	
	C- 456274-0101	9237 86-05-12	AUXILIARY COMPRESSOR	B- 648119-020V	
	C- 456309-0101	7382 84-12-06	LOWER FORMING RING	B- 648111-020V	
	C- 456309-0101	7382 84-12-06	LOWER FORMING RING	B- 648111-030V	
	C- 456309-020V	9215 86-05-29	LOWER FORMING RING	B- 648111-060V	070V
104-1	C- 456309-030V	13953 89-11-13	LOWER FORMING RING	B- 648111-080V	
	C- 456309-040V	14591 90-02-28	LOWER FORMING RING	B- 648111-090V	
	C- 456321-010V	8739 86-05-24	DATING UNIT	B- 648107-060V	
	C- 456321-020V	8739 86-05-24	DATING UNIT AB9 ST-R	B- 648107-070V	
715-1	C- 456321-030V	13921 89-10-31	DATING UNIT TBA/9	B- 648107-080V	
	C- 456322-010V	8698 86-02-17	DATING UNIT	B- 648107-060V	
	C- 456322-020V	8739 86-05-24	DATING UNIT	B- 648107-070V	
715-1	C- 456322-030V	13921 89-10-31	DATING UNIT TBA/9	B- 648107-080V	
	C- 456348-010V	7211 84-10-17	DATING UNIT	B- 648107-060V	
718-1	C- 456348-020V	13921 89-10-31	DATING UNIT	B- 648107-070V	080V
	C- 456349-010V	7211 84-10-17	DATING UNIT	B- 648107-060V	
718-1	C- 456349-020V	13921 89-10-31	DATING UNIT	B- 648107-070V	080V
	C- 456435-0101	6740 84-04-18	CONNECTION BOX	C- 441850-010V	
525-1.1	C- 456435-0201	9506 86-11-24	CONNECTION BOX	C- 441850-020V	
	C- 456435-0301	12530 90-01-05	CONNECTION BOX	C- 441850-030V	
	C- 456455-0101	8267 85-10-14	PIPE WORK	B- 648105-060V	070V
	C- 456455-020V	12529 89-02-09	PIPE WORK	B- 648105-080V	090V
517-1	C- 456455-0201		PIPE WORK		
	C- 456457-010V	9646 86-10-28	PLATFORM	B- 648102-060V	070V
209-1	C- 456457-020V	12933 89-04-19	PLATFORM TB/9	B- 648102-080V	
	C- 456457-030V	14635 90-03-03	PLATFORM	B- 648102-090V	
	C- 456458-010V	8824 86-02-19	PLATFORM	B- 648102-060V	070V
211-a/b	C- 456458-020V	14240 90-01-11	PLATFORM	B- 648102-080V	
	C- 456458-030V	14240 90-01-11	PLATFORM	B- 648102-090V	
	C- 456459-010V	6705 84-04-18	RAILING	B- 648102-060V	070V
210-1	C- 456459-020V	11782 88-06-02	RAILING TB/9	B- 648102-080V	
	C- 456459-030V	14716 90-03-29	RAILING TB/9	B- 648102-090V	
	C- 456460-010V	8034 85-06-26	RAILING	B- 648102-060V	070V
212-1a/b	C- 456460-020V	12270 88-10-20	RAILING TBA/9	B- 648102-080V	
	C- 456460-030V	13780 89-09-05	RAILING TBA/9	B- 648102-090V	
609-1	C- 456546-010V	12171 88-09-14	IMPULSE TRANSMITTER	B- 648106-060V	070V
	C- 456546-020V	12171 88-09-14	IMPULSE TRANSMITTER	B- 648106-080V	
	C- 456555-0101	8271 85-10-14	SUCTION PIPE	B- 648111-060V	070V
126-1	C- 456555-0201	12754 89-06-13	SUCTION PIPE	B- 648111-080V	
	C- 456555-0301	12181 89-11-22	SUCTION PIPE	B- 648111-090V	

Page No	PART NO	LAST AM	DESCRIPTION	GROUP NO	
	C- 456556-0101	8023 85-06-12	PEROXIDE PIPE	B- 648111-060V	070V
120-1	C- 456556-0201	8462 85-12-09	PEROXIDE PIPE	B- 648111-080V	090V
514-1	C- 456560-010V	10299 88-05-24	DISCHARGE CHUTE	B- 648105-060V	090V
518-1	C- 456567-0101	6626 84-03-20	SEPARATION INSERT	B- 648105-060V	090V
	C- 456588-010V	9627 86-10-17	CLEANING SYSTEM	B- 648105-060V	070V
519-1	C- 456588-020V	12529 89-02-09	CLEANING SYSTEM	B- 648105-080V	
	C- 456588-030V	14278 90-01-05	CLEANING SYSTEM	B- 648105-090V	
830-1.1.2	C- 456600-0101	6292 84-04-25	CONNECTION BOX	C- 449314-010V	
830-1.1.3	C- 456607-0101	7002 84-10-24	HEATING BLOCK	C- 449314-010V	
830-1.1.3	C- 456608-0101	6292 84-04-25	ELEMENT	C- 456607-010V	
	C- 456608-0101	6292 84-04-25	ELEMENT	C- 469316-010V	
	C- 456608-0101	6292 84-04-25	ELEMENT	C- 486955-010V	
815-1	C- 456612-0101	9177 86-07-15	BENDING ROLLER	B- 648118-060V	
809-1	C- 456674-0101	7394 85-07-18	DRIVE SHAFT	B- 648118-060V	
829-1	C- 456679-0101	6295 84-04-17	WASTE BOX	B- 648118-060V	080V
813-1.2	C- 456688-010V	9708 86-12-17	DRIVE ROLLER	C- 456696-010V	020V
813-1.2	C- 456688-020V	12944 89-08-29	DRIVE ROLLER	C- 456696-030V	
813-1	C- 456696-010V	9177 86-07-15	PAPER FEED	B- 648118-060V	070V
813-1	C- 456696-030V	12944 89-08-29	PAPER FEED	B- 648118-080V	
	RK- 456710-0101	6868 84-06-18	TRANSMISSION	B- 648110-010V	
	RK- 456711-0101	11981 89-08-15	REB.KIT CATCH LIFTING CAM	B- 648110-010V	
	RK- 456712-010V	11980 89-06-21	REB.KIT PRESSURE JAW	B- 648110-010V	
	RK- 456713-0101	12208 89-01-24	CAM SEGMENT ARM CAM	RK- 752408-010V	
	RK- 456713-0102	12208 89-01-24	CAM SEGMENT ARM CAM	RK- 456716-010V	
	RK- 456713-0102	12208 89-01-24	CAM SEGMENT ARM CAM	RK- 456717-010V	
	RK- 456713-0102	12208 89-01-24	CAM SEGMENT ARM CAM	RK- 752414-010V	
	RK- 456713-0103	12208 89-01-24	CAM SEGMENT ARM CAM	RK- 456716-010V	
	RK- 456713-0103	12208 89-01-24	CAM SEGMENT ARM CAM	RK- 456717-010V	
	RK- 456713-0103	12208 89-01-24	CAM SEGMENT ARM CAM	RK- 752414-010V	
	RK- 456713-0104	12208 89-01-24	CAM SEGMENT ARM CAM	RK- 752408-010V	
	RK- 456713-0104	12208 89-01-24	CAM SEGMENT ARM CAM	RK- 752410-010V	
	RK- 456713-0104	12208 89-01-24	CAM SEGMENT ARM CAM	RK- 752412-010V	
	RK- 456713-0105	12208 89-01-24	CAM SEGMENT ARM CAM	RK- 456716-010V	
	RK- 456713-0105	12208 89-01-24	CAM SEGMENT ARM CAM	RK- 456717-010V	
	RK- 456713-0105	12208 89-01-24	CAM SEGMENT ARM CAM	RK- 752414-010V	
	RK- 456713-0106	12208 89-01-24	CAM SEGMENT ARM CAM	RK- 752408-010V	
	RK- 456713-0106	12208 89-01-24	CAM SEGMENT ARM CAM	RK- 752410-010V	
	RK- 456713-0106	12208 89-01-24	CAM SEGMENT ARM CAM	RK- 752412-010V	
	RK- 456713-0107	12208 89-01-24	CAM SEGMENT ARM CAM	RK- 456716-010V	
	RK- 456713-0107	12208 89-01-24	CAM SEGMENT ARM CAM	RK- 456717-010V	
	RK- 456713-0107	12208 89-01-24	CAM SEGMENT ARM CAM	RK- 752414-010V	
	RK- 456713-0108	12208 89-01-24	CAM SEGMENT ARM CAM	RK- 752408-010V	
	RK- 456713-0108	12208 89-01-24	CAM SEGMENT ARM CAM	RK- 752410-010V	

Page No	PART NO	LAST AM	DESCRIPTION	GROUP NO
	RK- 456713-0108	12208 89-01-24	CAM SEGMENT ARM CAM	RK- 752412-010V
	RK- 456713-0109	12208 89-01-24	CAM SEGMENT ARM CAM	RK- 456716-010V
	RK- 456713-0109	12208 89-01-24	CAM SEGMENT ARM CAM	RK- 456717-010V
	RK- 456713-0109	12208 89-01-24	CAM SEGMENT ARM CAM	RK- 752414-010V
	RK- 456713-0110	12208 89-01-24	CAM SEGMENT ARM CAM	RK- 456716-010V
	RK- 456713-0110	12208 89-01-24	CAM SEGMENT ARM CAM	RK- 456717-010V
	RK- 456713-0110	12208 89-01-24	CAM SEGMENT ARM CAM	RK- 752414-010V
	RK- 456714-0101	9509 86-11-28	BRAKE	RK- 456716-010V
	RK- 456714-0101	9509 86-11-28	BRAKE	RK- 456717-010V
	RK- 456714-0101		BRAKE	RK- 752408-010V
	RK- 456714-0101		BRAKE	RK- 752410-010V
	RK- 456714-0101		BRAKE	RK- 752412-010V
	RK- 456714-0101		BRAKE	RK- 752414-010V
	RK- 456715-0101	12867 89-06-27	REB KIT HYDRAULIC SEALING	B- 648110-010V
	RK- 456715-0101	12867 89-06-27	REB KIT HYDRAULIC SEALING	B- 648110-060V
	RK- 456716-010V	12871 89-11-21	REB KIT OVERL JAW SYSTEM	B- 648110-010V
	RK- 456717-010V	12872 89-11-21	REB KIT OVERL JAW SYSTEM	B- 648110-060V 070V
	C- 456739-010V	12052 88-09-09	PIPE WORK TB/9	B- 648107-060V 080V
610-1.2	C- 456757-0101	11934 88-06-10	AIR INJECTOR	C- 271909-030V 040V
	C- 456757-0201	14200 90-02-13	AIR INJECTOR	C- 271909-050V
	RK- 456793-0101	8079 85-06-19	BATH	RK- 469808-010V
	RK- 456799-0101	9988 86-12-05	ASEPTIC CHAMBER	RK- 469808-010V
	RK- 456804-0101	8079 85-06-19	TANK	RK- 469808-010V
	C- 456812-0101	6755 84-04-17	SUCTION PIPE	C- 272381-020V
	C- 456812-0101	6755 84-04-17	SUCTION PIPE	RK- 469764-010V
201-1.2	C- 456827-0101	10764 88-05-05	CONNECTION BOX	C- 456100-010V 020V
	C -456836-010V	6877 84-06-04	CLEANING SYSTEM	B- 648111-030V
	C- 456836-020V	10157 87-02-07	CLEANING SYSTEM	B- 648111-060V 070V
136-1	C- 456836-030V	12569 89-02-15	CLEANING SYSTEM	B- 648111-080V
	C- 456836-0401	12775 89-12-02	CLEANING SYSTEM	B- 648111-090V
610-1.3	C- 456882-0101	6850 84-05-18	PUSH BUTTON BOX	C- 271909-030V
	C- 456882-0101	6850 84-05-18	PUSH BUTTON BOX	C- 271909-040V 050V
716-1	C- 456919-0101	7065 84-09-12	BENDING ROLLER	B- 648107-060V 080V
	C- 456923-0101	8036 85-06-24	MACHINE BODY	B- 648107-060V 070V
717-1	C- 456923-0201	8314 86-01-14	MACHINE BODY	B- 648107-080V
	C- 456923-0301	14273 90-02-06	MACHINE BODY TB/TBA/9	B- 648107-090V
	C- 456923-0302	14273 90-02-06	MACHINE BODY TB/TBA/9	B- 648107-090V
	C- 456935-010V	7065 84-09-12	PIPE WORK	B- 648107-060V 070V
710-1	C- 456935-020V	12153 88-09-12	PIPE WORK	B- 648107-080V
	C- 456935-030V	14010 90-03-06	PIPE WORK	B- 648107-090V
959-1.2	C- 456951-010V	8296 85-10-09	INDUCTOR UNIT	C- 456953-010V 020V
959-1	C- 456953-010V	12153 88-09-12	PERFORATION HEATER TBA/9	C- 77091-010V 030V
	C- 456953-010V	12153 88-09-12	PERFORATION HEATER TBA/9	B- 648119-060V

Page No	PART NO	LAST AM	DESCRIPTION	GROUP NO
	C- 456975-0101	8731 86-02-11	CABINET	B- 648109-060V
954-1	C- 456975-0201	11870 88-05-24	CABINET	C- 77091-010V 030V
	C- 456976-010V	6725 84-04-10	CONDUIT	B- 648111-030V 060
	C- 456976-020V	9415 86-10-17	CONDUIT	B- 648111-070V
125-1	C- 456976-030V	11932 88-06-15	CONDUIT	B- 648111-080V
	C- 456976-040V	14591 90-02-28	CONDUIT	B- 648111-090V
827-1	C- 457159-0101	9314 86-09-17	PANEL	B- 648118-060V
827-2	C- 457159-0201	9530 86-12-22	PANEL	B- 648118-070V
802-1	C- 457853-0101	7004 84-11-06	COVER	B- 648118-060V
	C- 457853-0201	10407 87-06-10	COVER	B- 648118-070V
	C- 457853-0301	14584 90-03-09	COVER	B- 648118-080V
824-1	C- 457856-0101	10407 87-06-10	CONNECTION BOX	B- 648118-060V 070V
824-2	C- 457856-0201	14110 90-02-22	CONNECTION BOX	B- 648118-080V
825-1	C- 457857-0101	6287 84-03-21	CABLE DUCT	B- 648118-060V
825-1	C- 457857-0201	10407 87-06-10	UPPER CABLE DUCT	B- 648118-070V 080V
825-1	C- 457857-0202	10407 87-06-10	UPPER CABLE DUCT	B- 648118-070V 080V
806-1.1a	C- 457866-010V	12939 89-05-19	SEALING JAW	B- 648118-060V 070V
	C- 457866-0107	12939 89-05-19	SEALING JAW	B- 648108-010V
806-1.1a	C- 457866-020V	14641 90-03-14	SEALING JAW TBA/9	B- 648118-080V
801-1	C- 457867-010V	10407 87-06-10	MACHINE BODY	B- 648118-060V 070V
801-2	C- 457867-020V	14110 90-02-22	MACHINE BODY	B- 648118-080V
806-1.2a	C- 457868-010V	8390 86-01-24	COUNTER JAW	B- 648118-060V
	C- 457868-0102	8390 86-01-24	COUNTER JAW	B- 648108-010V
820-1	C- 457881-0101	7601 85-07-18	LEG	B- 648118-060V 070V
820-2a	C- 457881-0301	14110 90-02-22	LEG TBA/9	B- 648118-080V
823-1	C- 457924-0101	9161 86-06-17	VALVE PANEL	B- 648118-060V
823-2	C- 457924-0201	10867 87-11-18	VALVE PANEL	B- 648118-070V
819-1	C- 457937-010V	8326 86-01-28	SLIDE	B- 648118-060V 070V
819-2	C- 457937-020V	14584 90-03-09	SLIDE	B- 648118-080V
602-1.9	C- 458383-010V	6474 83-12-29	PAPER REEL HOLDER	C- 272404-020V 050V
	C- 458383-020V	11717 89-06-27	PAPER REEL HOLDER	C- 272404-060V
602-1.9	C- 458384-010V	6474 83-12-29	PAPER REEL HOLDER	C- 272404-020V 060V
	C- 469074-0101	8116 85-08-21	SPLICE DETECTOR	B- 648111-060V 070V
108-1	C- 469074-0201	13953 89-11-13	SPLICE DETECTOR	B- 648111-080V
	C- 469091-010V	8376 85-10-18	UPPER FILLING TUBE	B- 648111-060V 070V
111-1	C- 469091-020V	14591 90-02-28	FILLING PIPE	B- 648111-080V 090V
	C- 469118-0101	6850 84-05-18	FLOW METER	C- 271909-030V
610-1.4	C- 469118-0201	9123 86-07-22	FLOW METER	C- 271909-040V 050V
	C- 469121-0101	8117 85-08-20	JUNCTION BLOCK	C- 271909-030V
610-1.5	C- 469121-0201	8437 86-02-18	JUNCTION BLOCK	C- 271909-040V 050V
	C- 469144-010V	6850 84-05-18	CONNECTION	C- 271909-030V
610-1.6	C- 469144-020V	9605 86-10-31	CONNECTION	C- 271909-040V
	C- 469144-030V	14366 90-02-26	CONNECTION	C- 271909-050V

Page No	PART NO	LAST AM	DESCRIPTION	GROUP NO
814-1	C- 469173-010V	13824 89-09-28	REEL	B- 648118-060V 080V
810-1	C- 469182-0101	7341 85-03-12	BELT TENSIONER	B- 648118-060V 070V
821-1	C- 469247-010V	7858 85-07-15	PULL TAB MAGAZINE	B- 648118-060V 070V
902-1	C- 469294-0101	6771 84-06-25	TYPE EXTRACTOR	RK- 469760-010V
	C- 469294-0101	6771 84-06-25	TYPE EXTRACTOR	B- 648109-060V 080V
803-1	C- 469299-0101	14859 90-05-23	FLUORESCENT LAMP	B- 648118-060V 080V
826-1	C- 469300-0101	10407 87-06-10	LOWER CABLE DUCT	B- 648118-060V 070V
836-1	C- 469316-010V	10805 87-09-28	START-UP KIT	B- 648118-060V 070V
836-2	C- 469316-020V	14859 90-05-23	START-UP KIT	B- 648118-080V
	C- 469366-010V	9907 86-12-01	CABLE DUCT	B- 648101-060V 070V
	C- 469366-020V	12788 89-04-25	CABLE DUCT	B- 648101-080V
	C- 469366-030V	14706 90-03-20	CABLE DUCT	B- 648101-090V
	C- 469374-0101	9199 86-05-27	CABLE DUCT	B- 648111-060V 070V
135-1	C- 469374-0201	13953 89-11-13	CABLE DUCT	B- 648111-080V
	C- 469374-0301	12180 89-12-01	CABLE DUCT	B- 648111-090V
616-1	C- 469384-0101	6882 84-06-07	START-UP KIT	B- 648106-060V 090V
	RK- 469411-0101	7568 85-02-15	SPLICING DEVICE OFFSET	RK- 491404-010V
	RK- 469411-0101	7568 85-02-15	SPLICING DEVICE OFFSET	B- 648110-010V
	RK- 469412-0101	6868 84-06-18	TEARING DEVICE	RK- 469411-010V
	RK- 469413-0101	6868 84-06-18	SUSPENSION ARM	RK- 469411-010V
	RK- 469414-0101	14789 90-04-23	SPLICING TABLE	RK- 469411-010V
	C- 469452-010V	10002 87-01-12	COMPRESSOR UNIT	B- 648111-060V 070
124-1a	C- 469452-020V	12844 89-06-13	COMPRESSOR UNIT	B- 648111-080V
	C- 469452-030V	8833 89-12-02	COMPRESSOR UNIT	B- 648111-090V
	RK- 469472-0101	8578 86-02-11	SPACER FRAME	RK- 469760-010V
	RK- 469472-0102	8578 86-02-11	SPACER FRAME	RK- 469760-010V
	RK- 469486-0101	7079 84-10-15	RAILING / PLATFORM	RK- 469760-010V
201-1	C- 469496-0101	6944 84-07-05	COVER PLATE	B- 648102-060V 090V
	C- 469501-0101	8477 85-11-25	AIR NOZZLE	B- 648111-060V
	C- 469501-020V	9415 86-10-17	AIR NOZZLE	B- 648101-070V
	C- 469501-020V	9415 86-10-17	AIR NOZZLE	B- 648111-070V
110-1	C- 469501-030V	14591 90-02-28	AIR NOZZLE	B- 648101-080V 090V
	C- 469501-030V	14591 90-02-28	AIR NOZZLE	B- 648111-080V 090V
	RK- 469533-0101	7079 84-10-15	CABLE DUCT	RK- 469760-010V
618-1.5	C- 469535-010V	12195 88-10-21	DOOR	B- 648106-070V 090V
	C- 469535-0101	12195 88-10-21	DOOR	B- 648106-060 070V
	RK- 469536-0101	7624 86-05-07	WATER CIRCULATION	RK- 490865-010V
948-1	C- 469586-0101	7204 84-10-20	TEMPLATE	C- 77094-010V
	C- 469586-0101	7204 84-10-20	TEMPLATE	B- 648119-060V
834-1	C- 469598-0101	9161 86-06-17	HOSE INSTALLATION	B- 648118-060V 070V
811-1	C- 469634-0101	10407 87-06-10	BUSBAR	B- 648118-060V 080V
822-1	C- 469635-010V	9361 86-10-23	COVER PLATE	B- 648118-060V 080V
828-1	C- 469649-010V	7006 84-11-02	PAPER GUIDE	B- 648118-060V 070V

Page No	PART NO	LAST AM	DESCRIPTION	GROUP NO
831-1.1a	C- 469736-010V	7827 85-07-17	STRIP MAGAZINE	C- 490600-010V
831-1.1b	C- 469736-010V	13967 89-10-04	STRIP MAGAZINE	C- 490600-020V
831-2.1	C- 469736-030V	14566 90-03-12	STRIP MAGAZINE	C- 490600-030V
	C- 469737-0101	7010 85-03-13	REEL	C- 283621-010V
	RK- 469760-010V	9237 86-05-12	ADAPTER KIT, OPENING DEV.	B- 648110-010V
213-1	C- 469762-0101	6929 84-10-08	LADDER	RK- 469760-010V
	C- 469762-0101	6929 84-10-08	LADDER	B- 648102-060V 090V
	RK- 469764-0101	7083 84-09-04	PIPE CONNECTION	B- 648110-010V
	RK- 469769-0101	7084 84-09-04	PEROXIDE PIPE	B- 648110-010V
	C- 469781-010V	8271 85-10-14	TUBE FLUSHING DEVICE	B- 648111-060V 070V
133-1	C- 469781-020V	14591 90-02-28	TUBE FLUSHING DEVICE	B- 648111-080V 090V
	RK- 469788-010V	7079 84-10-15	TUBE FLUSHING	RK- 469760-010V
	C- 469804-010V	7199 84-10-24	TUBE FLUSHING DEVICE	B- 648101-060V 090V
	RK- 469808-010V	11978 89-06-15	REB KIT ENVIRONMENT	RK- 491589-030V
	RK- 469808-0101	11978 89-06-15	REB KIT ENVIRONMENT	RK- 491404-010V
	RK- 469808-0101	11978 89-06-15	REB KIT ENVIRONMENT	B- 648110-010V
	RK- 469897-0101	7325 84-12-19	REB. KIT DISCHARGE CHUTE	RK- 469760-010V
	RK- 469898-0101	7325 84-12-19	REB. KIT TURNING STATION	RK- 469760-010V
	RK- 469961-0101	8079 85-06-19	BATH	RK- 469988-010V
	RK- 469961-0102	8079 85-06-19	BATH	RK- 469988-010V
	RK- 469984-0101	13953 89-11-13	ASEPTIC CHAMBER	RK- 469988-010V
	RK- 469988-010V	8079 85-06-19	REB KIT ENVIRONMENT	RK- 491590-030V
815-1.1	C- 476080-020V	8653 86-11-21	BELT TENSIONER	C- 533844-010V
955-1.4	C- 476189-010V	12503 89-04-14	WALL LEAD-IN	C- 751796-010V 020V
809-1	C- 476349-020V	11388 88-03-21	DRIVE SHAFT	B- 648118-070V 080V
	RK- 479278-0101	7193 84-10-29	PROXIMITY SWITCH	RK- 479279-010V
	RK- 479279-010V	7193 84-10-29	SAFETY CLUTCH	B- 648110-010V
955-1.6	C- 479821-0101	8541 86-04-29	FREE STAND	C- 751796-010V 020V
831-1.2	C- 484858-010V	10738 87-08-21	BOBBIN	C- 490600-010V 020V
831-2.2a	C- 484858-0301	14919 90-05-29	BOBBIN	C- 490600-030V
831-1.3	C- 484950-0101	12403 89-01-10	BRACKET	C- 490600-010V 020V
831-2.3	C- 484950-0201	12944 89-08-29	BRACKET	C- 490600-030V
831-1.4	C- 484984-010V	10096 87-11-11	SPLICING DEVICE	C- 490600-010V 020V
831-2.4	C- 484984-020V	14859 90-05-23	SPLICING DEVICE	C- 490600-030V
837-1	C- 486955-010V	10805 87-09-28	START-UP KIT	B- 648118-060V 070V
837-2	C- 486955-020V	14722 90-04-09	START-UP KIT	B- 648118-080V
958-1	C- 490504-0101	8673 86-02-17	CIRCULATING COOLING WATER	C- 77091-010V
	C- 490504-0101	8673 86-02-17	CIRCULATING COOLING WATER	B- 648119-060V
905-1	C- 490590-010V	8822 86-05-05	CONVEYOR FRAME	B- 648109-060V 080V
831-1	C- 490600-0101	9205 86-08-04	STRIP MAGAZINE COMPLETE	B- 648118-060V 070V
831-2	C- 490600-0301	14566 90-03-12	STRIP MAGAZINE COMPLETE	B- 648118-080V
831-1.5	C- 490601-0101	7827 85-07-17	CONNECTION BOX	C- 490600-010V 020V
835-1	C- 490610-010V	9708 86-12-17	BENDING ROLLERS, LS-STRIP	B- 648118-060V 070V

Page No	PART NO	LAST AM	DESCRIPTION	GROUP NO
835-2	C- 490610-030V	15138 90-08-29	BENDING ROLLERS, LS-STRIP	B- 648118-080V
605-1	C- 490761-0101	12427 88-12-08	DETERGENT PUMP	B- 648106-080V 090V
	RK- 490865-0101	9681 86-10-17	LOW ACID KIT	B- 648110-010V
	RK- 490877-0101	10648 87-07-02	PHOTOCELL UNIT	RK- 491744-010V
	RK- 490889-0101	7942 85-05-13	TOOL	RK- 469988-010V
521-1.1	C- 490912-0101	7648 85-03-06	CATCH	C- 271115-030V 040V
	C- 490947-0101	9596 86-09-05	PAPER GUARD	B- 648107-060V 070V
	C- 490947-0102	9596 86-09-05	PAPER GUARD	B- 648107-060V 070V
	C- 490947-020V	12198 88-12-02	PAPER GUARD	B- 648107-080V
714-1b	C- 490947-0201		PAPER GUARD	
714-1-a	C- 490947-0202		PAPER GUARD	
	RK- 490951-0101	7663 85-03-15	FIXING OF GUIDESIDES F.F.	B- 648110-060V
	RK- 491068-0101	8300 85-10-09	REINFORCEMENT	B- 648110-010V
	RK- 491073-0101	7925 85-05-23	GUIDING OF STATION CHAIN	B- 648110-010V
	C- 491083-010V	8167 85-09-04	GAUGE GROUP	B- 648111-060V 070V
130-1	C- 491083-020V	13673 89-09-11	GAUGE GROUP	B- 648111-080V 090V
	RK- 491131-010V	11979 89-08-16	LUBRIC. OF STATION CHAIN	B- 648110-010V
612-1	C- 491207-010V	12102 88-08-17	PIPE WORK	B- 648106-080V
	C- 491207-020V	13645 90-01-12	PIPE WORK	C- 751352-010V
502-1	CR- 491225-010V	14707 90-03-20	STATION CHAIN	B- 648105-080V 090V
	CR- 491225-0101	14707 90-03-20	STATION CHAIN	RK- 751156-010V
	CR- 491225-0101	14707 90-03-20	STATION CHAIN	RK- 751296-010V
	CR- 491225-0102	14707 90-03-20	STATION CHAIN	RK- 751156-010V
	CR- 491225-0102	14707 90-03-20	STATION CHAIN	RK- 751296-010V
	CR- 491225-0103	14707 90-03-20	STATION CHAIN	RK- 751156-010V
	CR- 491225-0103	14707 90-03-20	STATION CHAIN	RK- 751296-010V
	CR- 491225-0104	14707 90-03-20	STATION CHAIN	RK- 751156-010V
	CR- 491225-0104	14707 90-03-20	STATION CHAIN	RK- 751296-010V
	CR- 491225-0105	14707 90-03-20	STATION CHAIN	RK- 751156-010V
	CR- 491225-0105	14707 90-03-20	STATION CHAIN	RK- 751296-010V
	CR- 491225-0106	14707 90-03-20	STATION CHAIN	RK- 751156-010V
	CR- 491225-0106	14707 90-03-20	STATION CHAIN	RK- 751296-010V
	CR- 491225-0107	14707 90-03-20	STATION CHAIN	RK- 751156-010V
	CR- 491225-0107	14707 90-03-20	STATION CHAIN	RK- 751296-010V
	CR- 491225-0108	14707 90-03-20	STATION CHAIN	RK- 751156-010V
	CR- 491225-0108	14707 90-03-20	STATION CHAIN	RK- 751296-010V
613-1	C- 491243-030V	13997 89-11-16	PEROXIDE TANK	B- 648106-080V
	C- 491243-0301	13997 89-11-16	PEROXIDE TANK	RK- 491590-030V
501-1	C- 491259-010V	12529 89-02-09	GUIDE	B- 648105-080V
	C- 491259-0101	12529 89-02-09	GUIDE	RK- 751156-010V
	C- 491259-0102	12529 89-02-09	GUIDE	RK- 751156-010V
	C- 491259-0103	12529 89-02-09	GUIDE	RK- 751156-010V
	C- 491259-020V	12530 90-01-05	GUIDE	B- 648105-090V

Page No	PART NO	LAST AM	DESCRIPTION	GROUP NO
959-1	C- 491273-0101	8296 85-10-09	START-UP KIT	C- 456953-010V 020V
	RK- 491302-0101	10355 87-04-07	TENSION SPROCKET	RK- 751296-010V
613-1.1	C- 491323-0201	12060 88-07-04	PEROXIDE PUMP	C- 491243-030V
	C- 491323-0201	12060 88-07-04	PEROXIDE PUMP	RK- 491591-030V
	RK- 491324-0101	10113 87-02-06	PAPER BRAKE	RK- 491404-010V
	RK- 491373-0101	8500 85-12-18	BEARING	RK- 491588-010V
	RK- 491388-0101	12208 89-01-24	DISCONNECTION LINK	RK- 456716-010V
	RK- 491388-0101	12208 89-01-24	DISCONNECTION LINK	RK- 456717-010V
	RK- 491388-0101	12208 89-01-24	DISCONNECTION LINK	RK- 752414-010V
	RK- 491388-0102	12208 89-01-24	DISCONNECTION LINK	RK- 752408-010V
	RK- 491388-0102	12208 89-01-24	DISCONNECTION LINK	RK- 752408-010V
	RK- 491388-0102	12208 89-01-24	DISCONNECTION LINK	RK- 752410-010V
	RK- 491388-0102	12208 89-01-24	DISCONNECTION LINK	RK- 752412-010V
	RK- 491404-010V	9237 86-05-12	REBUILD.OFFSET KIT AB9-83	B- 648110-010V
	RK- 491405-010V	12894 89-11-20	REBUILDING OFFSET KIT	B- 648110-060V
	RK- 491416-0101	12866 89-06-01	AIR INJECTOR	B- 648110-010V
	RK- 491447-0101	8397 85-11-27	DISTRIBUTOR BLOCK	B- 648110-060V
	RK- 491512-010V	10603 87-06-23	LUBRICATION STATION CHAIN	B- 648110-060V
610-1.2	C- 491536-0101	11934 88-06-10	NON-RETURN VALVE	C- 456757-010V
	C- 491536-0101	11934 88-06-10	NON-RETURN VALVE	C- 456757-020V
	RK- 491539-0101	10585 87-10-17	PHOTOCELL UNIT	RK- 491543-010V
	RK- 491539-0102	10585 87-10-17	PHOTOCELL UNIT	RK- 751636-010V
	RK- 491543-0101	11983 89-08-15	REB.KIT PHOTO CELL UNIT	B- 648110-010V
	RK- 491568-0101	7624 86-05-07	WATER CIRCULATION	RK- 491795-010V
131-1	C- 491570-0101	8461 85-12-05	DOOR	B- 648111-080V 090V
132-1	C- 491579-0101	8461 85-12-05	DOOR	B- 648111-080V 090V
	RK- 491588-0101	9237 86-05-12	REB KIT BEARING IN BATH	B- 648110-010V 070V
	RK- 491589-030V	12868 89-08-15	REBUILDING KIT	B- 648110-010V
	RK- 491590-030V	12869 89-09-28	REBUILDING KIT	B- 648110-060V 070V
	RK- 491591-0301	10591 87-06-23	TANK	RK- 491589-030V
	RK- 491641-0101	8635 86-01-10	REB KIT DISTRIBUTOR BLOCK	B- 648110-010V
204-1.2	C- 491650-0101	12270 88-10-20	DISTRIBUTOR BLOCK	C- 271562-050V 070
	RK- 491744-0101	11986 89-06-29	REB KIT PHOTOCELL UNIT	B- 648110-010V
958-2	C- 491767-0101	9617 86-12-11	CIRCULATING COOLING WATER	C- 77091-020V 030V
	RK- 491780-0101	10648 87-07-02	PRESSURE FEED	RK- 491543-010V
	RK- 491780-0101	10648 87-07-02	PRESSURE FEED	RK- 491744-010V
	RK- 491780-0101	10648 87-07-02	PRESSURE FEED	RK- 491789-010V
	RK- 491780-0101	10648 87-07-02	PRESSURE FEED	RK- 491902-010V
	RK- 491780-0101	10648 87-07-02	PRESSURE FEED	RK- 751561-010V
	RK- 491780-0101	10648 87-07-02	PRESSURE FEED	RK- 751569-010V
	RK- 491780-0101	10648 87-07-02	PRESSURE FEED	RK- 751636-010V
312-1	C- 491787-010V	13591 89-08-10	DISCONNECTION LINK RIGHT	B- 648103-070V
	C- 491787-0201	12577 89-12-06	DISCONNECTION LINK RIGHT	B- 648103-080V

Page No	PART NO	LAST AM	DESCRIPTION	GROUP NO
312-1	C- 491788-010V	13591 89-08-10	DISCONNECTION LINK LEFT	B- 648103-070V
	C- 491788-0201	12577 89-12-06	DISCONNECTION LINK LEFT	B- 648103-080V
	RK- 491789-0101	11987 89-08-15	REB KIT PHOTOCELL UNIT	B- 648110-060V 070V
	RK- 491795-0101	11338 87-12-16	LOW ACID KIT	B- 648110-060V 070V
304-1	C- 491814-0101	12051 88-07-05	SLEWING BRACKET RIGHT	B- 648103-070V 080V
305-1	C- 491815-0101	12051 88-07-05	SLEWING BRACKET LEFT	B- 648103-070V 080V
504-1	C- 491846-0101	9514 86-11-26	TENSION SPROCKET	B- 648105-080V
	C- 491846-0101	9514 86-11-26	TENSION SPROCKET	RK-751156-010V
	C- 491846-0201	14278 90-01-05	TENSION SPROCKET	B- 648105-090V
503-1	C- 491850-0101	14278 90-01-05	DRIVE WHEEL	B- 648105-080V
	C- 491850-0101	14278 90-01-05	DRIVE WHEEL	B- 648105-090V
	RK- 491863-0101	10355 87-04-07	SAFETY SPROCK	RK- 751156-010V
	RK- 491863-0101	10355 87-04-07	SAFETY SPROCK	RK- 751296-010V
513-1.1	C- 491871-010V	10781 88-05-04	CHAIN TENSIONER	C- 295310-050V
	C- 491871-0101	10781 88-05-04	CHAIN TENSIONER	C- 295310-060V
606-1	C- 491890-0101	9123 86-07-22	OIL TANK	B- 648106-080V 090V
607-1	C- 491894-0101	9123 86-07-22	HYDRAULIC SYSTEM	B- 648106-080V 090V
	C- 491897-010V	11004 87-11-27	PHOTOCELL UNIT	RK- 491789-010V
	C- 491897-010V	11004 87-11-27	PHOTOCELL UNIT	B- 648101-070V
	C- 491897-0101	11004 87-11-27	PHOTOCELL UNIT	RK- 751561-010V
	C- 491897-0102	11004 87-11-27	PHOTOCELL UNIT	RK- 491902-010V
	C- 491897-0102	11004 87-11-27	PHOTOCELL UNIT	RK- 751561-010V
	RK- 491902-0101	11988 89-08-15	REB.KIT PHOTOCELL UNIT	B- 648110-060V
906-1	C- 491942-0101	9391 86-07-21	PAPER REEL TROLLEY	B- 648109-070V
	C- 491942-0101	9391 86-07-21	PAPER REEL TROLLEY	B- 648109-080V 090V
137-1	C- 491976-010V	11713 88-05-05	PHOTOCELL UNIT	B- 648101-080V
	C- 491976-010V	11713 88-05-05	PHOTOCELL UNIT	B- 648111-080V
	C- 491976-020V	14591 90-02-28	PHOTOCELL UNIT	B- 648101-090V
	C- 491976-020V	14591 90-02-28	PHOTOCELL UNIT	B- 648111-090V
	RK- 491984-0101	9287 86-06-11	PRESSURE RELEASE VALVE	B- 648110-010V 060V
	C- 493652-0102	8328 85-10-22	LID	C- 751373-010V
	C- 493652-0102	8328 85-10-22	LID	C- 751398-010V
	C- 493967-010V	7522 85-02-20	BRAKE	B- 648119-020V
806-1.2a	C- 497534-020V	10738 87-08-21	COUNTER JAW	B- 648118-070V 080V
138-1	SP- 499255-0101	7937 85-06-03	SEAL KIT	C- 295778-010V 030V
	SP- 499255-0201	10455 87-11-11	SEAL KIT	C- 295778-040V
965-1	RK- 520067-0101	14346 90-03-02	HEAD SPACE BY INJECTION	B- 648119-020V
965-1.1	RK- 520068-0101	14346 90-03-02	CONTROL CABINET	RK- 520067-010V
	RK- 520068-0101	14346 90-03-02	CONTROL CABINET	RK- 520094-010V
	RK- 520068-0101	14346 90-03-02	CONTROL CABINET	RK- 520096-010V
	RK- 520068-0101	14346 90-03-02	CONTROL CABINET	RK- 520129-010V
	RK- 520068-0101	14346 90-03-02	CONTROL CABINET	RK- 520130-010V
965-1.3	RK- 520069-0101	14852 90-05-23	A-VALVE MODIFICATION	RK- 520067-010V
	RK- 520069-0101	14852 90-05-23	A-VALVE MODIFICATION	RK- 520094-010V
	RK- 520069-0101	14852 90-05-23	A-VALVE MODIFICATION	RK- 520096-010V
	RK- 520069-0101	14852 90-05-23	A-VALVE MODIFICATION	RK- 520129-010V
	RK- 520069-0101	14852 90-05-23	A-VALVE MODIFICATION	RK- 520130-010V
	RK- 520069-0101	14852 90-05-23	A-VALVE MODIFICATION	RK- 978239-010V
	RK- 520069-0101	14852 90-05-23	A-VALVE MODIFICATION	RK- 978240-010V
	RK- 520069-0101	14852 90-05-23	A-VALVE MODIFICATION	RK- 978241-010V
965-1.4	RK- 520070-0101	10974 89-04-11	HEAT EXCHANGER	RK- 520067-010V
	RK- 520070-0101	10974 89-04-11	HEAT EXCHANGER	RK- 520094-010V
	RK- 520070-0101	10974 89-04-11	HEAT EXCHANGER	RK- 520096-010V
	RK- 520070-0101	10974 89-04-11	HEAT EXCHANGER	RK- 520129-010V
	RK- 520070-0101	10974 89-04-11	HEAT EXCHANGER	RK- 520130-010V
965-1.2	RK- 520071-0101	10974 89-04-11	TRANSITION PIPE	RK- 520067-010V
	RK- 520071-0101	10974 89-04-11	TRANSITION PIPE	RK- 520129-010V
	RK- 520071-0101		TRANSITION PIPE	RK- 520130-010V
965-3	RK- 520094-010V	14346 90-03-02	HEAD SPACE BY INJECTION	C- 77091-020V
965-1.2	RK- 520095-0101	10974 89-04-11	TRANSITION PIPE	RK- 520094-010V
	RK- 520095-0101	10974 89-04-11	TRANSITION PIPE	RK- 520096-010V
965-3	RK- 520096-010V	14346 90-03-02	HEAD SPACE BY INJECTION	C- 77091-020V
965-2	RK- 520129-010V	14346 90-03-02	HEAD SPACE BY INJECTION	C- 77091-010V
	RK- 520129-010V	14346 90-03-02	HEAD SPACE BY INJECTION	B- 648119-060V
965-2	RK- 520130-010V	14346 90-03-02	HEAD SPACE BY INJECTION	C- 77091-010V
	RK- 520130-010V	14346 90-03-02	HEAD SPACE BY INJECTION	B- 648119-060V
965-1.5	RK- 520167-0101	14852 90-05-23	START-UP KIT	RK- 520067-010V
	RK- 520167-0101	14852 90-05-23	START-UP KIT	RK- 520094-010V
	RK- 520167-0101	14852 90-05-23	START-UP KIT	RK- 520096-010V
	RK- 520167-0101	14852 90-05-23	START-UP KIT	RK- 520129-010V
	RK- 520167-0101	14852 90-05-23	START-UP KIT	RK- 520130-010V
	RK- 520167-0101	14852 90-05-23	START-UP KIT	RK- 978239-010V
	RK- 520167-0101	14852 90-05-23	START-UP KIT	RK- 978240-010V
	RK- 520167-0101	14852 90-05-23	START-UP KIT	RK- 978241-010V
	C- 527898-0101	10582 89-11-15	CONTAINER	C- 751352-010V
969-1	RK- 529345-0101	12856 90-01-29	CONTAINER	C- 77091-030V
964-1.4	C- 529621-0101	11716 88-09-21	READING DEVICE	C- 529932-010V
	C- 529621-0101	11716 88-09-21	READING DEVICE	C- 735253-010V
	C- 529621-0101	11716 88-09-21	READING DEVICE	C- 752669-010V
	C- 529621-0101	11716 88-09-21	READING DEVICE	C- 752985-010V
	C- 529621-0101	11716 88-09-21	READING DEVICE	C- 560459-010V
	C- 529621-0101	11716 88-09-21	READING DEVICE	C- 560460-010V
	C- 529621-0101	11716 88-09-21	READING DEVICE	C- 560886-010V
964-1.13	C- 529924-0101	12279 88-10-06	AIR VALVE	C- 529932-010V
	C- 529924-0101	12279 88-10-06	AIR VALVE	C- 735253-010V
	C- 529924-0101	12279 88-10-06	AIR VALVE	C- 752669-010V

Page No	PART NO	LAST AM	DESCRIPTION	GROUP NO	
	C- 529924-0101	12279 88-10-06	AIR VALVE	C- 752985-010V	
964-1	C- 529932-010V	14042 90-04-19	HEAD SPACE BY LLF	B- 648119-020V	
964-1.1	C- 529933-0101	11716 88-09-21	UPPER FILLING TUBE	C- 529932-010V	
	C- 529933-0101	11716 88-09-21	UPPER FILLING TUBE	C- 735253-010V	
	C- 529933-0101	11716 88-09-21	UPPER FILLING TUBE	C- 752669-010V	
	C- 529933-0101	11716 88-09-21	UPPER FILLING TUBE	C- 735253-010V	
	C- 529933-0101	11716 88-09-21	UPPER FILLING TUBE	C- 752985-010V	
	C- 529933-0101	11716 88-09-21	UPPER FILLING TUBE	C- 560459-010V	
	C- 529933-0101	11716 88-09-21	UPPER FILLING TUBE	C- 560460-010V	
	C- 529933-0101	11716 88-09-21	UPPER FILLING TUBE	C- 560886-010V	
964-1.2	C- 529935-0101	11716 88-09-21	LOWER FILLING TUBE	C- 529932-010V	
	C- 529935-0101	11716 88-09-21	LOWER FILLING TUBE	C- 752669-010V	
	C- 529935-0101	11716 88-09-21	LOWER FILLING TUBE	C- 752985-010V	
	C- 529935-0101	11716 88-09-21	LOWER FILLING TUBE	C- 560459-010V	
	C- 529935-0101	11716 88-09-21	LOWER FILLING TUBE	C- 560460-010V	
	C- 529935-0101	11716 88-09-21	LOWER FILLING TUBE	C- 560886-010V	
964-1.12a	C- 529940-0101	11716 88-09-21	PIPE-LINE	C- 529932-010V	
908-1	C- 531345-0101	8893 86-03-18	PERSONAL PROTECT. EQ H2O2	B- 648109-070V	090V
806-1.1b	C- 531657-010V	9361 86-10-23	SEALING JAW	B- 648118-060V	
806-1.1b	C- 531657-010V	9361 86-10-23	SEALING JAW	B- 648118-070V	080V
969-1	RK- 532210-0101	12856 90-01-29	CARRIAGE	C- 77091-030V	
957-1	C- 533014-0101	9292 86-09-08	LEAK FINDING EQUIPMENT	C- 77091-020V	030V
	RK- 533177-010V	11865 89-09-27	HEAT REDUCTION KIT	B- 648110-010V	060V
815-2	C- 533844-010V	9438 86-12-12	BENDING ROLLER	B- 648118-070V	080V
	C- 533903-010V	14277 90-02-12	BRAKE	RK- 536317-010V	
832-2	C- 533903-010V	14277 90-02-12	BRAKE	B- 648118-070V	
959-1.1	C- 533905-0101	9292 86-09-08	BAG	C- 533014-010V	
833-1	C- 534381-010V	9464 86-12-17	PAPER GUARD	B- 648118-070V	
	RK- 535606-010V	9126 87-06-04	REB KIT COUNTER JAW	B- 648110-060V	
	RK- 536317-010V	9955 87-04-28	REB KIT BRAKE	B- 648110-060V	
	RK- 536318-0101	9955 87-04-28	DRIVE SHAFT	RK- 536317-010V	
	RK- 536467-010V	10004 87-04-07	REB KIT BENDING ROLLER	B- 648110-060V	
	RK- 536470-0101	10004 87-04-07	BENDING ROLLER	RK- 536467-010V	
	RK- 536470-0102	10004 87-04-07	BENDING ROLLER	RK- 536467-010V	
	RK- 536470-0103	10004 87-04-07	BENDING ROLLER	RK- 536467-010V	
	RK- 536502-0101	10071 87-06-10	REB KIT PRODUCT VALVE APV	B- 648110-010V	
	RK- 536706-0101	10072 87-06-22	REBUILDING KIT	B- 648110-010V	070V
823-3	C- 536859-0101	14584 90-03-09	PANEL	B- 648118-080V	
	RK- 538412-0101	11727 88-03-19	DRIVE	RK- 538439-010V	
	RK- 538412-0101	11727 88-03-19	DRIVE	RK- 547986-010V	
	RK- 538412-0102	11727 88-03-19	DRIVE	RK- 538439-010V	
	RK- 538412-0102	11727 88-03-19	DRIVE	RK- 547986-010V	
	RK- 538413-0101	10326 87-08-13	BENDING ROLLER	RK- 538439-010V	
	RK- 538413-0101	10326 87-08-13	BENDING ROLLER	RK- 547986-010V	
	RK- 538413-0102	10326 87-08-13	BENDING ROLLER	RK- 538439-010V	
	RK- 538413-0102	10326 87-08-13	BENDING ROLLER	RK- 547986-010V	
	RK- 538413-0103	10326 87-08-13	BENDING ROLLER	RK- 538439-010V	
	RK- 538413-0103	10326 87-08-13	BENDING ROLLER	RK- 547986-010V	
	RK- 538413-0104	10326 87-08-13	BENDING ROLLER	RK- 538439-010V	
	RK- 538413-0104	10326 87-08-13	BENDING ROLLER	RK- 547986-010V	
	RK- 538413-0105	10326 87-08-13	BENDING ROLLER	RK- 538439-010V	
	RK- 538413-0105	10326 87-08-13	BENDING ROLLER	RK- 547986-010V	
	RK- 538413-0106	10326 87-08-13	BENDING ROLLER	RK- 538439-010V	
	RK- 538413-0106	10326 87-08-13	BENDING ROLLER	RK- 547986-010V	
	RK- 538415-0101	10326 87-08-13	TUBE FLUSHING	RK- 538439-010V	
	RK- 538415-0101	10326 87-08-13	TUBE FLUSHING	RK- 547986-010V	
	RK- 538415-0102	10326 87-08-13	TUBE FLUSHING	RK- 538439-010V	
	RK- 538415-0102	10326 87-08-13	TUBE FLUSHING	RK- 547986-010V	
	RK- 538415-0103	10326 87-08-13	TUBE FLUSHING	RK- 538439-010V	
	RK- 538415-0103	10326 87-08-13	TUBE FLUSHING	RK- 547986-010V	
942-1.1	C- 538421-010V	10515 89-01-19	MOULD FOR REEL	C- 548467-010V	
	RK- 538438-0101	10326 87-08-13	GAUGE GROUP	RK- 538439-010V	
	RK- 538438-0101	10326 87-08-13	GAUGE GROUP	RK- 547986-010V	
	RK- 538439-010V	14328 90-01-15	ADAPTER KIT, OPENING DEV.	B- 648110-060V	070V
	RK- 538449-0101	10384 87-06-05	REB KIT BENDING ROLLER	B- 648110-010V	
	RK- 538450-0101	10384 87-06-05	BENDING ROLLER	RK- 538449-010V	
	RK- 538739-0101	14328 90-01-15	SETTING TOOL	RK- 538439-010V	
	RK- 538739-0101	14328 90-01-15	SETTING TOOL	RK- 547986-010V	
	RK- 538739-0102	14328 90-01-15	SETTING TOOL	RK- 538439-010V	
	RK- 538739-0102	14328 90-01-15	SETTING TOOL	RK- 547986-010V	
	RK- 538739-0103	14328 90-01-15	SETTING TOOL	RK- 538439-010V	
	RK- 538739-0103	14328 90-01-15	SETTING TOOL	RK- 547986-010V	
113-1.1.1	C- 539209-0101	10455 87-11-11	A-CYLINDER	C- 440630-020V	
113-1.1.2	C- 539210-0101	10455 87-11-11	C-CYLINDER	C- 440630-020V	
113-1.1.3	C- 539211-0101	10455 87-11-11	B-CYLINDER	C- 440630-020V	
942-1.2	C- 539375-0101	10515 89-01-19	TOOL, REEL ADJUSTMENT	C- 548467-010V	
	RK- 540008-010V	10623 87-09-10	REB KIT SPLICING DEVICE	B- 648110-060V	
	RK- 540009-0101	10623 87-09-10	STRIP MAGAZINE	RK- 540008-010V	
	RK- 540009-0102	10623 87-09-10	STRIP MAGAZINE	RK- 540008-010V	
	RK- 540010-0101	10623 87-09-10	BOBBIN	RK- 540008-010V	
	RK- 540010-0102	10623 87-09-10	BOBBIN	RK- 540008-010V	
	RK- 540011-0101	10623 87-09-10	SPLICING DEVICE	RK- 540008-010V	
	RK- 540011-0102	10623 87-09-10	SPLICING DEVICE	RK- 540008-010V	
960-2	C- 540028-010V	12645 90-04-19	LS-STRIP A.S.U. TBA/9	C- 77091-010V	020V
	C- 540028-010V	12645 90-04-19	LS-STRIP A.S.U. TBA/9	B- 648119-060V	
	C- 540030-0101	10632 87-12-29	LS STRIP A.S.U. TBA/9	B- 648119-020V	

Page No	PART NO	LAST AM	DESCRIPTION	GROUP NO
113-1.1	C- 541163-0101	10455 87-11-11	CLAMP RING	C- 440630-020V
971-1.12	C- 541163-0101	10455 87-11-11	CLAMP RING	C- 794245-010V
113-1.1	C- 541164-0101	10455 87-11-11	CLAMP RING	C- 440630-020V
971-1.12	C- 541164-0101	10455 87-11-11	CLAMP RING	C- 794245-010V
	C- 543143-0101	10835 88-09-30	ADJUSTMENTMENT DEVICE	C- 752645-010V
	C- 543143-0101	10835 88-09-30	ADJUSTMENTMENT DEVICE	C- 752646-010V
	C- 543143-0101	10835 88-09-30	ADJUSTMENTMENT DEVICE	C- 752913-010V
	C- 543143-0101		ADJUSTMENTMENT DEVICE	C- 752914-010V
	C- 544381-0101	14257 89-12-20	CONNECTION BOX	RK- 548056-010V
830-2.1	C- 544389-0101	13120 89-09-12	CONTROL PANEL	C- 548057-010V
830-2.2	C- 544390-0101	14257 89-12-20	CONNECTION BOX	C- 548057-010V
	RK- 544391-010V	12525 89-06-14	REB. KIT DATING UNIT	B- 648110-060V 080V
950-1.1	C- 544393-0101	13825 90-03-06	ACCESSORIES HOT FOIL DAT.	C- 77091-030V
821-2.1	C- 544420-0101	14859 90-05-23	SPLICING DEVICE	C- 546285-010V
966-1	RK- 544465-0101	13101 89-05-25	SEALING JAW	RK- 545440-010V
	RK- 544466-010V	13951 89-10-30	COUNTER JAW	RK- 550132-010V
966-1	RK- 544466-0101	13951 89-10-30	COUNTER JAW	RK- 545440-010V
	RK- 544467-010V	13951 89-10-30	SEALING JAW PULLTAB	RK- 550132-010V
966-1	RK- 544467-0101	13951 89-10-30	SEALING JAW PULLTAB	RK- 545440-010V
966-1	RK- 544468-0101	13951 89-10-30	PULL TAB FEED	RK- 545440-010V
	RK- 544468-0101	13951 89-10-30	PULL TAB FEED	RK- 550132-010V
	RK- 544469-010V	13951 89-10-30	BOBBIN	RK- 550132-010V
966-1	RK- 544469-0101	13951 89-10-30	BOBBIN	RK- 545440-010V
966-1	RK- 544470-0101	13101 89-05-25	STRIP MAGAZINE	RK- 545440-010V
966-1	RK- 544471-0101	13101 89-05-25	ROLLER	RK- 545440-010V
966-1	RK- 544472-0101	11943 89-02-23	BRAKE	RK- 545440-010V
966-1	RK- 544473-0101	11943 89-02-23	PUNCH	RK- 545440-010V
966-1	RK- 544474-0101	13101 89-05-25	SPLICING DEVICE	RK- 545440-010V
966-1	RK- 544475-0101	13101 89-05-25	STRIP GUIDE	RK- 545440-010V
205-1	RK 544536-010		HOUSEMARKS SIGN KIT	
910-1	C- 544536-010		HOUSEMARKS SIGN KIT	
	C- 544536-0101	14592 90-04-06	SET OF SIGNS	C- 456457-020V 030V
968-1a	C- 544536-0101	14592 90-04-06	SET OF SIGNS	C- 752960-010V
968-1b	C- 544536-0101	14592 90-04-06	SET OF SIGNS	C- 752971-010V
	C- 544536-0102	14592 90-04-06	SET OF SIGNS	C- 456458-020V 030V
	C- 544536-0102	14592 90-04-06	SET OF SIGNS	C- 751860-010V
205-1	C- 544540-0101	12850 89-11-09	HOUSEMARKS SET OF SIGNS	C- 271442-030V
	RK- 545440-0101	13101 89-05-25	REBUILDING KIT, HOLE 11	C- 77091-010V 020V
	RK- 546255-0101	12184 88-09-28	REBUILDING KIT BOBBIN	B- 648110-060V 070V
821-2	C- 546285-0101	14722 90-04-09	MAGAZINE	B- 648118-080V
	RK- 546337-0101	12186 88-09-28	STRIP MAGAZINE	B- 648110-010V
	RK- 546489-0101	12236 88-10-03	PULL TAB MAGAZINE	B- 648110-010V
	RK- 547300-0101	12261 88-11-25	BRAKE	B- 648110-010V

Page No	PART NO	LAST AM	DESCRIPTION	GROUP NO
828-2	C- 547601-010V	14859 90-05-23	PAPER GUIDE	B- 648118-080V
	RK- 547723-0101	12345 88-11-22	REB.KIT. BENDING ROLLERS	B- 648110-010V
	RK- 547726-0101	12345 88-11-22	BENDING ROLLERS	RK- 547723-010V
	RK- 547750-020V	14043 90-03-21	REB.KIT CONV.H.O.T	B- 648110-060V 080V
	RK- 547751-020V	14299 89-12-21	SPLICING DEVICE	RK- 550132-010V
	RK- 547751-0301	14360 90-03-05	SPLICING DEVICE	RK- 547750-020V
	RK- 547751-0302	14360 90-03-05	SPLICING DEVICE	RK- 547750-020V
	RK- 547752-0101	14043 90-03-21	STRIP MAGAZINE	RK- 547750-020V
	RK- 547752-0102	14043 90-03-21	STRIP MAGAZINE	RK- 547750-020V
	RK- 547752-020V	14299 89-12-21	STRIP MAGAZINE	RK- 550132-010V
	RK- 547753-0101	13677 89-09-20	CONNECTION BOX	RK- 547750-020V
	RK- 547753-0101	13677 89-09-20	CONNECTION BOX	RK- 550132-010V
	RK- 547754-0101	14299 89-12-21	STRIP MAGAZINE	RK- 550132-010V
831-2.2b	C- 547756-0101	13951 89-10-30	BOBBIN	C- 490600-030V
	C- 547756-0101	13951 89-10-30	BOBBIN	RK- 547750-020V
	C- 547756-0101	13951 89-10-30	BOBBIN	RK- 550132-010V
	RK- 547757-0301	14299 89-12-21	BRAKE	RK- 547750-020V
	RK- 547757-0301	14299 89-12-21	BRAKE	RK- 550132-010V
	RK- 547758-0101	13677 89-09-20	DRIVE SHAFT	RK- 547750-020V
	RK- 547758-0101	13677 89-09-20	DRIVE SHAFT	RK- 550132-010V
	RK- 547759-0101	13677 89-09-20	PUNCH	RK- 547750-020V
	RK- 547759-020V	13951 89-10-30	PUNCH	RK- 550132-010V
	RK- 547760-0101	14360 90-03-05	SEALING JAW	RK- 547750-020V
	RK- 547760-0102	14360 90-03-05	SEALING JAW	RK- 547750-020V
	RK- 547760-0103	14360 90-03-05	SEALING JAW	RK- 547750-020V
	RK- 547760-0104	14360 90-03-05	SEALING JAW	RK- 547750-020V
	RK- 547760-020V	13951 89-10-30	SEALING JAW	RK- 550132-010V
	RK- 547761-0101	14299 89-12-21	PULL TAB MAGAZINE	RK- 547750-020V
	RK- 547761-0101	14299 89-12-21	PULL TAB MAGAZINE	RK- 550132-010V
	RK- 547765-0101	14299 89-12-21	STRIP GUIDE	RK- 547750-020V
	RK- 547765-020V	14299 89-12-21	STRIP GUIDE	RK- 550132-010V
	RK- 547769-0101	13677 89-09-20	STRIP SEALER	RK- 547750-020V
	RK- 547769-0101	13677 89-09-20	STRIP SEALER	RK- 550132-010V
	RK- 547782-0101	12376 88-12-28	STRIP GUIDE	B- 648110-010V
805-2	C- 547913-010V	14722 90-04-09	STRIP GUIDE	B- 648118-080V
	RK- 547986-010V	12375 90-01-19	ADAPTER KIT, OPENING DEV.	B- 648110-080V
834-2	C- 548031-0101	14584 90-03-09	HOSE INSTALLATION	B- 648118-080V
	C- 548031-0102	14584 90-03-09	HOSE INSTALLATION	B- 648118-080V
804-2	CR- 548040-010V	14859 90-05-23	PUNCH	B- 648118-080V
	RK- 548056-0101	14257 89-12-20	DATING UNIT	RK- 544391-010V
	RK- 548056-0102	14257 89-12-20	DATING UNIT	RK- 544391-010V
	RK- 548056-0103	14257 89-12-20	DATING UNIT	RK- 544391-010V
830-2	C- 548057-010V	13120 89-09-12	DATING UNIT	B- 648118-080V

Page No	PART NO	LAST AM		DESCRIPTION	GROUP NO	
808-2	CR- 548331-010V	14722	90-04-09	PULL TAB FEED	B- 648118-080V	
	RK- 548387-0102	12714	89-03-07	DRIVE	RK- 548407-010V	
	RK- 548387-0105	12714	89-03-07	DRIVE	RK- 548407-010V	
	RK- 548387-0106	12714	89-03-07	DRIVE	RK- 548407-010V	
	RK- 548387-0107	12714	89-03-07	DRIVE	RK- 548407-010V	
	RK- 548388-010V	13677	89-09-20	DRIVE UNIT	RK- 550132-010V	
	RK- 548388-0101	13677	89-09-20	DRIVE UNIT	RK- 547750-020V	
	RK- 548389-010V	14043	90-03-21	BENDING ROLLER	RK- 550132-010V	
	RK- 548389-0101	14043	90-03-21	BENDING ROLLER	RK- 547750-020V	
	RK- 548389-0102	14043	90-03-21	BENDING ROLLER	RK- 547750-020V	
	RK- 548389-0103	14043	90-03-21	BENDING ROLLER	RK- 547750-020V	
	RK- 548389-0104	14043	90-03-21	BENDING ROLLER	RK- 547750-020V	
	RK- 548407-010V	12714	89-03-07	DRIVE ROLLER	B- 648110-010V	080V
	C- 548467-0101	10515	89-01-19	SETTING TOOL	B- 648119-060V	090V
840-1	C- 550128-0101	13112	89-06-19	LIFTER	B- 648118-080V	
	RK- 550129-010V	13951	89-10-30	STATION CHAIN	RK- 550132-010V	
966-1	RK- 550129-0101	13951	89-10-30	STATION CHAIN	RK- 545440-010V	
	RK- 550132-010V	14299	89-12-21	REB.KIT CONV. H.O.E.	B- 648110-060V	080V
	RK- 550134-010V	13951	89-10-30	BENDING ROLLERS, LS-STRIP	RK- 550132-010V	
	RK- 550134-0201	14043	90-03-21	BENDING ROLLERS, LS-STRIP	RK- 547750-020V	
	RK- 550134-0202	14043	90-03-21	BENDING ROLLERS, LS-STRIP	RK- 547750-020V	
	RK- 550136-010V	13951	89-10-30	START-UP KIT	RK- 550132-010V	
	RK- 550140-010V	14043	90-03-21	GUIDE RAIL	RK- 550132-010V	
	RK- 550140-0101	14043	90-03-21	GUIDE RAIL	RK- 547750-020V	
	RK- 550140-0102	14043	90-03-21	GUIDE RAIL	RK- 547750-020V	
	RK- 550140-0103	14043	90-03-21	GUIDE RAIL	RK- 547750-020V	
831-2.5	C- 552013-0101	14110	90-02-22	CONNECTION BOX	C- 490600-030V	
820-2b	C- 552017-0101	12320	89-11-07	LEG	B- 648118-080V	
817-2a	C- 552030-0101	14722	90-04-09	PAPER MAGAZINE	B- 648118-080V	
817-2b	C- 552036-0101	14722	90-04-09	PAPER MAGAZINE	B- 648118-080V	
	RK- 553144-0101	14735	90-03-26	START-UP KIT	RK- 547750-020V	
	RK- 553144-0102	14735	90-03-26	START-UP KIT	RK- 547750-020V	
	RK- 553144-0103	14735	90-03-26	START-UP KIT	RK- 547750-020V	
	RK- 553144-0104	14735	90-03-26	START-UP KIT	RK- 547750-020V	
	RK- 553145-010V	13951	89-10-30	COUNTER JAW	RK- 550132-010V	
	RK- 553180-010V	13646	89-12-13	QUICK RESTART	B- 648110-010V	080V
	C- 553657-0101	13645	90-01-12	DOOR	C- 751352-010V	
	RK- 553820-010V	11865	89-09-27	HEAT REDUCTION KIT	B- 648110-070V	080V
838-1	C- 554341-0101	13963	89-12-11	TWIST GUARD	B- 648118-080V	
839-1	C- 554346-010V	14969	90-08-08	BLACK TAPE DETECTOR	B- 648118-080V	
832-3	C- 554360-010V	14859	90-05-23	BRAKE	B- 648118-080V	
960-4	C- 556723-0101	14147	90-02-26	LS-STRIP A.S.U. (TBA/9)	RK- 905722-010V	
	C- 556723-0102	14147	90-02-26	LS-STRIP A.S.U. (TBA/9)	RK- 905722-010V	
	C- 556723-0103	14147	90-02-26	LS-STRIP A.S.U. (TBA/9)	RK- 905722-010V	
	C- 556723-0104	14147	90-02-26	LS-STRIP A.S.U. (TBA/9)	RK- 905722-010V	
960-2	C- 556888-0101	12645	90-04-19	LS-EQUIPMENT	C- 540028-010V	
	C- 556888-0102	12645	90-04-19	LS-EQUIPMENT	C- 540028-010V	
	RK- 557012-0101	14601	90-04-02	ELECTRIC MATERIALS	C- 751796-020V	
	RK- 557165-0101	14767	90-04-02	ELECTRIC MATERIALS	C- 751796-020V	
	C- 560202-0101	14614	90-03-21	BENDING ROLLER REAR	B- 648107-090V	
964-2	C- 560459-010V	14983	90-06-17	HEAD SPACE BY LLF	B- 648119-090V	
964-2	C- 560460-010V	14983	90-06-17	HEAD SPACE BY LLF	B- 648119-090V	
964-2.3	C- 560858-0101	14983	90-06-07	AIR VALVE	C- 560459-010V	
964-2.3	C- 560858-0101	14983	90-06-07	AIR VALVE	C- 560460-010V	
964-2.3	C- 560858-0101	14983	90-06-07	AIR VALVE	C- 560886-010V	
964-2	C- 560886-010V	14983	90-06-17	HEAD SPACE BY LLF	B- 648119-090V	
964-1.11	C- 560921-0101	11716	88-09-21	PNEUMATIC EQUIPMENT	C- 560459-010V	
	C- 560921-0101	11716	88-09-21	PNEUMATIC EQUIPMENT	C- 560460-010V	
	C- 560921-0101	11716	88-09-21	PNEUMATIC EQUIPMENT	C- 560886-010V	
964-2.4	C- 561425-0101	14983	90-06-07	ASSEMBLING TOOL	C- 560459-010V	
	C- 561425-0101	14983	90-06-07	ASSEMBLING TOOL	C- 560460-010V	
	C- 561425-0101	14983	90-06-07	ASSEMBLING TOOL	C- 560886-010V	
	B- 648101-020V	6852	84-05-23	SUPERSTRUCTURE	A- 648151-020V	050V
	B- 648101-060V	7199	84-10-24	SUPERSTRUCTURE	A- 648151-100V	
	B- 648101-070V	10843	87-11-26	SUPERSTRUCTURE	A- 648151-110V	
	B- 648101-080V	12368	88-11-18	SUPERSTRUCTURE TB/9	A- 648151-120V	
	B- 648101-090V	13651	89-11-23	SUPERSTRUCTURE TB/9	A- 648151-130V	
	B- 648102-020V	6130	83-09-21	MACHINE BODY	A- 648152-020V	
	B- 648102-0201	6130	83-09-21	MACHINE BODY	A- 648151-020V	
	B- 648102-030V	6197	83-10-13	MACHINE BODY	A- 648152-030V	050V
	B- 648102-0301	6197	83-10-13	MACHINE BODY	A- 648151-030V	050V
	B- 648102-0601	6929	84-10-08	MACHINE BODY	A- 648151-100V	
	B- 648102-0602	6929	84-10-08	MACHINE BODY	A- 648152-100V	
	B- 648102-0701	8636	86-01-21	MACHINE BODY	A- 648151-110V	
	B- 648102-0702	8636	86-01-21	MACHINE BODY	A- 648152-110V	
200-1	B- 648102-080V	11733	88-11-23	MACHINE BODY TB/TBA/9	A- 648152-120V	
	B- 648102-0801	11733	88-11-23	MACHINE BODY TB/TBA/9	A- 648151-120V	
	B- 648102-090V	14198	90-03-06	MACHINE BODY TB/TBA/9	A- 648152-130V	
	B- 648102-0901	14198	90-03-06	MACHINE BODY TB/TBA/9	A- 648151-130V	
	B- 648103-020V	5253	82-04-01	DRIVE	A- 648151-020V	030
	B- 648103-030V	6147	83-09-29	DRIVE	A- 648151-040V	050V
	B- 648103-030V	6147	83-09-29	DRIVE	A- 648152-050V	
	B- 648103-0601	9368	86-06-11	DRIVE	A- 648151-100V	110V
	B- 648103-0602	9368	86-06-11	DRIVE	A- 648152-100V	110V
300-1	B- 648103-070V			DRIVE B/AB9		
	B- 648103-0701	13591	89-08-10	DRIVE B/AB9	A- 648151-120V	

Page No	PART NO	LAST AM	DESCRIPTION	GROUP NO
	B- 648103-0702	13591 89-08-10	DRIVE B/AB9	A- 648152-120V
	B- 648103-0801	12577 89-12-06	DRIVE TB/TBA/9	A- 648151-130V
	B- 648103-0802	12577 89-12-06	DRIVE TB/TBA/9	A- 648152-130V
	B- 648104-020V	6317 83-11-03	JAW SYSTEM	A- 648151-020V 040V
	B- 648104-020V	6317 83-11-03	JAW SYSTEM	A- 648152-020V 040V
	B- 648104-030V	6447 83-12-27	JAW SYSTEM	A- 648151-050V
	B- 648104-030V	6447 83-12-27	JAW SYSTEM	A- 648152-050V
	B- 648104-0601	6748 84-05-04	JAW SYSTEM	A- 648151-100V
	B- 648104-0602	6748 84-05-04	JAW SYSTEM	A- 648152-100V
	B- 648104-0701	8633 86-01-14	JAW SYSTEM	A- 648151-110V
	B- 648104-0702	8633 86-01-14	JAW SYSTEM	A- 648152-110V
400-1	B- 648104-080V		JAW SYSTEM	
	B- 648104-0801	8486 86-11-03	JAW SYSTEM	A- 648151-120V
	B- 648104-0802	8486 86-11-03	JAW SYSTEM	A- 648152-120V
	B- 648104-0901	12578 89-12-06	JAW SYSTEM	A- 648151-130V
	B- 648104-0902	12578 89-12-06	JAW SYSTEM	A- 648152-130V
	B- 648105-0201	7911 85-06-11	FINAL FOLDER	A- 648151-020V 030V
	B- 648105-0201	7911 85-06-11	FINAL FOLDER	A- 648152-020V 030V
	B- 648105-0301	7911 85-06-11	FINAL FOLDER	A- 648151-040V
	B- 648105-0301	7911 85-06-11	FINAL FOLDER	A- 648152-040V
	B- 648105-0401	7911 85-06-11	FINAL FOLDER	A- 648151-050V
	B- 648105-0401	7911 85-06-11	FINAL FOLDER	A- 648152-050V
	B- 648105-0601	7911 85-06-11	FINAL FOLDER	A- 648151-100V
	B- 648105-0601	7911 85-06-11	FINAL FOLDER	A- 648152-100V
	B- 648105-0701	8667 86-02-17	FINAL FOLDER	A- 648151-110V
	B- 648105-0701	8667 86-02-17	FINAL FOLDER	A- 648152-110V
500-1	B- 648105-080V		FINAL FOLDER	
	B- 648105-0801	12529 89-02-09	FINAL FOLDER TB/TBA/9	A- 648151-120V
	B- 648105-0801	12529 89-02-09	FINAL FOLDER TB/TBA/9	A- 648152-120V
	B- 648105-0901	14278 90-01-05	FINAL FOLDER TB/TBA/9	A- 648151-130V
	B- 648105-0901	14278 90-01-05	FINAL FOLDER TB/TBA/9	A- 648152-130V
	B- 648106-0201	6755 84-04-17	SERVICE UNIT	A- 648151-020V 050V
	B- 648106-0202	6755 84-04-17	SERVICE UNIT	A- 648152-020V 050V
	B- 648106-0601	7326 84-12-17	SERVICE UNIT	A- 648151-100V
	B- 648106-0602	7326 84-12-17	SERVICE UNIT	A- 648152-100V
	B- 648106-0701	9286 86-06-11	SERVICE UNIT	A- 648151-110V
	B- 648106-0702	9286 86-06-11	SERVICE UNIT	A- 648152-110V
	B- 648106-080V	12502 89-01-05	SERVICE UNIT TB/TBA/9	A- 648152-120V
	B- 648106-0801	12502 89-01-05	SERVICE UNIT TB/TBA/9	A- 648151-120V
	B- 648106-090V	14200 90-02-13	SERVICE UNIT TB/TBA/9	A- 648152-130V
	B- 648106-0901	14200 90-02-13	SERVICE UNIT TB/TBA/9	A- 648151-130V
	B- 648107-0201	9369 86-06-11	STRIP APPLICATOR	A- 648151-020V 040V
	B- 648107-0202	9369 86-06-11	STRIP APPLICATOR	A- 648152-020V 050V
	B- 648107-060V	8054 85-08-22	STRIP APPLICATOR	A- 648151-100V
	B- 648107-060V	8054 85-08-22	STRIP APPLICATOR	A- 648152-100V
	B- 648107-070V	8699 86-01-18	STRIP APPLICATOR	A- 648151-110V
	B- 648107-070V	8699 86-01-18	STRIP APPLICATOR	A- 648152-110V
700-1a/b	B- 648107-080V	12198 88-12-02	STRIP APPLICATOR	A- 648151-120V
	B- 648107-070V	8699 86-01-18	STRIP APPLICATOR	A- 648152-120V
	B- 648107-090V	14853 90-04-18	STRIP APPLICATOR	A- 648151-130V
	B- 648107-090V	14853 90-04-18	STRIP APPLICATOR	A- 648152-130V
	B- 648108-010V	8390 86-01-24	OPENING DEVICE	A- 648152-020V 050V
	B- 648109-020V	9616 86-09-11	STANDARD EQUIPMENT	A- 648151-020V 050V
	B- 648109-020V	9616 86-09-11	STANDARD EQUIPMENT	A- 648152-050V
	B- 648109-060V	10321 87-04-02	ORDINARY ACCESSORIES	A- 648151-100V
	B- 648109-060V	10321 87-04-02	ORDINARY ACCESSORIES	A -648152-100V
	B- 648109-070V	10843 87-11-26	ORDINARY ACCESSORIES	A- 648151-110V
	B- 648109-070V	10843 87-11-26	ORDINARY ACCESSORIES	A- 648152-110V
900-1	B- 648109-080V	14111 89-11-18	ORDINARY ACCESSORIES	A- 648151-120V
	B- 648109-080V	14111 89-11-18	ORDINARY ACCESSORIES	A- 648152-120V
	B- 648109-090V	14596 90-02-24	ORDINARY ACCESS. TB/TBA/9	A- 648151-130V
	B- 648109-090V	14596 90-02-24	ORDINARY ACCESS. TB/TBA/9	A- 648152-130V
	B- 648110-010V	13646 89-12-13	REBUILDING KITS BRIK	A- 648151-020V 050V
	B- 648110-010V	13646 89-12-13	REBUILDING KITS BRIK	A- 648152-020V 050V
	B- 648110-060V	14704 90-05-02	REBUILDING KITS BRIK	A- 648151-100V
	B- 648110-060V	14704 90-05-02	REBUILDING KITS BRIK	A- 648152-100V
	B- 648110-070V	14704 90-05-02	REBUILDING KITS BRIK	A- 648151-110V
	B- 648110-070V	14704 90-05-02	REBUILDING KITS BRIK	A- 648152-110V
	B- 648110-080V	14704 90-05-02	REBUILDING KITS TB/TBA/9	A- 648151-120V
	B- 648110-080V	14704 90-05-02	REBUILDING KITS TB/TBA/9	A- 648152-120V
	B- 648111-020V	6388 84-01-09	SUPERSTRUCTURE	A- 648152-020V 040V
	B- 648111-030V	7937 85-06-03	SUPERSTRUCTURE	A- 648152-050V
	B- 648111-060V	8083 85-07-10	SUPERSTRUCTURE	A- 648152-100V
	B- 648111-070V	8465 85-12-18	SUPERSTRUCTURE	A- 648152-110V
100-1	B- 648111-080V	11731 88-08-18	SUPERSTRUCTURE TBA/9	A- 648152-120V
	B- 648111-090V	12861 89-12-11	SUPERSTRUCTURE TBA/9	A- 648152-130V
	B- 648118-010V	9023 86-05-23	OPENING DEVICE	A- 648151-020V 050V
800-1	B- 648118-0601	9361 86-10-23	OPENING DEVICE	A- 648151-100V
800-1	B- 648118-0602	9361 86-10-23	OPENING DEVICE	A- 648152-100V
800-1	B- 648118-0701	12232 88-09-23	OPENING DEVICE TB/TBA/9	A- 648151-110V 120V
800-1	B- 648118-0702	12232 88-09-23	OPENING DEVICE TB/TBA/9	A- 648152-110V 120V
800-2	B- 648118-0801	14172 90-03-09	OPENING DEVICE TB/TBA/9	A- 648151-130V
800-2	B- 648118-0802	14172 90-03-09	OPENING DEVICE TB/TBA/9	A- 648152-130V
	B- 648119-020V	14042 90-04-19	EXTRA EQUIPMENT TB/TBA/9	A- 648151-020V 050V
	B- 648119-060V	12645 90-04-19	EXTRA EQUIPMENT TB/TBA/9	A- 648151-100V
	B- 648119-060V	12645 90-04-19	EXTRA EQUIPMENT TB/TBA/9	A- 648152-100V

Page No	PART NO	LAST AM	DESCRIPTION	GROUP NO	
	B- 648119-070V	10515 89-01-19	EXTRA EQUIPMENT	A- 648151-110V	
	B- 648119-070V	10515 89-01-19	EXTRA EQUIPMENT	A- 648152-110V	
940-1	B- 648119-080V		EXTRA EQUIPMENT		
	B- 648119-0801	10515 89-01-19	EXTRA EQUIPMENT	A- 648151-120V	
	B- 648119-0801	10515 89-01-19	EXTRA EQUIPMENT	A -648152-120V	
	B- 648119-0901	12856 90-01-29	EXTRA EQUIPMENT	A- 648151-130V	
	B- 648119-0901	12856 90-01-29	EXTRA EQUIPMENT	A -648152-130V	
	AE- 649045-010V	12623 90-04-23	EL. EQUIPMENT JUMBO REEL	C- 751796-020V	
	AE- 649204-010V		ELECTRIC EQUIPMENT	A- 648151-020V	050V
	AE- 649204-030V		ELECTRIC EQUIPMENT	A- 648151-100V	110V
	BE- 649204-0501	10860 88-10-18	ELECTRIC EQUIPMENT	A- 648151-120V	
	AE- 649205-010V		ELECTRIC EQUIPMENT	A- 648152-020V	050V
	AE- 649205-030V		ELECTRIC EQUIPMENT	A- 648152-100V	110V
	BE- 649205-0501	10500 88-09-19	EL-EQUIPMENT AB9-050V	A- 648152-120V	
	BE- 649205-0701	11919 89-05-10	EL-EQUIPMENT TBA/9-070V	A- 648152-120V	
	RK- 649244-0001		ELECTRICAL CONVERSION	RK- 479279-010V	
	AE- 649257-0001		ELECTRICAL CONVERSION	C- 456274-010V	
	RK- 649258-0001		ELECTRICAL CONVERSION	RK- 479279-010V	
	RK- 649262-0001		ELECTRICAL CONVERSION	RK- 479279-010V	
	RK- 649269-0001		ELECTRICAL CONVERSION	RK- 469760-010V	
	AE- 649280-0101	8052 85-06-25	ELECTRICAL CONVERSION	C- 456953-010V	030V
	AE- 649287-010V	8499 86-11-17	ELECTRIC EQUIPMENT	RK- 491744-010V	
	AE- 649293-010V	8840 86-11-17	ELECTRIC EQUIPMENT	RK- 491789-010V	
	AE- 649293-010V	8840 86-11-17	ELECTRIC EQUIPMENT	RK- 491902-010V	
	BE- 649294-010V	10616 87-11-03	ELECTRIC EQUIPMENT	RK- 68409-010V	
	BE- 649294-0101	10616 87-11-03	ELECTRIC EQUIPMENT	C- 540028-010V	
	BE- 649294-0101	10616 87-11-03	ELECTRIC EQUIPMENT	C- 540030-010V	
	BE- 649294-0101	10616 87-11-03	ELECTRIC EQUIPMENT	RK- 905544-010V	
	BE- 649294-0101		ELECTRIC EQUIPMENT	RK- 905545-010V	
	RK- 649297-010V	9030 87-10-17	EL-CONV. LOW ACID KIT	RK- 491795-010V	
965-1	RK- 649308-0101	13834 90-02-06	"HEADSPACE BY INJECTION"	RK- 520067-010V	
	649320-0101	10060 89-11-15	"L.L.F H.S."	C- 529932-010V	
965-2	RK- 649324-0101	13835 90-02-06	"HEADSPACE BY INJECTION"	RK- 520130-010V	
	RK- 649327-010V	10116 87-10-16	ELECTRIC EQUIPMENT	RK- 751202-010V	
	AE- 649328-010V	10117 87-09-04	ELECTRIC EQUIPMENT	RK- 751228-010V	
	RK- 649330-010V	10149 87-10-17	CONVERS. BAR CODE READING	RK- 491543-010V	
	RK- 649331-010V	10159 87-10-17	BAR CODE	RK- 751561-010V	
	RK- 649335-010V	10372 88-01-12	EL-CONV. SA TO PTS 3	RK- 538439-010V	
965-2	RK- 649340-0101	13836 90-02-06	"HEADSPACE BY INJECTION"	RK- 520129-010V	
	RK- 649342-010V	10621 88-02-29	BRAKE SUPPLY MOTOR	RK- 751548-010V	
	RK- 649343-010V	10624 88-02-29	BRAKE PAPER SUPPLY	RK- 751546-010V	
	RK- 649344-010V	10625 87-10-16	BRAKE PAPER SUPPLY	RK- 751479-010V	
	RK- 649350-010V	10676 87-10-17	PAPER SUPPLY MOTOR	RK- 751595-010V	

Page No	PART NO	LAST AM	DESCRIPTION	GROUP NO
	RK- 649352-010V	10678 87-10-17	BRAKE SUPPLY MOTOR	RK- 751589-010V
	RK- 649355-010V	10734 87-10-17	BRAKE SUPPLY MOTOR	RK- 751591-010V
	BE- 649356-010V	10791 87-11-26	BAR CODE	RK- 751569-010V
	RK- 649362-010V	10980 87-11-25	EL-CONVERSION BAR CODE	RK- 751636-010V
	RK- 649366-0101	14354 90-01-18	CONVERTIBLE PTS	RK- 547750-020V
	RK- 649369-0101	11772 89-07-06	HEAT REDUCTION	RK- 533177-010V
	RK- 649370-0101	14339 90-05-02	HEAT REDUCTION	RK- 533177-010V
	RK- 649370-0101	14339 90-05-02	HEAT REDUCTION	RK- 553820-010V
	RK- 649371-0101	14340 90-05-02	HEAT REDUCTION	RK- 533177-010V
	RK- 649371-0101	14340 90-05-02	HEAT REDUCTION	RK- 553820-010V
	RK- 649389-0101	10106 89-01-23	TEMP. SUPERV.HYDR.OIL(EL)	RK- 752270-010V
	RK- 649390-0101	12325 88-12-22	TEMP. SUPERV.HYDR.OIL(EL)	RK- 752270-010V
	RK- 649391-0101	12326 88-12-22	TEMP.SUPRV.HYDR.OIL (EL)	RK- 752270-010V
	RK- 649392-0101	14355 90-01-18	CONVERTIBLE PTS	RK- 547750-020V
	RK- 649400-0101	14162 89-11-14	TEMP.SUPERV.HYDR.OIL	RK- 752270-010V
	RK- 649401-0101	12798 89-04-25	TEMP.SUPERV.HYDR.OIL	RK- 752270-010V
	RK- 649402-0101	12799 89-04-25	TEMP.SUPERV.HYDR.OIL	RK- 752270-010V
964-2.1	C- 735014-0101	11716 88-09-21	AIR AND INERT GAS SYSTEMS	C- 735253-010V
	C- 735014-0101	11716 88-09-21	AIR AND INERT GAS SYSTEMS	C- 752669-010V
	C- 735014-0101	11716 88-09-21	AIR AND INERT GAS SYSTEMS	C- 752985-010V
964-2.2.1	C- 735031-0102	11715 88-06-07	CONNECTIONS BOX	C- 735270-010V
964-1.10	C- 735032-0101	11716 88-09-21	ASSEMB. OF C. AND P.BOXES	C- 529932-010V
	C- 735183-0101	13990 89-11-13	PNEUMATIC BOX	C- 735032-010V
964-1.10.2	C- 735183-0101	13990 89-11-13	PNEUMATIC BOX	C- 735270-010V
964-1.2	C- 735192-0101	11716 88-09-21	FILLING PIPE	C- 529932-010V
	C- 735192-0101	11716 88-09-21	FILLING PIPE	C- 735253-010V
	C- 735192-0101	11716 88-09-21	FILLING PIPE	C- 752669-010V
	C- 735192-0101	11716 88-09-21	FILLING PIPE	C- 752985-010V
	C- 735192-0101	11716 88-09-21	FILLING PIPE	C- 560459-010V
	C- 735192-0101	11716 88-09-21	FILLING PIPE	C- 560460-010V
	C- 735192-0101	11716 88-09-21	FILLING PIPE	C- 560886-010V
	C- 735192-0102	11716 88-09-21	FILLING PIPE	C- 529932-010V
	C- 735192-0102	11716 88-09-21	FILLING PIPE	C- 735253-010V
	C- 735192-0102	11716 88-09-21	FILLING PIPE	C- 752669-010V
	C- 735192-0102	11716 88-09-21	FILLING PIPE	C- 752985-010V
	C- 735192-0102	11716 88-09-21	FILLING PIPE	C- 560459-010V
	C- 735192-0102	11716 88-09-21	FILLING PIPE	C- 560460-010V
	C- 735192-0102	11716 88-09-21	FILLING PIPE	C- 560886-010V
964-1.8	C- 735222-0101	11716 88-09-21	CLEANING PIPE	C- 529932-010V
	C- 735222-0101	11716 88-09-21	CLEANING PIPE	C- 735253-010V
	C- 735222-0101	11716 88-09-21	CLEANING PIPE	C- 752669-010V
	C- 735222-0101	11716 88-09-21	CLEANING PIPE	C- 752985-010V
964-1.9	C- 735248-0101	11716 88-09-21	AIR AND INERT GAS SYSTEMS	C- 529932-010V

Page No	PART NO	LAST AM	DESCRIPTION	GROUP NO
	C- 736796-0101	13593 90-06-21	START-UP KIT	C- 794317-010V
	C- 736796-0102	13593 90-06-21	START-UP KIT	C- 752948-010V
	C- 736796-0102	13593 90-06-21	START-UP KIT	C- 794317-010V
	C- 736796-0103	13593 90-06-21	START-UP KIT	C- 752948-010V
	C- 736796-0103	13593 90-06-21	START-UP KIT	C- 794317-010V
	C- 736796-0104	13593 90-06-21	START-UP KIT	C- 752948-010V
	C- 736796-0104	13593 90-06-21	START-UP KIT	C- 794317-010V
971-1.1	C- 736797-0101	13593 90-06-21	PACKAGE EXTERNAL CLEANING	C- 752945-010V
	C- 736797-0101	13593 90-06-21	PACKAGE EXTERNAL CLEANING	C- 794212-010V
	C- 736797-0102	13593 90-06-21	PACKAGE EXTERNAL CLEANING	C- 752945-010V
	C- 736797-0102	13593 90-06-21	PACKAGE EXTERNAL CLEANING	C- 794212-010V
	C- 736797-0103	13593 90-06-21	PACKAGE EXTERNAL CLEANING	C- 752945-010V
	C- 736797-0103	13593 90-06-21	PACKAGE EXTERNAL CLEANING	C- 794212-010V
	C- 736797-0104	13593 90-06-21	PACKAGE EXTERNAL CLEANING	C- 752945-010V
	C- 736797-0104	13593 90-06-21	PACKAGE EXTERNAL CLEANING	C- 794212-010V
	C- 736797-0105	13593 90-06-21	PACKAGE EXTERNAL CLEANING	C- 752945-010V
	C- 736797-0105	13593 90-06-21	PACKAGE EXTERNAL CLEANING	C- 794212-010V
971-1.16	C- 736803-0101	13593 90-06-21	ELECTRIC MATERIALS	C- 736792-010V
	C- 736803-0101	13593 90-06-21	ELECTRIC MATERIALS	C- 736796-010V
964-1.3	C- 736865-0101	14042 90-04-19	TUBE LS COOLING	C- 529932-010V
	C- 736865-0101	14042 90-04-19	TUBE LS COOLING	C- 735253-010V
	C- 736865-0101	14042 90-04-19	TUBE LS COOLING	C- 752669-010V
	C- 736865-0101	14042 90-04-19	TUBE LS COOLING	C- 752985-010V
	C- 736865-0101	14042 90-04-19	TUBE LS COOLING	C- 560459-010V
	C- 736865-0101	14042 90-04-19	TUBE LS COOLING	C- 560460-010V
	C- 736865-0101	14042 90-04-19	TUBE LS COOLING	C- 560886-010V
	C- 736865-0102	14042 90-04-19	TUBE LS COOLING	C- 529932-010V
	C- 736865-0102	14042 90-04-19	TUBE LS COOLING	C- 735253-010V
	C- 736865-0102	14042 90-04-19	TUBE LS COOLING	C- 752669-010V
	C- 736865-0102	14042 90-04-19	TUBE LS COOLING	C- 752985-010V
	C- 736865-0102	14042 90-04-19	TUBE LS COOLING	C- 560459-010V
	C- 736865-0102	14042 90-04-19	TUBE LS COOLING	C- 560460-010V
	C- 736865-0102	14042 90-04-19	TUBE LS COOLING	C- 560886-010V
	C- 736865-0103	14042 90-04-19	TUBE LS COOLING	C- 529932-010V
	C- 736865-0103	14042 90-04-19	TUBE LS COOLING	C- 735253-010V
	C- 736865-0103	14042 90-04-19	TUBE LS COOLING	C- 752669-010V
	C- 736865-0103	14042 90-04-19	TUBE LS COOLING	C- 752985-010V
	C- 736865-0103	14042 90-04-19	TUBE LS COOLING	C- 560459-010V
	C- 736865-0103	14042 90-04-19	TUBE LS COOLING	C- 560460-010V
	C- 736865-0103	14042 90-04-19	TUBE LS COOLING	C- 560886-010V
	C- 736865-0104	14042 90-04-19	TUBE LS COOLING	C- 529932-010V
	C- 736865-0104	14042 90-04-19	TUBE LS COOLING	C- 735253-010V
	C- 736865-0105	14042 90-04-19	TUBE LS COOLING	C- 529932-010V

Page No	PART NO	LAST AM	DESCRIPTION	GROUP NO	
	C- 736865-0105	14042 90-04-19	TUBE LS COOLING	C- 735253-010V	
	C- 736865-0106	14042 90-04-19	TUBE LS COOLING	C- 529932-010V	
	C- 736865-0106	14042 90-04-19	TUBE LS COOLING	C- 735253-010V	
103-1	C- 751088-010V	10609 87-06-22	CREASE ROLLER	B- 648111-080V	
	C- 751088-0201	14591 90-02-28	CREASE ROLLER	B- 648111-090V	
610-1.7	C- 751089-0101	12278 88-11-29	PRESSURE FEED	C- 271909-040V	050V
904-1	C- 751094-010V	9618 86-10-31	CREASE WHEEL	B- 648109-080V	
	RK- 751156-010V	12873 89-06-27	REB KIT STATION CHAIN	B- 648110-060V	070V
	RK- 751157-010V	14771 90-04-04	HYDRAULIC SEALINGS	B- 648110-010V	060V
	RK- 751158-0101	10435 87-05-15	REB KIT PAPER GUARD	B- 648110-060V	
	RK- 751166-0101	12529 89-02-09	GUIDE	RK- 751296-010V	
	RK- 751166-0102	12529 89-02-09	GUIDE	RK- 751296-010V	
	RK- 751166-0103	12529 89-02-09	GUIDE	RK- 751296-010V	
	RK- 751202-0101	10657 87-08-27	REB KIT STRIP GUARD	B- 648110-010V	
	RK- 751228-0101	12892 89-08-15	REB KIT STRIP GUARD	B- 648110-060V	070V
	RK- 751296-010V	12874 89-07-04	REB KIT STATION CHAIN	B- 648110-010V	
	RK- 751303-0101	10428 87-04-27	REB KIT HOT AIR ELEMENT	B- 648110-010V	060V
	RK- 751305-0101	12875 89-06-29	REB.DIVIDED FORMING RING	B- 648110-010V	070V
	RK- 751307-0101	12876 89-07-04	REB.DIVIDED FORMING RING	B- 648110-060V	070V
	RK- 751311-0101	10428 87-04-27	REB KIT HOT AIR ELEMENT	B- 648110-010V	060V
613-1.2	C- 751317-010V	12103 88-08-18	CONNECTION PIPE	C- 491243-030V	
	C- 751317-0101	12103 88-08-18	CONNECTION PIPE	RK- 491591-030V	
210-1.1	C- 751332-0101	10058 87-08-06	BRACKET	C- 456459-020V	030V
212-1.1	C- 751332-0101	10058 87-08-06	BRACKET	C- 456460-020V	030V
216-1.1	C- 751332-0101	10058 87-08-06	BRACKET	C- 751900-010V	
968-1a	C- 751332-0101	10058 87-08-06	BRACKET	C- 752960-010V	
968-1b	C- 751332-0101	10058 87-08-06	BRACKET	C- 752971-010V	
	RK- 751345-0101	10687 87-09-04	BRAKE	RK- 751479-010V	
	RK- 751345-0101	10687 87-09-04	BRAKE	RK- 751546-010V	
	RK- 751345-0101	10687 87-09-04	BRAKE	RK- 751548-010V	
	RK- 751345-0101	10687 87-09-04	BRAKE	RK- 751589-010V	
	RK- 751345-0101	10687 87-09-04	BRAKE	RK- 751591-010V	
	RK- 751345-0101	10687 87-09-04	BRAKE	RK- 751595-010V	
	C- 751352-010V	13645 90-01-12	PEROXIDE HANDLING	B- 648106-090V	
	C- 751373-010V	13645 90-01-12	PEROXIDE TANK	C- 751352-010V	
	C- 751393-0101	10582 89-11-15	PEROXIDE PUMP	C- 751373-010V	
	C- 751398-010V	13645 90-01-12	PEROXIDE TANK	C- 751352-010V	
	C- 751406-010V	13645 90-01-12	HOUSING	C- 751352-010V	
	C- 751410-0101	10582 89-11-15	VALVE PANEL	C- 751406-010V	
	RK- 751461-010V	11982 89-11-20	REB.KIT BLOW-OFF NOZZLE	B- 648110-010V	060V
	RK- 751462-0101	12569 89-02-15	AIR NOZZLE	RK- 751461-010V	
	RK- 751462-0102	12569 89-02-15	AIR NOZZLE	RK- 751461-010V	
	RK- 751462-0103	12569 89-02-15	AIR NOZZLE	RK- 751461-010V	

Page No	PART NO	LAST AM	DESCRIPTION	GROUP NO
964-1	C- 735253-010V	12383 90-02-10	HEAD SPACE BY LLF	C- 77091-010V
	C- 735253-010V	12383 90-02-10	HEAD SPACE BY LLF	B- 648119-060V
964-1.8	C- 735258-0101	11716 88-09-21	CLEAN.PIPES IN POS.DEVICE	C- 529932-010V
	C- 735259-0101	11716 88-09-21	CONNECTIONS BOX	C- 735032-010V
964-1.15	C- 735261-0101	11716 88-09-21	RAILING	C- 529932-010V
	C- 735261-0101	11716 88-09-21	RAILING	C- 735253-010V
	C- 735261-0101	11716 88-09-21	RAILING	C- 752669-010V
	C- 735261-0101	11716 88-09-21	RAILING	C- 752985-010V
	C- 735261-0101	11716 88-09-21	RAILING	C- 560459-010V
	C- 735261-0101	11716 88-09-21	RAILING	C- 560460-010V
	C- 735261-0101	11716 88-09-21	RAILING	C- 560886-010V
964-1.12b	C- 735265-0101	12383 90-02-10	PIPE-LINE	C- 735253-010V
	C- 735265-0102	12383 90-02-10	PIPE-LINE	C- 752669-010V
	C- 735265-0102	12383 90-02-10	PIPE-LINE	C- 752985-010V
	C- 735265-0102	12383 90-02-10	PIPE-LINE	C- 560459-010V
	C- 735265-0102	12383 90-02-10	PIPE-LINE	C- 560460-010V
	C- 735265-0102	12383 90-02-10	PIPE-LINE	C- 560886-010V
964-1.16	C- 735267-0101	11716 88-09-21	BRACKETS FOR ELECT. EQUIP	C- 529932-010V
964-1.14a	C- 735268-0101	12383 90-02-10	START-UP KIT	C- 529932-010V
964-2.2	C- 735270-0101	11716 88-09-21	ASSEM. OF C. AND P. BOXES	C- 735253-010V
	C- 735270-0101	11716 88-09-21	ASSEM. OF C. AND P. BOXES	C- 752669-010V
	C- 735270-0101	11716 88-09-21	ASSEM. OF C. AND P. BOXES	C -752985-010V
964-1.14b	C- 735271-0101	12383 90-02-10	START-UP KIT	C- 735253-010V
	C- 735271-0101	12383 90-02-10	START-UP KIT	C- 752669-010V
	C- 735271-0101	12383 90-02-10	START-UP KIT	C- 752985-010V
964-2.4	C- 735271-0201	14983 90-06-07	START-UP KIT	C- 560459-010V
	C- 735271-0201	14983 90-06-07	START-UP KIT	C- 560460-010V
	C- 735271-0201	14983 90-06-07	START-UP KIT	C- 560886-010V
971-1.1	C- 736147-0101	13593 90-06-21	PACKAGE EXTERNAL CLEANING	C- 752945-010V
	C- 736147-0101	13593 90-06-21	PACKAGE EXTERNAL CLEANING	C- 794212-010V
	C- 736147-0102	13593 90-06-21	PACKAGE EXTERNAL CLEANING	C- 752945-010V
	C- 736147-0102	13593 90-06-21	PACKAGE EXTERNAL CLEANING	C- 794212-010V
	C- 736147-0103	13593 90-06-21	PACKAGE EXTERNAL CLEANING	C- 752945-010V
	C- 736147-0103	13593 90-06-21	PACKAGE EXTERNAL CLEANING	C- 794212-010V
	C- 736147-0104	13593 90-06-21	PACKAGE EXTERNAL CLEANING	C- 752945-010V
	C- 736147-0104	13593 90-06-21	PACKAGE EXTERNAL CLEANING	C- 794212-010V
	C- 736147-0105	13593 90-06-21	PACKAGE EXTERNAL CLEANING	C- 752945-010V
	C- 736147-0105	13593 90-06-21	PACKAGE EXTERNAL CLEANING	C- 794212-010V
971-1.2	C- 736360-0102	13593 90-06-21	FRAME GROUP	C- 752945-010V
	C- 736360-0102	13593 90-06-21	FRAME GROUP	C- 794212-010V
	C- 736360-0102	13593 90-06-21	FRAME GROUP	C- 752948-010V
	C- 736360-0102	13593 90-06-21	FRAME GROUP	C- 794317-010V
964-1.5	C- 736529-0101	14133 90-02-12	VALVE HOLDER	C- 529932-010V
	C- 736529-0101	14133 90-02-12	VALVE HOLDER	C- 735253-010V
	C- 736529-0101	14133 90-02-12	VALVE HOLDER	C- 752669-010V
	C- 736529-0101	14133 90-02-12	VALVE HOLDER	C- 752985-010V
	C- 736529-0101	14133 90-02-12	VALVE HOLDER	C- 560459-010V
	C- 736529-0101	14133 90-02-12	VALVE HOLDER	C- 560460-010V
	C- 736529-0101	14133 90-02-12	VALVE HOLDER	C- 560886-010V
964-1.7	C- 736592-0101	11716 88-09-21	CFV CONTROL DEVICE	C- 529932-010V
964-1.7	C- 736593-0101	11716 88-09-21	CFV CONTROL DEVICE	C- 735253-010V
	C- 736593-0101	11716 88-09-21	CFV CONTROL DEVICE	C- 752669-010V
	C- 736593-0101	11716 88-09-21	CFV CONTROL DEVICE	C- 752985-010V
	C- 736593-0101	11716 88-09-21	CFV CONTROL DEVICE	C- 560459-010V
	C- 736593-0101	11716 88-09-21	CFV CONTROL DEVICE	C- 560460-010V
	C- 736593-0101	11716 88-09-21	CFV CONTROL DEVICE	C- 560886-010V
964-1.11	C- 736594-0101	11716 88-09-21	PNEUMATIC EQUIPMENT	C- 529932-010V
	C- 736594-0101	11716 88-09-21	PNEUMATIC EQUIPMENT	C- 735253-010V
	C- 736594-0101	11716 88-09-21	PNEUMATIC EQUIPMENT	C- 752669-010V
	C- 736594-0101	11716 88-09-21	PNEUMATIC EQUIPMENT	C- 752985-010V
964-1.6	C- 736600-0101	14883 90-05-15	VALVE	C- 529932-010V
	C- 736600-0101	14883 90-05-15	VALVE	C- 735253-010V
	C- 736600-0101	14883 90-05-15	VALVE	C- 752669-010V
	C- 736600-0101	14883 90-05-15	VALVE	C- 752985-010V
	C- 736600-0101	14883 90-05-15	VALVE	C- 560459-010V
	C- 736600-0101	14883 90-05-15	VALVE	C- 560460-010V
	C- 736600-0101	14883 90-05-15	VALVE	C- 560886-010V
	C- 736600-0102	14883 90-05-15	VALVE	C- 529932-010V
	C- 736600-0102	14883 90-05-15	VALVE	C- 735253-010V
	C- 736600-0102	14883 90-05-15	VALVE	C- 752669-010V
	C- 736600-0102	14883 90-05-15	VALVE	C- 752985-010V
	C- 736600-0102	14883 90-05-15	VALVE	C- 560459-010V
	C- 736600-0102	14883 90-05-15	VALVE	C- 560460-010V
	C- 736600-0102	14883 90-05-15	VALVE	C- 560886-010V
964-1.14a	C- 736604-0101	11715 88-06-07	ELECTRIC MATERIALS	C- 735268-010V
964-1.14b	C- 736604-0101	11715 88-06-07	ELECTRIC MATERIALS	C- 735271-010V
964-2.4	C- 736604-0101	11715 88-06-07	ELECTRIC MATERIALS	C- 561425-010V
971-1.16	C- 736792-0101	13593 90-06-21	START-UP KIT	C- 752945-010V
	C- 736792-0101	13593 90-06-21	START-UP KIT	C- 794212-010V
	C- 736792-0102	13593 90-06-21	START-UP KIT	C- 752945-010V
	C- 736792-0102	13593 90-06-21	START-UP KIT	C- 794212-010V
	C- 736792-0103	13593 90-06-21	START-UP KIT	C- 752945-010V
	C- 736792-0103	13593 90-06-21	START-UP KIT	C- 794212-010V
	C- 736792-0104	13593 90-06-21	START-UP KIT	C- 752945-010V
	C- 736792-0104	13593 90-06-21	START-UP KIT	C- 794212-010V
971-1.16	C- 736796-0101	13593 90-06-21	START-UP KIT	C- 752948-010V

Page No	PART NO	LAST AM	DESCRIPTION	GROUP NO
	RK- 751462-0104	12569 89-02-15	AIR NOZZLE	RK- 751461-010V
	RK- 751462-0105	12569 89-02-15	AIR NOZZLE	RK- 751461-010V
	RK- 751468-0101	10585 87-10-17	CREASE WHEEL	RK- 491543-010V
	RK- 751468-0101	10585 87-10-17	CREASE WHEEL	RK- 751569-010V
	RK- 751469-0101	11050 87-11-27	COVER	RK- 491543-010V
	RK- 751469-0101	11050 87-11-27	COVER	RK- 751636-010V
	RK- 751470-0101	10981 87-11-25	CLEANING EQUIPMENT	RK- 491543-010V
	RK- 751470-0101	10981 87-11-25	CLEANING EQUIPMENT	RK- 751569-010V
	RK- 751470-0101	10981 87-11-25	CLEANING EQUIPMENT	RK- 751636-010V
602-1.10	C- 751478-0101	10626 87-09-04	BRAKE	C- 272404-050V
	C- 751478-0201	14366 90-02-26	BRAKE	C- 272404-060V
	RK- 751479-0101	12879 89-08-15	BRAKE POWER FEED ROLLER	B- 648110-010V
	RK- 751487-0101	9100 87-06-23	START-UP KIT	RK- 751461-010V
	RK- 751488-010V	10648 87-07-02	START UP KIT PHOTOCELL	RK- 491744-010V
	RK- 751488-010V		START UP KIT PHOTOCELL	RK- 491789-010V
	RK- 751488-010V		START UP KIT PHOTOCELL	RK- 491902-010V
	RK- 751488-0101	10648 87-07-02	START UP KIT PHOTOCELL	RK- 491543-010V
	RK- 751488-010	10648 87-07-02	START UPKIT PHOTOCELL	RK- 751561-010V
	RK- 751488-010	10648 87-07-02	START UPKIT PHOTOCELL	RK- 751569-010V
	RK- 751488-010	10648 87-07-02	START UPKIT PHOTOCELL	RK- 751636-010V
	RK- 751546-0101	12883 89-08-15	BRAKE POWER FEED ROLLER	B- 648110-060V 070V
	RK- 751548-0101	12884 89-08-15	BRAKE POWER FEED ROLLER	B- 648110-060V 070V
	RK- 751561-010V	11989 89-08-15	REB.KIT PHOTOCELL UNIT	B- 648110-060V
	RK- 751561-010V	11989 89-08-15	REB.KIT PHOTOCELL UNIT	B- 648110-070V
	RK- 751569-0101	11985 89-08-15	REB.KIT PHOTOCELL UNIT	B- 648110-060V
	RK- 751569-0101	11985 89-08-15	REB.KIT PHOTOCELL UNIT	B- 648110-070V
	RK- 751570-0101	10784 87-11-26	PHOTOCELL UNIT	RK- 751569-010V
	RK- 751574-0101	10784 87-11-26	COVER	RK- 751569-010V
	RK- 751589-0101	12880 89-08-15	BRAKE POWER FEED ROLLER	B- 648110-010V
	RK- 751591-0101	12881 89-08-15	BRAKE POWER FEED ROLLER	B- 648110-010V
	RK- 751595-0101	12882 89-08-15	BRAKE POWER FEED ROLLER	B- 648110-060V 070V
	RK- 751636-0101	11984 89-08-15	REB.KIT PHOTOCELL UNIT	B- 648110-010V
	C- 751689-010V	14595 90-04-25	CAM PACK	C- 751691-010V
	C- 751691-0101	13632 89-11-17	IMPULSE TRANSMITTER	B- 648106-090V
	C- 751702-0101	14256 89-12-09	COVER	B- 648111-090V
	C- 751718-0101	12932 89-06-05	DATING WHEEL HOLDER	RK- 752638-010V
	C- 751718-0101	12932 89-06-05	DATING WHEEL HOLDER	C- 752645-010V
	C- 751718-0101	12932 89-06-05	DATING WHEEL HOLDER	C- 752646-010V
	C- 751718-0101	12932 89-06-05	DATING WHEEL HOLDER	C- 752913-010V
	C- 751718-0101	12932 89-06-05	DATING WHEEL HOLDER	C- 752914-010V
955-1	C- 751796-010V	14766 90-05-10	JUMBO REEL EQUIPMENT	C- 77091-020V 030V
124-1b	C- 751800-010V	12419 89-01-19	COMPRESSOR UNIT	B- 648111-080V
	C- 751800-020V	8833 89-12-02	COMPRESSOR UNIT	B- 648111-090V

Page No	PART NO	LAST AM	DESCRIPTION	GROUP NO
214-1	C- 751860-010V	14790 90-05-12	PLATFORM-FRONT	B- 648102-080V 090V
618-1.7	C- 751885-0101	13218 89-06-27	COVER PLATE	B- 648106-080V
	C- 751885-0201	14200 90-02-13	COVER PLATES	B- 648106-090V
216-1	C- 751900-010V	14198 90-03-06	RAILING, FRONT	B- 648102-080V 090V
215-1.2	C- 751923-0101	12423 89-02-13	LADDER	C- 751932-010V
	C- 751923-0101	12423 89-02-13	LADDER	C- 752958-010V
	C- 751923-0101	12423 89-02-13	LADDER	C- 752959-010V
	C- 751924-0101	12423 89-02-13	LADDER	C- 751932-010V
962-1	C- 751924-0101	12423 89-02-13	LADDER	C- 751959-010V
	C- 751924-0101	12423 89-02-13	LADDER	C- 752958-010V
	C- 751924-0101	12423 89-02-13	LADDER	C- 752959-010V
215-1.3	C- 751924-0102	12423 89-02-13	LADDER	C- 751932-010V
	C- 751924-0102	12423 89-02-13	LADDER	C- 752958-010V
956-1	C- 751928-010V	14791 90-05-12	PLATFORM	C- 77091-020V 030V
215-1	C- 751932-010V	11733 88-11-23	PLATFORM REAR (WALLASSY.)	B- 648102-080V
216-1	C- 751934-010V	11733 88-11-23	RAILING REAR (WALLASSY.)	B- 648102-080V
962-1	C- 751959-0101	12422 89-05-23	RAILING / PLATFORM	C- 77091-020V
	C- 751968-010V	11717 89-06-27	PAPER GUIDE	C- 272404-060V
955-1.5.1	C- 752029-0101	11776 88-06-14	CONV.UNREEL.D. JUMBO REEL	C- 752046-010V
955-1.5.2	C- 752030-0101	11776 88-06-14	BRAKE	C- 752046-010V
	RK- 752035-0101	11865 89-09-27	CHANGE-OVER VALVE	RK- 533177-010V
	RK- 752035-0101	11865 89-09-27	CHANGE-OVER VALVE	RK- 553820-010V
	RK- 752035-0102	11865 89-09-27	CHANGE-OVER VALVE	RK- 533177-010V
	RK- 752035-0102		CHANGE-OVER VALVE	RK- 553820-010V
	RK- 752035-0103	11865 89-09-27	CHANGE-OVER VALVE	RK- 553820-010V
	RK- 752035-0104	11865 89-09-27	CHANGE-OVER VALVE	RK- 553820-010V
955-1.5.3	C- 752042-0101	11776 88-06-14	DOOR	C- 752046-010V
955-1.5	C- 752046-010V	12422 89-05-23	ROLLER UNIT	C- 751796-010V
955-1.5.8	C- 752049-0101	12764 89-05-30	MACHINE BODY	C- 752046-010V
	RK- 752170-0101	12171 88-09-14	REB. KIT VALVE PLUNGES	B- 648110-010V 070V
	C- 752173-010V	13604 89-11-24	LID	C- 256014-050V
714-2	C- 752244-010V	13966 89-12-04	PAPER GUARD	B- 648107-090V
	C- 752247-010V	14614 90-03-21	FRAME DATING UNIT	B- 648107-090V
	RK- 752270-010V	13577 89-09-22	TEMP.GUARD HYDR.OIL	B- 648110-060V 070V
	RK- 752270-0101	13577 89-09-22	TEMP.GUARD HYDR.OIL	B- 648110-010V
961-1	C- 752312-0101	12194 88-12-06	MACHINERAISING-KIT	C- 77091-020V 030V
	RK- 752408-010V	12208 89-01-24	REB KIT OVERL JAW SYSTEM	B- 648110-010V
	RK- 752410-010V	12208 89-01-24	REB KIT OVERL JAW SYSTEM	B- 648110-010V
	RK- 752412-010V	12208 89-01-24	REB KIT OVERL JAW SYSTEM	B- 648110-060V 070V
	RK- 752414-010V	12208 89-01-24	REB KIT OVERL JAW SYSTEM	B- 648110-060V 070V
	RK- 752436-010V	14704 90-05-02	CARRIAGE	B- 648110-060V 080V
956-1	C- 752474-0101	12607 89-02-06	PAPER GUARD	C- 751928-010V
	C- 752495-010V	14855 90-05-14	CONNECTION	C- 456836-040V

Page No	PART NO	LAST AM	DESCRIPTION	GROUP NO	
	C- 752567-010V	13806 89-11-22	PROTECTIVE COVER	C- 271513-050V	
	C- 752607-010V	13248 89-09-06	BENDING ROLLER REAR	B- 648107-090V	
	C- 752628-010V	13966 89-12-04	BENDING ROLLER FRONT	B- 648107-090V	
	RK- 752638-0101	12932 89-06-05	DATING WHEEL HOLDER	B- 648110-010V	080V
715-2	C- 752645-010V	14317 90-05-15	DATING UNIT TBA/9	B- 648107-090V	
715-2	C- 752646-010V	14317 90-05-15	DATING UNIT TBA/9	B- 648107-090V	
	C- 752664-0101	12530 90-01-05	GUIDE	CR- 256712-050V	
964-1	C- 752669-010V	12383 90-02-10	HEAD SPACE BY LLF	C- 77091-020V	
	C- 752671-010V	12578 89-12-06	SHOCKABSORBER PERFORM.1	B- 648104-090V	
	C- 752672-010V	12578 89-12-06	SHOCKABSORBER PERFORM.2	B- 648104-090V	
	RK- 752702-010V	12928 89-08-21	CONSTANT SPRAY VOLUME	B- 648110-010V	080V
	RK- 752703-010V	13223 90-03-12	IMPROVED FORMING ROLLERS	B- 648110-060V	080V
	RK- 752704-0101	13224 89-06-29	UPPER TUBE SUPPORT	RK- 752703-010V	
	RK- 752704-0102	13224 89-06-29	UPPER TUBE SUPPORT	RK- 752703-010V	
	RK- 752704-0103	13224 89-06-29	UPPER TUBE SUPPORT	RK- 752703-010V	
	RK- 752705-0101	13224 89-06-29	MOVABLE FORMING RING	RK- 752703-010V	
	RK- 752705-0102	13224 89-06-29	MOVABLE FORMING RING	RK- 752703-010V	
	RK- 752705-0103	13224 89-06-29	MOVABLE FORMING RING	RK- 752703-010V	
	RK- 752706-0101	13224 89-06-29	DIVIDED FORMING RING	RK- 752703-010V	
	RK- 752706-0102	13224 89-06-29	DIVIDED FORMING RING	RK- 752703-010V	
	RK- 752706-0103	13224 89-06-29	DIVIDED FORMING RING	RK- 752703-010V	
	RK- 752707-0101	13224 89-06-29	LOWER FORMING RING	RK- 752703-010V	
	RK- 752707-0102	13224 89-06-29	LOWER FORMING RING	RK- 752703-010V	
	RK- 752707-0103	13224 89-06-29	LOWER FORMING RING	RK- 752703-010V	
	RK- 752729-0102	13594 89-10-19	IMPROVED STRIP GUIDE	B- 648110-010V	080V
971-1.13	C- 752733-0101	13593 90-06-21	STERILE AIR GROUP	C- 752945-010V	
	C- 752733-0102	13593 90-06-21	STERILE AIR GROUP	C- 752945-010V	
	C- 752733-0101	13593 90-06-21	STERILE AIR GROUP	C- 794212-010V	
	C- 752733-0102	13593 90-06-21	STERILE AIR GROUP	C- 794212-010V	
971-1.13	C- 752734-0101	13593 90-06-21	STERILE AIR GROUP	C- 752945-010V	
	C- 752734-0102	13593 90-06-21	STERILE AIR GROUP	C- 752945-010V	
	C- 752734-0101	13593 90-06-21	STERILE AIR GROUP	C- 794212-010V	
	C- 752734-0102	13593 90-06-21	STERILE AIR GROUP	C- 794212-010V	
	RK -752755-010V	14454 90-02-05	BENDING ROLLER	B- 648101-090V	
	C- 752784-0101	13806 89-11-22	CONNECTION BOX	B- 648106-090V	
	C- 752889-010V	13966 89-12-04	CABLE DUCT	B- 648107-090V	
	C- 752898-010V	14614 90-03-21	TUBE ASSEMBLING TB/9	B- 648107-090V	
	C- 752913-010V	13966 89-12-04	DATING UNIT TB/9	B- 648107-090V	
	C- 752914-010V	13966 89-12-04	DATING UNIT TB/9	B- 648107-090V	
971-1	C- 752945-010V	13593 90-06-21	HVA-KIT	B- 648119-060V	070V
	C- 752945-010V	13593 90-06-21	HVA-KIT	C- 77091-010V	
971-1	C- 752948-0101	13593 90-06-21	HVA-KIT	B- 648119-080V	
	C- 752948-0101	13593 90-06-21	HVA-KIT	C- 77091-020V	

Page No	PART NO	LAST AM	DESCRIPTION	GROUP NO
	C- 752957-0101	13604 89-11-24	SPLICE DETECTOR	C- 256014-050V
	C- 752958-010V	14198 90-03-06	RAILING / PLATFORM	C- 978158-010V
	C- 752959-010V	14198 90-03-06	PLATFORMS BACK TBA/9-SBM	C- 978158-010V
968-1a	C- 752960-010V	14791 90-05-12	RAILING PLATFORM	C- 77091-030V
968-1b	C- 752971-010V	14791 90-05-12	RAILING PLATFORM	C- 77091-030V
964-1	C- 752985-010V	12383 90-02-10	HEAD SPACE BY LLF	C- 77091-020V
971-1.3	C- 794004-0101	13593 90-06-21	LOBE PUMP	C- 752945-010V
	C- 794004-0101	13593 90-06-21	LOBE PUMP	C- 794212-010V
	C- 794004-0101	13593 90-06-21	LOBE PUMP	C- 752948-010V
	C- 794004-0101	13593 90-06-21	LOBE PUMP	C- 794317-010V
971-1.4	C- 794069-0102	13593 90-06-21	TOUCH GUARD AND RAILING	C- 752945-010V
	C- 794069-0102	13593 90-06-21	TOUCH GUARD AND RAILING	C- 794212-010V
	C- 794069-0102	13593 90-06-21	TOUCH GUARD AND RAILING	C- 752948-010V
	C- 794069-0102	13593 90-06-21	TOUCH GUARD AND RAILING	C- 794317-010V
971-1.16	C- 794070-0101	13593 90-06-21	INSTALLATION DEVICE KIT	C- 736792-010V
	C- 794070-0101	13593 90-06-21	INSTALLATION DEVICE KIT	C- 736796-010V
971-1.5	C- 794092-0101	13593 90-06-21	LEVEL CONTROL	C- 752945-010V
	C- 794092-0101	13593 90-06-21	LEVEL CONTROL	C- 794212-010V
	C- 794092-0101	13593 90-06-21	LEVEL CONTROL	C- 752948-010V
	C- 794092-0101	13593 90-06-21	LEVEL CONTROL	C- 794317-010V
	C- 794092-0102	13593 90-06-21	LEVEL CONTROL	C- 752945-010V
	C- 794092-0102	13593 90-06-21	LEVEL CONTROL	C- 794212-010V
	C- 794092-0102	13593 90-06-21	LEVEL CONTROL	C- 752948-010V
	C- 794092-0102	13593 90-06-21	LEVEL CONTROL	C- 794317-010V
	C- 794092-0103	13593 90-06-21	LEVEL CONTROL	C- 752945-010V
	C- 794092-0103	13593 90-06-21	LEVEL CONTROL	C- 794212-010V
	C- 794092-0103	13593 90-06-21	LEVEL CONTROL	C- 752948-010V
	C- 794092-0103	13593 90-06-21	LEVEL CONTROL	C- 794317-010V
	C- 794092-0104	13593 90-06-21	LEVEL CONTROL	C- 752945-010V
	C- 794092-0104	13593 90-06-21	LEVEL CONTROL	C- 794212-010V
	C- 794092-0104	13593 90-06-21	LEVEL CONTROL	C- 752948-010V
	C- 794092-0104	13593 90-06-21	LEVEL CONTROL	C- 794317-010V
971-1.6	C- 794110-0101	13593 90-06-21	PRODUCT AND B-C VALVE	C- 752945-010V
	C- 794110-0101	13593 90-06-21	PRODUCT AND B-C VALVE	C- 794212-010V
	C- 794110-0102	13593 90-06-21	PRODUCT AND B-C VALVE	C- 752948-010V
	C- 794110-0102	13593 90-06-21	PRODUCT AND B-C VALVE	C- 794317-010V
971-1.16	C- 794128-0101	13593 90-06-21	DRILLING FIXTURE	C- 736792-010V
	C- 794128-0101	13593 90-06-21	DRILLING FIXTURE	C- 736796-010V
971-1.7	C- 794145-0101	13593 90-06-21	VALVE PANEL	C- 752945-010V
	C- 794145-0101	13593 90-06-21	VALVE PANEL	C- 794212-010V
	C- 794145-0101	13593 90-06-21	VALVE PANEL	C- 752948-010V
	C- 794145-0101	13593 90-06-21	VALVE PANEL	C- 794317-010V
971-1.8	C- 794168-0101	13593 90-06-21	CONDUIT	C- 752945-010V

Page No	PART NO	LAST AM		DESCRIPTION	GROUP NO	
	C- 794168-0101	13593	90-06-21	CONDUIT	C- 794212-010V	
	C- 794168-0101	13593	90-06-21	CONDUIT	C- 752948-010V	
	C- 794168-0101	13593	90-06-21	CONDUIT	C- 794317-010V	
971-1.9	C- 794178-0101	13593	90-06-21	STEAM CIRCUIT	C- 752945-010V	
	C- 794178-0101	13593	90-06-21	STEAM CIRCUIT	C- 794212-010V	
	C- 794178-0101	13593	90-06-21	STEAM CIRCUIT	C- 752948-010V	
	C- 794178-0101	13593	90-06-21	STEAM CIRCUIT	C- 794317-010V	
971-1.10	C- 794179-0101	13593	90-06-21	AIR CONNECTION	C- 752945-010V	
	C- 794179-0101	13593	90-06-21	AIR CONNECTION	C- 794212-010V	
	C- 794179-0101	13593	90-06-21	AIR CONNECTION	C- 752948-010V	
	C- 794179-0101	13593	90-06-21	AIR CONNECTION	C- 794317-010V	
971-1.11	C- 794180-0101	13593	90-06-21	WATER CONNECTION	C- 752945-010V	
	C- 794180-0101	13593	90-06-21	WATER CONNECTION	C- 794212-010V	
	C- 794180-0101	13593	90-06-21	WATER CONNECTION	C- 752948-010V	
	C- 794180-0101	13593	90-06-21	WATER CONNECTION	C- 794317-010V	
971-1	C- 794212-010V	13593	90-06-21	HVA-KIT	B- 648119-060V	070V
	C- 794212-010V	13593	90-06-21	HVA-KIT	C- 77091-010V	
971-1.12.1	C- 794213-0101	13593	90-06-21	C-CYLINDER	C- 794245-010V	
971-1.12	C- 794226-0101	13593	90-06-21	VALVE	C- 794245-010V	
971-1.12.2	C- 794243-0101	13593	90-06-21	B-CYLINDER	C- 794245-010V	
971-1.12.3	C- 794244-0101	13593	90-06-21	A-CYLINDER	C- 794245-010V	
971-1.12	C- 794245-0101	13593	90-06-21	VALVE GROUP	C- 752945-010V	
	C- 794245-0101	13593	90-06-21	VALVE GROUP	C- 794212-010V	
	C- 794245-0101	13593	90-06-21	VALVE GROUP	C- 752948-010V	
	C- 794245-0101	13593	90-06-21	VALVE GROUP	C- 794317-010V	
971-1.14	C- 794271-0101	13593	90-06-21	CLEANING GROUP	C- 752945-010V	
	C- 794271-0101	13593	90-06-21	CLEANING GROUP	C- 794212-010V	
	C- 794271-0101	13593	90-06-21	CLEANING GROUP	C- 752948-010V	
	C- 794271-0101	13593	90-06-21	CLEANING GROUP	C- 794317-010V	
971-1.15	C- 794272-0101	13593	90-06-21	ELECTRICAL CONNECTION	C- 752945-010V	
	C- 794272-0101	13593	90-06-21	ELECTRICAL CONNECTION	C- 794212-010V	
	C- 794272-0101	13593	90-06-21	ELECTRICAL CONNECTION	C- 752948-010V	
	C- 794272-0101	13593	90-06-21	ELECTRICAL CONNECTION	C- 794317-010V	
971-1	C- 794317-010V	13593	90-06-21	HVA-KIT	B- 648119-080V	
	C- 794317-010V	13593	90-06-21	HVA-KIT	C- 77091-020V	
971-1.16	C- 795900-0101	13593	90-06-21	TOOL	C- 736792-010V	
	C- 795900-0101	13593	90-06-21	TOOL	C- 736796-010V	
960-1.1.1	C- 905130-0101	14147	90-02-26	SPINDLE (JUMBO REEL)	C- 905131-010V	
960-1.1	C- 905131-0101	14147	90-02-26	INDEX PLATE	C- 556723-010V	
	C- 905131-0101	14147	90-02-26	INDEX PLATE	C- 905295-010V	
	C- 905131-0102	14147	90-02-26	INDEX PLATE	C- 905296-010V	
	C- 905131-0103	14147	90-02-26	INDEX PLATE	C- 556723-010V	
	C- 905131-0103	14147	90-02-26	INDEX PLATE	C- 905295-010V	

Page No	PART NO	LAST AM		DESCRIPTION	GROUP NO
	C- 905131-0104	14147	90-02-26	INDEX PLATE	C- 905296-010V
960-3	C- 905295-0101	14147	90-02-26	LS-STRIP A.S.U. (TBA/9)	RK- 905397-010V
	C- 905295-0101	14147	90-02-26	LS-STRIP A.S.U. (TBA/9)	RK- 905544-010V
	C- 905295-0102	14147	90-02-26	LS-STRIP A.S.U. (TBA/9)	RK- 905397-010V
	C- 905295-0102	14147	90-02-26	LS-STRIP A.S.U. (TBA/9)	RK- 905544-010V
	C- 905295-0103	14147	90-02-26	LS-STRIP A.S.U. (TBA/9)	RK- 905397-010V
	C- 905295-0103	14147	90-02-26	LS-STRIP A.S.U. (TBA/9)	RK- 905544-010V
	C- 905295-0104	14147	90-02-26	LS-STRIP A.S.U. (TBA/9)	RK- 905397-010V
	C- 905295-0104	14147	90-02-26	LS-STRIP A.S.U. (TBA/9)	RK- 905544-010V
960-1	C- 905296-0101	14147	90-02-26	LS-STRIP A.S.U.(TBA/9-83)	RK- 905545-010V
	C- 905296-0103	14147	90-02-26	LS-STRIP A.S.U.(TBA/9-83)	RK- 905545-010V
960-1.2	C- 905331-0101	14147	90-02-26	ARM	C- 556723-010V
	C- 905331-0101	14147	90-02-26	ARM	C- 905295-010V
	C- 905331-0101	14147	90-02-26	ARM	C- 905296-010V
960-3	RK- 905397-010V	14147	90-02-26	LS-STRIP A.S.U TBA/9-120V	C- 77091-020V
960-4.1	C- 905401-0101	14147	90-02-26	CONTROL PANEL	C- 556723-010V
960-1.1.1	C- 905541-0101	14147	90-02-26	SPINDLE (SMALL REEL)	C- 905131-010V
960-3	RK- 905544-010V	14147	90-02-26	LS-REMSA A.S.U. (TBA/9)	C- 77091-010V
	RK- 905544-010V	14147	90-02-26	LS-REMSA A.S.U. (TBA/9)	B- 648119-060V
960-1	RK- 905545-010V	14147	90-02-26	LS STRIP A.S.U. (TBA/9)	B- 648119-020V
960-4	RK- 905722-010V	14147	90-02-26	LS STRIP A.S.U. (TBA/9)	C- 77091-030V
970-1.4.1	C- 978048-010V	15018	90-05-31	CLAMPING ELEMENT	C- 978192-010V
	C- 978158-010V	14198	90-03-06	PLATFORM REAR	B- 648102-090V
	C- 978162-010V	14698	90-04-10	PAPER GUARD	B- 648107-090V
	C- 978179-0101	14698	90-04-10	PAPER GUARD (REAR)	B- 648107-090V
970-1.4	C- 978192-010V	15018	90-05-31	FINAL FOLDER 250/284	B- 648119-090V
970-1.2.1	C- 978200-0101	15001	90-05-23	ROCKER ARM 250/284	C- 978258-010V
965-1.4	RK- 978212-0101	14852	90-05-23	HEAT EXCHANGER	RK- 978239-010V
	RK- 978212-0101	14852	90-05-23	HEAT EXCHANGER	RK- 978240-010V
	RK- 978212-0101	14852	90-05-23	HEAT EXCHANGER	RK- 978241-010V
965-4.1	RK- 978234-0101	14852	90-05-23	CONTROL CABINET	RK- 978239-010V
	RK- 978234-0101	14852	90-05-23	CONTROL CABINET	RK- 978240-010V
	RK- 978234-0101	14852	90-05-23	CONTROL CABINET	RK- 978241-010V
965-4.2	RK- 978238-0101	14852	90-05-23	TRANSITION PIPE	RK- 978239-010V
	RK- 978238-0101	14852	90-05-23	TRANSITION PIPE	RK- 978240-010V
	RK- 978238-0101	14852	90-05-23	TRANSITION PIPE	RK- 978241-010V
965-4	RK- 978239-010V	14852	90-05-23	HEAD SPACE BY INJECTION	B- 648119-090V
965-4	RK- 978240-010V	14852	90-05-23	HEAD SPACE BY INJECTION	B- 648119-090V
965-4	RK- 978241-010V	14852	90-05-23	HEAD SPACE BY INJECTION	B- 648119-090V
970-1.2	C- 978258-0101	15001	90-05-23	DRIVE UNIT 250/284	B- 648119-090V
970-1.3	C- 978259-010V	15002	90-06-06	JAW SYSTEM 250/284	B- 648119-090V
970-1.1	C- 978260-0101	15004	90-06-05	MACHINE BODY 250/284	B- 648119-090V

SPC 648152
Tetra Brik Aseptic TBA/9

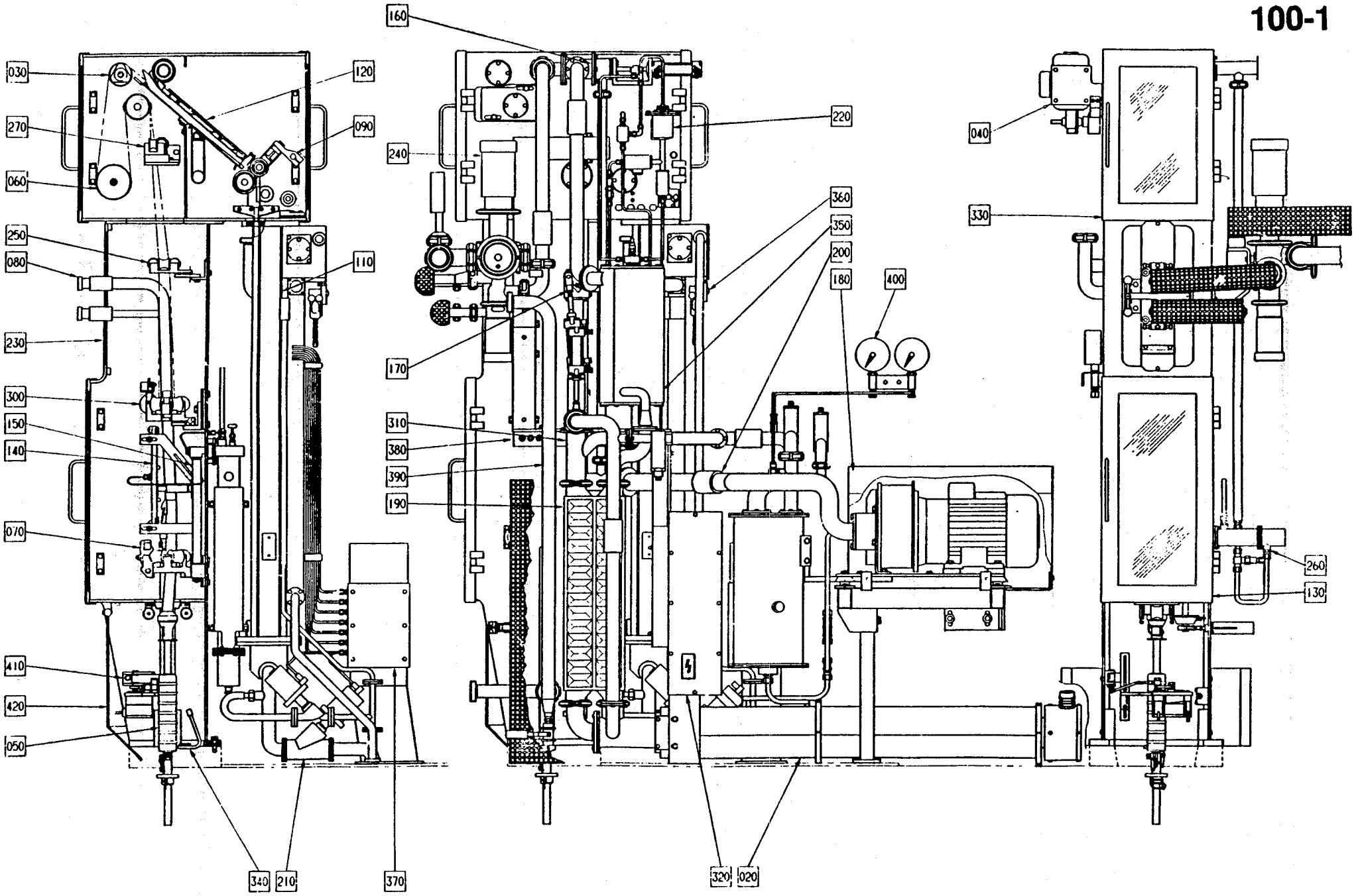

500 UPPSTARTSATS / START-UP KIT

From	Pos	Page	Description
	F030	101-1	BENDING ROLLER
	F040	102-1/2	BENDING ROLLER
	F060	103-1	CREASE ROLLER
	F070	104-1	LOWER FORMING RING
	F250	105-1/2	MOVABLE FORMING RING
	F270	106-1/2	UPPER TUBE SUPPORT
	F300	107-1/2	DIVIDED FORMING RING
-080V	F360	108-1	SPLICE DETECTOR
	F150	109-1	HOT AIR ELEMENT LS
	F140	110-1	AIR NOZZLE
	F080	111-1	UPPER FILLING TUBE
	F050	112-1	LOWER FILLING TUBE
	F240	113-1/2	PRODUCT VALVE
		113-1.1	. AP-VALVE
		113-1.1	. . CLAMP RING
		113-1.1.1	. . A-CYLINDER
		113-1.1.2	. . C-CYLINDER
		113-1.1.3	. . B-CYLINDER
	F260	114-1	HOT AIR ELEMENT, Short Stop
	F230	115-1	ASEPTIC CHAMBER
	F090	116-1	SQUEE-GEE ROLLER
	F110	117-1/2	BATH
		117-2.1	SPLICING GUARD
		117-2.2	LID
	F120	118-1	AIR KNIFE
	F160	119-1	VALVE
	F210	120-1	PEROXIDE PIPE
	F220	121-1/2	SPRAY SYSTEM
	F350	122-1	GENERATOR
	F020	123-1	AIR SUPER-HEATER
	F180	124-1a/2a	COMPRESSOR UNIT
	F180	124-1b	COMPRESSOR UNIT (Slim Body Machine)
	F190	125-1/2	CONDUIT
	F200	126-1	SUCTION PIPE
	F170	127-1/2	CHANGE-OVER VALVE
	F310	128-1	VALVE
	F320	129-1/2	CONNECTION BOX
	F400	130-1	GAUGE GROUP
	F130	131-1	DOOR
	F330	132-1	DOOR

From	Pos	Page No	Description
	F340	133-1	TUBE FLUSHING DEVICE
	F370	134-1	PIPE WORK-PNEUMATIC
	F380	135-1/2	CABLE DUCT
	F390	136-1/2	CLEANING SYSTEM
		136-2.1	CONNECTION
	F410	137-1	PHOTOCELL UNIT
	F500	138-1/2	START-UP KIT
090V-	F420	139-1	COVER

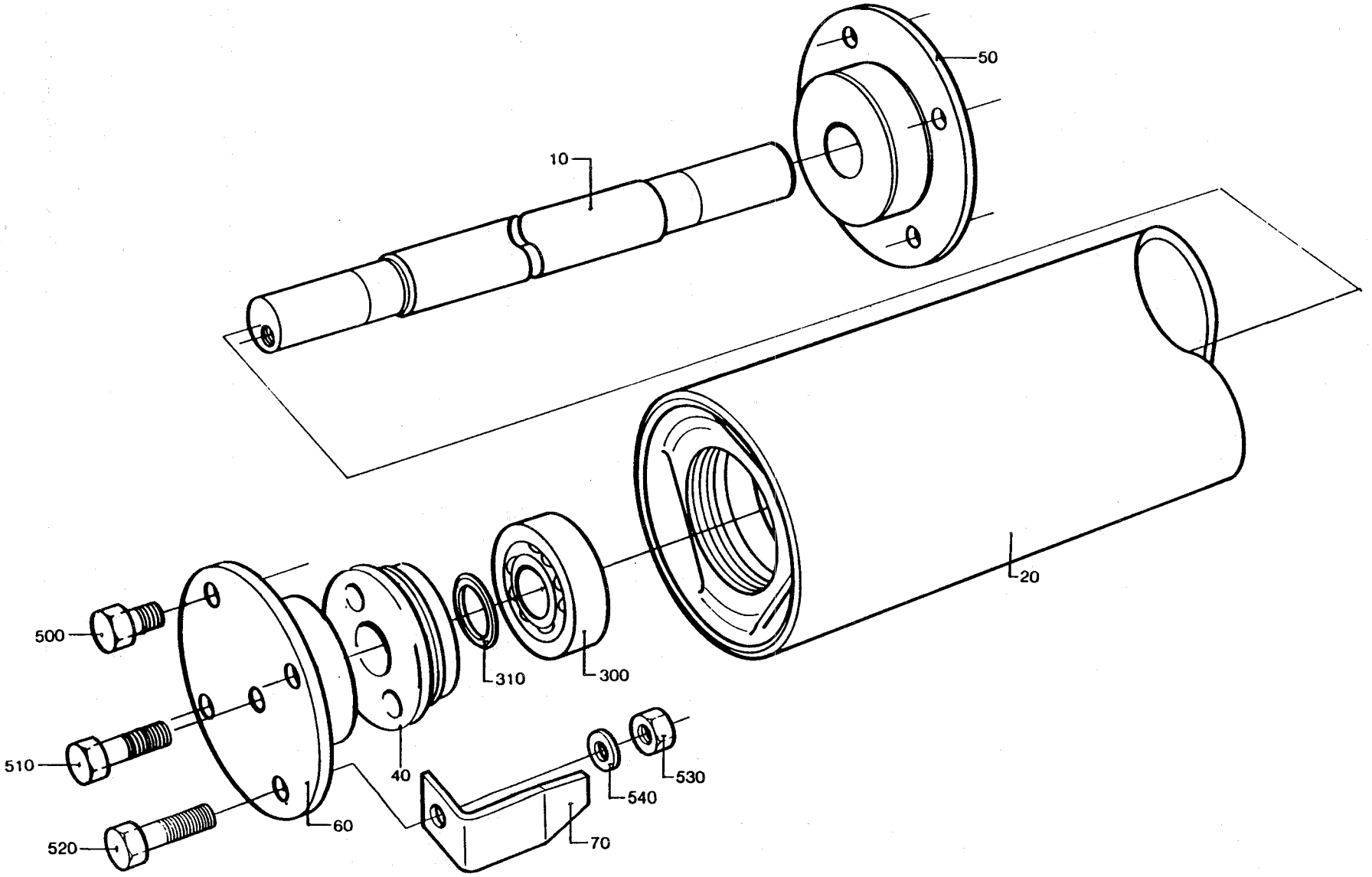
50
10
20
500
310
300
510
40
530
540
520
60
70

From	Pos	Part No	SP	UN	Qty	Description
Volume 180 - 284 ml						
090V-	070	752857	-		1	INDICATOR
Volume 200 ml SLIM						
090V-	070	752858	-		1	INDICATOR
Volume 125 ml						
090V-	070	752859	-		1	INDICATOR
Common Parts						
	010	491392	S		1	SHAFT
	020	272005	S		1	BENDING ROLLER
	040	247170	-		2	BEARING COVER
	050	491393	-		1	AXLE SUPPORT
	060	272018	-		1	AXLE SUPPORT
	300	90214-0098	S		2	BALL BEARING
	310	90214-0303	S		2	RING
	500	312105-0366	-		8	SCREW M6S6X12RFR
	510	312105-0370	-		1	SCREW M6S6X20RFR
090V-	520	312105-0371	-		1	SCREW M6S6X22RFR
090V-	530	312605-0316	-		1	NUT M6M6RFR
090V-	540	315105-0153	-		1	WASHER BRB6,4X12RFR

From	Pos	Part No	SP	UN	Qty	Description

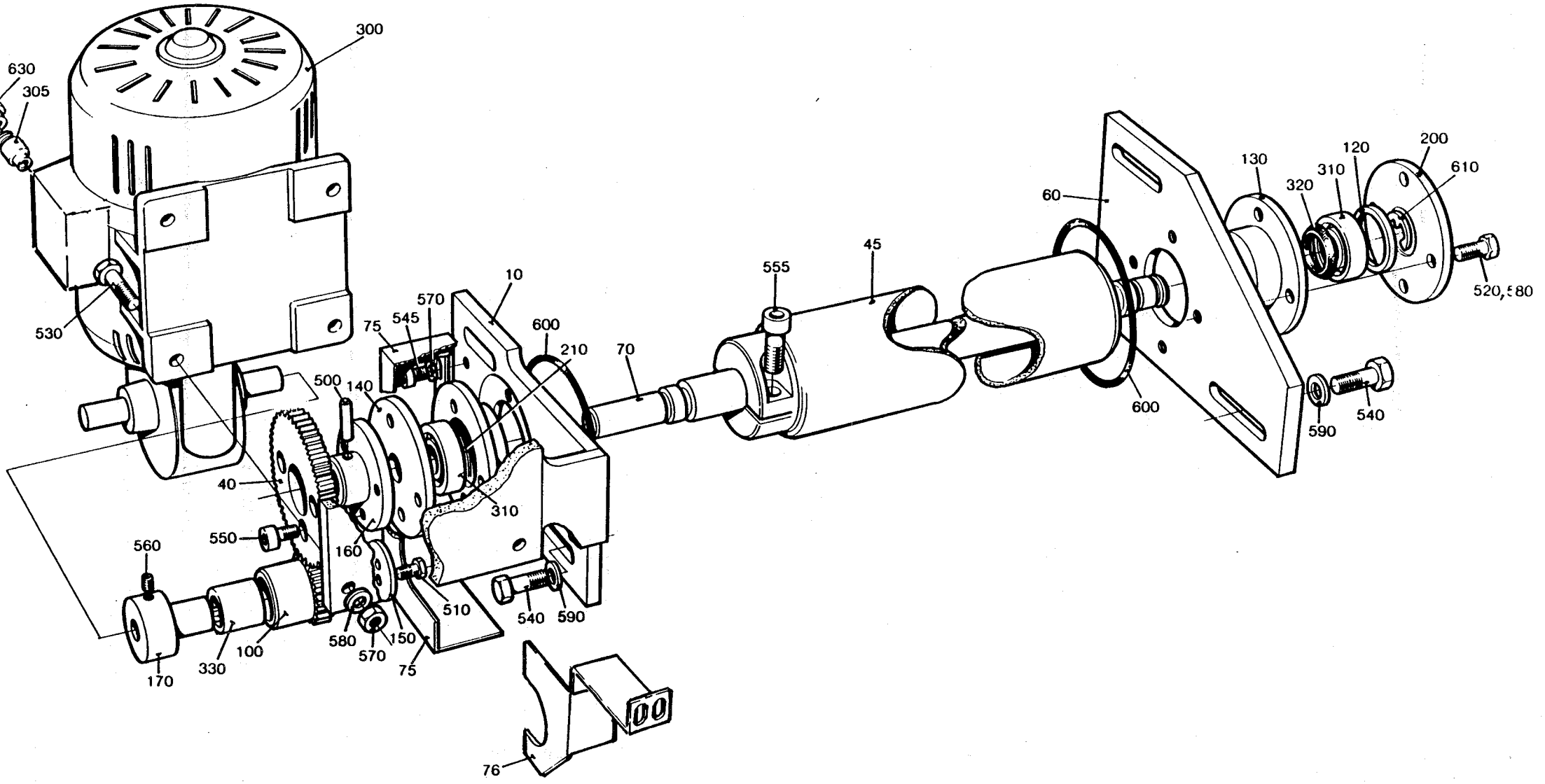
300
630
305
530
10
570
545
75
600
210
70
555
45
60
130
320
310
120
200
610
520,580
600
590
540
500
140
40
310
560
550
160
510
540
590
580
570
150
75
330
100
170
76
00

From	Pos	Part No	SP	UN	Qty	Description
Volume 180 - 250 ml with Pull Tab						
	040	255897-0004	S		1	GEAR WHEEL (250 ml)
	040	255897-0005	S		1	GEAR WHEEL (236 ml)
	040	255897-0006	S		1	GEAR WHEEL (200 ml)
	040	255897-0001	S		1	GEAR WHEEL (180 ml)
	045	441546	S		1	BENDING ROLLER
	070	456515	S		1	SHAFT
	100	209331-0011	S		1	GEAR WHEEL (250 ml)
	100	209331-0006	S		1	GEAR WHEEL (236 ml)
	100	209331-0004	S		1	GEAR WHEEL (200 ml)
	100	209331-0002	S		1	GEAR WHEEL (180 ml)
	555	312115-0451	-		2	SCREW 8X20 A4 80
Volume 180 - 250 ml without Pull Tab						
	040	255897-0007	S		1	GEAR WHEEL (250 ml)
	040	255897-0007	S		1	GEAR WHEEL (236 ml)
	040	255897-0004	S		1	GEAR WHEEL (200 ml)
	040	255897-0005	S		1	GEAR WHEEL (180 ml)
	045	441546	S		1	BENDING ROLLER
	070	456515	S		1	SHAFT
	100	209331-0001	S		1	GEAR WHEEL (250 ml)
	100	209331-0001	S		1	GEAR WHEEL (236 ml)
	100	209331-0011	S		1	GEAR WHEEL (200 ml)
	100	209331-0006	S		1	GEAR WHEEL (180 ml)
	555	312115-0451	-		2	SCREW 8X20 A4 80
Volume 125 ml with Pull Tab						
	040	255897-0001	S		1	GEAR WHEEL
	045	441547	S		1	BENDING ROLLER
	070	456515	S		1	SHAFT
	100	209331-0002	S		1	GEAR WHEEL
	555	312115-0451	-		2	SCREW 8X20 A4 80
Volume 125 ml without Pull Tab						
	040	255897-0005	S		1	GEAR WHEEL
	045	441547	S		1	BENDING ROLLER
	070	456515	S		1	SHAFT
	100	209331-0006	S		1	GEAR WHEEL
	555	312115-0451	-		2	SCREW 8X20 A4 80
Volume 200 ml SLIM with Pull Tab						
	040	255897-0003	S		1	GEAR WHEEL
	045	456527	S		1	BENDING ROLLER
	100	209331-0008	S		1	GEAR WHEEL
Volume 200 ml SLIM without Pull Tab						
	040	255897-0008	S		1	GEAR WHEEL
	045	456527	S		1	BENDING ROLLER
	100	209331-0009	S		1	GEAR WHEEL

From	Pos	Part No	SP	UN	Qty	Description
Common Parts						
	010	491412	-		1	MOTOR PLATE
	060	491413	-		1	PLATE
	075	752569	-		1	COVER
	076	752568	-		1	GUARD
	120	247172	-		1	SPACER RING
	130	247173	C		2	BEARING SEAT
	140	250590	-		1	BEARING COVER
	150	250592	-		1	WASHER
	160	255898	-		1	HUB
	170	255899	-		1	HUB
	200	456516	-		1	BEARING COVER
	210	491333	S		2	SPACER RING
	300	90069-0099	S		1	WORM GEAR MOTOR
		90056-0024	S		1	* WORM GEAR
	305	90089-0017	-		1	TRANSITIONAL MUFF
	310	90214-0098	S		2	BALL BEARING
	320	90214-0303	S		2	RING
	325	90296-0009	-	ML	X	GREASE
	330	90348-0007	S		1	FREE WHEEL COUPLING
	500	311103-0310	-		1	CYLINDRICACPR5M6X20RFR
	510	312105-0287	-		2	SCREW M6S4X8 A4 80
	520	312105-0367	-		8	SCREW M6S6X14RFR
	530	312105-0372	-		4	SCREW M6S6X25RFR
	540	312105-0451	-		4	SCREW M6S8X20RFR
	545	312115-0323	-		4	SCREW 5X8 A4 80
	550	312115-0327	-		3	SCREW MC6S5X12 A4 80
	560	312318-0364	-		1	GRUB SCREW SK6SS6X10RFR
	570	312605-0316	-		4	NUT M6M6RFR
	575	315105-0146	-		4	WASHER BRB5,3X10RFR
	580	315105-0153	-		12	WASHER BRB6,4X12RFR
	590	315115-0165	-		4	WASHER TBRB8,4X16RFR
	600	315204-0305	P		2	O-RING 69,5X3
	610	315755-0112	-		1	CIRCLIP E 12 RFR
	630	352103-0111	-		1	CABLE GLANR.PR22,5/10-14

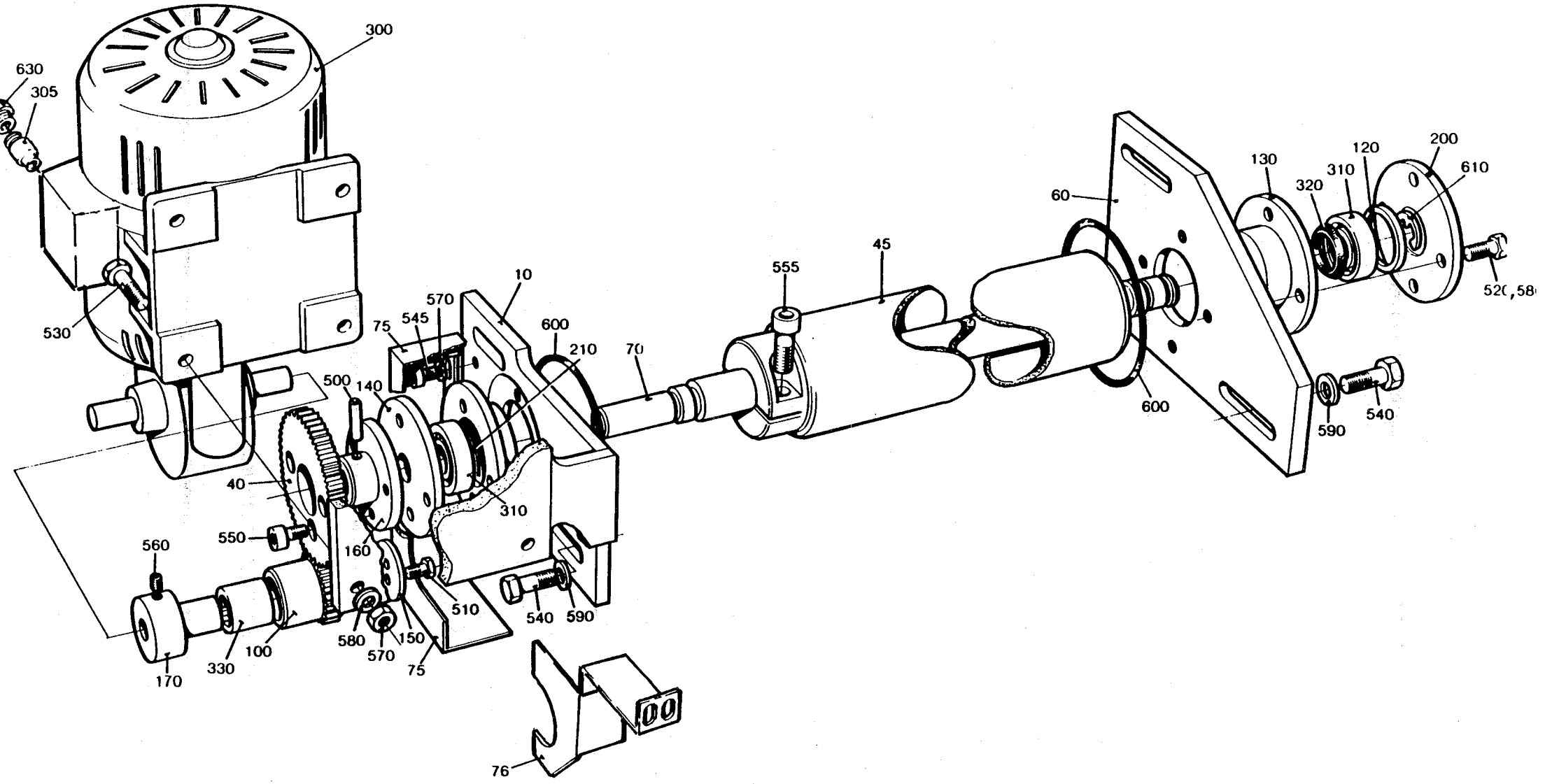
300
630
305
530
10
570
545
75
600
210
500
140
70
555
45
60
130
320
310
120
200
610
520,58
600
590
540
40
550
560
160
310
510
540
590
580
570
150
75
100
330
170
76

From	Pos	Part No	SP	UN	Qty	Description
Volume 284 ml						
	040	255897-0008	S		1	GEAR WHEEL
	045	441546	S		1	BENDING ROLLER
	070	456515	S		1	SHAFT
	100	209331-0001	S		1	GEAR WHEEL
	555	312115-0451	-		2	SCREW MC6S8X20 A4 80
Volume 250 ml						
	040	255897-0007	S		1	GEAR WHEEL
	045	441546	S		1	BENDING ROLLER
	070	456515	S		1	SHAFT
	100	209331-0001	S		1	GEAR WHEEL
	555	312115-0451	-		2	SCREW MC6S8X20 A4 80
Volume 236 ml						
	040	255897-0007	S		1	GEAR WHEEL
	045	441546	S		1	BENDING ROLLER
	070	456515	S		1	SHAFT
	100	209331-0001	S		1	GEAR WHEEL
	555	312115-0451	-		2	SCREW MC6S8X20 A4 80
Volume 200 ml						
	040	255897-0004	S		1	GEAR WHEEL
	045	441546	S		1	BENDING ROLLER
	070	456515	S		1	SHAFT
	100	209331-0011	S		1	GEAR WHEEL
	555	312115-0451	-		2	SCREW MC6S8X20 A4 80
Volume 180 ml						
	040	255897-0005	S		1	GEAR WHEEL
	045	441546	S		1	BENDING ROLLER
	070	456515	S		1	SHAFT
	100	209331-0006	S		1	GEAR WHEEL
	555	312115-0451	-		2	SCREW MC6S8X20 A4 80
Volume 125 ml						
	040	255897-0005	S		1	GEAR WHEEL
	045	441547	S		1	BENDING ROLLER
	070	456515	S		1	SHAFT
	100	209331-0006	S		1	GEAR WHEEL
	555	312115-0451	-		2	SCREW MC6S8X20 A4 80
Volume 200 ml SLIM						
	040	255897-0008	S		1	GEAR WHEEL
	045	456527	S		1	BENDING ROLLER
	100	209331-0009	S		1	GEAR WHEEL

From	Pos	Part No	SP	UN	Qty	Description
Common Parts						
	010	491412	-		1	MOTOR PLATE
	060	491413	-		1	PLATE
	075	752569	-		1	COVER
	076	752568	-		1	GUARD
	120	247172	-		1	SPACER RING
	130	247173	C		2	BEARING SEAT
	140	250590	-		1	BEARING COVER
	150	250592	-		1	WASHER
	160	255898	-		1	HUB
	170	255899	-		1	HUB
	200	456516	-		1	BEARING COVER
	210	491333	S		2	SPACER RING
	300	90069-0099	S		1	WORM GEAR MOTOR
		90056-0024	S		1	* WORM GEAR
	305	90089-0017	-		1	TRANSITIONAL MUFF
	310	90214-0098	S		2	BALL BEARING
	320	90214-0303	S		2	RING
	325	90296-0009	-	ML	X	GREASE
	330	90348-0007	S		1	FREE WHEEL COUPLING
	500	311103-0310	-		1	CYLINDRICACPR5M6X20RFR
	510	312105-0287	-		2	SCREW M6S4X8 A4 80
	520	312105-0367	-		8	SCREW M6S6X14RFR
	530	312105-0372	-		4	SCREW M6S6X25RFR
	540	312105-0451	-		4	SCREW M6S8X20RFR
	545	312115-0323	-		4	SCREW 5X8 A4 80
	550	312115-0327	-		3	SCREW MC6S5X12 A4 80
	560	312318-0364	-		1	GRUB SCREW SK6SS6X10RFR
	570	312605-0316	-		4	NUT M6M6RFR
	575	315105-0146	-		4	WASHER BRB5,3X10RFR
	580	315105-0153	-		12	WASHER BRB6,4X12RFR
	590	315115-0165	-		4	WASHER TBRB8,4X16RFR
	600	315204-0305	P		2	O-RING 69,5X3
	610	315755-0112	-		1	CIRCLIP E 12 RFR
	630	352103-0111	-		1	CABLE GLANR.PR22,5/10-14

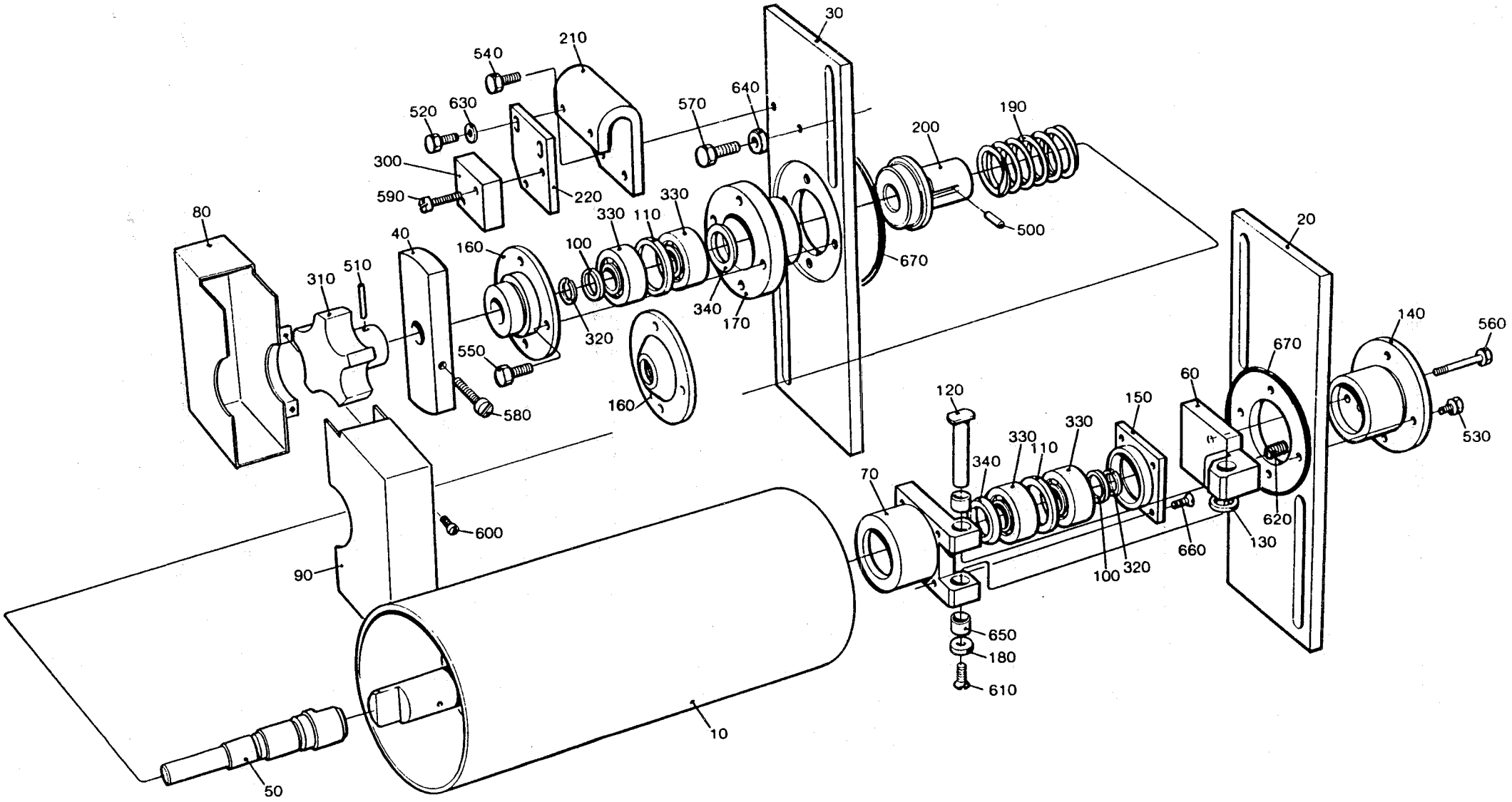
30
210
540
520
630
570
640
190
200
300
590
220
330
330
110
80
40
160
100
510
310
500
670
340
170
320
550
580
160
20
140
560
670
60
120
150
330
330
110
340
70
530
620
130
660
100
320
600
90
650
180
610
10
50

From	Pos	Part No	SP	UN	Qty	Description
	670	315204-0306	P		2	O-RING 5X3 VITON (125, 200 ml SLIM)
	670	315204-0303	P		2	O-RING 5X3 VITON (180 - 284 ml)
	010	490882	-		1	ROLLER
	020	491626	-		1	PLATE
-080V	030	491627	-		1	PLATE
090V-	030	752743	-		1	PLATE
-080V	040	255916	C		1	CAM
-080V	050	271834	C		1	SHAFT
090V-	050	752744	C		1	SHAFT
	060	271835	C		1	BRACKET
	070	456012	S		1	BEARING SEAT
-080V	080	490892	-		1	COVER
-080V	090	490893	-		1	COVER
	100	15529	-		2	WASHER
	110	247172	S		2	SPACER RING
	120	751467	S		1	SHAFT
	130	271656	S		2	WASHER
	140	271837	C		1	BRACKET
	150	456013	S		1	BEARING COVER
-080V	160	271840	C		1	BEARING COVER
090V-	160	752745	C		1	BEARING COVER
	170	271841	C		1	BEARING SEAT
	180	271844	C		1	WASHER
	190	272001	S		1	COMPRESSION SPRING
	200	295010	S		1	SLEEVE
-080V	210	441564	-		1	PLATE
-080V	220	441565	-		1	PLATE
-080V	300	90044-0104	P		1	PROXIMITY SWITCH
	310	90051-0045	-		1	HANDLE
	320	90141-0011	S		2	RING
	330	90214-0098	S		4	BALL BEARING
	340	90214-0303	P		2	RING
	350	90296-0009	-		X	GREASE
	500	311103-0234	S		1	CYLINDRICACPR3M6X12RFR
	510	311103-0238	-		1	CYLINDRICACPR3M6X20RFR
-080V	520	312105-0327	-		2	SCREW M6S5X12 A4 80
	530	312105-0362	-		4	SCREW M6S6X8RFR
-080V	540	312105-0366	-		8	SCREW M6S6X12RFR
	550	312105-0368	-		4	SCREW M6S6X16RFR
	560	312105-0374	-		2	SCREW M6S6X30RFR
	570	312105-0451	-		4	SCREW M6S8X20RFR

From	Pos	Part No	SP	UN	Qty	Description
-080V	580	312115-0372	-		2	SCREW MC6S6X25 A4 80
-080V	590	312125-0228	-		2	SLOTTED HEMCS3X16RFR
-080V	600	312125-0291	-		2	SLOTTED HEMCS4X12RFR
	610	312145-0287	-		1	SLOTTED HEMFS4X8RFR
	620	312318-0364	-		1	GRUB SCREW SK6SS6X10RFR
-080V	630	315105-0146	-		2	WASHER BRB5,3X10RFR
	640	315115-0165	-		4	WASHER TBRB8,4X16RFR
	650	321127-0100	S		2	BUSHING 10/13X10
	660	312155-0291	-		4	SCREW MF6S4X12RFR

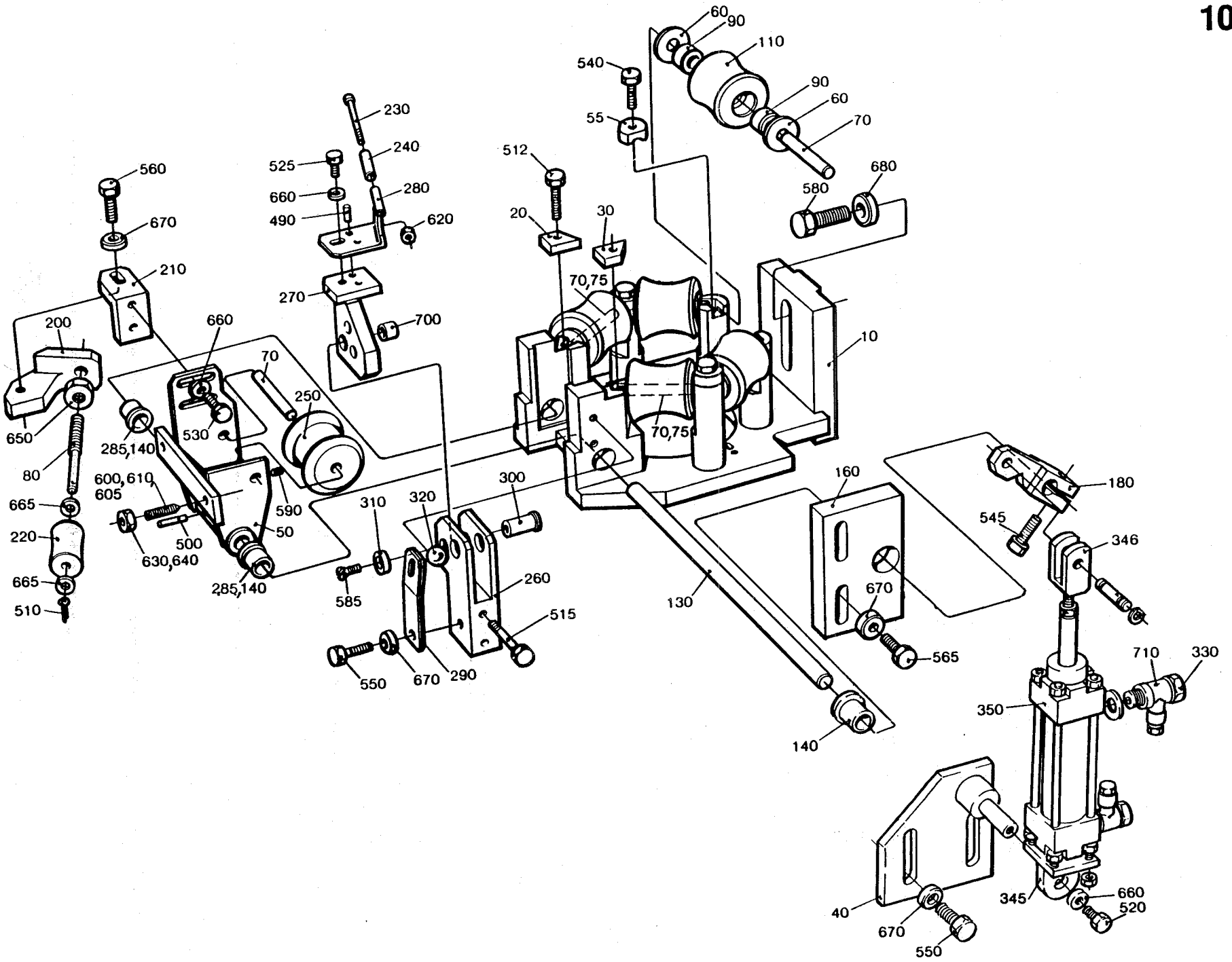
60
90
110
540
90
55
60
70
512
680
580
230
240
525
280
660
620
490
20
30
560
70,75
670
210
270
700
10
200
660
70
250
650
530
70,75
285,140
80
600,610
605
590
160
180
665
300
310
320
545
220
500
50
346
630,640
665
285,140
585
260
130
670
565
515
710
330
510
550
670
290
350
140
40
345
660
670
520
550

From	Pos	Part No	SP	UN	Qty	Description
Common Parts						
	040	491022	-		1	CYLINDER BRACKET
	060	2033-0011	P		12	WASHER
	080	239440	P		1	SHAFT
-080V	090	751230	P		10	PLAIN BEARING
090V-	090	90240-0172	P		12	BUSHING
	130	255969	S		1	SHAFT
	160	491021	-		1	BEARING PLATE
	180	441483	-		1	CYLINDER BRACKET
	200	257042	-		1	BRACKET
	210	257043	-		1	ANGLE BRACKET
	220	257044	P		1	ROLLER
-080V	230	257050	P		1	SHAFT
-080V	240	268059	P		1	ROLLER
-080V	260	271419	-		1	FORK
-080V	270	271420	-		1	BRACKET
-080V	290	271422	S		2	SPRING
-080V	300	271423-0001	S		1	SHAFT
-080V	310	271844	S		1	WASHER
090V-	315	752038	-		4	SHIM
-080V	320	90090-0003	P		1	STEEL BALL
	330	90235-0282	S		2	VALVE
	345	90239-0453	S		1	BRACKET
	346	90239-0516	S		1	PISTON ROD HEAD
	350	90239-0779	S		1	CYLINDER
		90239-0442	S		1	* SEAL KIT
-080V	490	311103-0233	-		2	CYLINDRICACPR3M6X10RFR
	500	311103-0238	-		2	CYLINDRICACPR3M6X20RFR
	510	311411-0140	-		1	SPLIT PIN SP1,6X16RFR
-080V	515	312105-0337	-		2	SCREW 'M6S5X35RFR
	520	312105-0364	-		1	SCREW M6S6X10RFR
-080V	525	312105-0366	-		1	SCREW M6S6X12RFR
	530	312105-0368	-		2	SCREW M6S6X16RFR
	545	312105-0372	-		1	SCREW M6S6X25RFR
090V-	547	312105-0447	-		2	SCREW M6S8X12RFR
-080V	550	312105-0449	-		3	SCREW M6S8X16RFR
	560	312105-0451	-		1	SCREW M6S8X20RFR
	565	312105-0453	-		2	SCREW M6S8X25RFR
	580	312105-0536	-		1	SCREW M6S12X30RFR
-080V	585	312145-0285	-		1	SLOTTED HEMFS4X6RFR
	590	312318-0285	-		1	GRUB SCREW SK6SS4X6RFR

From	Pos	Part No	SP	UN	Qty	Description
-080V	620	312605-0310	-		1	NUT M6M3RFR
	650	312605-0320	-		1	NUT M6M10RFR
	660	315105-0153	-		4	WASHER BRB6,4X12RFR
	665	315105-0165	-		4	WASHER BRB8,4X16RFR
	670	315115-0165	-		6	WASHER TBRB8,4X16RFR
	680	315115-0178	-		1	WASHER TBRB13X24RFR
-080V	700	321127-0100	-		1	BUSHING 10/13X10
	710	342797-0121	S		2	BANJO CONNSINGEL 6-1/8

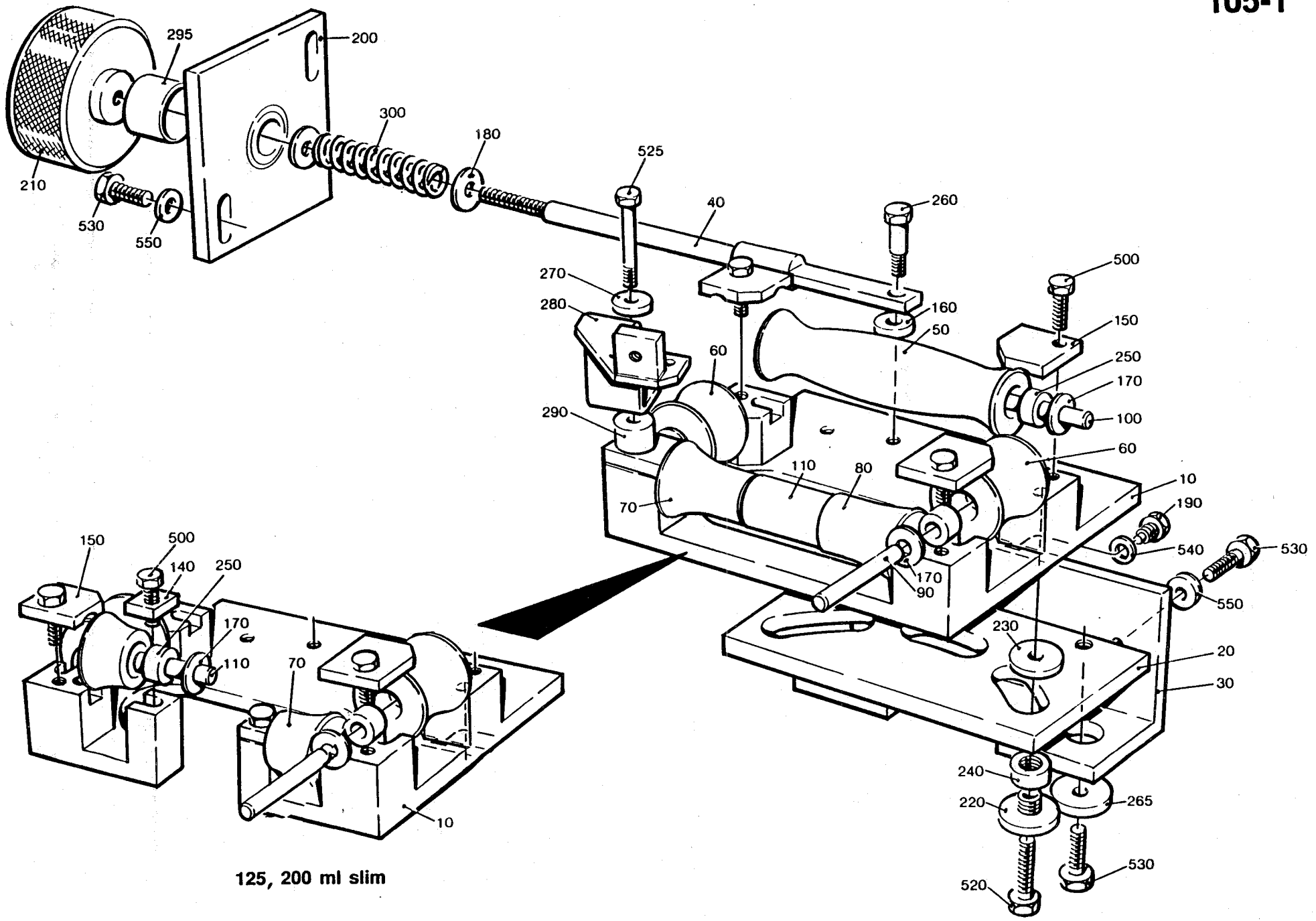

125, 200 ml slim

From	Pos	Part No	SP	UN	Qty	Description
Volume 180 - 284 ml						
	010	456138	-		1	PLATE
	030	456035	-		1	BRACKET
	050	456078	S		1	ROLLER
	060	456079	S		2	ROLLER
	070	456080	S		1	ROLLER
	080	456081	S		1	ROLLER
	090	263655-0005	S		2	SHAFT
	100	456140	S		1	SHAFT
	110	456141	S		1	SHAFT
	150	456139	-		4	LOCK BOARD
-030V	270	257175	-		1	WASHER
-030V	280	456449	-		1	ANGLE BRACKET
-030V	290	456450	-		1	SPACER
	500	312105-0368	-		4	SCREW M6S6X16RFR
-030V	525	312105-0376	-		1	SCREW M6S6X35RFR
Volume 125 ml						
	010	456905	-		1	PLATE
	030	469921	-		1	BRACKET
	050	469088	-		1	ROLLER
	060	469089	-		2	ROLLER
	070	469090	-		2	ROLLER
	090	263655-0002	-		2	SHAFT
	100	263655-0019	-		1	SHAFT
	110	263655-0011	-		2	SHAFT
	140	456907	-		2	LOCK BOARD
	150	456906	-		4	LOCK BOARD
	500	312105-0332	-		6	SCREW M6S5X22RFR
Volume 200 ml SLIM						
	010	456905	-		1	PLATE
	030	456035	-		1	BRACKET
	050	456908	-		1	ROLLER
	060	456909	-		2	ROLLER
	070	456910	-		2	ROLLER
	090	263655-0002	-		2	SHAFT
	100	263655-0019	-		1	SHAFT
	110	263655-0011	-		2	SHAFT
	140	456907	-		2	LOCK BOARD
	150	456906	-		4	LOCK BOARD
	500	312105-0332	-		6	SCREW M6S5X22RFR

From	Pos	Part No	SP	UN	Qty	Description
Common Parts						
	020	456034	-		1	BRACKET
	040	256309	S		1	SHAFT
	160	256312	-		1	WASHER
	170	2033-0011	P		10	WASHER
	180	26490	-		2	WASHER
	190	256280	S		2	PIN
	200	257089	-		1	PLATE
	210	257090	-		1	KNOB
	220	271717	S		3	SPACER
	230	271718	S		3	WASHER
	240	272797	S		3	ROLLER
	250	751230	P		10	PLAIN BEARING
	260	456042	S		1	SCREW
	265	28037	-		2	WASHER
	295	491153	P		1	GLAND
	300	90335-0008	S		1	SPRING
	520	312105-0372	-		3	SCREW M6S6X25RFR
	530	312105-0451	-		6	SCREW M6S8X20RFR
	540	315105-0165	-		2	WASHER BRB8,4X16RFR
	550	315115-0165	-		4	WASHER TBRB8,4X16RFR

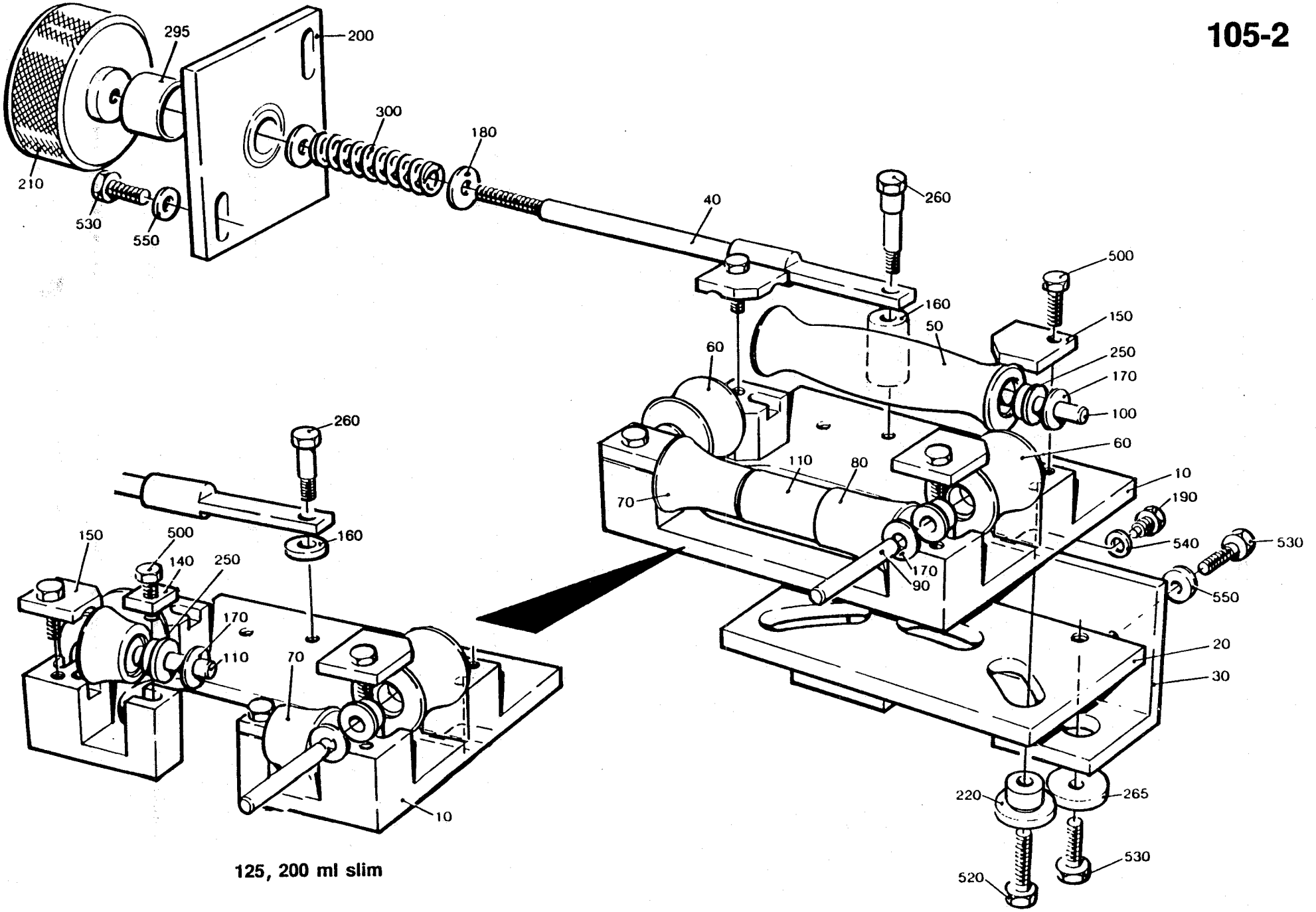

125, 200 ml slim

From	Pos	Part No	SP	UN	Qty	Description
Volume 180 - 284 ml						
	010	456138	-		1	PLATE
	030	751264	-		1	BRACKET
	050	751491	S		1	ROLLER
	060	751492	S		2	ROLLER
	070	751493	S		1	ROLLER
	080	751494	S		1	ROLLER
	090	752186-0005	S		2	SHAFT
	100	752186-0009	S		1	SHAFT
	110	752187	S		1	SHAFT
	150	456139	-		4	LOCK BOARD
	160	751266	-		1	SPACER
	250	90240-0172	P		10	BUSHING
	260	751265	-		1	SCREW
	500	312105-0368	-		4	SCREW M6S6X16RFR
Volume 125 ml						
	010	456905	-		1	PLATE
	030	469921	-		1	BRACKET
	050	752141	-		1	ROLLER
	060	752142	-		2	ROLLER
	070	752143	-		2	ROLLER
	090	752186-0002	-		2	SHAFT
	100	752186-0008	-		1	SHAFT
	110	752186-0006	-		2	SHAFT
	140	456907	-		2	LOCK BOARD
	150	456906	-		4	LOCK BOARD
	160	256312	-		1	WASHER
	250	90240-0172	P		6	BUSHING
	255	752156	P		4	BUSHING
	260	456042	S		1	SCREW
	500	312105-0332	-		6	SCREW M6S5X22RFR
Volume 200 ml SLIM						
	010	456905	-		1	PLATE
	030	456035	-		1	BRACKET
	050	752126	-		1	ROLLER
	060	752127	-		2	ROLLER
	070	752128	-		2	ROLLER
	090	752186-0002	-		2	SHAFT
	100	752186-0008	-		1	SHAFT
	110	752186-0006	-		2	SHAFT
	140	456907	-		2	LOCK BOARD
	150	456906	-		4	LOCK BOARD
	160	256312	-		1	WASHER
	250	90240-0172	P		6	BUSHING
	255	752156	P		4	BUSHING
	260	456042	S		1	SCREW
	500	312105-0332	-		6	SCREW M6S5X22RFR
Common Parts						
	020	751333	-		1	SETTING PLATE
	040	256309	S		1	SHAFT
	170	2033-0011	P		10	WASHER
	180	26490	-		2	WASHER
	190	256280	S		2	PIN
	200	257089	-		1	PLATE
	210	257090	-		1	KNOB
	220	751334	S		3	SPACER
	265	28037	-		2	WASHER
	295	491153	P		1	GLAND
	300	90335-0008	S		1	SPRING
	520	312105-0371	-		3	SCREW M6S6X22RFR
	530	312105-0451	-		6	SCREW M6S8X20RFR
	540	315105-0165	-		2	WASHER BRB8,4X16RFR
	550	315115-0165	-		4	WASHER TBRB8,4X16RFR

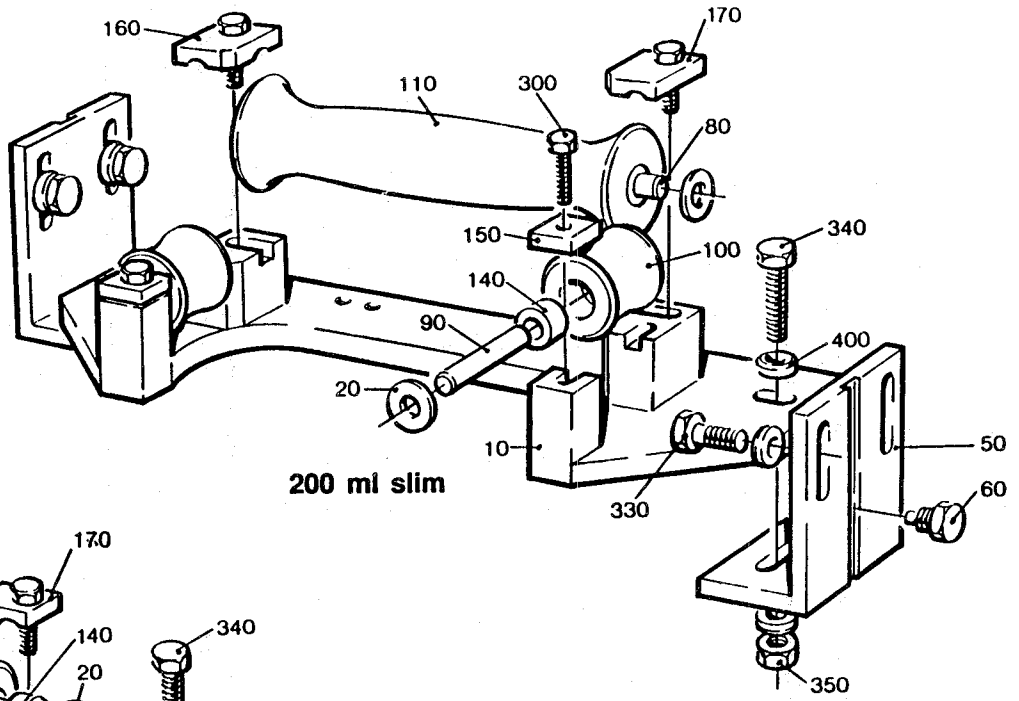

200 ml slim

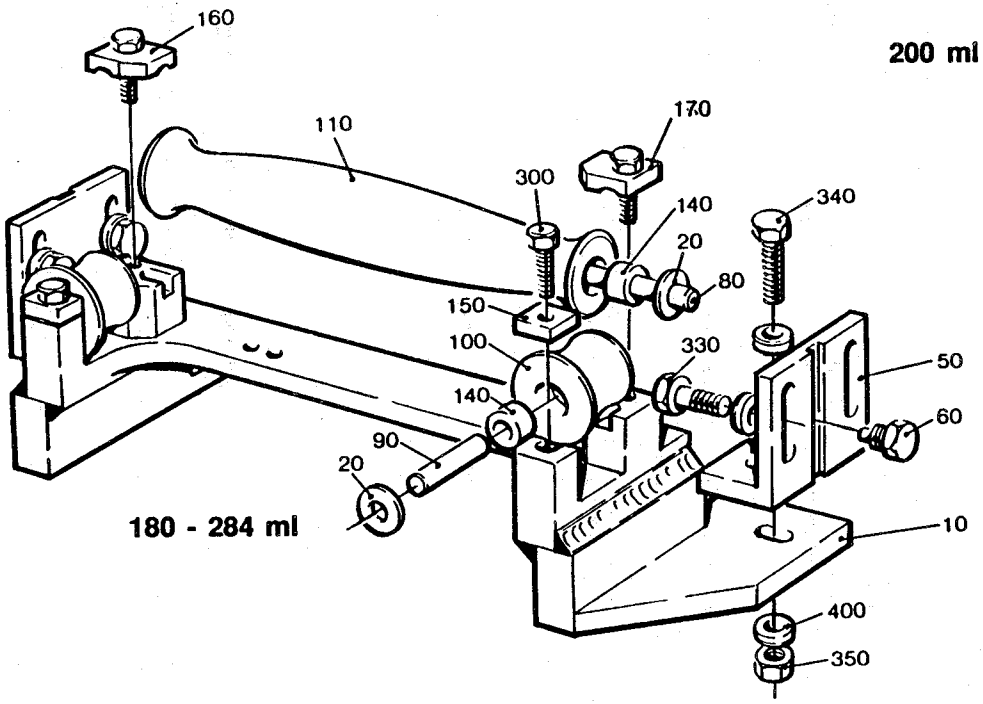

180 - 284 ml

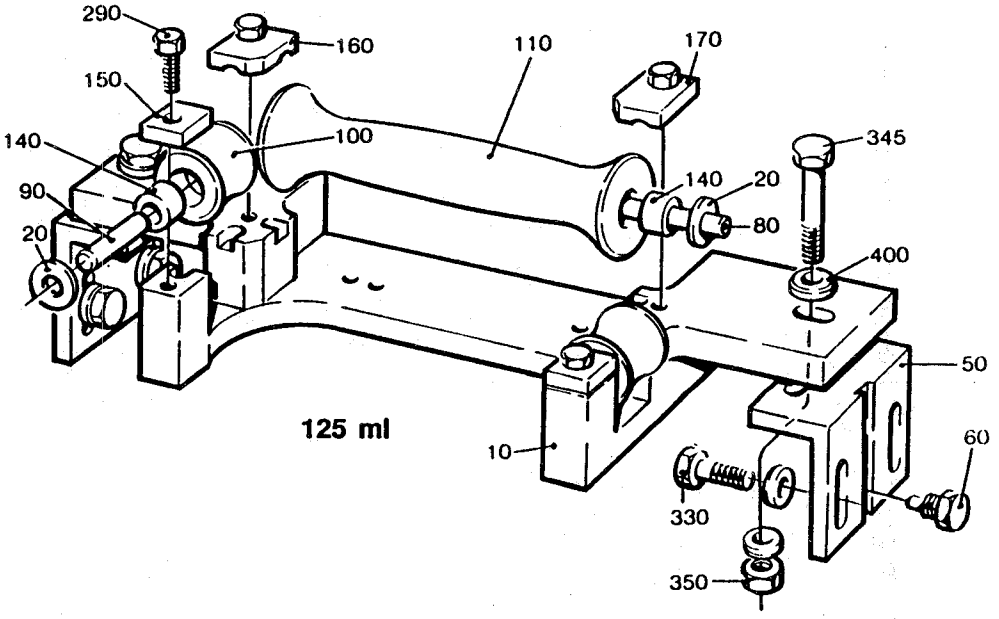

125 ml

From	Pos	Part No	SP	UN	Qty	Description
Volume 180 - 284 ml						
	010	456153	-		1	HOLDER
	050	256279	-		2	BRACKET
	080	456156	S		1	SHAFT
	090	263655-0003	S		2	SHAFT
	100	456077	S		2	ROLLER
	110	456076	S		1	ROLLER
	150	456154	-		2	LOCK BOARD
	160	456155	-		2	LOCK BOARD
	300	312105-0370	-		4	SCREW M6S6X20RFR
	340	312105-0455	-		2	SCREW M6S8X30RFR
Volume 125 ml						
	010	469078	-		1	HOLDER
	050	256279	-		2	BRACKET
	080	263655-0016	-		1	SHAFT
	090	263655-0021	-		2	SHAFT
	100	469083	-		2	ROLLER
	110	469082	-		1	ROLLER
	150	469081	-		2	LOCK BOARD
	160	469079	-		1	LOCK BOARD
	170	469080	-		1	LOCK BOARD
	290	312105-0368	-		4	SCREW M6S6X16RFR
	345	312105-0457	-		2	SCREW M6S8X35RFR
Volume 200 ml SLIM						
	010	469041	-		1	HOLDER
	050	469047	-		2	BRACKET
	080	263655-0016	-		1	SHAFT
	090	263655-0004	-		2	SHAFT
	100	469046	-		2	ROLLER
	110	469045	-		1	ROLLER
	150	469044	-		2	LOCK BOARD
	160	469042	-		1	LOCK BOARD
	170	469043	-		1	LOCK BOARD
	300	312105-0370	-		4	SCREW M6S6X20RFR
	340	312105-0455	-		2	SCREW M6S8X30RFR

From	Pos	Part No	SP	UN	Qty	Description
Common Parts						
	020	2033-0011	P		6	WASHER
	060	256280	S		4	PIN
	140	751230	P		6	PLAIN BEARING
	330	312105-0451	-		4	SCREW M6S8X20RFR
	350	312605-0318	-		2	NUT M6M8RFR
	400	315115-0165	-		8	WASHER TBRB8,4X16RFR

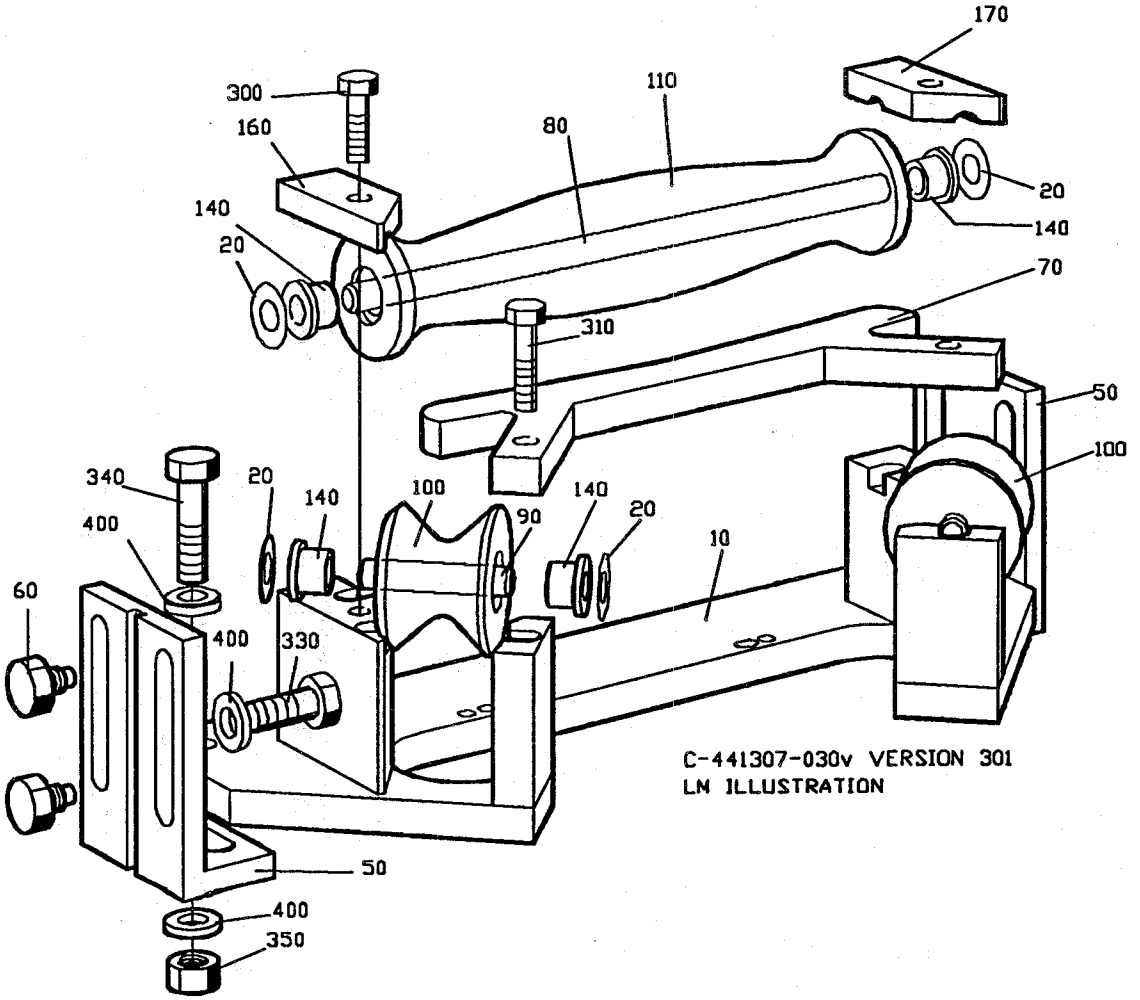
170
300
110
160
80
20
140
140
20
70
310
50
100
340
20
140
100
140
20
400
90
10
60
400
330
50
400
350
C-441307-030v VERSION 301
LN ILLUSTRATION

From	Pos	Part No	SP	UN	Qty	Description
Volume 180 - 284 ml						
	010	751295	-		1	HOLDER
	050	751267	-		2	BRACKET
	070	751965	-		1	TUBE SUPPORT
	080	752186-0011	S		1	SHAFT
	090	752186-0004	S		2	SHAFT
	100	751284	S		2	ROLLER
	110	751283	S		1	ROLLER
	160	751287	-		1	LOCK BOARD
	170	751288	-		1	LOCK BOARD
	310	312105-0372	-		2	SCREW M6S6X25RFR
	340	312105-0455	-		2	SCREW M6S8X30RFR

From	Pos	Part No	SP	UN	Qty	Description
Common Parts						
	020	2033-0011	P		6	WASHER
	060	256280	S		4	PIN
	140	90240-0172	P		6	BUSHING
	300	312105-0370	-		2	SCREW M6S6X20RFR
	330	312105-0451	-		4	SCREW M6S8X20RFR
	350	312605-0318	-		2	NUT M6M8RFR
	400	315115-0165	-		8	WASHER TBRB8,4X16RFR

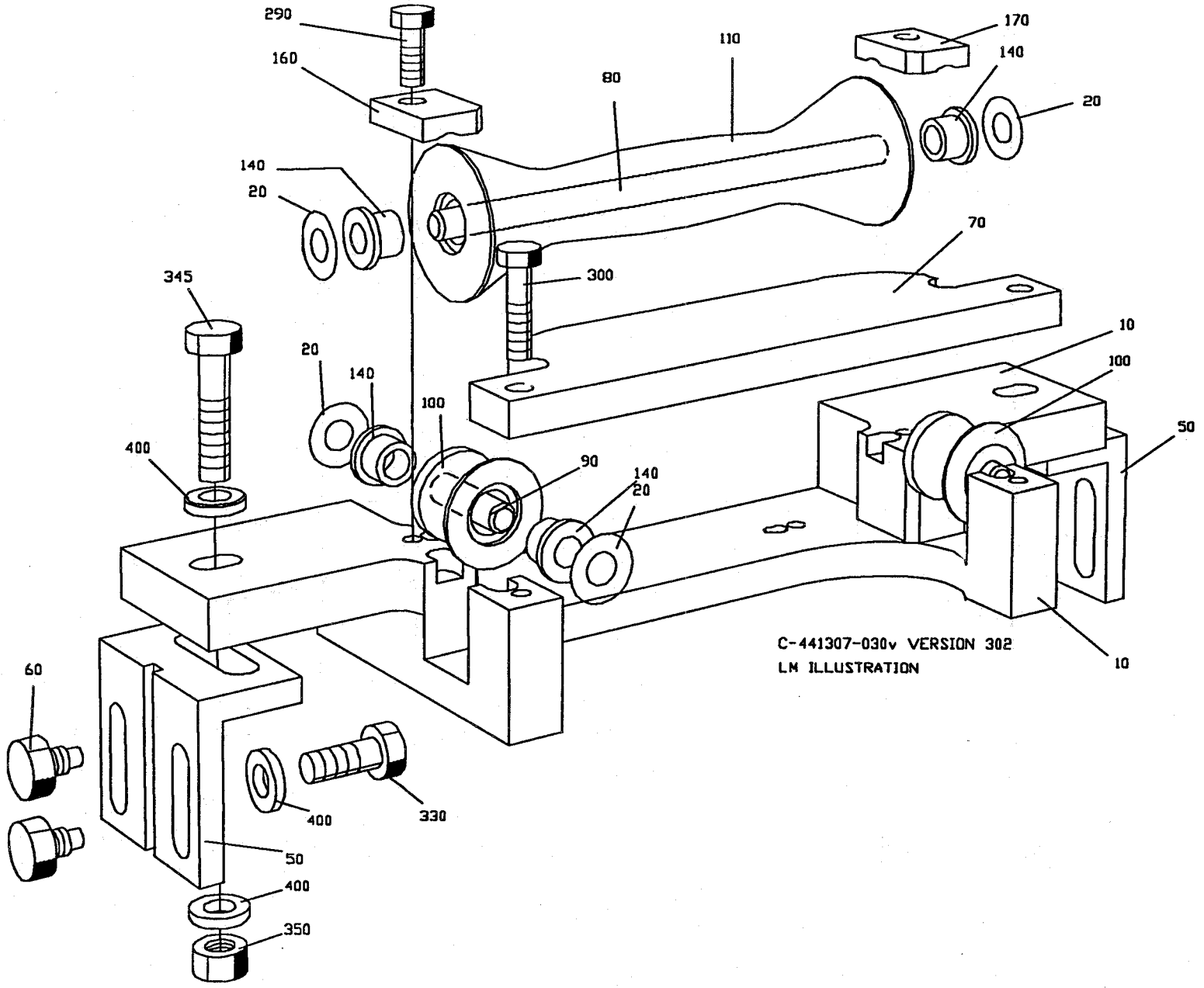
290
160
110
170
140
20
80
140
20
70
345
300
10
20
140
100
100
50
400
90
140
20
C-441307-030v VERSION 302
LM ILLUSTRATION
10
60
400
330
50
400
350

From	Pos	Part No	SP	UN	Qty	Description
Volume 125 ml						
	010	469078	-		1	HOLDER
	050	256279	-		2	BRACKET
	070	752297	-		1	TUBE SUPPORT
	080	752186-0010	-		1	SHAFT
	090	752186-0001	-		2	SHAFT
	100	752145	-		2	ROLLER
	110	752144	-		1	ROLLER
	160	469079	-		1	LOCK BOARD
	170	469080	-		1	LOCK BOARD
	290	312105-0368	-		2	SCREW M6S6X16RFR
	345	312105-0457	-		2	SCREW M6S8X35RFR

From	Pos	Part No	SP	UN	Qty	Description
Common Parts						
	020	2033-0011	P		6	WASHER
	060	256280	S		4	PIN
	140	90240-0172	P		6	BUSHING
	300	312105-0370	-		2	SCREW M6S6X20RFR
	330	312105-0451	-		4	SCREW M6S8X20RFR
	350	312605-0318	-		2	NUT M6M8RFR
	400	315115-0165	-		8	WASHER TBRB8,4X16RFR

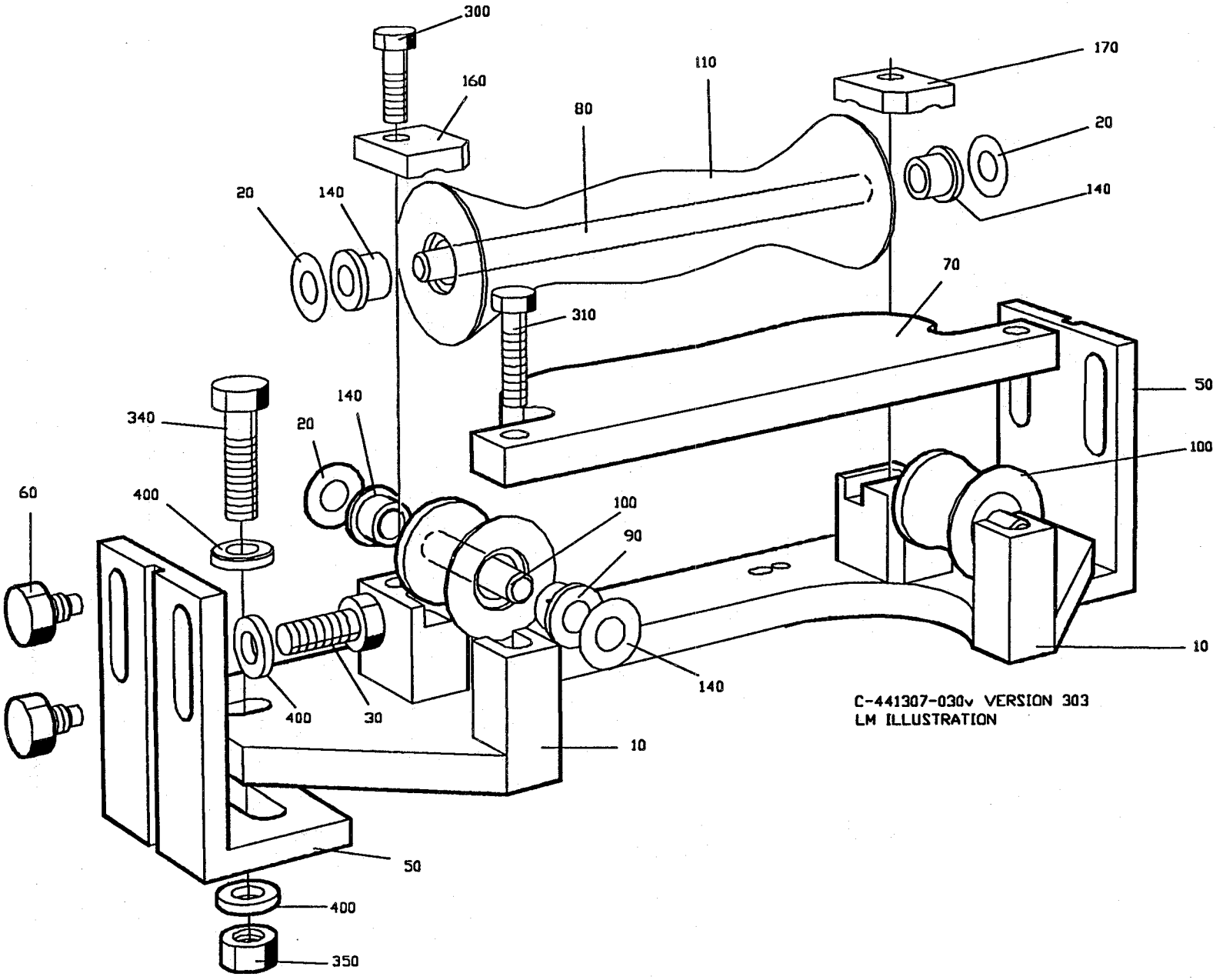
300
160
110
170
80
20
140
20
140
70
310
50
340
140
20
100
60
400
100
90
400
30
140
10
50
400
350
C-441307-030v VERSION 303
LM ILLUSTRATION

Volume 200 ml SLIM

From	Pos	Part No	SP	UN	Qty	Description
	010	469041	-		1	HOLDER
	050	469047	-		2	BRACKET
	070	752298	-		1	TUBE SUPPORT
	080	752186-0010	-		1	SHAFT
	090	752186-0004	S		2	SHAFT
	100	752130	-		2	ROLLER
	110	752129	-		1	ROLLER
	160	469042	-		1	LOCK BOARD
	170	469043	-		1	LOCK BOARD
	310	312105-0372	-		2	SCREW M6S6X20RFR
	340	312105-0455	-		2	SCREW M6S8X30RFR

Common Parts

From	Pos	Part No	SP	UN	Qty	Description
	020	2033-0011	P		6	WASHER
	060	256280	S		4	PIN
	140	90240-0172	P		6	BUSHING
	300	312105-0370	-		2	SCREW M6S6X20RFR
	330	312105-0451	-		4	SCREW M6S8X20RFR
	350	312605-0318	-		2	NUT M6M8RFR
	400	315115-0165	-		8	WASHER TBRB8,4X16RFR

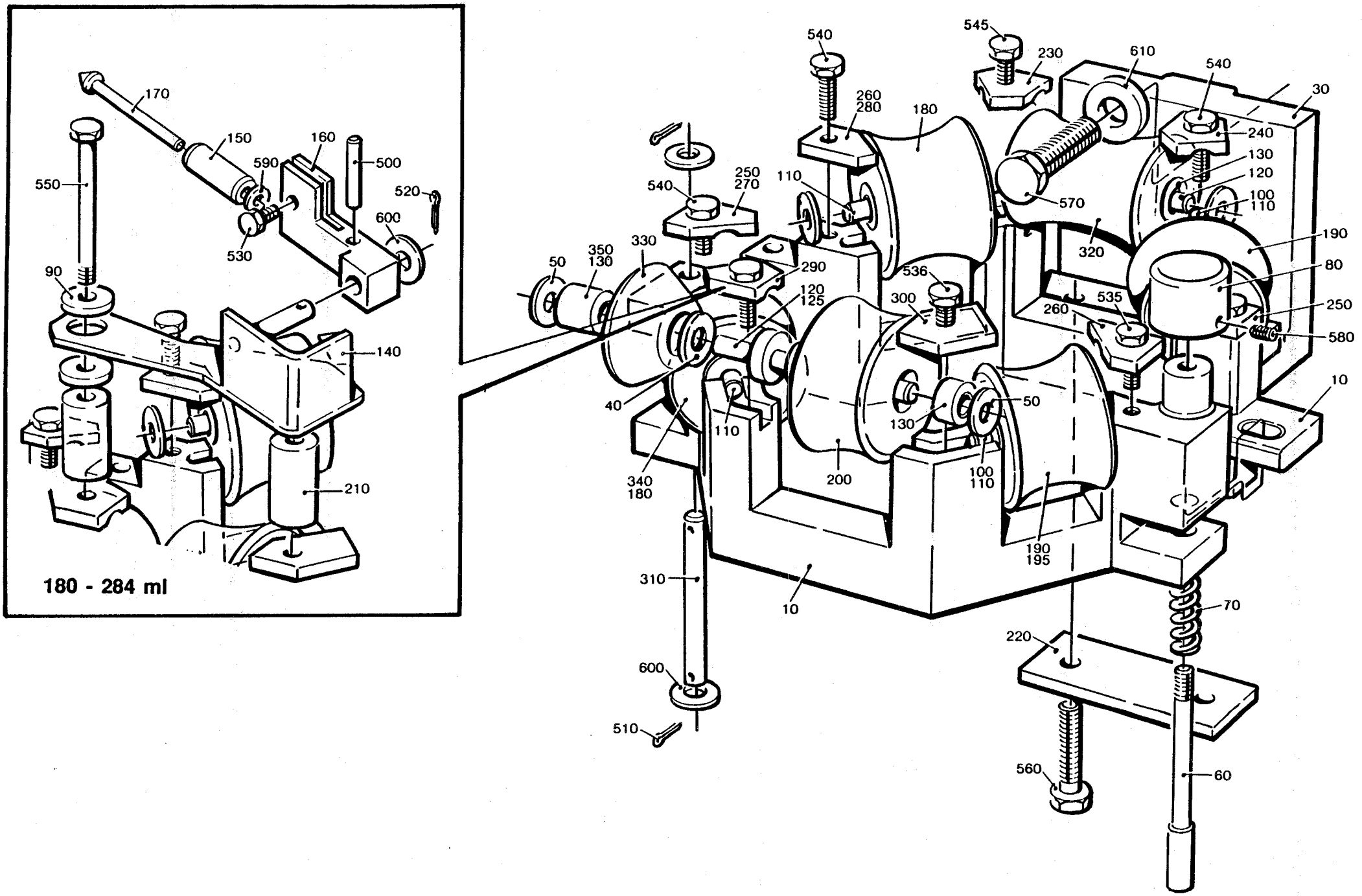
180 - 284 ml
170
150
160
590
500
520
550
600
530
90
140
210
540
545
230
610
540
30
260
280
180
240
130
120
100
110
570
250
270
110
540
320
190
80
350
130
330
50
290
536
120
125
300
535
260
250
580
40
110
200
50
130
10
340
180
100
110
190
195
310
10
70
220
600
510
560
60

From	Pos	Part No	SP	UN	Qty	Description
Volume 180 - 284 ml						
	010	469524	-		1	BRACKET
	020	751605	-		1	BRACKET
	030	491987	-		1	ANGLE BRACKET
	040	2033-0008	P		1	WASHER
	050	2033-0011	P		12	WASHER
	090	257175	-		4	WASHER
	100	263655-0004	S		2	SHAFT
	110	263655-0006	S		2	SHAFT
	120	263655-0009	S		2	SHAFT
	130	751230	P		14	PLAIN BEARING
	140	441918	-		1	BRACKET
	150	451117	S		1	ROLLER
	160	451148	-		1	BRACKET
	170	451149	S		1	SHAFT
	180	456082	S		1	ROLLER
	190	456085	S		2	ROLLER
	200	456086	S		1	ROLLER
	210	456181	-		2	SPACER
	230	456183	-		1	LOCK BOARD
	240	456184	-		1	LOCK BOARD
	250	456185	-		1	LOCK BOARD
	260	456186	-		1	LOCK BOARD
	270	456187	-		1	LOCK BOARD
	280	456188	-		1	LOCK BOARD
	290	456198	-		1	LOCK BOARD
	300	456199	-		1	LOCK BOARD
	320	456304	S		1	ROLLER
	330	456305	S		1	ROLLER
	340	456306	S		1	ROLLER
	500	311103-0312	-		1	CYLINDRICACPR5M6X25RFR
	520	311411-0165	-		1	SPLIT PIN SP2,5X16RFR
	530	312105-0325	-		1	SCREW M6S5X10 A4 80
	540	312105-0368	-		4	SCREW M6S6X16RFR
	545	312105-0370	-		6	SCREW M6S6X20RFR
	550	312105-0381	-		2	SCREW M6S6X55RFR
	590	315105-0136	-		1	WASHER BRB4,3X8RFR
	600	315105-0165	-		3	WASHER BRB8,4X16RFR
Volume 125 ml						
	010	469745	-		1	BRACKET
	020	751603	-		1	BRACKET
	030	G- 491907	-		1	ANGLE BRACKET
	050	2033-0011	P		14	WASHER
	110	263655-0018	S		4	SHAFT
	120	263655-0007	S		1	SHAFT
	125	456881	S		1	SHAFT
	130	751230	P		12	PLAIN BEARING
	180	469126	S		2	ROLLER
	190	469125	S		1	ROLLER
	195	469127	S		1	ROLLER
	200	469128	S		1	ROLLER
	230	456869	-		1	LOCK BOARD
	240	456871	-		1	LOCK BOARD
	250	456873	-		2	LOCK BOARD
	260	456874	-		2	LOCK BOARD
	290	456870	-		1	LOCK BOARD
	300	456872	-		1	LOCK BOARD
	320	469124	S		1	ROLLER
	330	469136	S		1	ROLLER
	350	751231	P		1	PLAIN BEARING
	535	312105-0329	-		4	SCREW M6S5X16 A4 80
	536	312105-0332	-		4	SCREW M6S5X22RFR
	545	312105-0370	-		4	SCREW M6S6X20RFR
	600	315105-0165	-		2	WASHER BRB8,4X16RFR
Volume 200 ml SLIM						
	010	469745	-		1	BRACKET
	020	751603	-		1	BRACKET
	030	491907	-		1	ANGLE BRACKET
	050	2033-0011	P		14	WASHER
	110	263655-0018	S		4	SHAFT
	120	263655-0007	S		1	SHAFT
	125	456881	S		1	SHAFT
	130	751230	P		12	PLAIN BEARING
	180	490549	S		2	ROLLER
	190	490548	S		1	ROLLER
	195	490550	S		1	ROLLER
	200	490551	S		1	ROLLER
	230	456869	-		1	LOCK BOARD
	240	456871	-		1	LOCK BOARD
	250	456873	-		2	LOCK BOARD
	260	456874	-		2	LOCK BOARD
	290	456870	-		1	LOCK BOARD
	300	456872	-		1	LOCK BOARD
	320	490547	S		1	ROLLER
	330	490552	S		1	ROLLER
	350	751231	P		1	PLAIN BEARING

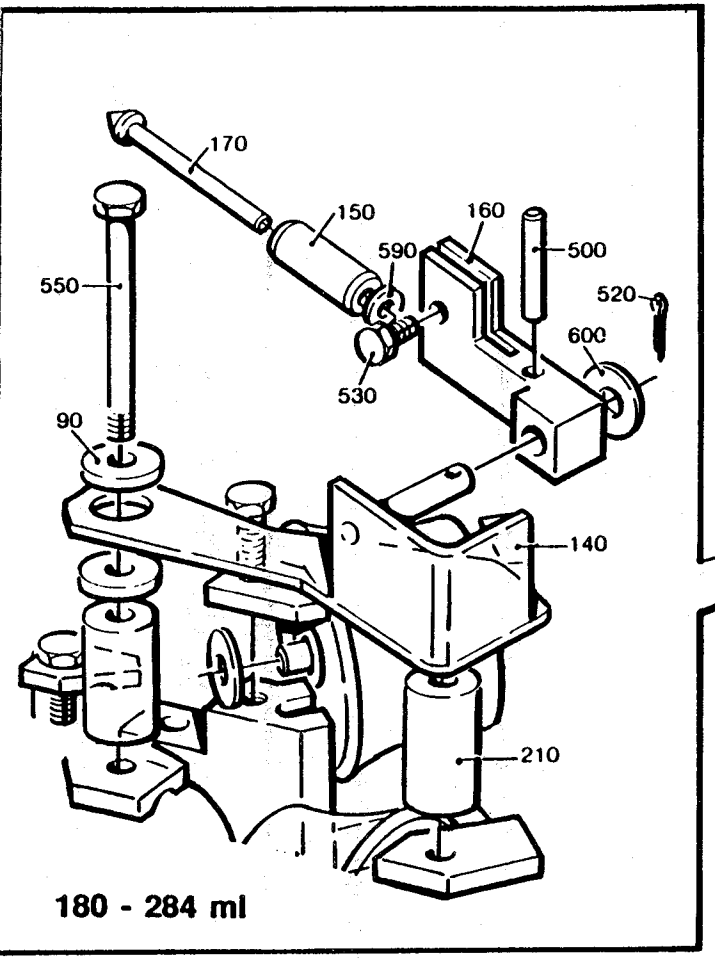
170
150
590
160
500
520
550
600
530
90
140
210

180 - 284 ml

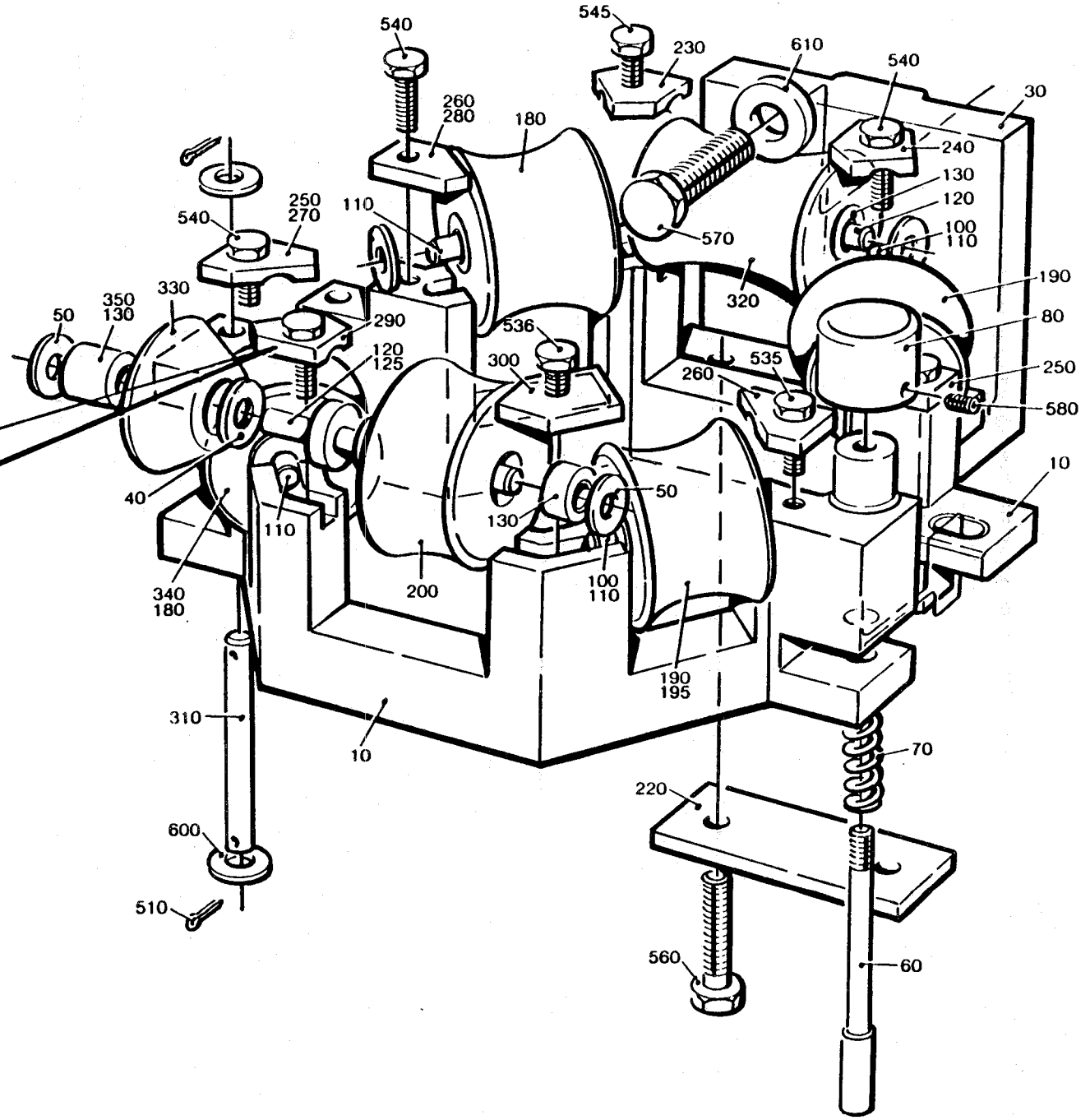
540
545
230
610
540
30
260
280
180
240
130
120
100
110
250
270
110
570
540
190
320
350
130
330
50
290
536
80
120
125
300
535
260
250
580
40
110
50
130
10
340
180
200
100
110
190
195
310
10
70
220
600
510
560
60

From	Pos	Part No	SP	UN	Qty	Description
	535	312105-0329	-		4	SCREW M6S5X16 A4 80
	536	312105-0332	-		4	SCREW M6S5X22RFR
	545	312105-0370	-		4	SCREW M6S6X20RFR
	600	315105-0165	-		2	WASHER BRB8,4X16RFR
Common Parts						
	055	28037	-		2	WASHER
	060	35918	S		1	SHAFT
	070	35919	S		1	COMPRESSION SPRING
	080	36325	S		1	KNOB
	121	271717	-		2	SPACER
	122	271718	-		2	WASHER
	123	272797	-		2	ROLLER
	220	751209	-		2	PLATE
	310	751318	-		1	SHAFT
	510	311411-0150	-		2	SPLIT PIN SP2X12RFR
	547	312105-0374	-		2	SCREW M6S6X30RFR
	548	312105-0376	-		2	SCREW M6S6X35RFR
	560	312105-0453	-		2	SCREW M6S8X25RFR
	570	312105-0536	-		1	SCREW M6S12X30RFR
	580	312318-0285	-		1	GRUB SCREW SK6SS4X6RFR
	585	312605-0316	-		2	NUT M6M6RFR
	610	315115-0178	-		1	WASHER TBRB13X24RFR

From	Pos	Part No	SP	UN	Qty	Description

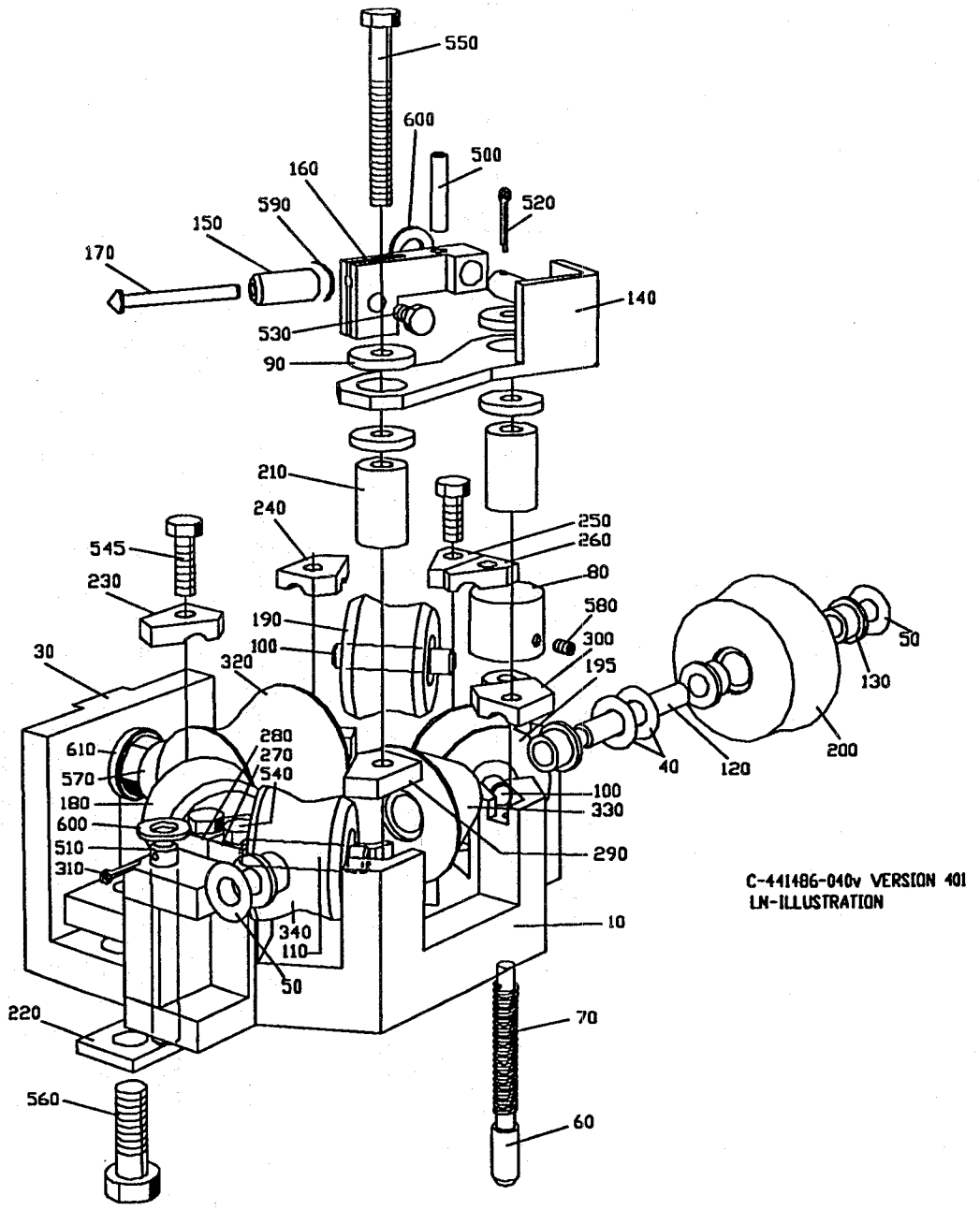
550
600
500
160
590
520
150
170
140
530
90
210
240
250
260
545
80
230
580
190
300
100
50
320
195
30
130
280
610
270
200
570
540
40
120
100
180
330
600
290
510
310
340
10
110
50
220
70
560
60
C-441486-040v VERSION 401
LN-ILLUSTRATION

From	Pos	Part No	SP	UN	Qty	Description
Volume 180 - 284 ml						
	010	469524	-		1	BRACKET
	040	2033-0008	P		2	WASHER
	050	2033-0011	P		12	WASHER
	090	257175	-		4	WASHER
	100	752186-0004	S		2	SHAFT
	110	752186-0005	S		2	SHAFT
	120	752186-0007	S		2	SHAFT
	130	90240-0172	P		14	PLAIN BEARING
	140	441918	-		1	BRACKET
	150	451117	S		1	ROLLER
	160	451148	-		1	BRACKET
	170	451149	S		1	SHAFT
	180	751499	S		1	ROLLER
	190	751497	S		1	ROLLER
	195	751496	S		1	ROLLER
	200	751495	S		1	ROLLER
	210	456181	-		2	SPACER
	230	456183	-		1	LOCK BOARD
	240	456184	-		1	LOCK BOARD
	250	456185	-		1	LOCK BOARD
	260	456186	-		1	LOCK BOARD
	270	456187	-		1	LOCK BOARD
	280	456188	-		1	LOCK BOARD
	290	456198	-		1	LOCK BOARD
	300	456199	-		1	LOCK BOARD
	320	751498	S		1	ROLLER
	330	751501	S		1	ROLLER
	340	751500	S		1	ROLLER
	500	311103-0312	-		1	CYLINDRICACPR5M6X25RFR
	520	311411-0165	-		1	SPLIT PIN SP2,5X16RFR
	530	312105-0325	-		1	SCREW M6S5X10 A4 80
	540	312105-0368	-		4	SCREW M6S6X16RFR
	545	312105-0370	-		2	SCREW M6S6X20RFR
	550	312105-0381	-		2	SCREW M6S6X55RFR
	590	315105-0136	-		1	WASHER BRB4,3X8RFR
	600	315105-0165	-		3	WASHER BRB8,4X16RFR

From	Pos	Part No	SP	UN	Qty	Description
Common Parts						
	030	456230	-		1	ANGLE BRACKET
	060	35918	S		1	SHAFT
	070	35919	S		1	COMPRESSION SPRING
	080	36325	S		1	KNOB
	220	456182	-		1	PLATE
	310	751318	-		1	SHAFT
	510	311411-0150	-		2	SPLIT PIN SP2X12RFR
	560	312105-0495	-		2	SCREW M6S10X30RFR
	570	312105-0536	-		1	SCREW M6S12X30RFR
	580	312318-0285	-		1	GRUB SCREW SK6SS4X6RFR
	610	315115-0178	-		1	WASHER TBRB13X24RFR

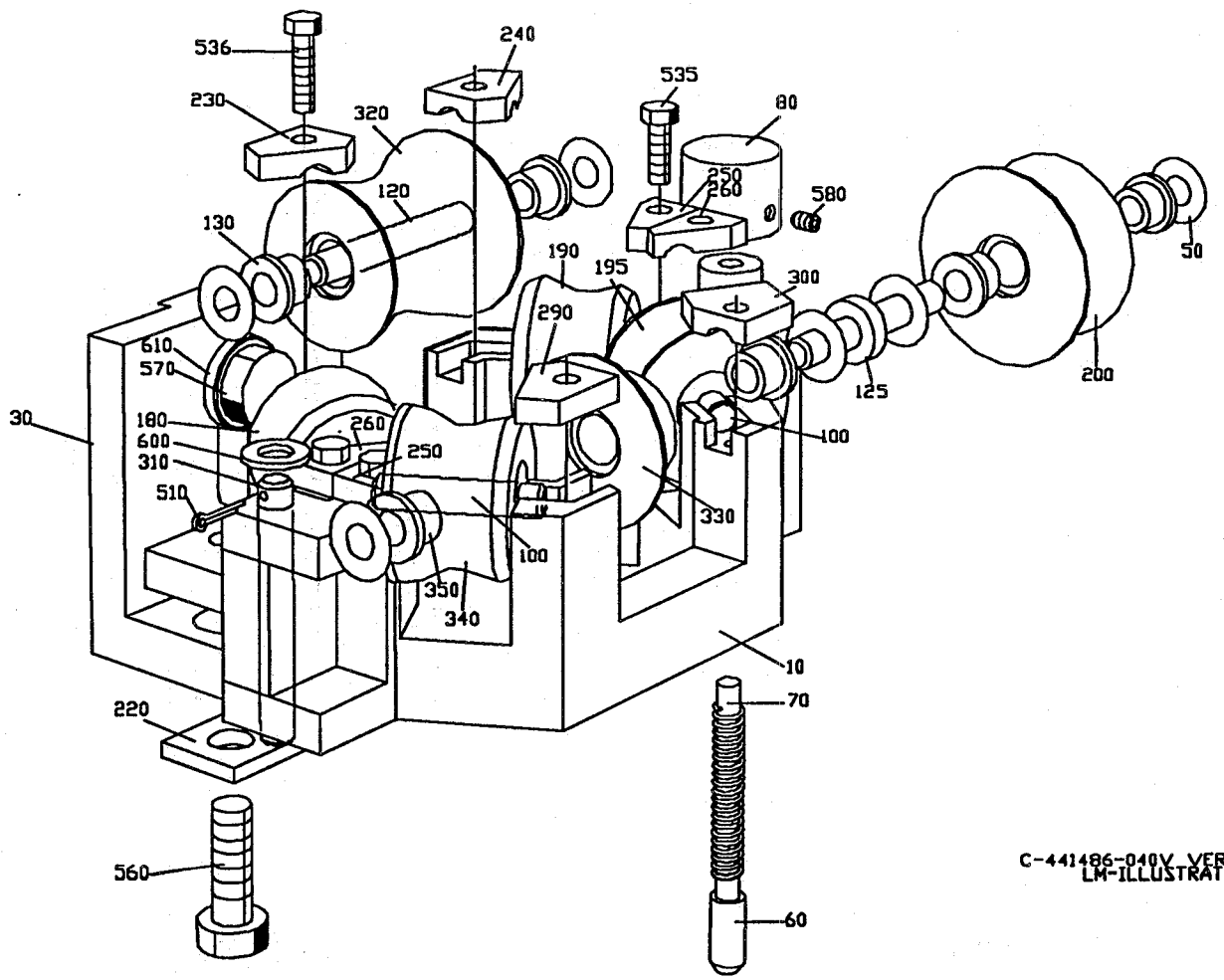
536
240
230
320
535
80
120
250
260
580
130
190
195
300
290
50
610
570
200
125
30
180
260
600
250
100
310
510
330
100
350
340
10
70
220
560
60
C-441486-040V VERSION 402
LM-ILLUSTRATION

From	Pos	Part No	SP	UN	Qty	Description
Volume 125 ml						
	010	469745	-		1	BRACKET
	050	2033-0011	P		14	WASHER
	100	752186-0003	S		4	SHAFT
	120	752186-0006	-		1	SHAFT
	125	752185	S		1	SHAFT
	130	90240-0172	P		12	PLAIN BEARING
	180	752147	S		1	ROLLER
	190	752148	S		1	ROLLER
	195	752150	S		1	ROLLER
	200	752151	S		1	ROLLER
	230	456869	-		1	LOCK BOARD
	240	456871	-		1	LOCK BOARD
	250	456873	-		2	LOCK BOARD
	260	456874	-		2	LOCK BOARD
	290	456870	-		1	LOCK BOARD
	300	456872	-		1	LOCK BOARD
	320	752146	S		1	ROLLER
	330	752152	S		1	ROLLER
	340	752149	S		1	ROLLER
	350	752156	P		2	PLAIN BEARING
	535	312105-0329	-		4	SCREW M6S5X16 A4 80
	536	312105-0332	-		4	SCREW M6S5X22RFR
	600	315105-0165	-		2	WASHER BRB8,4X16RFR
Volume 200 ml SLIM						
	010	469745	-		1	BRACKET
	050	2033-0011	P		14	WASHER
	100	752186-0003	S		4	SHAFT
	120	752186-0006	-		1	SHAFT
	125	752185	S		1	SHAFT
	130	90240-0172	P		12	PLAIN BEARING
	180	752132	S		1	ROLLER
	190	752133	S		1	ROLLER
	195	752135	S		1	ROLLER
	200	752136	S		1	ROLLER
	230	456869	-		1	LOCK BOARD
	240	456871	-		1	LOCK BOARD
	250	456873	-		2	LOCK BOARD
	260	456874	-		2	LOCK BOARD
	290	456870	-		1	LOCK BOARD
	300	456872	-		1	LOCK BOARD
	320	752131	S		1	ROLLER
	330	752137	S		1	ROLLER
	340	752134	S		1	ROLLER
	350	752156	P		2	PLAIN BEARING
	535	312105-0329	-		4	SCREW M6S5X16 A4 80
	536	312105-0332	-		4	SCREW M6S5X22RFR
	600	315105-0165	-		2	WASHER BRB8,4X16RFR
Common Parts						
	030	456230	-		1	ANGLE BRACKET
	060	35918	S		1	SHAFT
	070	35919	S		1	COMPRESSION SPRING
	080	36325	S		1	KNOB
	220	456182	-		1	PLATE
	310	751318	-		1	SHAFT
	510	311411-0150	-		2	SPLIT PIN SP2X12RFR
	560	312105-0495	-		2	SCREW M6S10X30RFR
	570	312105-0536	-		1	SCREW M6S12X30RFR
	580	312318-0285	-		1	GRUB SCREW SK6SS4X6RFR
	610	315115-0178	-		1	WASHER TBRB13X24RFR

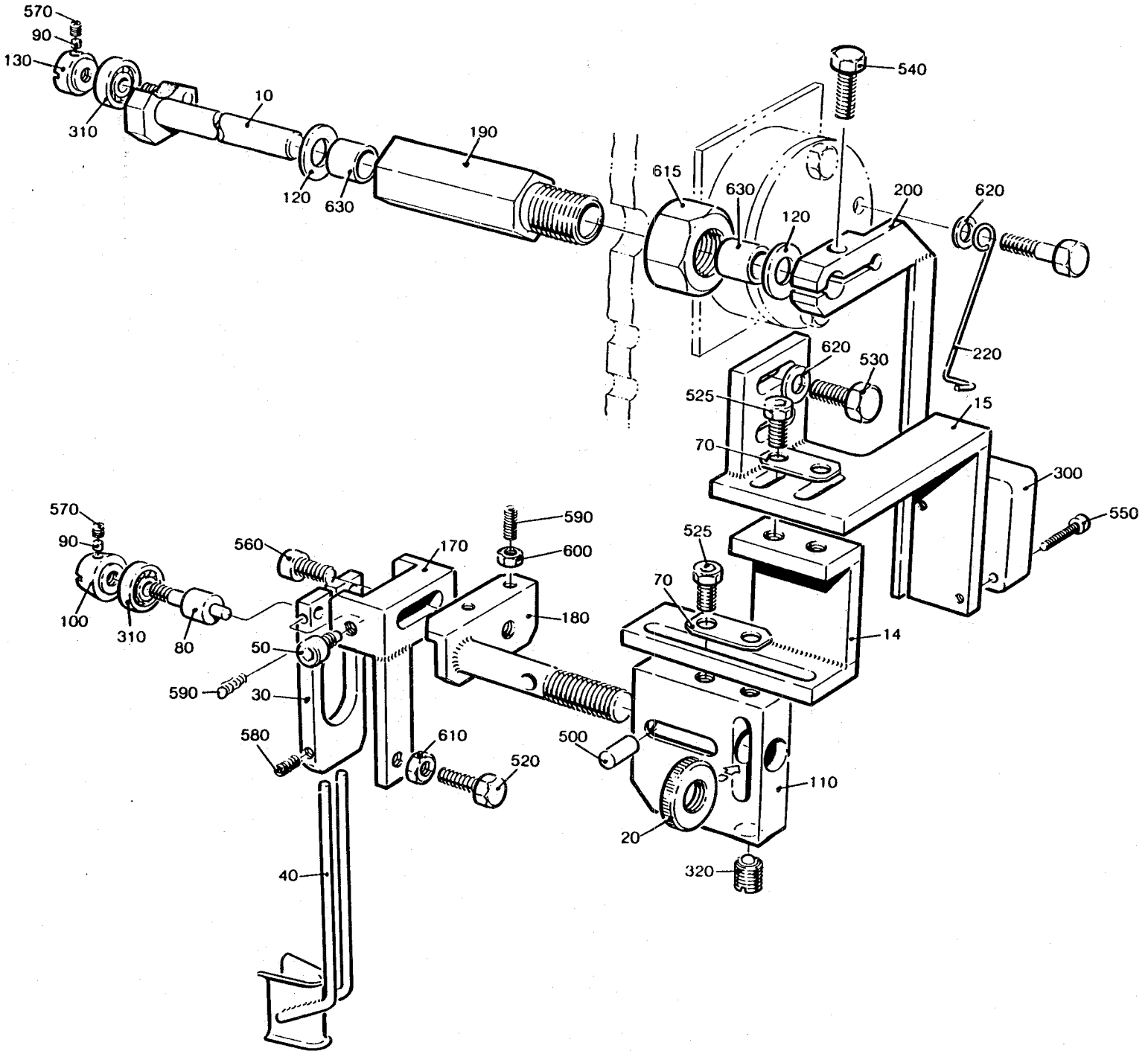
570
90
130
310
10
120
630
190
540
615
630
120
200
620
620
530
525
70
220
15
300
550
570
90
100
310
80
560
170
590
600
180
50
590
30
580
610
520
525
70
14
500
110
20
320
40

Last Alteration: AM 13953 89-09-13

Corresponding C-lists: 469074-020V
Assembly Drawing: 469074-2

Issue Date: 900223

From	Pos	Part No	SP	UN	Qty	Description
	010	469979	-		1	HOLDER
	014	491127	-		1	BRACKET
	015	491578	-		1	BRACKET
	020	23580	-		1	KNOB
	030	23582	-		1	HOLDER
	040	23583	S		1	GUIDE
	050	23584	S		2	SCREW
	070	24354	-		2	WASHER
	080	24355	S		2	PIN
	090	24356	S		5	BLOCK
	100	111543	S		2	CONE
	110	245210	-		1	BODY
	120	271211	-		2	WASHER
	130	271654	-		1	RETAINING RING
	170	272467	-		1	CLAMP
	180	456119	-		1	SHAFT
	190	469981	-		1	BRACKET
	200	456121	-		1	ARM
	220	491149	S		1	SPRING
	300	90044-0104	P		1	PROXIMITY SWITCH
	310	90214-0138	P		3	BALL BEARING
	320	90287-0009	S		1	SPRINGLOADED SCREW
	500	311103-0350	-		1	CYLINDRICACPR6M6X14RFR
	520	312105-0331	-		1	SCREW M6S5X20 A4 80
	525	312105-0366	-		4	SCREW M6S6X12RFR
	530	312105-0368	-		2	SCREW M6S6X16RFR
	540	312105-0370	-		1	SCREW M6S6X20RFR
	550	312115-0228	-		2	SCREW 3X16 A4 80
	560	312115-0366	-		1	SCREW 6X12 A4 80
	570	312318-0283	-		5	GRUB SCREW SK6SS4X4RFR
	580	312318-0285	-		3	GRUB SCREW SK6SS4X6RFR
	590	312318-0291	-		2	GRUB SCREW SK6SS4X12RFR
	600	312605-0312	-		2	NUT M6M4RFR
	610	312605-0314	-		1	NUT M6M5RFR
	615	312605-0326	-		1	NUT M6M20RFR
	620	315105-0153	-		3	WASHER BRB6,4X12RFR
	630	321127-0100	-		2	BUSHING 10/13X10

From	Pos	Part No	SP	UN	Qty	Description

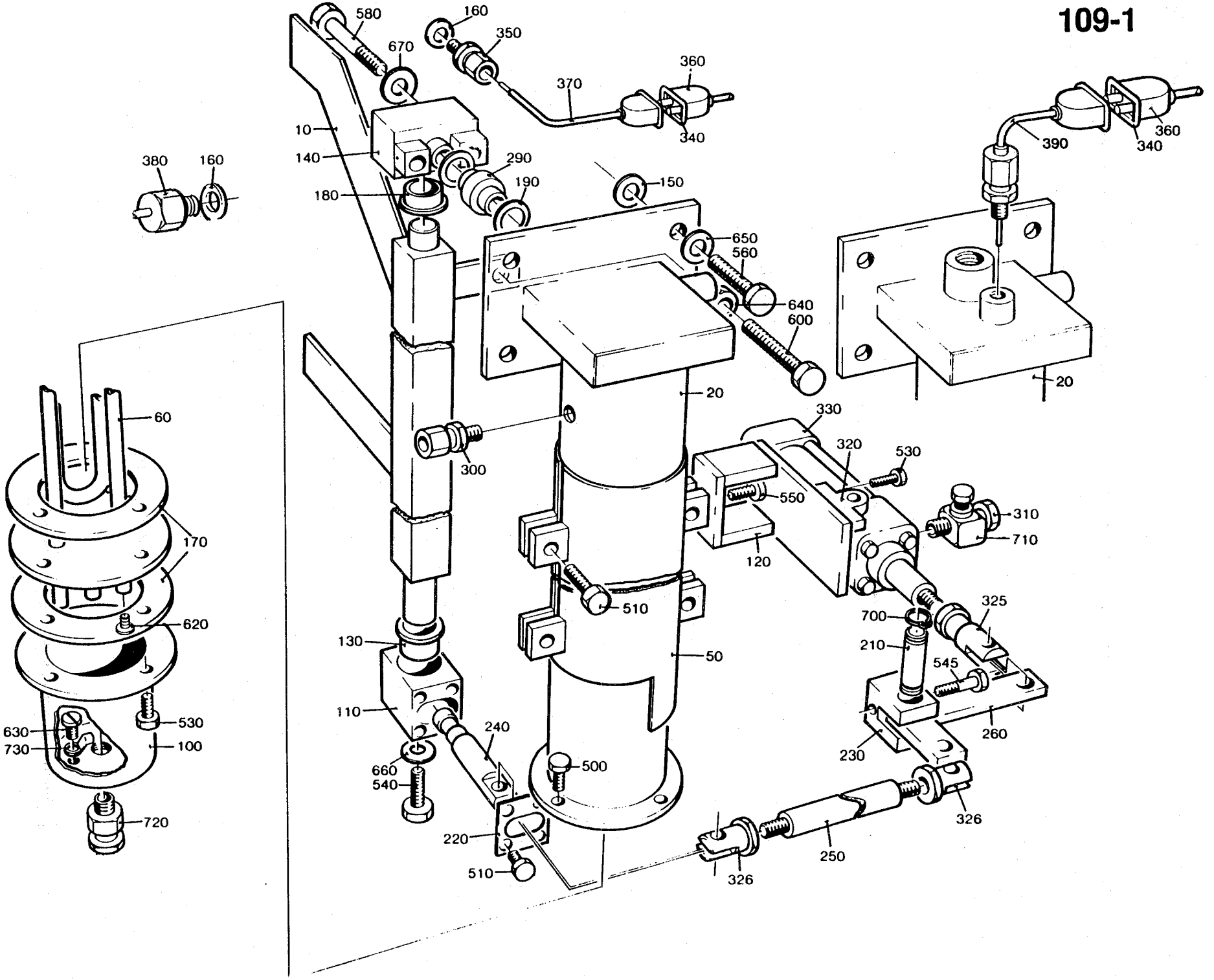
580
160
350
670
360
370
340
10
140
290
190
180
150
380
160
390
360
340
650
560
640
600
20
20
330
320
530
550
310
710
120
60
170
620
510
130
50
325
700
210
545
110
240
260
660
540
500
230
326
220
250
510
326
530
630
730
100
720

From	Pos	Part No	SP	UN	Qty	Description
	010	491169	C		1	PIVOT ARM
-080V	020	491486	C		1	HEATING PIPE
090V-	020	752174	C		1	HEATING PIPE
	050	272114	-		1	HEAT GUARD
	060	441804	PU		1	COIL HEATER
	100	491170	C		1	COVER
	110	491171	C		1	BEARING BLOCK
	120	491176	C		1	BRACKET
	130	271269	P		2	BUSHING
	140	272286	-		1	AXLE SUPPORT
	150	751019	P		8	WASHER
	160	273429	S		2	WASHER
	170	751020	P		2	GASKET
	180	295909	P		1	BUSHING
	190	751023	P		2	GASKET
	210	491931	-		1	SHAFT
	220	491172	S		1	GASKET
	230	491173	S		1	BRACKET
	240	491174	S		1	ARM
	250	491175	S		1	LINK
	260	491177	S		1	ARM
	290	491487	S		1	BUSHING
	300	90030-0187	-		1	PIPE CONNECTION
	310	90235-0282	-		2	VALVE
	320	90239-0460	-		1	BRACKET
	325	90239-0516	S		1	PISTON ROD HEAD
	326	90239-0532	S		2	PISTON ROD HEAD
	330	90239-0779			1	CYLINDER
		90239-0442	S		1	* SEAL KIT
	340	90326-0012	P		2	PROTECTIVE COVER
	350	90326-0017	P		1	GLAND
	360	90326-0020	P		2	SOCKET
	370	90326-0048	P		1	THERMOELEMENT
	380	90326-0304	S		1	LEAD IN
090V-	390	90326-0057	P		1	THERMOELEMENT
	500	312105-0327	-		2	SCREW M6S5X12 A4 80
	510	312105-0368	-		8	SCREW M6S6X16RFR
	530	312105-0370	-		10	SCREW M6S6X20RFR
	540	312105-0372	-		1	SCREW M6S6X25RFR
	545	312105-0376	-		2	SCREW M6S6X35RFR
	550	312105-0449	-		2	SCREW M6S8X16RFR
	560	312105-0455	-		4	SCREW M6S8X30RFR
	580	312105-0462	-		2	SCREW M6S8X55RFR

From	Pos	Part No	SP	UN	Qty	Description
	600	312109-0457	-		1	SCREW 8X35 H A4 80
	620	312125-0226	-		3	SLOTTED HEMCS3X12RFR
	630	312125-0323	-		1	SLOTTED HEMCS5X8RFR
	640	312605-0318	-		1	NUT M6M8RFR
	650	315105-0165	-		4	WASHER BRB8,4X16RFR
	660	315125-0153	-		1	WASHER SB 6,4X22X4 RFR
	670	315125-0165	-		2	WASHER SB 8,4X26X5 RFR
	700	90141-0016	-		2	LOCK RING
	710	342797-0121	S		2	BANJO CONNSINGEL 6-1/8
	720	352100-0106	-		1	CABLE GLANR.18,6-10,5
	730	353101-0132	P		1	CABLE SHOEYAE 14 M 53

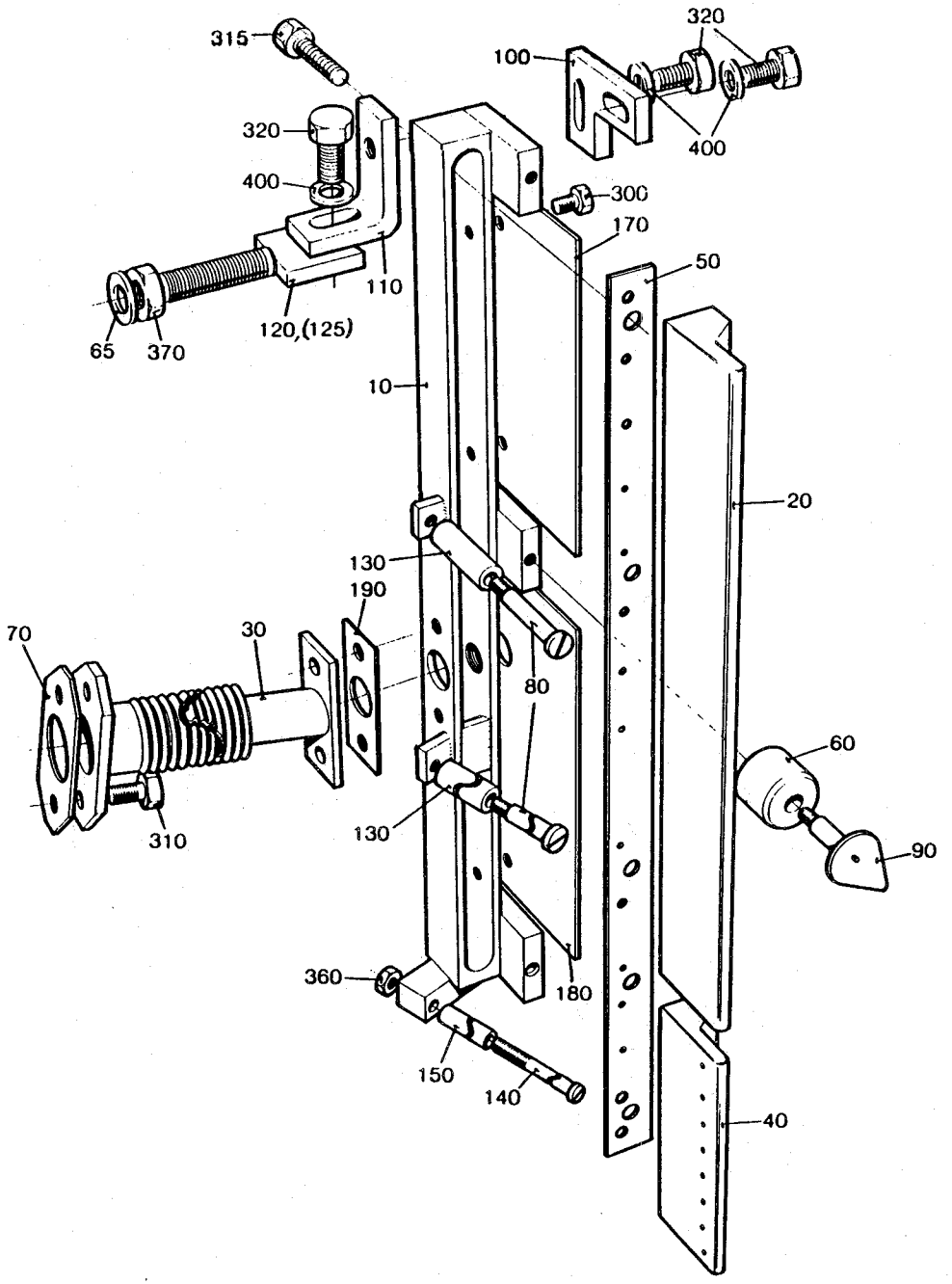
315
320
100
320
400
400
300
170
50
110
120,(125)
65
370
10
20
130
190
70
30
80
60
310
130
90
360
180
150
140
40

From	Pos	Part No	SP	UN	Qty	Description
	010	752218	C		1	CONNECTION
	020	751459	S		1	AIR NOZZLE
	030	751722	C		1	PIPE-LINE
	040	751282	C		1	AIR NOZZLE
	050	751293	S		1	GASKET
	060	6161	P		3	ROLLER
	065	28036	-		4	WASHER
	070	751010	P		1	GASKET
	080	256899	S		2	SHAFT (125 ml, 200 mlSLIM)
	080	256899	S		1	SHAFT (180-284 ml)
	090	272095	S		3	SHAFT
	100	469458	-		2	BRACKET
	110	469459	-		2	BRACKET
	120	469460	-		1	BRACKET
	125	491143	-		1	BRACKET
	130	469461	P		2	ROLLER (125 ml, 200 mlSLIM)
	130	469461	P		1	ROLLER (180-284 ml)
	140	469463	S		1	SHAFT
	150	469464	P		1	ROLLER
	170	469466	-		1	PLATE
	180	469466	-		1	PLATE
	190	751024	P		1	GASKET
	300	312105-0287	-		4	SCREW M6S4X8 A4 80
	310	312105-0325	-		4	SCREW M6S5X10 A4 80
	315	312105-0333	-		5	SCREW M6S5X25 A4 80
	320	312105-0366	-		6	SCREW M6S6X12RFR
	360	312605-0312	-		1	NUT M6M4RFR
	370	312605-0318	-		3	NUT M6M8RFR
	400	315105-0153	-		6	WASHER BRB6,4X12RFR

From	Pos	Part No	SP	UN	Qty	Description

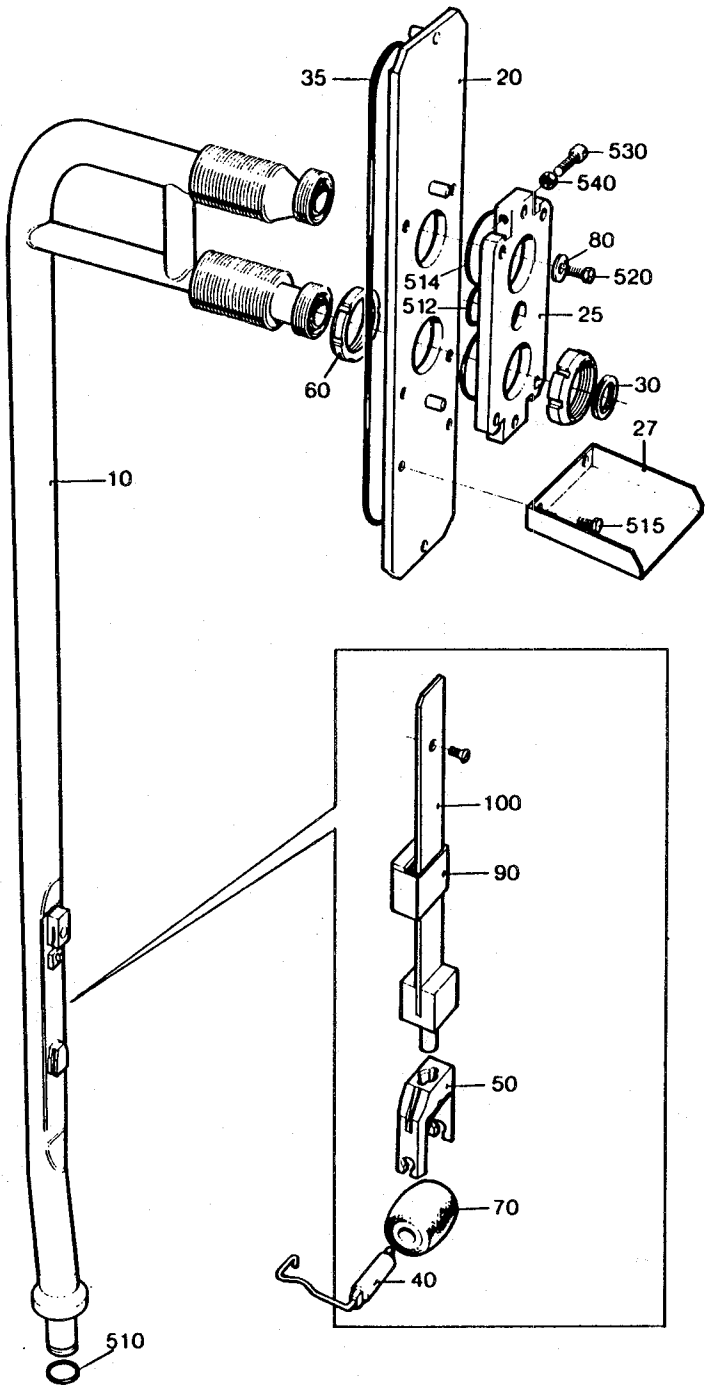
35
20
530
540
80
520
514
512
25
60
30
27
10
515
100
90
50
70
40
510

From	Pos	Part No	SP	UN	Qty	Description
Volume 180 - 284 ml						
	010	752694	S		1	FILLING PIPE
	040	295376	P		1	SHAFT
	050	295375	P		1	FORK
	070	257330	PU		1	PRESSURE ROLLER
	090	295377-0002	P		1	COVER
	100	544894	P		1	SPRING
Volume 200 ml SLIM						
	010	752689	S		1	FILLING PIPE
	040	255977	-		1	SHAFT
	050	255978	P		1	FORK
	070	272479	PU		1	PRESSURE ROLLER
	090	295377-0001	P		1	COVER
	100	751604	P		1	SPRING
Volume 125 ml						
	010	752689	S		1	FILLING PIPE
	040	255977	-		1	SHAFT
	050	255978	P		1	FORK
	070	272479	PU		1	PRESSURE ROLLER
	090	491441	P		1	COVER
	100	751604	P		1	SPRING
Common Parts						
	020	491414	S		1	PLATE
	025	491415	-		1	PLATE
	027	295984	-		1	DRIP GUARD
	030	12242-0001	P		2	GASKET
	035	491418-0001	PU		1	O-RING
	060	255981	-		4	NUT
	080	315125-0153	-		4	WASHER SB 6,4X22X4 RFR
	510	315204-0214	PU		1	O-RING 17,3X2,4VITON
	512	315204-0217	PU		1	O-RING 24,2X3VITON
	514	315204-0301	PU		2	O-RING 49,5X3VITON
	515	312105-0364	-		2	SCREW M6S6X10RFR
	520	312105-0372	-		4	SCREW M6S6X25RFR
	530	312115-0455	-		4	SCREW 8X30 A4 80
	540	312605-0318	-		4	NUT M6M8RFR

From	Pos	Part No	SP	UN	Qty	Description

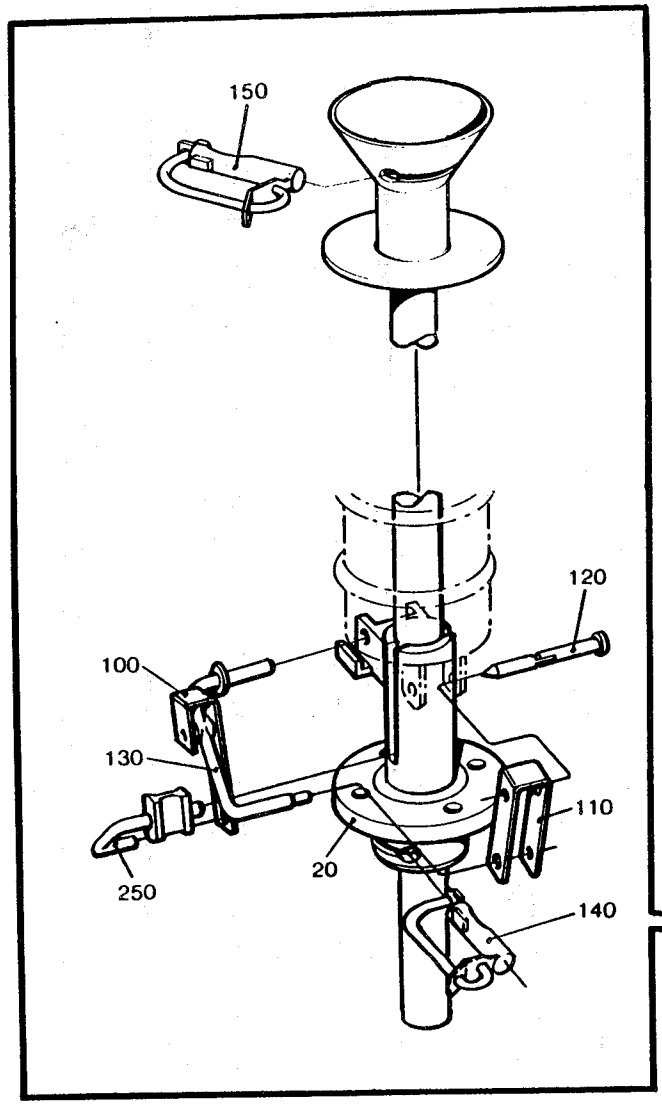
150
120
100
130
110
20
250
140

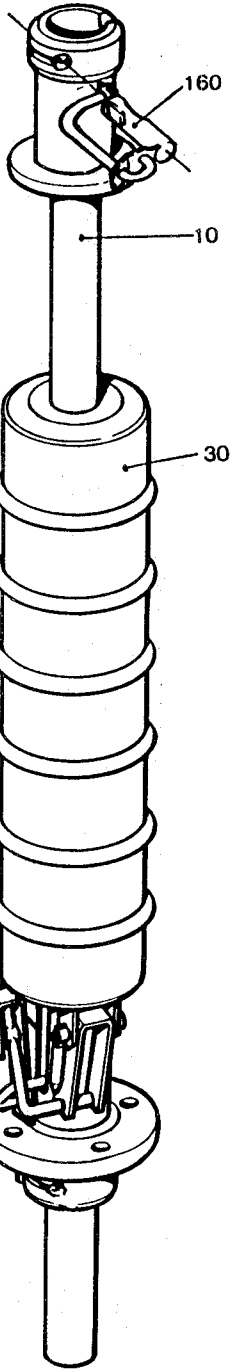
160
10
30

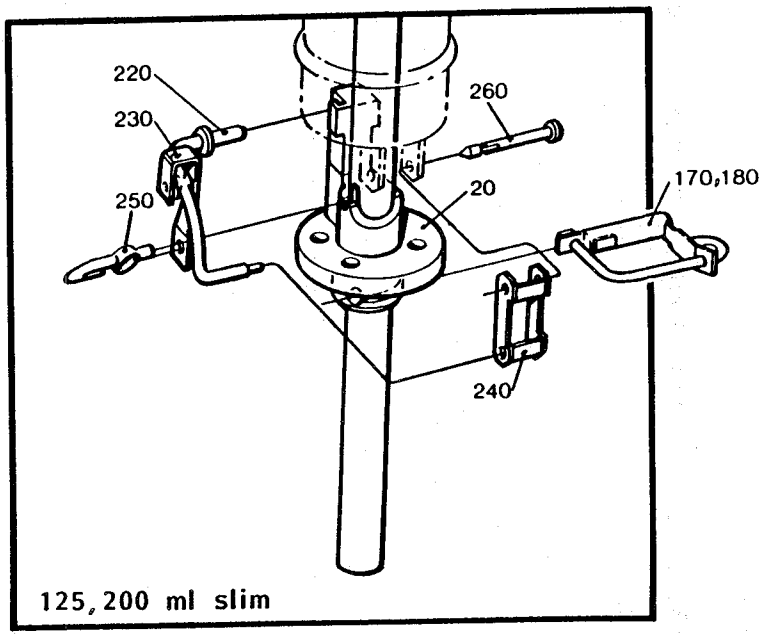
220
230
260
250
20
170,180
240
125, 200 ml slim

From	Pos	Part No	SP	UN	Qty	Description
Volume 125 ml						
	010	490869	S		1	FILLING TUBE LOWER
	020	490850	S		1	FLANGE
	030	272056	S		1	FLOAT
	160	752402	P		1	LOCKING PIN
	170	752402	P		1	LOCKING PIN
	220	271347	S		1	ARM
	230	271348	S		1	LINK
	240	491458	S		1	LINK
	250	271350	P		1	THROTTLE
	260	271351	P		1	SHEAR PIN
Volume 180, 200 ml						
	010	469972-0001	S		1	FILLING TUBE LOWER
	020	469973	S		1	FLANGE
	030	550487	S		1	FLOAT
	100	36816	S		1	LINK
	110	36817	S		1	CLAMPING ELEMENT
	120	36821-0002	P		1	SHEAR PIN
	130	37296	S		1	ARM
	140	445503	P		1	LOCKING PIN LOWER
	150	445505	P		1	LOCKING PIN UPPER
	250	295987	P		1	THROTTLE
Volume 236, 250, 284 ml						
	010	469972-0002	S		1	FILLING TUBE LOWER
	020	469973	S		1	FLANGE
	030	550487	S		1	FLOAT
	100	36816	S		1	LINK
	110	36817	S		1	CLAMPING ELEMENT
	120	36821-0002	P		1	SHEAR PIN
	130	37296	S		1	ARM
	140	445503	P		1	LOCKING PIN LOWER
	150	445505	P		1	LOCKING PIN UPPER
	250	295987	P		1	THROTTLE

From	Pos	Part No	SP	UN	Qty	Description
Volume 200 ml SLIM						
	010	491270	S		1	FILLING TUBE LOWER
	020	491271	S		1	FLANGE
	030	491142	S		1	FLOAT
	160	490871	P		1	LOCKING PIN UPPER
	180	491272	P		1	LOCKING PIN LOWER
	220	271347	S		1	ARM
	230	271348	S		1	LINK
	240	271349	S		1	LINK
	250	491141	S		1	THROTTLE
	260	271351	P		1	SHEAR PIN

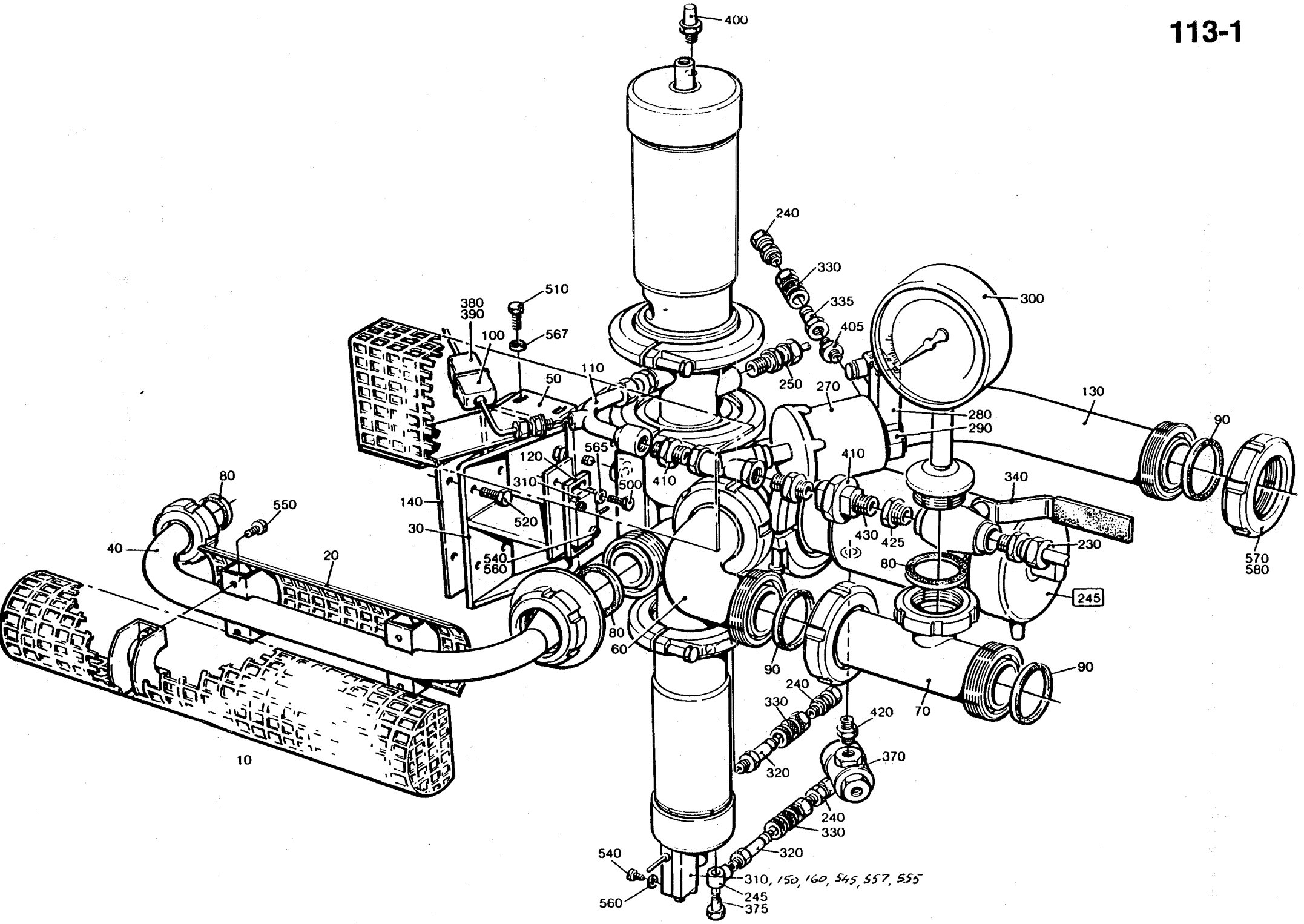
400
240
330
335
405
300
510
380
390
100
567
110
50
250
270
130
90
280
290
565
120
310
500
410
410
340
80
550
140
520
430
425
230
30
40
20
540
560
80
245
570
580
60
90
90
240
330
420
70
320
370
240
330
320
540
560
310, 150, 160, 545, 557, 555
245
375
10

From	Pos	Part No	SP	UN	Qty	Description
	F245	==>113-1.1	C		1	AP-VALVE
		SP- 499255-020V	PU		1	* SEAL KIT
	010	272555	-		1	TOUCH GUARD
	020	272554	-		1	TOUCH GUARD
	030	441723	-		1	BRACKET
	040	490983	-		1	PIPE
	050	490984	-		1	TOUCH GUARD
	060	440978	-		1	ELBOW PIPE
	070	449193	C		1	PRESSURE GAUGE TUBE
	080	12242-0003	P		3	GASKET
	090	12242-0005	P		5	GASKET
	100	37768	P		1	THERMOCOUPLE
	110	295250	S		1	PIPE
	120	297195	-		1	SPACER
	130	469503	-		1	ELBOW PIPE
	140	490985	C		2	SPACER PLATE
	150	440647	-		1	SLEEVE
	160	440731	-		1	PLATE
	230	90030-0109	-		1	PIPE CONNECTION
	240	90224-0307	C		5	CONNECTION
	245	90224-0308	C		1	BANJO CONNECTION
	250	90030-0187	-		2	PIPE CONNECTION
	270	90235-0267	S		1	VALVE
	280	90042-0094	S		1	SOLENOID VALVE
	290	90042-0383	S		1	PLATE
	300	90043-0050	S		1	PRESSURE GAUGE
	310	90044-0104	P		2	PROXIMITY SWITCH
	320	90163-0057	C		4	NIPPLE
	330	90163-0062	C		5	SLEEVE
	335	90163-0074	C		1	NIPPLE
	340	90187-0059	S		1	VALVE
	370	90235-0259	S		1	VALVE
	375	90235-0274	S		1	VALVE
	380	90326-0012	P		1	PROTECTIVE COVER
	390	90326-0020	P		1	SOCKET
	400	90328-0003	S		3	SILENCER
	405	90330-0013	S		1	REDUCTION NIPPLE
	410	90330-0019	S		2	REDUCTION NIPPLE
	420	90330-0032	S		1	NIPPLE
	425	90330-0048	-		1	BUSHING
	430	90330-0062	S		1	COUPLING
	500	312105-0329	-		2	SCREW M6S5X16 A4 80
	510	312105-0364	-		2	SCREW M6S6X10RFR
	520	312105-0451	-		8	SCREW M6S8X20RFR
	540	312115-0228	-		8	SCREW 3X16 A4 80
	545	312115-0305	-		2	SCREW 4X50 A4 80
	550	312115-0329	-		4	SCREW 5X16 A4 80
	555	312155-0532	-		1	SCREW MF6S12X20RFR
	557	315105-0136	-		2	WASHER BRB4,3X8RFR
	560	315105-0124	-		8	WASHER BRB3,2X6RFR
	565	315105-0146	-		2	WASHER BRB5,3X10RFR
	567	315115-0153	-		2	WASHER TBRB6,4X12RFR
	570	342803-0104	-		2	NUT 51
	580	342812-0104	-		2	SLEEVE ANSL.51

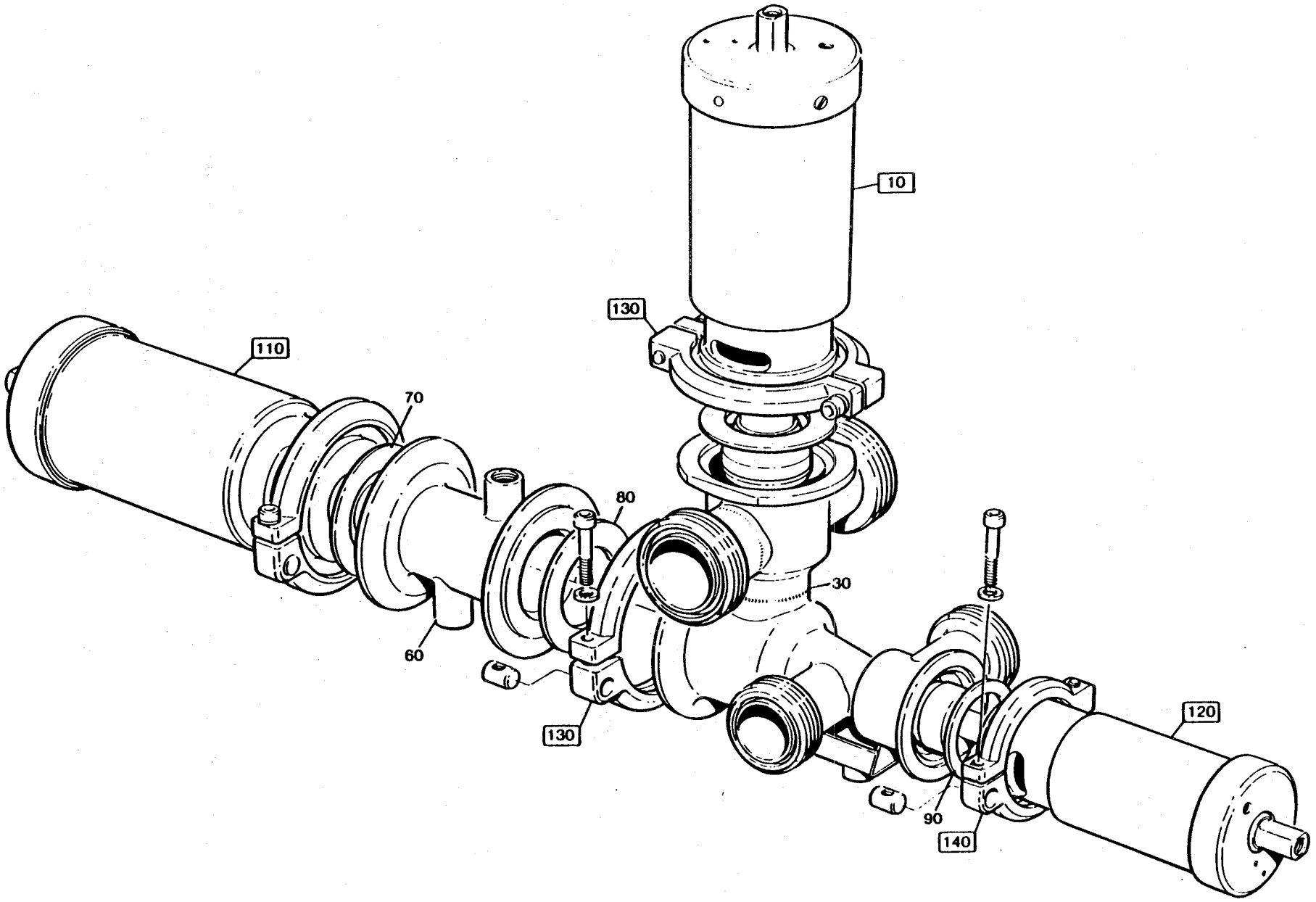
10
130
110
70
80
30
60
130
120
90
140

From	Pos	Part No	SP	UN	Qty	Description
	F010	==>113-1.1.1	-		1	A-CYLINDER
	F110	==>113-1.1.2	-		1	C-CYLINDER
	F120	==>113-1.1.3	-		1	B-CYLINDER
	F130	C- 541163-0101	-		3	CLAMP RING
		532117	-		2	. CLAMP RING
		497748	-		2	. PIN
		541165	-		2	. WASHER
		312115-0459	-		2	. SCREW 8X40 A4 80
	F140	C- 541164-0101	-		1	CLAMP RING
		532118	-		2	. CLAMP RING
		497748	-		2	. PIN
		541165	-		2	. WASHER
		312115-0459	-		2	. SCREW 8X40 A4 80
	030	440631	-		1	VALVE BODY 51
	060	440634	-		1	HOUSE
	070	539212	-		1	GASKET
	080	90207-0363	-		1	GASKET
	090	90207-0365	-		1	GASKET

From	Pos	Part No	SP	UN	Qty	Description

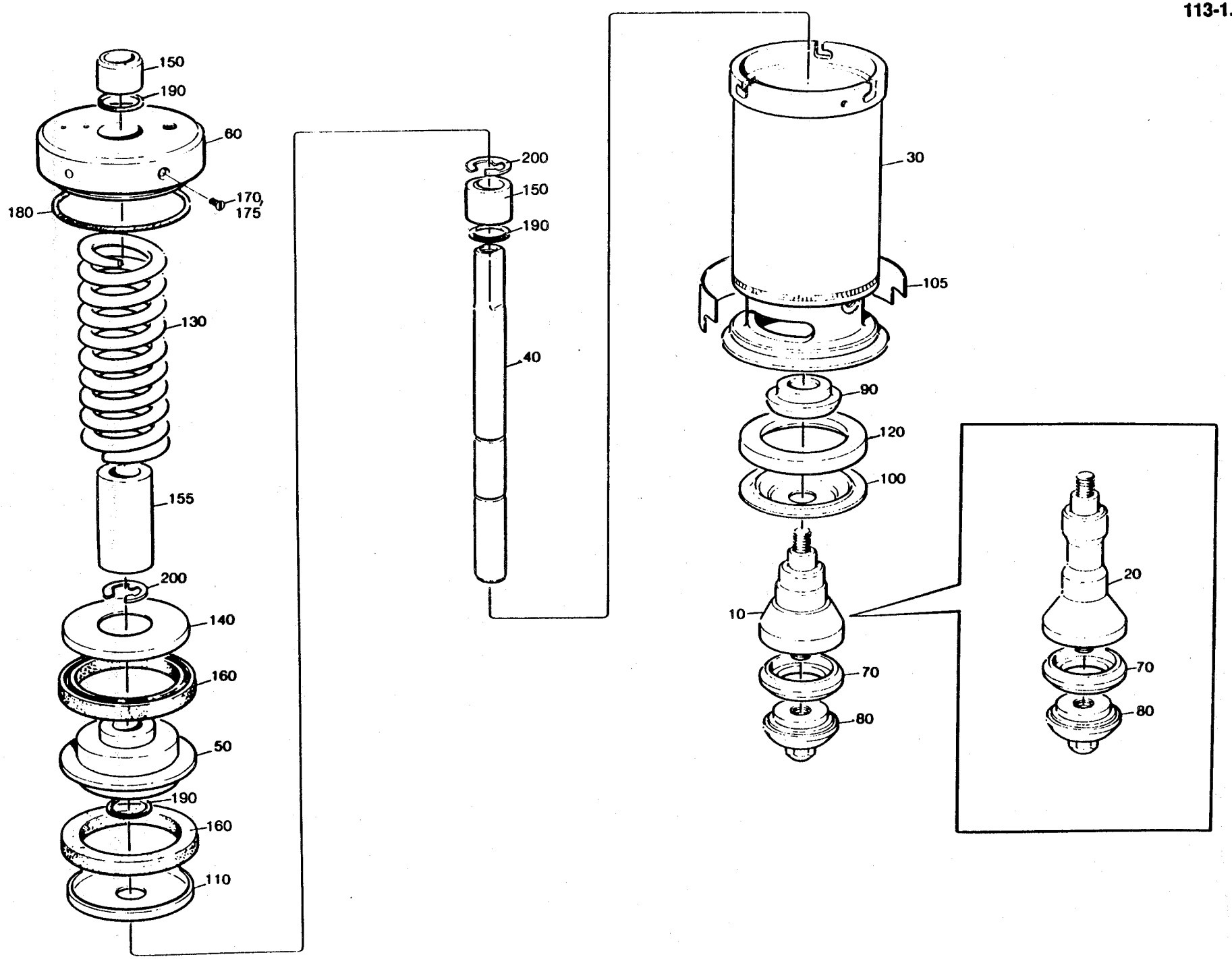
150
190
60
180
170
175
130
155
200
140
160
50
190
160
110
200
150
190
40
30
105
90
120
100
10
70
80
20
70
80

Last Alteration: AM 10455 87-11-11

Corresponding C-lists: 539209-010V
Assembly Drawing: 539209-1

Issue Date: 910408

From	Pos	Part No	SP	UN	Qty	Description
	010	530592	-		1	SEAL RING HOLDER 2"
	020	530595	-		1	SEAL RING HOLDER 3"
	030	440632	-		1	CYLINDER HOUSING
	040	440637	-		1	PISTON ROD
	050	440638	-		1	PISTON
	060	484998	-		1	GABLE
	070	530589	PU		1	SEAL RING
	080	530590	-		1	VALVE CONE
	090	541166	-		1	WASHER
	100	533169	PU		1	DIAPHRAGM
	105	476203	-		1	GUARD
	110	440651	-		1	WASHER
	120	440655	-		1	RING
	130	440663	-		1	COMPRESSION SPRING
	140	484975	-		1	WASHER
	150	497933	-		2	BUSHING
	155	541167	-		1	SPACER SLEEVE
	160	90020-0028	P		2	SLEEVE
	170	312125-0323	-		1	SLOTTED HEAD SCREW
	175	315233-0101	-		1	SEAL RING
	180	315202-0308	P		1	O-RING 84,5X3
	190	315204-0215	P		3	O-RING 19,2X3VITON
	200	315754-0113	P		2	CIRCLIP E 15

From	Pos	Part No	SP	UN	Qty	Description

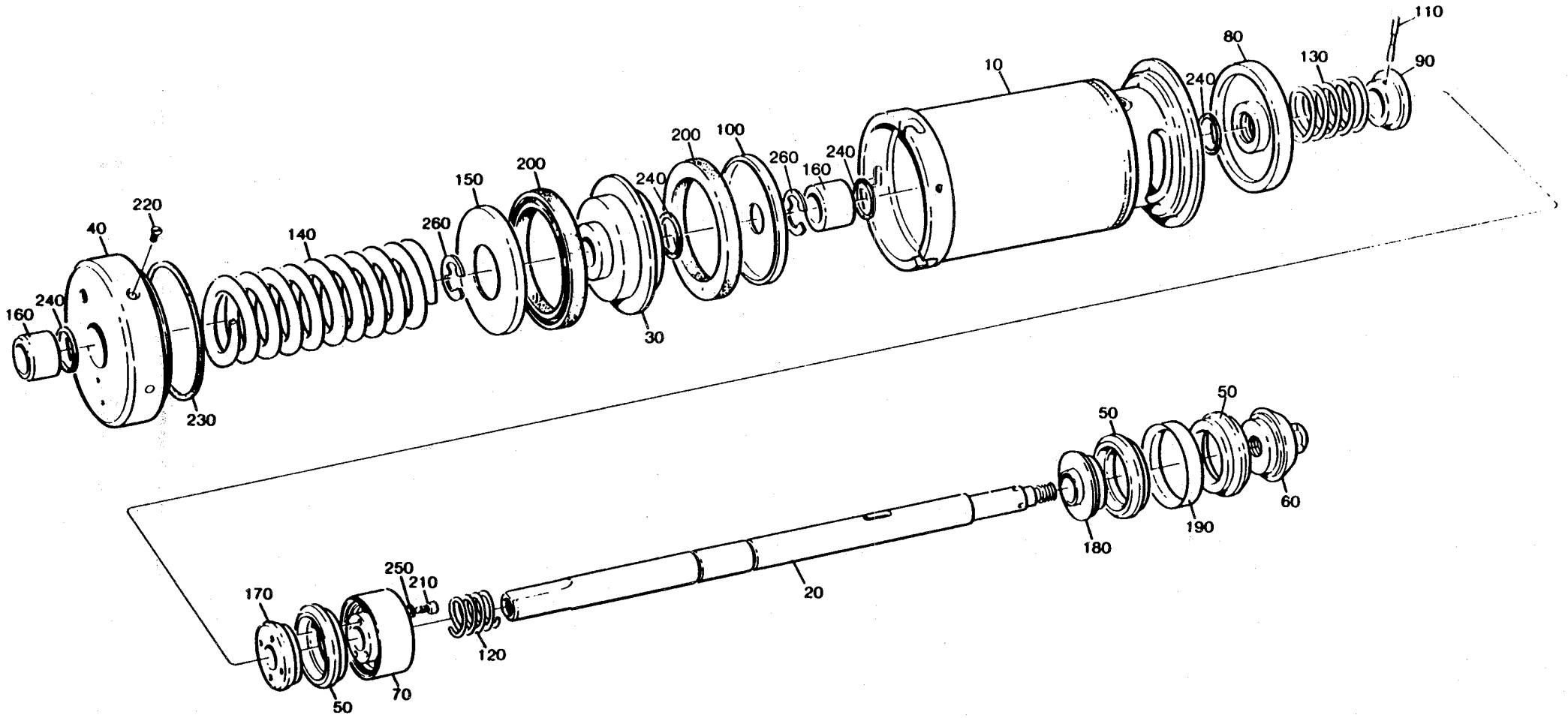
110
80
130
90
10
240
200
100
260
160
240
150
200
240
220
40
140
260
160
240
230
30
50
50
60
190
180
20
250
210
170
120
70
50

Last Alteration: AM 10455 87-11-11

Corresponding C-lists: 539210-010V
Assembly Drawing: 539210-1

Issue Date: 900223

From	Pos	Part No	SP	UN	Qty	Description
	010	440632	-		1	CYLINDER HOUSING
	020	440635	-		1	PISTON ROD
	030	440638	-		1	PISTON
	040	484998	-		1	GABLE
	050	530589	-		3	SEAL RING
	060	530590	-		1	VALVE CONE
	070	530591	-		1	HOLDER
	080	440648	-		1	SEALING WASHER
	090	440650	-		1	WASHER
	100	440651	-		1	WASHER
	110	440659	-		1	CYLINDRICAL PIN
	120	440660	-		1	COMPRESSION SPRING
	130	440661	-		1	COMPRESSION SPRING
	140	440663	-		1	COMPRESSION SPRING
	150	484975	-		1	WASHER
	160	497933	-		2	BUSHING
	170	530597	-		1	WASHER
	180	530598	-		1	WASHER
	190	530599	-		1	RING
	200	90020-0028	-		2	SLEEVE
	210	312115-0291	-		4	SCREW MC6S4X12 A4 80
	220	312155-0323	-		1	SCREW MF6S5X8RFR
	230	315202-0308	-		1	O-RING 84,5X3
	240	315204-0215	-		4	O-RING 19,2X3VITON
	250	315402-0136	-		4	WASHER FBB4,1RFR
	260	315754-0113	-		2	CIRCLIP E 15

From	Pos	Part No	SP	UN	Qty	Description

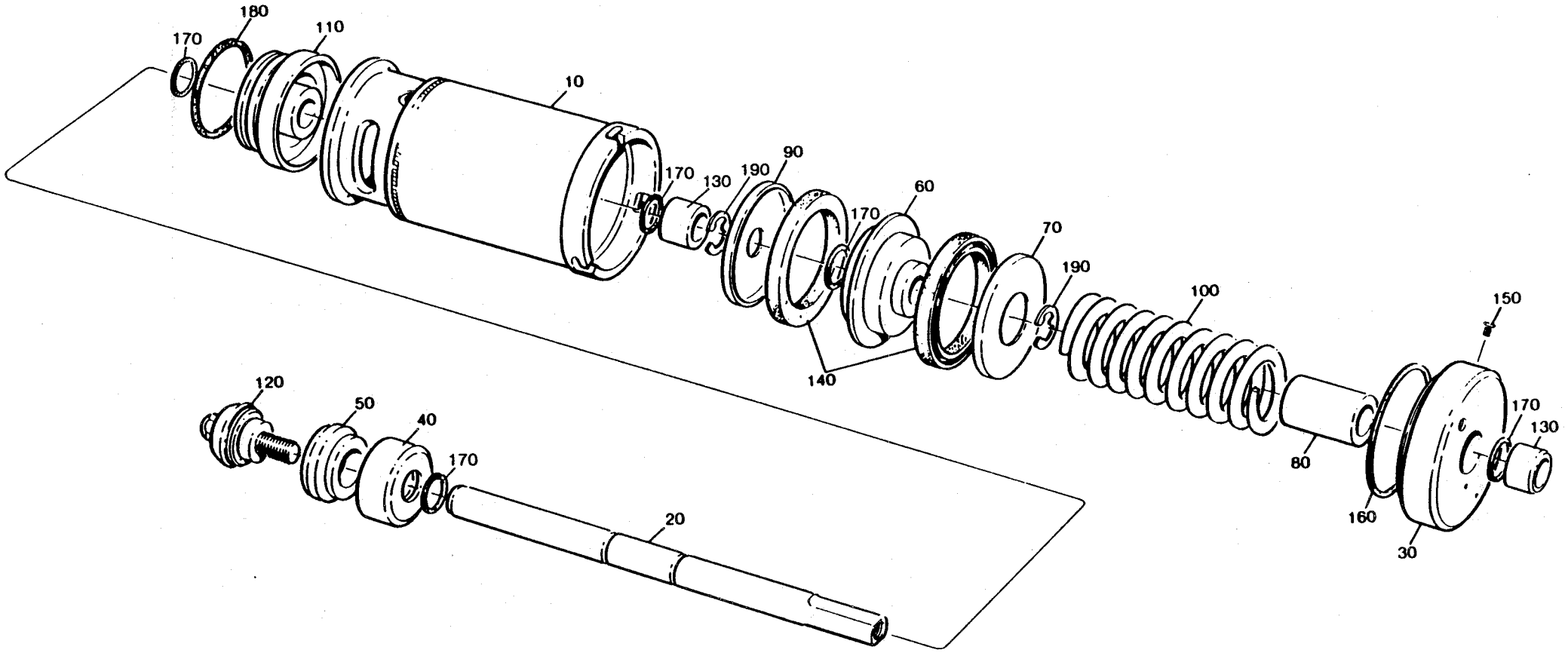
180
170
110
10
170
130
190
90
60
170
70
190
100
150
140
120
50
40
170
20
80
160
30
170
130

From	Pos	Part No	SP	UN	Qty	Description
	F005	==>113-1.1	C		1	AP-VALVE
		SP- 499255-020V	PU		1	* SEAL KIT
	010	272555	-		1	TOUCH GUARD
	020	272554	-		1	TOUCH GUARD
	030	441723	-		1	BRACKET
	040	490983	-		1	PIPE
	080	752176	-		1	PROTECTIVE COVER
	090	752691	-		1	PIPE
	100	440978	-		1	ELBOW PIPE
	110	449193	C		1	PRESSURE GAUGE TUBE
	130	752692	-		1	PIPE
	150	12242-0003	P		3	GASKET
	160	12242-0005	P		5	GASKET
	170	37768	P		1	THERMOCOUPLE
	180	297195	-		1	SPACER
	190	469503	-		1	ELBOW PIPE
	200	440647	-		1	SLEEVE
	210	440731	-		1	PLATE
	220	490985	C		2	SPACER PLATE
	240	752711	-		1	PIPE
	300	90030-0109	-		1	PIPE CONNECTION
	310	90224-0307	C		4	CONNECTION
	320	90224-0308	C		1	BANJO CONNECTION
	330	90030-0088	-		2	PIPE CONNECTION
	340	90030-0180	-		1	PIPE CONNECTION
	350	90030-0187	-		2	PIPE CONNECTION
	390	90043-0050	S		1	PRESSURE GAUGE
	400	90044-0104	P		2	PROXIMITY SWITCH
	410	90163-0057	C		4	NIPPLE
	420	90163-0062	C		4	SLEEVE
	440	90187-0059	S		1	VALVE
	450	90235-0259	S		1	VALVE
	460	90235-0274	S		1	VALVE
	470	90326-0012	P		1	PROTECTIVE COVER
	480	90326-0020	P		1	SOCKET
	490	90328-0003	S		3	SILENCER
	510	90330-0106	-		1	PIPE CONNECTION
	530	90330-0021	-		1	NIPPLE
	540	90330-0032	S		1	NIPPLE
	550	90360-0009	-		1	STEAM TRAP 1/4 TD 18
	570	90337-0331	-		1	FILTER HOUSING
	580	90337-0315	-		1	FILTER
	600	312105-0329	-		2	SCREW M6S5X16 A4 80
	620	312105-0451	-		8	SCREW M6S8X20RFR
	640	312115-0228	-		8	SCREW 3X16 A4 80
	650	312115-0305	-		2	SCREW 4X50 A4 80
	660	312115-0329	-		5	SCREW 5X16 A4 80
	690	312155-0532	-		1	SCREW MF6S12X20RFR
	700	315105-0136	-		2	WASHER BRB4,3X8RFR
	710	315105-0124	-		8	WASHER BRB3,2X6RFR
	720	315105-0146	-		2	WASHER BRB5,3X10RFR
	740	342803-0104	-		2	NUT 51
	750	342812-0104	-		2	SLEEVE ANSL.51

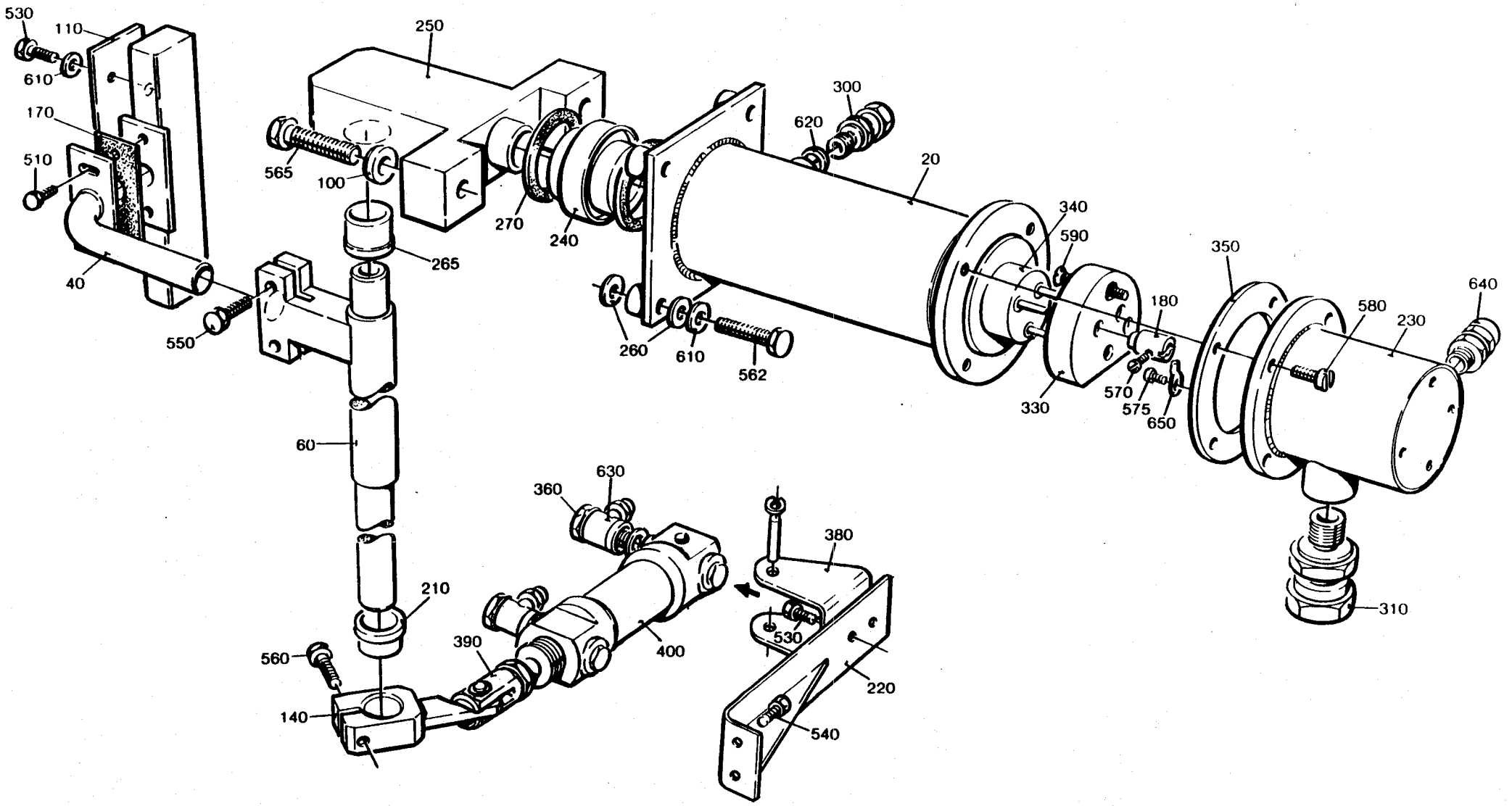
530
110
610
170
510
40
550
250
565
100
270
240
265
60
210
560
140
390
360
630
400
380
530
220
540
300
620
20
340
590
260
610
562
330
180
570
575
650
350
580
230
640
310

From	Pos	Part No	SP	UN	Qty	Description
-080V	020	272285	C		1	HEATING PIPE
090V-	020	751733	C		1	HEATING PIPE
	040	256112	C		1	BRACKET
	050	256689	S		1	AIR NOZZLE
	060	272948-0003	S		1	SHAFT
	100	315125-0165	-		2	WASHER SB 8,4X26X5 RFR
	110	491097	S		1	HEAT GUARD
	140	491545	C		1	BRACKET
	170	751015	P		1	GASKET
	180	266739	P		3	CABLE GLAND
	210	271269	S		1	BUSHING
	220	491224	-		1	BRACKET
	230	491223	C		1	COVER
	240	295936	S		1	BUSHING
	250	272287	-		1	AXLE SUPPORT
	260	751018	P		8	WASHER
	265	295910	S		1	BUSHING
	270	751023	P		2	GASKET
	300	90030-0184	-		1	PIPE CONNECTION
	310	90030-0187	-		1	PIPE CONNECTION
	330	90125-0020	S		1	PLATE
		270926	S		6	* NUT
		270927	S		3	* SCREW
		294464	S		1	* BASE PLATE
	340	90206-0031	PU		1	HEATING ELEMENT
	350	90206-0322	P		1	GASKET
	360	90235-0282	S		2	VALVE
	380	90239-0487	-		1	BRACKET
	390	90239-0532	S		1	
	400	90239-0847	S		1	CYLINDER
	510	312105-0287	-		2	SCREW M6S4X8 A4 80
	530	312105-0364	-		4	SCREW M6S6X10RFR
	540	312105-0366	-		2	SCREW M6S6X12RFR
	550	312105-0368	-		2	SCREW M6S6X16RFR
	560	312105-0370	-		1	SCREW M6S6X20RFR
	562	312105-0372	-		4	SCREW M6S6X25RFR
	565	312105-0455	-		2	SCREW M6S8X30RFR
	570	312125-0220	-		3	SLOTTED HEMCS3X6RFR
	575	312125-0285	-		1	SLOTTED HEMCS4X6RFR
	580	312125-0291	-		4	SLOTTED HEMCS4X12RFR
	590	312145-0228	-		3	SLOTTED HEMFS3X16RFR
	610	315105-0153	-		6	WASHER BRB6,4X12RFR
	620	315234-0109	S		1	SEAL RING R1/8"
	630	342797-0121	S		2	BANJO CONNSINGEL 6-1/8
	640	352103-0106	-		1	CABLE GLANR.18,6/5-10
	650	353104-0130	P		1	CABLE SHOEYAV 14 M 43!

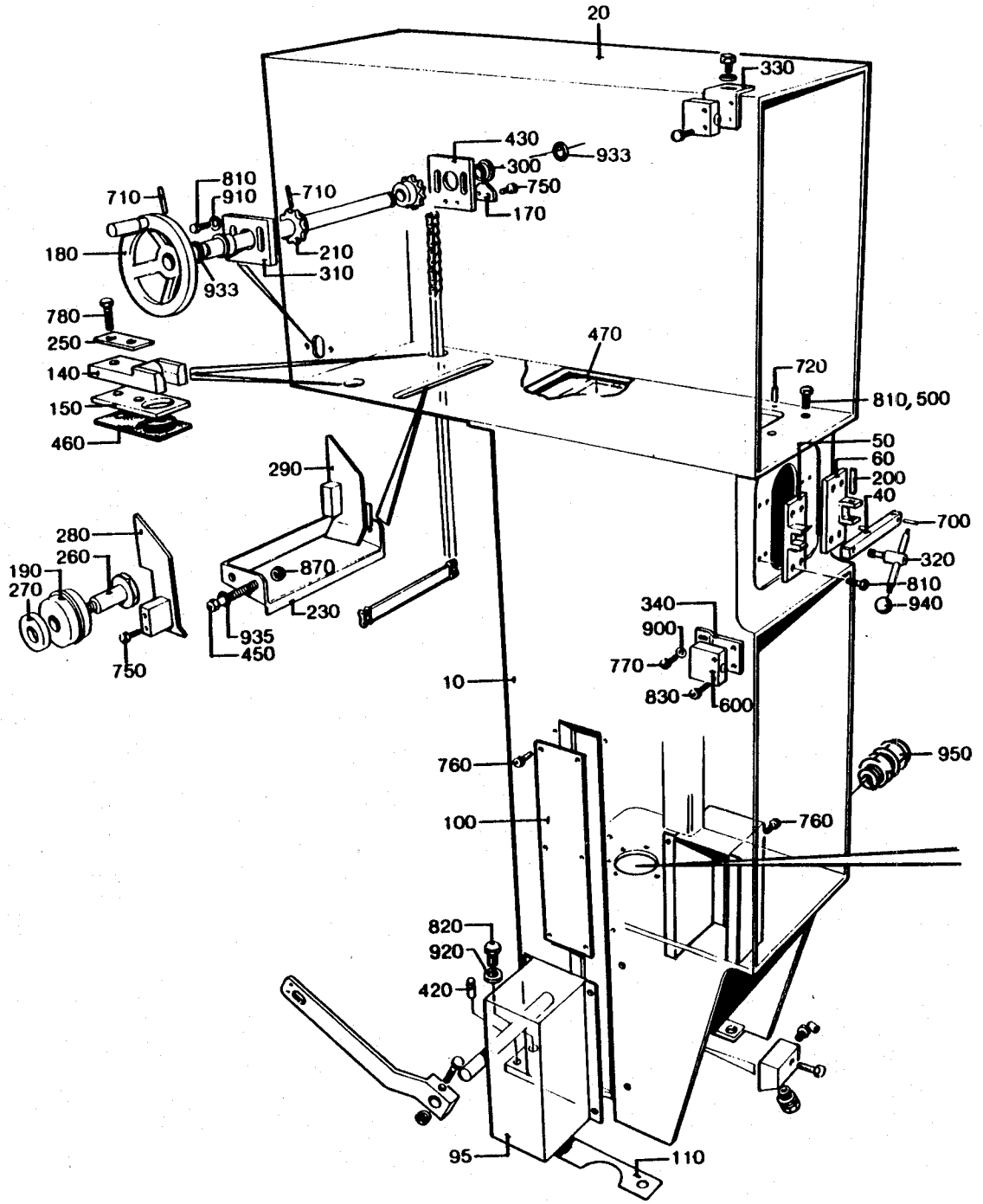
20
330
430
933
300
750
170
710
810
910
710
180
210
310
933
780
250
140
150
460
470
720
810, 500
50
60
200
40
700
320
810
940
290
280
260
190
270
870
230
935
450
750
340
900
770
830
600
10
760
100
950
760
820
920
420
95
110

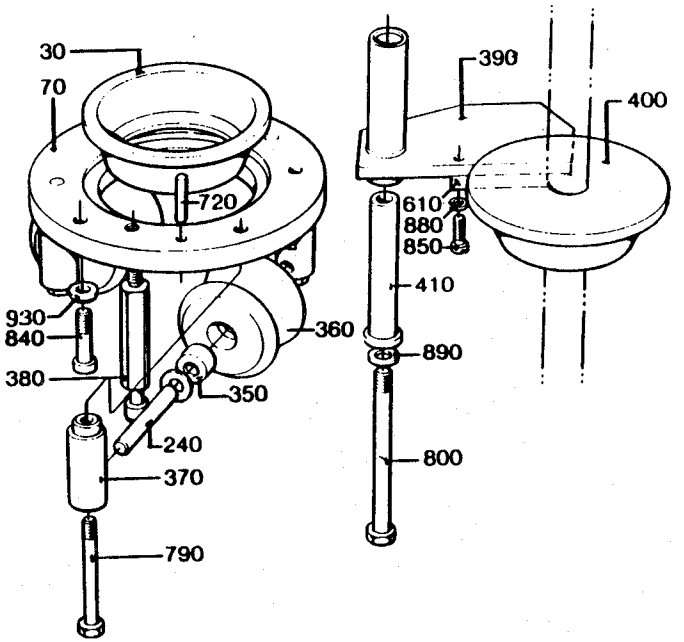
30
70
720
930
840
380
360
350
240
370
790
390
400
610
880
850
410
890
800

From	Pos	Part No	SP	UN	Qty	Description
Volume 125 ml						
	010	490917	-		1	COLUMN
	020	490894	-		1	OVER HOUSE
	030	490900	P		1	SEAL RING
	070	752892	-		1	RING
	240	490903	P		2	SHAFT
	350	751230	P		4	PLAIN BEARING
	360	441876	P		2	ROLLER
	370	490902	-		4	AXLE SUPPORT
-080V	380	751477	-		2	PIN
090V-	380	752519-0001	-		2	PIN
-080V	390	490904	-		1	ARM
090V-	390	553808	-		1	ARM
-080V	410	456803	C		1	PIVOT PIN
090V-	410	978384	C		1	PIVOT PIN
-080V	800	312105-0384	-		1	SCREW M6S6X70RFR
090V-	800	312105-0386	-		1	SCREW M6S6X80RFR
Volume 180 - 284 ml						
	010	490918	-		1	COLUMN
	020	490895	-		1	OVER HOUSE
	030	273953	P		1	SEAL
	070	456794	-		1	RING
	240	263655-0006	P		2	SHAFT
	360	456796	P		2	ROLLER
	370	456797	-		4	AXLE SUPPORT
-080V	380	456798	-		2	PIN
090V-	380	752519-0002	-		2	PIN
	390	456801	-		1	ARM
	410	456803	C		1	PIVOT PIN
	800	312105-0384	-		1	SCREW M6S6X70RFR
Volume 200 ml SLIM						
	010	490919	-		1	COLUMN
	020	490894	-		1	OVER HOUSE
	030	490901	P		1	SEAL RING
	070	490899	-		1	RING
	240	490903	P		2	SHAFT
	350	751230	P		4	PLAIN BEARING
	360	456996	P		2	ROLLER
	370	490902	-		4	AXLE SUPPORT
-080V	380	751477	-		2	PIN
090V-	380	752519-0001	-		2	PIN
-080V	390	490904	-		1	ARM
090V-	390	555764	-		1	ARM
-080V	410	456803	C		1	PIVOT PIN
090V-	410	553809	C		1	PIVOT PIN
-080V	800	312105-0384	-		1	SCREW M6S6X70RFR
090V-	800	312105-0386	-		1	SCREW M6S6X80RFR
Common Parts						
	040	295426	-		1	CLAMP
	050	295427	-		1	LOCK
	060	295428	-		1	HINGE
	095	490964	C		2	COVER
	100	456890	-		2	COVER PLATE
	110	469092	-		2	SHIM
	130	2033-0007	-		8	WASHER
	140	247349	P		2	GUIDE
	150	491602	-		2	GASKET HOLDER
	170	247355	-		1	LOCK WASHER
	180	247358	C		1	KNOB
	190	255986	S		2	WHEEL
	200	256163	S		1	SHAFT
	210	247357	S		2	SPROCKET
	220	751131	S		1	SHAFT
	230	256170	-		2	DRIP PLATE
	250	267033	-		2	WASHER
	260	271863	S		2	SHAFT
	270	271864	-		2	WASHER
	280	272002	-		1	PROTECTIVE COVER LEFT
	290	272003	-		1	PROTECTIVE COVER RIGHT
	300	279008	S		2	BUSHING
	310	279010	-		1	BEARING PLATE
	320	295429	C		1	HANDLE
	330	295789	-		2	BRACKET
	340	295790	-		1	BRACKET
	400	751730	C		1	CLAMP RING
	420	469159	-		2	PIN
	430	469521	-		1	BEARING PLATE
	450	491314	-		8	SCREW
	460	491128	P		2	GASKET
	470	491418-0002	P		1	O-RING
	480	751684	S		1	STOP LUG
	490	441737	-		1	WASHER
	500	28036	-		6	WASHER
	600	90044-0084	P		3	MICRO SWITCH
	610	90044-0104	-		1	PROXIMITY SWITCH
	700	311103-0272	-		1	CYLINDRICACPR4M6X20RFR
	710	311103-0276	-		3	CYLINDRICACPR4M6X30RFR

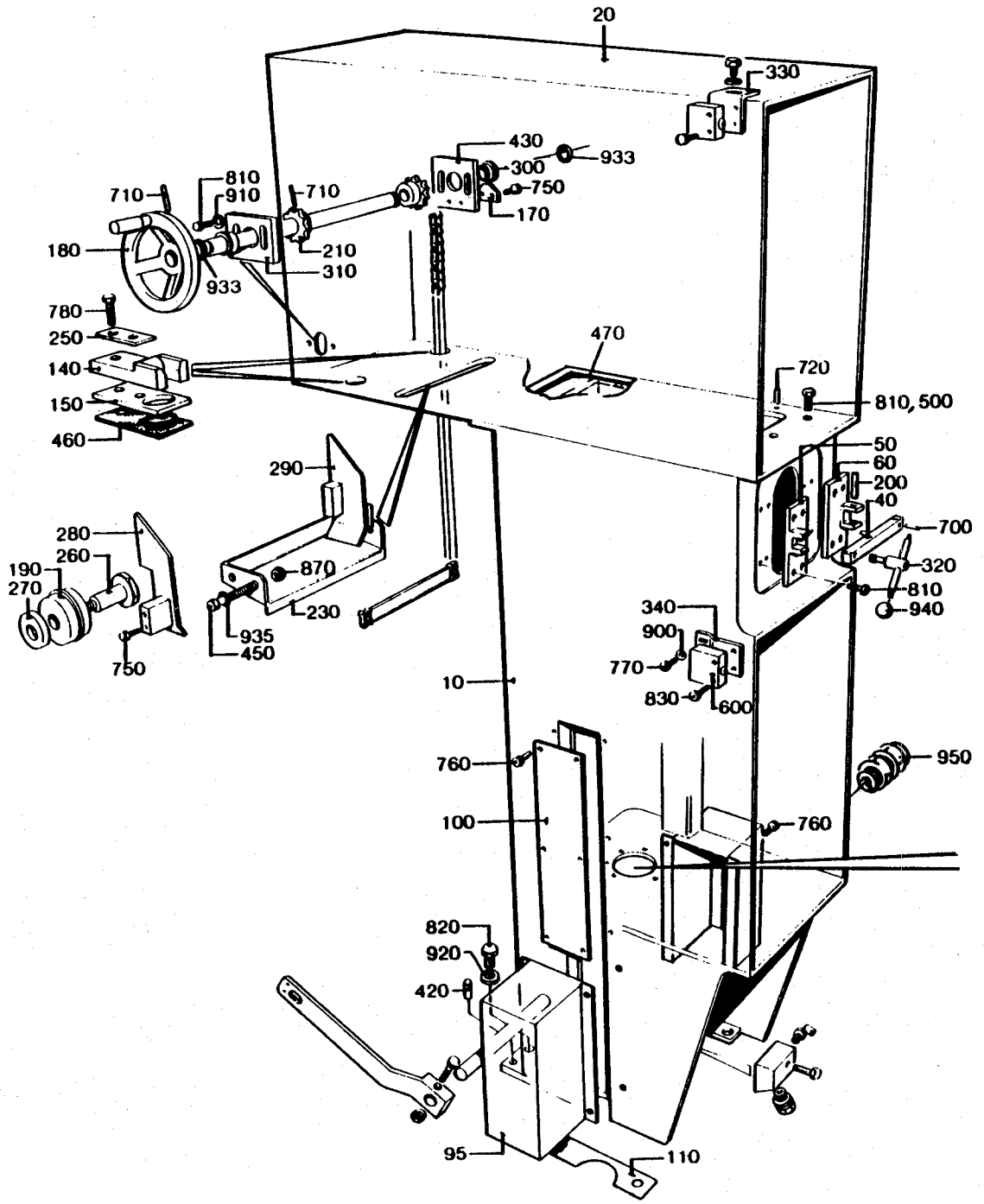
20
330
430
933
300
750
170
710
810
910
710
180
210
310
933
780
250
140
150
460
470
720
810, 500
50
60
200
40
700
320
810
940
290
280
260
190
270
870
230
935
450
750
340
900
770
830
600
10
760
100
760
950
820
920
420
95
110

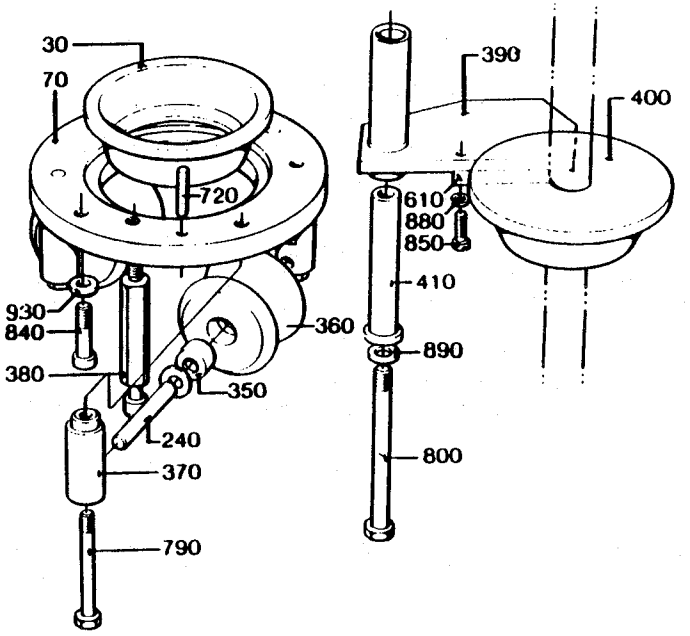
30
70
720
930
840
380
360
350
240
370
790
390
400
610
880
850
410
890
800

From	Pos	Part No	SP	UN	Qty	Description
	720	311103-0308	-		2	CYLINDRICACPR5M6X16RFR
	730	311103-0310	-		2	CYLINDRICACPR5M6X20RFR
	750	312105-0327	-		6	SCREW M6S5X12 A4 80
	760	312105-0364	-		20	SCREW M6S6X10RFR
	770	312105-0368	-		6	SCREW M6S6X16RFR
	780	312105-0372	-		4	SCREW M6S6X25RFR
	790	312105-0378	-		4	SCREW M6S6X40RFR
	810	312105-0451	-		24	SCREW M6S8X20RFR
	815	312105-0453	-		2	SCREW M6S8X25RFR
	820	312105-0499	-		7	SCREW M6S10X40RFR
	830	312115-0329	-		6	SCREW 5X16 A4 80
	840	312115-0370	-		2	SCREW 6X20 A4 80
	850	312125-0230	-		2	SLOTTED HEMCS3X20RFR
	860	312125-0287	-		4	SLOTTED HEMCS4X8RFR
	870	312605-0316	-		10	NUT M6M6RFR
	880	315105-0124	-		2	WASHER BRB3,2X6RFR
	890	315105-0153	-		3	WASHER BRB6,4X12RFR
	900	315115-0153	-		6	WASHER TBRB6,4X12RFR
	910	315115-0165	-		16	WASHER TBRB8,4X16RFR
	920	315115-0173	-		7	WASHER B 10,5X22 RFR
	930	315125-0153	-		2	WASHER SB 6,4X22X4 RFR
	933	315204-0109	P		2	O-RING 11,1X1,6VITON
	935	315204-0208	P		8	O-RING 9,3X2,4VITON
	940	318800-0103	S		2	KNOB LA D.25-M6
	950	352103-0101	-		3	CABLE GLANR.15,2/4-8
	960	352110-0100	-		4	CLIP TK 5-7

From	Pos	Part No	SP	UN	Qty	Description

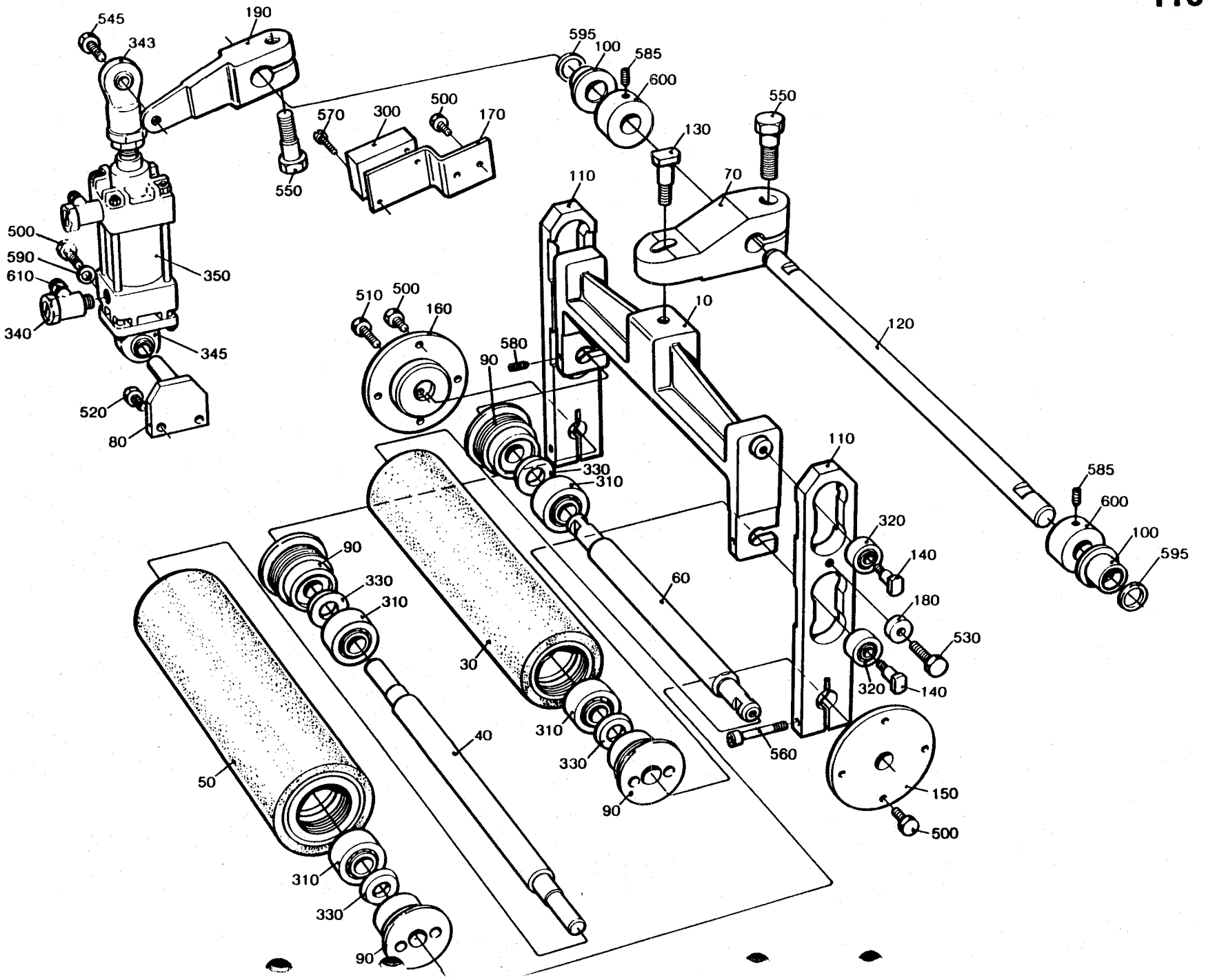
545
343
190
595
100
585
600
550
570
300
500
170
550
130
70
110
500
590
610
350
340
345
520
80
510
500
160
580
90
10
120
110
330
310
585
600
100
595
320
140
180
530
320
140
60
90
330
310
30
310
330
90
40
560
50
150
500
310
330
90

From	Pos	Part No	SP	UN	Qty	Description
	010	G- 272926	-		1	FORK
	030	491396	S		1	SQUEE-GEE ROLLER
	040	491392	C		1	SHAFT
	050	491397	S		1	SQUEE-GEE ROLLER
	060	271893	S		1	SHAFT
	070	272927	-		1	PRESSURE ARM
	080	441578-0002	-		1	CYLINDER BRACKET
	090	247170	C		4	BEARING COVER
	100	271269	S		2	BUSHING
	110	271895	-		2	BRACKET
	120	751132	C		1	SHAFT
	130	271898	C		1	SCREW
	140	271899	C		4	SCREW
	150	491393	-		1	AXLE SUPPORT
	160	272018	-		1	AXLE SUPPORT
	170	272033	-		1	BRACKET
	180	272369	-		2	SPACER
	190	G- 441904	-		1	ARM
	300	90044-0104	P		1	PROXIMITY SWITCH
	310	90214-0098	S		4	BALL BEARING
	320	90214-0040	P		4	BALL BEARING
	330	90214-0303	P		4	RING
	340	90235-0282	-		2	VALVE
	343	90239-0405	S		1	ROD END
	345	90239-0453	S		1	BRACKET
	350	90239-0773	S		1	CYLINDER
		90239-0442	S		1	* SEAL KIT
	360	90296-0009	-		X	GREASE
	500	312105-0364	-		11	SCREW M6S6X10RFR
	510	312105-0370	-		1	SCREW M6S6X20RFR
	520	312105-0447	-		2	SCREW M6S8X12RFR
	530	312105-0453	-		2	SCREW M6S8X25RFR
	545	312105-0491	-		1	SCREW M6S10X20RFR
	550	312105-0536	-		2	SCREW M6S12X30RFR
	560	312115-0457	-		2	SCREW A4 80
	570	312125-0228	-		2	SLOTTED HEMCS3X16RFR
	580	312318-0327	-		2	GRUB SCREW SK6SS5X12RFR
	585	312318-0362	-		4	GRUB SCREW SK6SS6X8RFR
	590	315105-0153	-		1	WASHER BRB6,4X12RFR
	595	315204-0111	-		2	O-RING 1X1,6 VITON
	600	315742-0112	-		2	RETAINING 16SMS199RFR
	610	342797-0121	S		2	BANJO CONNSINGEL 6-1/8

From	Pos	Part No	SP	UN	Qty	Description

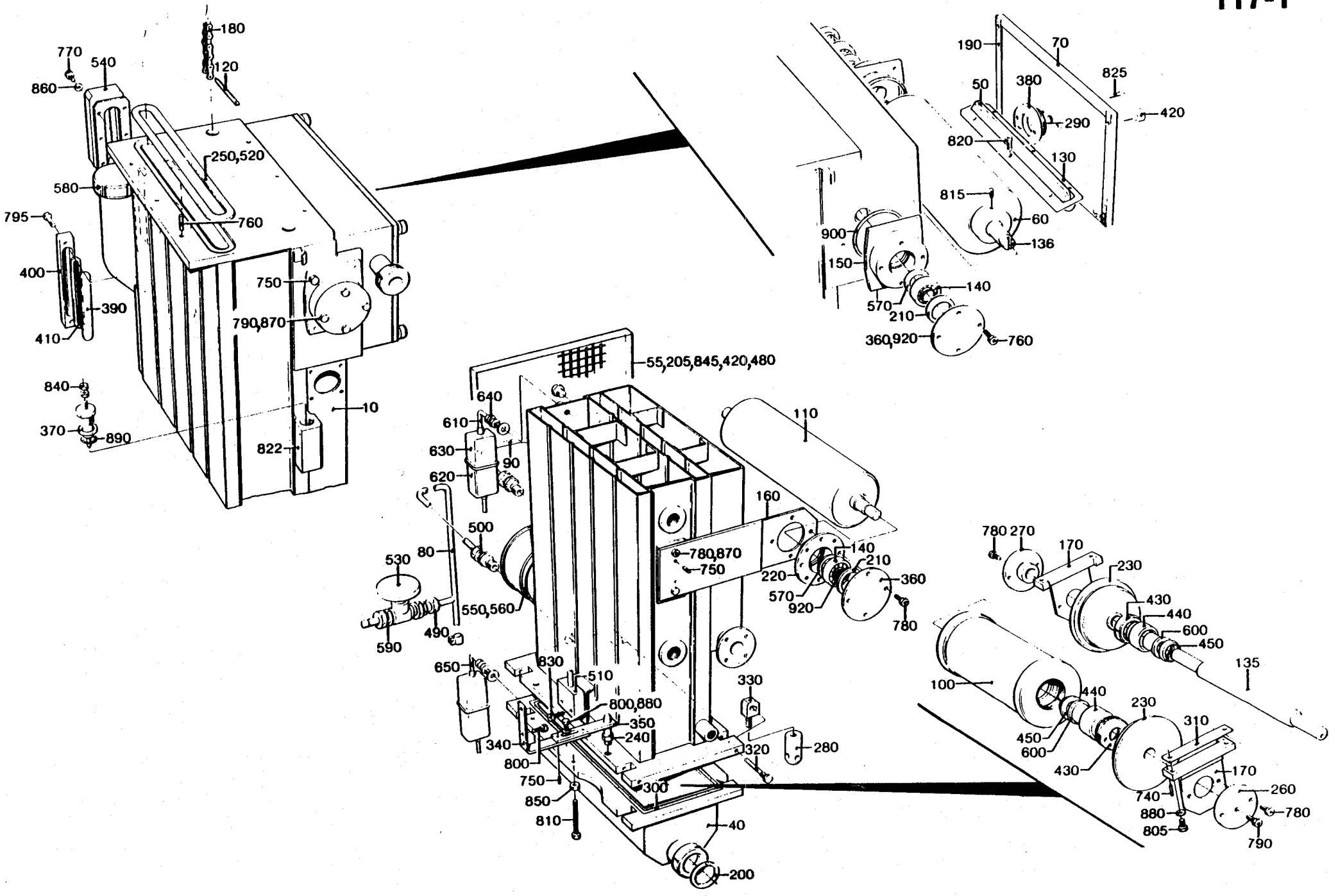
180
770
540
120
860
250,520
580
760
795
400
750
390
790,870
410
840
10
370
890
822
190
70
825
50
380
420
290
820
130
815
60
900
136
150
140
570
210
360,920
760
55,205,845,420,480
640
610
110
630
90
620
160
500
780,870
530
80
750
140
210
220
360
570
920
780
550,560
590
490
650
830
510
330
800,880
350
240
340
320
280
800
750
300
850
810
40
200
780 270
170
230
430
440
600
450
135
100
440
230
310
450
600
430
170
740
260
880
780
805
790

From	Pos	Part No	SP	UN	Qty	Description
Machine with Pull Tab						
	140	484190	S		2	BALL BEARING
	210	247172	S		2	SPACER RING
	360	456516	C		2	BEARING COVER
	570	90214-0303	P		6	RING
	750	311103-0270	-		8	CYLINDRICACPR4M6X16RFR
	780	312105-0366	-		16	SCREW M6S6X12RFR
	790	312105-0368	-		6	SCREW M6S6X16RFR
	870	315105-0153	-		5	WASHER BRB6,4X12RFR
	920	315751-0112	S		1	LOCK RING SGA15 RFR
Machine without Pull Tab						
	110	456994	S		1	BENDING ROLLER
	140	484190	S		4	BALL BEARING
	160	491599	-		2	BRACKET
	210	247172	S		4	SPACER RING
	220	247173	C		2	BEARING SEAT
	360	456516	C		4	BEARING COVER
	570	90214-0303	P		8	RING
	750	311103-0270	-		12	CYLINDRICACPR4M6X16RFR
	780	312105-0366	-		20	SCREW M6S6X12RFR
	790	312105-0368	-		14	SCREW M6S6X16RFR
	870	315105-0153	-		9	WASHER BRB6,4X12RFR
	920	315751-0112	S		2	LOCK RING SGA15 RFR
Common Parts						
	010	491592	-		1	BATH
	040	491593	-		1	COVER
	050	273954	P		1	SEAL
	055	751692	-		1	TOUCH GUARD
	060	491594	-		1	BENDING ROLLER
	070	491595	-		1	LID
	080	491596	-		1	PIPE
	090	491597	-		1	PIPE
	100	295111	S		1	BENDING ROLLER
	120	456995	S		1	CARRIER
	130	456784	-		1	LID
	135	491362	C		1	SHAFT
	136	491737	-		1	SHAFT
	150	491598	-		2	BEARING SEAT
	170	491600	-		2	BRACKET
	180	491601	S		2	ROLLER CHAIN
		484204	P		0	* LINK
	190	751331	P		1	GASKET
	200	12242-0003	PU		2	GASKET
	205	27815	S		4	WASHER
	230	247239	S		2	WHEEL
	240	247248	-		2	PIN
	250	256005	S		1	GASKET
	260	256006	-		1	AXLE SUPPORT
	270	256007	-		1	AXLE SUPPORT
	280	256010	S		4	NUT
	290	273937	P		1	DIAPHRAGM
	300	295388	PU		1	GASKET
	310	441474	-		2	SHIM
	320	441636	-		4	SHAFT
	330	441637	-		4	PIN
	340	456472	-		2	BRACKET
	350	456474	-		2	PLATE
	370	458962-0001	S		1	ELECTRODE
	380	469982	-		1	WASHER
	390	543470	S		2	LEVEL GLASS
	400	476398	-		2	LID
	410	476399	P		2	GASKET
	420	491126	-		6	SCREW
	430	491363	-		2	NUT
	440	491364	-		2	BEARING HOLDER
	450	491365	-		2	THRUST BEARING
	470	751698	-		2	HOLDER
	480	751699	-		2	WASHER
	490	90030-0109	S		1	PIPE CONNECTION
	500	90030-0187	S		2	PIPE CONNECTION
	510	90044-0084	P		2	MICRO SWITCH
	520	90153-0016	-		X	ADHESIVE
	530	90187-0029	S		1	VALVE
	540	90199-0010	S		1	LEVEL GLASS
	550	90206-0326	-		1	CONNECTION BOX
	560	90206-0070	PU		1	HEATING ELEMENT
	580	90217-0035	-		1	NUT
	590	90224-0078	-		1	CONNECTION
	600	90240-0146	S		2	BUSHING
	610	90326-0019	P		1	THERMOELEMENT
	620	90326-0020	P		2	SOCKET
	630	90326-0012	P		2	PROTECTIVE COVER
	640	90326-0017	P		1	GLAND
	650	90326-0052	P		1	THERMO ELEMENT
	740	311103-0236	-		4	CYLINDRICACPR3M6X16RFR
	760	311103-0310	-		2	CYLINDRICACPR5M6X20RFR

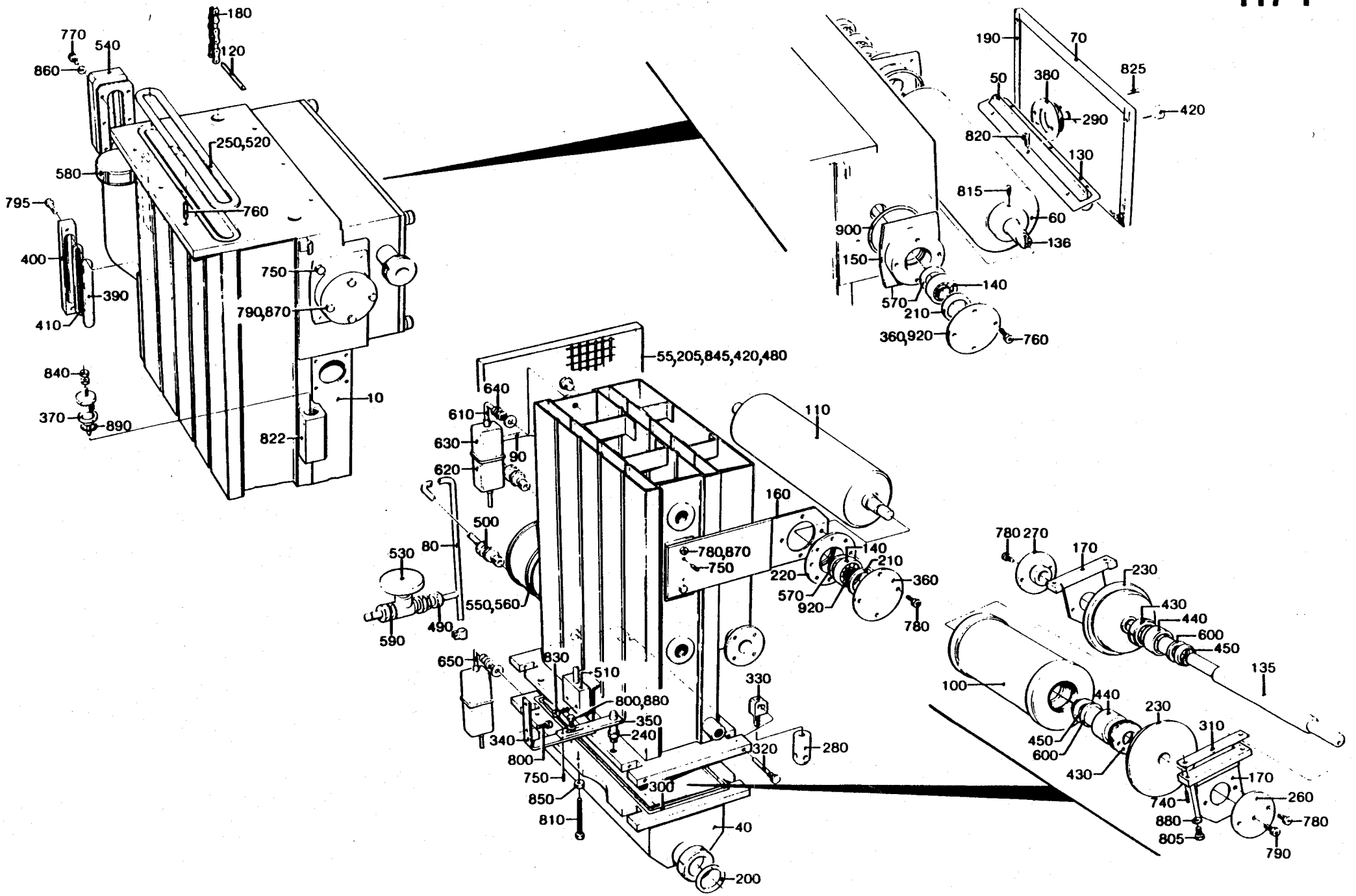
180
120
770
540
860
250,520
580
760
795
400
390
750
790,870
410
840
370
890
10
822
55,205,845,420,480
640
610
630
620
90
500
80
530
550,560
490
590
650
830
510
800,880
350
240
340
800
750
850
810
300
320
280
330
110
160
780,870
750
140
210
220
570
920
360
780
40
200
190
70
825
50
380
290
420
820
130
815
60
136
900
150
140
570
210
360,920
760
780 270
170
230
430
440
600
450
135
100
440
230
310
450
600
430
170
740
260
880
780
805
790

From	Pos	Part No	SP	UN	Qty	Description
	770	312105-0332	-		6	SCREW M6S5X22RFR
	795	312105-0370	-		4	SCREW M6S6X20RFR
	800	312105-0449	-		10	SCREW M6S8X16RFR
	805	312105-0451	-		4	SCREW M6S8X20RFR
	810	312109-0463	-		2	SCREW M6S8X60H A4 80
	815	312318-0368	-		2	GRUB SCREW SK6SS6X16RFR
	820	312115-0366	-		6	SCREW 6X12 A4 80
	822	312125-0285	-		1	SLOTTED HEMCS4X6RFR
	825	312125-0331	-		2	SLOTTED HEMCS5X20RFR
	830	312115-0329	-		4	SCREW 5X16 A4 80
	840	312605-0312	-		2	NUT M6M4RFR
	845	312605-0314	-		4	NUT M6M5RFR
	850	312605-0318	-		2	NUT M6M8RFR
	860	315105-0146	-		6	WASHER BRB5,3X10RFR
	880	315105-0165	-		6	WASHER BRB8,4X16RFR
	890	315204-0213	P		1	O-RING 15,3X2,4VITON
	900	315204-0305	P		2	O-RING 69,5X3

From	Pos	Part No	SP	UN	Qty	Description

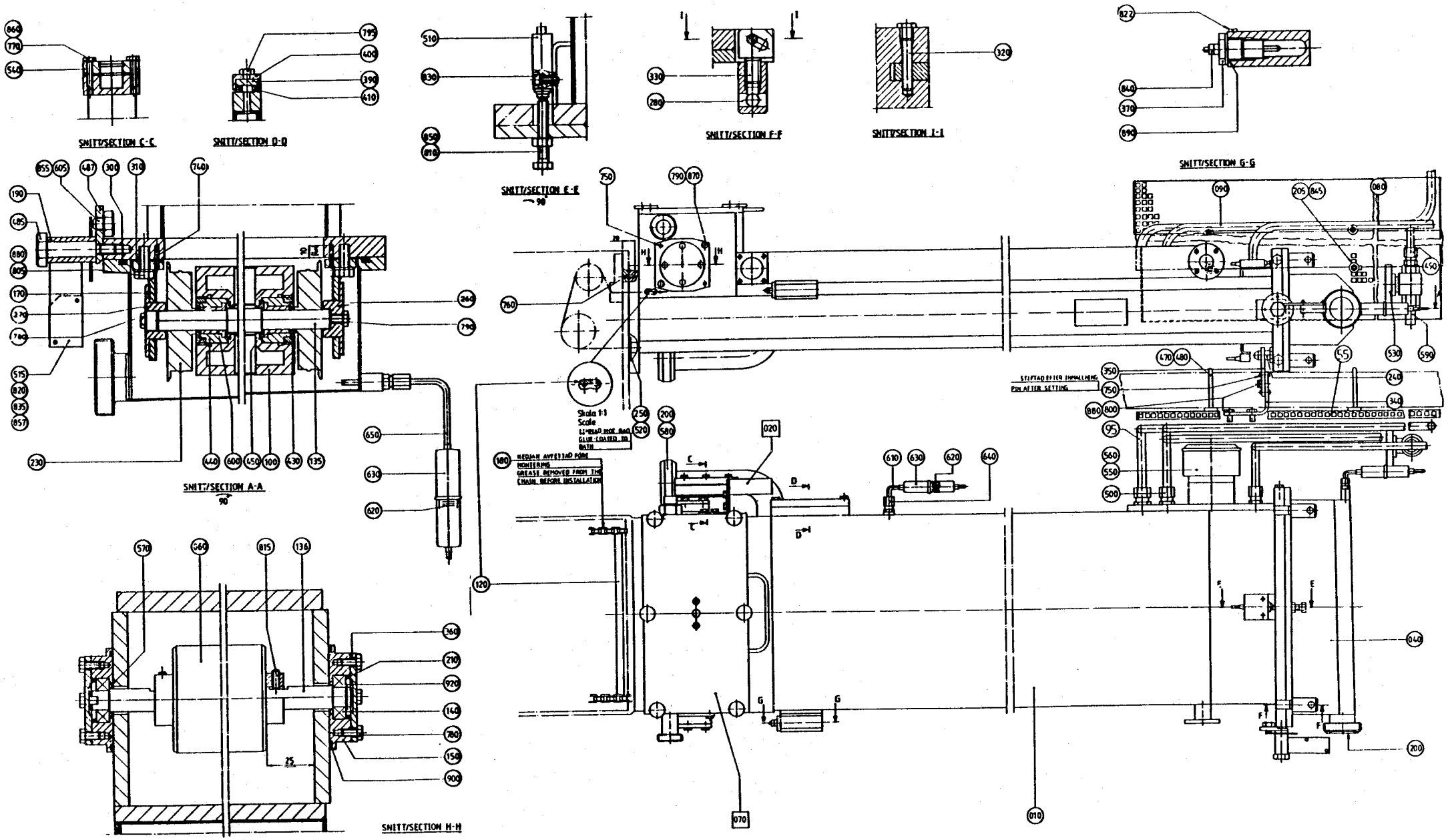
SNITT/SECTION C-C
SNITT/SECTION D-D
SNITT/SECTION E-E
SNITT/SECTION F-F
SNITT/SECTION I-I
SNITT/SECTION G-G
SNITT/SECTION A-A
SNITT/SECTION H-H
Skala 1:1
Scale

From	Pos	Part No	SP	UN	Qty	Description
	F020	==>117-2.1	-		1	SPLICE DETECTOR (with Pull Tab)
	F070	==>117-2.2	-		1	LID
	010	552846	-		1	BATH
	040	491593	-		1	COVER
	055	751692	-		1	TOUCH GUARD
	060	491594	-		1	BENDING ROLLER
	080	552839	-		1	PIPE
	090	552840	-		1	PIPE
	095	552841	-		1	PIPE
	100	295111	S		1	BENDING ROLLER
	120	456995	S		1	CARRIER
	135	491362	C		1	SHAFT
	136	491737	-		1	SHAFT
	140	484190	S		2	BALL BEARING
	150	491598	-		2	BEARING SEAT
	170	491600	-		2	BRACKET
	180	491601	S		2	ROLLER CHAIN
		484204	P		0	* LINK
	190	751761	-		1	ARM
	200	12242-0003	PU		2	GASKET
	205	27815	S		4	WASHER
	210	247172	S		2	SPACER RING
	230	247239	S		2	WHEEL
	240	247248	-		2	PIN
	250	256005	S		1	GASKET
	260	256006	-		1	AXLE SUPPORT
	270	256007	-		1	AXLE SUPPORT
	280	256010	S		4	NUT
	300	295388	PU		1	GASKET
	310	441474	-		2	SHIM
	320	441636	-		4	SHAFT
	330	441637	-		4	PIN
	340	45.472	-		2	BRACKET
	350	456474	-		2	PLATE
	360	456516	C		2	BEARING COVER
	370	458962-0001	S		1	ELECTRODE
	390	543470	S		2	LEVEL GLASS
	400	476398	-		2	LID
	410	476399	P		2	GASKET
	430	491363	-		2	NUT
	440	491364	-		2	BEARING HOLDER
	450	491365	-		2	THRUST BEARING
	470	751698	-		2	HOLDER
	480	751699	-		2	WASHER
	485	751762	-		1	SHAFT
	487	751763	-		1	BRACKET

From	Pos	Part No	SP	UN	Qty	Description
	490	90030-0109	S		1	PIPE CONNECTION
	500	90030-0187	S		3	PIPE CONNECTION
	510	90044-0084	P		2	MICRO SWITCH
	515	90044-0104	-		1	PROXIMITY SWITCH
	520	90153-0016	-	ML	X	ADHESIVE
	530	90187-0029	S		1	VALVE
	540	90199-0010	S		1	LEVEL GLASS
	550	90206-0326	-		1	CONNECTION BOX
	560	90206-0070	PU		1	HEATING ELEMENT
	570	90214-0303	P		6	RING
	580	90217-0035	-		1	NUT
	590	90224-0078	-		1	CONNECTION
	600	90240-0146	S		2	BUSHING
	605	90287-0106	-		1	SPRINGLOADED SCREW
	610	90326-0019	P		1	THERMOELEMENT
	620	90326-0020	P		2	SOCKET
	630	90326-0012	P		2	PROTECTIVE COVER
	640	90326-0017	P		1	GLAND
	650	90326-0052	P		1	THERMO ELEMENT
	740	311103-0236	-		4	CYLINDRICACPR3M6X16RFR
	750	311103-0270	-		8	CYLINDRICACPR4M6X16RFR
	760	311103-0310	-		2	CYLINDRICACPR5M6X20RFR
	770	312105-0332	-		6	SCREW M6S5X22RFR
	780	312105-0366	-		16	SCREW M6S6X12RFR
	790	312105-0368	-		6	SCREW M6S6X16RFR
	795	312105-0370	-		4	SCREW M6S6X20RFR
	800	312105-0449	-		10	SCREW M6S8X16RFR
	805	312105-0451	-		4	SCREW M6S8X20RFR
	810	312109-0463	-		2	SCREW
	815	312318-0368	-		2	GRUB SCREW SK6SS6X16RFR
	820	312125-0230	-		2	SLOTTED HEMCS3X20RFR
	822	312125-0285	-		1	SLOTTED HEMCS4X6RFR
	830	312115-0329	-		4	SCREW 5X16 A4 80
	835	312605-0310	-		2	NUT M6M3RFR
	840	312605-0312	-		2	NUT M6M4RFR
	845	312605-0314	-		4	NUT M6M5RFR
	850	312605-0318	-		2	NUT M6M8RFR
	855	312605-0320	-		1	NUT M6M10RFR
	857	315105-0124	-		2	WASHER BRB3,2X6RFR
	860	315105-0146	-		6	WASHER BRB5,3X10RFR
	870	315105-0153	-		5	WASHER BRB6,4X12RFR
	880	315105-0165	-		6	WASHER BRB8,4X16RFR
	890	90242-0168	P		1	O-RING
	900	315204-0305	P		2	O-RING 69,5X3
	920	315751-0112	S		1	LOCK RING SGA15 RFR

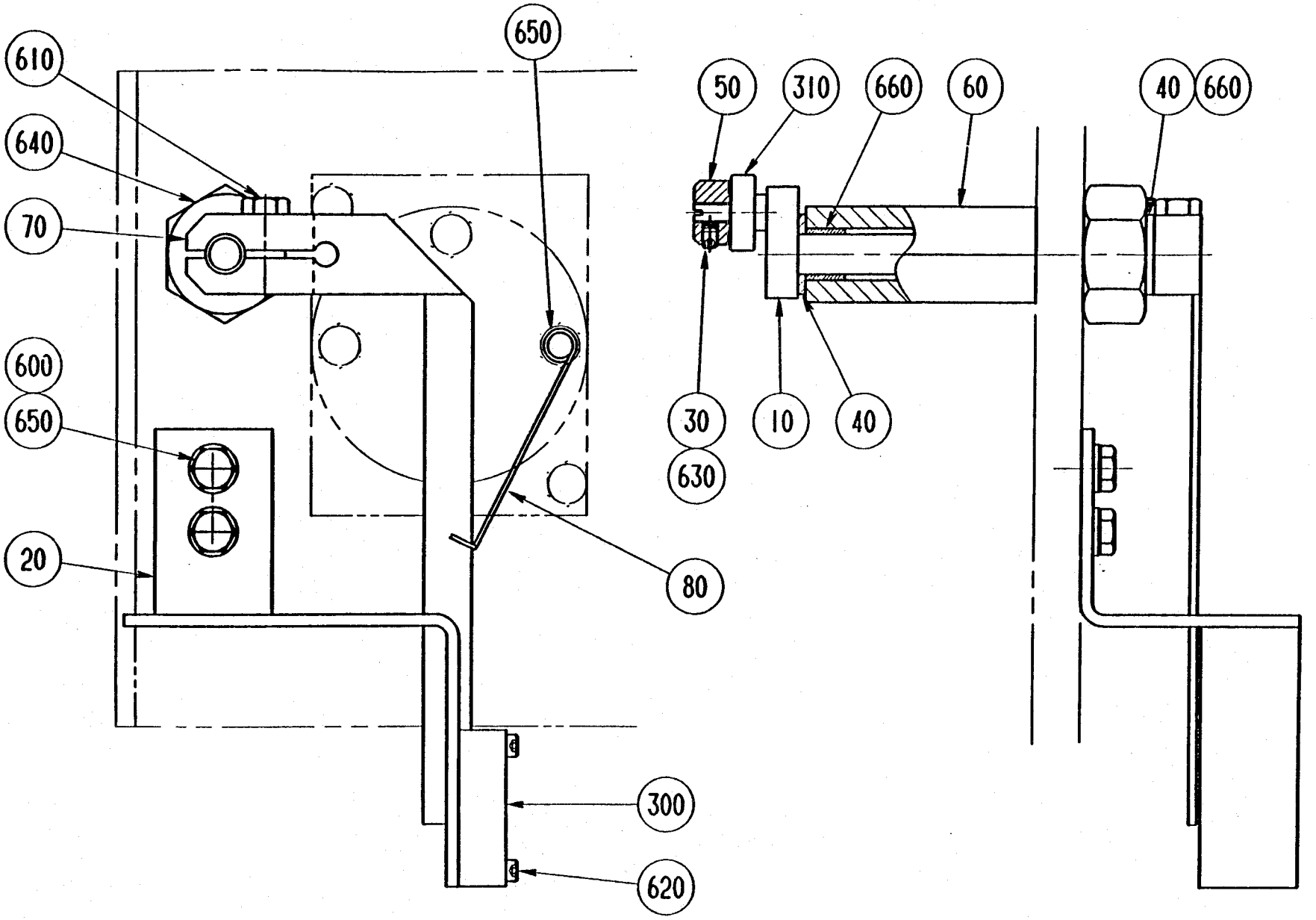
610
640
70
600
650
20
650
80
300
620
50
310
660
60
40
660
30
630
10
40

Last Alteration: AM 13604 89-11-24

Date Printed: 900223

Corresponding C-lists: 752957-010V
Assembly Drawing: 752957-1

From	Pos	Part No	SP	UN	Qty	Description
	010	469979	-		1	HOLDER
	020	491578	-		1	BRACKET
	030	24356	-		1	BLOCK
	040	271211	-		2	WASHER
	050	271654	-		1	RETAINING RING
	060	469981	-		1	BRACKET
	070	456121	-		1	ARM
	080	491149	-		1	SPRING
	300	90044-0104	-		1	PROXIMITY SWITCH
	310	90214-0138	-		1	BALL BEARING
	600	312105-0368	-		2	SCREW M6S6X16RFR
	610	312105-0370	-		1	SCREW M6S6X20RFR
	620	312115-0228	-		2	SCREW 3X16 A4 80
	630	312318-0283	-		1	GRUB SCREW SK6SS4X4RFR
	640	312605-0326	-		1	NUT M6M20RFR
	650	315105-0153	-		3	WASHER BRB6,4X12RFR
	660	321127-0100	-		2	BUSHING 10/13X10

From	Pos	Part No	SP	UN	Qty	Description

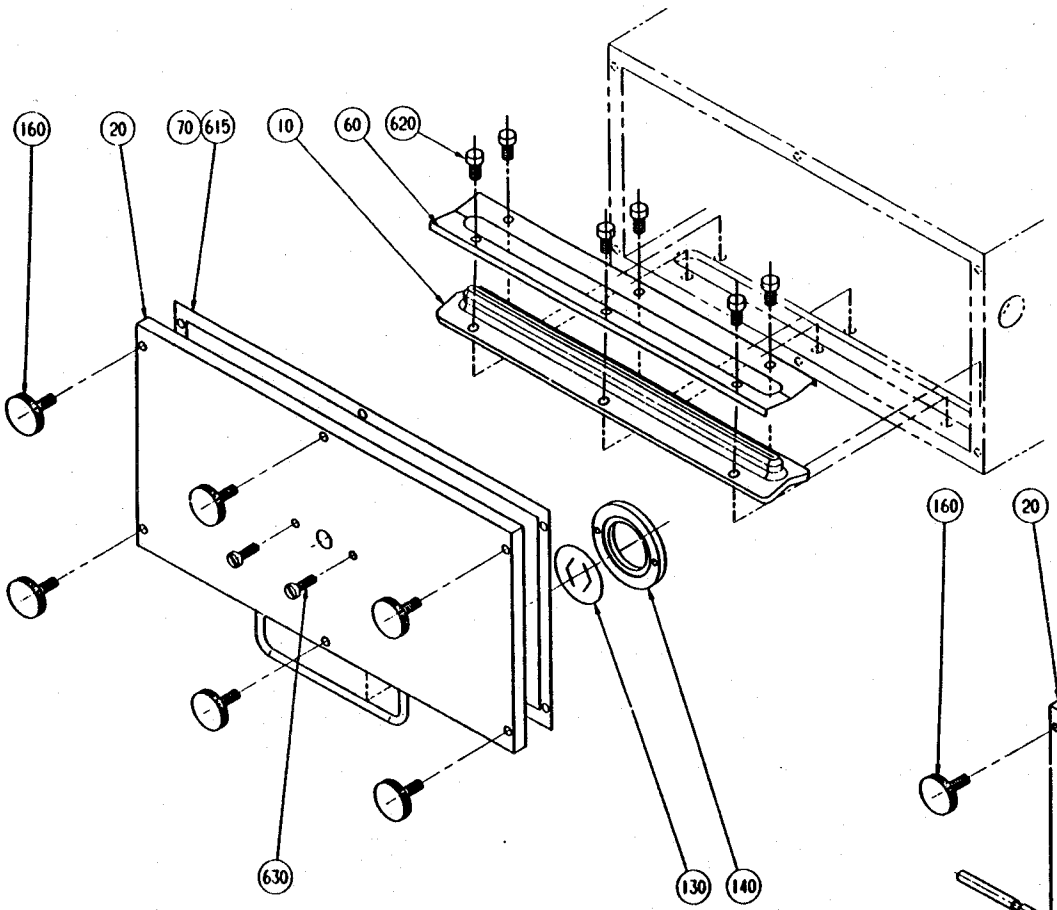

with pulltab

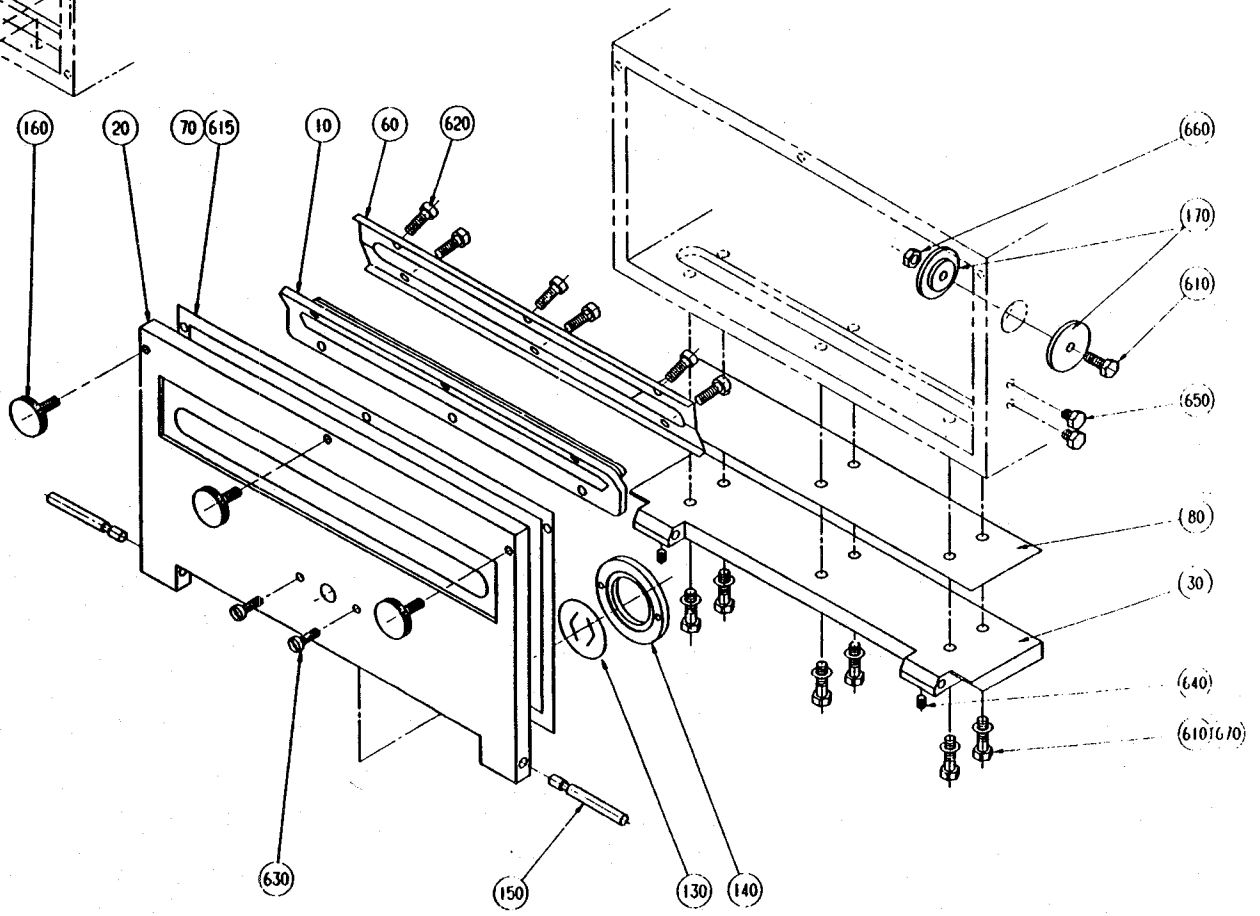

without pulltab

From	Pos	Part No	SP	UN	Qty	Description
Machine with Pull Tab						
	020	491595	-		1	LID
	160	491126	-		6	SCREW
Machine without Pull Tab						
	020	751756	-		1	LID
	030	751757	-		1	BRACKET
	080	751759	-		1	GASKET
	150	751679	-		2	SHAFT
	160	751680	-		3	SCREW
	170	752417	-		2	WASHER
	610	312105-0372	-		7	SCREW M6S6X25RFR
	640	312318-0321	-		2	GRUB SCREW SK6SS5X6RFR
	650	312105-0362	-		2	SCREW M6S6X8RFR
	660	312605-0316	-		1	NUT M6M6RFR
	670	315125-0153	-		6	WASHER TBRSB 6,4X22X4 RFR
Common Parts						
	010	273954	P		1	SEAL
	060	456784	-		1	LID
	070	751331	P		1	GASKET
	130	273937	P		1	DIAPHRAGM
	140	469982	-		1	WASHER
	615	90153-0023	-		X	ADHESIVE
	620	312115-0366	-		6	SCREW 6X12 A4 80
	630	312125-0331	-		2	SLOTTED HEMCS5X20RFR

From	Pos	Part No	SP	UN	Qty	Description

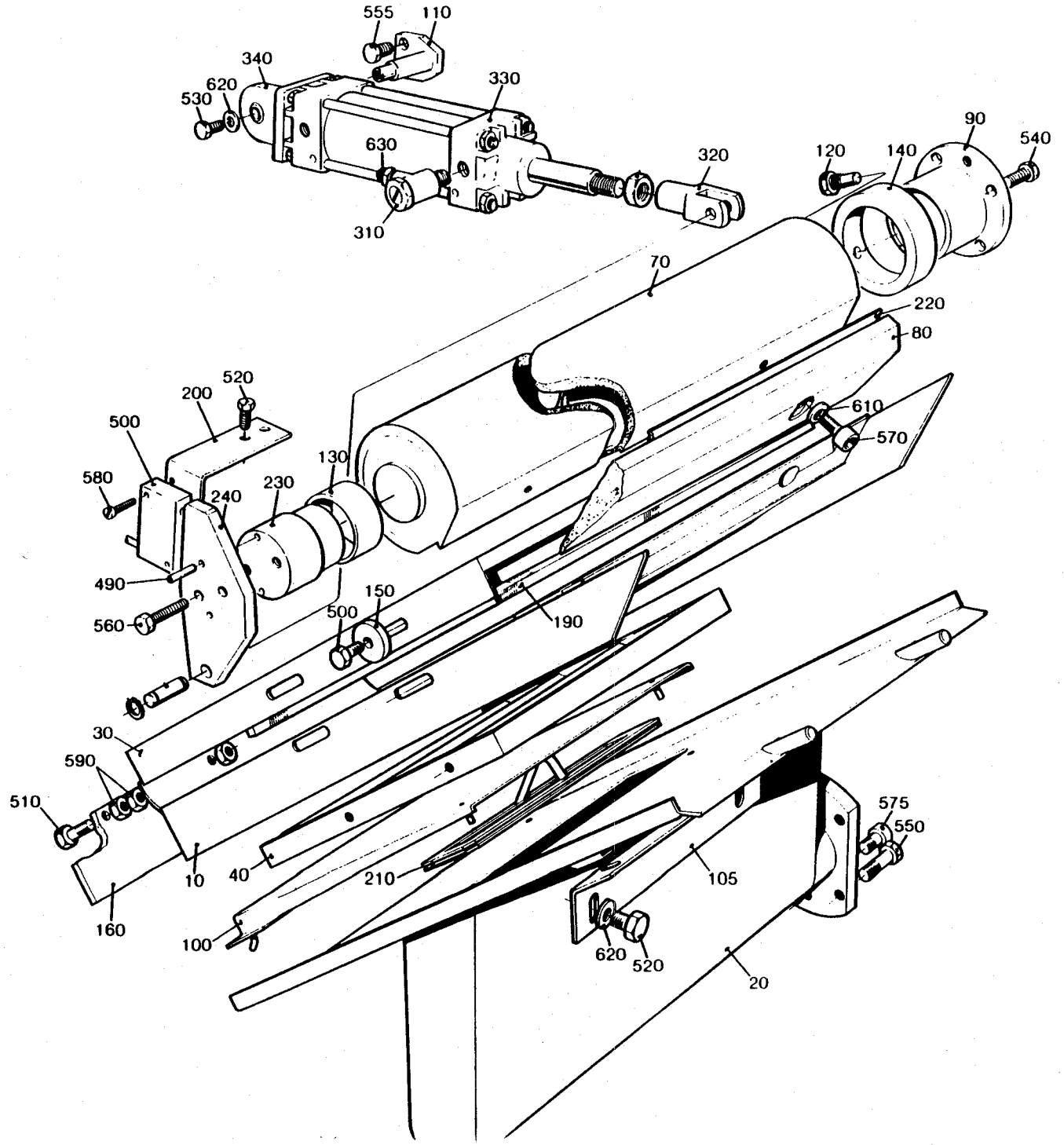
555
110
340
620
530
330
630
320
310
90
540
120
140
70
220
80
610
570
520
200
500
580
130
230
240
490
560
150
500
190
30
590
510
575
550
105
10
40
210
160
100
620
520
20

From	Pos	Part No	SP	UN	Qty	Description
Volume 125 ml						
	010	271824	-		1	AIR KNIFE, MOVABLE
	020	271825	-		1	FIXED AIR KNIFE
	030	271941-0001	-		1	FRAME
	040	271942-0001	-		1	AIR GUIDE
	070	272026-0001	-		1	AIR DISTRIBUTOR
	080	271820-0001	-		1	GUIDE RAIL
	100	272140-0001	-		1	GUIDE PLATE
	160	271827-0001	-		1	GUIDE PLATE
	190	272027-0001	S		1	GLASS PANE
	210	272141-0001	S		1	FILTER
	220	272329-0001	S		2	SHIM
	570	312115-0325	-		5	SCREW 5X10 A4 80
	610	315105-0146	-		3	WASHER BRB5,3X10RFR
Volume 180 - 284 ml						
	010	272022	-		1	AIR KNIFE, MOVABLE
	020	272023	-		1	FIXED AIR KNIFE
	030	271941-0002	-		1	FRAME
	040	271942-0002	-		1	AIR GUIDE
	070	272026-0002	-		1	AIR DISTRIBUTOR
	080	469991	-		1	RAIL
	100	272140-0002	-		1	GUIDE PLATE
	160	271827-0002	-		1	GUIDE PLATE
	190	272027-0002	S		1	GLASS PANE
	210	272141-0002	S		1	FILTER
	220	272329-0002	S		3	SHIM
	570	312115-0325	-		7	SCREW 5X10 A4 80
	610	315105-0146	-		5	WASHER BRB5,3X10RFR
Volume 200 ml SLIM						
	010	272022	-		1	AIR KNIFE, MOVABLE
	020	272023	-		1	FIXED AIR KNIFE
	030	271941-0002	-		1	FRAME
	040	271942-0002	-		1	AIR GUIDE
	070	272026-0002	-		1	AIR DISTRIBUTOR
	080	271820-0002	-		1	GUIDE RAIL
	100	272140-0002	-		1	GUIDE PLATE
	160	271827-0002	-		1	GUIDE PLATE
	190	272027-0002	S		1	GLASS PANE
	210	272141-0002	S		1	FILTER
	220	272329-0002	S		3	SHIM
	570	312115-0325	-		7	SCREW 5X10 A4 80
	610	315105-0146	-		5	WASHER BRB5,3X10RFR

From	Pos	Part No	SP	UN	Qty	Description
Common Parts						
	090	271858	-		1	FLANGE
	105	272464	-		1	ANGLE BRACKET
	110	441578-0001	S		1	CYLINDER BRACKET
	120	255995	S		1	SCREW
	130	751165	S		1	BUSHING
	140	256022	S		1	BUSHING
	150	263311	C		4	WASHER
	200	490867	-		1	BRACKET
	230	441576	-		1	SPACER
	240	441903	C		1	ARM
	300	90044-0104	P		1	PROXIMITY SWITCH
	310	90235-0282	-		2	VALVE
	320	90235-0516	-		1	PISTON ROD BRACKET
	330	90239-0773	S		1	CYLINDER
		90239-0442	S		1	* SEAL KIT
	340	90239-0453	-		1	BRACKET
	490	311103-0233	-		2	CYLINDRICACPR3M6X10RFR
	500	312105-0293	-		4	SCREW M6S4X16 A4 80
	510	312105-0331	-		2	SCREW M6S□X20 A4 80
	520	312105-0364	-		6	SCREW M6S6X10RFR
	530	312105-0366	-		1	SCREW M6S6X12RFR
	540	312105-0368	-		4	SCREW M6S6X16RFR
	550	312105-0370	-		4	SCREW M6S6X20RFR
	555	312105-0447	-		2	SCREW M6S8X12RFR
	560	312105-0464	-		2	SCREW M6S8X65RFR
	575	312115-0366	-		2	SCREW 6X12 A4 80
	580	312125-0228	-		2	SLOTTED HEMCS3X16RFR
	590	312605-0314	-		4	NUT M6M5RFR
	620	315105-0153	-		5	WASHER BRB6,4X12RFR
	630	342797-0121	S		2	BANJO CONNSINGEL 6-1/8

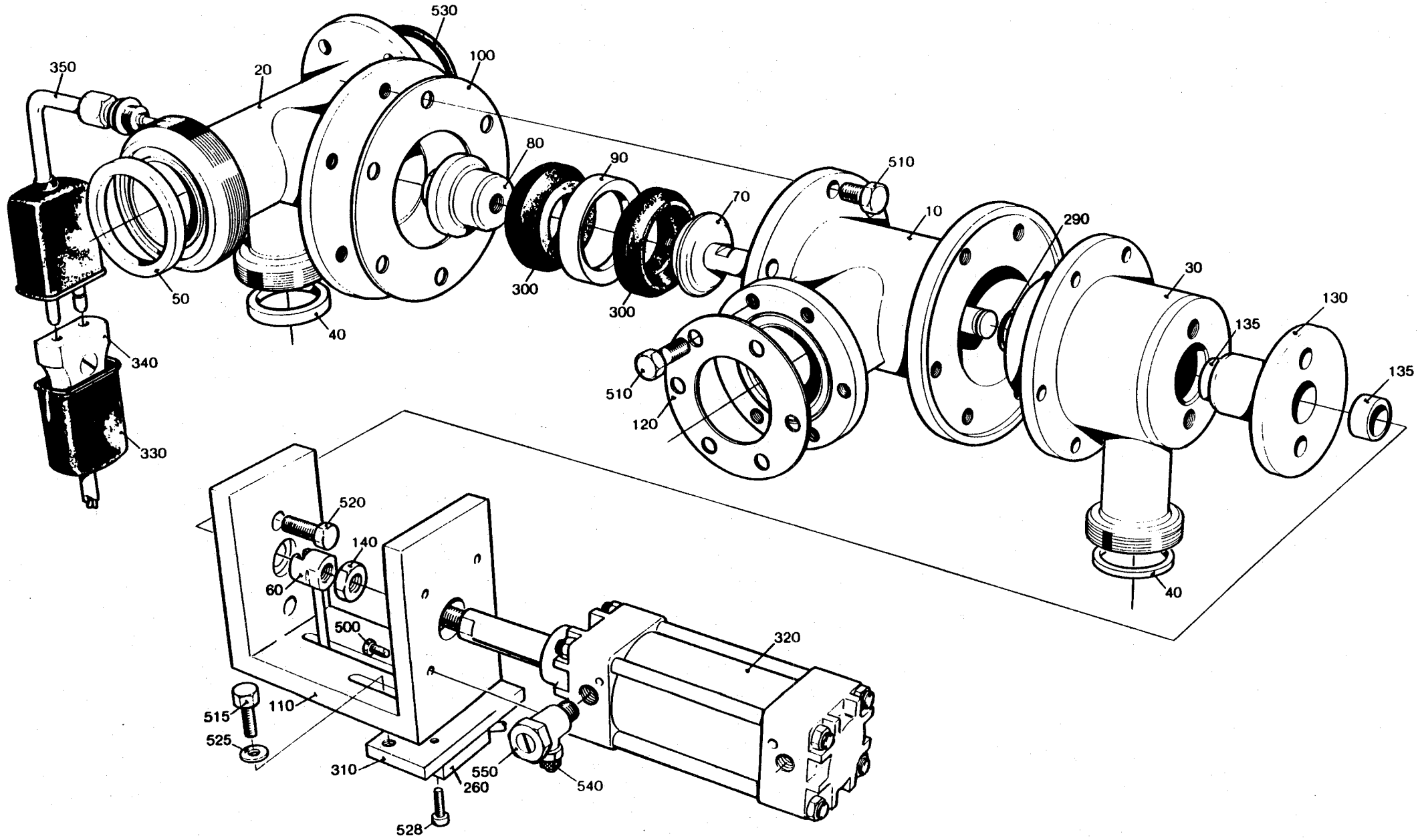
530
350
20
100
80
90
510
70
10
290
30
130
135
135
50
300
300
40
340
510
120
330
520
140
60
500
320
515
110
525
310
550
260
540
528
40

Last Alteration: AM 12648 89-11-14

Date Printed: 901029

Corresponding C-lists: 272337-030V,-040V
Assembly Drawing: 272337-3/4

From	Pos	Part No	SP	UN	Qty	Description
	010	271167	C		1	VALVE HOUSING
	020	490884	-		1	BRANCH PIPE
	030	491101	C		1	HOUSE
	040	90091-0180	P		2	GASKET
	050	90091-0182	P		1	GASKET
-080V	060	441871	S		1	PENDULUM SUSPENSION
090V-	060	553183	S		1	PENDULUM SUSPENSION
	070	266389	S		1	PISTON ROD
	080	266390	S		1	NUT
	090	266391	S		1	RING
	100	295160	S		2	GASKET
-080V	110	441843	C		1	BRACKET
090V-	110	553184	C		1	BRACKET
	120	531742	P		1	GASKET
	130	532348	S		1	SPINDLE GUIDE
	135	532349	S		2	PLAIN BEARING
	140	441286	C		1	NUT
090V-	260	90044-0104	P		1	PROXIMITY SWITCH
	290	90141-0022	S		1	RING
	300	530588	P		2	SEAL RING
	310	553187	-		1	PLATE
	320	90239-0779	S		1	CYLINDER
		90239-0442	S		1	* SEAL KIT
	330	90326-0012	S		1	PROTECTIVE COVER
	340	90326-0020	S		1	SOCKET
	350	90326-0051	P		1	THERMO COUPLE
	500	312105-0331	-		4	SCREW M6S5X20 A4 80
	510	312105-0366	-		18	SCREW M6S6X12RFR
090V-	515	312105-0370	-		2	SCREW M6S6X20RFR
	520	312105-0451	-		2	SCREW M6S8X20RFR
090V-	525	315125-0153	-		2	WASHER SB 6,4X22X4 RFR
090V-	528	312125-0228	-		2	SLOTTED HEMCS3X16RFR
	530	315204-0223	-		1	O-RING 39,2X3VITON
	540	342797-0121	S		2	BANJO CONNSINGEL 6-1/8
	550	342980-0303	-		2	BANJO CONN SINGEL 1/8"

From	Pos	Part No	SP	UN	Qty	Description

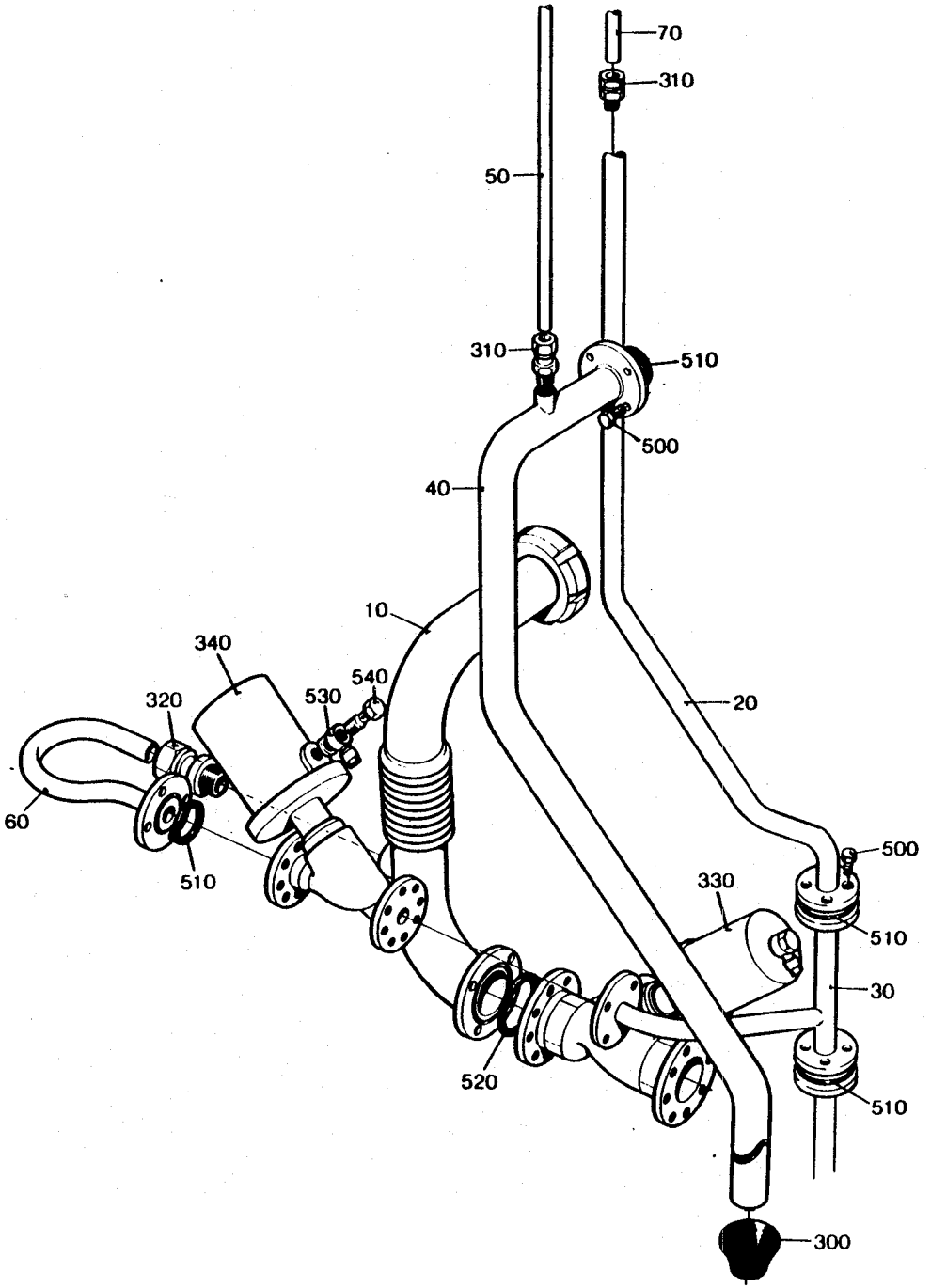
70
310
50
310
510
500
40
10
340
320
530
540
20
60
510
500
330
510
30
520
510
300

From	Pos	Part No	SP	UN	Qty	Description
	010	490966	-		1	PIPE
	020	491398	-		1	PIPE
	030	490994	-		1	PIPE
	040	490996	-		1	PIPE
	050	491399	-		1	PIPE
	060	490991	C		1	HOSE
	070	490979	-		1	PIPE
	300	90015-0024	P		1	BUSHING
	310	90030-0184	-		2	PIPE CONNECTION
	320	90030-0188	-		1	PIPE CONNECTION
	330	484538	S		1	VALVE
	340	484192	S		1	VALVE
	500	312105-0366	-		24	SCREW M6S6X12RFR
	510	90242-0172	PU		5	O-RING
	520	90242-0187	PU		2	O-RING 40,2X2,5 PTFE
	530	342797-0122	-		2	BANJO CONNSINGEL 6-1/4
	540	342980-0304	-		2	BANJO CONN SINGEL 1/4

From	Pos	Part No	SP	UN	Qty	Description

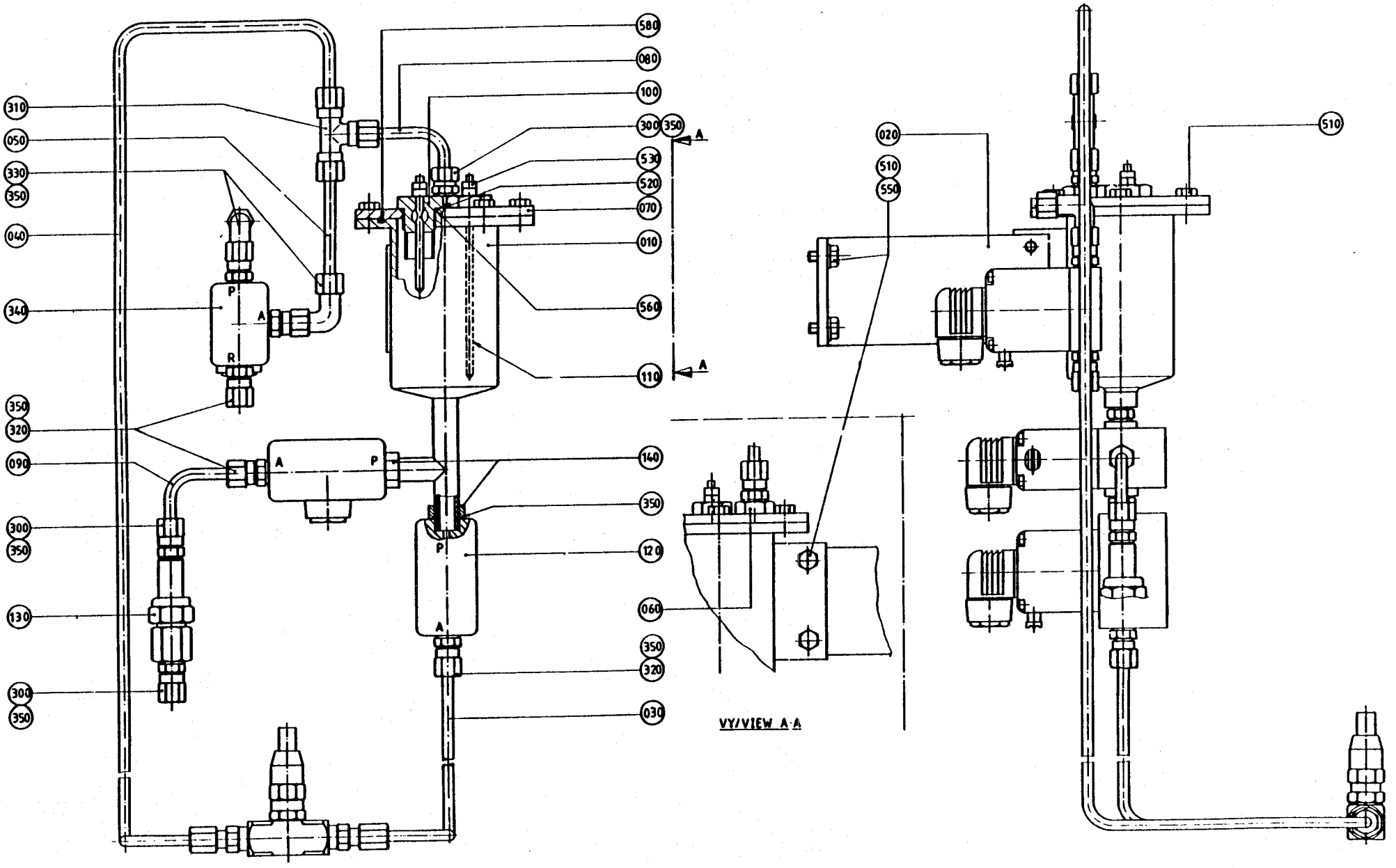
580
080
100
310
300
350
050
530
330
520
350
070
040
010
P
560
340
A
R
110
A
350
320
090
A
P
140
350
300
P
350
120
130
060
A
350
320
300
350
030
VY/VIEW A-A
020
510
550
510

From	Pos	Part No	SP	UN	Qty	Description
	010	491191	C		1	CONTAINER
	020	272844	-		1	BRACKET
	030	456897	-		1	PIPE
	040	469515	-		1	PIPE
	050	272627	-		1	PIPE
	060	450833	P		1	FILTER
	070	450837	-		1	LID
	080	456899	-		1	PIPE
	090	456900	-		1	PIPE
	100	458962-0004	S		1	ELECTRODE
	110	458962-0005	S		1	ELECTRODE
	120	484188	S		2	SOLENOID VALVE
		90042-0464	S		1	* DIAPHRAGM
		90042-0465	S		1	* O-RING
	130	484196	S		1	FILTER
		484197	PU		0	* FILTER
	140	491192	S		2	NUT
	300	90030-0184	-		3	PIPE CONNECTION
	310	90030-0076	-		1	CONNECTION
	320	90030-0202	-		3	PIPE CONNECTION
	330	90030-0203	-		2	PIPE CONNECTION
	340	90042-0085	S		1	SOLENOID VALVE
	350	90144-0004	-	MM X		TAPE
	510	312105-0366	-		10	SCREW M6S6X12RFR
	520	312125-0285	-		1	SLOTTED HEMCS4X6RFR
	530	312605-0312	-		4	NUT M6M4RFR
	550	315105-0153	-		4	WASHER BRB6,4X12RFR
	560	315204-0213	P		3	O-RING 15,3X2,4VITON
	580	315204-0305	P		1	O-RING 69,5X3

From	Pos	Part No	SP	UN	Qty	Description

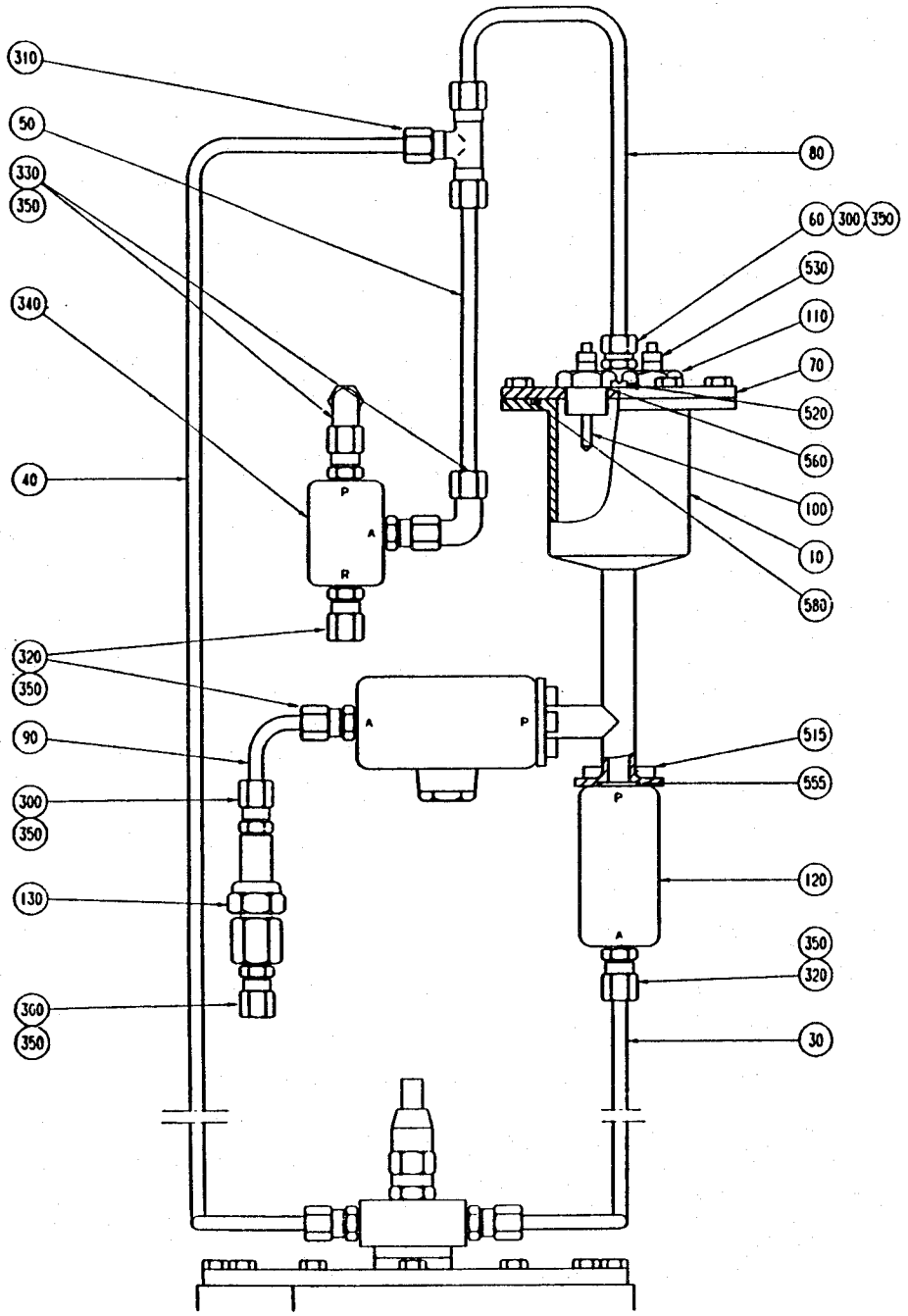
310
50
330
350
340
40
320
350
90
300
350
130
360
350
80
60
300
350
530
110
70
520
560
100
10
580
515
555
120
350
320
30
P
A
R
A
P
P
A

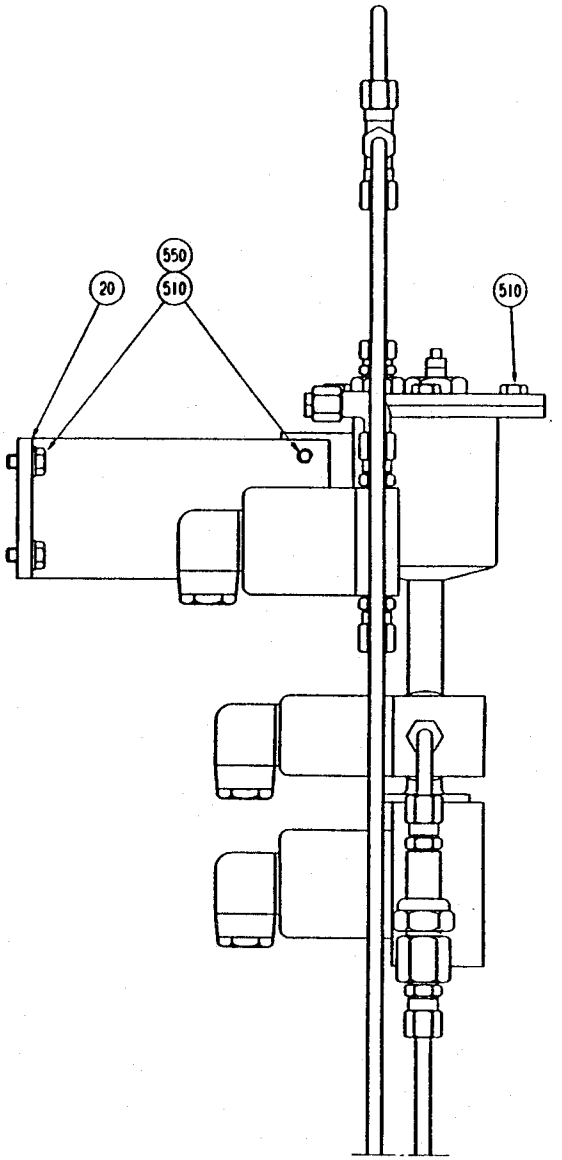
550
510
20
510

From	Pos	Part No	SP	UN	Qty	Description
	010	752576	C		1	CONTAINER
	020	272844	-		1	BRACKET
	030	456897	-		1	PIPE
	040	752696	-		1	PIPE
	050	752676	-		1	PIPE
	060	450833	P		1	FILTER
	070	450837	-		1	LID
	080	752675	-		1	PIPE
	090	456900	-		1	PIPE
	100	458962-0009	S		1	ELECTRODE
	110	458962-0010	S		1	ELECTRODE
	120	544906	S		2	SOLENOID VALVE
		90042-0464	S		1	* DIAPHRAGM
		90042-0465	S		1	* O-RING
	130	484196	S		1	FILTER
		484197	PU		0	* FILTER
	300	90030-0184	-		3	PIPE CONNECTION
	310	90030-0076	-		1	CONNECTION
	320	90030-0202	-		3	PIPE CONNECTION
	330	90030-0203	-		2	PIPE CONNECTION
	340	90042-0171	S		1	SOLENOID VALVE
	350	90144-0004	-	MM	X	TAPE
	510	312105-0366	-		10	SCREW M6S6X12RFR
	515	312115-0323	S		6	SCREW MC6S 5X8 A4 80
	520	312125-0285	-		1	SLOTTED HEMCS4X6RFR
	530	312605-0312	-		4	NUT M6M4RFR
	550	315105-0153	-		4	WASHER BRB6,4X12RFR
	555	90242-0184	P		2	O-RING 14,1X2 PTFE
	560	90242-0168	P		3	O-RING
	580	90242-0178	P		1	O-RING

From	Pos	Part No	SP	UN	Qty	Description

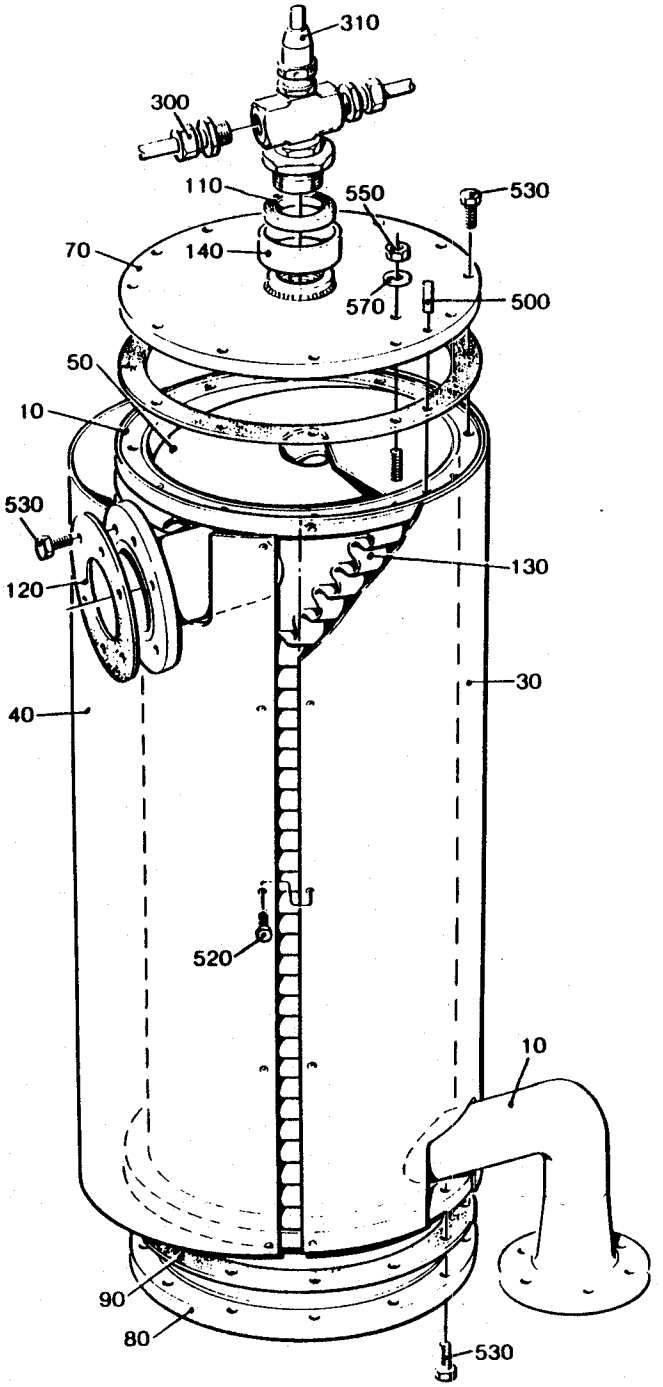
310
300
110
550
530
70
140
570
500
50
10
530
130
120
30
40
520
10
90
80
530

From	Pos	Part No	SP	UN	Qty	Description
	010	272274	C		1	CONTAINER
	030	272319	-		1	DISCHARGE TRAY
	040	272320	-		1	DISCHARGE TRAY
	050	272325	C		1	SPIRAL
	070	272275	C		1	LID
	080	272276	C		1	BOTTOM
	090	272277	S		2	GASKET
	110	12242-0001	S		1	GASKET
	120	531742	S		1	GASKET
	130	441501	S		1	INSULATION
	140	295993	C		1	GASKET HOLDER
	300	90030-0062	S		2	CONNECTION
	310	90424-0017	S		1	NOZZLE
		90424-0301	S		0	* SLEEVE
		90424-0302	S		0	* GASKET
		90424-0303	S		0	* GASKET
		90424-0304	PU		0	* GASKET
	500	311103-0236	-		1	CYLINDRICACPR3M6X16RFR
	520	312105-0325	-		14	SCREW M6S5X10 A4 80
	530	312105-0368	-		30	SCREW M6S6X16RFR
	550	312605-0314	-		1	NUT M6M5RFR
	570	315105-0146	-		1	WASHER BRB5,3X10RFR

From	Pos	Part No	SP	UN	Qty	Description

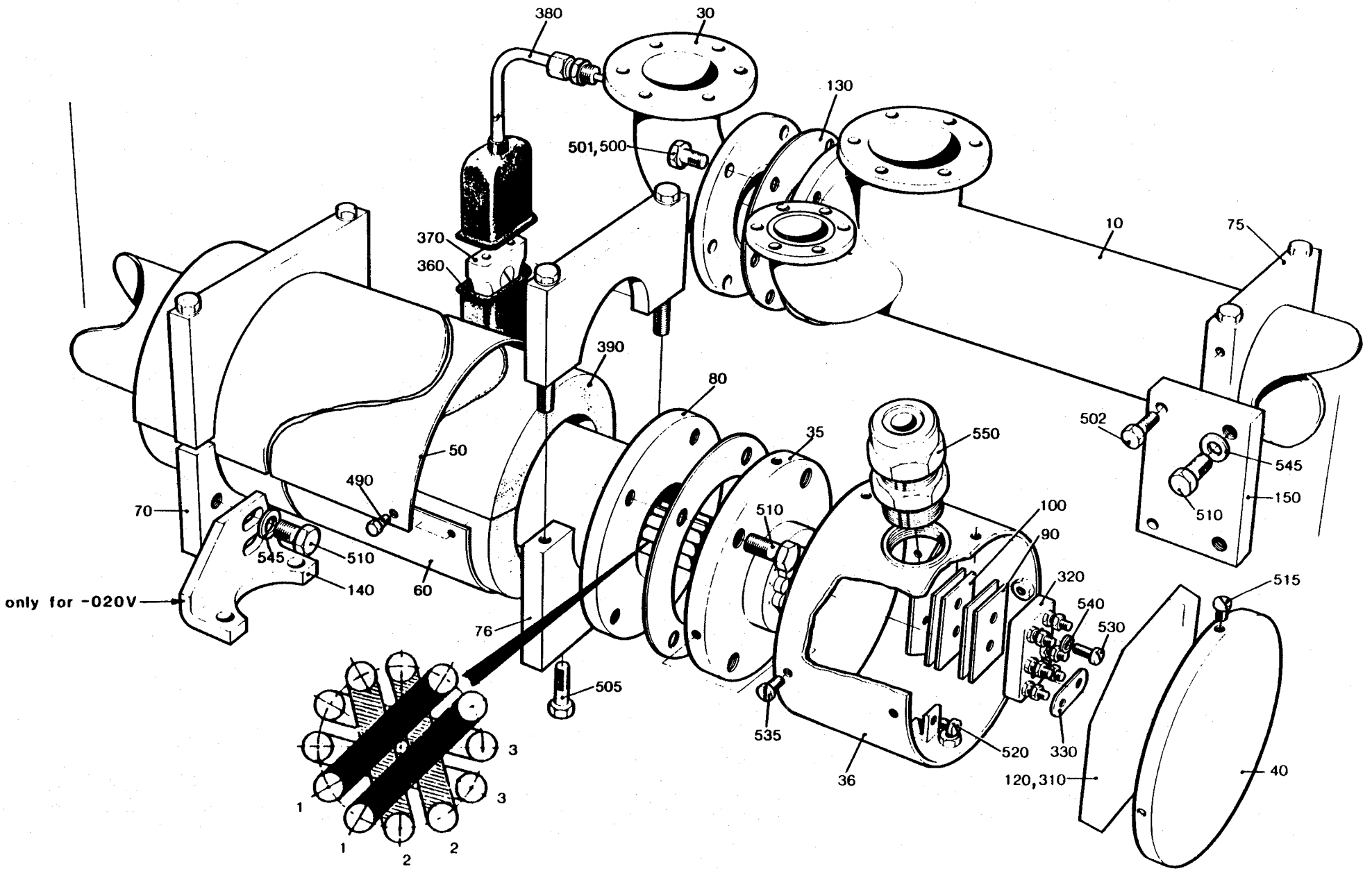
380
30
130
501,500
10
75
370
360
390
80
50
35
550
502
545
150
510
490
70
510
100
90
545
510
140
60
320
540
530
515
only for -020V
76
505
535
520
330
36
120,310
40
3
3
1
1
2
2

From	Pos	Part No	SP	UN	Qty	Description
-080V	010	272792	C		1	HEATING PIPE
090V-	010	752220	C		1	HEATING PIPE
-080V	030	271183	-		1	PIPE
090V-	030	752221	-		1	PIPE
	035	449939-0001	S		1	HEATING ELEMENT 15KW
		449938-0001	S		2	* HEATING PIPE
		449938-0002	S		2	* HEATING PIPE
		449938-0003	S		2	* HEATING PIPE
	036	451430	-		1	CONNECTION BOX
	040	29876	-		1	LID
	050	271184	-		1	DISCHARGE TRAY
	060	271185	-		1	DISCHARGE TRAY
	070	491218	-		1	SUPPORT
	075	272794	-		1	SUPPORT
	076	456123	-		1	SUPPORT
	080	531731	S		1	GASKET
	090	751009	S		1	INSULATION
	100	30298	S		1	INSULATION
	120	491305	-		1	CIRCUIT DIAGRAM
	130	751016	-		1	GASKET
	150	456125	-		1	PLATE
	310	90153-0020	S	ML	X	ADHESIVE
	320	90195-0028	S		1	TERMINAL BLOCK
	330	90195-0029	S		3	COUPLING STRIP
	360	90326-0012	P		1	PROTECTIVE COVER
	370	90326-0020	P		1	SOCKET
	380	90326-0051	P		1	THERMO COUPLE
	390	90411-0005	S	MM1100		INSULATOR
	490	312105-0325	-		12	SCREW M6S5X10 A4 80
	500	312105-0368	-		6	SCREW M6S6X16RFR
090V-	501	312105-0370	-		1	SCREW M6S6X20RFR
	502	312105-0374	-		2	SCREW M6S6X30RFR
	505	312105-0455	-		3	SCREW M6S8X30RFR
	510	312105-0453	-		6	SCREW M6S8X25RFR
	515	312125-0285	-		4	SLOTTED HEMCS4X6RFR
	520	312125-0323	-		1	SLOTTED HEMCS5X8RFR
	530	312125-0331	-		2	SLOTTED HEMCS5X20RFR
	535	312125-0366	-		4	SLOTTED HEMCS6X12RFR
	540	315105-0146	-		2	WASHER BRB5,3X10RFR
	545	315125-0165	-		3	WASHER TBRSB8,4X16RFR
	550	352100-0121	-		1	CABLE GLANR. 37-23,5

From	Pos	Part No	SP	UN	Qty	Description

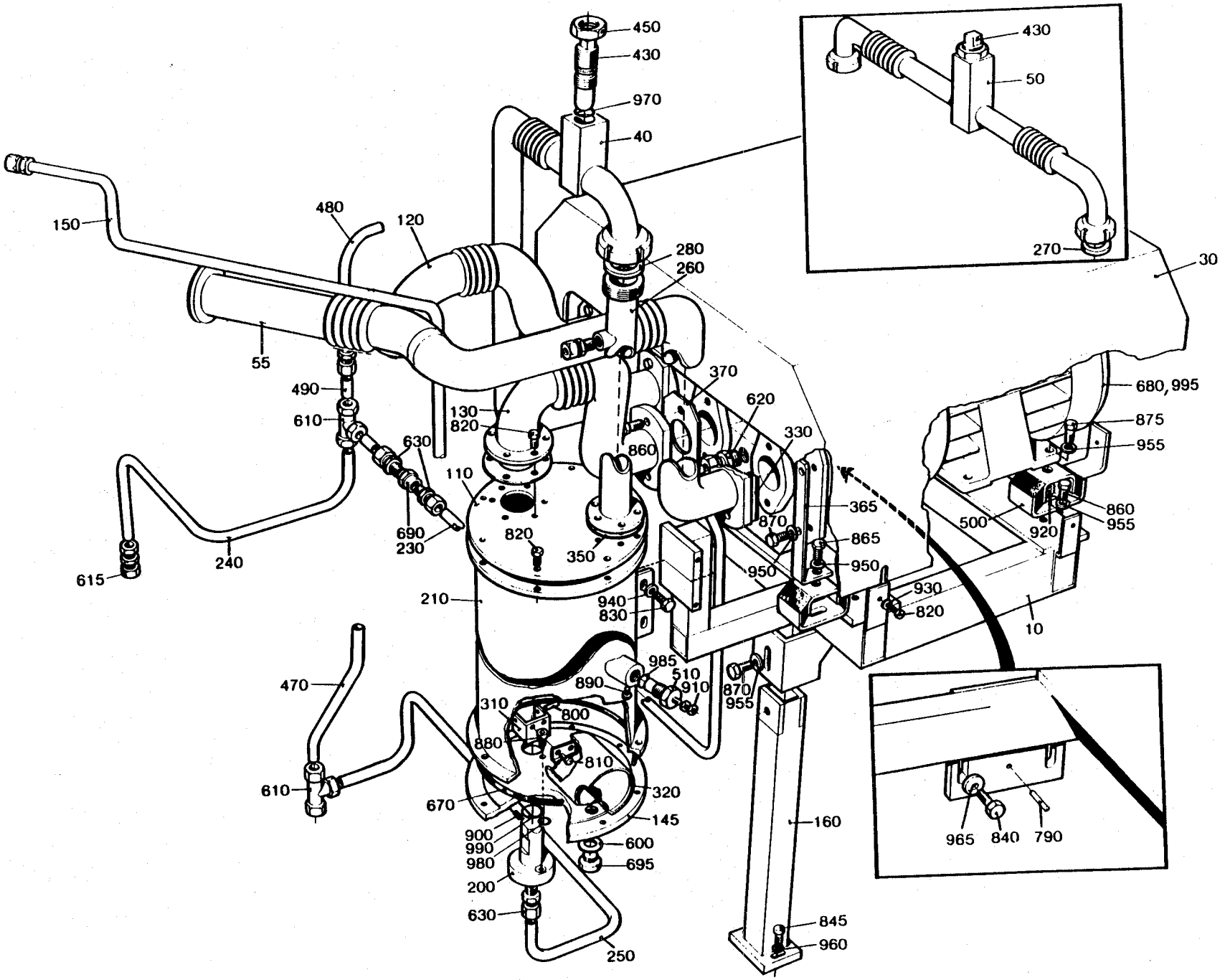
450
430
970
40
150
480
120
280
260
55
490
610
630
690
230
240
615
130
820
110
820
350
860
370
620
330
365
870
865
950
950
940
830
210
930
820
10
680, 995
875
955
860
955
500
920
985
510
910
890
870
955
470
310
800
880
810
610
670
320
145
600
695
900
990
980
200
630
250
160
845
960
430
50
270
30
965
840
790

From	Pos	Part No	SP	UN	Qty	Description
50 Hz						
	430	490998	C		1	SCREW
	450	442237	C		1	NUT
	635	90217-0026	-		2	NUT
	970	315202-0119	P		1	O-RING 25,1X1,6
60 Hz						
	050	491090	-		1	PIPE
	430	490998	C		2	SCREW
	450	442237	C		2	NUT
	970	315202-0119	P		2	O-RING 25,1X1,6
Common Parts						
	030	469150	-		1	COVER
	040	490997	-		1	PIPE
	055	491748	-		1	PIPE
	060	491749	-		1	BRACKET
	110	271640	C		2	LID
	120	469153	-		1	PIPE
	130	469154	-		1	PIPE
	145	469511	C		2	BOTTOM
	150	490862	-		1	PIPE
	160	491750	-		1	SUPPORT
	200	269443	C		2	BRACKET
	210	269461	C		2	CONTAINER
	230	469156	-		1	PIPE
	240	469157	-		1	PIPE
	250	469158	-		1	PIPE
	260	491095	-		1	PIPE
	270	12242-0001	P		2	GASKET
	280	12242-0003	P		1	GASKET
	310	179595	C		2	SHUTTER
	320	179596	C		2	FLOAT
	330	230551	PU		4	GASKET
	350	531742	P		1	GASKET
	365	269859	-		4	BRACKET
	370	271461	PU		2	GASKET
	470	456269	-		1	PIPE
	480	456270	-		1	PIPE
	490	456271	-		2	PIPE
	500	469160	S		8	VIBRATION DAMPER
	510	458962-0001	S		2	ELECTRODE
	600	90005-0006	-		2	SEAL RING
	610	90030-0058	-		1	CONNECTION
	620	90030-0109	-		2	PIPE CONNECTION

From	Pos	Part No	SP	UN	Qty	Description
	630	90030-0187	-		6	PIPE CONNECTION
	670	90242-0084	PU		4	O-RING
	680	90270-0011	-		2	COMPRESSOR
		90270-0348	R		1	* MOTOR
	690	90270-0347	C		2	VALVE
	695	90330-0029	-		2	PLUG
	790	311103-0310	-		2	CYLINDRICACPR5M6X20RFR
	800	311103-0361	-		2	CYLINDRICACPR6M6X40RFR
	810	312105-0287	-		4	SCREW M6S4X8 A4 80
	820	312105-0366	-		58	SCREW M6S6X12RFR
	830	312105-0447	-		8	SCREW M6S8X12RFR
	840	312105-0451	-		2	SCREW M6S8X20RFR
	845	312105-0453	-		2	SCREW M6S8X25RFR
	860	312105-0491	-		14	SCREW M6S10X20RFR
	865	312105-0493	-		6	SCREW M6S10X25RFR
	870	312105-0495	-		10	SCREW M6S10X30RFR
	875	312105-0497	-		4	SCREW M6S10X30RFR
	880	312115-0368	-		4	SCREW 6X16 A4 80
	890	312125-0285	-		2	SLOTTED HEMCS4X6RFR
	900	312318-0323	-		2	GRUB SCREW SK6SS5X8RFR
	910	312605-0312	-		4	NUT M6M4RFR
	920	312605-0320	-		8	NUT M6M10RFR
	930	315105-0153	-		5	WASHER BRB6,4X12RFR
	940	315105-0165	-		8	WASHER BRB8,4X16RFR
	950	315105-0173	-		12	WASHER BRB10,5X22RFR
	955	315115-0173	-		14	WASHER B 10,5X22 RFR
	960	315115-0165	-		2	WASHER TBRB8,4X16RFR
	965	315125-0165	-		2	WASHER TBRBS8,4X16RFR
	980	315204-0103	P		4	O-RING 5,1X1,6VITON
	985	315204-0213	P		2	O-RING 15,3X2,4VITON
	990	315204-0217	P		2	O-RING 24,2X3VITON
	995	352103-0111	-		2	CABLE GLAND PR22,5/10-14

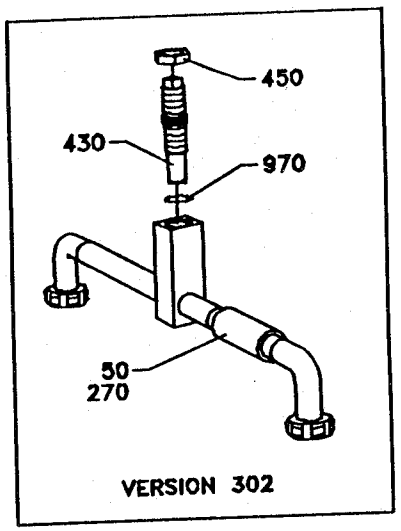
450
430
970
50
270
VERSION 302

450
430
970
40
50
270
55
635
270
30
365
850
950
870
330
680
995
930
820
120
370
860
870
955
260
280
130
330
820
70
965
840
790
370
820
350
110
480
620
625
840
960
80
230
620
625
860
830
710
60
955
865
790
670
940
830
210
190
630
690
490
220
630
610
490
690
630
240
230
160
835
960
310
200
990
800
900
810
320
880
980
600
695
985
510
910
670
820
250
ILLUtec®
4694523V

From	Pos	Part No	SP	UN	Qty	Description
50 Hz						
	430	490998	C		1	SCREW
	450	442237	C		1	NUT
	635	90217-0026	-		2	NUT
	970	315202-0119	P		1	O-RING 25,1X1,6
60 Hz						
	050	491090	-		1	PIPE
	430	490998	C		2	SCREW
	450	442237	C		2	NUT
	970	315202-0119	P		2	O-RING 25,1X1,6
Common Parts						
	030	751064	-		1	COVER
	040	751250	-		1	PIPE
	055	751251	-		1	PIPE
	060	751598	-		1	BRACKET
	070	751002	-		1	PLATE
	080	752002	-		2	BRACKET
	110	271640	C		2	LID
	120	751215	-		1	PIPE
	130	751216	-		1	PIPE
	145	469511	C		2	BOTTOM
	160	491750	-		1	SUPPORT
	190	751235	-		2	INSULATION
	200	269443	C		2	BRACKET
	210	269461	C		2	CONTAINER
	220	751246	-		1	HOSE
	230	469156	-		1	PIPE
	240	751247	-		1	HOSE
	250	751248	-		1	HOSE
	260	491095	-		1	PIPE
	270	12242-0001	P		2	GASKET
	280	12242-0003	P		1	GASKET
	310	179595	C		2	SHUTTER
	320	179596	C		2	FLOAT
	330	230551	PU		4	GASKET
	350	531742	P		1	GASKET
	365	751044	-		4	BRACKET
	370	271461	PU		2	GASKET
	480	456270	-		1	PIPE
	490	456271	-		2	PIPE
	510	458962-0001	S		2	ELECTRODE
	600	90005-0006	-		2	SEAL RING
	610	90030-0058	-		1	CONNECTION
	620	90030-0109	-		2	PIPE CONNECTION

From	Pos	Part No	SP	UN	Qty	Description
	625	90144-0004	-	MM	X	TAPE
	630	90030-0187	-		6	PIPE CONNECTION
	670	90242-0084	PU		4	O-RING
	680	90270-0011	-		2	COMPRESSOR
		90270-0348	R		1	* MOTOR
	690	90270-0347	C		2	VALVE
	695	90330-0029	-		2	PLUG
	710	90347-0089	-		5	DAMPER NOVIBRA RA 40EM-B
	790	311103-0310	-		2	CYLINDRICACPR5M6X20RFR
	800	311103-0361	-		2	CYLINDRICACPR6M6X40RFR
	810	312105-0287	-		4	SCREW M6S4X8 A4 80
	820	312105-0366	-		62	SCREW M6S6X12RFR
	830	312105-0447	-		18	SCREW M6S8X12RFR
	835	312105-0451	-		2	SCREW M6S8X20RFR
	840	312105-0453	-		6	SCREW M6S8X25RFR
	850	312105-0489	-		4	SCREW M6S10X16RFR
	860	312105-0491	-		13	SCREW M6S10X20RFR
	865	312105-0493	-		2	SCREW M6S10X25RFR
	870	312105-0495	-		16	SCREW M6S10X30RFR
	880	312115-0368	-		4	SCREW MC6S 6X16 A4 80
	890	312125-0285	-		2	SLOTTED HEMCS4X6RFR
	900	312318-0323	-		2	GRUB SCREW SK6SS5X8RFR
	910	312605-0312	-		4	NUT M6M4RFR
	930	315105-0153	-		6	WASHER BRB6,4X12RFR
	940	315105-0165	-		8	WASHER BRB8,4X16RFR
	950	315105-0173	-		12	WASHER BRB10,5X22RFR
	955	315115-0173	-		10	WASHER TBRB 10,5X22 RFR
	960	315115-0165	-		6	WASHER TBRB8,4X16RFR
	965	315125-0165	-		2	WASHER TBRSB8,4X16RFR
	980	315204-0103	P		4	O-RING 5,1X1,6VITON
	985	315204-0213	P		2	O-RING 15,3X2,4VITON
	990	315204-0217	P		2	O-RING 24,2X3VITON
	995	352103-0111	-		2	CABLE GLAND PR22,5/10-14

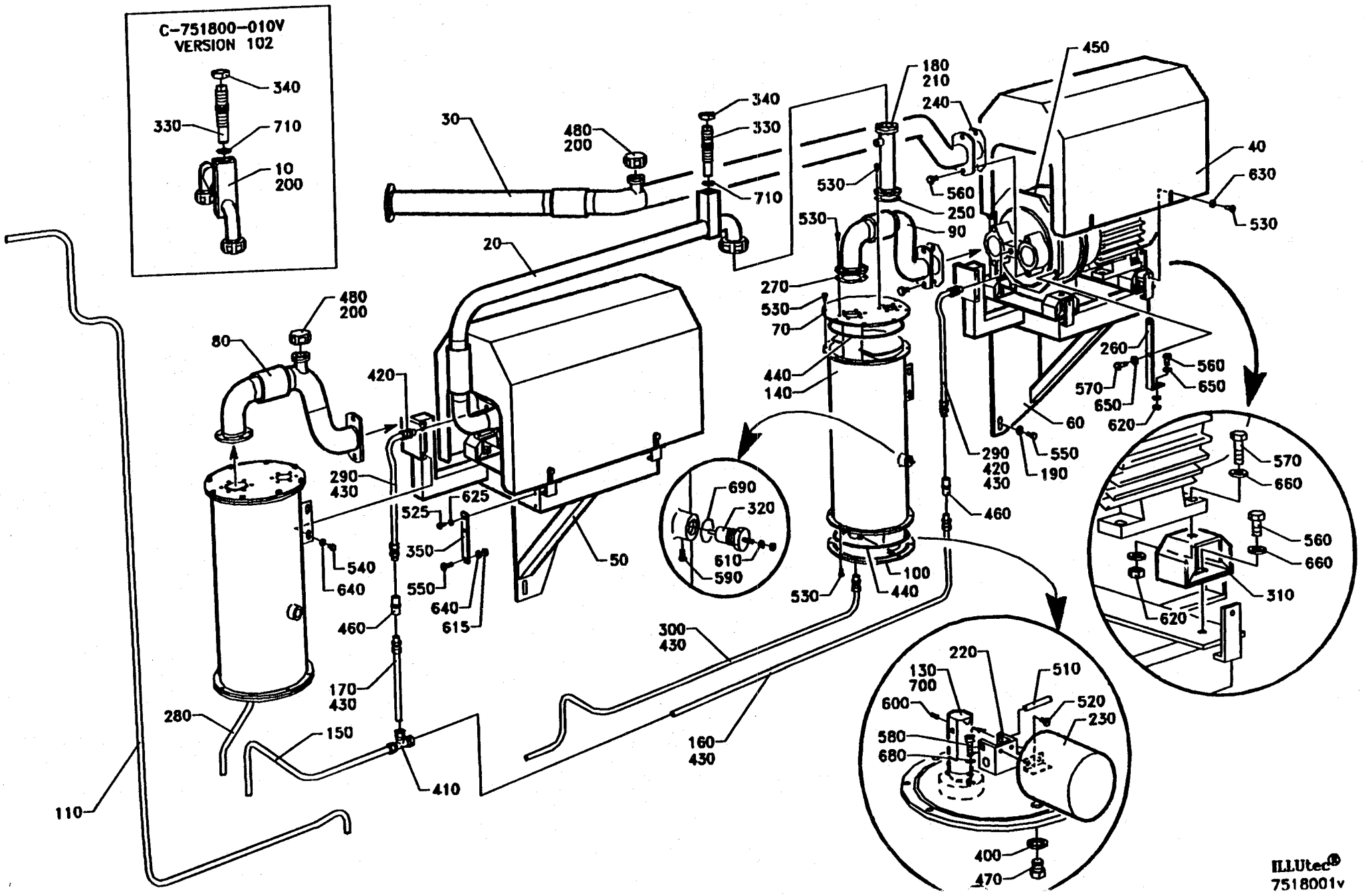
C-751800-010V
VERSION 102
340
330
710
10
200
30
480
200
340
330
710
20
180
210
240
450
40
630
530
560
250
90
530
530
270
530
70
440
140
480
200
80
420
290
430
625
525
350
550
640
615
460
540
640
50
690
320
610
590
260
560
570
650
650
620
60
290
420
430
550
190
460
570
660
560
660
310
620
100
440
530
300
430
160
430
170
430
280
150
410
110
220
130
700
510
520
230
600
580
680
400
470
ILLUtec®
7518001v

From	Pos	Part No	SP	UN	Qty	Description
50 Hz						
	330	490998	C		1	SCREW
	340	442237	C		1	NUT
	480	90217-0026	-		2	NUT
	710	315202-0119	P		1	O-RING 25,1X1,6
60 Hz						
	010	751804	-		1	PIPE
	330	490998	C		2	SCREW
	340	442237	C		2	NUT
	710	315202-0119	P		2	O-RING 25,1X1,6
Common Parts						
	020	751802	-		1	PIPE
	030	751803	-		1	PIPE
	040	751808	-		2	COVER
	050	751801	-		1	BRACKET
	060	751805	-		1	BRACKET
	070	271640	C		2	LID
	080	469153	-		1	PIPE
	090	469154	-		1	PIPE
	100	469511	C		2	BOTTOM
-080V	110	490862	-		1	PIPE
090V-	120	751235	-		2	INSULATION
	130	269443	C		2	BRACKET
	140	269461	C		2	CONTAINER
	150	751809	-		1	PIPE
	160	751810	-		1	PIPE
	170	751811	-		1	PIPE
	180	491095	-		1	PIPE
	190	28036	-		6	WASHER
	200	12242-0001	P		2	GASKET
	210	12242-0003	P		1	GASKET
	220	179595	C		2	SHUTTER
	230	179596	C		2	FLOAT
	240	230551	PU		4	GASKET
	250	531742	P		1	GASKET
	260	269859	-		4	BRACKET
	270	271461	PU		2	GASKET
	280	456269	-		1	PIPE
	290	751812	-		2	PIPE
	300	751813	-		1	PIPE
	310	469160	S		8	VIBRATION DAMPER
	320	458962-0001	S		2	ELECTRODE
	350	752313	-		1	BRACKET
	400	90005-0006	-		2	SEAL RING

From	Pos	Part No	SP	UN	Qty	Description
	410	90030-0058	-		1	CONNECTION
	420	90030-0109	-		2	PIPE CONNECTION
090V-	425	90144-0004	-	MM X		TAPE
	430	90030-0187	-		6	PIPE CONNECTION
	440	90242-0084	PU		4	O-RING
	450	90270-0011	-		2	COMPRESSOR
		90270-0348	R		1	* MOTOR
	460	90270-0347	C		2	VALVE
	470	90330-0029	-		2	PLUG
	510	311103-0361	-		2	CYLINDRICACPR6M6X40RFR
	520	312105-0287	-		4	SCREW M6S4X8 A4 80
	525	312105-0327	-		2	SCREW M6S5X12 A4 80
	530	312105-0366	-		58	SCREW M6S6X12RFR
	540	312105-0447	-		8	SCREW M6S8X12RFR
	550	312105-0451	-		7	SCREW M6S8X20RFR
	560	312105-0491	-		20	SCREW M6S10X20RFR
	570	312105-0495	-		12	SCREW M6S10X30RFR
	580	312115-0368	-		4	SCREW 6X16 A4 80
	590	312125-0285	-		2	SLOTTED HEMCS4X6RFR
	600	312318-0323	-		2	GRUB SCREW SK6SS5X8RFR
	610	312605-0312	-		4	NUT M6M4RFR
	615	312605-0318	-		1	NUT M6M8RFR
	620	312605-0320	-		8	NUT M6M10RFR
	625	315105-0146	-		2	WASHER BRB5,3X10RFR
	630	315105-0153	-		10	WASHER BRB6,4X12RFR
	640	315105-0165	-		9	WASHER BRB8,4X16RFR
	650	315105-0173	-		12	WASHER BRB10,5X22RFR
	660	315115-0173	-		14	WASHER B 10,5X22 RFR
	670	315115-0165	-		6	WASHER TBRB8,4X16RFR
	680	315204-0103	P		4	O-RING 5,1X1,6VITON
	690	315204-0213	P		2	O-RING 15,3X2,4VITON
	700	315204-0217	P		2	O-RING 24,2X3VITON
090V-	720	352103-0111	-		2	CABLE GLANR.22,5/10-14

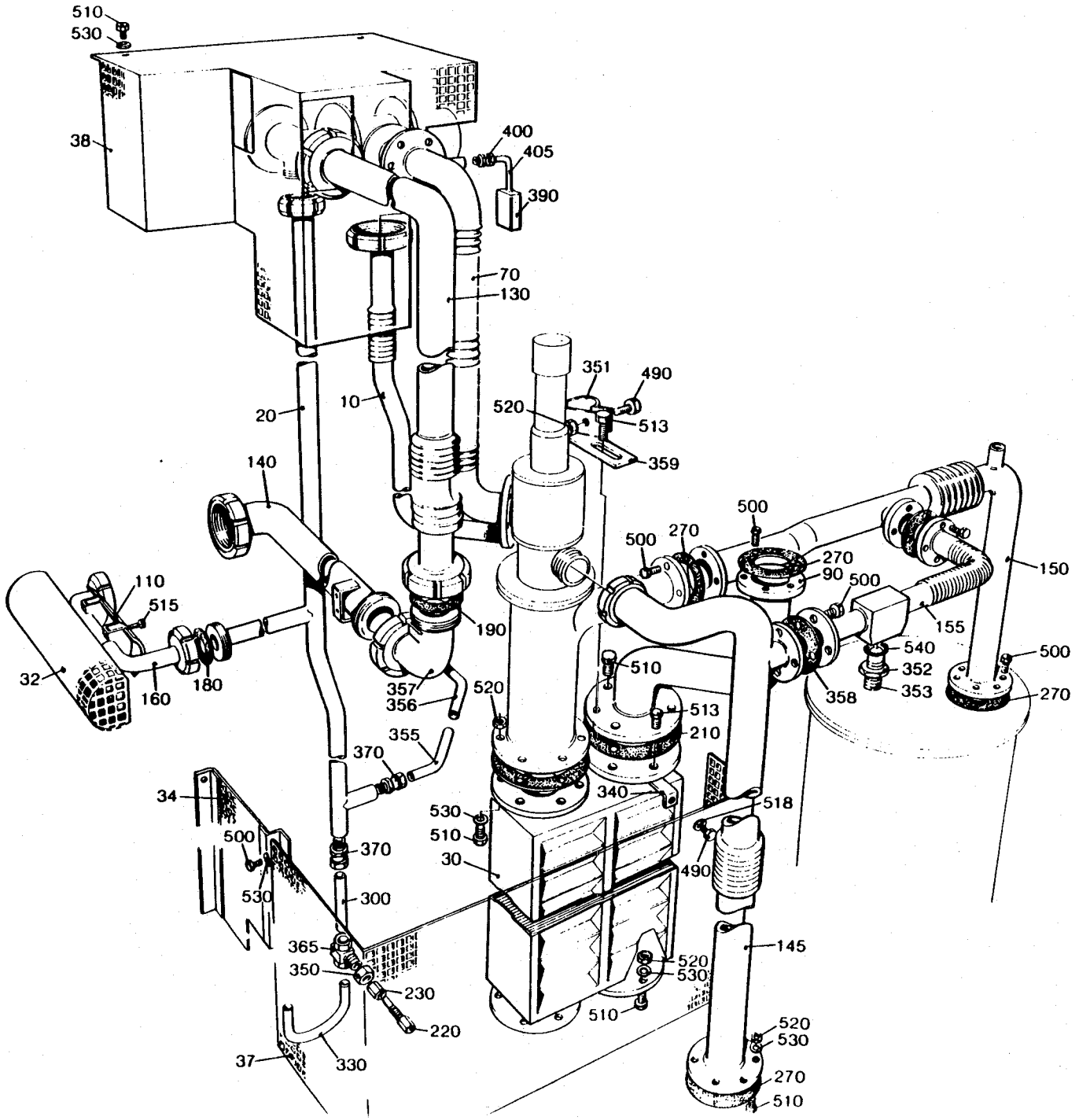
510
530
38
400
405
390
70
130
351
490
20
10
520
513
359
140
500
270
500
270
90
500
150
110
515
190
155
540
500
32
160
180
357
356
520
358
352
353
270
510
513
210
355
370
340
518
34
530
510
500
370
490
30
530
300
365
350
230
220
145
520
530
510
37
330
520
530
270
510

From	Pos	Part No	SP	UN	Qty	Description
Volume 125 ml						
	130	491637	-		1	PIPE
	140	491638	-		1	PIPE
	330	491209-0002	-		1	PIPE
Volume 180 - 250 ml						
	130	456591-0003	-		1	PIPE
	140	456592-0002	-		1	PIPE
	330	491209-0001	-		1	PIPE
Volume 200 ml SLIM						
	130	456591-0003	-		1	PIPE
	140	456592-0002	-		1	PIPE
	330	491209-0002	-		1	PIPE
Common Parts						
	010	491755	-		1	PIPE
	020	491219	-		1	PIPE
	030	527705	C		1	HEAT EXCHANGER
	032	272557-0001	-		1	TOUCH GUARD
	034	491299	-		1	TOUCH GUARD
	037	456912	-		1	TOUCH GUARD
	038	456913	-		1	TOUCH GUARD
	070	491154	-		1	PIPE
	090	272312	-		1	PIPE
	110	272556-0001	-		1	TOUCH GUARD
	145	469385	-		1	PIPE
	150	491094	-		1	PIPE
	155	491089	-		1	PIPE
	160	256840-0003	-		1	PIPE
	180	12242-0001	P		1	GASKET
	190	12242-0003	P		1	GASKET
	210	531737	P		4	GASKET
	220	209145	-		2	SCREW
	230	209146	-		2	LOCK NUT
	270	531742	PU		4	GASKET
	300	272349-0004	-		1	PIPE
	340	272808	-		1	BRACKET
	350	279589	-		2	NUT
	351	295549	-		1	CLIP
	352	490998	S		1	SCREW
	353	442237	-		1	NUT
	355	491220	-		1	PIPE
	356	491221	-		1	PIPE
	357	456904	-		1	PIPE
	358	441721	PU		2	GASKET
	359	441735	-		1	BRACKET

From	Pos	Part No	SP	UN	Qty	Description
	365	90030-0058	-		2	CONNECTION
	370	90030-0187	-		2	PIPE CONNECTION
	390	90326-0012	P		1	PROTECTIVE COVER
	400	90326-0020	P		1	SOCKET
	405	90326-0051	P		1	THERMO COUPLE
	490	312105-0364	-		3	SCREW M6S6X10RFR
	500	312105-0367	-		42	SCREW M6S6X14RFR
	510	312105-0370	-		24	SCREW M6S6X20RFR
	513	312105-0372	-		2	SCREW M6S6X25RFR
	515	312115-0329	-		4	SCREW MC6S 5X16 A4 80
	518	315125-0153	-		1	WASHER TBRSB 6,4X22X4 RFR
	520	312605-0316	-		29	NUT M6M6RFR
	530	315105-0153	-		30	WASHER BRB6,4X12RFR
	540	315204-0119	P		1	O-RING 25,1X1,6 VITON

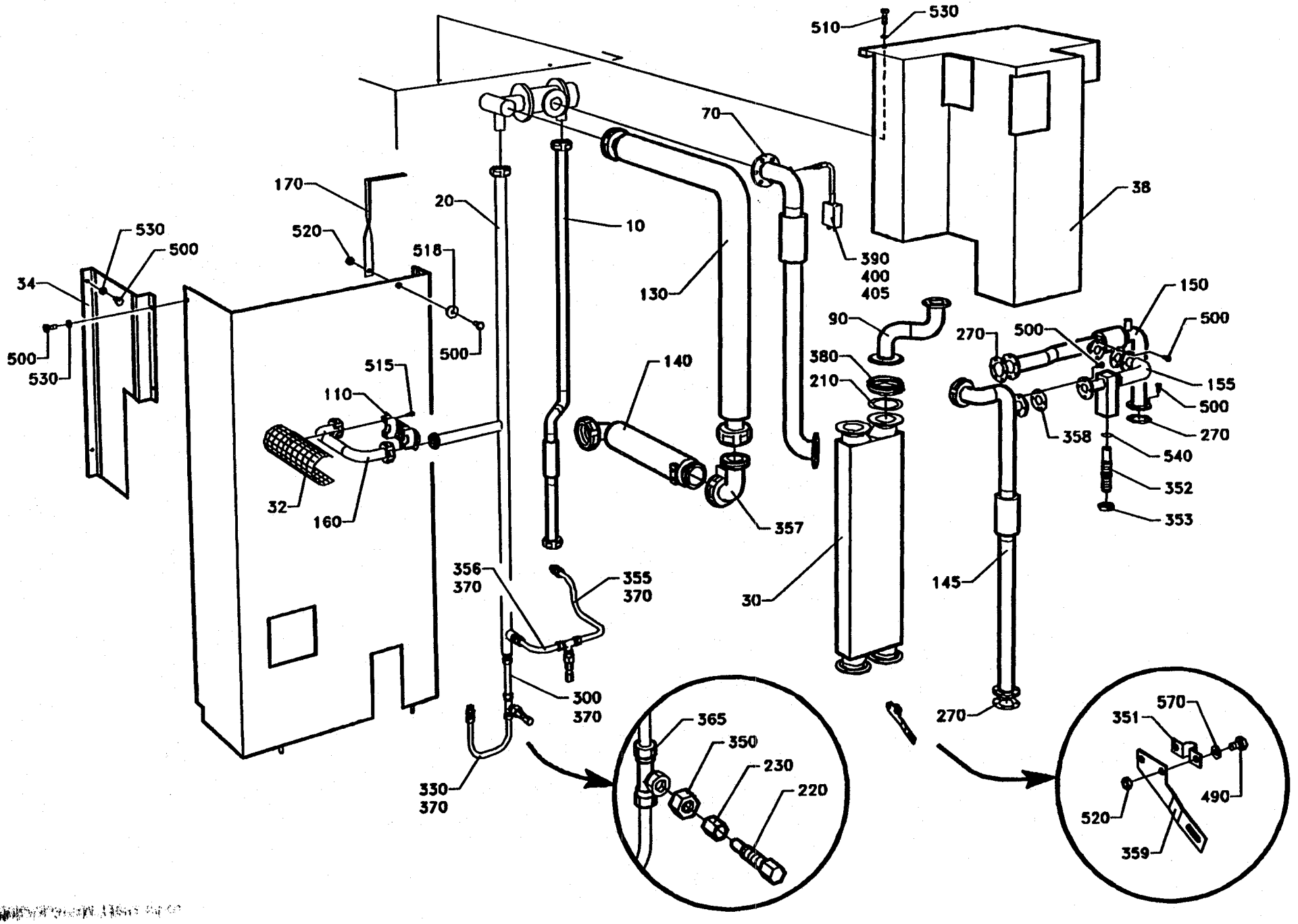
510
530
70
38
170
20
10
520
518
530
500
34
500
530
500
130
390
400
405
90
150
500
270
500
380
210
155
500
270
358
540
352
353
515
110
140
32
160
357
30
145
356
370
355
370
300
370
330
370
270
365
350
230
220
570
351
490
520
359

ILLUtec®

From	Pos	Part No	SP	UN	Qty	Description
Volume 125 ml						
	130	491637	-		1	PIPE
	140	491638	-		1	PIPE
	330	491209-0002	-		1	PIPE
Volume 180 - 284 ml						
	130	456591-0003	-		1	PIPE
	140	456592-0002	-		1	PIPE
	330	491209-0001	-		1	PIPE
Volume 200 ml SLIM						
	130	456591-0003	-		1	PIPE
	140	456592-0002	-		1	PIPE
	330	491209-0002	-		1	PIPE
Common Parts						
	010	491755	-		1	PIPE
	020	491219	-		1	PIPE
	030	752219	C		1	HEAT EXCHANGER
	032	272557-0001	-		1	TOUCH GUARD
	034	491299	-		1	TOUCH GUARD
	037	456912	-		1	TOUCH GUARD
	038	456913	-		1	TOUCH GUARD
	070	491154	-		1	PIPE
	090	752223	-		1	PIPE
	110	272556-0001	-		1	TOUCH GUARD
	145	469385	-		1	PIPE
	150	491094	-		1	PIPE
	155	491089	-		1	PIPE
	160	256840-0003	-		1	PIPE
	170	752268	-		1	BRACKET
	180	12242-0001	P		1	GASKET
	190	12242-0003	P		2	GASKET
	210	752224	P		4	GASKET
	220	209145	-		2	SCREW
	230	209146	-		2	LOCK NUT
	270	531742	PU		4	GASKET
	300	272349-0004	-		1	PIPE
	350	279589	-		2	NUT
	351	295549	-		1	CLIP
	352	490998	S		1	SCREW
	353	442237	-		1	NUT
	355	491220	-		1	PIPE
	356	491221	-		1	PIPE
	357	456904	-		1	PIPE
	358	441721	PU		2	GASKET
	359	752267	-		1	BRACKET

From	Pos	Part No	SP	UN	Qty	Description
	365	90030-0058	-		2	CONNECTION
	370	90030-0187	-		2	PIPE CONNECTION
	380	90217-0305	-		4	CLAMP
	390	90326-0012	P		1	PROTECTIVE COVER
	400	90326-0020	P		1	SOCKET
	405	90326-0051	P		1	THERMO COUPLE
	490	312105-0364	-		2	SCREW M6S6X10RFR
	500	312105-0367	-		45	SCREW M6S6X14RFR
	510	312105-0370	-		5	SCREW M6S6X20RFR
	515	312115-0329	-		4	SCREW MC6S 5X16 A4 80
	518	315125-0153	-		1	WASHER TBR3B 6,4X22X4 RFR
	520	312605-0316	-		3	NUT M6M6RFR
	530	315105-0153	-		6	WASHER BRB6,4X12RFR
	540	315204-0119	P		1	O-RING 25,1X1,6 VITON

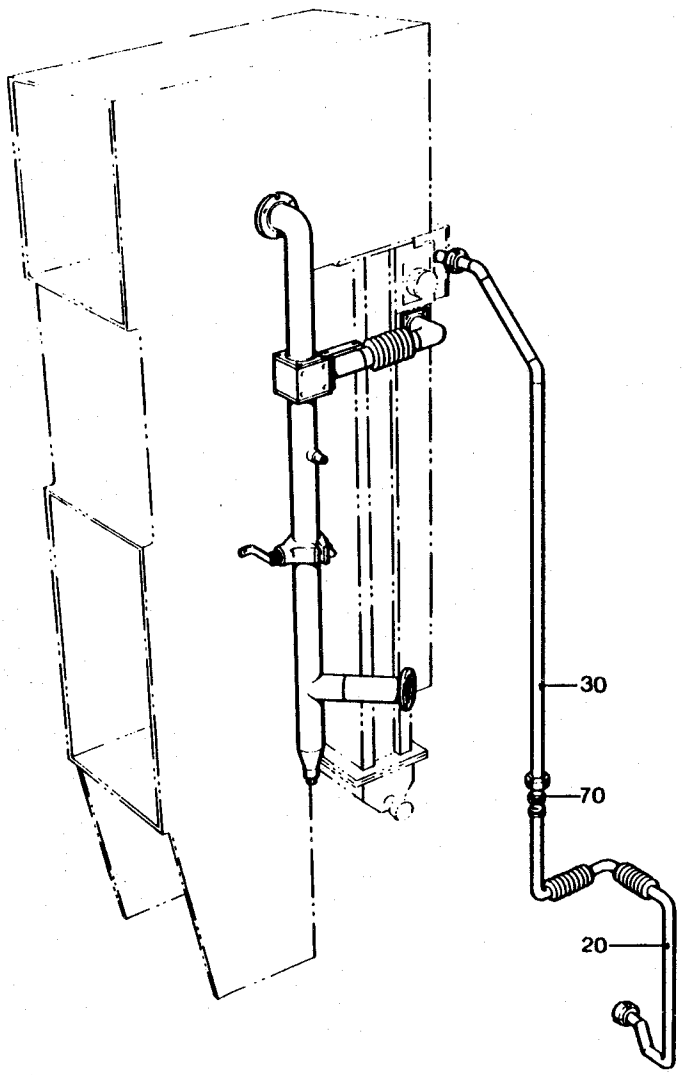
30
70
20

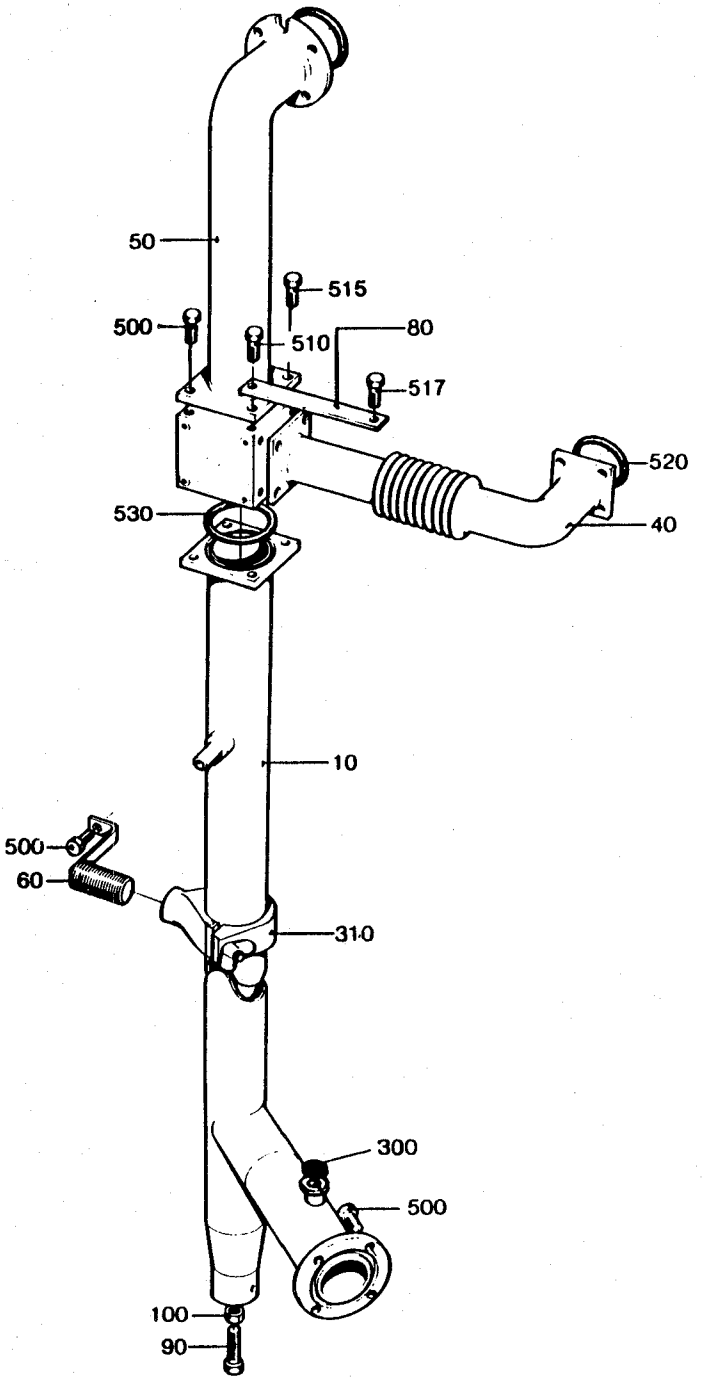
50
515
500
510
80
517
520
530
40
10
500
60
310
300
500
100
90

From	Pos	Part No	SP	UN	Qty	Description	
	010	491760	C		1	PIPE	
	020	491360	C		1	PIPE	
	030	469992	C		1	PIPE	
	040	255879	C		1	PIPE	
	050	255905	C		1	PIPE	
	060	490967	-		1	BRACKET	
	070	12242-0001	S		3	GASKET	
-080V	080	456496	-		1	STRUT	
090V-	080	752175	-		1	STRUT	
	090	490906	S		1	SCREW	
	100	490907	S		1	NUT	
	300	90091-0180	S		1	SEAL RING	
	310	90101-0004	-		1	HOLDER	
	500	312105-0366	-		21	SCREW	M6S6X12RFR
	510	312105-0368	-		3	SCREW	M6S6X16RFR
090V-	515	312105-0370	-		2	SCREW	M6S6X20RFR
090V-	517	312105-0372	-		1	SCREW	M6S6X25RFR
	520	315204-0223	S		1	O-RING	39,2X3VITON
	530	315204-0301	S		5	O-RING	49,5X3VITON

From	Pos	Part No	SP	UN	Qty	Description

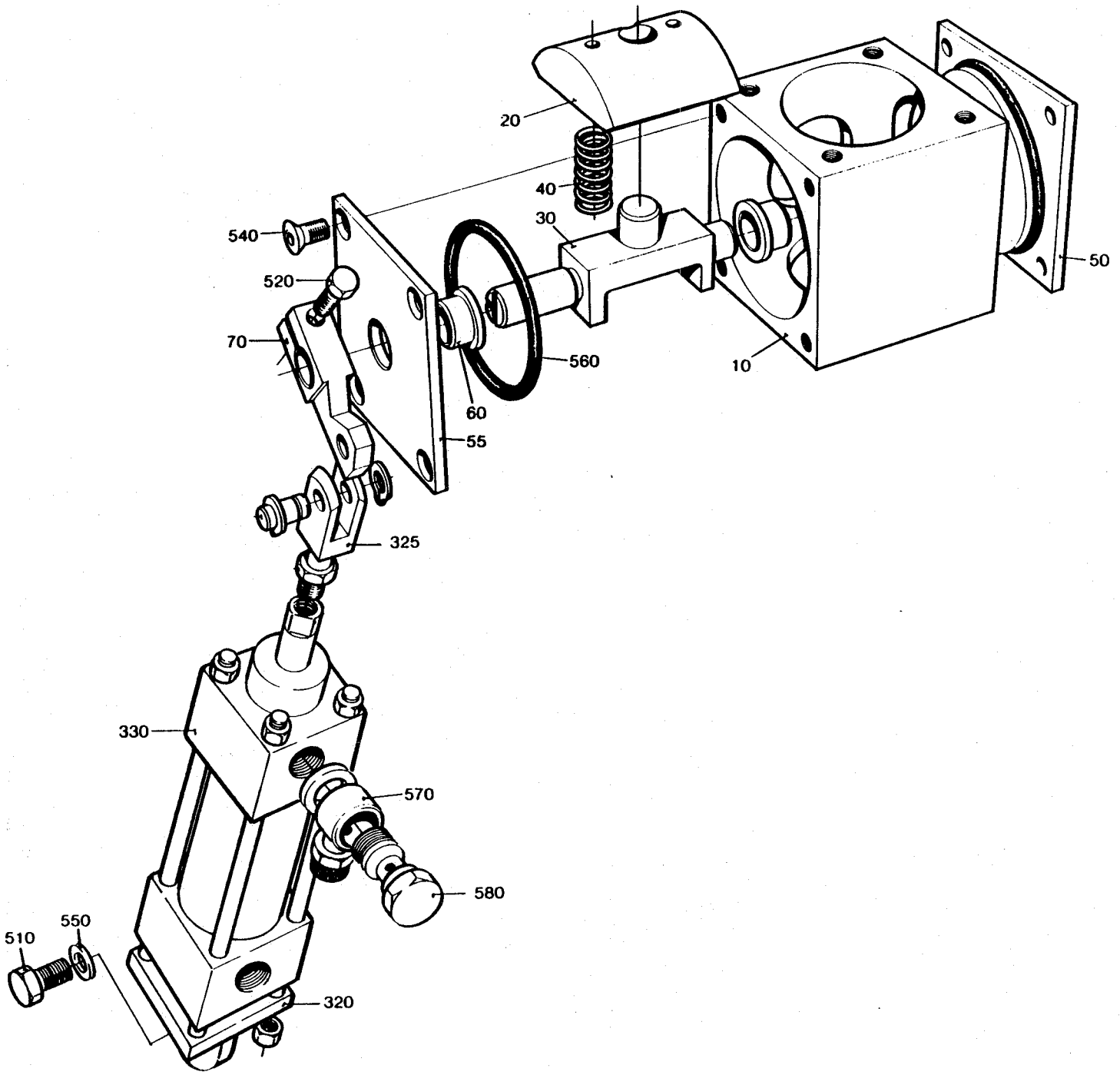
20
40
30
50
540
520
70
560
10
60
55
325
330
570
580
510
550
320

From	Pos	Part No	SP	UN	Qty	Description
	010	255870	C		1	VALVE HOUSING
	020	255871	S		1	BLOCK
	030	255872	S		1	BRACKET
	040	21521	S		2	COMPRESSION SPRING
	050	255874	S		1	BEARING COVER
	055	441957	S		1	BEARING COVER
	060	255875	S		2	BUSHING
	070	441483	C		1	CYLINDER BRACKET
	320	90239-0453	-		1	BRACKET
	325	90239-0516	-		1	PISTON ROD BRACKET
	330	90239-0779	S		1	CYLINDER
		90239-0442	S		1	* SEAL KIT
	510	312105-0366	-		1	SCREW M6S6X12RFR
	520	312105-0370	-		1	SCREW M6S6X20RFR
	540	312155-0364	-		8	SCREW MF6S6X10RFR
	550	315105-0153	-		1	WASHER BRB6,4X12RFR
	560	315204-0302	S		2	O-RING 54,5X3VITON
	570	342797-0121	S		2	BANJO CONNSINGEL 6-1/8
	580	342980-0303	-		2	BANJO CONN SINGEL 1/8"

From	Pos	Part No	SP	UN	Qty	Description

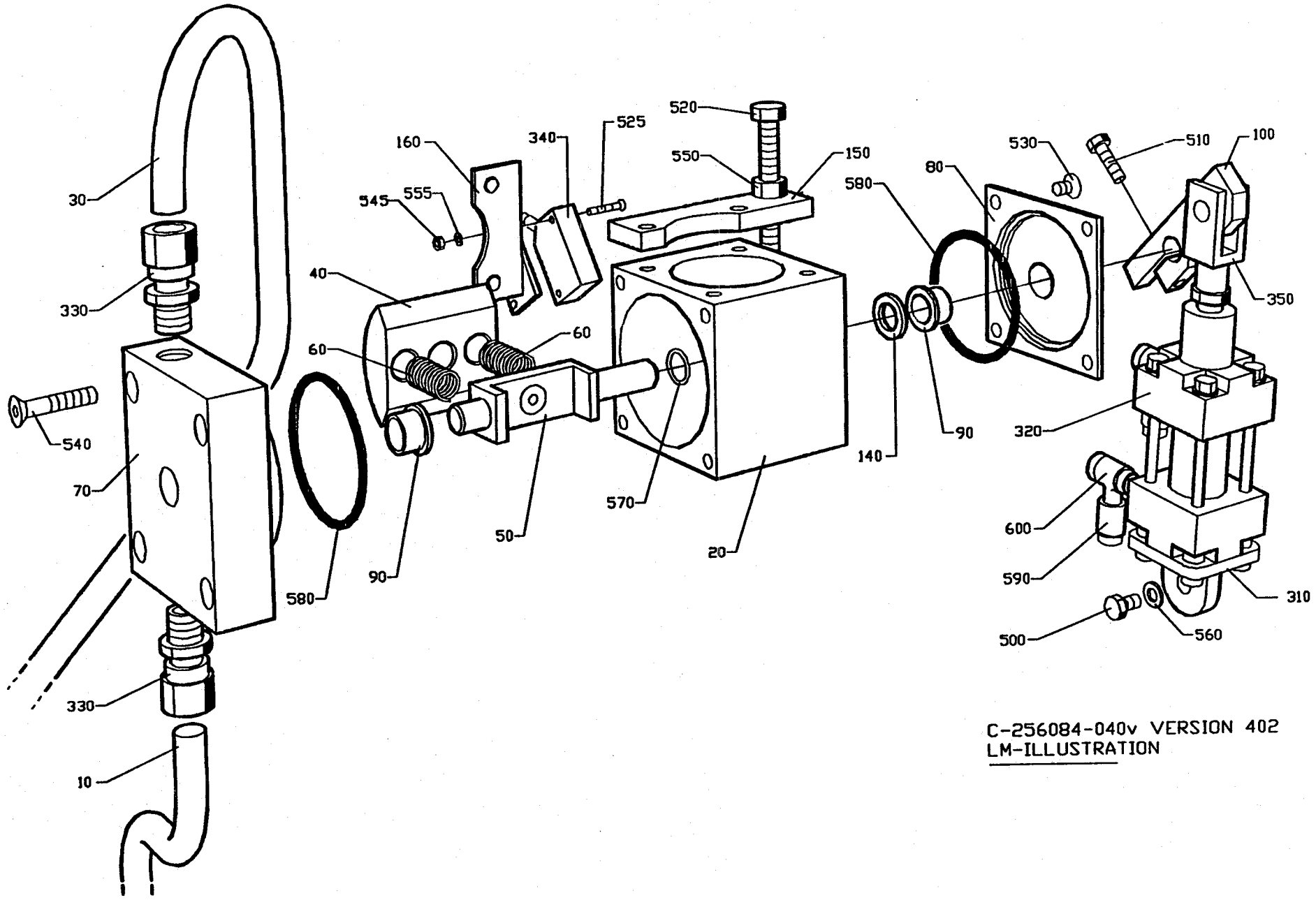

C-256084-040v VERSION 402
LM-ILLUSTRATION

Last Alteration: AM 14591 90-02-28

Corresponding C-lists: 256084-040V
Assembly Drawing: 256084-4

Date Printed: 901112

From	Pos	Part No	SP	UN	Qty	Description
	010	752742-0001	-		1	PIPE (180-284 ml)
	010	752742-0002	-		1	PIPE (200 mlSLIM,125 ml)
	020	255870	C		1	VALVE HOUSING
	030	751736	-		1	PIPE
	040	255871	S		1	BLOCK
	050	751732	S		1	BRACKET
	060	21521	S		2	COMPRESSION SPRING
	070	751731	S		1	BEARING COVER
	080	441957	S		1	BEARING COVER
	090	255875	S		2	BUSHING
	100	751760	C		1	CYLINDER BRACKET
	140	266737	-		1	WASHER
	150	751740	-		1	STOP
	160	752419	-		1	BRACKET
	310	90239-0453	-		1	BRACKET
	320	90239-0779	S		1	CYLINDER
		90239-0442	S		1	* SEAL KIT
	330	90030-0187	-		4	PIPE CONNECTION
	340	90044-0104	-		1	PROXIMITY SWITCH
	350	90239-0516	-		1	PISTON ROD HEAD
	500	312105-0366	-		1	SCREW M6S6X12RFR
	510	312105-0370	-		1	SCREW M6S6X20RFR
	520	312109-0463	-		1	SCREW
	525	312125-0230	-		2	SLOTTED HEMCS3X20RFR
	530	312155-0364	-		4	SCREW MF6S6X10RFR
	540	312155-0374	-		4	SCREW MF6S6X30RFR
	545	312605-0310	-		2	NUT M6M3RFR
	550	312605-0318	-		1	NUT M6M8RFR
	555	315105-0124	-		2	WASHER BRB3,2X6RFR
	560	315105-0153	-		1	WASHER BRB6,4X12RFR
	570	315204-0110	-		1	O-RING 1X1,6 VITON
	580	315204-0302	S		2	O-RING 54,5X3VITON
	590	342797-0121	S		2	BANJO CONNSINGEL 6-1/8
	600	342980-0303	-		2	BANJO CONN SINGEL 1/8"

From	Pos	Part No	SP	UN	Qty	Description

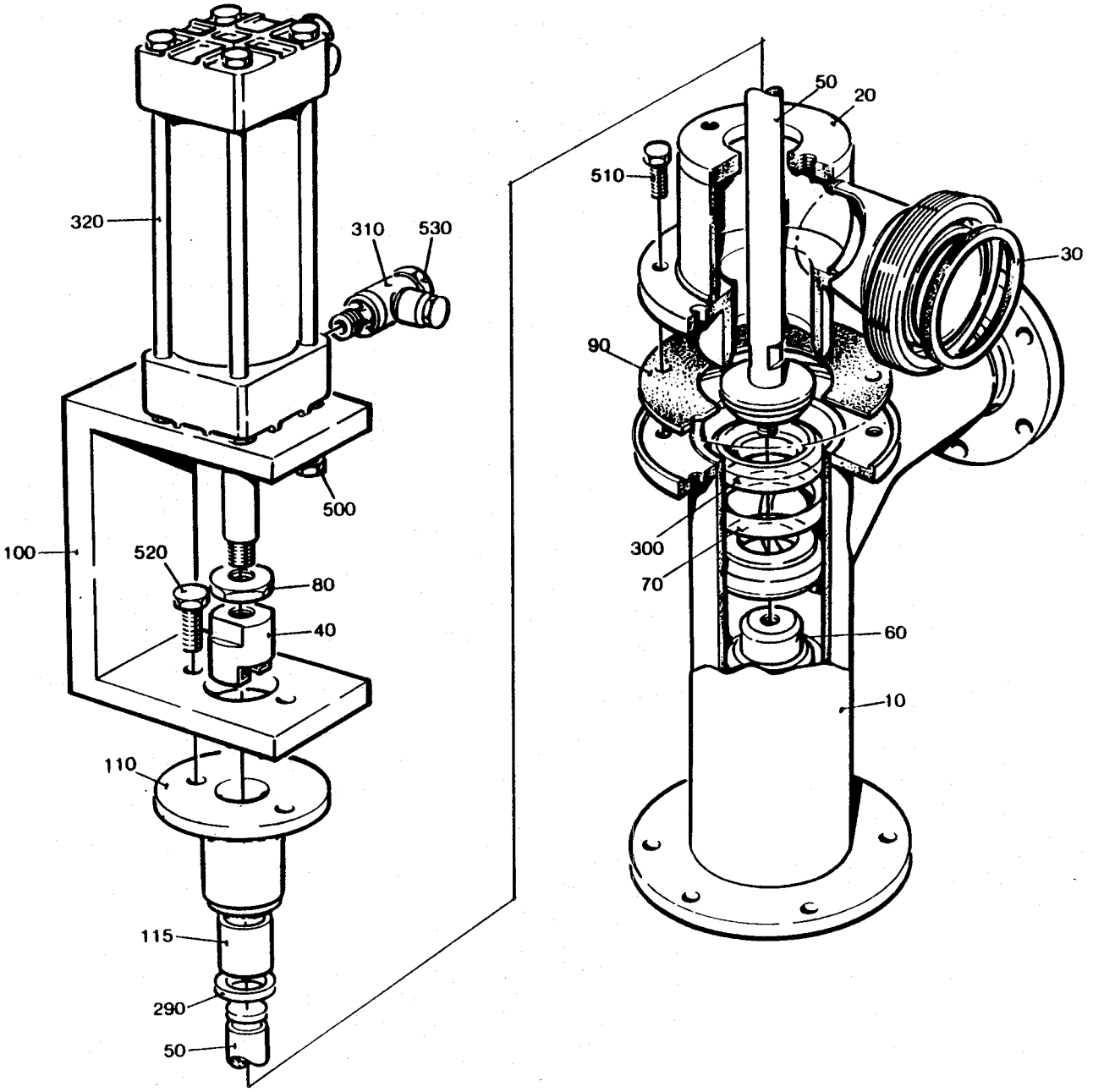
320
310
530
500
100
520
80
40
110
115
290
50
510
50
20
30
90
300
70
60
10

From	Pos	Part No	SP	UN	Qty	Description
-080V	010	490976	C		1	VALVE HOUSING
090V-	010	752222	C		1	VALVE HOUSING
	020	269401	C		1	HOUSE
	030	90091-0182	P		1	GASKET
	040	441871	S		1	PENDULUM SUSPENSION
	050	266389	S		1	PISTON ROD
	060	266390	S		1	NUT
	070	266391	S		1	RING
	080	441286	C		1	NUT
	090	295160	S		1	GASKET
	100	441843	C		1	BRACKET
	110	532348	S		1	SPINDLE GUIDE
	115	532349	S		2	PLAIN BEARING
	290	90141-0022	S		1	RING
	300	530588	P		2	SEAL RING
	320	90239-0779	S		1	CYLINDER
		90239-0442	S		1	* SEAL KIT
	500	312105-0331	-		4	SCREW M6S5X20 A4 80
	510	312105-0366	-		6	SCREW M6S6X12RFR
	520	312105-0451	-		2	SCREW M6S8X20RFR
	530	342797-0121	S		2	BANJO CONNSINGEL 6-1/8
	540	342980-0303	-		2	BANJO CONN SINGEL 1/8"

From	Pos	Part No	SP	UN	Qty	Description

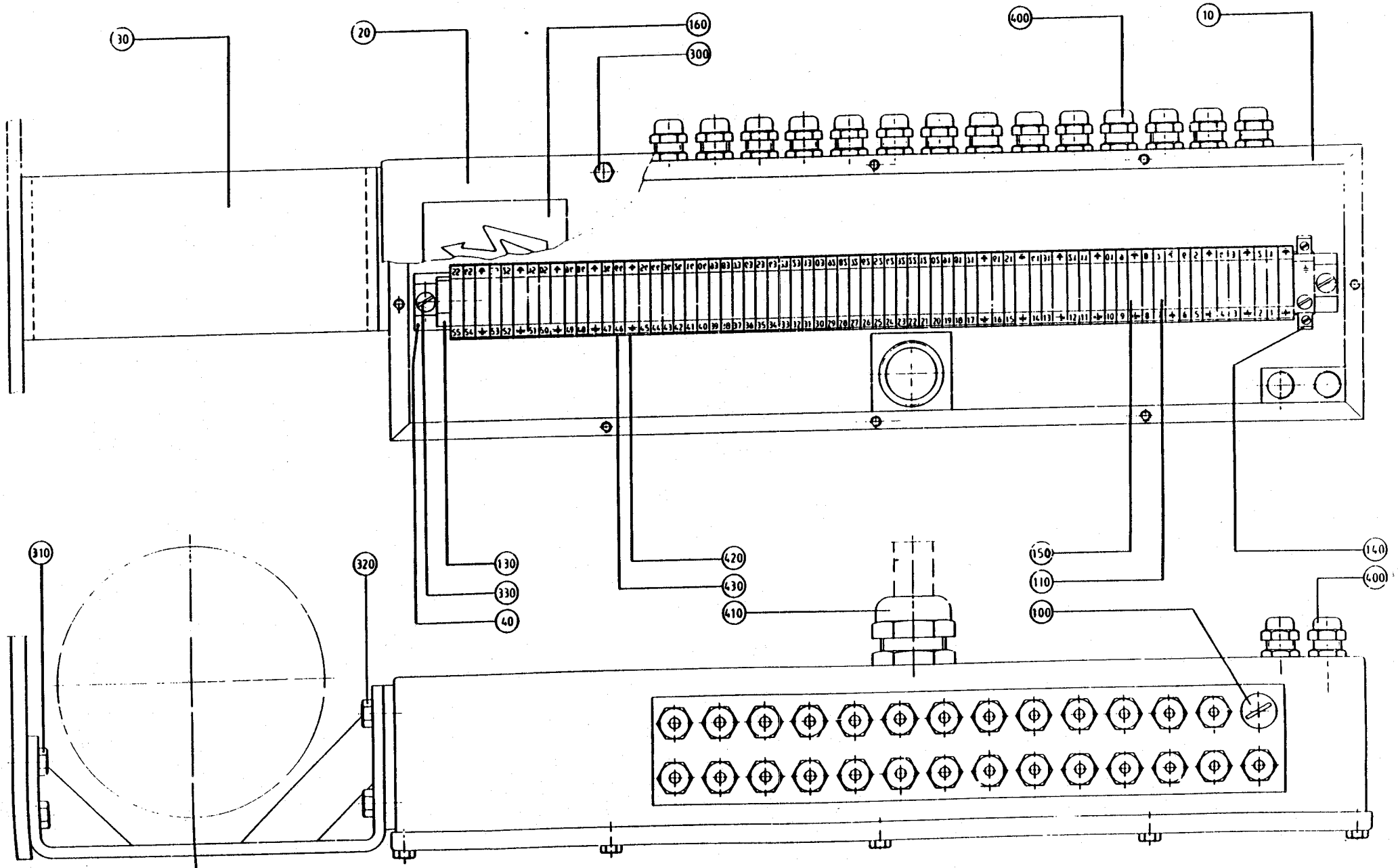
30
20
160
300
400
10
310
320
130
330
40
420
430
410
150
110
100
140
400

Last Alteration: AM 7914 85-05-21

Issue Date: 900223

Corresponding C-lists: 295470-030V
Assembly Drawing: 295470-2

From	Pos	Part No	SP	UN	Qty	Description
	010	456596	-		1	BOX
	020	295024	-		1	LID
	030	456554	-		1	BRACKET
	040	10793-0083	-		1	RAIL
	100	90002-0013	-		1	BLANK-OFF PLUG
	110	90077-0092	P		55	TERMINAL BLOCK
	130	90094-0004	P		1	EN SUPPORT
	140	90135-0008	P		1	EARTHING CLIP
	150	90135-0021	P		14	EARTHING CLAMP
	160	90194-0016	-		1	SIGN
	300	312105-0366	-		8	SCREW M6S6X12RFR
	310	312105-0449	-		4	SCREW M6S8X16RFR
	320	312105-0451	-		4	SCREW M6S8X20RFR
	330	312125-0364	-		2	SLOTTED HEMCS6X10RFR
	400	352103-0101	-		28	CABLE GLANR.15,2/4-8
	410	352103-0121	-		1	CABLE GLANR.37,0/18-25
	420	359011-0202	-		28	LABEL (JORD)
	430	359011-0800	-		2	LABEL BSFW 1-100

From	Pos	Part No	SP	UN	Qty	Description

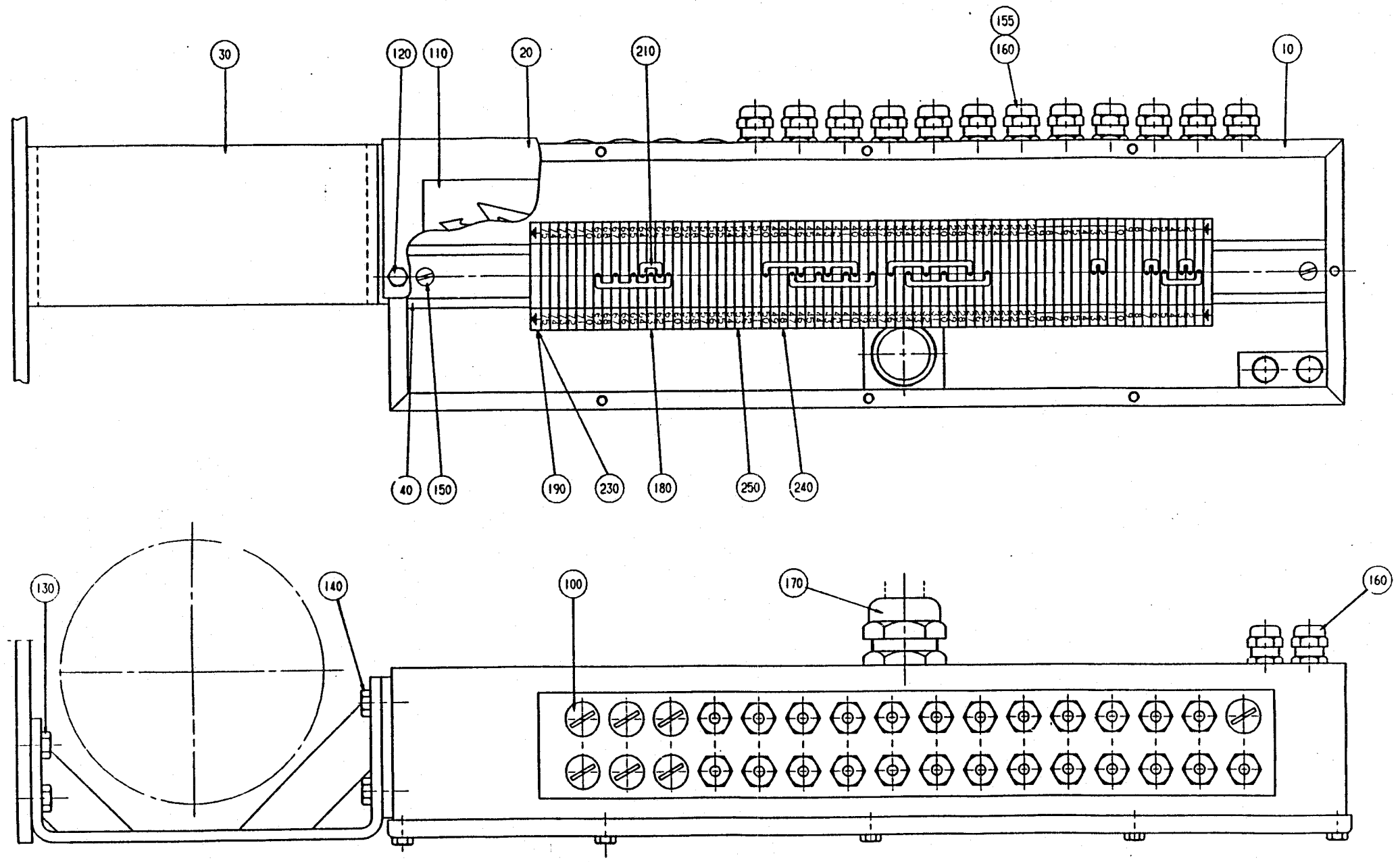
30
120
110
20
210
155
160
10
40
150
190
230
180
250
240
130
140
100
170
160

From	Pos	Part No	SP	UN	Qty	Description
Machine with Pull Tab						
	100	90002-0013	-		9	BLANK-OFF PLUG
	155	352103-0100	-		10	CABLE GLANR.15,2/2-6
Machine without Pull Tab						
	100	90002-0013	-		8	BLANK-OFF PLUG
	155	352103-0100	-		11	CABLE GLANR.15,2/2-6
Common Part						
	010	752440	-		1	BOX
	020	295624	-		1	LID
	030	456554	-		1	BRACKET
	040	751125-0003	-		1	RAIL
	110	90194-0016	-		1	SIGN
	120	312105-0366	-		8	SCREW M6S6X12RFR
	130	312105-0449	-		4	SCREW M6S8X16RFR
	140	312105-0451	-		4	SCREW M6S8X20RFR
	150	312125-0364	-		2	SLOTTED HEMCS6X10RFR
	160	352103-0101	-		15	CABLE GLANR.15,2/4-8
	170	352103-0121	-		1	CABLE GLANR.37,0/18-25
	180	353021-0216	P		75	TERMINAL
	190	353024-0204	P		2	EARTH CLIPL#MMA WPE 2,5
	210	353034-0013	-		7	CONTACT PIECE
	230	359011-0819	-		1	SET OF SIG5-GW (EARTH)
	240	359011-0807	-		2	SET OF SIG5-FW 1-50
	250	359011-0808	-		2	SET OF SIG5-FW 51-100

From	Pos	Part No	SP	UN	Qty	Description

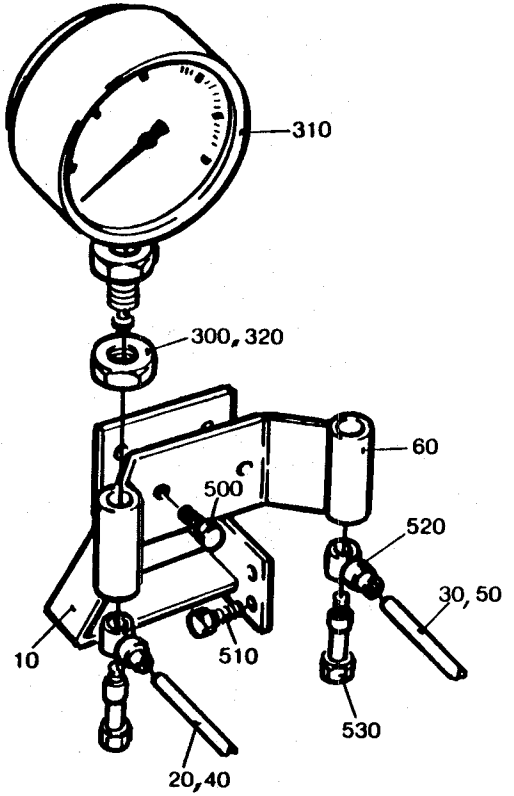
310
300, 320
60
500
520
30, 50
10
510
530
20, 40

From	Pos	Part No	SP	UN	Qty	Description
Machine with Pull Tab						
	010	491086	-		1	BRACKET
	040	491779	-		1	PIPE
	050	491088	-		1	PIPE
	510	312105-0449	-		2	SCREW M6S8X16RFR
Machine without Pull Tab						
	020	491778	-		1	PIPE
	020	751886	-		1	PIPE (Slim Body Machine)
	030	491020	-		1	PIPE
	030	751876	-		1	PIPE (Slim Body Machine)
Common Parts						
	060	33577	-		1	BRACKET
	300	90005-0019	-		2	WASHER
	310	90043-0067	S		2	PRESSURE GAUGE
	320	90330-0105	-		2	NUT
	500	312105-0366	-		2	SCREW M6S6X12RFR
	520	342797-0122	-		4	BANJO CONNSINGEL 6-1/4
	530	342980-0304	-		4	BANJO CONN SINGEL 1/4

From	Pos	Part No	SP	UN	Qty	Description

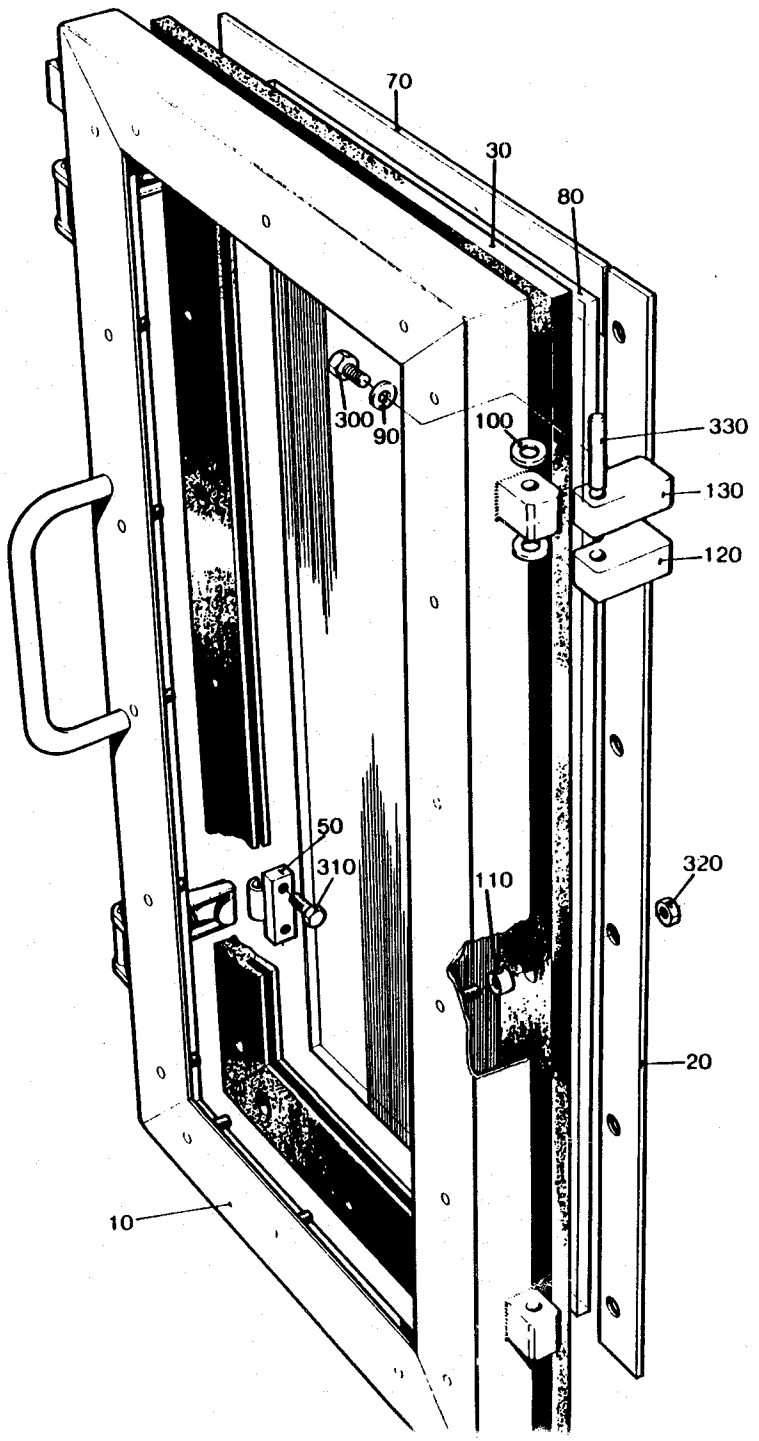
70
30
80
300
90
100
330
130
120
50
310
110
320
20
10

From	Pos	Part No	SP	UN	Qty	Description
	010	441715	-		1	FRAME
	020	272780	-		2	COVER STRIP
	030	272785	-		1	RUBBER STRIP
	050	271860	S		2	BLOCK
	070	272782	-		2	COVER STRIP
	080	272783-0003	-		1	GLASS PANE
	090	441737	S		2	WASHER
	100	441739	S		4	WASHER
	110	441718	C		18	SPACER
	120	G- 441740	S		2	HINGE FLANGE
	130	G- 441741	S		2	HINGE FLANGE
	300	312105-0451	-		4	SCREW M6S8X20RFR
	310	312105-0366	-		4	SCREW M6S6X12RFR
	320	312605-0314	-		18	NUT M6M5RFR
	330	311103-0413	-		2	CYLINDRICACPR8M6X50RFR

From	Pos	Part No	SP	UN	Qty	Description

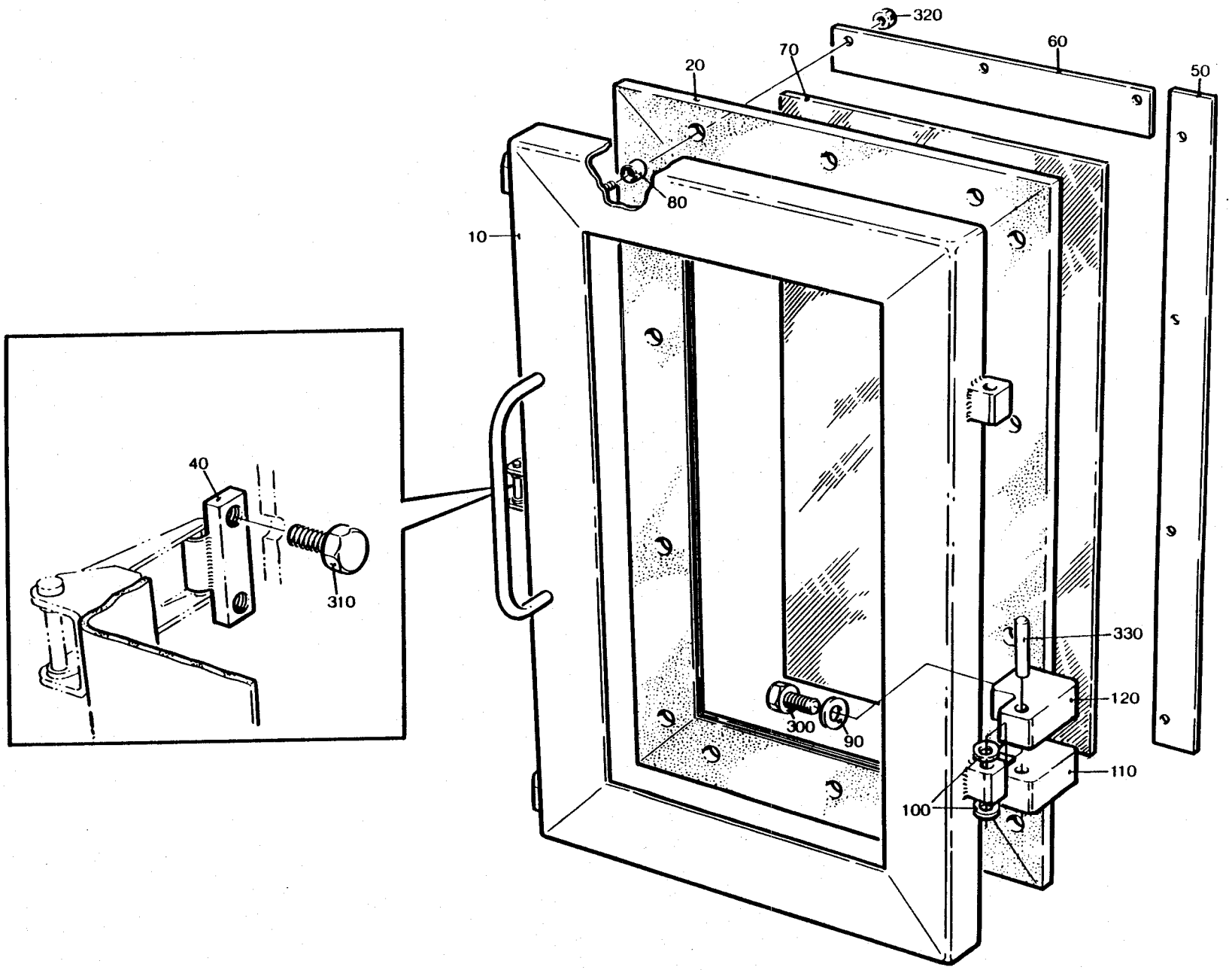
320
60
70
20
50
80
10
40
310
330
120
300
90
110
100

From	Pos	Part No	SP	UN	Qty	Description
	010	441713	-		1	FRAME
	020	272784-0002	S		1	RUBBER STRIP
	040	271860	S		1	BLOCK
	050	272781-0002	-		2	COVER STRIP
	060	272782	-		2	COVER STRIP
	070	272783-0002	S		1	GLASS PANE
	080	441718	S		14	SPACER
	090	441737	S		2	WASHER
	100	441739	S		4	WASHER
	110	G- 441740	S		2	HINGE FLANGE
	120	G- 441741	S		2	HINGE FLANGE
	300	312105-0451	-		4	SCREW M6S8X20RFR
	310	312105-0366	-		2	SCREW M6S6X12RFR
	320	312605-0314	-		14	NUT M6M5RFR
	330	311103-0413	-		2	CYLINDRICACPR8M6X50RFR

From	Pos	Part No	SP	UN	Qty	Description

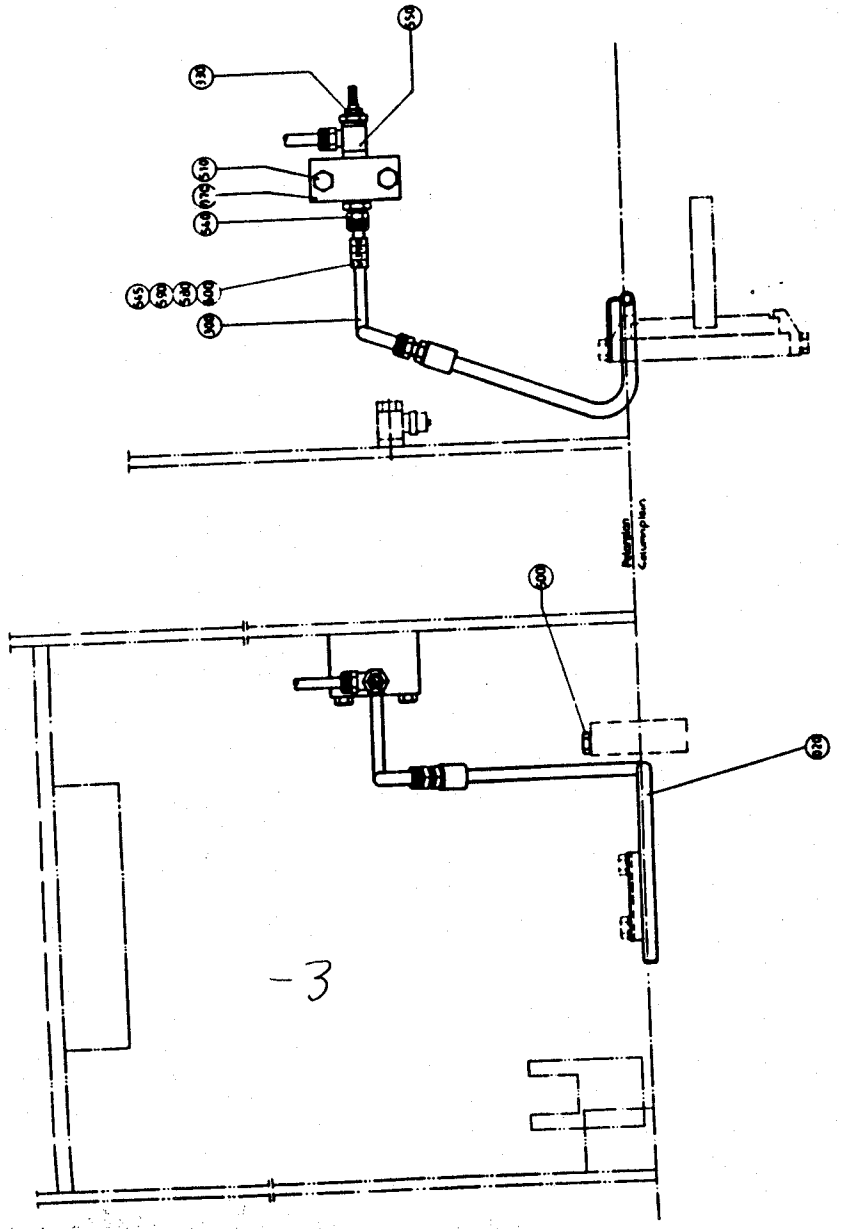
-3

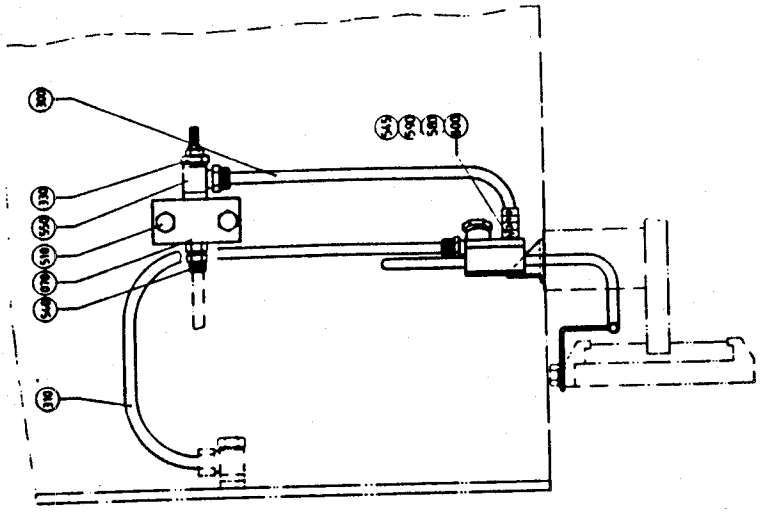

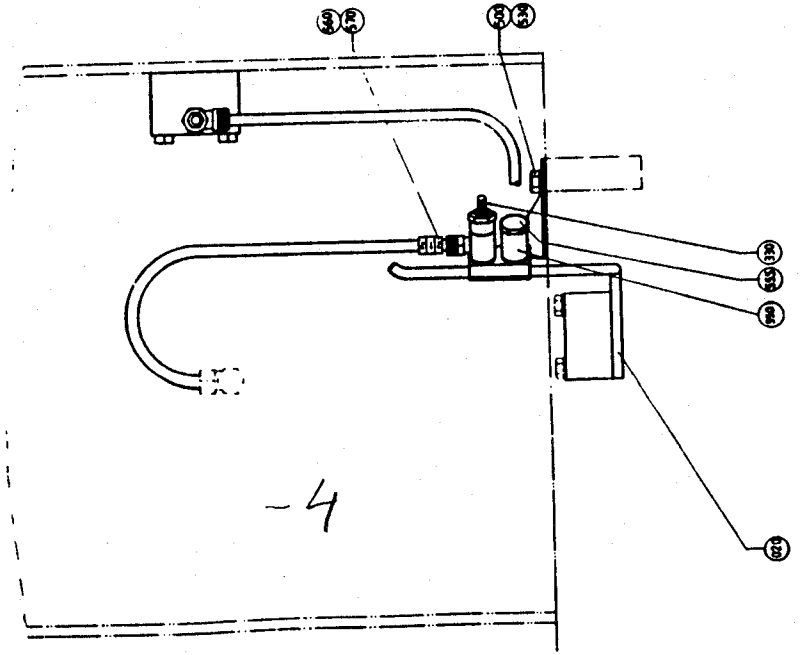
-4

From	Pos	Part No	SP	UN	Qty	Description
Volume 180 - 284 ml, without Pull Tab						
	020	469774	C		1	FLUSH PIPE
	330	90235-0280	-		1	VALVE
	540	342921-0113	-		2	PIPE CONNE6/4-1/8"
	550	342980-0113	S		1	BANJO CONNSINGEL 6/4-1/8
Volume 125 ml, without Pull Tab						
	020	469758	C		1	FLUSH PIPE
	330	90235-0280	-		1	VALVE
	540	342921-0113	-		2	PIPE CONNE6/4-1/8"
	550	342980-0113	S		1	BANJO CONNSINGEL 6/4-1/8
Volume 200 ml SLIM, without Pull Tab						
	020	469759	C		1	FLUSH PIPE
	330	90235-0280	-		1	VALVE
	540	342921-0113	-		2	PIPE CONNE6/4-1/8"
	550	342980-0113	S		1	BANJO CONNSINGEL 6/4-1/8
Volume 180 - 284 ml, with Pull Tab						
	020	469499	C		1	FLUSH PIPE
	310	90166-0124	-	MM	250	HOSE
	330	90235-0280	-		2	VALVE
	530	315105-0153	-		1	WASHER BRB6,4X12RFR
	540	342921-0113	-		1	PIPE CONNE6/4-1/8"
	550	342980-0113	S		3	BANJO CONNSINGEL 6/4-1/8
	555	342980-0303	-		1	BANJO CONN SINGEL 1/8"
	560	359000-0401	-		2	MARKING CO2/4"1"
	570	359000-0402	-		1	MARKING CO2/4"2"
Volume 125 ml, with Pull Tab						
	020	469778	C		1	FLUSH PIPE
	310	90166-0124	-	MM	250	HOSE
	330	90235-0280	-		2	VALVE
	530	315105-0153	-		1	WASHER BRB6,4X12RFR
	540	342921-0113	-		1	PIPE CONNE6/4-1/8"
	550	342980-0113	S		3	BANJO CONNSINGEL 6/4-1/8
	555	342980-0303	-		1	BANJO CONN SINGEL 1/8"
	560	359000-0401	-		2	MARKING CO2/4"1"
	570	359000-0402	-		1	MARKING CO2/4"2"

From	Pos	Part No	SP	UN	Qty	Description
Volume 200 ml SLIM, with Pull Tab						
	020	469522	C		1	FLUSH PIPE
	310	90166-0124	-	MM	250	HOSE
	330	90235-0280	-		2	VALVE
	530	315105-0153	-		1	WASHER BRB6,4X12RFR
	540	342921-0113	-		1	PIPE CONNE6/4-1/8"
	550	342980-0113	S		3	BANJO CONNSINGEL 6/4-1/8
	555	342980-0303	-		1	BANJO CONN SINGEL 1/8"
	560	359000-0401	-		2	MARKING CO2/4"1"
	570	359000-0402	-		1	MARKING CO2/4"2"
Common Parts						
	070	271509	-		1	JUNCTION BLOCK
	300	90166-0119	P	MM	250	HOSE
	500	312105-0366	-		1	SCREW M6S6X12RFR
	510	312105-0378	-		2	SCREW M6S6X40RFR
	545	359000-0400	-		1	MARKING CO2/4"0"
	580	359000-0403	-		1	MARKING CO2/4"3"
	590	359000-0409	-		1	MARKING CO2/4"9"
	600	359000-0771	-		1	MARKING CO2/4"V"

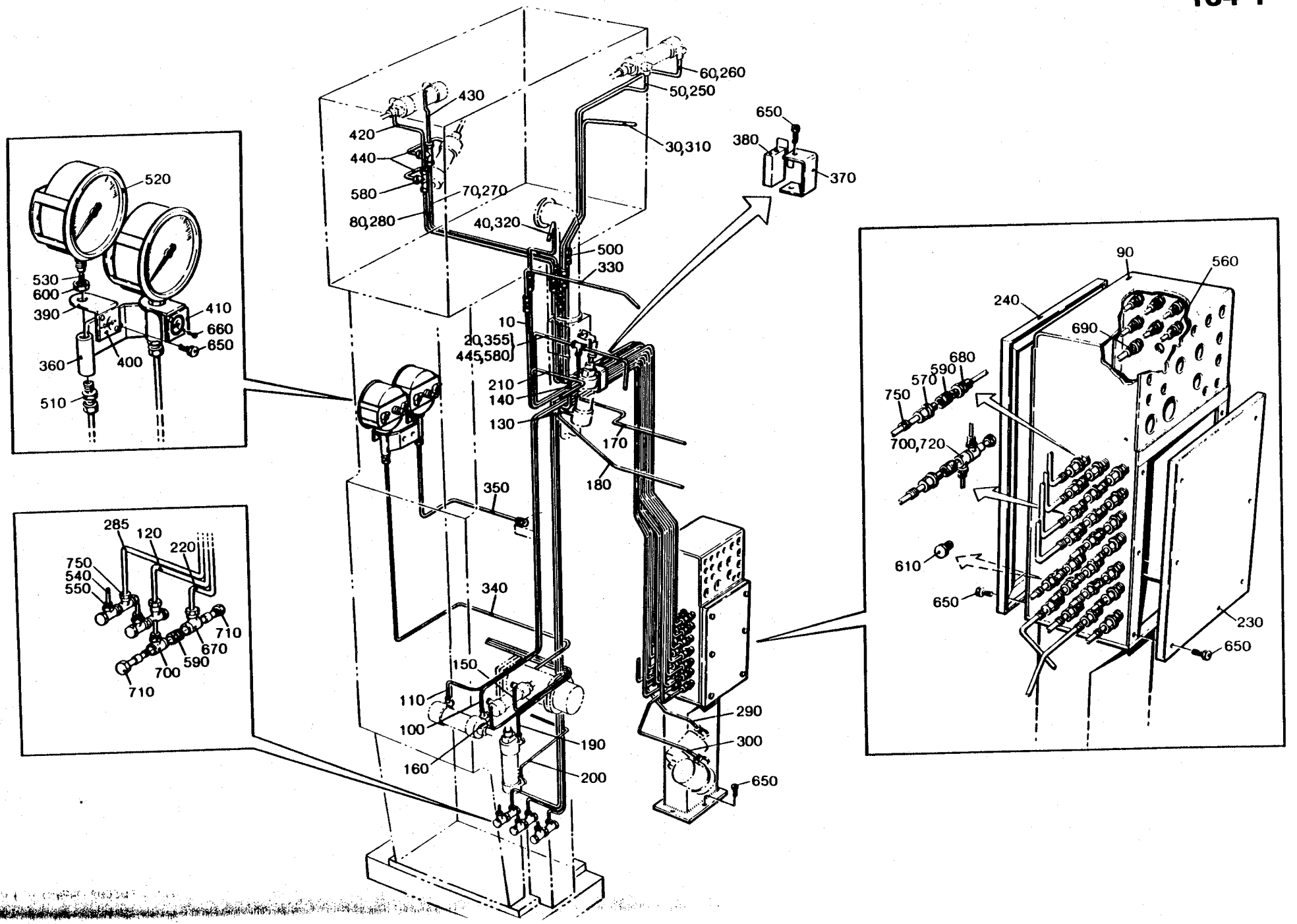
520
530
600
390
410
660
650
360
400
510
285
120
220
750
540
550
710
670
590
700
710
430
420
440
580
80,280
70,270
60,260
50,250
30,310
650
380
370
40,320
500
330
10
20,355
445,580
210
140
130
170
180
350
340
150
110
100
160
190
200
290
300
650
90
560
240
690
680
590
570
750
700,720
610
650
230
650

From	Pos	Part No	SP	UN	Qty	Description
Machines with Pull Tab						
	120	491659	-		1	PIPE 212
	560	90224-0324	S		1	CONNECTION
	570	90224-0307	S		26	CONNECTION
	610	90330-0066	-		6	PLUG
	670	342797-0121	-		3	BANJO CONNSINGEL 6-1/8
	700	342980-0113	-		11	BANJO CONNSINGEL 6/4-1/8
	710	342980-0303	-		6	BANJO CONN SINGEL 1/8"
Machines without Pull Tab						
	570	90224-0307	S		29	CONNECTION
	610	90330-0066	-		7	PLUG
	670	342797-0121	-		2	BANJO CONNSINGEL 6-1/8
	700	342980-0113	-		10	BANJO CONNSINGEL 6/4-1/8
	710	342980-0303	-		4	BANJO CONN SINGEL 1/8"
Common Parts						
-080V	010	295557	-		1	PIPE
	020	751105	-		1	PIPE 90
	030	295734	-		1	PIPE
	040	295735	-		1	PIPE
	050	295736	-		1	PIPE
	060	295737	-		1	PIPE
	070	295738	-		1	PIPE
	080	295739	-		1	PIPE
-080V	090	491422	-		1	CONNECTION BOX
090V-	090	752285	-		1	CONNECTION BOX
	100	491657	-		1	PIPE 200
	110	491658	-		1	PIPE 201
	130	491660	-		1	PIPE 230
	140	491661	-		1	PIPE 231
	150	491662	-		1	PIPE 240
	160	491663	-		1	PIPE 241
	170	491664	-		1	PIPE 250
	180	491665	-		1	PIPE 251
	190	491666	-		1	PIPE 260
	200	491667	-		1	PIPE 261
	210	295568	-		1	PIPE
	220	295590	-		1	PIPE
	230	456411	-		1	LID
	240	491423	-		1	LID
	250	491655	-		1	PIPE 190
	260	491656	-		1	PIPE 191
	270	491668	-		1	PIPE 210
	280	491669	-		1	PIPE 211
	285	751071	-		1	PIPE
	290	295591	-		1	PIPE
	300	295594	-		1	PIPE
	310	295740	-		1	PIPE
	320	295741	-		1	PIPE
-080V	330	441441	-		1	PIPE
	340	469497	-		1	PIPE
	350	469498	-		1	PIPE
	355	751106	-		1	PIPE 90
	360	33577	-		1	BRACKET
	370	295604	-		3	CLIP
	380	295605	-		3	BRACKET
	390	464173	-		2	SIGN HOLDER
	400	464174	-		1	SIGN
	410	464175	-		1	SIGN
	420	491670	-		1	PIPE 210
	430	491671	-		1	PIPE 211
	440	491672	-		2	PIPE 210 (211)
	445	751107	-		1	PIPE
	500	90224-0304	S		7	CONNECTION
	510	90030-0092	S		2	PIPE CONNECTION
	520	90043-0034	S		2	PRESSURE GAUGE
	530	90043-0302	S		2	SCREW
	540	90166-0119	P	MM	2100	HOSE
	550	90166-0132	P	M	3	HOSE
	580	90224-0310	S		3	CONNECTION
	590	90330-0025	S		35	BUSHING
	600	90330-0105	S		2	NUT
	650	312105-0366	-		27	SCREW M6S6X12RFR
	660	312502-0120	-		4	DRIVE SCREKDS0X5FNB
	680	342921-0113	-		26	PIPE CONNE6/4-1/8"
	690	342921-0121	S		1	PIPE CONNE8/6-1/8"
	720	342980-0313	-		4	BANJO CONN DUBBEL 1/8
	750	359000-0400	-		57	MARKING CO2/4"0"
	750	359000-0401	-		55	MARKING CO2/4"1"
	750	359000-0402	-		44	MARKING CO2/4"2"
	750	359000-0403	-		16	MARKING CO2/4"3"
	750	359000-0404	-		12	MARKING CO2/4"4"
	750	359000-0405	-		4	MARKING CO2/4"5"
	750	359000-0406	-		6	MARKING CO2/4"6"
	750	359000-0407	-		4	MARKING CO2/4"7"
	750	359000-0408	-		4	MARKING CO2/4"8"
	750	359000-0771	-		4	MARKING CO2/4"V"
	750	359000-0409	-		14	MARKING CO2/4"9"

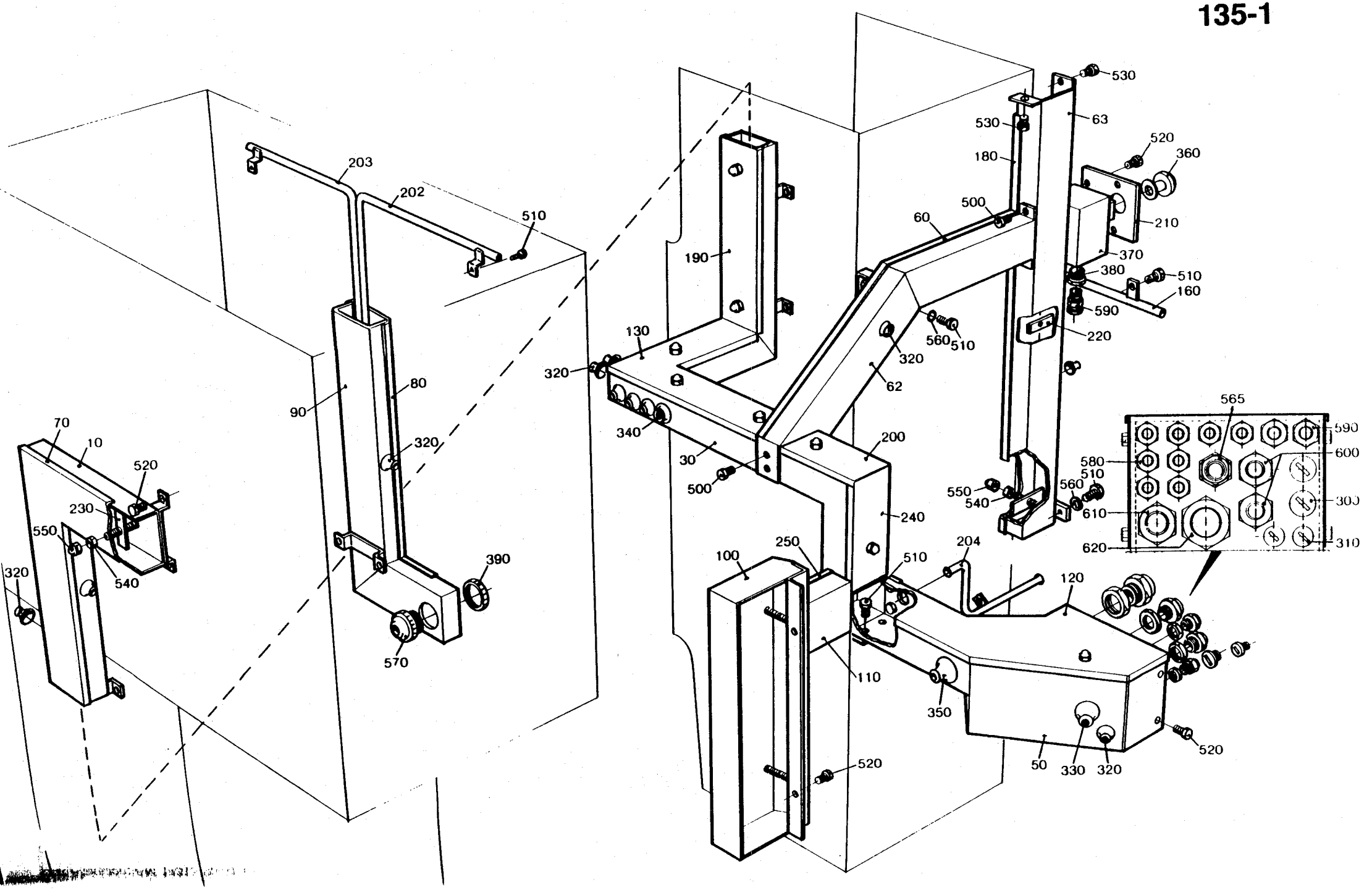
203
202
510
90
80
320
390
570
70
10
520
230
550
540
320
530
63
530
520
360
180
500
60
210
190
370
380
510
160
590
130
560
510
320
220
320
62
340
30
500
200
240
565
590
580
600
510
560
550
540
610
305
620
310
100
250
204
510
120
110
350
520
50
330
320
520

From	Pos	Part No	SP	UN	Qty	Description
	010	751076	-		1	CABLE DUCT
	030	751001	-		1	CABLE DUCT
	050	469346	-		1	CABLE DUCT
	060	469347	-		1	LID
	062	491836	-		1	CABLE DUCT
	063	491837	-		1	CABLE DUCT
	070	751077	-		1	LID
	080	295782	-		1	CABLE DUCT
	090	295783	-		1	LID
	100	469348	-		1	COVER
	110	469349	-		1	CABLE DUCT
	120	469350	-		1	LID
	130	469351	-		1	LID
	160	441311	-		1	CABLE CONDUIT
	180	469352	-		1	LID
	190	469353	-		1	LID
	200	469354	-		1	LID
	202	491673	-		1	CABLE CONDUIT
	203	491674	-		1	CABLE CONDUIT
	204	491838	-		1	CABLE CONDUIT
	210	271508	-		1	BRACKET
	220	272945	-		7	LOCK
	230	295466	-		15	LOCK
	240	295819-0003	-		1	LID
	250	469355	-		1	LID
	300	90002-0009	-		2	BLANK-OFF PLUG
	310	90002-0013	-		2	BLANK-OFF PLUG
	320	90015-0020	-		21	BUSHING
	330	90015-0021	-		2	BUSHING
	340	90015-0023	-		1	BUSHING
	350	90015-0024	-		1	BUSHING
	360	90064-0052	-		1	PUSH BUTTON
	370	90066-0013	-		1	PUSH BUTTON BOX
	380	90089-0003	-		1	SLEEVE
	390	90099-0011	-		1	NUT
	500	312105-0362	-		6	SCREW M6S6X8RFR
	510	312105-0364	-		13	SCREW M6S6X10RFR
	520	312105-0366	-		25	SCREW M6S6X12RFR
	530	312125-0323	-		2	SLOTTED HEMCS5X8RFR
	540	312605-0316	-		23	NUT M6M6RFR
	550	312705-0316	-		25	CAP NUT MHM 6 A2
	560	315105-0153	-		10	WASHER BRB6,4X12RFR
	565	352100-0112	-		1	CABLE GLANR.22,5-15

From	Pos	Part No	SP	UN	Qty	Description
	570	352101-0107	-		1	LEAD-IN G 37
	580	352103-0101	-		8	CABLE GLANR.15,2/4-8
	590	352103-0106	-		3	CABLE GLANR.18,6/5-10
	600	352103-0111	-		2	CABLE GLANR.PR22,5/10-14
	610	352103-0116	-		1	CABLE GLANR.28,3/13-18
	620	352103-0121	-		1	CABLE GLANR.37,0/18-25

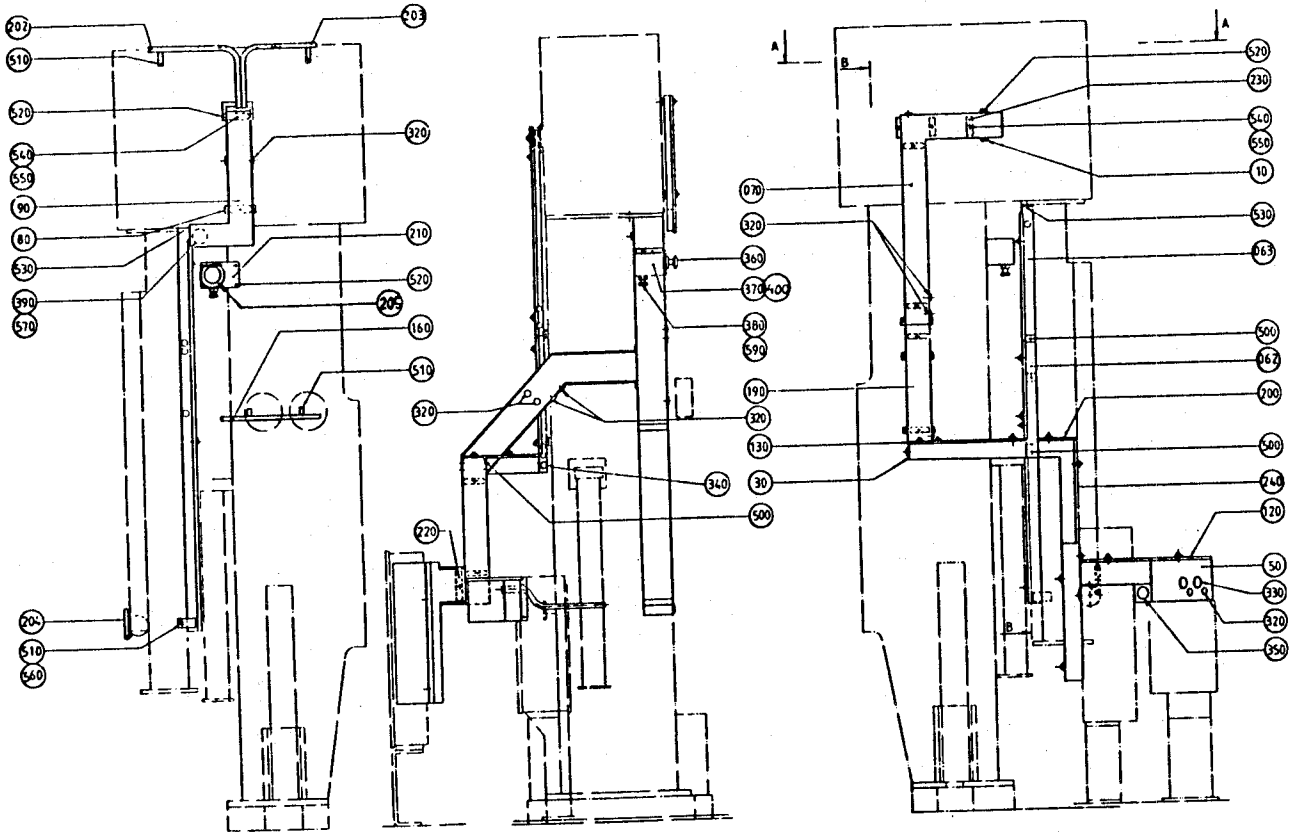

Vy utan bad.
View without bath

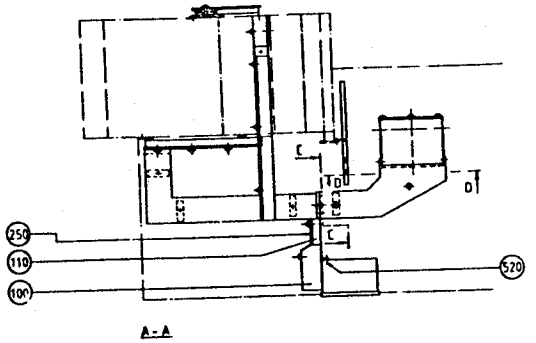

A - A

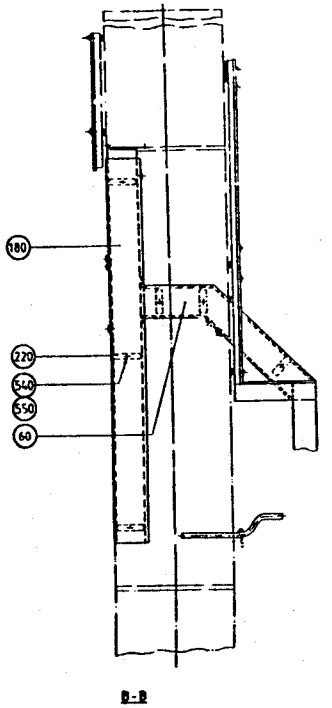

B - B

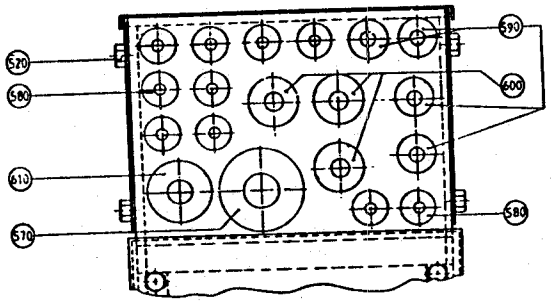

D - D
Scale 1:1

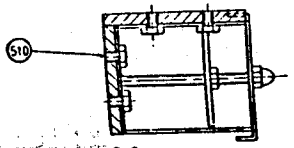

C - C
Scale 1:1

From	Pos	Part No	SP	UN	Qty	Description
	010	553215	-		1	CABLE DUCT
	030	553216	-		1	CABLE DUCT
	050	553217	-		1	CABLE DUCT
	060	469347	-		1	LID
	062	553218	-		1	CABLE DUCT
	063	491837	-		1	CABLE DUCT
	070	751077	-		1	LID
	080	295782	-		1	CABLE DUCT
	090	295783	-		1	LID
	100	752439	-		1	COVER
	110	752441	-		1	CABLE DUCT
	120	469350	-		1	LID
	130	469351	-		1	LID
	160	441311	-		1	CABLE CONDUIT
	180	469352	-		1	LID
	190	469353	-		1	LID
	200	469354	-		1	LID
	202	491673	-		1	CABLE CONDUIT
	203	491674	-		1	CABLE CONDUIT
	204	491838	-		1	CABLE CONDUIT
	205	207658-0001	-		1	CAUTION SIGN
	210	271508	-		1	BRACKET
	220	272945	-		7	LOCK
	230	295466	-		15	LOCK
	240	295819-0003	-		1	LID
	250	469355	-		1	LID
	320	90015-0020	-		19	BUSHING
	330	90015-0021	-		2	BUSHING
	340	90015-0023	-		1	BUSHING
	350	90015-0024	-		1	BUSHING
	360	90064-0052	-		1	PUSH BUTTON
	370	90066-0013	-		1	PUSH BUTTON BOX
	380	90089-0003	-		1	SLEEVE
	390	90099-0011	-		1	NUT
	400	90143-0069	S	MM	350	RUBBER STRIP
	500	312105-0362	-		6	SCREW M6S6X8RFR
	510	312105-0364	-		13	SCREW M6S6X10RFR
	520	312105-0366	-		25	SCREW M6S6X12RFR
	530	312125-0323	-		2	SLOTTED HEMCS5X8RFR
	540	312605-0316	-		23	NUT M6M6RFR
	550	312705-0316	-		25	CAP NUT MHM 6 A2
	560	315105-0153	-		10	WASHER BRB6,4X12RFR

From	Pos	Part No	SP	UN	Qty	Description
	570	352101-0107	-		2	LEAD-IN G 37
	580	352101-0102	-		10	LEAD-IN G 15,2
	590	352101-0103	-		4	LEAD-IN G 18,6
	600	352101-0105	-		3	LEAD-IN G 22,5
	610	352101-0106	-		1	LEAD-IN G 28,3

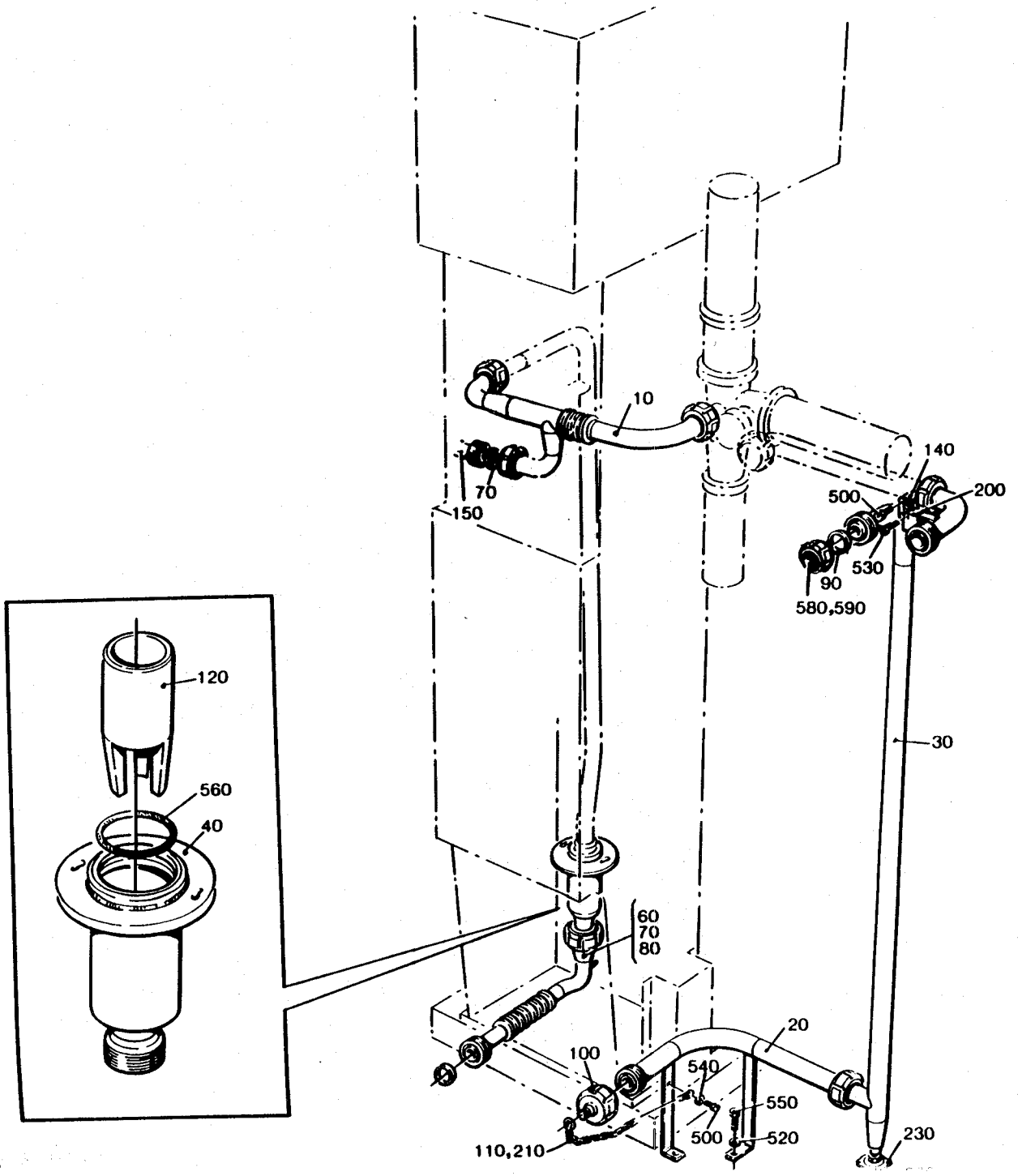
10
70
150
140
200
500
530
90
580,590
120
560
40
30
60
70
80
20
100
540
550
500
520
110,210
230

From	Pos	Part No	SP	UN	Qty	Description
Volume 125 ml						
	040	490896	-		1	CONTAINER
	120	295300	-		1	FLUSH PIPE
	560	315204-0224	P		1	O-RING 2X3 VITON
Volume 180 - 250 ml						
	040	469987	-		1	CONTAINER
	120	295301	-		1	FLUSH PIPE
	560	315204-0303	P		1	O-RING 5X3 VITON
Volume 200 ml SLIM						
	040	490896	-		1	CONTAINER
	120	295300	-		1	FLUSH PIPE
	560	315204-0224	P		1	O-RING 2X3 VITON
Common Parts						
	010	751121	-		1	CLEANING PIPE
	020	456858	-		1	PIPE
	030	456859-0002	-		1	PIPE
	060	752428	-		1	HOSE
	070	12242-0001	P		2	GASKET
	080	12242-0002	P		1	GASKET
	090	12242-0003	P		4	GASKET
	100	209181	-		1	LID
	110	209183	-		1	RING
	140	456857	-		1	BRACKET
	150	456902	-		1	PIPE
	200	90044-0104	-		1	PROXIMITY SWITCH
	210	90155-0008	-	MM	200	CHAIN
	220	90187-0051	-		1	VALVE
	230	90330-0028	-		1	NIPPLE
	500	312105-0364	-		3	SCREW M6S6X10RFR
	520	312105-0455	-		2	SCREW M6S8X30RFR
	530	312125-0228	-		2	SLOTTED HEMCS3X16RFR
	540	315105-0153	-		1	WASHER BRB6,4X12RFR
	550	315105-0165	-		2	WASHER BRB8,4X16RFR
	580	342803-0103	-		2	NUT 38
	590	342812-0103	-		2	SLEEVE ANSL.38

From	Pos	Part No	SP	UN	Qty	Description

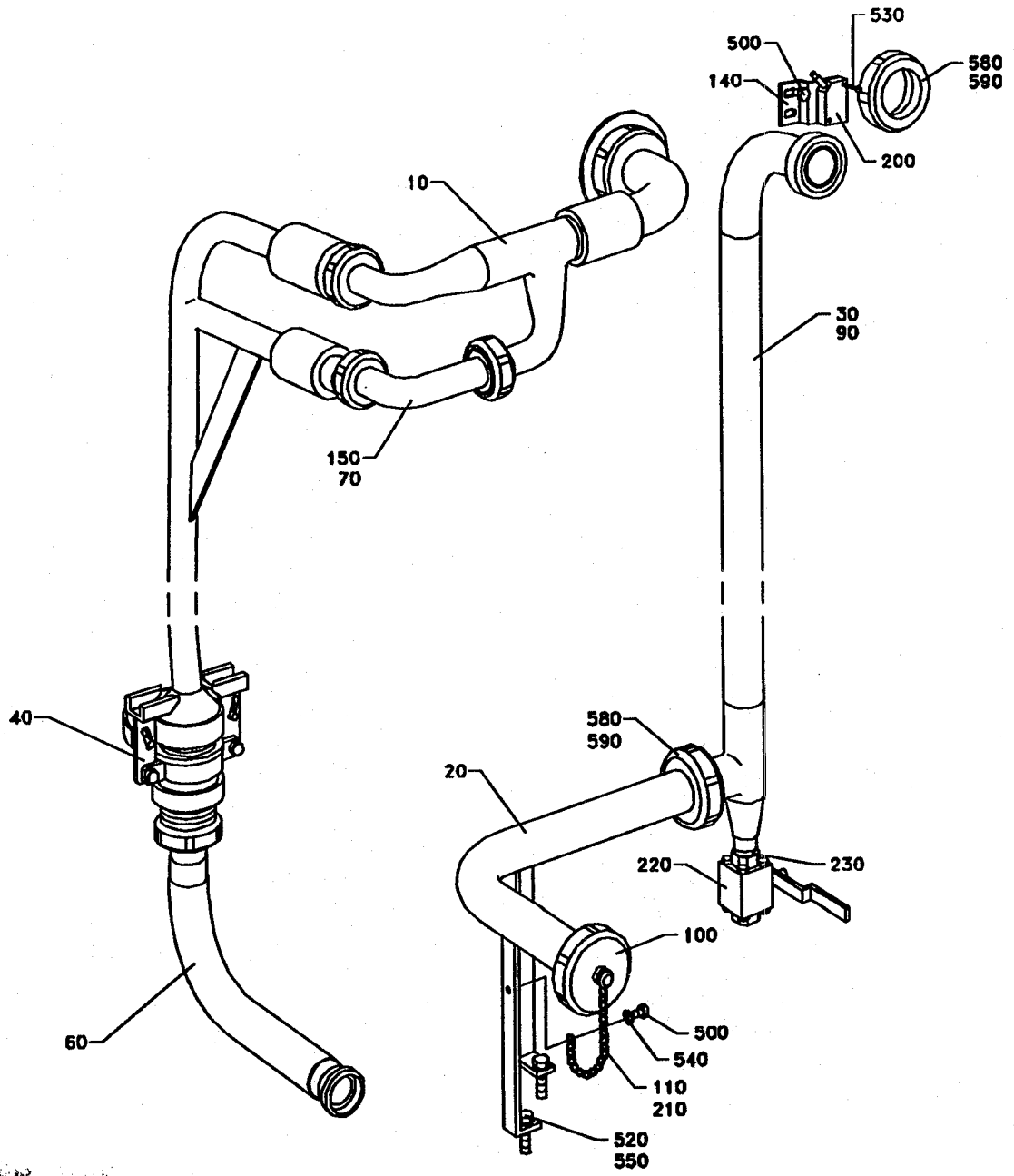
530
500
580
590
140
200
10
30
90
150
70
40
580
590
20
220
230
100
500
540
110
210
60
520
550

Last Alteration: AM 12775 89-12-02

Corresponding C-lists: 456836-040V
Assembly Drawing: 456836-5

Date Printed: 900223

From	Pos	Part No	SP	UN	Qty	Description
	F040	==>136-2.1	-		1	CONNECTION
	010	751121	-		1	CLEANING PIPE
	020	456858	-		1	PIPE
	030	456859-0002	-		1	PIPE
	060	752428	-		1	HOSE
	070	12242-0001	P		2	GASKET
	090	12242-0003	P		4	GASKET
	100	209181	-		1	LID
	110	209183	-		1	RING
	140	456857	-		1	BRACKET
	150	456902	-		1	PIPE
	200	90044-0104	-		1	PROXIMITY SWITCH
	210	90155-0008	-	MM	200	CHAIN
	220	90187-0051	-		1	VALVE
	230	90330-0028	-		1	NIPPLE
	500	312105-0364	-		3	SCREW M6S6X10RFR
	520	312105-0455	-		2	SCREW M6S8X30RFR
	530	312125-0228	-		2	SLOTTED HEMCS3X16RFR
	540	315105-0153	-		1	WASHER BRB6,4X12RFR
	550	315105-0165	-		2	WASHER BRB8,4X16RFR
	580	342803-0103	-		2	NUT 38
	590	342812-0103	-		2	SLEEVE ANSL.38

From	Pos	Part No	SP	UN	Qty	Description

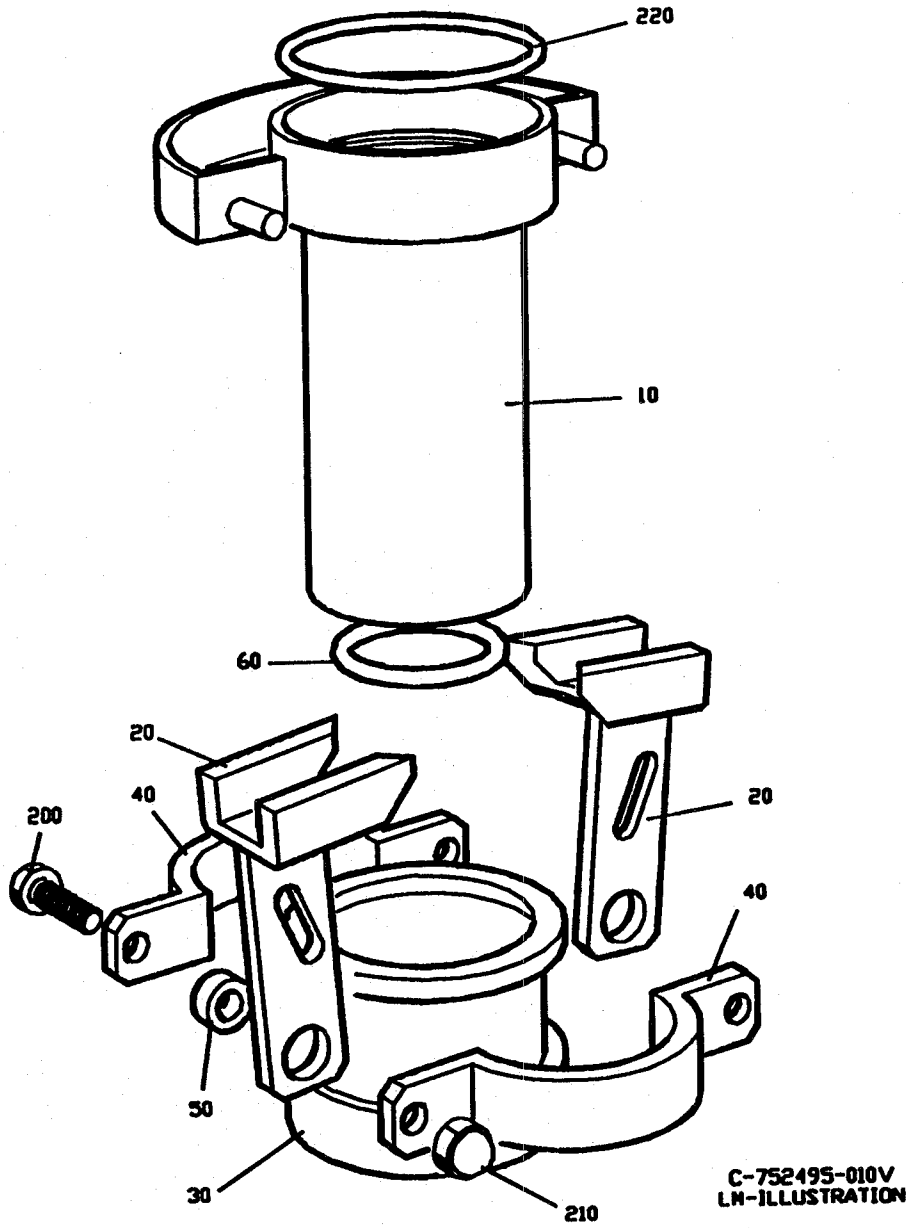
220
10
60
20
40
200
20
40
50
30
210
C-752495-010V
LH-ILLUSTRATION

From	Pos	Part No	SP	UN	Qty	Description
Volume 180-284 ml						
	010	752496	-		1	CLEANING PIPE
	020	752498	-		2	CATCH
	220	90242-0182	P		1	O-RING 50X4 VITON
Volume 200 ml SLIM,125 ml						
	010	752517	-		1	CLEANING PIPE
	020	752521	-		2	CATCH
	220	312204-0526	P		1	O-RING 36,1X3,53VITON
Common Parts						
	030	752497	-		1	NUT
	040	752499	-		2	RING
	050	553586	-		2	SPACER
	060	12242-0002	P		1	GASKET
	200	312105-0371	-		2	SCREW M6S6X22RFR
	210	312811-0316	-		2	LOCK NUT M6RFR

From	Pos	Part No	SP	UN	Qty	Description

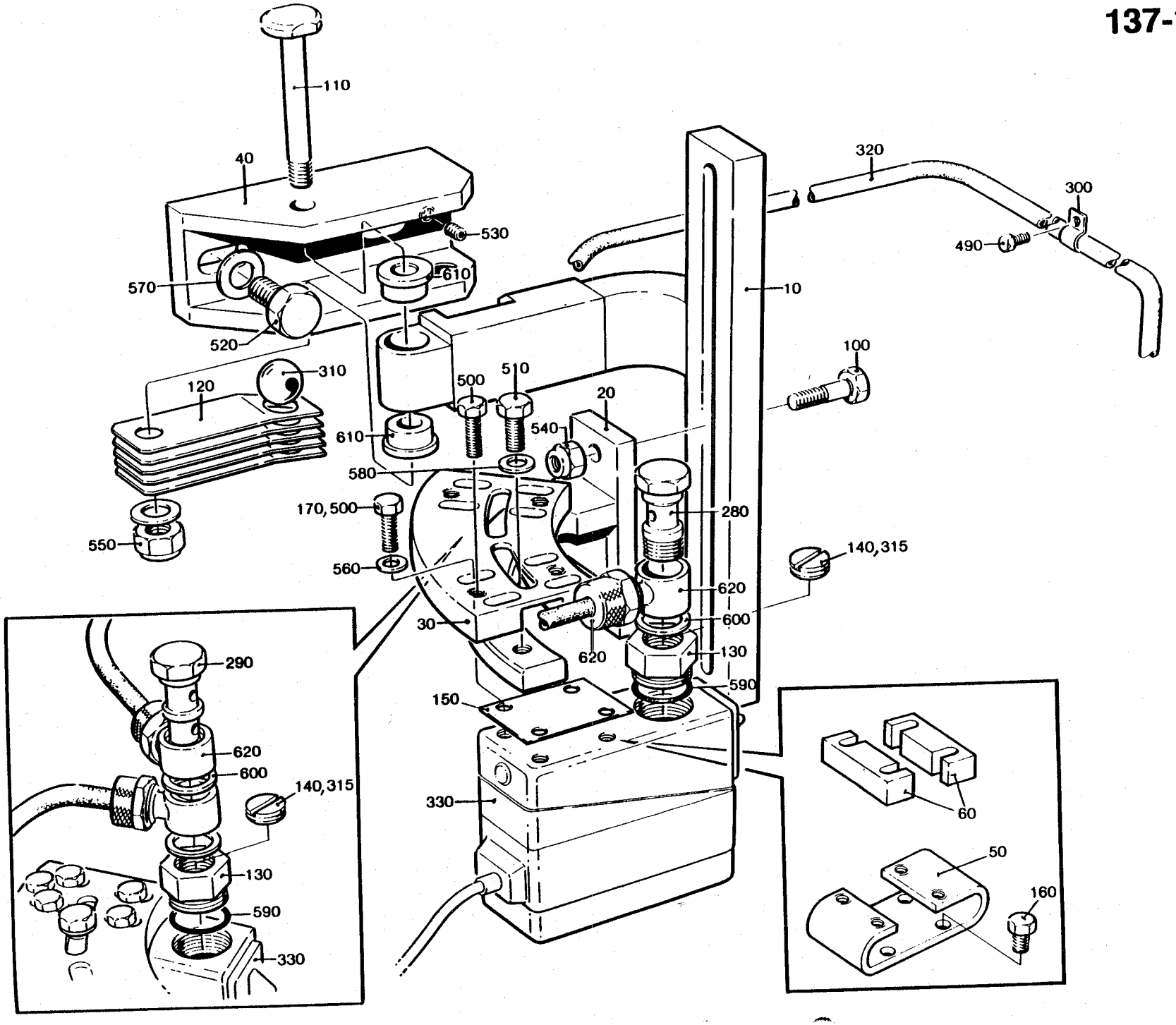
110
40
530
610
570
520
320
300
490
10
100
310
120
500
510
20
610
540
580
170,500
280
550
560
140,315
620
600
30
620
130
590
150
330
290
620
600
140,315
130
590
330
60
50
160

From	Pos	Part No	SP	UN	Qty	Description
Volume 180 - 284 ml						
-080V	010	490873	-		1	HOLDER
090V-	010	751456	-		1	HOLDER
-080V	020	490874	-		1	BRACKET
090V-	020	751457	-		1	BRACKET
	030	490875	-		1	PLATE
	040	490876	-		1	BRACKET
Volume 236 ml						
-080V	010	491844	-		1	HOLDER
090V-	010	751456	-		1	HOLDER
-080V	020	491873	-		1	BRACKET
090V-	020	751476	-		1	BRACKET
-080V	030	490875	-		1	PLATE
090V-	030	491880	-		1	PLATE
-080V	040	491845	-		1	BRACKET
090V-	040	490876	-		1	BRACKET
090V-	050	565670	-		2	SPACER
090V-	055	565671	-		2	SPACER
090V-	070	565641	-		1	LOCKING PLATE
090V-	160	312105-0325	-		8	SCREW M6S5X10 A4 80
090V-	515	312105-0374	-		2	SCREW M6S6X30RFR
090V-	565	315105-0153	-		2	WASHER BRB6,4X12RFR
Volume 125, 200 ml SLIM						
-080V	010	490873	-		1	HOLDER
090V-	010	751456	-		1	HOLDER
-080V	020	491542	-		1	BRACKET
090V-	020	565642	-		1	BRACKET
	030	491880	-		1	PLATE
	040	490876	-		1	BRACKET
090V-	060	752554	-		4	SPACER
090V-	170	312109-0335	-		8	SCREW M6S5X30HRFR
Common Parts						
	100	450628	-		2	GUIDE
	110	457367	-		1	SHAFT
	120	457368	-		5	SPRING
-080V	130	458054	-		2	BUSHING
090V-	130	548337	-		2	BUSHING
-080V	140	522187	-		1	HOLLOW SCREW
090V-	140	548336	-		2	WASHER
	150	53€374	-		2	WASHER
090V-	280	90030-0265	-		1	HOLLOW SCREW
090V-	290	90030-0266	-		1	HOLLOW SCREW

From	Pos	Part No	SP	UN	Qty	Description
	300	90074-0001	-		1	CLIP 10MM
	310	90090-0016	-		1	BALL RB15 RS
090V-	315	90157-0016	-			LOCKING FLUID
	320	90166-0124	-	MM	750	HOSE
	330	90232-0055	S		2	PHOTOCELL
	490	312105-0287	-		1	SCREW M6S4X8 A4 80
	500	312105-0329	-		10	SCREW M6S5X16 A4 80
	510	312105-0366	-		2	SCREW M6S6X12RFR
	520	312105-0449	-		2	SCREW M6S8X16RFR
-080V	530	312318-0323	-		1	GRUB SCREW SK6SS5X8RFR
090V-	530	312318-0325	-		1	GRUB SCREW SK6SS5X10RFR
	540	312812-0316	-		2	LOCK NUT A4-M6RFR
	550	312812-0318	-		1	LOCK NUT A4-M8RFR
	560	315105-0146	-		8	WASHER BRB5,3X10RFR
	570	315115-0165	-		2	WASHER TBRB8,4X16RFR
-080V	580	315115-0153	-		2	WASHER TBRB6,4X12RFR
	590	315204-0116	S		2	O-RING 18,1X1,6VITON
-080V	600	315233-0110	S		3	SEAL RING R1/4"
	610	321101-0143	-		2	BUSHING 8F7X8
	620	342980-0114	-		3	BANJO CONNSINGEL 6/4-1/4
-080V	630	342980-0304	-		1	BANJO CONN SINGEL 1/4

From	Pos	Part No	SP	UN	Qty	Description
	070	257330	-		1	PRESSURE ROLLER (180-250 ml)
	120	272479	-		1	PRESSURE ROLLER (125 ml)
	120	272479	-		1	PRESSURE ROLLER (200 ml SLIM)
	020	441804	-		1	COIL HEATER
	050	12242-0003	-		2	GASKET
	060	230551	-		2	GASKET
	080	531742	-		2	GASKET
	110	271461	-		1	GASKET
	150	295388	-		1	GASKET
	153	441721	-		1	GASKET
	160	90206-0031	-		1	HEATING ELEMENT
	180	90206-0070	-		1	HEATING ELEMENT
	200	315204-0214	-		1	O-RING 17,3X2,4VITON
	210	90242-0084	-		2	O-RING
	220	90415-0316	-		1	FILTER
	230	90424-0304	-		1	GASKET
	240	315204-0218	-		1	O-RING 26,2X3VITON
	260	315204-0223	-		2	O-RING 39,2X3VITON
Seal Kit -product valve for change every 1000-1200 hours						
	F010	SP- 499255-0101	-		1	SEAL KIT
	010	530589	-		4	SEAL RING
	020	530588	-		1	SEAL RING
	030	440665	-		1	DIAPHRAGM
	060	90207-0363	-		1	GASKET
	070	90207-0365	-		1	GASKET
	080	90207-0367	-		1	GASKET
	100	315204-0215	-		3	O-RING 19,2X3VITON
	110	315202-0301	-		1	O-RING 49,5X3
Seal Kit - for one air cylinder "A" or "C"						
	F010	SP- 499255-0102	-		1	SEAL KIT
	050	90020-0028	-		2	SLEEVE
	100	315204-0215	-		3	O-RING 19,2X3VITON
	120	315202-0308	-		2	O-RING 84,5X3
Seal Kit - for one air cylinder "B"						
	F010	SP- 499255-0103	-		1	SEAL KIT
	040	90020-0027	-		2	SLEEVE
	090	315202-0304	-		1	O-RING 64,5X3
	100	315204-0215	-		1	O-RING 19,2X3VITON

From	Pos	Part No	SP	UN	Qty	Description

From	Pos	Part No	SP	UN	Qty	Description
	F010	SP- 499255-0201	-		1	SEAL KIT
	070	257330	-		1	PRESSURE ROLLER (180-284 ml)
	120	272479	-		1	PRESSURE ROLLER (200 mlSLIM,125 ml)
	020	441804	-		1	COIL HEATER
	050	12242-0003	-		2	GASKET
	060	270551	-		2	GASKET
	080	531742	-		2	GASKET
	110	271461	-		1	GASKET
	150	295388	-		1	GASKET
	153	441721	-		1	GASKET
	160	90206-0031	-		1	HEATING ELEMENT
	180	90206-0070	-		1	HEATING ELEMENT
	200	90242-0185	-		1	O-RING 18,1X2 PTFE
	210	90242-0084	-		2	O-RING
	220	90415-0316	-		1	FILTER
	230	90424-0304	-		1	GASKET
	240	90242-0172	-		1	O-RING
	260	90242-0187	-		2	O-RING 40,2X2,5 PTFE

From	Pos	Part No	SP	UN	Qty	Description

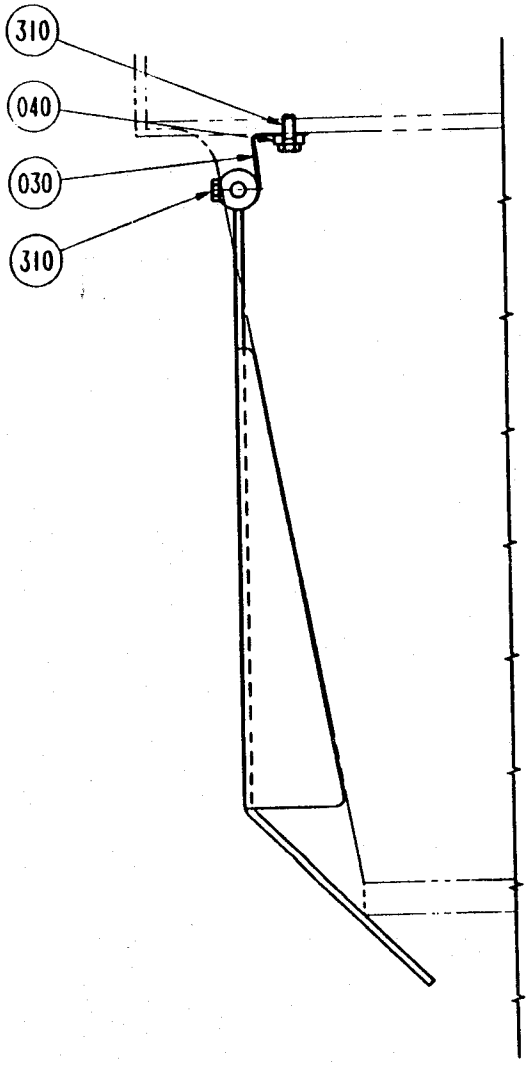
310
040
030
310

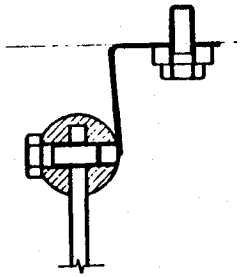
A-A
(1:1)

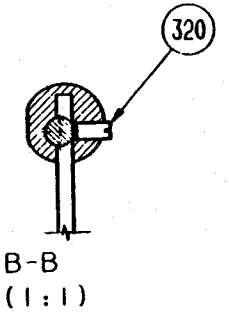
320
B-B
(1:1)

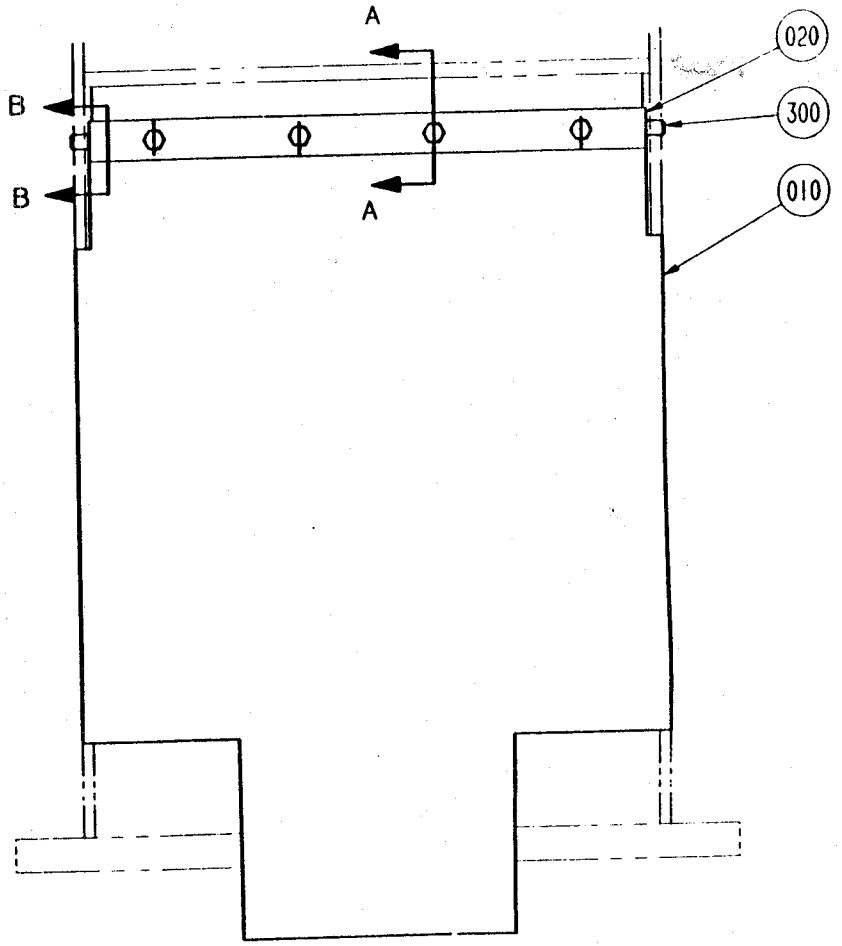
A
B
B
A
020
300
010

From	Pos	Part No	SP	UN	Qty	Description
	010	751674	-		1	COVER
	020	456809	-		1	AXLE
	030	469922	-		1	SPRING
	040	469927	-		1	STRIP
	300	311103-0405	-		2	CYLINDRICACPR8M6X30RFR
	310	312105-0368	-		7	SCREW M6S6X16RFR
	320	312318-0327	-		2	GRUB SCREW SK6SS5X12RFR

From	Pos	Part No	SP	UN	Qty	Description

SPC 648151/52
Tetra Brik TB/9
Tetra Brik Aseptic TBA/9

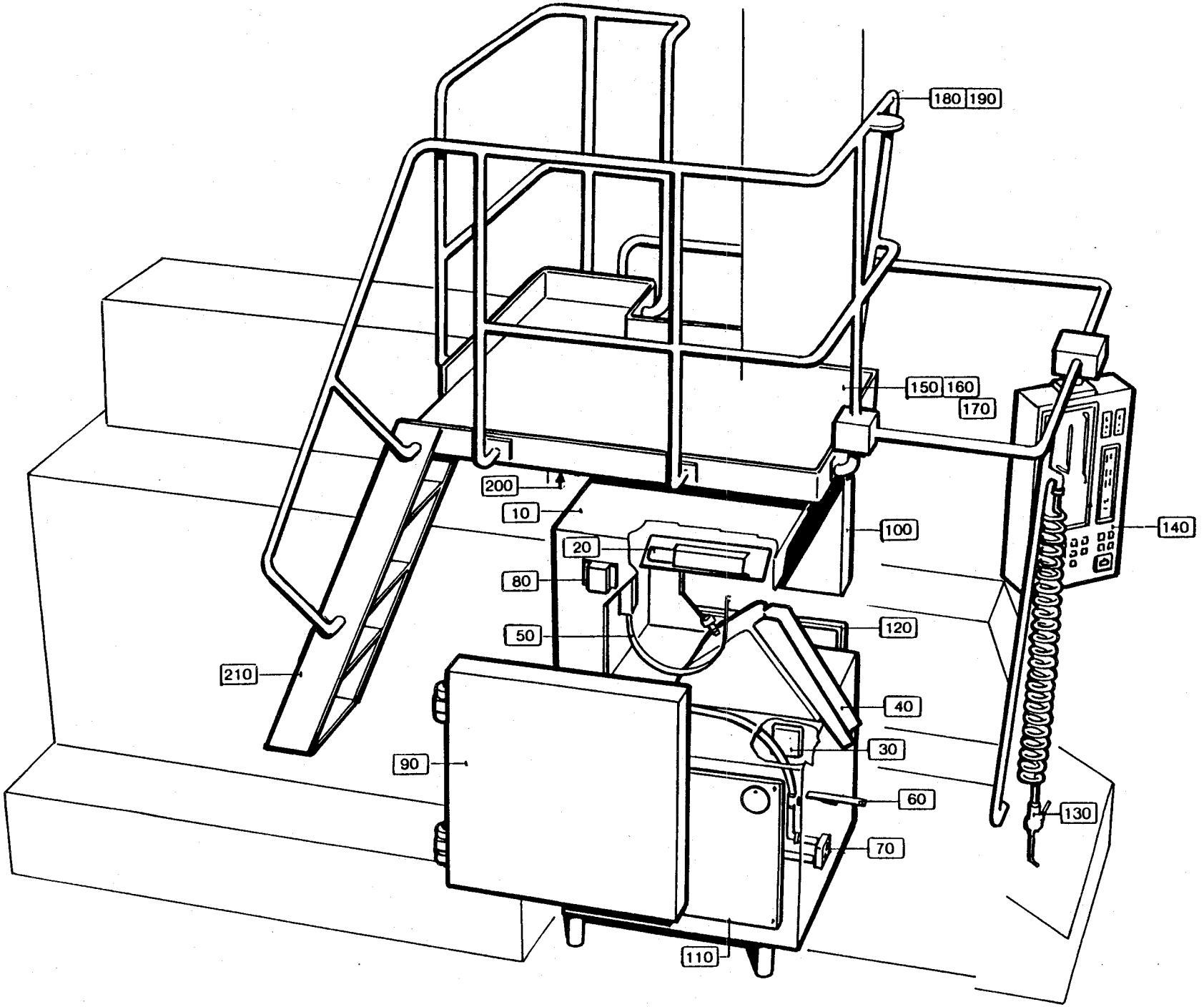
180
190
150
160
170
200
10
100
140
20
80
50
120
210
40
30
90
60
130
70
110

From	Pos	Page	Description
	F010	201-1	MACHINE BODY
	F200	201-1	. COVER PLATE
		201-1.1	. LIGHT FIXTURE
		201-1.2	. CONNECTION BOX
	F040	202-1	DROP CHUTE
	F050	203-1	TRANSMISSION
	F060	204-1	PIPE WORK MACHINE BODY
		204-1.1	. CLEANING SYSTEM
		204-1.2	. DISTRIBUTOR BLOCK
	F090	205-1	SIDE DOOR LEFT
	F100	205-1	SIDE DOOR RIGHT
	F110	206-1	COVER LEFT
	F120	206-1	COVER RIGHT
	F130	207-1	AIR JET GUN
-070V	F140	208-1	CONTROL PANEL
		208-1.1	. POTENTIOMETER
TB/9			
	F150	209-1/2	PLATFORM TB/9
	F180	210-1/2	RAILING TB/9
		210-1.1	. BRACKET
TBA/9			
	F160	211-1a/b	PLATFORM TBA/9
		211-1.1	. LIGHT FIXTURE
	F190	212-1a/b	RAILING TBA/9
		212-1.1	. BRACKET
	F210	213-1	LADDER
TBA/9 Slim Body			
	F165	214-1	PLATFORM, FRONT TBA/9
		211-1.1	. LIGHT FIXTURE
-080V	F170	215-1	PLATFORM, REAR TBA/9
090V-	F170	215-2	PLATFORM, REAR TBA/9
		215-1.1	. LADDER
		215-1.2	. LADDER
	F192	216-1	RAILING, FRONT TBA/9
		212-1.1	. BRACKET
-080V	F195	217-1	RAILING, REAR TBA/9

From	Pos	Page No	Description

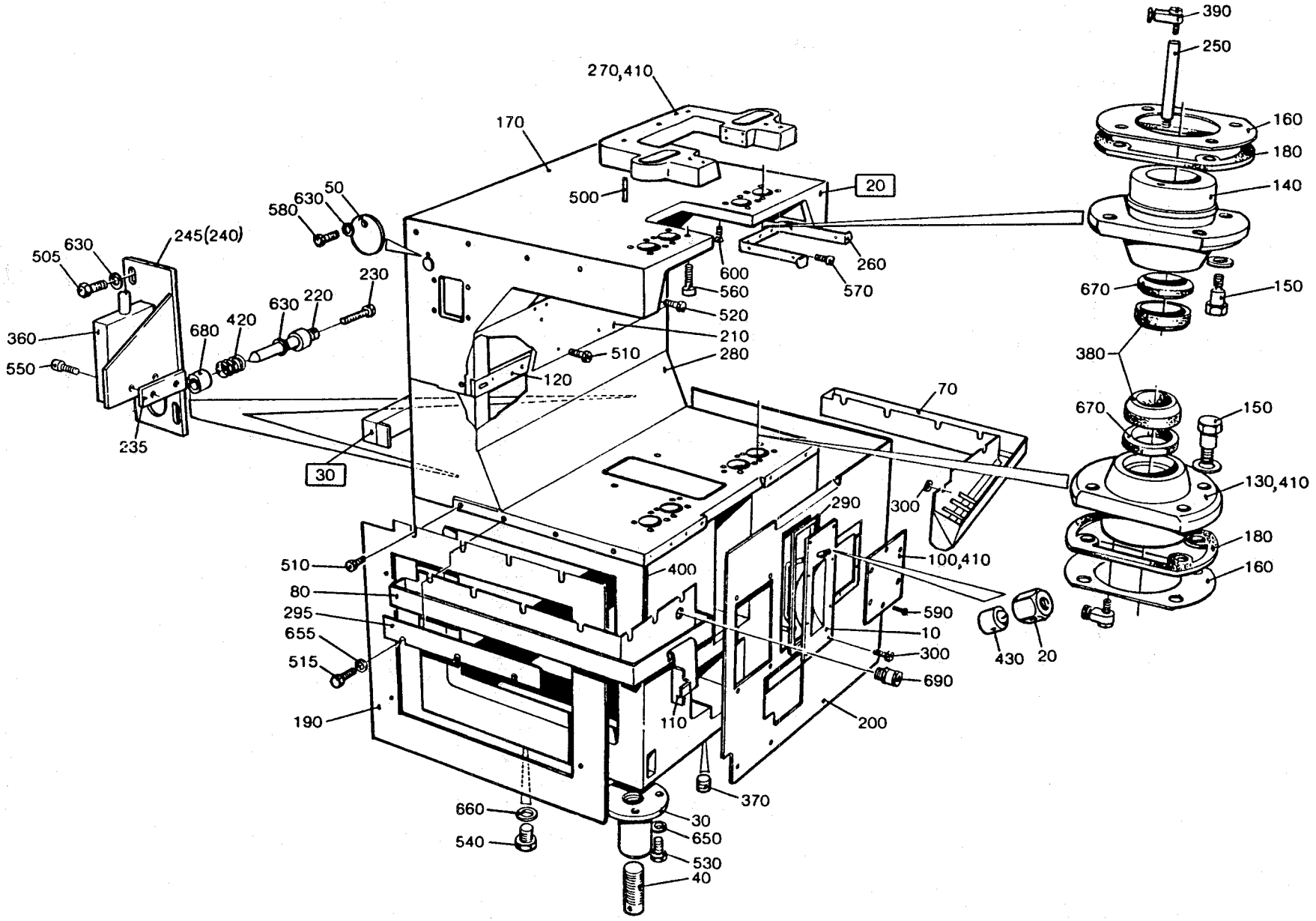
390
250
270,410
170
160
180
140
500
20
580
630
50
260
600
570
560
520
505
630
245(240)
230
670
150
630
220
210
360
680
420
510
280
380
550
120
70
670
150
235
30
130,410
290
300
180
510
400
100,410
160
80
590
295
10
655
300
515
430
20
690
190
110
200
370
660
30
650
540
530
40

From	Pos	Part No	SP	UN	Qty	Description
	F020	==>201-1.1	-		2	LIGHT FIXTURE
	F030	==>201-1.2	-		1	CONNECTION BOX
TB/9						
	010	469832-0001	-		1	COVER (200 ml SLIM)
	010	469831-0004	-		1	COVER (200 ml)
	010	469831-0006	-		1	COVER (180 ml)
	010	469832-0002	-		1	COVER (250 ml)
	010	469832-0003	-		1	COVER (236 ml)
	020	441077	-		1	BRACKET (180 ml)
	020	441077	-		1	BRACKET (200 ml)
	200	441659	-		1	FRONT PLATE (200 ml SLIM)
	200	441659	-		1	FRONT PLATE (180 ml)
	200	441659	-		1	FRONT PLATE (284 ml)
	200	441659	-		1	FRONT PLATE (250 ml)
	200	441659	-		1	FRONT PLATE (236 ml)
	200	441659	-		1	FRONT PLATE (200 ml)
	200	441659	-		1	FRONT PLATE (187 ml)
TBA/9						
	F001	C- 469496-010V			1	COVER PLATE
	002	469453	-		1	* COVER PLATE
	003	312105-0459	-		8	* SCREW M6S8X40RFR
	004	315105-0165	-		8	* WASHER BRB8,4X16RFR
	010	469831-0007	-		1	COVER (125 ml)
	010	469831-0006	-		1	COVER (180 ml)
	010	469832-0001	-		1	COVER (200 ml SLIM)
	010	469832-0001	-		1	COVER (284 ml)
	010	469831-0004	-		1	COVER (200 ml)
	010	469832-0002	-		1	COVER (250 ml)
	010	469831-0003	-		1	COVER (236 ml)
	020	441077	-		1	BRACKET (180 ml)
	020	441077	-		1	BRACKET (236 ml)
	020	441077	-		1	BRACKET (125 ml)
	020	441077	-		1	BRACKET (200 ml)
	020	441077	-		1	BRACKET (284 ml)
	200	456573	-		1	FRONT PLATE (200 ml SLIM)
	200	456573	-		1	FRONT PLATE (100 ml)
	200	456573	-		1	FRONT PLATE (125 ml)
	200	456573	-		1	FRONT PLATE (187 ml)
	200	456573	-		1	FRONT PLATE (250 ml)
	200	456573	-		1	FRONT PLATE (236 ml)
	200	456573	-		1	FRONT PLATE (200 ml)

From	Pos	Part No	SP	UN	Qty	Description
	200	456573	-		1	FRONT PLATE (284 ml)
	200	456573	-		1	FRONT PLATE (180 ml)
Common Parts						
	030	469095	C		4	HOLDER
	040	469096	C		4	LEG
	050	272058	-		2	LID
	060	751085	-		32	BUSHING
	070	978413	-		1	CHUTE
	080	272671	-		1	CHUTE
	100	295302	-		1	COVER
	110	441162	-		1	PROTECTION PLATE
	120	441212	C		1	HOLDER
	130	G- 441217	S		4	BUSHING LOWER
	140	G- 441218	S		4	BUSHING UPPER
	160	441221	-		8	WASHER
	170	G- 456475	-		1	MACHINE BODY
	180	441593	-		8	GASKET
	190	441658	-		1	FRONT PLATE
	210	751124	-		1	FRONT PLATE
	220	490891	C		2	PIN
	230	272158	S		2	PIN
	235	490890	-		2	PLATE
	240	490910	-		1	PLATE
	245	490911	-		1	PLATE
	250	469937	-		4	PIPE
	260	441677	-		1	FRONT PLATE
	270	G- 441806	-		1	COLLAR
	280	441809	-		1	FRONT PLATE
	290	441810	C		1	GASKET
	295	490986	-		1	PLATE
	300	6278	S		1	WASHER
	360	90044-0101	S		2	LIMIT SWITCH
	370	90087-0002	-		3	PIPE PLUG
	380	90091-0106	S		8	SEALED RING
	390	90137-0010	-		8	PIPE JOINT
	400	90143-0010	-	MM	260	STRIP
	405	90157-0016	-	ML	X	LOCKING FLUID
	410	90157-0022	-	G	X	SEALING COMPOUND
	420	90335-0036	S		2	SPRING
	430	90424-0027	S		1	NOZZLE
	500	311103-0415	-		3	CYLINDRICACPR8M6X55RFR

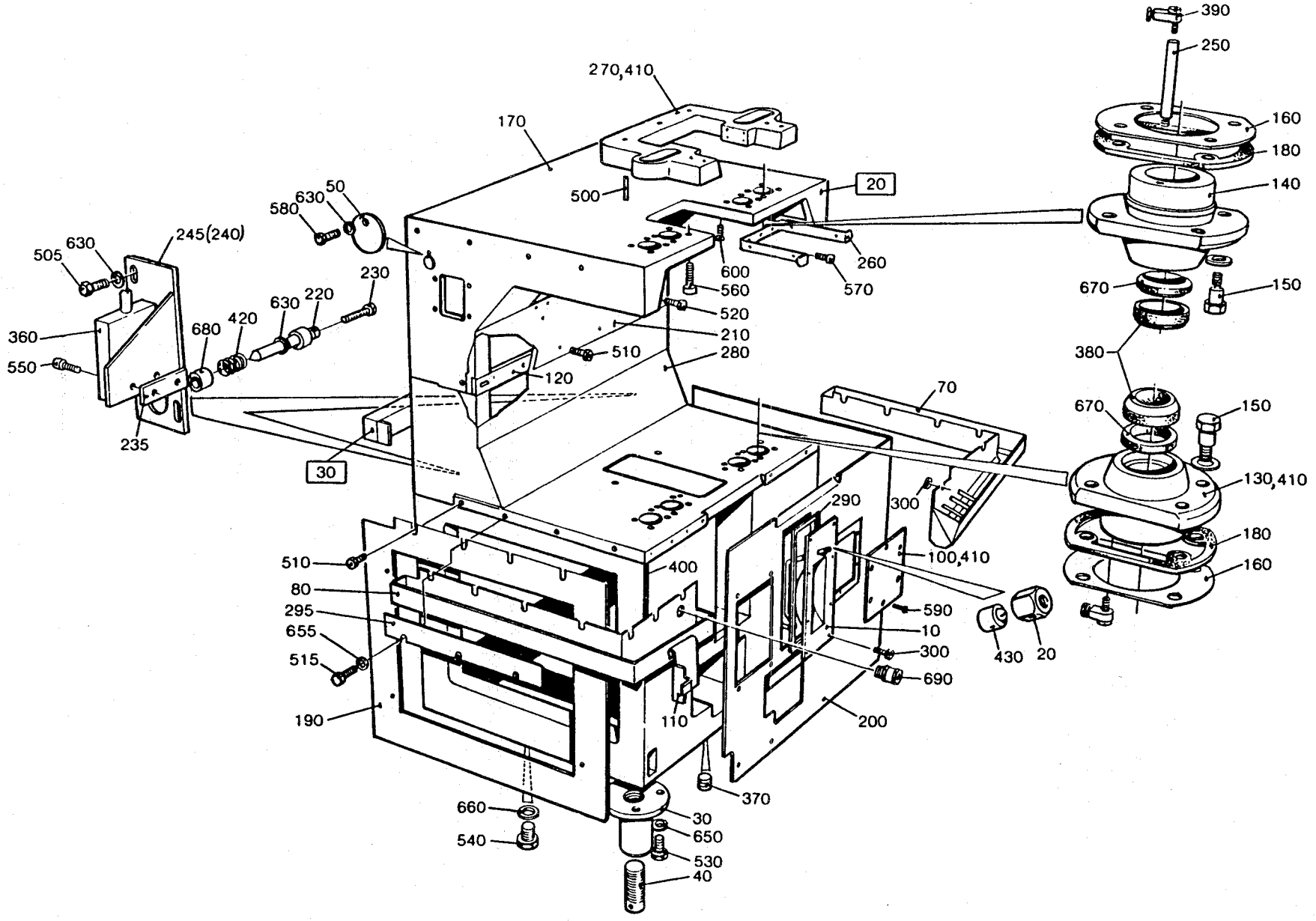
390
250
270,410
160
170
180
140
500
20
580
630
50
260
600
570
245(240)
505
630
560
150
670
520
230
360
680
420
630
220
210
380
550
510
280
120
70
670
150
235
30
130,410
290
300
180
510
400
100,410
160
80
590
295
10
655
300
515
430
20
690
190
110
200
370
660
30
540
650
530
40

From	Pos	Part No	SP	UN	Qty	Description
	505	312105-0327	-		4	SCREW M6S5X12 A4 80
	510	312105-0366	-		27	SCREW M6S6X12RFR
	515	312105-0368	-		3	SCREW M6S6X16RFR
	520	312105-0370	-		2	SCREW M6S6X20RFR
	525	312105-0374	-		32	SCREW M6S6X30RFR
	530	312105-0451	-		16	SCREW M6S8X20RFR
	540	312105-0489	-		8	SCREW M6S10X16RFR
	550	312111-0331	-		4	SCREW MC6S5X20FZB
	560	312115-0503	-		10	SCREW 10X60 A4 80
	570	312125-0323	-		7	SLOTTED HEMCS5X8RFR
	580	312125-0329	-		2	SLOTTED HEMCS5X16RFR
	590	312155-0325	-		6	SCREW MF6S5X10RFR
	600	312155-0366	-		9	SCREW MF6S6X12RFR
	630	315105-0146	-		6	WASHER BRB5,3X10RFR
	650	315105-0165	-		16	WASHER BRB8,4X16RFR
	655	315105-0153	-		35	WASHER BRB6,4X12RFR
	660	315233-0109	S		8	SEAL RING R1/8"
	670	315259-0102	S		8	FELT SEAL SKFFI190
	680	321116-0135	S		4	BUSHING 10E7/16X10
	690	352103-0100	-		1	CABLE GLANR.15,2/2-6

From	Pos	Part No	SP	UN	Qty	Description

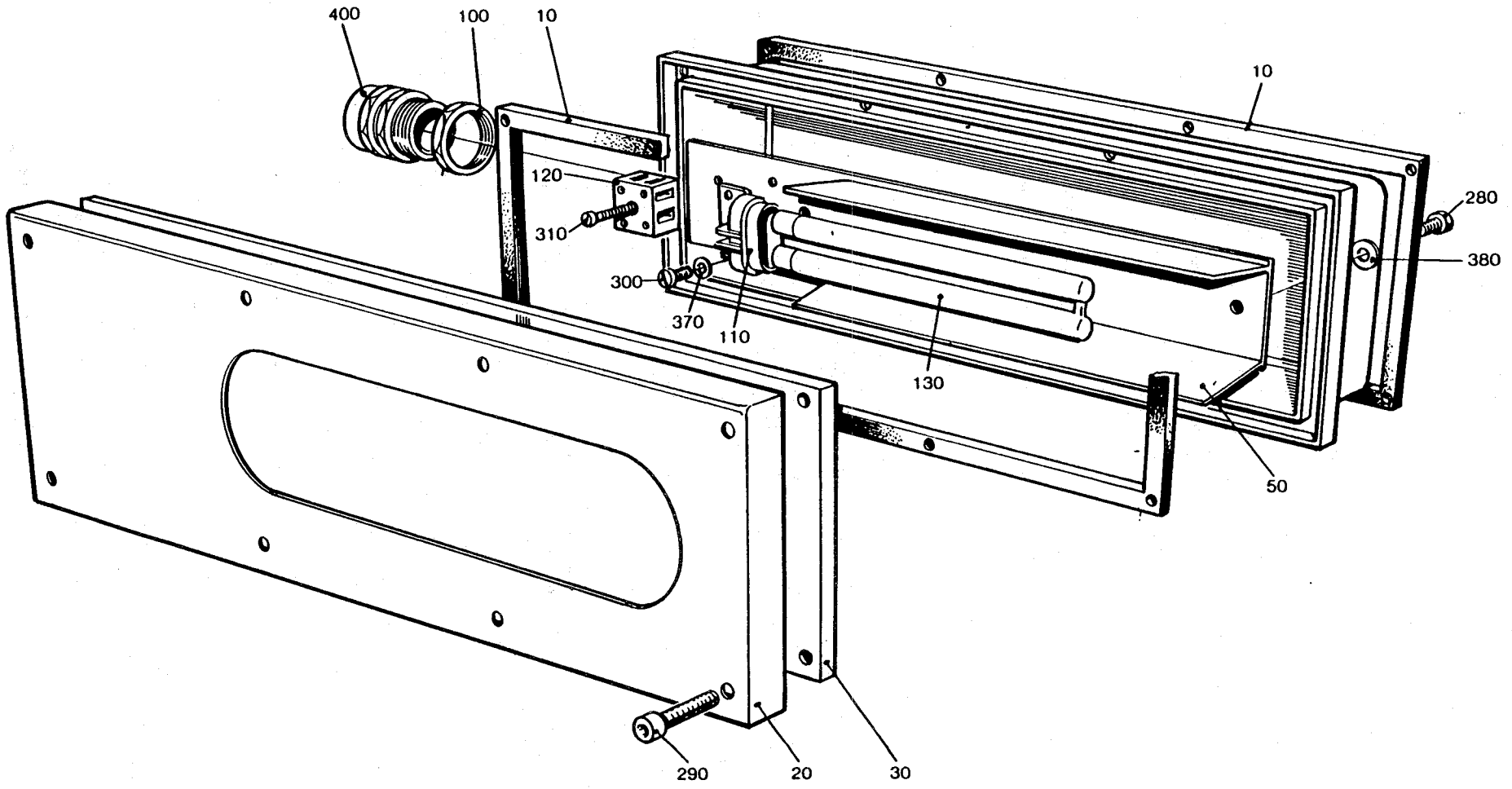
400
100
10
10
120
310
280
380
300
370
110
130
50
290
20
30

From	Pos	Part No	SP	UN	Qty	Description
	010	441536	S		2	GASKET
	020	456263	-		1	PLATE
	030	456264	S		1	GLASS
	040	469336	S		1	COVER
	050	469337	-		1	REFLECTOR
	100	90099-0002	-		1	NUT
	110	90164-0301	S		1	LAMPHOLDER
	120	90195-0020	-		1	TERMINAL BLOCK
	130	90297-0006	P		1	FLUORESCENT LAMP
	280	312105-0325	-		2	SCREW M6S5X10 A4 80
	290	312115-0331	-		8	SCREW 5X20 A4 80
	300	312125-0220	-		2	SLOTTED HEMCS3X6RFR
	310	312125-0230	-		1	SLOTTED HEMCS3X20RFR
	370	315105-0124	-		2	WASHER BRB3,2X6RFR
	380	315105-0146	-		2	WASHER BRB5,3X10RFR
	400	352103-0106	-		1	CABLE GLANR.18,6/5-10

From	Pos	Part No	SP	UN	Qty	Description

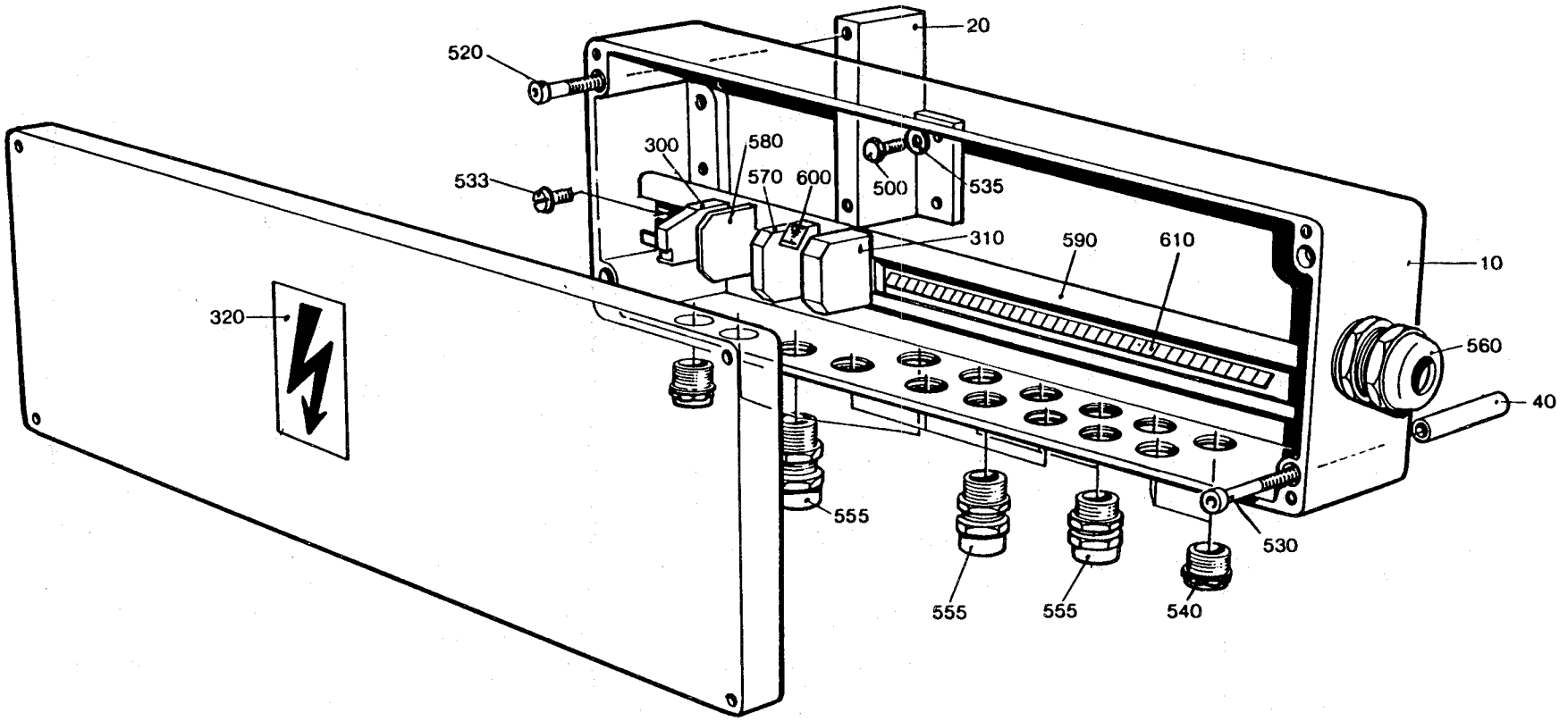
20
520
300
580
570
600
500
535
533
310
590
610
10
320
560
40
555
530
555
555
540

From	Pos	Part No	SP	UN	Qty	Description
	010	456750	-		1	APPLIANCE BOX
	020	456751	-		1	BRACKET
	040	456753	-		1	SPACER
	300	90094-0004	-		1	EN SUPPORT
	310	90135-0021	-		6	EARTHING CLAMP
	320	90194-0016	-		1	SIGN
	500	312101-0368	-		2	SCREW M6S6X16FZB
	520	312111-0372	-		2	SCREW MC6S6X25FZB
	530	312111-0385	-		1	SCREW MC6S6X75FZB
	533	312125-0364	-		2	SLOTTED HEMCS6X10RFR
	535	315101-0153	-		2	WASHER BRB6,4X12FZB
	540	352101-0102	-		4	LEAD-IN G 15,2
	555	352103-0101	-		11	CABLE GLANR.15,2/4-8
	560	352103-0115	-		1	CABLE GLANR.PR28,3/7-16
	570	353021-0110	-		37	CLAMP L#MMA SAK 4PA
	580	353032-0104	-		1	END PLATE AP 4 PA
	590	353042-0002	-	MM	340	RAIL
	600	359011-0202	-		12	LABEL (JORD)
	610	359011-0801	-		2	LABEL BSFW 0-49

From	Pos	Part No	SP	UN	Qty	Description

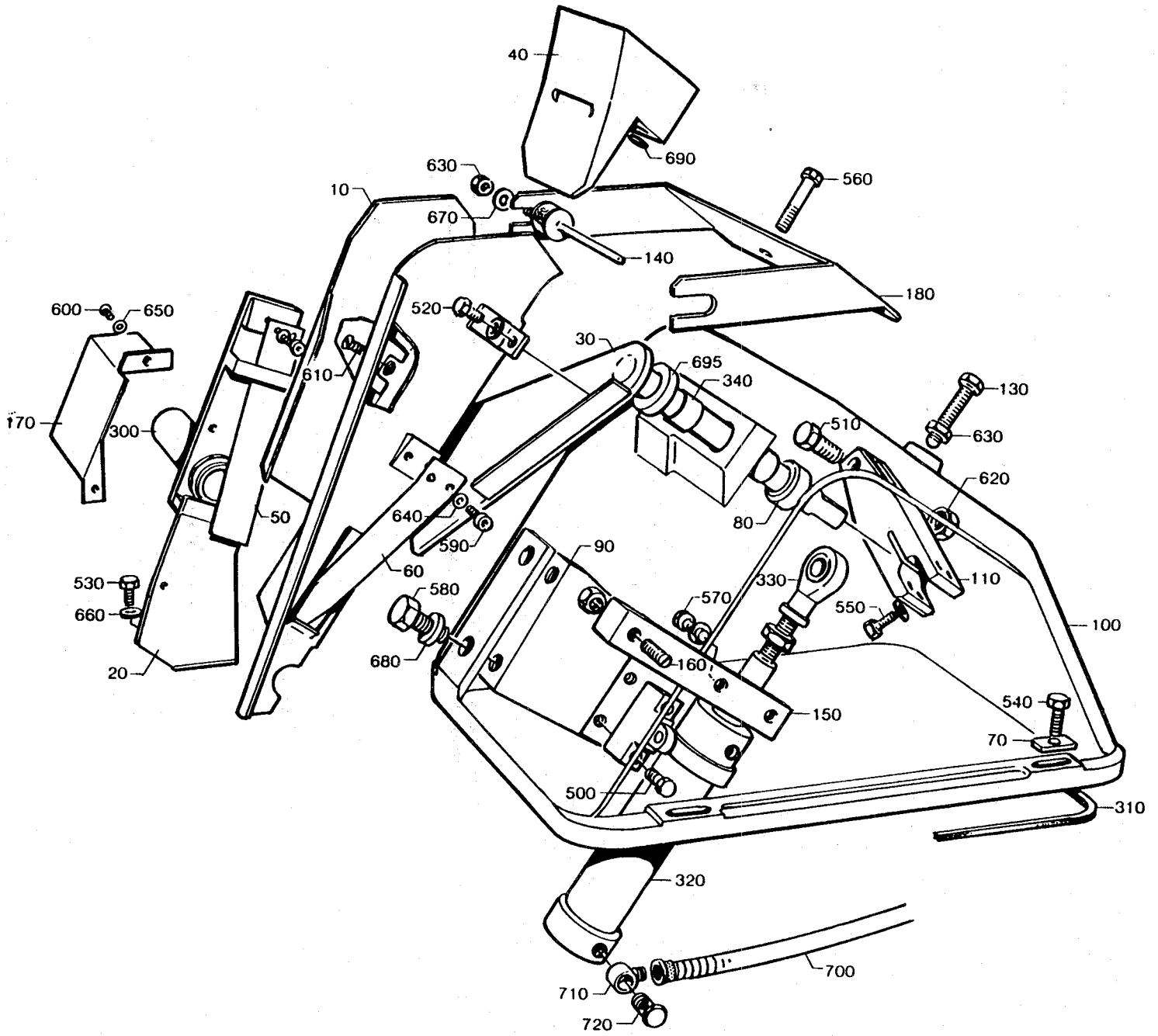
40
690
630
10
670
560
140
180
600
650
520
30
695
340
610
130
630
170
300
510
620
50
640
590
80
90
530
660
60
580
330
110
570
550
100
680
160
20
150
540
70
500
310
320
700
710
720

From	Pos	Part No	SP	UN	Qty	Description
TB/9						
	010	978407	-		1	DROP CHUTE (250 ml)
	010	978406	-		1	DROP CHUTE (236 ml)
	010	978405	-		1	DROP CHUTE (200 ml)
	010	978404	-		1	DROP CHUTE (180 ml)
	010	456158	-		1	DROP CHUTE (200 ml SLIM)
	020	456159	-		1	GUIDE PLATE (250 ml)
	020	456160	-		1	GUIDE PLATE (236 ml)
	020	456161	-		1	GUIDE PLATE (200 ml)
	020	456162	-		1	GUIDE PLATE (180 ml)
	020	456163	-		1	GUIDE PLATE (200 ml SLIM)
	030	491881-0001	-		1	PIVOT ARM (250 ml)
	030	491881-0001	-		1	PIVOT ARM (236 ml)
	030	491881-0001	-		1	PIVOT ARM (200 ml)
	030	491881-0001	-		1	PIVOT ARM (180 ml)
	030	491881-0001	-		1	PIVOT ARM (200 ml SLIM)
	040	295097	S		1	SLIDER (250 ml)
	040	295097	S		1	SLIDER (236 ml)
	040	295097	S		1	SLIDER (200 ml)
	040	295097	S		1	SLIDER (180 ml)
	040	255942	S		1	SLIDER (200 ml SLIM)
	050	456165	S		1	LEAF SPRING (250 ml)
	050	456165	S		1	LEAF SPRING (236 ml)
	050	456165	S		1	LEAF SPRING (200 ml)
	050	456165	S		1	LEAF SPRING (180 ml)
	050	456164	S		1	LEAF SPRING (200 ml SLIM)
	060	456167	S		1	LEAF SPRING (250 ml)
	060	456167	S		1	LEAF SPRING (236 ml)
	060	456167	S		1	LEAF SPRING (200 ml)
	060	456167	S		1	LEAF SPRING (180 ml)
	060	456166	S		1	LEAF SPRING (200 ml SLIM)
TBA/9						
	010	978411	-		1	DROP CHUTE (250 ml)
	010	978410	-		1	DROP CHUTE (236 ml)
	010	978409	-		1	DROP CHUTE (200 ml)
	010	978408	-		1	DROP CHUTE (180 ml)
	010	456145	-		1	DROP CHUTE (125 ml)
	010	456146	-		1	DROP CHUTE (200 ml SLIM)
	010	978412	-		1	DROP CHUTE (284 ml)
	020	456147	-		1	GUIDE PLATE (250 ml)
	020	456148	-		1	GUIDE PLATE (236 ml)
	020	456149	-		1	GUIDE PLATE (200 ml)
	020	456150	-		1	GUIDE PLATE (180 ml)
	020	456151	-		1	GUIDE PLATE (125 ml)
	020	456152	-		1	GUIDE PLATE (200 ml SLIM)
	020	456152	-		1	GUIDE PLATE (284 ml)
	030	491881-0001	-		1	PIVOT ARM (250 ml)
	030	491881-0001	-		1	PIVOT ARM (236 ml)
	030	491881-0001	-		1	PIVOT ARM (200 ml)
	030	491881-0001	-		1	PIVOT ARM (180 ml)
	030	491881-0002	-		1	PIVOT ARM (125 ml)
	030	491881-0001	-		1	PIVOT ARM (200 ml SLIM)
	040	295097	S		1	SLIDER (250 ml)
	040	295097	S		1	SLIDER (236 ml)
	040	295097	S		1	SLIDER (200 ml)
	040	295097	S		1	SLIDER (180 ml)
	040	295097	S		1	SLIDER (284 ml)
	040	255942	S		1	SLIDER (125 ml)
	040	469502	S		1	SLIDER (200 ml SLIM)
	050	456165	S		1	LEAF SPRING (250 ml)
	050	456165	S		1	LEAF SPRING (236 ml)
	050	456165	S		1	LEAF SPRING (200 ml)
	050	456165	S		1	LEAF SPRING (180 ml)
	050	456164	S		1	LEAF SPRING (125 ml)
	050	456164	S		1	LEAF SPRING (200 ml SLIM)
	050	978263	S		1	LEAF SPRING (284 ml)
	060	456167	S		1	LEAF SPRING (250 ml)
	060	456167	S		1	LEAF SPRING (236 ml)
	060	456167	S		1	LEAF SPRING (200 ml)
	060	456167	S		1	LEAF SPRING (180 ml)
	060	456166	S		1	LEAF SPRING (125 ml)
	060	456166	S		1	LEAF SPRING (200 ml SLIM)
	060	752893	S		1	LEAF SPRING (284 ml)
Common Parts						
	070	255939	-		4	WASHER
	080	255940	-		1	SPACER
	090	255943	-		1	HOLDER
	100	271163	C		1	BRACKET
	110	272600	-		1	ARM
	130	272602	-		1	SCREW
	140	272742	S		1	FINGER
	150	272852	-		1	HOLDER
	160	272853	-		1	SCREW
	170	295075	-		1	GUARD

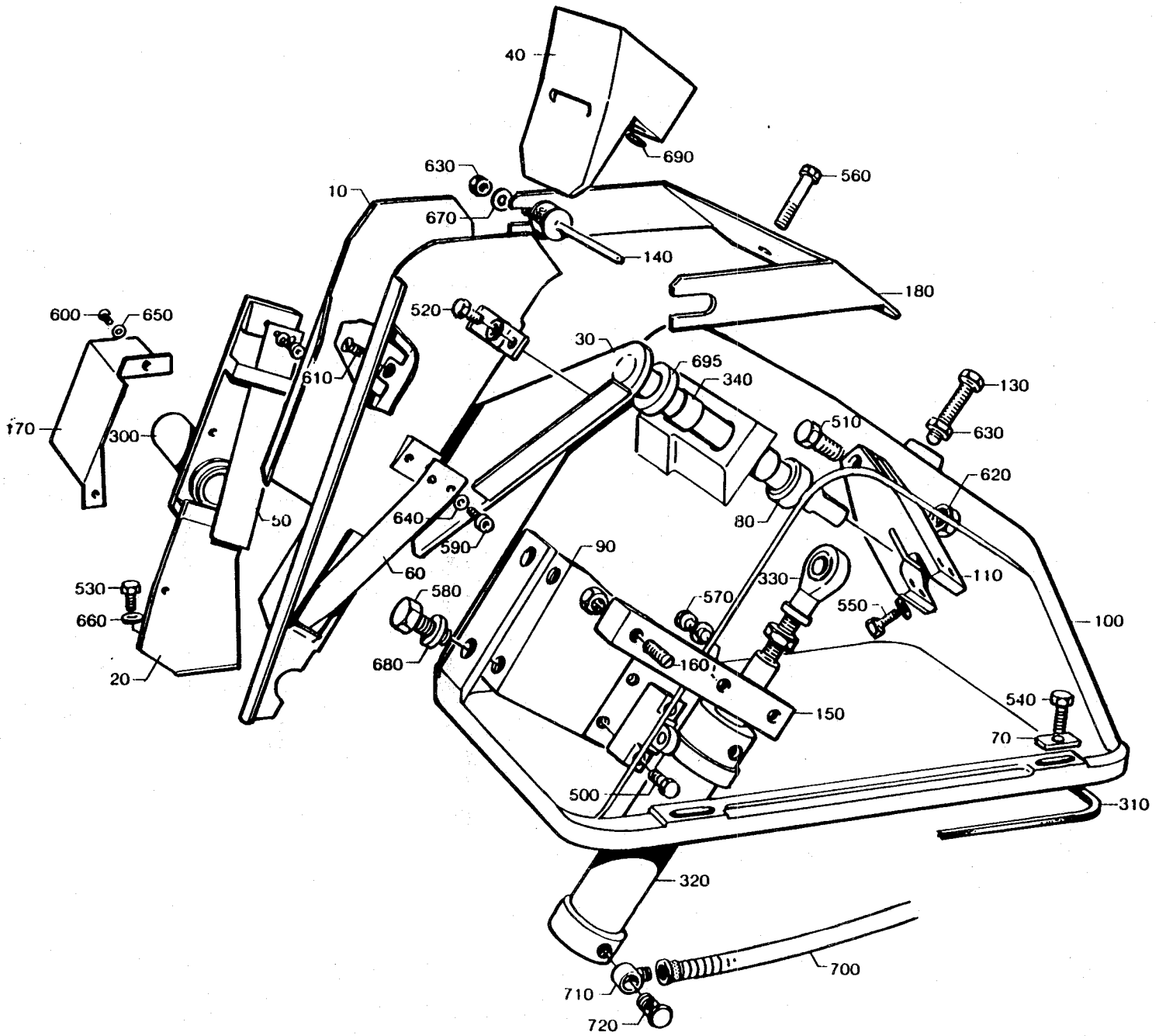
40
690
630
560
10
670
140
180
600
650
520
30
695
340
130
610
510
630
170
300
620
50
640
80
590
90
530
60
110
580
330
570
550
660
100
680
160
20
540
150
70
500
310
320
700
710
720

From	Pos	Part No	SP	UN	Qty	Description
	180	295399	C		1	HOLDER
	300	90044-0095	P		1	PROXIMITY SWITCH
	310	90161-0001	S	MM	1500	STRIP
	320	90239-0298	S		1	CYLINDER
		90239-0349	S		1	* SEAL KIT
	330	90239-0405	S		1	ROD END
	340	90240-0073	S		2	RICTION BEARING
	500	312101-0331	-		4	SCREW M6S5X20FZB
	510	312101-0499	-		1	SCREW M6S10X40FZB
	520	312105-0364	-		1	SCREW M6S6X10RFR
	530	312105-0368	-		2	SCREW M6S6X16RFR
	540	312105-0372	-		4	SCREW M6S6X25RFR
	550	312105-0376	-		2	SCREW M6S6X35RFR
	560	312105-0380	-		2	SCREW M6S6X50RFR
	570	312105-0451	-		2	SCREW M6S8X20RFR
	580	312105-0455	-		2	SCREW M6S8X30RFR
	590	312115-0285	-		4	SCREW S 4X6 A4 80
	600	312125-0323	-		2	SLOTTED HEMCS5X8RFR
	610	312155-0364	-		1	SCREW MF6S6X10RFR
	620	312601-0320	-		1	NUT M6M10FZB
	630	312605-0318	-		4	NUT M6M8RFR
	640	315105-0136	-		4	WASHER BRB4,3X8RFR
	650	315105-0146	-		2	WASHER BRB5,3X10RFR
	660	315105-0153	-		5	WASHER BRB6,4X12RFR
	670	315105-0165	-		2	WASHER BRB8,4X16RFR
	680	315115-0165	-		4	WASHER TBRB8,4X16RFR
	690	315202-0206	S		1	O-RING 7,3X2,4
	695	315233-0111	-		1	SEAL RING R3/8"
	700	342903-0121	S		3	NUT J#DER 1723-8/6
	710	342980-0121	S		3	BANJO CONNINGEL 8/6-1/8"
	720	342980-0303	S		3	BANJO CONN SINGEL 1/8"

From	Pos	Part No	SP	UN	Qty	Description

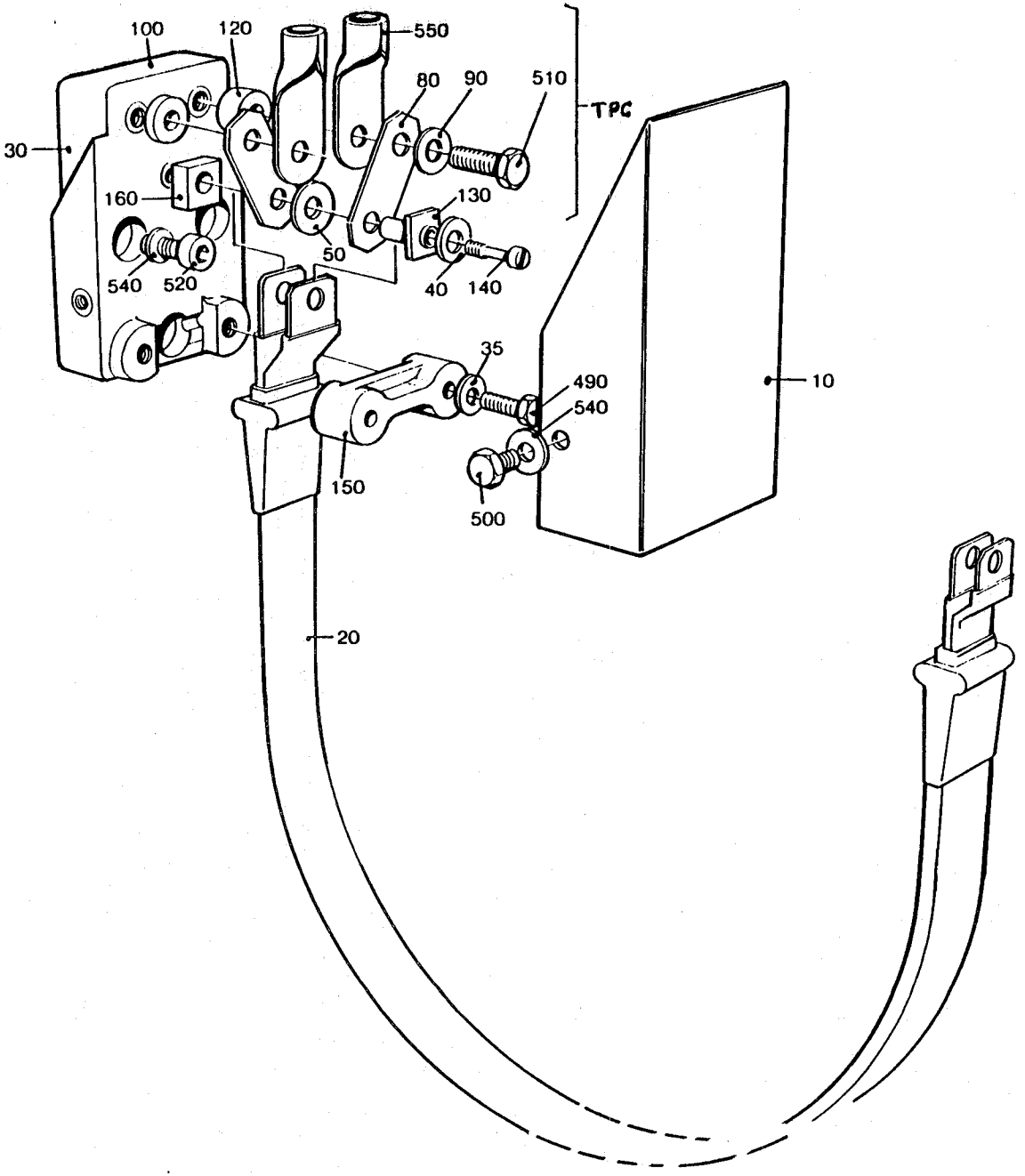
100
120
550
80
90
510
TPC
30
160
130
50
540
520
40
140
35
490
540
10
150
500
20

From	Pos	Part No	SP	UN	Qty	Description
TPC						
	050	32079	P		1	WASHER
	080	256976	S		2	PLATE
	090	256977-0001	S		2	WASHER
	100	256977-0002	S		1	WASHER
	120	256977-0003	S		1	WASHER
	510	312105-0370	-		2	SCREW M6S6X20RFR
	550	353102-0182	-		2	CABLE SHOEYAEV 2CL-M64
Common Parts						
	010	256975	-		1	GUARD
	020	491085	P		1	CABLE
	030	456845	S		1	BRACKET
	035	6427	S		2	WASHER
	040	28509	P		1	WASHER
	130	271846	P		1	INSULATION NUT
	140	271848	P		1	SCREW
	150	456846	S		1	CLIP
	160	295056	P		1	WASHER
	490	312105-0295	-		2	SCREW M6S4X20 A4 80
	500	312105-0364	-		2	SCREW M6S6X10RFR
	520	312115-0368	-		3	SCREW 6X16 A4 80
	540	315105-0153	-		5	WASHER BRB6,4X12RFR

From	Pos	Part No	SP	UN	Qty	Description

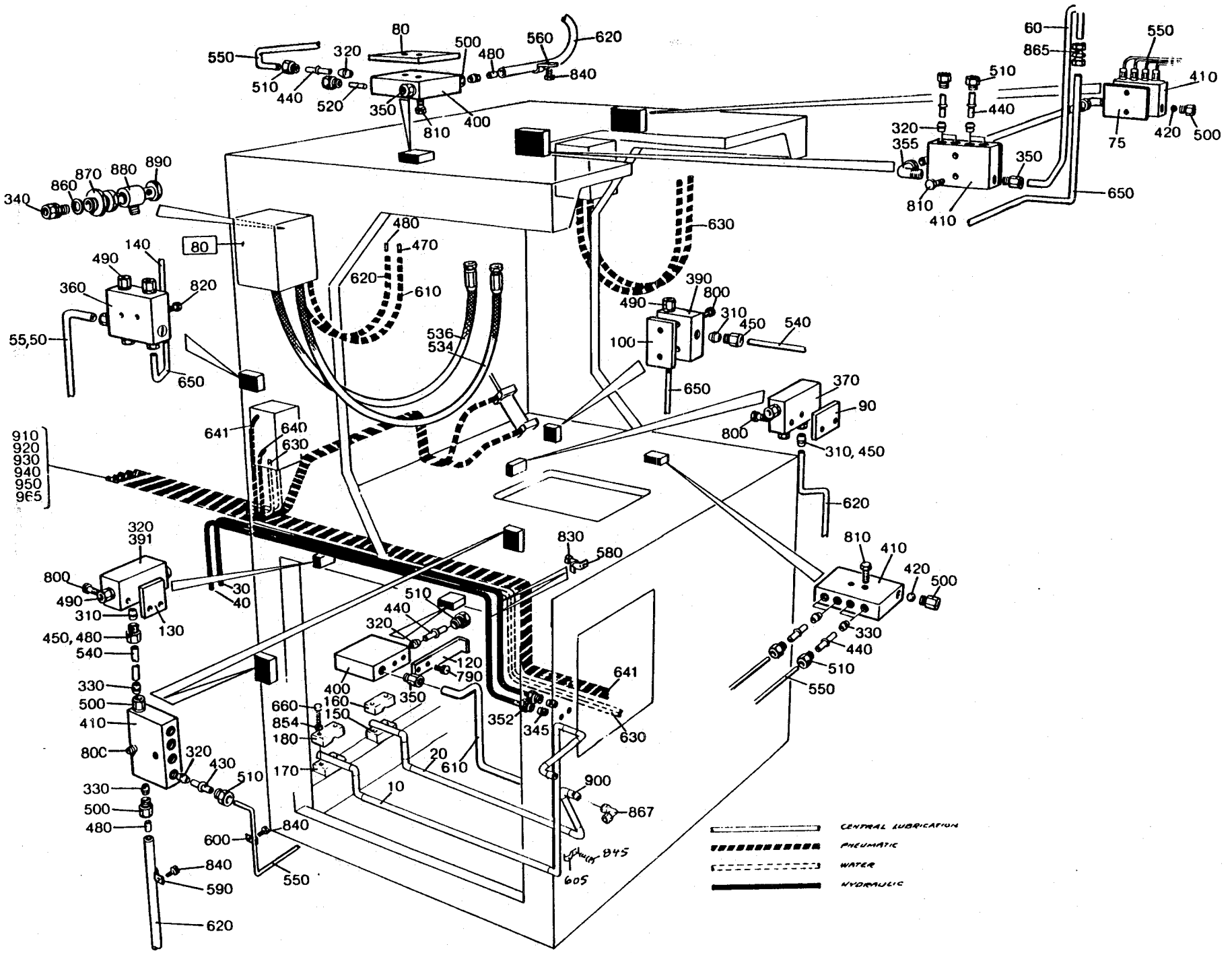
CENTRAL LUBRICATION
PNEUMATIC
WATER
HYDRAULIC

From	Pos	Part No	SP	UN	Qty	Description
	F070	==>204-1.1	-		1	CLEANING SYSTEM
ALL	F080	==>204-1.2	-		1	DISTRIBUTOR BLOCK
	630	90166-0118	-	M	12	HOSE
	010	491854	-		1	PIPE WATER
	020	491855	-		1	PIPE WATER
	030	271742	-		1	PIPE
	040	271743	-		1	PIPE
-080V	050	272346	-		1	PIPE
090V-	050	752727	-		1	PIPE
090V-	055	752726	-		1	PIPE
	060	469133	-		1	PIPE
	070	469132	-		1	PIPE
	075	469131	-		2	SHIM
	080	271621	-		1	SHIM
	090	271622	-		1	SHIM
	100	271623	-		1	SHIM
	120	295986	-		1	HOLDER
	130	456407	-		1	SHIM
	140	491390	-		1	PIPE CENTRAL LUBRICATION
	150	491859	-		1	HOLDER
	160	491860	-		1	HOLDER
	170	491861	-		1	HOLDER
	180	491862	-		1	HOLDER
	310	90028-0001	S		5	CONE
	320	90028-0020	S		23	CONE
	330	90028-0021	S		6	CONE
	340	90030-0051	S		1	PIPE CONNECTION
	345	90030-0098	S		10	CONE
	350	90030-0162	S		4	CONNECTION
	352	90030-0172	S		10	NUT
	355	90030-0200	-		2	PIPE JOINT
	360	90032-0014	-		1	JUNCTION BLOCK
	370	90032-0026	-		1	JUNCTION BLOCK
	390	90032-0030	-		1	JUNCTION BLOCK
	391	90032-0031	-		1	JUNCTION BLOCK
	400	90032-0038	-		2	BLOCK
	410	90032-0039	-		5	BLOCK
	420	90090-0008	S		2	STEEL BALL
	430	90092-0052	S		10	VALVE
	440	90092-0053	S		13	VALVE
	450	90134-0003	S		5	BUSHING
	470	90134-0030	S		4	SLEEVE
	480	90134-0031	S		7	SLEEVE
	490	90134-0034	S		10	NIPPLE
	500	90134-0038	S		9	BUSHING
	510	90134-0039	S		24	BUSHING
	520	90134-0052	S		1	PLUG
	534	90148-0037	S		2	HOSE
	536	90148-0038	S		2	HOSE
	540	90151-0001	-	M	2,2	PIPE
	550	90266-0019	-	MM	7000	PIPE
	560	90165-0002	-		2	CLIP
	580	90165-0007	-		2	CLIP
	590	90165-0022	-		8	CLIP
	600	90165-0023	-		6	CLIP
	605	90165-0039	-		1	CLIP
	610	90166-0108	-	MM	3300	HOSE
	620	90166-0109	-	MM	7000	HOSE
	640	90166-0132	-	M	5	HOSE
	641	90166-0133	-	M	10	HOSE
	650	90266-0006	-	MM	3800	TUBE
	660	312101-0337	-		4	SCREW M6S5X35FZB
	790	312105-0289	-		2	SCREW M6S4X10 A4 80
	800	312105-0295	-		8	SCREW M6S4X20 A4 80
	810	312105-0297	-		12	SCREW M6S4X25 A4 80
	820	312105-0372	-		2	SCREW M6S6X25RFR
	830	312115-0289	-		2	SCREW S4X10 A4 80
	840	312125-0287	-		16	SLOTTED HEMCS4X8RFR
	845	312125-0323	-		1	SLOTTED HEMCS5X8RFR
	850	312165-0325	-		2	SLOTTED HEMKFS5X10RFR
	854	315101-0146	-		4	WASHER BRB5,3X10FZB
	857	315105-0136	-		8	WASHER BRB4,3X8RFR
	860	315234-0109	S		1	SEAL RING R1/8"
	865	342727-0102	-		1	PIPE CONNEG6-LFZB
	867	342736-0109	-		1	ELBOW COUP W-12
	870	342767-0100	S		1	GROMMET R1/8
	880	342797-0121	S		1	BANJO CONNSINGEL 6-1/8
	890	342980-0303	S		1	BANJO CONN SINGEL 1/8"
	900	352113-0101	-		4	RIBBON CLAR
	910	359000-0400	-		22	MARKING CO2/4"0"
	920	359000-0401	-		20	MARKING CO2/4"1"
	930	359000-0402	-		14	MARKING CO2/4"2"
	940	359000-0403	-		8	MARKING CO2/4"3"
	950	359000-0404	-		2	MARKING CO2/4"4"
	951	359000-0405	-		4	MARKING CO2/4"5"
	952	359000-0406	-		4	MARKING CO2/4"6"
	965	359000-0407	-		8	MARKING CO2/4"7"
	990	359000-0771	-		16	MARKING CO2/4"V"

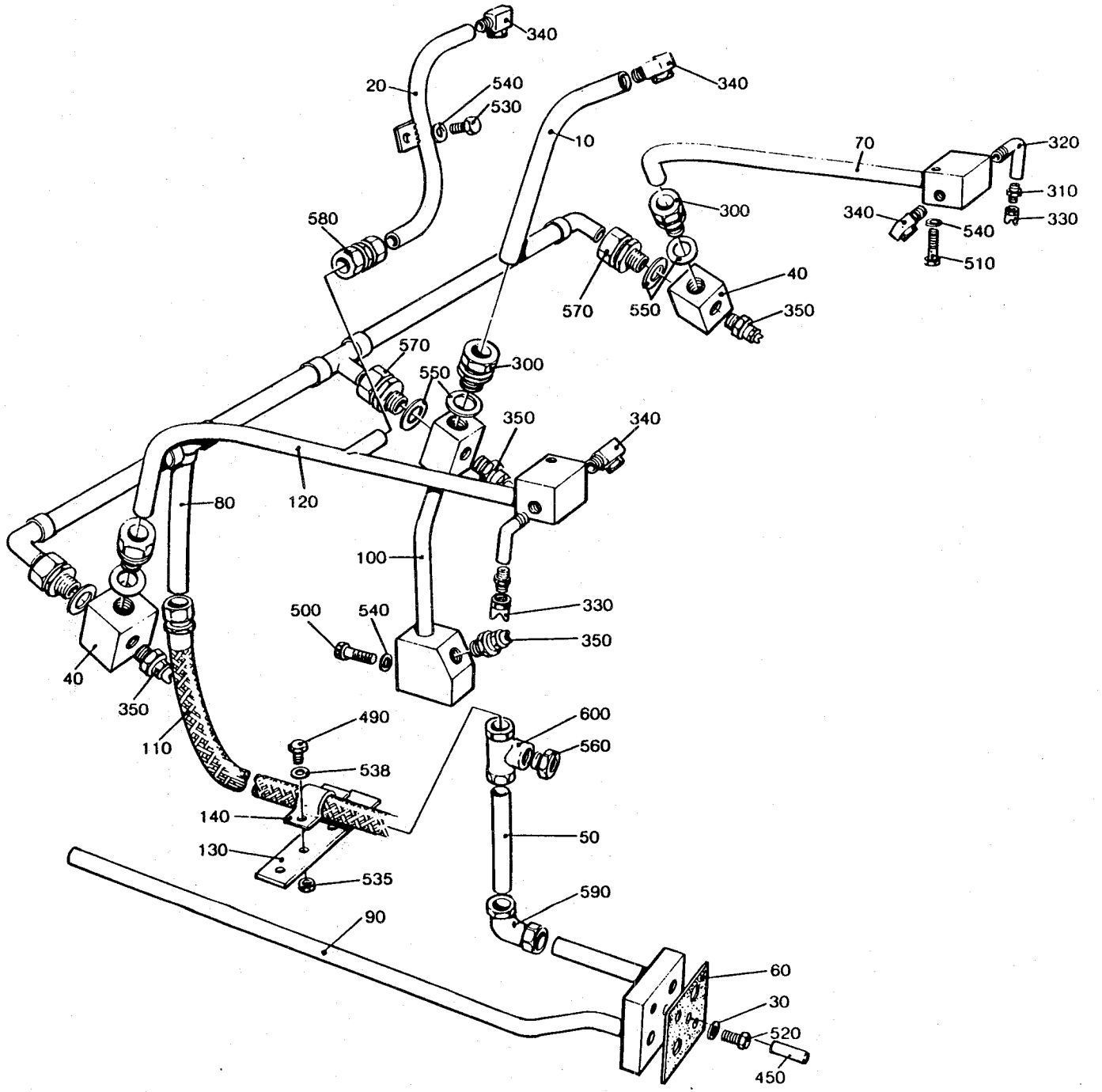
340
20
540
530
340
10
70
320
310
330
340
540
510
300
580
570
550
40
350
570
550
300
350
340
80
120
100
330
500
540
350
40
350
490
600
560
110
538
140
50
130
535
590
90
60
30
520
450

From	Pos	Part No	SP	UN	Qty	Description
TB/9						
	010	271121	-		1	FLUSH PIPE (180-284 ml)
	010	295985	-		1	FLUSH PIPE (200 ml SLIM)
	020	456129-0002	-		1	FLUSH PIPE (180-284 ml)
	020	456129-0002	-		1	FLUSH PIPE (200 ml SLIM)
TBA/9						
	010	271121	-		1	FLUSH PIPE (180-284 ml)
	010	271121	-		1	FLUSH PIPE (100, 125 ml)
	010	295985	-		1	FLUSH PIPE (200 ml SLIM)
	020	456129-0002	-		1	FLUSH PIPE (180-284 ml)
	020	456129-0001	-		1	FLUSH PIPE (100, 125 ml)
	020	456129-0002	-		1	FLUSH PIPE (200 ml SLIM)
Common Parts						
	030	18542	S		2	WASHER
	040	257190	-		2	JUNCTION BLOCK
	050	272679	-		1	PIPE
	060	295417	-		1	GASKET
	070	295785	-		1	FLUSH PIPE
	080	295978	-		1	PIPE
	090	491870	-		1	BRANCH PIPE
	100	441665	-		1	FLUSH PIPE
	110	469146	-		1	HOSE
	120	456128	-		1	FLUSH PIPE
	130	469134	-		1	BRACKET
	140	469135	-		1	HOLDER
	300	90030-0151	S		3	CONNECTION
	310	90330-0097	-		2	NIPPLE
	320	90330-0099	-		2	ELBOW PIPE
	330	90424-0032	S		2	NOZZLE
	340	90424-0033	S		4	NOZZLE
	350	90424-0035	S		4	NOZZLE
	450	311103-0272	-		1	CYLINDRICACPR4M6X20RFR
	490	312105-0327	-		4	SCREW M6S5X12 A4 80
	500	312105-0364	-		1	SCREW M6S6X10RFR
	510	312105-0378	-		2	SCREW M6S6X40RFR
	520	312105-0459	-		2	SCREW M6S8X40RFR
	530	312115-0364	-		1	SCREW 6X10 A4 80
	535	312605-0314	-		2	NUT M6M5RFR
	538	315105-0146	-		6	WASHER BRB5,3X10RFR
	540	315105-0153	-		4	WASHER BRB6,4X12RFR
	550	315233-0113	S		6	SEAL RING R1/2"
	560	342710-0115	S		1	REDUCER RBM16/8
	570	342720-0114	S		3	PIPE CONNEGA-15-1/2"
	580	342726-0109	S		1	PIPE CONNEG-12
	590	342736-0114	S		1	ELBOW COUP W-15
	600	342746-0114	S		1	T-PIECE T-15

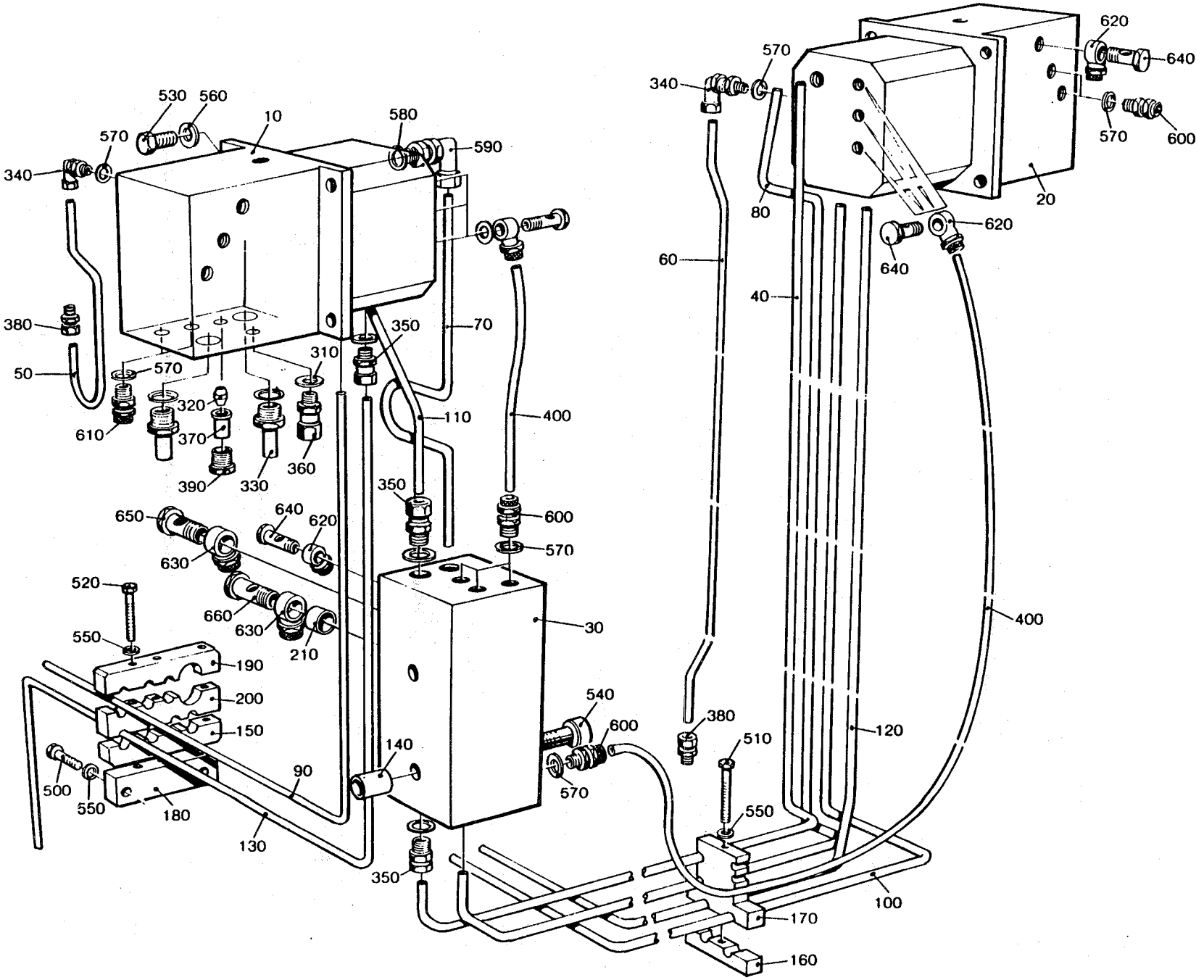
530
560
570
10
580
590
340
380
50
610
320
370
390
330
360
310
350
70
110
400
650
630
640
620
660
630
210
520
550
190
200
150
500
550
180
90
130
140
350
540
600
570
30
620
640
570
600
340
570
80
20
620
640
60
40
400
380
510
550
120
100
170
160

From	Pos	Part No	SP	UN	Qty	Description
	010	491255	-		1	DISTRIBUTOR BLOCK LEFT
	020	491254	-		1	DISTRIBUTOR BLOCK RIGHT
	030	491256	-		1	DISTRIBUTOR BLOCK LEFT
	040	491244	-		1	PIPE WATER
	050	491245	-		1	PIPE CENTRAL LUBRICATION
	060	491246	-		1	PIPE CENTRAL LUBRICATION
	070	491247	-		1	PIPE WATER
	080	491248	-		1	PIPE WATER
	090	491249	-		1	PIPE HYDRAULIC
	100	491250	-		1	PIPE HYDRAULIC
	110	491251	-		1	PIPE WATER
	120	491252	-		1	PIPE HYDRAULIC
	130	491253	-		1	PIPE HYDRAULIC
	140	271088	-		2	SPACER
	150	271323	-		1	HOLDER
	160	271343	-		2	HOLDER
	170	271344	-		2	HOLDER
	180	456561	-		1	BRACKET
	190	469000	-		1	HOLDER
	200	469001	-		1	HOLDER
	210	469071	-		2	SPACER
	310	90005-0045	-		2	WASHER
	320	90028-0021	P		2	CONE
	330	90030-0065	S		4	PIPE CONNECTION
	340	90030-0171	S		2	CONNECTION
	350	90030-0185	S		8	PIPE CONNECTION
	360	90134-0019	S		2	GLAND
	370	90134-0031	S		2	SLEEVE
	380	90134-0034	S		2	NIPPLE
	390	90134-0038	-		2	BUSHING
	400	90166-0132	-	M	5	HOSE
	500	312101-0372	-		2	SCREW M6S6X25FZB
	510	312101-0385	-		2	SCREW M6S6X75FZB
	520	312101-0388	-		3	SCREW M6S6X90FZB
	530	312105-0453	-		8	SCREW M6S8X25RFR
	540	312111-0471	-		2	SCREW MC6S8X100FZB
	550	315101-0153	-		7	WASHER BRB6,4X12FZB
	560	315105-0165	-		8	WASHER BRB8,4X16RFR
	570	315211-0105	S		16	SEALING WA
	580	315211-0108	S		4	SEALING WA
	590	342738-0208	S		4	ELBOW COUPY
	600	342921-0113	S		10	PIPE CONNE6/4-1/8"
	610	342921-0121	S		4	PIPE CONNE8/6-1/8"
	620	342980-0113	S		11	BANJO CONNSINGEL 6/4-1/8
	630	342980-0122	S		5	BANJO CONNSINGEL 8/6-1/4
	640	342980-0303	S		11	BANJO CONN SINGEL 1/8"
	650	342980-0304	S		3	BANJO CONN SINGEL 1/4
	660	342980-0314	S		2	BANJO CONN DUBBEL 1/4

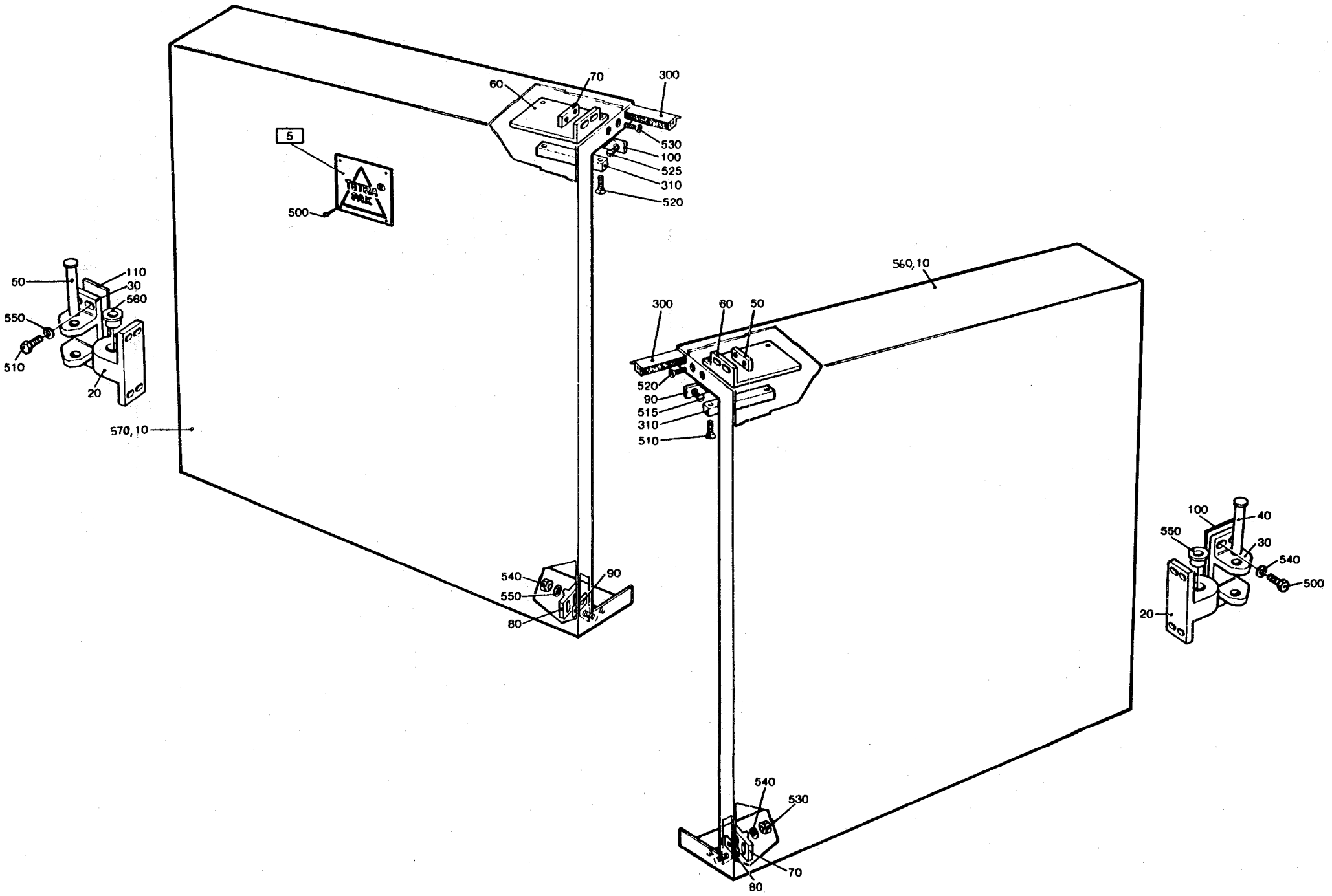
5
500
60
70
300
530
100
525
310
520
50
110
30
560
550
510
20
570, 10
540
550
80
90
560, 10
300
60
50
520
90
515
310
510
540
530
70
80
100
40
550
30
540
500
20

Side Door, Left

From	Pos	Part No	SP	UN	Qty	Description
	F005	544540-0101	C		1	HOUSEMARK SIGN SET, ASS'Y
	010	441667	C		1	DOOR
	020	271219	C		2	HINGE
	030	G- 271220	C		2	HINGE
	050	271221	C		2	PIN
	060	441668	-		1	HOLDER
	070	441691	-		1	PLATE
	080	491233	-		1	LUG
	090	456829	-		2	SHIM
	100	469492	-		1	SPACER
	110	491235	-		2	WASHER
	300	90143-0049	-	MM1500		STRIP
	310	90237-0071	S		1	LOCK
	500	311520-0435	-		4	BLANK RIVE3,2X8,9
	510	312105-0329	-		16	SCREW M6S5X16 A4 80
	520	312145-0222	-		2	SLOTTED HEMFS3X8RFR
	525	312145-0291	-		2	SLOTTED HEMFS4X12RFR
	530	312155-0329	-		2	SCREW MF6S5X16RFR
	540	312605-0314	-		2	NUT M6M5RFR
	550	315105-0146	-		18	WASHER BRB5,3X10RFR
	560	321111-0096	S		4	BUSHING 8E7X8
	570	90143-0060	-	MM 575		STRIP

Side Door, Right

From	Pos	Part No	SP	UN	Qty	Description
	010	441669	-		1	DOOR
	020	271219	C		2	HINGE
	030	G- 271220	C		2	HINGE
	040	271221	C		2	PIN
	050	441691	-		1	PLATE
	060	441692	-		1	HOLDER
	070	491233	-		1	LUG
	080	456829	-		2	SHIM
	090	469492	-		1	SPACER
	100	491235	-		2	WASHER
	300	90143-0049	-	MM1500		STRIP
	310	90237-0071	S		1	LOCK
	500	312105-0329	-		16	SCREW M6S5X16 A4 80
	510	312145-0222	-		2	SLOTTED HEMFS3X8RFR
	515	312145-0291	-		2	SLOTTED HEMFS4X12RFR
	520	312155-0329	-		2	SCREW MF6S5X16RFR
	530	312605-0314	-		2	NUT M6M5RFR
	540	315105-0146	-		18	WASHER BRB5,3X10RFR
	550	321111-0096	S		4	BUSHING 8E7X8
	560	90143-0060	-	MM 575		STRIP

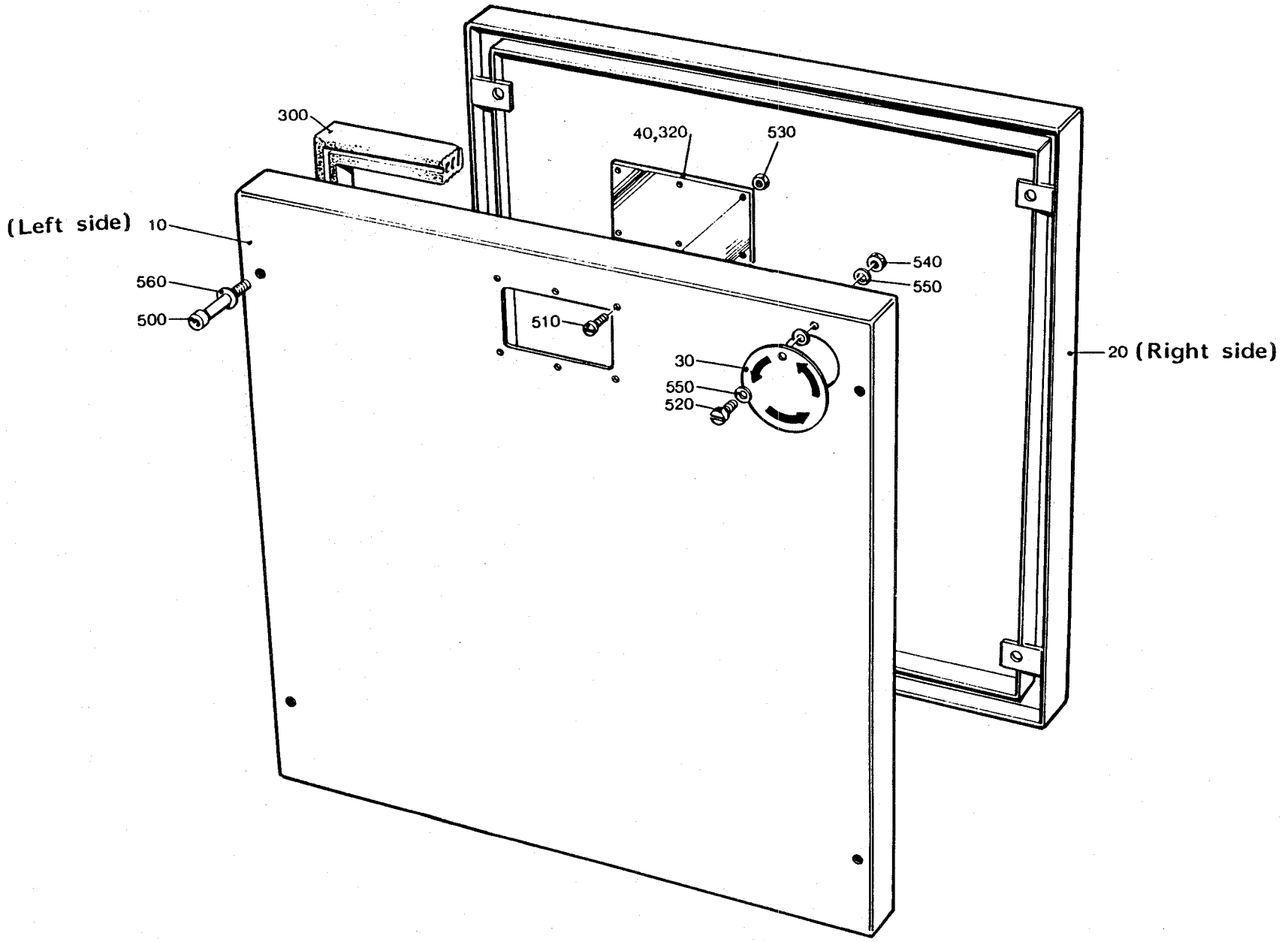
300
40,320
530
(Left side) 10
560
500
510
540
550
30
550
520
20 (Right side)

From	Pos	Part No	SP	UN	Qty	Description
Left Hand Version						
	010	295197	-		1	COVER
	030	469964	-		1	LID
	520	312125-0368	-		1	SLOTTED HEMCS6X16RFR
	540	312810-0314	-		1	LOCK NUT 5FZB
	550	315105-0146	-		3	WASHER BRB5,3X10RFR
Right Hand Version						
	020	295198	-		1	COVER
Common Parts						
	040	257231	C		1	WINDOW
	300	90143-0049	S	MM2200		STRIP
	320	90157-0022	S	G	X	SEALING COMPOUND
	500	312115-0463	-		4	SCREW 8X60 A4 80
	510	312125-0291	-		6	SLOTTED HEMCS4X12RFR
	530	312605-0312	-		6	NUT M6M4RFR
	560	315105-0165	-		4	WASHER BRB8,4X16RFR

From	Pos	Part No	SP	UN	Qty	Description

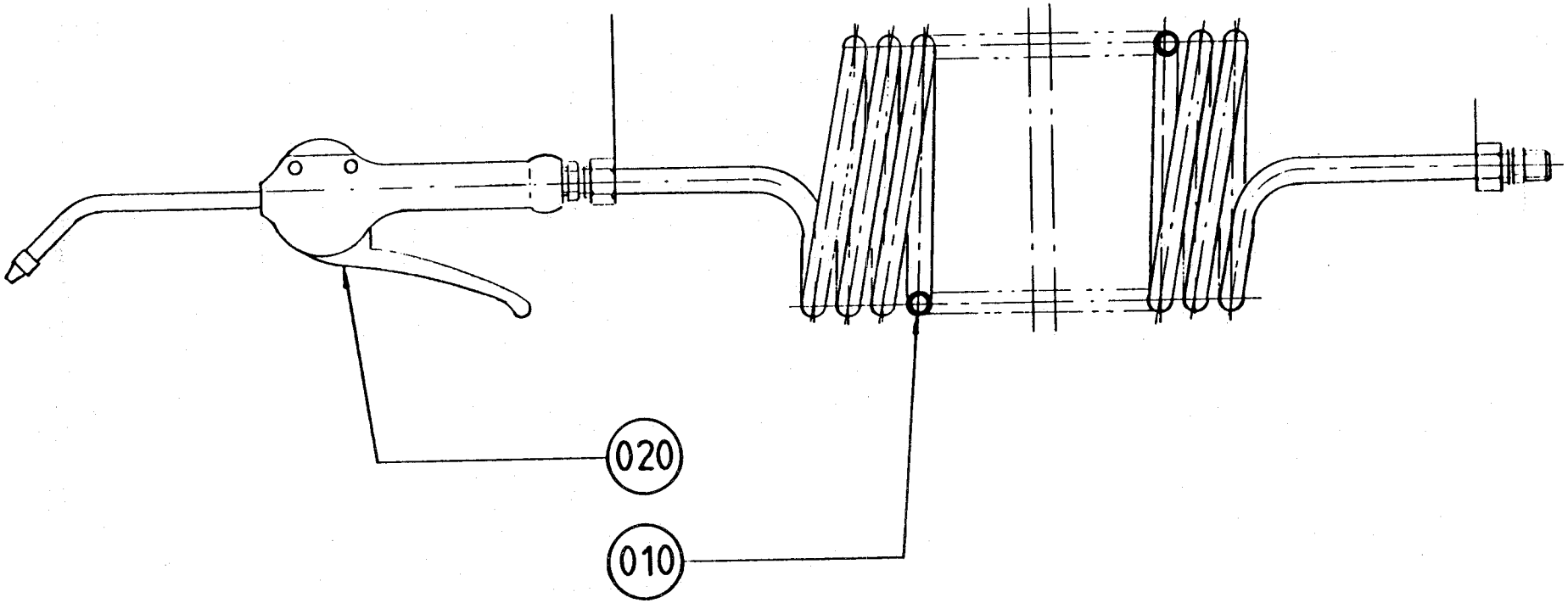
020
010

From	Pos	Part No	SP	UN	Qty	Description
	010	90152-0016	S		1	HOSE
	020	90243-0061	S		1	FAN NOZZLE

From	Pos	Part No	SP	UN	Qty	Description

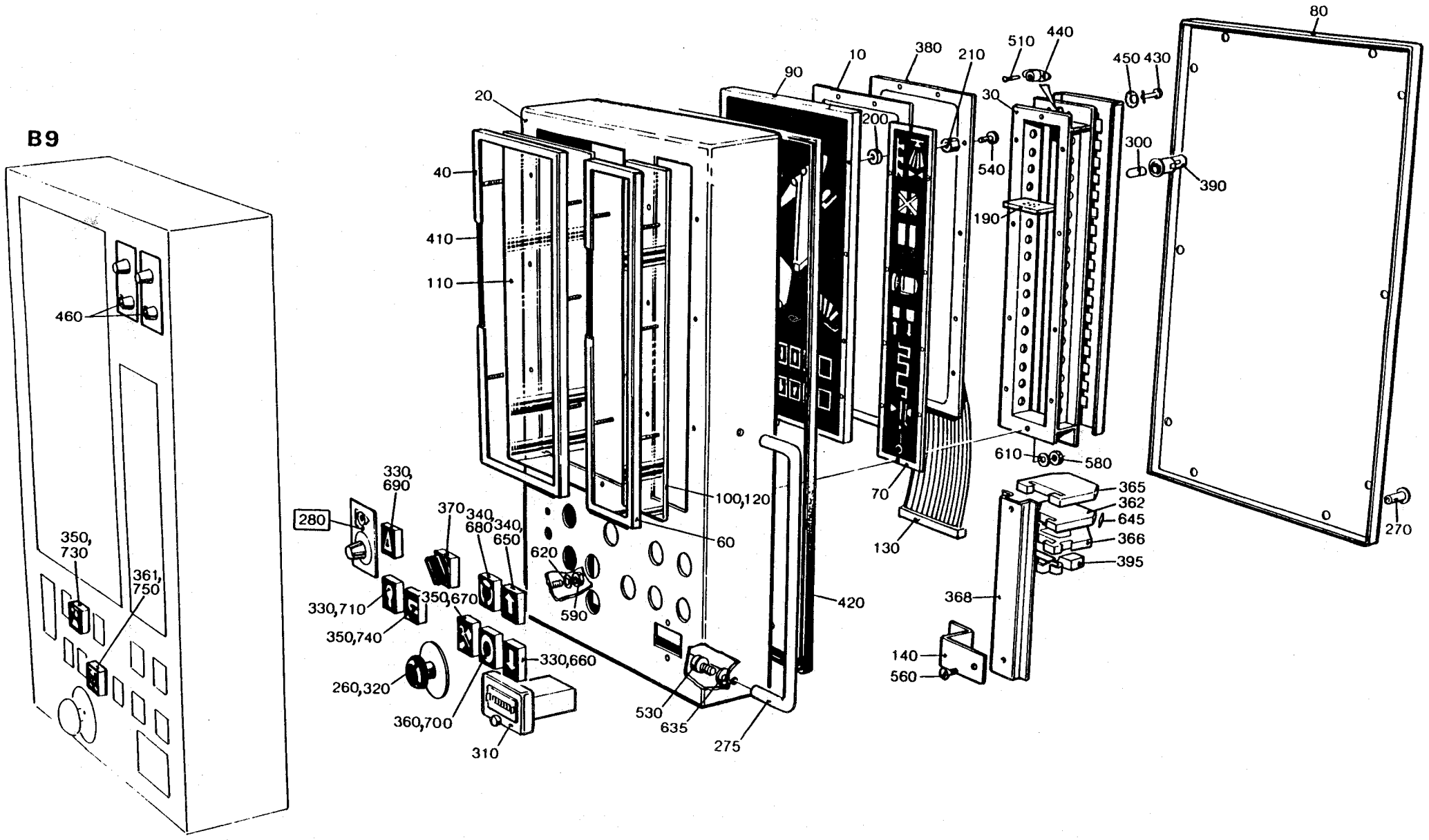
B9
460
350,
730
361,
750
80
10
380
210
510
440
450
430
90
20
30
200
540
300
390
190
40
410
110
610
580
365
362
645
366
395
330,
690
280
370
340,
680
340,
650
620
590
330,710
350,740
350,670
330,660
260,320
360,700
310
100,120
60
70
130
420
368
140
560
530
635
275
270

From	Pos	Part No	SP	UN	Qty	Description
	F280	==>208-1.1	S		1	POTENTIOMETER
TB/9 without Pull Tab						
	010	541717	C		1	CIRCUIT BOARD TB/9-SA
	020	469436	-		1	CONTROL CABINET
	030	35210	C		1	BRACKET
	050	35214	C		1	LID
	060	35213	-		1	FRAME
	070	263569	-		1	LADDER
	090	491926	-		1	MACHINE DISPLAY TB/9-SA
	100	35212-0002	S		1	GLASS PANE
	190	35215	C		6	PLATE
	300	90036-0044	P		20	BULB
	350	90064-0084	P		3	PUSH BUTTON YELLOW
	361	90064-0088	-		1	PUSH BUTTON YELLOW
	390	90124-0027	P		20	LAMP HOLDER
	460	90430-0304	-		2	PILOT UNIT
	580	312605-0310	-		14	NUT M6M3RFR
	610	315105-0124	-		14	WASHER BRB3,2X6RFR
	730	359301-0160	S		1	SIGN T
	750	359301-0215	S		1	SIGN T
TB/9 with Pull Tab						
	010	541718	C		1	CIRCUIT BOARD TB/9-OD
	020	469436	-		1	CONTROL CABINET
	030	35210	C		1	BRACKET
	050	35214	C		1	LID
	060	35213	-		1	FRAME
	070	263569	-		1	LADDER
	090	491925	-		1	MACHINE DISPLAY TB/9-OD
	100	35212-0002	S		1	GLASS PANE
	190	35215	C		6	PLATE
	300	90036-0044	P		20	BULB
	350	90064-0084	P		3	PUSH BUTTON YELLOW
	361	90064-0088	-		1	PUSH BUTTON YELLOW
	390	90124-0027	P		20	LAMP HOLDER
	460	90430-0304	-		2	PILOT UNIT
	580	312605-0310	-		14	NUT M6M3RFR
	610	315105-0124	-		14	WASHER BRB3,2X6RFR
	730	359301-0160	S		1	SIGN T
	750	359301-0215	S		1	SIGN T
TBA/9 without Pull Tab						
	010	540342	C		1	CIRCUIT BOARD TBA/9-SA
	020	469435	-		1	CONTROL CABINET
	030	265553	C		1	BRACKET
	050	265554	C		1	LID
	060	265555	-		1	FRAME
	070	265556	-		1	LADDER
	090	491924	-		1	MACHINE DISPLAY TBA/9-SA
	120	35212-0005	S		1	GLASS PANE
	190	35215	C		10	PLATE
	300	90036-0044	P		32	BULB
	350	90064-0084	P		2	PUSH BUTTON YELLOW
	390	90124-0027	P		32	LAMP HOLDER
	580	312605-0310	-		16	NUT M6M3RFR
	610	315105-0124	-		16	WASHER BRB3,2X6RFR
TBA/9 with Pull Tab						
	010	540014	C		1	CIRCUIT BOARD TBA/9-OD
	020	469435	-		1	CONTROL CABINET
	030	265553	C		1	BRACKET
	050	265554	C		1	LID
	060	265555	-		1	FRAME
	070	265556	-		1	LADDER
	090	491923	-		1	MACHINE DISPLAY TBA/9-OD
	120	35212-0005	S		1	GLASS PANE
	190	35215	C		10	PLATE
	300	90036-0044	P		32	BULB
	350	90064-0084	P		2	PUSH BUTTON YELLOW
	390	90124-0027	P		32	LAMP HOLDER
	580	312605-0310	-		16	NUT M6M3RFR
	610	315105-0124	-		16	WASHER BRB3,2X6RFR
Common Parts						
	040	263568	-		1	FRAME
	080	469437	-		1	BACK PIECE
	110	35212-0004	S		1	GLASS PANE
	130	254566	-		2	CABLE
	140	272827	-		2	TERMINAL HOLDER
	200	35216	-		12	WASHER
	210	295071	-		6	SPACER
	260	486826-0001	-		1	SIGN
	270	469454	-		10	NUT
	275	90017-0015	-		2	HANDLE
	310	90053-0018	S		1	COUNTER
	320	90064-0092	S		1	EMERGENCY PUSH BUTTON
	330	90064-0082	S		3	PUSH BUTTON WHITE
	340	90064-0093	S		2	PUSH BUTTON
	360	90064-0085	S		1	PUSH BUTTON RED

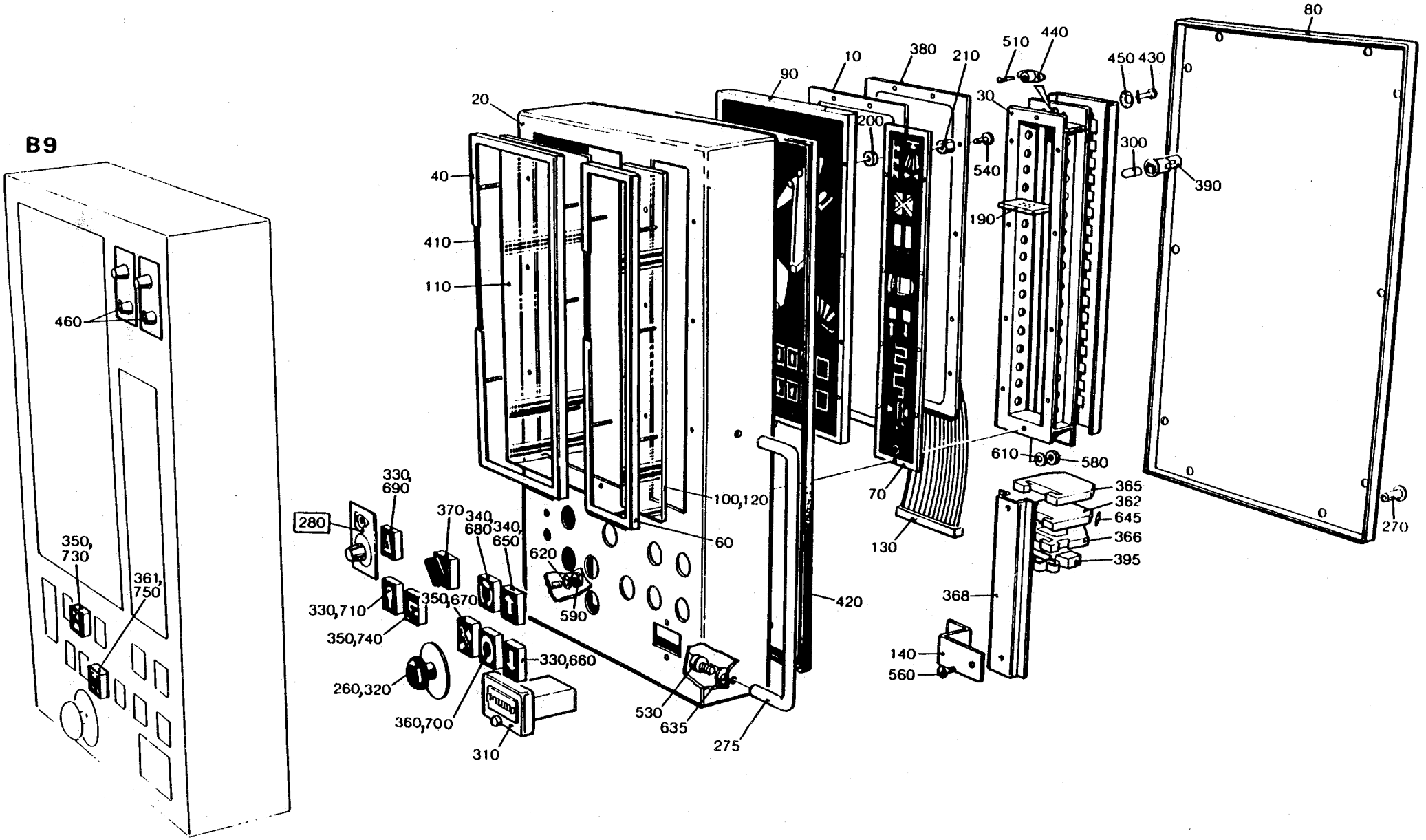
B9
460
350,
730
361,
750
80
10
380
210
510
440
450
430
90
20
200
30
540
300
390
40
410
110
190
610
580
365
362
645
366
395
368
140
560
330,
690
280
370
340
680
340,
650
620
590
330,710
350,740
350,670
330,660
260,320
360,700
310
100,120
60
70
130
420
530
635
275
270

From	Pos	Part No	SP	UN	Qty	Description
	362	90077-0079	-		40	TERMINAL BLOCK
	365	90077-0307	-		1	EN PLATE
	366	90077-0308	-		1	END SUPPORT
	368	90077-0328	-	MM	210	RAIL
	370	90111-0120	S		1	SWITCH
	380	90119-0046	C		1	CIRCUIT CARD
	395	90135-0003	-		1	EARHING CLIP
	400	90135-0026	-		1	EARTHING CLAMP
	410	90143-0051	-	MM	4600	STRIP
	420	90143-0059	-	MM	1900	STRIP
	430	90237-0064	C		2	LOCK
	440	90237-0307	C		2	BASE
	450	90237-0308	-		2	WASHER
	510	311520-0329	-		4	BLANK RIVE2,4X7,4
	530	312115-0447	-		4	SCREW 8X12 A4 80
	540	312125-0222	-		6	SLOTTED HEMCS3X8RFR
	560	312145-0285	-		6	SLOTTED HEMFS4X6RFR
	590	312605-0312	-		1	NUT M6M4RFR
	620	315105-0136	-		1	WASHER BRB4,3X8RFR
	635	315105-0165	-		4	WASHER BRB8,4X16RFR
	645	359011-0801	-		2	LABEL BSFW 0-49
	650	359301-0001	S		1	SIGN
	660	359301-0005	S		1	SIGN
	670	359301-0050	S		1	SIGN
	680	359301-0090	S		1	SIGN
	690	359301-0105	S		1	SIGN
	700	359301-0110	S		1	SIGN
	710	359301-0130	S		1	SIGN
	740	359301-0170	S		1	SIGN

From	Pos	Part No	SP	UN	Qty	Description

From	Pos	Part No	SP	UN	Qty	Description
	010	479957-0001	-		1	COMPONENTS WITHOUT TP-NO
	020	479949	-		1	PRINTED CIRCUIT BOARD
	030	479871	-		1	POTENTIOMETER
	040	479872	-		1	SPACER PLATE
	050	479873	-		1	COVER PLATE
	060	479876	-		1	SIGN
	070	479881	-		1	TAPE
	080	479882	-		1	SHIM

From	Pos	Part No	SP	UN	Qty	Description

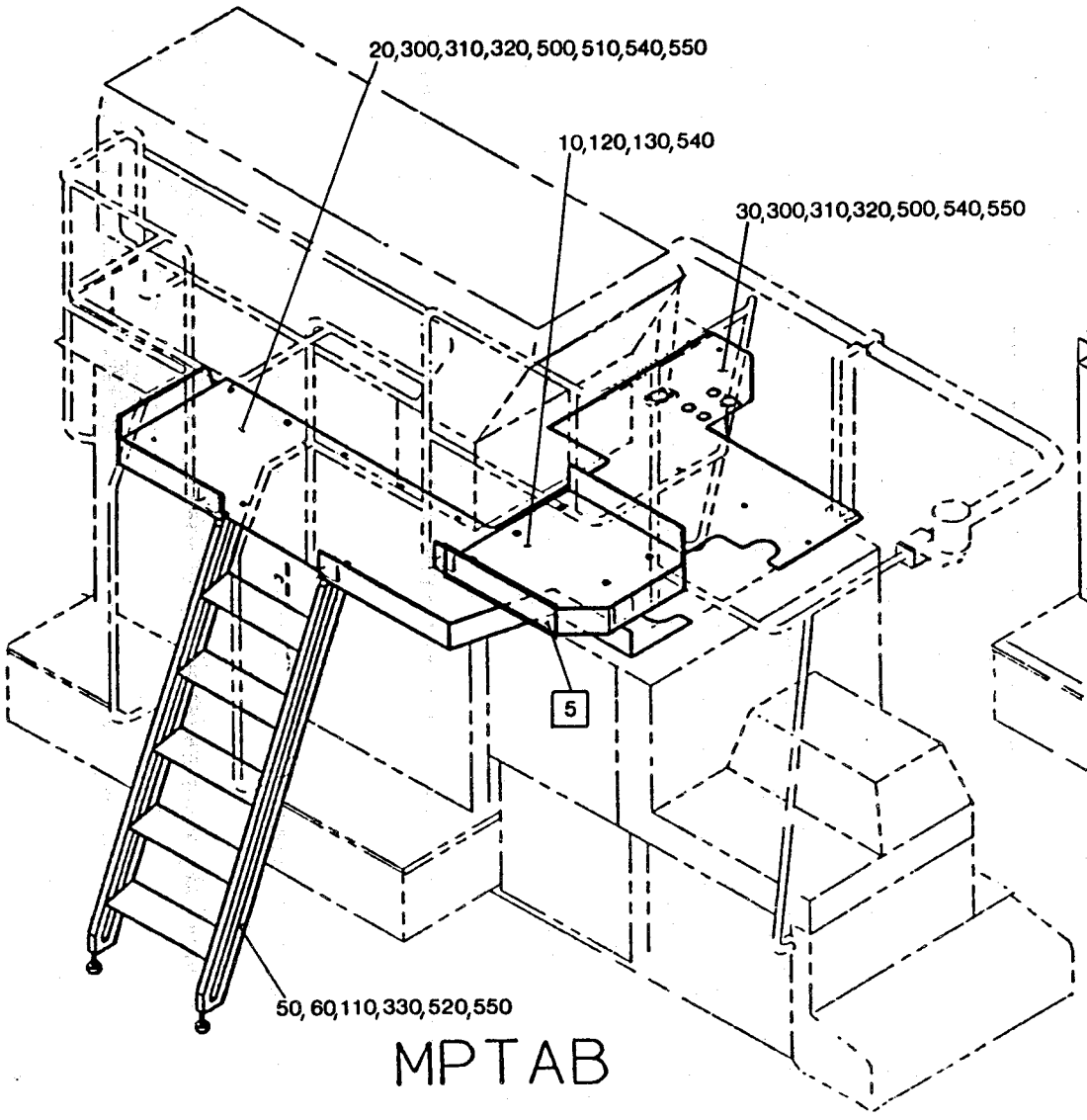
20,300,310,320,500,510,540,550
10,120,130,540
30,300,310,320,500,540,550
5
50,60,110,330,520,550

MPTAB

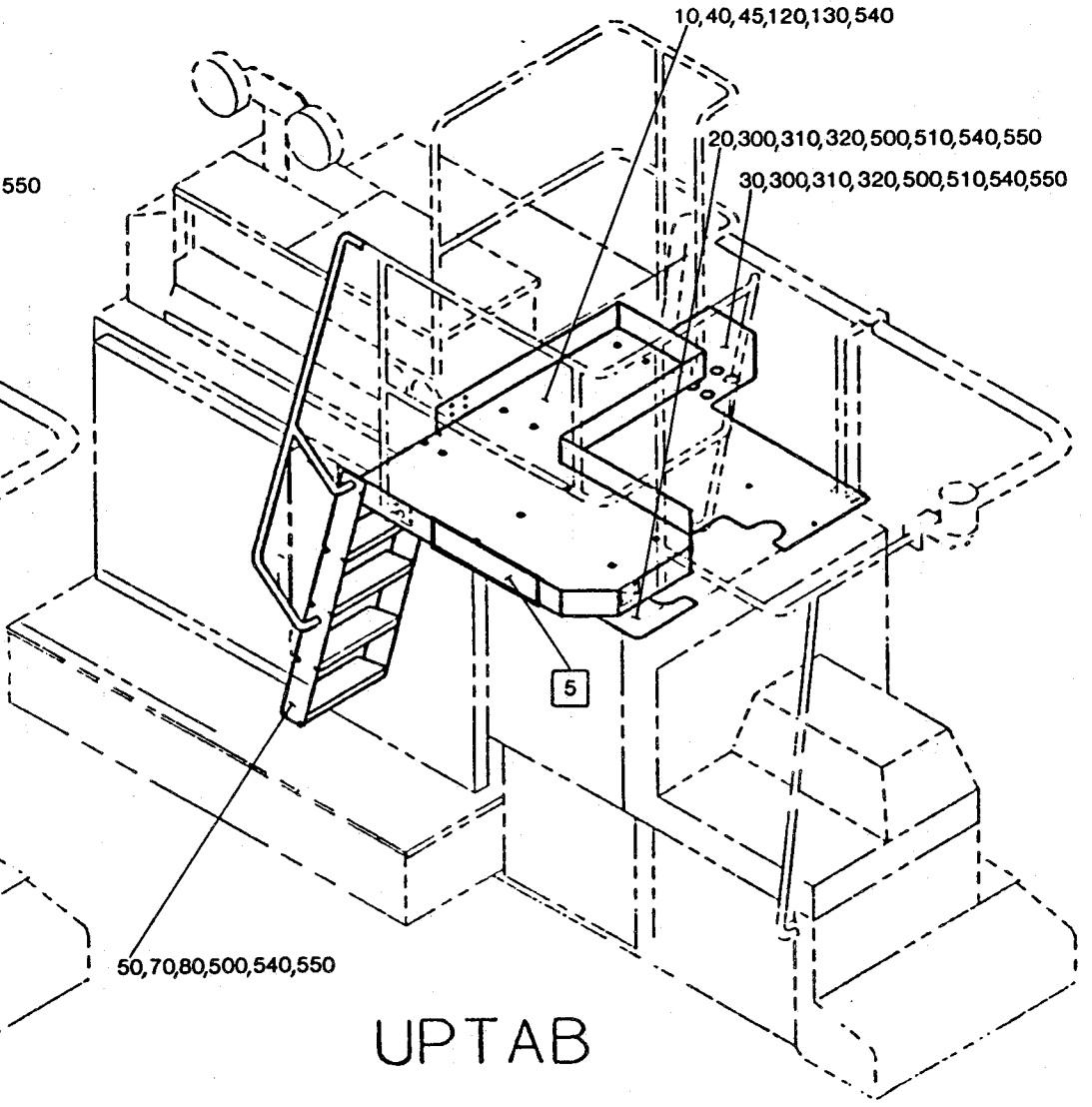
10,40,45,120,130,540
20,300,310,320,500,510,540,550
30,300,310,320,500,510,540,550
5
50,70,80,500,540,550

UPTAB

From	Pos	Part No	SP	UN	Qty	Description
Machines with Pull Tab						
	010	751242	-		1	PLATFORM
	020	456981	-		1	PLATFORM
	030	456983	-		1	PLATFORM
	050	441679	C		5	STEP
	060	441673	-		2	SIDE PIECE
	110	441905	-		2	PIN
	330	90347-0004	-		2	VIBRATION DAMPER
	500	312105-0449	-		12	SCREW M6S8X16RFR
	510	312105-0453	-		7	SCREW M6S8X25RFR
	520	312105-0459	-		20	SCREW M6S8X40RFR
	540	312155-0449	-		14	SCREW MF6S8X16RFR
	550	315105-0165	-		39	WASHER BRB8,4X16RFR
Machines without Pull Tab						
	010	751241	-		1	PLATFORM
	020	456982	-		1	PLATFORM
	030	752426	-		1	PLATFORM
	040	456985	-		1	LEG
	045	752418	-		1	LEG
	050	456986	C		4	STEP
	070	751054	-		1	SIDE PIECE
	080	456988	-		1	SIDE PIECE
	500	312105-0449	-		15	SCREW M6S8X16RFR
	510	312105-0453	-		15	SCREW M6S8X25RFR
	540	312155-0449	-		31	SCREW MF6S8X16RFR
	550	315105-0165	-		31	WASHER BRB8,4X16RFR
Common Parts						
	F005	**544536-0101**	-		2	**HOUSEMARK SIGN SET, ASS'Y**
	120	295287	-		1	MACHINE BODY
	130	295295	-		1	MACHINE BODY
	300	90143-0016	-	MM	1900	STRIP
	310	90153-0017	-	G	100	ADHESIVE
	320	90157-0022	-	G	X	SEALING COMPOUND

From	Pos	Part No	SP	UN	Qty	Description

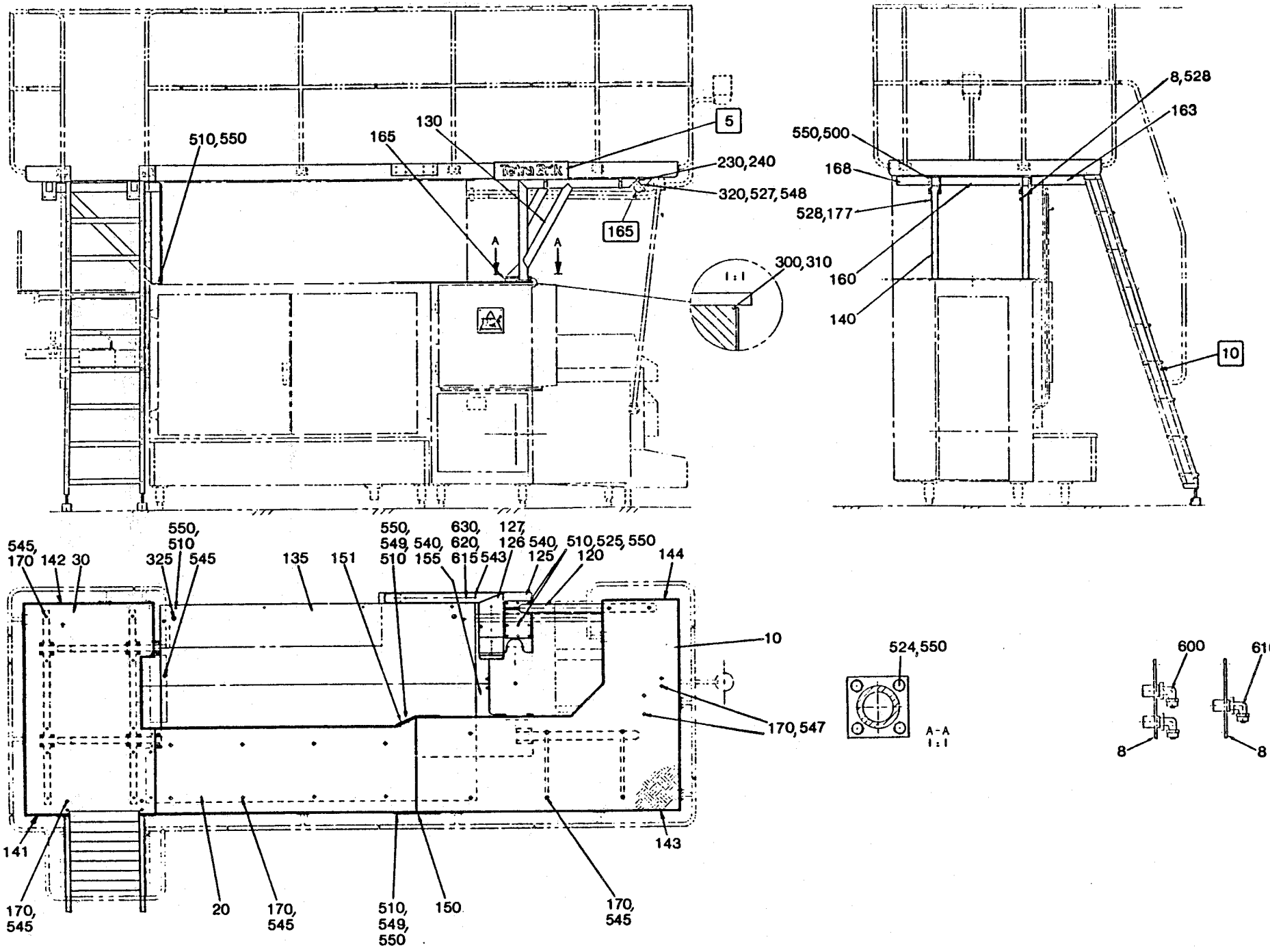
510,550
165
130
5
230,240
320,527,548
165
A
A
1:1
300,310
550,500
168
528,177
160
140
8,528
163
10
545,
170
142
30
550,
510
325
545
135
151
550,
549,
510
540,
155
630,
620,
615
543
127,
126
540,
125
510,525,550
120
144
10
170,547
524,550
A-A
1:1
600
610
8
8
141
170,
545
20
170,
545
510,
549,
550
150
170,
545
143

From	Pos	Part No	SP	UN	Qty	Description
	F005	**544536-0101**	-		1	**HOUSEMARK SIGN SET, ASS'Y**
	F010	**==>209-2.1**	-		1	**LADDER**
	F165	**==>211-1.1**	-		1	**LIGHT FIXTURE**
	008	752883	-		1	COVER **(with Pull Tab)**
	610	342931-0122	-		1	ELBOW COUP **(with Pull Tab)**
	008	752882	-		1	COVER **(without Pull Tab)**
	600	342931-0113	-		4	ELBOW COUP **(without Pull Tab)**
Common Parts						
	010	566298	-		1	PLATFORM
	020	566676	-		1	PLATFORM
	030	566299	-		1	PLATFORM
	120	469016	-		1	FRAME
	125	752800	-		1	PLATE
	126	752802	-		1	CABLE DUCT
	127	752803	-		1	LID
	130	752877	-		1	FRAME
	135	752799	-		1	PLATE
	140	752878	-		2	FRAME
	141	566308	-		1	PLATE
	142	566307	-		1	PLATE
	143	566309	-		1	PLATE
	144	566306	-		1	PLATE
	150	751854	-		1	PLATE
	151	751855	-		1	PLATE
	155	752801	-		1	PLATE
	160	752879	-		2	BEAM
	163	752881	-		2	BEAM
	165	752876	-		1	SHIM
	168	752880	-		2	BEAM
	170	230918	-		36	WASHER
	177	752884	-		1	COVER
	230	491016	-		2	HOLDER
	240	469027	-		1	SPACER
	300	90143-0016	-	MM	1900	STRIP
	310	90153-0017	-	G	100	ADHESIVE
	320	90157-0022	-	G	X	SEALING COMPOUND
	325	90261-0019	-		2	PIPE PLUG
	500	312105-0452	-		32	SCREW M6S8X22RFR
	510	312105-0453	-		57	SCREW M6S8X25RFR
	524	312109-0457	-		4	SCREW M6S 8X35 H A4 80
	525	312105-0460	-		6	SCREW M6S8X45RFR
	527	312125-0323	-		2	SLOTTED HEMCS5X8RFR
	528	312145-0323	-		8	SLOTTED HEMFS5X8RFR
	540	312155-0449	-		10	SCREW MF6S8X16RFR
	543	312125-0364	-		3	SLOTTED HEMCS6X10RFR
	545	312155-0451	-		40	SCREW MF6S8X20RFR
	547	312155-0455	-		5	SCREW MF6S8X30RFR
	548	315105-0146	-		2	WASHER BRB5,3X10RFR
	549	312605-0318	-		36	NUT M6M8RFR
	550	315105-0165	-		119	WASHER BRB8,4X16RFR
	615	312705-0312	-		5	CAP NUT MHM 4 A2
	620	315105-0136	-		5	WASHER BRB4,3X8RFR
	630	90015-0020	-		2	BUSHING

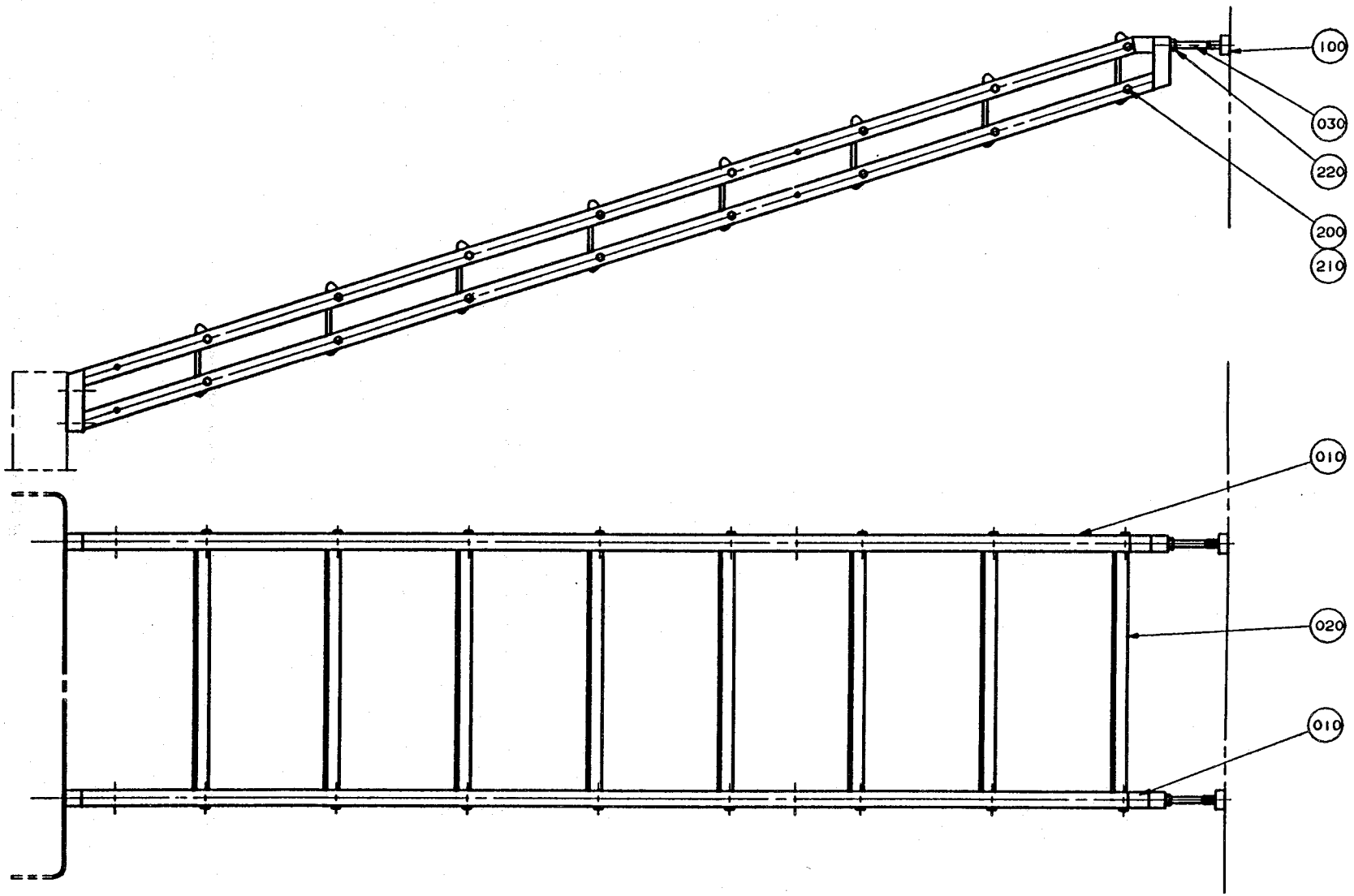
100
030
220
200
210
010
020
010

Last Alteration: AM 16371 91-05-23

Corresponding C-lists: 567034-010V
Assembly Drawing: 567034-1

Date Printed: 910530

From	Pos	Part No	SP	UN	Qty	Description
	010	751958	-		2	SIDE PIECE
	020	441679	C		8	STAIR
	030	441905	-		2	RETARD PIN
	100	90347-0004	-		2	VIBRATION DAMPER
	200	312105-0459	-		32	SCREW M6S8X40RFR
	210	315105-0165	-		32	WASHER BRB8,4X16RFR
	220	312605-0322	-		2	NUT M6M12RFR

From	Pos	Part No	SP	UN	Qty	Description

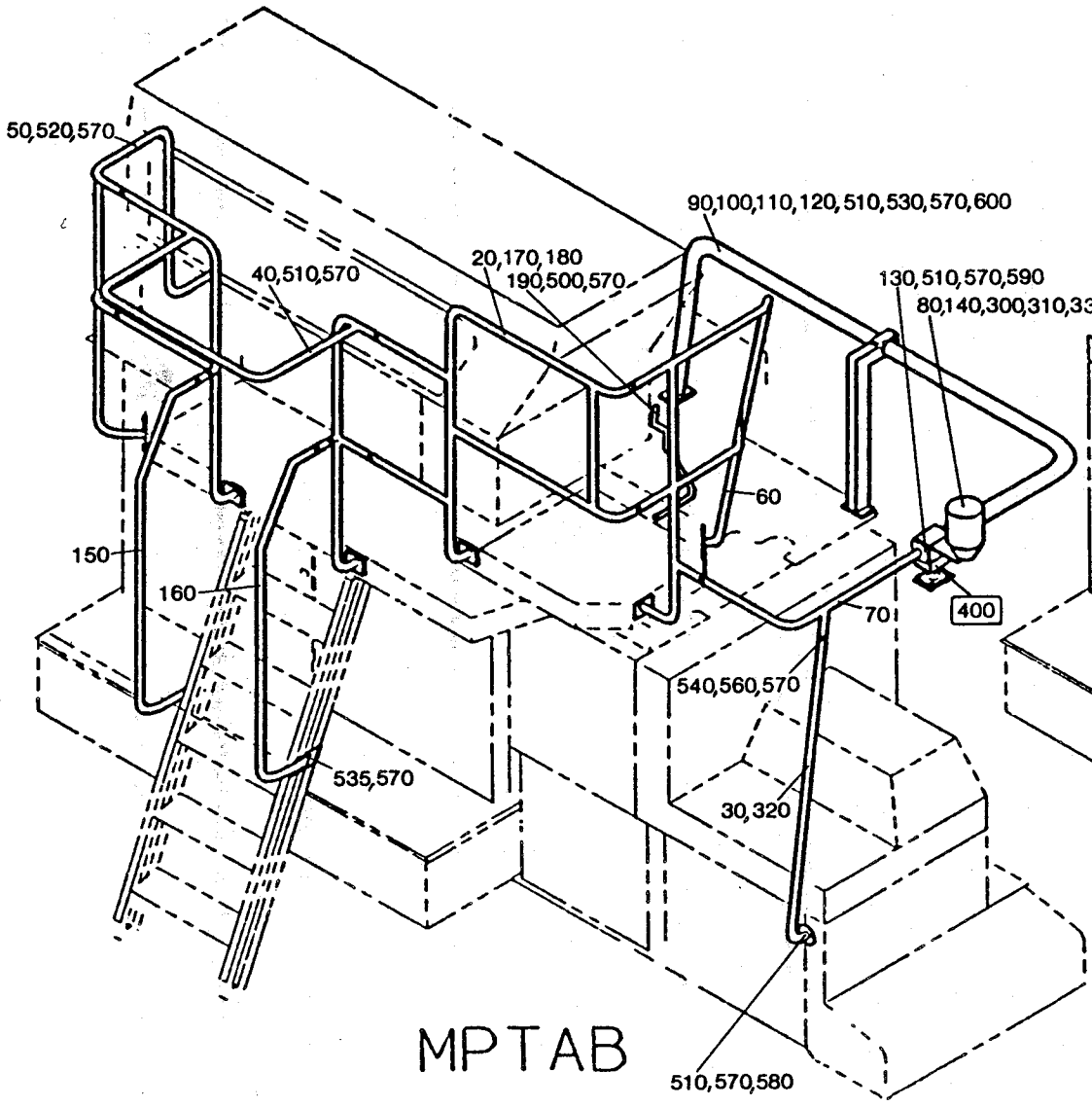
50,520,570
90,100,110,120,510,530,570,600
20,170,180
190,500,570
40,510,570
130,510,570,590
80,140,300,310,330
60
150
160
70
400
540,560,570
535,570
30,320
510,570,580

MPTAB

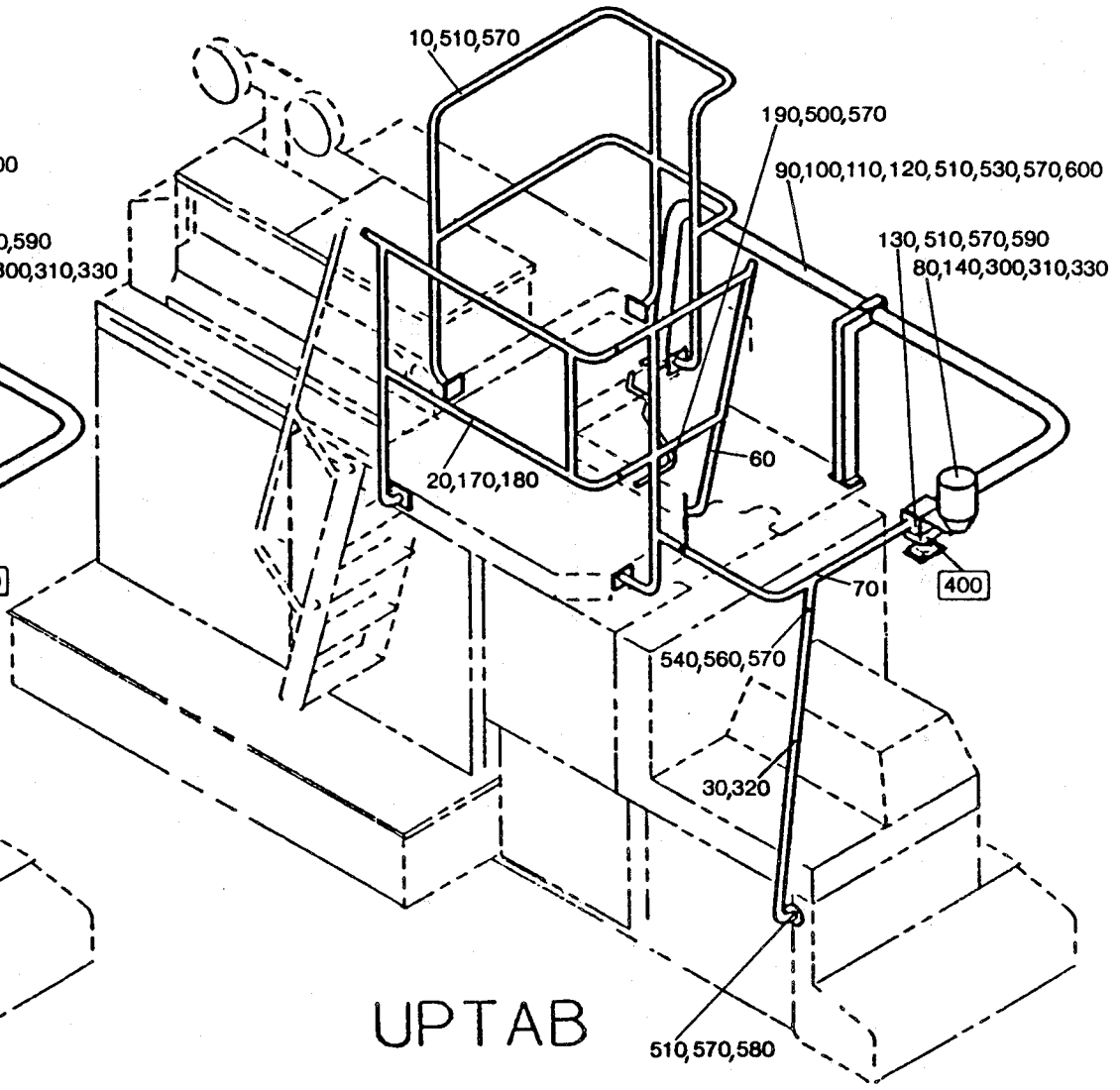
10,510,570
190,500,570
90,100,110,120,510,530,570,600
130,510,570,590
80,140,300,310,330
20,170,180
60
70
400
540,560,570
30,320
510,570,580

UPTAB

From	Pos	Part No	SP	UN	Qty	Description
	F400	==>210-1.1	-		1	BRACKET
Machines with Pull Tab						
	020	751238	-		1	RAILING
	040	751240	-		1	RAILING
	050	469966	-		1	RAILING
	150	751256	-		1	RAIL
	160	751257	-		1	RAIL
	170	751484	-		9	CLAMPING RING
	180	751485	-		9	SCREW
	510	312105-0449	-		38	SCREW M6S8X16RFR
	520	312105-0453	-		4	SCREW M6S8X25RFR
	535	312105-0459	-		4	SCREW M6S8X40RFR
	560	312605-0318	-		11	NUT M6M8RFR
	570	315105-0165	-		52	WASHER BRB8,4X16RFR
Machines without Pull Tab						
	010	441685	-			RAILING
	020	751237	-			RAILING
	170	751484	-			CLAMPING RING
	180	751485	-			SCREW
	510	312105-0449	-		40	SCREW M6S8X16RFR
	560	312605-0318	-		5	NUT M6M8RFR
	570	315105-0165	-		46	WASHER BRB8,4X16RFR
Common Parts						
	030	751055	-		1	STRUT
	060	751239	-		1	RAILING
	070	751236	-		1	RAILING
	080	441676	-		1	HOLDER
	090	751075-0001	-		1	CABLE CONDUIT
	100	469002	-		1	SUPPORT
	110	469003	-		1	PLATE
	120	469028	-		1	GASKET
	130	751182	-		1	GASKET
	140	751183	-		1	GASKET
	190	751770	-		1	CABLE CONDUIT
	300	90002-0016	-		1	PLUG

From	Pos	Part No	SP	UN	Qty	Description
	310	90036-0038	P		1	BULB
	320	90224-0234	S		1	BRACKET
	330	90419-0005	S		1	ALARM LAMP
	500	312105-0447	-		1	SCREW M6S8X12RFR
	530	312105-0455	-		4	SCREW M6S8X30RFR
	540	312115-0453	-		1	SCREW 8X25 A4 80
	580	315202-0215	S		1	O-RING 19,2X3
	590	352101-0102	-		1	LEAD-IN G 15,2
	600	352103-0100	-		2	CABLE GLANR.15,2/2-6

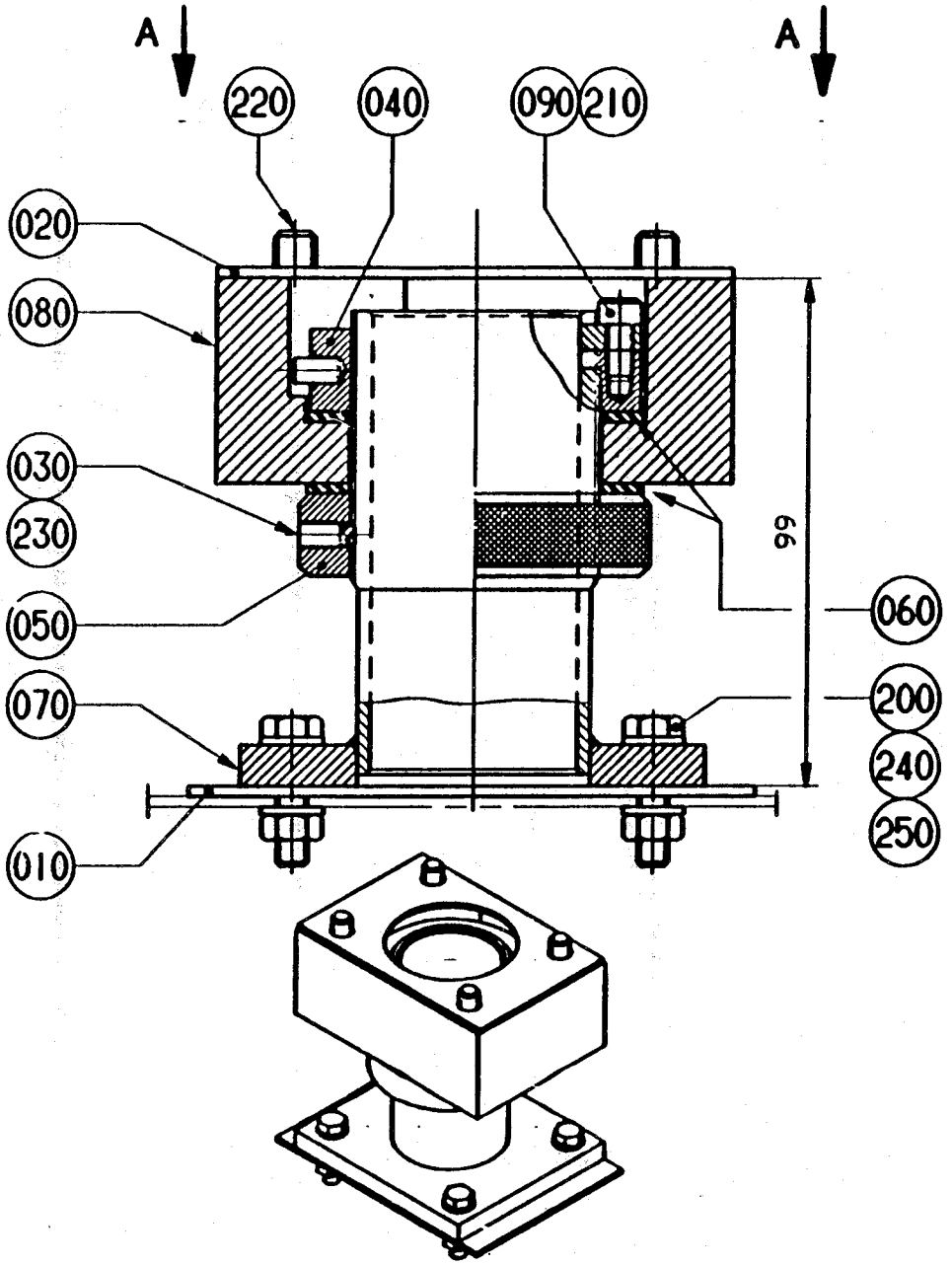

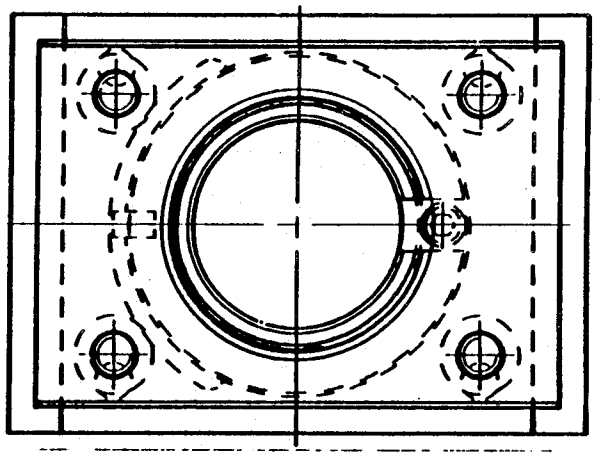

A-A

From	Pos	Part No	SP	UN	Qty	Description
	010	441448	S		1	GASKET
	020	490500	S		1	GASKET
	030	751095	S		2	PLUG
	040	751096	C		1	CLAMP RING
	050	751097	C		1	BRAKE RING
	060	751098	S		2	FRICTION DISC
	070	751099	C		1	LEAD-IN
	080	751100	C		1	BEARING HOUSING
	090	751108	C		1	SECURING PLATE
	200	312105-0372	-		4	SCREW M6S6X25RFR
	210	312115-0325	-		1	SCREW 5X10 A4 80
	220	312115-0459	-		4	SCREW 8X40 A4 80
	230	312318-0323	-		2	GRUB SCREW SK6SS5X8RFR
	240	312605-0316	-		4	NUT M6M6RFR
	250	315105-0153	-		8	WASHER BRB6,4X12RFR

From	Pos	Part No	SP	UN	Qty	Description

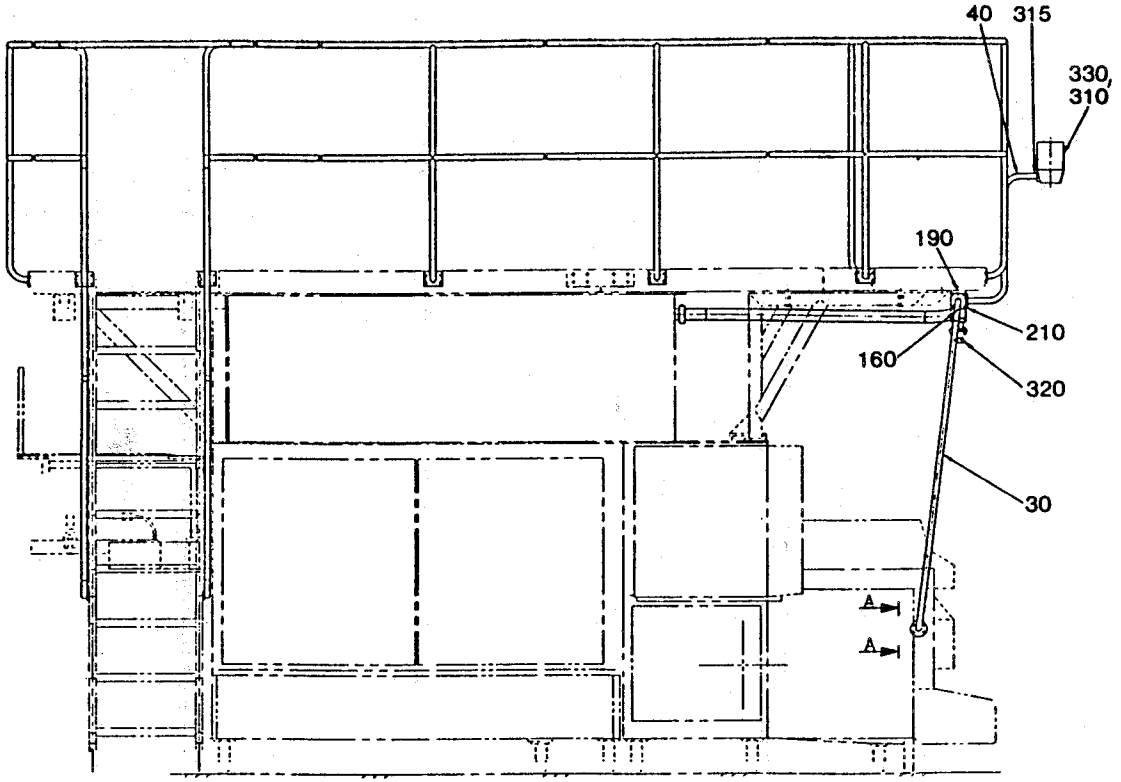
40
315
330,
310
190
210
160
320
30
A
A

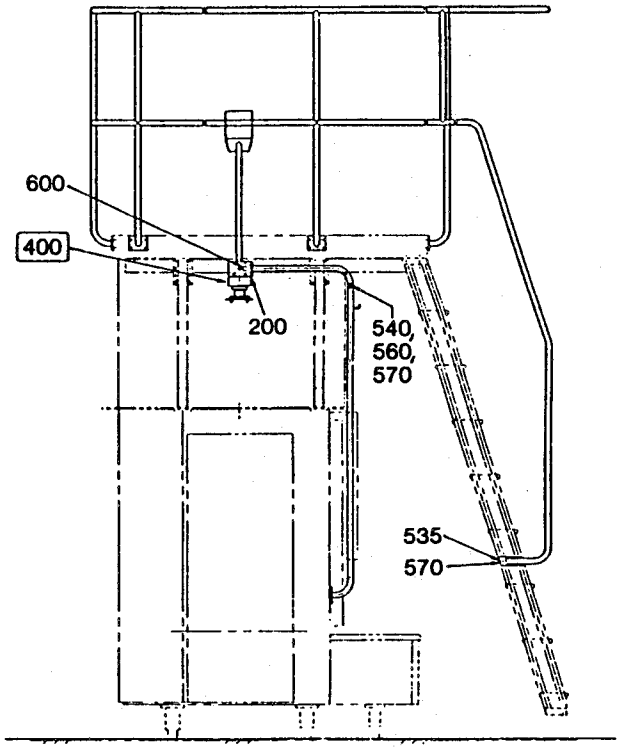
600
400
200
540,
560,
570
535
570

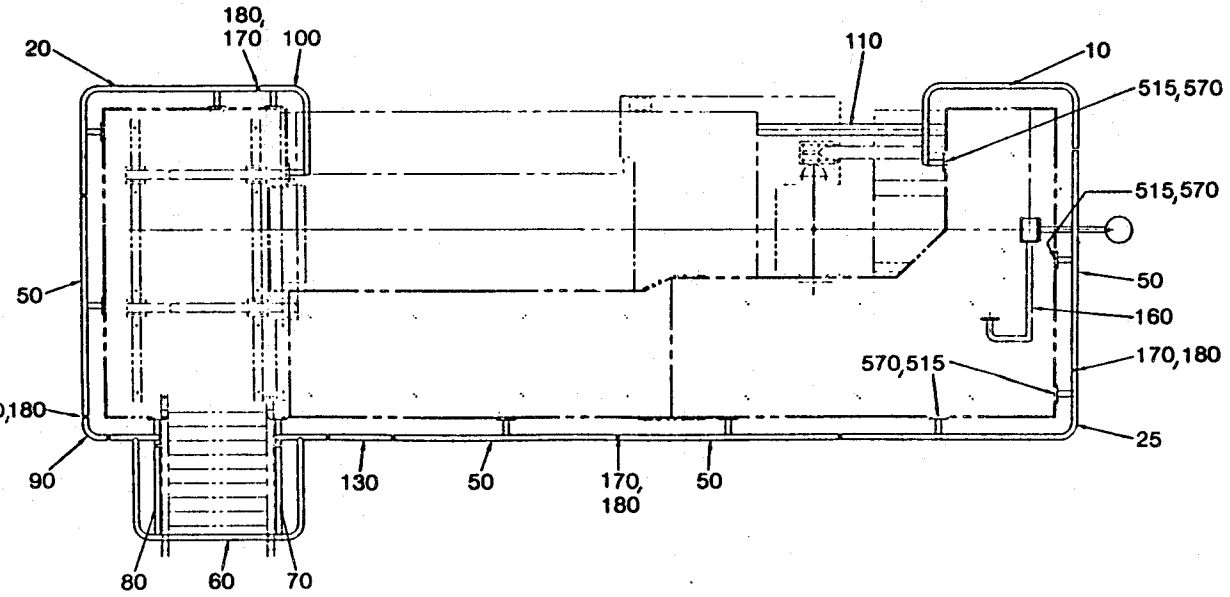
180,
170
100
20
110
10
515,570
515,570
50
160
50
170,180
570,515
25
,180
90
130
50
170,
180
50
80
60
70

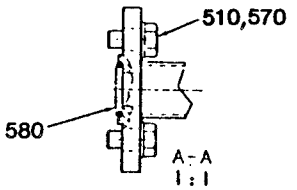
510,570
580
A-A
1:1

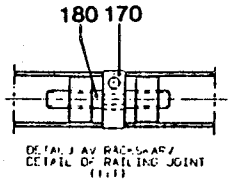
180 170

From	Pos	Part No	SP	UN	Qty	Description
	F400	==>210-1.1	-		1	BRACKET
	010	566300	-		1	RAILING
	020	566302	-		1	RAILING
	025	566301	-		1	RAILING
	030	752897	-		1	STRUT
	040	751896	-		1	HOLDER
	050	751948	-		4	RAILING
	060	566305	-		1	RAILING
	070	751956	-		1	RAIL
	080	751957	-		1	RAIL
	090	566303	-		1	RAILING
	100	566304	-		1	RAILING
	110	752894	-		1	CABLE CONDUIT
	130	566657	-		2	RAILING
	160	751056	-		1	STRUT END
	170	751484	-		24	CLAMPING RING
	180	751485	-		24	SCREW
	190	469026	-		1	SPACER
	200	751182	-		1	GASKET
	210	751183	-		1	GASKET
	310	90036-0038	P		1	BULB
	315	90099-0002	-		1	NUT
	320	90224-0234	S		1	BRACKET
	330	90419-0005	S		1	ALARM LAMP
		90419-0302	S		1	* LENS
	510	312105-0449	-		12	SCREW M6S8X16RFR
	515	312105-0451	-		40	SCREW M6S8X20RFR
	535	312105-0459	-		8	SCREW M6S8X40RFR
	540	312115-0453	-		2	SCREW MC6S 8X25 A4 80
	560	312605-0318	-		2	NUT M6M8RFR
	570	315105-0165	-		58	WASHER BRB8,4X16RFR
	580	315202-0215	S		1	O-RING 19,2X3
	600	352103-0108	-		1	CABLE GLANR.PR 20,4/6-12

From	Pos	Part No	SP	UN	Qty	Description

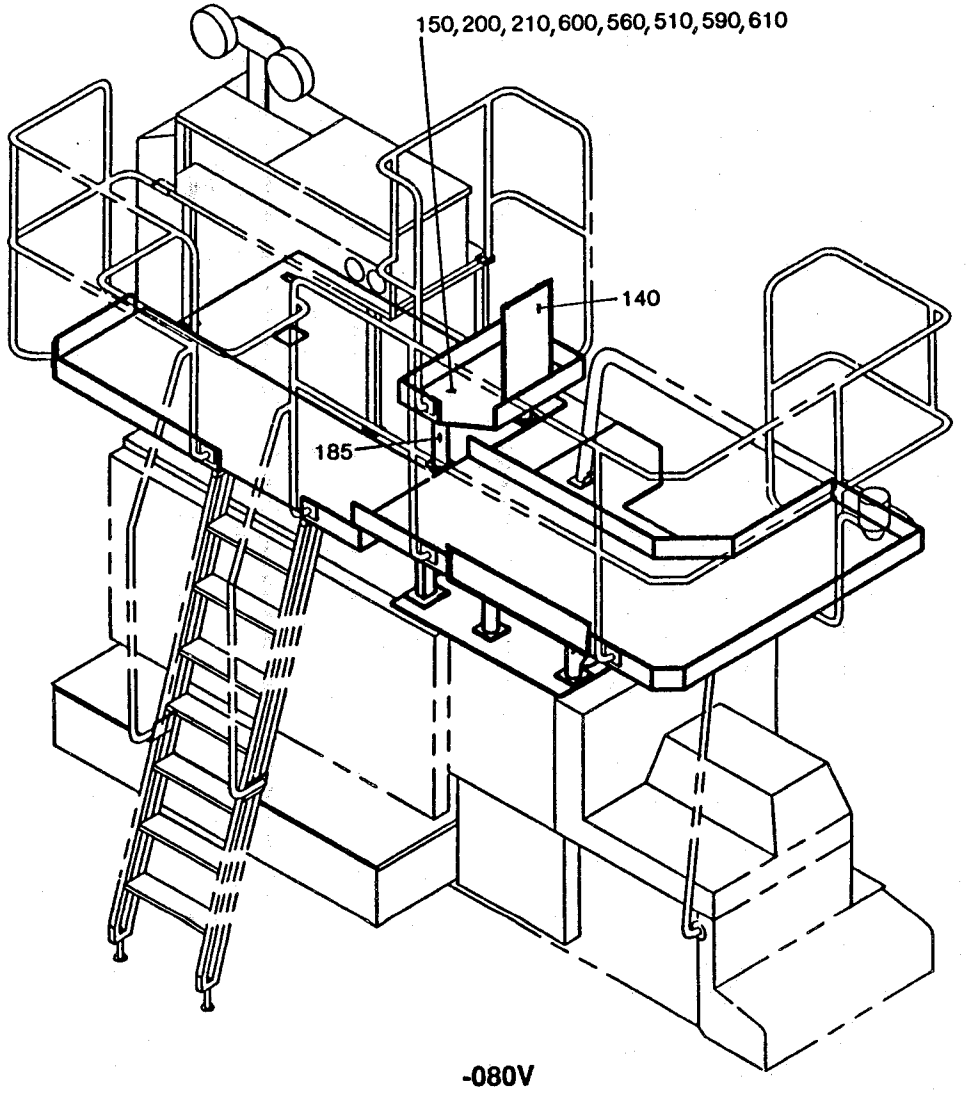
150,200,210,600,560,510,590,610
140
185

-080V

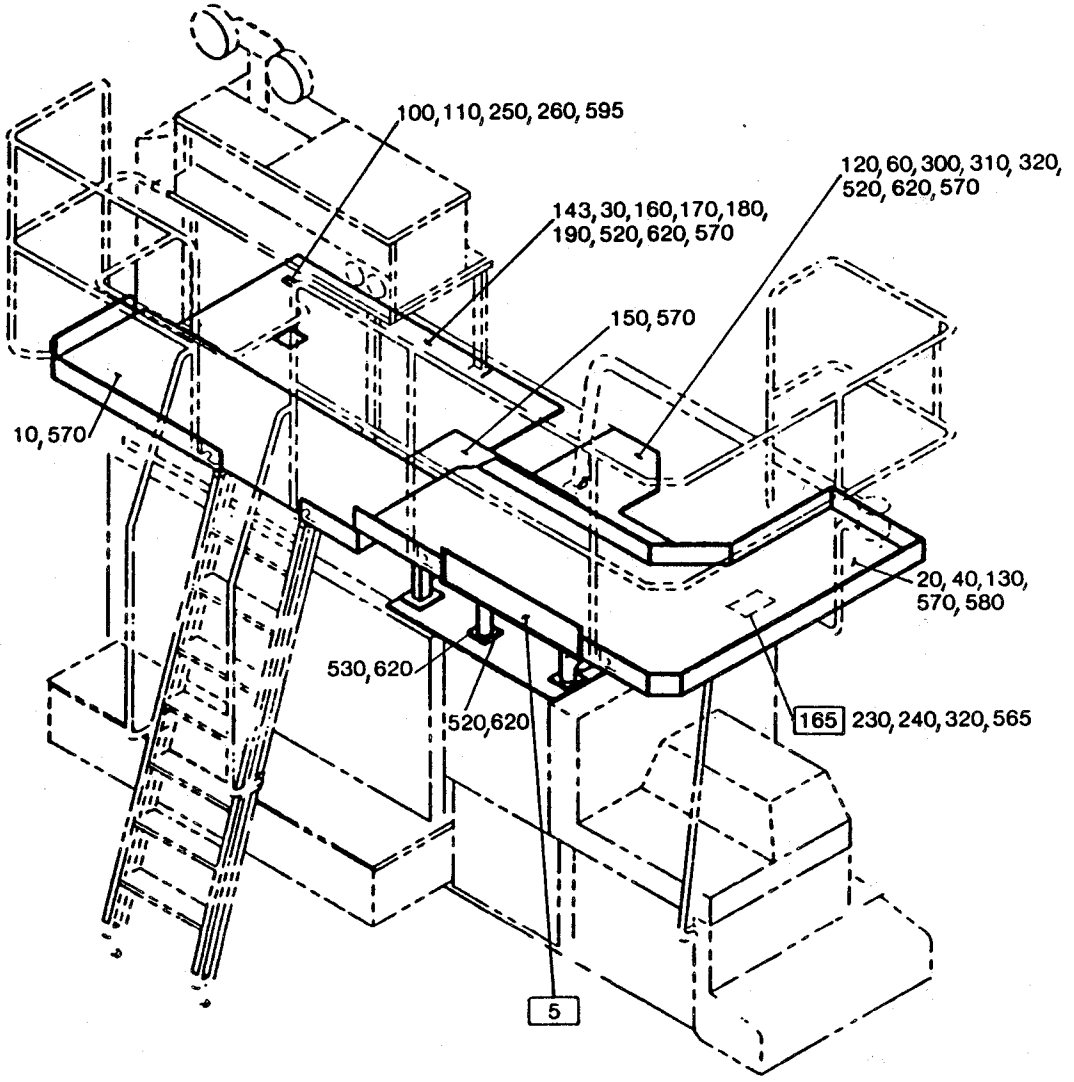
100,110,250,260,595
120,60,300,310,320,
520,620,570
143,30,160,170,180,
190,520,620,570
150,570
10,570
20,40,130,
570,580
530,620
520,620
165 230,240,320,565
5

From	Pos	Part No	SP	UN	Qty	Description
	F165	==>211-1.1	-		1	LIGHT FIXTURE
	F005	544536-0102	-		1	HOUSEMARK SIGN SET, ASS'Y
Machines without Pull Tab						
	010	469004	-		1	PLATFORM
-080V	140	469017	-		1	PLATE
	143	469010	-		1	PLATE
090V-	143	752053	-		1	PLATE
	150	469018	-		1	PLATFORM
090V-	150	752052	-		1	PLATE
-080V	185	469022	-		1	FRAME
-080V	200	295881	-		1	BRACKET
-080V	210	295882	-		1	BRACKET
-080V	510	312105-0370	-		6	SCREW M6S6X20RFR
	520	312105-0449	-		33	SCREW M6S8X16RFR
-080V	560	312115-0220	-		1	SCREW 3X6 A4 80
	570	312155-0449	-		46	SCREW MF6S8X16RFR
-080V	590	312605-0316	-		6	NUT M6M6RFR
-080V	600	315105-0136	-		1	WASHER BRB4,3X8RFR
-080V	610	315105-0153	-		12	WASHER BRB6,4X12RFR
	620	315105-0165	-		56	WASHER BRB8,4X16RFR
Common Parts						
	020	469005	-		1	PLATFORM
	030	469006	-		1	FRAME
	040	469007	-		1	FRAME
	060	751263	-		1	PLATE
	060	752766	-		1	PLATE
	100	469013	-		1	CABLE DUCT
	110	469014	-		1	LID
	120	469015	-		1	PLATE
090V-	125	978266	-		1	COVER
	130	469016	-		1	FRAME
	160	469019	-		1	LEG
	170	469020	-		1	LEG
	180	469021	-		2	LEG
090V-	180	751961	-		1	LEG
090V-	190	751962	-		1	LEG
	230	491016	-		2	HOLDER
	240	469027	-		1	SPACER
	250	469445	-		3	SPACER
	260	90015-0020	-		2	BUSHING
	300	90143-0012	-	MM	1900	STRIP
	310	90153-0017	-	G	50	ADHESIVE
	320	90157-0022	-	G	X	SEALING COMPOUND
	530	312105-0453	-		13	SCREW M6S8X25RFR
	565	312125-0323	-		2	SLOTTED HEMCS5X8RFR
	580	312155-0453	-		4	SCREW MF6S8X25RFR
	595	312705-0314	-		3	CAP NUT MHM 5 A2
090V-	600	315105-0173	-		2	WASHER BRB10,5X22RFR

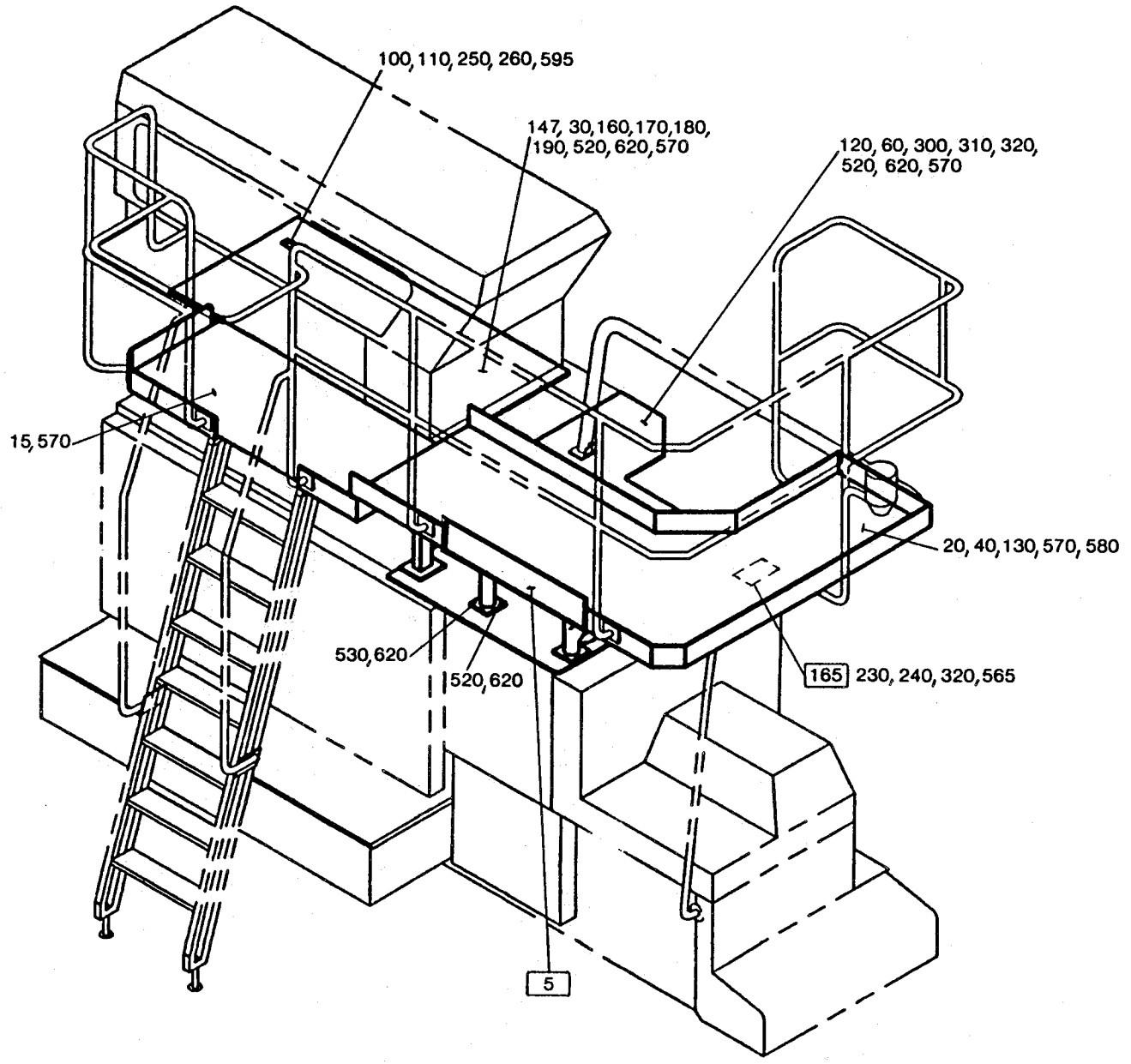
100, 110, 250, 260, 595
147, 30, 160, 170, 180, 190, 520, 620, 570
120, 60, 300, 310, 320, 520, 620, 570
15, 570
20, 40, 130, 570, 580
530, 620
520, 620
165 230, 240, 320, 565
5

From	Pos	Part No	SP	UN	Qty	Description
	F165	==>211-1.1	-		1	LIGHT FIXTURE
	F005	544536-0102	-		1	HOUSEMARK SIGN SET, ASS'Y
Machines with Pull Tab						
	015	469772	-		1	PLATFORM
	147	469773	-		1	PLATE
	520	312105-0449	-		33	SCREW M6S8X16RFR
	570	312155-0449	-		31	SCREW MF6S8X16RFR
	620	315105-0165	-		56	WASHER BRB8,4X16RFR
Common Parts						
	020	469005	-		1	PLATFORM
	030	469006	-		1	FRAME
	040	469007	-		1	FRAME
	060	751263	-		1	PLATE
	060	752766	-		1	PLATE
	100	469013	-		1	CABLE DUCT
	110	469014	-		1	LID
	120	469015	-		1	PLATE
090V-	125	978266	-		1	COVER
	130	469016	-		1	FRAME
	160	469019	-		1	LEG
	170	469020	-		1	LEG
	180	469021	-		2	LEG
090V-	180	751651	-		1	LEG
090V-	190	751652	-		1	LEG
	230	491016	-		2	HOLDER
	240	469027	-		1	SPACER
	250	469445	-		3	SPACER
	260	90015-0020	-		2	BUSHING
	300	90143-0012	-	MM	1900	STRIP
	310	90153-0017	-	G	50	ADHESIVE
	320	90157-0022	-	G	X	SEALING COMPOUND
	530	312105-0453	-		13	SCREW M6S8X25RFR
	565	312125-0323	-		2	SLOTTED HEMCS5X8RFR
	580	312155-0453	-		4	SCREW MF6S8X25RFR
	595	312705-0314	-		3	CAP NUT MHM 5 A2
090V-	600	315105-0173	-		2	WASHER BRB10,5X22RFR

From	Pos	Part No	SP	UN	Qty	Description

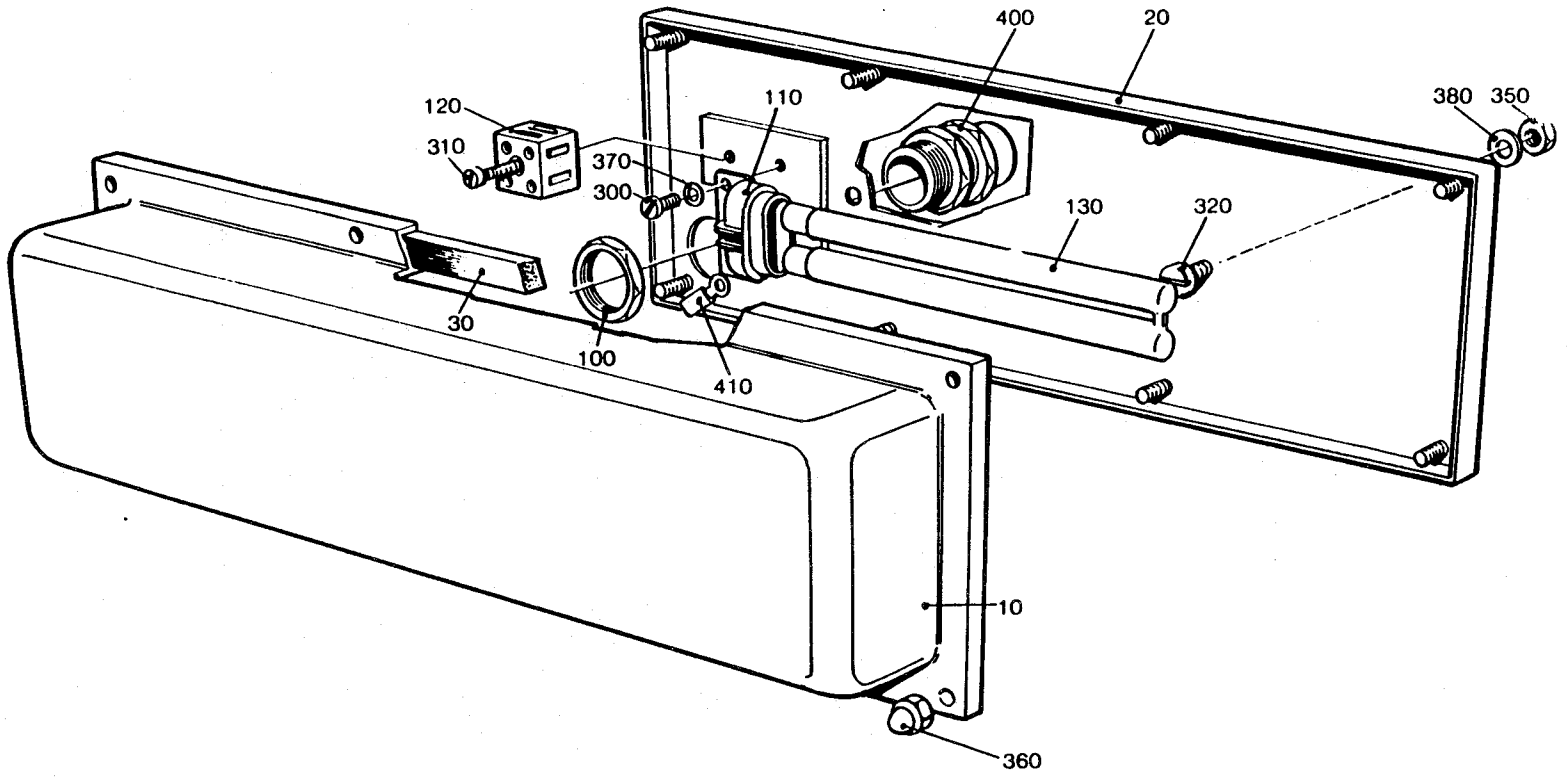
400
20
120
110
380
350
310
370
300
130
320
30
100
410
10
360

From	Pos	Part No	SP	UN	Qty	Description
Gable connections						
	010	456259	S		1	COVER
	020	456261	-		1	PLATE
	350	312605-0314	-		2	NUT M6M5RFR
	380	315105-0146	-		2	WASHER BRB5,3X10RFR
Bottom connections						
	010	456260	S		1	COVER
	020	456262	-		1	PLATE
Common Parts						
	030	441536	S		1	GASKET
	100	90099-0087	-		1	NUT
	110	90164-0301	S		1	LAMPHOLDER
	120	90195-0020	-		1	TERMINAL BLOCK
	130	90297-0007	P		1	FLUORESCENT LAMP
	300	312125-0220	-		2	SLOTTED HEMCS3X6RFR
	310	312125-0230	-		1	SLOTTED HEMCS3X20RFR
	320	312125-0327	-		2	SLOTTED HEMCS5X12RFR
	360	312705-0314	-		8	CAP NUT MHM 5 A2
	370	315105-0124	-		2	WASHER BRB3,2X6RFR
	400	352103-0108	-		1	CABLE GLANR.PR 20,4/6-12
	410	353101-0129	-		1	CABLE SHOEYAE 14 M 37

From	Pos	Part No	SP	UN	Qty	Description

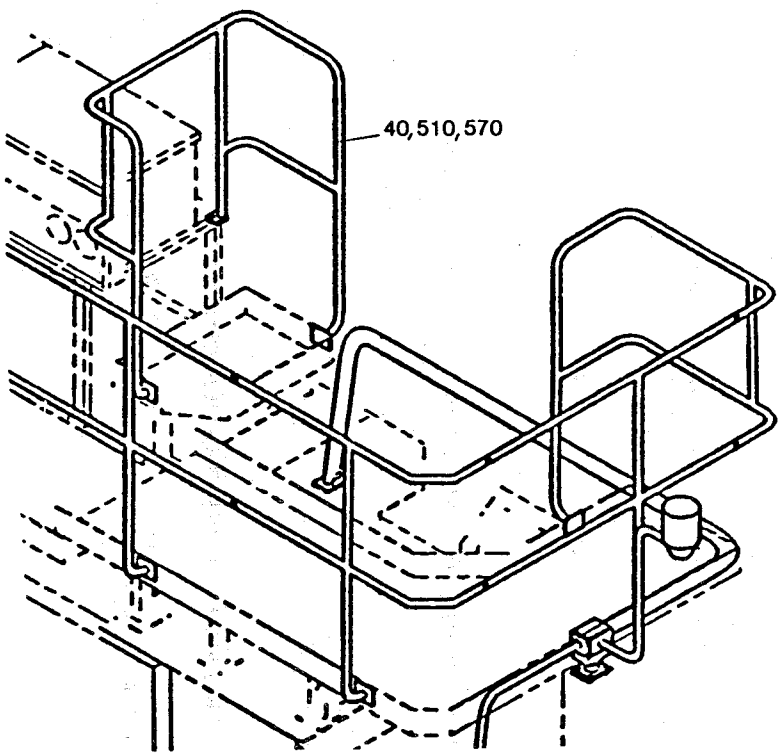
40,510,570

-080V

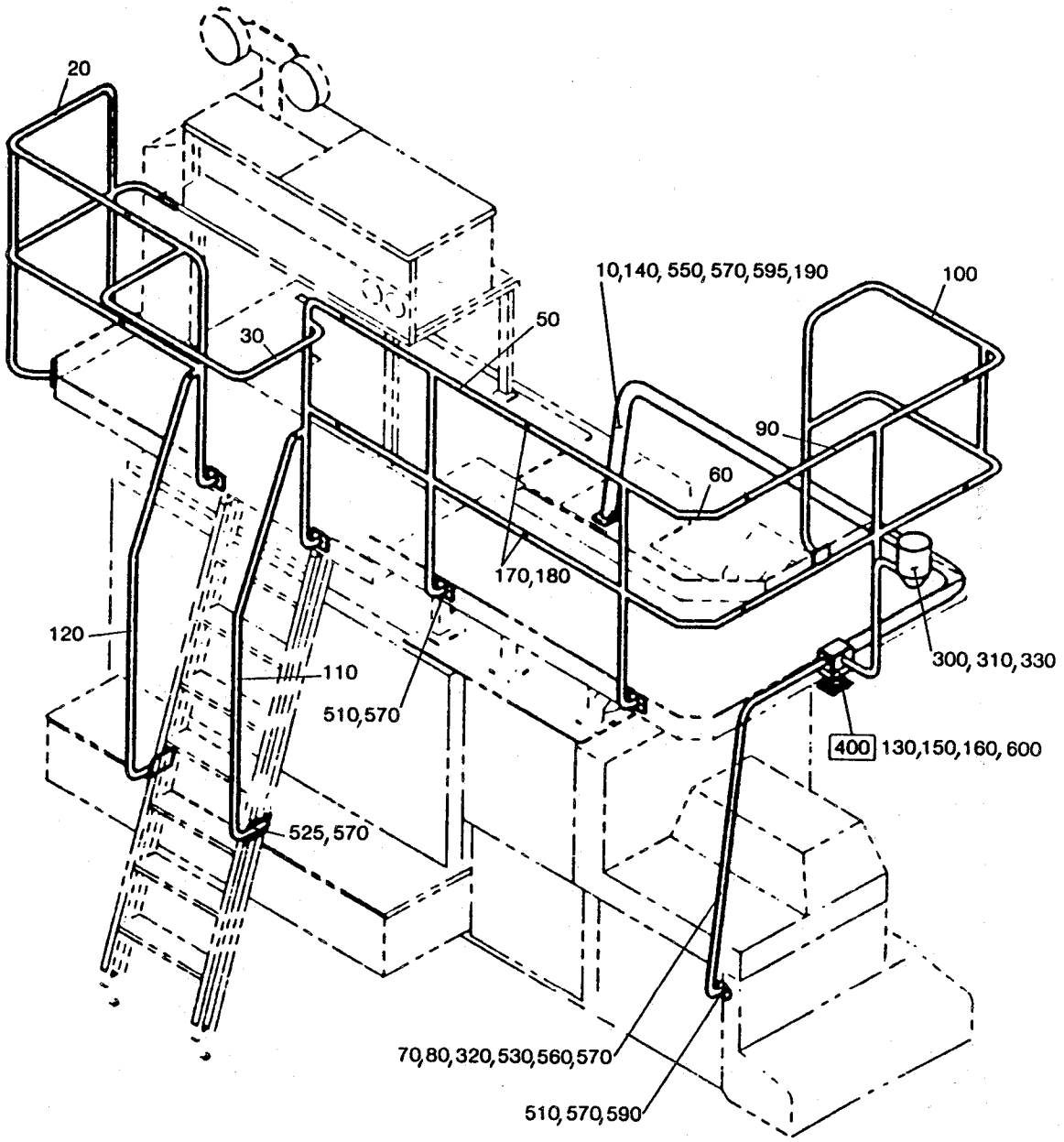
20
10,140, 550, 570, 595,190
100
50
30
90
60
170,180
120
110
510,570
300, 310, 330
400 130,150,160, 600
525, 570
70,80,320,530,560,570
510, 570,590

From	Pos	Part No	SP	UN	Qty	Description
	F400	==>212-1.1	-		1	BRACKET
Machines without Pull Tab						
	020	469967	-		1	RAILING
-080V	040	751309	-		1	RAILING
	510	312105-0449	-		41	SCREW M6S8X16RFR
	560	312605-0318	-		10	NUT M6M8RFR
	570	315105-0165	-		50	WASHER BRB8,4X16RFR
Common Parts						
	010	751075-0002	-		1	CABLE CONDUIT
	030	469965	-		1	RAILING
	050	751051	-		1	RAILING
	060	751052	-		1	RAILING
	070	751056	-		1	STRUT END
	080	751055	-		1	STRUT
	090	751053	-		1	RAILING
	100	751057	-		1	RAILING
	110	751050	-		1	RAIL
	120	751049	-		1	RAIL
	130	469026	-		1	SPACER
	140	469028	-		1	GASKET
	150	751182	-		1	GASKET
	160	751183	-		1	GASKET
	170	751484	-		12	CLAMPING RING
	180	751485	-		12	SCREW
	190	751745	-		1	CABLE CONDUIT
	300	90036-0038	P		1	BULB
	310	90099-0002	-		1	NUT
	320	90224-0234	S		1	BRACKET
	330	90419-0005	S		1	ALARM LAMP
	525	312105-0459	-		4	SCREW M6S8X40RFR
	530	312115-0453	-		1	SCREW 8X25 A4 80
	550	312105-0455	-		4	SCREW M6S8X30RFR
	590	315202-0215	S		1	O-RING 19,2X3
	595	352103-0100	-		2	CABLE GLANR.15,2/2-6
	600	352103-0108	-		1	CABLE GLANR.PR 20,4/6-12

From	Pos	Part No	SP	UN	Qty	Description

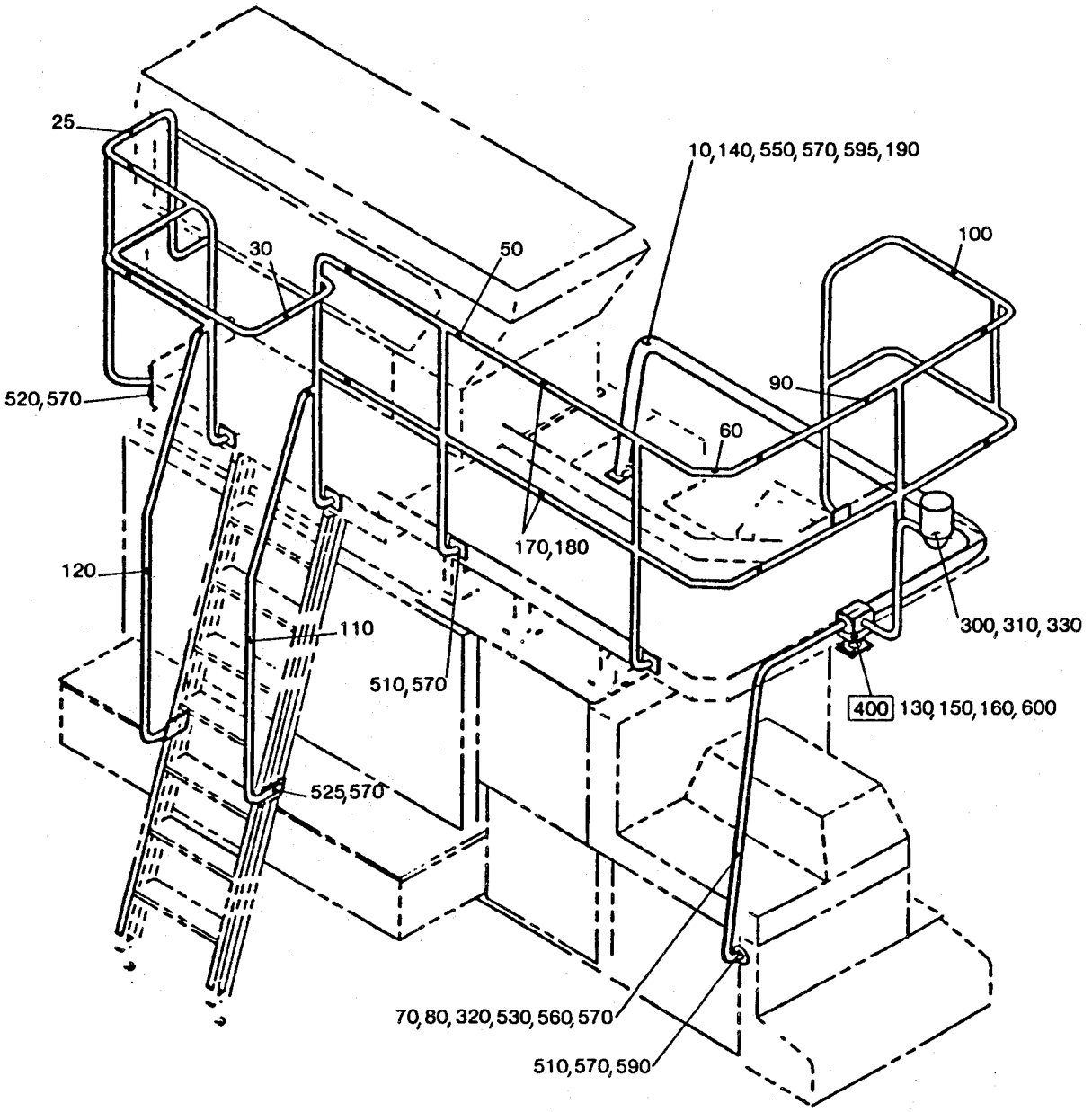
25
10,140,550,570,595,190
100
30
50
90
520,570
60
170,180
120
110
300,310,330
510,570
400 130,150,160,600
525,570
70,80,320,530,560,570
510,570,590

From	Pos	Part No	SP	UN	Qty	Description
	F400	==>212-1.1	-		1	BRACKET
Machines with Pull Tab						
	025	469966	-		1	RAILING
	510	312105-0449	-		38	SCREW M6S8X16RFR
-080V	520	312105-0453	-		4	SCREW M6S8X25RFR
	560	312605-0318	-		11	NUT M6M8RFR
	570	315105-0165	-		47	WASHER BRB8,4X16RFR
Common Parts						
	010	751075-0002	-		1	CABLE CONDUIT
	030	469965	-		1	RAILING
	050	751051	-		1	RAILING
	060	751052	-		1	RAILING
	070	751056	-		1	STRUT END
	080	751055	-		1	STRUT
	090	751053	-		1	RAILING
	100	751057	-		1	RAILING
	110	751050	-		1	RAIL
	120	751049	-		1	RAIL
	130	469026	-		1	SPACER
	140	469028	-		1	GASKET
	150	751182	-		1	GASKET
	160	751183	-		1	GASKET
	170	751484	-		12	CLAMPING RING
	180	751485	-		12	SCREW
	190	751745	-		1	CABLE CONDUIT
	300	90036-0038	P		1	BULB
	310	90099-0002	-		1	NUT
	320	90224-0234	S		1	BRACKET
	330	90419-0005	S		1	ALARM LAMP
	525	312105-0459	-		4	SCREW M6S8X40RFR
	530	312115-0453	-		1	SCREW 8X25 A4 80
	550	312105-0455	-		4	SCREW M6S8X30RFR
	590	315202-0215	S		1	O-RING 19,2X3
	595	352103-0100	-		2	CABLE GLANR.15,2/2-6
	600	352103-0108	-		1	CABLE GLANR.PR 20,4/6-12

From	Pos	Part No	SP	UN	Qty	Description

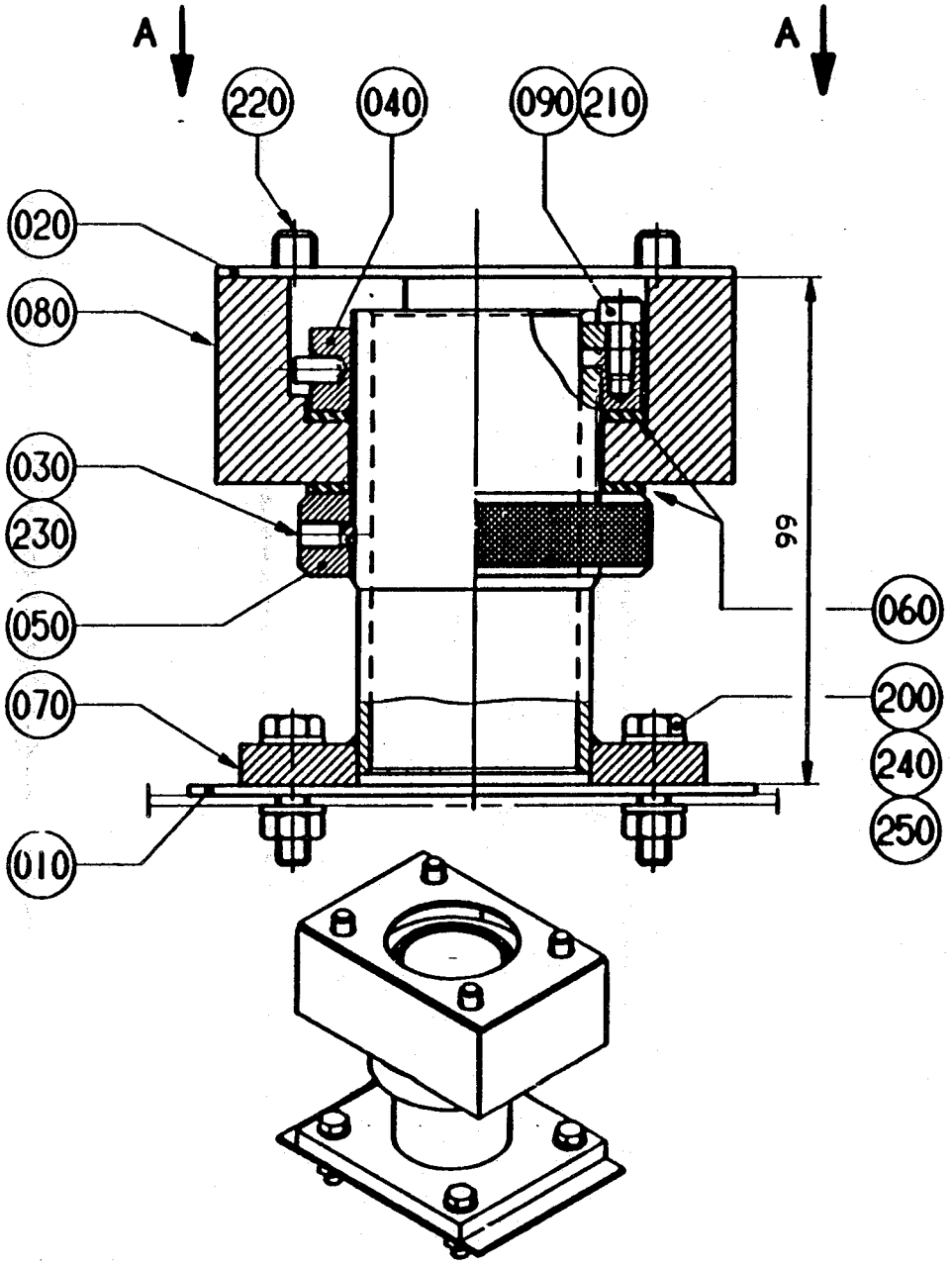

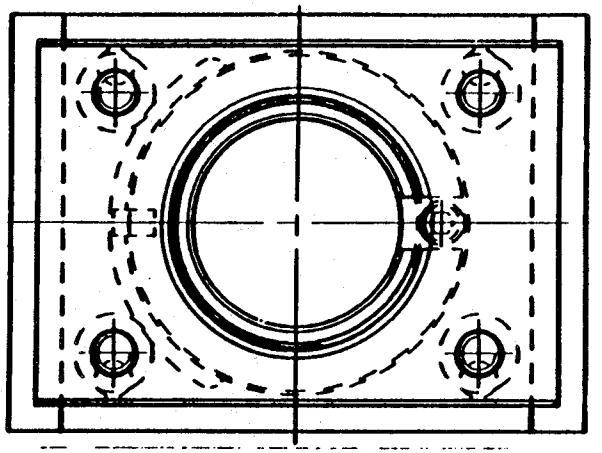

A-A

From	Pos	Part No	SP	UN	Qty	Description
	010	441448	S		1	GASKET
	020	490500	S		1	GASKET
	030	751095	S		2	PLUG
	040	751096	C		1	CLAMP RING
	050	751097	C		1	BRAKE RING
	060	751098	S		2	FRICTION DISC
	070	751099	C		1	LEAD-IN
	080	751100	C		1	BEARING HOUSING
	090	751108	C		1	SECURING PLATE
	200	312105-0372	-		4	SCREW M6S6X25RFR
	210	312115-0325	-		1	SCREW 5X10 A4 80
	220	312115-0459	-		4	SCREW 8X40 A4 80
	230	312318-0323	-		2	GRUB SCREW SK6SS5X8RFR
	240	312605-0316	-		4	NUT M6M6RFR
	250	315105-0153	-		8	WASHER BRB6,4X12RFR

From	Pos	Part No	SP	UN	Qty	Description

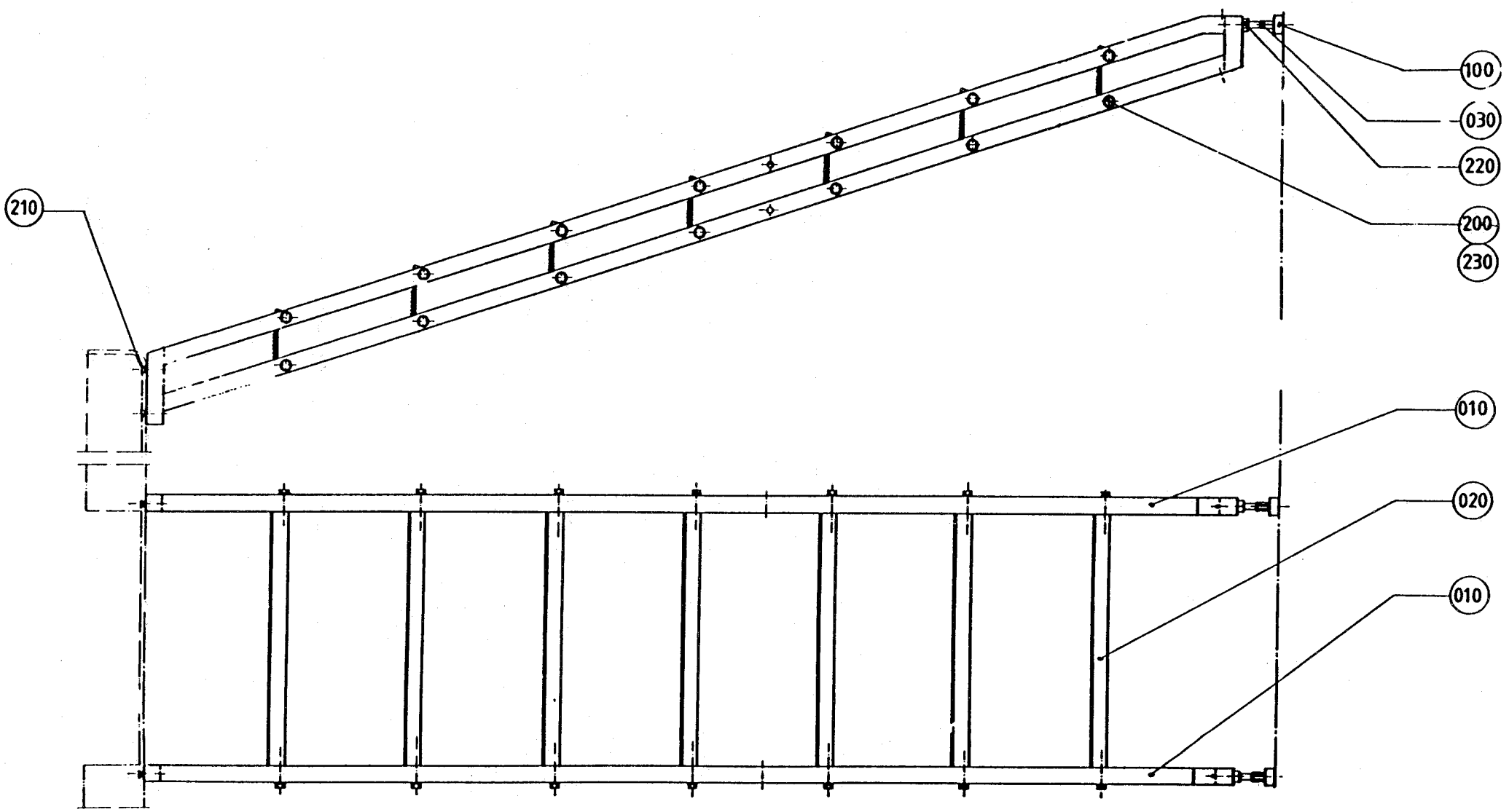
210
100
030
220
200
230
010
020
010

From	Pos	Part No	SP	UN	Qty	Description
	010	469008	-		2	SIDE PIECE
	020	441679	-		7	STEP
	030	441905	-		2	PIN
	100	90347-0004	-		2	VIBRATION DAMPER
	200	312105-0459	-		28	SCREW M6S8X40RFR
	210	312155-0449	-		4	SCREW MF6S8X16RFR
	220	312605-0322	-		2	NUT M6M12RFR
	230	315105-0165	-		28	WASHER BRB8,4X16RFR

From	Pos	Part No	SP	UN	Qty	Description

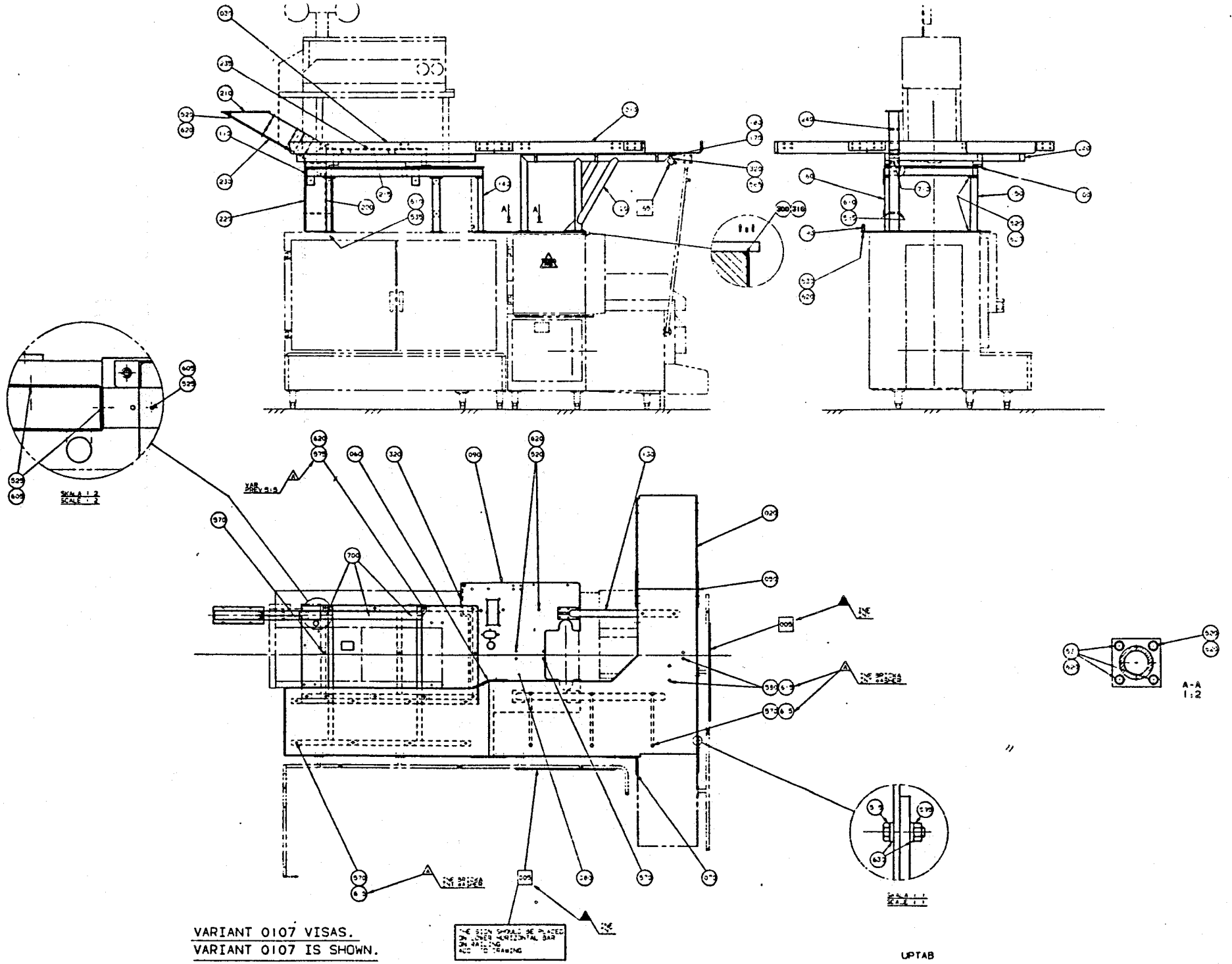

VARIANT 0107 VISAS.
VARIANT 0107 IS SHOWN.

UPTAB

Last Alteration: AM 15592 90-11-22

Corresponding C-lists: 751860-010V
Assembly Drawing: 751860-1/2

Date Printed: 910206

From	Pos	Part No	SP	UN	Qty	Description
	F005	C- 544536-0102	-		1	SET OF SIGNS TBA
	F165	==>211-1.1	-		1	LIGHT FIXTURE
Single Machine						
	010	751857	-		1	PLATFORM
Installation: First Machine						
	010	751858	-		1	PLATFORM
	020	751853	-		1	PLATFORM (c/c 2000 mm)
	020	752301	-		1	PLATFORM (c/c 2150 mm)
Installation: Intermediate Machine						
	010	751851	-		1	PLATFORM
	020	751853	-		1	PLATFORM (c/c 2000 mm)
	020	752301	-		1	PLATFORM (c/c 2150 mm)
	070	751856	-		1	PLATE
Installation: Last Machine						
	010	751859	-		1	PLATFORM
	070	751856	-		1	PLATE
Common Parts						
	030	751852	-		1	PLATFORM
	040	751850	-		1	FRAME
	050	751854	-		X	PLATE
	060	751855	-		1	PLATE
	080	469015	-		1	PLATE
	090	751819	-		1	PLATE
	100	751829	-		1	PLATE
	110	751807	-		1	FRAME
	120	469007	-		1	FRAME
	130	469016	-		1	FRAME
	140	469019	-		1	LEG
	150	469020	-		1	LEG
	155	978266	-		1	COVER PLATE
	160	751806	-		2	LEG
	170	491016	-		2	HOLDER
	180	469027	-		1	SPACER
	190	751862	-		1	COLUMN
	200	751863	-		1	CABLE DUCT
	210	751864	-		1	CABLE DUCT
	215	751878	-		1	CABLE DUCT
	220	751865	-		1	LID
	230	751866	-		1	LID
	235	751879	-		1	LID
	240	751867	-		5	SPACER
	300	90143-0012	-	MM	1900	STRIP

From	Pos	Part No	SP	UN	Qty	Description
	310	90153-0017	-	G	X	ADHESIVE
	320	90157-0022	-		X	SEALING COMPOUND
	515	312105-0455	-		X	SCREW M6S8X30RFR
	520	312105-0449	-		45	SCREW M6S8X16RFR
	525	312105-0325	-		4	SCREW M6S5X10 A4 80
	530	312105-0453	-		14	SCREW M6S8X25RFR
	535	312105-0367	-		12	SCREW M6S6X14RFR
	565	312125-0323	-		2	SLOTTED HEMCS5X8RFR
	570	312155-0449	-		18	SCREW MF6S8X16RFR
	575	312109-0457	-		4	SCREW 8X35 H A4 80
	580	312155-0453	-		1	SCREW MF6S8X25RFR
	590	312605-0310	-		1	NUT M6M3RFR
	595	312605-0318	-		X	NUT M6M8RFR
	605	315105-0146	-		4	WASHER BRB5,3X10RFR
	615	230918	-		22	WASHER
	620	315105-0165	-		63	WASHER BRB8,4X16RFR
	625	315105-0173	-		2	WASHER BRB10,5X22RFR
	630	315115-0165	-		X	WASHER TBRB8,4X16RFR
	700	312705-0316	-		3	CAP NUT MHM 6 A2
	710	312705-0318	-		5	CAP NUT MHM 8 A2

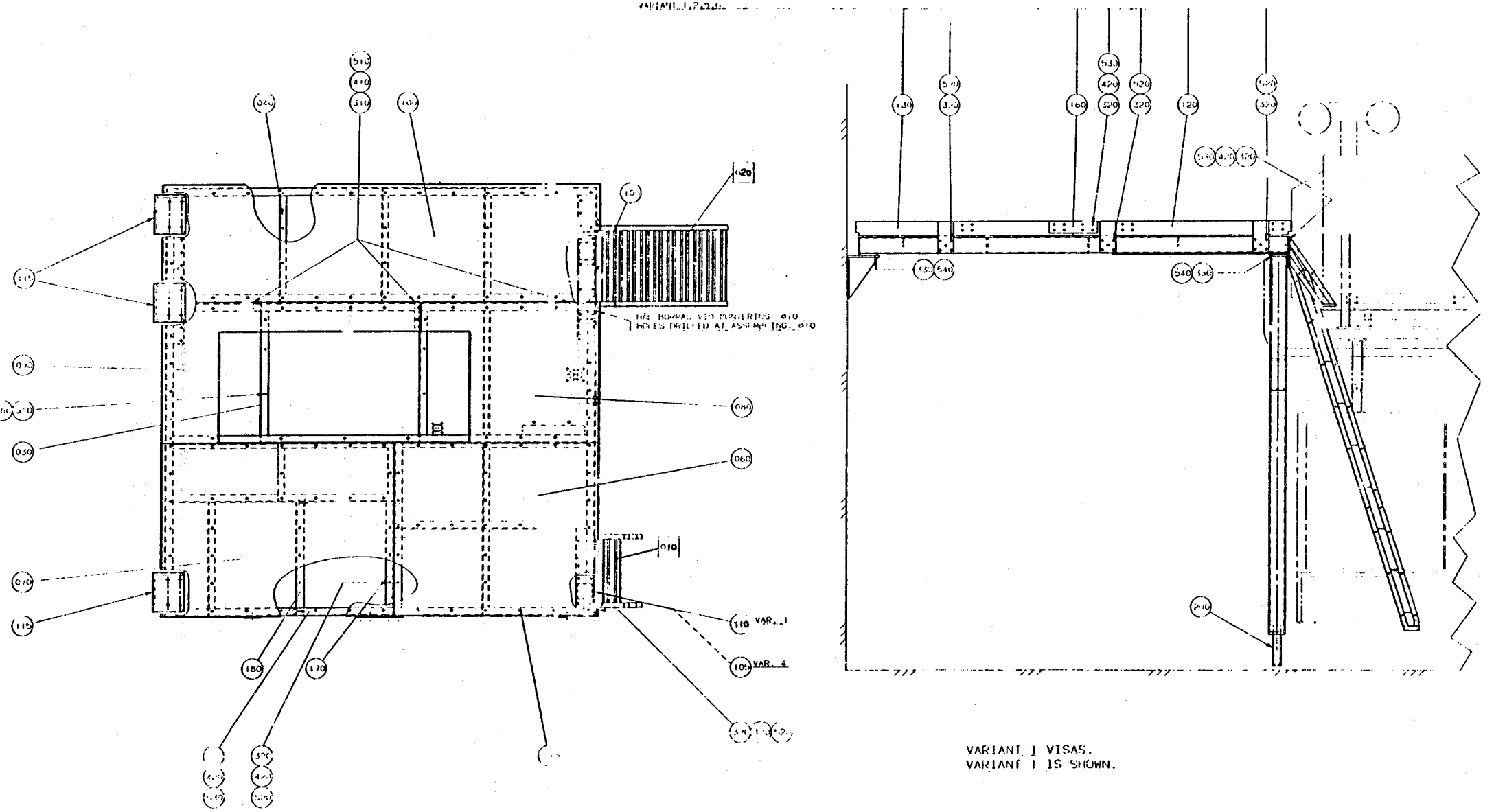

VARIANT 1 VISAS.
VARIANT 1 IS SHOWN.

From	Pos	Part No	SP	UN	Qty	Description
	F010	==>215-1.1	-		1	LADDER
Single Machine						
	F020	==>215-1.2	-		1	LADDER (c/c 2000 mm-450 mm)
	F020	==>215-1.2	-		1	LADDER (c/c 2150 mm-350 mm)
	030	751906	-		1	FRAME (c/c 2000 mm)
	030	751913	-		1	FRAME (c/c 2150 mm
	040	751916	-		1	FRAME (c/c 2000 mm)
	080	751910	-		1	PLATFORM (c/c 2000 mm)
	080	751930	-		1	PLATFORM (c/c 2150 mm)
	090	751911	-		1	PLATFORM (c/c 2000 mm)
	090	751929	-		1	PLATFORM (c/c 2150 mm)
	105	751919	-		1	LEG (c/c 2000 mm)
	110	752302	-		1	LEG (c/c 2000 mm)
	110	752302	-		2	LEG (c/c 2150 mm)
	120	751920	-		1	PLATE
	130	751922	-		1	PLATE
	140	752304	-		1	PLATE (c/c 2150 mm)
	150	752305	-		1	PLATE (c/c 2150 mm)
	160	751854	-		1	PLATE (c/c 2000 mm)
	160	751854	-		2	PLATE (c/c 2150 mm)
	190	752308	-		1	BRACKET (c/c 2150 mm)
	200	534867	-		2	LEG
Installation: First Machine						
	030	751906	-		1	FRAME (c/c 2000 mm)
	030	751913	-		1	FRAME (c/c 2150 mm
	080	751910	-		1	PLATFORM (c/c 2000 mm)
	080	751930	-		1	PLATFORM (c/c 2150 mm)
	090	751911	-		1	PLATFORM (c/c 2000 mm)
	090	751929	-		1	PLATFORM (c/c 2150 mm)
	110	752302	-		1	LEG
	120	751920	-		1	PLATE
	130	751922	-		1	PLATE
	160	751854	-		1	PLATE
	200	534867	-		1	LEG
Installation: Intermediate Machine						
	030	751906	-		1	FRAME (c/c 2000 mm)
	030	751913	-		1	FRAME (c/c 2150 mm
	080	751910	-		1	PLATFORM (c/c 2000 mm)
	080	751930	-		1	PLATFORM (c/c 2150 mm)
	090	751911	-		1	PLATFORM (c/c 2000 mm)
	090	751929	-		1	PLATFORM (c/c 2150 mm)
	105	751919	-		1	LEG
	200	534867	-		1	LEG
Installation: Last Machine						
	F020	==>215-1.2	-		1	LADDER (c/c 2000 mm-450 mm)
	F020	==>215-1.2	-		1	LADDER (c/c 2150 mm-350 mm)
	030	751906	-		1	FRAME (c/c 2000 mm)
	030	751913	-		1	FRAME (c/c 2150 mm
	040	751916	-		1	FRAME (c/c 2000 mm)
	080	751910	-		1	PLATFORM (c/c 2000 mm)
	080	752303	-		1	PLATFORM (c/c 2150 mm)
	090	751911	-		1	PLATFORM (c/c 2000 mm)
	090	751929	-		1	PLATFORM (c/c 2150 mm)
	100	751917	-		1	PLATFORM (c/c 2000 mm)
	105	751919	-		2	LEG (c/c 2000 mm)
	105	751919	-		1	LEG (c/c 2150 mm)
	110	752302	-		1	LEG (c/c 2150 mm)
	140	752304	-		1	PLATE (c/c 2150 mm)
	150	752305	-		1	PLATE (c/c 2150 mm)
	160	751854	-		1	PLATE (c/c 2150 mm)
	190	752308	-		1	BRACKET (c/c 2150 mm)
	200	534867	-		2	LEG
Common Parts						
	060	751908	-		1	PLATFORM
	070	751912	-		1	PLATFORM
	115	751931	-		X	BRACKET
	170	751925	-		1	BRACKET
	180	751926	-		1	BRACKET
	310	315115-0173	-		X	WASHER B 10,5X22 RFR
	320	315115-0165	-		X	WASHER TBRB8,4X16RFR
	330	315115-0178	-		X	WASHER TBRB13X24RFR
	410	312605-0320	-		3	NUT M6M10RFR
	420	312605-0318	-		X	NUT M6M8RFR
	510	312105-0497	-		3	SCREW M6S10X35RFR
	520	312105-0453	-		X	SCREW M6S8X25RFR
	530	312105-0455	-		X	SCREW M6S8X30RFR
	540	312105-0536	-		X	SCREW M6S12X30RFR
	550	90287-0076	-		X	SCREW
	560	312105-0493	-		7	SCREW M6S10X25RFR

Last Alteration: AM 14198 90-03-06

Corresponding C-lists: 978158-010V
Assembly Drawing:

Issue Date: 901113

From	Pos	Part No	SP	UN	Qty	Description
F170		==>215-2.1a	-		1	RAILING/PLATFORM (Single, c/c 2000 mm)
F170		==>215-2.1b	-		1	RAILING/PLATFORM (c/c 2000 mm)
		==>215-1.1	-		1	. LADDER
		==>215-1.2	-		1	. LADDER (350 mm)
		==>215-1.2	-		1	. LADDER (450 mm)
F170		==>215-2.2a	-		1	RAILING/PLATFORM (Single, c/c 2150 mm)
F170		==>215-2.2b	-		1	RAILING/PLATFORM (c/c 2150 mm)
		==>215-1.1	-		1	. LADDER
		==>215-1.2	-		1	. LADDER (350 mm)

From	Pos	Part No	SP	UN	Qty	Description

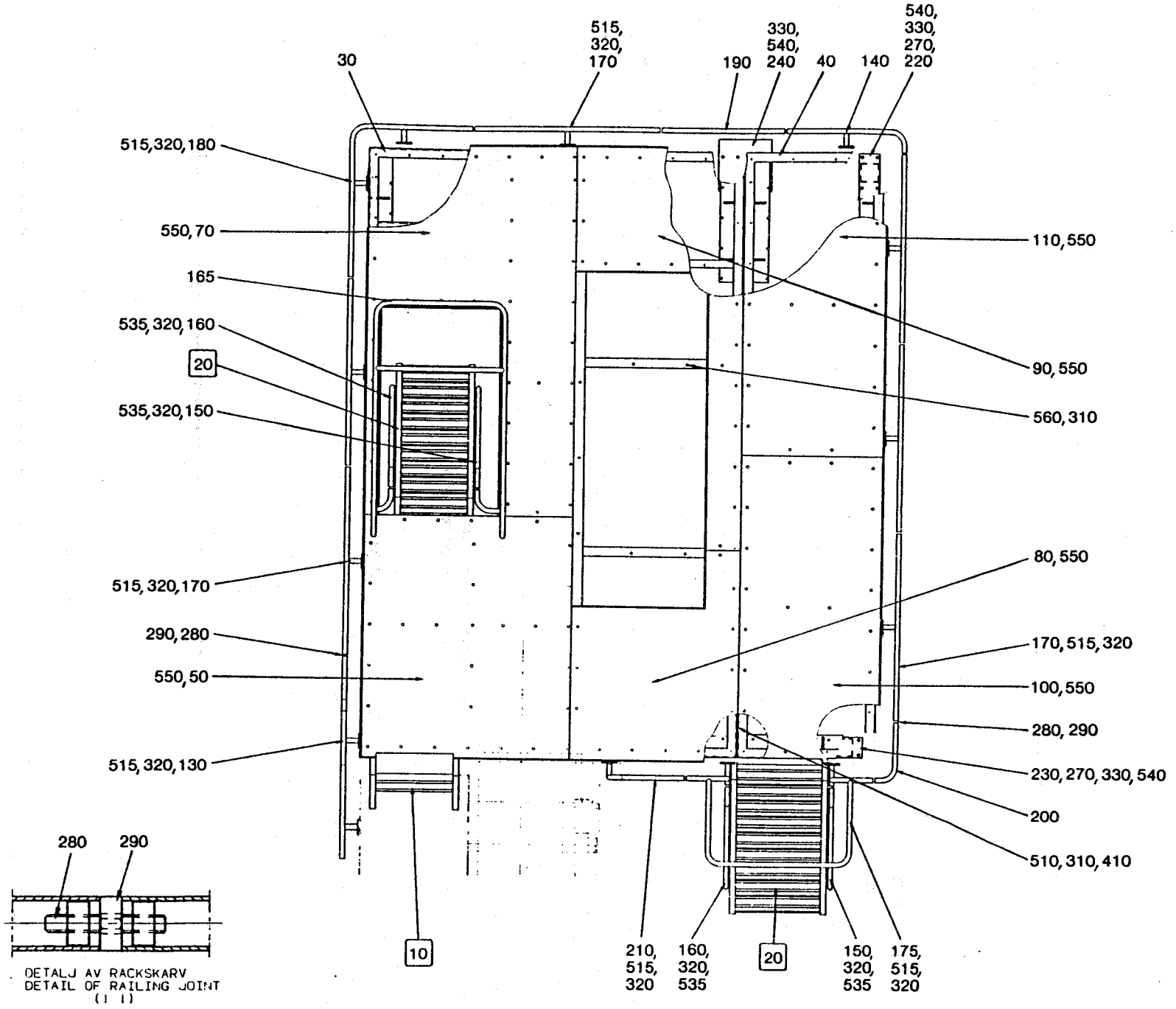
30
515, 320, 170
190
330, 540, 240
40
140
540, 330, 270, 220
515,320,180
550,70
165
535,320,160
20
535,320,150
515,320,170
290,280
550,50
515,320,130
110,550
90,550
560,310
80,550
170,515,320
100,550
280,290
230,270,330,540
200
510,310,410
10
210, 515, 320
160, 320, 535
20
150, 320, 535
175, 515, 320
280
290
DETALJ AV RACKSKARV
DETAIL OF RAILING JOINT
(1:1)

Last Alteration: AM 14198 90-03-06

Corresponding C-lists: 752958-010V
Assembly Drawing: 752958-1

Issue Date: **901113**

From	Pos	Part No	SP	UN	Qty	Description
	F010	**==>215-1.1**	-		1	**LADDER**
Single-Out-Ladder						
		C- 752958-0101				**RAILING/PLATFORM**
	F020	**==>215-1.2**	-		1	**LADDER (450 mm)**
	070	752924	-		1	PLATFORM
	100	752926	-		1	PLATFORM
	150	751898	-		1	RAIL RIGHT
	160	751899	-		1	RAIL LEFT
	170	751948	-		6	RAILING
	175	751952	-		1	RAILING
	250	751926	-		1	BRACKET
	260	751925	-		1	BRACKET
	420	312605-0318	-		12	NUT M6M8RFR
	520	312105-0453	-		8	SCREW M6S8X25RFR
	530	312105-0455	-		4	SCREW M6S8X30RFR
Single-Ins-Ladder						
		C- 752958-0102				**RAILING/PLATFORM**
	F020	**==>215-1.2**	-		1	**LADDER (350 mm)**
	070	752929	-		1	PLATFORM
	100	752928	-		1	PLATFORM
	165	751903	-		1	RAILING
	170	751948	-		7	RAILING
Single-Two-Ladder						
		C- 752958-0103				**RAILING/PLATFORM**
	F020	**==>215-1.2**	-		1	**LADDER (350 mm)**
	F020	**==>215-1.2**	-		1	**LADDER (450 mm)**
	070	752929	-		1	PLATFORM
	100	752926	-		1	PLATFORM
	150	751898	-		1	RAIL RIGHT
	160	751899	-		1	RAIL LEFT
	165	751903	-		1	RAILING
	170	751948	-		6	RAILING
	175	751952	-		1	RAILING
Common Parts						
	030	752920	-		1	FRAME
	040	752922	-		1	FRAME
	050	752923	-		1	PLATFORM
	080	752981	-		1	PLATFORM
	090	752925	-		1	PLATFORM
	110	752927	-		1	PLATFORM
	130	751891	-		1	RAILING
	140	751897	-		1	RAILING
	180	752988	-		1	RAILING
	190	752989	-		1	RAILING
	200	752990	-		1	RAILING
	210	752991-0002	-		1	RAILING
	220	751919	-		3	LEG
	230	752302	-		3	LEG
	240	752992	-		3	BRACKET
	270	534867	-		6	LEG
	280	751485	-		28	SCREW
	290	751484	-		28	CLAMPING RING
	310	315115-0173	-		15	WASHER B 10,5X22 RFR
	320	315115-0165	-		X	WASHER TBRB8,4X16RFR
	330	315115-0178	-		42	WASHER TBRB13X24RFR
	410	312605-0320	-		4	NUT M6M10RFR
	510	312105-0497	-		4	SCREW M6S10X35RFR
	515	312105-0449	-		X	SCREW M6S8X16RFR
	535	312109-0459	-		X	SCREW M6S8X40H A4 80
	540	312105-0536	-		42	SCREW M6S12X30RFR
	550	90287-0076	-		158	SCREW
	560	312105-0493	-		7	SCREW M6S10X25RFR

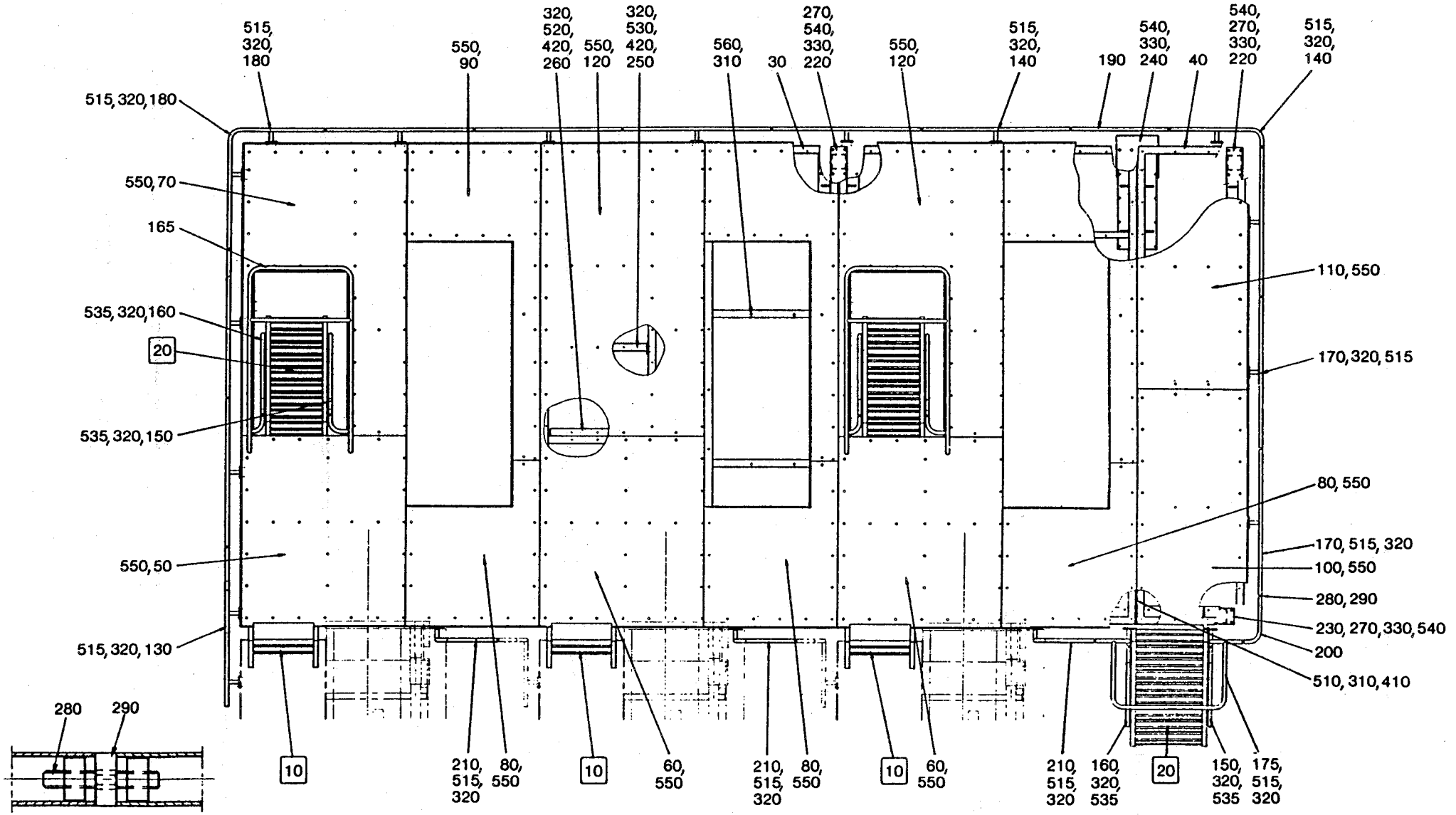

DETALJ AV RACKSKARV
DETAIL OF RAILING JOINT
(1:1)

Last Alteration: AM 14198 90-03-06

Corresponding C-lists: 752958-010V
Assembly Drawing: 752958-2

Issue Date: 901113

From	Pos	Part No	SP	UN	Qty	Description
	F010	==>215-1.1	•		1	LADDER
First						
		C- 752958-0104				RAILING/PLATFORM
	050	752923	-		1	PLATFORM
	070	752924	-		1	PLATFORM
	130	751891	-		1	RAILING
	180	752988	-		1	RAILING
	210	752991-0002	-		1	RAILING
	250	751926	-		1	BRACKET
	260	751925	-		1	BRACKET
	420	312605-0318	-		16	NUT M6M8RFR
	520	312105-0453	-		8	SCREW M6S8X25RFR
	530	312105-0455	-		4	SCREW M6S8X30RFR
First-Ladder						
		C- 752958-0105				RAILING/PLATFORM
	F020	==>215-1.2	•		1	LADDER (350 mm)
	050	752923	-		1	PLATFORM
	070	752929	-		1	PLATFORM
	130	751891	-		1	RAILING
	165	751903	-		1	RAILING
	180	752988	-		1	RAILING
	210	752991-0002	-		1	RAILING
	535	312109-0459	-		4	SCREW M6S8X40H A4 80
Inter-Ladder						
		C- 752958-0106				RAILING/PLATFORM
	F020	==>215-1.2	•		1	LADDER (350 mm)
	060	751908	-		1	PLATFORM
	120	752932	-		1	PLATFORM
	165	751903	-		1	RAILING
	535	312109-0459	-		4	SCREW M6S8X40H A4 80
Intermediate						
		C- 752958-0107				RAILING/PLATFORM
	060	751908	-		1	PLATFORM
	120	752931	-		1	PLATFORM
	250	751926	-		1	BRACKET
	260	751925	-		1	BRACKET
	420	312605-0318	-		16	NUT M6M8RFR
	520	312105-0453	-		8	SCREW M6S8X25RFR
	530	312105-0455	-		4	SCREW M6S8X30RFR

From	Pos	Part No	SP	UN	Qty	Description
Last-Out-Ladder						
		C- 752958-0108				RAILING/PLATFORM
	F020	==>215-1.2	-		1	LADDER (450 mm)
	040	752922	-		1	FRAME
	060	751908	-		1	PLATFORM
	100	752926	-		1	PLATFORM
	110	752927	-		1	PLATFORM
	120	752931	-		1	PLATFORM
	140	751897	-		1	RAILING
	150	751898	-		1	RAIL RIGHT
	160	751899	-		1	RAIL LEFT
	175	751952	-		1	RAILING
	190	752989	-		1	RAILING
	200	752990	-		1	RAILING
	210	752991-0002	-		1	RAILING
	250	751926	-		1	BRACKET
	260	751925	-		1	BRACKET
	535	312109-0459	-		4	SCREW M6S8X40H A4 80
	420	312605-0318	-		16	NUT M6M8RFR
	520	312105-0453	-		8	SCREW M6S8X25RFR
	530	312105-0455	-		4	SCREW M6S8X30RFR
Last-Ins-Ladder						
		C- 752958-0109				RAILING/PLATFORM
	F020	==>215-1.2	•		1	LADDER (350 mm)
	040	752922	-		1	FRAME
	060	751908	-		1	PLATFORM
	100	752928	-		1	PLATFORM
	110	752927	-		1	PLATFORM
	120	752932	-		1	PLATFORM
	140	751897	-		1	RAILING
	165	751903	-		1	RAILING
	190	752989	-		1	RAILING
	200	752990	-		1	RAILING
	210	752991-0002	-		1	RAILING
	535	312109-0459	-		4	SCREW M6S8X40H A4 80

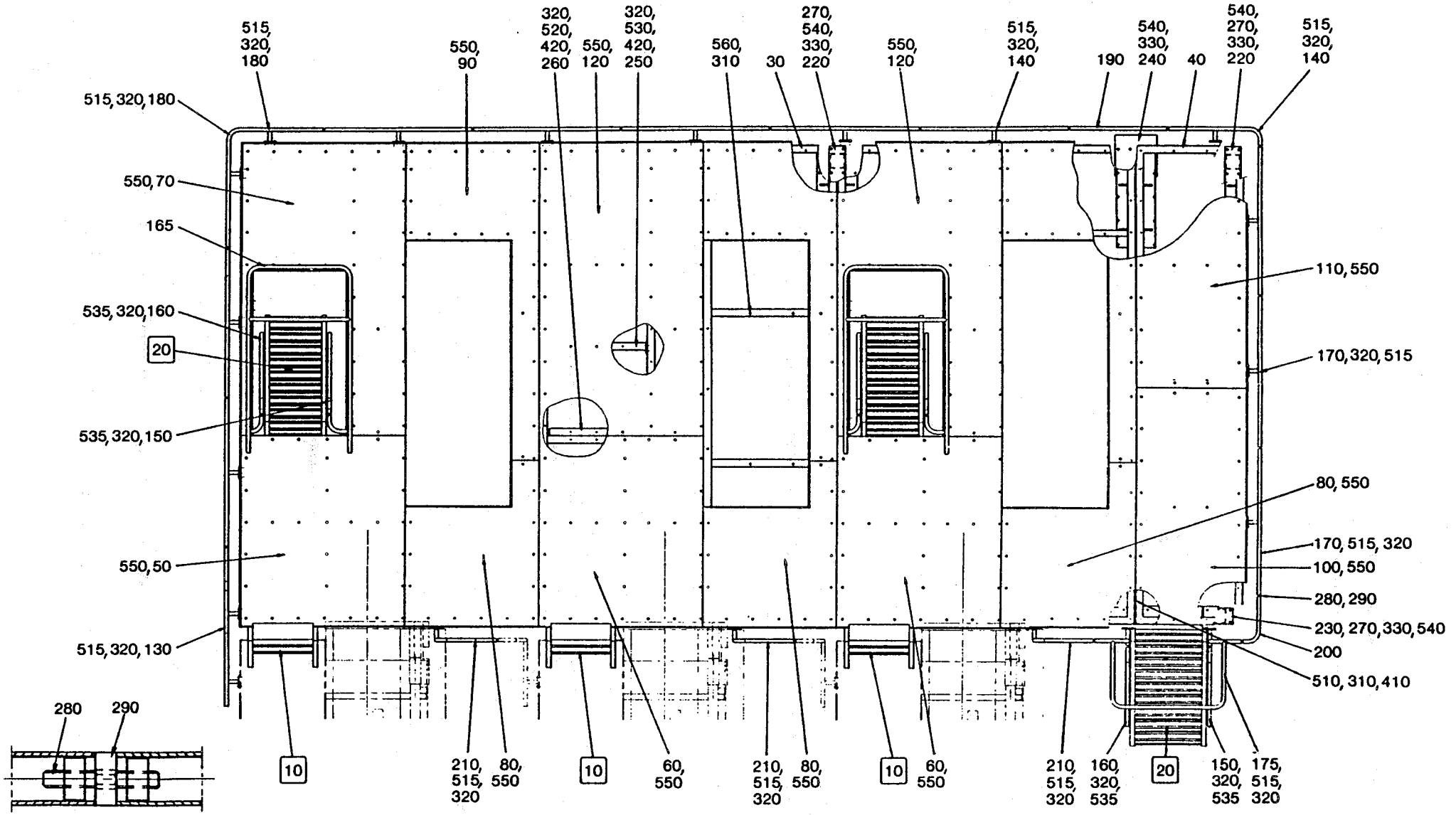

DETALJ AV RACKSKARV
DETAIL OF RAILING JOINT
(1 1)

From	Pos	Part No	SP	UN	Qty	Description
Last-Two-Ladder						
		C- 752958-0110				RAILING/PLATFORM
	F020	==>215-1.2	-		1	LADDER (350 mm)
	F020	==>215-1.2	-		1	LADDER (450 mm)
	040	752922	-		1	FRAME
	060	751908	-		1	PLATFORM
	100	752926	-		1	PLATFORM
	110	752927	-		1	PLATFORM
	120	752932	-		1	PLATFORM
	140	751897	-		1	RAILING
	150	751898	-		1	RAIL RIGHT
	160	751899	-		1	RAIL LEFT
	165	751903	-		1	RAILING
	175	751952	-		1	RAILING
	190	752989	-		1	RAILING
	200	752990	-		1	RAILING
	210	752991-0002	-		1	RAILING
	535	312109-0459	-		8	SCREW M6S8X40H A4 80
Common Parts						
	030	752920	-		1	FRAME
	080	752981	-		1	PLATFORM
	090	752925	-		1	PLATFORM
	170	751948	-		X	RAILING
	220	751919	-		X	LEG
	230	752302	-		X	LEG
	240	752992	-		X	BRACKET
	270	534867	-		X	LEG
	280	751485	-		X	SCREW
	290	751484	-		X	CLAMPING RING
	310	315115-0173	-		15	WASHER B 10,5X22 RFR
	320	315115-0165	-		X	WASHER TBRB8,4X16RFR
	330	315115-0178	-		X	WASHER TBRB13X24RFR
	410	312605-0320	-		4	NUT M6M10RFR
	510	312105-0497	-		4	SCREW M6S10X35RFR
	515	312105-0449	-		X	SCREW M6S8X16RFR
	540	312105-0536	-		X	SCREW M6S12X30RFR
	550	90287-0076	-		X	SCREW
	560	312105-0493	-		7	SCREW M6S10X25RFR

From	Pos	Part No	SP	UN	Qty	Description

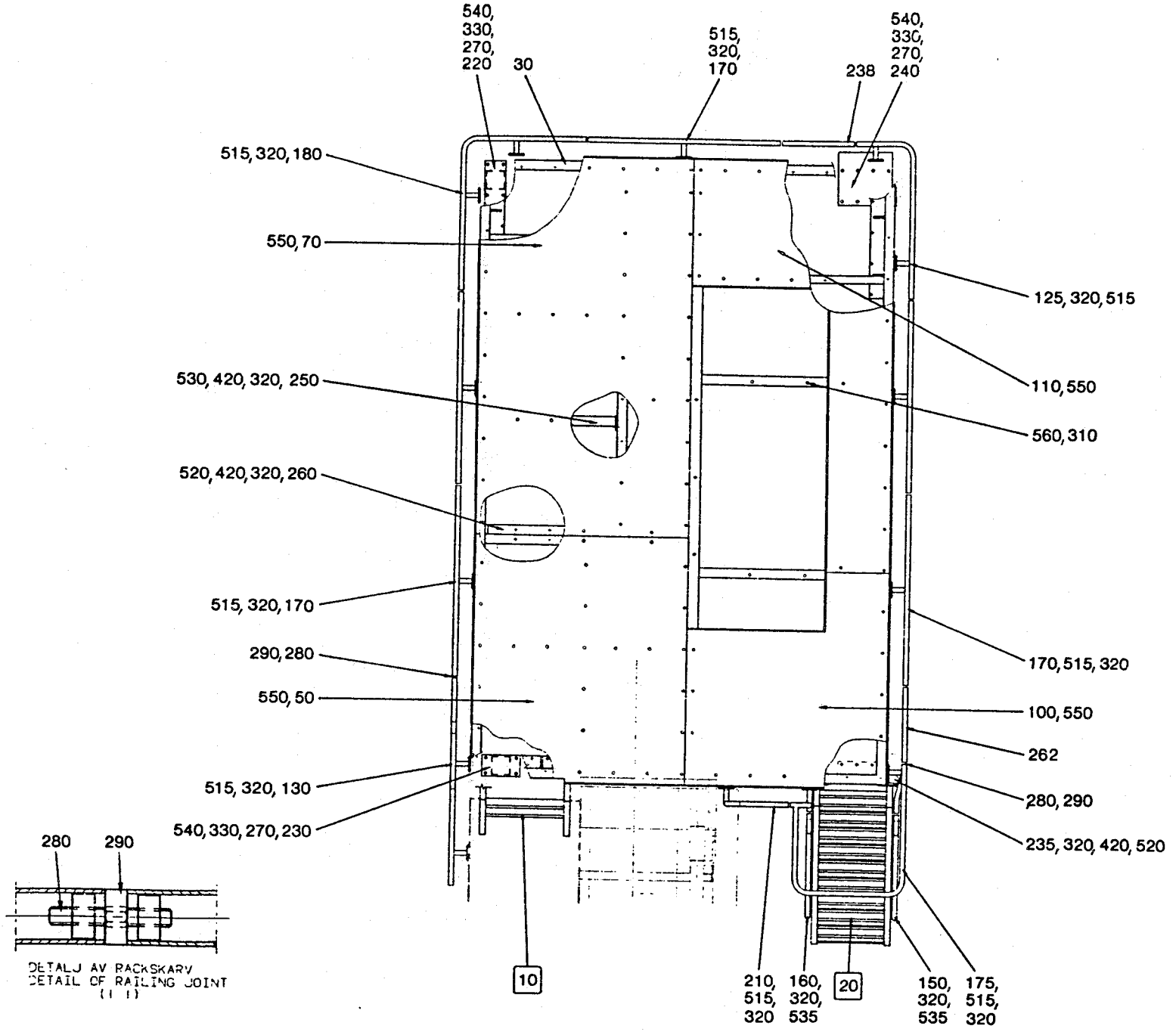

DETALJ AV RACKSKARV
DETAIL OF RAILING JOINT
(1 : 1)

From	Pos	Part No	SP	UN	Qty	Description
Single Machine						
	F010	**==>215-1.1**	**-**		**1**	**LADDER**
	F020	**==>215-1.2**	**-**		**1**	**LADDER (350 mm)**
	030	752921	-		1	FRAME
	050	752923	-		1	PLATFORM
	070	752924	-		1	PLATFORM
	100	752979	-		1	PLATFORM
	110	752934	-		1	PLATFORM
	125	751889	-		1	RAILING
	130	751891	-		1	RAILING
	150	751898	-		1	RAIL RIGHT
	160	751899	-		1	RAIL LEFT
	170	751948	-		5	RAILING
	175	752307	-		1	RAILING
	180	752988	-		1	RAILING
	210	752991-0001	-		1	RAILING
	220	751919	-		2	LEG
	230	752302	-		2	LEG
	235	752308	-		1	BRACKET
	238	752978	-		2	RAILING
	240	752992	-		2	BRACKET
	250	751926	-		1	BRACKET
	260	751925	-		1	BRACKET
	262	751951	-		2	RAILING
	270	534867	-		4	LEG
	280	751485	-		24	SCREW
	290	751484	-		24	CLAMPING RING
	320	315115-0165	-		80	WASHER TBRB8,4X16RFR
	330	315115-0178	-		42	WASHER TBRB13X24RFR
	420	312605-0318	-		12	NUT M6M8RFR
	515	312105-0449	-		56	SCREW M6S8X16RFR
	520	312105-0453	-		8	SCREW M6S8X25RFR
	530	312105-0455	-		4	SCREW M6S8X30RFR
	540	312105-0536	-		42	SCREW M6S12X30RFR
	550	90287-0076	-		158	SCREW
	560	312105-0493	-		7	SCREW M6S10X25RFR

From	Pos	Part No	SP	UN	Qty	Description

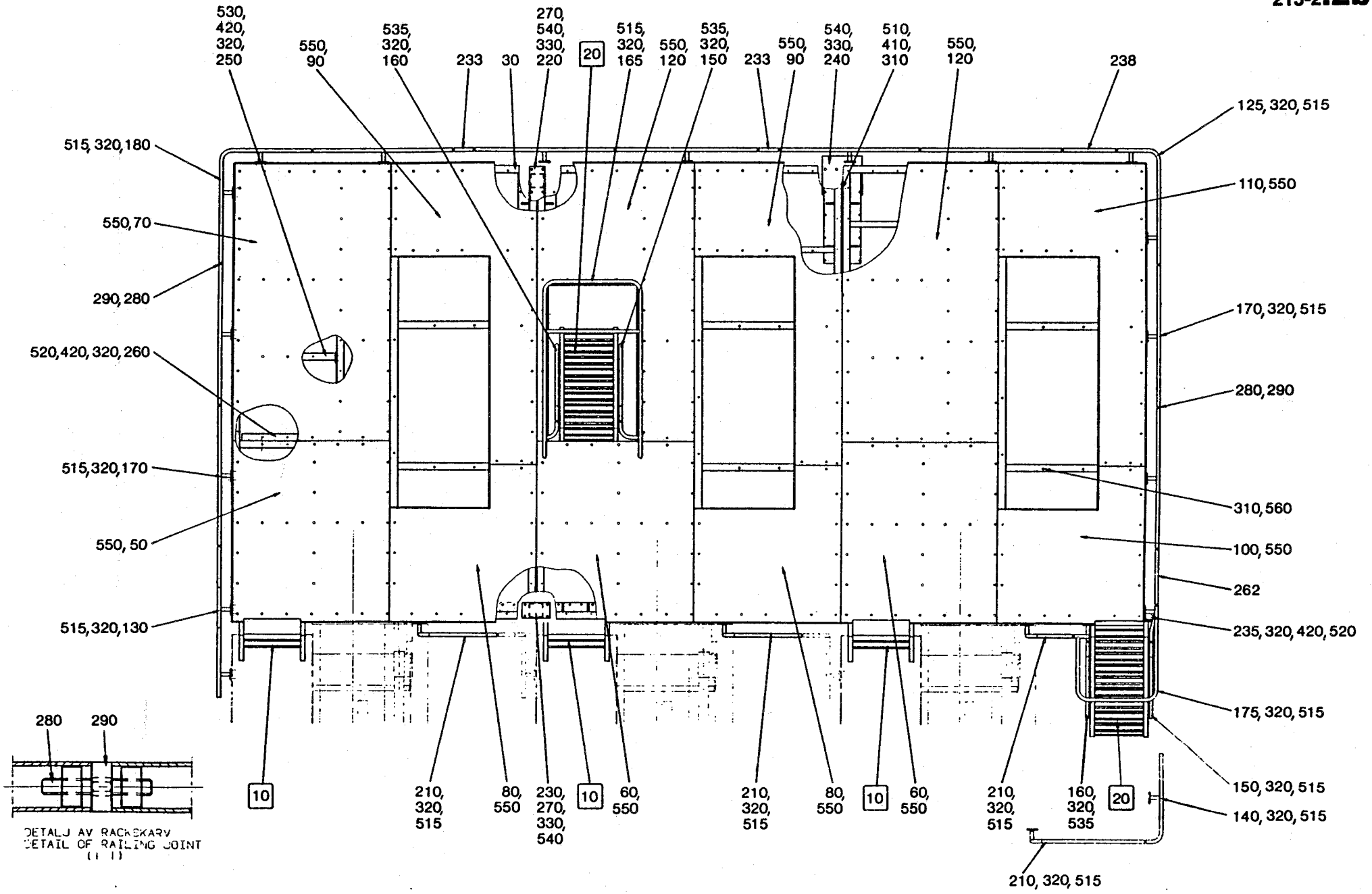
530, 420, 320, 250
550, 90
535, 320, 160
233
30
270, 540, 330, 220
20
515, 320, 165
550, 120
535, 320, 150
233
550, 90
540, 330, 240
510, 410, 310
550, 120
238
125, 320, 515
110, 550
515, 320, 180
550, 70
290, 280
520, 420, 320, 260
170, 320, 515
280, 290
515, 320, 170
550, 50
310, 560
100, 550
262
515, 320, 130
235, 320, 420, 520
175, 320, 515
150, 320, 515
140, 320, 515
210, 320, 515
210, 320, 515
210, 320, 515
210, 320, 515
80, 550
80, 550
230, 270, 330, 540
60, 550
60, 550
10
10
10
160, 320, 535
20
280
290
DETALJ AV RACKSKARV
DETAIL OF RAILING JOINT

Last Alteration: AM 14198 90-03-06

Corresponding C-lists: 752959-010V
Assembly Drawing: 752959-2

Issue Date: 901113

From	Pos	Part No	SP	UN Qty	Description
	F010	**==>215-1.1**	-	1	**LADDER**
First					
	050	752923	-	1	PLATFORM
	070	752924	-	1	PLATFORM
	080	752980	-	1	PLATFORM
	090	752933	-	1	PLATFORM
	130	751891	-	1	RAILING
	180	752988	-	1	RAILING
	210	752991-0003	-	1	RAILING
	250	751926	-	1	BRACKET
	260	751925	-	1	BRACKET
	420	312605-0318	-	16	NUT M6M8RFR
	520	312105-0453	-	8	SCREW M6S8X25RFR
	530	312105-0455	-	4	SCREW M6S8X30RFR
First-Ladder					
	F020	**==>215-1.2**	-	1	**LADDER (350 mm)**
	050	752923	-	1	PLATFORM
	070	752929	-	1	PLATFORM
	080	752980	-	1	PLATFORM
	090	752933	-	1	PLATFORM
	130	751891	-	1	RAILING
	150	751898	-	1	RAIL RIGHT
	160	751899	-	1	RAIL LEFT
	165	751903	-	1	RAILING
	180	752988	-	1	RAILING
	210	752991-0003	-	1	RAILING
Intermediate					
	060	751908	-	1	PLATFORM
	080	752980	-	1	PLATFORM
	090	752933	-	1	PLATFORM
	120	752931	-	1	PLATFORM
	210	752991-0003	-	1	RAILING
	233	751927	-	2	RAILING
	250	751926	-	1	BRACKET
	260	751925	-	1	BRACKET
	310	315115-0173	-	8	WASHER B 10,5X22 RFR
	410	312605-0320	-	4	NUT M6M10RFR
	510	312105-0497	-	4	SCREW M6S10X35RFR

From	Pos	Part No	SP	UN Qty	Description
Inter-Ladder					
	F020	**==>215-1.2**	-	1	**LADDER (350 mm)**
	060	751908	-	1	PLATFORM
	080	752980	-	1	PLATFORM
	090	752933	-	1	PLATFORM
	120	752932	-	1	PLATFORM
	150	751898	-	1	RAIL RIGHT
	160	751899	-	1	RAIL LEFT
	165	751903	-	1	RAILING
	210	752991-0003	-	1	RAILING
	233	751927	-	2	RAILING
	310	315115-0173	-	8	WASHER B 10,5X22 RFR
	410	312605-0320	-	4	NUT M6M10RFR
	420	312605-0318	-	16	NUT M6M8RFR
	510	312105-0497	-	4	SCREW M6S10X35RFR
	520	312105-0453	-	8	SCREW M6S8X25RFR
	530	312105-0455	-	4	SCREW M6S8X30RFR
Last-Out-Ladder					
	F020	**==>215-1.2**	-	1	**LADDER (350 mm)**
	060	751908	-	1	PLATFORM
	100	752979	-	1	PLATFORM
	110	752934	-	1	PLATFORM
	120	752931	-	1	PLATFORM
	125	751889	-	1	RAILING
	150	751898	-	1	RAIL RIGHT
	160	751899	-	1	RAIL LEFT
	175	752307	-	1	RAILING
	210	752991-0001	-	1	RAILING
	235	752308	-	1	BRACKET
	238	752978	-	2	RAILING
	250	751926	-	1	BRACKET
	260	751925	-	1	BRACKET
	262	751951	-	2	RAILING
	310	315115-0173	-	8	WASHER B 10,5X22 RFR
	410	312605-0320	-	4	NUT M6M10RFR
	420	312605-0318	-	20	NUT M6M8RFR
	510	312105-0497	-	4	SCREW M6S10X35RFR
	520	312105-0453	-	12	SCREW M6S8X25RFR
	530	312105-0455	-	4	SCREW M6S8X30RFR

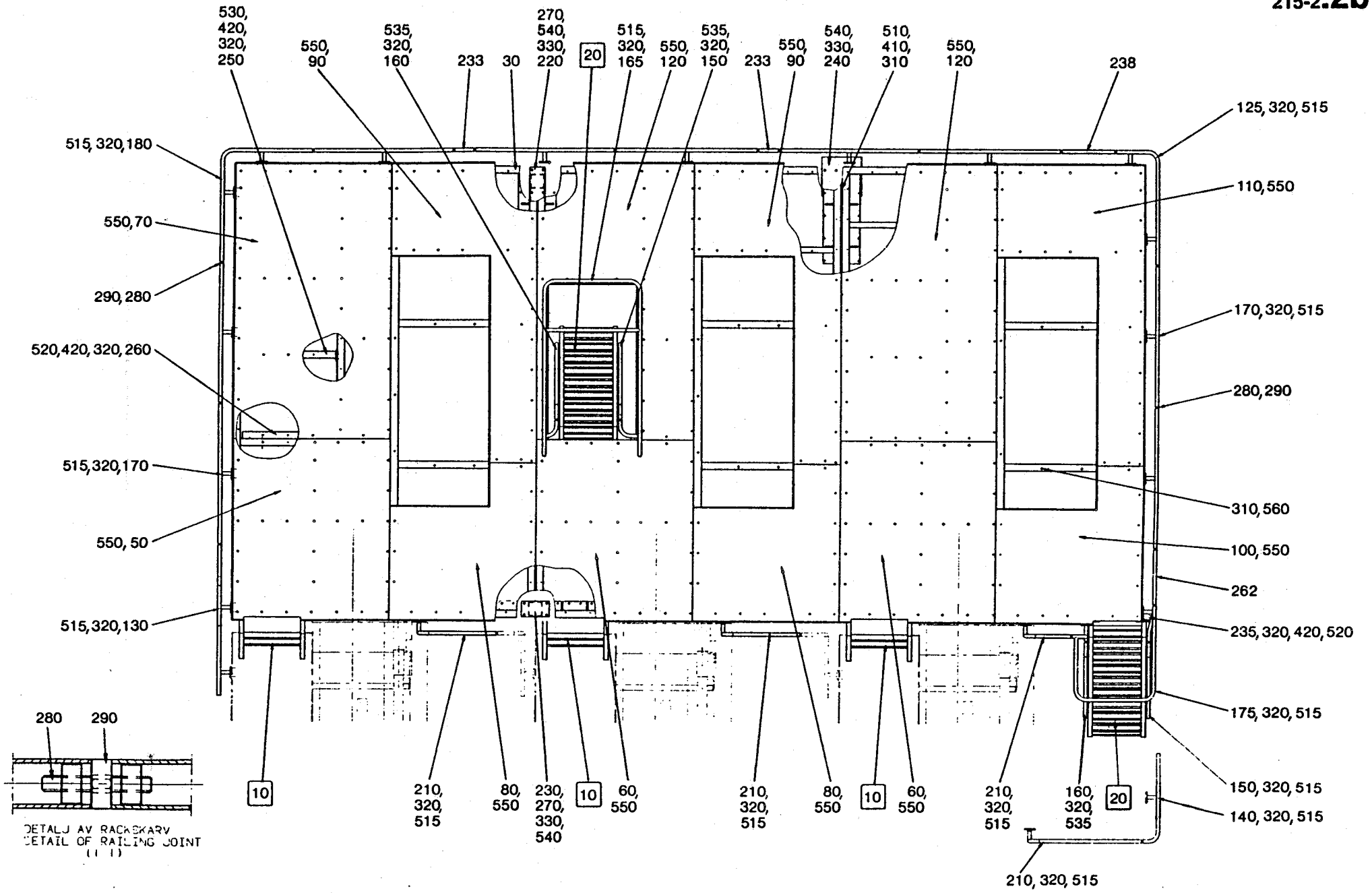

DETALJ AV RACKSKARV
DETAIL OF RAILING JOINT
(1)

Last Alteration:

Corresponding C-lists:
Assembly Drawing:

Issue Date: 901113

From	Pos	Part No	SP	UN	Qty	Description
Last						
	060	751908	-		1	PLATFORM
	100	752930	-		1	PLATFORM
	110	752934	-		1	PLATFORM
	120	752931	-		1	PLATFORM
	125	751889	-		1	RAILING
	140	751897	-		1	RAILING
	210	752991-0004	-		1	RAILING
	238	752978	-		2	RAILING
	310	315115-0173	-		8	WASHER B 10,5X22 RFR
	410	312605-0320	-		4	NUT M6M10RFR
	510	312105-0497	-		4	SCREW M6S10X35RFR
Common Parts						
	030	752921	-		1	FRAME
	170	751948	-		X	RAILING
	220	751919	-		X	LEG
	230	752302	-		X	LEG
	240	752992	-		X	BRACKET
	270	534867	-		X	LEG
	280	751485	-		X	SCREW
	290	751484	-		X	CLAMPING RING
	320	315115-0165	-		X	WASHER TBRB8,4X16RFR
	330	315115-0178	-		X	WASHER TBRB13X24RFR
	515	312105-0449	-		X	SCREW M6S8X16RFR
	540	312105-0536	-		X	SCREW M6S12X30RFR
	550	90287-0076	-		X	SCREW
	560	312105-0493	-		7	SCREW M6S10X25RFR

From	Pos	Part No	SP	UN	Qty	Description

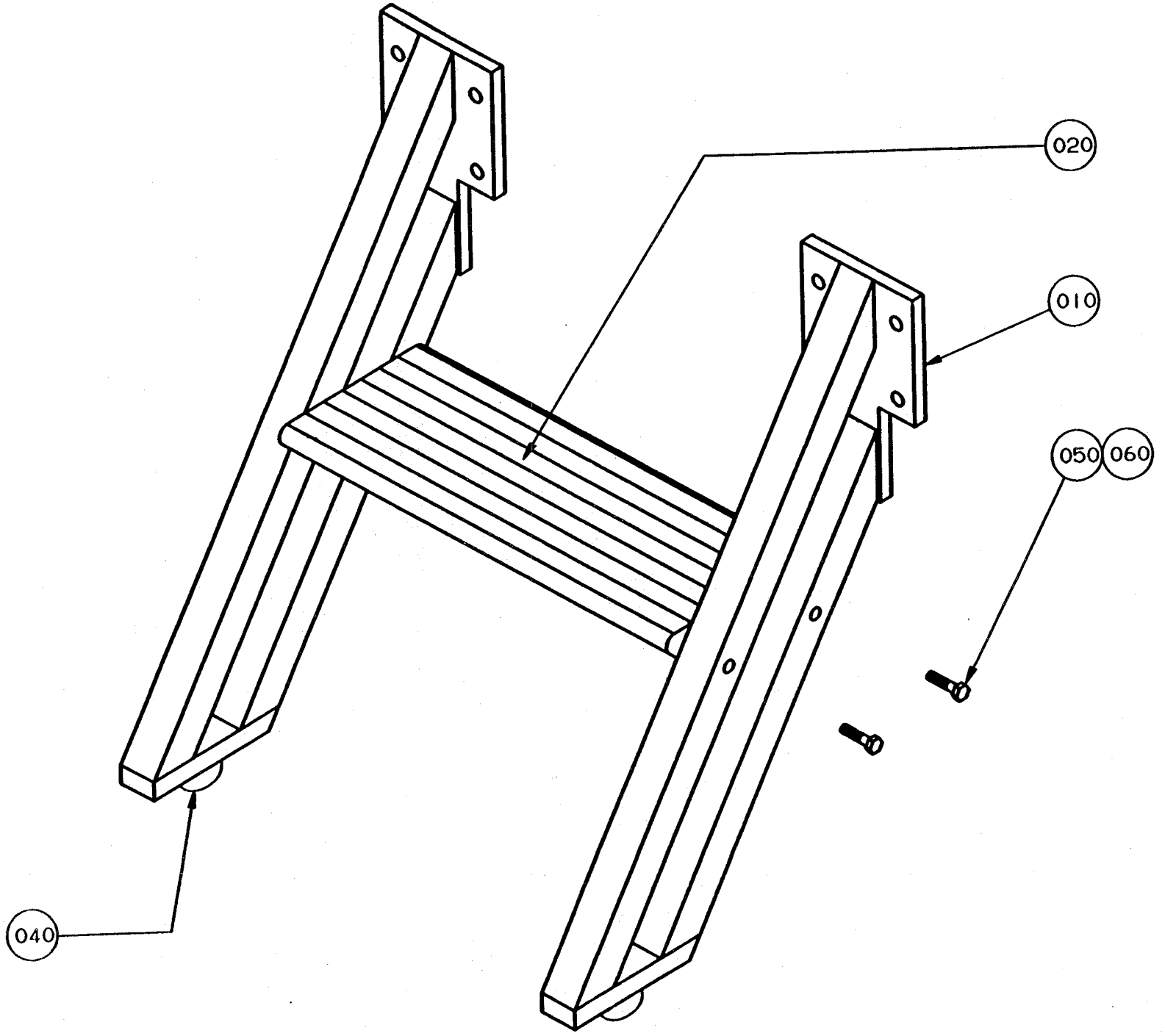
020
010
050
060
040

Last Alteration: AM 12423 89-02-13

Corresponding C-lists: 751923-010V
Assembly Drawing: 751923-1

Date Printed: 900223

From	Pos	Part No	SP	UN	Qty	Description
	010	751904	-		2	SIDE PIECE
	020	751921-0002	-		1	STEP
	040	90347-0004	-		2	VIBRATION DAMPER
	050	312105-0460	-		4	SCREW M6S8X45RFR
	060	315105-0165	-		4	WASHER BRB8,4X16RFR

From	Pos	Part No	SP	UN	Qty	Description

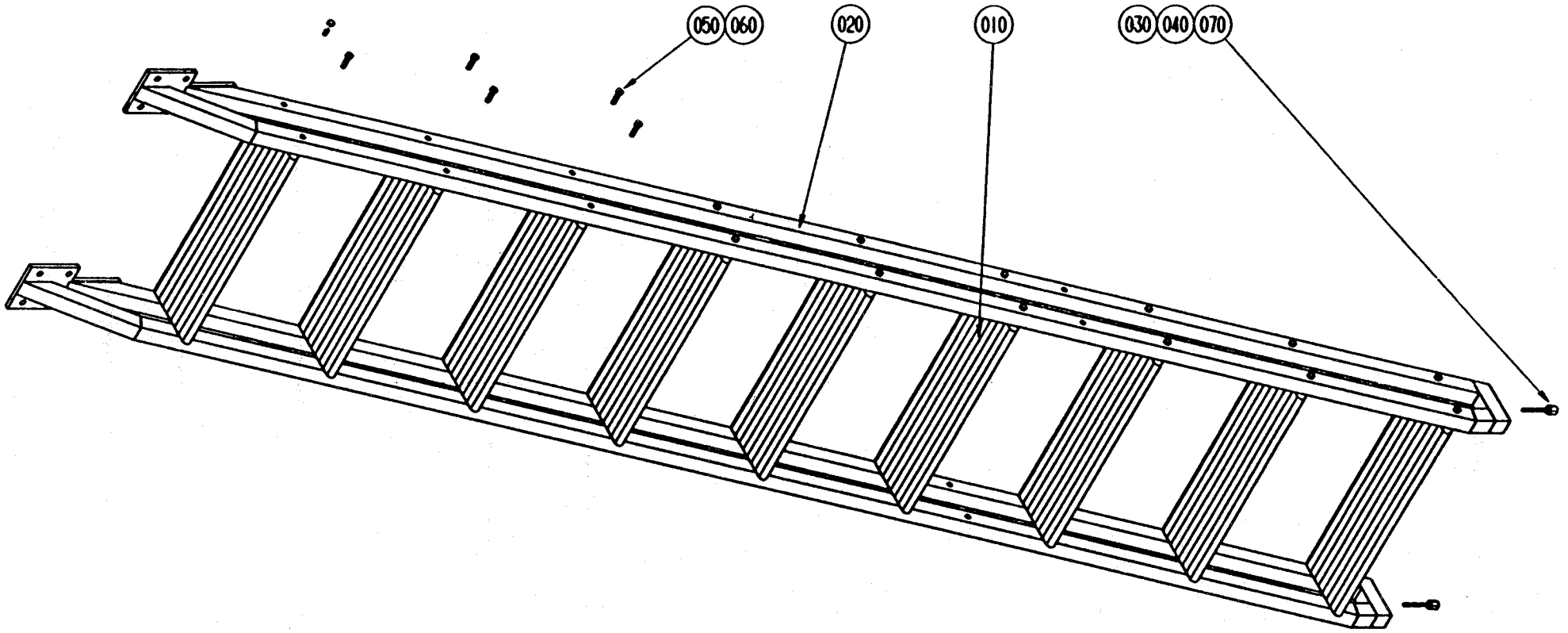
050
060
020
010
030
040
070

Last Alteration: AM 12423 89-02-13

Corresponding C-lists: 751924-010V
Assembly Drawing: 751924-1

Date Printed: 900223

From	Pos	Part No	SP	UN	Qty	Description
	010	751921-0001	-		9	STEP (350 MM)
	010	441679	-		9	STEP (450 MM)
	020	751905	-		2	SIDE PIECE
	030	441905	-		2	PIN
	040	90347-0004	-		2	VIBRATION DAMPER
	050	312105-0460	-		36	SCREW M6S8X45RFR
	060	315105-0165	-		36	WASHER BRB8,4X16RFR
	070	312601-0322	-		2	NUT M6M12FZB

From	Pos	Part No	SP	UN	Qty	Description

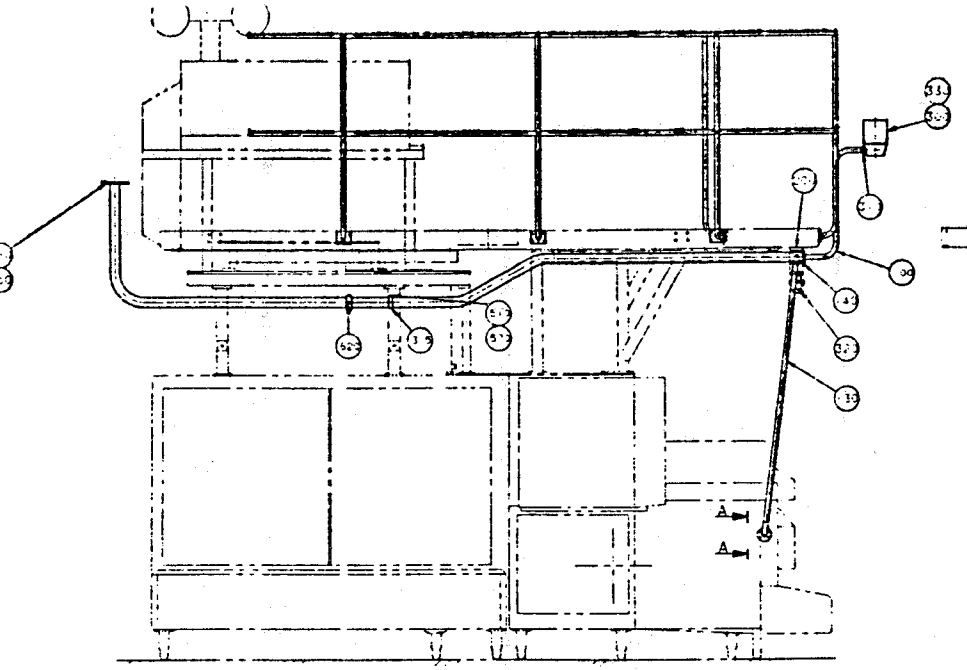

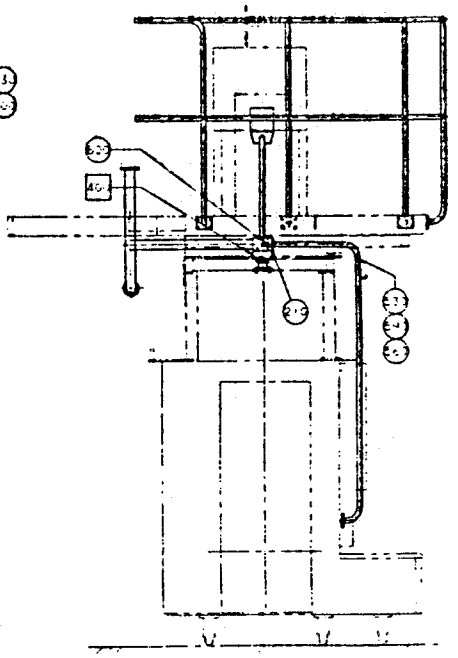

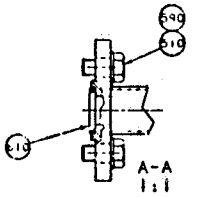

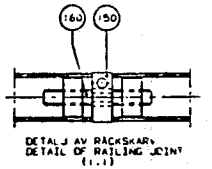

VARIANT 05 VISAS.
VARIANT 05 IS SHOWN.

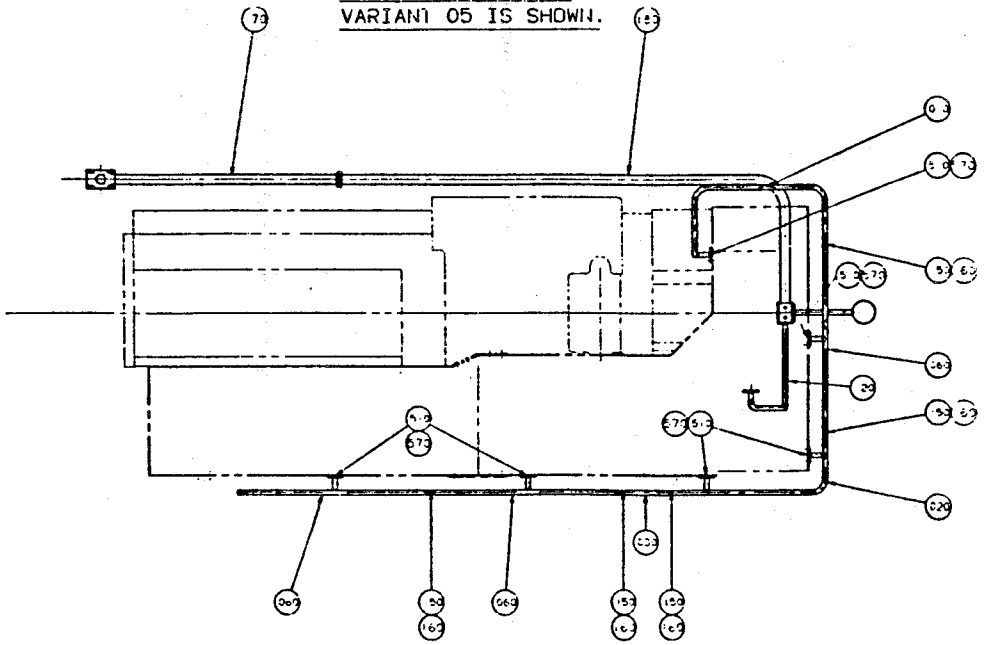

VARIANT 01 OCH 05.

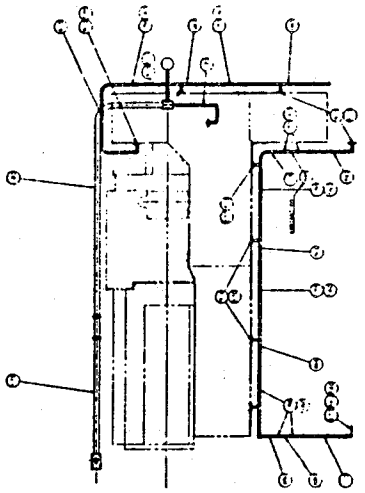

Last

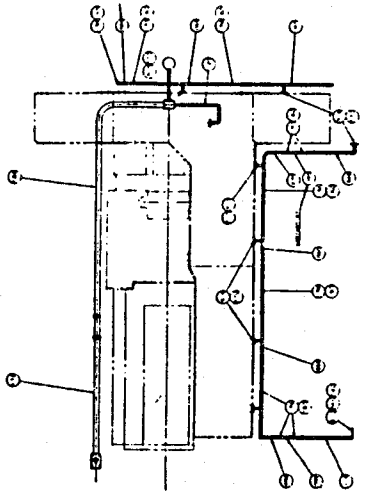

Intermediate

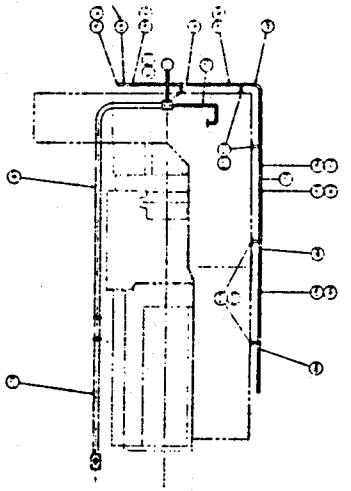

First

From	Pos	Part No	SP	UN	Qty	Description
	F400	==>212-1.1	-		1	BRACKET
Single Machine						
	010	751888	-		1	RAILING
	020	751889	-		1	RAILING
	030	751890	-		2	RAILING
	060	751948	-		3	RAILING
	150	751484	-		10	CLAMPING RING (c/c 2000 mm)
	150	751484	-		10	CLAMPING RING (c/c 2150 mm)
Installation: First Machine						
	020	751889	-		1	RAILING
	030	751890	-		2	RAILING
	060	751948	-		3	RAILING
	080	751927	-		2	RAILING (c/c 2150 mm)
	150	751484	-		10	CLAMPING RING (c/c 2000 mm)
	150	751484	-		12	CLAMPING RING (c/c 2150 mm)
Installation: Intermediate Machine						
	040	751893	-		1	RAILING
	050	751894	-		1	RAILING
	060	751948	-		4	RAILING
	070	751954	-		1	RAILING
	080	751927	-		6	RAILING (c/c 2150 mm)
	110	751895	-		1	RAILING
	150	751484	-		14	CLAMPING RING (c/c 2000 mm)
	150	751484	-		20	CLAMPING RING (c/c 2150 mm)
	540	312105-0453	-		2	SCREW M6S8X25RFR
Installation: Last Machine						
	010	751888	-		1	RAILING
	040	751893	-		1	RAILING
	050	751894	-		1	RAILING
	060	751948	-		4	RAILING
	070	751954	-		1	RAILING
	080	751927	-		4	RAILING (c/c 2150 mm)
	110	751895	-		1	RAILING
	150	751484	-		14	CLAMPING RING (c/c 2000 mm)
	150	751484	-		18	CLAMPING RING (c/c 2150 mm)
	540	312105-0453	-		2	SCREW M6S8X25RFR

From	Pos	Part No	SP	UN	Qty	Description
Common Parts						
	100	751896	-		1	HOLDER
	120	751056	-		1	STRUT END
	130	751055	-		1	STRUT
	140	751183	-		1	GASKET
	160	751485	-		X	SCREW
	170	751848	-		1	CABLE CONDUIT
	180	751827	-		1	CABLE CONDUIT
	200	469026	-		1	SPACER
	210	751182	-		1	GASKET
	300	90036-0038	-		1	BULB
	310	90099-0002	-		1	NUT
	315	90165-0043	-		1	HOLDER
	320	90224-0234	-		1	BRACKET
	330	90419-0005	-		1	ALARM LAMP
		90419-0302	S		1	* LENS
	510	312105-0449	-		X	SCREW M6S8X16RFR
	530	312115-0453	-		11	SCREW 8X25 A4 80
	550	312105-0370	-		4	SCREW M6S6X20RFR
	560	312605-0318	-		X	NUT M6M8RFR
	570	315115-0165	-		X	WASHER TBRB8,4X16RFR
	580	315115-0153	-		4	WASHER TBRB6,4X12RFR
	590	315105-0165	-		5	WASHER BRB8,4X16RFR
	600	352103-0108	-		1	CABLE GLANR.PR 20,4/6-12
	610	315202-0215	-		1	O-RING 19,2X3
	620	315250-0104	-		1	GASKET 61/51

VY/VIEW A.

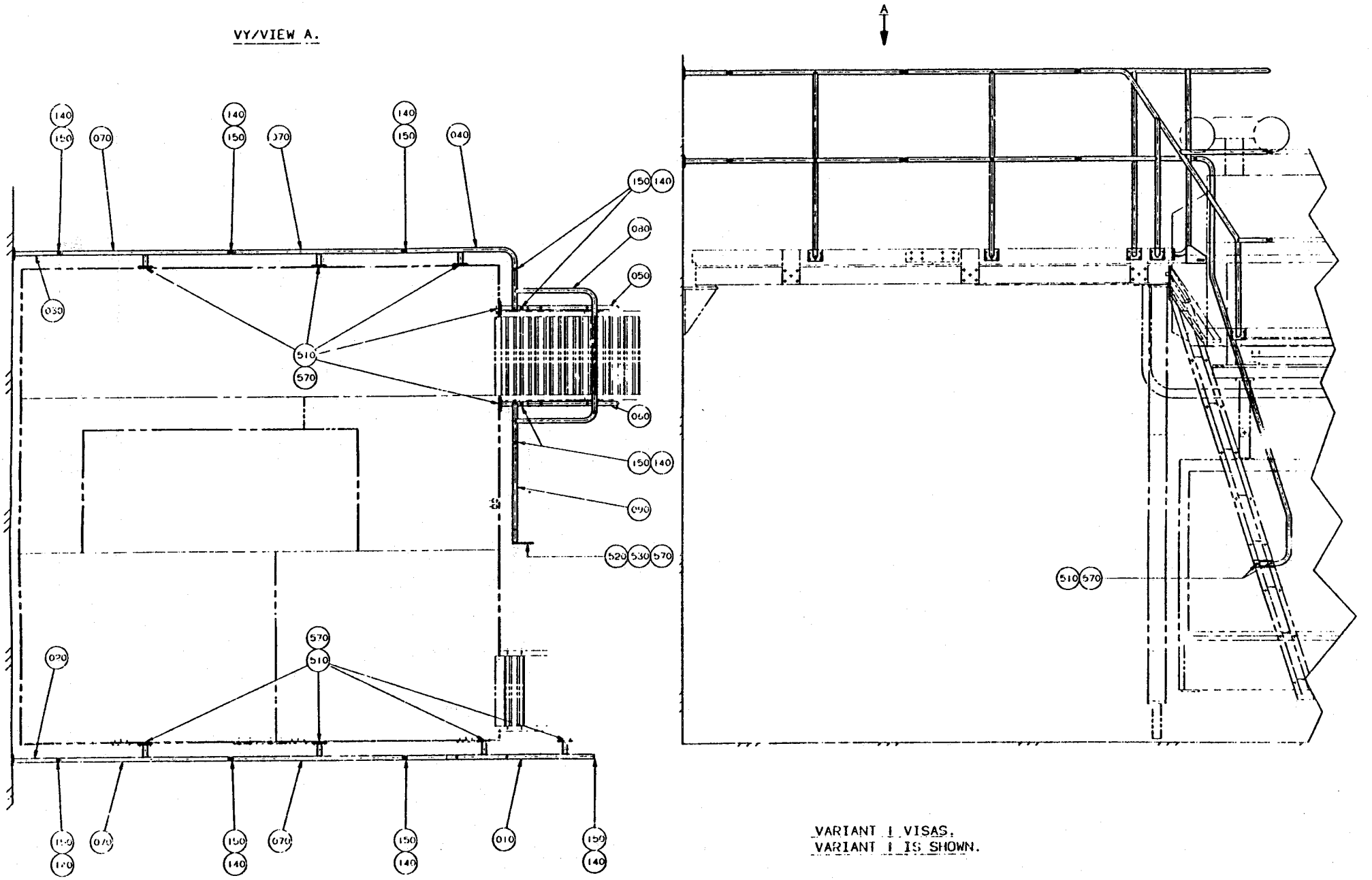

VARIANT 1 VISAS.
VARIANT 1 IS SHOWN.

Last Alteration: AM 11733 88-11-23

Corresponding C-lists: 751934-010V
Assembly Drawing: 751934-1

Date Printed: 900223

From	Pos	Part No	SP	UN	Qty	Description
Single Machine						
	010	751891	-		1	RAILING
	020	751892-0001	-		2	RAILING
	030	751892-0002	-		2	RAILING
	040	751897	-		1	RAILING (c/c 2000 mm)
	050	751898	-		1	RAIL RIGHT
	060	751899	-		1	RAIL LEFT
	070	751948	-		4	RAILING
	080	751952	-		1	RAILING (c/c 2000 mm)
	080	752307	-		1	RAILING (c/c 2150 mm)
	090	751895	-		1	RAILING (c/c 2000 mm)
	090	752306	-		1	RAILING (c/c 2150 mm)
	520	312105-0453	-		2	SCREW M6S8X25RFR
	530	312605-0318	-		2	NUT M6M8RFR
Installation: First Machine						
	010	751891	-		1	RAILING
	020	751892-0001	-		2	RAILING
	070	751948	-		2	RAILING
Installation: Intermediate Machine						
Installation: Last Machine						
	030	751892-0002	-		2	RAILING
	040	751897	-		1	RAILING (c/c 2000 mm)
	050	751898	-		1	RAIL RIGHT
	060	751899	-		1	RAIL LEFT
	070	751948	-		2	RAILING
	080	751952	-		1	RAILING (c/c 2000 mm)
	080	752307	-		1	RAILING (c/c 2150 mm)
	090	751895	-		1	RAILING (c/c 2000 mm)
	090	752306	-		1	RAILING (c/c 2150 mm)
	520	312105-0453	-		2	SCREW M6S8X25RFR
	530	312605-0318	-		2	NUT M6M8RFR
Common Parts						
	140	751485	-		X	SCREW
	150	751484	-		X	CLAMPING RING
	510	312105-0449	-		X	SCREW M6S8X16RFR
	570	315115-0165	-		X	WASHER TBRB8,4X16RFR

From	Pos	Part No	SP	UN	Qty	Description

SPC 648151/52
Tetra Brik TB/9
Tetra Brik Aseptic TBA/9

From	Pos	Page	Description
	F010	301-1	WORM GEAR
	F020	302-1	MOTOR
	F030	303-1a	ARM RIGHT
	F040	303-1b	ARM LEFT
	F050	304-1	SLEWING BRACKET RIGHT
	F060	305-1	SLEWING BRACKET LEFT
	F070	306-1	BELT TENSIONER
	F080	307-1	INTERMEDIARY SHAFT
	F090	308-1	CAM PACKAGE TPC
	F100	309-1	CAM PACKAGE IH
	F110	310-1	DOLLY
	F120	311-1	CRANK
	F130	312-1	DISCONNECTION LINK RIGHT
	F140	312-1	DISCONNECTION LINK LEFT

From	Pos	Page No	Description

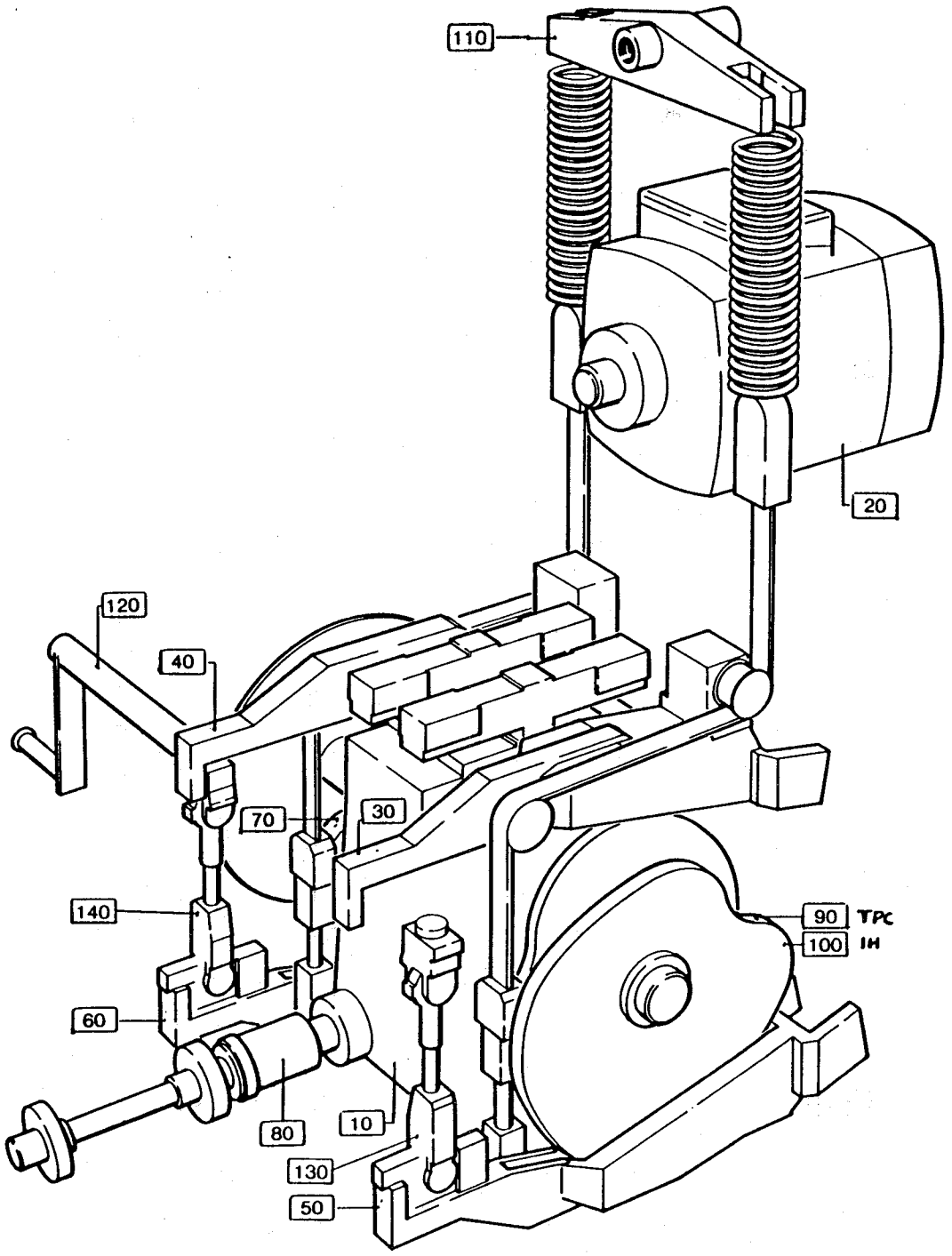
110
20
120
40
70
30
140
90
TPC
100
IH
60
80
10
130
50

From	Pos	Part No	SP	UN	Qty	Description
-070V	010	256174-0002	C		1	PULLEY (50Hz, 60Hz - 6000 pkg/h)
080V-	010	751742-0002	C		1	PULLEY (50Hz - TPC,IH/60Hz - IH)
-070V	010	256174-0003	C		1	PULLEY (60Hz - 5000 pkg/h)
080V-	010	751742-0003	C		1	PULLEY (60Hz - TPC)
	020	G- 441356	C		2	BRACKET
	030	751243	S		1	TOOTHED PULLY
	035	751245	S		2	FLANGE
	040	256176	S		1	GEAR WHEEL
	050	256177	S		1	SHAFT
	060	256178	S		1	RING FASTENER
	070	272372	S		1	HOUSE
	080	256179	-		2	SPACER SLEEVE
	090	256180	-		1	SPACER
	100	256181	-		1	SPACER PIPE
	110	257174	S		1	SEALING WASHER
	113	257179	-		1	GEAR WHEEL
	116	491409	-		1	WASHER
	120	271689	-		1	WASHER
	140	272374	S		1	CARRIER
	160	272376	-		1	PLUG
	170	272377-0001	-		1	CLIP
	180	272377-0002	-		1	CLIP
	190	272388	-		1	CLIP
	200	295140	S		2	PIN
	210	295766	S		1	SCREW
	220	295767	S		1	SEALING WASHER
	230	441024	S		1	SHIM
	240	441360	-		1	PLATE
	250	491410	S		1	SHIM
	260	456934	S		1	SEALING WASHER
	265	469999	-		1	FLANGE
	270	G- 491274	-		1	HUB
	290	90016-0010	S		2	DISC SPRING
	292	469867	-		1	HOSE HOLDER
	300	90056-0072	S		1	WORM GEAR
	310	90074-0026	-		1	CLIP
	312	90134-0058	-		2	BANJO CONNECTION
	315	90142-0005	-	MM	1500	HOSE
	316	90144-0004	-	MM	X	TAPE
	317	90157-0016	-	ML	X	LOCKING FLUID
	320	90166-0060	S	MM	530	HOSE
	325	90166-0133	-	MM	500	HOSE
	327	90214-0312	S		1	SEAL RING
	330	90287-0081	-		11	SCREW
	331	90287-0149	-		6	SCREW
	334	90296-0068	-	G	X	GREASE
	336	90296-0075	-	L	4	OIL
-070V	340	90355-0038	S		1	SHAFT COUPLING
		90214-0113	S		1	* BALL BEARING
080V-	340	90355-0088	S		1	SHAFT COUPLING
	350	90361-0011	S		1	BUSHING
	360	90417-0076	S		1	TIMING BELT
	370	90432-0008	S		1	BRAKE
	500	312101-0329	-		2	SCREW M6S5X16FZB
	510	312101-0366	-		3	SCREW M6S6X12FZB
	520	312101-0368	-		6	SCREW M6S6X16FZB
	525	312101-0370	-		1	SCREW M6S6X20FZB
	527	312101-0376	-		1	SCREW M6S6X35FZB
	530	312101-0488	-		1	SCREW M6S10X14FZB
	540	312101-0504	-		8	SCREW M6S10X65FZB
	550	312101-0550	-		6	SCREW M6S12X90FZB
	570	312111-0380	-		3	SCREW MC6S6X50FZB
	580	312121-0323	-		5	SLOTTED HEMCS5X8FZB
	590	312155-0447	-		1	SCREW MF6S8X12RFR
	600	315101-0153	-		6	WASHER BRB6,4X12FZB
	610	315111-0173	-		9	WASHER TBRB10,5X22FZB
	620	315111-0178	-		4	WASHER TBRB13X24FZB
	640	315121-0153	-		2	WASHER TBRSB6,4X22FZB
	650	315121-0178	-		2	WASHER TBRSB13X36FZB
	660	315221-0169	S		2	SEAL RING CB30X47X7
	670	315701-0239	S		1	FLAT WEDGE6X6X40
	675	315701-0268	-		1	FLAT WEDGE8X7X32
-070V	680	318108-0111	P		2	V-BELT SPZ 1137
080V-	680	90071-0027	P		1	V-BELT 2/3V X 450
	690	321308-0207	S		2	BALL BEARISKF6007-2RS
	700	321313-0105	S		2	BALL BEARISKF6205-2RS
	710	321600-0114	S		2	OIL SEAL LL3052
	712	342701-0208	-		1	BUSHING RNI3/4"-1/4"
	714	342930-0122	-		1	ELBOW COUP8/6-1/4
	716	342980-0122	-		1	BANJO CONNSINGEL 8/6-1/4
	718	342980-0304	-		1	BANJO CONN SINGEL 1/4
	720	342991-0104	-		2	HOSE CLIP 19-28MMRFR

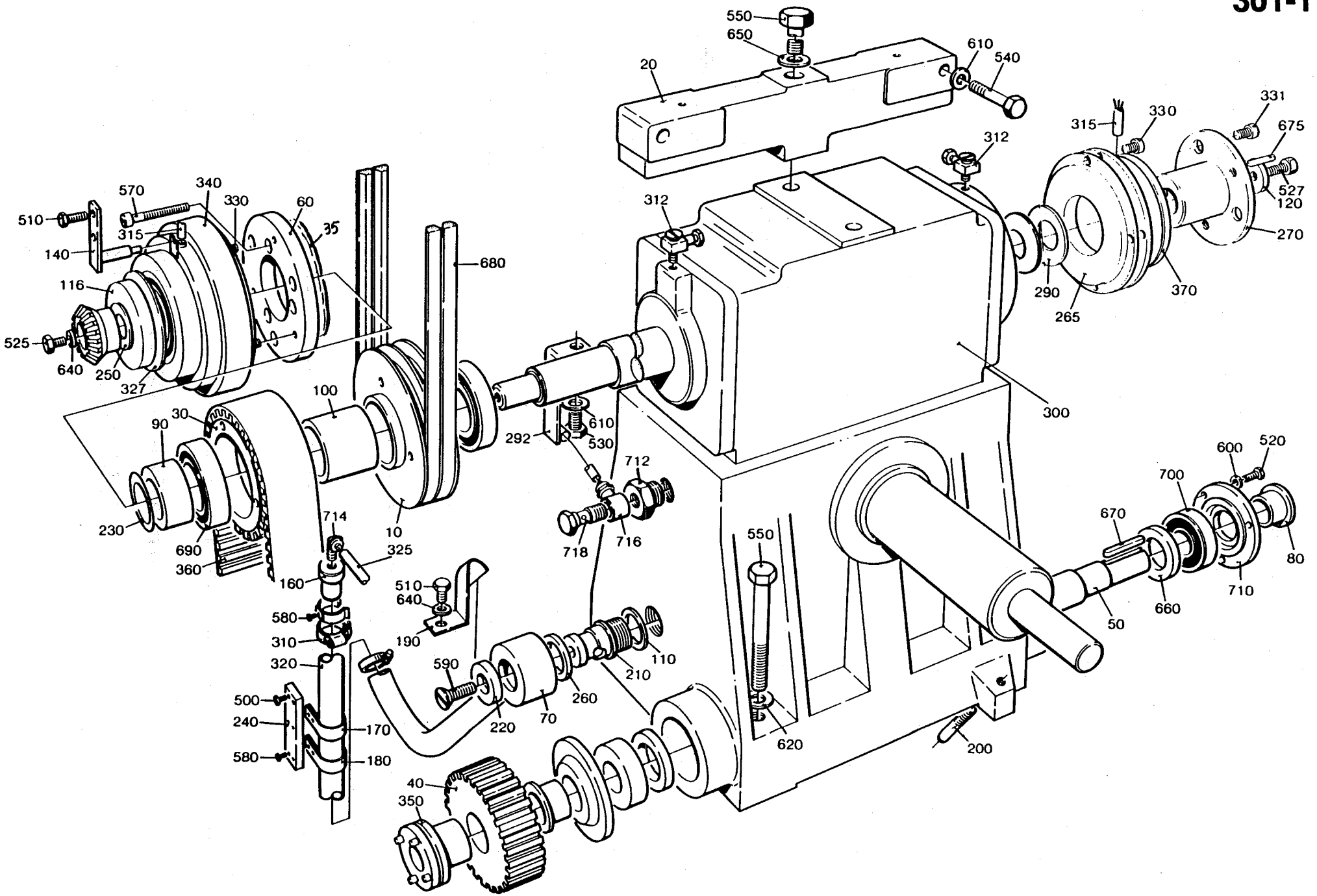
550
650
610
540
20
331
315
330
675
312
527
120
270
312
570
340
330
60
35
510
315
140
680
116
525
640
250
327
100
290
265
370
300
90
30
292
610
530
712
600
520
700
230
690
360
714
325
10
718
716
670
80
710
660
50
550
510
640
190
580
310
320
590
110
210
260
70
220
500
240
580
170
180
620
200
40
350

From	Pos	Part No	SP	UN	Qty	Description
Machines with Pull Tab						
-070V	010	456589-0002	S		1	V-BELT PULLEY (50 Hz)
-070V	010	456589-0001	S		1	V-BELT PULLEY (60 Hz)
Machines without Pull Tab						
-070V	010	456589-0004	S		1	V-BELT PULLEY (50 Hz)
-070V	010	456589-0003	S		1	V-BELT PULLEY (60 Hz)
TPC						
080V-	010	751741-0002	S		1	V-BELT PULLEY (50 Hz)
080V-	010	751741-0001	S		1	V-BELT PULLEY (60 Hz)
IH						
080V-	010	751741-0004	S		1	V-BELT PULLEY (50 Hz)
080V-	010	751741-0003	S		1	V-BELT PULLEY (60 Hz)
Common Parts						
	020	G- 272431	C		1	BRACKET
	030	441387	-		1	MOTOR CRADLE
	040	272434	S		1	SHAFT
	060	90002-0012	-		1	BLANK-OFF PLUG
	070	90045-0096	-		1	MOTOR
	100	312101-0457	-		4	SCREW M6S8X35FZB
	110	312101-0499	-		4	SCREW M6S10X40FZB
	120	312104-0505	-		1	SCREW M6S10X70H8.8FZB
	130	312311-0366	-		2	GRUB SCREW T6SS6X12FZB
	150	312601-0320	-		1	NUT M6M10FZB
	170	315111-0165	-		4	WASHER TBRB8,4X16FZB
	180	315111-0173	-		4	WASHER TBRB10,5X22FZB
	200	352103-0116	-		1	CABLE GLANR.28,3/13-18

From	Pos	Part No	SP	UN	Qty	Description

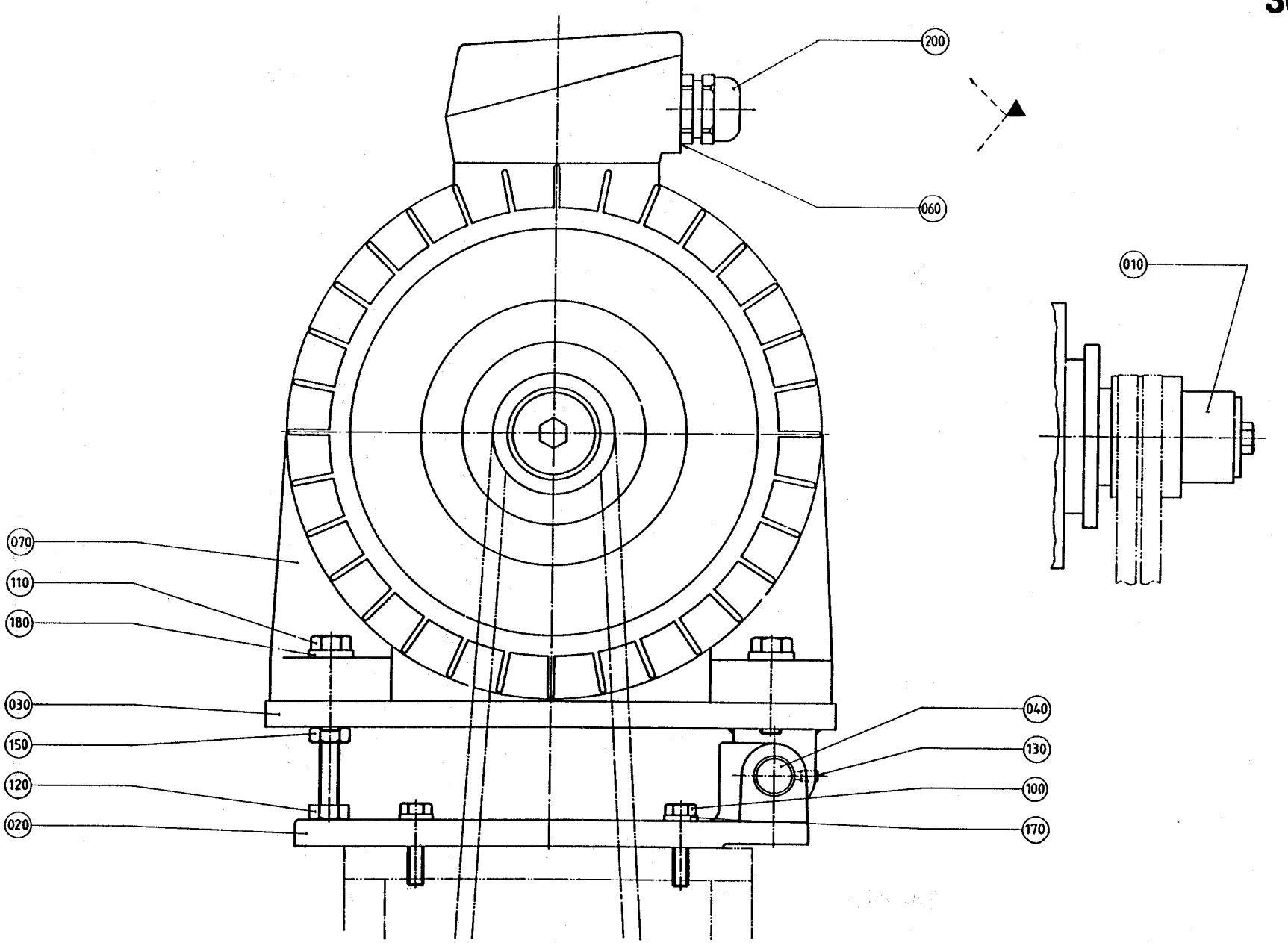
200
060
010
070
110
180
030
150
120
020
040
130
100
170

From	Pos	Part No	SP	UN	Qty	Description
	030	272459	S		1	WASHER
	080	G- 751212	C		1	ARM
	085	G- 272442	C		1	BRACKET
	090	256415	C		1	BEARING HOLDER
	100	272455	-		1	BEARING BRACKET
	110	G- 272456	S		1	LINK
	120	G- 272457	S		2	CLAMP
	130	295770	S		1	AXLE PIN
	140	256421	S		1	PULLEY
	150	256422	S		2	WASHER
	160	256426-0001	S		1	WASHER
	170	256426-0002	S		2	WASHER
	180	256427	S		1	SHAFT
	190	490916	S		2	AXLE PIN
	200	256472	S		1	WASHER
	210	257306	S		1	ROLLER
	220	257308	S		1	SCREW
	230	257309	S		1	SHAFT
	240	257310	S		1	NUT
	250	257311	S		4	CLAMP
	280	272116	S		1	CLAMP
	290	272458	S		1	ECCENTRIC SHAFT
	300	272461	S		1	WASHER
	310	441745	-		1	INDICATOR
	400	90028-0021	P		1	CONE
	410	90028-0020	P		5	CONE
	420	90032-0040	-		1	BLOCK
	430	90035-0005	-		1	COVER
	440	321531-0248	-		4	NEEDLE SLEHK2016
	450	90087-0019	-		1	PLUG
	458	90092-0052	S		4	VALVE
	460	90092-0053	S		1	VALVE
	480	90134-0031	-		1	SLEEVE
	500	90134-0038	-		1	BUSHING
	510	90134-0039	-		6	BUSHING
	520	90134-0052	-		1	PLUG
	530	90134-0058	-		7	BANJO CONNECTION
	540	90266-0019	-	MM	550	PIPE
	550	90165-0002	-		3	CLIP
	560	90165-0022	-		2	CLIP
	570	90166-0143	-	MM	1100	HOSE
	580	90240-0048	S		2	BEARING
	590	90240-0050	S		2	BEARING
	670	311101-0267	-		1	CYLINDRICACP4H6X10
	680	311303-0234	S		1	SLOTTED PIRPB3X12FZB
	700	312101-0297	-		2	SCREW M6S4X25FZB
	710	312101-0362	-		3	SCREW M6S6X8FZB
	720	312101-0364	-		2	SCREW M6S6X10FZB
	725	312101-0368	-		1	SCREW M6S6X16FZB
	730	312101-0453	-		4	SCREW M6S8X25FZB
	740	312101-0497	-		1	SCREW M6S10X35FZB
	750	312101-0504	-		1	SCREW M6S10X65FZB
	760	312101-0507	-		2	SCREW M6S10X80FZB
	770	312111-0376	-		4	SCREW MC6S6X35FZB
	780	312111-0378	-		2	SCREW MC6S6X40FZB
	790	312121-0287	-		5	SLOTTED HEMCS4X8FZB
	800	312151-0287	-		12	SCREW MF6S4X8FZB
	810	312151-0364	-		8	SCREW MF6S6X10FZB
	820	312601-0318	-		2	NUT M6M8FZB
	830	312811-0322	S		2	LOCK NUT M12RFR
	840	312811-0324	S		2	LOCK NUT M16RFR
	850	312811-0326	S		1	LOCK NUT M20RFR
	870	315101-0136	-		2	WASHER BRB4,3X8FZB
	880	315101-0153	-		4	WASHER BRB6,4X12FZB
	890	315101-0165	-		4	WASHER BRB8,4X16FZB
	900	315101-0173	-		2	WASHER BRB10,5X22FZB
	910	315101-0186	-		2	WASHER BRB17X30FZB
	920	315111-0173	-		2	WASHER TBRB10,5X22FZB
	930	315701-0335	-		1	FLAT WEDGE12X8X56
	940	321129-0137	S		4	WASHER 22/38X1,5
	950	321576-0260	S		1	SUPPORT RONUTR20

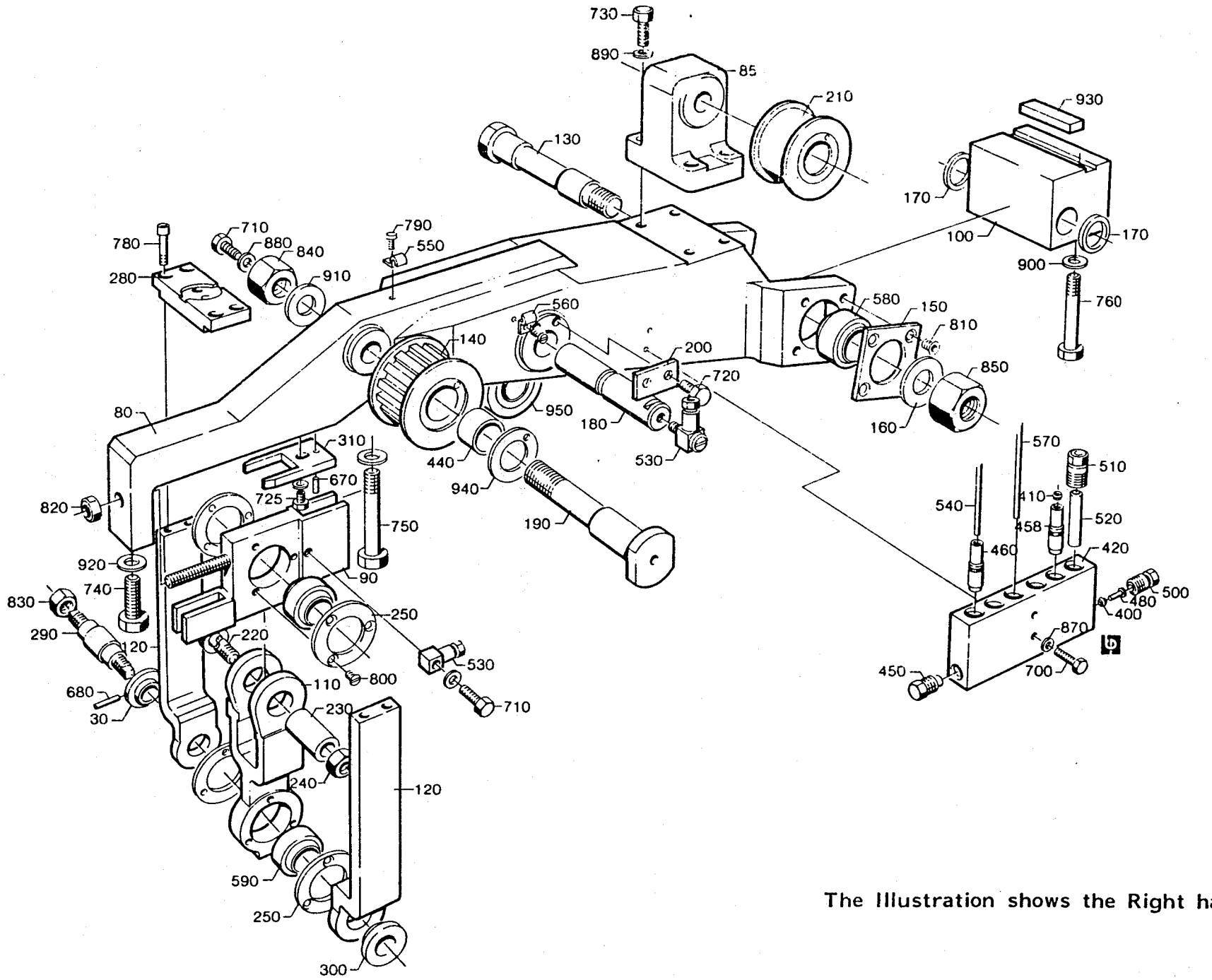

The Illustration shows the Right hand version.

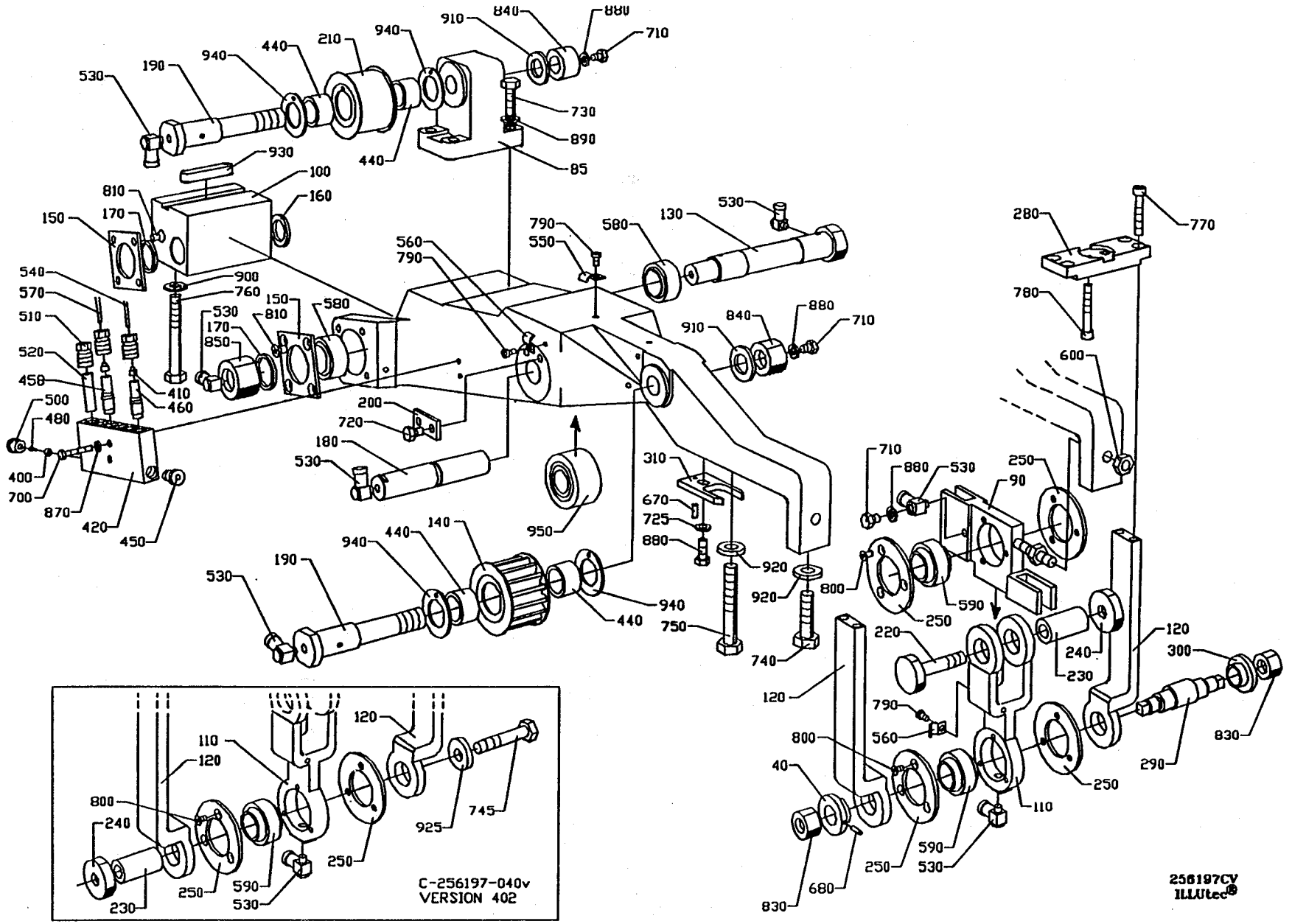
530
190
940
440
210
940
910
840
880
710
730
890
85
440
930
100
160
810
170
150
540
570
510
520
450
500
480
400
700
870
420
450
410
460
900
760
150
580
530
810
170
850
560
790
790
550
580
130
530
910
840
880
710
200
720
180
530
950
310
670
725
880
920
920
750
740
940
440
140
940
190
530
440
280
770
780
600
710
880
530
250
90
800
250
590
220
120
240
230
300
830
290
790
560
800
40
680
830
250
590
530
110
250
C-256197-040v
VERSION 402
256197CV
ILLUtec®

From	Pos	Part No	SP	UN	Qty	Description
-070V	040	272460	S		1	WASHER
	080	G- 751212	C		1	ARM
	085	G- 272442	C		1	BRACKET
	090	256415	C		1	BEARING HOLDER
	100	272455	-		1	BEARING BRACKET
	110	G- 272456	S		1	LINK
	120	G- 272457	S		2	CLAMP
	130	295770	S		1	AXLE PIN
	140	256421	S		1	PULLEY
	150	256422	S		2	WASHER
	160	256426-0001	S		1	WASHER
	170	256426-0002	S		2	WASHER
	180	256427	S		1	SHAFT
	190	490916	S		2	AXLE PIN
	200	256472	S		1	WASHER
	210	257306	S		1	ROLLER
	220	257308	S		1	SCREW
-070V	230	257309	S		1	SHAFT
080V-	230	257309	S		2	SHAFT
-070V	240	257310	S		1	NUT
080V-	240	257310	S		2	NUT
	250	257311	S		4	CLAMP
	280	272116	S		1	CLAMP
-070V	290	272458	S		1	ECCENTRIC SHAFT
-070V	300	272461	S		1	WASHER
	310	441745	-		1	INDICATOR
	400	90028-0021	P		1	CONE
	410	90028-0020	P		5	CONE
	420	90032-0040	-		1	BLOCK
	430	90035-0005	-		1	COVER
	440	321531-0248	-		4	NEEDLE SLEHK2016
	450	90087-0019	-		1	PLUG
	458	90092-0052	S		4	VALVE
	460	90092-0053	S		1	VALVE
	480	90134-0031	-		1	SLEEVE
	500	90134-0038	-		1	BUSHING
	510	90134-0039	-		6	BUSHING
	520	90134-0052	-		1	PLUG
	530	90134-0058	-		7	BANJO CONNECTION
	540	90266-0019	-	MM	550	PIPE
	550	90165-0002	-		3	CLIP
	560	90165-0022	-		2	CLIP

From	Pos	Part No	SP	UN	Qty	Description
	570	90166-0143	-	MM	1100	HOSE
	580	90240-0048	S		2	BEARING
	590	90240-0050	S		2	BEARING
	670	311101-0267	-		1	CYLINDRICACP4H6X10
-070V	680	311303-0234	S		1	SLOTTED PIRPB3X12FZB
	700	312101-0297	-		2	SCREW M6S4X25FZB
	710	312101-0362	-		3	SCREW M6S6X8FZB
	720	312101-0364	-		2	SCREW M6S6X10FZB
	725	312101-0368	-		1	SCREW M6S6X16FZB
	730	312101-0453	-		4	SCREW M6S8X25FZB
	740	312101-0497	-		1	SCREW M6S10X35FZB
080V-	745	312101-0502	-		1	SCREW M6S10X55FZB
	750	312101-0504	-		1	SCREW M6S10X65FZB
	760	312101-0507	-		2	SCREW M6S10X80FZB
	770	312111-0376	-		4	SCREW MC6S6X35FZB
	780	312111-0378	-		2	SCREW MC6S6X40FZB
	790	312121-0287	-		5	SLOTTED HEMCS4X8FZB
	800	312151-0287	-		12	SCREW MF6S4X8FZB
	810	312151-0364	-		8	SCREW MF6S6X10FZB
	820	312601-0318	-		2	NUT M6M8FZB
-070V	830	312811-0322	S		2	LOCK NUT M12RFR
	840	312811-0324	S		2	LOCK NUT M16RFR
	850	312811-0326	S		1	LOCK NUT M20RFR
	870	315101-0136	-		2	WASHER BRB4,3X8FZB
	880	315101-0153	-		4	WASHER BRB6,4X12FZB
	890	315101-0165	-		4	WASHER BRB8,4X16FZB
	900	315101-0173	-		2	WASHER BRB10,5X22FZB
	910	315101-0186	-		2	WASHER BRB17X30FZB
	920	315111-0173	-		2	WASHER TBRB10,5X22FZB
080V-	925	315121-0173	-		1	WASHER TBRSB10,5X28FZB
	930	315701-0335	-		1	FLAT WEDGE12X8X56
	940	321129-0137	S		4	WASHER 22/38X1,5
	950	321576-0260	S		1	SUPPORT RONUTR20

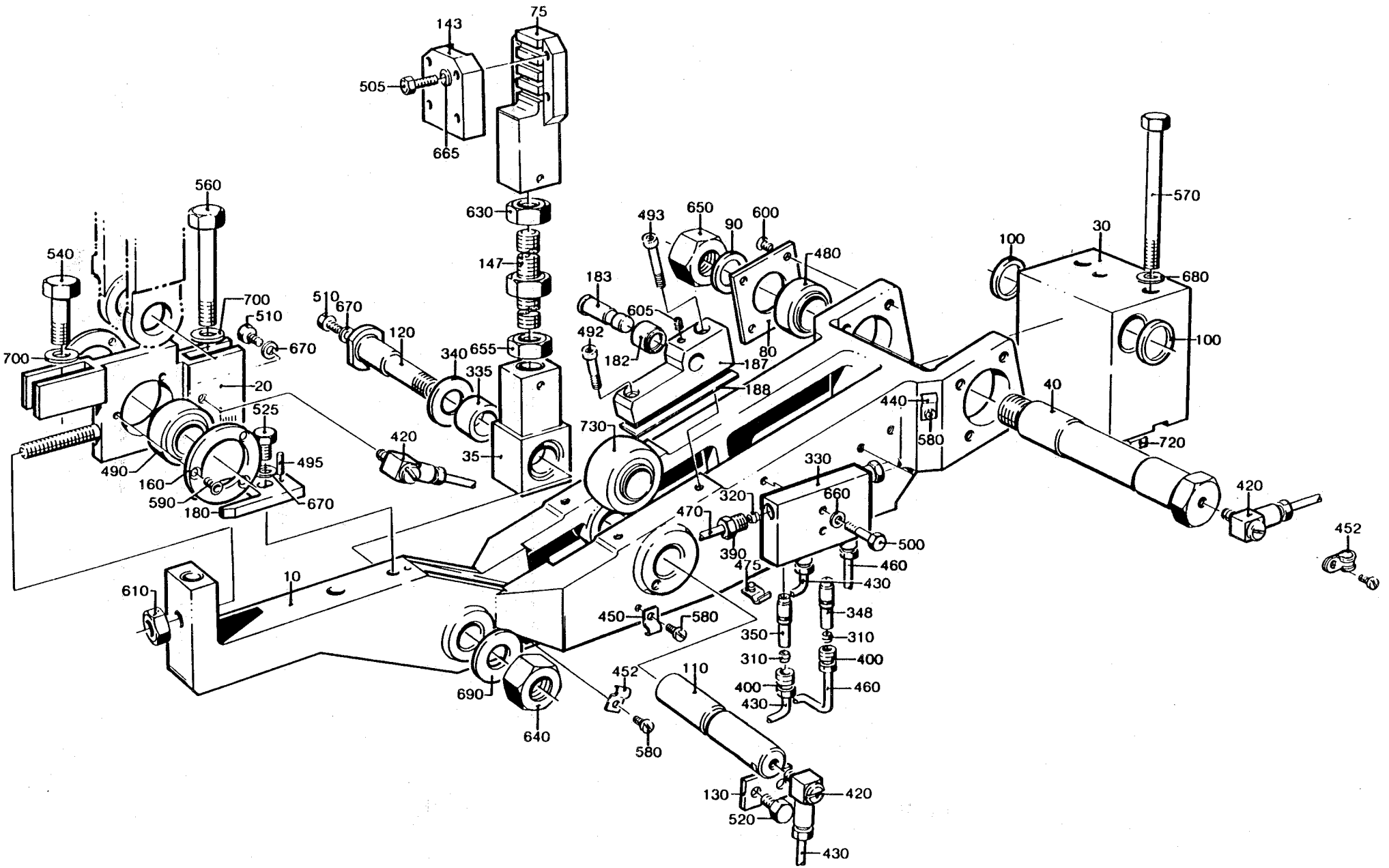
143
75
505
665
560
630
540
147
700
510
670
120
340
655
335
20
525
490
160
590
180
495
420
35
730
493
650
90
600
480
183
605
492
182
187
188
80
100
30
570
680
100
40
440
580
720
330
320
660
470
390
500
460
430
475
348
350
310
400
460
430
452
580
450
580
610
10
690
640
452
580
110
130
420
520
430

From	Pos	Part No	SP	UN Qty	Description
	010	G- 751212	C	1	ARM
	020	256415	C	1	BEARING HOLDER
	030	256418	C	1	BEARING BRACKET
	035	256515	S	1	END PIECE
	040	272462	S	1	AXLE PIN
	075	272607	C	1	BELT HOLDER
	080	256422	S	2	WASHER
	090	256426-0001	S	1	WASHER
	100	256426-0002	S	2	WASHER
	110	256427	C	1	SHAFT
	120	490916	S	1	AXLE PIN
	130	256472	S	1	WASHER
	143	256516	C	1	CLAMP
	147	256517	C	1	SCREW
	160	257311	S	2	CLAMP
	180	441745	-	1	INDICATOR
	182	491165	S	1	ROLLER
	183	491166	S	1	SHAFT
	187	751078	S	1	BRACKET RIGHT
	188	491319	S	2	SHIM
	310	90028-0020	P	4	CONE
	320	90028-0021	P	2	CONE
	330	90032-0039	-	1	BLOCK
	335	321531-0248	S	2	NEEDLE SLEHK2016
	340	90083-0016	S	2	PLATE
	348	90092-0052	S	3	VALVE
	350	90092-0053	S	1	VALVE
	390	90134-0038	S	2	BUSHING
	400	90134-0039	S	4	BUSHING
	420	90134-0058	-	5	BANJO CONNECTION
	430	90266-0019	-	MM 350	PIPE
	440	90165-0002	-	2	CLIP
	450	90165-0022	-	1	CLIP
	452	90165-0065	-	3	CLIP
	460	90166-0143	-	MM1100	HOSE
	470	90166-0109	P	MM 700	HOSE
	475	90182-0005	-	2	STRAP
	480	90240-0048	S	2	BEARING
	490	90240-0050	S	1	BEARING
	492	90287-0143	-	1	SCREW
	493	90287-0144	-	1	SCREW
	495	311101-0267	-	1	CYLINDRICACP4H6X10
	500	312101-0297	-	2	SCREW M6S4X25FZB
	505	312101-0333	-	4	SCREW M6S5X25FZB
	510	312101-0362	-	2	SCREW M6S6X8FZB
	520	312101-0364	-	2	SCREW M6S6X10FZB
	525	312101-0368	-	1	SCREW M6S6X16FZB
	540	312101-0497	-	1	SCREW M6S10X35FZB
	560	312101-0504	-	1	SCREW M6S10X65FZB
	570	312101-0515	-	2	SCREW M6S10X120FZB
	580	312121-0287	S	4	SLOTTED HEMCS4X8FZB
	590	312151-0287	-	6	SCREW MF6S4X8FZB
	600	312151-0364	-	8	SCREW MF6S6X10FZB
	605	312311-0321	-	1	GRUB SCREW T6SS5X6FZB
	610	312601-0318	-	2	NUT M6M8FZB
	630	312601-0324	-	1	NUT M6M16FZB
	640	312811-0324	S	1	LOCK NUT M16RFR
	650	312811-0326	S	1	LOCK NUT M20RFR
	655	312901-0324	-	1	NUT M6M16VFZB
	660	315101-0136	-	2	WASHER BRB4,3X8FZB
	665	315101-0146	-	4	WASHER BRB5,3X10FZB
	670	315101-0153	-	3	WASHER BRB6,4X12FZB
	680	315101-0173	-	2	WASHER BRB10,5X22FZB
	690	315101-0186	-	1	WASHER BRB17X30FZB
	700	315111-0173	-	2	WASHER TBRB10,5X22FZB
	720	315701-0335	-	1	FLAT WEDGE12X8X56
	730	321576-0260	S	1	SUPPORT RONUTR20

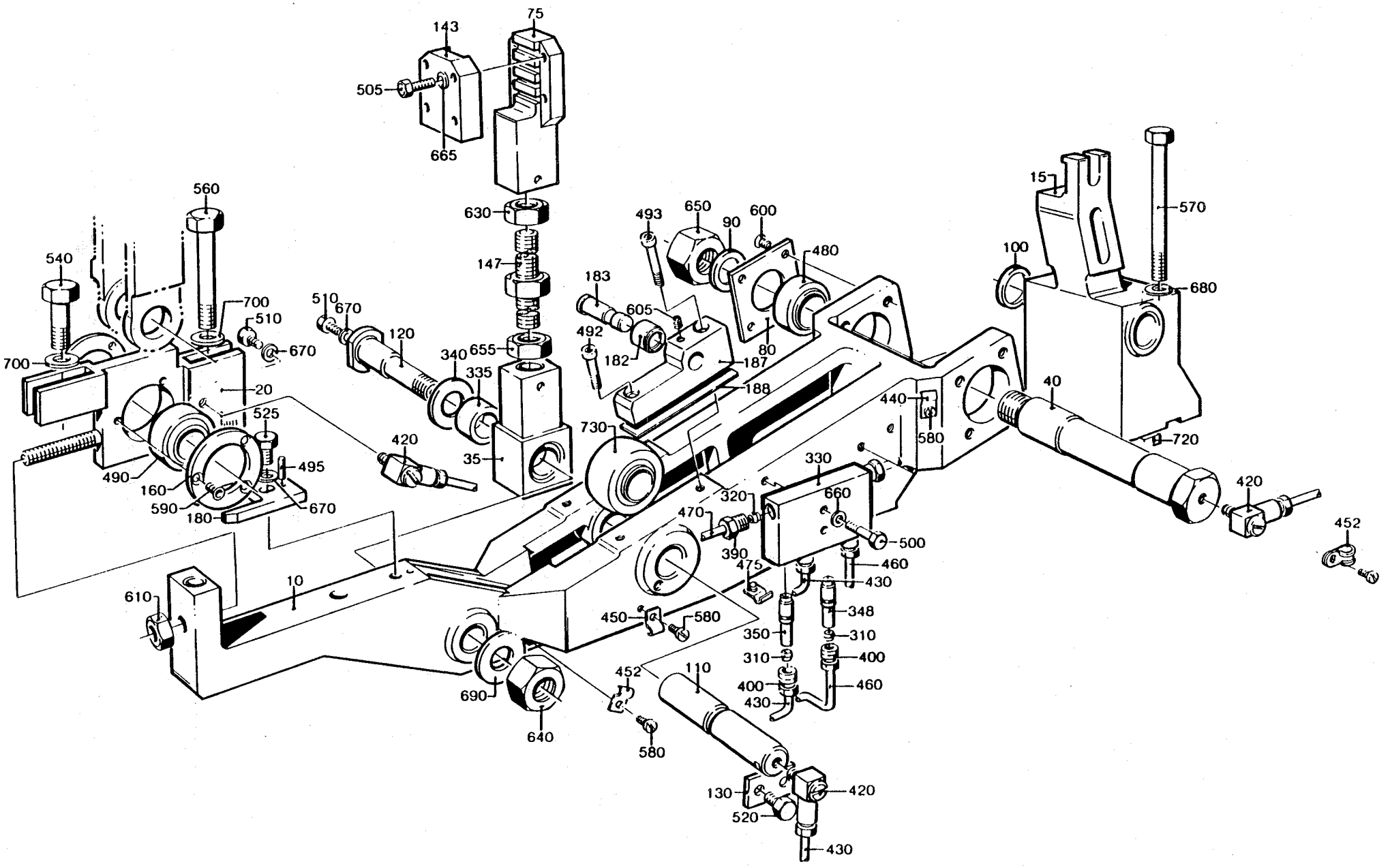
143
75
505
665
630
147
560
540
700
510
670
20
525
490
160
590
180
495
670
510
670
120
340
655
335
35
420
730
493
650
90
600
480
183
605
492
182
187
188
80
15
570
100
680
40
440
580
720
420
452
330
660
320
470
390
500
460
430
475
348
350
310
310
400
400
460
430
10
610
450
580
690
640
452
580
110
130
520
420
430

From	Pos	Part No	SP	UN	Qty	Description
	010	G- 751212	C		1	ARM
	015	G- 751213	C		1	BEARING BRACKET
	020	256415	C		1	BEARING HOLDER
	035	256515	S		1	END PIECE
	040	272462	S		1	AXLE PIN
	075	272607	C		1	BELT HOLDER
	080	256422	S		2	WASHER
	090	256426-0001	S		1	WASHER
	100	256426-0002	S		2	WASHER
	110	256427	C		1	SHAFT
	120	490916	S		1	AXLE PIN
	130	256472	S		1	WASHER
	143	256516	C		1	CLAMP
	147	256517	C		1	SCREW
	160	257311	S		2	CLAMP
	180	441745	-		1	INDICATOR
	182	491165	S		1	ROLLER
	183	491166	S		1	SHAFT
	187	751079	S		1	BRACKET LEFT
	188	491319	S		2	SHIM
	310	90028-0020	P		4	CONE
	320	90028-0021	P		2	CONE
	330	90032-0039	-		1	BLOCK
	335	321531-0248	S		2	NEEDLE SLEHK2016
	340	90083-0016	S		2	PLATE
	348	90092-0052	S		3	VALVE
	350	90092-0053	S		1	VALVE
	390	90134-0038	S		2	BUSHING
	400	90134-0039	S		4	BUSHING
	420	90134-0058	-		5	BANJO CONNECTION
	430	90266-0019	-	MM	350	PIPE
	440	90165-0002	-		2	CLIP
	450	90165-0022	-		1	CLIP
	452	90165-0065	-		4	CLIP
	460	90166-0143	-	MM	1100	HOSE
	470	90166-0109	P	MM	700	HOSE
	475	90182-0005	-		2	STRAP
	480	90240-0048	S		2	BEARING
	490	90240-0050	S		1	BEARING
	492	90287-0143	-		1	SCREW
	493	90287-0144	-		1	SCREW
	495	311101-0267	-		1	CYLINDRICACP4H6X10
	500	312101-0297	-		2	SCREW M6S4X25FZB
	505	312101-0333	-		4	SCREW M6S5X25FZB
	510	312101-0362	-		2	SCREW M6S6X8FZB
	520	312101-0364	-		2	SCREW M6S6X10FZB
	525	312101-0368	-		1	SCREW M6S6X16FZB
	540	312101-0497	-		1	SCREW M6S10X35FZB
	560	312101-0504	-		1	SCREW M6S10X65FZB
	570	312101-0515	-		2	SCREW M6S10X120FZB
	580	312121-0287	S		6	SLOTTED HEMCS4X8FZB
	590	312151-0287	-		6	SCREW MF6S4X8FZB
	600	312151-0364	-		8	SCREW MF6S6X10FZB
	605	312311-0321	-		1	GRUB SCREW T6SS5X6FZB
	610	312601-0318	-		2	NUT M6M8FZB
	630	312601-0324	-		1	NUT M6M16FZB
	640	312811-0324	S		1	LOCK NUT M16RFR
	650	312811-0326	S		1	LOCK NUT M20RFR
	655	312901-0324	-		1	NUT M6M16VFZB
	660	315101-0136	-		2	WASHER BRB4,3X8FZB
	665	315101-0146	-		4	WASHER BRB5,3X10FZB
	670	315101-0153	-		3	WASHER BRB6,4X12FZB
	680	315101-0173	-		2	WASHER BRB10,5X22FZB
	690	315101-0186	-		1	WASHER BRB17X30FZB
	700	315111-0173	-		2	WASHER TBRB10,5X22FZB
	720	315701-0335	-		1	FLAT WEDGE12X8X56
	730	321576-0260	S		1	SUPPORT RONUTR20

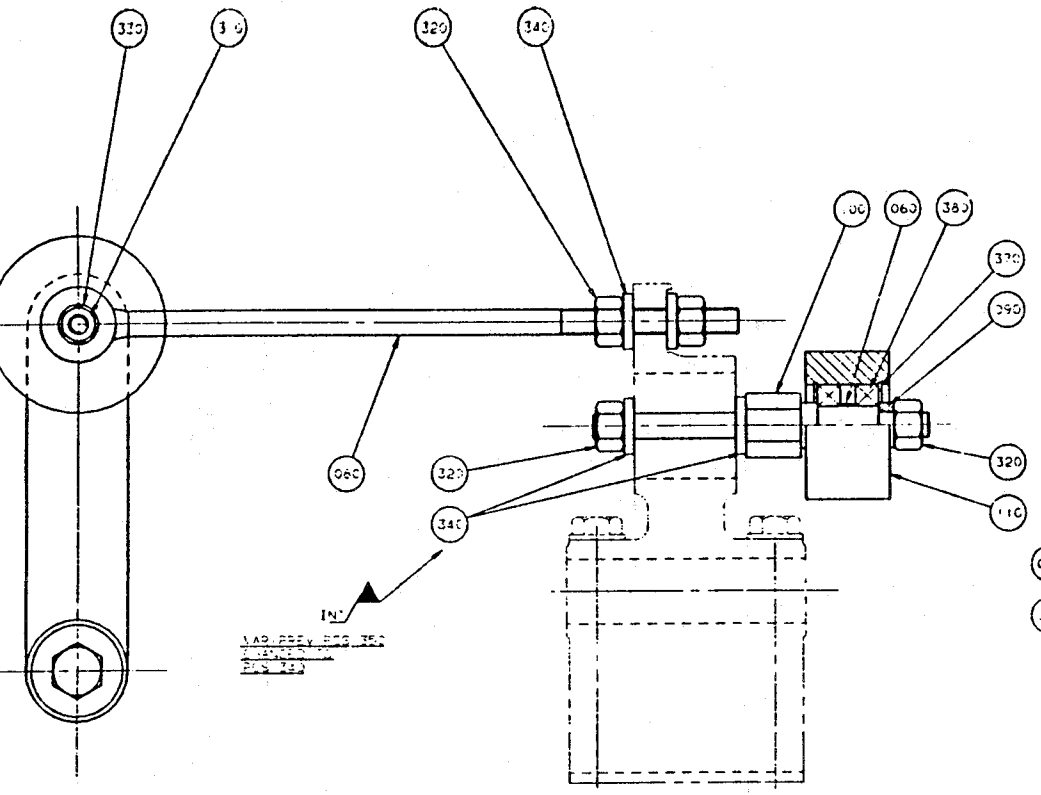

080V-

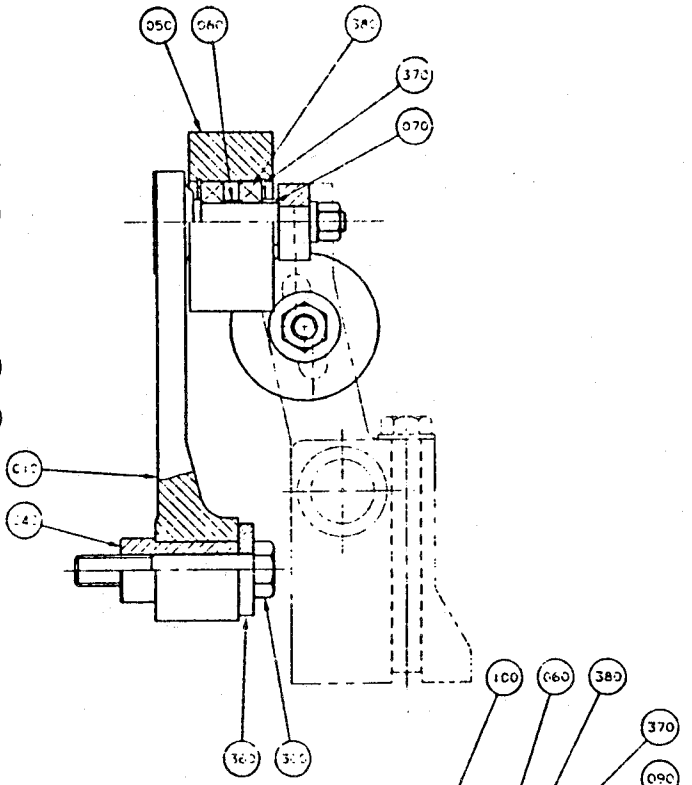

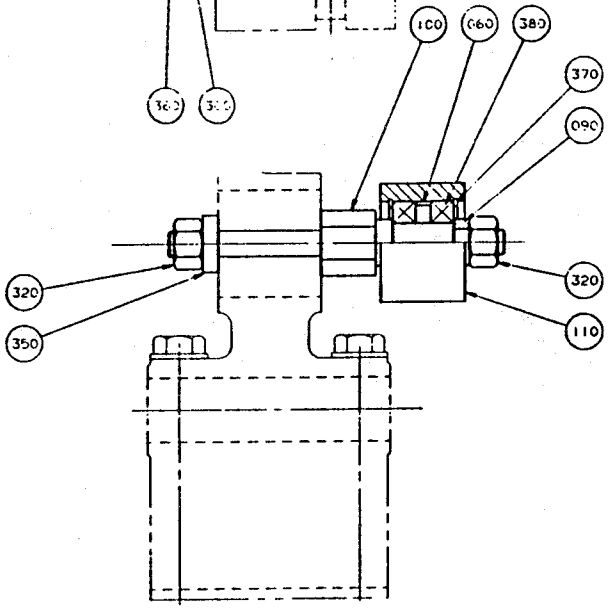

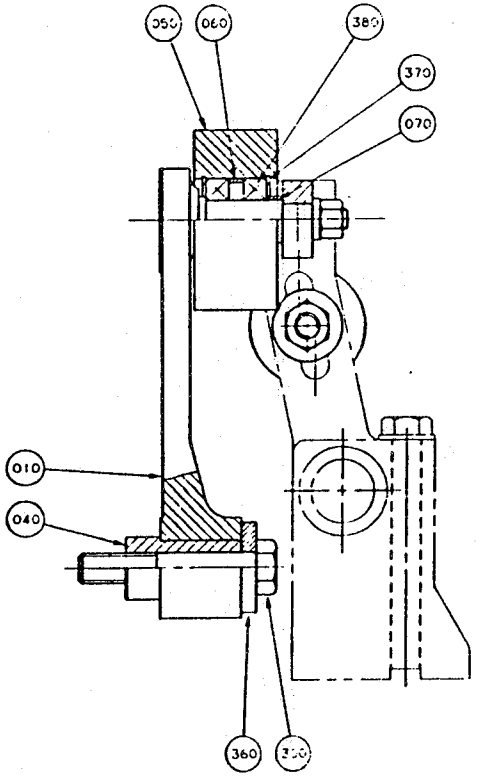

From	Pos	Part No	SP	UN	Qty	Description
	010	G- 272565	C		1	ARM
	040	256912	S		1	PIN
	050	751254	S		1	ROLLER
-070V	060	256914	S		2	SPACER RING
080V-	060	752765	S		2	SPACER RING
	070	256915	S		1	SPACER RING
	080	256916	S		1	STRUT
	090	256918	S		1	WASHER
	100	272566	S		1	AXLE PIN
-070V	110	272567	C		1	ROLLER
080V-	110	751180	C		1	ROLLER
	300	312101-0546	-		1	SCREW M6S12X70FZB
	310	312811-0318	S		1	LOCK NUT M8RFR
	320	312811-0320	S		4	LOCK NUT M10RFR
	330	315111-0165	-		1	WASHER TBRB8,4X16FZB
	340	315111-0173	-		4	WASHER TBRB10,5X22FZB
-070V	350	315121-0173	-		1	WASHER BRSB10,5X28FZB
	360	315121-0178	-		1	WASHER TBRSB13X36FZB
	370	315752-0123	S		4	LOCK RING SGH32
	380	321308-0202	S		4	BALL BEARISKF6002-2RS

From	Pos	Part No	SP	UN	Qty	Description

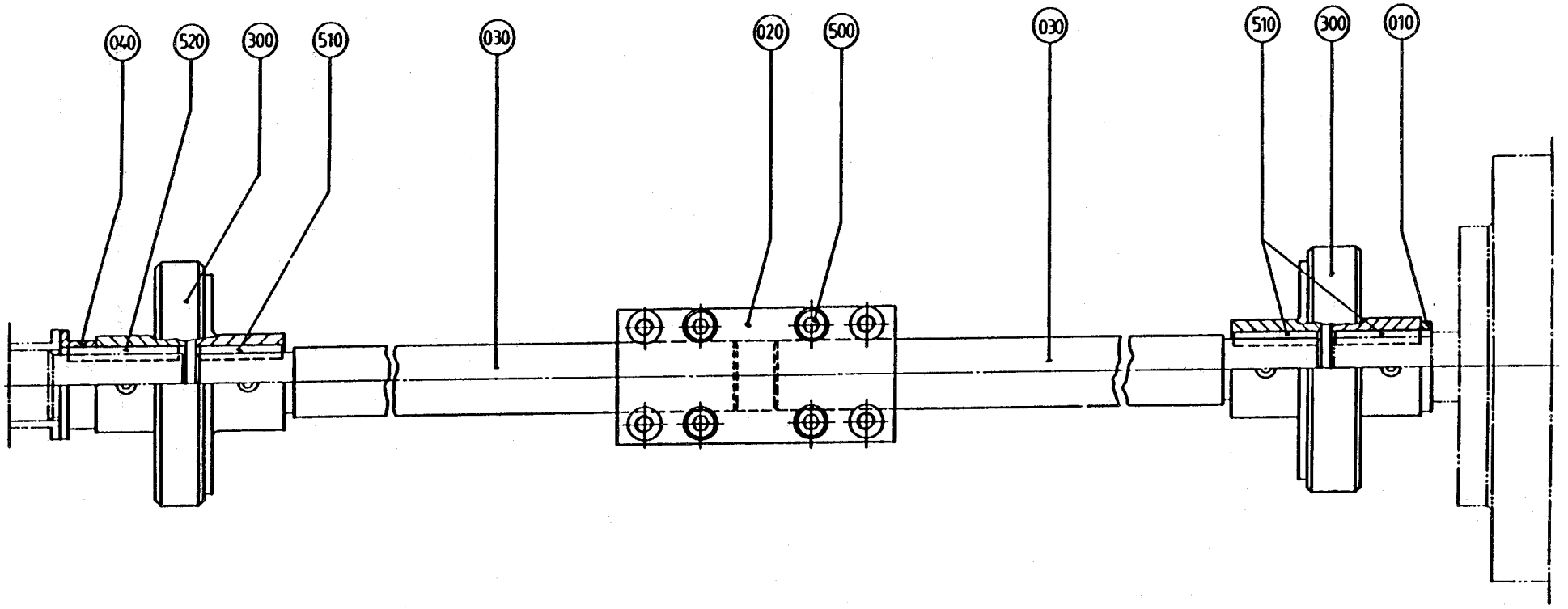
040
520
300
510
030
020
500
030
510
300
010

From	Pos	Part No	SP	UN	Qty	Description
	010	272857	S		1	RING
	020	295983	-		1	CONNECTION
	030	441339	S		2	SHAFT
	040	441720	S		1	SPACER
	300	90355-0048	S		2	CONNECTION
	500	312111-0368	-		8	SCREW MC6S6X16FZB
	510	315701-0235	S		3	FLAT WEDGE6X6X28
	520	315701-0239	S		1	FLAT WEDGE6X6X40

From	Pos	Part No	SP	UN	Qty	Description

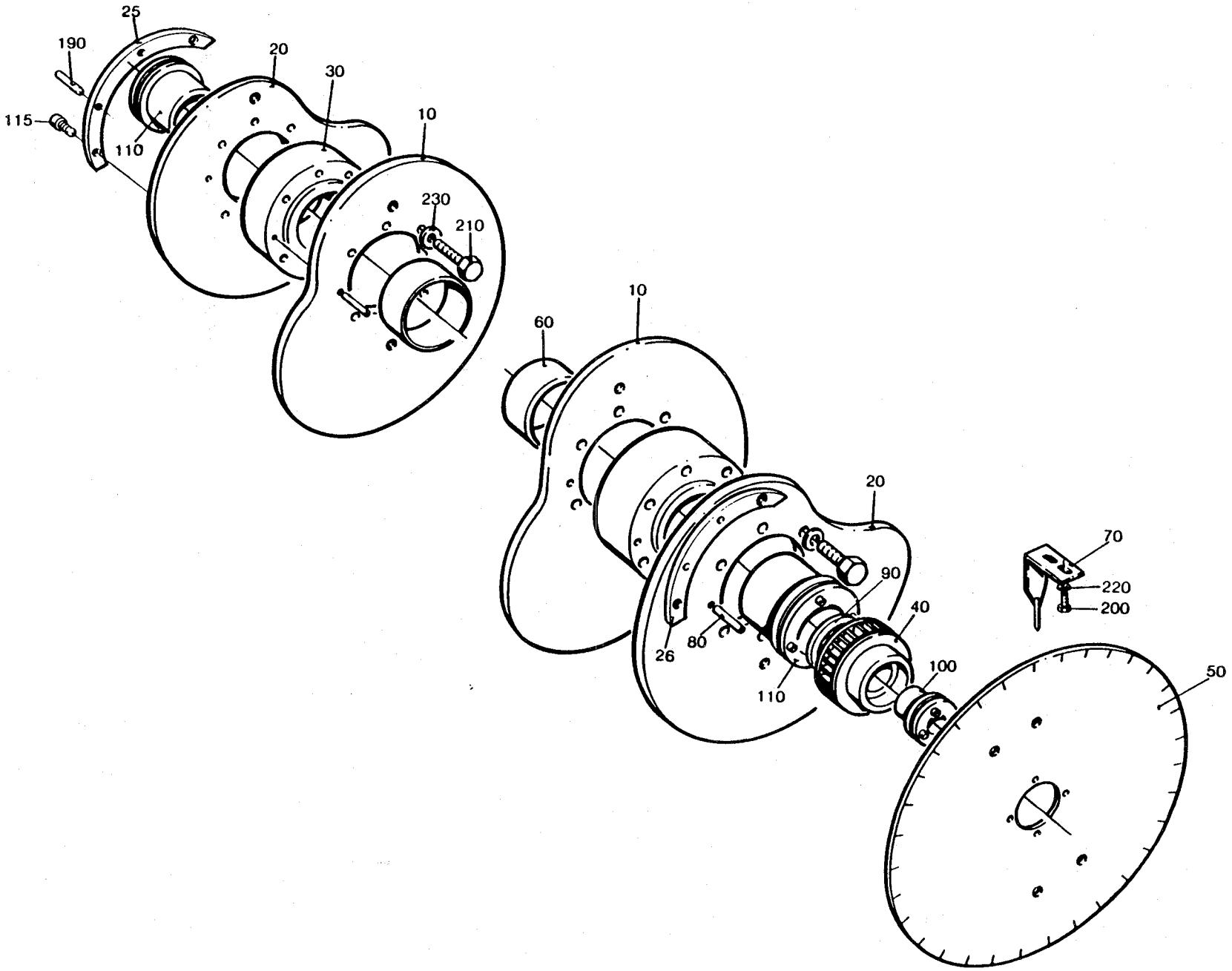
25
190
20
30
115
10
110
230
210
10
60
20
70
90
220
200
40
80
26
100
110
50

From	Pos	Part No	SP	UN	Qty	Description
Volume 250 ml						
	010	272587	C		2	CAM
	020	272588	C		2	CAM
	025	491908	S		1	CAM SEGMENT
	026	491909	S		1	CAM SEGMENT
	210	312101-0500	-		24	SCREW M6S10X45FZB
	230	315101-0173	-		24	WASHER BRB10,5X22FZB
Volume 200 ml						
	010	272589	C		2	CAM
	020	272590	C		2	CAM
	025	491910	S		1	CAM SEGMENT
	026	491911	S		1	CAM SEGMENT
	210	312101-0500	-		24	SCREW M6S10X45FZB
	230	315101-0173	-		24	WASHER BRB10,5X22FZB
Volume 180 ml						
	010	272591	C		2	CAM
	020	272592	C		2	CAM
	025	491912	S		1	CAM SEGMENT
	026	491913	S		1	CAM SEGMENT
	210	312101-0500	-		24	SCREW M6S10X45FZB
	230	315101-0173	-		24	WASHER BRB10,5X22FZB
Volume 200 ml SLIM						
	010	272593	C		2	CAM
	020	272594	C		2	CAM
	025	491914	S		1	CAM SEGMENT
	026	491915	S		1	CAM SEGMENT
	210	312101-0500	-		23	SCREW M6S10X45FZB
	230	315101-0173	-		23	WASHER BRB10,5X22FZB
Volume 236 ml						
	010	978172	C		2	CAM
	020	978173	C		2	CAM
	025	978174	S		1	CAM SEGMENT
	026	978175	S		1	CAM SEGMENT
	210	312101-0500	-		24	SCREW M6S10X45FZB
	230	315101-0173	-		24	WASHER BRB10,5X22FZB
Common Parts						
	030	456744	S		2	HUB
-070V	040	272820	C		1	PULLEY
080V-	040	751176	C		1	PULLEY
	050	272821	C		1	PROTRACTOR
	060	256653	-		2	SPACER
	070	271007	C		1	INDICATOR
	080	295140	S		4	PIN
080V-	090	978340	-		1	SPACER
	100	90208-0038	S		1	BUSHING
	110	90208-0039	S		2	BUSHING
	115	90287-0145	-		4	SCREW
	190	311103-0272	-		6	CYLINDRICACPR4M6X20RFR
	200	312101-0325	-		6	SCREW M6S5X10FZB
	220	315101-0146	-		6	WASHER BRB5,3X10FZB

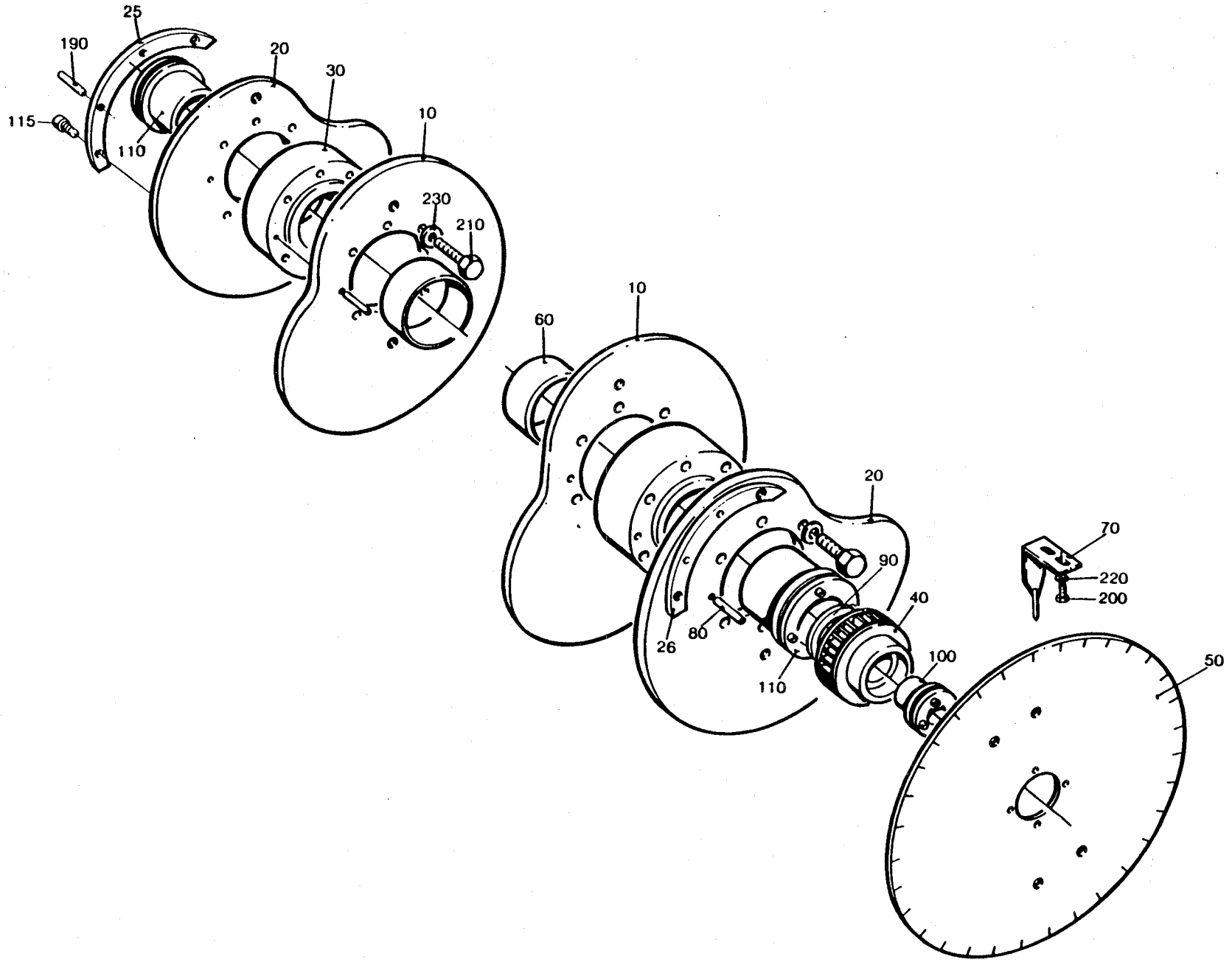
25
190
20
30
115
110
10
230
210
10
60
20
70
90
220
200
40
80
26
110
100
50

From	Pos	Part No	SP	UN	Qty	Description
Volume 250 ml						
	010	271759	C		2	CAM
	020	271760	C		2	CAM
	025	491459	S		1	CAM SEGMENT
	026	491460	S		1	CAM SEGMENT
	210	312101-0500	-		24	SCREW M6S10X45FZB
	230	315101-0173	-		24	WASHER BRB10,5X22FZB
Volume 236 ml						
	010	272118	C		2	CAM
	020	272119	C		2	CAM
	025	491916	S		1	CAM SEGMENT
	026	491917	S		1	CAM SEGMENT
	210	312101-0500	-		24	SCREW M6S10X45FZB
	230	315101-0173	-		24	WASHER BRB10,5X22FZB
Volume 200 ml						
	010	456373	C		2	CAM
	020	456374	C		2	CAM
	025	491345	S		1	CAM SEGMENT
	026	491346	S		1	CAM SEGMENT
	210	312101-0500	-		24	SCREW M6S10X45FZB
	230	315101-0173	-		24	WASHER BRB10,5X22FZB
Volume 180 ml						
	010	469369	C		2	CAM
	020	469370	C		2	CAM
	025	491918	S		1	CAM SEGMENT
	026	491919	S		1	CAM SEGMENT
	210	312101-0500	-		24	SCREW M6S10X45FZB
	230	315101-0173	-		24	WASHER BRB10,5X22FZB
Volume 125 ml						
	010	271317	C		2	CAM
	020	271318	C		2	CAM
	025	491920	S		1	CAM SEGMENT
	026	491921	S		1	CAM SEGMENT
	210	312101-0500	-		24	SCREW M6S10X45FZB
	230	315101-0173	-		24	WASHER BRB10,5X22FZB
Volume 200 ml SLIM						
	010	441411	C		2	CAM
	020	441412	C		2	CAM
	025	491461	S		1	CAM SEGMENT
	026	491462	S		1	CAM SEGMENT
	210	312101-0500	-		22	SCREW M6S10X45FZB
	230	315101-0173	-		22	WASHER BRB10,5X22FZB

From	Pos	Part No	SP	UN	Qty	Description
Volume 284 ml						
	010	752735	C		2	CAM
	020	752736	C		2	CAM
	025	752737	S		1	CAM SEGMENT
	026	752738	S		1	CAM SEGMENT
	210	312101-0500	-		22	SCREW M6S10X45FZB
	230	315101-0173	-		22	WASHER BRB10,5X22FZB
Common Parts						
	030	456744	S		2	HUB
-070V	040	272820	C		1	PULLEY
080V-	040	751176	C		1	PULLEY
	050	272821	C		1	PROTRACTOR
	060	256653	-		2	SPACER
	070	271007	C		1	INDICATOR
	080	295140	S		4	PIN
080V-	090	978340	-		1	SPACER
	100	90208-0038	S		1	BUSHING
	110	90208-0039	S		2	BUSHING
	115	90287-0145	-		4	SCREW
	190	311103-0272	-		6	CYLINDRICACPR4M6X20RFR
	200	312101-0325	-		6	SCREW M6S5X10FZB
	220	315101-0146	-		6	WASHER BRB5,3X10FZB

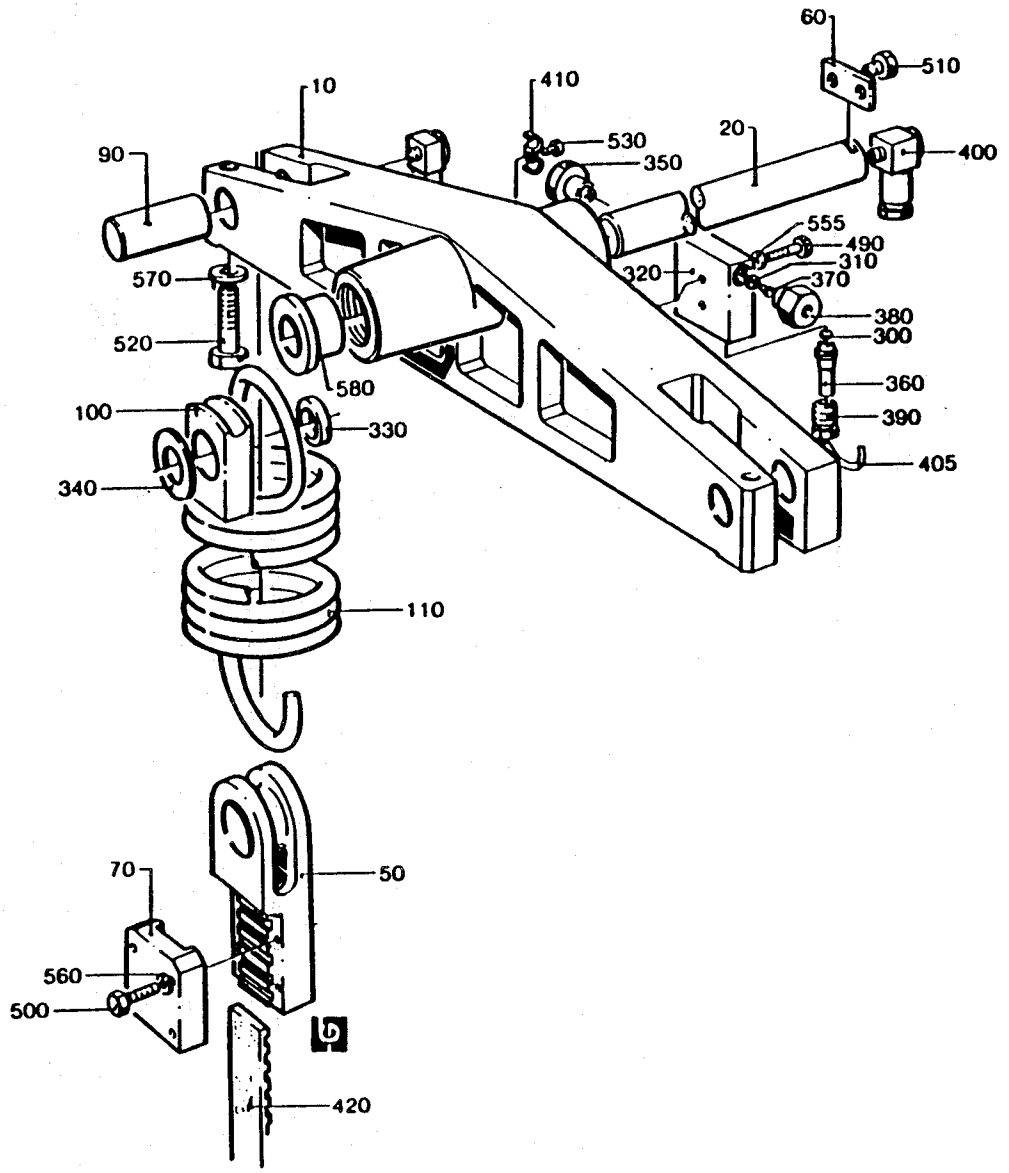
60
510
10
410
530
20
400
90
350
555
490
570
310
320
370
380
520
300
580
360
100
330
390
340
405
110
70
50
560
500
420

From	Pos	Part No	SP	UN	Qty	Description
TPC 180-200 ml, IH 125-236 ml						
	420	490566-0001	S		2	TIMING BELT
TPC 250 ml, 236 ml, IH 200 ml SLIM, 284 ml, 250 ml						
	420	490566-0002	S		2	TIMING BELT
TPC 200 ml SLIM						
	420	490566-0003	S		2	TIMING BELT
Common Parts						
	010	G- 272606	-		1	CRADLE
-070V	020	256514	C		1	SHAFT
080V-	020	752248	C		1	SHAFT
	050	272608	C		2	BELT HOLDER
-070V	060	256472	-		1	WASHER
080V-	060	752249	-		1	WASHER
	070	256516	-		2	CLAMP
	090	256518	C		2	SHAFT
	100	256519	C		2	SPRING HOLDER
	110	441353	S		2	TENSION SPRING
	300	90028-0020	-		2	CONE
	310	90028-0021	-		1	CONE
	320	90032-0038	-		1	BLOCK
	330	321531-0248	S		2	NEEDLE SLEHK2016
	340	90083-0016	S		4	PLATE
	350	90087-0019	-		1	PLUG
	360	90092-0052	S		2	VALVE
	370	90134-0031	-		1	SLEEVE
	380	90134-0038	-		1	BUSHING
	390	90134-0039	-		2	BUSHING
	400	90134-0058	-		3	BANJO CONNECTION
	405	90266-0019	-	MM	500	PIPE
	410	90165-0022	-		1	CLIP
	490	312101-0297	-		2	SCREW M6S4X25FZB
	500	312101-0333	-		8	SCREW M6S5X25FZB
	510	312101-0364	-		2	SCREW M6S6X10FZB
	520	312101-0457	-		2	SCREW M6S8X35FZB
	530	312121-0287	-		1	SLOTTED HEMCS4X8FZB
	555	315101-0136	-		2	WASHER BRB4,3X8FZB
	560	315101-0146	-		8	WASHER BRB5,3X10FZB
	570	315101-0165	-		2	WASHER BRB8,4X16FZB
	580	321101-0233	S		2	BUSHING 20F7X20

From	Pos	Part No	SP	UN	Qty	Description

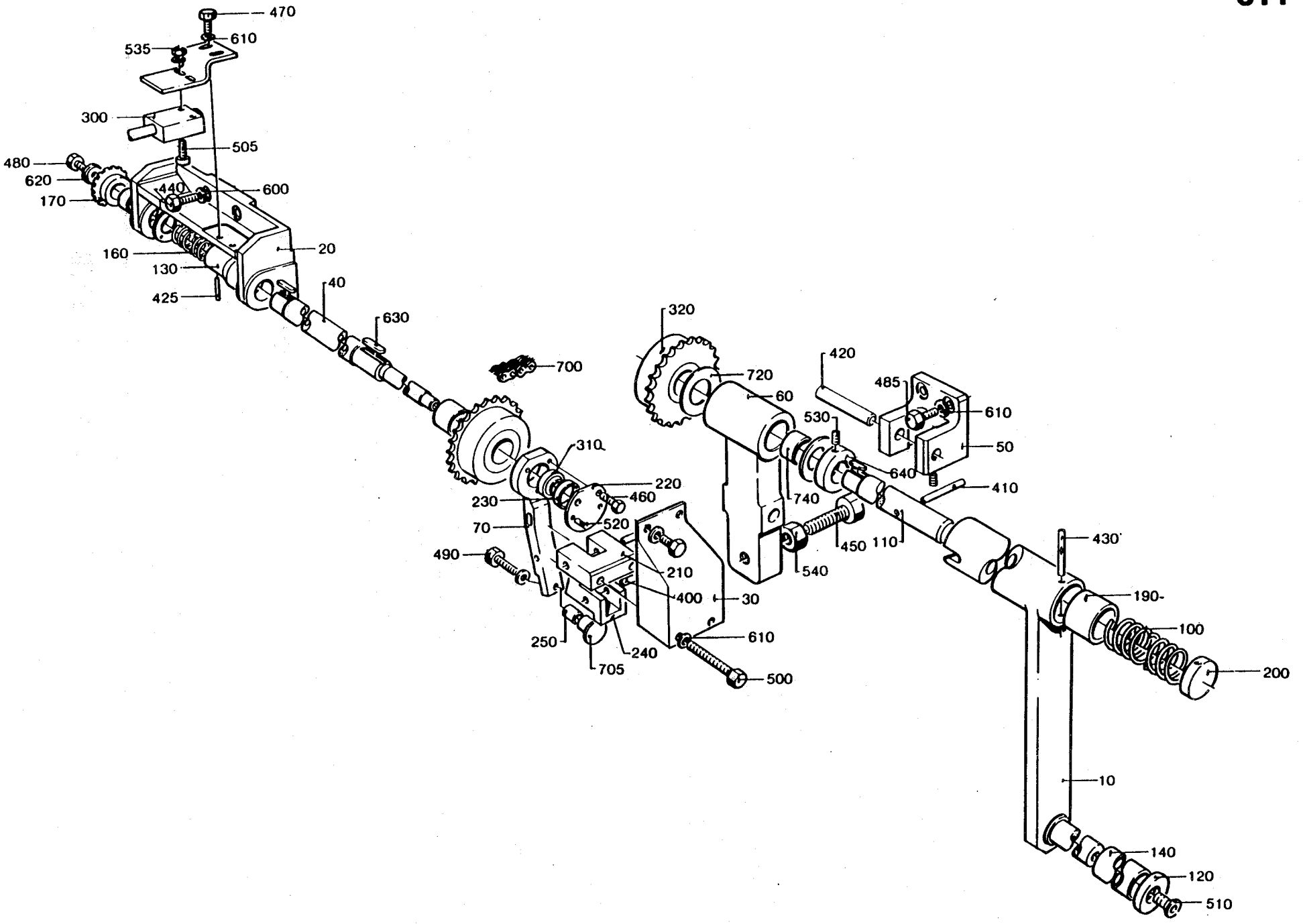
470
610
535
300
505
480
620
170
440
600
160
130
425
20
40
630
700
320
720
60
420
485
610
530
50
640
410
740
310
220
460
230
520
70
490
210
400
30
450
110
540
430
190
100
200
250
240
705
610
500
10
140
120
510

From	Pos	Part No	SP	UN	Qty	Description
	010	257326	C		1	CRANK
	020	272664	C		1	BRACKET
	030	272690	-		1	COVER
	040	456343	S		1	SHAFT
	050	272736	C		1	BRACKET
	060	272737	C		1	BRACKET
	070	272772	C		1	ARM
	100	12228	S		1	COMPRESSION SPRING
	110	256812	S		1	SHAFT
	120	256814	-		1	WASHER
	130	456344	-		1	SLEEVE
	140	256816	-		1	PIPE
	150	456345	-		1	BRACKET
	160	256828	S		1	SPRING
	170	257179	S		1	GEAR WHEEL
	190	257327	S		1	SLIDER
	200	257328	S		1	END PIECE
	210	272691	S		1	BRACKET
	220	272692	S		1	LID
	230	272693	S		1	RING
	240	272694	-		1	CATCH
	250	295773	-		1	SPACER
	300	90044-0084	S		1	MICRO SWITCH
	310	90240-0093	S		1	PLAIN BEARING
	320	90344-0022	S		2	SPROCKET
	400	311103-0355	-		2	CYLINDRICACPR6M6X25RFR
	410	311103-0361	-		1	CYLINDRICACPR6M6X40RFR
	420	311103-0470	-		1	CYLINDRICACPR10M6X60RFR
	425	311305-0274	-		1	SLOTTED PIRPC4X25FZB
	430	311307-0275	-		1	SLOTTED PIRPD4X28FZB
	440	312101-0453	-		4	SCREW M6S8X25FZB
	450	312104-0499	-		1	SCREW M6S10X40H8.8FZB
	460	312105-0293	-		3	SCREW M6S4X16 A4 80
	470	312105-0366	-		4	SCREW M6S6X12RFR
	480	312105-0368	-		1	SCREW M6S6X16RFR
	485	312105-0370	-		3	SCREW M6S6X20RFR
	490	312105-0374	-		1	SCREW M6S6X30RFR
	500	312105-0382	-		2	SCREW M6S6X60RFR
	505	312115-0331	-		2	SCREW 5X20 A4 80
	510	312151-0366	-		1	SCREW MF6S6X12FZB
	520	312318-0287	-		2	GRUB SCREW SK6SS4X8RFR
	530	312318-0362	-		3	GRUB SCREW SK6SS6X8RFR
	535	312605-0314	-		2	NUT M6M5RFR

From	Pos	Part No	SP	UN	Qty	Description
	540	312605-0320	-		1	NUT M6M10RFR
	600	315101-0165	-		4	WASHER BRB8,4X16FZB
	605	315105-0146	-		2	WASHER BRB5,3X10RFR
	610	315105-0153	-		10	WASHER BRB6,4X12RFR
	620	315121-0153	-		1	WASHER TBRSB6,4X22FZB
	630	315701-0232	-		3	FLAT WEDGE6X6X20
	640	315740-0116	-		1	RETAINING 20SMS199
	700	318201-0150	S		1	ROLLER CHA3/8"
	705	90051-0082	-		1	KNOB
	710	321120-0138	S		4	BUSHING 20/23X20
	720	321129-0131	S		4	WASHER 20/36X1,5

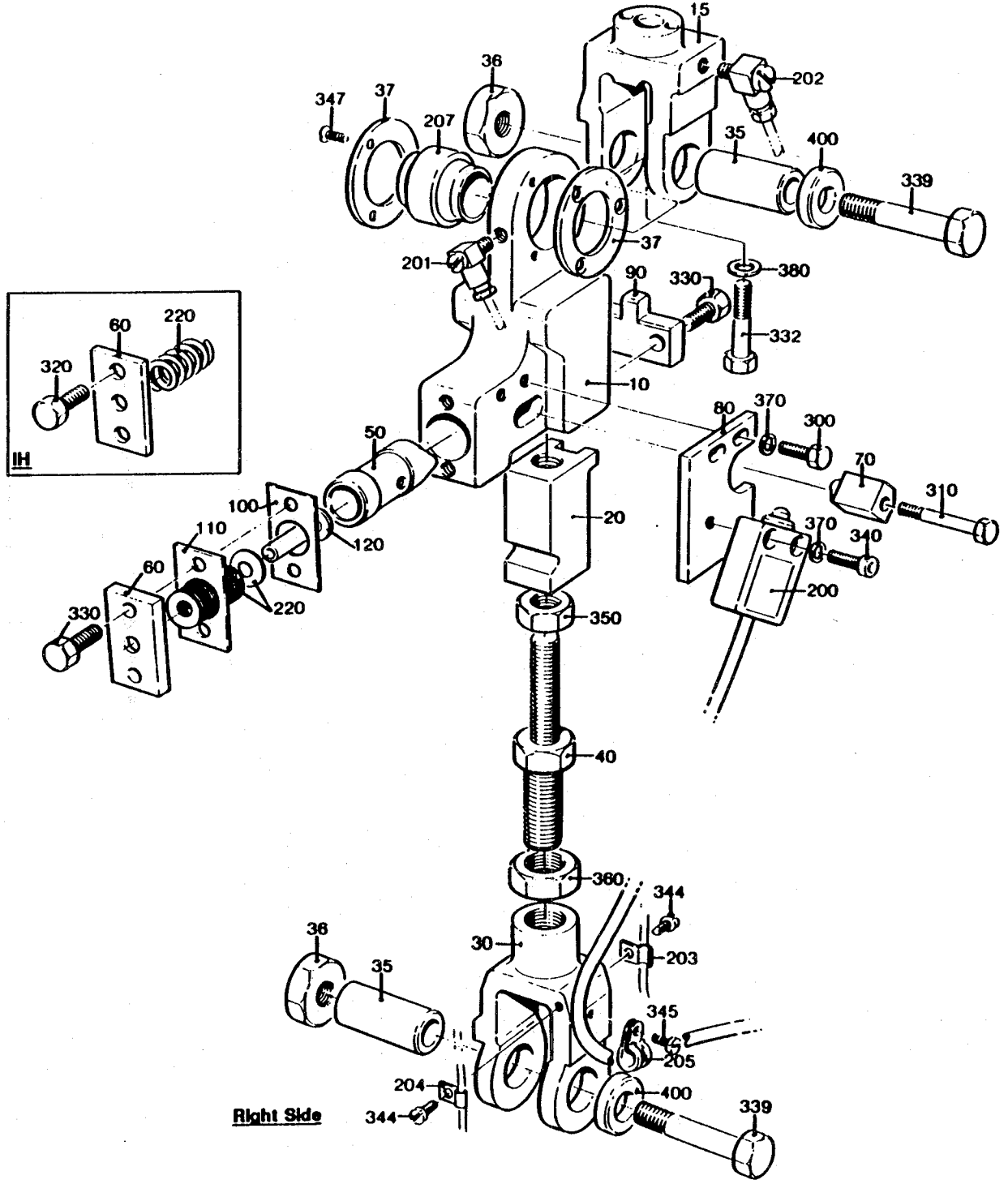
15
36
347
37
207
202
35
400
339
37
201
90
330
380
332
10
80
370
300
70
310
50
20
370
340
200
100
110
120
60
220
330
350
40
360
344
36
30
203
35
345
205
204
400
339
344
Right Side
IH
60
220
320

From	Pos	Part No	SP	UN	Qty	Description
Left and Right Sides						
TPC						
	060	752677	-		1	BACK PIECE
	100	752674-0001	S		1	SHIM
	110	752674-0006	S		1	SHIM
	120	752685	-		1	GUIDE PIN
	220	90016-0056	S		42	DISC SPRING
-070V	330	312101-0370	-		4	SCREW M6S6X20FZB
080V-	330	312101-0371	-		4	SCREW M6S6X22FZB
IH						
-070V	060	491199	-		1	BACK PIECE
-070V	220	90335-0086	S		1	COMPRESSION SPRING
-070V	320	312101-0368	-		2	SCREW M6S6X16FZB
-070V	330	312101-0370	-		2	SCREW M6S6X20FZB
Common Parts						
	010	491194	C		1	ROD END
	015	272472	-		1	END PIECE
	020	491195	S		1	SLIDER
	030	491196	S		1	LINK
	035	257309	S		2	SHAFT
	036	257310	S		2	NUT
	037	257311	S		2	CLAMP
	040	751659	S		1	ADJUSTING SCREW
	050	491198	S		1	PISTON
	070	491200	S		1	CARRIER
	080	491456	-		1	PLATE
	090	491375	-		1	CROSS PIECE
	200	90044-0084	S		1	MICRO SWITCH
	201	90134-0058	-		1	BANJO CONNECTION
	202	90134-0068	-		1	BANJO CONNECTION
	203	90165-0002	-		1	CLIP
	204	90165-0022	-		1	CLIP
	205	90165-0065	-		1	CLIP
	207	90240-0050	-		1	BEARING
	210	90296-0012	-		X	LUBRICANT
	300	312101-0329	-		2	SCREW M6S5X16FZB
	310	312101-0337	-		1	SCREW M6S5X35FZB
	332	312101-0376	-		2	SCREW M6S6X35FZB
	339	312101-0502	-		2	SCREW M6S10X55FZB
	340	312111-0329	-		2	SCREW MC6S5X16FZB
	344	312121-0287	-		2	SLOTTED HEMCS4X8FZB
	345	312121-0289	-		1	SLOTTED HEMCS4X10FZB

From	Pos	Part No	SP	UN	Qty	Description
	347	312151-0287	-		6	SCREW MF6S4X8FZB
	350	312621-0322	-		1	NUT ML6M12FZB
	360	312621-0324	-		1	NUT ML6M16FZB
	370	315101-0146	-		4	WASHER BRB5,3X10FZB
	380	315101-0153	-		2	WASHER BRB6,4X12FZB
	400	315121-0173	-		2	WASHER BRSB10,5X28FZB

SPC 648151/52
Tetra Brik TB/9
Tetra Brik Aseptic TBA/9

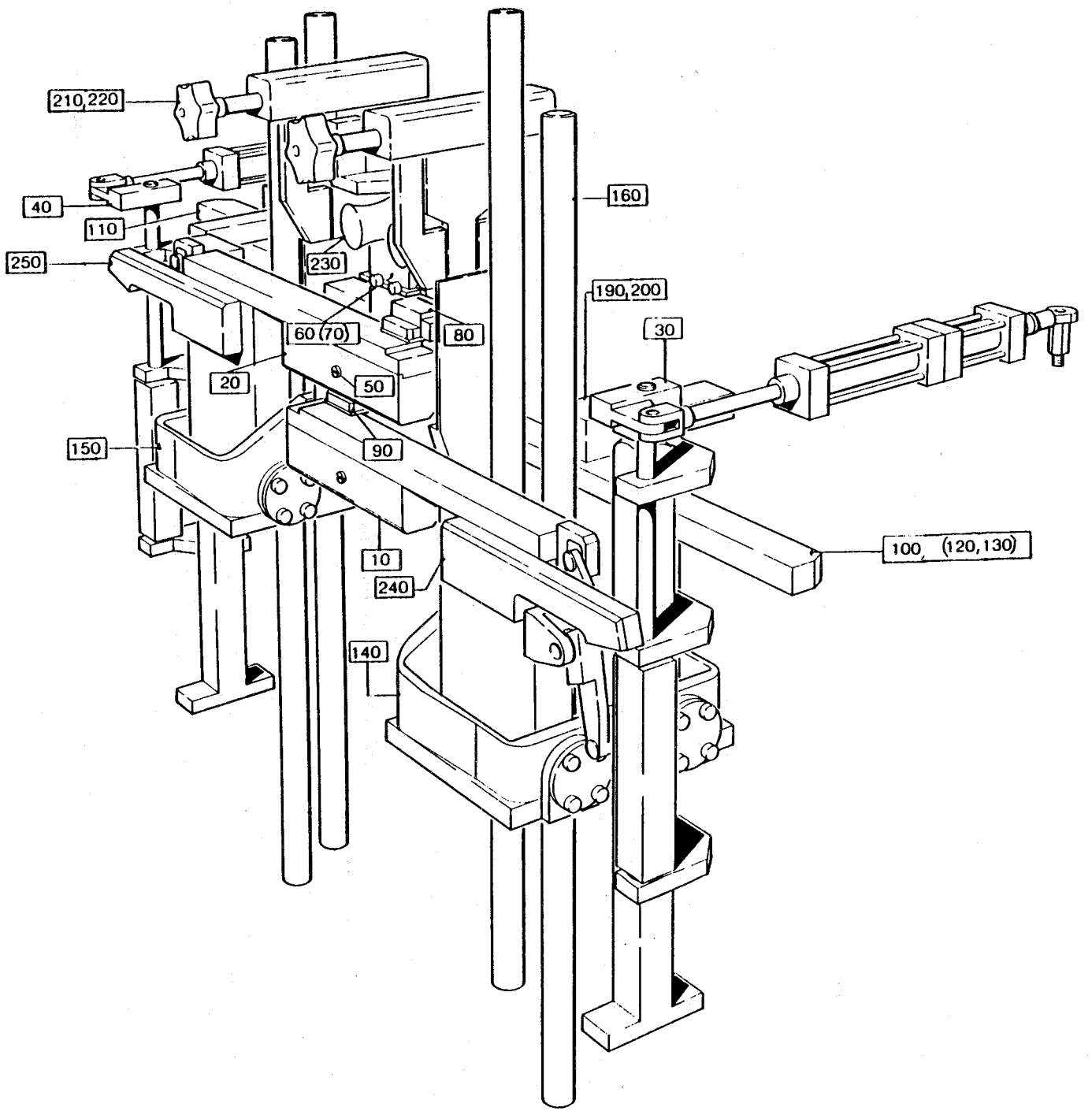
210,220
40
110
250
230
160
190,200
30
60 (70)
80
20
50
150
90
100, (120,130)
10
240
140

From	Pos	Part No	SP	UN	Qty	Description
	F130	401-1				PRESSURE RAIL (TPC)
	F210	402-1				VOLUME CAM PIECE (TPC)
	F120	403-1				PRESSURE RAIL (IH)
	F220	404-1				VOLUME CAM PIECE, (IH)
-080V	F010	405-1a/b				CUTTING JAW RIGHT
090V-	F010	405-2a/b/c				CUTTING JAW RIGHT
-080V	F020	406-1a/b				CUTTING JAW LEFT
090V-	F020	406-2a/b				CUTTING JAW LEFT
	F030	407-1				INTERMITTENT FEED DEVICE LEFT
	F040	408-1				INTERMITTENT FEED DEVICE RIGHT
	F050	409-1				KNIFE HOLDER
	F060	410-1				VOLUME FLAP
	F070	410-1				VOLUME FLAP
-080V	F090	411-1				SHOCK ABSORBER
090V-	F090	411-2				SHOCK ABSORBER
-080V	F080	411-1				SHOCK ABSORBER
090V-	F080	411-2				SHOCK ABSORBER
	F110	412-1				PRESSURE JAW LEFT
	F100	412-1				PRESSURE JAW RIGHT
	F150	413-1				YOKE
	F140	413-1				YOKE
	F160	414-1				GUIDE
	F190	415-1				TRANSMISSION RIGHT
	F200	415-1				TRANSMISSION LEFT
	F230	416-1				SUPPORT ROLLER
	F250	417-1				CONNECTION BLOCK
	F240	417-1				CONNECTION BLOCK
	F300	418-1				START-UP KIT

From	Pos	Part No	SP	UN	Qty	Description

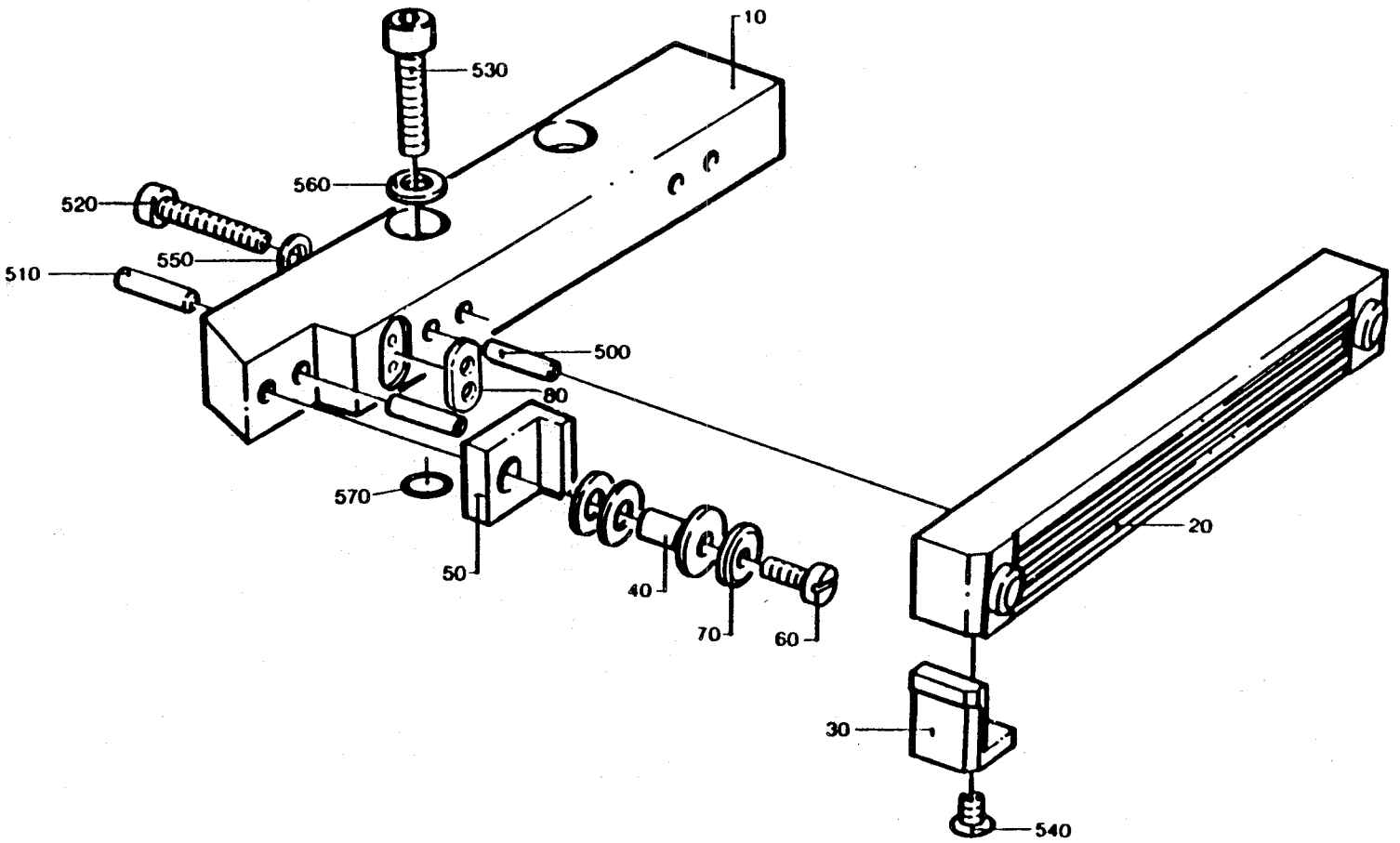
10
530
560
520
550
510
500
80
570
50
40
70
60
20
30
540

From	Pos	Part No	SP	UN	Qty	Description
	010	491961	S		1	RAIL (180-250 ml)
	010	491963	S		1	RAIL (200 ml SLIM)
	020	441733	UP		1	TPC BAR
	030	271845	P		1	ANGLE
	040	271846	P		1	INSULATION NUT
	050	271847	P		1	INSULATION
	060	271848	P		1	SCREW
	070	256882	P		1	WASHER
	080	491681	P		1	GASKET
	500	311103-0269	P		3	CYLINDRICACP M6 4X14 RFR
	510	311103-0270	P		2	CYLINDRICACP M6 4X16 RFR
	520	312115-0295	-		2	SCREW S 4X20 A4 80
	530	312115-0331	-		2	SCREW 5X20 A4 80
	540	312145-0285	-		1	SLOTTED HEMFS4X6RFR
	550	315105-0136	-		2	WASHER BRB4,3X8RFR
	560	315105-0146	-		2	WASHER BRB5,3X10RFR
	570	315202-0102	P		2	O-RING 4,1X1,6

From	Pos	Part No	SP	UN	Qty	Description

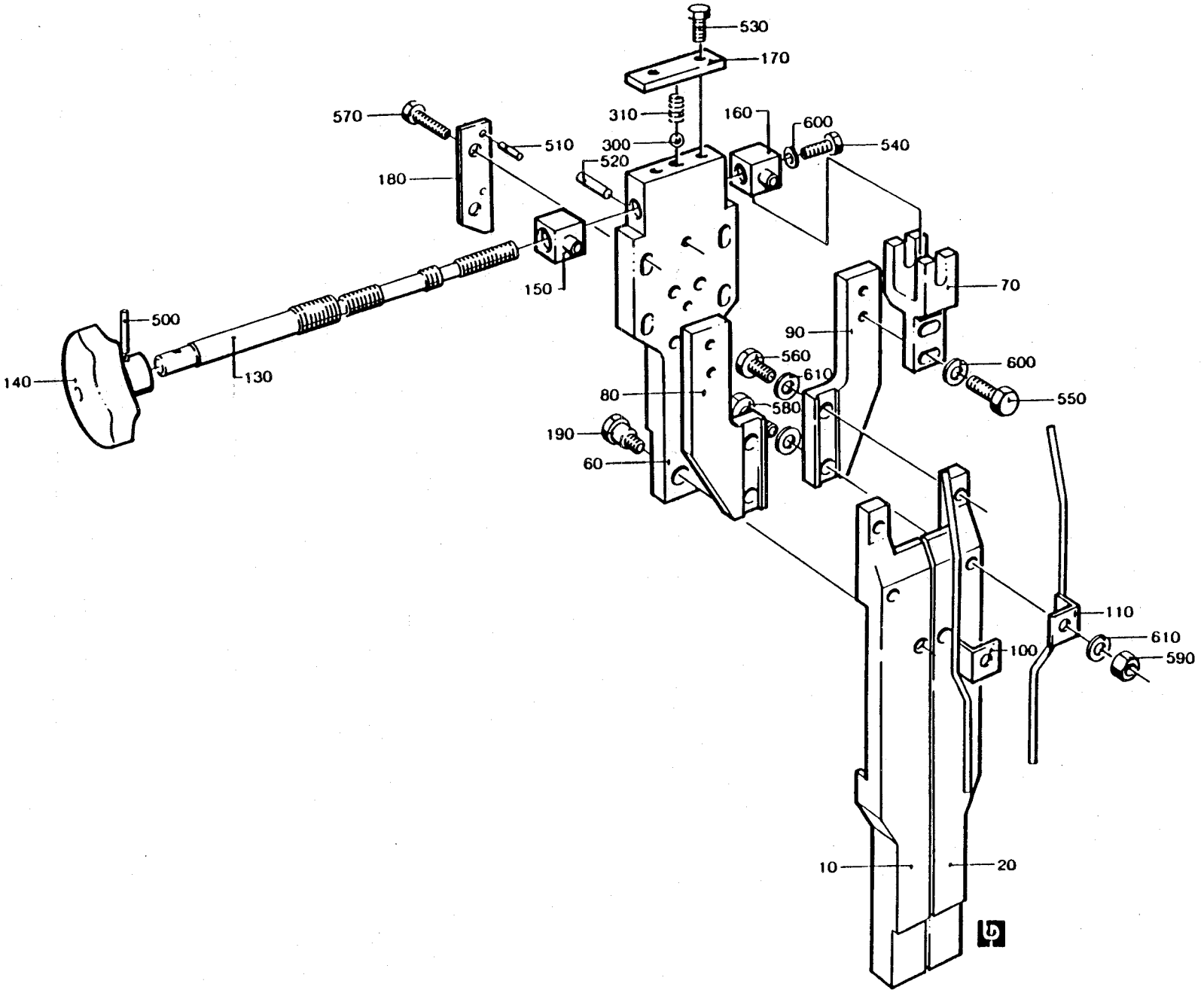
530
170
570
310
160
600
510
300
540
520
180
150
70
500
90
560
600
610
140
130
80
580
550
190
60
110
610
100
590
10
20

From	Pos	Part No	SP	UN	Qty	Description
Volume 250 ml						
	010	272949	S		2	VOLUME CAM LEFT
	020	272957	S		2	VOLUME CAM RIGHT
Volume 200 ml						
	010	272950	S		2	VOLUME CAM LEFT
	020	272958	S		2	VOLUME CAM RIGHT
Volume 180 ml						
	010	272951	S		2	VOLUME CAM LEFT
	020	272959	S		2	VOLUME CAM RIGHT
Volume 200 ml SLIM						
	010	272952	S		2	VOLUME CAM LEFT
	020	272960	S		2	VOLUME CAM RIGHT
Volume 236 ml						
	010	491436	S		2	VOLUME CAM LEFT
	020	491434	S		2	VOLUME CAM RIGHT
Common Parts						
	060	272969	-		2	BRACKET
	070	272761	S		4	FORK
	080	272970	-		2	ARM LEFT
	090	272971	-		2	ARM RIGHT
	100	441758	S		2	PIPE RIGHT
	110	441759	S		2	PIPE LEFT
	130	272978	S		2	SPINDLE
	140	240797	-		2	HANDLE
	150	257393-0001	S		2	NUT
	160	257393-0002	S		2	NUT
	170	257395	-		2	WASHER
	180	272972	-		4	RULER
	190	272973	S		4	PIN
	300	90090-0014	S		2	STEEL BALL
	305	90157-0021	-		X	LOCKING FLUID
	310	90335-0011	S		2	SPRING
	500	311103-0238	-		2	CYLINDRICACPR3M6X20RFR
	510	311103-0234	-		4	CYLINDRICACPR3M6X12RFR
	520	311103-0355	-		4	CYLINDRICACPR6M6X25RFR
	530	312105-0325	-		4	SCREW M6S5X10 A4 80
	540	312105-0366	-		2	SCREW M6S6X12RFR
	550	312105-0370	-		8	SCREW M6S6X20RFR
	560	312105-0451	-		4	SCREW M6S8X20RFR
	570	312105-0457	-		8	SCREW M6S8X35RFR
	580	312109-0459	-		4	SCREW M6S8X40H A4 80
	590	312605-0318	-		4	NUT M6M8RFR
	600	315105-0153	-		10	WASHER BRB6,4X12RFR
	610	315105-0165	-		12	WASHER BRB8,4X16RFR

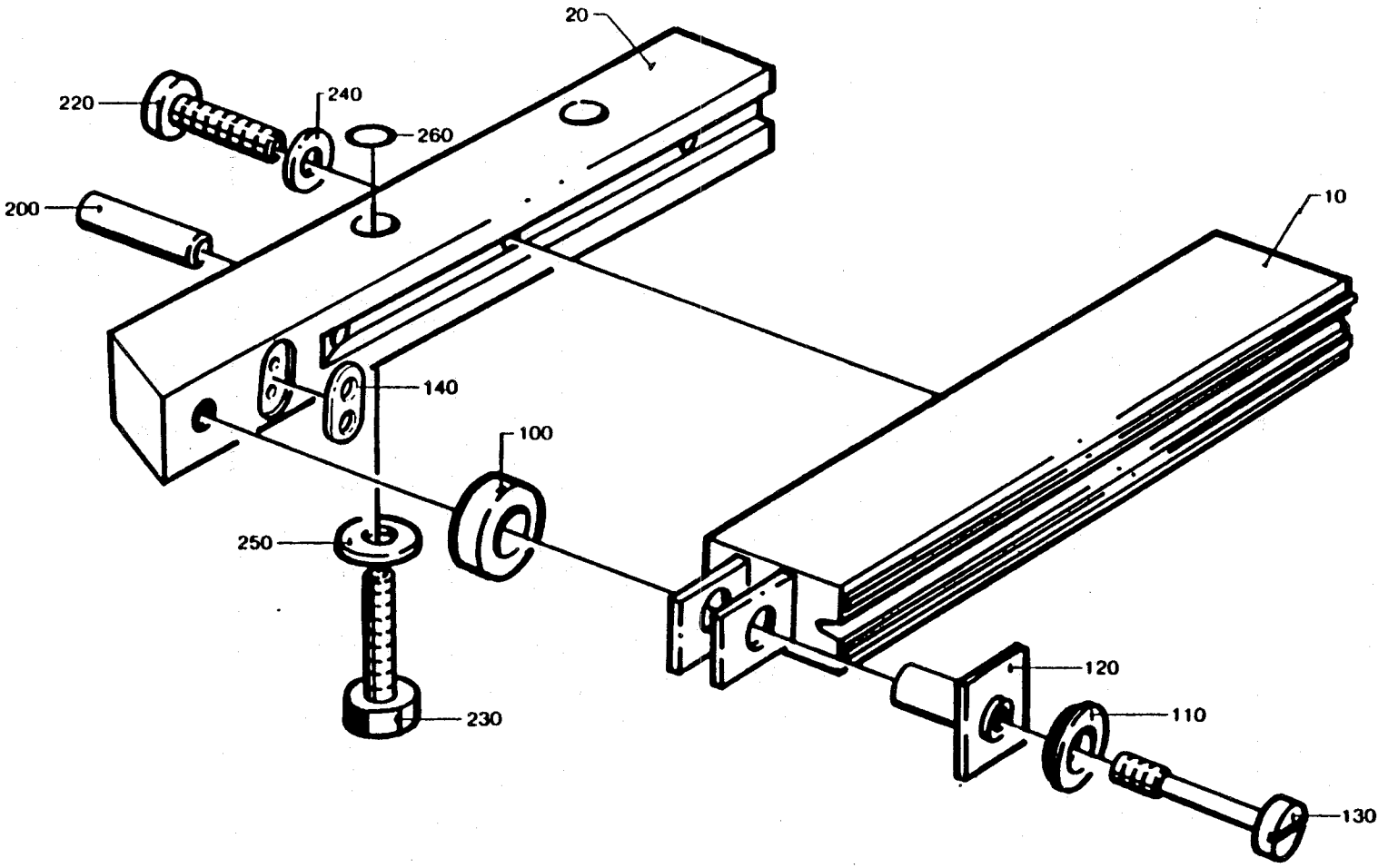
20
220
240
260
200
10
140
100
250
120
110
230
130

From	Pos	Part No	SP	UN	Qty	Description
Volume 180 - 284 ml						
	010	752489	UP		1	INDUCTOR
	020	491954	S		1	RAIL
	220	312115-0293	-		3	SCREW 4 X 16 A4 80
	230	312115-0331	-		2	SCREW 5X20 A4 80
	240	315105-0136	-		3	WASHER BRB4,3X8RFR
	260	315202-0102	P		2	O-RING 4,1X1,6
Volume 125 ml						
	010	555473	UP		1	INDUCTOR
	020	491886	S		1	RAIL
	220	312115-0293	-		3	SCREW 4 X 16 A4 80
	230	312105-0331	-		2	SCREW M6S5X20 A4 80
	240	315105-0136	-		3	WASHER BRB4,3X8RFR
Volume 200 ml SLIM						
	010	752489	UP		1	INDUCTOR
	020	491962	S		1	RAIL
	220	312115-0293	-		2	SCREW 4 X 16 A4 80
	230	312115-0331	-		2	SCREW 5X20 A4 80
	240	315105-0136	-		2	WASHER BRB4,3X8RFR
	260	315202-0102	P		2	O-RING 4,1X1,6
Common Parts						
	100	32644	P		1	WASHER
	110	256882	S		1	WASHER
	120	271846	P		1	INSULATION NUT
	130	271848	P		1	SCREW
	140	491681	P		1	GASKET
	200	311103-0270	-		2	CYLINDRICACPR4M6X16RFR
	250	315105-0146	-		2	WASHER BRB5,3X10RFR

From	Pos	Part No	SP	UN	Qty	Description

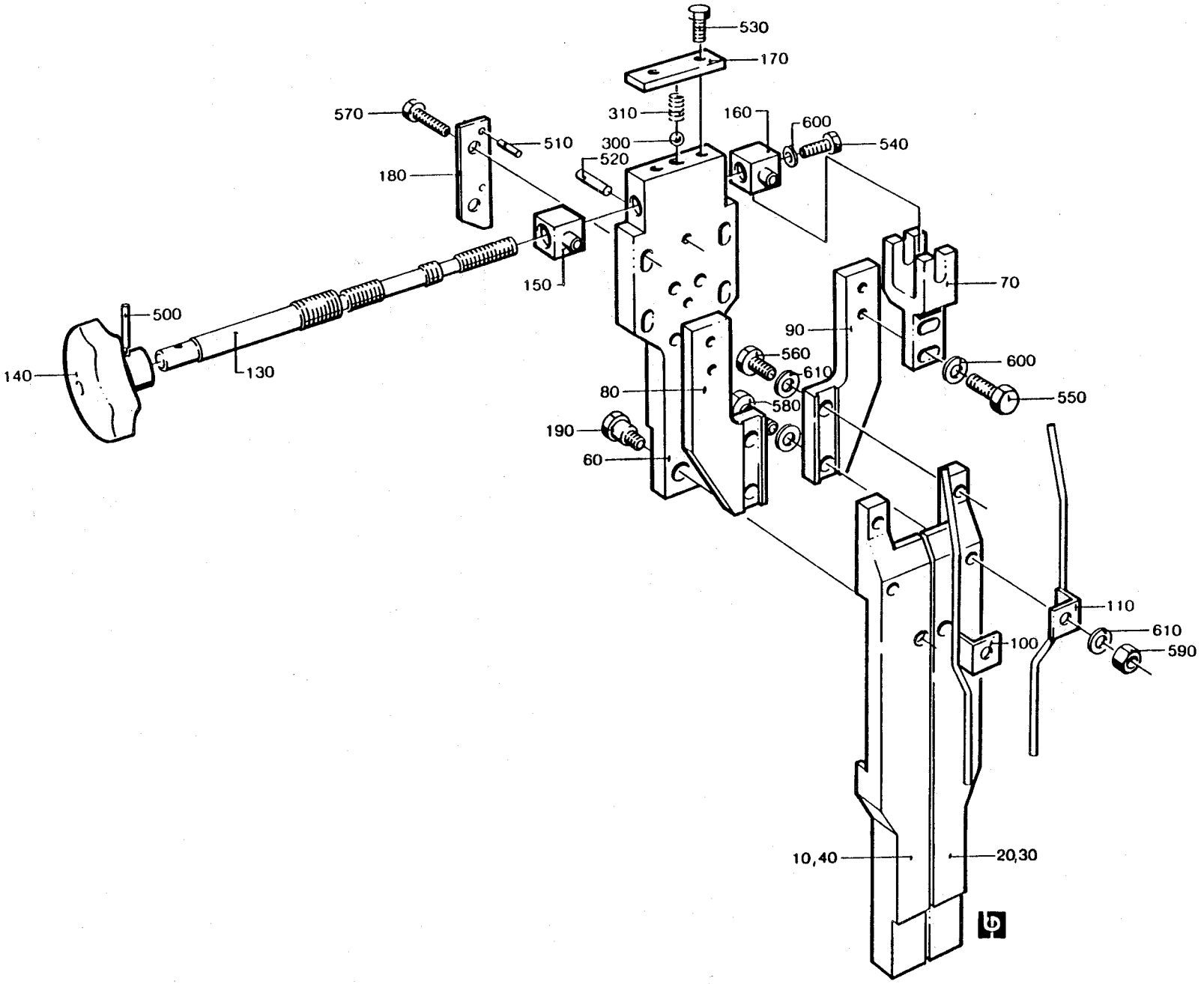
530
170
570
310
160
600
510
300
540
520
180
150
70
500
90
560
600
610
140
130
80
580
550
190
60
110
610
100
590
10,40
20,30

From	Pos	Part No	SP	UN	Qty	Description
Volume 250 ml						
	010	272953	S		2	VOLUME CAM LEFT
	020	272961	S		2	VOLUME CAM RIGHT
Volume 236 ml						
	010	272954	S		2	VOLUME CAM LEFT
	020	272962	S		2	VOLUME CAM RIGHT
Volume 200 ml						
	010	272955	S		2	VOLUME CAM LEFT
	020	272963	S		2	VOLUME CAM RIGHT
Volume 180 ml						
	010	272956	S		1	VOLUME CAM LEFT
	020	272964	S		1	VOLUME CAM RIGHT
	030	272965	S		1	VOLUME CAM LEFT, WIDE
	040	272967	S		1	VOLUME CAM RIGHT, WIDE
Volume 125 ml						
	010	272955	S		1	VOLUME CAM LEFT
	020	272963	S		1	VOLUME CAM RIGHT
	030	272966	S		1	VOLUME CAM LEFT, WIDE
	040	272968	S		1	VOLUME CAM RIGHT, WIDE
Volume 200 ml SLIM						
	010	491436	S		1	VOLUME CAM LEFT
	020	491434	S		1	VOLUME CAM RIGHT
	030	491433	S		1	VOLUME CAM LEFT, WIDE
	040	491435	S		1	VOLUME CAM RIGHT, WIDE
Volume 284 ml						
	010	272949	S		2	VOLUME CAM LEFT
	020	272957	S		2	VOLUME CAM RIGHT
Common Parts						
	060	272969	-		2	BRACKET
	070	272761	S		4	FORK
	080	272970	-		2	ARM LEFT
	090	272971	-		2	ARM RIGHT
	100	441758	S		2	PIPE RIGHT
	110	441759	S		2	PIPE LEFT
	130	272978	S		2	SPINDLE
	140	240797	-		2	HANDLE
	150	257393-0001	S		2	NUT
	160	257393-0002	S		2	NUT
	170	257395	-		2	WASHER
	180	272972	-		4	RULER
	190	272973	S		4	PIN
	300	90090-0014	S		2	STEEL BALL
	305	90157-0021	-		X	LOCKING FLUID
	310	90335-0011	S		2	SPRING
	500	311103-0238	-		2	CYLINDRICACPR3M6X20RFR
	510	311103-0234	-		8	CYLINDRICACPR3M6X12RFR
	520	311103-0355	-		4	CYLINDRICACPR6M6X25RFR
	530	312105-0325	-		4	SCREW M6S5X10 A4 80
	540	312105-0366	-		2	SCREW M6S6X12RFR
	550	312105-0370	-		8	SCREW M6S6X20RFR
	560	312105-0451	-		4	SCREW M6S8X20RFR
	570	312105-0457	-		8	SCREW M6S8X35RFR
	580	312109-0459	-		4	SCREW M6S8X40H A4 80
	590	312605-0318	-		4	NUT M6M8RFR
	600	315105-0153	-		10	WASHER BRB6,4X12RFR
	610	315105-0165	-		12	WASHER BRB8,4X16RFR

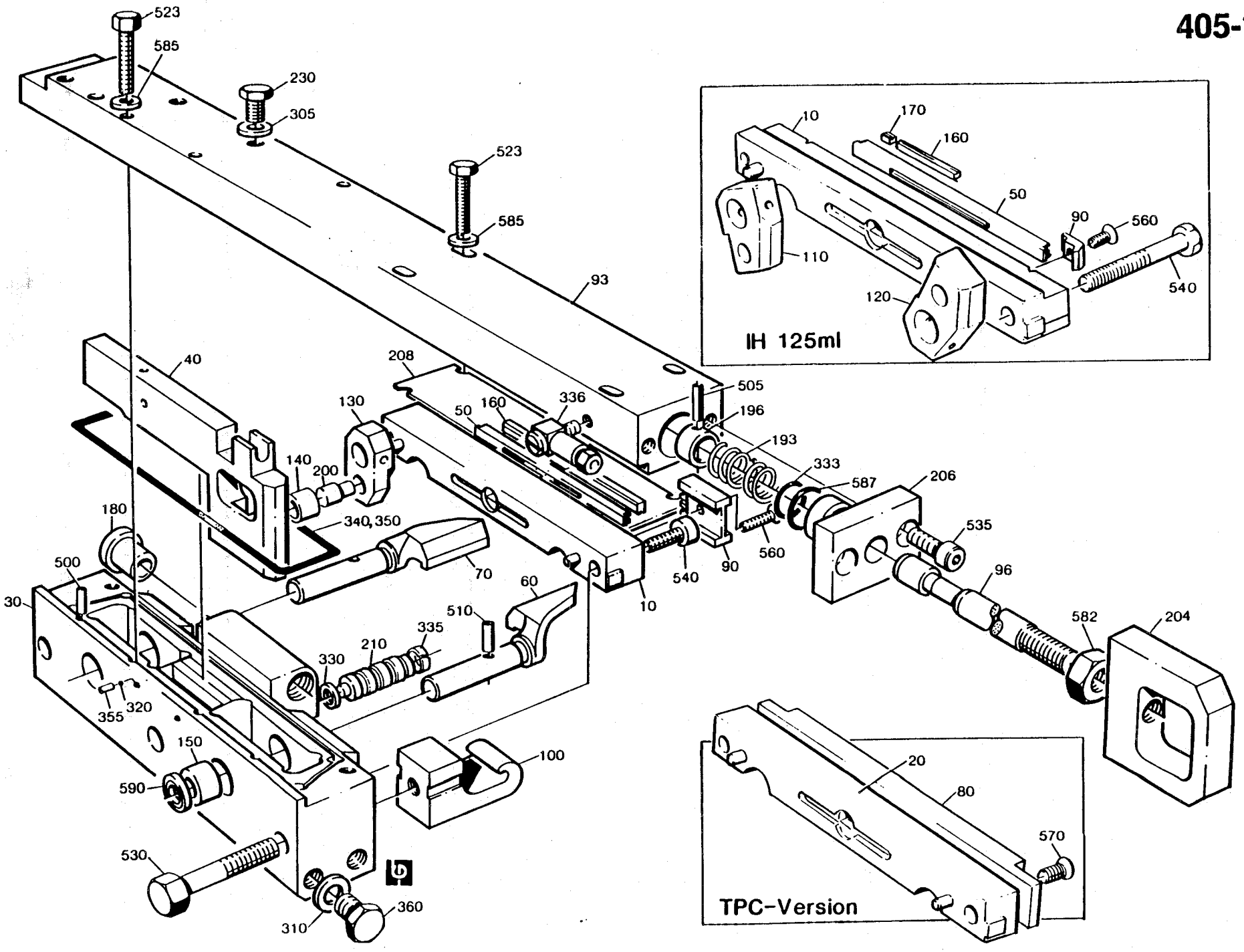
523
585
230
305
523
585
93
40
208
130
50
160
336
505
196
193
333
587
206
140
200
180
340, 350
70
60
500
30
510
335
210
330
355
320
150
590
530
310
360
100
540
90
560
535
96
582
204
10
170
160
50
90
560
110
120
540
IH 125ml
20
80
570
TPC-Version

From	Pos	Part No	SP	UN	Qty	Description
TPC 180 - 250 ml						
	020	271728	S		1	CUTTING JAW
	030	256770	S		1	BEARING HOUSING
	040	272485	S		1	CARRIER RULER
	060	272422	S		1	FOLDING FLAP
	070	272423	S		1	FOLDING FLAP
	080	456819	S		1	CUTTING JAW OUTER
	130	272419	S		2	CARRIER
	540	312115-0370	-		2	SCREW 6X20 A4 80
	570	312155-0327	-		2	SCREW MF6S5X12RFR
TPC 200 ml SLIM						
	020	272264	S		1	CUTTING JAW
	030	272263	S		1	BEARING HOUSING
	040	272487	S		1	CARRIER RULER
	060	272424	S		1	FOLDING FLAP
	070	272425	S		1	FOLDING FLAP
	080	456820	S		1	CUTTING JAW OUTER
	130	272419	S		2	CARRIER
	540	312115-0370	-		2	SCREW 6X20 A4 80
	570	312155-0327	-		2	SCREW MF6S5X12RFR
Common Parts						
	093	256693	S		1	CARRIER
	096	256659	S		1	ROD
	100	752116	S		2	CATCH
	140	22463	S		2	ROLLER
	150	33408	S		4	BEARING
	180	255653	S		2	BUSHING
	193	255742	P		1	COMPRESSION SPRING
	196	255801	S		1	RETAINING RING
	200	256607	S		2	AXLE PIN
	204	256626	S		1	EAR
	206	256706	S		1	BEARING PLATE
	208	257362	S		2	SHIM
	210	490944	S		2	PLUNGER
	230	441355	-		2	BLEEDING SCREW
	305	315237-0106	-		2	GASKET
	310	315237-0109	P		3	SEAL RING 1/8"
	320	90090-0005	P		2	STEEL BALL
	330	90091-0216	P		2	SEAL RING
	333	90091-0091	P		1	SEAL RING
	335	90091-0169	P		4	RING
	336	90134-0058	-		1	BANJO CONNECTION
	340	90153-0015	-	ML	X	ADHESIVE
	350	90242-0093	P	MM	450	O-RING
	355	90287-0128	-		2	GRUB SCREW
	360	90330-0066	-		3	PLUG
	500	311103-0312	-		1	CYLINDRICACPR5M6X25RFR
	505	311111-0207	S		1	HOLLOW PINFRP3X14
	510	311111-0308	S		2	HOLLOW PINFRP5X20
	523	312105-0376	-		8	SCREW M6S6X35RFR
	530	312105-0462	-		2	SCREW M6S8X55RFR
	535	312115-0366	-		2	SCREW 6X12 A4 80
	582	312605-0318	-		1	NUT M6M8RFR
	585	315115-0153	-		8	WASHER TBRB6,4X12RFR
	587	315202-0265	S		1	O-RING 12,3X2,4
	590	315230-0157	P		4	SEAL RING G12X16X3

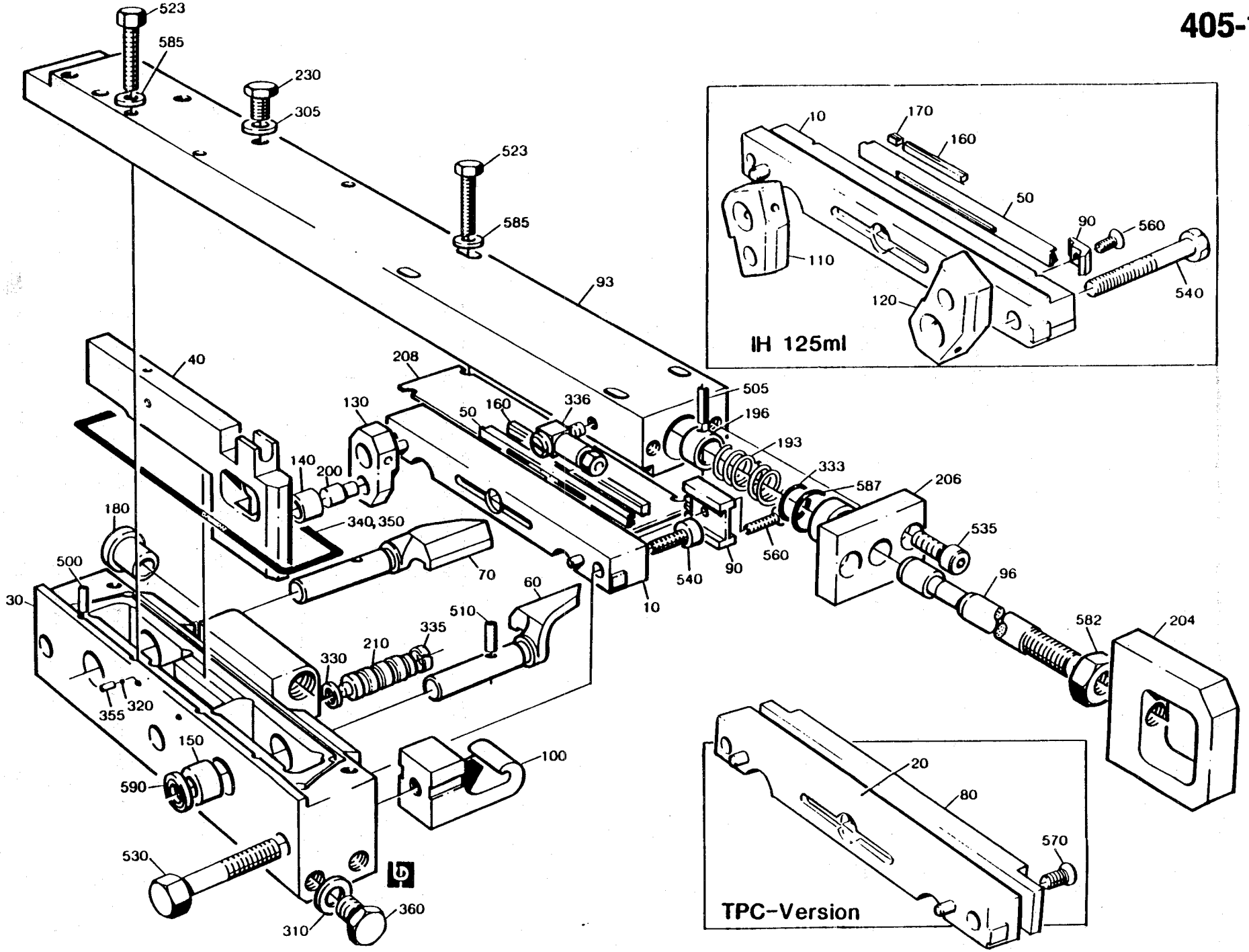
523
585
230
305
523
585
93
40
208
130
50
160
336
505
196
193
333
587
206
140
200
180
340,350
70
500
30
60
510
335
210
330
355
320
150
590
530
310
360
100
10
540
90
560
535
96
582
204
IH 125ml
10
170
160
50
90
560
110
120
540
TPC-Version
20
80
570

From	Pos	Part No	SP	UN	Qty	Description
IH 180 - 250 ml						
	010	256769	S		1	CUTTING JAW
	030	256770	S		1	BEARING HOUSING
	040	272485	S		1	CARRIER RULER
	050	295757	P		2	CUTTING RAIL
	060	272422	S		1	FOLDING FLAP
	070	272423	S		1	FOLDING FLAP
	090	491018	S		2	BRACKET
	130	272419	S		2	CARRIER
	160	295758	UP		2	DOLLY
	540	312115-0370	-		2	SCREW 6X20 A4 80
	560	312145-0291	-		2	SLOTTED HEMFS4X12RFR
IH 125 ml						
	010	256487	S		1	CUTTING JAW
	030	256784	S		1	BEARING HOUSING
	040	272483	S		1	CARRIER RULER
	050	295004	P		2	CUTTING RAIL
	060	272420	S		1	FOLDING FLAP
	070	272421	S		1	FOLDING FLAP
	090	272427	S		2	BRACKET
	110	272416	S		1	CARRIER
	120	272417	S		1	CARRIER
	160	295005	UP		2	DOLLY
	170	295260	P		4	END PIECE
	540	312105-0374	-		2	SCREW M6S6X30RFR
	560	312145-0289	-		2	SLOTTED HEMFS4X10RFR
IH 200 ml SLIM						
	010	441727	S		1	CUTTING JAW
	030	272263	S		1	BEARING HOUSING
	040	272487	S		1	CARRIER RULER
	050	295757	P		2	CUTTING RAIL
	060	272424	S		1	FOLDING FLAP
	070	272425	S		1	FOLDING FLAP
	090	491018	S		2	BRACKET
	130	272419	S		2	CARRIER
	160	752575	UP		2	DOLLY
	170	752574	P		4	END PIECE
	540	312115-0370	-		2	SCREW 6X20 A4 80
	560	312145-0291	-		2	SLOTTED HEMFS4X12RFR

From	Pos	Part No	SP	UN	Qty	Description
Common Parts						
	093	256693	S		1	CARRIER
	096	256659	S		1	ROD
	100	752116	S		2	CATCH
	140	22463	S		2	ROLLER
	150	33408	S		4	BEARING
	180	255653	S		2	BUSHING
	193	255742	P		1	COMPRESSION SPRING
	196	255801	S		1	RETAINING RING
	200	256607	S		2	AXLE PIN
	204	256626	S		1	EAR
	206	256706	S		1	BEARING PLATE
	208	257362	S		2	SHIM
	210	490944	S		2	PLUNGER
	230	441355	-		2	BLEEDING SCREW
	305	315237-0106	-		2	GASKET
	310	315237-0109	P		3	SEAL RING 1/8"
	320	90090-0005	P		2	STEEL BALL
	330	90091-0216	P		2	SEAL RING
	333	90091-0091	P		1	SEAL RING
	335	90091-0169	P		4	RING
	336	90134-0058	-		1	BANJO CONNECTION
	340	90153-0015	-	ML	X	ADHESIVE
	350	90242-0093	P	MM	450	O-RING
	355	90287-0128	-		2	GRUB SCREW
	360	90330-0066	-		3	PLUG
	500	311103-0312	-		1	CYLINDRICACPR5M6X25RFR
	505	311111-0207	S		1	HOLLOW PINFRP3X14
	510	311111-0308	S		2	HOLLOW PINFRP5X20
	523	312105-0376	-		8	SCREW M6S6X35RFR
	530	312105-0462	-		2	SCREW M6S8X55RFR
	535	312115-0366	-		2	SCREW 6X12 A4 80
	582	312605-0318	-		1	NUT M6M8RFR
	585	315115-0153	-		8	WASHER TBRB6,4X12RFR
	587	315202-0265	S		1	O-RING 12,3X2,4
	590	315230-0157	P		4	SEAL RING G12X16X3

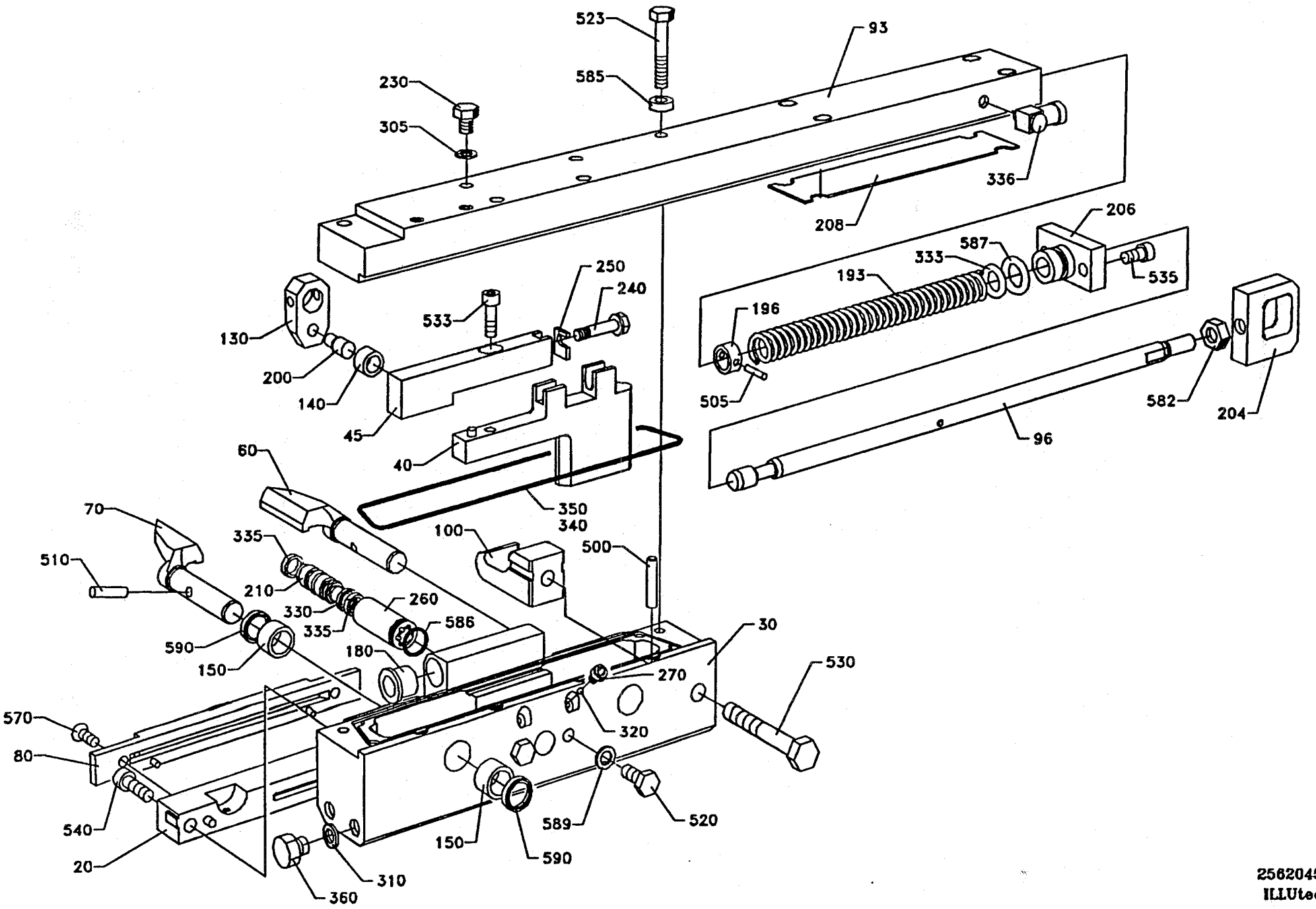

2562045A
ILLUtec®

From	Pos	Part No	SP	UN	Qty	Description
TPC 180 - 250 ml						
	020	271728	S		1	CUTTING JAW
	030	752113	S		1	BEARING HOUSING
	040	751575	S		1	RULERHALF
	045	751577	S		1	RULERHALF
	060	272422	S		1	FOLDING FLAP
	070	272423	S		1	FOLDING FLAP
	080	456819	S		1	CUTTING JAW OUTER
	130	272419	S		2	CARRIER
	540	312115-0370	-		2	SCREW 6X20 A4 80
	570	312155-0327	-		2	SCREW MF6S5X12RFR
TPC 200 ml SLIM						
	020	272264	S		1	CUTTING JAW
	030	752225	S		1	BEARING HOUSING
	040	752009	S		1	RULERHALF
	045	752010	S		1	RULERHALF
	060	272424	S		1	FOLDING FLAP
	070	272425	S		1	FOLDING FLAP
	080	456820	S		1	CUTTING JAW OUTER
	130	272419	S		2	CARRIER
	540	312115-0370	-		2	SCREW 6X20 A4 80
	570	312155-0327	-		2	SCREW MF6S5X12RFR
Common Parts						
	093	256693	S		1	CARRIER
	096	256659	S		1	ROD
	100	752116	S		2	CATCH
	140	22463	S		2	ROLLER
	150	33408	S		4	BEARING
	180	255653	S		2	BUSHING
	193	255742	P		1	COMPRESSION SPRING
	196	255801	S		1	RETAINING RING
	200	256607	S		2	AXLE PIN
	204	256626	S		1	EAR
	206	256706	S		1	BEARING PLATE
	208	257362	S		2	SHIM
	210	752115	S		2	PLUNGER
	240	751579	S		1	ADJUSTMENT SCREW
	250	751580	S		1	SHIM
	260	752288	S		2	SLEEVE
	270	752476	S		2	SCREW
	305	315237-0106	-		2	GASKET

From	Pos	Part No	SP	UN	Qty	Description
	310	315237-0109	P		3	SEAL RING 1/8"
	320	90090-0005	P		2	STEEL BALL
	330	90091-0216	P		2	SEAL RING
	333	90091-0091	P		1	SEAL RING
	335	90091-0169	P		4	RING
	336	90134-0058	-		1	BANJO CONNECTION
	340	90153-0015	-	ML	X	ADHESIVE
	350	90242-0093	P	MM	450	O-RING
	360	90330-0066	-		3	PLUG
	500	311103-0312	-		1	CYLINDRICACPR5M6X25RFR
	505	311111-0207	S		1	HOLLOW PINFRP3X14
	510	311111-0308	S		2	HOLLOW PINFRP5X20
	515	312105-0362	-		2	SCREW M6S6X8RFR
	520	312105-0367	-		2	SCREW M6S6X14RFR
	523	312105-0376	-		8	SCREW M6S6X35RFR
	530	312105-0462	-		2	SCREW M6S8X55RFR
	533	312115-0329	-		1	SCREW MC6S 5X16 A4 80
	535	312115-0366	-		2	SCREW MC6S 6X12 A4 80
	582	312605-0318	-		1	NUT M6M8RFR
	585	315115-0153	-		8	WASHER TBRB6,4X12RFR
	586	315202-0110	S		2	O-RING 12,1X1,6
	587	315202-0265	S		1	O-RING 12,3X2,4
	589	315211-0103	P		2	SEALING WASHER
	590	315230-0157	P		4	SEAL RING G12X16X3

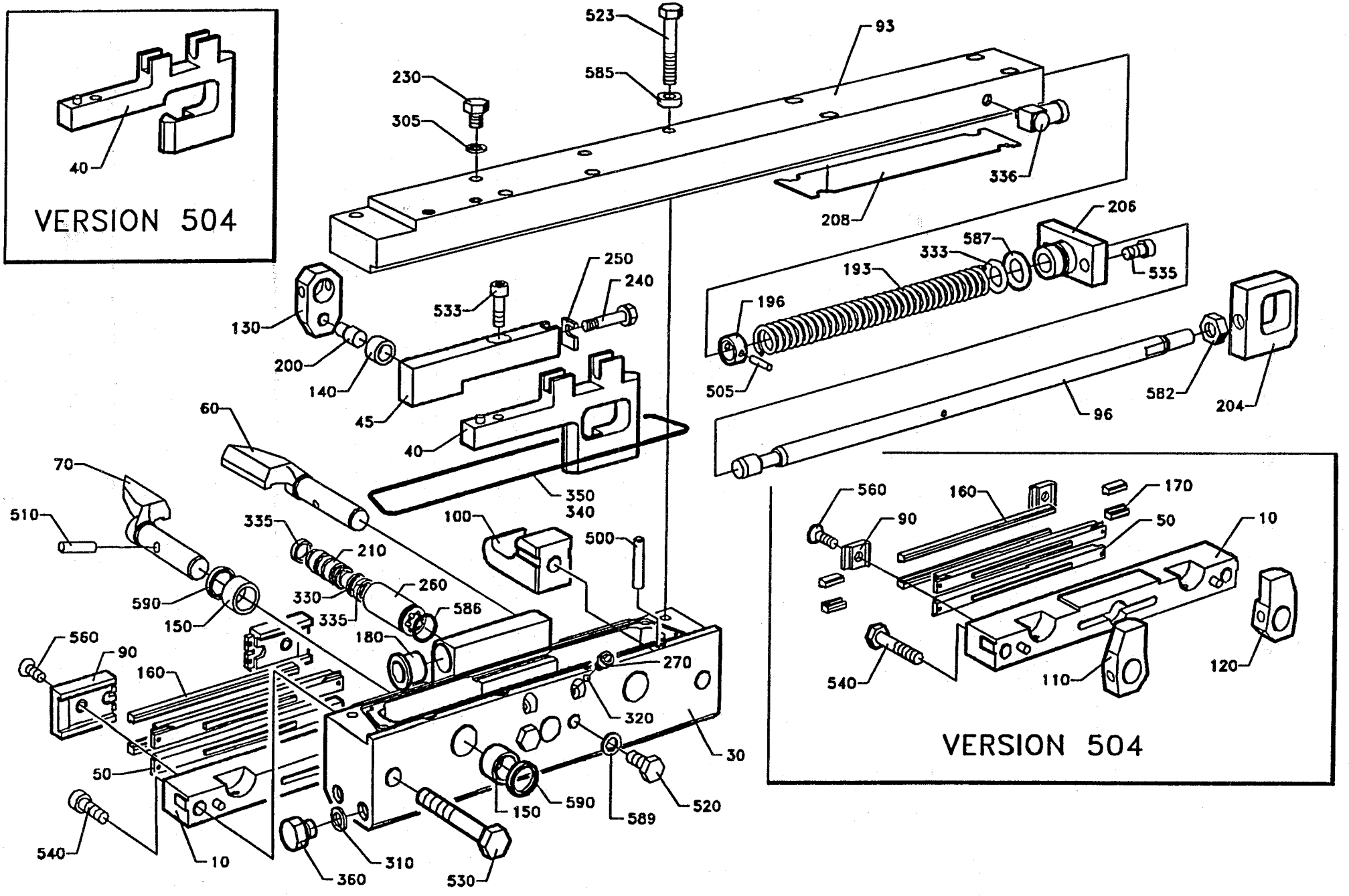
VERSION 504
40
523
585
230
305
93
336
208
206
587
333
193
535
196
505
582
204
96
250
240
533
130
200
140
45
40
350
340
60
70
510
590
150
335
210
260
330
586
180
100
500
560
90
160
50
10
540
120
110
170
270
320
30
520
589
150
590
310
360
530

VERSION 504

From	Pos	Part No	SP	UN	Qty	Description
IH 180 - 284 ml						
	010	256769	S		1	CUTTING JAW
	030	752113	S		1	BEARING HOUSING
	040	751575	S		1	RULERHALF
	045	751577	S		1	RULERHALF
	050	295757	P		2	CUTTING RAIL
	060	272422	S		1	FOLDING FLAP
	070	272423	S		1	FOLDING FLAP
	090	491018	S		2	BRACKET
	130	272419	S		2	CARRIER
	160	295758	UP		2	DOLLY
	540	312115-0370	-		2	SCREW 6X20 A4 80
	560	312145-0291	-		2	SLOTTED HEMFS4X12RFR
IH 125 ml						
	010	256487	S		1	CUTTING JAW
	030	752226	S		1	BEARING HOUSING
	040	752014	S		1	RULERHALF
	045	752015	S		1	RULERHALF
	050	295004	P		2	CUTTING RAIL
	060	272420	S		1	FOLDING FLAP
	070	272421	S		1	FOLDING FLAP
	090	272427	S		2	BRACKET
	110	272416	S		1	CARRIER
	120	272417	S		1	CARRIER
	160	295005	UP		2	DOLLY
	170	295260	P		4	END PIECE
	540	312105-0374	-		2	SCREW M6S6X30RFR
	560	312145-0289	-		2	SLOTTED HEMFS4X10RFR
Common Parts						
	093	256693	S		1	CARRIER
	096	256659	S		1	ROD
	100	752116	S		2	CATCH
	140	22463	S		2	ROLLER
	150	33408	S		4	BEARING
	180	255653	S		2	BUSHING
	193	255742	P		1	COMPRESSION SPRING
	196	255801	S		1	RETAINING RING
	200	256607	S		2	AXLE PIN
	204	256626	S		1	EAR
	206	256706	S		1	BEARING PLATE
	208	257362	S		2	SHIM
	210	752115	S		2	PLUNGER

From	Pos	Part No	SP	UN	Qty	Description
	240	751579	S		1	ADJUSTMENT SCREW
	250	751580	S		1	SHIM
	260	752288	S		2	SLEEVE
	270	752476	S		2	SCREW
	305	315237-0106	-		2	GASKET
	310	315237-0109	P		3	SEAL RING 1/8"
	320	90090-0005	P		2	STEEL BALL
	330	90091-0216	P		2	SEAL RING
	333	90091-0091	P		1	SEAL RING
	335	90091-0169	P		4	RING
	336	90134-0058	-		1	BANJO CONNECTION
	340	90153-0015	-	ML	X	ADHESIVE
	350	90242-0093	P	MM	450	O-RING
	360	90330-0066	-		3	PLUG
	500	311103-0312	-		1	CYLINDRICACPR5M6X25RFR
	505	311111-0207	S		1	HOLLOW PINFRP3X14
	510	311111-0308	S		2	HOLLOW PINFRP5X20
	515	312105-0362	-		2	SCREW M6S6X8RFR
	520	312105-0367	-		2	SCREW M6S6X14RFR
	523	312105-0376	-		8	SCREW M6S6X35RFR
	530	312105-0462	-		2	SCREW M6S8X55RFR
	533	312115-0329	-		1	SCREW MC6S 5X16 A4 80
	535	312115-0366	-		2	SCREW MC6S 6X12 A4 80
	582	312605-0318	-		1	NUT M6M8RFR
	585	315115-0153	-		8	WASHER TBRB6,4X12RFR
	586	315202-0110	S		2	O-RING 12,1X1,6
	587	315202-0265	S		1	O-RING 12,3X2,4
	589	315211-0103	P		2	SEALING WASHER
	590	315230-0157	P		4	SEAL RING G12X16X3

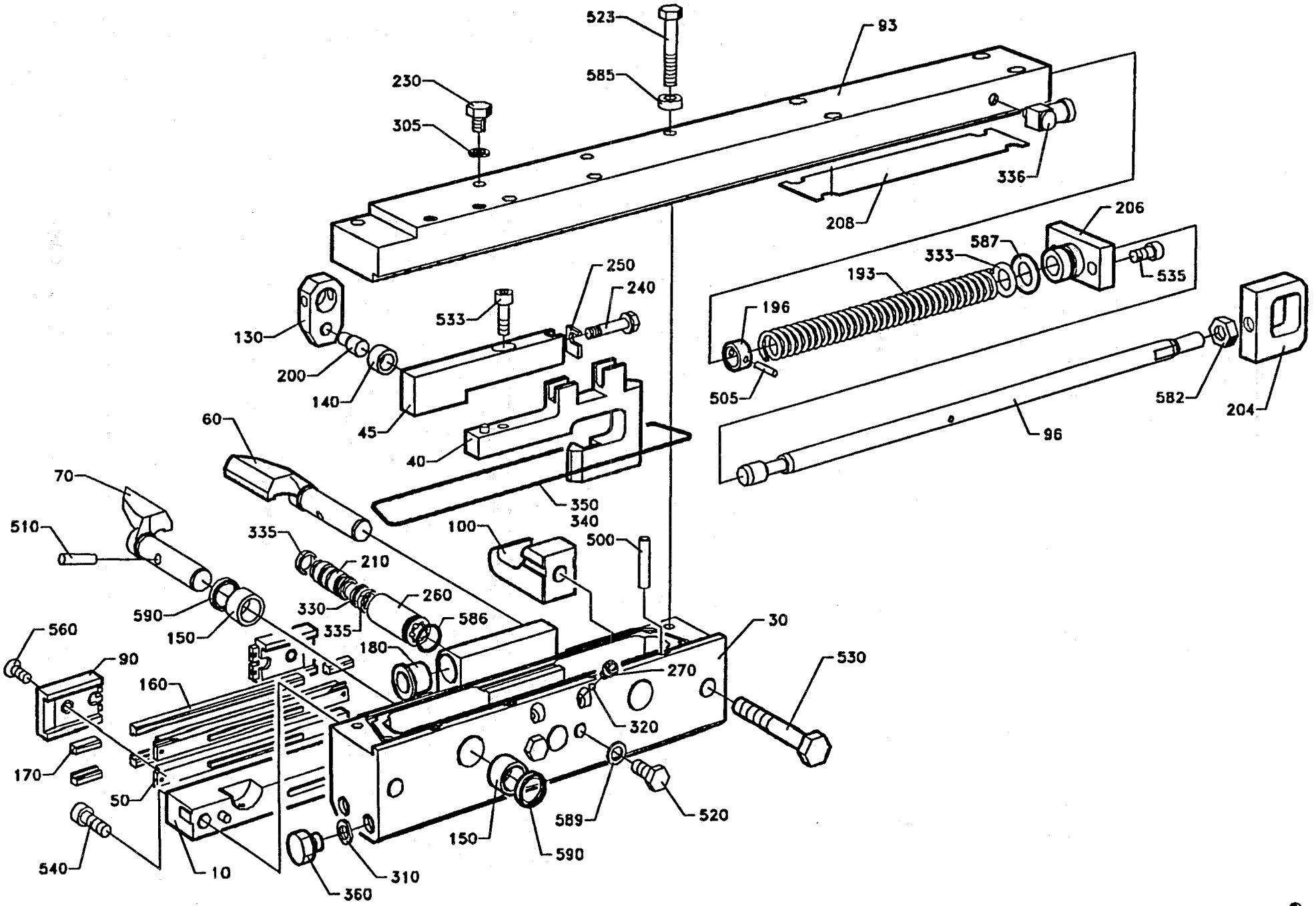
523
93
585
230
305
336
208
206
587
333
193
535
196
505
582
204
96
250
240
533
130
200
140
45
40
60
350
340
70
510
335
210
100
500
590
150
330
260
586
335
180
560
90
160
30
530
270
320
170
50
589
520
150
590
540
10
310
360

From	Pos	Part No	SP	UN	Qty	Description
IH 200 ml SLIM						
	010	441727	S		1	CUTTING JAW
	030	752225	S		1	BEARING HOUSING
	040	752009	S		1	RULERHALF
	045	752010	S		1	RULERHALF
	050	295757	P		2	CUTTING RAIL
	060	272424	S		1	FOLDING FLAP
	070	272425	S		1	FOLDING FLAP
	090	491018	S		2	BRACKET
	130	272419	S		2	CARRIER
	160	752575	UP		2	DOLLY
	170	752574	P		4	END PIECE
	540	312115-0370	-		2	SCREW 6X20 A4 80
	560	312145-0291	-		2	SLOTTED HEMFS4X12RFR
Common Parts						
	093	256693	S		1	CARRIER
	096	256659	S		1	ROD
	100	752116	S		2	CATCH
	140	22463	S		2	ROLLER
	150	33408	S		4	BEARING
	180	255653	S		2	BUSHING
	193	255742	P		1	COMPRESSION SPRING
	196	255801	S		1	RETAINING RING
	200	256607	S		2	AXLE PIN
	204	256626	S		1	EAR
	206	256706	S		1	BEARING PLATE
	208	257362	S		2	SHIM
	210	752115	S		2	PLUNGER
	240	751579	S		1	ADJUSTMENT SCREW
	250	751580	S		1	SHIM
	260	752288	S		2	SLEEVE
	270	752476	S		2	SCREW
	305	315237-0106	-		2	GASKET
	310	315237-0109	P		3	SEAL RING 1/8"
	320	90090-0005	P		2	STEEL BALL
	330	90091-0216	P		2	SEAL RING
	333	90091-0091	P		1	SEAL RING
	335	90091-0169	P		4	RING
	336	90134-0058	-		1	BANJO CONNECTION
	340	90153-0015	-	ML	X	ADHESIVE
	350	90242-0093	P	MM	450	O-RING
	360	90330-0066	-		3	PLUG

From	Pos	Part No	SP	UN	Qty	Description
	500	311103-0312	-		1	CYLINDRICACPR5M6X25RFR
	505	311111-0207	S		1	HOLLOW PINFRP3X14
	510	311111-0308	S		2	HOLLOW PINFRP5X20
	515	312105-0362	-		2	SCREW M6S6X8RFR
	520	312105-0367	-		2	SCREW M6S6X14RFR
	523	312105-0376	-		8	SCREW M6S6X35RFR
	530	312105-0462	-		2	SCREW M6S8X55RFR
	533	312115-0329	-		1	SCREW MC6S 5X16 A4 80
	535	312115-0366	-		2	SCREW MC6S 6X12 A4 80
	582	312605-0318	-		1	NUT M6M8RFR
	585	315115-0153	-		8	WASHER TBRB6,4X12RFR
	586	315202-0110	S		2	O-RING 12,1X1,6
	587	315202-0265	S		1	O-RING 12,3X2,4
	589	315211-0103	P		2	SEALING WASHER
	590	315230-0157	P		4	SEAL RING G12X16X3

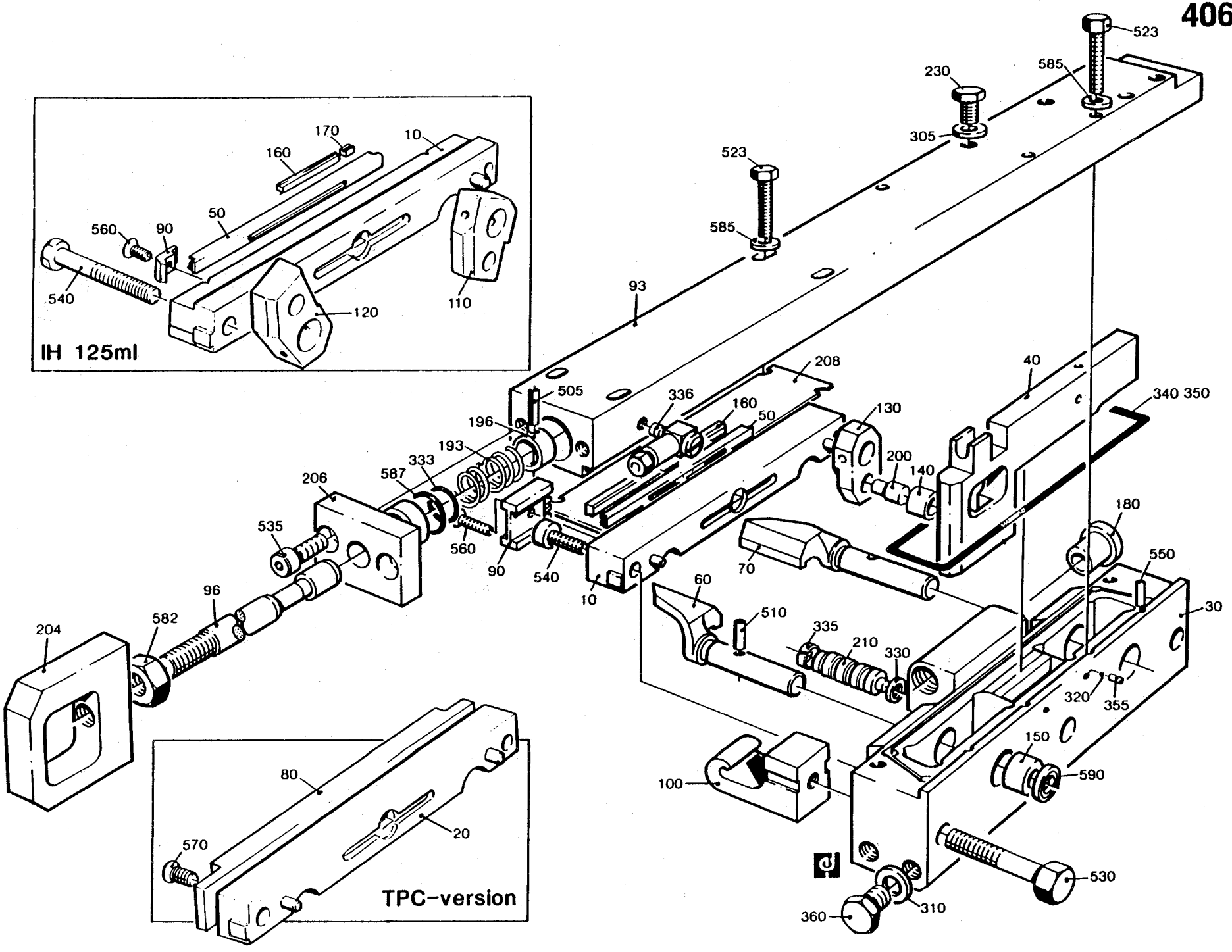
IH 125ml
170
160
10
50
560
90
540
120
110
TPC-version
80
20
570
523
585
230
305
93
208
505
336
160
50
196
193
333
587
206
535
560
90
540
10
130
200
140
40
340 350
70
180
550
30
60
510
335
210
330
320
355
150
590
100
530
310
360
582
96
204

From	Pos	Part No	SP	UN	Qty	Description
TPC 180 - 250 ml						
	020	271728	S		1	CUTTING JAW
	030	256770	S		1	BEARING HOUSING
	040	G- 272484	S		1	CARRIER RULER
	060	272422	S		1	FOLDING FLAP
	070	272423	S		1	FOLDING FLAP
	080	456819	S		1	CUTTING JAW OUTER
	130	272419	S		2	CARRIER
	540	312115-0370	-		2	SCREW 6X20 A4 80
	570	312155-0327	-		2	SCREW MF6S5X12RFR
TPC 200 ml SLIM						
	020	272264	S		1	CUTTING JAW
	030	272263	S		1	BEARING HOUSING
	040	272486	S		1	CARRIER RULER
	060	272424	S		1	FOLDING FLAP
	070	272425	S		1	FOLDING FLAP
	080	456820	S		1	CUTTING JAW OUTER
	130	272419	S		2	CARRIER
	540	312115-0370	-		2	SCREW 6X20 A4 80
	570	312155-0327	-		2	SCREW MF6S5X12RFR
Common Parts						
	093	256692	S		1	CARRIER
	096	256659	S		1	ROD
	100	752116	S		2	CATCH
	140	22463	S		2	ROLLER
	150	33408	S		4	BEARING
	180	255653	S		2	BUSHING
	193	255742	P		1	COMPRESSION SPRING
	196	255801	S		1	RETAINING RING
	200	256607	S		2	AXLE PIN
	204	256626	S		1	EAR
	206	256706	S		1	BEARING PLATE
	208	257362	S		2	SHIM
	210	490944	S		2	PLUNGER
	230	441355	-		2	BLEEDING SCREW
	305	315237-0106	-		2	GASKET
	310	315237-0109	P		3	SEAL RING 1/8"
	320	90090-0005	P		2	STEEL BALL
	330	90091-0216	P		2	SEAL RING
	333	90091-0091	P		1	SEAL RING
	335	90091-0169	P		4	RING
	336	90134-0058	-		1	BANJO CONNECTION

From	Pos	Part No	SP	UN	Qty	Description
	340	90153-0015	-	ML	X	ADHESIVE
	350	90242-0093	P	MM	450	O-RING
	355	90287-0128	-		2	GRUB SCREW
	360	90330-0066	-		3	PLUG
	500	311103-0312	-		1	CYLINDRICACPR5M6X25RFR
	505	311111-0207	S		1	HOLLOW PINFRP3X14
	510	311111-0308	S		2	HOLLOW PINFRP5X20
	523	312105-0376	-		8	SCREW M6S6X35RFR
	530	312105-0462	-		2	SCREW M6S8X55RFR
	535	312115-0366	-		2	SCREW 6X12 A4 80
	582	312605-0318	-		1	NUT M6M8RFR
	585	315115-0153	-		8	WASHER TBRB6,4X12RFR
	587	315202-0265	S		1	O-RING 12,3X2,4
	590	315230-0157	P		4	SEAL RING G12X16X3

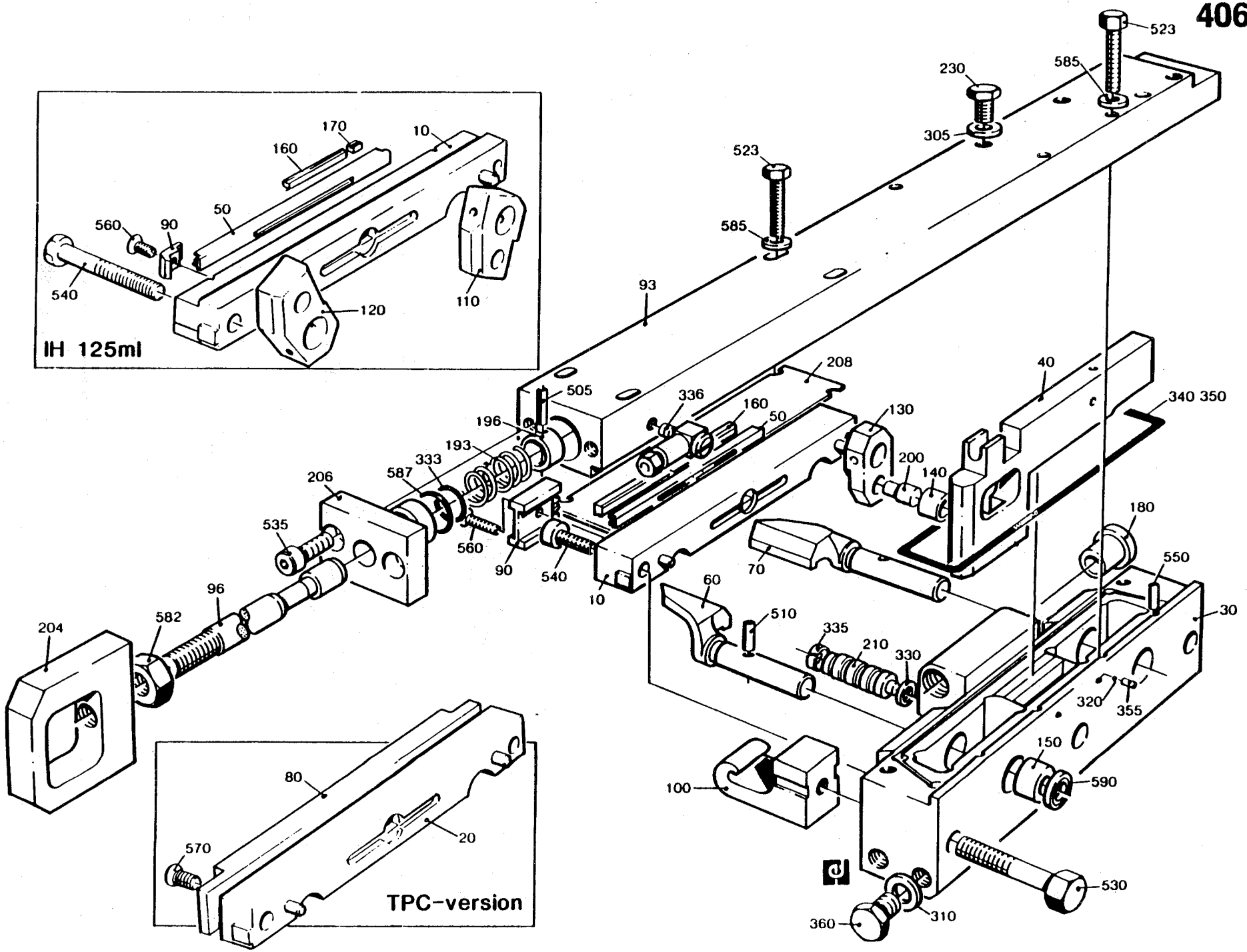
IH 125ml
170
160
10
560
90
50
540
120
110
TPC-version
80
570
20
523
585
230
305
93
208
505
336
160
50
196
193
333
587
206
535
560
90
540
10
130
200
140
40
340 350
180
550
30
70
60
510
335
210
330
320
355
96
582
204
100
150
590
530
360
310

From	Pos	Part No	SP	UN	Qty	Description
IH 180 - 250 ml						
	010	256769	S		1	CUTTING JAW
	030	256770	S		1	BEARING HOUSING
	040	272484	S		1	CARRIER RULER
	050	295757	P		2	CUTTING RAIL
	060	272422	S		1	FOLDING FLAP
	070	272423	S		1	FOLDING FLAP
	090	491018	S		2	BRACKET
	130	272419	S		2	CARRIER
	160	295758	UP		2	DOLLY
	540	312115-0370	-		2	SCREW 6X20 A4 80
	560	312145-0291	-		2	SLOTTED HEMFS4X12RFR
IH 125 ml						
	010	256487	S		1	CUTTING JAW
	030	256784	S		1	BEARING HOUSING
	040	272482	S		1	CARRIER RULER
	050	295004	P		2	CUTTING RAIL
	060	272420	S		1	FOLDING FLAP
	070	272421	S		1	FOLDING FLAP
	090	272427	S		2	BRACKET
	110	272416	S		1	CARRIER
	120	272417	S		1	CARRIER
	160	295005	UP		2	DOLLY
	170	295260	P		4	END PIECE
	540	312105-0374	-		2	SCREW M6S6X30RFR
	560	312145-0289	-		2	SLOTTED HEMFS4X10RFR
IH 200 ml SLIM						
	010	441727	S		1	CUTTING JAW
	030	272263	S		1	BEARING HOUSING
	040	272486	S		1	CARRIER RULER
	050	295757	P		2	CUTTING RAIL
	060	272424	S		1	FOLDING FLAP
	070	272425	S		1	FOLDING FLAP
	090	491018	S		2	BRACKET
	130	272419	S		2	CARRIER
	160	752575	UP		2	DOLLY
	170	752574	P		4	END PIECE
	540	312115-0370	-		2	SCREW 6X20 A4 80
	560	312145-0291	-		2	SLOTTED HEMFS4X12RFR

From	Pos	Part No	SP	UN	Qty	Description
Common Parts						
	093	256692	S		1	CARRIER
	096	256659	S		1	ROD
	100	752116	S		2	CATCH
	140	22463	S		2	ROLLER
	150	33408	S		4	BEARING
	180	255653	S		2	BUSHING
	193	255742	P		1	COMPRESSION SPRING
	196	255801	S		1	RETAINING RING
	200	256607	S		2	AXLE PIN
	204	256626	S		1	EAR
	206	256706	S		1	BEARING PLATE
	208	257362	S		2	SHIM
	210	490944	S		2	PLUNGER
	230	441355	-		2	BLEEDING SCREW
	305	315237-0106	-		2	GASKET
	310	315237-0109	P		3	SEAL RING 1/8"
	320	90090-0005	P		2	STEEL BALL
	330	90091-0216	P		2	SEAL RING
	333	90091-0091	P		1	SEAL RING
	335	90091-0169	P		4	RING
	336	90134-0058	-		1	BANJO CONNECTION
	340	90153-0015	-	ML	X	ADHESIVE
	350	90242-0093	P	MM	450	O-RING
	355	90287-0128	-		2	GRUB SCREW
	360	90330-0066	-		3	PLUG
	500	311103-0312	-		1	CYLINDRICACPR5M6X25RFR
	505	311111-0207	S		1	HOLLOW PINFRP3X14
	510	311111-0308	S		2	HOLLOW PINFRP5X20
	523	312105-0376	-		8	SCREW M6S6X35RFR
	530	312105-0462	-		2	SCREW M6S8X55RFR
	535	312115-0366	-		2	SCREW 6X12 A4 80
	582	312605-0318	-		1	NUT M6M8RFR
	585	315115-0153	-		8	WASHER TBRB6,4X12RFR
	587	315202-0265	S		1	O-RING 12,3X2,4
	590	315230-0157	P		4	SEAL RING G12X16X3

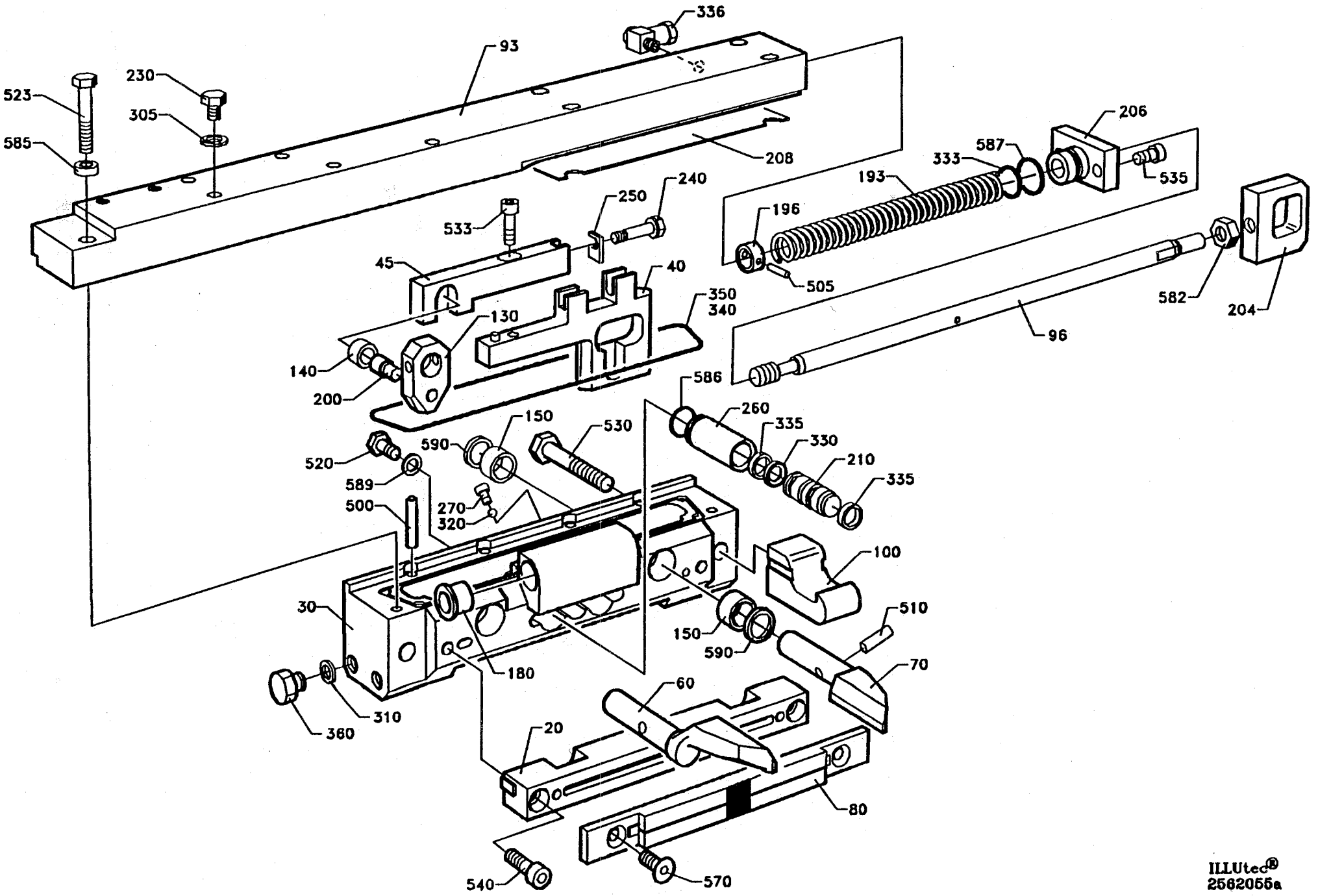

ILLUtec®
2562055a

From	Pos	Part No	SP	UN	Qty	Description
TPC 180 - 250 ml						
	020	271728	S		1	CUTTING JAW
	030	752113	S		1	BEARING HOUSING
	040	751576	S		1	RULERHALF
	045	751578	S		1	RULERHALF
	060	272422	S		1	FOLDING FLAP
	070	272423	S		1	FOLDING FLAP
	080	456819	S		1	CUTTING JAW OUTER
	130	272419	S		2	CARRIER
	540	312115-0370	-		2	SCREW 6X20 A4 80
	570	312155-0327	-		2	SCREW MF6S5X12RFR
TPC 200 ml SLIM						
	020	272264	S		1	CUTTING JAW
	030	752225	S		1	BEARING HOUSING
	040	752011	S		1	RULERHALF
	045	752012	S		1	RULERHALF
	060	272424	S		1	FOLDING FLAP
	070	272425	S		1	FOLDING FLAP
	080	456820	S		1	CUTTING JAW OUTER
	130	272419	S		2	CARRIER
	540	312115-0370	-		2	SCREW 6X20 A4 80
	570	312155-0327	-		2	SCREW MF6S5X12RFR
Common Parts						
	093	256692	S		1	CARRIER
	096	256659	S		1	ROD
	100	752116	S		2	CATCH
	140	22463	S		2	ROLLER
	150	33408	S		4	BEARING
	180	255653	S		2	BUSHING
	193	255742	P		1	COMPRESSION SPRING
	196	255801	S		1	RETAINING RING
	200	256607	S		2	AXLE PIN
	204	256626	S		1	EAR
	206	256706	S		1	BEARING PLATE
	208	257362	S		2	SHIM
	210	752115	S		2	PLUNGER
	240	751579	S		1	ADJUSTMENT SCREW
	250	751580	S		1	SHIM
	260	752288	S		2	SLEEVE
	270	752476	S		2	SCREW
	305	315237-0106	-		2	GASKET
	310	315237-0109	P		3	SEAL RING 1/8"

From	Pos	Part No	SP	UN	Qty	Description
	320	90090-0005	P		2	STEEL BALL
	330	90091-0216	P		2	SEAL RING
	333	90091-0091	P		1	SEAL RING
	335	90091-0169	P		4	RING
	336	90134-0058	-		1	BANJO CONNECTION
	340	90153-0015	-	ML	X	ADHESIVE
	350	90242-0093	P	MM	450	O-RING
	360	90330-0066	-		3	PLUG
	500	311103-0312	-		1	CYLINDRICACPR5M6X25RFR
	505	311111-0207	S		1	HOLLOW PINFRP3X14
	510	311111-0308	S		2	HOLLOW PINFRP5X20
	515	312105-0362	-		2	SCREW M6S6X8RFR
	520	312105-0367	-		2	SCREW M6S6X14RFR
	523	312105-0376	-		8	SCREW M6S6X35RFR
	530	312105-0462	-		2	SCREW M6S8X55RFR
	533	312115-0329	-		1	SCREW MC6S 5X16 A4 80
	535	312115-0366	-		2	SCREW MC6S 6X12 A4 80
	582	312605-0318	-		1	NUT M6M8RFR
	585	315115-0153	-		8	WASHER TBRB6,4X12RFR
	586	315202-0110	S		2	O-RING 12,1X1,6
	587	315202-0265	S		1	O-RING 12,3X2,4
	589	315211-0103	P		2	SEALING WASHER
	590	315230-0157	P		4	SEAL RING G12X16X3

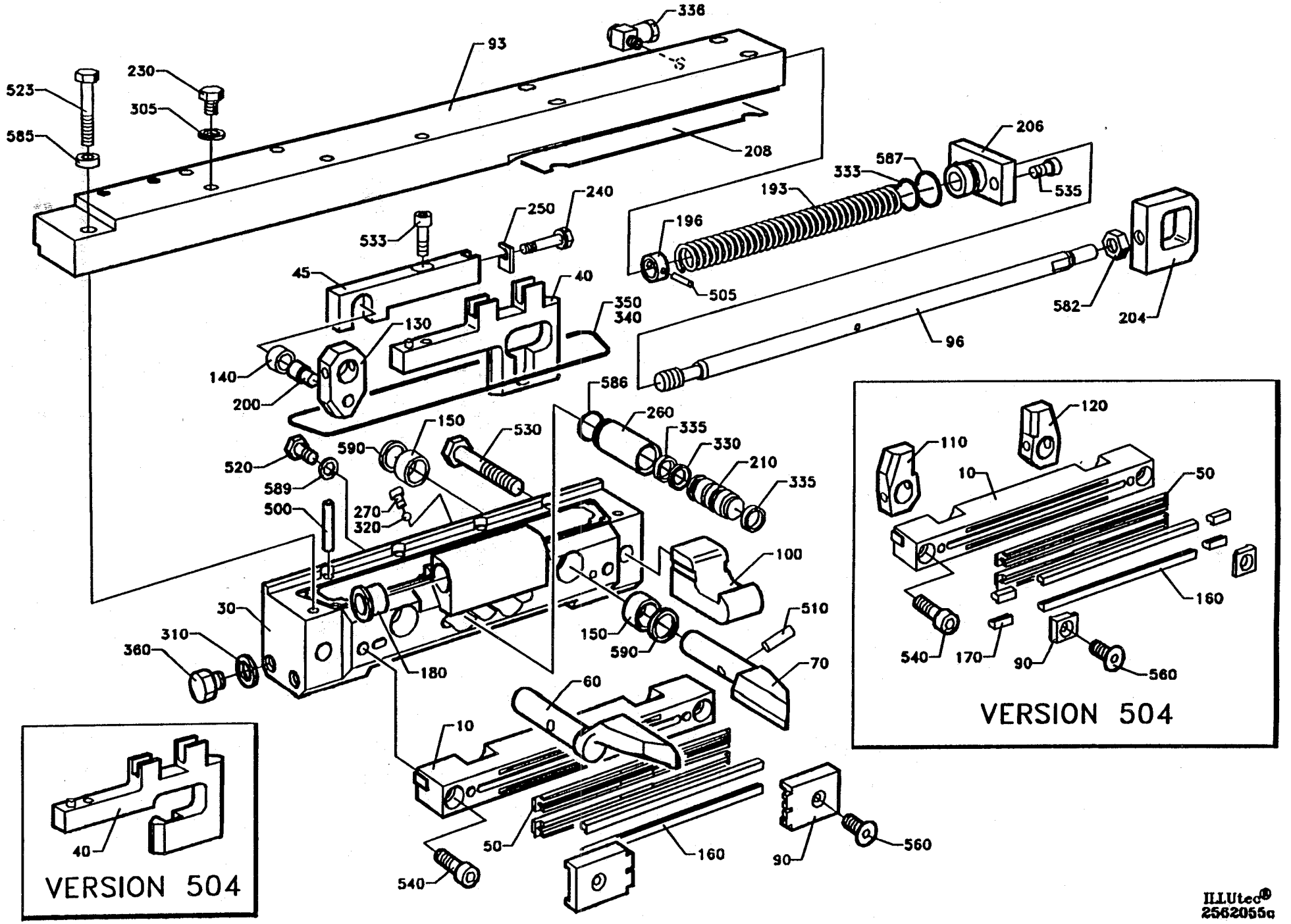

ILLUtec®
2562055a

From	Pos	Part No	SP	UN	Qty	Description
IH 180 - 284 ml						
	010	256769	S		1	CUTTING JAW
	030	752113	S		1	BEARING HOUSING
	040	751576	S		1	RULERHALF
	045	751578	S		1	RULERHALF
	050	295757	P		2	CUTTING RAIL
	060	272422	S		1	FOLDING FLAP
	070	272423	S		1	FOLDING FLAP
	090	491018	S		2	BRACKET
	130	272419	S		2	CARRIER
	160	295758	UP		2	DOLLY
	540	312115-0370	-		2	SCREW 6X20 A4 80
	560	312145-0291	-		2	SLOTTED HEMFS4X12RFR
IH 125 ml						
	010	256487	S		1	CUTTING JAW
	030	752226	S		1	BEARING HOUSING
	040	752016	S		1	RULERHALF
	045	752017	S		1	RULERHALF
	050	295004	P		2	CUTTING RAIL
	060	272420	S		1	FOLDING FLAP
	070	272421	S		1	FOLDING FLAP
	090	272427	S		2	BRACKET
	110	272416	S		1	CARRIER
	120	272417	S		1	CARRIER
	160	295005	UP		2	DOLLY
	170	295260	P		4	END PIECE
	540	312105-0374	-		2	SCREW M6S6X30RFR
	560	312145-0289	-		2	SLOTTED HEMFS4X10RFR
Common Parts						
	093	256692	S		1	CARRIER
	096	256659	S		1	ROD
	100	752116	S		2	CATCH
	140	22463	S		2	ROLLER
	150	33408	S		4	BEARING
	180	255653	S		2	BUSHING
	193	255742	P		1	COMPRESSION SPRING
	196	255801	S		1	RETAINING RING
	200	256607	S		2	AXLE PIN
	204	256626	S		1	EAR
	206	256706	S		1	BEARING PLATE
	208	257362	S		2	SHIM
	210	752115	S		2	PLUNGER

From	Pos	Part No	SP	UN	Qty	Description
	240	751579	S		1	ADJUSTMENT SCREW
	250	751580	S		1	SHIM
	260	752288	S		2	SLEEVE
	270	752476	S		2	SCREW
	305	315237-0106	-		2	GASKET
	310	315237-0109	P		3	SEAL RING 1/8"
	320	90090-0005	P		2	STEEL BALL
	330	90091-0216	P		2	SEAL RING
	333	90091-0091	P		1	SEAL RING
	335	90091-0169	P		4	RING
	336	90134-0058	-		1	BANJO CONNECTION
	340	90153-0015	-	ML	X	ADHESIVE
	350	90242-0093	P	MM	450	O-RING
	360	90330-0066	-		3	PLUG
	500	311103-0312	-		1	CYLINDRICACPR5M6X25RFR
	505	311111-0207	S		1	HOLLOW PINFRP3X14
	510	311111-0308	S		2	HOLLOW PINFRP5X20
	515	312105-0362	-		2	SCREW M6S6X8RFR
	520	312105-0367	-		2	SCREW M6S6X14RFR
	523	312105-0376	-		8	SCREW M6S6X35RFR
	530	312105-0462	-		2	SCREW M6S8X55RFR
	533	312115-0329	-		1	SCREW MC6S 5X16 A4 80
	535	312115-0366	-		2	SCREW MC6S 6X12 A4 80
	582	312605-0318	-		1	NUT M6M8RFR
	585	315115-0153	-		8	WASHER TBRB6,4X12RFR
	586	315202-0110	S		2	O-RING 12,1X1,6
	587	315202-0265	S		1	O-RING 12,3X2,4
	589	315211-0103	P		2	SEALING WASHER
	590	315230-0157	P		4	SEAL RING G12X16X3

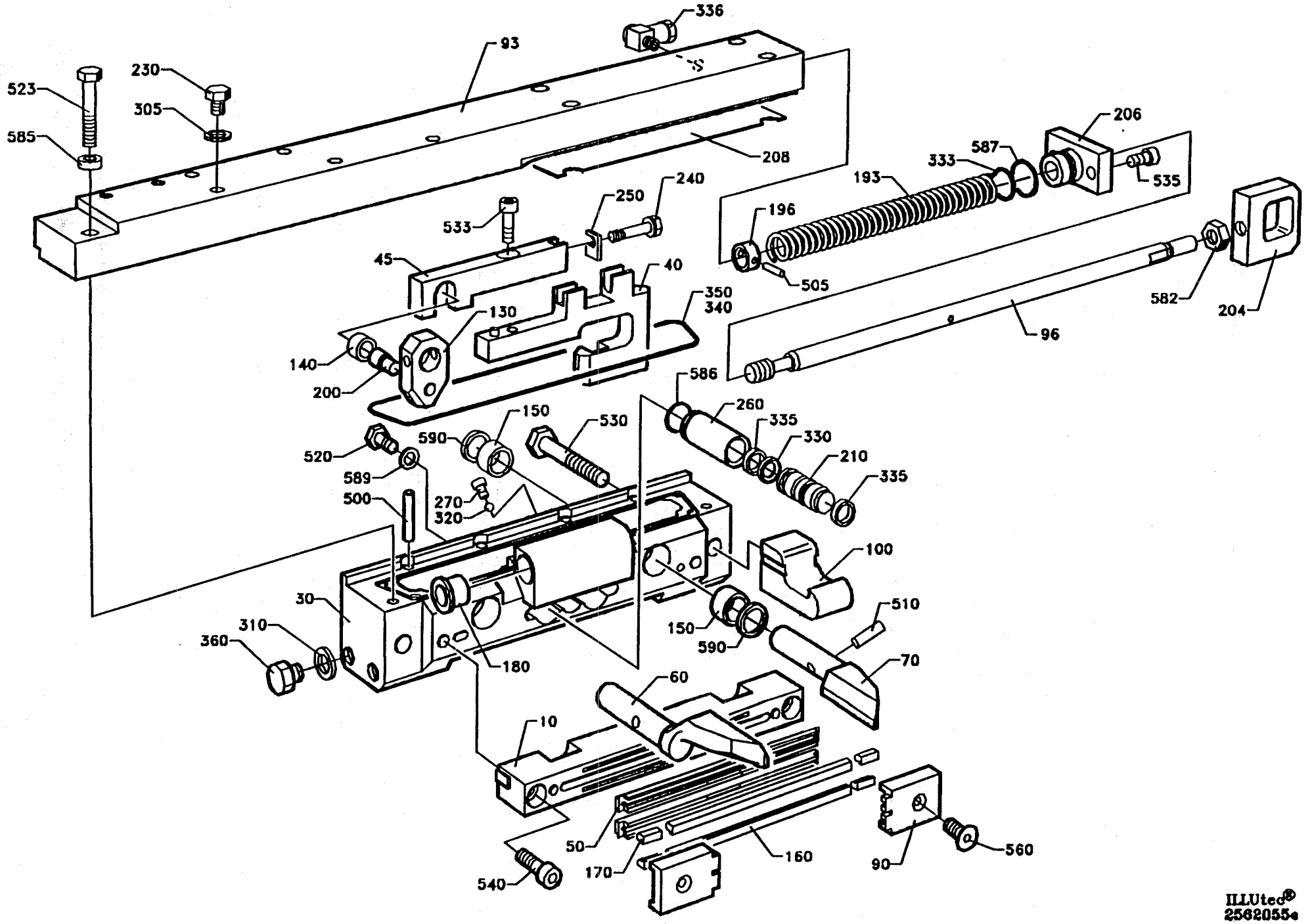

ILLUtec®
2562055e

From	Pos	Part No	SP	UN	Qty	Description
IH 200 ml SLIM						
	010	441727	S		1	CUTTING JAW
	030	752225	S		1	BEARING HOUSING
	040	752011	S		1	RULERHALF
	045	752012	S		1	RULERHALF
	050	295757	P		2	CUTTING RAIL
	060	272424	S		1	FOLDING FLAP
	070	272425	S		1	FOLDING FLAP
	090	491018	S		2	BRACKET
	130	272419	S		2	CARRIER
	160	752575	UP		2	DOLLY
	170	752574	P		4	END PIECE
	540	312115-0370	-		2	SCREW 6X20 A4 80
	560	312145-0291	-		2	SLOTTED HEMFS4X12RFR
Common Parts						
	093	256692	S		1	CARRIER
	096	256659	S		1	ROD
	100	752116	S		2	CATCH
	140	22463	S		2	ROLLER
	150	33408	S		4	BEARING
	180	255653	S		2	BUSHING
	193	255742	P		1	COMPRESSION SPRING
	196	255801	S		1	RETAINING RING
	200	256607	S		2	AXLE PIN
	204	256626	S		1	EAR
	206	256706	S		1	BEARING PLATE
	208	257362	S		2	SHIM
	210	752115	S		2	PLUNGER
	240	751579	S		1	ADJUSTMENT SCREW
	250	751580	S		1	SHIM
	260	752288	S		2	SLEEVE
	270	752476	S		2	SCREW
	305	315237-0106	-		2	GASKET
	310	315237-0109	P		3	SEAL RING 1/8"
	320	90090-0005	P		2	STEEL BALL
	330	90091-0216	P		2	SEAL RING
	333	90091-0091	P		1	SEAL RING
	335	90091-0169	P		4	RING
	336	90134-0058	-		1	BANJO CONNECTION
	340	90153-0015	-	ML	X	ADHESIVE
	350	90242-0093	P	MM	450	O-RING
	360	90330-0066	-		3	PLUG

From	Pos	Part No	SP	UN	Qty	Description
	500	311103-0312	-		1	CYLINDRICACPR5M6X25RFR
	505	311111-0207	S		1	HOLLOW PINFRP3X14
	510	311111-0308	S		2	HOLLOW PINFRP5X20
	515	312105-0362	-		2	SCREW M6S6X8RFR
	520	312105-0367	-		2	SCREW M6S6X14RFR
	523	312105-0376	-		8	SCREW M6S6X35RFR
	530	312105-0462	-		2	SCREW M6S8X55RFR
	533	312115-0329	-		1	SCREW MC6S 5X16 A4 80
	535	312115-0366	-		2	SCREW MC6S 6X12 A4 80
	582	312605-0318	-		1	NUT M6M8RFR
	585	315115-0153	-		8	WASHER TBRB6,4X12RFR
	586	315202-0110	S		2	O-RING 12,1X1,6
	587	315202-0265	S		1	O-RING 12,3X2,4
	589	315211-0103	P		2	SEALING WASHER
	590	315230-0157	P		4	SEAL RING G12X16X3

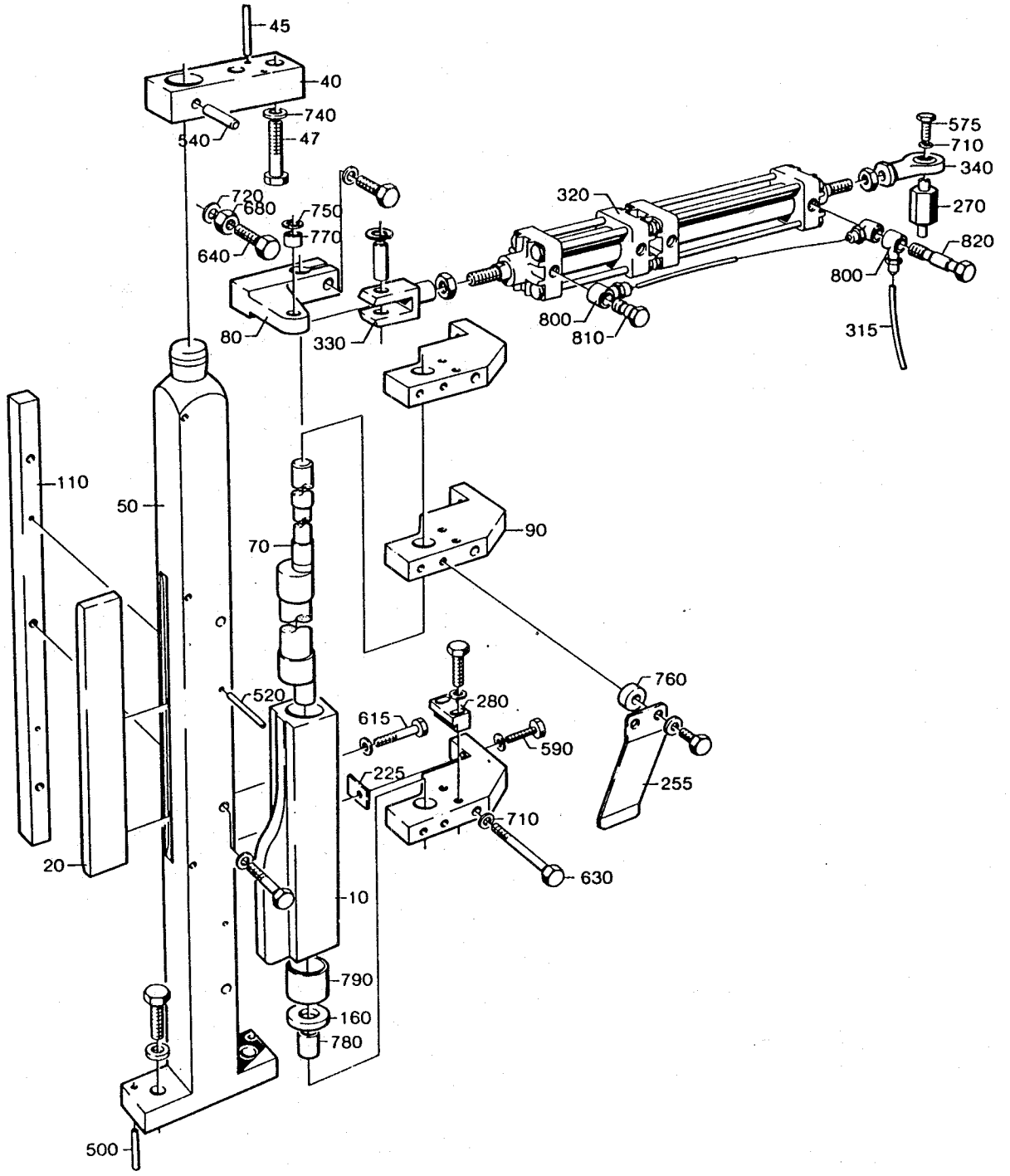
45
40
740
47
540
720
680
750
770
640
80
330
320
575
710
340
270
820
800
810
315
110
50
70
90
760
520
615
280
590
225
255
710
630
20
10
790
160
780
500

From	Pos	Part No	SP	UN	Qty	Description
TPC						
	010	456760-0001	S		1	FOLDING FLAP CAM (250 ML)
	010	456760-0006	S		1	FOLDING FLAP CAM (200 ML)
	010	456760-0006	S		1	FOLDING FLAP CAM (180 ML)
	010	456760-0008	S		1	FOLDING FLAP CAM (200 ML SLIM)
	010	456760-0002	S		1	FOLDING FLAP CAM (236 ML)
	020	272640-0001	S		1	CURVE (250 ML)
	020	272640-0004	S		1	CURVE (200 ML)
	020	272640-0006	S		1	CURVE (180 ML)
	020	272640-0008	S		1	CURVE (200 ML SLIM)
	020	272640-0009	S		1	CURVE (236 ML)
	040	295774	-		1	BRACKET (200 ML SLIM)
	045	311103-0310	S		2	CYLINDRICACPR5M6X20RFR (TPC200mlSLIM)
	047	312105-0453	-		2	SCREW M6S8X25RFR (TPC 200 ml SLIM)
IH						
	010	456760-0001	S		1	FOLDING FLAP CAM (284 ML)
	010	456760-0003	S		1	FOLDING FLAP CAM (250 ML)
	010	456760-0011	S		1	FOLDING FLAP CAM (236 ML)
	010	456760-0007	S		1	FOLDING FLAP CAM (200 ML)
	010	456760-0010	S		1	FOLDING FLAP CAM (180 ML)
	010	456760-0002	S		1	FOLDING FLAP CAM (200 ML SLIM)
	010	456760-0007	S		1	FOLDING FLAP CAM (125 ML)
	020	272640-0001	S		1	CURVE (284 ML)
	020	272640-0002	S		1	CURVE (250 ML)
	020	272640-0003	S		1	CURVE (236 ML)
	020	272640-0005	S		1	CURVE (200 ML)
	020	272640-0007	S		1	CURVE (180 ML)
	020	272640-0009	S		1	CURVE (200 ML SLIM)
	020	272640-0005	S		1	CURVE (125 ML)
	040	256707	-		1	BRACKET
	045	311103-0316	S		2	CYLINDRICACPR5M6X35RFR
	047	312105-0459	-		2	SCREW M6S8X40RFR
Common Parts						
	050	272641	-		1	COLUMN
	070	272654	S		1	ECCENTRIC SHAFT
	080	272429	S		1	ARM
	090	272491	-		3	BRACKET
	110	272645	S		1	RAIL
	160	256621	S		2	WASHER
	225	256705	S		6	SHIM
	255	257334	S		3	LEAF SPRING
	270	271132	-		1	SPACER
	280	271284	-		1	BLOCK
	315	90166-0132	P	MM	890	HOSE

From	Pos	Part No	SP	UN	Qty	Description
	320	90202-0011	S		1	CYLINDER
		90239-0349	S		2	* SEAL KIT
	330	90239-0357	S		1	BRACKET
	340	90239-0405	S		1	ROD END
	500	311103-0314	-		2	CYLINDRICACPR5M6X30RFR
	520	311103-0320	-		2	CYLINDRICACPR5M6X45RFR
	540	311103-0409	-		1	CYLINDRICACPR8M6X40RFR
	575	312105-0368	-		3	SCREW M6S6X16RFR
	590	312105-0372	-		5	SCREW M6S6X25RFR
	615	312105-0379	-		5	SCREW M6S6X45RFR
	630	312105-0384	-		3	SCREW M6S6X70RFR
	640	312105-0455	-		4	SCREW M6S8X30RFR
	680	312605-0318	-		1	NUT M6M8RFR
	710	315105-0153	-		16	WASHER BRB6,4X12RFR
	720	315105-0165	-		3	WASHER BRB8,4X16RFR
	740	315115-0165	-		4	WASHER TBRB8,4X16RFR
	750	315233-0109	S		1	SEAL RING R1/8"
	760	315742-0102	-		2	RETAINING 6SMS199RFR
	770	321120-0098	S		1	BUSHING 10/12,0X8
	780	321120-0118	S		3	BUSHING 14/16X15
	790	321120-0153	S		2	BUSHING 24/27X20
	800	342980-0113	S		5	BANJO CONNSINGEL 6/4-1/8
	810	342980-0303	S		3	BANJO CONN SINGEL 1/8"
	820	342980-0313	S		1	BANJO CONN DUBBEL 1/8

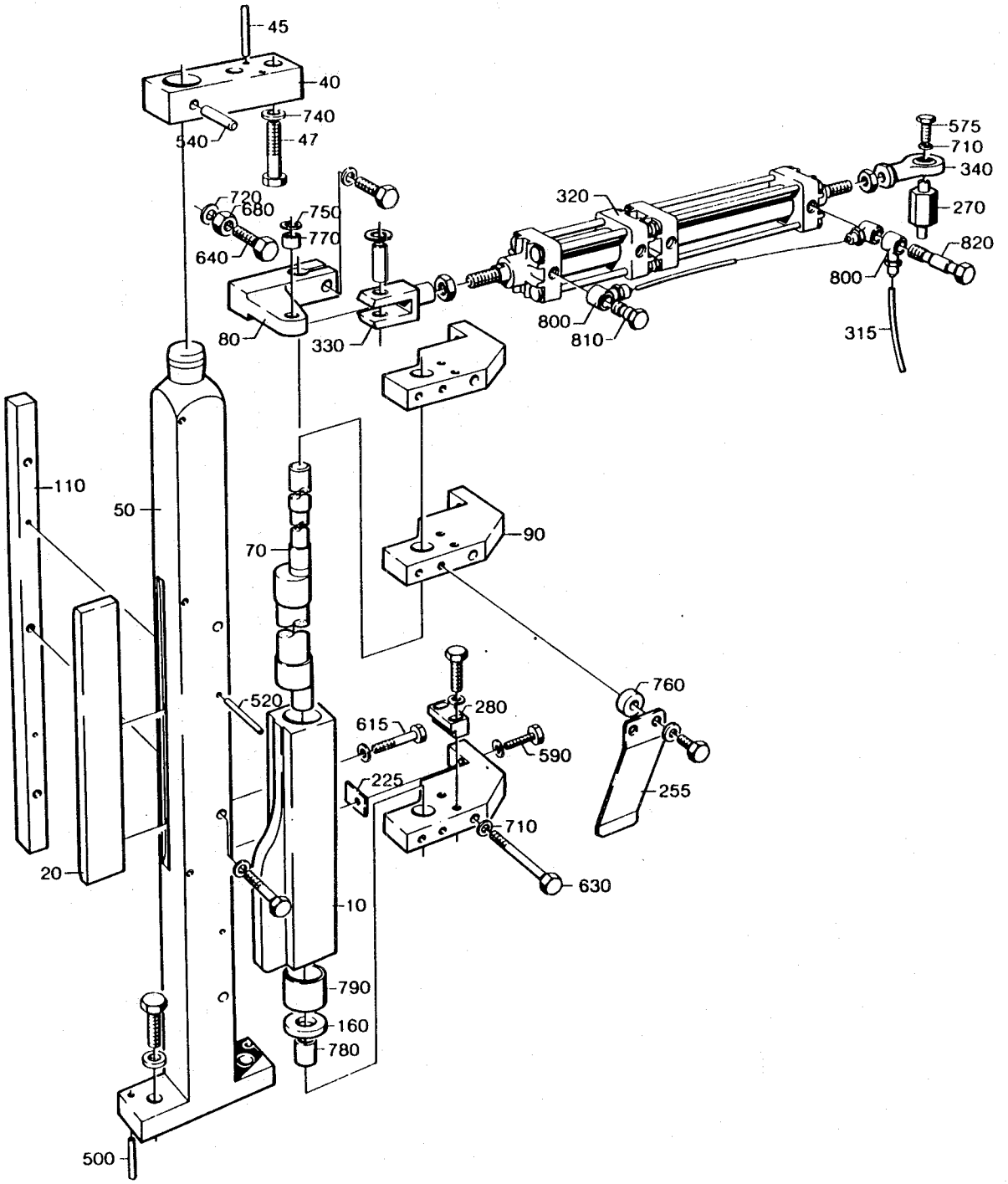
45
40
740
47
540
720
680
750
770
640
80
330
320
575
710
340
270
820
800
800
810
315
110
50
70
90
760
520
280
615
590
225
255
710
630
20
10
790
160
780
500

From	Pos	Part No	SP	UN	Qty	Description
TPC						
	010	456760-0001	S		1	FOLDING FLAP CAM (250 ml)
	010	456760-0006	S		1	FOLDING FLAP CAM (200 ml)
	010	456760-0006	S		1	FOLDING FLAP CAM (180 ml)
	010	456760-0008	S		1	FOLDING FLAP CAM (200 ml SLIM)
	010	456760-0002	S		1	FOLDING FLAP CAM (236 ml)
	020	272640-0001	S		1	CURVE (250 ml)
	020	272640-0004	S		1	CURVE (200 ml)
	020	272640-0006	S		1	CURVE (180 ml)
	020	272640-0008	S		1	CURVE (200 ml SLIM)
	020	272640-0009	S		1	CURVE (236 ml)
	040	295774	-		1	BRACKET (200 ml SLIM)
	045	311103-0310	S		2	CYLINDRICACPM6 5X20RFR (200 ml SLIM)
	047	312105-0453	-		2	SCREW M6S8X25RFR (200 ml SLIM)
IH						
	010	456760-0001	S		1	FOLDING FLAP CAM (284 ml)
	010	456760-0003	S		1	FOLDING FLAP CAM (250 ml)
	010	456760-0011	S		1	FOLDING FLAP CAM (236 ml)
	010	456760-0007	S		1	FOLDING FLAP CAM (200 ml)
	010	456760-0010	S		1	FOLDING FLAP CAM
	010	456760-0002	S		1	FOLDING FLAP CAM (200 ml SLIM)
	010	456760-0007	S		1	FOLDING FLAP CAM (125 ml)
	020	272640-0001	S		1	CURVE (284 ml)
	020	272640-0002	S		1	CURVE (250 ml)
	020	272640-0003	S		1	CURVE (236 ml)
	020	272640-0005	S		1	CURVE (200 ml)
	020	272640-0007	S		1	CURVE (180 ml)
	020	272640-0009	S		1	CURVE (200 ml SLIM)
	020	272640-0005	S		1	CURVE (125 ml)
	040	256707	-		1	BRACKET
	045	311103-0316	S		2	CYLINDRICACPM6 5X35RFR
	047	312105-0459	-		2	SCREW M6S8X40RFR
Common Parts						
	050	272642	-		1	COLUMN
	070	272654	S		1	ECCENTRIC SHAFT
	080	272429	S		1	ARM
	090	G- 272491	-		3	BRACKET
	110	272645	S		1	RAIL
	160	256621	S		2	WASHER
	225	256705	S		6	SHIM
	255	257334	S		3	LEAF SPRING

From	Pos	Part No	SP	UN	Qty	Description
	270	271132	-		1	SPACER
	280	271284	-		1	BLOCK
	315	90166-0132	P	MM	890	HOSE
	320	90202-0011	S		1	CYLINDER
		90239-0349	S		2	* SEAL KIT
	330	90239-0357	S		1	BRACKET
	340	90239-0405	S		1	ROD END
	500	311103-0314	-		2	CYLINDRICACPR5M6X30RFR
	520	311103-0320	-		2	CYLINDRICACPR5M6X45RFR
	540	311103-0409	-		1	CYLINDRICACPR8M6X40RFR
	575	312105-0368	-		3	SCREW M6S6X16RFR
	590	312105-0372	-		5	SCREW M6S6X25RFR
	615	312105-0379	-		5	SCREW M6S6X45RFR
	630	312105-0384	-		3	SCREW M6S6X70RFR
	640	312105-0455	-		4	SCREW M6S8X30RFR
	680	312605-0318	-		1	NUT M6M8RFR
	710	315105-0153	-		16	WASHER BRB6,4X12RFR
	720	315105-0165	-		3	WASHER BRB8,4X16RFR
	740	315115-0165	-		4	WASHER TBRB8,4X16RFR
	750	315233-0109	S		1	SEAL RING R1/8"
	760	315742-0102	-		2	RETAINING 6SMS199RFR
	770	321120-0098	S		1	BUSHING 10/12,0X8
	780	321120-0118	S		3	BUSHING 14/16X15
	790	321120-0153	S		2	BUSHING 24/27X20
	800	342980-0113	S		5	BANJO CONNSINGEL 6/4-1/8
	810	342980-0303	S		3	BANJO CONN SINGEL 1/8"
	820	342980-0313	S		1	BANJO CONN DUBBEL 1/8

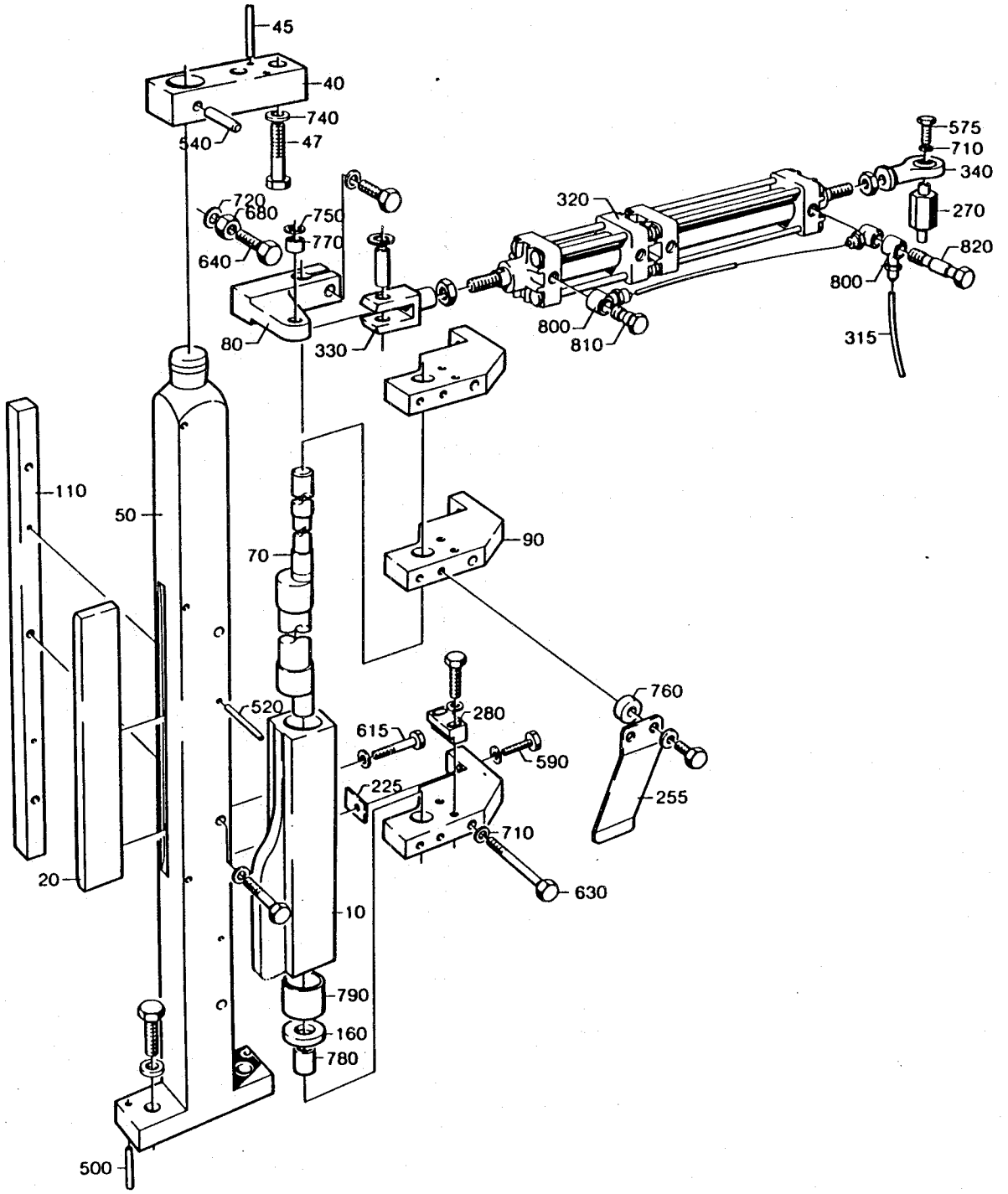
45
40
740
47
540
720
680
750
770
640
80
330
320
575
710
340
270
820
800
315
800
810
110
50
70
90
760
520
280
615
590
225
255
710
630
20
10
790
160
780
500

From	Pos	Part No	SP	UN	Qty	Description
Volume 180 - 284 ml						
	010	456006	P		1	KNIFE HOLDER
	020	271738	UP		1	KNIFE
Volume 100, 125 ml						
	010	456007	P		1	KNIFE HOLDER
	020	272762	UP		1	KNIFE
Volume 200 ml SLIM						
	010	456008	P		1	KNIFE HOLDER
	020	271738	UP		1	KNIFE
Common Parts						
	030	456011	UP		2	PIN
	040	441726	P		1	COMPRESSION SPRING
	050	272753	P		1	GUIDE
	060	456009	P		1	LINK
	070	272755	P		1	NUT

From	Pos	Part No	SP	UN	Qty	Description

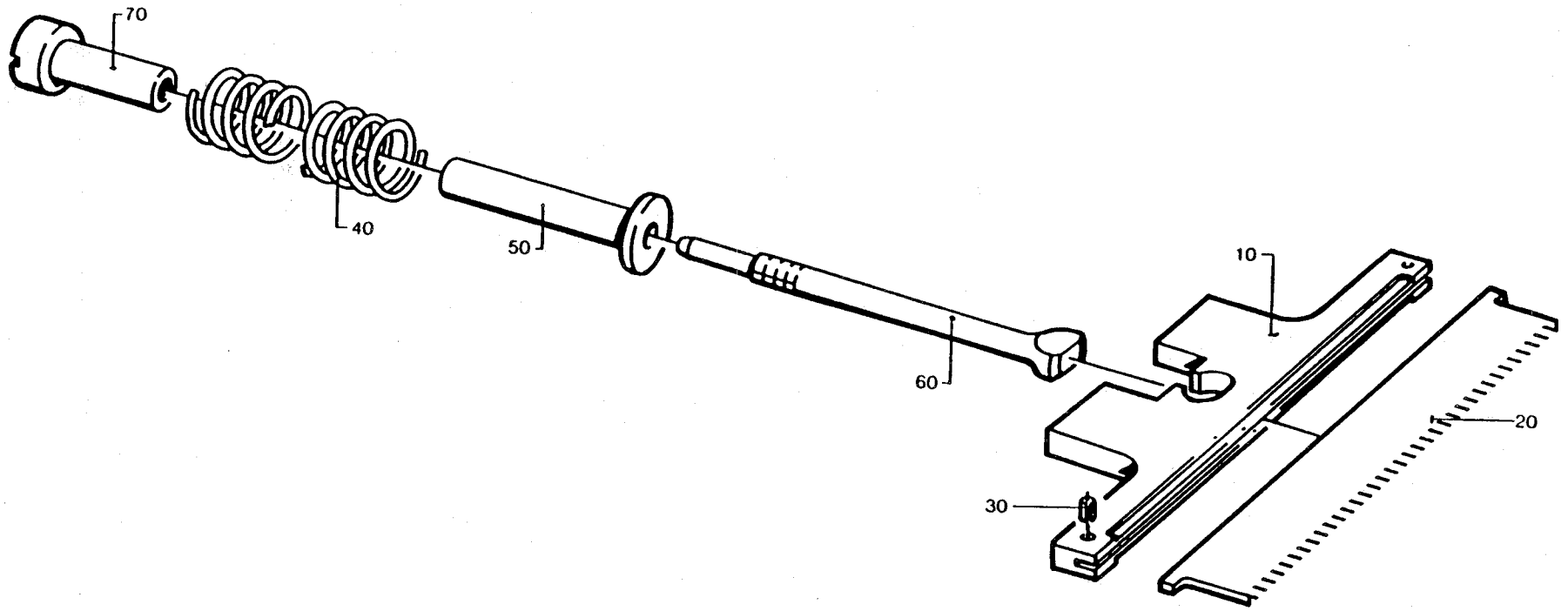
70
40
50
60
10
20
30

From	Pos	Part No	SP	UN	Qty	Description
Volume 250 ml						
-080V	010	272055	S		1	VOLUME FLAP
090V-	010	751038	S		1	VOLUME FLAP
	020	752612-0001	S		1	CARRIER
	025	272985-0001	S		1	ARM
	030	272986-0001	S		3	VOLUME SHIM
	040	456005-0001	S		1	VOLUME BULGE
Volume 236 ml						
	010	272498	S		1	VOLUME FLAP
	020	752612-0001	S		1	CARRIER
	025	272985-0001	S		1	ARM
	030	272986-0002	S		3	VOLUME SHIM
	040	272988-0002	S		1	VOLUME BULGE
Volume 200 ml						
-080V	010	256850	S		1	VOLUME FLAP
090V-	010	752212	S		1	VOLUME FLAP
	020	752612-0001	S		1	CARRIER
	025	272985-0001	S		1	ARM
	030	272986-0003	S		3	VOLUME SHIM
	040	456005-0003	S		1	VOLUME BULGE
Volume 180 ml						
-080V	010	272499	S		1	VOLUME FLAP
090V-	010	752292	S		1	VOLUME FLAP
	020	752612-0002	S		1	CARRIER
	025	272985-0002	S		1	ARM
	030	272986-0004	S		3	VOLUME SHIM
	040	272988-0004	S		1	VOLUME BULGE
Volume 125 ml						
	010	256849	S		1	VOLUME FLAP
	020	752612-0001	S		1	CARRIER
	025	272985-0001	S		1	ARM
	030	272987	S		3	VOLUME SHIM
	040	491868	S		1	VOLUME BULGE
Volume 200 ml SLIM						
-080V	010	752211	S		1	VOLUME FLAP
090V-	010	752999	S		1	VOLUME FLAP
	020	752612-0001	S		1	CARRIER
	025	272985-0001	S		1	ARM
	030	272991	S		3	VOLUME SHIM
	040	272990	S		1	VOLUME BULGE

From	Pos	Part No	SP	UN	Qty	Description
Volume 284 ml						
	010	978031	S		1	VOLUME FLAP
	020	752612-0001	S		1	CARRIER
	025	272985-0001	S		1	ARM
	030	272986-0005	S		3	VOLUME SHIM
	040	752739	S		1	VOLUME BULGE
Common Parts						
-080V	050	752596	S		1	SHAFT
090V-	050	752598	S		1	SHAFT
	060	256859	S		1	SCREW
-080V	070	256860	S		2	ROLLER
090V-	070	256860	S		1	ROLLER
090V-	080	752615	S		1	SPACER
	200	90166-0159	P	MM	21	RUBBER HOSE
	300	312145-0291	P		2	SLOTTED HEMFS4X12RFR
	310	312105-0376	-		1	SCREW M6S6X35RFR
	320	312115-0449	-		1	SCREW 8X16 A4 80

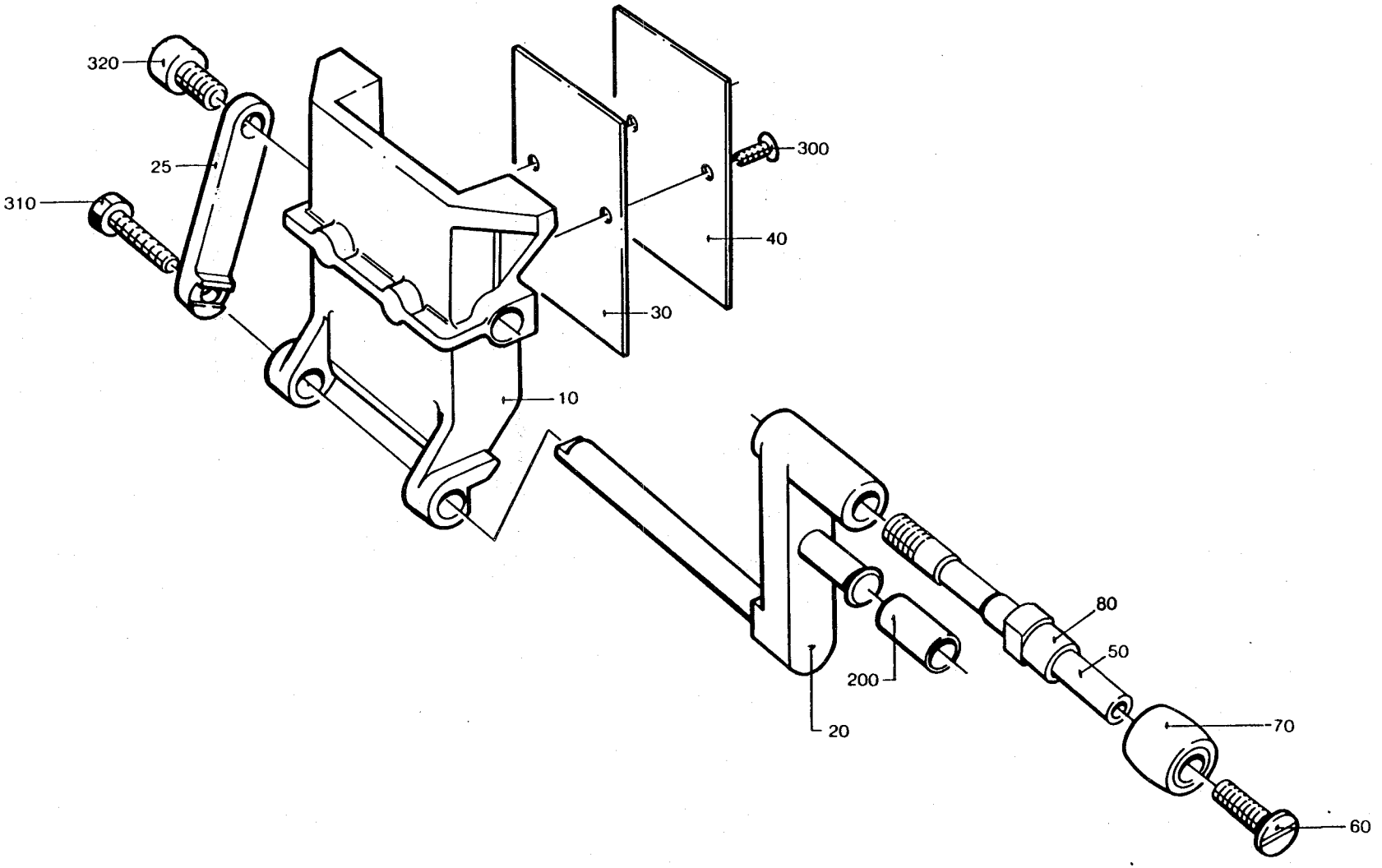
320
25
310
300
40
30
10
80
50
200
20
70
60

From	Pos	Part No	SP	UN	Qty	Description
256844 Performance 1						
	010	751252	S		1	STOP (200-250 ml,200 ml SLIM)
	010	491812	S		1	STOP (180 ml)
	010	751258	S		1	STOP (125 ml)
	020	491386	-		1	HOUSE
	025	491383	S		1	TORSION SPRING
	030	752169	S		1	SHAFT
	040	272495	S		1	ARM
	300	90296-0068	P	G	15	GREASE
	400	311112-0252	S		1	HOLLOW PINRP 4X12 RFR
	500	312105-0368	-		1	SCREW M6S6X16RFR
	510	312105-0371	-		2	SCREW M6S6X22RFR
	520	315105-0153	-		1	WASHER BRB6,4X12RFR
	530	315115-0153	-		2	WASHER TBRB6,4X12RFR
	550	321111-0095	S		2	BUSHING 8E7X6

From	Pos	Part No	SP	UN	Qty	Description

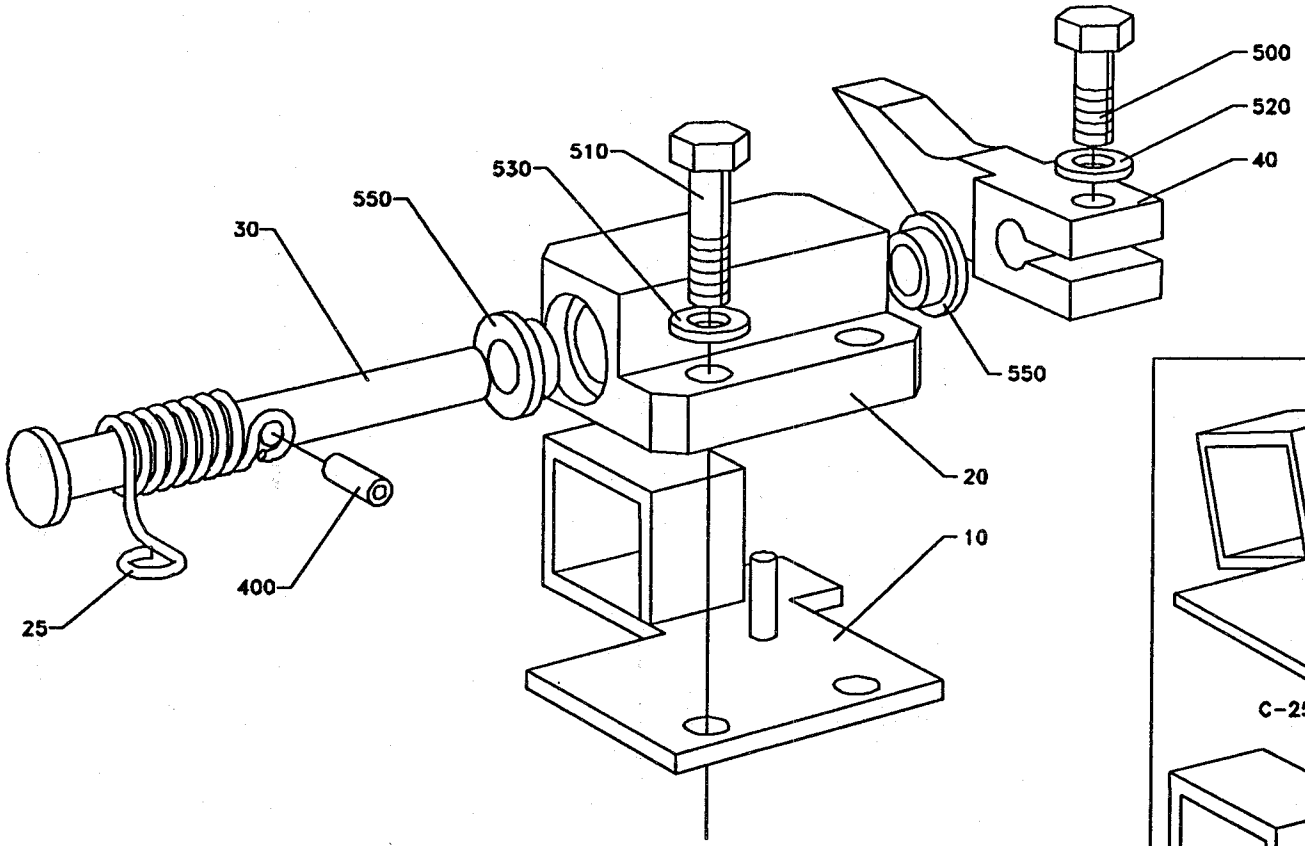

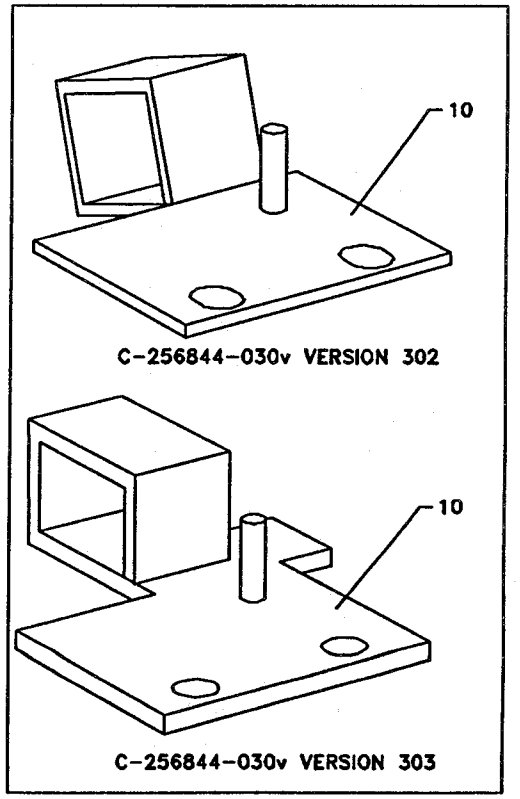

256844CV
ILLUtec®

From	Pos	Part No	SP	UN	Qty	Description
256845 Performance 2						
	010	751253	S		1	STOP (200-250 ml, 200 ml SLIM)
	010	491813	S		1	STOP (180 ml)
	010	751259	S		1	STOP (125 ml)
	020	491387	-		1	HOUSE
	025	491384	S		1	TORSION SPRING
	030	752169	S		1	SHAFT
	040	272495	S		1	ARM
	300	90296-0068	P	G	15	GREASE
	400	311112-0252	S		1	HOLLOW PINRP 4X12 RFR
	500	312105-0368	-		1	SCREW M6S6X16RFR
	510	312105-0371	-		2	SCREW M6S6X22RFR
	520	315105-0153	-		1	WASHER BRB6,4X12RFR
	530	315115-0153	-		2	WASHER TBRB6,4X12RFR
	550	321111-0095	S		2	BUSHING 8E7X6

From	Pos	Part No	SP	UN	Qty	Description

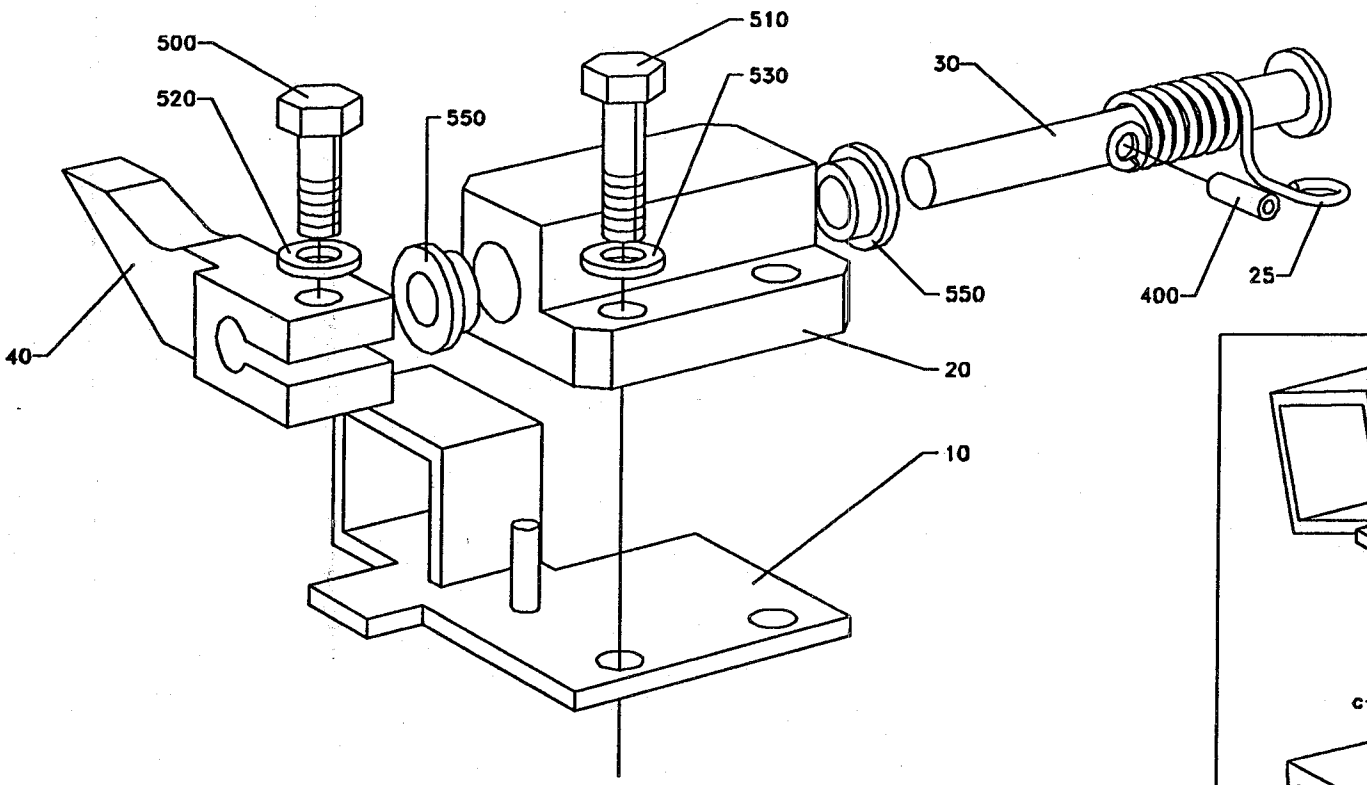

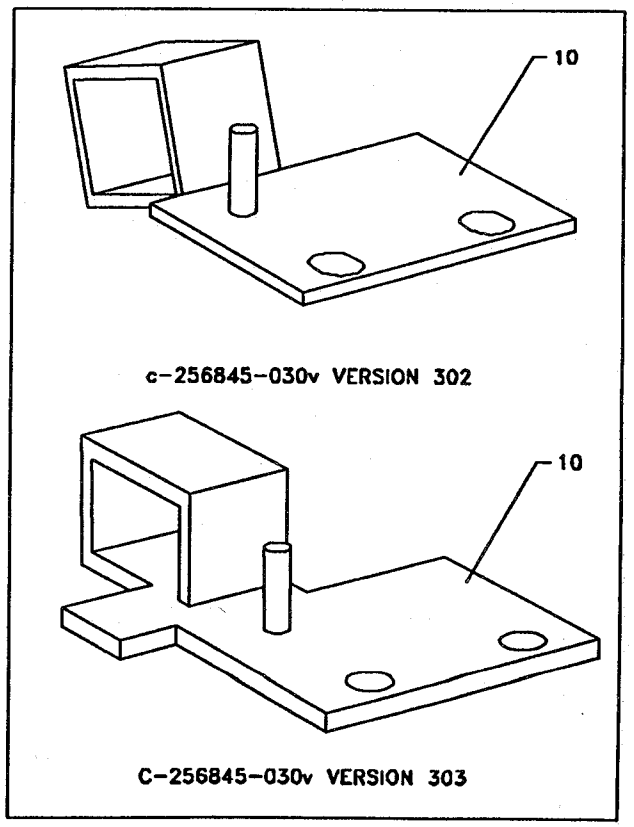

256845CV
ILLUtec®

From	Pos	Part No	SP	UN	Qty	Description	
752671 Performance 1							
	010	752559	S		1	STOP (200-284 ml,200 ml SLIM)	
	010	752561	S		1	STOP (180 ml)	
	010	752563	S		1	STOP (125 ml)	
	020	752425	S		1	LINK	
	030	752556	S		1	SPACER	
	040	752673	S		1	SPACER	
	050	752678	S		1	SPRING	
	060	752680	S		1	SLEEVE	
	070	752681	S		1	WASHER	
	100	312105-0327	-		1	SCREW	M6S5X12 A4 80
	110	312105-0368	-		1	SCREW	M6S6X16RFR
	120	312105-0372	-		1	SCREW	M6S6X25RFR
	130	315105-0146	-		1	WASHER	BRB5,3X10RFR
	140	315105-0153	-		1	WASHER	BRB6,4X12RFR
	200	90005-0060	-		2	WASHER	

From	Pos	Part No	SP	UN	Qty	Description	
752672 Performance 2							
	010	752560	S		1	STOP (200-284 ml,200 ml SLIM)	
	010	752562	S		1	STOP (180 ml)	
	010	752564	S		1	STOP (125 ml)	
	020	752425	S		1	LINK	
	030	752556	S		1	SPACER	
	040	752673	S		1	SPACER	
	050	752679	S		1	SPRING	
	060	752680	S		1	SLEEVE	
	070	752681	S		1	WASHER	
	100	312105-0327	-		1	SCREW	M6S5X12 A4 80
	110	312105-0368	-		1	SCREW	M6S6X16RFR
	120	312105-0372	-		1	SCREW	M6S6X25RFR
	130	315105-0146	-		1	WASHER	BRB5,3X10RFR
	140	315105-0153	-		1	WASHER	BRB6,4X12RFR
	200	90005-0060	-		2	WASHER	

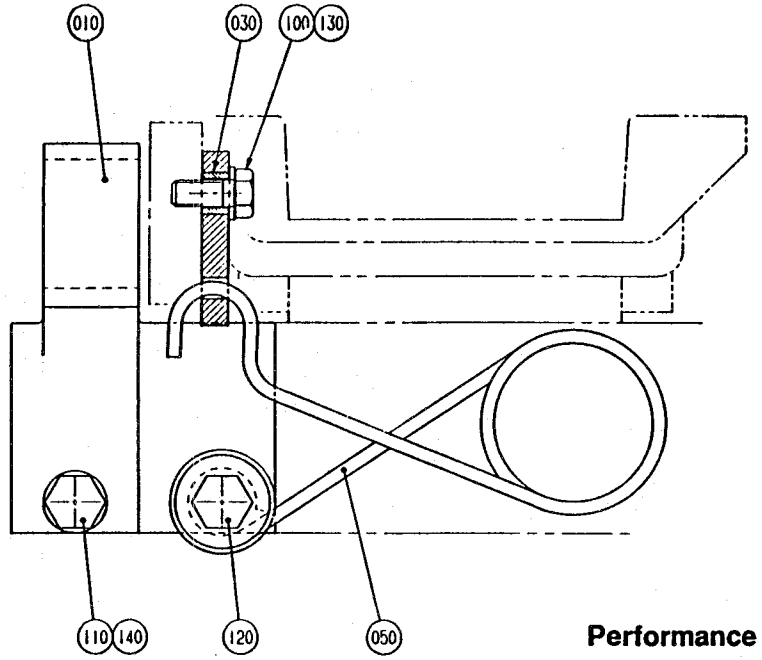

Performance 2

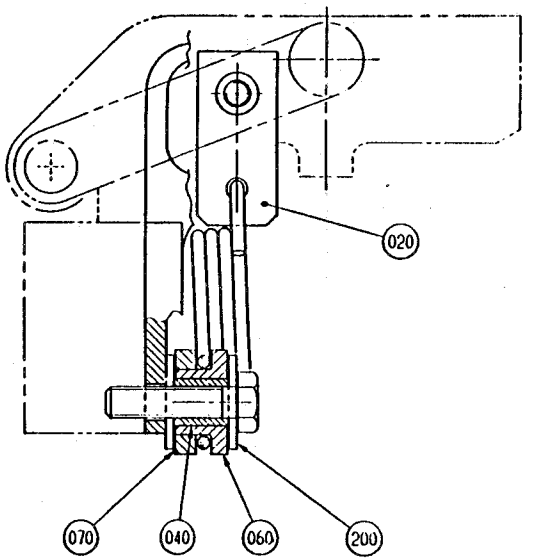

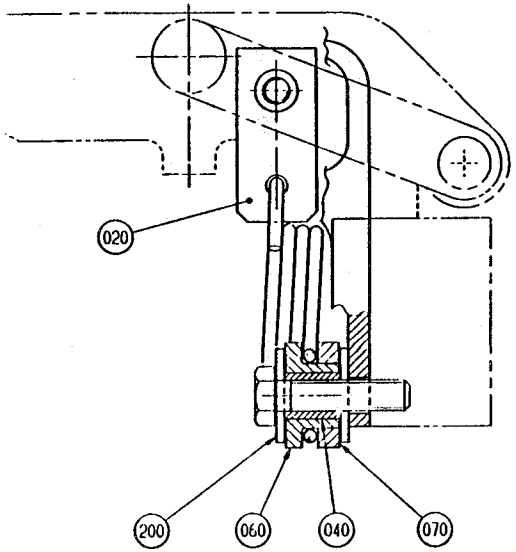

Performance 1

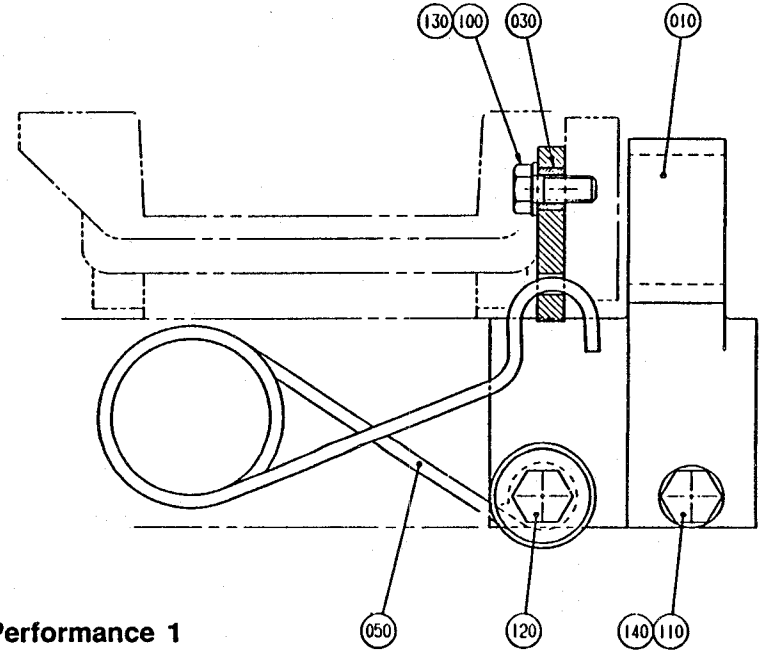

From	Pos	Part No	SP	UN	Qty	Description
Pressure Jaw Right						
	030	491297	S		1	CARRIER RIGHT
-080V	120	441762	S		1	CONNECTION RIGHT
090V-	120	752282	S		1	CONNECTION RIGHT
-080V	210	272488	-		1	CLAMP RIGHT
090V-	210	752289	-		1	CLAMP RIGHT
	220	272501	S		1	BRACKET RIGHT
	240	456311	S		1	TORSION SPRING RIGHT
Pressure Jaw Left						
	030	491298	S		1	CARRIER LEFT
-080V	120	441763	S		1	CONNECTION LEFT
090V-	120	752283	S		1	CONNECTION LEFT
-080V	210	272489	-		1	CLAMP LEFT
090V-	210	752290	-		1	CLAMP LEFT
	220	272502	S		1	BRACKET LEFT
	240	456312	S		1	TORSION SPRING LEFT
Common Parts						
	010	441710	C		1	BEARING HOUSING (180-284 ml)
	010	441711	C		1	BEARING HOUSING (125 ml)
	010	441712	C		1	BEARING HOUSING (200 ml SLIM)
	040	490940	C		1	CYLINDER
	050	752117	S		2	CATCH
-080V	060	272500	S		1	SHAFT
090V-	060	752284	S		1	SHAFT
	080	255653	S		2	BUSHING
	090	256557-0001	S		2	WASHER
	100	256557-0002	S		1	WASHER
	110	256557-0003	S		1	WASHER
	130	441385	S		1	HUB
	140	256576	P		1	ROLLER
	150	441764	S		1	SHAFT
	160	257249	S		2	SCREW
	170	G- 257250	-		2	LID
	190	490942	S		2	COMPRESSION SPRING
	200	490943	S		2	COMPRESSION SPRING
	230	272503	-		1	CLAMP
	250	272506	-		2	SHIM
	260	751743	S		2	PISTON
	270	441355	-		2	BLEEDING SCREW
	280	751769	S		2	SLEEVE
	300	315237-0107	S		1	GASKET
-080V	301	315237-0110	S		1	SEAL RING 1/4 "
	306	315237-0106	-		2	GASKET
	308	90030-0065	S		1	PIPE CONNECTION

From	Pos	Part No	SP	UN	Qty	Description
	310	90090-0005	P		4	STEEL BALL
	315	90091-0089	P		2	SEAL RING
	320	90091-0214	P		2	SEAL RING
	321	90091-0162	P		2	RING
	322	90091-0170	P		2	RING
	330	90091-0215	P		2	SEAL RING
	331	90092-0052	-		1	VALVE
	332	90092-0053	-		1	VALVE
	334	90134-0042	-		2	SPACER
	335	90134-0045	-		1	PLUG
	336	90134-0047	-		1	CONNECTION
	337	90134-0058	-		1	BANJO CONNECTION
	339	90166-0143	-	MM	160	HOSE
	340	90296-0068	-	G	25	GREASE
	500	311103-0242	S		2	CYLINDRICACPR3M6X30RFR
	510	311103-0312	S		1	CYLINDRICACPR5M6X25RFR
	520	312105-0370	-		11	SCREW M6S6X20RFR
	530	312105-0374	-		2	SCREW M6S6X30RFR
	540	312105-0376	-		6	SCREW M6S6X35RFR
	550	312105-0447	-		1	SCREW M6S8X12RFR
	560	312105-0453	-		1	SCREW M6S8X25RFR
	570	312105-0455	-		1	SCREW M6S8X30RFR
	580	312115-0371	-		2	SCREW 6X22 A4 80
-080V	590	491555	S		4	SCREW
090V-	590	752476	S		4	SCREW
	600	315105-0153	-		5	WASHER BRB6,4X12RFR
	605	315105-0165	-		1	WASHER BRB8,4X16RFR
	610	315115-0153	-		6	WASHER TBRB6,4X12RFR
	620	315202-0102	P		8	O-RING 4,1X1,6
	630	315202-0106	P		2	O-RING 8,1X1,6
	640	315202-0108	P		3	O-RING 10,1X1,6
	645	315234-0109	P		2	SEALING RING R 1/8"
	650	321120-0132	S		1	BUSHING 18/20X20
	660	342713-0209	-		2	BLANK-OFF

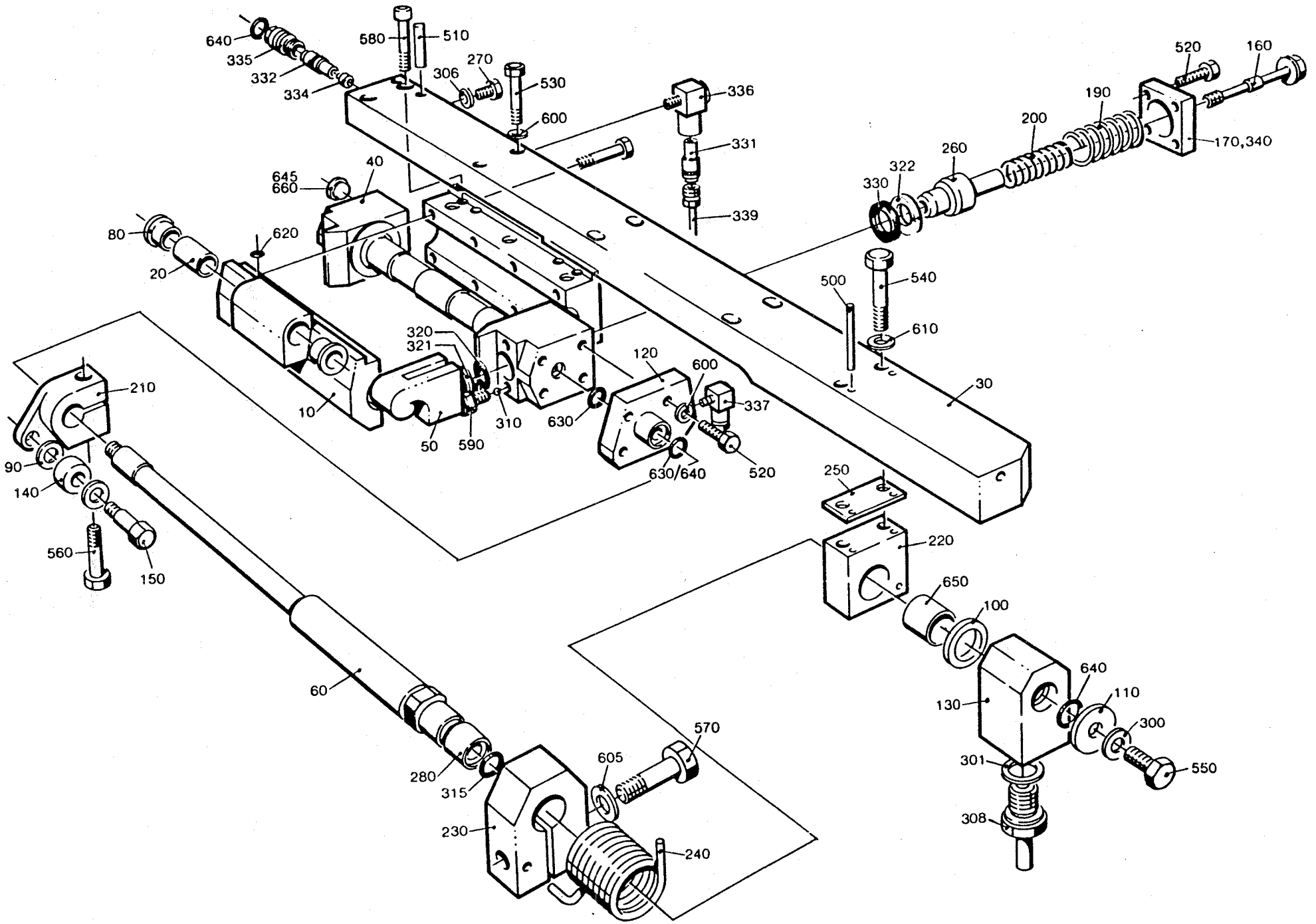
640
335
332
334
580
510
306
270
530
600
336
331
339
520
160
190
200
260
322
330
170,340
645
660
40
80
620
20
500
540
610
30
320
321
120
600
337
210
10
310
630
50
590
630/640
520
250
90
140
560
150
220
650
100
640
110
130
300
301
550
308
60
570
605
280
315
230
240

From	Pos	Part No	SP	UN	Qty	Description
256951						
	040	256953	S		1	BLOCK RIGHT
	045	272492	C		1	ARM RIGHT
	095	272496	C		1	BRACKET RIGHT
256952						
	040	256954	S		1	BLOCK LEFT
	045	272493	C		1	ARM LEFT
	095	272497	C		1	BRACKET LEFT
Common Parts						
	010	255609	S		1	ARM CUTTING JAW
	020	256834	S		1	YOKE
	030	256869	S		1	ARM PRESSURE JAW
	050	272454	S		4	PIVOT PIN
	060	256082	S		1	CLAMP
	070	256829	S		6	SCREW
	080	256870	S		1	BRACKET
	090	491349	S		1	BEARING SEAT
	100	20239	S		2	COMPRESSION SPRING
	102	22475	S		2	CAM ROLLER
	104	255653	S		2	BUSHING
	106	256628	S		1	BLOCK
	108	256629-0001	S		1	AXLE PIN
	110	256629-0003	S		1	AXLE PIN
	112	256704	S		2	WASHER
	114	256710	S		1	SHAFT
	118	256831-0001	S		2	SPACER
	120	256831-0002	S		4	SPACER
	130	256831-0003	S		4	SPACER
	140	256889	S		2	PLUNGER
	150	256890	-		2	SHIM
	160	256891	-		6	SHIM
	170	257213	S		4	BUSHING
	180	257317	-		1	SHIM
	185	271100	S		1	PIN
	190	272415	S		2	ARM
	200	441706	S		1	WASHER
	210	491350	S		1	SLIDER
	310	90092-0052	S		6	VALVE
	360	90134-0058	-		4	BANJO CONNECTION
	370	90134-0068	-		1	BANJO CONNECTION
	480	311103-0268	-		2	CYLINDRICACPM6 4X12RFR
	490	311103-0401	-		1	CYLINDRICACPM6 8X20RFR

From	Pos	Part No	SP	UN	Qty	Description
	500	312105-0368	-		16	SCREW M6S6X16RFR
	510	312105-0376	-		6	SCREW M6S6X35RFR
	520	312105-0380	-		4	SCREW M6S6X50RFR
	530	312105-0453	-		6	SCREW M6S8X25RFR
	540	312105-0455	-		6	SCREW M6S8X30RFR
	542	312318-0360	-		1	GRUB SCREW SK6SS6X6RFR
	544	312318-0368	-		1	GRUB SCREW SK6SS6X16RFR
	546	312811-0318	-		3	LOCK NUT M8RFR
	548	315105-0165	-		3	WASHER BRB8,4X16RFR
	550	315115-0153	-		10	WASHER TBRB6,4X12RFR
	560	315202-0206	S		5	O-RING 7,3X2,4
	570	315202-0207	S		6	O-RING 8,3X2,4
	580	315202-0219	S		8	O-RING 29,2X3

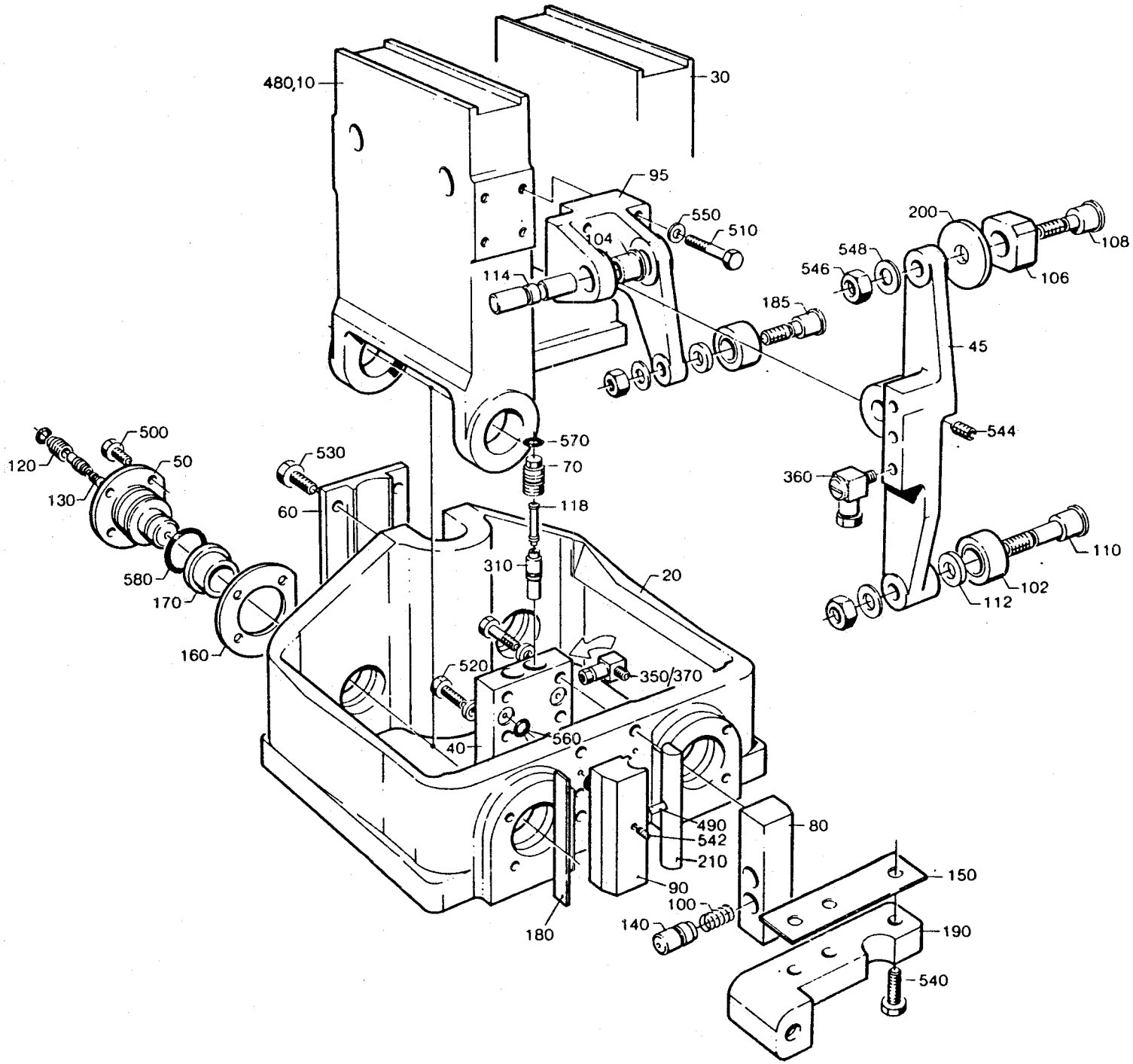
480,10
30
95
550
510
104
114
185
200
548
546
108
106
45
544
360
110
102
112
570
70
118
530
60
500
50
120
130
580
170
160
310
20
520
350/370
560
40
490
542
210
80
150
90
100
140
180
190
540

From	Pos	Part No	SP	UN	Qty	Description
	010	272689	C		2	BRACKET
	020	441749	S		2	CAM
	030	456002	S		2	BEARING
	050	441031	S		4	LINK BEARING
	060	256829	S		4	SCREW
	070	272490	C		2	SLEEVE
	080	441269	C		2	GUIDE
	090	441268	C		2	GUIDE
	095	441750	S		2	YOKE
	100	256738	S		16	WASHER
	110	256739	S		8	SCREW
	120	256831-0003	S		2	SPACER
	130	256831-0004	S		2	SPACER
	140	272840	-		2	ROD
	150	441355	-		2	BLEEDING SCREW
	160	441751	S		4	SHIM
	170	456004	-		2	SPACER
	300	90005-0003	S		2	WASHER
	310	90005-0014	S		4	WASHER
	320	90028-0020	P		8	CONE
	330	90092-0052	S		10	VALVE
	350	90134-0039	-		8	BUSHING
	360	90134-0058	-		8	BANJO CONNECTION
	370	90166-0143	-	MM	1240	HOSE
	390	90330-0037	-		4	PLUG
	600	311103-0401	-		4	CYLINDRICACPR8M6X20RFR
	620	312105-0372	-		6	SCREW M6S6X25RFR
	630	312105-0374	-		4	SCREW M6S6X30RFR
	640	312105-0452	-		4	SCREW M6S8X22RFR
	650	312105-0455	-		4	SCREW M6S8X30RFR
	655	312115-0372	-		4	SCREW MC6S6X25 A4 80
	660	315105-0153	-		10	WASHER BRB6,4X12RFR
	670	315105-0165	-		8	WASHER BRB8,4X16RFR
	680	315202-0106	S		6	O-RING 8,1X1,6
	690	315202-0204	S		2	O-RING 5,3X2,4
	700	315202-0207	S		4	O-RING 8,3X2,4
	710	315202-0219	S		4	O-RING 29,2X3

From	Pos	Part No	SP	UN	Qty	Description

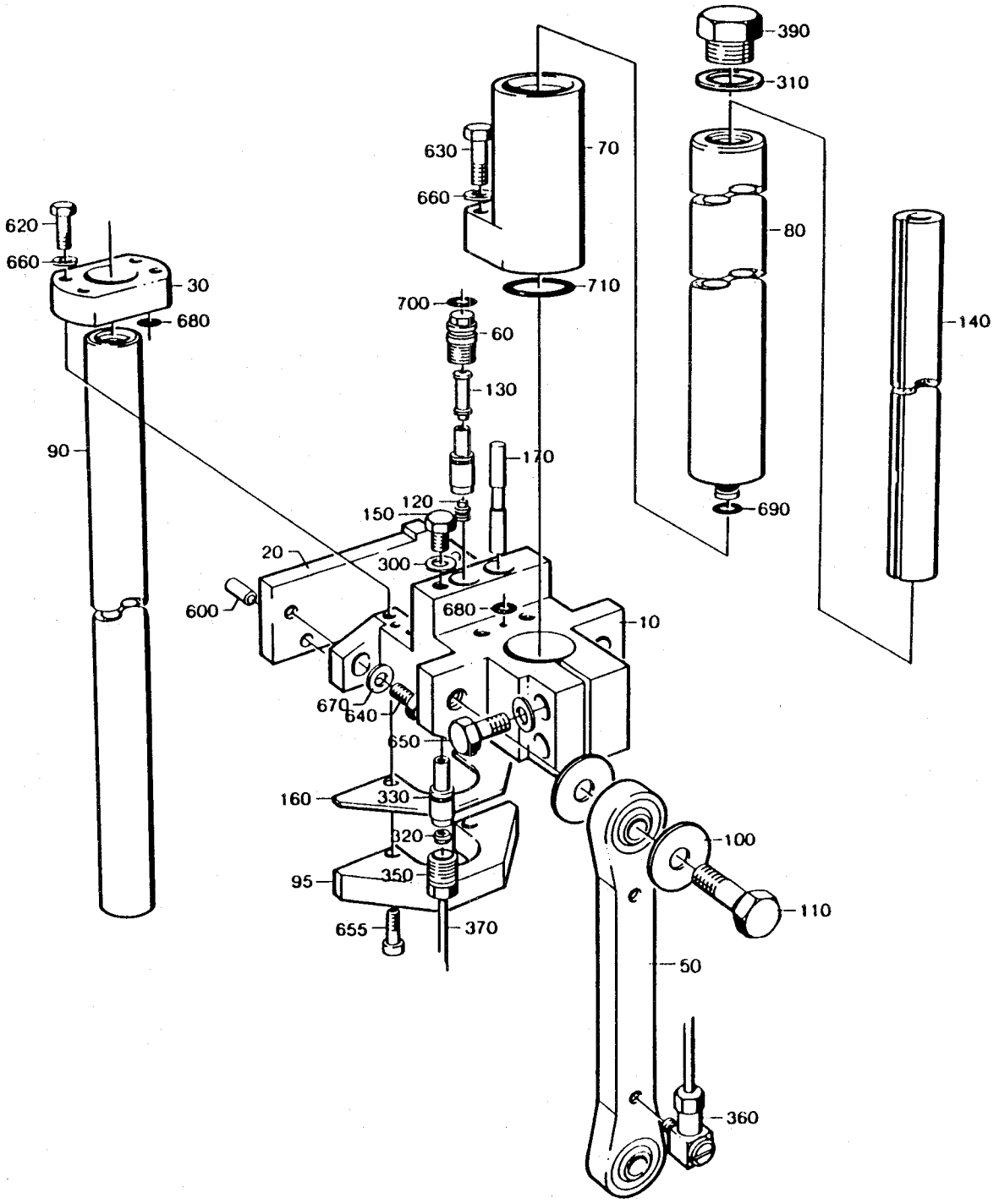
390
310
630
70
660
80
620
660
30
710
140
700
680
60
130
90
170
150
120
690
20
300
600
680
10
670
640
650
160
330
320
100
95
350
110
655
370
50
360

From	Pos	Part No	SP	UN	Qty	Description	
Right							
	010	271849-0001	S		1	BUSBAR RIGHT	
	010	271849-0002	S		1	BUSBAR RIGHT (125 ml)	
	020	255843	C		1	GUARD RIGHT	
Left							
	010	271850-0001	S		1	BUSBAR LEFT	
	010	271850-0002	S		1	BUSBAR LEFT (125 ml)	
	020	255844	C		1	GUARD LEFT	
Common Parts							
	030	456847	S		1	PLATE	
	035	6427	P		2	WASHER	
	040	28509	P		1	WASHER	
	050	271846	P		1	INSULATION NUT	
	060	271848	P		1	SCREW	
	070	456846	S		1	CLIP	
	080	295056	P		1	WASHER	
	200	312105-0295	-		2	SCREW	M6S4X20 A4 80
	210	312105-0364	-		4	SCREW	M6S6X10RFR
	220	312105-0374	-		2	SCREW	M6S6X30RFR
	230	315105-0153	-		6	WASHER	BRB6,4X12RFR

From	Pos	Part No	SP	UN	Qty	Description

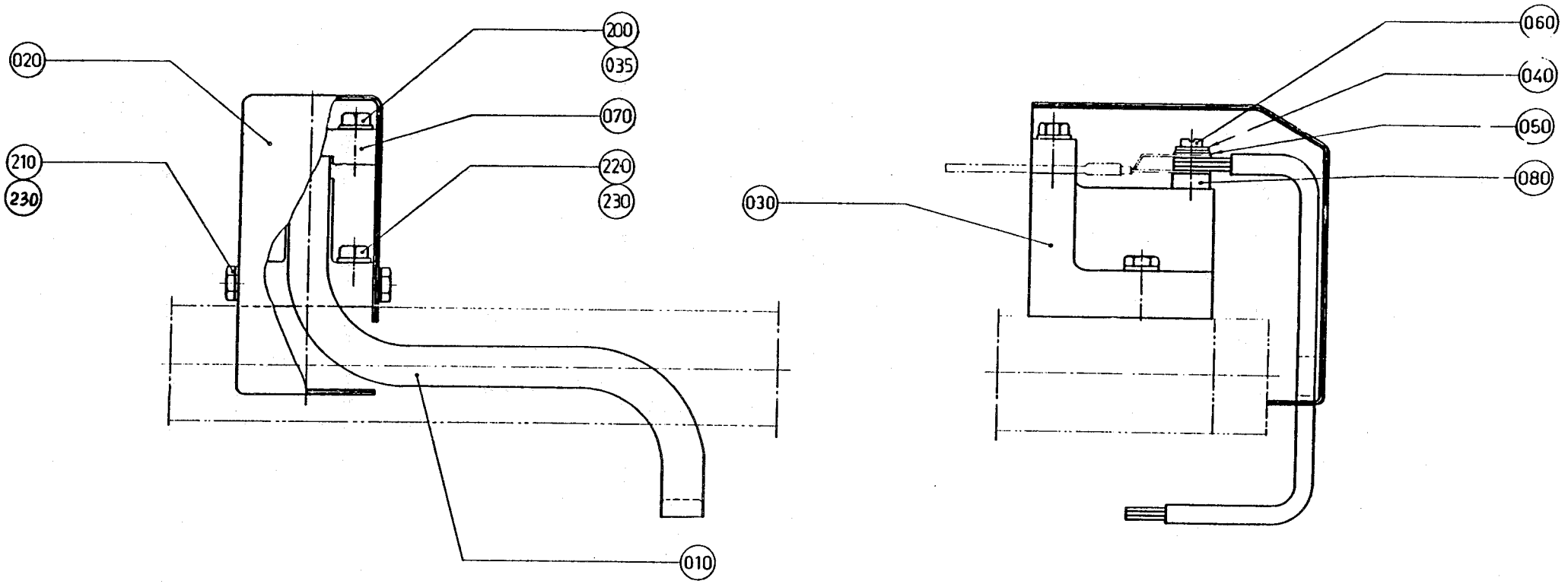
020
200
035
070
210
230
220
230
030
060
040
050
080
010

From	Pos	Part No	SP	UN	Qty	Description
Volume 180 - 284 ml						
	010	751032	S		2	SUPPORT ROLLER
	020	272974-0001	-		2	BRACKET
	030	295748-0001	-		1	BACK PIECE
Volume 125 ml						
	010	751033	S		2	SUPPORT ROLLER
	020	272974-0002	-		2	BRACKET
	030	295748-0002	-		1	BACK PIECE
Volume 200 ml SLIM						
	010	751034	S		2	SUPPORT ROLLER (TPC)
	010	751035	S		2	SUPPORT ROLLER (IH)
	020	272974-0001	-		2	BRACKET
	030	295748-0003	-		1	BACK PIECE
Common Parts						
-080V	040	295747	-		1	BRACKET
090V-	040	752649	-		1	BRACKET
	050	2033-0009	P		16	WASHER
	055	2033-0014	P		6	WASHER
	060	27815	S		2	WASHER
-080V	070	257004	-		2	PIN
090V-	070	752650	-		2	PIN
	080	295744	C		1	SCREW
	090	295749	-		1	ADJUSTING BLOCK
-080V	100	295750-0001	-		1	GUIDE RAIL
090V-	100	752651	-		1	GUIDE RAIL
	110	295750-0002	-		1	GUIDE RAIL
	500	312105-0333	-		2	SCREW M6S5X25 A4 80
	501	312105-0366	-		2	SCREW M6S6X12RFR
	504	311103-0405	-		1	CYLINDRICACPR8M6X30RFR
	506	312105-0370	-		4	SCREW M6S6X20RFR
	510	312105-0457	-		4	SCREW M6S8X35RFR
	520	312105-0459	-		2	SCREW M6S8X40RFR
	522	312115-0453	-		1	SCREW 8X25 A4 80
	524	312318-0321	-		1	GRUB SCREW SK6SS5X6RFR
	526	312625-0316	-		2	NUT M 6
	530	312811-0320	-		2	LOCK NUT M10RFR
	534	315105-0153	-		8	WASHER BRB6,4X12RFR
	540	315105-0165	-		3	WASHER BRB8,4X16RFR
	550	315105-0173	-		2	WASHER BRB10,5X22RFR
	560	315115-0165	-		4	WASHER TBRB8,4X16RFR

From	Pos	Part No	SP	UN	Qty	Description

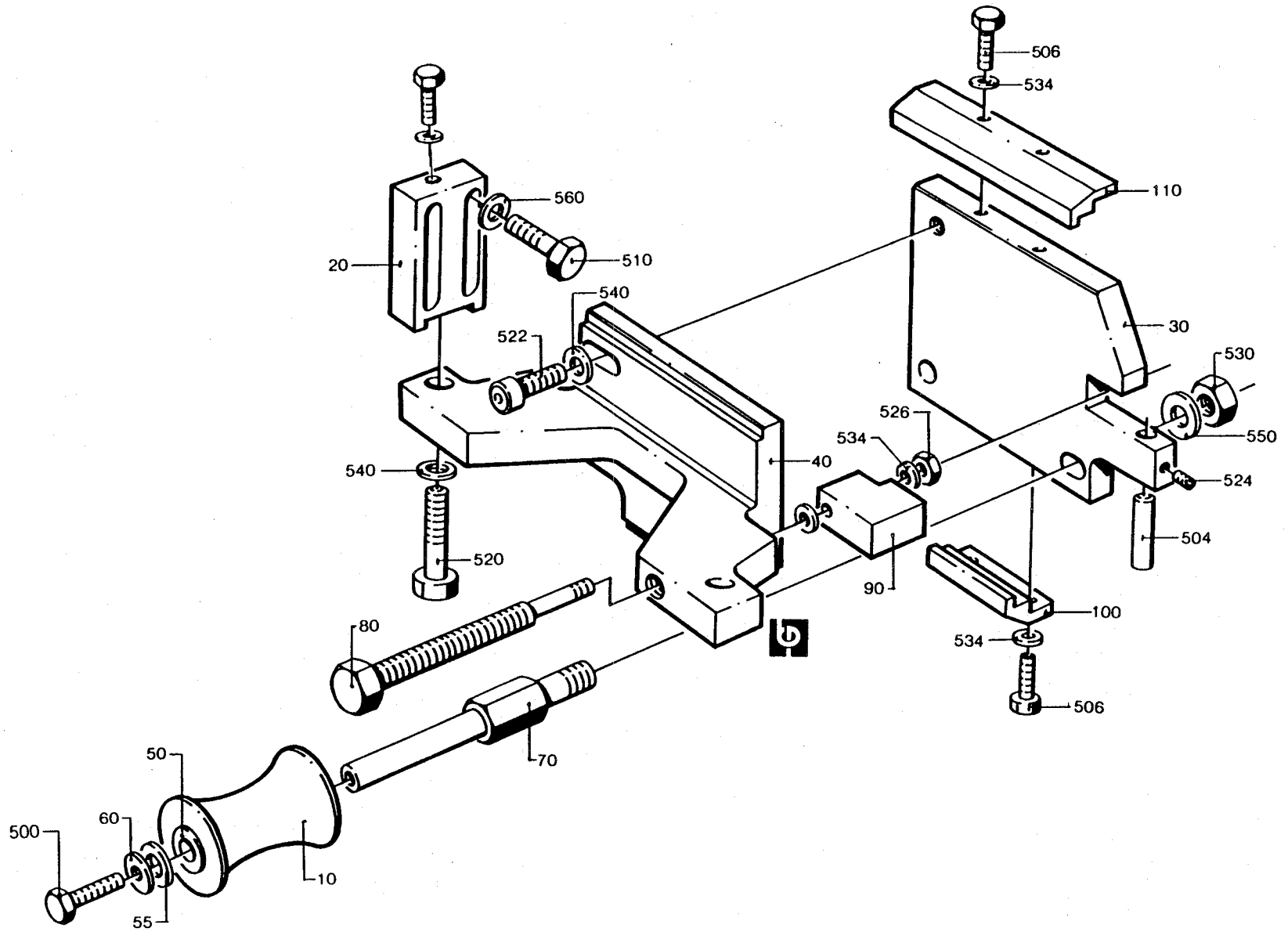
506
534
110
560
20
510
540
522
30
530
526
534
550
540
40
524
504
520
90
100
534
80
506
70
50
500
60
10
55

From	Pos	Part No	SP	UN	Qty	Description
Right						
	010	456017	S		1	HOSE HOLDER RIGHT
	030	257379	-		1	HYDRAULIC PIPE RIGHT
Left						
	010	456018	S		1	HOSE HOLDER LEFT
	030	257380	-		1	HYDRAULIC PIPE LEFT
Common Parts						
	040	257000	S		1	NIPPLE
	050	441355	-		1	BLEEDING SCREW
	290	90005-0003	-		1	WASHER
	300	90005-0005	P		1	WASHER
	305	90005-0007	-		1	WASHER
	325	90028-0020	P		5	CONE
	335	90030-0184	-		3	PIPE CONNECTION
	340	90030-0065	-		1	PIPE CONNECTION
	345	90092-0052	P		4	VALVE
	350	90092-0053	-		1	VALVE
	370	90134-0039	P		5	BUSHING
	378	90134-0066	-		1	CONNECTION
	380	90134-0068	-		1	BANJO CONNECTION
	385	90266-0019	-	MM	270	PIPE
	390	90166-0109	P	MM	240	HOSE
	395	90166-0143	-	MM	640	HOSE
	500	312105-0376	-		2	SCREW M6S6X35RFR
	510	315115-0153	-		2	WASHER TBRB6,4X12RFR
	540	342980-0121	-		2	BANJO CONNINGEL 8/6-1/8"
	550	342980-0303	-		2	BANJO CONN SINGEL 1/8"

From	Pos	Part No	SP	UN	Qty	Description

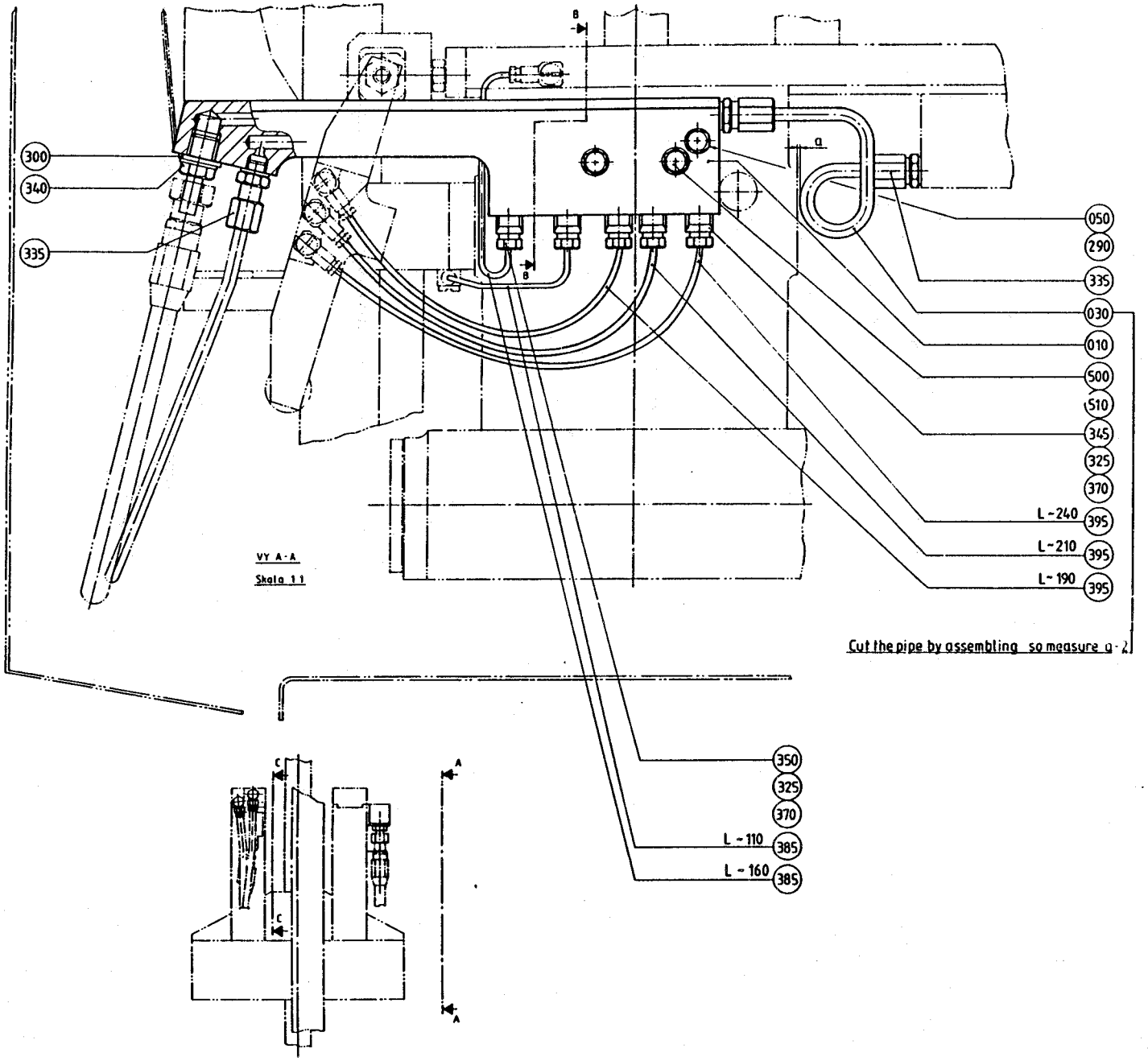

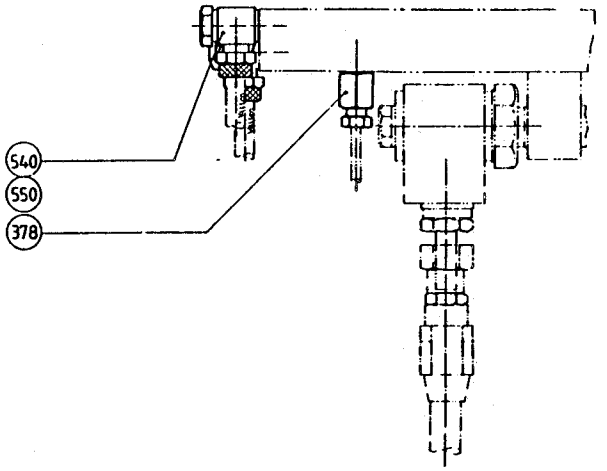

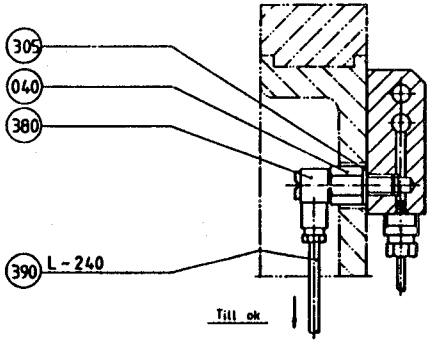

Snitt B-B
Skala 1:1

From	Pos	Part No	SP	UN	Qty	Description
TPC						
	030	441733	-		2	TPC BAR
	060	271738	-		4	KNIFE
	080	456011	-		6	PIN
IH, Volume 180 - 284, 200 ml SLIM						
	010	752489	-		2	INDUCTOR
	050	295758	-		4	DOLLY
	055	752575	-		4	DOLLY (200SLIM)
	060	271738	-		4	KNIFE
	080	456011	-		6	PIN
IH, Volume 100, 125 ml						
	020	555473	-		2	INDUCTOR
	040	295005	-		4	DOLLY
	070	272762	-		4	KNIFE
	080	456011	-		6	PIN

From	Pos	Part No	SP	UN	Qty	Description

SPC 648151/52
Tetra Brik TB/9
Tetra Brik Aseptic TBA/9

From	Pos	Page	Description
	F180	501-1/2	GUIDE
	F010	502-1	STATION CHAIN
	F020	503-1	DRIVE WHEEL
	F040	504-1	TENSION SPROCKET
	F050	505-1	INDEXING UNIT
	F070	506-1	DISC COUPLING
	F260	507-1	ANGULAR TRANSMITTER
	F080	508-1	WORM GEAR
	F130	509-1	FOLDING BAR
	F160	510-1/2	RETRIEVER
		510-2.1	GUIDE
	F090	511-1	ELEMENT
		511-1.1	. ELEMENT
		511-1.1	. ELEMENT
	F060	512-1/2	PRESSURE DEVICE
	F220	513-1	DISCHARGE UNIT
		513-1.1	. CHAIN TENSIONER
	F270	514-1	DISCHARGE CHUTE
	F290	515-1	SIDE FEEDER
	F200	516-1/2	BRACKET
		516-1.1	. CHAIN TENSIONER
		516-1.2	. ROTOR
	F140	517-1	PIPE WORK
	F215	518-1	SEPARATION INSERT
	F230	519-1	CLEANING SYSTEM
		519-1.1	. ROTOR
	F150	520-1	BOTTOM VALVE
	F250	521-1	PROTECTIVE COVER
		521-1.1	. CATCH
	F280	522-1	SPRAY GUN
	F190	523-1	MACHINE BODY
	F120	524-1	FRAME
	F300	525-1	CABLE ASSEMBLY
		525-1.1	. CONNECTION BOX
		525-1.1	. CONNECTION BOX
	F240	526-1/2	COVERING PANEL

From	Pos	Page No	Description

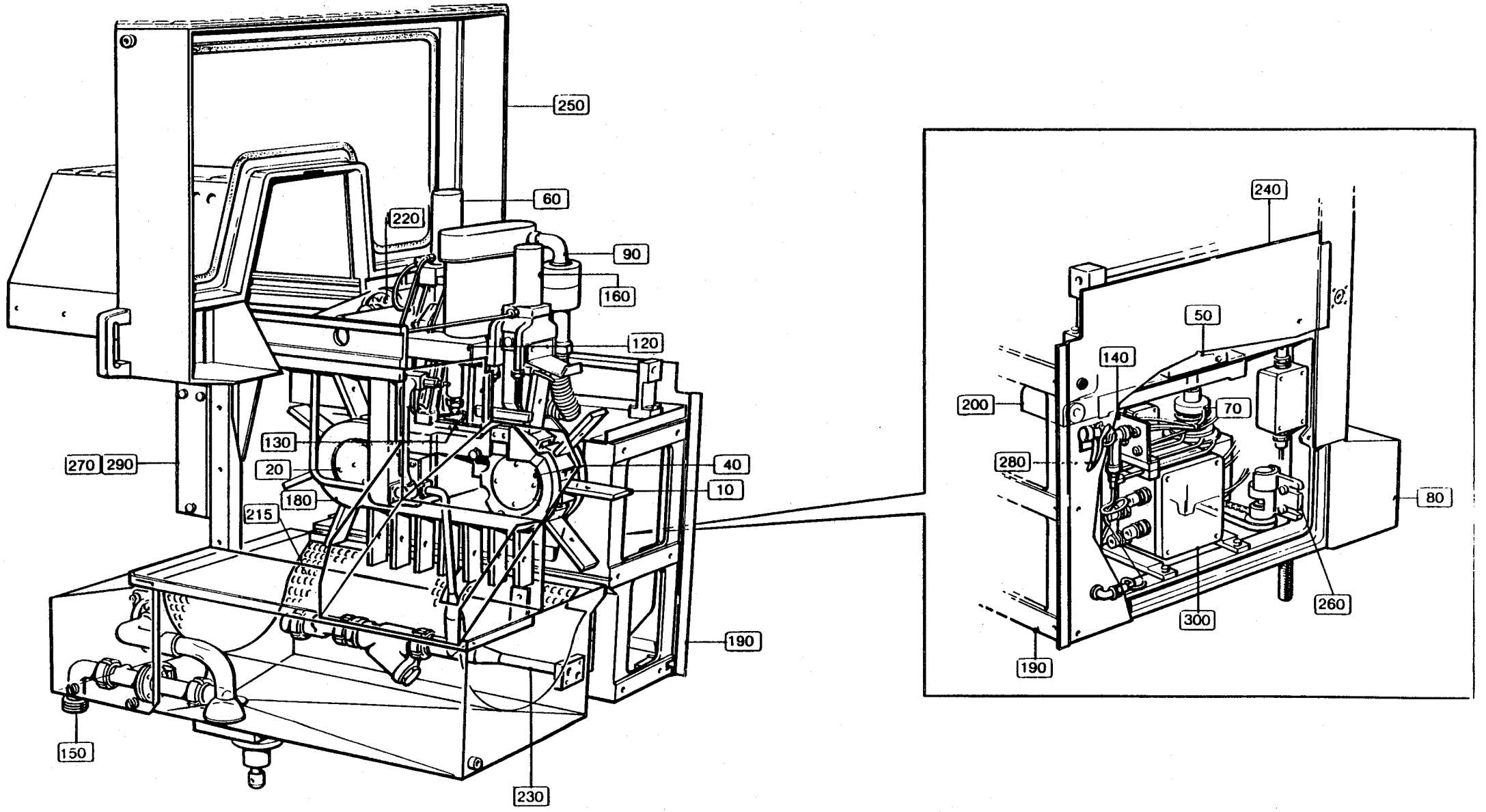
250
60
220
90
160
120
130
270
290
20
40
10
180
215
190
150
230
240
50
140
200
70
280
80
260
300
190

From	Pos	Part No	SP	UN	Qty	Description
Volume 180 - 284 ml						
	010	751707	S		1	FOLDING BAR RIGHT
	015	751708	S		1	FOLDING BAR LEFT
Volume 100, 125 ml						
	010	751697	S		1	FOLDING BAR RIGHT
	015	751696	S		1	FOLDING BAR LEFT
Volume 200 ml SLIM						
	010	751709	S		1	FOLDING BAR RIGHT
	015	751710	S		1	FOLDING BAR LEFT
Common Parts						
	020	491260	C		1	RAIL BRACKET
	030	751109	S		1	RAIL RIGHT
	035	751110	S		1	RAIL LEFT
	040	751119	C		1	BRACKET RIGHT
	045	751120	C		1	BRACKET LEFT
	050	491264	C		2	SPACER BLOCK
	060	491265	S		2	PLATE
	080	295729	C		2	WASHER
	100	491266	S		4	SHIM
	310	311103-0312	S		2	CYLINDRICACPR5M6X25RFR
	320	312105-0370	S		6	SCREW M6S6X20RFR
	330	312105-0372	S		4	SCREW M6S6X25RFR
	340	312105-0374	S		8	SCREW M6S6X30RFR
	370	312115-0501	S		4	SCREW 10X50 A4 80
	390	315105-0153	S		4	WASHER BRB6,4X12RFR

From	Pos	Part No	SP	UN	Qty	Description

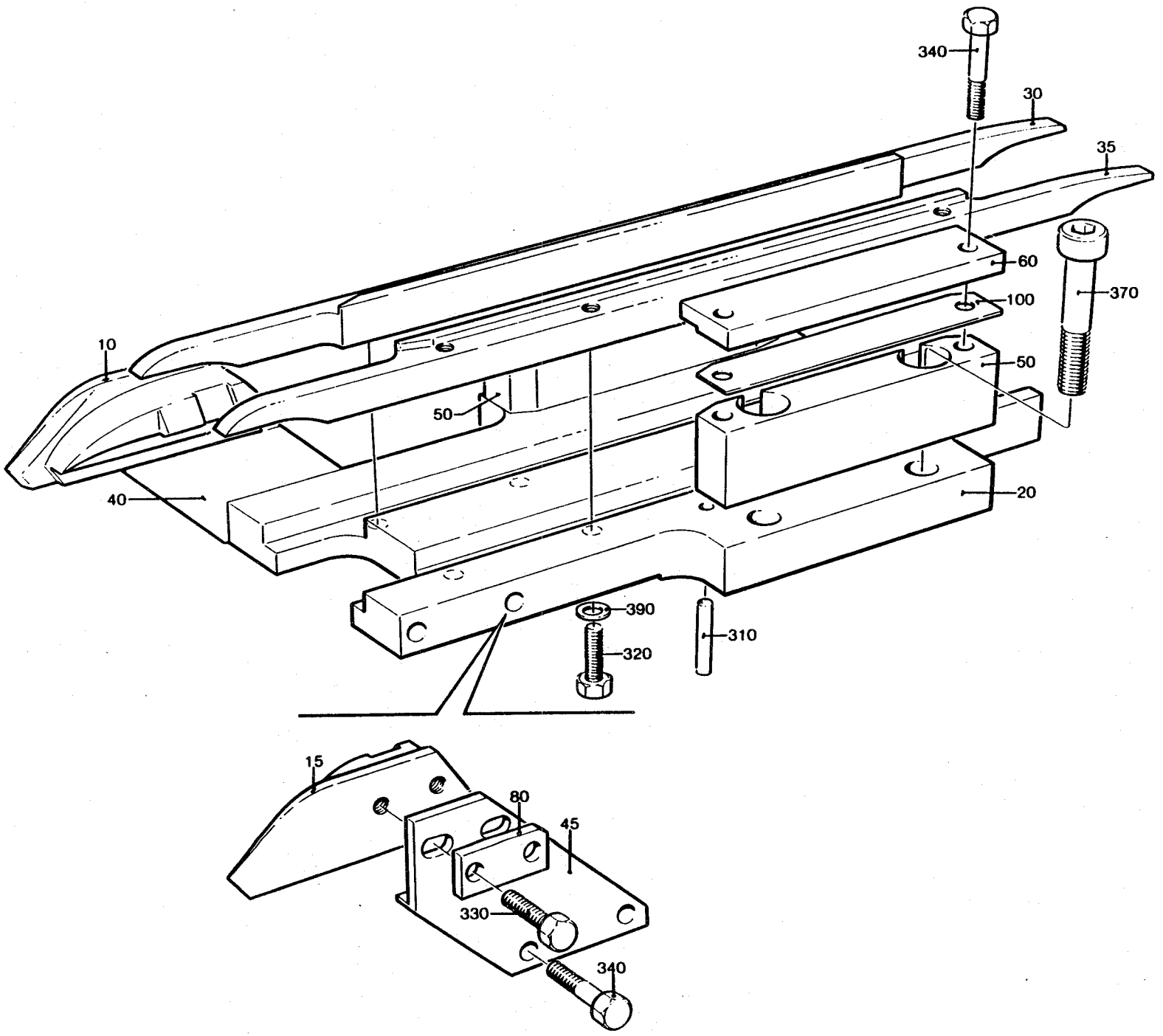
340
30
35
60
100
370
10
50
50
40
20
390
320
310
15
80
45
330
340

From	Pos	Part No	SP	UN	Qty	Description	
Volume 180 - 284 ml							
	010	751707	S		1	FOLDING BAR RIGHT	
	020	751708	S		1	FOLDING BAR LEFT	
Volume 125 ml							
	010	751697	S		1	FOLDING BAR RIGHT	
	020	751696	S		1	FOLDING BAR LEFT	
Volume 200 ml SLIM							
	010	751709	S		1	FOLDING BAR RIGHT	
	020	751710	S		1	FOLDING BAR LEFT	
Common Parts							
	030	751109	S		1	RAIL RIGHT	
	040	751110	S		1	RAIL LEFT	
	050	491265	S		2	PLATE	
	060	295729	C		2	WASHER	
	070	491266	S		4	SHIM	
	110	312105-0370	S		4	SCREW	M6S6X20RFR
	120	312105-0372	S		4	SCREW	M6S6X25RFR
	130	312105-0374	S		6	SCREW	M6S6X30RFR
	140	315105-0153	S		6	WASHER	BRB6,4X12RFR

From	Pos	Part No	SP	UN	Qty	Description

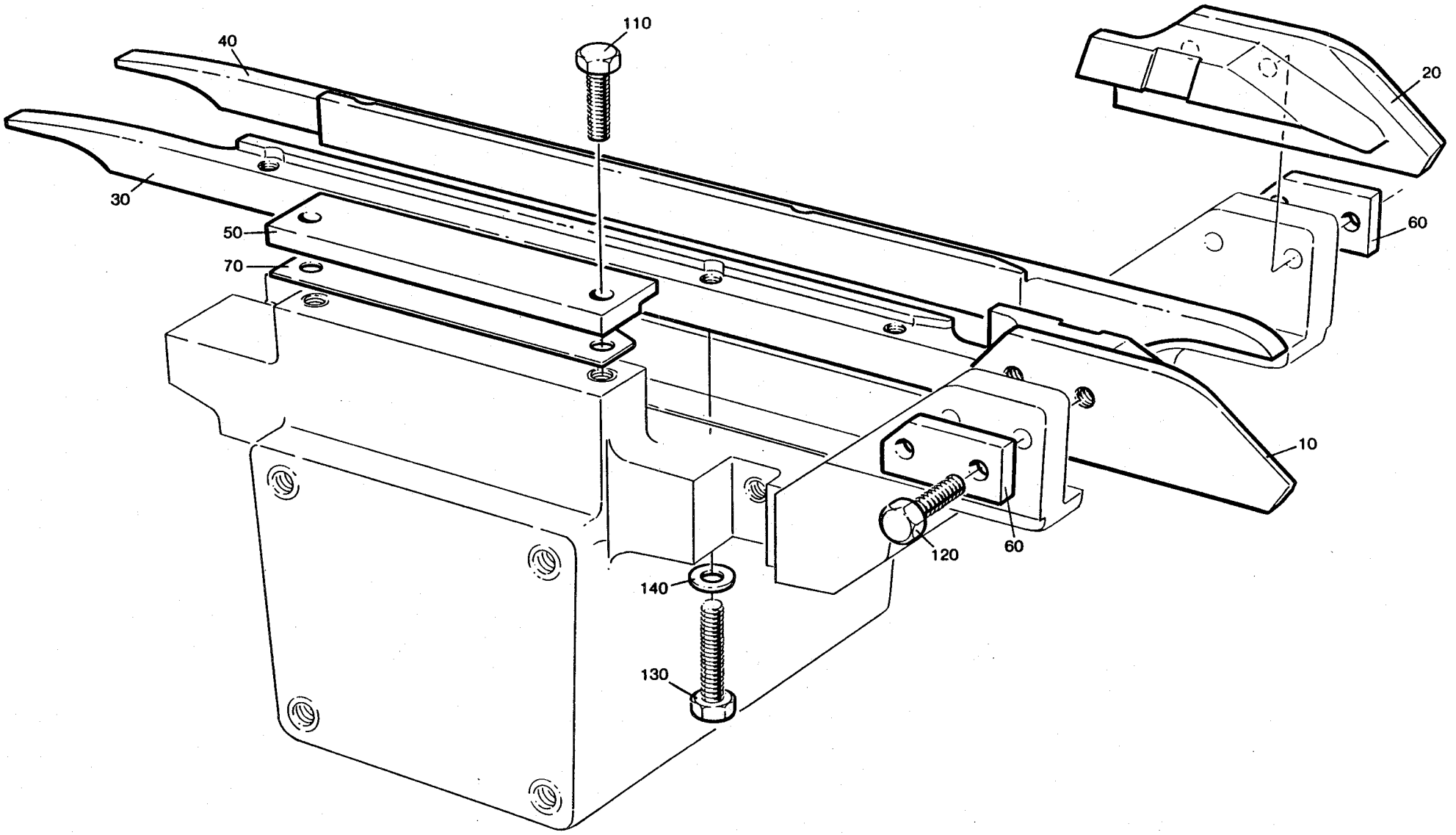
110
40
20
30
50
60
70
10
120
60
140
130

From	Pos	Part No	SP	UN	Qty	Description
	010	752048-0001	S		21	CARTON STATION (284 ml)
	010	752048-0002	S		21	CARTON STATION (250 ml)
	010	752048-0003	S		21	CARTON STATION (236 ml)
	010	752048-0004	S		21	CARTON STATION (200 ml)
	010	752048-0005	S		21	CARTON STATION (187 ml)
	010	752048-0006	S		21	CARTON STATION (180 ml)
	010	751472	S		21	CARTON STATION (125 ml)
	010	751490	S		21	CARTON STATION (200 ml SLIM)
	020	491227	S		42	SLIDER
	030	491228-0001	S		18	SHAFT
	040	491228-0002	S		3	SHAFT
	050	491229	S		42	BUSHING
	060	491230	S		21	GRUB SCREW
	070	491231	S		21	BUSHING
	090	315233-0101	S		21	SEAL RING M5

From	Pos	Part No	SP	UN	Qty	Description

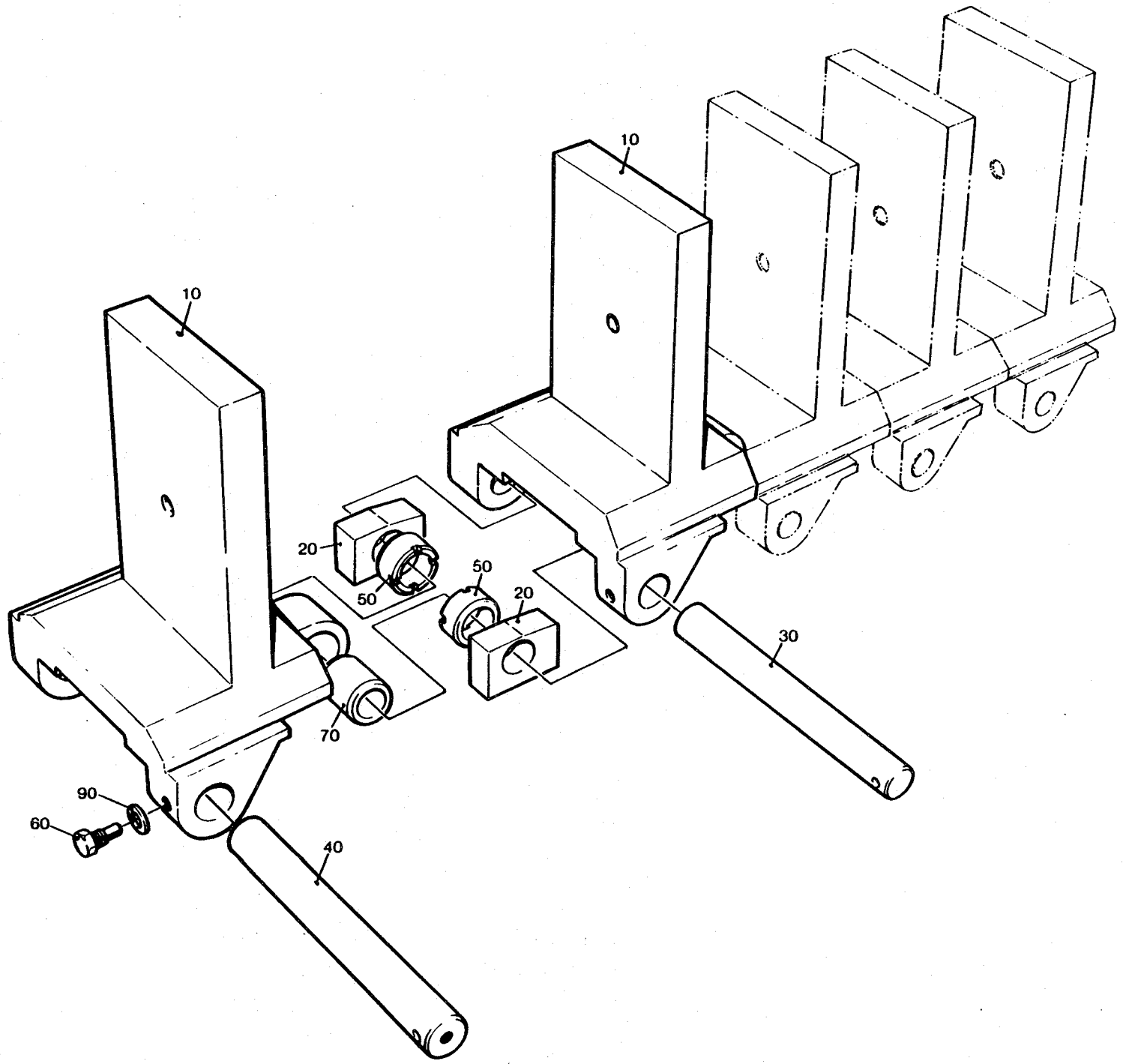
10
10
20
50
50
20
30
70
90
60
40

From	Pos	Part No	SP	UN	Qty	Description
	010	491258	C		1	DRIVE WHEEL
	020	491851	C		1	LID
	050	90208-0031	S		1	BUSHING
	090	312101-0530	S		1	SCREW M6S12X16FZB
	100	312105-0335	S		4	SCREW M6S5X30 A4 80
	110	315105-0146	S		4	WASHER BRB5,3X10RFR
	120	315202-0306	S		1	O-RING 74,5X3
	130	315220-0210	S		1	SEAL RING V-60S

From	Pos	Part No	SP	UN	Qty	Description

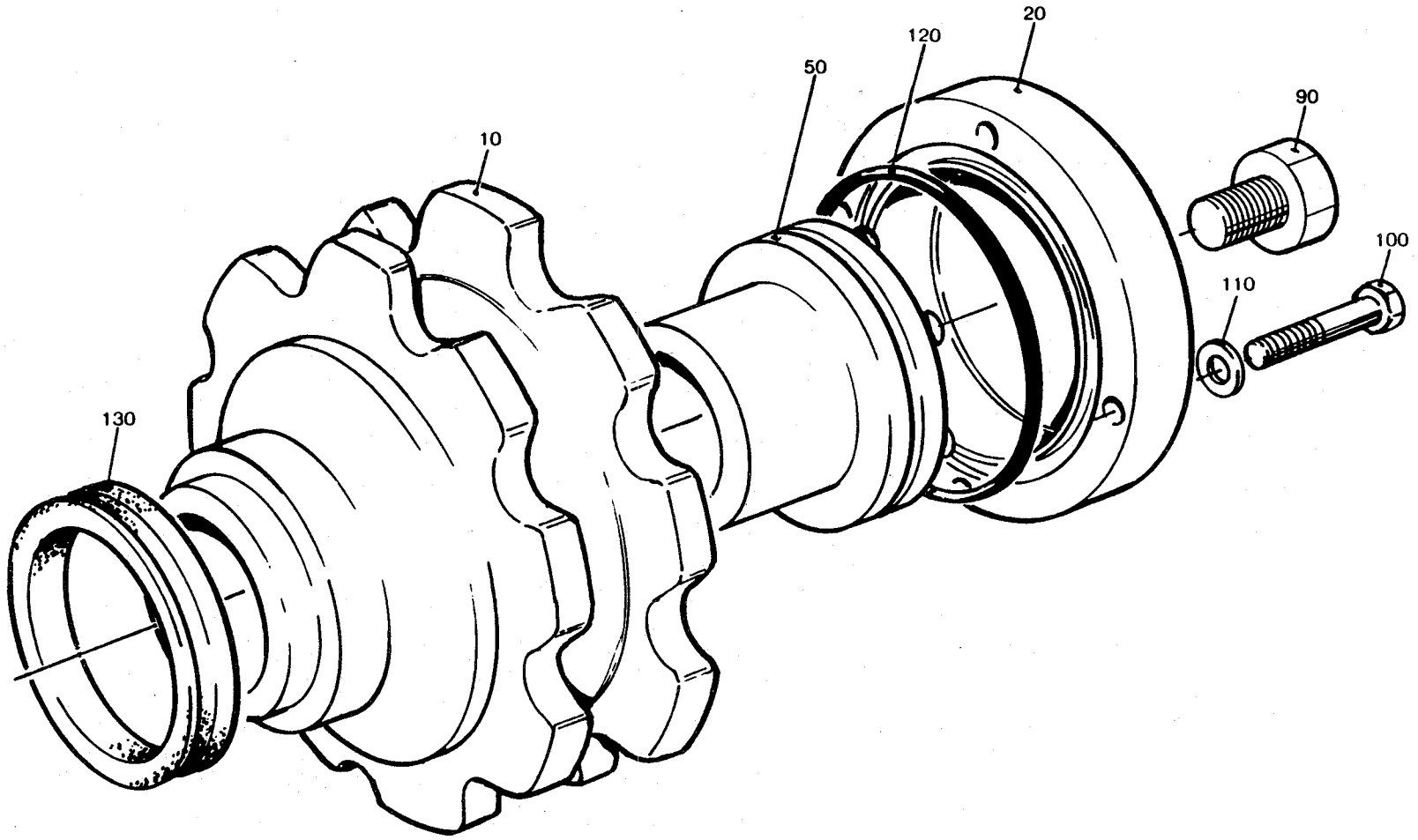
20
120
50
90
10
100
110
130

From	Pos	Part No	SP	UN	Qty	Description
	010	491847	C		1	TENSION SPROCKET
	020	491848	C		1	SHAFT
	030	491291	C		1	LID
-080V	040	491849	S		1	SHIM
090V-	040	441589	S		1	SHIM
	100	90214-0122	S		1	BALL BEARING
	105	90296-0070	S	G	40	GREASE
	110	312105-0331	S		4	SCREW M6S5X20 A4 80
	120	315221-0177	S		1	SEAL RING CB35X52X7
	130	312805-0106	C		1	NUT KM6
	140	312810-0324	S		1	LOCK NUT 16FZB
	150	315105-0146	S		4	WASHER BRB5,3X10RFR
	160	315111-0186	S		1	WASHER TBRB17X30FZB
	170	315202-0306	S		1	O-RING 74,5X3
	180	315220-0210	S		1	SEAL RING V-60S
	190	315410-0106	C		1	LOCK WASHESKFMB6

From	Pos	Part No	SP	UN	Qty	Description

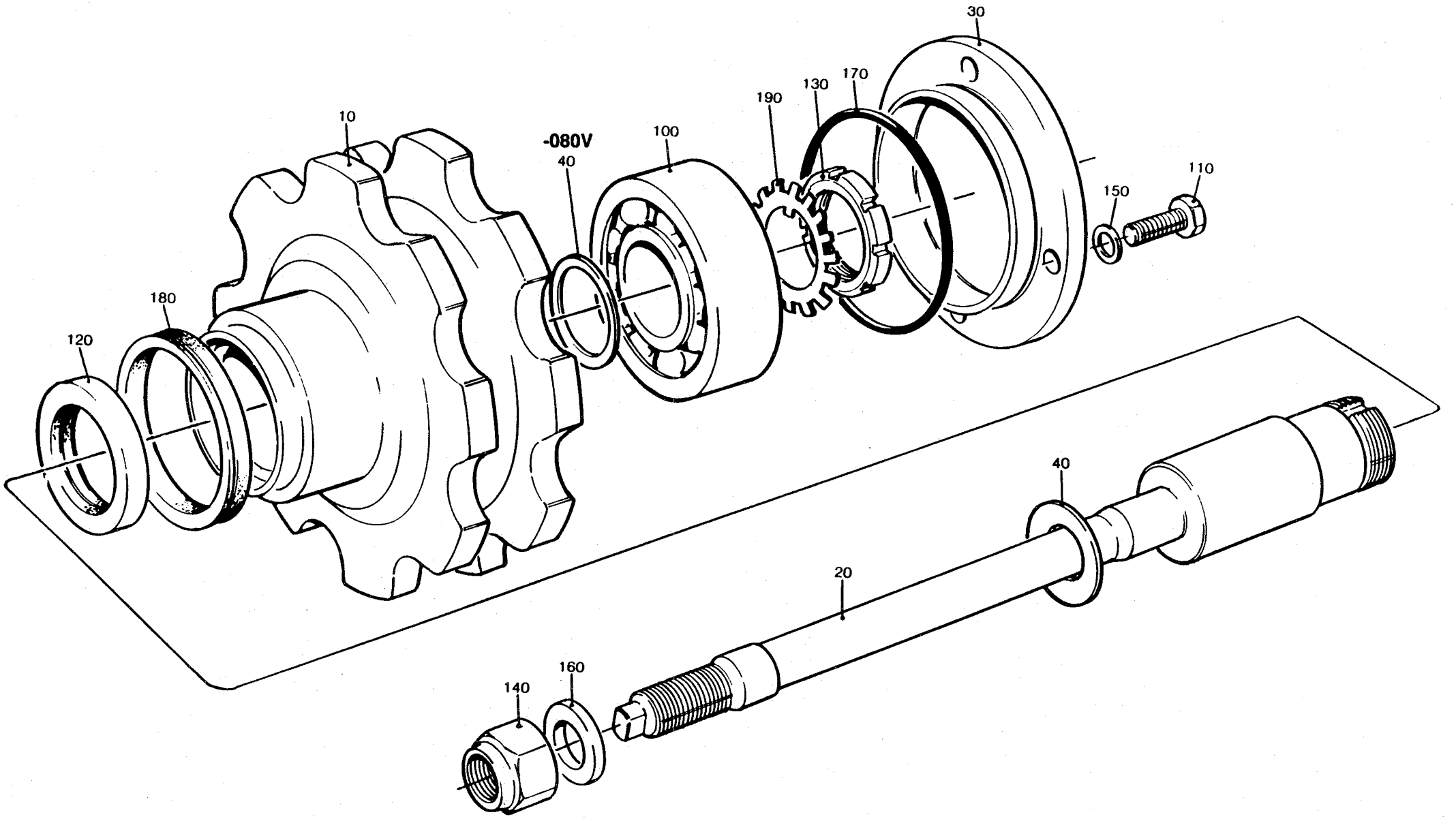
30
170
130
190
10
-080V
40
100
110
150
180
120
40
20
160
140

From	Pos	Part No	SP	UN	Qty	Description
-080V	020	256412	-		1	GUIDE PLATE
	300	90296-0028	-	L	4	OIL
	320	90416-0021	S		1	INDEXING DEVICE
-080V	500	311103-0308	-		2	CYLINDRICACPR5M6X16RFR
090V-	500	312304-0546	S		2	STUD PS12X70RFR
-080V	510	312105-0331	-		2	SCREW M6S5X20 A4 80
090V-	510	312605-0322	S		2	NUT M6M12RFR
	520	312105-0547	-		4	SCREW M6S12X75RFR
-080V	525	315105-0146	-		2	WASHER BRB5,3X10RFR
	530	315111-0178	-		4	WASHER TBRB13X24FZB
	550	315701-0263	-		1	FLAT WEDGE8X7X20
	560	315701-0271	-		1	FLAT WEDGE8X7X45

From	Pos	Part No	SP	UN	Qty	Description

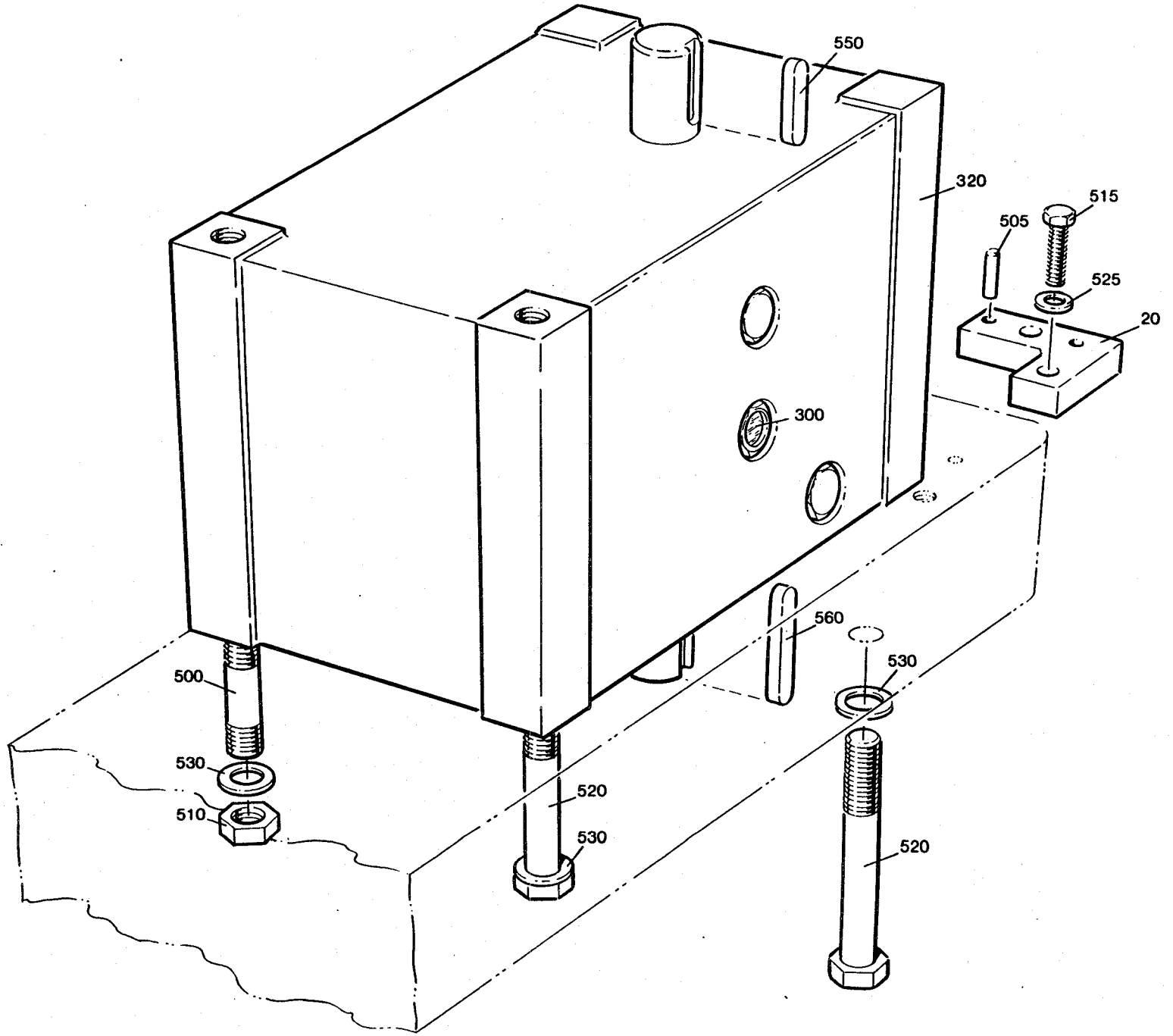
550
320
515
505
525
20
300
560
530
500
530
520
510
530
520

Last Alteration: AM 7911 85-06-11

Corresponding C-lists: 256437-020V
Assembly Drawing: 256437-2

Issue Date: 900227

From	Pos	Part No	SP	UN	Qty	Description	
	010	31559	S		20	SPRING PLATE	
	020	272746	S		1	ROD	
	030	272747	S		1	CONNECTION	
	040	31553-0001	-		14	WASHER	
	500	312101-0453	-		4	SCREW	M6S8X25FZB
	510	312101-0455	-		2	SCREW	M6S8X30FZB
	520	312101-0459	-		2	SCREW	M6S8X40FZB

From	Pos	Part No	SP	UN	Qty	Description

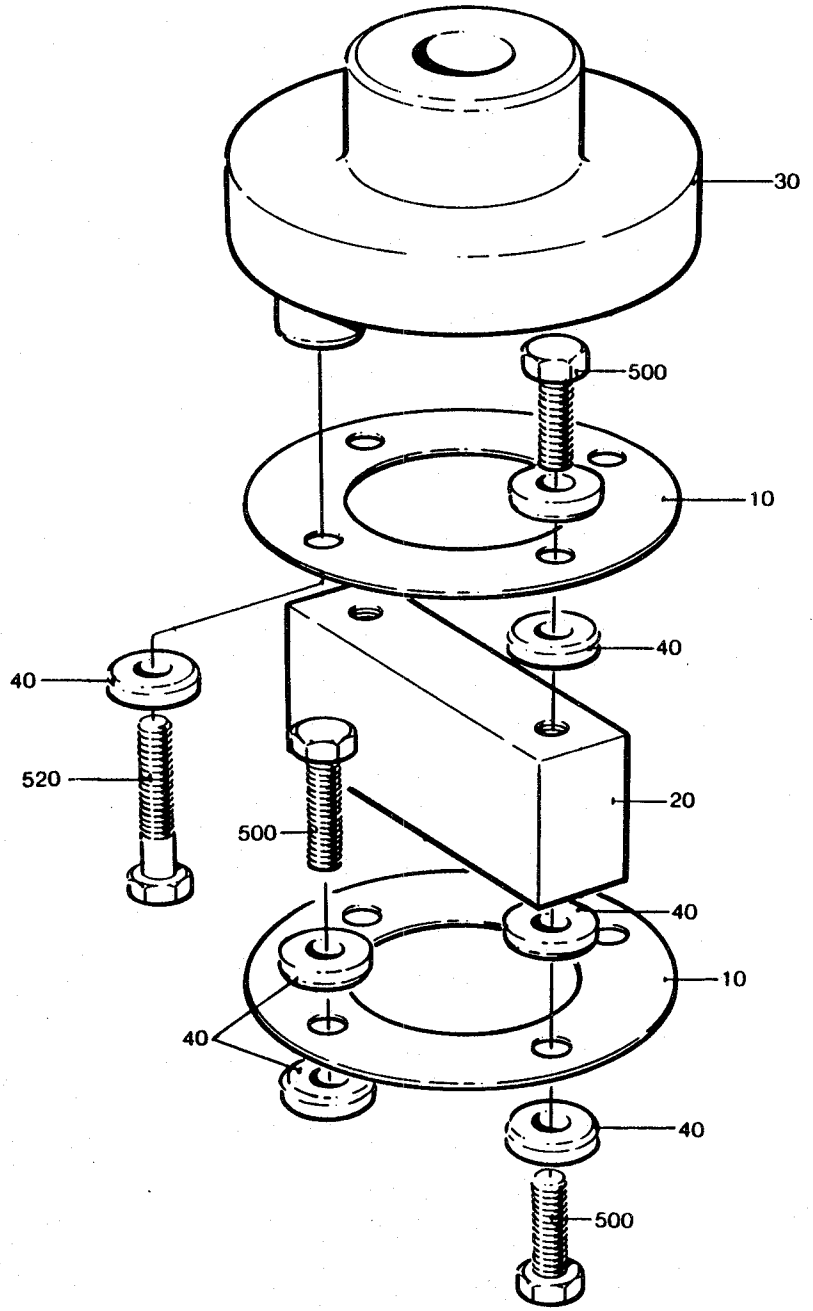
30
500
10
40
40
520
20
500
40
10
40
40
500

From	Pos	Part No	SP	UN	Qty	Description
	010	G- 441597	-		1	BEARING BRACKET
	020	257133	-		2	LID
	030	272647	-		1	SHAFT
	040	272648	S		1	PULLEY
	300	90061-0018	S		1	ANGLE ENCODER
	310	90355-0031	S		1	FLEXIBLE COUPLING
	320	90417-0050	S		1	TOOTHED BELT
	500	312101-0366	-		1	SCREW M6S6X12FZB
	510	312105-0376	-		2	SCREW M6S6X35RFR
	520	312111-0325	-		6	SCREW MC6S5X10FZB
	530	491630	-		2	SCREW
	550	315121-0153	-		3	WASHER TBRSB6,4X22FZB
	560	315701-0199	-		1	FLAT WEDGE5X5X16
	570	315752-0123	-		1	LOCK RING SGH32
	580	321308-0202	S		2	BALL BEARISKF6002-2RS

From	Pos	Part No	SP	UN	Qty	Description

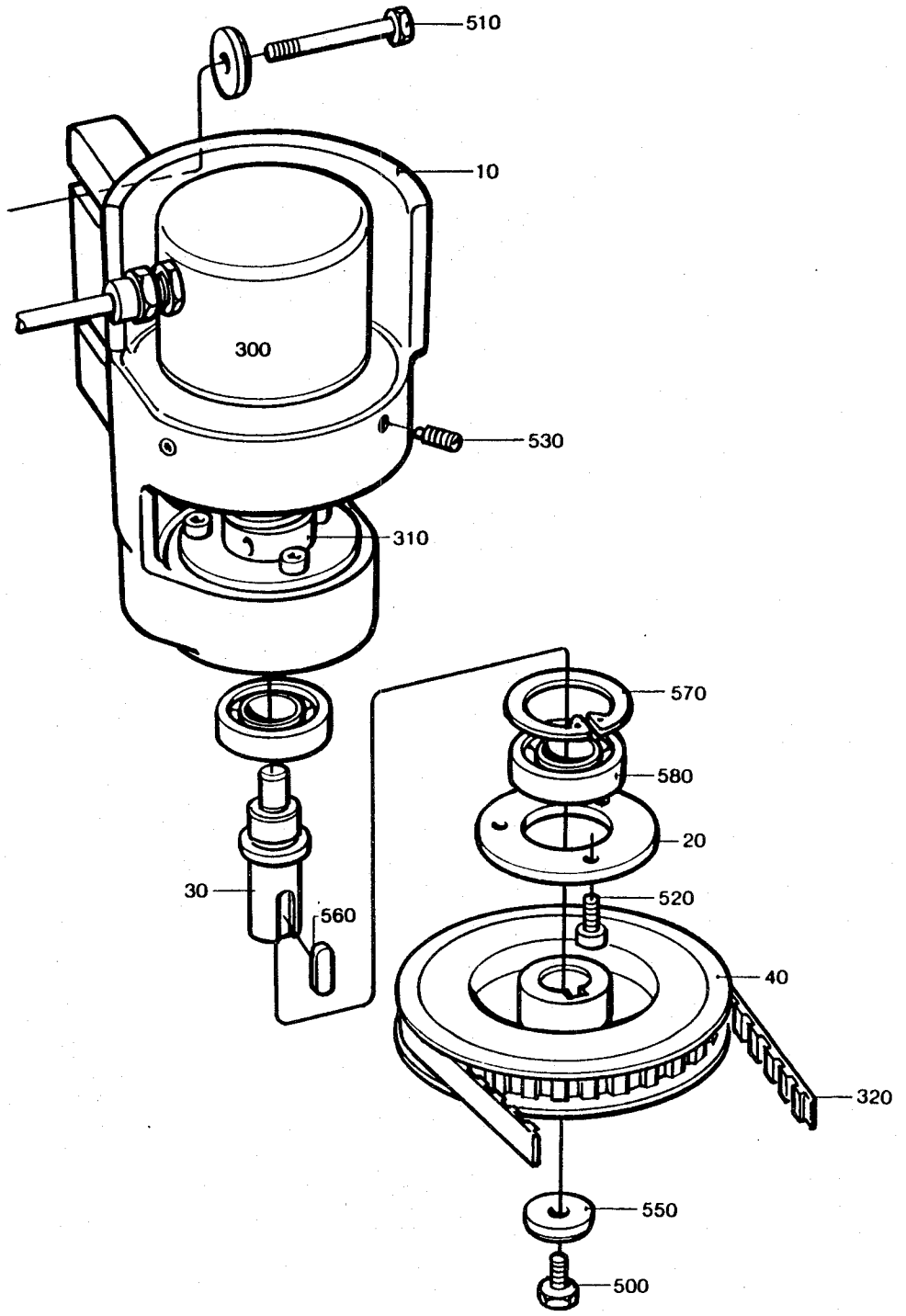
510
10
300
530
310
570
580
20
520
30
560
40
320
550
500

From	Pos	Part No	SP	UN	Qty	Description
	010	272758	S		1	PULLEY
	300	90056-0071	S		1	WORM GEAR
	303	90163-0052	-		1	NIPPLE
	305	90166-0113	-	MM	500	HOSE
	308	90257-0002	-		1	FILTER PLUG
	309	90261-0018	-		1	PIPE PLUG
	310	90296-0076	-	L	2	OIL
	320	90330-0085	-		1	BUSHING
	500	312101-0329	-		1	SCREW M6S5X16FZB
	520	312101-0552	-		3	SCREW M6S12X100FZB
	530	315101-0178	-		3	WASHER BRB13X24FZB
	540	315121-0153	-		1	WASHER TBRSB6,4X22FZB
	550	315234-0110	-		1	SEAL RING R1/4"
	560	315234-0113	-		1	SEAL RING R1/2"
	570	342991-0101	-		1	HOSE CLIP 11-17MMRFR
	580	352110-0103	-		1	CLIP TK 14-20

From	Pos	Part No	SP	UN	Qty	Description

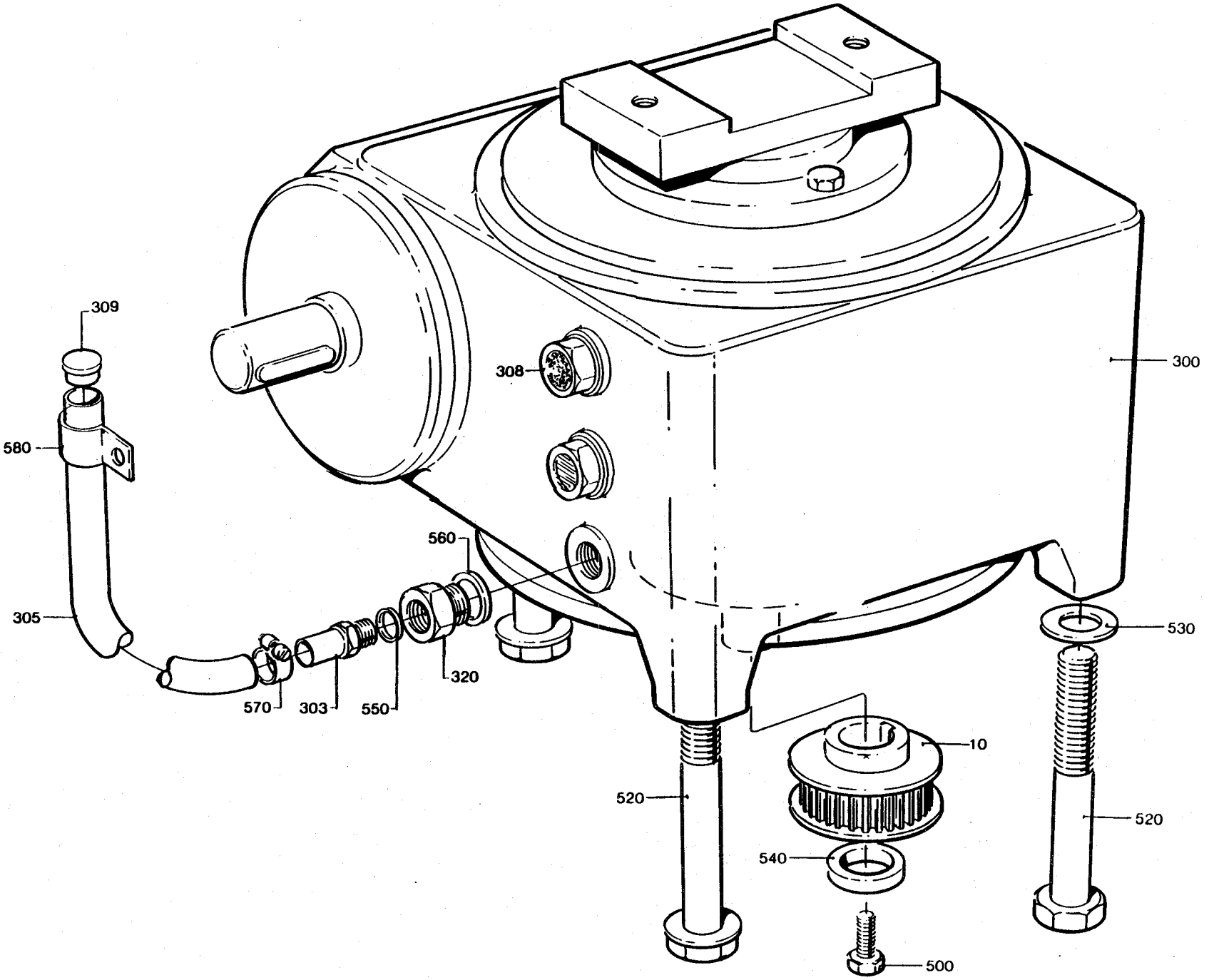
309
580
305
570
303
550
560
320
308
300
530
520
10
540
500
520

From	Pos	Part No	SP	UN	Qty	Description
Volume 250 ml						
	010	295862-0001	S		1	FOLDING BAR
	020	295871-0002	C		1	BRACKET
Volume 236 ml						
	010	295862-0002	S		1	FOLDING BAR
	020	295871-0003	C		1	BRACKET
Volume 200 ml						
	010	295862-0003	S		1	FOLDING BAR
	020	295871-0004	C		1	BRACKET
Volume 180 ml						
	010	295862-0004	S		1	FOLDING BAR
	020	295871-0005	C		1	BRACKET
Volume 125 ml						
	010	295863	S		1	FOLDING BAR
	020	295871-0006	C		1	BRACKET
Volume 200 ml SLIM						
	010	295864	S		1	FOLDING BAR
	020	295871-0001	C		1	BRACKET
Volume 284 ml						
	010	295862-0005	S		1	FOLDING BAR
	020	295871-0001	C		1	BRACKET
Common Parts						
	030	271587	-		2	WASHER
	300	90005-0056	-		2	WASHER
	500	312105-0364	-		2	SCREW M6S6X10RFR
	510	312105-0368	-		2	SCREW M6S6X16RFR
	520	312105-0372	-		4	SCREW M6S6X25RFR
	530	312105-0457	-		2	SCREW M6S8X35RFR
	540	315105-0153	-		2	WASHER BRB6,4X12RFR
	550	315105-0165	-		2	WASHER BRB8,4X16RFR
	560	342921-0112	S		2	PIPE CONNE6/4-6M

From	Pos	Part No	SP	UN	Qty	Description

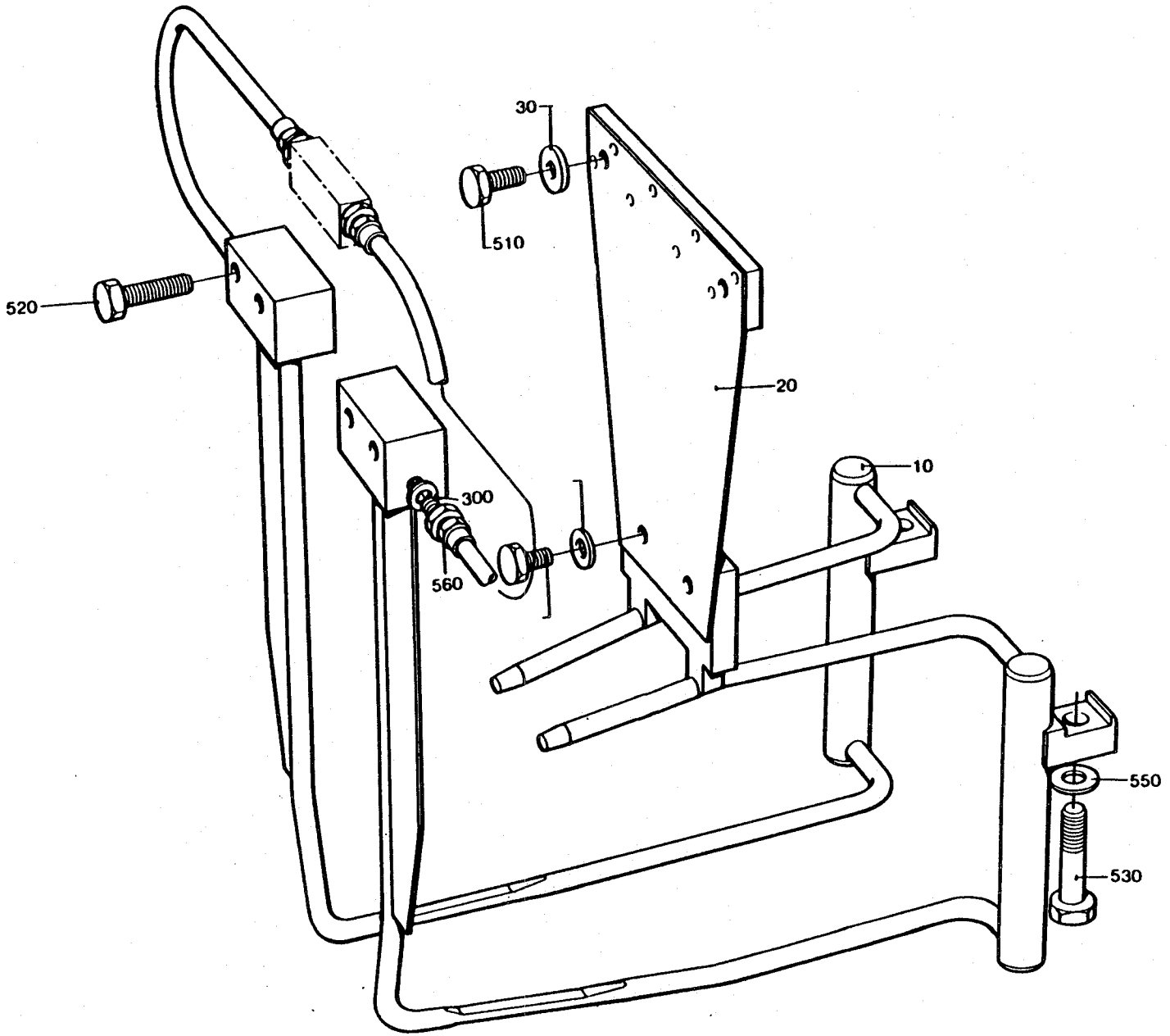
30
510
520
20
10
300
560
550
530

From	Pos	Part No	SP	UN	Qty	Description
Volume 250 ml						
	010	295843-0001	S		1	BRACKET
	020	272905-0001	S		1	ARM LEFT
	030	272906-0001	S		1	ARM RIGHT
	040	295057-0001	C		1	RAIL LEFT
	050	295058-0001	C		1	RAIL RIGHT
	060	272045-0002	S		1	SLIDE PLATE
	070	491804	S		1	BLOCK
Volume 236 ml						
	010	295843-0002	S		1	BRACKET
	020	272905-0002	S		1	ARM LEFT
	030	272906-0002	S		1	ARM RIGHT
	040	295057-0001	C		1	RAIL LEFT
	050	295058-0001	C		1	RAIL RIGHT
	060	272045-0002	S		1	SLIDE PLATE
	070	491804	S		1	BLOCK
Volume 200 ml						
	010	295843-0003	S		1	BRACKET
	020	272905-0003	S		1	ARM LEFT
	030	272906-0003	S		1	ARM RIGHT
	040	295057-0002	C		1	RAIL LEFT
	050	295058-0002	C		1	RAIL RIGHT
	060	272045-0003	S		1	SLIDE PLATE
	070	491804	S		1	BLOCK
Volume 180 ml						
	010	295843-0004	S		1	BRACKET
	020	272905-0004	S		1	ARM LEFT
	030	272906-0004	S		1	ARM RIGHT
	040	295057-0003	C		1	RAIL LEFT
	050	295058-0003	C		1	RAIL RIGHT
	060	272045-0004	S		1	SLIDE PLATE
	070	491804	S		1	BLOCK
Volume 125 ml						
	010	295843-0005	S		1	BRACKET
	020	272905-0005	S		1	ARM LEFT
	030	272906-0005	S		1	ARM RIGHT
	040	295059	C		1	RAIL LEFT
	050	295060	C		1	RAIL RIGHT
	060	271939-0001	S		1	SLIDE PLATE
	070	491805	S		1	BLOCK

From	Pos	Part No	SP	UN	Qty	Description
Volume 200 ml SLIM						
	010	295843-0006	S		1	BRACKET
	020	272905-0006	S		1	ARM LEFT
	030	272906-0006	S		1	ARM RIGHT
	040	295061	C		1	RAIL LEFT
	050	295062	C		1	RAIL RIGHT
	060	272045-0001	S		1	SLIDE PLATE
	070	491806	S		1	BLOCK
Volume 284 ml						
	010	295843-0006	S		1	BRACKET
	020	272905-0006	S		1	ARM LEFT
	030	272906-0006	S		1	ARM RIGHT
	040	295057-0001	C		1	RAIL LEFT
	050	295058-0001	C		1	RAIL RIGHT
	060	272045-0001	S		1	SLIDE PLATE
	070	491804	S		1	BLOCK
Common Parts						
	080	490980	S		1	CYLINDER
	090	491801	S		1	PISTON
	100	271731	P		1	COMPRESSION SPRING
	110	751163	C		1	COVER
	120	441894	S		1	SLEEVE
	130	295072	S		1	BUFFER RING
	140	441896	C		1	WASHER
	150	441895	P		1	BUFFER RING
	300	90091-0160	P		1	SEAL RING
	310	90091-0165	P		1	SEAL RING
	315	90091-0162	P		1	RING
	320	90091-0163	P		1	RING
	330	90090-0013	P		1	STEEL BALL
	500	312105-0455	-		4	SCREW M6S8X30RFR
	510	312105-0453	-		2	SCREW M6S8X25RFR
	515	312105-0325	-		1	SCREW M6S5X10 A4 80
	520	312105-0374	-		4	SCREW M6S6X30RFR
	530	312105-0368	-		2	SCREW M6S6X16RFR
	540	312115-0455	-		1	SCREW 8X30 A4 80
	550	312605-0320	-		1	NUT M6M10RFR
	560	315115-0165	-		2	WASHER TBRB8,4X16RFR
	565	315234-0101	-		1	SEAL RING M5
	570	312311-0327	-		1	RUB SCREW T6SS5X12FZB
	580	315105-0153	-		2	WASHER BRB6,4X12RFR

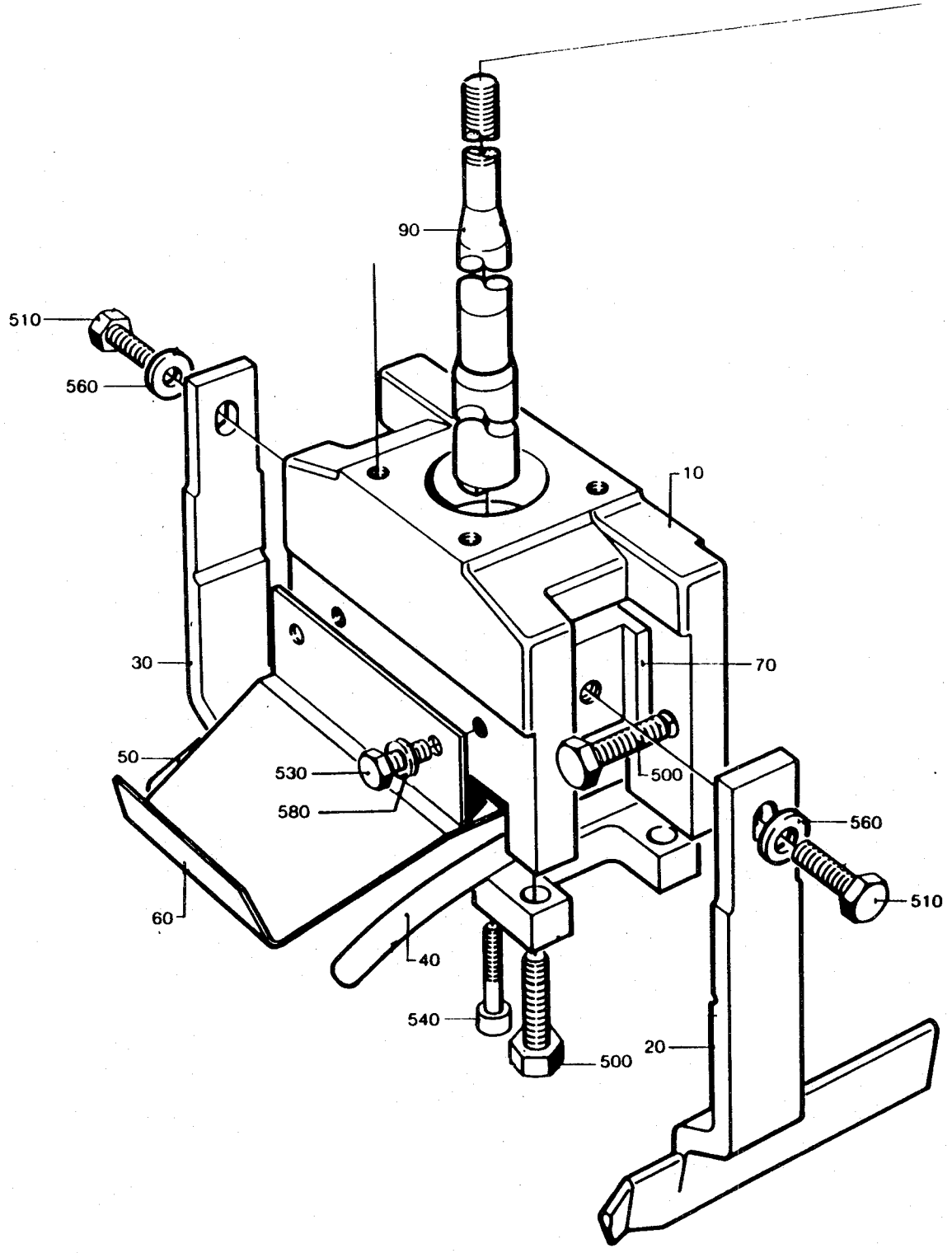
90
510
560
10
30
70
50
530
580
500
560
510
60
40
540
500
20

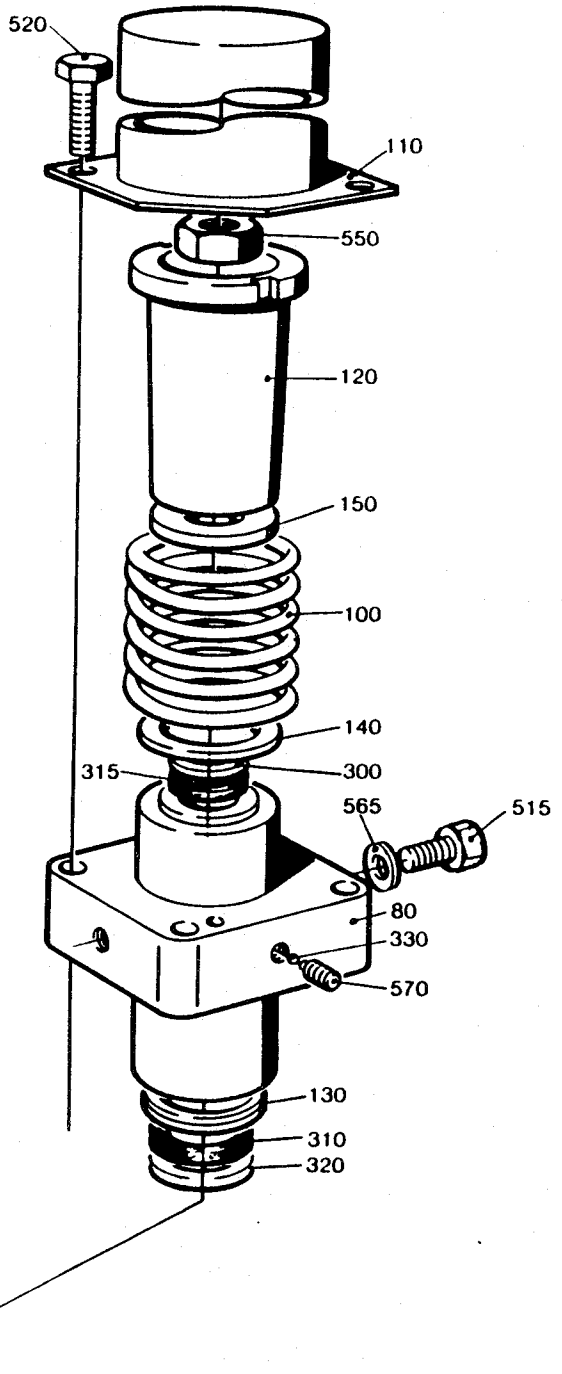
520
110
550
120
150
100
140
315
300
565
515
80
330
570
130
310
320

From	Pos	Part No	SP	UN	Qty	Description
	F200	==>510-2.1	-		1	GUIDE
Volume 250 ml						
	010	295843-0001	S		1	BRACKET
	020	272905-0001	S		1	ARM LEFT
	030	272906-0001	S		1	ARM RIGHT
	040	295057-0001	C		1	RAIL LEFT
	050	295058-0001	C		1	RAIL RIGHT
	060	272045-0002	S		1	SLIDE PLATE
	070	491804	S		1	BLOCK
Volume 236 ml						
	010	295843-0002	S		1	BRACKET
	020	272905-0002	S		1	ARM LEFT
	030	272906-0002	S		1	ARM RIGHT
	040	295057-0001	C		1	RAIL LEFT
	050	295058-0001	C		1	RAIL RIGHT
	060	272045-0002	S		1	SLIDE PLATE
	070	491804	S		1	BLOCK
Volume 200 ml						
	010	295843-0003	S		1	BRACKET
	020	272905-0003	S		1	ARM LEFT
	030	272906-0003	S		1	ARM RIGHT
	040	295057-0002	C		1	RAIL LEFT
	050	295058-0002	C		1	RAIL RIGHT
	060	272045-0003	S		1	SLIDE PLATE
	070	491804	S		1	BLOCK
Volume 180 ml						
	010	295843-0004	S		1	BRACKET
	020	272905-0004	S		1	ARM LEFT
	030	272906-0004	S		1	ARM RIGHT
	040	295057-0003	C		1	RAIL LEFT
	050	295058-0003	C		1	RAIL RIGHT
	060	272045-0004	S		1	SLIDE PLATE
	070	491804	S		1	BLOCK
Volume 125 ml						
	010	295843-0005	S		1	BRACKET
	020	272905-0005	S		1	ARM LEFT
	030	272906-0005	S		1	ARM RIGHT
	040	295059	C		1	RAIL LEFT
	050	295060	C		1	RAIL RIGHT
	060	271939-0001	S		1	SLIDE PLATE
	070	491805	S		1	BLOCK

From	Pos	Part No	SP	UN	Qty	Description
Volume 200 ml SLIM						
	010	295843-0006	S		1	BRACKET
	020	272905-0006	S		1	ARM LEFT
	030	272906-0006	S		1	ARM RIGHT
	040	295061	C		1	RAIL LEFT
	050	295062	C		1	RAIL RIGHT
	060	272045-0001	S		1	SLIDE PLATE
	070	491806	S		1	BLOCK
Volume 284 ml						
	010	295843-0006	S		1	BRACKET
	020	272905-0006	S		1	ARM LEFT
	030	272906-0006	S		1	ARM RIGHT
	040	295057-0001	C		1	RAIL LEFT
	050	295058-0001	C		1	RAIL RIGHT
	060	272045-0001	S		1	SLIDE PLATE
	070	491804	S		1	BLOCK
Common Parts						
	080	490980	S		1	CYLINDER
	090	752083	S		1	PISTON
	100	271731	P		1	COMPRESSION SPRING
	110	751163	C		1	COVER
	120	441894	S		1	SLEEVE
	130	295072	S		1	BUFFER RING
	140	441896	C		1	WASHER
	150	441895	P		1	BUFFER RING
	300	90090-0013	P		1	STEEL BALL
	310	90091-0162	P		1	RING
	320	90091-0163	P		1	RING
	330	90091-0160	P		1	SEAL RING
	340	90091-0165	P		1	SEAL RING
	500	312105-0325	-		1	SCREW M6S5X10 A4 80
	510	312105-0368	-		2	SCREW M6S6X16RFR
	520	312105-0455	-		6	SCREW M6S8X30RFR
	530	312311-0327	-		1	RUB SCREW T6SS5X12FZB
	540	312605-0320	-		1	NUT M6M10RFR
	550	315105-0153	-		2	WASHER BRB6,4X12RFR
	560	315105-0165	-		2	WASHER BRB8,4X16RFR
	570	315234-0101	-		1	SEAL RING M5

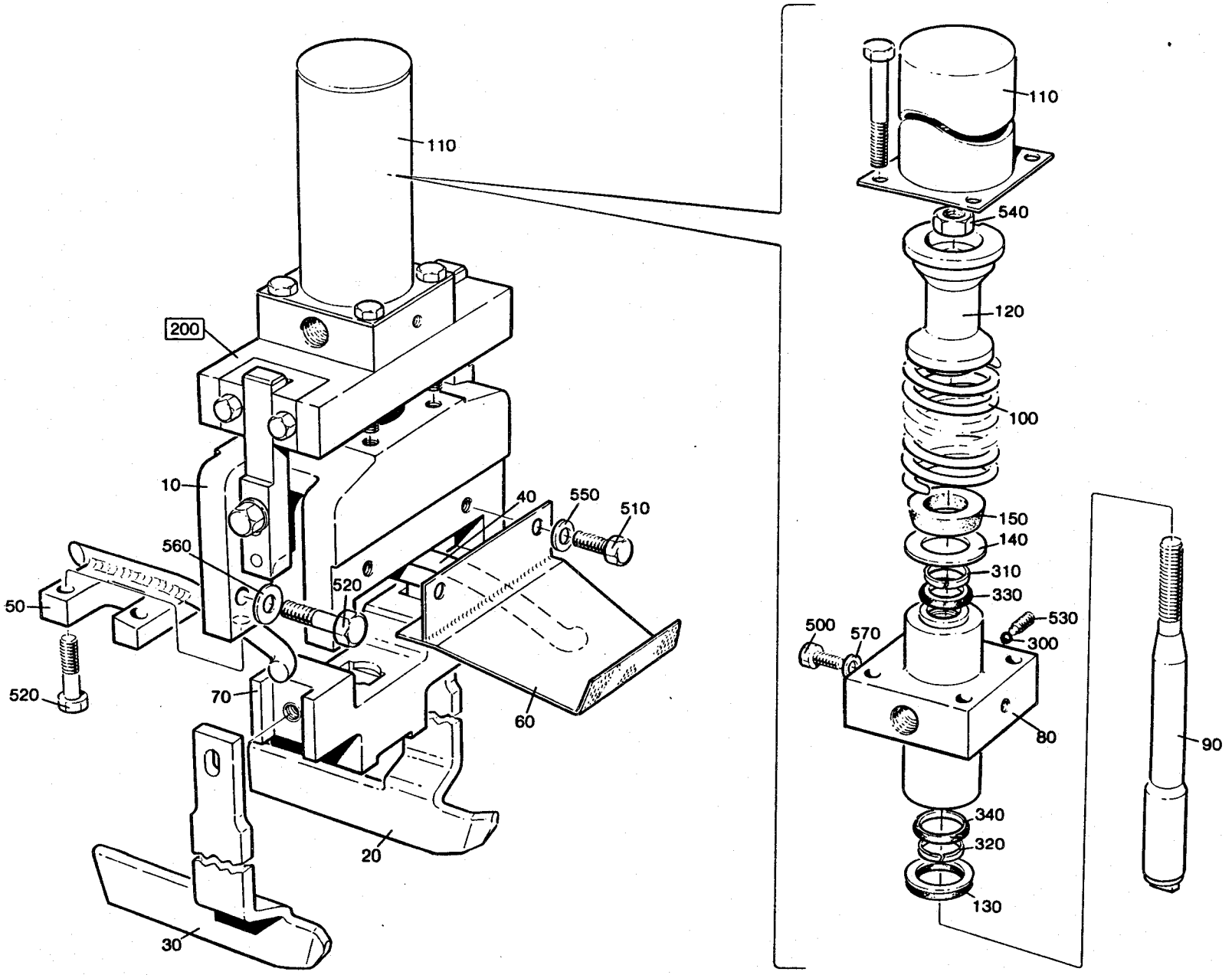
110
200
10
40
550
510
560
520
50
520
70
60
20
30
110
540
120
100
150
140
310
330
530
300
500
570
80
90
340
320
130

From	Pos	Part No	SP	UN	Qty	Description
	010	752656	-		1	GUIDE PLATE
	020	752657	-		1	SPACER SLEEVE
	050	752655	-		2	GUIDE PIN
	080	752658	-		2	GUIDE LUG
	150	311103-0309	-		2	CYLINDRICACPR5M6X18RFR
	170	312105-0376	-		4	SCREW M6S6X35RFR
	180	312105-0381	-		4	SCREW M6S6X55RFR
	190	312105-0457	-		2	SCREW M6S8X35RFR
	200	312115-0463	-		1	SCREW MC6S 8X60 A4 80
	220	315115-0165	-		2	WASHER TBRB8,4X16RFR
	060	272045-0002	S		1	SLIDE PLATE
	070	491804	S		1	BLOCK

From	Pos	Part No	SP	UN	Qty	Description

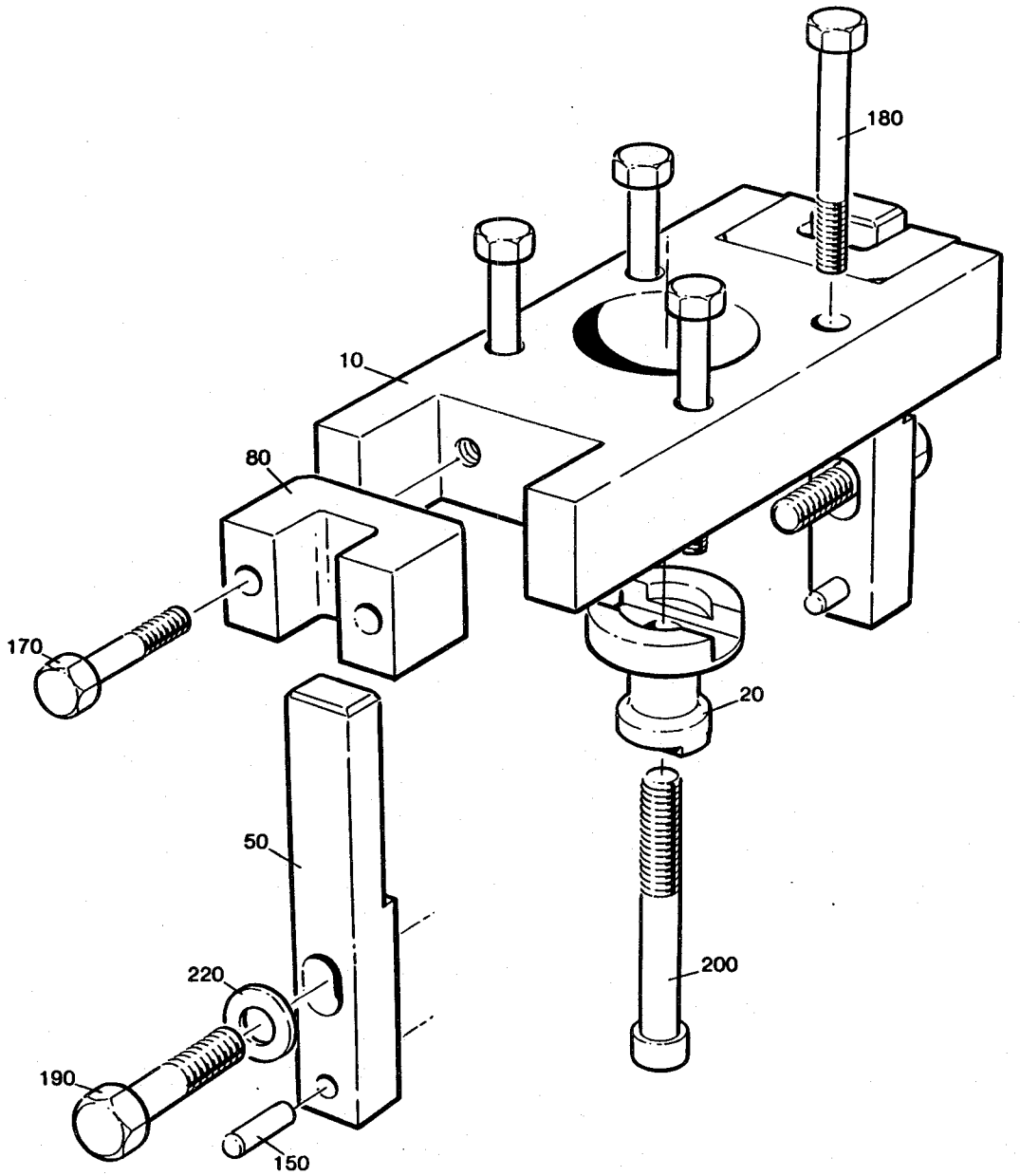
180
10
80
170
20
50
200
220
190
150

From	Pos	Part No	SP	UN	Qty	Description
	F110	==>511-1.1	S		2	ELEMENT
	F100	==>511-1.1	S		1	ELEMENT
Volume 250 ml						
	030	295617-0001	S		1	AIR NOZZLE
	040	295618-0001	S		1	AIR NOZZLE
	050	247227-0001	S		1	AIR NOZZLE
	120	23763-0006	C		1	SPACER PIPE
	160	23765-0005	S		1	INSULATING TUBE
	180	252766-0001	P		3	INSULATING TUBE
	220	263673	P		6	GASKET
Volume 236 ml						
	030	295617-0001	S		1	AIR NOZZLE
	040	295618-0001	S		1	AIR NOZZLE
	050	247227-0001	S		1	AIR NOZZLE
	120	23763-0005	C		1	SPACER PIPE
	160	23765-0005	S		1	INSULATING TUBE
	180	252766-0001	P		2	INSULATING TUBE
	190	252766-0002	P		1	INSULATING TUBE
	220	263673	P		8	GASKET
Volume 200 ml						
	030	295617-0001	S		1	AIR NOZZLE
	040	295618-0001	S		1	AIR NOZZLE
	050	247227-0001	S		1	AIR NOZZLE
	120	23763-0002	C		1	SPACER PIPE
	140	23765-0003	S		1	INSULATING TUBE
	180	252766-0001	P		2	INSULATING TUBE
	190	252766-0002	P		1	INSULATING TUBE
	220	263673	P		6	GASKET
Volume 180 ml						
	030	295617-0001	S		1	AIR NOZZLE
	040	295618-0001	S		1	AIR NOZZLE
	050	247227-0001	S		1	AIR NOZZLE
	120	23763-0001	C		1	SPACER PIPE
	140	23765-0003	S		1	INSULATING TUBE
	180	252766-0001	P		2	INSULATING TUBE
	190	252766-0002	P		1	INSULATING TUBE
	220	263673	P		6	GASKET
Volume 125 ml						
	030	295617-0002	S		1	AIR NOZZLE
	040	295618-0002	S		1	AIR NOZZLE
	050	295621	S		1	AIR NOZZLE

From	Pos	Part No	SP	UN	Qty	Description
	120	23763-0009	C		1	SPACER PIPE
	150	23765-0004	SC		1	INSULATING TUBE
	180	252766-0001	P		3	INSULATING TUBE
	220	263673	P		8	GASKET
Volume 200 ml SLIM						
	030	295617-0003	S		1	AIR NOZZLE
	040	295618-0003	S		1	AIR NOZZLE
	050	295622	S		1	AIR NOZZLE
	120	23763-0007	C		1	SPACER PIPE
	180	252766-0001	P		3	INSULATING TUBE
	220	263673	P		8	GASKET
Volume 284 ml						
	030	295617-0001	S		1	AIR NOZZLE
	040	295618-0001	S		1	AIR NOZZLE
	050	247227-0001	S		1	AIR NOZZLE
	120	23763-0012	C		1	SPACER PIPE
	180	252766-0001	P		3	INSULATING TUBE
	220	263673	P		6	GASKET
Common Parts						
	010	256548	-		1	HEATING CHAMBER
	020	441143	-		1	SPACER PIECE
	060	531730	P		3	FLANGE SEAL
	070	23769	S		1	STOP PLATE
	080	295306	-		1	COVER
	090	271191	-		1	LID
	095	295307	-		1	FLEXIBLE CONDUIT
	096	441693	-		1	HANDLE
	100	20702	-		1	COVER PLATE
	110	23762-0002	-		2	SIDE PIPE
	130	23765-0002	S		2	INSULATING TUBE
	200	259807	S		2	WASHER
	210	469977	S		1	ELECTRICAL CONNECTION
	240	271499	S		4	ELECTRICAL CONNECTION
	310	90166-0133	P	MM	1200	HOSE
	500	312105-0327	-		24	SCREW M6S5X12 A4 80
	510	90287-0208	-		2	SCREW M5X70 A4 80
	520	312105-0368	-		2	SCREW M6S6X16RFR
	525	312105-0372	-		2	SCREW M6S6X25RFR
	530	315105-0146	-		2	WASHER BRB5,3X10RFR
	540	315105-0153	-		2	WASHER BRB6,4X12RFR
	550	315204-0305	S		1	O-RING 69,5X3
	560	342920-0122	-		1	PIPE CONNE8/6-1/4
	590	352100-0107	-		4	CABLE GLANR.18,6-12

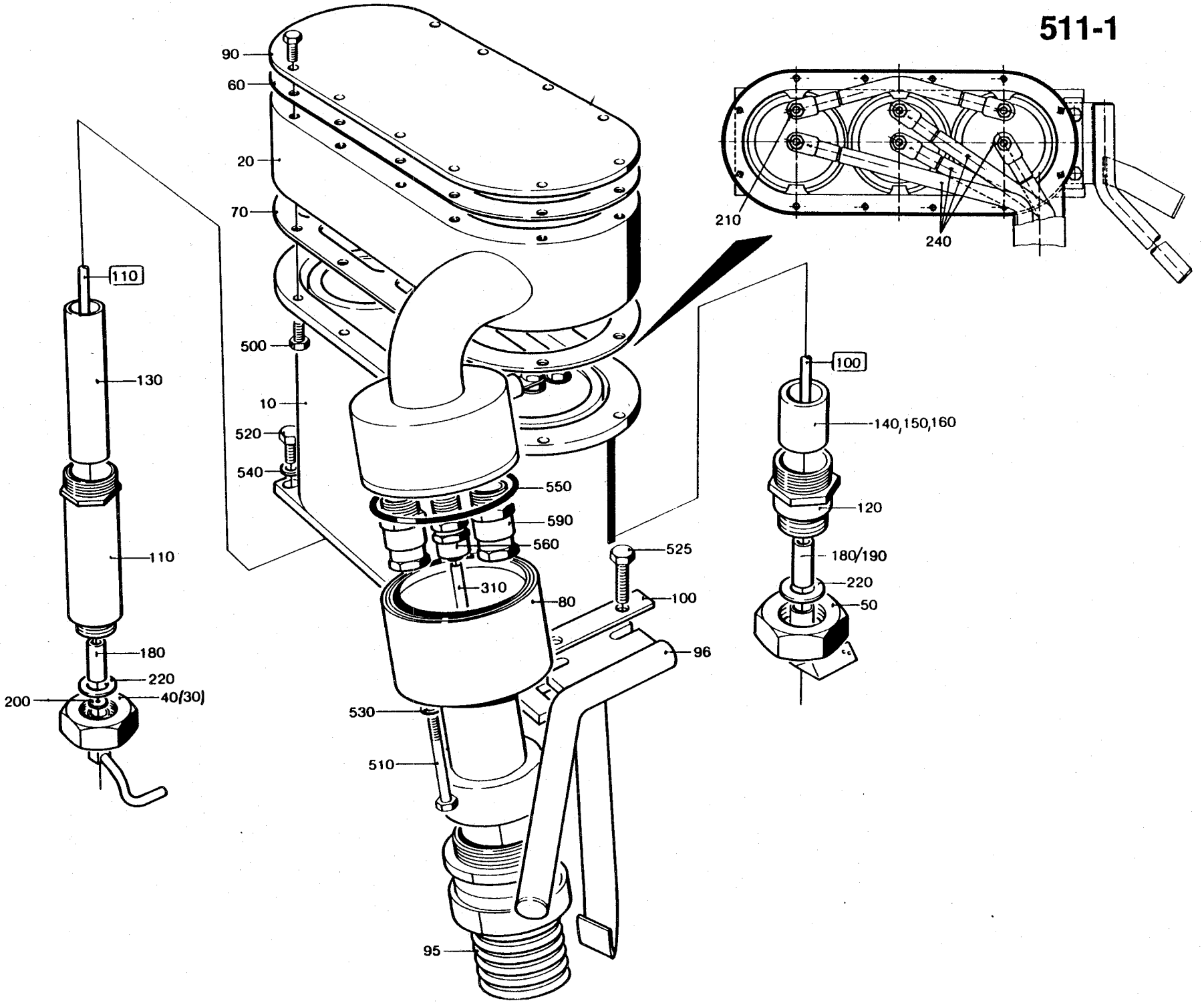
90
60
20
70
210
240
110
130
110
180
220
200
40(30)
500
10
520
540
550
590
560
525
310
80
100
96
530
510
95
100
140,150,160
120
180/190
220
50

Top Flap Sealing

From	Pos	Part No	SP	UN	Qty	Description
		C-31390-0102				ELEMENT Compl. Ass'y
	115	30310-0002	P		1	HEATING COIL
	122	20705-0001	S		1	INSULATING TUBE
	123	29411	S		1	SPACER PIPE
	124	29413	S		12	SHIM
	125	31653-0001	S		1	PLATE
	128	525233	S		5	GASKET
	129	20772	S		1	INSULATOR BODY
	130	37536	S		1	INSULATOR BODY
	131	23771	S		1	SPACER RING
	132	37537	S		1	SPACER RING
	133	37535	S		1	SUPPORT
	137	312605-0316	-		6	NUT M6M6RFR
	141	315105-0153	-		4	WASHER BRB6,4X12RFR
	142	315111-0153	-		1	WASHER TBRB6,4X12FZB

Bottom Flap Sealing

Volume 284, 250, 236, 200 ml SLIM

From	Pos	Part No	SP	UN	Qty	Description
		C-31390-0113				ELEMENT Compl. Ass'y
	115	30311-0001	P		1	HEATING COIL

Volume 200, 189, 180, 125, 100 ml

From	Pos	Part No	SP	UN	Qty	Description
		C-31390-0114				ELEMENT Compl. Ass'y
	115	30311-0002	P		1	HEATING COIL

Common Parts

From	Pos	Part No	SP	UN	Qty	Description
	122	20705-0001	S		1	INSULATING TUBE
	123	29411	S		1	SPACER PIPE
	124	29413	S		21	SHIM
	125	31653-0002	S		1	PLATE
	128	525233	S		5	GASKET
	129	20772	S		1	INSULATOR BODY
	130	37536	S		1	INSULATOR BODY
	131	23771	S		1	SPACER RING
	132	37537	S		1	SPACER RING
	133	37535	S		1	SUPPORT
	137	312605-0316	-		6	NUT M6M6RFR
	141	315105-0153	-		4	WASHER BRB6,4X12RFR
	142	315111-0153	-		1	WASHER TBRB6,4X12FZB

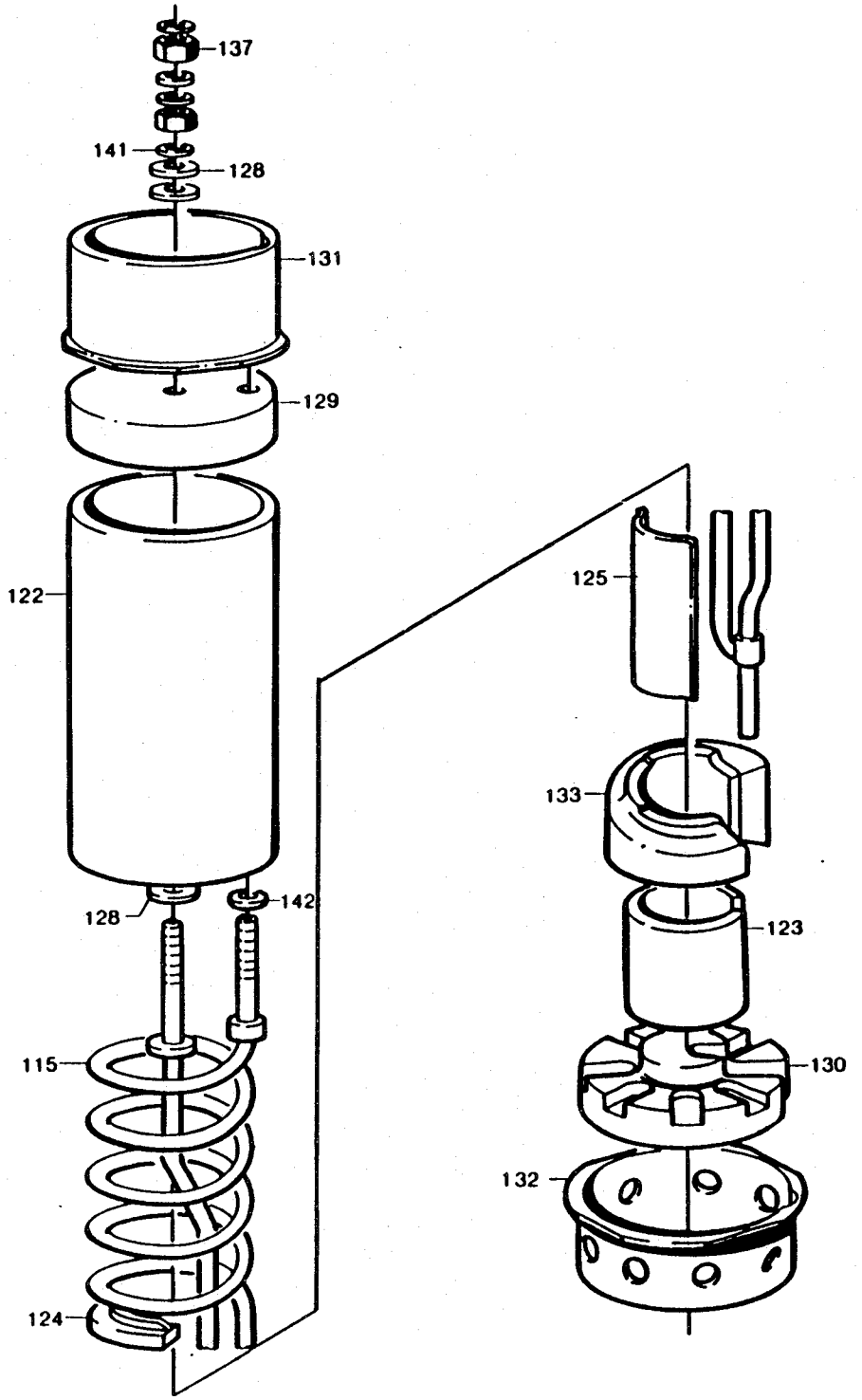
137
141
128
131
129
122
128
142
115
124
125
133
123
130
132

From	Pos	Part No	SP	UN	Qty	Description
Common Parts						
	010	490980	S		1	CYLINDER
	020	272576	C		1	BRACKET
	050	491803	C		1	HOUSE
	060	441973	P		2	ARM
	070	491801	S		1	PISTON
	080	21047	-		6	LOCK WASHER
	090	491802	-		1	WASHER
	100	751274	P		1	COMPRESSION SPRING
	110	256457	S		2	ARM
	120	256458-0001	P		2	SHAFT
	130	256458-0002	P		4	SHAFT
	135	256460	S		2	SLEEVE
	140	256461	S		1	PIN
	150	256462	S		2	SCREW
	160	256463	C		2	WASHER
	170	751163	C		1	COVER
	180	271731	S		1	COMPRESSION SPRING
	200	491771	S		1	BRACKET
	210	441894	S		1	SLEEVE
	240	295072	S		1	BUFFER RING
	250	441896	C		1	WASHER
	260	441895	P		1	BUFFER RING
	325	90090-0013	P		1	STEEL BALL
	330	90091-0160	P		1	SEAL RING
	335	90091-0162	P		1	RING
	340	90091-0165	P		1	SEAL RING
	345	90091-0163	P		1	RING
	350	90166-0117	-	MM	2500	HOSE
	360	90240-0052	S		12	RICTION BEARING
	370	90287-0119	P		1	SCREW
	500	312105-0325	-		7	SCREW M6S5X10 A4 80
	510	312105-0368	-		4	SCREW M6S6X16RFR
	525	312105-0372	-		4	SCREW M6S6X25RFR
	530	312115-0449	-		1	SCREW 8X16 A4 80
	540	312115-0455	-		1	SCREW 8X30 A4 80
	545	312155-0449	-		1	SCREW MF6S8X16RFR
	550	312605-0316	-		2	NUT M6M6RFR
	560	312605-0320	-		1	NUT M6M10RFR
	590	311103-0276	-		2	CYLINDRICACPR4M6X30RFR
	595	315234-0101	-		1	SEAL RING M5
	600	342980-0113	-		2	BANJO CONNSINGEL 6/4-1/8
	610	342980-0303	-		2	BANJO CONN SINGEL 1/8"

From	Pos	Part No	SP	UN	Qty	Description

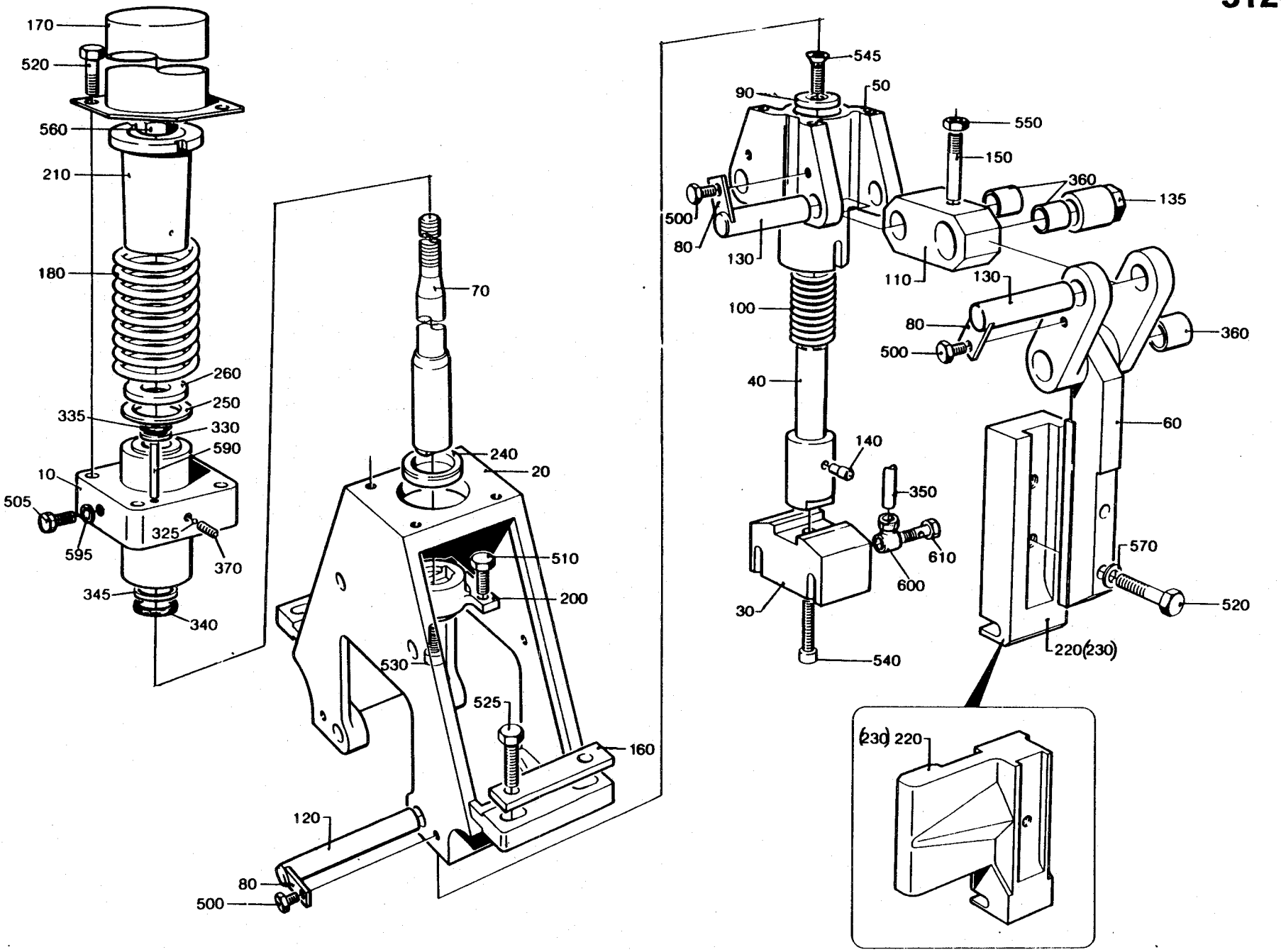
170
520
560
210
180
260
250
335
330
590
10
505
595
325
370
345
340
70
240
20
510
200
530
525
160
120
80
500
545
90
50
550
150
360
135
500
80
130
110
130
100
80
500
360
40
60
140
350
610
600
570
30
520
540
220(230)
(230) 220

From	Pos	Part No	SP	UN	Qty	Description
Volume 250 ml						
	030	491798	S		1	BLOCK
	040	491772-0002	S		1	SPINDLE
	220	271052-0002	S		1	BLOCK RIGHT
	230	271051-0002	S		1	BLOCK LEFT
	520	312105-0374	-		8	SCREW M6S6X30RFR
	570	315115-0153	-		4	WASHER TBRB6,4X12RFR
Volume 236 ml						
	030	491798	S		1	BLOCK
	040	491772-0003	S		1	SPINDLE
	220	271052-0003	S		1	BLOCK RIGHT
	230	271051-0003	S		1	BLOCK LEFT
	520	312105-0374	-		8	SCREW M6S6X30RFR
	570	315115-0153	-		4	WASHER TBRB6,4X12RFR
Volume 200 ml						
	030	491798	S		1	BLOCK
	040	491772-0004	S		1	SPINDLE
	220	456864-0001	S		1	BLOCK RIGHT
	230	456865-0001	S		1	BLOCK LEFT
	520	312105-0374	-		8	SCREW M6S6X30RFR
	570	315115-0153	-		2	WASHER TBRB6,4X12RFR
Volume 180 ml						
	030	491798	S		1	BLOCK
	040	491772-0006	S		1	SPINDLE
	220	456864-0002	S		1	BLOCK RIGHT
	230	456865-0002	S		1	BLOCK LEFT
	520	312105-0374	-		8	SCREW M6S6X30RFR
	570	315115-0153	-		2	WASHER TBRB6,4X12RFR
Volume 125 ml						
	030	491799	S		1	BLOCK
	040	491772-0007	S		1	SPINDLE
	220	272935	S		1	BLOCK RIGHT
	230	272936	S		1	BLOCK LEFT
	520	312105-0374	-		6	SCREW M6S6X30RFR
	570	315115-0153	-		2	WASHER TBRB6,4X12RFR
Volume 200 ml SLIM						
	030	491800	S		1	BLOCK
	040	491772-0001	S		1	SPINDLE
	220	469406	S		1	BLOCK RIGHT
	230	469405	S		1	BLOCK LEFT
	520	312105-0374	-		8	SCREW M6S6X30RFR
	570	315115-0153	-		4	WASHER TBRB6,4X12RFR

From	Pos	Part No	SP	UN	Qty	Description
Volume 284 ml						
	030	491798	S		1	BLOCK
	040	491772-0001	S		1	SPINDLE
	220	271052-0001	S		1	BLOCK RIGHT
	230	271051-0001	S		1	BLOCK LEFT
	520	312105-0374	-		8	SCREW M6S6X30RFR
	570	315115-0153	-		4	WASHER TBRB6,4X12RFR

From	Pos	Part No	SP	UN	Qty	Description
Volume 250 ml						
	030	491798	S		1	BLOCK
	040	491772-0002	S		1	SPINDLE
	220	271052-0002	S		1	BLOCK RIGHT
	230	271051-0002	S		1	BLOCK LEFT
	520	312105-0374	-		8	SCREW M6S6X30RFR
	570	315115-0153	-		4	WASHER TBRB6,4X12RFR
Volume 236 ml						
	030	491798	S		1	BLOCK
	040	491772-0003	S		1	SPINDLE
	220	271052-0003	S		1	BLOCK RIGHT
	230	271051-0003	S		1	BLOCK LEFT
	520	312105-0374	-		8	SCREW M6S6X30RFR
	570	315115-0153	-		4	WASHER TBRB6,4X12RFR
Volume 200 ml						
	030	491798	S		1	BLOCK
	040	491772-0004	S		1	SPINDLE
	220	456864-0001	S		1	BLOCK RIGHT
	230	456865-0001	S		1	BLOCK LEFT
	520	312105-0374	-		6	SCREW M6S6X30RFR
	570	315115-0153	-		2	WASHER TBRB6,4X12RFR
Volume 180 ml						
	030	491798	S		1	BLOCK
	040	491772-0006	S		1	SPINDLE
	220	456864-0002	S		1	BLOCK RIGHT
	230	456865-0002	S		1	BLOCK LEFT
	520	312105-0374	-		6	SCREW M6S6X30RFR
	570	315115-0153	-		2	WASHER TBRB6,4X12RFR
Volume 125 ml						
	030	491799	S		1	BLOCK
	040	491772-0007	S		1	SPINDLE
	220	272935	S		1	BLOCK RIGHT
	230	272936	S		1	BLOCK LEFT
	520	312105-0374	-		6	SCREW M6S6X30RFR
	570	315115-0153	-		2	WASHER TBRB6,4X12RFR
Volume 200 ml SLIM						
	030	491800	S		1	BLOCK
	040	491772-0001	S		1	SPINDLE
	220	469406	S		1	BLOCK RIGHT
	230	469405	S		1	BLOCK LEFT
	520	312105-0374	-		8	SCREW M6S6X30RFR
	570	315115-0153	-		4	WASHER TBRB6,4X12RFR

From	Pos	Part No	SP	UN	Qty	Description
Volume 284 ml						
	030	491798	S		1	BLOCK
	040	491772-0001	S		1	SPINDLE
	220	271052-0001	S		1	BLOCK RIGHT
	230	271051-0001	S		1	BLOCK LEFT
	520	312105-0374	-		8	SCREW M6S6X30RFR
	570	315115-0153	-		4	WASHER TBRB6,4X12RFR

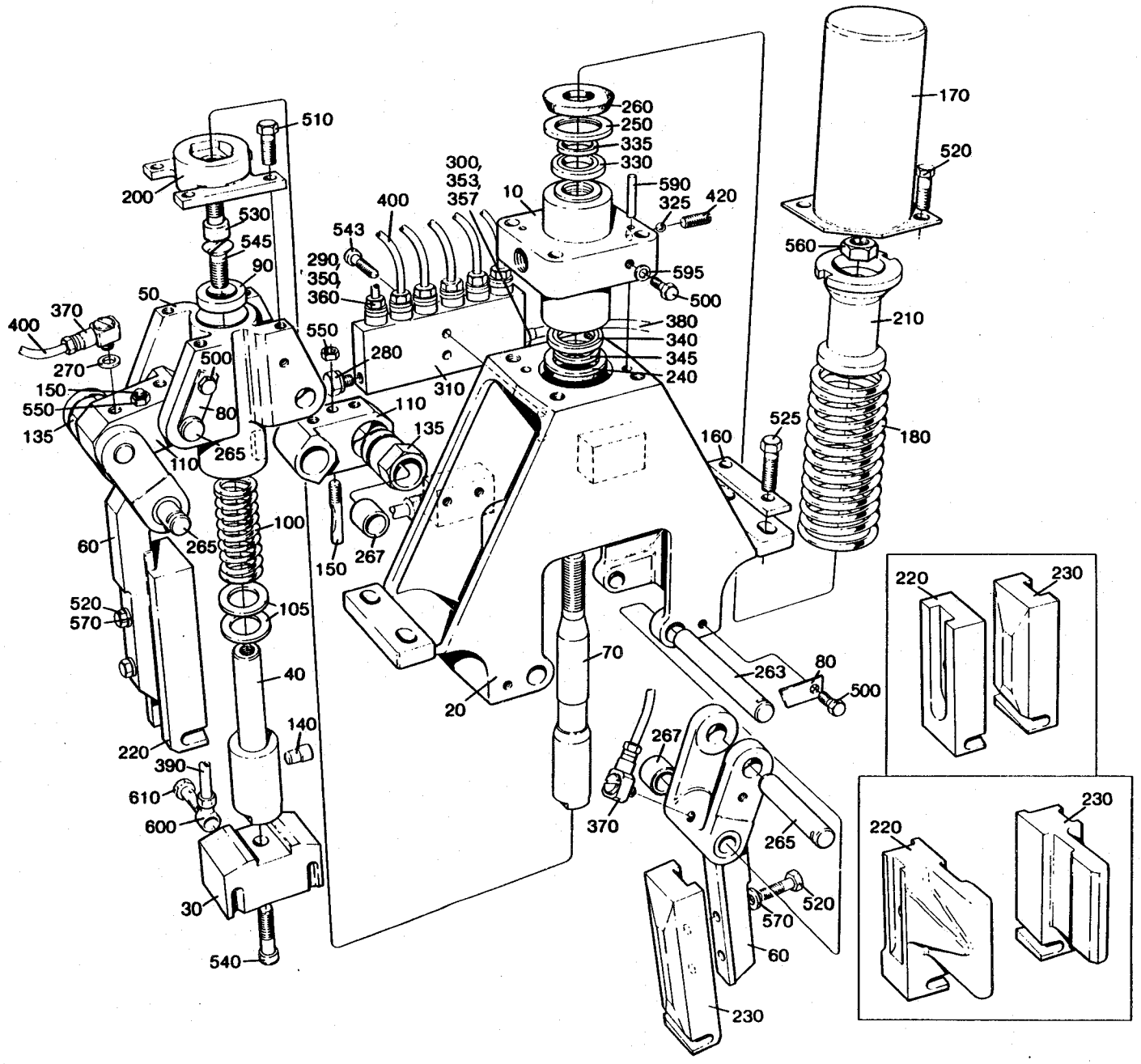
510
200
530
545
90
50
400
370
270
150
550
135
500
80
110
265
60
520
570
100
105
40
140
220
390
610
600
30
540
260
250
335
330
590
325
420
300,
353,
357
10
400
543
290,
350,
360
595
500
380
340
345
240
550
280
310
110
135
267
150
170
520
560
210
180
525
160
263
80
500
70
20
267
370
265
520
570
60
230
220
230
220
230

From	Pos	Part No	SP	UN	Qty	Description
Common Parts						
	010	490980	S		1	CYLINDER
	020	272576	C		1	BRACKET
	050	491803	C		1	HOUSE
	060	751552	P		2	ARM
	070	752083	S		1	PISTON
	080	21047	-		6	LOCK WASHER
	090	491802	-		1	WASHER
	100	490942	P		1	COMPRESSION SPRING
	105	260427	S		2	WASHER
	110	751553	S		2	ARM
	135	751557	S		2	SLEEVE
	140	256461	S		1	PIN
	150	256462	S		2	SCREW
	160	256463	C		2	WASHER
	170	751163	C		1	COVER
	180	271731	S		1	COMPRESSION SPRING
	200	491771	S		1	BRACKET
	210	441894	S		1	SLEEVE
	240	295072	S		1	BUFFER RING
	250	441896	C		1	WASHER
	260	441895	P		1	BUFFER RING
	263	751554-0001	P		2	SHAFT
	265	751554-0002	S		4	SHAFT
	267	751555	S		12	BUSHING
	270	90005-0056	-		2	WASHER
	280	90087-0019	-		1	PLUG
	290	90028-0020	-		6	CONE
	300	90028-0021	-		1	CONE
	310	90032-0040	-		1	BLOCK
	325	90090-0013	P		1	STEEL BALL
	330	90091-0160	P		1	SEAL RING
	335	90091-0162	P		1	RING
	340	90091-0165	P		1	SEAL RING
	345	90091-0163	P		1	RING
	350	90092-0054	-		6	METERING VALVE
	353	90134-0031	-		1	SLEEVE
	357	90134-0038	-		1	BUSHING
	360	90134-0039	-		6	BUSHING
	370	90134-0058	-		6	BANJO CONNECTION
	380	90166-0109	-	MM	700	HOSE
	390	90166-0117	-	MM	2500	HOSE
	400	90166-0143	-	MM	1500	HOSE
	420	90287-0119	P		1	SCREW P6SS 5X12 A2
	500	312105-0325	-		7	SCREW M6S5X10 A4 80
	510	312105-0368	-		4	SCREW M6S6X16RFR
	525	312105-0372	-		4	SCREW M6S6X25RFR
	530	312115-0449	-		1	SCREW 8X16 A4 80
	540	312115-0455	-		1	SCREW 8X30 A4 80
	543	312155-0295	-		2	SCREW MF6S4X20RFR
	545	312155-0449	-		1	SCREW MF6S8X16RFR
	550	312605-0316	-		2	NUT M6M6RFR
	560	312605-0320	-		1	NUT M6M10RFR
	590	311103-0276	-		2	CYLINDRICACPR4M6X30RFR
	595	315234-0101	-		1	SEAL RING M5
	600	342980-0113	-		2	BANJO CONNSINGEL 6/4-1/8
	610	342980-0303	-		2	BANJO CONN SINGEL 1/8"

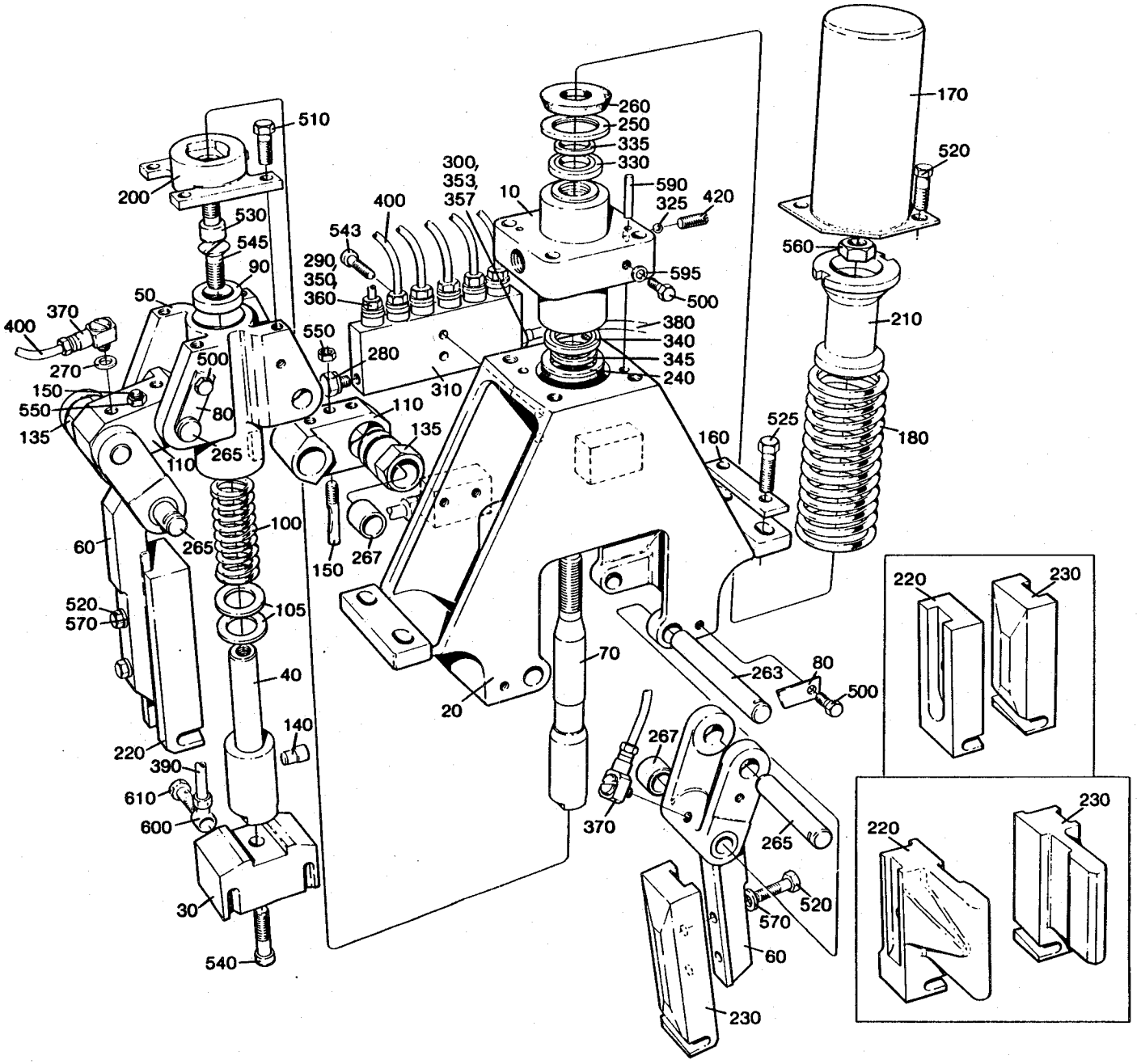
510
200
530
545
90
50
370
400
270
150
550
135
500
80
110
265
60
520
570
100
105
40
140
220
390
610
600
30
540
260
250
335
330
300,
353,
357
10
400
543
290,
350,
360
550
280
310
590
325
420
595
500
380
340
345
240
110
135
267
150
170
520
560
210
180
525
160
70
20
263
80
500
267
370
265
520
570
60
230
220
230
220
230

From	Pos	Part No	SP	UN	Qty	Description
	F225	==>513-1.1	-		1	CHAIN TENSIONER
	010	456451	S		1	ROLLER (180-284 ml)
		315202-0306	S		2	* O-RING 74,5X3
	010	469433	S		1	ROLLER (125 ml)
		315202-0311	S		2	* O-RING 99,5X3
	010	469434	S		1	ROLLER (200 ml SLIM)
		315202-0306	S		2	* O-RING 74,5X3
	020	G- 295311	-		1	DISCHARGE HOUSE
	030	G- 456175	C		1	LID
	040	295313	-		1	SHAFT
	042	456176	S		1	GASKET
	046	272068	S		1	CARRIER CHAIN
	048	272517	S		1	SPROCKET
	050	295314	S		1	SPROCKET
	060	295315	S		1	SHAFT
	070	295316	S		1	STRIP
	080	295092	-		1	BEARING HOUSING
	090	441978	C		1	BEARING
	095	491193	-		1	HOLDER
	100	271975	S		1	SHAFT
	110	271978	S		1	NUT
	120	272534	S		2	WASHER
	130	272742	P		1	FINGER
	140	295842	-		1	WASHER
	150	295093	-		2	LID
	160	295094	S		1	SHAFT
	170	441979	S		1	SHAFT
	180	295116	S		1	SPROCKET
	190	469393	-		1	BRACKET
	200	441980	S		1	GEAR WHEEL
	210	491746	-		1	WASHER
	220	295163	-		1	SHOULDER RING
	230	295164	S		1	GEAR WHEEL
	240	295165	S		1	GEAR WHEEL
	250	295166	C		1	SHAFT
	260	491733	-		1	SHOULDER RING
	270	295168	-		1	LID
	280	295169	S		1	SPACER RING
	290	295170	S		1	PLUG
	300	491751	S		1	SPROCKET
	310	295299	S		1	GEAR WHEEL
	320	295308	S		1	SHIM
	330	295309	S		1	SHIM
	340	295317	-		1	WASHER
	350	295318	-		1	GREASE NIPPLE
	360	295319	S		1	SPROCKET
	370	295320	S		1	PLATE
	380	295321	S		1	STRIP
	390	491753	C		1	WASHER
	400	491752	S		1	HUB
	410	491754	P		1	SHEAR PIN
	420	295323	-		1	WASHER
	430	491872	-		1	COVER PLATE
	440	456064	-		1	SPACER
	445	491215	-		1	SLEEVE
	450	295326	-		1	RETAINING RING
	452	751061	-		1	LID
	455	90028-0021	P		1	CONE
	460	90092-0052	P		1	VALVE
	465	90134-0040	P		1	BUSHING
	466	90134-0068	S		3	BANJO CONNECTION
	467	90141-0018	-		1	LOCK RING
	470	90208-0050	S		1	COLLAR
	475	90208-0047	S		3	COLLAR
	480	90240-0090	S		2	RICTION BEARING
	485	90240-0091	S		1	RICTION BEARING
	490	90240-0092	S		3	RICTION BEARING
	491	90266-0165	S	MM	100	PIPE
	492	90288-0036	S		1	ROLLER CHAIN
	496	90296-0068	-	G	100	GREASE
	500	321308-0204	S		1	BALL BEARISKF6004-2RS
	505	321308-0208	S		1	BALL BEARISKF6008-2RS
	510	321313-0102	S		3	BALL BEARISKF6202-2RS
	520	315410-0102	S		1	LOCK WASHESKFMB2
	525	315410-0103	S		1	LOCK WASHESKFMB3
	530	312805-0102	-		1	NUT KM2
	535	312805-0103	-		1	NUT KM3
	540	315750-0112	S		2	LOCK RING SGA15
	550	315750-0127	S		1	LOCK RING SGA40
	560	315752-0124	S		1	LOCK RING SGH35
	580	315701-0170	-		1	FLAT WEDGE4X4X20
	590	315701-0198	-		2	FLAT WEDGE5X5X14
	600	315701-0207	-		1	FLAT WEDGE5X5X36
	610	315220-0121	S		1	SEAL RING V-14S
	630	312145-0331	-		4	SLOTTED HEMFS5X20RFR

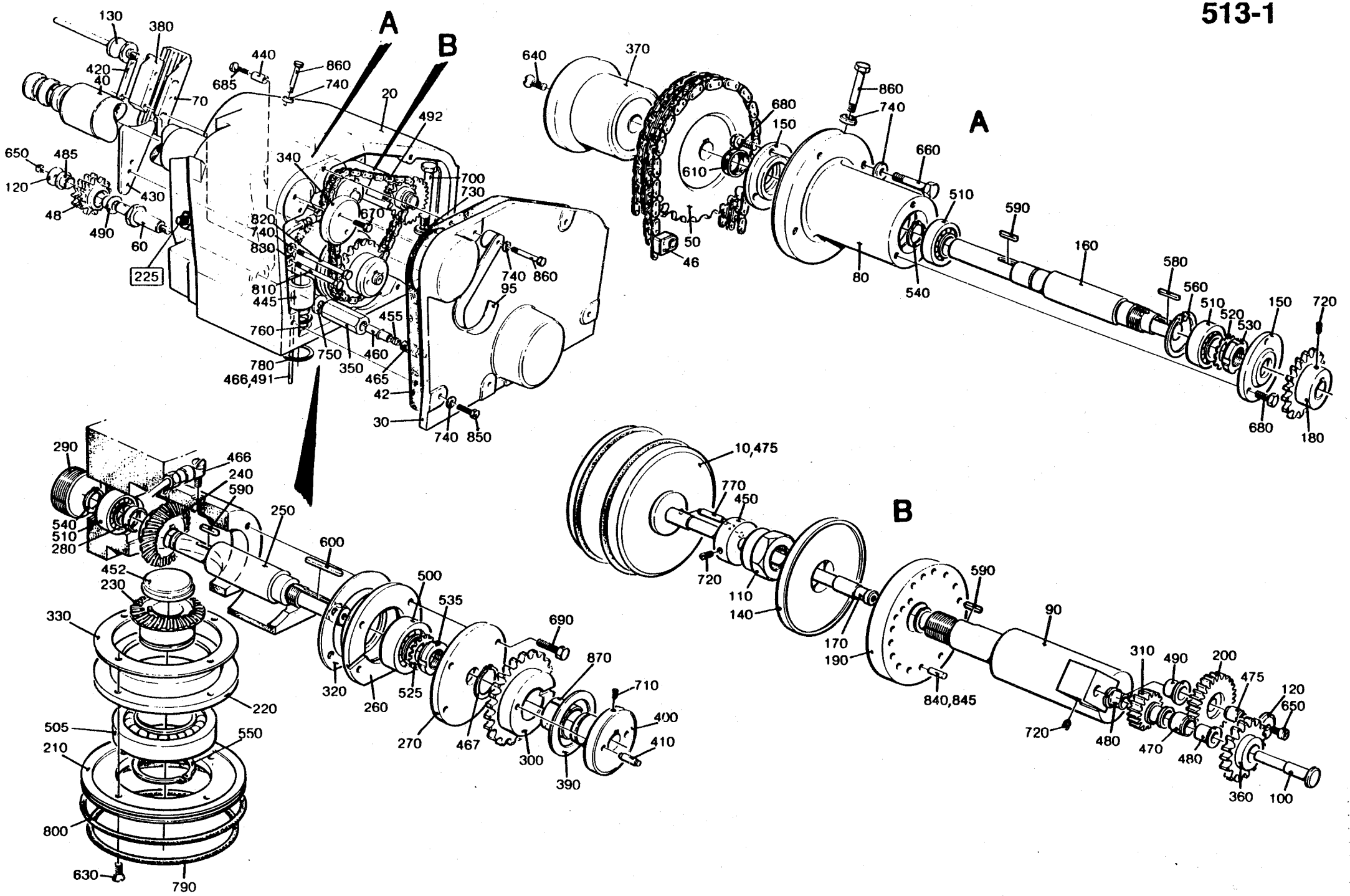
A
B
130
380
420
40
70
440
685
860
740
20
492
650
485
120
48
490
60
225
430
340
700
730
670
820
740
830
810
445
760
780
466,491
750
350
460
455
465
42
30
740
850
740
860
95
640
370
680
150
610
50
46
860
740
660
510
590
160
580
560
510
520
530
150
720
680
180
80
540
290
466
240
590
540
510
280
250
600
452
230
330
220
505
550
210
800
630
790
320
260
500
535
525
270
467
690
870
710
400
410
300
390
10,475
770
450
720
110
140
170
190
590
90
840,845
310
490
200
475
120
650
720
480
470
480
360
100

From	Pos	Part No	SP	UN	Qty	Description
	640	312145-0329	-		1	SLOTTED HEMFS5X16RFR
	650	312115-0287	-		2	SCREW 4X8 A4 80
	660	312105-0374	-		4	SCREW M6S6X30RFR
	670	312105-0370	-		2	SCREW M6S6X20RFR
	680	312105-0329	-		6	SCREW M6S5X16 A4 80
	685	312105-0333	-		1	SCREW M6S5X25 A4 80
	690	312105-0331	-		4	SCREW M6S5X20 A4 80
	700	312101-0546	-		4	SCREW M6S12X70FZB
	710	312318-0321	-		2	GRUB SCREW SK6SS5X6RFR
	720	312318-0362	-		3	GRUB SCREW SK6SS6X8RFR
	730	315115-0178	-		4	WASHER TBRB13X24RFR
	740	315115-0153	-		13	WASHER TBRB6,4X12RFR
	750	315105-0173	-		1	WASHER BRB10,5X22RFR
	760	315202-0119	S		1	O-RING 25,1X1,6
	770	311305-0312	-		1	SLOTTED PIRPC5X25FZB
	780	315202-0220	S		1	O-RING 32,2X3
	790	315202-0312	S		1	O-RING 104,5X3
	800	315202-0314	S		1	O-RING 114,5X3
	810	312105-0382	-		2	SCREW M6S6X60RFR
	820	312105-0384	-		2	SCREW M6S6X70RFR
	830	315105-0153	-		2	WASHER BRB6,4X12RFR
	840	311103-0235	-		2	CYLINDRICACPR3M6X14RFR
090V-	845	311103-0240	-		1	CYLINDRICACPR3M6X25RFR
	850	312105-0372	-		5	SCREW M6S6X25RFR
	860	312105-0378	-		2	SCREW M6S6X40RFR
	870	321120-0153	S		1	BUSHING 24/27X20

From	Pos	Part No	SP	UN	Qty	Description

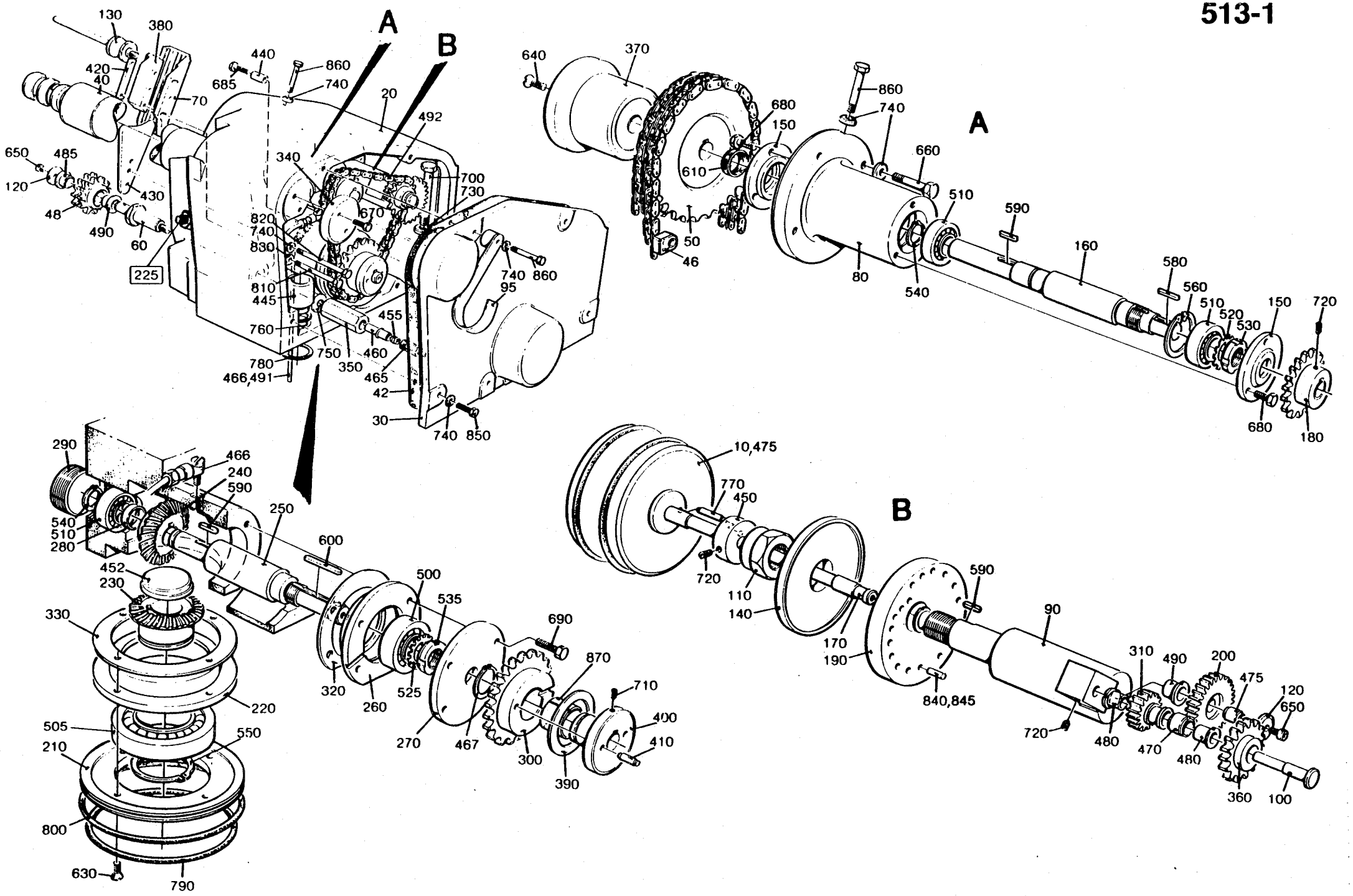
A
B
130
380
420
40
70
440
685
860
740
20
492
340
700
730
650
485
120
48
490
60
225
430
820
740
830
670
810
445
760
780
466,491
750
350
460
455
465
42
30
740
850
740
860
95
640
370
680
150
610
50
46
860
740
660
510
590
160
580
560
510
520
530
150
720
680
180
80
540
290
466
240
590
540
510
280
250
600
452
230
330
220
505
550
210
800
630
790
500
535
320
260
525
270
467
690
870
710
400
410
300
390
10,475
770
450
720
110
140
170
190
590
90
840,845
310
490
200
475
120
650
720
480
470
480
360
100

From	Pos	Part No	SP	UN	Qty	Description
	010	272546	S		1	SLIDER
	020	272547	C		1	PIN
	030	118582	S		1	COMPRESSION SPRING
	040	272549	C		1	WASHER
	050	272550	C		1	ADJUSTING SCREW
	060	491240	C		1	BRACKET
	500	312105-0451	-		2	SCREW M6S8X20RFR
	510	312105-0461	-		1	SCREW M6S8X50RFR
	530	312605-0322	-		1	NUT M6M12RFR
	540	315105-0165	-		1	WASHER BRB8,4X16RFR
	550	315105-0178	-		1	WASHER BRB13X24RFR
	560	315115-0165	-		2	WASHER TBRB8,4X16RFR

From	Pos	Part No	SP	UN	Qty	Description

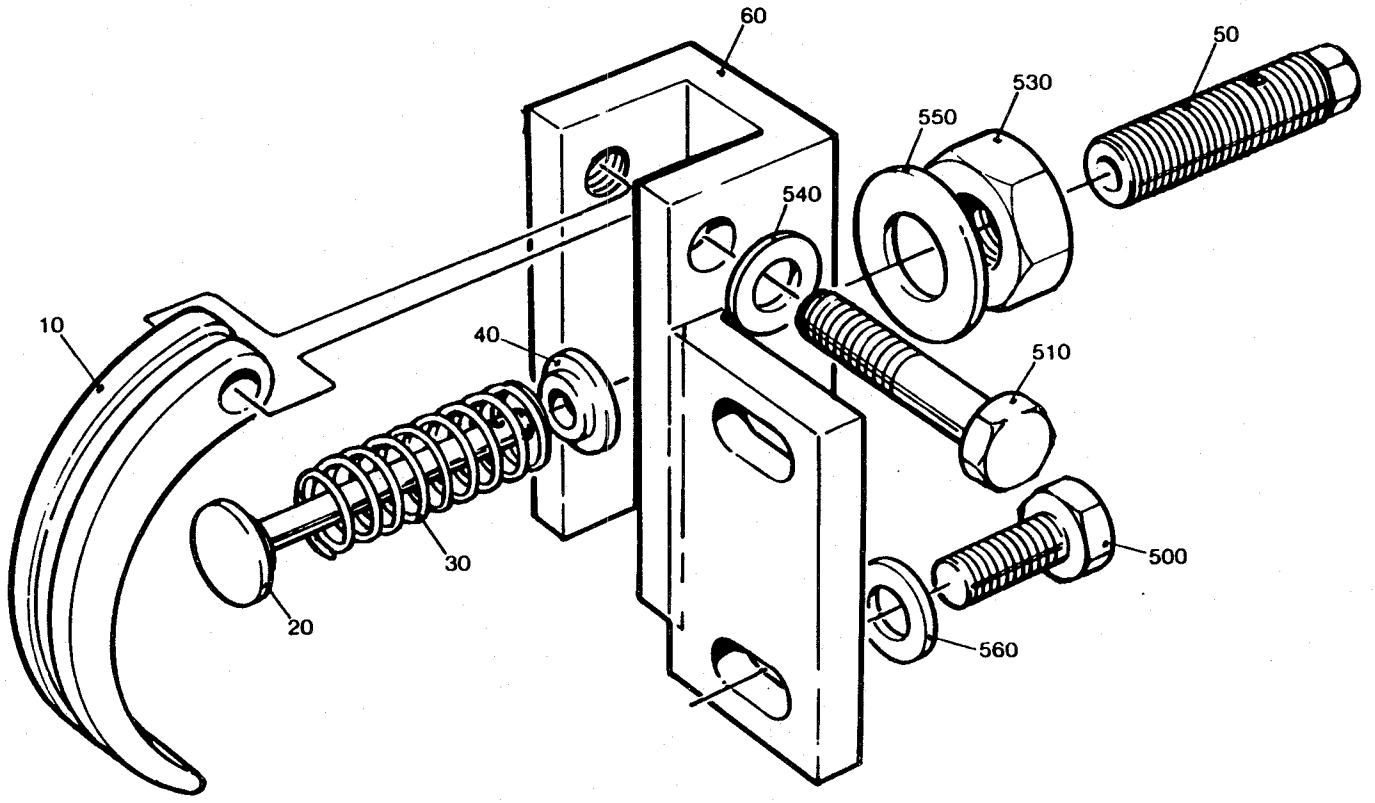
60
50
530
550
540
10
40
510
30
500
20
560

From	Pos	Part No	SP	UN	Qty	Description
Volume 250, 236 ml						
	010	751154	-		1	RAIL
	020	456503	-		1	SIDE GUIDE LEFT
	030	456506	-		1	SIDE GUIDE RIGHT
	040	295498	-		2	HOLDER
	060	469449	-		1	CHUTE
	070	456513	-		1	LINKPIECE OUTER
	080	456514	-		1	KEY
	090	295511-0004	-		1	STOP LUG
	100	295512	S		1	TENSION SPRING
	300	311103-0421	-		2	CYLINDRICACPR8M6X75RFR
	310	312105-0328	-		1	SCREW M6S5X14 A4 80
	350	312105-0471	-		2	SCREW M6S8X100RFR
	420	315105-0146	-		1	WASHER BRB5,3X10RFR
	430	315105-0153	-		7	WASHER BRB6,4X12RFR
	440	315105-0165	-		2	WASHER BRB8,4X16RFR
Volume 200, 180 ml						
	010	751154	-		1	RAIL
	020	456504	-		1	SIDE GUIDE LEFT
	030	456507	-		1	SIDE GUIDE RIGHT
	040	295498	-		2	HOLDER
	060	469449	-		1	CHUTE
	070	456513	-		1	LINKPIECE OUTER
	090	295511-0004	-		1	STOP LUG
	100	295512	S		1	TENSION SPRING
	300	311103-0421	-		2	CYLINDRICACPR8M6X75RFR
	350	312105-0471	-		2	SCREW M6S8X100RFR
	430	315105-0153	-		7	WASHER BRB6,4X12RFR
	440	315105-0165	-		2	WASHER BRB8,4X16RFR
Volume 200 ml SLIM						
	010	469891	-		1	RAIL
	020	456505	-		1	SIDE GUIDE LEFT
	030	456508	-		1	SIDE GUIDE RIGHT
	040	295495	-		2	HOLDER
	060	491565	-		1	CHUTE
	070	491564	-		1	LINKPIECE OUTER
	090	295511-0003	-		1	STOP LUG
	100	295513	S		1	TENSION SPRING
	140	491479	-		1	HOLDER
	150	491480	-		1	LOCATING PIECE
	300	311103-0420	-		2	CYLINDRICACPR8M6X70RFR
	325	312105-0370	-		2	SCREW M6S6X20RFR
	390	312145-0467	-		2	SCREW MFS8X80RFR
	430	315105-0153	-		9	WASHER BRB6,4X12RFR

From	Pos	Part No	SP	UN	Qty	Description
Volume 125 ml						
	010	469891	-		1	RAIL
	020	490854-0001	-		1	SIDE GUIDE LEFT
	030	490854-0002	-		1	SIDE GUIDE RIGHT
	040	295495	-		2	HOLDER
	060	491565	-		1	CHUTE
	070	491564	-		1	LINKPIECE OUTER
	090	295511-0003	-		1	STOP LUG
	100	295513	S		1	TENSION SPRING
	140	491479	-		1	HOLDER
	150	491628	-		1	LOCATING PIECE
	300	311103-0420	-		2	CYLINDRICACPR8M6X70RFR
	325	312105-0370	-		2	SCREW M6S6X20RFR
	390	312145-0467	-		2	SCREW MFS8X80RFR
	430	315105-0153	-		9	WASHER BRB6,4X12RFR
Common Parts						
	110	295480	-		2	PIN
	120	469338	-		1	LINKPIECE INNER
	130	295515	-		2	SPRING HOLDER
	320	312105-0368	-		4	SCREW M6S6X16RFR
	330	312105-0372	-		4	SCREW M6S6X25RFR
	340	312115-0366	-		2	SCREW 6X12 A4 80
	360	312115-0368	-		2	SCREW 6X16 A4 80
	370	312115-0452	-		1	SCREW 8X22 A4 80
	410	312605-0316	-		1	NUT M6M6RFR
	450	315115-0165	-		8	WASHER TBRB8,4X16RFR

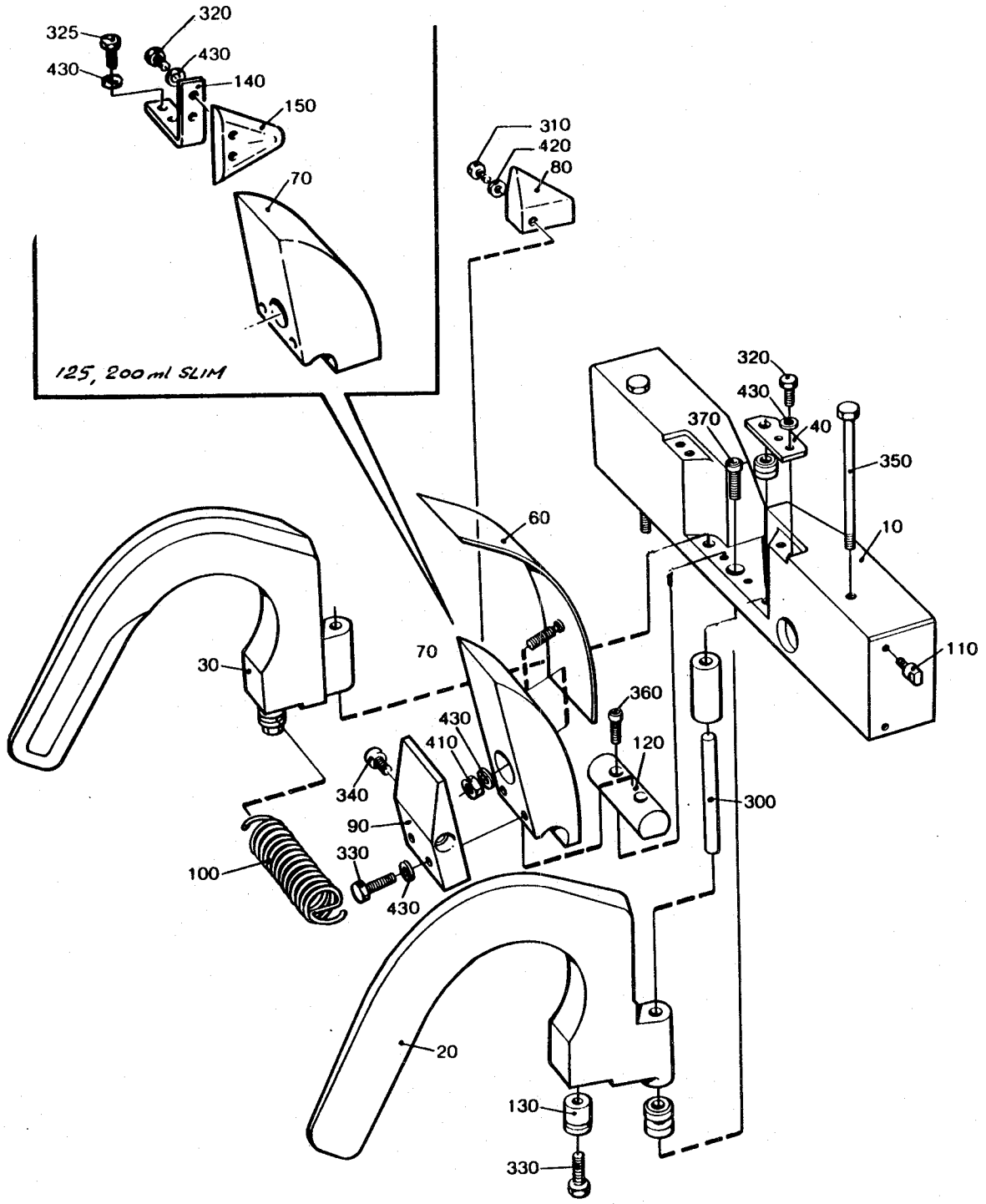
325
320
430
430
140
150
70
125, 200 ml SLIM
310
420
80
320
430
370
40
350
10
110
60
70
30
360
120
430
410
340
90
330
430
300
100
20
130
330

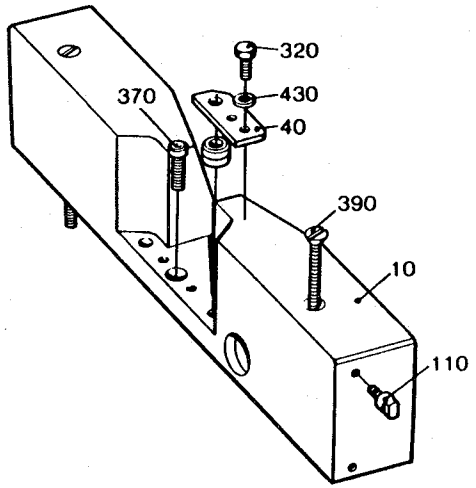
320
370
430
40
390
10
110
125, 200 ml SLIM

From	Pos	Part No	SP	UN	Qty	Description
Volume 180 - 250 ml						
	020	456105	-		1	GUARD
	030	456109	-		1	GUIDE RAIL
	040	441782	-		1	SLIDE PLATE
	050	441783	-		1	LOCATING PIECE
	060	295475-0002	-		1	GUIDE
	070	456106	-		1	SIDE PLATE
	110	456112	-		1	BRACKET
	120	295479	-		1	BLOCK
Volume 125 ml						
	020	491478	-		1	PLATE
	025	491482	-		1	PLATE
	030	490855	-		1	GUIDE RAIL
	040	469887	-		1	SLIDE PLATE
	050	490856	-		1	LOCATING PIECE
	060	490857	-		1	GUIDE
	065	441139	-		1	NUT
	070	456107	-		1	SIDE PLATE
	110	456113	-		1	BRACKET
	120	491586	-		1	BLOCK
Volume 200 ml SLIM						
	020	491478	-		1	PLATE
	025	491482	-		1	PLATE
	030	469886	-		1	GUIDE RAIL
	040	491629	-		1	SLIDE PLATE
	050	469888	-		1	LOCATING PIECE
	060	469890	-		1	GUIDE
	065	441139	-		1	NUT
	070	456107	-		1	SIDE PLATE
	110	456113	-		1	BRACKET
	120	491586	-		1	BLOCK
	620	315115-0153	-		1	WASHER

From	Pos	Part No	SP	UN	Qty	Description
Common Parts						
	010	441791	-		1	PLATE
	090	456108	-		1	SHIM
	130	295480	-		2	PIN
	140	441807	-		1	SUPPORT BAR
	150	239399	-		1	SUPPORT BAR
	160	245039	-		1	GUIDE ROLLER
	170	228844	-		1	BLOCK
	180	228845	-		1	BLOCK
	190	229202	-		1	BLOCK
	200	229207	-		1	BEARING SLEEVE
	205	230706	-		1	SLIDE RAIL
	210	239403	-		1	SLIDE RAIL
	215	228850-0018	-		1	SLIDE RAIL
	220	229201-0001	-		1	SPACER
	225	229201-0025	-		1	SPACER
	230	229508-0033	-		4	STUD BOLT
	235	229760-0014	-		1	STUD BOLT
	510	312105-0327	-		2	SCREW M6S5X12 A4 80
	520	312105-0367	-		10	SCREW M6S6X14RFR
	530	312115-0366	-		2	SCREW 6X12 A4 80
	540	312155-0370	-		2	SCREW MF6S6X20RFR
	560	312145-0463	-		4	SCREW
	570	312705-0316	-		4	CAP NUT MHM 6 A2
	580	312705-0320	-		1	CAP NUT MHM 10 A2
	590	315105-0146	-		2	WASHER BRB5,3X10RFR
	600	315105-0153	-		14	WASHER BRB6,4X12RFR
	610	315105-0173	-		1	WASHER BRB10,5X22RFR

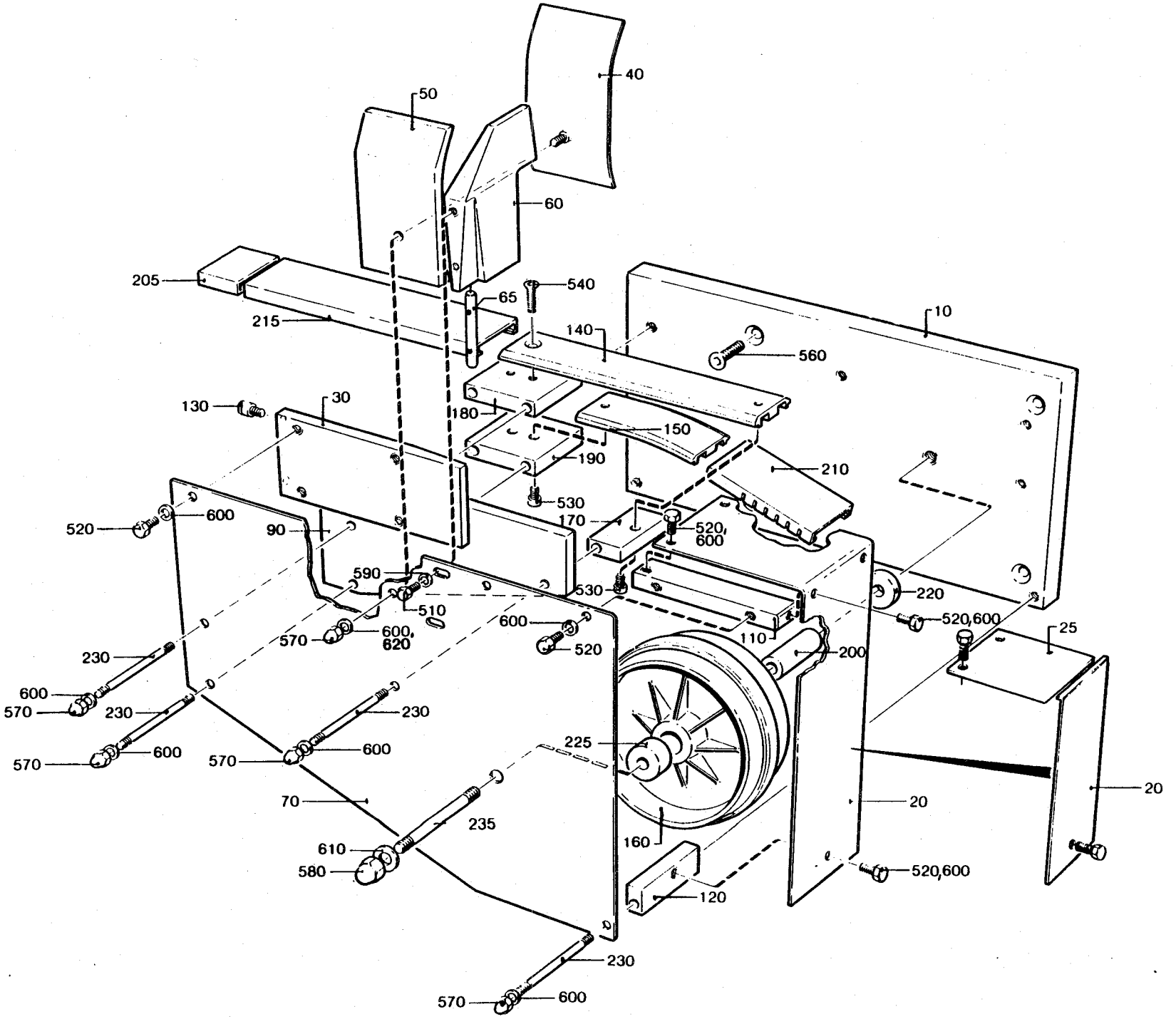
40
50
60
205
65
540
215
140
10
560
130
30
180
150
190
210
530
520
600
90
170
520,
600
590
530
220
510
520,600
600
25
570
600,
620
520
110
230
200
600
570
230
230
600
570
600
225
570
600
70
20
235
610
580
160
520,600
120
230
570
600

From	Pos	Part No	SP	UN	Qty	Description
	F205	==>516-1.2	-		1	ROTOR
	F210	==>516-1.1	C		1	CHAIN TENSIONER
	010	441599	C		1	BED
	020	441600	C		1	LINK ARM
	030	441774	-		1	PLATE
	040	751082	C		1	PIPE CONNECTION
	050	441598	C		1	SUPPORTING ARM
	060	256276	C		1	SHAFT
	070	469143	-		1	LEAD-IN
	075	751070	C		1	DISTRIBUTOR BLOCK
	080	272997	-		1	STOP
	150	490932	-		1	SLEEVE
	160	490933	-		1	NUT
	310	90005-0048	-		1	WASHER
	315	90015-0028	-		1	BUSHING
	320	90028-0021	S		3	CONE
	330	90028-0025	S		1	CONE
	340	90032-0038	-		1	BLOCK
	345	90092-0048	S		4	OIL BRUSH
	350	90092-0054	S		5	VALVE
	360	90134-0038	S		1	BUSHING
	370	90134-0040	S		2	BUSHING
	372	90134-0042	S		4	SPACER
	375	90134-0045	S		4	PLUG
	377	90134-0051	S		1	SPACER COLLOR
	380	90134-0055	S		1	BUSHING
	390	90134-0068	S		1	BANJO CONNECTION
	400	90144-0004	-	M	1	TAPE
	410	90166-0109	-	MM1600		HOSE
	420	90240-0055	S		2	RICTION BEARING
	430	90044-0085	S		1	SENSOR
	440	90424-0009	-		1	NOZZLE
	450	90330-0078	-		1	BUSHING
	510	312101-0297	-		2	SCREW M6S4X25FZB
	520	312101-0552	-		4	SCREW M6S12X100FZB
	530	312105-0364	-		2	SCREW M6S6X10RFR
	540	312105-0366	-		15	SCREW M6S6X12RFR
	545	312105-0370	-		1	SCREW M6S6X20RFR
	550	312105-0459	-		4	SCREW M6S8X40RFR
	570	312115-0372	-		2	SCREW MC6S6X25 A4 80
	580	312318-0325	-		1	GRUB SCREW SK6SS5X10RFR
	610	315101-0136	-		2	WASHER BRB4,3X8FZB
	620	315105-0153	-		17	WASHER BRB6,4X12RFR
	630	315111-0165	-		4	WASHER TBRB8,4X16FZB
	640	315111-0178	-		4	WASHER TBRB13X24FZB
	670	315202-0115	S		1	O-RING 17,1X1,6
	680	315202-0117	S		1	O-RING 19,1X1,6
	700	315202-0215	S		1	O-RING 19,2X3
	710	315202-0304	S		1	O-RING 64,5X3
	738	315233-0109	S		2	SEAL RING R1/8"
	750	315233-0111	S		2	SEAL RING R3/8"
	780	90134-0031	S		6	SLEEVE
	800	342960-0112	-		2	GROMMET 6/4

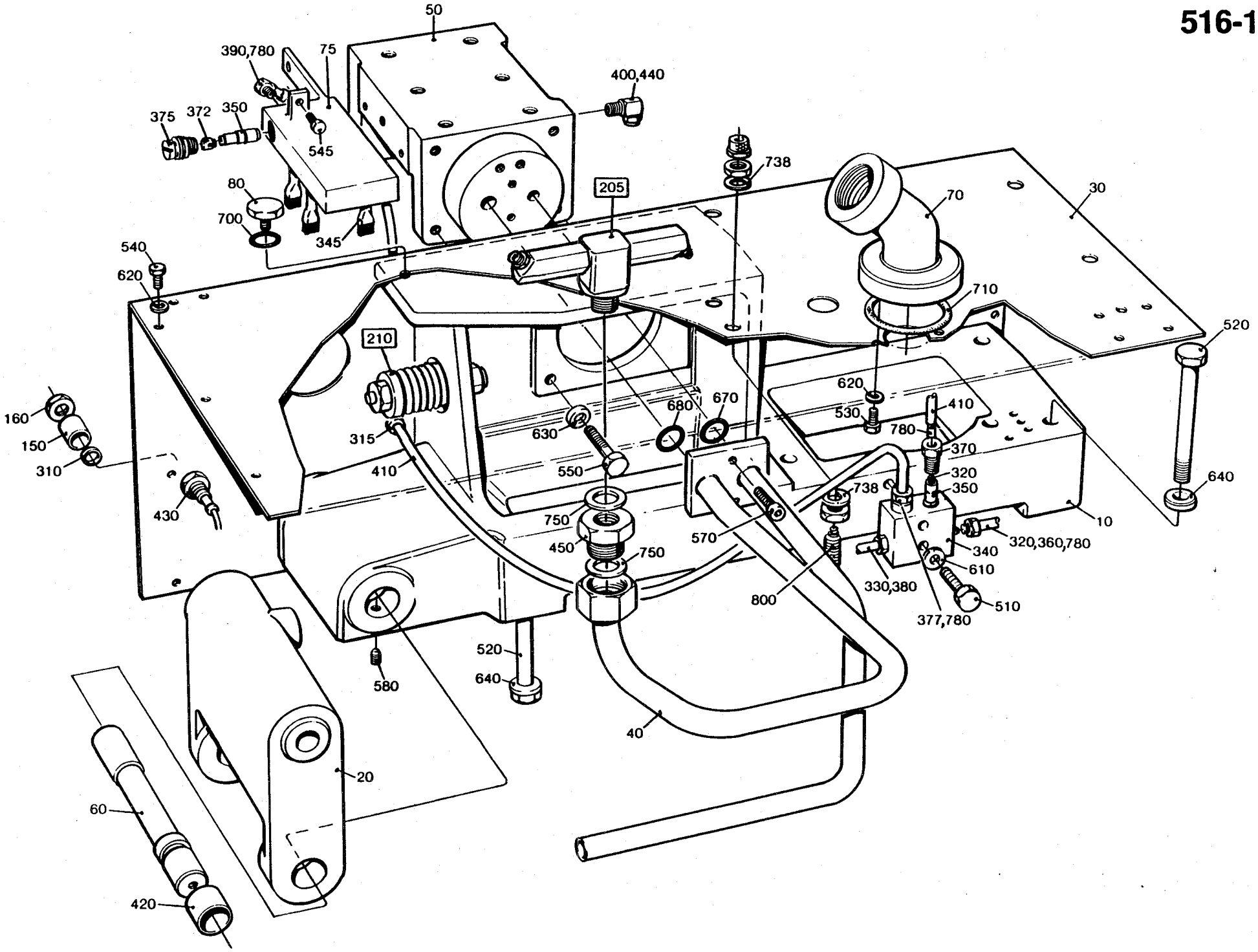
50
390,780
75
400,440
375
372
350
545
738
80
205
70
30
700
345
540
620
710
520
210
620
680
670
530
410
160
150
310
315
630
780
370
410
550
320
640
738
350
430
750
570
10
450
750
320,360,780
340
610
330,380
800
377,780
510
520
640
580
40
20
60
420

From	Pos	Part No	SP	UN	Qty	Description
	F150	**==>516-1.2**	**C**		**1**	**ROTOR**
	F160	**==>516-1.1**	**C**		**1**	**CHAIN TENSIONER**
	010	G- 441600	C		1	LINK ARM
	020	441774	-		1	PLATE
	030	751070	C		1	DISTRIBUTOR BLOCK
	040	751082	C		1	PIPE CONNECTION
	050	G- 752485	C		1	SUPPORTING ARM
	060	256276	C		1	SHAFT
	070	469143	C		1	LEAD-IN
	080	272997	C		1	STOP
	090	490932	C		1	SLEEVE
	100	490933	C		1	NUT
	210	90005-0048	C		1	WASHER
	220	90015-0028	S		1	BUSHING
	230	90028-0021	S		5	CONE
	240	90028-0025	S		1	CONE
	250	90032-0039	C		1	BLOCK
	260	90044-0085	S		1	SENSOR
	270	90092-0048	S		4	OIL BRUSH
	280	90092-0054	S		6	VALVE
	290	90134-0031	S		7	SLEEVE
	300	90134-0038	S		1	BUSHING
	310	90134-0040	S		4	BUSHING
	320	90134-0042	S		4	SPACER
	330	90134-0045	S		4	PLUG
	340	90134-0051	S		2	SPACER COLLOR
	350	90134-0055	S		1	BUSHING
	360	90134-0068	S		1	BANJO CONNECTION
	370	90144-0004	S		X	TAPE
	375	90157-0022	S		X	SEALING COMPOUND
	380	90166-0109	S	MM	2000	HOSE
	390	90224-0355	S		1	GROMMET
	400	90240-0055	S		2	RICTION BEARING
	410	90330-0078	C		1	BUSHING
	420	90424-0009	S		1	NOZZLE
	510	311103-0401	C		1	CYLINDRICACPR8M6X20RFR
	520	312105-0297	S		2	SCREW M6S4X25 A4 80
	530	312105-0364	S		2	SCREW M6S6X10RFR
	540	312105-0366	S		15	SCREW M6S6X12RFR
	550	312105-0368	S		1	SCREW M6S6X16RFR
	560	312105-0459	S		4	SCREW M6S8X40RFR
	570	312115-0372	S		2	SCREW MC6S6X25 A4 80
	580	312318-0325	S		1	GRUB SCREW SK6SS5X10RFR
	590	315105-0136	S		2	WASHER BRB4,3X8RFR
	600	315105-0153	S		17	WASHER BRB6,4X12RFR
	610	315111-0165	S		4	WASHER TBRB8,4X16FZB
	615	315115-0165	S		1	WASHER TBRB8,4X16RFR
	620	315202-0118	S		2	O-RING 22,1X1,6
	640	315202-0215	S		1	O-RING 19,2X3
	650	315202-0304	S		1	O-RING 64,5X3
	660	315233-0109	S		3	SEAL RING R1/8"
	670	315233-0111	S		2	SEAL RING R3/8"
	680	342960-0112	S		2	GROMMET 6/4

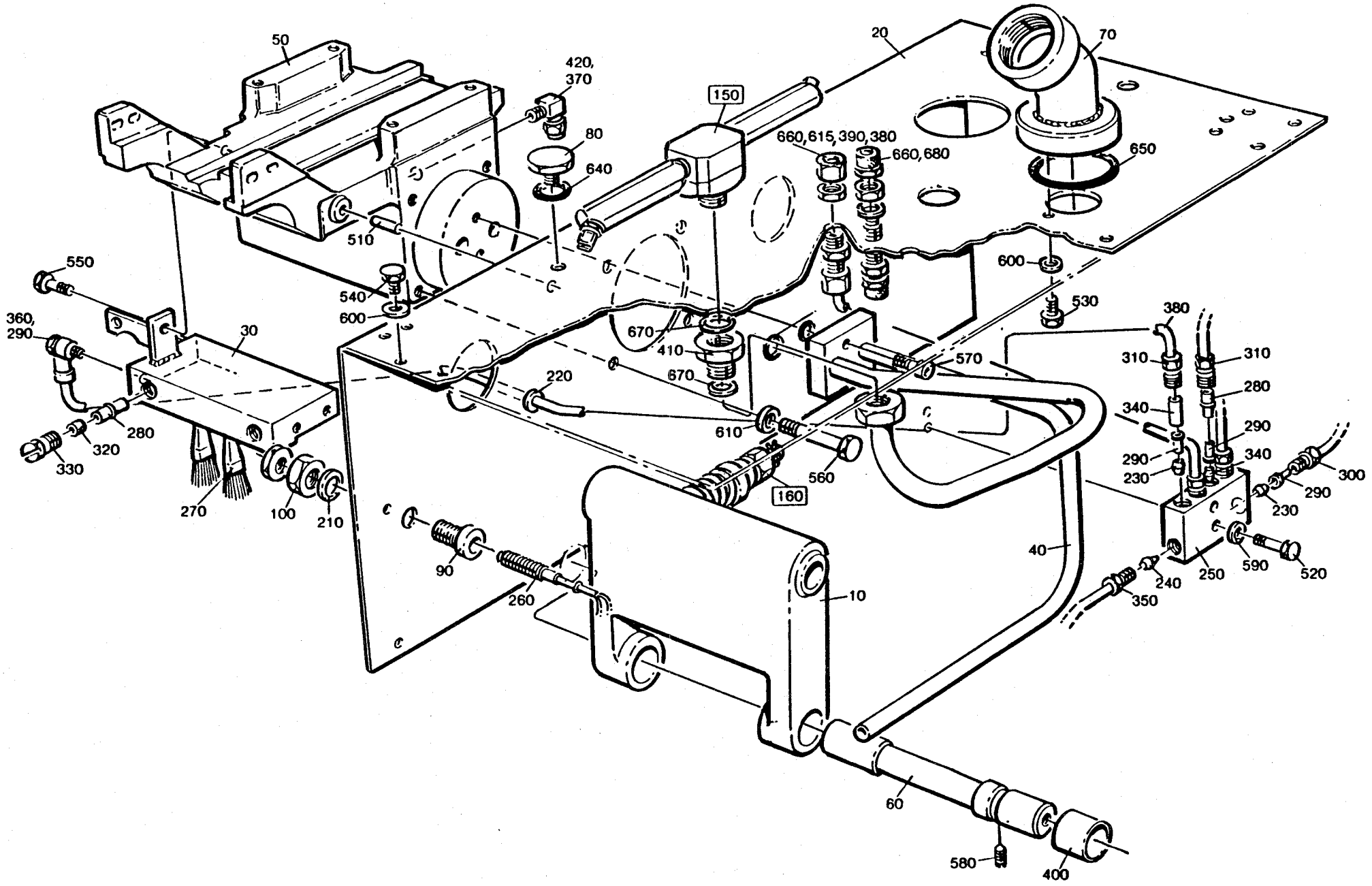
50
420,
370
80
640
510
150
20
70
660,615,390,380
660,680
650
600
530
550
540
600
360,
290
30
670
410
670
220
610
570
380
310
310
280
340
290
290
340
230
300
290
230
280
320
330
270
100
210
560
160
40
90
260
10
240
250
590
520
350
60
580
400

From	Pos	Part No	SP	UN	Qty	Description
	010	491731	-		1	WASHER
	020	256190	-		1	NUT
	030	441328	-		1	PIN
	040	491732	-		1	WASHER
	300	90335-0096	S		1	SPRING
	500	311411-0152	S		1	SPLIT PIN SP2X16RFR

From	Pos	Part No	SP	UN	Qty	Description

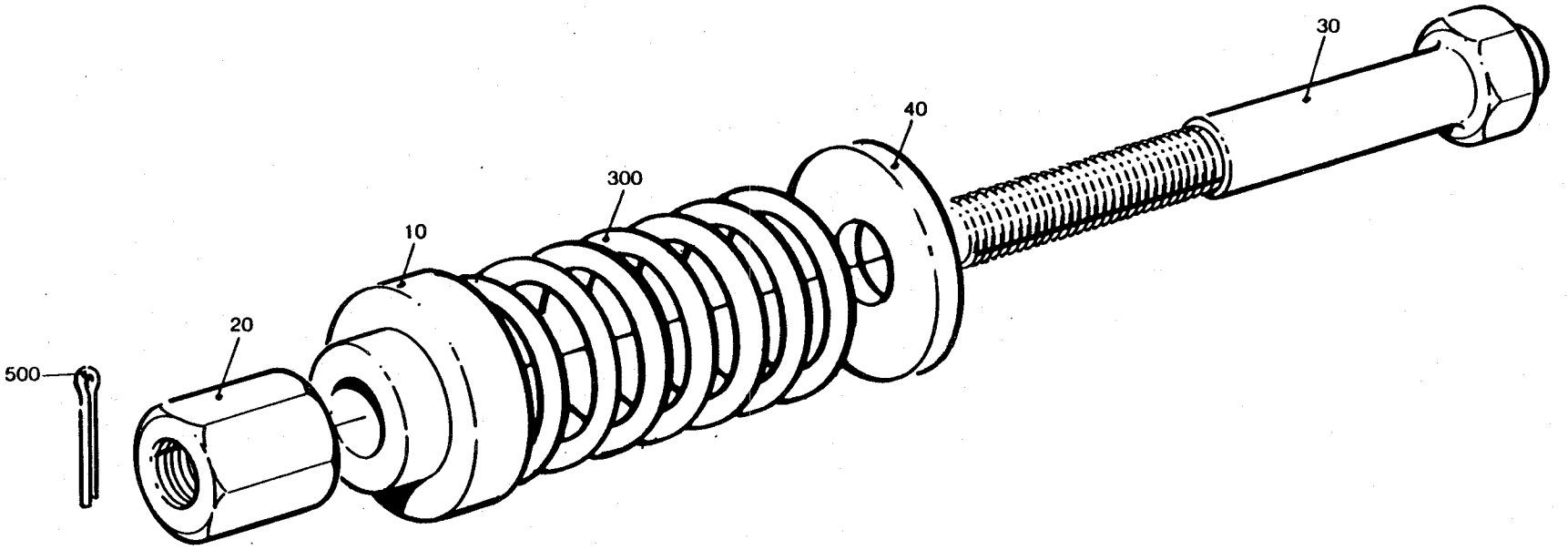
30
40
300
10
20
500

From	Pos	Part No	SP	UN	Qty	Description
	010	441792	C		1	HEAD
	020	441793	C		1	BEARING HOUSING
	030	441794	C		1	PIVOT PIN
	040	441795	C		1	WASHER
	050	441796	P		1	SEAL
	060	441797	S		2	SHIM
	070	441799	S		2	CONNECTION
	200	90141-0017	S		1	LOCK RING
	210	90214-0092	S		2	BALL BEARING
	220	90330-0101	S		2	NIPPLE
	230	90424-0035	S		2	NOZZLE
	300	312155-0299	-		2	SCREW MF6S 4X30 A4 80
	310	315202-0217	S		1	O-RING 24,2X3

From	Pos	Part No	SP	UN	Qty	Description

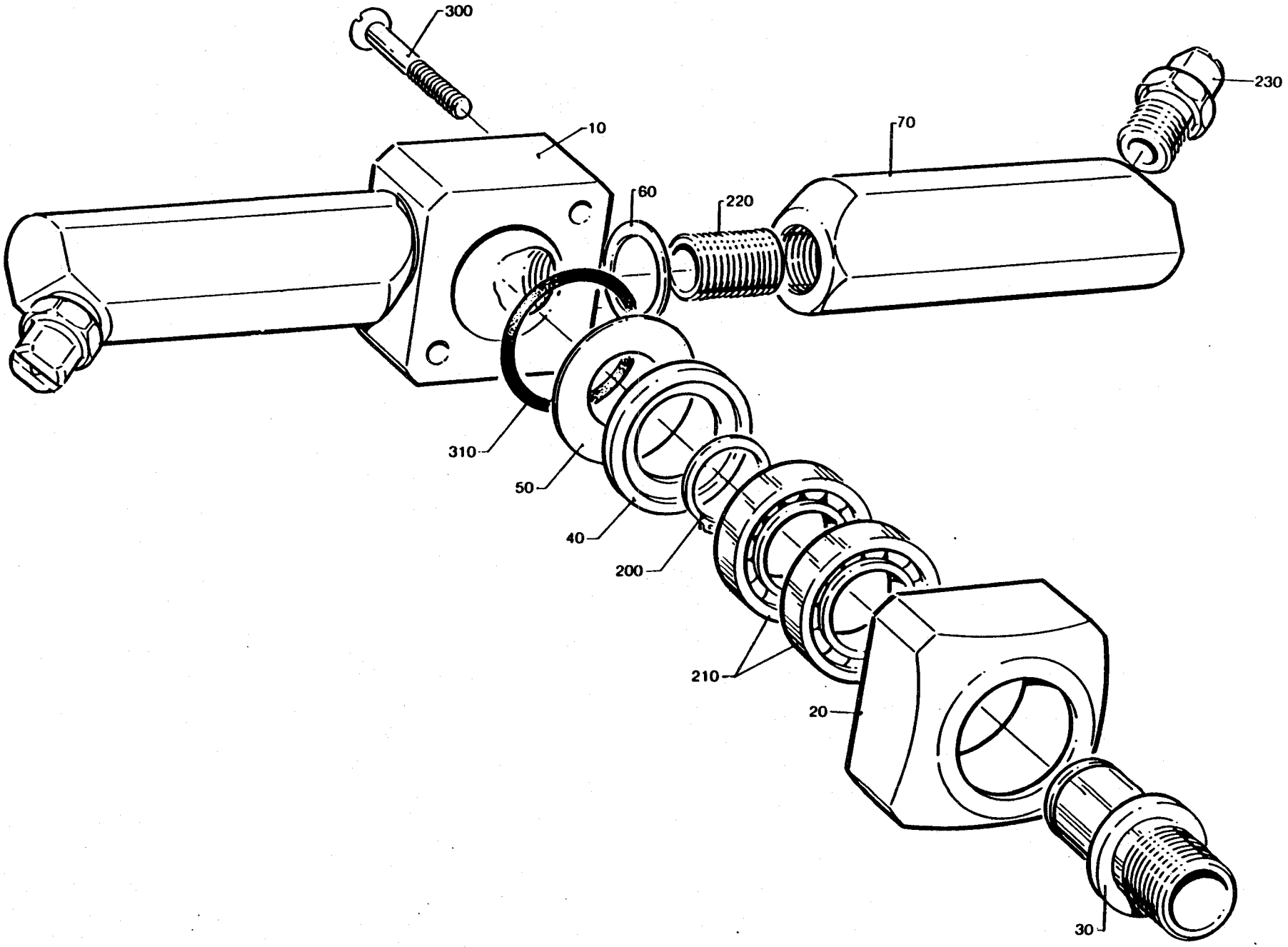
300
10
70
230
60
220
310
50
40
200
210
20
30

From	Pos	Part No	SP	UN	Qty	Description
TBA/9						
	045	490618	-		1	BRANCH
	050	441500	-		2	HOSE
	230	90030-0151	-		2	CONNECTION
	650	315233-0113	-		2	SEAL RING R1/2"
TB/9, TBA/9 C						
	050	441500	-		1	HOSE
	230	90030-0151	-		1	CONNECTION
	650	315233-0113	-		1	SEAL RING R1/2"
Common Parts						
	010	295471	-		1	PIPE
	020	295472	-		1	PIPE
	030	441499	-		1	HOLDER
	040	456852	-		1	DISTRIBUTOR
	060	456853-0001	-		1	PIPE CLAMP
	062	456853-0002	-		1	PIPE CLAMP
	063	456853-0003	-		1	PIPE CLAMP
	070	256907	-		2	WASHER
	080	271478	-		1	PLATE
	090	272191	-		1	DISTRIBUTOR
	100	272741	S		1	SEAL
	110	456854-0001	-		1	CLIP
	112	456854-0002	-		1	CLIP
	120	491807	-		1	PIPE
	210	90005-0007	S		1	WASHER
	220	90030-0091	-		2	PIPE CONNECTION
	240	90030-0185	-		2	PIPE CONNECTION
	245	90157-0034	-		X	SEALING COMPOUND
	250	90163-0028	-		1	SLEEVE
	260	90166-0117	P	MM1640		HOSE
	270	90166-0132	P	MM1800		HOSE
	280	90166-0133	P	MM 520		HOSE
	290	90224-0186	-		1	NIPPLE
	310	90424-0009	S		1	NOZZLE
	320	90424-0016	S		1	NOZZLE
	510	312105-0372	-		4	SCREW M6S6X25RFR
	515	312105-0374	-		1	SCREW M6S6X30RFR
	520	312105-0378	-		3	SCREW M6S6X40RFR
	530	312105-0380	-		2	SCREW M6S6X50RFR
	560	312105-0463	-		1	SCREW M6S8X60RFR
	600	312605-0316	-		6	NUT M6M6RFR
	620	315105-0153	-		12	WASHER BRB6,4X12RFR

From	Pos	Part No	SP	UN	Qty	Description
	660	342708-0107	-		2	SLEEVE 12X1/MS
	670	342746-0114	-		1	T-PIECE T-15
	680	342920-0122	-		1	PIPE CONNE8/6-1/4
	690	342960-0112	-		1	GROMMET 6/4
	700	342960-0121	-		2	GROMMET 8/6-6/4
	710	342960-0122	-		2	GROMMET 8/6
	720	342991-0106	-		7	HOSE CLIP 26-38MMRFR

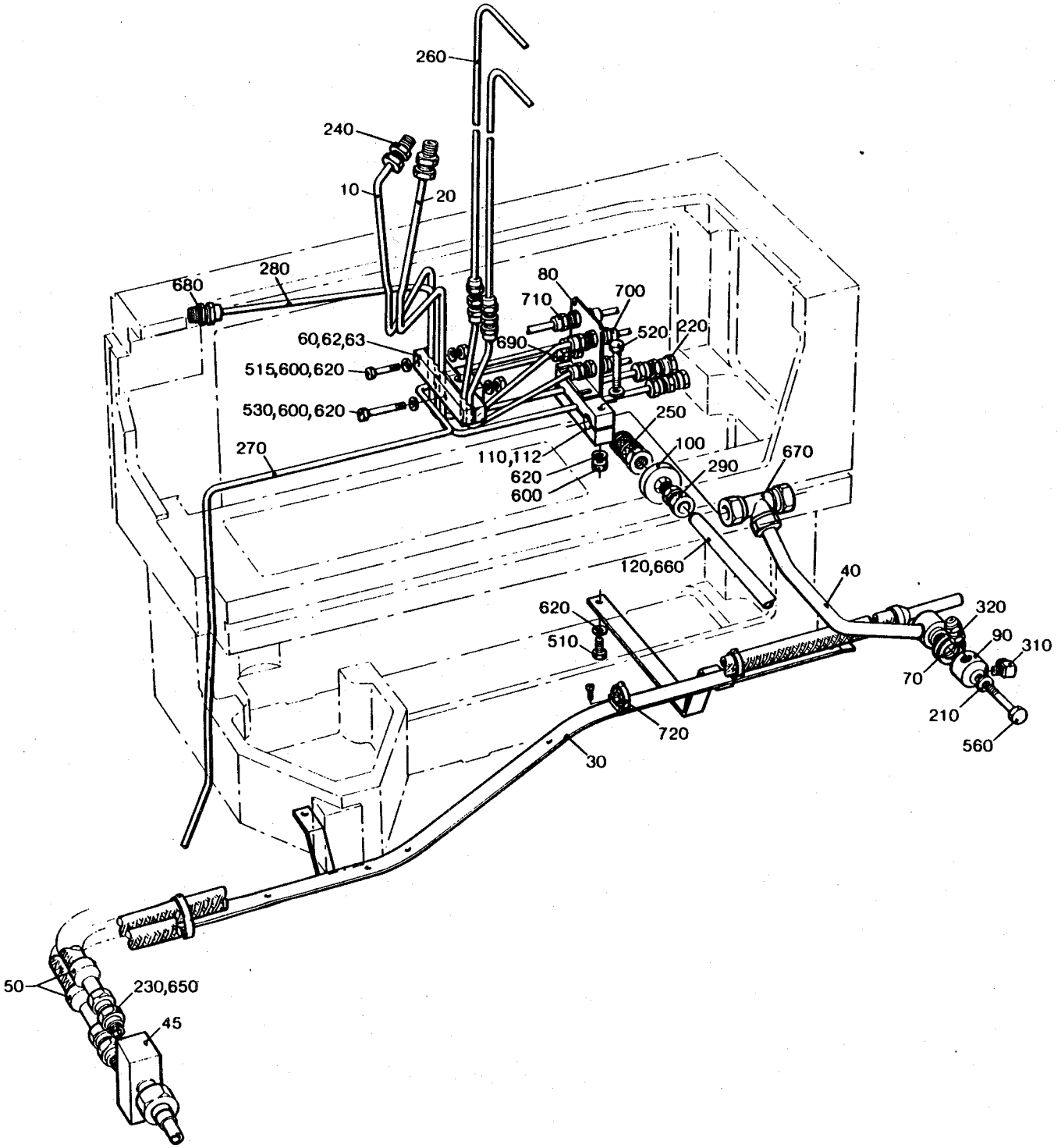
260
240
10
20
680
280
80
710
700
520
220
690
60,62,63
515,600,620
530,600,620
250
270
110,112
620
600
100
290
670
120,660
40
620
510
320
90
310
70
210
560
720
30
50
230,650
45

From	Pos	Part No	SP	UN	Qty	Description
	010	456568	-		1	PLATE
	020	456569	-		2	BRACKET
	030	90287-0134	-		4	SCREW

From	Pos	Part No	SP	UN	Qty	Description

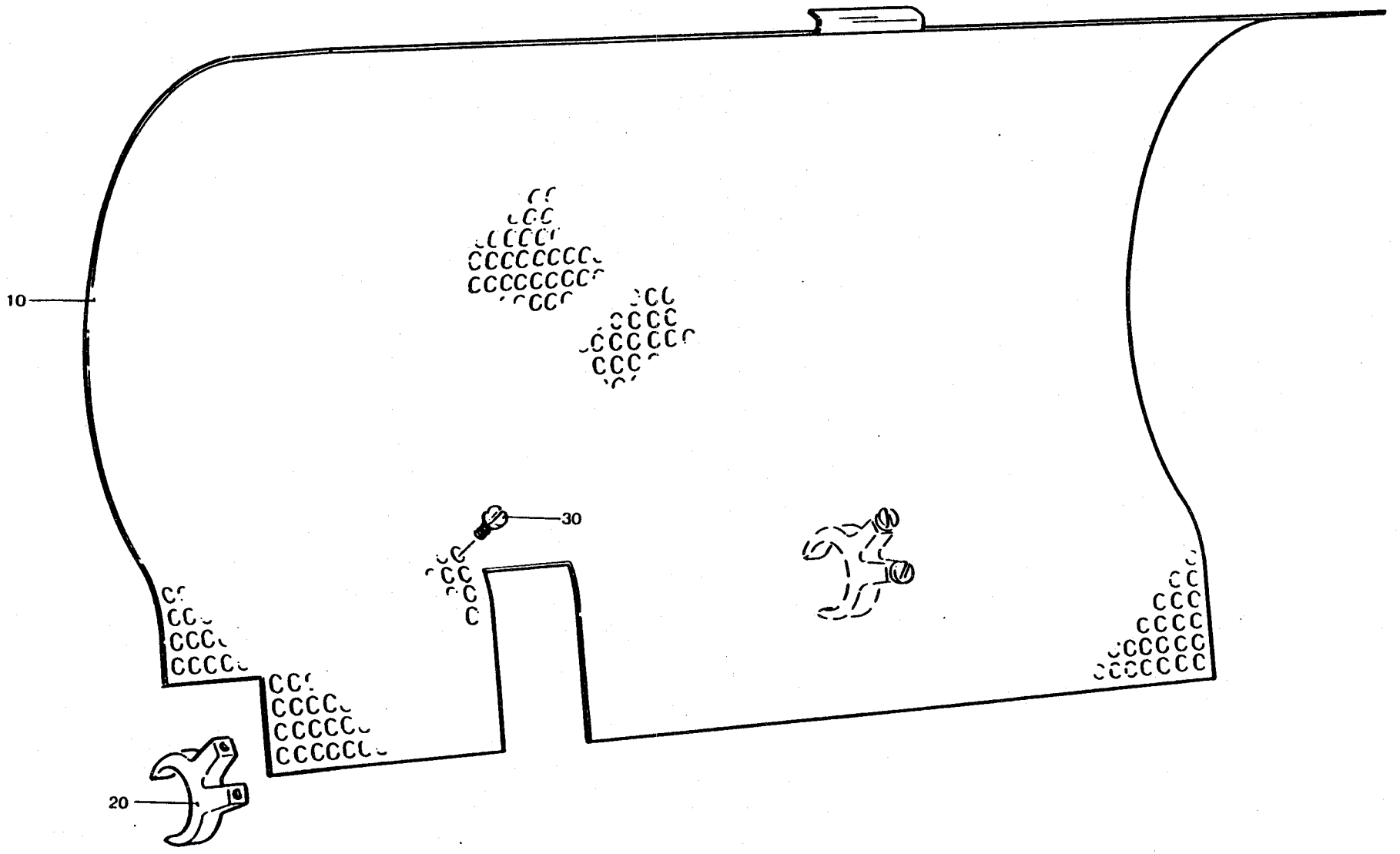
10
20
30

From	Pos	Part No	SP	UN	Qty	Description
	F235	==>519-1.1	-		1	ROTOR
	300	90321-0015	C		1	PUMP (50 Hz)
	300	90321-0034	C		1	PUMP (60 Hz)
		90321-0466	S		1	* SPARE PART KIT
		90321-0481	S		1	* GASKET
		352103-0111	S		1	* CABLE GLR.PR22,5/10-14
	010	491808	-		1	CLEANING EQUIPMENT
	020	G- 751162	-		1	INLET PIPE
	030	G- 441603	-		1	BRACKET
	040	441839	C		1	PIPE
	050	256640	-		1	HOLDER
	060	271433	-		1	PIPE
	070	456393	-		1	PIPE
-080V	080	441401	-		1	BRACKET
090V-	080	525386	C		1	PROTECTIVE GRATING
	090	295412	-		1	PIPE
	100	456293	-		1	PIPE
	110	456395	S		1	GASKET
	120	456396	S		1	GASKET
	130	456394	S		1	SEALING WASHER
	140	256641	-		1	LEG
	150	295417	S		1	GASKET
	160	271435	-		1	WASHER
	170	751017	S		3	GASKET
	180	295434	-		2	BUSHING
	310	90005-0067	-		1	WASHER
	320	90217-0041	-		2	NIPPLE
090V-	330	90261-0033	S		4	PLUG
	340	90415-0022	-		1	FILTER
		90415-0320	S		0	* FILTER INSERT
	500	312105-0368	-		7	SCREW M6S6X16RFR
	510	312105-0370	-		4	SCREW M6S6X20RFR
	520	312105-0372	-		1	SCREW M6S6X25RFR
	530	312105-0384	-		2	SCREW M6S6X70RFR
-080V	540	312105-0447	-		2	SCREW M6S8X12RFR
	550	312105-0451	-		4	SCREW M6S8X20RFR
	560	312105-0464	-		4	SCREW M6S8X65RFR
	570	312105-0491	-		1	SCREW M6S10X20RFR
	580	312105-0532	-		5	SCREW M6S12X20RFR
	590	312105-0538	-		2	SCREW M6S12X35RFR
	600	312605-0316	-		2	NUT M6M6RFR
	610	315105-0165	-		4	WASHER BRB8,4X16RFR
	620	315105-0178	-		2	WASHER BRB13X24RFR
	630	315202-0215	-		2	O-RING 19,2X3
	640	315211-0107	-		1	SEALING WA
	660	315250-0103	-		3	GASKET 48/38
	670	315250-0104	-		1	GASKET 61/51
	680	342803-0103	-		2	NUT 38
090V-	690	353101-0123	S		1	CABLE SHOE
090V-	700	353101-0126	S		1	CABLE SHOE

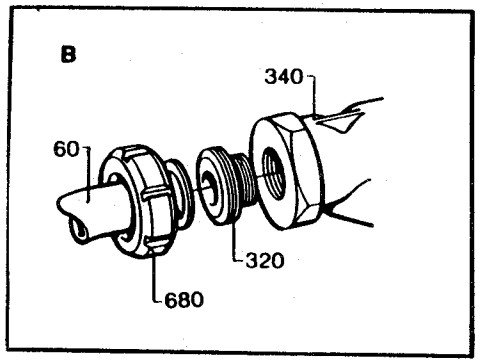
B
340
60
320
680

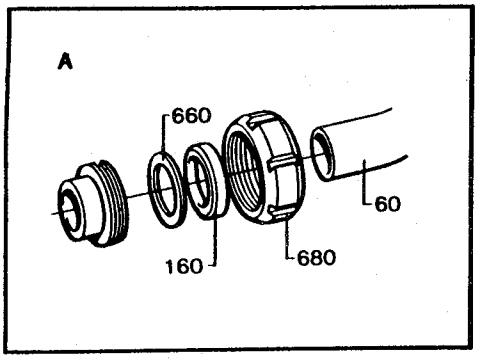
A
660
60
160
680

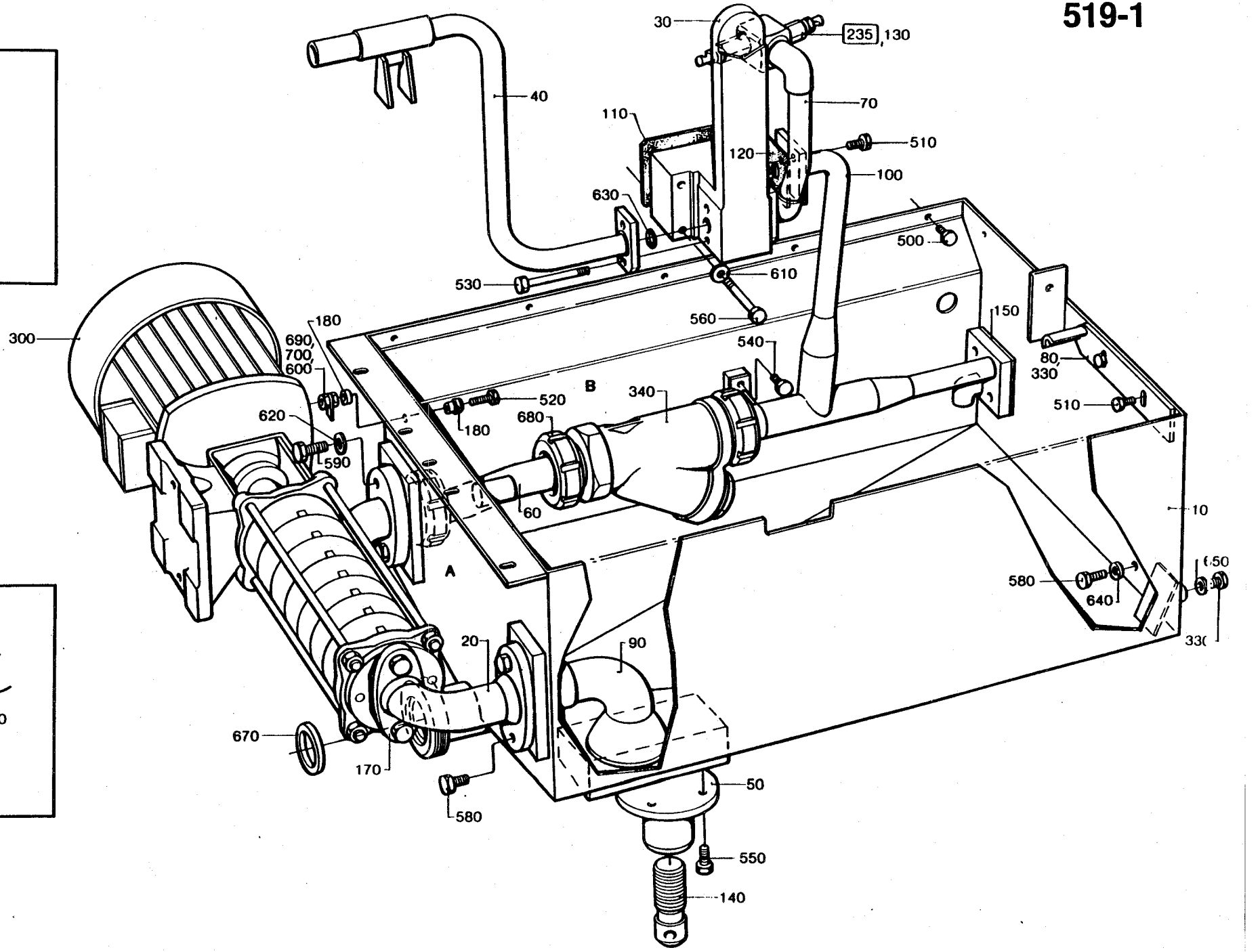
30
235
130
40
70
110
120
510
100
630
500
530
610
560
150
540
80
330
180
690
700
600
300
520
340
510
620
680
590
180
60
10
A
B
580
640
650
330
20
90
670
170
580
50
550
140

From	Pos	Part No	SP	UN	Qty	Description
	010	441792	C		1	HEAD
	020	441793	C		1	BEARING HOUSING
	030	441794	C		1	PIVOT PIN
	040	441795	C		1	WASHER
	050	441796	P		1	SEAL
	060	441797	S		2	SHIM
	070	441800	S		2	FITTING
	200	90141-0017	S		1	LOCK RING
	210	90214-0092	S		2	BALL BEARING
	220	90330-0101	S		2	NIPPLE
	230	90424-0025	S		2	NOZZLE
	300	312155-0299	-		2	SCREW MF6S 4X30 A4 80
	310	315202-0217	S		1	O-RING 24,2X3

From	Pos	Part No	SP	UN	Qty	Description

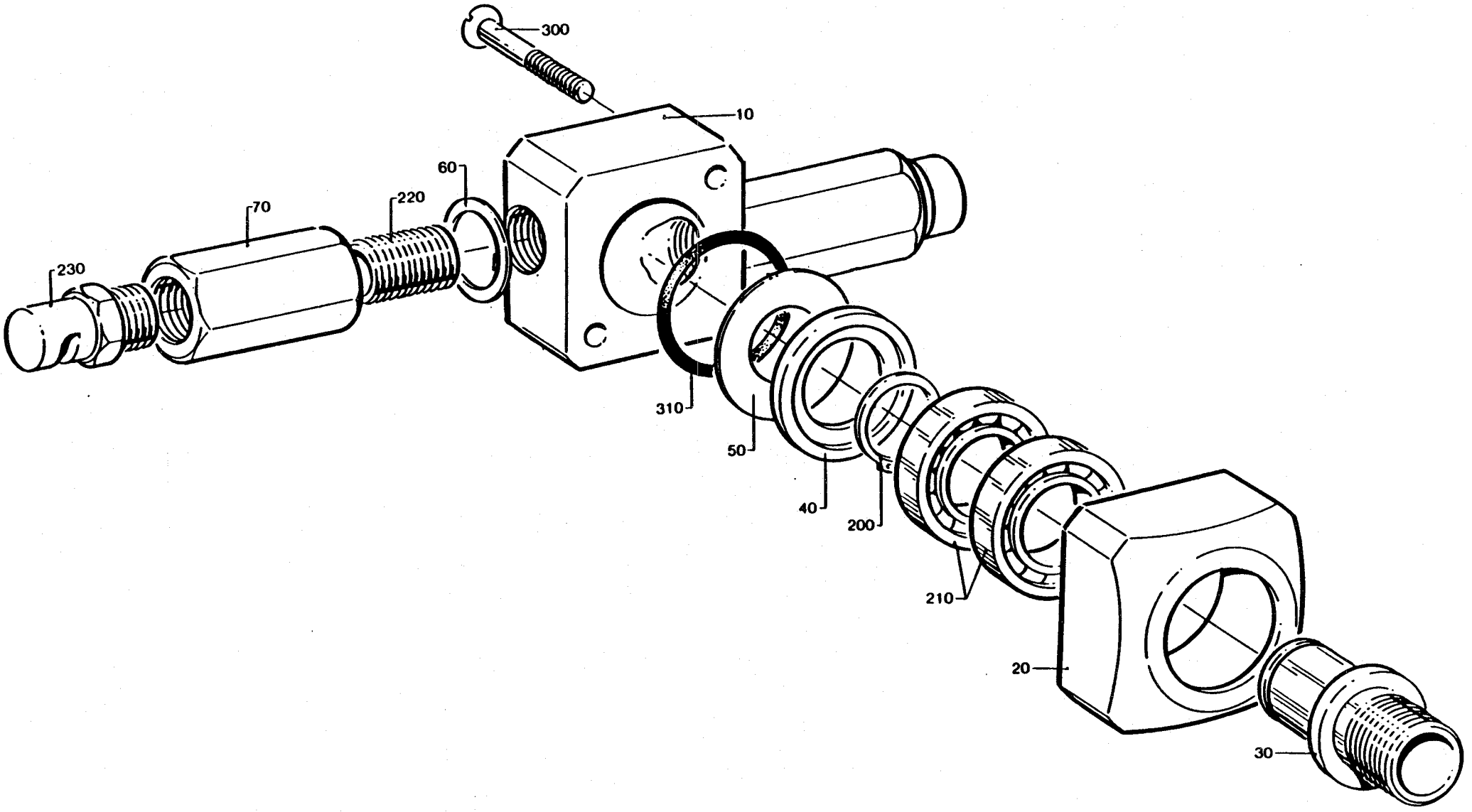
300
10
60
70
220
230
310
50
40
200
210
20
30

From	Pos	Part No	SP	UN	Qty	Description
	010	272751	C		1	BOTTOM VALVE
	300	90166-0089	-	MM	1100	HOSE
-080V	310	90166-0089	-	MM	420	HOSE
	510	315250-0104	-		1	GASKET 61/51
	530	342807-0104	-		1	ELBOW PIPE 51
-080V	540	342980-0213	-		1	BANJO CONNDUBBEL 6/4-1/8
090V-	540	342980-0113	-		1	BANJO CONN SINGEL 6/4-1/8
	550	342980-0303	-		1	BANJO CONN SINGEL 1/8"

From	Pos	Part No	SP	UN	Qty	Description

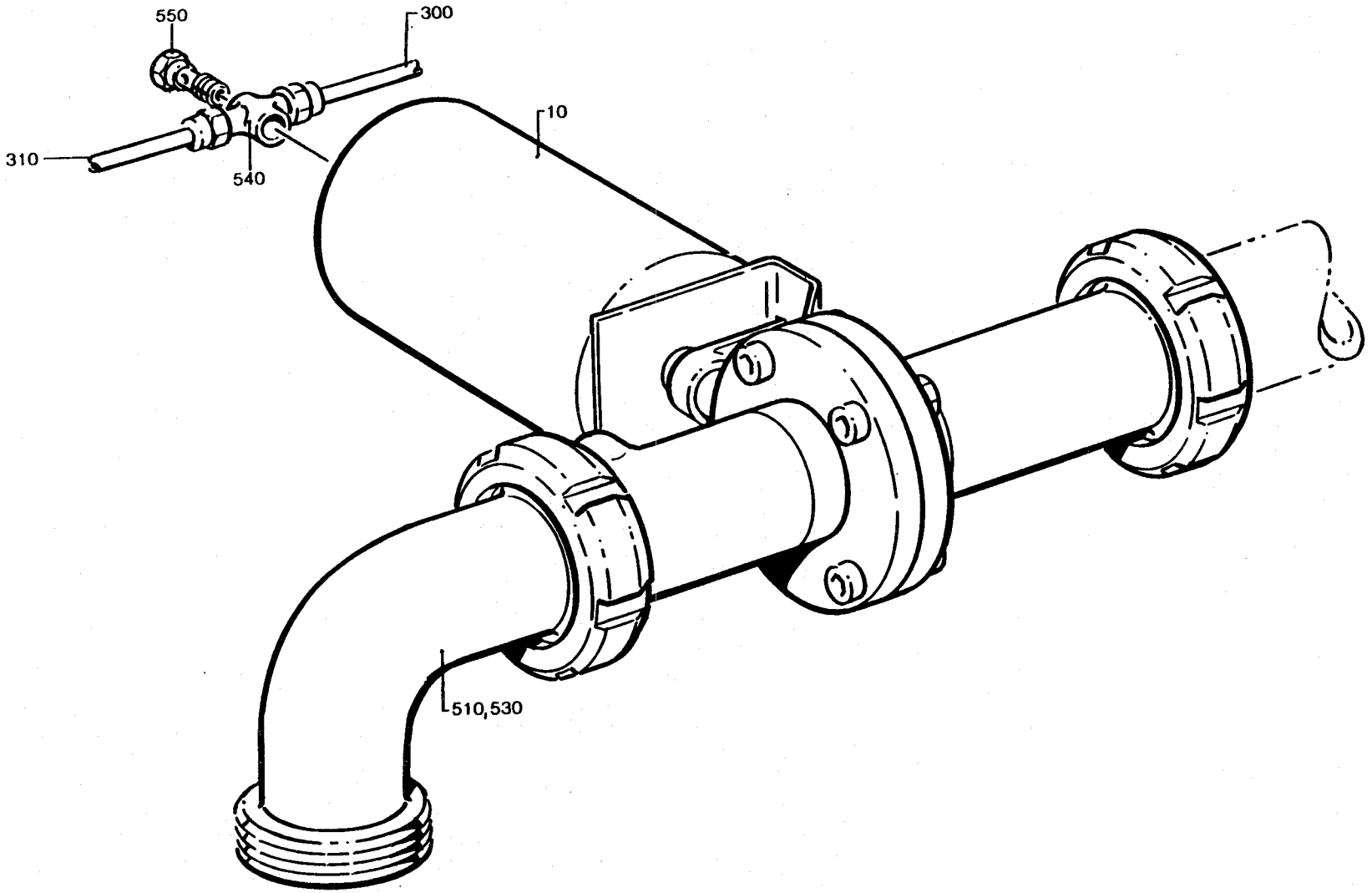
550
300
10
310
540
510,530

From	Pos	Part No	SP	UN	Qty	Description
	F255	==>521-1.1	C		2	CATCH
	010	469050	-		1	FRONT GUARD
	020	469051	-		1	COVER
	030	441829	-		1	PIPE
	040	295347	C		1	BEARING BRACKET
-080V	045	469052	S		1	LID
090V-	045	525389	C		1	PROTECTIVE COVER
	050	295348	S		1	GLASS
	060	295349	C		1	BEARING BRACKET
	070	469053	-		1	CHECKER PLATE
	075	469054	-		1	PLATE
	085	469056	-		1	CHECKER PLATE
	090	469057	-		1	CHECKER PLATE
	095	469058	C		2	HANDLE
	100	295353	-		1	RAIL
	115	271608	S		2	SCREW
	120	441359	S		2	GUIDE
	130	469061	-		1	PLATE
	140	271708	-		1	SLIDE RAIL
	150	271784	S		1	KNOB
	160	295354	-		1	LID
	170	295355	-		1	BEARING BRACKET
	180	295356	-		1	HOUSING
	190	295357	S		1	ROD
	200	295358	C		1	RULER
	203	469811	-		1	SHAFT
	204	469812	S		2	BEARING
	205	469813	C		2	CLAMP
	206	469814	C		2	LINK ARM
	207	469815	-		2	END PIECE
	208	469816	C		2	CLAMP
	209	469817	S		2	PIN
	210	469818	C		2	ROD
	211	469819	S		2	PEEL-OFF SHIM
	212	469820	-		2	BRACKET
	220	295423	S		1	SEAL
	230	469063	-		2	HEAD
	260	469066	-		2	SHAFT
-080V	270	469067	-		2	HANGER
090V-	270	525391	-		2	BRACKET

From	Pos	Part No	SP	UN	Qty	Description
	275	469068	S		1	SLEEVE
	280	469069	-		1	PLATE
	290	469968	-		1	STRIP
	298	90143-0016	-	MM	300	STRIP
	300	90143-0039	-	MM	3400	STRIP
	310	90143-0049	-	MM	2600	STRIP
	320	90157-0022	-	G	200	SEALING COMPOUND
	330	90189-0019	S		2	BALL BUSHING
	332	90208-0047	-		2	COLLAR
	336	90240-0052	-		4	RICTION BEARING
	338	90240-0076	S		2	RICTION BEARING
	340	90240-0083	S		2	RICTION BEARING
	348	312155-0289	-		5	SCREW MF6S4X10RFR
	350	90287-0062	-		9	SCREW
	360	90335-0024	S		1	SPRING
	363	90335-0055	C		2	SPRING
	368	90424-0035	-		2	NOZZLE
	370	90424-0036	-		5	NOZZLE
-080V	470	311103-0214	-		2	CYLINDRICACPR2,5M6X25RFR
	480	311103-0407	-		2	CYLINDRICACPR8M6X35RFR
	490	312105-0323	-		4	SCREW M6S5X8 A4 80
	500	312105-0327	-		7	SCREW M6S5X12 A4 80
	510	312105-0329	-		2	SCREW M6S5X16 A4 80
	515	312105-0332	-		2	SCREW M6S5X22RFR
	520	312105-0362	-		1	SCREW M6S6X8RFR
090V-	525	312105-0364	-		1	SCREW M6S6X10RFR
	530	312105-0455	-		2	SCREW M6S8X30RFR
	550	312105-0378	-		12	SCREW M6S6X40RFR
	560	312105-0492	-		2	SCREW M6S10X22RFR
	565	312115-0374	-		2	SCREW 6X30 A4 80
	570	312155-0368	-		10	SCREW MF6S6X16RFR
	580	312155-0372	-		8	SCREW MF6S6X25RFR
	583	312155-0378	-		2	SCREW MF6S6X40RFR
	586	312155-0455	-		2	SCREW MF6S8X30RFR
	590	312605-0316	-		2	NUT M6M6RFR
	600	312812-0316	-		10	LOCK NUT A4-M6RFR
	610	315105-0146	-		13	WASHER BRB5,3X10RFR
	620	315105-0153	-		15	WASHER BRB6,4X12RFR
	630	315105-0173	-		2	WASHER BRB10,5X22RFR
	640	315115-0153	-		4	WASHER TBRB6,4X12RFR
	650	315233-0110	-		2	SEAL RING R1/4"
	660	315233-0111	-		2	SEAL RING R3/8"

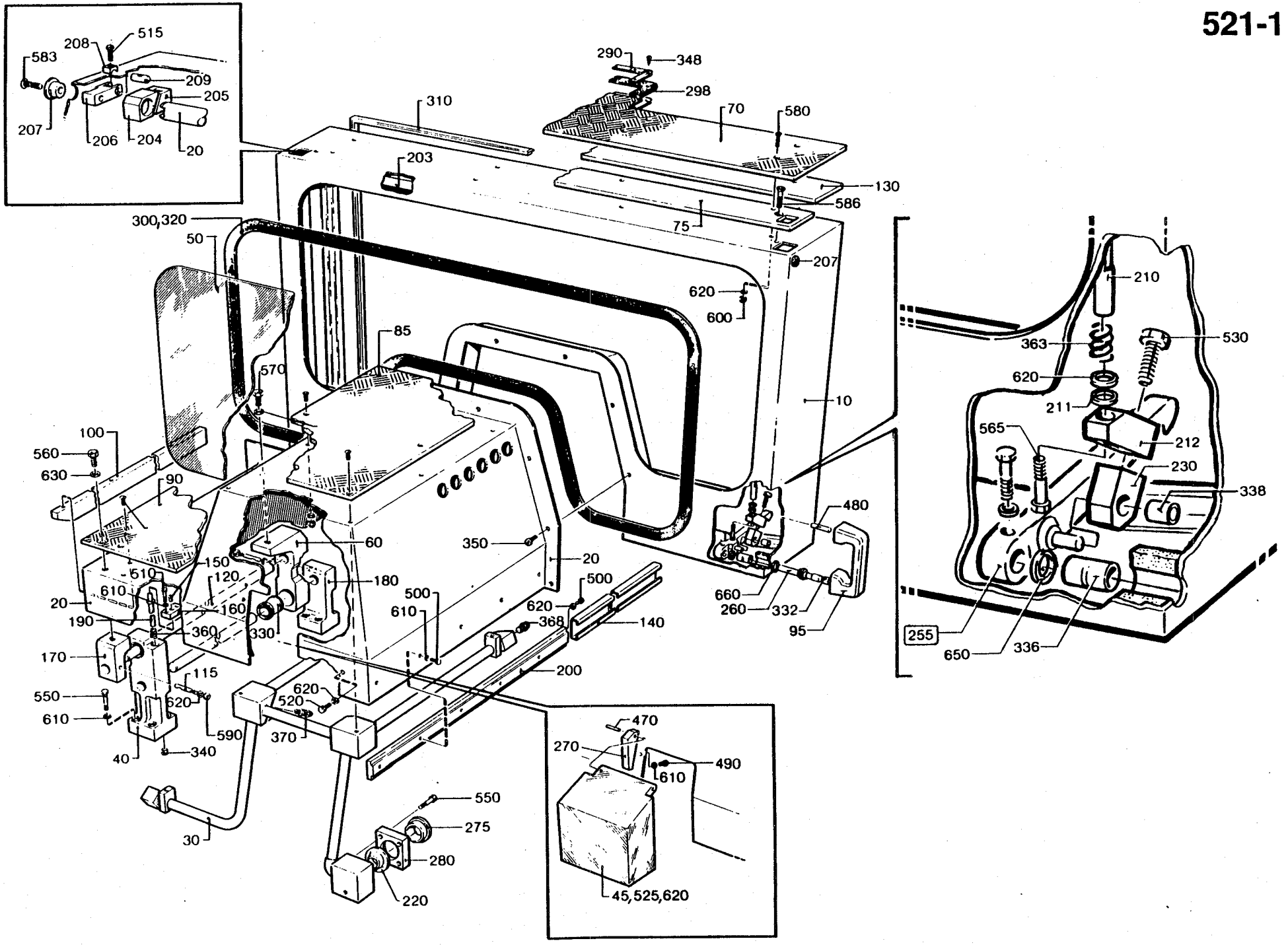
515
208
583
209
205
207
206
204
20
290
348
298
310
70
580
203
130
586
75
300,320
50
207
620
600
85
570
10
210
363
530
620
211
565
212
230
338
100
560
630
90
480
60
350
20
150
120
180
500
610
500
620
140
660
260
332
95
368
330
160
360
190
170
115
620
520
550
610
590
40
340
370
200
255
650
336
470
270
490
610
45,525,620
550
275
280
220
30

Last Alteration: AM 7648 85-03-06

Corresponding C-lists: 490912-010V
Assembly Drawing: 490912-1

Issue Date: 900227

From	Pos	Part No	SP	UN	Qty	Description	
	010	469821	C		1	CATCH	
	020	469822	C		1	AXLE PIN	
	030	312105-0372	-		1	SCREW	M6S6X25RFR
	040	315105-0153	-		1	WASHER	BRB6,4X12RFR

From	Pos	Part No	SP	UN	Qty	Description

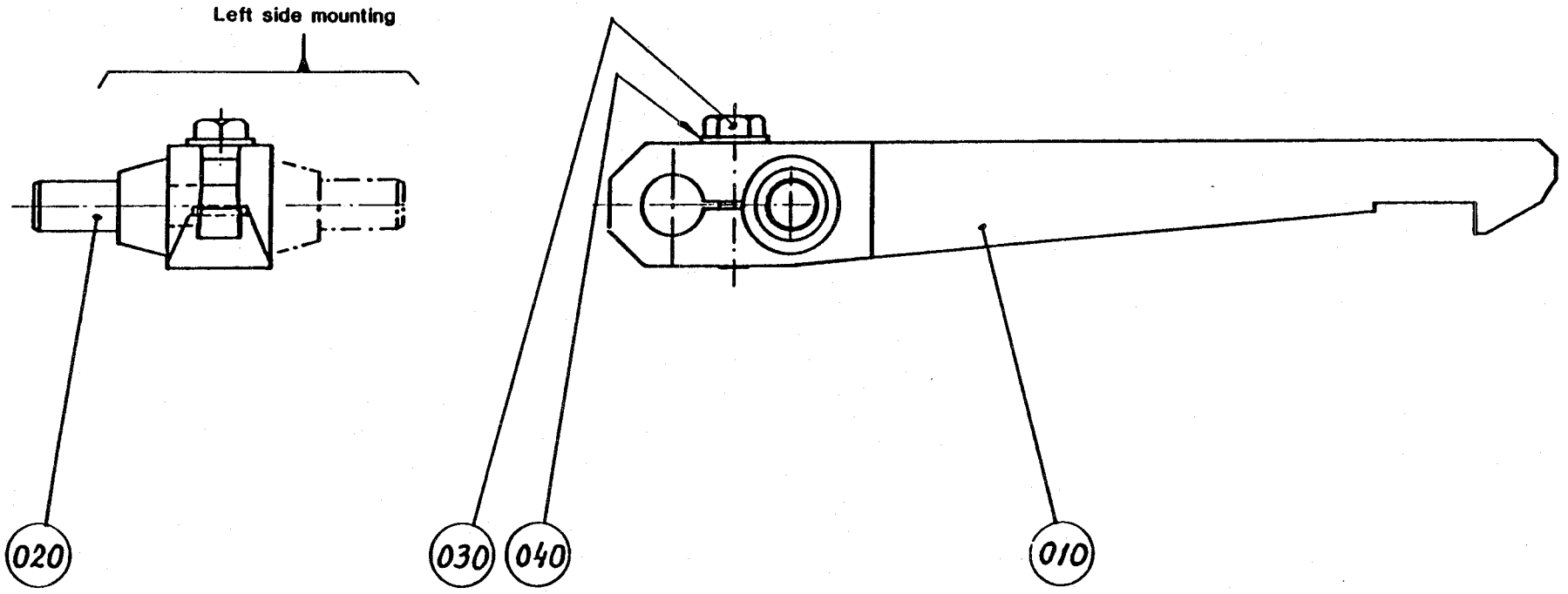
Left side mounting
020
030
040
010

From	Pos	Part No	SP	UN	Qty	Description
	300	90152-0017	-		1	HOSE
	310	90163-0014	-		1	NIPPLE
	320	90330-0081	-		1	ELBOW PIPE
	330	90426-0003	S		1	HAND SHOWER
	500	315233-0110	-		3	SEAL RING R1/4"
	510	315233-0113	-		1	SEAL RING R1/2"
	520	342701-0205	-		1	BUSHING RNI1/2"-1/4"

From	Pos	Part No	SP	UN	Qty	Description

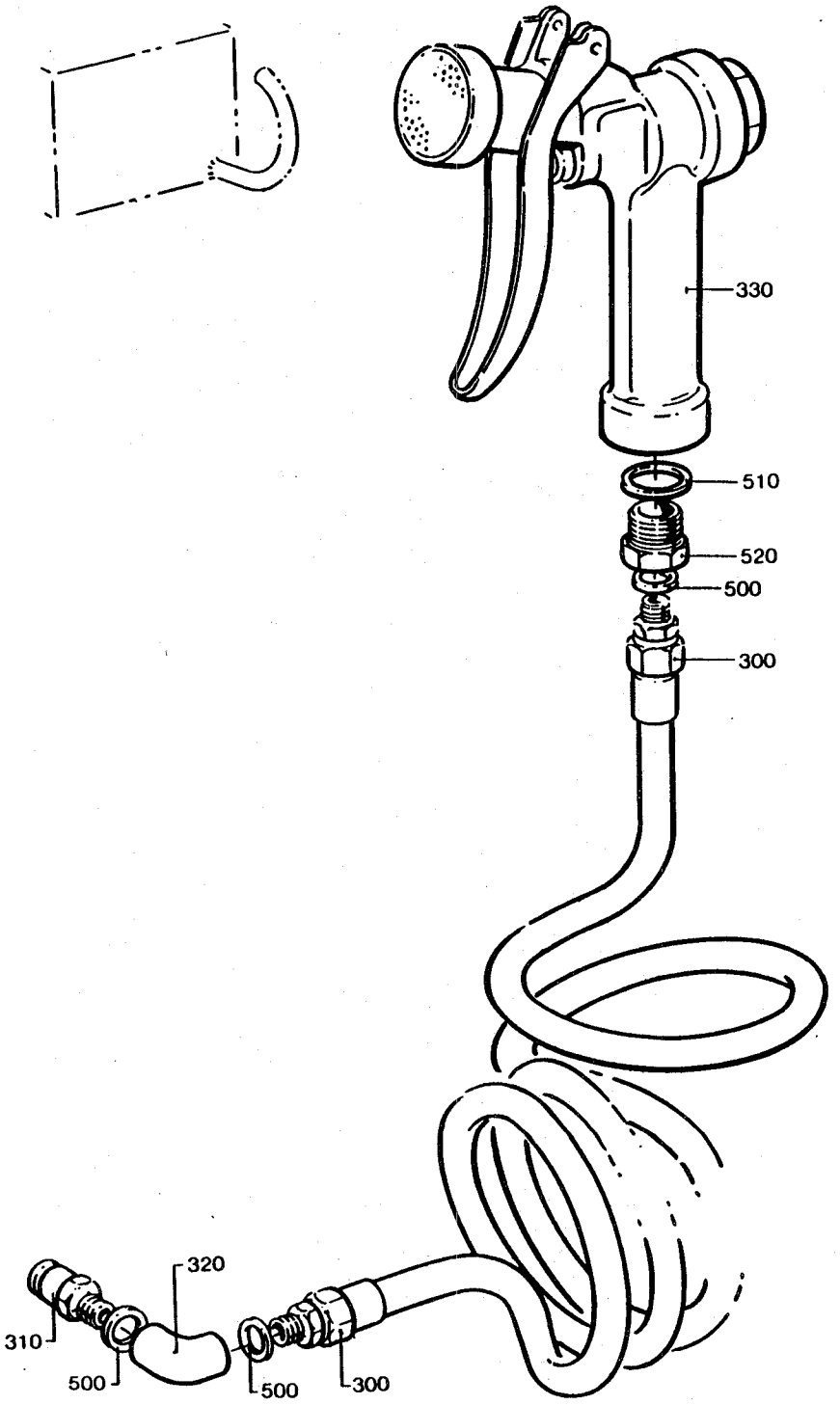
330
510
520
500
300
320
310
500
500
300

From	Pos	Part No	SP	UN	Qty	Description	
-080V	010	441595	-		1	MACHINE BODY	
090V-	010	752215	-		1	MACHINE BODY	
-080V	015	441596	-		1	BRACKET	
	020	272659	-		1	SIDE PIECE	
	030	272660	-		1	SIDE PIECE	
-080V	040	272745	-		1	COVER	
090V-	040	752213	-		1	COVER	
	050	271591	-		2	BUTTON	
	060	272661	-		2	STEP	
	070	272673	-		1	LEG	
	080	272743	-		1	LID	
-080V	200	90143-0056	S	MM2700		STRIP	
090V-	200	90143-0028	S	MM2700		STRIP	
	210	90261-0025	-		2	PIPE PLUG	
-080V	300	312105-0370	-		5	SCREW	M6S6X20RFR
090V-	300	312105-0367	-		7	SCREW	M6S6X14RFR
	310	312105-0451	-		12	SCREW	M6S8X20RFR
	320	312105-0544	-		6	SCREW	M6S12X60RFR
	330	315105-0153	-		8	WASHER	BRB6,4X12RFR
	340	315105-0165	-		12	WASHER	BRB8,4X16RFR
	350	315105-0178	-		6	WASHER	BRB13X24RFR
-080V	360	312115-0491	-		2	SCREW	10X20 A4 80

From	Pos	Part No	SP	UN	Qty	Description

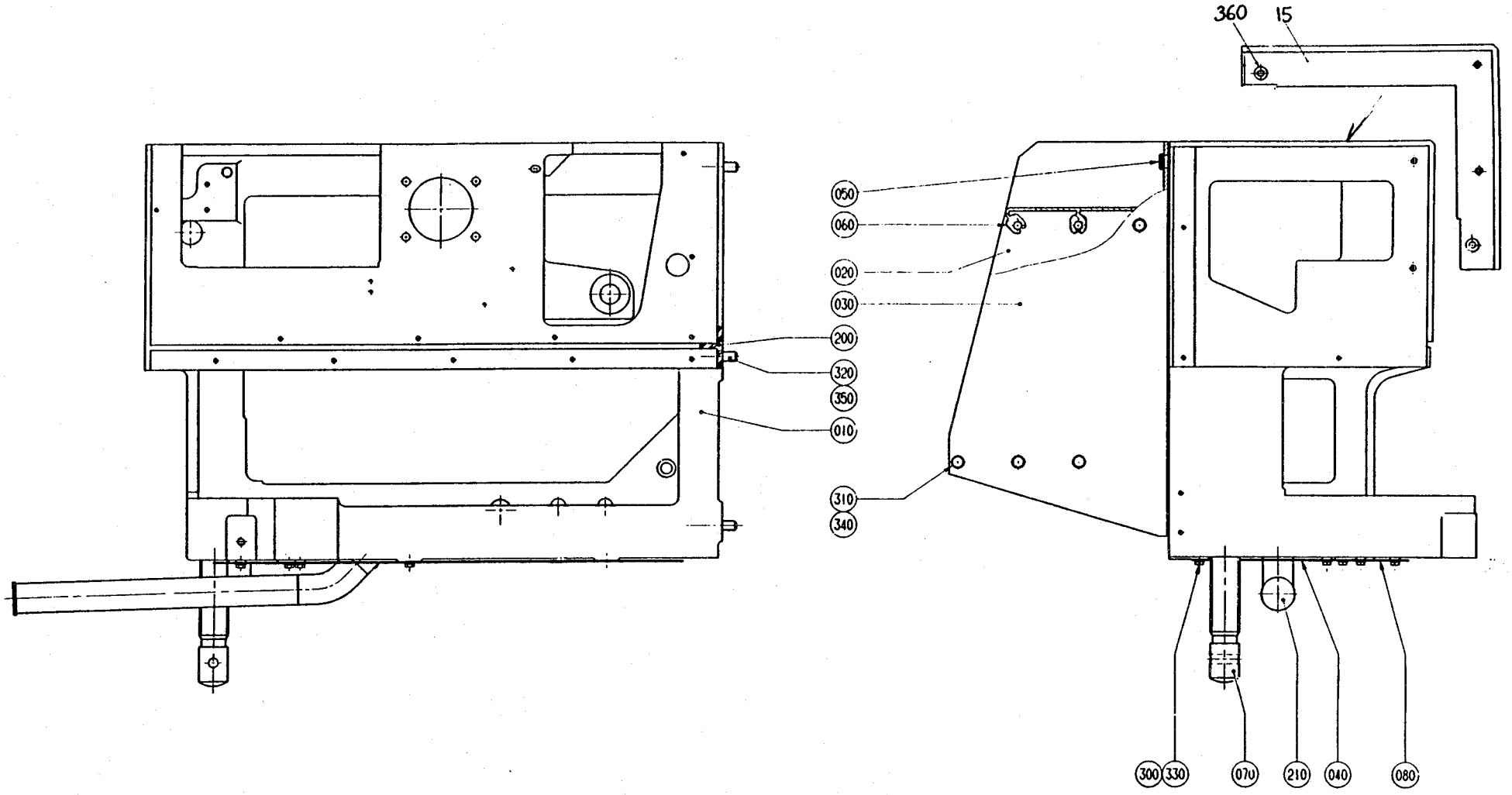
360
15
050
060
020
030
200
320
350
010
310
340
300
330
070
210
040
080

From	Pos	Part No	SP	UN	Qty	Description
	010	295202-0001	C		1	SWIVEL (284, 250, 200 ml SLIM)
	010	295202-0002	C		1	SWIVEL (125-236 ml)
	020	G- 295201	C		1	FRAME
	030	295203	C		1	LID
	040	295204-0001	S		2	SHIM
	050	295204-0002	S		2	SHIM
	060	295204-0003	S		2	SHIM
	070	295205	-		1	SPACER SLEEVE
	080	G- 295206	-		1	FLAP
	090	295207	-		1	HOLDER
	100	295208	-		1	SECURING PLATE
	110	295430	-		1	SUPPORT
	120	295431	-		1	SCREW
	130	295432	-		1	SCREW
	140	469527	-		1	BRACKET
	300	90091-0136	S		3	SEAL RING
	310	90240-0094	S		2	PLAIN BEARING
	500	312105-0366	-		1	SCREW M6S6X12RFR
	510	312105-0370	-		4	SCREW M6S6X20RFR
	520	312105-0374	-		1	SCREW M6S6X30RFR
	530	312105-0376	-		1	SCREW M6S6X35RFR
	535	312318-0323	-		2	GRUB SCREW SK6SS5X8RFR
	540	315105-0153	-		4	WASHER BRB6,4X12RFR

From	Pos	Part No	SP	UN	Qty	Description

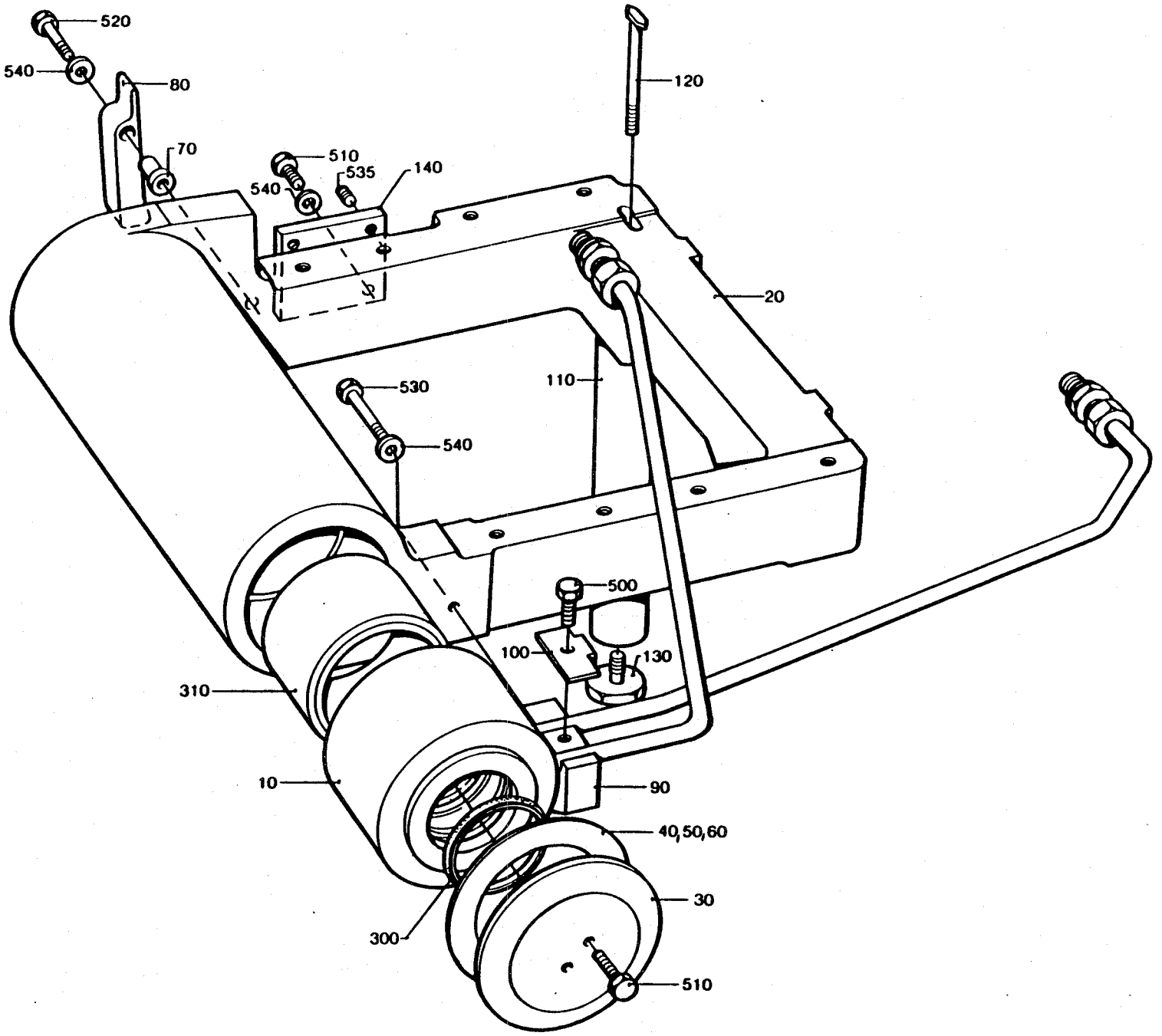
520
540
80
70
510
535
540
140
120
20
530
540
110
500
100
130
310
10
90
40,50,60
30
300
510

From	Pos	Part No	SP	UN	Qty	Description
	F310	==>525-1.1	-		1	CONNECTION BOX
	F320	==>525-1.1	-		1	CONNECTION BOX
-080V	020	456245	S		3	PROTECTIVE COVER
	030	456249	S		1	PROTECTIVE COVER
-080V	040	456256	S		1	PROTECTIVE COVER
	050	456862	-		1	PLATE
-080V	060	456863	-		1	BRACKET
090V-	060	752571	-		1	BRACKET
	100	90015-0016	-		1	BUSHING
	110	90015-0023	-		4	BUSHING
	120	90044-0101	-		1	LIMIT SWITCH
	125	90077-0102	-		2	TERMINAL BLOCK
-080V	220	312115-0331	-		2	SCREW MC6S 5X20 A4 80
090V-	220	312115-0329	-		2	SCREW MC6S 5X16 A4 80
	230	312115-0372	-		3	SCREW MC6S6X25 A4 80
	240	312115-0374	-		2	SCREW 6X30 A4 80
	250	312125-0287	-		10	SLOTTED HEMCS4X8RFR
	255	312125-0230	-		4	SLOTTED HEMCS3X20RFR
	270	312155-0333	-		2	SCREW MF6S5X25RFR
	290	312605-0314	-		2	NUT M6M5RFR
	340	315115-0153	-		3	WASHER TBRB6,4X12RFR
	360	352103-0108	-		1	CABLE GLANR.PR 20,4/6-12
090V-	370	352103-0111	S		1	CABLE GLANR.PR 22,5/10-14
-080V	380	352113-0102	-		8	RIBBON CLAR
090V-	380	352103-0116	S		1	CABLE GLANR. 28,3/13-18
090V-	390	352113-0102	-		8	RIBBON CLAR
-080V	390	352113-0202	-		8	ARMATURE -TM2-S8
090V-	400	352113-0202	-		8	ARMATURE -TM2-S8
-080V	400	352135-0102	-	MM1000		HOSE .010
	410	352135-0106	-	MM 350		HOSE .016
-080V	420	352103-0106	-		4	CABLE GLANR.18,6/5-10
	430	352136-0129	-		1	GLAND
	440	353001-0102	-		6	END SLEEVE0,75

From	Pos	Part No	SP	UN	Qty	Description

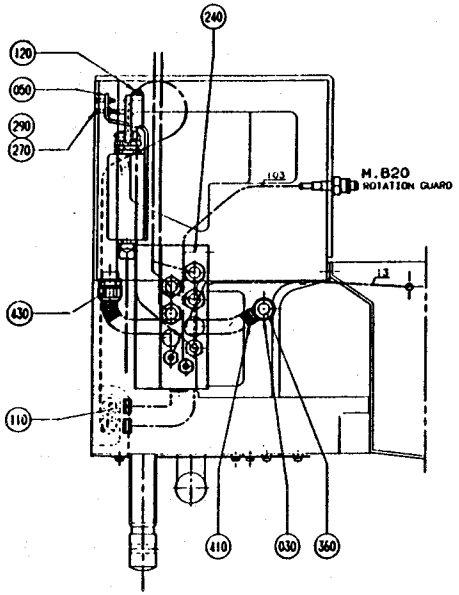
240
120
050
290
270
M.820
ROTATION GUARD
430
110
410
030
360

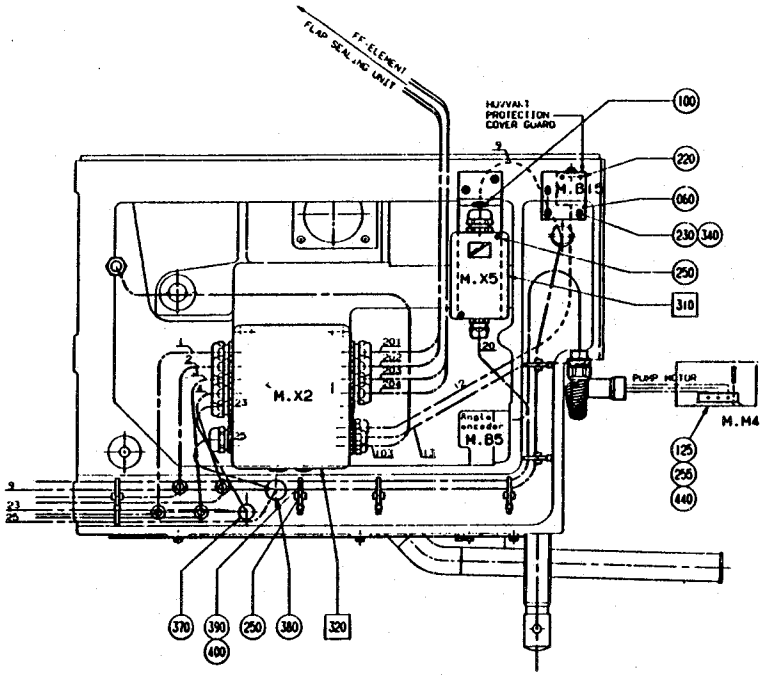
FF. ELEMENT
FLAP SEALING UNIT
HI/VALT
PROTECTION
COVER GUARD
100
220
060
230
340
250
310
M.B1
M.X5
M.X2
PUMP MOTOR
M.M4
125
255
440
M.B5
370
390
400
250
380
320

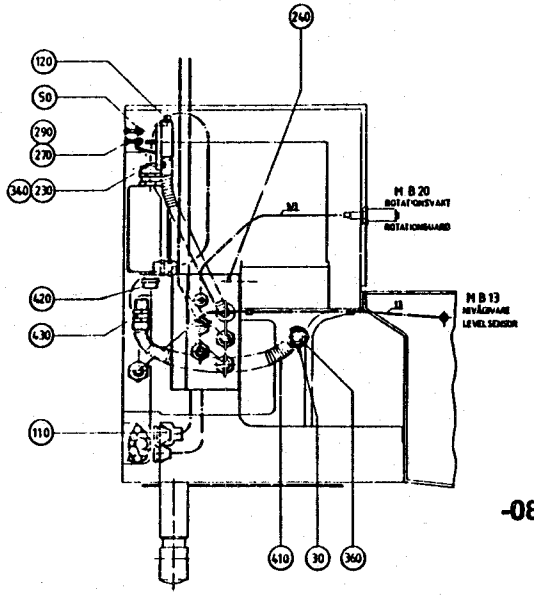
240
120
50
290
270
340
230
M B 20
ROTATIONSVAKT
ROTATIONSGUARD
420
430
M B 13
NIVÅGIVARE
LEVEL SENSOR
110
410
30
360

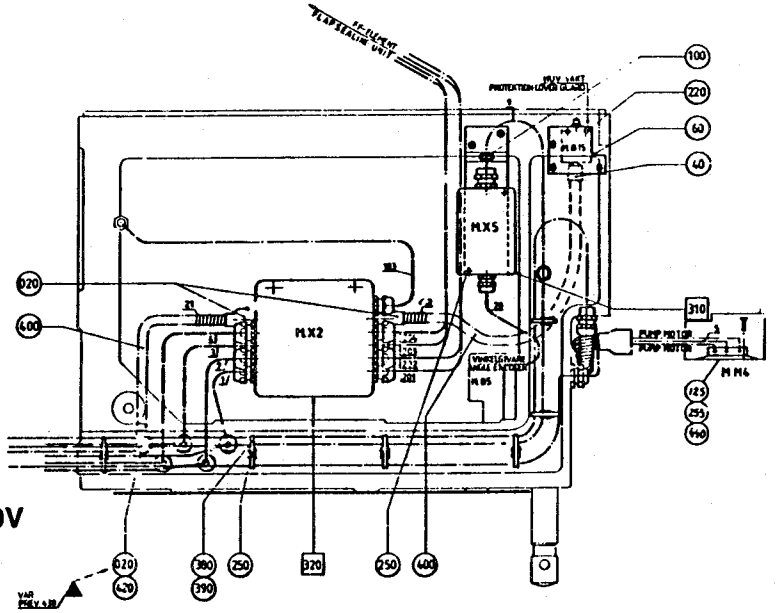
FF-ELEMENT
FLAPSEALING UNIT
100
220
60
40
M.X5
M.X2
320
600
310
PUMP MOTOR
M M6
125
255
440
410
30
360
250
320
250
400
390
390

-080V

From	Pos	Part No	SP	UN	Qty	Description
090V-	F030	68917-0101	C		1	CIRCUIT BOARD
Position F310						
-080V	010	464297	-		1	CONNECTION BOX
090V-	010	751631	C		1	CONNECTION BOX
	020	451423	S		1	CIRCUIT BOARD
	050	352103-0106	S		2	CABLE GLANR.18,6/5-10
090V-	060	352103-0110	S		1	CABLE GLANR.22,5/4-13
	110	312125-0220	S		4	SLOTTED HEMCS3X6RFR
	120	312125-0291	S		4	SLOTTED HEMCS4X12RFR
Position F320 -080V						
	010	751129	-		1	CONNECTION BOX
	020	751125-0001	-		1	RAIL
	050	312125-0364	S		2	SLOTTED HEMCS6X10RFR
	060	352103-0105	-		1	CABLE GLANR.PR18,6/3-7
	070	352103-0106	S		2	CABLE GLANR.18,6/5-10
	080	352103-0111	S		8	CABLE GLANR.PR22,5/10-14
	090	353021-0216	S		5	CLAMP
	100	353021-0219	S		4	CLAMP
	110	353024-0204	S		1	EARTH CLIP WPE 2,5
	120	353031-0201	S		2	END PLATE EW35
	130	353032-0006	-		1	END PLATE WTW 2,5-10
	140	359011-0807	S		2	SET OF SIG5-FW 1-50

From	Pos	Part No	SP	UN	Qty	Description
Position F320 090V-						
	010	752125	C		1	CONNECTION BOX
	020	751125-0002	C		1	RAIL
	100	90002-0004	C		1	BLANK-OFF PLUG
	110	90002-0009	C		3	BLANK-OFF PLUG
	120	90002-0013	C		2	BLANK-OFF PLUG
	150	90194-0016	C		1	SIGN
	200	312125-0364	S		2	SLOTTED HEMCS6X10RFR
	210	352103-0101	S		2	CABLE GLANR.15,2/4-8
	220	352103-0106	S		1	CABLE GLANR.18,6/5-10
	230	352103-0111	S		9	CABLE GLANR.PR22,5/10-14
	240	352103-0116	S		1	CABLE GLANR.28,3/13-18
	250	353021-0212	S		3	CLAMP WDU 2,5
	260	353021-0219	S		4	CLAMP
	270	353021-0302	S		8	CLAMP
	280	353024-0204	S		2	EARTH CLIP WPE 2,5
	290	353031-0201	S		1	END PLATE EW35
	300	353032-0004	S		1	END PLATE WAP 2,5-10
	310	353032-0005	S		1	END PLATE 2,5-10
	320	359011-0819	S		1	SET OF SIGN 5-GW (EARTH)
	330	359011-0807	S		2	SET OF SIGN 5-FW 1-50

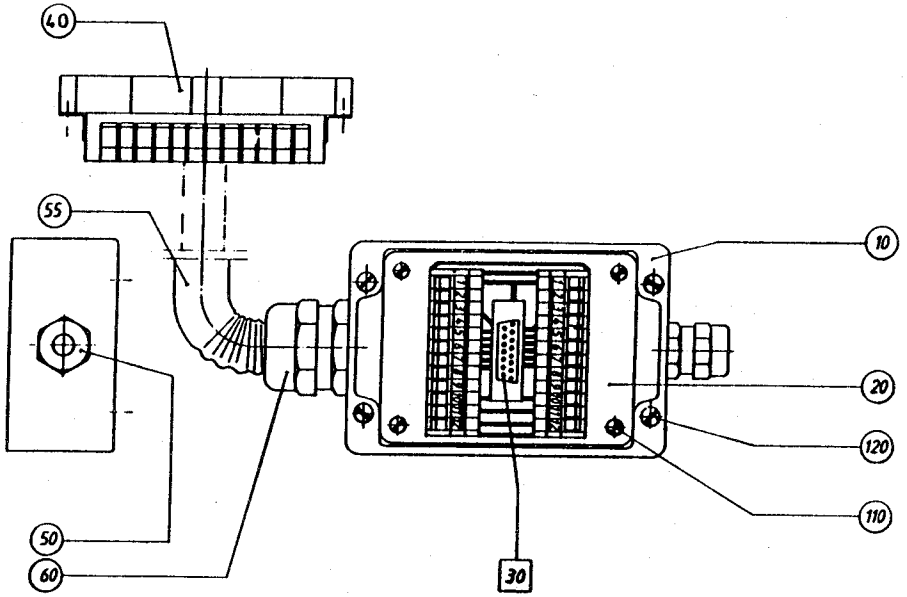

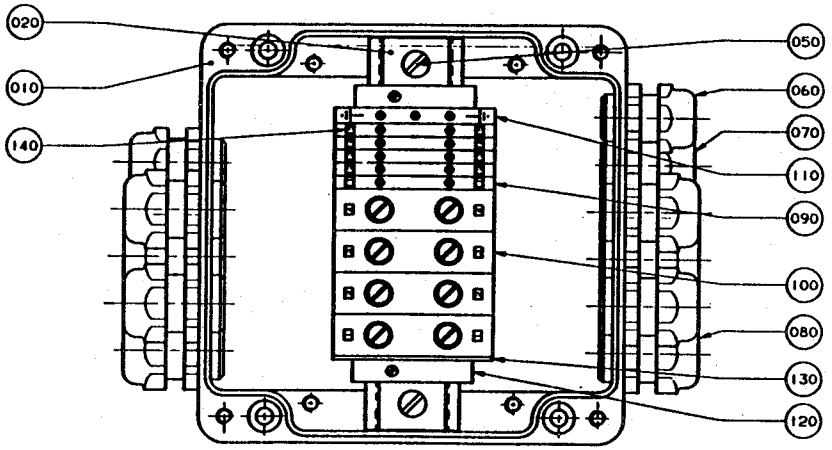

RITAD UTAN LOCK
DRAWN WITHOUT LID

-080V

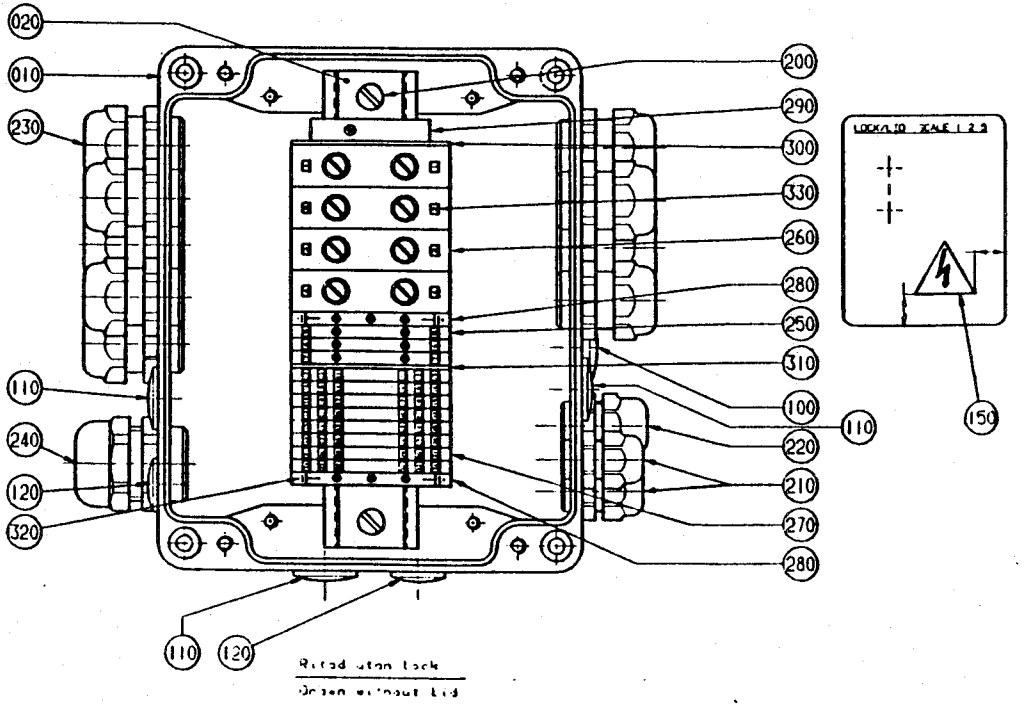

From	Pos	Part No	SP	UN	Qty	Description
	010	295332	-		1	RAIL
	020	295333	-		1	CHECKER PLATE
	030	295334	-		1	SIDE PLATE RIGHT
	040	456284	-		1	FRONT PLATE
	050	295336	-		1	BOTTOM PLATE
	060	456285	-		1	COVER
	070	456286	-		1	SIDE PLATE LEFT
	080	456289	-		1	BLOCK
	090	271584	C		1	CHUTE
	100	456287	-		1	COLUMN
	110	295340	-		1	SIDE PLATE
	115	456290	-		1	GUSSET PLATE
	120	38087	-		1	WASHER
	130	271585	-		1	WASHER
	140	271586-0001	-		2	WASHER
	150	271586-0002	-		2	WASHER
	160	271587	-		6	WASHER
	170	295341	-		1	SPACER
	180	295342	-		1	CLIP
	190	469795	-		1	HOLDER
	300	90287-0062	-		34	SCREW
	310	90347-0035	S		1	DAMPER
	500	312105-0366	-		4	SCREW M6S6X12RFR
	510	312105-0368	-		2	SCREW M6S6X16RFR
	520	312105-0382	-		1	SCREW M6S6X60RFR
	530	312105-0449	-		2	SCREW M6S8X16RFR
	540	312105-0451	-		3	SCREW M6S8X20RFR
	545	312105-0457	-		1	SCREW M6S8X35RFR
	550	312105-0459	-		1	SCREW M6S8X40RFR
	555	312155-0368	-		1	SCREW MF6S6X16RFR
	560	312155-0461	-		1	SCREW MF6S8X50RFR
	570	312605-0316	-		3	NUT M6M6RFR
	580	312705-0316	-		2	CAP NUT MHM 6 A2
	590	312705-0318	-		1	CAP NUT MHM 8 A2
	595	315105-0153	-		3	WASHER BRB6,4X12RFR
	600	315105-0165	-		5	WASHER BRB8,4X16RFR

From	Pos	Part No	SP	UN	Qty	Description

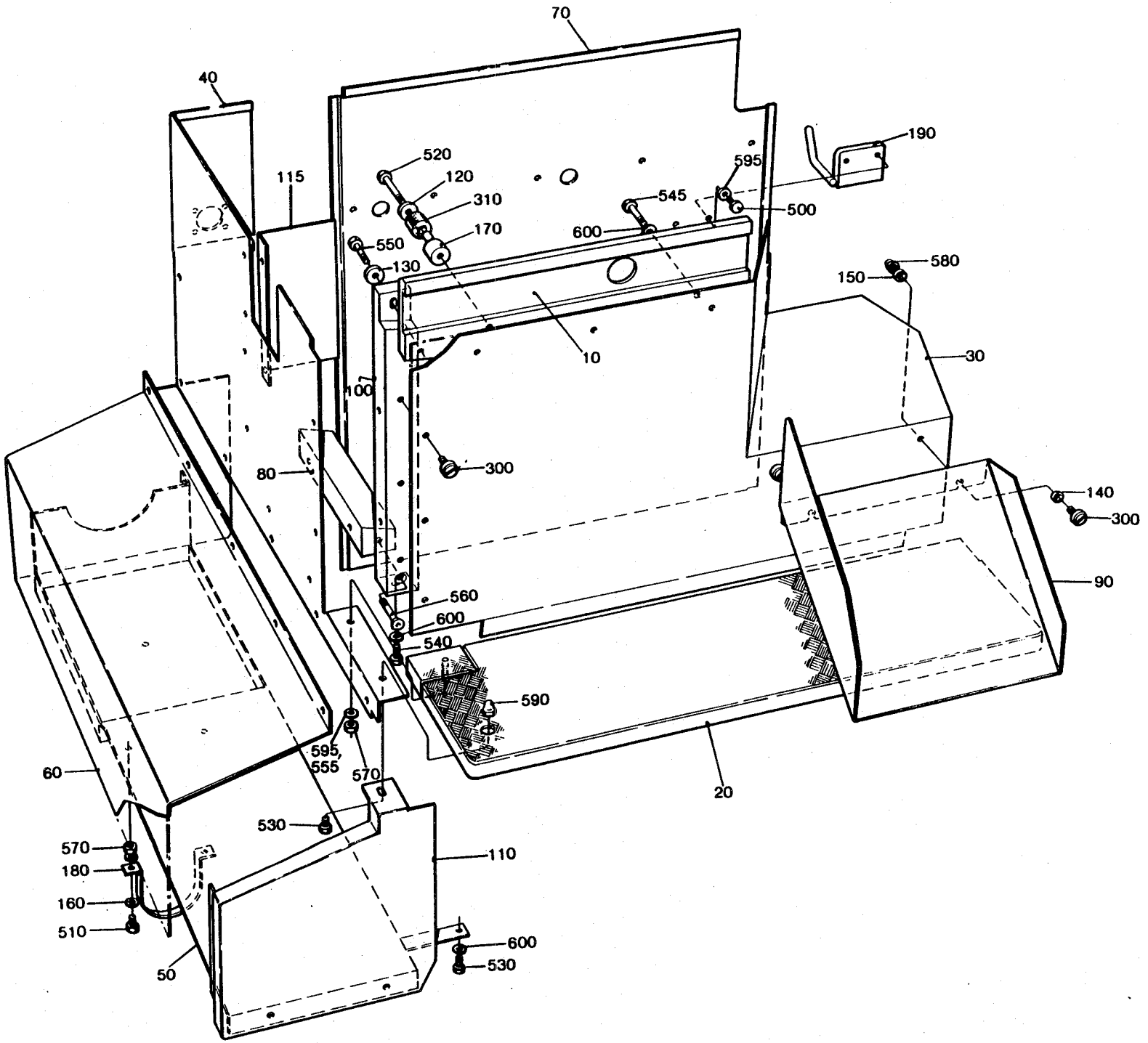
70
40
115
520
120
310
170
550
130
595
545
500
600
190
580
150
10
30
100
300
80
140
300
90
560
600
540
590
595
555
570
60
20
530
110
570
180
160
510
600
530
50

From	Pos	Part No	SP	UN	Qty	Description
	010	295332	-		1	RAIL
	020	525392	-		1	CHECKER PLATE
	030	295334	-		1	SIDE PLATE RIGHT
	040	456284	-		1	FRONT PLATE
	050	295336	-		1	BOTTOM PLATE
	060	456285	-		1	COVER
	070	752092	-		1	SIDE PLATE LEFT
	080	456289	-		1	BLOCK
	090	525387	C		1	CHUTE
	100	456287	-		1	COLUMN
	110	295340	-		1	SIDE PLATE
	115	456290	-		1	GUSSET PLATE
	120	38087	-		1	WASHER
	130	271585	-		1	WASHER
	140	271586-0001	C		2	WASHER
	150	271586-0002	C		2	WASHER
	160	271587	-		6	WASHER
	170	295341	-		1	SPACER
	180	295342	-		1	CLIP
	190	752093	-		1	HOLDER
	200	257231	C		1	WINDOW
	210	525388	C		1	BRACKET
	220	525393	C		1	CHECKER PLATE
	230	566015	-		2	WASHER
	290	90157-0022	S		X	SEALING COMPOUND
	300	90287-0062	-		34	SCREW
	310	90347-0035	S		1	DAMPER
	320	90248-0022	C		2	HINGE
	500	312105-0366	-		4	SCREW M6S6X12RFR
	510	312105-0368	-		2	SCREW M6S6X16RFR
	520	312105-0382	-		1	SCREW M6S6X60RFR
	530	312105-0449	-		2	SCREW M6S8X16RFR
	540	312105-0451	-		3	SCREW M6S8X20RFR
	545	312105-0457	-		1	SCREW M6S8X35RFR
	550	312105-0459	-		1	SCREW M6S8X40RFR
	555	312125-0291	-		6	SLOTTED HEMCS4X12RFR
	560	312155-0461	-		1	SCREW MF6S8X50RFR
	565	312605-0312	-		6	NUT M6M4RFR
	570	312605-0316	-		3	NUT M6M6RFR
	580	312705-0316	-		2	CAP NUT MHM 6 A2
	590	312705-0318	-		1	CAP NUT MHM 8 A2
	595	315105-0153	-		3	WASHER BRB6,4X12RFR
	600	315105-0165	-		5	WASHER BRB8,4X16RFR

From	Pos	Part No	SP	UN	Qty	Description

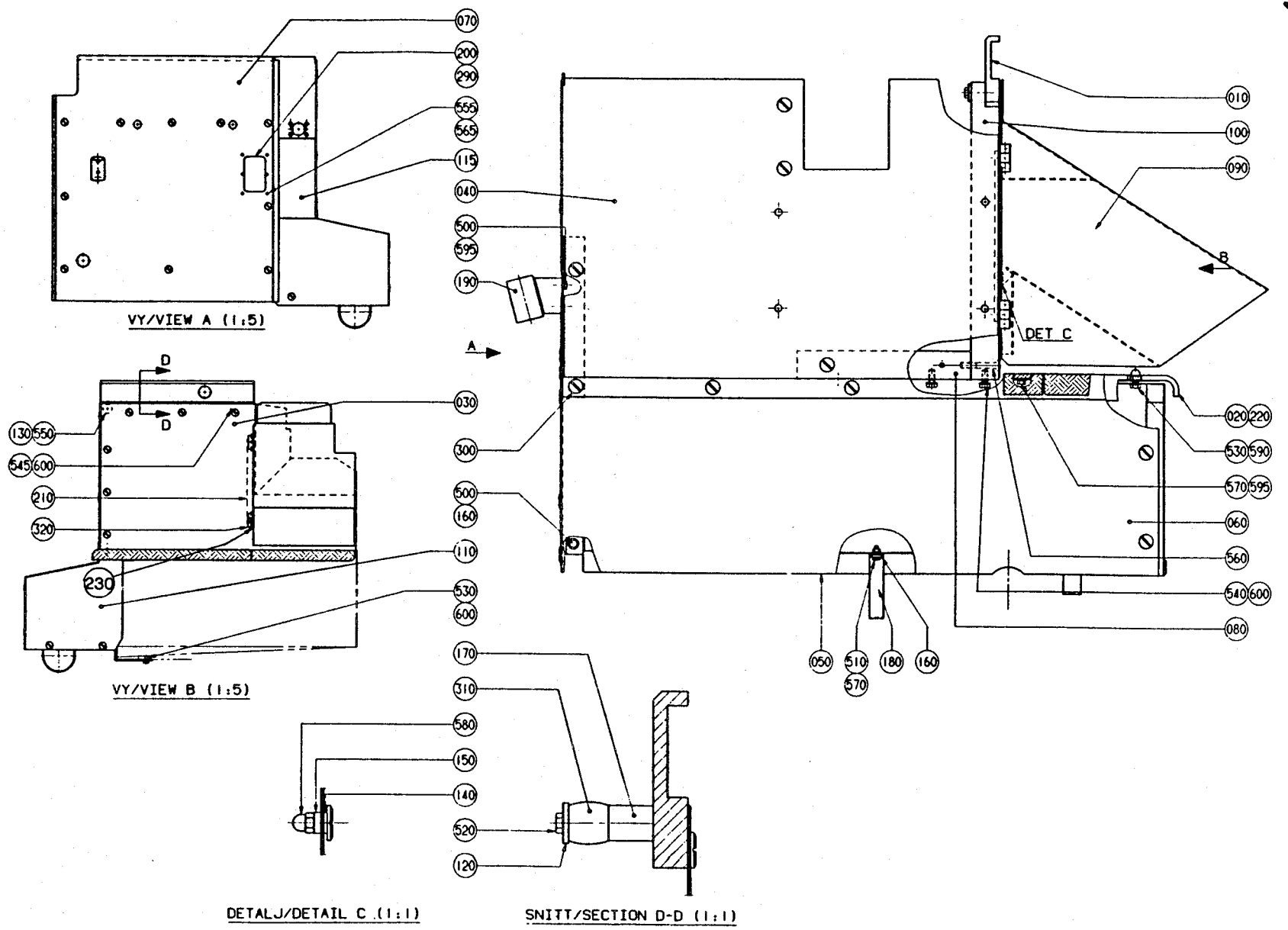
070
200
290
555
565
115
040
500
595
190
VY/VIEW A (1:5)
A
D
D
130 550
545 600
210
320
230
030
300
500
160
110
530
600
VY/VIEW B (1:5)
170
310
580
150
140
520
120
DETALJ/DETAIL C (1:1)
SNITT/SECTION D-D (1:1)
010
100
090
B
DET C
020 220
530 590
570 595
060
560
540 600
080
050
510
570
180
160

SPC 648151/52
Tetra Brik TB/9
Tetra Brik Aseptic TBA/9

From	Pos	Page	Description
	F010	601-1	BENDING ROLLER
	F020	602-1	CARRIAGE
		602-1.1	. BENDING ROLLER
		602-1.2	. CATCH HANDLE
		602-1.3	. PAPER GUIDE PLATE
		602-1.4b	. STRETCHER
		602-1.5b	. PAPER GUIDE
		602-1.6	. BENDING ROLLER
		602-1.7	. CARRIAGE
		602-1.8	. CONNECTION BOX
		602-1.9	. PAPER REEL HOLDER
		602-1.9	. PAPER REEL HOLDER
		602-1.10	. BRAKE
	F140	603-1	SPLICING DEVICE
		603-1.1	. HEATING BLOCK
		603-1.2	. COUNTER RAIL
		603-1.3	. SUSPENSION ARM
		603-1.4	. TABLE
		603-1.5	. TEARING DEVICE
		603-1.6	. TABLE
		603-1.7	. TABLE
	F150	604-1	PAPER HOLDER
	F170	605-1	DETERGENT PUMP
	F350	606-1	OIL TANK
	F360	607-1	HYDRAULIC SYSTEM
	F280	608-1	CONNECTION BOX
	F290	609-1	IMPULSE TRANSMITTER
		609-1.1	. BLOCK
	F180	610-2a/b	VALVE PANEL
		610-1.1	. CONNECTION BOX
		610-1.2	. AIR INJECTOR
		610-1.2	. . NON-RETURN VALVE
		610-1.3	. PUSH BUTTON BOX
		610-1.4	. FLOW METER
		610-1.5	. JUNCTION BLOCK
		610-1.6	. CONNECTION
		610-1.7	. PRESSURE FEED
	F240	611-1	CONNECTION BOX
	F250	612-2	PIPE WORK
	F260	613-2	PEROXIDE TANK
		613-2.1	. PEROXIDE PUMP

From	Pos	Page No	Description
	F370	614-2a/b/c	PIPE WORK
	F380	615-1	TRANSMISSION
	F390	615-1	TRANSMISSION
	F600	616-1	START-UP KIT
	F320	617-1/2	GUIDE
	F330	617-1/2	GUIDE
	F230	618-1	MACHINE BODY, SERV. UNIT
		618-1.1	. SPACER PIECE
	F160	618-1.2	CABLE TRACK AND CHUTE
	F090	618-1.3	LID
	F110	618-1.4	COVER
	F100	618-1.5	DOOR
	F120	618-1.5	DOOR
	F130	618-1.6	COVER PLATE
	F130	618-1.6	COVER PLATE
	F130	618-1.7	COVER PLATE

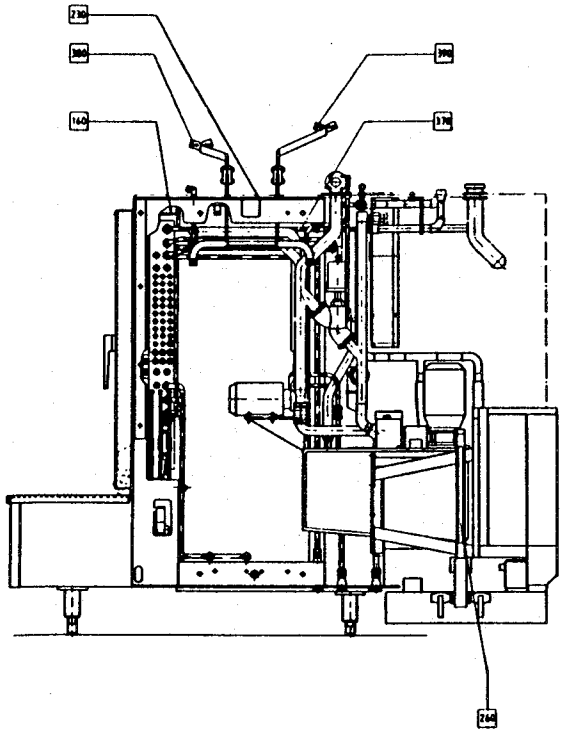

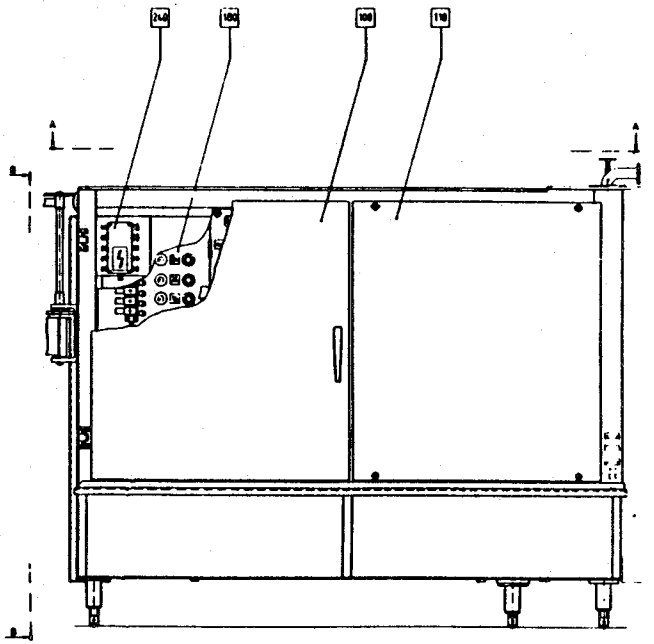

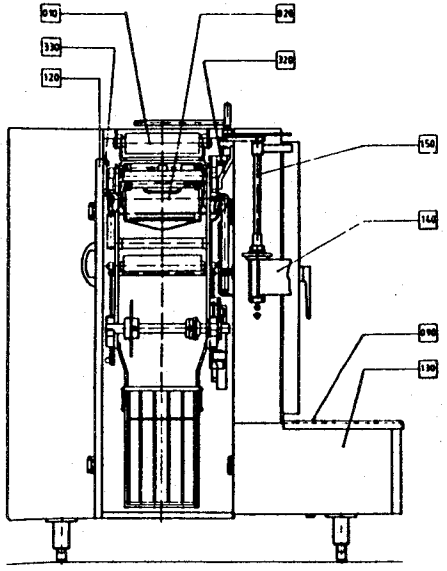

VY B-B MED OPPEN KASSETTDØRR
VIEW B-B WITH OPEN DOOR

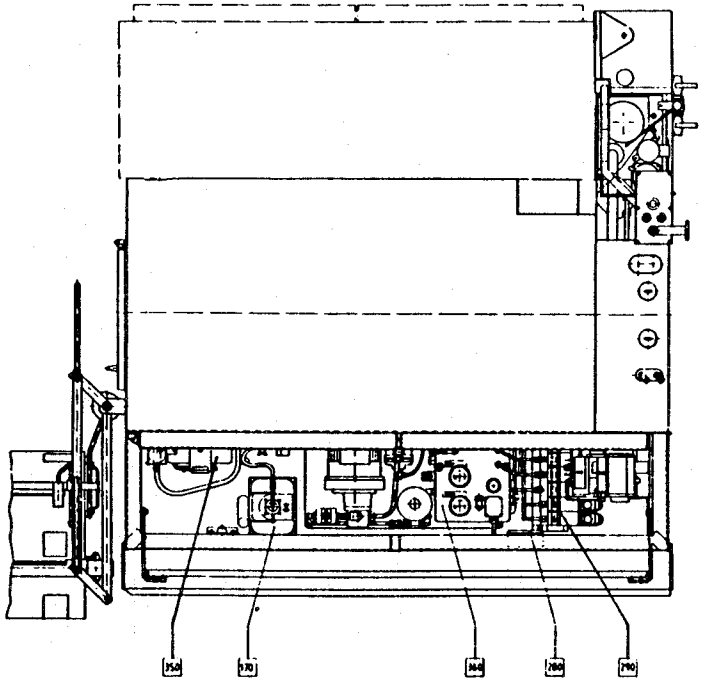

VY A-A MED OPPET LOKK
VIEW A-A WITH OPEN LID

From	Pos	Page	Description
	F010	601-1	BENDING ROLLER
	F020	602-1	CARRIAGE
		602-1.1	. BENDING ROLLER
		602-1.2	. CATCH HANDLE
		602-1.3	. PAPER GUIDE PLATE
		602-1.4a	. STRETCHER
		602-1.5a	. PAPER GUIDE
		602-1.6	. BENDING ROLLER
		602-1.7	. CARRIAGE
		602-1.8	. CONNECTION BOX
		602-1.9	. PAPER REEL HOLDER
		602-1.9	. PAPER REEL HOLDER
		602-1.10	. BRAKE
	F140	603-1	SPLICING DEVICE
		603-1.1	. HEATING BLOCK
		603-1.2	. COUNTER RAIL
		603-1.3	. SUSPENSION ARM
		603-1.4	. TABLE
		603-1.5	. TEARING DEVICE
		603-1.6	. TABLE
		603-1.7	. TABLE
	F150	604-1	PAPER HOLDER
	F170	605-1	DETERGENT PUMP
	F350	606-1	OIL TANK
	F360	607-1	HYDRAULIC SYSTEM
	F280	608-1	CONNECTION BOX
	F290	609-1	IMPULSE TRANSMITTER
		609-1.1	. BLOCK
	F180	610-1	VALVE PANEL
		610-1.1	. CONNECTION BOX
		610-1.2	. AIR INJECTOR
		610-1.2	. . NON-RETURN VALVE
		610-1.3	. PUSH BUTTON BOX
		610-1.4	. FLOW METER
		610-1.5	. JUNCTION BLOCK
		610-1.6	. CONNECTION
		610-1.7	. PRESSURE FEED
	F240	611-1	CONNECTION BOX
	F250	612-1	PIPE WORK
	F260	613-1	PEROXIDE TANK
		613-1.1	. PEROXIDE PUMP
		613-1.2	. CONNECTION PIPE

From	Pos	Page No	Description
	F370	614-1	PIPE WORK
	F380	615-1	TRANSMISSION
	F390	615-1	TRANSMISSION
	F600	616-1	START-UP KIT
	F320	617-1/2	GUIDE
	F330	617-1/2	GUIDE
	F230	618-1	MACHINE BODY, SERV. UNIT
		618-1.1	. SPACER PIECE
	F160	618-1.2	CABLE TRACK AND CHUTE
	F090	618-1.3	LID
	F110	618-1.4	COVER
	F100	618-1.5	DOOR
	F120	618-1.5	DOOR
	F130	618-1.6	COVER PLATE
	F130	618-1.6	COVER PLATE
	F130	618-1.7	COVER PLATE

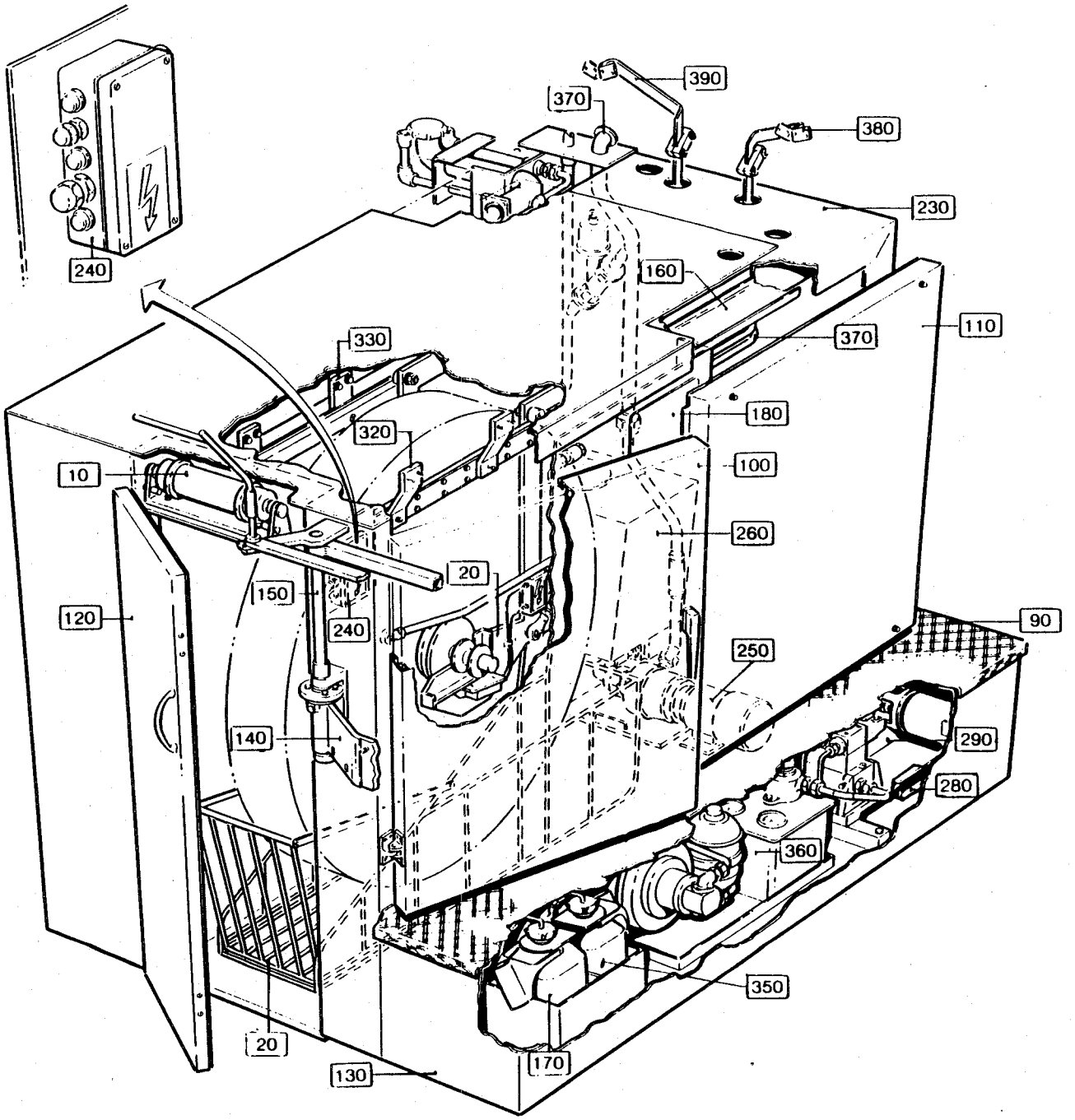
390
370
380
230
240
160
110
370
330
180
320
100
10
260
20
150
240
120
90
250
140
290
280
360
350
20
170
130

From	Pos	Part No	SP	UN	Qty	Description
	010	272360	-		1	BRACKET
-080V	015	272361	C		1	CLAMP
090V-	020	752206	C		1	PAPER SUPPORT (180-250 ML)
090V-	020	752207	C		1	PAPER SUPPORT (200 ml SLIM)
090V-	020	752208	C		1	PAPER SUPPORT (125 ml)
	030	271753	S		1	SHAFT
	040	456544	S		1	BENDING ROLLER
-080V	050	456545	-		2	FLANGE
	060	272362	S		2	BEARING
	100	311103-0351	-		2	CYLINDRICACPR6M6X16RFR
	110	312105-0449	-		2	SCREW M6S8X16RFR
-080V	120	312105-0451	-		2	SCREW M6S8X20RFR
090V-	120	312105-0455	-		2	SCREW M6S8X30RFR
	130	312318-0321	-		4	GRUB SCREW SK6SS5X6RFR
-080V	140	312318-0323	-		4	GRUB SCREW SK6SS5X8RFR
	150	312318-0360	-		2	GRUB SCREW SK6SS6X6RFR
	160	315105-0165	-		4	WASHER BRB8,4X16RFR
	170	315742-0111	-		2	RETAINING 15SMS199RFR
	180	321308-0202	S		2	BALL BEARISKF6002-2RS

From	Pos	Part No	SP	UN	Qty	Description

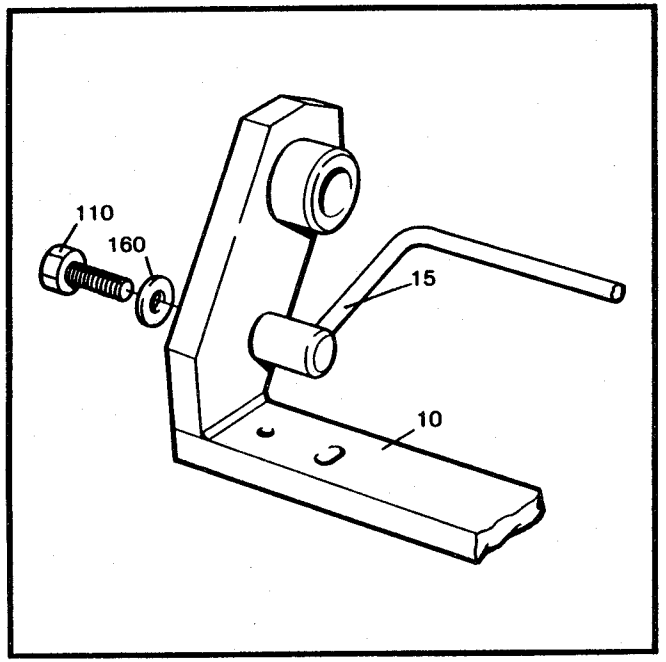
110
160
15
10

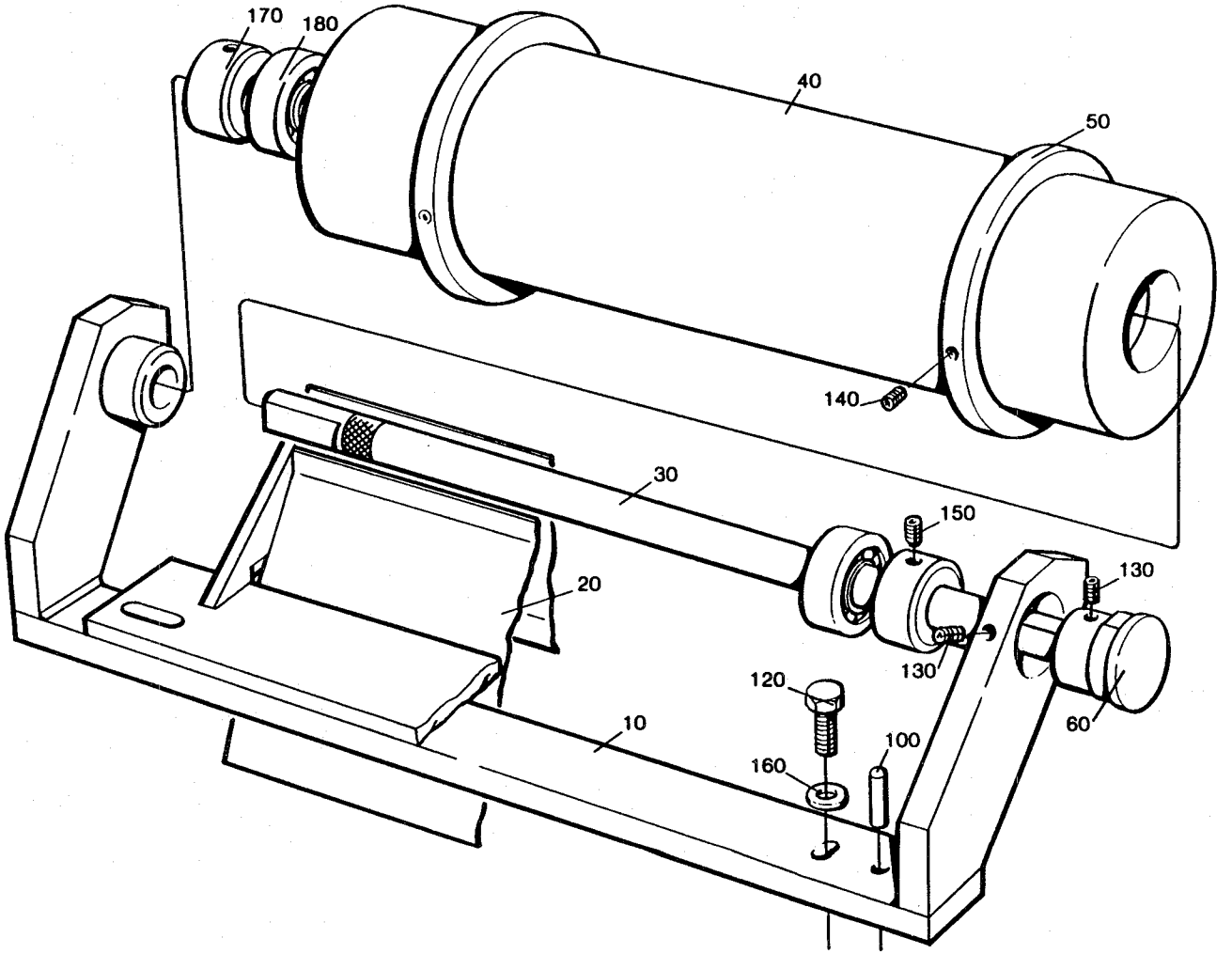
170
180
40
50
140
30
150
20
130
130
120
10
100
160
60

From	Pos	Part No	SP	UN	Qty	Description
	F025	==>602-1.7	-		1	CARRIAGE
	F030	==>602-1.6	-		1	BENDING ROLLER
	F040	==>602-1.4a	-		1	STRETCHER
090V-	F040	==>602-1.4b	-		1	STRETCHER
	F050	==>602-1.1	-		1	BENDING ROLLER
	F052	==>602-1.3	-		1	PAPER GUIDE PLATE
	F054	==>602-1.5a	-		1	PAPER GUIDE
090V-	F054	==>602-1.5b	-		1	PAPER GUIDE
	F060	==>602-1.9	-		2	PAPER REEL HOLDER
	F060	==>602-1.9	-		2	PAPER REEL HOLDER
	F070	==>602-1.2	-		1	CATCH HANDLE
	F080	==>602-1.8	-		1	CONNECTION BOX
	F090	==>602-1.10	-		1	BRAKE
	020	271546	C		1	BASKET
	030	441907	-		1	GUIDE
	060	271547	C		1	DOOR
	070	271548	C		2	LINK
	080	271558	C		1	BRACKET
	090	490779	C		1	BRACKET LEFT
	100	490780	C		1	BRACKET RIGHT
	110	272697	C		1	BRACKET
	120	441908	-		2	CLAMP
090V-	130	751724	C		1	BLOCK
	140	272564	-		1	BEARING
-080V	145	272564	-		1	BEARING
090V-	145	751586	-		1	BEARING
	150	456072	S		24	WASHER
	300	90166-0060	S	MM	1350	HOSE
	310	90166-0132	-	M	3	HOSE
	320	90232-0039	-		1	PHOTOCELL
	490	311112-0255	-		4	HOLLOW PINRP 4X18 RFR
	500	312105-0364	-		4	SCREW M6S6X10RFR
	510	312105-0368	-		10	SCREW M6S6X16RFR
090V-	515	312105-0449	-		8	SCREW M6S8X16RFR
	520	312105-0491	-		4	SCREW M6S10X20RFR
	530	312115-0368	-		4	SCREW 6X16 A4 80
	540	312115-0449	-		4	SCREW 8X16 A4 80
	550	312125-0285	-		14	SLOTTED HEMCS4X6RFR
	570	312125-0297	-		2	SLOTTED HEMCS4X25RFR
	580	312605-0312	-		2	NUT M6M4RFR
	590	312631-0324	-		8	NUT M6M16X1,5FZB

From	Pos	Part No	SP	UN	Qty	Description
	600	315105-0153	-		10	WASHER BRB6,4X12RFR
090V-	610	315105-0165	-		12	WASHER BRB8,4X16RFR
	620	315105-0186	-		8	WASHER BRB17X30RFR
	630	321582-0212	S		8	CAM ROLLERNUKR35
	640	342991-0105	-		2	HOSE CLIP 22-32MMRFR
	650	352110-0100	-		12	CLIP TK 5-7
	660	352110-0101	-		3	CLIP TK 7-10
	670	359000-0400	-		4	MARKING CO2/4"0"
	680	359000-0404	-		2	MARKING CO2/4"4"

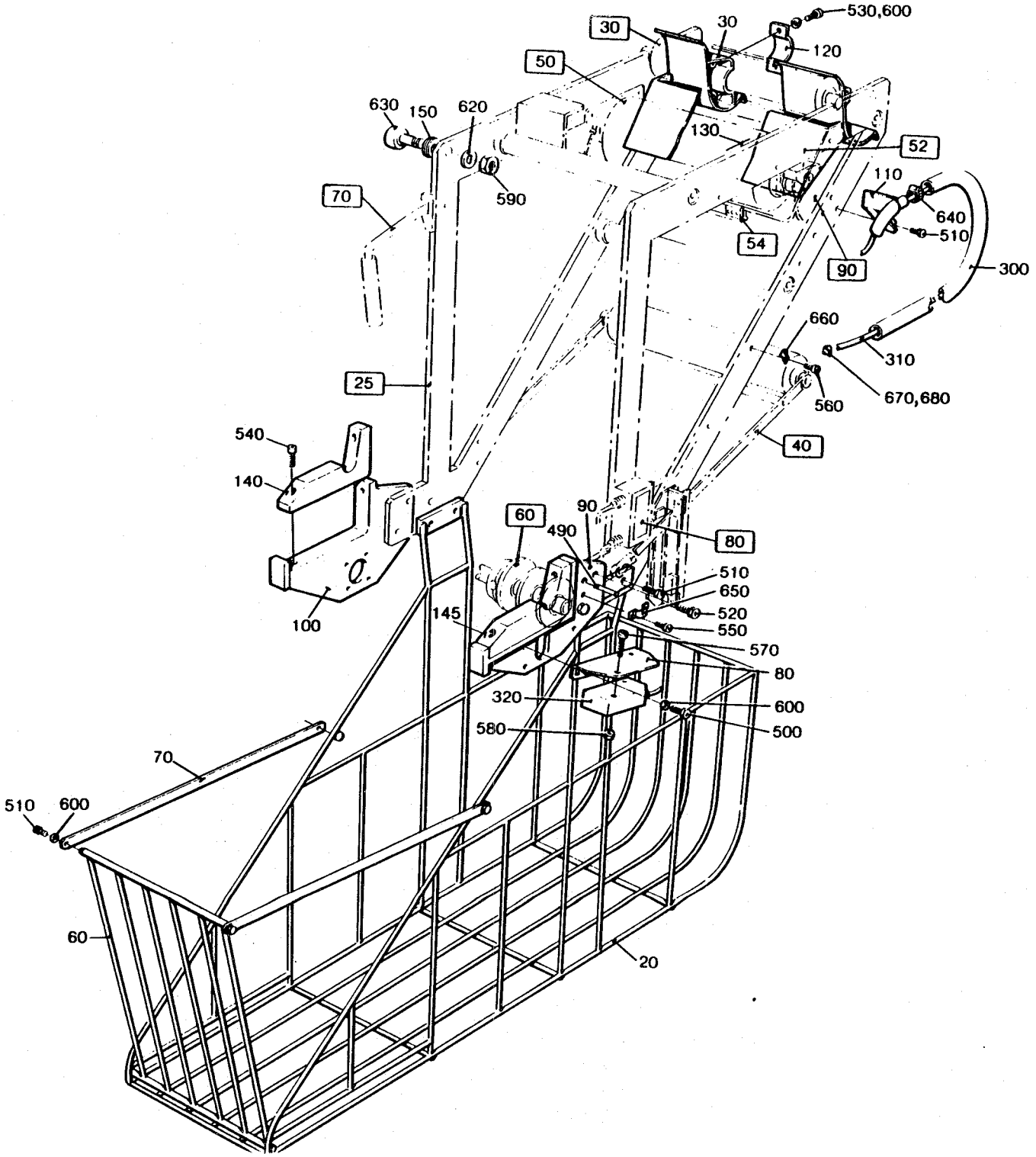
530,600
30
30
120
50
630
150
620
130
52
590
110
70
640
510
54
90
300
660
310
25
560
670,680
540
40
140
90
60
490
80
510
650
145
520
550
570
80
320
600
580
500
70
510
600
60
20

From	Pos	Part No	SP	UN	Qty	Description	
	010	272584	S		2	BEARING	
	020	257224	S		2	CLAMP	
090V-	030	752057	S		1	STOP	
-080V	300	90045-0102	S		1	MOTOR	
090V-	300	90045-0124	S		1	MOTOR	
-080V	500	312105-0451	-		8	SCREW	M6S8X20RFR
090V-	500	312105-0451	-		6	SCREW	M6S8X20RFR
-080V	510	315105-0165	-		4	WASHER	BRB8,4X16RFR
090V-	510	321105-0453	-		2	SCREW	M6S8X25RFR
090V-	520	315105-0165	-		8	WASHER	BRB8,4X16RFR

From	Pos	Part No	SP	UN	Qty	Description

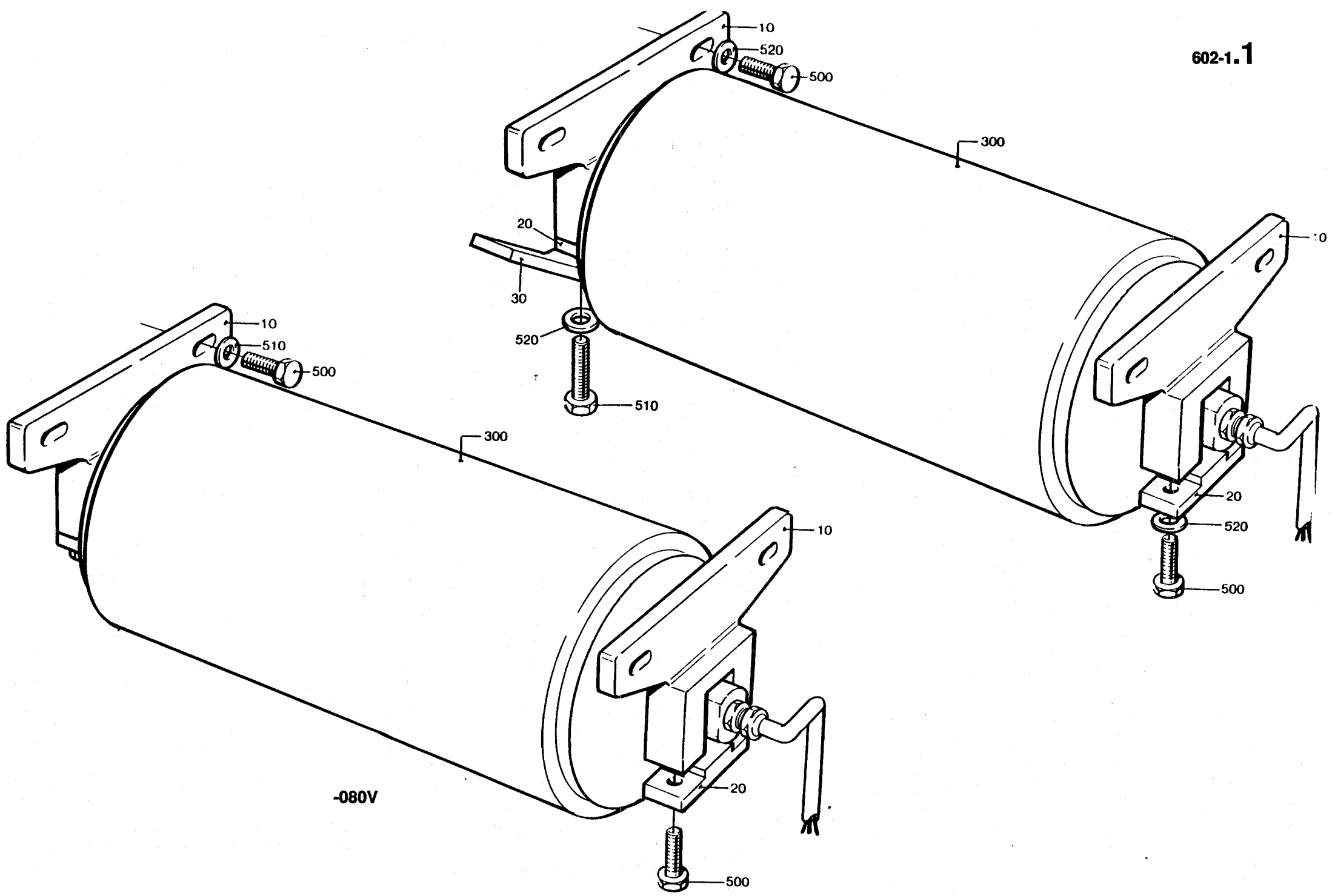
10
520
500
300
20
30
520
510
10
20
520
500
10
510
500
300
10
20
500
-080V

From	Pos	Part No	SP	UN	Qty	Description
	010	G- 272569	-		1	CATCH HANDLE
	040	272603	-		1	STOP LUG
	050	272604	-		1	LUG
	300	90017-0001	-		1	HANDLE
	310	90347-0012	S		1	DAMPER
	500	312105-0366	-		4	SCREW M6S6X12RFR
	510	312105-0370	-		1	SCREW M6S6X20RFR
	520	312105-0500	-		1	SCREW M6S10X45RFR
	540	312605-0320	-		1	NUT M6M10RFR

From	Pos	Part No	SP	UN	Qty	Description

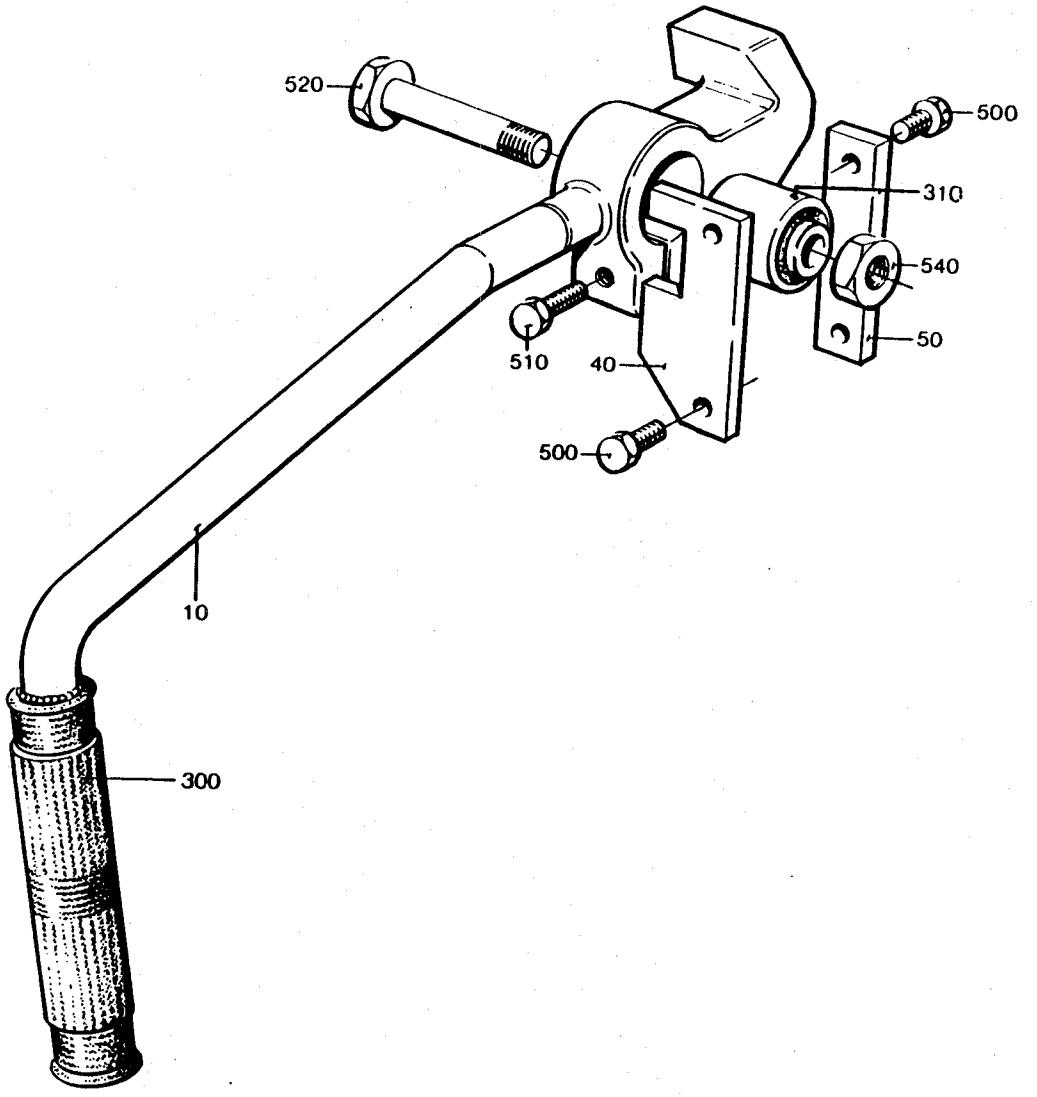
520
500
310
540
50
510
40
500
10
300

From	Pos	Part No	SP	UN	Qty	Description
	010	295716	C		1	CLAMP
	040	295717	C		1	BRACKET
	070	263150	C		1	BRACKET
	080	271911	C		1	SHAFT
	110	295873	C		1	BRACKET
	120	263152	S		1	SHAFT
	130	263153	S		1	NUT
	140	266710	S		1	WHEEL
	150	271912	S		1	SHAFT
	300	90239-0750	C		1	CYLINDER
	500	312105-0368	-		3	SCREW M6S6X16RFR
	510	312105-0451	-		2	SCREW M6S8X20RFR
	520	312115-0327	-		4	SCREW MC6S5X12 A4 80
	530	312155-0368	-		4	SCREW MF6S6X16RFR
	560	312318-0323	-		2	GRUB SCREW SK6SS5X8RFR
	590	312605-0316	-		1	NUT M6M6RFR
	620	315105-0153	-		2	WASHER BRB6,4X12RFR
	630	315105-0165	-		2	WASHER BRB8,4X16RFR
	660	315750-0112	P		1	LOCK RING SGA15
	690	321101-0202	S		2	BUSHING 16F7X12
	700	321308-0202	S		4	BALL BEARISKF6002-2RS
	730	342980-0113	-		2	BANJO CONNSINGEL 6/4-1/8
	740	342980-0313	-		1	BANJO CONN DUBBEL 1/8

From	Pos	Part No	SP	UN	Qty	Description

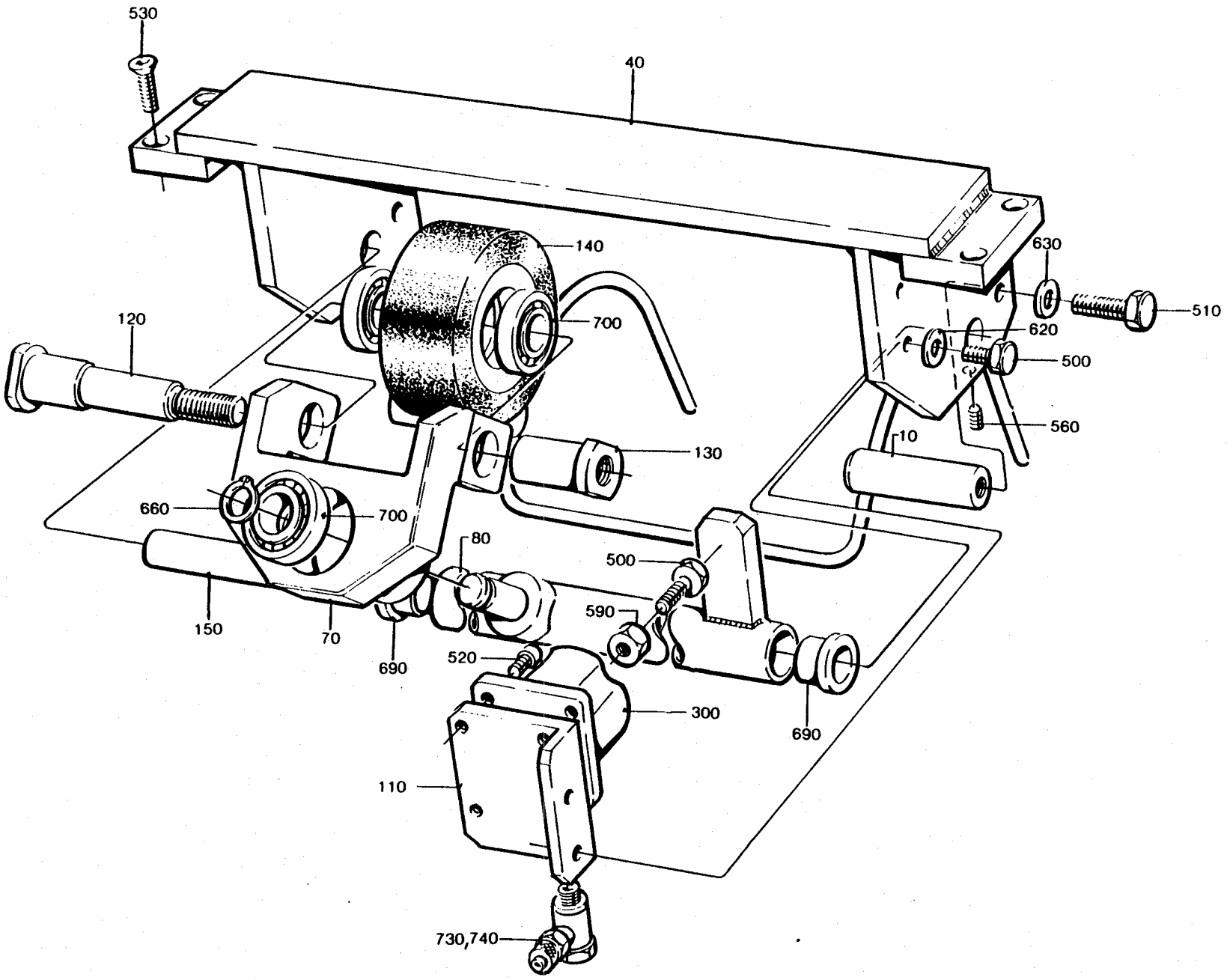
530
40
140
630
510
120
700
620
500
560
10
130
660
700
80
500
590
150
70
690
520
300
690
110
730,740

From	Pos	Part No	SP	UN	Qty	Description
	010	272085	C		1	PENDULUM ARM
	020	469518	C		1	PENDULUM ARM
	030	272087	-		1	HOLDER
	040	272088	-		1	GUIDE
	050	272089	S		1	SLIDE RAIL
	060	272090	S		1	SLIDE RAIL
	070	272476	S		1	SHAFT
	080	272477	C		1	HOLDER
	090	456544	S		1	BENDING ROLLER
	095	295110	-		1	SPACER
	100	272091	-		2	BRACKET
	110	230918	-		2	WASHER
	200	90044-0104	P		2	PROXIMITY SWITCH
	210	90115-0133	S		2	JOINT
	280	312105-0287	-		4	SCREW M6S4X8 A4 80
	290	312105-0291	-		2	SCREW M6S4X12RFR
	305	312105-0452	-		2	SCREW M6S8X22RFR
	310	312105-0536	-		2	SCREW M6S12X30RFR
	320	312125-0228	-		4	SLOTTED HEMCS3X16RFR
	340	312145-0287	-		6	SLOTTED HEMFS4X8RFR
	350	312155-0368	-		4	SCREW MF6S6X16RFR
	355	312155-0449	-		2	SCREW MF6S8X16RFR
	360	312318-0360	-		2	GRUB SCREW SK6SS6X6RFR
	370	312605-0322	-		2	NUT M6M12RFR
	380	315105-0124	-		4	WASHER BRB3,2X6RFR
	390	315105-0136	-		6	WASHER BRB4,3X8RFR
	400	315105-0165	-		2	WASHER BRB8,4X16RFR
	410	315105-0178	-		4	WASHER BRB13X24RFR
	420	315742-0111	-		2	RETAINING 15SMS199RFR
	430	321308-0202	S		2	BALL BEARISKF6002-2RS

From	Pos	Part No	SP	UN	Qty	Description

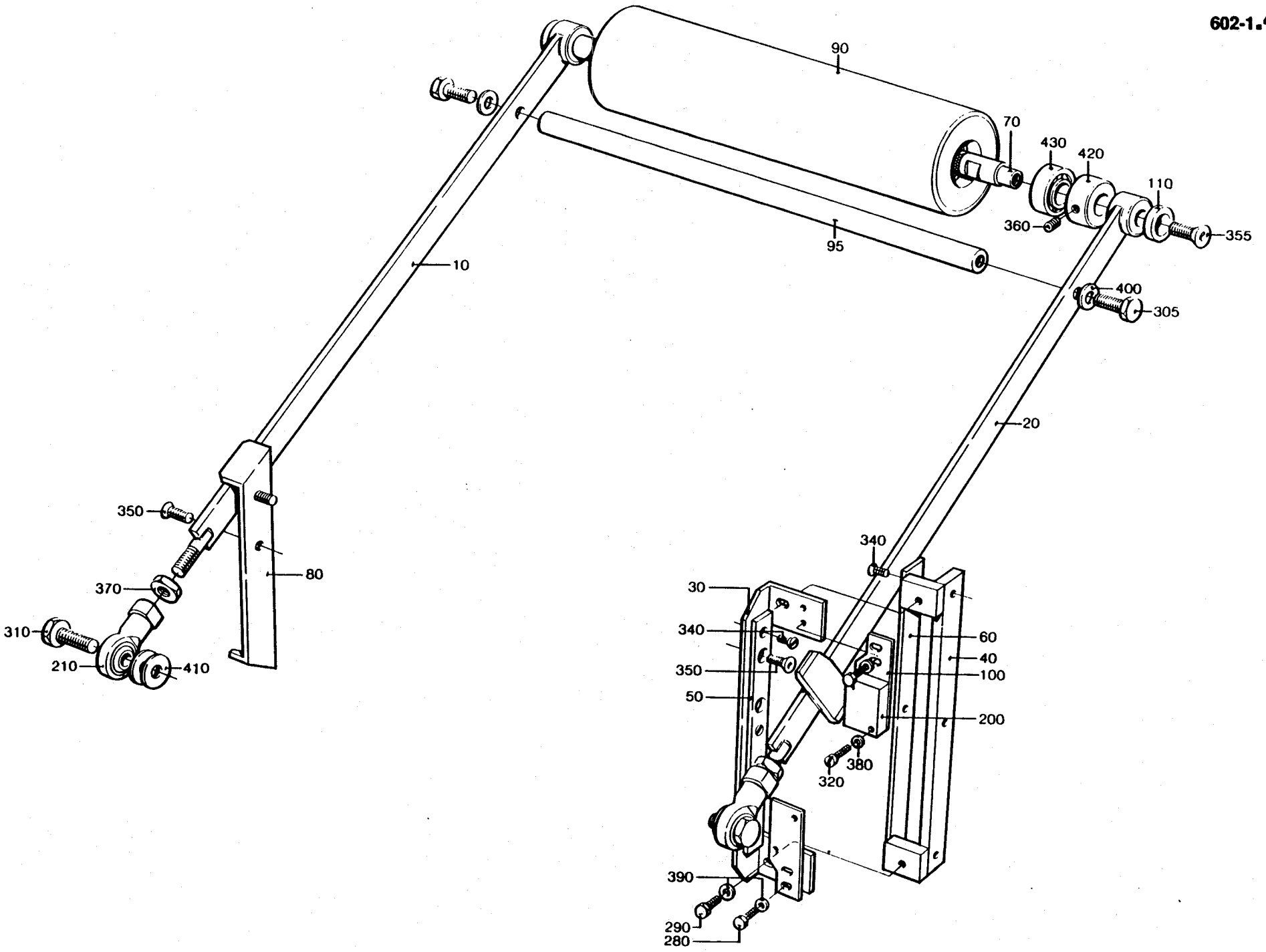
90
70
430
420
110
360
355
95
10
400
305
20
350
80
370
310
210
410
340
30
340
60
40
350
100
50
200
380
320
390
290
280

From	Pos	Part No	SP	UN	Qty	Description
	010	752552	C		2	PENDULUM ARM
	020	751979	C		1	RAIL
	030	272087	-		1	HOLDER
	040	272089	S		1	SLIDE RAIL
	050	272476	S		1	SHAFT
	060	752553	C		1	HOLDER
	070	456544	S		1	BENDING ROLLER
	080	751981	C		1	SLIDE
	090	751984	C		1	STRUT
	110	751980	-		2	HOLDER
	120	751982	-		1	LINK ARM
	200	90044-0104	P		2	PROXIMITY SWITCH
	210	90115-0133	S		2	JOINT
	215	311411-0151	-		2	SPLIT PIN SP2X14RFR
	300	312105-0329	-		2	SCREW M6S5X16 A4 80
	305	312105-0453	-		2	SCREW M6S8X25RFR
	310	312105-0536	-		2	SCREW M6S12X30RFR
	320	312125-0230	-		4	SLOTTED HEMCS3X20RFR
	330	312125-0287	-		5	SLOTTED HEMCS4X8RFR
	340	312145-0287	-		3	SLOTTED HEMFS4X8RFR
	350	312145-0293	-		1	SLOTTED HEMFS4X16RFR
	360	312155-0368	-		4	SCREW MF6S6X16RFR
	380	312318-0360	-		2	GRUB SCREW SK6SS6X6RFR
	390	312605-0322	-		2	NUT M6M12RFR
	405	312621-0318	-		2	NUT ML6M8FZB
	410	312812-0318	-		2	LOCK NUT A4-M8RFR
	420	315105-0124	-		4	WASHER BRB3,2X6RFR
	430	315105-0136	-		7	WASHER BRB4,3X8RFR
	440	315105-0146	-		2	WASHER BRB5,3X10RFR
	445	315105-0153	-		2	WASHER BRB6,4X12RFR
	450	315105-0165	-		2	WASHER BRB8,4X16RFR
	460	315105-0178	-		4	WASHER BRB13X24RFR
	470	315742-0111	-		2	RETAINING 15SMS199RFR
	480	321308-0202	S		2	BALL BEARISKF6002-2RS
	490	352110-0099	-		1	CLIP TK 3-5

From	Pos	Part No	SP	UN	Qty	Description

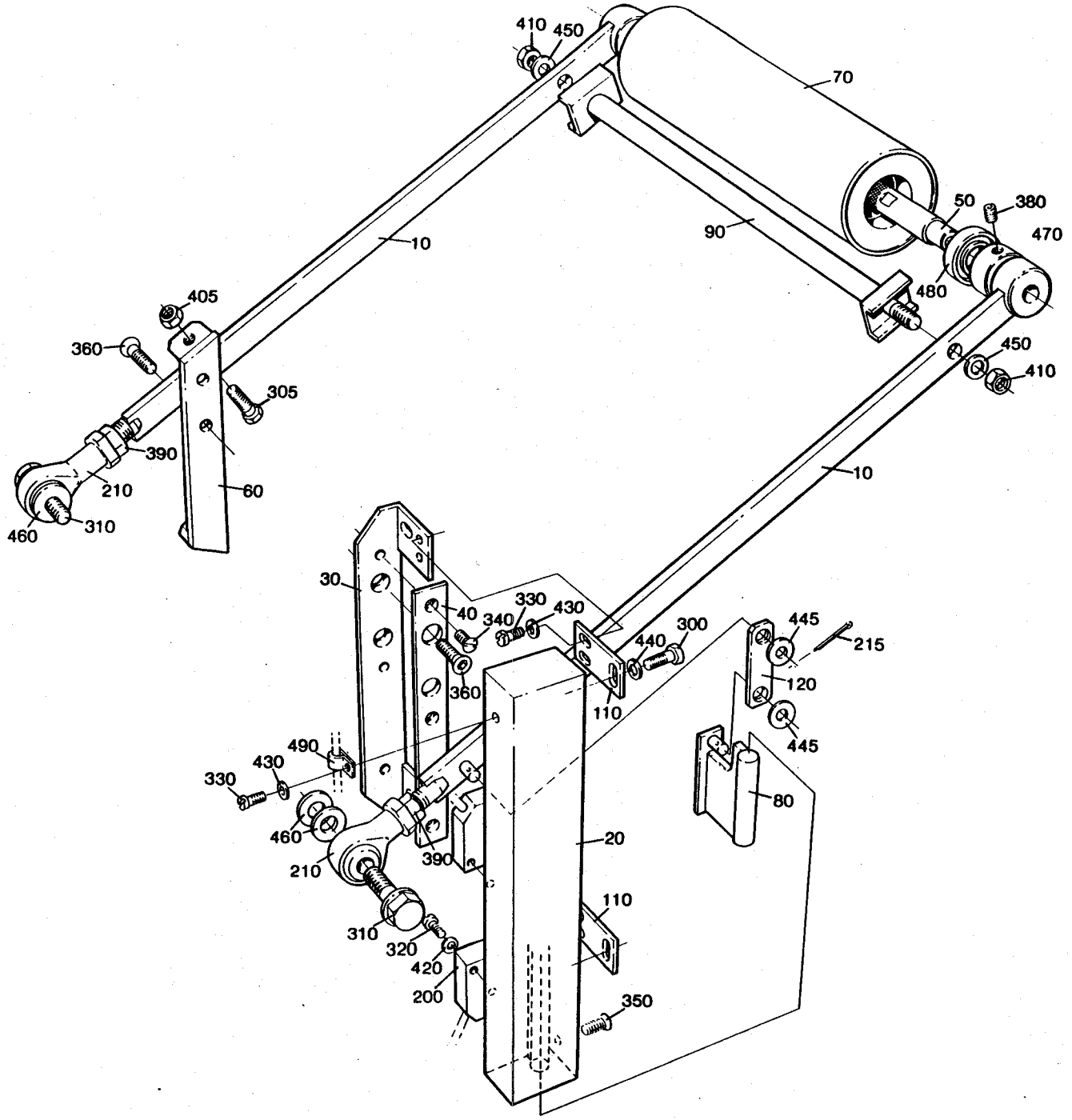
410
450
70
50
380
470
90
480
10
405
360
305
450
410
390
210
60
10
460
310
30
40
330
430
340
360
110
300
440
445
215
120
445
490
430
330
460
210
390
20
80
110
310
320
420
200
350

From	Pos	Part No	SP	UN	Qty	Description
	030	490759	-		1	CLAMP
	060	490760	-		1	GUIDING ARBOR
	070	295015	-		1	BRACKET
	080	295016	-		1	BRACKET
	110	272236	S		2	SPACER SLEEVE
	300	90115-0068	S		2	JOINT
	500	312105-0368	-		4	SCREW M6S6X16RFR
	510	312105-0372	-		2	SCREW M6S6X25RFR
	520	312105-0378	-		2	SCREW M6S6X40RFR
	530	312605-0316	-		4	NUT M6M6RFR
	560	315105-0153	-		8	WASHER BRB6,4X12RFR

From	Pos	Part No	SP	UN	Qty	Description

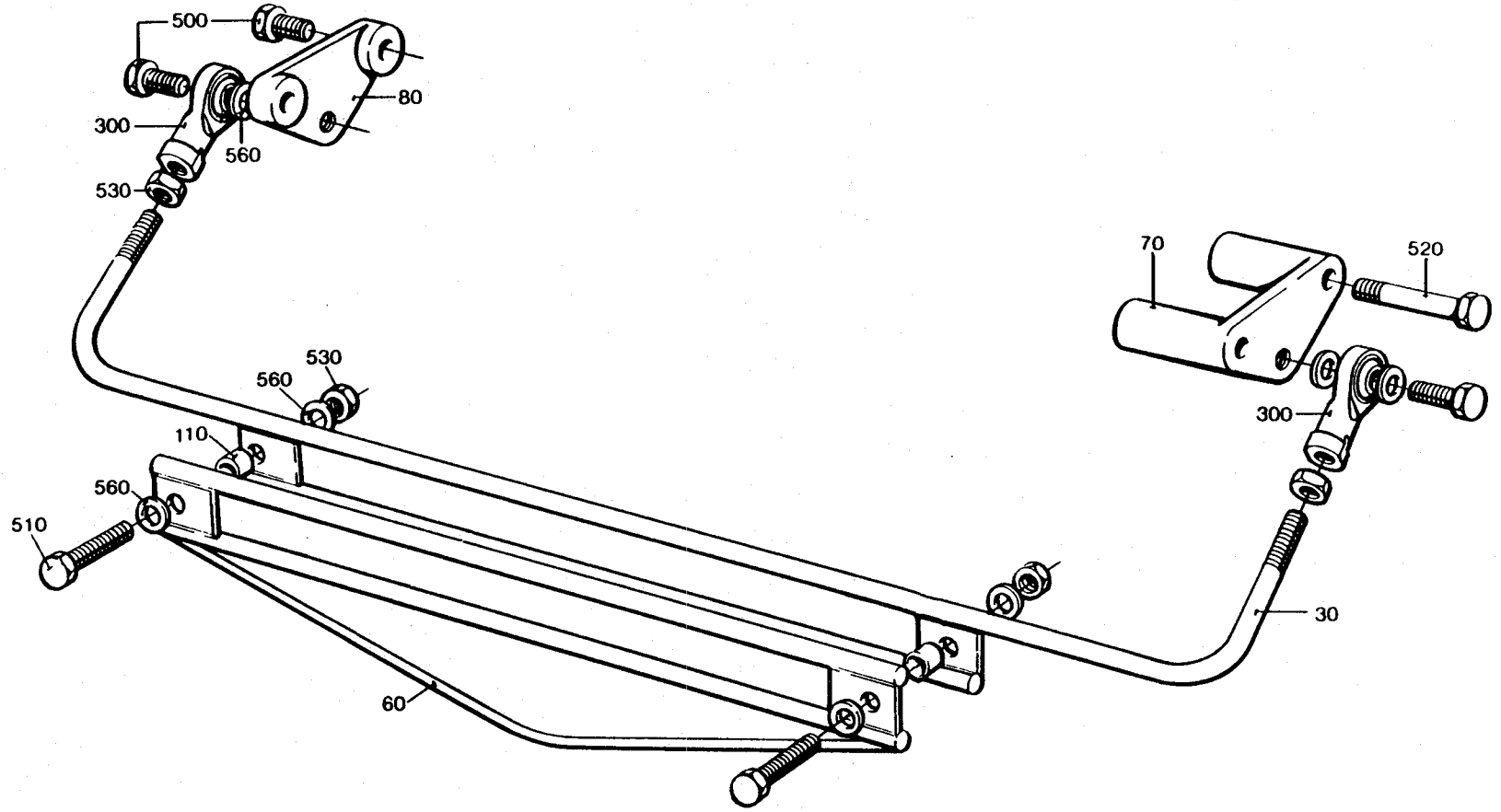
500
80
300
560
530
70
520
530
560
110
300
560
510
30
60

From	Pos	Part No	SP	UN	Qty	Description
Volume 180-250 ml						
		C- 751968-0101				PAPER GUIDE
	010	752178	-		1	CLAMP
	020	752180	-		1	GUIDING ARBOR
	030	752183	-		1	SPRING HOLDER
	050	752084	-		2	SPRING
Volume 200 ml SLIM						
		C- 751968-0102				PAPER GUIDE
	010	752179	-		1	CLAMP
	020	752181	-		1	GUIDING ARBOR
	030	752184	-		1	SPRING HOLDER
	050	752085	-		2	SPRING
Volume 125 ml						
		C- 751968-0103				PAPER GUIDE
	010	752179	-		1	CLAMP
	020	752182	-		1	GUIDING ARBOR
	030	752184	-		1	SPRING HOLDER
	050	752085	-		2	SPRING
Common Parts						
	040	751972	-		2	SPRING HOLDER
	070	295015	-		1	BRACKET
	080	295016	-		1	BRACKET
	100	90115-0068	-		2	JOINT
	150	312105-0368	-		4	SCREW M6S6X16RFR
	160	312105-0378	-		2	SCREW M6S6X40RFR
	200	312605-0316	-		2	NUT M6M6RFR
	210	312812-0314	-		3	LOCK NUT A4-M5RFR
	220	315105-0146	-		3	WASHER BRB5,3X10RFR
	230	315105-0153	-		10	WASHER BRB6,4X12RFR

From	Pos	Part No	SP	UN	Qty	Description

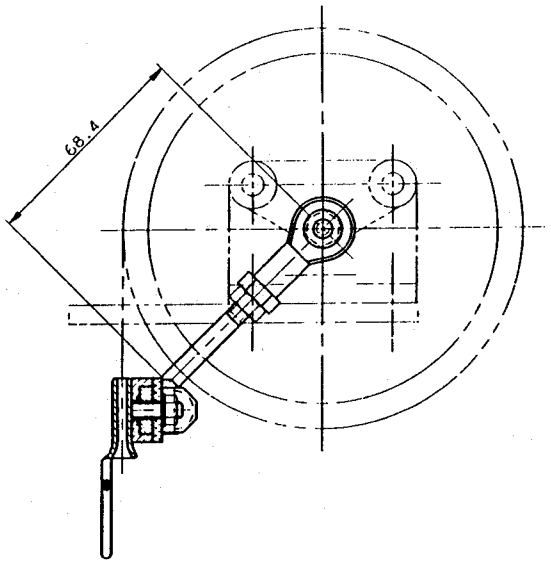

SNITT A-A
SECTION A-A

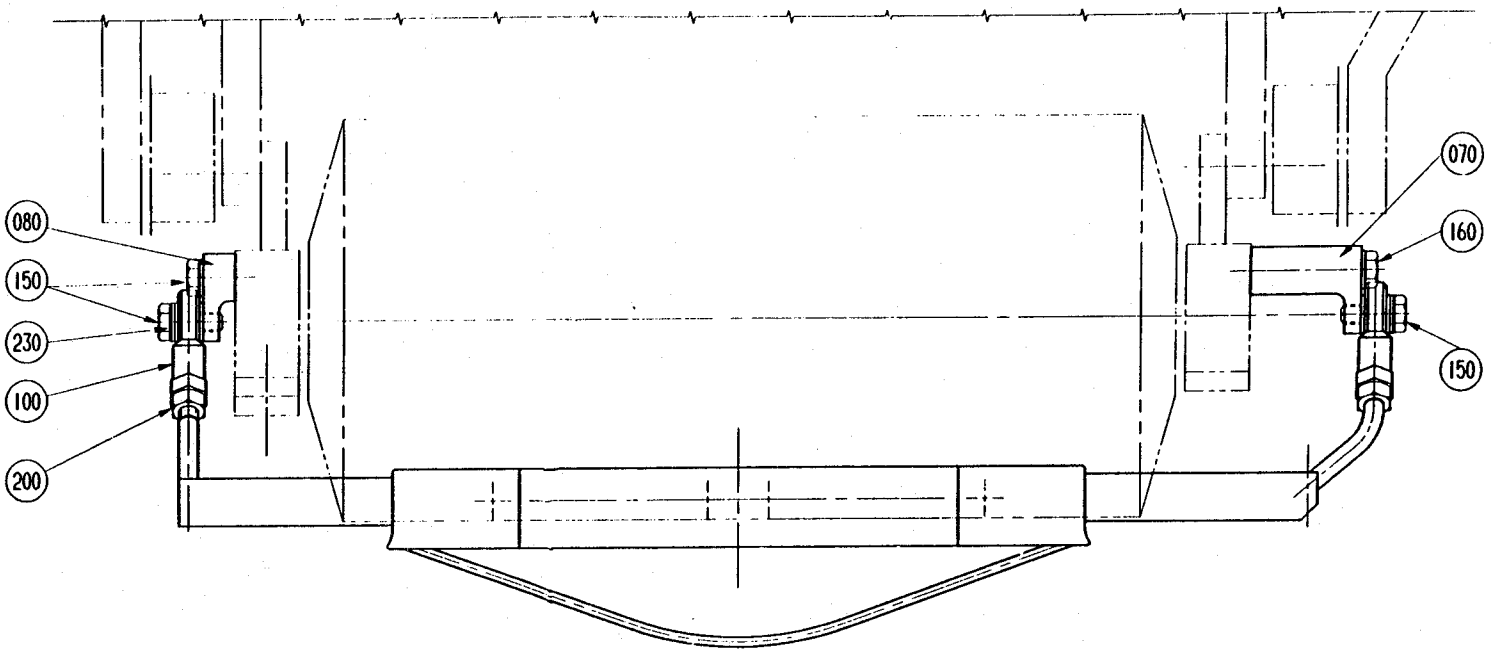

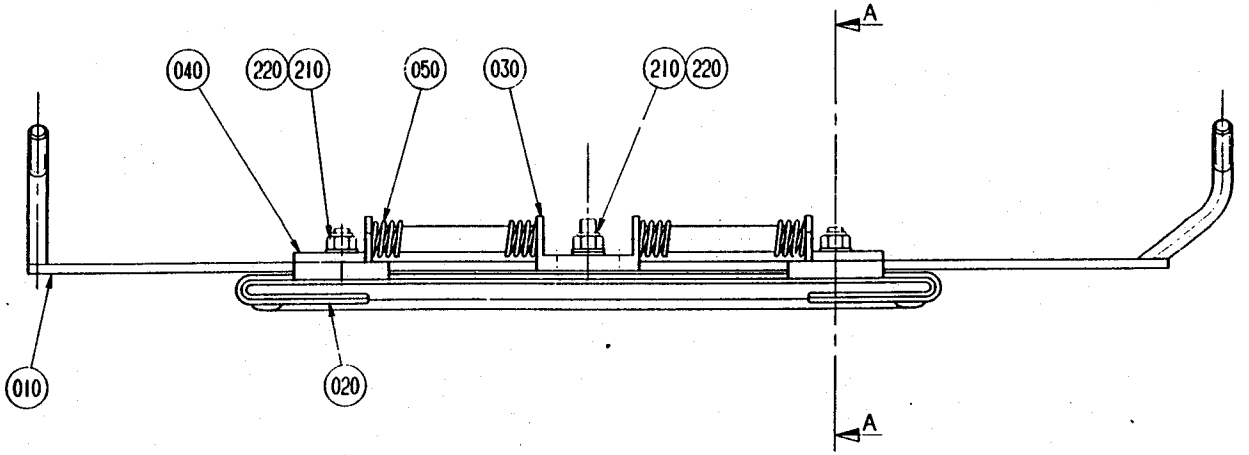

From	Pos	Part No	SP	UN	Qty	Description
	010	272474	S		1	SHAFT
	020	456544	S		1	BENDING ROLLER
	030	272475	-		2	CLAMP
	100	312155-0366	-		4	SCREW MF6S6X12RFR
	110	312318-0360	-		4	GRUB SCREW SK6SS6X6RFR
	120	315742-0111	-		2	RETAINING 15SMS199RFR
	130	321308-0202	S		2	BALL BEARISKF6002-2RS

From	Pos	Part No	SP	UN	Qty	Description

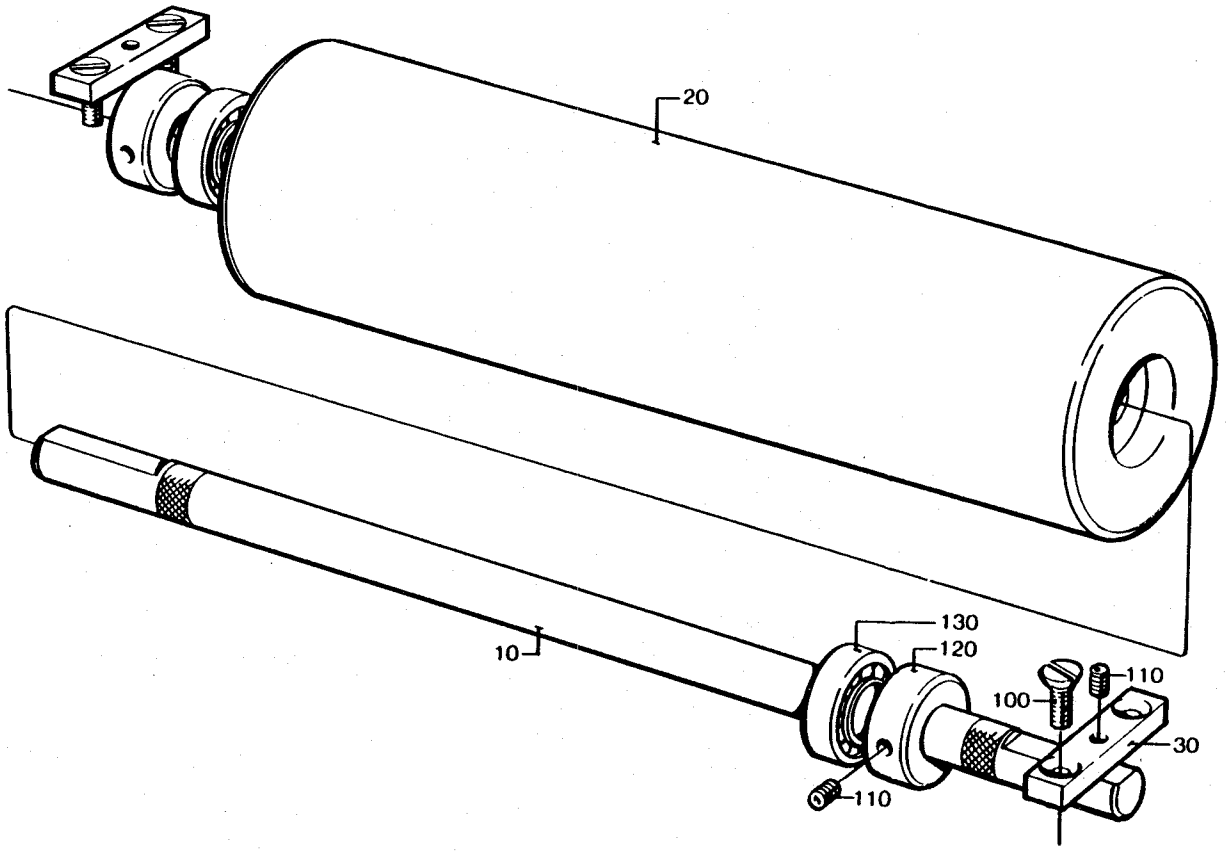
20
10
130
120
110
100
30
110

From	Pos	Part No	SP	UN	Qty	Description
	010	272789	-		1	SIDE PIECE
	020	272790	-		1	SIDE PIECE
	030	272791	C		3	SPACER PIPE
	300	312115-0540	-		6	SCREW 12X40 A4 80

From	Pos	Part No	SP	UN	Qty	Description

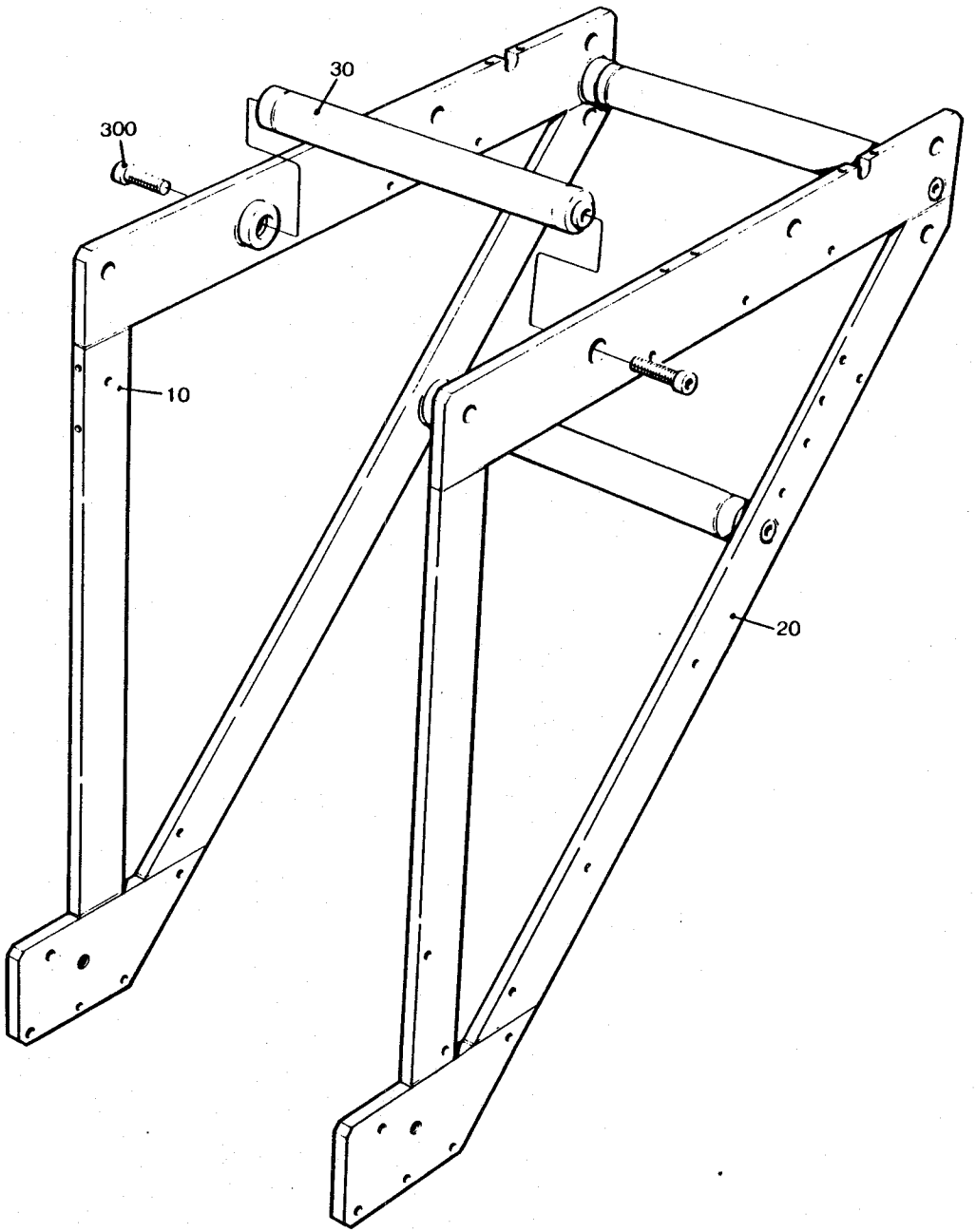
30
300
10
20

From	Pos	Part No	SP	UN	Qty	Description
	010	751321	-		1	CONNECTION BOX
	100	90194-0016	-		1	SIGN
	200	312125-0295	-		2	SLOTTED HEMCS4X20RFR
	210	352103-0101	-		4	CABLE GLANR.15,2/4-8
	220	352103-0106	-		1	CABLE GLANR.18,6/5-10

From	Pos	Part No	SP	UN	Qty	Description

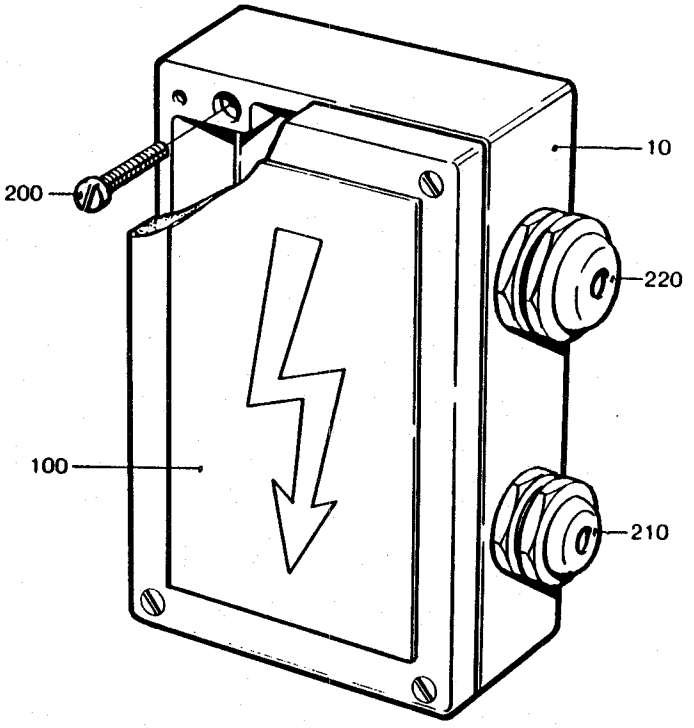
200
10
220
100
210

From	Pos	Part No	SP	UN	Qty	Description
Jumbo Reels						
Volume 180 - 250 ml						
	020	272815-0001	S		1	SLEEVE
	050	272816-0001	S		1	SHAFT
Volume 125 ml						
	020	272815-0002	S		1	SLEEVE
	050	272816-0002	S		1	SHAFT
Volume 200 ml SLIM						
	020	272815-0003	S		1	SLEEVE
	050	272816-0003	S		1	SHAFT
Common Parts						
	010	272814	S		1	SLEEVE
	030	272811	S		1	PLUNGER RIGHT
	040	272812	S		1	PLUNGER LEFT
	070	272728	S		1	CATCH
090V-	080	752001	S		1	GUIDE RING
	300	90335-0025	S		3	SPRING
	500	311103-0274	S		2	CYLINDRICACPR4M6X25RFR
	510	312101-0381	-		2	SCREW M6S6X55FZB
	520	312812-0316	-		2	LOCK NUT A4-M6RFR
	530	315101-0153	-		2	WASHER BRB6,4X12FZB

From	Pos	Part No	SP	UN	Qty	Description
Normal Reels						
Volume 180 - 250 ml						
	020	272810-0001	S		1	SLEEVE
	050	272816-0001	S		1	SHAFT
Volume 125 ml						
	020	272810-0002	S		1	SLEEVE
	050	272816-0002	S		1	SHAFT
Volume 200 ml SLIM						
	020	272810-0003	S		1	SLEEVE
	050	272816-0003	S		1	SHAFT
Common Parts						
	010	271239	S		1	SLEEVE
	040	272813	S		2	PLUNGER
	060	271241	S		2	SCREW
	300	90335-0025	S		2	SPRING
	510	312101-0381	-		2	SCREW M6S6X55FZB
	520	312812-0316	-		2	LOCK NUT A4-M6RFR
	530	315101-0153	-		2	WASHER BRB6,4X12FZB

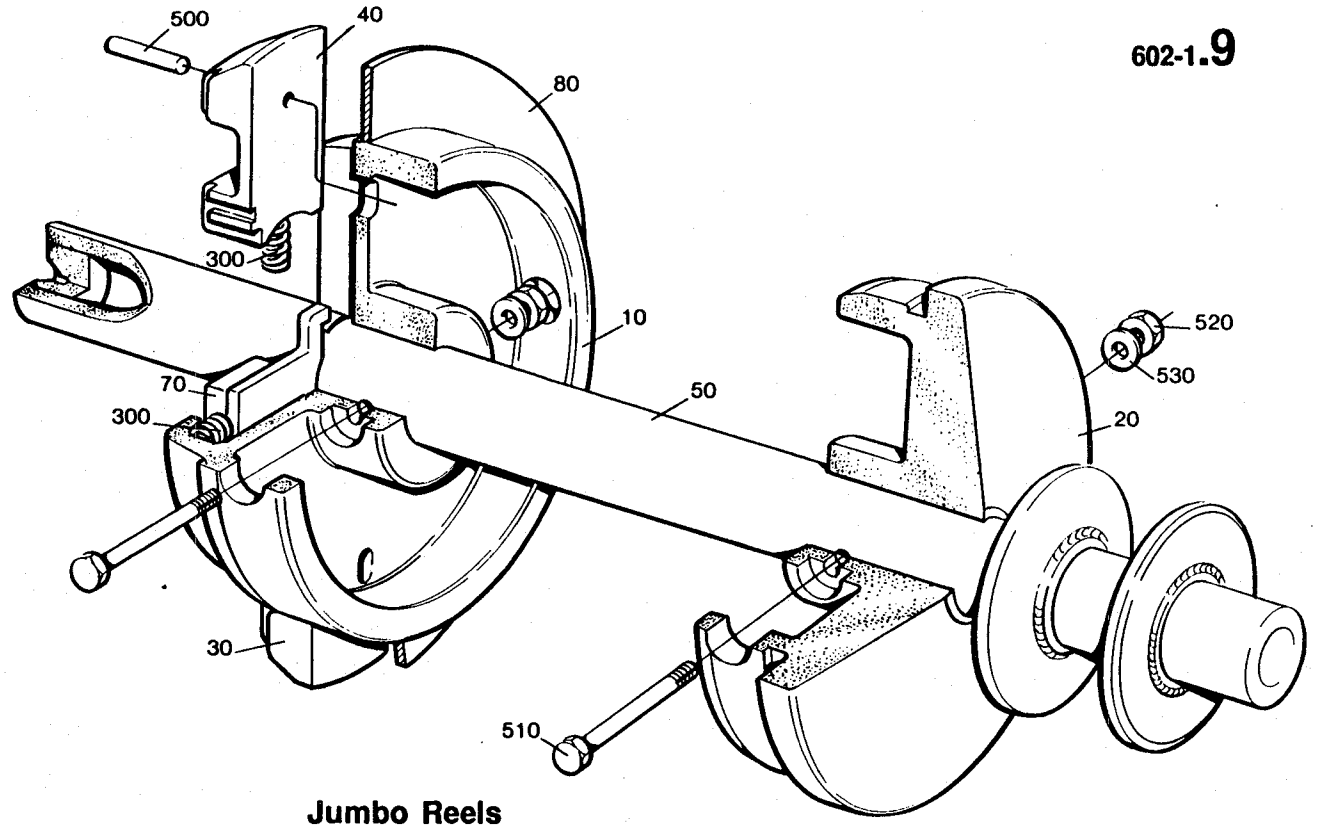

Jumbo Reels

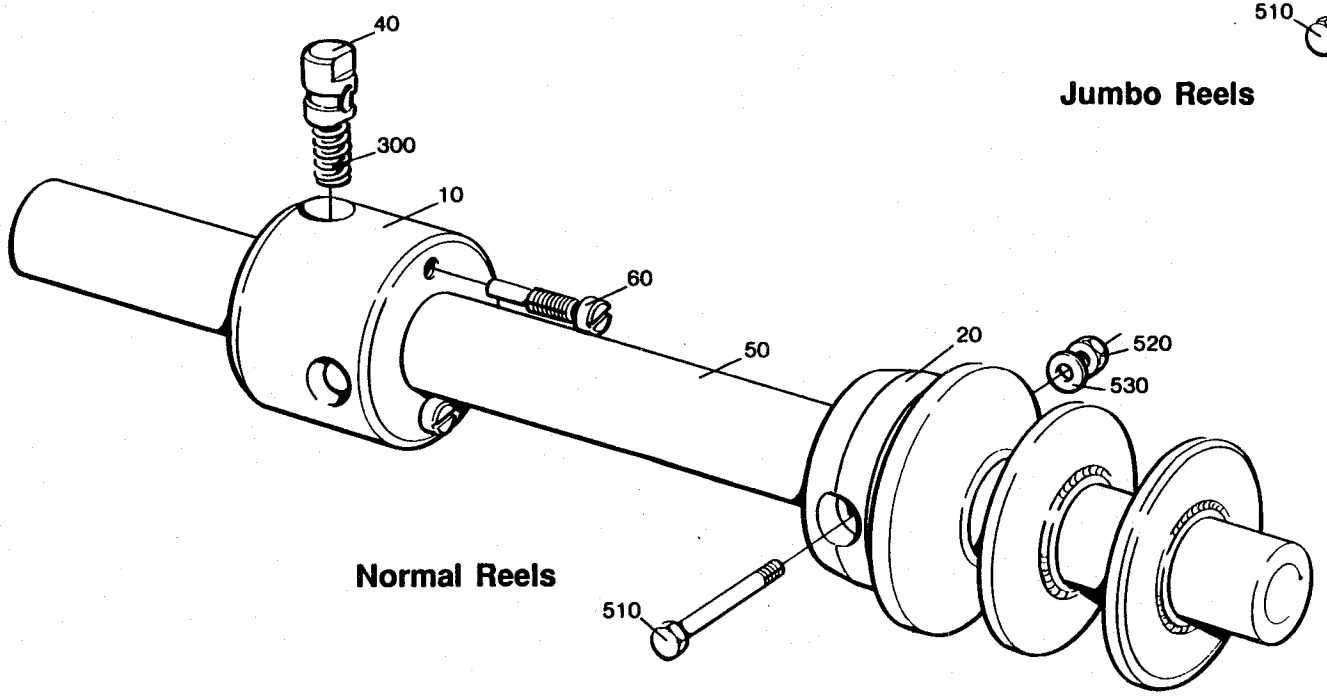

Normal Reels

From	Pos	Part No	SP	UN	Qty	Description
	020	751322	-		1	BRACKET
	030	751323	P		1	BRAKE SHOE
	040	751324	-		1	HOLDER
	050	751325	-		1	BRACKET
	060	751326	-		1	BRACKET
	100	90042-0109	-		1	SOLENOID VALVE
-080V	110	90042-0326	S		1	COIL
090V-	110	90042-0345	S		1	COIL
	120	90042-0366	-		1	CONTACT
	130	90042-0438	-		1	CONNECTION RAMP
	140	90166-0132	-	M	1	HOSE
	150	90239-0983	-		1	CYLINDER
	160	90328-0020	-		1	SILENCER
	200	312105-0325	-		4	SCREW M6S5X10 A4 80
	210	312105-0374	-		2	SCREW M6S6X30RFR
	220	312111-0340	-		2	SCREW MC6S5X45FZB
	230	312122-0287	-		2	SLOTTED HEMCS4X8MSGFN
	240	312125-0285	-		1	SLOTTED HEMCS4X6RFR
	250	312605-0314	-		1	NUT M6M5RFR
	260	315105-0146	-		4	WASHER BRB5,3X10RFR
	270	315105-0153	-		2	WASHER BRB6,4X12RFR
	280	315233-0109	P		1	SEAL RING R1/8"
	300	342903-0111	-		1	NUT J#DER 1723-6/4
	310	342921-0113	-		1	PIPE CONNE6/4-1/8"
	320	342980-0111	-		1	BANJO CONNSINGEL 6/4-5M
	330	342980-0113	-		1	BANJO CONNSINGEL 6/4-1/8
	340	342980-0301	-		1	BANJO CONN SINGEL 5M
		315233-0101	P		0	* SEAL RINM5
	350	342980-0303	-		1	BANJO CONN SINGEL 1/8"
	410	352110-0100	-		1	CLIP TK 5-7

From	Pos	Part No	SP	UN	Qty	Description

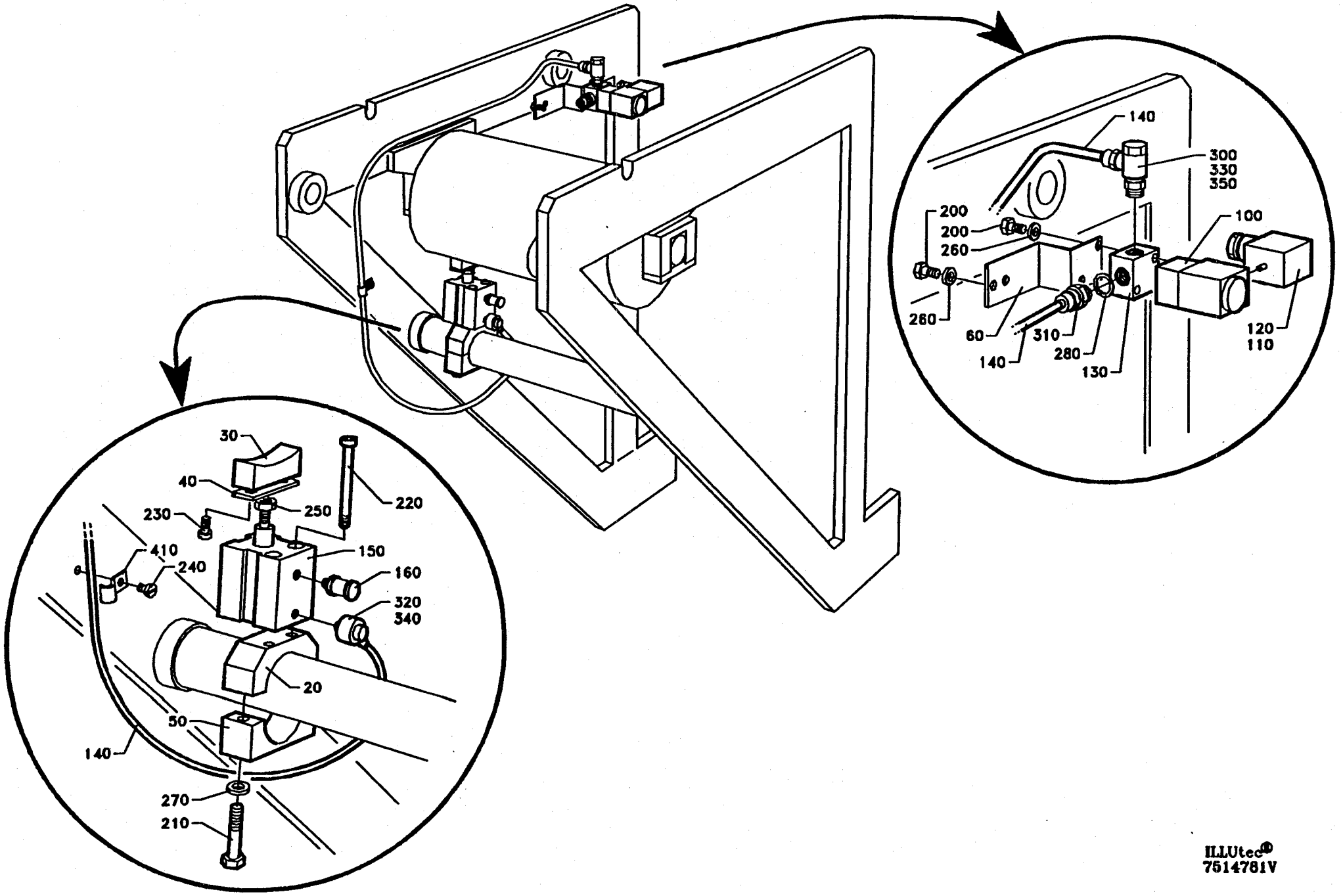

ILLUtec®
7514781V

From	Pos	Part No	SP	UN	Qty	Description
	F010	==>603-1.1	-		1	HEATING BLOCK
	F020	==>603-1.2	-		1	COUNTER RAIL
	F030	==>603-1.5	-		1	TEARING DEVICE
	F040	==>603-1.3	-		1	SUSPENSION ARM
	F050	==>603-1.4	-		1	TABLE

From	Pos	Part No	SP	UN	Qty	Description

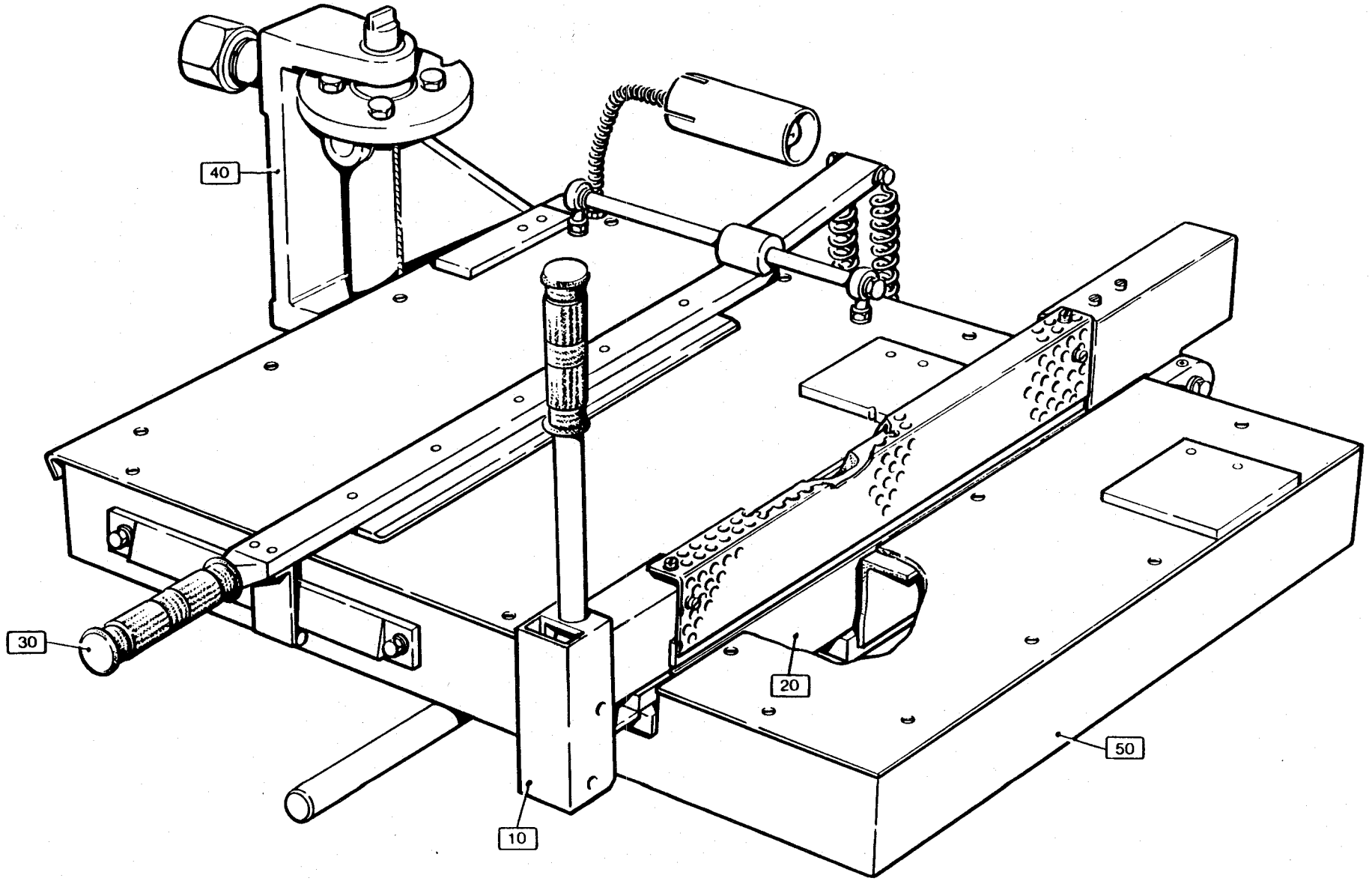
40
30
20
50
10

From	Pos	Part No	SP	UN	Qty	Description
	010	255301	-		1	HEATING RAIL
	015	37879	-		1	LOCKING ARM
	020	37880	-		1	HINGE
	025	243132	-		1	PROTECTION PLATE
	030	31017	S		1	KNIFE
	035	31723	P		1	TEFLON STRIP
	040	31724	-		1	LOCK BAR
	045	37882	-		1	PROTECTION PLATE
	050	37883	-		1	LOCK BAR
	055	37884	S		1	SHAFT
	060	37885	S		2	TENSION SPRING
	065	37886	S		1	INSULATING DISK
	070	37888	S		1	ROLLER
	075	37889	S		2	SHAFT
	080	37890	S		4	FLANGE ROLLER
	085	37892	-		1	CONNECTION BOX
	090	37893	-		1	LID
	095	208173	S		1	SHAFT
	100	229775	-		6	SPACER
	105	243133	-		1	PLATE
	110	245221	-		1	STOP
	120	90017-0001	S		1	HANDLE
	125	90059-0001	S		1	THERMOSTAT
	130	90099-0002	-		1	NUT
	135	90077-0102	-		1	TERMINAL BLOCK
	140	90206-0053	S		1	HEATING ELEMENT
	150	312101-0297	-		2	SCREW M6S4X25FZB
	155	312101-0304	-		2	SCREW M6S4X45FZB
	157	312101-0323	-		2	SCREW M6S5X8FZB
	160	312105-0364	-		4	SCREW M6S6X10RFR
	165	312105-0449	-		2	SCREW M6S8X16RFR
	170	312115-0380	-		4	SCREW 6X50 A4 80
	175	312125-0230	-		2	SLOTTED HEMCS3X20RFR
	180	312125-0287	-		19	SLOTTED HEMCS4X8RFR
	190	312316-0287	S		2	GRUB SCREW SK6SS4X8FZB
	195	312605-0310	-		2	NUT M6M3RFR
	200	315105-0136	-		5	WASHER BRB4,3X8RFR
	205	315105-0153	-		8	WASHER BRB6,4X12RFR
	210	321101-0173	S		2	BUSHING 12F7X12
	213	351127-0144	-	MM	1800	CABLE N-F 3G1,5
	215	352103-0106	-		1	CABLE GLANR.18,6/5-10

From	Pos	Part No	SP	UN	Qty	Description

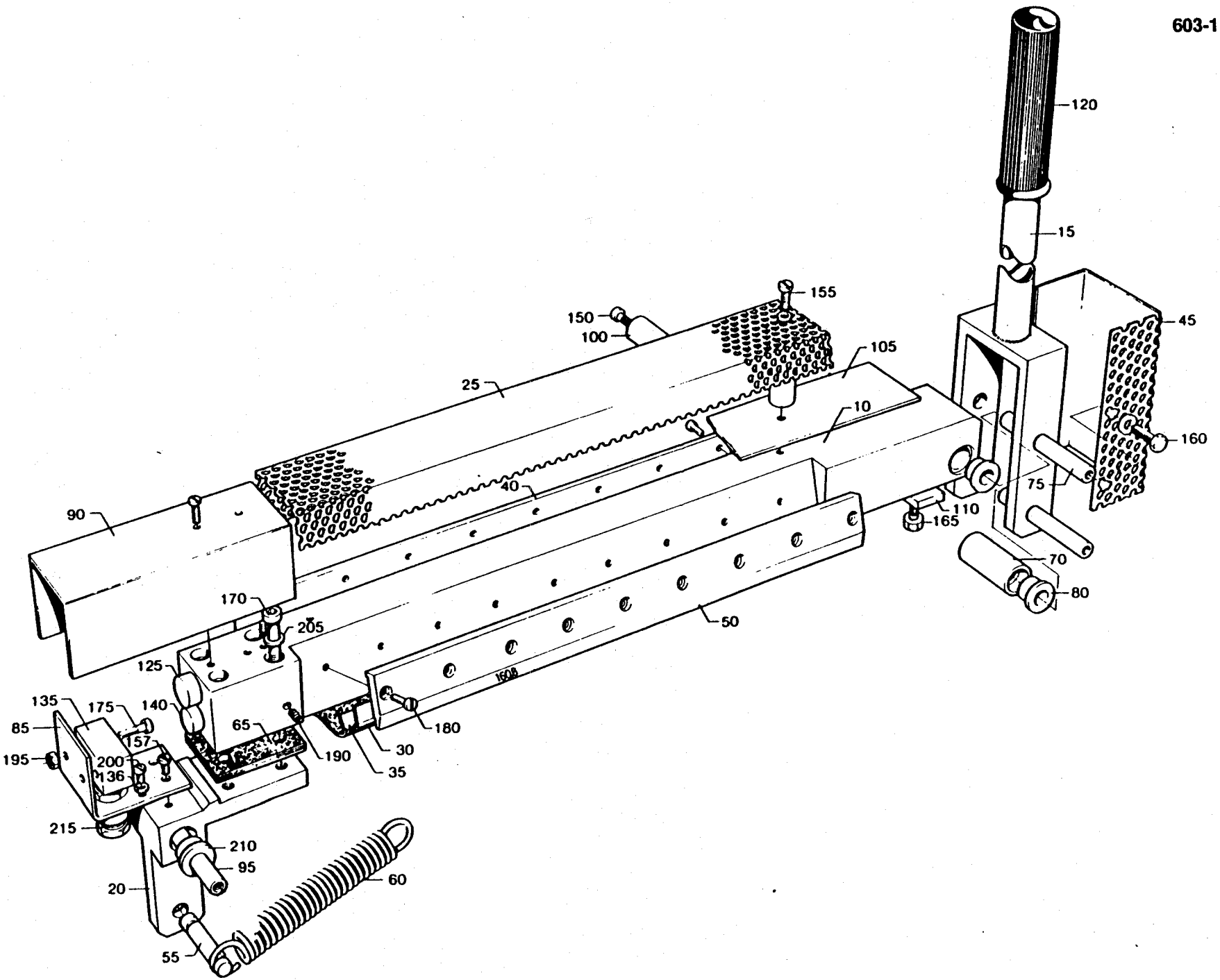
120
15
155
150
100
105
45
25
10
160
40
75
90
110
165
70
80
170
205
50
125
135
175
140
65
180
85
157
30
195
200
136
190
35
215
210
95
20
60
55

From	Pos	Part No	SP	UN	Qty	Description	
	105	37895	-		1	RAIL	
	108	37896	-		1	PIN	
	109	37897	-		1	WASHER	
	112	90144-0030	P	MM	360	TAPE	
	115	312601-0324	-		1	NUT	M6M16FZB

From	Pos	Part No	SP	UN	Qty	Description

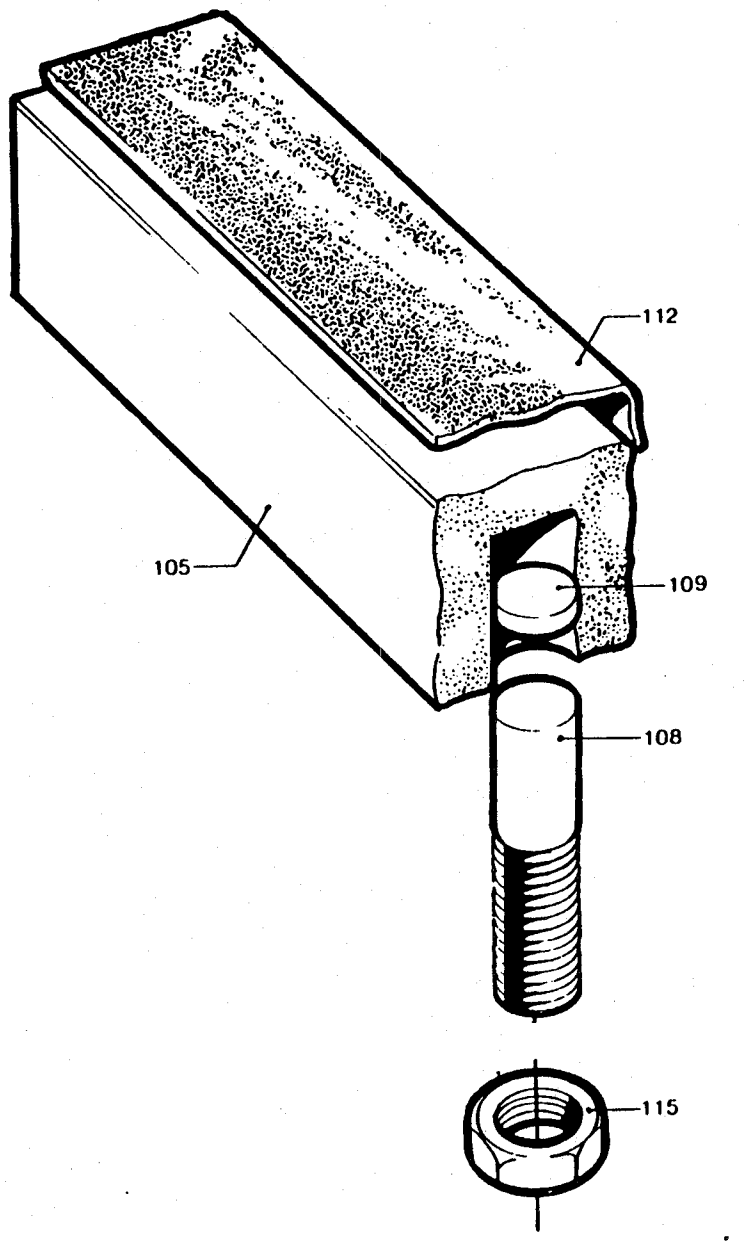
112
105
109
108
115

From	Pos	Part No	SP	UN	Qty	Description
	010	469076	-		1	ARM
	020	272864	-		1	BRACKET
	030	272865	-		1	SHAFT
	040	272866	S		1	LOCKING FLANGE
	045	458380	-		1	CLAMP
	050	271632	S		1	COVER
	060	272862	C		1	HOLDER
	070	272867	S		1	SPRING HOUSING
	080	272868	S		1	STOPPER
	090	272869-0001	S		1	FLAP
	090	272869-0002	S		1	FLAP
	300	37927	S		1	COMPRESSION SPRING
	490	312105-0364	-		2	SCREW M6S6X10RFR
	500	312105-0451	-		8	SCREW M6S8X20RFR
	510	312105-0459	-		1	SCREW M6S8X40RFR
	515	312125-0291	-		6	SLOTTED HEMCS4X12RFR
	520	312115-0491	-		4	SCREW 10X20 A4 80
	530	312115-0495	-		1	SCREW 10X30 A4 80
	535	315105-0136	-		6	WASHER BRB4,3X8RFR
	540	315105-0165	-		5	WASHER BRB8,4X16RFR
	560	321101-0233	S		2	BUSHING 20F7X20
	570	321111-0134	S		1	BUSHING 10E7X8
	580	321116-0151	-		1	BUSHING 12E7/16X12
	590	352110-0100	-		2	CLIP TK 5-7
	600	352110-0102	-		4	CLIP TK 10-14

From	Pos	Part No	SP	UN	Qty	Description

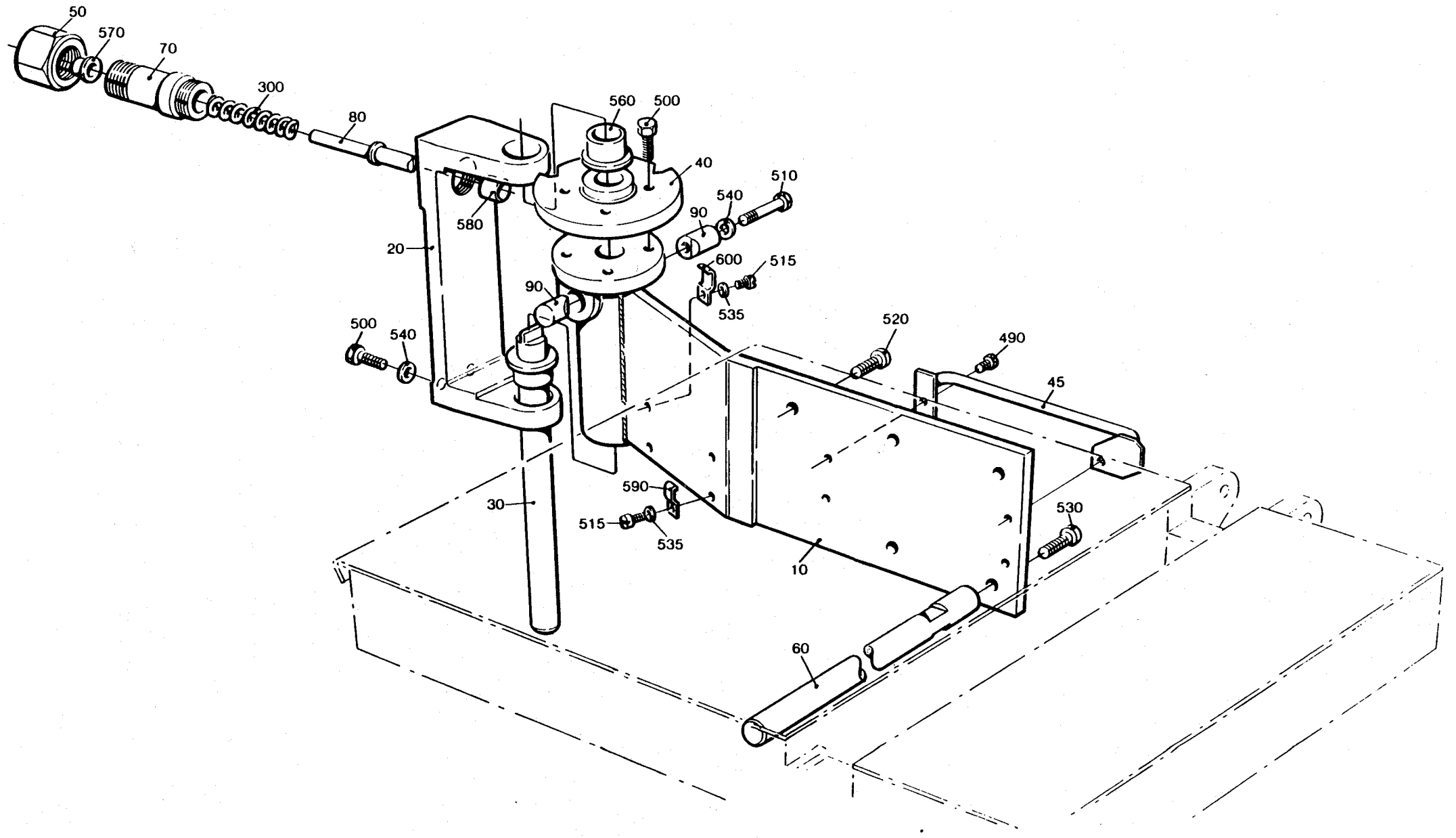
50
570
70
300
80
560
500
40
510
540
90
580
20
600
515
90
535
500
540
520
490
45
590
30
515
535
530
10
60

From	Pos	Part No	SP	UN	Qty	Description
Volume 180 - 250 ml						
	010	37913	-		1	RULER
	020	450278	-		1	RULER
	030	37917	-		1	RULER
Volume 125 ml						
	010	271642	-		1	RULER
	020	469084	-		1	RULER
	030	271644	-		1	RULER
Volume 200 ml SLIM						
	010	272886	-		1	RULER
	020	469085	-		1	RULER
	030	272888	-		1	RULER
Common Parts						
	060	458379	-		1	FRAME
	090	450098	-		1	PLATE
	100	450099	-		1	PLATE
	130	37774	-		1	PROTECTIVE COVER
	140	37775	-		1	LAMP HOLDER
	150	37908	-		1	PLATE
	170	37910	-		1	LOCK
	180	37911	S		1	SHIM
	190	37912	-		1	LOCK BOARD
	200	450100	S		1	SPRING
	300	90036-0009	P		1	BULB
	310	90037-0001	-		1	LAMPHOLDER
	320	90086-0001	-		1	NIPPLE
	330	90152-0001	-	MM	200	HOSE
	500	312105-0325	-		2	SCREW M6S5X10 A4 80
	510	312105-0362	-		6	SCREW M6S6X8RFR
	520	312105-0491	-		1	SCREW M6S10X20RFR
	530	312115-0323	-		2	SCREW 5X8 A4 80
	540	312145-0220	-		23	SLOTTED HEMFS3X6RFR
	550	312318-0362	-		2	GRUB SCREW SK6SS6X8RFR
	560	315105-0146	-		2	WASHER BRB5,3X10RFR
	570	352101-0102	-		1	LEAD-IN G 15,2
	580	352103-0105	-		1	CABLE GLANR.18,6/3-7

From	Pos	Part No	SP	UN	Qty	Description

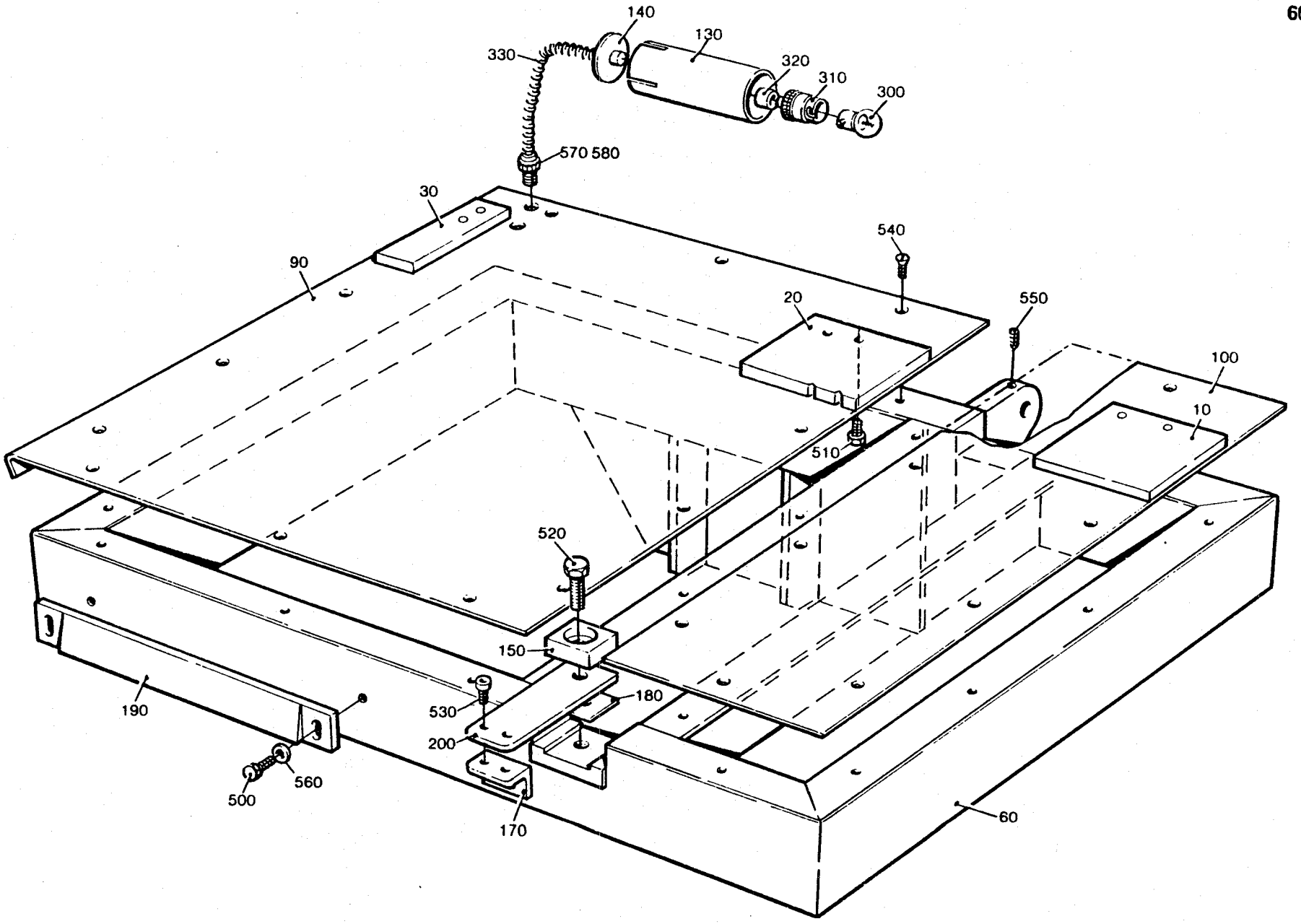
140
130
330
320
310
300
570 580
30
540
90
20
550
100
10
510
520
150
180
530
200
190
560
500
170
60

From	Pos	Part No	SP	UN	Qty	Description
	010	450102	-		1	PRESSURE ARM
	040	450103	-		1	KNIFE
	070	37901	-		1	SHAFT
	080	206913	-		1	LOCKING CLAMP
	130	90017-0001	-		1	HANDLE
	140	90115-0054	-		2	JOINT
	150	90335-0004	S		2	SPRING
	180	312101-0327	-		2	SCREW M6S5X12FZB
	190	312101-0329	-		2	SCREW M6S5X16FZB
	200	312105-0455	-		2	SCREW M6S8X30RFR
	210	312145-0291	-		5	SLOTTED HEMFS4X12RFR
	220	312316-0321	-		2	GRUB SCREW SK6SS5X6FZB
	260	312605-0318	-		4	NUT M6M8RFR
	290	315101-0146	-		2	WASHER BRB5,3X10FZB
	300	315105-0165	-		6	WASHER BRB8,4X16RFR

From	Pos	Part No	SP	UN	Qty	Description

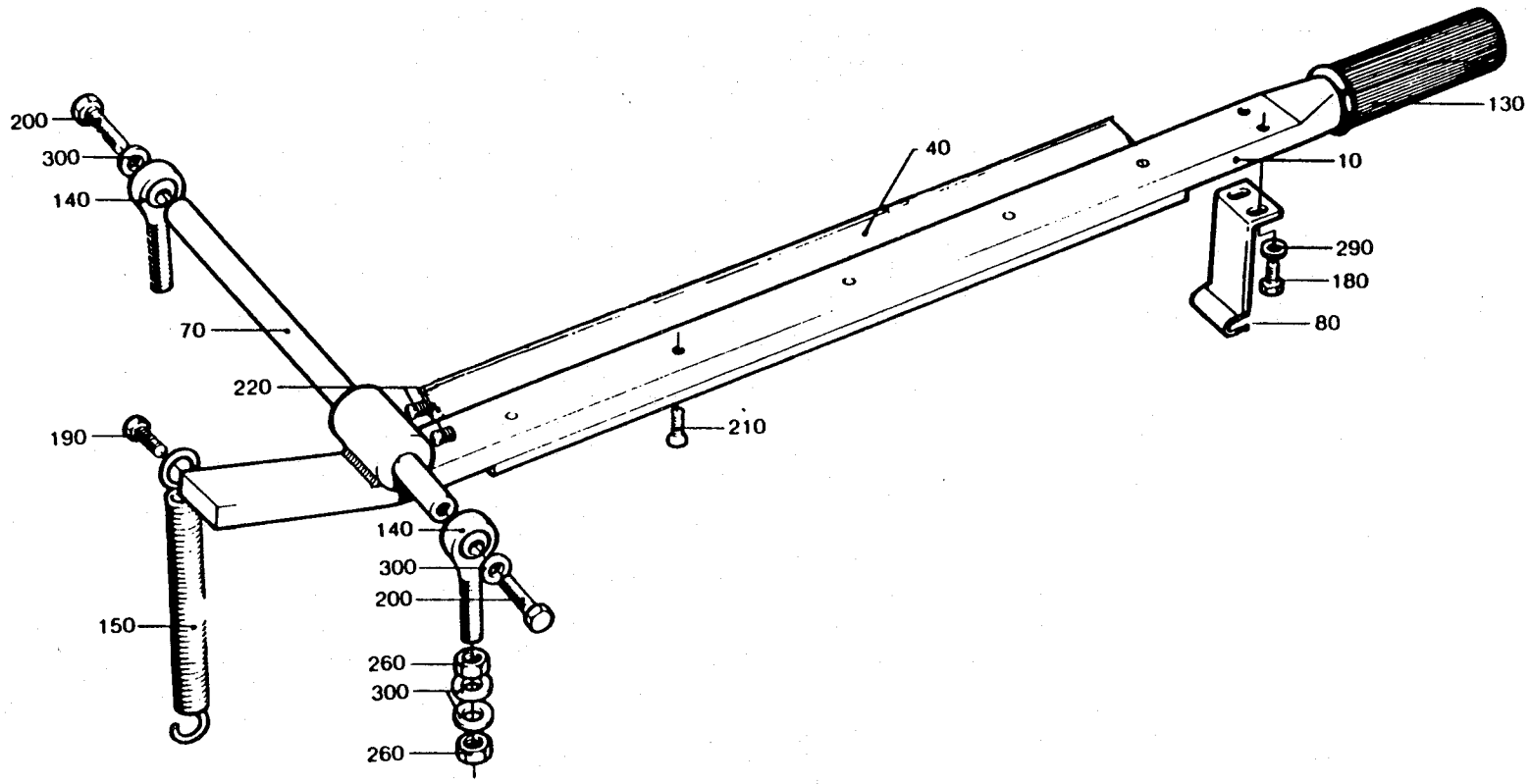
200
300
140
70
220
190
150
140
300
200
260
300
260
40
210
130
10
290
180
80

From	Pos	Part No	SP	UN	Qty	Description
	010	271380	-		1	LINK
	020	271381	-		1	STRUT
	030	271428	-		1	HOLDER
	040	271993	-		1	BEARING
	050	295408	-		1	ARM
	060	295409	-		1	SHAFT
	070	469141	-		1	HOLDER
	080	271995	-		1	SLEEVE
	090	295661	-		1	SHAFT
	300	90347-0005	S		1	VIBRATION DAMPER
	400	311103-0267	S		1	CYLINDRICACPR4M6X10RFR
	500	312105-0451	-		2	SCREW M6S8X20RFR
	510	312105-0455	-		2	SCREW M6S8X30RFR
	520	312105-0459	-		1	SCREW M6S8X40RFR
	530	312125-0291	-		1	SLOTTED HEMCS4X12RFR
	540	312318-0362	-		3	GRUB SCREW SK6SS6X8RFR
	560	315105-0165	-		5	WASHER BRB8,4X16RFR
	590	315742-0112	-		3	RETAINING 16SMS199RFR
	620	321101-0202	S		4	BUSHING 16F7X12
	630	321101-0233	S		1	BUSHING 20F7X20
	650	321129-0117	S		2	WASHER 16/30X1,5

From	Pos	Part No	SP	UN	Qty	Description

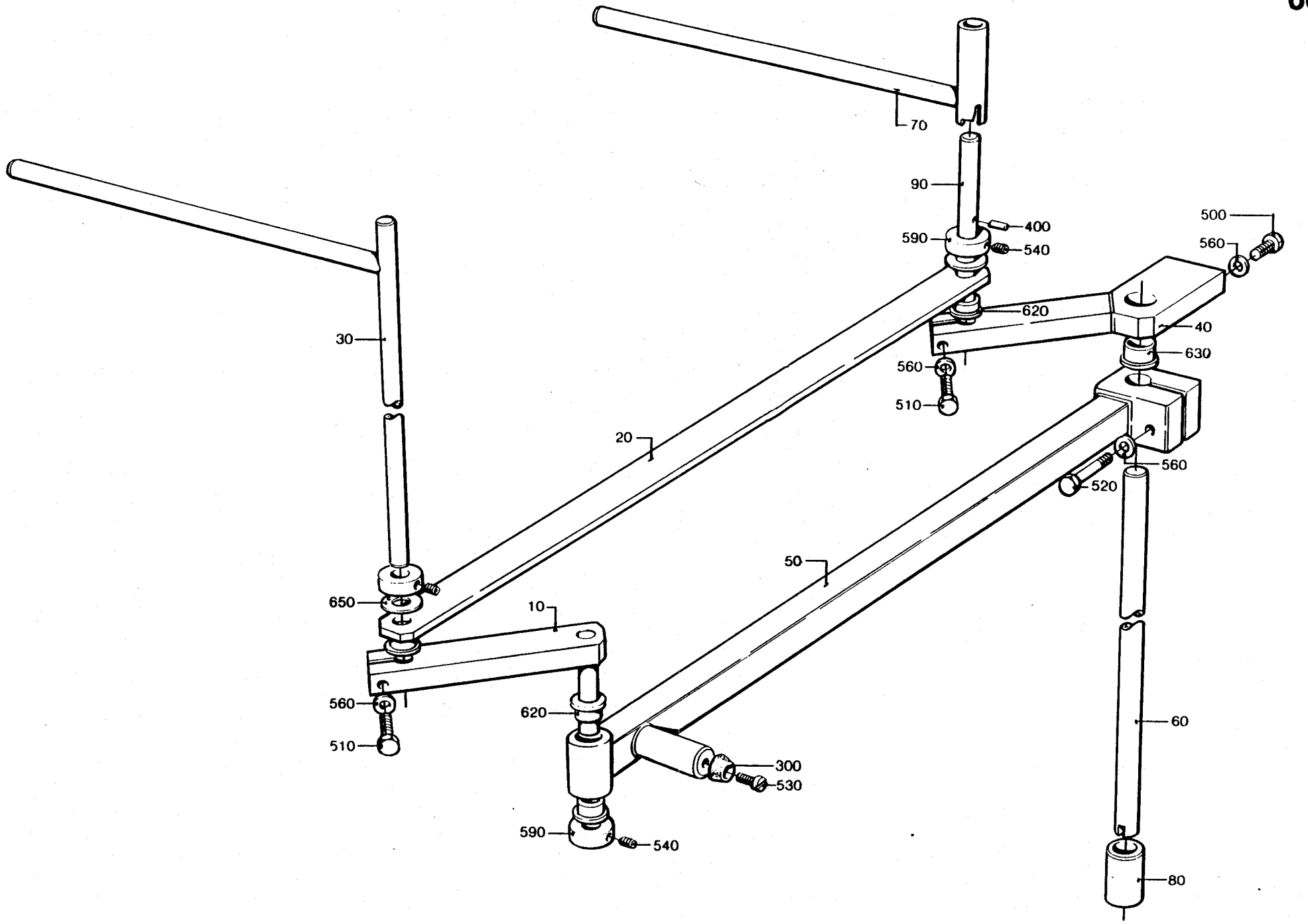
70
90
590
400
540
500
560
620
40
630
30
560
510
20
560
520
650
10
50
560
620
510
60
300
530
590
540
80

From	Pos	Part No	SP	UN	Qty	Description
	010	490768	-		1	BOX
	020	490769	-		1	BRACKET
	030	295384	-		1	SUCTION PIPE
	040	295387	-		1	LABEL
	050	35962	S		1	LID
	060	295390	S		1	SIGN
	300	90050-0011	S		1	BOTTLE
	310	90099-0003	-		1	NUT
	315	90195-0020	-		1	CONNECTION PIECE
	320	90224-0094	-		1	NIPPLE
	330	90157-0021	-	G	X	LOCKING FLUID
	340	90166-0008	-	MM2000		HOSE
	350	90321-0037	-		1	UMP
		90166-0157	S	MM1500		* HOSE
		90321-0380	S		0	* DIAPHRAGM
		90321-0396	S		0	* FILTER
	500	311520-0329	-		2	BLANK RIVE2,4X7,4
	510	312105-0366	-		2	SCREW M6S6X12RFR
	520	312105-0370	-		2	SCREW M6S6X20RFR
	530	312125-0285	-		1	SLOTTED HEMCS4X6RFR
	540	312605-0316	-		2	NUT M6M6RFR
	550	315105-0153	-		4	WASHER BRB6,4X12RFR
	560	315202-0109	-		1	O-RING 11,1X1,6
	570	352101-0105	-		1	LEAD-IN G 22,5
	580	352103-0110	-		1	CABLE GLANR.22,5/4-13
	590	352110-0102	-		1	CLIP TK 10-14
	600	352113-0101	-		2	RIBBON CLAR

From	Pos	Part No	SP	UN	Qty	Description

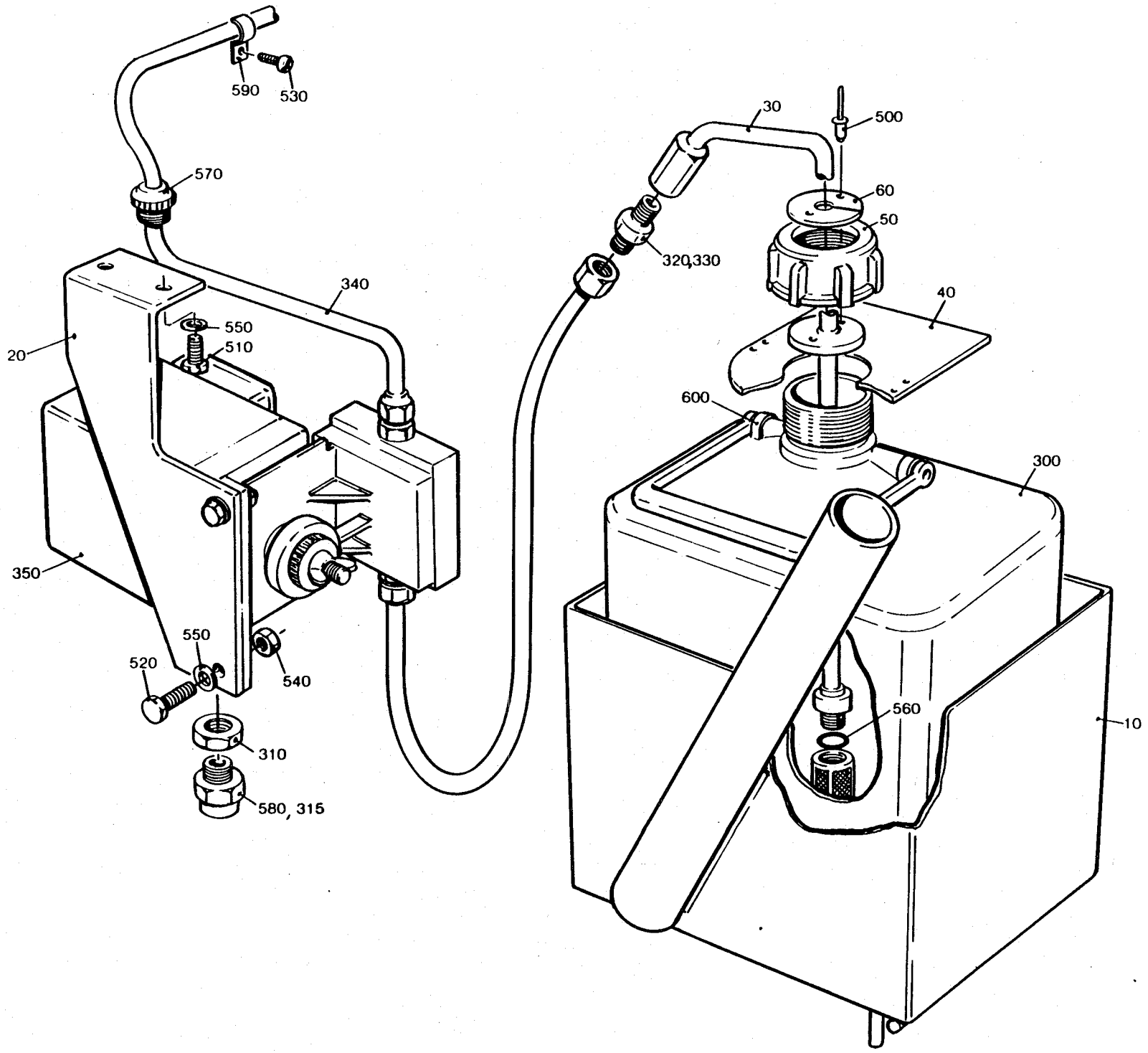
590
530
570
340
20
550
510
350
550
520
540
310
580, 315
30
500
60
50
320,330
40
600
300
560
10

From	Pos	Part No	SP	UN	Qty	Description
	010	491889	-		1	HOLDER
	020	491892	-		1	HOSE
	040	469410	-		1	HOSE COUPLING
	050	490777	-		1	BRACKET
	060	279515	-		1	WASHER
	070	456272	-		1	PLATE
	080	469409	-		1	PLATE
	090	469523	-		1	SIGN
	100	469761	-		1	HOLDER
	110	491891	-		1	CLAMP
	200	90005-0044	-		2	WASHER
	210	90015-0021	-		1	BUSHING
	220	90048-0440	S		1	GASKET
	230	90163-0050	-		1	NIPPLE
	240	90163-0052	-		2	NIPPLE
	250	90163-0066	-		1	NIPPLE
	270	90165-0044	-		4	CLIP
	280	90166-0008	-	MM	400	HOSE
	300	90166-0113	-	MM	1100	HOSE
	320	90274-0029	S		1	GUARD
	330	90304-0013	-		1	CONTAINER
	340	90304-0301	-		1	PIPE
	345	90304-0302	-		1	PIPE FITTING
	350	90304-0303	-		1	COVER
	360	90304-0305	-		1	PIPE
	380	90415-0033	-		1	OIL FILTER
		90415-0330	S		1	* FILTER INSERT
	500	312105-0366	-		9	SCREW M6S6X12RFR
	505	312105-0368	-		4	SCREW M6S6X16RFR
	510	312105-0378	-		2	SCREW M6S6X40RFR
	520	312115-0329	-		4	SCREW 5X16 A4 80
	530	312125-0287	-		4	SLOTTED HEMCS4X8RFR
	540	312502-0221	-		2	DRIVE SCREKDS4X6FNB
	550	315105-0153	-		15	WASHER BRB6,4X12RFR
	555	315233-0110	S		2	SEAL RING R1/4"
	560	315233-0111	S		2	SEAL RING R3/8"
	600	342762-0103	-		1	GROMMET SV8-LFZB
	610	342991-0100	-		1	HOSE CLIP 8-14MMRFR
	620	342991-0101	-		4	HOSE CLIP 11-17MMRFR

From	Pos	Part No	SP	UN	Qty	Description

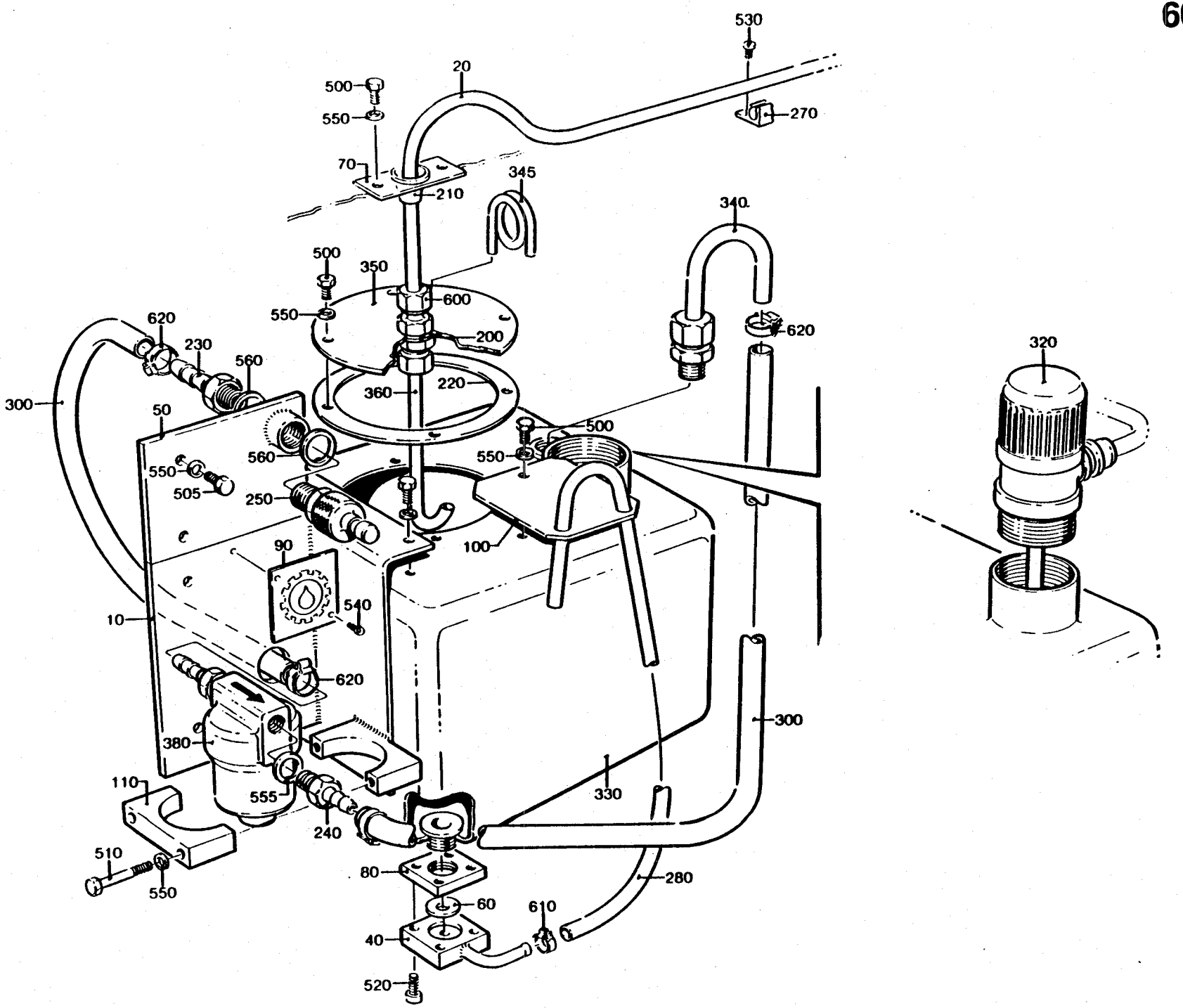
530
20
500
550
270
70
345
210
340
500
350
600
620
550
200
620
230
560
220
300
360
50
500
560
550
550
505
250
320
90
100
10
540
620
300
380
330
110
555
240
510
550
80
280
60
610
40
520

From	Pos	Part No	SP	UN	Qty	Description
	600	312101-0451	-		4	SCREW M6S8X20FZB
	630	315101-0165	-		4	WASHER BRB8,4X16FZB
Tetra Pak registered Spare Parts						
	010	247385	-		1	SIGN
	020	247386	-		1	SIGN
	300	90043-0062	S		2	GAUGE
	310	90045-0079	S		1	MOTOR
	320	90091-0159	S		1	GASKET
	330	90113-0044	S		1	PRESSURE REGULATOR
	335	90148-0036	S		1	HOSE
	340	90163-0076	-		1	SLEEVE
	350	90201-0014	S		1	VALVE
	360	90201-0307	-		1	PLATE
	370	90201-0308	-		1	PLATE
	380	90230-0017	S		1	NON RETURN VALVE
	390	90274-0053	S		1	LEVEL PROBE
	400	90277-0041	S		1	FILTER
	410	90321-0018	S		1	PUMP
	420	90321-0381	S		1	ACCUMULATOR
	430	90321-0384	-		1	DISTANCE PIECE
	440	90321-0385	S		1	COUPLING
	450	P- 90415-0029	S		1	FILTER
	460	P- 90422-0008	S		1	COOLER
	610	312111-0333	-		4	SCREW MC6S5X25FZB
	620	312111-0343	-		4	SCREW MC6S5X60FZB
	640	315233-0113	S		1	SEAL RING R1/2"
	650	315233-0118	S		1	SEAL RING R11/2"
	660	342701-0208	S		2	BUSHING RNI3/4"-1/4"
	670	342732-0104	-		1	ELBOW COUP D8-R1/4"
	680	342980-0122	S		2	BANJO CONNSINGEL 8/6-1/4
	690	342980-0304	S		2	BANJO CONN SINGEL 1/4
	700	352103-0106	-		1	CABLE GLANR.18,6/5-10
	710	352103-0110	-		1	CABLE GLANR.22,5/4-13
	720	315202-0507	S		8	O-RING 9,25X1,78

From	Pos	Part No	SP	UN	Qty	Description

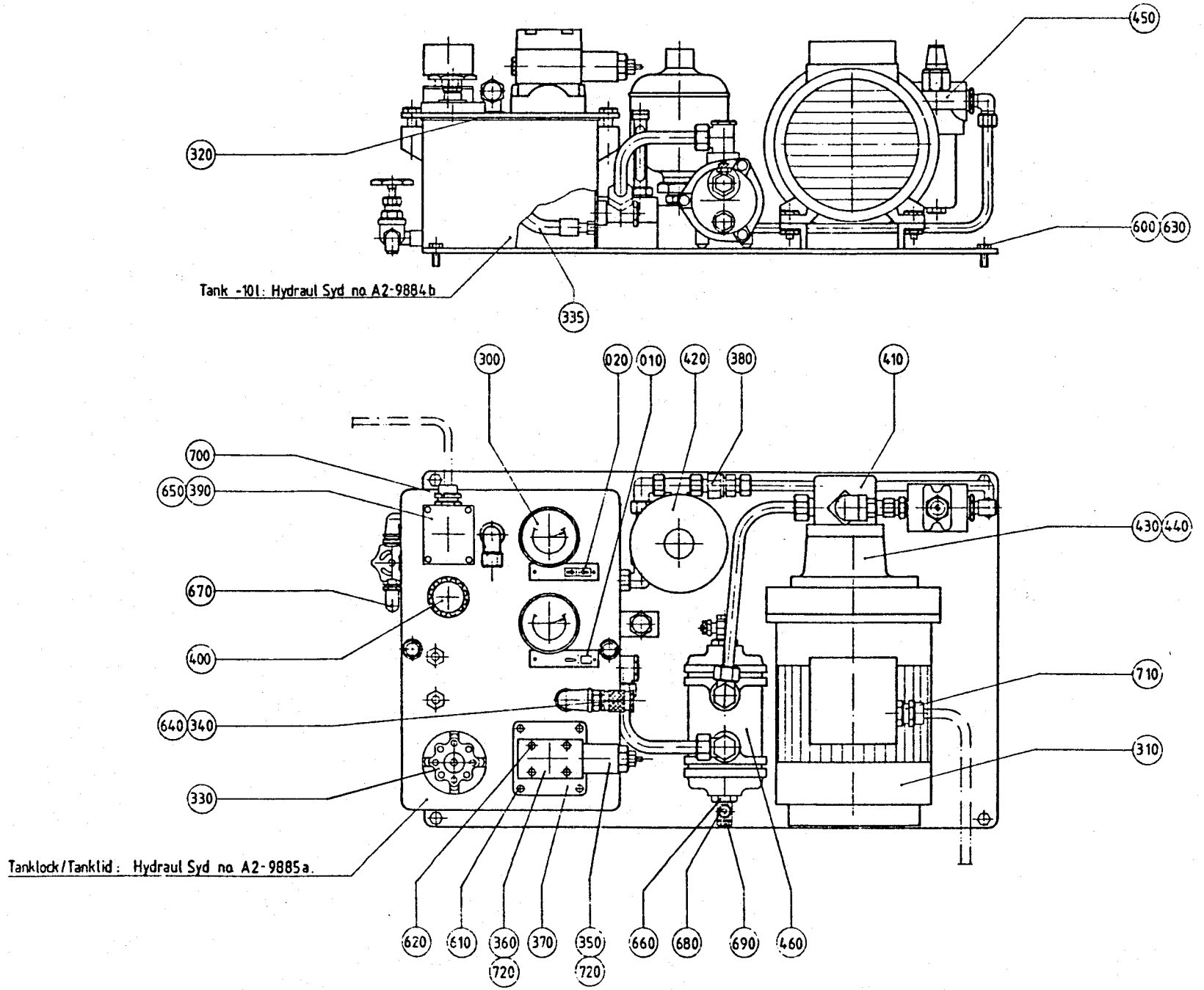
450
320
600
630
Tank -101: Hydraul Syd no. A2-9884b
335
300
020
010
420
380
410
700
650
390
430
440
670
400
710
640
340
310
330
Tanklock/Tanklid: Hydraul Syd no. A2-9885a.
620
610
360
720
370
350
720
660
680
690
460

From	Pos	Part No	SP	UN	Qty	Description
-080V		C- 451348-0101				CONNECTION BOX, ass'y
	010	464297	-		1	CONNECTION BOX
	050	352103-0106	-		2	CABLE GLANR.18,6/5-10
	020	451423	-		1	CIRCUIT BOARD
	110	312125-0220	-		4	SLOTTED HEMCS3X6RFR
	120	312125-0291	-		4	SLOTTED HEMCS4X12RFR
090V-		C- 752784-0101				CONNECTION BOX, ass'y
	F010	C- 451348-0201	-		1	CONNECTION BOX
	F030	C- 68917-0101	C		1	* ANGLE INDICATOR, compl
	010	751631	C		1	* CONNECTION BOX
	020	451423	S		1	* CIRCUIT BOARD
	050	352103-0106	S		1	* CABLE GLANR.18,6/5-10
	060	352103-0110	S		1	* CABLE GLANR.22,5/4-13
	110	312125-0220	S		4	* SLOTTED HEMCS3X6RFR
	120	312125-0291	S		4	* SLOTTED HEMCS4X12RFR
	250	752056	-		1	HOLDER
	220	312101-0289	-		4	SCREW M6S4X10FZB
	230	315101-0136	-		4	WASHER BRB4,3X8FZB

From	Pos	Part No	SP	UN	Qty	Description

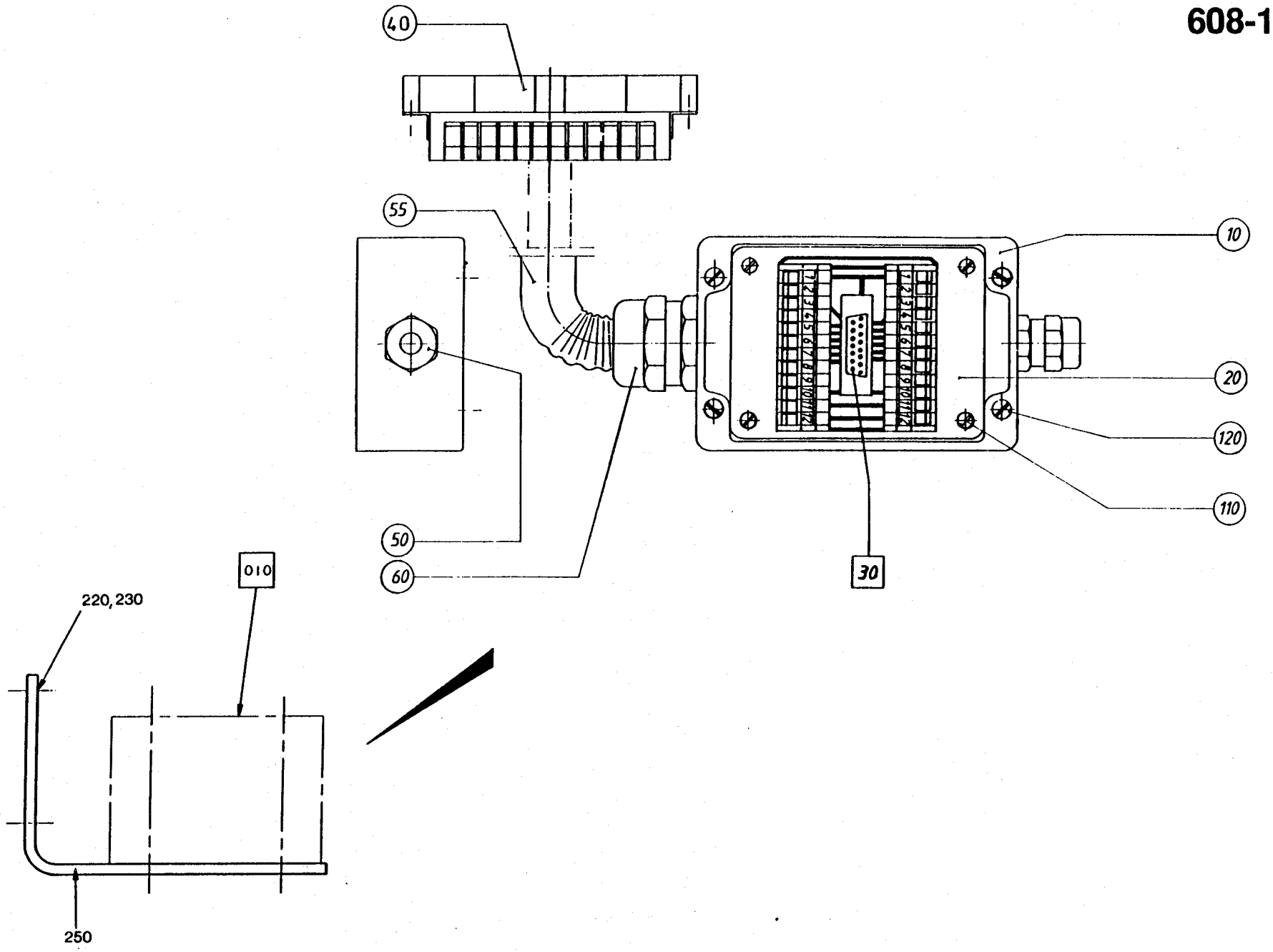
40
55
10
20
120
110
50
60
30
010
220,230
250

From	Pos	Part No	SP	UN	Qty	Description
	F005	==>609-1.1	-		1	BLOCK
	040	295927	C		2	CAM (IH)
	040	295928	C		2	CAM (TPC)
	010	G- 456528	C		1	BEARING BRACKET
	020	G- 272573	C		1	HUB
	030	G- 272574	C		1	HUB
	050	295929	C		2	CAM
	070	G- 751573	S		4	ARM
	080	255862	S		1	PULLEY
	090	256983	S		1	SHAFT
	100	272575	-		2	BEAM
	120	246502	S		4	SHAFT
	130	490778	S		4	SCREW
	135	751329	C		4	WASHER
	140	255783	S		1	SPACER RING
	150	256987	S		1	SECURING PLATE
	160	257024	S		1	SHAFT
	170	456529	S		3	HOLDER
	300	90061-0018	C		1	ANGLE ENCODER
	320	90208-0038	S		1	BUSHING
	340	90355-0031	S		1	FLEXIBLE COUPLING
	350	90417-0088	S		1	TIMING BELT
	500	312101-0327	-		2	SCREW M6S5X12FZB
	505	312101-0368	-		3	SCREW M6S6X16FZB
	510	312101-0370	-		12	SCREW M6S6X20FZB
	520	312101-0459	-		4	SCREW M6S8X40FZB
	530	312101-0462	-		4	SCREW M6S8X55FZB
	540	312104-0457	-		2	SCREW M6S8X35H8.8FZB
	545	312111-0465	-		2	SCREW MC6S8X70FZB
	550	312316-0323	-		4	GRUB SCREW SK6SS5X8FZB
	560	312601-0322	-		1	NUT M6M12FZB
	570	312621-0318	-		4	NUT ML6M8FZB
	580	315101-0153	-		15	WASHER BRB6,4X12FZB
	590	315101-0165	-		8	WASHER BRB8,4X16FZB
	600	315101-0178	-		1	WASHER BRB13X24FZB
	610	321123-0107	S		8	BUSHING .16/20X16
	620	321308-0205	S		2	BALL BEARISKF6005-2RS
	630	321574-0151	S		4	SUPPORT RONATR10

From	Pos	Part No	SP	UN	Qty	Description

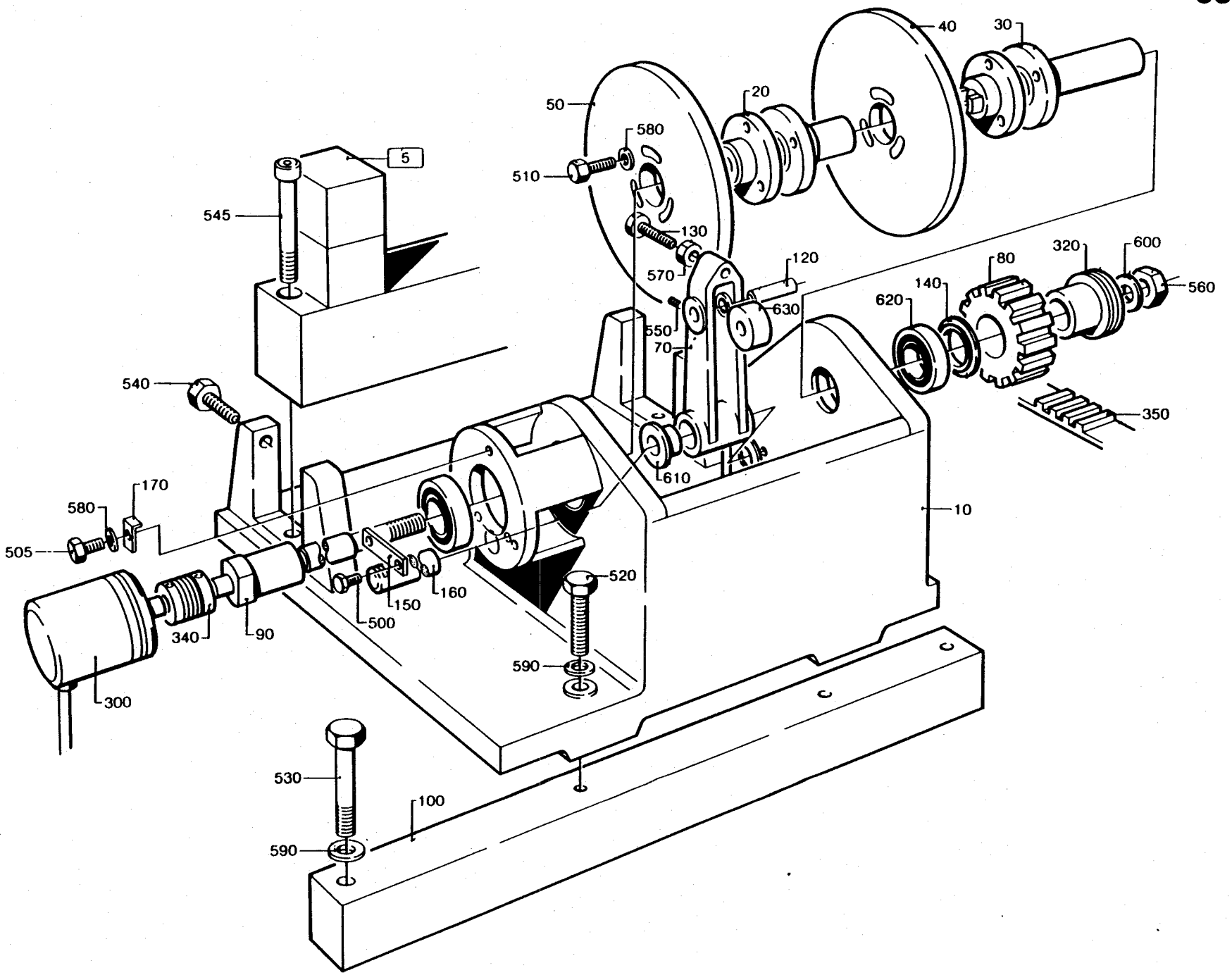
40
30
50
20
580
510
5
545
130
570
120
80
320
600
140
620
560
630
550
70
540
350
610
170
580
10
505
520
150
160
500
340
90
590
300
530
100
590

From	Pos	Part No	SP	UN	Qty	Description
	020	295391-0002	S		4	SCREW
	030	295391-0003	S		2	SCREW
	300	90201-0010	S		6	VALVE
		90201-0300	R		0	* PLATE
		90201-0301	R		0	* SPRING
		90201-0302	R		0	* WASHER
		90201-0303	R		0	* SPARE PARTS KIT
	305	90201-0016	S		4	VALVE
		90020-0031	S		1	* SLEEVE
		90201-0312	R		0	* COIL
		90201-0314	S		1	* CYLINDER
		90201-0315	S		1	* PLUNGER
		90201-0316	S		1	* SPRING
	310	90201-0017	S		2	VALVE
		90201-0312	C		1	* COIL
	315	90110-0095	S		2	CONTAKT
	320	90201-0303	-		6	SPARE PARTS KIT
	330	90201-0306	-		1	BLOCK
	500	342713-0310	-		3	BLANK-OFF BPS14
	510	342713-0313	-		1	BLANK-OFF BPS12
	520	342721-0103	-		8	PIPE CONNEGA8-LRFZB
	530	342721-0114	-		1	PIPE CONNEGA15-LRFZB

From	Pos	Part No	SP	UN	Qty	Description

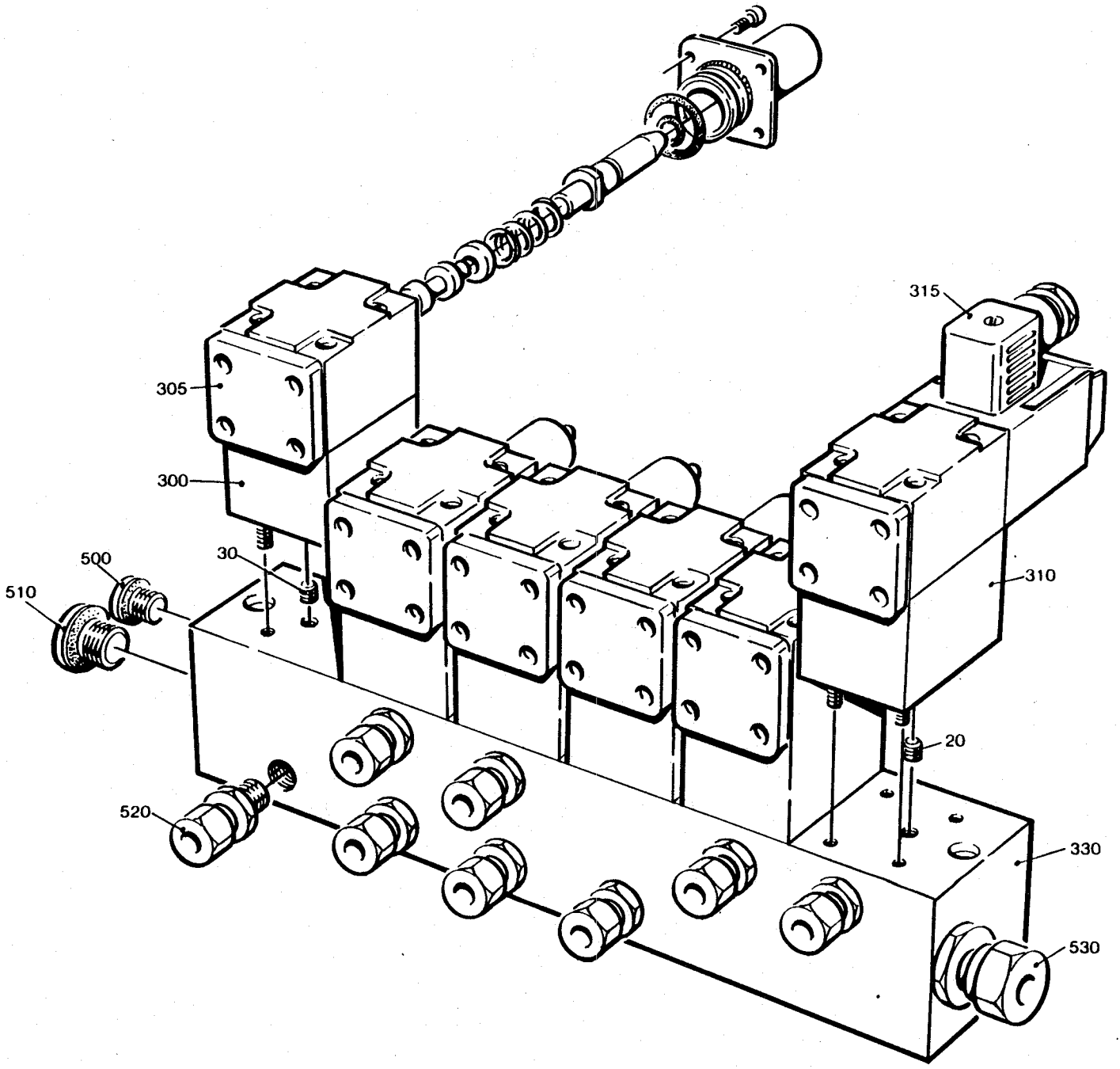
315
305
300
30
500
510
310
20
520
330
530

From	Pos	Part No	SP	UN	Qty	Description
	F105	==>609-2.1	-		1	BLOCK
	F115	==>609-2.2	-		1	CAM PACK
	010	751667	-		1	TROUGH
	020	751668	-		1	PLATE
	030	751669	-		1	ARM
	040	751670	-		1	BRACKET
	050	752603	-		1	WASHER
	060	28036	-		1	WASHER
	070	752604	-		1	PIPE HOLDER
	080	752491	-		2	CLAMP
	090	752622	-		1	STOP
	150	90417-0139	-		1	TOOTHED BELT
	200	312115-0465	-		2	SCREW 8X70 A4 80
	210	312109-0459	-		2	SCREW M6S8X40H A4 80
	220	312105-0459	-		4	SCREW M6S8X40RFR
	230	312105-0455	-		4	SCREW M6S8X30RFR
	235	312105-0453	-		1	SCREW M6S8X25RFR
	240	312105-0366	-		2	SCREW M6S6X12RFR
	245	312318-0360	-		2	GRUB SCREW SK6SS6X6RFR
	300	315105-0165	-		8	WASHER BRB8,4X16RFR
	310	315105-0153	-		2	WASHER BRB6,4X12RFR
	320	315105-0171	-		1	WASHER BRB10X18RFR
	330	312105-0368	-		2	SCREW M6S6X16RFR

From	Pos	Part No	SP	UN	Qty	Description

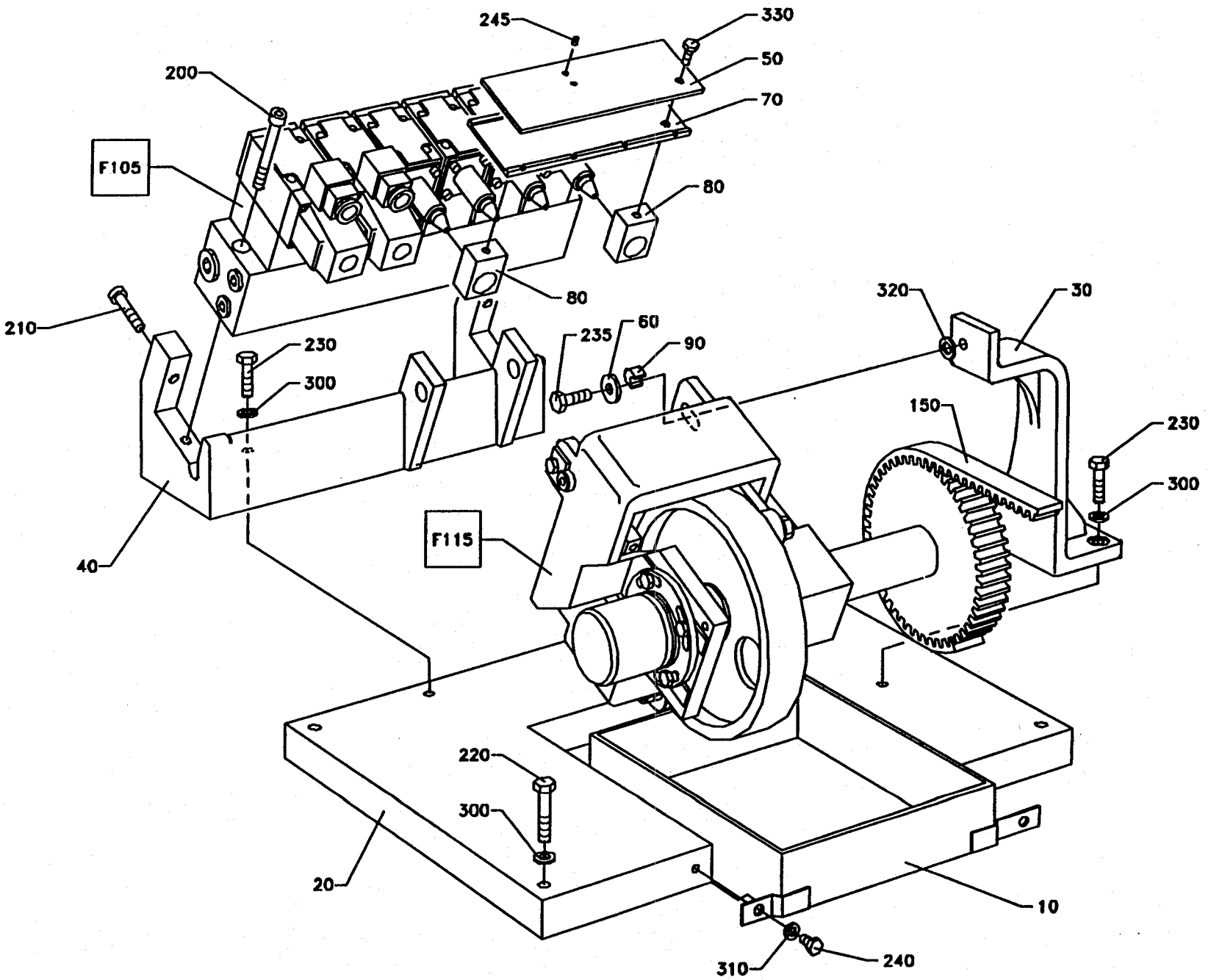
245
330
200
50
70
F105
80
80
210
320
30
60
235
90
230
300
150
230
300
F115
40
220
300
20
10
310
240

From	Pos	Part No	SP	UN	Qty	Description
	020	295391-0002	S		4	SCREW
	030	295391-0003	S		2	SCREW
	300	90201-0010	S		6	VALVE
		90201-0300	R		0	* PLATE
		90201-0301	R		0	* SPRING
		90201-0302	R		0	* WASHER
		90201-0303	R		0	* SPARE PARTS KIT
	305	90201-0057	S		4	VALVE
	310	90201-0058	S		2	SOLENOID VALVE
		90201-0334	S		1	* COIL
	315	90110-0095	S		2	CONTAKT
	320	90201-0303	-		6	SPARE PARTS KIT
	330	90201-0306	-		1	BLOCK
	500	342713-0310	-		3	BLANK-OFF BPS14
	510	342713-0313	-		1	BLANK-OFF BPS12
	520	342721-0103	-		8	PIPE CONN. GA8-LRFZB
	530	342721-0114	-		1	PIPE CONN. GA15-LRFZB

From	Pos	Part No	SP	UN	Qty	Description

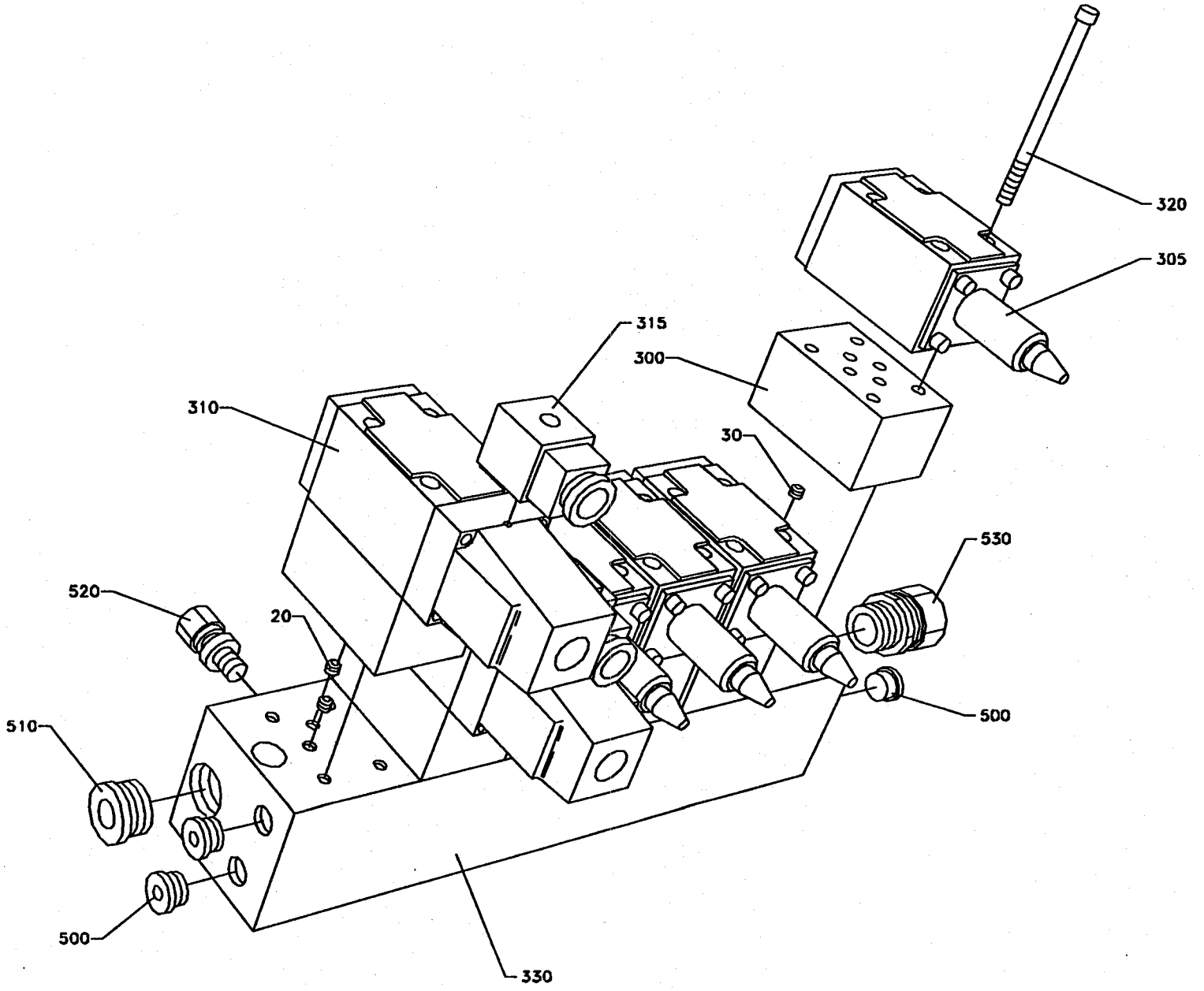

2711680A
ILLUtec®

From	Pos	Part No	SP	UN	Qty	Description
	010	751171	-		1	CAM IH
	010	752690	-		1	CAM TPC
	020	G- 292473	-		1	BRACKET
	030	G- 297091	-		2	ARM
	040	G- 297092	-		2	ARM
	050	292477	-		1	SHAFT
	060	751682	-		1	SHAFT
	070	751671	-		1	SHAFT
	080	751672	-		1	SPACER SLEEVE
	090	751177	-		1	PULLEY
	100	479354	-		4	SCREW
	110	292482	-		2	WASHER
	120	542063	-		1	FLANGE
	130	751703	-		1	SHAFT
	140	752767	-		1	TEMPLATE
	190	90099-0015	-		8	NUT
	200	90061-0018	-		1	ANGLE ENCODER
	210	90208-0080	-		1	CLAMPING ELEMENT
	220	90355-0031	-		1	FLEXIBLE COUPLING
	230	321308-0205	-		2	BALL BEARISKF6005-2RS
	240	321580-0165	-		4	CAM ROLLERKR30
	250	315701-0262	-		1	FLAT WEDGE8X7X18
	260	315750-0119	-		1	LOCK RING SGA25
	270	321111-0240	-		14	BUSHING 16E7X12
	350	312601-0316	-		4	NUT M6M6FZB
	360	312101-0366	-		4	SCREW M6S6X12FZB
	370	312316-0362	-		1	GRUB SCREW SK6SS6X8FZB
	380	312151-0287	-		3	SCREW MF6S4X8FZB
	390	312115-0364	-		1	SCREW 6X10 A4 80
	400	315101-0153	-		2	WASHER BRB6,4X12FZB

From	Pos	Part No	SP	UN	Qty	Description

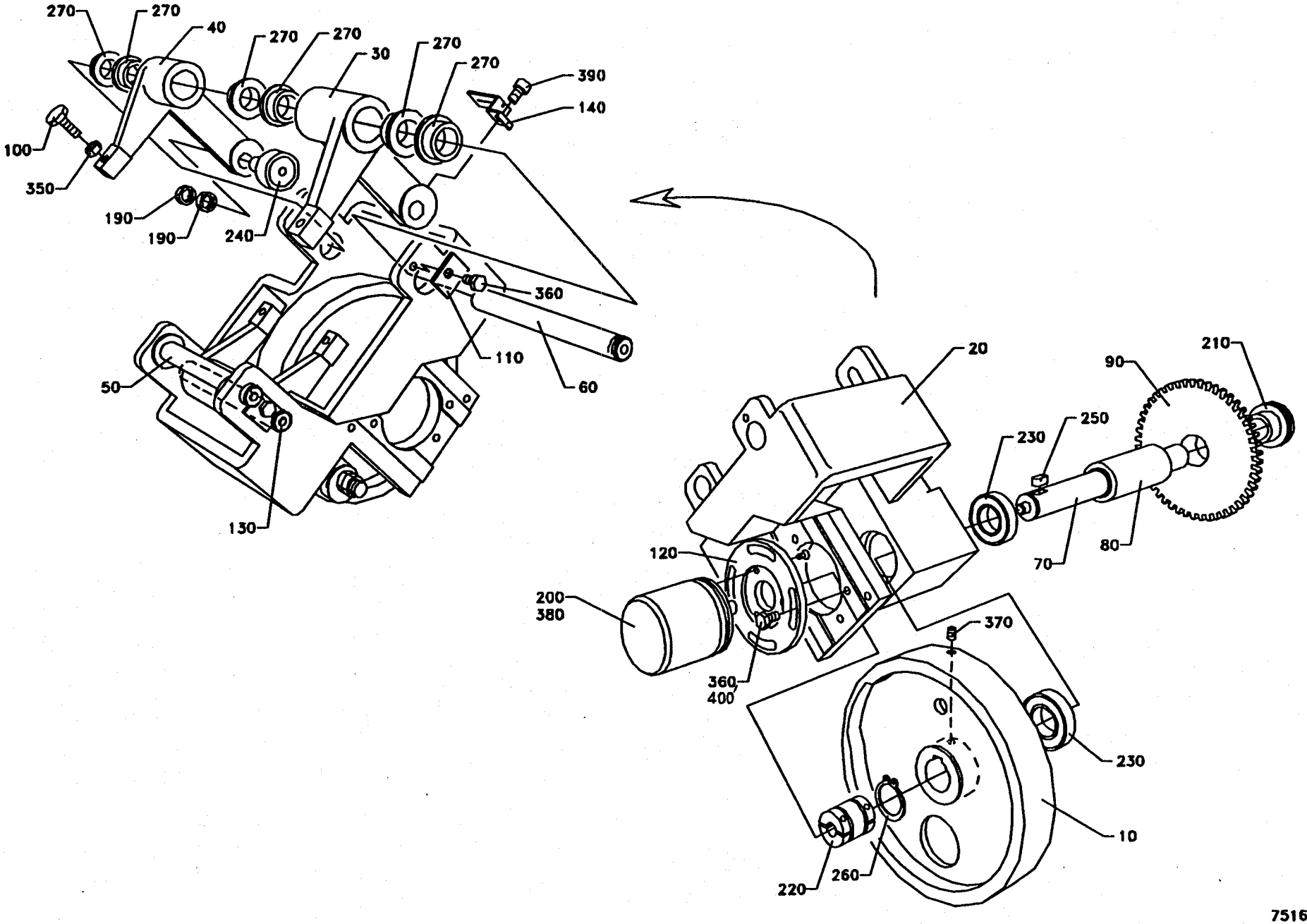
270
270
40
270
270
30
270
270
390
140
100
350
190
190
240
360
110
60
50
130
20
210
90
250
230
70
80
120
200
380
370
360
400
230
10
220
260

From	Pos	Part No	SP	UN	Qty	Description
	F001	==>610-1.1	-		1	CONNECTION BOX
	F002	==>610-1.2	-		1	AIR INJECTOR
		==>610-1.2				. NON-RETURN VALVE
	F003	==>610-1.3	-		1	PUSH BUTTON BOX
	F004	==>610-1.4	-		1	FLOW METER
	F005	==>610-1.5	-		1	JUNCTION BLOCK
	F006	==>610-1.6	-		1	CONNECTION
	F007	==>610-1.7	-		1	PRESSURE FEED
		90042-0371	P		0	* WEAR & TEAR PARTS KIT
		90042-0373	P		0	* COIL
TB/9						
	010	751090	-		1	PLATE
	070	469162	-		1	PIPE
	090	469164	-		1	PIPE
	1010	90235-0281	S		2	VALVE
	1090	90328-0018	P		6	SILENCER
	110	271950	-		16	SCREW
	1220	312101-0367	-		10	SCREW M6S6X14FZB
	1260	312101-0378	-		4	SCREW M6S6X40FZB
	1280	312101-0380	-		3	SCREW M6S6X50FZB
	1310	312502-0120	-		22	DRIVE SCREKDS0X5FNB
	1340	315101-0146	-		5	WASHER BRB5,3X10FZB
	1350	315101-0153	-		32	WASHER BRB6,4X12FZB
	1370	315202-0710	P		16	O-RING 25,12X1,78
	1390	315233-0110	P		3	SEAL RING R1/4"
	1400	315233-0111	S		4	SEAL RING R3/8"
	1420	315233-0115	P		32	SEAL RING R3/4"
	1440	342708-0109	-		1	SLEEVE 15X1/MS
	1450	342713-0210	-		1	BLANK-OFF
	1480	342720-0109	-		2	PIPE CONNEGA-12-3/8"
	1485	342720-0114	-		2	PIPE CONNEGA-15-1/2"
	1500	342767-0100	-		4	GROMMET R1/8
	1520	342767-0114	-		1	GROMMET R1/2
	1590	342921-0123	-		1	PIPE CONNE8/6-3/8"
	1600	342930-0113	-		3	ELBOW COUP6/4-1/8
	1610	342930-0114	-		1	ELBOW COUP6/4-1/4
	1650	342960-0112	S		18	GROMMET 6/4
	1660	342960-0122	-		16	GROMMET 8/6
	1670	342980-0113	S		10	BANJO CONNSINGEL 6/4-1/8
	1680	342980-0114	S		8	BANJO CONNSINGEL 6/4-1/4
	1700	342980-0303	S		11	BANJO CONN SINGEL 1/8"
	1710	342980-0304	S		12	BANJO CONN SINGEL 1/4

From	Pos	Part No	SP	UN	Qty	Description
	1720	342980-0314	S		1	BANJO CONN DUBBEL 1/4
	1730	346800-0111	S		4	SILENCER FILTER R3/8"
	1750	352101-0103	-		30	LEAD-IN G 18,6
	180	469328	-		15	BANJO CONNECTION
	1800	359000-0406	-		10	MARKING CO2/4"6"
	1800	359000-0405	-		15	MARKING CO2/4"5"
	1800	359000-0409	-		5	MARKING CO2/4"9"
	1800	359000-0408	-		5	MARKING CO2/4"8"
	1800	359000-0402	-		35	MARKING CO2/4"2"
	1800	359000-0400	-		70	MARKING CO2/4"0"
	1800	359000-0401	-		45	MARKING CO2/4"1"
	1800	359000-0403	-		20	MARKING CO2/4"3"
	200	456436	-		1	PLATE
	280	271949	-		16	NUT
	510	90005-0061	-		16	WASHER
	540	90030-0166	-		13	REDUCER
	560	90042-0052	S		6	SOLENOID VALVE
	570	90042-0060	S		4	SOLENOID VALVE
	580	90042-0074	S		4	SOLENOID VALVE
	590	90042-0079	S		3	SOLENOID VALVE
	610	90042-0326	-		4	COIL
	645	90042-0361	-		1	ASSEMBLY UNIT
	650	90042-0364	-		1	PLATE
	660	90042-0366	P		4	CONTACT
	670	90042-0367	-		4	PLATE
	680	90042-0368	-		1	CONNECTION
	690	90042-0369	-		1	END PIECE
	710	90043-0068	S		1	PRESSURE GAUGE
	720	90043-0069	S		2	PRESSURE GAUGE
	770	90113-0021	S		3	REGULATOR
	870	90166-0132	P	M	40	HOSE
	940	90224-0296	-		6	GROMMET

610-1a

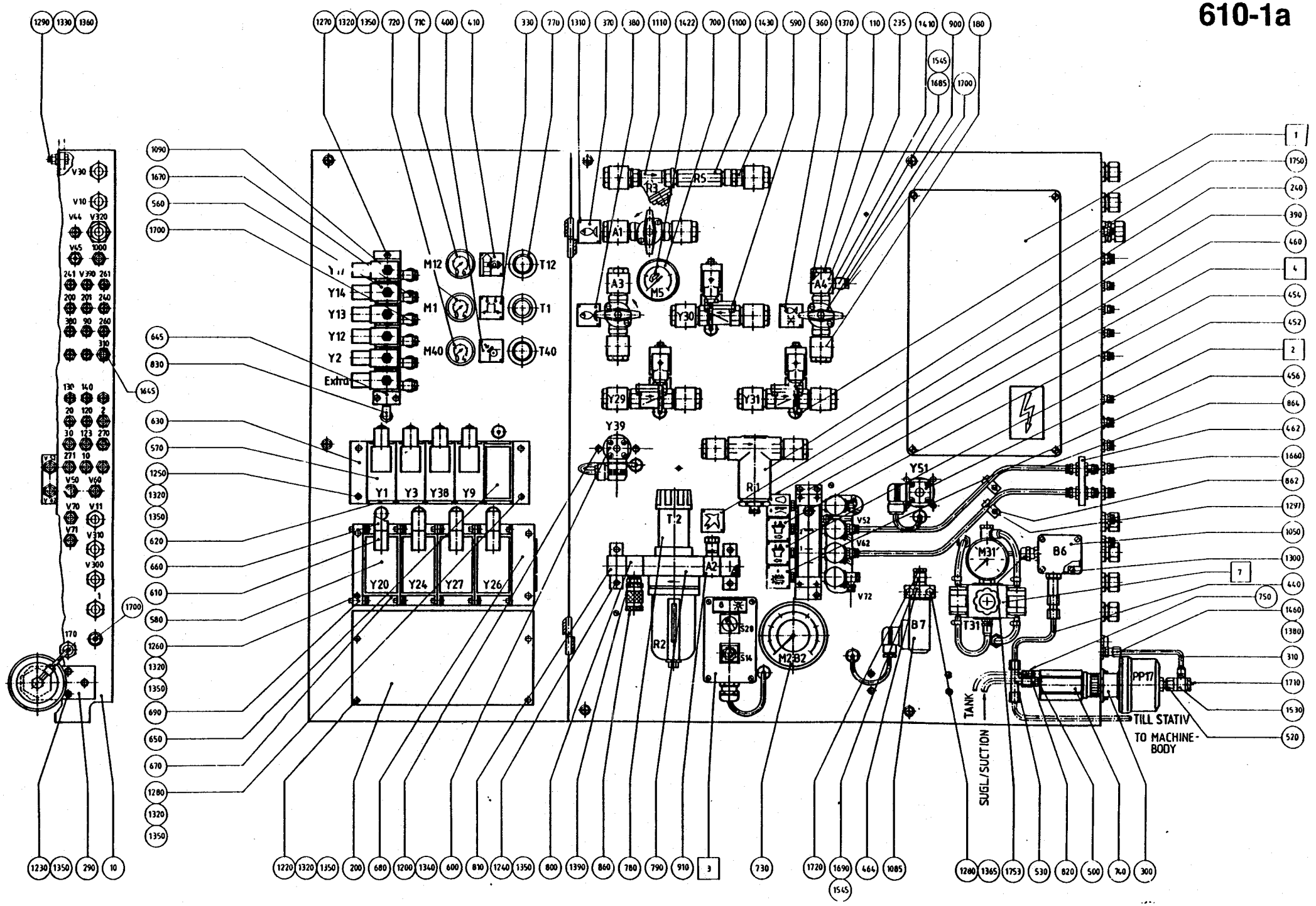
Y14
Y13
Y12
Y2
Extra
M12
M1
M40
T12
T1
T40
Y1
Y3
Y38
Y9
Y20
Y24
Y27
Y26
R3
R5
A1
A3
A4
M5
Y30
Y29
Y31
Y39
R1
T2
A2
R2
S20
S14
M2
B2
V52
V62
V72
Y51
M31
B6
B7
T31
PP17
TANK
SUGL/SUCTION
TILL STATIV
TO MACHINE-
BODY

From	Pos	Part No	SP	UN	Qty	Description
	F001	==>610-1.1	-		1	CONNECTION BOX
	F002	==>610-1.2	-		1	AIR INJECTOR
		==>610-1.2				. NON-RETURN VALVE
	F003	==>610-1.3	-		1	PUSH BUTTON BOX
	F004	==>610-1.4	-		1	FLOW METER
	F005	==>610-1.5	-		1	JUNCTION BLOCK
	F006	==>610-1.6	-		1	CONNECTION
	F007	==>610-1.7	-		1	PRESSURE FEED
		90042-0371	P		0	* WEAR & TEAR PARTS KIT
		90042-0373	P		0	* COIL
TBA/9						
	020	751091	-		1	PLATE
	060	295448	-		1	PIPE
	080	469163	-		1	PIPE
	1000	90235-0151	S		1	NON-RETURN VALVE
	1010	90235-0281	S		3	VALVE
	1030	90042-0332	-		1	ASSEBLY UNIT
	1060	90277-0323	S		1	FILTER HOUSING
	1070	90277-0324	P		1	FILTER CARTRIDGE
	1090	90328-0018	P		10	SILENCER
	110	271950	-		18	SCREW
	1210	312101-0329	-		2	SCREW M6S5X16FZB
	1220	312101-0367	-		6	SCREW M6S6X14FZB
	1260	312101-0378	-		8	SCREW M6S6X40FZB
	1280	312101-0380	-		5	SCREW M6S6X50FZB
	1310	312502-0120	-		26	DRIVE SCREKDS0X5FNB
	1340	315101-0146	-		7	WASHER BRB5,3X10FZB
	1350	315101-0153	-		34	WASHER BRB6,4X12FZB
	1370	315202-0710	P		18	O-RING 25,12X1,78
	1390	315233-0110	P		8	SEAL RING R1/4"
	1400	315233-0111	S		6	SEAL RING R3/8"
	1420	315233-0115	P		36	SEAL RING R3/4"
	1450	342713-0210	-		4	BLANK-OFF
	1480	342720-0109	-		3	PIPE CONNEGA-12-3/8"
	150	295453	-		1	PIPE
	1500	342920-0122	-		1	PIPE CONNE8/6-1/4
	1500	342920-0114	-		1	PIPE CONNE6/4-1/4
	1500	342767-0100	-		6	GROMMET R1/8
	1560	342921-0114	-		2	PIPE CONNE6/4-1/4"
	1570	342921-0121	-		1	PIPE CONNE8/6-1/8"
	1590	342921-0123	-		2	PIPE CONNE8/6-3/8"
	1600	342930-0113	-		5	ELBOW COUP6/4-1/8

From	Pos	Part No	SP	UN	Qty	Description
	1610	342930-0114	-		2	ELBOW COUP6/4-1/4
	1640	342950-0114	-		1	L-CONNECTI6/4-1/4
	1650	342960-0112	S		31	GROMMET 6/4
	1660	342960-0122	-		15	GROMMET 8/6
	1670	342980-0113	S		16	BANJO CONNSINGEL 6/4-1/8
	1680	342980-0114	S		19	BANJO CONNSINGEL 6/4-1/4
	1700	342980-0303	S		17	BANJO CONN SINGEL 1/8"
	1710	342980-0304	S		20	BANJO CONN SINGEL 1/4
	1720	342980-0314	S		3	BANJO CONN DUBBEL 1/4
	1730	346800-0111	S		6	SILENCER FILTER R3/8"
	1750	352101-0103	-		45	LEAD-IN G 18,6
	180	469328	-		17	BANJO CONNECTION
	1800	359000-0406	-		15	MARKING CO2/4"6"
	1800	359000-0400	-		105	MARKING CO2/4"0"
	1800	359000-0408	-		10	MARKING CO2/4"8"
	1800	359000-0409	-		10	MARKING CO2/4"9"
	1800	359000-0401	-		75	MARKING CO2/4"1"
	1800	359000-0405	-		20	MARKING CO2/4"5"
	1800	359000-0402	-		60	MARKING CO2/4"2"
	1800	359000-0403	-		25	MARKING CO2/4"3"
	280	271949	-		18	NUT
	320	491649	-		1	BRACKET
	340	273450	-		1	SIGN
	350	273452	-		1	SIGN
	450	295497	-		1	CONNECTION
	510	90005-0061	-		18	WASHER
	540	90030-0166	-		25	REDUCER
	56O	90042-0052	S		10	SOLENOID VALVE
	570	90042-0060	S		5	SOLENOID VALVE
	580	90042-0074	S		8	SOLENOID VALVE
	590	90042-0079	S		4	SOLENOID VALVE
	61O	90042-0326	-		8	COIL
	660	90042-0366	P		8	CONTACT
	670	90042-0367	-		10	PLATE
	680	90042-0368	-		2	CONNECTION
	690	90042-0369	-		2	END PIECE
	695	90042-0370	-		2	PLATE
	710	90043-0068	S		2	PRESSURE GAUGE
	720	90043-0069	S		3	PRESSURE GAUGE
	770	90113-0021	S		5	REGULATOR
	870	90166-0132	P	M	80	HOSE
	940	90224-0296	-		7	GROMMET

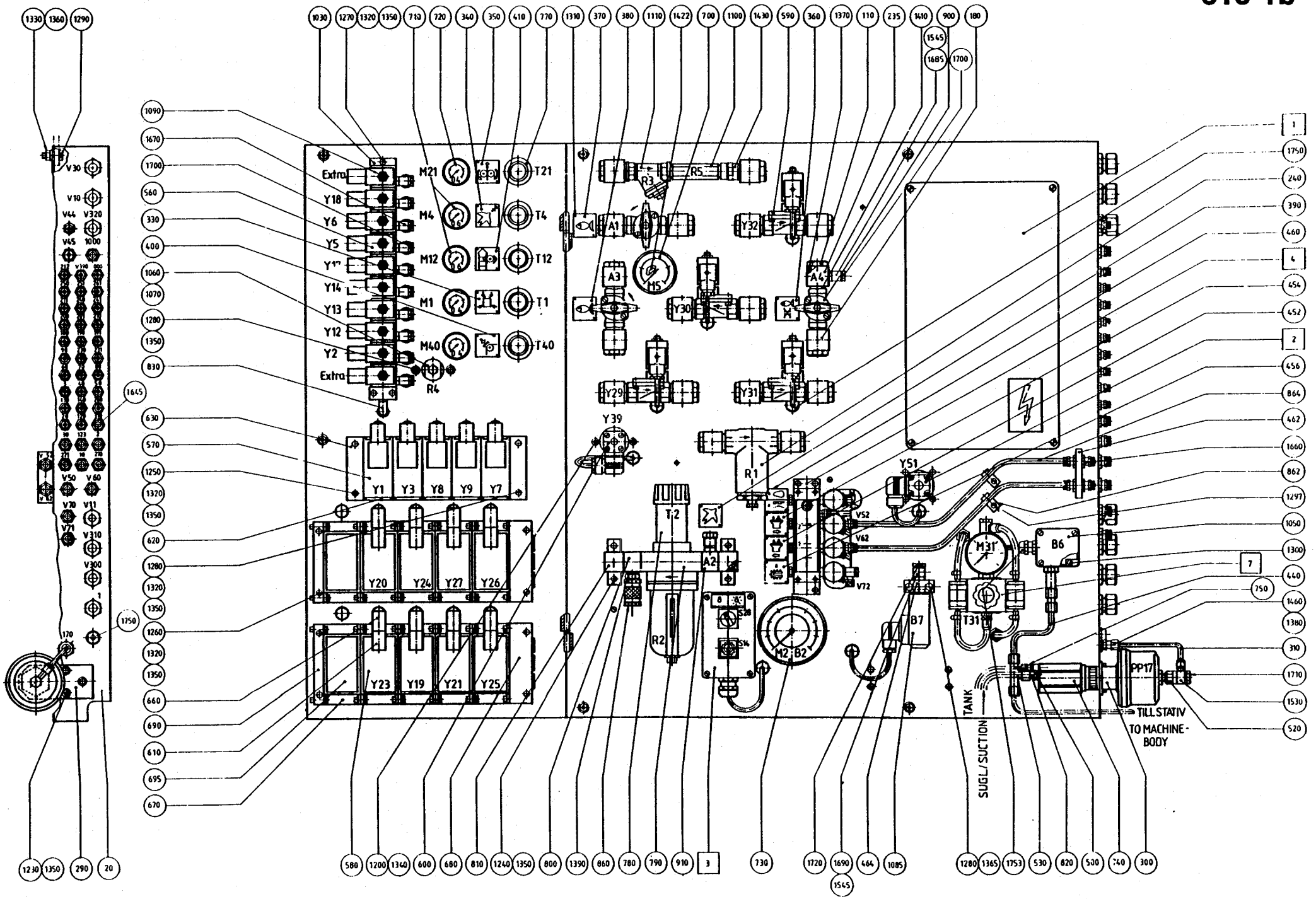
Extra
Y18
Y6
Y5
Y1''
Y14
Y13
Y12
Y2
Extra
M21
M4
M12
M1
M40
R4
T21
T4
T12
T1
T40
Y1
Y3
Y8
Y9
Y7
Y20
Y24
Y27
Y26
Y23
Y19
Y21
Y25
R3
R5
A1
Y32
A3
M5
A4
Y30
Y29
Y31
Y39
R1
T2
A2
R2
S28
S34
M2
B2
Y51
V52
V62
V72
M31
B6
B7
T31
PP17
TANK
SUGL/SUCTION
TILL STATIV
TO MACHINE-
BODY
V30
V10
V44
V320
V45
1000
V50
V60
V70
V11
V71
V310
V300
1
170
1030
1270
1320
1350
710
720
340
350
410
770
1310
370
380
1110
1422
700
1100
1430
590
360
1370
110
235
1410
900
180
1545
1685
1700
1090
1670
1700
560
330
400
1060
1070
1280
1350
830
1645
630
570
1250
1320
1350
620
1280
1320
1350
1260
1320
1350
660
690
610
695
670
1750
1230
1350
290
20
580
1200
1340
600
680
810
1240
1350
800
1390
860
780
790
910
3
730
1720
1690
1545
464
1085
1280
1365
1753
530
820
500
740
300
1
1750
240
390
460
4
454
452
2
456
864
462
1660
862
1297
1050
1300
7
440
750
1460
1380
310
1710
1530
520

Common Parts

From	Pos	Part No	SP	UN	Qty	Description
	1800	359000-0404	-		20	MARKING CO2/4"4"
	1800	359000-0407	-		15	MARKING CO2/4"7"
	330	273449	-		1	SIGN
	360	273454	-		1	SIGN
	370	273455	-		1	SIGN
	380	273456	-		1	SIGN
	390	273458	-		1	SIGN
	400	295424	-		1	SIGN
	410	295425	-		1	SIGN
	1800	359000-0771	-		35	MARKING CO2/4"V"
	100	469165	-		1	PIPE
	130	295451	-		1	PIPE
	140	295452	-		1	PIPE
	170	295455	-		1	PIPE
	175	469166	-		1	PIPE
	220	295460	-		1	BRACKET
	230	295496	-		1	BLOCK
	235	491951	-		1	BANJO CONNECTION
	240	271823	P		1	FILTER
		90415-0314	P		0	* FILTERINSERT
		90415-0325	P		0	* GASKET
	250	271907-0001	-		1	PIPE
	260	271907-0002	-		1	PIPE
	270	271907-0003	-		1	PIPE
	290	272129	-		1	BRACKET
	300	272130	-		1	SPACER
	310	272340	-		1	PIPE
	420	295461	-		1	RUBBER GASKET
	430	295462	-		1	HOLDER
	440	295473	-		1	PIPE
	452	445533	-		1	SIGN
	454	445534	-		1	SIGN
	456	445535	-		1	SIGN
	458	469329	-		1	PIPE
	460	469330	-		1	SIGN
	462	469331	-		1	HOLDER
	464	469332	-		1	CONNECTION
	466	456884	-		1	THROTTLE NIPPLE
	470	456137	-		1	HOSE
	500	90005-0045	-		1	WASHER
	520	90030-0116	-		1	REDUCER
	530	90030-0127	-		1	PIPE CONNECITON
	550	90030-0168	-		2	REDUCER
	600	90042-0089	S		1	SOLENOID VALVE
	620	90042-0347	-		5	PLATE
	630	90042-0348	-		1	ASSEMBLY UNIT
	700	90043-0006	S		1	PRESSURE GAUGE
	730	90043-0070	S		1	PRESSURE GAUGE
	740	90048-0018	S		1	OIL PUMP
		90048-0443	S		1	* CONTAINER
		90048-0444	S		1	* PIPE
		90048-0450	SP		1	* SPARE PARTS KIT
		90048-0451	S		1	* VALVE
		90048-0452	S		1	* SEALING KIT
		90048-0453	S		1	* OVERFLOW TRAP
		90048-0523	S		1	* COMPRESSION SPRING
		90048-0525	S		1	* PUMP HOUSING
		90048-0526	S		1	* O-RING
		90048-0527	S		1	* SEAL RING
		90048-0528	S		1	* PISTON SEAL
	750	90048-0453	-		1	OVERFLOW TRAP
	780	90113-0047	S		1	REGULATOR
		90277-0314	P		0	* FILTER
	790	90113-0338	-		1	YOKE
	800	90113-0342	-		1	JUNCTION BLOCK
	810	90113-0356	-		1	BRACKET
	820	90134-0019	-		1	GLAND
	830	90140-0013	-		1	ELBOW PIPE
	840	90140-0014	-		1	ELBOW PIPE
	850	90153-0035	-		X	ADHESIVE
	860	90163-0016	-		1	SLEEVE
	862	90165-0044	-		5	CLIP
	864	90166-0118	-	MM	3400	HOSE
	866	90166-0119	-	MM	1500	HOSE
	880	90166-0133	-	M	22	HOSE
	890	90166-0134	-	MM	1180	HOSE
	900	90187-0029	S		3	VALVE
	910	90187-0047	S		1	VALVE
	920	90224-0078	-		1	CONNECTION
	930	90224-0094	-		1	NIPPLE
	950	90224-0297	-		1	REDUCER
	960	90224-0298	-		1	CONNECTION
	990	90224-0303	-		1	CONNECTION
	995	90224-0324	-		1	CONNECTION
	1050	90274-0027	S		1	GUARD

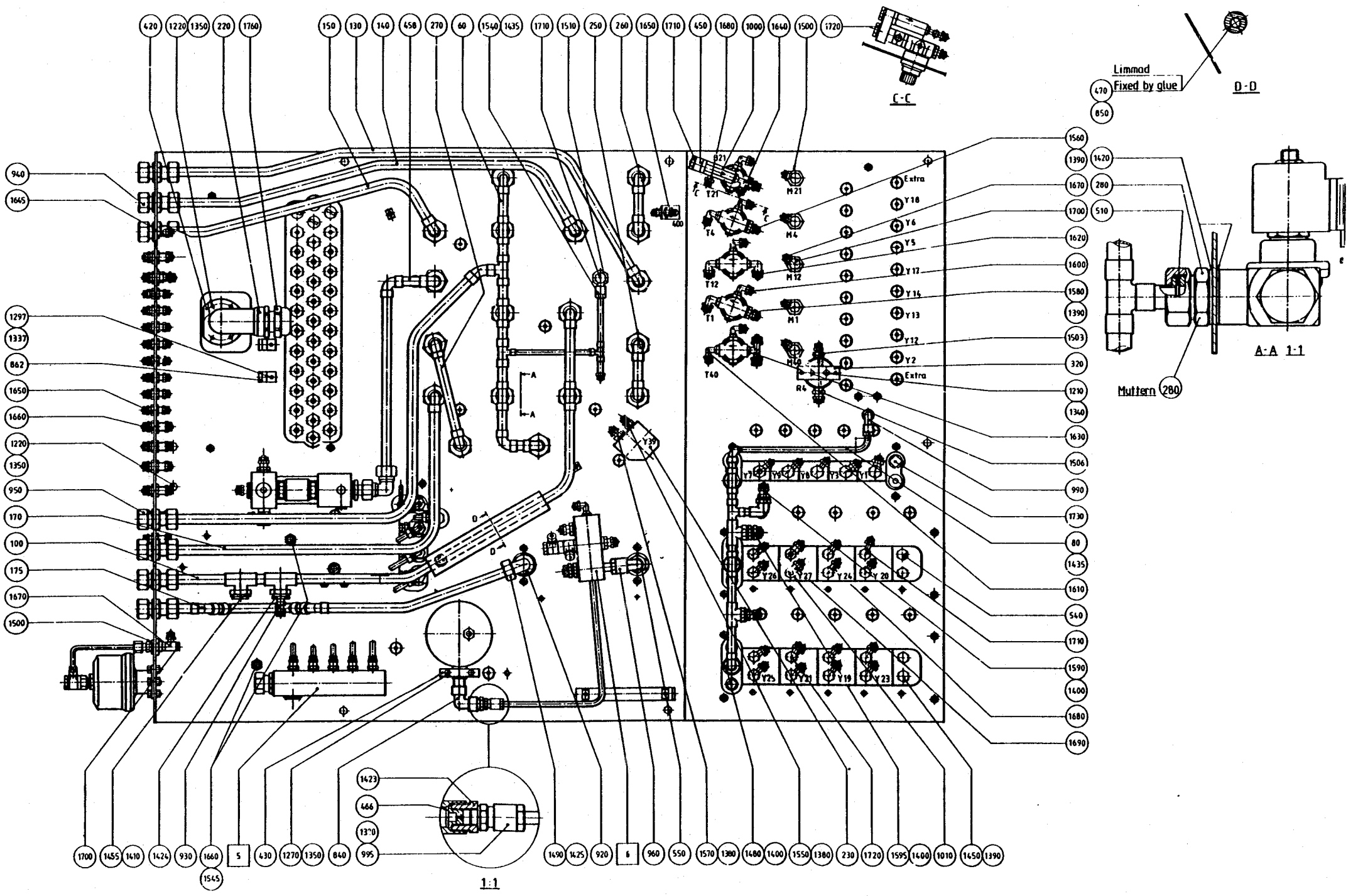
420 1220 1350 220 1760
150 130 140 458 270 60 1540 1435 1710 1510 250 260 1650 1710 450 1680 1000 1640 1500 1720
C-C
Limmad
Fixed by glue
470
850
D-D
1560 1390 1670 1700 1620 1600 1580 1390 1503 320 1210 1340 1630 1506 990 1730 80 1435 1610 540 1710 1590 1400 1680 1690
940 1665 1297 1337 862 1650 1660 1220 1350 950 170 100 175 1670 1500
1700 1455 1410 1424 930 1660 5 430 1270 1350 840 995 1545
1423 466 1370
1490 1425 920 6 960 550 1570 1380 1480 1400 1550 1380 230 1720 1595 1400 1010 1450 1390
1:1
1420 280 510
A-A 1:1
Muttern 280

From	Pos	Part No	SP	UN	Qty	Description
	1085	90274-0056	S		1	PRESSURE GUARD
	1100	90415-0018	S		1	FILTER
	1110	90415-0019	S		1	FILTER
	1200	312101-0327	-		2	SCREW M6S5X12FZB
	1230	312101-0368	-		3	SCREW M6S6X16FZB
	1240	312101-0372	-		4	SCREW M6S6X25FZB
	1250	312101-0376	-		3	SCREW M6S6X35FZB
	1270	312101-0379	-		5	SCREW M6S6X45FZB
	1290	312101-0451	-		6	SCREW M6S8X20FZB
	1293	312121-0285	-		2	SLOTTED HEMCS4X6FZB
	1297	312121-0287	-		4	SLOTTED HEMCS4X8FZB
	1300	312121-0291	-		3	SLOTTED HEMCS4X12FZB
	1305	312125-0335	-		1	SLOTTED HEMCS5X30RFR
	1315	312601-0312	-		1	NUT M6M4FZB
	1320	312601-0316	-		16	NUT M6M6FZB
	1330	312601-0318	-		6	NUT M6M8FZB
	1332	312605-0314	-		2	NUT M6M5RFR
	1333	312705-0312	-		2	CAP NUT MHM 4 A2
	1337	315101-0136	-		5	WASHER BRB4,3X8FZB
	1360	315101-0165	-		6	WASHER BRB8,4X16FZB
	1365	315115-0153	-		2	WASHER TBRB6,4X12RFR
	1380	315233-0109	P		4	SEAL RING R1/8"
	1410	315233-0113	P		19	SEAL RING R1/2"
	1422	342701-0201	-		1	BUSHING RNI1/4"-1/8"
	1423	342701-0202	-		1	BUSHING RNI3/8"-1/8"
	1424	342701-0205	-		1	BUSHING RNI1/2"-1/4"
	1425	342704-0115	-		1	CUTTING RIR-16MSG
	1430	342707-0113	-		1	SLEEVE
	1435	342708-0103	-		2	SLEEVE 8X1/MS
	1455	342713-0213	-		1	BLANK-OFF
	1460	342720-0102	-		1	PIPE CONNEGA-6-1/8"
	1490	342736-0114	-		1	ELBOW COUP W-15
	1510	342767-0104	-		1	GROMMET R1/4
	1530	342797-0122	-		1	BANJO CONNSINGEL 6-1/4
	1540	342797-0132	-		1	BANJO CONNSINGEL 8-1/4
	1545	342903-0121	-		2	NUT J#DER 1723-8/6
	1550	342921-0113	-		1	PIPE CONNE6/4-1/8"
	1580	342921-0122	-		1	PIPE CONNE8/6-1/4"
	1595	342921-0141	-		1	PIPE CONNE12/10-3/8
	1620	342930-0122	-		3	ELBOW COUP8/6-1/4
	1630	342940-0122	-		1	T-PIECE 8/6-1/4
	1645	342960-0121	-		2	GROMMET 8/6-6/4
	1685	342980-0121	-		1	BANJO CONNINGEL 8/6-1/8"

From	Pos	Part No	SP	UN	Qty	Description
	1690	342980-0122	-		5	BANJO CONNSINGEL 8/6-1/4
	1753	352103-0106	-		1	CABLE GLANR.18,6/5-10
	1760	352103-0121	-		1	CABLE GLANR.37,0/18-25
	1770	352112-0101	-	MM	500	BUNDLING SGSBAND TUB 12
	1780	352113-0101	-		35	RIBBON CLAR
	1790	352113-0102	-		25	RIBBON CLAR
	1900	352113-0202	-		4	ARMATURE -TM2-S8

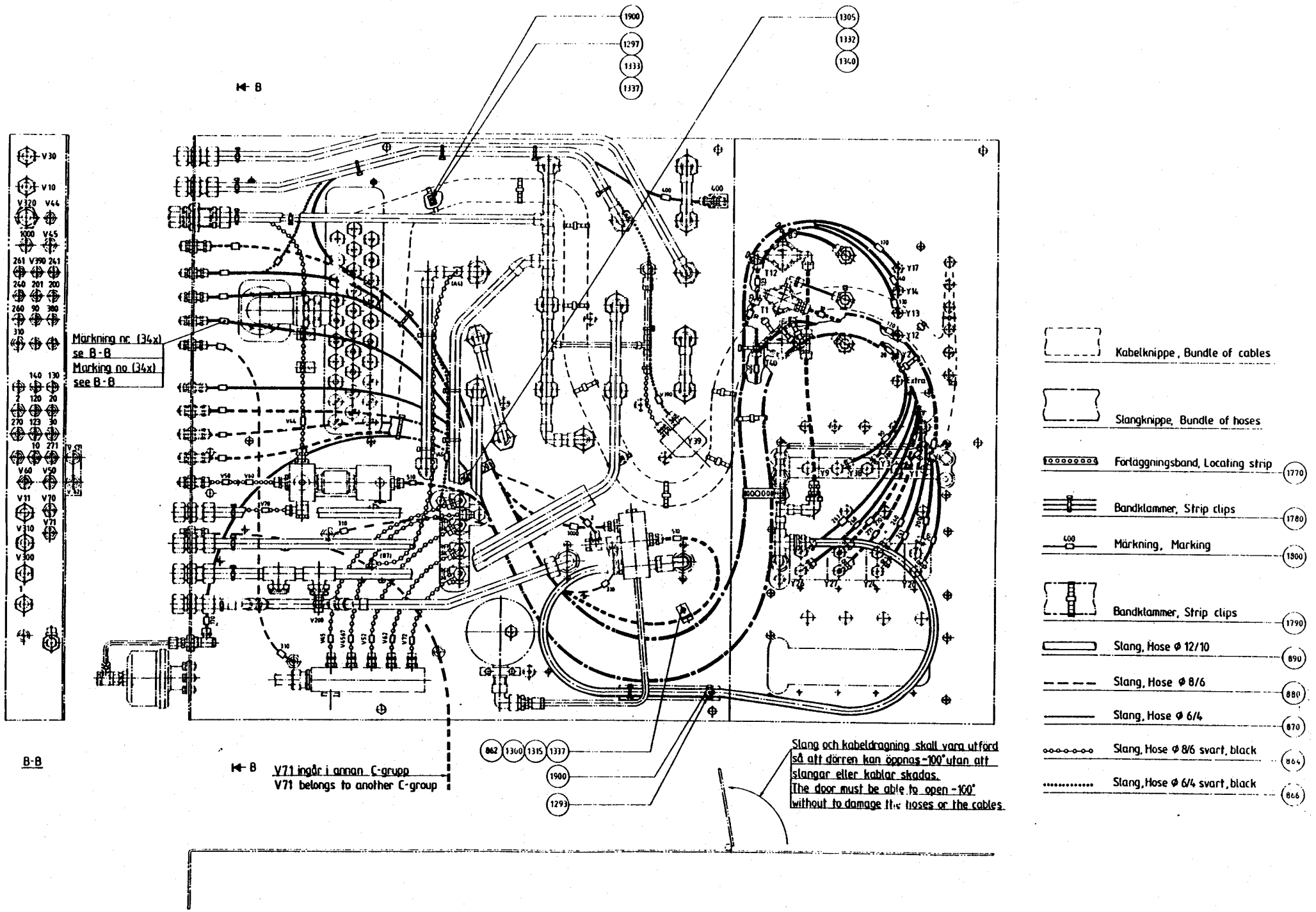
1900
1297
1333
1337
1305
1332
1340
B
Märkning nr (34x)
se B-B
Marking no (34x)
see B-B
B-B
B
V71 ingår i annan C-grupp
V71 belongs to another C-group
862
1300
1315
1337
1900
1293
Slang och kabeldragning skall vara utförd så att dörren kan öppnas -100° utan att slangar eller kablar skadas.
The door must be able to open -100° without to damage the hoses or the cables
Kabelknippe, Bundle of cables
Slangknippe, Bundle of hoses
Förläggningsband, Locating strip 1770
Bandklammer, Strip clips 1780
Märkning, Marking 1800
Bandklammer, Strip clips 1790
Slang, Hose ø 12/10 890
Slang, Hose ø 8/6 880
Slang, Hose ø 6/4 870
Slang, Hose ø 8/6 svart, black 864
Slang, Hose ø 6/4 svart, black 866

From	Pos	Part No	SP	UN	Qty	Description
TB/9						
	010	295442	-		1	CONNECTION BOX
	200	90002-0013	-		4	BLANK-OFF PLUG
	570	352103-0101	-		26	CABLE GLANR.15,2/4-8
	600	353021-0201	-		30	CLAMP L#MMA DKI T4 PA
	640	353033-0103	-		3	WALL
	660	353041-0001	-	MM	170	RAIL 10X3MS
	670	353041-0104	-		4	RAIL K
	680	359011-0202	-		30	LABEL (JORD)
TBA/9						
	010	456841	-		1	CONNECTION BOX
	200	90002-0013	-		2	BLANK-OFF PLUG
	570	352103-0101	-		35	CABLE GLANR.15,2/4-8
	600	353021-0201	-		40	CLAMP L#MMA DKI T4 PA
	640	353033-0103	-		4	WALL
	660	353041-0001	-	MM	235	RAIL 10X3MS
	670	353041-0104	-		5	RAIL K
	680	359011-0202	-		40	LABEL (JORD)
Common Parts						
	020	295444	-		2	SPACER
	210	90077-0302	-	MM	324	RAIL
	220	90194-0016	-		1	SIGN
	500	312121-0291	-		2	SLOTTED HEMCS4X12FZB
	510	312121-0372	-		2	SLOTTED HEMCS6X25FZB
	520	312121-0378	-		4	SLOTTED HEMCS6X40FZB
	525	312601-0316	-		4	NUT M6M6FZB
	530	315101-0136	-		2	WASHER BRB4,3X8FZB
	535	315101-0153	-		4	WASHER BRB6,4X12FZB
	610	353024-0201	-		1	EARTH CLIPL#MMA EK4/35 PA
	620	353031-0201	-		1	END PLATE EW35
	630	353032-0201	-		1	END PLATE AP PA
	650	353041-0001	-	MM	60	RAIL 10X3MS
	690	359011-0800	-		2	LABEL BSFW 1-100

From	Pos	Part No	SP	UN	Qty	Description

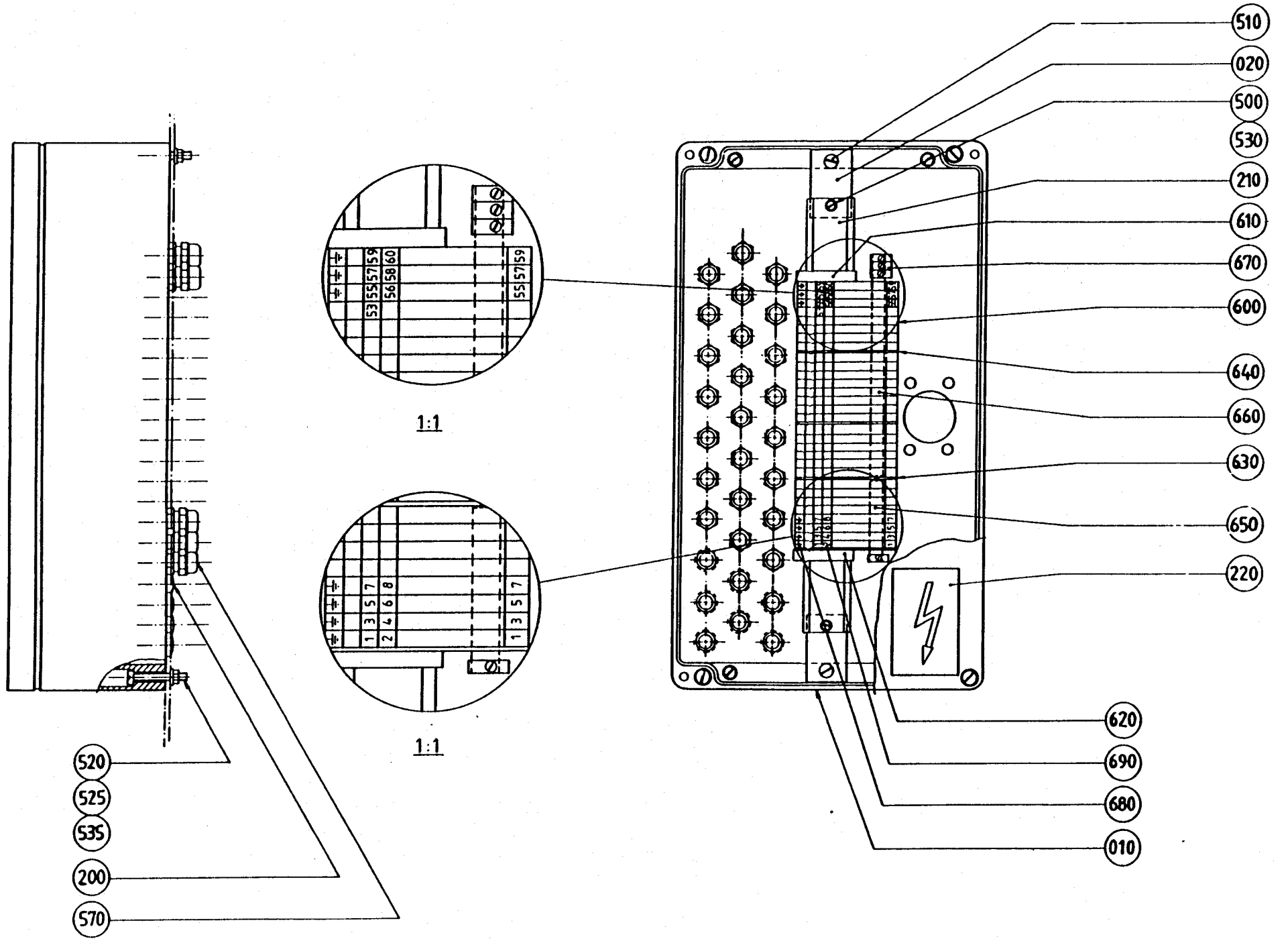
510
020
500
530
210
610
670
600
640
660
630
650
220
620
690
680
010
520
525
535
200
570
1:1
1:1

From	Pos	Part No	SP	UN	Qty	Description
	F005	C- 491536-0101	-		2	NON-RETURN VALVE
	.006	751086	-		2	. NIPPLE
	.007	90230-0028	S		1	. NON-RETURN VALVE
	.008	315233-0111	P		2	. SEAL RING R3/8"
	050	456756	-		1	BLOCK
	100	456755	-		1	BLOCK
	350	90042-0089	S		1	SOLENOID VALVE
090V	350	90042-0173	S		1	SOLENOID VALVE
	400	90224-0078	-		1	CONNECTION
	520	312101-0327	-		4	SCREW M6S5X12FZB
	540	312111-0471	-		2	SCREW MC6S8X100FZB
	560	315101-0146	-		4	WASHER BRB5,3X10FZB
	580	315233-0109	S		1	SEAL RING R1/8"
	600	315233-0110	S		3	SEAL RING R1/4"
	620	315233-0111	S		7	SEAL RING R3/8"
	640	315233-0113	S		1	SEAL RING R1/2"
	660	342704-0114	-		1	CUTTING RIR-15 MSG
	680	342713-0209	-		1	BLANK-OFF
	700	342713-0210	-		1	BLANK-OFF
	720	342713-0211	-		1	BLANK-OFF
	760	342736-0115	-		1	ELBOW COUPW16
	780	342921-0122	-		2	PIPE CONNE8/6-1/4"
	800	342921-0123	-		2	PIPE CONNE8/6-3/8"
	850	342980-0122	-		1	BANJO CONNSINGEL R/6-1/4
	900	342980-0304	S		1	BANJO CONN SINGEL 1/4

From	Pos	Part No	SP	UN	Qty	Description

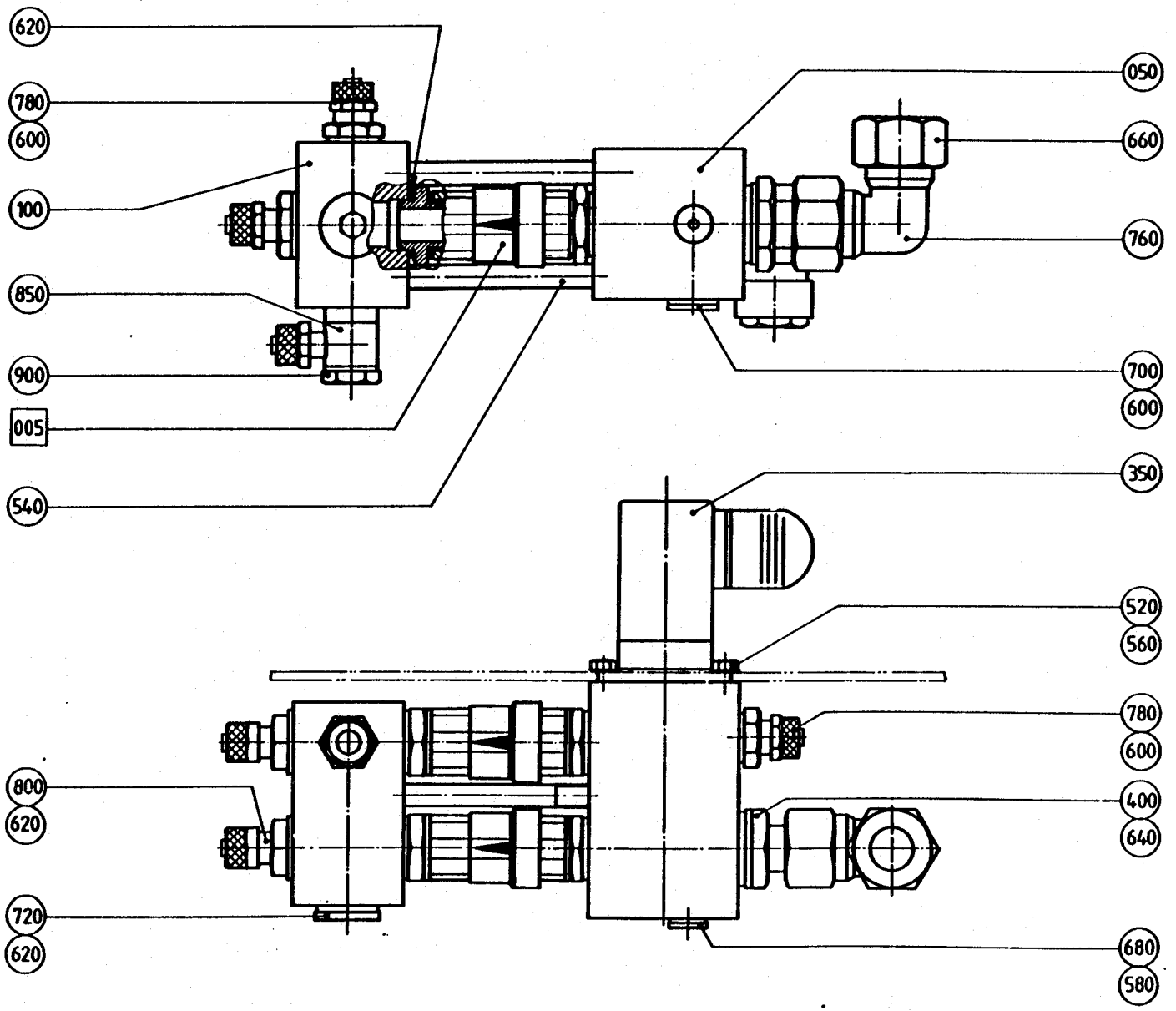
620
780
600
100
850
900
005
540
050
660
760
700
600
350
520
560
780
600
400
640
800
620
720
620
680
580

From	Pos	Part No	SP	UN	Qty	Description
	200	456883	-		1	PUSH BUTTON BOX
	350	90064-0084	S		1	PUSH BUTTON YELLOW
	450	90111-0120	S		1	SWITCH
	500	311520-0329	-		2	BLANK RIVE2,4X7,4
	550	312121-0333	-		2	SLOTTED HEMCS5X25FZB
	600	315101-0146	-		2	WASHER BRB5,3X10FZB
	650	352103-0101	-		1	CABLE GLANR.15,2/4-8
	700	352103-0110	-		1	CABLE GLANR.22,5/4-13
	750	359240-0100	-		1	SIGN HOLDER
	800	359241-0140	-		1	SIGN KYLT
	850	359301-0125	-		1	SIGN

From	Pos	Part No	SP	UN	Qty	Description

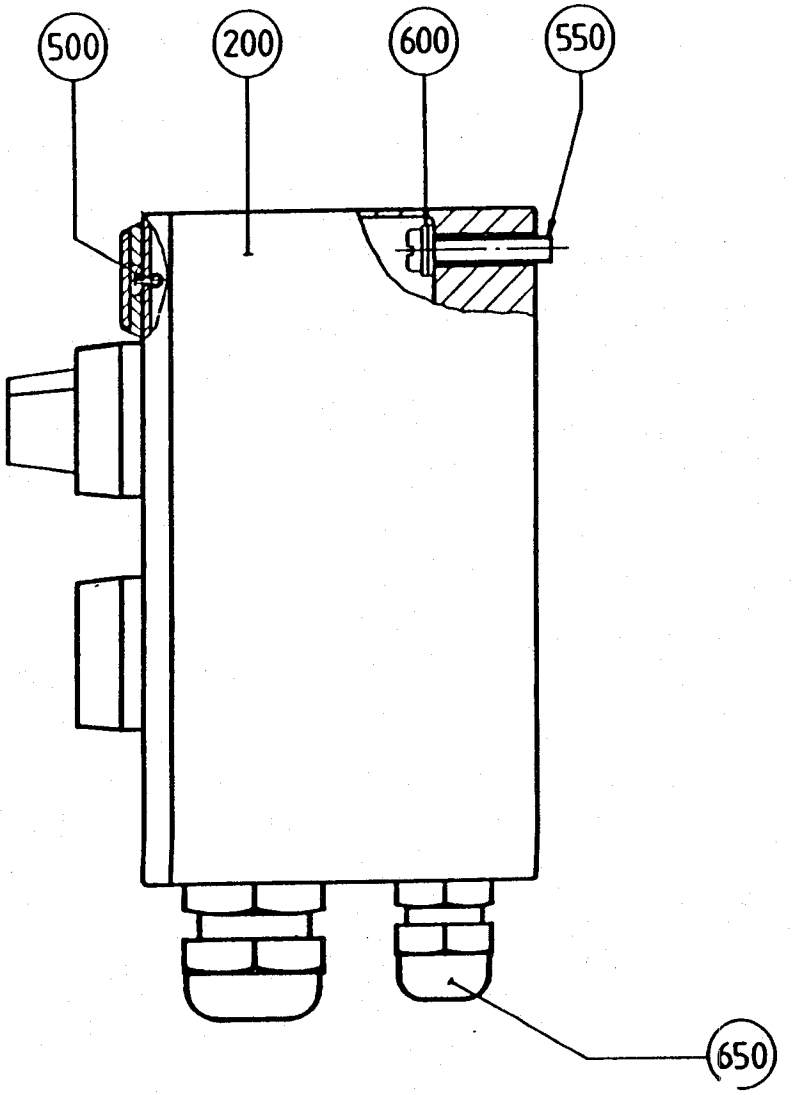
500
200
600
550
650

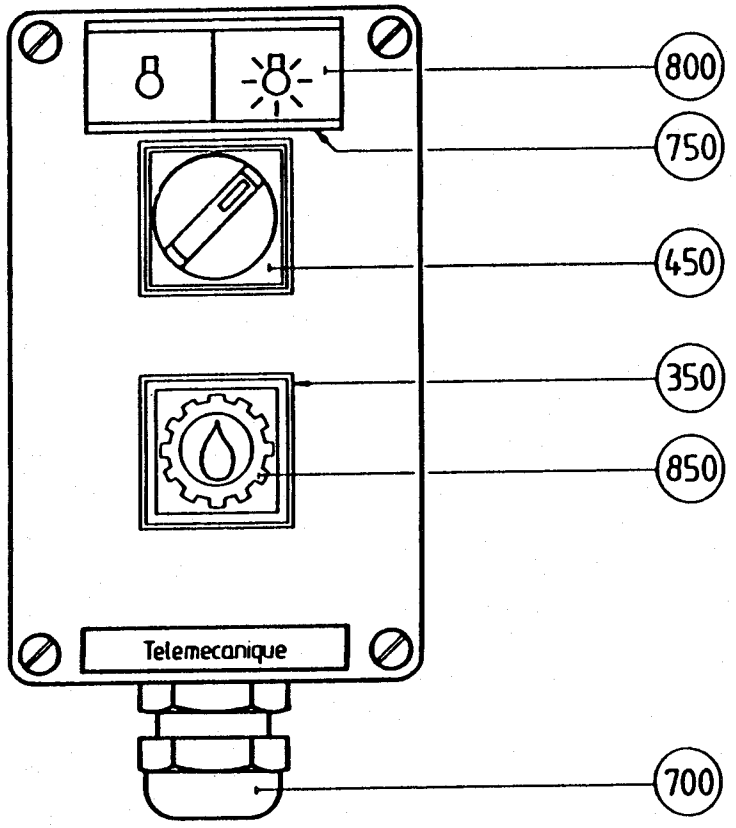
800
750
450
350
850
Telemecanique
700

From	Pos	Part No	SP	UN	Qty	Description
	040	469119	-		1	BLOCK
	060	469120	-		1	HOLDER
	080	456011	S		6	PIN
	300	90030-0166	-		1	REDUCER
	320	90166-0118	-	MM	1250	HOSE
	360	90166-0119	-	MM	750	HOSE
	400	90230-0018	S		1	NON RETURN VALVE
	440	90235-0064	S		4	VALVE
		90235-0311	S		1	* WEAR & TEAR PARTS KIT
	480	90243-0134	S		1	FLOW METER
	520	312105-0341	-		4	SCREW M6S5X50 A4 80
	540	312105-0380	-		4	SCREW M6S6X50RFR
	560	315202-0116	-		2	O-RING 18,1X1,6
	580	315105-0146	-		4	WASHER BRB5,3X10RFR
	600	315115-0153	-		3	WASHER TBRB6,4X12RFR
	620	315233-0109	S		2	SEAL RING R1/8"
	630	315233-0110	S		1	SEAL RING R1/4"
	640	315233-0111	S		1	SEAL RING R3/8"
	660	342713-0211	-		1	BLANK-OFF
	680	342921-0121	S		2	PIPE CONNE8/6-1/8"
	700	342930-0113	S		1	ELBOW COUP6/4-1/8
	720	342930-0121	-		4	ELBOW COUP8/6-1/8
	730	342980-0121	-		1	BANJO CONNINGEL 8/6-1/8"
	740	342980-0122	-		1	BANJO CONNSINGEL 8/6-1/4
	750	342980-0303	S		1	BANJO CONN SINGEL 1/8"
	780	342980-0313	S		8	BANJO CONN DUBBEL 1/8

From	Pos	Part No	SP	UN	Qty	Description

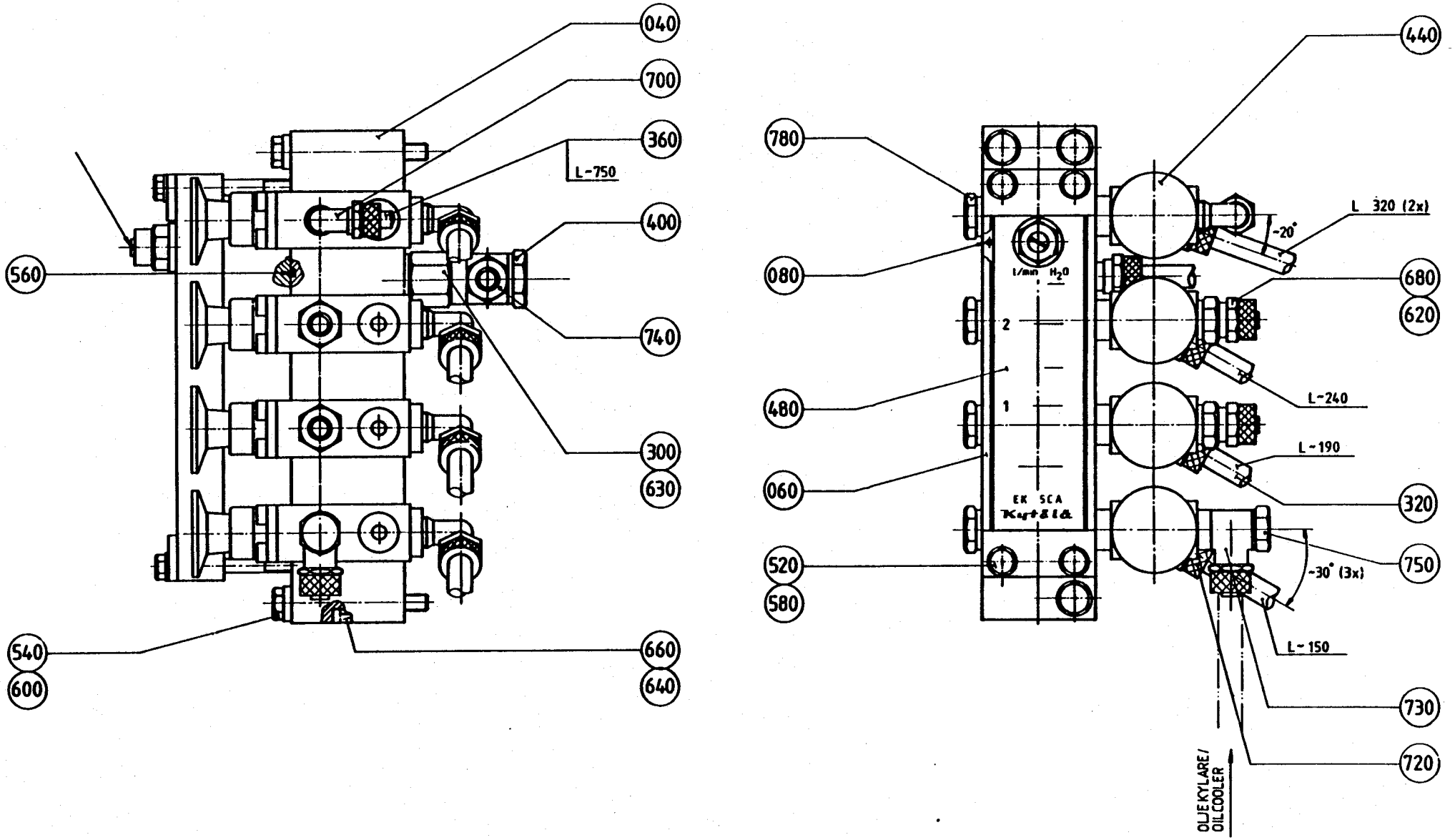
040
700
360
L-750
400
560
740
300
630
540
600
660
640
780
080
480
060
520
580
440
L 320 (2x)
-20°
680
620
L-240
L-190
320
750
-30° (3x)
L-150
730
720
l/min H2O
2
1
EK SCA
OLJEKYLARE/
OIL COOLER

From	Pos	Part No	SP	UN	Qty	Description
	050	469122	-		1	BLOCK
	520	312105-0368	-		4	SCREW M6S6X16RFR
	540	315105-0153	-		4	WASHER BRB6,4X12RFR
	560	315233-0109	S		5	SEAL RING R1/8"
	580	315233-0113	S		1	SEAL RING R1/2"
	600	342713-0213	-		1	BLANK-OFF
	620	342720-0114	-		1	PIPE CONNEGA-15-1/2"
	640	342921-0121	-		5	PIPE CONNE8/6-1/8"

From	Pos	Part No	SP	UN	Qty	Description

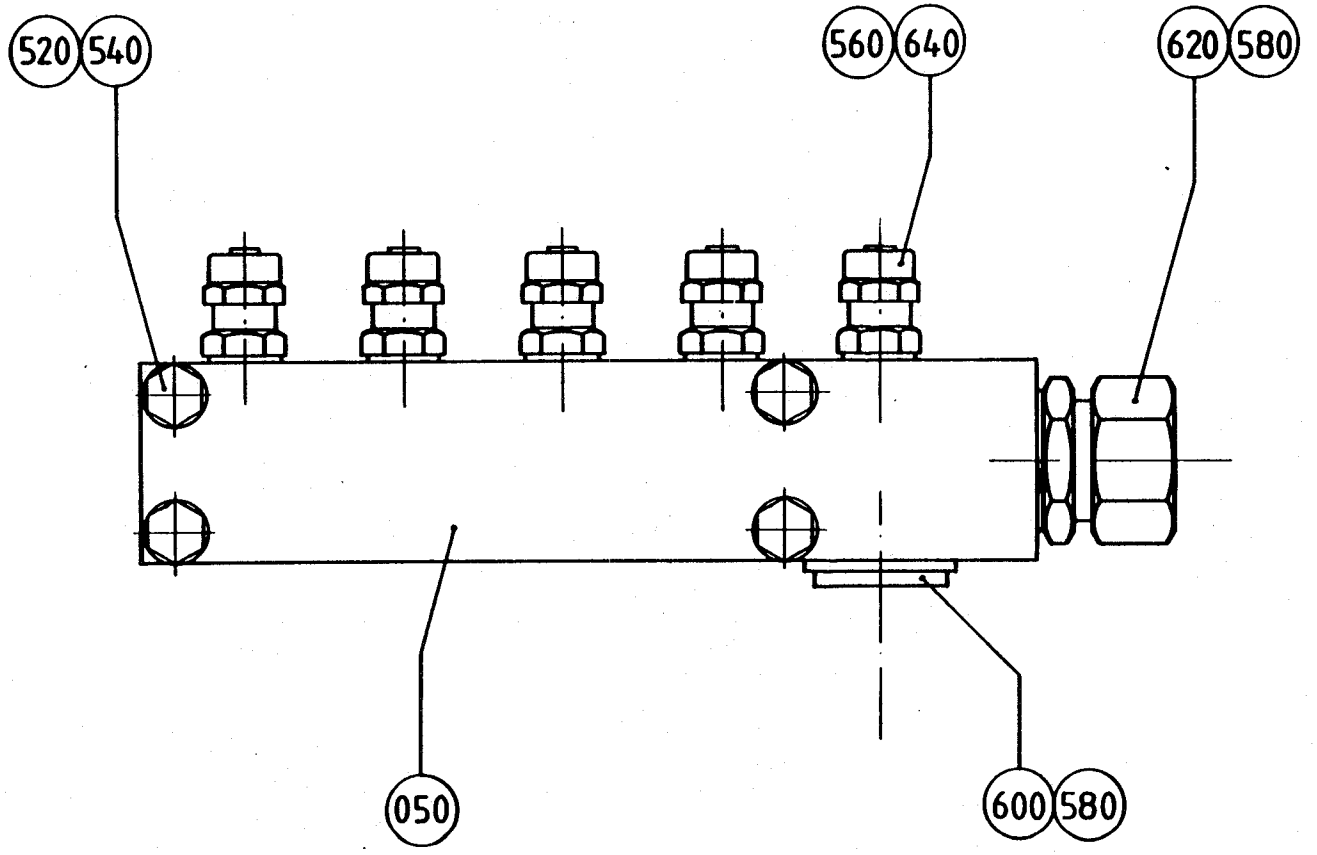
520
540
560
640
620
580
050
600
580

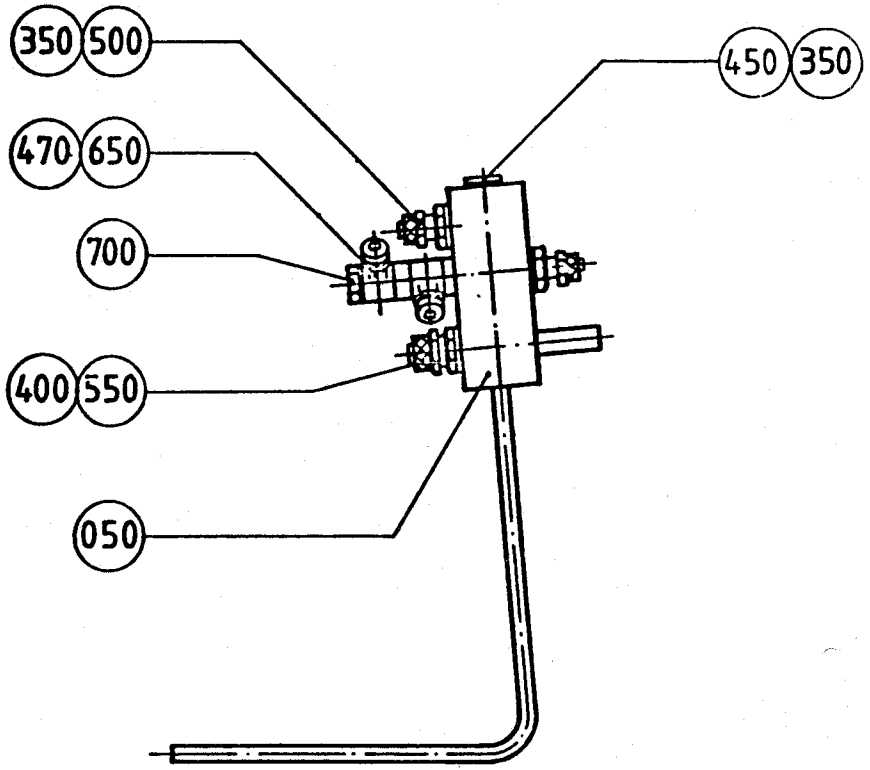
350
500
450
350
470
650
700
400
550
050

B9

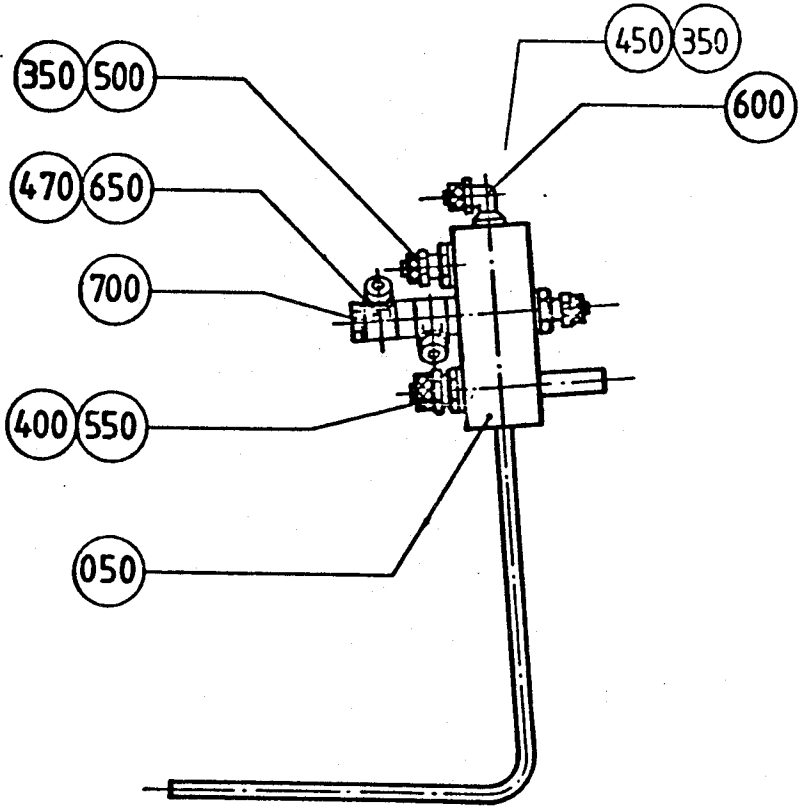
450
350
350
500
600
470
650
700
400
550
050

AB9

From	Pos	Part No	SP	UN	Qty	Description
TB/9						
	350	315233-0110	S		3	SEAL RING R1/4"
	450	342713-0210	-		1	BLANK-OFF
TBA/9						
	350	315233-0110	S		3	SEAL RING R1/4"
090V-	450	342713-0210	-		1	BLANK-OFF
-080V	600	342930-0114	-		1	ELBOW COUP6/4-1/4
Common Parts						
	050	469161	-		1	JUNCTION BLOCK
	400	315233-0111	S		1	SEAL RING R3/8"
	470	342903-0121	-		2	NUT J#DER 1723-8/6
	500	342921-0122	-		2	PIPE CONNE8/6-1/4"
	550	342921-0141	-		1	PIPE CONNE12/10-3/8
	650	342980-0122	-		2	BANJO CONNSINGEL 8/6-1/4
	700	342980-0314	-		1	BANJO CONN DUBBEL 1/4

From	Pos	Part No	SP	UN	Qty	Description

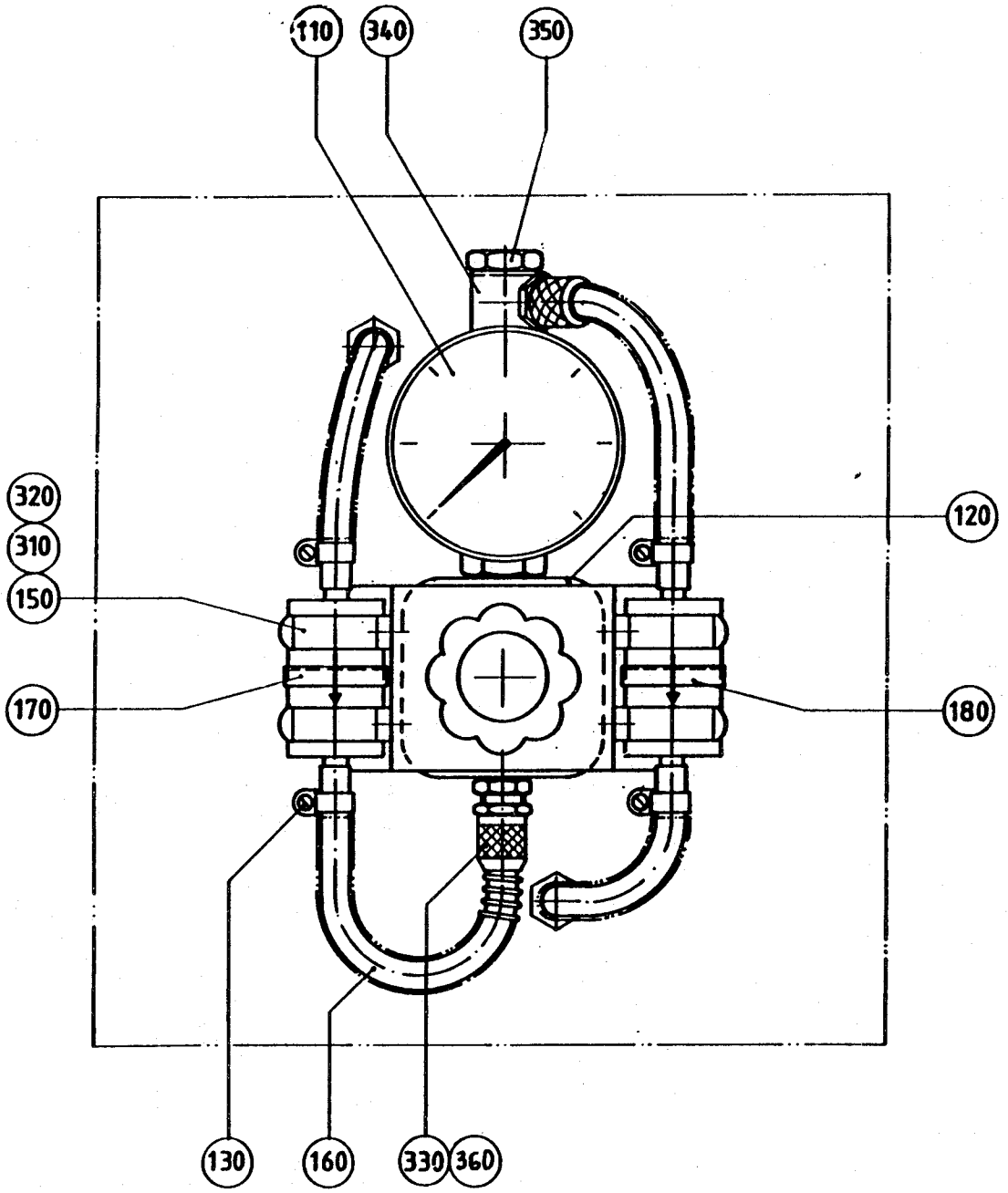
110
340
350
320
310
150
120
170
180
130
160
330
360

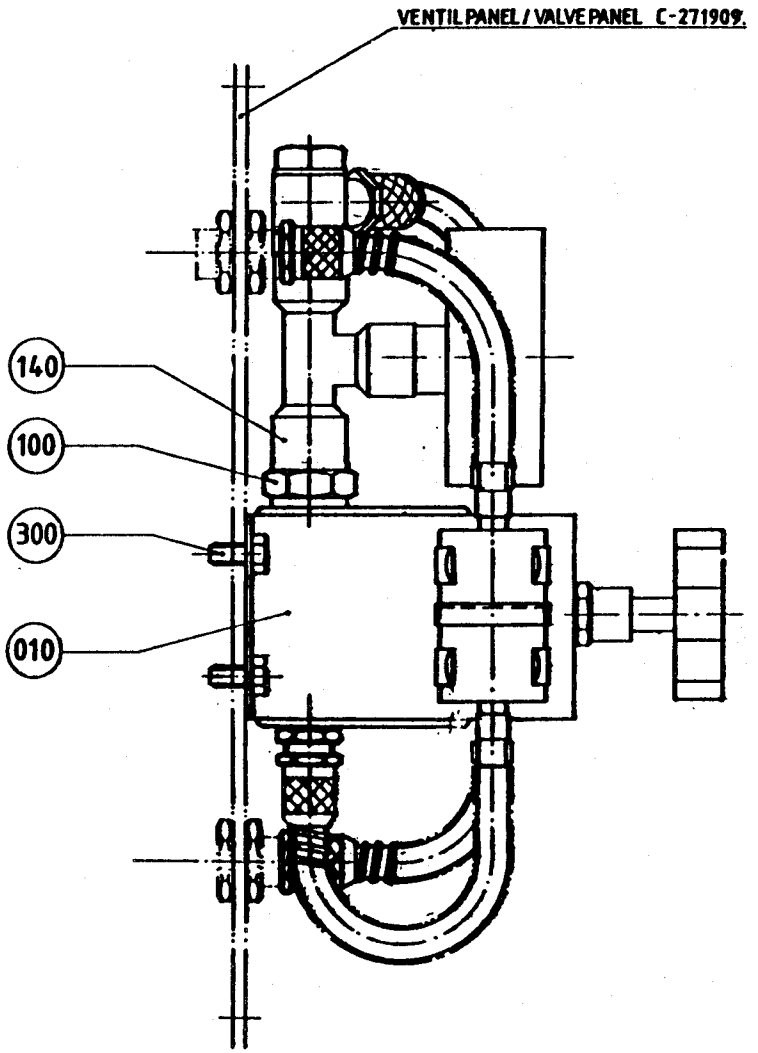
VENTILPANEL / VALVE PANEL C-271909.
140
100
300
010

From	Pos	Part No	SP	UN	Qty	Description
	010	491675	-		1	CLAMP
	090	90005-0005	P		2	WASHER
	100	342700-0110	S		1	NIPPLE RNA1/4"-1/4"
	110	90043-0078	S		1	PRESSURE GAUGE
	120	90113-0056	S		1	REGULATOR
	130	90132-0021	S		4	HOSE CLIP
	140	90140-0018	S		1	T-PIECE
	150	90165-0019	-		4	CLIP
	160	90166-0122	S	MM1000		HOSE
	170	90277-0045	P		1	FILTER
	180	90277-0046	P		1	FILTER
	300	312105-0325	-		4	SCREW M6S5X10 A4 80
	310	312125-0220	-		4	SLOTTED HEMCS3X6RFR
	320	312605-0310	-		4	NUT M6M3RFR
	330	342903-0121	S		4	NUT J#DER 1723-8/6
	340	342980-0122	-		1	BANJO CONNSINGEL 8/6-1/4
	350	342980-0304	S		1	BANJO CONN SINGEL 1/4
	360	342920-0122	-		1	PIPE CONNECTION 8/6-1/4

From	Pos	Part No	SP	UN	Qty	Description

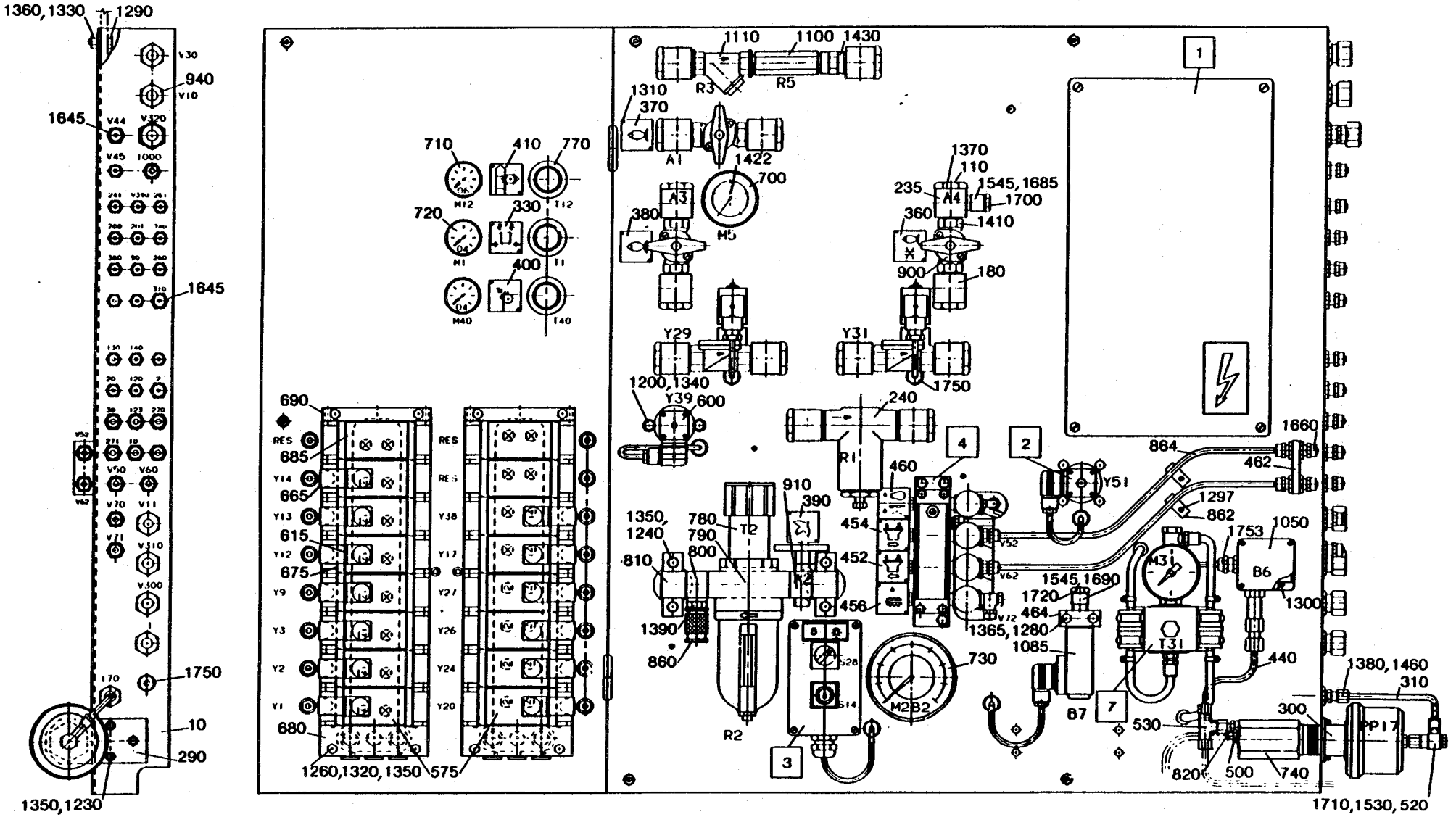
1360,1330
1290
940
1645
1645
1750
10
290
1350,1230
710
410
770
720
330
400
690
685
665
615
675
680
1260,1320,1350
575
1110
1100
1430
R3
R5
1310
370
1422
700
380
1370
110
235
1545,1685
1700
360
1410
900
180
Y29
Y31
1200,1340
Y39,600
1750
240
R1
460
910
390
454
452
456
1350,
1240
780
790
800
810
1390
860
R2
730
M2B2
1660
462
864
1297
862
Y51
1753
1050
B6
1300
1545,1690
1720
464
1365,1280
1085
B7
530
440
1380,1460
310
300
820
500
740
1710,1530,520

Last Alteration: AM 16262 91-05-22

Corresponding C-lists: 271909-0501
Assembly Drawing: 271909-25/27/29

Date Printed: 910528

From	Pos	Part No	SP	UN	Qty	Description
	F001	==>610-1.1	-		1	CONNECTION BOX
	F002	==>610-1.2	-		1	AIR INJECTOR
		==>610-1.2				. NON-RETURN VALVE
	F003	==>610-1.3	-		1	PUSH BUTTON BOX
	F004	==>610-1.4	-		1	FLOW METER
	F005	==>610-1.5	-		1	JUNCTION BLOCK
	F006	==>610-1.6	-		1	CONNECTION
	F007	==>610-1.7	-		1	PRESSURE FEED
	0010	752420	-		1	PLATE
	0090	978029	-		1	PIPE
	0110	271950	-		14	SCREW
	0180	469328	-		13	BANJO CONNECTION
	0280	271949	-		14	NUT
	0510	90005-0061	-		14	WASHER
	0540	90030-0166	-		17	REDUCER
	0575	90042-0108	-		13	SOLENOID VALVE
	0575.	90042-0451	SP		1	* WEAR & TEAR PARTS KIT
	0590	90042-0172	S		2	SOLENOID VALVE
	0590.	90042-0467	P		0	* COIL
	0615	90042-0345	-		13	COIL
	0665	90042-0392	-		13	CONTACT
	0675	90042-0431	-		16	PLATE
	0685	90042-0404	-		3	PLATE
	0710	90043-0068	S		1	PRESSURE GAUGE
	0720	90043-0069	S		2	PRESSURE GAUGE
	0770	90113-0021	S		3	REGULATOR
	0870	90166-0132	P	M	40	HOSE
	0940	90224-0296	-		6	GROMMET
	0970	90224-0356	-		2	END CAP D=4
	0980	90224-0357	-		1	END CAP D=6
	1280	312101-0380	-		3	SCREW M6S6X50FZB
	1310	312502-0120	-		22	DRIVE SCREKDS0X5FNB
	1320	312601-0316	-		16	NUT M6M6FZB
	1340	315101-0146	-		5	WASHER BRB5,3X10FZB
	1370	315202-0710	P		14	O-RING 25,12X1,78
	1390	315233-0110	P		40	SEAL RING R1/4"
	1400	315233-0111	S		4	SEAL RING R3/8"
	1420	315233-0115	P		28	SEAL RING R3/4"
	1440	342708-0109	-		1	SLEEVE 15X1/MS
	1445	342713-0211	-		1	BLANK-OFF
	1450	342713-0210	-		15	BLANK-OFF
	1485	342720-0114	-		2	PIPE CONNEGA-15-1/2"

From	Pos	Part No	SP	UN	Qty	Description
	1500	342767-0100	-		4	GROMMET R1/8
	1520	342767-0114	-		1	GROMMET R1/2
	1570	342921-0121	-		1	PIPE CONNE8/6-1/8"
	1590	342921-0123	-		1	PIPE CONNE8/6-3/8"
	1600	342930-0113	-		3	ELBOW COUP6/4-1/8
	1615	90224-0329	-		14	ELBOW COUPLING
	1650	342960-0112	S		18	GROMMET 6/4
	1660	342960-0122	-		16	GROMMET 8/6
	1670	342980-0113	S		4	BANJO CONNSINGEL 6/4-1/8
	1700	342980-0303	S		5	BANJO CONN SINGEL 1/8"
	1710	342980-0304	S		1	BANJO CONN SINGEL 1/4
	1720	342980-0314	S		1	BANJO CONN DUBBEL 1/4
	1750	352101-0103	-		30	LEAD-IN G 18,6
	1800	359000-0405	-		15	MARKING CO2/4"5"
	1800	359000-0406	-		10	MARKING CO2/4"6"
	1800	359000-0401	-		45	MARKING CO2/4"1"
	1800	359000-0408	-		5	MARKING CO2/4"8"
	1800	359000-0400	-		70	MARKING CO2/4"0"
	1800	359000-0402	-		35	MARKING CO2/4"2"
	1800	359000-0403	-		20	MARKING CO2/4"3"
	1800	359000-0409	-		5	MARKING CO2/4"9"

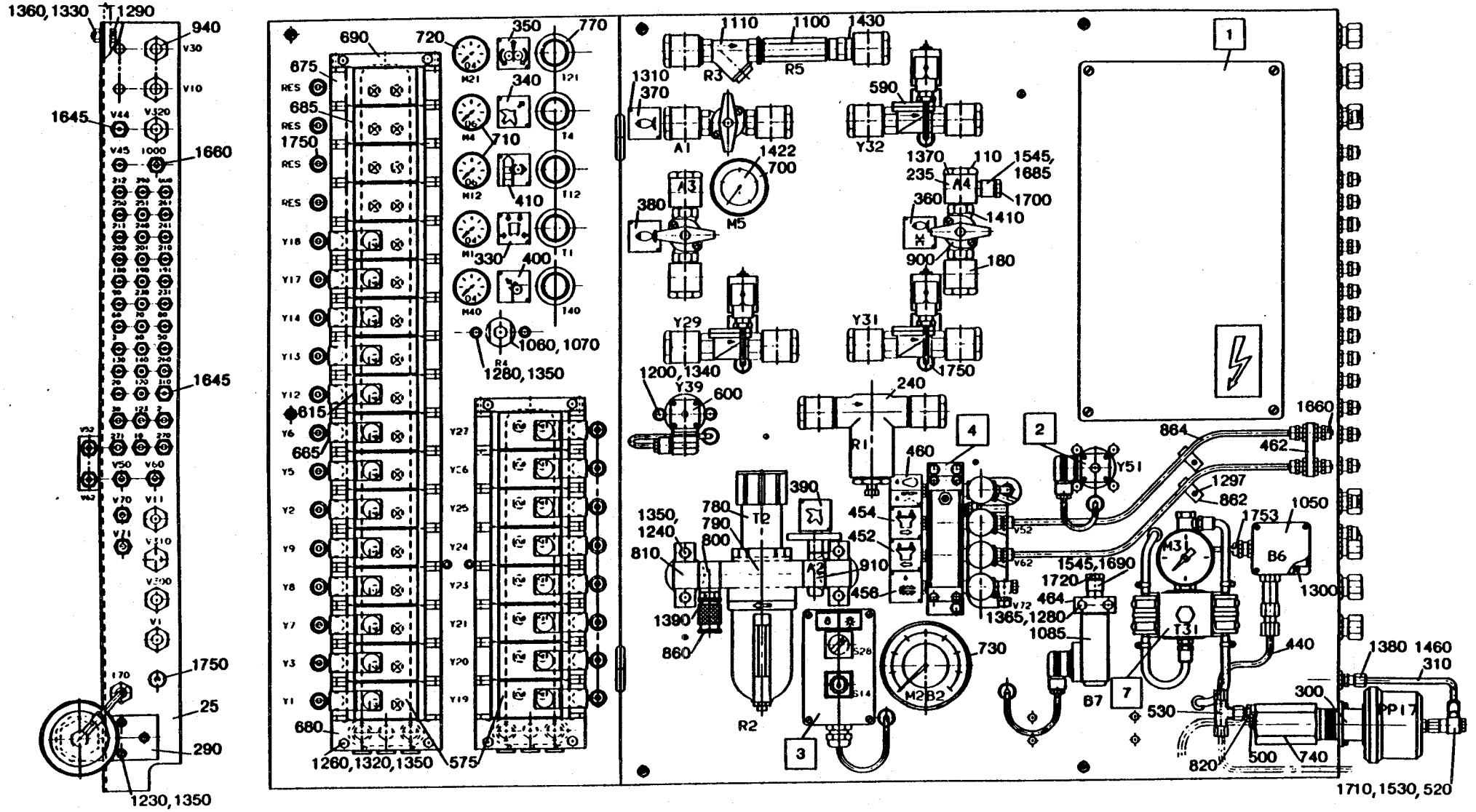
1360,1330
1290
940
1645
1660
1645
1750
25
290
1230,1350
690
720
350
770
675
685
1750
340
710
410
330
400
1060,1070
1280,1350
615
665
680
1260,1320,1350
575
1110
1100
1430
1310
370
590
1422
700
1370
110
1545,
1685
235
1700
360
1410
380
900
180
1200,1340
600
240
460
390
780
790
800
1350,
1240
810
454
452
910
456
1390
860
730
1365,1280
1085
1545,1690
1720
464
1753
1050
1300
440
1380 1460
310
300
530
820
500
740
1710,1530,520
1660
462
864
1297
862

From	Pos	Part No	SP	UN	Qty	Description
	F001	==>610-1.1	-		1	CONNECTION BOX
	F002	==>610-1.2	-		1	AIR INJECTOR
		==>610-1.2				. NON-RETURN VALVE
	F003	==>610-1.3	-		1	PUSH BUTTON BOX
	F004	==>610-1.4	-		1	FLOW METER
	F005	==>610-1.5	-		1	JUNCTION BLOCK
	F006	==>610-1.6	-		1	CONNECTION
	F007	==>610-1.7	-		1	PRESSURE FEED
	0025	752260	-		1	PLATE
	0060	978019	-		1	PIPE
	0110	271950	-		16	SCREW
	0150	295453	-		1	PIPE
	0180	469328	-		15	BANJO CONNECTION
	0280	271949	-		16	NUT
	0320	491649	-		1	BRACKET
	0340	273450	-		1	SIGN
	0350	273452	-		1	SIGN
	0450	295497	-		1	CONNECTION
	0510	90005-0061	-		16	WASHER
	0540	90030-0166	-		29	REDUCER
	0575	90042-0108	-		21	SOLENOID VALVE
	0575.	90042-0451	SP		1	* WEAR & TEAR PARTS KIT
	0590	90042-0172	S		3	SOLENOID VALVE
	0590.	90042-0467	P		0	* COIL
	0615	90042-0345	-		21	COIL
	0665	90042-0392	-		21	CONTACT
	0675	90042-0431	-		25	PLATE
	0685	90042-0404	-		4	PLATE
	0710	90043-0068	S		2	PRESSURE GAUGE
	0720	90043-0069	S		3	PRESSURE GAUGE
	0770	90113-0021	S		5	REGULATOR
	0870	90166-0132	P	M	80	HOSE
	0940	90224-0296	-		7	GROMMET
	1000	90235-0151	S		1	NON-RETURN VALVE
	1060	90277-0323	S		1	FILTER HOUSING
	1070	90277-0324	P		1	FILTER CARTRIDGE
	1210	312101-0329	-		2	SCREW M6S5X16FZB
	1280	312101-0380	-		5	SCREW M6S6X50FZB
	1310	312502-0120	-		26	DRIVE SCREKDS0X5FNB
	1320	312601-0316	-		10	NUT M6M6FZB
	1340	315101-0146	-		7	WASHER BRB5,3X10FZB
	1370	315202-0710	P		16	O-RING 25,12X1,78

From	Pos	Part No	SP	UN	Qty	Description
	1390	315233-0110	P		65	SEAL RING R1/4"
	1400	315233-0111	S		9	SEAL RING R3/8"
	1420	315233-0115	P		32	SEAL RING R3/4"
	1450	342713-0210	-		21	BLANK-OFF
	1500	342767-0100	-		6	GROMMET R1/8
	1503	342920-0114	-		1	PIPE CONNE6/4-1/4
	1506	342920-0122	-		1	PIPE CONNE8/6-1/4
	1560	342921-0114	-		2	PIPE CONNE6/4-1/4"
	1570	342921-0121	-		1	PIPE CONNE8/6-1/8"
	1590	342921-0123	-		2	PIPE CONNE8/6-3/8"
	1600	342930-0113	-		5	ELBOW COUP6/4-1/8
	1615	90224-0329	-		26	ELBOW COUPLING
	1640	342950-0114	-		1	L-CONNECTI6/4-1/4
	1650	342960-0112	S		31	GROMMET 6/4
	1660	342960-0122	-		15	GROMMET 8/6
	1670	342980-0113	S		6	BANJO CONNSINGEL 6/4-1/8
	1680	342980-0114	S		4	BANJO CONNSINGEL 6/4-1/4
	1700	342980-0303	S		7	BANJO CONN SINGEL 1/8"
	1710	342980-0304	S		3	BANJO CONN SINGEL 1/4
	1720	342980-0314	S		3	BANJO CONN DUBBEL 1/4
	1750	352101-0103	-		34	LEAD-IN G 18,6
	1800	359000-0401	-		75	MARKING CO2/4"1"
	1800	359000-0400	-		105	MARKING CO2/4"0"
	1800	359000-0402	-		60	MARKING CO2/4"2"
	1800	359000-0409	-		10	MARKING CO2/4"9"
	1800	359000-0408	-		10	MARKING CO2/4"8"
	1800	359000-0403	-		25	MARKING CO2/4"3"
	1800	359000-0406	-		15	MARKING CO2/4"6"
	1800	359000-0405	-		20	MARKING CO2/4"5"

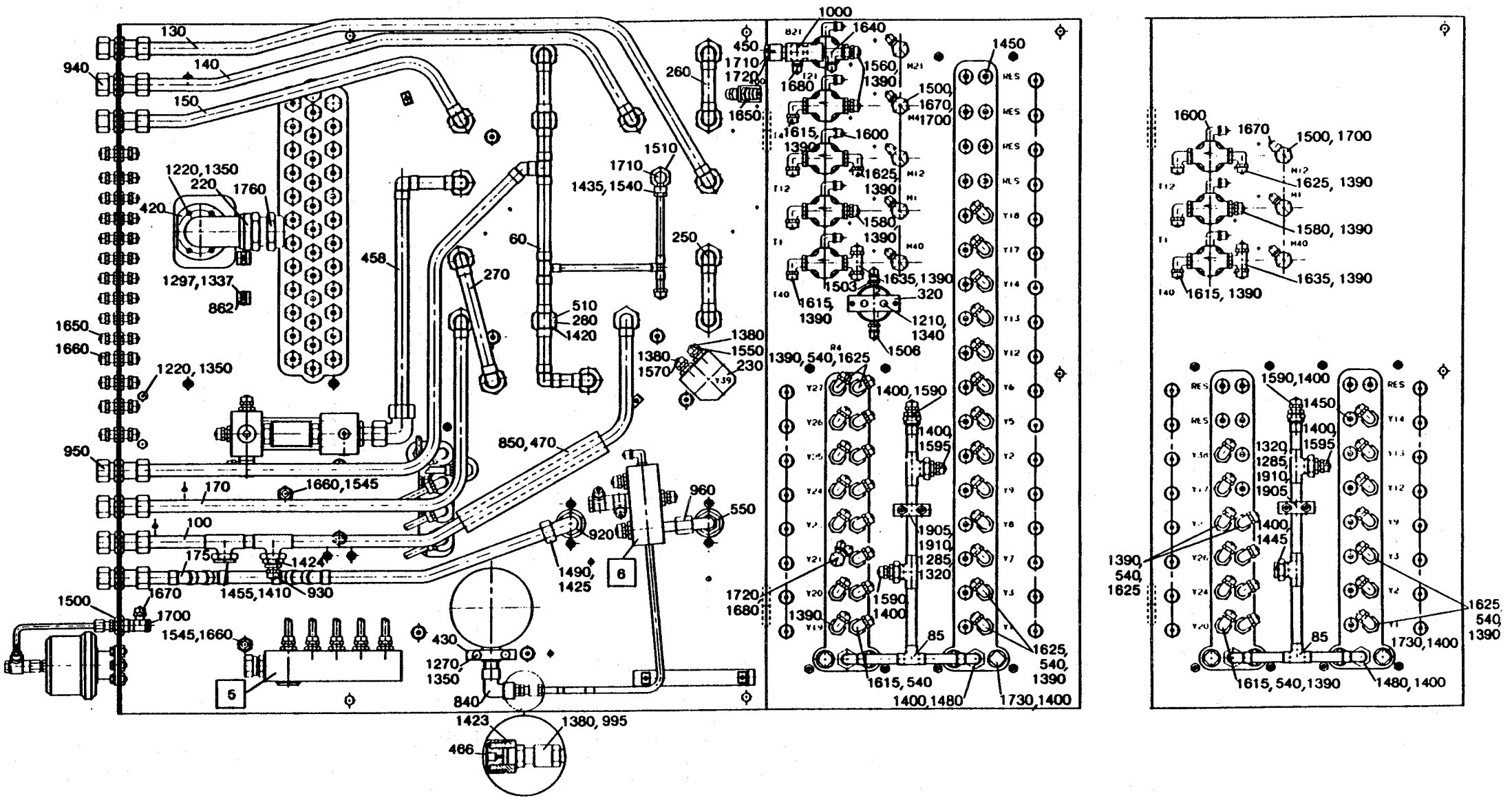
130
140
150
940
1220,1350
220
1760
420
1297,1337
862
1650
1660
1220,1350
950
170
1660,1545
100
175
1424
1670
1455,1410
930
1500
1700
1545,1660
5
430
1270,
1350
840
1423
1380, 995
466
850,470
458
270
60
510
280
1420
1510
1710
1435,1540
250
260
450
1710
1720
1650
1380
1550
230
1380
1570
Y39
920
960
550
1490,
1425
6
1000
B21
1640
1560
1390
1680
1615,
1390
1600
1625,
1390
1580,
1390
1503
1635,1390
320
1615,
1390
1210,
1340
1506
1450
1500,
1670,
1700
M21
M12
M1
M40
T12
T1
T40
RES
Y18
Y17
Y14
Y13
Y12
Y6
Y5
Y2
Y9
Y8
Y7
Y3
Y1
1390,540,1625
R4
Y27
Y26
Y25
Y24
Y23
Y22
Y21
Y20
Y19
1400,1590
1400,
1595
1905,
1910,
1285,
1320
1590,
1400
1720,
1680
1390,
85
1615,540
1400,1480
1625,
540,
1390
1730,1400
1600
1670
1500, 1700
1625, 1390
1580, 1390
1635, 1390
1615, 1390
1590,1400
1450
1400,
1595
1320,
1285,
1910,
1905
1400,
1445
1390,
540,
1625
85
1615, 540,1390
1480, 1400
1730,1400
1625,
540,
1390

From	Pos	Part No	SP	UN	Qty	Description
Common Parts						
	085	752261	-		1	PIPE
	330	273449	-		1	SIGN
	360	273454	-		1	SIGN
	370	273455	-		1	SIGN
	380	273456	-		1	SIGN
	390	273458	-		1	SIGN
	400	295424	-		1	SIGN
	410	295425	-		1	SIGN
	100	978018	-		1	PIPE
	130	295451	-		1	PIPE
	140	295452	-		1	PIPE
	170	295455	-		1	PIPE
	175	469166	-		1	PIPE
	220	295460	-		1	BRACKET
	230	295496	-		1	BLOCK
	235	491951	-		1	BANJO CONNECTION
	240	271823	P		1	FILTER
	240.	90415-0314	P		0	* FILTERINSERT
	240.	90415-0325	P		0	* GASKET
	250	271907-0001	-		1	PIPE
	260	271907-0002	-		1	PIPE
	270	271907-0003	-		1	PIPE
	290	272129	-		1	BRACKET
	300	272130	-		1	SPACER
	310	272340	-		1	PIPE
	420	295461	-		1	RUBBER GASKET
	430	295462	-		1	HOLDER
	440	295473	-		1	PIPE
	452	445533	-		1	SIGN
	454	445534	-		1	SIGN
	456	445535	-		1	SIGN
	458	469329	-		1	PIPE
	460	469330	-		1	SIGN
	462	469331	-		1	HOLDER
	464	469332	-		1	CONNECTION
	466	456884	-		1	THROTTLE NIPPLE
	470	456137	-		1	HOSE
	500	90005-0045	-		1	WASHER
	520	90030-0116	-		1	REDUCER
	530	90030-0127	-		1	PIPE CONNECITON
	550	90030-0168	-		2	REDUCER
	600	90042-0173	S		1	SOLENOID VALVE
	680	90042-0368	-		2	CONNECTION
	690	90042-0369	-		2	END PIECE
	700	90043-0006	S		1	PRESSURE GAUGE
	730	90043-0070	S		1	PRESSURE GAUGE
	740	90048-0041	S		1	OIL PUMP
	740.	90048-0443	S		1	* CONTAINER
	740.	90048-0444	S		1	* PIPE
	740.	90048-0450	SP		1	* SPARE PARTS KIT
	740.	90048-0451	S		1	* VALVE
	740.	90048-0452	S		1	* SEALING KIT
	740.	90048-0453	S		1	* OVERFLOW TRAP
	740.	90048-0523	S		1	* COMPRESSION SPRING
	740.	90048-0525	S		1	* PUMP HOUSING
	740.	90048-0526	S		1	* O-RING
	740.	90048-0527	S		1	* SEAL RING
	740.	90048-0528	S		1	* PISTON SEAL
	750	90048-0453	-		X	OVERFLOW TRAP
	780	90113-0047	S		1	REGULATOR
	780.	90277-0314	P		0	* FILTER
	790	90113-0338	-		1	YOKE
	800	90113-0342	-		1	JUNCTION BLOCK
	810	90113-0356	-		1	BRACKET
	820	90134-0019	-		1	GLAND
	840	90140-0014	-		1	ELBOW PIPE
	850	90153-0035	-		X	ADHESIVE
	860	90163-0016	-		1	SLEEVE
	862	90165-0044	-		5	CLIP
	864	90166-0118	-	MM	3400	HOSE
	866	90166-0119	-	MM	1500	HOSE
	880	90166-0133	-	M	22	HOSE
	890	90166-0134	-	MM	1180	HOSE
	900	90187-0029	S		3	VALVE
	910	90187-0047	S		1	VALVE
	920	90224-0078	-		1	CONNECTION
	930	90224-0094	-		1	NIPPLE
	950	90224-0297	-		1	REDUCER
	960	90224-0298	-		1	CONNECTION
	995	90224-0324	-		1	CONNECTION
	1050	90274-0027	S		1	GUARD
	1085	90274-0056	S		1	PRESSURE GUARD
	1100	90415-0018	S		1	FILTER
	1110	90415-0019	S		1	FILTER
	1200	312101-0327	-		2	SCREW M6S5X12FZB

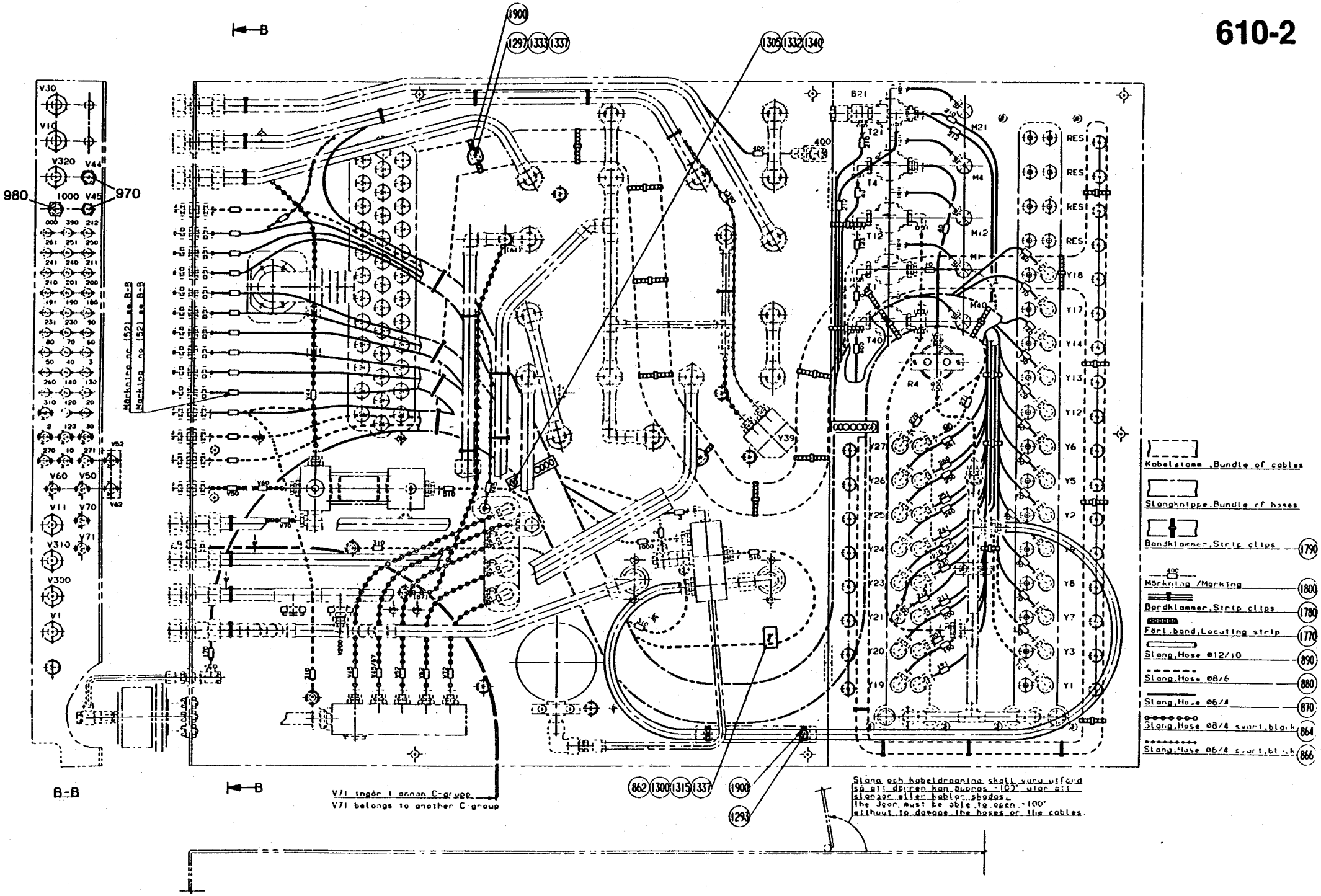
B-B
B-B
980
970
1000
1900
1297
1333
1337
1305
1332
1340
Markning se (52) se B-B
Marking se (52) se B-B
V71 ingår i annan C-grupp
V71 belongs to another C-group
862
1300
1315
1337
1900
1293
Slang och kabeldragning skall vara utförd så att dörren kan öppnas -100° utan att slangar eller kablar skadas.
The door must be able to open -100° without to damage the hoses or the cables.
Kabelstomme ,Bundle of cables
Slanghäppe,Bundle of hoses
Bandklammer,Strip clips 1790
Märkning /Marking 1800
Bandklammer,Strip clips 1780
Fört.band,Locating strip 1770
Slang,Hose ø12/10 890
Slang,Hose ø8/6 880
Slang,Hose ø6/4 870
Slang,Hose ø8/4 svart,black 864
Slang,Hose ø6/4 svart,black 866

From	Pos	Part No	SP	UN	Qty	Description
	1220	312101-0367	-		6	SCREW M6S6X14FZB
	1230	312101-0368	-		3	SCREW M6S6X16FZB
	1240	312101-0372	-		4	SCREW M6S6X25FZB
	1260	312101-0378	-		8	SCREW M6S6X40FZB
	1270	312101-0379	-		3	SCREW M6S6X45FZB
	1285	312111-0390	-		2	SCREW MC6S6X100FZB
	1290	312101-0451	-		6	SCREW M6S8X20FZB
	1293	312121-0285	-		2	SLOTTED HEMCS4X6FZB
	1297	312121-0287	-		4	SLOTTED HEMCS4X8FZB
	1300	312121-0291	-		3	SLOTTED HEMCS4X12FZB
	1305	312125-0335	-		1	SLOTTED HEMCS5X30RFR
	1315	312601-0312	-		1	NUT M6M4FZB
	1330	312601-0318	-		6	NUT M6M8FZB
	1332	312605-0314	-		2	NUT M6M5RFR
	1333	312705-0312	-		2	CAP NUT MHM 4 A2
	1337	315101-0136	-		5	WASHER BRB4,3X8FZB
	1350	315101-0153	-		27	WASHER BRB6,4X12FZB
	1360	315101-0165	-		6	WASHER BRB8,4X16FZB
	1365	315115-0153	-		2	WASHER TBRB6,4X12RFR
	1380	315233-0109	P		4	SEAL RING R1/8"
	1410	315233-0113	P		17	SEAL RING R1/2"
	1422	342701-0201	-		1	BUSHING RNI1/4"-1/8"
	1423	342701-0202	-		1	BUSHING RNI3/8"-1/8"
	1424	342701-0205	-		1	BUSHING RNI1/2"-1/4"
	1425	342704-0115	-		1	CUTTING RIR-16MSG
	1430	342707-0113	-		1	SLEEVE
	1435	342708-0103	-		1	SLEEVE 8X1/MS
	1455	342713-0213	-		1	BLANK-OFF
	1460	342720-0102	-		1	PIPE CONNEGA-6-1/8"
	1480	342720-0109	-		2	PIPE CONNEGA-12-3/8"
	1490	342736-0114	-		1	ELBOW COUP W-15
	1510	342767-0104	-		1	GROMMET R1/4
	1530	342797-0122	-		1	BANJO CONNSINGEL 6-1/4
	1540	342797-0132	-		1	BANJO CONNSINGEL 8-1/4
	1545	342903-0121	-		3	NUT J#DER 1723-8/6
	1550	342921-0113	-		1	PIPE CONNE6/4-1/8"
	1580	342921-0122	-		1	PIPE CONNE8/6-1/4"
	1595	342921-0141	-		1	PIPE CONNE12/10-3/8
	1625	342931-0122	-		7	ELBOW COUP
	1635	342941-0122	-		1	T-PIECE
	1645	342960-0121	-		2	GROMMET 8/6-6/4
	1685	342980-0121	-		1	BANJO CONNINGEL 8/6-1/8"
	1690	342980-0122	-		1	BANJO CONNSINGEL 8/6-1/4

From	Pos	Part No	SP	UN	Qty	Description
	1730	346800-0111	S		4	SILENCER FILTER R3/8"
	1753	352103-0106	-		1	CABLE GLANR.18,6/5-10
	1760	352103-0121	-		1	CABLE GLANR.37,0/18-25
	1770	352112-0101	-	MM	500	BUNDLING SGSBAND TUB 12
	1780	352113-0101	-		35	RIBBON CLA
	1790	352113-0102	-		25	RIBBON CLA
	1800	359000-0404	-		20	MARKING CO2/4"4"
	1800	359000-0771	-		35	MARKING CO2/4"V"
	1800	359000-0407	-		15	MARKING CO2/4"7"
	1900	352113-0202	-		4	ARMATURE -TM2-S8
	1905	752262	-		1	PIPE HOLDER
	1910	752263	-		1	PIPE HOLDER

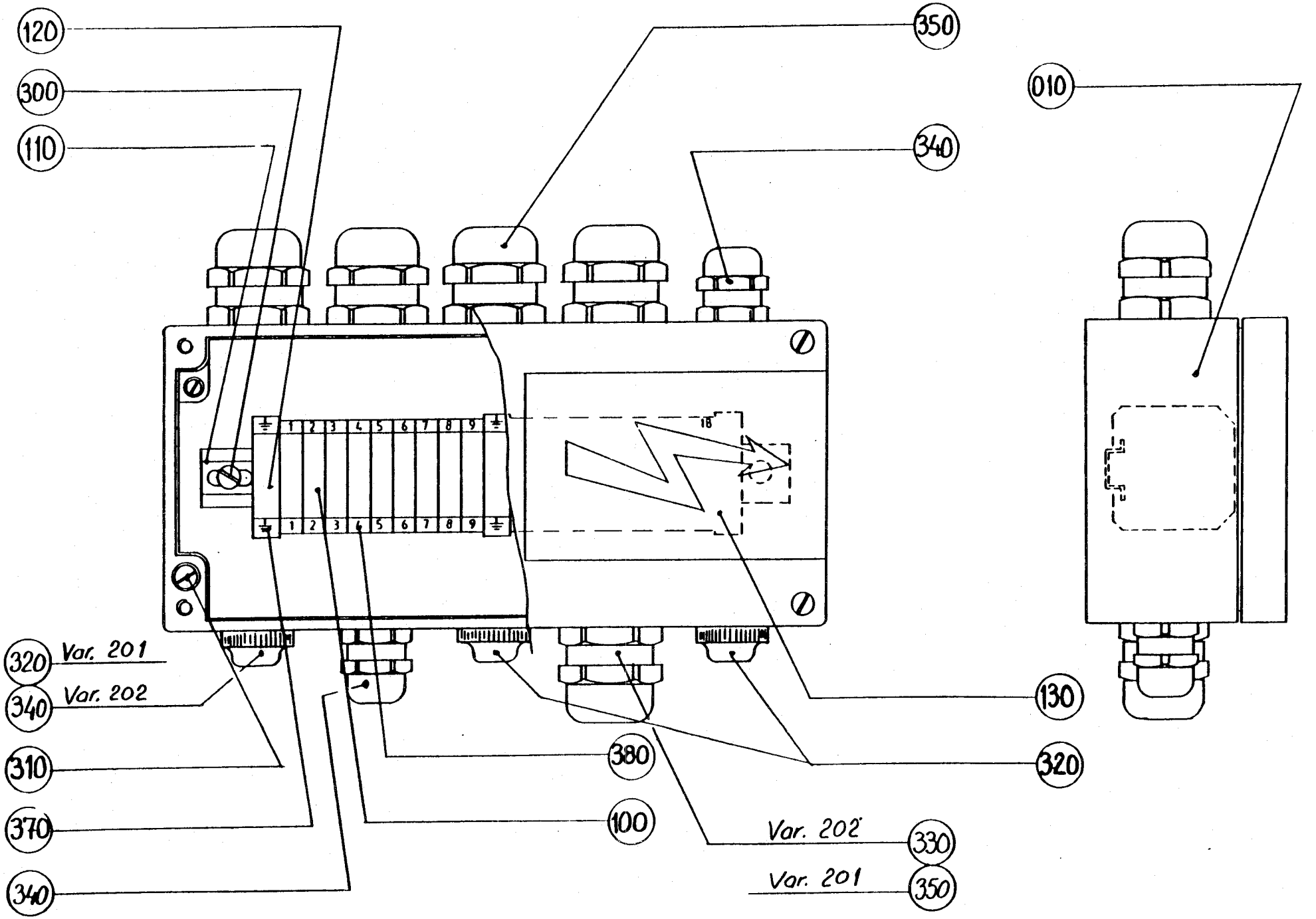
120
300
110
350
340
010
320 Var. 201
340 Var. 202
310
370
340
380
100
130
320
Var. 202
330
Var. 201
350

From	Pos	Part No	SP	UN	Qty	Description
TB/9 without Pull Tab, TBA/9						
	320	352101-0102	-		3	LEAD-IN G 15,2
	340	352103-0101	-		2	CABLE GLANR.15,2/4-8
	350	352103-0110	-		5	CABLE GLANR.22,5/4-13
	320	352101-0102	-		2	LEAD-IN G 15,2
TB/9 with Pull Tab						
	330	352101-0105	-		1	LEAD-IN G 22,5
	340	352103-0101	-		3	CABLE GLANR.15,2/4-8
	350	352103-0110	-		4	CABLE GLANR.22,5/4-13
Common Parts						
	010	295913	-		1	CONNECTION BOX
	100	90077-0079	-		18	TERMINAL BLOCK
	110	90077-0328	-	MM	156	RAIL
	120	90135-0026	-		3	EARTHING CLAMP
	130	90194-0016	-		1	SIGN
	300	312121-0285	-		2	SLOTTED HEMCS4X6FZB
	310	312121-0293	-		2	SLOTTED HEMCS4X16FZB
	370	359011-0202	-		6	LABEL (JORD)
	380	359011-0802	-		1	LABEL BSFW 11-20

From	Pos	Part No	SP	UN	Qty	Description

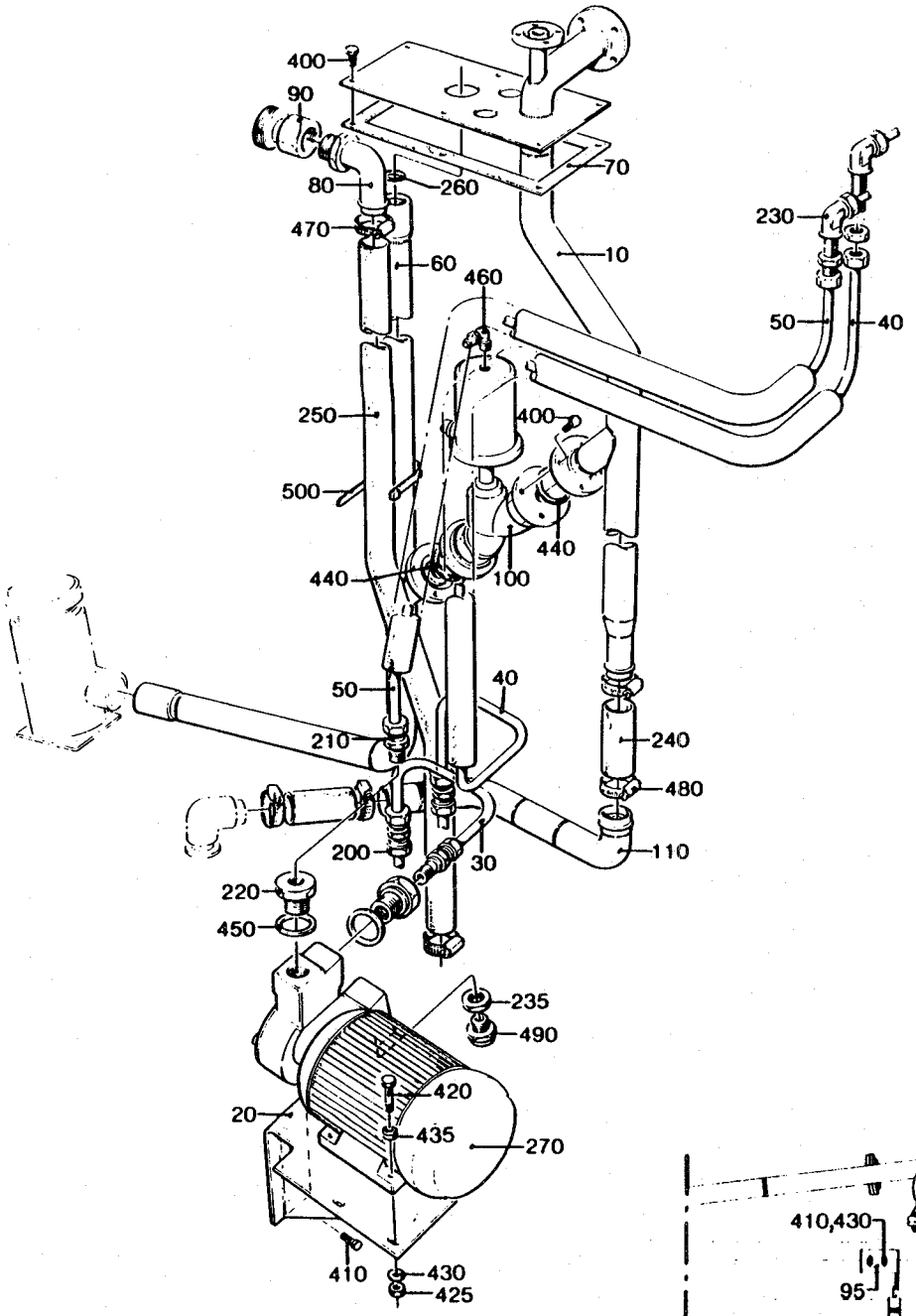

Variant –0102

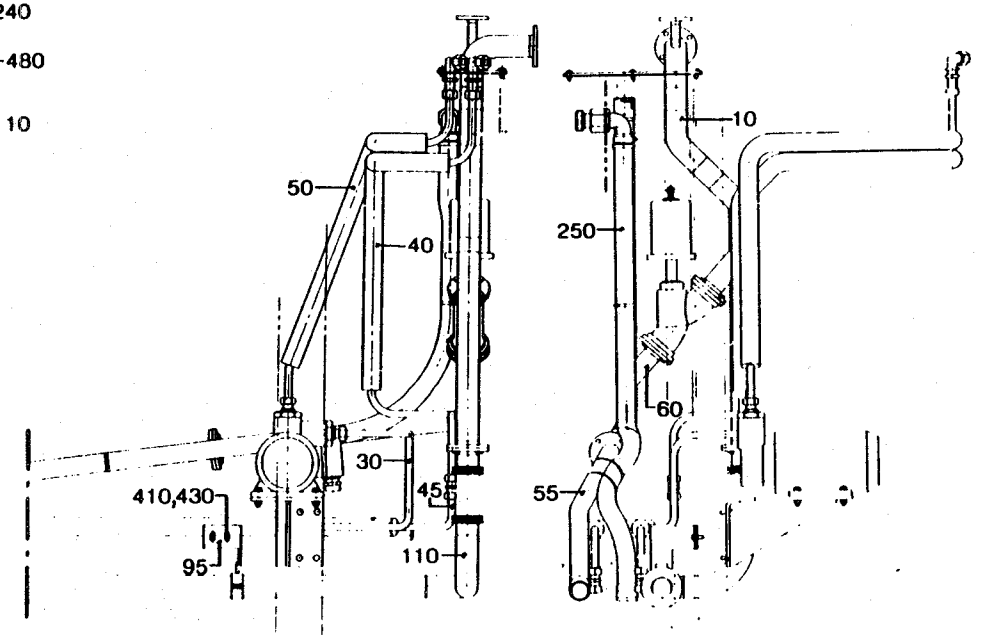

From	Pos	Part No	SP	UN	Qty	Description
TBA/9						
	010	491181	-		1	PIPE
	030	469539	-		1	PIPE
	060	491182	-		1	RETURN PIPE
	110	491366	-		1	PUMP PIPE
	200	90030-0106	-		2	PIPE CONNECTION
	240	90166-0156	S	MM	200	HOSE
	250	90166-0158	S	MM	900	HOSE
	400	312105-0366	-		14	SCREW M6S6X12RFR
	410	312105-0368	-		4	SCREW M6S6X16RFR
	430	315105-0153	-		4	WASHER BRB6,4X12RFR
	440	315204-0223	P		2	O-RING 39,2X3VITON
	480	342991-0107	-		4	HOSE CLIP 32-44MMRFR
	500	352113-0102	-		1	RIBBON CLAR
TBA/9 Slim Body						
	010	751822	-		1	TUBE
	030	751823	-		1	TUBE
	045	751815	-		1	TUBE
	055	751820	-		1	TUBE
	060	751821	-		1	RETURN TUBE
	095	751846	-		1	BRACKET
	110	751814	-		1	TUBE
	200	90030-0106	-		3	PIPE CONNECTION
	250	90166-0158	S	MM	2500	HOSE
	400	312105-0366	-		26	SCREW M6S6X12RFR
	410	312105-0368	-		6	SCREW M6S6X16RFR
	430	315105-0153	-		6	WASHER BRB6,4X12RFR
	440	315204-0223	P		5	O-RING 39,2X3VITON
	500	352113-0102	-		4	RIBBON CLAR
Common Parts						
	020	469538	-		1	BRACKET
	040	751067	-		1	PIPE
	050	751066	-		1	PIPE
	070	272818	S		1	GASKET
	080	469993	-		1	HOSE COUPLING
	090	469994	-		1	CONNECTION
	100	499501	S		1	VALVE
	210	90030-0187	-		2	PIPE CONNECTION
	220	90030-0209	-		2	REDUCER
	230	90030-0221	-		2	GROMMET
	235	90089-0017	-		1	TRANSITIONAL MUFF
	260	90242-0065	P		1	O-RING

From	Pos	Part No	SP	UN	Qty	Description
	270	90321-0039	S		1	PUMP
	420	312105-0374	-		4	SCREW M6S6X30RFR
	425	312605-0316	-		4	NUT M6M6RFR
	435	315115-0153	-		4	WASHER TBRB6,4X12RFR
	450	315233-0116	-		2	SEAL RING R1"
	460	342930-0114	-		1	ELBOW COUP6/4-1/4
	470	342991-0106	-		2	HOSE CLIP 26-38MMRFR
	490	352103-0110	-		1	CABLE GLANR.22,5/4-13

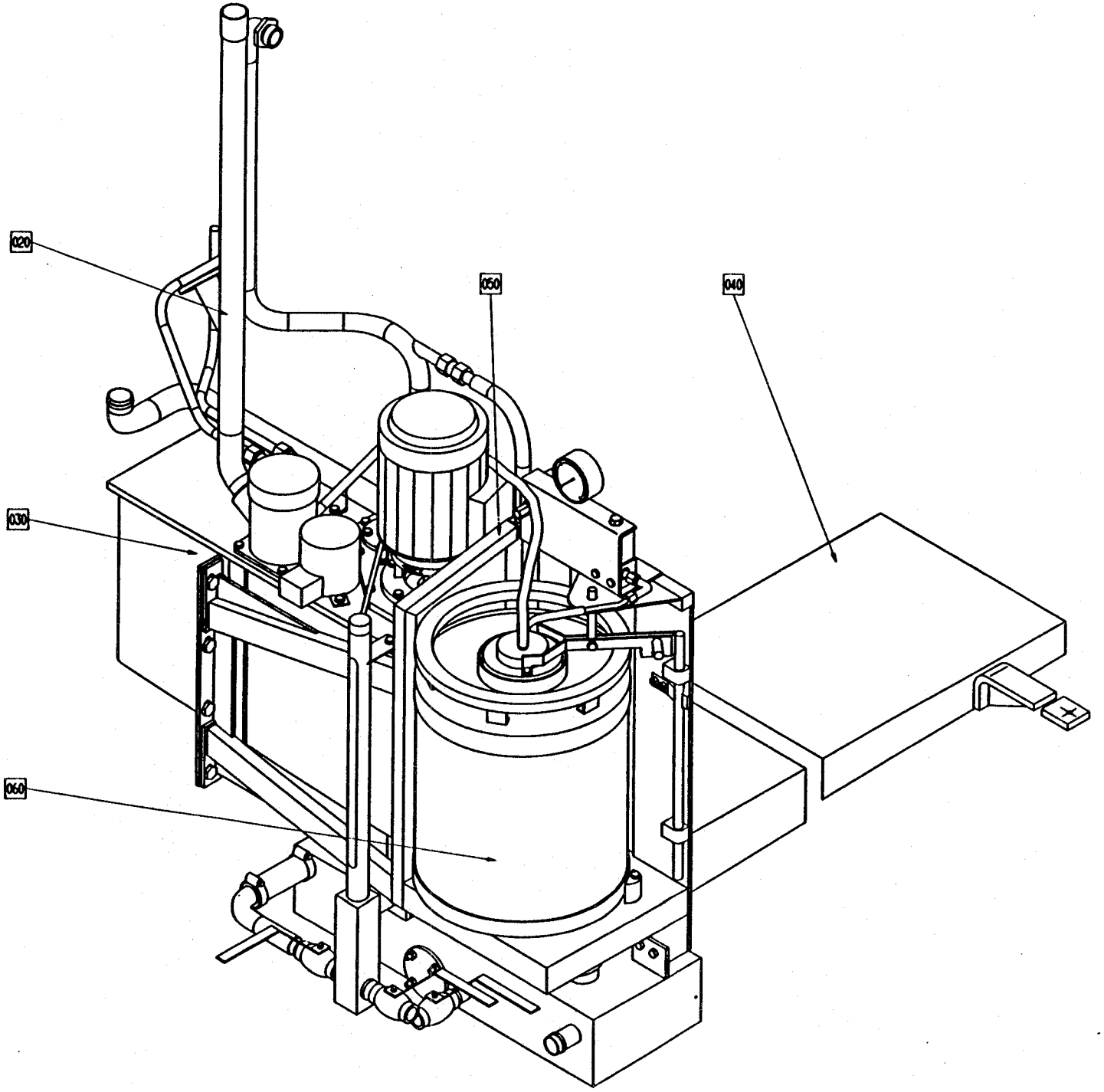
020
050
040
030
060

From	Pos	Part No	SP	UN	Qty	Description
	F020	==>612-2.1a	-		1	PIPE WORK
	F030	==>613-2	-		1	PEROXIDE TANK
		==>613-2				. LID
		==>613-2.1				. PEROXIDE PUMP
	F040	==>612-2.2	-		1	PEROXIDE TANK
		==>612-2.2				. LID
	F050	==>612-2.3	-		1	HOUSING
		==>612-2.3.1				. VALVE PANEL
	F060	==>612-2.3	-		2	* CONTAINER

From	Pos	Part No	SP	UN	Qty	Description

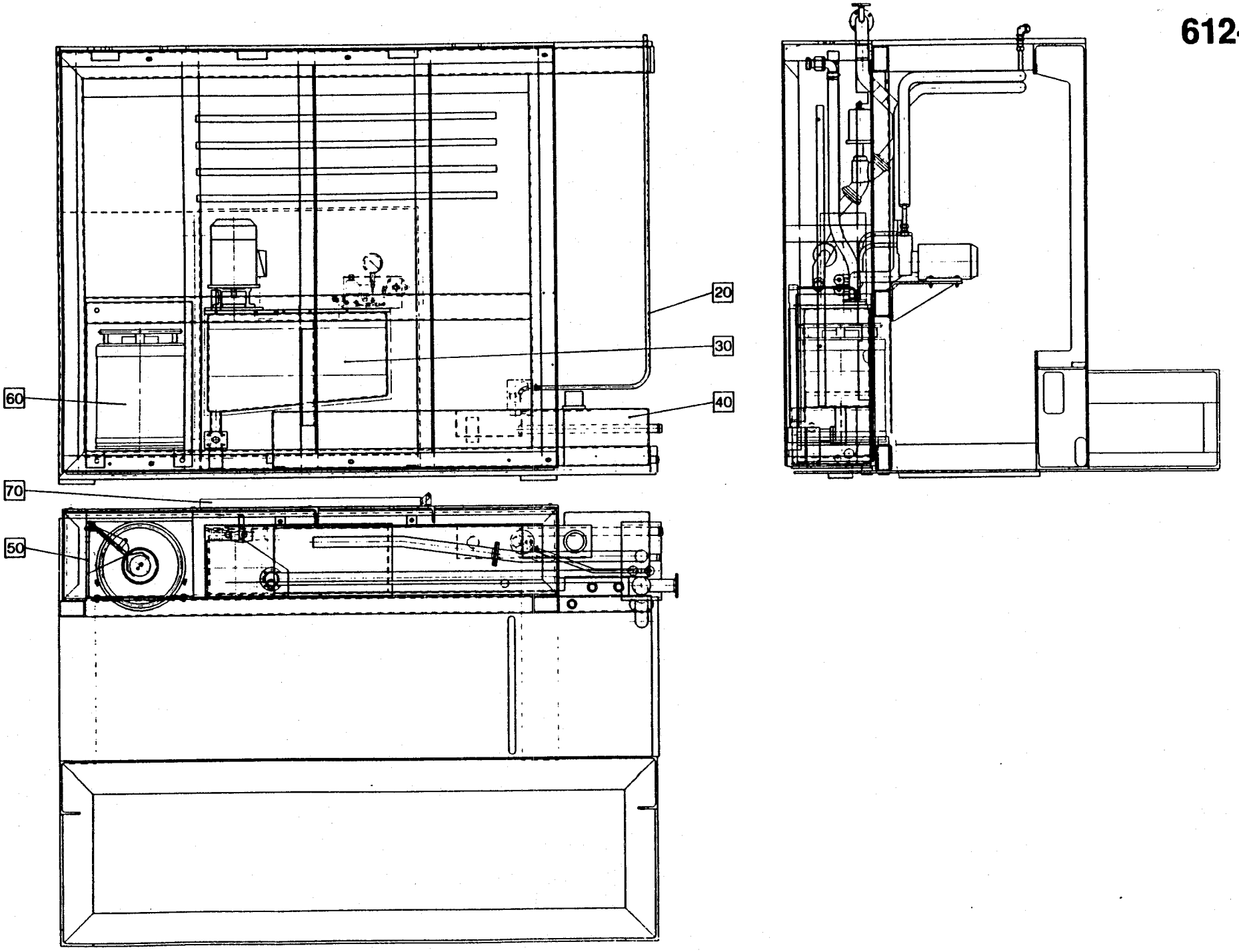
20
30
60
40
70
50

From	Pos	Part No	SP	UN	Qty	Description
	F020	==>612-2.1b	-		1	PIPE WORK
	F030	==>613-2	-		1	PEROXIDE TANK
		==>613-2				. LID
		==>613-2.1				. PEROXIDE PUMP
	F040	==>612-2.2	-		1	PEROXIDE TANK
		==>612-2.2				. LID
	F050	==>612-2.3	-		1	HOUSING
		==>612-2.3.1				. VALVE PANEL
	F060	==>612-2.3	-		2	* CONTAINER
	F070	==>612-2.4	-		1	DOOR

From	Pos	Part No	SP	UN	Qty	Description

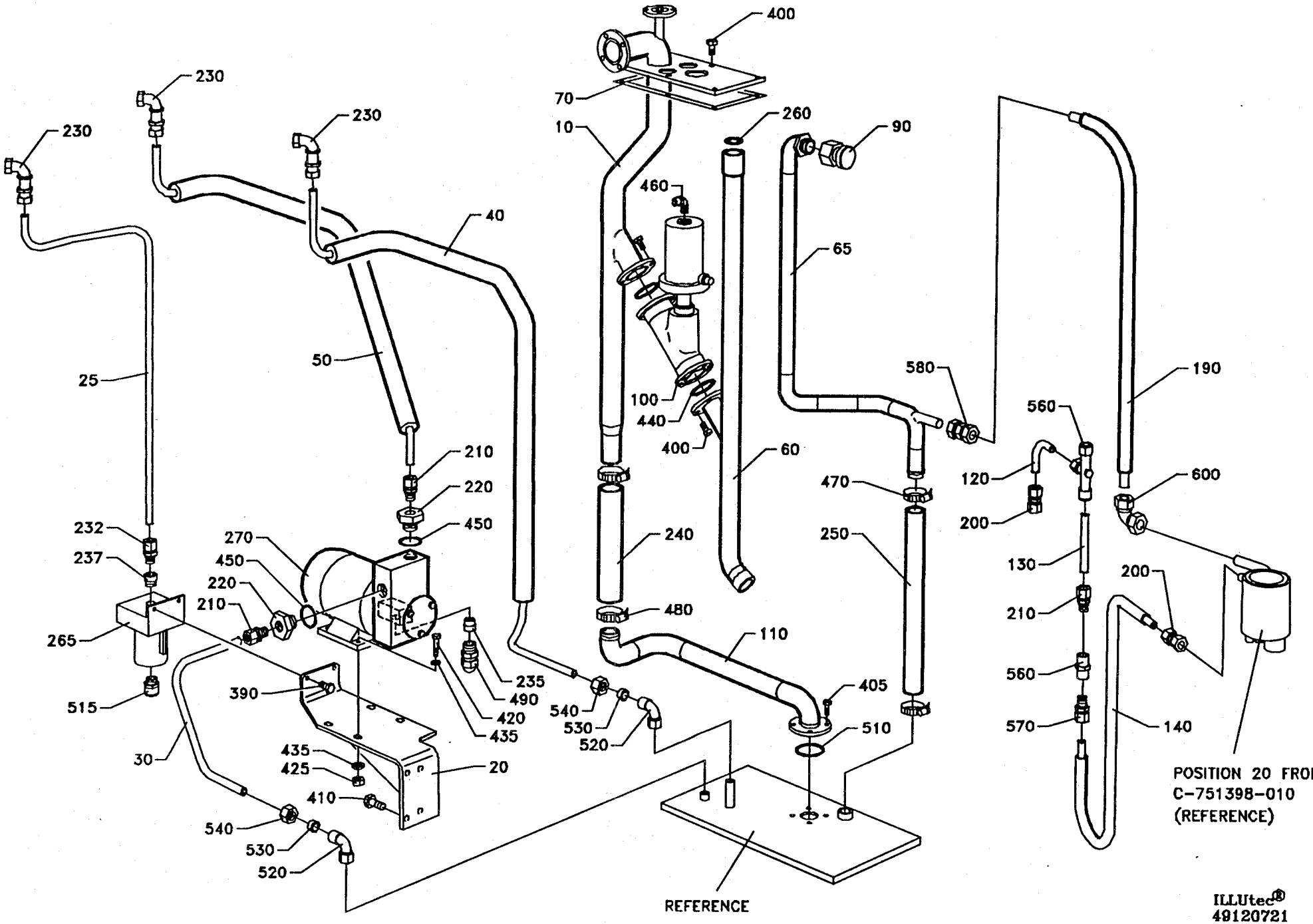
400
70
230
230
230
10
260
90
460
40
65
50
580
190
100
440
400
60
560
120
600
210
220
450
470
200
232
237
270
450
220
210
240
250
130
200
265
480
110
210
560
515
390
235
490
420
435
405
540
530
520
510
570
140
30
435
425
20
410
540
530
520
POSITION 20 FROM
C-751398-010
(REFERENCE)
REFERENCE
ILLUtec®
49120721

From	Pos	Part No	SP	UN	Qty	Description
	010	491181	-		1	PIPE
	020	552837	-		1	BRACKET
	025	552838	-		1	PIPE
	030	751366	-		1	PIPE
	040	752613	-		1	PIPE
	050	751066	-		1	PIPE
	060	751362	-		1	RETURN PIPE
	065	752566	-		1	PIPE
	070	272818	S		1	GASKET
	090	469994	-		1	CONNECTION
	100	499501	S		1	VALVE
	110	751364	-		1	PUMP PIPE
	120	752660	-		1	PIPE
	130	752659	-		1	PIPE
	140	752661	-		1	HOSE
	190	752864	-		1	HOSE
	200	90030-0106	-		1	PIPE CONNECTION
	210	90030-0187	-		4	PIPE CONNECTION
	220	90030-0209	-		2	REDUCER
	230	90030-0221	-		3	GROMMET
	232	90030-0253	-		1	PIPE CONNECTION
	235	90089-0017	-		1	TRANSITIONAL MUFF
	237	90089-0018	-		1	TRANSITIONAL NIPPLE
	240	90166-0156	S	MM	200	HOSE
	250	90166-0151	S	MM	500	HOSE
	260	90242-0065	P		1	O-RING
	265	90274-0065	-		1	PRESSURE GUARD
	270	90321-0039	S		1	PUMP
		90321-0542	C	ST	1	* SPARE PART KIT
	390	312105-0327	-		2	SCREW M6S5X12 A4 80
	400	312105-0366	-		14	SCREW M6S6X12RFR
	405	312101-0368	-		4	SCREW M6S6X16FZB
	410	312105-0368	-		4	SCREW M6S6X16RFR
	420	312105-0374	-		4	SCREW M6S6X30RFR
	425	312605-0316	-		4	NUT M6M6RFR
	430	315105-0153	-		4	WASHER BRB6,4X12RFR
	435	315115-0153	-		4	WASHER TBRB6,4X12RFR
	440	90242-0187	P		2	O-RING 40,2X2,5 PTFE
	450	90005-0020	-		2	WASHER
	460	342930-0114	-		1	ELBOW COUP6/4-1/4
	470	342991-0106	-		2	HOSE CLIP 26-38MMRFR
	480	342991-0107	-		2	HOSE CLIP 32-44MMRFR
	490	352103-0110	-		1	CABLE GLANR.22,5/4-13

From	Pos	Part No	SP	UN	Qty	Description
	500	352113-0102	-		2	RIBBON CLA
	510	90242-0174	-		1	O-RING
	515	352136-0129	-		1	GLAND
	520	90030-0096	-		3	PIPE CONNECTION
	530	90030-0110	-		2	CONE
	540	342703-0215	-		4	NUT M12-L/SY
	550	90030-0058	-		1	CONNECTION
	560	90270-0347	-		1	VALVE
	570	90030-0181	-		1	PIPE CONNECTION
	580	342727-0214	-		1	PIPE CONNEG 15-L/SY
	600	342737-0221	-		1	ELBOW COUP W 15-L RFR
	630	352113-0202	-		2	ARMATURE STA-TM2-S8
	650	312125-0291	-		2	SLOTTED HEMCS4X12RFR
	660	312605-0312	-		2	NUT M6M4RFR

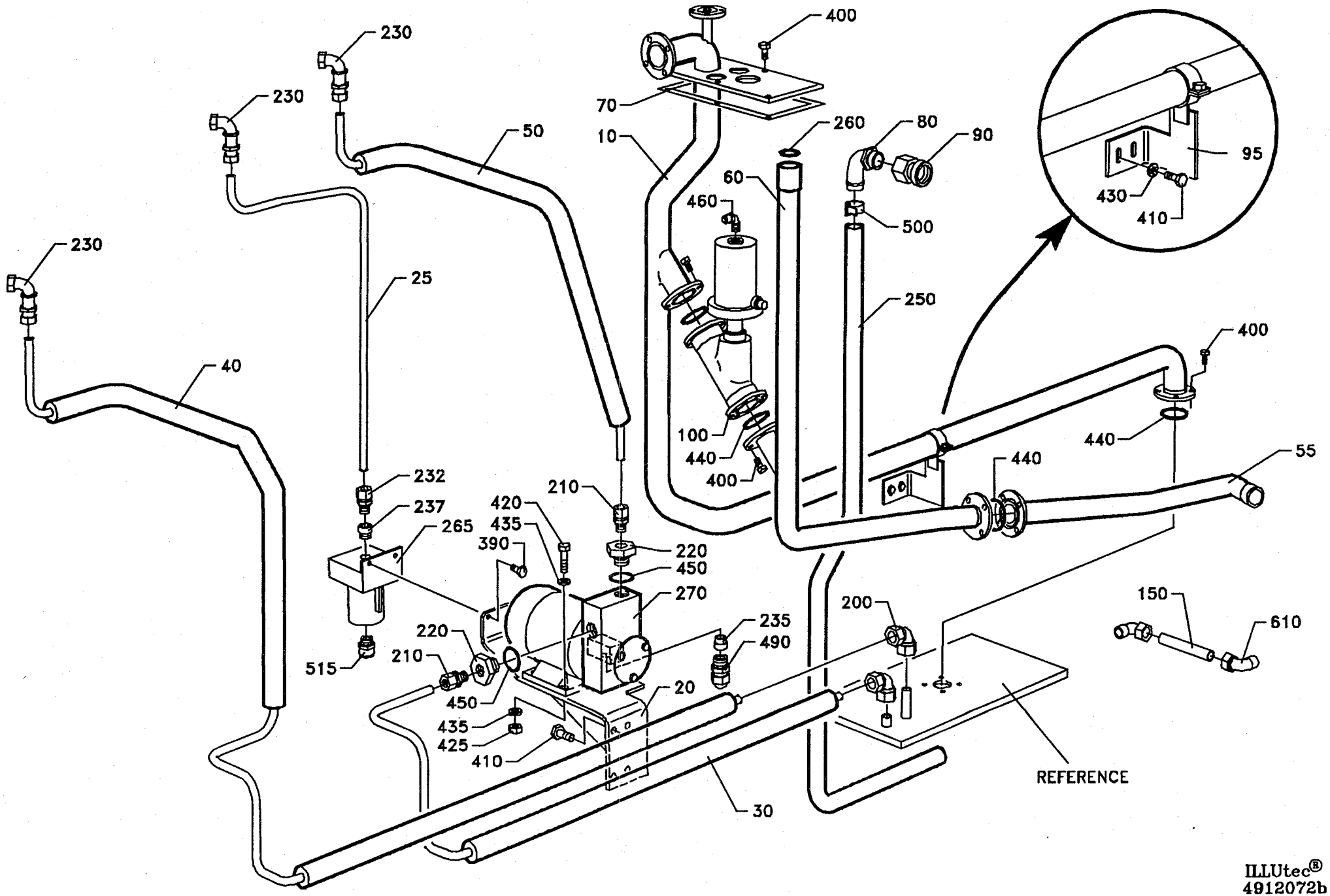

ILLUtec®
4912072b

Last Alteration: AM 16279 91-05-02

Corresponding C-lists: 491207-0202
Assembly Drawing: 491207-5

Date Printed: 910514

From	Pos	Part No	SP	UN	Qty	Description
	010	553128	-		1	PIPE
	015	563278	-		1	PIPE
	020	552837	-		1	BRACKET
	025	552838	-		1	PIPE
	030	553650	-		1	PIPE
	040	553649	-		1	PIPE
	050	751066	-		1	PIPE
	055	553651	-		1	PIPE
	060	553653	-		1	RETURN PIPE
	070	272818	S		1	GASKET
	080	469993	-		1	HOSE COUPLING
	090	469994	-		1	CONNECTION
	095	553658	-		1	BRACKET
	100	499501	S		1	VALVE
	150	555435	-		1	PIPE
	160	563281	-		1	T-PIPE
	200	90030-0106	-		3	PIPE CONNECTION
	210	90030-0187	-		2	PIPE CONNECTION
	220	90030-0209	-		2	REDUCER
	230	90030-0221	-		3	GROMMET
	232	90030-0253	-		1	PIPE CONNECTION
	235	90089-0017	-		1	TRANSITIONAL MUFF
	237	90089-0018	-		1	TRANSITIONAL NIPPLE
	245	90166-0110	-	MM	1500	HOSE
	250	90166-0151	S	MM	1500	HOSE
	255	90166-0161	-	MM	800	HOSE
	260	90242-0065	P		1	O-RING
	265	90274-0065	-		1	PRESSURE GUARD
	270	90321-0039	S		1	PUMP
		90321-0542	C	ST	1	* SPARE PART KIT
	390	312105-0327	-		2	SCREW M6S5X12 A4 80
	400	312105-0366	-		30	SCREW M6S6X12RFR
	410	312105-0368	-		6	SCREW M6S6X16RFR
	420	312105-0374	-		4	SCREW M6S6X30RFR
	425	312605-0316	-		4	NUT M6M6RFR
	430	315105-0153	-		6	WASHER BRB6,4X12RFR
	435	315115-0153	-		4	WASHER TBRB6,4X12RFR
	440	90242-0187	P		5	O-RING 40,2X2,5 PTFE
	450	90005-0020	-		2	WASHER
	460	342930-0114	-		1	ELBOW COUP6/4-1/4
	490	352103-0110	-		1	CABLE GLANR.22,5/4-13
	500	352113-0102	-		6	RIBBON CLA
	515	352136-0129	-		1	GLAND

From	Pos	Part No	SP	UN	Qty	Description
	555	563282	-		1	BALL VALVE
	565	90330-0020	-		1	ELBOW PIPE
	575	90330-0021	-		2	NIPPLE
	610	342731-0221	-		2	ELBOW COUP WA15-LK RFR
	620	342991-0101	-		4	HOSE CLIP 11-17MMRFR
	630	352113-0202	-		2	ARMATURE STA-TM2-S8
	650	312125-0291	-		2	SLOTTED HEMCS4X12RFR
	660	312605-0312	-		2	NUT M6M4RFR

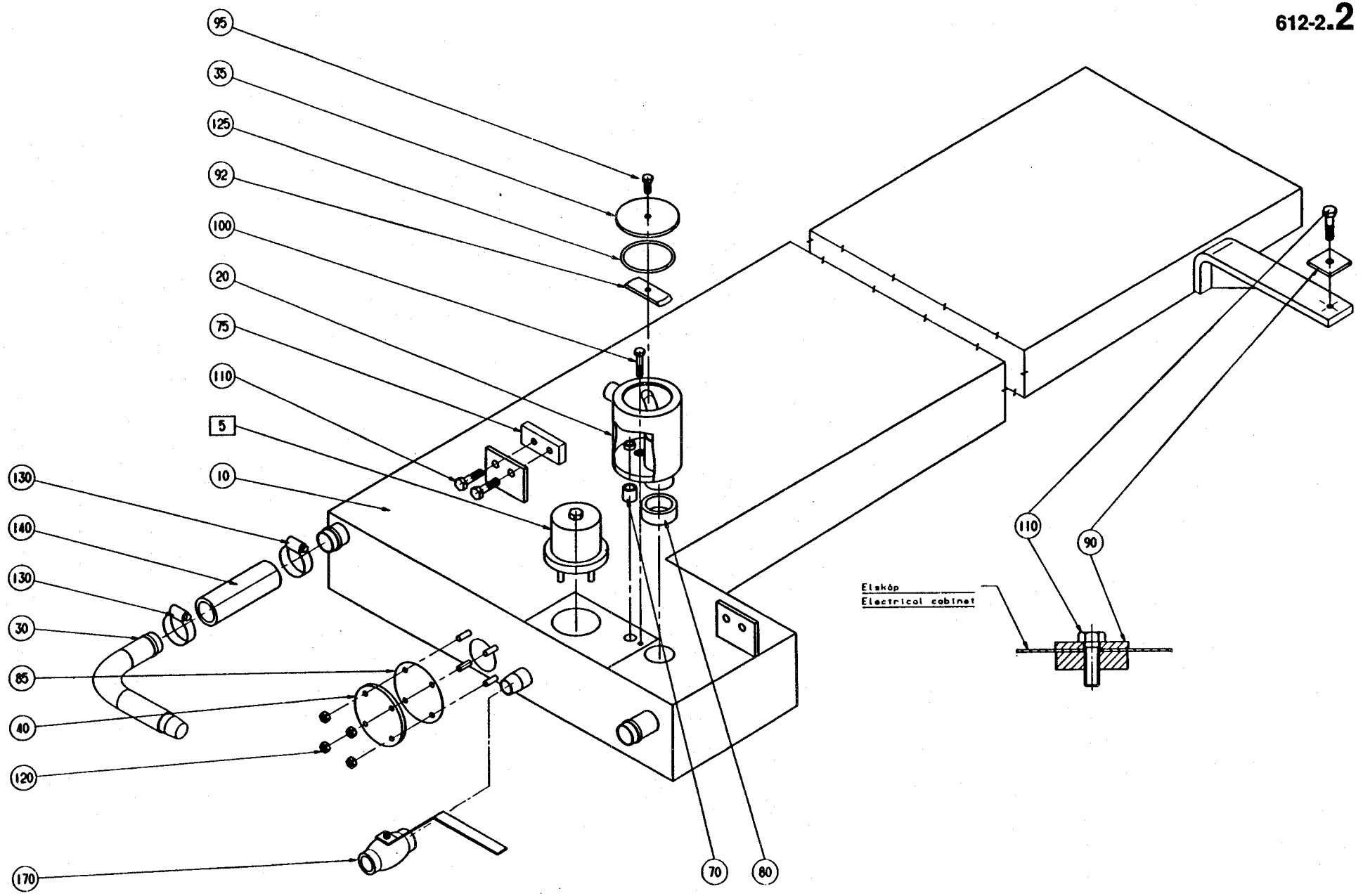
95
35
125
92
100
20
75
110
5
10
130
140
130
30
85
40
120
170
70
80
110
90
Elskáp
Electrical cabinet

From	Pos	Part No	SP	UN	Qty	Description
	F005	C- 493652-0102	-		1	LID
	100	273964	-		1	* LID
	200	273965-0001	-		1	* WEIGHT
	300	90143-0020	-	MM	190	* STRIP
	400	311103-0357	-		4	* CYLINDRICACPR6M6X30RFR
	500	312105-0461	-		1	* SCREW M6S8X50RFR
TBA/9						
	010	751399	-		1	TANK
	030	751400	-		1	CONNECTION PIPE
	090	751402	-		1	WASHER
	110	312105-0451	-		3	SCREW M6S8X20RFR
	130	342991-0106	-		2	HOSE CLIP 26-38MMRFR
	140	90166-0049	-	MM	100	HOSE
	170	90187-0059	-		1	VALVE
TBA/9 Slim Body						
	010	553123	-		1	TANK
	110	312105-0451	-		2	SCREW M6S8X20RFR
	115	315125-0165	-		2	WASHER TBRSB 8,4X26X5 RFR
Common Parts						
	020	752810	-		1	METERING DEVICE
	035	751223	-		1	LID
	040	532205	-		1	LID
	070	527906	C		1	GASKET
	080	527905	C		1	GASKET
	085	532206	S		1	GASKET
	092	751403	-		1	BRACKET
	095	312105-0368	-		1	SCREW M6S6X16RFR
	100	312105-0374	-		2	SCREW M6S6X30RFR
	120	312605-0316	-		4	NUT M6M6RFR
	125	90242-0176	-		1	O-RING

From	Pos	Part No	SP	UN	Qty	Description

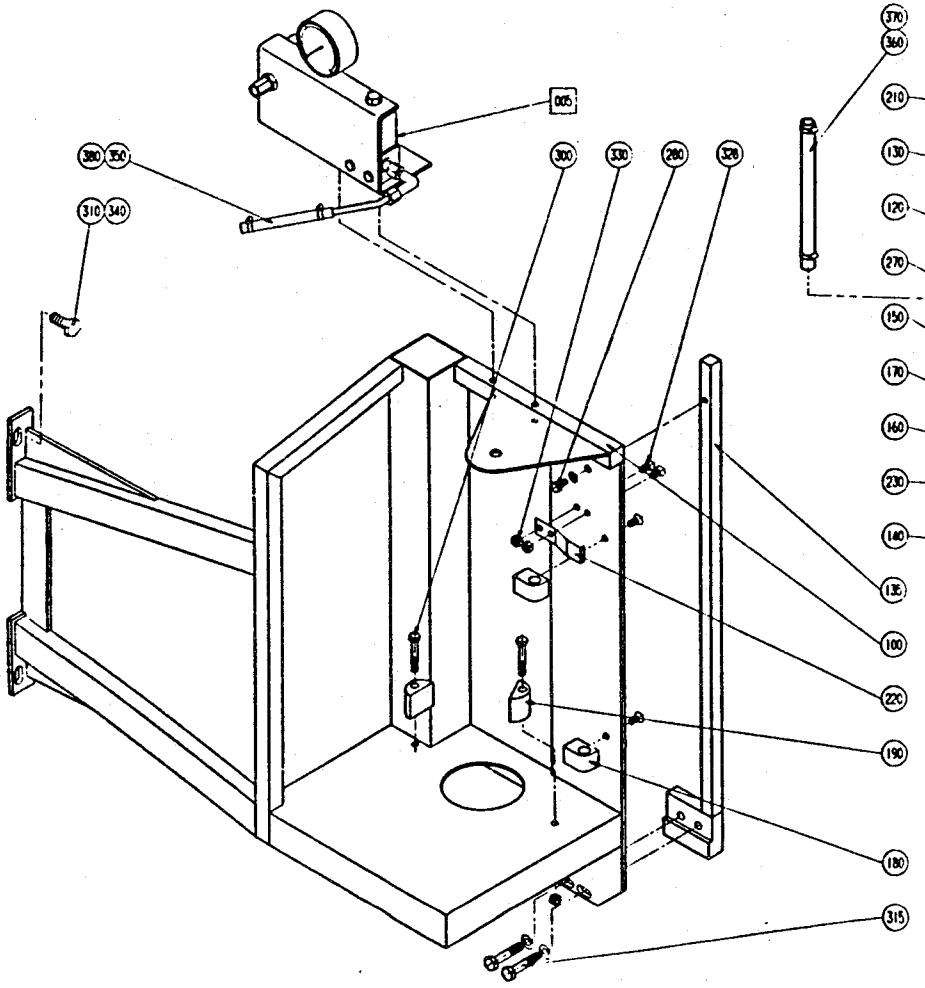
005
380
350
310
340
300
330
280
320
135
100
220
190
180
315

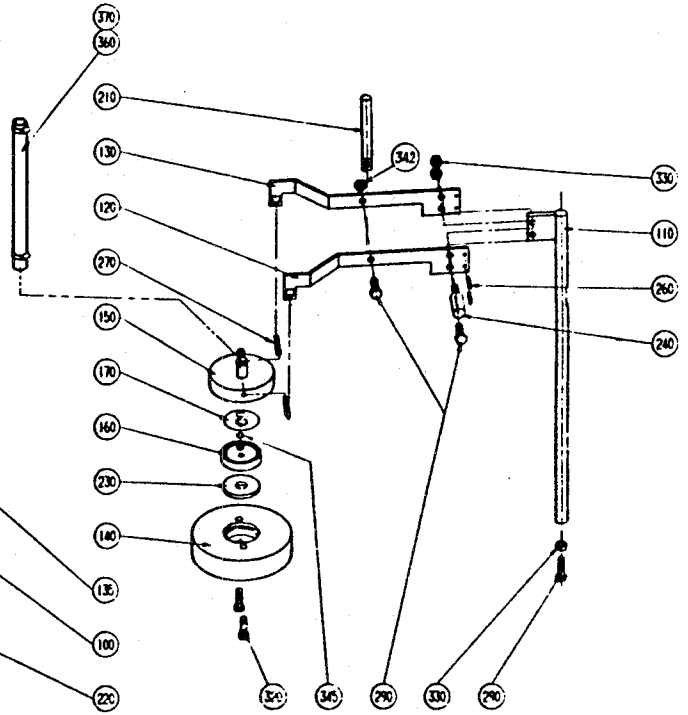
370
360
210
130
120
270
150
170
160
230
140
342
330
110
260
240
340
345
290
330
290

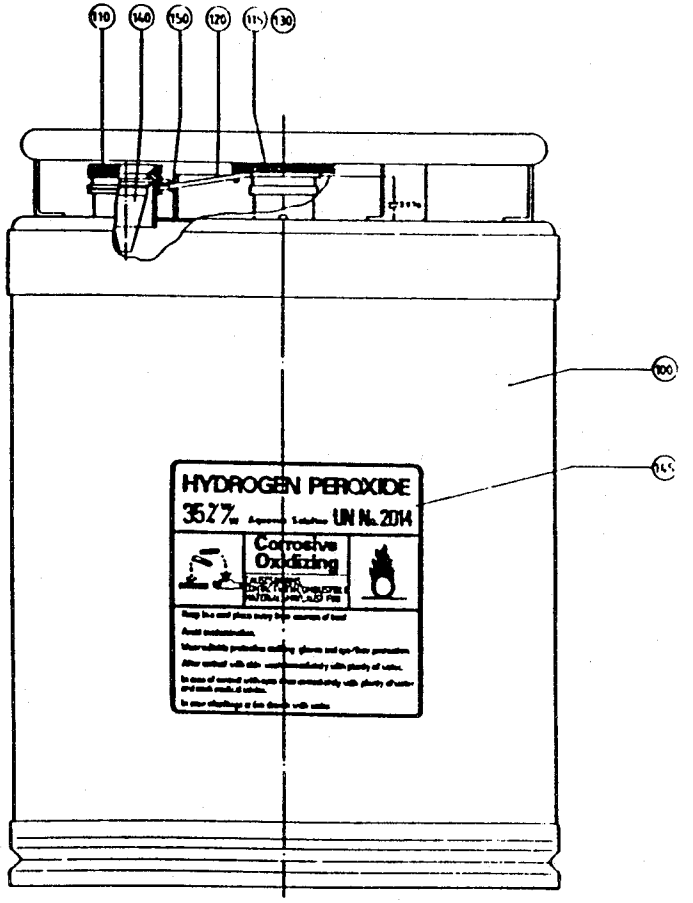
110
140
150
120
111
130
100
145
HYDROGEN PEROXIDE
35.7%
UN No. 2014
Corrosive
Oxidizing

From	Pos	Part No	SP	UN	Qty	Description
	F005	==>612-2.3.1	-		1	VALVE PANEL
TBA/9						
	100	751407	-		1	FRAME
	135	751222	-		1	SPACER
	280	312105-0366	-		1	SCREW M6S6X12RFR
	310	312105-0453	-		2	SCREW M6S8X25RFR
	315	312105-0459	-		2	SCREW M6S8X40RFR
	328	312155-0364	-		4	SCREW MF6S6X10RFR
	340	315115-0165	-		4	WASHER TBRB8,4X16RFR
	350	90166-0101	-	MM	300	HOSE
TBA/9 Slim Body						
	105	555440	-		1	BRACKET
	350	90166-0101	-	MM	900	HOSE
Common Parts						
	110	527120	-		1	GUIDE
	120	527121-0001	-		1	CLAMP
	130	527121-0002	-		1	CLAMP
	140	273982	-		1	WEIGHT
	150	527122	-		1	CONNECTION
	160	530551	-		1	WASHER
	170	527912	S		1	NON-RETURN VALVE
	180	527124	-		2	BEARING
	190	527125	-		2	GUIDE
	210	527128	-		1	PIN
	220	527126	C		1	LEAF SPRING
	230	273981	S		1	GASKET
	240	527127	-		1	PIN
	260	311103-0234	-		2	CYLINDRICACPR3M6X12RFR
	270	311103-0273	-		2	CYLINDRICACPR4M6X22RFR
	290	312105-0370	-		3	SCREW M6S6X20RFR
	300	312105-0378	-		2	SCREW M6S6X40RFR
	320	312125-0370	-		2	SLOTTED HEMCS6X20RFR
	330	312605-0316	-		7	NUT M6M6RFR
	342	312811-0316	-		1	LOCK NUT M6RFR
	345	90242-0163	-		1	O-RING
	360	90166-0138	-	MM	800	HOSE
	370	90132-0023	-		2	HOSE CLIP
	380	90132-0021	-		2	HOSE CLIP

From	Pos	Part No	SP	UN	Qty	Description
	F060	C- 527898-0101				CONTAINER, ASS'Y
	100	273976	C		1	CONTAINER
	110	273977	C		1	NUT
	115	273996	C		1	NUT
	120	273980	C		1	SPRING
	130	273979	C		1	VALVE
	140	273978	C		1	LEVEL GLASS
	145	532655	C		1	CAUTION SIGN
	150	315204-0217	-		1	O-RING 24,2X3 VITON

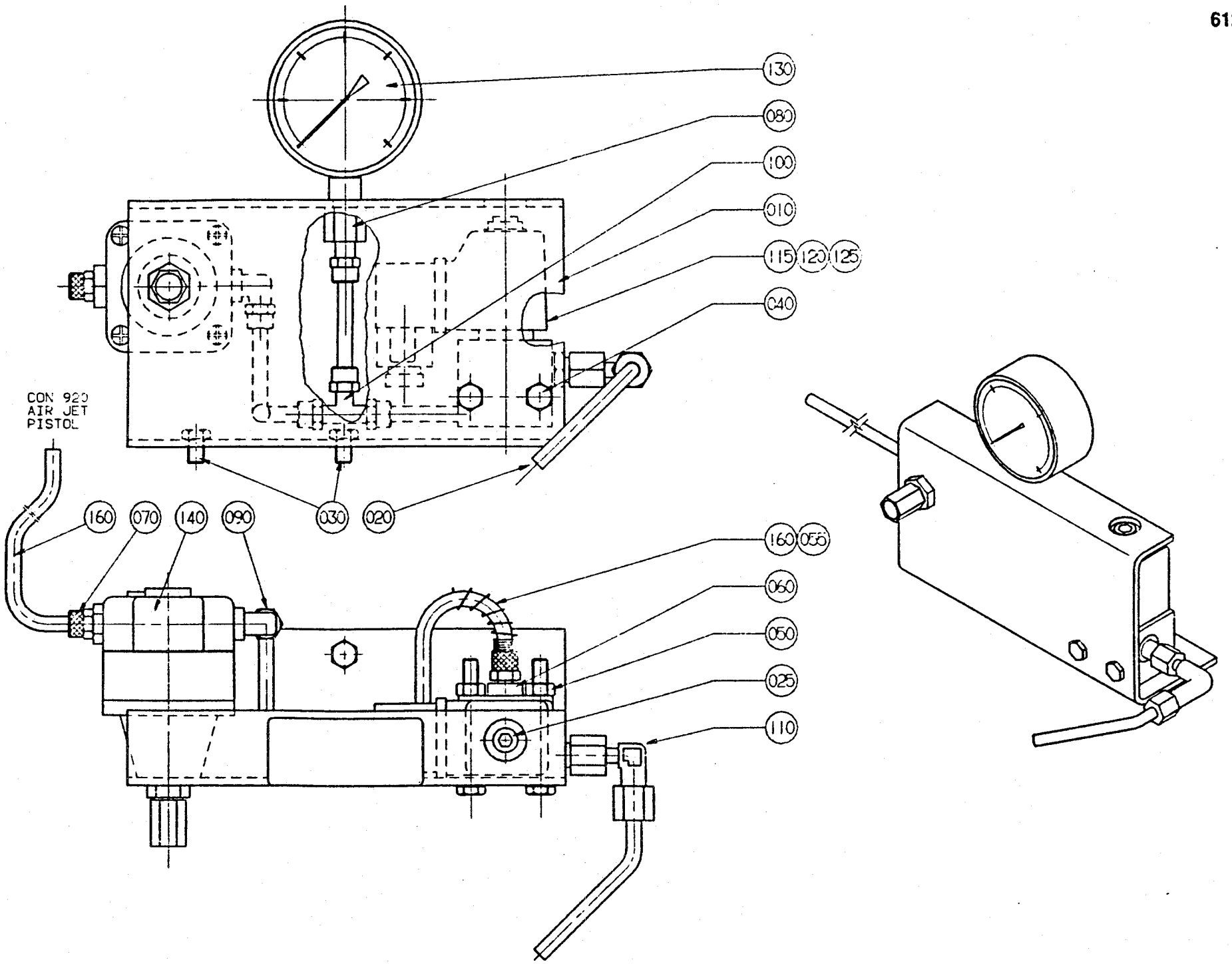
130
080
100
010
115
120
125
040
CON 920
AIR JET
PISTOL
160
070
140
090
030
020
160
055
060
050
025
110

Last Alteration: AM 15694 91-01-29

Corresponding C-lists: 751410-010V
Assembly Drawing: 751410-1

Date Printed: 910214

From	Pos	Part No	SP	UN	Qty	Description
	010	751411	-		1	HOLDER
	020	751372	-		1	PIPE
	025	563285	-		1	BLANK-OFF PLUG
	030	312105-0370	-		2	SCREW M6S6X20RFR
	040	312105-0380	-		2	SCREW M6S6X50RFR
	050	312605-0316	-		2	NUT M6M6RFR
	055	342903-0111	-		3	NUT J#DER 1723-6/4
	060	342930-0113	-		1	ELBOW COUP6/4-1/8
	070	342921-0114	-		1	PIPE CONNE6/4-1/4"
	080	342923-0114	-		1	PIPE CONNE6/4-1/4
	090	342920-0114	-		1	PIPE CONNE6/4-1/4
	100	342946-0112	-		1	T-PIECE 6/4
	110	90030-0171	-		1	CONNECTION
	115	90110-0095	-		1	CONTAKT
	120	90042-0206	-		1	SOLENOID VALVE
	125	90042-0487	-		1	COIL 24VDC
	130	90043-0004	-		1	PRESSURE GAUGE
	140	90113-0056	-		1	REGULATOR
	160	90166-0132	-	MM	3200	HOSE

From	Pos	Part No	SP	UN	Qty	Description

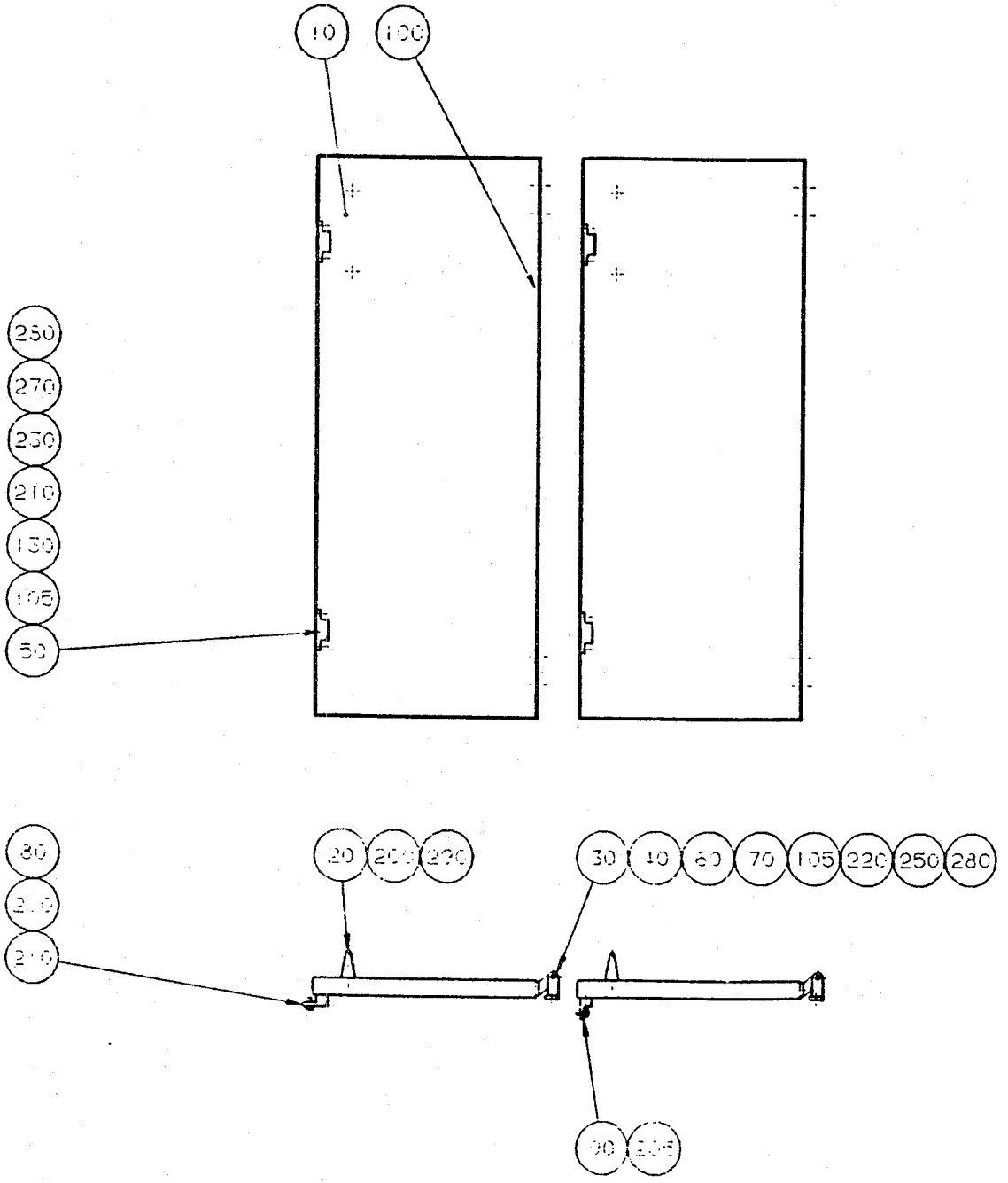
10
100
260
270
230
210
130
105
50
80
20
30
40
60
70
105
220
250
280

From	Pos	Part No	SP	UN	Qty	Description
	010	563283	-		2	DOOR
	020	7309	-		2	HANDLE
	030	257397	-		4	PIN
	040	271011	-		8	WASHER
	050	272453	-		4	SPACER
	060	272510	-		4	HINGE
	070	272511	-		4	HINGE
	080	563280	-		2	BRACKET
	090	563284	-		2	BRACKET
	100	90143-0047	-	MM	5000	STRIP
	105	90157-0016	-		X	LOCKING FLUID
	130	90339-0004	-		4	MAGNETIC LOCK
	200	312105-0364	-		6	SCREW M6S6X10RFR
	205	312105-0366	-		4	SCREW M6S6X12RFR
	210	312125-0222	-		16	SLOTTED HEMCS3X8RFR
	220	312125-0291	-		16	SLOTTED HEMCS4X12RFR
	230	312145-0291	-		8	SLOTTED HEMFS4X12RFR
	250	312605-0312	-		8	NUT M6M4RFR
	270	315105-0124	-		16	WASHER BRB3,2X6RFR
	280	315105-0136	-		30	WASHER BRB4,3X8RFR
	290	315105-0153	-		4	WASHER BRB6,4X12RFR

From	Pos	Part No	SP	UN	Qty	Description

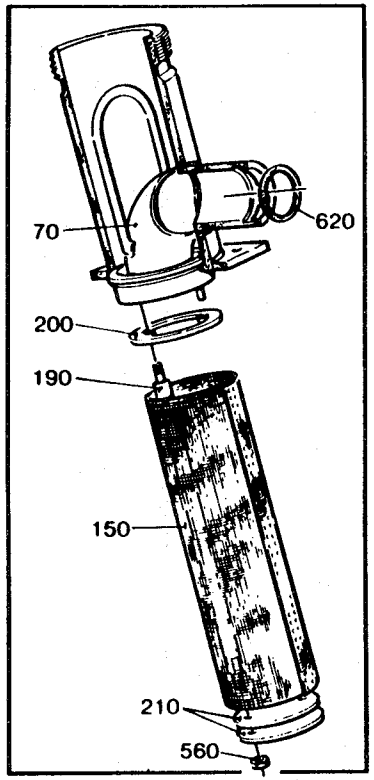
70
620
200
190
150
210
560

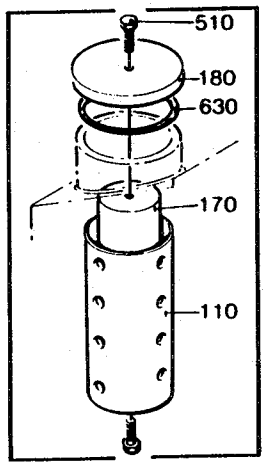
510
180
630
170
110

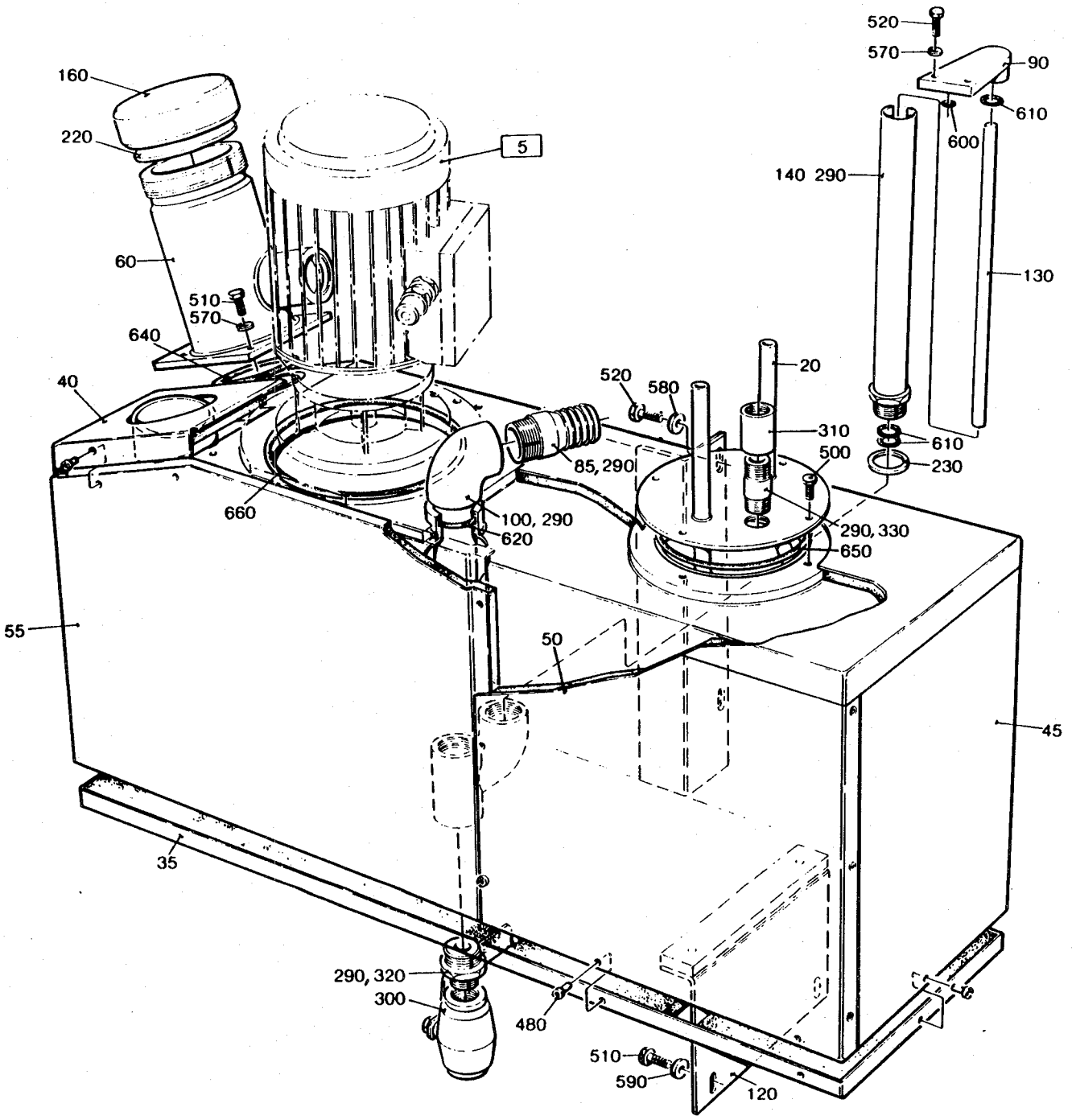
520
570
90
610
600
140 290
130
160
220
5
60
510
570
640
40
520
580
20
310
610
230
500
85, 290
660
100, 290
620
290, 330
650
55
50
45
35
290, 320
300
480
510
590
120

From	Pos	Part No	SP	UN	Qty	Description
	F005	==>613-1.1	-		1	PEROXIDE PUMP
ALL	F015	==>613-1.2	-		1	CONNECTION PIPE
TBA/9						
	010	490790	-		1	TANK
	020	491442	-		1	PIPE COIL
	035	491994	-		1	INSULATING PLATE
	040	491995	-		1	INSULATING PLATE
	045	491996	-		1	INSULATING PLATE
	050	491997	-		1	INSULATING PLATE
	055	491998	-		1	INSULATING PLATE
	090	490792	-		1	CONNECTION
	120	499500	-		1	BRACKET
	230	499504	P		1	WASHER
	320	90330-0080	-		1	REDUCTION NIPPLE
	520	312105-0451	-		5	SCREW M6S8X20RFR
	580	315115-0165	-		3	WASHER TBRB8,4X16RFR
	590	315125-0153	-		4	WASHER SB 6,4X22X4 RFR
TBA/9 Slim Body						
	010	751817	-		1	PEROXIDE TANK
	020	751824	-		1	PIPE COIL
	035	751830	-		1	INSULATING PLATE
	040	751831	-		1	INSULATING PLATE
	045	751832	-		1	INSULATING PLATE
	050	751833	-		1	INSULATING PLATE
	055	751834	-		1	INSULATING PLATE
	090	751825	-		1	CONNECTION
	120	751826	-		2	BRACKET
	230	499504	P		2	WASHER
	305	90330-0021	-		2	NIPPLE
	340	90330-0020	-		1	ELBOW PIPE
	350	90330-0046	-		1	PLUG
	360	90330-0026	-		1	PLUG
	515	312105-0449	-		4	SCREW M6S8X16RFR
	520	312105-0451	-		2	SCREW M6S8X20RFR
	580	315115-0165	-		4	WASHER TBRB8,4X16RFR
	585	315115-0153	-		4	WASHER TBRB6,4X12RFR
Common Parts						
	030	491992	-		1	INSULATING PLATE
	060	490789	-		1	FILLING PIPE
	070	491188	-		1	HOLDER
	110	490987	-		1	STRAINER
	130	499502	-		1	LEVEL TUBE

From	Pos	Part No	SP	UN	Qty	Description
	140	499503	-		1	PROTECTION PIPE
	150	257202	-		1	STRAINER
	160	469829	-		1	FILLER CAP
	170	490988	-		1	STRUT
	180	490989	-		1	LID
	190	491203	-		2	STRUT
	200	491303	-		1	WASHER
	210	491304	-		2	WASHER
	220	491367	S		1	GASKET
	290	90144-0004	-	MM	X	TAPE
	300	484536	S		1	VALVE
	310	90330-0054	-		1	SLEEVE
	330	90330-0100	-		1	NIPPLE TUBE
	480	311521-0142	-		34	BLANK RIVE2X6,7 RFR
	490	312105-0362	-		2	SCREW M6S6X8RFR
	500	312105-0366	-		4	SCREW M6S6X12RFR
	510	312105-0368	-		10	SCREW M6S6X16RFR
	560	312605-0314	-		2	NUT M6M5RFR
	570	315105-0153	-		6	WASHER BRB6,4X12RFR
	600	315204-0206	P		1	O-RING 7,3X2,4VITON
	610	315204-0210	P		3	O-RING 11,3X2,4VITON
	620	315204-0221	P		1	O-RING 34,2X3VITON
	630	315204-0302	P		1	O-RING 54,5X3VITON
	640	315204-0307	P		1	O-RING 79,5X3 VITON
	650	315204-0313	P		1	O-RING 109,5X3VITON
	660	315204-0320	P		1	O-RING ,5X3

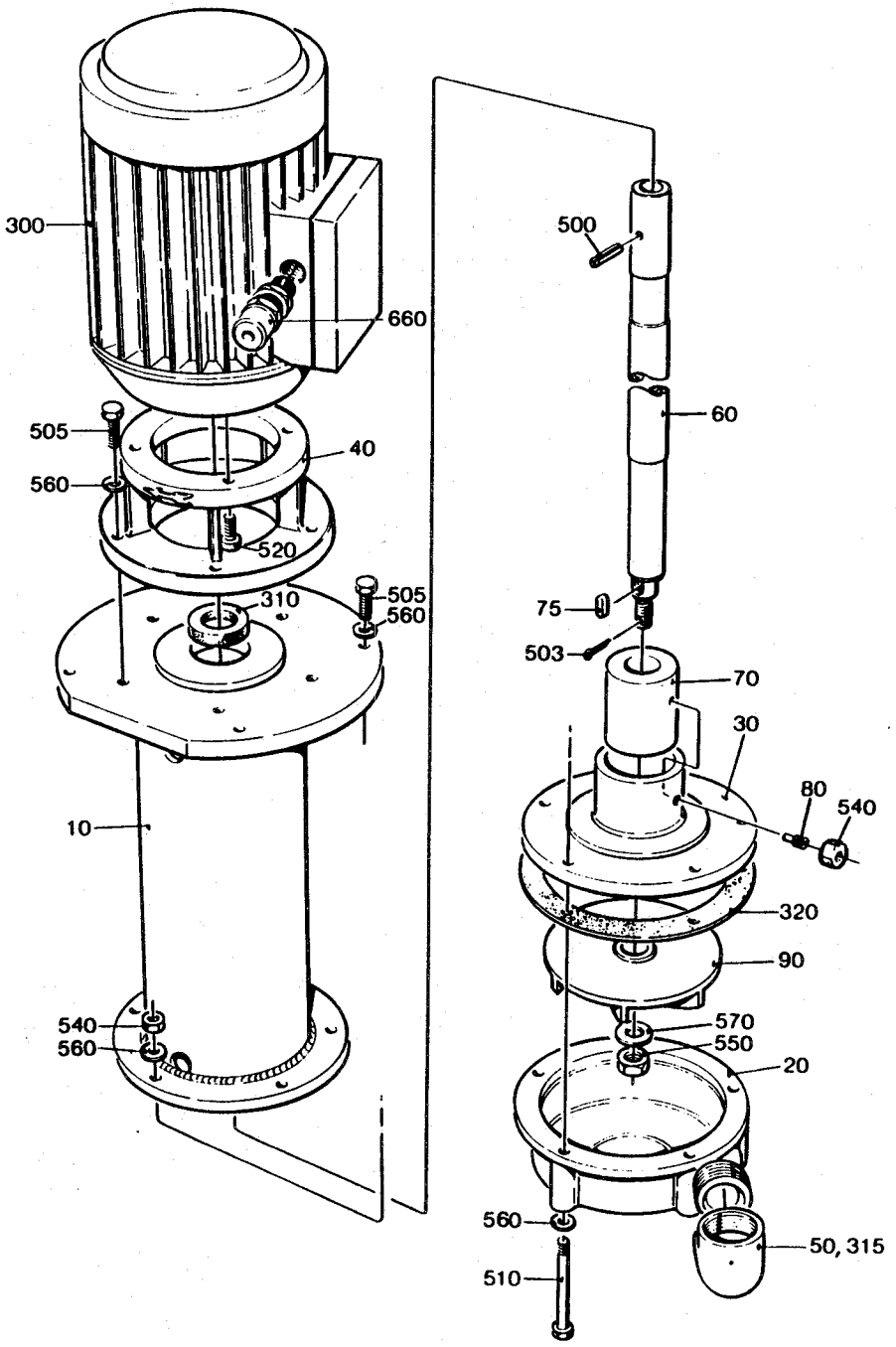
300
660
505
40
560
520
310
505
560
10
540
560
500
60
75
503
70
30
80
540
320
90
570
550
20
560
510
50, 315

From	Pos	Part No	SP	UN	Qty	Description
	010	490798	-		1	EXTENSION PIPE
	020	G- 292449	-		1	PUMP HOUSING
	030	292456	-		1	BEARING COVER
	040	292464	-		1	FLANGE
	060	491676	S		1	SHAFT
	070	491770	S		1	BUSHING
	075	315705-0196	S		1	FLAT WEDGE
	080	90287-0159	-		2	GRUB SCREW
	090	G- 491929	-		1	IMPELLER
	300	90045-0087	S		1	MOTOR
	310	90091-0137	P		1	SEAL RING
	320	90321-0411	P		1	GASKET
	500	311112-0256	-		1	HOLLOW PINRP 4X20 RFR
	503	311411-0169	P		1	SPLIT PIN SP2,5X25RFR
	505	312105-0370	-		9	SCREW M6S6X20RFR
	510	312105-0382	-		5	SCREW M6S6X60RFR
	520	312105-0368	-		4	SCREW M6S6X16RFR
	540	312605-0316	-		7	NUT M6M6RFR
	550	312605-0320	-		1	NUT M6M10RFR
	560	315105-0153	-		19	WASHER BRB6,4X12RFR
	570	315105-0173	-		1	WASHER BRB10,5X22RFR
	600	352103-0110	-		1	CABLE GLANR.22,5/4-13

From	Pos	Part No	SP	UN	Qty	Description

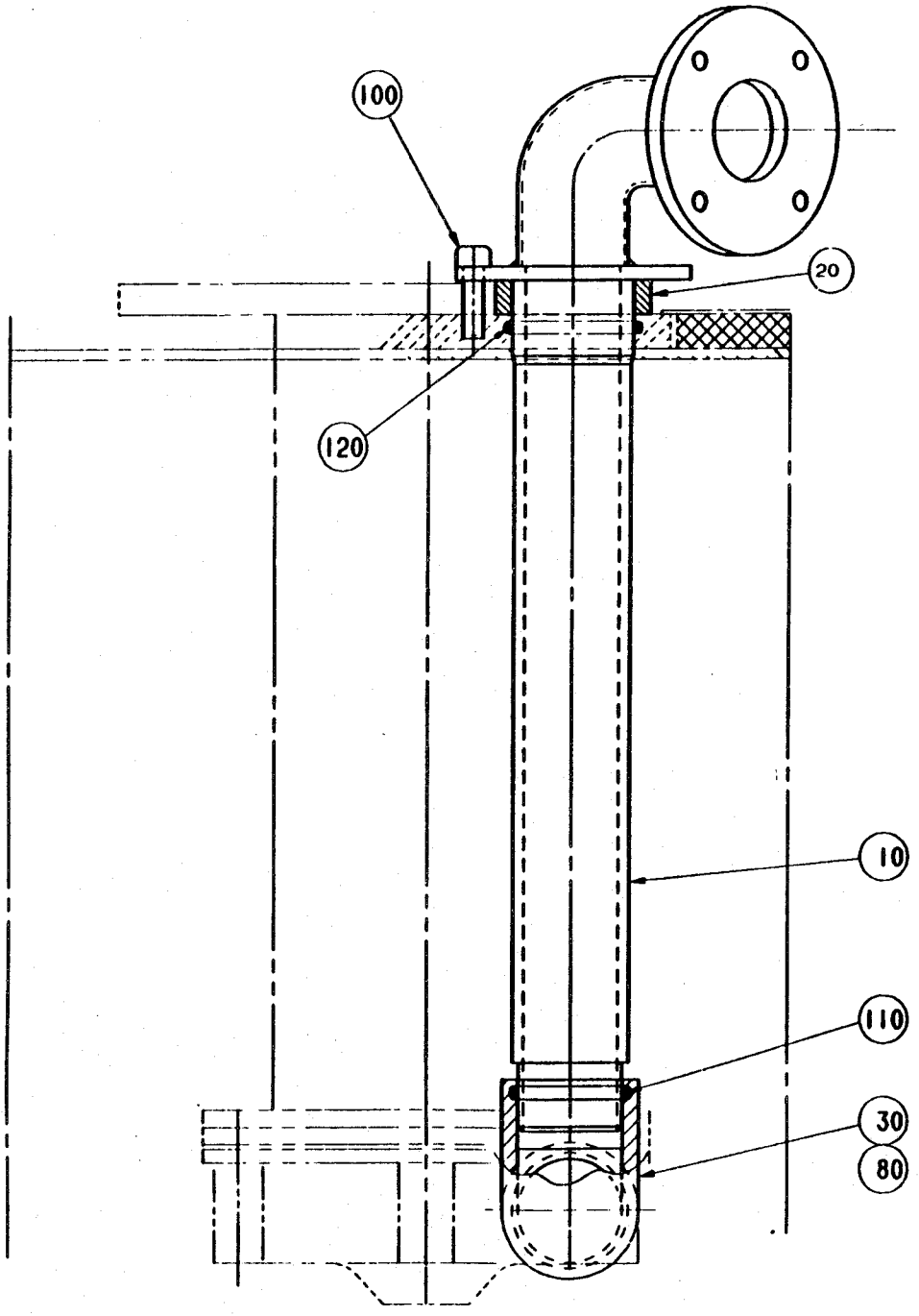
100
20
120
10
110
30
80

From	Pos	Part No	SP	UN	Qty	Description
	010	751314	-		1	CONNECTION PIPE (TBA/9)
	010	751818	-		1	CONNECTION TUBE (TBA/9 Slim Body)
	020	751315	-		1	SPACER
	030	751316	-		1	ELBOW PIPE
	080	90144-0004	-	MM	X	TAPE
	100	312115-0370	-		2	SCREW 6X20 A4 80
	110	315204-0219	P		1	O-RING 29,2X3VITON
	120	315204-0221	P		1	O-RING 34,2X3VITON

From	Pos	Part No	SP	UN	Qty	Description

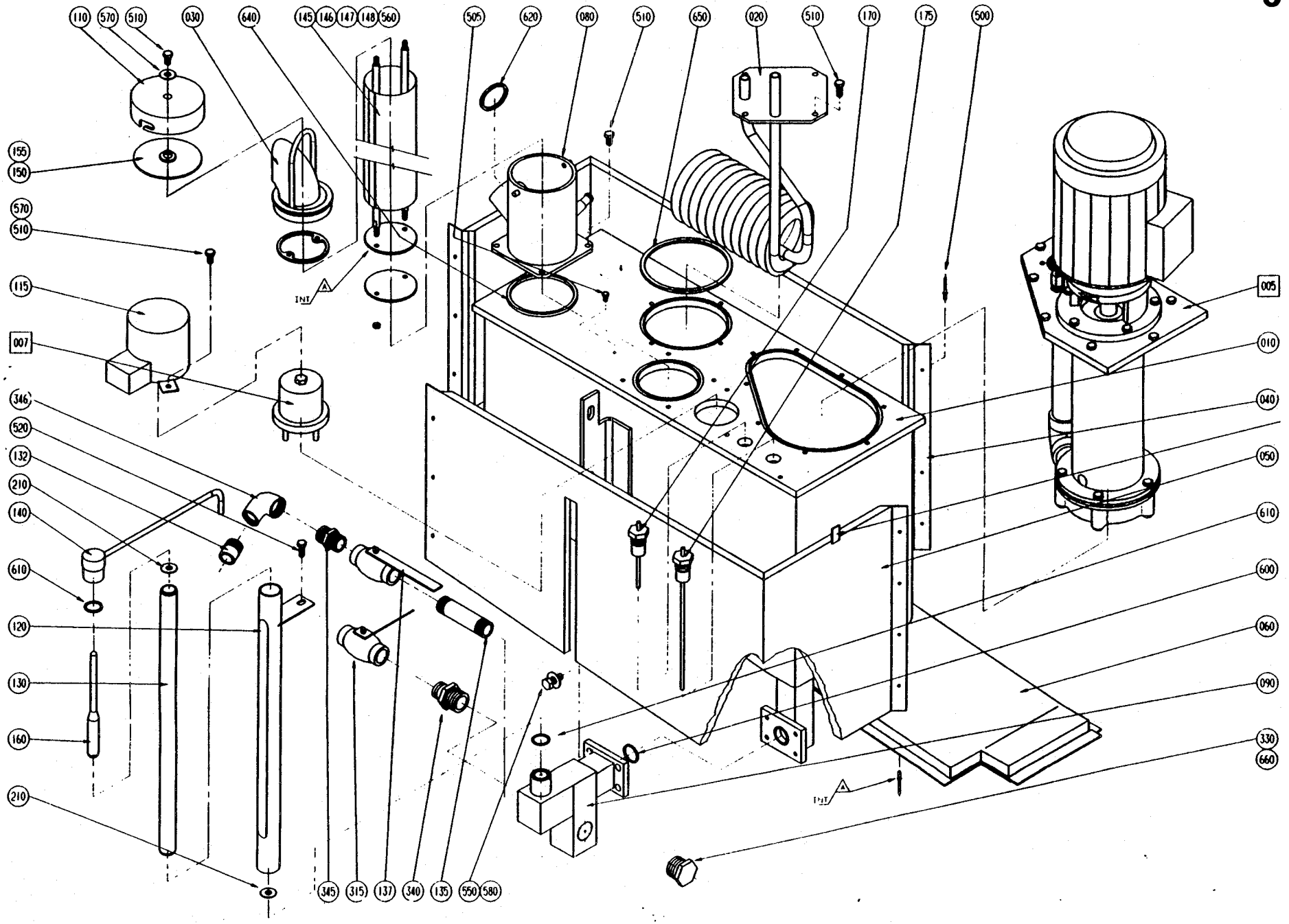
110
570
510
030
640
145
146
147
148
560
505
620
080
510
650
020
510
170
175
500
155
150
570
510
115
007
346
520
132
210
140
610
120
130
160
210
INT
A
005
010
040
050
610
600
060
090
330
660
345
315
137
340
135
550
580

From	Pos	Part No	SP	UN	Qty	Description
	F005	==>613-2.1	-		1	PEROXIDE PUMP
	F007	C- 493652-0102	-		1	LID
		273964	-		1	* LID
		273965-0001	-		1	* WEIGHT
		90143-0020	-	MM	190	* STRIP
		311103-0357	-		4	* CYLINDRICACPR6M6X30RFR
		312105-0461	-		1	* SCREW M6S8X50RFR
TBA/9						
	010	751374	-		1	PEROXIDE TANK
	060	751378	-		1	INSULATING PLATE
	090	751381	-		1	CONNECTION
	140	751221	-		1	PIPE
	310	90187-0059	-		2	VALVE
TBA/9 Slim Body						
	010	553126	-		1	PEROXIDE TANK
	060	553652	-		1	INSULATING PLATE
	090	553120	-		1	CONNECTION
	132	978370	-		1	PIPE
	135	978371	-		1	PIPE
	137	978372	-		1	VALVE
	140	553127	-		1	PIPE
	315	563282	-		1	VALVE
	330	90330-0046	-		1	PLUG
	345	90330-0021	-		1	NIPPLE
	346	90330-0020	-		1	ELBOW PIPE
	660	315233-0115	-		1	SEAL RING R3/4"
Common Parts						
	020	751375	-		1	PIPE COIL
	030	752614	-		1	HOLDER
	040	751376	-		1	INSULATING PLATE
	050	751377	-		1	INSULATING PLATE
	080	751380	-		1	FILLING PIPE
	110	751220	-		1	FILLER CAP
	115	751357	-		1	GUARD
	120	751382	-		1	PROTECTION PIPE
	130	751383	-		1	LEVEL TUBE
	145	257202	C		1	STRAINER
	146	491203	-		2	STRUT
	147	491304	-		2	WASHER
	148	491303	-		1	WASHER
	150	563286	-		1	GASKET
	155	563287	-		1	WASHER
	160	273984	C		1	AEROMETER
	170	458962-0004	C		1	ELECTRODE
	175	458962-0012	C		1	ELECTRODE
	210	529337	-		2	BUFFER RING
	300	90144-0004	-		X	TAPE
	340	90330-0080	-		2	REDUCTION NIPPLE
	500	311521-0142	-		9	BLANK RIVE2X6,7 RFR
	505	312105-0287	-		1	SCREW M6S4X8 A4 80
	510	312105-0366	-		12	SCREW M6S6X12RFR
	520	312105-0368	-		1	SCREW M6S6X16RFR
	550	312105-0451	-		6	SCREW M6S8X20RFR
	560	312605-0314	-		2	NUT M6M5RFR
	570	315105-0153	-		14	WASHER BRB6,4X12RFR
	580	315115-0165	-		6	WASHER TBRB8,4X16RFR
	600	90242-0171	P		1	O-RING
	610	315204-0117	P		2	O-RING 1X1,6 VITON
	620	90242-0186	P		1	O-RING 35,2X2,5 PTFE
	640	90242-0188	P		1	O-RING 80,5X2,5 PTFE
	650	90242-0189	P		1	O-RING 110,5X2,5 PTFE

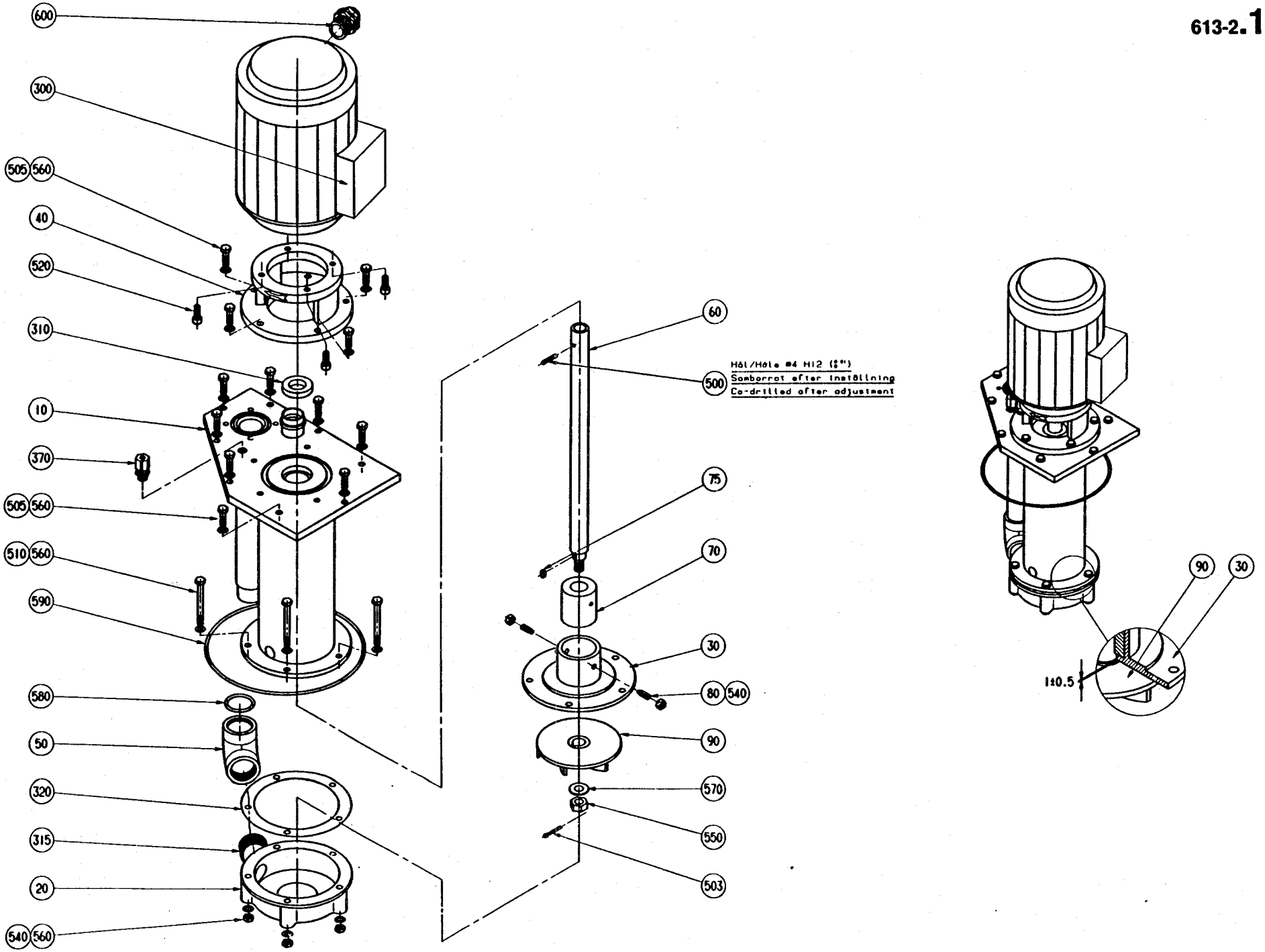
600
300
505 560
40
520
310
10
370
505 560
510 560
590
580
50
320
315
20
540 560
60
500
Hål/Hole ø4 H12 (5/32")
Somborrat efter inställning
Co-drilled after adjustment
75
70
30
80 540
90
570
550
503
90
30
1±0.5

From	Pos	Part No	SP	UN	Qty	Description
	010	751394	-		1	EXTENSION PIPE
	020	292449	-		1	PUMP HOUSING
	030	292456	-		1	BEARING COVER
	040	751395	-		1	FLANGE
	050	751316	-		1	ELBOW PIPE
	060	491676	S		1	SHAFT
	070	491770	S		1	BUSHING
	075	315705-0196	S		1	FLAT WEDGE
	080	90287-0159	-		2	GRUB SCREW
	090	491929	-		1	IMPELLER
	300	90045-0087	S		1	MOTOR
	310	90091-0137	P		1	SEAL RING
	315	90144-0004	-	MM	X	TAPE
	320	90321-0411	P		1	GASKET
	370	90030-0184	-		1	PIPE CONNECTION
	500	311112-0256	-		1	HOLLOW PINRP 4X20 RFR
	503	311411-0169	P		1	SPLIT PIN SP2,5X25RFR
	505	312105-0370	-		13	SCREW M6S6X20RFR
	510	312105-0382	-		5	SCREW M6S6X60RFR
	520	312115-0368	-		4	SCREW 6X16 A4 80
	540	312605-0316	-		7	NUT M6M6RFR
	550	312605-0320	-		1	NUT M6M10RFR
	560	315105-0153	-		23	WASHER BRB6,4X12RFR
	570	315105-0173	-		1	WASHER BRB10,5X22RFR
	580	90242-0173	P		1	O-RING
	590	90242-0153	P		1	O-RING
	600	352103-0110	-		1	CABLE GLANR.22,5/4-13

From	Pos	Part No	SP	UN	Qty	Description

AB 9

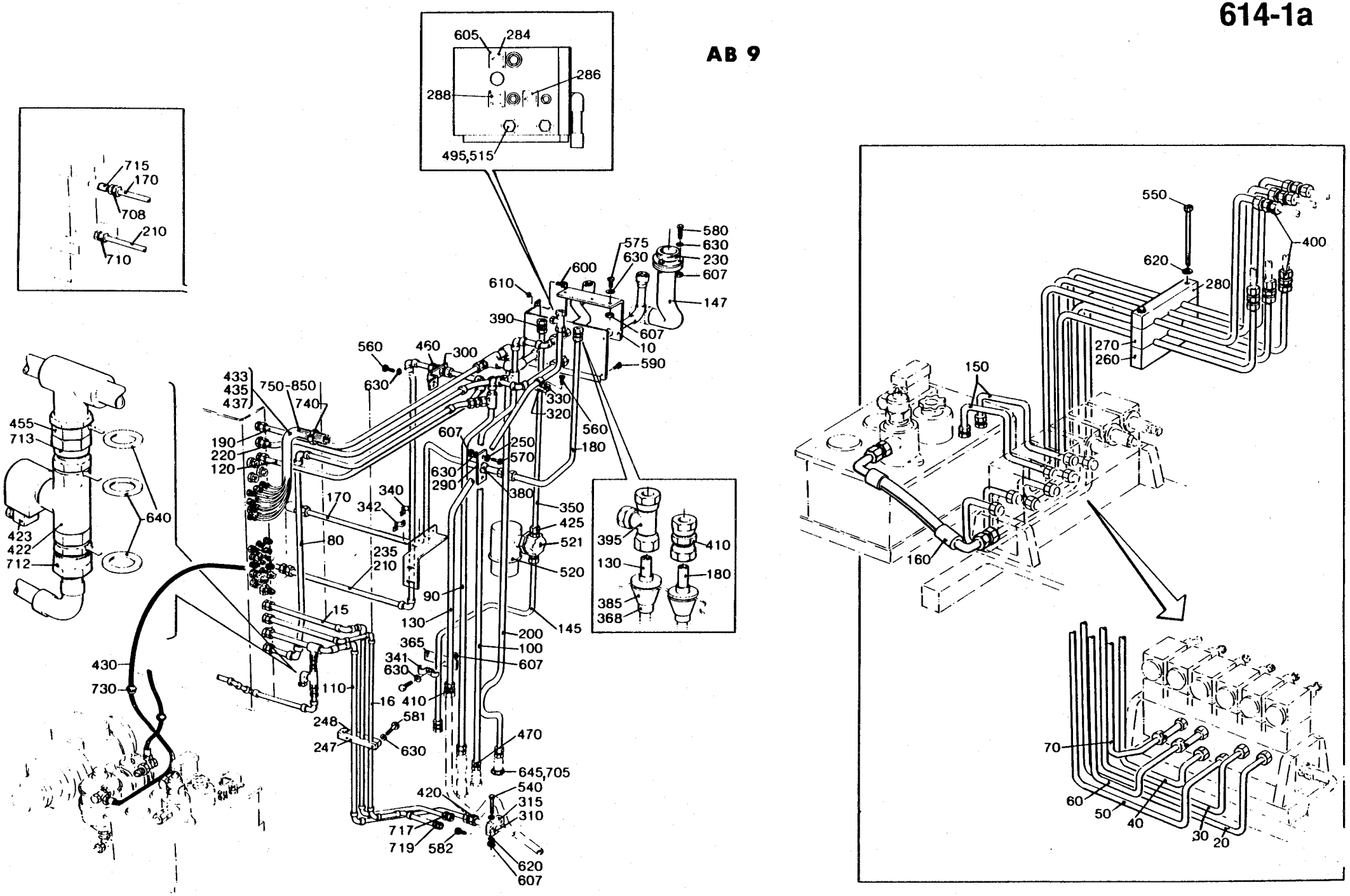
605
284
286
288
495,515
715
170
708
210
710
580
630
230
607
147
575
630
600
610
390
607
10
590
560
460
300
630
433
435
437
750-850
740
330
320
560
180
607
250
570
630
290
380
340
342
170
350
425
521
520
145
395
410
130
180
385
368
455
713
640
423
422
712
80
235
210
90
130
15
200
100
607
365
341
630
410
16
110
430
730
248
247
581
630
470
645,705
420
540
315
310
717
719
582
620
607
550
400
620
280
270
260
150
160
70
60
50
40
30
20

From	Pos	Part No	SP	UN	Qty	Description
TBA/9						
	010	456597	-		1	CONNECTION PIPE
	100	295531	-		1	PIPE
	120	295533	-		1	PIPE
	130	456599	-		1	PIPE
	145	491455	-		1	PIPE
	147	456598	-		1	CABLE CONDUIT
	170	456823	-		1	PIPE
	180	456824	-		1	PIPE
	200	456978	-		1	PIPE
	210	456821	-		1	PIPE
	230	456758	-		1	CONNECTION
	235	456825	-		1	BRACKET
	250	315125-0153	S		2	WASHER SB 6,4X22X4 RFR
	290	295540	-		1	PLATE
	320	90165-0009	-		3	CLIP
	340	295549	-		1	CLIP
	342	456826	-		1	PIPE CLAMP
	350	441449-0001	-		1	PIPE
	365	491453	-		1	HOLDER
	368	469550	-		2	SLEEVE
	380	90015-0021	-		1	BUSHING
	385	90015-0022	-		2	BUSHING
	390	90030-0030	-		1	PIPE CONNECTION
	395	90030-0058	-		1	CONNECTION
	410	90030-0106	-		4	PIPE CONNECTION
	425	90330-0061	-		2	COUPLING
	437	90166-0133	-	M	3	HOSE
	435	90166-0132	-	M	62	HOSE
	520	90360-0005	S		1	STEAM TRAP
	521	90360-0006	S		1	CONNECTION
	560	312105-0364	-		13	SCREW M6S6X10RFR
	570	312105-0368	-		3	SCREW M6S6X16RFR
	580	312105-0374	-		3	SCREW M6S6X30RFR
	607	312605-0316	-		11	NUT M6M6RFR
	630	315105-0153	-		29	WASHER BRB6,4X12RFR
	645	90005-0016	S		3	SEALING WASHER
	708	342714-0110	-		1	REDUCER KOR 15/12-L/SY
	710	342723-0114	-		1	PIPE CONNEGI-15-1/2"
	715	342725-0114	-		1	PIPE COUPLGI 15LR/RO RFR
	740	352113-0102	-		12	RIBBON CLAR
	750	359000-0400	-		50	MARKING CO2/4"0"
	760	359000-0401	-		36	MARKING CO2/4"1"
	770	359000-0402	-		38	MARKING CO2/4"2"
	780	359000-0403	-		10	MARKING CO2/4"3"
	790	359000-0404	-		16	MARKING CO2/4"4"
	800	359000-0405	-		8	MARKING CO2/4"5"
	810	359000-0406	-		6	MARKING CO2/4"6"
	820	359000-0407	-		6	MARKING CO2/4"7"
	830	359000-0408	-		4	MARKING CO2/4"8"
	840	359000-0409	-		8	MARKING CO2/4"9"
	850	359000-0771	-		10	MARKING CO2/4"V"

B 9

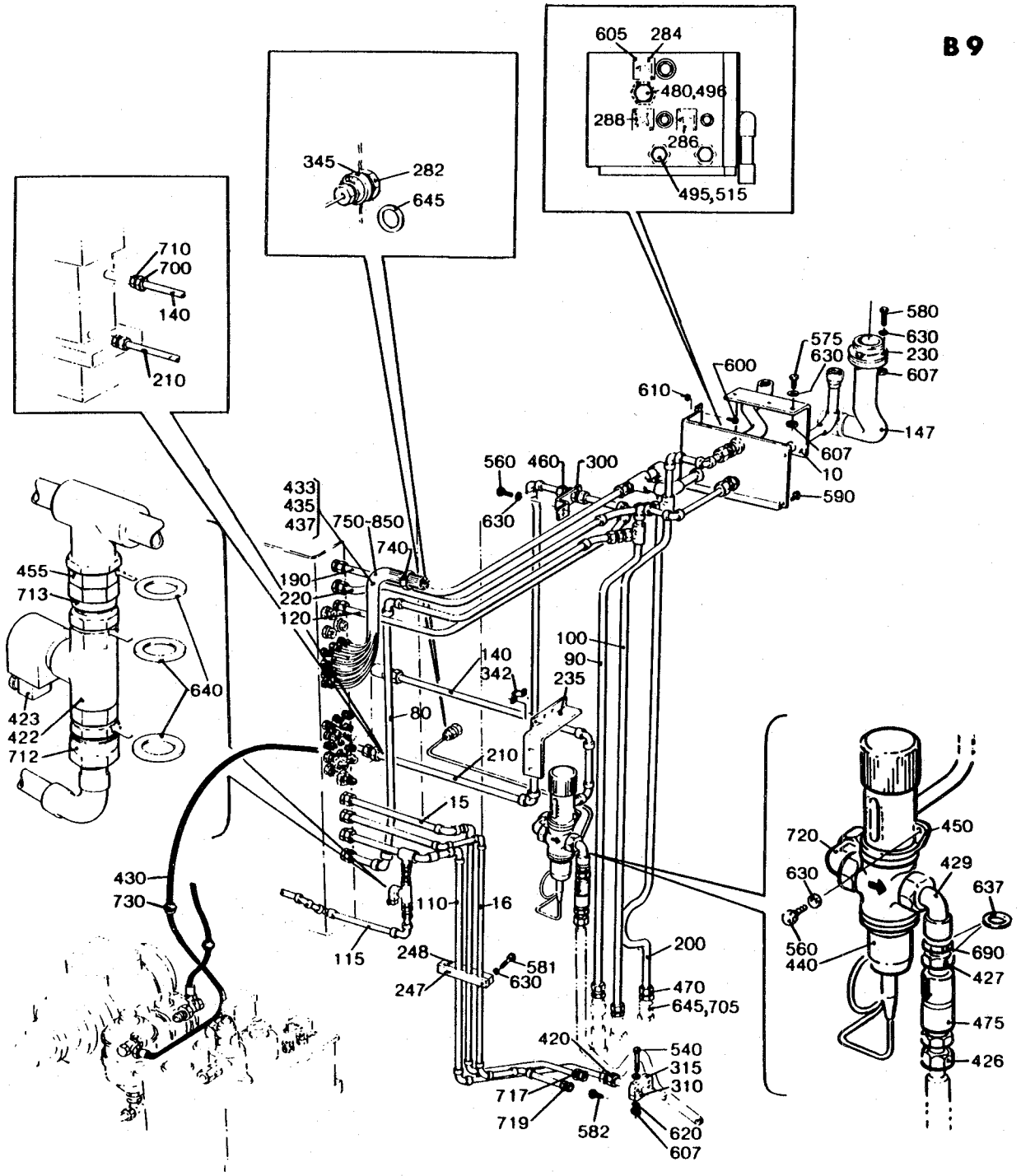
605
284
480,496
288
286
495,515
345
282
645
710
700
140
210
580
630
230
607
575
630
600
610
147
607
10
590
560
460
300
630
433
435
437
750
850
740
190
220
120
455
713
640
423
422
712
140
342
100
90
235
80
210
15
430
730
110
16
115
248
247
581
630
200
470
645,705
420
540
315
310
717
719
582
620
607

720
630
560
440
450
429
637
690
427
475
426

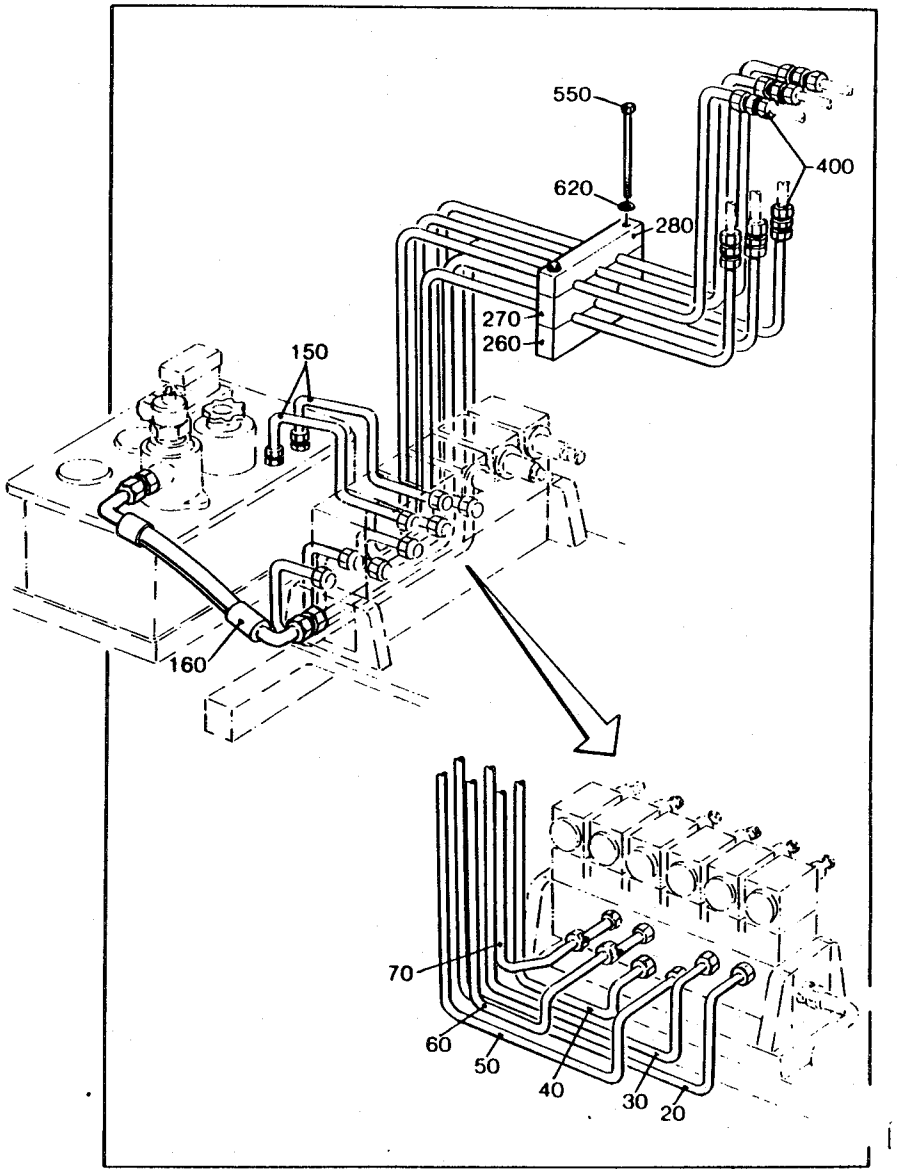
550
620
400
280
270
260
150
160
70
60
50
40
30
20

From	Pos	Part No	SP	UN	Qty	Description
TB/9						
	010	456597	-		1	CONNECTION PIPE
	100	295531	-		1	PIPE
	120	295533	-		1	PIPE
	130	456599	-		1	PIPE
	145	491455	-		1	PIPE
	147	456598	-		1	CABLE CONDUIT
	170	456823	-		1	PIPE
	180	456824	-		1	PIPE
	200	456978	-		1	PIPE
	210	456821	-		1	PIPE
	230	456758	-		1	CONNECTION
	235	456825	-		1	BRACKET
	250	315125-0153	S		2	WASHER SB 6,4X22X4 RFR
	290	295540	-		1	PLATE
	320	90165-0009	-		3	CLIP
	340	295549	-		1	CLIP
	342	456826	-		1	PIPE CLAMP
	350	441449-0001	-		1	PIPE
	365	491453	-		1	HOLDER
	368	469550	-		2	SLEEVE
	380	90015-0021	-		1	BUSHING
	385	90015-0022	-		2	BUSHING
	390	90030-0030	-		1	PIPE CONNECTION
	395	90030-0058	-		1	CONNECTION
	410	90030-0106	-		4	PIPE CONNECTION
	425	90330-0061	-		2	COUPLING
	435	90166-0132	-	M	62	HOSE
	520	90360-0005	S		1	STEAM TRAP
	521	90360-0006	S		1	CONNECTION
	560	312105-0364	-		13	SCREW M6S6X10RFR
	570	312105-0368	-		3	SCREW M6S6X16RFR
	580	312105-0374	-		3	SCREW M6S6X30RFR
	607	312605-0316	-		11	NUT M6M6RFR
	630	315105-0153	-		29	WASHER BRB6,4X12RFR
	645	90005-0016	S		4	SEALING WASHER
	708	342714-0110	-		1	REDUCER KOR 15/12-L/SY
	710	342723-0114	-		1	PIPE CONNEGI-15-1/2"
	715	342725-0114	-		1	PIPE COUPLGI 15LR/RO RFR
	760	359000-0401	-		2	MARKING CO2/4"1"
	770	359000-0402	-		2	MARKING CO2/4"2"

From	Pos	Part No	SP	UN	Qty	Description

From	Pos	Part No	SP	UN	Qty	Description
TBA/9 Slim Body						
	010	751828	-		1	CONNECTION PIPE
	100	751843	-		1	TUBE
	120	295533	-		1	PIPE
	130	456599	-		1	PIPE
	145	751837	-		1	TUBE
	170	751841	-		1	TUBE
	180	751840	-		1	TUBE
	200	751842	-		1	TUBE
	205	751880	-		1	TUBE
	210	751838	-		1	TUBE
	215	751839	-		1	TUBE
	225	751881	-		1	TUBE
	255	751844	-		1	BRACKET
	265	751918	-		1	BRACKET
	320	90165-0009	-		3	CLIP
	340	295549	-		2	CLIP
	350	751836	-		1	TUBE
	365	491453	-		1	HOLDER
	368	469550	-		2	SLEEVE
	385	90015-0022	-		2	BUSHING
	390	90030-0030	-		4	PIPE CONNECTION
	395	90030-0058	-		1	CONNECTION
	410	90030-0106	-		4	PIPE CONNECTION
	415	90224-0176	-		1	GLAND
	425	90330-0061	-		2	COUPLING
	435	90166-0132	-	M	62	HOSE
	437	90166-0133	-	M	3	HOSE
	490	90030-0187	-		2	PIPE CONNECTION
	492	90330-0019	-		2	REDUCTION NIPPLE
	520	90360-0005	S		1	STEAM TRAP
	521	90360-0006	S		1	CONNECTION
	560	312105-0364	-		15	SCREW M6S6X10RFR
	570	312105-0368	-		1	SCREW M6S6X16RFR
	607	312605-0316	-		5	NUT M6M6RFR
	630	315105-0153	-		30	WASHER BRB6,4X12RFR
	645	90005-0016	S		3	SEALING WASHER
	740	352113-0102	-		12	RIBBON CLAR
	750	359000-0400	-		50	MARKING CO2/4"0"
	760	359000-0401	-		36	MARKING CO2/4"1"
	770	359000-0402	-		38	MARKING CO2/4"2"
	780	359000-0403	-		10	MARKING CO2/4"3"
	790	359000-0404	-		16	MARKING CO2/4"4"
	800	359000-0405	-		8	MARKING CO2/4"5"
	810	359000-0406	-		6	MARKING CO2/4"6"
	820	359000-0407	-		6	MARKING CO2/4"7"
	830	359000-0408	-		4	MARKING CO2/4"8"
	840	359000-0409	-		8	MARKING CO2/4"9"
	850	359000-0771	-		10	MARKING CO2/4"V"

From	Pos	Part No	SP	UN	Qty	Description
Common Parts						
	015	491187	-		1	PIPE
	016	491866	-		1	PIPE
	020	271867	-		1	PIPE
	030	271868	-		1	PIPE
	040	271869	-		1	PIPE
	050	271870	-		1	PIPE
	060	271871	-		1	PIPE
	070	271872	-		1	PIPE
	080	295529	-		1	PIPE
	090	295530	-		1	PIPE
	110	491183	-		1	PIPE
	115	491463	-		1	PIPE
	150	491864	-		2	PIPE
	160	491865	-		1	HOSE
	190	295536	-		1	PIPE
	220	295539	-		1	PIPE
	247	491241	-		1	HOLDER
	248	491242	-		1	HOLDER
	260	271320	-		1	HOLDER
	270	271321	-		1	HOLDER
	280	271322	-		1	HOLDER
	284	273455	-		1	SIGN
	286	273456	-		1	SIGN
	288	273458	-		1	SIGN
	300	295541	-		1	BRACKET
	310	441295	-		1	HOLDER
	315	441296	-		1	HOLDER
	400	90030-0091	-		6	PIPE CONNECTION
	420	90030-0188	-		1	PIPE CONNECTION
	422	90042-0184	S		1	SOLENOID VALVE
		90042-0424	S		0	* COIL
	430	90166-0118	-	MM	1700	HOSE
	433	90166-0119	-	M	8	HOSE
	455	90224-0078	-		1	CONNECTION
	460	90224-0296	-		1	GROMMET
	470	90224-0305	-		9	PIPE CONNECTION
	495	90330-0037	-		2	PLUG
	515	90330-0093	-		2	NUT
	540	312101-0378	-		2	SCREW M6S6X40FZB
	550	312101-0388	-		2	SCREW M6S6X90FZB

From	Pos	Part No	SP	UN	Qty	Description
	575	312105-0371	-		2	SCREW M6S6X22RFR
	581	312105-0378	-		2	SCREW M6S6X40RFR
	582	312105-0453	-		2	SCREW M6S8X25RFR
	590	312125-0325	-		2	SLOTTED HEMCS5X10RFR
	600	312125-0329	-		2	SLOTTED HEMCS5X16RFR
	605	312502-0120	-		6	DRIVE SCREKDS0X5FNB
	610	312605-0314	-		2	NUT M6M5RFR
	620	315101-0153	-		6	WASHER BRB6,4X12FZB
	640	315233-0113	S		4	SEAL RING R1/2"
	705	342713-0215	-		3	BLANK-OFF
	712	342720-0114	-		1	PIPE CONNEGA-15-1/2"
	713	342720-0115	-		1	PIPE CONNEGA-16-1/2"
	717	342726-0109	-		1	PIPE CONNEG-12
	719	342726-0114	-		1	PIPE CONNEG-15
	730	352101-0105	-		2	LEAD-IN G 22,5

614-2a

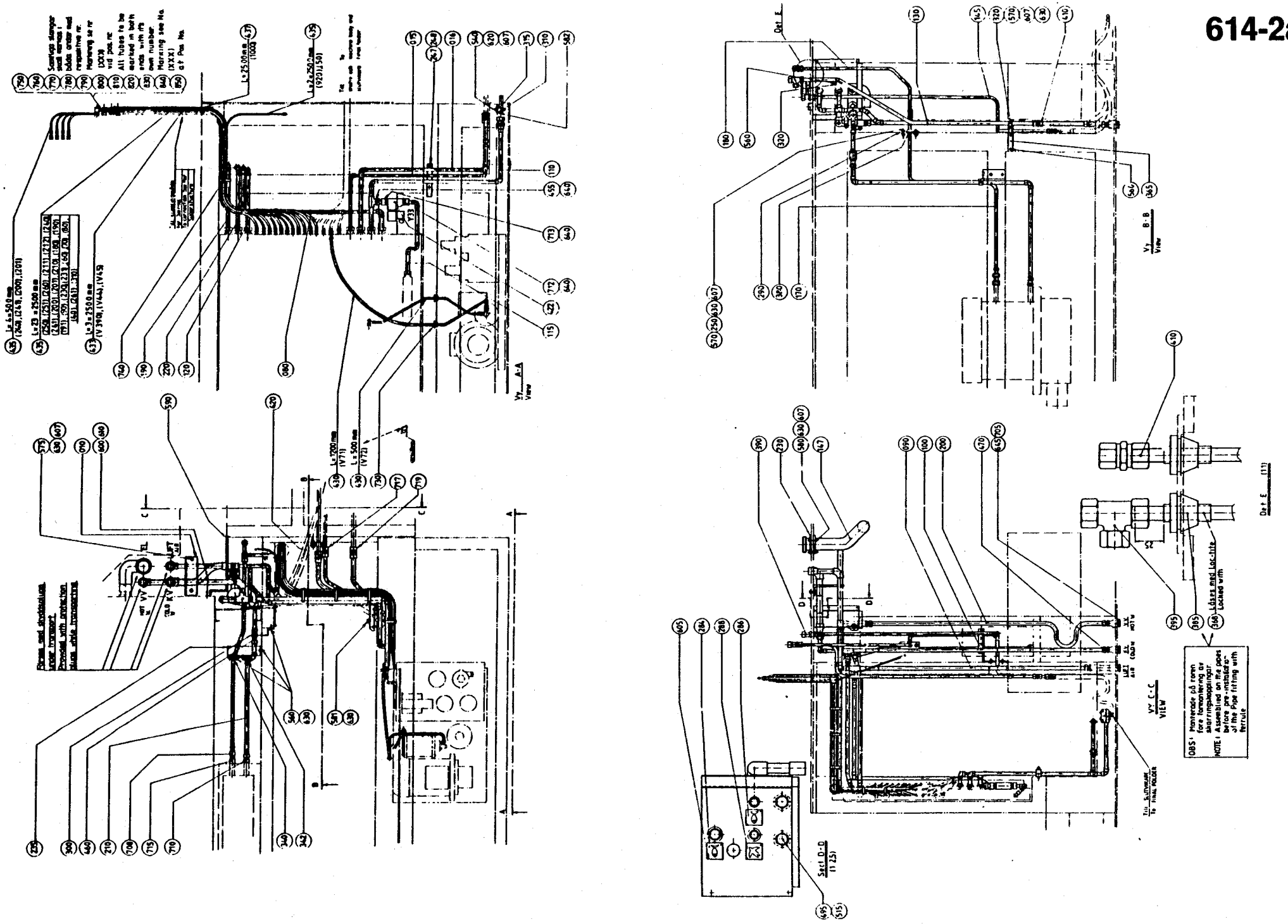

From	Pos	Part No	SP	UN	Qty	Description
	010	456597	-		1	CONNECTION PIPE
	080	295529	-		1	PIPE
	090	295530	-		1	PIPE
	100	295531	-		1	PIPE
	130	456599	-		1	PIPE
	145	751994	-		1	PIPE
	147	456598	-		1	CABLE CONDUIT
	170	456823	-		1	PIPE
	180	456824	-		1	PIPE
	190	295536	-		1	PIPE
	200	456978	-		1	PIPE
	210	456821	-		1	PIPE
	220	295539	-		1	PIPE
	230	456758	-		1	CONNECTION
	235	456825	-		1	BRACKET
	250	315125-0153	S		2	WASHER SB 6,4X22X4 RFR
	290	295540	-		1	PLATE
	320	90165-0009	-		3	CLIP
	340	295549	-		1	CLIP
	342	456826	-		1	PIPE CLAMP
	365	491453	-		1	HOLDER
	368	469550	-		2	SLEEVE
	380	90015-0021	-		1	BUSHING
	385	90015-0022	-		2	BUSHING
	390	90030-0030	-		1	PIPE CONNECTION
	395	90030-0058	-		1	CONNECTION
	410	90030-0106	-		3	PIPE CONNECTION
	433	90166-0119	-	M	8	HOSE
	435	90166-0132	-	M	62	HOSE
	437	90166-0133	-	M	3	HOSE
	470	90224-0305	-		9	PIPE CONNECTION
	495	90330-0037	-		2	PLUG
	515	90330-0093	-		2	NUT
	560	312105-0364	-		13	SCREW M6S6X10RFR
	570	312105-0368	-		3	SCREW M6S6X16RFR
	575	312105-0371	-		2	SCREW M6S6X22RFR
	580	312105-0374	-		3	SCREW M6S6X30RFR
	607	312605-0316	-		11	NUT M6M6RFR
	630	315105-0153	-		29	WASHER BRB6,4X12RFR
	645	90005-0016	S		3	WASHER
	708	342714-0110	-		1	REDUCER KOR 15/12-L/SY
	710	342723-0114	-		1	PIPE CONNEGI-15-1/2"

From	Pos	Part No	SP	UN	Qty	Description
	715	342725-0114	-		1	PIPE COUPLGI 15LR/RO RFR
	717	342726-0109	-		1	PIPE CONNEG-12
	740	352113-0102	-		12	RIBBON CLA
	750	359000-0400	-		52	MARKING CO2/4"0"
	760	359000-0401	-		36	MARKING CO2/4"1"
	770	359000-0402	-		40	MARKING CO2/4"2"
	780	359000-0403	-		8	MARKING CO2/4"3"
	790	359000-0404	-		16	MARKING CO2/4"4"
	800	359000-0405	-		8	MARKING CO2/4"5"
	810	359000-0406	-		6	MARKING CO2/4"6"
	820	359000-0407	-		6	MARKING CO2/4"7"
	830	359000-0408	-		4	MARKING CO2/4"8"
	840	359000-0409	-		10	MARKING CO2/4"9"
	850	359000-0771	-		10	MARKING CO2/4"V"

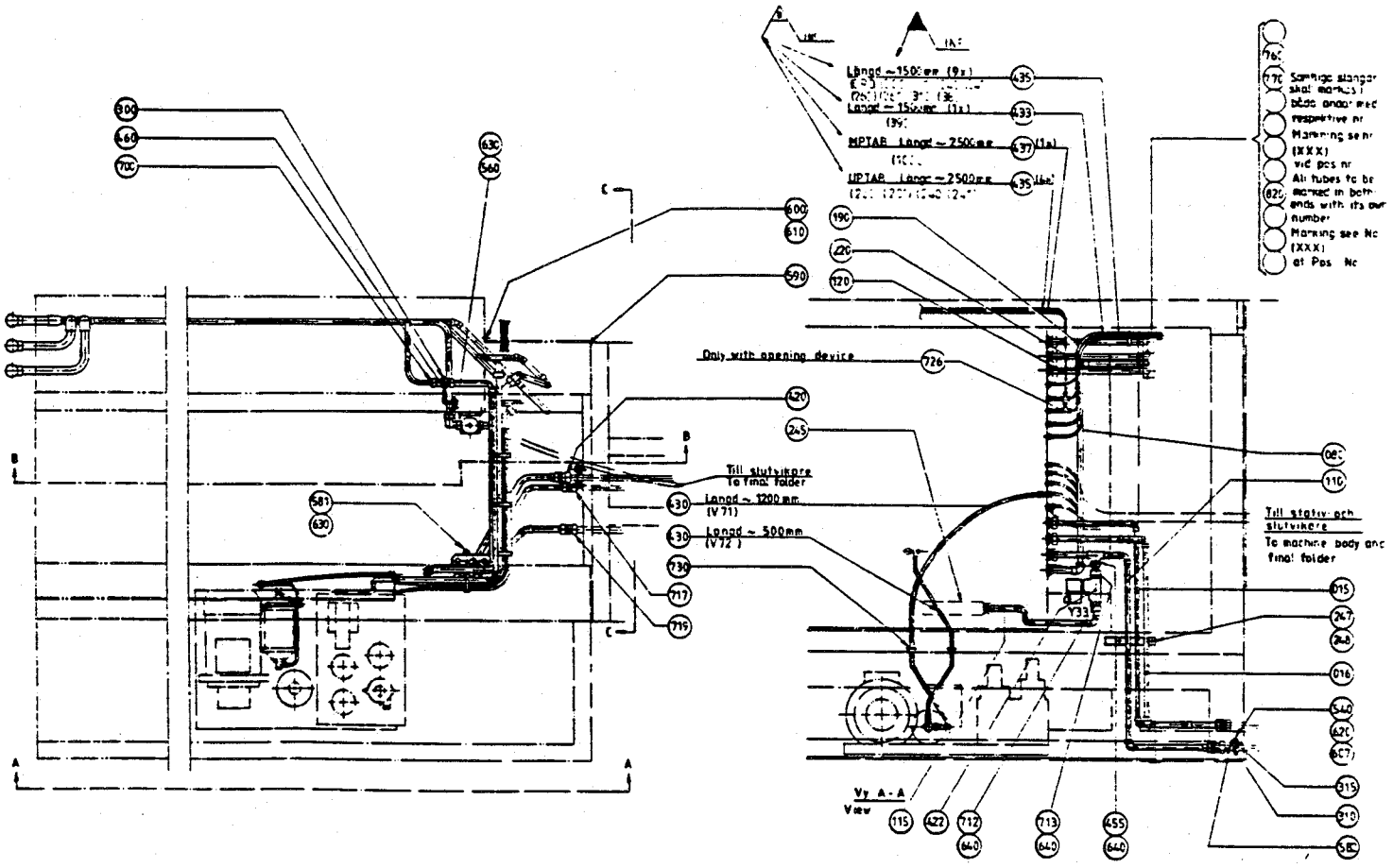
Vy A-A
View
Till slutvikare
To final folder
Till stativ- och slutvikare
To machine body and final folder
Only with opening device
Längd ~ 1200 mm
(V 71)
Längd ~ 500mm
(V 72)
MPTAR Längd ~ 2500 mm
UPTAR Längd ~ 2500 mm
Samtliga slangar skall markeras i båda ändarna med respektive nr
Marking see No (XXX) at Pos No
All tubes to be marked in both ends with its own number
Marking see No (XXX) at Pos No

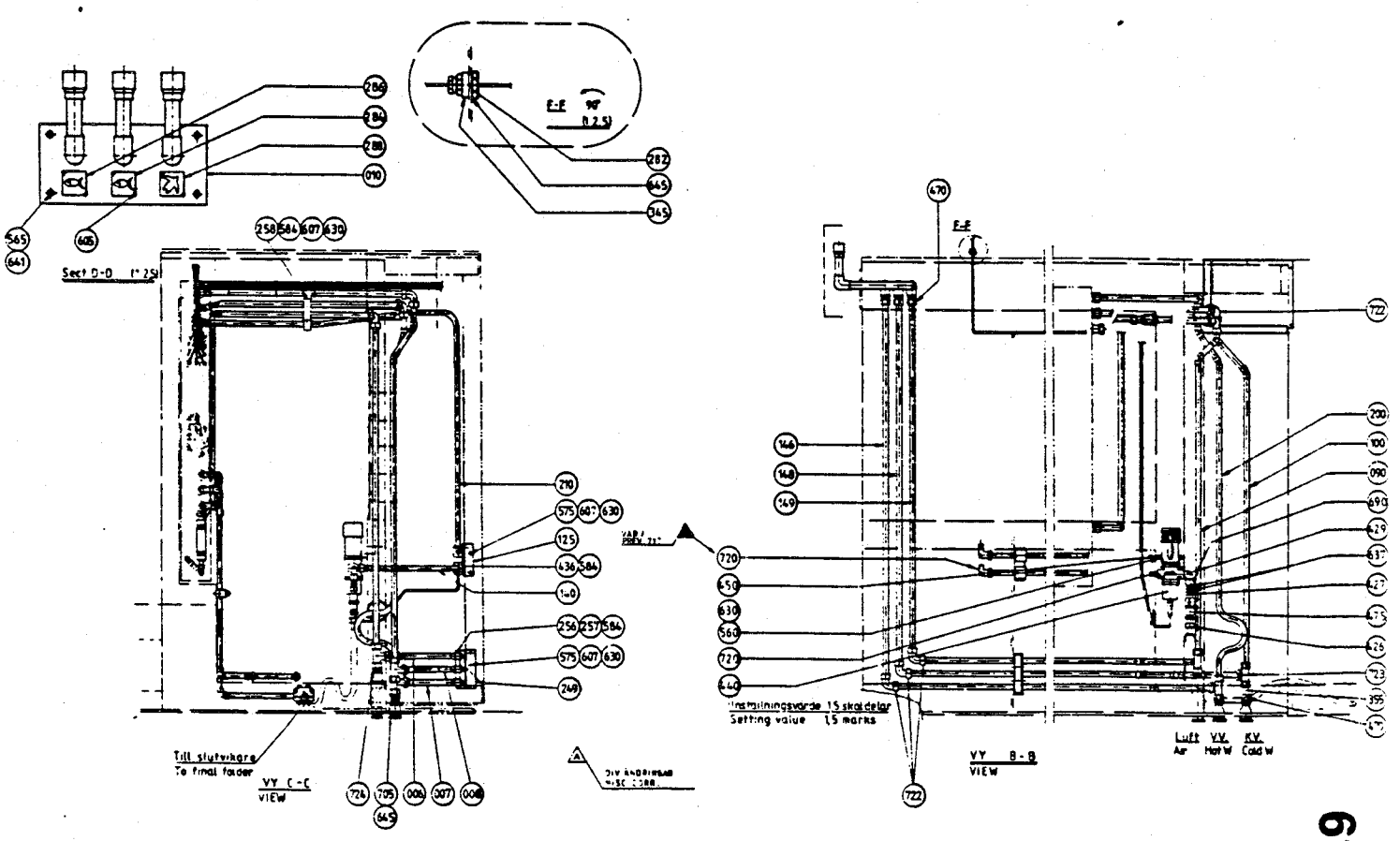
Sect D-D
E-E
Till slutvikare
To final folder
VY C-C
VIEW
VY B-B
VIEW
Inställningsvärde 15 skaldelar
Setting value 15 marks
Luft VV KV
Air Hot W Cold W

614-2b

From	Pos	Part No	SP	UN	Qty	Description
	006	752785	-		1	PIPE
	007	752786	-		1	PIPE
	008	752787	-		1	PIPE
	010	752809	-		1	PIPE CONNECTION
	080	752791	-		1	PIPE
	090	752790	-		1	PIPE
	100	752789	-		1	PIPE
	125	752813	-		2	BRACKET
	140	752812	-		1	PIPE
	146	752794-0001	-		1	PIPE
	148	752794-0002	-		1	PIPE
	149	752794-0003	-		1	PIPE
	190	752792	-		1	PIPE
	200	752788	-		1	PIPE
	210	752811	-		1	PIPE
	220	752793	-		1	PIPE
	245	295945	-		1	GUARD
	249	752863	-		1	BRACKET
	256	978006	-		1	PIPE HOLDER
	257	978007	-		1	PIPE HOLDER
	258	978008	-		2	PIPE HOLDER
	282	271949	-		1	NUT
	345	295970	-		1	RING
	355	752795	-		1	PIPE
	426	90030-0181	-		1	PIPE CONNECTION
	427	90030-0182	-		1	NIPPLE
	429	90140-0020	-		1	ELBOW PIPE
	433	90166-0119	-	M	2	HOSE
	435	90166-0132	-	M	22	HOSE
	436	90165-0051	-		4	CLIP
	437	90166-0133	-	M	3	HOSE **with pull tab**
	440	90187-0069	-		1	VALVE
	450	90187-0311	-		1	HOLDER
	470	90224-0305	-		6	PIPE CONNECTION
	475	90270-0347	-		1	VALVE
	560	312105-0364	-		4	SCREW M6S6X10RFR
	575	312105-0371	-		8	SCREW M6S6X22RFR
	607	312605-0316	-		23	NUT M6M6RFR
	630	315105-0153	-		39	WASHER BRB6,4X12RFR
	637	315233-0111	-		2	SEAL RING R3/8"
	641	315105-0165	-		4	WASHER BRB8,4X16RFR
	645	90005-0016	S		4	WASHER

From	Pos	Part No	SP	UN	Qty	Description
	690	342700-0111	-		1	NIPPLE RNA3/8"-3/8"
	700	90224-0297	-		1	REDUCER
	720	342730-0109	-		3	ELBOW COUP WA-12-3/8"
	722	342736-0114	-		6	ELBOW COUP W-15
	723	342746-0114	-		1	T-PIECE T-15
	724	342759-0114	-		2	L-CONNECTI
	726	342946-0112	-		4	T-PIECE 6/4 **without pull tab**
	750	359000-0400	-		–	MARKING CO2/4"0"
	760	359000-0401	-		2	MARKING CO2/4"1"
	770	359000-0402	-		2	MARKING CO2/4"2"
	790	359000-0404	-		–	MARKING CO2/4"4"
	820	359000-0407	-		4	MARKING CO2/4"7"

614-2c

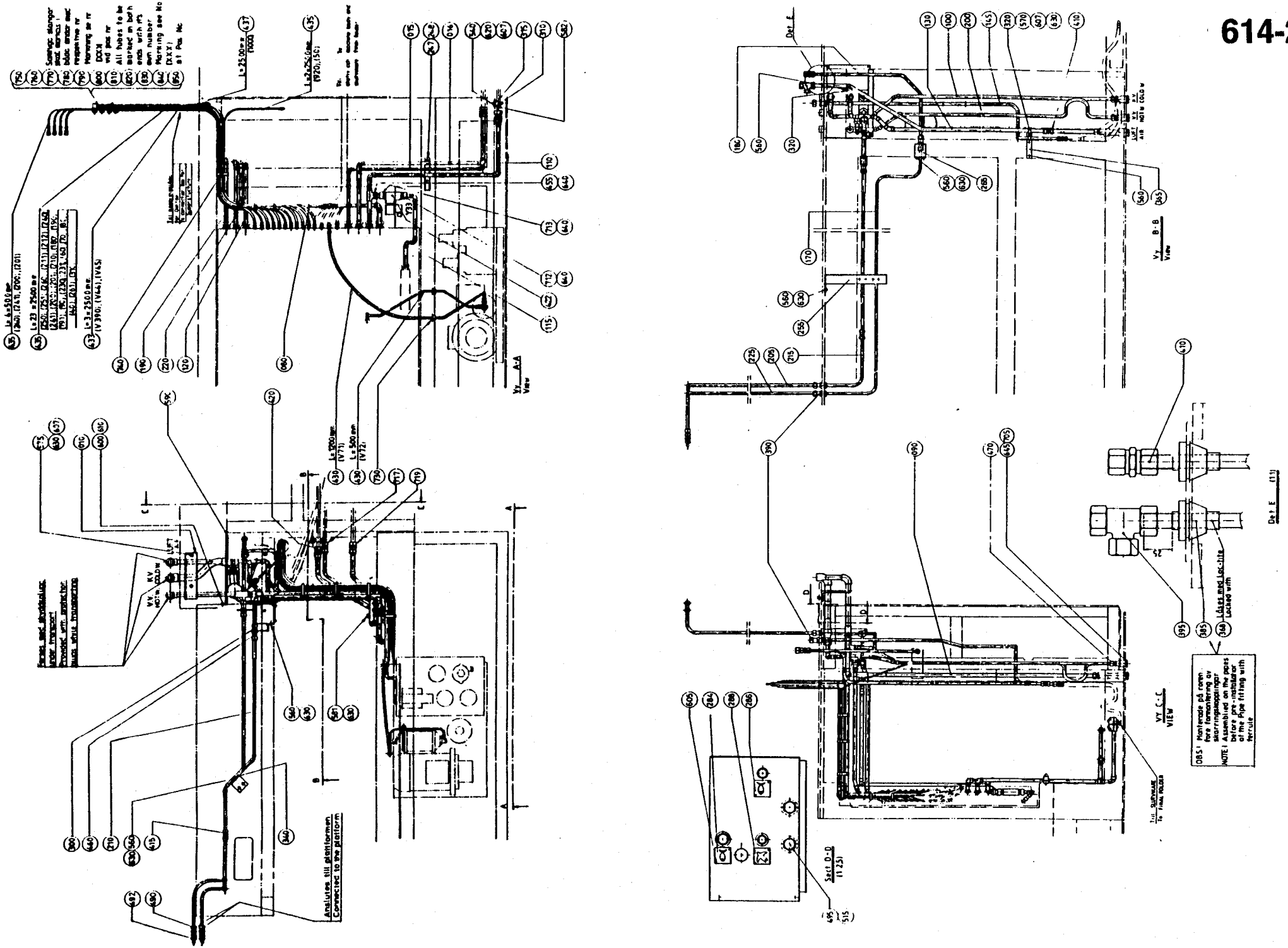

From	Pos	Part No	SP	UN	Qty	Description
	010	751828	-		1	CONNECTION PIPE
	080	295529	-		1	PIPE
	090	295530	-		1	PIPE
	100	751843	-		1	TUBE
	130	456599	-		1	PIPE
	145	752861	-		1	PIPE
	170	751841	-		1	TUBE
	180	751840	-		1	TUBE
	190	295536	-		1	PIPE
	200	751842	-		1	TUBE
	205	751880	-		1	TUBE
	210	751838	-		1	TUBE
	215	751839	-		1	TUBE
	220	295539	-		1	PIPE
	225	751881	-		1	TUBE
	255	751844	-		1	BRACKET
	265	751918	-		1	BRACKET
	320	90165-0009	-		3	CLIP
	340	295549	-		2	CLIP
	365	491453	-		1	HOLDER
	368	469550	-		2	SLEEVE
	385	90015-0022	-		2	BUSHING
	390	90030-0030	-		4	PIPE CONNECTION
	395	90030-0058	-		1	CONNECTION
	410	90030-0106	-		3	PIPE CONNECTION
	415	90224-0176	-		1	GLAND
	433	90166-0119	-	M	8	HOSE
	435	90166-0132	-	M	62	HOSE
	437	90166-0133	-	M	3	HOSE
	470	90224-0305	-		9	PIPE CONNECTION
	490	90030-0187	-		2	PIPE CONNECTION
	492	90330-0019	-		2	REDUCTION NIPPLE
	495	90330-0037	-		2	PLUG
	515	90330-0093	-		2	NUT
	560	312105-0364	-		15	SCREW M6S6X10RFR
	570	312105-0368	-		1	SCREW M6S6X16RFR
	575	312105-0371	-		2	SCREW M6S6X22RFR
	607	312605-0316	-		5	NUT M6M6RFR
	630	315105-0153	-		30	WASHER BRB6,4X12RFR
	645	90005-0016	S		3	WASHER
	717	342726-0109	-		1	PIPE CONNEG-12
	740	352113-0102	-		12	RIBBON CLA

From	Pos	Part No	SP	UN	Qty	Description
	750	359000-0400	-		52	MARKING CO2/4"0"
	760	359000-0401	-		36	MARKING CO2/4"1"
	770	359000-0402	-		40	MARKING CO2/4"2"
	780	359000-0403	-		8	MARKING CO2/4"3"
	790	359000-0404	-		16	MARKING CO2/4"4"
	800	359000-0405	-		8	MARKING CO2/4"5"
	810	359000-0406	-		6	MARKING CO2/4"6"
	820	359000-0407	-		6	MARKING CO2/4"7"
	830	359000-0408	-		4	MARKING CO2/4"8"
	840	359000-0409	-		10	MARKING CO2/4"9"
	850	359000-0771	-		10	MARKING CO2/4"V"

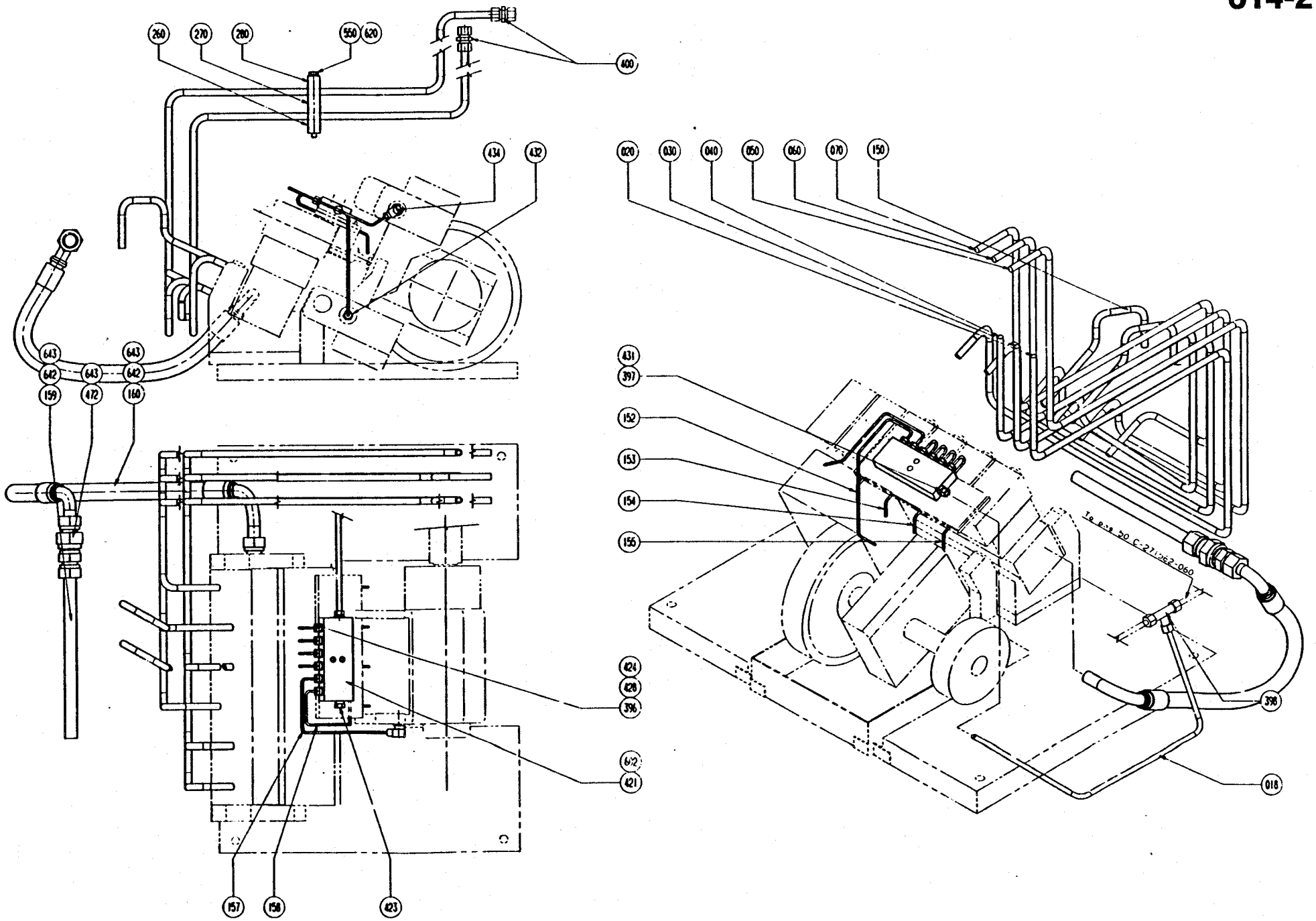
260
270
280
550
620
600
434
432
643
642
643
642
643
642
159
472
160
424
426
396
612
421
157
158
423
020
030
040
050
060
070
150
431
397
152
153
154
155
398
018

From	Pos	Part No	SP	UN	Qty	Description
	120	295533	-		1	PIPE
	015	491187	-		1	PIPE
	016	491866	-		1	PIPE
	018	752728	-		1	LUBRICATING PIPE
	020	751662	-		1	PIPE
	030	751661	-		1	PIPE
	040	751664	-		1	PIPE
	050	751663	-		1	PIPE
	060	751665	-		1	PIPE
	070	751666	-		1	PIPE
	110	491183	-		1	PIPE
	115	491463	-		1	PIPE
	150	751660	-		2	PIPE
	152	752599	-		1	LUBRICATING PIPE
	153	752600	-		1	LUBRICATING PIPE
	154	752601	-		1	LUBRICATING PIPE
	155	752602	-		1	LUBRICATING PIPE
	157	752662	-		1	LUBRICATING PIPE
	158	752663	-		1	LUBRICATING PIPE
	159	752652	-		1	PIPE
	160	752775	-		1	HOSE
	247	491241	-		1	HOLDER
	248	491242	-		1	HOLDER
	260	271320	-		1	HOLDER
	270	271321	-		1	HOLDER
	280	271322	-		1	HOLDER
	284	273455	-		1	SIGN
	286	273456	-		1	SIGN
	288	273458	-		1	SIGN
	300	295541	-		1	BRACKET
	310	441295	-		1	HOLDER
	315	441296	-		1	HOLDER
	396	90028-0020	-		6	CONE
	398	90030-0076	-		1	CONNECTION
	400	90030-0091	-		6	PIPE CONNECTION
	420	90030-0188	-		1	PIPE CONNECTION
	421	90032-0040	-		1	BLOCK
	422	90042-0134	S		1	SOLENOID VALVE
	422.	90042-0428	S		1	* COIL
	423	90087-0019	-		1	PLUG
	424	90092-0052	-		6	VALVE
	428	90134-0039	-		6	BUSHING
	430	90166-0118	-	MM	1700	HOSE

From	Pos	Part No	SP	UN	Qty	Description
	431	90134-0055	-		1	BUSHING
	432	90134-0065	-		1	CONNECTION
	434	90134-0058	-		1	BANJO CONNECTION
	455	90224-0078	-		1	CONNECTION
	460	90224-0296	-		1	GROMMET
	472	90230-0011	-		1	NON RETURN VALVE
	540	312101-0378	-		2	SCREW M6S6X40FZB
	550	312101-0388	-		2	SCREW M6S6X90FZB
	581	312105-0378	-		2	SCREW M6S6X40RFR
	582	312105-0453	-		2	SCREW M6S8X25RFR
	590	312125-0325	-		2	SLOTTED HEMCS5X10RFR
	600	312125-0329	-		2	SLOTTED HEMCS5X16RFR
	602	312155-0297	-		2	SCREW MF6S4X25RFR
	605	312502-0120	-		6	DRIVE SCREKDS0X5FNB
	610	312605-0314	-		2	NUT M6M5RFR
	620	315101-0153	-		6	WASHER BRB6,4X12FZB
	640	315233-0113	S		4	SEAL RING R1/2"
	642	342703-0114	-		2	NUT M15-LFZB
	643	342705-0114	-		4	CUTTING RIR15-LFZB
	705	342713-0215	-		3	BLANK-OFF
	712	342720-0114	-		1	PIPE CONNEGA-15-1/2"
	713	342720-0115	-		1	PIPE CONNEGA-16-1/2"
	719	342726-0114	-		1	PIPE CONNEG-15
	730	352101-0105	-		2	LEAD-IN G 22,5

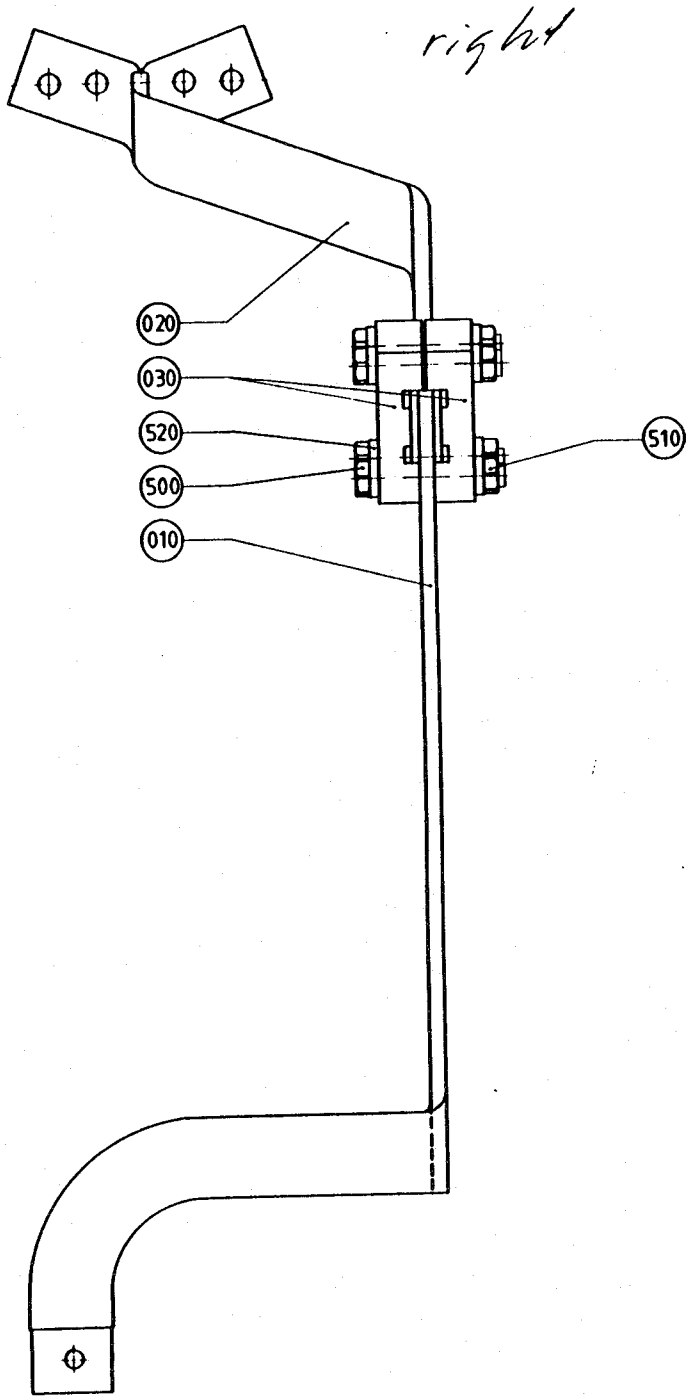
right
020
030
520
500
010
510

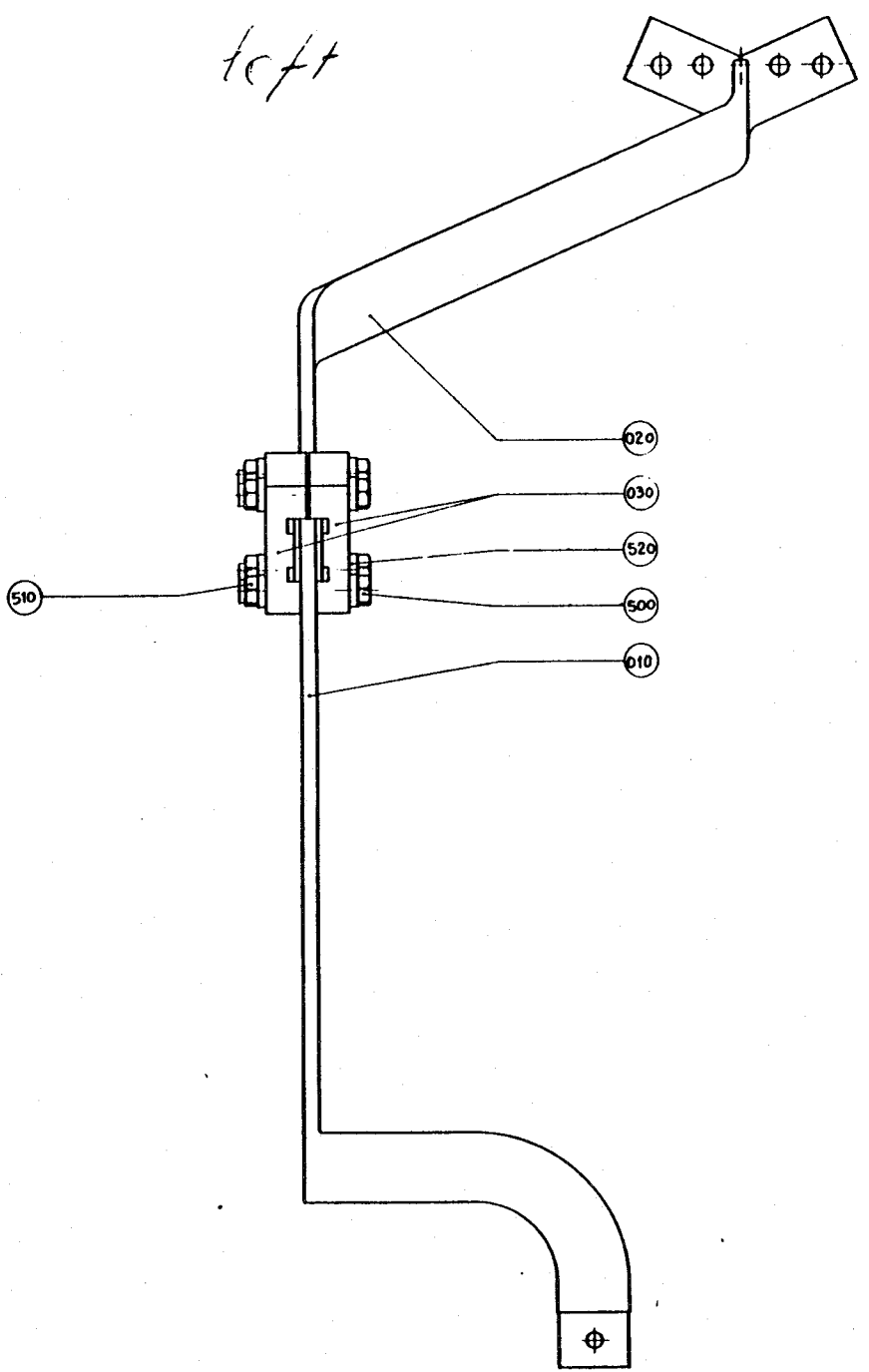
left
020
030
520
500
010
510

Left Side

From	Pos	Part No	SP	UN	Qty	Description
	010	456557	S		1	BUSBAR
	020	271787	S		1	CONNECTION
	030	271789	S		2	CLAMP
	500	312105-0380	-		4	SCREW M6S6X50RFR
	510	312605-0316	-		4	NUT M6M6RFR
	520	315115-0153	-		8	WASHER TBRB6,4X12RFR

Right Side

From	Pos	Part No	SP	UN	Qty	Description
	010	456558	S		1	BUSBAR
	020	271788	S		1	CONNECTION
	030	271789	S		2	CLAMP
	500	312105-0380	-		4	SCREW M6S6X50RFR
	510	312605-0316	-		4	NUT M6M6RFR
	520	315115-0153	-		8	WASHER TBRB6,4X12RFR

From	Pos	Part No	SP	UN	Qty	Description
	010	90296-0053	-	L	10	OIL
	020	90296-0075	-	ML	2500	OIL
	030	90298-0019	-		1	DETERGENT
	040	90144-0003	-		1	TAPE

From	Pos	Part No	SP	UN	Qty	Description

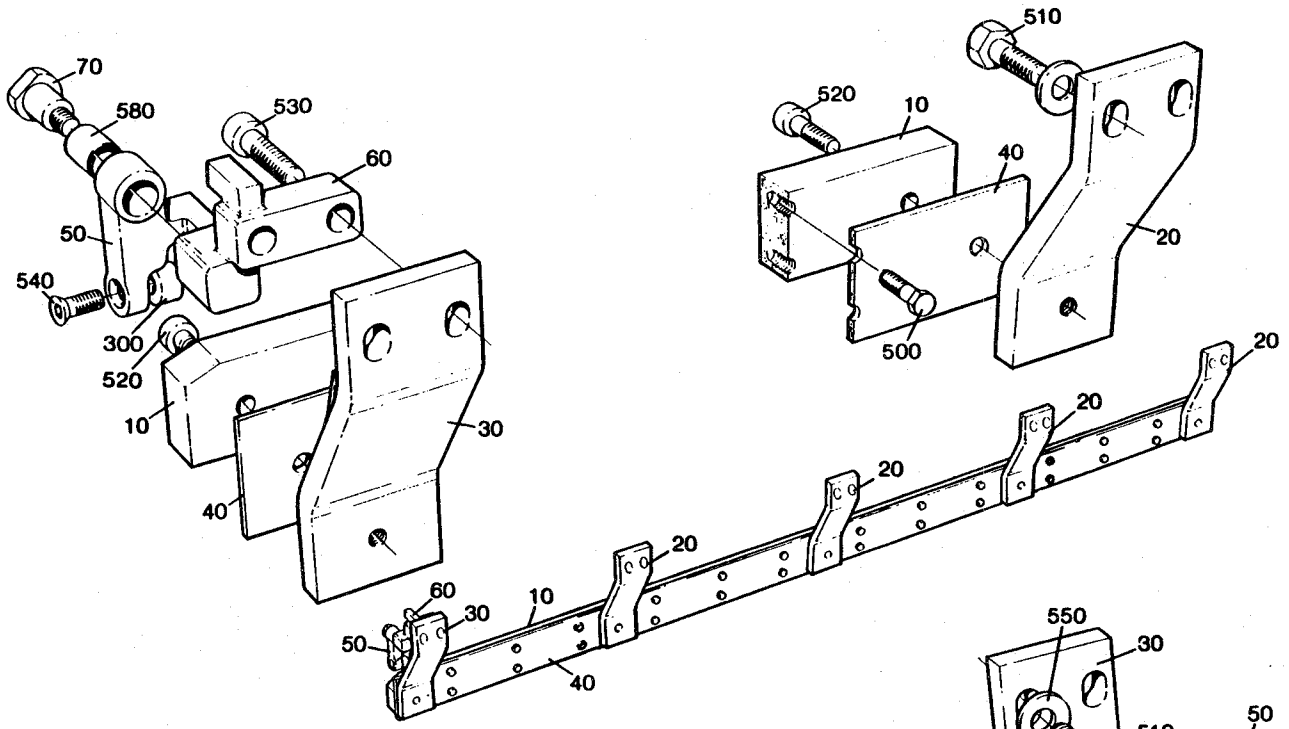

Left Side

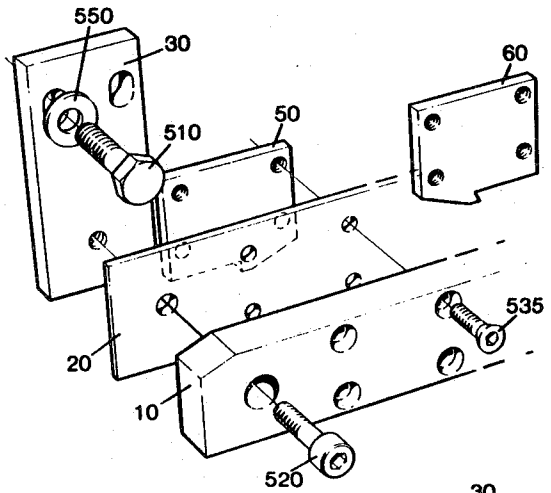

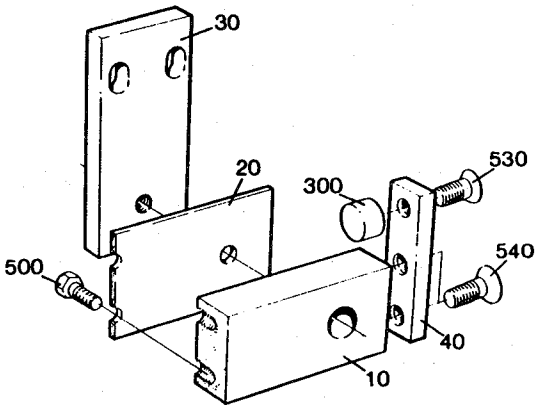

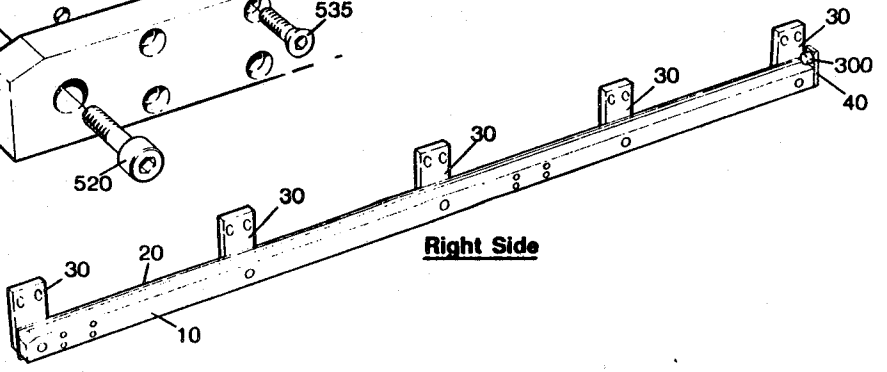

Right Side

Left Side

From	Pos	Part No	SP	UN	Qty	Description
	010	272620	S		1	GUIDE
	020	271472	-		4	BRACKET
	030	271959	-		1	BRACKET
	040	272621	S		1	GUIDE RAIL
	050	272630	S		1	CATCH
	060	272631	S		1	BRACKET
	070	271961	S		1	SCREW
	300	90347-0011	P		1	VIBRATION DAMPER
	500	312105-0366	-		24	SCREW M6S6X12RFR
	510	312105-0495	-		8	SCREW M6S10X30RFR
	520	312115-0453	-		5	SCREW 8X25 A4 80
	530	312115-0497	-		2	SCREW 10X35 A4 80
	540	312155-0366	-		1	SCREW MF6S6X12RFR
	550	315105-0173	-		8	WASHER BRB10,5X22RFR
	580	321120-0112	S		1	BUSHING 12/14X20

Right Side

From	Pos	Part No	SP	UN	Qty	Description
	010	272596	S		1	GUIDE
	020	272597	-		1	GUIDE RAIL
	030	257151	-		5	BRACKET
	040	257271	S		1	STOP
	050	271456	S		1	CATCH
	060	271457	S		1	CATCH
	300	90347-0011	P		1	VIBRATION DAMPER
	500	312105-0366	-		20	SCREW M6S6X12RFR
	510	312105-0493	-		10	SCREW M6S10X25RFR
	520	312115-0453	-		5	SCREW 8X25 A4 80
	530	312155-0366	-		1	SCREW MF6S6X12RFR
	535	312155-0374	-		8	SCREW MF6S6X30RFR
	540	312155-0449	-		2	SCREW MF6S8X16RFR
	550	315105-0173	-		10	WASHER BRB10,5X22RFR

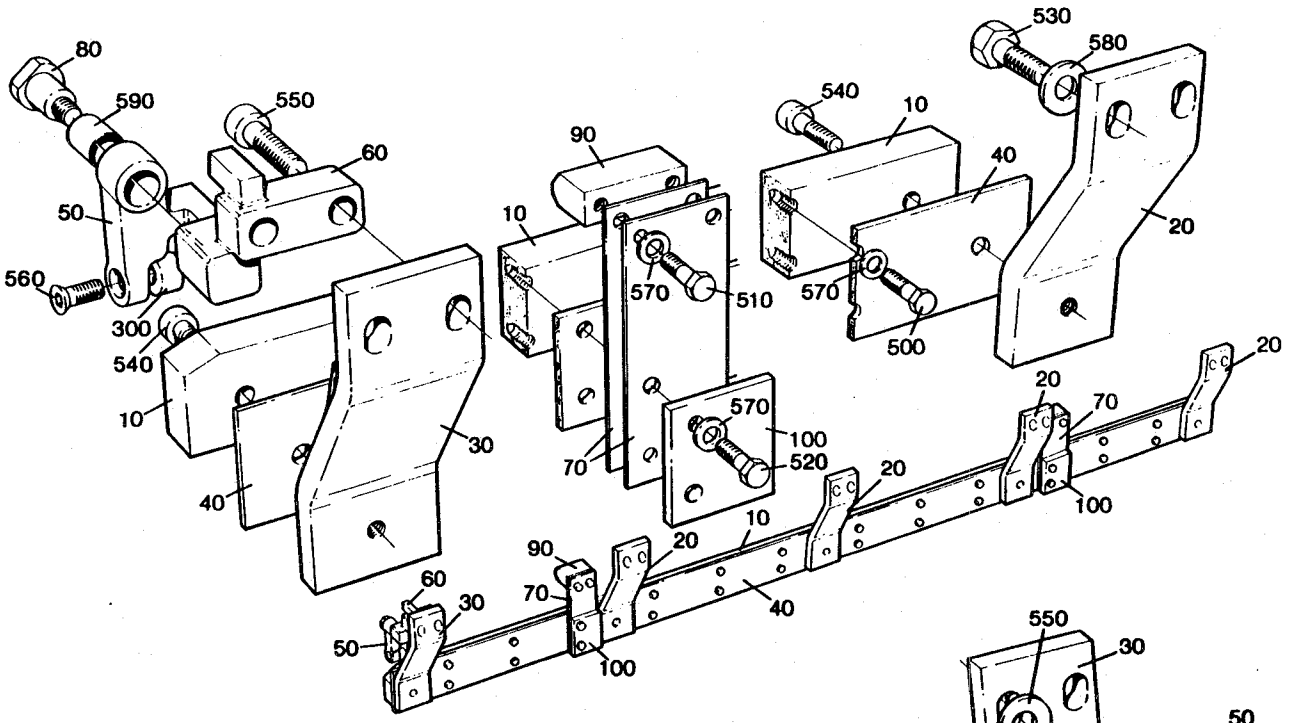

Left Side

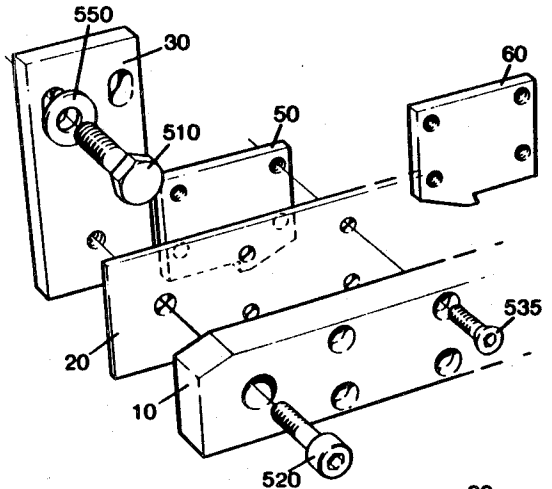

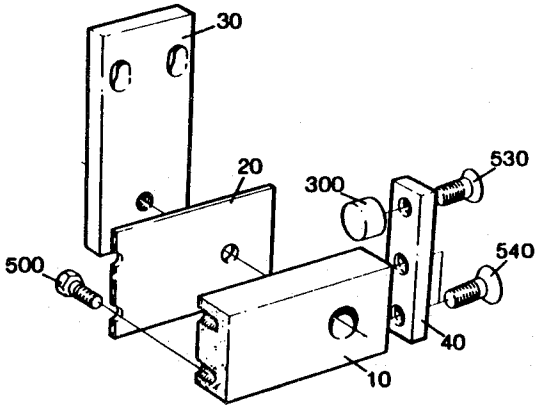

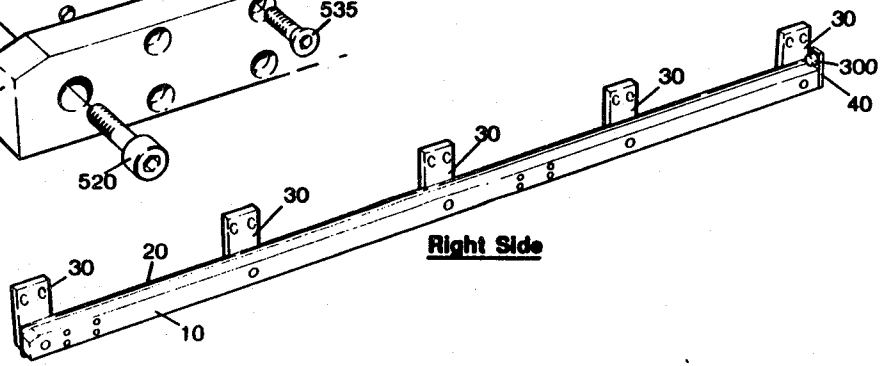

Right Side

Left Side

From	Pos	Part No	SP	UN	Qty	Description
	010	272620	S		1	GUIDE
	020	271472	-		4	BRACKET
	030	271959	-		1	BRACKET
	040	272621	S		1	GUIDE RAIL
	050	272630	S		1	CATCH
	060	272631	S		1	BRACKET
	070	751725	S		4	PLATE
	080	271961	S		1	SCREW
	090	751727	S		2	SLIDE LUG
	100	751729	S		2	WASHER
	300	90347-0011	P		1	VIBRATION DAMPER
	500	312105-0366	-		20	SCREW M6S6X12RFR
	510	312105-0368	-		4	SCREW M6S6X16RFR
	520	312105-0371	-		4	SCREW M6S6X22RFR
	530	312105-0495	-		8	SCREW M6S10X30RFR
	540	312115-0453	-		5	SCREW 8X25 A4 80
	550	312115-0497	S		2	SCREW 10X35 A4 80
	560	312155-0366	-		1	SCREW MF6S6X12RFR
	570	315105-0153	-		28	WASHER BRB6,4X12RFR
	580	315105-0173	-		8	WASHER BRB10,5X22RFR
	590	321120-0112	S		1	BUSHING 12/14X20

Right Side

From	Pos	Part No	SP	UN	Qty	Description
	010	272596	S		1	GUIDE
	020	272597	-		1	GUIDE RAIL
	030	257151	-		5	BRACKET
	040	257271	S		1	STOP
	050	271456	S		1	CATCH
	060	271457	S		1	CATCH
	300	90347-0011	P		1	VIBRATION DAMPER
	500	312105-0366	-		20	SCREW M6S6X12RFR
	510	312105-0493	-		10	SCREW M6S10X25RFR
	520	312115-0453	-		5	SCREW 8X25 A4 80
	530	312155-0366	-		1	SCREW MF6S6X12RFR
	535	312155-0374	-		8	SCREW MF6S6X30RFR
	540	312155-0449	-		2	SCREW MF6S8X16RFR
	550	315105-0173	-		10	WASHER BRB10,5X22RFR

SPC 648151/52
Tetra Brik TB/9
Tetra Brik Aseptic TBA/9

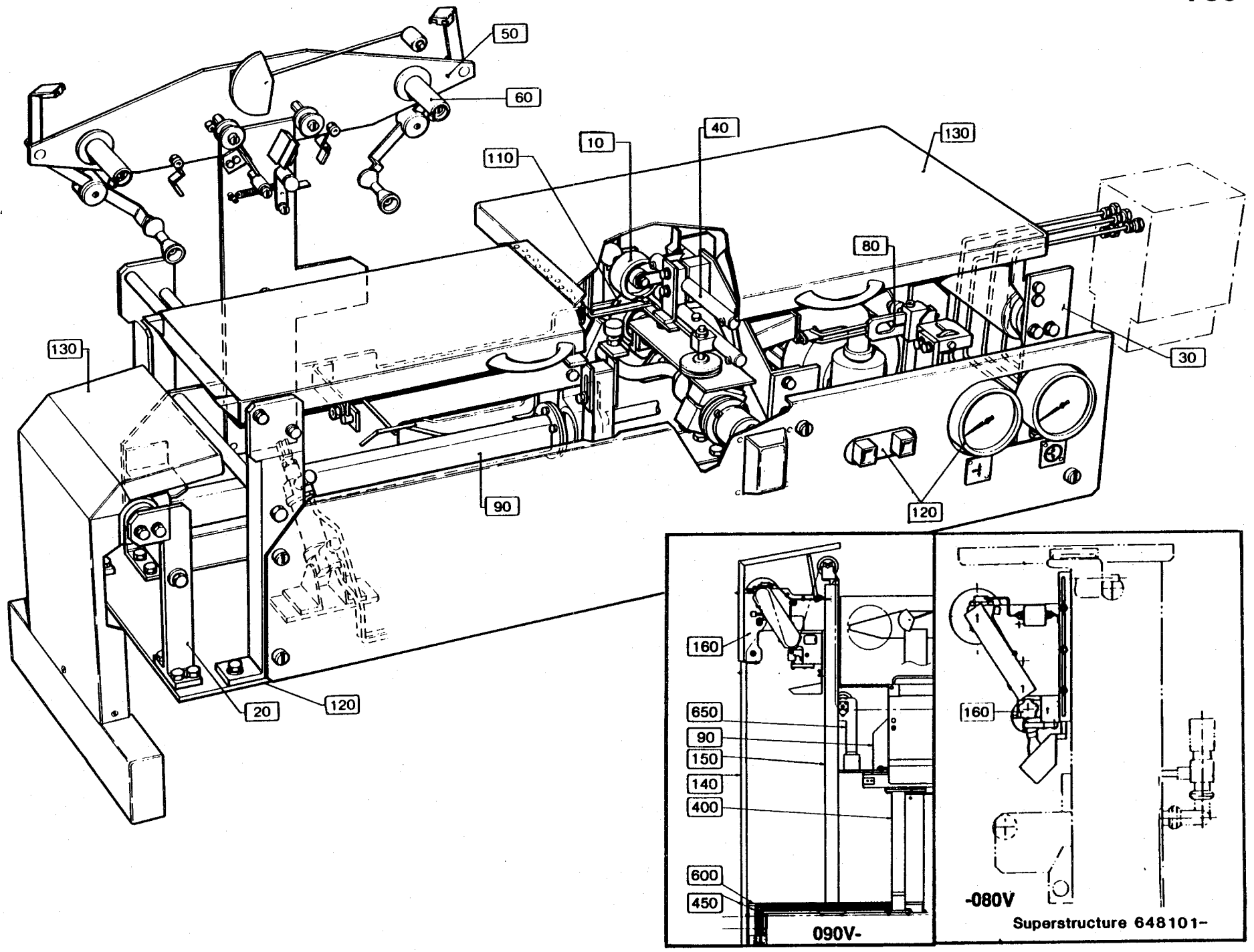
50
60
110
10
40
130
80
30
130
90
120
20
120
160
650
90
150
140
400
600
450
090V-
160
-080V
Superstructure 648101-

From	Pos	Page	Description
-080V	F020	701-1	BENDING ROLLER BRACKET
	F030	702-1/2	BENDING ROLLER
	F050	703-1	STRIP HOLDER
		703-1.1	. BOBBIN
	F090	704-1	STRIP APPLICATOR
	F010	705-1	PRESSURE ROLLER
	F110	706-1	PRESSURE ROLLER
	F040	707-1	STRIP GUIDE
-080V	F080	708-1	PAPER GUIDE
	F120	709-1	PLATE
090V-	F450	710-1b	PIPE WORK
		711-1	. PRINTING WHEEL
		712-1a/b	. INK UNIT
	F500	713-1	START-UP KIT
TB/9			
	F130	714-1b/2a	PAPER GUARD
090V-	F130	714-2b	PAPER GUARD
090V-	F140	714-2c	PAPER GUARD REAR
090V-	F150	719-1	FRAME, DATING UNIT
	F160	718-1/2	DATING UNIT
090V-	F400	717-1	MACHINE BODY
090V-	F600	720-1	CABLE DUCT
090V-	F650	701-2	BENDING ROLLER REAR

From	Pos	Page No	Description

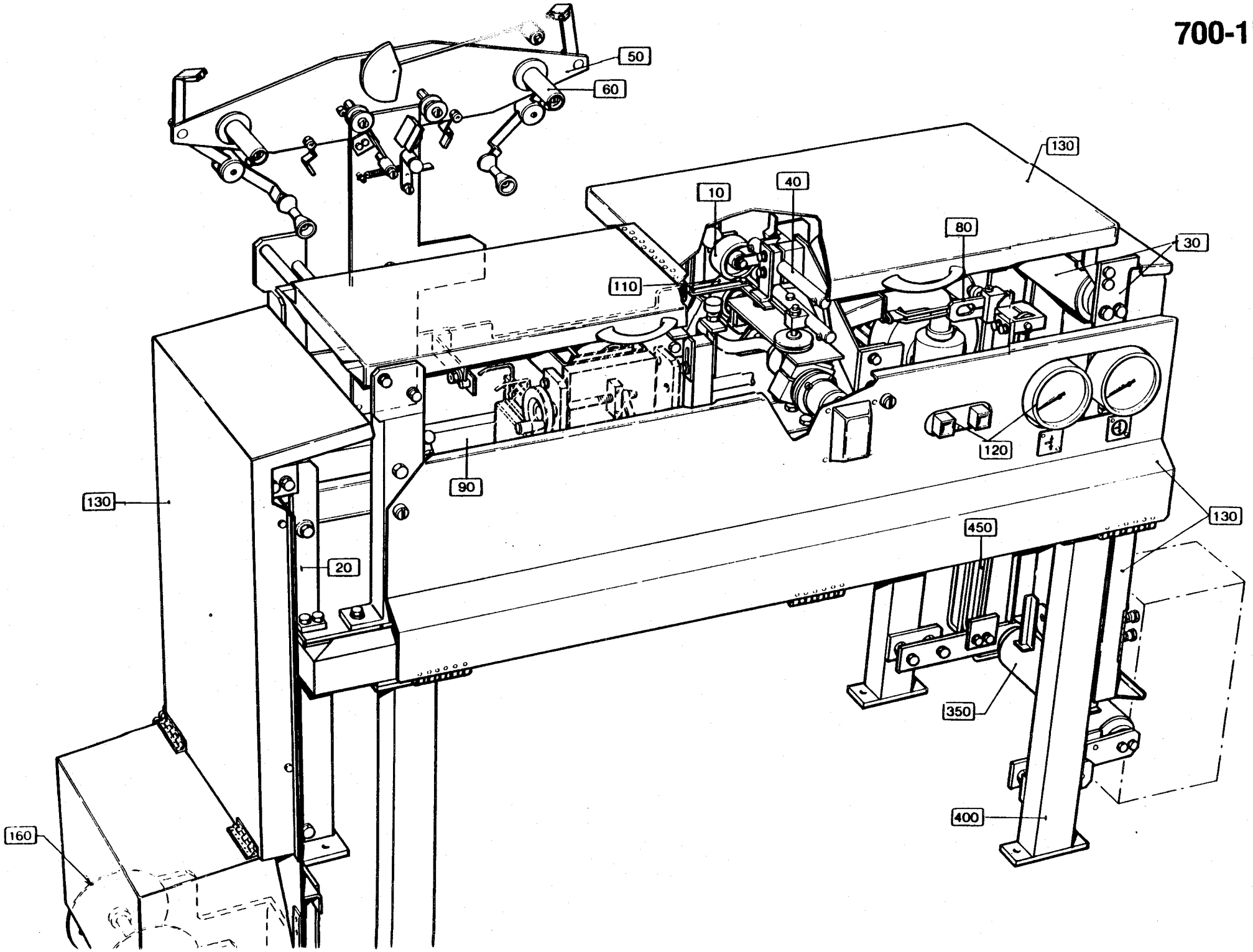
50
60
130
10
40
80
30
110
120
90
130
130
20
450
350
400
160

From	Pos	Page	Description
	F020	701-1	BENDING ROLLER BRACKET
	F030	702-1/2	BENDING ROLLER
	F050	703-1	STRIP HOLDER
		703-1.1	. BOBBIN
	F090	704-1	STRIP APPLICATOR
	F010	705-1	PRESSURE ROLLER
	F110	706-1	PRESSURE ROLLER
	F040	707-1	STRIP GUIDE
-080V	F080	708-1	PAPER GUIDE
	F120	709-1	PLATE
	F450	710-1a	PIPE WORK
		711-1	. PRINTING WHEEL
		712-1a/b	. INK UNIT
	F500	713-1	START-UP KIT
TBA/9			
	F130	714-1a/2a	PAPER GUARD
	F160	715-1/2	DATING UNIT
-080V	F350	716-1	BENDING ROLLER
	F400	717-1	MACHINE BODY

From	Pos	Page No	Description

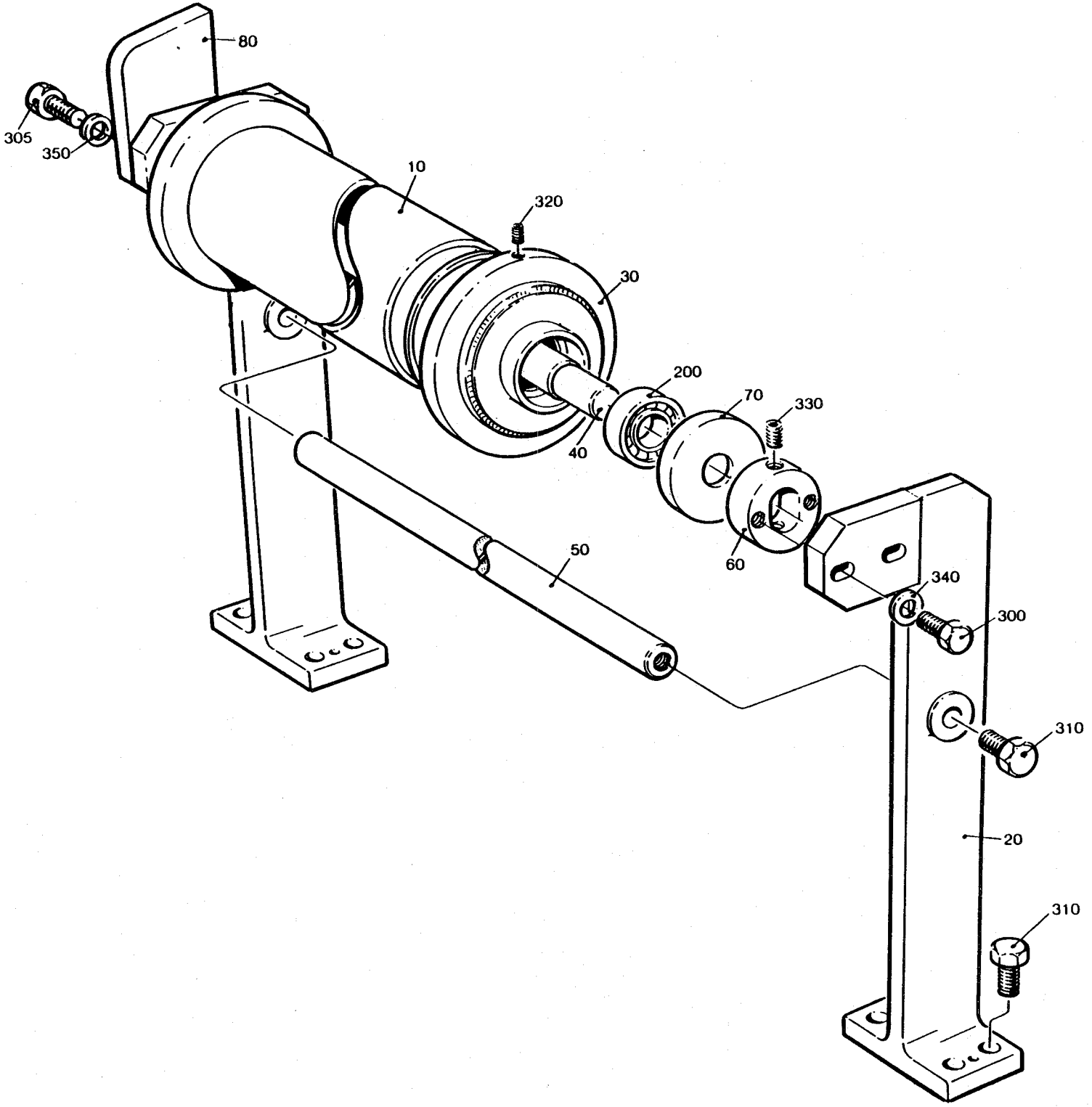
80
305
350
10
320
30
200
70
330
40
60
50
340
300
310
20
310

From	Pos	Part No	SP	UN	Qty	Description
Stamp location, strip side						
	010	295869	C		1	BENDING ROLLER (180-284 ml)
	010	456318	C		1	BENDING ROLLER (100, 125 ml)
	010	456319	C		1	BENDING ROLLER (200 ml SLIM)
Stamp location, opposite strip side						
	010	295869	C		1	BENDING ROLLER (180-284 ml)
	010	456318	C		1	BENDING ROLLER 100, 125 ml)
	010	456319	C		1	BENDING ROLLER (200 ml SLIM)
Common Parts						
	020	546116	-		2	BRACKET
	030	250588	C		2	FLANGE
	040	256985	S		1	SHAFT
	050	256986-0001	-		1	STRUT
	060	265567	C		2	BEARING
	070	265568	-		2	DUST COVER
	080	751048	-		1	SUPPORT
	200	90214-0098	S		2	BALL BEARING
	300	312105-0370	-		2	SCREW M6S6X20RFR
	305	312105-0376	-		2	SCREW M6S6X35RFR
	310	312105-0451	-		10	SCREW M6S8X20RFR
	320	312318-0325	S		4	GRUB SCREW SK6SS5X10RFR
	330	312318-0364	S		4	GRUB SCREW SK6SS6X10RFR
	340	315105-0153	-		2	WASHER BRB6,4X12RFR
	350	315125-0153	-		2	WASHER SB 6,4X22X4 RFR

From	Pos	Part No	SP	UN	Qty	Description

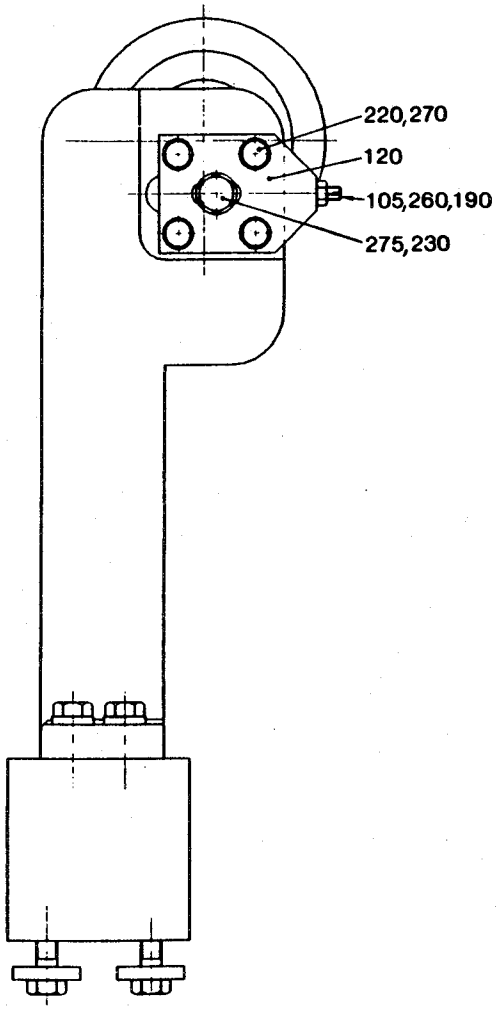
220,270
120
105,260,190
275,230

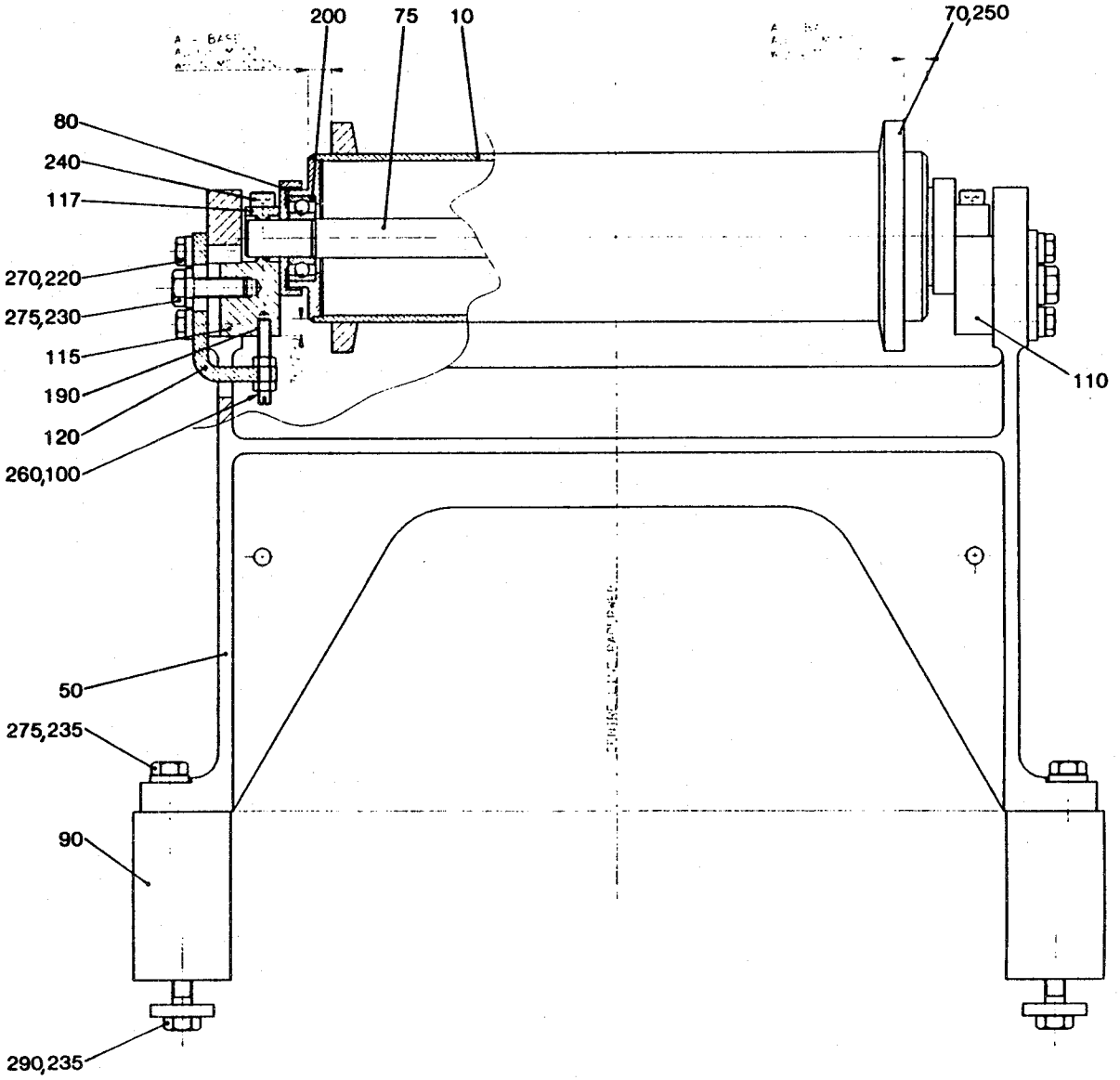
200
75
10
70,250
80
240
117
270,220
275,230
115
190
120
260,100
110
50
275,235
90
290,235

From	Pos	Part No	SP	UN	Qty	Description
	010	256984	C		1	BENDING ROLLER
	050	752197	-		1	CANTILEVER
	070	250588	C		2	FLANGE
	075	256985	S		1	SHAFT
	080	265568	-		2	DUST COVER
	090	560185	-		2	HOLDER
	100	751527-0001	-		1	ADJUSTING SCREW
	105	751527-0003	-		1	ADJUSTING SCREW
	110	752194	-		1	ATTACHMENT LUG
	115	752195	-		1	ATTACHMENT LUG
	117	752196	-		2	CAP
	120	752199	-		2	PLATE
	190	90157-0021	-		X	LOCKING FLUID
	200	90214-0098	S		2	BALL BEARING
	220	312105-0370	-		8	SCREW M6S6X20RFR
	230	312105-0453	-		2	SCREW M6S8X25RFR
	235	312105-0455	-		4	SCREW M6S8X30RFR
	240	312115-0370	S		4	SCREW MC6S 6X20 A4 80
	250	312318-0325	S		4	GRUB SCREW SK6SS5X10RFR
	260	312605-0314	-		4	NUT M6M5RFR
	270	315115-0153	-		8	WASHER TBRB6,4X12RFR
	275	315115-0165	-		6	WASHER TBRB8,4X16RFR
	290	315125-0165	-		4	WASHER TBRSB 8,4X26X5 RFR

From	Pos	Part No	SP	UN	Qty	Description

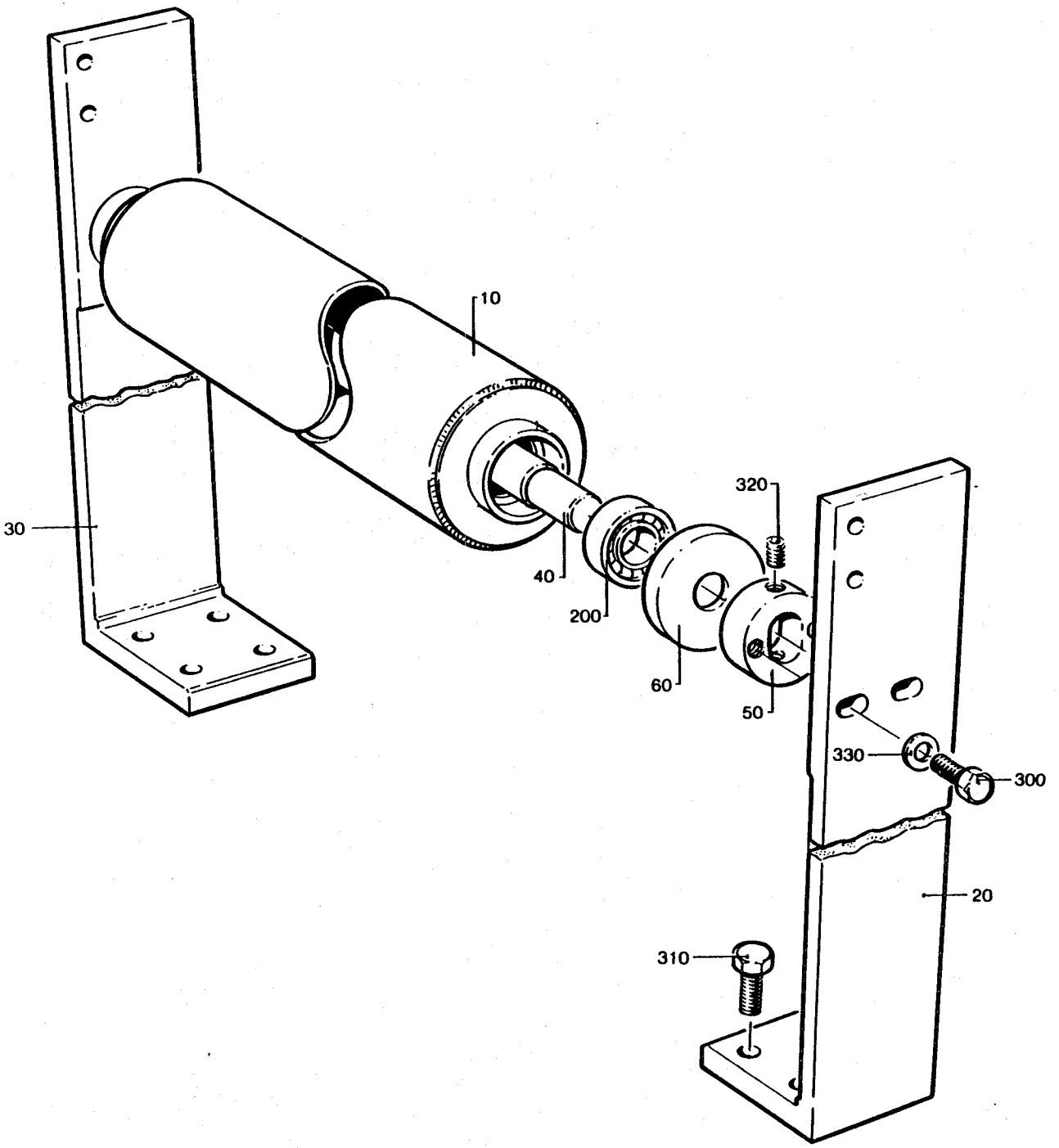
10
30
40
200
60
50
320
330
300
20
310

From	Pos	Part No	SP	UN	Qty	Description
	010	256984	C		1	BENDING ROLLER
	020	256992	-		1	BRACKET
	030	256993	-		1	BRACKET
	040	256985	S		1	SHAFT
	050	265567	C		2	BEARING
	060	265568	-		2	DUST COVER
	200	90214-0098	S		2	BALL BEARING
	300	312105-0370	-		4	SCREW M6S6X20RFR
	310	312105-0451	-		8	SCREW M6S8X20RFR
	320	312318-0364	S		4	GRUB SCREW SK6SS6X10RFR
	330	315105-0153	-		4	WASHER BRB6,4X12RFR

From	Pos	Part No	SP	UN	Qty	Description

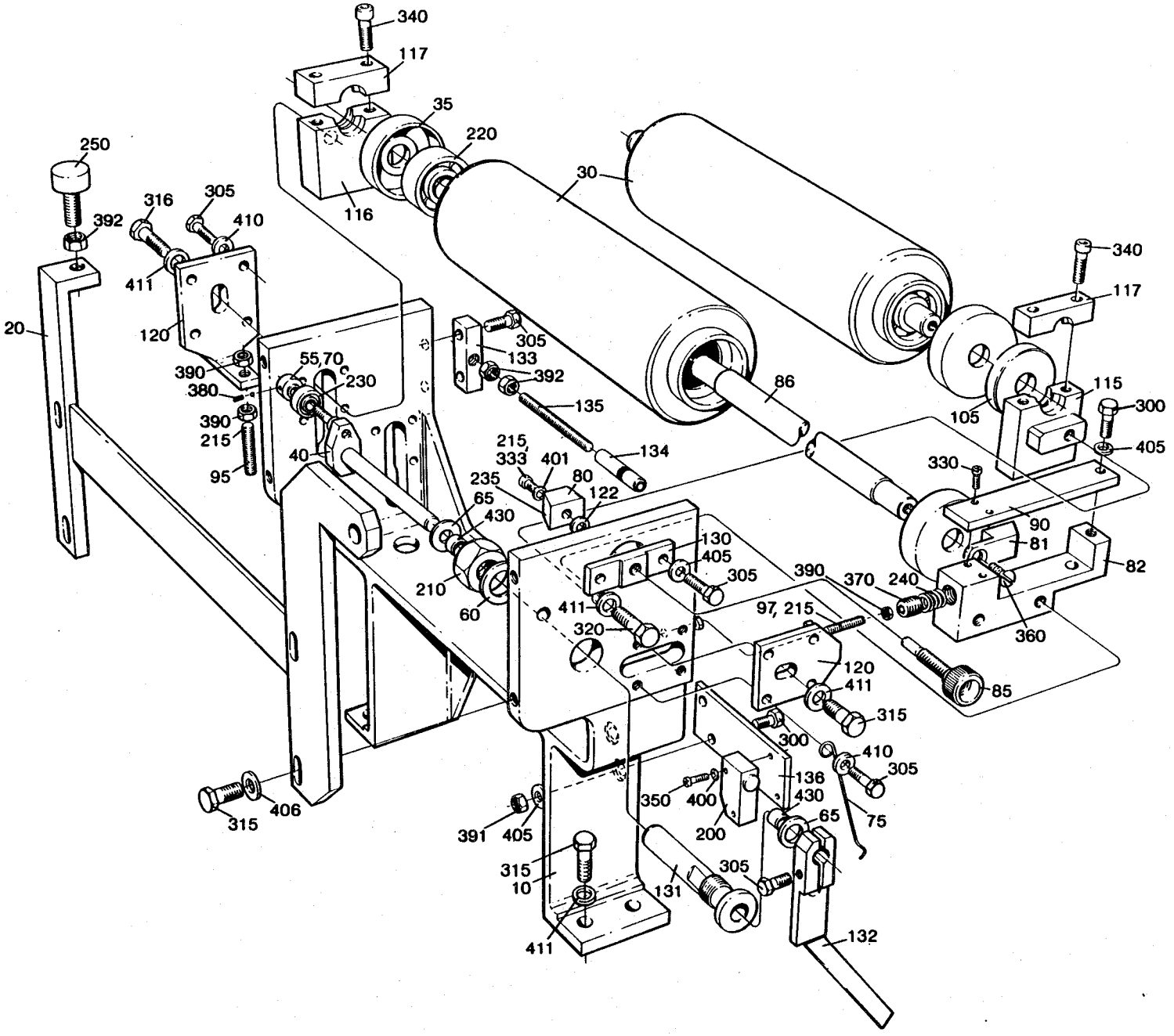
340
117
35
220
116
30
250
316
305
410
392
411
20
120
390
380
55,70
230
390
215
95
40
305
133
392
135
134
215
333
401
80
235
122
65
430
210
60
130
405
305
411
320
340
117
115
105
300
405
330
90
81
82
390
370
240
360
97, 215
85
120
411
315
300
410
305
136
430
65
75
350
400
200
391
405
315
10
411
131
305
132
315
406

From	Pos	Part No	SP	UN	Qty	Description
	010	550480	-		1	BRACKET
	020	752909	-		1	BRACKET
	030	256984	C		2	BENDING ROLLER
	035	265568	-		4	DUST COVER
	040	469979	C		1	HOLDER
	055	24356	C		1	BLOCK
	060	118344	-		1	WASHER
	065	271211	-		2	WASHER
	070	271654	-		1	RETAINING RING
	075	491149	C		1	SPRING
	080	751509	-		1	SLIDER
	081	751510	-		1	SLIDER
	082	751511	-		1	LUG
	085	751514	C		1	ADJUSTING SCREW
	086	751515	S		2	SHAFT
	090	751522	-		1	PLATE
	095	751527-0001	S		2	ADJUSTING SCREW
	097	751527-0003	S		1	ADJUSTING SCREW
	105	751986	-		1	SPACER RING
	115	752194	-		1	LUG
	116	752195	-		2	LUG
	117	752196	-		3	CLAMP
	120	752199	-		3	PLATE
	122	752243	-		1	WASHER
	130	752630	C		1	PLATE
	131	752631	-		1	BRACKET
	132	752632	-		1	ARM
	133	752633	-		1	BRACKET
	134	752634	-		1	SLEEVE
	135	752635	-		1	STUD BOLT
	136	752636	-		1	PLATE
	200	90044-0104	C		1	PROXIMITY SWITCH
	210	90099-0057	-		1	NUT
	215	90157-0021	-		X	LOCKING FLUID
	220	90214-0098	S		4	BALL BEARING
	230	90214-0138	C		1	BALL BEARING
	235	90296-0068	-		X	GREASE
	240	90335-0067	S		1	SPRING
	250	90347-0004	C		1	VIBRATION DAMPER
	300	312105-0368	-		3	SCREW M6S6X16RFR
	305	312105-0370	-		17	SCREW M6S6X20RFR
	315	312105-0452	-		8	SCREW M6S8X22RFR
	316	312105-0453	-		3	SCREW M6S8X25RFR

From	Pos	Part No	SP	UN	Qty	Description
	320	312105-0455	-		2	SCREW M6S8X30RFR
	330	312115-0226	-		2	SCREW S 3X12 A4 80
	333	312115-0287	-		1	SCREW 4X8 A4 80
	340	312115-0370	S		6	SCREW 6X20 A4 80
	350	312125-0230	-		2	SLOTTED HEMCS3X20RFR
	360	312155-0366	-		1	SCREW MF6S6X12RFR
	370	312316-0528	-		1	GRUB SCREW SK6SS12X12FZB
	380	312318-0283	-		1	GRUB SCREW SK6SS4X4RFR
	390	312605-0314	S		6	NUT M6M5RFR
	391	312605-0316	-		2	NUT M6M6RFR
	392	312605-0318	-		3	NUT M6M8RFR
	400	315105-0124	-		2	WASHER BRB3,2X6RFR
	401	315105-0136	-		1	WASHER BRB4,3X8RFR
	405	315105-0153	-		5	WASHER BRB6,4X12RFR
	406	315105-0165	-		4	WASHER BRB8,4X16RFR
	410	315115-0153	-		12	WASHER TBRB6,4X12RFR
	411	315115-0165	-		9	WASHER TBRB8,4X16RFR
	430	321127-0100	C		2	BUSHING 10/13X10

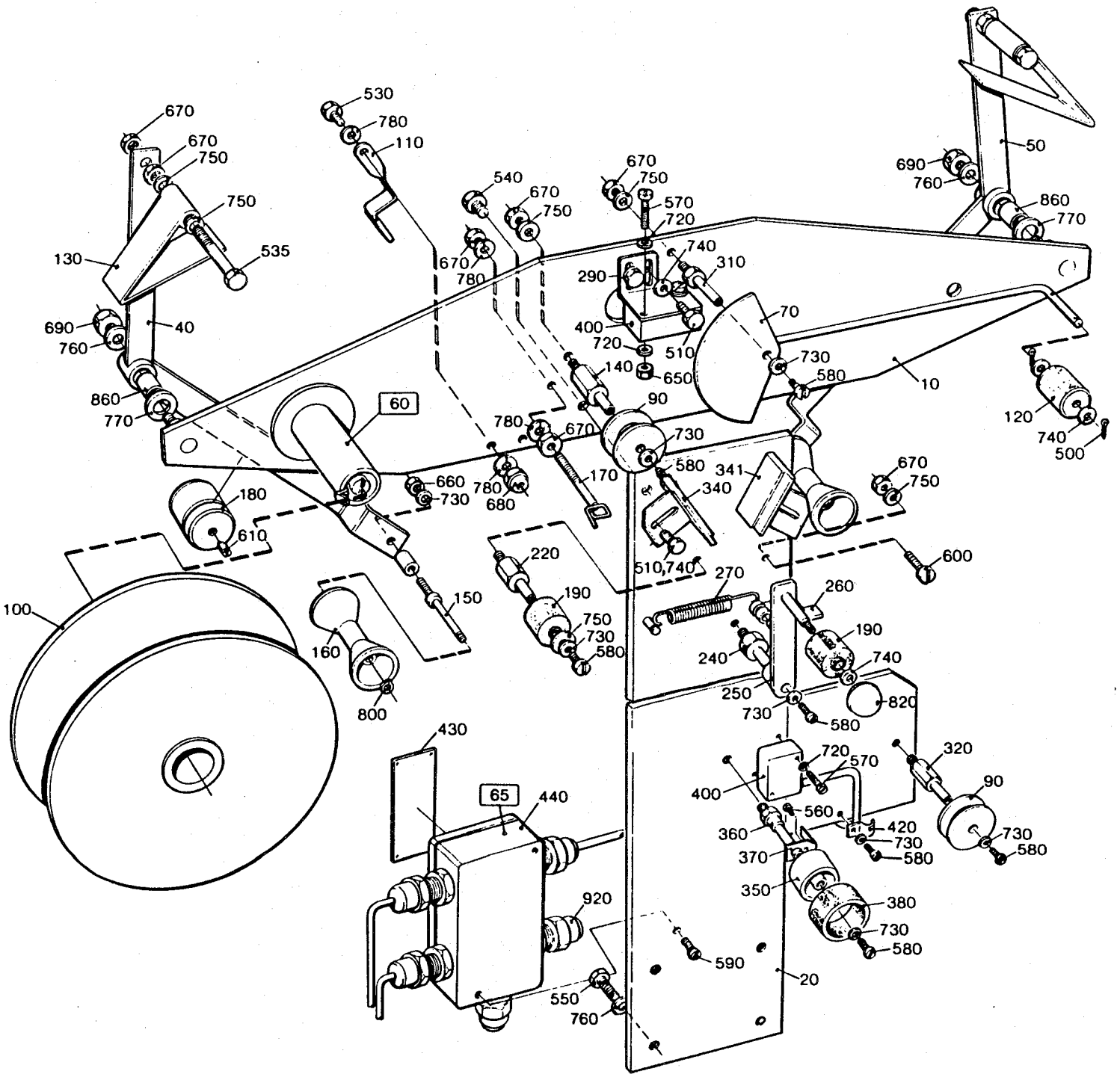
670
670
750
750
535
130
690
760
40
860
770
530
780
110
540
670
750
670
780
670
750
570
720
740
310
290
400
720
510
140
650
70
730
580
10
690
760
50
860
770
120
740
500
60
780
670
90
730
580
341
340
170
660
730
780
680
180
610
100
150
160
800
220
190
750
730
580
510,740
270
260
190
240
740
250
730
580
820
600
670
750
430
65
440
920
590
550
760
20
720
570
400
560
420
730
580
360
370
350
380
730
580
320
90
730
580

From	Pos	Part No	SP	UN	Qty	Description
TB/9						
-080V	020	491765	-		1	HOLDER
090V-	020	555923	-		1	HOLDER
-080V	910	352103-0105	-		3	CABLE GLANR.18,6/3-7
-080V	920	352103-0106	-		3	CABLE GLANR.18,6/5-10
TBA/9						
-080V	020	491766	-		1	HOLDER
090V-	020	555923	-		1	HOLDER
-080V	910	352103-0105	-		4	CABLE GLANR.18,6/3-7
-080V	920	352103-0106	-		5	CABLE GLANR.18,6/5-10
Common Parts						
	F060	==>703-1.1	-		2	**BOBBIN**
090V-	F065	==>703-1.2	-		1	**CONNECTION BOX**
	010	441005	C		1	PLATE
	040	491832	-		1	BOBBIN BRAKE
	050	491833	-		1	BOBBIN BRAKE
	070	441034	-		1	ARM
-080V	090	6695	P		3	ROLLER
090V-	090	544730	P		2	ROLLER
	100	7814	-		X	BOBBIN
	110	14846	S		2	CATCH
	120	14966	P		1	ROLLER
	130	491834	-		2	BRAKE PLATE
	140	18880	S		2	AXLE PIN
	150	19453	S		2	SHAFT
-080V	160	19455	P		2	ROLLER
090V-	160	552528	P		2	ROLLER
-080V*	170	19515	S		2	EYELET
	180	19893	C		2	WEIGHT
	190	232979	P		2	PRESSURE ROLLER
	220	269053-0001	S		1	SHAFT
	240	269053-0003	S		1	SHAFT
	250	269054	S		1	ARM
	260	269056	-		1	CATCH
	270	269057	S		1	TENSION SPRING
	290	295760	-		1	BRACKET
	310	441010	S		1	SHAFT
	320	441011	S		1	AXLE PIN
	340	469874	-		1	GUIDE RAIL
	341	469875	-		1	GUIDE RAIL
	350	751504	-		1	ROLLER
	360	491762	-		1	SHAFT

From	Pos	Part No	SP	UN	Qty	Description
	370	751505	-		1	SHEET
	400	90044-0104	P		2	PROXIMITY SWITCH
	420	90165-0024	-		5	CLIP
-080V	430	90194-0016	-		1	SIGN
-080V	440	90265-0056	-		1	CONNECTION BOX
	500	311411-0137	P		2	SPLIT PIN SP1,6X10RFR
	510	312105-0325	-		6	SCREW M6S5X10 A4 80
	530	312105-0368	-		2	SCREW M6S6X16RFR
	535	312105-0380	-		2	SCREW M6S6X50RFR
	540	312105-0447	-		2	SCREW M6S8X12RFR
	550	312105-0453	-		4	SCREW M6S8X25RFR
	560	312125-0222	-		1	SLOTTED HEMCS3X8RFR
	570	312125-0230	-		4	SLOTTED HEMCS3X20RFR
	580	312125-0285	-		11	SLOTTED HEMCS4X6RFR
-080V	590	312125-0293	-		2	SLOTTED HEMCS4X16RFR
	592	312125-0297	-		1	SLOTTED HEMCS4X25RFR
	600	312125-0374	-		1	SLOTTED HEMCS6X30RFR
	610	312318-0360	-		2	GRUB SCREW SK6SS6X6RFR
	650	312605-0310	-		3	NUT M6M3RFR
	660	312605-0312	-		2	NUT M6M4RFR
	670	312605-0316	-		12	NUT M6M6RFR
	680	312811-0316	-		2	LOCK NUT M6RFR
	690	312811-0318	-		2	LOCK NUT M8RFR
	720	315105-0124	-		6	WASHER BRB3,2X6RFR
	730	315105-0136	-		16	WASHER BRB4,3X8RFR
	740	315105-0146	-		9	WASHER BRB5,3X10RFR
	750	315105-0153	-		10	WASHER BRB6,4X12RFR
	760	315105-0165	-		6	WASHER BRB8,4X16RFR
	770	315105-0178	-		2	WASHER BRB13X24RFR
	780	315402-0156	-		8	WASHER FBB6,5RFR
	800	315750-0101	P		2	LOCK RING SGA4
	820	318800-0102	-		1	KNOB LA D.20-M5
	860	321120-0111	S		2	BUSHING 12/14X15

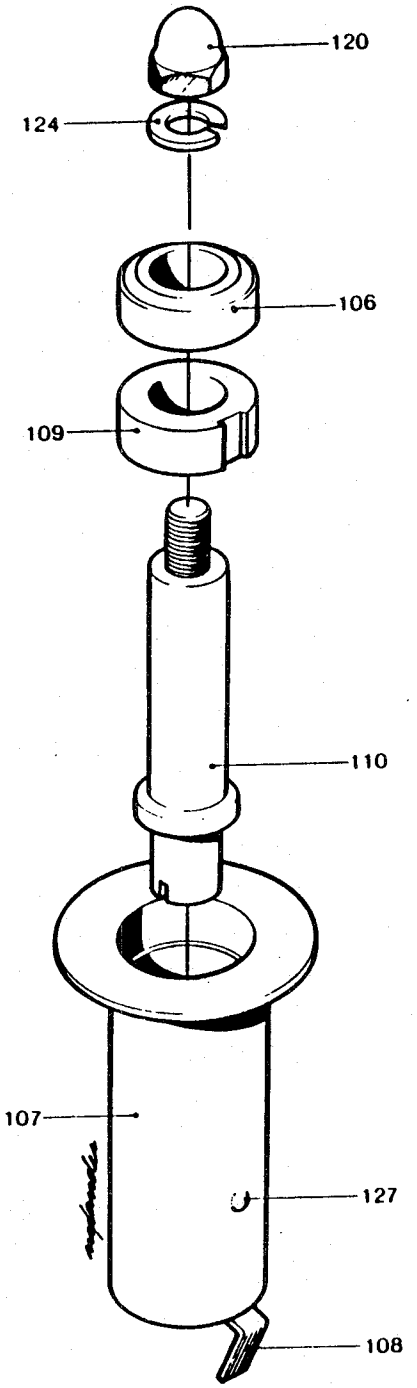
120
124
106
109
110
107
127
108

From	Pos	Part No	SP	UN	Qty	Description	
	106	5486	S		1	BEARING	
	107	6157	-		1	BOBBIN	
	108	6158	S		1	SPRING	
	109	6159	S		1	BEARING	
	110	6160	-		1	SHAFT	
	120	312701-0318	-		1	CAP NUT	MHM8FKRB
	124	315402-0165	-		1	WASHER	FBB8,2RFR
	127	311506-0278	S		1	RIVET	KN2,6X6KPR

From	Pos	Part No	SP	UN	Qty	Description

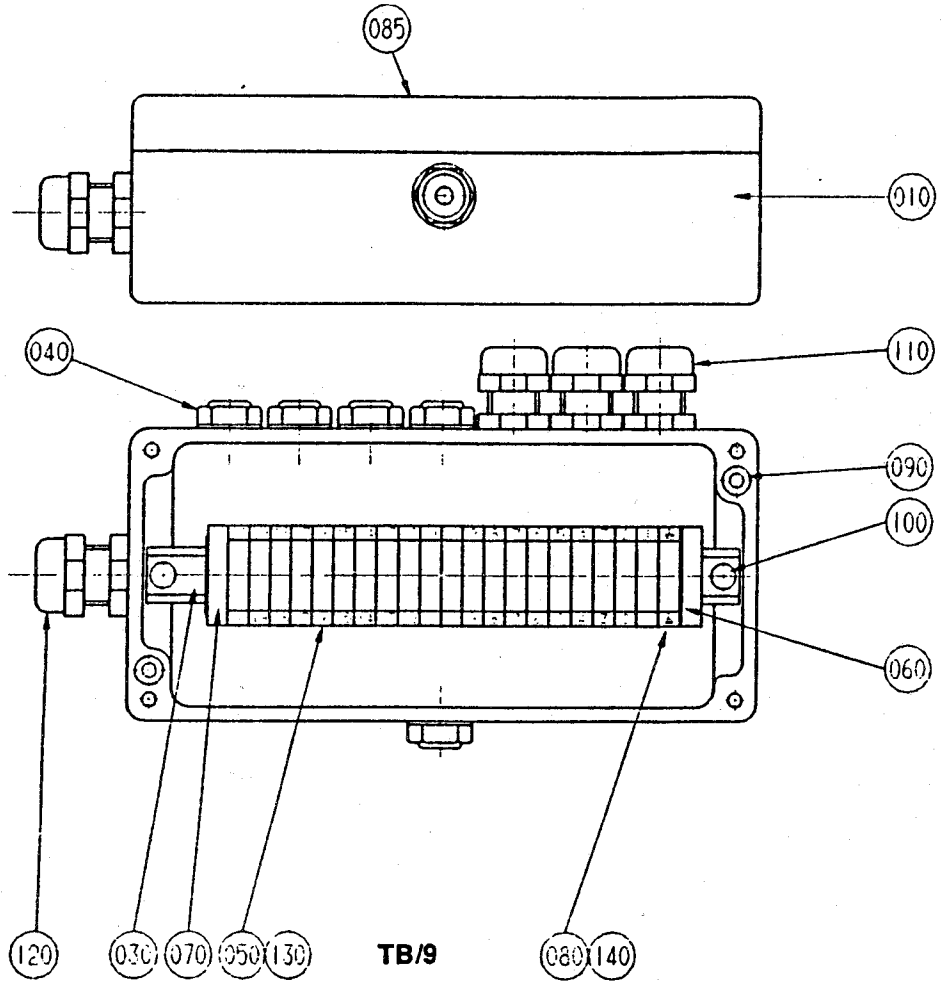
085
010
040
110
090
100
060
120
030
070
050
130
080
140

TB/9

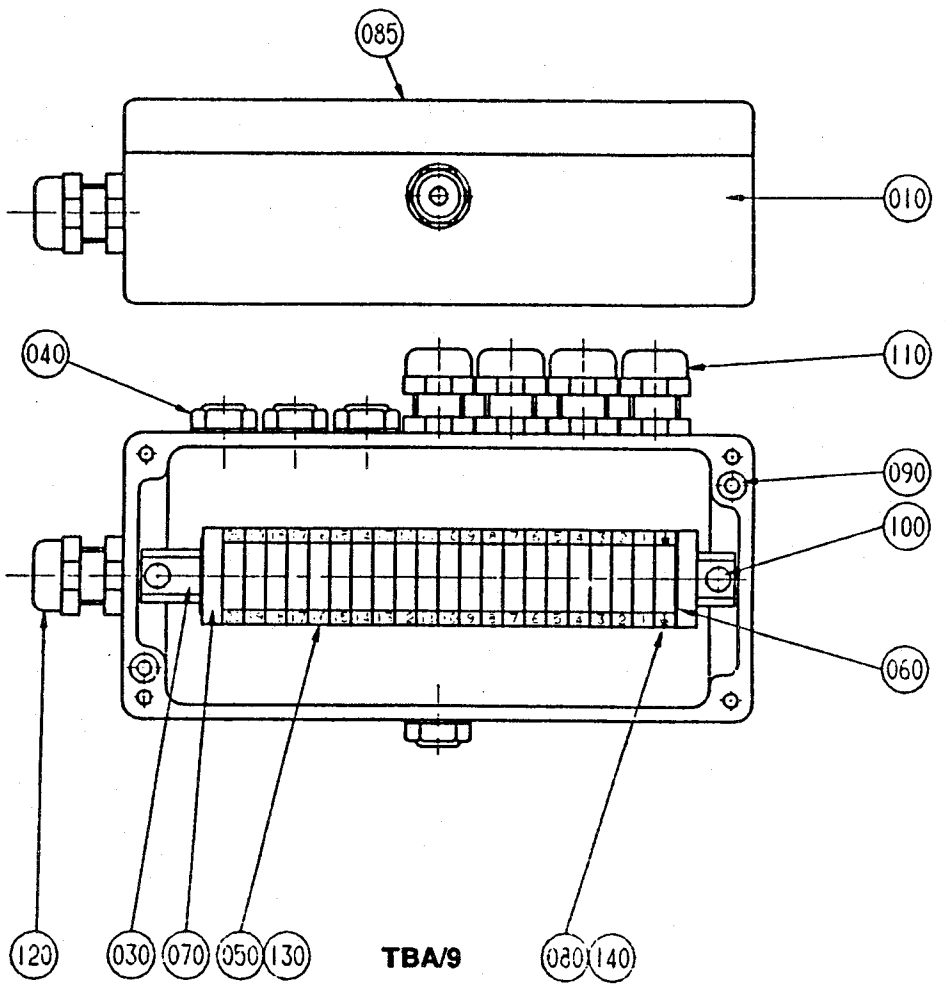
085
010
040
110
090
100
060
120
030
070
050
130
080
140

TBA/9

From	Pos	Part No	SP	UN	Qty	Description
TB/9						
	040	90002-0013	-		5	BLANK-OFF PLUG
	110	352103-0100	-		3	CABLE GLANR.15,2/2-6
TBA/9						
	040	90002-0013	-		4	BLANK-OFF PLUG
	110	352103-0100	-		4	CABLE GLANR.15,2/2-6
Common Parts						
	010	563089	-		1	APPLIANCE BOX
	030	552015	-		1	MOUNTING RAIL
	050	90077-0079	-		20	TERMINAL BOX
	060	90077-0307	-		1	END PLATE
	070	90077-0308	-		1	END SUPPORT
	080	90135-0026	-		1	EARTHING CLAMP
	085	90194-0016	-		1	SIGN
	090	312125-0295	-		2	SLOTTED HEMCS4X20RFR
	100	312132-0284	-		2	SLOTTED HEMSCS4X5MSGFN
	120	352103-0111	-		1	CABLE GLANR.22,5/10-14
	130	359011-0807	-		2	SET OF SIGNS
	140	359011-0202	-		2	SIGN BOARD

From	Pos	Part No	SP	UN	Qty	Description

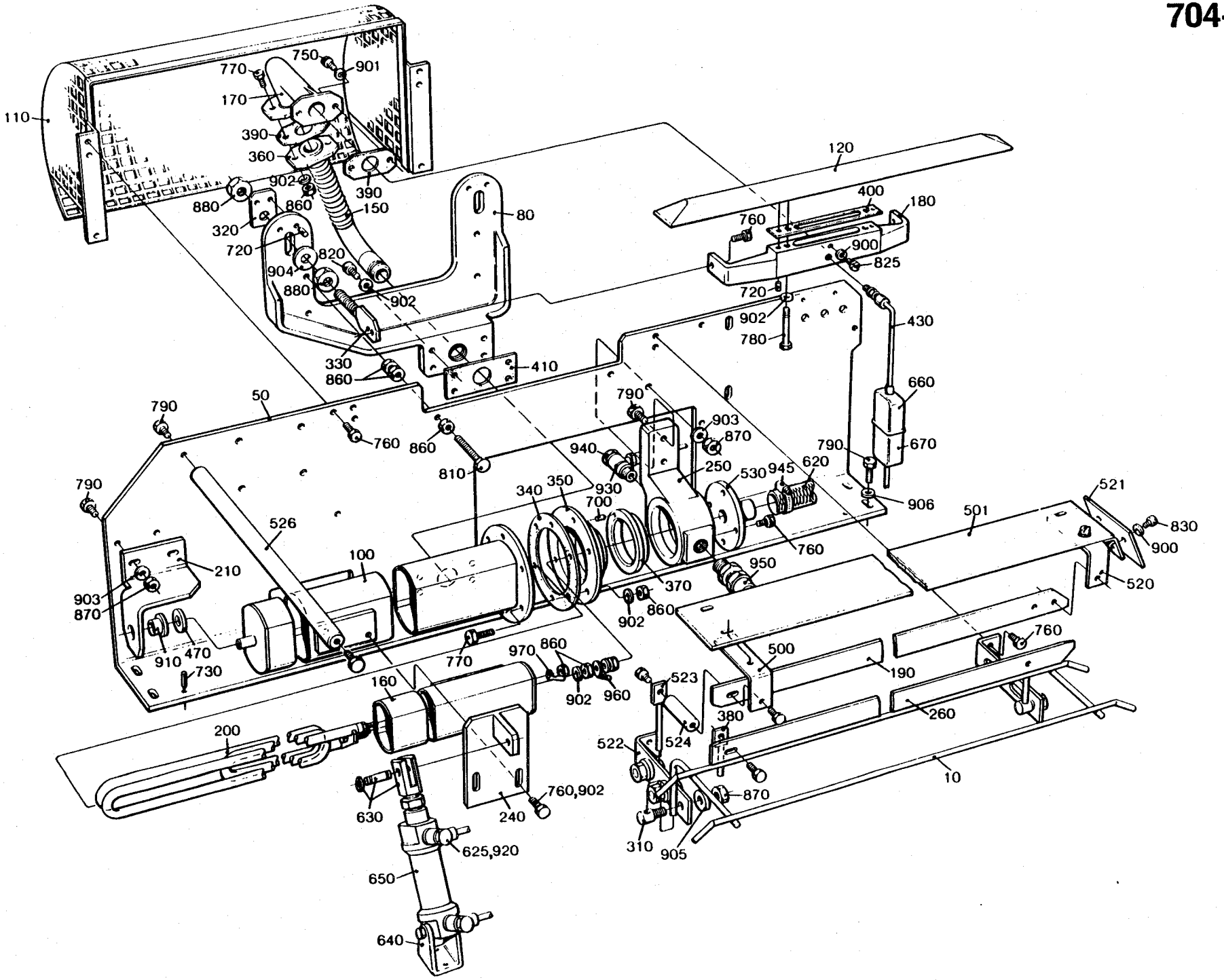
110
770
750
901
170
390
360
902
880
860
150
390
320
720
820
904
880
902
80
330
860
410
50
790
760
860
810
790
903
870
940
250
530
945
620
906
790
670
660
430
780
902
720
400
180
760
900
825
120
790
340
350
930
700
526
100
210
903
870
910
470
730
770
970
860
902
960
160
200
630
240
760,902
625,920
650
640
370
902
860
950
760
500
190
523
380
522
524
260
10
870
310
905
501
521
830
900
520
760

From	Pos	Part No	SP	UN	Qty	Description
Volume 180 - 284 ml						
	010	36316	S		1	PAPER SUPPORT
	526	256986-0005	-		1	STRUT
Volume 125 ml						
	010	456918	S		1	PAPER SUPPORT
	526	256986-0006	-		1	STRUT
Volume 200 ml SLIM						
	010	456918	S		1	PAPER SUPPORT
	526	256986-0007	-		1	STRUT
Common Parts						
	050	751093	-		1	PLATE
	080	32668	-		1	ARM
	100	36749	-		1	MANTLE
	110	267306	-		1	TOUCH GUARD
	120	283361	S		1	AIR NOZZLE
	150	32451	C		1	AIR DUCT
	160	32453	-		1	MANTLE
	170	32474	-		1	CONNECTION
	180	245189-0001	-		1	CONNECTION
	190	246342	-		1	PAPER SUPPORT
	200	251279	PU		1	COIL HEATER
	210	251490	C		1	BRACKET
	240	751087	C		1	BRACKET
	250	283172	-		1	BEARING HOUSING
	260	441348	-		1	PAPER SUPPORT
	310	22559	P		5	GRUB SCREW
	320	32213	-		2	WASHER
	330	32215	C		2	HOLDER
	340	531733	PU		1	GASKET
	350	32217	-		1	BOTTOM SECTION
	360	32219	-		1	WASHER
	370	32223	S		1	BEARING
	380	32400	-		2	HOLDER
	390	531734	PU		2	GASKET
	400	531735	PU		1	GASKET
	410	531736	PU		1	GASKET
	430	37768	P		1	THERMOCOUPLE
	470	230107	P		1	WASHER
	500	246343	-		1	BRACKET
	501	246344	-		1	HEAT GUARD
	520	251501	-		1	BRACKET
	521	251502	-		1	HEAT GUARD
	522	251503	-		2	HOLDER
	523	251504	-		1	HOLDER
	524	251505	-		1	SPACER
	530	279672	-		1	CONNECTION
	620	90166-0087	-	MM	300	HOSE
	625	90235-0274	P		2	VALVE
	630	90239-0516	S		1	PISTON ROD HEAD
	640	90239-0488	S		1	BRACKET
	650	90239-0858	S		1	CYLINDER
	660	90326-0012	P		1	PROTECTIVE COVER
	670	90326-0020	P		1	SOCKET
	700	311103-0232	-		1	CYLINDRICACPR3M6X8RFR
	720	311103-0267	-		10	CYLINDRICACPR4M6X10RFR
	730	311305-0308	-		2	SLOTTED PIRPC5X16FZB
	750	312105-0325	-		2	SCREW M6S5X10 A4 80
	760	312105-0366	-		16	SCREW M6S6X12RFR
	770	312105-0368	-		12	SCREW M6S6X16RFR
	780	312105-0378	-		2	SCREW M6S6X40RFR
	790	312105-0451	-		12	SCREW M6S8X20RFR
	810	312109-0381	-		2	SCREW M6S6X55HA480
	820	312115-0368	-		4	SCREW 6X16 A4 80
	825	312125-0285	-		1	SLOTTED HEMCS4X6RFR
	830	312125-0287	-		6	SLOTTED HEMCS4X8RFR
	860	312605-0316	-		14	NUT M6M6RFR
	870	312605-0318	-		9	NUT M6M8RFR
	880	312605-0320	-		4	NUT M6M10RFR
	900	315105-0136	-		7	WASHER BRB4,3X8RFR
	901	315105-0146	-		2	WASHER BRB5,3X10RFR
	902	315105-0153	-		21	WASHER BRB6,4X12RFR
	903	315105-0165	-		4	WASHER BRB8,4X16RFR
	904	315105-0173	-		2	WASHER BRB10,5X22RFR
	905	315115-0165	-		5	WASHER TBRB8,4X16RFR
	906	315125-0165	-		6	WASHER SB 8,4X26X5 RFR
	910	321101-0173	P		1	BUSHING 12F7X12
	920	342797-0121	-		2	BANJO CONNSINGEL 6-1/8
	930	342797-0122	-		1	BANJO CONNSINGEL 6-1/4
	940	342980-0304	-		1	BANJO CONN SINGEL 1/4
	945	342991-0103	-		2	HOSE CLIP 15-24MMRFR
	950	352103-0106	-		1	CABLE GLANR.18,6/5-10
	960	353101-0134	-		1	CABLE SHOE
	970	353104-0130	-		2	CABLE SHOEYAV 14 M 43!

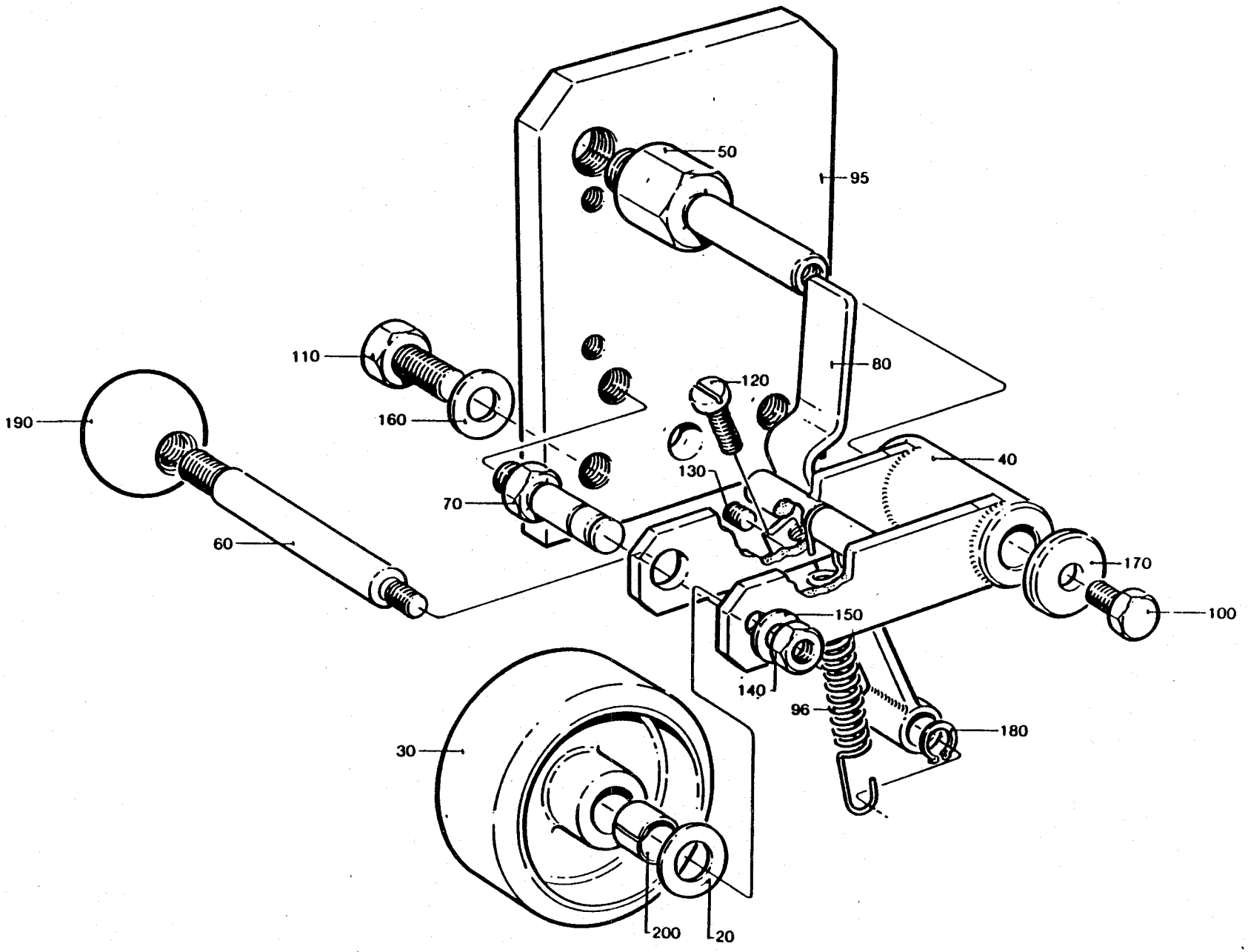
50
95
110
80
120
190
160
40
130
70
60
170
150
100
140
96
180
30
200
20

From	Pos	Part No	SP	UN	Qty	Description
	020	2033-0009	-		2	WASHER
	030	21903	R		1	ROLLER
	040	251493	-		1	FORK
	050	251494	-		1	SHAFT
	060	251495	-		1	SHAFT
	070	251496	-		1	SHAFT
	080	251498	-		1	CATCH
	095	266752	-		1	PLATE
	096	279074	-		1	TENSION SPRING
	100	312105-0368	-		1	SCREW M6S6X16RFR
	110	312105-0449	-		2	SCREW M6S8X16RFR
	120	312125-0329	-		1	SLOTTED HEMCS5X16RFR
	130	312318-0285	-		1	GRUB SCREW SK6SS4X6RFR
	140	312605-0316	-		1	NUT M6M6RFR
	150	315105-0153	-		1	WASHER BRB6,4X12RFR
	160	315105-0165	-		2	WASHER BRB8,4X16RFR
	170	315121-0153	-		1	WASHER TBRSB6,4X22FZB
	180	315750-0105	-		1	LOCK RING SGA8
	190	318800-0104	-		1	KNOB LA D.30-M8
	200	321120-0104	-		2	BUSHING 10/12X10

From	Pos	Part No	SP	UN	Qty	Description

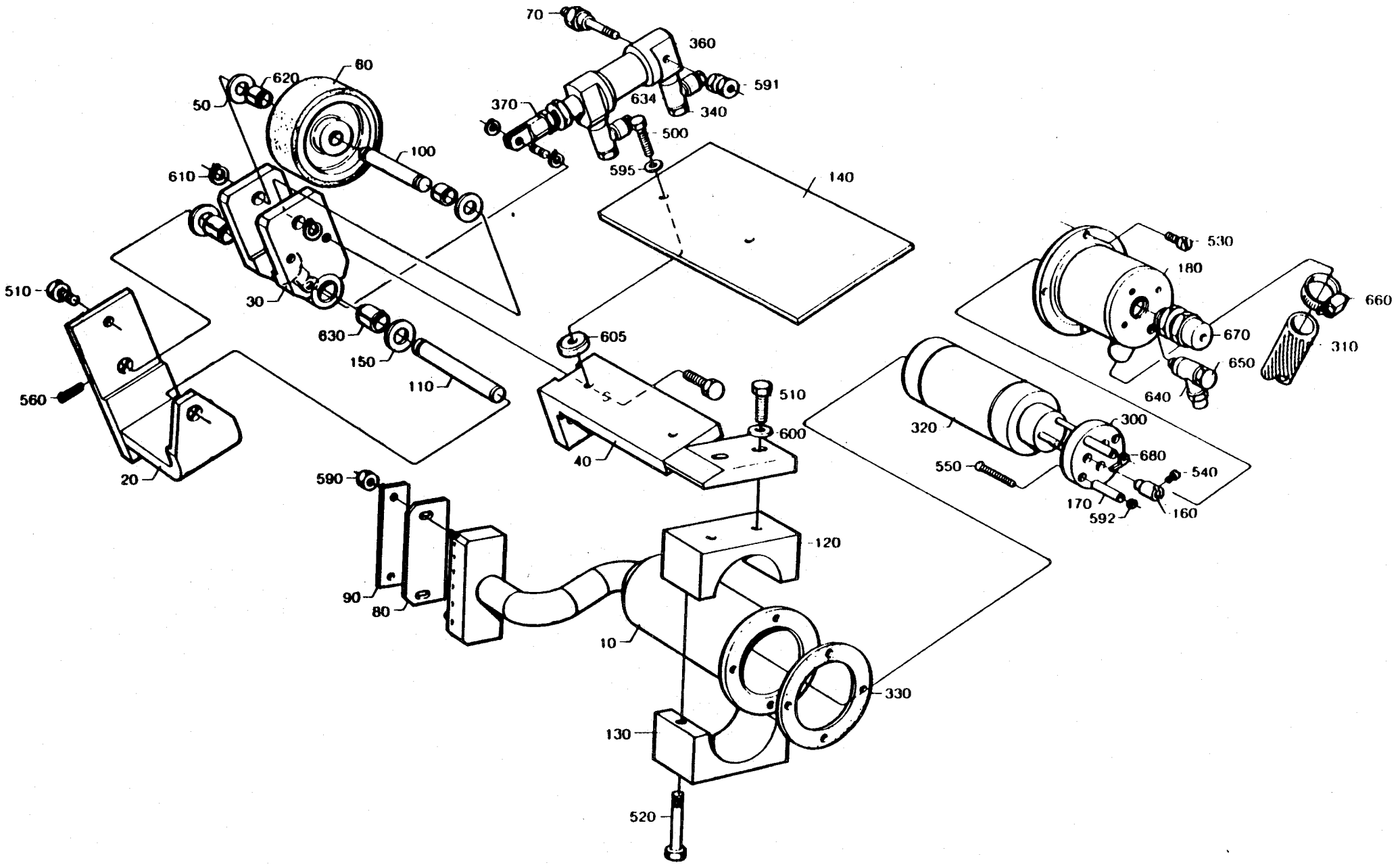
70
360
591
634
340
370
500
595
140
60
620
50
100
610
30
630
150
110
605
510
600
40
510
560
20
590
90
80
120
10
330
130
520
530
180
660
670
310
650
640
320
300
680
540
550
170
592
160

From	Pos	Part No	SP	UN	Qty	Description
	140	441354	-		1	HEAT GUARD (180-284 ml)
	140	456917	-		1	HEAT GUARD (100,125,200 ml SLIM)
	010	266727	C		1	AIR NOZZLE
	020	266728	-		1	BRACKET
	030	456914	-		1	ROCKER ARM
	040	266730	-		1	HOLDER
	050	2033-0009	P		2	WASHER
	060	21903	PU		1	ROLLER
	070	751143	C		1	CYLINDER BRACKET
	080	255416	S		1	PLATE
	090	255417	S		1	WASHER
	100	266731	C		1	SHAFT
	110	266732	C		1	SHAFT
	120	266733	-		1	BLOCK
	130	266734	-		1	CLAMP
	150	266737	S		2	WASHER
	160	266739	-		3	CABLE GLAND
	170	266740-0003	-		3	SPACER
	180	456915	-		1	COVER
090V-	180	752912	-		1	COVER
	300	90125-0020	S		1	PLATE
		270926	S		6	* NUT
		270927	S		3	* SCREW
		294464	S		1	* BASE PLATE
	310	90166-0087	P	MM	300	HOSE
	320	90206-0031	S		1	HEATING ELEMENT
	330	90206-0322	S		1	GASKET
	340	90235-0274	-		2	VALVE
	360	90239-0846	S		1	CYLINDER
	370	90239-0088	S		1	BRACKET
	500	312105-0370	-		2	SCREW M6S6X20RFR
	510	312105-0451	-		6	SCREW M6S8X20RFR
	520	312105-0459	-		2	SCREW M6S8X40RFR
	530	312125-0291	-		4	SLOTTED HEMCS4X12RFR
	540	312125-0220	-		3	SLOTTED HEMCS3X6RFR
	550	312145-0238	-		3	SLOTTED HEMFS3X40RFR
	560	312318-0291	P		1	GRUB SCREW SK6SS4X12RFR
	590	312605-0314	-		2	NUT M6M5RFR
	591	312605-0318	-		2	NUT M6M8RFR
	592	315105-0124	-		2	WASHER BRB3,2X6RFR
	595	315105-0153	-		2	WASHER BRB6,4X12RFR
	600	315105-0165	-		2	WASHER BRB8,4X16RFR
	605	315121-0153	-		2	WASHER TBRSB6,4X22FZB
	610	315750-0107	P		2	LOCK RING SGA10

From	Pos	Part No	SP	UN	Qty	Description
	620	321120-0104	S		2	BUSHING 10/12X10
	630	321120-0110	S		2	BUSHING 12/14X12
	634	342797-0121	-		2	BANJO CONNSINGEL 6-1/8
	640	342980-0113	S		1	BANJO CONNSINGEL 6/4-1/8
	650	342980-0303	S		1	BANJO CONN SINGEL 1/8"
	660	342991-0103	-		2	HOSE CLIP 15-24MMRFR
	670	352103-0106	-		1	CABLE GLANR.18,6/5-10
	680	353104-0130	S		1	CABLE SHOEYAV 14 M 43!

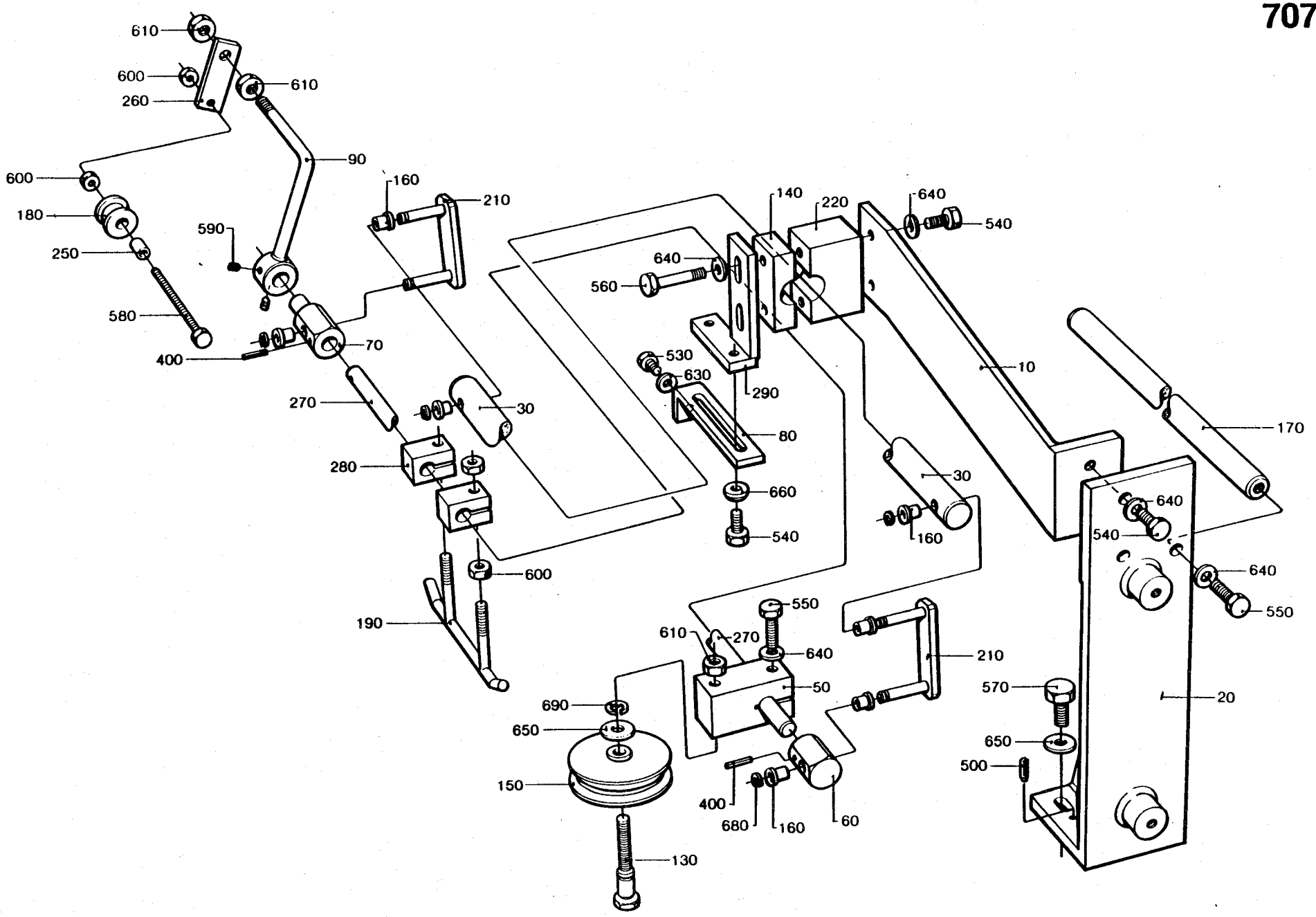
610
600
260
610
90
600
180
250
590
580
400
160
210
70
270
30
280
600
190
140
220
640
540
640
560
530
630
290
80
660
540
10
170
30
160
640
540
640
550
610
270
640
550
210
50
690
650
150
400
680
160
60
570
650
500
20
130

From	Pos	Part No	SP	UN	Qty	Description
Volume 180 - 284 ml						
	170	256986-0002	-		1	STRUT
	190	266049	-		1	SUPPORT
Volume 200 ml SLIM						
	170	256986-0003	-		1	STRUT
	190	266049	-		1	SUPPORT
Volume 125 ml						
	170	256986-0004	-		1	STRUT
	190	491654	-		1	SUPPORT
Common Parts						
	010	243218	-		1	BRACKET
	020	272173	-		1	BRACKET
	030	243151	C		1	SHAFT
	050	456027	C		1	HOLDER
	060	456028	C		1	JOINT
	070	456029	C		1	JOINT
	080	456030	-		1	BRACKET
	090	456031	-		1	BRACKET
	130	31418	S		1	SHAFT
	140	31423	-		1	LUG
	150	31425	S		1	GUIDE ROLLER
	160	255064	P		8	BUSHING
	180	257923	S		1	GUIDE ROLLER
	210	272177	S		2	LINK
	220	272178	-		1	LUG
	250	456022	S		1	SLEEVE
	260	456023	-		1	JOINT
	270	456024	C		1	GUIDE SHAFT
	280	456025	C		2	HOLDER
	290	456026	-		1	BRACKET
	400	90258-0031	P		2	HOLLOW PIN
	500	311305-0308	-		2	SLOTTED PIRPC5X16FZB
	530	312105-0368	-		1	SCREW M6S6X16RFR
	540	312105-0451	-		6	SCREW M6S8X20RFR
	550	312105-0453	-		3	SCREW M6S8X25RFR
	560	312105-0459	-		2	SCREW M6S8X40RFR
	570	312105-0491	-		4	SCREW M6S10X20RFR
	580	312109-0386	-		1	SCREW M6S6X80RFR
	590	312318-0362	-		2	GRUB SCREW SK6SS6X8RFR
	600	312605-0316	-		7	NUT M6M6RFR
	610	312605-0318	-		3	NUT M6M8RFR
	620	315105-0146	-		2	WASHER BRB5,3X10RFR
	630	315105-0153	-		2	WASHER BRB6,4X12RFR
	640	315105-0165	-		9	WASHER BRB8,4X16RFR
	650	315105-0173	-		5	WASHER BRB10,5X22RFR
	660	315115-0165	-		2	WASHER TBRB8,4X16RFR
	680	315754-0107	P		4	CIRCLIP E 5
	690	315754-0110	P		1	CIRCLIP E 9

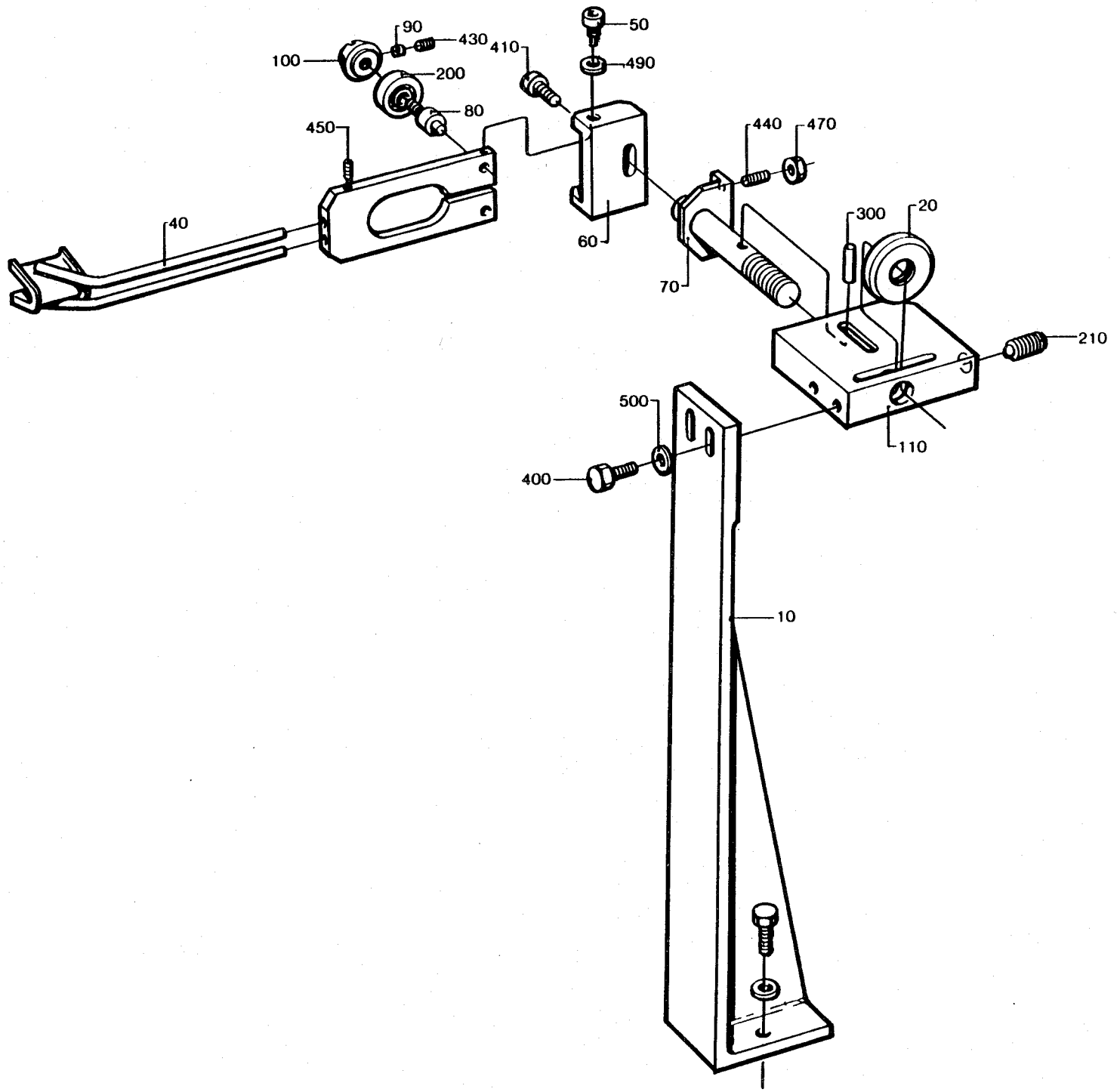
90
430
100
410
50
490
200
80
450
440
470
40
60
300
20
70
210
500
110
400
10

From	Pos	Part No	SP	UN	Qty	Description
	010	267316	-		1	BRACKET
	020	23580	-		1	KNOB
	030	23582	C		1	HOLDER
	040	23583	S		1	GUIDE
	050	23584	-		2	SCREW
	060	24351	-		1	CLAMP
	070	24352	-		1	SHAFT
	080	24355	-		2	PIN
	090	24356	-		4	BLOCK
	100	111543	S		2	CONE
	110	245210	-		1	BODY
	200	90214-0138	P		2	BALL BEARING
	210	90287-0009	-		1	SPRINGLOADED SCREW
	300	311103-0350	-		1	CYLINDRICACPR6M6X14RFR
	400	312105-0368	-		4	SCREW M6S6X16RFR
	410	312115-0366	-		1	SCREW 6X12 A4 80
	430	312316-0283	P		4	GRUB SCREW SK6SS4X4FZB
	440	312316-0291	S		3	GRUB SCREW SK6SS4X12FZB
	450	312318-0285	S		2	GRUB SCREW SK6SS4X6RFR
	470	312605-0312	-		3	NUT M6M4RFR
	490	315105-0146	-		2	WASHER BRB5,3X10RFR
	500	315105-0153	-		4	WASHER BRB6,4X12RFR

From	Pos	Part No	SP	UN	Qty	Description

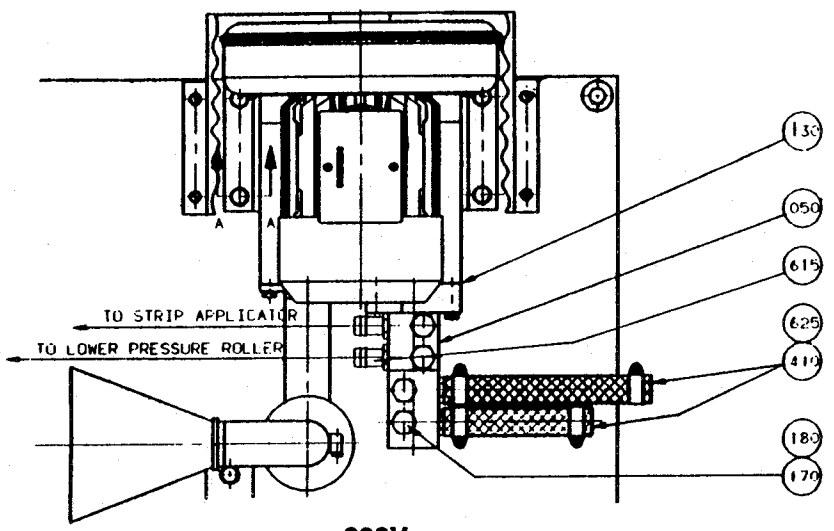
TO STRIP APPLICATOR
TO LOWER PRESSURE ROLLER
130
050
615
625
410
180
170

090V-

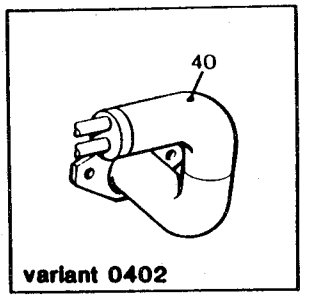
40
variant 0402

20
420
60
500
530
630
540
600
230
220
130
410
630
50
350
550
250
10
360
430
570
600
180
440
240
200
520
580
170
160
260
90
100
510
610
400
535
390
620
550
520
600
190
560
120
640
210
380,650
370,660

From	Pos	Part No	SP	UN	Qty	Description
TB/9						
-080V	010	751092	-		1	PLATE
090V-	010	560134	-		1	PLATE
	050	751466	-		1	CONNECTION
090V-	050	556309	-		1	CONNECTION
-080V	090	456974	-		1	CABLE DUCT
-080V	120	28036	-		4	WASHER
	170	209145	-		2	SCREW
090V-	170	293364	-		4	SCREW
	180	209146	-		2	LOCK NUT
090V-	180	293363	-		4	LOCK NUT
-080V	240	279589	-		2	NUT
-080V	250	279590	-		2	REDUCTION
-080V	260	456000	-		1	SUPPORT
-080V	340	90015-0023	-		1	BUSHING
-080V	395	90074-0003	-		1	CLIP
-080V	396	90074-0007	-		2	CLIP
-080V	400	90143-0054	-	MM	170	STRIP
	410	90166-0107	-	MM	700	HOSE
090V-	410	90166-0087	-	MM	370	HOSE
-080V	440	90030-0058	-		2	CONNECTION
090V-	532	312105-0378	-		2	SCREW M6S6X40RFR
	560	312105-0453	-		6	SCREW M6S8X25RFR
-080V	570	312105-0455	-		1	SCREW M6S8X30RFR
-080V	575	312125-0285	-		5	SLOTTED HEMCS4X6RFR
090V-	598	315105-0146	-		4	WASHER BRB5,3X10RFR
090V-	599	315105-0153	-		10	WASHER BRB6,4X12RFR
	600	315105-0165	-		12	WASHER BRB8,4X16RFR
090V-	605	315125-0165	-		6	WASHER TBRSB 8,4X26X5 RFR
090V-	615	342901-0106	-		4	HOSE NIPPLE
090V-	625	342991-0103	-		4	HOSE CLIP 15-24MMRFR
	630	342991-0108	-		3	HOSE CLIP 38-50MMRFR
TBA/9						
	010	751092	-		1	PLATE
	040	751465	-		1	CONNECTION
	120	28036	-		4	WASHER
	170	209145	-		2	SCREW
	180	209146	-		2	LOCK NUT
	240	279589	-		2	NUT
	250	279590	-		2	REDUCTION
	440	90030-0058	-		2	CONNECTION
	560	312105-0453	-		4	SCREW M6S8X25RFR

From	Pos	Part No	SP	UN	Qty	Description
	600	315105-0165	-		6	WASHER BRB8,4X16RFR
	630	342991-0108	-		1	HOSE CLIP 38-50MMRFR
Common Parts						
	020	272184	-		1	COVER
	060	272622	-		1	DRINKING STRAW
	100	456973	-		1	BRACKET
	130	531732	P		2	GASKET
	160	33577	-		1	BRACKET
	190	751083	-		1	PLATE
	200	272188	-		1	BRACKET
	210	272189	-		1	LID
	220	272190	-		2	SHIM
	230	272632	S		1	SILENCER
	350	90043-0034	S		2	PRESSURE GAUGE
	360	90043-0302	-		2	SCREW
	370	90064-0085	-		1	PUSH BUTTON RED
	380	90064-0084	-		1	PUSH BUTTON YELLOW
	390	90066-0020	-		1	PUSCH BUTTON BOX
	420	90264-0042	C		1	FAN
	430	90330-0038	-		2	NUT
	500	312105-0325	-		4	SCREW M6S5X10 A4 80
	510	312105-0364	-		2	SCREW M6S6X10RFR
	520	312105-0366	-		4	SCREW M6S6X12RFR
	525	312105-0370	-		4	SCREW M6S6X20RFR
	530	312105-0372	-		1	SCREW M6S6X25RFR
	535	312105-0448	-		2	SCREW M6S8X14RFR
	540	312105-0449	-		4	SCREW M6S8X16RFR
	550	312105-0451	-		2	SCREW M6S8X20RFR
	580	312125-0325	-		4	SLOTTED HEMCS5X10RFR
	610	342797-0122	S		2	BANJO CONNSINGEL 6-1/4
	620	342980-0304	S		2	BANJO CONN SINGEL 1/4
	640	352103-0110	-		1	CABLE GLANR.22,5/4-13
	650	359301-0100	-		1	SIGN
	660	359301-0110	-		1	SIGN

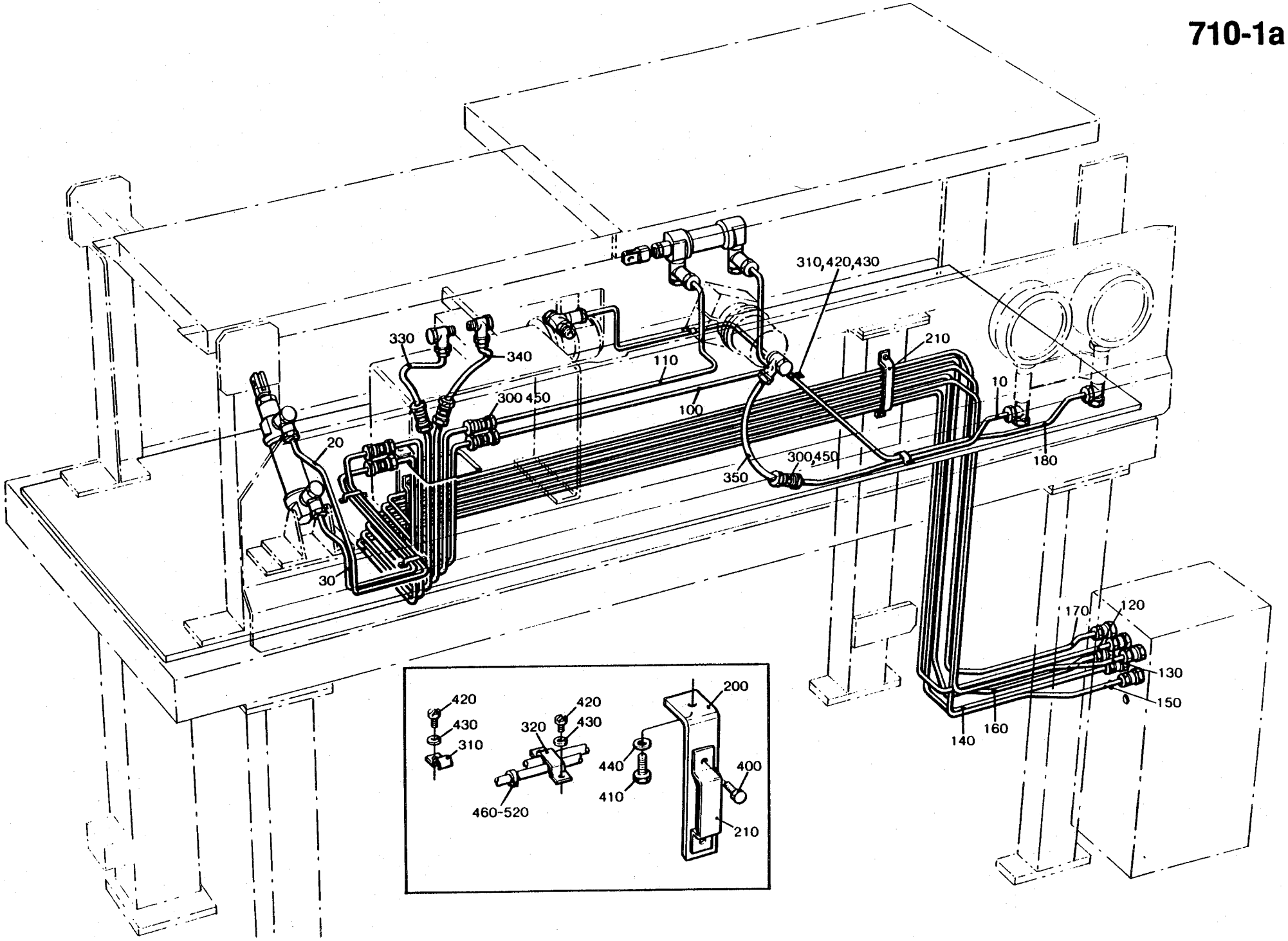
310,420,430
330
340
110
210
10
300 450
100
20
300,450
350
180
30
170
120
130
150
140
160
420
430
310
320
420
430
460-520
200
440
410
400
210

From	Pos	Part No	SP	UN	Qty	Description
Volume 180 - 284 ml						
	010	456731-0001	-		1	PIPE
	020	751073-0001	-		1	PIPE 240
	030	751074-0001	-		1	PIPE 241
	100	751080-0001	-		1	PIPE 200
	110	751144-0001	-		1	PIPE 201
Volume 200 ml SLIM						
	010	456731-0002	-		1	PIPE
	020	751073-0002	-		1	PIPE 240
	030	751074-0002	-		1	PIPE 241
	100	751080-0002	-		1	PIPE 200
	110	751144-0002	-		1	PIPE 201
Volume 125 ml						
	010	456731-0003	-		1	PIPE
	020	751073-0002	-		1	PIPE 240
	030	751074-0002	-		1	PIPE 241
	100	751080-0003	-		1	PIPE 200
	110	751144-0003	-		1	PIPE 201
Common Parts						
	120	456938	-		1	PIPE 241
	130	456939	-		1	PIPE 240
-080V	140	456940	-		1	PIPE V45
-080V	150	456941	-		1	PIPE V44
	160	456942	-		1	PIPE 201
	170	456943	-		1	PIPE 200
	180	456732	-		1	PIPE
	200	456936	-		1	BRACKET
	210	456937	-		2	CLIP
	300	90224-0304	-		7	CONNECTION
-080V	305	90087-0031	-		2	COVER
	310	90165-0005	-		1	CLIP
	320	90165-0006	-		2	CLIP
	350	90166-0132	-	MM	350	HOSE
	400	312105-0364	-		4	SCREW M6S6X10RFR
	410	312105-0451	-		1	SCREW M6S8X20RFR
	420	312125-0285	-		5	SLOTTED HEMCS4X6RFR
	430	315105-0136	-		5	WASHER BRB4,3X8RFR
	440	315105-0165	-		1	WASHER BRB8,4X16RFR
	450	342708-0101	-		1	SLEEVE 6X1/MS

From	Pos	Part No	SP	UN	Qty	Description
	460	359000-0064	-		60	MARKING CO2/4 OM#RKT
	470	359000-0400	-		20	MARKING CO2/4"0"
	480	359000-0401	-		10	MARKING CO2/4"1"
	490	359000-0402	-		20	MARKING CO2/4"2"
	500	359000-0404	-		25	MARKING CO2/4"4"
-080V	510	359000-0405	-		5	MARKING CO2/4"5"
-080V	520	359000-0771	-		10	MARKING CO2/4"V"

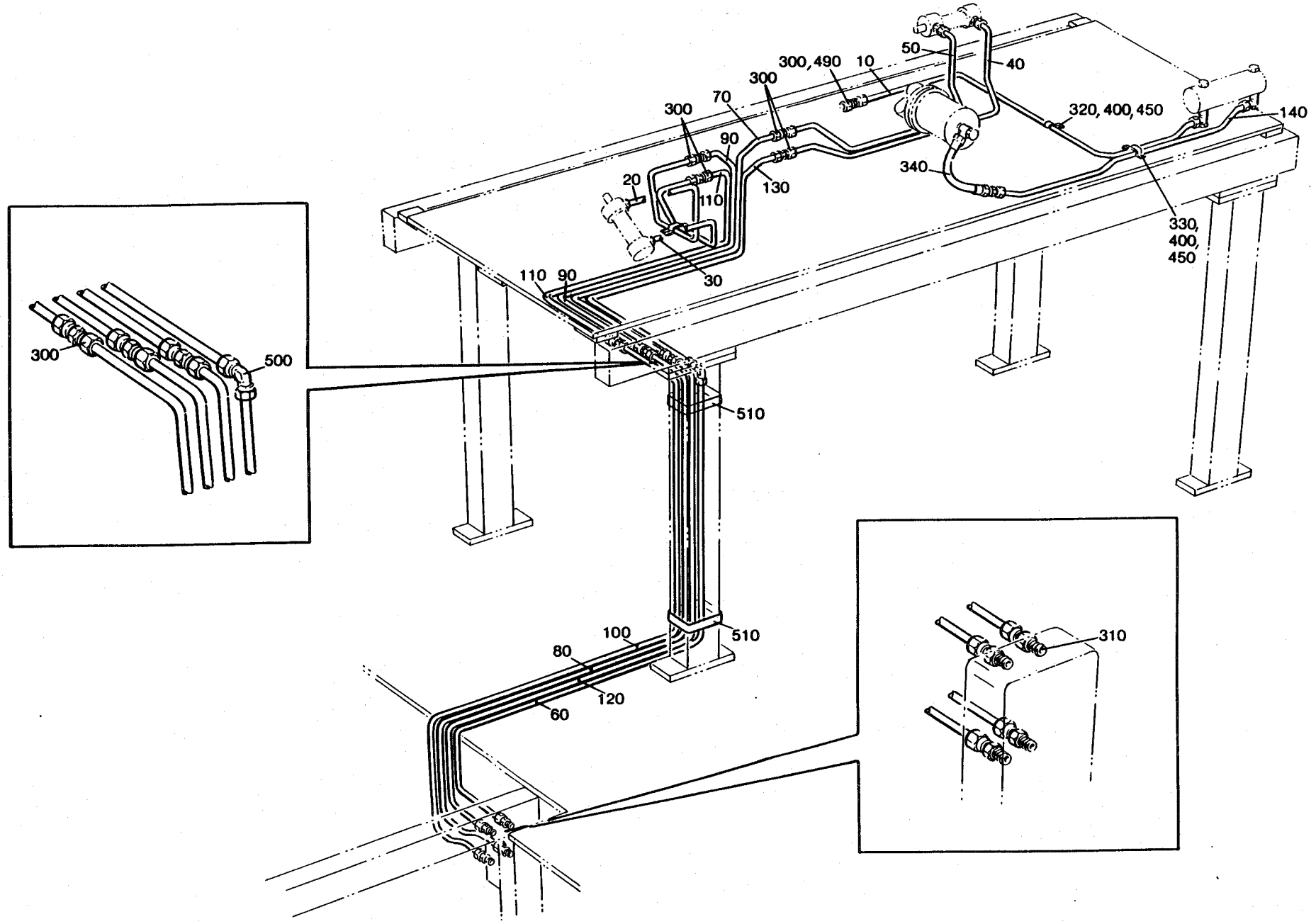
300
500
300, 490
10
50
40
300
70
300
90
320, 400, 450
140
20
110
130
340
330,
400,
450
30
110
90
510
100
80
120
60
510
310

From	Pos	Part No	SP	UN	Qty	Description
Volume 180 - 250 ml						
	010	456731-0001	-		1	PIPE
	020	751073-0001	-		1	PIPE 240
	030	751074-0001	-		1	PIPE 241
	040	751080-0001	-		1	PIPE 200
	050	751144-0001	-		1	PIPE 201
Volume 200 mlSLIM						
	010	456731-0002	-		1	PIPE
	020	751073-0002	-		1	PIPE 240
	030	751074-0002	-		1	PIPE 241
	040	751080-0002	-		1	PIPE 200
	050	751144-0002	-		1	PIPE 201
Volume 125 ml						
	010	456731-0003	-		1	PIPE
	020	751073-0002	-		1	PIPE 240
	030	751074-0002	-		1	PIPE 241
	040	751080-0003	-		1	PIPE 200
	050	751144-0003	-		1	PIPE 201
Common Parts						
	060	752899	-		1	PIPE
	070	752900	-		1	PIPE
	080	752901	-		1	PIPE
	090	752902	-		1	PIPE
	100	752903	-		1	PIPE
	110	752904	-		1	PIPE
	120	752905	-		1	PIPE
	130	752906	-		1	PIPE
	140	456732	-		1	PIPE
	300	90030-0075	-		8	PIPE CONNECTION
	310	90030-0184	-		4	PIPE CONNECTION
	320	90165-0005	-		1	CLIP
	330	90165-0006	-		2	CLIP
	340	90166-0132	-	MM	350	HOSE
	400	312125-0285	-		5	SLOTTED HEMCS4X6RFR
	450	315105-0136	-		5	WASHER BRB4,3X8RFR
	490	342708-0101	-		1	SLEEVE 6X1/MS
	500	342737-0204	-		1	ELBOW COUP W 6-L RFR
	510	342991-0110	-		2	HOSE CLIP 50-65MMRFR
	520	359000-0064	-		16	MARKING CO2/4 OM#RKT
	530	359000-0400	-		8	MARKING CO2/4"0"
	540	359000-0401	-		4	MARKING CO2/4"1"
	550	359000-0402	-		8	MARKING CO2/4"2"
	560	359000-0404	-		4	MARKING CO2/4"4"

From	Pos	Part No	SP	UN	Qty	Description

Strip Side

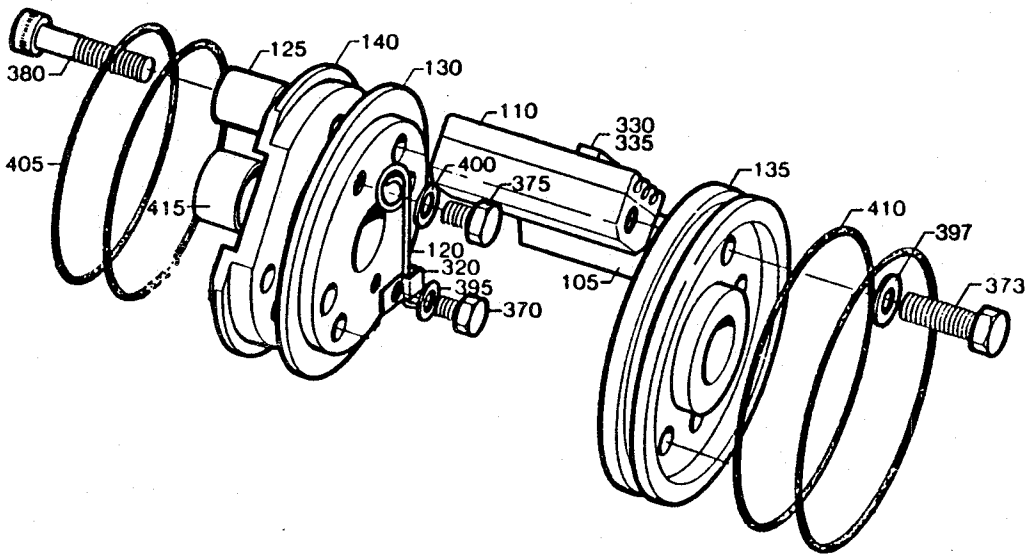

Opposite Strip Side

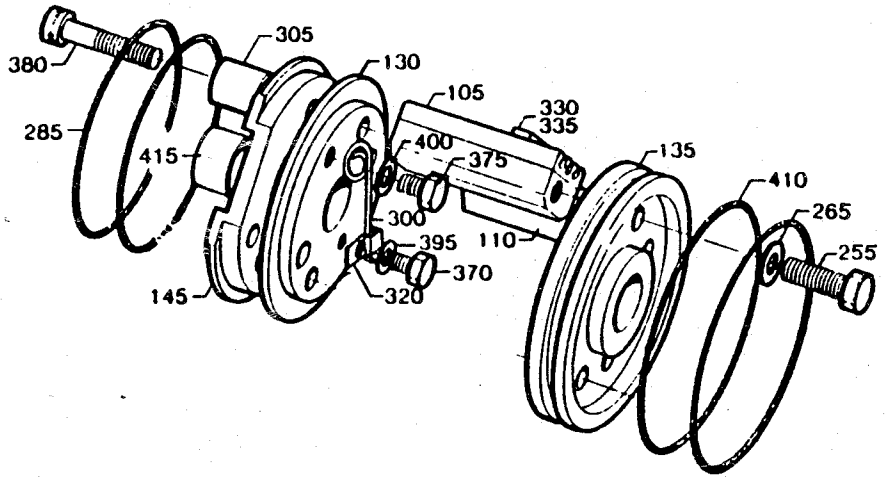

==>711-1.1

STAMPING SUMMARY

Stamp location, opposite strip side

From	Pos	Part No	SP	UN	Qty	Description
		296684-0204				DATING WHEEL, ASS'Y
	105	293395-0002	P		2	TYPE HOLDER
	110	293395-0001	P		2	TYPE HOLDER
	130	292412	C		1	GABLE
	135	292413	C		1	GABLE
	145	293659	C		1	CARRIER
	255	312101-0331	-		7	SCREW M6S5X20FZB
	265	315101-0146	-		7	WASHER BRB5,3X10FZB
	285	315202-0304	P		2	O-RING 64,5X3
	300	32691	P		1	LOCKING SPRING
	305	33011	S		1	SLEEVE
	320	90165-0010	-		1	CLIP
	330	90413-0033	P		1	CODE INSERT SET, 0-9, 4 MM
	330	90413-0043	P		1	CODE INSERT SET, 0-9, 6 MM
	335	90413-0044	P		1	CODE INSERT SET, A-Z, 6 MM
	335	90413-0047	P		1	CODE INSERT SET, A-Ö, 4 MM
	370	312101-0287	-		1	SCREW M6S4X8FZB
	375	312101-0364	-		1	SCREW M6S6X10FZB
	380	312111-0335	-		1	SCREW MC6S5X30FZB
	395	315101-0136	-		1	WASHER BRB4,3X8FZB
	400	315111-0153	-		1	WASHER TBRB6,4X12FZB
	410	315202-0305	P		2	O-RING 69,5X3
	415	321120-0122	S		2	BUSHING 15/17X15

Stamp location, strip side

From	Pos	Part No	SP	UN	Qty	Description
		296685-0201				DATING WHEEL, ASS'Y
	105	293395-0002	P		2	TYPE HOLDER
	110	293395-0001	P		2	TYPE HOLDER
	120	32691	P		1	LOCKING SPRING
	125	33011	S		1	SLEEVE
	130	292412	C		1	GABLE
	135	292413	C		1	GABLE
	140	292414	C		1	CARRIER
	320	90165-0010	-		1	CLIP
	330	90413-0033	P		1	CODE INSERT SET, 0-9, 4 MM
	330	90413-0043	P		1	CODE INSERT SET, 0-9, 6 MM
	335	90413-0044	P		1	CODE INSERT SET, A-Z, 6 MM
	335	90413-0047	P		1	CODE INSERT SET, A-Ö, 4 MM
	370	312101-0287	-		1	SCREW M6S4X8FZB
	373	312101-0331	-		7	SCREW M6S5X20FZB
	375	312101-0364	-		1	SCREW M6S6X10FZB
	380	312111-0335	-		1	SCREW MC6S5X30FZB
	395	315101-0136	-		1	WASHER BRB4,3X8FZB
	397	315101-0146	-		7	WASHER BRB5,3X10FZB
	400	315111-0153	-		1	WASHER TBRB6,4X12FZB
	405	315202-0304	P		2	O-RING 64,5X3
	410	315202-0305	P		2	O-RING 69,5X3
	415	321120-0122	S		2	BUSHING 15/17X15

TOP STAMP. NOT STRIP SIDE.

VOL 1136-500 ml

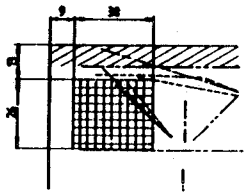

STILHÖJD/HEIGHT 8mm. ANTAL/NUMBER 4-9
6mm 5-10
4mm 6-12

VOL 500 S.355 ml

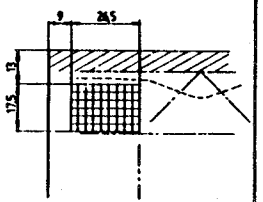

STILHÖJD/HEIGHT 8mm. ANTAL/NUMBER 3-8
6mm 4-9
4mm 5-11

VOL 375.300ml

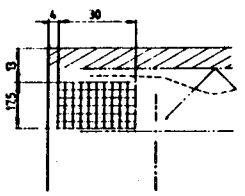

STILHÖJD/HEIGHT 8mm ANTAL/NUMBER 4-9
6mm 5-10
4mm 6-12

VOL 284-180ml PULLTAB

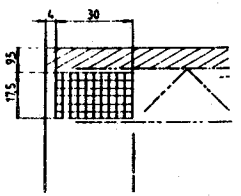

STILHÖJD/HEIGHT 8mm ANTAL/NUMBER 4-9
6mm 5-10
4mm 6-12

VOL 250. 236ml

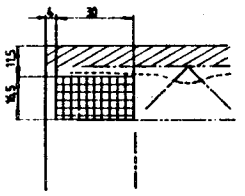

STILHÖJD/HEIGHT 8mm ANTAL/NUMBER 4-9
6mm 5-10
4mm 6-12

VOL 200S ml

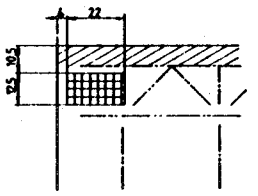

STILHÖJD/HEIGHT 8mm. ANTAL/NUMBER 2-7
6mm 3-8
4mm 4-10

VOL 125 ml

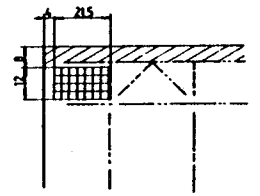

STILHÖJD/HEIGHT 8mm ANTAL/NUMBER 2-7
6mm 3-8
4mm 4-10

TOP STAMP. STRIP SIDE.

VOL 300I 300ml

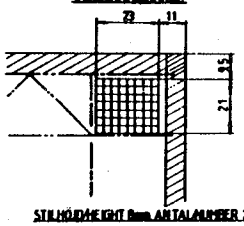

STILHÖJD/HEIGHT 8mm ANTAL/NUMBER 2-7
6mm 3-8
4mm 4-10

VOL 284-180ml

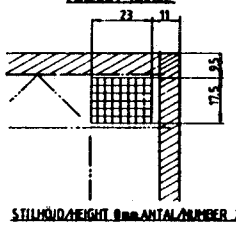

STILHÖJD/HEIGHT 8mm ANTAL/NUMBER 2-7
6mm 3-8
4mm 4-10

POSSIBLE STAMPING COMBINATIONS.

1.

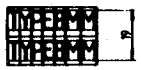

2.



3.

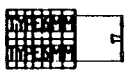

4.



5.

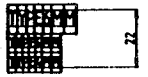

6.

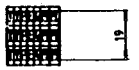

7.

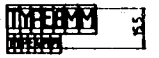

8.



9.



10.



11.



12.



13(ARAB)

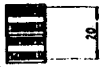

14.(ARAB)



From	Pos	Part No	SP	UN	Qty	Description
		539347-1				STAMPING SUMMARY

From	Pos	Part No	SP	UN	Qty	Description

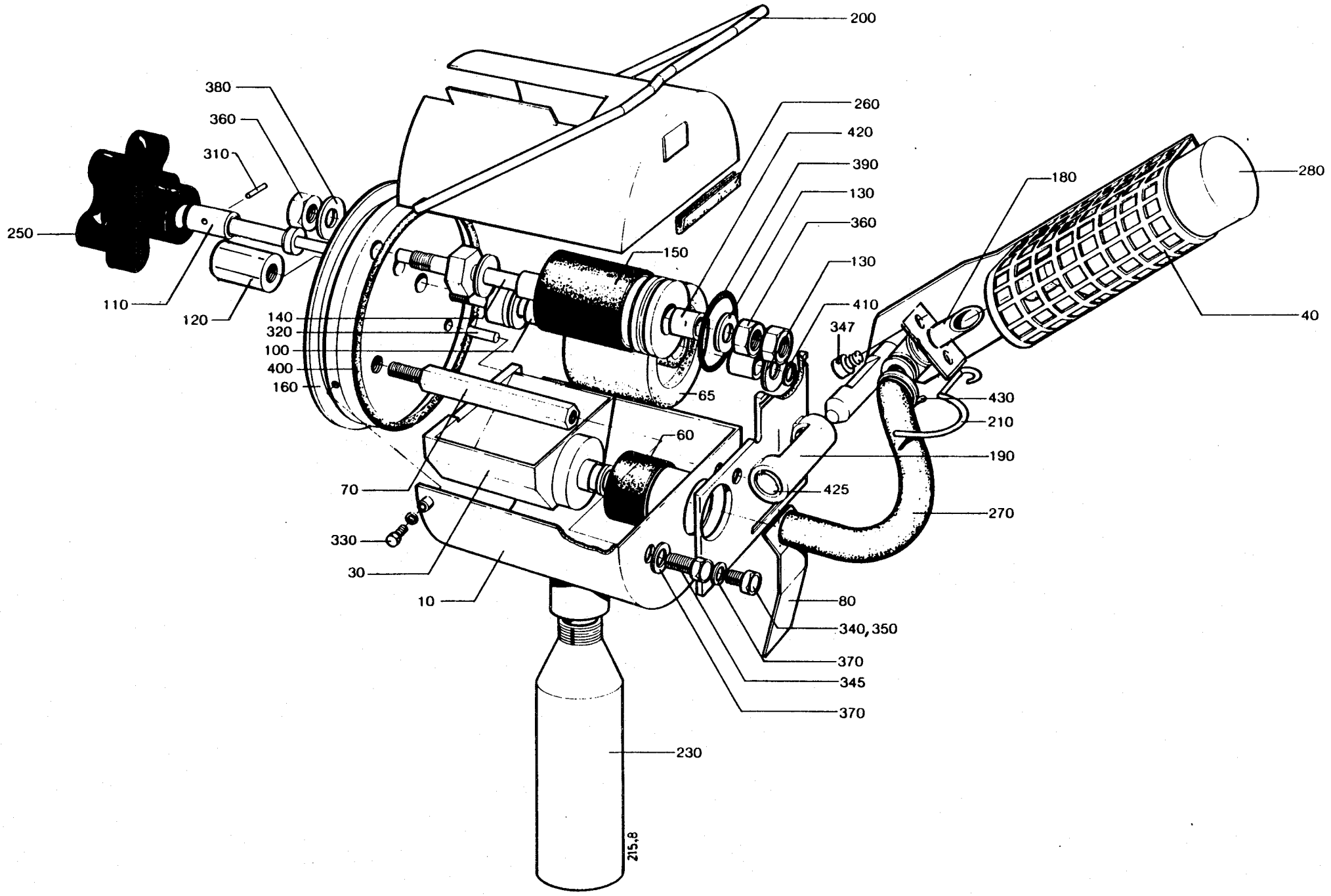
200
380
360
310
250
110
120
260
420
390
130
360
130
410
347
150
140
320
100
400
160
65
60
70
330
30
10
180
280
40
430
210
190
425
270
80
340, 350
370
345
370
230
215,8

From	Pos	Part No	SP	UN	Qty	Description
	010	297988	-		1	COVER
	030	297211	-		1	INK WELL
	040	476356	C		1	HOLDER FOR INK BOTTLE
	060	445542	P		1	RUBBER GASKET
	065	450355	S		1	INK ROLLER
	070	33010	-		1	SCREW
	080	35547	S		1	SPRING
	100	292044	P		1	SHAFT
	110	293667	S		1	PIN
	120	436927	C		1	NUT
	130	293669-0001	P		4	WASHER
	130	293669-0002	P		2	WASHER
	130	293669-0003	P		2	WASHER
	130	293669-0004	P		2	WASHER
	140	293670	P		1	SHAFT
	150	543135	P		1	ROLLER
	160	293697	S		1	GABLE
	180	476354	S		1	CANNULAR TUBE
	190	456773	C		1	BRACKET
	200	434747	S		1	CLAMP
	210	537308	-		1	SPRING
	230	90050-0008	P		1	BOTTLE, TB/9
	230	90050-0012	P		1	BOTTLE, TBA/9
	250	90051-0077	S		1	HANDLE
	260	90143-0029	S	MM	295	STRIP
	270	90166-0138	P	MM	100	HOSE
	280	90299-0013	P		X	INK
		90299-0300	R		0	* COVER
	300	311103-0236	-		2	CYLINDRICACPR3M6X16RFR
	310	311103-0238	-		1	CYLINDRICACPR3M6X20RFR
	320	311103-0270	-		1	CYLINDRICACPR4M6X16RFR
	330	312105-0291	-		3	SCREW M6S4X12RFR
	340	312105-0327	-		2	SCREW M6S5X12 A4 80
	345	312105-0329	-		1	SCREW M6S5X16 A4 80
	347	312115-0287	-		2	SCREW 4X8 A4 80
	350	312605-0314	-		2	NUT M6M5RFR
	360	312605-0318	-		3	NUT M6M8RFR
	370	315105-0146	-		3	WASHER BRB5,3X10RFR
	380	315105-0165	-		2	WASHER BRB8,4X16RFR
	390	315202-0218	P		1	O-RING 26,2X3
	400	315202-0309	P		1	O-RING 89,5X3
	410	315750-0105	P		1	LOCK RING SGA8

From	Pos	Part No	SP	UN	Qty	Description
	420	321120-0100	S		4	BUSHING 8/10X12
	425	321120-0109	S		2	BUSHING 12/14X10
	430	352113-0101	P		1	RIBBON CLAR

712-1b

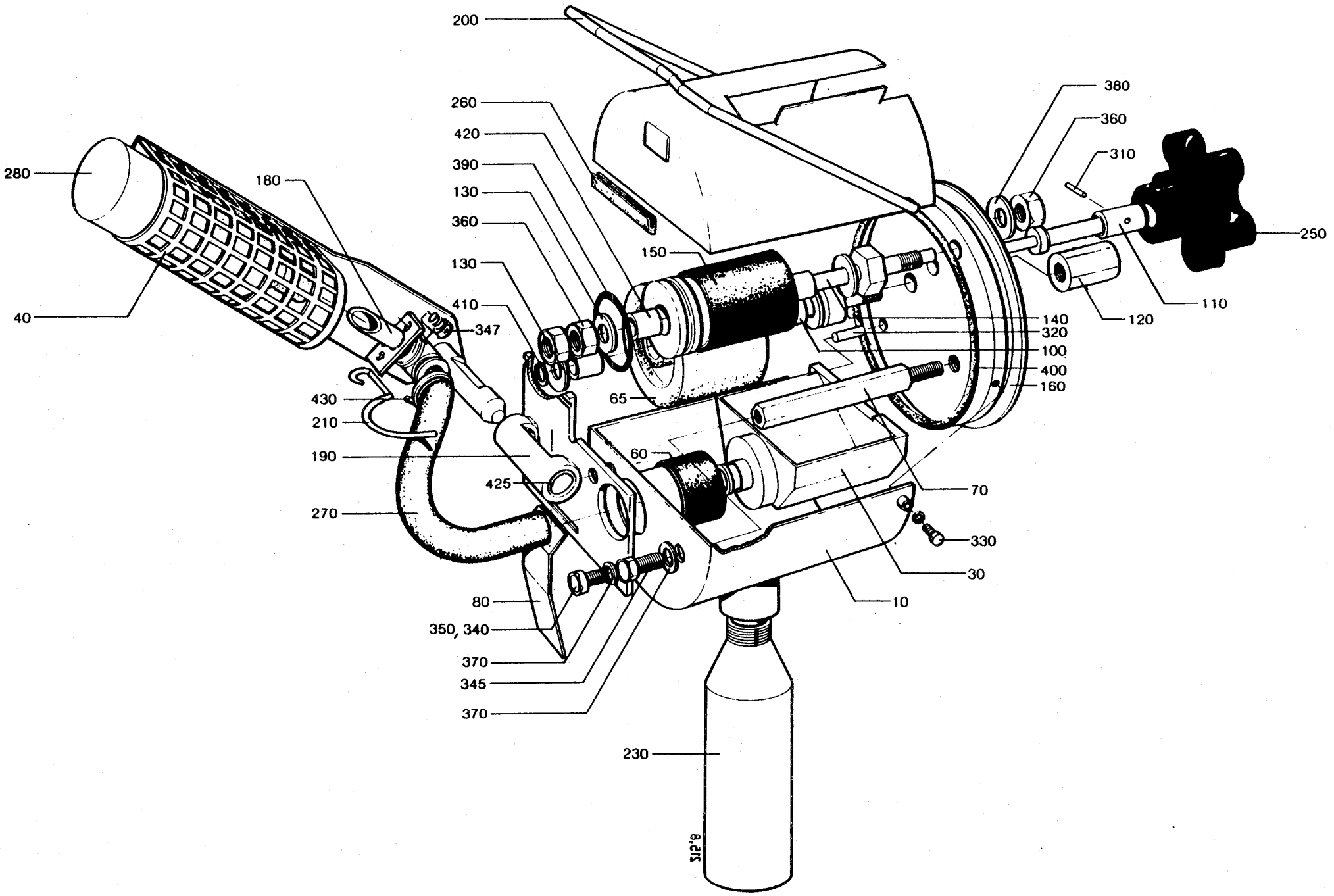
200
260
420
390
130
360
130
410
347
430
210
190
425
270
280
180
40
380
360
310
250
150
110
120
140
320
100
400
160
65
60
70
330
30
10
80
350, 340
370
345
370
230
8215

From	Pos	Part No	SP	UN	Qty	Description
	010	297989	-		1	COVER
	030	297210	-		1	INK WELL
	040	476356	C		1	HOLDER FOR INK BOTTLE
	060	445542	P		1	RUBBER GASKET
	065	450355	S		1	INK ROLLER
	070	33010	-		1	SCREW
	080	35547	S		1	SPRING
	100	292044	P		1	SHAFT
	110	293667	S		1	PIN
	120	436927	C		1	NUT
	130	293669-0001	P		4	WASHER
	130	293669-0002	P		2	WASHER
	130	293669-0003	P		2	WASHER
	130	293669-0004	P		2	WASHER
	140	293670	P		1	SHAFT
	150	543135	P		1	ROLLER
	160	297213	S		1	GABLE
	180	476355	S		1	CANNULAR TUBE
	190	456772	C		1	BRACKET
	200	434747	S		1	CLAMP
	210	537308	-		1	SPRING
	230	90050-0008	P		1	BOTTLE, TB/9
	230	90050-0012	P		1	BOTTLE, TBA/9
	250	90051-0077	S		1	HANDLE
	260	90143-0029	S	MM	295	STRIP
	270	90166-0138	P	MM	100	HOSE
	280	90299-0013	P		X	INK
		90299-0300	R		0	* COVER
	300	311103-0236	-		2	CYLINDRICACPR3M6X16RFR
	310	311103-0238	-		1	CYLINDRICACPR3M6X20RFR
	320	311103-0270	-		1	CYLINDRICACPR4M6X16RFR
	330	312105-0291	-		3	SCREW M6S4X12RFR
	340	312105-0327	-		2	SCREW M6S5X12 A4 80
	345	312105-0329	-		1	SCREW M6S5X16 A4 80
	347	312115-0287	-		2	SCREW 4X8 A4 80
	350	312605-0314	-		2	NUT M6M5RFR
	360	312605-0318	-		3	NUT M6M8RFR
	370	315105-0146	-		3	WASHER BRB5,3X10RFR
	380	315105-0165	-		2	WASHER BRB8,4X16RFR
	390	315202-0218	P		1	O-RING 26,2X3
	400	315202-0309	P		1	O-RING 89,5X3
	410	315750-0105	P		1	LOCK RING SGA8

From	Pos	Part No	SP	UN	Qty	Description
	420	321120-0100	S		4	BUSHING 8/10X12
	425	321120-0109	S		2	BUSHING 12/14X10
	430	352113-0101	P		1	RIBBON CLAR

From	Pos	Part No	SP	UN	Qty	Description
	010	251279	-		1	COIL HEATER
	020	21903	-		1	ROLLER
	030	531733	-		1	GASKET
	040	531734	-		2	GASKET
	050	531735	-		1	GASKET
	060	531736	-		1	GASKET
	070	90206-0031	-		1	HEATING ELEMENT

From	Pos	Part No	SP	UN	Qty	Description

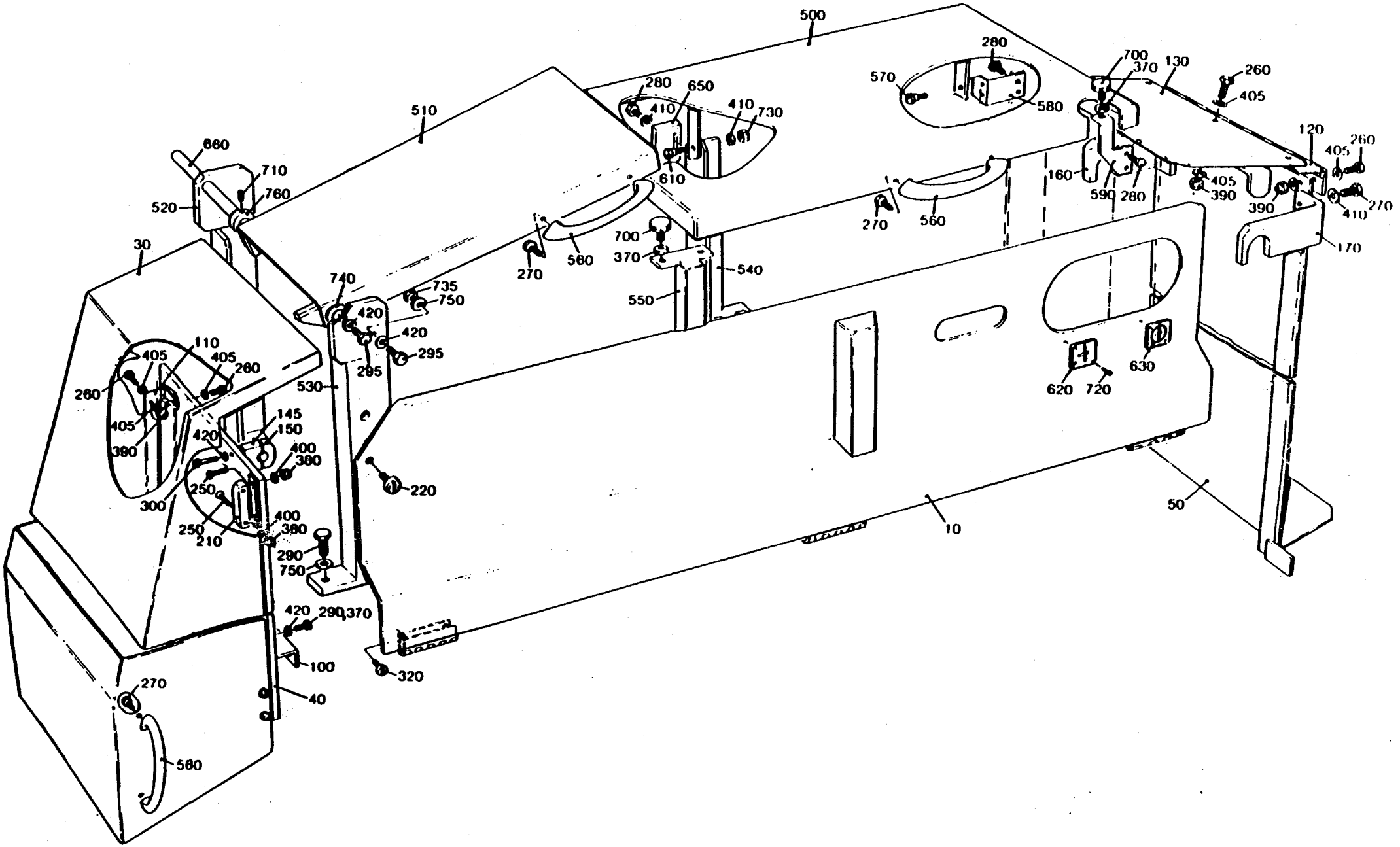
500
280
700
370
130
260
405
570
580
280
650
410
410
730
610
510
660
710
760
520
30
270
560
700
370
540
550
740
735
750
420
420
295
295
530
110
405
405
260
260
405
390
145
150
420
400
380
250
300
250
210
400
380
290
750
420
290
370
100
40
270
560
220
320
270
560
160
590
280
120
260
405
405
390
390
260
405
410
270
170
620
720
630
50
10

From	Pos	Part No	SP	UN	Qty	Description
	010	456972	-		1	PROTECTION PLATE
	030	490948	-		1	COVER
	035	751914	-		1	COVER (Slim Body Machine)
	040	490949	-		1	PLATE
	050	490955	-		1	BACK PLATE
	100	491552	-		1	PLATE
	110	490950	-		1	HINGE
	120	490956	-		1	HINGE
	130	490957	-		1	LID
	145	456964	-		2	HOLDER
	150	456965	-		2	CLAMP
	160	490958	-		1	BRACKET
	170	490965	-		1	BRACKET
	210	90237-0071	-		2	LOCK
	220	90287-0062	-		2	SCREW
	250	312155-0291	-		8	SCREW MF6S4X12RFR
	260	312105-0327	-		16	SCREW M6S5X12 A4 80
	270	312105-0366	-		10	SCREW M6S6X12RFR
	290	312105-0451	-		10	SCREW M6S8X20RFR
	300	312105-0459	-		4	SCREW M6S8X40RFR
	320	312125-0323	-		6	SLOTTED HEMCS5X8RFR
	370	312605-0318	-		5	NUT M6M8RFR
	380	312812-0312	-		8	LOCK NUT A4-M4RFR
	390	312812-0314	-		11	LOCK NUT A4-M5RFR
	400	315105-0136	-		8	WASHER BRB4,3X8RFR
	405	315105-0146	-		27	WASHER BRB5,3X10RFR
	410	315105-0153	-		8	WASHER BRB6,4X12RFR
	420	315105-0165	-		12	WASHER BRB8,4X16RFR
	510	469840	-		1	LID (180-250 ml)
	510	751047	-		1	LID (125, 200 ml SLIM)
	560	7309	-		3	HANDLE
	280	312105-0368	-		6	SCREW M6S6X16RFR
	295	312105-0453	-		3	SCREW M6S8X25RFR
	500	469839	-		1	LID
	520	469841	-		1	LEG
	530	469842	-		1	LEG
	540	469843	-		1	LEG
	550	491734	-		1	SUPPORT
	570	252972	-		1	SHOULDER SCREW
	580	272636	-		1	BRACKET
	590	441027	-		1	BRACKET
	610	456967	-		1	SHOULDER SCREW
	620	464176	-		1	SIGN
	630	464177	-		1	SIGN

From	Pos	Part No	SP	UN	Qty	Description
	650	469846	-		1	STOP LUG
	660	469847	-		1	SHAFT
	700	90347-0004	-		3	VIBRATION DAMPER
	710	312318-0362	-		1	GRUB SCREW SK6SS6X8RFR
	720	312502-0120	-		4	DRIVE SCREKDS0X5FNB
	730	312812-0316	-		1	LOCK NUT A4-M6RFR
	735	312812-0318	-		1	LOCK NUT A4-M8RFR
	740	315105-0186	-		1	WASHER BRB17X30RFR
	750	315115-0165	-		9	WASHER TBRB8,4X16RFR
	760	315742-0112	-		1	RETAINING 16SMS199RFR

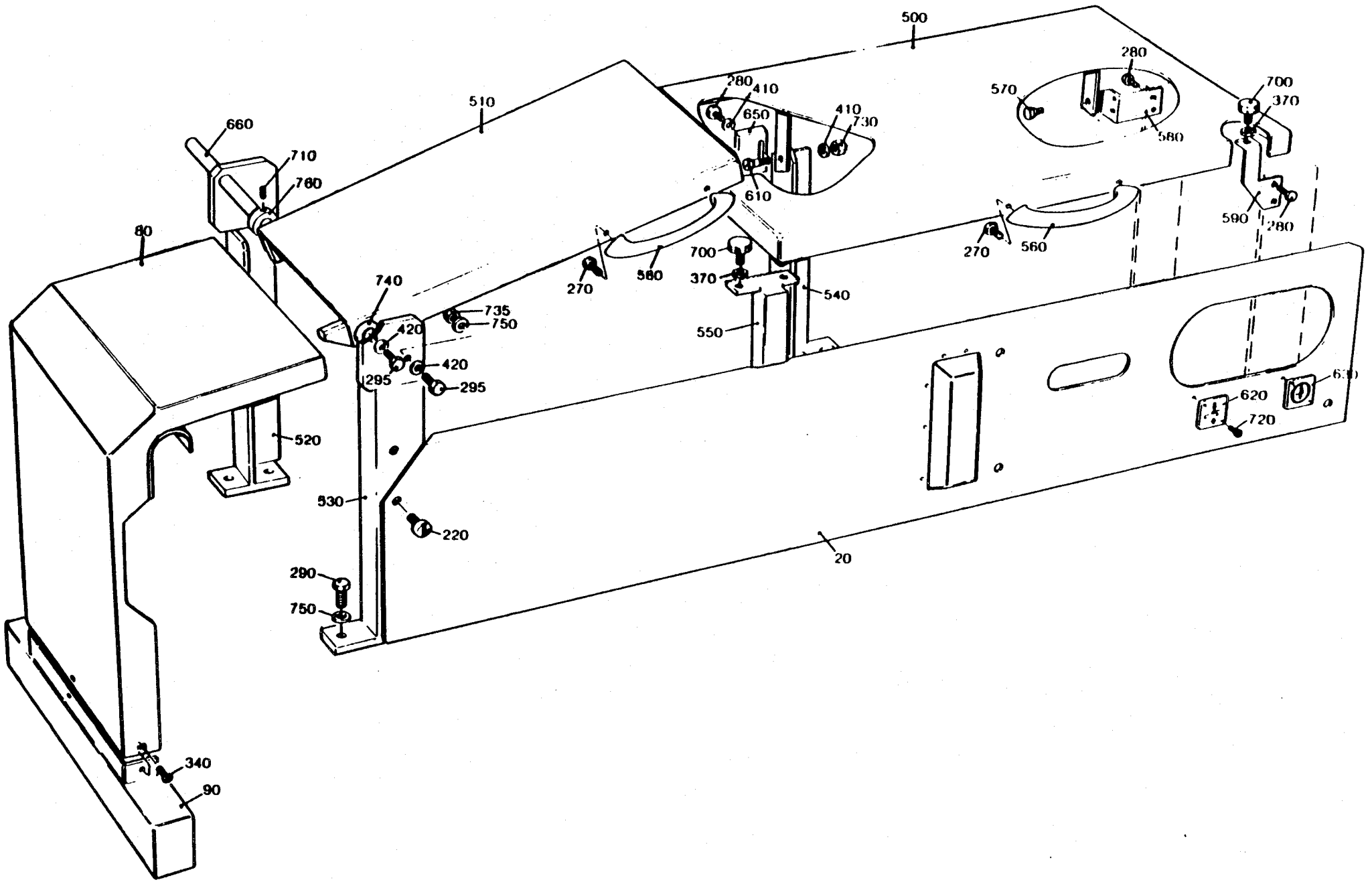
500
280
570
700
370
280
410
650
410
730
580
660
710
760
510
610
590
280
80
270
560
700
370
740
270
580
540
735
750
420
550
420
295
295
620
720
520
530
220
20
290
750
340
90

From	Pos	Part No	SP	UN	Qty	Description
	020	469855	-		1	PROTECTION PLATE
	080	272837	-		1	PAPER GUARD
	090	272838	-		1	COVER
	220	90287-0062	-		5	SCREW
	270	312105-0366	-		4	SCREW M6S6X12RFR
	290	312105-0451	-		8	SCREW M6S8X20RFR
	340	312165-0325	-		3	SLOTTED HEMKFS5X10RFR
	370	312605-0318	-		3	NUT M6M8RFR
	410	315105-0153	-		4	WASHER BRB6,4X12RFR
	420	315105-0165	-		4	WASHER BRB8,4X16RFR
	510	469840	-		1	LID (180-250 ml)
	510	751047	-		1	LID (125, 200 ml SLIM)
	560	7309	-		2	HANDLE
	280	312105-0368	-		6	SCREW M6S6X16RFR
	295	312105-0453	-		3	SCREW M6S8X25RFR
	500	469839	-		1	LID
	520	469841	-		1	LEG
	530	469842	-		1	LEG
	540	469843	-		1	LEG
	550	491734	-		1	SUPPORT
	570	252972	-		1	SHOULDER SCREW
	580	272636	-		1	BRACKET
	590	441027	-		1	BRACKET
	610	456967	-		1	SHOULDER SCREW
	620	464176	-		1	SIGN
	630	464177	-		1	SIGN
	650	469846	-		1	STOP LUG
	660	469847	-		1	SHAFT
	700	90347-0004	-		3	VIBRATION DAMPER
	710	312318-0362	-		1	GRUB SCREW SK6SS6X8RFR
	720	312502-0120	-		4	DRIVE SCREKDS0X5FNB
	730	312812-0316	-		1	LOCK NUT A4-M6RFR
	735	312812-0318	-		1	LOCK NUT A4-M8RFR
	740	315105-0186	-		1	WASHER BRB17X30RFR
	750	315115-0165	-		9	WASHER TBRB8,4X16RFR
	760	315742-0112	-		1	RETAINING 16SMS199RFR

From	Pos	Part No	SP	UN	Qty	Description

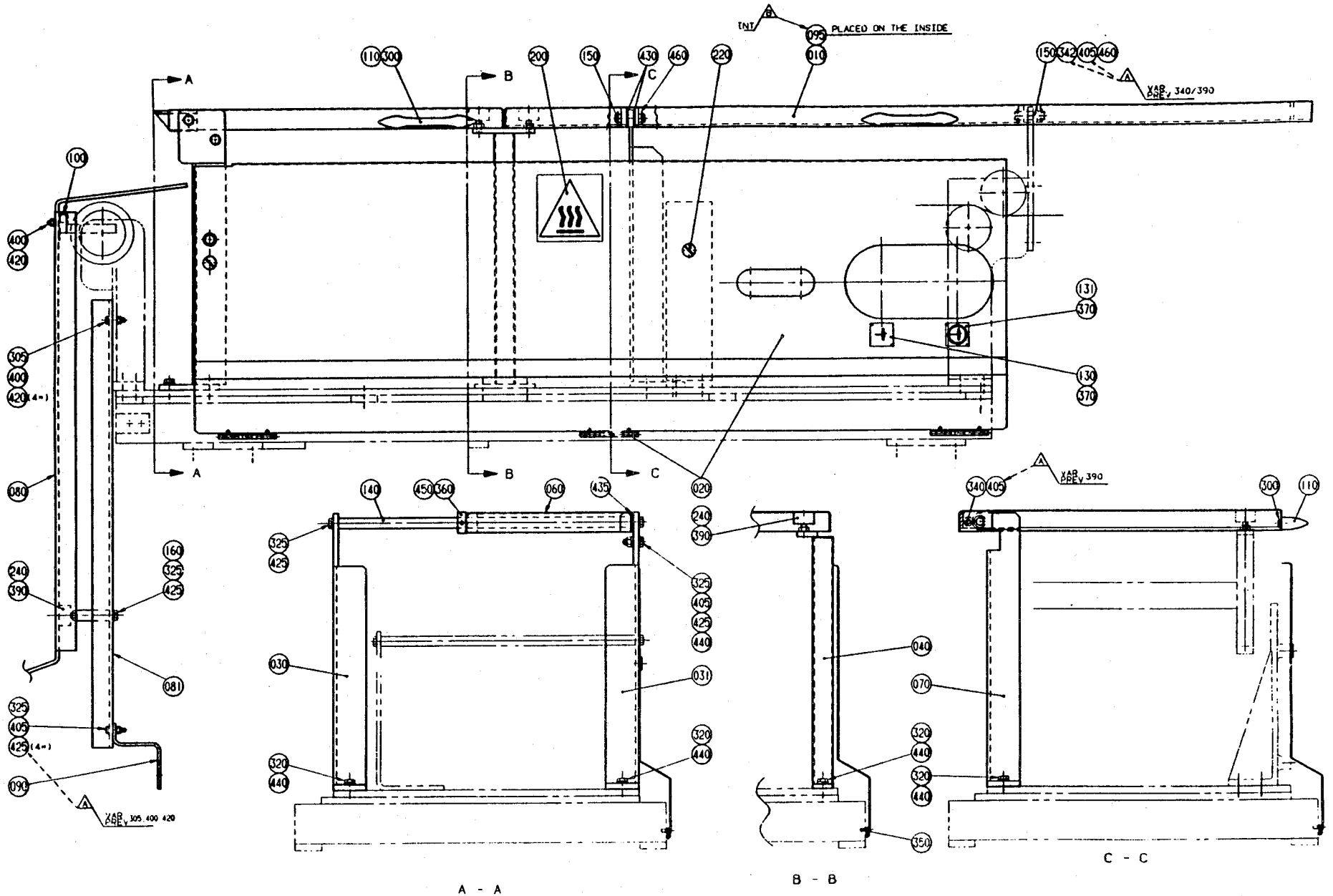
INT
095
PLACED ON THE INSIDE
010
XAB PREV 340/390
XAB PREV 305 400 420
XAB PREV 390
A - A
B - B
C - C

Last Alteration: AM 16176 91-03-25

Date Printed: 910404

Corresponding C-lists: 752244-010V
Assembly Drawing: 752244-1

From	Pos	Part No	SP	UN	Qty	Description
	010	751518	-		1	COVER
	020	752697	-		1	PROTECTION PLATE
	030	469841	-		1	LEG
	031	469842	-		1	LEG
	040	491734	-		1	SUPPORT
	060	751047	-		1	LID
	070	751525	-		1	BRACKET
	080	752916	-		1	COVER
	081	752917	-		1	PLATE
	090	491552	-		1	PLATE
	095	561402	-		1	SIGN
	100	752550	-		1	BRACKET
	110	7309	-		2	HANDLE
	130	464176	-		1	SIGN
	131	464177	-		1	SIGN
	140	469847	-		1	SHAFT
	150	751519	-		2	SHAFT
	160	752549	-		2	SPACER
	200	90194-0075	-		1	SIGN
	220	90287-0062	-		2	SCREW
	240	90347-0004	-		4	VIBRATION DAMPER
	300	312105-0366	-		4	SCREW M6S6X12RFR
	305	312105-0372	-		2	SCREW M6S6X25RFR
	320	312105-0451	-		8	SCREW M6S8X20RFR
	325	312105-0453	-		7	SCREW M6S8X25RFR
	340	312115-0459	-		1	SCREW 8X40 A4 80
	342	312115-0460	-		1	SCREW 8X45 A4 80
	350	312125-0323	-		6	SLOTTED HEMCS5X8RFR
	360	312318-0362	-		1	GRUB SCREW SK6SS6X8RFR
	370	312502-0120	-		4	DRIVE SCREKDS0X5FNB
	390	312605-0318	-		4	NUT M6M8RFR
	400	312812-0316	-		5	LOCK NUT A4-M6RFR
	405	312812-0318	-		5	LOCK NUT A4-M8RFR
	420	315105-0153	-		7	WASHER BRB6,4X12RFR
	425	315105-0165	-		9	WASHER BRB8,4X16RFR
	430	315105-0178	-		2	WASHER BRB13X24RFR
	435	315105-0186	-		1	WASHER BRB17X30RFR
	440	315115-0165	-		9	WASHER TBRB8,4X16RFR
	450	315742-0112	-		1	RETAINING 16SMS199RFR
	460	315755-0110	-		4	CIRCLIP E 9RFR

From	Pos	Part No	SP	UN	Qty	Description

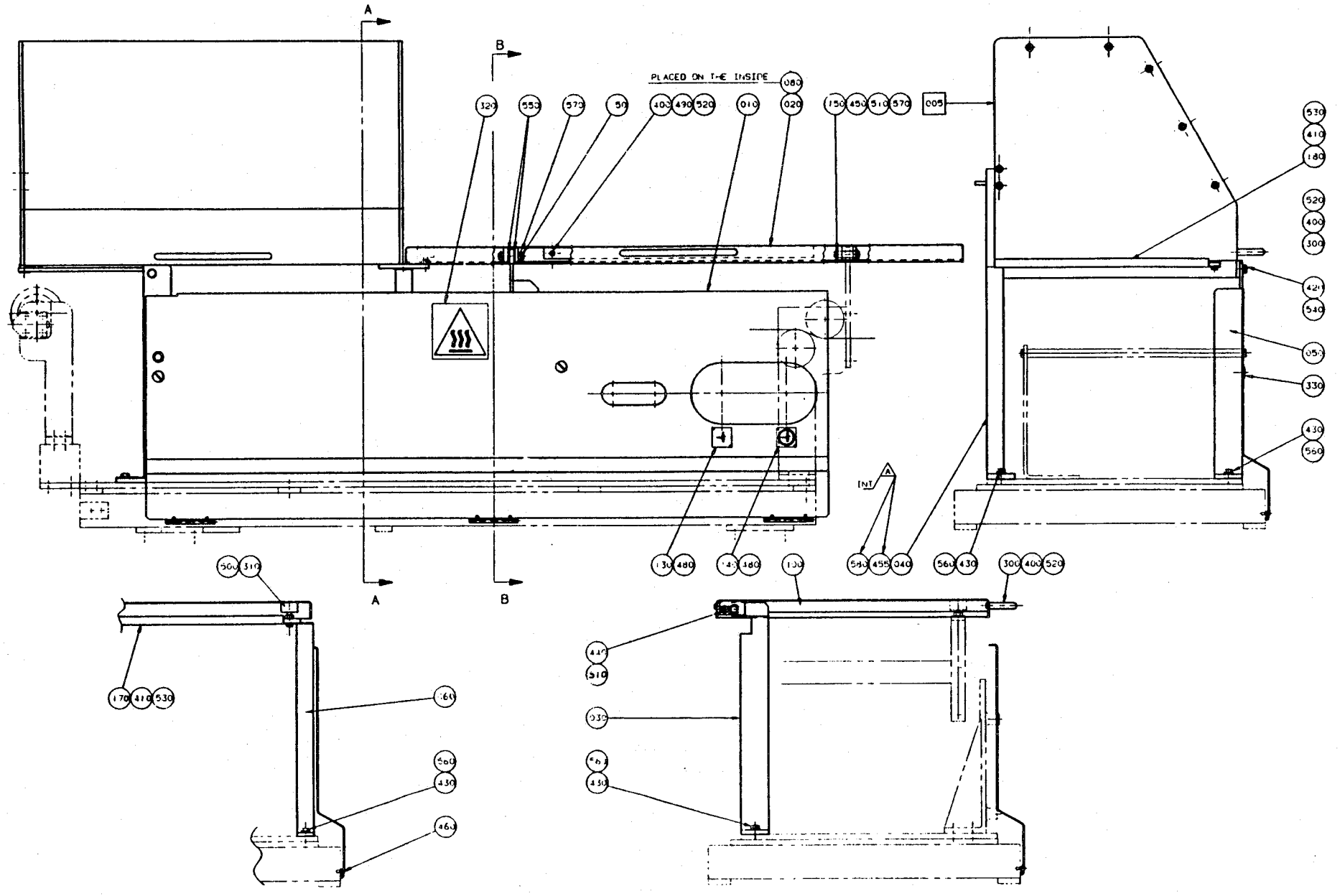
A
B
PLACED ON THE INSIDE
080
320
553
573
50
400
490
520
010
020
150
450
510
570
005
530
410
180
520
400
300
420
540
053
330
430
560
INT
A
130
480
130
560
455
040
560
430
300
400
520
170
410
530
560
310
560
430
460
A - A
B - B

From	Pos	Part No	SP	UN	Qty	Description
	F005	==>714-2.1	-		1	COVER
	010	752697	-		1	PROTECTION PLATE
	020	978163	-		1	LEG
	030	751525	-		1	BRACKET
	040	978164	-		1	BRACKET
	050	978165	-		1	LEG
	060	978166	-		1	SUPPORT
	080	561402	-		1	SIGN
	100	978167	-		1	STRUT
	130	464176	-		1	SIGN
	140	464177	-		1	SIGN
	150	751519	-		2	SHAFT
	170	978168	-		1	CHUTE
	180	752916	-		1	CHUTE
	300	90017-0012	-		1	HANDLE
	310	90347-0004	-		1	VIBRATION DAMPER
	320	90194-0075	-		1	SIGN
	330	90287-0062	-		2	SCREW
	400	312105-0328	-		4	SCREW M6S5X14 A4 80
	410	312105-0362	-		4	SCREW M6S6X8RFR
	420	312105-0449	-		1	SCREW M6S8X16RFR
	430	312105-0451	-		8	SCREW M6S8X20RFR
	440	312115-0459	-		1	SCREW MC6S 8X40 A4 80
	450	312115-0460	-		1	SCREW MC6S 8X45 A4 80
	455	312125-0285	-		2	SLOTTED HEMCS4X6RFR
	460	312125-0323	-		6	SLOTTED HEMCS5X8RFR
	480	312502-0120	-		4	DRIVE SCREKDS0X5FNB
	490	312605-0314	-		2	NUT M6M5RFR
	500	312605-0318	-		1	NUT M6M8RFR
	510	312812-0318	-		2	LOCK NUT A4-M8RFR
	520	315105-0146	-		6	WASHER BRB5,3X10RFR
	530	315105-0153	-		4	WASHER BRB6,4X12RFR
	540	315105-0165	-		1	WASHER BRB8,4X16RFR
	550	315105-0178	-		2	WASHER BRB13X24RFR
	560	315115-0165	-		8	WASHER TBRB8,4X16RFR
	570	315755-0110	-		4	CIRCLIP E 9RFR
	580	352113-0203	-		2	ARMATURE TM3-S8

From	Pos	Part No	SP	UN	Qty	Description

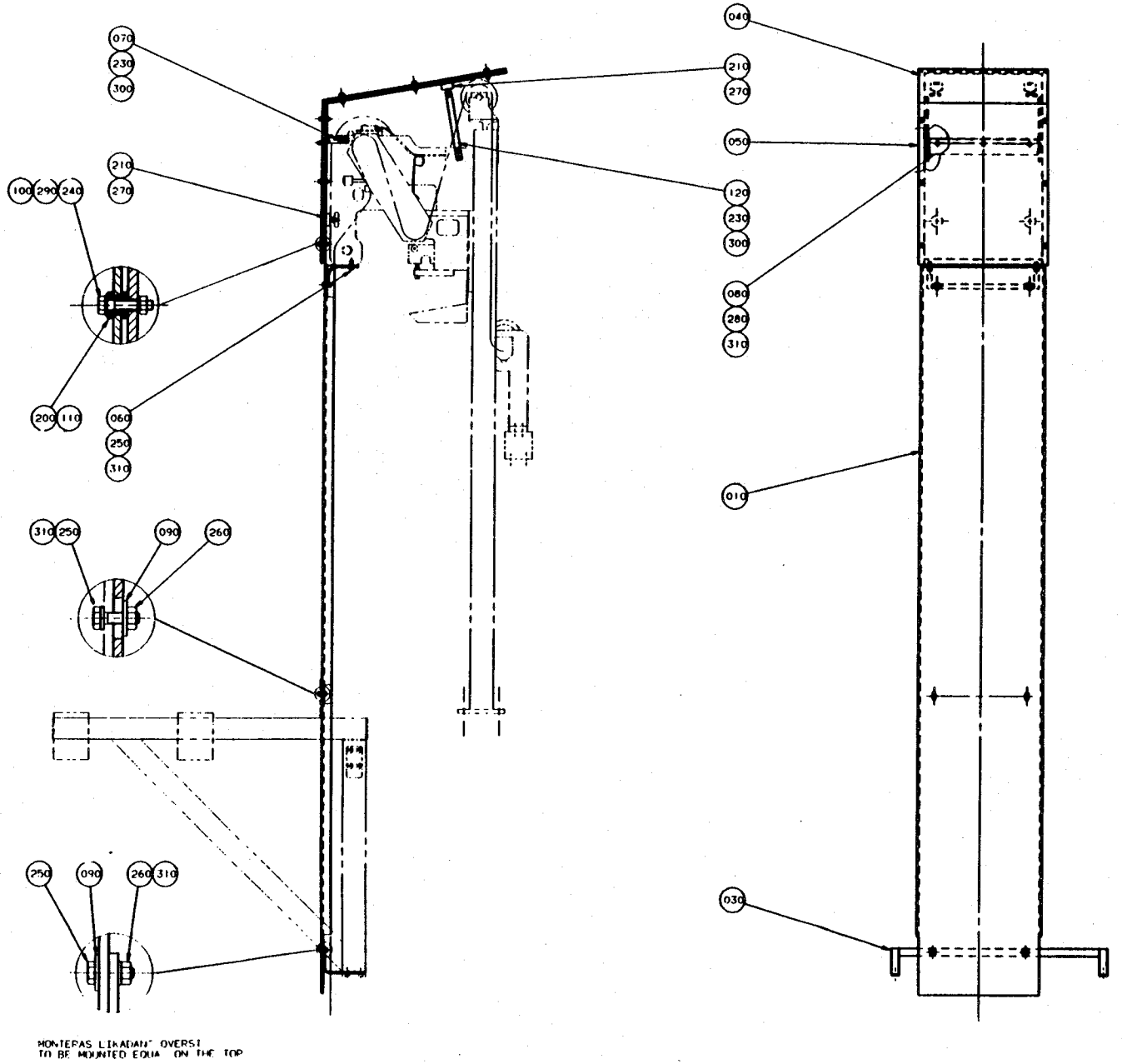

MONTERAS LIKADAN OVERSI
TO BE MOUNTED EQUA ON THE TOP

From	Pos	Part No	SP	UN	Qty	Description
	010	554412	-		1	COVER
	030	554413	-		1	BRACKET
	040	978345	-		1	COVER
	050	978346	-		1	FRAME
	060	554414	-		1	BRACKET
	070	978181	-		1	HOLDER
	080	978182	-		1	HOOK
	090	6278	-		6	WASHER
	100	28509	-		12	WASHER
	110	740654	-		12	SPACER
	120	978183	-		2	ANGLE BRACKET
	200	90015-0032	-		12	LEAD-IN BUSHING
	210	90347-0004	-		4	VIBRATION DAMPER
	230	312105-0328	-		8	SCREW M6S5X14 A4 80
	240	312105-0333	-		12	SCREW M6S5X25 A4 80
	250	312105-0370	-		8	SCREW M6S6X20RFR
	260	312605-0316	-		6	NUT M6M6RFR
	270	312621-0318	-		6	NUT ML6M8FZB
	280	312705-0316	-		3	CAP NUT MHM 6 A2
	290	312812-0314	-		12	LOCK NUT A4-M5RFR
	300	315105-0146	-		8	WASHER BRB5,3X10RFR
	310	315105-0153	-		11	WASHER BRB6,4X12RFR

From	Pos	Part No	SP	UN	Qty	Description

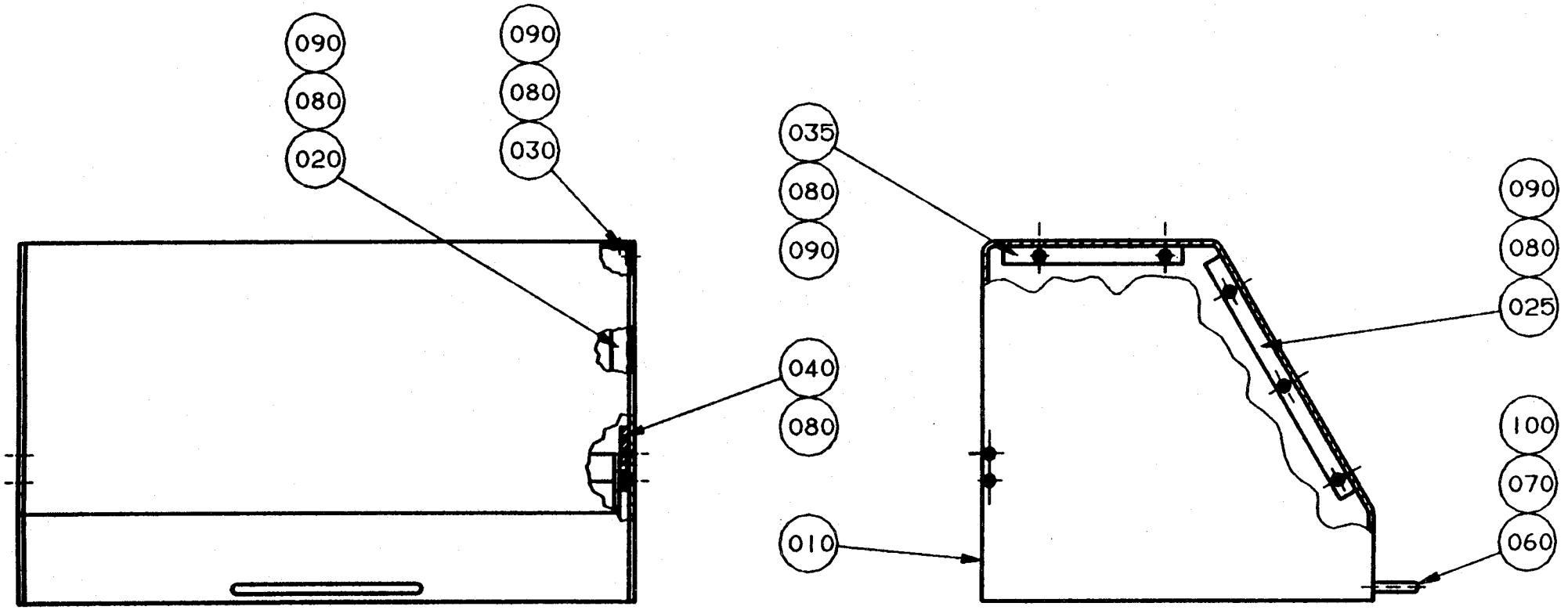
090
080
020
090
080
030
040
080
035
080
090
090
080
025
100
070
060
010

From	Pos	Part No	SP	UN	Qty	Description
	010	978044	-		1	COVER
	020	978342	-		1	ANGLE IRON
	025	566377	-		1	ANGLE IRON
	030	978343	-		1	ANGLE IRON
	035	566378	-		1	ANGLE IRON
	040	978037	-		2	BRACKET
	060	90017-0012	-		1	HANDLE
	070	312105-0328	-		2	SCREW M6S5X14 A4 80
	080	312155-0368	-		24	SCREW MF6S6X16RFR
	090	312812-0316	-		20	LOCK NUT A4-M6RFR
	100	315105-0146	-		2	WASHER BRB5,3X10RFR

From	Pos	Part No	SP	UN	Qty	Description

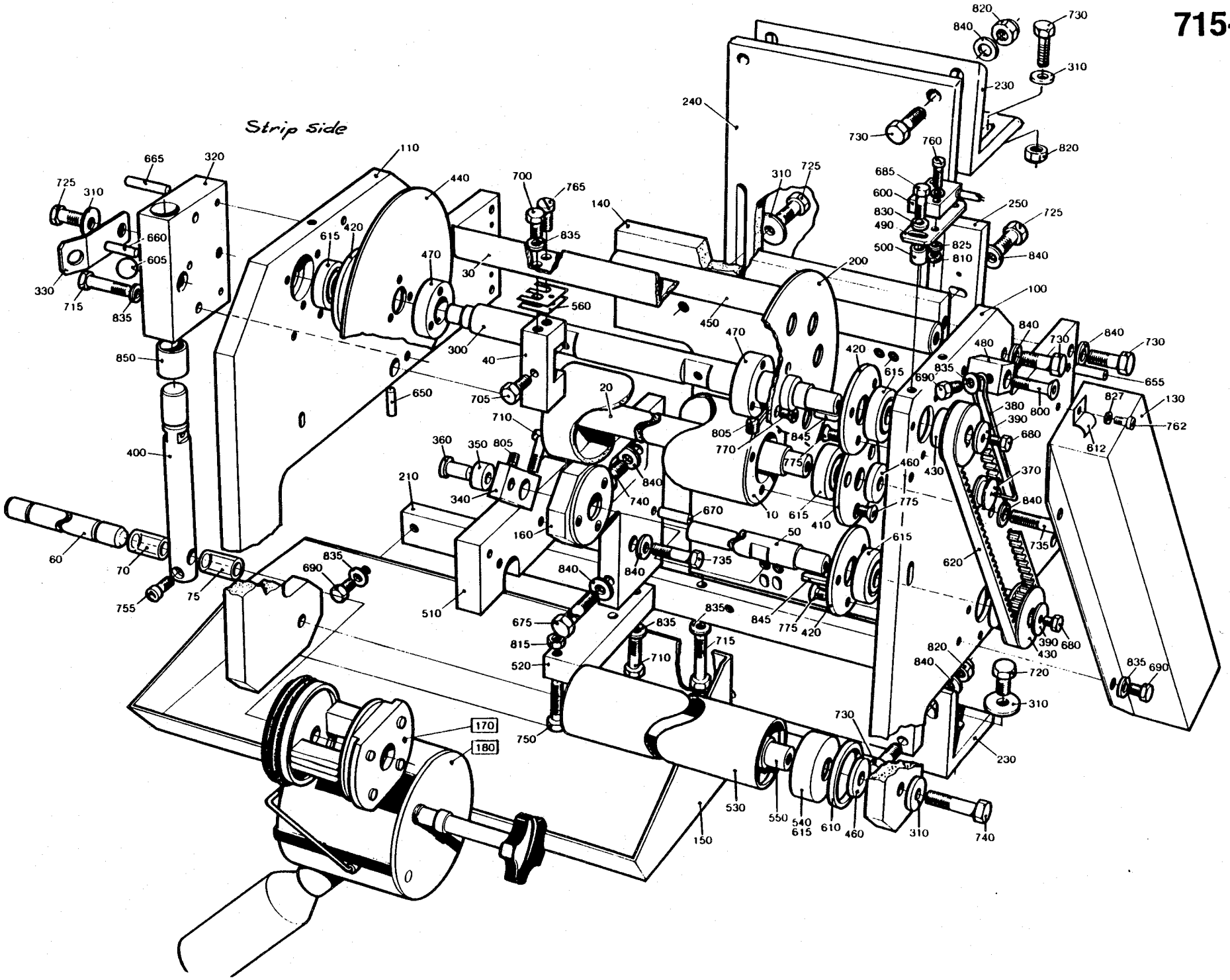
Strip Side
665
320
725
310
660
605
330
715
835
110
440
615
420
470
30
700
765
835
140
240
730
760
685
600
830
490
500
825
810
310
725
250
725
840
820
840
730
310
230
820
200
100
480
840
730
840
730
655
827
130
762
812
380
390
680
800
690
835
705
650
710
20
805
770
845
775
460
430
615
410
775
370
840
735
620
615
50
670
735
840
840
160
740
840
210
340
360
350
805
400
850
300
40
560
450
470
420
615
510
675
815
520
835
715
710
845
775
420
390
680
430
820
840
720
310
230
730
835
690
750
170
180
530
550
540
615
610
460
310
740
150
60
70
75
755
835
690

From	Pos	Part No	SP	UN	Qty	Description
	F170	==>711-1	-		2	PRINTING WHEEL
	F180	==>712-1a/b	-		1	INK UNIT
Volume 180 - 250 ml						
	010	256391-0001	C		1	BENDING ROLLER
	020	256392-0001	C		1	SHAFT
	030	456767	C		2	CREASE BAR
	040	441556-0002	C		2	SPACER (250 ml)
	040	441556-0003	C		2	SPACER (236 ml)
	040	441556-0004	C		2	SPACER (200 ml)
	040	441556-0006	C		2	SPACER 180 ml)
	050	256399-0001	C		1	SHAFT
	060	256400	C		1	SHAFT
	070	90166-0059	P	MM	28	HOSE
	070	90166-0059	P	MM	28	HOSE
	075	90166-0059	P	MM	28	HOSE
Volume 125, 200 ml SLIM						
	010	456328	C		1	BENDING ROLLER
	020	256392-0003	C		1	SHAFT
	030	456327	C		2	CREASE BAR (125 ml)
	030	441554	C		2	CREASE BAR (200 ml SLIM)
	040	441556-0007	C		2	SPACER (125 ml)
	040	441556-0009	C		2	SPACER (200 ml SLIM)
	050	456811	C		1	SHAFT
	060	456334	C		1	SHAFT
	070	90166-0059	P	MM	41	HOSE
	075	90166-0059	P	MM	41	HOSE
Common Parts						
	130	441572	-		1	COVER
	140	491722	-		1	PLATE
	150	491723	-		1	SPLASH PLATE
	200	441752	-		1	SIDE PLATE
	230	456331	-		2	ANGLE BRACKET
	240	491724	-		1	PLATE
	250	456333	-		1	RAIL
	260	752250	-		1	BEARING COVER
	270	752251	-		1	BEARING COVER
	280	752252	-		2	BEARING COVER
	300	456813	C		1	SHAFT
	310	28036	-		15	WASHER
	320	32919	C		1	BEARING BLOCK
	330	32923	S		7	SPRING
	340	32925	C		1	CARRIER

From	Pos	Part No	SP	UN	Qty	Description
	350	544392	C		1	ROLLER
	360	32927	C		1	SHAFT
	370	33182	S		1	ROLLER
	380	33183	S		1	SPRING
	390	106758	-		2	WASHER
	400	228652	C		1	STOPPER
	410	256248-0001	C		2	LID
	420	256398	C		4	LID
	430	256403	C		2	TOOTHED WHEEL
	440	256406	-		1	SIDE PLATE
	450	256408-0001	-		1	SPACER
	460	256409	-		5	WASHER
	470	257141	-		2	RETAINING RING
	480	271441	-		1	BRACKET
	490	441753	-		1	PLATE
	500	441754	-		2	SPACER
	520	456337	-		1	BRACKET
	530	456776	C		2	MANTLE
	540	456777	C		4	SLEEVE
	550	456778	C		2	SHAFT
	560	456817-0001	S		8	SHIM
	600	90044-0104	P		1	PROXIMITY SWITCH
	605	90090-0001	S		1	STEEL BALL
	610	90141-0020	C		4	LOCK RING
	612	90165-0024	-		6	CLIP
	615	90214-0098	P		10	BALL BEARING
	620	90417-0081	P		1	TOOTHED BELT
	650	311103-0240	-		1	CYLINDRICACPR3M6X25RFR
	655	311103-0312	-		6	CYLINDRICACPR5M6X25RFR
	660	311103-0314	-		1	CYLINDRICACPR5M6X30RFR
	665	311103-0318	-		2	CYLINDRICACPR5M6X40RFR
	670	311103-0357	-		1	CYLINDRICACPR6M6X30RFR
	675	312101-0466	-		1	SCREW M6S8X75FZB
	680	312105-0327	-		2	SCREW M6S5X12 A4 80
	685	312105-0332	-		2	SCREW M6S5X22RFR
	690	312105-0364	-		3	SCREW M6S6X10RFR
	700	312105-0366	-		8	SCREW M6S6X12RFR
	705	312105-0368	-		2	SCREW M6S6X16RFR
	710	312105-0374	-		3	SCREW M6S6X30RFR
	715	312105-0378	-		2	SCREW M6S6X40RFR
	720	312105-0451	-		4	SCREW M6S8X20RFR
	725	312105-0453	-		5	SCREW M6S8X25RFR
	730	312105-0455	-		12	SCREW M6S8X30RFR

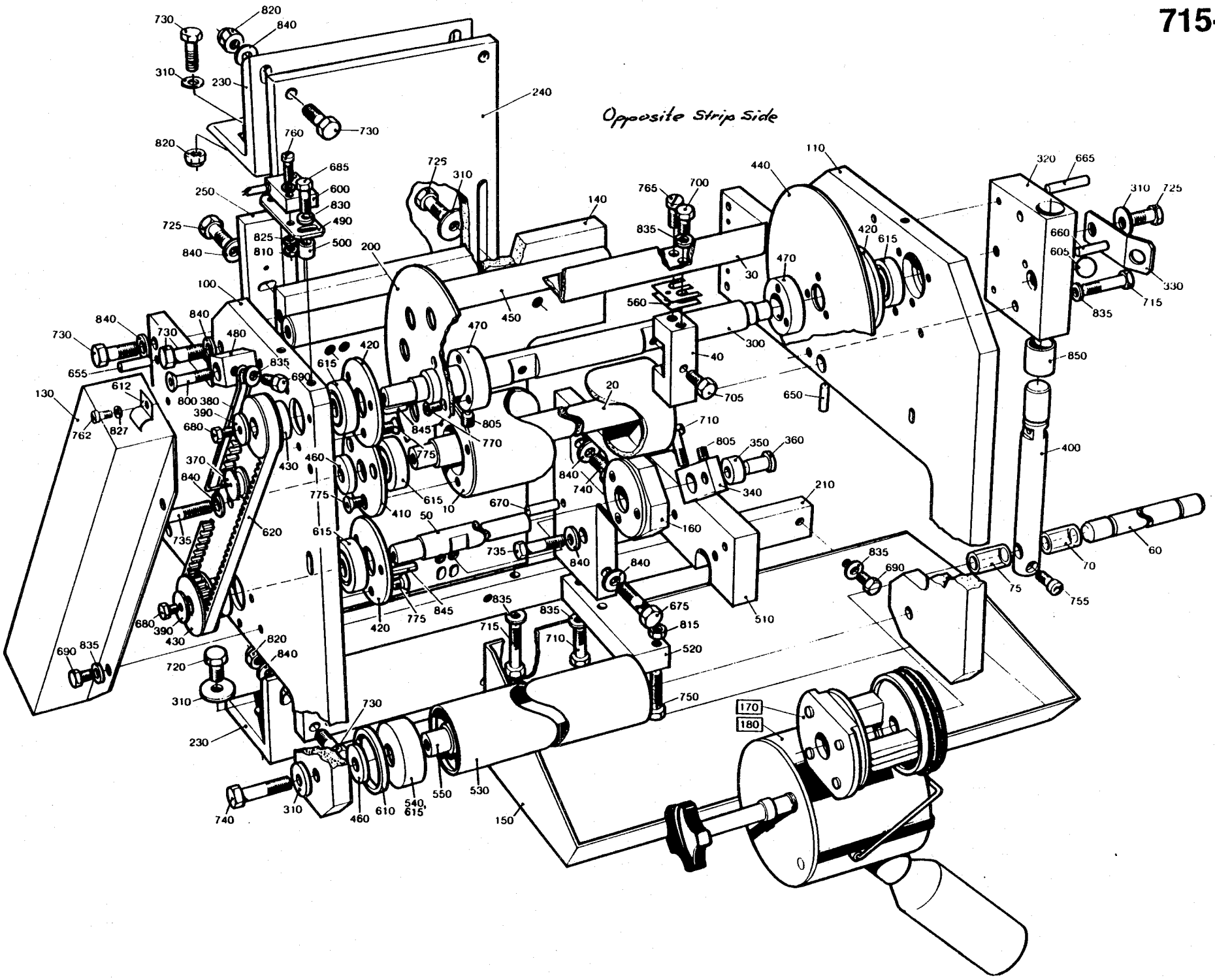
Opposite Strip Side
730
820
840
310
230
240
820
760
730
685
600
830
490
500
250
725
840
825
810
200
725
310
140
765
700
835
110
440
420
615
320
665
310
725
660
605
330
715
835
470
30
560
300
40
705
650
850
400
20
710
805
350
360
340
210
160
670
50
10
410
615
620
735
775
460
430
845
770
805
680
390
370
380
800
612
762
827
130
655
730
840
480
835
690
615
420
450
100
840
730
840
690
835
675
815
520
510
755
75
70
60
720
310
230
730
740
310
460
610
540
615
550
530
150
750
170
180

From	Pos	Part No	SP	UN	Qty	Description
	735	312105-0457	-		2	SCREW M6S8X35RFR
	740	312105-0459	-		5	SCREW M6S8X40RFR
	750	312109-0376	-		1	SCREW M6S6X35 H RFR
	755	312115-0370	-		1	SCREW MC6S6X20 A4 80
	757	312115-0372	-		1	SCREW MC6S6X25 A4 80
	760	312125-0230	-		2	SLOTTED HEMCS3X20RFR
	762	312125-0289	-		6	SLOTTED HEMCS4X10RFR
	765	312125-0366	-		4	SLOTTED HEMCS6X12RFR
	770	312155-0291	-		6	SCREW MF6S4X12RFR
	775	312155-0327	-		6	SCREW MF6S5X12RFR
	777	312155-0323	-		24	SCREW MF6S5X8RFR
	800	312155-0376	-		1	SCREW MF6X35RFR
	805	312318-0362	-		3	GRUB SCREW SK6SS6X8RFR
	810	312605-0310	-		2	NUT M6M3RFR
	815	312605-0316	-		1	NUT M6M6RFR
	820	312812-0318	-		6	LOCK NUT A4-M8RFR
	825	315105-0124	-		4	WASHER BRB3,2X6RFR
	827	315105-0136	-		6	WASHER BRB4,3X8RFR
	830	315105-0146	-		2	WASHER BRB5,3X10RFR
	835	315105-0153	-		15	WASHER BRB6,4X12RFR
	840	315105-0165	-		16	WASHER BRB8,4X16RFR
	845	315701-0170	-		2	FLAT WEDGE4X4X20
	850	321120-0147	-		2	BUSHING 22/25X25
Stamp location, strip side						
	100	*456774-0001	-		1	GABLE
	100	752510	-		1	GABLE
	110	**456775-0001	-		1	GABLE
	110	752511	-		1	GABLE
	160	456326-0001	C		1	BEARING BRACKET
	160	752512	C		1	BEARING BRACKET
	510	456335	-		1	BRACKET
Stamp location, opposite strip side						
	100	*456774-0002	-		1	GABLE
	100	752510	-		1	GABLE
	110	**456775-0002	-		1	GABLE
	110	752511	-		1	GABLE
	160	456326-0002	C		1	BEARING BRACKET
	160	752512	C		1	BEARING BRACKET
	510	456336	-		1	BRACKET

* Replaced by 752513-0101
** Replaced by 752513-0102

From	Pos	Part No	SP	UN	Qty	Description

Strip Side

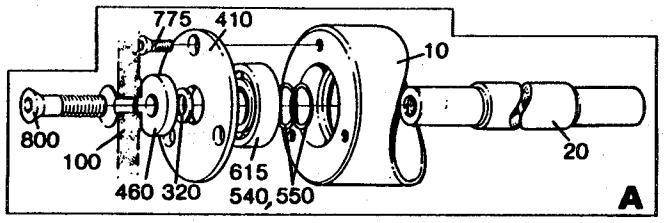
775
410
10
800
100
460
320
615
540,550
20
A

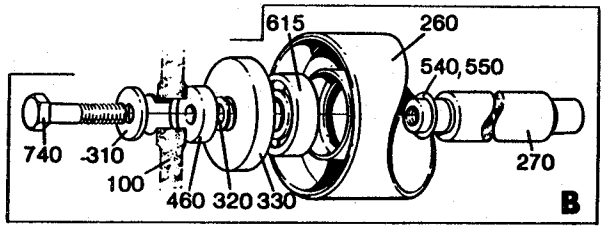
615
260
540,550
740
310
100
460
320
330
270
B

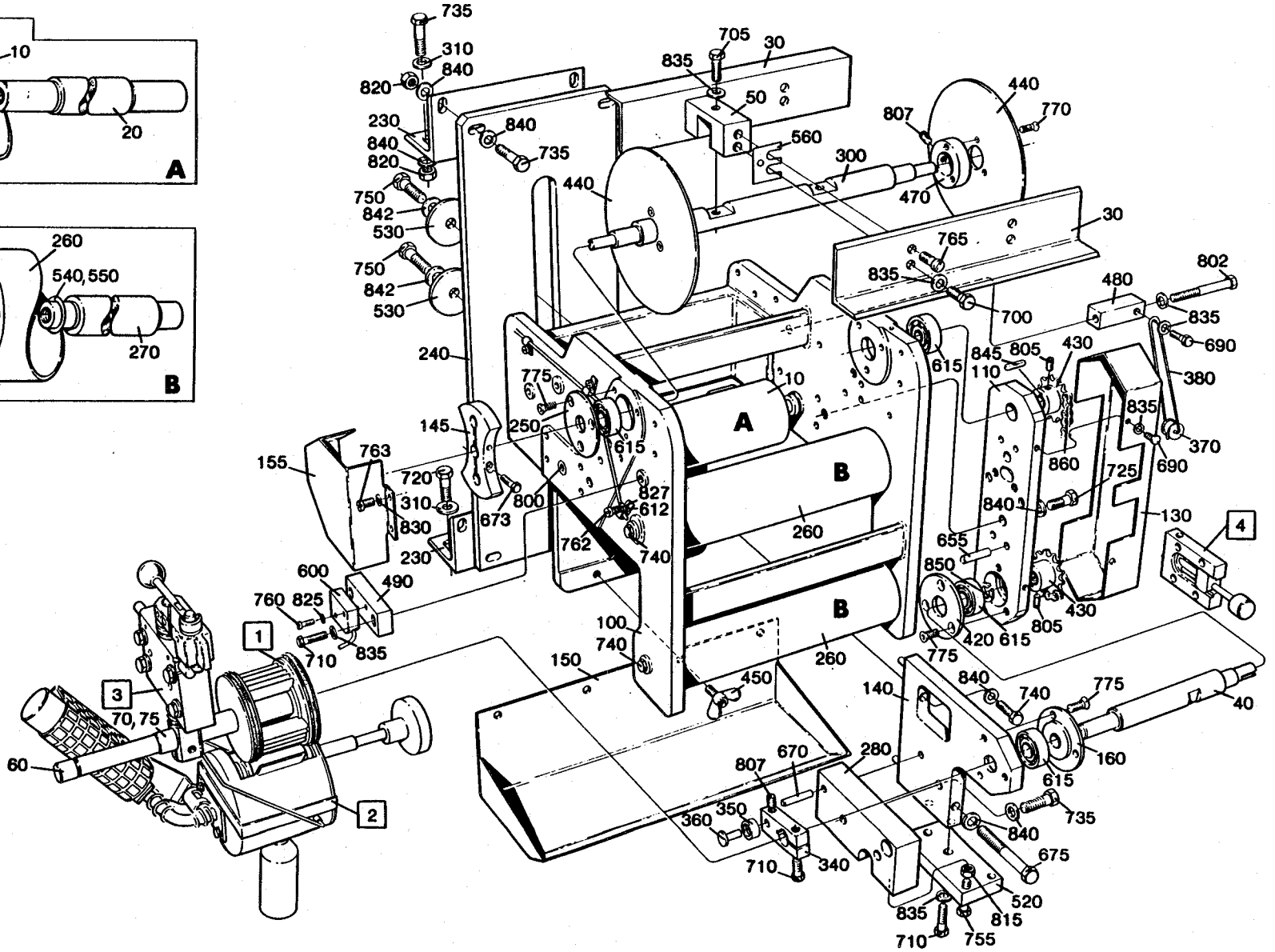
735
310
840
820
705
30
835
50
440
770
807
560
300
470
230
840
820
750
842
530
240
775
10
A
B
260
145
250
615
155
763
720
310
830
673
800
827
612
762
740
230
600
490
760
825
710
835
1
3
70,75
60
2
100
740
150
450
140
840
740
775
40
160
615
807
670
280
360
350
710
340
675
520
815
755
735
480
802
835
690
380
370
725
860
845
805
430
110
655
850
420
130
4

From	Pos	Part No	SP	UN	Qty	Description
	F001	==>711-1	-		2	PRINTING WHEEL
	F002	==>712-1a/b	-		1	INK UNIT
	F003	==>715-2.2	-		1	DATING WHEEL HOLDER
	F004	==>715-2.1	-		1	ADJUSTMENT DEVICE
Volume 180-284 ml						
	010	752542-0001	C		1	BENDING ROLLER
	020	752543-0001	C		1	SHAFT
	030	456767	C		2	CREASE BAR
	040	752536-0001	C		1	SHAFT
	050	441556-0002	C		2	SPACER (250 ml)
	050	441556-0003	C		2	SPACER (236 ml)
	050	441556-0004	C		2	SPACER (200 ml)
	050	441556-0006	C		2	SPACER (180 ml)
	050	441556-0001	C		2	SPACER (284 ml)
	060	256400	C		1	SHAFT
	070	90166-0059	P	MM	24	HOSE
	075	90166-0059	P	MM	24	HOSE
Volume 125, 200 ml SLIM						
	010	752542-0002	C		1	BENDING ROLLER
	020	752543-0002	C		1	SHAFT
	030	456327	C		2	CREASE BAR (125 ml)
	030	441554	C		2	CREASE BAR (200 ml SLIM)
	040	752536-0002	C		1	SHAFT
	050	441556-0007	C		2	SPACER (125 ml)
	050	441556-0009	C		2	SPACER (200 ml SLIM)
	060	456334	C		1	SHAFT
	070	90166-0059	P	MM	37	HOSE
	075	90166-0059	P	MM	37	HOSE
Common Parts						
	100	G- 752200	-		1	BRACKET
	110	752526	-		1	PLATE
	130	752528	-		1	COVER
	140	752527	-		1	BRACKET
	145	491965	-		1	CAM
	150	491723	-		1	SPLASH PLATE
	155	556422	-		1	GUARD
	160	752529	C		1	BEARING COVER
	230	456331	-		2	ANGLE BRACKET
	240	752539	-		1	PLATE
	250	752240	-		1	LID
	260	752537	C		2	BENDING ROLLER
	270	752538	C		2	SHAFT
	280	752642	-		1	BRACKET
	300	752535	C		1	SHAFT
	310	28036	-		8	WASHER
	320	2033-0011	C		20	WASHER
	330	265568	S		4	DUST COVER
	340	32925	C		1	CARRIER
	350	32926	C		1	ROLLER
	360	32927	C		1	SHAFT
	370	33182	S		1	ROLLER
	380	752237	S		1	SPRING
	410	256248-0001	C		2	LID
	420	256398	C		1	LID
	430	752530	S		2	SPROCKET
	440	256406	-		2	SIDE PLATE
	450	752644	-		2	SCREW
	460	256409	-		6	WASHER
	470	257141	-		2	RETAINING RING
	480	752531	-		1	BRACKET
	490	752534	-		1	PLATE
	520	752541	-		1	BRACKET
	530	253107	C		2	WASHER
	540	752544-0001	C		6	SHIM
	550	752544-0002	C		8	SHIM
	560	456817-0001	S		8	SHIM
	600	90044-0104	P		1	PROXIMITY SWITCH
	612	90165-0056	-		6	CLIP
	615	90214-0098	P		10	BALL BEARING
	655	311103-0312	-		2	CYLINDRICACPR5M6X25RFR
	670	311103-0357	-		1	CYLINDRICACPR6M6X30RFR
	671	311103-0353	-		2	CYLINDRICACPR6M6X20RFR
	673	312115-0333	-		2	SCREW A4 80
	675	312111-0471	-		1	SCREW MC6S8X100FZB
	680	312105-0327	-		2	SCREW M6S5X12 A4 80
	690	312105-0364	-		3	SCREW M6S6X10RFR
	700	312105-0366	-		4	SCREW M6S6X12RFR
	705	312105-0370	-		2	SCREW M6S6X20RFR
	710	312105-0372	-		5	SCREW M6S6X25RFR
	720	312105-0451	-		2	SCREW M6S8X20RFR
	725	312105-0453	-		2	SCREW M6S8X25RFR
	735	312105-0457	-		7	SCREW M6S8X35RFR
	740	312105-0459	-		5	SCREW M6S8X40RFR
	750	312105-0493	-		2	SCREW M6S10X25RFR

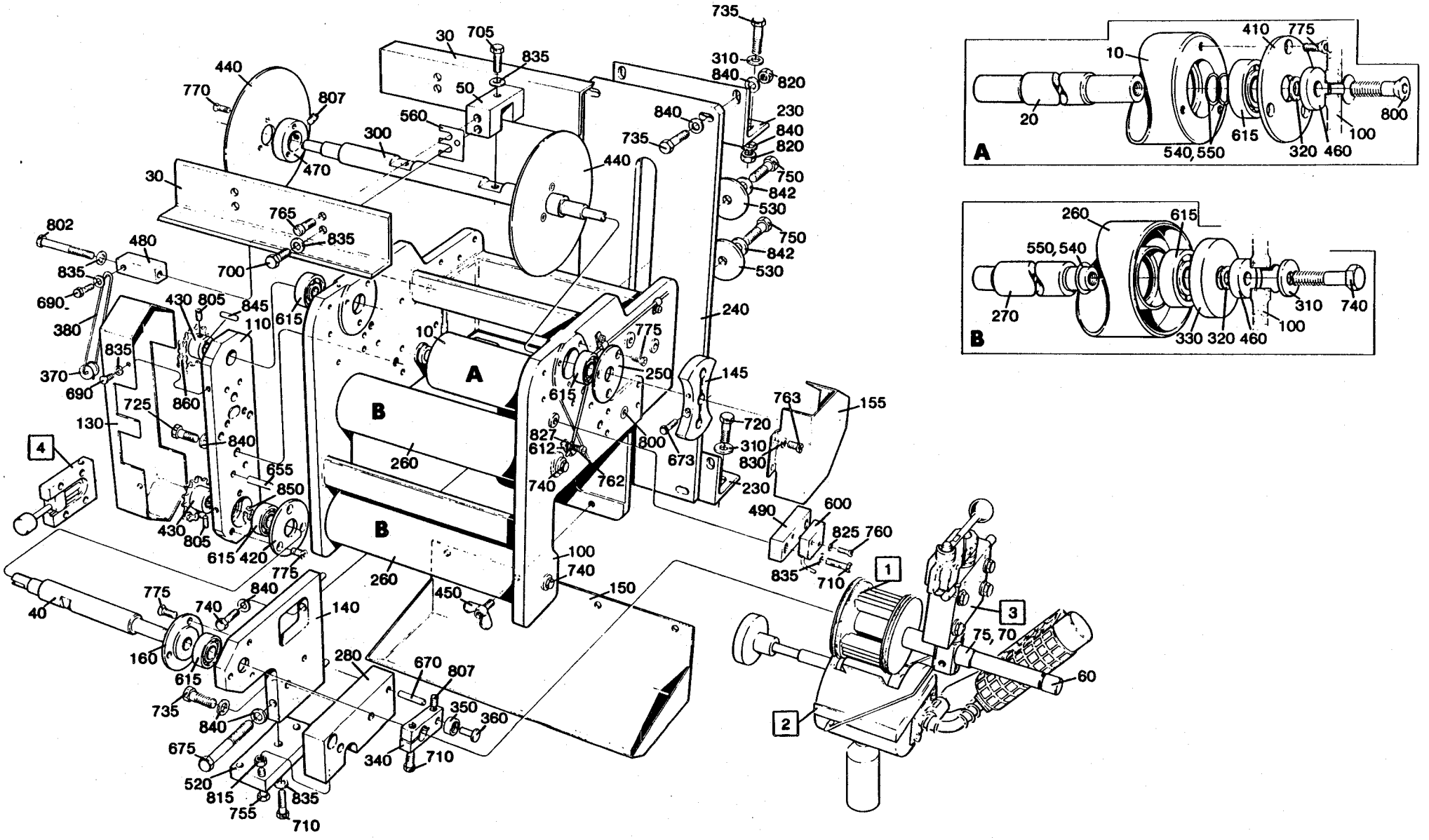
735
30
705
835
310
840
820
440
770
807
50
560
300
840
230
840
820
735
440
750
842
530
750
842
530
802
480
835
690
380
700
765
835
430
805
845
110
615
240
10
775
250
145
370
690
835
725
860
130
615
763
155
720
310
830
230
827
612
800
673
740
762
655
850
840
490
600
825
760
835
710
100
740
150
450
260
140
775
740
840
40
160
615
280
670
807
350
360
735
840
675
340
710
520
815
755
835
710
A
B
B
1
2
3
4
A
10
410
775
20
615
800
100
540, 550
320
460
B
260
615
550, 540
270
310
740
100
330
320
460

From	Pos	Part No	SP	UN	Qty	Description
	755	312109-0376	-		1	SCREW 6X35 H RFR
	760	312125-0230	-		2	SLOTTED HEMCS3X20RFR
	762	312125-0289	-		6	SLOTTED HEMCS4X10RFR
	763	312125-0325	-		2	SLOTTED HEMCS5X10RFR
	765	312125-0366	-		4	SLOTTED HEMCS6X12RFR
	770	312155-0291	-		6	SCREW MF6S4X12RFR
	775	312155-0327	-		15	SCREW MF6S5X12RFR
	800	312155-0457	-		2	SCREW MF6S8X35RFR
	802	312105-0382	-		1	SCREW M6S6X60RFR
	805	312318-0287	-		2	GRUB SCREW SK6SS4X8RFR
	807	312318-0362	-		3	GRUB SCREW SK6SS6X8RFR
	815	312605-0316	-		1	NUT M6M6RFR
	820	312812-0318	-		6	LOCK NUT A4-M8RFR
	825	315105-0124	-		2	WASHER BRB3,2X6RFR
	827	315105-0136	-		6	WASHER BRB4,3X8RFR
	830	315105-0146	-		2	WASHER BRB5,3X10RFR
	835	315105-0153	-		14	WASHER BRB6,4X12RFR
	840	315105-0165	-		15	WASHER BRB8,4X16RFR
	842	315105-0173	-		2	WASHER BRB10,5X22RFR
	845	315701-0169	S		2	FLAT WEDGE4X4X18
	850	315751-0112	P		1	LOCK RING SGA15 RFR
	860	318207-0168	S		1	ROLLER CHA6MM

From	Pos	Part No	SP	UN	Qty	Description

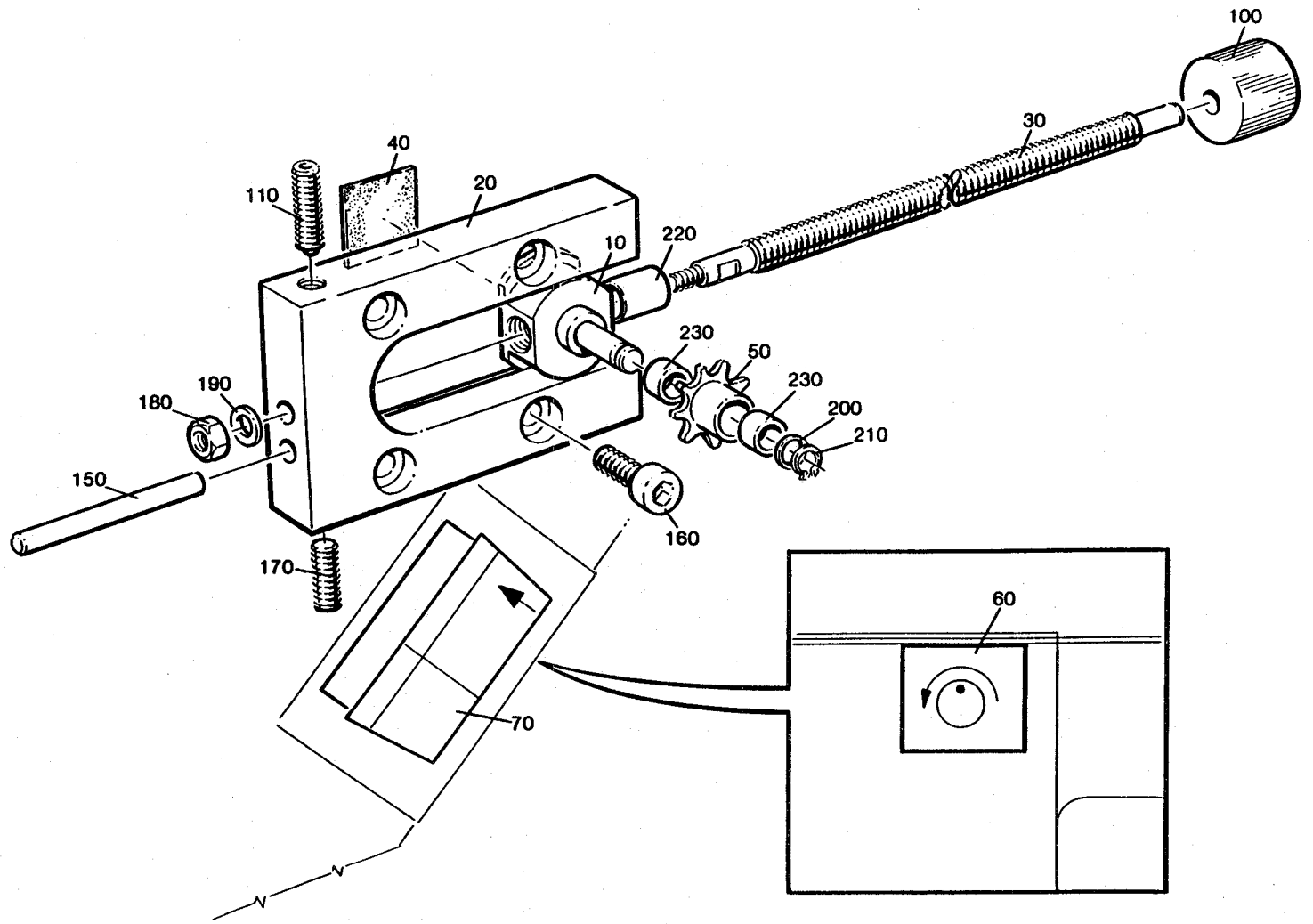
100
30
40
110
20
10
220
230
50
230
200
210
180
190
150
160
170
60
70

Last Alteration: AM 10835

Corresponding C-lists: 543143-010V
Assembly Drawing: 543143-1

Date Printed: 900306

From	Pos	Part No	SP	UN	Qty	Description
	010	526984	-		1	SLIDE
	020	526985	-		1	PLATE
	030	526986-0001	-		1	SHAFT
	040	527649	-		1	DISTANCE RUBBER
	050	529362	-		1	SPROCKET
	060	543141	-		1	SIGN
	070	543142	-		1	SIGN
	100	90051-0089	-		1	KNOB
	110	90287-0167	-		1	SPRINGLOADED SCREW
	150	311103-0365	-		1	CYLINDRICACPR6M6X50RFR
	160	312115-0368	-		2	SCREW 6X16 A4 80
	170	312318-0368	-		1	GRUB SCREW SK6SS6X16RFR
	180	312605-0312	-		1	NUT M6M4RFR
	190	315105-0136	-		1	WASHER BRB4,3X8RFR
	200	315105-0153	-		1	WASHER BRB6,4X12RFR
	210	315751-0103	-		1	LOCK RING SGA 6 RFR
	220	321120-0100	-		1	BUSHING 8/10X12
	230	321120-0101	-		2	BUSHING 6/8X6

From	Pos	Part No	SP	UN	Qty	Description

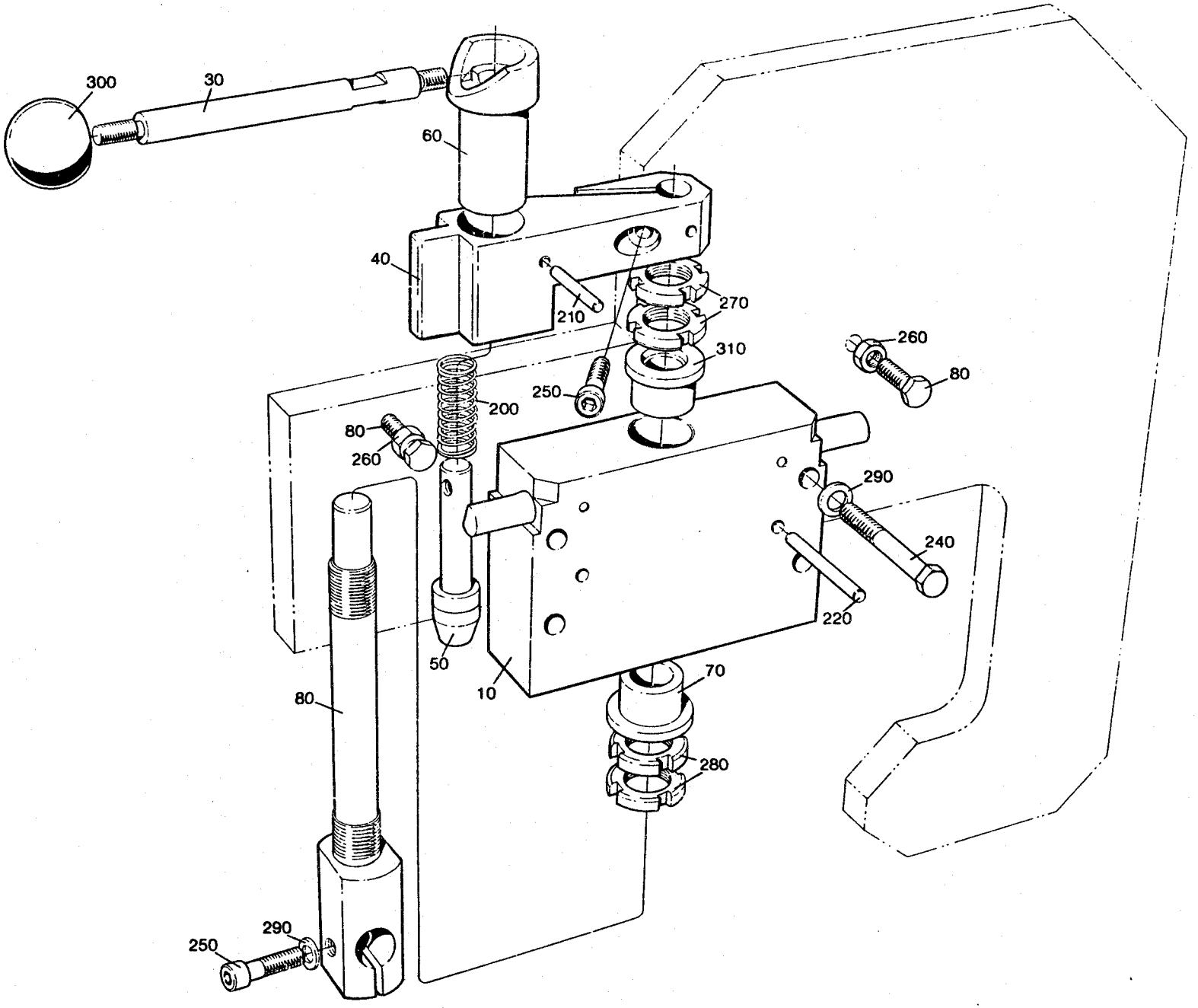
300
30
60
40
210
270
310
260
80
250
200
80
260
290
240
220
50
10
70
80
280
250
290

Last Alteration: AM 12932 89-06-05

Corresponding C-lists: 751718-010V
Assembly Drawing: 751718-1

Date Printed: 900306

From	Pos	Part No	SP	UN	Qty	Description
	010	464009-0003	-		1	BLOCK
	020	450497	-		1	SHAFT
	030	450500	-		1	PIN
	040	464010	-		1	ARM
	050	464011	-		1	FAUCET
	060	464012	-		1	CAM
	070	466430	-		1	BUSHING
	080	476377	-		2	SCREW
	200	90335-0064	-		1	SPRING
	210	311103-0274	-		2	CYLINDRICACPR4M6X25RFR
	220	311103-0318	-		2	CYLINDRICACPR5M6X40RFR
	240	312105-0378	-		4	SCREW M6S6X40RFR
	250	312115-0370	-		2	SCREW 6X20 A4 80
	260	312605-0316	-		2	NUT M6M6RFR
	270	312805-0102	-		2	NUT KM2
	280	312805-0103	-		2	NUT KM3
	290	315105-0153	-		5	WASHER BRB6,4X12RFR
	300	318800-0103	-		1	KNOB LA D.25-M6
	310	321111-0212	-		1	BUSHING 15E7X15

From	Pos	Part No	SP	UN	Qty	Description

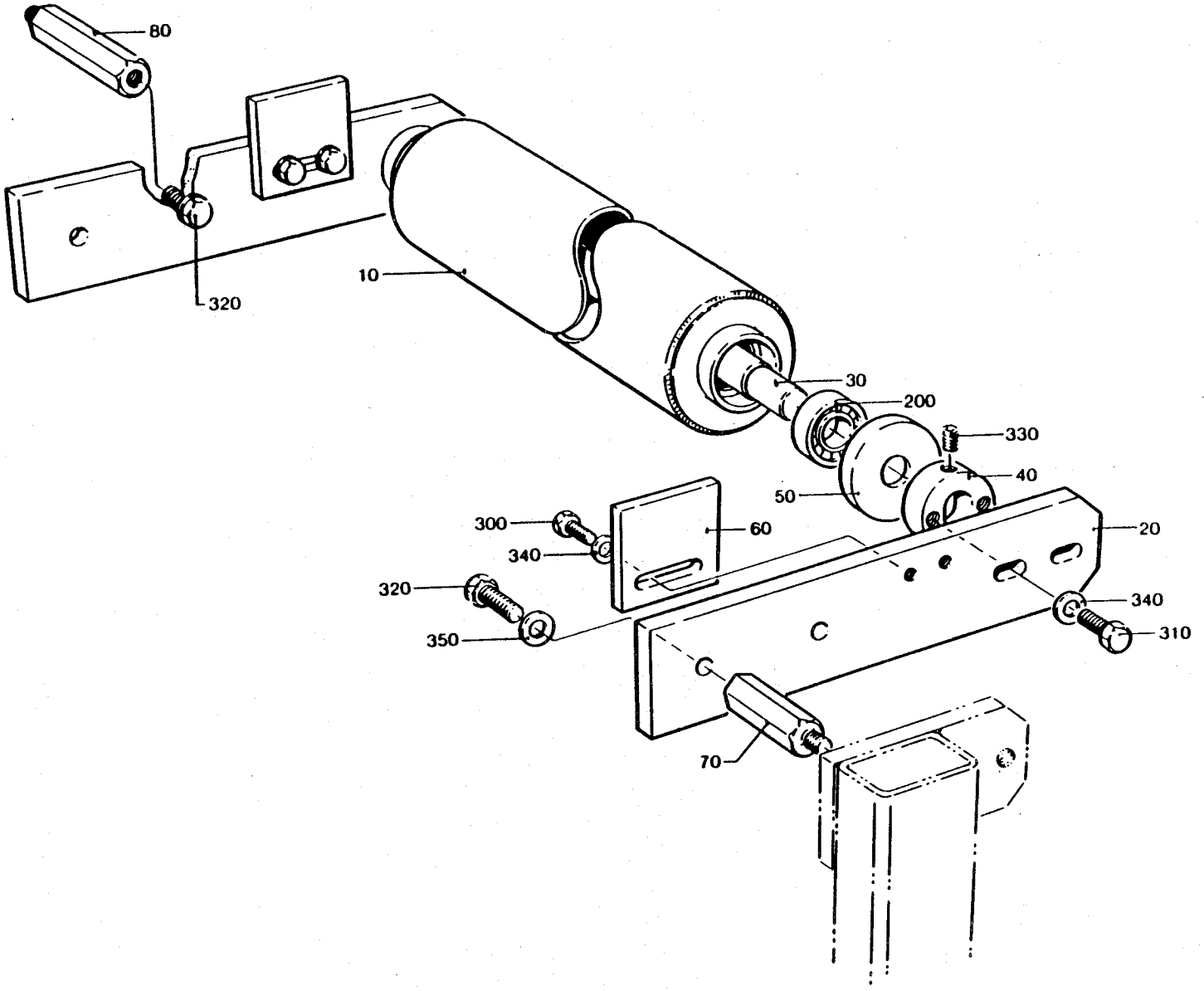
80
320
10
30
200
330
40
50
300
60
340
20
320
340
350
310
70

From	Pos	Part No	SP	UN	Qty	Description
	010	256984	C		1	BENDING ROLLER
	020	456920	-		2	BRACKET
	030	256985	S		1	SHAFT
	040	265567	C		2	BEARING
	050	265568	-		2	DUST COVER
	060	456921	-		2	STOP
	070	456922-0001	-		2	STRUT
	080	456922-0002	-		2	STRUT
	200	90214-0098	P		2	BALL BEARING
	300	312105-0368	-		4	SCREW M6S6X16RFR
	310	312105-0370	-		4	SCREW M6S6X20RFR
	320	312105-0453	-		4	SCREW M6S8X25RFR
	330	312318-0364	-		4	GRUB SCREW SK6SS6X10RFR
	340	315105-0153	-		8	WASHER BRB6,4X12RFR
	350	315105-0165	-		4	WASHER BRB8,4X16RFR

From	Pos	Part No	SP	UN	Qty	Description

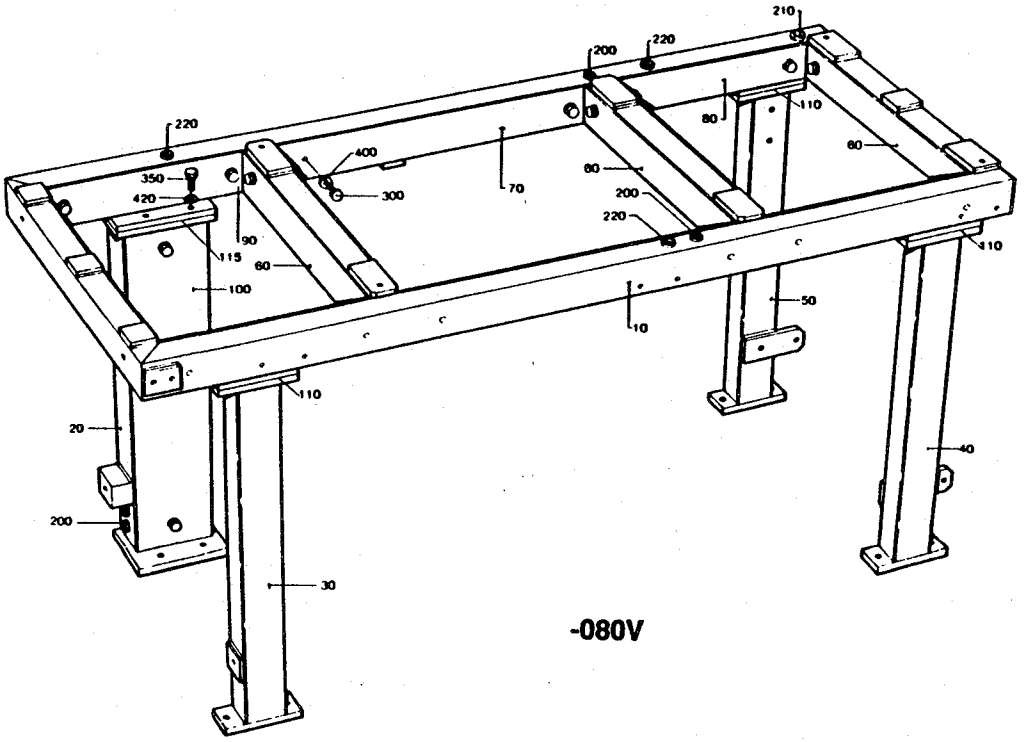
220
350
420
400
300
70
90
115
60
100
80
60
200
220
210
200
220
110
60
110
50
10
110
20
200
30
40

-080V

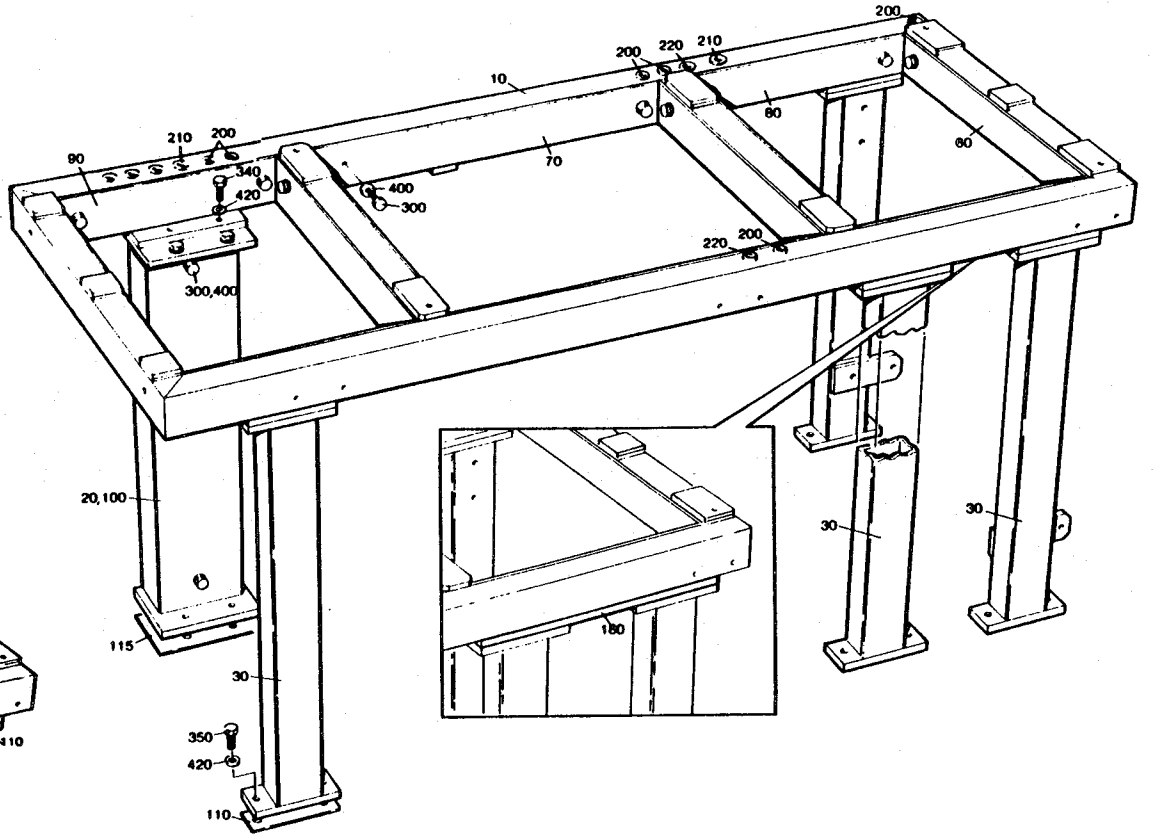
200
200
220
210
10
90
210
200
340
420
400
300
70
60
60
220
200
300,400
20,100
115
30
350
420
110
180
30
30

From	Pos	Part No	SP	UN	Qty	Description	
	010	456924	-		1	FRAME	
	020	491725	-		1	LEG	
090V-	020	752895	-		1	LEG **TB/9**	
-080V	030	491726	-		1	LEG	
090V-	030	491726	-		3	LEG	
-080V	040	456927	-		1	LEG	
090V-	040	491726	-		1	LEG	
-080V	050	456928	-		1	LEG	
090V-	050	491726	-		1	LEG	
	060	456929	-		4	LID	
	070	456930	-		2	LID	
	080	456931	-		2	LID	
	090	456932	-		2	LID	
	100	456933	-		1	LID	
090V-	100	752896	-		1	LID **TB/9**	
090V-	110	752245	C		3	SHIM	
090V-	115	752246	C		1	SHIM	
090V-	180	311103-0310	-		3	CYL PIN	CPR5M6X20RFR
	200	90015-0020	-		7	BUSHING	
	210	90015-0021	-		5	BUSHING	
	220	90015-0023	-		3	BUSHING	
	300	312105-0366	-		22	SCREW	M6S6X12RFR
090V-	340	312105-0491	-		2	SCREW	M6S10X20RFR
-080V	350	312105-0493	-		16	SCREW	M6S10X25RFR
	400	315105-0153	-		22	WASHER	BRB6,4X12RFR
	420	315105-0173	-		16	WASHER	BRB10,5X22RFR

From	Pos	Part No	SP	UN	Qty	Description

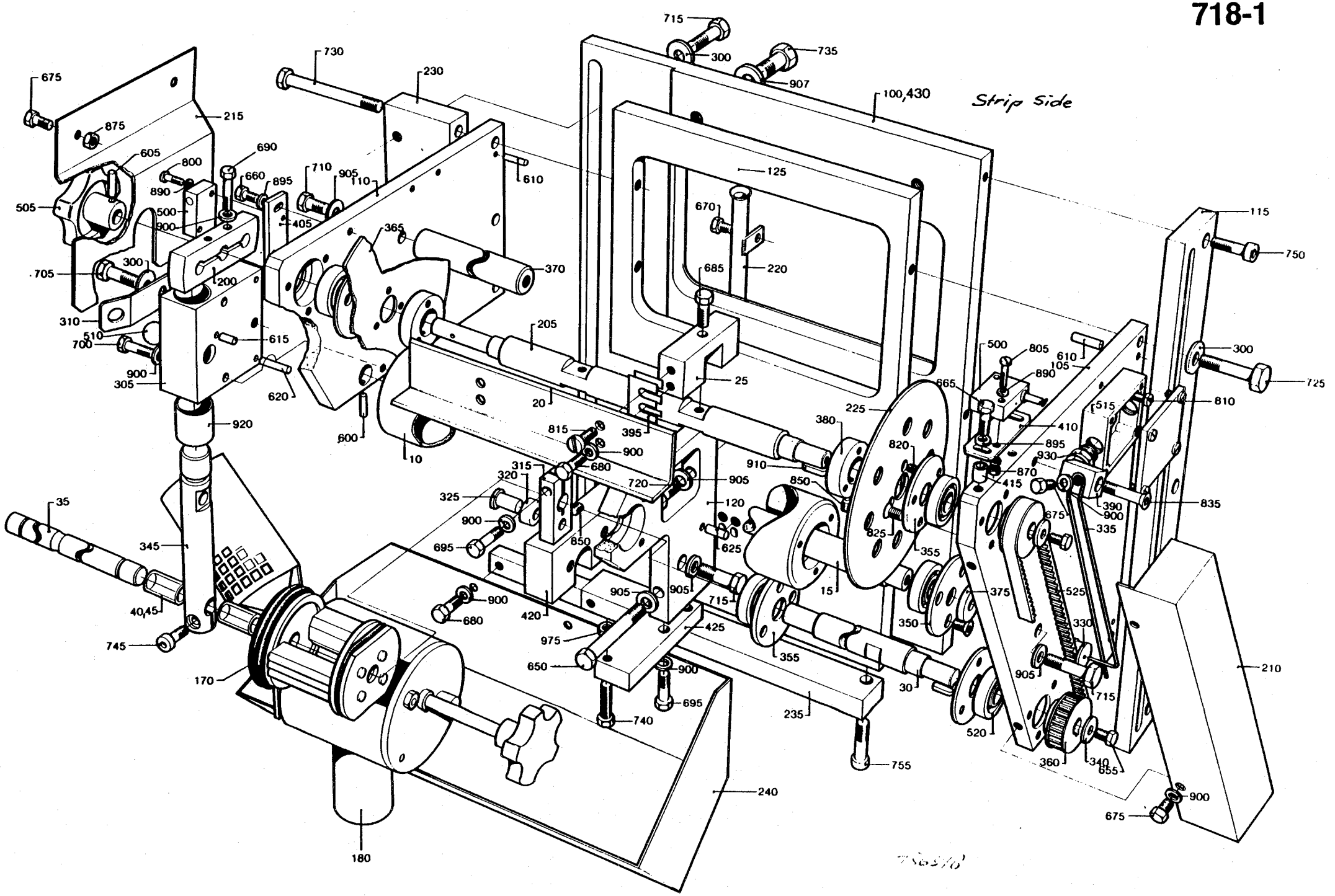
Strip Side
715
300
735
907
730
230
675
875
215
605
800
690
660
895
710
905
110
610
505
890
500
900
405
365
370
125
670
685
220
705
300
200
310
510
700
615
620
205
25
20
600
10
900
305
920
815
395
900
680
315
320
325
900
695
720
905
120
850
625
910
380
225
820
825
355
665
500
805
610
105
890
515
410
895
930
870
415
390
900
835
675
335
810
115
750
300
725
35
345
40,45
745
170
180
420
975
425
650
900
695
740
235
755
240
375
525
330
350
30
520
905
715
360
340
655
210
675
900
100,430

From	Pos	Part No	SP	UN	Qty	Description
	F170	==>711-1	-		2	PRINTING WHEEL
	F180	==>712-1a/b	-		1	INK UNIT
Volume 180 - 250 ml						
	010	256391-0001	C		1	BENDING ROLLER
	015	256392-0001	C		1	SHAFT
	020	456767	C		2	CREASE BAR
	025	441556-0002	C		2	SPACER (250 ml)
	025	441556-0003	C		2	SPACER (236 ml)
	025	441556-0004	C		2	SPACER (200 ml)
	025	441556-0006	C		2	SPACER (180 ml)
	030	256399-0001	C		1	SHAFT
	035	256400	C		1	SHAFT
	040	90166-0059	P	MM	28	HOSE
	045	90166-0059	P	MM	28	HOSE
Volume 200 ml SLIM						
	010	456328	C		1	BENDING ROLLER
	015	256392-0003	C		1	SHAFT
	020	441554	C		2	CREASE BAR
	025	441556-0009	C		2	SPACER
	030	456811	C		1	SHAFT
	035	456334	C		1	SHAFT
	040	90166-0059	P	MM	41	HOSE
	045	90166-0059	P	MM	41	HOSE
Common Parts						
	100	456061	-		1	PLATE
	115	456062	-		1	RAIL
	125	456350	-		1	PLATE
	200	255916	C		1	CAM
	205	456768	C		1	SHAFT
	210	256395	-		1	COVER
	215	544394	-		1	GUARD
	220	441540	-		1	CABLE CONDUIT
	225	441752	-		1	SIDE PLATE
	230	456063	-		1	BRACKET
	235	456303	-		1	BRACKET
	300	28036	-		5	WASHER
	305	32919	C		1	BEARING BLOCK
	310	32923	S		7	SPRING
	315	32925	C		1	CARRIER
	320	32926	C		1	ROLLER
	325	32927	C		1	SHAFT
	330	33182	S		1	ROLLER
	335	33183	S		1	SPRING
	340	106758	-		2	WASHER
	345	228652	C		1	STOPPER
	350	256248-0001	C		2	LID
	355	256398	C		4	LID

From	Pos	Part No	SP	UN	Qty	Description
	360	256403	C		2	TOOTHED WHEEL
	365	256406	-		1	SIDE PLATE
	370	256408-0001	-		1	SPACER
	375	256409	-		1	WASHER
	380	257141	-		2	RETAINING RING
	390	271441	-		1	BRACKET
	395	456817-0001	C		8	SHIM
	405	295765	-		1	PLATE
	410	441753	-		1	PLATE
	415	441754	-		2	SPACER
	420	456335	-		1	BRACKET
	425	456337	-		1	BRACKET
	430	544395	-		2	SHIM
	500	90044-0104	P		1	PROXIMITY SWITCH
	505	90051-0045	S		1	HANDLE
	510	90090-0001	S		1	STEEL BALL
	515	90195-0037	-		1	CONNECTION BOX
	520	90214-0098	P		6	BALL BEARING
	525	90417-0081	P		1	TOOTHED BELT
	600	311103-0240	-		1	CYLINDRICACPR3M6X25RFR
	605	311103-0272	-		1	CYLINDRICACPR4M6X20RFR
	610	311103-0312	-		4	CYLINDRICACPR5M6X25RFR
	615	311103-0314	-		1	CYLINDRICACPR5M6X30RFR
	620	311103-0318	-		2	CYLINDRICACPR5M6X40RFR
	625	311103-0357	-		1	CYLINDRICACPR6M6X30RFR
	650	312101-0466	-		1	SCREW M6S8X75FZB
	655	312105-0327	-		2	SCREW M6S5X12 A4 80
	660	312105-0331	-		2	SCREW M6S5X20 A4 80
	665	312105-0332	-		2	SCREW M6S5X22RFR
	670	312105-0362	-		2	SCREW M6S6X8RFR
	675	312105-0364	-		3	SCREW M6S6X10RFR
	680	312105-0366	-		7	SCREW M6S6X12RFR
	685	312105-0368	-		4	SCREW M6S6X16RFR
	690	312105-0372	-		2	SCREW M6S6X25RFR
	695	312105-0374	-		3	SCREW M6S6X30RFR
	700	312105-0378	-		2	SCREW M6S6X40RFR
	705	312105-0453	-		1	SCREW M6S8X25RFR
	710	312105-0455	-		2	SCREW M6S8X30RFR
	715	312105-0457	-		4	SCREW M6S8X35RFR
	720	312105-0459	-		1	SCREW M6S8X40RFR
	725	312105-0461	-		3	SCREW M6S8X50RFR
	730	312105-0469	-		3	SCREW M6S8X90RFR
	735	312105-0492	-		4	SCREW M6S10X22RFR
	740	312109-0376	-		1	SCREW 6X35 H RFR
	745	312115-0370	-		1	SCREW 6X20 A4 80
	750	312115-0374	-		3	SCREW 6X30 A4 80

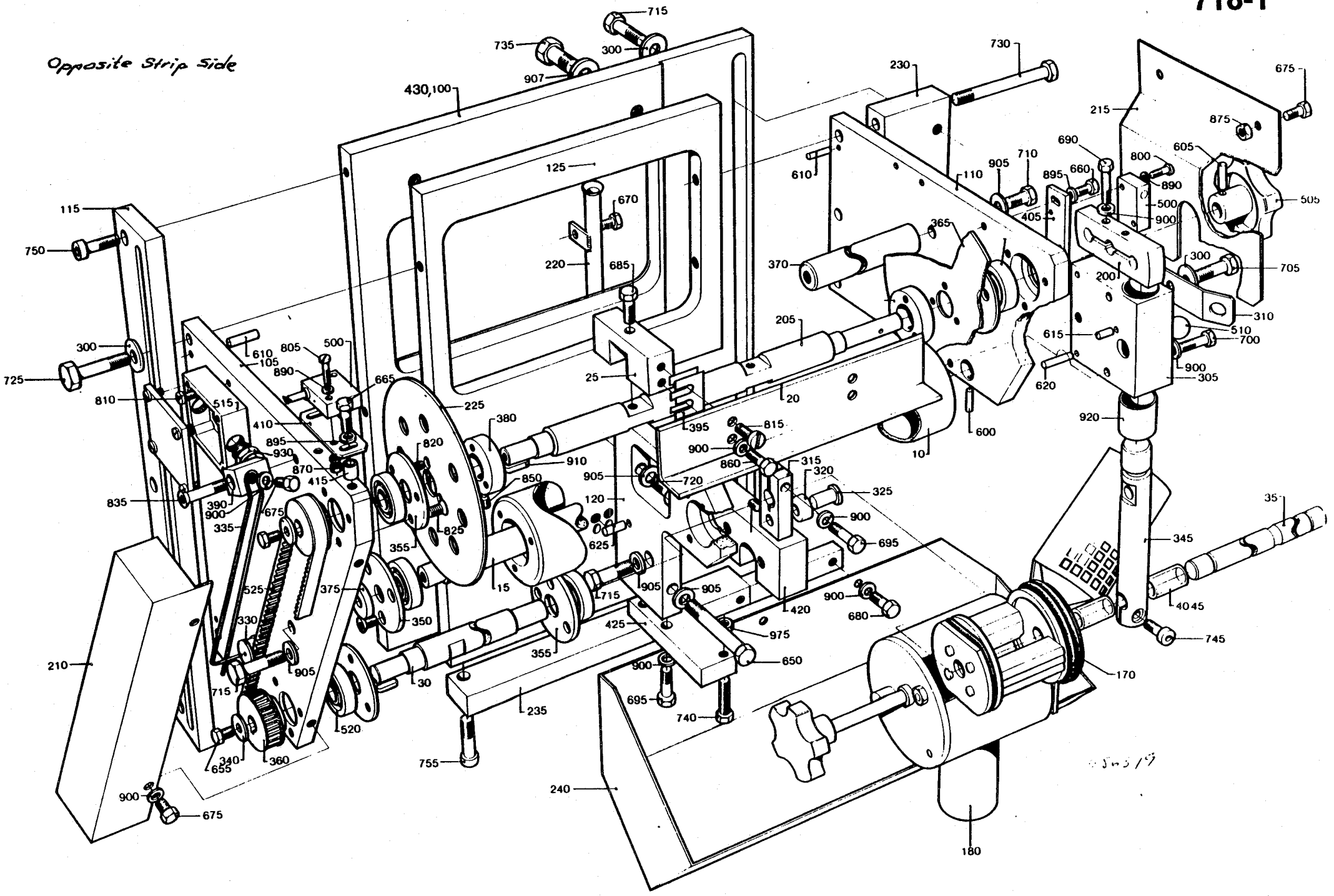
Opposite Strip Side
715
735
300
907
430,100
125
670
220
685
610
230
730
675
215
875
690
905
710
800
605
110
895
660
890
500
505
405
900
365
370
705
300
200
310
205
615
510
700
620
900
305
920
600
10
25
20
395
815
900
860
315
320
325
910
905
720
850
120
625
900
695
680
975
650
420
425
715
905
905
900
740
695
900
755
235
240
180
170
745
4045
345
35
340
655
360
520
30
350
355
375
15
525
330
335
675
390
900
835
515
410
895
930
870
415
225
820
825
380
665
805
500
610
105
890
810
725
300
750
115
210
520
340
655
360
900
675
715
905
330
525
335
675
390
900
835
515
410
895
930
870
415
820
825
355
375
350
355
15
625
715
905
905
900
740
695
900
755
235
240
180
170
745
4045
345
35
420
425
975
650
900
680
900
695
905
720
850
120
910
380
225
395
815
900
860
315
320
325
920
600
10
25
20
205
615
620
900
305
510
700
310
200
705
300
690
905
710
800
605
110
895
660
890
500
505
405
900
365
370
610
230
730
675
215
875
115
750
300
725
810
515
410
895
930
870
415
225
820
825
380
665
805
500
610
105
890
210
520
340
655
360
900
675
715
905
330
525
335
675
390
900
835
515
410
895
930
870
415
820
825
355
375
350
355
15
625
715
905
905
900
740
695
900
755
235
240
180
170
745
4045
345
35
420
425
975
650
900
680
900
695
905
720
850
120
910
380
225
395
815
900
860
315
320
325
920
600
10
25
20
205
615
620
900
305
510
700
310
200
705
300
690
905
710
800
605
110
895
660
890
500
505
405
900
365
370
610
230
730
675
215
875

From	Pos	Part No	SP	UN	Qty	Description
	755	312115-0457	-		2	SCREW A4 80
	800	312125-0228	-		2	SLOTTED HEMCS3X16RFR
	805	312125-0230	-		2	SLOTTED HEMCS3X20RFR
	810	312125-0291	-		2	SLOTTED HEMCS4X12RFR
	815	312125-0366	-		4	SLOTTED HEMCS6X12RFR
	820	312155-0291	-		6	SCREW MF6S4X12RFR
	825	312155-0327	-		6	SCREW MF6S5X12RFR
	835	312155-0376	-		1	SCREW MF6X35RFR
	850	312318-0362	-		3	GRUB SCREW SK6SS6X8RFR
	870	312605-0310	-		2	NUT M6M3RFR
	875	312605-0316	-		1	NUT M6M6RFR
	890	315105-0124	-		4	WASHER BRB3,2X6RFR
	895	315105-0146	-		2	WASHER BRB5,3X10RFR
	900	315105-0153	-		13	WASHER BRB6,4X12RFR
	905	315105-0165	-		6	WASHER BRB8,4X16RFR
	907	315115-0173	-		4	WASHER B 10,5X22 RFR
	910	315701-0170	-		2	FLAT WEDGE4X4X20
	920	321120-0147	-		2	BUSHING 22/25X25
	930	352103-0106	-		2	CABLE GLANR.18,6/5-10
Stamp location, strip side						
	105	256388-0002	-		1	GABLE
	110	256389-0002	-		1	GABLE
	120	*456326-0001	C		1	BEARING BRACKET
	240	456352	-		1	SPLASH PLATE
Stamp location, opposite strip side						
	105	256388-0001	-		1	GABLE
	110	256389-0001	-		1	GABLE
	120	*456326-0002	C		1	BEARING BRACKET
	240	456353	-		1	SPLASH PLATE
	835	312155-0364	-		4	SCREW MF6S6x10RFR

*Replaced by 752513-0103

From	Pos	Part No	SP	UN	Qty	Description

Strip Side

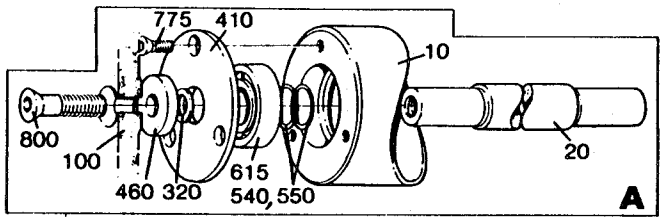
775
410
10
800
100
460
320
615
540,550
20
A

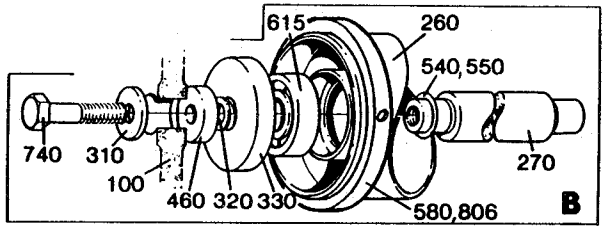
615
260
540,550
740
310
100
460
320
330
580,806
270
B

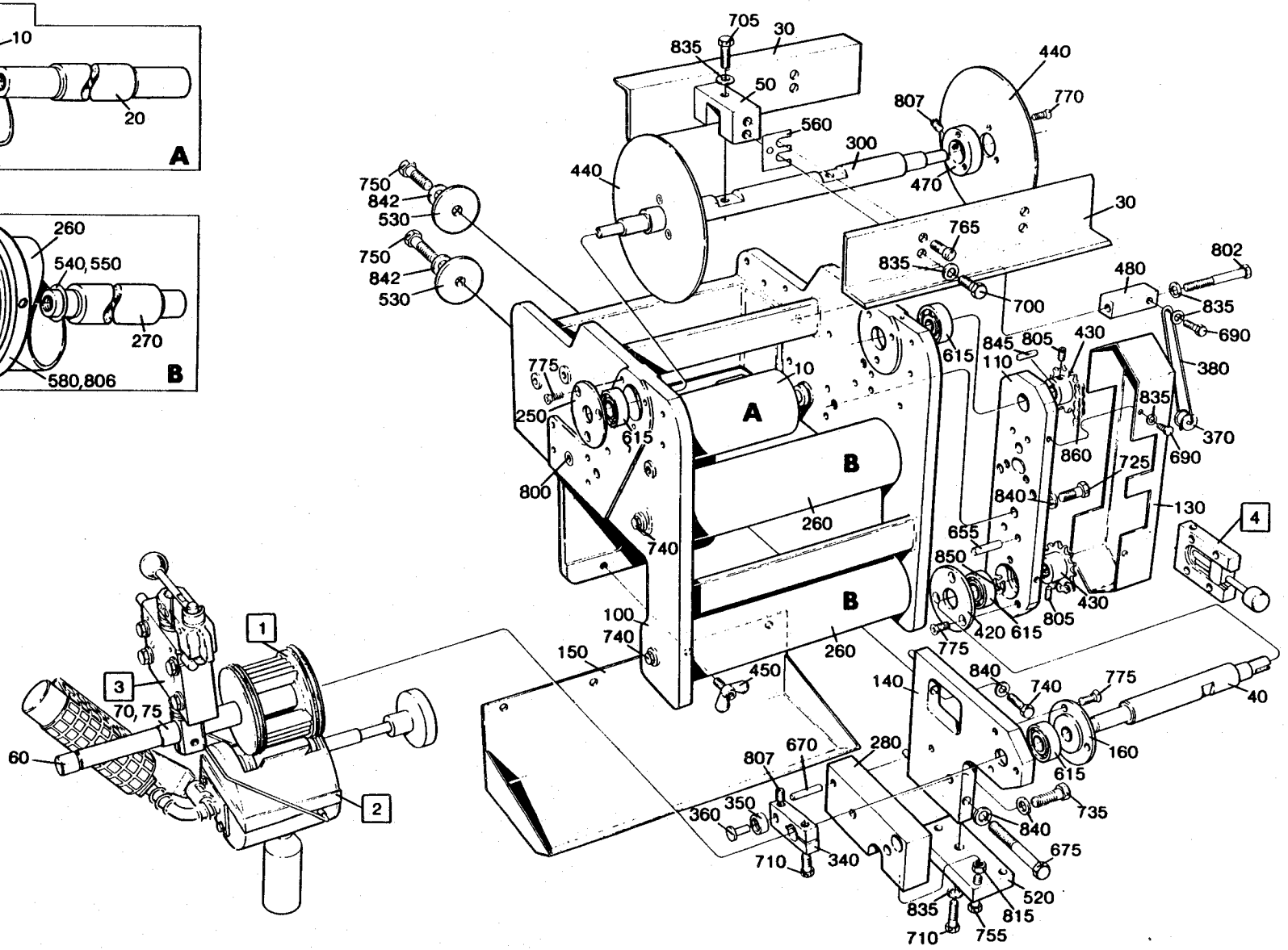
705
30
835
50
440
770
807
560
300
440
470
750
842
530
750
842
530
30
765
835
700
802
480
835
690
845
805
110
430
380
775
250
615
10
A
B
800
740
260
615
860
725
690
370
840
130
4
655
850
420
615
805
430
100
740
150
450
260
775
140
840
740
775
40
160
615
807
670
280
360
350
735
840
675
710
340
520
835
815
710
755
1
3
70,75
60
2

From	Pos	Part No	SP	UN	Qty	Description
	F001	==>711-1	-		2	PRINTING WHEEL
	F002	==>712-1a/b	-		1	INK UNIT
	F003	==>715-2.2	-		1	DATING WHEEL HOLDER
	F004	==>715-2.1	-		1	ADJUSTMENT DEVICE
Volume 250 - 180 ml						
	010	752542-0001	C		1	BENDING ROLLER
	020	752543-0001	C		1	SHAFT
	030	456767	C		2	CREASE BAR
	040	752536-0001	C		1	SHAFT
	050	441556-0002	C		2	SPACER (250 ml)
	050	441556-0003	C		2	SPACER (236 ml)
	050	441556-0004	C		2	SPACER (200 ml)
	050	441556-0006	C		2	SPACER (180 ml)
	060	256400	C		1	SHAFT
	070	90166-0059	P	MM	24	HOSE
	075	90166-0059	P	MM	24	HOSE
Volume 125, 200 mlSLIM						
	010	752542-0002	C		1	BENDING ROLLER
	020	752543-0002	C		1	SHAFT
	030	456327	C		2	CREASE BAR (125 ml)
	030	441554	C		2	CREASE BAR (200 mlSLIM)
	040	752536-0002	C		1	SHAFT
	050	441556-0007	C		2	SPACER (125 ml)
	050	441556-0009	C		2	SPACER (200 mlSLIM)
	060	456334	C		1	SHAFT
	070	90166-0059	P	MM	37	HOSE
	075	90166-0059	P	MM	37	HOSE
Common Parts						
	100	G- 752200	-		1	BRACKET
	110	752526	-		1	PLATE
	130	752528	-		1	COVER
	140	752527	-		1	BRACKET
	150	491723	-		1	SPLASH PLATE
	160	752529	C		1	BEARING COVER
	250	752240	-		1	LID
	260	752537	C		2	BENDING ROLLER
	270	752538	C		2	SHAFT
	280	752642	-		1	BRACKET
	300	752535	C		1	SHAFT
	310	28036	-		4	WASHER
	320	2033-0011	C		20	WASHER
	330	265568	S		4	DUST COVER
	340	32925	C		1	CARRIER
	350	32926	C		1	ROLLER
	360	32927	C		1	SHAFT
	370	33182	S		1	ROLLER
	380	752237	S		1	SPRING
	410	256248-0001	C		2	LID
	420	256398	C		1	LID
	430	752530	S		2	SPROCKET
	440	256406	-		2	SIDE PLATE
	450	752644	-		2	SCREW
	460	256409	-		6	WASHER
	470	257141	-		2	RETAINING RING
	480	752531	-		1	BRACKET
	520	752541	-		1	BRACKET
	530	253107	C		2	WASHER
	540	752544-0001	C		6	SHIM
	550	752544-0002	C		8	SHIM
	560	456817-0001	S		8	SHIM
	580	456545	-		2	FLANGE
	615	90214-0098	P		10	BALL BEARING
	655	311103-0312	-		2	CYLINDRICACPR5M6X25RFR
	670	311103-0357	-		1	CYLINDRICACPR6M6X30RFR
	675	312101-0466	-		1	SCREW M6S8X75FZB
	680	312105-0327	-		2	SCREW M6S5X12 A4 80
	690	312105-0364	-		3	SCREW M6S6X10RFR
	700	312105-0366	-		4	SCREW M6S6X12RFR
	705	312105-0370	-		2	SCREW M6S6X20RFR
	710	312105-0372	-		3	SCREW M6S6X25RFR
	725	312105-0453	-		2	SCREW M6S8X25RFR
	735	312105-0457	-		1	SCREW M6S8X35RFR
	740	312105-0459	-		5	SCREW M6S8X40RFR
	750	312105-0493	-		2	SCREW M6S10X25RFR
	755	312109-0376	-		1	SCREW 6X35 H RFR
	765	312125-0366	-		4	SLOTTED HEMCS6X12RFR
	770	312155-0291	-		6	SCREW MF6S4X12RFR
	775	312155-0327	-		15	SCREW MF6S5X12RFR
	800	312155-0457	-		2	SCREW MF6S8X35RFR
	802	312105-0382	-		1	SCREW M6S6X60RFR
	805	312318-0287	-		2	GRUB SCREW SK6SS4X8RFR
	806	312318-0325	-		4	GRUB SCREW SK6SS5X10RFR
	807	312318-0362	-		3	GRUB SCREW SK6SS6X8RFR

Opposite Strip Side

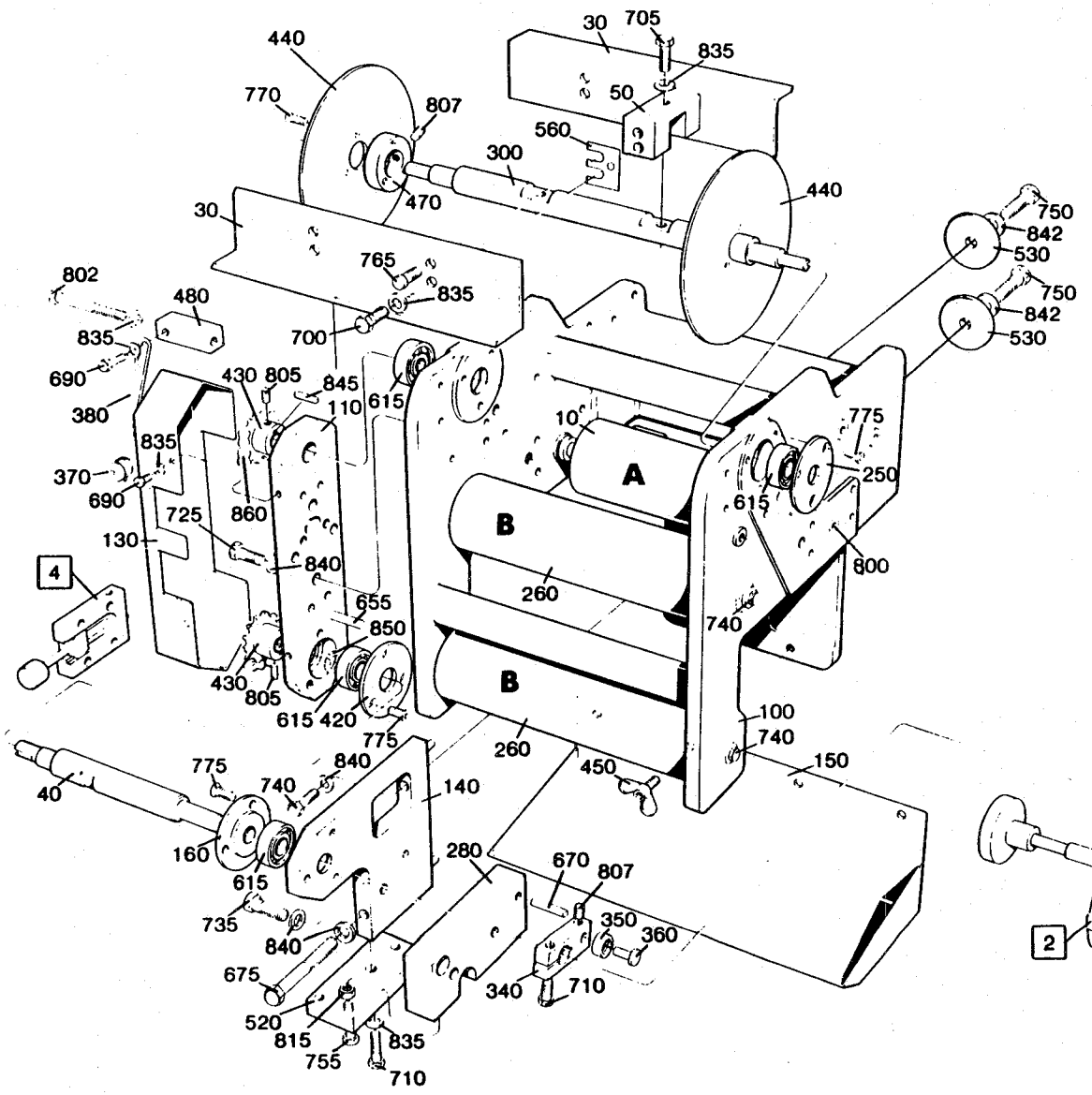

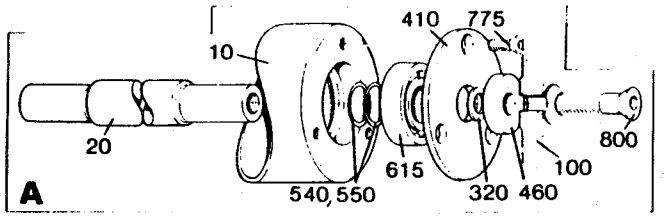

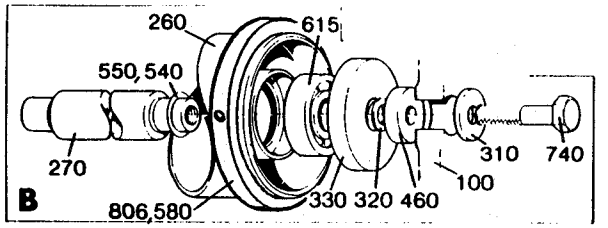

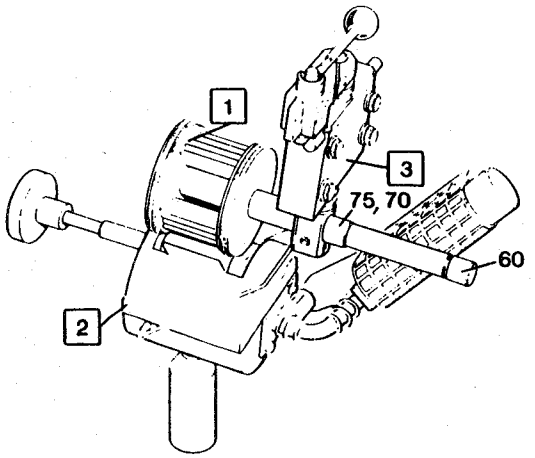

From	Pos	Part No	SP	UN	Qty	Description
	815	312605-0316	-		1	NUT M6M6RFR
	835	315105-0153	-		12	WASHER BRB6,4X12RFR
	840	315105-0165	-		5	WASHER BRB8,4X16RFR
	842	315105-0173	-		2	WASHER BRB10,5X22RFR
	845	315701-0169	S		2	FLAT WEDGE4X4X18
	850	315751-0112	P		1	LOCK RING SGA15 RFR
	860	318207-0168	S		1	ROLLER CHA6MM

From	Pos	Part No	SP	UN	Qty	Description

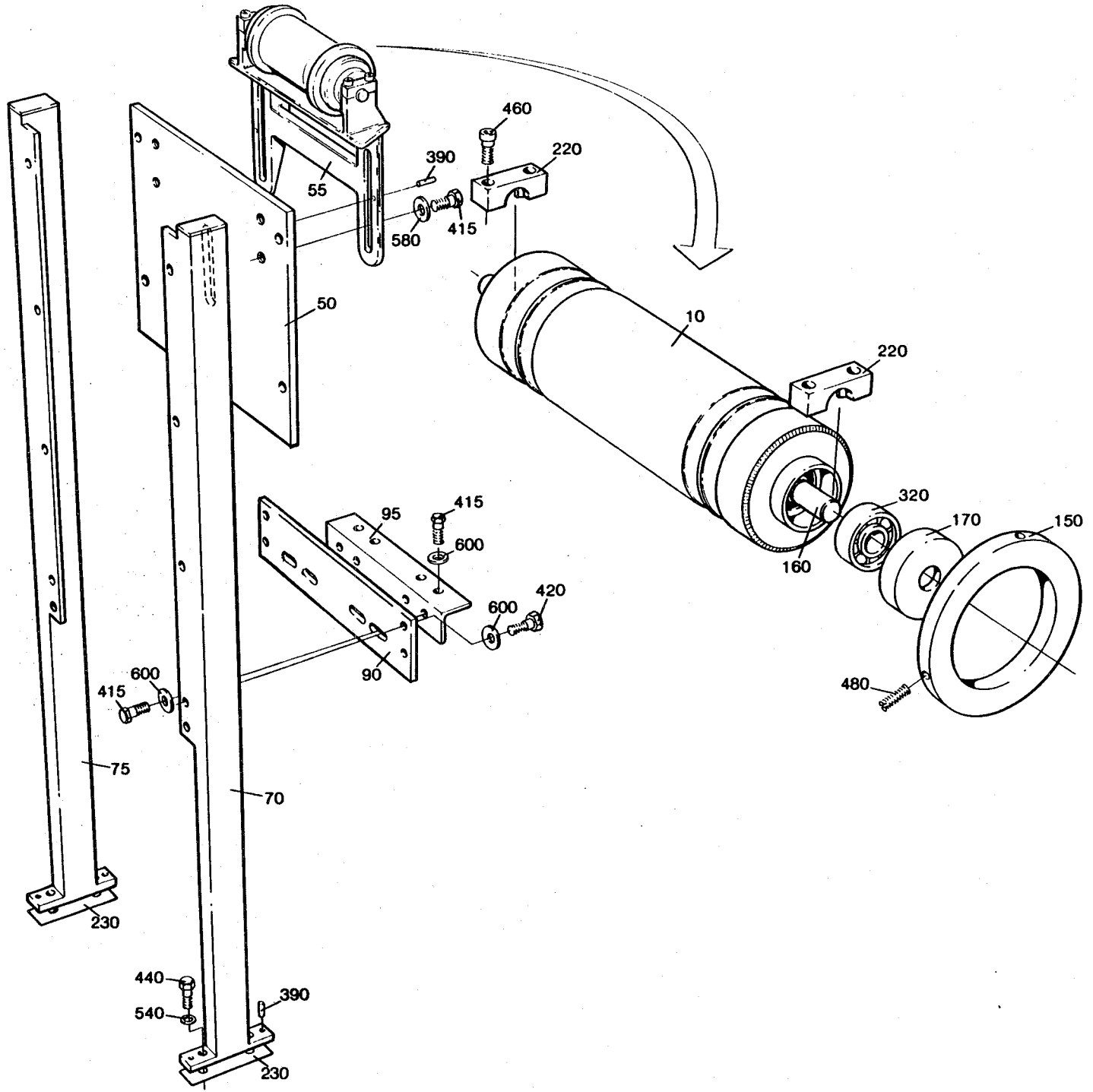
460
220
390
55
580
415
50
10
220
320
170
150
160
95
415
600
600
420
90
600
415
75
70
230
440
540
390
230
480

Last Alteration: AM 16176 91-03-25

Corresponding C-lists: 752247-010V
Assembly Drawing: 752247-1

Date Printed: 910404

From	Pos	Part No	SP	UN	Qty	Description
	010	752637-0001	C		1	BENDING ROLLER (284-180 ml)
	010	752637-0002	C		1	BENDING ROLLER (125 ml)
	010	752637-0003	C		1	BENDING ROLLER (200 mlSLIM)
	050	752862	-		1	PLATE
	055	G- 752867	-		1	BENDING ROLLER BRACKET
	070	752870	-		1	LEG
	075	752871	-		1	LEG
	090	560186	-		1	PLATE
	095	560187	-		1	BRACKET
	150	250588	C		2	FLANGE
	160	256985	S		1	SHAFT
	170	265568	-		2	DUST COVER
	220	752196	-		2	CLAMP
	230	752987	-		2	SHIM
	320	90214-0098	S		2	BALL BEARING
	390	311103-0310	-		6	CYLINDRICACPR5M6X20RFR
	415	312105-0453	-		12	SCREW M6S8X25RFR
	420	312105-0455	-		8	SCREW M6S8X30RFR
	440	312105-0493	-		4	SCREW M6S10X25RFR
	460	312115-0370	S		4	SCREW 6X20 A4 80
	480	312318-0325	S		4	GRUB SCREW SK6SS5X10RFR
	540	315105-0173	-		4	WASHER BRB10,5X22RFR
	600	315125-0165	-		20	WASHER SB 8,4X26X5 RFR

From	Pos	Part No	SP	UN	Qty	Description

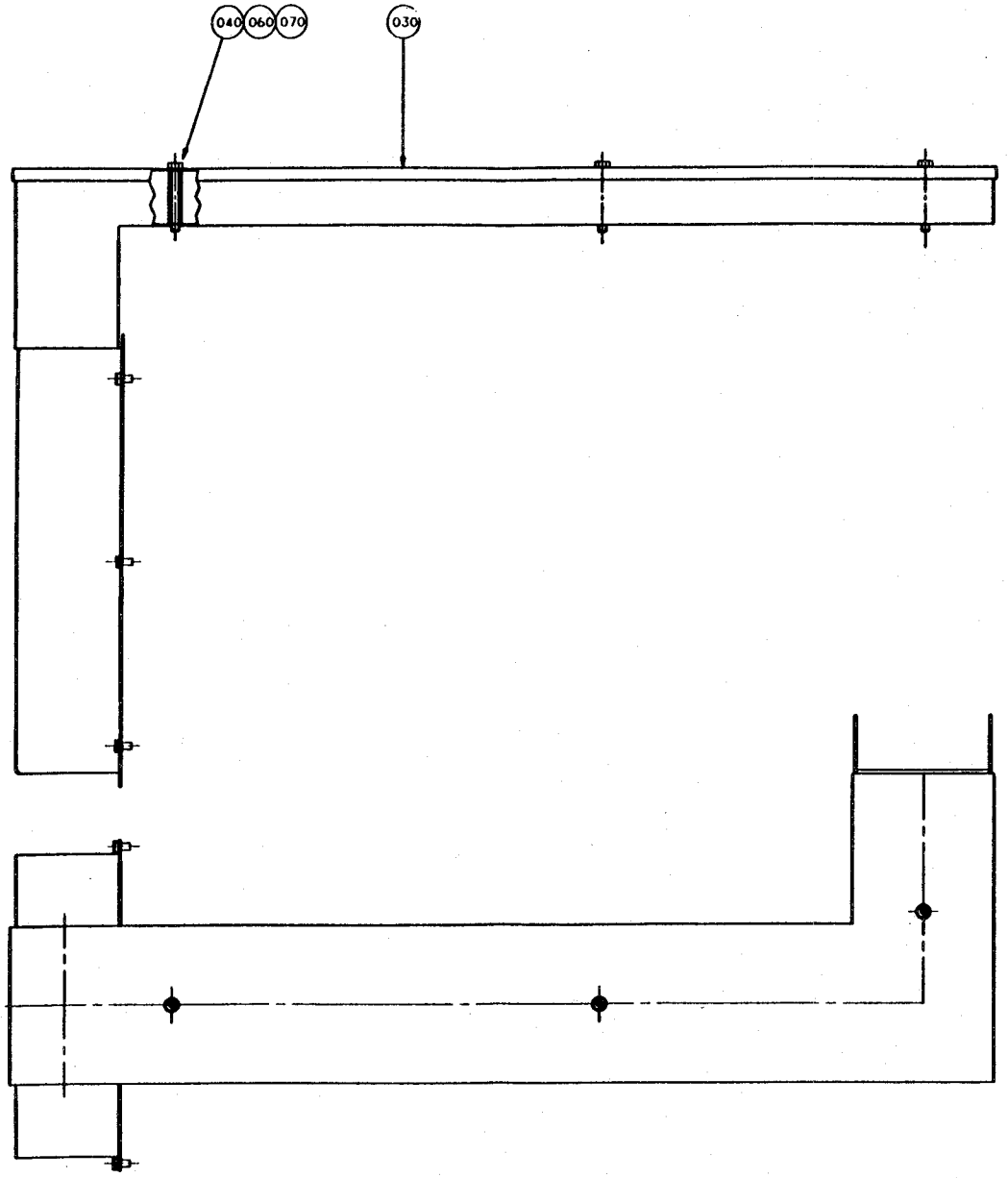
040
060
070
030

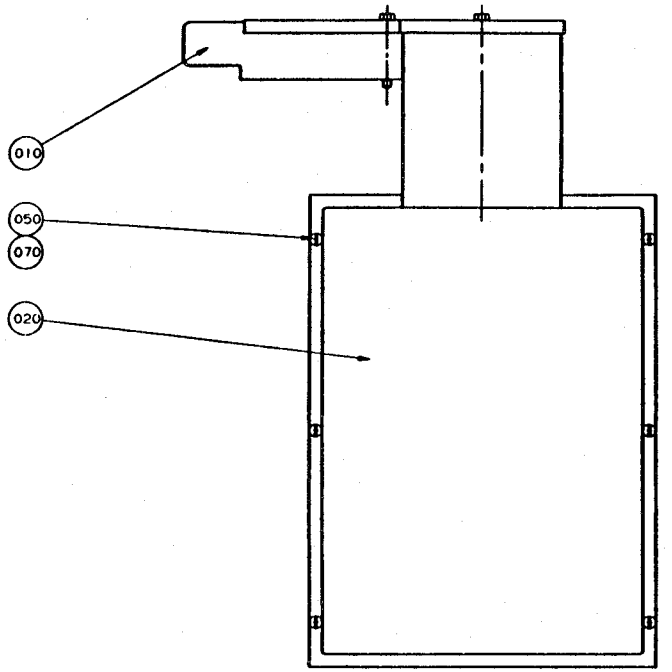
010
050
070
020

From	Pos	Part No	SP	UN	Qty	Description
	010	752890	-		1	CABLE DUCT
	020	552039	-		1	COVER
	030	752891	-		1	LID
	040	552042	-		3	SCREW
	050	312125-0364	-		6	SLOTTED HEMCS6X10RFR
	060	312605-0316	-		3	NUT M6M6RFR
	070	315105-0153	-		9	WASHER BRB6,4X12RFR

From	Pos	Part No	SP	UN	Qty	Description

SPC 648151/52
Tetra Brik TB/9
Tetra Brik Aseptic TBA/9

From	Pos	Page	Description
	F020	901-1	CLEANING PIPE
-080V	F080	902-1	TYPE EXTRACTOR
010V-070V	F030	903-1	HOSE
-080V	F110	904-1	CREASE WHEEL
090V-	F110		ADAPTER, TYPE 1
-080V	F005	905-1	CONVEYOR FRAME
	F040	906-1	PAPER REEL TROLLEY
	F050	907-1	CLAMP
	F090	908-1	PERSONAL PROTECT.EQUIPM
	F100	909-1	TOOL KIT

From	Pos	Page No	Description

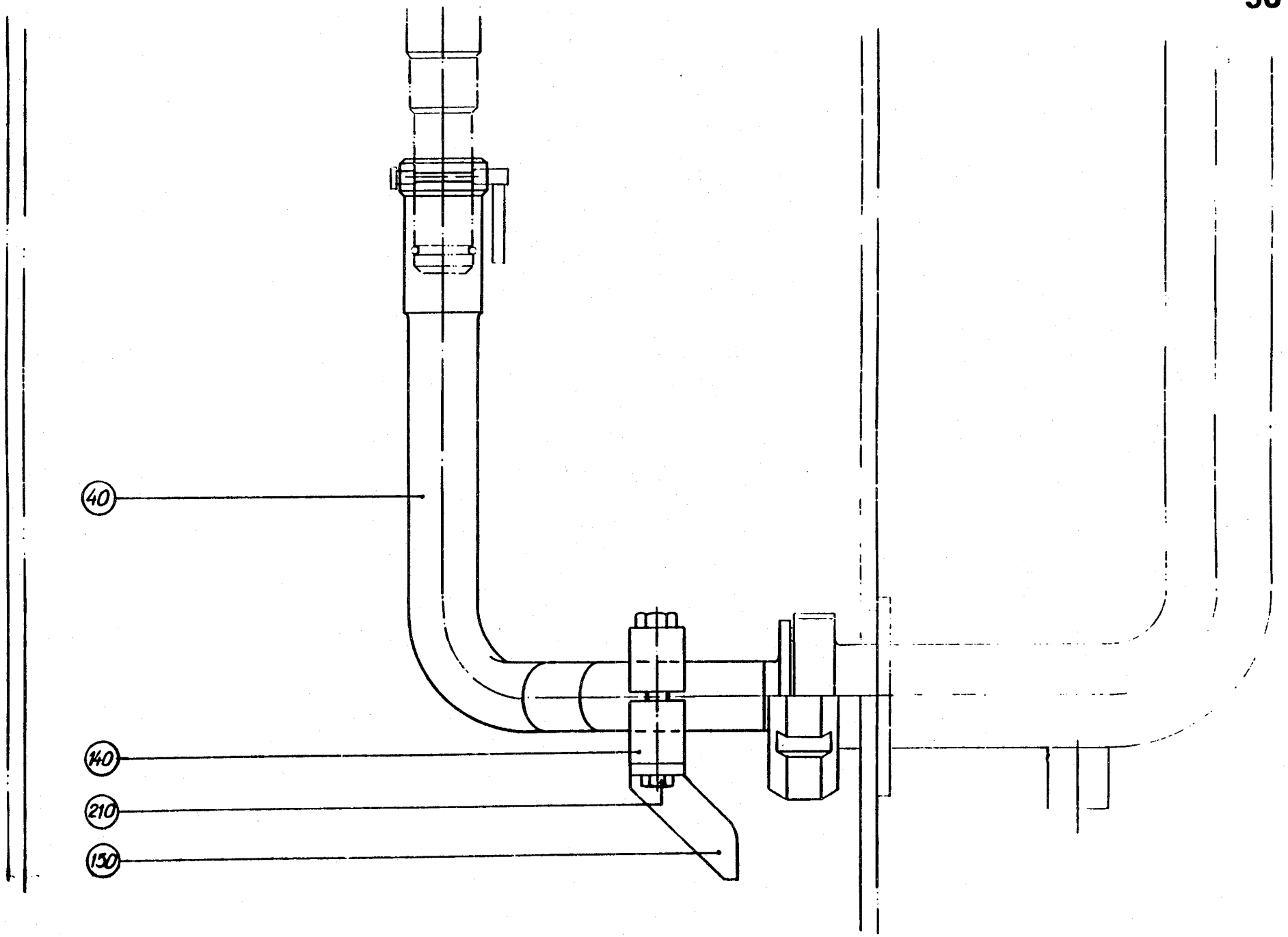
40
140
210
150

From	Pos	Part No	SP	UN	Qty	Description
	040	295263	-		1	CLEANING PIPE
	140	295999	-		1	CLAMP
	150	751280	-		1	ARM
	210	312105-0366	-		2	SCREW M6S6X12RFR

From	Pos	Part No	SP	UN	Qty	Description

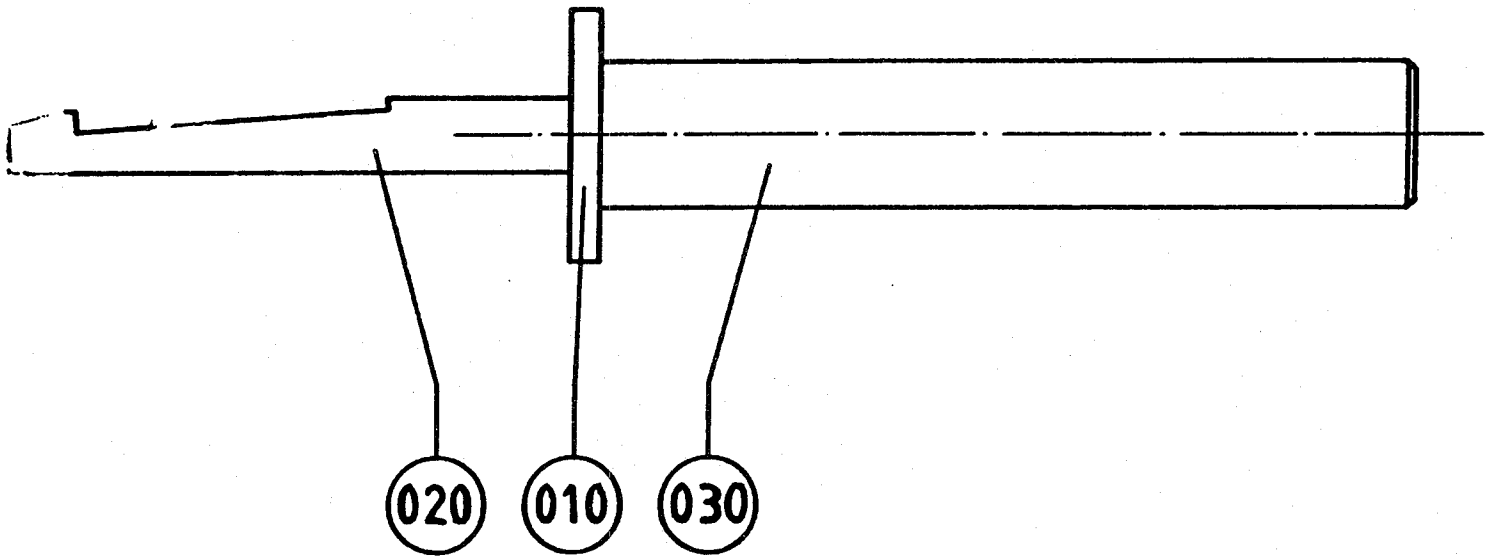
020
010
030

From	Pos	Part No	SP	UN	Qty	Description
	010	274177	-		1	WASHER
	020	469293	-		1	CLAW
	030	274179	-		1	HANDLE

From	Pos	Part No	SP	UN	Qty	Description

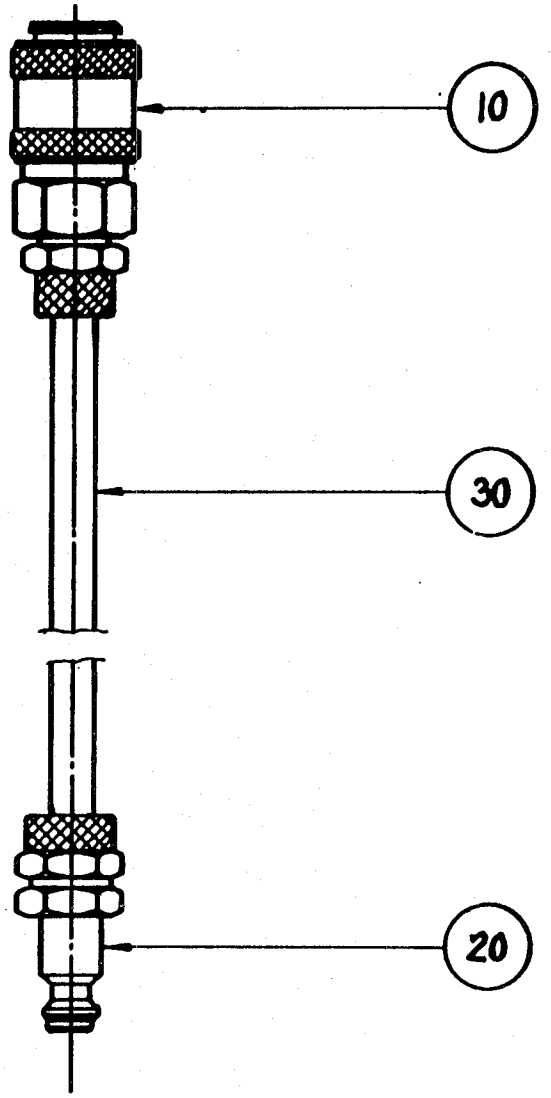
10
30
20

From	Pos	Part No	SP	UN	Qty	Description
	010	90163-0056	-		1	SLEEVE
	020	90163-0063	-		1	NIPPLE
	030	90166-0124	-	MM	1500	HOSE

From	Pos	Part No	SP	UN	Qty	Description

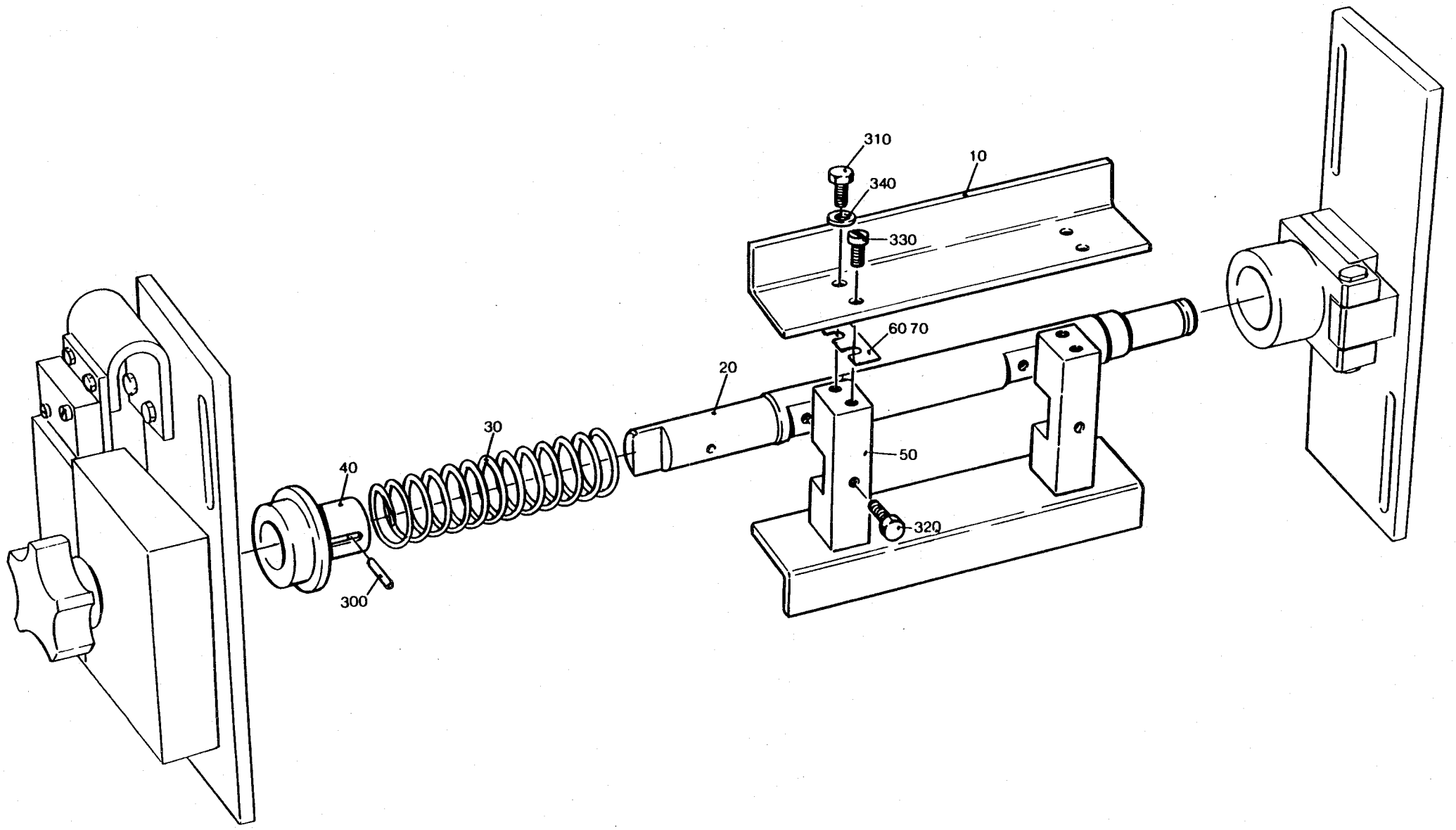
310
10
340
330
60 70
20
30
40
50
320
300

From	Pos	Part No	SP	UN	Qty	Description
Volume 125 ml						
	010	441551	S		2	CREASE BAR
	050	441556-0007	S		2	SPACER
Volume 180 ml						
	010	441552	S		2	CREASE BAR
	050	441556-0006	S		2	SPACER
Volume 200 ml						
	010	441552	S		2	CREASE BAR
	050	441556-0004	S		2	SPACER
Volume 236 ml						
	010	441552	S		2	CREASE BAR
	050	441556-0003	S		2	SPACER
Volume 250 ml						
	010	441552	S		2	CREASE BAR
	050	441556-0002	S		2	SPACER
Volume 200 ml SLIM						
	010	441554	S		2	CREASE BAR
	050	441556-0009	S		2	SPACER
Common Parts						
	020	441555	C		1	SHAFT
	030	272001	S		1	COMPRESSION SPRING
	040	295010	S		1	SLEEVE
	060	456817-0001	C		8	SHIM
	070	456817-0002	C		4	SHIM
	300	311103-0234	S		1	CYLINDRICACPR3M6X12RFR
	310	312105-0366	-		4	SCREW M6S6X12RFR
	320	312105-0370	-		2	SCREW M6S6X20RFR
	330	312125-0364	-		4	SLOTTED HEMCS6X10RFR
	340	315105-0153	-		4	WASHER BRB6,4X12RFR

From	Pos	Part No	SP	UN	Qty	Description

for car/sea freight

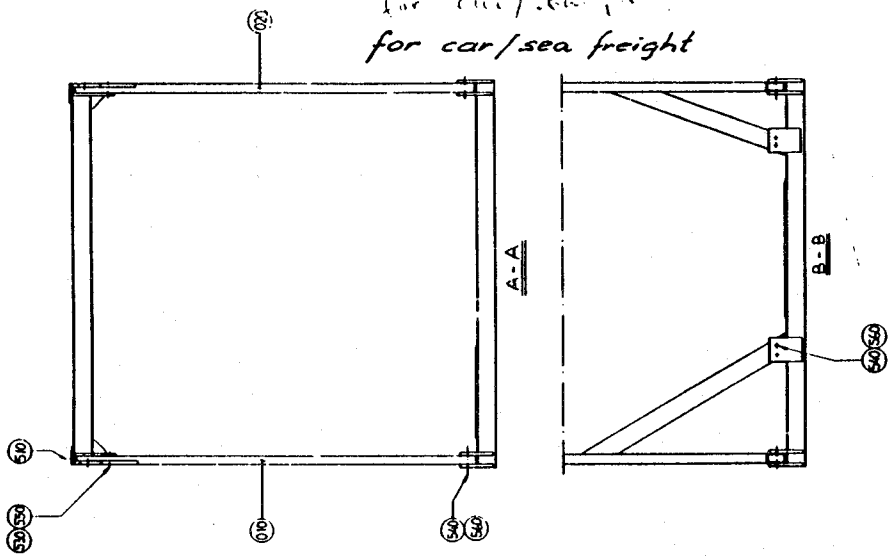

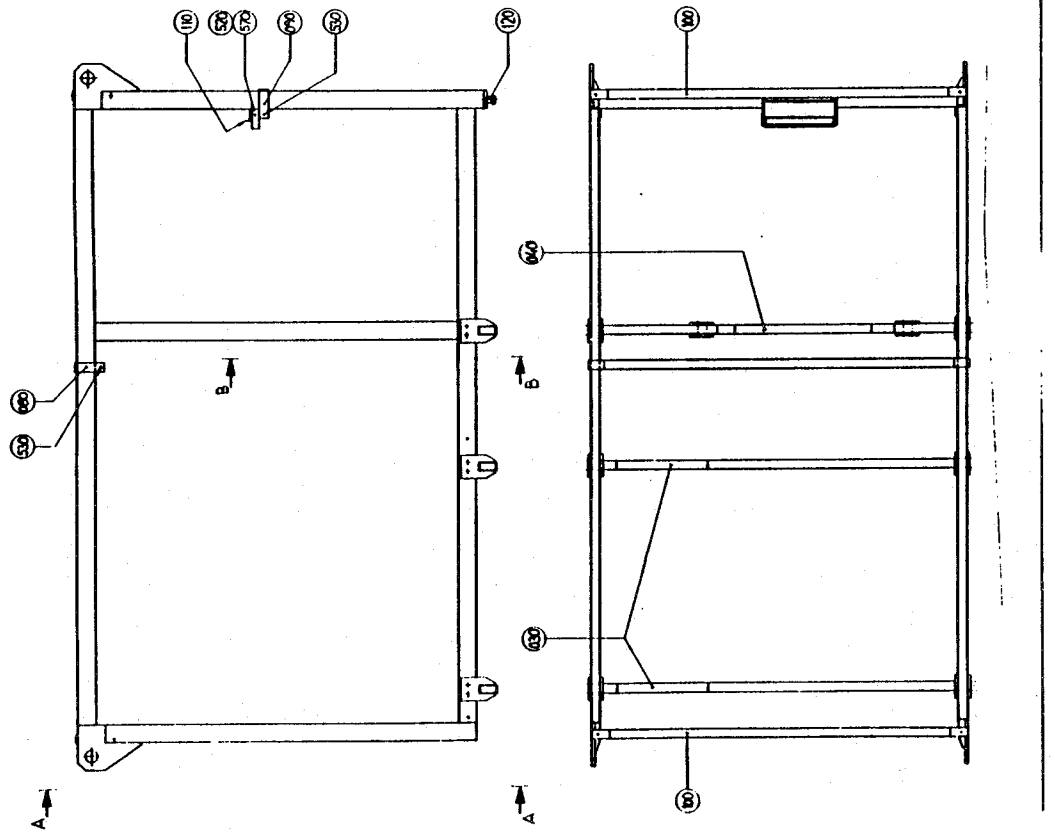

for air freight

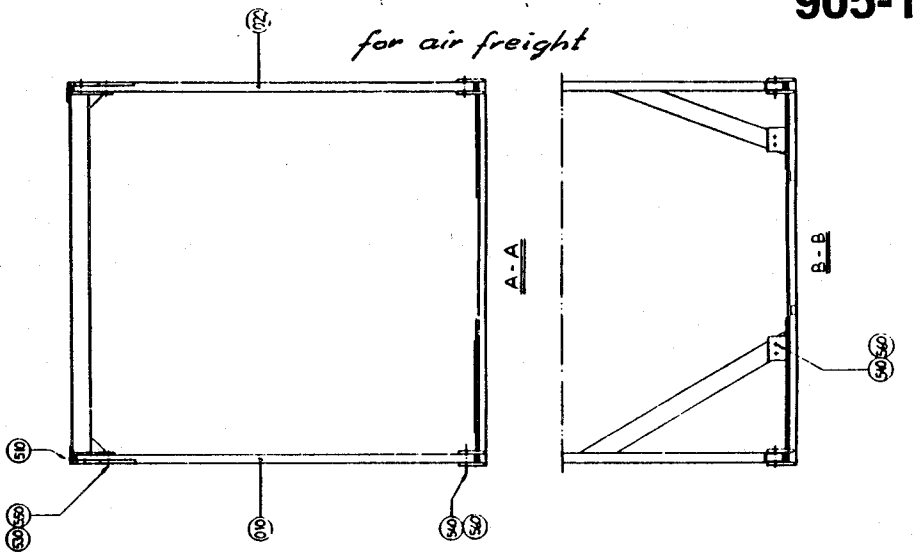

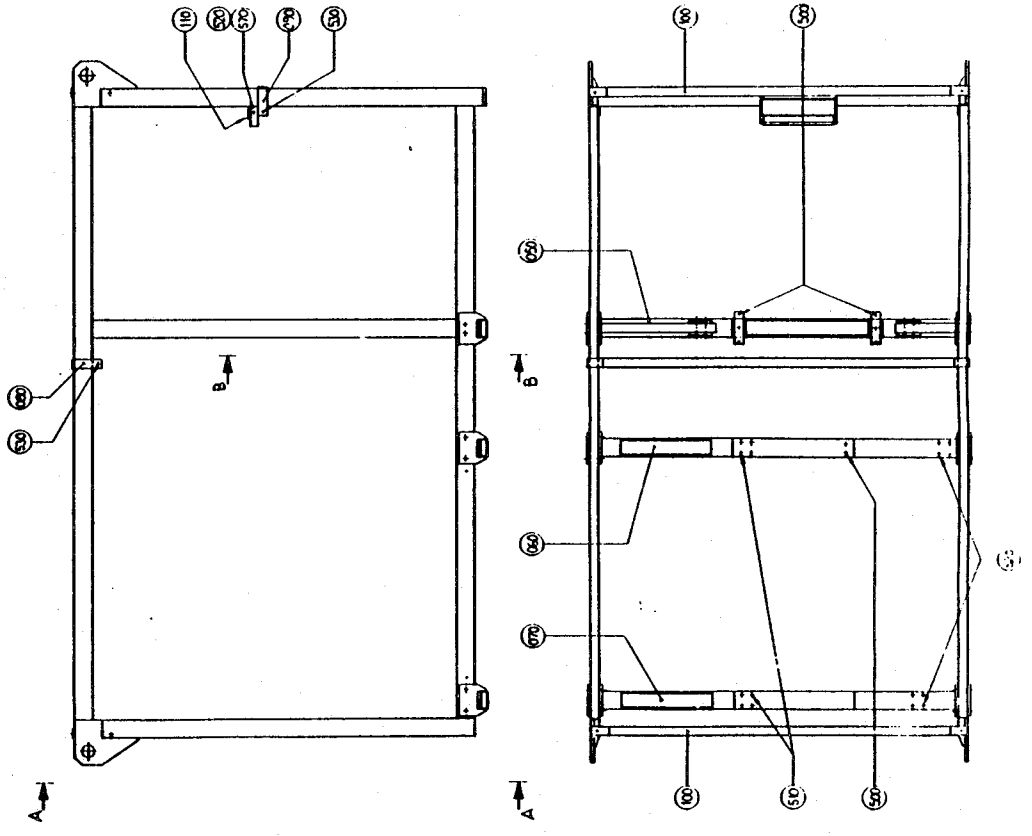

From	Pos	Part No	SP	UN	Qty	Description
By car/sea freight						
	030	491465	-		1	GIRDER FRONT
	035	491466	-		1	GIRDER MIDDLE
	040	491467	-		1	GIRDER REAR
	120	490589	-		2	SPACER BOLT
By air freight						
	050	490583	-		1	BEAM, FRONT.
	060	490584	-		1	BEAM, MIDDLE.
	070	490585	-		1	BEAM, BACK.
Common Parts						
	010	490579	-		1	FRAME RIGHT
	020	490580	-		1	FRAME LEFT
	080	469861	-		1	CROSS BAR
	100	490587	-		2	CORNER BAR
	110	491680	-		1	SUPPORT
	500	312101-0493	-		8	SCREW M6S10X25FZB
	510	312101-0453	-		8	SCREW M6S8X25FZB
	520	312101-0457	-		8	SCREW M6S8X35FZB
	525	312101-0538	-		4	SCREW M6S12X35FZB
	530	312101-0548	-		8	SCREW M6S12X80FZB
	540	312101-0640	-		16	SCREW M6S16X100FZB
	550	312810-0322	-		4	LOCK NUT 12FZB
	560	312810-0324	-		16	LOCK NUT 16FZB
	570	315101-0180	-		4	WASHER

From	Pos	Part No	SP	UN	Qty	Description

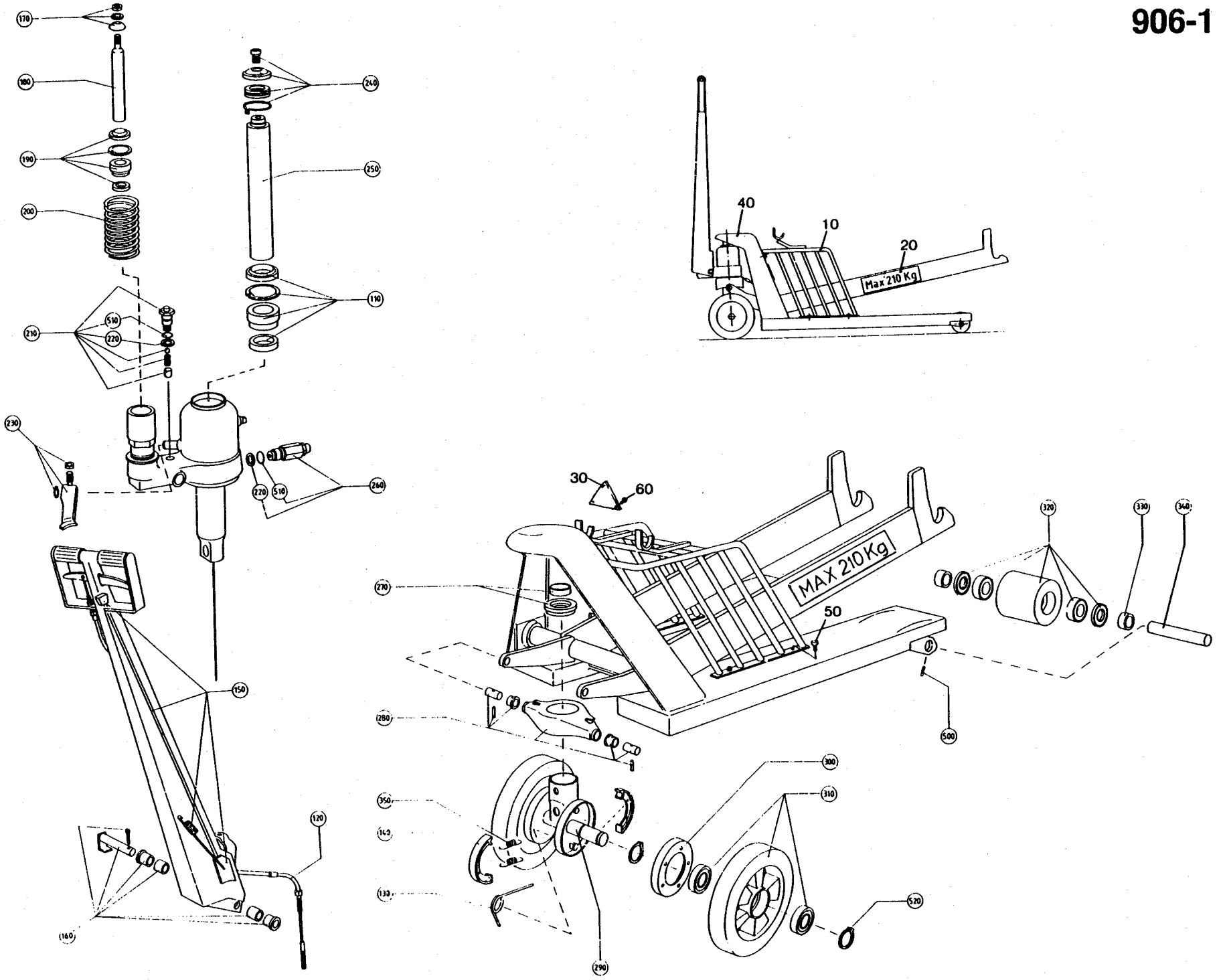
170
180
190
200
210
510
220
230
240
250
110
260
220
510
150
120
160
40
10
20
Max 210 Kg
30
60
MAX 210 Kg
50
270
280
320
330
340
500
300
310
350
140
130
290
520

From	Pos	Part No	SP	UN	Qty	Description
	010	295106	-		1	GUARD
	020	491189	-		2	SIGN
	030	3675	-		1	TETRA PAK NAME PLATE
	040	90067-0010	-		1	CARRIAGE
	050	312105-0364	-		5	SCREW M6S6X10RFR
	060	312121-0224	-		3	SLOTTED HEMCS3X10FZB
Spare Parts for Carriage 90067-0010						
	110	90067-0300	S		1	SPARE PARTS KIT
	120	90067-0301	S		1	BRAKE WIRE
	130	90067-0302	S		2	TORSION SPRING
	140	90067-0317	S		2	BRAKE LINING
	150	90067-0322	S		1	REPAIR KIT
	160	90067-0323	S		1	BEARING KIT
	170	90067-0324	S		1	REPAIR KIT
	180	90067-0325	S		1	PUMP PISTON
	190	90067-0326	S		1	REPAIR KIT
	200	90067-0327	S		1	RETURN SPRING
	210	90067-0328	S		1	VALVE
	220	90067-0329	S		2	COPPER WASHER
	230	90067-0330	S		1	VALVE ARM
	240	90067-0331	S		1	TOP BEARING KIT
	250	90067-0332	S		1	LIFT PISTON
	260	90067-0333	S		1	VALVE
	270	90067-0334	S		1	AXIAL BEARING KIT
	280	90067-0335	S		1	YOKE UNIT
	290	90067-0336	S		1	GUIDE SHAFT UNIT
	300	90067-0337	S		2	BRAKE DRUM
	310	90067-0338	S		2	GUIDE ROLLER
	320	90067-0339	S		2	WHEEL
	330	90067-0340	S		4	SLEEVE
	340	90067-0341	S		2	SHAFT
	350	90067-0342	S		4	TENSION SPRING
	500	311303-0271	S		2	SLOTTED PIRPB4X18FZB
	510	315204-0108	S		2	O-RING 10,1X1,6VITON
	520	315750-0119	S		4	LOCK RING SGA25

From	Pos	Part No	SP	UN	Qty	Description

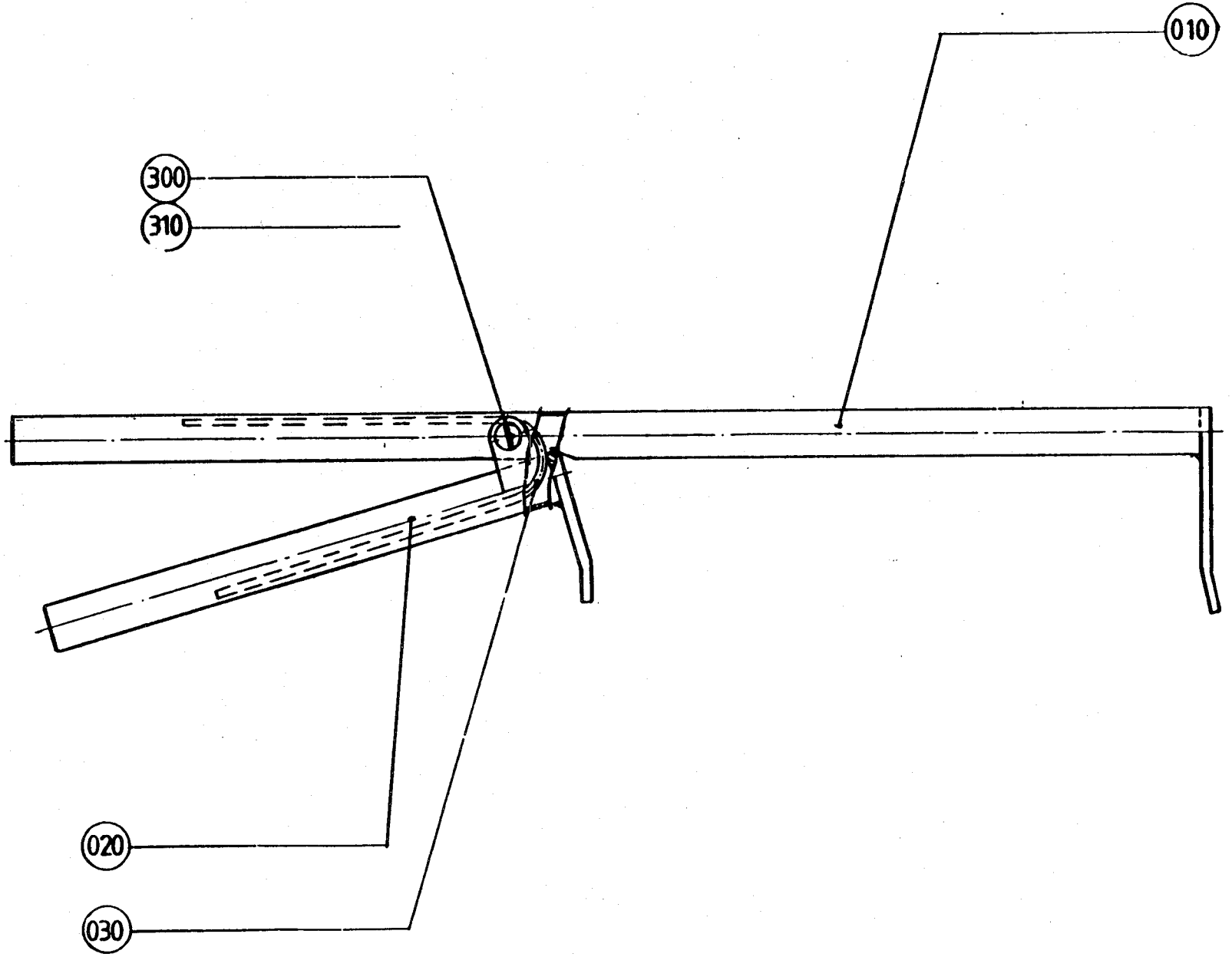
010
300
310
020
030

From	Pos	Part No	SP	UN	Qty	Description
	010	295905-0003	-		1	HOLDER (180-250 ml)
	010	295905-0002	-		1	HOLDER (200 ml SLIM)
	010	295905-0001	-		1	HOLDER (125 ml)
	020	295906	-		1	HANDLE
	030	295907	-		1	SPRING
	300	312125-0295	-		1	SLOTTED HEMCS4X20RFR
	310	312605-0312	-		1	NUT M6M4RFR

From	Pos	Part No	SP	UN	Qty	Description

From	Pos	Part No	SP	UN	Qty	Description
	010	90303-0004	-		1	GLOVES
	020	90303-0005	-		1	PROTECTIVE EQUIPMENT
	030	779130-0102	-		1	PROTECTIVE GOGGLES

From	Pos	Part No	SP	UN	Qty	Description

From	Pos	Part No	SP	UN	Qty	Description
	010	75665	-		1	ASSEMBLY TOOL
	020	72947	-		1	HOOK SPANNER
	030	76167	-		1	LOCKING CLAMP
	040	76138	-		1	LOCKING CLAMP
	050	434841	-		1	GAUGE
	060	76131	-		1	ASSEMBLY CONE
	070	76132	-		1	ASSEMBLY TOOL
080V	080	76153	-		1	SETTING TOOL
090V-	080	78801	-		1	CALIBRATION TOOL
	090	77247	-		1	ASSEMBLY PIN
	210	777120-0215	-		2	C-SPANNER
	220	777120-0220	-		2	C-SPANNER
	230	777120-0232	-		2	C-SPANNER
	240	777122-0137	-		1	C-SPANNER V=36
	250	777122-0142	-		1	C-SPANNER V=46
	260	777150-0801	-		2	KEY SET ,SEXKANT
	270	777200-0101	-		1	PIPE WRENCEL

From	Pos	Part No	SP	UN	Qty	Description

Part Number Index
648151/52
TB, TBA/9

Date Printed: **900228**

PART NO	LAST AM	DESCRIPTION	GROUP NO
4- 1883-0004		WASHER	RK- 547782-010V
			C- 449388-010V
4- 1883-0005		WASHER	RK- 544475-010V
			RK- 547782-010V
			C- 449388-010V
4- 1883-0006		WASHER	RK- 544475-010V
4- 1883-0007		WASHER	RK- 544475-010V
4- 1883-0008		WASHER	RK- 547782-010V
			C- 449388-010V
4- 2033-0005		WASHER	C- 294888-010V
			C- 457866-010V
			C- 457868-010V
			C- 457866-010V
			C- 457868-010V
			C- 457866-010V
			C- 497534-020V
4- 2033-0007		WASHER	C- 272021-030V
			C- 272021-040V
			C- 272021-050V
4- 2033-0008		WASHER	C- 441486-010V
			C- 441486-020V
			C- 441486-030V
			C- 441486-040V
4- 2033-0009		WASHER	C- 400865-010V
			C- 256223-020V
			C- 256223-030V
			C- 246388-020V
			C- 272343-020V
			C- 246388-020V
			C- 272343-030V
			C- 246388-020V
			C- 272343-030V
			C- 246388-020V
			C- 272343-040V
			C- 246388-020V
			C- 272343-050V
4- 2033-0011		WASHER	C- 256238-020V
			C- 441088-010V
			C- 441092-010V
			C- 441102-010V
			C- 256238-020V
			C- 441088-010V
			C- 441092-010V
			C- 441102-010V
			C- 256238-030V
			C- 441088-010V
			C- 441092-010V
			C- 441102-010V
			C- 256238-040V
			C- 441088-010V
			C- 441092-010V
			C- 441102-010V
			C- 752645-010V
			C- 752646-010V
			C- 752913-010V
4- 2033-0011		WASHER	C- 752914-010V
			C- 255957-020V
			C- 272030-020V
			C- 272031-020V
			C- 441304-010V
			C- 441307-010V
			C- 441486-010V
			C- 456309-010V
			C- 255957-020V
			C- 272030-020V
			C- 272031-020V
			C- 441304-010V
			C- 441307-010V
			C- 441486-010V
			C- 456309-010V
			C- 441304-020V
			C- 441307-020V
			C- 441486-020V
			C- 456309-020V
			C- 441304-020V
			C- 441307-020V
			C- 441486-020V
			C- 456309-020V
			C- 441304-020V
			C- 441307-020V
			C- 441486-030V
			C- 456309-030V
			C- 441304-030V
			C- 441307-030V
			C- 441486-040V
			C- 456309-040V
4- 2033-0012		WASHER	C- 272021-020V
4- 2033-0013		WASHER	C- 469736-020V
			RK- 544470-010V
			RK- 544471-010V
			RK- 544474-010V
			RK- 547751-030V
			RK- 547752-010V
			RK- 550134-020V
			RK- 547751-020V
			RK- 547752-020V
			RK- 550134-010V
			C- 272014-020V
4- 2033-0014		WASHER	C- 400865-010V
			C- 256223-020V
			C- 256223-030V
4- 2873		SHAFT	C- 76133-010V
			C- 76133-020V
			C- 76606-010V
			C- 76606-020V
			C- 76133-030V
			C- 76606-030V
			C- 255957-020V
			C- 456309-020V
			C- 456309-030V
			C- 76133-010V
			C- 76606-010V
4- 3675		TETRA PAK NAME PLATE	C- 271442-020V
			C- 295971-010V
4- 3675		TETRA PAK NAME PLATE	C- 491942-010V
4- 4623		SPRING	C- 450125-010V
4- 5486		BEARING	C- 7003-010V
4- 6157		BOBBIN	C- 7003-010V
4- 6158		SPRING	C- 7003-010V
4- 6159		BEARING	C- 7003-010V
4- 6160		SHAFT	C- 7003-010V
4- 6161		ROLLER	C- 295256-020V
			C- 295667-020V
			C- 295256-020V
			C- 295667-020V
			C- 295667-030V
			C- 469501-020V
			C- 295667-030V
			C- 469501-030V
			C- 295667-030V
			C- 469501-030V
			C- 271485-020V
			C- 271485-030V
			C- 469501-010V
			C- 469501-020V
			C- 469501-030V
			RK- 751462-010V
			RK- 751487-010V
4- 6183		SPRING	C- 256806-020V
4- 6278		WASHER	RK- 456799-010V
			RK- 469984-010V
			C- 456100-010V
			C- 456100-020V
4- 6427		WASHER	C- 256973-020V
			C- 256973-030V
			C- 256219-020V
			C- 256220-020V
			C- 256219-020V
			C- 256220-020V
			C- 256219-030V

PART NO	LAST AM	DESCRIPTION	GROUP NO
			C- 256220-030V
			C- 256219-030V
			C- 256220-030V
			C- 256219-030V
			C- 256220-030V
			C- 256219-030V
			C- 256220-030V
			CR- 283606-010V
4- 6689		SPRING	C- 529933-010V
			C- 295667-020V
			C- 295667-030V
			C- 255982-020V
			C- 469091-010V
			C- 529933-010V
4- 6695		ROLLER	C- 441000-020V
			C- 441000-030V
			C- 441000-040V
C- 7003-0101	6317 83-11-03	BOBBIN	C- 400865-010V
			C- 441000-020V
			C- 441000-030V
			C- 441000-040V
			C- 441000-050V
			C- 547756-010V
4- 7309		HANDLE	C- 401207-010V
			C- 271804-020V
			C- 271804-030V
			C- 271804-040V
			C- 272508-010V
			C- 469535-010V
			C- 272839-020V
			C- 490947-010V
			C- 490947-020V
			C- 752244-010V
			C- 268656-010V
			C- 294785-010V
			C- 553657-010V
			C- 752042-010V
4- 7814		BOBBIN	C- 441000-020V
			C- 441000-030V
			C- 441000-040V
			C- 441000-050V
4- 8408		SPRING	C- 268656-010V
			C- 268665-010V
4- 10793-0009		RAIL	C- 283633-010V
4- 10793-0014		RAIL	C- 246357-010V
4- 10793-0083		RAIL	C- 295470-020V
			C- 295470-030V
4- 10793-0087		RAIL	C- 456435-010V
4- 12228		COMPRESSION SPRING	C- 256806-030V
4- 12241		GASKET	C- 256973-020V
			C- 256219-020V
			C- 256220-020V
			C- 256219-020V
			C- 256220-020V
4- 12242-0001		GASKET	C- 456274-010V
			RK- 469988-010V
			RK- 520071-010V
			RK- 520167-010V
			RK- 520095-010V
			RK- 520167-010V
			RK- 520095-010V
			RK- 520167-010V
			RK- 520071-010V
			RK- 520167-010V
			RK- 520071-010V
			RK- 520167-010V
			C- 529933-010V
			C- 529940-010V
			C- 735222-010V
			C- 736600-010V
			C- 295262-020V
			C- 295262-030V
			C- 456274-010V
			C- 255982-020V
			C- 256089-020V
			C- 271274-020V
			C- 272342-020V

PART NO	LAST AM	DESCRIPTION	GROUP NO
			C- 272407-020V
			C- 255982-020V
			C- 256089-020V
			C- 271274-020V
			C- 272407-020V
4- 12242-0001		GASKET	C- 456976-010V
			C- 272407-020V
			C- 456555-010V
			C- 456836-020V
			C- 456976-020V
			C- 469091-010V
			C- 469452-010V
			C- 272407-020V
			C- 456555-010V
			C- 456836-020V
			C- 456976-020V
			C- 469091-010V
			C- 469452-010V
			C- 272407-020V
			C- 456555-020V
			C- 456836-030V
			C- 456976-030V
			C- 469091-020V
			C- 469452-020V
			C- 751800-010V
			C- 272407-020V
			C- 456555-030V
			C- 456836-040V
			C- 456976-040V
			C- 469091-020V
			C- 469452-030V
			C- 751800-020V
			C- 456274-010V
			C- 529933-010V
			C- 735222-010V
			C- 735265-010V
			C- 736600-010V
			C- 529933-010V
			C- 735222-010V
			C- 735265-010V
			C- 736600-010V
			C- 529933-010V
			C- 735222-010V
			C- 735265-010V
			C- 736600-010V
4- 12242-0002		GASKET	C- 752495-010V
			C- 295262-020V
			C- 295262-030V
			C- 256014-020V
			C- 295778-010V
			C- 256014-020V
			C- 295778-010V
			C- 456836-020V
			C- 456836-030V
4- 12242-0003		GASKET	C- 456274-010V
			RK- 520071-010V
			RK- 520167-010V
			RK- 520095-010V
			RK- 520167-010V
			RK- 520095-010V
			RK- 520167-010V
			RK- 520071-010V
			RK- 520167-010V
			RK- 520071-010V
4- 12242-0003		GASKET	RK- 520167-010V
			C- 736600-010V
			C- 456274-010V
			C- 256014-020V
			C- 272342-020V
			C- 272560-020V
			C- 295778-010V
			C- 256014-020V
			C- 272560-030V
			C- 295778-010V
			C- 456836-010V
			C- 456976-010V
			C- 256014-030V

PART NO	LAST AM	DESCRIPTION	GROUP NO
			C- 272560-030V
			C- 295778-020V
			C- 456836-020V
			C- 456976-020V
			C- 469452-010V
			C- 256014-030V
			C- 272560-030V
			C- 295778-030V
			C- 456836-020V
			C- 456976-020V
			C- 469452-010V
			C- 256014-040V
			C- 272560-040V
			C- 295778-030V
			C- 456836-030V
			C- 456976-030V
			C- 469452-020V
			C- 751800-010V
			C- 256014-050V
			C- 272560-050V
			C- 295778-040V
			C- 456836-040V
			C- 456976-040V
			C- 469452-030V
			C- 751800-020V
			C- 456274-010V
			C- 736600-010V
4- 12242-0005		GASKET	C- 272560-020V
			C- 272560-030V
			C- 272560-040V
			C- 272560-050V
4- 14844		BRACKET	C- 283600-010V
4- 14846		CATCH	C- 441000-020V
			C- 441000-030V
			C- 441000-040V
			C- 441000-050V
4- 14966		ROLLER	C- 283600-010V
			C- 441000-020V
			C- 441000-030V
			C- 441000-040V
			C- 441000-050V
4- 15529		WASHER	RK- 491744-010V
			C- 272014-020V
			C- 272014-030V
			C- 751088-010V
			C- 751088-020V
4- 15810		BRAKE SHOE	C- 469738-010V
			C- 441000-020V
			C- 441000-030V
			C- 283600-010V
			C- 469316-010V
			C- 486955-010V
			C- 469316-010V
			C- 486955-010V
4- 18052-0003		RUBBER GASKET	C- 256358-010V
4- 18135		WASHER	C- 283604-010V
			C- 283624-010V
			C- 283604-020V
			C- 533903-010V
			RK- 547726-010V
			C- 752755-010V
			C- 283602-010V
			C- 283604-010V
			C- 283617-010V
			C- 294659-010V
			RK- 547300-010V
			C- 283602-010V
			C- 283617-010V
			C- 283621-010V
			CR- 283605-010V
			C- 449323-010V
			C- 456612-010V
			C- 456696-010V
			CR- 283605-010V
			C- 456696-020V
			C- 533844-010V
			C- 533903-010V

PART NO	LAST AM	DESCRIPTION	GROUP NO
4- 18542		WASHER	C- 271261-020V
			C- 271261-030V
			C- 271261-040V
			C- 271261-050V
4- 18880		AXLE PIN	C- 441000-020V
			C- 441000-030V
			C- 441000-040V
			C- 441000-050V
4- 19135		LOCK WASHER	C- 283618-010V
			CR- 283618-020V
4- 19262		WASHER	C- 256968-020V
			C- 268865-010V
3- 19452		BOBBIN BRAKE	C- 441000-020V
			C- 441000-030V
4- 19453		SHAFT	C- 441000-020V
			C- 441000-030V
			C- 441000-040V
			C- 441000-050V
4- 19455		ROLLER	C- 441000-020V
			C- 441000-030V
			C- 441000-040V
4- 19515		EYELET	C- 256968-020V
			C- 441000-020V
			C- 441000-030V
			C- 441000-040V
4- 19893		WEIGHT	C- 469736-010V
			C- 441000-020V
			C- 441000-030V
4- 19893		WEIGHT	C- 441000-040V
			C- 441000-050V
			C- 283600-010V
4- 19997		ADJUSTING SCREW	C- 268865-010V
			C- 283611-010V
			RK- 547782-010V
			C- 283611-010V
			C- 449388-010V
4- 20039		RUBBER STRIP	C- 283602-010V
4- 20073		ADJUSTING SCREW	C- 256228-020V
4- 20239		COMPRESSION SPRING	C- 256951-020V
			C- 256952-020V
			C- 256951-020V
			C- 256952-020V
			C- 256951-030V
			C- 256952-030V
			C- 256951-030V
			C- 256952-030V
			C- 256951-040V
			C- 256952-040V
			C- 256951-040V
			C- 256952-040V
4- 20702		COVER PLATE	CR- 256547-020V
			CR- 256547-030V
4- 20705-0001		INSULATING TUBE	CR- 31390-010V
			CR- 31390-011V
			CR- 31390-010V
			CR- 31390-011V
4- 20772		INSULATOR BODY	CR- 31390-010V
			CR- 31390-011V
			CR- 31390-010V
			CR- 31390-011V
4- 20990		TIE ROD	C- 250610-010V
4- 21047		LOCK WASHER	CR- 256436-020V
			CR- 256436-030V
			CR- 256436-040V
			CR- 256436-050V
4- 21521		COMPRESSION SPRING	C- 256084-020V
			C- 256084-030V
			C- 256084-040V
4- 21903		ROLLER	C- 246388-020V
			C- 272343-020V
			C- 295668-020V
			C- 246388-020V
			C- 272343-030V
			C- 295668-030V
			C- 246388-020V
			C- 272343-030V
			C- 295668-030V

PART NO	LAST AM	DESCRIPTION	GROUP NO
			C- 246388-020V
			C- 272343-040V
			C- 295668-030V
			C- 246388-020V
			C- 272343-050V
			C- 295668-030V
4- 21944		PLATE	C- 256228-020V
4- 22314		SPACER SLEEVE	C- 268665-010V
4- 22463		ROLLER	CR- 256204-020V
			CR- 256205-020V
4- 22463		ROLLER	CR- 256204-020V
			CR- 256205-020V
			CR- 256204-030V
			CR- 256205-030V
			CR- 256204-040V
			CR- 256205-040V
			CR- 256204-040V
			CR- 256205-040V
			CR- 256204-050V
			CR- 256205-050V
4- 22475		CAM ROLLER	C- 256951-020V
			C- 256952-020V
			C- 256951-020V
			C- 256952-020V
			C- 256951-030V
			C- 256952-030V
			C- 256951-030V
			C- 256952-030V
			C- 256951-040V
			C- 256952-040V
			C- 256951-040V
			C- 256952-040V
4- 22559		GRUB SCREW	C- 295891-010V
			C- 295891-020V
3- 23106		MATCHING TRANSFORMER	C- 295891-030V
			CE- 67720-010V
			CE- 68133-010V
			CE- 68307-010V
			CE- 68133-010V
3- 23113		MATCHING TRANSFORMER	CE- 68307-010V
			CE- 67720-010V
			CE- 68133-010V
			CE- 68307-010V
			CE- 68133-010V
3- 23118		TRANSFORMER	CE- 68307-010V
			CE- 67716-010V
			CE- 68128-010V
			CE- 68304-010V
			CE- 68128-010V
			CE- 67716-010V
3- 23124		TRANSFORMER	CE- 68304-010V
			CE- 67716-010V
			CE- 68128-010V
			CE- 68304-010V
			CE- 68128-010V
			CE- 67716-010V
3- 23132		TRANSFORMER	CE- 68304-010V
3- 23139		TRANSFORMER	CE- 68128-010V
			CE- 67716-010V
			CE- 68128-010V
			CE- 68304-010V
			CE- 68128-010V
			CE- 67716-010V
4- 23580		KNOB	CE- 68304-010V
			C- 271649-020V
			C- 267315-010V
			C- 271649-020V
			C- 272014-020V
4- 23580		KNOB	C- 271649-020V
			C- 272014-020V
			C- 469074-010V
4- 23582		HOLDER	C- 469074-020V
			C- 256229-020V
			C- 271649-020V
			C- 256229-020V
			C- 271649-020V
			C- 256229-020V

PART NO	LAST AM	DESCRIPTION	GROUP NO
			C- 271649-020V
			C- 256229-020V
			C- 271649-020V
			C- 256229-020V
			C- 267315-010V
			C- 257166-020V
			C- 271649-020V
			C- 257166-020V
			C- 271649-020V
			C- 257166-030V
			C- 469074-010V
			C- 257166-030V
			C- 469074-010V
4- 23583		GUIDE	C- 469074-020V
			C- 256229-020V
			C- 271649-020V
			C- 256229-020V
			C- 271649-020V
			C- 256229-020V
			C- 271649-020V
			C- 256229-020V
			C- 267315-010V
			C- 257166-020V
			C- 271649-020V
			C- 257166-020V
			C- 271649-020V
			C- 257166-030V
			C- 469074-010V
			C- 257166-030V
			C- 469074-010V
4- 23584		SCREW	C- 469074-020V
			C- 256229-020V
			C- 271649-020V
			C- 256229-020V
			C- 271649-020V
			C- 256229-020V
			C- 271649-020V
			C- 256229-020V
			C- 271649-020V
			C- 256229-020V
			C- 267315-010V
			C- 257166-020V
			C- 271649-020V
			C- 257166-020V
			C- 271649-020V
			C- 257166-030V
			C- 469074-010V
			C- 257166-030V
4- 23584		SCREW	C- 469074-010V
4- 23762-0002		SIDE PIPE	C- 469074-020V
			CR- 256547-020V
4- 23763-0001		SPACER PIPE	CR- 256547-030V
			CR- 256547-020V
4- 23763-0002		SPACER PIPE	CR- 256547-030V
			CR- 256547-020V
4- 23763-0005		SPACER PIPE	CR- 256547-030V
			CR- 256547-020V
4- 23763-0006		SPACER PIPE	CR- 256547-030V
			CR- 256547-020V
4- 23763-0007		SPACER PIPE	CR- 256547-030V
			CR- 256547-020V
4- 23763-0009		SPACER PIPE	CR- 256547-030V
			CR- 256547-020V
4- 23765-0002		INSULATING TUBE	CR- 256547-030V
			CR- 256547-020V
4- 23765-0003		INSULATING TUBE	CR- 256547-030V
			CR- 256547-020V
4- 23765-0004		INSULATING TUBE	CR- 256547-030V
			CR- 256547-020V
4- 23765-0005		INSULATING TUBE	CR- 256547-030V
			CR- 256547-020V
3- 23768		FLANGE SEAL	CR- 256547-030V
3- 23769		STOP PLATE	CR- 256547-020V
			CR- 256547-020V
			CR- 256547-030V

PART NO	LAST AM	DESCRIPTION	GROUP NO
4- 23771		SPACER RING	CR- 31390-010V CR- 31390-011V CR- 31390-010V CR- 31390-011V
4- 24237		NUT	C- 256228-020V
4- 24351		CLAMP	C- 267315-010V C- 257166-020V C- 257166-030V
4- 24352		SHAFT	C- 271649-020V C- 267315-010V C- 271649-020V
4- 24354		WASHER	C- 256229-020V C- 271649-020V C- 256229-020V C- 271649-020V C- 256229-020V C- 271649-020V C- 256229-020V C- 271649-020V C- 256229-020V C- 257166-020V C- 271649-020V C- 257166-020V C- 271649-020V C- 469074-010V C- 469074-020V
4- 24355		PIN	C- 271649-020V C- 267315-010V C- 257166-020V C- 271649-020V C- 257166-020V C- 271649-020V C- 257166-030V
4- 24355		PIN	C- 469074-010V C- 257166-030V C- 469074-010V C- 469074-020V
4- 24356		BLOCK	C- 752957-010V C- 256229-020V C- 271649-020V C- 256229-020V C- 271649-020V C- 256229-020V C- 271649-020V C- 256229-020V C- 271649-020V C- 256229-020V C- 271649-020V C- 256229-020V C- 271649-030V C- 267315-010V C- 752628-010V C- 257166-020V C- 271649-020V C- 257166-020V C- 271649-020V C- 257166-030V C- 469074-010V C- 257166-030V C- 469074-010V C- 469074-020V
4- 24755		CLAMP	CR- 283605-010V
4- 26490		WASHER	C- 456274-010V C- 256233-020V C- 456274-010V C- 271274-020V C- 272021-020V C- 272030-020V C- 441304-010V C- 271274-020V C- 272021-020V C- 272030-020V C- 441304-010V C- 441304-020V C- 441304-030V C- 456274-010V
4- 27815		WASHER	C- 256223-020V C- 256223-030V C- 256014-040V

PART NO	LAST AM	DESCRIPTION	GROUP NO
4- 27906		WASHER	C- 256014-050V C- 441088-010V C- 441092-010V C- 441088-010V C- 441092-010V C- 441088-010V C- 441092-010V C- 441088-010V C- 441092-010V
4- 27929-0003		GASKET	C- 272560-020V
4- 28036		WASHER	C- 256236-020V C- 469501-020V C- 469501-030V
4- 28036		WASHER	C- 272381-020V C- 751691-010V C- 272408-020V C- 272408-030V C- 456321-010V C- 456322-010V C- 456348-010V C- 456349-010V C- 272408-030V C- 456321-020V C- 456322-020V C- 456348-020V C- 456349-020V C- 272408-040V C- 456321-030V C- 456322-030V C- 456348-020V C- 456349-020V C- 272408-050V C- 752645-010V C- 752646-010V C- 752913-010V C- 752914-010V C- 255957-020V C- 256055-020V C- 271274-020V C- 271485-020V C- 272445-020V C- 272560-020V C- 255957-020V C- 256055-020V C- 271274-020V C- 271485-020V C- 272445-020V C- 272560-030V C- 469501-010V C- 272560-030V C- 469501-020V C- 469501-030V C- 751800-010V C- 272021-050V C- 469501-030V C- 751800-020V C- 283631-010V C- 456679-010V
4- 28037		WASHER	RK- 751462-010V RK- 751305-010V RK- 751307-010V RK- 751305-010V RK- 751307-010V C- 272030-020V C- 441304-010V C- 272030-020V C- 441304-010V C- 441304-020V C- 441486-030V C- 441304-030V
4- 28325		COUNTER ROLLER	C- 256238-020V C- 295667-020V
4- 28325		COUNTER ROLLER	C- 256238-020V C- 295667-020V C- 256238-030V

PART NO	LAST AM	DESCRIPTION	GROUP NO
4- 28326		ROLLER	C- 295667-030V
			C- 256238-020V
			C- 295667-020V
			C- 256238-020V
			C- 295667-020V
			C- 256238-030V
			C- 295667-030V
			C- 256238-040V
			C- 295667-030V
			C- 256238-040V
			C- 295667-030V
4- 28508		SCREW	C- 457866-010V
4- 28509		WASHER	C- 256973-020V
			C- 256973-030V
			C- 256219-020V
			C- 256220-020V
			C- 256219-020V
			C- 256220-020V
			C- 256219-030V
			C- 256220-030V
			C- 256219-030V
			C- 256220-030V
			C- 256219-030V
			C- 256220-030V
			C- 256219-030V
			C- 256220-030V
			C- 457866-010V
			C- 271880-020V
			C- 457866-010V
			C- 469634-010V
			C- 457866-010V
4- 28510		INSULATION NUT	C- 469634-010V
			C- 457866-010V
			C- 469634-010V
			C- 457866-010V
4- 28837		TRIMMING ROLLER PLUS	C- 469634-010V
			C- 77093-010V
			C- 77093-020V
			B- 648119-020V
			B- 648119-060V
			B- 648119-020V
4- 28838		TRIMMING ROLLER MINUS	B- 648119-060V
			C- 77093-010V
			C- 77093-020V
			B- 648119-020V
			B- 648119-060V
			B- 648119-020V
			B- 648119-060V
4- 29411		SPACER PIPE	CR- 31390-010V
4- 29413		SHIM	CR- 31390-010V
			CR- 31390-011V
			CR- 31390-010V
			CR- 31390-011V
3- 29876		LID	C- 271181-020V
			C- 271181-030V
			C- 271181-040V
4- 30298		INSULATION	C- 271181-020V
			C- 271181-030V
			C- 271181-040V
2- 30310-0002		HEATING COIL	CR- 31390-010V
2- 30311-0001		HEATING COIL	CR- 31390-011V
2- 30311-0002		HEATING COIL	CR- 31390-011V
4- 31017		KNIFE	C- 37877-030V
CR- 31390-0102	13601 89-11-03	ELEMENT	CR- 256547-020V
			CR- 256547-030V
CR- 31390-011V	12952 89-06-14	ELEMENT	CR- 256547-020V
			CR- 256547-030V
4- 31418		SHAFT	C- 256968-020V
			C- 456032-010V
4- 31420		WASHER	C- 256968-020V
4- 31423		LUG	C- 256968-020V
			C- 456032-010V
4- 31424		ROLLER BRACKET	C- 256968-020V
4- 31425		GUIDE ROLLER	C- 256968-020V
			C- 456032-010V
4- 31553-0001		WASHER	C- 256437-020V
3- 31559		SPRING PLATE	C- 256437-020V

PART NO	LAST AM	DESCRIPTION	GROUP NO
4- 31653-0001		PLATE	CR- 31390-010V
4- 31653-0002		PLATE	CR- 31390-011V
4- 31723		TEFLON STRIP	C- 37877-030V
4- 31724		LOCK BAR	C- 37877-030V
4- 32079		WASHER	C- 256973-020V
			C- 256973-030V
			C- 469634-010V
			C- 441736-010V
4- 32134		SHIM	C- 456953-010V
			C- 294880-010V
			C- 441736-010V
			C- 456953-010V
4- 32136		SHIM	C- 456953-010V
			C- 294880-010V
			C- 469634-010V
			C- 441736-010V
			C- 456953-010V
4- 32208		GASKET	C- 256237-020V
			C- 256237-030V
			C- 272408-020V
4- 32213		WASHER	C- 295891-010V
			C- 295891-020V
			C- 295891-030V
4- 32215		HOLDER	C- 295891-010V
			C- 295891-020V
			C- 295891-030V
4- 32216		GASKET	C- 295668-020V
			C- 295891-010V
4- 32217		BOTTOM SECTION	C- 295891-010V
			C- 295891-020V
			C- 295891-030V
4- 32219		WASHER	C- 295891-010V
			C- 295891-020V
			C- 295891-030V
4- 32223		BEARING	C- 295891-010V
			C- 295891-020V
			C- 295891-030V
4- 32400		HOLDER	C- 295891-010V
4- 32400		HOLDER	C- 295891-020V
			C- 295891-030V
4- 32438		GASKET	C- 295668-020V
			C- 295891-010V
4- 32439		GASKET	C- 295668-020V
			C- 295891-010V
4- 32440		GASKET	C- 295668-020V
			C- 295891-010V
3- 32451		AIR DUCT	C- 295891-010V
			C- 295891-020V
			C- 295891-030V
3- 32453		MANTLE	C- 295891-010V
			C- 295891-020V
			C- 295891-030V
3- 32474		CONNECTION	C- 295891-010V
			C- 295891-020V
			C- 295891-030V
4- 32544		INSULATION NUT	C- 456953-010V
			C- 457866-010V
			C- 469634-010V
			C- 457866-010V
			C- 469634-010V
			C- 441736-010V
4- 32644		WASHER	C- 456953-010V
			C- 456953-010V
			CR- 256214-020V
			CR- 256214-030V
			C- 457866-010V
			C- 441736-010V
2- 32668		ARM	C- 456953-010V
			C- 295891-010V
			C- 295891-020V
4- 32691		LOCKING SPRING	C- 295891-030V
			C- 228779-010V
			C- 293685-010V
			C- 293685-020V
			C- 293684-010V
			C- 293684-020V
			C- 293685-010V

PART NO	LAST AM	DESCRIPTION	GROUP NO
			C- 293685-020V
			C- 293684-010V
			C- 293684-020V
			C- 293685-020V
			C- 293684-020V
			C- 293685-020V
			C- 293684-020V
4- 32692		PIN	C- 228779-010V
4- 32919		BEARING BLOCK	C- 256236-020V
			C- 456321-010V
			C- 456322-010V
			C- 456348-010V
			C- 456349-010V
			C- 456321-020V
			C- 456322-020V
			C- 456348-020V
			C- 456349-020V
			C- 456321-030V
			C- 456322-030V
			C- 456348-020V
4- 32919		BEARING BLOCK	C- 456349-020V
			C- 272445-020V
4- 32921		INK ROLLER	C- 256358-010V
4- 32922		ROLLER	C- 256358-010V
4- 32923		SPRING	C- 256236-020V
			C- 456321-010V
			C- 456322-010V
			C- 456348-010V
			C- 456349-010V
			C- 456321-020V
			C- 456322-020V
			C- 456348-020V
			C- 456349-020V
			C- 456321-030V
			C- 456322-030V
			C- 456348-020V
			C- 456349-020V
			C- 272445-020V
4- 32925		CARRIER	C- 256236-020V
			C- 456321-010V
			C- 456322-010V
			C- 456348-010V
			C- 456349-010V
			C- 456321-020V
			C- 456322-020V
			C- 456348-020V
			C- 456349-020V
			C- 456321-030V
			C- 456322-030V
			C- 456348-020V
			C- 456349-020V
			C- 752645-010V
			C- 752646-010V
			C- 752913-010V
			C- 752914-010V
			C- 272445-020V
4- 32926		ROLLER	C- 256236-020V
			C- 456321-010V
			C- 456322-010V
			C- 456348-010V
			C- 456349-010V
			C- 456321-020V
			C- 456322-020V
			C- 456348-020V
			C- 456349-020V
			C- 456348-020V
			C- 456349-020V
			C- 752645-010V
			C- 752646-010V
			C- 752913-010V
			C- 752914-010V
			C- 272445-020V
4- 32927		SHAFT	C- 256236-020V
			C- 456321-010V
			C- 456322-010V
			C- 456348-010V
			C- 456349-010V

PART NO	LAST AM	DESCRIPTION	GROUP NO
			C- 456321-020V
			C- 456322-020V
4- 32927		SHAFT	C- 456348-020V
			C- 456349-020V
			C- 456321-030V
			C- 456322-030V
			C- 456348-020V
			C- 456349-020V
			C- 752645-010V
			C- 752646-010V
			C- 752913-010V
			C- 752914-010V
			C- 272445-020V
4- 32929		GABLE	C- 228779-010V
4- 32930		GABLE	C- 228779-010V
4- 32931		TYPE HOLDER	C- 228779-010V
4- 32932		TYPE HOLDER	C- 228779-010V
4- 32933		CARRIER	C- 228779-010V
4- 32934		CARRIER	C- 228779-010V
3- 32996		INK WELL	C- 256358-010V
3- 33007		COVER	C- 256358-010V
4- 33010		SCREW	C- 256358-010V
			C- 434774-020V
			C- 434774-030V
			C- 434074-020V
			C- 434074-030V
			C- 434774-020V
			C- 434774-030V
			C- 434074-020V
			C- 434074-030V
			C- 434774-030V
			C- 434074-030V
			C- 434774-030V
			C- 434074-030V
4- 33011		SLEEVE	C- 228779-010V
			C- 293685-010V
			C- 293685-020V
			C- 293684-010V
			C- 293684-020V
			C- 293685-010V
			C- 293685-020V
			C- 293684-010V
			C- 293684-020V
			C- 293685-020V
			C- 293684-020V
			C- 293685-020V
			C- 293684-020V
4- 33052-0001		SPACER	C- 228779-010V
4- 33052-0002		SPACER	C- 228779-010V
4- 33052-0003		SPACER	C- 228779-010V
4- 33052-0004		SPACER	C- 228779-010V
4- 33052-0005		SPACER	C- 228779-010V
4- 33182		ROLLER	C- 256236-020V
			C- 456321-010V
			C- 456322-010V
			C- 456348-010V
			C- 456349-010V
			C- 456321-020V
			C- 456322-020V
			C- 456348-020V
			C- 456349-020V
4- 33182		ROLLER	C- 456321-030V
			C- 456322-030V
			C- 456348-020V
			C- 456349-020V
			C- 752645-010V
			C- 752646-010V
			C- 752913-010V
			C- 752914-010V
			C- 272445-020V
4- 33183		SPRING	C- 256236-020V
			C- 456321-010V
			C- 456322-010V
			C- 456348-010V
			C- 456349-010V
			C- 456321-020V
			C- 456322-020V

PART NO	LAST AM	DESCRIPTION	GROUP NO
			C- 456348-020V
			C- 456349-020V
			C- 456321-030V
			C- 456322-030V
			C- 456348-020V
			C- 456349-020V
			C- 272445-020V
4- 33408		BEARING	CR- 256204-020V
			CR- 256205-020V
			CR- 256204-020V
			CR- 256205-020V
			CR- 256204-030V
			CR- 256205-030V
			CR- 256204-040V
			CR- 256205-040V
			CR- 256204-040V
			CR- 256205-040V.
			CR- 256204-050V
			CR- 256205-050V
4- 33550		TYPE HOLDER	C- 228779-010V
4- 33577		BRACKET	C- 256233-020V
			C- 256233-030V
			C- 256233-040V
			C- 256233-050V
			C- 272408-020V
			C- 272408-030V
			C- 272408-040V
			C- 272408-050V
			C- 295045-020V
			C- 295045-030V
			C- 491083-010V
			C- 295045-040V
			C- 491083-010V
			C- 295045-050V
			C- 491083-020V
			C- 295045-060V
			C- 491083-020V
2- 35210		BRACKET	C- 295026-010V
			C- 295026-020V
3- 35212-0002		GLASS PANE	C- 295026-030V
			C- 295026-010V
			C- 295026-020V
3- 35212-0004		GLASS PANE	C- 295026-030V
			C- 295026-010V
			C- 295026-020V
3- 35212-0005		GLASS PANE	C- 295026-030V
			C- 295026-010V
			C- 295026-020V
3- 35213		FRAME	C- 295026-030V
			C- 295026-010V
			C- 295026-020V
3- 35214		LID	C- 295026-030V
			C- 295026-010V
			C- 295026-020V
4- 35215		PLATE	C- 295026-030V
			C- 295026-010V
			C- 295026-020V
4- 35216		WASHER	C- 295026-030V
			C- 295026-010V
			C- 295026-020V
4- 35547		SPRING	C- 295026-030V
			C- 256358-010V
			C- 434774-020V
			C- 434774-030V
			C- 434074-020V
			C- 434074-030V
			C- 434774-020V
			C- 434774-030V
			C- 434074-020V
			C- 434074-030V
			C- 434774-030V
			C- 434074-030V
			C- 434774-030V
4- 35548		SPRING	C- 434074-030V
4- 35549		CANNULAR TUBE	C- 256358-010V
4- 35550		BRACKET	C- 256358-010V
			C- 256358-010V

PART NO	LAST AM	DESCRIPTION	GROUP NO
4- 35616		PRESSURE GAUGE TUBE	C- 272560-020V
4- 35849		FLANGE	C- 256234-020V
			C- 256234-030V
4- 35918		SHAFT	C- 441486-010V
			C- 441486-020V
			C- 441486-030V
			C- 441486-040V
4- 35919		COMPRESSION SPRING	C- 441486-010V
			C- 441486-020V
			C- 441486-030V
			C- 441486-040V
4- 35962		LID	C- 271452-020V
			C- 271453-020V
			C- 271452-020V
			C- 271453-020V
			C- 271452-020V
			C- 271453-030V
			C- 490761-010V
3- 36148		PISTON HOUSING	C- 256232-020V
			C- 256232-030V
3- 36149		VALVE SPINDLE	C- 256232-020V
			C- 256232-030V
4- 36160		PISTON	C- 256232-020V
			C- 256232-030V
4- 36161		NUT	C- 256232-020V
4- 36161		NUT	C- 256232-030V
4- 36164		NUT	C- 256232-020V
			C- 256232-030V
4- 36166		GASKET	C- 256232-020V
			C- 295667-020V
			C- 256232-020V
			C- 295667-020V
			C- 256232-020V
			C- 295667-030V
			C- 256232-030V
			C- 295667-030V
			C- 256232-030V
			C- 295667-030V
4- 36178-0001		SIGN	C- 256232-020V
4- 36178-0002		SIGN	C- 256232-020V
4- 36178-0003		SIGN	C- 256232-020V
			C- 256232-030V
4- 36178-0004		SIGN	C- 256232-020V
			C- 256232-030V
3- 36316		PAPER SUPPORT	C- 295891-010V
			C- 295891-020V
			C- 295891-030V
4- 36325		KNOB	C- 441486-010V
			C- 441486-020V
			C- 441486-030V
			C- 441486-040V
4- 36360		CANNULAR TUBE	C- 256358-010V
3- 36361		HOLDER	C- 256358-010V
3- 36362		COVER	C- 256358-010V
3- 36364		INK WELL	C- 256358-010V
4- 36451		COMPRESSION SPRING	C- 256232-020V
			C- 256232-030V
4- 36489		ASSEMBLING TOOL	C- 456975-020V
			C- 250610-010V
2- 36749		MANTLE	C- 456975-010V
			C- 295891-010V
			C- 295891-020V
4- 36816		LINK	C- 295891-030V
			C- 256230-020V
			C- 256230-030V
			C- 255921-020V
			C- 255921-030V
4- 36817		CLAMPING ELEMENT	C- 255921-040V
			C- 256230-020V
			C- 256230-030V
			C- 255921-020V
			C- 255921-030V
4- 36821-0002		SHEAR PIN	C- 255921-040V
			C- 256230-020V
			C- 256230-030V
			C- 255921-020V
			C- 255921-030V

PART NO	LAST AM	DESCRIPTION	GROUP NO
			C- 255921-040V
2- 36871		VALVE HOUSING	C- 256232-020V
			C- 256232-030V
4- 36888		CYLINDER	C- 256232-020V
			C- 256232-030V
4- 36953-0007		ROLLER	C- 255957-020V
4- 37296		ARM	C- 256230-020V
4- 37296		ARM	C- 256230-030V
			C- 255921-020V
			C- 255921-030V
			C- 255921-040V
4- 37535		SUPPORT	CR- 31390-010V
			CR- 31390-011V
			CR- 31390-010V
			CR- 31390-011V
4- 37536		INSULATOR BODY	CR- 31390-010V
			CR- 31390-011V
			CR- 31390-010V
			CR- 31390-011V
4- 37537		SPACER RING	CR- 31390-010V
			CR- 31390-011V
			CR- 31390-010V
			CR- 31390-011V
4- 37638		PENDULUM SUSPENSION	C- 271169-020V
			C- 272337-020V
			C- 271169-020V
			C- 272337-020V
			C- 271169-020V
			C- 272337-020V
			C- 271169-020V
			C- 272337-020V
4- 37768		THERMOCOUPLE	C- 256237-020V
			C- 256237-030V
			C- 256237-040V
			C- 256237-050V
			C- 256237-060V
			C- 295891-010V
			C- 295891-020V
			C- 295891-030V
			C- 272560-020V
			C- 272560-030V
			C- 272560-040V
			C- 272560-050V
4- 37774		PROTECTIVE COVER	C- 271641-020V
			C- 271641-030V
4- 37775		LAMP HOLDER	C- 271641-020V
			C- 271641-030V
C- 37877-0301	10574 87-10-07	HEATING BLOCK	C- 271699-020V
			C- 271699-030V
			C- 752046-010V
2- 37879		LOCKING ARM	C- 37877-030V
3- 37880		HINGE	C- 37877-030V
4- 37882		PROTECTION PLATE	C- 37877-030V
4- 37883		LOCK BAR	C- 37877-030V
4- 37884		SHAFT	C- 37877-030V
4- 37885		TENSION SPRING	C- 37877-030V
4- 37886		INSULATING DISK	C- 37877-030V
4- 37888		ROLLER	C- 37877-030V
4- 37889		SHAFT	C- 37877-030V
4- 37890		FLANGE ROLLER	C- 37877-030V
4- 37892		CONNECTION BOX	C- 37877-030V
4- 37893		LID	C- 37877-030V
C- 37894-0101	5061 81-11-06	COUNTER RAIL	C- 271699-020V
			C- 271699-030V
			C- 752046-010V
3- 37895		RAIL	C- 37894-010V
4- 37896		PIN	C- 37894-010V
4- 37897		WASHER	C- 37894-010V
C- 37898-0101	6317 83-11-03	TEARING DEVICE	C- 271699-020V
2- 37899		PRESSURE ARM	C- 37898-010V
3- 37900		KNIFE	C- 37898-010V
4- 37901		SHAFT	C- 37898-010V
			C- 450101-010V
4- 37903		TENSION SPRING	C- 37898-010V
1- 37905		FRAME	C- 271641-020V
3- 37906		PLATE	C- 271641-020V
3- 37907		PLATE	C- 271641-020V

PART NO	LAST AM	DESCRIPTION	GROUP NO
4- 37908		PLATE	C- 271641-020V
			C- 271641-030V
4- 37909		SPRING	C- 271641-020V
4- 37910		LOCK	C- 271641-020V
			C- 271641-030V
4- 37911		SHIM	C- 271641-020V
			C- 271641-030V
4- 37912		LOCK BOARD	C- 271641-020V
			C- 271641-030V
4- 37913		RULER	C- 271641-020V
			C- 271641-030V
4- 37916		RULER	C- 271641-020V
4- 37917		RULER	C- 271641-020V
			C- 271641-030V
4- 37927		COMPRESSION SPRING	C- 271626-020V
			C- 271626-030V
4- 38087		WASHER	C- 271113-020V
			C- 271114-030V
			C- 271114-040V
4- 38535-0001		PIN	C- 256230-020V
			C- 255921-020V
			C- 255921-030V
4- 38535-0002		PIN	C- 735192-010V
			C- 256230-020V
			C- 255921-020V
			C- 255921-030V
			C- 735192-010V
4- 38630-0003		COUNTER ROLLER	C- 255957-020V
			C- 456309-010V
			C- 255957-020V
			C- 456309-010V
			C- 456309-020V
			C- 456309-030V
BE- 39452-010V	5842 88-04-07	IH EQUIPMENT	CE- 67721-010V
BE- 39452-0103	5842 88-04-07	IH EQUIPMENT	CE- 68308-010V
			BE- 649205-050V
			BE- 649205-070V
BE- 39642-0102	7188 88-09-12	IH-EQUIPMENT	RK- 68874-010V
CE- 40903-010V	5842 88-04-07	IH EQUIPMENT	CE- 67721-010V
CE- 40903-0101	5842 88-04-07	IH EQUIPMENT	CE- 68308-010V
			BE- 649205-050V
			BE- 649205-070V
RK- 41274-0101	8587 89-01-24	EL-MTRL JAW SYSTEM OVERL.	RK- 456716-010V
RK- 41275-0101	8588 89-01-24	EL-MTRL JAW SYSTEM OVERL.	RK- 456717-010V
RK- 41377-010V	13835 90-02-06	ELECTRIC MATERIALS	RK- 43880-010V
RK- 41377-0101	13835 90-02-06	ELECTRIC MATERIALS	RK- 649324-010V
RK- 41378-0101	10106 89-01-23	EL-MTRL JAW SYSTEM OVERL.	RK- 752414-010V
RK- 41379-0101	10107 89-01-24	EL-MTRL JAW SYSTEM OVERL.	RK- 752412-010V
RK- 41461-010V	13836 90-02-06	ELECTRIC MATERIALS	RK- 43879-010V
RK- 41461-0101	13836 90-02-06	ELECTRIC MATERIALS	RK- 649340-010V
RK- 41486-0101	10869 89-01-24	EL-MTRL JAW SYSTEM OVERL.	RK- 752408-010V
RK- 41510-010V	11772 89-07-06	EL-MATERIAL	RK- 69566-010V
			RK- 649369-010V
RK- 41511-010V	11773 89-07-06	EL-MATERIAL	RK- 69564-010V
			RK- 649370-010V
RK- 41512-010V	11774 89-07-06	EL-MATERIAL	RK- 69565-010V
			RK- 649371-010V
RK- 41534-0101	12256 89-01-23	EL-MTRL JAW SYSTEM OVERL.	RK- 752410-010V
RK- 41544-010V	12324 88-12-22	MATERIAL	RK- 41545-010V
RK- 41544-0101	12324 88-12-22	MATERIAL	RK- 649389-010V
RK- 41545-0101	12324 88-12-22	DOCUMENT	RK- 649389-010V
RK- 41546-010V	12325 88-12-22	MATERIAL	RK- 41547-010V
RK- 41546-0101	12325 88-12-22	MATERIAL	RK- 649390-010V
RK- 41547-0101	12325 88-12-22	DOCUMENT	RK- 649390-010V
RK- 41548-010V	12326 88-12-22	MATERIAL	RK- 41549-010V
RK- 41548-0101	12326 88-12-22	MATERIAL	RK- 649391-010V
RK- 41549-0101	12326 88-12-22	DOCUMENT	RK- 649391-010V
RK- 41567-010V	13834 90-02-06	ELECTRIC MATERIALS	RK- 41578-010V
RK- 41567-0101	13834 90-02-06	ELECTRIC MATERIALS	RK- 649308-010V
CE- 41572-010V	12797 89-04-25	ELECTRIC MATERIALS	CE- 41573-010V
			RK- 649400-010V
CE- 41573-010V	12797 89-04-25	ELECTRICAL DOCUMENT	RK- 649400-010V
CE- 41574-010V	12798 89-04-25	ELECTRIC MATERIALS	CE- 41575-010V
			RK- 649401-010V
CE- 41575-010V	12798 89-04-25	ELECTRICAL DOCUMENT	RK- 649401-010V
CE- 41576-010V	12799 89-04-25	ELECTRIC MATERIALS	CE- 41577-010V
			RK- 649402-010V

PART NO	LAST AM	DESCRIPTION
CE- 41577-010V	12799 89-04-25	ELECTRICAL DOCUMENT
RK- 41578-0101	9358 89-08-10	ELECTRICAL DOCUMENT
RK- 43879-0101	10566 89-08-08	ELECTRICAL DOCUMENT
RK- 43880-0101	10064 89-08-08	ELECTRICAL DOCUMENT
C- 67025-0201	8344 85-10-30	DESIGN CORRECTION LOGIC
C- 67027-0102	8010 85-06-26	DATACABLE
C- 67051-0102	8345 85-10-28	COMPONENT LIST
C- 67054-0101	8344 85-10-30	COMPONENT LIST
C- 67054-0201	8099 85-06-26	COMPONENT LIST
C- 67058-0201	8896 86-07-11	CIRCUIT BOARD
C- 67062-010V	8099 85-06-26	POTENTIOMETER
C- 67062-0201	8897 86-07-11	POTENTIOMETER
C- 67347-0101	9248 88-03-17	BRAKE
CE- 67716-010V	13583 89-09-01	EL-CABINET AB9-050V
CE- 67716-0101	13583 89-09-01	EL-CABINET AB9-050V
CE- 67718-010V	9622 88-04-07	MACHINE AB9-050V
CE- 67718-0101	9622 88-04-07	MACHINE AB9-050V
CE- 67719-010V	9622 88-04-07	EQUIPMENT AB9-050V
CE- 67719-0101	9622 88-04-07	EQUIPMENT AB9-050V
CE- 67720-010V	9622 88-04-07	EXTRA EQUIPMENT AB9-050V
CE- 67720-0101	9622 88-04-07	EXTRA EQUIPMENT AB9-050V
CE- 67721-0101	9622 88-04-07	ELECTRICAL DOCUMENT
CE- 67722-010V	9622 88-04-07	SPARE PARTS KIT AB9-050V
CE- 67722-0101	9622 88-04-07	SPARE PARTS KIT AB9-050V
CE- 68128-010V	10860 88-10-18	ELECTRICAL CABINET
CE- 68128-0101	10860 88-10-18	ELECTRICAL CABINET
CE- 68129-010V	10860 88-10-18	SPARE PART KIT TB/9-050V
CE- 68129-0101	10860 88-10-18	SPARE PART KIT TB/9-050V
CE- 68131-010V	10860 88-10-18	MACHINE TB/9-050V
CE- 68131-0101	10860 88-10-18	MACHINE TB/9-050V
CE- 68132-010V	10860 88-10-18	EQUIPMENT TB/9-050V
CE- 68132-0101	10860 88-10-18	EQUIPMENT TB/9-050V
CE- 68133-010V	10860 88-10-18	EXTRA EQUIPMENT TB/9-050V
CE- 68134-0101	10860 88-10-18	EL-DOCUMENT TB/9-050V
RK- 68178-0101	14287 89-12-18	"L.L.F. HEAD SPACE KIT"
RK- 68179-010V	10822 89-07-04	ELECTRICAL DOCUMENT
RK- 68180-010V	10822 89-07-04	ELECTRIC MATERIALS
RK- 68181-0101	14288 89-12-18	"L.L.F. HEAD SPACE KIT"
RK- 68182-010V	10823 89-07-04	ELECTRICAL DOCUMENT
RK- 68183-010V	10823 89-07-04	ELECTRIC MATERIALS
CE- 68304-010V	11919 89-05-10	EL-CABINET TBA/9-070V
CE- 68304-0101	11919 89-05-10	EL-CABINET TBA/9-070V
CE- 68305-010V	11919 89-05-10	SPARE PARTS TBA/9-070V
CE- 68305-0101	11919 89-05-10	SPARE PARTS TBA/9-070V
CE- 68306-010V	11919 89-05-10	EQUIPMENT TBA/9-070V
CE- 68306-0101	11919 89-05-10	EQUIPMENT TBA/9-070V
CE- 68307-010V	11919 89-05-10	EXTRA EQUIPMENT TBA9-070V
CE- 68308-0101	11919 89-05-10	EL-DOCUMENT TBA/9-070V
CE- 68379-010V	11919 89-05-10	CONTROL PANEL TBA/9-070V
CE- 68379-0101	11919 89-05-10	CONTROL PANEL TBA/9-070V
RK- 68721-0101	13838 90-02-09	"HEADSPACE BY INJECTION"
RK- 68722-010V	13838 90-02-09	ELECTRIC MATERIALS
RK- 68723-010V	13838 90-02-09	ELECTRICAL DOCUMENT
RK- 68724-0101	13837 90-02-09	"HEADSPACE BY INJECTION"
RK- 68725-010V	13837 90-02-09	ELECTRIC MATERIALS
RK- 68725-0101	13837 90-02-09	ELECTRIC MATERIALS
RK- 68726-0101	13837 90-02-09	ELECTRICAL DOCUMENT
CE- 68780-010V	11919 89-05-10	MACHINE TBA/9-070V
CE- 68780-0101	11919 89-05-10	MACHINE TBA/9-070V
RK- 68864-0101	12255 89-07-06	"HEAT REDUCTION"
RK- 68865-010V	12255 89-07-06	EL-MATERIAL
RK- 68868-010V	12255 89-07-06	EL-DOCUMENT
RK- 68873-0101	12260 89-10-11	"SA TO PTS 3"
RK- 68874-010V	12260 89-10-11	MATERIAL
RK- 68875-010V	12260 89-10-11	DOCUMENT

GROUP NO
RK- 649402-010V
RK- 649308-010V
RK- 649340-010V
RK- 649324-010V
CE- 67716-010V
CE- 68128-010V
CE- 68304-010V
CE- 68128-010V
C- 67027-010V
C- 67025-020V
C- 67062-010V
CE- 67716-010V
CE- 68128-010V
CE- 68304-010V
C- 295026-020V
CE- 68379-010V
C- 295026-030V
RK- 68874-010V
CE- 67721-010V
BE- 649205-050V
CE- 67721-010V
BE- 649205-050V
CE- 67721-010V
BE- 649205-050V
CE- 67721-010V
BE- 649205-050V
BE- 649205-050V
CE- 67721-010V
BE- 649205-050V
CE- 68134-010V
BE- 649204-050V
CE- 68134-010V
BE- 649204-050V
CE- 68134-010V
BE- 649204-050V
CE- 68134-010V
BE- 649204-050V
BE- 649204-050V
C- 752669-010V
RK- 68178-010V
RK- 68178-010V
RK- 68179-010V
C- 752985-010V
RK- 68181-010V
RK- 68181-010V
RK- 68182-010V
CE- 68308-010V
BE- 649205-070V
CE- 68308-010V
BE- 649205-070V
CE- 68308-010V
BE- 649205-070V
CE- 68308-010V
BE- 649205-070V
BE- 649205-070V
CE- 68308-010V
BE- 649205-070V
RK- 520096-010V
RK- 68721-010V
RK- 68723-010V
RK- 68721-010V
RK- 520094-010V
RK- 68726-010V
RK- 68724-010V
RK- 68724-010V
CE- 68308-010V
BE- 649205-070V
RK- 553820-010V
RK- 68864-010V
RK- 68866-010V
RK- 68864-010V
RK- 547986-010V
RK- 68873-010V
RK- 68875-010V
RK- 68873-010V

PART NO	LAST AM	DESCRIPTION
RK- 68904-0101	12321 89-05-22	"JUMBO REEL"
RK- 68905-010V	12321 89-05-22	EL-EQUIPMENT
RK- 68905-0101	12321 89-05-22	EL-EQUIPMENT
RK- 68906-0101	12321 89-05-22	EL-DOCUMENT
RK- 68907-0101	12322 89-05-22	"LS STRIP SPLICER"
RK- 68908-010V	13599 89-08-29	ELECTRIC MATERIALS
RK- 68908-0101	13599 89-08-29	ELECTRIC MATERIALS
RK- 68909-0101	12322 89-05-22	EL-DOCUMENT
C- 68917-0101	10472 89-01-25	ANGLE INDICATOR
RK- 69217-0101	12789 89-07-06	"HEAT REDUCTION"
RK- 69218-010V	12789 89-07-06	ELECTRIC MATERIALS
RK- 69219-010V	12789 89-07-06	ELECTRICAL DOCUMENT
RK- 69261-0101	14290 89-12-18	"HOT FOIL DATE UNIT"
RK- 69262-010V	14290 89-12-18	ELECTRIC MATERIALS
RK- 69263-010V	12838 89-07-06	ELECTRICAL DOCUMENT
RK- 69288-0101	14452 90-02-13	QUICK RESTART
RK- 69289-010V	12858 89-08-22	ELECTRIC MATERIALS
RK- 69290-010V	14452 90-02-13	ELECTRICAL DOCUMENT
RK- 69345-0101	12907 89-07-06	HOT FOIL DATE UNIT
RK- 69346-010V	12907 89-07-06	ELECTRIC MATERIALS
RK- 69347-010V	12907 89-07-06	ELECTRICAL DOCUMENT
RK- 69392-0101	12961 89-07-06	HOT FOIL DATE UNIT
RK- 69393-010V	12961 89-07-06	EL MATERIAL
RK- 69394-010V	12961 89-07-06	EL DOCUMENT
RK- 69395-0101	14289 89-12-18	"HOT FOIL DATE UNIT"
RK- 69396-010V	14289 89-12-18	ELECTRICAL MATERIEL
RK- 69397-010V	12962 89-07-07	ELECTRICAL DOCUMENT
RK- 69458-0101	14254 89-12-07	ELECTRIC EQUIPMENT
RK- 69459-010V	13133 89-06-26	ELECTRICAL DOCUMENT
RK- 69460-0101	13134 89-06-14	CONSTANT SPRAY VOLUME
RK- 69461-010V	13134 89-06-14	ELECTRICAL DOCUMENT
RK- 69462-0101	13135 89-06-14	CONSTANT SPRAY VOLUME
RK- 69463-010V	13135 89-06-14	ELECTRICAL DOCUMENT
RK- 69464-0101	13136 89-06-14	CONSTANT SPRAY VOLUME
RK- 69465-010V	13136 89-06-14	ELECTRICAL DOCUMENT
RK- 69466-0101	13137 89-06-14	CONSTANT SPRAY VOLUME
RK- 69467-010V	13137 89-06-14	ELECTRICAL DOCUMENT
RK- 69500-0101	13196 89-08-22	QUICK RESTART
RK- 69501-010V	13196 89-08-22	ELECTRIC MATERIALS
RK- 69502-010V	14166 89-11-14	ELECTRICAL DOCUMENT
RK- 69503-0101	13197 89-08-22	QUICK RESTART
RK- 69504-010V	13197 89-08-22	ELECTRIC MATERIALS
RK- 69505-010V	14167 89-11-14	ELECTRICAL DOCUMENT
RK- 69506-0101	13198 89-08-22	QUICK RESTART
RK- 69507-010V	13198 89-08-22	ELECTRIC MATERIALS
RK- 69508-010V	14169 89-11-14	ELECTRICAL DOCUMENT
RK- 69509-0101	13199 89-11-14	QUICK RESTART
RK- 69510-010V	13199 89-11-14	ELECTRIC MATERIALS
RK- 69511-010V	13199 89-11-14	ELECTRICAL DOCUMENT
RK- 69522-0101	13220 89-08-14	CONSTANT SPRAY VOLUME
RK- 69523-010V	13220 89-08-14	ELECTRICAL DOCUMENT
RK- 69561-0101	14279 89-12-18	QUICK RESTART
RK- 69562-010V	13243 89-11-14	ELECTRIC MATERIALS
RK- 69563-010V	13243 89-11-14	ELECTRICAL DOCUMENT
RK- 69564-010V	11773 89-07-06	EL-DOCUMENT
RK- 69565-010V	11774 89-07-06	EL-DOCUMENT
RK- 69566-010V	11772 89-07-06	EL-DOCUMENT
4- 72947		HOOK SPANNER
4- 74387		HOOK SPANNER
C- 74767-0102	8017 85-07-02	DYNAMOMETER
4- 74768		SLEEVE

GROUP NO
C- 751796-010V
RK- 68906-010V
RK- 68904-010V
RK- 68904-010V
C- 540028-010V
RK- 68909-010V
RK- 68907-010V
RK- 68907-010V
C- 451348-020V
RK- 553820-010V
RK- 69217-010V
RK- 69219-010V
RK- 69217-010V
RK- 544391-010V
RK- 69261-010V
RK- 69263-010V
RK- 69261-010V
RK- 553180-010V
RK- 69288-010V
RK- 69290-010V
RK- 69288-010V
RK- 544391-010V
RK- 69345-010V
RK- 69347-010V
RK- 69345-010V
RK- 544391-010V
RK- 69392-010V
RK- 69394-010V
RK- 69392-010V
RK- 544391-010V
RK- 69395-010V
RK- 69397-010V
RK- 69395-010V
RK- 752702-010V
RK- 69458-010V
RK- 752702-010V
RK- 69460-010V
RK- 752702-010V
RK- 69462-010V
RK- 752702-010V
RK- 69464-010V
RK- 752702-010V
RK- 69466-010V
RK- 553180-010V
RK- 69500-010V
RK- 69502-010V
RK- 69500-010V
RK- 553180-010V
RK- 69503-010V
RK- 69505-010V
RK- 69503-010V
RK- 553180-010V
RK- 69506-010V
RK- 69508-010V
RK- 69506-010V
RK- 553180-010V
RK- 69509-010V
RK- 69511-010V
RK- 69509-010V
RK- 752702-010V
RK- 69522-010V
RK- 553180-010V
RK- 69561-010V
RK- 69563-010V
RK- 69561-010V
RK- 649370-010V
RK- 649371-010V
RK- 649369-010V
C- 250610-010V
C- 456975-010V
C- 77099-010V
C- 250610-010V
C- 77092-010V
C- 77092-020V
B- 648119-020V
B- 648119-060V
C- 74767-010V

PART NO	LAST AM	DESCRIPTION	GROUP NO
4- 74769		SLEEVE	C- 74767-010V
4- 74770		ROD	C- 74767-010V
4- 74771		GUIDE	C- 74767-010V
4- 74772		DIAL	C- 74767-010V
4- 74912		PIN	C- 74767-010V
4- 75451		PIN	C- 75467-020V
			C- 76460-010V
			C- 75467-020V
			C- 76460-010V
2- 75453		HOLDER	C- 75467-020V
4- 75454		ROD	C- 76460-010V
C- 75466-0201	5374 82-06-11	SETTING TOOL	C- 75466-020V
			C- 75466-020V
			C- 77092-010V
			C- 77092-020V
			B- 648119-020V
C- 75467-0201	8296 85-10-09	SETTING TOOL CURVES	B- 648119-060V
			C- 77092-010V
			C- 77092-020V
			B- 648119-020V
C- 75469-0201	5504 82-09-17	SETTING TOOL	B- 648119-060V
4- 75470		TEMPLATE	C- 76335-010V
4- 75471		BRACKET	C- 75469-020V
4- 75472		CLAMP	C- 75469-020V
4- 75514		PLIERS	C- 75469-020V
			C- 77094-010V
			B- 648119-020V
			B- 648119-060V
2- 75515		TEMPLATE	B- 648119-020V
C- 75525-020V	8433 85-12-12	TEMPLATE	B- 648119-060V
			C- 75466-020V
			C- 77092-010V
			C- 77092-020V
			B- 648119-020V
3- 75531-0001		TEMPLATE	B- 648119-060V
3- 75531-0002		TEMPLATE	C- 75525-020V
C- 75542-0101	5688 83-01-14	LIFTING UNIT	C- 75525-020V
			C- 77091-010V
			C- 77091-020V
			C- 77091-030V
			B- 648119-020V
			B- 648119-060V
1- 75543		HOLDER	C- 75542-010V
4- 75544		BRACKET	C- 75542-010V
4- 75545		TEMPLATE	C- 75525-020V
4- 75665		ASSEMBLING TOOL	C- 456975-010V
			C- 77099-010V
			B- 648109-020V
			B- 648109-030V
			B- 648109-020V
			B- 648109-030V
4- 75931-0001		TEMPLATE	C- 76335-010V
4- 75931-0002		TEMPLATE	C- 76335-010V
4- 75931-0003		TEMPLATE	C- 76335-010V
4- 75931-0004		TEMPLATE	C- 76335-010V
4- 75931-0005		TEMPLATE	C- 76335-010V
4- 75931-0006		TEMPLATE	C- 76335-010V
4- 75931-0008		TEMPLATE	C- 76335-010V
4- 75931-0009		TEMPLATE	C- 76335-010V
4- 75931-0010		TEMPLATE	C- 76335-010V
4- 75931-0011		TEMPLATE	C- 76335-010V
4- 75936		TEMPLATE	C- 76335-010V
4- 75937		TEMPLATE	C- 76335-010V
4- 75938		TEMPLATE	C- 76335-010V
4- 75939		TEMPLATE	C- 76335-010V
4- 75943		TEMPLATE	C- 76335-010V
4- 75944		TEMPLATE	C- 76335-010V
4- 75945		CAM TEMPLATE	C- 76335-010V
RK- 76123-0101	7193 84-10-29	DRILLING JIG	RK- 76613-010V
4- 76124		BUSHING	RK- 76123-010V
4- 76125		BUSHING	RK- 76123-010V
3- 76126		DRILLING JIG	RK- 76123-010V
2- 76128		TEMPLATE	C- 77092-010V
			C- 77092-020V
			B- 648119-020V
			B- 648119-060V
			B- 648119-020V

PART NO	LAST AM	DESCRIPTION	GROUP NO
			B- 648119-060V
4- 76129		CLAMPING RING	RK- 76613-010V
			C- 77092-010V
			C- 77092-020V
			B- 648119-020V
			B- 648119-060V
			B- 648119-020V
			B- 648119-060V
2- 76130		SETTING TOOL	C- 77092-010V
			C- 77092-020V
			B- 648119-020V
			B- 648119-060V
			B- 648119-020V
			B- 648119-060V
4- 76131		ASSEMBLY CONE	C- 456975-010V
			C- 77099-010V
			RK- 456715-010V
4- 76132		ASSEMBLING TOOL	C- 456975-010V
			C- 77099-010V
			RK- 456715-010V
C- 76133-0101	9341 86-07-21	TEMPLATE LS-ELEMENT	C- 77092-010V
			RK- 751461-010V
C- 76133-0201	13140 89-06-13	TEMPLATE LS-ELEMENT	C- 77092-010V
C- 76133-0301	12856 90-01-29	TEMPLATE LS-ELEMENT	C- 77092-020V
2- 76134		RULER	C- 76133-010V
			C- 76133-020V
			C- 76133-030V
			C- 76133-010V
1- 76137		PLATFORM TRANSPORT	C- 76200-010V
3- 76138		LOCKING CLAMP	C- 250610-010V
			C- 456975-010V
			C- 77099-010V
4- 76139		STOP	C- 76595-010V
			C- 76595-020V
			C- 76595-030V
4- 76139		STOP	C- 76595-010V
4- 76153		SETTING TOOL	C- 456975-010V
			C- 77099-010V
			RK- 456715-010V
3- 76156		STOP 200ML SLIM	C- 76492-010V
3- 76157		STOP 125ML	C- 76492-010V
2- 76158		STOP 200ML SLIM	C- 76492-010V
2- 76159		STOP 125ML	C- 76492-010V
4- 76163		BRACKET	C- 76595-010V
			C- 76595-030V
			C- 76595-010V
4- 76164		BRACKET	C- 76595-010V
			C- 76595-020V
			C- 76595-030V
			C- 76595-010V
3- 76165		SETTING TOOL	C- 77094-010V
			B- 648119-060V
4- 76166		GUIDE PLATE	C- 76175-010V
3- 76167		LOCKING CLAMP	C- 456975-010V
			C- 77099-010V
3- 76168		DRILLING JIG	RK- 456713-010V
3- 76169		DRILLING JIG	RK- 456713-010V
2- 76174-0001		DRILLING JIG	RK- 456713-010V
2- 76174-0002		DRILLING JIG	RK- 456713-010V
2- 76174-0003		DRILLING JIG	RK- 456713-010V
2- 76174-0004		DRILLING JIG	RK- 456713-010V
2- 76174-0005		DRILLING JIG	RK- 456713-010V
2- 76174-0006		DRILLING JIG	RK- 456713-010V
2- 76174-0007		DRILLING JIG	RK- 456713-010V
2- 76174-0009		DRILLING JIG	RK- 456713-010V
2- 76174-0010		DRILLING JIG	RK- 456713-010V
C- 76175-0101	8296 85-10-09	PULLER	C- 77092-010V
			C- 77092-020V
			B- 648119-060V
4- 76176		TEMPLATE	C- 76335-010V
4- 76178		STOP	C- 76133-010V
			C- 76133-020V
			C- 76133-030V
			C- 76133-010V
4- 76179		STOP	C- 76133-010V
4- 76180		TEMPLATE	C- 77094-010V
4- 76181		TEMPLATE	C- 77094-010V

PART NO	LAST AM	DESCRIPTION	GROUP NO
4- 76184		BRACKET	C- 76606-010V
			C- 76606-030V
4- 76185		STOP	C- 76606-010V
			C- 76606-010V
			C- 76606-020V
			C- 76606-030V
4- 76186		STOP	C- 76606-010V
4- 76187		TEMPLATE FILLING TUBE	C- 76606-010V
			C- 77092-010V
4- 76188		TEMPLATE FILLING TUBE	C- 77092-020V
			C- 77092-010V
1- 76195		LIFTING UNIT	C- 77092-020V
1- 76196		FRAME	C- 77094-010V
C- 76197-0101	9341 86-07-21	JIG	C- 76197-010V
C- 76200-0101	7948 85-05-24	TRANSPORTER	C- 77094-010V
			C- 77094-010V
			B- 648119-060V
1- 76201		BOTTOM PLATE	C- 76200-010V
1- 76202		FRAME	C- 76200-010V
3- 76203		SUPPORT LEG	C- 76200-010V
4- 76204		ARM	C- 76200-010V
4- 76205		ARM	C- 76200-010V
4- 76206		ARM	C- 76200-010V
4- 76207		STOP	C- 76200-010V
4- 76208		SHIM	C- 76200-010V
4- 76209		SUPPORT	C- 76200-010V
4- 76210		BRACKET	C- 76200-010V
4- 76211		SUPPORT	C- 76200-010V
4- 76212		SHAFT	C- 76200-010V
4- 76213		SUPPORT	C- 76200-010V
4- 76214		ARM	C- 76200-010V
4- 76215		WASHER	C- 76200-010V
4- 76216		STRUT	C- 76200-010V
4- 76217		SUPPORT	C- 76200-010V
4- 76276		SCREW	C- 76490-010V
4- 76290		SPACER	C- 76595-010V
			C- 76595-020V
			C- 76595-030V
			C- 76344-010V
			C- 76595-010V
C- 76291-0101	6457 84-01-09	YOKE	C- 76335-010V
1- 76292		YOKE	C- 76291-010V
3- 76293		BRACKET	C- 76291-010V
3- 76294		LOCATING PIECE	C- 76291-010V
3- 76295		SPACER	C- 76291-010V
4- 76296		HOOK	C- 76291-010V
4- 76297		SCREW	C- 76291-010V
2- 76298		RULER	C- 76335-010V
2- 76299		TEMPLATE SUPPORT ROLLERS	C- 76335-010V
C- 76301-0101	6847 84-05-11	TEMPLATE	C- 76335-010V
2- 76302		BRACKET	C- 76301-010V
C- 76304-0101	6457 84-01-09	COMPRESSION SPRING	C- 76335-010V
4- 76305		BRACKET	C- 76304-010V
4- 76307-0001		TEMPLATE	C- 75525-020V
4- 76307-0002		TEMPLATE	C- 75525-020V
4- 76307-0003		TEMPLATE	C- 75525-020V
4- 76307-0004		TEMPLATE	C- 75525-020V
4- 76307-0005		TEMPLATE	C- 75525-020V
4- 76307-0006		TEMPLATE	C- 75525-020V
4- 76308		TEMPLATE	C- 75525-020V
C- 76335-010V	8433 85-12-12	SETTING TOOL JAW SYSTEM	C- 75525-020V
1- 76337		BAG	C- 76600-010V
2- 76338		SETTING TOOL	C- 76591-010V
C- 76344-0101	7059 84-08-29	TEMPLATE	C- 75467-020V
			B- 648119-020V
2- 76345		RULER	B- 648119-060V
4- 76346		BRACKET	C- 76344-010V
4- 76347		BRACKET	C- 76344-010V
3- 76348		TEMPLATE	C- 76344-010V
3- 76349		CAM TEMPLATE	C- 75525-020V
C- 76350-0101	7560 85-02-19	SETTING TOOL	C- 76335-010V
			C- 77092-010V
			C- 77092-020V
			B- 648119-020V
			B- 648119-060V
1- 76394		BRACKET	C- 76485-010V
3- 76396		BRACKET	RK- 538739-010V
3- 76396		BRACKET	C- 76485-010V

PART NO	LAST AM	DESCRIPTION	GROUP NO
4- 76398		TEMPLATE	C- 77092-010V
			C- 77092-020V
			B- 648119-020V
			B- 648119-060V
			B- 648119-020V
			B- 648119-060V
C- 76402-0101	12764 89-05-30	TEMPLATE	C- 76600-010V
2- 76403		V-BLOCK	C- 76402-010V
3- 76404		SHAFT	C- 76402-010V
2- 76406		TEMPLATE COLUMN	C- 77092-010V
			C- 77092-020V
			B- 648119-020V
			B- 648119-060V
			B- 648119-020V
			B- 648119-060V
C- 76411-0101	6847 84-05-11	SETTING TOOL	C- 77094-010V
			B- 648119-020V
			B- 648119-060V
1- 76412		RULER	C- 76411-010V
1- 76413		RULER	C- 76411-010V
3- 76414		ARM	C- 76411-010V
4- 76415		LOCK BOARD	C- 76411-010V
C- 76416-0101	7278 84-12-14	CLAMP	C- 77092-010V
			C- 77092-020V
			B- 648119-020V
			B- 648119-060V
4- 76417		CLAMP	C- 76416-010V
4- 76418		CLAMP	C- 76416-010V
C- 76447-0101	6847 84-05-11	SETTING TOOL	C- 77094-010V
			B- 648119-020V
			B- 648119-060V
2- 76448		PLATE	C- 76447-010V
3- 76449		BLOCK	C- 76447-010V
3- 76450		BLOCK	C- 76447-010V
4- 76451-0001		SPACER	C- 76447-010V
4- 76451-0002		SPACER	C- 76447-010V
4- 76451-0003		SPACER	C- 76447-010V
4- 76451-0004		SPACER	C- 76447-010V
4- 76452		SUPPORT	C- 76447-010V
4- 76453		CLAW	C- 76447-010V
4- 76454		SPACER	C- 76447-010V
4- 76455		BRACKET	C- 76447-010V
4- 76456		HOOK	C- 76447-010V
4- 76457		SHAFT	C- 76447-010V
C- 76460-0101	7204 84-10-20	SETTING TOOL	C- 77094-010V
			B- 648119-020V
			B- 648119-060V
1- 76461		SUPPORT ARM	C- 76460-010V
2- 76462		TEMPLATE	C- 76460-010V
4- 76463		BUSHING	C- 76460-010V
4- 76464		BRACKET	C- 76301-010V
4- 76465		SCREW	C- 76301-010V
4- 76466		SHAFT	C- 76416-010V
4- 76467		TEMPLATE	C- 77092-010V
			C- 77092-020V
			B- 648119-020V
			B- 648119-060V
			B- 648119-020V
4- 76467		TEMPLATE	B- 648119-060V
C- 76468-0101	12333 88-12-15	TEMPLATE	C- 76600-010V
3- 76469		BRACKET	C- 76468-010V
C- 76470-0101	7383 85-01-22	BAG	C- 76350-010V
1- 76471		BAG	C- 76470-010V
1- 76484		LID	C- 76470-010V
			C- 76591-010V
C- 76485-0101	7613 85-03-26	SETTING TOOL	B- 648119-020V
1- 76486		RULER	C- 76485-010V
2- 76487-0001		ARM	C- 76485-010V
2- 76487-0002		ARM	C- 76485-010V
2- 76487-0003		ARM	C- 76485-010V
4- 76488		TEMPLATE	C- 76485-010V
4- 76489		TEMPLATE	C- 76485-010V
C- 76490-0101	7522 85-02-20	TEMPLATE TUBE FORMING	B- 648119-020V
3- 76491		BRACKET	C- 76490-010V
C- 76492-010V	8381 85-11-25	ASSEMBLY JIG	B- 648119-020V
			B- 648119-060V
C- 76492-0101	8381 85-11-25	ASSEMBLY JIG	C- 77094-010V

PART NO	LAST AM	DESCRIPTION	GROUP NO
1- 76493		PLATE	C- 76492-010V
3- 76494		STOP	C- 76492-010V
3- 76495		BLOCK	C- 76492-010V
4- 76496		HOOK	C- 76492-010V
4- 76497		STOP	C- 76344-010V
4- 76498		STOP	C- 76344-010V
4- 76499		TEMPLATE	C- 77094-010V
C- 76500-0101	7186 84-10-16	LIFTING UNIT	C- 77091-010V
			C- 77091-020V
			C- 77091-030V
2- 76501		CAM	B- 648119-060V
3- 76502		SHAFT	C- 76500-010V
4- 76503		PIN	C- 76500-010V
C- 76504-0101	12095 88-07-01	LIFTING UNIT	C- 76500-010V
			C- 77091-010V
			C- 77091-020V
2- 76505		ROD	C- 77091-030V
C- 76580-0101	7204 84-10-20	SETTING TOOL	B- 648119-060V
			C- 76504-010V
			C- 77094-010V
3- 76581		COLUMN	B- 648119-020V
3- 76582		BLOCK	B- 648119-060V
3- 76583		BLOCK	C- 76580-010V
2- 76584		STOP	C- 76580-010V
3- 76585		STOP	C- 76580-010V
4- 76586		PIN	C- 76492-010V
4- 76587		SLEEVE	C- 76492-010V
4- 76588		HOOK	C- 76492-010V
1- 76589		BAG	C- 76492-010V
1- 76590		BAG	C- 76470-010V
C- 76591-0101	7383 85-01-22	BAG	C- 76591-010V
C- 76594-0101	10349 87-06-30	SETTING TOOL	C- 76600-010V
C- 76595-0101	8433 85-12-12	TEMPLATE LS-ELEMENT	C- 76350-010V
			C- 77092-010V
C- 76595-0201	13140 89-06-13	TEMPLATE LS-ELEMENT	B- 648119-060V
C- 76595-0301	12856 90-01-29	TEMPLATE LS-ELEMENT	RK- 751461-010V
4- 76597		STOP	C- 77092-010V
C- 76600-0101	13991 89-11-16	SETTING TOOL	C- 77092-020V
			C- 76595-010V
			C- 77092-010V
2- 76601		RULER	C- 77092-020V
			B- 648119-020V
			B- 648119-060V
3- 76602		GAUGE	C- 76595-010V
			C- 76595-020V
			C- 76595-030V
2- 76603		BRACKET	C- 76595-010V
3- 76604		SHAFT	C- 77092-010V
4- 76605		BRACKET	C- 77092-020V
			B- 648119-020V
			C- 76485-010V
			C- 77094-010V
			B- 648119-060V
			C- 76133-010V
			C- 76133-020V
			C- 76606-010V
C- 76606-0101	9341 86-07-21	TEMPLATE LS-ELEMENT	C- 76606-020V
			C- 76133-030V
C- 76606-0201	13140 89-06-13	TEMPLATE LS-ELEMENT	C- 76606-030V
C- 76606-0301	12856 90-01-29	TEMPLATE LS-ELEMENT	C- 76133-010V
2- 76607		RULER	C- 76606-010V
			C- 77092-010V
			RK- 751461-010V
4- 76610		BRACKET	C- 77092-010V
			C- 77092-020V
			C- 76606-010V
			C- 76606-020V
			C- 76606-030V
RK- 76613-0101	7193 84-10-29	TOOL	C- 76606-010V
C- 77091-010V	12930 89-10-15	ACCESSORIES PARTS	C- 76133-010V
C- 77091-020V	12383 90-02-10	ACCESSORIES PARTS	C- 76133-030V
C- 77091-030V	12856 90-01-29	ACCESSORIES PARTS	C- 76133-010V
			RK- 479279-010V
			B- 648119-070V
			B- 648119-080V
			B- 648119-090V

PART NO	LAST AM	DESCRIPTION	GROUP NO
C- 77092-010V	13140 89-06-13	SERVICE PARTS	B- 648119-070V
			B- 648119-080V
C- 77092-020V	12856 90-01-29	SERVICE PARTS	B- 648119-090V
C- 77093-010V	8741 86-06-16	TRIMMING PARTS	B- 648119-070V
			B- 648119-080V
C- 77093-020V	12856 90-01-29	TRIMMING PARTS	B- 648119-090V
C- 77094-010V	12333 88-12-15	PRODUCTION PARTS	B- 648119-070V
			B- 648119-080V
			B- 648119-090V
C- 77099-0101	13627 89-08-14	TOOL KIT	B- 648109-070V
			B- 648109-080V
			B- 648109-090V
3- 77100		SETTING TOOL	C- 77092-010V
			C- 77092-020V
4- 77163		SLEEVE	C- 77165-010V
4- 77164		STUD BOLT	C- 77165-010V
C- 77165-0101	9933 87-02-07	EXTRACTOR	C- 77092-010V
			C- 77092-020V
			RK- 456716-010V
			RK- 456717-010V
			RK- 752408-010V
			RK- 752410-010V
C- 77165-0101		EXTRACTOR	RK- 752412-010V
			RK- 752414-010V
4- 77221		TIGHTENING TOOL	C- 456975-020V
2- 77223		DRILLING TEMPLATE	RK- 456713-010V
4- 77240		PROTECTION PLATE	C- 77092-010V
			C- 77092-020V
4- 77241		STOP	C- 76595-020V
			C- 76595-030V
4- 77242		STOP	C- 76606-020V
			C- 76606-030V
4- 77243		STOP	C- 76133-020V
			C- 76133-030V
4- 77244		BRACKET	C- 76595-020V
4- 77245		BRACKET	C- 76606-020V
4- 77248		BRACKET	C- 76133-020V
4- 77247		ASSEMBLY PIN	C- 77099-010V
90001-0023		BOX	CE- 67716-010V
90001-0025		WALL SOCKET	CE- 68128-010V
			CE- 68304-010V
			CE- 68128-010V
			CE- 68304-010V
90002-0004		PLUG	C- 456435-030V
			C- 469366-010V
			C- 469366-020V
90002-0009		BLANK-OFF PLUG	C- 295611-020V
			C- 456435-030V
			RK- 548056-010V
			C- 441000-050V
			C- 295777-010V
			C- 469374-010V
			C- 469374-020V
90002-0012		BLANK-OFF PLUG	C- 271128-030V
			C- 271128-040V
90002-0013		BLANK-OFF PLUG	C- 295441-010V
			C- 295441-020V
			C- 295441-030V
			C- 456435-030V
			C- 469366-010V
			C- 283633-010V
			C- 295470-020V
			C- 295470-030V
			C- 469374-010V
			C- 295470-030V
			C- 469374-010V
			C- 295470-030V
			C- 469374-020V
			C- 295470-040V
			C- 283633-010V
90002-0014		BLANK-OFF PLUG	CE- 67716-010V
90002-0016		PLUG	C- 456459-010V
			C- 456459-020V
90005-0003		WASHER	CR- 256204-020V
			CR- 256205-020V
			C- 256217-020V
			C- 257381-020V

PART NO	LAST AM	DESCRIPTION	GROUP NO
			C- 257382-020V
			CR- 256204-020V
			CR- 256205-020V
			C- 256217-030V
90005-0003		WASHER	C- 257381-020V
			C- 257382-020V
			CR- 256204-030V
			CR- 256205-030V
			CR- 256212-030V
			CR- 256213-030V
			C- 256217-040V
			C- 257381-030V
			C- 257382-030V
			C- 256217-040V
			C- 257381-030V
			C- 257382-030V
			C- 256217-040V
			C- 257381-030V
			C- 257382-030V
			C- 256217-040V
			C- 257381-030V
			C- 257382-030V
			C- 272765-020V
			RK- 456712-010V
90005-0005		WASHER	C- 271533-020V
			C- 271533-030V
			C- 751089-010V
			RK- 491780-010V
			RK- 751488-010V
			RK- 491780-010V
			RK- 751488-010V
			RK- 491780-010V
			RK- 751488-010V
			RK- 491780-010V
			RK- 751488-010V
			C- 257381-020V
			C- 257382-020V
			C- 257381-020V
			C- 257382-020V
			C- 257381-030V
			C- 257382-030V
			C- 257381-030V
			C- 257382-030V
			C- 257381-030V
			C- 257382-030V
			C- 257381-030V
			C- 257382-030V
			RK- 491641-010V
			RK- 491447-010V
			RK- 491780-010V
			RK- 751488-010V
			RK- 491780-010V
			RK- 751488-010V
			RK- 491780-010V
			RK- 751488-010V
90005-0006		SEAL RING	C- 469452-010V
			C- 469452-020V
			C- 751800-010V
			C- 469452-030V
			C- 751800-020V
90005-0007		WASHER	CR- 256212-020V
			CR- 256213-020V
			C- 257381-020V
90005-0007		WASHER	C- 257382-020V
			CR- 256212-020V
			CR- 256213-020V
			C- 257381-020V
			C- 257382-020V
			CR- 256212-030V
			CR- 256213-030V
			C- 257381-030V
			C- 257382-030V
			C- 257381-030V
			C- 257382-030V
			C- 257381-030V
			C- 257382-030V
			C- 257381-030V

PART NO	LAST AM	DESCRIPTION	GROUP NO
			C- 257382-030V
			C- 256802-020V
			C- 456455-010V
			C- 456455-020V
90005-0009		WASHER	C- 271533-020V
			C- 271533-030V
			CR- 256204-020V
			CR- 256205-020V
			C- 257381-020V
			C- 257382-020V
			CR- 256204-020V
			CR- 256205-020V
			C- 257381-020V
			C- 257382-020V
			CR- 256204-030V
			CR- 256205-030V
90005-0013		WASHER	C- 271113-020V
90005-0014		WASHER	C- 256217-020V
			C- 256217-030V
			C- 256217-040V
90005-0015		WASHER	C- 271113-020V
90005-0016		WASHER	C- 271866-040V
			C- 271866-050V
90005-0019		WASHER	C- 456274-010V
			C- 256055-020V
			C- 272342-020V
			C- 256055-020V
			C- 456976-010V
			C- 491083-010V
			C- 491083-020V
			C- 456274-010V
90005-0020		WASHER	RK- 469536-010V
			RK- 491568-010V
90005-0034		WASHER	C- 256358-010V
90005-0040		WASHER	C- 271274-020V
90005-0044		WASHER	C- 529621-010V
			C- 735268-010V
			C- 491890-010V
			C- 529621-010V
			C- 735271-010V
			C- 529621-010V
			C- 735271-010V
			C- 529621-010V
			C- 735271-010V
90005-0045		WASHER	C- 271533-020V
90005-0045		WASHER	C- 271533-030V
			C- 491650-010V
			C- 257381-020V
			C- 257382-020V
			C- 257381-020V
			C- 257382-020V
			C- 271909-020V
			C- 271909-030V
			C- 271909-040V
			C- 271909-050V
90005-0048		WASHER	C- 272765-030V
			C- 272765-040V
			C- 272765-050V
			C- 272765-060V
			RK- 751296-010V
90005-0056		WASHER	C- 295218-010V
			CR- 256436-050V
			C- 295218-010V
90005-0060		WASHER	C- 752671-010V
			C- 752672-010V
			C- 271115-020V
			C- 441881-010V
			C- 271115-020V
			C- 441881-010V
			C- 271115-020V
			C- 441881-010V
90005-0061		WASHER	C- 490504-010V
			C- 491767-010V
			C- 271909-020V
			C- 271909-030V
			C- 271909-040V
			C- 271909-050V

PART NO	LAST AM	DESCRIPTION	GROUP NO
			C- 490504-010V
90005-0067		WASHER	C- 456588-010V
			C- 456588-020V
			C- 456588-030V
90006-0008		BUSHING	C- 256237-020V
			C- 256237-030V
			C- 256055-020V
			C- 256055-030V
90006-0009		BUSHING	C- 256237-020V
			C- 256237-030V
			C- 256055-020V
			C- 256055-030V
90007-0083		FUSE H.MANN 1P 10A 2	CE- 67716-010V
			CE- 68128-010V
			CE- 68304-010V
			CE- 68128-010V
			CE- 67716-010V
			CE- 68304-010V
90007-0086		FUSE H.MANN 1P 15A P	CE- 67716-010V
			CE- 68128-010V
			CE- 68304-010V
			CE- 68128-010V
			CE- 67716-010V
			CE- 68304-010V
90007-0092		FUSE H.MANN 3P 15A 10	CE- 67716-010V
			CE- 68128-010V
			CE- 68304-010V
90007-0092		FUSE H.MANN 3P 15A 10	CE- 68128-010V
			CE- 67716-010V
			CE- 68304-010V
90007-0093		FUSE H.MANN 3P 20A 10	CE- 68128-010V
90007-0094		FUSE H.MANN 3P 25A 10	CE- 67716-010V
			CE- 68304-010V
			CE- 67716-010V
			CE- 68304-010V
90007-0098		FUSE H.MANN 3P 25A P	CE- 67716-010V
			CE- 68304-010V
			CE- 67716-010V
			CE- 68304-010V
90007-0103		FUSE H.MANN 3P 6A 10	CE- 67716-010V
			CE- 68128-010V
			CE- 68304-010V
			CE- 68128-010V
			CE- 67716-010V
			CE- 68304-010V
90007-0104		FUSE H.MANN 1P 10A P	CE- 68128-010V
90007-0106		FUSE H.MANN 2P 60A 10	CE- 68128-010V
90007-0108		FUSE H.MANN 1P 6A 2	CE- 67716-010V
			CE- 68128-010V
			CE- 68304-010V
			CE- 68128-010V
			CE- 67716-010V
			CE- 68304-010V
90007-0110		FUSE H.MANN 3P 2A 253	CE- 67716-010V
			CE- 68128-010V
			CE- 68304-010V
			CE- 68128-010V
			CE- 67716-010V
			CE- 68304-010V
90007-0111		FUSE H.MANN 1P 10A 253	CE- 67716-010V
			CE- 68128-010V
			CE- 68304-010V
			CE- 68128-010V
			CE- 67716-010V
			CE- 68304-010V
90007-0112		FUSE H.MANN 1P 15A 253	CE- 67716-010V
			CE- 68128-010V
			CE- 68304-010V
			CE- 68128-010V
			CE- 67716-010V
			CE- 68304-010V
90007-0113		FUSE H.MANN 1P 10A DC2	CE- 67716-010V
			CE- 68128-010V
			CE- 68304-010V
			CE- 68128-010V
			CE- 67716-010V
			CE- 68304-010V

PART NO	LAST AM	DESCRIPTION	GROUP NO
90007-0115		FUSE H.MANN 2P 80A 2	CE- 67716-010V
			CE- 68128-010V
			CE- 68304-010V
			CE- 68128-010V
			CE- 67716-010V
			CE- 68304-010V
90007-0116		FUSE H.MANN 3P 15A P	CE- 67716-010V
			CE- 68304-010V
			CE- 67716-010V
90007-0116		FUSE H.MANN 3P 15A P	CE- 68304-010V
90012-0049		GLAND	C- 256555-020V
			C- 256555-030V
90012-0059		GLAND	RK- 68908-010V
			RK- 520068-010V
90012-0060		GLAND	RK- 520068-010V
90012-0062		GLAND	C- 457924-010V
			C- 457924-020V
90012-0063		GLAND	C- 490601-010V
			C- 490600-010V
			C- 490600-020V
			C- 735183-010V
			C- 735259-010V
			C- 735031-010V
			C- 735183-010V
90012-0064		GLAND	C- 529621-010V
			C- 735259-010V
			C- 529621-010V
			C- 735031-010V
			C- 529621-010V
90014-0011		ROLLER	C- 441821-010V
			C- 441271-010V
			C- 441271-020V
			RK- 491863-010V
90015-0016		BUSHING	C- 441850-010V
			C- 441850-020V
			C- 441850-030V
90015-0020		BUSHING	RK- 520129-010V
			RK- 520130-010V
			RK- 520094-010V
			RK- 520096-010V
			C- 752960-010V
			C- 752971-010V
			RK- 520069-010V
			RK- 520071-010V
			RK- 520069-010V
			RK- 520095-010V
			RK- 520069-010V
			RK- 520095-010V
			RK- 520069-010V
			RK- 520071-010V
			RK- 520069-010V
			RK- 520071-010V
			C- 735258-010V
			C- 256233-020V
			C- 469366-010V
			C- 469366-020V
			C- 469366-030V
			C- 456458-010V
			C- 456458-020V
			C- 456457-030V
			C- 456458-030V
			C- 272765-010V
			C- 272765-020V
			C- 456923-010V
			C- 456923-020V
			C- 456923-030V
			C- 268656-010V
			RK- 491404-010V
90015-0020		BUSHING	RK- 535606-010V
			C- 295777-010V
			C- 469374-010V
			C- 469374-020V
			C- 469374-030V
			C- 457857-010V
			C- 457867-010V
			C- 457881-010V
			C- 490600-010V

PART NO	LAST AM	DESCRIPTION	GROUP NO
			C- 457857-020V
			C- 457867-010V
			C- 457881-020V
			C- 490600-020V
			C- 497534-020V
			RK- 520067-010V
			RK- 520129-010V
			RK- 520130-010V
90015-0021		BUSHING	C- 295883-030V
			C- 295883-040V
			RK- 469472-010V
			C- 271453-020V
			C- 271866-020V
			C- 271453-020V
			C- 271866-030V
			C- 271453-030V
			C- 271866-030V
			C- 271866-040V
			C- 491890-010V
			C- 271866-050V
			C- 491890-010V
			C- 456923-010V
			C- 456923-020V
			C- 456923-030V
			C- 271274-020V
			C- 295777-010V
			C- 271274-020V
			C- 295777-010V
			C- 469374-010V
			C- 469374-020V
			C- 469374-030V
90015-0022		BUSHING	C- 271866-030V
			C- 271866-040V
			C- 271866-050V
			C- 295777-010V
90015-0023		BUSHING	C- 256233-020V
			C- 469366-010V
			C- 469366-020V
			C- 469366-030V
			C- 441850-010V
			C- 441850-020V
			C- 441850-030V
			C- 456923-010V
			C- 272408-040V
			C- 456923-020V
			C- 272408-050V
			C- 456923-030V
			RK- 535606-010V
			C- 295777-010V
			C- 469374-010V
90015-0023		BUSHING	C- 469374-020V
			C- 469374-030V
			C- 457857-020V
			C- 497534-020V
90015-0024		BUSHING	C- 295883-020V
			C- 295883-030V
			C- 295883-040V
			RK- 469472-010V
			C- 272241-020V
			C- 456556-010V
			C- 469374-010V
			C- 456556-010V
			C- 469374-010V
			C- 456556-020V
			C- 469374-020V
			C- 456556-020V
			C- 469374-030V
			C- 457867-010V
90015-0028		BUSHING	C- 272765-030V
			C- 272765-040V
			C- 272765-050V
			C- 272765-060V
			RK- 491512-010V
90016-0010		DISC SPRING	C- 256173-020V
			C- 256173-030V
			C- 256173-040V
90016-0012		DISC SPRING	C- 283600-010V

PART NO	LAST AM	DESCRIPTION	GROUP NO
90016-0035		DISC SPRING	C- 283600-010V
90016-0040		DISC SPRING	C- 232781-040V
90016-0042		DISC SPRING	C- 283610-010V
			CR- 449275-010V
90016-0052		DISC SPRING	C- 469737-010V
			C- 283622-010V
			C- 469173-010V
90016-0053		DISC SPRING	C- 441821-010V
			C- 441271-010V
90016-0054		SPRING WASHER	C- 441821-010V
			C- 441271-010V
			C- 441271-020V
			RK- 491863-010V
90016-0056		DISC SPRING	C- 491787-010V
			C- 491788-010V
			C- 491787-020V
			C- 491788-020V
90017-0001		HANDLE	C- 37877-030V
			C- 37898-010V
			C- 37877-030V
			C- 450101-010V
			C- 271454-020V
			C- 37877-030V
			C- 450101-010V
90017-0012		HANDLE	C- 484858-010V
			C- 484858-020V
			RK- 548056-010V
			C- 547756-010V
			C- 283600-010V
			C- 283620-010V
			C- 294725-010V
			C- 294780-010V
90017-0012		HANDLE	C- 457853-010V
			C- 457853-020V
90017-0014		HANDLE	C- 283631-010V
			C- 456679-010V
90017-0015		HANDLE	C- 295026-020V
			C- 295026-030V
90020-0027		SLEEVE	C- 440630-010V
			C- 539211-010V
90020-0028		SLEEVE	C- 440630-010V
			C- 539209-010V
			C- 539210-010V
90020-0031		SLEEVE	RK- 752170-010V
90023-0039		CABLE	CE- 67716-010V
90023-0041		END PIECE	CE- 67716-010V
			CE- 68128-010V
			CE- 67716-010V
90023-0047		VOLTAGE UNIT	CE- 67716-010V
			CE- 68128-010V
			CE- 67716-010V
90023-0048		MODULE	RK- 41567-010V
			RK- 41461-010V
			RK- 41377-010V
			CE- 67716-010V
			CE- 68128-010V
			RK- 68180-010V
			RK- 68183-010V
			RK- 68722-010V
			RK- 68725-010V
			RK- 68874-010V
			RK- 69289-010V
			RK- 69346-010V
			RK- 69393-010V
			RK- 69501-010V
			RK- 69504-010V
			RK- 69507-010V
			RK- 69510-010V
			CE- 68128-010V
			CE- 67716-010V
			RK- 41567-010V
			RK- 41377-010V
			RK- 41461-010V
90023-0051		MODULE	RK- 41567-010V
			RK- 41461-010V
			RK- 41377-010V
			CE- 67716-010V

PART NO	LAST AM	DESCRIPTION	GROUP NO
			CE- 68128-010V
			RK- 68180-010V
			RK- 68183-010V
			RK- 68722-010V
			RK- 68725-010V
			RK- 69510-010V
			CE- 68128-010V
			CE- 67716-010V
			RK- 41567-010V
			RK- 41377-010V
			RK- 41461-010V
90023-0059		MODULE	CE- 67716-010V
			CE- 68128-010V
			CE- 67716-010V
90023-0062		MEMORY SEGMENT	CE- 67716-010V
			CE- 68128-010V
			CE- 67716-010V
90023-0065		CABLE	CE- 67716-010V
			CE- 68128-010V
			CE- 67716-010V
90023-0068		MODULE	CE- 67716-010V
			CE- 68128-010V
			CE- 67716-010V
90023-0070		SWITCH UNIT	CE- 67716-010V
			CE- 68128-010V
			CE- 68304-010V
			CE- 68128-010V
			CE- 67716-010V
			CE- 68304-010V
90023-0071		TAPE	RK- 68180-010V
			RK- 68183-010V
90023-0073		BATTERY	CE- 67716-010V
			CE- 68128-010V
			CE- 67716-010V
90023-0080		PROCESSOR	CE- 67716-010V
			CE- 68128-010V
			CE- 67716-010V
90023-0081		MODULE	CE- 67716-010V
			CE- 68128-010V
			CE- 67716-010V
90023-0089		RACK	CE- 67716-010V
			CE- 68128-010V
			CE- 67716-010V
90023-0304		RELAY	CE- 67716-010V
90023-0318		ARM	CE- 67716-010V
			CE- 68128-010V
			RK- 69289-010V
			RK- 69346-010V
			RK- 69393-010V
			RK- 69501-010V
			RK- 69504-010V
			RK- 69507-010V
			RK- 69510-010V
			CE- 68128-010V
			CE- 67716-010V
90023-0323		ARM	CE- 67716-010V
			CE- 68128-010V
			CE- 67716-010V
90023-0324		CABLE	CE- 67716-010V
			CE- 68128-010V
			CE- 67716-010V
90023-0501		POTENTIOMETER	C- 295026-010V
90023-0502		PLATE	CE- 68379-010V
			C- 295026-010V
			CE- 68379-010V
90024-0027		INTERFER.PROTECTION	CE- 67716-010V
			CE- 68128-010V
			CE- 68304-010V
			CE- 68128-010V
			CE- 67716-010V
			CE- 68304-010V
90025-0011		RACK	CE- 68304-010V
90025-0012		POWER SUPPLY UNIT	CE- 68304-010V
90025-0014		RACK	CE- 68304-010V
90025-0015		PANELINTERFACE	CE- 68379-010V
90025-0016		ENCODER MODULE	CE- 68304-010V
90025-0017		INPUT MODULE	CE- 68304-010V

PART NO	LAST AM	DESCRIPTION	GROUP NO
90025-0022		RACK	CE- 68304-010V
90025-0023		TERMINAL BLOCK	CE- 68304-010V
90025-0024		TERMINAL BLOCK	CE- 68304-010V
90025-0025		TERMINAL BLOCK	CE- 68304-010V
90025-0029		TERMINAL BLOCK	CE- 68379-010V
90025-0030		TERMINAL BLOCK	CE- 68379-010V
90025-0031		TERMINAL BLOCK	CE- 68379-010V
90025-0037		OUTPUT MODULE	CE- 68304-010V
90025-0045		CENTRAL UNIT	CE- 68304-010V
90028-0001		CONE	C- 271562-020V
			C- 271562-030V
			C- 271562-040V
			C- 271562-050V
			C- 271562-060V
			C- 271562-070V
			C- 256951-020V
			C- 256952-020V
			C- 257381-020V
			C- 257382-020V
			C- 256951-020V
			C- 256952-020V
			C- 257381-020V
			C- 257382-020V
90028-0017		SEALING CONE	RK- 469536-010V
			RK- 491568-010V
			RK- 490865-010V
			RK- 491795-010V
90028-0020		CONE	C- 271562-020V
			C- 271562-030V
			C- 271562-040V
			C- 271562-050V
			C- 271562-060V
			C- 271562-070V
			C- 256197-020V
			C- 256198-020V
			C- 256203-020V
			C- 256197-020V
			C- 256198-020V
			C- 256203-020V
			C- 256197-030V
			C- 256198-030V
			C- 256203-030V
			C- 256197-030V
			C- 256203-030V
			C- 491814-010V
			C- 491815-010V
			C- 256197-040V
			C- 256203-040V
			C- 491814-010V
			C- 491815-010V
			C- 256217-020V
			C- 257381-020V
			C- 257382-020V
			C- 256217-030V
			C- 257381-020V
90028-0020		CONE	C- 257382-020V
			C- 256217-040V
			C- 257381-030V
			C- 257382-030V
			C- 256217-040V
			C- 257381-030V
			C- 257382-030V
			C- 256217-040V
			C- 257381-030V
			C- 257382-030V
			CR- 256436-050V
			C- 271866-050V
			RK- 456716-010V
			RK- 752408-010V
			RK- 752410-010V
			RK- 456717-010V
			RK- 752412-010V
			RK- 752414-010V
			RK- 456717-010V

PART NO	LAST AM	DESCRIPTION	GROUP NO
			RK- 752412-010V
			RK- 752414-010V
90028-0021		CONE	C- 271533-020V
			C- 271533-030V
			C- 491650-010V
			C- 271562-020V
			C- 271562-030V
			C- 271562-040V
			C- 271562-050V
			C- 271562-060V
			C- 271562-070V
			C- 256197-020V
			C- 256198-020V
			C- 256203-020V
			C- 256197-020V
			C- 256198-020V
			C- 256203-020V
			C- 256197-030V
			C- 256198-030V
			C- 256203-030V
			C- 256197-030V
			C- 256203-030V
			C- 491814-010V
			C- 491815-010V
			C- 256197-040V
			C- 256203-040V
			C- 491814-010V
			C- 491815-010V
			C- 257381-020V
			C- 257382-020V
			C- 257381-020V
			C- 257382-020V
			C- 272765-010V
			C- 295310-010V
			C- 272765-020V
			C- 295310-010V
			C- 272765-020V
90028-0021		CONE	C- 295310-020V
			C- 272765-030V
			C- 295310-030V
			C- 272765-040V
			C- 295310-040V
			C- 272765-050V
			C- 295310-050V
			CR- 256436-050V
			C- 272765-060V
			C- 295310-060V
			RK- 491512-010V
90028-0022		CONE	C- 271866-050V
90028-0024		CONE	RK- 491131-010V
90028-0025		CONE	C- 272765-030V
			C- 272765-040V
			C- 272765-050V
			C- 272765-060V
90030-0030		PIPE CONNECTION	RK- 469536-010V
			RK- 491568-010V
			C- 271866-020V
			C- 271866-030V
			C- 271866-040V
			C- 271866-050V
90030-0051		PIPE CONNECTION	C- 271533-020V
			C- 271533-030V
			C- 256237-020V
			C- 256239-020V
			C- 256237-030V
			C- 256239-020V
			C- 271562-020V
			C- 271562-030V
			C- 271562-040V
			C- 271562-050V
			C- 271562-060V
			C- 271562-070V
			C- 257381-020V
			C- 257382-020V
			C- 257381-020V
			C- 257382-020V
			RK- 491641-010V

PART NO	LAST AM	DESCRIPTION	GROUP NO
			RK- 491447-010V
			C- 272241-020V
			C- 272623-020V
			C- 272241-020V
			C- 272623-020V
90030-0052		PIPE CONNECTION	C- 271533-020V
			C- 271533-030V
90030-0058		CONNECTION	RK- 469536-010V
			C- 456274-010V
			RK- 491568-010V
			C- 256237-020V
			C- 256237-030V
			C- 256237-040V
			C- 256237-050V
			C- 256237-060V
			C- 271866-040V
			C- 271866-050V
			C- 272408-020V
			C- 272408-030V
90030-0058		CONNECTION	C- 272408-040V
			C- 272408-050V
			C- 456274-010V
			C- 272342-020V
			C- 456976-010V
			C- 456976-020V
			C- 469452-010V
			C- 456976-020V
			C- 469452-010V
			C- 456976-030V
			C- 469452-020V
			C- 751800-010V
			C- 456976-040V
			C- 469452-030V
			C- 751800-020V
			C- 456274-010V
			C- 491207-020V
90030-0062		CONNECTION	C- 272407-020V
90030-0065		PIPE CONNECTION	C- 271533-020V
			C- 271533-030V
			C- 491650-010V
			CR- 256212-020V
			CR- 256213-020V
			C- 257381-020V
			C- 257382-020V
			CR- 256212-020V
			CR- 256213-020V
			C- 257381-020V
			C- 257382-020V
			CR- 256212-030V
			CR- 256213-030V
			C- 257381-030V
			C- 257382-030V
			CR- 256212-040V
			CR- 256213-040V
			C- 257381-030V
			C- 257382-030V
			CR- 256212-040V
			CR- 256213-040V
			C- 257381-030V
			C- 257382-030V
			CR- 256212-050V
			CR- 256213-050V
			C- 257381-030V
			C- 257382-030V
			RK- 456712-010V
90030-0067		GROMMET	C- 735248-010V
			C- 735268-010V
90030-0071		PIPE CONNECTION	C- 735183-010V
90030-0075		PIPE CONNECTION	C- 271533-020V
			C- 271533-030V
			C- 735268-010V
			C- 736594-010V
			C- 456739-010V
			C- 456935-010V
			C- 456739-010V
			C- 456935-010V
			C- 456739-010V

PART NO	LAST AM	DESCRIPTION	GROUP NO
90030-0075		PIPE CONNECTION	C- 752898-010V C- 295045-020V C- 295045-030V C- 295045-040V C- 735271-010V C- 736594-010V C- 735271-010V C- 736594-010V C- 735271-010V C- 736594-010V
90030-0076		CONNECTION	C- 271866-050V C- 272623-020V C- 272623-030V C- 272623-040V C- 272623-050V
90030-0088		PIPE CONNECTION	C- 272560-050V
90030-0091		PIPE CONNECTION	C- 735183-010V C- 271109-020V C- 456455-010V C- 456455-020V C- 271866-020V C- 271866-030V C- 271866-040V C- 271866-050V
90030-0092		PIPE CONNECTION	C- 256233-020V C- 256233-030V C- 256233-040V C- 256233-050V C- 295045-020V C- 295045-030V C- 295045-040V C- 295045-050V C- 295045-060V
90030-0096		PIPE CONNECTION	C- 491207-020V
90030-0097		CONE	RK- 520129-010V RK- 520130-010V RK- 520094-010V RK- 520096-010V RK- 469536-010V RK- 491568-010V RK- 490865-010V RK- 752702-010V RK- 491795-010V RK- 752702-010V RK- 491795-010V RK- 752702-010V RK- 520067-010V RK- 520129-010V RK- 520130-010V
90030-0098		CONE	C- 271562-040V C- 271562-050V C- 271562-060V C- 271562-070V RK- 491641-010V RK- 491447-010V RK- 469536-010V RK- 491568-010V
90030-0106		PIPE CONNECTION	C- 271866-020V C- 271866-030V C- 271866-040V C- 491207-010V C- 271866-050V C- 271274-020V C- 469452-010V C- 491207-020V
90030-0106		PIPE CONNECTION	RK- 469536-010V C- 456274-010V RK- 491568-010V C- 456274-010V C- 256014-020V C- 272560-020V C- 256014-020V C- 272560-030V C- 256014-030V C- 272560-030V C- 469452-010V C- 256014-030V
90030-0109		PIPE CONNECTION	C- 272560-030V C- 469452-010V C- 256014-040V C- 272560-040V C- 469452-020V C- 751800-010V C- 256014-050V C- 272560-050V C- 469452-030V C- 751800-020V
90030-0110		CONE	C- 456274-010V
90030-0114		NIPPLE	C- 491207-020V C- 456274-010V C- 256233-020V C- 256237-020V C- 256239-020V C- 256233-030V C- 256237-030V C- 256239-020V C- 256233-030V C- 256239-020V C- 256233-040V C- 271866-020V C- 271866-030V C- 456274-010V C- 271274-020V C- 272021-020V C- 272342-020V C- 272560-020V C- 271274-020V C- 272021-020V C- 272560-030V
90030-0116		REDUCER	C- 456976-010V C- 272560-030V C- 456274-010V C- 271909-020V C- 271909-030V C- 271909-040V C- 271909-050V RK- 491984-010V
90030-0127		PIPE CONNECITON	C- 271909-020V C- 271909-030V C- 271909-040V C- 271909-050V
90030-0127		PIPE CONNECITON	RK- 553180-010V RK- 490865-010V RK- 491795-010V C- 256233-020V C- 272623-020V C- 271866-030V C- 271261-020V C- 271261-030V C- 271261-040V C- 271261-050V C- 271109-020V C- 456455-010V C- 456455-020V C- 271866-020V C- 271866-030V C- 272241-020V C- 272241-020V C- 456556-010V C- 490504-010V C- 491767-010V C- 490504-010V C- 271562-020V C- 271562-030V C- 271562-040V C- 271562-050V C- 271562-060V C- 271562-070V C- 469118-010V C- 469118-020V C- 271909-020V C- 271909-030V C- 271909-040V C- 271909-050V
90030-0132		PLUG	
90030-0133		NUT	
90030-0137		CONNECTION	
90030-0140		PIPE CONNECTION	
90030-0151		CONNECTION	
90030-0152		CONNECTION	
90030-0159		GROMMET	
90030-0162		CONNECTION	
90030-0166		REDUCER	

PART NO	LAST AM	DESCRIPTION	GROUP NO
90030-0168		REDUCER	C- 271909-020V
			C- 271909-030V
			C- 271909-040V
			C- 271909-050V
90030-0169		NIPPLE	C- 735183-010V
90030-0171		CONNECTION	C- 491650-010V
			RK- 491641-010V
			RK- 491447-010V
			C- 751410-010V
90030-0172		NUT	C- 271562-040V
			C- 271562-050V
			C- 271562-060V
			C- 271562-070V
90030-0180		PIPE CONNECTION	C- 735248-010V
			C- 735268-010V
			C- 271866-020V
			C- 271866-030V
			C- 271274-020V
			C- 272560-050V
			C- 735014-010V
			C- 735271-010V
			C- 735014-010V
			C- 735271-010V
			C- 735014-010V
90030-0180		PIPE CONNECTION	C- 735271-010V
90030-0181		PIPE CONNECTION	C- 456274-010V
			C- 271866-020V
			C- 271866-030V
			C- 271866-040V
			C- 271866-050V
			C- 456274-010V
			C- 491207-020V
90030-0182		NIPPLE	C- 271866-020V
			C- 271866-030V
			C- 271866-040V
			C- 271866-050V
90030-0184		PIPE CONNECTION	RK- 469536-010V
			RK- 491568-010V
			C- 256237-040V
			C- 256232-030V
			C- 256237-050V
			C- 256239-030V
			C- 256232-030V
			C- 256237-060V
			C- 256239-040V
			C- 257381-030V
			C- 257382-030V
			C- 257381-030V
			C- 257382-030V
			C- 257381-030V
			C- 257382-030V
			C- 257381-030V
			C- 257382-030V
			C- 752898-010V
			C- 256055-020V
			C- 256095-020V
			C- 256055-020V
			C- 256095-020V
			C- 256055-030V
			C- 256095-020V
			C- 272623-030V
			C- 456556-010V
			C- 256055-040V
			C- 256095-020V
			C- 272623-030V
			C- 456556-010V
			C- 256095-030V
			C- 272623-040V
			C- 456556-020V
			C- 256095-040V
			C- 272623-050V
			C- 456556-020V
90030-0185		PIPE CONNECTION	C- 751393-010V
			C- 491650-010V
			C- 271109-020V
			C- 456455-010V
			C- 456455-020V

PART NO	LAST AM	DESCRIPTION	GROUP NO
			C- 271453-020V
			C- 271866-020V
			C- 271453-020V
			C- 271453-030V
			C- 271168-040V
90030-0187		PIPE CONNECTION	RK- 469536-010V
90030-0187		PIPE CONNECTION	RK- 491568-010V
			RK- 752035-010V
			C- 256237-040V
			C- 256237-050V
			C- 256239-030V
			C- 256233-050V
			C- 256237-060V
			C- 256239-040V
			C- 271866-040V
			C- 491207-010V
			C- 271866-050V
			RK- 553180-010V
			C- 256055-020V
			C- 256095-020V
			C- 256055-020V
			C- 256095-020V
			C- 256055-030V
			C- 256095-020V
			C- 456976-020V
			C- 469452-010V
			C- 256055-040V
			C- 256095-020V
			C- 456976-020V
			C- 469452-010V
			C- 256014-040V
			C- 256055-050V
			C- 256095-030V
			C- 272560-040V
			C- 456976-030V
			C- 469452-020V
			C- 751800-010V
			C- 256014-050V
			C- 256055-060V
			C- 256084-040V
			C- 256095-040V
			C- 272560-050V
			C- 456976-040V
			C- 469452-030V
			C- 751800-020V
			C- 491207-020V
90030-0188		PIPE CONNECTION	C- 490504-010V
			C- 491767-010V
			C- 469121-010V
			C- 271866-040V
			C- 271866-050V
			C- 456556-010V
			C- 456556-020V
			C- 490504-010V
			C- 271168-040V
90030-0194		CONNECTION	C- 271866-020V
90030-0200		PIPE JOINT	C- 271562-040V
			C- 271562-050V
			C- 271562-060V
			C- 271562-070V
90030-0202		PIPE CONNECTION	C- 272623-030V
			C- 272623-040V
			C- 272623-050V
90030-0203		PIPE CONNECTION	C- 272623-030V
			C- 272623-040V
90030-0203		PIPE CONNECTION	C- 272623-050V
90030-0209		REDUCER	RK- 469536-010V
			RK- 491568-010V
			C- 491207-010V
			C- 491207-020V
90030-0221		GROMMET	C- 491207-010V
			C- 491207-020V
90030-0223		NIPPLE	C- 533014-010V
90030-0224		NIPPLE	C- 533014-010V
90030-0225		REDUCTION NIPPEL	C- 533014-010V
90030-0230		BULKHEAD UNION	RK- 520068-010V
90030-0231		UNION	RK- 520129-010V

PART NO	LAST AM	DESCRIPTION	GROUP NO
			RK- 520130-010V
			RK- 520094-010V
			RK- 520096-010V
			RK- 520067-010V
			RK- 520129-010V
90030-0233		MALE CONNECTOR	RK- 520130-010V
90030-0234		MALE CONNECTOR	RK- 520068-010V
			RK- 520129-010V
			RK- 520130-010V
			RK- 520094-010V
			RK- 520096-010V
			RK- 520068-010V
			RK- 520067-010V
			RK- 520129-010V
			RK- 520130-010V
90030-0245		MALE ELBOW	RK- 520070-010V
90030-0253		PIPE CONNECTION	C- 491207-020V
90030-0265		SCREW	C- 491976-020V
90030-0266		SCREW	C- 491976-020V
90032-0014		JUNCTION BLOCK	C- 271562-020V
			C- 271562-030V
			C- 271562-040V
			C- 271562-050V
			C- 271562-060V
			C- 271562-070V
90032-0026		JUNCTION BLOCK	C- 271562-020V
			C- 271562-030V
			C- 271562-040V
			C- 271562-050V
			C- 271562-060V
90032-0030		JUNCTION BLOCK	C- 271562-070V
			C- 271562-020V
			C- 271562-030V
			C- 271562-040V
			C- 271562-050V
			C- 271562-060V
90032-0031		JUNCTION BLOCK	C- 271562-070V
			C- 271562-030V
			C- 271562-040V
			C- 271562-050V
			C- 271562-060V
90032-0038		BLOCK	C- 271562-070V
			C- 271562-020V
			C- 271562-030V
			C- 271562-040V
			C- 271562-050V
			C- 271562-060V
90032-0038		BLOCK	C- 271562-070V
			C- 256203-020V
			C- 256203-030V
			C- 256203-040V
			C- 272765-030V
			C- 272765-040V
			C- 272765-050V
90032-0039		BLOCK	C- 271562-020V
			C- 271562-030V
			C- 271562-040V
			C- 271562-050V
			C- 271562-060V
			C- 271562-070V
			C- 256198-020V
			C- 256198-030V
			C- 491814-010V
			C- 491815-010V
			C- 491814-010V
			C- 491815-010V
			C- 272765-060V
90032-0040		BLOCK	C- 256197-020V
			C- 256197-030V
			C- 256197-040V
			CR- 256436-050V
			C- 271866-050V
90032-0043		JUNKTION BLOCK	RK- 491131-010V
90035-0002		COVER	CE- 67716-010V
			CE- 68128-010V
			CE- 68304-010V
			CE- 68128-010V

PART NO	LAST AM	DESCRIPTION	GROUP NO
			CE- 67716-010V
			CE- 68304-010V
90035-0005		COVER	C- 256197-020V
			C- 256197-030V
			C- 256197-040V
90036-0009		BULB	C- 271641-020V
			C- 271641-030V
			C- 232781-040V
			C- 271641-030V
90036-0035		BULB	C- 229400-060V
90036-0038		BULB	C- 752960-010V
			C- 752971-010V
			C- 272833-010V
			C- 272882-010V
			C- 295188-010V
			C- 272833-010V
			C- 272882-010V
			C- 295188-010V
			C- 456459-010V
			C- 456460-010V
			C- 456459-010V
			C- 456460-010V
			C- 456459-020V
			C- 456460-020V
			C- 751900-010V
			C- 456459-030V
			C- 456460-030V
			C- 751900-010V
90036-0044		BULB	CE- 67722-010V
90036-0044		BULB	CE- 68129-010V
			CE- 68305-010V
			CE- 68379-010V
			C- 295026-010V
			C- 295026-020V
			C- 295026-030V
			CE- 68129-010V
			CE- 67722-010V
			CE- 68305-010V
			CE- 68379-010V
90036-0053		BULB	RK- 520068-010V
90037-0001		LAMPHOLDER	C- 271641-020V
			C- 271641-030V
90038-0021		DIODE	RK- 69289-010V
			RK- 69501-010V
			RK- 69504-010V
			RK- 69507-010V
			RK- 69510-010V
90038-0024		RECTIFIER	CE- 67716-010V
			CE- 68128-010V
			CE- 68304-010V
			CE- 68128-010V
			CE- 67716-010V
			CE- 68304-010V
90038-0030		RECTIFIER	C- 294888-010V
			C- 294887-010V
			C- 469316-010V
			C- 486955-010V
			C- 469316-010V
			C- 486955-010V
P- 90042-0042		SOLENOID VALVE	C- 294658-010V
90042-0052		SOLENOID VALVE	C- 271909-020V
			C- 271909-030V
			C- 271909-040V
			C- 294658-010V
			C- 283631-010V
			C- 457924-010V
			C- 457924-020V
			C- 735183-010V
90042-0060		SOLENOID VALVE	C- 271909-020V
			C- 271909-030V
			C- 271909-040V
P- 90042-0067		SOLENOID VALVE	C- 272623-020V
P- 90042-0074		SOLENOID VALVE	C- 469736-020V
			C- 271909-020V
			C- 271909-030V
			C- 271909-040V
			C- 294658-010V

PART NO	LAST AM	DESCRIPTION	GROUP NO
			C- 283631-010V
			C- 294763-010V
			C- 457924-010V
			C- 457924-020V
			C- 735183-010V
P- 90042-0079		SOLENOID VALVE	C- 271909-020V
			C- 271909-030V
			C- 271909-040V
90042-0085		SOLENOID VALVE	RK- 520068-010V
			C- 272623-020V
			C- 272623-030V
90042-0085		SOLENOID VALVE	C- 272623-040V
90042-0089		SOLENOID VALVE	C- 456757-010V
			C- 271909-020V
			C- 271909-030V
			C- 271909-040V
90042-0094		SOLENOID VALVE	C- 272560-020V
			C- 272560-030V
			C- 272560-040V
P- 90042-0108		SOLENOID VALVE	C- 271909-050V
90042-0109		SOLENOID VALVE	C- 751478-010V
			RK- 751345-010V
90042-0152		SOLENOID VALVE	C- 751410-010V
90042-0162		SOLENOID VALVE	C- 401207-010V
			C- 400895-010V
90042-0167		SOLENOID VALVE	RK- 547751-030V
			RK- 547751-020V
90042-0171		SOLENOID VALVE	C- 272623-050V
P- 90042-0172		SOLENOID VALVE	C- 271909-050V
90042-0173		SOLENOID VALVE	C- 456757-020V
			C- 271909-050V
P- 90042-0184		SOLENOID VALVE	C- 271866-040V
			C- 271866-050V
90042-0326		COIL	C- 751478-010V
			C- 469736-020V
			RK- 547751-030V
			RK- 547751-020V
			RK- 550136-010V
			C- 271909-020V
			C- 271909-030V
			C- 271909-040V
			C- 294658-010V
			C- 294888-010V
			C- 283631-010V
			C- 294763-010V
			C- 294887-010V
			C- 457924-010V
			C- 457924-020V
			C- 735183-010V
			RK- 751345-010V
90042-0332		ASSEBLY UNIT	C- 271909-020V
			C- 271909-030V
			C- 271909-040V
			C- 271909-050V
90042-0333		COIL	C- 469736-020V
			C- 294888-010V
90042-0345		COIL	C- 271909-050V
90042-0347		PLATE	C- 271909-020V
			C- 271909-030V
			C- 271909-040V
90042-0348		ASSEMBLY UNIT	C- 271909-020V
			C- 271909-030V
			C- 271909-040V
90042-0351		SEAL KIT	C- 271909-020V
90042-0353		COIL	C- 751410-010V
90042-0360		PLATE	C- 469736-020V
			C- 294658-010V
			C- 283631-010V
			C- 294763-010V
			C- 457924-010V
90042-0360		PLATE	C- 457924-020V
90042-0361		ASSEMBLY UNIT	C- 271909-020V
			C- 271909-030V
			C- 271909-040V
90042-0364		PLATE	C- 271909-020V
			C- 271909-030V
			C- 271909-040V

PART NO	LAST AM	DESCRIPTION	GROUP NO
90042-0366		CONTACT	C- 751478-010V
			C- 469736-020V
			RK- 547751-030V
			RK- 547751-020V
			C- 271909-020V
			C- 271909-030V
			C- 271909-040V
			C- 294658-010V
			C- 283631-010V
			C- 457924-010V
			C- 457924-020V
			C- 735183-010V
			RK- 751345-010V
90042-0367		PLATE	C- 271909-020V
			C- 271909-030V
			C- 271909-040V
			C- 457924-010V
			C- 457924-020V
			C- 735183-010V
90042-0368		CONNECTION	C- 271909-020V
			C- 271909-030V
			C- 271909-040V
			C- 271909-050V
			C- 457924-010V
			C- 457924-020V
			C- 735183-010V
90042-0369		END PIECE	C- 271909-020V
			C- 271909-030V
			C- 271909-040V
			C- 271909-050V
			C- 457924-010V
			C- 457924-020V
			C- 735183-010V
90042-0370		PLATE	C- 271909-030V
			C- 271909-040V
			C- 735183-010V
90042-0374		SEAL KIT	C- 457924-010V
			C- 457924-020V
90042-0383		PLATE	C- 272560-020V
			C- 272560-030V
			C- 272560-040V
90042-0392		CONTACT	C- 271909-050V
90042-0404		PLATE	C- 271909-050V
90042-0431		PLATE	C- 271909-050V
90042-0438		CONNECTION RAMP	C- 751478-010V
			RK- 751345-010V
90042-0461		BASE PLATE	C- 401207-010V
			C- 400895-010V
90043-0004		PRESSURE GAUGE	C- 751410-010V
90043-0006		PRESSURE GAUGE	C- 271909-020V
			C- 271909-030V
			C- 271909-040V
90043-0006		PRESSURE GAUGE	C- 271909-050V
90043-0021		PRESSURE GAUGE	C- 533014-010V
90043-0034		PRESSURE GAUGE	C- 256233-020V
			C- 256233-030V
			C- 256233-040V
			C- 256233-050V
			C- 272408-020V
			C- 272408-030V
			C- 272408-040V
			C- 272408-050V
			C- 295045-020V
			C- 295045-030V
			C- 295045-040V
			C- 295045-050V
			C- 295045-060V
90043-0043		PRESSURE GAUGE	C- 533014-010V
90043-0050		PRESSURE GAUGE	C- 256232-020V
			C- 256232-030V
			C- 272560-020V
			C- 272560-030V
			C- 272560-040V
			C- 272560-050V
90043-0062		GAUGE	C- 271507-020V
90043-0065		PRESSURE GAUGE	RK- 520068-010V
			C- 294715-010V

PART NO	LAST AM	DESCRIPTION	GROUP NO
			C- 283631-010V
			C- 283632-010V
			C- 457159-010V
			C- 457159-020V
90043-0067		PRESSURE GAUGE	C- 456274-010V
			C- 272342-020V
			C- 456976-010V
			C- 491083-010V
			C- 491083-020V
			C- 456274-010V
90043-0068		PRESSURE GAUGE	C- 271909-020V
			C- 271909-030V
			C- 271909-040V
			C- 271909-050V
90043-0069		PRESSURE GAUGE	C- 271909-020V
			C- 271909-030V
			C- 271909-040V
			C- 271909-050V
90043-0070		PRESSURE GAUGE	C- 271909-020V
			C- 271909-030V
			C- 271909-040V
			C- 271909-050V
90043-0076		MANOMETER	C- 457159-010V
			C- 457924-020V
90043-0078		PRESSURE GAUGE	C- 751089-010V
			RK- 491780-010V
			C- 735183-010V
			RK- 491780-010V
90043-0302		SCREW	C- 256233-020V
			C- 256233-030V
			C- 256233-040V
			C- 256233-050V
			C- 272408-020V
			C- 272408-030V
90043-0302		SCREW	C- 272408-040V
			C- 272408-050V
			C- 295045-020V
			C- 295045-030V
			C- 295045-040V
			C- 295045-050V
			C- 295045-060V
P- 90044-0003		MICRO SWITCH	C- 229400-060V
90044-0007		MICRO SWITCH	CE- 67716-010V
			CE- 68128-010V
			CE- 68304-010V
			CE- 68128-010V
			CE- 67716-010V
			CE- 68304-010V
90044-0019		MICRO SWITCH	C- 256806-020V
90044-0051		MICRO SWITCH	C- 256200-020V
90044-0080		GIVER	C- 294888-010V
			C- 294887-010V
90044-0084		MICRO SWITCH	RK- 491388-010V
			C- 529924-010V
			C- 256806-030V
			C- 491787-010V
			C- 491788-010V
			C- 256806-030V
			C- 491787-020V
			C- 491788-020V
			C- 256014-020V
			C- 272021-020V
			C- 256014-020V
			C- 272021-020V
			C- 256014-030V
			C- 272021-030V
			C- 256014-030V
			C- 272021-030V
			C- 256014-040V
			C- 272021-040V
			C- 256014-050V
			C- 272021-050V
			C- 529924-010V
			RK- 491388-010V
			C- 529924-010V
90044-0085		SENSOR	RK- 479278-010V
			C- 469736-010V

PART NO	LAST AM	DESCRIPTION	GROUP NO
			C- 469736-020V
			RK- 547751-030V
			RK- 547752-010V
			RK- 547751-020V
			RK- 547752-020V
			RK- 550136-010V
			C- 256555-020V
			C- 256555-030V
			C- 456100-010V
			C- 456100-020V
			C- 272765-020V
			C- 272765-030V
			C- 272765-040V
			C- 272765-050V
			C- 272765-060V
90044-0085		SENSOR	C- 283600-010V
			C- 283628-010V
			C- 294888-010V
			C- 283600-010V
			C- 283628-010V
			C- 294887-010V
			C- 283635-010V
			C- 469316-010V
			C- 486955-010V
			C- 283635-010V
			C- 469316-010V
			C- 486955-010V
90044-0087		INDUCTIVE EMITTER	C- 272084-020V
			C- 256236-020V
			C- 441000-020V
			C- 456348-010V
			C- 456349-010V
			C- 456348-020V
			C- 456349-020V
			C- 456348-020V
			C- 456349-020V
			C- 268656-010V
			C- 268665-010V
			C- 283600-010V
			C- 294658-010V
			C- 294888-010V
			C- 272014-020V
			C- 272445-020V
			C- 272560-020V
			C- 272014-020V
			C- 272445-020V
			C- 283600-010V
			C- 283620-010V
			C- 294887-010V
			C- 441736-010V
P- 90044-0090		LIMIT SWITCH	C- 256555-020V
			C- 256555-030V
			C- 271109-020V
			C- 294785-010V
			C- 294780-010V
90044-0094		LIMIT SWITCH	C- 457853-010V
			C- 457937-010V
			C- 457853-020V
			C- 457937-010V
90044-0095		PROXIMITY SWITCH	C- 255907-020V
			C- 456180-010V
90044-0101		LIMIT SWITCH	C- 456100-010V
			C- 456100-020V
			C- 441850-010V
			C- 441850-020V
			C- 441850-030V
90044-0104		PROXIMITY SWITCH	C- 456953-010V
			C- 752957-010V
			C- 272084-030V
			C- 469736-010V
			C- 469736-020V
			RK- 520069-010V
			RK- 520070-010V
			RK- 520071-010V
			RK- 520069-010V
90044-0104		PROXIMITY SWITCH	RK- 520070-010V
			RK- 520095-010V

PART NO	LAST AM	DESCRIPTION	GROUP NO
			RK- 520069-010V
			RK- 520070-010V
			RK- 520095-010V
			RK- 520069-010V
			RK- 520070-010V
			RK- 520071-010V
			RK- 520069-010V
			RK- 520070-010V
			RK- 520071-010V
			C- 735258-010V
			C- 736529-010V
			RK- 536318-010V
			C- 401207-010V
			C- 400895-010V
			C- 256233-020V
			C- 271649-020V
			C- 295112-020V
			C- 256233-030V
			C- 271649-020V
			C- 295112-020V
			C- 256233-030V
			C- 271649-020V
			C- 295112-020V
			C- 256233-040V
			C- 271649-020V
			C- 295112-020V
			C- 256233-050V
			C- 271649-030V
			C- 441000-030V
			C- 456321-010V
			C- 456322-010V
			C- 441000-030V
			C- 456321-020V
			C- 456322-020V
			C- 441000-040V
			C- 456321-030V
			C- 456322-030V
			C- 441000-050V
			C- 752628-010V
			C- 752645-010V
			C- 752646-010V
			C- 752913-010V
			C- 752914-010V
			RK- 547300-010V
			C- 271649-020V
			C- 272021-020V
			C- 272024-020V
			C- 272025-020V
			C- 271649-020V
			C- 272021-020V
			C- 272024-020V
			C- 272025-020V
			C- 272560-030V
			C- 272014-030V
			C- 272021-030V
			C- 272024-020V
			C- 272025-020V
90044-0104		PROXIMITY SWITCH	C- 272560-030V
			C- 456836-020V
			C- 469074-010V
			C- 272014-030V
			C- 272021-030V
			C- 272024-020V
			C- 272025-020V
			C- 272560-030V
			C- 456836-020V
			C- 469074-010V
			C- 272021-040V
			C- 272024-030V
			C- 272025-030V
			C- 272560-040V
			C- 456836-030V
			C- 469074-020V
			C- 751088-010V
			C- 256014-050V
			C- 256084-040V
			C- 272021-050V

PART NO	LAST AM	DESCRIPTION	GROUP NO
			C- 272024-030V
			C- 272025-030V
			C- 272337-040V
			C- 272560-050V
			C- 456836-040V
			C- 283631-010V
			C- 457867-010V
			C- 469247-010V
			C- 469316-010V
			C- 486955-010V
			C- 457867-010V
			C- 469247-020V
			C- 469316-010V
			C- 486955-010V
			C- 456953-010V
			C- 736529-010V
90044-0107		INDUCTIVE TRANSMITTER	C- 752755-010V
90044-0112		PROXIMITY SWITCH	C- 529621-010V
90045-0079		MOTOR	C- 271507-020V
90045-0084		MOTOR	C- 271128-020V
90045-0087		MOTOR	C- 491323-020V
			C- 751393-010V
90045-0096		MOTOR	C- 271128-020V
			C- 271128-030V
			C- 271128-040V
90045-0102		MOTOR	C- 271017-020V
90045-0124		MOTOR	C- 271017-030V
P- 90048-0018		OIL PUMP	C- 271909-020V
			C- 271909-030V
			C- 271909-040V
			C- 271909-050V
P- 90048-0022		OIL PUMP	C- 77091-010V
			C- 77091-020V
			C- 77091-030V
90048-0440		GASKET	C- 491890-010V
90048-0453		OVERFLOW TRAP	C- 271909-030V
			C- 271909-040V
			C- 271909-050V
			RK- 491984-010V
90050-0008		BOTTLE	C- 256358-010V
			C- 434774-020V
			C- 434774-030V
			C- 434074-020V
			C- 434074-030V
90050-0011		BOTTLE	C- 271452-020V
			C- 271453-020V
			C- 271452-020V
			C- 271453-020V
			C- 271452-020V
			C- 271453-030V
			C- 490761-010V
90050-0012		BOTTLE	C- 434774-020V
			C- 434774-030V
			C- 434074-020V
			C- 434074-030V
			C- 434774-030V
			C- 434074-030V
			C- 434774-030V
			C- 434074-030V
90051-0025		HANDLE	C- 256233-020V
			C- 256233-030V
			C- 256233-040V
90051-0035		HANDLE	C- 76133-010V
			C- 76133-020V
			C- 76595-010V
			C- 76595-020V
			C- 76133-030V
			C- 76595-030V
			C- 256358-010V
			C- 76344-010V
			C- 76595-010V
			C- 76133-010V
			C- 76595-010V
90051-0040		HANDLE	C- 76291-010V
			C- 76411-010V
			C- 76447-010V
			C- 76492-010V

PART NO	LAST AM	DESCRIPTION	GROUP NO
			C- 76411-010V
			C- 76447-010V
			C- 76492-010V
			C- 76411-010V
			C- 76447-010V
			C- 76492-010V
90051-0045		HANDLE	C- 256236-020V
			C- 295112-020V
			C- 456348-010V
			C- 456349-010V
			C- 456348-020V
			C- 456349-020V
			C- 456348-020V
			C- 456349-020V
			C- 272014-020V
			C- 272014-030V
			C- 751088-010V
90051-0046		HANDLE	C- 283602-010V
90051-0053		HANDLE	C- 76301-010V
			C- 76606-010V
			C- 76606-020V
90051-0053		HANDLE	C- 76606-030V
			RK- 456793-010V
			RK- 469961-010V
			C- 256014-030V
			C- 76606-010V
90051-0059		HANDLE	C- 76335-010V
			C- 76402-010V
			C- 256358-010V
90051-0064		HANDLE	CR- 449275-010V
90051-0076		WHEEL	C- 283624-010V
			RK- 536470-010V
			RK- 538450-010V
			RK- 547726-010V
			C- 269589-010V
			C- 283618-010V
			CR- 283618-020V
			C- 456612-010V
			CR- 283618-020V
			C- 533844-010V
90051-0077		HANDLE	C- 434774-020V
			C- 434774-030V
			C- 434074-020V
			C- 434074-030V
			C- 434774-020V
			C- 434774-030V
			C- 434074-020V
			C- 434074-030V
			C- 434774-030V
			C- 434074-030V
			C- 434774-030V
			C- 434074-030V
90051-0082		KNOB	C- 256806-020V
			C- 256806-030V
90051-0083		HANDLE	C- 76301-010V
			C- 76416-010V
			C- 76447-010V
			C- 76416-010V
			C- 76447-010V
			C- 76485-010V
			C- 76416-010V
			C- 76447-010V
90051-0084		HANDLE	RK- 538739-010V
			C- 76485-010V
90051-0089		KNOB	C- 543143-010V
90053-0018		COUNTER	C- 295026-010V
			C- 295026-020V
			C- 295026-030V
P- 90053-0024		COUNTER	CE- 68379-010V
90053-0026		COUNTER	CE- 67716-010V
			CE- 68304-010V
			CE- 67716-010V
			CE- 68304-010V
90053-0306		FRAME	CE- 68379-010V
90056-0071		WORM GEAR	C- 256438-020V
P- 90056-0072		WORM GEAR	C- 256173-020V
			C- 256173-030V

PART NO	LAST AM	DESCRIPTION	GROUP NO
			C- 256173-040V
90059-0001		THERMOSTAT	C- 37877-030V
90059-0014		THERMOSTAT	RK- 752270-010V
90060-0068		TIME RELAY	CE- 67716-010V
			CE- 68304-010V
			CE- 67716-010V
			CE- 68304-010V
90061-0015		GIVER	C- 256555-020V
			C- 256555-030V
			C- 256965-020V
90061-0018		ANGLE ENCODER	C- 271116-030V
			C- 456546-010V
			C- 456546-020V
			C- 751689-010V
P- 90064-0041		PUSH BUTTON	C- 232781-040V
P- 90064-0045		PUSH BUTTON	C- 232781-040V
90064-0052		PUSH BUTTON	C- 295276-020V
			C- 256233-050V
			C- 295026-010V
			C- 295777-010V
			C- 469374-010V
			C- 469374-020V
			C- 469374-030V
			C- 232781-040V
P- 90064-0054		PUSH BUTTON	C- 232781-040V
90064-0067		PUSH BUTTON	C- 271909-020V
P- 90064-0072		PUSH BUTTON	C- 272408-020V
			C- 294715-010V
			C- 283632-010V
90064-0073		PUSH BUTTON	C- 272408-020V
			C- 294715-010V
			C- 283632-010V
90064-0082		PUSH BUTTON WHITE	CE- 68379-010V
			C- 295026-010V
			C- 295026-020V
			C- 295026-030V
			CE- 68379-010V
90064-0083		PUSH BUTTON GREEN	RK- 68874-010V
			C- 295026-010V
90064-0084		PUSH BUTTON YELLOW	CE- 67722-010V
			CE- 68129-010V
			CE- 68305-010V
			CE- 68379-010V
			C- 456882-010V
			C- 484984-010V
			C- 295026-010V
			C- 295026-020V
			C- 295026-030V
			C- 272408-030V
			C- 272408-040V
			C- 272408-050V
			C- 457159-010V
			C- 457159-020V
			CE- 68129-010V
			CE- 67722-010V
			CE- 68305-010V
			CE- 68379-010V
90064-0085		PUSH BUTTON RED	CE- 67716-010V
			CE- 68128-010V
			CE- 68379-010V
			C- 295026-010V
90064-0085		PUSH BUTTON RED	C- 295026-020V
			C- 295026-030V
			C- 751885-010V
			C- 271513-050V
			C- 751885-020V
			C- 272408-030V
			C- 272408-040V
			C- 272408-050V
			C- 457159-010V
			C- 457159-020V
			CE- 68128-010V
			CE- 67716-010V
			CE- 68379-010V
90064-0087		PUSH BUTTON GREEN	RK- 520068-010V
90064-0088		PUSH BUTTON YELLOW	C- 295026-010V
			C- 295026-020V

PART NO	LAST AM	DESCRIPTION	GROUP NO
			C- 295026-030V
90064-0092		EMERGENCY PUSH BUTTON	CE- 67716-010V
			CE- 68128-010V
			CE- 68379-010V
			C- 295026-020V
			C- 295026-030V
			C- 751885-010V
			C- 271513-050V
			C- 751885-020V
			CE- 68128-010V
			CE- 67716-010V
			CE- 68379-010V
90064-0093		PUSH BUTTON	CE- 68379-010V
			C- 295026-020V
			C- 295026-030V
			CE- 68379-010V
90064-0315		TOOL	CE- 67722-010V
			CE- 68129-010V
			CE- 68305-010V
			CE- 68129-010V
			CE- 67722-010V
			CE- 68305-010V
90064-0317		TOUCH GUARD	CE- 67716-010V
			CE- 68128-010V
			RK- 68874-010V
			CE- 68128-010V
			CE- 67716-010V
90066-0013		PUSH BUTTON BOX	C- 295276-020V
			C- 256233-050V
			C- 271909-020V
			C- 295777-010V
			C- 469374-010V
			C- 469374-020V
			C- 469374-030V
90066-0018		PUSH BUTTON BOX	C- 232781-040V
90066-0020		PUSCH BUTTON BOX	C- 751885-010V
			C- 271513-050V
			C- 751885-020V
			C- 272408-020V
			C- 272408-030V
			C- 272408-040V
			C- 272408-050V
			C- 294715-010V
			C- 283632-010V
P- 90067-0010		CARRIAGE	C- 295971-010V
			C- 491942-010V
90069-0069		WORM GEAR MOTOR	C- 229400-060V
90069-0098		WORM GEAR MOTOR	C- 229400-060V
			C- 752029-010V
P- 90069-0099		WORM GEAR MOTOR	C- 256234-020V
			C- 256234-030V
			C- 256234-040V
			C- 272028-020V
			C- 272028-030V
			C- 272028-040V
			C- 272028-050V
P- 90069-0100		VARIATOR	C- 294522-010V
90071-0027		V-BELT	C- 256173-040V
90073-0003		CLIP	C- 256233-020V
			C- 469366-010V
90074-0001		CLIP	C- 491976-010V
			C- 491976-020V
			C- 491976-010V
			C- 491976-020V
90074-0003		CLIP	C- 271866-020V
			C- 272408-040V
90074-0005		CLIP	C- 490504-010V
			C- 491767-010V
			C- 490504-010V
90074-0007		CLIP	C- 272408-040V
90074-0026		CLIP	RK- 469808-010V
			C- 401207-010V
			C- 256173-020V
			C- 256173-030V
			C- 256173-040V
			RK- 469808-010V
90074-0027		CLAMP	RK- 469808-010V

PART NO	LAST AM	DESCRIPTION	GROUP NO
90075-0109		CONTACTOR	CE- 67716-010V
			CE- 67722-010V
			CE- 68128-010V
			CE- 68129-010V
			CE- 68304-010V
			CE- 68305-010V
			CE- 68128-010V
			CE- 68129-010V
			CE- 67716-010V
			CE- 67722-010V
			CE- 68304-010V
			CE- 68305-010V
90075-0110		CONTACTOR	CE- 67716-010V
			CE- 67722-010V
			CE- 68128-010V
			CE- 68129-010V
			CE- 68304-010V
			CE- 68305-010V
			CE- 68128-010V
			CE- 68129-010V
			CE- 67716-010V
			CE- 67722-010V
			CE- 68304-010V
			CE- 68305-010V
90077-0030		TERMINAL STRIP	C- 544381-010V
90077-0048		TERMINAL BLOCK	C- 246357-010V
90077-0048		TERMINAL BLOCK	C- 456435-010V
90077-0079		TERMINAL BLOCK	RK- 520068-010V
			C- 295026-010V
			C- 295026-020V
			C- 295026-030V
			C- 295382-020V
90077-0090		TERMINAL BLOCK	C- 735259-010V
			C- 735031-010V
90077-0092		TERMINAL BLOCK	C- 283633-010V
			C- 295470-020V
			C- 295470-030V
			C- 283633-010V
90077-0102		TERMINAL BLOCK	CE- 67716-010V
			CE- 68304-010V
			C- 37877-030V
			C- 544381-010V
			C- 441850-010V
			C- 441850-020V
			C- 441850-030V
			CE- 67716-010V
			CE- 68304-010V
			C- 232781-040V
			C- 37877-030V
90077-0106		STRIP	CE- 67716-010V
			CE- 68304-010V
			C- 401207-010V
			C- 400895-010V
			CE- 67716-010V
			CE- 68304-010V
90077-0115		TERMINAL BLOCK	RK- 69562-010V
90077-0302		RAIL	C- 295441-010V
			C- 295441-020V
			C- 295441-030V
90077-0307		EN PLATE	C- 295026-010V
			C- 295026-020V
			C- 295026-030V
90077-0308		END SUPPORT	RK- 520068-010V
			C- 295026-010V
			C- 295026-020V
			C- 295026-030V
90077-0309		END PLATE	C- 735259-010V
			C- 735031-010V
90077-0314		END PLATE	C- 283633-010V
90077-0316		BRIDGE	C- 735259-010V
			C- 735031-010V
90077-0328		RAIL	C- 295026-010V
			C- 295026-020V
			C- 295026-030V
			C- 295382-020V
90081-0026		MAGNET	C- 476189-010V
90081-0027		MAGNET DISC	C- 476189-010V

PART NO	LAST AM	DESCRIPTION	GROUP NO
90083-0014		ROLLER	C- 283610-010V
90083-0015		BUSHING	CR- 449275-010V C- 256197-020V C- 256198-020V C- 256203-020V
90083-0016		PLATE	C- 256197-020V C- 256198-020V C- 256203-020V C- 256198-020V C- 256203-020V C- 256198-020V C- 256203-020V C- 256198-030V C- 256203-030V C- 491814-010V C- 491815-010V C- 256203-040V C- 491814-010V C- 491815-010V
90086-0001		NIPPLE	C- 271641-020V
90087-0002		PIPE PLUG	C- 271641-030V C- 256555-020V C- 256555-030V C- 456100-010V C- 456100-020V
90087-0019		PLUG	C- 256197-020V C- 256203-020V C- 256197-020V C- 256203-020V C- 256197-030V C- 256203-030V C- 256197-030V C- 256203-030V C- 256197-040V C- 256203-040V CR- 256436-050V C- 271866-050V
90087-0031		COVER	C- 456935-020V
90089-0003		SLEEVE	C- 295276-020V C- 256233-050V C- 295777-010V C- 469374-010V C- 469374-020V C- 469374-030V
90089-0006		SLEEVE	C- 229400-060V
90089-0007		SLEEVE	C- 469299-010V
90089-0013		SLEEVE	C- 271109-020V
90089-0017		TRANSITIONAL MUFF	C- 256234-030V C- 256234-040V C- 491207-010V C- 272028-030V C- 272028-040V C- 272028-050V C- 491207-020V
90089-0018		TRANSITIONAL NIPPLE	C- 491207-020V
90090-0001		STEEL BALL	C- 256236-020V C- 456321-010V C- 456322-010V C- 456348-010V C- 456349-010V C- 456321-020V C- 456322-020V C- 456348-020V C- 456349-020V C- 456321-030V C- 456322-030V C- 456348-020V C- 456349-020V C- 272445-020V
90090-0001		STEEL BALL	C- 256238-040V C- 255957-020V C- 456309-010V C- 255957-020V C- 456309-010V C- 456309-020V C- 456309-030V C- 456309-040V
90090-0003		STEEL BALL	

PART NO	LAST AM	DESCRIPTION	GROUP NO
90090-0005		STEEL BALL	CR- 256204-020V CR- 256205-020V CR- 256212-020V CR- 256213-020V CR- 256204-020V CR- 256205-020V CR- 256212-020V CR- 256213-020V CR- 256204-030V CR- 256205-030V CR- 256212-030V CR- 256213-030V CR- 256204-040V CR- 256205-040V CR- 256212-040V CR- 256213-040V CR- 256204-040V CR- 256205-040V CR- 256212-040V CR- 256213-040V CR- 256204-050V CR- 256205-050V CR- 256212-050V CR- 256213-050V RK- 456712-010V RK- 456715-010V
90090-0008		STEEL BALL	C- 271562-020V C- 271562-030V C- 271562-040V C- 271562-050V C- 271562-060V C- 271562-070V C- 232781-040V
90090-0012		STEEL BALL	CR- 256436-020V
90090-0013		STEEL BALL	CR- 256712-020V CR- 256436-020V CR- 256712-020V CR- 256436-020V CR- 256712-020V CR- 256436-020V CR- 256712-020V CR- 256436-030V CR- 256712-030V CR- 256436-040V CR- 256712-040V CR- 256436-050V CR- 256712-050V RK- 751157-010V
90090-0014		STEEL BALL	C- 256221-020V C- 256222-020V C- 256221-020V C- 256222-020V C- 256221-020V C- 256222-020V C- 256221-020V C- 256222-020V C- 256221-020V C- 256222-020V C- 256221-020V C- 256222-020V C- 256221-020V C- 256222-020V
90090-0014		STEEL BALL	
90090-0016		BALL	RK- 491539-010V RK- 490877-010V C- 491897-010V C- 736865-010V C- 491897-010V C- 491976-010V C- 491976-020V C- 491976-010V C- 491976-020V C- 736865-010V C- 491897-010V RK- 751570-010V RK- 491539-010V
90091-0079		SEAL	C- 735268-010V C- 736600-010V C- 735271-010V C- 736600-010V

PART NO	LAST AM	DESCRIPTION	GROUP NO
			C- 735271-010V
			C- 736600-010V
			C- 735271-010V
			C- 736600-010V
90091-0082		SEAL	CR- 256204-020V
			CR- 256205-020V
			CR- 256204-020V
			CR- 256205-020V
			CR- 256204-030V
90091-0089		SEAL RING	CR- 256205-030V
			CR- 256212-020V
			CR- 256213-020V
			CR- 256212-020V
			CR- 256213-020V
			CR- 256212-030V
			CR- 256213-030V
			CR- 256212-040V
			CR- 256213-040V
			CR- 256212-040V
			CR- 256213-040V
			CR- 256212-050V
			CR- 256213-050V
			CR- 256436-020V
			CR- 256712-020V
			CR- 256436-020V
			CR- 256712-020V
			CR- 256436-020V
			CR- 256712-020V
			CR- 256436-020V
			CR- 256712-020V
90091-0091		SEAL RING	RK- 456712-010V
			CR- 256204-020V
			CR- 256205-020V
			CR- 256204-020V
			CR- 256205-020V
			CR- 256204-030V
			CR- 256205-030V
			CR- 256204-040V
			CR- 256205-040V
			CR- 256204-040V
			CR- 256205-040V
			CR- 256204-050V
			CR- 256205-050V
90091-0106		SEALED RING	C- 256555-020V
			C- 256555-030V
			C- 456100-010V
			C- 456100-020V
90091-0107		SEAL RING	CR- 256212-020V
			CR- 256213-020V
			CR- 256212-020V
			CR- 256213-020V
			CR- 256212-030V
			CR- 256213-030V
90091-0129		SEAL RING	CR- 256436-020V
			CR- 256712-020V
			CR- 256436-020V
			CR- 256712-020V
			CR- 256436-020V
			CR- 256712-020V
			CR- 256436-020V
			CR- 256712-020V
90091-0136		SEAL RING	C- 295211-010V
90091-0137		SEAL RING	C- 491323-020V
			C- 751393-010V
90091-0139		SEAL RING	C- 295026-010V
			C- 295026-020V
90091-0159		GASKET	C- 271507-020V
90091-0160		SEAL RING	CR- 256436-030V
			CR- 256712-030V
90091-0162		RING	CR- 256212-040V
			CR- 256213-040V
			CR- 256212-040V
			CR- 256213-040V
			CR- 256212-050V
			CR- 256213-050V
			CR- 256436-030V
			CR- 256712-030V

PART NO	LAST AM	DESCRIPTION	GROUP NO
			CR- 256436-040V
			CR- 256712-040V
			CR- 256436-050V
			CR- 256712-050V
			RK- 456712-010V
			RK- 456715-010V
			RK- 751157-010V
			RK- 456715-010V
			RK- 751157-010V
90091-0163		RING	CR- 256436-030V
			CR- 256712-030V
			CR- 256436-040V
			CR- 256712-040V
90091-0163		RING	CR- 256436-050V
			CR- 256712-050V
			RK- 751157-010V
90091-0165		SEAL RING	CR- 256436-030V
			CR- 256712-030V
90091-0166		SEAL RING	RK- 456715-010V
90091-0167		SEAL RING	RK- 456712-010V
			RK- 456715-010V
90091-0168		SEAL RING	RK- 456712-010V
			RK- 456715-010V
90091-0169		RING	CR- 256204-040V
			CR- 256205-040V
			CR- 256204-040V
			CR- 256205-040V
			CR- 256204-050V
			CR- 256205-050V
			RK- 456715-010V
90091-0170		RING	CR- 256212-040V
			CR- 256213-040V
			CR- 256212-040V
			CR- 256213-040V
			CR- 256212-050V
			CR- 256213-050V
			RK- 456712-010V
			RK- 456715-010V
90091-0180		GASKET	C- 272337-020V
			C- 272337-030V
			C- 456555-020V
			C- 271169-040V
			C- 272337-040V
90091-0182		GASKET	C- 271169-020V
			C- 272337-020V
			C- 271169-020V
			C- 272337-020V
			C- 271169-020V
			C- 272337-020V
			C- 271169-020V
			C- 272337-020V
			C- 271169-030V
			C- 272337-030V
			C- 272337-040V
			C- 456555-030V
90091-0214		SEAL RING	CR- 256212-040V
			CR- 256213-040V
			CR- 256212-040V
			CR- 256213-040V
			CR- 256212-050V
			CR- 256213-050V
90091-0215		SEAL RING	CR- 256212-040V
			CR- 256213-040V
			CR- 256212-040V
			CR- 256213-040V
			CR- 256212-050V
			CR- 256213-050V
90091-0216		SEAL RING	CR- 256204-040V
			CR- 256205-040V
			CR- 256204-040V
			CR- 256205-040V
			CR- 256204-050V
90091-0216		SEAL RING	CR- 256205-050V
90091-0220		SEAL RING	CR- 256436-040V
			CR- 256712-040V
			CR- 256436-050V
			CR- 256712-050V

PART NO	LAST AM	DESCRIPTION	GROUP NO
90091-0221		SEAL RING	RK- 751157-010V
			CR- 256436-040V
			CR- 256712-040V
			CR- 256436-050V
			CR- 256712-050V
90092-0048		OIL BRUSH	RK- 751157-010V
			C- 272765-030V
			C- 272765-040V
			C- 272765-050V
			C- 272765-060V
			RK- 491131-010V
			RK- 491512-010V
90092-0052		VALVE	C- 271562-020V
			C- 271562-030V
			C- 271562-040V
			C- 271562-050V
			C- 271562-060V
			C- 271562-070V
			C- 256197-020V
			C- 256198-020V
			C- 256203-020V
			C- 256197-020V
			C- 256198-020V
			C- 256203-020V
			C- 256197-030V
			C- 256198-030V
			C- 256203-030V
			C- 256197-030V
			C- 256203-030V
			C- 491814-010V
			C- 491815-010V
			C- 256197-040V
			C- 256203-040V
			C- 491814-010V
			C- 491815-010V
			C- 256217-020V
			C- 256951-020V
			C- 256952-020V
			C- 257381-020V
			C- 257382-020V
			C- 256217-030V
			C- 256951-020V
			C- 256952-020V
			C- 257381-020V
			C- 257382-020V
			CR- 256212-030V
			CR- 256213-030V
			C- 256217-040V
			C- 256951-030V
			C- 256952-030V
			C- 257381-030V
			C- 257382-030V
			CR- 256212-040V
			CR- 256213-040V
90092-0052		VALVE	C- 256217-040V
			C- 256951-030V
			C- 256952-030V
			C- 257381-030V
			C- 257382-030V
			CR- 256212-040V
			CR- 256213-040V
			C- 256217-040V
			C- 256951-040V
			C- 256952-040V
			C- 257381-030V
			C- 257382-030V
			CR- 256212-050V
			CR- 256213-050V
			C- 256217-040V
			C- 256951-040V
			C- 256952-040V
			C- 257381-030V
			C- 257382-030V
			C- 272765-010V
			C- 295310-010V
			C- 272765-020V
			C- 295310-010V

PART NO	LAST AM	DESCRIPTION	GROUP NO
			C- 272765-020V
			C- 295310-020V
			C- 295310-030V
			C- 295310-040V
			C- 295310-050V
			C- 295310-060V
			C- 271866-050V
			RK- 456712-010V
90092-0053		VALVE	C- 271562-020V
			C- 271562-030V
			C- 271562-040V
			C- 271562-050V
			C- 271562-060V
			C- 271562-070V
			C- 256197-020V
			C- 256198-020V
			C- 256197-020V
			C- 256198-020V
			C- 256197-030V
			C- 256198-030V
			C- 256197-030V
			C- 491814-010V
			C- 491815-010V
			C- 256197-040V
			C- 491814-010V
			C- 491815-010V
			C- 257381-020V
			C- 257382-020V
			C- 256217-030V
			C- 257381-020V
			C- 257382-020V
			CR- 256212-030V
			CR- 256213-030V
			C- 257381-030V
			C- 257382-030V
			CR- 256212-040V
90092-0053		VALVE	CR- 256213-040V
			C- 257381-030V
			C- 257382-030V
			CR- 256212-040V
			CR- 256213-040V
			C- 257381-030V
			C- 257382-030V
			CR- 256212-050V
			CR- 256213-050V
			C- 257381-030V
			C- 257382-030V
			RK- 456711-010V
			RK- 456712-010V
90092-0054		VALVE	C- 272765-030V
			C- 272765-040V
			C- 272765-050V
			CR- 256436-050V
			C- 272765-060V
			RK- 491131-010V
			RK- 491512-010V
90093-0012		END PLATE	C- 246357-010V
			C- 456435-010V
90094-0004		END SUPPORT	C- 246357-010V
			C- 456435-010V
			C- 456827-010V
			C- 283633-010V
			C- 295470-020V
			C- 295470-030V
90099-0001		NUT	C- 283633-010V
			C- 295883-010V
			C- 295883-020V
			C- 295883-030V
			C- 295883-040V
			C- 736865-010V
			C- 283633-010V
			RK- 491543-010V
			RK- 491744-010V
			RK- 751636-010V
			RK- 491789-010V
			RK- 491902-010V
			RK- 751561-010V

PART NO	LAST AM	DESCRIPTION	GROUP NO
			RK- 751569-010V
			RK- 491789-010V
			RK- 751561-010V
			RK- 751569-010V
			C- 283633-010V
			C- 294867-010V
			C- 457159-010V
			C- 457159-020V
			C- 735259-010V
			C- 736865-010V
			C- 735031-010V
			C- 736865-010V
90099-0002		NUT	C- 752960-010V
			C- 752971-010V
			C- 37877-030V
			C- 441534-010V
			C- 456460-010V
			C- 456460-020V
90099-0002		NUT	C- 751900-010V
			C- 456459-030V
			C- 456460-030V
			C- 751900-010V
			C- 37877-030V
90099-0003		NUT	C- 295883-010V
			C- 295883-020V
			C- 295883-030V
			C- 295883-040V
			C- 271452-020V
			C- 490761-010V
			RK- 490865-010V
			RK- 491795-010V
			C- 294867-010V
			C- 457159-010V
			C- 457159-020V
90099-0004		NUT	RK- 68180-010V
			RK- 68183-010V
			C- 295883-010V
			C- 295883-020V
			C- 295883-030V
			C- 295883-040V
			C- 283633-010V
90099-0011		NUT	RK- 68874-010V
			C- 295883-010V
			C- 295883-020V
			C- 295883-030V
			C- 295883-040V
			C- 295777-010V
			C- 469374-010V
			C- 469374-020V
			C- 469374-030V
90099-0015		NUT	C- 751689-010V
90099-0033		NUT	C- 294763-010V
90099-0048		NUT	C- 449313-010V
90099-0057		NUT	C- 752628-010V
90099-0075		NUT	C- 279809-010V
			C- 283632-010V
90099-0087		NUT	C- 441535-010V
90101-0003		HOLDER	C- 256232-020V
			C- 256237-040V
			C- 256232-030V
			C- 256237-050V
			C- 256232-030V
90101-0004		HOLDER	RK- 469988-010V
			C- 256237-040V
			C- 256237-050V
			C- 456555-010V
			C- 456555-020V
			C- 456555-030V
90110-0028		CONTACT UNIT	CE- 67716-010V
			CE- 68128-010V
			CE- 68304-010V
			CE- 68128-010V
			CE- 67716-010V
			CE- 68304-010V
90110-0029		CONTACT UNIT	CE- 67716-010V
			CE- 68128-010V
			CE- 68304-010V

PART NO	LAST AM	DESCRIPTION	GROUP NO
90110-0029		CONTACT UNIT	CE- 68128-010V
			CE- 67716-010V
			CE- 68304-010V
90110-0035		CABLE CONNECTION	C- 283617-010V
			C- 283613-010V
			C- 283617-010V
90110-0036		CABLE CONNECTION	C- 283617-010V
			C- 283613-010V
			C- 283617-010V
90110-0051		CONTACT UNIT	C- 256965-020V
90110-0078		CONTACT	C- 451348-010V
90110-0080		CONTACT UNIT	C- 294763-010V
90110-0081		CONTACT UNIT	C- 294767-010V
90110-0095		CONTAKT	C- 271168-020V
			C- 457924-010V
			C- 457924-020V
			C- 751410-010V
			C- 271168-040V
90110-0097		CONTACT UNIT	C- 456608-010V
90110-0098		CONTACT UNIT	C- 456600-010V
90111-0104		SWITCH	C- 232781-040V
90111-0120		SWITCH	CE- 68379-010V
			RK- 69262-010V
			RK- 69346-010V
			RK- 69393-010V
			RK- 69396-010V
			C- 456882-010V
			C- 295026-010V
			C- 295026-020V
			C- 295026-030V
			CE- 68379-010V
90111-0121		SWITCH	RK- 68180-010V
			RK- 68183-010V
90111-0122		SWITCH	CE- 67716-010V
			CE- 68304-010V
			CE- 67716-010V
			CE- 68304-010V
90111-0124		SWITCH	CE- 67716-010V
			CE- 68304-010V
			CE- 67716-010V
			CE- 68304-010V
90111-0134		SWITCH	CE- 68128-010V
90111-0135		SWITCH	CE- 67716-010V
			CE- 68304-010V
			CE- 67716-010V
			CE- 68304-010V
90111-0137		SWITCH	C- 457159-010V
			C- 457159-020V
90113-0021		REGULATOR	C- 271909-020V
			C- 271909-030V
			C- 271909-040V
			C- 271909-050V
			C- 279809-010V
			C- 294715-010V
			C- 283631-010V
			C- 283632-010V
			C- 457159-010V
			C- 457159-020V
90113-0022		NUT	C- 279809-010V
90113-0022		NUT	C- 294715-010V
			C- 283632-010V
90113-0044		PRESSURE REGULATOR	C- 271507-020V
P- 90113-0047		REGULATOR	C- 271909-020V
			C- 271909-030V
			C- 271909-040V
			C- 271909-050V
90113-0054		REGULATOR	RK- 520068-010V
90113-0056		REGULATOR	C- 751089-010V
			RK- 491780-010V
			C- 735183-010V
			C- 751410-010V
			RK- 491780-010V
90113-0059		REGULATOR	C- 533014-010V
90113-0338		YOKE	C- 271909-020V
			C- 271909-030V
			C- 271909-040V
			C- 271909-050V

PART NO	LAST AM	DESCRIPTION	GROUP NO
90113-0342		JUNCTION BLOCK	C- 271909-020V C- 271909-030V C- 271909-040V C- 271909-050V
90113-0356		BRACKET	C- 271909-020V C- 271909-030V C- 271909-040V C- 271909-050V
90115-0006		JOINT	C- 272084-020V
90115-0020		ROD END	C- 294906-010V C- 457853-020V
90115-0021		ROD END	C- 294906-010V
90115-0022		ROD END	C- 294785-010V
90115-0054		JOINT	C- 37898-010V C- 450101-010V
90115-0068		JOINT	C- 272231-020V C- 272231-030V C- 751968-010V
90115-0080		ROD END	C- 294780-010V C- 457853-010V
90115-0082		JOINT	C- 283602-010V C- 283618-010V C- 283602-010V C- 283618-010V CR- 283618-020V
90115-0120		JOINT	C- 283602-010V
90115-0133		JOINT	C- 272084-030V
90117-0001		HANDLE	RK- 548056-010V
90117-0003		HANDLE	RK- 548056-010V
90117-0008		HANDLE	RK- 547759-010V RK- 547759-020V C- 283602-010V
90119-0006		RELAY	RK- 68908-010V
90119-0045		RELAY	CE- 67716-010V CE- 68304-010V CE- 67716-010V CE- 68304-010V
90119-0046		CIRCUIT CARD	C- 295026-010V C- 295026-020V C- 295026-030V
90119-0052		RELAY	RK- 41567-010V
90119-0052		RELAY	RK- 41461-010V RK- 41377-010V CE- 67716-010V CE- 67722-010V CE- 68128-010V CE- 68129-010V CE- 68304-010V CE- 68305-010V RK- 68722-010V RK- 68725-010V RK- 68908-010V CE- 68128-010V CE- 68129-010V CE- 67716-010V CE- 67722-010V CE- 68304-010V CE- 68305-010V RK- 41567-010V RK- 41377-010V RK- 41461-010V
90119-0054		RELAY	CE- 67716-010V CE- 67722-010V CE- 68128-010V CE- 68129-010V CE- 68304-010V CE- 68128-010V CE- 68129-010V CE- 67716-010V CE- 67722-010V
90119-0063		OPTO-RELAY	CE- 68304-010V
90119-0067		RELAY	RK- 69510-010V CE- 68305-010V
90121-0096		RESISTANCE	CE- 67716-010V CE- 68128-010V CE- 68304-010V CE- 68128-010V

PART NO	LAST AM	DESCRIPTION	GROUP NO
			CE- 67716-010V CE- 68304-010V
90121-0099		RESISTANCE	C- 442080-010V
90124-0027		LAMP HOLDER	CE- 68379-010V C- 295026-010V C- 295026-020V C- 295026-030V CE- 68379-010V
P- 90125-0020		PLATE	C- 256239-020V C- 256239-030V C- 256239-040V C- 272343-020V C- 272343-030V C- 272343-040V C- 272343-050V C- 256095-020V C- 256095-030V C- 256095-040V
90129-0006		BASE	RK- 41567-010V RK- 41461-010V RK- 41377-010V CE- 67716-010V CE- 68128-010V CE- 68304-010V
90129-0006		BASE	RK- 68722-010V RK- 68725-010V CE- 68128-010V CE- 67716-010V CE- 68304-010V RK- 41567-010V RK- 41377-010V RK- 41461-010V
90129-0008		HOLDER	CE- 67716-010V CE- 68128-010V CE- 68304-010V CE- 68128-010V CE- 67716-010V CE- 68304-010V
90131-0003		HOSE COUPLING	C- 256232-020V C- 256232-030V
90132-0021		HOSE CLIP	C- 751089-010V RK- 491780-010V C- 751406-010V RK- 491780-010V
90132-0023		HOSE CLIP	C- 751406-010V
90134-0003		BUSHING	C- 271562-020V C- 271562-030V C- 271562-040V C- 271562-050V C- 271562-060V C- 271562-070V C- 256951-020V C- 256952-020V C- 257381-020V C- 257382-020V C- 256951-020V C- 256952-020V C- 257381-020V C- 257382-020V
90134-0019		GLAND	C- 271533-020V C- 271533-030V C- 491650-010V C- 257381-020V C- 257382-020V C- 257381-020V C- 257382-020V C- 271909-020V C- 271909-030V C- 271909-040V C- 271909-050V
90134-0030		SLEEVE	C- 271562-020V C- 271562-030V C- 271562-040V C- 271562-050V C- 271562-060V C- 271562-070V
90134-0031		SLEEVE	C- 271533-020V

PART NO	LAST AM	DESCRIPTION	GROUP NO
			C- 271533-030V
			C- 491650-010V
			C- 271562-020V
			C- 271562-030V
			C- 271562-040V
90134-0031		SLEEVE	C- 271562-050V
			C- 271562-060V
			C- 271562-070V
			C- 256197-020V
			C- 256203-020V
			C- 256197-020V
			C- 256203-020V
			C- 256197-030V
			C- 256203-030V
			C- 256197-030V
			C- 256203-030V
			C- 256197-040V
			C- 256203-040V
			C- 256951-020V
			C- 256952-020V
			C- 257381-020V
			C- 257382-020V
			C- 256951-020V
			C- 256952-020V
			C- 257381-020V
			C- 257382-020V
			C- 272765-010V
			C- 272765-020V
			C- 272765-050V
			CR- 256436-050V
			C- 272765-060V
90134-0034		NIPPLE	C- 271533-020V
			C- 271533-030V
			C- 491650-010V
			C- 271562-020V
			C- 271562-030V
			C- 271562-040V
			C- 271562-050V
			C- 271562-060V
			C- 271562-070V
			RK- 491641-010V
			RK- 491447-010V
90134-0038		BUSHING	C- 271533-020V
			C- 271533-030V
			C- 491650-010V
			C- 271562-020V
			C- 271562-030V
			C- 271562-040V
			C- 271562-050V
			C- 271562-060V
			C- 271562-070V
			C- 256197-020V
			C- 256198-020V
			C- 256203-020V
			C- 256197-020V
			C- 256198-020V
			C- 256203-020V
			C- 256197-030V
			C- 256198-030V
			C- 256203-030V
			C- 256197-030V
			C- 256203-030V
			C- 491814-010V
			C- 491815-010V
90134-0038		BUSHING	C- 256197-040V
			C- 256203-040V
			C- 491814-010V
			C- 491815-010V
			C- 272765-010V
			C- 272765-020V
			C- 272765-030V
			C- 272765-040V
			C- 272765-050V
			CR- 256436-050V
			C- 272765-060V
			RK- 491131-010V
90134-0039		BUSHING	C- 271562-020V

PART NO	LAST AM	DESCRIPTION	GROUP NO
			C- 271562-030V
			C- 271562-040V
			C- 271562-050V
			C- 271562-060V
			C- 271562-070V
			C- 256197-020V
			C- 256198-020V
			C- 256203-020V
			C- 256197-020V
			C- 256198-020V
			C- 256203-020V
			C- 256197-030V
			C- 256198-030V
			C- 256203-030V
			C- 256197-030V
			C- 256203-030V
			C- 491814-010V
			C- 491815-010V
			C- 256197-040V
			C- 256203-040V
			C- 491814-010V
			C- 491815-010V
			C- 256217-020V
			C- 257381-020V
			C- 257382-020V
			C- 256217-030V
			C- 257381-020V
			C- 257382-020V
			C- 256217-040V
			C- 257381-030V
			C- 257382-030V
			C- 256217-040V
			C- 257381-030V
			C- 257382-030V
			C- 256217-040V
			C- 257381-030V
			C- 257382-030V
			CR- 256436-050V
			C- 271866-050V
90134-0040		BUSHING	C- 257381-020V
			C- 257382-020V
			C- 257381-020V
			C- 257382-020V
90134-0040		BUSHING	C- 295310-010V
			C- 295310-020V
			C- 272765-030V
			C- 295310-030V
			C- 272765-040V
			C- 295310-040V
			C- 272765-050V
			C- 295310-050V
			C- 272765-060V
			C- 295310-060V
			RK- 491512-010V
90134-0042		SPACER	CR- 256212-030V
			CR- 256213-030V
			CR- 256212-040V
			CR- 256213-040V
			CR- 256212-040V
			CR- 256213-040V
			CR- 256212-050V
			CR- 256213-050V
			C- 272765-010V
			C- 272765-020V
			C- 272765-030V
			C- 272765-040V
			C- 272765-050V
			C- 272765-060V
			RK- 456712-010V
			RK- 491131-010V
			RK- 491512-010V
90134-0045		PLUG	CR- 256212-030V
			CR- 256213-030V
			CR- 256212-040V

PART NO	LAST AM	DESCRIPTION	GROUP NO
			CR- 256213-040V
			CR- 256212-040V
			CR- 256213-040V
			CR- 256212-050V
			CR- 256213-050V
			C- 272765-010V
			C- 272765-020V
			C- 272765-030V
			C- 272765-040V
			C- 272765-050V
			C- 272765-060V
			RK- 456712-010V
			RK- 491131-010V
			RK- 491512-010V
90134-0047		CONNECTION	CR- 256212-030V
			CR- 256213-030V
			CR- 256212-040V
			CR- 256213-040V
			CR- 256212-040V
			CR- 256213-040V
			CR- 256212-050V
			CR- 256213-050V
			RK- 456712-010V
90134-0051		SPACER COLLOR	C- 272765-040V
			C- 272765-050V
			C- 272765-060V
			RK- 491512-010V
90134-0052		PLUG	C- 271562-020V
90134-0052		PLUG	C- 271562-030V
			C- 271562-040V
			C- 271562-050V
			C- 271562-060V
			C- 271562-070V
			C- 256197-020V
			C- 256197-030V
			C- 256197-040V
			C- 272765-030V
			RK- 491512-010V
90134-0055		BUSHING	C- 272765-030V
			C- 272765-040V
			C- 272765-050V
			C- 272765-060V
			C- 271866-050V
90134-0058		BANJO CONNECTION	C- 256173-020V
			C- 256197-030V
			C- 256198-030V
			C- 256203-030V
			C- 256173-030V
			C- 256197-030V
			C- 256203-030V
			C- 491787-010V
			C- 491788-010V
			C- 491814-010V
			C- 491815-010V
			C- 256173-040V
			C- 256197-040V
			C- 256203-040V
			C- 491787-020V
			C- 491788-020V
			C- 491814-010V
			C- 491815-010V
			CR- 256204-030V
			CR- 256205-030V
			CR- 256212-030V
			CR- 256213-030V
			C- 256217-040V
			C- 256951-030V
			C- 256952-030V
			CR- 256204-040V
			CR- 256205-040V
			CR- 256212-040V
			CR- 256213-040V
			C- 256217-040V
			C- 256951-030V
			C- 256952-030V
			CR- 256204-040V
			CR- 256205-040V

PART NO	LAST AM	DESCRIPTION	GROUP NO
			CR- 256212-040V
			CR- 256213-040V
			C- 256217-040V
			C- 256951-040V
			C- 256952-040V
			CR- 256204-050V
			CR- 256205-050V
			CR- 256212-050V
			CR- 256213-050V
90134-0058		BANJO CONNECTION	C- 256217-040V
			C- 256951-040V
			C- 256952-040V
			CR- 256436-050V
			C- 271866-050V
			RK- 456712-010V
90134-0065		CONNECTION	C- 271866-050V
90134-0066		CONNECTION	C- 257381-030V
			C- 257382-030V
			C- 257381-030V
			C- 257382-030V
			C- 257381-030V
			C- 257382-030V
			C- 257381-030V
			C- 257382-030V
			RK- 456712-010V
90134-0068		BANJO CONNECTION	C- 256198-020V
			C- 256198-030V
			C- 491787-010V
			C- 491788-010V
			C- 491787-020V
			C- 491788-020V
			C- 256951-030V
			C- 256952-030V
			C- 257381-030V
			C- 257382-030V
			C- 256951-030V
			C- 256952-030V
			C- 257381-030V
			C- 257382-030V
			C- 256951-040V
			C- 256952-040V
			C- 257381-030V
			C- 257382-030V
			C- 256951-040V
			C- 256952-040V
			C- 257381-030V
			C- 257382-030V
			C- 272765-030V
			C- 272765-040V
			C- 295310-040V
			C- 272765-050V
			C- 295310-050V
			C- 272765-060V
			C- 295310-060V
			RK- 491131-010V
			RK- 491512-010V
90135-0003		EARHING CLIP	RK- 520068-010V
			C- 295026-010V
			C- 295026-020V
			C- 295026-030V
90135-0008		EARTHING CLIP	C- 283633-010V
			C- 295470-020V
			C- 295470-030V
			C- 283633-010V
90135-0021		EARTHING CLAMP	C- 456827-010V
			C- 283633-010V
			C- 295470-020V
			C- 295470-030V
			C- 283633-010V
90135-0022		EARTHING CLAMP	C- 735259-010V
90135-0026		EARTHING CLAMP	C- 735031-010V
			RK- 520068-010V
			C- 295026-020V
			C- 295026-030V
			C- 295382-020V
90136-0002		PLUG	C- 271562-020V
			C- 271562-030V

PART NO	LAST AM	DESCRIPTION	GROUP NO
			C- 271562-040V
90136-0003		PLUG	C- 283604-010V
			C- 283604-020V
			C- 283604-010V
			C- 283612-010V
			C- 283617-010V
			C- 283612-010V
			C- 283617-010V
			CR- 449275-010V
			CR- 283605-010V
			C- 283612-010V
			CR- 449275-010V
			CR- 283605-010V
			C- 283612-010V
			CR- 449275-010V
90137-0005		PIPE JOINT	C- 256951-020V
			C- 256952-020V
			C- 257381-020V
			C- 257382-020V
			C- 256951-020V
			C- 256952-020V
			C- 257381-020V
			C- 257382-020V
90137-0010		PIPE JOINT	C- 256555-020V
			C- 256555-030V
			C- 456100-010V
			C- 456100-020V
			C- 256197-020V
			C- 256198-020V
			C- 256203-020V
			C- 256197-020V
			C- 256198-020V
			C- 256203-020V
			CR- 256204-020V
			CR- 256205-020V
			C- 256217-020V
			C- 256951-020V
			C- 256952-020V
			CR- 256204-020V
			CR- 256205-020V
			C- 256217-030V
			C- 256951-020V
			C- 256952-020V
			RK- 456716-010V
			RK- 752408-010V
			RK- 752410-010V
			RK- 456717-010V
			RK- 752412-010V
			RK- 752414-010V
			RK- 456717-010V
			RK- 752412-010V
90137-0010		PIPE JOINT	RK- 752414-010V
90140-0013		ELBOW PIPE	C- 271909-020V
			C- 271909-030V
			C- 271909-040V
90140-0014		ELBOW PIPE	C- 271909-020V
			C- 271909-030V
			C- 271909-040V
			C- 271909-050V
90140-0015		T-PIECE	C- 533014-010V
			RK- 520068-010V
90140-0018		T-PIECE	C- 751089-010V
			RK- 491780-010V
90140-0019		BRACKET	C- 735183-010V
90140-0020		ELBOW PIPE	C- 271866-020V
			C- 271866-030V
			C- 271866-040V
			C- 271866-050V
90140-0023		T-PIECE	RK- 491416-010V
90140-0032		SCREW CAP G 1/8 ISO	C- 735183-010V
90141-0005		RING	C- 283617-010V
90141-0011		RING	RK- 491744-010V
			C- 272014-020V
			C- 272014-030V
			C- 751088-010V
			C- 751088-020V
90141-0015		LOCK RING	C- 400872-010V

PART NO	LAST AM	DESCRIPTION	GROUP NO
			C- 484858-010V
			C- 401207-010V
			C- 400895-010V
90141-0016		LOCK RING	C- 400865-010V
			C- 400872-010V
			C- 400865-010V
			C- 400872-010V
			C- 256055-050V
			C- 256055-060V
90141-0017		LOCK RING	C- 441798-010V
			C- 441811-010V
90141-0018		LOCK RING	C- 295310-010V
			C- 295310-020V
			C- 295310-030V
			C- 295310-040V
			C- 295310-050V
			C- 295310-060V
90141-0020		LOCK RING	C- 533903-010V
			RK- 536470-010V
			RK- 538450-010V
			RK- 547726-010V
			C- 456321-010V
			C- 456322-010V
			C- 456321-020V
			C- 456322-020V
			C- 456321-030V
			C- 456322-030V
			RK- 547300-010V
			C- 533844-010V
			C- 533903-010V
90141-0022		RING	C- 271169-030V
			C- 272337-030V
			C- 271169-040V
90141-0022		RING	C- 272337-040V
90142-0005		HOSE	C- 256173-020V
			C- 256173-030V
			C- 256173-040V
			C- 283617-010V
			C- 283613-010V
			C- 283617-010V
90143-0010		STRIP	C- 456100-010V
			C- 456100-020V
90143-0012		STRIP	C- 456458-010V
			C- 456458-020V
			C- 751860-010V
			C- 456458-030V
			C- 751860-010V
90143-0016		STRIP	C- 752960-010V
			C- 752971-010V
			C- 272802-010V
			C- 272825-010V
			C- 295305-010V
			C- 272802-010V
			C- 272825-010V
			C- 295305-010V
			C- 456457-010V
			C- 456457-020V
			C- 456457-030V
			C- 271115-030V
			C- 271115-040V
90143-0020		STRIP	RK- 456793-010V
			C- 493652-010V
90143-0028		STRIP	C- 441695-020V
90143-0029		STRIP	C- 434774-020V
			C- 434774-030V
			C- 434074-020V
			C- 434074-030V
			C- 434774-020V
			C- 434774-030V
			C- 434074-020V
			C- 434074-030V
			C- 434774-030V
			C- 434074-030V
			C- 434774-030V
			C- 434074-030V
90143-0039		STRIP	C- 271115-020V
			C- 271115-030V

PART NO	LAST AM	DESCRIPTION	GROUP NO
90143-0041		STRIP	C- 271115-040V
			C- 272765-010V
			C- 272765-020V
90143-0043		STRIP	C- 295026-010V
90143-0044		STRIP	C- 295026-010V
90143-0047		STRIP	C- 272508-010V
			C- 469535-010V
			C- 553657-010V
			C- 752042-010V
90143-0048		STRIP	C- 294785-010V
90143-0049		STRIP	C- 256665-020V
			C- 271442-020V
			C- 271443-020V
			C- 256665-020V
90143-0049		STRIP	C- 271442-020V
			C- 271443-020V
			C- 256665-020V
			C- 271442-030V
			C- 271443-030V
			C- 256665-020V
			C- 271442-030V
			C- 271443-030V
			C- 256665-020V
			C- 271442-030V
			C- 271443-030V
			C- 256665-020V
			C- 271442-030V
			C- 271443-030V
			C- 271115-020V
			C- 271115-030V
			C- 271115-040V
			C- 256873-020V
			C- 256875-020V
			C- 256873-020V
			C- 256875-020V
			C- 256873-020V
			C- 256875-020V
			C- 256873-020V
			C- 256875-020V
			C- 256873-040V
			C- 256875-020V
90143-0051		STRIP	C- 295026-020V
			C- 295026-030V
90143-0054		STRIP	C- 272408-020V
			C- 272408-030V
			C- 272408-040V
			C- 272408-050V
90143-0056		STRIP	C- 441695-010V
90143-0059		STRIP	RK- 520068-010V
			C- 295026-020V
			C- 295026-030V
90143-0060		STRIP	C- 271513-050V
90144-0003		TAPE	C- 469384-010V
90144-0004		TAPE	C- 751317-010V
			RK- 491591-030V
			C- 491243-030V
			C- 751317-010V
			C- 735268-010V
			C- 258173-020V
			C- 256173-030V
			C- 256173-040V
			C- 272765-010V
			C- 272765-020V
			C- 272765-030V
			C- 272765-040V
			C- 272765-050V
			C- 272765-060V
			C- 491243-030V
			RK- 491416-010V
			RK- 491589-030V
			C- 272623-040V
			C- 469452-030V
			C- 751800-020V
			C- 735271-010V
90144-0004		TAPE	C- 751373-010V
			C- 751393-010V
			C- 735271-010V

PART NO	LAST AM	DESCRIPTION	GROUP NO
90144-0030		TAPE	C- 37894-010V
90144-0044		TAPE	RK- 520068-010V
90145-0005		WIRE	CR- 31390-010V
90148-0037		HOSE	C- 271562-040V
			C- 271562-050V
			C- 271562-060V
			C- 271562-070V
90148-0038		HOSE	C- 271562-040V
			C- 271562-050V
			C- 271562-060V
			C- 271562-070V
90151-0001		PIPE	C- 271562-020V
			C- 271562-030V
			C- 271562-040V
			C- 271562-050V
			C- 271562-060V
			C- 271562-070V
90151-0004		PIPE	C- 271562-020V
			C- 271562-030V
			C- 256197-020V
			C- 256198-020V
			C- 256203-020V
			C- 256197-020V
			C- 256198-020V
			C- 256203-020V
			C- 257381-020V
			C- 257382-020V
			C- 257381-020V
			C- 257382-020V
90152-0001		HOSE	C- 271641-020V
			C- 271641-030V
90152-0014		HOSE	C- 294867-010V
90152-0016		HOSE	C- 271414-020V
90152-0017		HOSE	C- 271387-020V
			C- 271387-030V
90152-0029		HOSE	RK- 68908-010V
			RK- 520068-010V
90152-0031		HOSE	C- 457924-010V
			C- 457924-020V
90152-0033		HOSE	RK- 68180-010V
			RK- 68183-010V
			C- 490600-010V
			C- 490600-020V
90153-0008		ADHESIVE	C- 735183-010V
			C- 256233-020V
90153-0015		ADHESIVE	C- 295045-020V
			CR- 256204-020V
			CR- 256205-020V
			CR- 256204-020V
			CR- 256205-020V
			CR- 256204-030V
			CR- 256205-030V
			CR- 256204-040V
			CR- 256205-040V
			CR- 256204-040V
			CR- 256205-040V
90153-0015		ADHESIVE	CR- 256204-050V
			CR- 256205-050V
90153-0016		ADHESIVE	C- 256014-030V
			C- 256014-040V
90153-0017		ADHESIVE	C- 256014-050V
			C- 752960-010V
			C- 752971-010V
			C- 272802-010V
			C- 272825-010V
			C- 295305-010V
			C- 272802-010V
			C- 272825-010V
			C- 295305-010V
			C- 456457-010V
			C- 456458-010V
			C- 456457-010V
			C- 456458-010V
			C- 456457-020V
			C- 456458-020V
			C- 751860-010V
			C- 456457-030V

PART NO	LAST AM	DESCRIPTION	GROUP NO
			C- 456458-030V
			C- 751860-010V
90153-0020		ADHESIVE	C- 271181-020V
			C- 271181-030V
			C- 271181-040V
90153-0023		ADHESIVE	C- 752173-010V
90153-0035		ADHESIVE	C- 271909-020V
			C- 271909-030V
			C- 271909-040V
			C- 271909-050V
90155-0008		CHAIN	C- 256233-020V
			C- 256233-030V
			C- 256233-040V
			C- 256233-050V
			C- 456836-010V
			C- 456836-020V
			C- 456836-030V
			C- 456836-040V
90157-0016		LOCKING FLUID	RK- 456714-010V
			RK- 469472-010V
			C- 441821-010V
			RK- 538450-010V
			C- 491976-020V
			C- 456100-020V
			C- 256173-020V
			C- 256173-030V
			C- 256173-040V
			C- 271113-020V
			C- 441821-010V
			C- 271113-020V
			C- 441821-010V
			C- 441271-010V
			C- 441271-020V
			C- 256873-020V
			C- 469535-010V
			C- 256873-020V
			C- 469535-010V
			C- 256873-020V
90157-0016		LOCKING FLUID	C- 271513-040V
			C- 469535-010V
			C- 751885-010V
			C- 271513-050V
			C- 469535-010V
			C- 751885-020V
			C- 491976-020V
			RK- 491863-010V
			C- 553657-010V
			C- 752042-010V
			RK- 456714-010V
90157-0021		LOCKING FLUID	C- 256221-020V
			C- 256222-020V
			C- 256221-020V
			C- 256222-020V
			C- 256221-020V
			C- 256222-020V
			C- 256221-020V
			C- 256222-020V
			C- 256221-020V
			C- 256222-020V
			C- 271452-020V
			C- 490761-010V
			C- 752247-010V
			C- 752627-010V
			C- 752628-010V
90157-0022		SEALING COMPOUND	C- 752960-010V
			C- 752971-010V
			RK- 469472-010V
			RK- 456793-010V
			RK- 456804-010V
			C- 456274-010V
			RK- 469988-010V
			C- 256555-020V
			C- 256665-020V
			C- 272802-010V
			C- 272825-010V

PART NO	LAST AM	DESCRIPTION	GROUP NO
			C- 295305-010V
			C- 256555-030V
			C- 256665-020V
			C- 272802-010V
			C- 272825-010V
			C- 295305-010V
			C- 256665-020V
			C- 456100-010V
			C- 456457-010V
			C- 456458-010V
			C- 256665-020V
			C- 456100-020V
			C- 456457-010V
			C- 456458-010V
			C- 256665-020V
			C- 456100-020V
			C- 456457-020V
			C- 456458-020V
			C- 751860-010V
			C- 256665-020V
90157-0022		SEALING COMPOUND	C- 456100-020V
			C- 456457-030V
			C- 456458-030V
			C- 751860-010V
			C- 271115-020V
			C- 272765-010V
			C- 271115-020V
			C- 272765-020V
			C- 271115-020V
			C- 272765-020V
			C- 271115-030V
			C- 271114-040V
			C- 271115-040V
			C- 271513-020V
			C- 271513-030V
			C- 272381-030V
			C- 271513-030V
			C- 272381-030V
			C- 271513-040V
			C- 271513-050V
			C- 456274-010V
			C- 271274-020V
			C- 256014-030V
			C- 457881-010V
			C- 457881-020V
			C- 441736-010V
			C- 456274-010V
90157-0034		SEALING COMPOUND	C- 456455-020V
90161-0001		STRIP	C- 255907-020V
			C- 456180-010V
90161-0006		STRIP	C- 268656-010V
P- 90163-0001		CONNECTION	C- 256232-020V
			C- 256232-030V
90163-0007		CONNECTION	RK- 529345-010V
P- 90163-0013		SLEEVE	C- 271109-020V
			C- 456455-010V
90163-0014		NIPPLE	C- 271387-020V
			C- 271387-030V
90163-0016		SLEEVE	C- 271909-020V
			C- 271909-030V
			C- 271909-040V
			C- 271909-050V
90163-0028		SLEEVE	C- 456455-020V
90163-0042		NIPPLE	C- 400872-010V
90163-0050		NIPPLE	C- 491890-010V
90163-0052		NIPPLE	C- 256438-020V
			C- 491890-010V
90163-0056		SLEEVE	C- 533014-010V
			C- 284953-010V
90163-0057		NIPPLE	C- 533014-010V
			C- 272560-020V
			C- 272560-030V
			C- 272560-040V
			C- 272560-050V
90163-0062		SLEEVE	C- 272560-020V
			C- 272560-030V
			C- 272560-040V

PART NO	LAST AM	DESCRIPTION	GROUP NO
			C- 272560-050V
90163-0063		NIPPLE	C- 284953-010V
90163-0068		NIPPLE	C- 491890-010V
90163-0074		NIPPLE	C- 272560-020V
			C- 272560-030V
			C- 272560-040V
90163-0087		NIPPLE	C- 533014-010V
P- 90164-0003		LIGHT FIXTURE	C- 272825-010V
			C- 294785-010V
			C- 294780-010V
			C- 469299-010V
90164-0301		LAMPHOLDER	C- 295861-010V
			C- 441534-010V
			C- 441535-010V
90165-0002		CLIP	C- 271562-020V
			C- 271562-030V
			C- 271562-040V
			C- 271562-050V
			C- 271562-060V
			C- 271562-070V
			C- 256197-020V
			C- 256198-020V
			C- 256197-020V
			C- 256198-020V
			C- 256197-030V
			C- 256198-030V
			C- 256197-030V
			C- 491787-010V
			C- 491788-010V
			C- 491814-010V
			C- 491815-010V
			C- 256197-040V
			C- 491787-020V
			C- 491788-020V
			C- 491814-010V
			C- 491815-010V
			C- 491890-010V
90165-0005		CLIP	C- 271562-020V
			C- 456739-010V
			C- 456935-010V
			C- 456739-010V
			C- 456935-010V
			C- 456739-010V
			C- 456935-020V
			C- 752898-010V
90165-0006		CLIP	C- 456739-010V
			C- 456935-010V
			C- 456739-010V
			C- 456935-010V
			C- 456739-010V
			C- 456935-020V
			C- 752898-010V
90165-0007		CLIP	C- 271562-020V
			C- 271562-030V
			C- 271562-040V
			C- 271562-050V
			C- 271562-060V
			C- 271562-070V
90165-0009		CLIP	C- 271866-040V
			C- 271866-050V
90165-0010		CLIP	C- 228779-010V
90165-0010		CLIP	C- 293685-010V
			C- 293685-020V
			C- 293684-010V
			C- 293684-020V
			C- 293685-010V
			C- 293685-020V
			C- 293684-010V
			C- 293684-020V
			C- 293685-020V
			C- 293684-020V
			C- 293685-020V
			C- 293684-020V
90165-0019		CLIP	C- 751089-010V
			RK- 491780-010V
90165-0022		CLIP	RK- 520070-010V
			C- 271562-020V

PART NO	LAST AM	DESCRIPTION	GROUP NO
			C- 271562-030V
			C- 271562-040V
			C- 271562-050V
			C- 271562-060V
			C- 271562-070V
			C- 256197-020V
			C- 256198-020V
			C- 256203-020V
			C- 256197-020V
			C- 256198-020V
			C- 256203-020V
			C- 256197-030V
			C- 256198-030V
			C- 256203-030V
			C- 256197-030V
			C- 256203-030V
			C- 491787-010V
			C- 491788-010V
			C- 491814-010V
			C- 491815-010V
			C- 256197-040V
			C- 256203-040V
			C- 491787-020V
			C- 491788-020V
			C- 491814-010V
			C- 491815-010V
90165-0023		CLIP	C- 271562-020V
			C- 271562-030V
			C- 271562-040V
			C- 271562-050V
			C- 271562-060V
			C- 271562-070V
90165-0024		CLIP	C- 456953-010V
			C- 441000-020V
			C- 441000-030V
			C- 456321-010V
			C- 456322-010V
			C- 441000-030V
			C- 456321-020V
			C- 456322-020V
			C- 441000-040V
			C- 456321-030V
			C- 456322-030V
90165-0024		CLIP	C- 441000-050V
			C- 752645-010V
			C- 752646-010V
			C- 441736-010V
			C- 456953-010V
90165-0027		CLIP	C- 456739-010V
90165-0039		CLIP	C- 271562-060V
			C- 271562-070V
90165-0043		HOLDER	C- 751900-010V
90165-0044		CLIP	C- 271453-020V
			C- 271909-030V
			C- 271453-030V
			C- 271909-030V
			C- 271909-040V
			C- 491890-010V
			C- 271909-050V
			C- 491890-010V
90165-0051		CLIP	C- 271866-050V
90165-0056		CLIP	C- 752913-010V
			C- 752914-010V
90165-0057		CLIP	C- 283612-010V
			RK- 535606-010V
			C- 283612-010V
			C- 531657-010V
			C- 283612-010V
			C- 497534-020V
			C- 531657-010V
90165-0065		CLIP	RK- 491388-010V
			C- 491787-010V
			C- 491788-010V
			C- 491814-010V
			C- 491815-010V
			C- 491787-020V
			C- 491788-020V

PART NO	LAST AM	DESCRIPTION	GROUP NO
			C- 491814-010V
			C- 491815-010V
			RK- 491388-010V
90165-0086		CLIP	C- 544536-010V
90166-0007		HOSE	C- 256358-010V
90166-0008		HOSE	C- 271452-020V
			C- 490761-010V
			C- 491890-010V
			C- 490761-010V
			C- 491890-010V
90166-0011		HOSE	C- 491890-010V
90166-0045		HOSE	RK- 529345-010V
90166-0048		HOSE	C- 256197-020V
			C- 256198-020V
			C- 256197-020V
			C- 256198-020V
			C- 256217-020V
			C- 256217-030V
90166-0049		HOSE	C- 751398-010V
90166-0050		HOSE	C- 256438-020V
90166-0059		HOSE	C- 256236-020V
			C- 456321-010V
			C- 456322-010V
			C- 456348-010V
			C- 456349-010V
90166-0059		HOSE	C- 456321-020V
			C- 456322-020V
			C- 456348-020V
			C- 456349-020V
			C- 456321-030V
			C- 456322-030V
			C- 456348-020V
			C- 456349-020V
			C- 752645-010V
			C- 752646-010V
			C- 752913-010V
			C- 752914-010V
			C- 272445-020V
90166-0060		HOSE	RK- 456804-010V
			C- 256173-020V
			C- 256173-030V
			C- 256173-040V
			C- 272404-020V
			C- 272404-030V
			C- 272404-040V
			C- 272404-050V
			C- 272404-060V
90166-0081		HOSE	C- 232781-040V
90166-0087		HOSE	C- 256843-020V
			C- 256843-030V
			C- 256843-040V
			C- 256843-050V
			C- 272343-020V
			C- 295891-010V
			C- 272343-030V
			C- 295891-020V
			C- 272343-030V
			C- 295891-020V
			C- 272343-040V
			C- 295891-030V
			C- 272343-050V
			C- 272408-050V
			C- 295891-030V
90166-0089		HOSE	C- 256674-020V
			C- 441881-010V
			C- 256674-020V
			C- 441881-010V
			C- 256674-020V
			C- 441881-010V
			C- 256674-020V
			C- 256674-030V
90166-0090		HOSE	C- 401439-010V
			C- 401419-010V
90166-0101		HOSE	C- 751406-010V
90166-0105		HOSE	C- 401207-010V
			C- 400895-010V
90166-0107		HOSE	C- 256237-020V

PART NO	LAST AM	DESCRIPTION	GROUP NO
			C- 256237-030V
			C- 256237-040V
			C- 256237-050V
			C- 256237-060V
			C- 272408-020V
			C- 272408-030V
			C- 272408-040V
90166-0108		HOSE	C- 271562-020V
			C- 271562-030V
			C- 271562-040V
			C- 271562-050V
			C- 271562-060V
			C- 271562-070V
90166-0109		HOSE	C- 271562-020V
			C- 271562-030V
			C- 271562-040V
			C- 271562-050V
			C- 271562-060V
			C- 271562-070V
			C- 256198-020V
			C- 256198-030V
			C- 491814-010V
			C- 491815-010V
			C- 491814-010V
			C- 491815-010V
			C- 257381-020V
			C- 257382-020V
			C- 257381-020V
			C- 257382-020V
			C- 257381-030V
			C- 257382-030V
			C- 257381-030V
			C- 257382-030V
			C- 257381-030V
			C- 257382-030V
			C- 257381-030V
			C- 257382-030V
			C- 272765-010V
			C- 272765-020V
			C- 272765-030V
			C- 272765-040V
			C- 272765-050V
			CR- 256436-050V
			C- 272765-060V
			C- 271453-020V
			C- 271453-030V
			RK- 491131-010V
			RK- 491984-010V
			RK- 491512-010V
			RK- 491984-010V
90166-0113		HOSE	RK- 529345-010V
			C- 491890-010V
90166-0114		HOSE	C- 257381-020V
			C- 257382-020V
			C- 257381-020V
			C- 257382-020V
90166-0117		HOSE	CR- 256436-020V
			C- 271109-020V
			CR- 256436-020V
			C- 271109-020V
			CR- 256436-020V
			C- 271109-020V
			CR- 256436-020V
			C- 456455-010V
			CR- 256436-030V
			C- 456455-010V
90166-0117		HOSE	CR- 256436-040V
			C- 456455-020V
			CR- 256436-050V
			C- 456455-020V
90166-0118		HOSE	C- 469118-010V
			C- 469118-020V
			C- 271562-020V
			C- 271562-030V
			C- 271562-040V
			C- 271562-050V
			C- 271562-060V

PART NO	LAST AM	DESCRIPTION	GROUP NO
			C- 271562-070V
			C- 271866-020V
			C- 271866-030V
			C- 271909-030V
			C- 271866-030V
			C- 271909-030V
			C- 271866-040V
			C- 271909-040V
			C- 271866-050V
			C- 271909-050V
90166-0119		HOSE	C- 469118-010V
			C- 469118-020V
			RK- 469472-010V
			RK- 469788-010V
			C- 736865-010V
			C- 256233-020V
			C- 456265-010V
			C- 469366-010V
			C- 469804-010V
			C- 469366-010V
			C- 469804-010V
			C- 469366-020V
			C- 469804-010V
			C- 469366-030V
			C- 469804-010V
			C- 271866-030V
			C- 271909-030V
			C- 271866-030V
			C- 271909-030V
			C- 271866-040V
			C- 271909-040V
			C- 271866-050V
			C- 271909-050V
			RK- 491543-010V
			RK- 751636-010V
			RK- 751569-010V
			C- 271880-020V
			C- 295045-020V
			C- 271880-020V
			C- 295045-020V
			C- 295045-030V
			C- 469781-010V
			C- 295045-040V
			C- 469781-010V
			C- 295045-050V
			C- 469781-020V
			C- 295045-060V
			C- 469781-020V
90166-0119		HOSE	C- 294763-010V
			C- 469598-010V
			C- 469598-020V
			C- 736865-010V
90166-0122		HOSE	C- 751089-010V
			RK- 491780-010V
			C- 279809-010V
			C- 294715-010V
			C- 283632-010V
			RK- 491780-010V
90166-0124		HOSE	C- 533014-010V
			RK- 469788-010V
			RK- 491780-010V
			RK- 538415-010V
			C- 491976-010V
			C- 491976-020V
			C- 279809-010V
			C- 283600-010V
			C- 294715-010V
			C- 284953-010V
			C- 271880-020V
			C- 469781-010V
			C- 469781-020V
			C- 491976-010V
			C- 469781-020V
			C- 491976-020V
			C- 283600-010V
			C- 283632-010V
			RK- 491780-010V

PART NO	LAST AM	DESCRIPTION	GROUP NO
90166-0132		HOSE	C- 456953-010V
			RK- 520129-010V
			RK- 520130-010V
			C- 456953-010V
			RK- 520094-010V
			RK- 520096-010V
			C- 491650-010V
			C- 751478-010V
			RK- 520068-010V
			C- 736865-010V
			RK- 548056-010V
			RK- 547754-010V
			C- 256233-020V
			C- 469366-010V
			C- 469366-020V
			C- 469366-030V
			C- 271562-020V
			C- 271562-030V
			C- 271562-040V
			C- 271562-050V
			C- 271562-060V
			C- 271562-070V
			C- 256206-020V
			C- 256207-020V
			C- 256206-020V
			C- 256207-020V
			C- 256206-020V
			C- 256207-020V
			C- 256206-020V
			C- 256207-020V
90166-0132		HOSE	C- 256206-020V
			C- 256207-020V
			C- 256206-020V
			C- 256207-020V
			C- 456455-010V
			C- 456455-020V
			C- 271866-020V
			C- 271909-020V
			C- 272404-020V
			C- 271866-030V
			C- 271909-030V
			C- 272404-030V
			C- 271866-030V
			C- 271909-030V
			C- 272404-040V
			C- 271866-040V
			C- 271909-040V
			C- 272404-050V
			C- 271866-050V
			C- 271909-050V
			C- 272404-060V
			C- 272343-020V
			C- 295891-010V
			C- 456739-010V
			C- 456935-010V
			C- 456739-010V
			C- 456935-010V
			C- 456739-010V
			C- 456935-020V
			C- 752898-010V
			RK- 491416-010V
			RK- 491641-010V
			RK- 491447-010V
			C- 295045-020V
			C- 295045-030V
			C- 295045-040V
			C- 295045-050V
			C- 295045-060V
			C- 457159-010V
			C- 457924-010V
			C- 469598-010V
			C- 490600-010V
			C- 457159-020V
			C- 457924-020V
			C- 469598-020V
			C- 490600-020V
			C- 441736-010V

PART NO	LAST AM	DESCRIPTION	GROUP NO
			RK- 520067-010V
			C- 456953-010V
			RK- 520129-010V
			RK- 520130-010V
			C- 736865-010V
			C- 751410-010V
			RK- 751345-010V
			C- 752030-010V
			C- 736865-010V
90166-0133		HOSE	C- 735248-010V
			C- 469366-020V
			C- 271562-020V
90166-0133		HOSE	C- 271562-030V
			C- 271562-040V
			C- 271562-050V
			C- 271562-060V
			C- 271562-070V
			C- 256173-020V
			C- 256173-030V
			C- 256173-040V
			CR- 256547-020V
			CR- 256547-030V
			C- 456455-010V
			CR- 256547-030V
			C- 456455-010V
			CR- 256547-030V
			C- 456455-020V
			CR- 256547-030V
			C- 456455-020V
			C- 271909-020V
			C- 271866-030V
			C- 271909-030V
			C- 271866-030V
			C- 271909-030V
			C- 271866-040V
			C- 271909-040V
			C- 271866-050V
			C- 271909-050V
			RK- 491416-010V
			C- 457924-010V
			C- 469598-010V
			C- 457924-020V
			C- 469598-020V
			C- 735183-010V
			C- 735014-010V
			C- 735183-010V
			C- 735014-010V
90166-0134		HOSE	C- 271909-020V
			C- 271909-030V
			C- 271909-040V
			C- 271909-050V
90166-0138		HOSE	C- 434774-020V
			C- 434774-030V
			C- 434074-020V
			C- 434074-030V
			C- 434774-020V
			C- 434774-030V
			C- 434074-020V
			C- 434074-030V
			C- 751406-010V
			C- 434774-030V
			C- 434074-030V
			C- 434774-030V
			C- 434074-030V
90166-0141		HOSE	RK- 469472-010V
90166-0143		HOSE	C- 256197-030V
			C- 256198-030V
			C- 256197-030V
			C- 491814-010V
			C- 491815-010V
			C- 256197-040V
90166-0143		HOSE	C- 491814-010V
			C- 491815-010V
			CR- 256212-030V
			CR- 256213-030V
			C- 256217-040V
			C- 257381-030V

PART NO	LAST AM	DESCRIPTION	GROUP NO
			C- 257382-030V
			CR- 256212-040V
			CR- 256213-040V
			C- 256217-040V
			C- 257381-030V
			C- 257382-030V
			CR- 256212-040V
			CR- 256213-040V
			C- 256217-040V
			C- 257381-030V
			C- 257382-030V
			CR- 256212-050V
			CR- 256213-050V
			C- 256217-040V
			C- 257381-030V
			C- 257382-030V
			CR- 256436-050V
			RK- 456712-010V
			RK- 456716-010V
			RK- 752408-010V
			RK- 752410-010V
			RK- 456717-010V
			RK- 752412-010V
			RK- 752414-010V
			RK- 456717-010V
			RK- 752412-010V
			RK- 752414-010V
90166-0151		HOSE	C- 491207-020V
90166-0156		HOSE	C- 456812-010V
			C- 272381-030V
			C- 491207-010V
			RK- 469764-010V
			RK- 491589-030V
			RK- 491590-030V
			C- 491207-020V
90166-0158		HOSE	C- 272381-030V
			C- 491207-010V
90166-0159		RUBBER HOSE	CR- 256209-020V
			CR- 256210-020V
			CR- 256209-020V
			CR- 256210-020V
			CR- 256209-020V
			CR- 256210-020V
			CR- 256209-020V
			CR- 256210-020V
			CR- 256209-020V
			CR- 256210-020V
			CR- 256209-030V
			CR- 256210-030V
90168-0005		ELECTRONIC VALVE	C- 442080-010V
90171-0380		ALARM PANEL	RK- 520068-010V
90178-0006		HOUR METER	CE- 67716-010V
			CE- 68128-010V
90178-0006		HOUR METER	CE- 68304-010V
			CE- 68128-010V
			CE- 67716-010V
			CE- 68304-010V
90182-0005		STRAP	C- 491814-010V
			C- 491815-010V
			C- 491814-010V
			C- 491815-010V
			C- 736604-010V
90184-0001		LOCK	C- 271804-020V
			C- 271804-030V
			C- 271804-040V
			C- 229400-060V
90187-0029		VALVE	C- 271909-020V
			C- 271909-030V
			C- 271909-040V
			C- 271909-050V
			C- 256014-020V
			C- 256014-030V
			C- 256014-040V
			C- 256014-050V
90187-0045		VALVE	RK- 529345-010V
90187-0047		VALVE	C- 271909-020V
			C- 271909-030V

PART NO	LAST AM	DESCRIPTION	GROUP NO
			C- 271909-040V
			C- 271909-050V
90187-0050		VALVE	C- 272560-020V
			C- 272560-030V
90187-0051		VALVE	C- 256233-020V
			C- 256233-030V
			C- 256233-040V
			C- 256233-050V
			C- 456836-010V
			C- 456836-020V
			C- 456836-030V
			C- 456836-040V
90187-0059		VALVE	RK- 491591-030V
			C- 272381-020V
			C- 272381-030V
			C- 272560-040V
			C- 272560-050V
			C- 751373-010V
			C- 751398-010V
90187-0066		VALVE	C- 736865-010V
90187-0069		VALVE	C- 271866-020V
			C- 271866-030V
			C- 271866-040V
			C- 271866-050V
90187-0311		HOLDER	C- 271866-020V
			C- 271866-030V
			C- 271866-040V
			C- 271866-050V
90189-0019		BALL BUSHING	C- 271115-020V
			C- 271115-030V
			C- 271115-040V
90189-0021		BALL BUSHING	CR- 294695-010V
90189-0024		SEAL RING	CR- 294695-010V
90189-0030		BALL BUSHING	C- 484984-010V
90189-0031		AXLE	C- 484984-010V
90191-0025		WHEEL	RK- 532210-010V
90191-0027		WHEEL	C- 271635-030V
			C- 271635-020V
			C- 271635-030V
90191-0047		WHEEL	RK- 532210-010V
90194-0015		SIGN	CE- 67716-010V
			CE- 68128-010V
			CE- 68304-010V
			CE- 68128-010V
			CE- 67716-010V
			CE- 68304-010V
90194-0016		SIGN	C- 456827-010V
			C- 441000-050V
			C- 295470-040V
			C- 735259-010V
			C- 735031-010V
90194-0038		SIGN	CE- 67716-010V
			CE- 68304-010V
			CE- 67716-010V
			CE- 68304-010V
90194-0040		FLASH SIGN	C- 295611-020V
			C- 295441-010V
			C- 295441-020V
			C- 295441-030V
			C- 295839-010V
			C- 295839-020V
			C- 256555-020V
			C- 256555-030V
			C- 295382-020V
			C- 441000-020V
			C- 441000-030V
			C- 441000-040V
			C- 283633-010V
			C- 295470-020V
			C- 295470-030V
			C- 283633-010V
			C- 457856-010V
			RK- 751345-010V
90194-0075		SIGN	C- 752244-010V
90194-0302		MOUNTING KIT F.CONVERTING	RK- 41544-010V
			RK- 41546-010V
			RK- 41548-010V

PART NO	LAST AM	DESCRIPTION	GROUP NO
			CE- 41572-010V
			CE- 41574-010V
			CE- 41576-010V
			RK- 68874-010V
			RK- 69262-010V
			RK- 69289-010V
			RK- 69346-010V
			RK- 69393-010V
			RK- 69396-010V
			RK- 69501-010V
			RK- 69504-010V
			RK- 69507-010V
			RK- 69510-010V
			RK- 69562-010V
			RK- 41544-010V
			RK- 41546-010V
			RK- 41548-010V
90194-0302		MOUNTING KIT F.CONVERTING	CE- 41572-010V
			CE- 41574-010V
			CE- 41576-010V
90195-0010		TERMINAL BLOCK	CE- 67716-010V
			CE- 68128-010V
			CE- 68304-010V
			CE- 68128-010V
			CE- 67716-010V
			CE- 68304-010V
90195-0020		TERMINAL BLOCK	CE- 68128-010V
			C- 295861-010V
			C- 441534-010V
			C- 441535-010V
			C- 271452-020V
			C- 490761-010V
			CE- 68128-010V
90195-0028		TERMINAL BLOCK	C- 441535-010V
			C- 271181-020V
			C- 271181-030V
			C- 271181-040V
90195-0029		COUPLING STRIP	C- 271181-020V
			C- 271181-030V
			C- 271181-040V
90195-0037		CONNECTION BOX	RK- 479278-010V
			C- 256233-020V
			C- 256236-020V
			C- 295112-020V
			C- 295276-020V
			C- 295112-020V
			C- 295276-020V
			C- 469366-010V
			C- 295112-020V
			C- 295276-020V
			C- 469366-010V
			C- 295112-020V
			C- 295276-020V
			C- 469366-020V
			C- 469366-030V
			C- 752755-010V
			C- 256555-020V
			C- 256555-030V
			C- 272765-020V
			C- 441850-010V
			C- 456348-010V
			C- 456349-010V
			C- 456348-020V
			C- 456349-020V
			C- 456348-020V
			C- 456349-020V
90199-0010		LEVEL GLASS	C- 256014-020V
			C- 256014-030V
			C- 256014-040V
			C- 256014-050V
P- 90201-0010		VALVE	C- 271168-020V
			C- 271168-040V
90201-0014		VALVE	C- 271507-020V
P- 90201-0016		VALVE	C- 271168-020V
P- 90201-0017		VALVE	C- 271168-020V
90201-0057		VALVE	C- 271168-040V
P- 90201-0058		SOLENOID VALVE	C- 271168-040V

PART NO	LAST AM	DESCRIPTION	GROUP NO
90201-0303		SPARE PARTS KIT	C- 271168-020V
			C- 271168-040V
90201-0306		BLOCK	C- 271168-020V
			C- 271168-040V
90201-0307		PLATE	C- 271507-020V
90201-0308		PLATE	C- 271507-020V
90201-0315		PLUNGER	RK- 752170-010V
P- 90202-0011		CYLINDER	C- 256206-020V
			C- 256207-020V
			C- 256206-020V
			C- 256207-020V
			C- 256206-020V
			C- 256207-020V
			C- 256206-020V
			C- 256207-020V
			C- 256206-020V
			C- 256207-020V
			C- 256206-020V
			C- 256207-020V
90206-0031		HEATING ELEMENT	C- 256239-020V
			C- 295667-020V
			C- 256239-020V
			C- 295667-020V
			C- 256239-020V
			C- 295667-030V
			C- 256239-030V
			C- 295667-030V
			C- 272343-020V
			C- 295668-020V
			C- 272343-030V
			C- 295668-030V
			C- 272343-030V
			C- 295668-030V
			C- 272343-040V
			C- 295668-030V
			C- 272343-050V
			C- 295668-030V
			C- 256095-020V
			C- 295778-010V
			C- 256095-020V
			C- 295778-010V
			C- 256095-020V
			C- 295778-020V
			C- 256095-020V
			C- 295778-030V
			C- 256095-030V
			C- 295778-030V
			C- 256095-040V
			C- 295778-040V
90206-0038		HEATING ELEMENT	C- 294888-010V
90206-0053		HEATING ELEMENT	C- 37877-030V
P- 90206-0056		HEATING ELEMENT	C- 256014-020V
			C- 295778-010V
			C- 256014-020V
			C- 295778-010V
90206-0057		HEATING ELEMENT	C- 294887-010V
90206-0068		HEATING ELEMENT	C- 283613-010V
			C- 294887-010V
90206-0070		HEATING ELEMENT	C- 256014-020V
			C- 295778-010V
			C- 256014-020V
			C- 295778-010V
			C- 256014-030V
			C- 295778-020V
			C- 256014-030V
			C- 295778-030V
			C- 256014-040V
			C- 295778-030V
			C- 256014-050V
			C- 295778-040V
90206-0072		HEATING ELEMENT	C- 283617-010V
			C- 294888-010V
			C- 283617-010V
			C- 294887-010V
90206-0076		HEATING ELEMENT	C- 294767-010V
90206-0079		HEATING ELEMENT	C- 456608-010V
90206-0083		HEATING CARTRIDGE	CR- 283606-010V

PART NO	LAST AM	DESCRIPTION	GROUP NO
			C- 469316-010V
			C- 486955-010V
			CR- 283606-010V
			C- 469316-010V
			C- 486955-010V
90206-0086		HEATING CARTRIDGE	C- 256239-040V
90206-0322		GASKET	C- 256239-020V
			C- 256239-030V
			C- 256239-040V
			C- 272343-020V
			C- 272343-030V
			C- 272343-040V
			C- 272343-050V
			C- 256095-020V
			C- 256095-030V
			C- 256095-040V
90206-0326		CONNECTION BOX	C- 256014-020V
			C- 256014-030V
			C- 256014-040V
			C- 256014-050V
P- 90207-0040		VALVE	C- 272560-020V
90207-0363		GASKET	C- 440630-010V
			C- 440630-020V
			SP- 499255-010V
			SP- 499255-020V
			RK- 536502-010V
			RK- 536706-010V
90207-0364		O-RING	RK- 536502-010V
90207-0365		GASKET	C- 440630-010V
			C- 440630-020V
			SP- 499255-010V
			SP- 499255-020V
			RK- 536502-010V
			RK- 536706-010V
90207-0367		GASKET	C- 440630-010V
			SP- 499255-010V
			RK- 536502-010V
			RK- 536706-010V
90207-0368		SEAL RING	C- 271169-020V
			C- 272337-020V
90207-0368		SEAL RING	C- 271169-020V
			C- 272337-020V
			C- 271169-020V
			C- 272337-020V
			C- 271169-020V
			C- 272337-020V
90207-0416		SPRING	RK- 536502-010V
			RK- 536706-010V
90207-0461		CLAMP	C- 456976-040V
90208-0031		BUSHING	C- 256185-020V
			C- 491850-010V
			C- 294522-010V
			C- 283626-010V
90208-0032		BUSHING	C- 469737-010V
90208-0038		BUSHING	C- 256201-020V
			C- 256202-020V
			C- 256201-020V
			C- 256202-020V
			C- 256201-020V
			C- 256202-020V
			C- 256201-030V
			C- 256202-030V
			C- 256201-040V
			C- 256202-040V
			C- 256965-020V
			C- 456548-010V
			C- 456548-020V
			C- 294522-010V
			C- 283626-010V
90208-0039		BUSHING	C- 256201-020V
			C- 256202-020V
			C- 256201-020V
			C- 256202-020V
			C- 256201-020V
			C- 256202-020V
			C- 256201-030V
			C- 256202-030V

PART NO	LAST AM	DESCRIPTION	GROUP NO
			C- 256201-040V
			C- 256202-040V
90208-0047		COLLAR	C- 295310-010V
			C- 295310-020V
			C- 271115-030V
			C- 295310-030V
			C- 271115-030V
			C- 295310-040V
			C- 271115-030V
			C- 295310-050V
			C- 271115-040V
			C- 295310-060V
90208-0050		COLLAR	C- 295310-010V
			C- 295310-020V
			C- 295310-030V
			C- 295310-040V
			C- 295310-050V
			C- 295310-060V
90208-0051		CLAMPING ELEMENT	C- 283622-010V
			C- 469173-010V
90208-0052		CLAMPING ELEMENT	C- 283623-010V
			C- 456688-010V
90208-0052		CLAMPING ELEMENT	C- 283623-010V
			C- 283626-020V
			C- 283626-030V
90208-0053		CLAMPING ELEMENT	C- 456674-010V
			C- 476349-020V
90208-0054		CLAMPING ELEMENT	C- 283626-020V
			C- 283626-030V
90208-0080		CLAMPING ELEMENT	C- 751689-010V
90214-0028		BALL BEARING	C- 256234-020V
			C- 256236-020V
			C- 295112-020V
			C- 295276-020V
			C- 441146-010V
			C- 295112-020V
			C- 295276-020V
			C- 441146-010V
			C- 295112-020V
			C- 295276-020V
			C- 441146-010V
			C- 295112-020V
			C- 295276-020V
			C- 441146-010V
			C- 256966-020V
			C- 256967-020V
			C- 256966-020V
			C- 256967-020V
			C- 456321-010V
			C- 456322-010V
			C- 456348-010V
			C- 456349-010V
			C- 456919-010V
			C- 256966-020V
			C- 256967-020V
			C- 456321-020V
			C- 456322-020V
			C- 456348-020V
			C- 456349-020V
			C- 456919-010V
			C- 256966-020V
			C- 256967-020V
			C- 456321-030V
			C- 456348-020V
			C- 456349-020V
			C- 456919-010V
			C- 272014-020V
			C- 272445-020V
			C- 272014-020V
			C- 272445-020V
90214-0035		BALL BEARING	C- 256229-020V
			C- 257166-020V
			C- 257166-030V
			C- 469074-010V
			C- 257166-030V
			C- 469074-010V
			C- 469074-020V

PART NO	LAST AM	DESCRIPTION	GROUP NO
90214-0040		BALL BEARING	C- 272024-020V
			C- 272024-030V
90214-0068		BEARING	C- 283612-010V
			C- 283617-010V
90214-0068		BEARING	C- 283612-010V
			C- 283617-010V
			CR- 283605-010V
			C- 283612-010V
			CR- 283605-010V
			C- 283612-010V
90214-0092		BALL BEARING	C- 441798-010V
			C- 441811-010V
90214-0098		BALL BEARING	C- 256234-030V
			C- 256234-040V
			C- 456322-030V
			C- 752247-010V
			C- 752627-010V
			C- 752628-010V
			C- 752645-010V
			C- 752646-010V
			C- 752913-010V
			C- 752914-010V
			RK- 491744-010V
			C- 256014-020V
			C- 272004-020V
			C- 272024-020V
			C- 272028-020V
			C- 256014-020V
			C- 272004-020V
			C- 272024-020V
			C- 272028-020V
			C- 272004-020V
			C- 272014-030V
			C- 272024-020V
			C- 272028-030V
			C- 272004-020V
			C- 272014-030V
			C- 272024-020V
			C- 272028-030V
			C- 272004-030V
			C- 272024-030V
			C- 272028-040V
			C- 751088-010V
			C- 272004-040V
			C- 272024-030V
			C- 272028-050V
			C- 751088-020V
90214-0122		BALL BEARING	C- 491846-010V
			C- 491846-020V
			C- 491846-010V
			RK- 491302-010V
90214-0138		BALL BEARING	C- 752957-010V
			C- 271649-020V
			C- 271649-030V
			C- 267315-010V
			C- 752628-010V
			C- 271649-020V
90214-0303		RING	C- 441146-010V
			RK- 491744-010V
			C- 256014-020V
			C- 272004-020V
			C- 272014-020V
			C- 272024-020V
90214-0303		RING	C- 272028-020V
			C- 272445-020V
			C- 256014-020V
			C- 272004-020V
			C- 272014-020V
			C- 272024-020V
			C- 272028-020V
			C- 272445-020V
			C- 256014-030V
			C- 272004-020V
			C- 272014-030V
			C- 272024-020V
			C- 272028-030V
			C- 256014-030V

PART NO	LAST AM	DESCRIPTION	GROUP NO
			C- 272004-020V
			C- 272014-030V
			C- 272024-020V
			C- 272028-030V
			C- 256014-040V
			C- 272004-030V
			C- 272024-030V
			C- 272028-040V
			C- 751088-010V
			C- 256014-050V
			C- 272004-040V
			C- 272024-030V
			C- 272028-050V
			C- 751088-020V
90214-0312		SEAL RING	C- 256173-030V
			C- 256173-040V
90217-0026		NUT	C- 456274-010V
			RK- 520071-010V
			RK- 520095-010V
			RK- 520071-010V
			C- 456274-010V
			C- 256089-020V
			C- 271274-020V
			C- 256089-020V
			C- 271274-020V
			C- 469452-010V
			C- 469452-020V
			C- 751800-010V
			C- 469452-030V
			C- 751800-020V
			C- 456274-010V
90217-0035		NUT	C- 256014-020V
			C- 256014-030V
			C- 256014-040V
			C- 256014-050V
90217-0041		NIPPLE	C- 271113-020V
			C- 456588-010V
			C- 456588-020V
			C- 456588-030V
90217-0044		NIPPLE	C- 271113-020V
90217-0047		NUT	C- 271866-020V
90220-0036		CABLE	CE- 68780-010V
90220-0057		CABLE	C- 442080-010V
90220-0058		CABLE	C- 442094-010V
90220-0059		CABLE	RK- 41567-010V
90220-0059		CABLE	RK- 41461-010V
			RK- 41377-010V
			CE- 67718-010V
			CE- 68131-010V
			CE- 68780-010V
			RK- 68722-010V
			RK- 68725-010V
			RK- 68865-010V
			RK- 68874-010V
			RK- 69218-010V
			RK- 69289-010V
			RK- 69501-010V
			RK- 69504-010V
			RK- 69507-010V
			RK- 69510-010V
			RK- 69562-010V
			RK- 41511-010V
			RK- 41512-010V
			RK- 41510-010V
			CE- 68131-010V
			CE- 67718-010V
			CE- 68780-010V
			RK- 41567-010V
			RK- 41377-010V
			RK- 41461-010V
			RK- 41510-010V
			RK- 41511-010V
			RK- 41512-010V
90220-0069		CABLE	RK- 520068-010V
90220-0071		CABLE	CE- 68780-010V
90224-0003		NIPPLE	C- 469366-010V
			C- 469366-020V

PART NO	LAST AM	DESCRIPTION	GROUP NO
			C- 295045-030V
			C- 295045-040V
90224-0078		CONNECTION	C- 456757-010V
			C- 456757-020V
			C- 271909-020V
			C- 271909-030V
			C- 271866-040V
			C- 271909-040V
			C- 271866-050V
			C- 271909-050V
			C- 256014-020V
			C- 256014-030V
			C- 256014-040V
			C- 256014-050V
90224-0090		SLEEVE	C- 256232-030V
90224-0094		NIPPLE	C- 271452-020V
			C- 271909-020V
			C- 271452-020V
			C- 271909-030V
			C- 271452-020V
			C- 271909-030V
			C- 271909-040V
			C- 490761-010V
			C- 271909-050V
			C- 490761-010V
90224-0097		NIPPLE	C- 256232-020V
90224-0154		SLEEVE	C- 457924-020V
90224-0176		GLAND	C- 271866-040V
			C- 271866-050V
90224-0186		NIPPLE	C- 271109-020V
			C- 456455-010V
			C- 456455-020V
90224-0228		CONNECTION	RK- 491416-010V
90224-0234		BRACKET	C- 752960-010V
			C- 752971-010V
			C- 272833-010V
			C- 272882-010V
			C- 295188-010V
			C- 272833-010V
			C- 272882-010V
			C- 295188-010V
			C- 456459-010V
			C- 456460-010V
			C- 456459-010V
			C- 456460-010V
			C- 456459-020V
			C- 456460-020V
			C- 751900-010V
			C- 456459-030V
			C- 456460-030V
			C- 751900-010V
90224-0270		PLATE	C- 294715-010V
			C- 283632-010V
			C- 457159-010V
			C- 457159-020V
90224-0296		GROMMET	C- 271866-020V
			C- 271909-020V
			C- 271866-030V
			C- 271909-030V
			C- 271866-030V
			C- 271909-030V
			C- 271866-040V
			C- 271909-040V
			C- 271866-050V
			C- 271909-050V
			RK- 456718-010V
			RK- 752408-010V
			RK- 752410-010V
90224-0297		REDUCER	C- 271909-020V
			C- 271909-030V
			C- 271909-040V
			C- 271909-050V
90224-0298		CONNECTION	C- 271909-020V
			C- 271909-030V
			C- 271909-040V
			C- 271909-050V
90224-0302		CONNECTION	C- 271909-020V

PART NO	LAST AM	DESCRIPTION	GROUP NO
90224-0303		CONNECTION	C- 533014-010V
			C- 271909-020V
			C- 271909-030V
			C- 271909-040V
90224-0304		CONNECTION	C- 456935-020V
			C- 295045-050V
			C- 295045-060V
90224-0305		PIPE CONNECTION	C- 271866-020V
			C- 271866-030V
90224-0305		PIPE CONNECTION	C- 271866-040V
			C- 271866-050V
90224-0307		CONNECTION	C- 441510-010V
			RK- 538415-010V
			C- 469366-010V
			C- 469366-020V
			C- 469366-030V
			RK- 538439-010V
			RK- 547986-010V
			C- 272560-020V
			C- 295045-020V
			C- 272560-030V
			C- 295045-020V
			C- 272560-030V
			C- 295045-030V
			C- 272560-030V
			C- 295045-040V
			C- 272560-040V
			C- 295045-050V
			C- 272560-050V
			C- 295045-060V
			CR- 449275-010V
90224-0308		BANJO CONNECTION	C- 469598-020V
			C- 272560-040V
90224-0310		CONNECTION	C- 272560-050V
			C- 295045-020V
			C- 295045-030V
			C- 295045-040V
			C- 295045-050V
			C- 295045-060V
90224-0312		GROMMET	RK- 491131-010V
90224-0324		CONNECTION	C- 271909-030V
			C- 271909-040V
			C- 271909-050V
			RK- 538439-010V
			RK- 547986-010V
			C- 295045-050V
			C- 295045-060V
90224-0329		ELBOW COUPLING	C- 469598-020V
90224-0355		GROMMET	C- 271909-050V
90226-0004		CABINET	C- 272765-060V
			C- 456975-020V
			C- 250610-010V
			C- 456975-010V
90230-0011		NON RETURN VALVE	C- 271866-050V
90230-0017		NON RETURN VALVE	C- 271507-020V
90230-0018		NON RETURN VALVE	C- 469118-010V
			C- 469118-020V
90230-0028		NON-RETURN VALVE	C- 491536-010V
			RK- 491416-010V
P- 90232-0033		PHOTOCELL	C- 232781-040V
90232-0038		PHOTOCELL	C- 294658-010V
			C- 457867-010V
90232-0039		PHOTOCELL	C- 272404-020V
			C- 272404-030V
			C- 272404-040V
			C- 272404-050V
			C- 272404-060V
90232-0055		PHOTOCELL	RK- 491539-010V
90232-0055		PHOTOCELL	RK- 490877-010V
			C- 491897-010V
			C- 491976-010V
			C- 491976-020V
			C- 491976-010V
			C- 491976-020V
			C- 491897-010V
			RK- 751570-010V
			RK- 491539-010V

PART NO	LAST AM	DESCRIPTION	GROUP NO
90232-0066		PHOTOCELL	C- 400865-010V
90232-0307		REFLECTOR	C- 232781-040V
90232-0308		REFLECTOR MIRROR	C- 272404-020V
90233-0009		TUBE FUSE	CE- 67716-010V
			CE- 67722-010V
			CE- 68128-010V
			CE- 68129-010V
			CE- 68304-010V
			CE- 68305-010V
			CE- 68128-010V
			CE- 68129-010V
			CE- 67716-010V
			CE- 67722-010V
			CE- 68304-010V
			CE- 68305-010V
90233-0019		TUBE FUSE	CE- 67722-010V
			CE- 68129-010V
			CE- 68305-010V
			CE- 68129-010V
			CE- 67722-010V
			CE- 68305-010V
90233-0020		TUBE FUSE	CE- 67722-010V
			CE- 68129-010V
			CE- 68305-010V
			CE- 68129-010V
			CE- 67722-010V
			CE- 68305-010V
90235-0032		VALVE	C- 457924-010V
			C- 457924-020V
P- 90235-0035		VALVE	C- 283600-010V
P- 90235-0036		VALVE	C- 294763-010V
P- 90235-0041		VALVE	C- 469736-010V
			C- 469736-020V
P- 90235-0064		VALVE	C- 469118-010V
			C- 469118-020V
90235-0151		NON-RETURN VALVE	C- 271909-020V
			C- 271909-030V
			C- 271909-040V
			C- 271909-050V
P- 90235-0204		VALVE	C- 457924-010V
			C- 457924-020V
90235-0208		VALVE	C- 279809-010V
			C- 294715-010V
			C- 283632-010V
			C- 457159-010V
			C- 457159-020V
90235-0241		VALVE	C- 401207-010V
			C- 400895-010V
90235-0246		VALVE	C- 272343-020V
90235-0247		VALVE	C- 256237-020V
90235-0247		VALVE	C- 256238-020V
90235-0251		VALVE	C- 279809-010V
			C- 283600-010V
90235-0259		VALVE	C- 283632-010V
			C- 272560-020V
			C- 272560-030V
			C- 272560-040V
			C- 272560-050V
90235-0260		VALVE	C- 272241-020V
90235-0261		VALVE	C- 272241-020V
90235-0262		VALVE	C- 272381-020V
90235-0263		VALVE	C- 456265-010V
			C- 441881-010V
90235-0266		VALVE	C- 272241-020V
90235-0267		VALVE	C- 272560-020V
			C- 272560-030V
			C- 272560-040V
90235-0271		VALVE	RK- 469769-010V
90235-0274		VALVE	RK- 520069-010V
			C- 256239-020V
			C- 256238-040V
			C- 272343-030V
			C- 272343-040V
			C- 295891-030V
			C- 272343-050V
			C- 295891-030V
			C- 256095-020V

PART NO	LAST AM	DESCRIPTION	GROUP NO
			C- 272560-040V
			C- 272560-050V
90235-0275		VALVE	C- 256237-030V
			C- 256237-040V
			C- 256238-030V
			C- 295891-010V
			C- 295891-020V
			C- 255957-020V
			C- 256055-020V
			C- 256084-020V
			C- 271169-020V
			C- 272024-020V
			C- 272025-020V
			C- 272337-020V
			C- 456309-010V
			C- 255957-020V
			C- 256055-020V
			C- 256084-020V
			C- 271169-020V
			C- 272024-020V
			C- 272025-020V
			C- 272337-020V
			C- 456309-010V
			C- 256055-030V
			C- 256084-020V
			C- 271169-020V
			C- 272024-020V
			C- 272025-020V
			C- 272337-020V
			C- 456309-020V
			C- 256055-040V
			C- 256084-020V
90235-0275		VALVE	C- 271169-020V
			C- 272024-020V
			C- 272025-020V
			C- 272337-020V
			C- 456309-020V
90235-0276		VALVE	C- 457824-010V
			C- 457924-020V
90235-0278		VALVE	C- 271868-020V
90235-0280		VALVE	RK- 469788-010V
			C- 736865-010V
			RK- 538415-010V
			C- 469804-010V
			C- 271880-020V
			C- 469781-010V
			C- 469781-020V
			C- 736865-010V
90235-0281		VALVE	C- 271909-020V
			C- 271909-030V
			C- 271909-040V
			C- 271909-050V
90235-0282		VALVE	C- 256237-050V
			C- 256239-030V
			C- 256237-060V
			C- 256239-040V
			C- 256055-050V
			C- 256095-030V
			C- 272024-030V
			C- 272025-030V
			C- 456309-030V
			C- 256055-060V
			C- 256095-040V
			C- 272024-030V
			C- 272025-030V
			C- 456309-040V
90235-0289		VALVE	C- 400872-010V
			C- 401207-010V
			C- 400895-010V
90235-0290		VALVE	C- 490600-010V
			C- 490600-020V
90235-0292		THROTTLE CHECK VALVE	C- 490600-010V
			C- 490600-020V
90235-0700		VALVE	RK- 491416-010V
90235-0723		THROTTLE VALVE	C- 400872-010V
90235-0732		THROTTLE CHECK VALVE	C- 400865-010V
90236-0012		BRACKET	RK- 520068-010V

PART NO	LAST AM	DESCRIPTION	GROUP NO
90236-0020		BRACKET	C- 469736-010V
90236-0028		BRACKET	C- 533014-010V
90236-0303		SCREW	C- 271909-020V
P- 90237-0044		DOOR HANDLE	C- 256873-020V
			C- 256873-040V
90237-0053		GRUB SCREW	RK- 520068-010V
90237-0064		LOCK	C- 295026-010V
			C- 295026-020V
			C- 295026-030V
90237-0071		LOCK	C- 271442-030V
			C- 271443-030V
			C- 271442-030V
			C- 271443-030V
			C- 271442-030V
90237-0071		LOCK	C- 271443-030V
			C- 271442-030V
			C- 271443-030V
			C- 490947-010V
			C- 490947-020V
90237-0307		BASE	C- 295026-010V
			C- 295026-020V
			C- 295026-030V
90237-0308		WASHER	C- 295026-010V
			C- 295026-020V
			C- 295026-030V
P- 90239-0073		CYLINDER	C- 256239-020V
			C- 256095-020V
P- 90239-0075		CYLINDER	C- 283602-010V
			C- 283618-010V
			C- 283602-010V
			C- 283618-010V
P- 90239-0084		CYLINDER	C- 272343-020V
			C- 272343-030V
90239-0088		BRACKET	C- 256239-020V
			C- 272343-020V
			C- 272343-030V
			C- 272343-040V
			C- 272343-050V
			C- 256095-020V
90239-0099		BRACKET	C- 256239-020V
			C- 256095-020V
			C- 283631-010V
90239-0126		BRACKET	C- 283617-010V
			CR- 283605-010V
90239-0127		BRACKET	C- 256237-020V
			C- 256238-020V
			C- 256237-030V
			C- 256238-020V
			C- 256237-040V
			C- 256238-030V
			C- 295891-010V
			C- 295891-020V
			C- 255957-020V
			C- 256055-020V
			C- 256084-020V
			C- 272014-020V
			C- 272025-020V
			C- 456309-010V
			C- 255957-020V
			C- 256055-020V
			C- 256084-020V
			C- 272014-020V
			C- 272025-020V
			C- 456309-010V
			C- 256055-030V
			C- 256084-020V
			C- 272025-020V
			C- 456309-020V
			C- 256055-040V
			C- 256084-020V
			C- 272025-020V
			C- 456309-020V
			C- 229400-060V
90239-0153		BRACKET	C- 295891-010V
			C- 295891-020V
P- 90239-0166		CYLINDER	C- 256238-020V
			C- 256238-030V

PART NO	LAST AM	DESCRIPTION	GROUP NO
			C- 295891-010V
			C- 295891-020V
			C- 255957-020V
			C- 256084-020V
			C- 271169-020V
			C- 272337-020V
			C- 456309-010V
			C- 255957-020V
			C- 256084-020V
			C- 271169-020V
			C- 272337-020V
			C- 456309-010V
			C- 256084-020V
			C- 271169-020V
			C- 272337-020V
			C- 456309-020V
			C- 256084-020V
			C- 271169-020V
			C- 272337-020V
			C- 456309-020V
			C- 294763-010V
90239-0181		CONNECTION	C- 232781-040V
90239-0188		CYLINDER	C- 283612-010V
P- 90239-0189		CYLINDER	C- 529924-010V
			C- 256237-020V
			C- 256237-030V
			C- 256237-040V
			C- 283617-010V
			C- 256055-020V
			C- 272024-020V
			C- 272025-020V
			C- 256055-020V
			C- 272024-020V
			C- 272025-020V
			C- 256055-030V
			C- 272024-020V
			C- 272025-020V
			C- 256055-040V
			C- 272024-020V
			C- 272025-020V
			C- 283617-010V
			CR- 283605-010V
			C- 529924-010V
			C- 229400-060V
			C- 232781-040V
			C- 529924-010V
P- 90239-0298		CYLINDER	C- 255907-020V
			C- 456180-010V
90239-0299		CYLINDER	C- 294658-010V
			C- 283631-010V
			C- 457867-010V
90239-0320		BRACKET	C- 283617-010V
			C- 272024-020V
			C- 283617-010V
			CR- 283605-010V
90239-0321		BRACKET	C- 283612-010V
90239-0357		BRACKET	C- 533903-010V
			C- 256206-020V
			C- 256207-020V
			C- 256206-020V
			C- 256207-020V
			C- 256206-020V
			C- 256207-020V
			C- 256206-020V
			C- 256207-020V
			C- 256206-020V
			C- 256207-020V
			RK- 547300-010V
			C- 533903-010V
90239-0384		BRACKET	C- 283612-010V
90239-0405		ROD END	C- 449314-010V
			C- 255907-020V
			C- 456180-010V
			C- 256206-020V
			C- 256207-020V

PART NO	LAST AM	DESCRIPTION	GROUP NO
			C- 256206-020V
			C- 256207-020V
			C- 256206-020V
			C- 256207-020V
			C- 256206-020V
			C- 256207-020V
			C- 256206-020V
			C- 256207-020V
			C- 256206-020V
			C- 256207-020V
			C- 272024-030V
90239-0453		BRACKET	C- 256237-050V
			C- 256238-040V
			C- 256237-060V
			C- 256238-040V
			C- 256084-030V
			C- 272024-030V
			C- 272025-030V
			C- 456309-030V
			C- 256084-040V
			C- 272024-030V
			C- 272025-030V
			C- 456309-040V
90239-0460		BRACKET	C- 256055-050V
			C- 256055-060V
90239-0479		BRACKET	C- 469736-010V
90239-0486		BRACKET	C- 484984-010V
90239-0487		BRACKET	C- 256239-030V
			C- 256239-040V
			C- 256095-030V
			C- 256095-040V
			CR- 283618-020V
			C- 449323-010V
			CR- 283618-020V
90239-0488		BRACKET	C- 449314-010V
			C- 295891-030V
90239-0489		BRACKET	C- 484984-010V
90239-0490		BRACKET	C- 449323-010V
90239-0491		BRACKET	C- 400872-010V
90239-0492		BRACKET	C- 401207-010V
			C- 400895-010V
90239-0516		PISTON ROD HEAD	C- 256237-050V
			C- 256238-040V
			C- 256237-060V
			C- 256238-040V
			C- 295891-030V
			C- 256055-050V
			C- 256084-030V
			C- 272025-030V
			C- 456309-030V
			C- 256055-060V
			C- 256084-040V
			C- 272025-030V
			C- 456309-040V
90239-0532			C- 256237-050V
			C- 256239-030V
			C- 256237-060V
			C- 256239-040V
			C- 256055-050V
			C- 256095-030V
			C- 256055-060V
			C- 256095-040V
90239-0732		CYLINDER	C- 283617-010V
			CR- 283607-010V
90239-0734		CYLINDER	C- 457868-010V
			C- 283614-010V
			C- 457868-010V
			C- 283614-010V
			C- 497534-020V
90239-0750		CYLINDER	C- 271934-020V
			C- 271934-030V
			C- 449314-010V
			RK- 491324-010V
			C- 752030-010V
P- 90239-0773		CYLINDER	C- 272024-030V
			C- 272025-030V
			C- 272024-030V

PART NO	LAST AM	DESCRIPTION	GROUP NO
P- 90239-0779		CYLINDER	C- 272025-030V
			C- 256237-050V
			C- 256238-040V
			C- 256237-060V
			C- 256238-040V
			C- 256055-050V
			C- 256084-030V
			C- 271169-030V
			C- 272337-030V
			C- 456309-030V
			C- 256055-060V
			C- 256084-040V
			C- 271169-040V
			C- 272337-040V
			C- 456309-040V
P- 90239-0813		CYLINDER	C- 449313-010V
90239-0814		CYLINDER	C- 449314-010V
90239-0816		CYLINDER	C- 484984-010V
90239-0819		CYLINDER	C- 401207-010V
90239-0819		CYLINDER	C- 400895-010V
90239-0820		CYLINDER	CR- 283618-020V
90239-0821		CYLINDER	CR- 283618-020V
			C- 449323-010V
			CR- 283618-020V
90239-0824		CYLINDER	C- 401207-010V
			C- 400895-010V
90239-0846		CYLINDER	C- 272343-040V
			C- 272343-050V
90239-0847		CYLINDER	C- 256239-030V
			C- 256239-040V
			C- 256095-030V
			C- 256095-040V
90239-0858		CYLINDER	C- 295891-030V
90239-0863		CYLINDER	C- 441881-010V
P- 90239-0910		CYLINDER	C- 469736-010V
			C- 484984-010V
90239-0983		CYLINDER	C- 751478-010V
			RK- 751345-010V
90239-0984		CYLINDER	C- 400872-010V
90239-0999		CYLINDER	C- 400865-010V
90240-0048		BEARING	C- 256197-020V
			C- 256198-020V
			C- 256197-020V
			C- 256198-020V
			C- 256197-030V
			C- 256198-030V
			C- 256197-030V
			C- 491814-010V
			C- 491815-010V
			C- 256197-040V
			C- 491814-010V
			C- 491815-010V
90240-0050		BEARING	C- 256197-020V
			C- 256198-020V
			C- 256197-020V
			C- 256198-020V
			C- 256197-030V
			C- 256198-030V
			C- 256197-030V
			C- 491787-010V
			C- 491788-010V
			C- 491814-010V
			C- 491815-010V
			C- 256197-040V
			C- 491787-020V
			C- 491788-020V
			C- 491814-010V
			C- 491815-010V
90240-0052		RICTION BEARING	CR- 256436-020V
			C- 271115-030V
			CR- 256436-030V
			C- 271115-030V
			CR- 256436-040V
			C- 271115-030V
			C- 271115-040V
90240-0055		RICTION BEARING	C- 256272-020V
			C- 272765-030V

PART NO	LAST AM	DESCRIPTION	GROUP NO
			C- 272765-040V
90240-0055		RICTION BEARING	C- 272765-050V
			C- 272765-060V
90240-0073		RICTION BEARING	C- 255907-020V
			C- 456180-010V
90240-0076		RICTION BEARING	C- 271115-030V
			C- 271115-040V
90240-0083		RICTION BEARING	C- 271115-020V
			C- 271115-030V
			C- 271115-040V
90240-0090		RICTION BEARING	C- 295310-010V
			C- 295310-020V
			C- 295310-030V
			C- 295310-040V
			C- 295310-050V
			C- 295310-060V
90240-0091		RICTION BEARING	C- 295310-010V
			C- 295310-020V
			C- 295310-030V
			C- 295310-040V
			C- 295310-050V
			C- 295310-060V
90240-0092		RICTION BEARING	C- 295310-010V
			C- 295310-020V
			C- 295310-030V
			C- 295310-040V
			C- 295310-050V
			C- 295310-060V
90240-0093		PLAIN BEARING	C- 283604-010V
			C- 283604-020V
			C- 256806-020V
			C- 256806-030V
			C- 283604-010V
90240-0094		PLAIN BEARING	C- 295211-010V
90240-0109		PLAIN BEARING	C- 441821-010V
			C- 441271-010V
			C- 441271-020V
			RK- 491863-010V
90240-0110		PLAIN BEARING	C- 441881-010V
90240-0118		PLAIN BEARING	RK- 76123-010V
90240-0146		BUSHING	RK- 491373-010V
			C- 256014-040V
			C- 256014-050V
90240-0172		BUSHING	C- 441304-030V
			C- 441307-030V
			C- 441486-040V
			C- 456309-040V
90242-0033		O-RING	RK- 520070-010V
			RK- 520167-010V
			RK- 520070-010V
			RK- 520167-010V
			RK- 520070-010V
			RK- 520167-010V
			RK- 520070-010V
			RK- 520167-010V
			RK- 520070-010V
			RK- 520167-010V
90242-0039		O-RING	RK- 456804-010V
			C- 272381-020V
90242-0064		O-RING	C- 272381-030V
			C- 529933-010V
			C- 295402-020V
			C- 295667-020V
			C- 295402-020V
			C- 295667-020V
			C- 295402-020V
			C- 295667-030V
			C- 295402-020V
			C- 295667-030V
			C- 295402-020V
			C- 295667-030V
			C- 529933-010V
90242-0065		O-RING	RK- 456804-010V
			C- 256232-020V
			C- 295667-020V
			C- 256232-020V
			C- 295667-020V

PART NO	LAST AM	DESCRIPTION	GROUP NO
			C- 256232-020V
			C- 295667-030V
			C- 256232-030V
			C- 295667-030V
			C- 256232-030V
			C- 295667-030V
			C- 272381-020V
			C- 272381-030V
			C- 491207-010V
90242-0084		O-RING	C- 491207-020V
			C- 456274-010V
			C- 271274-020V
			C- 295778-010V
			C- 271274-020V
			C- 295778-010V
			C- 295778-020V
			C- 469452-010V
			C- 295778-030V
			C- 469452-010V
			C- 295778-030V
			C- 469452-020V
			C- 751800-010V
			C- 295778-040V
			C- 469452-030V
			C- 751800-020V
90242-0093		O-RING	C- 456274-010V
			CR- 256204-020V
			CR- 256205-020V
			CR- 256204-020V
			CR- 256205-020V
			CR- 256204-030V
			CR- 256205-030V
			CR- 256204-040V
			CR- 256205-040V
			CR- 256204-040V
			CR- 256205-040V
			CR- 256204-050V
			CR- 256205-050V
90242-0153		O-RING	C- 751393-010V
90243-0061		FAN NOZZLE	C- 271414-020V
90243-0118		TOOL BAG	C- 533905-010V
90243-0125		SPIRIT LEVEL	C- 76402-010V
90243-0126		PROTECTIVE GOGGLES	C- 76594-010V
90243-0133		CONTAINER	C- 469535-010V
90243-0134		FLOW METER	C- 469118-010V
			C- 469118-020V
90243-0136		SPIRIT LEVEL	C- 456975-020V
			C- 456975-010V
90243-0137		MEASURING INSTRUMENT	C- 533014-010V
			C- 77091-010V
90243-0147		FLOW METER	C- 533014-010V
P- 90243-0155		FLOW METER	RK- 520068-010V
90243-0164		HOOK SPANNER ADJUST.DIA.4	C- 735268-010V
			C- 735271-010V
90243-0165		SPIRIT LEVEL	C- 735268-010V
			C- 735271-010V
90243-0173		PARTING TOOL 30,5 MM	C- 735268-010V
			C- 735271-010V
90243-0186		PUNCH	RK- 520096-010V
90246-0005		POWER SUPPLY	C- 442080-010V
90248-0013		HINGE	C- 256873-020V
			C- 256873-040V
90248-0022		HINGE	C- 271114-040V
90252-0034		DRIVE BELT	RK- 547757-030V
			RK- 550136-010V
90256-0001		TAPE HOLDER	C- 272508-010V
			C- 469535-010V
90257-0001		FILTER PLUG	RK- 547751-030V
			RK- 547751-020V
			C- 294658-010V
			C- 283631-010V
90257-0002		FILTER PLUG	C- 256438-020V
90257-0003		FILTER PLUG	C- 469737-010V
			C- 279809-010V
			C- 283602-010V
			C- 283618-010V
			C- 283622-010V

PART NO	LAST AM	DESCRIPTION	GROUP NO
			C- 294715-010V
			C- 283602-010V
			C- 283618-010V
			C- 283632-010V
			CR- 283618-020V
			C- 449323-010V
			C- 457159-010V
			C- 457924-010V
			C- 469173-010V
			CR- 283618-020V
			C- 457159-020V
			C- 457924-020V
			C- 469173-010V
90257-0006		FILTER PLUG	C- 735183-010V
90258-0001		HOLLOW PIN	C- 469736-020V
			RK- 540009-010V
90258-0002		HOLLOW PIN	C- 469173-010V
90258-0007		TAPER PIN	C- 283621-010V
			C- 456696-020V
90258-0031		HOLLOW PIN	C- 456032-010V
90259-0017		OVERLOAD PROTECTION	CE- 67716-010V
			CE- 68128-010V
			CE- 68304-010V
90259-0017		OVERLOAD PROTECTION	CE- 68128-010V
			CE- 67716-010V
90259-0021		OVERLOAD PROTECTION	CE- 68304-010V
			CE- 67716-010V
			CE- 68128-010V
			CE- 68304-010V
			CE- 68128-010V
			CE- 67716-010V
90259-0022		OVERLOAD PROTECTION	CE- 68304-010V
			CE- 67716-010V
			CE- 68128-010V
			CE- 68304-010V
			CE- 68128-010V
			CE- 67716-010V
90259-0024		OVERLOAD PROTECTION	CE- 68304-010V
			CE- 67716-010V
			CE- 68128-010V
			CE- 68304-010V
			CE- 68128-010V
			CE- 67716-010V
90259-0026		OVERLOAD PROTECTION	CE- 68304-010V
			CE- 67716-010V
			CE- 68128-010V
			CE- 68304-010V
			CE- 68128-010V
			CE- 67716-010V
90259-0306		AUXILIARY CONTACT	CE- 68304-010V
			CE- 67716-010V
			CE- 68128-010V
			CE- 68304-010V
			CE- 68128-010V
			CE- 67716-010V
			CE- 68304-010V
90261-0001		PIPE PLUG	C- 271513-050V
90261-0003		PIPE PLUG	RK- 491131-010V
90261-0008		PIPE PLUG	C- 256843-020V
			C- 256843-030V
			C- 256843-040V
			C- 256843-050V
90261-0018		PIPE PLUG	C- 256438-020V
90261-0025		PIPE PLUG	C- 441695-020V
90261-0033		PLUG	C- 456588-030V
90261-0041		PLASTIC PLUG	RK- 520068-010V
90264-0005		FAN	C- 256237-020V
			C- 256237-030V
			C- 256237-040V
			C- 272408-020V
			C- 272408-030V
90264-0026		FAN	CE- 67716-010V
			CE- 68128-010V
			CE- 68304-010V
			CE- 68128-010V
			CE- 67716-010V
			CE- 68304-010V

PART NO	LAST AM	DESCRIPTION	GROUP NO
90264-0042		FAN	C- 256237-050V
			C- 256237-060V
			C- 272408-040V
			C- 272408-050V
90264-0306		SILENCER	C- 256237-020V
			C- 256237-030V
90264-0308		SILENCER	C- 256237-060V
90264-0317		GRILL	C- 294785-010V
90264-0319		FLANGE	C- 256237-020V
			C- 256237-030V
			C- 256237-040V
			C- 256237-050V
			C- 256237-060V
90265-0020		CONNECTION BOX	C- 295611-020V
			C- 271569-040V
			C- 271569-050V
90265-0041		APPLIANCE BOX	C- 401207-010V
			C- 400895-010V
90265-0054		ACCESSORY BOX	C- 457856-010V
90265-0056		CONNECTION BOX	C- 441000-020V
			C- 441000-030V
			C- 441000-040V
			C- 441000-050V
90265-0306		BLANK-OFF FLANGE	CE- 67716-010V
			CE- 68128-010V
			CE- 68304-010V
			CE- 68128-010V
			CE- 67716-010V
			CE- 68304-010V
90265-0320		PLATE	C- 457856-010V
90266-0006		TUBE	C- 271562-020V
			C- 271562-030V
			C- 271562-040V
			C- 271562-050V
			C- 271562-060V
			C- 271562-070V
90266-0019		PIPE	C- 271562-040V
			C- 271562-050V
			C- 271562-060V
			C- 271562-070V
			C- 256197-030V
			C- 256198-030V
			C- 256203-030V
			C- 256197-030V
			C- 256203-030V
			C- 491814-010V
			C- 491815-010V
			C- 256197-040V
			C- 256203-040V
			C- 491814-010V
			C- 491815-010V
			C- 257381-030V
			C- 257382-030V
			C- 257381-030V
			C- 257382-030V
			C- 257381-030V
			C- 257382-030V
			C- 257381-030V
			C- 257382-030V
90266-0022		DAIRY PIPE	C- 237776-040V
90266-0165		PIPE	C- 295310-040V
			C- 295310-050V
			C- 295310-060V
P- 90270-0008		COMPRESSOR	C- 271274-020V
P- 90270-0010		COMPRESSOR	C- 271274-020V
P- 90270-0011		COMPRESSOR	C- 456274-010V
			C- 469452-010V
			C- 469452-020V
			C- 751800-010V
			C- 469452-030V
			C- 751800-020V
			C- 456274-010V
90270-0344		VALVE	C- 271274-020V
90270-0347		VALVE	C- 456274-010V
			C- 271868-020V
			C- 271868-030V
			C- 271868-040V

PART NO	LAST AM	DESCRIPTION	GROUP NO
			C- 271866-050V
			C- 456274-010V
			C- 469452-010V
			C- 469452-020V
			C- 751800-010V
			C- 469452-030V
			C- 751800-020V
			C- 456274-010V
			C- 491207-020V
P- 90274-0003		PRESSURE GUARD	C- 735183-010V
90274-0027		GUARD	C- 271909-020V
			C- 271909-030V
			C- 271909-040V
			C- 271909-050V
90274-0029		GUARD	C- 491890-010V
90274-0039		GUARD	C- 271909-020V
			C- 271909-030V
90274-0040		GUARD	C- 294658-010V
			C- 283631-010V
90274-0044		GUARD	C- 457924-010V
			C- 457924-020V
90274-0056		PRESSURE GUARD	C- 271909-040V
			C- 271909-050V
90274-0065		PRESSURE GUARD	C- 491207-020V
90274-0066		PRESSURE GUARD	RK- 520068-010V
90277-0035		AIR-PRESSURE FILTER	C- 283610-010V
			C- 283617-010V
			C- 469598-010V
			C- 469598-020V
P- 90277-0040		FILTER	RK- 520068-010V
90277-0045		FILTER	C- 751089-010V
			RK- 491780-010V
			RK- 751488-010V
			RK- 491780-010V
			RK- 751488-010V
			RK- 491780-010V
			RK- 751488-010V
			RK- 491780-010V
			RK- 751488-010V
			RK- 491780-010V
			RK- 751488-010V
			RK- 491780-010V
			RK- 751488-010V
			RK- 491780-010V
			RK- 751488-010V
90277-0046		FILTER	C- 751089-010V
			RK- 491780-010V
90277-0046		FILTER	RK- 751488-010V
			RK- 491780-010V
			RK- 751488-010V
			RK- 491780-010V
			RK- 751488-010V
			RK- 491780-010V
			RK- 751488-010V
			RK- 491780-010V
			RK- 751488-010V
			RK- 491780-010V
			RK- 751488-010V
			RK- 491780-010V
			RK- 751488-010V
90277-0052		FILTER	RK- 520070-010V
			RK- 520167-010V
			RK- 520070-010V
			RK- 520167-010V
			RK- 520070-010V
			RK- 520167-010V
			RK- 520070-010V
			RK- 520167-010V
			RK- 520070-010V
			RK- 520167-010V
90277-0323		FILTER HOUSING	RK- 520068-010V
			C- 271909-020V
			C- 271909-030V
			C- 271909-040V
			C- 271909-050V
90277-0324		FILTER CARTRIDGE	RK- 520068-010V
			C- 271909-020V

PART NO	LAST AM	DESCRIPTION	GROUP NO
			C- 271909-030V
			C- 271909-040V
			C- 271909-050V
90277-0331		FILTER	C- 529940-010V
			C- 735268-010V
			C- 735265-010V
			C- 735271-010V
			C- 735265-010V
			C- 735271-010V
			C- 735265-010V
			C- 735271-010V
90277-0333		O-RING	C- 735268-010V
			C- 735271-010V
90278-0001		PUMP	C- 456975-020V
			C- 250610-010V
			C- 456975-010V
90279-0001		OIL CAN	C- 456975-020V
			C- 250610-010V
			C- 456975-010V
90285-0096		SEAL	C- 283618-010V
90287-0009		SPRINGLOADED SCREW	C- 271649-020V
			C- 267315-010V
			C- 271649-020V
			C- 469074-010V
			C- 469074-020V
90287-0014		SCREW	RK- 456713-010V
90287-0062		SCREW	C- 271114-020V
			C- 271115-020V
			C- 271114-020V
90287-0062		SCREW	C- 271115-020V
			C- 271114-020V
			C- 271115-020V
			C- 271114-030V
			C- 271115-030V
			C- 271114-030V
			C- 271115-030V
			C- 271114-030V
			C- 271115-030V
			C- 271114-040V
			C- 271115-040V
			C- 272839-020V
			C- 490947-010V
			C- 490947-020V
			C- 752244-010V
			C- 294725-010V
			C- 294780-010V
			C- 457853-010V
			C- 469635-010V
			C- 457853-020V
			C- 469635-010V
90287-0076		SCREW	C- 751932-010V
			C- 752958-010V
			C- 752959-010V
			C- 751885-010V
			C- 271513-050V
			C- 751885-020V
90287-0081		SCREW	RK- 456714-010V
			C- 256173-020V
			C- 256173-030V
			C- 256173-040V
			RK- 456714-010V
90287-0082		SCREW	C- 249650-010V
90287-0105		EXPANSION BOLT	C- 229400-060V
90287-0106		SPRINGLOADED SCREW	RK- 546337-010V
			RK- 546489-010V
			RK- 546255-010V
			C- 256014-050V
			C- 469247-010V
			C- 469247-020V
90287-0112		SPRINGLOADED SCREW	RK- 547765-010V
			RK- 547765-020V
90287-0117		EXPANSIONSBOLT	C- 232781-040V
			C- 479821-010V
90287-0119		SCREW	CR- 256436-020V
			CR- 256436-030V
			CR- 256436-040V
			CR- 256436-050V

PART NO	LAST AM	DESCRIPTION	GROUP NO
			RK- 751157-010V
90287-0128		GRUB SCREW	CR- 256204-020V
			CR- 256205-020V
			CR- 256212-020V
			CR- 256213-020V
			CR- 256204-020V
			CR- 256205-020V
			CR- 256212-020V
			CR- 256213-020V
			CR- 256204-030V
			CR- 256205-030V
90287-0128		GRUB SCREW	CR- 256212-030V
			CR- 256213-030V
			CR- 256204-040V
			CR- 256205-040V
			CR- 256204-040V
			CR- 256205-040V
			RK- 456715-010V
90287-0133		SCREW	RK- 76123-010V
90287-0134		SCREW	C- 456567-010V
90287-0143		SCREW	C- 491814-010V
			C- 491815-010V
			C- 491814-010V
			C- 491815-010V
90287-0144		SCREW	RK- 456713-010V
			C- 491814-010V
			C- 491815-010V
			C- 491814-010V
			C- 491815-010V
			RK- 456713-010V
90287-0145		SCREW	RK- 456713-010V
			C- 256201-030V
			C- 256202-030V
			C- 256201-040V
			C- 256202-040V
			RK- 456713-010V
90287-0147		EXPANDING PLUG	C- 229400-060V
90287-0149		SCREW	RK- 456714-010V
			C- 256173-030V
			C- 256173-040V
			RK- 456714-010V
90287-0159		GRUB SCREW	C- 491323-020V
			C- 751393-010V
90287-0167		SPRINGLOADED SCREW	C- 543143-010V
90287-0170		DISTANCE SCREW	C- 442089-010V
P- 90288-0027		ROLLER CHAIN	C- 272021-020V
90288-0036		ROLLER CHAIN	C- 295310-010V
			C- 295310-020V
			C- 295310-030V
			C- 295310-040V
			C- 295310-050V
			C- 295310-060V
90296-0009		GREASE	CR- 256844-020V
			CR- 256845-020V
			CR- 256844-020V
			CR- 256845-020V
			CR- 256844-020V
			CR- 256845-020V
			CR- 256844-020V
			CR- 256845-020V
			C- 272014-030V
			C- 272028-030V
			C- 272014-030V
			C- 272028-030V
			C- 272024-030V
			C- 272028-040V
			C- 751088-010V
			C- 272024-030V
			C- 272028-050V
			C- 751088-020V
90296-0012		LUBRICANT	RK- 491388-010V
			C- 491787-010V
			C- 491788-010V
			C- 491787-020V
			C- 491788-020V
			RK- 491388-010V
90296-0028		OIL	C- 256410-020V

PART NO	LAST AM	DESCRIPTION	GROUP NO
			C- 256410-030V
			C- 256410-040V
			C- 256410-050V
90296-0051		PASTE	RK- 520071-010V
			RK- 520095-010V
			RK- 520071-010V
			C- 295026-010V
			C- 295026-020V
			RK- 535606-010V
			CR- 283606-010V
			C- 469316-010V
			C- 486955-010V
			CR- 283606-010V
			C- 469316-010V
			C- 486955-010V
			C- 497534-020V
90296-0053		OIL	C- 469384-010V
90296-0068		GREASE	C- 441821-010V
			C- 256173-020V
			C- 256173-030V
			C- 256173-040V
			CR- 256212-020V
			CR- 256213-020V
			CR- 256212-020V
			CR- 256213-020V
			CR- 256212-030V
			CR- 256213-030V
			CR- 256212-040V
			CR- 256213-040V
			CR- 256212-040V
			CR- 256213-040V
			CR- 256844-030V
			CR- 256845-030V
			CR- 256212-050V
			CR- 256213-050V
			C- 256410-020V
			C- 295310-010V
			C- 256410-020V
			C- 295310-010V
			C- 441821-010V
			C- 256410-020V
			C- 295310-020V
			C- 441821-010V
			C- 295310-030V
			C- 295310-040V
			C- 295310-050V
			C- 295310-060V
			C- 752628-010V
			C- 283610-010V
			C- 283612-010V
			C- 283617-010V
			CR- 256844-030V
90296-0068		GREASE	CR- 256845-030V
			RK- 456712-010V
			CR- 256844-030V
			CR- 256845-030V
			CR- 256844-030V
			CR- 256845-030V
			C- 283612-010V
			C- 283617-010V
			CR- 449275-010V
			CR- 283605-010V
			C- 283612-010V
			CR- 449275-010V
			CR- 283605-010V
			C- 283612-010V
			CR- 449275-010V
90296-0070		GREASE	C- 441271-010V
			C- 441594-010V
			C- 441271-020V
			C- 441594-010V
			C- 491846-010V
			C- 491846-020V
			C- 491846-010V
			RK- 491863-010V
			RK- 491302-010V
			RK- 491863-010V

PART NO	LAST AM	DESCRIPTION	GROUP NO
90296-0075		OIL	C- 256173-020V
			C- 256173-030V
			C- 256173-040V
			C- 469384-010V
90296-0076		OIL	C- 256438-020V
			C- 294522-010V
			C- 283626-010V
			C- 283626-020V
			C- 283626-030V
90297-0006		FLUORESCENT LAMP	C- 295861-010V
			C- 441534-010V
90297-0007		FLUORESCENT LAMP	CE- 68128-010V
			C- 441535-010V
			CE- 68128-010V
			C- 441535-010V
90297-0300		BALLAST COIL FOR 50 HZ	CE- 67716-010V
			CE- 68128-010V
			CE- 68304-010V
			C- 294785-010V
			CE- 68128-010V
			CE- 67716-010V
			CE- 68304-010V
90297-0301		COIL	CE- 67720-010V
			CE- 68133-010V
			CE- 68307-010V
			CE- 68133-010V
			CE- 68307-010V
90297-0306		BALLAST COIL	CE- 67716-010V
			CE- 68128-010V
			CE- 68304-010V
			CE- 68128-010V
			CE- 67716-010V
			CE- 68304-010V
90297-0307		BALLAST COIL	CE- 67720-010V
90297-0307		BALLAST COIL	CE- 68133-010V
			CE- 68307-010V
			CE- 68133-010V
			CE- 68307-010V
90298-0012		INHIBITOR	C- 271513-020V
			C- 271513-030V
			C- 271513-040V
			C- 751885-010V
			C- 271513-050V
			C- 751885-020V
90298-0019		DETERGENT	C- 469384-010V
90298-0022		ZERUST CAPSULE	CE- 67716-010V
			CE- 68128-010V
			CE- 68304-010V
			CE- 68128-010V
			CE- 67716-010V
			CE- 68304-010V
90298-0033		WATLUBE HEAT LIQUID	RK- 553145-010V
P- 90299-0013		INK	C- 256358-010V
			C- 434774-020V
			C- 434774-030V
			C- 434074-020V
			C- 434074-030V
			C- 434774-020V
			C- 434774-030V
			C- 434074-020V
			C- 434074-030V
			C- 434774-030V
			C- 434074-030V
			C- 434774-030V
			C- 434074-030V
90303-0004		GLOVES	C- 531345-010V
90303-0005		PROTECTIVE EQUIPMENT	C- 531345-010V
90304-0013		CONTAINER	C- 491890-010V
90304-0301		PIPE	C- 491890-010V
90304-0303		COVER	C- 491890-010V
90304-0305		PIPE	C- 491890-010V
90304-0306		VENTILATING PIPE	C- 491890-010V
90314-0021		LEVEL REGULATOR	RK- 41567-010V
			RK- 41461-010V
			RK- 41377-010V
			CE- 67716-010V
			CE- 68128-010V

PART NO	LAST AM	DESCRIPTION	GROUP NO
			CE- 68304-010V
			RK- 68722-010V
			RK- 68725-010V
			CE- 68128-010V
			CE- 67716-010V
			CE- 68304-010V
			RK- 41567-010V
			RK- 41377-010V
			RK- 41461-010V
P- 90321-0015		PUMP	C- 271113-020V
			C- 456588-010V
			C- 456588-020V
P- 90321-0017		PUMP	C- 456588-030V
90321-0018		PUMP	C- 271452-020V
P- 90321-0034		PUMP	C- 271507-020V
P- 90321-0034		PUMP	C- 271113-020V
			C- 456588-010V
			C- 456588-020V
P- 90321-0036		PUMP	C- 456588-030V
P- 90321-0037		UMP	C- 272381-020V
P- 90321-0039		PUMP	C- 490761-010V
			RK- 469536-010V
			RK- 491568-010V
P- 90321-0045		PUMP	C- 491207-010V
90321-0381		ACCUMULATOR	C- 491207-020V
90321-0384		DISTANCE PIECE	C- 272381-030V
90321-0385		COUPLING	C- 271507-020V
90321-0396		FILTER	C- 271507-020V
90321-0411		GASKET	C- 271507-020V
			C- 271453-020V
90326-0012		PROTECTIVE COVER	C- 491323-020V
			C- 751393-010V
			RK- 520071-010V
			RK- 520095-010V
			RK- 520071-010V
			RK- 752035-010V
			C- 256237-020V
			C- 256237-030V
			C- 256237-040V
			C- 256237-050V
			C- 256237-060V
			C- 295891-010V
			C- 295891-020V
			C- 295891-030V
			C- 283617-010V
			C- 256014-020V
			C- 256055-020V
			C- 271181-020V
			C- 272337-020V
			C- 272342-020V
			C- 272560-020V
			C- 256014-020V
			C- 256055-020V
			C- 271181-020V
			C- 272337-020V
			C- 272560-030V
			C- 456976-010V
			C- 256014-030V
			C- 256055-030V
			C- 271181-020V
			C- 272337-020V
			C- 272560-030V
			C- 456976-020V
			C- 256014-030V
			C- 256055-040V
			C- 271181-020V
			C- 272337-020V
			C- 272560-030V
			C- 456976-020V
			C- 256014-040V
			C- 256055-050V
			C- 271181-030V
			C- 272337-030V
			C- 272560-040V
90326-0012		PROTECTIVE COVER	C- 456976-030V
			C- 256014-050V
			C- 256055-060V

PART NO	LAST AM	DESCRIPTION	GROUP NO
			C- 271181-040V
			C- 272337-040V
			C- 272560-050V
			C- 456976-040V
			C- 283613-010V
			C- 283617-010V
90326-0017		GLAND	C- 256014-020V
			C- 256055-020V
			C- 256014-020V
			C- 256055-020V
			C- 256014-030V
			C- 256055-030V
			C- 256014-030V
			C- 256055-040V
			C- 256014-040V
			C- 256055-050V
			C- 256014-050V
			C- 256055-060V
90326-0019		THERMOELEMENT	C- 256014-020V
			C- 256014-030V
			C- 256014-040V
90326-0020		SOCKET	C- 256014-050V
			RK- 520071-010V
			RK- 520095-010V
			RK- 520071-010V
			RK- 752035-010V
			C- 256237-020V
			C- 256237-030V
			C- 256237-040V
			C- 256237-050V
			C- 256237-060V
			C- 295891-010V
			C- 295891-020V
			C- 295891-030V
			C- 283617-010V
			C- 256014-020V
			C- 256055-020V
			C- 271181-020V
			C- 272337-020V
			C- 272342-020V
			C- 272560-020V
			C- 256014-020V
			C- 256055-020V
			C- 271181-020V
			C- 272337-020V
			C- 272560-030V
			C- 456976-010V
			C- 256014-030V
			C- 256055-030V
			C- 271181-020V
			C- 272337-020V
			C- 272560-030V
			C- 456976-020V
			C- 256014-030V
			C- 256055-040V
			C- 271181-020V
90326-0020		SOCKET	C- 272337-020V
			C- 272560-030V
			C- 456976-020V
			C- 256014-040V
			C- 256055-050V
			C- 271181-030V
			C- 272337-030V
			C- 272560-040V
			C- 456976-030V
			C- 256014-050V
			C- 256055-060V
			C- 271181-040V
			C- 272337-040V
			C- 272560-050V
			C- 456976-040V
			C- 283613-010V
90326-0022		PLUG	C- 283617-010V
			C- 283617-010V
			C- 283613-010V
90326-0044		THERMOELEMENT	C- 283617-010V
			C- 294888-010V

PART NO	LAST AM	DESCRIPTION	GROUP NO
90326-0047		THERMOELEMENT	C- 294767-010V
			C- 294887-010V
90326-0048		THERMOELEMENT	C- 256055-020V
			C- 256055-030V
			C- 256055-040V
			C- 256055-050V
			C- 256055-060V
90326-0051		THERMO COUPLE	C- 271181-020V
			C- 272337-020V
			C- 272342-020V
			C- 271181-020V
			C- 272337-020V
			C- 456976-010V
			C- 271181-020V
			C- 272337-020V
			C- 456976-020V
			C- 271181-020V
			C- 272337-020V
			C- 456976-020V
			C- 271181-030V
			C- 272337-030V
			C- 456976-030V
			C- 271181-040V
			C- 272337-040V
			C- 456976-040V
90326-0052		THERMO ELEMENT	RK- 520071-010V
			RK- 520095-010V
			RK- 520071-010V
			RK- 752035-010V
			C- 256014-020V
			C- 256014-030V
			C- 256014-040V
			C- 256014-050V
90326-0057		THERMOELEMENT	C- 256055-060V
90326-0060		THERMOCOUPLE	C- 484984-010V
			RK- 535606-010V
			CR- 283606-010V
			C- 469316-010V
			C- 486955-010V
90326-0060		THERMOCOUPLE	C- 531657-010V
			CR- 283606-010V
			C- 469316-010V
			C- 486955-010V
			C- 497534-020V
			C- 531657-010V
90326-0304		LEAD IN	RK- 751461-010V
			C- 256055-020V
			C- 256055-030V
			C- 256055-040V
			C- 256055-050V
			C- 256055-060V
90328-0003		SILENCER	C- 272560-020V
			C- 272560-030V
			C- 272560-040V
			C- 272560-050V
			C- 490600-010V
			C- 490600-020V
90328-0018		SILENCER	C- 271909-020V
			C- 271909-030V
			C- 271909-040V
90328-0020		SILENCER	C- 751478-010V
			RK- 751345-010V
90328-0025		SILENCER	RK- 529345-010V
90330-0003		NUT	C- 271866-030V
			C- 271866-040V
90330-0013		REDUCTION NIPPLE	RK- 520129-010V
			RK- 520130-010V
			RK- 520094-010V
			RK- 520096-010V
			C- 272560-020V
			C- 272560-030V
			C- 272560-040V
			RK- 520067-010V
			RK- 520129-010V
			RK- 520130-010V
90330-0019		REDUCTION NIPPLE	C- 271866-040V
			C- 271866-050V

PART NO	LAST AM	DESCRIPTION	GROUP NO
			C- 272560-020V
			C- 272560-030V
			C- 272560-040V
90330-0020		ELBOW PIPE	RK- 456793-010V
			C- 271866-020V
			C- 271866-030V
			C- 491243-030V
90330-0021		NIPPLE	C- 491243-030V
			C- 272560-050V
90330-0024		T-PIECE	C- 272623-020V
			C- 272623-030V
90330-0025		BUSHING	RK- 520068-010V
			C- 256233-020V
			C- 456265-010V
			C- 469366-010V
			C- 469804-010V
			C- 469366-010V
			C- 469804-010V
			C- 469366-020V
			C- 469804-010V
			C- 469366-030V
90330-0025		BUSHING	C- 469804-010V
			C- 272623-020V
			C- 295045-020V
			C- 272623-020V
			C- 295045-020V
			C- 295045-030V
			C- 295045-040V
			C- 295045-050V
			C- 295045-060V
90330-0026		PLUG	RK- 520068-010V
			C- 491243-030V
			C- 256014-020V
			C- 256014-030V
90330-0028		NIPPLE	C- 256233-020V
			C- 256233-030V
			C- 256233-040V
			C- 256233-050V
			C- 456836-010V
			C- 456836-020V
			C- 456836-030V
			C- 456836-040V
90330-0029		PLUG	C- 533014-010V
			C- 271113-020V
			C- 456588-010V
			C- 469452-010V
			C- 469452-020V
			C- 751800-010V
			C- 469452-030V
			C- 751800-020V
90330-0032		NIPPLE	RK- 520129-010V
			RK- 520130-010V
			RK- 520094-010V
			RK- 520096-010V
			C- 272560-020V
			C- 272560-030V
			C- 272560-040V
			C- 272560-050V
			RK- 520067-010V
			RK- 520129-010V
			RK- 520130-010V
90330-0037		PLUG	RK- 469536-010V
			RK- 491568-010V
			C- 735268-010V
			C- 256217-020V
			C- 256217-030V
			C- 256217-040V
			C- 271866-030V
			C- 271866-040V
			C- 271866-050V
			C- 271274-020V
			C- 735271-010V
90330-0038		NUT	C- 456274-010V
			C- 256233-020V
			C- 271113-020V
			C- 272408-020V
			C- 272408-030V

PART NO	LAST AM	DESCRIPTION	GROUP NO
			C- 272408-040V
			C- 272408-050V
			C- 456274-010V
90330-0038		NUT	C- 272342-020V
			C- 295045-020V
			C- 456976-010V
			C- 456274-010V
90330-0042		BUSHING	C- 491083-010V
90330-0043		NIPPLE	C- 735183-010V
			RK- 520068-010V
			C- 272623-020V
90330-0044		NIPPLE	C- 272623-030V
90330-0046		PLUG	RK- 491589-030V
			RK- 456804-010V
			C- 271866-030V
			C- 271866-040V
			C- 491243-030V
			C- 751373-010V
90330-0048		BUSHING	RK- 456793-010V
			C- 272560-020V
			C- 272560-030V
			C- 272560-040V
90330-0054		SLEEVE	RK- 491591-030V
			C- 491243-030V
			C- 271866-020V
			C- 272381-030V
			C- 491243-030V
90330-0059		NIPPLE	RK- 456793-010V
			RK- 456804-010V
90330-0061		COUPLING	C- 271866-020V
			C- 271866-040V
90330-0062		COUPLING	C- 272560-020V
			C- 272560-030V
			C- 272560-040V
90330-0066		PLUG	C- 469366-010V
			C- 469366-020V
			CR- 256204-020V
			CR- 256205-020V
			CR- 256204-020V
			CR- 256205-020V
			CR- 256204-030V
			CR- 256205-030V
			CR- 256204-040V
			CR- 256205-040V
			CR- 256204-040V
			CR- 256205-040V
			CR- 256204-050V
			CR- 256205-050V
			RK- 538439-010V
			RK- 547986-010V
			C- 272560-020V
			C- 295045-030V
			C- 295045-040V
			C- 295045-050V
			C- 295045-060V
90330-0073		CONNECTION	C- 256233-020V
			C- 256233-030V
			C- 256233-040V
			C- 256233-050V
90330-0076		CONNECTION	C- 256233-020V
90330-0078		BUSHING	C- 272021-020V
90330-0078		BUSHING	C- 272765-030V
			C- 272765-040V
			C- 272765-050V
			C- 272765-060V
			C- 256055-020V
90330-0080		REDUCTION NIPPLE	C- 256055-030V
			RK- 491591-030V
			C- 491243-030V
			C- 272381-020V
			C- 272381-030V
			C- 491243-030V
90330-0081		ELBOW PIPE	C- 751373-010V
			RK- 520068-010V
			C- 271109-020V
			C- 271387-020V
			C- 271109-020V

PART NO	LAST AM	DESCRIPTION	GROUP NO
			C- 271387-020V
			C- 271109-020V
			C- 271387-020V
			C- 271387-030V
			C- 456455-010V
			C- 271387-030V
			C- 456455-010V
			C- 271387-030V
90330-0083		NIPPLE	RK- 520068-010V
90330-0085		BUSHING	C- 256438-020V
90330-0092		COUPLING	C- 272381-020V
90330-0093		NUT	C- 271866-030V
			C- 271866-040V
90330-0095		T-PIECE	C- 271866-050V
			RK- 520129-010V
			RK- 520130-010V
			RK- 520094-010V
			RK- 520096-010V
			RK- 520067-010V
			RK- 520129-010V
			RK- 520130-010V
90330-0096		CONNECTION	C- 272342-020V
			C- 456976-010V
90330-0097		NIPPLE	C- 271261-040V
			C- 271261-050V
90330-0099		ELBOW PIPE	C- 271261-040V
			C- 271261-050V
90330-0100		NIPPLE TUBE	RK- 491591-030V
			C- 491243-030V
			C- 272381-030V
			C- 491243-030V
90330-0101		NIPPLE	C- 441798-010V
			C- 441811-010V
90330-0105		NUT	C- 256233-030V
			C- 256233-040V
			C- 256233-050V
			C- 295045-030V
			C- 491083-010V
			C- 295045-040V
			C- 491083-010V
			C- 295045-050V
			C- 491083-020V
			C- 295045-060V
			C- 491083-020V
90330-0106		PIPE CONNECTION	C- 272560-050V
90332-0007		RECORDER	CE- 67716-010V
			CE- 68128-010V
			CE- 68304-010V
			CE- 68128-010V
			CE- 67716-010V
			CE- 68304-010V
90332-0008		RECORDER	CE- 67720-010V
			CE- 68133-010V
			CE- 68307-010V
			CE- 68133-010V
			CE- 68307-010V
P- 90332-0012		RECORDER	CE- 67720-010V
			CE- 68307-010V
90333-0004		GRAPH PAPER	CE- 67722-010V
			CE- 68128-010V
			CE- 68129-010V
			CE- 68305-010V
			CE- 68128-010V
			CE- 68129-010V
			CE- 67722-010V
			CE- 68305-010V
90335-0004		SPRING	C- 450101-010V
			RK- 469412-010V
			C- 450101-010V
90335-0005		SPRING	C- 484984-010V
			C- 283610-010V
			CR- 449275-010V
90335-0007		SPRING	CR- 256844-020V
			CR- 256845-020V
			CR- 256844-020V
			CR- 256845-020V
			CR- 256844-020V

PART NO	LAST AM	DESCRIPTION	GROUP NO
			CR- 256845-020V
			CR- 256844-020V
			CR- 256845-020V
90335-0008		SPRING	C- 441102-010V
			C- 441102-020V
			C- 272030-020V
			C- 441304-010V
			C- 272030-020V
			C- 441304-010V
			C- 441304-020V
			C- 441304-030V
90335-0009		SPRING	C- 533903-010V
			RK- 547300-010V
			C- 533903-010V
90335-0011		SPRING	C- 256221-020V
			C- 256222-020V
			C- 256221-020V
			C- 256222-020V
			C- 256221-020V
			C- 256222-020V
			C- 256221-020V
			C- 256222-020V
			C- 256221-020V
			C- 256222-020V
90335-0014		SPRING	C- 283611-010V
			RK- 547782-010V
			C- 283611-010V
			C- 449388-010V
90335-0021		SPRING	C- 284873-010V
90335-0024		SPRING	C- 271115-020V
			C- 271115-030V
			C- 271115-040V
90335-0025		SPRING	C- 458383-010V
			C- 458384-010V
			C- 458383-010V
			C- 458384-010V
			C- 458383-010V
			C- 458384-010V
			C- 458383-010V
			C- 458384-010V
90335-0027		SPRING	C- 469737-010V
			RK- 540011-010V
			C- 283618-010V
			C- 283622-010V
			C- 283618-010V
			C- 469173-010V
90335-0036		SPRING	C- 256233-020V
			C- 256233-030V
			C- 256233-040V
			C- 256233-050V
			C- 256555-020V
			C- 256555-030V
			C- 456100-010V
			C- 456100-020V
90335-0037		SPRING	C- 449314-010V
90335-0042		SPRING	C- 283610-010V
			CR- 449275-010V
90335-0043		SPRING	C- 294659-010V
90335-0044		SPRING	C- 283612-010V
			C- 283617-010V
			C- 283612-010V
			C- 283617-010V
			CR- 283605-010V
			C- 283612-010V
			CR- 283605-010V
			C- 283612-010V
90335-0052		SPRING	C- 76304-010V
90335-0055		SPRING	C- 271115-030V
			C- 271115-040V
90335-0059		SPRING	C- 442080-010V
90335-0060		SPRING	C- 441765-010V
90335-0062		SPRING	CR- 283618-020V
90335-0064		SPRING	C- 533903-010V

PART NO	LAST AM	DESCRIPTION	GROUP NO
			RK- 536470-010V
			RK- 538450-010V
			RK- 547726-010V
			RK- 547300-010V
			C- 533844-010V
			C- 533903-010V
			C- 751718-010V
90335-0067		SPRING	C- 752628-010V
90335-0067		SPRING	CR- 283618-020V
90335-0084		TENSION SPRING	C- 469736-020V
			RK- 540009-010V
90335-0086		SPRING	RK- 491388-010V
			C- 491787-010V
			C- 491788-010V
			RK- 491388-010V
90335-0096		SPRING	C- 272652-030V
90335-0100		COMPR. SPRING	C- 484984-010V
			RK- 540011-010V
90335-0120		SPRING	RK- 547752-010V
			RK- 547752-020V
90335-0121		SPRING	RK- 547752-010V
			RK- 547752-020V
90335-0122		SPRING	RK- 547769-010V
90335-0127		SPRING	RK- 547759-010V
			RK- 547759-020V
90337-0315		FILTER	C- 272560-050V
90337-0331		FILTER HOUSING	C- 272560-050V
90337-0341		PIN	C- 442080-010V
90337-0342		WINDOW	C- 442080-010V
90339-0004		MAGNETIC LOCK	C- 271442-020V
			C- 271443-020V
			C- 271442-020V
			C- 271443-020V
			C- 272508-010V
			C- 469535-010V
			C- 268656-010V
			C- 553657-010V
			C- 752042-010V
90339-0011		LOCK	RK- 548056-010V
P- 90340-0014		FREE WHEEL COUPLING	C- 283618-010V
			CR- 283618-020V
90342-0013		BELLOWS	C- 401207-010V
90342-0014		BELLOWS	C- 400895-010V
90344-0022		SPROCKET	C- 256806-020V
			C- 256806-030V
90344-0300		ROLLER	C- 283626-030V
90345-0007		BEARING	C- 283627-010V
			C- 456674-010V
			C- 476349-020V
90347-0001		DAMPER	B- 648109-060V
90347-0004		VIBRATION DAMPER	C- 752960-010V
			C- 752971-010V
			C- 469762-010V
			C- 401207-010V
			C- 538421-010V
			C- 456457-010V
			C- 469762-010V
			C- 456457-010V
			C- 469762-010V
			C- 456457-020V
			C- 469762-010V
			C- 456457-030V
			C- 469762-010V
			C- 272839-020V
			C- 490947-010V
			C- 490947-020V
			C- 752244-010V
90347-0004		VIBRATION DAMPER	C- 752628-010V
			C- 441765-010V
			C- 751923-010V
			C- 751924-010V
			C- 751923-010V
			C- 751924-010V
			C- 751923-010V
			C- 751924-010V
90347-0005		VIBRATION DAMPER	C- 271992-020V
			C- 441765-010V

PART NO	LAST AM	DESCRIPTION	GROUP NO
90347-0007		VIBRATION DAMPER	C- 752474-010V
90347-0011		VIBRATION DAMPER	C- 271468-020V
			C- 271469-020V
			C- 271468-020V
			C- 271469-020V
			C- 271468-020V
			C- 271469-020V
			C- 271468-020V
			C- 271469-020V
			C- 271468-040V
			C- 271469-020V
			C- 294785-010V
			C- 294780-010V
			C- 457853-010V
			C- 457853-020V
90347-0012		DAMPER	C- 271454-020V
90347-0014		DAMPER	C- 294785-010V
90347-0027		DAMPER	C- 272652-020V
			C- 272652-010V
90347-0035		DAMPER	C- 271114-020V
			C- 271114-030V
			C- 271114-040V
90347-0037		DAMPER	C- 294725-010V
90347-0039		DAMPER	C- 294906-010V
90347-0041		DAMPER	C- 294780-010V
			C- 457853-010V
			C- 457853-020V
90347-0079		DAMPER	B- 648109-070V
			B- 648109-080V
			B- 648109-090V
			B- 648109-070V
			B- 648109-080V
			B- 648109-090V
90347-0089		DAMPER	C- 469452-030V
90348-0007		FREE WHEEL COUPLING	C- 256234-020V
			C- 256234-030V
			C- 256234-040V
			C- 272028-020V
			C- 272028-030V
			C- 272028-040V
			C- 272028-050V
90355-0031		FLEXIBLE COUPLING	C- 271116-020V
			C- 271116-030V
			C- 256965-020V
			C- 456546-010V
			C- 456546-020V
			C- 751689-010V
P- 90355-0038		SHAFT COUPLING	C- 256173-020V
			C- 256173-030V
90355-0048		CONNECTION	C- 256200-020V
			C- 256200-030V
90355-0049		CONNECTION	C- 256200-020V
90355-0088		MAGNETIC CLUTCH	C- 256173-040V
90360-0004		STEAM TRAP	C- 271866-020V
			C- 271866-030V
90360-0005		STEAM TRAP	C- 271866-040V
90360-0006		CONNECTION	C- 271866-040V
90360-0009		STEAM TRAP	C- 272560-050V
90361-0009		BUSHING	C- 283627-010V
90361-0011		BUSHING	C- 256173-020V
			C- 256173-030V
			C- 256173-040V
90364-0007		PUMP	C- 279809-010V
			C- 283632-010V
P- 90364-0010		PUMP	C- 457924-010V
P- 90364-0012		PUMP	C- 457924-020V
90364-0327		SILENCER	C- 457924-010V
			C- 457924-020V
90410-0020		TEMPERATURE CONTROL INST	CE- 67716-010V
			CE- 68128-010V
			CE- 68304-010V
			CE- 68128-010V
			CE- 67716-010V
			CE- 68304-010V
90410-0021		TEMPERATURE CONTROL INST	CE- 67716-010V
			CE- 68128-010V
			CE- 68304-010V

PART NO	LAST AM	DESCRIPTION	GROUP NO
			RK- 68874-010V
			RK- 69289-010V
			RK- 69501-010V
			RK- 69504-010V
			RK- 69507-010V
			RK- 69510-010V
			RK- 69562-010V
			CE- 68128-010V
			CE- 67716-010V
			CE- 68304-010V
90410-0027		TEMPERATURE CONTROL INST	CE- 67716-010V
			CE- 68304-010V
			CE- 67716-010V
			CE- 68304-010V
90410-0034		RELAY	RK- 41461-010V
			RK- 41377-010V
			CE- 67716-010V
			CE- 68304-010V
			RK- 68722-010V
			RK- 68725-010V
			CE- 67716-010V
			CE- 68304-010V
			RK- 41377-010V
			RK- 41461-010V
90410-0035		TEMPERATURE REGULATOR	CE- 67716-010V
			CE- 68304-010V
			RK- 68874-010V
			CE- 67716-010V
			CE- 68304-010V
90410-0039		TEMPERATURE REGULATOR	RK- 41567-010V
90410-0313		RACK	CE- 67716-010V
90410-0313		RACK	CE- 68128-010V
			CE- 68304-010V
			CE- 68128-010V
			CE- 67716-010V
			CE- 68304-010V
90411-0005		INSULATOR	C- 271181-020V
			C- 271181-030V
			C- 271181-040V
90413-0033		CODE INSERT SET	C- 228779-010V
			C- 293685-010V
			C- 293685-020V
			C- 293684-010V
			C- 293684-020V
			C- 293685-010V
			C- 293685-020V
			C- 293684-010V
			C- 293684-020V
			C- 293685-020V
			C- 293684-020V
			C- 293685-020V
			C- 293684-020V
90413-0043		CODE INSERT SET	C- 293685-010V
			C- 293685-020V
			C- 293684-010V
			C- 293684-020V
			C- 293685-010V
			C- 293685-020V
			C- 293684-010V
			C- 293684-020V
			C- 293685-020V
			C- 293684-020V
			C- 293685-020V
			C- 293684-020V
90413-0044		CODE INSERT SET	C- 293685-010V
			C- 293685-020V
			C- 293684-010V
			C- 293684-020V
			C- 293685-010V
			C- 293685-020V
			C- 293684-010V
			C- 293684-020V
			C- 293685-020V
			C- 293684-020V
			C- 293685-020V
			C- 293684-020V
90413-0047		CODE INSERT SET	C- 228779-010V

PART NO	LAST AM	DESCRIPTION	GROUP NO
			C- 293685-010V
			C- 293685-020V
			C- 293684-010V
			C- 293684-020V
			C- 293685-010V
			C- 293685-020V
			C- 293684-010V
			C- 293684-020V
			C- 293685-020V
			C- 293684-020V
			C- 293685-020V
			C- 293684-020V
90413-0048		CODE INSERT SET	C- 228779-010V
90413-0049		CODE INSERT SET	C- 228779-010V
90413-0183		SET OF NUMERALS 22 X 4 MM	C- 294767-010V
			C- 456607-010V
90413-0184		SET OF LETTERS 26 X 4 MM	C- 294767-010V
			C- 456607-010V
90413-0185		SET OF NUMERALS 10 X 4 MM	C- 294767-010V
			C- 456607-010V
90413-0186		SET OF SPACERS 8 X 4 MM	C- 294767-010V
			C- 456607-010V
90413-0187		CODE INSERT SET	C- 77091-010V
			C- 77091-020V
			C- 77091-030V
			B- 648119-020V
			B- 648119-060V
			B- 648119-020V
			B- 648119-060V
90413-0188		CODE INSERT SET	C- 77091-010V
			C- 77091-020V
			C- 77091-030V
			B- 648119-020V
			B- 648119-060V
			B- 648119-020V
			B- 648119-060V
90413-0189		CODE INSERT SET	C- 77091-010V
			C- 77091-020V
			C- 77091-030V
			B- 648119-020V
			B- 648119-060V
			B- 648119-020V
			B- 648119-060V
90413-0190		CODE INSERT SET	C- 77091-010V
			C- 77091-020V
			C- 77091-030V
			B- 648119-020V
			B- 648119-060V
			B- 648119-020V
			B- 648119-060V
90413-0195		CODE INSERT SET	C- 77091-010V
			C- 77091-020V
			C- 77091-030V
			B- 648119-020V
			B- 648119-060V
			B- 648119-020V
			B- 648119-060V
90413-0196		CODE INSERT SET	C- 77091-010V
			C- 77091-020V
			C- 77091-030V
			B- 648119-020V
			B- 648119-060V
			B- 648119-020V
			B- 648119-060V
90413-0197		CODE INSERT SET	C- 77091-010V
			C- 77091-020V
			B- 648119-020V
			B- 648119-060V
			B- 648119-020V
			B- 648119-060V
90413-0504		CODE INSERT SET	RK- 548056-010V
P- 90415-0014		FILTER	C- 271507-020V
90415-0018		FILTER	C- 271909-020V
			C- 271909-030V
			C- 271909-040V
			C- 271909-050V
90415-0019		FILTER	C- 271909-020V

PART NO	LAST AM	DESCRIPTION	GROUP NO
			C- 271909-030V
			C- 271909-040V
			C- 271909-050V
P- 90415-0022		FILTER	C- 271113-020V
			C- 456588-010V
			C- 456588-020V
			C- 456588-030V
P- 90415-0027		FILTER	C- 272623-020V
P- 90415-0033		OIL FILTER	C- 491890-010V
90415-0034		SUCTION FILTER	C- 271453-030V
			RK- 491984-010V
90415-0316		FILTER	C- 295778-010V
			C- 295778-020V
			C- 295778-030V
			C- 295778-040V
90416-0011		INDEXING DEVICE	C- 294522-010V
			C- 283626-010V
			C- 283626-020V
			C- 283626-030V
90416-0014		INDEXERING DEVICE	C- 256410-020V
			C- 256410-030V
90416-0021		INDEXING DEVICE	C- 256410-040V
			C- 256410-050V
90417-0050		TOOTHED BELT	C- 271116-030V
90417-0067		TOOTHED BELT	C- 294658-010V
90417-0073		TOOTHED BELT	C- 283618-010V
			CR- 283618-020V
90417-0074		TIMING BELT	C- 294522-010V
90417-0075		TIMING BELT	C- 294522-010V
90417-0076		TIMING BELT	C- 256173-020V
			C- 256173-030V
			C- 256173-040V
90417-0077		TIMING BELT	C- 256203-020V
90417-0081		TOOTHED BELT	C- 256236-020V
			C- 456321-010V
			C- 456322-010V
			C- 456348-010V
			C- 456349-010V
			C- 456321-020V
			C- 456322-020V
			C- 456348-020V
			C- 456349-020V
			C- 456321-030V
			C- 456322-030V
			C- 456348-020V
			C- 456349-020V
			C- 272445-020V
90417-0088		TIMING BELT	C- 256965-020V
			C- 456546-010V
			C- 456546-020V
90417-0118		TOOTHED BELT	C- 283631-010V
90417-0120		TOOTHED BELT	C- 283626-010V
			C- 283626-020V
			C- 283626-030V
90417-0131		TOOTHED BELT	C- 271116-020V
90417-0139		TOOTHED BELT	C- 751691-010V
90417-0144		TOOTHED BELT	C- 457867-010V
90417-0145		TOOTHED BELT	C- 457867-010V
90417-0148		TOOTHED BELT	C- 457867-010V
P- 90419-0005		ALARM LAMP	C- 752960-010V
			C- 752971-010V
			C- 272833-010V
			C- 272882-010V
			C- 295188-010V
			C- 272833-010V
			C- 272882-010V
			C- 295188-010V
			C- 456459-010V
			C- 456460-010V
			C- 456459-010V
			C- 456460-010V
			C- 456459-020V
			C- 456460-020V
			C- 751900-010V
			C- 456459-030V
			C- 456460-030V
			C- 751900-010V

PART NO	LAST AM	DESCRIPTION	GROUP NO
P- 90422-0008		COOLER	C- 229400-060V
P- 90424-0006		SPRAY GUN	C- 271507-020V
90424-0009		NOZZLE	C- 271387-020V
			C- 271261-020V
			C- 271261-030V
			C- 256802-020V
			C- 272765-010V
			C- 256802-020V
			C- 272765-020V
			C- 256802-020V
			C- 272765-020V
			C- 272765-030V
			C- 456455-010V
			C- 272765-040V
			C- 456455-010V
			C- 272765-050V
			C- 456455-020V
			C- 272765-060V
90424-0011		NOZZLE	C- 456455-020V
			C- 271261-020V
90424-0016		NOZZLE	C- 271261-030V
			C- 256802-020V
			C- 271115-020V
			C- 256802-020V
			C- 271115-020V
			C- 256802-020V
			C- 271115-020V
			C- 456455-010V
P- 90424-0017		NOZZLE	C- 456455-020V
90424-0018		NOZZLE	C- 272407-020V
			C- 256233-020V
90424-0025		NOZZLE	C- 272021-020V
90424-0027		NOZZLE	C- 441811-010V
			C- 256555-020V
			C- 256555-030V
90424-0027		NOZZLE	C- 456100-010V
90424-0032		NOZZLE	C- 456100-020V
			C- 271261-040V
			C- 271261-050V
90424-0033		NOZZLE	C- 736865-010V
			C- 271261-040V
90424-0035		NOZZLE	C- 271261-050V
			C- 271261-040V
			C- 271261-050V
			C- 441798-010V
			C- 271115-030V
90424-0036		NOZZLE	C- 271115-040V
			C- 271115-030V
90424-0300		CONNECTION	C- 271115-040V
90424-0304		GASKET	C- 271387-020V
			C- 295778-010V
			C- 295778-020V
			C- 295778-030V
90425-0016		EJECTOR	C- 295778-040V
90426-0003		HAND SHOWER	RK- 529345-010V
P- 90427-0002		DATING UNIT	C- 271387-030V
P- 90427-0005		DATING UNIT	C- 268665-010V
P- 90427-0006		DATING UNIT	RK- 548056-010V
90427-0322		RIBBON	RK- 548056-010V
90427-0327		ACCESSORIES-FITTINGS	C- 268665-010V
			C- 294767-010V
			C- 456807-010V
90427-0329		PLATE	C- 268665-010V
90427-0330		DATE INDICATOR SET	C- 268665-010V
90427-0331		DATE INDICATOR SET	C- 268665-010V
90427-0332		DATE INDICATOR SET	C- 268665-010V
90427-0333		DATE INDICATOR SET	C- 268665-010V
90427-0343		HANDLE	C- 268665-010V
90427-0506		TYPE HOLDER	C- 249650-010V
P- 90427-0507		DOLLY	RK- 548056-010V
90430-0013		THYRISTOR UNIT	RK- 548056-010V
90430-0015		CIRCUIT BOARD	CE- 68128-010V
			CE- 67716-010V
			CE- 68128-010V
			CE- 68304-010V
			CE- 68128-010V
			CE- 67716-010V

PART NO	LAST AM	DESCRIPTION	GROUP NO
90430-0303		HOLDER	CE- 68304-010V
			CE- 67716-010V
			CE- 68128-010V
			CE- 68304-010V
			CE- 68128-010V
			CE- 67716-010V
			CE- 68304-010V
90430-0304		PILOT UNIT	C- 295026-010V
			C- 295026-020V
			C- 295026-030V
90430-0308		BALLAST COIL	CE- 67716-010V
			CE- 68128-010V
			CE- 68304-010V
			CE- 68128-010V
			CE- 67716-010V
			CE- 68304-010V
90430-0310		CIRCUIT CARD	CE- 68128-010V
90432-0005		BRAKE	C- 256173-020V
90432-0008		BRAKE	RK- 456714-010V
			C- 256173-030V
			C- 256173-040V
90432-0012		BRAKE	RK- 456714-010V
			C- 533903-010V
			RK- 547300-010V
92300-0015		OFFICE REQUISITES	C- 533903-010V
			CE- 68134-010V
			CE- 67721-010V
			CE- 68308-010V
4- 106758		WASHER	C- 256236-020V
			C- 441881-010V
			C- 456321-010V
			C- 456322-010V
			C- 456348-010V
			C- 456349-010V
			C- 456321-020V
			C- 456322-020V
			C- 456348-020V
			C- 456349-020V
			C- 456321-030V
			C- 456322-030V
			C- 456348-020V
			C- 456349-020V
			C- 272445-020V
			C- 294725-010V
4- 107000		SPRING	C- 74767-010V
4- 107010		SPACER SLEEVE	C- 268665-010V
4- 110222		CLAMP	C- 256228-020V
4- 110223		PIN	C- 256228-020V
4- 110224		LINK	C- 256228-020V
4- 110225		STUD BOLT	C- 256228-020V
4- 110226		SHAFT	C- 256228-020V
4- 110227		SHAFT	C- 256228-020V
4- 111032		SHAFT	C- 256228-020V
4- 111428		COMPRESSION SPRING	C- 232781-040V
4- 111543		CONE	C- 256229-020V
			C- 271649-020V
			C- 256229-020V
			C- 271649-020V
			C- 256229-020V
			C- 271649-020V
			C- 256229-020V
			C- 271649-020V
			C- 256229-020V
			C- 267315-010V
			C- 257166-020V
			C- 271649-020V
			C- 257166-020V
			C- 271649-020V
			C- 257166-030V
			C- 469074-010V
			C- 257166-030V
			C- 469074-010V
4- 118344		WASHER	C- 469074-020V
4- 118582		COMPRESSION SPRING	C- 752628-010V
4- 120902		SUCTION CUP	C- 491871-010V
			C- 469737-010V
			C- 283622-010V

PART NO	LAST AM	DESCRIPTION	GROUP NO
4- 120902		SUCTION CUP	C- 294888-010V
			C- 294887-010V
			C- 469173-010V
			C- 469316-010V
			C- 486955-010V
4- 120904		BUSHING	C- 469737-010V
			C- 283622-010V
			C- 469173-010V
C- 155083-0101	7329 84-11-15	PRESSURE PLATE	C- 294763-010V
C- 155091-0101	4721 80-12-31	HANDLE	C- 294763-010V
4- 179595		SHUTTER	C- 456274-010V
			C- 271274-020V
			C- 469452-010V
			C- 469452-020V
			C- 751800-010V
			C- 469452-030V
			C- 751800-020V
			C- 456274-010V
4- 179596		FLOAT	C- 456274-010V
			C- 271274-020V
			C- 469452-010V
			C- 469452-020V
			C- 751800-010V
			C- 469452-030V
			C- 751800-020V
			C- 456274-010V
4- 206703		GASKET	C- 272342-020V
			C- 456976-010V
4- 206913		LOCKING CLAMP	C- 37898-010V
			C- 450101-010V
4- 207018		SUPPORT	C- 256234-020V
			C- 256234-030V
			C- 256234-040V
4- 208144-0001		TYPE HOLDER	C- 228779-010V
4- 208144-0002		TYPE HOLDER	C- 228779-010V
4- 208173		SHAFT	C- 37877-030V
3- 208361-0001		STEP	C- 272802-010V
			C- 272825-010V
			C- 295305-010V
			C- 272802-010V
			C- 272825-010V
			C- 295305-010V
4- 209145		SCREW	C- 256237-020V
			C- 256237-030V
			C- 256237-040V
			C- 256237-050V
			C- 256237-060V
			C- 272408-020V
			C- 272408-030V
			C- 272408-040V
			C- 272408-050V
			C- 272342-020V
			C- 456976-010V
			C- 456976-020V
			C- 456976-030V
			C- 456976-040V
4- 209148		LOCK NUT	C- 256237-020V
			C- 256237-030V
			C- 256237-040V
			C- 256237-050V
			C- 256237-060V
			C- 272408-020V
			C- 272408-030V
			C- 272408-040V
			C- 272408-050V
			C- 272342-020V
			C- 456976-010V
			C- 456976-020V
			C- 456976-030V
			C- 456976-040V
4- 209181		LID	C- 256233-020V
			C- 256233-030V
			C- 256233-040V
			C- 256233-050V

PART NO	LAST AM	DESCRIPTION	GROUP NO
			C- 456836-010V
			C- 456836-020V
			C- 456836-030V
			C- 456836-040V
4- 209183		RING	C- 256233-020V
			C- 256233-030V
			C- 256233-040V
			C- 256233-050V
			C- 456836-010V
			C- 456836-020V
			C- 456836-030V
			C- 456836-040V
4- 209184		BRACKET	C- 256233-020V
			C- 256233-030V
			C- 256233-040V
			C- 256233-050V
4- 209331-0001		GEAR WHEEL	RK- 548389-010V
			C- 272028-020V
			C- 272028-030V
			C- 272028-040V
			C- 272028-050V
4- 209331-0002		GEAR WHEEL	RK- 538413-010V
			C- 272028-020V
			C- 272028-030V
			C- 272028-040V
4- 209331-0004		GEAR WHEEL	RK- 538413-010V
			RK- 469760-010V
			C- 272028-030V
			C- 272028-040V
4- 209331-0006		GEAR WHEEL	RK- 538413-010V
			RK- 548389-010V
			C- 256234-020V
			C- 256234-030V
			C- 256234-040V
			C- 272028-020V
			C- 272028-030V
			C- 272028-040V
			C- 272028-050V
4- 209331-0008		GEAR WHEEL	RK- 538413-010V
			C- 272028-030V
			C- 272028-040V
4- 209331-0009		GEAR WHEEL	RK- 548389-010V
			C- 256234-020V
			C- 256234-030V
			C- 256234-040V
			C- 272028-030V
			C- 272028-040V
			C- 272028-050V
4- 209331-0010		GEAR WHEEL	C- 256234-020V
			C- 256234-030V
			C- 256234-040V
4- 209331-0011		GEAR WHEEL	RK- 538413-010V
			RK- 548389-010V
			C- 256234-020V
			C- 256234-030V
			C- 256234-040V
			RK- 469760-010V
			C- 272028-020V
			C- 272028-030V
			C- 272028-040V
			C- 272028-050V
4- 209332		BEARING HOLDER	C- 256234-020V
			C- 256234-030V
			C- 256234-040V
4- 209334		WASHER	C- 256234-020V
			C- 256234-030V
			C- 256234-040V
4- 227896		WASHER	C- 294763-010V
4- 228652		STOPPER	C- 256236-020V
			C- 456321-010V
			C- 456322-010V
			C- 456348-010V
			C- 456349-010V
			C- 456321-020V
			C- 456322-020V
			C- 456348-020V
			C- 456349-020V

PART NO	LAST AM	DESCRIPTION	GROUP NO
			C- 456321-030V
			C- 456322-030V
			C- 456348-020V
			C- 456349-020V
			C- 272445-020V
C- 228779-010V	6317 83-11-03	PRINTING WHEEL	C- 256236-020V
			C- 272445-020V
4- 228844		BLOCK	C- 295359-010V
			C- 456103-010V
4- 228845		BLOCK	C- 295359-010V
			C- 456103-010V
3- 228850-0018		SLIDE RAIL	C- 456103-010V
3- 228850-0025		SLIDE RAIL	C- 295359-010V
4- 228943		THROTTLE	C- 256230-020V
			C- 256230-030V
4- 229201-0001		SPACER	C- 295359-010V
			C- 456103-010V
4- 229201-0025		SPACER	C- 295359-010V
			C- 456103-010V
4- 229202		BLOCK	C- 295359-010V
			C- 456103-010V
4- 229207		BEARING SLEEVE	C- 295359-010V
			C- 456103-010V
C- 229400-060V	13242 89-10-12	UNREELING DEVICE	C- 751796-010V
3- 229402		ROLLER	C- 229400-060V
3- 229403		ARM	C- 229400-060V
3- 229404		CLAMP	C- 229400-060V
4- 229405		BEARING BRACKET	C- 229400-060V
4- 229406		PRESSURE ROLLER	C- 229400-060V
4- 229408		ROD	C- 229400-060V
4- 229409		BEARING	C- 229400-060V
4- 229410		CATCH	C- 229400-060V
4- 229411		SHAFT	C- 229400-060V
4- 229412		SHAFT	C- 229400-060V
4- 229413		SHAFT	C- 229400-060V
4- 229414		WEIGHT	C- 229400-060V
3- 229494		BOBBIN BRAKE	C- 441000-020V
			C- 441000-030V
4- 229508-0033		STUD BOLT	C- 295359-010V
			C- 456103-010V
4- 229760-0014		STUD BOLT	C- 295359-010V
			C- 456103-010V
4- 229775		SPACER	C- 37877-030V
4- 230007		SLEEVE	C- 735183-010V
4- 230107		WASHER	C- 295891-010V
			C- 295891-020V
			C- 295891-030V
4- 230551		GASKET	C- 456274-010V
			C- 256089-020V
			C- 271274-020V
			C- 256089-020V
			C- 271274-020V
			C- 295778-020V
			C- 469452-010V
			C- 295778-030V
			C- 469452-010V
			C- 295778-030V
			C- 469452-020V
			C- 751800-010V
			C- 295778-040V
			C- 469452-030V
			C- 751800-020V
			C- 456274-010V
4- 230706		SLIDE RAIL	C- 295359-010V
			C- 456103-010V
4- 230918		WASHER	C- 752960-010V
			C- 752971-010V
			C- 272084-020V
			C- 272084-030V
			C- 751860-010V
			C- 456457-030V
			C- 751860-010V
4- 230929-0002		SHAFT	C- 256358-010V
4- 230930		BRACKET	C- 256358-010V
4- 232117		SPRING HOLDER	C- 400865-010V
3- 232772		BRACKET	C- 229400-060V
C- 232781-040V	11776 88-06-14	REVOLVING HEAD	C- 751796-010V

PART NO	LAST AM	DESCRIPTION	GROUP NO
1- 232784		BEARING HOUSING	C- 232781-040V
3- 232786		FLANGE	C- 232781-040V
3- 232787		AXLE PIN	C- 232781-040V
4- 232788		LID	C- 232781-040V
4- 232789		SPRING HOUSING	C- 232781-040V
4- 232790		SPACER PIPE	C- 232781-040V
4- 232791		SPACER RING	C- 232781-040V
4- 232792		CYLINDER BRACKET	C- 232781-040V
4- 232793		COVER PLATE	C- 232781-040V
4- 232794		CONE	C- 232781-040V
4- 232856		BRACKET	C- 256358-010V
4- 232979		PRESSURE ROLLER	C- 441000-020V
			C- 441000-030V
			C- 441000-040V
			C- 441000-050V
			C- 283611-010V
4- 234421		WASHER	C- 283618-010V
4- 234517		PIN	C- 283610-010V
			CR- 449275-010V
4- 234591		SPRING	C- 283618-010V
4- 234628		AXLE PIN	C- 268665-010V
4- 234844		WHEEL	C- 469736-010V
			C- 469736-020V
			C- 268656-010V
			C- 283600-010V
			C- 283620-010V
3- 236628		BRACKET	C- 237776-040V
3- 236629		WALL BRACKET	C- 237776-040V
3- 236631		HANDLE	C- 237776-040V
4- 236633		HANDLE	C- 237776-040V
4- 236634		SHAFT	C- 237776-040V
4- 236901		REDUCER	C- 271387-020V
3- 237461		SUPPORT BAR	C- 295359-010V
C- 237776-040V	12422 89-05-23	PAPER GUARD	C- 751796-010V
4- 237810		PLATE	C- 229400-060V
4- 237812		PLATE	C- 229400-060V
3- 237825		BEARING	C- 232781-040V
3- 237826		BEARING	C- 232781-040V
3- 237827-0001		SHAFT	C- 232781-040V
3- 237827-0002		SHAFT	C- 232781-040V
3- 237871		CATCH	C- 272560-020V
			C- 272560-030V
4- 237873		SHAFT	C- 272560-020V
			C- 272560-030V
4- 238987		SHAFT	C- 256358-010V
3- 239399		SUPPORT BAR	C- 295359-010V
			C- 456103-010V
4- 239403		SLIDE RAIL	C- 295359-010V
			C- 456103-010V
4- 239440		SHAFT	C- 256238-020V
			C- 256238-030V
			C- 256238-040V
			C- 255957-020V
			C- 456309-010V
			C- 255957-020V
			C- 456309-010V
			C- 456309-020V
			C- 456309-030V
			C- 456309-040V
4- 240797		HANDLE	C- 256221-020V
			C- 256222-020V
			C- 256221-020V
			C- 256222-020V
			C- 256221-020V
4- 240797		HANDLE	C- 256222-020V
			C- 256221-020V
			C- 256222-020V
			C- 256221-020V
			C- 256222-020V
			C- 256221-020V
			C- 256222-020V
4- 240813		COMPRESSION SPRING	C- 294763-010V
C- 243068-0101	5054 82-02-18	INDUCTOR	C- 441742-010V
4- 243072		PLATE	C- 243068-010V
4- 243073		LOCK NUT	C- 450125-010V
4- 243075		KNOB	C- 450125-010V
4- 243076		SCREW	C- 450125-010V

PART NO	LAST AM	DESCRIPTION	GROUP NO
4- 243077		SCREW	C- 450125-010V
4- 243078		GUIDE SHAFT	C- 450125-010V
4- 243081		SECURING PLATE	C- 450125-010V
4- 243084		SPACER SLEEVE	C- 450125-010V
3- 243085		BUSBAR	C- 243068-010V
3- 243086		RAIL	C- 243068-010V
3- 243132		PROTECTION PLATE	C- 37877-030V
4- 243133		PLATE	C- 37877-030V
3- 243151		SHAFT	C- 256968-020V
			C- 456032-010V
1- 243218		BRACKET	C- 256968-020V
			C- 456032-010V
2- 243234		FRAME	C- 232781-040V
3- 245039		GUIDE ROLLER	C- 295359-010V
			C- 456103-010V
4- 245165		ASSEMBLING TOOL	C- 250610-010V
3- 245189-0001		CONNECTION	C- 295891-010V
			C- 295891-020V
			C- 295891-030V
4- 245210		BODY	C- 271649-020V
			C- 267315-010V
			C- 271649-020V
			C- 469074-010V
			C- 469074-020V
4- 245221		STOP	C- 37877-030V
3- 246342		PAPER SUPPORT	C- 295891-010V
			C- 295891-020V
			C- 295891-030V
4- 246343		BRACKET	C- 295891-010V
			C- 295891-020V
			C- 295891-030V
4- 246344		HEAT GUARD	C- 295891-010V
			C- 295891-020V
			C- 295891-030V
C- 246357-0101	6317 83-11-03	TERMINAL BLOCK	C- 272765-010V
			C- 272765-020V
C- 246388-0201	4745 81-01-16	PRESSURE ROLLER	B- 648107-020V
			B- 648107-060V
			B- 648107-070V
			B- 648107-080V
			B- 648107-090V
G3- 246501		ARM	C- 256965-020V
			C- 456546-010V
4- 246502		SHAFT	C- 256965-020V
			C- 456546-010V
			C- 456546-020V
4- 247170		BEARING COVER	C- 272004-020V
			C- 272024-020V
			C- 272004-020V
			C- 272024-020V
			C- 272004-020V
			C- 272024-020V
			C- 272004-020V
			C- 272024-020V
			C- 272004-030V
			C- 272024-030V
			C- 272004-040V
			C- 272024-030V
4- 247171		BEARING COVER	C- 256014-020V
			C- 272028-020V
			C- 256014-020V
			C- 272028-020V
4- 247172		SPACER RING	RK- 491744-010V
			C- 256014-020V
			C- 272014-020V
			C- 272028-020V
			C- 256014-020V
			C- 272014-020V
			C- 272028-020V
			C- 256014-030V
			C- 272014-030V
			C- 272028-030V
			C- 256014-030V
			C- 272014-030V
			C- 272028-030V
			C- 256014-040V
			C- 272028-040V

PART NO	LAST AM	DESCRIPTION	GROUP NO
			C- 751088-010V
			C- 256014-050V
			C- 272028-050V
			C- 751088-020V
4- 247173		BEARING SEAT	C- 256014-020V
			C- 272028-020V
			C- 256014-020V
			C- 272028-020V
			C- 256014-030V
			C- 272028-030V
			C- 256014-030V
			C- 272028-030V
			C- 256014-040V
			C- 272028-040V
			C- 272028-050V
2- 247227-0001		AIR NOZZLE	CR- 256547-020V
			CR- 256547-030V
4- 247239		WHEEL	C- 256014-020V
			C- 256014-030V
			C- 256014-040V
			C- 256014-050V
4- 247248		PIN	C- 256014-020V
			C- 256014-030V
			C- 256014-040V
			C- 256014-050V
4- 247349		GUIDE	C- 272021-020V
			C- 272021-030V
			C- 272021-040V
4- 247349		GUIDE	C- 272021-050V
4- 247350		GASKET HOLDER	C- 272021-020V
			C- 272021-030V
4- 247351		GASKET	C- 272021-020V
4- 247355		LOCK WASHER	C- 272021-020V
			C- 272021-030V
			C- 272021-040V
			C- 272021-050V
4- 247357		SPROCKET	C- 272021-040V
			C- 272021-050V
4- 247358		KNOB	C- 272021-020V
			C- 272021-030V
			C- 272021-040V
			C- 272021-050V
4- 247385		SIGN	C- 271507-020V
4- 247386		SIGN	C- 271507-020V
4- 249288		COMPRESSION SPRING	C- 283611-010V
4- 249298		ROLLER	C- 441000-020V
			C- 441000-030V
4- 249312		NUT	C- 283611-010V
4- 249323		SHIM	C- 268665-010V
2- 249326		BEARING	C- 294763-010V
4- 249336		BOLT	C- 294763-010V
4- 249342		GUIDE PLATE	C- 294763-010V
4- 249352		BOLT	C- 294763-010V
4- 249607		ROLLER	C- 268665-010V
4- 249608		SHAFT	C- 268665-010V
4- 249631		SHAFT	C- 294658-010V
4- 249634		WASHER	C- 268665-010V
C- 249650-0101	4676 80-11-10	TYPE HOLDER	C- 268665-010V
4- 249771		TYPE HOLDER	C- 249650-010V
4- 249772		PLATE	C- 249650-010V
4- 249774		PRESSURE PLATE	C- 155083-010V
4- 249776		TEFLON TAPE	C- 155083-010V
			C- 294888-010V
			C- 294887-010V
4- 250588		FLANGE	C- 256966-020V
			C- 752247-010V
			C- 752627-010V
4- 250590		BEARING COVER	C- 272028-020V
			C- 272028-030V
			C- 272028-040V
			C- 272028-050V
4- 250592		WASHER	C- 272028-020V
			C- 272028-030V
			C- 272028-040V
			C- 272028-050V
C- 250610-0101	8187 85-09-17	CABINET	B- 648109-020V
			B- 648109-030V

PART NO	LAST AM	DESCRIPTION	GROUP NO
3- 251279		COIL HEATER	C- 295668-020V
			C- 295891-010V
			C- 295668-030V
			C- 295891-020V
			C- 295668-030V
			C- 295891-020V
			C- 295668-030V
			C- 295891-030V
			C- 295668-030V
			C- 295891-030V
4- 251358		FLANGE	C- 229400-060V
			C- 237776-040V
1- 251440		FRAME	C- 229400-060V
1- 251449		COVER	C- 229400-060V
3- 251490		BRACKET	C- 295891-010V
			C- 295891-020V
			C- 295891-030V
4- 251493		FORK	C- 246388-020V
4- 251494		SHAFT	C- 246388-020V
4- 251495		SHAFT	C- 246388-020V
4- 251496		SHAFT	C- 246388-020V
4- 251498		CATCH	C- 246388-020V
4- 251501		BRACKET	C- 295891-010V
			C- 295891-020V
			C- 295891-030V
4- 251502		HEAT GUARD	C- 295891-010V
			C- 295891-020V
			C- 295891-030V
4- 251503		HOLDER	C- 295891-010V
			C- 295891-020V
			C- 295891-030V
4- 251504		HOLDER	C- 295891-010V
			C- 295891-020V
			C- 295891-030V
4- 251505		SPACER	C- 295891-010V
			C- 295891-020V
			C- 295891-030V
1- 251539		HOLDER	C- 232781-040V
4- 252766-0001		INSULATING TUBE	CR- 256547-020V
			CR- 256547-030V
4- 252766-0002		INSULATING TUBE	CR- 256547-020V
			CR- 256547-030V
4- 252926		COMPRESSION SPRING	C- 469737-010V
			C- 283622-010V
			C- 469173-010V
4- 252972		SHOULDER SCREW	C- 272839-020V
			C- 490947-010V
			C- 490947-020V
4- 253107		WASHER	C- 752645-010V
			C- 752646-010V
			C- 752913-010V
			C- 752914-010V
3- 254566		CABLE	C- 295026-010V
			C- 295026-020V
			C- 295026-030V
4- 255064		BUSHING	C- 256968-020V
			C- 456032-010V
1- 255301		HEATING RAIL	C- 37877-030V
4- 255310		CYLINDER BRACKET	C- 272343-020V
4- 255416		PLATE	C- 272343-020V
			C- 272343-030V
			C- 272343-040V
			C- 272343-050V
4- 255417		WASHER	C- 272343-020V
			C- 272343-030V
			C- 272343-040V
			C- 272343-050V
4- 255420		BENDING ROLLER	C- 229400-060V
			C- 237776-040V
1- 255510		ARM	C- 283610-010V
3- 255513		SHAFT	C- 283610-010V
			CR- 449275-010V
4- 255515		LID	C- 283610-010V
			CR- 449275-010V
4- 255516		BRACKET	C- 283610-010V
			CR- 449275-010V
4- 255519		RING	C- 283610-010V
			CR- 449275-010V
4- 255520		RING	C- 283610-010V
			CR- 449275-010V
4- 255593		SHAFT	C- 283612-010V
G1- 255609		ARM CUTTING JAW	C- 256951-020V
			C- 256952-020V
			C- 256951-020V
			C- 256952-020V
			C- 256951-030V
			C- 256952-030V
			C- 256951-030V
			C- 256952-030V
			C- 256951-040V
			C- 256952-040V
			C- 256951-040V
			C- 256952-040V
4- 255653		BUSHING	CR- 256204-020V
			CR- 256205-020V
			CR- 256212-020V
			CR- 256213-020V
			C- 256951-020V
			C- 256952-020V
			CR- 256204-020V
			CR- 256205-020V
			CR- 256212-020V
			CR- 256213-020V
			C- 256951-020V
			C- 256952-020V
			CR- 256204-030V
			CR- 256205-030V
			CR- 256212-030V
			CR- 256213-030V
			C- 256951-030V
			C- 256952-030V
			CR- 256204-040V
			CR- 256205-040V
			CR- 256212-040V
			CR- 256213-040V
			C- 256951-030V
			C- 256952-030V
			CR- 256204-040V
			CR- 256205-040V
			CR- 256212-040V
			CR- 256213-040V
			C- 256951-040V
			C- 256952-040V
			CR- 256204-050V
			CR- 256205-050V
			CR- 256212-050V
			CR- 256213-050V
			C- 256951-040V
4- 255653		BUSHING	C- 256952-040V
			RK- 456712-010V
4- 255695		ROLLER	C- 441000-020V
4- 255697-0001		CONNECTION PIPE	CR- 256204-020V
			CR- 256205-020V
			CR- 256212-020V
			CR- 256213-020V
			CR- 256204-020V
			CR- 256205-020V
			CR- 256212-020V
			CR- 256213-020V
			CR- 256204-030V
			CR- 256205-030V
			CR- 256212-030V
			CR- 256213-030V
4- 255697-0002		CONNECTION PIPE	CR- 256204-020V
			CR- 256205-020V
			CR- 256212-020V
			CR- 256213-020V
			CR- 256204-020V
			CR- 256205-020V
			CR- 256212-020V
			CR- 256213-020V
			CR- 256204-030V
			CR- 256205-030V
			CR- 256212-030V

PART NO	LAST AM	DESCRIPTION	GROUP NO
			CR- 256213-030V
4- 255742		COMPRESSION SPRING	CR- 256204-020V
			CR- 256205-020V
			CR- 256204-020V
			CR- 256205-020V
			CR- 256204-030V
			CR- 256205-030V
			CR- 256204-040V
			CR- 256205-040V
			CR- 256204-040V
			CR- 256205-040V
			CR- 256204-050V
			CR- 256205-050V
4- 255783		SPACER RING	C- 256965-020V
			C- 456546-010V
			C- 456546-020V
4- 255801		RETAINING RING	CR- 256204-020V
			CR- 256205-020V
			CR- 256204-020V
			CR- 256205-020V
			CR- 256204-030V
			CR- 256205-030V
			CR- 256204-040V
			CR- 256205-040V
			CR- 256204-040V
			CR- 256205-040V
			CR- 256204-050V
			CR- 256205-050V
3- 255830		HOLDER	C- 256843-020V
4- 255831		LEG	C- 256843-020V
3- 255843		GUARD RIGHT	C- 256219-020V
			C- 256219-030V
3- 255844		GUARD LEFT	C- 256220-020V
3- 255844		GUARD LEFT	C- 256220-030V
3- 255862		PULLEY	C- 256965-020V
			C- 456546-010V
			C- 456546-020V
2- 255870		VALVE HOUSING	C- 256084-020V
			C- 256084-030V
			C- 256084-040V
3- 255871		BLOCK	C- 256084-020V
			C- 256084-030V
			C- 256084-040V
3- 255872		BRACKET	C- 256084-020V
			C- 256084-030V
4- 255874		BEARING COVER	C- 256084-020V
			C- 256084-030V
4- 255875		BUSHING	RK- 752035-010V
			C- 256084-020V
			C- 256084-030V
			C- 256084-040V
3- 255879		PIPE	C- 256089-020V
			C- 456555-010V
			C- 456555-020V
			C- 456555-030V
3- 255897-0001		GEAR WHEEL	RK- 538413-010V
			C- 272028-020V
			C- 272028-030V
			C- 272028-040V
3- 255897-0003		GEAR WHEEL	RK- 538413-010V
			C- 272028-030V
			C- 272028-040V
3- 255897-0004		GEAR WHEEL	RK- 538413-010V
			RK- 548389-010V
			RK- 469760-010V
			C- 272028-020V
			C- 272028-030V
			C- 272028-040V
			C- 272028-050V
3- 255897-0005		GEAR WHEEL	RK- 538413-010V
			RK- 548389-010V
			C- 272028-020V
			C- 272028-030V
			C- 272028-040V
			C- 272028-050V
3- 255897-0006		GEAR WHEEL	RK- 538413-010V
			RK- 469760-010V

PART NO	LAST AM	DESCRIPTION	GROUP NO
			C- 272028-030V
			C- 272028-040V
3- 255897-0007		GEAR WHEEL	RK- 548389-010V
			C- 272028-020V
			C- 272028-030V
			C- 272028-040V
			C- 272028-050V
3- 255897-0008		GEAR WHEEL	RK- 548389-010V
			C- 272028-030V
			C- 272028-040V
			C- 272028-050V
4- 255898		HUB	C- 272028-020V
			C- 272028-030V
			C- 272028-040V
			C- 272028-050V
4- 255899		HUB	C- 272028-020V
			C- 272028-030V
			C- 272028-040V
			C- 272028-050V
3- 255905		PIPE	C- 256089-020V
			C- 456555-010V
			C- 456555-020V
			C- 456555-030V
C- 255907-020V	6311 83-11-16	CHUTE	B- 648102-020V
			B- 648102-030V
3- 255910		PLATE	C- 272014-020V
3- 255911		PLATE	C- 272014-020V
3- 255916		CAM	C- 456953-010V
			C- 256236-020V
			C- 295112-020V
			C- 456348-010V
			C- 456349-010V
			C- 456348-020V
			C- 456349-020V
			C- 456348-020V
			C- 456349-020V
			C- 272014-020V
			C- 272014-030V
			C- 751088-010V
			C- 441736-010V
			C- 456953-010V
C- 255921-020V	6317 83-11-03	FILLING PIPE	B- 648111-020V
			B- 648111-030V
C- 255921-030V	9284 86-07-02	FILLING PIPE	B- 648111-060V
C- 255921-040V	13673 89-09-11	LOWER FILLING TUBE	B- 648111-070V
			B- 648111-080V
			B- 648111-090V
4- 255924		LOCK	C- 255921-020V
CR- 255933-020V	7595 85-02-26	STATION CHAIN	B- 648105-020V
			B- 648105-030V
			B- 648105-040V
CR- 255933-030V	9584 86-09-08	STATION CHAIN	B- 648105-060V
			B- 648105-070V
4- 255935		SHAFT	CR- 255933-020V
4- 255936		BUSHING	CR- 255933-020V
4- 255937		ROLLER	CR- 255933-020V
4- 255938		CAM ROLLER	CR- 255933-020V
4- 255939		WASHER	C- 255907-020V
			C- 456180-010V
4- 255940		SPACER	C- 255907-020V
			C- 456180-010V
3- 255942		SLIDER	C- 255907-020V
			C- 456180-010V
3- 255943		HOLDER	C- 255907-020V
			C- 456180-010V
4- 255952-0001		SPACER	C- 272014-020V
4- 255952-0002		SPACER	C- 272014-020V
4- 255952-0003		SPACER	C- 272014-020V
4- 255952-0004		SPACER	C- 272014-020V
4- 255952-0007		SPACER	C- 272014-020V
C- 255957-020V	6445 84-01-10	LOWER FORMING RING	B- 648111-020V
			B- 648111-030V
2- 255958		FORMING RING	C- 255957-020V
3- 255959		BEARING HOLDER	C- 255957-020V
3- 255960		BEARING HOLDER	C- 255957-020V
3- 255962		CYLINDER BRACKET	C- 255957-020V
4- 255969		SHAFT	C- 256238-020V

PART NO	LAST AM	DESCRIPTION	GROUP NO
			C- 256238-030V
			C- 256238-040V
			C- 255957-020V
			C- 456309-010V
			C- 255957-020V
			C- 456309-010V
			C- 456309-020V
			C- 456309-030V
			C- 456309-040V
4- 255970		BUSHING	C- 256238-020V
			C- 256238-030V
			C- 256238-040V
			C- 255957-020V
			C- 456309-010V
			C- 255957-020V
			C- 456309-010V
			C- 456309-020V
			C- 456309-030V
4- 255971		BUSHING	C- 456309-040V
			C- 256238-020V
			C- 256238-030V
			C- 255957-020V
			C- 456309-010V
			C- 255957-020V
4- 255972		BEARING PLATE	C- 456309-010V
			C- 456309-020V
			C- 256238-020V
			C- 256238-030V
			C- 255957-020V
			C- 456309-010V
			C- 255957-020V
			C- 456309-010V
4- 255974		BRACKET	C- 456309-020V
			C- 256238-020V
			C- 256238-030V
			C- 255957-020V
			C- 456309-010V
			C- 255957-020V
			C- 456309-010V
4- 255977		SHAFT	C- 456309-020V
			C- 295402-020V
			C- 255982-020V
			C- 469091-010V
			C- 469091-020V
4- 255978		FORK	C- 295402-020V
			C- 255982-020V
			C- 469091-010V
			C- 469091-020V
4- 255981		NUT	C- 529933-010V
			C- 255982-020V
			C- 469091-010V
			C- 469091-020V
			C- 529933-010V
C- 255982-020V	7769 85-04-03	FILLING PIPE	B- 648111-020V
			B- 648111-030V
4- 255984-0001		CYLINDER BRACKET	C- 272025-020V
4- 255986		WHEEL	C- 272021-020V
			C- 272021-030V
			C- 272021-040V
4- 255987		BEARING COVER	C- 272021-050V
			C- 256014-020V
3- 255989		SHAFT	C- 256014-030V
			C- 272004-020V
			C- 272024-020V
			C- 272004-020V
			C- 272024-020V
			C- 272004-020V
			C- 272024-020V
			C- 272004-020V
			C- 272024-020V
4- 255995		SCREW	C- 272025-020V
			C- 272025-030V
3- 255998		BENDING ROLLER	C- 256014-020V
3- 256001		BRACKET	C- 256014-020V
			C- 256014-020V
4- 256005		GASKET	C- 256014-030V
			C- 256014-020V
			C- 256014-030V

PART NO	LAST AM	DESCRIPTION	GROUP NO
			C- 256014-040V
			C- 256014-050V
4- 256006		AXLE SUPPORT	C- 256014-020V
			C- 256014-030V
			C- 256014-040V
			C- 256014-050V
4- 256007		AXLE SUPPORT	C- 256014-020V
			C- 256014-030V
			C- 256014-040V
4- 256008		SHAFT	C- 256014-050V
			C- 256014-020V
4- 256010		NUT	C- 256014-030V
			C- 256014-020V
			C- 256014-030V
			C- 256014-040V
4- 256011		PIN	C- 256014-050V
			C- 256014-020V
4- 256012		SHAFT	C- 256014-030V
			C- 256014-020V
			C- 256014-030V
C- 256014-020V	7091 84-09-13	BATH	B- 648111-020V
			B- 648111-030V
C- 256014-030V	10002 87-01-12	BATH	B- 648111-060V
			B- 648111-070V
C- 256014-040V	12844 89-06-13	BATH	B- 648111-080V
C- 256014-050V	13604 89-11-24	BATH	B- 648111-090V
4- 256021		BUSHING	C- 272025-020V
4- 256022		BUSHING	C- 272025-020V
			C- 272025-030V
4- 256031		SHAFT	C- 257075-020V
			C- 271851-020V
			C- 257075-020V
			C- 271851-020V
			C- 257075-025V
			C- 271851-020V
			C- 257075-025V
			C- 271851-020V
C- 256055-0201	7066 84-08-31	HOT AIR ELEMENT	B- 648111-020V
C- 256055-0201		HOT AIR ELEMENT	B- 648111-030V
C- 256055-030V	7596 85-02-26	HOT AIR ELEMENT	B- 648111-060V
C- 256055-0401	9415 86-10-17	HOT AIR ELEMENT	B- 648111-070V
C- 256055-050V	9523 86-11-13	HOT AIR ELEMENT	B- 648111-080V
C- 256055-060V	12181 89-11-22	HOT AIR ELEMENT	B- 648111-090V
1- 256056		PIVOT ARM	C- 256237-020V
			C- 256237-030V
			C- 256237-040V
			C- 256055-020V
			C- 256055-030V
1- 256057		HEATING PIPE	C- 256055-040V
			C- 256237-020V
3- 256058		CABLE	C- 256237-030V
			C- 256237-020V
			C- 256237-030V
			C- 256055-020V
3- 256059		COVER	C- 256055-030V
			C- 256237-020V
			C- 256237-030V
			C- 256055-020V
4- 256061		LID	C- 256055-030V
			C- 256237-020V
			C- 256237-030V
			C- 256055-020V
4- 256063		CYLINDER BRACKET	C- 256055-030V
			C- 256055-020V
			C- 256055-030V
4- 256066		GASKET	C- 256055-040V
			C- 256237-020V
			C- 256237-030V
			C- 256055-020V
			C- 256055-030V
4- 256067		GASKET	C- 469501-010V
			C- 256237-020V
			C- 256237-030V
4- 256069		GASKET	C- 256237-040V
			C- 256237-020V
			C- 256237-030V
			C- 256055-020V

PART NO	LAST AM	DESCRIPTION	GROUP NO
			C- 256055-030V
4- 256070		GASKET	C- 256237-020V
			C- 256237-030V
			C- 256055-020V
			C- 256055-030V
4- 256073		SCREW	C- 256237-020V
			C- 256237-030V
			C- 256055-020V
			C- 256055-030V
3- 256082		CLAMP	C- 256951-020V
			C- 256952-020V
			C- 256951-020V
			C- 256952-020V
			C- 256951-030V
			C- 256952-030V
			C- 256951-030V
			C- 256952-030V
			C- 256951-040V
			C- 256952-040V
			C- 256951-040V
3- 256082		CLAMP	C- 256952-040V
C- 256084-0201	7047 84-08-29	CHANGE-OVER VALVE	B- 648111-020V
			B- 648111-030V
			B- 648111-060V
C- 256084-0301	12412 88-12-06	CHANGE-OVER VALVE	B- 648111-070V
C- 256084-040V	12181 89-11-22	CHANGE-OVER VALVE	B- 648111-080V
C- 256089-020V	6475 84-02-22	CONDUIT	B- 648111-090V
			B- 648111-020V
C- 256095-0201	9415 86-10-17	HOT AIR ELEMENT	B- 648111-030V
			B- 648111-020V
			B- 648111-030V
			B- 648111-060V
C- 256095-0301	9523 86-11-13	HOT AIR ELEMENT	B- 648111-070V
C- 256095-0401	12181 89-11-22	HOT AIR ELEMENT	B- 648111-080V
2- 256109		HEATING PIPE	B- 648111-090V
			C- 256239-020V
			C- 256239-030V
3- 256112		BRACKET	C- 256239-040V
			C- 256239-020V
			C- 256239-030V
			C- 256239-040V
			C- 256095-020V
			C- 256095-030V
			C- 256095-040V
4- 256117		BRACKET	C- 256239-020V
			C- 256095-020V
3- 256148		HOLDER	C- 257146-020V
4- 256150		SCREW	C- 257146-020V
3- 256155-0001		ARM	C- 272021-020V
3- 256155-0002		ARM	C- 272021-020V
4- 256160		COVER PLATE	C- 256233-020V
			C- 272021-020V
4- 256161		PIN	C- 256014-020V
4- 256163		SHAFT	C- 272021-020V
			C- 272021-030V
			C- 272021-040V
			C- 272021-050V
4- 256164		SHAFT	C- 272021-020V
4- 256165		SPROCKET	C- 272021-020V
			C- 272021-030V
4- 256166		SHAFT	C- 272021-020V
			C- 272021-030V
4- 256170		DRIP PLATE	C- 272021-020V
			C- 272021-030V
			C- 272021-040V
			C- 272021-050V
C- 256173-020V	7236 84-10-25	WORM GEAR	B- 648103-020V
			B- 648103-030V
			B- 648103-060V
C- 256173-030V	10858 87-11-11	WORM GEAR	B- 648103-070V
C- 256173-040V	12577 89-12-06	WORM GEAR	B- 648103-080V
3- 256174-0002		PULLEY	RK- 548388-010V
			C- 256173-020V
			C- 256173-030V
3- 256174-0003		PULLEY	RK- 538412-010V
			C- 256173-020V
			C- 256173-030V

PART NO	LAST AM	DESCRIPTION	GROUP NO
			RK- 469760-010V
3- 256175		GEAR WHEEL	C- 256173-020V
3- 256176		GEAR WHEEL	C- 256173-020V
			C- 256173-030V
			C- 256173-040V
3- 256177		SHAFT	C- 256173-020V
			C- 256173-030V
			C- 256173-040V
3- 256178		RING FASTENER	C- 256173-020V
			C- 256173-030V
			C- 256173-040V
4- 256179		SPACER SLEEVE	C- 256173-020V
			C- 256173-030V
			C- 256173-040V
4- 256180		SPACER	C- 256173-020V
			C- 256173-030V
			C- 256173-040V
4- 256181		SPACER PIPE	C- 256173-020V
			C- 256173-030V
			C- 256173-040V
C- 256185-0201	6317 83-11-03	SPROCKET	B- 648105-020V
			B- 648105-030V
			B- 648105-040V
4- 256186		LID	C- 256185-020V
4- 256189		SLEEVE	C- 272652-010V
4- 256190		NUT	C- 272652-020V
			C- 272652-030V
			C- 272652-010V
C- 256197-0201	6317 83-11-03	ARM	B- 648103-020V
			B- 648103-030V
C- 256197-0202	6317 83-11-03	ARM	B- 648103-020V
			B- 648103-030V
C- 256197-0301	10858 87-11-11	ARM	B- 648103-060V
			B- 648103-070V
C- 256197-0302	10858 87-11-11	ARM	B- 648103-060V
			B- 648103-070V
C- 256197-0401	12577 89-12-06	ARM	B- 648103-080V
C- 256197-0402	12577 89-12-06	ARM	B- 648103-080V
C- 256198-0201	6317 83-11-03	LINK ARM	B- 648103-020V
			B- 648103-030V
C- 256198-0202	6317 83-11-03	LINK ARM	B- 648103-020V
			B- 648103-030V
C- 256198-0301	7890 85-05-15	LINK ARM	B- 648103-060V
C- 256198-0302	7890 85-05-15	LINK ARM	B- 648103-060V
C- 256199-0201	6317 83-11-03	BELT TENSIONER	B- 648103-020V
			B- 648103-030V
			B- 648103-060V
C- 256199-0301	10858 87-11-11	BELT TENSIONER	B- 648103-070V
C- 256199-0401	12577 89-12-06	BELT TENSIONER	B- 648103-080V
C- 256200-0201	6317 83-11-03	INTERMEDIARY SHAFT	B- 648103-020V
C- 256200-0301	6317 83-11-03	INTERMEDIARY SHAFT	B- 648103-030V
			B- 648103-060V
			B- 648103-070V
			B- 648103-080V
C- 256201-020V	7069 84-08-31	CAM PACK	B- 648103-020V
			B- 648103-030V
			B- 648103-060V
C- 256201-030V	12207 88-10-06	CAM PACKAGE TPC	B- 648103-070V
C- 256201-040V	12577 89-12-06	CAM PACKAGE TPC	B- 648103-080V
C- 256202-020V	7069 84-08-31	CAM PACK	B- 648103-020V
			B- 648103-030V
C- 256202-020V		CAM PACK	B- 648103-060V
C- 256202-030V	12207 88-10-06	CAM PACKAGE IH	B- 648103-070V
C- 256202-040V	12577 89-12-06	CAM PACKAGE IH	B- 648103-080V
C- 256203-0201	6317 83-11-03	DOLLY	B- 648103-020V
			B- 648103-030V
C- 256203-030V	7499 85-02-11	DOLLY	B- 648103-060V
			B- 648103-070V
C- 256203-040V	12577 89-12-06	DOLLY	B- 648103-080V
CR- 256204-020V	7595 85-02-26	CUTTING JAW	B- 648104-020V
			B- 648104-030V
CR- 256204-030V	7595 85-02-26	CUTTING JAW	B- 648104-060V
CR- 256204-040V	13230 89-06-20	CUTTING JAW RIGHT	B- 648104-070V
			B- 648104-080V
CR- 256204-050V	12578 89-12-06	CUTTING JAW RIGHT	B- 648104-090V
CR- 256205-020V	7595 85-02-26	CUTTING JAW	B- 648104-020V
			B- 648104-030V

PART NO	LAST AM	DESCRIPTION	GROUP NO
CR- 256205-030V	7595 85-02-26	CUTTING JAW	B- 648104-060V B- 648104-070V B- 648104-080V B- 648104-090V B- 648104-020V B- 648104-030V B- 648104-060V B- 648104-070V B- 648104-080V B- 648104-090V B- 648104-020V B- 648104-030V B- 648104-060V B- 648104-070V B- 648104-080V B- 648104-090V B- 648104-020V B- 648104-030V B- 648104-060V B- 648104-070V B- 648104-080V B- 648104-090V B- 648104-020V B- 648104-030V B- 648104-060V B- 648104-070V B- 648104-080V B- 648104-090V B- 648104-020V B- 648104-030V B- 648104-060V B- 648104-070V B- 648104-080V B- 648104-090V B- 648104-020V B- 648104-030V B- 648104-060V B- 648104-070V B- 648104-080V B- 648104-090V B- 648104-020V B- 648104-030V B- 648104-060V B- 648104-070V B- 648104-080V B- 648104-090V B- 648104-020V B- 648104-030V B- 648104-060V B- 648104-070V B- 648104-080V B- 648104-090V B- 648104-020V B- 648104-030V B- 648104-060V B- 648104-070V B- 648104-080V B- 648104-090V B- 648104-020V B- 648104-030V B- 648104-060V B- 648104-070V B- 648104-080V B- 648104-090V B- 648104-020V B- 648104-030V B- 648104-060V B- 648104-070V B- 648104-080V B- 648104-090V B- 648104-020V B- 648104-030V B- 648104-060V B- 648104-070V B- 648104-080V B- 648104-090V B- 648104-020V
CR- 256205-040V	13230 89-06-20	CUTTING JAW	
CR- 256205-050V	12578 89-12-06	CUTTING JAW LEFT	
C- 256206-020V	12500 88-11-16	INTERMITTENT FEED DEVICE	
C- 256207-020V	12500 88-11-16	INTERMITTENT FEED DEVICE	
CR- 256208-020V	7595 85-02-26	KNIFE HOLDER	
CR- 256208-030V	7595 85-02-26	KNIFE HOLDER	
CR- 256209-020V	13607 89-09-04	VOLUME FLAP	
CR- 256209-030V	12578 89-12-06	VOLUME FLAP	
CR- 256210-020V	13607 89-09-04	VOLUME FLAP	
CR- 256210-030V	12578 89-12-06	VOLUME FLAP	
CR- 256212-020V	7595 85-02-26	PRESSURE JAW	
CR- 256212-030V	7892 85-05-02	PRESSURE JAW	
CR- 256212-040V	13607 89-09-04	PRESSURE JAW RIGHT	
CR- 256212-050V	12578 89-12-06	PRESSURE JAW RIGHT	
CR- 256213-020V	7595 85-02-26	PRESSURE JAW	
CR- 256213-030V	7892 85-05-02	PRESSURE JAW	
CR- 256213-040V	13607 89-09-04	PRESSURE JAW LEFT	
CR- 256213-050V	12578 89-12-06	PRESSURE JAW LEFT	
CR- 256214-020V	7595 85-02-26	PRESSURE RAIL	
CR- 256214-030V	14291 89-12-19	PRESSURE RAIL	
CR- 256215-020V	7595 85-02-26	PRESSURE RAIL	
CR- 256215-030V	9716 86-10-27	PRESSURE RAIL	
C- 256217-0201	6317 83-11-03	GUIDE	
C- 256217-0301	7464 85-01-24	GUIDE	
C- 256217-0401	7033 84-08-08	GUIDE	
C- 256219-020V	6299 83-11-23	TRANSMISSION	
C- 256219-030V	8446 85-11-27	TRANSMISSION RIGHT	
C- 256220-020V	6299 83-11-23	TRANSMISSION	
C- 256220-030V	8446 85-11-27	TRANSMISSION LEFT	
C- 256221-020V	13607 89-09-04	VOLUM CURVE PIECE	

PART NO	LAST AM	DESCRIPTION	GROUP NO
C- 256222-020V	13607 89-09-04	VOLUME CAM PIECE, IH	B- 648104-030V B- 648104-060V B- 648104-070V B- 648104-080V B- 648104-090V B- 648104-020V B- 648104-030V B- 648104-060V B- 648104-070V B- 648104-080V B- 648104-090V B- 648104-020V B- 648104-030V B- 648104-060V B- 648104-070V B- 648104-080V B- 648104-090V B- 648101-020V B- 648101-060V B- 648101-070V B- 648101-080V B- 648101-090V B- 648101-020V B- 648101-060V B- 648101-070V B- 648101-080V B- 648101-090V B- 648101-020V B- 648101-060V B- 648101-070V B- 648101-080V B- 648101-090V B- 648101-020V B- 648101-060V B- 648101-070V B- 648101-080V B- 648101-090V B- 648101-020V B- 648101-060V B- 648101-070V B- 648101-080V B- 648101-090V B- 648101-020V B- 648101-060V B- 648101-070V B- 648101-080V B- 648101-090V B- 648101-020V B- 648101-060V B- 648101-070V B- 648101-080V B- 648101-090V C- 256234-020V C- 256234-030V C- 256234-040V C- 256234-020V C- 256234-030V C- 256234-020V C- 256234-030V C- 256234-020V C- 256234-030V C- 256234-020V C- 256234-030V C- 256234-040V C- 256234-020V C- 256234-030V
C- 256223-020V	9409 86-07-04	SUPPORT ROLLER	
C- 256223-030V	12578 89-12-06	SUPPORT ROLLER	
C- 256228-0201	6444 84-01-02	BRACKET	
C- 256229-020V	13651 89-11-23	PAPER GUIDE	
C- 256229-020V		PAPER GUIDE	
C- 256230-020V	6995 84-07-05	FILLING PIPE	
C- 256230-030V	13651 89-11-23	FILLING PIPE	
C- 256232-0201	5329 82-05-24	VALVE	
C- 256232-0301	10542 87-06-23	PRODUCT VALVE	
C- 256233-020V	8297 85-10-15	COLUMN	
C- 256233-030V	10843 87-11-26	COLUMN	
C- 256233-040V	11814 88-06-01	COLUMN	
C- 256233-050V	14454 90-02-05	COLUMN	
C- 256234-020V	7318 84-11-09	BENDING ROLLER	
C- 256234-030V	12146 88-08-30	BENDING ROLLER	
C- 256234-040V	13651 89-11-23	BENDING ROLLER	
C- 256236-020V	6698 84-05-02	DATING UNIT	
C- 256237-020V	6275 83-11-01	HOT AIR ELEMENT	
C- 256237-030V	7126 84-09-26	HOT AIR ELEMENT	
C- 256237-040V	9436 86-09-09	HOT AIR ELEMENT	
C- 256237-050V	12094 88-07-06	HOT AIR ELEMENT LS	
C- 256237-060V	13651 89-11-23	HOT AIR ELEMENT LS	
C- 256238-020V	9942 87-01-12	LOWER FORMING RING	
C- 256238-030V	9942 87-01-12	LOWER FORMING RING	
C- 256238-040V	13651 89-11-23	LOWER FORMING RING	
C- 256239-0201	10003 87-01-12	HOT AIR ELEMENT	
C- 256239-0301	10542 87-06-23	HOT AIR ELEMENT KS	
C- 256239-0401	13651 89-11-23	HOT AIR ELEMENT KS	
2- 256241		BRACKET	
3- 256242-0001		BENDING ROLLER	
3- 256242-0002		BENDING ROLLER	
3- 256243		GUARD	
3- 256244-0001		GEAR WHEEL	
3- 256245		SHAFT	

PART NO	LAST AM	DESCRIPTION	GROUP NO
			C- 256234-040V
3- 256246		CONNECTION	C- 256234-020V
			C- 256234-030V
			C- 256234-040V
4- 256247		WASHER	C- 256234-020V
			C- 256234-030V
			C- 256234-040V
4- 256248-0001		LID	C- 256236-020V
			C- 295112-020V
			C- 456321-010V
			C- 456322-010V
			C- 456348-010V
			C- 456349-010V
			C- 456321-020V
			C- 456322-020V
			C- 456348-020V
			C- 456349-020V
			C- 456321-030V
			C- 456322-030V
			C- 456348-020V
			C- 456349-020V
			C- 752645-010V
			C- 752646-010V
			C- 752913-010V
			C- 752914-010V
			C- 272445-020V
4- 256248-0002		LID	C- 256234-020V
			C- 256234-030V
			C- 256234-040V
2- 256253		FORMING RING	C- 256238-020V
			C- 256238-030V
			C- 255957-020V
3- 256255		BEARING HOLDER	C- 256238-020V
			C- 256238-030V
			C- 255957-020V
3- 256256		BEARING HOLDER	C- 256238-020V
			C- 256238-030V
4- 256258		CYLINDER BRACKET	C- 256238-020V
			C- 256238-030V
			C- 255957-020V
			C- 456309-010V
			C- 255957-020V
			C- 456309-020V
3- 256261		PIPE-LINE	C- 256232-020V
			C- 256232-030V
4- 256262		BRACKET	C- 256232-020V
			C- 256232-030V
4- 256263		HOLDER	C- 256232-020V
			C- 256232-030V
2- 256264-0001		FILLING PIPE	C- 256230-020V
4- 256265		AXLE SUPPORT	C- 256239-020V
			C- 256239-030V
			C- 256239-040V
1- 256267		BRACKET	C- 256228-020V
3- 256268		PLATE	C- 256228-020V
4- 256269		SHAFT	C- 256228-020V
4- 256270		PLATE	C- 256228-020V
4- 256271		WASHER	C- 256228-020V
C- 256272-0201	6317 83-11-03	AXLE	B- 648105-020V
			B- 648105-030V
			B- 648105-040V
3- 256274		SHAFT	C- 256272-020V
3- 256276		SHAFT	C- 256272-020V
			C- 272765-030V
			C- 272765-040V
3- 256276		SHAFT	C- 272765-050V
			C- 272765-060V
4- 256279		BRACKET	C- 272031-020V
			C- 441307-010V
			C- 272031-020V
			C- 441307-010V
			C- 441307-020V
			C- 441307-030V
4- 256280		PIN	C- 272030-020V
			C- 272031-020V
			C- 441304-010V

PART NO	LAST AM	DESCRIPTION	GROUP NO
			C- 441307-010V
			C- 272030-020V
			C- 272031-020V
			C- 441304-010V
			C- 441307-010V
			C- 441304-020V
			C- 441307-020V
			C- 441304-020V
			C- 441307-020V
			C- 441304-020V
			C- 441307-020V
			C- 441304-030V
			C- 441307-030V
4- 256302		WASHER	C- 256272-020V
4- 256303		LID	C- 256272-020V
3- 256305		BRACKET	C- 272030-020V
3- 256308		CLAMP	C- 272030-020V
4- 256309		SHAFT	C- 272030-020V
			C- 441304-010V
			C- 272030-020V
			C- 441304-010V
			C- 441304-020V
			C- 441304-030V
4- 256310		SCREW	C- 272014-020V
			C- 272030-020V
			C- 272014-020V
			C- 272030-020V
4- 256312		WASHER	C- 256233-020V
			C- 441304-010V
			C- 441304-020V
			C- 441304-030V
4- 256325		AXLE SUPPORT	C- 256237-020V
			C- 256237-030V
			C- 256237-040V
4- 256327		CYLINDER BRACKET	C- 256237-020V
			C- 256237-030V
			C- 256237-040V
4- 256329		FORK	C- 256237-020V
			C- 256237-030V
			C- 256237-040V
4- 256330		FORK	C- 256237-020V
			C- 256237-030V
			C- 256237-040V
2- 256355		BRACKET	C- 272560-020V
			C- 272560-030V
4- 256357		PROTECTIVE SLEEVE	C- 256185-020V
C- 256358-010V	6317 83-11-03	INK UNIT	C- 256236-020V
			C- 272445-020V
2- 256388-0001		GABLE	C- 256236-020V
			C- 456349-010V
			C- 456349-020V
2- 256388-0002		GABLE	C- 256236-020V
			C- 456348-010V
			C- 456348-020V
2- 256389-0001		GABLE	C- 256236-020V
			C- 456349-010V
			C- 456349-020V
2- 256389-0002		GABLE	C- 256236-020V
			C- 456348-010V
			C- 456348-020V
3- 256391-0001		BENDING ROLLER	C- 256236-020V
			C- 295112-020V
			C- 456321-010V
			C- 456322-010V
			C- 456348-010V
			C- 456349-010V
			C- 456321-020V
			C- 456322-020V
			C- 456348-020V
			C- 456349-020V
			C- 456321-030V
			C- 456322-030V
			C- 456348-020V
			C- 456349-020V
			C- 272445-020V
3- 256392-0001		SHAFT	C- 256236-020V
			C- 456321-010V

PART NO	LAST AM	DESCRIPTION	GROUP NO
			C- 456322-010V C- 456348-010V C- 456349-010V C- 456321-020V C- 456322-020V C- 456348-020V C- 456349-020V C- 456321-030V C- 456322-030V C- 456348-020V C- 456349-020V C- 272445-020V
3- 256392-0003		SHAFT	C- 456321-010V C- 456322-010V C- 456348-010V C- 456349-010V C- 456321-020V C- 456322-020V C- 456348-020V C- 456349-020V C- 456321-030V C- 456322-030V C- 456348-020V C- 456349-020V C- 256236-020V C- 256236-020V C- 456348-010V C- 456349-010V C- 456348-020V
3- 256393-0001		SHAFT	C- 456349-020V C- 456348-020V C- 456349-020V C- 456348-020V C- 456349-020V C- 456348-020V C- 456349-020V C- 256236-020V C- 295112-020V C- 295276-020V C- 295112-020V C- 295276-020V C- 295112-020V C- 295276-020V C- 295112-020V C- 295276-020V C- 456321-010V C- 456322-010V C- 456348-010V C- 456349-010V C- 456321-020V C- 456322-020V C- 456348-020V C- 456349-020V C- 456321-030V C- 456322-030V C- 456348-020V C- 456349-020V C- 752645-010V C- 752646-010V C- 752913-010V C- 752914-010V C- 272445-020V C- 256236-020V C- 456321-010V C- 456322-010V C- 456348-010V C- 456349-010V C- 456321-020V C- 456322-020V C- 456348-020V C- 456349-020V C- 456321-030V C- 456322-030V C- 456348-020V C- 456349-020V C- 272445-020V C- 256236-020V C- 456321-010V C- 456322-010V C- 456348-010V C- 456349-010V
3- 256395		COVER	
4- 256398		LID	
4- 256399-0001		SHAFT	
4- 256400		SHAFT	

PART NO	LAST AM	DESCRIPTION	GROUP NO
			C- 456321-020V C- 456322-020V C- 456348-020V C- 456349-020V C- 456321-030V C- 456322-030V C- 456348-020V C- 456349-020V C- 752645-010V C- 752648-010V C- 752913-010V C- 752914-010V C- 272445-020V
4- 256400		SHAFT	C- 256236-020V C- 272445-020V C- 256236-020V C- 456321-010V C- 456322-010V C- 456348-010V C- 456349-010V C- 456321-020V C- 456322-020V C- 456348-020V C- 456349-020V C- 456321-030V C- 456322-030V C- 456348-020V C- 456349-020V C- 272445-020V C- 256236-020V C- 272445-020V C- 256236-020V C- 272445-020V RK- 751468-010V C- 256236-020V C- 295112-020V C- 456321-010V C- 456322-010V C- 456348-010V C- 456349-010V C- 456321-020V C- 456322-020V C- 456348-020V C- 456349-020V C- 456321-030V C- 456322-030V C- 456348-020V C- 456349-020V C- 752645-010V C- 752648-010V C- 752913-010V C- 752914-010V C- 272445-020V RK- 751468-010V C- 256236-020V C- 295112-020V C- 456321-010V C- 456322-010V C- 456348-010V C- 456349-010V C- 456321-020V C- 456322-020V C- 456348-020V C- 456349-020V C- 456321-030V C- 456322-030V C- 456348-020V C- 456349-020V C- 272445-020V C- 256236-020V C- 295112-020V C- 456321-010V C- 456322-010V C- 456348-010V C- 456349-010V C- 456321-020V C- 456322-020V
4- 256402		BEARING BRACKET	
4- 256403		TOOTHED WHEEL	
4- 256404		BRACKET	
4- 256405		BRACKET	
4- 256406		SIDE PLATE	
4- 256408-0001		SPACER	
4- 256409		WASHER	
4- 256409		WASHER	

PART NO	LAST AM	DESCRIPTION	GROUP NO
			C- 456348-020V
			C- 456349-020V
			C- 456321-030V
			C- 456322-030V
			C- 456348-020V
			C- 456349-020V
			C- 752645-010V
			C- 752646-010V
			C- 752913-010V
			C- 752914-010V
			C- 272445-020V
C- 256410-0201	6940 84-08-15	INDEXING UNIT	B- 648105-020V
			B- 648105-030V
			B- 648105-040V
C- 256410-0301	9585 86-09-11	INDEXING UNIT	B- 648105-060V
			B- 648105-070V
C- 256410-0401	9514 86-11-26	INDEXING UNIT	B- 648105-080V
C- 256410-0501	14278 90-01-05	INDEXING UNIT	B- 648105-090V
4- 256411		SLEEVE	C- 256410-020V
4- 256412		GUIDE PLATE	C- 256410-020V
			C- 256410-030V
			C- 256410-040V
3- 256415		BEARING HOLDER	C- 256197-020V
			C- 256198-020V
			C- 256197-020V
			C- 256198-020V
			C- 256197-030V
			C- 256198-030V
			C- 256197-030V
			C- 491814-010V
			C- 491815-010V
			C- 256197-040V
			C- 491814-010V
			C- 491815-010V
3- 256418		BEARING BRACKET	C- 256198-020V
			C- 256198-030V
			C- 491814-010V
4- 256421		PULLEY	C- 256197-020V
			C- 256197-030V
			C- 256197-040V
4- 256422		WASHER	C- 256197-020V
			C- 256198-020V
			C- 256197-020V
			C- 256198-020V
			C- 256197-030V
			C- 256198-030V
			C- 256197-030V
			C- 491814-010V
			C- 491815-010V
			C- 256197-040V
			C- 491814-010V
			C- 491815-010V
4- 256426-0001		WASHER	C- 256197-020V
4- 256426-0001		WASHER	C- 256198-020V
			C- 256197-020V
			C- 256198-020V
			C- 256197-030V
			C- 256198-030V
			C- 256197-030V
			C- 491814-010V
			C- 491815-010V
			C- 256197-040V
			C- 491814-010V
			C- 491815-010V
4- 256426-0002		WASHER	C- 256197-020V
			C- 256198-020V
			C- 256197-020V
			C- 256198-020V
			C- 256197-030V
			C- 256198-030V
			C- 256197-030V
			C- 491814-010V
			C- 491815-010V
			C- 256197-040V
			C- 491814-010V
			C- 491815-010V
4- 256427		SHAFT	C- 256197-020V

PART NO	LAST AM	DESCRIPTION	GROUP NO
			C- 256198-020V
			C- 256197-020V
			C- 256198-020V
			C- 256197-030V
			C- 256198-030V
			C- 256197-030V
			C- 491814-010V
			C- 491815-010V
			C- 256197-040V
			C- 491814-010V
			C- 491815-010V
3- 256429		ROLLER	C- 295276-020V
3- 256430		BRACKET	C- 295276-020V
4- 256431		SPACER	C- 295276-020V
4- 256433		ROD	C- 295276-020V
CR- 256436-020V	8057 85-06-27	PRESSURE DEVICE	B- 648105-020V
			B- 648105-030V
			B- 648105-040V
			B- 648105-060V
CR- 256436-030V	8482 86-01-08	PRESSURE DEVICE	B- 648105-070V
CR- 256436-040V	13111 89-06-02	PRESSURE DEVICE	B- 648105-080V
CR- 256436-050V	12530 90-01-05	PRESSURE DEVICE	B- 648105-090V
C- 256437-0201	7911 85-06-11	DISC COUPLING	B- 648105-020V
			B- 648105-030V
			B- 648105-040V
			B- 648105-060V
			B- 648105-070V
			B- 648105-080V
			B- 648105-090V
C- 256438-0201	8267 85-10-14	WORM GEAR	B- 648105-020V
			B- 648105-030V
			B- 648105-040V
			B- 648105-060V
			B- 648105-070V
			B- 648105-080V
C- 256438-0201		WORM GEAR	B- 648105-090V
3- 256439-0001		SPINDLE	CR- 256436-020V
			CR- 256436-030V
3- 256439-0002		SPINDLE	CR- 256436-020V
			CR- 256436-030V
3- 256439-0003		SPINDLE	CR- 256436-020V
			CR- 256436-030V
3- 256439-0004		SPINDLE	CR- 256436-020V
			CR- 256436-030V
3- 256439-0006		SPINDLE	CR- 256436-020V
			CR- 256436-030V
3- 256439-0007		SPINDLE	CR- 256436-020V
			CR- 256436-030V
4- 256454		WASHER	C- 271114-020V
			C- 271866-020V
			C- 272381-020V
4- 256455		COMPRESSION SPRING	CR- 256436-020V
			CR- 256436-030V
4- 256457		ARM	CR- 256436-020V
			CR- 256436-030V
			CR- 256436-040V
4- 256458-0001		SHAFT	CR- 256436-020V
			CR- 256436-030V
			CR- 256436-040V
4- 256458-0002		SHAFT	CR- 256436-020V
			CR- 256436-030V
			CR- 256436-040V
4- 256460		SLEEVE	CR- 256436-020V
			CR- 256436-030V
			CR- 256436-040V
4- 256461		PIN	CR- 256436-020V
			CR- 256436-030V
			CR- 256436-040V
			CR- 256436-050V
4- 256462		SCREW	CR- 256436-020V
			CR- 256436-030V
			CR- 256436-040V
			CR- 256436-050V
4- 256463		WASHER	CR- 256436-020V
			CR- 256436-030V
			CR- 256436-040V
			CR- 256436-050V

PART NO	LAST AM	DESCRIPTION	GROUP NO
1- 256471		BEARING HOUSING	CR- 256212-020V CR- 256213-020V CR- 256212-020V CR- 256213-020V C- 256197-020V C- 256198-020V C- 256203-020V C- 256197-020V C- 256198-020V C- 256203-020V C- 256197-030V C- 256198-030V C- 256203-030V C- 256197-030V C- 256203-030V C- 491814-010V C- 491815-010V
4- 256472		WASHER	C- 256197-040V C- 491814-010V C- 491815-010V CR- 256204-020V CR- 256205-020V CR- 256204-020V CR- 256205-020V CR- 256204-030V CR- 256205-030V CR- 256204-040V CR- 256205-040V CR- 256204-040V CR- 256205-040V CR- 256204-050V CR- 256205-050V
4- 256472		WASHER	C- 256233-020V C- 272021-020V C- 256203-020V C- 256203-030V C- 256198-020V C- 256198-030V C- 491814-010V C- 491815-010V C- 491814-010V C- 491815-010V C- 256198-020V C- 256203-020V C- 256198-020V C- 256203-020V C- 256198-030V C- 256203-030V C- 491814-010V C- 491815-010V C- 491814-010V C- 491815-010V C- 256198-020V C- 256198-030V C- 491814-010V C- 491815-010V C- 491814-010V C- 491815-010V C- 256203-020V C- 256203-030V C- 256203-040V C- 256203-020V C- 256203-030V C- 256203-040V CR- 256212-020V CR- 256213-020V CR- 256212-020V CR- 256213-020V CR- 256208-020V C- 295523-020V CR- 256208-020V C- 295523-020V B- 648105-020V B- 648105-030V B- 648105-040V B- 648105-060V B- 648105-070V B- 648105-080V B- 648105-090V CR- 256547-020V CR- 256547-030V CR- 256547-020V B- 648102-020V B- 648102-030V CR- 256212-020V CR- 256213-020V CR- 256212-020V CR- 256213-020V CR- 256212-030V CR- 256213-030V CR- 256212-040V CR- 256213-040V CR- 256212-040V CR- 256213-040V CR- 256212-050V CR- 256213-050V RK- 456712-010V CR- 256212-020V CR- 256213-020V CR- 256212-020V CR- 256213-020V CR- 256212-030V CR- 256213-030V CR- 256212-040V CR- 256213-040V CR- 256212-040V CR- 256213-040V CR- 256212-050V CR- 256213-050V RK- 456712-010V CR- 256212-020V CR- 256213-020V CR- 256212-020V CR- 256213-020V CR- 256212-030V CR- 256213-030V CR- 256212-040V CR- 256213-040V CR- 256212-040V CR- 256213-040V CR- 256212-050V CR- 256213-050V RK- 456712-010V CR- 256212-020V CR- 256213-020V CR- 256212-020V CR- 256213-020V CR- 256212-030V CR- 256213-030V CR- 256212-040V CR- 256213-040V CR- 256212-040V CR- 256213-040V CR- 256212-050V CR- 256213-050V RK- 456712-010V CR- 256212-020V CR- 256213-020V CR- 256212-020V CR- 256213-020V CR- 256212-030V CR- 256213-030V CR- 256212-040V CR- 256213-040V CR- 256212-040V CR- 256213-040V CR- 256212-050V CR- 256213-050V RK- 456712-010V CR- 256212-020V CR- 256213-020V CR- 256212-020V CR- 256213-020V CR- 256212-030V CR- 256213-030V CR- 256212-040V CR- 256213-040V CR- 256212-040V CR- 256213-040V CR- 256212-050V CR- 256213-050V RK- 456712-010V CR- 256212-020V CR- 256213-020V CR- 256212-020V CR- 256213-020V CR- 256212-030V CR- 256213-030V CR- 256212-040V CR- 256213-040V CR- 256212-040V CR- 256213-040V CR- 256212-050V CR- 256213-050V
1- 256487		CUTTING JAW	
3- 256492		COVER	
3- 256514		SHAFT	
3- 256515		END PIECE	
4- 256516		CLAMP	
4- 256517		SCREW	
4- 256518		SHAFT	
4- 256519		SPRING HOLDER	
1- 256538		BEARING HOUSING	
4- 256541		PIN	
CR- 256547-020V	7911 85-06-11	ELEMENT	
CR- 256547-030V	9627 86-10-17	ELEMENT	

PART NO	LAST AM	DESCRIPTION	GROUP NO
1- 256548		HEATING CHAMBER	
1- 256549		SPACER PIECE	
C- 256555-020V	5932 83-05-10	MACHINE BODY	
C- 256555-030V	6501 84-02-08	MACHINE BODY	
4- 256557-0001		WASHER	
4- 256557-0002		WASHER	
4- 256557-0003		WASHER	
4- 256573		CONNECTION	
4- 256574		CONNECTION	
4- 256576		ROLLER	
4- 256576		ROLLER	
4- 256577		SHAFT	
1- 256594		HOUSE	
4- 256607		AXLE PIN	

PART NO	LAST AM	DESCRIPTION	GROUP NO
			CR- 256204-050V
			CR- 256205-050V
4- 256621		WASHER	C- 256206-020V
			C- 256207-020V
			C- 256206-020V
			C- 256207-020V
			C- 256206-020V
			C- 256207-020V
			C- 256206-020V
			C- 256207-020V
			C- 256206-020V
			C- 256207-020V
			C- 256206-020V
			C- 256207-020V
4- 256626		EAR	CR- 256204-020V
			CR- 256205-020V
			CR- 256204-020V
			CR- 256205-020V
			CR- 256204-030V
			CR- 256205-030V
			CR- 256204-040V
			CR- 256205-040V
			CR- 256204-040V
			CR- 256205-040V
			CR- 256204-050V
			CR- 256205-050V
4- 256628		BLOCK	C- 256951-020V
			C- 256952-020V
			C- 256951-020V
			C- 256952-020V
			C- 256951-030V
			C- 256952-030V
			C- 256951-030V
			C- 256952-030V
			C- 256951-040V
			C- 256952-040V
			C- 256951-040V
			C- 256952-040V
4- 256629-0001		AXLE PIN	C- 256951-020V
			C- 256952-020V
4- 256629-0001		AXLE PIN	C- 256951-020V
			C- 256952-020V
			C- 256951-030V
			C- 256952-030V
			C- 256951-030V
			C- 256952-030V
			C- 256951-040V
			C- 256952-040V
			C- 256951-040V
			C- 256952-040V
4- 256629-0003		AXLE PIN	C- 256951-020V
			C- 256952-020V
			C- 256951-020V
			C- 256952-020V
			C- 256951-030V
			C- 256952-030V
			C- 256951-030V
			C- 256952-030V
			C- 256951-040V
			C- 256952-040V
			C- 256951-040V
			C- 256952-040V
3- 256640		HOLDER	C- 271113-020V
			C- 456588-010V
			C- 456588-020V
			C- 456588-030V
4- 256641		LEG	C- 271113-020V
			C- 456588-010V
			C- 456588-020V
			C- 456588-030V
4- 256653		SPACER	C- 256201-020V
			C- 256202-020V
			C- 256201-020V
			C- 256202-020V
			C- 256201-020V
			C- 256202-020V
			C- 256201-030V

PART NO	LAST AM	DESCRIPTION	GROUP NO
			C- 256202-030V
			C- 256201-040V
			C- 256202-040V
3- 256659		ROD	CR- 256204-020V
			CR- 256205-020V
			CR- 256204-020V
			CR- 256205-020V
			CR- 256204-030V
			CR- 256205-030V
			CR- 256204-040V
			CR- 256205-040V
			CR- 256204-040V
			CR- 256205-040V
			CR- 256204-050V
			CR- 256205-050V
C- 256665-0201	10505 87-06-22	COVER	B- 648102-020V
			B- 648102-030V
			B- 648102-060V
			B- 648102-070V
			B- 648102-080V
			B- 648102-090V
C- 256665-0202	10505 87-06-22	COVER	B- 648102-020V
C- 256665-0202		COVER	B- 648102-030V
			B- 648102-060V
			B- 648102-070V
			B- 648102-080V
			B- 648102-090V
C- 256674-0201	7344 85-02-12	BOTTOM VALVE	B- 648105-020V
			B- 648105-030V
			B- 648105-040V
			B- 648105-060V
			B- 648105-070V
			B- 648105-080V
C- 256674-0301	12530 90-01-05	BOTTOM VALVE	B- 648105-090V
3- 256689		AIR NOZZLE	C- 256095-020V
			C- 256095-030V
			C- 256095-040V
1- 256692		CARRIER	CR- 256205-020V
			CR- 256205-030V
			CR- 256205-040V
			CR- 256205-050V
1- 256693		CARRIER	CR- 256204-020V
			CR- 256204-030V
			CR- 256204-040V
			CR- 256204-050V
4- 256704		WASHER	C- 256951-020V
			C- 256952-020V
			C- 256951-020V
			C- 256952-020V
			C- 256951-030V
			C- 256952-030V
			C- 256951-030V
			C- 256952-030V
			C- 256951-040V
			C- 256952-040V
			C- 256951-040V
			C- 256952-040V
4- 256705		SHIM	C- 256206-020V
			C- 256207-020V
			C- 256206-020V
			C- 256207-020V
			C- 256208-020V
			C- 256207-020V
			C- 256208-020V
			C- 256207-020V
			C- 256208-020V
			C- 256207-020V
			C- 256206-020V
			C- 256207-020V
4- 256706		BEARING PLATE	CR- 256204-020V
			CR- 256205-020V
			CR- 256204-020V
			CR- 256205-020V
			CR- 256204-030V
			CR- 256205-030V
			CR- 256204-040V
			CR- 256205-040V

PART NO	LAST AM	DESCRIPTION	GROUP NO
			CR- 256204-040V
			CR- 256205-040V
			CR- 256204-050V
			CR- 256205-050V
4- 256707		BRACKET	C- 256206-020V
			C- 256207-020V
			C- 256206-020V
			C- 256207-020V
			C- 256206-020V
			C- 256207-020V
			C- 256206-020V
			C- 256207-020V
			C- 256206-020V
			C- 256207-020V
			C- 256206-020V
4- 256710		SHAFT	C- 256207-020V
			C- 256951-020V
			C- 256952-020V
			C- 256951-020V
			C- 256952-020V
			C- 256951-030V
			C- 256952-030V
			C- 256951-030V
			C- 256952-030V
			C- 256951-040V
			C- 256952-040V
			C- 256951-040V
			C- 256952-040V
CR- 256712-020V	8057 85-06-27	RETRIEVER	B- 648105-020V
			B- 648105-030V
			B- 648105-040V
			B- 648105-060V
CR- 256712-030V	8482 86-01-08	RETRIEVER	B- 648105-070V
CR- 256712-040V	13111 89-06-02	RETRIEVER	B- 648105-080V
CR- 256712-050V	12530 90-01-05	RETRIEVER	B- 648105-090V
4- 256727		COVER	CR- 256436-020V
			CR- 256712-020V
			CR- 256436-020V
			CR- 256712-020V
			CR- 256436-020V
			CR- 256712-020V
			CR- 256436-020V
			CR- 256712-020V
			CR- 256436-030V
			CR- 256712-030V
4- 256738		WASHER	C- 256217-020V
			C- 256217-030V
			C- 256217-040V
4- 256739		SCREW	C- 256217-020V
			C- 256217-030V
			C- 256217-040V
1- 256769		CUTTING JAW	CR- 256204-020V
			CR- 256205-020V
			CR- 256204-020V
			CR- 256205-020V
			CR- 256204-030V
			CR- 256205-030V
			CR- 256204-040V
			CR- 256205-040V
			CR- 256204-040V
			CR- 256205-040V
			CR- 256204-050V
			CR- 256205-050V
1- 256770		BEARING HOUSING	CR- 256204-020V
			CR- 256205-020V
			CR- 256204-020V
			CR- 256205-020V
			CR- 256204-030V
			CR- 256205-030V
			CR- 256204-040V
			CR- 256205-040V
			CR- 256204-040V
			CR- 256205-040V
3- 256777		BRACKET	CR- 256204-020V
			CR- 256205-020V
			CR- 256204-020V
			CR- 256205-020V

PART NO	LAST AM	DESCRIPTION	GROUP NO
			CR- 256204-030V
			CR- 256205-030V
1- 256784		BEARING HOUSING	CR- 256204-020V
			CR- 256205-020V
			CR- 256204-020V
			CR- 256205-020V
			CR- 256204-030V
			CR- 256205-030V
			CR- 256204-040V
			CR- 256205-040V
			CR- 256204-040V
			CR- 256205-040V
3- 256786		CREASE BAR	C- 272014-020V
3- 256787		CREASE BAR	C- 272014-020V
2- 256796		BUSHING	C- 256555-020V
C- 256802-0201	6940 84-08-15	SPRINKLER	B- 648105-020V
			B- 648105-030V
			B- 648105-040V
C- 256806-0201	6938 84-08-07	CRANK	B- 648103-020V
			B- 648103-030V
C- 256806-0301	7499 85-02-11	CRANK	B- 648103-060V
			B- 648103-070V
			B- 648103-080V
4- 256812		SHAFT	C- 256806-020V
			C- 256806-030V
4- 256814		WASHER	C- 256806-020V
			C- 256806-030V
4- 256815		RING	C- 256806-020V
4- 256816		PIPE	C- 256806-020V
			C- 256806-030V
4- 256828		SPRING	C- 256806-020V
			C- 256806-030V
3- 256829		SCREW	C- 256217-020V
			C- 256951-020V
			C- 256952-020V
			C- 256217-030V
			C- 256951-020V
			C- 256952-020V
			C- 256217-040V
			C- 256951-030V
			C- 256952-030V
			C- 256217-040V
			C- 256951-030V
			C- 256952-030V
3- 256829		SCREW	C- 256217-040V
			C- 256951-040V
			C- 256952-040V
			C- 256217-040V
			C- 256951-040V
4- 256831-0001		SPACER	C- 256952-040V
			C- 256951-020V
			C- 256952-020V
			C- 256951-020V
			C- 256952-020V
			C- 256951-030V
			C- 256952-030V
			C- 256951-030V
			C- 256952-030V
			C- 256951-040V
			C- 256952-040V
			C- 256951-040V
			C- 256952-040V
4- 256831-0002		SPACER	C- 256951-020V
			C- 256952-020V
			C- 256951-020V
			C- 256952-020V
			C- 256951-030V
			C- 256952-030V
			C- 256951-030V
			C- 256952-030V
			C- 256951-040V
			C- 256952-040V
			C- 256951-040V
			C- 256952-040V
4- 256831-0003		SPACER	C- 256217-020V
			C- 256951-020V
			C- 256952-020V

PART NO	LAST AM	DESCRIPTION	GROUP NO
			C- 256217-030V
			C- 256951-020V
			C- 256952-020V
			C- 256217-040V
			C- 256951-030V
			C- 256952-030V
			C- 256217-040V
			C- 256951-030V
			C- 256952-030V
			C- 256217-040V
			C- 256951-040V
			C- 256952-040V
			C- 256217-040V
			C- 256951-040V
			C- 256952-040V
4- 256831-0004		SPACER	C- 256217-020V
			C- 256217-030V
			C- 256217-040V
G1- 256834		YOKE	C- 256951-020V
			C- 256952-020V
			C- 256951-020V
			C- 256952-020V
			C- 256951-030V
			C- 256952-030V
			C- 256951-030V
			C- 256952-030V
			C- 256951-040V
G1- 256834		YOKE	C- 256952-040V
			C- 256951-040V
			C- 256952-040V
3- 256840-0001		PIPE	C- 272342-020V
			C- 456976-010V
3- 256840-0002		PIPE	C- 272342-020V
			C- 456976-010V
			C- 456976-020V
3- 256840-0003		PIPE	C- 456976-030V
			C- 456976-040V
C- 256843-0201	6602 84-05-02	MACHINE BODY	B- 648106-020V
C- 256843-030V	7326 84-12-17	MACHINE BODY	B- 648106-060V
			B- 648106-070V
C- 256843-040V	12104 88-08-17	MACHINE BODY, SERV. UNIT	B- 648106-080V
C- 256843-050V	13645 90-01-12	MACHINE BODY	B- 648106-090V
CR- 256844-020V	7595 85-02-26	SHOCK ABSORBER	B- 648104-020V
			B- 648104-030V
			B- 648104-060V
			B- 648104-070V
CR- 256844-030V	12158 88-09-05	SHOCK ABSORBER	B- 648104-080V
			B- 648110-010V
			B- 648110-060V
			B- 648110-070V
CR- 256845-020V	7595 85-02-26	SHOCK ABSORBER	B- 648104-020V
			B- 648104-030V
			B- 648104-060V
			B- 648104-070V
CR- 256845-030V	12158 88-09-05	SHOCK ABSORBER	B- 648104-080V
			B- 648110-010V
			B- 648110-060V
			B- 648110-070V
G1- 256849		VOLUMEFLAP 125 CC	CR- 256209-020V
			CR- 256210-020V
			CR- 256209-020V
			CR- 256210-020V
			CR- 256209-020V
			CR- 256210-020V
			CR- 256209-020V
			CR- 256210-020V
			CR- 256209-020V
			CR- 256210-020V
			CR- 256209-030V
			CR- 256210-030V
G1- 256850		VOLUME FLAP 200 ML	CR- 256209-020V
			CR- 256210-020V
			CR- 256209-020V
			CR- 256210-020V
			CR- 256209-020V
			CR- 256210-020V

PART NO	LAST AM	DESCRIPTION	GROUP NO
			CR- 256210-020V
			CR- 256209-020V
			CR- 256210-020V
3- 256853		STOP	CR- 256844-020V
3- 256854		STOP	CR- 256845-020V
3- 256855		STOP	CR- 256844-020V
3- 256856		STOP	CR- 256845-020V
3- 256857		HOUSE	CR- 256844-020V
3- 256858		HOUSE	CR- 256845-020V
4- 256859		SCREW	CR- 256209-020V
			CR- 256210-020V
			CR- 256209-020V
			CR- 256210-020V
			CR- 256209-020V
			CR- 256210-020V
			CR- 256209-020V
			CR- 256210-020V
			CR- 256209-020V
4- 256860		ROLLER	CR- 256210-020V
			CR- 256209-020V
			CR- 256210-020V
			CR- 256209-020V
			CR- 256210-020V
			CR- 256209-020V
			CR- 256210-020V
			CR- 256209-020V
			CR- 256210-020V
			CR- 256209-020V
			CR- 256210-020V
			CR- 256209-030V
			CR- 256210-030V
4- 256866		SHAFT	CR- 256844-020V
			CR- 256845-020V
			CR- 256844-020V
			CR- 256845-020V
			CR- 256844-020V
			CR- 256845-020V
			CR- 256844-020V
G1- 256869		ARM PRESSURE JAW	C- 256951-020V
			C- 256952-020V
			C- 256951-020V
			C- 256952-020V
			C- 256951-030V
			C- 256952-030V
			C- 256951-030V
			C- 256952-030V
			C- 256951-040V
			C- 256952-040V
			C- 256951-040V
			C- 256952-040V
3- 256870		BRACKET	C- 256951-020V
			C- 256952-020V
			C- 256951-020V
			C- 256952-020V
			C- 256951-030V
			C- 256952-030V
			C- 256951-030V
			C- 256952-030V
			C- 256951-040V
			C- 256952-040V
			C- 256951-040V
			C- 256952-040V
1- 256871		COLUMN	C- 256233-020V
C- 256873-0201	12427 88-12-08	DOOR	B- 648106-020V
			B- 648106-060V
C- 256873-0201		DOOR	B- 648106-070V
			B- 648106-080V
C- 256873-0401	13806 89-11-22	DOOR	B- 648106-090V
C- 256875-0201	5614 82-12-15	COVER	B- 648106-020V
			B- 648106-060V
			B- 648106-070V
			B- 648106-080V
			B- 648106-090V
4- 256876		CYLINDER BRACKET	C- 256084-020V

PART NO	LAST AM	DESCRIPTION	GROUP NO
4- 256882		WASHER	CR- 256214-020V CR- 256215-020V CR- 256214-020V CR- 256215-020V CR- 256214-020V CR- 256215-020V CR- 256214-020V CR- 256215-020V CR- 256214-030V CR- 256215-030V CR- 256214-030V CR- 256215-030V
4- 256889		PLUNGER	C- 256951-020V C- 256952-020V C- 256951-020V C- 256952-020V C- 256951-030V C- 256952-030V C- 256951-030V C- 256952-030V C- 256951-040V C- 256952-040V
4- 256890		SHIM	C- 256951-040V C- 256952-040V C- 256951-020V C- 256952-020V C- 256951-020V C- 256952-020V C- 256951-030V C- 256952-030V C- 256951-030V C- 256952-030V C- 256951-040V C- 256952-040V
4- 256891		SHIM	C- 256951-040V C- 256952-040V C- 256951-020V C- 256952-020V C- 256951-020V C- 256952-020V C- 256951-030V C- 256952-030V C- 256951-030V C- 256952-030V C- 256951-040V C- 256952-040V
4- 256899		SHAFT	C- 469501-020V C- 469501-030V
4- 256899		SHAFT	C- 469501-010V C- 469501-020V C- 469501-030V
4- 256907		WASHER	RK- 751462-010V C- 256802-020V C- 456455-010V C- 456455-020V
4- 256908		WASHER	C- 271113-020V
4- 256912		PIN	C- 256199-020V C- 256199-030V C- 256199-040V
4- 256913		ROLLER	C- 256199-020V
4- 256914		SPACER RING	C- 256199-020V C- 256199-030V
4- 256915		SPACER RING	C- 256199-020V C- 256199-030V C- 256199-040V
4- 256916		STRUT	C- 256199-020V C- 256199-030V C- 256199-040V
4- 256918		WASHER	C- 256199-020V C- 256199-030V C- 256199-040V
3- 256920		ANGLE BRACKET	C- 441088-010V C- 441092-010V C- 441088-010V C- 441092-010V

PART NO	LAST AM	DESCRIPTION	GROUP NO
			C- 441088-010V C- 441092-010V C- 441088-010V C- 441092-010V C- 441088-010V C- 441092-010V
3- 256948		GASKET	C- 295256-020V
C- 256951-0201	6299 83-11-23	YOKE	B- 648104-020V B- 648104-030V B- 648104-060V B- 648104-070V B- 648104-080V B- 648104-090V
C- 256951-0301	6300 84-01-09	YOKE	B- 648104-020V B- 648104-030V B- 648104-060V B- 648104-070V B- 648104-080V B- 648104-090V
C- 256951-0401	8691 86-02-17	YOKE	C- 256951-020V C- 256951-030V C- 256951-040V
C- 256952-0201	6299 83-11-23	YOKE	C- 256952-020V C- 256952-030V C- 256952-040V
C- 256952-0301	6300 84-01-09	YOKE	B- 648106-020V B- 648107-020V B- 648107-060V B- 648107-070V B- 648107-080V B- 648107-020V
C- 256952-0401	8691 86-02-17	YOKE	B- 648107-060V B- 648107-070V B- 648107-080V B- 648107-020V B- 648102-020V B- 648102-030V B- 648102-060V B- 648102-070V B- 648102-080V B- 648102-090V
2- 256953		BLOCK RIGHT	C- 256973-020V C- 256973-030V C- 256973-020V C- 256973-030V C- 256973-020V C- 256973-030V C- 256973-020V C- 256973-030V C- 256973-020V C- 256973-030V C- 256965-020V C- 456546-010V C- 456546-020V C- 256967-020V C- 456919-010V C- 256967-020V C- 456919-010V C- 256967-020V C- 456919-010V
2- 256954		BLOCK LEFT	C- 752247-010V C- 752628-010V C- 256966-020V C- 256967-020V C- 256966-020V C- 256967-020V C- 456919-010V C- 256966-020V C- 256967-020V C- 456919-010V C- 256966-020V C- 256967-020V C- 456919-010V C- 752247-010V C- 752627-010V C- 256966-020V C- 256968-020V
C- 256965-020V	7887 85-05-20	IMPULSE TRANSMITTER	
C- 256966-020V	9596 86-09-05	BENDING ROLLER BRACKET	
C- 256967-0201	6317 83-11-03	BENDING ROLLER	
C- 256967-0201		BENDING ROLLER	
C- 256968-0201	7720 85-04-30	STRIP GUIDE	
C- 256973-020V	6501 84-02-08	TRANSMISSION	
C- 256973-030V	7944 85-05-14	TRANSMISSION	
3- 256975		GUARD	
4- 256976		PLATE	
4- 256977-0001		WASHER	
4- 256977-0002		WASHER	
4- 256977-0003		WASHER	
3- 256983		SHAFT	
3- 256984		BENDING ROLLER	
4- 256985		SHAFT	
4- 256986-0001		STRUT	
4- 256986-0002		STRUT	

PART NO	LAST AM	DESCRIPTION	GROUP NO
			C- 456032-010V
4- 256986-0003		STRUT	C- 456032-010V
4- 256986-0004		STRUT	C- 456032-010V
4- 256986-0005		STRUT	C- 295891-020V
			C- 295891-030V
4- 256986-0006		STRUT	C- 295891-020V
			C- 295891-030V
4- 256986-0007		STRUT	C- 295891-020V
			C- 295891-030V
4- 256987		SECURING PLATE	C- 256965-020V
			C- 456546-010V
G3- 256992		BRACKET	C- 456546-020V
G3- 256993		BRACKET	C- 256967-020V
2- 256998		HOSE HOLDER	C- 256967-020V
2- 256999		HOSE HOLDER	C- 257382-020V
4- 257000		NIPPLE	C- 257381-020V
			C- 257381-020V
			C- 257382-020V
			C- 257381-020V
			C- 257382-020V
			C- 257381-030V
			C- 257382-030V
			C- 257381-030V
			C- 257382-030V
			C- 257381-030V
			C- 257382-030V
			C- 257381-030V
			C- 257382-030V
4- 257004		PIN	C- 256223-020V
4- 257024		SHAFT	C- 256965-020V
			C- 456546-010V
			C- 456546-020V
3- 257025		DRIP GUARD	C- 256228-020V
3- 257040		FORK	C- 256238-020V
			C- 256238-030V
			C- 256238-040V
			C- 255957-020V
			C- 456309-010V
			C- 255957-020V
			C- 456309-010V
			C- 456309-020V
			C- 456309-030V
			C- 456309-040V
3- 257041		FORK	C- 255957-020V
			C- 456309-020V
			C- 456309-030V
			C- 456309-040V
4- 257042		BRACKET	C- 256238-020V
			C- 256238-030V
			C- 256238-040V
			C- 255957-020V
			C- 456309-010V
			C- 255957-020V
			C- 456309-010V
			C- 456309-020V
			C- 456309-030V
			C- 456309-040V
4- 257043		ANGLE BRACKET	C- 256238-020V
			C- 256238-030V
			C- 256238-040V
			C- 255957-020V
			C- 456309-010V
			C- 255957-020V
			C- 456309-010V
			C- 456309-020V
			C- 456309-030V
			C- 456309-040V
4- 257044		ROLLER	C- 256238-020V
			C- 256238-030V
			C- 256238-040V
			C- 255957-020V
			C- 456309-010V
			C- 255957-020V
4- 257044		ROLLER	C- 456309-010V
			C- 456309-020V
			C- 456309-030V
			C- 456309-040V

PART NO	LAST AM	DESCRIPTION	GROUP NO
4- 257050		SHAFT	C- 256238-020V
			C- 256238-030V
			C- 256238-040V
			C- 255957-020V
			C- 456309-010V
			C- 255957-020V
			C- 456309-010V
			C- 456309-020V
			C- 456309-030V
			C- 456309-040V
3- 257074		BENDING ROLLER	C- 272028-020V
C- 257075-020V	6668 84-03-29	DOOR	B- 648111-020V
			B- 648111-030V
C- 257075-0251	6669 84-03-21	DOOR	B- 648111-060V
			B- 648111-070V
4- 257089		PLATE	C- 272030-020V
			C- 441304-010V
			C- 272030-020V
			C- 441304-010V
			C- 441304-020V
			C- 441304-030V
4- 257090		KNOB	C- 441102-010V
			C- 441102-020V
			C- 272030-020V
			C- 441304-010V
			C- 272030-020V
			C- 441304-010V
			C- 441304-020V
			C- 441304-030V
3- 257097		FLANGE	C- 255921-020V
			C- 255921-030V
4- 257101		LOCK	C- 256230-020V
			C- 255921-020V
			C- 255921-030V
3- 257105		CLAMP	C- 272031-020V
4- 257133		LID	C- 271116-020V
			C- 271116-030V
4- 257141		RETAINING RING	C- 256236-020V
			C- 295112-020V
			C- 456321-010V
			C- 456322-010V
			C- 456348-010V
			C- 456349-010V
			C- 456321-020V
			C- 456322-020V
			C- 456348-020V
			C- 456349-020V
			C- 456321-030V
			C- 456322-030V
			C- 456348-020V
			C- 456349-020V
			C- 752645-010V
			C- 752646-010V
			C- 752913-010V
			C- 752914-010V
4- 257141		RETAINING RING	C- 272445-020V
C- 257146-0201	5385 82-07-08	LID	B- 648106-020V
			B- 648106-060V
			B- 648106-070V
			B- 648106-080V
			B- 648106-090V
4- 257151		BRACKET	C- 271469-020V
C- 257166-020V	7235 84-11-01	PAPER GUIDE	B- 648111-020V
			B- 648111-030V
C- 257166-0301	7210 84-10-19	PAPER GUIDE	B- 648111-060V
			B- 648111-070V
4- 257174		SEALING WASHER	C- 256173-020V
			C- 256173-030V
			C- 256173-040V
4- 257175		WASHER	C- 255982-020V
			C- 271274-020V
			C- 272342-020V
			C- 441304-010V
			C- 441486-010V
			C- 255982-020V
			C- 271274-020V
			C- 441304-010V

PART NO	LAST AM	DESCRIPTION	GROUP NO
			C- 441488-010V
			C- 456976-010V
			C- 441486-020V
			C- 441486-030V
			C- 441486-040V
4- 257179		GEAR WHEEL	C- 256173-020V
			C- 256806-020V
			C- 256173-020V
			C- 256806-020V
			C- 256173-020V
			C- 256806-030V
			C- 256173-030V
			C- 256806-030V
			C- 256173-040V
			C- 256806-030V
4- 257190		JUNCTION BLOCK	C- 271261-020V
			C- 271261-030V
			C- 271261-040V
			C- 271261-050V
4- 257199		STRUT	RK- 456804-010V
			C- 272381-020V
			C- 272381-030V
4- 257200		WASHER	RK- 456804-010V
			C- 272381-020V
			C- 272381-030V
4- 257201		WASHER	RK- 456804-010V
			C- 272381-020V
			C- 272381-030V
4- 257202		STRAINER	RK- 491591-030V
			C- 491243-030V
			C- 272381-020V
			C- 491243-030V
			C- 751373-010V
4- 257209		FLANGE	C- 272381-020V
4- 257213		BUSHING	C- 256951-020V
			C- 256952-020V
			C- 256951-020V
257213		BUSHING	C- 256952-020V
			C- 256951-030V
			C- 256952-030V
			C- 256951-030V
			C- 256952-030V
			C- 256951-040V
			C- 256952-040V
			C- 256951-040V
			C- 256952-040V
4- 257214		WASHER	C- 256173-020V
4- 257224		CLAMP	C- 271017-020V
			C- 271017-030V
4- 257231		WINDOW	C- 256665-020V
			C- 271114-040V
3- 257248		CATCH	CR- 256212-020V
			CR- 256213-020V
			CR- 256212-020V
			CR- 256213-020V
			CR- 256212-030V
4- 257249		SCREW	CR- 256213-030V
			CR- 256212-020V
			CR- 256213-020V
			CR- 256212-020V
			CR- 256213-020V
			CR- 256212-030V
			CR- 256213-030V
			CR- 256212-040V
			CR- 256213-040V
			CR- 256212-040V
			CR- 256213-040V
			CR- 256212-050V
			CR- 256213-050V
			RK- 456712-010V
G4- 257250		LID	CR- 256212-020V
			CR- 256213-020V
			CR- 256212-020V
			CR- 256213-020V
			CR- 256212-030V
			CR- 256213-030V
			CR- 256212-040V

PART NO	LAST AM	DESCRIPTION	GROUP NO
			CR- 256213-040V
			CR- 256212-040V
			CR- 256213-040V
			CR- 256212-050V
			CR- 256213-050V
			RK- 456712-010V
4- 257271		STOP	C- 271469-020V
4- 257306		ROLLER	C- 256197-020V
			C- 256197-030V
			C- 256197-040V
4- 257308		SCREW	C- 256197-020V
			C- 256197-030V
			C- 256197-040V
4- 257309		SHAFT	C- 256197-020V
			C- 256198-020V
			C- 256197-020V
			C- 256198-020V
			C- 256197-030V
			C- 256198-030V
4- 257309		SHAFT	C- 256197-030V
			C- 491787-010V
			C- 491788-010V
			C- 256197-040V
			C- 491787-020V
			C- 491788-020V
4- 257310		NUT	C- 256197-020V
			C- 256198-020V
			C- 256197-020V
			C- 256198-020V
			C- 256197-030V
			C- 256198-030V
			C- 256197-030V
			C- 491787-010V
			C- 491788-010V
			C- 256197-040V
			C- 491787-020V
			C- 491788-020V
4- 257311		CLAMP	C- 256197-020V
			C- 256198-020V
			C- 256197-020V
			C- 256198-020V
			C- 256197-030V
			C- 256198-030V
			C- 256197-030V
			C- 491787-010V
			C- 491788-010V
			C- 491814-010V
			C- 491815-010V
			C- 256197-040V
			C- 491787-020V
			C- 491788-020V
			C- 491814-010V
			C- 491815-010V
4- 257314		SCREW	C- 256198-020V
			C- 256198-030V
4- 257316		BRACKET	C- 295276-020V
4- 257317		SHIM	C- 256951-020V
			C- 256952-020V
			C- 256951-020V
			C- 256952-020V
			C- 256951-030V
			C- 256952-030V
			C- 256951-030V
			C- 256952-030V
			C- 256951-040V
			C- 256952-040V
			C- 256951-040V
			C- 256952-040V
2- 257326		CRANK	C- 256806-020V
			C- 256806-030V
4- 257327		SLIDER	C- 256806-020V
			C- 256806-030V
4- 257328		END PIECE	C- 256806-020V
			C- 256806-030V
4- 257330		PRESSURE ROLLER	C- 529933-010V
			C- 295687-020V
			C- 255982-020V

PART NO	LAST AM	DESCRIPTION	GROUP NO
			C- 295778-010V
4- 257330		PRESSURE ROLLER	C- 255982-020V
			C- 295778-010V
			C- 295778-020V
			C- 469091-010V
			C- 295778-030V
			C- 469091-010V
			C- 295778-030V
			C- 469091-020V
			C- 295778-040V
			C- 469091-020V
			C- 529933-010V
4- 257334		LEAF SPRING	C- 256206-020V
			C- 256207-020V
			C- 256206-020V
			C- 256207-020V
			C- 256206-020V
			C- 256207-020V
			C- 256206-020V
			C- 256207-020V
			C- 256206-020V
			C- 256207-020V
3- 257335		PIPE	C- 295045-020V
3- 257336		PIPE	C- 295045-020V
3- 257337		PIPE	C- 295045-020V
3- 257338		PIPE	C- 295045-020V
3- 257341		GUIDE	C- 256951-020V
			C- 256952-020V
			C- 256951-020V
			C- 256952-020V
			C- 256951-030V
			C- 256952-030V
			C- 256951-030V
			C- 256952-030V
4- 257347		WASHER	C- 256200-020V
3- 257349		CATCH	CR- 256204-020V
			CR- 256205-020V
			CR- 256204-020V
			CR- 256205-020V
			CR- 256204-030V
			CR- 256205-030V
1- 257360		CARRIER	CR- 256212-020V
1- 257361		CARRIER	CR- 256213-020V
4- 257362		SHIM	CR- 256204-020V
			CR- 256205-020V
			CR- 256204-020V
			CR- 256205-020V
			CR- 256204-030V
			CR- 256205-030V
			CR- 256204-040V
			CR- 256205-040V
			CR- 256204-040V
			CR- 256205-040V
			CR- 256204-050V
			CR- 256205-050V
4- 257363		COMPRESSION SPRING	CR- 256212-020V
			CR- 256213-020V
4- 257363		COMPRESSION SPRING	CR- 256212-020V
4- 257364		COMPRESSION SPRING	CR- 256213-020V
			CR- 256212-020V
			CR- 256213-020V
			CR- 256212-020V
			CR- 256213-020V
3- 257379		HYDRAULIC PIPE RIGHT	C- 257381-020V
			C- 257381-030V
3- 257380		HYDRAULIC PIPE LEFT	C- 257382-020V
			C- 257382-030V
C- 257381-0201	6486 84-02-15	CONNECTION BLOCK	B- 648104-020V
			B- 648104-030V
C- 257381-0301	6300 84-01-09	CONNECTION BLOCK	B- 648104-060V
			B- 648104-070V
			B- 648104-080V
			B- 648104-090V
C- 257382-0201	6486 84-02-15	CONNECTION BLOCK	B- 648104-020V
			B- 648104-030V

PART NO	LAST AM	DESCRIPTION	GROUP NO
C- 257382-0301	6300 84-01-09	CONNECTION BLOCK	B- 648104-060V
			B- 648104-070V
			B- 648104-080V
			B- 648104-090V
4- 257393-0001		NUT	C- 256221-020V
			C- 256222-020V
			C- 256221-020V
			C- 256222-020V
			C- 256221-020V
			C- 256222-020V
			C- 256221-020V
			C- 256222-020V
			C- 256221-020V
			C- 256222-020V
4- 257393-0002		NUT	C- 256221-020V
			C- 256222-020V
			C- 256221-020V
			C- 256222-020V
			C- 256221-020V
			C- 256222-020V
			C- 256221-020V
			C- 256222-020V
			C- 256221-020V
			C- 256222-020V
4- 257395		WASHER	C- 256221-020V
			C- 256222-020V
			C- 256221-020V
			C- 256222-020V
			C- 256221-020V
			C- 256222-020V
			C- 256221-020V
			C- 256222-020V
			C- 256221-020V
			C- 256222-020V
			C- 256221-020V
			C- 256222-020V
4- 257397		PIN	RK- 548056-010V
			C- 272508-010V
4- 257397		PIN	C- 469535-010V
			C- 553657-010V
			C- 752042-010V
4- 257690		SHAFT	C- 283618-010V
			CR- 283618-020V
4- 257696		HUB	C- 283618-010V
			CR- 283618-020V
4- 257707		BRACKET	C- 283617-010V
			CR- 283607-010V
4- 257708		PLATE	C- 283617-010V
			CR- 283607-010V
4- 257710		PIN	C- 283617-010V
			CR- 283605-010V
4- 257711		BLOCK	C- 283617-010V
			CR- 283605-010V
4- 257712		SHAFT	C- 283617-010V
			CR- 283605-010V
4- 257722		SHAFT	C- 256234-020V
			C- 256234-030V
			C- 256234-040V
3- 257875		HUB	C- 294522-010V
			C- 283626-010V
			C- 283626-020V
			C- 283626-030V
3- 257876		GEAR WHEEL	C- 294522-010V
			C- 283626-010V
			C- 283626-020V
			C- 283626-030V
4- 257883		PULLEY	C- 294522-010V
			C- 283626-010V
			C- 283626-020V
			C- 283626-030V
4- 257923		GUIDE ROLLER	C- 256968-020V
			C- 456032-010V
3- 259580		FLOAT	C- 256230-020V

PART NO	LAST AM	DESCRIPTION	GROUP NO
			C- 255921-020V
			C- 255921-030V
4- 259761		TOOTHED PULLY	C- 283618-010V
			CR- 283618-020V
4- 259762		TOOTHED PULLY	C- 283618-010V
			CR- 283618-020V
4- 259783-0001		COUNTER JAW	C- 283611-010V
4- 259783-0003		COUNTER JAW	RK- 547782-010V
			C- 449388-010V
4- 259783-0004		COUNTER JAW	C- 449388-010V
4- 259793-0002		ROLLER	C- 283618-010V
4- 259807		WASHER	CR- 256547-020V
			CR- 256547-030V
4- 259816		ROLLER	C- 283618-010V
			CR- 283618-020V
4- 260427		WASHER	CR- 256436-050V
4- 260986		BRACKET	C- 294763-010V
4- 260989		PRESSURE PLATE	C- 294767-010V
			C- 456607-010V
4- 260991		PRESSURE PLATE	C- 294767-010V
			C- 456607-010V
4- 260992		JIG	C- 294767-010V
			C- 456607-010V
4- 260996		CONNECTION	C- 294763-010V
4- 260997		GUIDE	C- 294763-010V
4- 260998		ROD	C- 294763-010V
3- 260999		LEVER	C- 294763-010V
4- 261001		CONNECTION	C- 294763-010V
4- 261028		BOLT	C- 294763-010V
3- 261224		BRACKET	C- 294763-010V
4- 261226		BRACKET	C- 294763-010V
3- 261237		KNIFE	C- 283618-010V
4- 261691		GUIDE	C- 294767-010V
3- 261692		BRACKET	C- 294767-010V
3- 261693		GUARD	C- 294767-010V
4- 261939		RUBBER	C- 155083-010V
4- 262183		BUSHING	C- 271115-020V
4- 263062		PRESSURE ROLLER	C- 295402-020V
			C- 295667-030V
			C- 295402-020V
			C- 295667-030V
			C- 295402-020V
			C- 295667-030V
3- 263150		BRACKET	C- 271934-020V
			C- 271934-030V
			RK- 491324-010V
			C- 752030-010V
4- 263152		SHAFT	C- 271934-020V
			C- 271934-030V
			RK- 491324-010V
			C- 752030-010V
4- 263153		NUT	C- 271934-020V
			C- 271934-030V
			RK- 491324-010V
			C- 752030-010V
4- 263156		SHAFT	C- 283617-010V
			CR- 283605-010V
4- 263311		WASHER	C- 456274-010V
			C- 256014-020V
			C- 271274-020V
			C- 272025-020V
			C- 272623-020V
			C- 256014-020V
			C- 271274-020V
			C- 272025-020V
			C- 272623-020V
			C- 272025-020V
			C- 272025-030V
			C- 456274-010V
P4- 263401		ELECTRICAL CONNECTION	CR- 256547-020V
4- 263496		GEAR WHEEL	C- 283623-010V
			C- 456688-010V
			C- 283623-010V
4- 263499		SPRING HOLDER	C- 294659-010V
			RK- 547300-010V
			C- 283621-010V
2- 263568		FRAME	C- 295026-010V

PART NO	LAST AM	DESCRIPTION	GROUP NO
			C- 295026-020V
			C- 295026-030V
3- 263569		LADDER	C- 295026-010V
			C- 295026-020V
			C- 295026-030V
4- 263655-0002		SHAFT	C- 441092-010V
4- 263655-0002		SHAFT	C- 441304-020V
4- 263655-0003		SHAFT	C- 441307-010V
			C- 441307-020V
4- 263655-0004		SHAFT	C- 441088-010V
			C- 272030-020V
			C- 272031-020V
			C- 441486-010V
			C- 272030-020V
			C- 272031-020V
			C- 441486-010V
			C- 441307-020V
			C- 441486-020V
			C- 441307-020V
			C- 441486-020V
			C- 441307-020V
			C- 441486-030V
4- 263655-0005		SHAFT	C- 441092-010V
			C- 441304-010V
			C- 441304-020V
4- 263655-0006		SHAFT	C- 76595-010V
			C- 76595-020V
			C- 76595-030V
			RK- 456799-010V
			C- 256238-020V
			C- 256238-030V
			C- 256238-040V
			C- 255957-020V
			C- 272030-020V
			C- 441486-010V
			C- 456309-010V
			C- 255957-020V
			C- 272030-020V
			C- 441486-010V
			C- 456309-010V
			C- 272021-030V
			C- 441486-020V
			C- 456309-020V
			C- 272021-030V
			C- 441486-020V
			C- 456309-020V
			C- 272021-040V
			C- 441486-030V
			C- 456309-030V
			C- 272021-050V
			C- 76595-010V
4- 263655-0007		SHAFT	C- 441486-020V
			C- 441486-030V
4- 263655-0008		SHAFT	C- 441102-010V
			C- 441102-020V
4- 263655-0009		SHAFT	C- 441102-010V
			C- 441102-020V
			C- 441486-010V
			C- 441486-020V
			C- 441486-030V
4- 263655-0011		SHAFT	C- 441102-010V
			C- 441102-020V
			C- 441304-020V
4- 263655-0012		SHAFT	C- 441102-010V
			C- 441102-020V
4- 263655-0013		SHAFT	C- 441092-010V
4- 263655-0014		SHAFT	C- 441088-010V
			C- 272031-020V
4- 263655-0015		SHAFT	C- 441102-010V
			C- 441102-020V
4- 263655-0016		SHAFT	C- 441092-010V
			C- 441307-020V
4- 263655-0017		SHAFT	C- 441088-010V
4- 263655-0018		SHAFT	C- 441486-020V
			C- 441486-030V
4- 263655-0019		SHAFT	C- 441304-020V
4- 263655-0021		SHAFT	C- 441307-020V

PART NO	LAST AM	DESCRIPTION	GROUP NO
4- 263673		GASKET	CR- 256547-020V
			CR- 256547-030V
4- 263700		HOLDER	C- 283618-010V
4- 263701		ROLLER	C- 283618-010V
			CR- 283618-020V
2- 265553		BRACKET	C- 295026-010V
			C- 295026-020V
			C- 295026-030V
2- 265554		LID	C- 295026-010V
			C- 295026-020V
			C- 295026-030V
2- 265555		FRAME	C- 295026-010V
			C- 295026-020V
			C- 295026-030V
2- 265556		LADDER	C- 295026-010V
			C- 295026-020V
			C- 295026-030V
2- 265563		BRACKET	C- 256966-020V
4- 265567		BEARING	C- 256966-020V
			C- 256967-020V
			C- 256966-020V
			C- 256967-020V
			C- 456919-010V
			C- 256966-020V
			C- 256967-020V
			C- 456919-010V
4- 265568		DUST COVER	C- 256966-020V
			C- 256967-020V
			C- 256966-020V
			C- 256967-020V
			C- 456919-010V
			C- 256968-020V
			C- 256967-020V
			C- 456919-010V
			C- 256968-020V
			C- 256967-020V
			C- 456919-010V
			C- 752247-010V
			C- 752627-010V
			C- 752628-010V
			C- 752645-010V
			C- 752646-010V
			C- 752913-010V
			C- 752914-010V
4- 265603		SCREW	C- 469737-010V
			C- 283622-010V
			C- 469173-010V
4- 265913		TOOTHED PULLY	C- 294522-010V
4- 265914		TOOTHED PULLY	C- 294522-010V
			C- 283626-010V
			C- 283626-020V
			C- 283626-030V
4- 265915		TOOTHED PULLY	C- 294522-010V
4- 266049		SUPPORT	C- 256968-020V
			C- 456032-010V
4- 266098-0002		DOLLY	C- 283614-010V
			C- 294887-010V
			C- 283614-010V
4- 266358		BRACKET	C- 283612-010V
4- 266359		BRACKET	C- 283612-010V
4- 266389		PISTON ROD	C- 271169-020V
			C- 272337-020V
			C- 271169-020V
			C- 272337-020V
			C- 271169-020V
			C- 272337-020V
			C- 271169-020V
			C- 272337-020V
			C- 271169-030V
			C- 272337-030V
			C- 271169-040V
			C- 272337-040V
4- 266390		NUT	C- 271169-020V
			C- 272337-020V

PART NO	LAST AM	DESCRIPTION	GROUP NO
			C- 271169-020V
			C- 272337-020V
			C- 271169-020V
			C- 272337-020V
			C- 271169-020V
			C- 272337-020V
			C- 271169-030V
			C- 272337-030V
			C- 271169-040V
			C- 272337-040V
4- 266391		RING	C- 271169-020V
			C- 272337-020V
			C- 271169-020V
			C- 272337-020V
			C- 271169-020V
			C- 272337-020V
			C- 271169-020V
			C- 272337-020V
			C- 271169-030V
			C- 272337-030V
			C- 271169-040V
			C- 272337-040V
4- 266394		BRACKET	C- 271169-020V
			C- 272337-020V
			C- 271169-020V
			C- 272337-020V
			C- 271169-020V
			C- 272337-020V
			C- 271169-020V
4- 266394		BRACKET	C- 272337-020V
2- 266416		BRACKET	C- 294522-010V
4- 266422		NUT	C- 283618-010V
			CR- 283618-020V
2- 266480		CAM	C- 283627-010V
4- 266506		HUB	C- 283627-010V
			C- 456674-010V
			C- 476349-020V
4- 266507		SHAFT	C- 283612-010V
4- 266610		GASKET	C- 456274-010V
			C- 272342-020V
			C- 295778-010V
			C- 456976-010V
			C- 295778-020V
			C- 456274-010V
4- 266710		WHEEL	C- 271934-020V
			C- 271934-030V
			RK- 491324-010V
			C- 256014-020V
2- 266727		AIR NOZZLE	C- 272343-020V
			C- 272343-030V
			C- 272343-040V
			C- 272343-050V
3- 266728		BRACKET	C- 272343-020V
			C- 272343-030V
			C- 272343-040V
			C- 272343-050V
3- 266729		ROCKER ARM	C- 272343-020V
3- 266730		HOLDER	C- 272343-020V
			C- 272343-030V
			C- 272343-040V
			C- 272343-050V
4- 266731		SHAFT	C- 272343-020V
			C- 272343-030V
			C- 272343-040V
			C- 272343-050V
4- 266732		SHAFT	C- 272343-020V
			C- 272343-030V
			C- 272343-040V
			C- 272343-050V
4- 266733		BLOCK	C- 272343-020V
			C- 272343-030V
			C- 272343-040V
			C- 272343-050V
4- 266734		CLAMP	C- 272343-020V
			C- 272343-030V
			C- 272343-040V
			C- 272343-050V

PART NO	LAST AM	DESCRIPTION	GROUP NO
4- 266737		WASHER	RK- 752035-010V
			C- 272343-020V
			C- 272343-030V
			C- 272343-040V
			C- 272343-050V
4- 266739		CABLE GLAND	C- 256084-040V
			C- 256239-020V
			C- 256239-030V
			C- 256239-040V
			C- 272343-020V
4- 266739		CABLE GLAND	C- 272343-030V
			C- 272343-040V
			C- 272343-050V
			C- 256095-020V
			C- 256095-030V
			C- 256095-040V
4- 266740-0003		SPACER	C- 256239-020V
			C- 272343-020V
			C- 272343-030V
			C- 272343-040V
			C- 272343-050V
			C- 256095-020V
4- 266752		PLATE	C- 246388-020V
3- 266822-0001		SHAFT	C- 283627-010V
3- 266822-0002		SHAFT	C- 283627-010V
3- 266822-0005		SHAFT	RK- 547300-010V
2- 267001		DOOR	C- 268656-010V
3- 267002		HOLDER	C- 268656-010V
3- 267004		ARM	C- 268656-010V
4- 267005		HANGER	C- 268658-010V
			C- 283600-010V
4- 267006		HANGER	C- 268656-010V
			C- 283600-010V
4- 267033		WASHER	C- 272021-020V
			C- 272021-030V
			C- 272021-040V
			C- 272021-050V
2- 267306		TOUCH GUARD	C- 295891-010V
			C- 295891-020V
			C- 295891-030V
3- 267309		BRACKET	C- 295891-010V
			C- 295891-020V
4- 267311		PLATE	C- 272408-020V
			C- 272408-030V
C- 267315-0101	14273 90-02-06	PAPER GUIDE	B- 648107-020V
			B- 648107-060V
			B- 648107-070V
			B- 648107-080V
2- 267316		BRACKET	C- 267315-010V
4- 267479		FLANGE	C- 283602-010V
			C- 283630-010V
			C- 283602-010V
			C- 283630-010V
3- 267494		COIL HEATER	C- 256237-020V
			C- 295667-020V
			C- 256237-030V
			C- 295667-020V
			C- 256055-020V
			C- 295778-010V
			C- 256055-020V
			C- 295778-010V
			C- 256055-030V
			C- 295778-020V
3- 267534		HOLDER	C- 283610-010V
			CR- 449275-010V
4- 267641		STUD BOLT	C- 283611-010V
4- 267686		BUSHING	C- 456274-010V
			C- 271274-020V
			C- 272623-020V
			C- 271274-020V
4- 267686		BUSHING	C- 272623-020V
			C- 456274-010V
3- 267732		BRACKET	C- 232781-040V
3- 267733		BRACKET	C- 232781-040V
1- 267795		COVER PLATE	C- 294658-010V
			C- 271274-020V
4- 267944		RING	C- 268656-010V

PART NO	LAST AM	DESCRIPTION	GROUP NO
			C- 283620-010V
4- 267945		SHAFT	C- 469736-010V
			C- 283600-010V
4- 267946		ROLLER	C- 469736-010V
			C- 283600-010V
4- 268056		TOOTHED PULLY	C- 283627-010V
			C- 456674-010V
			C- 476349-020V
4- 268059		ROLLER	C- 256238-020V
			C- 256238-030V
			C- 256238-040V
			C- 255957-020V
			C- 456309-010V
			C- 255957-020V
			C- 456309-010V
			C- 456309-020V
			C- 456309-030V
			C- 456309-040V
4- 268061		TOOTHED PULLY	C- 283618-010V
4- 268289		CAM	C- 283627-010V
			C- 456674-010V
1- 268580		ARM	C- 283617-010V
			CR- 283605-010V
4- 268583		SHAFT	C- 283612-010V
4- 268584		SHAFT	C- 283617-010V
			CR- 283605-010V
4- 268585		LID	C- 283612-010V
			C- 283617-010V
			C- 283612-010V
			C- 283617-010V
			CR- 283605-010V
			C- 283612-010V
			CR- 283605-010V
			C- 283612-010V
4- 268587		BRACKET	C- 283612-010V
			C- 283617-010V
			C- 283612-010V
			C- 283617-010V
			CR- 283605-010V
			C- 283612-010V
			CR- 283605-010V
			C- 283612-010V
4- 268588		WASHER	C- 283612-010V
			C- 283617-010V
			C- 283612-010V
			C- 283617-010V
			CR- 283605-010V
			C- 283612-010V
			CR- 283605-010V
			C- 283612-010V
3- 268640		EXTENSION PIECE	C- 232781-040V
C- 268656-0101	5909 83-05-11	MAGAZINE	B- 648108-010V
C- 268665-0101	5770 83-04-13	DATING UNIT	B- 648108-010V
4- 268691		WASHER	C- 283610-010V
			CR- 449275-010V
4- 268692		PIN	C- 283610-010V
			CR- 449275-010V
4- 268694		SHEET	C- 283617-010V
			CR- 283607-010V
2- 268914		CAM	C- 283627-010V
4- 268915		PROTRACTOR	C- 283627-010V
			C- 456674-010V
			C- 476349-020V
4- 268934		SHAFT	C- 283618-010V
			CR- 283618-020V
4- 268935		ARM	C- 283618-010V
			CR- 283618-020V
4- 269053-0001		SHAFT	C- 441000-020V
			C- 441000-030V
			C- 441000-040V
			C- 441000-050V
4- 269053-0002		SHAFT	C- 441000-020V
4- 269053-0003		SHAFT	C- 441000-020V
			C- 441000-030V
			C- 441000-040V
			C- 441000-050V
4- 269054		ARM	C- 441000-020V

PART NO	LAST AM	DESCRIPTION	GROUP NO
			C- 441000-030V
			C- 441000-040V
			C- 441000-050V
4- 269056		CATCH	C- 441000-020V
			C- 441000-030V
			C- 441000-040V
			C- 441000-050V
4- 269057		TENSION SPRING	C- 441000-020V
			C- 441000-030V
			C- 441000-040V
			C- 441000-050V
G1- 269142		GABLE	C- 283621-010V
4- 269166		BRACKET	C- 237776-040V
2- 269173-0001		SHAFT	C- 283623-010V
2- 269173-0002		SHAFT	C- 283623-010V
2- 269173-0003		SHAFT	C- 456688-010V
4- 269338		LID	C- 272623-020V
3- 269371		GRILL	C- 229400-060V
2- 269400		VALVE HOUSING	C- 271169-020V
3- 269401		HOUSE	C- 271169-020V
			C- 272337-020V
			C- 271169-020V
			C- 272337-020V
			C- 271169-020V
			C- 272337-020V
			C- 271169-020V
			C- 272337-020V
			C- 271169-030V
			C- 271169-040V
[illegible] 269425		PLATE	C- 229400-060V
[illegible] 269435		BENDING ROLLER	C- 269589-010V
[illegible]37		LID	C- 269589-010V
[illegible]38-0001		SHAFT	C- 269589-010V
[illegible]38-0002		SHAFT	C- 283624-010V
4- 269438-0003		SHAFT	C- 456612-010V
3- 269439		PLATE	C- 294659-010V
			C- 283621-010V
			C- 456696-010V
			C- 456696-020V
4- 269440		PLATE	C- 294659-010V
			C- 283621-010V
			C- 456696-010V
			C- 456696-020V
3- 269443		BRACKET	C- 456274-010V
			C- 271274-020V
			C- 469452-010V
			C- 469452-020V
			C- 751800-010V
			C- 469452-030V
			C- 751800-020V
			C- 456274-010V
4- 269450		ROLLER	C- 294658-010V
3- 269461		CONTAINER	C- 456274-010V
			C- 271274-020V
			C- 469452-010V
			C- 469452-020V
			C- 751800-010V
			C- 469452-030V
			C- 751800-020V
			C- 456274-010V
4- 269582-0001		SPRING HOLDER	C- 283604-010V
			C- 469736-020V
			C- 533903-010V
			RK- 540009-010V
			C- 283604-010V
			C- 283611-010V
			RK- 547300-010V
			RK- 547782-010V
			C- 283611-010V
			C- 449388-010V
			C- 533903-010V
C- 269589-0101	5971 83-05-11	BENDING ROLLER	B- 648108-010V
1- 269591		BRACKET	C- 268665-010V
4- 269788		SCREW	C- 294658-010V
			C- 283631-010V
			C- 457867-010V
3- 269795		PLATE	C- 269589-010V

PART NO	LAST AM	DESCRIPTION	GROUP NO
3- 269796		PLATE	C- 269589-010V
3- 269797-0001		SPACER	C- 269589-010V
3- 269798-0001		SHAFT	C- 269589-010V
3- 269798-0002		SHAFT	C- 283624-010V
			RK- 538450-010V
3- 269798-0004		SHAFT	RK- 536470-010V
			RK- 547726-010V
			C- 456612-010V
			C- 533844-010V
3- 269799-0001		SHAFT	C- 269589-010V
3- 269799-0002		SHAFT	C- 283624-010V
			RK- 538450-010V
3- 269799-0005		SHAFT	RK- 536470-010V
			RK- 547726-010V
			C- 456612-010V
			C- 533844-010V
3- 269800		PLATE	C- 269589-010V
3- 269801		PLATE	C- 269589-010V
4- 269802		SCREW	C- 283624-010V
			C- 269589-010V
4- 269803		LOCK NUT	C- 283624-010V
			RK- 536470-010V
			RK- 538450-010V
			RK- 547726-010V
			C- 269589-010V
			C- 456612-010V
			C- 533844-010V
4- 269804-0001		SHAFT	C- 269589-010V
3- 269832		PLATE	C- 268665-010V
4- 269859		BRACKET	C- 456274-010V
			C- 271274-020V
			C- 469452-010V
			C- 469452-020V
			C- 751800-010V
			C- 751800-020V
			C- 456274-010V
4- 269956		CATCH	C- 284873-010V
3- 269957-0001		BOBBIN HOLDER	C- 284873-010V
3- 269961		BRACKET	C- 237776-040V
4- 269962		THROTTLING	C- 237776-040V
4- 271007		INDICATOR	C- 256201-020V
			C- 256202-020V
			C- 256201-020V
			C- 256202-020V
			C- 256201-020V
			C- 256202-020V
			C- 256201-030V
			C- 256202-030V
			C- 256201-040V
			C- 256202-040V
4- 271011		WASHER	RK- 548056-010V
			C- 272508-010V
			C- 469535-010V
			C- 553657-010V
			C- 752042-010V
C- 271017-0201	8360 85-10-15	BENDING ROLLER	C- 272404-020V
			C- 272404-030V
			C- 272404-040V
			C- 272404-050V
C- 271017-0301	11717 89-08-27	BENDING ROLLER	C- 272404-060V
4- 271036		BRACKET	C- 256014-020V
			C- 256014-030V
2- 271040		GUARD	C- 256237-020V
			C- 256237-030V
3- 271051-0002		BLOCK LEFT	CR- 256436-020V
			CR- 256436-030V
			CR- 256436-040V
			CR- 256436-050V
3- 271051-0003		BLOCK LEFT	CR- 256436-020V
			CR- 256436-030V
			CR- 256436-040V
			CR- 256436-050V
3- 271052-0002		BLOCK RIGHT	CR- 256436-020V
			CR- 256436-030V
			CR- 256436-040V
3- 271052-0002		BLOCK RIGHT	CR- 256436-050V
3- 271052-0003		BLOCK RIGHT	CR- 256436-020V

PART NO	LAST AM	DESCRIPTION	GROUP NO
			CR- 256436-030V
			CR- 256436-040V
			CR- 256436-050V
4- 271058		WASHER	C- 256410-020V
4- 271088		SPACER	C- 271533-020V
			C- 271533-030V
			C- 491650-010V
C- 271089-020V	6441 84-01-18	GUIDE	B- 648105-020V
			B- 648105-030V
C- 271089-030V	8241 85-09-20	GUIDE	B- 648105-040V
			B- 648105-060V
4- 271100		PIN	B- 648105-070V
			C- 256951-020V
			C- 256952-020V
			C- 256951-020V
			C- 256952-020V
			C- 256951-030V
			C- 256952-030V
			C- 256951-030V
			C- 256952-030V
			C- 256951-040V
			C- 256952-040V
			C- 256951-040V
			C- 256952-040V
C- 271109-0201	6441 84-01-18	MACHINE BODY	B- 648105-020V
			B- 648105-030V
			B- 648105-040V
3- 271111-0001		CARTON STATION	CR- 255933-030V
3- 271111-0002		CARTON STATION	CR- 255933-020V
			CR- 255933-030V
3- 271111-0003		CARTON STATION	CR- 255933-020V
			CR- 255933-030V
3- 271111-0004		CARTON STATION	CR- 255933-020V
			CR- 255933-030V
3- 271111-0005		CARTON STATION	CR- 255933-030V
3- 271111-0006		CARTON STATION	CR- 255933-020V
			CR- 255933-030V
C- 271113-020V	7911 85-06-11	CLEANING SYSTEM	B- 648105-020V
			B- 648105-030V
			B- 648105-040V
C- 271114-0201	7911 85-06-11	COVERING PANEL	B- 648105-020V
			B- 648105-030V
			B- 648105-040V
C- 271114-0301	13119 89-06-02	COVERING PANEL	B- 648105-060V
			B- 648105-070V
			B- 648105-080V
C- 271114-0401	14278 90-01-05	COVERING PANEL	B- 648105-090V
C- 271115-0201	6317 83-11-03	PROTECTIVE COVER	B- 648105-020V
			B- 648105-030V
			B- 648105-040V
C- 271115-0301	7648 85-03-06	PROTECTIVE COVER	B- 648105-060V
			B- 648105-070V
			B- 648105-080V
C- 271115-0401	14278 90-01-05	PROTECTIVE COVER	B- 648105-090V
C- 271116-0201	6317 83-11-03	ANGLE ENCODER	B- 648105-020V
			B- 648105-030V
			B- 648105-040V
C- 271116-0301	12530 90-01-05	ANGULAR TRANSMITTER	B- 648105-060V
			B- 648105-070V
			B- 648105-080V
			B- 648105-090V
3- 271121		FLUSH PIPE	C- 271261-020V
			C- 271261-030V
			C- 271261-040V
			C- 271261-050V
3- 271125-0001		CARTON STATION	CR- 255933-020V
			CR- 255933-030V
3- 271125-0002		CARTON STATION	CR- 255933-030V
C- 271128-020V	6026 83-07-08	MOTOR	B- 648103-020V
C- 271128-030V	6938 84-08-07	MOTOR	B- 648103-030V
			B- 648103-060V
			B- 648103-070V
C- 271128-040V	12577 89-12-06	MOTOR	B- 648103-080V
4- 271132		SPACER	C- 256206-020V
			C- 256207-020V
			C- 256206-020V
			C- 256207-020V

PART NO	LAST AM	DESCRIPTION	GROUP NO
			C- 256206-020V
			C- 256207-020V
			C- 256206-020V
			C- 256207-020V
			C- 256206-020V
			C- 256207-020V
			C- 256206-020V
			C- 256207-020V
4- 271136		BRACKET	C- 256014-020V
2- 271160		BUSHING	C- 256555-020V
3- 271161		COVER PLATE	C- 256555-020V
			C- 256555-030V
1- 271163		BRACKET	C- 255907-020V
			C- 456180-010V
2- 271167		VALVE HOUSING	C- 272337-020V
			C- 272337-030V
			C- 272337-040V
C- 271168-0201	7766 85-04-30	BLOCK	C- 256965-020V
			C- 456546-010V
			C- 456546-020V
C- 271168-0401	13632 89-11-17	BLOCK	C- 751691-010V
C- 271169-0201	9284 86-07-02	VALVE	B- 648111-020V
			B- 648111-030V
			B- 648111-060V
			B- 648111-070V
C- 271169-0301	12754 89-06-13	VALVE	B- 648111-080V
C- 271169-0401	12366 89-11-22	VALVE	B- 648111-090V
C- 271181-0201	9415 86-10-17	AIR SUPER-HEATER	B- 648111-020V
			B- 648111-030V
			B- 648111-060V
			B- 648111-070V
C- 271181-0301	12365 89-01-02	AIR SUPER-HEATER	B- 648111-080V
C- 271181-0401	12366 89-11-22	AIR SUPER-HEATER	B- 648111-090V
2- 271183		PIPE	C- 271181-020V
			C- 271181-030V
3- 271184		DISCHARGE TRAY	C- 271181-020V
			C- 271181-030V
			C- 271181-040V
3- 271185		DISCHARGE TRAY	C- 271181-020V
3- 271185		DISCHARGE TRAY	C- 271181-030V
			C- 271181-040V
3- 271191		LID	CR- 256547-020V
			CR- 256547-030V
4- 271203		ARM	C- 272014-020V
4- 271204		SHAFT	C- 272014-020V
3- 271205		BODY	C- 272014-020V
4- 271211		WASHER	C- 752957-010V
			RK- 456793-010V
			RK- 469961-010V
			C- 271649-020V
			C- 271649-030V
			C- 752628-010V
			C- 271649-020V
			C- 469074-010V
			C- 469074-020V
3- 271214		COVER	C- 272014-020V
3- 271219		HINGE	C- 271442-020V
			C- 271443-020V
			C- 271442-020V
			C- 271443-020V
			C- 271442-030V
			C- 271443-030V
			C- 271442-030V
			C- 271443-030V
			C- 271442-030V
			C- 271443-030V
			C- 271442-030V
G3- 271220		HINGE	C- 271443-030V
			C- 271442-020V
			C- 271443-020V
			C- 271442-020V
			C- 271443-020V
			C- 271442-030V
			C- 271443-030V
			C- 271442-030V
			C- 271443-030V
			C- 271442-030V

PART NO	LAST AM	DESCRIPTION	GROUP NO
			C- 271443-030V
			C- 271442-030V
			C- 271443-030V
4- 271221		PIN	C- 271442-020V
			C- 271443-020V
			C- 271442-020V
			C- 271443-020V
			C- 271442-030V
			C- 271443-030V
			C- 271442-030V
			C- 271443-030V
			C- 271442-030V
			C- 271443-030V
4- 271222		PIN	C- 256555-020V
4- 271223		PLATE	C- 256555-020V
			C- 256555-030V
2- 271229		BOX	C- 271452-020V
1- 271230		FILLING PIPE	C- 255982-020V
3- 271239		SLEEVE	C- 458384-010V
4- 271241		SCREW	C- 458384-010V
2- 271248		PIPE	C- 272342-020V
			C- 456976-010V
2- 271249		PIPE	C- 272342-020V
			C- 456976-010V
3- 271251		GRAPH PAPER	C- 272342-020V
			C- 456976-010V
			C- 456976-020V
C- 271261-020V	5853 83-04-05	CLEANING SYSTEM	C- 271562-020V
C- 271261-030V	6197 83-10-13	CLEANING SYSTEM	C- 271562-030V
C- 271261-040V	6787 84-05-16	CLEANING SYSTEM	C- 271562-040V
			C- 271562-050V
C- 271261-050V	9059 86-05-13	CLEANING SYSTEM	C- 271562-060V
			C- 271562-070V
4- 271269		BUSHING	C- 256237-050V
			C- 256237-060V
			C- 256055-020V
			C- 256095-020V
			C- 272024-020V
			C- 256055-020V
			C- 256095-020V
			C- 272024-020V
			C- 256055-030V
			C- 256095-020V
			C- 272024-020V
			C- 256055-040V
			C- 256095-020V
			C- 272024-020V
			C- 256055-050V
			C- 256095-030V
			C- 272024-030V
			C- 256055-060V
			C- 256095-040V
			C- 272024-030V
2- 271271		BOTTOM	C- 456274-010V
			C- 271274-020V
			C- 456274-010V
C- 271274-020V	6445 84-01-10	COMPRESSOR	B- 648111-020V
			B- 648111-030V
3- 271275		COVER	C- 271274-020V
4- 271280		PIPE	C- 256014-020V
			C- 256014-030V
4- 271282		VIBRATION DAMPER	C- 456274-010V
			C- 271274-020V
			C- 456274-010V
4- 271284		BLOCK	C- 256206-020V
			C- 256207-020V
			C- 256206-020V
			C- 256207-020V
			C- 256206-020V
			C- 256207-020V
			C- 256206-020V
			C- 256207-020V
			C- 256206-020V
			C- 256207-020V
			C- 256206-020V

PART NO	LAST AM	DESCRIPTION	GROUP NO
			C- 256207-020V
4- 271311		PIPE	C- 272623-020V
4- 271316		BRACKET	C- 256095-020V
1- 271317		CAM	C- 256202-020V
			C- 256202-030V
			C- 256202-040V
1- 271318		CAM	C- 256202-020V
			C- 256202-030V
			C- 256202-040V
4- 271320		HOLDER	C- 271866-020V
			C- 271866-030V
			C- 271866-040V
			C- 271866-050V
4- 271321		HOLDER	C- 271866-020V
			C- 271866-030V
			C- 271866-040V
			C- 271866-050V
4- 271322		HOLDER	C- 271866-020V
			C- 271866-030V
			C- 271866-040V
			C- 271866-050V
4- 271323		HOLDER	C- 271533-020V
			C- 271533-030V
			C- 491650-010V
4- 271324		HOLDER	C- 271533-020V
4- 271325		HOLDER	C- 271533-020V
4- 271343		HOLDER	C- 271533-020V
			C- 271533-030V
			C- 491650-010V
4- 271344		HOLDER	C- 271533-020V
			C- 271533-030V
			C- 491650-010V
4- 271345		BRACKET	C- 256055-020V
			C- 256055-030V
			C- 256055-040V
4- 271346		FORK	C- 256055-020V
			C- 256055-030V
			C- 256055-040V
4- 271347		ARM	C- 256230-020V
			C- 256230-030V
			C- 255921-020V
			C- 255921-030V
			C- 255921-040V
4- 271348		LINK	C- 256230-020V
			C- 256230-030V
			C- 255921-020V
			C- 255921-030V
			C- 255921-040V
4- 271349		LINK	C- 256230-020V
			C- 256230-030V
			C- 255921-020V
			C- 255921-030V
			C- 255921-040V
4- 271350		THROTTLE	C- 255921-020V
			C- 255921-030V
			C- 255921-040V
4- 271351		SHEAR PIN	C- 735192-010V
			C- 256230-020V
			C- 256230-030V
			C- 255921-020V
			C- 255921-030V
			C- 255921-040V
4- 271351		SHEAR PIN	C- 735192-010V
3- 271363		FILLING PIPE	C- 255921-020V
C- 271376-020V	7911 85-06-11	CHUTE	B- 648105-020V
			B- 648105-030V
			B- 648105-040V
3- 271380		LINK	C- 271992-020V
3- 271381		STRUT	C- 271992-020V
C- 271387-0201	7911 85-06-11	SPRAY GUN	B- 648105-020V
			B- 648105-030V
			B- 648105-040V
C- 271387-0301	7122 84-10-31	SPRAY GUN	B- 648105-060V
			B- 648105-070V
			B- 648105-080V
			B- 648105-090V
4- 271403		LID	C- 272381-020V

PART NO	LAST AM	DESCRIPTION	GROUP NO
1- 271405		DISTRIBUTOR BLOCK LEFT	C- 271533-020V
C- 271414-0201	6317 83-11-03	AIR JET GUN	B- 648102-020V
			B- 648102-030V
			B- 648102-060V
			B- 648102-070V
			B- 648102-080V
			B- 648102-090V
2- 271415		CONNECTION	C- 271485-020V
2- 271416		CONNECTION	C- 295256-020V
			C- 271485-020V
			C- 271485-030V
4- 271419		FORK	C- 256238-040V
			C- 255957-020V
			C- 456309-010V
			C- 255957-020V
			C- 456309-010V
			C- 456309-020V
			C- 456309-030V
			C- 456309-040V
4- 271420		BRACKET	C- 256238-040V
			C- 255957-020V
			C- 456309-010V
			C- 255957-020V
			C- 456309-010V
			C- 456309-020V
			C- 456309-030V
4- 271421		HOLDER	C- 456309-040V
			C- 256238-040V
			C- 255957-020V
			C- 456309-010V
			C- 255957-020V
			C- 456309-010V
			C- 456309-020V
			C- 456309-030V
4- 271422		SPRING	C- 456309-040V
			C- 256238-040V
			C- 255957-020V
			C- 456309-010V
			C- 255957-020V
			C- 456309-010V
			C- 456309-020V
			C- 456309-030V
			C- 456309-040V
4- 271423-0001		SHAFT	C- 256238-040V
4- 271423-0001		SHAFT	C- 255957-020V
			C- 456309-010V
			C- 255957-020V
			C- 456309-010V
			C- 456309-020V
			C- 456309-030V
			C- 456309-040V
4- 271423-0002		SHAFT	C- 272014-020V
			C- 272014-030V
4- 271423-0005		SHAFT	C- 256237-020V
			C- 256237-030V
			C- 256237-040V
			C- 256055-020V
			C- 256055-030V
			C- 256055-040V
4- 271424		HOLDER	C- 271443-020V
1- 271425		DISTRIBUTOR BLOCK RIGHT	C- 271533-020V
			C- 271533-030V
3- 271428		HOLDER	C- 271992-020V
3- 271433		PIPE	C- 271113-020V
			C- 456588-010V
			C- 456588-020V
			C- 456588-030V
4- 271435		WASHER	C- 271113-020V
			C- 456588-010V
			C- 456588-020V
			C- 456588-030V
4- 271437		GASKET	C- 271113-020V
4- 271441		BRACKET	C- 256236-020V
			C- 456321-010V
			C- 456322-010V
			C- 456348-010V
			C- 456349-010V

PART NO	LAST AM	DESCRIPTION	GROUP NO
			C- 456321-020V
			C- 456322-020V
			C- 456348-020V
			C- 456349-020V
			C- 456321-030V
			C- 456322-030V
			C- 456348-020V
			C- 456349-020V
			C- 272445-020V
C- 271442-0201	6736 84-05-07	DOOR	B- 648102-020V
			B- 648102-030V
C- 271442-0301	12933 89-04-19	SIDE DOOR LEFT	B- 648102-060V
			B- 648102-070V
			B- 648102-080V
C- 271443-0201	6736 84-05-07	DOOR	B- 648102-090V
			B- 648102-020V
C- 271443-0301	10505 87-06-22	SIDE DOOR RIGHT	B- 648102-030V
			B- 648102-060V
			B- 648102-070V
			B- 648102-080V
4- 271445		HOLDER	B- 648102-090V
3- 271451		BRACKET	C- 271442-020V
C- 271452-0201	9017 86-03-13	PUMP	C- 271452-020V
			B- 648106-020V
			B- 648106-060V
C- 271453-0201	9017 86-03-13	LUBRICANT CONTAINER	B- 648106-070V
			B- 648106-020V
C- 271453-0301	9286 86-06-11	LUBRICANT CONTAINER	B- 648106-060V
C- 271454-0201	6317 83-11-03	CATCH HANDLE	B- 648106-070V
			C- 272404-020V
			C- 272404-030V
			C- 272404-040V
			C- 272404-050V
			C- 272404-060V
4- 271456		CATCH	C- 271469-020V
4- 271457		CATCH	C- 271469-020V
4- 271461		GASKET	C- 456274-010V
			C- 271274-020V
			C- 295778-010V
			C- 271274-020V
			C- 295778-010V
			C- 295778-020V
			C- 469452-010V
			C- 295778-030V
			C- 469452-010V
			C- 295778-030V
			C- 469452-020V
			C- 751800-010V
			C- 295778-040V
			C- 469452-030V
			C- 751800-020V
			C- 456274-010V
C- 271468-0201	6317 83-11-03	GUIDE	B- 648106-020V
			B- 648106-060V
			B- 648106-070V
			B- 648106-080V
C- 271468-0401	13632 89-11-17	GUIDE	B- 648106-090V
C- 271469-0201	6317 83-11-03	GUIDE	B- 648106-020V
			B- 648106-060V
			B- 648106-070V
			B- 648106-080V
			B- 648106-090V
3- 271472		BRACKET	C- 271468-020V
			C- 271468-040V
3- 271473		COVER	C- 272014-020V
4- 271478		PLATE	C- 271109-020V
			C- 456455-010V
			C- 456455-020V
4- 271484		HOLDER	C- 272833-010V
			C- 272882-010V
			C- 295188-010V
			C- 272833-010V
			C- 272882-010V
			C- 295188-010V
C- 271485-020V	6276 83-11-11	AIR NOZZLE	B- 648111-020V
			B- 648111-030V
C- 271485-0301	7532 85-02-14	AIR NOZZLE	B- 648111-060V

PART NO	LAST AM	DESCRIPTION	GROUP NO
3- 271488		PLATE	C- 272030-020V
3- 271489		PLATE	C- 272031-020V
2- 271497		BRACKET	C- 271274-020V
4- 271498		ELECTRICAL CONNECTION	CR- 256547-020V
4- 271499		ELECTRICAL CONNECTION	CR- 256547-020V
			CR- 256547-030V
2- 271503		CONTAINER	C- 295262-020V
			C- 295262-030V
C- 271507-0201	8140 85-08-29	HYDRAULIC SYSTEM	B- 648106-020V
			B- 648106-060V
			B- 648106-070V
4- 271508		BRACKET	C- 256233-050V
			C- 295777-010V
			C- 469374-010V
			C- 469374-020V
			C- 469374-030V
4- 271509		JUNCTION BLOCK	C- 456265-010V
			C- 469804-010V
			C- 271880-020V
			C- 469781-010V
			C- 469781-020V
C- 271513-020V	5916 83-06-01	COVER PLATE	B- 648106-020V
C- 271513-030V	9017 86-03-13	COVER PLATE	B- 648106-060V
			B- 648106-070V
C- 271513-040V	9018 86-05-13	COVER PLATE	B- 648106-080V
C- 271513-050V	13806 89-11-22	COVER PLATE	B- 648106-090V
4- 271530		BUSHING	C- 256014-020V
C- 271533-020V	6617 84-02-29	JUNCTION BLOCK	C- 271562-020V
			C- 271562-030V
C- 271533-0301	7345 85-01-24	JUNCTION BLOCK	C- 271562-040V
3- 271540		LEG	C- 295305-010V
1- 271546		BASKET	C- 272404-020V
			C- 272404-030V
			C- 272404-040V
			C- 272404-050V
			C- 272404-060V
3- 271547		DOOR	C- 272404-020V
			C- 272404-030V
			C- 272404-040V
			C- 272404-050V
			C- 272404-060V
3- 271548		LINK	C- 272404-020V
			C- 272404-030V
			C- 272404-040V
			C- 272404-050V
			C- 272404-060V
3- 271558		BRACKET	C- 272404-020V
			C- 272404-030V
			C- 272404-040V
			C- 272404-050V
			C- 272404-060V
4- 271559		LID	C- 272404-020V
C- 271562-020V	9367 86-06-11	PIPE WORK	B- 648102-020V
C- 271562-030V	9367 86-06-11	PIPE WORK	B- 648102-030V
C- 271562-040V	9367 86-06-11	PIPE WORK	B- 648102-060V
C- 271562-050V	8636 86-01-21	PIPE WORK	B- 648102-070V
C- 271562-060V	12270 88-10-20	PIPE WORK MACHINE BODY	B- 648102-080V
C- 271562-070V	13920 89-11-20	PIPE WORK MACHINE BODY	B- 648102-090V
4- 271565		BRACKET	C- 256239-020V
3- 271566		AIR NOZZLE	C- 256239-020V
			C- 256239-030V
			C- 256239-040V
C- 271569-0201	5507 82-10-13	CABLE TRACK	B- 648106-020V
C- 271569-0301	7078 84-09-13	CABLE TRACK	B- 648106-060V
			B- 648106-070V
C- 271569-040V	14073 89-11-10	CABLE TRACK	B- 648106-080V
C- 271569-050V	13845 90-01-12	CABLE TRACK	B- 648106-090V
3- 271581		BLOCK	C- 271114-020V
3- 271584		CHUTE	C- 271114-020V
			C- 271114-030V
4- 271585		WASHER	C- 271114-020V
			C- 271114-030V
			C- 271114-040V
4- 271586-0001		WASHER	C- 271114-020V
			C- 271114-030V
			C- 271114-040V
4- 271586-0002		WASHER	C- 271114-020V

PART NO	LAST AM	DESCRIPTION	GROUP NO
			C- 271114-030V
			C- 271114-040V
4- 271587		WASHER	C- 271114-020V
			C- 295218-010V
			C- 271114-020V
			C- 295218-010V
			C- 271114-020V
			C- 295218-010V
			C- 271114-030V
			C- 295218-010V
			C- 271114-030V
			C- 295218-010V
			C- 271114-030V
			C- 295218-010V
			C- 271114-040V
			C- 295218-010V
			C- 271485-020V
4- 271591		BUTTON	C- 271109-020V
			C- 441695-010V
			C- 441695-020V
4- 271594-0001		BRACKET	C- 295256-020V
			C- 271485-020V
			C- 271485-030V
4- 271594-0002		BRACKET	C- 295256-020V
			C- 271485-020V
			C- 271485-030V
4- 271595		ANGLE BRACKET	C- 295256-020V
			C- 271485-020V
			C- 271485-030V
4- 271608		SCREW	C- 271115-020V
			C- 271115-030V
			C- 271115-040V
2- 271613		PAPER GUARD	C- 256233-020V
			C- 256233-030V
			C- 256233-040V
3- 271614		GUARD	C- 256236-020V
			C- 295112-020V
			C- 456348-010V
			C- 456349-010V
			C- 456349-020V
4- 271621		SHIM	C- 271562-020V
			C- 271562-030V
			C- 271562-040V
			C- 271562-050V
			C- 271562-060V
			C- 271562-070V
4- 271622		SHIM	C- 271562-020V
			C- 271562-030V
			C- 271562-040V
4- 271622		SHIM	C- 271562-050V
			C- 271562-060V
			C- 271562-070V
4- 271623		SHIM	C- 271562-020V
			C- 271562-030V
			C- 271562-040V
			C- 271562-050V
			C- 271562-060V
			C- 271562-070V
C- 271626-0201	6317 83-11-03	SUSPENSION ARM	C- 271699-020V
C- 271626-0301	6793 84-05-03	SUSPENSION ARM	C- 271699-030V
4- 271632		COVER	C- 271626-020V
			C- 271626-030V
C- 271635-0201	5374 82-06-11	TRANSPORTER	B- 648119-020V
C- 271635-0301	6961 84-06-29	TRANSPORTER	C- 77091-010V
			C- 77091-020V
			C- 77091-030V
			B- 648119-060V
2- 271636		BEAM	C- 271635-020V
2- 271640		LID	C- 456274-010V
			C- 271274-020V
			C- 469452-010V
			C- 469452-020V
			C- 751800-010V
			C- 469452-030V
			C- 751800-020V
			C- 456274-010V
C- 271641-0201	6317 83-11-03	TABLE	C- 271699-020V

PART NO	LAST AM	DESCRIPTION	GROUP NO
C- 271641-0202	6317 83-11-03	TABLE	C- 271699-020V
C- 271641-0203	6317 83-11-03	TABLE	C- 271699-020V
C- 271641-030V	6793 84-05-03	TABLE	C- 752046-010V
C- 271641-0301	6793 84-05-03	TABLE	C- 271699-030V
C- 271641-0302	6793 84-05-03	TABLE	C- 271699-030V
C- 271641-0303	6793 84-05-03	TABLE	C- 271699-030V
4- 271642		RULER	C- 271641-020V
			C- 271641-030V
4- 271643		RULER	C- 271641-020V
4- 271644		RULER	C- 271641-020V
			C- 271641-030V
C- 271649-020V	12367 88-11-18	GUARD	B- 648101-020V
			B- 648101-060V
			B- 648101-070V
			B- 648101-080V
			B- 648111-020V
C- 271649-030V	13651 89-11-23	GUARD	B- 648111-030V
3- 271650		BRACKET	B- 648101-090V
4- 271651		ANGLE BRACKET	C- 271649-020V
			C- 271649-020V
			C- 271649-030V
4- 271652		HOLDER	C- 271649-020V
			C- 271649-020V
			C- 271649-030V
4- 271653		ARM	C- 271649-020V
			C- 271649-020V
			C- 271649-030V
4- 271654		RETAINING RING	C- 271649-020V
			C- 752957-010V
			C- 271649-020V
4- 271654		RETAINING RING	C- 271649-030V
			C- 752628-010V
			C- 271649-020V
			C- 469074-010V
4- 271655		HOLDER	C- 469074-020V
			C- 271649-020V
			C- 271649-030V
4- 271656		WASHER	C- 271649-020V
			RK- 491744-010V
			C- 272014-020V
			C- 272014-030V
			C- 751088-010V
2- 271668		MACHINE BODY	C- 751088-020V
4- 271688		HANDLE	C- 272825-010V
4- 271689		WASHER	C- 271115-020V
			C- 256173-020V
			C- 256173-030V
			C- 256173-040V
C- 271699-020V	6587 84-02-21	SPLICING DEVICE	B- 648106-020V
C- 271699-030V	6793 84-05-03	SPLICING DEVICE	B- 648106-060V
			B- 648106-070V
			B- 648106-080V
			B- 648106-090V
4- 271708		SLIDE RAIL	C- 271115-020V
			C- 271115-030V
			C- 271115-040V
4- 271717		SPACER	C- 441102-010V
			RK- 751305-010V
			RK- 751307-010V
			RK- 751305-010V
			RK- 751307-010V
			C- 272030-020V
			C- 441304-010V
			C- 272030-020V
			C- 441304-010V
			C- 441304-020V
4- 271718		WASHER	C- 441486-030V
			C- 441102-010V
			RK- 751305-010V
			RK- 751307-010V
			RK- 751305-010V
			RK- 751307-010V
			C- 272030-020V
			C- 441304-010V
			C- 272030-020V
			C- 441304-010V
			C- 441304-020V

PART NO	LAST AM	DESCRIPTION	GROUP NO
1- 271728		CUTTING JAW	C- 441486-030V
			CR- 256204-020V
			CR- 256205-020V
			CR- 256204-020V
			CR- 256205-020V
			CR- 256204-030V
			CR- 256205-030V
			CR- 256204-040V
			CR- 256205-040V
			CR- 256204-040V
			CR- 256205-040V
			CR- 256204-050V
4- 271731		COMPRESSION SPRING	CR- 256205-050V
			CR- 256436-020V
			CR- 256712-020V
			CR- 256436-020V
			CR- 256712-020V
			CR- 256436-020V
			CR- 256712-020V
			CR- 256436-020V
			CR- 256712-020V
			CR- 256436-030V
			CR- 256712-030V
			CR- 256436-040V
			CR- 256712-040V
			CR- 256436-050V
			CR- 256712-050V
3- 271738		KNIFE	CR- 256208-020V
			C- 295523-020V
			CR- 256208-020V
			C- 295523-020V
			CR- 256208-030V
			C- 295523-030V
			CR- 256208-030V
			C- 295523-030V
			CR- 256208-030V
			C- 295523-030V
			CR- 256208-030V
			C- 295523-030V
2- 271742		PIPE	C- 271562-020V
			C- 271562-030V
			C- 271562-040V
			C- 271562-050V
			C- 271562-060V
			C- 271562-070V
2- 271743		PIPE	C- 271562-020V
			C- 271562-030V
			C- 271562-040V
			C- 271562-050V
			C- 271562-060V
			C- 271562-070V
3- 271744		BENDING ROLLER	C- 272004-020V
4- 271745		PLUNGER	CR- 256204-020V
			CR- 256205-020V
			CR- 256204-020V
			CR- 256205-020V
			CR- 256204-030V
			CR- 256205-030V
4- 271747		PIN	C- 272560-020V
			C- 272560-030V
4- 271748		BEARING BLOCK	C- 272560-020V
			C- 272560-030V
3- 271753		SHAFT	C- 272359-020V
			C- 272359-030V
			C- 752030-010V
1- 271759		CAM	C- 256202-020V
			C- 256202-030V
			C- 256202-040V
1- 271760		CAM	C- 256202-020V
			C- 256202-030V
			C- 256202-040V
4- 271762		NUT	C- 490504-010V
4- 271762		NUT	C- 491767-010V
			C- 490504-010V
3- 271772		PIPE	C- 271109-020V
3- 271775-0002		V-BELT PULLEY	C- 271128-020V
3- 271775-0003		V-BELT PULLEY	C- 271128-020V

PART NO	LAST AM	DESCRIPTION	GROUP NO
3- 271775-0004		V-BELT PULLEY	C- 271128-020V
4- 271777		CLAMP	C- 271635-030V
			C- 271635-020V
			C- 271635-030V
4- 271784		KNOB	C- 271115-020V
			C- 271115-030V
			C- 271115-040V
2- 271787		CONNECTION	C- 271790-020V
			C- 271790-030V
2- 271788		CONNECTION	C- 271791-020V
			C- 271791-030V
4- 271789		CLAMP	C- 271790-020V
			C- 271791-020V
			C- 271790-030V
			C- 271791-030V
			C- 271790-030V
			C- 271791-030V
			C- 271790-030V
			C- 271791-030V
			C- 271790-030V
			C- 271791-030V
C- 271790-0201	5145 82-02-12	TRANSMISSION	B- 648106-020V
C- 271790-0301	6610 84-02-23	TRANSMISSION	B- 648106-060V
			B- 648106-070V
			B- 648106-080V
			B- 648106-090V
C- 271791-0201	6317 83-11-03	TRANSMISSION	B- 648106-020V
C- 271791-0301	6610 84-02-23	TRANSMISSION	B- 648106-060V
			B- 648106-070V
			B- 648106-080V
			B- 648106-090V
1- 271792		BUSBAR	C- 271790-020V
1- 271793		BUSBAR	C- 271791-020V
C- 271804-0201	5329 82-05-24	COVER	B- 648101-020V
C- 271804-0301	6959 84-08-17	COVER	B- 648101-060V
C- 271804-0401	10843 87-11-26	COVER	B- 648101-070V
			B- 648101-080V
			B- 648101-090V
3- 271805		COVER	C- 271804-020V
4- 271806		STRIP	C- 271804-020V
			C- 271804-030V
			C- 271804-040V
4- 271807		STRIP	C- 271804-020V
			C- 271804-030V
			C- 271804-040V
G4- 271808		HINGE FLANGE	C- 271804-020V
			C- 271804-030V
			C- 271804-040V
4- 271809		HINGE	C- 271804-020V
			C- 271804-030V
			C- 271804-040V
4- 271810		SHAFT	C- 271804-020V
			C- 271804-030V
			C- 271804-040V
4- 271811		PLATE	C- 271804-020V
			C- 271804-030V
			C- 271804-040V
4- 271812		PLATE	C- 271804-020V
			C- 271804-030V
			C- 271804-040V
3- 271820-0001		GUIDE RAIL	RK- 491405-010V
			C- 272025-020V
			C- 272025-030V
3- 271820-0002		GUIDE RAIL	RK- 491405-010V
			C- 272025-020V
			C- 272025-030V
1- 271822		HOUSE	C- 272021-020V
P4- 271823		FILTER	C- 271909-020V
			C- 271909-030V
			C- 271909-040V
			C- 271909-050V
1- 271824		AIR KNIFE, MOVABLE	C- 272025-020V
			C- 272025-030V
1- 271825		FIXED AIR KNIFE	C- 272025-020V
			C- 272025-030V
4- 271827-0001		GUIDE PLATE	C- 272025-020V
			C- 272025-030V

PART NO	LAST AM	DESCRIPTION	GROUP NO
4- 271827-0002		GUIDE PLATE	C- 272025-020V
			C- 272025-030V
3- 271833		SHAFT	C- 272014-020V
3- 271834		SHAFT	C- 272014-020V
			C- 272014-030V
			C- 751088-010V
3- 271835		BRACKET	RK- 491744-010V
			C- 272014-020V
			C- 272014-030V
			C- 751088-010V
			C- 751088-020V
4- 271837		BRACKET	C- 272014-020V
			C- 272014-030V
			C- 751088-010V
			C- 751088-020V
4- 271840		BEARING COVER	C- 272014-020V
			C- 272014-030V
			C- 751088-010V
4- 271841		BEARING SEAT	C- 272014-020V
			C- 272014-030V
			C- 751088-010V
			C- 751088-020V
4- 271844		WASHER	C- 256237-020V
			C- 256237-030V
			C- 256237-040V
			C- 256238-040V
			RK- 491744-010V
			C- 255957-020V
			C- 256055-020V
			C- 272014-020V
			C- 456309-010V
			C- 255957-020V
			C- 256055-020V
			C- 272014-020V
			C- 456309-010V
			C- 256055-030V
4- 271844		WASHER	C- 272014-030V
			C- 456309-020V
			C- 256055-040V
			C- 272014-030V
			C- 456309-020V
			C- 456309-030V
			C- 751088-010V
			C- 456309-040V
			C- 751088-020V
3- 271845		BRACKET	CR- 256215-020V
			CR- 256215-030V
4- 271846		INSULATION NUT	C- 256973-020V
			C- 256973-030V
			CR- 256214-020V
			CR- 256215-020V
			C- 256219-020V
			C- 256220-020V
			CR- 256214-020V
			CR- 256215-020V
			C- 256219-020V
			C- 256220-020V
			CR- 256214-020V
			CR- 256215-020V
			C- 256219-030V
			C- 256220-030V
			CR- 256214-020V
			CR- 256215-020V
			C- 256219-030V
			C- 256220-030V
			CR- 256214-030V
			CR- 256215-030V
			C- 256219-030V
			C- 256220-030V
			CR- 256214-030V
			CR- 256215-030V
			C- 256219-030V
			C- 256220-030V
4- 271847		INSULATION	CR- 256215-020V
			CR- 256215-030V
4- 271848		SCREW	C- 256973-020V
			C- 256973-030V

PART NO	LAST AM	DESCRIPTION	GROUP NO
			CR- 256214-020V
			CR- 256215-020V
			C- 256219-020V
			C- 256220-020V
			CR- 256214-020V
			CR- 256215-020V
			C- 256219-020V
			C- 256220-020V
			CR- 256214-020V
			CR- 256215-020V
			C- 256219-030V
			C- 256220-030V
			CR- 256214-020V
			CR- 256215-020V
			C- 256219-030V
			C- 256220-030V
			CR- 256214-030V
			CR- 256215-030V
			C- 256219-030V
			C- 256220-030V
			CR- 256214-030V
			CR- 256215-030V
			C- 256219-030V
			C- 256220-030V
4- 271848		SCREW	C- 256219-020V
			C- 256219-030V
			C- 256219-020V
			C- 256219-030V
			C- 256220-020V
			C- 256220-030V
			C- 256220-020V
			C- 256220-030V
			B- 648111-020V
			B- 648111-030V
			B- 648111-060V
2- 271849-0001		BUSBAR RIGHT	B- 648111-070V
2- 271849-0002		BUSBAR RIGHT	C- 272025-020V
2- 271850-0001		BUSBAR LEFT	C- 272025-030V
2- 271850-0002		BUSBAR LEFT	C- 272025-020V
C- 271851-0201	7047 84-08-29	DOOR	C- 257075-020V
			C- 271851-020V
			C- 257075-020V
			C- 271851-020V
3- 271858		FLANGE	C- 257075-025V
4- 271859		ARM	C- 271851-020V
4- 271860		BLOCK	C- 257075-025V
			C- 271851-020V
			C- 491570-010V
			C- 491579-010V
			C- 491570-010V
			C- 491579-010V
4- 271863		SHAFT	C- 272021-020V
			C- 272021-030V
			C- 272021-040V
4- 271864		WASHER	C- 272021-050V
			C- 272021-020V
			C- 272021-030V
			C- 272021-040V
4- 271865		SLEEVE	C- 272021-050V
C- 271866-020V	6561 84-02-15	PIPE WORK	C- 272025-020V
C- 271866-030V	10111 87-02-06	PIPE WORK SERVICE UNIT	B- 648106-020V
			B- 648106-060V
C- 271866-040V	14073 89-11-10	PIPE WORK	B- 648106-070V
C- 271866-050V	13632 89-11-17	PIPE WORK	B- 648106-080V
2- 271867		PIPE	B- 648106-090V
			C- 271868-020V
2- 271868		PIPE	C- 271868-030V
			C- 271868-040V
			C- 271868-020V
2- 271869		PIPE	C- 271868-030V
			C- 271868-040V
			C- 271868-020V
2- 271870		PIPE	C- 271868-030V
			C- 271868-040V

PART NO	LAST AM	DESCRIPTION	GROUP NO
2- 271871		PIPE	C- 271866-020V
			C- 271868-030V
2- 271872		PIPE	C- 271866-040V
			C- 271866-020V
			C- 271866-030V
3- 271873		PIPE	C- 271866-040V
3- 271874		PIPE	C- 271866-020V
			C- 271866-020V
3- 271879		BRACKET	C- 271866-030V
			C- 272765-010V
C- 271880-020V	6745 84-04-25	TUBE FLUSHING DEVICE	C- 272765-020V
			B- 648111-020V
2- 271883		MOTOR PLATE	B- 648111-030V
			C- 272028-020V
3- 271884		PLATE	C- 272028-030V
			C- 272028-020V
3- 271888		BRACKET	C- 272028-030V
			C- 271562-020V
3- 271889		BRACKET	C- 271562-030V
			C- 271562-020V
2- 271890		BRANCH PIPE	C- 271562-030V
3- 271893		SHAFT	C- 272337-020V
			C- 272024-020V
4- 271895		BRACKET	C- 272024-030V
			C- 272024-020V
4- 271896		SHAFT	C- 272024-030V
4- 271898		SCREW	C- 272024-020V
			C- 272024-020V
4- 271899		SCREW	C- 272024-030V
			C- 272024-020V
4- 271907-0001		PIPE	C- 272024-030V
			C- 271909-020V
			C- 271909-030V
			C- 271909-040V
4- 271907-0002		PIPE	C- 271909-050V
			C- 271909-020V
			C- 271909-030V
			C- 271909-040V
4- 271907-0003		PIPE	C- 271909-050V
			C- 271909-020V
			C- 271909-030V
			C- 271909-040V
C- 271909-020V	6994 84-07-06	VALVE PANEL	C- 271909-050V
C- 271909-030V	9286 86-06-11	VALVE PANEL	B- 648106-020V
			B- 648106-060V
C- 271909-040V	9605 86-10-31	VALVE PANEL	B- 648106-070V
C- 271909-050V	14200 90-02-13	VALVE PANEL	B- 648106-080V
3- 271911		SHAFT	B- 648106-090V
			C- 271934-020V
4- 271912		SHAFT	C- 271934-030V
			C- 752030-010V
			C- 271934-020V
4- 271922		SPACER	C- 271934-030V
			C- 752030-010V
			C- 256233-020V
			C- 256233-030V
3- 271928		BEARING HOLDER	C- 256233-040V
4- 271932		FILTER	C- 255957-020V
4- 271933		SHAFT	C- 272021-020V
C- 271934-0201	6317 83-11-03	PAPER GUIDE PLATE	C- 272021-020V
			C- 272404-020V
			C- 272404-030V
C- 271934-0301	10626 87-09-04	PAPER GUIDE PLATE	C- 272404-040V
			C- 272404-050V
3- 271939-0001		SLIDE PLATE	C- 272404-060V
			CR- 256712-020V
			CR- 256712-030V
			CR- 256712-040V
1- 271941-0001		FRAME	CR- 256712-050V
			C- 272025-020V
1- 271941-0002		FRAME	C- 272025-030V
			C- 272025-020V
1- 271942-0001		AIR GUIDE	C- 272025-030V
			C- 272025-020V
1- 271942-0002		AIR GUIDE	C- 272025-030V
			C- 272025-020V
			C- 272025-030V

PART NO	LAST AM	DESCRIPTION	GROUP NO
4- 271949		NUT	C- 271909-020V
			C- 271866-030V
			C- 271909-030V
			C- 271866-030V
			C- 271909-030V
			C- 271866-040V
			C- 271909-040V
			C- 271866-050V
			C- 271909-050V
3- 271950		SCREW	C- 271909-020V
			C- 271909-030V
			C- 271909-040V
			C- 271909-050V
3- 271951		BANJO CONNECTION	C- 271909-020V
3- 271959		BRACKET	C- 271468-020V
			C- 271468-040V
4- 271961		SCREW	C- 271468-020V
			C- 271468-040V
4- 271966		SHAFT	CR- 255933-020V
3- 271967		CLAMP	C- 295262-020V
			C- 295262-030V
4- 271969		STOP	C- 272021-020V
4- 271975		SHAFT	C- 295310-010V
			C- 295310-020V
			C- 295310-030V
			C- 295310-040V
			C- 295310-050V
			C- 295310-060V
4- 271978		NUT	C- 295310-010V
			C- 295310-020V
			C- 295310-030V
			C- 295310-040V
			C- 295310-050V
			C- 295310-060V
C- 271992-0201	6808 84-05-10	PAPER HOLDER	B- 648106-020V
			B- 648106-060V
			B- 648106-070V
			B- 648106-080V
			B- 648106-090V
3- 271993		BEARING	C- 271992-020V
4- 271995		SLEEVE	C- 271992-020V
2- 271998		CONTAINER	C- 295262-020V
			C- 295262-030V
3- 271999		CLAMP	C- 295262-020V
			C- 295262-030V
4- 272001		COMPRESSION SPRING	C- 751094-010V
			RK- 491744-010V
			RK- 491789-010V
			RK- 491902-010V
			RK- 751561-010V
			RK- 491789-010V
			RK- 751561-010V
			C- 272014-020V
			C- 272014-030V
			C- 751088-010V
			C- 751088-020V
4- 272002		PROTECTIVE COVER LEFT	C- 272021-020V
			C- 272021-030V
			C- 272021-040V
			C- 272021-050V
4- 272003		PROTECTIVE COVER RIGHT	C- 272021-020V
			C- 272021-030V
			C- 272021-040V
			C- 272021-050V
C- 272004-020V	8271 85-10-14	BENDING ROLLER	B- 648111-020V
			B- 648111-030V
			B- 648111-060V
			B- 648111-070V
C- 272004-0301	8462 85-12-09	BENDING ROLLER	B- 648111-080V
C- 272004-0401	12648 89-11-14	BENDING ROLLER	B- 648111-090V
3- 272005		BENDING ROLLER	C- 272004-020V
			C- 272004-030V
			C- 272004-040V
C- 272014-020V	6980 84-07-03	WHEEL	B- 648111-020V
			B- 648111-030V
C- 272014-030V	10002 87-01-12	CREASE WHEEL	B- 648111-060V
			B- 648111-070V

PART NO	LAST AM	DESCRIPTION	GROUP NO
4- 272017		AXLE SUPPORT	C- 272004-020V
			C- 272024-020V
			C- 272004-020V
			C- 272024-020V
			C- 272004-020V
			C- 272024-020V
			C- 272004-020V
			C- 272024-020V
4- 272018		AXLE SUPPORT	C- 272004-020V
			C- 272024-020V
			C- 272004-020V
			C- 272024-020V
			C- 272004-020V
			C- 272024-020V
			C- 272004-020V
			C- 272024-020V
			C- 272004-030V
			C- 272024-030V
			C- 272004-040V
			C- 272024-030V
1- 272020		HOUSE	C- 272021-020V
C- 272021-020V	10157 87-02-07	ASEPTIC CHAMBER	B- 648111-020V
			B- 648111-030V
C- 272021-030V	9199 86-05-27	ASEPTIC CHAMBER	B- 648111-060V
			B- 648111-070V
C- 272021-040V	13953 89-11-13	ASEPTIC CHAMBER	B- 648111-080V
C- 272021-050V	14315 90-01-10	ASEPTIC CHAMBER	B- 648111-090V
1- 272022		AIR KNIFE, MOVABLE	C- 272025-020V
			C- 272025-030V
1- 272023		FIXED AIR KNIFE	C- 272025-020V
			C- 272025-030V
C- 272024-0201	8595 85-12-09	SQUEE-GEE ROLLER	B- 648111-020V
			B- 648111-030V
			B- 648111-060V
			B- 648111-070V
C- 272024-0301	9523 86-11-13	SQUEE-GEE ROLLER	B- 648111-080V
			B- 648111-090V
C- 272025-020V	8595 85-12-09	AIR KNIFE	B- 648111-020V
			B- 648111-030V
			B- 648111-060V
			B- 648111-070V
C- 272025-030V	12412 88-12-06	AIR KNIFE	B- 648111-080V
			B- 648111-090V
2- 272026-0001		AIR DISTRIBUTOR	C- 272025-020V
			C- 272025-030V
2- 272026-0002		AIR DISTRIBUTOR	C- 272025-020V
			C- 272025-030V
4- 272027-0001		GLASS PANE	C- 272025-020V
			C- 272025-030V
4- 272027-0002		GLASS PANE	C- 272025-020V
			C- 272025-030V
C- 272028-020V	7091 84-09-13	BENDING ROLLER	B- 648111-020V
			B- 648111-030V
C- 272028-030V	10200 87-02-20	BENDING ROLLER	B- 648111-060V
			B- 648111-070V
C- 272028-040V	13953 89-11-13	BENDING ROLLER	B- 648111-080V
C- 272028-050V	12861 89-12-11	BENDING ROLLER	B- 648111-090V
C- 272030-020V	7235 84-11-01	FORMING RING	B- 648111-020V
			B- 648111-030V
C- 272031-020V	7235 84-11-01	CLAMP	B- 648111-020V
			B- 648111-030V
4- 272033		BRACKET	C- 272024-020V
			C- 272024-030V
3- 272043		COVER	C- 256233-020V
			C- 272021-020V
3- 272045-0001		SLIDE PLATE	CR- 256712-020V
			CR- 256712-030V
			CR- 256712-040V
			CR- 256712-050V
3- 272045-0002		SLIDE PLATE	CR- 256712-020V
			CR- 256712-030V
			CR- 256712-040V
			CR- 256712-050V
3- 272045-0003		SLIDE PLATE	CR- 256712-020V
			CR- 256712-030V
			CR- 256712-040V
			CR- 256712-050V

PART NO	LAST AM	DESCRIPTION	GROUP NO
3- 272045-0004		SLIDE PLATE	CR- 256712-020V CR- 256712-030V CR- 256712-040V CR- 256712-050V
G1- 272055		VOLUME FLAP 250 ML	CR- 256209-020V CR- 256210-020V
G1- 272055		VOLUME FLAP 250 ML	CR- 256209-020V CR- 256210-020V CR- 256209-020V CR- 256210-020V
3- 272056		FLOAT	CR- 256209-020V CR- 256210-020V CR- 256209-020V CR- 256210-020V C- 256230-020V C- 256230-030V
4- 272058		LID	C- 255921-020V C- 255921-030V C- 255921-040V C- 256555-020V C- 256555-030V C- 456100-010V C- 456100-020V
4- 272065		BRACKET	C- 257166-020V
3- 272068		CARRIER CHAIN	C- 295310-010V C- 295310-020V C- 295310-030V C- 295310-040V C- 295310-050V C- 295310-060V
4- 272083		COVER	C- 256239-020V C- 256095-020V
C- 272084-0201	7766 85-04-30	STRETCHER	C- 272404-020V C- 272404-030V C- 272404-040V C- 272404-050V C- 272404-060V
C- 272084-0301	11717 89-06-27	STRETCHER	C- 272084-020V C- 272084-020V C- 272084-030V C- 272084-020V
2- 272085		PENDULUM ARM	C- 272084-020V C- 272084-030V
3- 272087		HOLDER	C- 272084-020V C- 272084-020V C- 272084-020V C- 272084-020V C- 295256-020V C- 469501-020V C- 469501-030V C- 271485-020V C- 271485-030V C- 469501-010V C- 469501-020V C- 469501-030V RK- 751462-010V
3- 272088		GUIDE	
3- 272089		SLIDE RAIL	
3- 272090		SLIDE RAIL	
4- 272091		BRACKET	
4- 272095		SHAFT	
4- 272100		HOLDER	C- 256014-020V
4- 272101		SHAFT	C- 256014-020V
4- 272102		WASHER	C- 256014-020V
4- 272105		CONNECTION BOX	C- 256237-020V C- 256237-030V C- 256055-020V C- 256055-030V C- 256055-020V C- 256055-030V C- 256055-040V C- 256055-050V C- 256055-060V
2- 272114		HEAT GUARD	C- 256197-020V C- 256197-030V C- 256197-040V
2- 272114		HEAT GUARD	C- 256202-020V C- 256202-030V C- 256202-040V
4- 272116		CLAMP	C- 256202-020V C- 256202-030V C- 256202-040V C- 271909-020V C- 271909-030V
1- 272118		CAM	
1- 272119		CAM	
4- 272129		BRACKET	

PART NO	LAST AM	DESCRIPTION	GROUP NO
4- 272130		SPACER	C- 271909-040V C- 271909-050V C- 271909-020V C- 271909-030V C- 271909-040V C- 271909-050V
2- 272133		CLEANING PIPE	C- 256233-020V C- 256233-030V C- 256233-040V C- 256233-050V
4- 272135		PLATE	C- 256233-020V C- 256233-030V C- 256233-040V C- 256233-050V
3- 272140-0001		GUIDE PLATE	C- 272025-020V C- 272025-030V
3- 272140-0002		GUIDE PLATE	C- 272025-020V C- 272025-030V
4- 272141-0001		FILTER	C- 272025-020V C- 272025-030V
4- 272141-0002		FILTER	C- 272025-020V C- 272025-030V
4- 272145		CONNECTION PLATE	C- 256237-020V C- 256237-030V C- 256055-020V C- 256055-030V
4- 272146		COUPLING STRIP	C- 256237-020V C- 256237-030V C- 256055-020V C- 256055-030V
4- 272147		ROLLER	C- 255957-020V
4- 272148		COUNTER ROLLER	C- 255957-020V
4- 272155		SHIM	C- 272014-020V
2- 272157		CONTAINER	C- 272623-020V C- 272623-030V
4- 272158		PIN	C- 256555-020V C- 456100-020V
4- 272161		ELECTRODE	C- 272623-020V
2- 272172		GUIDE SHAFT	C- 256968-020V
2- 272173		BRACKET	C- 256968-020V C- 456032-010V
3- 272174		BRACKET	C- 256968-020V
3- 272175		ARM	C- 256968-020V
4- 272176		BRACKET	C- 256968-020V
4- 272177		LINK	C- 256968-020V C- 456032-010V
4- 272178		LUG	C- 256968-020V C- 456032-010V
4- 272179		SHAFT	C- 256968-020V
4- 272180		SPRING	C- 295667-020V C- 255982-020V C- 469091-010V
3- 272182		BRACKET	C- 441000-020V
2- 272184		COVER	C- 256237-020V C- 256237-030V C- 256237-040V C- 256237-050V C- 256237-060V C- 272408-020V C- 272408-030V C- 272408-040V C- 272408-050V
2- 272186		CONNECTION	C- 272408-020V C- 272408-030V
2- 272187		CONNECTION	C- 272408-020V C- 272408-030V
4- 272188		BRACKET	C- 272408-020V C- 272408-030V C- 272408-040V C- 272408-050V
4- 272189		LID	C- 272408-020V C- 272408-030V C- 272408-040V C- 272408-050V
4- 272190		SHIM	C- 256237-020V C- 256237-030V C- 256237-040V

PART NO	LAST AM	DESCRIPTION	GROUP NO
			C- 256237-050V
			C- 256237-060V
			C- 272408-020V
			C- 272408-030V
			C- 272408-040V
			C- 272408-050V
4- 272191		DISTRIBUTOR	C- 256802-020V
			C- 456455-010V
			C- 456455-020V
4- 272210-0001		WASHER	C- 272014-020V
4- 272210-0002		WASHER	C- 272014-020V
G1- 272212		ARM	C- 256197-020V
			C- 256198-020V
			C- 256197-020V
			C- 256198-020V
			C- 256198-030V
1- 272216		MACHINE BODY	C- 272825-010V
C- 272231-0201	6694 84-04-04	PAPER GUIDE	C- 272404-020V
			C- 272404-030V
C- 272231-0301	8101 86-01-16	PAPER GUIDE	C- 272404-040V
			C- 272404-050V
4- 272236		SPACER SLEEVE	C- 272231-020V
			C- 272231-030V
C- 272241-020V	6475 84-02-22	CONDUIT	B- 648111-020V
			B- 648111-030V
G1- 272248		VOLUME FLAP	CR- 256209-020V
			CR- 256210-020V
			CR- 256209-020V
G1- 272248		VOLUME FLAP	CR- 256210-020V
			CR- 256209-020V
			CR- 256210-020V
			CR- 256209-020V
			CR- 256210-020V
			CR- 256209-020V
			CR- 256210-020V
3- 272251		CREASE BAR	C- 295112-020V
1- 272253		BEARING HOUSING	CR- 256212-020V
			CR- 256213-020V
			CR- 256212-020V
			CR- 256213-020V
3- 272259		CARTON STATION	CR- 255933-020V
			CR- 255933-030V
3- 272260		FLANGE	C- 256230-020V
1- 272263		BEARING HOUSING	CR- 256204-020V
			CR- 256205-020V
			CR- 256204-020V
			CR- 256205-020V
			CR- 256204-030V
			CR- 256205-030V
			CR- 256204-040V
			CR- 256205-040V
			CR- 256204-040V
			CR- 256205-040V
1- 272264		CUTTING JAW	CR- 256204-020V
			CR- 256205-020V
			CR- 256204-020V
			CR- 256205-020V
			CR- 256204-030V
			CR- 256205-030V
			CR- 256204-040V
			CR- 256205-040V
			CR- 256204-050V
			CR- 256205-050V
1- 272274		CONTAINER	C- 272407-020V
3- 272275		LID	C- 272407-020V
3- 272276		BOTTOM	C- 272407-020V
3- 272277		GASKET	C- 272407-020V
4- 272281		WASHER	C- 272014-020V
1- 272284		HEATING PIPE	C- 256055-020V
			C- 256055-030V
2- 272285		HEATING PIPE	C- 256095-020V
			C- 256095-030V
4- 272288		AXLE SUPPORT	C- 256055-020V
			C- 256055-030V
			C- 256055-040V

PART NO	LAST AM	DESCRIPTION	GROUP NO
			C- 256055-050V
			C- 256055-060V
4- 272287		AXLE SUPPORT	C- 256095-020V
			C- 256095-030V
			C- 256095-040V
4- 272292-0002		WASHER	C- 256055-020V
			C- 256055-030V
2- 272294		FILLING TUBE LOWER	C- 256230-020V
4- 272301		THROTTLE	C- 256230-020V
			C- 256230-030V
1- 272308-0001		PIPE	C- 272342-020V
			C- 456976-010V
1- 272308-0002		PIPE	C- 272342-020V
			C- 456976-010V
1- 272308-0003		PIPE	C- 456976-020V
2- 272309-0001		PIPE	C- 272342-020V
2- 272309-0002		PIPE	C- 272342-020V
2- 272310		PIPE	C- 272342-020V
			C- 456976-010V
2- 272311		PIPE	C- 272342-020V
			C- 456976-010V
2- 272312		PIPE	C- 272342-020V
			C- 456976-010V
			C- 456976-020V
			C- 456976-030V
2- 272319		DISCHARGE TRAY	C- 272407-020V
2- 272320		DISCHARGE TRAY	C- 272407-020V
2- 272325		SPIRAL	C- 272407-020V
4- 272329-0001		SHIM	RK- 491404-010V
			RK- 491405-010V
			C- 272025-020V
			C- 272025-030V
4- 272329-0002		SHIM	RK- 491404-010V
			RK- 491405-010V
			C- 272025-020V
			C- 272025-030V
C- 272337-0201	9284 86-07-02	VALVE	B- 648111-020V
			B- 648111-030V
			B- 648111-060V
			B- 648111-070V
C- 272337-0301	11456 88-03-09	VALVE	B- 648111-080V
C- 272337-0401	12648 89-11-14	VALVE	B- 648111-090V
4- 272338		COVER	C- 272343-020V
4- 272340		PIPE	C- 271909-020V
			C- 271909-030V
			C- 271909-040V
			C- 271909-050V
4- 272341		SPINDLE GUIDE	C- 271169-020V
			C- 272337-020V
			C- 271169-020V
			C- 272337-020V
			C- 271169-020V
			C- 272337-020V
			C- 271169-020V
			C- 272337-020V
C- 272342-020V	6475 84-02-22	CONDUIT	B- 648111-020V
C- 272343-0201	6317 83-11-03	PRESSURE ROLLER	B- 648107-020V
C- 272343-030V	6743 84-04-18	PRESSURE ROLLER	B- 648107-060V
			B- 648107-070V
C- 272343-040V	11029 87-11-27	PRESSURE ROLLER	B- 648107-080V
C- 272343-050V	13968 89-12-04	PRESSURE ROLLER	B- 648107-090V
2- 272346		PIPE	C- 271562-020V
			C- 271562-030V
			C- 271562-040V
			C- 271562-050V
			C- 271562-060V
4- 272347		PIPE	C- 272342-020V
			C- 456976-010V
			C- 456976-020V
4- 272348		PIPE	C- 272342-020V
			C- 456976-010V
4- 272349-0001		PIPE	C- 272342-020V
			C- 456976-010V
			C- 456976-020V
4- 272349-0002		PIPE	C- 256237-020V
			C- 256237-030V
			C- 256237-040V

PART NO	LAST AM	DESCRIPTION	GROUP NO
4- 272349-0003		PIPE	C- 272342-020V
			C- 456976-010V
4- 272349-0004		PIPE	C- 456976-030V
			C- 456976-040V
2- 272352		PIPE	C- 272560-020V
			C- 272560-030V
2- 272354		PIPE	C- 271274-020V
1- 272355		PIPE	C- 272342-020V
			C- 456976-010V
1- 272356		PIPE	C- 272342-020V
			C- 456976-010V
			C- 456976-020V
4- 272357		PIPE	C- 272342-020V
C- 272359-0201	7397 85-01-10	BENDING ROLLER	B- 648106-020V
			B- 648106-060V
			B- 648106-070V
			B- 648106-080V
C- 272359-030V	11717 89-06-27	BENDING ROLLER	B- 648106-090V
1- 272360		BRACKET	C- 272359-020V
			C- 272359-030V
2- 272361		CLAMP	C- 272359-020V
4- 272362		BEARING	C- 272359-020V
			C- 272359-030V
			C- 752030-010V
4- 272369		SPACER	C- 272024-020V
			C- 272024-030V
3- 272372		HOUSE	C- 256173-020V
			C- 256173-030V
			C- 256173-040V
4- 272374		CARRIER	C- 256173-020V
			C- 256173-030V
			C- 256173-040V
4- 272376		PLUG	C- 256173-020V
			C- 256173-030V
			C- 256173-040V
4- 272377-0001		CLIP	C- 256173-020V
			C- 256173-030V
			C- 256173-040V
4- 272377-0002		CLIP	C- 256173-020V
			C- 256173-030V
			C- 256173-040V
C- 272381-020V	6981 84-06-27	TANK	B- 648106-020V
C- 272381-0301	8730 86-01-27	PEROXIDE TANK	B- 648106-060V
			B- 648106-070V
4- 272388		CLIP	C- 256173-020V
			C- 256173-030V
			C- 256173-040V
3- 272392		PROTECTION PIPE	C- 272381-020V
			C- 272381-030V
3- 272398		ANGLE BRACKET	C- 441102-010V
			C- 441102-020V
C- 272404-0201	6609 84-02-21	CARRIAGE	B- 648106-020V
C- 272404-0301	7397 85-01-10	CARRIAGE	B- 648106-060V
C- 272404-0401	8101 86-01-16	CARRIAGE	B- 648106-070V
C- 272404-0501	10626 87-09-04	CARRIAGE	B- 648106-080V
C- 272404-0601	14200 90-02-13	CARRIAGE	B- 648106-090V
4- 272406		BRACKET	C- 271909-020V
C- 272407-0201	9415 86-10-17	GENERATOR	B- 648111-020V
			B- 648111-030V
			B- 648111-060V
			B- 648111-070V
			B- 648111-080V
			B- 648111-090V
C- 272408-0201	6267 83-11-23	PLATE	B- 648107-020V
C- 272408-0202	6267 83-11-23	PLATE	B- 648107-020V
C- 272408-0301	9415 86-10-17	PLATE	B- 648107-060V
			B- 648107-070V
C- 272408-0302	9415 86-10-17	PLATE	B- 648107-060V
			B- 648107-070V
C- 272408-0401	12052 88-09-09	PLATE	B- 648107-080V
C- 272408-0402	12052 88-09-09	PLATE	B- 648107-080V
C- 272408-0501	14273 90-02-06	PLATE	B- 648107-090V
C- 272408-0502	14273 90-02-06	PLATE	B- 648107-090V
3- 272409		BRACKET	C- 272408-020V
4- 272415		ARM	C- 256951-020V
			C- 256952-020V
			C- 256951-020V

PART NO	LAST AM	DESCRIPTION	GROUP NO
			C- 256952-020V
			C- 256951-030V
			C- 256952-030V
			C- 256951-030V
			C- 256952-030V
			C- 256951-040V
			C- 256952-040V
			C- 256951-040V
			C- 256952-040V
G3- 272416		CARRIER	CR- 256204-020V
			CR- 256205-020V
			CR- 256204-020V
			CR- 256205-020V
			CR- 256204-030V
			CR- 256205-030V
			CR- 256204-040V
			CR- 256205-040V
			CR- 256204-040V
			CR- 256205-040V
			CR- 256204-050V
			CR- 256205-050V
3- 272417		CARRIER	CR- 256204-020V
			CR- 256205-020V
			CR- 256204-020V
			CR- 256205-020V
			CR- 256204-030V
			CR- 256205-030V
			CR- 256204-040V
			CR- 256205-040V
			CR- 256204-040V
			CR- 256205-040V
			CR- 256204-050V
			CR- 256205-050V
3- 272419		CARRIER	CR- 256204-020V
			CR- 256205-020V
			CR- 256204-020V
			CR- 256205-020V
			CR- 256204-030V
			CR- 256205-030V
			CR- 256204-040V
			CR- 256205-040V
			CR- 256204-040V
			CR- 256205-040V
			CR- 256204-050V
			CR- 256205-050V
G2- 272420		FOLDING FLAP	CR- 256204-020V
			CR- 256205-020V
			CR- 256204-020V
			CR- 256205-020V
			CR- 256204-030V
			CR- 256205-030V
			CR- 256204-040V
			CR- 256205-040V
			CR- 256204-040V
			CR- 256205-040V
			CR- 256204-050V
			CR- 256205-050V
G2- 272421		FOLDING FLAP	CR- 256204-020V
			CR- 256205-020V
			CR- 256204-020V
			CR- 256205-020V
			CR- 256204-030V
			CR- 256205-030V
			CR- 256204-040V
			CR- 256205-040V
			CR- 256204-040V
			CR- 256205-040V
			CR- 256204-050V
			CR- 256205-050V
G2- 272422		FOLDING FLAP	CR- 256204-020V
			CR- 256205-020V
			CR- 256204-020V
			CR- 256205-020V
			CR- 256204-030V
			CR- 256205-030V
			CR- 256204-040V
			CR- 256205-040V

PART NO	LAST AM	DESCRIPTION	GROUP NO
			CR- 256204-040V
			CR- 256205-040V
			CR- 256204-050V
			CR- 256205-050V
G2- 272423		FOLDING FLAP	CR- 256204-020V
			CR- 256205-020V
			CR- 256204-020V
			CR- 256205-020V
			CR- 256204-030V
			CR- 256205-030V
			CR- 256204-040V
			CR- 256205-040V
			CR- 256204-040V
			CR- 256205-040V
			CR- 256204-050V
G2- 272423		FOLDING FLAP	CR- 256205-050V
G2- 272424		FOLDING FLAP	CR- 256204-020V
			CR- 256205-020V
			CR- 256204-020V
			CR- 256205-020V
			CR- 256204-030V
			CR- 256205-030V
			CR- 256204-040V
			CR- 256205-040V
			CR- 256204-040V
			CR- 256205-040V
			CR- 256204-050V
			CR- 256205-050V
G2- 272425		FOLDING FLAP	CR- 256204-020V
			CR- 256205-020V
			CR- 256204-020V
			CR- 256205-020V
			CR- 256204-030V
			CR- 256205-030V
			CR- 256204-040V
			CR- 256205-040V
			CR- 256204-040V
			CR- 256205-040V
			CR- 256204-050V
			CR- 256205-050V
4- 272427		BRACKET	CR- 256204-020V
			CR- 256205-020V
			CR- 256204-020V
			CR- 256205-020V
			CR- 256204-030V
			CR- 256205-030V
			CR- 256204-040V
			CR- 256205-040V
			CR- 256204-040V
			CR- 256205-040V
			CR- 256204-050V
			CR- 256205-050V
3- 272429		ARM	C- 256206-020V
			C- 256207-020V
			C- 256206-020V
			C- 256207-020V
			C- 256206-020V
			C- 256207-020V
			C- 256206-020V
			C- 256207-020V
			C- 256206-020V
			C- 256207-020V
			C- 256206-020V
			C- 256207-020V
3- 272430		BRACKET	C- 256014-020V
G2- 272431		BRACKET	C- 271128-020V
			C- 271128-030V
			C- 271128-040V
2- 272433		MOTOR CRADLE	C- 271128-020V
4- 272434		SHAFT	C- 271128-020V
			C- 271128-030V
			C- 271128-040V
4- 272437		TRIMMING ROLLER PLUS	B- 648119-020V
4- 272438		TRIMMING ROLLER MINUS	B- 648119-020V
4- 272440		PIPE	C- 272342-020V
			C- 456976-010V
			C- 456976-020V

PART NO	LAST AM	DESCRIPTION	GROUP NO
G2- 272442		BRACKET	C- 256197-020V
			C- 256197-030V
			C- 256197-040V
C- 272445-020V	6642 84-04-03	DATING UNIT	B- 648111-020V
			B- 648111-030V
2- 272448		PLATE	C- 272445-020V
3- 272450		CREASE BAR	C- 256236-020V
			C- 295112-020V
			C- 272445-020V
3- 272451		PLATE	C- 272445-020V
3- 272452		ANGLE BRACKET	C- 272445-020V
4- 272453		SPACER	C- 272508-010V
			C- 469535-010V
			C- 553657-010V
			C- 752042-010V
2- 272454		PIVOT PIN	C- 256951-020V
			C- 256952-020V
			C- 256951-020V
			C- 256952-020V
			C- 256951-030V
			C- 256952-030V
			C- 256951-030V
			C- 256952-030V
			C- 256951-040V
			C- 256952-040V
			C- 256951-040V
			C- 256952-040V
3- 272455		BEARING BRACKET	C- 256197-020V
			C- 256197-030V
			C- 256197-040V
G3- 272456		LINK	C- 256197-020V
			C- 256197-030V
			C- 256197-040V
G3- 272457		CLAMP	C- 256197-020V
			C- 256197-030V
			C- 256197-040V
4- 272458		ECCENTRIC SHAFT	C- 256197-020V
			C- 256197-030V
			C- 256197-040V
4- 272459		WASHER	C- 256197-020V
			C- 256197-030V
			C- 256197-040V
4- 272460		WASHER	C- 256197-020V
			C- 256197-030V
4- 272461		WASHER	C- 256197-020V
			C- 256197-030V
			C- 256197-040V
3- 272462		AXLE PIN	C- 256198-020V
			C- 256198-030V
			C- 491814-010V
			C- 491815-010V
			C- 491814-010V
			C- 491815-010V
1- 272463		MACHINE BODY	C- 256555-020V
3- 272464		ANGLE BRACKET	C- 272025-020V
			C- 272025-030V
4- 272465		WASHER	C- 271649-020V
			C- 271649-030V
			C- 271649-020V
4- 272466		SPRING	C- 271649-020V
			C- 271649-030V
			C- 271649-020V
4- 272467		CLAMP	C- 271649-020V
			C- 469074-010V
			C- 469074-020V
3- 272470		ROD END	C- 256198-020V
			C- 256198-030V
3- 272471		LINK	C- 256198-020V
			C- 256198-030V
3- 272472		END PIECE	C- 256198-020V
			C- 256198-030V
			C- 491787-010V
			C- 491788-010V
			C- 491787-020V
			C- 491788-020V
C- 272473-0101	6904 84-06-29	BENDING ROLLER	C- 272404-020V
			C- 272404-030V

PART NO	LAST AM	DESCRIPTION	GROUP NO
			C- 272404-040V
			C- 272404-050V
			C- 272404-060V
3- 272474		SHAFT	C- 272473-010V
4- 272475		CLAMP	C- 272473-010V
3- 272476		SHAFT	C- 272084-020V
			C- 272084-030V
3- 272477		HOLDER	C- 272084-020V
3- 272478		BRACKET	C- 271649-020V
			C- 271649-030V
			C- 271649-020V
4- 272479		PRESSURE ROLLER	C- 295402-020V
			C- 295667-020V
			C- 295402-020V
			C- 295667-020V
			C- 295402-020V
			C- 295667-030V
			C- 295402-020V
			C- 295667-030V
			C- 295402-020V
			C- 295667-030V
			C- 255982-020V
			C- 295778-010V
			C- 255982-020V
			C- 295778-010V
			C- 295778-020V
			C- 469091-010V
			C- 295778-030V
			C- 469091-010V
			C- 295778-030V
			C- 469091-020V
			C- 295778-040V
			C- 469091-020V
G2- 272480		BEARING BRACKET	C- 256198-020V
			C- 256198-030V
1- 272481		TOUCH GUARD	C- 272342-020V
2- 272482		CARRIER RULER	CR- 256205-020V
			CR- 256205-030V
2- 272482		CARRIER RULER	CR- 256205-040V
2- 272483		CARRIER RULER	CR- 256204-020V
			CR- 256204-030V
G2- 272484		CARRIER RULER	CR- 256204-040V
			CR- 256205-020V
			CR- 256205-030V
G2- 272485		CARRIER RULER	CR- 256205-040V
			CR- 256204-020V
			CR- 256204-030V
1- 272486		CARRIER RULER	CR- 256204-040V
			CR- 256205-020V
			CR- 256205-030V
1- 272487		CARRIER RULER	CR- 256205-040V
			CR- 256204-020V
			CR- 256204-030V
4- 272488		CLAMP RIGHT	CR- 256204-040V
			CR- 256212-020V
			CR- 256212-030V
4- 272489		CLAMP LEFT	CR- 256212-040V
			RK- 456712-010V
			CR- 256213-020V
			CR- 256213-030V
			CR- 256213-040V
G3- 272490		SLEEVE	RK- 456712-010V
			C- 256217-020V
			C- 256217-030V
G3- 272491		BRACKET	C- 256217-040V
			C- 256206-020V
			C- 256207-020V
			C- 256206-020V
			C- 256207-020V
			C- 256206-020V
			C- 256207-020V
			C- 256206-020V
			C- 256207-020V
			C- 256206-020V
			C- 256207-020V
			C- 256206-020V
			C- 256207-020V

PART NO	LAST AM	DESCRIPTION	GROUP NO
G2- 272492		ARM RIGHT	C- 256951-020V
			C- 256951-030V
			C- 256951-040V
G2- 272493		ARM LEFT	C- 256952-020V
			C- 256952-030V
			C- 256952-040V
4- 272495		ARM	CR- 256844-020V
			CR- 256845-020V
			CR- 256844-020V
			CR- 256845-020V
			CR- 256844-020V
			CR- 256845-020V
			CR- 256844-020V
			CR- 256845-020V
			CR- 256844-030V
			CR- 256845-030V
			CR- 256844-030V
			CR- 256845-030V
			CR- 256844-030V
			CR- 256845-030V
4- 272495		ARM	CR- 256844-030V
			CR- 256845-030V
G3- 272496		BRACKET RIGHT	C- 256951-020V
			C- 256951-030V
			C- 256951-040V
G3- 272497		BRACKET LEFT	C- 256952-020V
			C- 256952-030V
			C- 256952-040V
G1- 272498		VOLUME FLAP 236 CC	CR- 256209-020V
			CR- 256210-020V
			CR- 256209-020V
			CR- 256210-020V
			CR- 256209-020V
			CR- 256210-020V
			CR- 256209-020V
			CR- 256210-020V
			CR- 256209-020V
			CR- 256210-020V
			CR- 256209-030V
			CR- 256210-030V
G1- 272499		VOLUME FLAP 180 CC	CR- 256209-020V
			CR- 256210-020V
			CR- 256209-020V
			CR- 256210-020V
			CR- 256209-020V
			CR- 256210-020V
			CR- 256209-020V
			CR- 256210-020V
			CR- 256209-020V
			CR- 256210-020V
3- 272500		SHAFT	CR- 256212-020V
			CR- 256213-020V
			CR- 256212-020V
			CR- 256213-020V
			CR- 256212-030V
			CR- 256213-030V
			CR- 256212-040V
			CR- 256213-040V
			CR- 256212-040V
			CR- 256213-040V
			RK- 456712-010V
4- 272501		BRACKET RIGHT	CR- 256212-020V
			CR- 256212-030V
			CR- 256212-040V
			CR- 256212-050V
			RK- 456712-010V
4- 272502		BRACKET LEFT	CR- 256213-020V
			CR- 256213-030V
			CR- 256213-040V
			CR- 256213-050V
			RK- 456712-010V
4- 272503		CLAMP	CR- 256212-020V
			CR- 256213-020V
			CR- 256212-020V
			CR- 256213-020V
			CR- 256212-030V
			CR- 256213-030V

PART NO	LAST AM	DESCRIPTION	GROUP NO
			CR- 256212-040V
			CR- 256213-040V
4- 272503		CLAMP	CR- 256212-040V
			CR- 256213-040V
			CR- 256212-050V
			CR- 256213-050V
			RK- 456712-010V
4- 272504		TORSION SPRING	CR- 256212-020V
4- 272505		TORSION SPRING	CR- 256213-020V
4- 272506		SHIM	CR- 256212-020V
			CR- 256213-020V
			CR- 256212-020V
			CR- 256213-020V
			CR- 256212-030V
			CR- 256213-030V
			CR- 256212-040V
			CR- 256213-040V
			CR- 256212-040V
			CR- 256213-040V
			CR- 256212-050V
			CR- 256213-050V
			RK- 456712-010V
C- 272508-0101	6317 83-11-03	DOOR	B- 648106-020V
2- 272509		DOOR	C- 272508-010V
4- 272510		HINGE	RK- 548056-010V
			C- 272508-010V
			C- 469535-010V
			C- 553657-010V
			C- 752042-010V
4- 272511		HINGE	RK- 548056-010V
			C- 272508-010V
			C- 469535-010V
			C- 553657-010V
			C- 752042-010V
3- 272517		SPROCKET	C- 295310-010V
			C- 295310-020V
			C- 295310-030V
			C- 295310-040V
			C- 295310-050V
			C- 295310-060V
4- 272534		WASHER	C- 295310-010V
			C- 295310-020V
			C- 295310-030V
			C- 295310-040V
			C- 295310-050V
			C- 295310-060V
4- 272546		SLIDER	C- 491871-010V
4- 272547		PIN	C- 491871-010V
4- 272549		WASHER	C- 491871-010V
4- 272550		ADJUSTING SCREW	C- 491871-010V
4- 272552		BRACKET	C- 257146-020V
2- 272554		TOUCH GUARD	C- 272560-020V
			C- 272560-030V
			C- 272560-040V
			C- 272560-050V
1- 272555		TOUCH GUARD	C- 272560-020V
			C- 272560-030V
			C- 272560-040V
			C- 272560-050V
2- 272556-0001		TOUCH GUARD	C- 272342-020V
			C- 456976-010V
2- 272556-0001		TOUCH GUARD	C- 456976-020V
			C- 456976-030V
			C- 456976-040V
2- 272556-0002		TOUCH GUARD	C- 272342-020V
1- 272557-0001		TOUCH GUARD	C- 456976-010V
			C- 272342-020V
			C- 456976-010V
			C- 456976-020V
			C- 456976-030V
			C- 456976-040V
1- 272557-0002		TOUCH GUARD	C- 272342-020V
			C- 456976-010V
3- 272559		CABLE TRACK	C- 271569-020V
			C- 271569-030V
			C- 271569-040V
			C- 271569-050V

PART NO	LAST AM	DESCRIPTION	GROUP NO
C- 272560-0201	6317 83-11-03	VALVE	B- 648111-020V
C- 272560-0301	9437 86-09-05	VALVE	B- 648111-030V
			B- 648111-060V
			B- 648111-070V
C- 272560-040V	11023 87-12-14	PRODUCT VALVE	B- 648111-080V
C- 272560-050V	11914 89-11-14	PRODUCT VALVE	B- 648111-090V
3- 272562		HOLDER	C- 272404-020V
			C- 272404-030V
3- 272563		HOLDER	C- 272404-020V
			C- 272404-030V
4- 272564		BEARING	C- 272404-020V
			C- 272404-030V
			C- 272404-040V
			C- 272404-050V
			C- 272404-060V
G3- 272565		ARM	C- 256199-020V
			C- 256199-030V
			C- 256199-040V
4- 272566		AXLE PIN	C- 256199-020V
			C- 256199-030V
			C- 256199-040V
4- 272567		ROLLER	C- 256199-020V
			C- 256199-030V
4- 272568		ELBOW PIPE	C- 272560-020V
G2- 272569		CATCH HANDLE	C- 271454-020V
3- 272570		AXLE SUPPORT	C- 255957-020V
3- 272571		AXLE SUPPORT	C- 256238-020V
			C- 256238-030V
			C- 255957-020V
1- 272572		BEARING BRACKET	C- 256965-020V
G2- 272573		HUB	C- 256965-020V
			C- 456546-010V
			C- 456546-020V
G2- 272574		HUB	C- 256965-020V
			C- 456546-010V
			C- 456546-020V
3- 272575		BEAM	C- 256965-020V
			C- 456546-010V
			C- 456546-020V
2- 272576		BRACKET	CR- 256436-020V
			CR- 256436-030V
			CR- 256436-040V
			CR- 256436-050V
3- 272580		HOUSE	CR- 256436-020V
			CR- 256436-030V
G4- 272583		BRACKET	CR- 256436-020V
			CR- 256436-030V
3- 272584		BEARING	C- 271017-020V
			C- 271017-030V
1- 272585		TOUCH GUARD	C- 272342-020V
1- 272586		TOUCH GUARD	C- 272342-020V
			C- 456976-010V
			C- 456976-020V
1- 272587		CAM	C- 256201-020V
			C- 256201-030V
			C- 256201-040V
1- 272588		CAM	C- 256201-020V
			C- 256201-030V
			C- 256201-040V
1- 272589		CAM	C- 256201-020V
			C- 256201-030V
			C- 256201-040V
1- 272590		CAM	C- 256201-020V
			C- 256201-030V
			C- 256201-040V
1- 272591		CAM	C- 256201-020V
			C- 256201-030V
			C- 256201-040V
1- 272592		CAM	C- 256201-020V
			C- 256201-030V
			C- 256201-040V
1- 272593		CAM	C- 256201-020V
			C- 256201-030V
			C- 256201-040V
1- 272594		CAM	C- 256201-020V
			C- 256201-030V
			C- 256201-040V

PART NO	LAST AM	DESCRIPTION	GROUP NO
1- 272595		TOUCH GUARD	C- 272342-020V
2- 272596		GUIDE	C- 271469-020V
3- 272597		GUIDE RAIL	C- 271469-020V
2- 272599-0001		PIVOT ARM	C- 255907-020V
2- 272599-0002		PIVOT ARM	C- 255907-020V
3- 272600		ARM	C- 255907-020V
			C- 456180-010V
4- 272601		WASHER	C- 255907-020V
4- 272602		SCREW	C- 255907-020V
			C- 456180-010V
4- 272603		STOP LUG	C- 271454-020V
4- 272604		LUG	C- 271454-020V
3- 272605		BENDING ROLLER	C- 256014-020V
G1- 272606		CRADLE	C- 256203-020V
			C- 256203-030V
			C- 256203-040V
3- 272607		BELT HOLDER	C- 256198-020V
			C- 256198-030V
			C- 491814-010V
			C- 491815-010V
			C- 491814-010V
			C- 491815-010V
3- 272608		BELT HOLDER	C- 256203-020V
			C- 256203-030V
			C- 256203-040V
G2- 272609		CYLINDER	CR- 256436-020V
			CR- 256712-020V
			CR- 256436-020V
			CR- 256712-020V
			CR- 256436-020V
			CR- 256712-020V
			CR- 256436-020V
			CR- 256712-020V
3- 272610		PISTON	CR- 256436-020V
			CR- 256712-020V
			CR- 256436-020V
			CR- 256712-020V
			CR- 256436-020V
			CR- 256712-020V
			CR- 256436-020V
			CR- 256712-020V
			CR- 256436-030V
			CR- 256712-030V
			RK- 751157-010V
4- 272611		SLEEVE	CR- 256436-020V
			CR- 256712-020V
			CR- 256436-020V
			CR- 256712-020V
			CR- 256436-020V
			CR- 256712-020V
			CR- 256436-030V
			CR- 256712-030V
2- 272620		GUIDE	C- 271468-020V
			C- 271468-040V
3- 272621		GUIDE RAIL	C- 271468-020V
			C- 271468-040V
2- 272622		DRINKING STRAW	C- 272408-020V
			C- 272408-030V
			C- 272408-040V
			C- 272408-050V
C- 272623-020V	6317 83-11-03	SPRAY SYSTEM	B- 648111-020V
			B- 648111-030V
C- 272623-0301	8097 85-07-08	SPRAY SYSTEM	B- 648111-060V
			B- 648111-070V
C- 272623-0401	8806 86-02-19	SPRAY SYSTEM	B- 648111-080V
C- 272623-0501	12648 89-11-14	SPRAY SYSTEM	B- 648111-090V
2- 272624		PIPE	C- 272623-020V
3- 272625		PIPE	C- 272623-020V
3- 272626		PIPE	C- 272623-020V
4- 272627		PIPE	C- 272623-020V
			C- 272623-030V
			C- 272623-040V
3- 272630		CATCH	C- 271468-020V
			C- 271468-040V
3- 272631		BRACKET	C- 271468-020V

PART NO	LAST AM	DESCRIPTION	GROUP NO
4- 272632		SILENCER	C- 271468-040V
			C- 272408-020V
			C- 272408-030V
			C- 272408-040V
			C- 272408-050V
4- 272636		BRACKET	C- 272839-020V
			C- 490947-010V
4- 272636		BRACKET	C- 490947-020V
4- 272637		BRACKET	C- 272839-020V
1- 272638		ARM	C- 256272-020V
G3- 272639		SPROCKET	C- 256185-020V
4- 272640-0001		CURVE	C- 256206-020V
			C- 256207-020V
			C- 256206-020V
			C- 256207-020V
			C- 256206-020V
			C- 256207-020V
			C- 256206-020V
			C- 256207-020V
			C- 256206-020V
			C- 256207-020V
			C- 256206-020V
			C- 256207-020V
4- 272640-0002		CURVE	C- 256206-020V
			C- 256207-020V
			C- 256206-020V
			C- 256207-020V
			C- 256206-020V
			C- 256207-020V
			C- 256206-020V
			C- 256207-020V
			C- 256206-020V
			C- 256207-020V
			C- 256206-020V
			C- 256207-020V
4- 272640-0003		CURVE	C- 256206-020V
			C- 256207-020V
			C- 256206-020V
			C- 256207-020V
			C- 256206-020V
			C- 256207-020V
			C- 256206-020V
			C- 256207-020V
			C- 256206-020V
			C- 256207-020V
			C- 256206-020V
			C- 256207-020V
4- 272640-0004		CURVE	C- 256206-020V
			C- 256207-020V
			C- 256206-020V
			C- 256207-020V
			C- 256206-020V
			C- 256207-020V
			C- 256206-020V
			C- 256207-020V
			C- 256206-020V
			C- 256207-020V
			C- 256206-020V
			C- 256207-020V
4- 272640-0005		CURVE	C- 256206-020V
			C- 256207-020V
			C- 256206-020V
			C- 256207-020V
			C- 256206-020V
			C- 256207-020V
			C- 256206-020V
			C- 256207-020V
4- 272640-0005		CURVE	C- 256206-020V
			C- 256207-020V
			C- 256206-020V
			C- 256207-020V
			C- 256206-020V
			C- 256207-020V
4- 272640-0006		CURVE	C- 256206-020V
			C- 256207-020V
			C- 256206-020V
			C- 256207-020V
			C- 256206-020V
			C- 256207-020V

PART NO	LAST AM	DESCRIPTION	GROUP NO
			C- 256206-020V
			C- 256207-020V
			C- 256206-020V
			C- 256207-020V
			C- 256206-020V
			C- 256207-020V
4- 272640-0007		CURVE	C- 256206-020V
			C- 256207-020V
			C- 256206-020V
			C- 256207-020V
			C- 256206-020V
			C- 256207-020V
			C- 256206-020V
			C- 256207-020V
			C- 256206-020V
			C- 256207-020V
			C- 256206-020V
			C- 256207-020V
4- 272640-0008		CURVE	C- 256206-020V
			C- 256207-020V
			C- 256206-020V
			C- 256207-020V
			C- 256206-020V
			C- 256207-020V
			C- 256206-020V
			C- 256207-020V
			C- 256206-020V
			C- 256207-020V
4- 272640-0009		CURVE	C- 256206-020V
			C- 256207-020V
			C- 256206-020V
			C- 256207-020V
			C- 256206-020V
			C- 256207-020V
			C- 256206-020V
			C- 256207-020V
			C- 256206-020V
			C- 256207-020V
2- 272641		COLUMN	C- 256206-020V
2- 272642		COLUMN	C- 256207-020V
2- 272643		CYLINDER	CR- 256212-020V
			CR- 256213-020V
			CR- 256212-020V
			CR- 256213-020V
4- 272644		PISTON	CR- 256212-020V
			CR- 256213-020V
			CR- 256212-020V
			CR- 256213-020V
			CR- 256212-030V
			CR- 256213-030V
3- 272645		RAIL	C- 256206-020V
			C- 256207-020V
			C- 256206-020V
			C- 256207-020V
			C- 256206-020V
			C- 256207-020V
			C- 256206-020V
			C- 256207-020V
			C- 256206-020V
			C- 256207-020V
2- 272646		HOLDER	C- 271116-020V
4- 272647		SHAFT	C- 271116-020V
			C- 271116-030V
4- 272648		PULLEY	C- 271116-020V
			C- 271116-030V
4- 272649		SPACER	C- 256272-020V
4- 272650		SHAFT	C- 272652-010V
4- 272651		WASHER	C- 272652-020V
			C- 272652-010V
C- 272652-0101	6317 83-11-03	CHAIN TENSIONER	B- 648105-020V
			B- 648105-030V

PART NO	LAST AM	DESCRIPTION	GROUP NO
			B- 648105-040V
C- 272652-0201	6153 83-11-15	CHAIN TENSIONER	C- 272765-030V
C- 272652-0301	8667 86-02-17	CHAIN TENSIONER	C- 272765-040V
			C- 272765-050V
			C- 272765-060V
1- 272653		MACHINE BODY	C- 271109-020V
3- 272654		ECCENTRIC SHAFT	C- 256206-020V
			C- 256207-020V
			C- 256206-020V
			C- 256207-020V
			C- 256206-020V
			C- 256207-020V
			C- 256206-020V
			C- 256207-020V
			C- 256206-020V
			C- 256207-020V
			C- 256206-020V
			C- 256207-020V
3- 272656		KNIFE HOLDER	CR- 256208-020V
2- 272657		PIPE	C- 256802-020V
1- 272658		DISTRIBUTOR	C- 256802-020V
2- 272659		SIDE PIECE	C- 271109-020V
			C- 441695-010V
			C- 441695-020V
2- 272660		SIDE PIECE	C- 271109-020V
			C- 441695-010V
			C- 441695-020V
4- 272661		STEP	C- 271109-020V
			C- 441695-010V
			C- 441695-020V
4- 272663		HOLDER	C- 271109-020V
2- 272664		BRACKET	C- 256806-020V
			C- 256806-030V
2- 272667		FRONT PLATE	C- 256555-020V
			C- 256555-030V
2- 272668		FRONT PLATE	C- 256555-020V
			C- 256555-030V
2- 272669		FRONT PLATE	C- 256555-020V
			C- 256555-030V
2- 272670		CHUTE	C- 256555-020V
			C- 256555-030V
			C- 456100-010V
			C- 456100-020V
2- 272671		CHUTE	C- 256555-020V
			C- 256555-030V
			C- 456100-010V
			C- 456100-020V
3- 272672		HOLDER	C- 256555-020V
4- 272673		LEG	C- 256555-020V
			C- 256555-030V
			C- 271109-020V
			C- 441695-010V
			C- 441695-020V
1- 272674-0003		COVER	C- 256555-020V
			C- 256555-030V
1- 272674-0004		COVER	C- 256555-020V
			C- 256555-030V
1- 272674-0006		COVER	C- 256555-020V
			C- 256555-030V
1- 272674-0007		COVER	C- 256555-020V
			C- 256555-030V
2- 272677		BRANCH PIPE	C- 271261-020V
			C- 271261-030V
4- 272679		PIPE	C- 271261-020V
			C- 271261-030V
			C- 271261-040V
			C- 271261-050V
3- 272681		SPLASH GUARD	C- 272381-020V
3- 272682		FILLING PIPE	C- 272381-020V
1- 272688		FLUSH PIPE	C- 256233-020V
G1- 272689		BRACKET	C- 256217-020V
			C- 256217-030V
			C- 256217-040V
3- 272690		COVER	C- 256806-020V
			C- 256806-030V
4- 272691		BRACKET	C- 256806-020V
			C- 256806-030V

PART NO	LAST AM	DESCRIPTION	GROUP NO
4- 272692		LID	C- 256806-020V C- 256806-030V
4- 272693		RING	C- 256806-020V C- 256806-030V
4- 272694		CATCH	C- 256806-020V C- 256806-030V
2- 272696		HOLDER	C- 271513-020V C- 271513-030V C- 271513-040V C- 271513-050V C- 751885-020V
3- 272697		BRACKET	C- 272404-020V
3- 272697		BRACKET	C- 272404-030V C- 272404-040V C- 272404-050V C- 272404-060V
4- 272698		BRACKET	C- 271513-020V C- 271513-030V C- 271513-040V C- 271513-050V C- 751885-020V
3- 272700		WASTE CHUTE	C- 272381-020V C- 272381-030V
1- 272718		MACHINE BODY	C- 256843-020V
G4- 272728		CATCH	C- 458383-010V C- 458383-020V
2- 272730		DRINKING STRAW	C- 271113-020V C- 456588-010V
4- 272731		FLANGE	C- 272241-020V
3- 272734		SHAFT	C- 256806-020V
2- 272735		PAPER GUARD	C- 272839-020V
3- 272736		BRACKET	C- 256806-020V C- 256806-030V
3- 272737		BRACKET	C- 256806-020V C- 256806-030V
4- 272741		SEAL	C- 271109-020V C- 456455-010V
4- 272742		FINGER	C- 456455-020V C- 255907-020V C- 456180-010V C- 295310-010V C- 295310-020V C- 295310-030V C- 295310-040V C- 295310-050V C- 295310-060V
4- 272743		LID	C- 271109-020V C- 441695-010V C- 441695-020V
3- 272745		COVER	C- 271109-020V C- 441695-010V
3- 272746		ROD	C- 256437-020V
3- 272747		CONNECTION	C- 256437-020V
3- 272749		STOP	CR- 256844-020V
3- 272750		STOP	CR- 256845-020V
3- 272751		BOTTOM VALVE	C- 256674-020V C- 256674-030V
1- 272752		CRADLE	C- 272765-010V C- 272765-020V
4- 272753		GUIDE	CR- 256208-020V CR- 256208-030V
4- 272754		LINK	CR- 256208-020V
4- 272755		NUT	CR- 256208-020V CR- 256208-030V
3- 272756		KNIFE HOLDER	CR- 256208-020V
3- 272757		KNIFE HOLDER	CR- 256208-020V
4- 272758		PULLEY	C- 256438-020V
3- 272759		RAIL	CR- 256215-020V
3- 272760		RAIL	CR- 256215-020V
3- 272761		FORK	C- 256221-020V C- 256222-020V
3- 272761		FORK	C- 256221-020V C- 256222-020V C- 256221-020V C- 256222-020V C- 256221-020V C- 256222-020V

PART NO	LAST AM	DESCRIPTION	GROUP NO
3- 272762		KNIFE	C- 256221-020V C- 256222-020V C- 256221-020V C- 256222-020V CR- 256208-020V C- 295523-020V CR- 256208-020V C- 295523-020V CR- 256208-030V C- 295523-030V CR- 256208-030V C- 295523-030V CR- 256208-030V C- 295523-030V CR- 256208-030V C- 295523-030V
3- 272764		ANGLE FLANGE	C- 256410-020V
C- 272765-0101	6441 84-01-18	BRACKET	B- 648105-020V
C- 272765-0201	7911 85-06-11	BRACKET	B- 648105-030V B- 648105-040V
C- 272765-0301	10017 87-01-12	BRACKET	B- 648105-060V
C- 272765-0401	10017 87-01-12	BRACKET	B- 648105-070V
C- 272765-0501	12254 88-10-20	BRACKET	B- 648105-080V
C- 272765-0601	14151 89-11-10	BRACKET	B- 648105-090V
2- 272769		CAM	C- 256217-020V
2- 272770		BEARING	C- 256217-020V C- 256217-030V
2- 272771		BEARING	C- 256217-020V C- 256217-030V
3- 272772		ARM	C- 256806-020V C- 256806-030V
4- 272773		BRACKET	C- 272839-020V
4- 272775		FLANGE	C- 272241-020V
2- 272777		FRAME	C- 271851-020V
2- 272778		FRAME	C- 257075-020V
2- 272779		FRAME	C- 257075-020V C- 257075-025V
3- 272780		COVER STRIP	C- 257075-020V C- 257075-025V C- 491570-010V
4- 272781-0001		COVER STRIP	C- 257075-020V
4- 272781-0002		COVER STRIP	C- 271851-020V C- 491579-010V
4- 272782		COVER STRIP	C- 257075-020V C- 271851-020V C- 257075-020V C- 271851-020V C- 257075-025V C- 271851-020V C- 257075-025V C- 271851-020V C- 491570-010V C- 491579-010V
4- 272782		COVER STRIP	C- 491570-010V C- 491579-010V
4- 272783-0001		GLASS PANE	C- 257075-020V
4- 272783-0002		GLASS PANE	C- 271851-020V C- 491579-010V
4- 272783-0003		GLASS PANE	C- 257075-020V C- 257075-025V C- 491570-010V
3- 272784-0001		RUBBER STRIP	C- 257075-020V
3- 272784-0002		RUBBER STRIP	C- 271851-020V C- 491579-010V
3- 272785		RUBBER STRIP	C- 257075-020V C- 257075-025V C- 491570-010V
4- 272786		HINGE	C- 257075-020V C- 271851-020V C- 257075-020V C- 271851-020V C- 257075-025V C- 271851-020V C- 257075-025V C- 271851-020V
4- 272787		WASHER	C- 257075-020V C- 271851-020V

PART NO	LAST AM	DESCRIPTION	GROUP NO
			C- 257075-020V
			C- 271851-020V
			C- 257075-025V
			C- 271851-020V
			C- 257075-025V
			C- 271851-020V
C- 272788-0101	6317 83-11-03	CARRIAGE	C- 272404-020V
			C- 272404-030V
			C- 272404-040V
			C- 272404-050V
			C- 272404-060V
2- 272789		SIDE PIECE	C- 272788-010V
2- 272790		SIDE PIECE	C- 272788-010V
3- 272791		SPACER PIPE	C- 272788-010V
1- 272792		HEATING PIPE	C- 271181-020V
			C- 271181-030V
3- 272793		SUPPORT	C- 271181-020V
3- 272794		SUPPORT	C- 271181-020V
			C- 271181-030V
			C- 271181-040V
1- 272795		DOOR	C- 271442-020V
1- 272796		DOOR	C- 271443-020V
4- 272797		ROLLER	C- 441102-010V
			RK- 751305-010V
			RK- 751307-010V
			RK- 751305-010V
			RK- 751307-010V
			C- 272030-020V
			C- 441304-010V
			C- 272030-020V
			C- 441304-010V
			C- 441304-020V
			C- 441486-030V
3- 272798		BRACKET	C- 272030-020V
3- 272799		BRACKET	C- 272030-020V
C- 272802-0101	5749 83-02-14	PLATFORM	B- 648102-020V
			B- 648102-030V
2- 272803		PLATFORM LEFT	C- 272802-010V
2- 272804		PLATFORM	C- 272802-010V
3- 272805		SIDE PIECE	C- 272802-010V
			C- 295305-010V
			C- 272802-010V
			C- 295305-010V
3- 272806		SIDE PIECE	C- 272802-010V
			C- 295305-010V
			C- 272802-010V
			C- 295305-010V
4- 272808		BRACKET	C- 272342-020V
			C- 456976-010V
			C- 456976-020V
			C- 456976-030V
3- 272810-0001		SLEEVE	C- 458384-010V
3- 272810-0002		SLEEVE	C- 458384-010V
3- 272810-0003		SLEEVE	C- 458384-010V
3- 272811		PLUNGER RIGHT	C- 458383-010V
			C- 458383-020V
3- 272812		PLUNGER LEFT	C- 458383-010V
			C- 458383-020V
3- 272813		PLUNGER	C- 458384-010V
G2- 272814		SLEEVE	C- 458383-010V
			C- 458383-020V
G2- 272815-0001		SLEEVE	C- 458383-010V
			C- 458383-020V
G2- 272815-0002		SLEEVE	C- 458383-010V
			C- 458383-020V
G2- 272815-0003		SLEEVE	C- 458383-010V
			C- 458383-020V
3- 272816-0001		SHAFT	C- 458383-010V
			C- 458384-010V
			C- 458383-010V
			C- 458384-010V
			C- 458383-010V
			C- 458384-010V
			C- 458383-010V
			C- 458384-010V

PART NO	LAST AM	DESCRIPTION	GROUP NO
3- 272816-0002		SHAFT	C- 458383-010V
			C- 458384-010V
			C- 458383-010V
			C- 458384-010V
			C- 458383-010V
			C- 458384-010V
			C- 458383-010V
			C- 458384-010V
			C- 458383-020V
			C- 458384-010V
3- 272816-0003		SHAFT	C- 458383-010V
			C- 458384-010V
			C- 458383-010V
			C- 458384-010V
			C- 458383-010V
			C- 458384-010V
			C- 458383-010V
3- 272816-0003		SHAFT	C- 458384-010V
			C- 458383-020V
			C- 458384-010V
3- 272818		GASKET	C- 272381-020V
			C- 272381-030V
			C- 491207-010V
			C- 491207-020V
3- 272820		PULLEY	C- 256201-020V
			C- 256202-020V
			C- 256201-020V
			C- 256202-020V
			C- 256201-020V
			C- 256202-020V
			C- 256201-030V
			C- 256202-030V
3- 272821		PROTRACTOR	C- 256201-020V
			C- 256202-020V
			C- 256201-020V
			C- 256202-020V
			C- 256201-020V
			C- 256202-020V
			C- 256201-030V
			C- 256202-030V
			C- 256201-040V
			C- 256202-040V
C- 272825-010V	6736 84-05-07	PLATFORM	B- 648102-020V
			B- 648102-030V
1- 272826		PLATFORM	C- 272825-010V
3- 272827		TERMINAL HOLDER	C- 295026-010V
			C- 295026-020V
			C- 295026-030V
2- 272828-0001		PLATFORM LEFT	C- 272825-010V
2- 272828-0002		PLATFORM LEFT	C- 272825-010V
2- 272829		PLATFORM	C- 272825-010V
2- 272830		MACHINE BODY	C- 272825-010V
3- 272831		PLATFORM	C- 272825-010V
C- 272833-010V	6351 83-12-05	RAILING	B- 648102-020V
			B- 648102-030V
2- 272834		STRUT	C- 272833-010V
1- 272835		RAILING	C- 272833-010V
3- 272837		PAPER GUARD	C- 272839-020V
			C- 490947-010V
			C- 490947-020V
3- 272838		COVER	C- 272839-020V
			C- 490947-010V
			C- 490947-020V
C- 272839-0201	6606 84-04-03	PAPER GUARD	B- 648107-020V
C- 272839-0202	6606 84-04-03	PAPER GUARD	B- 648107-020V
4- 272840		ROD	C- 256217-020V
			C- 256217-030V
			C- 256217-040V
3- 272843		PIPE	C- 272623-020V
3- 272844		BRACKET	C- 272623-020V
			C- 272623-030V
			C- 272623-040V
			C- 272623-050V
4- 272845		PIPE	C- 272623-020V
2- 272849		CABLE CONDUIT	C- 272408-020V
3- 272852		HOLDER	C- 255907-020V
3- 272852		HOLDER	C- 456180-010V

PART NO	LAST AM	DESCRIPTION	GROUP NO
4- 272853		SCREW	C- 255907-020V
			C- 456180-010V
4- 272855		HUB	C- 256200-020V
4- 272856		HUB	C- 256200-020V
4- 272857		RING	C- 256200-020V
			C- 256200-030V
4- 272858		SHAFT	C- 256200-020V
4- 272860		RING	C- 256200-020V
4- 272862		HOLDER	C- 271626-020V
			C- 271626-030V
1- 272863		ARM	C- 271626-020V
2- 272864		BRACKET	C- 271626-020V
			C- 271626-030V
3- 272865		SHAFT	C- 271626-020V
			C- 271626-030V
3- 272866		LOCKING FLANGE	C- 271626-020V
			C- 271626-030V
4- 272867		SPRING HOUSING	C- 271626-020V
			C- 271626-030V
4- 272868		STOPPER	C- 271626-020V
			C- 271626-030V
4- 272869-0001		FLAP	C- 271626-020V
			C- 271626-030V
4- 272869-0002		FLAP	C- 271626-020V
			C- 271626-030V
1- 272879		RAILING	C- 272833-010V
2- 272880		CABLE CONDUIT	C- 272833-010V
2- 272881		CABLE CONDUIT	C- 272833-010V
C- 272882-0101	6351 83-12-05	RAILING	B- 648102-020V
			B- 648102-030V
1- 272883		RAILING	C- 272882-010V
1- 272884		RAILING	C- 272882-010V
2- 272885		STRUT	C- 272882-010V
			C- 295188-010V
			C- 272882-010V
			C- 295188-010V
4- 272886		RULER	C- 271641-020V
			C- 271641-030V
4- 272887		RULER	C- 271641-020V
4- 272888		RULER	C- 271641-020V
			C- 271641-030V
G3- 272902		BLOCK	CR- 256712-020V
			CR- 256712-030V
G3- 272903		BLOCK	CR- 256712-020V
			CR- 256712-030V
G3- 272904		BLOCK	CR- 256712-020V
			CR- 256712-030V
G3- 272905-0001		ARM	CR- 256712-020V
			CR- 256712-030V
			CR- 256712-040V
G3- 272905-0002		ARM	CR- 256712-050V
			CR- 256712-020V
			CR- 256712-030V
			CR- 256712-040V
G3- 272905-0003		ARM	CR- 256712-050V
			CR- 256712-020V
			CR- 256712-030V
G3- 272905-0003		ARM	CR- 256712-040V
G3- 272905-0004		ARM	CR- 256712-050V
			CR- 256712-020V
			CR- 256712-030V
			CR- 256712-040V
G3- 272905-0005		ARM	CR- 256712-050V
			CR- 256712-020V
			CR- 256712-030V
			CR- 256712-040V
G3- 272905-0006		ARM	CR- 256712-050V
			CR- 256712-020V
			CR- 256712-030V
			CR- 256712-040V
G3- 272906-0001		ARM	CR- 256712-050V
			CR- 256712-020V
			CR- 256712-030V
			CR- 256712-040V
G3- 272906-0002		ARM	CR- 256712-050V
			CR- 256712-020V
			CR- 256712-030V

PART NO	LAST AM	DESCRIPTION	GROUP NO
			CR- 256712-040V
			CR- 256712-050V
G3- 272906-0003		ARM	CR- 256712-020V
			CR- 256712-030V
			CR- 256712-040V
			CR- 256712-050V
G3- 272906-0004		ARM	CR- 256712-020V
			CR- 256712-030V
			CR- 256712-040V
			CR- 256712-050V
G3- 272906-0005		ARM	CR- 256712-020V
			CR- 256712-030V
			CR- 256712-040V
			CR- 256712-050V
G3- 272906-0006		ARM	CR- 256712-020V
			CR- 256712-030V
			CR- 256712-040V
			CR- 256712-050V
3- 272919		BENDING ROLLER	C- 272028-020V
G2- 272926		FORK	C- 272024-020V
			C- 272024-030V
3- 272927		PRESSURE ARM	C- 272024-020V
			C- 272024-030V
G4- 272928		ARM	C- 272024-020V
4- 272929		BRACKET	C- 272024-020V
G3- 272935		BLOCK RIGHT	CR- 256436-020V
			CR- 256436-030V
			CR- 256436-040V
			CR- 256436-050V
G3- 272936		BLOCK LEFT	CR- 256436-020V
			CR- 256436-030V
			CR- 256436-040V
			CR- 256436-050V
3- 272940		CABLE DUCT	C- 256233-020V
3- 272941		CABLE DUCT	C- 256233-020V
3- 272942		CABLE DUCT	C- 256233-020V
3- 272943		LID	C- 256233-020V
4- 272945		LOCK	C- 256233-020V
			C- 469366-010V
			C- 469366-020V
4- 272945		LOCK	C- 469366-030V
			C- 295777-010V
			C- 469374-010V
			C- 469374-020V
			C- 469374-030V
3- 272948-0001		SHAFT	C- 256239-020V
			C- 256239-030V
			C- 256239-040V
3- 272948-0002		SHAFT	C- 256095-020V
3- 272948-0003		SHAFT	C- 256095-030V
			C- 256095-040V
2- 272949		VOLUME CAM LEFT	C- 256221-020V
2- 272950		VOLUME CAM LEFT	C- 256221-020V
2- 272951		VOLUME CAM LEFT	C- 256221-020V
2- 272952		VOLUME CAM LEFT	C- 256221-020V
2- 272953		VOLUME CAM LEFT	C- 256222-020V
2- 272954		VOLUME CAM LEFT	C- 256222-020V
2- 272955		VOLUME CAM LEFT	C- 256222-020V
2- 272956		VOLUME CAM LEFT	C- 256222-020V
2- 272957		VOLUME CAM RIGHT	C- 256221-020V
2- 272958		VOLUME CAM RIGHT	C- 256221-020V
2- 272959		VOLUME CAM RIGHT	C- 256221-020V
2- 272960		VOLUME CAM RIGHT	C- 256221-020V
2- 272961		VOLUME CAM RIGHT	C- 256222-020V
2- 272962		VOLUME CAM RIGHT	C- 256222-020V
2- 272963		VOLUME CAM RIGHT	C- 256222-020V
2- 272964		VOLUME CAM RIGHT	C- 256222-020V
2- 272965		VOLUME CAM LEFT, WIDE	C- 256222-020V
2- 272966		VOLUME CAM LEFT, WIDE	C- 256222-020V
2- 272967		VOLUME CAM RIGHT, WIDE	C- 256222-020V
2- 272968		VOLUME CAM RIGHT, WIDE	C- 256222-020V
2- 272969		BRACKET	C- 256221-020V
			C- 256222-020V
			C- 256221-020V
			C- 256222-020V
			C- 256221-020V
			C- 256222-020V

PART NO	LAST AM	DESCRIPTION	GROUP NO
			CR- 256210-020V
			CR- 256209-030V
			CR- 256210-030V
4- 272988-0002		VOLUME BULGE	CR- 256209-020V
			CR- 256210-020V
			CR- 256209-020V
			CR- 256210-020V
			CR- 256209-020V
			CR- 256210-020V
			CR- 256209-020V
			CR- 256210-030V
4- 272988-0004		VOLUME BULGE	CR- 256209-020V
			CR- 256210-020V
			CR- 256209-020V
			CR- 256210-020V
			CR- 256209-020V
			CR- 256210-020V
			CR- 256209-020V
			CR- 256209-030V
			CR- 256210-030V
4- 272990		VOLUME BULGE	CR- 256209-020V
			CR- 256210-020V
			CR- 256209-020V
			CR- 256210-020V
			CR- 256209-020V
			CR- 256210-020V
			CR- 256209-020V
			CR- 256210-020V
			CR- 256209-030V
			CR- 256210-030V
4- 272991		VOLUME SHIM	CR- 256209-020V
			CR- 256210-020V
			CR- 256209-020V
			CR- 256210-020V
			CR- 256209-020V
			CR- 256210-020V
4- 272991		VOLUME SHIM	CR- 256209-020V
			CR- 256210-020V
			CR- 256209-020V
			CR- 256210-020V
			CR- 256209-030V
			CR- 256210-030V
2- 272992		PLATE	C- 272765-010V
			C- 272765-020V
2- 272993		COVER PLATE	C- 272765-010V
			C- 272765-020V
2- 272994		DISTRIBUTOR	C- 272765-010V
3- 272995		PIPE	C- 272765-020V
			C- 272765-010V
4- 272996		PIPE	C- 272765-020V
			C- 272765-010V
4- 272997		STOP	C- 272765-020V
			C- 272765-010V
			C- 272765-020V
			C- 272765-030V
			C- 272765-040V
			C- 272765-050V
			C- 272765-060V
4- 272998		SHIM	C- 271089-020V
			C- 271089-030V
4- 273429		WASHER	RK- 751461-010V
			C- 256055-020V
			C- 256055-030V
			C- 256055-040V
			C- 256055-050V
			C- 256055-060V
			RK- 751487-010V
4- 273444-0001		SCREW	C- 283600-010V

PART NO	LAST AM	DESCRIPTION	GROUP NO
			C- 283611-010V
			C- 283600-010V
			C- 283611-010V
4- 273444-0002		SCREW	C- 283600-010V
			C- 283611-010V
			C- 283600-010V
			C- 283611-010V
			C- 283620-010V
4- 273444-0004		SCREW	C- 268665-010V
4- 273445-0001		SCREW	C- 283611-010V
4- 273449		SIGN	C- 271909-020V
			C- 271909-030V
			C- 271909-040V
			C- 271909-050V
4- 273450		SIGN	C- 271909-020V
			C- 271909-030V
			C- 271909-040V
			C- 271909-050V
4- 273452		SIGN	C- 271909-020V
			C- 271909-030V
			C- 271909-040V
			C- 271909-050V
4- 273454		SIGN	C- 271909-020V
			C- 271909-030V
			C- 271909-040V
			C- 271909-050V
4- 273455		SIGN	C- 271866-020V
4- 273455		SIGN	C- 271909-020V
			C- 271868-030V
			C- 271909-030V
			C- 271866-030V
			C- 271909-030V
			C- 271866-040V
			C- 271909-040V
			C- 271866-050V
			C- 271909-050V
4- 273456		SIGN	C- 271866-020V
			C- 271909-020V
			C- 271866-030V
			C- 271909-030V
			C- 271866-030V
			C- 271909-030V
			C- 271866-040V
			C- 271909-040V
			C- 271866-050V
			C- 271909-050V
4- 273458		SIGN	C- 271866-020V
			C- 271909-020V
			C- 271866-030V
			C- 271909-030V
			C- 271866-030V
			C- 271909-030V
			C- 271866-040V
			C- 271909-040V
			C- 271866-050V
			C- 271909-050V
4- 273493-0001		BUSHING	C- 284873-010V
4- 273494-0001		AXLE PIN	C- 284873-010V
4- 273554		BRACKET	C- 272560-020V
3- 273738		PLATE	C- 276253-010V
3- 273739		ARM	C- 276253-010V
4- 273740		SCREW	C- 276253-010V
4- 273741		TOOTHED PULLY	C- 276253-010V
4- 273781		SPRING HOLDER	C- 283610-010V
			CR- 449275-010V
4- 273937		DIAPHRAGM	C- 752173-010V
			RK- 456793-010V
			RK- 469961-010V
			C- 256014-030V
			C- 256014-040V
4- 273938		WASHER	RK- 456793-010V
3- 273953		SEAL	RK- 456799-010V
			C- 272021-030V
			C- 272021-040V
			C- 272021-050V
2- 273954		SEAL	C- 752173-010V
			RK- 456793-010V

PART NO	LAST AM	DESCRIPTION	GROUP NO
			C- 256221-020V
			C- 256222-020V
			C- 256221-020V
			C- 256222-020V
			C- 256221-020V
3- 272970		ARM LEFT	C- 256222-020V
			C- 256221-020V
			C- 256222-020V
			C- 256221-020V
			C- 256222-020V
			C- 256221-020V
			C- 256222-020V
			C- 256221-020V
			C- 256222-020V
			C- 256221-020V
			C- 256222-020V
			C- 256221-020V
3- 272971		ARM RIGHT	C- 256222-020V
			C- 256221-020V
			C- 256222-020V
			C- 256221-020V
3- 272971		ARM RIGHT	C- 256222-020V
			C- 256221-020V
			C- 256222-020V
			C- 256221-020V
			C- 256222-020V
			C- 256221-020V
			C- 256222-020V
			C- 256221-020V
4- 272972		RULER	C- 256222-020V
			C- 256221-020V
			C- 256222-020V
			C- 256221-020V
			C- 256222-020V
			C- 256221-020V
			C- 256222-020V
			C- 256221-020V
			C- 256222-020V
			C- 256221-020V
			C- 256222-020V
4- 272973		PIN	C- 256221-020V
			C- 256222-020V
			C- 256221-020V
			C- 256222-020V
			C- 256221-020V
			C- 256222-020V
			C- 256221-020V
			C- 256222-020V
4- 272974-0001		BRACKET	RK- 469788-010V
			C- 256223-020V
4- 272974-0002		BRACKET	C- 256223-030V
			C- 256223-020V
3- 272978		SPINDLE	C- 256223-030V
			C- 256221-020V
			C- 256222-020V
			C- 256221-020V
			C- 256222-020V
			C- 256221-020V
			C- 256222-020V
			C- 256221-020V
			C- 256222-020V
			C- 256221-020V
			C- 256222-020V
			C- 256221-020V
			C- 256222-020V
3- 272980		RAIL	CR- 256214-020V
3- 272981		RAIL	CR- 256214-020V
4- 272985-0001		ARM	CR- 256209-020V
			CR- 256210-020V
			CR- 256209-020V
			CR- 256210-020V

PART NO	LAST AM	DESCRIPTION	GROUP NO
			CR- 256209-020V
			CR- 256210-020V
			CR- 256209-020V
			CR- 256210-020V
4- 272985-0001		ARM	CR- 256209-020V
			CR- 256210-020V
			CR- 256209-030V
			CR- 256210-030V
4- 272985-0002		ARM	CR- 256209-020V
			CR- 256210-020V
			CR- 256209-020V
			CR- 256210-020V
			CR- 256209-020V
			CR- 256210-020V
			CR- 256209-020V
			CR- 256210-020V
			CR- 256209-020V
			CR- 256210-020V
			CR- 256209-030V
			CR- 256210-030V
4- 272986-0001		VOLUME SHIM	CR- 256209-020V
			CR- 256210-020V
			CR- 256209-020V
			CR- 256210-020V
			CR- 256209-020V
			CR- 256210-020V
			CR- 256209-020V
			CR- 256210-020V
			CR- 256209-020V
			CR- 256210-020V
			CR- 256209-030V
			CR- 256210-030V
4- 272986-0002		VOLUME SHIM	CR- 256209-020V
			CR- 256210-020V
			CR- 256209-020V
			CR- 256210-020V
			CR- 256209-020V
			CR- 256210-020V
			CR- 256209-020V
			CR- 256210-020V
			CR- 256209-020V
			CR- 256210-020V
			CR- 256209-030V
			CR- 256210-030V
4- 272986-0003		VOLUME SHIM	CR- 256209-020V
			CR- 256210-020V
			CR- 256209-020V
			CR- 256210-020V
			CR- 256209-020V
			CR- 256210-020V
			CR- 256209-020V
			CR- 256210-020V
			CR- 256209-020V
			CR- 256210-020V
			CR- 256209-030V
			CR- 256210-030V
4- 272986-0004		VOLUME SHIM	CR- 256209-020V
			CR- 256210-020V
			CR- 256209-020V
			CR- 256210-020V
			CR- 256209-020V
			CR- 256210-020V
			CR- 256209-020V
			CR- 256210-020V
4- 272986-0004		VOLUME SHIM	CR- 256209-020V
			CR- 256210-020V
			CR- 256209-020V
			CR- 256210-020V
			CR- 256209-030V
			CR- 256210-030V
4- 272987		VOLUME SHIM	CR- 256209-020V
			CR- 256210-020V
			CR- 256209-020V
			CR- 256210-020V
			CR- 256209-020V
			CR- 256210-020V
			CR- 256209-020V
			CR- 256210-020V
			CR- 256209-020V

PART NO	LAST AM	DESCRIPTION	GROUP NO
			RK- 469961-010V
			C- 256014-030V
			C- 256014-040V
4- 273964		LID	C- 493652-010V
4- 273965-0001		WEIGHT	C- 493652-010V
1- 273976		CONTAINER	C- 527898-010V
4- 273977		NUT	C- 527898-010V
4- 273978		LEVEL GLASS	C- 527898-010V
4- 273979		VALVE	C- 527898-010V
4- 273980		SPRING	C- 527898-010V
4- 273981		GASKET	C- 751406-010V
4- 273982		WEIGHT	C- 751406-010V
4- 273984		AEROMETER	C- 751373-010V
1- 273985		CARRIAGE	RK- 532210-010V
4- 273996		NUT	C- 527898-010V
4- 274177		WASHER	C- 155091-010V
			C- 469294-010V
4- 274178		CLAW	C- 155091-010V
4- 274179		HANDLE	C- 155091-010V
			C- 469294-010V
3- 276069		INTERFERENCE PROTECTION	CE- 67716-010V
			CE- 68128-010V
			CE- 68379-010V
			CE- 68128-010V
			CE- 67716-010V
			CE- 68379-010V
3- 276141		BRACKET	C- 294658-010V
			C- 283631-010V
4- 276142		INDICATOR	C- 294658-010V
4- 276143		KEY	C- 283618-010V
			CR- 283618-020V
4- 276154		SHAFT	C- 294658-010V
4- 276175		HOLDER	C- 294658-010V
4- 276182		CABLE CLAMP	C- 456953-010V
			C- 294880-010V
			C- 469634-010V
			C- 441736-010V
			C- 456953-010V
4- 276194		SPRING HOLDER	C- 283617-010V
			CR- 283605-010V
4- 276203		SHAFT	C- 268656-010V
			C- 283600-010V
4- 276213-0001		ROLLER	C- 268656-010V
4- 276214-0001		SCREW	C- 268656-010V
3- 276248		BRACKET	C- 294658-010V
4- 276251		SHAFT	C- 294658-010V
C- 276253-0101	5928 83-04-28	BELT TENSIONER	B- 648108-010V
4- 276384		PRESSURE ROLLER	RK- 547782-010V
			C- 449388-010V
4- 276664		WASHER	C- 271115-020V
1- 278990		COVER	C- 294785-010V
3- 278993		HANGER	C- 294785-010V
3- 278994		HANGER	C- 294785-010V
4- 278995		SHAFT	C- 294785-010V
			C- 294780-010V
			C- 457853-010V
			C- 457853-020V
4- 279008		BUSHING	C- 272021-020V
			C- 272021-030V
			C- 272021-040V
			C- 272021-050V
4- 279009		BEARING PLATE	C- 272021-020V
4- 279010		BEARING PLATE	C- 272021-020V
			C- 272021-030V
			C- 272021-040V
			C- 272021-050V
4- 279074		TENSION SPRING	C- 246388-020V
4- 279473		GASKET	C- 456274-010V
4- 279473		GASKET	C- 256014-020V
			C- 271274-020V
			C- 272623-020V
			C- 295778-010V
			C- 256014-020V
			C- 271274-020V
			C- 272623-020V
			C- 295778-010V
			C- 456274-010V

PART NO	LAST AM	DESCRIPTION	GROUP NO
4- 279474		GASKET	C- 456274-010V
			C- 256014-020V
			C- 271274-020V
			C- 272623-020V
			C- 295778-010V
			C- 256014-020V
			C- 271274-020V
			C- 272623-020V
			C- 295778-010V
			C- 456274-010V
4- 279475-0002		ELECTRODE	C- 256014-020V
4- 279475-0003		ELECTRODE	C- 456274-010V
			C- 271274-020V
			C- 456274-010V
4- 279476		BUSHING	C- 456274-010V
			C- 256014-020V
			C- 271274-020V
			C- 272623-020V
			C- 256014-020V
			C- 271274-020V
			C- 272623-020V
			C- 456274-010V
4- 279480		GUIDE RAIL	C- 441000-020V
4- 279515		WASHER	C- 456274-010V
			C- 491890-010V
			C- 456274-010V
			C- 256014-020V
			C- 271274-020V
			C- 272623-020V
			C- 256014-020V
			C- 271274-020V
			C- 272623-020V
			C- 456274-010V
4- 279589		NUT	C- 256237-020V
			C- 256237-030V
			C- 256237-040V
			C- 256237-050V
			C- 256237-060V
			C- 272408-020V
			C- 272408-030V
			C- 272408-040V
			C- 272408-050V
			C- 272342-020V
			C- 456976-010V
			C- 456976-020V
			C- 456976-030V
			C- 456976-040V
4- 279590		REDUCTION	C- 272408-020V
			C- 272408-030V
			C- 272408-040V
4- 279590		REDUCTION	C- 272408-050V
4- 279672		CONNECTION	C- 295891-010V
			C- 295891-020V
			C- 295891-030V
4- 279799		GASKET	C- 256237-020V
			C- 256237-030V
			C- 256237-040V
			C- 256055-020V
			C- 256055-030V
4- 279803		ROLLER	C- 294658-010V
C- 279809-0101	5762 83-02-24	PANEL	B- 648108-010V
3- 279876		BRACKET	C- 279809-010V
4- 279970		BRACKET	C- 294658-010V
			C- 283631-010V
3- 282579		PLATE	C- 268665-010V
4- 282580		BLOCK	C- 283602-010V
4- 282581		SHAFT	C- 283602-010V
2- 282760		WINDOW	C- 294785-010V
3- 283011		V-BLOCK	C- 76197-010V
			C- 436467-010V
4- 283020		STOP	C- 76197-010V
			C- 436467-010V
3- 283084		GUIDE SHAFT	C- 250610-010V
3- 283085		SLEEVE	C- 250610-010V
3- 283103		COVER	C- 256358-010V
3- 283172		BEARING HOUSING	C- 295891-010V
			C- 295891-020V

PART NO	LAST AM	DESCRIPTION	GROUP NO
2- 283361		AIR NOZZLE	C- 295891-030V
			C- 295891-010V
			C- 295891-020V
			C- 295891-030V
3- 283410		ARM	C- 268665-010V
4- 283411		ARM	C- 268665-010V
4- 283412		HOLDER	C- 268665-010V
4- 283413		PENDULUM	C- 268665-010V
2- 283521		DRIVE ROLLER	C- 456688-010V
			C- 283623-010V
3- 283527		GUIDE	C- 283611-010V
4- 283528		HOLDER	C- 283611-010V
4- 283529		HOLDER	C- 283611-010V
4- 283531		ARM	C- 283611-010V
4- 283532		ARM	C- 283611-010V
4- 283533-0001		ROLLER	C- 283611-010V
3- 283534		BRACKET	C- 283611-010V
G1- 283535		BRACKET	C- 283612-010V
2- 283538-0001		BOX	C- 268656-010V
2- 283539		HOLDER	C- 268656-010V
3- 283540		BRACKET	C- 268656-010V
3- 283541		BRACKET	C- 268656-010V
1- 283542		BRACKET	C- 283618-010V
3- 283543-0001		CHUTE	C- 283618-010V
3- 283544-0001		GUIDE PLATE	C- 283618-010V
4- 283545		SPRING	C- 283618-010V
4- 283546		SCREW	CR- 283618-020V
			C- 283618-010V
4- 283547		BLOCK	CR- 283618-020V
4- 283548		SHAFT	C- 283618-010V
4- 283549		BRACKET	C- 283618-010V
4- 283550		HOLDER	C- 283618-010V
4- 283551		SCREW	C- 283618-010V
			CR- 283618-020V
1- 283554		BRACKET	C- 283610-010V
4- 283555		PLATE	C- 283610-010V
			CR- 449275-010V
G1- 283564		BRACKET	C- 283617-010V
			CR- 283605-010V
3- 283569		BRAKE DRUM	C- 484858-010V
			C- 484858-020V
			C- 283600-010V
4- 283575		CAM	C- 283627-010V
			C- 456674-010V
2- 283581		CAM	C- 283627-010V
3- 283582		BRACKET	C- 283611-010V
3- 283583		DRIVE ROLLER	C- 283623-010V
			C- 456688-010V
2- 283587-0001		PRESSURE ROLLER	C- 283604-010V
2- 283587-0002		PRESSURE ROLLER	C- 283604-010V
2- 283587-0003		PRESSURE ROLLER	C- 283604-020V
			C- 283604-010V
4- 283588		RAIL	C- 283617-010V
			CR- 283607-010V
4- 283590		KNIFE	C- 283617-010V
			C- 294888-010V
			C- 283617-010V
			C- 294887-010V
			CR- 283606-010V
			C- 469316-010V
			C- 486955-010V
			CR- 283606-010V
			C- 469316-010V
			C- 486955-010V
3- 283591-0002		BENDING ROLLER	C- 283624-010V
3- 283591-0003		BENDING ROLLER	C- 456612-010V
3- 283595		GABLE	C- 283624-010V
			C- 456612-010V
C- 283600-0101	6158 83-09-29	MAGAZINE	B- 648108-010V
			B- 648118-010V
C- 283602-0101	5909 83-05-11	GABLE	B- 648108-010V
C- 283602-0102	5909 83-05-11	GABLE	B- 648118-010V
C- 283604-010V	8452 86-02-11	PRESSURE ROLLER	B- 648108-010V
C- 283604-0103	8452 86-02-11	PRESSURE ROLLER	C- 283621-010V
C- 283604-0201	8653 86-11-21	PRESSURE ROLLER	C- 456696-010V
			C- 456696-020V

PART NO	LAST AM	DESCRIPTION	GROUP NO
CR- 283605-0101	13824 89-09-28	PULL TAB SEALING UNIT	B- 648118-060V
			B- 648118-070V
CR- 283606-010V	10738 87-08-21	SEALING JAW PULLTAB	B- 648118-060V
			B- 648118-070V
CR- 283607-010V	10738 87-08-21	COUNTER JAW	B- 648118-060V
			B- 648118-070V
C- 283610-0101	8126 85-09-21	PUNCH	B- 648108-010V
C- 283611-0101	5909 83-05-11	STRIP GUIDE	B- 648108-010V
			B- 648118-010V
C- 283612-0103	13824 89-09-28	STRIP SEALER	B- 648108-010V
			B- 648118-010V
			B- 648118-060V
			B- 648118-070V
C- 283613-0101	5770 83-04-13	SEALING JAW	B- 648118-010V
C- 283614-0101	10637 87-09-02	COUNTER JAW	B- 648118-010V
			B- 648118-060V
			B- 648118-070V
C- 283617-0101	6066 83-09-06	SEALING UNIT	B- 648108-010V
			B- 648118-010V
C- 283618-0101	5971 83-05-11	FEED DEVICE	B- 648108-010V
			B- 648118-010V
CR- 283618-020V	12939 89-05-19	PULL TAB FEED	B- 648118-060V
			B- 648118-070V
C- 283619-0101	10738 87-08-21	BELT TENSIONER	C- 283624-010V
			C- 456612-010V
C- 283620-0101	9023 86-05-23	MAGAZINE	B- 648118-010V
C- 283621-0102	9023 86-05-23	PAPER FEED	B- 648118-010V
C- 283622-0101	8234 86-01-07	REEL	B- 648108-010V
C- 283623-0101	8234 86-01-07	DRIVE ROLLER	B- 648108-010V
C- 283623-0102	8234 86-01-07	DRIVE ROLLER	C- 283621-010V
C- 283624-0101	8452 86-02-11	BENDING ROLLER	C- 283621-010V
C- 283626-0101	6066 83-09-06	UNIT	B- 648118-010V
C- 283626-0201	8234 86-01-07	DRIVE UNIT	B- 648118-060V
C- 283626-030V	14110 90-02-22	DRIVE UNIT	B- 648118-070V
C- 283627-0101	8126 85-09-21	DRIVE SHAFT	B- 648108-010V
C- 283627-0102	8126 85-09-21	DRIVE SHAFT	B- 648118-010V
C- 283628-0101	7877 85-07-15	PAPER MAGAZINE	B- 648118-010V
C- 283628-0102	7877 85-07-15	PAPER MAGAZINE	B- 648108-010V
C- 283629-0101	5909 83-05-11	ROLLER	B- 648108-010V
			B- 648118-010V
C- 283629-0201	12403 89-01-10	ROLLER	B- 648118-060V
			B- 648118-070V
C- 283630-0101	5909 83-05-11	ROLLER	B- 648108-010V
			B- 648118-010V
C- 283630-0201	8363 86-12-04	ROLLER	C- 283635-010V
C- 283631-0101	7753 86-02-06	MACHINE BODY	B- 648118-010V
C- 283632-0101	7753 86-02-06	PANEL	B- 648118-010V
C- 283633-0101	7753 86-02-06	CONNECTION BOX	B- 648108-010V
			B- 648118-010V
C- 283635-010V	12232 88-09-23	PAPER MAGAZINE	B- 648118-060V
			B- 648118-070V
4- 283641		ROLLER	C- 283602-010V
4- 283642		SHAFT	C- 283602-010V
4- 283650		CYLINDER BRACKET	C- 283602-010V
1- 283658		BRACKET	C- 283612-010V
G1- 283659		ARM	C- 283612-010V
3- 283660		HEATING JAW	C- 283613-010V
3- 283661		HEATING RAIL	C- 294887-010V
3- 283668		INSULATING PLATE	C- 283613-010V
			C- 531657-010V
3- 283669		SHIM	C- 457868-010V
			RK- 535606-010V
			C- 283613-010V
			C- 457868-010V
			C- 531657-010V
			C- 497534-020V
			C- 531657-010V
4- 283676-0001		SPRING HOLDER	C- 283612-010V
3- 283677		RAIL	C- 283614-010V
3- 283680		ARM	C- 283619-010V
3- 283681		DRIVE ROLLER	C- 456688-010V
4- 283684		END WASHER	C- 283613-010V
			C- 531657-010V
3- 283688		CARRIER	C- 469737-010V
3- 283690		RULER	C- 469737-010V
3- 283691		CLAMP	C- 469737-010V
3- 283692-0001		RULER	C- 283622-010V

PART NO	LAST AM	DESCRIPTION	GROUP NO
3- 283692-0002		RULER	C- 469737-010V
			C- 469173-010V
3- 283692-0003		RULER	C- 469173-010V
4- 283693		SPRING	C- 283613-010V
3- 283748		BRACKET	C- 294658-010V
4- 283747		BRACKET	C- 294658-010V
4- 283795		WEIGHT	C- 229400-060V
4- 283813		BRACKET	C- 294785-010V
2- 283847		REEL	C- 283622-010V
3- 283848		SHAFT	C- 283622-010V
3- 283849		CLAMP	C- 283622-010V
3- 283850		RULER	C- 283622-010V
3- 283851		CARRIER	C- 283622-010V
4- 283852		HUB	C- 283622-010V
4- 283853		HUB	C- 469737-010V
			C- 283622-010V
			C- 469173-010V
4- 283854		ROD	C- 283622-010V
4- 283856		ROD	C- 469737-010V
4- 283857		PIN	C- 469737-010V
			C- 283622-010V
3- 283902		HOLDER	C- 294658-010V
2- 284185		WINDOW	C- 294785-010V
4- 284679		WASHER	C- 284873-010V
3- 284698		PLATE	C- 457868-010V
			C- 283614-010V
			C- 457868-010V
			C- 283614-010V
			C- 497534-020V
3- 284699		BRACKET	C- 457868-010V
			C- 283614-010V
			C- 457868-010V
			C- 283614-010V
			C- 497534-020V
4- 284735		SHAFT	C- 283618-010V
4- 284736		SHAFT	C- 283618-010V
4- 284737		SHAFT	C- 283618-010V
4- 284741		SHAFT	C- 283618-010V
3- 284805		BLOCK	C- 469737-010V
			C- 283622-010V
4- 284806		HUB	C- 469737-010V
			C- 469173-010V
4- 284807		FORK	C- 469737-010V
			C- 283622-010V
2- 284824		ROLLER	C- 283602-010V
C- 284873-0101	5909 83-05-11	BOBBIN HOLDER	B- 648108-010V
3- 284948		ROLLER	C- 283630-010V
4- 284949		SHAFT	C- 283630-010V
3- 284950		ROLLER	C- 283629-010V
3- 284951		SHAFT	C- 283602-010V
C- 284953-010V	5053 81-12-16	HOSE	B- 648109-020V
			B- 648109-030V
			B- 648109-060V
			B- 648109-070V
4- 284997		TOOTHED PULLY	C- 283619-010V
4- 284997		TOOTHED PULLY	C- 476080-020V
4- 284998		SHAFT	C- 283619-010V
			C- 476080-020V
4- 292044		SHAFT	C- 434774-020V
			C- 434774-030V
			C- 434074-020V
			C- 434074-030V
			C- 434774-020V
			C- 434774-030V
			C- 434074-020V
			C- 434074-030V
			C- 434774-030V
			C- 434074-030V
			C- 434774-030V
			C- 434074-030V
4- 292062		SHAFT	C- 283602-010V
4- 292063		WASHER	C- 283602-010V
4- 292064		WASHER	C- 283602-010V
4- 292412		GABLE	C- 293685-010V
			C- 293685-020V
			C- 293684-010V
			C- 293684-020V

PART NO	LAST AM	DESCRIPTION	GROUP NO
			C- 293685-010V
			C- 293685-020V
			C- 293684-010V
			C- 293684-020V
			C- 293685-020V
			C- 293684-020V
			C- 293685-020V
			C- 293684-020V
4- 292413		GABLE	C- 293685-010V
			C- 293685-020V
			C- 293684-010V
			C- 293684-020V
			C- 293685-010V
			C- 293685-020V
			C- 293684-010V
			C- 293684-020V
			C- 293685-020V
			C- 293684-020V
			C- 293685-020V
			C- 293684-020V
4- 292414		CARRIER	C- 293685-010V
			C- 293685-020V
			C- 293685-010V
			C- 293685-020V
G2- 292449		PUMP HOUSING	C- 491323-020V
			C- 751393-010V
3- 292456		BEARING COVER	C- 491323-020V
			C- 751393-010V
3- 292464		FLANGE	C- 491323-020V
G1- 292473		BRACKET	C- 751689-010V
4- 292477		SHAFT	C- 751689-010V
4- 292482		WASHER	C- 751689-010V
4- 293363		LOCK NUT	C- 272408-050V
4- 293364		SCREW	C- 272408-050V
2- 293395-0001		TYPE HOLDER	C- 293685-010V
			C- 293685-020V
			C- 293684-010V
2- 293395-0001		TYPE HOLDER	C- 293684-020V
			C- 293685-010V
			C- 293685-020V
			C- 293684-010V
			C- 293684-020V
			C- 293685-020V
			C- 293684-020V
			C- 293685-020V
			C- 293684-020V
2- 293395-0002		TYPE HOLDER	C- 293685-010V
			C- 293685-020V
			C- 293684-010V
			C- 293684-020V
			C- 293685-010V
			C- 293685-020V
			C- 293684-010V
			C- 293684-020V
			C- 293685-020V
			C- 293684-020V
			C- 293685-020V
			C- 293684-020V
4- 293659		CARRIER	C- 293684-010V
			C- 293684-020V
			C- 293684-010V
			C- 293684-020V
4- 293667		PIN	C- 434774-020V
			C- 434774-030V
			C- 434074-020V
			C- 434074-030V
			C- 434774-020V
			C- 434774-030V
			C- 434074-020V
			C- 434074-030V
			C- 434774-030V
			C- 434074-030V
			C- 434774-030V
4- 293669-0001		WASHER	C- 434774-020V
			C- 434774-030V
			C- 434074-020V

PART NO	LAST AM	DESCRIPTION	GROUP NO
			C- 434074-030V
			C- 434774-020V
			C- 434774-030V
			C- 434074-020V
			C- 434074-030V
			C- 434774-030V
			C- 434074-030V
			C- 434774-030V
			C- 434074-030V
4- 293669-0002		WASHER	C- 434774-020V
			C- 434774-030V
			C- 434074-020V
			C- 434074-030V
			C- 434774-020V
			C- 434774-030V
			C- 434074-020V
			C- 434074-030V
			C- 434774-030V
4- 293669-0002		WASHER	C- 434074-030V
			C- 434774-030V
4- 293669-0003		WASHER	C- 434074-030V
			C- 434774-020V
			C- 434774-030V
			C- 434074-020V
			C- 434074-030V
			C- 434774-020V
			C- 434774-030V
			C- 434074-020V
			C- 434074-030V
			C- 434774-030V
			C- 434074-030V
			C- 434774-030V
4- 293669-0004		WASHER	C- 434074-030V
			C- 434774-020V
			C- 434774-030V
			C- 434074-020V
			C- 434074-030V
			C- 434774-020V
			C- 434774-030V
			C- 434074-020V
			C- 434074-030V
			C- 434774-030V
			C- 434074-030V
			C- 434774-030V
4- 293670		SHAFT	C- 434074-030V
			C- 434774-020V
			C- 434774-030V
			C- 434074-020V
			C- 434074-030V
			C- 434774-020V
			C- 434774-030V
			C- 434074-020V
			C- 434074-030V
			C- 434774-030V
			C- 434074-030V
			C- 434774-030V
4- 293675		ROLLER	C- 434074-030V
			C- 434774-020V
			C- 434774-030V
			C- 434074-020V
			C- 434074-030V
			C- 434774-020V
			C- 434774-030V
			C- 434074-020V
			C- 434074-030V
			C- 434774-030V
			C- 434074-030V
			C- 434774-030V
C- 293684-0106	7024 84-10-15	PRINTING WHEEL	C- 434074-030V
C- 293684-0204	13807 89-10-27	PRINTING WHEEL	C- 456322-010V
			C- 456349-010V
			C- 456322-020V
			C- 456322-030V
			C- 456349-020V
			C- 752646-010V
			C- 752914-010V
C- 293685-0102	7024 84-10-15	PRINTING WHEEL	C- 456321-010V

PART NO	LAST AM	DESCRIPTION	GROUP NO
			C- 456348-010V
C- 293685-0201	10572 87-09-17	PRINTING WHEEL	C- 456321-020V
			C- 456321-030V
			C- 456348-020V
			C- 752645-010V
			C- 752913-010V
4- 293697		GABLE	C- 434074-020V
			C- 434074-030V
			C- 434074-020V
			C- 434074-030V
4- 294397		BOBBIN HOLDER	C- 283620-010V
4- 294398		SCREW	C- 283620-010V
4- 294399		SPRING	C- 283600-010V
			C- 283620-010V
4- 294400		BLOCK	C- 283618-010V
4- 294508		ARM	C- 283620-010V
G1- 294513		GABLE	C- 283621-010V
2- 294515-0001		PLATE	C- 294659-010V
2- 294515-0002		PLATE	C- 283621-010V
2- 294519		BRACKET	C- 283626-010V
			C- 283626-020V
			C- 283626-030V
3- 294520		HOLDER	C- 283617-010V
			C- 283613-010V
			C- 283617-010V
C- 294522-0101	6066 83-09-06	UNIT	B- 648108-010V
2- 294523		PLATE	C- 283600-010V
3- 294529		BRACKET	C- 283600-010V
4- 294532		AXLE PIN	C- 283600-010V
3- 294540		INDUCTOR	C- 294888-010V
4- 294543		TOOTHED PULLY	C- 283626-010V
2- 294546		BRACKET	C- 294658-010V
4- 294556		BRACKET	C- 294780-010V
2- 294559		BRACKET	C- 283628-010V
3- 294560		BRACKET	C- 283628-010V
3- 294561		ROD	C- 283628-010V
4- 294562		BLOCK	C- 283628-010V
4- 294563		SHAFT	C- 283629-010V
4- 294571		BRACKET	C- 283628-010V
4- 294572		BRACKET	C- 283628-010V
4- 294573		BLOCK	C- 283628-010V
4- 294574		PLATE	C- 283628-010V
4- 294575		PLATE	C- 283628-010V
G3- 294576		ARM	C- 283617-010V
			CR- 283605-010V
3- 294577		HEATING BLOCK	C- 283617-010V
4- 294578		LOCKING LUG	C- 283617-010V
			CR- 283605-010V
4- 294579		KEY	C- 283617-010V
			CR- 283606-010V
4- 294580		INSULATING PLATE	C- 283617-010V
			CR- 283606-010V
4- 294584		DOLLY	C- 283617-010V
			CR- 283605-010V
2- 294585		SLIDE	C- 283620-010V
3- 294586		GUIDE	C- 283620-010V
3- 294587		PLATE	C- 283620-010V
3- 294588		BRACKET	C- 283620-010V
3- 294589		BRACKET	C- 283620-010V
4- 294590		BRACKET	C- 283620-010V
4- 294591		BLOCK	C- 283620-010V
4- 294594		BRACKET	C- 283617-010V
			CR- 283607-010V
4- 294595		SHAFT	C- 283617-010V
			CR- 283607-010V
4- 294596		ROLLER	C- 283617-010V
			CR- 283607-010V
3- 294601		BOBBIN HOLDER	C- 283600-010V
4- 294602		RING	C- 283600-010V
2- 294617		CAM	C- 283627-010V
1- 294618		MACHINE BODY	C- 283631-010V
4- 294624-0001		ROLLER	C- 268665-010V
			C- 283600-010V
			C- 283611-010V
			C- 283600-010V
			C- 283611-010V
			C- 283620-010V

PART NO	LAST AM	DESCRIPTION	GROUP NO
4- 294628		SHAFT	CR- 294695-010V
4- 294632		CAM	C- 469737-010V
			C- 283622-010V
P2- 294636		VARIATOR	C- 469173-010V
1- 294645		MACHINE BODY	C- 283626-010V
1- 294646		GABLE	C- 294658-010V
1- 294647		GABLE	C- 283602-010V
1- 294648		SPACER PLATE	C- 283602-010V
2- 294649		BRAKE ARM	C- 283602-010V
4- 294650		PLATE	C- 283602-010V
4- 294651		SCREW	C- 283602-010V
4- 294652		SCREW	C- 283602-010V
C- 294658-0101	6066 83-09-06	MACHINE BODY	B- 648108-010V
C- 294659-0101	5514 82-10-20	FEED DEVICE	B- 648108-010V
4- 294660		BLOCK	C- 283617-010V
			CR- 283605-010V
3- 294663		ARM	C- 294670-010V
4- 294664		ROLLER	C- 294670-010V
			C- 469182-010V
4- 294665		BRACKET	C- 469182-010V
4- 294666		PIN	C- 469182-010V
2- 294667		COVER	C- 294725-010V
2- 294668		GLASS PANE	C- 294725-010V
3- 294669		GLASS PANE	C- 294725-010V
C- 294670-0101	11707 88-03-28	BELT TENSIONER	B- 648118-010V
3- 294672-0001		PAPER GUIDE	C- 294658-010V
3- 294673		BRACKET	C- 294658-010V
G1- 294674		BRACKET	CR- 294695-010V
G2- 294675		GUIDE	CR- 294695-010V
4- 294676		WASHER	CR- 294695-010V
4- 294677		WASHER	CR- 294695-010V
2- 294678		CAM	C- 294522-010V
			C- 283626-010V
4- 294680		ARM	CR- 294695-010V
3- 294688		BRACKET	C- 283620-010V
4- 294690		ROD	C- 283622-010V
CR- 294695-0101	10738 87-08-21	BACK FEEDER	B- 648108-010V
			B- 648118-010V
			B- 648118-060V
1- 294703		BRACKET	B- 648118-070V
3- 294705		ARM	C- 294906-010V
3- 294706		ARM	C- 294906-010V
3- 294707		BRACKET	C- 294906-010V
4- 294708		SHAFT	C- 294906-010V
4- 294709		SHAFT	C- 294906-010V
4- 294710		SCREW	C- 294906-010V
1- 294714		PLATE	C- 294906-010V
C- 294715-0101	5762 83-02-24	PANEL	C- 283632-010V
C- 294725-0101	6066 83-09-06	GLASS	B- 648108-010V
4- 294726		HOLDER	B- 648118-010V
4- 294727		HINGE	C- 294725-010V
4- 294728		HINGE	C- 294725-010V
4- 294729		SHAFT	C- 294725-010V
3- 294731		BRACKET	C- 294725-010V
4- 294734		WASHER	C- 283632-010V
			C- 283631-010V
			C- 294725-010V
			C- 294780-010V
			C- 456679-010V
			C- 457853-010V
4- 294735		SPACER	C- 456679-010V
			C- 457853-020V
			C- 294725-010V
			C- 294780-010V
			C- 457853-010V
			C- 457937-010V
3- 294736		BRACKET	C- 457853-020V
4- 294737		SHAFT	C- 457937-010V
4- 294738		SHIM	C- 294725-010V
4- 294739		SHIM	C- 294725-010V
3- 294743		PLATE	C- 294725-010V
3- 294744		BLOCK	C- 294725-010V
4- 294748		INDICATOR	C- 283620-010V
			C- 283620-010V
			C- 283631-010V
			C- 457867-010V

PART NO	LAST AM	DESCRIPTION	GROUP NO
4- 294749		STUD BOLT	C- 279809-010V
			C- 283632-010V
1- 294751		LEG	C- 283631-010V
1- 294752		LEG	C- 283631-010V
1- 294753		LEG	C- 283631-010V
1- 294754		BEAM	C- 283631-010V
2- 294755		BEAM	C- 283631-010V
2- 294756		BEAM	C- 283631-010V
1- 294758		BOX	C- 283633-010V
2- 294759		LID	C- 283633-010V
2- 294761		COVER PLATE	C- 294780-010V
2- 294762		COVER PLATE	C- 294780-010V
C- 294763-0101	6066 83-09-06	DATING UNIT	B- 648118-010V
1- 294764		BRACKET	C- 294763-010V
2- 294765		PLATE	C- 294763-010V
4- 294766		BRACKET	C- 294763-010V
C- 294767-0101	5770 83-04-13	HEATING JAW	C- 294763-010V
2- 294768		HEATING JAW	C- 294767-010V
1- 294769		PANEL	C- 279809-010V
1- 294770		PANEL	C- 294715-010V
3- 294771		BRACKET	C- 283632-010V
2- 294773		BRACKET	C- 294780-010V
1- 294774		COVER	C- 294780-010V
4- 294775		BRACKET	C- 294715-010V
3- 294776		BRACKET	C- 294780-010V
			C- 457853-010V
			C- 457853-020V
2- 294777		GLASS PANE	C- 294780-010V
2- 294778		GLASS PANE	C- 294780-010V
2- 294779		PLATE	C- 294780-010V
C- 294780-0101	6003 83-06-14	COVERING PANEL	B- 648118-010V
4- 294782		SHIM	C- 294725-010V
4- 294783		SCREW	C- 294725-010V
4- 294784		BRACKET	C- 294780-010V
C- 294785-0101	5591 82-11-18	COVER	B- 648108-010V
C- 294786-0101	5841 83-03-15	COVERING PANEL	B- 648108-010V
3- 294787		HANGER	C- 294780-010V
			C- 457853-010V
			C- 457853-020V
1- 294799		GUARD	C- 294880-010V
3- 294800		BRACKET	C- 456953-010V
			C- 294880-010V
			C- 441736-010V
3- 294801		BRACKET	C- 456953-010V
			C- 456953-010V
			C- 294880-010V
			C- 441736-010V
4- 294802		BRACKET	C- 456953-010V
			C- 456953-010V
			C- 294880-010V
			C- 441736-010V
1- 294803		BOX	C- 456953-010V
1- 294804		COVER PLATE	C- 294786-010V
1- 294805		COVER PLATE	C- 294786-010V
2- 294814		PLATE	C- 294786-010V
3- 294815		BENDING ROLLER	C- 294658-010V
4- 294816		LID	C- 269589-010V
3- 294825		ARM	C- 269589-010V
4- 294826		SHAFT	C- 294906-010V
			C- 294780-010V
			C- 457853-010V
4- 294827		CAM	C- 457853-020V
			C- 294780-010V
			C- 457853-010V
3- 294829-0002		BENDING ROLLER	C- 457853-020V
			C- 283624-010V
3- 294829-0003		BENDING ROLLER	RK- 538450-010V
			RK- 536470-010V
			RK- 547726-010V
			C- 456612-010V
4- 294830		LID	C- 533844-010V
			C- 283624-010V
			RK- 536470-010V
			RK- 538450-010V
			RK- 547726-010V
			C- 456612-010V
			C- 533844-010V

PART NO	LAST AM	DESCRIPTION	GROUP NO
1- 294831		SPACER PLATE	C- 283602-010V
4- 294832		SHAFT	C- 533903-010V
			C- 283602-010V
1- 294837		CABLE DUCT	C- 533903-010V
1- 294838		LID	C- 294867-010V
1- 294839		LID	C- 294867-010V
2- 294840		BRACKET	C- 294867-010V
2- 294841		BRAKE ARM	C- 283600-010V
2- 294842		COVER	C- 283600-010V
2- 294843		PLATE	C- 283600-010V
3- 294844		BRACKET	C- 283600-010V
3- 294845		BOBBIN HOLDER	C- 283600-010V
3- 294846		ARM	C- 283600-010V
3- 294847		ARM	C- 283600-010V
3- 294848		ARM	C- 283600-010V
4- 294849		ROLLER	C- 283600-010V
4- 294851		SHAFT	C- 283600-010V
4- 294852		SCREW	C- 283600-010V
4- 294854		NOZZLE	C- 283600-010V
4- 294855		SCREW	C- 283600-010V
2- 294857		OWERFLOW PIPE	C- 294658-010V
2- 294863		OWERFLOW PIPE	C- 283631-010V
C- 294867-0101	7753 86-02-06	CABLE DUCT	B- 648118-010V
4- 294868		COUNTER RUBBER	C- 283617-010V
			C- 294888-010V
			C- 283617-010V
			C- 294887-010V
			CR- 283607-010V
			C- 469316-010V
			C- 486955-010V
			CR- 283607-010V
4- 294869		END WASHER	C- 469316-010V
4- 294870		SHIM	C- 486955-010V
			C- 283617-010V
4- 294871		SHIM	C- 283617-010V
			CR- 283606-010V
4- 294872		WASHER	C- 283617-010V
			CR- 283605-010V
			C- 283600-010V
			C- 283628-010V
4- 294873		WASHER	C- 283600-010V
			C- 283628-010V
			C- 283600-010V
			C- 283628-010V
			C- 283600-010V
2- 294874		BUSBAR	C- 294880-010V
3- 294877		SPACER	C- 283631-010V
3- 294878		SPACER	C- 283631-010V
4- 294879		PANEL PLATE	C- 283631-010V
C- 294880-0101	5762 83-02-24	BUSBAR	B- 648108-010V
4- 294881		SCREW	C- 283617-010V
			CR- 283605-010V
C- 294887-0101	6158 83-09-29	SPARE PART KIT	B- 648118-010V
C- 294888-0101	6777 84-07-10	SPARE PART KIT	B- 648108-010V
4- 294891		BRACKET	C- 294658-010V
4- 294904		SPACER	C- 283602-010V
3- 294905		PAPER GUIDE	C- 294658-010V
C- 294906-0101	5971 83-05-11	BRACKET	B- 648108-010V
			B- 648118-010V
4- 294914		SCREW	C- 283602-010V
3- 294918		HEATING RAIL	C- 283613-010V
			C- 531657-010V
3- 294921		OWERFLOW PIPE	CR- 449275-010V
4- 294930-0001		PRESSURE JAW	C- 283611-010V
3- 294935		GABLE	C- 283624-010V
			C- 456612-010V
4- 294936		SHAFT	C- 283624-010V
			RK- 538450-010V
4- 294937		SPACER	C- 283624-010V
			RK- 538450-010V
4- 294938		NUT	C- 283624-010V
			RK- 536470-010V
			RK- 538450-010V
			RK- 547726-010V
			C- 456612-010V

PART NO	LAST AM	DESCRIPTION	GROUP NO
			C- 533844-010V
4- 294939		SHAFT	C- 294780-010V
			C- 457853-010V
4- 294955		BRACKET	C- 294658-010V
2- 294964		DRIVE ROLLER	C- 456688-010V
2- 294966		DRIVE ROLLER	C- 456688-010V
4- 294971		INDICATION	CR- 449275-010V
4- 294973		SHAFT	CR- 449275-010V
4- 294974		BLOCK	CR- 449275-010V
4- 294975		BRACKET	CR- 449275-010V
4- 294976		ROLLER BRACKET	CR- 449275-010V
2- 294977		BRACKET	C- 283628-010V
4- 294986-0001		ROLLER	C- 283600-010V
4- 294987		SPRING	C- 283600-010V
2- 295004		CUTTING RAIL	CR- 256204-020V
			CR- 256205-020V
			CR- 256204-020V
			CR- 256205-020V
			CR- 256204-030V
			CR- 256205-030V
			CR- 256204-040V
			CR- 256205-040V
			CR- 256204-040V
			CR- 256205-040V
			CR- 256204-050V
			CR- 256205-050V
4- 295005		DOLLY	CR- 256204-020V
			CR- 256205-020V
			C- 295523-020V
			CR- 256204-020V
			CR- 256205-020V
			C- 295523-020V
			CR- 256204-030V
			CR- 256205-030V
			C- 295523-030V
			CR- 256204-040V
			CR- 256205-040V
			C- 295523-030V
			CR- 256204-040V
			CR- 256205-040V
			C- 295523-030V
			CR- 256204-050V
			CR- 256205-050V
4- 295010		SLEEVE	C- 295523-030V
			C- 751094-010V
			RK- 491744-010V
4- 295010		SLEEVE	RK- 491789-010V
			RK- 491902-010V
			RK- 751561-010V
			RK- 491789-010V
			RK- 751561-010V
			C- 272014-020V
			C- 272014-030V
			C- 751088-010V
3- 295011		PIPE	C- 751088-020V
			C- 256233-020V
			C- 256233-030V
3- 295012		PIPE	C- 256233-040V
			C- 256233-020V
			C- 256233-030V
2- 295013		CABLE DUCT	C- 256233-040V
C- 295014-0101	5297 82-05-12	CABLE DUCT	C- 295014-010V
			B- 648102-020V
G3- 295015		BRACKET	B- 648102-030V
			C- 272231-020V
			C- 272231-030V
G3- 295016		BRACKET	C- 751968-010V
			C- 272231-020V
			C- 272231-030V
4- 295017		PIPE	C- 751968-010V
			C- 256233-020V
			C- 256233-030V
			C- 256233-040V
4- 295025		BRACKET	C- 256233-050V
			C- 271880-020V
C- 295026-010V	6317 83-11-03	CONTROL PANEL	C- 469781-010V
			B- 648102-020V

PART NO	LAST AM	DESCRIPTION	GROUP NO
			B- 648102-030V
			B- 648102-060V
			B- 648102-070V
C- 295026-020V	9646 86-10-28	CONTROL PANEL	B- 648102-080V
C- 295026-030V	10764 88-05-05	CONTROL PANEL	C- 295026-010V
1- 295027		CIRCUIT BOARD	C- 295026-010V
1- 295028		CIRCUIT BOARD	C- 295026-010V
2- 295029		BACK PIECE	C- 295026-010V
3- 295030		HOLDER	C- 295026-010V
			C- 295026-020V
3- 295031		HOLDER	C- 295026-010V
			C- 295026-020V
3- 295032		LEAD-IN	C- 295026-010V
3- 295033		BRACKET	C- 295026-010V
4- 295044		BEARING	C- 256237-020V
			C- 256237-030V
			C- 256237-040V
C- 295045-020V	6445 84-01-10	PIPE WORK-PNEUMATIC	B- 648111-020V
			B- 648111-030V
C- 295045-030V	8271 85-10-14	PIPE WORK-PNEUMATIC	B- 648111-060V
C- 295045-040V	8465 85-12-18	PIPE WORK-PNEUMATIC	B- 648111-070V
C- 295045-050V	13953 89-11-13	PIPE WORK-PNEUMATIC	B- 648111-080V
C- 295045-060V	14315 90-01-10	PIPE WORK-PNEUMATIC	B- 648111-090V
4- 295050		PIPE	C- 271274-020V
2- 295051		GUARD	C- 256239-020V
			C- 256239-030V
			C- 256239-040V
4- 295052		AXLE SUPPORT	C- 256239-020V
			C- 256239-030V
			C- 256239-040V
3- 295054		PLATE	C- 256219-020V
			C- 256220-020V
			C- 256219-020V
			C- 256220-020V
4- 295055		CLIP	C- 256973-020V
			C- 256219-020V
			C- 256220-020V
			C- 256219-020V
			C- 256220-020V
4- 295056		WASHER	C- 256973-020V
			C- 256973-030V
			C- 256219-020V
			C- 256220-020V
			C- 256219-020V
			C- 256220-020V
			C- 256219-030V
			C- 256220-030V
			C- 256219-030V
			C- 256220-030V
			C- 256219-030V
			C- 256220-030V
			C- 256219-030V
			C- 256220-030V
3- 295057-0001		RAIL	CR- 256712-020V
			CR- 256712-030V
			CR- 256712-040V
			CR- 256712-050V
3- 295057-0002		RAIL	CR- 256712-020V
			CR- 256712-030V
			CR- 256712-040V
			CR- 256712-050V
3- 295057-0003		RAIL	CR- 256712-020V
			CR- 256712-030V
			CR- 256712-040V
			CR- 256712-050V
3- 295058-0001		RAIL	CR- 256712-020V
			CR- 256712-030V
			CR- 256712-040V
			CR- 256712-050V
3- 295058-0002		RAIL	CR- 256712-020V
			CR- 256712-030V
			CR- 256712-040V
			CR- 256712-050V
3- 295058-0003		RAIL	CR- 256712-020V
			CR- 256712-030V
			CR- 256712-040V
			CR- 256712-050V

PART NO	LAST AM	DESCRIPTION	GROUP NO
			CR- 256712-030V
			CR- 256712-040V
			CR- 256712-050V
3- 295060		RAIL	CR- 256712-020V
			CR- 256712-030V
			CR- 256712-040V
			CR- 256712-050V
3- 295061		RAIL	CR- 256712-020V
			CR- 256712-030V
			CR- 256712-040V
			CR- 256712-050V
3- 295062		RAIL	CR- 256712-020V
			CR- 256712-030V
			CR- 256712-040V
			CR- 256712-050V
1- 295063		CIRCUIT BOARD	C- 295026-010V
1- 295064		CIRCUIT BOARD	C- 295026-010V
1- 295065		CONTROL CABINET	C- 295026-010V
1- 295066		CONTROL CABINET	C- 295026-010V
2- 295067		MACHINE DISPLAY B9 UPTAB	C- 295026-010V
2- 295068		MACHINE DISPLAY B9 MPTAB	C- 295026-010V
2- 295069		MACHINE DISPLAY AB9 UPTAB	C- 295026-010V
2- 295070		MACHINE DISPLAY AB9 MPTAB	C- 295026-010V
4- 295071		SPACER	C- 295026-010V
			C- 295026-020V
			C- 295026-030V
4- 295072		BUFFER RING	CR- 256436-020V
			CR- 256712-020V
			CR- 256436-020V
			CR- 256712-020V
			CR- 256436-020V
			CR- 256712-020V
			CR- 256436-020V
			CR- 256712-020V
			CR- 256436-030V
			CR- 256712-030V
			CR- 256436-040V
			CR- 256712-040V
			CR- 256436-050V
			CR- 256712-050V
			RK- 751157-010V
4- 295073		GASKET	C- 256237-020V
			C- 256237-030V
			C- 256237-040V
2- 295075		GUARD	C- 255907-020V
			C- 456180-010V
2- 295076		GUARD	C- 256239-020V
			C- 256239-030V
			C- 256239-040V
2- 295077		PIPE	C- 272241-020V
3- 295078-0001		PIPE	C- 272241-020V
			C- 456556-010V
4- 295079		PIPE	C- 272241-020V
4- 295080		PIPE	C- 272241-020V
4- 295081		PIPE	C- 272241-020V
			C- 456556-010V
4- 295082		PIPE	C- 272241-020V
4- 295083		PIPE	C- 272241-020V
			C- 456556-010V
2- 295084		INDUCTOR	C- 295523-020V
2- 295085		INDUCTOR	C- 295523-020V
4- 295086		LEAF SPRING	C- 255907-020V
4- 295087		LEAF SPRING	C- 255907-020V
4- 295088		LEAF SPRING	C- 255907-020V
4- 295089		LEAF SPRING	C- 255907-020V
3- 295092		BEARING HOUSING	C- 295310-010V
			C- 295310-020V
			C- 295310-030V
			C- 295310-040V
			C- 295310-050V
3- 295092		BEARING HOUSING	C- 295310-060V
4- 295093		LID	C- 295310-010V
			C- 295310-020V
			C- 295310-030V
			C- 295310-040V
			C- 295310-050V

PART NO	LAST AM	DESCRIPTION	GROUP NO
4- 295094		SHAFT	C- 295310-010V
			C- 295310-020V
			C- 295310-030V
			C- 295310-040V
			C- 295310-050V
			C- 295310-060V
4- 295095		ELBOW PIPE	C- 256237-020V
			C- 256237-030V
			C- 256237-040V
2- 295096		CONNECTION	C- 256237-020V
2- 295097		SLIDER	C- 255907-020V
			C- 456180-010V
3- 295098		PLATE	C- 256237-020V
4- 295103		SPACER	C- 272025-020V
1- 295106		GUARD	C- 295971-010V
			C- 491942-010V
3- 295110		SPACER	C- 272084-020V
3- 295111		BENDING ROLLER	C- 256014-020V
			C- 256014-030V
			C- 256014-040V
			C- 256014-050V
C- 295112-020V	8297 85-10-15	WHEEL	B- 648101-020V
			B- 648101-060V
			B- 648101-070V
			B- 648101-080V
3- 295114		BEARING	C- 295310-010V
4- 295115		SHAFT	C- 295310-010V
4- 295116		SPROCKET	C- 295310-010V
			C- 295310-020V
			C- 295310-030V
			C- 295310-040V
			C- 295310-050V
			C- 295310-060V
4- 295117		WASHER	C- 295310-010V
4- 295118		GEAR WHEEL	C- 295310-010V
4- 295122		BRACKET	C- 272825-010V
2- 295123		SIDE PIECE	C- 272825-010V
4- 295140		PIN	C- 256233-020V
			C- 256173-020V
			C- 256201-020V
			C- 256202-020V
			C- 256173-020V
			C- 256201-020V
			C- 256202-020V
			C- 256173-020V
			C- 256201-020V
			C- 256202-020V
			C- 256173-030V
			C- 256201-030V
			C- 256202-030V
			C- 256173-040V
			C- 256201-040V
4- 295140		PIN	C- 256202-040V
			C- 272021-020V
3- 295141		BRACKET	C- 256973-020V
1- 295142-0002		GUIDE PLATE	C- 255907-020V
1- 295142-0003		GUIDE PLATE	C- 255907-020V
1- 295142-0004		GUIDE PLATE	C- 255907-020V
1- 295143-0001		GUIDE PLATE	C- 255907-020V
1- 295143-0003		GUIDE PLATE	C- 255907-020V
1- 295144-0001		GUIDE PLATE	C- 255907-020V
2- 295150-0001		PIPE	C- 272241-020V
2- 295150-0003		PIPE	C- 456556-010V
3- 295152		PLATE	C- 255982-020V
			C- 469091-010V
1- 295156		LID	C- 257146-020V
2- 295157		ARM	C- 257146-020V
1- 295158		DOOR	C- 256873-020V
			C- 256873-040V
2- 295159		COVER	C- 256875-020V
4- 295160		GASKET	C- 271169-020V
			C- 272337-020V
			C- 271169-020V
			C- 272337-020V
			C- 271169-020V
			C- 272337-020V
			C- 271169-020V

PART NO	LAST AM	DESCRIPTION	GROUP NO
			C- 272337-020V
			C- 271169-030V
			C- 272337-030V
			C- 271169-040V
			C- 272337-040V
3- 295161		BRACKET	C- 441102-010V
4- 295162		WASHER	C- 295310-010V
			C- 295310-020V
			C- 295310-030V
4- 295163		SHOULDER RING	C- 295310-010V
			C- 295310-020V
			C- 295310-030V
			C- 295310-040V
			C- 295310-050V
			C- 295310-060V
4- 295164		GEAR WHEEL	C- 295310-010V
			C- 295310-020V
			C- 295310-030V
			C- 295310-040V
			C- 295310-050V
			C- 295310-060V
4- 295165		GEAR WHEEL	C- 295310-010V
			C- 295310-020V
			C- 295310-030V
			C- 295310-040V
			C- 295310-050V
			C- 295310-060V
4- 295166		SHAFT	C- 295310-010V
			C- 295310-020V
			C- 295310-030V
			C- 295310-040V
			C- 295310-050V
			C- 295310-060V
4- 295167		SHOULDER RING	C- 295310-010V
4- 295167		SHOULDER RING	C- 295310-020V
			C- 295310-030V
4- 295168		LID	C- 295310-010V
			C- 295310-020V
			C- 295310-030V
			C- 295310-040V
			C- 295310-050V
			C- 295310-060V
4- 295169		SPACER RING	C- 295310-010V
			C- 295310-020V
			C- 295310-030V
			C- 295310-040V
			C- 295310-050V
			C- 295310-060V
4- 295170		PLUG	C- 295310-010V
			C- 295310-020V
			C- 295310-030V
			C- 295310-040V
			C- 295310-050V
			C- 295310-060V
4- 295171		SPROCKET	C- 295310-010V
			C- 295310-020V
			C- 295310-030V
2- 295174		LID	C- 256014-020V
2- 295175		FRONT PLATE	C- 256014-020V
3- 295178		TENSION RAIL	C- 256014-020V
3- 295179		RUBBER SEAL	C- 256014-020V
4- 295180		HOUSE	C- 256014-020V
4- 295181		SEAL	C- 256014-020V
3- 295184		PIPE	C- 271274-020V
2- 295186		PIPE	C- 256089-020V
2- 295187		PIPE	C- 256089-020V
C- 295188-010V	6317 83-11-03	RAILING	B- 648102-020V
			B- 648102-030V
4- 295189		GASKET	C- 272802-010V
			C- 272825-010V
			C- 295305-010V
			C- 272802-010V
			C- 272825-010V
			C- 295305-010V
4- 295191		BRACKET	C- 256555-020V
			C- 256555-030V
			C- 456100-010V

PART NO	LAST AM	DESCRIPTION	GROUP NO
			C- 456100-020V
3- 295192		PIPE	C- 272241-020V
4- 295193		BASE	C- 295026-010V
2- 295195		RAILING	C- 272833-010V
3- 295196-0002		PIPE	C- 272241-020V
			C- 456556-010V
2- 295197		COVER	C- 256665-020V
2- 295198		COVER	C- 256665-020V
G1- 295201		FRAME	C- 295211-010V
2- 295202-0001		SWIVEL	C- 295211-010V
2- 295202-0002		SWIVEL	C- 295211-010V
4- 295203		LID	C- 295211-010V
4- 295204-0001		SHIM	C- 295211-010V
4- 295204-0002		SHIM	C- 295211-010V
4- 295204-0003		SHIM	C- 295211-010V
4- 295205		SPACER SLEEVE	C- 295211-010V
G4- 295206		FLAP	C- 295211-010V
4- 295207		HOLDER	C- 295211-010V
4- 295208		SECURING PLATE	C- 295211-010V
4- 295210		WASHER	C- 256236-020V
			C- 295112-020V
C- 295211-010V	6991 84-08-29	FRAME	B- 648105-020V
			B- 648105-030V
			B- 648105-040V
			B- 648105-060V
			B- 648105-070V
			B- 648105-080V
			B- 648105-090V
3- 295213		PROTECTIVE GLAS	C- 271880-020V
4- 295215		PIPE	C- 256014-020V
C- 295218-010V	7911 85-06-11	FOLDING BAR	B- 648105-020V
			B- 648105-030V
			B- 648105-040V
			B- 648105-060V
			B- 648105-070V
			B- 648105-080V
			B- 648105-090V
1- 295226		CLEANING PIPE	C- 295262-020V
4- 295227		PIPE	C- 295262-020V
2- 295228		GABLE	C- 295112-020V
2- 295229		GABLE	C- 295112-020V
2- 295230		PLATE	C- 295112-020V
3- 295231		SHAFT	C- 295112-020V
4- 295232		SHAFT	C- 295112-020V
3- 295233		PIPE	C- 295112-020V
1- 295234		CIRCUIT DIAGRAM	C- 272241-020V
			B- 648109-020V
			B- 648109-030V
			B- 648109-020V
1- 295235		CIRCUIT DIAGRAM	B- 648109-030V
			RK- 469760-010V
			B- 648109-020V
			B- 648109-030V
1- 295236		CIRCUIT DIAGRAM	B- 648109-020V
			B- 648109-030V
			B- 648109-020V
1- 295237		CIRCUIT DIAGRAM	B- 648109-030V
			B- 648109-020V
			B- 648109-030V
1- 295238		CIRCUIT DIAGRAM	B- 648109-020V
			B- 648109-030V
			B- 648109-020V
1- 295239		CIRCUIT DIAGRAM	B- 648109-030V
			B- 648109-020V
			B- 648109-030V
1- 295240		CIRCUIT DIAGRAM	B- 648109-020V
			B- 648109-030V
			B- 648109-020V
1- 295241		VALVE PANEL	B- 648109-030V
1- 295241		VALVE PANEL	B- 648109-020V
			B- 648109-030V

PART NO	LAST AM	DESCRIPTION	GROUP NO
			B- 648109-020V
1- 295242		VALVE PANEL	B- 648109-030V
			B- 648109-020V
			B- 648109-030V
2- 295246		HOLDER	C- 256873-020V
3- 295247		LEAF SPRING	C- 256873-020V
			C- 256873-040V
4- 295250		PIPE	C- 272560-020V
			C- 272560-030V
			C- 272560-040V
3- 295252		FLANGE	C- 256230-020V
			C- 255921-020V
			C- 255921-030V
C- 295256-020V	7533 85-02-18	AIR NOZZLE	B- 648101-020V
			B- 648101-060V
3- 295259		HOLDER	C- 256843-020V
			C- 256843-030V
			C- 256843-040V
			C- 256843-050V
4- 295260		END PIECE	CR- 256204-020V
			CR- 256205-020V
			CR- 256204-020V
			CR- 256205-020V
			CR- 256204-030V
			CR- 256205-030V
			CR- 256204-040V
			CR- 256205-040V
			CR- 256204-040V
			CR- 256205-040V
			CR- 256204-050V
			CR- 256205-050V
G3- 295261-0001		CLEANING PIPE	C- 271113-020V
G3- 295261-0002		CLEANING PIPE	C- 271113-020V
G3- 295261-0003		CLEANING PIPE	C- 271113-020V
G3- 295261-0004		CLEANING PIPE	C- 271113-020V
G3- 295261-0005		CLEANING PIPE	C- 271113-020V
G3- 295261-0006		CLEANING PIPE	C- 271113-020V
C- 295262-020V	6667 84-03-28	CLEANING PIPE	B- 648109-020V
C- 295262-030V	6726 84-04-10	CLEANING PIPE	B- 648109-030V
C- 295262-0401	8082 85-07-11	CLEANING PIPE	B- 648109-060V
C- 295262-0501	10843 87-11-26	CLEANING PIPE	B- 648109-070V
			B- 648109-080V
2- 295263		CLEANING PIPE	B- 648109-090V
			C- 295262-020V
			C- 295262-030V
			C- 295262-040V
			C- 295262-050V
2- 295265		CABLE CONDUIT	C- 256233-020V
2- 295266		CABLE CONDUIT	C- 256233-020V
1- 295267		COLUMN	C- 256233-020V
4- 295268		LOCK	C- 256233-020V
2- 295271		BEAM	C- 271635-030V
			C- 271635-020V
			C- 271635-030V
3- 295272		PLATE	C- 255982-020V
3- 295273		PLATE	C- 529933-010V
3- 295273		PLATE	C- 255982-020V
			C- 469091-010V
			C- 529933-010V
C- 295276-020V	12367 88-11-18	BENDING ROLLER	B- 648101-020V
			B- 648101-060V
			B- 648101-070V
			B- 648101-080V
3- 295277		BRACKET	C- 295276-020V
3- 295278		BRACKET	C- 295276-020V
3- 295279		HOLDER	C- 295276-020V
1- 295280		PLATFORM	C- 295305-010V
3- 295281		PLATFORM	C- 295305-010V
2- 295282		PLATFORM LEFT	C- 295305-010V
2- 295283		PLATFORM LEFT	C- 295305-010V
2- 295284		PLATFORM	C- 295305-010V
2- 295285		PLATFORM	C- 295305-010V
2- 295286		SIDE PIECE	C- 295305-010V
3- 295287		MACHINE BODY	C- 295305-010V
			C- 456457-010V
			C- 456457-020V

PART NO	LAST AM	DESCRIPTION	GROUP NO
3- 295288		SIDE PIECE	C- 295305-010V
1- 295289		RAILING	C- 295188-010V
1- 295290		RAILING	C- 295188-010V
1- 295291		RAILING	C- 295188-010V
1- 295292		RAILING	C- 295188-010V
2- 295293		RAILING	C- 295188-010V
2- 295294		RAILING	C- 295188-010V
3- 295295		MACHINE BODY	C- 295305-010V
			C- 456457-010V
			C- 456457-020V
3- 295296		CABLE TRACK	C- 271569-020V
			C- 271569-030V
			C- 271569-040V
			C- 271569-050V
4- 295299		GEAR WHEEL	C- 295310-010V
			C- 295310-020V
			C- 295310-030V
			C- 295310-040V
			C- 295310-050V
			C- 295310-060V
4- 295300		FLUSH PIPE	C- 295262-020V
			C- 295262-030V
			C- 456836-020V
			C- 456836-030V
4- 295301		FLUSH PIPE	C- 295262-020V
			C- 295262-030V
			C- 456836-020V
			C- 456836-030V
4- 295302		COVER	C- 256555-020V
			C- 256555-030V
			C- 456100-010V
			C- 456100-020V
C- 295305-010V	6736 84-05-07	PLATFORM	B- 648102-020V
			B- 648102-030V
3- 295306		COVER	CR- 256547-020V
			CR- 256547-030V
3- 295307		FLEXIBLE CONDUIT	CR- 256547-020V
			CR- 256547-030V
4- 295308		SHIM	C- 295310-010V
4- 295308		SHIM	C- 295310-020V
			C- 295310-030V
			C- 295310-040V
			C- 295310-050V
			C- 295310-060V
4- 295309		SHIM	C- 295310-010V
			C- 295310-020V
			C- 295310-030V
			C- 295310-040V
			C- 295310-050V
			C- 295310-060V
C- 295310-010V	7911 85-06-11	DELIVERY UNIT	B- 648105-020V
			B- 648105-030V
C- 295310-020V	7911 85-06-11	DELIVERY UNIT	B- 648105-040V
C- 295310-030V	8161 85-08-27	DISCHARGE UNIT	B- 648105-060V
C- 295310-040V	9585 86-09-11	DISCHARGE UNIT	B- 648105-070V
C- 295310-050V	12254 88-10-20	DISCHARGE UNIT	B- 648105-080V
C- 295310-060V	12530 90-01-05	DISCHARGE UNIT	B- 648105-090V
G1- 295311		DISCHARGE HOUSE	C- 295310-010V
			C- 295310-020V
			C- 295310-030V
			C- 295310-040V
			C- 295310-050V
			C- 295310-060V
G1- 295312		LID	C- 295310-010V
2- 295313		SHAFT	C- 295310-010V
			C- 295310-020V
			C- 295310-030V
			C- 295310-040V
			C- 295310-050V
			C- 295310-060V
3- 295314		SPROCKET	C- 295310-010V
			C- 295310-020V
			C- 295310-030V
			C- 295310-040V
			C- 295310-050V
			C- 295310-060V
3- 295315		SHAFT	C- 295310-010V

PART NO	LAST AM	DESCRIPTION	GROUP NO
			C- 295310-020V
			C- 295310-030V
			C- 295310-040V
			C- 295310-050V
			C- 295310-060V
3- 295316		STRIP	C- 295310-010V
			C- 295310-020V
			C- 295310-030V
			C- 295310-040V
			C- 295310-050V
			C- 295310-060V
4- 295317		WASHER	C- 295310-010V
			C- 295310-020V
			C- 295310-030V
			C- 295310-040V
			C- 295310-050V
			C- 295310-060V
4- 295318		GREASE NIPPLE	C- 295310-010V
			C- 295310-020V
			C- 295310-030V
			C- 295310-040V
4- 295318		GREASE NIPPLE	C- 295310-050V
			C- 295310-060V
4- 295319		SPROCKET	C- 295310-010V
			C- 295310-020V
			C- 295310-030V
			C- 295310-040V
			C- 295310-050V
			C- 295310-060V
4- 295320		PLATE	C- 295310-010V
			C- 295310-020V
			C- 295310-030V
			C- 295310-040V
			C- 295310-050V
			C- 295310-060V
4- 295321		STRIP	C- 295310-010V
			C- 295310-020V
			C- 295310-030V
			C- 295310-040V
			C- 295310-050V
			C- 295310-060V
4- 295323		WASHER	C- 295310-010V
			C- 295310-020V
			C- 295310-030V
			C- 295310-040V
			C- 295310-050V
			C- 295310-060V
2- 295325		GASKET	C- 295310-010V
4- 295326		RETAINING RING	C- 295310-010V
			C- 295310-020V
			C- 295310-030V
			C- 295310-040V
			C- 295310-050V
			C- 295310-060V
4- 295327-0001		ROLLER	C- 295310-010V
1- 295328		GUIDE PLATE	C- 271089-020V
G1- 295329		SIDE PIECE	C- 271089-020V
G1- 295330		SIDE PIECE	C- 271089-020V
3- 295331		PLATE	C- 271089-020V
			C- 271089-030V
2- 295332		RAIL	C- 271114-020V
			C- 271114-030V
			C- 271114-040V
2- 295333		CHECKER PLATE	C- 271114-020V
			C- 271114-030V
2- 295334		SIDE PLATE	C- 271114-020V
			C- 271114-030V
			C- 271114-040V
2- 295335		FRONT PLATE	C- 271114-020V
2- 295336		BOTTOM PLATE	C- 271114-020V
			C- 271114-030V
			C- 271114-040V
2- 295337		COVER	C- 271114-020V
2- 295338		SIMULATOR	C- 271114-020V
3- 295339		COLUMN	C- 271114-020V
3- 295340		SIDE PLATE	C- 271114-020V
			C- 271114-030V

PART NO	LAST AM	DESCRIPTION	GROUP NO
			C- 271114-040V
4- 295341		SPACER	C- 271114-020V
			C- 271114-030V
4- 295341		SPACER	C- 271114-040V
4- 295342		CLIP	C- 271114-020V
			C- 271114-030V
			C- 271114-040V
G4- 295343		HOLDER	C- 271114-020V
1- 295344		FRONT PLATE	C- 271115-020V
1- 295345		COVER	C- 271115-020V
1- 295346		CLEANING PIPE	C- 271115-020V
G2- 295347		BEARING BRACKET	C- 271115-020V
			C- 271115-030V
			C- 271115-040V
3- 295348		GLASS	C- 271115-020V
			C- 271115-030V
			C- 271115-040V
G3- 295349		BEARING BRACKET	C- 271115-020V
			C- 271115-030V
			C- 271115-040V
3- 295350		CHECKER PLATE	C- 271115-020V
3- 295351		CHECKER PLATE	C- 271115-020V
3- 295352		CHECKER PLATE	C- 271115-020V
3- 295353		RAIL	C- 271115-020V
			C- 271115-030V
			C- 271115-040V
4- 295354		LID	C- 271115-020V
			C- 271115-030V
			C- 271115-040V
4- 295355		BEARING BRACKET	C- 271115-020V
			C- 271115-030V
			C- 271115-040V
G4- 295356		HOUSING	C- 271115-020V
			C- 271115-030V
			C- 271115-040V
4- 295357		ROD	C- 271115-020V
			C- 271115-030V
			C- 271115-040V
4- 295358		RULER	C- 271115-020V
			C- 271115-030V
			C- 271115-040V
C- 295359-010V	6255 83-12-12	STATION	B- 648105-020V
			B- 648105-030V
			B- 648105-040V
1- 295360		PLATE	RK- 469898-010V
			C- 295359-010V
1- 295361		PLATE	C- 295359-010V
G1- 295362		PLATE	C- 295359-010V
1- 295363-0001		GUARD	C- 295359-010V
4- 295364		BRACKET	C- 295359-010V
2- 295365		SIDE PLATE	C- 295359-010V
3- 295366		SHIM	C- 295359-010V
4- 295367		GUIDE RAIL	C- 295359-010V
4- 295368		GUIDE RAIL	C- 295359-010V
4- 295370		SLIDE PLATE	C- 295359-010V
2- 295372		COVER	C- 256014-020V
2- 295373		COVER	C- 256014-020V
1- 295374		FILLING PIPE	C- 255982-020V
			C- 469091-010V
			C- 469091-020V
4- 295375		FORK	C- 529933-010V
			C- 295402-020V
4- 295375		FORK	C- 255982-020V
			C- 469091-010V
			C- 469091-020V
			C- 529933-010V
4- 295376		SHAFT	C- 529933-010V
			C- 295402-020V
			C- 255982-020V
			C- 469091-010V
			C- 469091-020V
			C- 529933-010V
4- 295377-0001		COVER	C- 295402-020V
			C- 255982-020V
			C- 469091-010V
			C- 469091-020V
4- 295377-0002		COVER	C- 529933-010V

PART NO	LAST AM	DESCRIPTION	GROUP NO
			C- 295402-020V
			C- 255982-020V
			C- 469091-010V
			C- 469091-020V
			C- 529933-010V
1- 295378		BATH	C- 256014-020V
1- 295379		BATH	C- 256014-020V
1- 295381-0001		PIPE	C- 272241-020V
C- 295382-020V	5769 83-03-22	CONNECTION BOX	B- 648106-020V
			B- 648106-060V
			B- 648106-070V
			B- 648106-080V
			B- 648106-090V
3- 295384		SUCTION PIPE	C- 271452-020V
			C- 271453-020V
			C- 271452-020V
			C- 271453-020V
			C- 271452-020V
			C- 271453-030V
			C- 490761-010V
3- 295386		LABEL	C- 271453-020V
			C- 271453-030V
3- 295387		LABEL	C- 271452-020V
			C- 490761-010V
4- 295388		GASKET	C- 256014-020V
			C- 295778-010V
			C- 256014-020V
			C- 295778-010V
			C- 256014-030V
			C- 295778-020V
			C- 256014-030V
			C- 295778-030V
			C- 256014-040V
			C- 295778-030V
			C- 256014-050V
			C- 295778-040V
4- 295389		SIGN	C- 271453-020V
			C- 271453-030V
4- 295390		SIGN	C- 271452-020V
			C- 490761-010V
3- 295391-0002		SCREW	C- 271168-020V
			C- 271168-040V
3- 295391-0003		SCREW	C- 271168-020V
			C- 271168-040V
1- 295392		HOUSE	C- 272021-020V
3- 295393		FLUSH PIPE	C- 271880-020V
3- 295394		FLUSH PIPE	C- 456265-010V
			C- 271880-020V
3- 295395		BRACKET	C- 271880-020V
			C- 469781-010V
3- 295396		PROTECTIVE GLAS	C- 271880-020V
4- 295397		HINGE	C- 271880-020V
			C- 469781-010V
4- 295398		HINGE	C- 271880-020V
			C- 469781-010V
2- 295399		HOLDER	C- 255907-020V
			C- 456180-010V
3- 295401		SIDE PIECE	C- 272825-010V
C- 295402-020V	13651 89-11-23	FILLING PIPE	B- 648101-020V
			B- 648101-060V
			B- 648101-070V
			B- 648101-080V
			B- 648101-090V
1- 295404		RECEPTACLE	C- 271113-020V
1- 295406		FILLING TUBE UPPER	C- 295402-020V
3- 295408		ARM	C- 271992-020V
3- 295409		SHAFT	C- 271992-020V
G2- 295410		BRACKET	C- 271113-020V
2- 295411		PIPE	C- 271113-020V
3- 295412		PIPE	C- 271113-020V
			C- 456588-010V
			C- 456588-020V
			C- 456588-030V
3- 295413		BRANCH PIPE	C- 271113-020V
G3- 295414		JUNCTION BLOCK	C- 271113-020V
3- 295415		PIPE	C- 271113-020V
G3- 295416-0001		CLEANING PIPE	C- 271113-020V

PART NO	LAST AM	DESCRIPTION	GROUP NO
G3- 295416-0002		CLEANING PIPE	C- 271113-020V
G3- 295416-0003		CLEANING PIPE	C- 271113-020V
G3- 295416-0004		CLEANING PIPE	C- 271113-020V
G3- 295416-0005		CLEANING PIPE	C- 271113-020V
G3- 295416-0006		CLEANING PIPE	C- 271113-020V
4- 295417		GASKET	C- 271261-040V
			C- 271261-050V
			C- 271113-020V
			C- 456588-010V
			C- 456588-020V
			C- 456588-030V
4- 295418		STUD BOLT	C- 271113-020V
4- 295419		FLANGE	C- 271113-020V
4- 295420		NIPPLE TUBE	C- 271113-020V
4- 295421-0001		SEAL	C- 271113-020V
4- 295421-0002		SEAL	C- 271113-020V
4- 295422		GUIDE	C- 271115-020V
4- 295423		SEAL	C- 271115-020V
			C- 271115-030V
4- 295424		SIGN	C- 271115-040V
			C- 271909-020V
			C- 271909-030V
			C- 271909-040V
4- 295425		SIGN	C- 271909-050V
			C- 271909-020V
4- 295425		SIGN	C- 271909-030V
			C- 271909-040V
3- 295426		CLAMP	C- 271909-050V
			C- 272021-020V
			C- 272021-030V
3- 295427		LOCK	C- 272021-040V
			C- 272021-050V
			C- 272021-020V
3- 295428		HINGE	C- 272021-030V
			C- 272021-040V
			C- 272021-050V
4- 295429		HANDLE	C- 272021-020V
			C- 272021-030V
			C- 272021-040V
4- 295430		SUPPORT	C- 272021-050V
4- 295431		SCREW	C- 295211-010V
4- 295432		SCREW	C- 295211-010V
4- 295434		BUSHING	C- 295211-010V
			C- 271113-020V
			C- 456588-010V
			C- 456588-020V
4- 295435		WASHER	C- 456588-030V
			C- 271113-020V
			C- 456588-010V
4- 295436		PROTECTION PLATE	C- 272021-020V
4- 295438		HOLDER	C- 256229-020V
1- 295439		BRACKET	C- 271274-020V
2- 295440		CABLE CONDUIT	C- 272408-020V
C- 295441-010V	5436 82-07-16	CONNECTION BOX	C- 271909-020V
C- 295441-020V	6850 84-05-18	CONNECTION BOX	C- 271909-030V
C- 295441-030V	9123 86-07-22	CONNECTION BOX	C- 271909-040V
			C- 271909-050V
2- 295442		CONNECTION BOX	C- 295441-010V
			C- 295441-020V
			C- 295441-030V
2- 295443		CONNECTION BOX	C- 295441-010V
4- 295444		SPACER	C- 295441-010V
			C- 295441-020V
			C- 295441-030V
1- 295445		PLATE	C- 271909-020V
1- 295446		PLATE	C- 271909-020V
2- 295448		PIPE	C- 271909-020V
			C- 271909-030V
			C- 271909-040V
2- 295449		PIPE	C- 271909-050V
2- 295450		PIPE	C- 271909-020V
3- 295451		PIPE	C- 271909-020V
			C- 271909-020V

PART NO	LAST AM	DESCRIPTION	GROUP NO
			C- 271909-030V
			C- 271909-040V
			C- 271909-050V
3- 295452		PIPE	C- 271909-020V
			C- 271909-030V
			C- 271909-040V
3- 295453		PIPE	C- 271909-050V
3- 295453		PIPE	C- 271909-020V
			C- 271909-030V
			C- 271909-040V
3- 295454		PIPE	C- 271909-050V
3- 295455		PIPE	C- 271909-020V
			C- 271909-020V
			C- 271909-030V
			C- 271909-040V
3- 295456		PIPE	C- 271909-050V
3- 295457		PIPE	C- 271909-020V
3- 295458		PIPE	C- 271909-020V
3- 295459		CONNECTION	C- 271909-020V
3- 295460		BRACKET	C- 271909-020V
			C- 271909-020V
			C- 271909-030V
			C- 271909-040V
4- 295461		RUBBER GASKET	C- 271909-050V
			C- 271909-020V
			C- 271909-030V
			C- 271909-040V
4- 295462		HOLDER	C- 271909-050V
			C- 271909-020V
			C- 271909-030V
			C- 271909-040V
1- 295463		CABLE DUCT	C- 271909-050V
			C- 295777-010V
2- 295464		CABLE DUCT	C- 469374-010V
2- 295465-0001		LID	C- 295777-010V
2- 295465-0002		LID	C- 295777-010V
			C- 295777-010V
4- 295466		LOCK	C- 469374-010V
			C- 295777-010V
			C- 469374-010V
			C- 469374-020V
			C- 469374-030V
3- 295468		PLATE	C- 272014-020V
3- 295469		PLATE	C- 272014-020V
			C- 272014-030V
C- 295470-0201	6317 83-11-03	CONNECTION BOX	B- 648111-020V
			B- 648111-030V
C- 295470-0301	7914 85-05-21	CONNECTION BOX	B- 648111-060V
			B- 648111-070V
			B- 648111-080V
C- 295470-040V	12180 89-12-01	CONNECTION BOX	B- 648111-090V
2- 295471		PIPE	C- 271109-020V
			C- 456455-010V
2- 295472		PIPE	C- 456455-020V
			C- 271109-020V
			C- 456455-010V
4- 295473		PIPE	C- 456455-020V
			C- 271909-020V
			C- 271909-030V
			C- 271909-040V
4- 295474		BLOCK	C- 271909-050V
4- 295475-0001		GUIDE	C- 295359-010V
			RK- 469898-010V
4- 295475-0002		GUIDE	C- 295359-010V
			C- 295359-010V
4- 295477		BRACKET	C- 456103-010V
4- 295478		ROD	C- 295359-010V
4- 295479		BLOCK	C- 295359-010V
			C- 295359-010V
4- 295480		PIN	C- 456103-010V
			C- 271376-020V
			C- 295359-010V
			C- 271376-020V
			C- 295359-010V
			C- 271376-020V
			C- 295359-010V
			C- 456103-010V

PART NO	LAST AM	DESCRIPTION	GROUP NO
			C- 456560-010V
			C- 456103-010V
			C- 456560-010V
			C- 456103-010V
			C- 456560-010V
			C- 456103-010V
			C- 456560-010V
2- 295481		SIDE PLATE	C- 295359-010V
2- 295482		RAIL	RK- 469897-010V
			C- 271376-020V
2- 295483		RAIL	C- 271376-020V
2- 295484		RAIL	C- 271376-020V
3- 295486		RAIL	C- 271376-020V
G3- 295487		GUIDE	C- 271376-020V
G3- 295488		GUIDE	C- 271376-020V
G3- 295489		GUIDE	C- 271376-020V
G3- 295490		GUIDE	C- 271376-020V
4- 295493		HOLDER	RK- 469897-010V
			C- 271376-020V
4- 295494		HOLDER	RK- 469897-010V
			C- 271376-020V
4- 295495		HOLDER	C- 271376-020V
			C- 456560-010V
3- 295496		BLOCK	C- 271909-020V
			C- 271909-030V
			C- 271909-040V
4- 295497		CONNECTION	C- 271909-050V
			C- 271909-020V
			C- 271909-030V
			C- 271909-040V
			C- 271909-050V
4- 295498		HOLDER	C- 271376-020V
			C- 456560-010V
4- 295500		CHUTE	RK- 469897-010V
			C- 271376-020V
4- 295506		RAIL	RK- 469897-010V
			C- 271376-020V
4- 295511-0001		STOP LUG	C- 271376-020V
4- 295511-0003		STOP LUG	C- 271376-020V
			C- 456560-010V
4- 295511-0004		STOP LUG	C- 456560-010V
4- 295512		TENSION SPRING	C- 271376-020V
			C- 456560-010V
4- 295513		TENSION SPRING	C- 271376-020V
			C- 456560-010V
4- 295514		RAIL	C- 271376-020V
4- 295515		SPRING HOLDER	C- 271376-020V
			C- 456560-010V
3- 295517		CATCH	C- 271115-020V
3- 295518		REVOLVING AXLE	C- 271115-020V
4- 295519		BRACKET	C- 271115-020V
4- 295520		PLATE	C- 271115-020V
4- 295521		PLATE	C- 271115-020V
4- 295522		BRACKET	C- 271115-020V
C- 295523-020V	6331 83-11-10	SPARE PART KIT	B- 648104-020V
			B- 648104-030V
C- 295523-030V	14291 89-12-19	START-UP KIT	B- 648104-060V
			B- 648104-070V
			B- 648104-080V
			B- 648104-090V
4- 295527		SIGN	C- 271909-020V
1- 295528		CONNECTION PIPE	C- 271866-020V
2- 295529		PIPE	C- 271866-020V
			C- 271866-030V
			C- 271866-040V
2- 295530		PIPE	C- 271866-050V
			C- 271866-020V
			C- 271866-030V
			C- 271866-040V
2- 295531		PIPE	C- 271866-050V
			C- 271866-020V
			C- 271866-030V
			C- 271866-040V
2- 295532		PIPE	C- 271866-050V
			C- 271866-020V
2- 295533		PIPE	C- 271866-030V
			C- 271866-020V

PART NO	LAST AM	DESCRIPTION	GROUP NO
			C- 271866-030V
			C- 271866-040V
			C- 271866-050V
3- 295534		PIPE	C- 271866-020V
3- 295535		PIPE	C- 271866-020V
3- 295536		PIPE	C- 271866-020V
			C- 271866-030V
			C- 271866-040V
3- 295537		PIPE	C- 271866-050V
3- 295538		PIPE	C- 271866-020V
3- 295539		PIPE	C- 271866-020V
			C- 271866-020V
			C- 271866-030V
			C- 271866-040V
4- 295540		PLATE	C- 271866-050V
			C- 271866-020V
			C- 271866-030V
			C- 271866-040V
4- 295541		BRACKET	C- 271866-050V
			C- 271866-020V
			C- 271866-030V
			C- 271866-040V
2- 295544		PIPE	C- 271866-050V
4- 295547		SHIM	C- 271866-020V
4- 295549		CLIP	C- 271866-020V
			C- 271866-020V
			C- 271866-030V
			C- 271866-040V
			C- 271866-050V
			C- 271274-020V
4- 295549		CLIP	C- 456976-020V
			C- 456976-030V
4- 295550		SCREW	C- 456976-040V
			C- 295262-020V
1- 295552-0002		CABLE DUCT	C- 295262-030V
3- 295553-0001		LID	C- 295777-010V
3- 295553-0002		LID	C- 295777-010V
3- 295554-0002		LID	C- 295777-010V
4- 295555		LID	C- 295777-010V
1- 295556		PIPE	C- 295777-010V
1- 295557		PIPE	C- 295045-020V
			C- 295045-020V
			C- 295045-030V
			C- 295045-040V
1- 295560		PIPE	C- 295045-050V
			C- 295045-020V
			C- 295045-030V
			C- 295045-040V
2- 295565		PIPE	C- 295045-020V
2- 295566		PIPE	C- 295045-020V
2- 295567		PIPE	C- 295045-020V
2- 295568		PIPE	C- 295045-020V
			C- 295045-020V
			C- 295045-030V
			C- 295045-040V
			C- 295045-050V
2- 295569		PIPE	C- 295045-060V
2- 295570		PIPE	C- 295045-020V
			C- 295045-020V
			C- 295045-030V
2- 295571		PIPE	C- 295045-040V
			C- 295045-020V
			C- 295045-030V
2- 295572		PIPE	C- 295045-040V
2- 295573		PIPE	C- 295045-020V
2- 295574		PIPE	C- 295045-020V
2- 295575		PIPE	C- 295045-020V
			C- 295045-020V
			C- 295045-030V
2- 295576		PIPE	C- 295045-040V
2- 295577		PIPE	C- 295045-020V
			C- 295045-020V
			C- 295045-030V
2- 295578		PIPE	C- 295045-040V
2- 295579		PIPE	C- 295045-020V
2- 295580		PIPE	C- 295045-020V
2- 295581		PIPE	C- 295045-020V
			C- 295045-020V

PART NO	LAST AM	DESCRIPTION	GROUP NO
			C- 295045-030V
			C- 295045-040V
2- 295582		PIPE	C- 295045-020V
2- 295583		PIPE	C- 295045-020V
			C- 295045-030V
			C- 295045-040V
2- 295584		PIPE	C- 295045-020V
2- 295585		PIPE	C- 295045-020V
			C- 295045-030V
			C- 295045-040V
2- 295586		PIPE	C- 295045-020V
2- 295587		PIPE	C- 295045-020V
			C- 295045-030V
2- 295587		PIPE	C- 295045-040V
2- 295588		PIPE	C- 295045-020V
			C- 295045-030V
			C- 295045-040V
2- 295589		PIPE	C- 295045-020V
			C- 295045-030V
			C- 295045-040V
2- 295590		PIPE	C- 295045-020V
			C- 295045-030V
			C- 295045-040V
			C- 295045-050V
			C- 295045-060V
3- 295591		PIPE	C- 295045-020V
			C- 295045-030V
			C- 295045-040V
			C- 295045-050V
			C- 295045-060V
3- 295592		PIPE	C- 295045-020V
3- 295593		PIPE	C- 295045-020V
3- 295594		PIPE	C- 295045-020V
			C- 295045-030V
			C- 295045-040V
			C- 295045-050V
			C- 295045-060V
3- 295595		PIPE	C- 295045-020V
3- 295596		PIPE	C- 295045-020V
3- 295597		PIPE	C- 295045-020V
4- 295598		PIPE	C- 295045-020V
4- 295599		PIPE	C- 295045-020V
4- 295600		PIPE	C- 295045-020V
			C- 295045-030V
			C- 295045-040V
4- 295601		PIPE	C- 295045-020V
			C- 295045-030V
			C- 295045-040V
4- 295602		PIPE	C- 295045-020V
			C- 295045-030V
			C- 295045-040V
4- 295603		PIPE	C- 295045-020V
			C- 295045-030V
			C- 295045-040V
4- 295604		CLIP	C- 295045-020V
			C- 295045-030V
			C- 295045-040V
			C- 295045-050V
			C- 295045-060V
4- 295605		BRACKET	C- 295045-020V
			C- 295045-030V
			C- 295045-040V
			C- 295045-050V
			C- 295045-060V
3- 295606-0001		HYDRAULIC HOSE	C- 271562-020V
			C- 271562-030V
3- 295606-0002		HYDRAULIC HOSE	C- 271562-020V
			C- 271562-030V
2- 295607		PIPE	C- 271562-020V
			C- 271562-030V
2- 295608		PIPE	C- 271562-020V
			C- 271562-030V
3- 295609		PIPE	C- 271562-020V
			C- 271562-030V
3- 295610		PIPE	C- 271562-020V
			C- 271562-030V
C- 295611-0201	6501 84-02-08	CONNECTION BOX	C- 256555-020V

PART NO	LAST AM	DESCRIPTION	GROUP NO
			C- 256555-030V
3- 295615		BRACKET	C- 271569-020V
			C- 271569-030V
			C- 271569-040V
			C- 271569-050V
4- 295616		CABLE DUCT	C- 271569-020V
			C- 271569-030V
			C- 271569-040V
			C- 271569-050V
2- 295617-0001		AIR NOZZLE	CR- 256547-020V
			CR- 256547-030V
2- 295617-0002		AIR NOZZLE	CR- 256547-020V
			CR- 256547-030V
2- 295617-0003		AIR NOZZLE	CR- 256547-020V
			CR- 256547-030V
2- 295618-0001		AIR NOZZLE	CR- 256547-020V
			CR- 256547-030V
2- 295618-0002		AIR NOZZLE	CR- 256547-020V
			CR- 256547-030V
2- 295618-0003		AIR NOZZLE	CR- 256547-020V
			CR- 256547-030V
2- 295621		AIR NOZZLE	CR- 256547-020V
			CR- 256547-030V
2- 295622		AIR NOZZLE	CR- 256547-020V
			CR- 256547-030V
1- 295623		BOX	C- 295470-020V
2- 295624		LID	C- 295470-020V
			C- 295470-030V
			C- 295470-040V
2- 295625		BRACKET	C- 295470-020V
2- 295630		FRONT PLATE	C- 256555-020V
			C- 256555-030V
2- 295634		COVER PLATE	C- 271513-020V
2- 295635		COVER PLATE	C- 271513-020V
2- 295636		COVER PLATE	C- 271513-020V
2- 295637		COVER PLATE	C- 271513-020V
2- 295638		COVER PLATE	C- 271513-020V
2- 295639		BOTTOM PLATE	C- 271513-020V
			C- 271513-030V
			C- 271513-040V
			C- 751885-010V
			C- 271513-050V
			C- 751885-020V
2- 295641		SIDE PLATE	C- 271513-020V
2- 295642		GUSSET PLATE	C- 271513-020V
3- 295643		COVER PLATE	C- 271513-020V
3- 295644		COVER PLATE	C- 271513-020V
3- 295645		COVER, UPPER	C- 271513-020V
			C- 271513-030V
			C- 271513-040V
			C- 271513-050V
			C- 751885-020V
3- 295646		COVER, LOWER	C- 271513-020V
			C- 271513-030V
3- 295646		COVER, LOWER	C- 271513-040V
			C- 271513-050V
			C- 751885-020V
3- 295647		STRIP	C- 271513-020V
			C- 271513-030V
			C- 271513-040V
			C- 271513-050V
			C- 751885-020V
3- 295648		STRIP	C- 271513-020V
			C- 271513-030V
			C- 271513-040V
			C- 271513-050V
			C- 751885-020V
3- 295649		GUSSET PLATE	C- 271513-020V
3- 295650		COVER PLATE	C- 271513-020V
			C- 271513-030V
			C- 271513-040V
			C- 751885-010V
			C- 271513-050V
			C- 751885-020V
3- 295651		COVER PLATE	C- 271513-020V
			C- 271513-030V
			C- 271513-040V

PART NO	LAST AM	DESCRIPTION	GROUP NO
3- 295652		COVER PLATE	C- 271513-050V C- 751885-020V C- 271513-020V C- 271513-030V C- 271513-040V C- 751885-010V
3- 295653		COVER PLATE	C- 271513-050V C- 751885-020V C- 271513-020V C- 271513-030V C- 271513-040V C- 751885-010V
3- 295654		COVER PLATE	C- 271513-050V C- 751885-020V C- 271513-020V C- 271513-030V C- 271513-040V C- 751885-010V
4- 295656		COVER PLATE	C- 271513-050V C- 751885-020V C- 271513-020V C- 271513-020V C- 271513-030V C- 271513-040V
4- 295657		COVER PLATE	C- 751885-010V C- 271513-050V C- 751885-020V C- 271513-020V C- 271513-020V C- 271513-030V
3- 295658		COVER STRIP	C- 271513-040V C- 751885-010V C- 271513-050V C- 751885-020V C- 271513-020V C- 271513-030V
3- 295659		COVER STRIP	C- 271513-040V C- 751885-010V C- 271513-050V C- 751885-020V C- 271513-020V C- 271513-030V
4- 295661		SHAFT	C- 271513-040V C- 751885-010V C- 271513-050V C- 751885-020V C- 271992-020V CR- 256547-020V
3- 295664		HANDLE	C- 271274-020V C- 271274-020V B- 648101-020V B- 648101-060V B- 648101-070V B- 648101-080V
2- 295665		PIPE	B- 648101-090V B- 648107-020V B- 648107-060V B- 648107-070V B- 648107-080V B- 648107-090V
2- 295666		PIPE	C- 272381-020V C- 272381-020V C- 272381-020V C- 272381-020V C- 272381-020V C- 272381-030V
C- 295667-020V	7093 84-09-14	START-UP KIT	C- 272381-020V C- 272381-030V C- 272381-020V C- 272381-030V C- 295045-020V C- 295045-020V
C- 295667-030V	13651 89-11-23	START-UP KIT	C- 271934-020V C- 271934-030V C- 271934-020V C- 271934-030V C- 271089-020V C- 271089-030V
C- 295668-0201	5756 83-03-04	SPARE PART KIT	C- 271089-020V C- 271089-030V C- 271089-020V C- 271089-030V C- 271089-020V C- 271089-030V
C- 295668-0301	9628 86-10-16	START-UP KIT	C- 271089-020V C- 271089-030V C- 271089-020V C- 271089-030V C- 271089-020V C- 271089-030V
1- 295703		PIPE	C- 271089-020V C- 271089-030V C- 271089-020V C- 271089-030V C- 271089-020V C- 271089-030V
1- 295704		PIPE	C- 271089-020V C- 271089-030V C- 271089-020V C- 271089-030V C- 271089-020V C- 271089-030V
2- 295705		PIPE	C- 271089-020V C- 271089-030V C- 271089-020V C- 271089-030V C- 271089-020V C- 271089-030V
3- 295707		RETURN PIPE	C- 271089-020V C- 271089-030V C- 271089-020V C- 271089-030V C- 271089-020V C- 271089-030V
4- 295708		BRACKET	C- 271089-020V C- 271089-030V C- 271089-020V C- 271089-030V C- 271089-020V C- 271089-030V
1- 295709		TANK	C- 271089-020V C- 271089-030V C- 271089-020V C- 271089-030V C- 271089-020V C- 271089-030V
3- 295711		LID	C- 271089-020V C- 271089-030V C- 271089-020V C- 271089-030V C- 271089-020V C- 271089-030V
1- 295712		CONNECTION BOX	C- 271089-020V C- 271089-030V C- 271089-020V C- 271089-030V C- 271089-020V C- 271089-030V
1- 295713		CONNECTION BOX	C- 271089-020V C- 271089-030V C- 271089-020V C- 271089-030V C- 271089-020V C- 271089-030V
1- 295716		CLAMP	C- 271089-020V C- 271089-030V C- 271089-020V C- 271089-030V C- 271089-020V C- 271089-030V
2- 295717		BRACKET	C- 271089-020V C- 271089-030V C- 271089-020V C- 271089-030V C- 271089-020V C- 271089-030V
3- 295719		RAIL	C- 271089-020V C- 271089-030V C- 271089-020V C- 271089-030V C- 271089-020V C- 271089-030V
3- 295720		RAIL, LEFT	C- 271089-020V C- 271089-030V C- 271089-020V C- 271089-030V C- 271089-020V C- 271089-030V
3- 295721		RAIL	C- 271089-020V C- 271089-030V C- 271089-020V C- 271089-030V C- 271089-020V C- 271089-030V
3- 295722		RAIL	C- 271089-020V C- 271089-030V C- 271089-020V C- 271089-030V C- 271089-020V C- 271089-030V
3- 295723		RAIL, RIGHT	C- 271089-020V C- 271089-030V C- 271089-020V C- 271089-030V C- 271089-020V C- 271089-030V
3- 295724		RAIL	C- 271089-020V C- 271089-030V C- 271089-020V C- 271089-030V C- 271089-020V C- 271089-030V
4- 295725		GUIDE PLATE	C- 271089-020V C- 271089-030V C- 271089-020V C- 271089-030V C- 271089-020V C- 271089-030V
4- 295726-0001		GUIDE PLATE	C- 271089-020V C- 271089-030V C- 271089-020V C- 271089-030V C- 271089-020V C- 271089-030V
4- 295726-0002		GUIDE PLATE	C- 271089-020V C- 271089-030V C- 271089-020V C- 271089-030V C- 271089-020V C- 271089-030V
4- 295727		GUIDE PLATE	C- 271089-020V C- 271089-030V C- 271089-020V C- 271089-030V C- 271089-020V C- 271089-030V
4- 295728-0001		GUIDE PLATE	C- 271089-020V C- 271089-030V C- 271089-020V C- 271089-030V C- 271089-020V C- 271089-030V
4- 295728-0002		GUIDE PLATE	C- 271089-020V C- 271089-030V C- 271089-020V C- 271089-030V C- 271089-020V C- 271089-030V
4- 295729		WASHER	C- 271089-020V C- 271089-030V C- 271089-020V C- 491259-010V C- 491259-020V C- 491259-010V
4- 295730		SPACER PLATE	RK- 751166-010V C- 272560-020V C- 272560-030V C- 271261-020V C- 271261-030V
1- 295731		FLUSH PIPE	C- 295045-020V C- 295045-020V C- 295045-020V C- 295045-030V C- 295045-040V C- 295045-050V
1- 295731		FLUSH PIPE	C- 295045-060V C- 295045-020V C- 295045-030V C- 295045-040V C- 295045-050V C- 295045-060V
2- 295732		PIPE	C- 295045-020V C- 295045-030V C- 295045-040V C- 295045-050V C- 295045-060V C- 295045-020V
3- 295733		LID	C- 295045-030V C- 295045-040V C- 295045-050V C- 295045-060V C- 295045-020V C- 295045-030V
1- 295734		PIPE	C- 295045-040V C- 295045-050V C- 295045-060V C- 295045-020V C- 295045-030V C- 295045-040V
1- 295735		PIPE	C- 295045-050V C- 295045-060V C- 295045-020V C- 295045-030V C- 295045-040V C- 295045-050V
1- 295736		PIPE	C- 295045-060V C- 295045-020V C- 295045-030V C- 295045-040V C- 295045-050V C- 295045-060V
1- 295737		PIPE	C- 295045-020V C- 295045-030V C- 295045-040V C- 295045-050V C- 295045-060V C- 295045-020V
1- 295738		PIPE	C- 295045-030V C- 295045-040V C- 295045-050V C- 295045-060V C- 295045-020V C- 295045-030V
1- 295739		PIPE	C- 295045-040V C- 295045-050V C- 295045-060V C- 295045-020V C- 295045-030V C- 295045-040V
3- 295740		PIPE	C- 295045-050V C- 295045-060V C- 295045-020V C- 295045-030V C- 295045-040V C- 295045-050V
3- 295741		PIPE	C- 295045-060V C- 295045-020V C- 295045-030V C- 295045-040V C- 295045-050V C- 295045-060V
3- 295742		PIPE	C- 295045-020V C- 295045-030V C- 295045-040V C- 295045-020V C- 295045-030V C- 295045-040V
3- 295743		PIPE	C- 256223-020V C- 256223-030V C- 256223-020V C- 256223-020V C- 256223-030V C- 256223-020V
4- 295744		SCREW	C- 256223-030V C- 256223-020V C- 256223-030V C- 256223-020V C- 256223-030V C- 256223-020V
2- 295747		BRACKET	
3- 295748-0001		BACK PIECE	
3- 295748-0002		BACK PIECE	
3- 295748-0003		BACK PIECE	
4- 295749		ADJUSTING BLOCK	

PART NO	LAST AM	DESCRIPTION	GROUP NO
4- 295749		ADJUSTING BLOCK	C- 256223-030V
4- 295750-0001		GUIDE RAIL	C- 256223-020V
4- 295750-0002		GUIDE RAIL	C- 256223-020V
			C- 256223-030V
2- 295757		CUTTING RAIL	CR- 256204-020V
			CR- 256205-020V
			CR- 256204-020V
			CR- 256205-020V
			CR- 256204-030V
			CR- 256205-030V
			CR- 256204-040V
			CR- 256205-040V
			CR- 256204-040V
			CR- 256205-040V
			CR- 256204-050V
			CR- 256205-050V
4- 295758		DOLLY	CR- 256204-020V
			CR- 256205-020V
			C- 295523-020V
			CR- 256204-020V
			CR- 256205-020V
			C- 295523-020V
			CR- 256204-030V
			CR- 256205-030V
			C- 295523-030V
			CR- 256204-040V
			CR- 256205-040V
			C- 295523-030V
			CR- 256204-040V
			CR- 256205-040V
			C- 295523-030V
			CR- 256204-050V
			CR- 256205-050V
			C- 295523-030V
4- 295760		BRACKET	C- 441000-020V
			C- 441000-030V
			C- 441000-040V
			C- 441000-050V
4- 295765		PLATE	C- 456953-010V
			C- 256236-020V
			C- 295112-020V
			C- 456348-010V
			C- 456349-010V
			C- 456348-020V
			C- 456349-020V
			C- 456348-020V
			C- 456349-020V
			C- 441736-010V
			C- 456953-010V
4- 295766		SCREW	C- 256173-020V
			C- 256173-030V
			C- 256173-040V
4- 295767		SEALING WASHER	C- 256173-020V
			C- 256173-030V
			C- 256173-040V
3- 295770		AXLE PIN	C- 256197-020V
			C- 256197-030V
			C- 256197-040V
4- 295771		BRACKET	C- 256200-020V
4- 295772		SHAFT	C- 256200-020V
4- 295773		SPACER	C- 256806-020V
			C- 256806-030V
4- 295774		BRACKET	C- 256206-020V
			C- 256207-020V
			C- 256206-020V
			C- 256207-020V
			C- 256206-020V
			C- 256207-020V
			C- 256206-020V
			C- 256207-020V
			C- 256206-020V
			C- 256207-020V
			C- 256206-020V
			C- 256207-020V
3- 295775		PIPE	C- 295045-020V
			C- 295045-030V
			C- 295045-040V

PART NO	LAST AM	DESCRIPTION	GROUP NO
3- 295776		PIPE	C- 295045-020V
			C- 295045-030V
			C- 295045-040V
C- 295777-010V	5953 83-06-07	CABLE DUCT	B- 648111-020V
			B- 648111-030V
C- 295778-010V	7937 85-06-03	SPARE PART KIT	B- 648111-020V
			B- 648111-030V
C- 295778-020V	7937 85-06-03	START-UP KIT	B- 648111-060V
C- 295778-030V	9415 86-10-17	START-UP KIT	B- 648111-070V
			B- 648111-080V
C- 295778-040V	12861 89-12-11	START-UP KIT	B- 648111-090V
4- 295779		WASHER	C- 271115-020V
2- 295782		CABLE DUCT	C- 295777-010V
			C- 469374-010V
			C- 469374-020V
			C- 469374-030V
2- 295783		LID	C- 295777-010V
			C- 469374-010V
			C- 469374-020V
			C- 469374-030V
2- 295785		FLUSH PIPE	C- 271261-020V
			C- 271261-030V
			C- 271261-040V
			C- 271261-050V
1- 295786		FLUSH PIPE	C- 271261-020V
			C- 271261-030V
4- 295789		BRACKET	C- 272021-020V
			C- 272021-030V
			C- 272021-040V
			C- 272021-050V
4- 295790		BRACKET	C- 272021-020V
			C- 272021-030V
			C- 272021-040V
			C- 272021-050V
3- 295792		REFLECTOR	C- 295861-010V
2- 295795		COVER	C- 295777-010V
2- 295796		CABLE DUCT	C- 295777-010V
4- 295797		LID	C- 295777-010V
2- 295799		CABLE DUCT	C- 295777-010V
2- 295800		LID	C- 295777-010V
4- 295801		BRACKET	C- 256229-020V
1- 295802		CABLE DUCT	C- 295777-010V
1- 295803		CABLE DUCT	C- 295777-010V
3- 295804		PLEXIGLASS	C- 295835-010V
3- 295805		FRAME	C- 295835-010V
3- 295806		GASKET	C- 295835-010V
3- 295807		GASKET	C- 295835-010V
3- 295809		CABLE DUCT	C- 295777-010V
3- 295812		REFLECTOR	C- 295861-010V
1- 295813		FILLING TUBE UPPER	C- 295402-020V
2- 295814		LID	C- 295777-010V
2- 295815		LID	C- 295777-010V
3- 295816		LID	C- 295777-010V
3- 295817		LID	C- 295777-010V
4- 295819-0002		LID	C- 295777-010V
4- 295819-0003		LID	C- 469374-010V
			C- 469374-020V
			C- 469374-030V
4- 295821		LID	C- 295777-010V
4- 295822		LID	C- 295777-010V
3- 295823		ELBOW PIPE	C- 295402-020V
C- 295835-0101	6501 84-02-08	LIGHT FIXTURE	B- 648102-020V
			B- 648102-030V
C- 295839-0101	5561 82-11-30	CONNECTION BOX	C- 272404-020V
			C- 272404-030V
			C- 272404-040V
C- 295839-0201	10626 87-09-04	CONNECTION BOX	C- 272404-050V
			C- 272404-060V
3- 295840		CONNECTION BOX	C- 295839-010V
4- 295842		WASHER	C- 295310-010V
			C- 295310-020V
			C- 295310-030V
			C- 295310-040V
			C- 295310-050V
			C- 295310-060V
G2- 295843-0001		BRACKET	CR- 256712-020V
			CR- 256712-030V

PART NO	LAST AM	DESCRIPTION	GROUP NO
			CR- 256712-040V
			CR- 256712-050V
G2- 295843-0002		BRACKET	CR- 256712-020V
			CR- 256712-030V
			CR- 256712-040V
			CR- 256712-050V
G2- 295843-0003		BRACKET	CR- 256712-020V
			CR- 256712-030V
			CR- 256712-040V
G2- 295843-0004		BRACKET	CR- 256712-050V
			CR- 256712-020V
			CR- 256712-030V
			CR- 256712-040V
G2- 295843-0005		BRACKET	CR- 256712-050V
			CR- 256712-020V
			CR- 256712-030V
			CR- 256712-040V
G2- 295843-0006		BRACKET	CR- 256712-050V
			CR- 256712-020V
			CR- 256712-030V
			CR- 256712-040V
			CR- 256712-050V
2- 295846		AIR NOZZLE	C- 295256-020V
2- 295846		AIR NOZZLE	C- 271485-020V
			C- 271485-030V
3- 295847		PLATE	C- 295256-020V
			C- 271485-020V
			C- 271485-030V
3- 295848		PLATE	C- 295256-020V
			C- 271485-020V
			C- 271485-030V
C- 295861-0101	6317 83-11-03	FITTING	C- 295835-010V
C- 295861-0102	6317 83-11-03	FITTING	C- 295835-010V
1- 295862-0001		FOLDING BAR	C- 295218-010V
1- 295862-0002		FOLDING BAR	C- 295218-010V
1- 295862-0003		FOLDING BAR	C- 295218-010V
1- 295862-0004		FOLDING BAR	C- 295218-010V
1- 295863		FOLDING BAR	C- 295218-010V
1- 295864		FOLDING BAR	C- 295218-010V
3- 295869		BENDING ROLLER	C- 256966-020V
1- 295870		HEAT EXCHANGER	C- 272342-020V
			C- 456976-010V
			C- 456976-020V
4- 295871-0001		BRACKET	C- 295218-010V
4- 295871-0002		BRACKET	C- 295218-010V
4- 295871-0003		BRACKET	C- 295218-010V
4- 295871-0004		BRACKET	C- 295218-010V
4- 295871-0005		BRACKET	C- 295218-010V
4- 295871-0006		BRACKET	C- 295218-010V
2- 295872		PIPE-LINE	C- 272342-020V
			C- 456976-010V
4- 295873		BRACKET	C- 271934-020V
			C- 271934-030V
			C- 752030-010V
4- 295878		SCREW	C- 272342-020V
			C- 456976-010V
			C- 456976-020V
4- 295879		NUT	C- 272342-020V
			C- 456976-010V
			C- 456976-020V
2- 295880		PLATE	C- 272825-010V
3- 295881		BRACKET	C- 272825-010V
			C- 456458-010V
			C- 456458-020V
			C- 751860-010V
3- 295882		BRACKET	C- 272825-010V
			C- 456458-010V
			C- 456458-020V
			C- 751860-010V
C- 295883-010V	6602 84-05-02	SPACER PIECE	C- 256843-020V
C- 295883-020V	10111 87-02-06	SPACER PIECE	C- 256843-030V
C- 295883-030V	11823 88-05-19	SPACER PIECE	C- 256843-040V
C- 295883-040V	13806 89-11-22	SPACER PIECE	C- 256843-050V
1- 295884		SPACER PIECE	C- 295883-010V
2- 295885		CABLE LEAD-IN PLATE	C- 295883-010V
2- 295886		CABLE LEAD-IN PLATE	C- 295883-010V
1- 295887		CIRCUIT DIAGRAM	B- 648109-020V

PART NO	LAST AM	DESCRIPTION	GROUP NO
			B- 648109-030V
			B- 648109-060V
			B- 648109-070V
			B- 648109-020V
			B- 648109-030V
1- 295887		CIRCUIT DIAGRAM	B- 648109-060V
			B- 648109-070V
4- 295889		PLUG	C- 272381-020V
C- 295891-0101	6606 84-04-03	STRIP APPLICATOR	B- 648107-020V
C- 295891-020V	9628 86-10-16	STRIP APPLICATOR	B- 648107-060V
			B- 648107-070V
C- 295891-030V	9785 86-10-23	STRIP APPLICATOR	B- 648107-080V
			B- 648107-090V
4- 295892		LAMP HOLDER	C- 272825-010V
4- 295894		PLATE	C- 295026-010V
			C- 295026-020V
3- 295897		FRAME	C- 271513-020V
			C- 271513-030V
			C- 271513-040V
			C- 751885-010V
			C- 751885-020V
1- 295900		WIRING DIAGRAM ASEPTIC	B- 648109-020V
			B- 648109-030V
			B- 648109-020V
			B- 648109-030V
C- 295904-010V	6113 83-08-08	CLAMP	B- 648109-020V
			B- 648109-030V
			B- 648109-060V
			B- 648109-070V
			B- 648109-080V
			B- 648109-090V
3- 295905-0001		HOLDER	C- 295904-010V
3- 295905-0002		HOLDER	C- 295904-010V
3- 295905-0003		HOLDER	C- 295904-010V
3- 295906		HANDLE	C- 295904-010V
4- 295907		SPRING	C- 295904-010V
4- 295909		BUSHING	C- 256237-050V
			C- 256237-060V
			C- 256055-020V
			C- 256055-030V
			C- 256055-040V
			C- 256055-050V
			C- 256055-060V
4- 295910		BUSHING	C- 256095-020V
			C- 256095-030V
			C- 256095-040V
3- 295913		CONNECTION BOX	C- 295382-020V
2- 295920		AIR NOZZLE	C- 271485-020V
2- 295927		CAM	C- 256965-020V
			C- 456546-010V
			C- 456546-020V
2- 295928		CAM	C- 256965-020V
			C- 456546-010V
			C- 456546-020V
2- 295929		CAM	C- 256965-020V
			C- 456546-010V
			C- 456546-020V
4- 295935		SPACER	C- 271562-020V
4- 295936		BUSHING	C- 256055-020V
			C- 256095-020V
			C- 256055-020V
			C- 256095-020V
			C- 256055-030V
			C- 256095-020V
4- 295936		BUSHING	C- 256055-040V
			C- 256095-020V
			C- 256095-030V
			C- 256095-040V
4- 295937		GASKET	C- 256055-020V
			C- 256055-030V
3- 295945		GUARD	C- 271866-020V
			C- 271866-030V
			C- 271866-040V
			C- 271866-050V
3- 295960		GREASE NIPPLE	C- 257381-020V
			C- 257382-020V
			C- 257381-020V

PART NO	LAST AM	DESCRIPTION	GROUP NO
4- 295970		RING	C- 257382-020V
			C- 271866-020V
			C- 271866-030V
			C- 271866-040V
C- 295971-0101	8657 86-01-11	PAPER REEL TROLLEY	C- 271866-050V
			B- 648109-020V
			B- 648109-030V
4- 295972		LINKPIECE OUTER	B- 648109-060V
4- 295973		CHUTE	C- 271376-020V
4- 295975		ROLLER	C- 271376-020V
3- 295977		BRACKET	C- 272021-020V
2- 295978		PIPE	C- 272021-020V
			C- 271261-020V
			C- 271261-030V
			C- 271261-040V
3- 295979		PIPE	C- 271261-050V
3- 295980		PIPE	C- 271261-020V
3- 295981		PIPE	C- 271261-020V
4- 295983		CONNECTION	C- 271261-020V
			C- 256200-020V
3- 295984		DRIP GUARD	C- 256200-030V
			C- 529933-010V
			C- 255982-020V
			C- 469091-010V
			C- 469091-020V
3- 295985		FLUSH PIPE	C- 529933-010V
			C- 271261-020V
			C- 271261-030V
			C- 271261-040V
4- 295986		HOLDER	C- 271261-050V
			C- 271562-020V
			C- 271562-030V
			C- 271562-040V
			C- 271562-050V
			C- 271562-060V
4- 295987		THROTTLE	C- 271562-070V
			C- 255921-020V
			C- 255921-030V
			C- 255921-040V
4- 295988-0001		ELECTRODE	C- 272623-020V
4- 295988-0002		ELECTRODE	C- 272623-020V
4- 295989		SPACER	C- 271562-020V
4- 295990		PIPE	C- 256233-020V
4- 295993		GASKET HOLDER	C- 272407-020V
4- 295996		BEARING HOUSING	C- 256233-020V
			C- 256233-030V
4- 295996		BEARING HOUSING	C- 256233-040V
			C- 256233-050V
4- 295997		SHAFT	C- 256233-020V
			C- 256233-030V
			C- 256233-040V
4- 295998		LID	C- 256233-050V
			C- 256233-020V
			C- 256233-030V
			C- 256233-040V
			C- 256233-050V
4- 295999		CLAMP	C- 295262-020V
			C- 295262-030V
			C- 295262-040V
			C- 295262-050V
G3- 297091		ARM	C- 751689-010V
G3- 297092		ARM	C- 751689-010V
4- 297195		SPACER	C- 272560-040V
			C- 272560-050V
3- 297210		INK WELL	C- 434774-020V
			C- 434774-030V
			C- 434774-020V
			C- 434774-030V
3- 297211		INK WELL	C- 434074-020V
			C- 434074-030V
			C- 434074-020V
			C- 434074-030V
4- 297213		GABLE	C- 434774-020V
			C- 434774-030V
			C- 434774-020V
			C- 434774-030V
4- 297307		CANNULAR TUBE	C- 434774-020V

PART NO	LAST AM	DESCRIPTION	GROUP NO
4- 297308		CANNULAR TUBE	C- 434074-020V
4- 297349		BRACKET	C- 229400-060V
			C- 237776-040V
2- 297394		GUIDE PLATE	C- 229400-060V
2- 297395		PAPER GUARD	C- 229400-060V
3- 297959		FLANGE	C- 237776-040V
3- 297960		CONNECTION	C- 237776-040V
2- 297988		COVER	C- 434074-020V
			C- 434074-030V
			C- 434074-020V
			C- 434074-030V
2- 297989		COVER	C- 434774-020V
			C- 434774-030V
			C- 434774-020V
			C- 434774-030V
1- 400634		INDEX PLATE	C- 400865-010V
2- 400645		ARM	C- 400872-010V
1- 400784		MOUNTING BASE	C- 400895-010V
3- 400788		BRACKET	C- 400895-010V
4- 400791		AXLE	C- 401207-010V
			C- 400895-010V
4- 400792		HOLDER	C- 400895-010V
4- 400793		AXLE	C- 400895-010V
4- 400794		SHAFT	C- 400895-010V
3- 400795		ARM	C- 400895-010V
4- 400796		SHAFT	C- 400895-010V
4- 400798		PLUNGER	C- 400895-010V
4- 400799		SLEEVE	C- 400895-010V
4- 400800		SPRING	C- 401207-010V
			C- 400895-010V
4- 400802		BUSHING	C- 400895-010V
4- 400804		SHAFT	C- 400865-010V
4- 400805		ARM	C- 400865-010V
2- 400807		BRAKE ARM	C- 400865-010V
1- 400810		COVER PLATE	C- 400865-010V
3- 400814		HUB	C- 400865-010V
4- 400815		BRAKE	C- 400865-010V
3- 400816		BRACKET	C- 400895-010V
4- 400819		SHAFT	C- 400872-010V
4- 400820		AXLE	C- 400872-010V
2- 400826		BLOCK	C- 400865-010V
4- 400828		SPRING	C- 400872-010V
4- 400833		PLUNGER	C- 400872-010V
4- 400864		BAR	C- 400872-010V
C- 400865-0101	12765 89-06-12	INDEXING UNIT	C- 400895-010V
C- 400865-0102	12765 89-06-12	INDEXING UNIT	C- 401207-010V
4- 400866		HEATING PAD	C- 400865-010V
4- 400867		KEY	C- 400865-010V
C- 400872-0101	11828 88-06-07	ARM ASSEMBLY	C- 400895-010V
			C- 401207-010V
C- 400895-0101	11879 88-06-07	LS-EQUIPMENT	C- 540030-010V
4- 400932		CLAMP	C- 400865-010V
4- 401000		AXLE	C- 400872-010V
4- 401022		ROLLER	C- 400872-010V
			C- 401207-010V
			C- 400895-010V
3- 401023		SHOULDER SCREW	C- 400865-010V
3- 401042-0001		AXLE	C- 400872-010V
3- 401043		HUB	C- 401207-010V
			C- 400895-010V
2- 401100		MOUNTING BRACKET	C- 400895-010V
4- 401105		PIVOT PIN	C- 400895-010V
1- 401128		SPLICE BLOCK	C- 400872-010V
3- 401129		LOCATOR	C- 400872-010V
3- 401130		LOCATING BAR	C- 400865-010V
2- 401139		BLOCK	C- 400872-010V
3- 401140		GUIDE	C- 400872-010V
2- 401148		COVER	C- 400872-010V
4- 401157		SPRING	C- 400865-010V
4- 401165		AXLE	C- 400895-010V
2- 401169		MOUNTING PLATE	C- 400895-010V
1- 401171		MOUNTING BRACKET	C- 401207-010V
2- 401172		ANGLE BRACKET	C- 401207-010V
2- 401174		PLATE	C- 401207-010V
3- 401178		AXLE	C- 401207-010V
3- 401179		AXLE	C- 401207-010V
2- 401181		BRACKET	C- 401207-010V

PART NO	LAST AM	DESCRIPTION	GROUP NO
2- 401182		ARM	C- 401207-010V
3- 401183		GUIDE AXLE	C- 401207-010V
4- 401184		AXLE	C- 401207-010V
3- 401185-0001		SHAFT	C- 401207-010V
			C- 400895-010V
4- 401186		HEX NUT	C- 401207-010V
1- 401200-0001		COVER	C- 401207-010V
1- 401200-0002		COVER	C- 401207-010V
3- 401201		SHAFT	C- 401207-010V
3- 401202		HOLDER	C- 401207-010V
3- 401203		HOLDER	C- 401207-010V
4- 401205		SPACER	C- 400865-010V
C- 401207-0101	11829 88-06-07	LS-EQUIPMENT	C- 540028-010V
C- 401207-0102	11829 88-06-07	LS-EQUIPMENT	C- 540028-010V
4- 401215		BRAKE PAD	C- 400865-010V
3- 401231		BLOCK	C- 400872-010V
3- 401232		BLOCK	C- 400872-010V
3- 401233		BLOCK	C- 400872-010V
3- 401238		SPACER	C- 401207-010V
4- 401240		ROLLER	C- 400865-010V
3- 401241		BRACKET	C- 401207-010V
1- 401251		AIR DIAGRAM LS-STRIP	C- 401207-010V
1- 401252		AIR DIAGRAM LS-STRIP	C- 400895-010V
2- 401255		COVER	C- 400895-010V
3- 401258		PLATE	C- 401207-010V
2- 401266		COVER	C- 401207-010V
3- 401344		HOLDER	C- 401207-010V
3- 401348		FLAG	C- 401207-010V
4- 401370		BUSHING	C- 401207-010V
4- 401371		BUSHING	C- 401207-010V
			C- 400895-010V
4- 401372		BUSHING	C- 401207-010V
3- 401400		BRACKET	C- 401207-010V
C- 401419-0101	10631 87-12-29	PIPING ASSEMBLY LS-STRIP	C- 401207-010V
2- 401424		PLATE	C- 401207-010V
3- 401436		FLAG	C- 400895-010V
3- 401437		BRACKET	C- 400895-010V
C- 401439-0101	10632 87-12-29	PIPE ASSEMBLY TBA/9	C- 400895-010V
3- 401442		BRACKET	C- 400895-010V
4- 401445		SPACER	C- 400895-010V
4- 401448		SPACER	C- 400895-010V
3- 401462		GEAR	RK- 548387-010V
			C- 283626-030V
3- 401463		GEAR	RK- 548387-010V
4- 434003		PLUG	C- 529924-010V
4- 434004		SEAL RING	C- 529924-010V
C- 434074-0201	7730 85-04-24	INK UNIT	C- 456349-010V
C- 434074-0202	7730 85-04-24	INK UNIT	C- 456322-010V
C- 434074-0301	10576 87-10-07	INK UNIT	C- 456349-020V
C- 434074-0302	10576 87-10-07	INK UNIT	C- 456322-020V
			C- 456322-030V
			C- 752646-010V
			C- 752914-010V
G1- 434374		GABLE	C- 294659-010V
G1- 434375		GABLE	C- 294659-010V
4- 434437		GUARD	C- 232781-040V
1- 434453		MACHINE BODY	C- 232781-040V
2- 434454		BRACKET	C- 232781-040V
4- 434747		CLAMP	C- 434774-020V
			C- 434774-030V
			C- 434074-020V
			C- 434074-030V
			C- 434774-020V
			C- 434774-030V
			C- 434074-020V
			C- 434074-030V
			C- 434774-030V
			C- 434074-030V
			C- 434774-030V
4- 434747		CLAMP	C- 434074-030V
4- 434773		LOCK SPRING	C- 434774-020V
			C- 434074-020V
			C- 434774-020V
			C- 434074-020V
C- 434774-0201	7730 85-04-24	INK UNIT	C- 456348-010V
C- 434774-0202	7730 85-04-24	INK UNIT	C- 456321-010V
C- 434774-0301	10576 87-10-07	INK UNIT	C- 456348-020V

PART NO	LAST AM	DESCRIPTION	GROUP NO
C- 434774-0302	10576 87-10-07	INK UNIT	C- 456321-020V
			C- 456321-030V
			C- 752645-010V
			C- 752913-010V
4- 434841		GAUGE	C- 250610-010V
			C- 456975-010V
			C- 77099-010V
C- 436467-0101	7383 85-01-22	JIG	B- 648119-060V
3- 436469		CATCH	C- 76197-010V
			C- 436467-010V
3- 436470		CATCH	C- 76197-010V
			C- 436467-010V
1- 436670		FRAME	C- 436467-010V
4- 436920		GROUND TERMINAL	CE- 67716-010V
			CE- 67721-010V
			CE- 68308-010V
4- 436927		NUT	C- 434774-020V
			C- 434774-030V
			C- 434074-020V
			C- 434074-030V
			C- 434774-020V
			C- 434774-030V
			C- 434074-020V
			C- 434074-030V
			C- 434774-030V
			C- 434074-030V
			C- 434774-030V
			C- 434074-030V
3- 439813		PLATE	C- 529933-010V
4- 439818-0002		GASKET	C- 735192-010V
			C- 735268-010V
			C- 735192-010V
			C- 735271-010V
			C- 735192-010V
			C- 735271-010V
			C- 735192-010V
			C- 735271-010V
4- 439854		COMPRESSION SPRING	C- 736600-010V
1- 439963		UPPER FILLING TUBE	C- 529933-010V
P- 440630-0101	12796 89-11-29	VALVE	C- 272560-030V
P- 440630-0201	10455 87-11-11	AP-VALVE	C- 272560-040V
			C- 272560-050V
1- 440631		VALVE BODY 51	C- 440630-010V
			C- 440630-020V
2- 440632		CYLINDER HOUSING	C- 440630-010V
			C- 539209-010V
			C- 539210-010V
2- 440633		CYLINDER HOUSING	C- 440630-010V
			C- 539211-010V
2- 440634		HOUSE	C- 440630-010V
			C- 440630-020V
3- 440635		PISTON ROD	C- 440630-010V
			C- 539210-010V
3- 440636		PISTON ROD	C- 440630-010V
			C- 539211-010V
3- 440637		PISTON ROD	C- 440630-010V
			C- 539209-010V
3- 440638		PISTON	C- 440630-010V
			C- 539209-010V
			C- 539210-010V
3- 440639		GABLE	C- 440630-010V
3- 440640		SEAL RING	C- 440630-010V
			SP- 499255-010V
3- 440641		HOLDER	C- 440630-010V
3- 440642		HOLDER	C- 440630-010V
4- 440645		SEAL RING	C- 440630-010V
			SP- 499255-010V
4- 440646		PISTON	C- 440630-010V
			C- 539211-010V
4- 440647		SLEEVE	C- 272560-040V
			C- 272560-050V
4- 440648		SEALING WASHER	C- 440630-010V
			C- 539210-010V
4- 440649		SEALING WASHER	C- 440630-010V
4- 440650		WASHER	C- 440630-010V
			C- 539210-010V
4- 440651		WASHER	C- 440630-010V

PART NO	LAST AM	DESCRIPTION	GROUP NO
4- 440652		WASHER	C- 539209-010V
4- 440653		WASHER	C- 539210-010V
4- 440654		SPACER SLEEVE	C- 440630-010V
4- 440655		RING	C- 539211-010V
4- 440656		WASHER	C- 440630-010V
4- 440657		WASHER	C- 539209-010V
4- 440658		WASHER	C- 440630-010V
4- 440659		CYLINDRICAL PIN	C- 539211-010V
4- 440660		COMPRESSION SPRING	C- 440630-010V
4- 440661		COMPRESSION SPRING	C- 539210-010V
4- 440662		COMPRESSION SPRING	C- 440630-010V
4- 440663		COMPRESSION SPRING	C- 539211-010V
4- 440664		SEALING WASHER	C- 539209-010V
4- 440665		DIAPHRAGM	C- 539210-010V
4- 440666		RING	C- 440630-010V
4- 440667		VALVE CONE	C- 539211-010V
4- 440668		VALVE CONE	C- 440630-010V
4- 440669		VALVE CONE	SP- 499255-010V
3- 440694		CLAMP RING	C- 440630-010V
3- 440695		GABLE	C- 440630-010V
3- 440729		CLAMP RING	C- 440630-010V
4- 440730		BOLT	C- 539211-010V
4- 440731		PLATE	C- 440630-010V
3- 440978		ELBOW PIPE	C- 272560-040V
C- 441000-0201	6454 84-01-10	STRIP HOLDER	C- 272560-050V
C- 441000-0301	8009 85-06-24	STRIP HOLDER	C- 272560-030V
C- 441000-0302	8009 85-06-24	STRIP HOLDER	C- 272560-040V
C- 441000-0401	10819 87-10-10	STRIP HOLDER	C- 272560-050V
C- 441000-0402	10819 87-10-10	STRIP HOLDER	B- 648107-020V
C- 441000-0501	14273 90-02-06	STRIP HOLDER	B- 648107-060V
C- 441000-0502	14273 90-02-06	STRIP HOLDER	B- 648107-070V
1- 441005		PLATE	B- 648107-060V
2- 441006		HOLDER	B- 648107-070V
2- 441007		HOLDER	B- 648107-080V
3- 441008		BRACKET	B- 648107-080V
4- 441009		ARM	B- 648107-090V
4- 441010		SHAFT	B- 648107-090V
4- 441011		AXLE PIN	C- 441000-020V
1- 441018		PLATE	C- 441000-030V
1- 441019		PROTECTION PLATE	C- 441000-040V
1- 441020		PROTECTION PLATE	C- 441000-050V
4- 441023		AXLE PIN	C- 441000-020V
4- 441024		SHIM	C- 441000-020V
			C- 441000-020V
			C- 441000-020V
			C- 441000-020V
			C- 441000-020V
			C- 441000-030V
			C- 441000-040V
			C- 441000-050V
			C- 441000-020V
			C- 441000-030V
			C- 441000-040V
			C- 272408-020V
			C- 272408-030V
			C- 272839-020V
			C- 272839-020V
			C- 256197-020V
			C- 256198-020V
			C- 256197-020V
			C- 256198-020V
			C- 256173-020V
			C- 256173-030V
			C- 256173-040V

PART NO	LAST AM	DESCRIPTION	GROUP NO
1- 441025		PAPER GUARD	C- 272839-020V
4- 441026		BRACKET	C- 256968-020V
4- 441027		BRACKET	C- 272839-020V
2- 441030		PIPE-LINE	C- 490947-010V
3- 441031		LINK BEARING	C- 490947-020V
1- 441032-0001		PIPE	C- 271274-020V
1- 441032-0002		PIPE	C- 256217-020V
2- 441033		PIPE	C- 256217-030V
3- 441034		ARM	C- 256217-040V
3- 441034		ARM	C- 256089-020V
4- 441036		ARM	C- 256089-020V
4- 441056		SPACER	C- 456274-010V
4- 441064		SHAFT	C- 271274-020V
4- 441065		WASHER	C- 456274-010V
G1- 441066		MACHINE BODY	C- 441000-020V
2- 441067		SIDE COVER LEFT	C- 441000-030V
3- 441068		SIDE PLATE	C- 441000-040V
4- 441069-0001		BRACKET	C- 441000-050V
4- 441069-0002		BRACKET	C- 295262-020V
1- 441070		BOX	C- 295262-030V
1- 441071		BOX	C- 295262-040V
4- 441072-0001		RING	C- 256233-020V
4- 441072-0002		RING	C- 456265-010V
2- 441073		HOLDER	C- 469366-010V
2- 441074-0001		FILLING PIPE	C- 469804-010V
2- 441074-0002		FILLING PIPE	C- 469366-010V
4- 441075		STUD BOLT	C- 469804-010V
4- 441077		BRACKET	C- 469366-020V
3- 441078		GASKET	C- 469804-010V
3- 441079		PLATE	C- 272021-020V
3- 441080		PLATE	C- 272021-020V
4- 441081		BAR	C- 256555-030V
G3- 441082		SIDE GUIDE LEFT	C- 271513-020V
G3- 441083		SIDE GUIDE RIGHT	C- 271513-030V
4- 441086		CHUTE	C- 271513-040V
4- 441087		ROLLER	C- 271513-050V
C- 441088-010V	6852 84-05-23	UPPER TUBE SUPPORT	C- 751885-020V
			C- 271513-020V
			C- 271513-030V
			C- 271513-040V
			C- 271513-050V
			C- 751885-020V
			C- 271513-020V
			C- 271513-030V
			C- 271513-040V
			C- 271513-050V
			C- 751885-020V
			C- 272021-020V
			C- 272021-020V
			C- 272021-020V
			C- 272021-020V
			C- 256555-020V
			C- 255921-020V
			C- 255921-030V
			C- 255921-020V
			C- 255921-030V
			C- 256555-020V
			C- 256555-020V
			C- 256555-030V
			C- 456100-010V
			C- 456100-020V
			C- 271485-020V
			C- 271485-020V
			C- 271485-020V
			C- 271485-020V
			C- 271376-020V
			C- 271376-020V
			C- 271376-020V
			C- 295310-010V
			B- 648101-020V
			B- 648101-060V
			B- 648101-070V

PART NO	LAST AM	DESCRIPTION	GROUP NO
			B- 648101-080V
			B- 648101-090V
C- 441092-010V	6852 84-05-23	MIDDLE TUPE SUPPORT	B- 648101-020V
			B- 648101-060V
			B- 648101-070V
			B- 648101-080V
			B- 648101-090V
C- 441102-010V	7533 85-02-18	MOVABLE FORMING RING	B- 648101-020V
			B- 648101-060V
			B- 648101-070V
			B- 648101-080V
C- 441102-020V	13651 89-11-23	MOVABLE FORMING RING	B- 648101-090V
4- 441137		SHIM	C- 295045-020V
3- 441138		GUIDE	C- 295359-010V
4- 441139		NUT	C- 295359-010V
			C- 456103-010V
1- 441140-0001		COVER	C- 256555-020V
			C- 256555-030V
1- 441140-0002		COVER	C- 256555-020V
			C- 256555-030V
3- 441141		PLATE	C- 295359-010V
4- 441142		PLATE	C- 295359-010V
1- 441143		SPACER PIECE	CR- 256547-030V
2- 441144		AIR NOZZLE	C- 295256-020V
4- 441145		LINKPIECE OUTER	C- 271376-020V
C- 441146-0101	5859 83-04-07	ROD	B- 648101-020V
			B- 648101-060V
			B- 648101-070V
			B- 648101-080V
			B- 648101-090V
3- 441147		SHAFT	C- 441146-010V
			C- 272445-020V
3- 441148		BEARING SEAT	C- 441146-010V
3- 441149		BEARING SEAT	C- 441146-010V
4- 441150		BEARING COVER	C- 441146-010V
			C- 272445-020V
4- 441152		ROLLER	C- 256238-020V
			C- 295667-020V
			C- 256238-020V
			C- 295667-020V
			C- 295667-030V
4- 441153		COUNTER ROLLER	C- 256238-020V
			C- 295667-020V
			C- 256238-020V
			C- 295667-020V
			C- 295667-030V
4- 441154		TRIMMING ROLLER PLUS	B- 648119-020V
			B- 648119-060V
			B- 648119-020V
			B- 648119-060V
4- 441155		TRIMMING ROLLER MINUS	B- 648119-020V
			B- 648119-060V
			B- 648119-020V
			B- 648119-060V
3- 441156		CABLE CONDUIT	C- 295276-020V
2- 441157		CONNECTION	C- 295256-020V
3- 441158		PLATE	C- 295256-020V
4- 441159		ROLLER	C- 295310-010V
1- 441160		CABLE DUCT	C- 256233-020V
2- 441161		CABLE CONDUIT	C- 256233-020V
4- 441162		PROTECTION PLATE	C- 256555-020V
			C- 256555-030V
			C- 456100-010V
			C- 456100-020V
1- 441163		COLUMN	C- 256233-020V
4- 441164		CABLE CONDUIT	C- 256233-020V
			C- 469366-010V
			C- 469366-020V
			C- 469366-030V
2- 441209		PIPE	C- 256237-020V
4- 441210		BRACKET	C- 256238-020V
			C- 256238-030V
4- 441211		HOLDER	C- 256238-020V
			C- 256238-030V
3- 441212		HOLDER	C- 256555-030V
			C- 456100-010V
			C- 456100-020V

PART NO	LAST AM	DESCRIPTION	GROUP NO
G3- 441213		GUIDE	C- 271376-020V
G3- 441214		GUIDE	C- 271376-020V
3- 441216		LID	C- 256233-020V
G2- 441217		BUSHING LOWER	C- 256555-030V
			C- 456100-010V
			C- 456100-020V
G2- 441218		BUSHING UPPER	C- 256555-030V
			C- 456100-010V
			C- 456100-020V
4- 441219		SCREW	C- 256555-030V
			C- 456100-010V
4- 441221		WASHER	C- 256555-030V
			C- 456100-010V
			C- 456100-020V
1- 441222		CABLE DUCT	C- 295777-010V
2- 441223		CABLE DUCT	C- 295777-010V
2- 441224		LID	C- 295777-010V
3- 441225		LID	C- 295777-010V
3- 441226		LID	C- 295777-010V
4- 441227		LID	C- 295777-010V
2- 441229		CABLE DUCT	C- 295777-010V
1- 441230		WASTE PIPE	C- 441510-010V
1- 441231		WASTE PIPE	C- 441510-010V
4- 441239		ANGLE BRACKET	C- 295883-020V
			C- 295883-030V
			C- 295883-040V
3- 441248		PLATE	C- 449314-010V
3- 441249		LEVER	C- 449314-010V
3- 441255		GUIDE PLATE	C- 449314-010V
4- 441257		BRACKET	C- 449314-010V
4- 441258		SHAFT	C- 449314-010V
4- 441259		CLAMP RING	C- 449314-010V
4- 441260		SPRING HOUSING	C- 449314-010V
4- 441261		SCREW	C- 449314-010V
4- 441264		BRACKET	C- 449314-010V
3- 441268		GUIDE	C- 256217-020V
			C- 256217-030V
			C- 256217-040V
3- 441269		GUIDE	C- 256217-020V
			C- 256217-030V
			C- 256217-040V
C- 441271-0101	8241 85-09-20	SAFETY SPROCK	B- 648105-060V
C- 441271-0201	8667 86-02-17	SAFETY SPROCK	B- 648105-070V
4- 441276		RING	C- 441821-010V
			C- 441271-010V
3- 441282		PLATE	C- 441881-010V
4- 441283		CATCH	C- 441881-010V
4- 441284		AXLE PIN	C- 441881-010V
4- 441285		ROD END	C- 441881-010V
4- 441286		NUT	C- 441881-010V
			C- 271169-030V
			C- 272337-030V
			C- 271169-040V
			C- 272337-040V
4- 441287		SPACER DISC	C- 441881-010V
4- 441288		PLATE	C- 271115-020V
4- 441289		PIVOT PIN	C- 271115-020V
			C- 441881-010V
			C- 271115-020V
			C- 441881-010V
			C- 271115-020V
			C- 441881-010V
4- 441290		ROLLER	C- 271115-020V
4- 441291		AXLE PIN	C- 441881-010V
4- 441292		WASHER	C- 441881-010V
4- 441295		HOLDER	C- 271866-020V
			C- 271866-030V
			C- 271866-040V
			C- 271866-050V
4- 441296		HOLDER	C- 271866-020V
			C- 271866-030V
			C- 271866-040V
			C- 271866-050V
C- 441304-0101	7382 84-12-06	MOVABLE FORMING RING	B- 648111-020V
			B- 648111-030V
C- 441304-020V	12844 89-06-13	MOVABLE FORMING RING	B- 648111-060V
			B- 648111-070V

PART NO	LAST AM	DESCRIPTION	GROUP NO
C- 441304-030V	12409 89-11-22	MOVABLE FORMING RING	B- 648111-080V
3- 441305		BRACKET	B- 648111-090V
4- 441306		BRACKET	C- 272030-020V
C- 441307-0101	7382 84-12-06	UPPER TUBE SUPPORT	C- 272030-020V
			B- 648111-020V
C- 441307-020V	12844 89-06-13	UPPER TUBE SUPPORT	B- 648111-030V
			B- 648111-060V
			B- 648111-070V
C- 441307-030V	12409 89-11-22	UPPER TUBE SUPPORT	B- 648111-080V
3- 441309		CABLE CONDUIT	B- 648111-090V
			C- 295777-010V
3- 441310		CABLE CONDUIT	C- 469374-010V
			C- 295777-010V
3- 441311		CABLE CONDUIT	C- 469374-010V
			C- 295777-010V
			C- 469374-010V
			C- 469374-020V
3- 441312		CABLE CONDUIT	C- 469374-030V
			C- 295777-010V
4- 441327		PLATE	C- 469374-010V
4- 441328		PIN	C- 272652-020V
			C- 272652-020V
4- 441339		SHAFT	C- 272652-030V
3- 441341		CABLE CONDUIT	C- 256200-030V
3- 441342		SPLASH PLATE	C- 295777-010V
3- 441343		SPLASH PLATE	C- 272445-020V
3- 441344		CABLE	C- 272445-020V
3- 441348		PAPER SUPPORT	C- 256973-020V
			C- 295891-010V
			C- 295891-020V
1- 441349		CARRIER RIGHT	C- 295891-030V
1- 441350		CARRIER LEFT	CR- 256212-030V
4- 441353		TENSION SPRING	CR- 256213-030V
			C- 256203-020V
4- 441354		HEAT GUARD	C- 256203-030V
			C- 256203-040V
			C- 272343-020V
			C- 272343-030V
4- 441355		BLEEDING SCREW	C- 272343-040V
			C- 272343-050V
			CR- 256204-020V
			CR- 256205-020V
			C- 257381-020V
			C- 257382-020V
			CR- 256204-030V
			CR- 256205-030V
			CR- 256212-030V
			CR- 256213-030V
			C- 256217-040V
			C- 257381-030V
			C- 257382-030V
			CR- 256204-040V
			CR- 256205-040V
			CR- 256212-040V
			CR- 256213-040V
			C- 256217-040V
			C- 257381-030V
			C- 257382-030V
			CR- 256204-040V
			CR- 256205-040V
			CR- 256212-040V
			CR- 256213-040V
			C- 256217-040V
			C- 257381-030V
			C- 257382-030V
			CR- 256204-050V
			CR- 256205-050V
			CR- 256212-050V
			CR- 256213-050V
			C- 256217-040V
			C- 257381-030V
			C- 257382-030V
			RK- 456712-010V

PART NO	LAST AM	DESCRIPTION	GROUP NO
G2- 441356		BRACKET	C- 256173-020V
			C- 256173-030V
G2- 441356		BRACKET	C- 256173-040V
3- 441357		SHIM	C- 256233-020V
			C- 272021-020V
3- 441358		RUBBER SEAL	C- 256014-020V
4- 441359		GUIDE	C- 271115-020V
			C- 271115-030V
			C- 271115-040V
4- 441360		PLATE	C- 256173-020V
			C- 256173-030V
			C- 256173-040V
4- 441383		WASHER	C- 272028-020V
4- 441385		HUB	CR- 256212-020V
			CR- 256213-020V
			CR- 256212-020V
			CR- 256213-020V
			CR- 256212-030V
			CR- 256213-030V
			CR- 256212-040V
			CR- 256213-040V
			CR- 256212-040V
			CR- 256213-040V
			CR- 256212-050V
			CR- 256213-050V
			RK- 456712-010V
3- 441386		CABLE DUCT	C- 272408-020V
2- 441387		MOTOR CRADLE	C- 271128-020V
			C- 271128-030V
			C- 271128-040V
3- 441401		BRACKET	C- 271113-020V
			C- 456588-010V
			C- 456588-020V
4- 441404		LOCK	C- 295777-010V
1- 441411		CAM	C- 256202-020V
			C- 256202-030V
			C- 256202-040V
1- 441412		CAM	C- 256202-020V
			C- 256202-030V
			C- 256202-040V
3- 441421		PROTECTIVE COVER	C- 271513-020V
			C- 271513-030V
3- 441423		BRACKET	C- 295276-020V
3- 441424		BRACKET	C- 295276-020V
3- 441425		CABLE CONDUIT	C- 295276-020V
3- 441441		PIPE	C- 295045-020V
			C- 295045-030V
			C- 295045-040V
3- 441442		PIPE	C- 295045-050V
4- 441443		SHIM	C- 272241-020V
4- 441444		PIPE	C- 295045-020V
			C- 272342-020V
			C- 456976-010V
4- 441445		PIPE	C- 456976-020V
			C- 272342-020V
			C- 456976-010V
3- 441446		BLOCK	C- 456976-020V
3- 441447		BLOCK	C- 272021-020V
4- 441448		GASKET	C- 272021-020V
			C- 751332-010V
4- 441448		GASKET	C- 295026-010V
			C- 295026-020V
4- 441449-0001		PIPE	C- 751332-010V
			C- 271866-020V
4- 441449-0002		PIPE	C- 271866-040V
			C- 271866-020V
4- 441449-0003		PIPE	C- 271866-030V
2- 441450		PIPE	C- 271866-030V
			C- 271866-020V
4- 441453		GASKET	C- 271866-030V
4- 441467		BRACKET	C- 295026-010V
4- 441474		SHIM	C- 271866-020V
			C- 256014-030V
			C- 256014-040V
4- 441477		COMPRESSION SPRING	C- 256014-050V
4- 441482		GUARD	C- 441649-010V
			C- 256237-020V

PART NO	LAST AM	DESCRIPTION	GROUP NO
4- 441483		CYLINDER BRACKET	C- 256238-040V
			C- 256084-030V
			C- 456309-030V
			C- 456309-040V
C- 441486-0101	7382 84-12-06	DIVIDED FORMING RING	B- 648111-020V
			B- 648111-030V
C- 441486-020V	10411 87-04-23	DIVIDED FORMING RING	B- 648111-060V
			B- 648111-070V
C- 441486-030V	12844 89-06-13	DIVIDED FORMING RING	B- 648111-080V
C- 441486-040V	12409 89-11-22	DIVIDED FORMING RING	B- 648111-090V
1- 441490		GUIDE PLATE	C- 271089-030V
G1- 441491		GUIDE SIDE LEFT	C- 271089-030V
G1- 441492		GUIDE SIDE RIGHT	C- 271089-030V
4- 441494		WASHER	C- 271089-030V
2- 441499		HOLDER	C- 271109-020V
			C- 456455-010V
			C- 456455-020V
3- 441500		HOSE	C- 271109-020V
			C- 456455-010V
			C- 456455-020V
4- 441501		INSULATION	C- 272407-020V
4- 441502		HOLDER	C- 271866-020V
			C- 271866-030V
C- 441510-0101	6130 83-09-21	WASTE PIPE	C- 271562-020V
			C- 271562-030V
C- 441510-0102	6130 83-09-21	WASTE PIPE	C- 271562-020V
			C- 271562-030V
3- 441512		STRUT END	C- 456460-010V
C- 441534-0101	9085 86-05-16	LIGHT FIXTURE	C- 456100-010V
			C- 456100-020V
C- 441535-0102	6867 84-06-12	LIGHT FIXTURE	C- 456457-030V
			C- 456458-010V
			C- 456458-020V
			C- 456458-030V
			C- 751860-010V
			C- 752960-010V
			C- 752971-010V
3- 441536		GASKET	C- 441534-010V
			C- 441535-010V
1- 441537-0002		DROP CHUTE	C- 255907-020V
1- 441537-0003		DROP CHUTE	C- 255907-020V
1- 441537-0004		DROP CHUTE	C- 255907-020V
1- 441537-0006		DROP CHUTE	C- 255907-020V
1- 441538		DROP CHUTE	C- 255907-020V
1- 441539		DROP CHUTE	C- 255907-020V
3- 441540		CABLE CONDUIT	C- 256236-020V
			C- 456348-010V
			C- 456349-010V
			C- 456348-020V
			C- 456349-020V
			C- 456348-020V
			C- 456349-020V
3- 441545		GASKET	C- 271485-020V
			C- 271485-030V
2- 441546		BENDING ROLLER	C- 272028-030V
			C- 272028-040V
			C- 272028-050V
2- 441547		BENDING ROLLER	C- 272028-030V
			C- 272028-040V
			C- 272028-050V
3- 441551		CREASE BAR	C- 751094-010V
			C- 272014-030V
3- 441552		CREASE BAR	C- 751094-010V
			C- 272014-030V
3- 441554		CREASE BAR	C- 456321-010V
			C- 456322-010V
			C- 456348-010V
			C- 456349-010V
			C- 456321-020V
			C- 456322-020V
			C- 456348-020V
			C- 456349-020V
			C- 456321-030V
			C- 456322-030V
			C- 456348-020V
			C- 456349-020V
			C- 752645-010V

PART NO	LAST AM	DESCRIPTION	GROUP NO
			C- 752646-010V
			C- 752913-010V
			C- 752914-010V
			C- 751094-010V
			C- 272014-030V
3- 441555		SHAFT	C- 751094-010V
			C- 272014-030V
4- 441556-0002		SPACER	C- 456321-010V
			C- 456322-010V
			C- 456348-010V
			C- 456349-010V
			C- 456321-020V
			C- 456322-020V
			C- 456348-020V
			C- 456349-020V
			C- 456321-030V
			C- 456322-030V
			C- 456348-020V
			C- 456349-020V
			C- 752645-010V
			C- 752646-010V
			C- 752913-010V
			C- 752914-010V
			C- 751094-010V
			C- 272014-030V
4- 441556-0003		SPACER	C- 456321-010V
			C- 456322-010V
			C- 456348-010V
			C- 456349-010V
			C- 456321-020V
			C- 456322-020V
			C- 456348-020V
			C- 456349-020V
			C- 456321-030V
			C- 456322-030V
			C- 456348-020V
			C- 456349-020V
			C- 752645-010V
			C- 752646-010V
			C- 752913-010V
			C- 752914-010V
			C- 751094-010V
			C- 272014-030V
4- 441556-0004		SPACER	C- 456321-010V
			C- 456322-010V
			C- 456348-010V
			C- 456349-010V
			C- 456321-020V
			C- 456322-020V
			C- 456348-020V
			C- 456349-020V
			C- 456321-030V
			C- 456322-030V
			C- 456348-020V
			C- 456349-020V
			C- 752645-010V
			C- 752646-010V
			C- 752913-010V
			C- 752914-010V
			C- 751094-010V
			C- 272014-030V
4- 441556-0006		SPACER	C- 456321-010V
			C- 456322-010V
			C- 456348-010V
			C- 456349-010V
			C- 456321-020V
			C- 456322-020V
			C- 456348-020V
			C- 456349-020V
			C- 456321-030V
			C- 456322-030V
			C- 456348-020V
			C- 456349-020V
			C- 752645-010V
			C- 752646-010V
			C- 752913-010V
			C- 752914-010V

PART NO	LAST AM	DESCRIPTION	GROUP NO
4- 441556-0007		SPACER	C- 751094-010V C- 272014-030V C- 456321-010V C- 456322-010V C- 456321-020V C- 456322-020V C- 456321-030V C- 456322-030V C- 752645-010V C- 752646-010V C- 752913-010V C- 752914-010V
4- 441556-0007		SPACER	C- 751094-010V C- 272014-030V C- 456321-010V C- 456322-010V C- 456348-010V C- 456349-010V C- 456321-020V C- 456322-020V C- 456348-020V C- 456349-020V C- 456321-030V C- 456322-030V C- 456348-020V C- 456349-020V C- 752645-010V C- 752646-010V C- 752913-010V C- 752914-010V C- 751094-010V
4- 441556-0009		SPACER	C- 272014-030V C- 272014-030V C- 751088-010V C- 272014-030V C- 751088-010V C- 272014-030V C- 272445-020V C- 272445-020V C- 272445-020V C- 272445-020V C- 456321-010V C- 456322-010V C- 456321-020V C- 456322-020V C- 456321-030V C- 456322-030V C- 272445-020V C- 272025-030V C- 272025-030V C- 272024-030V C- 256237-050V C- 256237-060V C- 441594-010V C- 441594-010V C- 441594-010V C- 441594-010V C- 441594-010V C- 491846-020V C- 256555-030V C- 456100-010V C- 456100-020V B- 648105-060V B- 648105-070V C- 441695-010V C- 441695-010V C- 271116-030V C- 272765-030V C- 272765-040V C- 272765-050V C- 272765-030V C- 272765-040V C- 272765-050V C- 272765-030V C- 272765-040V C- 272765-050V C- 272765-060V
4- 441564		PLATE	
4- 441565		PLATE	
3- 441566		PLATE	
1- 441570-0001		GABLE	
1- 441570-0002		GABLE	
1- 441571-0001		GABLE	
1- 441571-0002		GABLE	
2- 441572		COVER	
4- 441576		SPACER	
3- 441578-0001		CYLINDER BRACKET	
3- 441578-0002		CYLINDER BRACKET	
3- 441578-0003		CYLINDER BRACKET	
3- 441583		SHAFT	
3- 441584		TENSION SPROCKET	
4- 441587		WASHER	
4- 441588		SPACER	
4- 441589		SHIM	
4- 441593		GASKET	
C- 441594-0101	8241 85-09-20	TENSION SPROCKET	
G1- 441595		MACHINE BODY	
3- 441596		BRACKET	
G1- 441597		BEARING BRACKET	
G2- 441598		SUPPORTING ARM	
G1- 441599		BED	
G1- 441600		LINK ARM	

PART NO	LAST AM	DESCRIPTION	GROUP NO
G2- 441601		SHELF	C- 441850-010V
G3- 441602		SPROCKET	C- 441271-010V C- 441271-020V
G2- 441603		BRACKET	C- 456588-010V C- 456588-020V C- 456588-030V
3- 441604		BRACKET	C- 271649-020V
4- 441605		ANGLE BRACKET	C- 271649-020V
3- 441623		HOUSE	C- 441649-010V
3- 441624		BENDING ROLLER	C- 256014-030V
4- 441630		ADJUSTING KNOB	C- 441649-010V
4- 441631		LOCK NUT	C- 441649-010V
4- 441632		FRICTION BLOCK	C- 441649-010V
4- 441633		SPINDLE	C- 441649-010V
4- 441635		BEARING SEAT	C- 256014-030V
4- 441636		SHAFT	C- 256014-040V C- 256014-050V
4- 441637		PIN	C- 256014-040V C- 256014-050V
C- 441649-0101	6781 84-04-11	BRAKE	C- 256014-030V
3- 441658		FRONT PLATE	C- 456100-010V C- 456100-020V
1- 441659		FRONT PLATE	C- 456100-010V C- 456100-020V
2- 441660		FRONT PLATE	C- 456100-010V
4- 441661		PIN	C- 456100-010V
4- 441662		PIN	C- 456100-010V
4- 441663		PLATE	C- 456100-010V
2- 441664		BRANCH PIPE	C- 271261-040V
2- 441665		FLUSH PIPE	C- 271261-040V C- 271261-050V
1- 441667		DOOR	C- 271442-030V
4- 441668		HOLDER	C- 271442-030V
1- 441669		DOOR	C- 271443-030V
3- 441672		PLATFORM	C- 456457-010V
1- 441673		SIDE PIECE	C- 456457-010V C- 456457-020V
2- 441674		RAIL	C- 456457-010V
2- 441675		RAIL	C- 456457-010V
2- 441676		HOLDER	C- 456459-010V
4- 441677		FRONT PLATE	C- 456459-020V C- 456100-010V C- 456100-020V
3- 441679		STEP	C- 751928-010V C- 752960-010V C- 752971-010V C- 469762-010V
3- 441679		STEP	C- 456457-010V C- 469762-010V C- 456457-010V C- 469762-010V C- 456457-020V C- 469762-010V C- 456457-030V C- 469762-010V
1- 441681		RAILING	C- 751924-010V
1- 441683		RAILING	C- 456459-010V
1- 441685		RAILING	C- 456459-010V C- 456459-010V
2- 441687		STRUT	C- 456459-020V C- 456459-010V C- 456460-010V C- 456459-010V
4- 441691		PLATE	C- 456460-010V C- 271442-030V C- 271443-030V C- 271442-030V C- 271443-030V C- 271442-030V C- 271443-030V C- 271442-030V C- 271443-030V
4- 441692		HOLDER	C- 271443-030V
3- 441693		HANDLE	CR- 256547-030V
C- 441695-0101	6591 84-02-20	MACHINE BODY	B- 648105-060V B- 648105-070V B- 648105-080V

PART NO	LAST AM	DESCRIPTION	GROUP NO
C- 441695-0201	14151 89-11-10	MACHINE BODY	B- 648105-090V
4- 441702		BUSHING	CR- 255933-030V
4- 441706		WASHER	C- 256951-020V
			C- 256952-020V
			C- 256951-020V
			C- 256952-020V
			C- 256951-030V
			C- 256952-030V
			C- 256951-030V
			C- 256952-030V
			C- 256951-040V
			C- 256952-040V
			C- 256951-040V
			C- 256952-040V
2- 441709		CYLINDER	CR- 256212-030V
			CR- 256213-030V
1- 441710		BEARING HOUSING	CR- 256212-030V
			CR- 256213-030V
			CR- 256212-040V
			CR- 256213-040V
			CR- 256212-040V
			CR- 256213-040V
			CR- 256212-050V
			CR- 256213-050V
			RK- 456712-010V
1- 441711		BEARING HOUSING	CR- 256212-030V
			CR- 256213-030V
			CR- 256212-040V
			CR- 256213-040V
1- 441711		BEARING HOUSING	CR- 256212-040V
			CR- 256213-040V
			CR- 256212-050V
			CR- 256213-050V
			RK- 456712-010V
1- 441712		BEARING HOUSING	CR- 256212-030V
			CR- 256213-030V
			CR- 256212-040V
			CR- 256213-040V
			CR- 256212-040V
			CR- 256213-040V
			CR- 256212-050V
			CR- 256213-050V
			RK- 456712-010V
2- 441713		FRAME	C- 491579-010V
2- 441715		FRAME	C- 491570-010V
4- 441718		SPACER	C- 257075-020V
			C- 271851-020V
			C- 257075-020V
			C- 271851-020V
			C- 257075-025V
			C- 271851-020V
			C- 257075-025V
			C- 271851-020V
			C- 491570-010V
			C- 491579-010V
			C- 491570-010V
			C- 491579-010V
4- 441720		SPACER	C- 256200-030V
4- 441721		GASKET	C- 295778-020V
			C- 456976-020V
			C- 295778-030V
			C- 456976-020V
			C- 295778-030V
			C- 456976-030V
			C- 295778-040V
			C- 456976-040V
3- 441722		BRACKET	C- 441742-010V
2- 441723		BRACKET	C- 272560-040V
			C- 272560-050V
3- 441725		COVER PLATE	C- 77094-010V
4- 441726		COMPRESSION SPRING	CR- 256208-020V
			CR- 256208-030V
1- 441727		CUTTING JAW	CR- 256204-030V
			CR- 256205-030V
			CR- 256204-040V
			CR- 256205-040V
			CR- 256204-040V

PART NO	LAST AM	DESCRIPTION	GROUP NO
			CR- 256205-040V
			CR- 256204-050V
			CR- 256205-050V
3- 441731		CABLE	C- 441736-010V
3- 441732		RAIL	CR- 256214-020V
3- 441733		TPC BAR	CR- 256215-020V
			C- 295523-020V
			CR- 256215-020V
			C- 295523-020V
			CR- 256215-020V
			C- 295523-030V
			CR- 256215-020V
3- 441733		TPC BAR	C- 295523-030V
			CR- 256215-030V
			C- 295523-030V
			CR- 256215-030V
			C- 295523-030V
4- 441735		BRACKET	C- 271274-020V
			C- 456976-020V
			C- 456976-030V
C- 441736-0101	6805 84-05-04	ZONE HEATER	B- 648119-020V
4- 441737		WASHER	C- 272021-040V
			C- 491570-010V
			C- 491579-010V
			C- 272021-050V
			C- 491570-010V
			C- 491579-010V
4- 441738		SHIM	C- 256173-020V
4- 441739		WASHER	C- 491570-010V
			C- 491579-010V
			C- 491570-010V
			C- 491579-010V
G4- 441740		HINGE FLANGE	C- 491570-010V
			C- 491579-010V
			C- 491570-010V
			C- 491579-010V
G4- 441741		HINGE FLANGE	C- 491570-010V
			C- 491579-010V
			C- 491570-010V
			C- 491579-010V
C- 441742-0101	6313 83-12-01	INDUCTOR UNIT	C- 441736-010V
3- 441743		BRACKET	C- 456953-010V
			C- 441736-010V
			C- 456953-010V
2- 441744		COVER	C- 456953-010V
			C- 441736-010V
			C- 456953-010V
4- 441745		INDICATOR	C- 256197-020V
			C- 256198-020V
			C- 256197-020V
			C- 256198-020V
			C- 256197-030V
			C- 256198-030V
			C- 256197-030V
			C- 491814-010V
			C- 491815-010V
			C- 256197-040V
			C- 491814-010V
			C- 491815-010V
2- 441749		CAM	C- 256217-030V
			C- 256217-040V
			RK- 456711-010V
3- 441750		YOKE	C- 256217-030V
			C- 256217-040V
			RK- 456711-010V
4- 441751		SHIM	C- 256217-030V
			C- 256217-040V
			RK- 456711-010V
3- 441752		SIDE PLATE	C- 256236-020V
			C- 295112-020V
			C- 456321-010V
3- 441752		SIDE PLATE	C- 456322-010V
			C- 456348-010V
			C- 456349-010V
			C- 456321-020V
			C- 456322-020V
			C- 456348-020V

PART NO	LAST AM	DESCRIPTION	GROUP NO
			C- 456349-020V
			C- 456321-030V
			C- 456322-030V
			C- 456348-020V
			C- 456349-020V
			C- 752913-010V
			C- 752914-010V
			C- 272445-020V
4- 441753		PLATE	C- 256236-020V
			C- 295112-020V
			C- 752755-010V
			C- 456321-010V
			C- 456322-010V
			C- 456348-010V
			C- 456349-010V
			C- 456321-020V
			C- 456322-020V
			C- 456348-020V
			C- 456349-020V
			C- 456321-030V
			C- 456322-030V
			C- 456348-020V
			C- 456349-020V
			C- 752913-010V
			C- 752914-010V
			C- 272445-020V
4- 441754		SPACER	C- 256236-020V
			C- 295112-020V
			C- 752755-010V
			C- 456321-010V
			C- 456322-010V
			C- 456348-010V
			C- 456349-010V
			C- 456321-020V
			C- 456322-020V
			C- 456348-020V
			C- 456349-020V
			C- 456321-030V
			C- 456322-030V
			C- 456348-020V
			C- 456349-020V
			C- 752913-010V
			C- 752914-010V
			C- 272445-020V
1- 441755		GUARD	C- 441736-010V
2- 441756		BUSBAR	C- 441736-010V
3- 441758		PIPE RIGHT	C- 256221-020V
			C- 256222-020V
			C- 256221-020V
			C- 256222-020V
			C- 256221-020V
3- 441758		PIPE RIGHT	C- 256222-020V
			C- 256221-020V
			C- 256222-020V
			C- 256221-020V
3- 441759		PIPE LEFT	C- 256222-020V
			C- 256221-020V
			C- 256222-020V
			C- 256221-020V
			C- 256222-020V
			C- 256221-020V
			C- 256222-020V
			C- 256221-020V
			C- 256222-020V
			C- 256221-020V
			C- 256222-020V
4- 441761		TORSION SPRING	C- 441000-020V
3- 441762		CONNECTION RIGHT	CR- 256212-030V
			CR- 256212-040V
			RK- 456712-010V
3- 441763		CONNECTION LEFT	CR- 256213-030V
			CR- 256213-040V
			RK- 456712-010V

PART NO	LAST AM	DESCRIPTION	GROUP NO
4- 441764		SHAFT	CR- 256212-030V
			CR- 256213-030V
			CR- 256212-040V
			CR- 256213-040V
			CR- 256212-040V
			CR- 256213-040V
			CR- 256212-050V
			CR- 256213-050V
			RK- 456712-010V
C- 441765-0101	6329 83-12-06	PLATFORM	B- 648119-020V
1- 441766		FRAME	C- 441765-010V
1- 441774		PLATE	C- 272765-030V
			C- 272765-040V
			C- 272765-050V
			C- 272765-060V
1- 441775		PIPE CONNECTION	C- 272765-030V
			C- 272765-040V
4- 441782		SLIDE PLATE	C- 295359-010V
			C- 456103-010V
4- 441783		LOCATING PIECE	C- 295359-010V
			C- 456103-010V
3- 441784		BEARING SLEEVE	C- 441821-010V
			C- 441271-010V
			C- 441271-020V
			RK- 491863-010V
3- 441785		RING	C- 441821-010V
			C- 441271-010V
4- 441786		AXLE PIN	C- 441821-010V
			C- 441271-010V
4- 441787		CARRIER	C- 441821-010V
			C- 441271-010V
4- 441789		WASHER	C- 441821-010V
			C- 441271-010V
4- 441790		WASHER	C- 441821-010V
			C- 441271-010V
4- 441790		WASHER	C- 441271-020V
			RK- 491863-010V
G1- 441791		PLATE	C- 456103-010V
3- 441792		HEAD	C- 441798-010V
			C- 441811-010V
4- 441793		BEARING HOUSING	C- 441798-010V
			C- 441811-010V
4- 441794		PIVOT PIN	C- 441798-010V
			C- 441811-010V
4- 441795		WASHER	C- 441798-010V
			C- 441811-010V
4- 441796		SEAL	C- 441798-010V
			C- 441811-010V
4- 441797		SHIM	C- 441798-010V
			C- 441811-010V
			RK- 490951-010V
C- 441798-0101	6626 84-03-20	ROTOR	C- 272765-030V
			C- 272765-040V
			C- 272765-050V
			C- 272765-060V
4- 441799		CONNECTION	C- 441798-010V
4- 441800		FITTING	C- 441811-010V
2- 441804		COIL HEATER	C- 256237-040V
			C- 295667-030V
			C- 256237-050V
			C- 295667-030V
			C- 256237-060V
			C- 295667-030V
			RK- 751303-010V
			RK- 751311-010V
			RK- 751303-010V
			RK- 751311-010V
			C- 256055-040V
			C- 295778-030V
			C- 256055-050V
			C- 295778-030V
			C- 256055-060V
			C- 295778-040V
3- 441805		HOSE	C- 271261-030V
G1- 441806		COLLAR	C- 456100-010V
			C- 456100-020V
3- 441807		SUPPORT BAR	C- 456103-010V

PART NO	LAST AM	DESCRIPTION	GROUP NO
2- 441809		FRONT PLATE	C- 456100-010V
			C- 456100-020V
3- 441810		GASKET	C- 456100-010V
			C- 456100-020V
C- 441811-0101	6626 84-03-20	ROTOR	C- 456588-010V
			C- 456588-020V
			C- 456588-030V
2- 441819		FRONT PLATE	C- 256014-020V
2- 441820		PIPE	C- 271866-020V
C- 441821-0101	7911 85-06-11	SAFETY SPROCK	RK- 479279-010V
			B- 648105-030V
			B- 648105-040V
G3- 441822		SPROCKET	C- 441821-010V
4- 441823		LID	C- 441821-010V
4- 441824		RING	C- 441821-010V
			RK- 491863-010V
4- 441827		SHAFT	C- 272030-020V
4- 441828		PLAIN BEARING	RK- 469984-010V
			C- 272030-020V
			C- 272031-020V
			C- 441304-010V
			C- 441307-010V
			C- 441486-010V
			C- 456309-010V
			C- 272030-020V
			C- 272031-020V
			C- 441304-010V
			C- 441307-010V
			C- 441486-010V
			C- 456309-010V
			C- 272021-030V
			C- 456309-020V
			C- 272021-030V
			C- 456309-020V
1- 441829		PIPE	C- 271115-030V
			C- 271115-040V
2- 441839		PIPE	C- 456588-010V
			C- 456588-020V
			C- 456588-030V
3- 441843		BRACKET	C- 271169-030V
			C- 272337-030V
			C- 271169-040V
4- 441845		SPACER RING	C- 441271-010V
			C- 441271-020V
3- 441847		GUIDING ARBOR	C- 272231-020V
C- 441850-0101	7911 85-06-11	CABLE	B- 648105-060V
			B- 648105-070V
C- 441850-0201	10781 88-05-04	CABLE ASSEMBLY	B- 648105-080V
C- 441850-0301	12530 90-01-05	CABLE ASSEMBLY	B- 648105-090V
4- 441871		PENDULUM SUSPENSION	C- 271169-030V
			C- 272337-030V
			C- 271169-040V
4- 441876		ROLLER	RK- 469984-010V
			C- 272021-030V
			C- 456309-020V
			C- 272021-030V
			C- 456309-020V
			C- 272021-040V
			C- 456309-030V
			C- 272021-050V
4- 441878		TRIMMING ROLLER MINUS	C- 77093-010V
			B- 648119-060V
4- 441879		TRIMMING ROLLER PLUS	C- 77093-010V
			B- 648119-060V
4- 441880		BRACKET	C- 257166-020V
C- 441881-0101	6202 83-10-11	LOCK	B- 648105-020V
			B- 648105-030V
			B- 648105-040V
4- 441884		PIN	C- 256555-030V
4- 441885		PIN	C- 256555-030V
4- 441886		NUT	C- 256555-030V
4- 441894		SLEEVE	CR- 256436-040V
			CR- 256712-040V
			CR- 256436-050V
			CR- 256712-050V
4- 441895		BUFFER RING	CR- 256436-040V
4- 441895		BUFFER RING	CR- 256712-040V

PART NO	LAST AM	DESCRIPTION	GROUP NO
			CR- 256436-050V
			CR- 256712-050V
4- 441896		WASHER	CR- 256436-020V
			CR- 256712-020V
			CR- 256436-020V
			CR- 256712-020V
			CR- 256436-020V
			CR- 256712-020V
			CR- 256436-020V
			CR- 256712-020V
			CR- 256436-030V
			CR- 256712-030V
			CR- 256436-040V
			CR- 256712-040V
			CR- 256436-050V
			CR- 256712-050V
			RK- 751157-010V
4- 441897		STOP WASHER	CR- 256436-020V
			CR- 256712-020V
			CR- 256436-020V
			CR- 256712-020V
			CR- 256436-020V
			CR- 256712-020V
			CR- 256436-020V
			CR- 256712-020V
			CR- 256436-030V
			CR- 256712-030V
			RK- 751157-010V
4- 441898		PLATE	C- 441102-010V
			C- 441102-020V
4- 441900		WASHER	C- 441102-010V
			C- 441102-020V
4- 441901		SHAFT	C- 441102-010V
			C- 441102-020V
4- 441903		ARM	C- 272025-030V
G4- 441904		ARM	C- 272024-030V
3- 441905		PIN	C- 751928-010V
			C- 752960-010V
			C- 752971-010V
			C- 469762-010V
			C- 456457-010V
			C- 469762-010V
			C- 456457-010V
			C- 469762-010V
			C- 456457-020V
			C- 469762-010V
			C- 456457-030V
			C- 469762-010V
			C- 441765-010V
			C- 751924-010V
4- 441906-0002		BRACKET	C- 295310-020V
4- 441906-0003		BRACKET	C- 295310-020V
4- 441906-0005		BRACKET	C- 295310-020V
4- 441906-0007		BRACKET	C- 295310-020V
4- 441906-0009		BRACKET	C- 295310-020V
1- 441907		GUIDE	C- 272404-020V
			C- 272404-030V
			C- 272404-040V
1- 441907		GUIDE	C- 272404-050V
			C- 272404-060V
3- 441908		CLAMP	C- 272404-020V
			C- 272404-030V
			C- 272404-040V
			C- 272404-050V
			C- 272404-060V
4- 441918		BRACKET	C- 441486-010V
			C- 441486-020V
			C- 441486-030V
			C- 441486-040V
3- 441949		GUIDE PLATE	C- 295256-020V
			C- 271485-020V
			C- 271485-030V
4- 441952		SPACER	C- 271376-020V
4- 441957		BEARING COVER	C- 256084-030V
			C- 256084-040V
4- 441962		KEY	C- 271376-020V
4- 441967		RAIL	C- 271376-020V

PART NO	LAST AM	DESCRIPTION	GROUP NO
4- 441968		CHUTE	C- 271376-020V
4- 441970		CARRIER	C- 295310-010V
			C- 295310-020V
			C- 295310-030V
4- 441971		HUB	C- 295310-010V
			C- 295310-020V
			C- 295310-030V
4- 441972		SHEAR PIN	C- 295310-010V
			C- 295310-020V
			C- 295310-030V
G3- 441973		ARM	CR- 256436-020V
			CR- 256436-030V
			CR- 256436-040V
3- 441978		BEARING	C- 295310-020V
			C- 295310-030V
			C- 295310-040V
			C- 295310-050V
4- 441979		SHAFT	C- 295310-060V
			C- 295310-020V
			C- 295310-030V
			C- 295310-040V
			C- 295310-050V
4- 441980		GEAR WHEEL	C- 295310-060V
			C- 295310-020V
			C- 295310-030V
			C- 295310-040V
			C- 295310-050V
			C- 295310-060V
1- 441981		BRACKET	C- 456274-010V
1- 441982		PLATFORM	C- 456274-010V
1- 441983		PIPE	C- 456274-010V
2- 441984		RAIL	C- 441765-010V
2- 441985		CARRIAGE	C- 441765-010V
2- 441986		RAILING	C- 441765-010V
2- 441987		PLATFORM	C- 441765-010V
3- 441988		STEP	C- 441765-010V
3- 441989		SLIDE RAIL	C- 441765-010V
3- 441990		BRACKET	C- 441765-010V
4- 441991		GABLE	C- 441765-010V
4- 441992		SHAFT	C- 441765-010V
4- 441993		SHAFT	C- 441765-010V
4- 441994		SHAFT	C- 441765-010V
4- 441995		WHEEL	C- 441765-010V
C- 442080-0101	6018 83-06-13	LASER	C- 76594-010V
2- 442081		HOUSE	C- 442080-010V
2- 442082		HEAD	C- 442080-010V
3- 442083		GABLE	C- 442080-010V
3- 442084		RING	C- 442080-010V
3- 442085		JET DIVERTER	C- 442080-010V
3- 442086		REFLECTOR	C- 442080-010V
3- 442087		SCREW	C- 442080-010V
C- 442089-0101	10395 87-06-30	HOUSE	C- 76594-010V
2- 442090		HOUSE	C- 442089-010V
3- 442091		CIRCUIT BOARD	C- 442089-010V
3- 442092		CIRCUIT BOARD	C- 442089-010V
C- 442094-0101	6018 83-06-13	DISPLAY	C- 76594-010V
2- 442095		DISPLAY	C- 442094-010V
3- 442096		CIRCUIT BOARD	C- 442094-010V
3- 442097		CIRCUIT BOARD	C- 442094-010V
3- 442113		STOP	C- 76402-010V
4- 442173		GAUGE BLOCK	C- 250610-010V
4- 442236		SCREW	C- 456274-010V
			C- 271274-020V
			C- 469452-010V
4- 442237		NUT	C- 456274-010V
			C- 456274-010V
			C- 271274-020V
			C- 469452-010V
			C- 456976-030V
			C- 469452-020V
			C- 751800-010V
			C- 456976-040V
			C- 469452-030V
			C- 751800-020V
3- 445503		LOCKING PIN LOWER	C- 456274-010V
			C- 256230-030V
			C- 255921-040V

PART NO	LAST AM	DESCRIPTION	GROUP NO
3- 445505		LOCKING PIN UPPER	C- 256230-030V
			C- 255921-040V
4- 445533		SIGN	C- 271909-030V
			C- 271909-040V
			C- 271909-050V
4- 445534		SIGN	C- 271909-030V
			C- 271909-040V
			C- 271909-050V
4- 445535		SIGN	C- 271909-030V
			C- 271909-040V
			C- 271909-050V
4- 445542		RUBBER GASKET	C- 434774-020V
			C- 434774-030V
			C- 434074-020V
			C- 434074-030V
			C- 434774-020V
			C- 434774-030V
			C- 434074-020V
			C- 434074-030V
			C- 434774-030V
			C- 434074-030V
			C- 434774-030V
4- 445542		RUBBER GASKET	C- 434074-030V
4- 445638		BOTTOM PLATE	C- 450125-010V
4- 445639		SHAFT	C- 450125-010V
4- 445640		SHAFT	C- 450125-010V
4- 445641		ROLLER	C- 450125-010V
			C- 491273-010V
3- 445645		FRAME	C- 450125-010V
3- 445646		SUPPORTING FRAME	C- 450125-010V
3- 445647		BEARING HOUSING	C- 450125-010V
3- 449193		PRESSURE GAUGE TUBE	C- 272560-030V
			C- 272560-040V
			C- 272560-050V
2- 449200-0001		HOLDER	C- 283604-020V
			C- 283604-010V
2- 449200-0002		HOLDER	C- 283604-010V
2- 449200-0003		HOLDER	C- 283604-010V
3- 449201		ARM	C- 283604-010V
			C- 283604-020V
			C- 283604-010V
3- 449202-0001		SHAFT	C- 283604-020V
			C- 283604-010V
3- 449202-0002		SHAFT	C- 283604-010V
3- 449202-0003		SHAFT	C- 283604-010V
3- 449203-0001		SHAFT	C- 283604-020V
			C- 283604-010V
3- 449203-0002		SHAFT	C- 283604-010V
3- 449203-0003		SHAFT	C- 283604-010V
4- 449204		HUB	C- 283604-010V
			C- 283604-020V
4- 449205		HOLDER	C- 283604-010V
			C- 283604-010V
			C- 283604-020V
4- 449206		SHAFT	C- 283604-010V
			C- 283604-010V
			C- 283604-020V
4- 449226		ARM	C- 283604-010V
			RK- 547782-010V
4- 449230		ROLLER	C- 449388-010V
4- 449231-0001		PRESSURE JAW	C- 449388-010V
			RK- 547782-010V
4- 449231-0002		PRESSURE JAW	C- 449388-010V
2- 449242		DRIVE ROLLER	C- 449388-010V
4- 449243		SHIM	C- 456688-010V
4- 449244-0001		ADJUSTING SCREW	C- 449313-010V
4- 449244-0002		ADJUSTING SCREW	C- 449313-010V
3- 449245		CYLINDER BRACKET	C- 449313-010V
4- 449246		LID	C- 449313-010V
4- 449249		ROD	C- 449313-010V
2- 449250		GABLE	C- 449313-010V
2- 449253		PLATE	C- 449313-010V
2- 449270		PLATE	C- 449313-010V
CR- 449275-010V	10805 87-09-28	PUNCH	C- 449315-010V
			B- 648118-060V
CR- 449275-0102	10805 87-09-28	PUNCH	B- 648118-070V
			B- 648118-010V

PART NO	LAST AM	DESCRIPTION	GROUP NO
G1- 449276		BRACKET	CR- 449275-010V
G1- 449277		ARM	CR- 449275-010V
G1- 449279		BRACKET	C- 449314-010V
4- 449281		SCREW	RK- 536470-010V
4- 449281		SCREW	RK- 538450-010V
			RK- 547726-010V
			C- 456612-010V
3- 449282-0001		HEATING RAIL	C- 533844-010V
			C- 283617-010V
			C- 294888-010V
			C- 283617-010V
4- 449284		REAMED BOLT	C- 294887-010V
			C- 533903-010V
			C- 449323-010V
4- 449286		BRACKET	C- 533903-010V
3- 449288		PLATE	C- 449323-010V
			C- 533903-010V
			C- 449323-010V
3- 449289		GABLE	C- 533903-010V
3- 449290		GABLE	C- 449323-010V
3- 449294		ROLLER	C- 449323-010V
3- 449295		ROLLER	C- 283630-020V
4- 449296		SHAFT	C- 283629-020V
4- 449297		FLANGE	C- 283629-020V
4- 449298		ADAPTER	C- 283630-020V
1- 449306		MACHINE BODY V0125	C- 449313-010V
1- 449307		MACHINE BODY V0180	C- 457867-010V
1- 449308		MACHINE BODY V0200	C- 457867-010V
1- 449309		MACHINE BODY V0236	C- 457867-010V
1- 449310		MACHINE BODY V0250	C- 457867-010V
1- 449311		MACHINE BODY V0284	C- 457867-010V
1- 449312		MACHINE BODY 200ML SLIM	C- 457867-010V
C- 449313-010V	9314 86-09-17	BRACKET FOR DATING UNIT	B- 648118-060V
			B- 648118-070V
C- 449314-0101	10407 87-06-10	DATING UNIT	C- 449313-010V
C- 449315-0101	6292 84-04-25	PRESSURE PLATE	C- 449314-010V
2- 449317		PLATE	C- 449315-010V
G2- 449318		ARM	C- 449314-010V
4- 449320		RUBBER	C- 449315-010V
4- 449321		TEFLON TAPE	C- 449315-010V
C- 449323-010V	13946 89-09-28	BENDING ROLLER, BACK	B- 648118-060V
4- 449329		HOLDER	C- 457867-010V
2- 449330		SHAFT	C- 456674-010V
3- 449332		SUPPORT	C- 283635-010V
3- 449334		SUPPORT	C- 283635-010V
4- 449336		BRACKET	C- 283635-010V
4- 449337		HOLDER	C- 457867-010V
3- 449339		HOLDER	C- 457867-010V
3- 449340		HOLDER	C- 457867-010V
4- 449341		HOLDER	C- 457867-010V
3- 449343		HOLDER	C- 457867-010V
3- 449344		HOLDER	C- 457867-010V
P2- 449346		VARIATOR UNIT	C- 283626-020V
			C- 283626-030V
4- 449347		SPACER	C- 456674-010V
			C- 476349-020V
4- 449359		SHAFT	C- 469736-010V
4- 449360		ROLLER	C- 469736-010V
2- 449380		PLATE	RK- 547782-010V
			C- 449388-010V
4- 449381-0001		SPACER	C- 449388-010V
4- 449381-0004		SPACER	RK- 547782-010V
4- 449382		PIN	RK- 547782-010V
			C- 449388-010V
4- 449383		BLOCK	RK- 547782-010V
			C- 449388-010V
4- 449384-0001		SHAFT	RK- 547782-010V
			C- 449388-010V
4- 449384-0002		SHAFT	RK- 547782-010V
			C- 449388-010V
4- 449385		FORK	RK- 547782-010V
			C- 449388-010V
4- 449386		PIN	RK- 547782-010V
			C- 449388-010V
4- 449387		BRACKET	RK- 547782-010V
			C- 449388-010V

PART NO	LAST AM	DESCRIPTION	GROUP NO
C- 449388-010V	7913 85-06-06	STRIP GUIDE	B- 648118-060V
			B- 648118-070V
3- 449391		HOLDER	C- 456679-010V
3- 449392		RAIL	C- 456679-010V
3- 449393		RAIL	C- 456679-010V
2- 449398		OWERFLOW PIPE	CR- 449275-010V
2- 449399		INDUCTOR BRACKET	C- 457866-010V
3- 449414		BRACKET	C- 529924-010V
P1- 449939-0001		HEATING ELEMENT 15KW	C- 271181-020V
			C- 271181-030V
			C- 271181-040V
C- 449969-0101	6514 84-03-22	TOOL	C- 77092-010V
			C- 77092-020V
			C- 77094-010V
			B- 648119-020V
			B- 648119-060V
3- 449970		HOLDER	C- 449969-010V
4- 449971		SPINDLE	C- 449969-010V
3- 450015		HOUSE	C- 450125-010V
4- 450016		NUT	C- 450125-010V
3- 450061-0002		INDUCTOR	C- 456951-010V
			C- 491273-010V
3- 450065-0002		BRACKET	C- 456951-010V
3- 450065-0003		BRACKET	C- 456951-010V
3- 450098		PLATE	C- 271641-030V
			RK- 469414-010V
			C- 271641-030V
3- 450099		PLATE	C- 271641-030V
			RK- 469414-010V
			C- 271641-030V
4- 450100		SPRING	C- 271641-030V
			RK- 469414-010V
			C- 271641-030V
C- 450101-0101	6886 84-06-04	TEARING DEVICE	C- 271699-030V
			C- 752046-010V
2- 450102		PRESSURE ARM	C- 450101-010V
			RK- 469412-010V
			C- 450101-010V
3- 450103		KNIFE	C- 450101-010V
			RK- 469412-010V
			C- 450101-010V
4- 450123		BRACKET	C- 450125-010V
3- 450124		BRACKET	C- 450125-010V
C- 450125-0102	6751 84-04-18	HEATING DEVICE	C- 441736-010V
			C- 456953-010V
4- 450278		RULER	C- 271641-030V
			RK- 469414-010V
			C- 271641-030V
4- 450355		INK ROLLER	C- 434774-020V
			C- 434774-030V
			C- 434074-020V
			C- 434074-030V
			C- 434774-020V
			C- 434774-030V
			C- 434074-020V
			C- 434074-030V
			C- 434774-030V
			C- 434074-030V
			C- 434774-030V
			C- 434074-030V
4- 450497		SHAFT	C- 751718-010V
4- 450500		PIN	C- 751718-010V
4- 450628		GUIDE	RK- 491539-010V
			RK- 490877-010V
			C- 491897-010V
			C- 491976-010V
			C- 491976-020V
			C- 491976-010V
			C- 491976-020V
			C- 491897-010V
			RK- 751570-010V
			RK- 491539-010V
4- 450833		FILTER	C- 272623-030V
			C- 272623-040V
			C- 272623-050V
4- 450837		LID	C- 272623-030V
			C- 272623-040V

PART NO	LAST AM	DESCRIPTION	GROUP NO
4- 451117		ROLLER	C- 272623-050V C- 441486-010V C- 441486-020V C- 441486-030V C- 441486-040V
3- 451140		FLOAT	RK- 520129-010V RK- 520130-010V RK- 520094-010V RK- 520096-010V RK- 520087-010V
4- 451148		BRACKET	RK- 520129-010V RK- 520130-010V C- 441486-010V C- 441486-020V C- 441486-030V
4- 451149		SHAFT	C- 441486-040V C- 441486-010V C- 441486-020V C- 441486-030V C- 441486-040V
C- 451348-010V	9440 86-10-01	CONNECTION BOX	B- 648106-060V B- 648106-070V B- 648106-080V
C- 451348-0101	9440 86-10-01	CONNECTION BOX	C- 441850-010V C- 441850-020V C- 441850-030V
C- 451348-0201	12530 90-01-05	CONNECTION BOX	C- 752784-010V C- 451348-010V
4- 451409		CONNECTION BOX	C- 451348-010V C- 451348-020V C- 451348-010V C- 451348-020V
4- 451423		CIRCUIT BOARD	
2- 451430		CONNECTION BOX	C- 271181-020V C- 271181-030V C- 271181-040V
4- 456000		SUPPORT	C- 272408-020V C- 272408-030V C- 272408-040V
4- 456001		STOP	C- 272408-050V C- 272839-020V C- 490947-010V
2- 456002		BEARING	C- 256217-040V
4- 456004		SPACER	C- 256217-040V
4- 456005-0001		VOLUME BULGE	CR- 256209-020V CR- 256210-020V CR- 256209-020V CR- 256210-020V CR- 256209-020V CR- 256210-020V CR- 256209-020V CR- 256210-020V CR- 256209-020V CR- 256210-020V
4- 456005-0003		VOLUME BULGE	CR- 256209-030V CR- 256210-030V CR- 256209-020V CR- 256210-020V CR- 256209-020V CR- 256210-020V CR- 256209-020V CR- 256210-020V CR- 256209-020V CR- 256210-020V CR- 256209-020V CR- 256210-020V CR- 256209-030V CR- 256210-030V
3- 456006		KNIFE HOLDER	CR- 256208-030V
3- 456007		KNIFE HOLDER	CR- 256208-030V
3- 456008		KNIFE HOLDER	CR- 256208-030V
4- 456009		LINK	CR- 256208-030V
4- 456010		SPACER PLATE	C- 272030-020V
4- 456011		PIN	C- 469118-010V C- 469118-020V CR- 256208-030V C- 295523-030V CR- 256208-030V

PART NO	LAST AM	DESCRIPTION	GROUP NO
			C- 295523-030V CR- 256208-030V C- 295523-030V CR- 256208-030V C- 295523-030V
3- 456012		BEARING SEAT	RK- 491744-010V C- 272014-020V C- 272014-030V C- 751088-010V C- 751088-020V
3- 456012 4- 456013		BEARING SEAT BEARING COVER	RK- 491744-010V C- 272014-020V C- 272014-030V C- 751088-010V C- 751088-020V
3- 456016		RAIL	C- 272445-020V
2- 456017		HOSE HOLDER RIGHT	C- 257381-030V
2- 456018		HOSE HOLDER LEFT	C- 257382-030V
4- 456022		SLEEVE	C- 456032-010V
4- 456023		JOINT	C- 456032-010V
4- 456024		GUIDE SHAFT	C- 456032-010V
4- 456025		HOLDER	C- 456032-010V
4- 456026		BRACKET	C- 456032-010V
3- 456027		HOLDER	C- 456032-010V
3- 456028		JOINT	C- 456032-010V
3- 456029		JOINT	C- 456032-010V
3- 456030		BRACKET	C- 456032-010V
3- 456031		BRACKET	C- 456032-010V
C- 456032-010V	8655 86-01-11	STRIP GUIDE	B- 648107-060V B- 648107-070V B- 648107-080V B- 648107-090V
3- 456033		SPACER	C- 272241-020V
3- 456034		BRACKET	C- 441304-010V C- 441304-020V
3- 456035		BRACKET	C- 441304-010V C- 441304-020V C- 441304-030V
3- 456036		SHAFT	C- 272445-020V
4- 456042		SCREW	C- 441102-010V C- 441102-020V C- 441304-010V C- 441304-020V C- 441304-030V
1- 456047		CIRCUIT DIAGRAM	B- 648109-060V B- 648109-070V B- 648109-060V B- 648109-070V
1- 456048		CIRCUIT DIAGRAM	RK- 538439-010V B- 648109-060V B- 648109-070V B- 648109-060V B- 648109-070V
1- 456049		CIRCUIT DIAGRAM	B- 648109-060V B- 648109-070V B- 648109-060V B- 648109-070V
1- 456050		CIRCUIT DIAGRAM	B- 648109-060V B- 648109-070V B- 648109-060V B- 648109-070V
1- 456051		WATER DIAGRAM	B- 648109-060V B- 648109-070V B- 648109-060V B- 648109-070V
1- 456052		WATER DIAGRAM	B- 648109-060V B- 648109-070V
1- 456052		WATER DIAGRAM	B- 648109-060V B- 648109-070V
1- 456053		PANEL SURVEY	B- 648109-060V B- 648109-070V B- 648109-060V B- 648109-070V
1- 456054		PANEL SURVEY	B- 648109-060V B- 648109-070V B- 648109-060V B- 648109-070V

PART NO	LAST AM	DESCRIPTION	GROUP NO
1- 456055		DIAGRAM CENTRAL LUBRIC.	RK- 491984-010V
			RK- 491512-010V
			RK- 491984-010V
			B- 648109-060V
			B- 648109-070V
			B- 648109-060V
			B- 648109-070V
1- 456056		CIRCUIT DIAGRAM	B- 648109-060V
			B- 648109-070V
			B- 648109-060V
			B- 648109-070V
3- 456058		SHIM	C- 456274-010V
2- 456059		SUPPORT	C- 456274-010V
2- 456060		SUPPORT	C- 456274-010V
1- 456061		PLATE	C- 456348-010V
			C- 456349-010V
			C- 456348-020V
			C- 456349-020V
			C- 456348-020V
2- 456062		RAIL	C- 456349-020V
			C- 456348-010V
			C- 456349-010V
			C- 456348-020V
			C- 456349-020V
			C- 456348-020V
3- 456063		BRACKET	C- 456349-020V
			C- 256236-020V
			C- 456348-010V
			C- 456349-010V
			C- 456348-020V
			C- 456349-020V
			C- 456348-020V
4- 456064		SPACER	C- 456349-020V
			C- 295310-010V
			C- 295310-020V
			C- 295310-030V
			C- 295310-040V
			C- 295310-050V
2- 456071		COVER	C- 295310-060V
4- 456072		WASHER	C- 456274-010V
			C- 272404-020V
			C- 272404-030V
			C- 272404-040V
			C- 272404-050V
			C- 272404-060V
2- 456074		PIPE	C- 271909-020V
2- 456075		PIPE	C- 271909-020V
4- 456076		ROLLER	C- 441307-010V
			C- 441307-020V
4- 456077		ROLLER	C- 441307-010V
4- 456077		ROLLER	C- 441307-020V
4- 456078		ROLLER	C- 441304-010V
			C- 441304-020V
4- 456079		ROLLER	C- 441304-010V
			C- 441304-020V
4- 456080		ROLLER	C- 441304-010V
			C- 441304-020V
4- 456081		ROLLER	C- 441304-010V
			C- 441304-020V
4- 456082		ROLLER	C- 441486-010V
			C- 441486-020V
			C- 441486-030V
4- 456085		ROLLER	C- 441486-010V
			C- 441486-020V
			C- 441486-030V
4- 456088		ROLLER	C- 441486-010V
			C- 441486-020V
			C- 441486-030V
4- 456090		ROLLER	C- 456309-010V
			C- 456309-020V
			C- 456309-030V
4- 456091		TRIMMING ROLLER PLUS	C- 77093-010V
			B- 648119-020V
			B- 648119-060V
			B- 648119-020V
			B- 648119-060V
4- 456092		TRIMMING ROLLER MINUS	C- 77093-010V

PART NO	LAST AM	DESCRIPTION	GROUP NO
			B- 648119-020V
			B- 648119-060V
			B- 648119-020V
			B- 648119-060V
1- 456093		HOLDER	C- 456309-010V
			C- 456309-020V
2- 456094		JUNCTION BLOCK	C- 271909-020V
C- 456100-010V	8456 85-11-26	MACHINE BODY	B- 648102-060V
C- 456100-020V	10505 87-06-22	MACHINE BODY	B- 648102-070V
			B- 648102-080V
			B- 648102-090V
C- 456103-010V	10299 88-05-24	SIDE FEEDER	B- 648105-060V
			B- 648105-070V
			B- 648105-080V
			B- 648105-090V
2- 456105		GUARD	C- 456103-010V
2- 456106		SIDE PLATE	C- 456103-010V
2- 456107		SIDE PLATE	C- 456103-010V
3- 456108		SHIM	C- 456103-010V
3- 456109		GUIDE RAIL	C- 456103-010V
4- 456112		BRACKET	C- 456103-010V
4- 456113		BRACKET	C- 456103-010V
4- 456119		SHAFT	C- 469074-010V
			C- 469074-020V
4- 456121		ARM	C- 752957-010V
			C- 469074-010V
			C- 469074-020V
3- 456123		SUPPORT	C- 271181-020V
			C- 271181-030V
			C- 271181-040V
4- 456124		ANGLE BRACKET	C- 271181-020V
4- 456125		PLATE	C- 271181-020V
4- 456125		PLATE	C- 271181-030V
			C- 271181-040V
1- 456128		FLUSH PIPE	C- 271261-040V
			C- 271261-050V
2- 456129-0001		FLUSH PIPE	C- 271261-040V
			C- 271261-050V
2- 456129-0002		FLUSH PIPE	C- 271261-040V
			C- 271261-050V
4- 456130		LOCK BOARD	C- 456309-010V
			C- 456309-020V
4- 456131		LOCK BOARD	C- 456309-010V
			C- 456309-020V
4- 456132		LOCK BOARD	C- 456309-010V
			C- 456309-020V
3- 456137		HOSE	C- 271909-020V
			C- 271909-030V
			C- 271909-040V
2- 456138		PLATE	C- 271909-050V
			C- 441304-010V
			C- 441304-020V
4- 456139		LOCK BOARD	C- 441304-030V
			C- 441304-010V
			C- 441304-020V
			C- 441304-030V
4- 456140		SHAFT	C- 441304-010V
			C- 441304-020V
4- 456141		SHAFT	C- 441304-010V
			C- 441304-020V
3- 456142		PIPE	C- 272241-020V
3- 456143		PIPE	C- 272241-020V
			C- 456556-010V
1- 456144-0002		DROP CHUTE	C- 456180-010V
1- 456144-0003		DROP CHUTE	C- 456180-010V
1- 456144-0004		DROP CHUTE	C- 456180-010V
1- 456144-0006		DROP CHUTE	C- 456180-010V
1- 456145		DROP CHUTE	C- 456180-010V
1- 456146		DROP CHUTE	C- 456180-010V
1- 456147		GUIDE PLATE	C- 456180-010V
1- 456148		GUIDE PLATE	C- 456180-010V
1- 456149		GUIDE PLATE	C- 456180-010V
1- 456150		GUIDE PLATE	C- 456180-010V
1- 456151		GUIDE PLATE	C- 456180-010V
1- 456152		GUIDE PLATE	C- 456180-010V
2- 456153		HOLDER	C- 441307-010V
			C- 441307-020V

PART NO	LAST AM	DESCRIPTION	GROUP NO
4- 456154		LOCK BOARD	C- 441307-010V
			C- 441307-020V
4- 456155		LOCK BOARD	C- 441307-010V
			C- 441307-020V
4- 456156		SHAFT	C- 441307-010V
			C- 441307-020V
1- 456157-0002		DROP CHUTE	C- 456180-010V
1- 456157-0003		DROP CHUTE	C- 456180-010V
1- 456157-0004		DROP CHUTE	C- 456180-010V
1- 456157-0006		DROP CHUTE	C- 456180-010V
1- 456158		DROP CHUTE	C- 456180-010V
1- 456159		GUIDE PLATE	C- 456180-010V
1- 456160		GUIDE PLATE	C- 456180-010V
1- 456161		GUIDE PLATE	C- 456180-010V
1- 456162		GUIDE PLATE	C- 456180-010V
1- 456163		GUIDE PLATE	C- 456180-010V
4- 456164		LEAF SPRING	C- 456180-010V
4- 456165		LEAF SPRING	C- 456180-010V
4- 456166		LEAF SPRING	C- 456180-010V
4- 456167		LEAF SPRING	C- 456180-010V
G1- 456175		LID	C- 295310-020V
			C- 295310-030V
			C- 295310-040V
			C- 295310-050V
2- 456176		GASKET	C- 295310-060V
			C- 295310-020V
			C- 295310-030V
			C- 295310-040V
			C- 295310-050V
C- 456180-010V	9109 86-05-18	DROP CHUTE	C- 295310-060V
			B- 648102-060V
			B- 648102-070V
			B- 648102-080V
			B- 648102-090V
4- 456181		SPACER	C- 441486-010V
			C- 441486-020V
			C- 441486-030V
			C- 441486-040V
4- 456182		PLATE	C- 441486-010V
			C- 441486-020V
			C- 441486-040V
4- 456183		LOCK BOARD	C- 441486-010V
			C- 441486-020V
			C- 441486-030V
			C- 441486-040V
4- 456184		LOCK BOARD	C- 441486-010V
			C- 441486-020V
			C- 441486-030V
			C- 441486-040V
4- 456185		LOCK BOARD	C- 441486-010V
			C- 441486-020V
			C- 441486-030V
			C- 441486-040V
4- 456186		LOCK BOARD	C- 441486-010V
			C- 441486-020V
			C- 441486-030V
			C- 441486-040V
4- 456187		LOCK BOARD	C- 441486-010V
			C- 441486-020V
			C- 441486-030V
			C- 441486-040V
4- 456188		LOCK BOARD	C- 441486-010V
			C- 441486-020V
			C- 441486-030V
			C- 441486-040V
3- 456189		PIPE	C- 456274-010V
			C- 469452-010V
			C- 456274-010V
4- 456198		LOCK BOARD	C- 441486-010V
			C- 441486-020V
			C- 441486-030V
			C- 441486-040V
4- 456199		LOCK BOARD	C- 441486-010V
4- 456199		LOCK BOARD	C- 441486-020V
			C- 441486-030V
			C- 441486-040V
G3- 456230		ANGLE BRACKET	C- 441486-010V

PART NO	LAST AM	DESCRIPTION	GROUP NO
			C- 441486-020V
			C- 441486-040V
4- 456231		SHAFT	C- 441488-010V
4- 456235		PIPE	C- 456274-010V
4- 456244		PROTECTIVE COVER	C- 449314-010V
			RK- 547754-010V
			C- 457924-010V
			C- 457924-020V
4- 456245		PROTECTIVE COVER	C- 441850-010V
			C- 441850-020V
4- 456249		PROTECTIVE COVER	RK- 68908-010V
			C- 449314-010V
			C- 441850-010V
			C- 441850-020V
			C- 441850-030V
			C- 457867-010V
			C- 469299-010V
			C- 490600-010V
			C- 457867-010V
			C- 469299-010V
			C- 490600-020V
4- 456256		PROTECTIVE COVER	C- 441850-010V
			C- 441850-020V
2- 456260		COVER	C- 441535-010V
2- 456262		PLATE	C- 441535-010V
2- 456263		PLATE	C- 441534-010V
3- 456264		GLASS	C- 441534-010V
C- 456265-0101	6444 84-01-02	TUBE FLUSHING DEVICE	B- 648101-020V
3- 456266		PIPE	C- 456274-010V
3- 456267		PIPE	C- 456274-010V
3- 456268		PIPE	C- 456274-010V
4- 456269		PIPE	C- 456274-010V
			C- 469452-010V
			C- 469452-020V
			C- 751800-010V
			C- 751800-020V
			C- 456274-010V
4- 456270		PIPE	C- 456274-010V
			C- 469452-010V
			C- 469452-020V
			C- 469452-030V
			C- 456274-010V
4- 456271		PIPE	C- 456274-010V
			C- 469452-010V
			C- 469452-020V
			C- 469452-030V
			C- 456274-010V
4- 456272		PLATE	C- 271453-020V
			C- 271453-030V
			C- 491890-010V
4- 456273		SHIM	C- 456274-010V
C- 456274-010V	9237 86-05-12	AUXILIARY COMPRESSOR	RK- 491404-010V
			B- 648110-010V
C- 456274-0101	9237 86-05-12	AUXILIARY COMPRESSOR	B- 648119-020V
2- 456284		FRONT PLATE	C- 271114-030V
2- 456284		FRONT PLATE	C- 271114-040V
2- 456285		COVER	C- 271114-030V
			C- 271114-040V
2- 456286		SIDE PLATE	C- 271114-030V
3- 456287		COLUMN	C- 271114-030V
			C- 271114-040V
3- 456289		BLOCK	C- 271114-030V
			C- 271114-040V
4- 456290		GUSSET PLATE	C- 271114-030V
			C- 271114-040V
2- 456293		PIPE	C- 456588-010V
			C- 456588-020V
			C- 456588-030V
3- 456301		SPLASH PLATE	C- 256236-020V
3- 456302		SPLASH PLATE	C- 256236-020V
3- 456303		BRACKET	C- 256236-020V
			C- 456348-010V
			C- 456349-010V
			C- 456348-020V
			C- 456349-020V
			C- 456348-020V
			C- 456349-020V

PART NO	LAST AM	DESCRIPTION	GROUP NO
4- 456304		ROLLER	C- 441486-010V
			C- 441486-020V
			C- 441486-030V
4- 456305		ROLLER	C- 441486-010V
			C- 441486-020V
			C- 441486-030V
4- 456306		ROLLER	C- 441486-010V
			C- 441486-020V
			C- 441486-030V
1- 456308		PLATE	C- 295891-010V
			C- 295891-020V
C- 456309-0101	7382 84-12-06	LOWER FORMING RING	B- 648111-020V
			B- 648111-030V
C- 456309-020V	9215 86-05-29	LOWER FORMING RING	B- 648111-060V
			B- 648111-070V
C- 456309-030V	13953 89-11-13	LOWER FORMING RING	B- 648111-080V
C- 456309-040V	12409 89-11-22	LOWER FORMING RING	B- 648111-090V
4- 456310		BRACKET	C- 256806-020V
4- 456311		TORSION SPRING RIGHT	CR- 256212-030V
			CR- 256212-040V
			CR- 256212-050V
4- 456312		TORSION SPRING LEFT	RK- 456712-010V
			CR- 256213-030V
			CR- 256213-040V
			CR- 256213-050V
			RK- 456712-010V
3- 456318		BENDING ROLLER	C- 256966-020V
3- 456319		BENDING ROLLER	C- 256966-020V
4- 456320		SLEEVE	CR- 256212-020V
			CR- 256213-020V
			CR- 256212-020V
			CR- 256213-020V
			CR- 256212-030V
			CR- 256213-030V
C- 456321-010V	8739 86-05-24	DATING UNIT	B- 648107-060V
C- 456321-020V	8739 86-05-24	DATING UNIT AB9 ST-R	B- 648107-070V
C- 456321-030V	13921 89-10-31	DATING UNIT TBA/9	B- 648107-080V
C- 456322-010V	8698 86-02-17	DATING UNIT	B- 648107-060V
C- 456322-020V	8739 86-05-24	DATING UNIT	B- 648107-070V
C- 456322-030V	13921 89-10-31	DATING UNIT TBA/9	B- 648107-080V
2- 456323		PLATE	C- 456321-010V
			C- 456322-010V
			C- 456321-020V
2- 456324		SPLASH PLATE	C- 456322-020V
			C- 456321-010V
2- 456325		SPLASH PLATE	C- 456321-020V
			C- 456322-010V
2- 456326-0001		BEARING BRACKET	C- 456322-020V
			C- 456321-010V
			C- 456348-010V
			C- 456321-020V
			C- 456348-020V
2- 456326-0002		BEARING BRACKET	C- 456322-010V
			C- 456349-010V
			C- 456322-020V
3- 456327		CREASE BAR	C- 456349-020V
			C- 456321-010V
			C- 456322-010V
			C- 456321-020V
			C- 456322-020V
			C- 456321-030V
			C- 456322-030V
			C- 752645-010V
			C- 752646-010V
			C- 752913-010V
			C- 752914-010V
3- 456328		BENDING ROLLER	C- 456321-010V
			C- 456322-010V
			C- 456348-010V
			C- 456349-010V
			C- 456321-020V
			C- 456322-020V
			C- 456348-020V
			C- 456349-020V
			C- 456321-030V
			C- 456322-030V
			C- 456348-020V

PART NO	LAST AM	DESCRIPTION	GROUP NO
			C- 456349-020V
3- 456329		BAR	C- 456321-010V
			C- 456322-010V
			C- 456321-020V
			C- 456322-020V
3- 456330		BRACKET	C- 456321-010V
			C- 456322-010V
			C- 456321-020V
			C- 456322-020V
3- 456331		ANGLE BRACKET	C- 456321-010V
			C- 456322-010V
			C- 456321-020V
			C- 456322-020V
			C- 456321-030V
			C- 456322-030V
			C- 752645-010V
			C- 752646-010V
3- 456332		PLATE	C- 456321-010V
			C- 456322-010V
3- 456332		PLATE	C- 456321-020V
			C- 456322-020V
3- 456333		RAIL	C- 456321-010V
			C- 456322-010V
			C- 456321-020V
			C- 456322-020V
			C- 456321-030V
			C- 456322-030V
4- 456334		SHAFT	C- 456321-010V
			C- 456322-010V
			C- 456348-010V
			C- 456349-010V
			C- 456321-020V
			C- 456322-020V
			C- 456348-020V
			C- 456349-020V
			C- 752645-010V
			C- 752646-010V
			C- 752913-010V
			C- 752914-010V
4- 456335		BRACKET	C- 456321-010V
			C- 456348-010V
			C- 456321-020V
			C- 456348-020V
			C- 456321-030V
			C- 456348-020V
4- 456336		BRACKET	C- 456322-010V
			C- 456349-010V
			C- 456322-020V
			C- 456349-020V
			C- 456322-030V
			C- 456349-020V
4- 456337		BRACKET	C- 456321-010V
			C- 456322-010V
			C- 456348-010V
			C- 456349-010V
			C- 456321-020V
			C- 456322-020V
			C- 456348-020V
			C- 456349-020V
			C- 456321-030V
			C- 456322-030V
			C- 456348-020V
			C- 456349-020V
1- 456339		GUARD	C- 456953-010V
2- 456340		BUSBAR	C- 456953-010V
3- 456341		CABLE	C- 456953-010V
3- 456343		SHAFT	C- 256806-030V
4- 456344		SLEEVE	C- 256806-030V
4- 456345		BRACKET	C- 256806-030V
C- 456348-010V	7211 84-10-17	DATING UNIT	B- 648107-060V
C- 456348-020V	13921 89-10-31	DATING UNIT	B- 648107-070V
			B- 648107-080V
C- 456349-010V	7211 84-10-17	DATING UNIT	B- 648107-060V

PART NO	LAST AM	DESCRIPTION	GROUP NO
C- 456349-020V	13921 89-10-31	DATING UNIT	B- 648107-070V
C- 456349-020V		DATING UNIT	B- 648107-080V
2- 456350		PLATE	C- 456348-010V
			C- 456349-010V
			C- 456348-020V
			C- 456349-020V
			C- 456348-020V
			C- 456349-020V
3- 456352		SPLASH PLATE	C- 456348-010V
			C- 456348-020V
3- 456353		SPLASH PLATE	C- 456349-010V
			C- 456349-020V
4- 456354		SUPPORT	C- 272839-020V
1- 456373		CAM	C- 256202-020V
			C- 256202-030V
			C- 256202-040V
1- 456374		CAM	C- 256202-020V
			C- 256202-030V
			C- 256202-040V
2- 456378		HOSE	C- 271453-020V
			C- 271453-030V
4- 456379		HOLDER	C- 272021-020V
4- 456380		NET	C- 272021-020V
2- 456382		PLATE	C- 441102-010V
			C- 441102-020V
4- 456383		LOCK BOARD	C- 441102-010V
			C- 441102-020V
4- 456384		LOCK BOARD	C- 441102-010V
			C- 441102-020V
4- 456385		LOCK BOARD	C- 441102-010V
			C- 441102-020V
4- 456386		LOCK BOARD	C- 441102-010V
			C- 441102-020V
4- 456387		ROLLER	C- 441102-010V
			C- 441102-020V
4- 456388		ROLLER	C- 441102-010V
			C- 441102-020V
4- 456389		ROLLER	C- 441102-010V
			C- 441102-020V
4- 456390		ROLLER	C- 441102-010V
			C- 441102-020V
4- 456391		SPACER	C- 441102-010V
			C- 441102-020V
4- 456392		SCREW	C- 441102-010V
			C- 441102-020V
3- 456393		PIPE	C- 456588-010V
			C- 456588-020V
			C- 456588-030V
4- 456394		SEALING WASHER	C- 456588-010V
			C- 456588-020V
			C- 456588-030V
4- 456395		GASKET	C- 456588-010V
			C- 456588-020V
			C- 456588-030V
4- 456396		GASKET	C- 456588-010V
			C- 456588-020V
			C- 456588-030V
2- 456397		PIPE	C- 271562-030V
4- 456407		SHIM	C- 271562-030V
			C- 271562-040V
4- 456407		SHIM	C- 271562-050V
			C- 271562-060V
			C- 271562-070V
2- 456411		LID	C- 295045-030V
			C- 295045-040V
			C- 295045-050V
			C- 295045-060V
2- 456415		PLATE	C- 441092-010V
4- 456416		ROLLER	C- 441092-010V
4- 456417		ROLLER	C- 441092-010V
4- 456418		LOCK BOARD	C- 441092-010V
4- 456419		LOCK BOARD	C- 441092-010V
4- 456420		LOCK BOARD	C- 441092-010V
4- 456421		LOCK BOARD	C- 441092-010V
4- 456422		LOCK BOARD	C- 441092-010V
1- 456423		CLEANING BASIN	C- 456588-010V
2- 456424		PLATE	C- 441088-010V

PART NO	LAST AM	DESCRIPTION	GROUP NO
4- 456425		LOCK BOARD	C- 441088-010V
4- 456426		LOCK BOARD	C- 441088-010V
4- 456427		LOCK BOARD	C- 441088-010V
4- 456428		ROLLER	C- 441088-010V
4- 456429		ROLLER	C- 441088-010V
1- 456430		PIPE	C- 456274-010V
1- 456431		PIPE	C- 456274-010V
1- 456432		DIAGRAM	B- 648109-020V
			B- 648109-030V
			B- 648109-020V
			B- 648109-030V
1- 456433		PLATE	C- 271909-030V
2- 456434		CONNECTION BOX	C- 456435-010V
C- 456435-0101	6740 84-04-18	CONNECTION BOX	C- 441850-010V
C- 456435-0201	9506 86-11-24	CONNECTION BOX	C- 441850-020V
C- 456435-0301	12530 90-01-05	CONNECTION BOX	C- 441850-030V
3- 456436		PLATE	C- 271909-030V
			C- 271909-040V
4- 456449		ANGLE BRACKET	C- 441304-010V
4- 456450		SPACER	C- 441304-010V
P4- 456451		ROLLER	C- 295310-020V
			C- 295310-030V
			C- 295310-040V
			C- 295310-050V
			C- 295310-060V
C- 456455-0101	8267 85-10-14	PIPE WORK	B- 648105-060V
			B- 648105-070V
C- 456455-020V	12529 89-02-09	PIPE WORK	B- 648105-080V
			B- 648105-090V
C- 456457-010V	9646 86-10-28	PLATFORM	B- 648102-060V
			B- 648102-070V
C- 456457-020V	12933 89-04-19	PLATFORM TB/9	B- 648102-080V
C- 456457-030V	14240 90-01-11	PLATFORM TB/9-SBM	B- 648102-090V
C- 456458-010V	8824 86-02-19	PLATFORM	B- 648102-060V
			B- 648102-070V
C- 456458-020V	14240 90-01-11	PLATFORM	B- 648102-080V
C- 456458-030V	14240 90-01-11	PLATFORM	B- 648102-090V
C- 456459-010V	6705 84-04-18	RAILING	B- 648102-060V
			B- 648102-070V
C- 456459-020V	11782 88-06-02	RAILING TB/9	B- 648102-080V
C- 456459-030V	14240 90-01-11	RAILING TB/9-SBM	B- 648102-090V
C- 456460-010V	8034 85-06-26	RAILING	B- 648102-060V
C- 456460-010V		RAILING	B- 648102-070V
C- 456460-020V	12270 88-10-20	RAILING TBA/9	B- 648102-080V
C- 456460-030V	13780 89-09-05	RAILING TBA/9	B- 648102-090V
2- 456468		BRACKET	C- 256233-020V
2- 456469		BRACKET	C- 256233-020V
2- 456470		BRACKET	C- 256233-020V
4- 456472		BRACKET	C- 256014-020V
			C- 256014-030V
			C- 256014-040V
4- 456473		BRACKET	C- 256014-050V
4- 456474		PLATE	C- 256014-020V
			C- 256014-020V
			C- 256014-030V
			C- 256014-040V
G1- 456475		MACHINE BODY	C- 256014-050V
			C- 456100-010V
4- 456496		STRUT	C- 456100-020V
			C- 256089-020V
			C- 456555-010V
4- 456500		PLATE	C- 456555-020V
			RK- 479278-010V
G3- 456503		SIDE GUIDE LEFT	C- 272765-020V
G3- 456504		SIDE GUIDE LEFT	C- 456560-010V
G3- 456505		SIDE GUIDE LEFT	C- 456560-010V
G3- 456506		SIDE GUIDE RIGHT	C- 456560-010V
G3- 456507		SIDE GUIDE RIGHT	C- 456560-010V
G3- 456508		SIDE GUIDE RIGHT	C- 456560-010V
4- 456513		LINKPIECE OUTER	C- 456560-010V
4- 456514		KEY	C- 456560-010V
3- 456515		SHAFT	C- 456560-010V
			C- 272028-030V
			C- 272028-040V
			C- 272028-050V
4- 456516		BEARING COVER	RK- 469961-010V
			C- 256014-030V

PART NO	LAST AM	DESCRIPTION	GROUP NO
			C- 272028-030V
			C- 256014-030V
			C- 272028-030V
			C- 256014-040V
			C- 272028-040V
			C- 256014-050V
			C- 272028-050V
3- 456527		BENDING ROLLER	C- 272028-030V
			C- 272028-040V
			C- 272028-050V
G1- 456528		BEARING BRACKET	C- 456546-010V
			C- 456546-020V
4- 456529		HOLDER	C- 456546-010V
			C- 456546-020V
2- 456530		PIPE	C- 456556-010V
2- 456532		PLATE	C- 441102-010V
			C- 441102-020V
3- 456533		BRACKET	C- 441102-010V
4- 456534		LOCK BOARD	C- 441102-010V
			C- 441102-020V
4- 456535		LOCK BOARD	C- 441102-010V
			C- 441102-020V
4- 456536		LOCK BOARD	C- 441102-010V
			C- 441102-020V
4- 456537		LOCK BOARD	C- 441102-010V
			C- 441102-020V
4- 456538		ROLLER	C- 441102-010V
			C- 441102-020V
4- 456539		ROLLER	C- 441102-010V
			C- 441102-020V
4- 456540		ROLLER	C- 441102-010V
			C- 441102-020V
4- 456541		ROLLER	C- 441102-010V
			C- 441102-020V
4- 456542		ROLLER	C- 441102-010V
			C- 441102-020V
4- 456543		SHAFT	C- 441102-010V
			C- 441102-020V
3- 456544		BENDING ROLLER	C- 272084-020V
			C- 272473-010V
			C- 272084-020V
			C- 272473-010V
			C- 272084-020V
			C- 272473-010V
			C- 272084-020V
			C- 272473-010V
			C- 272084-030V
			C- 272473-010V
			C- 272359-020V
			C- 272359-030V
			C- 449323-010V
			C- 752029-010V
			C- 752030-010V
4- 456545		FLANGE	C- 272359-020V
			C- 449323-010V
			C- 752029-010V
			C- 752030-010V
C- 456546-010V	12171 88-09-14	IMPULSE TRANSMITTER	B- 648106-060V
			B- 648106-070V
C- 456546-020V	12171 88-09-14	IMPULSE TRANSMITTER	B- 648106-080V
2- 456547		PLATE	C- 441092-010V
4- 456548		LOCK BOARD	C- 441092-010V
4- 456549		LOCK BOARD	C- 441092-010V
4- 456550		ROLLER	C- 441092-010V
4- 456551		ROLLER	C- 441092-010V
4- 456553		ROLLER	C- 441092-010V
2- 456554		BRACKET	C- 295470-030V
			C- 295470-040V
C- 456555-0101	8271 85-10-14	SUCTION PIPE	B- 648111-060V
			B- 648111-070V
C- 456555-0201	12754 89-06-13	SUCTION PIPE	B- 648111-080V
C- 456555-0301	12181 89-11-22	SUCTION PIPE	B- 648111-090V
C- 456556-0101	8023 85-06-12	PEROXIDE PIPE	B- 648111-060V
			B- 648111-070V
C- 456556-0201	8462 85-12-09	PEROXIDE PIPE	B- 648111-080V
			B- 648111-090V
1- 456557		BUSBAR	C- 271790-030V

PART NO	LAST AM	DESCRIPTION	GROUP NO
1- 456558		BUSBAR	C- 271791-030V
1- 456559		SPACER PIECE	C- 295883-020V
C- 456560-010V	10299 88-05-24	DISCHARGE CHUTE	B- 648105-060V
			B- 648105-070V
			B- 648105-080V
			B- 648105-090V
4- 456561		BRACKET	C- 271533-020V
			C- 271533-030V
			C- 491650-010V
2- 456562		PLATE	C- 441088-010V
4- 456563		LOCK BOARD	C- 441088-010V
4- 456564		LOCK BOARD	C- 441088-010V
4- 456565		ROLLER	C- 441088-010V
4- 456566		ROLLER	C- 441088-010V
C- 456567-0101	6626 84-03-20	SEPARATION INSERT	B- 648105-060V
			B- 648105-070V
			B- 648105-080V
			B- 648105-090V
1- 456568		PLATE	C- 456567-010V
4- 456569		BRACKET	C- 456567-010V
1- 456570		CONNECTION BOX	C- 295045-030V
2- 456571		HOLDER	C- 295883-020V
			C- 295883-030V
2- 456572		HOLDER	C- 295883-020V
			C- 295883-030V
1- 456573		FRONT PLATE	C- 456100-010V
			C- 456100-020V
2- 456575		PIPE	C- 295045-030V
			C- 295045-040V
4- 456576		PLATE	C- 256233-020V
1- 456582		PLATE	C- 256236-020V
2- 456583		PLATE	C- 256236-020V
3- 456584		RAIL	C- 256236-020V
C- 456588-010V	9627 86-10-17	CLEANING SYSTEM	B- 648105-060V
			B- 648105-070V
C- 456588-020V	12529 89-02-09	CLEANING SYSTEM	B- 648105-080V
C- 456588-030V	14278 90-01-05	CLEANING SYSTEM	B- 648105-090V
3- 456589-0001		V-BELT PULLEY	RK- 538412-010V
			C- 271128-030V
			RK- 469760-010V
3- 456589-0002		V-BELT PULLEY	RK- 538412-010V
			C- 271128-030V
			RK- 469760-010V
3- 456589-0003		V-BELT PULLEY	RK- 548388-010V
			C- 271128-030V
3- 456589-0004		V-BELT PULLEY	RK- 548388-010V
			C- 271128-030V
3- 456590		SETTING TOOL	RK- 76613-010V
			B- 648119-020V
			B- 648119-060V
			B- 648119-020V
			B- 648119-060V
2- 456591-0001		PIPE	C- 456976-010V
2- 456591-0002		PIPE	C- 456976-010V
			C- 456976-020V
2- 456591-0003		PIPE	C- 456976-030V
			C- 456976-040V
2- 456592-0001		PIPE	C- 456976-010V
2- 456592-0002		PIPE	C- 456976-010V
			C- 456976-020V
			C- 456976-030V
			C- 456976-040V
1- 456596		BOX	C- 295470-030V
1- 456597		CONNECTION PIPE	C- 271866-030V
			C- 271866-040V
1- 456597		CONNECTION PIPE	C- 271866-050V
2- 456598		CABLE CONDUIT	C- 271866-030V
			C- 271866-040V
			C- 271866-050V
2- 456599		PIPE	C- 271866-030V
			C- 271866-040V
			C- 271866-050V
C- 456600-0101	6292 84-04-25	CONNECTION BOX	C- 449314-010V
3- 456601		CONNECTION BOX	C- 456600-010V
4- 456605-0003		SPACER	CR- 283618-020V
C- 456607-0101	7002 84-10-24	HEATING BLOCK	C- 449314-010V
C- 456608-0101	6292 84-04-25	ELEMENT	C- 456607-010V

PART NO	LAST AM	DESCRIPTION	GROUP NO
4- 456609		SHAFT	C- 469316-010V
4- 456610		HOLDER	C- 486955-010V
C- 456612-0101	9177 86-07-15	BENDING ROLLER	CR- 283618-020V
4- 456613-0001		SHAFT	C- 449314-010V
			B- 648118-060V
			RK- 536470-010V
			RK- 547726-010V
4- 456614-0001		SPACER	C- 456612-010V
			C- 533844-010V
			RK- 536470-010V
			RK- 547726-010V
2- 456615		CABLE DUCT	C- 456612-010V
			C- 533844-010V
2- 456621		SHAFT	C- 457924-010V
3- 456622		TIE ROD	C- 457924-020V
			C- 469173-010V
3- 456623		TIE ROD	C- 456696-010V
			C- 456696-020V
3- 456624		BEARING HOUSING	C- 456696-010V
3- 456625		BEARING HOUSING	C- 456696-020V
4- 456626		ROD	C- 469173-010V
4- 456627		ROD	C- 469173-010V
4- 456628		KNOB	C- 469173-010V
4- 456629		KNOB	C- 469173-010V
4- 456630		LOCK WASHER	C- 469173-010V
4- 456631		SPACER	C- 469173-010V
			C- 456696-010V
3- 456632		BRACKET	C- 456696-020V
4- 456633		BRACKET	C- 283628-010V
4- 456634		PLATE	C- 283628-010V
3- 456635		RULER	C- 283628-010V
3- 456636		RULER	C- 469173-010V
3- 456643		CLAMP	C- 469173-010V
3- 456645		CLAMP	C- 469173-010V
G2- 456646		REEL	C- 469173-010V
G2- 456647		REEL	C- 469173-010V
G2- 456648		REEL	C- 469173-010V
G2- 456649		REEL	C- 469173-010V
G2- 456650		REEL	C- 469173-010V
G2- 456652		REEL	C- 469173-010V
2- 456660		COVER PLATE	C- 457867-010V
P3- 456663		INDUCTOR	RK- 547760-010V
			C- 457866-010V
			C- 469316-010V
P3- 456663		INDUCTOR	C- 457866-010V
P3- 456665		INDUCTOR	C- 469316-010V
			RK- 547760-010V
			C- 457866-010V
			C- 469316-010V
			C- 457866-010V
1- 456672		LEG	C- 469316-010V
			C- 457881-010V
C- 456674-0101	7394 85-07-18	DRIVE SHAFT	C- 457881-020V
2- 456675		CURVE PT-SEALING	B- 648118-060V
			C- 456674-010V
2- 456676		CAM	C- 476349-020V
			C- 456674-010V
2- 456677		CURVE LS-SEALING	C- 476349-020V
			C- 456674-010V
2- 456678		CAM	C- 476349-020V
			C- 456674-010V
C- 456679-0101	6295 84-04-17	WASTE BOX	C- 476349-020V
			B- 648118-060V
2- 456681		BRACKET	B- 648118-070V
2- 456682		BRACKET	C- 283635-010V
4- 456683		BRACKET	C- 283635-010V
4- 456684		SPRING HOLDER	C- 283635-010V
4- 456685		WASHER	CR- 294695-010V
3- 456686		BRACKET	CR- 294695-010V
4- 456687		TOOTHED PULLY	C- 283635-010V
C- 456688-010V	9708 86-12-17	DRIVE ROLLER	CR- 283618-020V
			C- 456696-010V
4- 456689		ROLLER	C- 456696-020V
			RK- 547782-010V
			C- 449388-010V

PART NO	LAST AM	DESCRIPTION	GROUP NO
4- 456695		SPRING	CR- 294695-010V
C- 456696-010V	9177 86-07-15	PAPER FEED	B- 648118-060V
C- 456696-020V	10583 87-06-24	PAPER FEED	B- 648118-070V
RK- 456710-0101	6868 84-06-18	TRANSMISSION	B- 648110-010V
RK- 456711-0101	11981 89-08-15	REB.KIT CATCH LIFTING CAM	B- 648110-010V
RK- 456712-010V	11980 89-06-21	REB.KIT PRESSURE JAW	B- 648110-010V
RK- 456713-0101	12208 89-01-24	CAM SEGMENT ARM CAM	RK- 752408-010V
			RK- 752410-010V
			RK- 752412-010V
RK- 456713-0102	12208 89-01-24	CAM SEGMENT ARM CAM	RK- 456716-010V
			RK- 456717-010V
			RK- 752414-010V
RK- 456713-0103	12208 89-01-24	CAM SEGMENT ARM CAM	RK- 456716-010V
			RK- 456717-010V
			RK- 752414-010V
RK- 456713-0104	12208 89-01-24	CAM SEGMENT ARM CAM	RK- 752408-010V
			RK- 752410-010V
			RK- 752412-010V
RK- 456713-0105	12208 89-01-24	CAM SEGMENT ARM CAM	RK- 456716-010V
			RK- 456717-010V
			RK- 752414-010V
RK- 456713-0106	12208 89-01-24	CAM SEGMENT ARM CAM	RK- 752408-010V
			RK- 752410-010V
			RK- 752412-010V
RK- 456713-0107	12208 89-01-24	CAM SEGMENT ARM CAM	RK- 456716-010V
			RK- 456717-010V
			RK- 752414-010V
RK- 456713-0108	12208 89-01-24	CAM SEGMENT ARM CAM	RK- 752408-010V
RK- 456713-0108		CAM SEGMENT ARM CAM	RK- 752410-010V
RK- 456713-0109	12208 89-01-24	CAM SEGMENT ARM CAM	RK- 752412-010V
			RK- 456716-010V
			RK- 456717-010V
RK- 456713-0110	12208 89-01-24	CAM SEGMENT ARM CAM	RK- 752414-010V
			RK- 456716-010V
			RK- 456717-010V
			RK- 752414-010V
RK- 456714-0101	9509 86-11-28	BRAKE	RK- 456716-010V
			RK- 456717-010V
			RK- 752408-010V
			RK- 752410-010V
			RK- 752412-010V
			RK- 752414-010V
RK- 456715-0101	12867 89-06-27	REB KIT HYDRAULIC SEALING	B- 648110-010V
			B- 648110-060V
RK- 456716-010V	12871 89-11-21	REB KIT OVERL JAW SYSTEM	B- 648110-010V
RK- 456717-010V	12872 89-11-21	REB KIT OVERL JAW SYSTEM	B- 648110-060V
			B- 648110-070V
3- 456730-0001		PIPE	C- 456935-010V
3- 456730-0002		PIPE	C- 456935-010V
3- 456730-0003		PIPE	C- 456935-010V
3- 456730-0004		PIPE	C- 456935-010V
3- 456730-0005		PIPE	C- 456935-010V
3- 456730-0006		PIPE	C- 456935-010V
2- 456731-0001		PIPE	C- 456739-010V
			C- 456935-010V
			C- 456739-010V
			C- 456935-010V
			C- 456739-010V
			C- 456935-020V
2- 456731-0002		PIPE	C- 752898-010V
			C- 456739-010V
			C- 456935-010V
			C- 456739-010V
			C- 456935-010V
			C- 456739-010V
			C- 456935-020V
2- 456731-0003		PIPE	C- 752898-010V
			C- 456935-010V
			C- 456935-020V
3- 456732		PIPE	C- 752898-010V
			C- 456739-010V
			C- 456935-010V
			C- 456739-010V
			C- 456935-010V
			C- 456739-010V
			C- 456935-020V
			C- 752898-010V

PART NO	LAST AM	DESCRIPTION	GROUP NO
3- 456733		ARM	C- 441000-030V
4- 456734		SHAFT	C- 441000-030V
4- 456735		PIN	C- 441000-030V
4- 456736		PLATE	C- 441000-030V
2- 456737-0001		PIPE	C- 456935-010V
2- 456737-0002		PIPE	C- 456935-010V
2- 456738-0001		PIPE	C- 456935-010V
2- 456738-0002		PIPE	C- 456935-010V
C- 456739-010V	12052 88-09-09	PIPE WORK TB/9	B- 648107-060V
			B- 648107-070V
			B- 648107-080V
2- 456740-0001		PIPE 200	C- 456739-010V
2- 456740-0002		PIPE 200	C- 456739-010V
2- 456741-0001		PIPE 201	C- 456739-010V
2- 456741-0002		PIPE 201	C- 456739-010V
2- 456742-0001		PIPE 241	C- 456739-010V
2- 456742-0002		PIPE 241	C- 456739-010V
2- 456743-0001		PIPE 240	C- 456739-010V
2- 456743-0002		PIPE 240	C- 456739-010V
3- 456744		HUB	C- 256201-020V
			C- 256202-020V
			C- 256201-020V
			C- 256202-020V
			C- 256201-020V
			C- 256202-020V
			C- 256201-030V
			C- 256202-030V
			C- 256201-040V
			C- 256202-040V
1- 456750		APPLIANCE BOX	C- 456827-010V
3- 456751		BRACKET	C- 456827-010V
4- 456753		SPACER	C- 456827-010V
2- 456755		BLOCK	C- 456757-010V
			C- 456757-020V
1- 456756		BLOCK	C- 456757-010V
			C- 456757-020V
C- 456757-0101	11934 88-06-10	AIR INJECTOR	C- 271909-030V
			C- 271909-040V
C- 456757-0201	14200 90-02-13	AIR INJECTOR	C- 271909-050V
3- 456758		CONNECTION	C- 271866-030V
			C- 271866-040V
			C- 271866-050V
3- 456759		TPC BAR	C- 77091-010V
			C- 77091-020V
			C- 77091-030V
			B- 648119-020V
			B- 648119-060V
			B- 648119-020V
			B- 648119-060V
3- 456760-0001		FOLDING FLAP CAM	C- 256206-020V
			C- 256207-020V
			C- 256206-020V
			C- 256207-020V
			C- 256206-020V
			C- 256207-020V
			C- 256206-020V
			C- 256207-020V
3- 456760-0002		FOLDING FLAP CAM	C- 256206-020V
			C- 256207-020V
			C- 256206-020V
			C- 256207-020V
			C- 256206-020V
			C- 256207-020V
			C- 256206-020V
			C- 256207-020V
			C- 256206-020V
3- 456760-0002		FOLDING FLAP CAM	C- 256207-020V
			C- 256206-020V
			C- 256207-020V
3- 456760-0003		FOLDING FLAP CAM	C- 256206-020V
			C- 256207-020V
			C- 256206-020V
			C- 256207-020V

PART NO	LAST AM	DESCRIPTION	GROUP NO
			C- 256206-020V
			C- 256207-020V
			C- 256206-020V
			C- 256207-020V
			C- 256206-020V
			C- 256207-020V
			C- 256206-020V
			C- 256207-020V
3- 456760-0006		FOLDING FLAP CAM	C- 256206-020V
			C- 256207-020V
			C- 256206-020V
			C- 256207-020V
			C- 256206-020V
			C- 256207-020V
			C- 256206-020V
			C- 256207-020V
			C- 256206-020V
			C- 256207-020V
3- 456760-0007		FOLDING FLAP CAM	C- 256206-020V
			C- 256207-020V
			C- 256206-020V
			C- 256207-020V
			C- 256206-020V
			C- 256207-020V
			C- 256206-020V
			C- 256207-020V
			C- 256206-020V
			C- 256207-020V
			C- 256206-020V
			C- 256207-020V
3- 456760-0008		FOLDING FLAP CAM	C- 256206-020V
			C- 256207-020V
			C- 256206-020V
			C- 256207-020V
			C- 256206-020V
			C- 256207-020V
			C- 256206-020V
			C- 256207-020V
			C- 256206-020V
			C- 256207-020V
3- 456760-0010		FOLDING FLAP CAM	C- 256206-020V
			C- 256207-020V
			C- 256206-020V
			C- 256207-020V
			C- 256206-020V
			C- 256207-020V
			C- 256206-020V
			C- 256207-020V
3- 456760-0010		FOLDING FLAP CAM	C- 256206-020V
			C- 256207-020V
			C- 256206-020V
			C- 256207-020V
3- 456760-0011		FOLDING FLAP CAM	C- 256206-020V
			C- 256207-020V
			C- 256206-020V
			C- 256207-020V
			C- 256206-020V
			C- 256207-020V
			C- 256206-020V
			C- 256207-020V
			C- 256206-020V
			C- 256207-020V
			C- 256206-020V
			C- 256207-020V
3- 456762		ELBOW PIPE	C- 456812-010V
			C- 272381-030V
4- 456763		PLATE	C- 456812-010V
			C- 272381-030V
4- 456764		CONNECTION	C- 456812-010V
			C- 272381-030V
4- 456765		FLANGE	C- 456812-010V
			C- 272381-030V
3- 456767		CREASE BAR	C- 456321-010V

PART NO	LAST AM	DESCRIPTION	GROUP NO
			C- 456322-010V
			C- 456348-010V
			C- 456349-010V
			C- 456321-020V
			C- 456322-020V
			C- 456348-020V
			C- 456349-020V
			C- 456321-030V
			C- 456322-030V
			C- 456348-020V
			C- 456349-020V
			C- 752645-010V
			C- 752646-010V
			C- 752913-010V
3- 456768		SHAFT	C- 752914-010V
			C- 456348-010V
			C- 456349-010V
			C- 456348-020V
			C- 456349-020V
			C- 456348-020V
			C- 456349-020V
3- 456771		HOLDER FOR INK BOTTLE	C- 434774-020V
			C- 434074-020V
			C- 434774-020V
4- 456772		BRACKET	C- 434074-020V
			C- 434774-020V
			C- 434774-030V
			C- 434774-020V
4- 456773		BRACKET	C- 434774-030V
			C- 434074-020V
			C- 434074-030V
			C- 434074-020V
1- 456774-0001		GABLE	C- 434074-030V
1- 456774-0001		GABLE	C- 456321-010V
1- 456774-0002		GABLE	C- 456321-020V
			C- 456322-010V
1- 456775-0001		GABLE	C- 456322-020V
			C- 456321-010V
1- 456775-0002		GABLE	C- 456321-020V
			C- 456322-010V
4- 456776		MANTLE	C- 456322-020V
			C- 456321-010V
			C- 456322-010V
			C- 456321-020V
			C- 456322-020V
			C- 456321-030V
4- 456777		SLEEVE	C- 456322-030V
			C- 456321-010V
			C- 456322-010V
			C- 456321-020V
			C- 456322-020V
			C- 456321-030V
4- 456778		SHAFT	C- 456322-030V
			C- 456321-010V
			C- 456322-010V
			C- 456321-020V
			C- 456322-020V
			C- 456321-030V
			C- 456322-030V
3- 456781		BRACKET	RK- 456793-010V
3- 456782		BOTTOM	RK- 456793-010V
3- 456783		TOP	RK- 456793-010V
3- 456784		LID	C- 752173-010V
			RK- 456793-010V
			RK- 469961-010V
			C- 256014-030V
3- 456785		PLATE	C- 256014-040V
4- 456786		BLOCK	RK- 456793-010V
4- 456788		BRACKET	RK- 456793-010V
4- 456789		HOLDER	RK- 456793-010V
4- 456790		SPRING	RK- 456793-010V
3- 456791		CONNECTION	RK- 456793-010V
			RK- 456804-010V
RK- 456793-0101	8079 85-06-19	BATH	C- 272381-030V
3- 456794		RING	RK- 469808-010V
			RK- 456799-010V
			C- 272021-030V

PART NO	LAST AM	DESCRIPTION	GROUP NO
			C- 272021-040V
			C- 272021-050V
4- 456795		RING	RK- 456799-010V
4- 456796		ROLLER	RK- 456799-010V
			C- 272021-030V
			C- 272021-040V
4- 456797		AXLE SUPPORT	C- 272021-050V
			RK- 456799-010V
			C- 272021-030V
			C- 272021-040V
4- 456798		PIN	C- 272021-050V
			RK- 456799-010V
			RK- 469984-010V
			C- 272021-030V
RK- 456799-0101	9988 86-12-05	ASEPTIC CHAMBER	C- 272021-040V
3- 456800		DRILLING JIG	RK- 469808-010V
4- 456801		ARM	RK- 469808-010V
			RK- 456799-010V
			C- 272021-030V
			C- 272021-040V
4- 456802		CLAMP RING	C- 272021-050V
			RK- 456799-010V
			RK- 469984-010V
4- 456803		PIVOT PIN	C- 272021-030V
			RK- 456799-010V
			RK- 469984-010V
			C- 272021-030V
			C- 272021-040V
RK- 456804-0101	8079 85-06-19	TANK	C- 272021-050V
3- 456805		LID	RK- 469808-010V
			RK- 456804-010V
3- 456807		COVER	C- 272381-030V
3- 456809		SHAFT	RK- 469988-010V
			RK- 469988-010V
4- 456811		SHAFT	C- 751702-010V
			C- 456321-010V
			C- 456322-010V
			C- 456348-010V
			C- 456349-010V
			C- 456321-020V
			C- 456322-020V
			C- 456348-020V
			C- 456349-020V
			C- 456321-030V
			C- 456322-030V
			C- 456348-020V
C- 456812-0101	6755 84-04-17	SUCTION PIPE	C- 456349-020V
			C- 272381-020V
3- 456813		SHAFT	RK- 469764-010V
			C- 456321-010V
			C- 456322-010V
			C- 456321-020V
			C- 456322-020V
			C- 456321-030V
4- 456814		SCREW	C- 456322-030V
			C- 256236-020V
			C- 295112-020V
4- 456815-0001		SPACER	C- 272445-020V
			C- 256236-020V
			C- 295112-020V
4- 456815-0002		SPACER	C- 272445-020V
			C- 256236-020V
			C- 295112-020V
4- 456815-0003		SPACER	C- 272445-020V
4- 456815-0004		SPACER	C- 272445-020V
			C- 256236-020V
			C- 295112-020V
4- 456815-0005		SPACER	C- 272445-020V
4- 456816		WASHER	C- 295112-020V
4- 456817-0001		SHIM	C- 295112-020V
			C- 456321-010V
			C- 456322-010V
			C- 456348-010V
			C- 456349-010V
4- 456817-0001		SHIM	C- 456321-020V
			C- 456322-020V
			C- 456348-020V

PART NO	LAST AM	DESCRIPTION	GROUP NO
			C- 456349-020V
			C- 456321-030V
			C- 456322-030V
			C- 456348-020V
			C- 456349-020V
			C- 752645-010V
			C- 752646-010V
			C- 752913-010V
			C- 752914-010V
			C- 751094-010V
			C- 272014-030V
4- 456817-0002		SHIM	C- 751094-010V
			C- 272014-030V
3- 456818		COVER	C- 272028-020V
			C- 272028-030V
2- 456819		CUTTING JAW OUTER	CR- 256204-020V
			CR- 256205-020V
			CR- 256204-020V
			CR- 256205-020V
			CR- 256204-030V
			CR- 256205-030V
			CR- 256204-040V
			CR- 256205-040V
			CR- 256204-040V
			CR- 256205-040V
			CR- 256204-050V
			CR- 256205-050V
2- 456820		CUTTING JAW OUTER	CR- 256204-020V
			CR- 256205-020V
			CR- 256204-020V
			CR- 256205-020V
			CR- 256204-030V
			CR- 256205-030V
			CR- 256204-040V
			CR- 256205-040V
			CR- 256204-040V
			CR- 256205-040V
			CR- 256204-050V
			CR- 256205-050V
3- 456821		PIPE	C- 271866-030V
			C- 271866-040V
			C- 271866-050V
3- 456822		PIPE	C- 271866-030V
			C- 271866-040V
3- 456823		PIPE	C- 271866-030V
			C- 271866-040V
			C- 271866-050V
3- 456824		PIPE	C- 271866-030V
			C- 271866-040V
			C- 271866-050V
3- 456825		BRACKET	C- 271866-030V
			C- 271866-040V
			C- 271866-050V
4- 456826		PIPE CLAMP	C- 271866-030V
			C- 271866-040V
			C- 271866-050V
C- 456827-0101	10764 88-05-05	CONNECTION BOX	C- 456100-010V
C- 456827-0101		CONNECTION BOX	C- 456100-020V
4- 456829		SHIM	C- 271442-030V
			C- 271443-030V
			C- 271442-030V
			C- 271443-030V
			C- 271442-030V
			C- 271443-030V
			C- 271442-030V
			C- 271443-030V
3- 456830		PIPE	C- 295262-030V
2- 456831		CABLE LEAD-IN PLATE	C- 295883-020V
2- 456832		CABLE LEAD-IN PLATE	C- 295883-020V
			C- 295883-030V
1- 456833		PIPE	C- 272381-030V
2- 456834		PUMP PIPE	C- 272381-030V
			RK- 469764-010V
2- 456835		RETURN PIPE	C- 272381-030V
C- 456836-010V	6877 84-06-04	CLEANING SYSTEM	B- 648111-030V
C- 456836-020V	10157 87-02-07	CLEANING SYSTEM	B- 648111-060V
			B- 648111-070V

PART NO	LAST AM	DESCRIPTION	GROUP NO
C- 456836-030V	12569 89-02-15	CLEANING SYSTEM	B- 648111-080V
C- 456836-0401	12775 89-12-02	CLEANING SYSTEM	B- 648111-090V
1- 456837		HOLDER	C- 456309-020V
			C- 456309-030V
			C- 456309-040V
4- 456838		LOCK BOARD	C- 456309-020V
			C- 456309-030V
			C- 456309-040V
4- 456839		LOCK BOARD	C- 456309-020V
			C- 456309-030V
			C- 456309-040V
4- 456840		LOCK BOARD	C- 456309-020V
			C- 456309-030V
			C- 456309-040V
2- 456841		CONNECTION BOX	C- 295441-020V
			C- 295441-030V
2- 456845		BRACKET	C- 256973-030V
			RK- 456710-010V
4- 456846		CLIP	C- 256973-030V
			C- 256219-030V
			C- 256220-030V
			C- 256219-030V
			C- 256220-030V
			C- 256219-030V
			C- 256220-030V
			C- 256219-030V
			C- 256220-030V
			RK- 456710-010V
3- 456847		PLATE	C- 256219-030V
			C- 256220-030V
			C- 256219-030V
			C- 256220-030V
			C- 256219-030V
			C- 256220-030V
			C- 256219-030V
			C- 256220-030V
			RK- 456710-010V
4- 456848		HOSE COUPLING	C- 272381-030V
			RK- 469764-010V
2- 456852		DISTRIBUTOR	C- 456455-010V
			C- 456455-020V
3- 456853-0001		PIPE CLAMP	C- 456455-010V
			C- 456455-020V
3- 456853-0002		PIPE CLAMP	C- 456455-010V
			C- 456455-020V
3- 456853-0003		PIPE CLAMP	C- 456455-010V
			C- 456455-020V
4- 456854-0001		CLIP	C- 456455-010V
			C- 456455-020V
4- 456854-0002		CLIP	C- 456455-010V
			C- 456455-020V
4- 456855		PIPE	C- 456455-010V
4- 456857		BRACKET	C- 735258-010V
			C- 456836-020V
			C- 456836-030V
			C- 456836-040V
2- 456858		PIPE	C- 456836-010V
			C- 456836-020V
			C- 456836-030V
			C- 456836-040V
2- 456859-0001		PIPE	C- 456836-010V
2- 456859-0002		PIPE	C- 456836-020V
			C- 456836-030V
			C- 456836-040V
3- 456860		PIPE	C- 295262-030V
			C- 456836-020V
1- 456861		PIPE	C- 456836-010V
4- 456862		PLATE	C- 441850-010V
			C- 441850-020V
4- 456863		BRACKET	C- 441850-030V
			C- 441850-010V
			C- 441850-020V
4- 456864-0001		BLOCK RIGHT	CR- 256436-020V
			CR- 256436-030V
			CR- 256436-040V
			CR- 256436-050V

PART NO	LAST AM	DESCRIPTION	GROUP NO
4- 456864-0002		BLOCK RIGHT	CR- 256436-020V CR- 256436-030V CR- 256436-040V CR- 256436-050V
4- 456865-0001		BLOCK LEFT	CR- 256436-020V CR- 256436-030V CR- 256436-040V CR- 256436-050V
4- 456865-0002		BLOCK LEFT	CR- 256436-020V CR- 256436-030V CR- 256436-040V CR- 256436-050V
2- 456866		CLAMP	C- 272231-020V
4- 456869		LOCK BOARD	C- 441486-020V C- 441486-030V C- 441486-040V
4- 456870		LOCK BOARD	C- 441486-020V C- 441486-030V C- 441486-040V
4- 456871		LOCK BOARD	C- 441486-020V C- 441486-030V C- 441486-040V
4- 456871		LOCK BOARD	C- 441486-020V C- 441486-030V C- 441486-040V
4- 456872		LOCK BOARD	C- 441486-020V C- 441486-030V C- 441486-040V
4- 456873		LOCK BOARD	C- 441486-020V C- 441486-030V C- 441486-040V
4- 456874		LOCK BOARD	C- 441486-020V C- 441486-030V C- 441486-040V
4- 456881		SHAFT	C- 441486-020V C- 441486-030V C- 271909-030V
C- 456882-0101	6850 84-05-18	PUSH BUTTON BOX	C- 271909-040V C- 271909-050V C- 456882-010V
3- 456883		PUSH BUTTON BOX	C- 271909-030V
4- 456884		THROTTLE NIPPLE	C- 271909-040V C- 271909-050V C- 256843-030V
1- 456885		MACHINE BODY	C- 271169-020V C- 272337-020V
4- 456886		WASHER	C- 271169-020V C- 272337-020V C- 271169-020V C- 272337-020V
1- 456888		HOUSE	C- 272021-030V
3- 456889		COVER	C- 256233-030V C- 272021-030V C- 256233-030V C- 256233-040V C- 256233-050V
3- 456890		COVER PLATE	C- 272021-030V C- 272021-040V C- 272021-050V
1- 456892		COLUMN	C- 256233-030V
1- 456893		COLUMN	C- 256233-030V
3- 456894		COVER	C- 256233-030V
2- 456895		MOTOR SHELF	C- 256234-030V C- 256234-040V C- 271804-030V
2- 456896		COVER	C- 272623-030V C- 272623-040V C- 272623-050V
3- 456897		PIPE	C- 272623-030V C- 272623-040V C- 272623-030V C- 272623-040V C- 272623-050V
4- 456899		PIPE	C- 295262-030V C- 456836-020V C- 295262-030V C- 456836-020V C- 456836-030V
4- 456900		PIPE	C- 456836-040V C- 456976-010V C- 456976-020V C- 456976-030V C- 456976-040V C- 441304-020V C- 441304-030V
1- 456901		CLEANING PIPE	C- 441304-020V C- 441304-030V C- 441304-020V C- 441304-030V C- 441304-020V C- 441304-030V

PART NO	LAST AM	DESCRIPTION	GROUP NO
4- 456936		BRACKET	C- 456935-010V
			C- 456935-020V
4- 456937		CLIP	C- 456935-010V
			C- 456935-020V
2- 456938		PIPE 241	C- 456935-010V
			C- 456935-020V
2- 456939		PIPE 240	C- 456935-010V
			C- 456935-020V
2- 456940		PIPE V45	C- 456935-010V
			C- 456935-020V
2- 456941		PIPE V44	C- 456935-010V
			C- 456935-020V
2- 456942		PIPE 201	C- 456935-010V
			C- 456935-020V
2- 456943		PIPE 200	C- 456935-010V
			C- 456935-020V
2- 456947-0003		INDUCTOR	CR- 256214-020V
2- 456948-0003		INDUCTOR	CR- 256214-020V
2- 456949		COVER	C- 456953-010V
3- 456950		HOLDER	C- 450125-010V
C- 456951-010V	8296 85-10-09	INDUCTOR UNIT	C- 456953-010V
C- 456953-010V	12153 88-09-12	PERFORATION HEATER TBA/9	C- 77091-010V
			C- 77091-020V
			B- 648119-060V
3- 456954		PLATE	C- 441736-010V
3- 456956		PLATE	C- 490947-010V
4- 456964		HOLDER	C- 490947-010V
			C- 490947-020V
4- 456965		CLAMP	C- 490947-010V
			C- 490947-020V
4- 456967		SHOULDER SCREW	C- 490947-010V
			C- 490947-020V
1- 456972		PROTECTION PLATE	C- 490947-010V
			C- 490947-020V
2- 456973		BRACKET	C- 272408-030V
			C- 272408-040V
			C- 272408-050V
2- 456974		CABLE DUCT	C- 272408-030V
			C- 272408-040V
			C- 272408-050V
C- 456975-0101	8731 86-02-11	CABINET	B- 648109-060V
C- 456975-0201	11870 88-05-24	CABINET	C- 77091-010V
			C- 77091-020V
			C- 77091-030V
C- 456976-010V	6725 84-04-10	CONDUIT	B- 648111-030V
C- 456976-020V	9415 86-10-17	CONDUIT	B- 648111-060V
			B- 648111-070V
C- 456976-030V	11932 88-06-15	CONDUIT	B- 648111-080V
C- 456976-040V	14315 90-01-10	CONDUIT	B- 648111-090V
3- 456978		PIPE	C- 271866-030V
			C- 271866-040V
			C- 271866-050V
1- 456979-0001		CABLE CONDUIT	C- 456459-010V
1- 456979-0002		CABLE CONDUIT	C- 456460-010V
1- 456980		PLATFORM	C- 456457-010V
1- 456981		PLATFORM	C- 456457-010V
			C- 456457-020V
2- 456982		PLATFORM	C- 456457-010V
			C- 456457-020V
2- 456983		PLATFORM	C- 456457-010V
			C- 456457-020V
2- 456984		PLATFORM	C- 456457-010V
3- 456985		LEG	C- 456457-010V
			C- 456457-020V
3- 456986		STEP	C- 456457-010V
			C- 456457-020V
1- 456987		SIDE PIECE	C- 456457-010V
3- 456988		SIDE PIECE	C- 456457-010V
			C- 456457-020V
1- 456989		RAILING	C- 456459-010V
1- 456991		PLATE	C- 271909-030V
1- 456992		BATH	C- 256014-030V
2- 456993		COVER	C- 256014-030V
3- 456994		BENDING ROLLER	C- 256014-030V
			C- 256014-040V
3- 456995		CARRIER	C- 272021-020V
			C- 256014-030V

PART NO	LAST AM	DESCRIPTION	GROUP NO
			C- 256014-040V
			C- 256014-050V
4- 456996		ROLLER	C- 272021-030V
			C- 456309-020V
			C- 272021-030V
			C- 456309-020V
			C- 272021-040V
			C- 456309-030V
			C- 272021-050V
4- 456998		TRIMMING ROLLER MINUS	C- 77093-010V
			B- 648119-060V
4- 456999		TRIMMING ROLLER PLUS	C- 77093-010V
			B- 648119-060V
C- 457159-0101	9314 86-09-17	PANEL	B- 648118-060V
C- 457159-0201	9530 86-12-22	PANEL	B- 648118-070V
1- 457160		COLUMN	C- 457159-010V
			C- 457159-020V
2- 457163		CABLE DUCT	C- 457159-010V
			C- 457159-020V
4- 457164		LID	C- 457159-010V
			C- 457159-020V
4- 457165		BRACKET	C- 457159-010V
			C- 457159-020V
4- 457168		SPACER	C- 457159-010V
			C- 457159-020V
4- 457367		SHAFT	RK- 491539-010V
4- 457367		SHAFT	RK- 490877-010V
			C- 491897-010V
			C- 736865-010V
			C- 491897-010V
			C- 491976-010V
			C- 491976-020V
			C- 491976-010V
			C- 491976-020V
			C- 736865-010V
			C- 491897-010V
			RK- 751570-010V
			RK- 491539-010V
4- 457368		SPRING	RK- 491539-010V
			RK- 490877-010V
			C- 491897-010V
			C- 736865-010V
			C- 491897-010V
			C- 491976-010V
			C- 491976-020V
			C- 491976-010V
			C- 491976-020V
			C- 736865-010V
			C- 491897-010V
			RK- 751570-010V
			RK- 491539-010V
3- 457387		TERMINAL CARD X9	RK- 69505-010V
2- 457804		LID	C- 457881-010V
			C- 457881-020V
1- 457805		PROTECTIVE COVER	C- 457857-010V
			C- 457857-020V
2- 457806		LID	C- 457857-010V
			C- 457857-020V
2- 457807		LID	C- 457857-010V
			C- 457857-020V
4- 457808		SPACER	C- 457857-010V
			C- 457857-020V
1- 457809		CABLE DUCT	C- 457857-010V
			C- 457857-020V
2- 457810		LID	C- 457857-010V
4- 457812		BRACKET	C- 457867-010V
1- 457813		CABLE DUCT	C- 457857-010V
			C- 457857-020V
2- 457814		LID	C- 457857-010V
			C- 457857-020V
4- 457815		SPACER	C- 457857-010V
			C- 457867-010V
			C- 457857-020V
			C- 457867-010V
2- 457819		JAW	C- 457868-010V
4- 457820		GUARD	C- 457868-010V
3- 457821		BRACKET	C- 457856-010V

PART NO	LAST AM	DESCRIPTION	GROUP NO
3- 457822		CABLE DUCT	C- 457856-010V
4- 457824		PUNCH	C- 283610-010V
			CR- 449275-010V
			C- 469316-010V
			C- 486955-010V
			CR- 449275-010V
			C- 469316-010V
			C- 486955-010V
3- 457825		DIE	C- 283610-010V
			CR- 449275-010V
			C- 469316-010V
			C- 486955-010V
			CR- 449275-010V
			C- 469316-010V
			C- 486955-010V
4- 457826		PUNCH	CR- 449275-010V
			C- 469316-010V
			C- 486955-010V
			CR- 449275-010V
			C- 469316-010V
			C- 486955-010V
3- 457827		DIE	CR- 449275-010V
			C- 469316-010V
			C- 486955-010V
			CR- 449275-010V
			C- 469316-010V
			C- 486955-010V
4- 457828		HOLDER	C- 457867-010V
1- 457830		LEFT LEG REAR	C- 457881-010V
			C- 457881-020V
4- 457841-0002		FABRIC	C- 283614-010V
			C- 486955-010V
			C- 283614-010V
1- 457842		COVER	C- 486955-010V
2- 457843		GLASS PANE	C- 457853-010V
			C- 457853-010V
			C- 457853-020V
2- 457844		GLASS PANE	C- 457853-010V
			C- 457853-020V
2- 457845		BRACKET	C- 457853-010V
			C- 457853-020V
4- 457846		PLATE	C- 457853-010V
			C- 457853-020V
4- 457848		SHIM	C- 469634-010V
2- 457850		INDUCTOR BRACKET	C- 457866-010V
2- 457851		JAW	C- 457868-010V
C- 457853-0101	7004 84-11-06	COVER	B- 648118-060V
C- 457853-0201	10407 87-06-10	COVER	B- 648118-070V
4- 457854		BRACKET	CR- 283618-020V
3- 457855		BUSBAR	C- 457866-010V
C- 457856-0101	10407 87-06-10	CONNECTION BOX	B- 648118-060V
			B- 648118-070V
C- 457857-0101	6287 84-03-21	CABLE DUCT	B- 648118-060V
C- 457857-0201	10407 87-06-10	UPPER CABLE DUCT	B- 648118-070V
C- 457857-0202	10407 87-06-10	UPPER CABLE DUCT	B- 648118-070V
C- 457866-010V	12939 89-05-19	SEALING JAW	B- 648118-060V
			B- 648118-070V
C- 457866-0107	12939 89-05-19	SEALING JAW	B- 648108-010V
C- 457867-010V	10407 87-06-10	MACHINE BODY	B- 648118-060V
			B- 648118-070V
C- 457868-010V	8390 86-01-24	COUNTER JAW	B- 648118-060V
C- 457868-0102	8390 86-01-24	COUNTER JAW	B- 648108-010V
4- 457874		SPACER	C- 469300-010V
3- 457875		LID	C- 457881-010V
			C- 457881-020V
2- 457876		CABLE DUCT	C- 469300-010V
3- 457877		LID	C- 469300-010V
2- 457878		HEATING BLOCK	C- 456607-010V
3- 457879		BRACKET	C- 449314-010V
4- 457880		GUIDE	C- 456607-010V
C- 457881-0101	7601 85-07-18	LEG	B- 648118-060V
C- 457881-0201	10638 87-06-22	LEG	B- 648118-070V
C- 457881-0202	10638 87-06-22	LEG	B- 648118-070V
4- 457896		SHAFT	CR- 283618-020V
4- 457898		SHAFT	CR- 283618-020V
4- 457899		SHAFT	CR- 283618-020V
4- 457900		SHAFT	CR- 283618-020V

PART NO	LAST AM	DESCRIPTION	GROUP NO
3- 457901		BRACKET	C- 457159-010V
			C- 457159-020V
4- 457909		ROLLER	CR- 283618-020V
4- 457910		ROLLER	CR- 283618-020V
4- 457913		BRACKET	CR- 283618-020V
4- 457914		HOLDER	CR- 283618-020V
1- 457916		WIRING DIAGRAM PNEUM. O.D	RK- 469760-010V
			B- 648109-060V
			B- 648109-070V
			B- 648109-060V
			B- 648109-070V
C- 457924-0101	9161 86-06-17	VALVE PANEL	B- 648118-060V
C- 457924-0201	10867 87-11-18	VALVE PANEL	B- 648118-070V
4- 457929		BLOCK	C- 283635-010V
4- 457930		FLAG	C- 283635-010V
C- 457937-010V	8326 86-01-28	SLIDE	B- 648118-060V
			B- 648118-070V
1- 457938		RAIL	C- 457937-010V
1- 457939		SUPPORT UPPER	C- 457937-010V
1- 457941		FLAT STEEL	C- 457937-010V
2- 457943		GLASS PANE	C- 457937-010V
2- 457944		BRACKET	C- 457937-010V
3- 457945		GLASS PANE	C- 457937-010V
3- 457946		GLASS PANE	C- 457937-010V
3- 457948		BRACKET	C- 457937-010V
3- 457949		BRACKET	C- 457937-010V
4- 457950		HANDLE	C- 457937-010V
4- 457951		WASHER	C- 457937-010V
4- 457952		RUBBER WASHER	C- 457937-010V
4- 457953		SPACER	C- 457937-010V
4- 457954		SPACER	C- 457937-010V
G1- 457955		GABLE	C- 456696-010V
			C- 456696-020V
G1- 457956		SIDE PLATE	C- 456696-010V
			C- 456696-020V
1- 457960		FRAME	C- 457857-010V
			C- 457857-020V
3- 457971		BRACKET	C- 449314-010V
1- 457999		BOX	C- 283631-010V
			C- 456679-010V
4- 458054		BUSHING	RK- 491780-010V
			C- 491976-010V
			RK- 491780-010V
4- 458068		BLOCK	C- 294670-010V
4- 458194-0001		WASHER	C- 256236-020V
			C- 295112-020V
			C- 272445-020V
1- 458379		FRAME	C- 271641-030V
			RK- 469414-010V
1- 458379		FRAME	C- 271641-030V
3- 458380		CLAMP	C- 271626-030V
			RK- 469413-010V
C- 458383-010V	6474 83-12-29	PAPER REEL HOLDER	C- 272404-020V
			C- 272404-030V
			C- 272404-040V
			C- 272404-050V
C- 458383-020V	11717 89-06-27	PAPER REEL HOLDER	C- 272404-060V
C- 458384-010V	6474 83-12-29	PAPER REEL HOLDER	C- 272404-020V
			C- 272404-030V
			C- 272404-040V
			C- 272404-050V
			C- 272404-060V
4- 458962-0001		ELECTRODE	C- 469452-010V
			C- 256014-040V
			C- 469452-020V
			C- 751800-010V
			C- 256014-050V
			C- 469452-030V
			C- 751800-020V
4- 458962-0003		ELECTRODE	C- 751373-010V
4- 458962-0004		ELECTRODE	C- 272623-030V
			C- 272623-040V
4- 458962-0005		ELECTRODE	C- 272623-030V
			C- 272623-040V
4- 458962-0006		ELECTRODE	C- 256014-030V
			C- 751373-010V
4- 458962-0007		ELECTRODE	RK- 520068-010V

PART NO	LAST AM	DESCRIPTION	GROUP NO
4- 458962-0009		ELECTRODE	C- 272623-050V
4- 458962-0010		ELECTRODE	C- 272623-050V
3- 464009-0003		BLOCK	C- 751718-010V
4- 464010		ARM	C- 751718-010V
4- 464011		FAUCET	C- 751718-010V
4- 464012		CAM	C- 751718-010V
4- 464146		BRACKET	C- 283621-010V
			C- 456696-010V
4- 464153		TOOTHED PULLY	CR- 283618-020V
4- 464154		PULLEY	C- 283626-030V
4- 464173		SIGN HOLDER	C- 256233-030V
			C- 256233-040V
			C- 256233-050V
			C- 295045-030V
			C- 295045-040V
			C- 295045-050V
			C- 295045-060V
4- 464174		SIGN	C- 256233-030V
			C- 256233-040V
			C- 256233-050V
			C- 295045-030V
			C- 295045-040V
			C- 295045-050V
			C- 295045-060V
4- 464175		SIGN	C- 256233-030V
			C- 256233-040V
			C- 256233-050V
			C- 295045-030V
			C- 295045-040V
			C- 295045-050V
			C- 295045-060V
4- 464176		SIGN	C- 490947-010V
			C- 490947-020V
			C- 752244-010V
4- 464177		SIGN	C- 490947-010V
			C- 490947-020V
			C- 752244-010V
4- 464297		CONNECTION BOX	C- 451348-010V
3- 466310		RAIL	CR- 283607-010V
4- 466312		RUBBER PROFILE	CR- 283607-010V
4- 466325		SHEET	CR- 283607-010V
4- 466430		BUSHING	C- 751718-010V
4- 469000		HOLDER	C- 271533-030V
			C- 491650-010V
4- 469001		HOLDER	C- 271533-030V
			C- 491650-010V
2- 469002		SUPPORT	C- 456459-010V
			C- 456459-020V
4- 469003		PLATE	C- 456459-010V
			C- 456459-020V
1- 469004		PLATFORM	C- 456458-010V
			C- 456458-020V
			C- 456458-030V
1- 469005		PLATFORM	C- 456458-010V
			C- 456458-020V
			C- 456458-030V
1- 469006		FRAME	C- 456458-010V
			C- 456458-020V
			C- 456458-030V
1- 469007		FRAME	C- 456458-010V
			C- 456458-020V
			C- 751860-010V
			C- 456458-030V
			C- 751860-010V
1- 469008		SIDE PIECE	C- 469762-010V
1- 469009		PLATE	C- 456458-010V
2- 469010		PLATE	C- 456458-010V
			C- 456458-020V
2- 469013		CABLE DUCT	C- 456458-010V
			C- 456458-020V
			C- 456458-030V
2- 469014		LID	C- 456458-010V
			C- 456458-020V
			C- 456458-030V
2- 469015		PLATE	C- 456458-010V
			C- 456458-020V
			C- 751860-010V

PART NO	LAST AM	DESCRIPTION	GROUP NO
			C- 456458-030V
			C- 751860-010V
2- 469016		FRAME	C- 752960-010V
			C- 752971-010V
			C- 456458-010V
			C- 456458-020V
			C- 751860-010V
			C- 456457-030V
			C- 456458-030V
			C- 751860-010V
2- 469017		PLATE	C- 456458-010V
			C- 456458-020V
			C- 751860-010V
2- 469018		PLATFORM	C- 456458-010V
			C- 456458-020V
3- 469019		LEG	C- 456458-010V
			C- 456458-020V
			C- 751860-010V
			C- 456458-030V
			C- 751860-010V
3- 469020		LEG	C- 456458-010V
			C- 456458-020V
			C- 751860-010V
			C- 456458-030V
			C- 751860-010V
3- 469021		LEG	C- 456458-010V
			C- 456458-020V
3- 469022		FRAME	C- 456458-010V
			C- 456458-020V
			C- 751860-010V
1- 469023		RAILING	C- 456460-010V
1- 469024		RAILING	C- 456460-010V
2- 469025		RAILING	C- 456460-010V
4- 469026		SPACER	C- 752960-010V
			C- 752971-010V
			C- 456460-010V
			C- 456460-020V
			C- 751900-010V
			C- 456459-030V
			C- 456460-030V
			C- 751900-010V
4- 469027		SPACER	C- 752960-010V
			C- 752971-010V
			C- 456458-010V
			C- 456458-020V
			C- 751860-010V
			C- 456457-030V
			C- 456458-030V
			C- 751860-010V
4- 469028		GASKET	C- 456459-010V
			C- 456460-010V
			C- 456459-010V
			C- 456460-010V
			C- 456459-020V
			C- 456460-020V
			C- 456460-030V
2- 469029		COVER PLATE	C- 271513-030V
			C- 271513-040V
			C- 271513-050V
2- 469030		COVER PLATE	C- 271513-030V
			C- 271513-040V
			C- 271513-050V
2- 469031		COVER PLATE	C- 271513-030V
			C- 271513-040V
2- 469032		COVER PLATE	C- 271513-030V
			C- 271513-040V
2- 469033		COVER PLATE	C- 271513-030V
			C- 271513-040V
			C- 271513-050V
			C- 751885-020V
2- 469034		GUSSET PLATE	C- 271513-030V
			C- 271513-040V
2- 469034		GUSSET PLATE	C- 271513-050V
2- 469035		GUSSET PLATE	C- 271513-030V
			C- 271513-040V
			C- 271513-050V
			C- 751885-020V

PART NO	LAST AM	DESCRIPTION	GROUP NO
3- 469036		COVER PLATE	C- 271513-030V
3- 469037		COVER PLATE	C- 271513-030V C- 271513-040V
3- 469038		COVER PLATE	C- 271513-030V C- 271513-040V C- 751885-010V
3- 469039		COVER PLATE	C- 271513-050V C- 751885-020V C- 271513-030V C- 271513-040V C- 751885-010V C- 271513-050V C- 751885-020V
2- 469040		PIPE	C- 271866-030V C- 271866-040V
2- 469041		HOLDER	C- 441307-020V C- 441307-030V
4- 469042		LOCK BOARD	C- 441307-020V C- 441307-030V
4- 469043		LOCK BOARD	C- 441307-020V C- 441307-030V
4- 469044		LOCK BOARD	C- 441307-020V
4- 469045		ROLLER	C- 441307-030V
4- 469046		ROLLER	C- 441307-020V
4- 469047		BRACKET	C- 441307-020V
1- 469048		COLUMN	C- 441307-030V C- 272021-030V
3- 469049		CABLE	RK- 456710-010V
1- 469050		FRONT GUARD	C- 271115-030V C- 271115-040V
1- 469051		COVER	C- 271115-030V C- 271115-040V
2- 469052		LID	C- 271115-030V
3- 469053		CHECKER PLATE	C- 271115-030V C- 271115-040V
3- 469054		PLATE	C- 271115-030V C- 271115-040V
3- 469056		CHECKER PLATE	C- 271115-030V C- 271115-040V
3- 469057		CHECKER PLATE	C- 271115-030V C- 271115-040V
G3- 469058		HANDLE	C- 271115-030V C- 271115-040V
4- 469061		PLATE	C- 271115-030V C- 271115-040V
4- 469063		HEAD	C- 271115-030V C- 271115-040V
4- 469066		SHAFT	C- 271115-030V C- 271115-040V
4- 469067		HANGER	C- 271115-030V
4- 469068		SLEEVE	C- 271115-030V C- 271115-040V
4- 469069		PLATE	C- 271115-030V C- 271115-040V
4- 469070		CIRCUIT DIAGRAM	C- 271181-020V
4- 469071		SPACER	C- 271533-030V C- 491650-010V
C- 469074-0101	8116 85-08-21	SPLICE DETECTOR	B- 648111-060V
C- 469074-0201	13953 89-11-13	SPLICE DETECTOR	B- 648111-070V B- 648111-080V
4- 469075		BRAKE DISC	C- 441649-010V
1- 469076		ARM	C- 271626-030V
1- 469077		DISTRIBUTOR BLOCK LEFT	C- 271533-030V
2- 469078		HOLDER	C- 441307-020V C- 441307-030V
4- 469079		LOCK BOARD	C- 441307-020V C- 441307-030V
4- 469080		LOCK BOARD	C- 441307-020V C- 441307-030V
4- 469081		LOCK BOARD	C- 441307-020V
4- 469082		ROLLER	C- 441307-030V
4- 469083		ROLLER	C- 441307-020V
4- 469084		RULER	C- 271641-030V RK- 469414-010V
4- 469085		RULER	C- 271641-030V C- 271641-030V RK- 469414-010V

PART NO	LAST AM	DESCRIPTION	GROUP NO
2- 469086		PIPE	C- 271641-030V C- 271562-040V
2- 469087		PIPE	C- 271562-050V C- 271562-040V C- 271562-050V
4- 469088		ROLLER	C- 441304-020V
4- 469089		ROLLER	C- 441304-020V
4- 469090		ROLLER	C- 441304-020V
C- 469091-010V	8376 85-10-18	UPPER FILLING TUBE	B- 648111-060V B- 648111-070V
C- 469091-020V	13673 89-09-11	FILLING PIPE	B- 648111-080V B- 648111-090V
3- 469092		SHIM	C- 256233-030V C- 256233-040V C- 256233-050V
4- 469093		HOLDER	C- 272021-030V C- 272021-040V C- 272021-050V C- 272021-020V
4- 469094		PRESSURE ARM	C- 272021-020V
3- 469095		HOLDER	C- 456100-010V C- 456100-020V C- 256843-030V C- 256843-040V C- 256843-050V
4- 469096		LEG	C- 456100-010V C- 456100-020V C- 256843-030V C- 256843-040V C- 256843-050V
2- 469097		BEAM	C- 271635-030V
4- 469107		LEVEL TUBE	C- 272381-020V C- 272381-030V
1- 469110		CIRCUIT BOARD	C- 295026-020V
1- 469111		CIRCUIT BOARD	C- 295026-020V
1- 469112		CIRCUIT BOARD	C- 295026-020V
1- 469112		CIRCUIT BOARD	RK- 469760-010V RK- 538439-010V
1- 469113		CIRCUIT BOARD	C- 295026-020V
2- 469114		MACHINE DISPLAY B9 MPTAB	C- 295026-020V
2- 469115		MACHINE DISPLAY B9 UPTAB	C- 295026-020V
2- 469116		MACHINE DISPLAY AB9 MPTAB	C- 295026-020V RK- 469760-010V RK- 538439-010V
2- 469117		MACHINE DISPLAY AB9 UPTAB	C- 295026-020V
C- 469118-0101	6850 84-05-18	FLOW METER	C- 271909-030V
C- 469118-0201	9123 86-07-22	FLOW METER	C- 271909-040V C- 271909-050V
2- 469119		BLOCK	C- 469118-010V C- 469118-020V
3- 469120		HOLDER	C- 469118-010V C- 469118-020V
C- 469121-0101	8117 85-08-20	JUNCTION BLOCK	C- 271909-030V
C- 469121-0201	8437 86-02-18	JUNCTION BLOCK	C- 271909-040V C- 271909-050V
3- 469122		BLOCK	C- 469121-010V C- 469121-020V
4- 469123		PIN	C- 256229-020V
4- 469124		ROLLER	C- 441486-020V C- 441486-030V
4- 469125		ROLLER	C- 441486-020V C- 441486-030V
4- 469126		ROLLER	C- 441486-020V C- 441486-030V
4- 469127		ROLLER	C- 441486-020V C- 441486-030V
4- 469128		ROLLER	C- 441486-020V C- 441486-030V
4- 469131		SHIM	C- 271562-040V C- 271562-050V C- 271562-060V C- 271562-070V
3- 469132		PIPE	C- 271562-040V C- 271562-050V C- 271562-060V C- 271562-070V
2- 469133		PIPE	C- 271562-040V

PART NO	LAST AM	DESCRIPTION	GROUP NO
			C- 271562-050V
			C- 271562-060V
			C- 271562-070V
4- 469134		BRACKET	C- 271261-040V
			C- 271261-050V
4- 469135		HOLDER	C- 271261-040V
			C- 271261-050V
4- 469136		ROLLER	C- 441486-020V
			C- 441486-030V
3- 469138		BRACKET	C- 256229-020V
4- 469139		HOLDER	C- 256229-020V
1- 469140		FILLING PIPE	C- 469091-010V
			C- 469091-020V
3- 469141		HOLDER	C- 271992-020V
4- 469142		SPACER	C- 271376-020V
3- 469143		LEAD-IN	C- 272765-030V
			C- 272765-040V
			C- 272765-050V
3- 469143		LEAD-IN	C- 272765-060V
C- 469144-010V	6850 84-05-18	CONNECTION	C- 271909-030V
C- 469144-020V	9605 86-10-31	CONNECTION	C- 271909-040V
			C- 271909-050V
3- 469146		HOSE	C- 271261-040V
			C- 271261-050V
1- 469148		BRACKET	C- 469452-010V
1- 469149		PIPE	C- 469452-010V
1- 469150		COVER	C- 469452-010V
			C- 469452-020V
1- 469151		PIPE	C- 469452-010V
1- 469152		PIPE	C- 469452-010V
2- 469153		PIPE	C- 469452-010V
			C- 469452-020V
			C- 751800-010V
			C- 751800-020V
2- 469154		PIPE	C- 469452-010V
			C- 469452-020V
			C- 751800-010V
			C- 751800-020V
2- 469155		SUPPORT	C- 469452-010V
3- 469156		PIPE	C- 469452-010V
			C- 469452-020V
			C- 469452-030V
3- 469157		PIPE	C- 469452-010V
			C- 469452-020V
3- 469158		PIPE	C- 469452-010V
			C- 469452-020V
4- 469159		PIN	C- 256233-030V
			C- 256233-040V
			C- 256233-050V
			C- 272021-030V
			C- 272021-040V
			C- 272021-050V
4- 469160		VIBRATION DAMPER	C- 469452-010V
			C- 469452-020V
			C- 751800-010V
			C- 751800-020V
2- 469161		JUNCTION BLOCK	C- 469144-010V
			C- 469144-020V
2- 469162		PIPE	C- 271909-030V
			C- 271909-040V
2- 469163		PIPE	C- 271909-030V
			C- 271909-040V
2- 469164		PIPE	C- 271909-030V
			C- 271909-040V
			C- 271909-050V
2- 469165		PIPE	C- 271909-030V
			C- 271909-040V
			C- 271909-050V
3- 469166		PIPE	C- 271909-030V
			C- 271909-040V
			C- 271909-050V
C- 469173-010V	13824 89-09-28	REEL	B- 648118-060V
			B- 648118-070V
3- 469174		CLAMP	C- 469173-010V
3- 469175		CLAMP	C- 469173-010V
3- 469176		CLAMP	C- 469173-010V
3- 469177		CLAMP	C- 469173-010V

PART NO	LAST AM	DESCRIPTION	GROUP NO
2- 469178		CAM	C- 283626-020V
			C- 283626-030V
4- 469179		TOOTHED PULLY	C- 283626-020V
			C- 283626-030V
4- 469180		PLATE	C- 283626-020V
			C- 283626-030V
4- 469181		KEY	C- 283626-020V
			C- 283626-030V
C- 469182-0101	7341 85-03-12	BELT TENSIONER	B- 648118-060V
			B- 648118-070V
3- 469183		ARM	C- 469182-010V
4- 469205		BRACKET	C- 457853-010V
			C- 457853-020V
4- 469206		COUNTER RUBBER	RK- 544466-010V
			RK- 550136-010V
			CR- 283607-010V
			C- 469316-010V
			C- 486955-010V
			CR- 283607-010V
			C- 469316-010V
			C- 486955-010V
4- 469213		ROD	C- 469737-010V
G2- 469214		REEL	C- 469737-010V
3- 469215		SHAFT	C- 469737-010V
4- 469216-0001		PLATE	C- 449323-010V
4- 469216-0002		PLATE	C- 449323-010V
4- 469217		RUBBER STRIP	C- 449323-010V
2- 469222		SHAFT	C- 449323-010V
3- 469223		SHAFT	C- 449323-010V
2- 469225		PLATE	C- 457159-010V
C- 469247-010V	7858 85-07-15	PULL TAB MAGAZINE	B- 648118-060V
C- 469247-020V	12403 89-01-10	PULL TAB MAGAZINE	B- 648118-070V
1- 469248		MAGAZINE	C- 469247-010V
			C- 469247-020V
1- 469249		FRAME	C- 469247-010V
			C- 469247-020V
2- 469250		BRACKET	C- 469247-010V
			C- 469247-020V
2- 469251		PLATE	C- 469247-010V
			C- 469247-020V
2- 469252		BRACKET	C- 469247-010V
			C- 469247-020V
2- 469253		HOLDER	C- 469247-010V
			C- 469247-020V
3- 469254		ARM	C- 469247-010V
			C- 469247-020V
3- 469256		ROLLER BRACKET	C- 469247-010V
			C- 469247-020V
3- 469257		SLIDE RAIL	C- 469247-010V
			C- 469247-020V
4- 469258		AXLE PIN	C- 469247-010V
			C- 469247-020V
4- 469259		ROLLER	C- 469247-010V
			C- 469247-020V
4- 469260		CLAMP	C- 469247-010V
			C- 469247-020V
4- 469261		SPACER	C- 469247-010V
			C- 469247-020V
4- 469263		ROLLER	C- 469247-010V
4- 469263		ROLLER	C- 469247-020V
4- 469265		AXLE PIN	C- 469247-010V
			C- 469247-020V
4- 469266		STOP	C- 469247-010V
			C- 469247-020V
1- 469268		SUPPORT LOWER	C- 457937-010V
1- 469269		FLAT BAR LOWER	C- 457937-010V
4- 469271		WASHER	C- 469247-010V
			C- 469247-020V
4- 469276		BRACKET	C- 457159-010V
			C- 457159-020V
4- 469277		GUARD	C- 457159-010V
			C- 457159-020V
2- 469282		GUIDE	C- 469736-010V
			C- 469736-020V
3- 469286		BRACKET	C- 484858-010V
			C- 484858-020V
			C- 547756-010V

PART NO	LAST AM	DESCRIPTION	GROUP NO
3- 469287		BRACKET	C- 469736-010V
4- 469288		BLOCK	C- 469736-010V
			C- 469736-020V
3- 469293		CLAW	C- 469294-010V
C- 469294-0101	6771 84-06-25	TYPE EXTRACTOR	RK- 469760-010V
			B- 648109-060V
			B- 648109-070V
			B- 648109-080V
2- 469295		CABLE DUCT	C- 469300-010V
3- 469296		LID	C- 469300-010V
C- 469299-0101	6999 84-10-17	FLUORESCENT LAMP	B- 648118-060V
			B- 648118-070V
C- 469300-0101	10407 87-06-10	LOWER CABLE DUCT	B- 648118-060V
			B- 648118-070V
3- 469301-0001		DOLLY	C- 294888-010V
			C- 457866-010V
			C- 457868-010V
			C- 457866-010V
			C- 457868-010V
			C- 469316-010V
			C- 457866-010V
			C- 469316-010V
			C- 497534-020V
3- 469301-0002		DOLLY	C- 457866-010V
			C- 457868-010V
			C- 469316-010V
			C- 457866-010V
			C- 469316-010V
			C- 497534-020V
3- 469301-0003		DOLLY	C- 497534-020V
3- 469304		RAIL	C- 457856-010V
3- 469314		BRACKET	C- 457867-010V
1- 469315		BUSBAR	RK- 469760-010V
C- 469316-010V	10805 87-09-28	START-UP KIT	B- 648118-060V
			B- 648118-070V
1- 469317		PLATE	C- 457924-010V
4- 469324		ROLLER	C- 469247-010V
			C- 469247-020V
4- 469325		ROLLER	C- 469247-010V
			C- 469247-020V
3- 469328		BANJO CONNECTION	C- 271909-030V
3- 469328		BANJO CONNECTION	C- 271909-040V
			C- 271909-050V
4- 469329		PIPE	C- 271909-030V
			C- 271909-040V
			C- 271909-050V
4- 469330		SIGN	C- 271909-030V
			C- 271909-040V
			C- 271909-050V
4- 469331		HOLDER	C- 271909-030V
			C- 271909-040V
			C- 271909-050V
4- 469332		CONNECTION	C- 271909-030V
			C- 271909-040V
			C- 271909-050V
2- 469336		COVER	C- 441534-010V
3- 469337		REFLECTOR	C- 441534-010V
4- 469338		LINKPIECE INNER	C- 456560-010V
4- 469339		SHIM	C- 271866-030V
4- 469340		CLIP	C- 271866-030V
3- 469341		LEAD-IN	C- 295026-020V
1- 469343		CABLE DUCT	C- 469374-010V
1- 469344		CABLE DUCT	C- 469374-010V
1- 469345		CABLE DUCT	C- 469374-010V
1- 469346		CABLE DUCT	C- 469374-010V
			C- 469374-020V
1- 469347		LID	C- 469374-010V
			C- 469374-020V
			C- 469374-030V
2- 469348		COVER	C- 469374-010V
			C- 469374-020V
2- 469349		CABLE DUCT	C- 469374-010V
			C- 469374-020V
2- 469350		LID	C- 469374-010V
			C- 469374-020V
			C- 469374-030V
2- 469351		LID	C- 469374-010V

PART NO	LAST AM	DESCRIPTION	GROUP NO
			C- 469374-020V
			C- 469374-030V
3- 469352		LID	C- 469374-010V
			C- 469374-020V
			C- 469374-030V
3- 469353		LID	C- 469374-010V
			C- 469374-020V
			C- 469374-030V
3- 469354		LID	C- 469374-010V
			C- 469374-020V
			C- 469374-030V
4- 469355		LID	C- 469374-010V
			C- 469374-020V
			C- 469374-030V
2- 469356		HOLDER	C- 272031-020V
4- 469357		LOCK BOARD	C- 272031-020V
4- 469358		ROLLER	C- 272031-020V
4- 469359		ROLLER	C- 272031-020V
1- 469360		HOLDER	C- 272030-020V
4- 469361		LOCK BOARD	C- 272030-020V
4- 469362		LOCK BOARD	C- 272030-020V
4- 469363		LOCK BOARD	C- 272030-020V
4- 469364		ROLLER	C- 272030-020V
4- 469365		ROLLER	C- 272030-020V
C- 469366-010V	9907 86-12-01	CABLE DUCT	B- 648101-060V
			B- 648101-070V
C- 469366-020V	12788 89-04-25	CABLE DUCT	B- 648101-080V
C- 469366-030V	13651 89-11-23	CABLE DUCT	B- 648101-090V
1- 469369		CAM	C- 256202-020V
			C- 256202-030V
			C- 256202-040V
1- 469370		CAM	C- 256202-020V
			C- 256202-030V
			C- 256202-040V
C- 469374-0101	9199 86-05-27	CABLE DUCT	B- 648111-060V
			B- 648111-070V
C- 469374-0201	13953 89-11-13	CABLE DUCT	B- 648111-080V
C- 469374-0301	12180 89-12-01	CABLE DUCT	B- 648111-090V
4- 469376		COVER PLATE	C- 295310-010V
			C- 295310-020V
			C- 295310-030V
			C- 295310-040V
3- 469378		PIPE	RK- 469769-010V
			C- 456556-010V
4- 469383		SHIM	C- 441271-010V
C- 469384-0101	6882 84-06-07	START-UP KIT	B- 648106-060V
			B- 648106-070V
			B- 648106-080V
			B- 648106-090V
2- 469385		PIPE	C- 456976-020V
			C- 456976-030V
			C- 456976-040V
2- 469386		PIPE	C- 456976-020V
2- 469387		PIPE	C- 456976-020V
4- 469393		BRACKET	C- 295310-030V
			C- 295310-040V
			C- 295310-050V
4- 469405		BLOCK	C- 295310-060V
			CR- 256436-020V
			CR- 256436-030V
			CR- 256436-040V
4- 469406		BLOCK	CR- 256436-050V
			CR- 256436-020V
			CR- 256436-030V
			CR- 256436-040V
4- 469409		PLATE	CR- 256436-050V
3- 469410		HOSE COUPLING	C- 491890-010V
RK- 469411-0101	7568 85-02-15	SPLICING DEVICE OFFSET	C- 491890-010V
			RK- 491404-010V
RK- 469412-0101	6868 84-06-18	TEARING DEVICE	B- 648110-010V
RK- 469413-0101	6868 84-06-18	SUSPENSION ARM	RK- 469411-010V
RK- 469414-0101	6868 84-06-18	SPLICING TABLE	RK- 469411-010V
2- 469416		CONNECTION	RK- 469411-010V
			C- 469501-020V
			C- 469501-010V
			C- 469501-020V
2- 469418		AIR NOZZLE	C- 469501-020V

PART NO	LAST AM	DESCRIPTION	GROUP NO
			C- 469501-010V
			C- 469501-020V
3- 469420		AIR NOZZLE	C- 469501-020V
			C- 469501-010V
			C- 469501-020V
3- 469424		PIPE	C- 271866-030V
2- 469426		CONNECTION	C- 256237-030V
			C- 256237-040V
3- 469430		SPACER FRAME	RK- 469472-010V
4- 469431		BRACKET	RK- 469533-010V
			C- 271569-030V
4- 469432		CABLE DUCT	RK- 469533-010V
			C- 271569-030V
			C- 271569-040V
			C- 271569-050V
P4- 469433		ROLLER	C- 295310-020V
			C- 295310-030V
			C- 295310-040V
			C- 295310-050V
			C- 295310-060V
P4- 469434		ROLLER	C- 295310-020V
			C- 295310-030V
			C- 295310-040V
			C- 295310-050V
			C- 295310-060V
1- 469435		CONTROL CABINET	C- 295026-020V
			C- 295026-030V
1- 469436		CONTROL CABINET	C- 295026-020V
			C- 295026-030V
2- 469437		BACK PIECE	C- 295026-020V
			C- 295026-030V
4- 469445		SPACER	C- 456458-010V
			C- 456458-020V
			C- 456458-030V
4- 469449		CHUTE	C- 456560-010V
C- 469452-010V	10002 87-01-12	COMPRESSOR UNIT	B- 648111-060V
			B- 648111-070V
C- 469452-020V	12844 89-06-13	COMPRESSOR UNIT	B- 648111-080V
C- 469452-030V	8833 89-12-02	COMPRESSOR UNIT	B- 648111-090V
2- 469453		COVER PLATE	RK- 469472-010V
			C- 469496-010V
4- 469454		NUT	C- 295026-020V
			C- 295026-030V
4- 469458		BRACKET	C- 469501-020V
			C- 469501-030V
			C- 469501-010V
			C- 469501-020V
			C- 469501-030V
			RK- 751462-010V
4- 469459		BRACKET	C- 469501-020V
			C- 469501-030V
			C- 469501-010V
			C- 469501-020V
			C- 469501-030V
			RK- 751462-010V
4- 469460		BRACKET	C- 469501-020V
			C- 469501-030V
			C- 469501-010V
			C- 469501-020V
			C- 469501-030V
			RK- 751462-010V
4- 469461		ROLLER	C- 469501-020V
			C- 469501-030V
			C- 469501-010V
4- 469461		ROLLER	C- 469501-020V
			C- 469501-030V
			RK- 751462-010V
4- 469463		SHAFT	C- 469501-020V
			C- 469501-030V
			C- 469501-010V
			C- 469501-020V
			C- 469501-030V
			RK- 751462-010V
4- 469464		ROLLER	C- 469501-020V
			C- 469501-030V
			C- 469501-010V
			C- 469501-020V

PART NO	LAST AM	DESCRIPTION	GROUP NO
			C- 469501-030V
			RK- 751462-010V
			RK- 751487-010V
4- 469466		PLATE	C- 469501-020V
			C- 469501-030V
			C- 469501-010V
			C- 469501-020V
			C- 469501-030V
			RK- 751462-010V
4- 469467		PLATE	C- 469501-020V
			C- 469501-010V
			C- 469501-020V
RK- 469472-0101	8578 86-02-11	SPACER FRAME	RK- 469760-010V
RK- 469472-0102	8578 86-02-11	SPACER FRAME	RK- 469760-010V
1- 469474		BRACKET	RK- 469472-010V
2- 469475		BRACKET	RK- 469472-010V
1- 469476		FRAME	RK- 469472-010V
2- 469477		PLATE	RK- 469472-010V
2- 469478		PLATE	RK- 469472-010V
1- 469479		PLATE	RK- 469472-010V
2- 469480		CABLE DUCT	RK- 469472-010V
2- 469481		LID	RK- 469472-010V
3- 469482		LEG	RK- 469472-010V
3- 469483		LEG	RK- 469472-010V
3- 469484		LEG	RK- 469472-010V
4- 469485		SPACER	RK- 469472-010V
RK- 469486-0101	7079 84-10-15	RAILING / PLATFORM	RK- 469760-010V
1- 469487		PLATFORM	RK- 469486-010V
1- 469488		RAILING	RK- 469486-010V
2- 469489		RAIL	RK- 469486-010V
			C- 456460-010V
2- 469490		RAIL	RK- 469486-010V
			C- 456460-010V
2- 469491		CABLE DUCT	RK- 469472-010V
4- 469492		SPACER	C- 271442-030V
			C- 271443-030V
			C- 271442-030V
			C- 271443-030V
			C- 271442-030V
			C- 271443-030V
			C- 271442-030V
			C- 271443-030V
4- 469495		BRACKET	C- 256229-020V
C- 469496-0101	6944 84-07-05	COVER PLATE	B- 648102-060V
			B- 648102-070V
			B- 648102-080V
C- 469496-0101		COVER PLATE	B- 648102-090V
3- 469497		PIPE	C- 295045-030V
			C- 295045-040V
			C- 295045-050V
			C- 295045-060V
3- 469498		PIPE	C- 295045-030V
			C- 295045-040V
			C- 295045-050V
			C- 295045-060V
2- 469499		FLUSH PIPE	RK- 469788-010V
			RK- 538415-010V
			C- 469781-010V
			C- 469781-020V
C- 469501-0101	8477 85-11-25	AIR NOZZLE	B- 648111-060V
C- 469501-020V	9415 86-10-17	AIR NOZZLE	B- 648101-070V
			B- 648111-070V
C- 469501-030V	13195 89-06-13	AIR NOZZLE	B- 648101-080V
			B- 648101-090V
			B- 648111-080V
			B- 648111-090V
3- 469502		SLIDER	C- 456180-010V
4- 469503		ELBOW PIPE	C- 272560-030V
			C- 272560-040V
			C- 272560-050V
4- 469504		WASHER	C- 441271-020V
			RK- 491863-010V
2- 469505		GUARD	C- 256233-020V
1- 469507		COLUMN	C- 272021-030V
1- 469508		COLUMN	C- 272021-030V
2- 469511		BOTTOM	C- 469452-010V
			C- 469452-020V

PART NO	LAST AM	DESCRIPTION	GROUP NO
			C- 751800-010V
			C- 469452-030V
3- 469515		PIPE	C- 751800-020V
2- 469516		SIDE PLATE RIGHT	C- 272623-030V
			C- 272623-040V
			C- 271513-030V
			C- 271513-040V
			C- 271513-050V
2- 469518		PENDULUM ARM	C- 751885-020V
4- 469519		HOLDER	C- 272084-020V
4- 469521		BEARING PLATE	RK- 469472-010V
			C- 272021-030V
			C- 272021-040V
2- 469522		FLUSH PIPE	C- 272021-050V
			RK- 538415-010V
			C- 469781-010V
4- 469523		SIGN	C- 469781-020V
1- 469524		BRACKET	C- 491890-010V
			C- 441486-010V
			C- 441486-020V
			C- 441486-030V
2- 469526		DOOR	C- 441486-040V
4- 469527		BRACKET	C- 469535-010V
2- 469531		LID	C- 295211-010V
RK- 469533-0101	7079 84-10-15	CABLE DUCT	RK- 469472-010V
C- 469535-010V	12195 88-10-21	DOOR	RK- 469760-010V
			B- 648106-080V
			B- 648106-090V
C- 469535-0101	12195 88-10-21	DOOR	B- 648106-060V
			B- 648106-070V
RK- 469536-0101	7624 86-05-07	WATER CIRCULATION	RK- 490865-010V
2- 469538		BRACKET	RK- 469536-010V
			RK- 491568-010V
			C- 491207-010V
2- 469539		PIPE	RK- 469536-010V
			RK- 491568-010V
			C- 491207-010V
2- 469542		PIPE	RK- 469536-010V
			RK- 491568-010V
3- 469543		PIPE	RK- 469536-010V
			RK- 491568-010V
2- 469544		PLATE	RK- 469536-010V
			RK- 491568-010V
1- 469545		CONNECTION	C- 256237-030V
			C- 256237-040V
			C- 256237-050V
2- 469546		CONNECTION	C- 256237-030V
			C- 256237-040V
2- 469547		PLATE	C- 256237-030V
			C- 256237-040V
			C- 256237-050V
			C- 256237-060V
1- 469548		HOUSE	C- 272021-030V
2- 469549		FILLING PIPE	C- 255921-030V
4- 469550		SLEEVE	C- 271866-030V
			C- 271866-040V
			C- 271866-050V
4- 469556		SHAFT	C- 469247-010V
			C- 469247-020V
4- 469561		SHAFT	C- 469247-010V
			C- 469247-020V
3- 469562		PANEL PLATE	C- 457159-010V
4- 469564		BRACKET	C- 469247-010V
			C- 469247-020V
3- 469565		ARM	C- 469247-010V
			C- 469247-020V
4- 469566		ROLLER	C- 469247-010V
			C- 469247-020V
4- 469567		SHAFT	C- 469247-010V
			C- 469247-020V
4- 469569		BRACKET	C- 469247-010V
			C- 469247-020V
4- 469570		ROLLER	C- 469247-010V
			C- 469247-020V
4- 469571		JIG	C- 469247-010V
3- 469572		TEMPLATE	C- 469586-010V
3- 469573		TEMPLATE	C- 469586-010V

PART NO	LAST AM	DESCRIPTION	GROUP NO
3- 469574		TEMPLATE	C- 469586-010V
3- 469575		TEMPLATE	C- 469586-010V
4- 469576		TEMPLATE	C- 469586-010V
4- 469577		TEMPLATE	C- 469586-010V
4- 469578		TEMPLATE	C- 469586-010V
4- 469579		TEMPLATE	C- 469586-010V
4- 469580		TEMPLATE	C- 469586-010V
4- 469581		TEMPLATE	C- 469586-010V
4- 469582		TEMPLATE	C- 469586-010V
4- 469583		TEMPLATE	C- 469586-010V
4- 469584		TEMPLATE	C- 469586-010V
4- 469585		JIG	C- 469247-010V
C- 469586-0101	7204 84-10-20	TEMPLATE	C- 77094-010V
			B- 648119-060V
2- 469587		CABLE DUCT	RK- 469760-010V
4- 469588		LID	RK- 469760-010V
4- 469591		RUBBER RING	C- 469247-010V
			C- 469247-020V
4- 469592		FLANGE	C- 469247-010V
			C- 469247-020V
4- 469594		BRACKET	C- 457924-010V
			C- 457924-020V
2- 469595		BRACKET	C- 457924-010V
			C- 457924-020V
C- 469598-0101	9161 86-06-17	HOSE INSTALLATION	B- 648118-060V
C- 469598-0201	9530 86-12-22	HOSE INSTALLATION	B- 648118-070V
3- 469599		GUARD	C- 457159-010V
			C- 457159-020V
3- 469600		LID	C- 457159-010V
			C- 457159-020V
3- 469606		LID	C- 457867-010V
4- 469607		LID	C- 457867-010V
3- 469616		HOUSE	C- 469247-010V
			C- 469247-020V
4- 469617		RING	C- 469247-010V
			C- 469247-020V
4- 469619		RING	C- 469247-010V
			C- 469247-020V
1- 469620		LEG	C- 457881-010V
			C- 457881-020V
3- 469622		BRACKET	C- 469634-010V
2- 469623		LID	C- 457867-010V
2- 469624		LID	C- 457867-010V
2- 469625		LID	C- 457867-010V
3- 469626		BOTTOM	C- 457867-010V
3- 469627		BOTTOM	C- 457867-010V
3- 469628		BOTTOM	C- 457867-010V
3- 469629		LID	C- 457867-010V
3- 469630		HOLDER	C- 469634-010V
4- 469631		SHIM	C- 457881-010V
			C- 457881-020V
4- 469632		SHIM	C- 457881-010V
			C- 457881-020V
C- 469634-0101	10407 87-06-10	BUSBAR	B- 648118-060V
			B- 648118-070V
C- 469635-010V	9361 86-10-23	COVER PLATE	B- 648118-060V
			B- 648118-070V
1- 469636		COVER PLATE	C- 469635-010V
1- 469637		COVER PLATE	C- 469635-010V
1- 469638		RIGHT LEG REAR	C- 457881-010V
			C- 457881-020V
2- 469639		BRACKET	C- 469635-010V
4- 469642		LID	C- 283619-010V
			C- 476080-020V
			C- 294670-010V
4- 469643		LID	C- 469182-010V
			C- 283604-010V
			C- 283604-020V
4- 469644		LID	C- 283604-010V
			C- 283621-010V
			C- 456696-010V
			C- 469173-010V
			C- 456696-020V
4- 469645		LID	C- 469173-010V
			C- 283623-010V
			C- 456688-010V
			C- 283622-010V

PART NO	LAST AM	DESCRIPTION	GROUP NO
			C- 283623-010V
			C- 469173-010V
4- 469646		LID	C- 283619-010V
			C- 476080-020V
			C- 294670-010V
			C- 469182-010V
4- 469647		LID	C- 283621-010V
			C- 456696-010V
			C- 456696-020V
C- 469649-010V	7006 84-11-02	PAPER GUIDE	B- 648118-060V
			B- 648118-070V
3- 469650		SUPPORT	C- 469649-010V
3- 469651		SUPPORT	C- 469649-010V
3- 469652		SUPPORT	C- 469649-010V
3- 469653		GUIDE RAIL	C- 469649-010V
3- 469654		GUIDE RAIL	C- 469649-010V
3- 469655		GUIDE RAIL	C- 469649-010V
4- 469659		SHIM	C- 457881-010V
			C- 457881-020V
3- 469668		HOLDER	C- 449323-010V
3- 469669		FLANGE	C- 449323-010V
2- 469675		GUIDE RAIL	C- 283631-010V
P3- 469683		INDUCTOR	RK- 547760-010V
			C- 457866-010V
			C- 469316-010V
			C- 457866-010V
			C- 469316-010V
4- 469688		ROLLER	C- 533903-010V
			C- 449323-010V
			C- 533903-010V
2- 469690		SUPPORT	C- 283631-010V
4- 469691		DOCUMENT	RK- 469411-010V
2- 469693		COVER PLATE	C- 469635-010V
2- 469694		COVER PLATE	C- 469635-010V
1- 469702		PLATE	C- 469736-010V
3- 469703		ARM	C- 469736-010V
			C- 469736-020V
4- 469704		SHAFT	C- 469736-010V
4- 469706		SPACER	C- 469736-010V
4- 469707		KNOB	C- 469736-010V
4- 469708		SCREW	C- 469736-010V
			C- 469736-020V
4- 469709		RING	C- 469736-010V
			C- 469736-020V
4- 469710		BRACKET	C- 469736-010V
2- 469711		BRAKE ARM	C- 469736-010V
2- 469712		HINGE	C- 469736-010V
			C- 469736-020V
4- 469717		SHAFT	C- 469736-010V
4- 469719		ROLLER	C- 469736-010V
			C- 484984-010V
4- 469719		ROLLER	C- 469736-020V
			C- 484984-010V
			C- 490610-010V
			C- 490610-020V
4- 469720		BRACKET	C- 469736-010V
			C- 484950-010V
			C- 484984-010V
			C- 469736-020V
			C- 484950-010V
			C- 484984-010V
2- 469723		TIME SCHEDULE 250ML O.D	RK- 469760-010V
			B- 648109-060V
			B- 648109-070V
			B- 648109-060V
			B- 648109-070V
2- 469724		TIME SCHEDULE 250ML O.D	B- 648109-060V
			B- 648109-070V
			B- 648109-060V
			B- 648109-070V
2- 469727		TIME SCHEDULE 200ML O.D	RK- 469760-010V
			B- 648109-060V
			B- 648109-070V
			B- 648109-060V
			B- 648109-070V
2- 469731		TIME SCHEDULE 125ML O.D	B- 648109-060V
			B- 648109-070V

PART NO	LAST AM	DESCRIPTION	GROUP NO
			B- 648109-060V
			B- 648109-070V
2- 469732		TIME SCHEDULE 125ML O.D	B- 648109-060V
			B- 648109-070V
			B- 648109-060V
			B- 648109-070V
2- 469733		TIME SCHEDULE 200S O.D	B- 648109-060V
			B- 648109-070V
			B- 648109-060V
			B- 648109-070V
2- 469734		TIME SCHEDULE 200S O.D	B- 648109-060V
			B- 648109-070V
			B- 648109-060V
			B- 648109-070V
4- 469735		ROLLER	C- 469736-010V
			C- 484984-010V
			C- 469736-020V
			C- 484984-010V
			C- 490610-010V
			C- 490610-020V
C- 469736-010V	7827 85-07-17	STRIP MAGAZINE	C- 490600-010V
C- 469736-020V	13967 89-10-04	STRIP MAGAZINE	C- 490600-020V
C- 469737-0101	7010 85-03-13	REEL	C- 283621-010V
4- 469738		SHIM	C- 283626-020V
1- 469745		BRACKET	C- 441486-020V
			C- 441486-030V
			C- 441486-040V
1- 469747-0001		CABLE DUCT	C- 469366-010V
			C- 469366-020V
			C- 469366-030V
1- 469748		CABLE DUCT	C- 469366-010V
1- 469749		CABLE DUCT	C- 469366-010V
3- 469752		LID	C- 469366-010V
3- 469752		LID	C- 469366-020V
3- 469753		LID	C- 469366-010V
			C- 469366-020V
			C- 469366-030V
4- 469755		LID	C- 469366-010V
3- 469758		FLUSH PIPE	C- 469804-010V
			C- 469781-010V
			C- 469781-020V
3- 469759		FLUSH PIPE	C- 469804-010V
			C- 469781-010V
			C- 469781-020V
RK- 469760-010V	9237 86-05-12	ADAPTER KIT, OPENING DEV.	B- 648110-010V
4- 469761		HOLDER	C- 491890-010V
C- 469762-0101	6929 84-10-08	LADDER	RK- 469760-010V
			B- 648102-060V
			B- 648102-070V
			B- 648102-080V
			B- 648102-090V
RK- 469764-0101	7083 84-09-04	PIPE CONNECTION	B- 648110-010V
4- 469766		HOSE COUPLING	RK- 469764-010V
3- 469767		PROTECTIVE GLAS	RK- 469788-010V
			C- 469781-010V
3- 469768		PROTECTIVE GLAS	C- 469781-010V
RK- 469769-0101	7084 84-09-04	PEROXIDE PIPE	B- 648110-010V
3- 469770		PIPE	RK- 469769-010V
4- 469771		DOCUMENT	RK- 469760-010V
1- 469772		PLATFORM	C- 456458-010V
			C- 456458-020V
			C- 456458-030V
			RK- 538439-010V
			RK- 547986-010V
2- 469773		PLATE	C- 456458-010V
			C- 456458-020V
			C- 456458-030V
			RK- 538439-010V
			RK- 547986-010V
3- 469774		FLUSH PIPE	C- 469804-010V
			C- 469781-010V
			C- 469781-020V
1- 469775		RAILING	C- 456460-010V
			RK- 538439-010V
2- 469778		FLUSH PIPE	RK- 538415-010V
			C- 469781-010V
			C- 469781-020V

PART NO	LAST AM	DESCRIPTION	GROUP NO
C- 469781-010V	8271 85-10-14	TUBE FLUSHING DEVICE	B- 648111-060V
			B- 648111-070V
C- 469781-020V	11456 88-03-09	TUBE FLUSHING DEVICE	B- 648111-080V
			B- 648111-090V
4- 469786		NIPPLE	C- 256014-030V
RK- 469788-010V	7079 84-10-15	TUBE FLUSHING	RK- 469760-010V
2- 469789		HOLDER	C- 256237-030V
4- 469790		BRACKET	C- 256237-030V
4- 469791		GASKET	C- 469501-010V
2- 469792		PIPE-LINE	C- 469501-020V
			C- 469501-010V
			C- 469501-020V
3- 469795		HOLDER	RK- 751462-010V
3- 469796		GASKET	C- 271114-030V
4- 469797		LOCK BOARD	C- 469501-010V
C- 469804-010V	7199 84-10-24	TUBE FLUSHING DEVICE	C- 272031-020V
			B- 648101-060V
			B- 648101-070V
2- 469805		PIPE	B- 648101-080V
2- 469806		COVER	B- 648101-090V
			RK- 469536-010V
4- 469807		DOCUMENT	RK- 469536-010V
RK- 469808-010V	11978 89-06-15	REB KIT ENVIRONMENT	RK- 491568-010V
RK- 469808-0101	11978 89-06-15	REB KIT ENVIRONMENT	RK- 469808-010V
			RK- 491589-030V
4- 469810		BRACKET	RK- 491404-010V
4- 469811		SHAFT	B- 648110-010V
			C- 272025-020V
4- 469812		BEARING	C- 271115-030V
			C- 271115-040V
4- 469813		CLAMP	C- 271115-030V
			C- 271115-040V
4- 469814		LINK ARM	C- 271115-030V
			C- 271115-040V
4- 469815		END PIECE	C- 271115-030V
			C- 271115-040V
4- 469816		CLAMP	C- 271115-030V
			C- 271115-040V
4- 469817		PIN	C- 271115-030V
			C- 271115-040V
4- 469818		ROD	C- 271115-030V
			C- 271115-040V
4- 469819		PEEL-OFF SHIM	C- 271115-030V
			C- 271115-040V
4- 469820		BRACKET	C- 271115-030V
			C- 271115-040V
3- 469821		CATCH	C- 490912-010V
4- 469822		AXLE PIN	C- 490912-010V
4- 469829		FILLER CAP	RK- 456804-010V
			RK- 491591-030V
			C- 491243-030V
			C- 272381-030V
1- 469831-0003		COVER	C- 491243-030V
			C- 456100-010V
1- 469831-0004		COVER	C- 456100-020V
			C- 456100-010V
1- 469831-0006		COVER	C- 456100-020V
			C- 456100-010V
1- 469831-0007		COVER	C- 456100-020V
			C- 456100-010V
1- 469832-0001		COVER	C- 456100-020V
			C- 456100-010V
1- 469832-0002		COVER	C- 456100-020V
			C- 456100-010V
1- 469839		LID	C- 456100-020V
			C- 490947-010V
2- 469840		LID	C- 490947-020V
			C- 490947-010V
2- 469841		LEG	C- 490947-020V
			C- 490947-010V
			C- 490947-020V
2- 469842		LEG	C- 752244-010V
			C- 490947-010V
			C- 490947-020V
			C- 752244-010V

PART NO	LAST AM	DESCRIPTION	GROUP NO
2- 469843		LEG	C- 490947-010V
			C- 490947-020V
2- 469844		SUPPORT	C- 490947-010V
4- 469845		BRACKET	C- 490947-010V
4- 469846		STOP LUG	C- 490947-010V
			C- 490947-020V
4- 469847		SHAFT	C- 490947-010V
			C- 490947-020V
			C- 752244-010V
1- 469855		PROTECTION PLATE	C- 490947-010V
			C- 490947-020V
3- 469861		CROSS BAR	C- 490590-010V
4- 469865		BRACKET	C- 490947-010V
4- 469867		HOSE HOLDER	C- 256173-020V
			C- 256173-030V
			C- 256173-040V
1- 469872		HOLDER	C- 441000-030V
1- 469873		HOLDER	C- 441000-030V
4- 469874		GUIDE RAIL	C- 441000-030V
			C- 441000-040V
			C- 441000-050V
4- 469875		GUIDE RAIL	C- 441000-030V
			C- 441000-040V
			C- 441000-050V
2- 469884		BRACKET	C- 484950-010V
3- 469886		GUIDE RAIL	C- 456103-010V
3- 469887		SLIDE PLATE	C- 456103-010V
4- 469888		LOCATING PIECE	C- 456103-010V
3- 469890		GUIDE	C- 456103-010V
2- 469891		RAIL	C- 456560-010V
3- 469894		BRACKET	C- 456953-010V
3- 469895		HEAT GUARD	C- 456953-010V
RK- 469897-0101	7325 84-12-19	REB. KIT DISCHARGE CHUTE	RK- 469760-010V
RK- 469898-0101	7325 84-12-19	REB. KIT TURNING STATION	RK- 469760-010V
3- 469921		BRACKET	C- 441304-020V
			C- 441304-030V
3- 469922		SPRING	RK- 469988-010V
			C- 751702-010V
4- 469927		STRIP	RK- 469988-010V
			C- 751702-010V
2- 469934		DRILLING JIG	RK- 490889-010V
4- 469937		PIPE	C- 456100-010V
			C- 456100-020V
4- 469946		WASHER	RK- 469536-010V
			RK- 491568-010V
4- 469960		GASKET	RK- 469536-010V
			RK- 491568-010V
RK- 469961-0101	8079 85-06-19	BATH	RK- 469988-010V
RK- 469961-0102	8079 85-06-19	BATH	RK- 469988-010V
1- 469962		BOX	RK- 469961-010V
			C- 256014-030V
2- 469963		BRACKET	C- 256843-030V
			C- 256843-040V
			C- 256843-050V
			RK- 538439-010V
			RK- 547986-010V
4- 469964		LID	C- 256665-020V
1- 469965		RAILING	C- 456460-020V
			C- 456460-030V
1- 469966		RAILING	C- 456459-020V
			C- 456460-020V
			C- 456460-030V
			RK- 547986-010V
1- 469967		RAILING	C- 456460-020V
			C- 456460-030V
3- 469968		STRIP	C- 271115-030V
			C- 271115-040V
2- 469969		PIPE	C- 456976-020V
2- 469972-0001		FILLING TUBE LOWER	C- 255921-040V
2- 469972-0002		FILLING TUBE LOWER	C- 255921-040V
3- 469973		FLANGE	C- 256230-030V
			C- 255921-040V
4- 469977		ELECTRICAL CONNECTION	CR- 256547-030V
2- 469978		LID	RK- 469961-010V
3- 469979		HOLDER	C- 752957-010V
			RK- 469961-010V
			C- 752628-010V

PART NO	LAST AM	DESCRIPTION	GROUP NO
			C- 469074-010V
			C- 469074-020V
3- 469980		BRACKET	RK- 469961-010V
4- 469981		BRACKET	C- 752957-010V
			RK- 469961-010V
			C- 469074-010V
			C- 469074-020V
4- 469982		WASHER	C- 752173-010V
			RK- 469961-010V
			C- 256014-030V
			C- 256014-040V
4- 469983		SPRING	RK- 469961-010V
RK- 469984-0101	13953 89-11-13	ASEPTIC CHAMBER	RK- 469988-010V
1- 469985		PIPE	RK- 469808-010V
			RK- 469988-010V
			RK- 469808-010V
			C- 456555-010V
2- 469987		CONTAINER	RK- 469988-010V
			C- 456836-020V
			C- 456836-030V
RK- 469988-010V	8079 85-06-19	REB KIT ENVIRONMENT	RK- 491590-030V
2- 469989		FILLING PIPE	C- 272381-030V
1- 469990		PIPE	RK- 469988-010V
2- 469991		RAIL	RK- 491404-010V
			RK- 491405-010V
			C- 272025-020V
			C- 272025-030V
2- 469992		PIPE	RK- 469988-010V
			C- 456555-010V
			C- 456555-020V
			C- 456555-030V
3- 469993		HOSE COUPLING	RK- 469988-010V
			C- 272381-030V
			C- 491207-010V
			C- 491207-020V
3- 469994		CONNECTION	RK- 469988-010V
			C- 272381-030V
			C- 491207-010V
3- 469994		CONNECTION	C- 491207-020V
4- 469995		DOCUMENT FOLDER	RK- 469988-010V
3- 469999		FLANGE	RK- 456714-010V
			C- 256173-030V
			C- 256173-040V
			RK- 456714-010V
C- 476080-020V	8653 86-11-21	BELT TENSIONER	C- 533844-010V
G1- 476108		BRACKET	CR- 283618-020V
G2- 476109		BRACKET	CR- 283618-020V
4- 476184		DIAPHRAGM	RK- 536502-010V
			RK- 536706-010V
4- 476185		VALVE CONE	C- 539211-010V
			RK- 536502-010V
			RK- 536706-010V
C- 476189-010V	12503 89-04-14	WALL LEAD-IN	C- 751796-010V
2- 476190		FRAME	C- 476189-010V
2- 476191		FRAME	C- 476189-010V
2- 476192		COVER PLATE	C- 476189-010V
2- 476193		COVER PLATE	C- 476189-010V
2- 476194		COVER PLATE	C- 476189-010V
2- 476195		COVER	C- 476189-010V
3- 476196		RAIL	C- 476189-010V
3- 476197		DROP WING	C- 476189-010V
3- 476198-0001		BRACKET	C- 476189-010V
3- 476198-0002		BRACKET	C- 476189-010V
4- 476199		PLATE	C- 476189-010V
4- 476200		SPACER	C- 476189-010V
4- 476201		SLEEVE	C- 476189-010V
4- 476202		SCREW	C- 476189-010V
3- 476203		GUARD	C- 539209-010V
C- 476349-020V	11388 88-03-21	DRIVE SHAFT	B- 648118-070V
4- 476354		CANNULAR TUBE	C- 434074-030V
4- 476355		CANNULAR TUBE	C- 434774-030V
3- 476356		HOLDER FOR INK BOTTLE	C- 434774-030V
			C- 434074-030V
			C- 434774-030V
			C- 434074-030V
			C- 434774-030V
			C- 434074-030V

PART NO	LAST AM	DESCRIPTION	GROUP NO
			C- 434774-030V
			C- 434074-030V
4- 476377		SCREW	C- 751718-010V
4- 476397		GLASS	C- 256014-040V
			C- 256014-050V
4- 476398		LID	C- 256014-040V
			C- 256014-050V
4- 476399		GASKET	C- 256014-040V
			C- 256014-050V
4- 476600		PIPE HOLDER	C- 533014-010V
4- 476864		BRACKET	CR- 283618-020V
4- 476930		SPRING HOLDER	C- 533903-010V
			C- 456696-010V
			C- 456696-020V
			C- 533903-010V
3- 479182		PAPER GUIDE PLATE	C- 229400-060V
RK- 479278-0101	7193 84-10-29	PROXIMITY SWITCH	RK- 479279-010V
RK- 479279-010V	7193 84-10-29	SAFETY CLUTCH	B- 648110-010V
4- 479354		SCREW	C- 751689-010V
4- 479773		CABLE	C- 67027-010V
C- 479821-0101	8541 86-04-29	FREE STAND	C- 751796-010V
2- 479822		COLUMN	C- 479821-010V
3- 479823		STRUT	C- 479821-010V
3- 479824		PLATE	C- 479821-010V
4- 479825		CROSS BAR	C- 479821-010V
4- 479826		COVER PLATE	C- 476189-010V
4- 479870		PRINTED CIRCUIT BOARD	C- 67062-010V
4- 479871		POTENTIOMETER	C- 67062-020V
			C- 67062-010V
			C- 67062-020V
4- 479872		SPACER PLATE	C- 67062-020V
			C- 67062-010V
			C- 67062-020V
4- 479873		COVER PLATE	C- 67062-020V
			C- 67062-010V
			C- 67062-020V
4- 479874		PRINTED CIRCUIT BOARD	C- 67025-020V
4- 479875		PROTECTIVE CAP	C- 67025-020V
4- 479876		SIGN	C- 67062-020V
			C- 67062-010V
			C- 67062-020V
4- 479881		TAPE	C- 67062-020V
			C- 67062-010V
			C- 67062-020V
4- 479882		SHIM	C- 67062-020V
			C- 67062-010V
			C- 67062-020V
4- 479909		PRINTED CIRCUIT BOARD	C- 67058-020V
4- 479910		SCREENPRINTING PANEL	C- 67058-020V
4- 479911		DRILLING PATTERN PANEL	C- 67058-020V
4- 479921		CIRCUIT BOARD PROTECTION	C- 67058-020V
4- 479949		PRINTED CIRCUIT BOARD	C- 67062-020V
4- 479957-0001		COMPONENTS WITHOUT TP-NO	C- 67062-020V
4- 479958-0001		COMPONENTS WITHOUT TP-NO	C- 67058-020V
4- 479986		DOCUMENT	RK- 479279-010V
P3- 484188		SOLENOID VALVE	C- 272623-030V
			C- 272623-040V
3- 484190		BALL BEARING	C- 256014-030V
			C- 256014-040V
			C- 256014-050V
3- 484192		VALVE	C- 456556-010V
			C- 456556-020V
P3- 484196		FILTER	C- 272623-030V
			C- 272623-040V
			C- 272623-050V
3- 484535		HOSE NIPPLE	RK- 491589-030V
3- 484536		VALVE	C- 491243-030V
3- 484538		VALVE	C- 456556-010V
			C- 456556-020V
3- 484540		BRACKET	RK- 491589-030V
4- 484602		INSULATING PLATE	RK- 535606-010V
			C- 497534-020V
C- 484858-010V	10738 87-08-21	BOBBIN	C- 490600-010V
C- 484858-020V	10096 87-11-11	BOBBIN	C- 490600-020V
2- 484859		SLIDE	C- 484858-010V
			C- 484858-020V
3- 484860		BOBBIN HOLDER	C- 484858-010V

PART NO	LAST AM	DESCRIPTION	GROUP NO
3- 484861		BOBBIN HOLDER	C- 484858-010V
4- 484862		SHAFT	C- 484858-010V
4- 484863		SHAFT	C- 484858-010V
1- 484903		PROTECTIVE COVER	C- 484984-010V
2- 484904		PLATE	C- 484984-010V
3- 484905		GABLE	C- 484984-010V
3- 484906		GABLE	C- 484984-010V
3- 484907		HEATING JAW	C- 484984-010V
3- 484908		COUNTER JAW	C- 484984-010V
3- 484909		HINGE	C- 484984-010V
3- 484910		PLATE	C- 484984-010V
3- 484911		SPACER	C- 490600-010V
			C- 490600-020V
3- 484912		TOUCH GUARD	C- 484984-010V
3- 484913		COVER	C- 484984-010V
3- 484914		HEATING ELEMENT	C- 484984-010V
			C- 469316-010V
			C- 486955-010V
			C- 469316-010V
			C- 486955-010V
4- 484915		BRACKET	C- 484984-010V
4- 484916		PLATE	C- 484984-010V
4- 484917		DOLLY	C- 484984-010V
4- 484918		ARM	C- 484984-010V
4- 484919		ARM	C- 484984-010V
4- 484920		ARM	C- 484984-010V
4- 484921		HOLDER	C- 484984-010V
4- 484922		PIN	C- 484984-010V
4- 484923		SPRING HOUSING	C- 484984-010V
4- 484924		SLEEVE	C- 484984-010V
4- 484925		SLEEVE	C- 484984-010V
4- 484926		SCREW	C- 484984-010V
4- 484927		SCREW	C- 484984-010V
4- 484928		REAMED BOLT	C- 484984-010V
4- 484929		FABRIC	C- 484984-010V
			C- 469316-010V
			C- 486955-010V
			C- 469316-010V
			C- 486955-010V
4- 484930		ROLLER	C- 484984-010V
4- 484932		SPACER	C- 484984-010V
4- 484933		SPACER	C- 484984-010V
4- 484934		STOP LUG	C- 484984-010V
4- 484935		CLIP	C- 484984-010V
C- 484950-0101	12403 89-01-10	BRACKET	C- 490600-010V
			C- 490600-020V
1- 484951		PLATE	C- 484950-010V
2- 484952		BAR	C- 484950-010V
2- 484953		PLATE	C- 484950-010V
2- 484954		HANGER	C- 484950-010V
3- 484955		SPACER	C- 484950-010V
4- 484975		WASHER	C- 539209-010V
			C- 539210-010V
C- 484984-010V	10096 87-11-11	SPLICING DEVICE	C- 490600-010V
			C- 490600-020V
2- 484985		PLATE	C- 484984-010V
4- 484986		ROLLER	C- 484984-010V
4- 484988		CAM	RK- 536318-010V
			RK- 547300-010V
4- 484989		CAM	C- 476349-020V
4- 484990		CAM	C- 476349-020V
2- 484998		GABLE	C- 476349-020V
			C- 539209-010V
4- 486823		DOCUMENT	C- 539210-010V
4- 486826-0001		SIGN	C- 456274-010V
			CE- 67716-010V
			CE- 68128-010V
			CE- 68379-010V
			C- 295026-020V
			C- 295026-030V
			C- 751885-010V
			C- 271513-050V
			C- 751885-020V
			CE- 68128-010V
			CE- 67716-010V
			CE- 68379-010V
C- 486955-010V	10805 87-09-28	START-UP KIT	B- 648118-060V

PART NO	LAST AM	DESCRIPTION	GROUP NO
4- 486974		GUIDE	B- 648118-070V
			C- 533903-010V
			RK- 536470-010V
			RK- 538450-010V
			RK- 547726-010V
			RK- 547300-010V
			C- 533844-010V
4- 486978		GUIDE	C- 533903-010V
			C- 533903-010V
			RK- 536470-010V
			RK- 538450-010V
			RK- 547726-010V
			RK- 547300-010V
			C- 533844-010V
4- 486979		FLANGE	C- 533903-010V
			C- 533903-010V
			RK- 547300-010V
4- 486980		RING	C- 533903-010V
			C- 533903-010V
			RK- 536470-010V
			RK- 538450-010V
			RK- 547726-010V
			RK- 547300-010V
			C- 533844-010V
2- 490015-0002		PIPE	C- 533903-010V
2- 490015-0003		PIPE	C- 735265-010V
2- 490016-0002		PIPE	C- 529940-010V
			C- 529940-010V
3- 490021		BRACKET	C- 735265-010V
3- 490023		BRACKET	C- 735032-010V
4- 490063		BRACKET	C- 735267-010V
4- 490076-0002		PACKING MEMBRANE	C- 735267-010V
			C- 735192-010V
			C- 735268-010V
			C- 735192-010V
			C- 735271-010V
			C- 735192-010V
			C- 735271-010V
			C- 735192-010V
			C- 735271-010V
4- 490252		RAIL	C- 735259-010V
			C- 735031-010V
3- 490336		FLOAT	C- 735192-010V
4- 490500		GASKET	C- 751332-010V
			C- 295026-020V
			C- 751332-010V
C- 490504-0101	8673 86-02-17	CIRCULATING COOLING WATER	C- 77091-010V
2- 490506		HOSE	B- 648119-060V
			C- 490504-010V
			C- 491767-010V
			C- 490504-010V
2- 490507		HOSE	C- 490504-010V
2- 490508		GUARD	C- 490504-010V
			C- 491767-010V
4- 490509		SPACER	C- 490504-010V
			C- 490504-010V
			C- 491767-010V
4- 490510		SECURING PLATE	C- 490504-010V
			C- 490504-010V
			C- 491767-010V
4- 490511		HOLDER	C- 490504-010V
4- 490512		HOLDER	C- 490504-010V
			C- 490504-010V
			C- 491767-010V
4- 490513		HOLDER	C- 490504-010V
			C- 490504-010V
			C- 491767-010V
4- 490514		HOLDER	C- 490504-010V
			C- 490504-010V
			C- 491767-010V
G1- 490518		HOLDER	C- 490504-010V
			C- 256238-040V
			C- 456309-030V
			C- 456309-040V
4- 490523		ROLLER	C- 256968-020V
3- 490529		CABLE	C- 457866-010V
3- 490530		BRACKET	C- 295026-020V

PART NO	LAST AM	DESCRIPTION	GROUP NO
G4- 490538		LOCK BOARD	C- 256238-040V
			C- 456309-030V
			C- 456309-040V
G4- 490539		LOCK BOARD	C- 256238-040V
			C- 456309-030V
			C- 456309-040V
G4- 490540		LOCK BOARD	C- 256238-040V
			C- 456309-030V
			C- 456309-040V
4- 490547		ROLLER	C- 441486-020V
			C- 441486-030V
4- 490548		ROLLER	C- 441486-020V
			C- 441486-030V
4- 490549		ROLLER	C- 441486-020V
			C- 441486-030V
4- 490550		ROLLER	C- 441486-020V
			C- 441486-030V
4- 490551		ROLLER	C- 441486-020V
			C- 441486-030V
4- 490552		ROLLER	C- 441486-020V
			C- 441486-030V
4- 490566-0001		TIMING BELT	C- 256203-030V
			C- 256203-040V
4- 490566-0002		TIMING BELT	C- 256203-030V
			C- 256203-040V
4- 490566-0003		TIMING BELT	C- 256203-030V
			C- 256203-040V
1- 490579		FRAME RIGHT	C- 490590-010V
1- 490580		FRAME LEFT	C- 490590-010V
2- 490583		BEAM, FRONT.	C- 490590-010V
2- 490584		BEAM, MIDDLE.	C- 490590-010V
2- 490585		BEAM, BACK.	C- 490590-010V
3- 490587		CORNER BAR	C- 490590-010V
4- 490589		SPACER BOLT	C- 490590-010V
C- 490590-010V	8822 88-05-05	CONVEYOR FRAME	B- 648109-060V
			B- 648109-070V
			B- 648109-080V
2- 490591		FILLING TUBE LOWER	C- 256230-030V
2- 490594		LID	RK- 456793-010V
4- 490595		GASKET	RK- 456793-010V
C- 490600-0101	9205 86-08-04	STRIP MAGAZINE COMPLETE	B- 648118-060V
C- 490600-0201	10755 87-10-13	STRIP MAGAZINE COMPLETE	B- 648118-070V
C- 490601-0101	7827 85-07-17	CONNECTION BOX	C- 490600-010V
			C- 490600-020V
3- 490602		CONNECTION BOX	C- 490601-010V
4- 490603		BRACKET	C- 490600-010V
			C- 490600-020V
4- 490604		SPACER	C- 490600-010V
			C- 490600-020V
4- 490605		BRACKET	C- 490600-010V
			C- 490600-020V
4- 490606		LIP	C- 490600-010V
			C- 490600-020V
4- 490607		PLATE	C- 490600-010V
			C- 490600-020V
3- 490608		SIGN	C- 490504-010V
			C- 491767-010V
4- 490609		SEALING WASHER	C- 490504-010V
			C- 490504-010V
			C- 491767-010V
C- 490610-010V	9708 86-12-17	BENDING ROLLERS, LS-STRIP	C- 490504-010V
C- 490610-020V	10584 87-06-16	BENDING ROLLERS, LS-STRIP	B- 648118-060V
2- 490611		BRACKET	B- 648118-070V
3- 490612		BRACKET	C- 490610-010V
			C- 490610-010V
3- 490613		BRACKET	C- 490610-020V
			C- 490610-010V
3- 490614		HOLDER	C- 490610-020V
4- 490615		SHAFT	C- 490610-010V
			C- 490610-010V
4- 490616		SHAFT	C- 490610-020V
			C- 490610-010V
2- 490618		BRANCH	C- 490610-020V
			C- 456455-010V
3- 490619		HOSE	C- 456455-020V
4- 490680		WASHER	C- 456455-010V
			C- 469173-010V

PART NO	LAST AM	DESCRIPTION	GROUP NO
3- 490671		DISTRIBUTOR BLOCK	C- 469173-010V
4- 490673		SLIDE RAIL	C- 457937-010V
4- 490674		BEARING HOLDER	C- 457937-010V
4- 490675		HOLDER	C- 457937-010V
4- 490676		HOLDER	C- 457937-010V
4- 490677		SHAFT	C- 457937-010V
4- 490678		PROTECTION PLATE	C- 457937-010V
4- 490711		PROTECTION PLATE	C- 457937-010V
4- 490712		PROTECTION PLATE	C- 457937-010V
3- 490714		CARRIER	C- 469173-010V
4- 490716		BRACKET	C- 271866-030V
4- 490720		DOCUMENT	C- 490504-010V
4- 490727		STOP	C- 457937-010V
4- 490728		STOP	C- 457937-010V
2- 490729		PROTECTIVE COVER	C- 469634-010V
3- 490730		BAR	C- 457937-010V
3- 490735		BRACKET	C- 469634-010V
1- 490741		BUSBAR	C- 469634-010V
1- 490753		PNEUMATIC DIAGRAM	B- 648109-020V
4- 490754		BRACKET	C- 469736-010V
			C- 469736-020V
2- 490759		CLAMP	C- 272231-030V
3- 490760		GUIDING ARBOR	C- 272231-030V
C- 490761-0101	12427 88-12-08	DETERGENT PUMP	B- 648106-080V
			B- 648106-090V
4- 490765		GUARD	C- 469634-010V
2- 490767		SHAFT	C- 449323-010V
2- 490768		BOX	C- 490761-010V
3- 490769		BRACKET	C- 490761-010V
3- 490775		GUIDE PLATE	CR- 283618-020V
3- 490777		BRACKET	C- 491890-010V
4- 490778		SCREW	C- 256965-020V
			C- 456546-010V
			C- 456546-020V
			RK- 752170-010V
G2- 490779		BRACKET LEFT	C- 272404-040V
			C- 272404-050V
			C- 272404-060V
G2- 490780		BRACKET RIGHT	C- 272404-040V
			C- 272404-050V
			C- 272404-060V
2- 490788		RETURN PIPE	RK- 491589-030V
2- 490789		FILLING PIPE	RK- 491591-030V
			C- 491243-030V
1- 490790		TANK	RK- 491591-030V
			C- 491243-030V
3- 490791		CARRIER	C- 469173-010V
3- 490792		CONNECTION	RK- 491591-030V
			C- 491243-030V
1- 490798		EXTENSION PIPE	C- 491323-020V
1- 490800		WATER DIAGRAM	C- 490504-010V
3- 490850		FLANGE	C- 255921-040V
3- 490851		FLANGE	C- 256230-030V
4- 490852		SIGN	RK- 490865-010V
G2- 490854-0001		SIDE GUIDE LEFT	C- 456560-010V
G2- 490854-0002		SIDE GUIDE RIGHT	C- 456560-010V
3- 490855		GUIDE RAIL	C- 456103-010V
4- 490856		LOCATING PIECE	C- 456103-010V
3- 490857		GUIDE	C- 456103-010V
2- 490862		PIPE	C- 469452-010V
			C- 469452-020V
4- 490864		DOCUMENT FOLDER	C- 751800-010V
RK- 490865-0101	9681 88-10-17	LOW ACID KIT	RK- 490865-010V
4- 490867		BRACKET	B- 648110-010V
2- 490869		FILLING TUBE LOWER	C- 272025-030V
2- 490870		FILLING TUBE LOWER	C- 255921-040V
3- 490871		LOCKING PIN UPPER	C- 256230-030V
			C- 256230-030V
3- 490872		LOCKING PIN LOWER	C- 255921-040V
			C- 256230-030V
3- 490873		HOLDER	C- 255921-040V
			RK- 491539-010V
			RK- 490877-010V
			C- 491897-010V
			C- 736865-010V
			C- 491897-010V
			C- 491976-010V

PART NO	LAST AM	DESCRIPTION	GROUP NO
			C- 736865-010V
			C- 491897-010V
			RK- 751570-010V
3- 490874		BRACKET	RK- 491539-010V
			RK- 490877-010V
			C- 491897-010V
			C- 491976-010V
			C- 491897-010V
3- 490875		PLATE	RK- 491539-010V
			RK- 490877-010V
			C- 491897-010V
			C- 491976-010V
			C- 491976-020V
			C- 491976-010V
			C- 491976-020V
			C- 491897-010V
3- 490876		BRACKET	RK- 491539-010V
			RK- 491539-010V
			RK- 490877-010V
			C- 491897-010V
			C- 736865-010V
			C- 491897-010V
			C- 491976-010V
			C- 491976-020V
			C- 491976-010V
			C- 491976-020V
			C- 736865-010V
			C- 491897-010V
			RK- 751570-010V
RK- 490877-0101	10648 87-07-02	PHOTOCELL UNIT	RK- 491539-010V
3- 490878		BRACKET	RK- 491744-010V
2- 490882		ROLLER	RK- 490951-010V
			RK- 491744-010V
			RK- 491789-010V
			RK- 491902-010V
			RK- 751561-010V
			RK- 491789-010V
			RK- 751561-010V
			C- 751088-010V
4- 490883		SCREW	C- 751088-020V
2- 490884		BRANCH PIPE	C- 271089-030V
			C- 272337-030V
			C- 272337-040V
RK- 490889-0101	7942 85-05-13	TOOL	RK- 469988-010V
4- 490890		PLATE	C- 456100-020V
4- 490891		PIN	C- 456100-020V
3- 490892		COVER	C- 272014-030V
			C- 751088-010V
3- 490893		COVER	C- 272014-030V
			C- 751088-010V
1- 490894		OVER HOUSE	C- 272021-040V
			C- 272021-050V
1- 490895		OVER HOUSE	C- 272021-040V
			C- 272021-050V
2- 490896		CONTAINER	RK- 469988-010V
			C- 456836-020V
			C- 456836-030V
3- 490897		DRILLING JIG	RK- 490889-010V
3- 490899		RING	C- 272021-030V
			C- 272021-040V
			C- 272021-050V
3- 490900		SEAL RING	RK- 469984-010V
			C- 272021-030V
			C- 272021-040V
			C- 272021-050V
3- 490901		SEAL RING	C- 272021-030V
			C- 272021-040V
			C- 272021-050V
4- 490902		AXLE SUPPORT	RK- 469984-010V
			C- 272021-030V
			C- 272021-040V
4- 490903		SHAFT	C- 272021-050V
			RK- 469984-010V
			C- 272021-030V
			C- 272021-040V
4- 490904		ARM	C- 272021-050V
			RK- 469984-010V

PART NO	LAST AM	DESCRIPTION	GROUP NO
			C- 272021-030V
			C- 272021-040V
4- 490906		SCREW	RK- 469808-010V
			RK- 469988-010V
			RK- 469808-010V
			C- 456555-010V
			C- 456555-020V
			C- 456555-030V
4- 490907		NUT	RK- 469808-010V
			RK- 469988-010V
			RK- 469808-010V
			C- 456555-010V
			C- 456555-020V
			C- 456555-030V
4- 490909		LID	RK- 469988-010V
3- 490910		PLATE	C- 456100-020V
3- 490911		PLATE	C- 456100-020V
C- 490912-0101	7648 85-03-06	CATCH	C- 271115-030V
			C- 271115-040V
4- 490916		AXLE PIN	C- 256197-030V
			C- 256198-030V
			C- 256197-030V
			C- 491814-010V
			C- 491815-010V
			C- 256197-040V
			C- 491814-010V
			C- 491815-010V
1- 490917		COLUMN	C- 272021-040V
			C- 272021-050V
1- 490918		COLUMN	C- 272021-040V
1- 490918		COLUMN	C- 272021-050V
1- 490919		COLUMN	C- 272021-040V
			C- 272021-050V
4- 490932		SLEEVE	C- 272765-030V
			C- 272765-040V
			C- 272765-050V
			C- 272765-060V
			RK- 751296-010V
4- 490933		NUT	C- 272765-030V
			C- 272765-040V
			C- 272765-050V
			C- 272765-060V
			RK- 751296-010V
2- 490940		CYLINDER	CR- 256212-040V
			CR- 256213-040V
			CR- 256212-040V
			CR- 256213-040V
			CR- 256212-050V
			CR- 256213-050V
			RK- 456712-010V
4- 490941		PISTON	RK- 456715-010V
			RK- 456712-010V
4- 490942		COMPRESSION SPRING	RK- 456715-010V
			CR- 256212-040V
			CR- 256213-040V
			CR- 256212-040V
			CR- 256213-040V
			CR- 256212-050V
			CR- 256213-050V
			CR- 256436-050V
			RK- 456712-010V
4- 490943		COMPRESSION SPRING	RK- 456715-010V
			CR- 256212-040V
			CR- 256213-040V
			CR- 256212-040V
			CR- 256213-040V
			CR- 256212-050V
			CR- 256213-050V
			RK- 456712-010V
4- 490944		PLUNGER	RK- 456715-010V
			CR- 256204-040V
			CR- 256205-040V
			CR- 256204-040V
			CR- 256205-040V
			RK- 456715-010V
C- 490947-0101	9596 86-09-05	PAPER GUARD	B- 648107-060V
			B- 648107-070V

PART NO	LAST AM	DESCRIPTION	GROUP NO
C- 490947-0102	9596 86-09-05	PAPER GUARD	B- 648107-060V
			B- 648107-070V
C- 490947-020V	12198 88-12-02	PAPER GUARD	B- 648107-080V
1- 490948		COVER	C- 490947-010V
			C- 490947-020V
2- 490949		PLATE	C- 490947-010V
			C- 490947-020V
3- 490950		HINGE	C- 490947-010V
			C- 490947-020V
RK- 490951-0101	7663 85-03-15	FIXING OF GUIDESIDES F.F.	B- 648110-060V
4- 490953		DOCUMENT	RK- 490951-010V
2- 490955		BACK PLATE	C- 490947-010V
2- 490955		BACK PLATE	C- 490947-020V
3- 490956		HINGE	C- 490947-010V
			C- 490947-020V
3- 490957		LID	C- 752474-010V
			C- 490947-010V
			C- 490947-020V
4- 490958		BRACKET	C- 752474-010V
			C- 490947-010V
			C- 490947-020V
3- 490964		COVER	C- 752474-010V
			C- 272021-040V
4- 490965		BRACKET	C- 272021-050V
			C- 490947-010V
			C- 490947-020V
1- 490966		PIPE	C- 752474-010V
3- 490967		BRACKET	C- 456556-020V
			RK- 469988-010V
			C- 456555-010V
			C- 456555-020V
3- 490970		HOLDER	C- 456555-030V
			RK- 456804-010V
4- 490973		STRAINER	C- 272381-030V
			RK- 456804-010V
4- 490974		COMPRESSION SPRING	C- 272381-030V
			CR- 256212-030V
4- 490975		COMPRESSION SPRING	CR- 256213-030V
			CR- 256212-030V
			CR- 256213-030V
2- 490976		VALVE HOUSING	C- 271169-030V
1- 490977		PIPE	RK- 469536-010V
2- 490978		PIPE	RK- 469536-010V
4- 490979		PIPE	RK- 469536-010V
			RK- 491568-010V
			C- 456556-020V
G2- 490980		CYLINDER	CR- 256436-030V
			CR- 256712-030V
			CR- 256436-040V
			CR- 256712-040V
			CR- 256436-050V
			CR- 256712-050V
			RK- 751157-010V
3- 490981		PLATE	RK- 491068-010V
4- 490982		CLAMP	RK- 491068-010V
2- 490983		PIPE	C- 272560-040V
			C- 272560-050V
2- 490984		TOUCH GUARD	C- 272560-040V
4- 490985		SPACER PLATE	C- 272560-040V
			C- 272560-050V
3- 490986		PLATE	C- 456100-010V
			C- 456100-020V
3- 490987		STRAINER	RK- 456804-010V
			RK- 491591-030V
			C- 491243-030V
			C- 272381-030V
4- 490988		STRUT	C- 491243-030V
			RK- 456804-010V
			RK- 491591-030V
			C- 491243-030V
4- 490988		STRUT	C- 272381-030V
4- 490989		LID	C- 491243-030V
			RK- 456804-010V
			RK- 491591-030V
			C- 491243-030V
			C- 272381-030V
			C- 491243-030V

PART NO	LAST AM	DESCRIPTION	GROUP NO
3- 490991		HOSE	C- 456556-010V
			C- 456556-020V
2- 490994		PIPE	C- 456556-020V
2- 490996		PIPE	C- 456556-020V
1- 490997		PIPE	C- 469452-020V
4- 490998		SCREW	C- 456976-030V
			C- 469452-020V
			C- 751800-010V
			C- 456976-040V
			C- 469452-030V
			C- 751800-020V
4- 491013		LID	RK- 491863-010V
4- 491016		HOLDER	C- 752960-010V
			C- 752971-010V
			C- 456458-010V
			C- 456458-020V
			C- 751860-010V
			C- 456457-030V
			C- 456458-030V
			C- 751860-010V
3- 491018		BRACKET	CR- 256204-040V
			CR- 256205-040V
			CR- 256204-040V
			CR- 256205-040V
			CR- 256204-050V
			CR- 256205-050V
1- 491019		PIPE	C- 491083-010V
2- 491020		PIPE	C- 491083-010V
			C- 491083-020V
4- 491021		BEARING PLATE	C- 256238-040V
			C- 456309-030V
			C- 456309-040V
3- 491022		CYLINDER BRACKET	C- 256238-040V
			C- 456309-030V
			C- 456309-040V
RK- 491068-0101	8300 85-10-09	REINFORCEMENT	B- 648110-010V
4- 491072		DOCUMENT FOLDER	RK- 491068-010V
RK- 491073-0101	7925 85-05-23	GUIDING OF STATION CHAIN	B- 648110-010V
4- 491075		DOCUMENT FOLDER	RK- 491073-010V
G1- 491076		SIDE GUIDE LEFT	RK- 491073-010V
G1- 491077		SIDE GUIDE RIGHT	RK- 491073-010V
4- 491078		GUIDE FLANGE	RK- 491073-010V
C- 491083-010V	8167 85-09-04	GAUGE GROUP	B- 648111-060V
			B- 648111-070V
C- 491083-020V	13673 89-09-11	GAUGE GROUP	B- 648111-080V
			B- 648111-090V
4- 491084		SPACER	RK- 469961-010V
3- 491085		CABLE	C- 256973-030V
1- 491086		BRACKET	RK- 538438-010V
			C- 491083-010V
			C- 491083-020V
2- 491087		PIPE	RK- 538438-010V
			C- 491083-010V
3- 491088		PIPE	RK- 538438-010V
			C- 491083-010V
			C- 491083-020V
2- 491089		PIPE	C- 456976-030V
			C- 456976-040V
1- 491090		PIPE	C- 469452-020V
			C- 469452-030V
4- 491091		DOCUMENT FOLDER	RK- 456711-010V
1- 491092		COVER PLATE	B- 648109-060V
			B- 648109-070V
			B- 648109-080V
			B- 648109-090V
			B- 648109-060V
			B- 648109-070V
			B- 648109-080V
			B- 648109-090V
4- 491093		DOCUMENT FOLDER	RK- 456712-010V
2- 491094		PIPE	C- 456976-030V
			C- 456976-040V
3- 491095		PIPE	C- 469452-020V
			C- 751800-010V
			C- 469452-030V
			C- 751800-020V
4- 491097		HEAT GUARD	C- 256239-020V

PART NO	LAST AM	DESCRIPTION	GROUP NO
			C- 256239-030V
			C- 256239-040V
			C- 256095-020V
			C- 256095-030V
			C- 256095-040V
2- 491098		BLOCK	CR- 256436-020V
			CR- 256436-030V
2- 491099		BLOCK	CR- 256436-020V
			CR- 256436-030V
2- 491100		BLOCK	CR- 256436-020V
			CR- 256436-030V
3- 491101		HOUSE	C- 272337-030V
			C- 272337-040V
3- 491114		ANGLE BRACKET	RK- 456793-010V
2- 491125		LID	C- 256014-030V
4- 491126		SCREW	C- 752173-010V
			RK- 538439-010V
			RK- 547986-010V
3- 491127		BRACKET	C- 256014-040V
			C- 271649-020V
			C- 469074-010V
4- 491128		GASKET	C- 469074-020V
			RK- 469808-010V
			C- 272021-030V
			C- 272021-040V
P3- 491130		ROLLER CHAIN	C- 272021-050V
			C- 272021-020V
RK- 491131-010V	11979 89-08-16	LUBRIC. OF STATION CHAIN	C- 256014-030V
4- 491133		DOCUMENT	B- 648110-010V
2- 491135		DISTRIBUTOR BLOCK	RK- 491131-010V
4- 491137		BRACKET	RK- 491131-010V
3- 491138		STRUT	RK- 491131-010V
2- 491139		FILLING PIPE	C- 456460-010V
3- 491140		FLANGE	C- 255921-030V
4- 491141		THROTTLE	C- 255921-030V
			C- 255921-030V
3- 491142		FLOAT	C- 255921-040V
			C- 255921-030V
4- 491143		BRACKET	C- 255921-040V
			C- 469501-020V
			C- 469501-030V
			C- 469501-010V
			C- 469501-020V
			C- 469501-030V
4- 491147		WASHER	RK- 751462-010V
			CR- 256436-020V
3- 491148		BRACKET	CR- 256436-030V
			RK- 469961-010V
4- 491149		SPRING	C- 469074-010V
			C- 752957-010V
			RK- 469961-010V
			C- 752628-010V
			C- 469074-010V
4- 491150		DOCUMENT FOLDER	C- 469074-020V
4- 491153		GLAND	C- 456953-010V
			C- 441304-020V
1- 491154		PIPE	C- 441304-030V
			C- 456976-030V
			C- 456976-040V
4- 491165		ROLLER	RK- 456713-010V
			C- 491814-010V
			C- 491815-010V
			C- 491814-010V
			C- 491815-010V
			RK- 456713-010V
4- 491166		SHAFT	RK- 456713-010V
			C- 491814-010V
			C- 491815-010V
			C- 491814-010V
			C- 491815-010V
			RK- 456713-010V
1- 491169		PIVOT ARM	C- 256237-050V
			C- 256237-060V
			C- 256055-050V
			C- 256055-060V
3- 491170		COVER	C- 256237-040V
			C- 256237-050V

PART NO	LAST AM	DESCRIPTION	GROUP NO
			C- 256237-060V
			RK- 751303-010V
			RK- 751311-010V
			RK- 751303-010V
			RK- 751311-010V
			C- 256055-040V
			C- 256055-050V
			C- 256055-060V
3- 491171		BEARING BLOCK	C- 256237-050V
			C- 256237-060V
			C- 256055-050V
			C- 256055-060V
4- 491172		GASKET	C- 256237-050V
			C- 256237-060V
			C- 256055-050V
			C- 256055-060V
4- 491173		BRACKET	C- 256237-050V
4- 491173		BRACKET	C- 256237-060V
			C- 256055-050V
			C- 256055-060V
4- 491174		ARM	C- 256237-050V
			C- 256237-060V
			C- 256055-050V
			C- 256055-060V
4- 491175		LINK	C- 256055-050V
			C- 256055-060V
3- 491176		BRACKET	C- 256055-050V
			C- 256055-060V
4- 491177		ARM	C- 256055-050V
			C- 256055-060V
4- 491178		BRACKET	C- 469501-020V
			C- 469501-010V
			C- 469501-020V
			RK- 751462-010V
2- 491179		PIPE	RK- 469536-010V
			RK- 491568-010V
2- 491180		PIPE	RK- 469536-010V
			RK- 491568-010V
1- 491181		PIPE	C- 491207-010V
			C- 491207-020V
2- 491182		RETURN PIPE	C- 491207-010V
1- 491183		PIPE	C- 271866-040V
			C- 271866-050V
2- 491184		RETURN PIPE	RK- 491590-030V
2- 491185		HOSE	C- 491767-010V
3- 491186		COVER STRIP	C- 271513-030V
1- 491187		PIPE	C- 271866-040V
			C- 271866-050V
2- 491188		HOLDER	RK- 491591-030V
			C- 491243-030V
3- 491189		SIGN	C- 295971-010V
			C- 491942-010V
3- 491190		PIPE	C- 491767-010V
2- 491191		CONTAINER	C- 272623-040V
4- 491192		NUT	C- 272623-040V
3- 491193		HOLDER	C- 295310-030V
			C- 295310-040V
			C- 295310-050V
			C- 295310-060V
G2- 491194		ROD END	RK- 491388-010V
			C- 491787-010V
			C- 491788-010V
			C- 491787-020V
			C- 491788-020V
3- 491195		SLIDER	RK- 491388-010V
			RK- 491388-010V
			C- 491787-010V
			C- 491788-010V
			C- 491787-020V
			C- 491788-020V
G3- 491196		LINK	RK- 491388-010V
			RK- 491388-010V
			C- 491787-010V
			C- 491788-010V
			C- 491787-020V
G3- 491196		LINK	C- 491788-020V
			RK- 491388-010V

PART NO	LAST AM	DESCRIPTION	GROUP NO
3- 491198		PISTON	RK- 491388-010V
			C- 491787-010V
			C- 491788-010V
			C- 491787-020V
			C- 491788-020V
			RK- 491388-010V
4- 491199		BACK PIECE	RK- 491388-010V
			C- 491787-010V
			C- 491788-010V
			RK- 491388-010V
4- 491200		CARRIER	RK- 491388-010V
			C- 491787-010V
			C- 491788-010V
			C- 491787-020V
			C- 491788-020V
			RK- 491388-010V
4- 491203		STRUT	RK- 491591-030V
			C- 491243-030V
			C- 751373-010V
C- 491207-010V	12102 88-08-17	PIPE WORK	B- 648106-080V
C- 491207-020V	13645 90-01-12	PIPE WORK	C- 751352-010V
4- 491209-0001		PIPE	C- 456976-030V
			C- 456976-040V
4- 491209-0002		PIPE	C- 456976-030V
			C- 456976-040V
4- 491215		SLEEVE	C- 295310-040V
			C- 295310-050V
			C- 295310-080V
3- 491218		SUPPORT	C- 271181-030V
			C- 271181-040V
1- 491219		PIPE	C- 456976-030V
			C- 456976-040V
3- 491220		PIPE	C- 456976-030V
			C- 456976-040V
4- 491221		PIPE	C- 456976-030V
			C- 456976-040V
4- 491222		COUNTER ROLLER	C- 456309-020V
			C- 456309-030V
3- 491223		COVER	C- 256239-030V
			C- 256239-040V
			C- 256095-030V
			C- 256095-040V
3- 491224		BRACKET	C- 256239-030V
			C- 256239-040V
			C- 256095-030V
			C- 256095-040V
CR- 491225-010V	9514 86-11-26	STATION CHAIN	B- 648105-080V
			B- 648105-090V
CR- 491225-0101	9514 86-11-26	STATION CHAIN	RK- 751156-010V
			RK- 751296-010V
CR- 491225-0102	9514 86-11-26	STATION CHAIN	RK- 751156-010V
			RK- 751296-010V
CR- 491225-0103	9514 86-11-26	STATION CHAIN	RK- 751156-010V
			RK- 751296-010V
CR- 491225-0104	9514 86-11-26	STATION CHAIN	RK- 751156-010V
			RK- 751296-010V
CR- 491225-0105	9514 86-11-26	STATION CHAIN	RK- 751156-010V
			RK- 751296-010V
CR- 491225-0106	9514 86-11-26	STATION CHAIN	RK- 751156-010V
			RK- 751296-010V
CR- 491225-0107	9514 86-11-26	STATION CHAIN	RK- 751156-010V
			RK- 751296-010V
CR- 491225-0108	9514 86-11-26	STATION CHAIN	RK- 751156-010V
			RK- 751296-010V
2- 491226-0001		CARTON STATION	CR- 491225-010V
2- 491226-0002		CARTON STATION	CR- 491225-010V
2- 491226-0003		CARTON STATION	CR- 491225-010V
2- 491226-0004		CARTON STATION	CR- 491225-010V
2- 491226-0005		CARTON STATION	CR- 491225-010V
2- 491226-0006		CARTON STATION	CR- 491225-010V
4- 491227		SLIDER	CR- 491225-010V
4- 491228-0001		SHAFT	CR- 491225-010V
4- 491228-0002		SHAFT	CR- 491225-010V
4- 491229		BUSHING	CR- 491225-010V
4- 491230		GRUB SCREW	CR- 491225-010V
4- 491231		BUSHING	RK- 550129-010V
			CR- 491225-010V

PART NO	LAST AM	DESCRIPTION	GROUP NO
4- 491233		LUG	C- 271442-030V
			C- 271443-030V
			C- 271442-030V
			C- 271443-030V
			C- 271442-030V
			C- 271443-030V
			C- 271442-030V
			C- 271443-030V
4- 491235		WASHER	C- 271442-030V
			C- 271443-030V
			C- 271442-030V
			C- 271443-030V
			C- 271442-030V
			C- 271443-030V
			C- 271442-030V
			C- 271443-030V
3- 491240		BRACKET	C- 491871-010V
3- 491241		HOLDER	C- 271866-040V
			C- 271866-050V
3- 491242		HOLDER	C- 271866-040V
			C- 271866-050V
C- 491243-030V	13997 89-11-16	PEROXIDE TANK	B- 648106-080V
C- 491243-0301	13997 89-11-16	PEROXIDE TANK	RK- 491590-030V
2- 491244		PIPE WATER	C- 491650-010V
			RK- 491641-010V
			RK- 491447-010V
2- 491245		PIPE CENTRAL LUBRICATION	C- 491650-010V
			RK- 491641-010V
			RK- 491447-010V
2- 491246		PIPE CENTRAL LUBRICATION	C- 491650-010V
			RK- 491641-010V
			RK- 491447-010V
3- 491247		PIPE WATER	C- 491650-010V
			RK- 491641-010V
			RK- 491447-010V
1- 491248		PIPE WATER	C- 491650-010V
			RK- 491641-010V
			RK- 491447-010V
3- 491249		PIPE HYDRAULIC	C- 491650-010V
			RK- 491641-010V
3- 491249		PIPE HYDRAULIC	RK- 491447-010V
1- 491250		PIPE HYDRAULIC	C- 491650-010V
			RK- 491641-010V
			RK- 491447-010V
3- 491251		PIPE WATER	C- 491650-010V
			RK- 491641-010V
			RK- 491447-010V
1- 491252		PIPE HYDRAULIC	C- 491650-010V
			RK- 491641-010V
			RK- 491447-010V
2- 491253		PIPE HYDRAULIC	C- 491650-010V
			RK- 491641-010V
			RK- 491447-010V
1- 491254		DISTRIBUTOR BLOCK RIGHT	C- 491650-010V
			RK- 491641-010V
			RK- 491447-010V
1- 491255		DISTRIBUTOR BLOCK LEFT	C- 491650-010V
			RK- 491641-010V
			RK- 491447-010V
2- 491256		DISTRIBUTOR BLOCK LEFT	C- 491650-010V
			RK- 491447-010V
3- 491257		DRIVE WHEEL	RK- 491863-010V
3- 491258		DRIVE WHEEL	C- 491850-010V
C- 491259-010V	12529 89-02-09	GUIDE	B- 648105-080V
C- 491259-0101	12529 89-02-09	GUIDE	RK- 751156-010V
C- 491259-0102	12529 89-02-09	GUIDE	RK- 751156-010V
C- 491259-0103	12529 89-02-09	GUIDE	RK- 751156-010V
C- 491259-020V	12530 90-01-05	GUIDE	B- 648105-090V
2- 491260		RAIL BRACKET	C- 491259-010V
			RK- 751166-010V
3- 491264		SPACER BLOCK	C- 491259-010V
			RK- 751166-010V
3- 491265		PLATE	C- 491259-010V
			C- 491259-020V
			C- 491259-010V
			RK- 751166-010V
4- 491266		SHIM	C- 491259-010V

PART NO	LAST AM	DESCRIPTION	GROUP NO
			C- 491259-020V
			C- 491259-010V
2- 491270		FILLING TUBE LOWER	RK- 751166-010V
3- 491271		FLANGE	C- 255921-040V
3- 491272		LOCKING PIN LOWER	C- 255921-040V
C- 491273-0101	8296 85-10-09	START-UP KIT	C- 255921-040V
G3- 491274		HUB	C- 456953-010V
			RK- 456714-010V
			C- 256173-030V
			C- 256173-040V
4- 491286		REFLECTOR	RK- 456714-010V
			C- 271513-030V
			C- 271513-040V
			C- 271513-050V
2- 491287		PROTECTIVE COVER	C- 751885-020V
			C- 271513-040V
			C- 271513-050V
3- 491289		TENSION SPROCKET	RK- 491590-030V
3- 491290		SHAFT	RK- 491302-010V
4- 491291		LID	RK- 491302-010V
			C- 491846-010V
4- 491291		LID	C- 491846-020V
			C- 491846-010V
4- 491292		CLAMPING RING	RK- 491302-010V
4- 491293		WASHER	RK- 491302-010V
4- 491294		SEAL	RK- 491302-010V
2- 491295		COVER PLATE	RK- 491302-010V
3- 491296		COVER PLATE	RK- 491589-030V
1- 491297		CARRIER RIGHT	RK- 491589-030V
			CR- 256212-040V
			CR- 256212-050V
1- 491298		CARRIER LEFT	RK- 456712-010V
			CR- 256213-040V
			CR- 256213-050V
1- 491299		TOUCH GUARD	RK- 456712-010V
			C- 456976-030V
			C- 456976-040V
RK- 491302-0101	10355 87-04-07	TENSION SPROCKET	RK- 751296-010V
4- 491303		WASHER	RK- 491591-030V
			C- 491243-030V
4- 491304		WASHER	C- 751373-010V
			RK- 491591-030V
			C- 491243-030V
4- 491305		CIRCUIT DIAGRAM	C- 751373-010V
			C- 271181-030V
			C- 271181-040V
4- 491310		GUIDING FLANGE RIGHT	C- 441271-010V
			C- 441594-010V
			C- 441271-020V
4- 491311		GUIDE FLANGE LEFT	C- 441594-010V
			C- 441271-010V
3- 491312		GUIDE FLANGE LEFT	C- 441271-020V
3- 491313		GUIDE STRIP	C- 441594-010V
4- 491314		SCREW	C- 271089-030V
			C- 272021-030V
			C- 272021-040V
4- 491317		BRACKET RIGHT	C- 272021-050V
4- 491318		BRACKET LEFT	RK- 456713-010V
4- 491319		SHIM	RK- 456713-010V
			RK- 456713-010V
			C- 491814-010V
			C- 491815-010V
			C- 491814-010V
			C- 491815-010V
3- 491322		WATER DIAGRAM	RK- 456713-010V
			RK- 490865-010V
C- 491323-0201	12060 88-07-04	PEROXIDE PUMP	RK- 491795-010V
			C- 491243-030V
RK- 491324-0101	10113 87-02-06	PAPER BRAKE	RK- 491591-030V
2- 491325		BRACKET	RK- 491404-010V
3- 491326		BRACKET	RK- 491324-010V
3- 491327		SHAFT	RK- 491324-010V
3- 491328		ROLLER	RK- 491324-010V
4- 491329		ARM	RK- 491404-010V
4- 491333		SPACER RING	RK- 491324-010V
			C- 272028-030V
			C- 272028-040V

PART NO	LAST AM	DESCRIPTION	GROUP NO
			C- 272028-050V
4- 491344		PLATE	RK- 491404-010V
3- 491345		CAM SEGMENT	RK- 456713-010V
			C- 256202-030V
3- 491345		CAM SEGMENT	C- 256202-040V
			RK- 456713-010V
3- 491346		CAM SEGMENT	RK- 456713-010V
			C- 256202-030V
			C- 256202-040V
3- 491349		BEARING SEAT	RK- 456713-010V
			C- 256951-040V
			C- 256952-040V
			C- 256951-040V
4- 491350		SLIDER	C- 256952-040V
			C- 256951-040V
			C- 256952-040V
			C- 256951-040V
1- 491360		PIPE	C- 256952-040V
			C- 456555-010V
			C- 456555-020V
3- 491362		SHAFT	C- 456555-030V
			RK- 491373-010V
			C- 256014-040V
4- 491363		NUT	C- 256014-050V
			RK- 491373-010V
			C- 256014-040V
4- 491364		BEARING HOLDER	C- 256014-050V
			RK- 491373-010V
			C- 256014-040V
4- 491365		THRUST BEARING	C- 256014-050V
			RK- 491373-010V
			C- 256014-040V
3- 491366		PUMP PIPE	C- 256014-050V
			C- 491207-010V
4- 491367		GASKET	RK- 491590-030V
			RK- 491591-030V
			C- 491243-030V
			C- 272381-030V
RK- 491373-0101	8500 85-12-18	BEARING	C- 491243-030V
4- 491375		CROSS PIECE	RK- 491588-010V
			RK- 491388-010V
			C- 491787-010V
			C- 491788-010V
			C- 491787-020V
			C- 491788-020V
4- 491376		COUNTER ROLLER	RK- 491388-010V
			C- 456309-020V
			C- 456309-030V
4- 491382		DOCUMENT FOLDER	RK- 491588-010V
4- 491383		TORSION SPRING PERF 1	CR- 256844-030V
4- 491384		TORSION SPRING PERF 2	CR- 256845-030V
3- 491386		HOUSE PERF 1	CR- 256844-030V
3- 491387		HOUSE PERF 2	CR- 256845-030V
RK- 491388-0101	12208 89-01-24	DISCONNECTION LINK	RK- 456716-010V
			RK- 456717-010V
			RK- 752414-010V
RK- 491388-0102	12208 89-01-24	DISCONNECTION LINK	RK- 752408-010V
			RK- 752410-010V
			RK- 752412-010V
2- 491390		PIPE CENTRAL LUBRICATION	C- 271562-050V
			C- 271562-060V
			C- 271562-070V
2- 491390		PIPE CENTRAL LUBRICATION	RK- 491641-010V
2- 491391		PLATE	RK- 491447-010V
3- 491392		SHAFT	C- 295112-020V
			C- 272004-030V
			C- 272024-030V
			C- 272004-040V
4- 491393		AXLE SUPPORT	C- 272024-030V
			C- 272004-030V
			C- 272024-030V
			C- 272004-040V
1- 491394		PAPER GUARD	C- 272024-030V
			C- 256233-020V
			C- 256233-030V
1- 491395		CABLE DUCT	C- 256233-040V
			C- 469366-010V

PART NO	LAST AM	DESCRIPTION	GROUP NO
			C- 469366-020V
			C- 469366-030V
3- 491396		SQUEE-GEE ROLLER	RK- 491404-010V
			RK- 491405-010V
			C- 272024-020V
			C- 272024-030V
3- 491397		SQUEE-GEE ROLLER	RK- 491404-010V
			RK- 491405-010V
			C- 272024-020V
			C- 272024-030V
1- 491398		PIPE	C- 456556-020V
2- 491399		PIPE	C- 456556-020V
4- 491402-0001		DOCUMENT FOLDER	RK- 491404-010V
4- 491403		DOCUMENT FOLDER	RK- 491405-010V
RK- 491404-010V	9237 86-05-12	REBUILD.OFFSET KIT AB9-83	B- 648110-010V
RK- 491405-010V	12894 89-11-20	REBUILDING OFFSET KIT	B- 648110-060V
4- 491409		WASHER	C- 256173-030V
			C- 256173-040V
4- 491410		SHIM	C- 256173-030V
			C- 256173-040V
2- 491412		MOTOR PLATE	C- 272028-040V
			C- 272028-050V
3- 491413		PLATE	C- 272028-040V
			C- 272028-050V
2- 491414		PLATE	C- 469091-020V
3- 491415		PLATE	C- 469091-020V
RK- 491416-0101	12866 89-06-01	AIR INJECTOR	B- 648110-010V
4- 491417		DOCUMENT FOLDER	RK- 491416-010V
4- 491418-0001		O-RING	C- 469091-020V
4- 491418-0002		O-RING	C- 272021-040V
			C- 272021-050V
3- 491419		WATER DIAGRAM AIR INJECT.	RK- 491418-010V
4- 491421		SLEEVE	RK- 456712-010V
1- 491422		CONNECTION BOX	C- 295045-040V
			C- 295045-050V
2- 491423		LID	C- 295045-040V
			C- 295045-050V
			C- 295045-060V
2- 491433		VOLUME CAM LEFT, WIDE	C- 256222-020V
2- 491434		VOLUME CAM RIGHT	C- 256222-020V
2- 491435		VOLUME CAM RIGHT, WIDE	C- 256222-020V
2- 491436		VOLUME CAM LEFT	C- 256222-020V
4- 491441		COVER	C- 469091-010V
			C- 469091-020V
1- 491442		PIPE COIL	RK- 491591-030V
1- 491442		PIPE COIL	C- 491243-030V
4- 491445		DOCUMENT FOLDER	RK- 491447-010V
RK- 491447-0101	8397 85-11-27	DISTRIBUTOR BLOCK	B- 648110-060V
3- 491448		GUARD	C- 272028-030V
4- 491453		HOLDER	C- 271866-040V
			C- 271866-050V
2- 491455		PIPE	C- 271866-040V
4- 491456		PLATE	RK- 491388-010V
			C- 491787-010V
			C- 491788-010V
			C- 491787-020V
			C- 491788-020V
			RK- 491388-010V
3- 491457		HOSE	RK- 456716-010V
			RK- 752408-010V
			RK- 752410-010V
			RK- 456717-010V
			RK- 752412-010V
			RK- 752414-010V
			RK- 456717-010V
			RK- 752412-010V
			RK- 752414-010V
4- 491458		LINK	C- 255921-030V
			C- 255921-040V
3- 491459		CAM SEGMENT	RK- 456713-010V
			C- 256202-030V
			C- 256202-040V
			RK- 456713-010V
3- 491460		CAM SEGMENT	RK- 456713-010V
			C- 256202-030V
			C- 256202-040V
			RK- 456713-010V

PART NO	LAST AM	DESCRIPTION	GROUP NO
3- 491461		CAM SEGMENT	RK- 456713-010V
			C- 256202-030V
			C- 256202-040V
			RK- 456713-010V
3- 491462		CAM SEGMENT	RK- 456713-010V
			C- 256202-030V
			C- 256202-040V
			RK- 456713-010V
3- 491463		PIPE	C- 271866-040V
			C- 271866-050V
2- 491465		GIRDER FRONT	C- 490590-010V
2- 491466		GIRDER MIDDLE	C- 490590-010V
2- 491467		GIRDER REAR	C- 490590-010V
2- 491470		COVER PLATE	C- 271513-040V
			C- 271513-050V
			RK- 491590-030V
3- 491478		PLATE	C- 456103-010V
3- 491479		HOLDER	C- 456560-010V
3- 491480		LOCATING PIECE	C- 456560-010V
4- 491482		PLATE	C- 456103-010V
2- 491485		DISTRIBUTOR BLOCK	C- 272765-030V
			C- 272765-040V
			RK- 491512-010V
1- 491486		HEATING PIPE	C- 256055-050V
4- 491487		BUSHING	C- 256055-050V
			C- 256055-060V
3- 491488		PROTECTIVE COVER	C- 271513-040V
3- 491488		PROTECTIVE COVER	C- 271513-050V
			RK- 491589-030V
			RK- 491590-030V
4- 491510		ROLLER	CR- 255933-030V
4- 491511		CAM ROLLER	CR- 255933-030V
RK- 491512-010V	10603 87-06-23	LUBRICATION STATION CHAIN	B- 648110-060V
4- 491513		DOCUMENT	RK- 491512-010V
C- 491536-0101	11934 88-06-10	NON-RETURN VALVE	C- 456757-010V
			C- 456757-020V
RK- 491539-0101	10585 87-10-17	PHOTOCELL UNIT	RK- 491543-010V
RK- 491539-0102	10585 87-10-17	PHOTOCELL UNIT	RK- 751636-010V
2- 491542		BRACKET	RK- 491539-010V
			C- 491897-010V
			C- 491976-010V
			C- 491897-010V
			RK- 751570-010V
RK- 491543-0101	11983 89-08-15	REB.KIT PHOTO CELL UNIT	B- 648110-010V
4- 491544		DOCUMENT FOLDER	RK- 491543-010V
4- 491545		BRACKET	C- 256239-030V
			C- 256239-040V
			C- 256095-030V
			C- 256095-040V
1- 491546		CIRQUIT DIAGRAM ASEPTIC	B- 648109-080V
3- 491547		GUARD	RK- 751158-010V
3- 491548		COVER PLATE	RK- 751158-010V
3- 491552		PLATE	C- 490947-020V
			C- 752244-010V
3- 491554		CATCH	RK- 456712-010V
4- 491555		SCREW	CR- 256212-040V
			CR- 256213-040V
			CR- 256212-040V
			CR- 256213-040V
			RK- 456712-010V
2- 491556		PIPE	RK- 469536-010V
			RK- 491568-010V
4- 491557		SPACER	RK- 491568-010V
2- 491560		PIPE	RK- 491568-010V
4- 491563		SCREW	RK- 491568-010V
3- 491564		LINKPIECE OUTER	C- 456560-010V
3- 491565		CHUTE	C- 456560-010V
RK- 491568-0101	7624 86-05-07	WATER CIRCULATION	RK- 491795-010V
4- 491569		COVER PLATE	RK- 491591-030V
C- 491570-0101	8461 85-12-05	DOOR	B- 648111-080V
			B- 648111-090V
1- 491576		WATER DIAGRAM	C- 491767-010V
3- 491578		BRACKET	C- 752957-010V
			C- 469074-020V
C- 491579-0101	8461 85-12-05	DOOR	B- 648111-080V
			B- 648111-090V
1- 491580		PIPE	RK- 491568-010V

PART NO	LAST AM	DESCRIPTION	GROUP NO
4- 491586		BLOCK	C- 456103-010V
4- 491587		HOLDER	C- 456309-020V
			C- 456309-030V
			C- 456309-040V
RK- 491588-0101	9237 86-05-12	REB KIT BEARING IN BATH	B- 648110-010V
			B- 648110-060V
RK- 491589-030V	12868 89-08-15	REBUILDING KIT	B- 648110-070V
RK- 491590-030V	12869 89-09-28	REBUILDING KIT	B- 648110-010V
RK- 491590-030V		REBUILDING KIT	B- 648110-060V
RK- 491591-0301	10591 87-06-23	TANK	B- 648110-070V
1- 491592		BATH	RK- 491589-030V
1- 491593		COVER	C- 256014-040V
			C- 256014-040V
3- 491594		BENDING ROLLER	C- 256014-050V
			C- 256014-040V
2- 491595		LID	C- 256014-050V
			C- 752173-010V
2- 491596		PIPE	C- 256014-040V
2- 491597		PIPE	C- 256014-040V
3- 491598		BEARING SEAT	C- 256014-040V
			C- 256014-040V
3- 491599		BRACKET	C- 256014-050V
3- 491600		BRACKET	C- 256014-040V
			C- 256014-040V
P3- 491601		ROLLER CHAIN	C- 256014-050V
			C- 256014-040V
4- 491602		GASKET HOLDER	C- 256014-050V
			C- 272021-040V
3- 491626		PLATE	C- 272021-050V
			C- 751088-010V
3- 491627		PLATE	C- 751088-020V
3- 491628		LOCATING PIECE	C- 751088-010V
3- 491629		SLIDE PLATE	C- 456560-010V
4- 491630		SCREW	C- 456103-010V
4- 491632		DOCUMENT FOLDER	C- 271116-030V
1- 491637		PIPE	RK- 456715-010V
			C- 456976-030V
1- 491638		PIPE	C- 456976-040V
			C- 456976-030V
4- 491639		DOCUMENT FOLDER	C- 456976-040V
RK- 491641-0101	8635 86-01-10	REB KIT DISTRIBUTOR BLOCK	RK- 491641-010V
2- 491642		DISTRIBUTOR BLOCK	B- 648110-010V
1- 491643		HEATING PIPE	RK- 491641-010V
2- 491644		PIPE	C- 256055-040V
4- 491645		PIPE	C- 456976-020V
4- 491646		ELBOW PIPE	C- 456836-020V
1- 491647		HEATING PIPE	C- 456976-020V
			C- 256237-040V
			C- 256237-050V
4- 491649		BRACKET	C- 256237-060V
			RK- 751311-010V
C- 491650-0101	12270 88-10-20	DISTRIBUTOR BLOCK	C- 271909-030V
			C- 271909-040V
2- 491651		GUARD	C- 271909-050V
			C- 271562-050V
			C- 271562-060V
1- 491653		WATER DIAGRAM	C- 271562-070V
			C- 256237-040V
			C- 256237-050V
4- 491654		SUPPORT	C- 256237-060V
2- 491655		PIPE 190	RK- 751311-010V
			B- 648109-080V
2- 491656		PIPE 191	B- 648109-090V
			B- 648109-080V
1- 491657		PIPE 200	B- 648109-090V
			C- 456032-010V
1- 491658		PIPE 201	C- 295045-050V
			C- 295045-060V
1- 491659		PIPE 212	C- 295045-050V
			C- 295045-060V
			C- 295045-050V
			C- 295045-060V
			C- 295045-050V
			C- 295045-060V
			RK- 538415-010V
			C- 295045-050V
			C- 295045-060V

PART NO	LAST AM	DESCRIPTION	GROUP NO
1- 491660		PIPE 230	C- 295045-050V
			C- 295045-060V
1- 491661		PIPE 231	C- 295045-050V
			C- 295045-060V
1- 491662		PIPE 240	C- 295045-050V
			C- 295045-060V
1- 491663		PIPE 241	C- 295045-050V
			C- 295045-060V
1- 491664		PIPE 250	C- 295045-050V
			C- 295045-060V
1- 491665		PIPE 251	C- 295045-050V
			C- 295045-060V
1- 491666		PIPE 260	C- 295045-050V
			C- 295045-060V
1- 491667		PIPE 261	C- 295045-050V
			C- 295045-060V
2- 491668		PIPE 210	C- 295045-050V
			C- 295045-060V
2- 491669		PIPE 211	C- 295045-050V
			C- 295045-060V
4- 491670		PIPE 210	C- 295045-050V
			C- 295045-060V
4- 491671		PIPE 211	C- 295045-050V
			C- 295045-060V
4- 491672		PIPE 210 (211)	C- 295045-050V
			C- 295045-060V
3- 491673		CABLE CONDUIT	C- 469374-020V
			C- 469374-030V
3- 491674		CABLE CONDUIT	C- 469374-020V
			C- 469374-030V
3- 491675		CLAMP	C- 751089-010V
			RK- 491780-010V
2- 491676		SHAFT	C- 491323-020V
			C- 751393-010V
1- 491679		WATER DIAGRAM	B- 648109-080V
			B- 648109-090V
			B- 648109-080V
			B- 648109-090V
3- 491680		SUPPORT	C- 490590-010V
4- 491681		GASKET	CR- 256214-030V
			CR- 256215-030V
			CR- 256214-030V
			CR- 256215-030V
2- 491722		PLATE	C- 456321-030V
			C- 456322-030V
2- 491723		SPLASH PLATE	C- 456321-030V
			C- 456322-030V
			C- 752645-010V
			C- 752646-010V
2- 491723		SPLASH PLATE	C- 752913-010V
3- 491724		PLATE	C- 752914-010V
			C- 456321-030V
2- 491725		LEG	C- 456322-030V
			C- 456923-020V
3- 491726		LEG	C- 456923-030V
			C- 456923-020V
3- 491727		DRIVING RING	C- 456923-030V
			C- 441271-020V
4- 491728		CARRIER	RK- 491863-010V
			C- 441271-020V
4- 491729		PRESSURE PLATE	RK- 491863-010V
			C- 441271-020V
4- 491730		PEEL-OFF SHIMS	RK- 491863-010V
			C- 441271-020V
4- 491731		WASHER	RK- 491863-010V
4- 491732		WASHER	C- 272652-030V
3- 491733		SHOULDER RING	C- 272652-030V
			C- 295310-040V
			C- 295310-050V
2- 491734		SUPPORT	C- 295310-060V
			C- 490947-020V
3- 491737		SHAFT	C- 752244-010V
			C- 256014-040V
			C- 256014-050V
RK- 491744-0101	11986 89-06-29	REB KIT PHOTOCELL UNIT	B- 648110-010V
4- 491745		DOCUMENT FOLDER	RK- 491744-010V
4- 491746		WASHER	C- 295310-040V

PART NO	LAST AM	DESCRIPTION	GROUP NO
			C- 295310-050V
			C- 295310-060V
1- 491748		PIPE	C- 469452-020V
1- 491749		BRACKET	C- 469452-020V
2- 491750		SUPPORT	C- 469452-020V
			C- 469452-030V
3- 491751		SPROCKET	C- 295310-040V
			C- 295310-050V
			C- 295310-060V
4- 491752		HUB	C- 295310-040V
			C- 295310-050V
			C- 295310-060V
4- 491753		WASHER	C- 295310-040V
			C- 295310-050V
			C- 295310-060V
4- 491754		SHEAR PIN	C- 295310-040V
			C- 295310-050V
			C- 295310-060V
1- 491755		PIPE	C- 456976-030V
			C- 456976-040V
1- 491760		PIPE	C- 456555-020V
			C- 456555-030V
4- 491762		SHAFT	C- 441000-040V
			C- 441000-050V
			RK- 751202-010V
4- 491764		RUBBER SLEEVE	RK- 751228-010V
			RK- 751202-010V
1- 491765		HOLDER	RK- 751228-010V
1- 491766		HOLDER	C- 441000-040V
C- 491767-0101	9617 86-12-11	CIRCULATING COOLING WATER	C- 441000-040V
			C- 77091-020V
4- 491768		DOCUMENT FOLDER	C- 77091-030V
4- 491770		BUSHING	C- 491767-010V
			C- 491323-020V
G3- 491771		BRACKET	C- 751393-010V
			CR- 256436-040V
3- 491772-0001		SPINDLE	CR- 256436-050V
			CR- 256436-040V
3- 491772-0002		SPINDLE	CR- 256436-050V
			CR- 256436-040V
3- 491772-0003		SPINDLE	CR- 256436-050V
			CR- 256436-040V
3- 491772-0004		SPINDLE	CR- 256436-050V
			CR- 256436-040V
3- 491772-0006		SPINDLE	CR- 256436-050V
			CR- 256436-040V
3- 491772-0007		SPINDLE	CR- 256436-050V
			CR- 256436-040V
1- 491778		PIPE	CR- 256436-050V
2- 491779		PIPE	C- 491083-020V
RK- 491780-0101	10648 87-07-02	PRESSURE FEED	C- 491083-020V
			RK- 491543-010V
			RK- 491744-010V
			RK- 491789-010V
			RK- 491902-010V
			RK- 751561-010V
			RK- 751569-010V
			RK- 751636-010V
C- 491787-010V	13591 89-08-10	DISCONNECTION LINK RIGHT	B- 648103-070V
C- 491787-0201	12577 89-12-06	DISCONNECTION LINK RIGHT	B- 648103-080V
C- 491788-010V	13591 89-08-10	DISCONNECTION LINK LEFT	B- 648103-070V
C- 491788-0201	12577 89-12-06	DISCONNECTION LINK LEFT	B- 648103-080V
RK- 491789-0101	11987 89-08-15	REB KIT PHOTOCELL UNIT	B- 648110-060V
			B- 648110-070V
4- 491790		DOCUMENT FOLDER	RK- 491789-010V
3- 491794		PIPE	RK- 469536-010V
			RK- 491568-010V
RK- 491795-0101	11338 87-12-16	LOW ACID KIT	B- 648110-060V
			B- 648110-070V
4- 491796		DOCUMENT FOLDER	RK- 491795-010V
1- 491797		ASEPTIC DIAGRAM	RK- 490865-010V
			RK- 491795-010V
2- 491798		BLOCK	CR- 256436-040V
			CR- 256436-050V
2- 491799		BLOCK	CR- 256436-040V
			CR- 256436-050V
2- 491800		BLOCK	CR- 256436-040V

PART NO	LAST AM	DESCRIPTION	GROUP NO
			CR- 256436-050V
3- 491801		PISTON	CR- 256436-040V
			CR- 256712-040V
			CR- 256436-050V
			CR- 256712-050V
4- 491802		WASHER	CR- 256436-040V
			CR- 256436-050V
G3- 491803		HOUSE	CR- 256436-040V
			CR- 256436-050V
G3- 491804		BLOCK	CR- 256712-040V
			CR- 256712-050V
G3- 491805		BLOCK	CR- 256712-040V
			CR- 256712-050V
G3- 491806		BLOCK	CR- 256712-040V
G3- 491806		BLOCK	CR- 256712-050V
4- 491807		PIPE	C- 456455-020V
1- 491808		CLEANING EQUIPMENT	C- 456588-020V
			C- 456588-030V
4- 491812		STOP PERF 1	CR- 256844-030V
4- 491813		STOP PERF 2	CR- 256845-030V
C- 491814-0101	12051 88-07-05	SLEWING BRACKET RIGHT	B- 648103-070V
			B- 648103-080V
C- 491815-0101	12051 88-07-05	SLEWING BRACKET LEFT	B- 648103-070V
			B- 648103-080V
4- 491816		DOCUMENT FOLDER	RK- 456716-010V
4- 491817		DOCUMENT FOLDER	RK- 456717-010V
3- 491832		BOBBIN BRAKE	C- 441000-040V
			C- 441000-050V
3- 491833		BOBBIN BRAKE	C- 441000-040V
			C- 441000-050V
4- 491834		BRAKE PLATE	C- 441000-040V
			C- 441000-050V
1- 491836		CABLE DUCT	C- 469374-020V
1- 491837		CABLE DUCT	C- 469374-020V
			C- 469374-030V
3- 491838		CABLE CONDUIT	C- 469374-020V
			C- 469374-030V
3- 491844		HOLDER	C- 491976-010V
3- 491845		BRACKET	C- 491976-010V
C- 491846-0101	9514 86-11-26	TENSION SPROCKET	B- 648105-080V
			RK- 751156-010V
C- 491846-0201	14278 90-01-05	TENSION SPROCKET	B- 648105-090V
3- 491847		TENSION SPROCKET	C- 491846-010V
			C- 491846-020V
			C- 491846-010V
3- 491848		SHAFT	C- 491846-010V
			C- 491846-020V
			C- 491846-010V
4- 491849		SHIM	C- 491846-010V
			RK- 491302-010V
C- 491850-0101	14278 90-01-05	DRIVE WHEEL	B- 648105-080V
			B- 648105-090V
4- 491851		LID	C- 491850-010V
2- 491852-0001		CARTON STATION	CR- 491225-010V
1- 491854		PIPE WATER	C- 271562-060V
			C- 271562-070V
1- 491855		PIPE WATER	C- 271562-060V
			C- 271562-070V
4- 491859		HOLDER	C- 271562-060V
			C- 271562-070V
4- 491860		HOLDER	C- 271562-060V
			C- 271562-070V
4- 491861		HOLDER	C- 271562-060V
			C- 271562-070V
4- 491862		HOLDER	C- 271562-060V
			C- 271562-070V
RK- 491863-0101	10355 87-04-07	SAFETY SPROCK	RK- 751156-010V
			RK- 751296-010V
3- 491864		PIPE	C- 271866-040V
3- 491865		HOSE	C- 271866-040V
1- 491866		PIPE	C- 271866-040V
			C- 271866-050V
4- 491868		VOLUME BULGE	CR- 256209-020V
4- 491868		VOLUME BULGE	CR- 256210-020V
			CR- 256209-020V
			CR- 256210-020V
			CR- 256209-020V

PART NO	LAST AM	DESCRIPTION	GROUP NO
			CR- 256210-020V
			CR- 256209-020V
			CR- 256210-020V
			CR- 256209-020V
			CR- 256210-020V
			CR- 256209-030V
			CR- 256210-030V
2- 491870		BRANCH PIPE	C- 271261-050V
C- 491871-010V	10781 88-05-04	CHAIN TENSIONER	C- 295310-050V
C- 491871-0101	10781 88-05-04	CHAIN TENSIONER	C- 295310-060V
4- 491872		COVER PLATE	C- 295310-050V
			C- 295310-060V
3- 491873		BRACKET	C- 491976-010V
3- 491880		PLATE	RK- 491539-010V
			C- 491897-010V
			C- 491976-010V
			C- 491976-020V
			C- 491976-010V
			C- 491976-020V
			C- 491897-010V
2- 491881-0001		PIVOT ARM	RK- 751570-010V
2- 491881-0002		PIVOT ARM	C- 456180-010V
3- 491886		RAIL	C- 456180-010V
2- 491889		HOLDER	CR- 256214-030V
C- 491890-0101	9123 86-07-22	OIL TANK	C- 491890-010V
			B- 648106-080V
4- 491891		CLAMP	B- 648106-090V
2- 491892		HOSE	C- 491890-010V
2- 491893		HOSE	C- 491890-010V
C- 491894-0101	9123 86-07-22	HYDRAULIC SYSTEM	C- 491890-010V
			B- 648106-080V
C- 491897-010V	11004 87-11-27	PHOTOCELL UNIT	B- 648106-090V
			RK- 491789-010V
C- 491897-0101	11004 87-11-27	PHOTOCELL UNIT	B- 648101-070V
C- 491897-0102	11004 87-11-27	PHOTOCELL UNIT	RK- 751561-010V
			RK- 491902-010V
RK- 491902-0101	11988 89-08-15	REB.KIT PHOTOCELL UNIT	RK- 751561-010V
4- 491903		DOCUMENT FOLDER	B- 648110-060V
G3- 491907		ANGLE BRACKET	RK- 491902-010V
			RK- 751307-010V
3- 491908		CAM SEGMENT	C- 441486-030V
			C- 256201-030V
			C- 256201-040V
3- 491909		CAM SEGMENT	RK- 456713-010V
			C- 256201-030V
			C- 256201-040V
3- 491910		CAM SEGMENT	RK- 456713-010V
			C- 256201-030V
			C- 256201-040V
3- 491911		CAM SEGMENT	RK- 456713-010V
			C- 256201-030V
			C- 256201-040V
3- 491912		CAM SEGMENT	RK- 456713-010V
			C- 256201-030V
3- 491912		CAM SEGMENT	C- 256201-040V
3- 491913		CAM SEGMENT	RK- 456713-010V
			C- 256201-030V
			C- 256201-040V
3- 491914		CAM SEGMENT	RK- 456713-010V
			C- 256201-030V
			C- 256201-040V
3- 491915		CAM SEGMENT	RK- 456713-010V
			C- 256201-030V
			C- 256201-040V
3- 491916		CAM SEGMENT	RK- 456713-010V
			RK- 456713-010V
			C- 256202-030V
			C- 256202-040V
3- 491917		CAM SEGMENT	RK- 456713-010V
			RK- 456713-010V
			C- 256202-030V
			C- 256202-040V
3- 491918		CAM SEGMENT	RK- 456713-010V
			RK- 456713-010V
			C- 256202-030V
			C- 256202-040V
			RK- 456713-010V

PART NO	LAST AM	DESCRIPTION	GROUP NO
3- 491919		CAM SEGMENT	RK- 456713-010V
			C- 256202-030V
			C- 256202-040V
3- 491920		CAM SEGMENT	RK- 456713-010V
			RK- 456713-010V
			C- 256202-030V
			C- 256202-040V
3- 491921		CAM SEGMENT	RK- 456713-010V
			RK- 456713-010V
			C- 256202-030V
			C- 256202-040V
1- 491922		HYDRAULIC DIAGRAM	RK- 456713-010V
			B- 648109-080V
			B- 648109-090V
			B- 648109-080V
1- 491923		MACHINE DISPLAY TBA/9-OD	B- 648109-090V
			C- 295026-030V
1- 491924		MACHINE DISPLAY TBA/9-SA	RK- 547986-010V
2- 491925		MACHINE DISPLAY TB/9-OD	C- 295026-030V
2- 491926		MACHINE DISPLAY TB/9-SA	C- 295026-030V
1- 491927		COLUMN	C- 295026-030V
1- 491928		COLUMN	C- 256233-040V
G3- 491929		IMPELLER	C- 256233-040V
			C- 491323-020V
4- 491931		SHAFT	C- 751393-010V
			C- 256237-050V
			C- 256237-060V
			C- 256055-050V
1- 491932		MACHINE BODY	C- 256055-060V
			C- 256843-040V
4- 491941		DOCUMENT FOLDER	C- 256843-050V
C- 491942-0101	9391 86-07-21	PAPER REEL TROLLEY	RK- 491589-030V
			B- 648109-070V
3- 491945		CABLE TRACK	B- 648109-080V
			B- 648109-090V
3- 491946		CABLE TRACK	C- 271569-040V
			C- 271569-050V
4- 491949		SHAFT	C- 271569-040V
4- 491950		SHAFT	C- 271569-050V
3- 491951		BANJO CONNECTION	CR- 255933-030V
			CR- 255933-030V
3- 491954		RAIL	C- 271909-040V
3- 491961		RAIL	C- 271909-050V
3- 491962		RAIL	CR- 256214-030V
3- 491963		RAIL	CR- 256215-030V
3- 491965		CAM	CR- 256214-030V
			CR- 256215-030V
4- 491966		ROLLER	C- 752645-010V
			C- 752646-010V
4- 491967		COUNTER ROLLER	C- 256238-030V
			C- 256238-040V
4- 491968		TRIMMING ROLLER PLUS	C- 256238-030V
			C- 256238-040V
4- 491969		TRIMMING ROLLER MINUS	C- 77093-010V
			C- 77093-020V
1- 491972		DISTRIBUTOR BLOCK	C- 77093-010V
C- 491976-010V	11713 88-05-05	PHOTOCELL UNIT	C- 77093-020V
			RK- 751296-010V
C- 491976-020V	13640 89-11-13	PHOTOCELL UNIT	B- 648101-080V
			B- 648111-080V
4- 491978		SHAFT	B- 648101-090V
			B- 648111-090V
4- 491979		HOLDER	C- 256237-040V
			C- 256237-050V
			C- 256237-040V
1- 491980		CONNECTION BOX	C- 256237-050V
			C- 256237-060V
4- 491981		NIPPLE	C- 469366-010V
3- 491983		GASKET	C- 469366-020V
RK- 491984-0101	9287 86-06-11	PRESSURE RELEASE VALVE	C- 271453-030V
			C- 469501-020V
4- 491985		DOCUMENT FOLDER	B- 648110-010V
G3- 491987		ANGLE BRACKET	B- 648110-060V
			RK- 491984-010V
2- 491992		INSULATING PLATE	RK- 751305-010V
			C- 441486-030V
			RK- 491591-030V

PART NO	LAST AM	DESCRIPTION	GROUP NO
			C- 491243-030V
2- 491994		INSULATING PLATE	RK- 491591-030V
			C- 491243-030V
2- 491995		INSULATING PLATE	RK- 491591-030V
			C- 491243-030V
2- 491996		INSULATING PLATE	RK- 491591-030V
			C- 491243-030V
2- 491997		INSULATING PLATE	C- 491243-030V
2- 491998		INSULATING PLATE	C- 491243-030V
4- 493031		BRACKET	C- 469736-020V
4- 493067		TENSION SPRING	C- 283604-010V
C- 493652-0102	8328 85-10-22	LID	C- 751373-010V
			C- 751398-010V
4- 493735		NIPPLE	C- 533014-010V
4- 493878		SIGN	CE- 67716-010V
			CE- 68128-010V
			CE- 68304-010V
			CE- 68128-010V
			CE- 67716-010V
4- 493878		SIGN	CE- 68304-010V
C- 493967-010V	7522 85-02-20	BRAKE	B- 648119-020V
2- 493968		CLAMP	C- 493967-010V
4- 493969		PLATE	C- 493967-010V
4- 493970		RUBBER STRIP	C- 493967-010V
3- 495201		COOLING ELEMENT	CE- 67716-010V
			CE- 68128-010V
			CE- 68304-010V
			CE- 68128-010V
			CE- 67716-010V
			CE- 68304-010V
2- 495770		GASKET	C- 77094-010V
2- 495780		PLATE	C- 77094-010V
4- 497479-0001		NOZZLE	RK- 520071-010V
			RK- 520095-010V
			RK- 520071-010V
4- 497479-0002		NOZZLE	RK- 520071-010V
			RK- 520095-010V
			RK- 520071-010V
4- 497479-0003		NOZZLE	RK- 520071-010V
			RK- 520095-010V
			RK- 520071-010V
C- 497534-020V	10738 87-08-21	COUNTER JAW	B- 648118-070V
4- 497748		PIN	C- 541163-010V
			C- 541164-010V
4- 497933		BUSHING	C- 440630-010V
			C- 539209-010V
			C- 539210-010V
			C- 539211-010V
4- 497934		HOLDER	C- 283626-030V
4- 497935		BRACKET	C- 283626-030V
4- 499190		NUT	RK- 547765-010V
			RK- 547765-020V
			RK- 547782-010V
			C- 449388-010V
4- 499191		FITTING BOLT	RK- 547765-010V
			RK- 547765-020V
			RK- 547782-010V
			C- 449388-010V
4- 499192		ROLLER	RK- 547782-010V
			C- 449388-010V
SP- 499255-0101	7937 85-06-03	SEAL KIT	C- 295778-010V
			C- 295778-020V
			C- 295778-030V
SP- 499255-0201	10455 87-11-11	SEAL KIT	C- 295778-040V
3- 499500		BRACKET	RK- 491591-030V
			C- 491243-030V
3- 499501		VALVE	C- 272381-030V
			C- 491207-010V
			C- 491207-020V
3- 499502		LEVEL TUBE	RK- 491591-030V
			C- 491243-030V
3- 499503		PROTECTION PIPE	RK- 491591-030V
			C- 491243-030V
4- 499504		WASHER	RK- 491591-030V
			C- 491243-030V
			C- 272381-030V
			C- 491243-030V

PART NO	LAST AM	DESCRIPTION	GROUP NO
2- 499527		BRACKET	C- 490610-020V
3- 499542		CHUTE	CR- 283618-020V
4- 499543		SPRING	CR- 283618-020V
3- 499560		HEATING BLOCK	CR- 283606-010V
4- 499580		SHAFT	CR- 283618-020V
4- 499581		SHAFT	CR- 283618-020V
4- 499589		SHAFT	C- 283630-020V
3- 499632		HEATING RAIL	CR- 283606-010V
			C- 469316-010V
			C- 486955-010V
			CR- 283606-010V
			C- 469316-010V
			C- 486955-010V
3- 499633		HEATING RAIL	CR- 283606-010V
			C- 469316-010V
			C- 486955-010V
			CR- 283606-010V
			C- 469316-010V
			C- 486955-010V
3- 499642		CHUTE	CR- 283618-020V
3- 499646		GUIDE PLATE	CR- 283618-020V
4- 499680		SCREW	C- 283633-010V
4- 499815-0001		SHIM	CR- 283606-010V
4- 499815-0002		SHIM	CR- 283606-010V
4- 499822		SHIM	CR- 283618-020V
1- 520042		HEATING CHAMBER	RK- 520070-010V
1- 520043		HEATING COIL	RK- 520070-010V
2- 520044		RESERVOIR	RK- 520068-010V
3- 520045		T-PIECE	RK- 520071-010V
			RK- 520095-010V
			RK- 520071-010V
3- 520046-0001		PIPE	RK- 520071-010V
3- 520046-0002		PIPE	RK- 520095-010V
1- 520047		CABINET	RK- 520068-010V
1- 520048		DOOR	RK- 520068-010V
2- 520050		WINDOW	RK- 520068-010V
1- 520051-0001		TRANSITION PIPE	RK- 520071-010V
1- 520051-0003		TRANSITION PIPE	RK- 520095-010V
1- 520052		TRANSITION BRACKET	RK- 520071-010V
			RK- 520095-010V
			RK- 520071-010V
3- 520053		PIPE	RK- 520071-010V
			RK- 520095-010V
			RK- 520071-010V
2- 520054		BRACKET	RK- 520068-010V
1- 520055		PLATE	RK- 520068-010V
4- 520057		STOP PLATE	RK- 520069-010V
4- 520058		SPACER	RK- 520069-010V
3- 520059		BRACKET	RK- 520069-010V
2- 520060		RETURN PIPE	RK- 520129-010V
			RK- 520130-010V
			RK- 520067-010V
			RK- 520129-010V
			RK- 520130-010V
2- 520061		SPRAY PIPE	RK- 520129-010V
			RK- 520130-010V
			RK- 520067-010V
			RK- 520129-010V
			RK- 520130-010V
3- 520063		CABLE DUCT	RK- 520068-010V
3- 520064		VALVE HEAD	RK- 520068-010V
3- 520065		HOSE HOLDER	RK- 520068-010V
RK- 520067-0101	12930 89-10-15	HEAD SPACE BY INJECTION	B- 648119-020V
RK- 520068-0101	10974 89-04-11	CONTROL CABINET	RK- 520067-010V
			RK- 520094-010V
			RK- 520096-010V
			RK- 520129-010V
			RK- 520130-010V
RK- 520069-0101	10974 89-04-11	A-VALVE MODIFICATION	RK- 520067-010V
			RK- 520094-010V
			RK- 520096-010V
			RK- 520129-010V
			RK- 520130-010V
RK- 520070-0101	10974 89-04-11	HEAT EXCHANGER	RK- 520067-010V
			RK- 520094-010V
			RK- 520096-010V
			RK- 520129-010V

PART NO	LAST AM	DESCRIPTION	GROUP NO
			RK- 520130-010V
RK- 520071-0101	10974 89-04-11	TRANSITION PIPE	RK- 520067-010V
			RK- 520129-010V
4- 520072		LABEL	RK- 520130-010V
4- 520073		LABEL	RK- 520068-010V
4- 520074		EXTENSION PIPE	RK- 520068-010V
			RK- 520129-010V
			RK- 520130-010V
			RK- 520094-010V
			RK- 520096-010V
			RK- 520067-010V
			RK- 520129-010V
2- 520075		COVER	RK- 520130-010V
4- 520081		PROX.SW. BRACKET	RK- 520068-010V
RK- 520094-010V	12930 89-10-15	HEAD SPACE BY INJECTION	RK- 520095-010V
RK- 520095-0101	10974 89-04-11	TRANSITION PIPE	C- 77091-020V
			RK- 520094-010V
RK- 520096-010V	12930 89-10-15	HEAD SPACE BY INJECTION	RK- 520096-010V
2- 520118		FILL PIPE H2O2	C- 77091-020V
			RK- 520129-010V
			RK- 520130-010V
			RK- 520067-010V
2- 520119		FILL PIPE H2O2	RK- 520129-010V
			RK- 520130-010V
			RK- 520067-010V
			RK- 520129-010V
2- 520120		AIR/N2 PIPING	RK- 520130-010V
			RK- 520067-010V
			RK- 520129-010V
			RK- 520130-010V
3- 520121		SPRAY PIPE	RK- 520068-010V
3- 520122		FILLING PIPE	RK- 520068-010V
3- 520123		RETURN PIPE	RK- 520068-010V
3- 520124		PIPE	RK- 520068-010V
3- 520125		CABLE DUCT	RK- 520068-010V
3- 520126		CABLE DUCT	RK- 520068-010V
3- 520127		CABLE DUCT	RK- 520068-010V
3- 520128		TERMINAL HOLDER	RK- 520068-010V
RK- 520129-010V	12930 89-10-15	HEAD SPACE BY INJECTION	C- 77091-010V
			B- 648119-060V
RK- 520130-010V	12930 89-10-15	HEAD SPACE BY INJECTION	C- 77091-010V
			B- 648119-060V
2- 520141		BRACKET	RK- 520070-010V
4- 520147-0001		SPACER	RK- 520070-010V
			RK- 520167-010V
			RK- 520070-010V
			RK- 520167-010V
			RK- 520070-010V
			RK- 520167-010V
			RK- 520070-010V
			RK- 520167-010V
			RK- 520070-010V
4- 520147-0002		SPACER	RK- 520167-010V
			RK- 520070-010V
			RK- 520167-010V
			RK- 520070-010V
			RK- 520167-010V
			RK- 520070-010V
			RK- 520167-010V
			RK- 520070-010V
			RK- 520167-010V
RK- 520167-0101	10974 89-04-11	START-UP KIT	RK- 520067-010V
			RK- 520094-010V
			RK- 520096-010V
			RK- 520129-010V
			RK- 520130-010V
2- 520276		SPRAY PIPE	RK- 520094-010V
			RK- 520096-010V
2- 520277		RETURN PIPE	RK- 520094-010V
			RK- 520096-010V
2- 520278		FILL PIPE H2O2	RK- 520094-010V

PART NO	LAST AM	DESCRIPTION	GROUP NO
			RK- 520096-010V
2- 520279		FILL PIPE H2O2	RK- 520094-010V
			RK- 520096-010V
2- 520280		AIR/N2 PIPING	RK- 520094-010V
			RK- 520096-010V
2- 520281		CLEANING PIPE	RK- 520129-010V
			RK- 520130-010V
			RK- 520094-010V
			RK- 520096-010V
			RK- 520067-010V
			RK- 520129-010V
			RK- 520130-010V
4- 521166		ROLLER	C- 547756-010V
4- 522187		SCREW	RK- 491780-010V
			C- 491976-010V
			RK- 491780-010V
3- 522411		GABLE	C- 533903-010V
3- 522412		GABLE	C- 533903-010V
3- 522413-0001		ROLLER	C- 533903-010V
			RK- 547300-010V
3- 522413-0002		ROLLER	C- 533903-010V
3- 522413-0003		ROLLER	C- 533903-010V
3- 522413-0004		ROLLER	C- 533903-010V
3- 522414		FLANGE	C- 533903-010V
3- 522415-0001		SHAFT	C- 533903-010V
3- 522415-0002		SHAFT	C- 533903-010V
3- 522415-0003		SHAFT	C- 533903-010V
3- 522415-0004		SHAFT	C- 533903-010V
4- 522425		SHAFT	C- 533903-010V
4- 522429		SLEEVE	C- 533903-010V
			RK- 536470-010V
			RK- 538450-010V
			RK- 547726-010V
			RK- 547300-010V
			C- 533844-010V
4- 522430		HOLDER	C- 533903-010V
			C- 533903-010V
			RK- 547757-030V
4- 522431		PULLEY	C- 533903-010V
4- 522432		BELT	C- 533903-010V
			C- 449323-010V
			C- 533903-010V
4- 525233		GASKET	CR- 31390-010V
			CR- 31390-011V
			CR- 31390-010V
			CR- 31390-011V
2- 525386		PROTECTIVE GRATING	C- 456588-030V
1- 525387		WASTE CHUTE	C- 271114-040V
4- 525388		BRACKET	C- 271114-040V
1- 525389		PROTECTIVE COVER	C- 271115-040V
4- 525391		HOLDER	C- 271115-040V
3- 525392		CHECKER PLATE	C- 271114-040V
3- 525393		CHECKER PLATE	C- 271114-040V
3- 526936		KNIFE	RK- 544468-010V
			CR- 283618-020V
4- 526984		SLIDE	C- 543143-010V
4- 526985		PLATE	C- 543143-010V
4- 526986-0001		SHAFT	C- 543143-010V
3- 527120		GUIDE	C- 751406-010V
3- 527121-0001		CLAMP	C- 751406-010V
3- 527121-0002		CLAMP	C- 751406-010V
4- 527122		CONNECTION	C- 751406-010V
4- 527124		BEARING	C- 751406-010V
4- 527125		GUIDE	C- 751406-010V
4- 527126		LEAF SPRING	C- 751406-010V
4- 527127		PIN	C- 751406-010V
4- 527128		PIN	C- 751406-010V
4- 527649		DISTANCE RUBBER	C- 543143-010V
1- 527705		HEAT EXCHANGER	C- 456976-030V
C- 527898-0101	10582 89-11-15	CONTAINER	C- 751352-010V
4- 527905		GASKET	C- 751398-010V
4- 527906		GASKET	C- 751398-010V
4- 527912		NON-RETURN VALVE	C- 751406-010V
3- 529313		ROD	C- 476189-010V
3- 529314		BRACKET	C- 476189-010V

PART NO	LAST AM	DESCRIPTION	GROUP NO
4- 529337		BUFFER RING	C- 751373-010V
RK- 529345-0101	12856 90-01-29	CONTAINER	C- 77091-030V
2- 529348		BACK PIECE, WALL	C- 229400-060V
3- 529351		GRILL UPPER	C- 229400-060V
4- 529362		SPROCKET	C- 543143-010V
3- 529399		KNIFE	CR- 283618-020V
4- 529400-0002		LUG	C- 456696-020V
3- 529620		PANEL	C- 735267-010V
C- 529621-0101	11716 88-09-21	READING DEVICE	C- 529932-010V
			C- 735253-010V
			C- 752669-010V
4- 529622		SLEEVE	C- 752985-010V
4- 529623		SLEEVE	C- 529621-010V
4- 529657		COMPRESSION SPRING	C- 529621-010V
4- 529659		COMPRESSION SPRING	C- 736600-010V
1- 529682		FILTERS HOUSING	C- 736600-010V
			C- 529940-010V
4- 529895		PIPE	C- 735265-010V
3- 529905		CYLINDER	C- 736600-010V
4- 529908		WASHER	C- 736600-010V
4- 529909		TIE ROD	C- 736600-010V
4- 529910		WASHER	C- 736600-010V
4- 529913		PISTON	C- 736600-010V
4- 529914		KNOB	C- 736600-010V
3- 529916		LATERAL BODY VALVE	C- 736600-010V
4- 529917		SHUTTER	C- 736600-010V
C- 529924-0101	12279 88-10-06	AIR VALVE	C- 529932-010V
			C- 735253-010V
			C- 752669-010V
3- 529925		VALVE BODY	C- 752985-010V
3- 529926		COVER	C- 529924-010V
4- 529927		PISTON ROD	C- 529924-010V
C- 529932-010V	12383 90-02-10	HEAD SPACE BY LLF	C- 529924-010V
C- 529933-0101	11716 88-09-21	UPPER FILLING TUBE	B- 648119-020V
			C- 529932-010V
			C- 735253-010V
			C- 752669-010V
C- 529935-0101	11716 88-09-21	LOWER FILLING TUBE	C- 752985-010V
			C- 529932-010V
			C- 735253-010V
			C- 752669-010V
4- 529937		CONNECTION PLATE	C- 752985-010V
4- 529938		CONNECTION PLATE	C- 735183-010V
C- 529940-0101	11716 88-09-21	PIPE-LINE	C- 735183-010V
3- 529941		BRACKET	C- 529932-010V
			C- 529940-010V
2- 529943		EQUALIZING PIPE	C- 735265-010V
			C- 529940-010V
4- 529944		SUCTION TUBE	C- 735265-010V
			C- 529940-010V
2- 529945		PIPE	C- 735265-010V
			C- 529940-010V
2- 529946		PIPE	C- 735265-010V
			C- 529940-010V
1- 529947		BOX	C- 735265-010V
3- 529948		BOX	C- 735183-010V
			C- 735259-010V
2- 530518		SPACER	C- 735031-010V
2- 530519		BACK PIECE, FLOOR	C- 237776-040V
3- 530533		HEATING BLOCK	C- 229400-060V
3- 530534		GABLE, RIGHT	CR- 283606-010V
3- 530535		GABLE, LEFT	C- 229400-060V
3- 530542		GRILL UPPER	C- 229400-060V
4- 530551		WASHER	C- 229400-060V
3- 530587		WASHER	C- 751406-010V
			C- 539211-010V
			RK- 536502-010V
3- 530588		SEAL RING	RK- 536706-010V
			SP- 499255-020V
			C- 539211-010V
			RK- 536502-010V
			RK- 536706-010V
			C- 271169-030V
			C- 272337-030V
			C- 271169-040V
			C- 272337-040V

PART NO	LAST AM	DESCRIPTION	GROUP NO
3- 530589		SEAL RING	SP- 499255-020V
			C- 539209-010V
			C- 539210-010V
			RK- 520167-010V
			RK- 536502-010V
			RK- 536706-010V
3- 530590		VALVE CONE	C- 539209-010V
			C- 539210-010V
			RK- 536502-010V
			RK- 536706-010V
3- 530591		HOLDER	C- 539210-010V
			RK- 536502-010V
			RK- 536706-010V
3- 530592		SEAL RING HOLDER	C- 539209-010V
			RK- 536706-010V
3- 530594		WASHER	RK- 536706-010V
4- 530597		WASHER	C- 539210-010V
			RK- 536502-010V
			RK- 536706-010V
4- 530598		WASHER	C- 539210-010V
			RK- 536502-010V
			RK- 536706-010V
4- 530599		RING	C- 539210-010V
			RK- 536502-010V
			RK- 536706-010V
2- 530775		END PIECE	C- 237776-040V
3- 530776		PAPER GUARD	C- 237776-040V
3- 530777		GRILL	C- 237776-040V
4- 530784		PIPE CLAMP	C- 237776-040V
3- 530785		PAPER GUARD	C- 237776-040V
2- 531139		BRACKET	C- 229400-060V
			C- 479821-010V
C- 531345-0101	8893 86-03-18	PERSONAL PROTECT. EQ H2O2	B- 648109-070V
			B- 648109-080V
			B- 648109-090V
2- 531638		CAM	RK- 536318-010V
			RK- 547300-010V
			C- 476349-020V
4- 531641		BRAKE SLEEVE	C- 533903-010V
			RK- 547300-010V
			C- 533903-010V
4- 531642		HUB	C- 533903-010V
			RK- 547300-010V
			C- 533903-010V
4- 531643		SHAFT	C- 533903-010V
			RK- 547300-010V
			C- 533903-010V
4- 531644		SPACER	C- 533903-010V
			RK- 547300-010V
			C- 533903-010V
4- 531652		SPACER	C- 457853-020V
2- 531653		GABLE	C- 449313-010V
2- 531654		PLATE	C- 449313-010V
4- 531655		ROD	C- 449313-010V
3- 531656		HEATING ELEMENT	C- 486955-010V
			C- 531657-010V
			C- 486955-010V
C- 531657-010V	9361 86-10-23	SEALING JAW	C- 531657-010V
			B- 648118-060V
			B- 648118-070V
2- 531658		HEATING JAW	C- 531657-010V
1- 531661		COVER PLATE	C- 469635-010V
2- 531662		PANEL PLATE	C- 457159-020V
3- 531663		PANEL PLATE	C- 457159-020V
1- 531664		PLATE	C- 457924-020V
2- 531671		LID	C- 457857-020V
2- 531672		LID	C- 457857-020V
1- 531673		COVER	C- 457853-020V
4- 531684		PRESSURE JAW	RK- 544475-010V
3- 531730		FLANGE SEAL	CR- 256547-030V
4- 531731		GASKET	C- 271181-020V
			C- 271181-030V
			C- 271181-040V
4- 531732		GASKET	C- 256237-040V
			C- 256237-050V
			C- 256237-060V
			C- 272408-030V

PART NO	LAST AM	DESCRIPTION	GROUP NO
			C- 272408-040V
4- 531733		GASKET	C- 272408-050V
			C- 295668-030V
			C- 295891-020V
			C- 295668-030V
			C- 295891-020V
			C- 295668-030V
			C- 295891-030V
			C- 295668-030V
4- 531734		GASKET	C- 295891-030V
			C- 295668-030V
			C- 295891-020V
			C- 295668-030V
			C- 295891-020V
			C- 295668-030V
			C- 295891-030V
			C- 295668-030V
4- 531735		GASKET	C- 295891-030V
			C- 295668-030V
			C- 295891-020V
			C- 295668-030V
			C- 295891-020V
			C- 295668-030V
4- 531736		GASKET	C- 295891-030V
			C- 295668-030V
			C- 295891-020V
			C- 295668-030V
4- 531736		GASKET	C- 295891-020V
			C- 295668-030V
			C- 295891-030V
			C- 295668-030V
			C- 295891-030V
4- 531737		GASKET	RK- 520070-010V
			C- 456976-020V
			C- 456976-030V
4- 531742		GASKET	C- 529924-010V
			C- 272337-020V
			C- 272407-020V
			C- 272337-020V
			C- 272407-020V
			C- 272337-020V
			C- 272407-020V
			C- 456976-020V
			C- 469452-010V
			C- 272337-020V
			C- 272407-020V
			C- 295778-030V
			C- 456976-020V
			C- 469452-010V
			C- 272337-030V
			C- 272407-020V
			C- 295778-030V
			C- 456976-030V
			C- 469452-020V
			C- 751800-010V
			C- 272337-040V
			C- 272407-020V
			C- 295778-040V
			C- 456976-040V
			C- 469452-030V
			C- 751800-020V
			C- 529924-010V
3- 531908		SPACER	RK- 536318-010V
			C- 476349-020V
4- 531909		GABLE	C- 533903-010V
			RK- 547300-010V
			C- 533903-010V
4- 531911		ARM	C- 533903-010V
4- 531974-0001		BRACKET	C- 533903-010V
4- 531975-0001		ARM	C- 533903-010V
4- 531976		HUB	RK- 536318-010V
			RK- 547300-010V
			C- 476349-020V
4- 531978		STUD BOLT	C- 533903-010V
			RK- 547300-010V

PART NO	LAST AM	DESCRIPTION	GROUP NO
			C- 533903-010V
4- 531979		PIN	C- 533903-010V
			RK- 547300-010V
			C- 533903-010V
4- 532016		SPRING	C- 283604-020V
4- 532095		SPRING HOLDER	C- 283604-020V
G1- 532117		CLAMP RING	C- 541163-010V
G1- 532118		CLAMP RING	C- 541164-010V
4- 532149		BUSHING	C- 456612-010V
3- 532167		SEALING WASHER	RK- 536502-010V
4- 532168		ECCENTRIC	C- 484858-010V
4- 532168		ECCENTRIC	C- 484858-020V
3- 532183-0001		BENDING ROLLER	RK- 536470-010V
			C- 533844-010V
3- 532183-0002		BENDING ROLLER	RK- 536470-010V
			RK- 538450-010V
			C- 533844-010V
3- 532183-0003		BENDING ROLLER	RK- 536470-010V
			RK- 547726-010V
			C- 533844-010V
3- 532184-0001		SHAFT	C- 533844-010V
3- 532184-0002		SHAFT	C- 533844-010V
3- 532185		BRACKET	RK- 536470-010V
			RK- 538450-010V
			C- 533844-010V
3- 532186		GABLE	RK- 536470-010V
			RK- 538450-010V
			RK- 547726-010V
			C- 533844-010V
3- 532187		FLANGE	RK- 536470-010V
			RK- 538450-010V
			RK- 547726-010V
			C- 533844-010V
4- 532188		FLANGE	RK- 536470-010V
			RK- 538450-010V
			RK- 547726-010V
			C- 533844-010V
4- 532205		LID	C- 751398-010V
4- 532206		GASKET	C- 751398-010V
3- 532208		SHAFT	RK- 532210-010V
3- 532209		PLATE	RK- 532210-010V
RK- 532210-0101	12856 90-01-29	CARRIAGE	C- 77091-030V
4- 532211		PIN	RK- 532210-010V
3- 532222		DIE	CR- 449275-010V
4- 532223		PUNCH	CR- 449275-010V
3- 532231		SHAFT	RK- 547726-010V
			C- 533844-010V
4- 532235		FABRIC	C- 484984-010V
4- 532245		BUSHING	RK- 536470-010V
			RK- 538450-010V
			RK- 547726-010V
			C- 533844-010V
3- 532330-0001		ARM	C- 476080-020V
3- 532330-0002		ARM	C- 476080-020V
4- 532348		SPINDLE GUIDE	C- 271169-030V
			C- 272337-030V
			C- 271169-040V
4- 532349		PLAIN BEARING	C- 272337-040V
			C- 271169-030V
			C- 272337-030V
			C- 271169-040V
			C- 272337-040V
4- 532443-0001		COMPONENTS WITHOUT TP-NO	C- 67347-010V
3- 532655		CAUTION SIGN	C- 527898-010V
4- 532656		CAP NUT	C- 751410-010V
2- 532676		PLATE	C- 533014-010V
4- 532677		PIPE	C- 533014-010V
4- 532678		PIN	C- 533014-010V
4- 532679		PLATE	C- 533014-010V
3- 532732		HEATING RAIL	CR- 283606-010V
C- 533014-0101	9292 86-09-08	LEAK FINDING EQUIPMENT	C- 77091-020V
			C- 77091-030V
2- 533015		CIRCUIT DIAGRAM	C- 533014-010V
3- 533169		DIAPHRAGM	SP- 499255-020V
			C- 539209-010V
4- 533175		DOCUMENT FOLDER	RK- 533177-010V
RK- 533177-010V	11865 89-09-27	HEAT REDUCTION KIT	B- 648110-010V

PART NO	LAST AM	DESCRIPTION	GROUP NO
			B- 648110-060V
3- 533373		BRACKET	CR- 283618-020V
1- 533374		FITMENT BOTTOM	C- 533905-010V
3- 533387		HOLDER	RK- 536502-010V
3- 533388		PISTON ROD	RK- 536502-010V
4- 533391		PISTON ROD	RK- 536502-010V
2- 533396-0001		SHAFT	C- 476349-020V
2- 533396-0002		SHAFT	C- 476349-020V
2- 533396-0004		SHAFT	C- 476349-020V
2- 533396-0007		SHAFT	RK- 536318-010V
			C- 476349-020V
1- 533429		LEFT LEG REAR	C- 457881-020V
1- 533430		RIGHT LEG REAR	C- 457881-020V
1- 533431		LEFT LEG REAR	C- 457881-020V
3- 533811		PUNCH (HOLE 21)	RK- 547759-020V
			RK- 550136-010V
3- 533812		DIE (HOLE 21)	RK- 547759-020V
			RK- 550136-010V
C- 533844-010V	9438 86-12-12	BENDINGROLLERS	B- 648118-070V
C- 533903-010V	14277 90-02-12	BRAKE	RK- 536317-010V
			B- 648118-070V
C- 533905-0101	9292 86-09-08	BAG	C- 533014-010V
1- 533906		FITMENT COVER	C- 533905-010V
3- 534369		FUSE PANEL LABEL	CE- 67716-010V
			CE- 67721-010V
4- 534370		INDEX, EL-MANUAL	CE- 67721-010V
4- 534371		LABEL, EL-MANUAL	CE- 67721-010V
C- 534381-010V	9464 86-12-17	PAPER GUARD	B- 648118-070V
2- 534382		BRACKET	C- 534381-010V
3- 534383		BRACKET	C- 534381-010V
3- 534384		BRACKET	C- 534381-010V
3- 534385		GUARD	C- 534381-010V
3- 534460		TERMINAL CARD X9	CE- 67716-010V
			CE- 67721-010V
4- 534634		PIPE	RK- 529345-010V
4- 534635		VALVE	RK- 529345-010V
4- 534636		LEVEL GLASS	RK- 529345-010V
3- 534637		CONNECTION	RK- 529345-010V
4- 534691		DIAPHRAGM	RK- 529345-010V
1- 534692		FRAME	RK- 529345-010V
2- 534693		PLATE	RK- 529345-010V
3- 534694		SUCTIONPIPE	RK- 529345-010V
4- 534695		WEIGHT	RK- 529345-010V
4- 534696		VALVE	RK- 529345-010V
4- 534697		VALVE HOUSING	RK- 529345-010V
4- 534698		NIPPLE	RK- 529345-010V
1- 534753		PNEUMATIC DIAGRAM	RK- 538439-010V
			RK- 547986-010V
			B- 648118-070V
			B- 648109-080V
			B- 648118-070V
			B- 648109-080V
1- 534753		PNEUMATIC DIAGRAM	B- 648118-070V
3- 534762		HEATING CARTRIDGE	RK- 535606-010V
			C- 497534-020V
4- 534826-0001		JIG	C- 469247-020V
4- 534826-0002		JIG	C- 469247-020V
4- 534827		LOCK HANDLE	C- 469247-020V
4- 534828		BRACKET	C- 469247-020V
4- 534829		TOROSION SPRING	C- 469247-020V
4- 534830		CATCH	C- 469247-020V
4- 534831		LOCKING CLAMP	C- 469247-020V
4- 534832		SHAFT	C- 469247-020V
4- 534833		WASHER	C- 469247-020V
4- 534867		LEG	C- 751932-010V
			C- 752958-010V
			C- 752959-010V
4- 534882		SHAFT	C- 237776-040V
4- 534888		BRACKET	RK- 535606-010V
			C- 497534-020V
2- 534890		GUIDE PLATE	C- 533903-010V
1- 534904		TIME SCHEDULE TB/9	B- 648118-070V
			B- 648109-080V
			B- 648118-070V
			B- 648109-090V
			B- 648109-080V
			B- 648109-090V

PART NO	LAST AM	DESCRIPTION	GROUP NO
1- 534905		TIME SCHEDULE TBA/9	RK- 538439-010V
			RK- 547986-010V
			B- 648109-080V
			B- 648109-090V
			B- 648118-070V
			B- 648109-080V
			B- 648118-070V
			B- 648109-090V
3- 535031		HEATING CARTRIDGE	C- 497534-020V
4- 535089		NEUTRAL TERMINAL	CE- 67716-010V
			CE- 67721-010V
3- 535090		DISTRIBUTION TERMINAL	CE- 67716-010V
			CE- 67721-010V
3- 535201		PIPE	C- 469598-020V
3- 535202		PIPE	C- 469598-020V
4- 535203		PIPE	C- 469598-020V
3- 535204		BRACKET	C- 469598-020V
P3- 535528		INDUCTOR	RK- 547760-010V
			C- 457866-010V
			C- 469316-010V
			C- 457866-010V
			C- 469316-010V
P3- 535532		INDUCTOR	C- 457866-010V
			C- 469316-010V
			C- 457866-010V
			C- 469316-010V
RK- 535606-010V	9126 87-06-04	REB KIT COUNTER JAW	B- 648110-060V
4- 535647		DOCUMENT FOLDER	RK- 535606-010V
4- 536315		DOCUMENT FOLDER	RK- 536317-010V
RK- 536317-010V	9955 87-04-28	REB KIT BRAKE	B- 648110-060V
RK- 536318-0101	9955 87-04-28	DRIVE SHAFT	RK- 536317-010V
4- 536374		WASHER	C- 491976-010V
			C- 491976-020V
			C- 491976-010V
4- 536374		WASHER	C- 491976-020V
RK- 536467-010V	10004 87-04-07	REB KIT BENDING ROLLER	B- 648110-060V
4- 536469		DOCUMENT FOLDER	RK- 536467-010V
RK- 536470-0101	10004 87-04-07	BENDING ROLLER	RK- 536467-010V
RK- 536470-0102	10004 87-04-07	BENDING ROLLER	RK- 536467-010V
RK- 536470-0103	10004 87-04-07	BENDING ROLLER	RK- 536467-010V
3- 536485		CHUTE	RK- 544468-010V
3- 536486		GUIDE PLATE	RK- 544468-010V
3- 536487		FITTING RING	RK- 544473-010V
			RK- 547759-020V
3- 536488		DIE	RK- 544473-010V
			RK- 547759-020V
			RK- 550136-010V
4- 536489		PUNCH	RK- 544473-010V
			RK- 547759-020V
			RK- 550136-010V
4- 536497		ROLLER	RK- 544475-010V
			RK- 547765-020V
RK- 536502-0101	10071 87-06-10	REB KIT PRODUCT VALVE APV	B- 648110-010V
RK- 536706-0101	10072 87-06-22	REBUILDING KIT	B- 648110-010V
			B- 648110-060V
			B- 648110-070V
3- 536843		TERMINAL BLOCK	CE- 68379-010V
			CE- 68308-010V
			CE- 68379-010V
4- 536885		BRACKET	C- 457924-020V
3- 536900		INDUCTOR	RK- 544465-010V
			RK- 547760-020V
			RK- 550136-010V
4- 537019		CIRCUIT BOARD PROT. FRONT	C- 67347-010V
4- 537021		CIRCUIT BOARD	C- 67347-010V
4- 537022		COOLING DISTANCE	C- 67347-010V
4- 537023		DRILLING PATTERN PANEL	C- 67347-010V
4- 537308		SPRING	C- 434774-030V
			C- 434074-030V
			C- 434774-030V
			C- 434074-030V
			C- 434774-030V
			C- 434074-030V
			C- 434774-030V
			C- 434074-030V
4- 537585		TEMPLATE	C- 539375-010V
4- 537586		TOOL	C- 539375-010V

PART NO	LAST AM	DESCRIPTION	GROUP NO
2- 537587		PLATE	C- 538421-010V
4- 537876		ROLLER	RK- 547765-020V
4- 537889		FABRIC	RK- 547751-020V
RK- 538412-0101	11727 88-03-19	DRIVE	RK- 550136-010V RK- 538439-010V RK- 547986-010V
RK- 538412-0102	11727 88-03-19	DRIVE	RK- 538439-010V RK- 547986-010V
RK- 538413-0101	10326 87-08-13	BENDING ROLLER	RK- 538439-010V RK- 547986-010V
RK- 538413-0102	10326 87-08-13	BENDING ROLLER	RK- 538439-010V RK- 547986-010V
RK- 538413-0103	10326 87-08-13	BENDING ROLLER	RK- 538439-010V RK- 547986-010V
RK- 538413-0104	10326 87-08-13	BENDING ROLLER	RK- 538439-010V RK- 547986-010V
RK- 538413-0105	10326 87-08-13	BENDING ROLLER	RK- 538439-010V RK- 547986-010V
RK- 538413-0106	10326 87-08-13	BENDING ROLLER	RK- 538439-010V RK- 547986-010V
RK- 538415-0101	10326 87-08-13	TUBE FLUSHING	RK- 538439-010V RK- 547986-010V
RK- 538415-0102	10326 87-08-13	TUBE FLUSHING	RK- 538439-010V RK- 547986-010V
RK- 538415-0103	10326 87-08-13	TUBE FLUSHING	RK- 538439-010V RK- 547986-010V
4- 538418-0001		SPACER	C- 538421-010V
4- 538418-0002		SPACER	C- 538421-010V
4- 538418-0003		SPACER	C- 538421-010V
4- 538418-0004		SPACER	C- 538421-010V
4- 538418-0005		SPACER	C- 538421-010V
4- 538418-0006		SPACER	C- 538421-010V
4- 538419		SUPPORT	C- 538421-010V
4- 538420-0001		TEMPLATE	C- 538421-010V
4- 538420-0002		TEMPLATE	C- 538421-010V
C- 538421-010V	10515 89-01-19	MOULD FOR REEL	C- 548467-010V
RK- 538438-0101	10326 87-08-13	GAUGE GROUP	RK- 538439-010V RK- 547986-010V
RK- 538439-010V	14328 90-01-15	ADAPTER KIT, OPENING DEV.	B- 648110-060V B- 648110-070V RK- 538449-010V
4- 538447		DOCUMENT FOLDER	B- 648110-010V
RK- 538449-0101	10384 87-06-05	REB KIT BENDING ROLLER	RK- 538449-010V RK- 547300-010V
RK- 538450-0101	10384 87-06-05	BENDING ROLLER	RK- 547300-010V RK- 547300-010V RK- 547300-010V
4- 538492		SHAFT	RK- 547300-010V RK- 536470-010V
4- 538493		FLANGE	RK- 536470-010V RK- 538450-010V
3- 538494		GABLE	RK- 536470-010V C- 469736-020V
4- 538495		BRACKET	RK- 540009-010V C- 469736-020V
3- 538498		ARM	RK- 540009-010V C- 469736-020V
3- 538508-0001		SHAFT	RK- 540009-010V C- 469736-020V
3- 538508-0002		SHAFT	RK- 540009-010V C- 469736-020V
3- 538508-0003		SHAFT	RK- 540009-010V C- 469736-020V
2- 538672		BRAKE ARM	RK- 540009-010V C- 469736-020V
3- 538673		ARM	RK- 540009-010V C- 469736-020V
3- 538674		BRACKET	RK- 540009-010V C- 469736-020V
4- 538675		SHAFT	RK- 540009-010V C- 469736-020V
4- 538678		ROLLER	RK- 540009-010V C- 469736-020V
4- 538681		HUB	RK- 540009-010V C- 469736-020V
4- 538682		BRACKET	RK- 540009-010V C- 469736-020V
4- 538683		SHAFT	RK- 540009-010V C- 469736-020V
4- 538684		ARM	RK- 540009-010V C- 469736-020V
4- 538686		PLATE	RK- 540009-010V C- 484858-020V
3- 538724-0001		BOBBIN HOLDER	RK- 540010-010V RK- 544469-010V
3- 538724-0002		BOBBIN HOLDER	RK- 544469-010V C- 484858-020V
3- 538724-0003		BOBBIN HOLDER	
3- 538724-0004		BOBBIN HOLDER	

PART NO	LAST AM	DESCRIPTION	GROUP NO
4- 538725-0001		SHAFT	RK- 540010-010V C- 484858-020V
4- 538725-0002		SHAFT	RK- 540010-010V
4- 538725-0003		SHAFT	RK- 544469-010V RK- 544469-010V
4- 538725-0004		SHAFT	RK- 546255-010V C- 484858-020V
4- 538726		WASHER	RK- 540010-010V C- 484858-020V
RK- 538739-0101	14328 90-01-15	SETTING TOOL	RK- 540010-010V RK- 546337-010V RK- 546489-010V RK- 546255-010V RK- 538439-010V
RK- 538739-0102	14328 90-01-15	SETTING TOOL	RK- 547986-010V RK- 538439-010V RK- 547986-010V
RK- 538739-0103	14328 90-01-15	SETTING TOOL	RK- 538439-010V RK- 547986-010V
4- 538740-0001		SPACER	C- 484858-020V RK- 540010-010V
4- 538740-0002		SPACER	RK- 544469-010V
4- 538740-0003		SPACER	RK- 544469-010V RK- 546337-010V RK- 546489-010V
4- 538740-0004		SPACER	RK- 546255-010V C- 484858-020V
4- 538741		LIP	RK- 540010-010V C- 469736-020V
4- 538972		SHAFT	RK- 540009-010V C- 469736-020V
4- 538973		SHAFT	RK- 540009-010V C- 484984-010V
1- 538976		COUNTER JAW	RK- 540011-010V RK- 535606-010V
1- 538977		COUNTER JAW	C- 497534-020V RK- 535606-010V
1- 538978		COUNTER JAW	C- 497534-020V C- 497534-020V
3- 538988		SETTING TOOL	RK- 538739-010V
3- 538989		SETTING TOOL	RK- 538739-010V
3- 538991-0001		SETTING TOOL	RK- 538739-010V
3- 538991-0002		SETTING TOOL	RK- 538739-010V
3- 538991-0003		SETTING TOOL	RK- 538739-010V
2- 538992		SETTING TOOL	RK- 538739-010V
4- 539193		SHAFT	C- 469736-020V RK- 540009-010V
4- 539194		SHAFT	C- 484984-010V RK- 540011-010V
4- 539195		SHAFT	C- 469736-020V RK- 540009-010V
4- 539196		ROLLER	C- 469736-020V RK- 540009-010V
4- 539197		SPRING HOLDER	C- 469736-020V RK- 540009-010V
C- 539209-0101	10455 87-11-11	A-CYLINDER	C- 440630-020V
C- 539210-0101	10455 87-11-11	C-CYLINDER	C- 440630-020V
C- 539211-0101	10455 87-11-11	B-CYLINDER	C- 440630-020V
4- 539212		GASKET	C- 440630-020V SP- 499255-020V
3- 539213		HOLDER	C- 490610-020V
4- 539303		SCREW	RK- 538739-010V
4- 539304		NUT	RK- 538739-010V
4- 539364		DOCUMENT FOLDER	RK- 538439-010V
4- 539365		SETTING TOOL	RK- 538739-010V
4- 539366		SETTING TOOL	RK- 538739-010V
3- 539367		SETTING TOOL	RK- 538739-010V
2- 539368		SETTING TOOL	RK- 538739-010V
C- 539375-0101	10515 89-01-19	TOOL, REEL ADJUSTMENT	C- 548467-010V
4- 539691		CABLE	C- 442089-010V
4- 539728		BOLT	C- 533903-010V RK- 547300-010V
4- 539729		BRACKET	C- 533903-010V C- 533903-010V RK- 547300-010V
4- 539752		DOCUMENT FOLDER	C- 533903-010V RK- 536502-010V

PART NO	LAST AM	DESCRIPTION	GROUP NO
4- 540006		DOCUMENT FOLDER	RK- 540008-010V
RK- 540008-010V	10623 87-09-10	REB KIT SPLICING DEVICE	B- 648110-060V
RK- 540009-0101	10623 87-09-10	STRIP MAGAZINE	RK- 540008-010V
RK- 540009-0102	10623 87-09-10	STRIP MAGAZINE	RK- 540008-010V
RK- 540010-0101	10623 87-09-10	BOBBIN	RK- 540008-010V
RK- 540010-0102	10623 87-09-10	BOBBIN	RK- 540008-010V
RK- 540011-0101	10623 87-09-10	SPLICING DEVICE	RK- 540008-010V
RK- 540011-0102	10623 87-09-10	SPLICING DEVICE	RK- 540008-010V
1- 540014		CIRCUIT BOARD TBA/9-OD	C- 295026-030V
			RK- 547986-010V
C- 540028-010V	12422 89-05-23	LS-STRIP A.S.U. TBA/9	C- 77091-010V
			C- 77091-020V
			C- 77091-030V
			B- 648119-060V
4- 540029		DOCUMENT FOLDER	C- 540028-010V
C- 540030-0101	10632 87-12-29	LS STRIP A.S.U. TBA/9	B- 648119-020V
4- 540031		DOCUMENT FOLDER	C- 540030-010V
4- 540094		DOCUMENT FOLDER	RK- 536706-010V
4- 540306-0001		COMPONENTS WITHOUT TP-NO	C- 68917-010V
4- 540307		PRINTED CIRCUIT BOARD	C- 68917-010V
1- 540342		CIRCUIT BOARD TBA/9-SA	C- 295026-030V
4- 540708		PULLEY	RK- 547757-030V
4- 540719		WHEEL	C- 752030-010V
3- 540887		HOLDER	RK- 544472-010V
4- 540892		ROLLER	RK- 544468-010V
4- 541126		COUNTER RUBBER	RK- 544466-010V
			RK- 550136-010V
C- 541163-0101	10455 87-11-11	CLAMP RING	C- 440630-020V
C- 541164-0101	10455 87-11-11	CLAMP RING	C- 440630-020V
4- 541165		WASHER	C- 541163-010V
			C- 541164-010V
3- 541166		WASHER	C- 539209-010V
4- 541167		SPACER SLEEVE	C- 539209-010V
3- 541256		TERMINAL X3	CE- 68128-010V
			CE- 68134-010V
3- 541257		TERMINAL X9	CE- 68128-010V
			CE- 68134-010V
3- 541258		TERMINAL X11	CE- 68128-010V
			CE- 68134-010V
3- 541259		DISTRIBUTION TERMINAL	CE- 68128-010V
			CE- 68134-010V
3- 541260		GROUND TERMINAL PLC	CE- 68128-010V
			CE- 68134-010V
3- 541261		FUSE PANEL LABEL	CE- 68128-010V
			CE- 68134-010V
4- 541262		INDEX EL-MANUAL	CE- 68128-010V
			CE- 68134-010V
4- 541263		SIGN EL-MANUAL	CE- 68128-010V
			CE- 68134-010V
1- 541273		PLATE	C- 469736-020V
1- 541717		CIRCUIT BOARD TB/9-SA	C- 295026-030V
1- 541718		CIRCUIT BOARD TB/9-OD	C- 295026-030V
4- 542044		ROLLER	RK- 547765-010V
			RK- 547765-020V
2- 542063		FLANGE	C- 751689-010V
4- 542084		PRESSURE ROLLER	RK- 547765-010V
			RK- 547765-020V
4- 542085		PIN	RK- 547765-010V
			RK- 547765-020V
4- 542086		FORK	RK- 547765-010V
			RK- 547765-020V
4- 542270		BRACKET	C- 533903-010V
3- 542828		PLATE	RK- 553145-010V
2- 542829		HOLDER	RK- 553145-010V
2- 543085		PLATE	RK- 547765-010V
			RK- 547765-020V
4- 543088		HANDLE	RK- 547765-010V
			RK- 547765-020V
4- 543089		WASHER	RK- 547765-010V
			RK- 547765-020V
4- 543090		BRACKET	RK- 547765-010V
			RK- 547765-020V
4- 543092		ROLLER BRACKET	RK- 547759-010V
			RK- 547759-020V
4- 543094		ROLLER	RK- 547765-010V
			RK- 547765-020V
4- 543141		SIGN	C- 543143-010V

PART NO	LAST AM	DESCRIPTION	GROUP NO
4- 543142		SIGN	C- 543143-010V
C- 543143-0101	10635 88-09-30	ADJUSTMENTMENT DEVICE	C- 752645-010V
			C- 752646-010V
			C- 752913-010V
			C- 752914-010V
3- 543173		PLATE	RK- 547751-030V
			RK- 547751-020V
4- 543174		DOLLY	RK- 547751-030V
			RK- 547751-020V
3- 543175		COUNTER JAW	RK- 547751-030V
			RK- 547751-020V
4- 543178		ROLLER	RK- 544474-010V
			RK- 547751-020V
4- 543180		ROLLER	RK- 544474-010V
			RK- 547751-020V
4- 543181		BRACKET	C- 547756-010V
4- 543182		SHAFT	C- 547756-010V
4- 543185		LOCKING WIRE	RK- 547751-030V
			RK- 547751-020V
4- 543186		ROLLER	RK- 547751-030V
4- 543188		ROLLER	RK- 547751-030V
4- 543191		ROLLER	RK- 547751-030V
3- 543192		GUIDE RAIL	RK- 547751-030V
4- 543193		HOLDER	RK- 547761-010V
4- 543194		PRESSURE JAW	RK- 547765-010V
			RK- 547765-020V
4- 543195		COUNTER JAW	RK- 547765-010V
			RK- 547765-020V
3- 543196		HEATING RAIL	RK- 544467-010V
			RK- 550136-010V
2- 543197		CAM	RK- 547758-010V
4- 543612		SPRING	RK- 544470-010V
			RK- 547752-010V
			RK- 547752-020V
4- 543711		FORK	RK- 547765-010V
			RK- 547765-020V
3- 543733		HEATING RAIL	RK- 544467-010V
			RK- 550136-010V
3- 544370		STRIP	RK- 548056-010V
4- 544371		BRACKET	RK- 548056-010V
4- 544372		BRACKET	RK- 548056-010V
3- 544373		GUARD	RK- 548056-010V
3- 544374		GUARD	RK- 548056-010V
4- 544375		BRACKET	RK- 548056-010V
2- 544376		DOOR	RK- 548056-010V
3- 544377		APPLIANCE BOX	C- 544381-010V
3- 544378		BRACKET	RK- 548056-010V
1- 544379		PNEUMATIC DIAGRAM	RK- 548056-010V
C- 544381-0101	14257 89-12-20	CONNECTION BOX	RK- 548056-010V
4- 544383		DOCUMENT FOLDER	RK- 548056-010V
4- 544385		PLATE	C- 544381-010V
RK- 544391-010V	12525 89-06-14	REB. KIT DATING UNIT	B- 648110-060V
			B- 648110-070V
			B- 648110-080V
4- 544392		ROLLER	C- 456321-030V
			C- 456322-030V
3- 544394		GUARD	C- 456348-020V
4- 544395		SHIM	C- 456348-020V
			C- 456349-020V
			C- 456348-020V
			C- 456349-020V
1- 544399		PNEUMATIC DIAGRAM	RK- 548056-010V
			RK- 547750-020V
			RK- 550132-010V
			RK- 547750-020V
			RK- 550132-010V
			RK- 547750-020V
			RK- 550132-010V
3- 544414		INDUCTOR	RK- 547760-010V
			RK- 547760-020V
			RK- 550136-010V
4- 544448		PIN	RK- 547751-020V
4- 544449		BRACKET	RK- 547754-010V
4- 544450		BRACKET	RK- 547754-010V
4- 544451		PIN	RK- 547751-030V
			RK- 547751-020V
4- 544454		BRACKET	RK- 547752-010V

PART NO	LAST AM	DESCRIPTION	GROUP NO
3- 544456		FLANGE	RK- 547752-020V
3- 544457		KNIFE	RK- 547757-030V
3- 544457		KNIFE	RK- 547751-030V
			RK- 547751-020V
4- 544458		ARM	RK- 550136-010V
			RK- 547752-010V
4- 544459		BRACKET	RK- 547752-020V
			RK- 547752-010V
4- 544460		CLAMP	RK- 547752-020V
			RK- 547752-010V
4- 544461		SPRING HOLDER	RK- 547752-010V
			RK- 547752-020V
2- 544463		DRIVE ROLLER	RK- 548387-010V
4- 544464		WASHER	RK- 547759-010V
RK- 544465-0101	13101 89-05-25	SEALING JAW	RK- 547759-020V
RK- 544466-010V	13951 89-10-30	COUNTER JAW	RK- 545440-010V
RK- 544466-0101	13951 89-10-30	COUNTER JAW	RK- 550132-010V
RK- 544467-010V	13951 89-10-30	SEALING JAW PULLTAB	RK- 545440-010V
RK- 544467-0101	13951 89-10-30	SEALING JAW PULLTAB	RK- 550132-010V
RK- 544468-0101	13951 89-10-30	PULL TAB FEED	RK- 545440-010V
			RK- 545440-010V
RK- 544469-010V	13951 89-10-30	BOBBIN	RK- 550132-010V
RK- 544469-0101	13951 89-10-30	BOBBIN	RK- 550132-010V
RK- 544470-0101	13101 89-05-25	STRIP MAGAZINE	RK- 545440-010V
RK- 544471-0101	13101 89-05-25	ROLLER	RK- 545440-010V
RK- 544472-0101	11943 89-02-23	BRAKE	RK- 545440-010V
RK- 544473-0101	11943 89-02-23	PUNCH	RK- 545440-010V
RK- 544474-0101	13101 89-05-25	SPLICING DEVICE	RK- 545440-010V
RK- 544475-0101	13101 89-05-25	STRIP GUIDE	C- 544536-010V
1- 544526		MACHINE PLATE TB	C- 544536-010V
1- 544527		MACHINE PLATE TBA	C- 544536-010V
4- 544533		FASTENER	C- 456457-020V
C- 544536-0101	12850 89-11-09	SET OF SIGNS	C- 456457-030V
			C- 752960-010V
C- 544536-0102	12850 89-11-09	SET OF SIGNS	C- 752971-010V
			C- 456458-020V
3- 544539		HOUSEMARK	C- 456458-030V
C- 544540-0101	12850 89-11-09	HOUSEMARKS SET OF SIGNS	C- 544540-010V
4- 544730		ROLLER	C- 271442-030V
			C- 441000-050V
3- 544781		CHUTE	RK- 752729-010V
4- 544782		NUT	RK- 547751-030V
			RK- 547751-030V
4- 544894		SPRING	RK- 547751-020V
			C- 295402-020V
4- 544906		SOLENOID VALVE	C- 469091-020V
3- 545401		DISTRIBUTION TERMINAL	C- 272623-050V
			CE- 68304-010V
3- 545402-0001		TERMINAL BLOCK	CE- 68308-010V
			CE- 68304-010V
3- 545402-0002		TERMINAL BLOCK	CE- 68308-010V
			CE- 68304-010V
3- 545402-0003		TERMINAL BLOCK	CE- 68308-010V
			CE- 68304-010V
3- 545403		NEUTRAL TERMINAL	CE- 68308-010V
			CE- 68304-010V
RK- 545440-0101	13101 89-05-25	REBUILDING KIT, HOLE 11	CE- 68308-010V
			C- 77091-010V
4- 545441		DOCUMENT FOLDER	C- 77091-020V
4- 545444		ROLLER	RK- 545440-010V
4- 545445		ROLLER	RK- 547751-020V
4- 545446		ROLLER	RK- 547751-020V
3- 545450		CHUTE	RK- 547751-020V
3- 545452		GUIDE RAIL	RK- 547751-020V
4- 545453		DOLLY	RK- 547751-020V
3- 545454		PLATE	RK- 547751-020V
2- 545455		SLIDE	C- 547756-010V
3- 545456		KNIFE	RK- 547751-020V
			RK- 550136-010V
4- 545460		ROLLER	RK- 547751-030V
3- 545461		HEATING JAW	RK- 547751-030V
			RK- 547751-020V
4- 545462		CLAMP	RK- 547752-010V

PART NO	LAST AM	DESCRIPTION	GROUP NO
4- 545464		ROLLER	RK- 547752-020V
			C- 469736-020V
			RK- 544470-010V
			RK- 544471-010V
			RK- 547752-010V
			RK- 550134-020V
			RK- 547752-020V
4- 545465		ROLLER	RK- 550134-010V
			C- 469736-020V
			RK- 544470-010V
			RK- 544471-010V
			RK- 547752-010V
			RK- 550134-020V
			RK- 547752-020V
4- 545466		SHAFT	RK- 550134-010V
			C- 469736-020V
			RK- 544470-010V
			RK- 547752-010V
4- 545467		SHAFT	RK- 547752-020V
			C- 469736-020V
			RK- 544470-010V
			RK- 547752-010V
4- 545468		SHAFT	RK- 547752-020V
			RK- 544471-010V
			RK- 550134-020V
			RK- 550134-010V
3- 546126		HOLDER	CR- 283618-020V
1- 546160		MACHINE DISPLAY	CE- 68379-010V
1- 546161		CIRCUIT BOARD	CE- 68379-010V
RK- 546255-0101	12184 88-09-28	REBUILDING KIT BOBBIN	B- 648110-060V
			B- 648110-070V
3- 546256		BOBBIN HOLDER	RK- 546337-010V
			RK- 546489-010V
4- 546258		DOCUMENT FOLDER	RK- 546255-010V
4- 546309		BRACKET	RK- 546255-010V
1- 546319		PNEUMATIC DIAGRAM	C- 283635-010V
			RK- 547750-020V
			RK- 550132-010V
			RK- 547750-020V
			RK- 550132-010V
			RK- 547750-020V
			RK- 550132-010V
1- 546320		PNEUMATIC DIAGRAM	B- 648109-090V
1- 546321		MACHINE BODY	RK- 548056-010V
RK- 546337-0101	12186 88-09-28	STRIP MAGAZINE	B- 648110-010V
4- 546338		SHAFT	RK- 546337-010V
4- 546339		DOCUMENT FOLDER	RK- 546337-010V
3- 546391		FUSE PANEL LABEL	CE- 68304-010V
			CE- 68308-010V
RK- 546489-0101	12236 88-10-03	PULL TAB MAGAZINE	B- 648110-010V
4- 546490		AXLE PIN	RK- 546489-010V
4- 546491		DOCUMENT FOLDER	RK- 546489-010V
4- 546913		RETAINING RING	RK- 546489-010V
4- 547298		DOCUMENT FOLDER	RK- 547300-010V
RK- 547300-0101	12261 88-11-25	BRAKE	B- 648110-010V
1- 547301		GABLE	RK- 547300-010V
3- 547302		ARM	RK- 547300-010V
3- 547303		HOLDER	RK- 547300-010V
3- 547304		SHAFT	RK- 547300-010V
4- 547416		INDEX EL-MANUAL	CE- 68308-010V
4- 547417		LABEL EL-MANUAL	CE- 68308-010V
1- 547524		FUNCTION CHART	RK- 547300-010V
3- 547586		FUSE PANEL	RK- 68874-010V
			RK- 68875-010V
RK- 547723-0101	12345 88-11-22	REB.KIT, BENDING ROLLERS	RK- 68874-010V
4- 547724		DOCUMENT FOLDER	B- 648110-010V
RK- 547726-0101	12345 88-11-22	BENDING ROLLERS	RK- 547723-010V
3- 547727		PLATE	RK- 547723-010V
3- 547728		PLATE	RK- 547726-010V
4- 547740		ROLLER	RK- 547726-010V
			RK- 547752-010V
4- 547741		ROLLER	RK- 550134-020V
			RK- 547752-010V
4- 547742		SHAFT	RK- 550134-020V
4- 547743		SHAFT	RK- 547752-010V
4- 547744		SHAFT	RK- 547752-010V
			RK- 550134-020V

PART NO	LAST AM	DESCRIPTION	GROUP NO
4- 547745		ROLLER	RK- 547752-020V
			RK- 550134-010V
4- 547746		ROLLER	RK- 547752-020V
			RK- 550134-010V
4- 547747		SHAFT	RK- 547752-020V
4- 547748		SHAFT	RK- 547752-020V
4- 547749		SHAFT	RK- 550134-010V
RK- 547750-020V	14299 89-12-21	REB.KIT CONV.H.O.T	B- 648110-060V
			B- 648110-070V
			B- 648110-080V
RK- 547751-020V	14299 89-12-21	SPLICING DEVICE	RK- 550132-010V
RK- 547751-030V	14299 89-12-21	SPLICING DEVICE	RK- 547750-020V
RK- 547752-010V	14299 89-12-21	STRIP MAGAZINE	RK- 547750-020V
RK- 547752-020V	14299 89-12-21	STRIP MAGAZINE	RK- 550132-010V
RK- 547753-0101	13677 89-09-20	CONNECTION BOX	RK- 547750-020V
			RK- 550132-010V
RK- 547754-0101	14299 89-12-21	STRIP MAGAZINE	RK- 547750-020V
			RK- 550132-010V
C- 547756-0101	13951 89-10-30	BOBBIN	RK- 547750-020V
			RK- 550132-010V
RK- 547757-0301	14299 89-12-21	BRAKE	RK- 547750-020V
			RK- 550132-010V
RK- 547758-0101	13677 89-09-20	DRIVE SHAFT	RK- 547750-020V
			RK- 550132-010V
RK- 547759-0101	13677 89-09-20	PUNCH	RK- 547750-020V
RK- 547759-020V	13951 89-10-30	PUNCH	RK- 550132-010V
RK- 547760-010V	14062 89-10-20	SEALING JAW	RK- 547750-020V
RK- 547760-020V	13951 89-10-30	SEALING JAW	RK- 550132-010V
RK- 547761-0101	14299 89-12-21	PULL TAB MAGAZINE	RK- 547750-020V
			RK- 550132-010V
RK- 547765-010V	14299 89-12-21	STRIP GUIDE	RK- 547750-020V
RK- 547765-020V	14299 89-12-21	STRIP GUIDE	RK- 550132-010V
RK- 547769-0101	13677 89-09-20	STRIP SEALER	RK- 547750-020V
			RK- 550132-010V
3- 547781		FUSE PANEL LABEL	RK- 68908-010V
RK- 547782-0101	12376 88-12-28	STRIP GUIDE	B- 648110-010V
3- 547783		PLATE	RK- 547782-010V
4- 547784		DOCUMENT FOLDER	RK- 547782-010V
4- 547911		FITTING BOLT	RK- 547765-010V
			RK- 547765-020V
4- 547912		ROLLER	RK- 547765-020V
RK- 547986-010V	12375 90-01-19	ADAPTER KIT, OPENING DEV.	B- 648110-080V
4- 547987		DOCUMENT FOLDER	RK- 547986-010V
2- 548028		PLATE	RK- 548056-010V
3- 548029		BEARING BRACKET	RK- 548056-010V
3- 548030		PLATE	RK- 548056-010V
3- 548041		BRACKET	RK- 548056-010V
3- 548042		PLATE	RK- 548056-010V
4- 548043		CLAMP	RK- 548056-010V
4- 548044		WASHER BEARING	RK- 548056-010V
3- 548046		ROD	RK- 548056-010V
4- 548047		ROD	RK- 548056-010V
4- 548048		ROD	RK- 548056-010V
2- 548049		PLATE	RK- 548056-010V
4- 548051		PLATE	RK- 548056-010V
RK- 548056-0101	14257 89-12-20	DATING UNIT	RK- 544391-010V
RK- 548056-0102	14257 89-12-20	DATING UNIT	RK- 544391-010V
RK- 548056-0103	14257 89-12-20	DATING UNIT	RK- 544391-010V
4- 548336		WASHER	C- 491976-020V
4- 548337		BUSHING	C- 491976-020V
1- 548382		FUNCTION DIAGRAM TBA/9	RK- 547750-020V
			RK- 550132-010V
			RK- 547750-020V
			RK- 550132-010V
			RK- 547750-020V
			RK- 550132-010V
3- 548383		GUIDE RAIL	RK- 550140-010V
4- 548385		FLANGE	RK- 547757-030V
4- 548386		BUSHING	RK- 547757-030V
RK- 548387-0102	12714 89-03-07	DRIVE	RK- 548407-010V
RK- 548387-0104	12714 89-03-07	DRIVE	RK- 548407-010V
RK- 548387-0105	12714 89-03-07	DRIVE	RK- 548407-010V
RK- 548387-0106	12714 89-03-07	DRIVE	RK- 548407-010V
RK- 548387-0107	12714 89-03-07	DRIVE	RK- 548407-010V
RK- 548388-010V	13677 89-09-20	DRIVE UNIT	RK- 550132-010V
RK- 548388-0101	13677 89-09-20	DRIVE UNIT	RK- 547750-020V
RK- 548389-010V	13677 89-09-20	BENDING ROLLER	RK- 550132-010V

PART NO	LAST AM	DESCRIPTION	GROUP NO
RK- 548389-0101	13677 89-09-20	BENDING ROLLER	RK- 547750-020V
4- 548394		SHAFT	RK- 544474-010V
			RK- 547751-020V
4- 548395		SHAFT	RK- 547751-020V
4- 548396		ROLLER	RK- 544474-010V
			RK- 547751-020V
3- 548399		CHUTE	RK- 547751-030V
			RK- 547751-020V
4- 548400		ROLLER	RK- 547751-020V
3- 548403		GUIDE RAIL	RK- 547751-020V
2- 548404		DRIVE ROLLER	RK- 548387-010V
2- 548405		DRIVE ROLLER	RK- 548387-010V
RK- 548407-010V	12714 89-03-07	DRIVE ROLLER	B- 648110-010V
			B- 648110-060V
			B- 648110-070V
			B- 648110-080V
4- 548409		DOCUMENT FOLDER	RK- 548407-010V
C- 548467-0101	10515 89-01-19	SETTING TOOL	B- 648119-060V
			B- 648119-070V
			B- 648119-080V
			B- 648119-090V
2- 549002		HOLDER	RK- 553145-010V
3- 549003		PLATE	RK- 553145-010V
2- 549005		HOLDER	RK- 553145-010V
3- 549016		INDUCTOR	RK- 547760-010V
			RK- 547760-020V
			RK- 550136-010V
3- 549600		PLATE	RK- 548056-010V
4- 549602		SCREW	RK- 548056-010V
3- 550004		PROTECTION PLATE	CR- 283618-020V
4- 550005		DOLLY	CR- 283618-020V
4- 550006		PIN	CR- 283618-020V
2- 550112		DRIVE ROLLER	RK- 548387-010V
2- 550113		DRIVE ROLLER	RK- 548387-010V
4- 550114		SHAFT	RK- 547751-020V
4- 550115		SHAFT	RK- 547751-020V
4- 550116		ROLLER	RK- 547751-020V
3- 550117		HEATING BLOCK	RK- 547751-020V
3- 550118		COUNTER JAW	RK- 547751-020V
4- 550119		FABRIC	RK- 547751-030V
			RK- 547751-020V
4- 550120		ARM	RK- 550136-010V
			RK- 547751-030V
3- 550124		GUIDE RAIL	RK- 547751-020V
RK- 550129-010V	13951 89-10-30	STATION CHAIN	RK- 550140-010V
RK- 550129-0101	13951 89-10-30	STATION CHAIN	RK- 550132-010V
4- 550130		DOCUMENT FOLDER	RK- 545440-010V
RK- 550132-010V	14299 89-12-21	REB.KIT CONV. H.O.E.	RK- 550132-010V
			B- 648110-060V
			B- 648110-070V
RK- 550134-010V	13951 89-10-30	BENDING ROLLERS, LS-STRIP	B- 648110-080V
RK- 550134-020V	13677 89-09-20	BENDING ROLLERS, LS-STRIP	RK- 550132-010V
RK- 550136-010V	13951 89-10-30	START-UP KIT	RK- 547750-020V
4- 550138		SHAFT	RK- 550132-010V
4- 550139		SHAFT	RK- 547751-030V
RK- 550140-010V	13677 89-09-20	GUIDE RAIL	RK- 547751-030V
			RK- 547750-020V
3- 550167		KNIFE HOLDER	RK- 550132-010V
4- 550329		TERMINAL	CR- 283618-020V
G1- 550480		BRACKET	RK- 41567-010V
3- 550487		FLOAT	C- 752628-010V
			C- 256230-030V
4- 551319		DOCUMENT FOLDER	C- 255921-040V
2- 552011		DOLLY	RK- 752702-010V
3- 552023		INDUCTOR	RK- 553145-010V
3- 552027		INDUCTOR	RK- 547760-010V
3- 552027		INDUCTOR	RK- 547760-020V
2- 552039		COVER	RK- 550136-010V
4- 552042		SCREW	C- 752889-010V
3- 552044		INDUCTOR	C- 752889-010V
4- 552528		ROLLER	RK- 547760-010V
			C- 441000-050V
2- 552837		BRACKET	RK- 752729-010V
2- 552838		PIPE	C- 491207-020V
2- 552839		PIPE	C- 491207-020V
2- 552840		PIPE	C- 256014-050V
			C- 256014-050V

PART NO	LAST AM	DESCRIPTION	GROUP NO
2- 552841		PIPE	C- 256014-050V
1- 552846		BATH	C- 256014-050V
4- 552847		PLATE	C- 271569-040V
4- 552854		BRACKET	RK- 68908-010V
3- 552858		TERMINAL CARD X9	RK- 69290-010V
3- 552859		TERMINAL CARD X9	RK- 69508-010V
2- 553120		CONNECTION	C- 751373-010V
2- 553122		DOOR	C- 553657-010V
1- 553123		TANK	C- 751398-010V
1- 553126		PEROXIDE TANK	C- 751373-010V
3- 553127		PIPE	C- 751373-010V
1- 553128		PIPE	C- 491207-020V
4- 553130		ROLLER	RK- 547751-030V
4- 553131		ROLLER	RK- 547751-030V
4- 553132		ROLLER	RK- 547751-030V
4- 553133		ROLLER	RK- 547751-030V
4- 553134		SHAFT	RK- 547751-030V
4- 553135		SHAFT	RK- 547751-030V
3- 553140		GUIDE RAIL	RK- 550140-010V
RK- 553144-010V	14140 89-11-15	START-UP KIT	RK- 547750-020V
RK- 553145-010V	13951 89-10-30	COUNTER JAW	RK- 550132-010V
3- 553149		GUIDE RAIL	RK- 547751-030V
4- 553178		DOCUMENT FOLDER	RK- 553180-010V
RK- 553180-010V	13646 89-12-13	QUICK RESTART	B- 648110-010V
			B- 648110-060V
			B- 648110-070V
4- 553183		PENDULUM SUSPENSION	B- 648110-080V
2- 553184		BRACKET	C- 272337-040V
4- 553187		PLATE	C- 272337-040V
1- 553215		CABLE DUCT	C- 272337-040V
1- 553216		CABLE DUCT	C- 469374-030V
1- 553217		CABLE DUCT	C- 469374-030V
1- 553218		CABLE DUCT	C- 469374-030V
4- 553586		SPACER	C- 469374-030V
1- 553649		PIPE	C- 752495-010V
2- 553650		PIPE	C- 491207-020V
2- 553651		PIPE	C- 491207-020V
2- 553652		INSULATING PLATE	C- 491207-020V
1- 553653		RETURN PIPE	C- 751373-010V
1- 553654		PLATE	C- 491207-020V
1- 553655		BRACKET	C- 751885-020V
2- 553656		COVER PLATE	C- 751406-010V
C- 553657-0101	13645 90-01-12	DOOR	C- 751885-020V
2- 553658		BRACKET	C- 751352-010V
4- 553808		ARM	C- 491207-020V
4- 553809		PIVOT PIN	C- 272021-050V
RK- 553820-010V	11865 89-09-27	HEAT REDUCTION KIT	C- 272021-050V
			B- 648110-070V
4- 553821		DOCUMENT FOLDER	B- 648110-080V
1- 555434		MACHINE BODY	RK- 553820-010V
4- 555435		PIPE	C- 256843-050V
1- 555436		PLATE	C- 491207-020V
2- 555473		INDUCTOR 125CC	C- 751885-020V
			C- 295523-030V
			CR- 256214-030V
			C- 295523-030V
			CR- 256214-030V
3- 555632		GABLE	C- 295523-030V
1- 555923		HOLDER	C- 533903-010V
2- 556309		BRANCH PIPE	C- 441000-050V
3- 556314		TUBE LS	C- 272408-050V
2- 556315		TUBE KS	C- 256233-050V
4- 556390		LUG	C- 256233-050V
B- 648101-020V	6852 84-05-23	SUPERSTRUCTURE	C- 752247-010V
			A- 648151-020V
			A- 648151-030V
			A- 648151-040V
B- 648101-060V	7199 84-10-24	SUPERSTRUCTURE	A- 648151-050V
B- 648101-070V	10843 87-11-26	SUPERSTRUCTURE	A- 648151-100V
B- 648101-080V	12368 88-11-18	SUPERSTRUCTURE TB/9	A- 648151-110V
B- 648101-090V	13651 89-11-23	SUPERSTRUCTURE TB/9	A- 648151-120V
B- 648102-020V	6130 83-09-21	MACHINE BODY	A- 648151-130V
B- 648102-0201	6130 83-09-21	MACHINE BODY	A- 648152-020V
B- 648102-030V	6197 83-10-13	MACHINE BODY	A- 648151-020V
			A- 648152-030V
			A- 648152-040V
			A- 648152-050V

PART NO	LAST AM	DESCRIPTION	GROUP NO
B- 648102-0301	6197 83-10-13	MACHINE BODY	A- 648151-030V
			A- 648151-040V
			A- 648151-050V
B- 648102-0601	6929 84-10-08	MACHINE BODY	A- 648151-100V
B- 648102-0602	6929 84-10-08	MACHINE BODY	A- 648152-100V
B- 648102-0701	8636 86-01-21	MACHINE BODY	A- 648151-110V
B- 648102-0702	8636 86-01-21	MACHINE BODY	A- 648152-110V
B- 648102-080V	11733 88-11-23	MACHINE BODY TB/TBA/9	A- 648152-120V
B- 648102-0801	11733 88-11-23	MACHINE BODY TB/TBA/9	A- 648151-120V
B- 648102-090V	14240 90-01-11	MACHINE BODY TB/TBA/9	A- 648152-130V
B- 648102-0901	14240 90-01-11	MACHINE BODY TB/TBA/9	A- 648151-130V
B- 648103-020V	5253 82-04-01	DRIVE	A- 648151-020V
			A- 648151-030V
			A- 648152-020V
B- 648103-030V	6147 83-09-29	DRIVE	A- 648152-030V
			A- 648151-040V
			A- 648151-050V
			A- 648152-040V
B- 648103-0601	9368 86-06-11	DRIVE	A- 648152-050V
			A- 648151-100V
B- 648103-0602	9368 86-06-11	DRIVE	A- 648151-110V
			A- 648152-100V
B- 648103-0701	13591 89-08-10	DRIVE B/AB9	A- 648152-110V
B- 648103-0702	13591 89-08-10	DRIVE B/AB9	A- 648151-120V
B- 648103-0801	12577 89-12-06	DRIVE TB/TBA/9	A- 648152-120V
B- 648103-0802	12577 89-12-06	DRIVE TB/TBA/9	A- 648151-130V
B- 648104-020V	6317 83-11-03	JAW SYSTEM	A- 648152-130V
			A- 648151-020V
			A- 648151-030V
			A- 648151-040V
B- 648104-020V		JAW SYSTEM	A- 648152-020V
			A- 648152-030V
			A- 648152-040V
B- 648104-030V	6447 83-12-27	JAW SYSTEM	A- 648151-050V
			A- 648152-050V
B- 648104-0601	6748 84-05-04	JAW SYSTEM	A- 648151-100V
B- 648104-0602	6748 84-05-04	JAW SYSTEM	A- 648152-100V
B- 648104-0701	8633 86-01-14	JAW SYSTEM	A- 648151-110V
B- 648104-0702	8633 86-01-14	JAW SYSTEM	A- 648152-110V
B- 648104-0801	8486 86-11-03	JAW SYSTEM	A- 648151-120V
B- 648104-0802	8486 86-11-03	JAW SYSTEM	A- 648152-120V
B- 648104-0901	12578 89-12-06	JAW SYSTEM	A- 648151-130V
B- 648104-0902	12578 89-12-06	JAW SYSTEM	A- 648152-130V
B- 648105-0201	7911 85-06-11	FINAL FOLDER	A- 648151-020V
			A- 648151-030V
			A- 648152-020V
B- 648105-0301	7911 85-06-11	FINAL FOLDER	A- 648152-030V
			A- 648151-040V
B- 648105-0401	7911 85-06-11	FINAL FOLDER	A- 648152-040V
			A- 648151-050V
B- 648105-0601	7911 85-06-11	FINAL FOLDER	A- 648152-050V
			A- 648151-100V
B- 648105-0701	8667 86-02-17	FINAL FOLDER	A- 648152-100V
			A- 648151-110V
B- 648105-0801	12529 89-02-09	FINAL FOLDER TB/TBA/9	A- 648152-110V
			A- 648151-120V
B- 648105-0901	14278 90-01-05	FINAL FOLDER TB/TBA/9	A- 648152-120V
			A- 648151-130V
B- 648106-0201	6755 84-04-17	SERVICE UNIT	A- 648152-130V
			A- 648151-020V
			A- 648151-030V
			A- 648151-040V
B- 648106-0202	6755 84-04-17	SERVICE UNIT	A- 648151-050V
			A- 648152-020V
			A- 648152-030V
			A- 648152-040V
B- 648106-0601	7326 84-12-17	SERVICE UNIT	A- 648152-050V
B- 648106-0602	7326 84-12-17	SERVICE UNIT	A- 648151-100V
B- 648106-0701	9286 86-06-11	SERVICE UNIT	A- 648152-100V
B- 648106-0702	9286 86-06-11	SERVICE UNIT	A- 648151-110V
B- 648106-080V	12502 89-01-05	SERVICE UNIT TB/TBA/9	A- 648152-110V
B- 648106-0801	12502 89-01-05	SERVICE UNIT TB/TBA/9	A- 648152-120V
B- 648106-090V	14200 90-02-13	SERVICE UNIT TB/TBA/9	A- 648151-120V
B- 648106-0901	14200 90-02-13	SERVICE UNIT TB/TBA/9	A- 648152-130V
B- 648107-0201	9369 86-06-11	STRIP APPLICATOR	A- 648151-130V
			A- 648151-020V
			A- 648151-030V

PART NO	LAST AM	DESCRIPTION	GROUP NO
			A- 648151-040V
			A- 648151-050V
B- 648107-0202	9369 86-06-11	STRIP APPLICATOR	A- 648152-020V
			A- 648152-030V
			A- 648152-040V
			A- 648152-050V
B- 648107-060V	8054 85-08-22	STRIP APPLICATOR	A- 648151-100V
			A- 648152-100V
B- 648107-070V	8699 86-01-18	STRIP APPLICATOR	A- 648151-110V
			A- 648152-110V
B- 648107-080V	12198 88-12-02	STRIP APPLICATOR	A- 648151-120V
			A- 648152-120V
B- 648107-090V	14273 90-02-06	STRIP APPLICATOR	A- 648151-130V
B- 648107-090V		STRIP APPLICATOR	A- 648152-130V
B- 648108-010V	8390 86-01-24	OPENING DEVICE	A- 648152-020V
			A- 648152-030V
			A- 648152-040V
			A- 648152-050V
B- 648109-020V	9616 86-09-11	STANDARD EQUIPMENT	A- 648151-020V
			A- 648151-030V
			A- 648151-040V
			A- 648152-020V
			A- 648152-030V
B- 648109-030V	6726 84-04-10	STANDARD EQUIPMENT	A- 648151-050V
			A- 648152-050V
B- 648109-060V	10321 87-04-02	ORDINARY ACCESSORIES	A- 648151-100V
			A- 648152-100V
B- 648109-070V	10843 87-11-26	ORDINARY ACCESSORIES	A- 648151-110V
			A- 648152-110V
B- 648109-080V	14111 89-11-18	ORDINARY ACCESSORIES	A- 648151-120V
			A- 648152-120V
B- 648109-090V	14040 90-01-22	ORDINARY ACCESS. TB/TBA/9	A- 648151-130V
			A- 648152-130V
B- 648110-010V	13646 89-12-13	REBUILDING KITS BRIK	A- 648151-020V
			A- 648151-030V
			A- 648151-040V
			A- 648151-050V
			A- 648152-020V
			A- 648152-030V
			A- 648152-040V
B- 648110-060V	14328 90-01-15	REBUILDING KITS BRIK	A- 648152-050V
			A- 648151-100V
B- 648110-070V	14328 90-01-15	REBUILDING KITS BRIK	A- 648152-100V
			A- 648151-110V
B- 648110-080V	12375 90-01-19	REBUILDING KITS TB/TBA/9	A- 648152-110V
			A- 648151-120V
B- 648111-020V	6388 84-01-09	SUPERSTRUCTURE	A- 648152-120V
			A- 648152-020V
			A- 648152-030V
			A- 648152-040V
B- 648111-030V	7937 85-06-03	SUPERSTRUCTURE	A- 648152-050V
B- 648111-060V	8083 85-07-10	SUPERSTRUCTURE	A- 648152-100V
B- 648111-070V	8465 85-12-18	SUPERSTRUCTURE	A- 648152-110V
B- 648111-080V	11731 88-08-18	SUPERSTRUCTURE TBA/9	A- 648152-120V
B- 648111-090V	12861 89-12-11	SUPERSTRUCTURE TBA/9	A- 648152-130V
B- 648118-010V	9023 86-05-23	OPENING DEVICE	A- 648151-020V
			A- 648151-030V
			A- 648151-040V
			A- 648151-050V
B- 648118-0601	9361 86-10-23	OPENING DEVICE	A- 648151-100V
B- 648118-0602	9361 86-10-23	OPENING DEVICE	A- 648152-100V
B- 648118-0701	12232 88-09-23	OPENING DEVICE TB/TBA/9	A- 648151-110V
			A- 648151-120V
B- 648118-0702	12232 88-09-23	OPENING DEVICE TB/TBA/9	A- 648152-110V
			A- 648152-120V
B- 648119-020V	12930 89-10-15	EXTRA EQUIPMENT TB/TBA/9	A- 648151-020V
			A- 648151-030V
			A- 648151-040V
			A- 648151-050V
			A- 648152-020V
			A- 648152-030V
B- 648119-020V		EXTRA EQUIPMENT TB/TBA/9	A- 648152-040V
			A- 648152-050V
B- 648119-060V	12930 89-10-15	EXTRA EQUIPMENT TB/TBA/9	A- 648151-100V
			A- 648152-100V
B- 648119-070V	10515 89-01-19	EXTRA EQUIPMENT	A- 648151-110V

PART NO	LAST AM	DESCRIPTION	GROUP NO
			A- 648152-110V
B- 648119-0801	10515 89-01-19	EXTRA EQUIPMENT	A- 648151-120V
			A- 648152-120V
B- 648119-0901	12856 90-01-29	EXTRA EQUIPMENT	A- 648151-130V
			A- 648152-130V
AE- 649204-010V		ELECTRIC EQUIPMENT	A- 648151-020V
			A- 648151-030V
			A- 648151-040V
			A- 648151-050V
AE- 649204-030V		ELECTRIC EQUIPMENT	A- 648151-100V
			A- 648151-110V
BE- 649204-0501	10860 88-10-18	ELECTRIC EQUIPMENT	A- 648151-120V
AE- 649205-010V		ELECTRIC EQUIPMENT	A- 648152-020V
			A- 648152-030V
			A- 648152-040V
			A- 648152-050V
AE- 649205-030V		ELECTRIC EQUIPMENT	A- 648152-100V
			A- 648152-110V
BE- 649205-0501	10500 88-09-19	EL-EQUIPMENT AB9-050V	A- 648152-120V
BE- 649205-0701	11919 89-05-10	EL-EQUIPMENT TBA/9-070V	A- 648152-120V
RK- 649244-0001		ELECTRICAL CONVERSION	RK- 479279-010V
AE- 649257-0001		ELECTRICAL CONVERSION	C- 456274-010V
RK- 649258-0001		ELECTRICAL CONVERSION	RK- 479279-010V
RK- 649262-0001		ELECTRICAL CONVERSION	RK- 479279-010V
RK- 649269-0001		ELECTRICAL CONVERSION	RK- 469760-010V
AE- 649280-0101	8052 85-06-25	ELECTRICAL CONVERSION	C- 456953-010V
AE- 649287-010V	8499 86-11-17	ELECTRIC EQUIPMENT	RK- 491744-010V
AE- 649293-010V	8840 86-11-17	ELECTRIC EQUIPMENT	RK- 491789-010V
			RK- 491902-010V
BE- 649294-0101	10616 87-11-03	ELECTRIC EQUIPMENT	C- 540028-010V
			C- 540030-010V
RK- 649297-010V	9030 87-10-17	EL-CONV. LOW ACID KIT	RK- 491795-010V
RK- 649308-0101	13834 90-02-06	"HEADSPACE BY INJECTION"	RK- 520067-010V
RK- 649324-0101	13835 90-02-06	"HEADSPACE BY INJECTION"	RK- 520130-010V
RK- 649327-010V	10116 87-10-16	ELECTRIC EQUIPMENT	RK- 751202-010V
AE- 649328-010V	10117 87-09-04	ELECTRIC EQUIPMENT	RK- 751228-010V
RK- 649330-010V	10149 87-10-17	CONVERS. BAR CODE READING	RK- 491543-010V
RK- 649331-010V	10159 87-10-17	BAR CODE	RK- 751561-010V
RK- 649335-010V	10372 88-01-12	EL-CONV. SA TO PTS 3	RK- 538439-010V
RK- 649340-0101	13836 90-02-06	"HEADSPACE BY INJECTION"	RK- 520129-010V
RK- 649342-010V	10621 88-02-29	BRAKE SUPPLY MOTOR	RK- 751548-010V
RK- 649343-010V	10624 88-02-29	BRAKE PAPER SUPPLY	RK- 751546-010V
RK- 649344-010V	10625 87-10-16	BRAKE PAPER SUPPLY	RK- 751479-010V
RK- 649350-010V	10676 87-10-17	PAPER SUPPLY MOTOR	RK- 751595-010V
RK- 649352-010V	10678 87-10-17	BRAKE SUPPLY MOTOR	RK- 751589-010V
RK- 649355-010V	10734 87-10-17	BRAKE SUPPLY MOTOR	RK- 751591-010V
BE- 649356-010V	10791 87-11-26	BAR CODE	RK- 751569-010V
RK- 649362-010V	10980 87-11-25	EL-CONVERSION BAR CODE	RK- 751636-010V
RK- 649369-0101	11772 89-07-06	HEAT REDUCTION	RK- 533177-010V
RK- 649370-0101	11773 89-07-06	HEAT REDUCTION	RK- 533177-010V
			RK- 553820-010V
RK- 649371-0101	11774 89-07-06	HEAT REDUCTION	RK- 533177-010V
			RK- 553820-010V
RK- 649389-0101	10106 89-01-23	TEMP. SUPERV.HYDR.OIL(EL)	RK- 752270-010V
RK- 649390-0101	12325 88-12-22	TEMP. SUPERV.HYDR.OIL(EL)	RK- 752270-010V
RK- 649391-0101	12326 88-12-22	TEMP.SUPRV.HYDR.OIL (EL)	RK- 752270-010V
RK- 649400-0101	14162 89-11-14	TEMP.SUPERV.HYDR.OIL	RK- 752270-010V
RK- 649401-0101	12798 89-04-25	TEMP.SUPERV.HYDR.OIL	RK- 752270-010V
RK- 649402-0101	12799 89-04-25	TEMP.SUPERV.HYDR.OIL	RK- 752270-010V
4- 730415-0001		MECHANICAL DOCUMENTATION	CE- 67716-010V
3- 734052		SOCKET	RK- 41567-010V
2- 735005		PIPE	C- 735014-010V
2- 735006		PIPE	C- 735248-010V
			C- 735014-010V
C- 735014-0101	11716 88-09-21	AIR AND INERT GAS SYSTEMS	C- 735253-010V
			C- 752669-010V
			C- 752985-010V
4- 735018		SLEEVE	C- 736592-010V
			C- 736593-010V
4- 735029		PIPE	C- 735183-010V
C- 735031-0102	11715 88-06-07	CONNECTIONS BOX	C- 735270-010V
C- 735032-0101	11716 88-09-21	ASSEMB. OF C. AND P.BOXES	C- 529932-010V
4- 735034		PIPE	C- 735183-010V
4- 735041		CLAMP	C- 529940-010V
			C- 736592-010V
			C- 735265-010V
4- 735050		CLAMP	C- 736593-010V

PART NO	LAST AM	DESCRIPTION	GROUP NO
4- 735052		BRACKET	C- 529621-010V
4- 735053		SLEEVE	C- 735183-010V
4- 735054		WASHER	C- 736600-010V
4- 735055		WASHER	C- 736600-010V
3- 735056		BODY CENTRAL VALVE	C- 736600-010V
3- 735057		TUBE	C- 736594-010V
3- 735058		TUBE	C- 736594-010V
3- 735059		TUBE	C- 736594-010V
3- 735060		TUBE	C- 736594-010V
3- 735074		HOLDER	C- 735192-010V
4- 735150		COMPRESSION SPRING	C- 736600-010V
C- 735183-0101	13990 89-11-13	PNEUMATIC BOX	C- 735032-010V
			C- 735270-010V
3- 735185		LABEL	RK- 68180-010V
			RK- 68183-010V
C- 735192-0101	11716 88-09-21	LOWER FILLING TUBE	C- 529932-010V
			C- 735253-010V
			C- 752669-010V
C- 735192-0102	11716 88-09-21	LOWER FILLING TUBE	C- 752985-010V
			C- 529932-010V
			C- 735253-010V
3- 735193-0001		FILLING TUBE	C- 752669-010V
3- 735193-0002		FILLING TUBE	C- 752985-010V
4- 735210		SPACER	C- 735192-010V
4- 735219		BRACKET	C- 735192-010V
			C- 736529-010V
C- 735222-0101	11716 88-09-21	CLEANING PIPE	C- 735248-010V
			C- 735014-010V
			C- 529932-010V
			C- 735253-010V
			C- 752669-010V
2- 735246		PIPE	C- 752985-010V
4- 735247		HOLDER	C- 735248-010V
C- 735248-0101	11716 88-09-21	AIR AND INERT GAS SYSTEMS	C- 735248-010V
C- 735253-010V	12383 90-02-10	HEAD SPACE BY LLF	C- 529932-010V
C- 735253-010V		HEAD SPACE BY LLF	C- 77091-010V
3- 735254		TUBE	B- 648119-060V
C- 735258-0101	11716 88-09-21	CLEAN.PIPES IN POS.DEVICE	C- 736594-010V
C- 735259-0101	11716 88-09-21	CONNECTIONS BOX	C- 529932-010V
C- 735261-0101	11716 88-09-21	RAILING	C- 735032-010V
			C- 529932-010V
			C- 735253-010V
4- 735263		RAILING	C- 752669-010V
4- 735264		PLUG	C- 752985-010V
C- 735265-0101	12383 90-02-10	PIPE-LINE	C- 735261-010V
C- 735265-0102	12383 90-02-10	PIPE-LINE	C- 735261-010V
			C- 735253-010V
C- 735267-0101	11716 88-09-21	BRACKETS FOR ELECT. EQUIP	C- 752669-010V
C- 735268-0101	12383 90-02-10	START-UP KIT	C- 752985-010V
1- 735269		TOUCH GUARD	C- 529932-010V
			C- 529932-010V
C- 735270-0101	11716 88-09-21	ASSEM. OF C. AND P. BOXES	C- 735268-010V
			C- 735271-010V
			C- 735253-010V
C- 735271-0101	12383 90-02-10	START-UP KIT	C- 752669-010V
			C- 752985-010V
			C- 735253-010V
4- 735279-0001		SPINDLE	C- 752669-010V
4- 735279-0002		SPINDLE	C- 752985-010V
4- 736501		GEAR	C- 736592-010V
			C- 736593-010V
4- 736502		KNOB	C- 736592-010V
			C- 736593-010V
3- 736508-0001		MEMBRANE	C- 735268-010V
			C- 736600-010V
			C- 735271-010V
			C- 736600-010V
			C- 735271-010V
			C- 736600-010V
4- 736514		SHOCK ABSORBER	C- 735268-010V
			C- 736600-010V
			C- 735271-010V
			C- 736600-010V

PART NO	LAST AM	DESCRIPTION	GROUP NO
			C- 735271-010V
			C- 736600-010V
			C- 735271-010V
			C- 736600-010V
3- 736519		HS BY LLF PNEUM. DIAGRAM	C- 735268-010V
			C- 735271-010V
3- 736525		PNEUMATIC BOX SURVEY	C- 735268-010V
			C- 735271-010V
4- 736526		FLOW METER	C- 735183-010V
C- 736529-0101	14133 90-02-12	VALVE HOLDER	C- 529932-010V
			C- 735253-010V
			C- 752669-010V
3- 736530		VALVE HOLDER	C- 752985-010V
3- 736531		HOLDER	C- 736529-010V
4- 736532		SCREW	C- 736529-010V
1- 736533		TUBE	C- 736529-010V
			C- 529940-010V
			C- 735265-010V
3- 736534		CLEANING PIPE	C- 735222-010V
3- 736535		CLEANING PIPE	C- 735222-010V
3- 736552		LOWER FILLING TUBE	C- 529935-010V
3- 736554		PRODUCT PIPE	C- 736600-010V
3- 736555		LATERAL BODY	C- 736600-010V
4- 736557		MEMBRANE	C- 735268-010V
			C- 736600-010V
			C- 735271-010V
			C- 736600-010V
			C- 735271-010V
			C- 736600-010V
			C- 735271-010V
			C- 736600-010V
3- 736558		DOSING VALVE BODY	C- 736600-010V
3- 736564		VALVE BODY	C- 736600-010V
4- 736565		SHAFT	C- 736600-010V
4- 736568		SCREW	C- 736600-010V
4- 736574		BRACKET	C- 736592-010V
4- 736575		BRACKET	C- 736593-010V
3- 736581		COUPLING BOX	C- 736592-010V
			C- 736593-010V
3- 736582-0001		SHAFT SLIDE GUIDE	C- 736592-010V
			C- 736593-010V
4- 736585		PIN	C- 736592-010V
			C- 736593-010V
4- 736587		SHAFT	C- 736592-010V
			C- 736593-010V
4- 736588-0001		SHAFT	C- 736592-010V
			C- 736593-010V
C- 736592-0101	11716 88-09-21	CFV CONTROL DEVICE	C- 529932-010V
C- 736593-0101	11716 88-09-21	CFV CONTROL DEVICE	C- 735253-010V
			C- 752669-010V
			C- 752985-010V
C- 736594-0101	11716 88-09-21	PNEUMATIC EQUIPMENT	C- 529932-010V
			C- 735253-010V
			C- 752669-010V
			C- 752985-010V
3- 736595		TUBE	C- 736594-010V
4- 736599		DOUBLE CLAMP	C- 736592-010V
			C- 736593-010V
C- 736600-0101	12383 90-02-10	CONSTANT FLOW VALVE	C- 529932-010V
			C- 735253-010V
			C- 752669-010V
			C- 752985-010V
C- 736600-0102	12383 90-02-10	CONSTANT FLOW VALVE	C- 529932-010V
			C- 735253-010V
			C- 752669-010V
			C- 752985-010V
4- 736602		WASHER	C- 736600-010V
C- 736604-0101	11715 88-06-07	ELECTRIC MATERIALS	C- 735268-010V
			C- 735271-010V
4- 736606		DRILL 15 MM	C- 735268-010V
			C- 735271-010V
4- 736608		DOCUMENT DF	C- 752669-010V
			C- 752985-010V
4- 736664		CLAMP	C- 736865-010V
3- 736705		BRACKET	C- 735270-010V
4- 736716		DOSING PISTON	C- 736600-010V
3- 736730-0002		GUIDE PLATE	C- 736865-010V

PART NO	LAST AM	DESCRIPTION	GROUP NO
3- 736730-0003		GUIDE PLATE	C- 736865-010V
3- 736730-0004		GUIDE PLATE	C- 736865-010V
1- 736748		PIPE	C- 735265-010V
4- 736749		CLAMP	C- 735261-010V
			C- 736592-010V
			C- 735261-010V
			C- 736593-010V
			C- 735261-010V
			C- 736593-010V
			C- 735261-010V
			C- 736593-010V
4- 736754		PENDULUM SUSPENSION	C- 529924-010V
4- 736848		ARM	C- 736865-010V
4- 736850		ARM	C- 736865-010V
4- 736851		HOLDER	C- 736865-010V
C- 736865-0101	12383 90-02-10	TUBE LS COOLING	C- 529932-010V
			C- 735253-010V
			C- 752669-010V
			C- 752985-010V
C- 736865-0102	12383 90-02-10	TUBE LS COOLING	C- 529932-010V
			C- 735253-010V
			C- 752669-010V
			C- 752985-010V
C- 736865-0103	12383 90-02-10	TUBE LS COOLING	C- 529932-010V
			C- 735253-010V
			C- 752669-010V
			C- 752985-010V
C- 736865-0104	12383 90-02-10	TUBE LS COOLING	C- 529932-010V
			C- 735253-010V
C- 736865-0105	12383 90-02-10	TUBE LS COOLING	C- 529932-010V
			C- 735253-010V
C- 736865-0106	12383 90-02-10	TUBE LS COOLING	C- 529932-010V
			C- 735253-010V
4- 736867		BRUSH	C- 736865-010V
4- 736999		BRACKET	C- 736865-010V
1- 751001		CABLE DUCT	C- 469374-020V
1- 751002		PLATE	C- 469452-030V
3- 751008		COVER	C- 256233-040V
			C- 256233-050V
4- 751009		INSULATION	C- 271181-020V
			C- 271181-030V
			C- 271181-040V
4- 751010		GASKET	C- 469501-020V
			C- 469501-030V
			C- 469501-020V
			C- 469501-030V
			RK- 751462-010V
			RK- 751487-010V
4- 751011		GASKET	C- 256237-050V
			C- 256237-060V
			RK- 751311-010V
4- 751014		GASKET	C- 256239-020V
			C- 256239-030V
			C- 256239-040V
4- 751015		GASKET	C- 256239-020V
			C- 256239-030V
			C- 256239-040V
			C- 256095-020V
			C- 256095-030V
4- 751015		GASKET	C- 256095-040V
4- 751016		GASKET	RK- 520070-010V
			C- 271181-020V
			C- 271181-030V
			C- 271181-040V
4- 751017		GASKET	C- 456588-010V
			C- 456588-020V
			C- 456588-030V
4- 751018		WASHER	C- 256095-020V
			C- 256095-030V
			C- 256095-040V
4- 751019		WASHER	C- 256055-040V
			C- 256055-050V
			C- 256055-060V
4- 751020		GASKET	C- 256237-050V
			C- 256237-060V
			RK- 751303-010V
			RK- 751311-010V

PART NO	LAST AM	DESCRIPTION	GROUP NO
			RK- 751303-010V
			RK- 751311-010V
			C- 256055-040V
			C- 256055-050V
			C- 256055-060V
4- 751021		GASKET	C- 256239-020V
			C- 256239-030V
			C- 256239-040V
4- 751022		GASKET	C- 256237-050V
			C- 256237-060V
4- 751023		GASKET	C- 256095-020V
			C- 256055-040V
			C- 256095-020V
			C- 256055-050V
			C- 256095-030V
			C- 256055-060V
			C- 256095-040V
4- 751024		GASKET	C- 469501-020V
			C- 469501-030V
			C- 469501-020V
			C- 469501-030V
			RK- 751462-010V
			RK- 751487-010V
2- 751027		CONNECTION	C- 256237-050V
2- 751028		CONNECTION	C- 256237-050V
3- 751029		ARM	C- 256237-050V
			C- 256237-060V
4- 751030		ELBOW PIPE	C- 256237-050V
1- 751031		PNEUMATIC DIAGRAM	RK- 491902-010V
			B- 648109-080V
4- 751032		SUPPORT ROLLER	C- 256223-020V
			C- 256223-030V
4- 751033		SUPPORT ROLLER	C- 256223-020V
			C- 256223-030V
4- 751034		SUPPORT ROLLER	C- 256223-020V
			C- 256223-030V
4- 751035		SUPPORT ROLLER	C- 256223-020V
			C- 256223-030V
1- 751036		PANEL SURVEY	B- 648109-080V
1- 751037		PANEL SURVEY	B- 648109-080V
G1- 751038		VOLUME FLAP 250 CC	CR- 256209-030V
G1- 751038		VOLUME FLAP 250 CC	CR- 256210-030V
2- 751040		CABLE DUCT	C- 469366-010V
3- 751041		LID	C- 469366-010V
4- 751044		BRACKET	C- 469452-030V
2- 751047		LID	C- 490947-020V
			C- 752244-010V
4- 751048		SUPPORT	C- 256966-020V
2- 751049		RAIL	C- 456460-020V
			C- 456460-030V
2- 751050		RAIL	C- 456460-020V
			C- 456460-030V
1- 751051		RAILING	C- 456460-020V
			C- 456460-030V
1- 751052		RAILING	C- 456460-020V
			C- 456460-030V
1- 751053		RAILING	C- 456460-020V
			C- 456460-030V
1- 751054		SIDE PIECE	C- 456457-020V
2- 751055		STRUT	C- 456459-020V
			C- 456460-020V
			C- 751900-010V
			C- 456460-030V
3- 751056		STRUT END	C- 751900-010V
			C- 752960-010V
			C- 752971-010V
			C- 456460-020V
			C- 751900-010V
			C- 456459-030V
			C- 456460-030V
2- 751057		RAILING	C- 751900-010V
			C- 456460-020V
			C- 456460-030V
4- 751058		PIN	RK- 752638-010V
4- 751059		BRACKET	C- 271569-040V
			C- 271569-050V
4- 751060		BRACKET	C- 271569-040V

PART NO	LAST AM	DESCRIPTION	GROUP NO
4- 751061		LID	C- 271569-050V
			C- 295310-040V
			C- 295310-050V
			C- 295310-060V
1- 751064		COVER	C- 469452-030V
1- 751066		PIPE	C- 491207-010V
			C- 491207-020V
1- 751067		PIPE	C- 491207-010V
2- 751068		CABLE LEAD-IN PLATE	C- 295883-030V
1- 751070		DISTRIBUTOR BLOCK	C- 272765-050V
			C- 272765-060V
2- 751071		PIPE	RK- 751156-010V
			C- 295045-050V
			C- 295045-060V
1- 751072		SPACER PIECE	C- 295883-030V
2- 751073-0001		PIPE 240	C- 456935-020V
			C- 752898-010V
2- 751073-0002		PIPE 240	C- 456935-020V
			C- 752898-010V
2- 751074-0001		PIPE 241	C- 456935-020V
			C- 752898-010V
2- 751074-0002		PIPE 241	C- 456935-020V
			C- 752898-010V
1- 751075-0001		CABLE CONDUIT	C- 456459-020V
1- 751075-0002		CABLE CONDUIT	C- 456460-020V
			C- 456460-030V
1- 751076		CABLE DUCT	C- 469374-020V
2- 751077		LID	C- 469374-020V
			C- 469374-030V
4- 751078		BRACKET RIGHT	C- 491814-010V
4- 751079		BRACKET LEFT	C- 491815-010V
2- 751080-0001		PIPE 200	C- 456935-020V
			C- 752898-010V
2- 751080-0002		PIPE 200	C- 456935-020V
			C- 752898-010V
2- 751080-0003		PIPE 200	C- 456935-020V
			C- 752898-010V
1- 751082		PIPE CONNECTION	C- 272765-050V
			C- 272765-060V
4- 751083		PLATE	C- 272408-040V
			C- 272408-050V
4- 751085		BUSHING	C- 456100-020V
3- 751086		NIPPLE	C- 491536-010V
3- 751087		BRACKET	C- 295891-030V
C- 751088-010V	10609 87-06-22	CREASE ROLLER	B- 648111-080V
C- 751088-0201	13633 89-11-22	CREASE ROLLER	B- 648111-090V
C- 751089-0101	12278 88-11-29	PRESSURE FEED	C- 271909-040V
			C- 271909-050V
1- 751090		PLATE	C- 271909-040V
1- 751091		PLATE	C- 271909-040V
1- 751092		PLATE	C- 272408-040V
			C- 272408-050V
1- 751093		PLATE	C- 295891-030V
C- 751094-010V	9618 86-10-31	CREASE WHEEL	B- 648109-080V
4- 751095		PLUG	C- 751332-010V
4- 751096		CLAMP RING	C- 751332-010V
4- 751097		BRAKE RING	C- 751332-010V
4- 751098		FRICTION DISC	C- 751332-010V
3- 751099		LEAD-IN	C- 751332-010V
3- 751100		BEARING HOUSING	C- 751332-010V
1- 751105		PIPE 90	C- 295045-050V
			C- 295045-060V
3- 751106		PIPE 90	C- 295045-050V
			C- 295045-060V
4- 751107		PIPE	C- 295045-050V
			C- 295045-060V
4- 751108		SECURING PLATE	C- 751332-010V
2- 751109		RAIL RIGHT	C- 491259-010V
			C- 491259-020V
			C- 491259-010V
2- 751110		RAIL LEFT	RK- 751166-010V
			C- 491259-010V
			C- 491259-020V
			C- 491259-010V
3- 751117		BRACKET RIGHT	RK- 751166-010V
3- 751118		BRACKET LEFT	RK- 751166-010V
			RK- 751166-010V

PART NO	LAST AM	DESCRIPTION	GROUP NO
3- 751119		BRACKET RIGHT	C- 491259-010V
3- 751120		BRACKET LEFT	C- 491259-010V
1- 751121		CLEANING PIPE	C- 456836-030V
			C- 456836-040V
2- 751124		FRONT PLATE	C- 456100-020V
4- 751125-0001		RAIL	C- 456435-020V
4- 751125-0002		RAIL	C- 456435-030V
4- 751125-0003		RAIL	C- 295470-040V
1- 751126		PNEUMATIC DIAGRAM	RK- 751561-010V
			RK- 547986-010V
1- 751127		PNEUMATIC DIAGRAM	B- 648109-080V
1- 751128		PNEUMATIC DIAGRAM	B- 648109-080V
			RK- 491543-010V
			RK- 751569-010V
2- 751129		CONNECTION BOX	B- 648109-080V
4- 751131		SHAFT	C- 456435-020V
			C- 272021-040V
4- 751132		SHAFT	C- 272021-050V
2- 751133-0001		CARTON STATION	C- 272024-030V
4- 751143		CYLINDER BRACKET	CR- 491225-010V
			C- 272343-040V
2- 751144-0001		PIPE 201	C- 272343-050V
			C- 456935-020V
2- 751144-0002		PIPE 201	C- 752898-010V
			C- 456935-020V
2- 751144-0003		PIPE 201	C- 752898-010V
			C- 456935-020V
1- 751148		CIRQUIT DIAG.CENTRAL-LUB.	C- 752898-010V
			B- 648109-080V
			B- 648109-090V
			B- 648109-080V
			B- 648109-090V
2- 751154		RAIL	C- 456560-010V
RK- 751156-010V	12873 89-06-27	REB KIT STATION CHAIN	B- 648110-060V
			B- 648110-070V
RK- 751157-010V	13785 89-09-01	HYDRAULIC SEALINGS	B- 648110-010V
			B- 648110-060V
RK- 751158-0101	10435 87-05-15	REB KIT PAPER GUARD	B- 648110-060V
4- 751159		DOCUMENT FOLDER	RK- 751158-010V
G2- 751162		INLET PIPE	C- 456588-020V
			C- 456588-030V
4- 751163		COVER	CR- 256436-040V
			CR- 256712-040V
			CR- 256436-050V
			CR- 256712-050V
4- 751165		BUSHING	C- 272025-030V
RK- 751166-0101	12529 89-02-09	GUIDE	RK- 751296-010V
RK- 751166-0102	12529 89-02-09	GUIDE	RK- 751296-010V
RK- 751166-0103	12529 89-02-09	GUIDE	RK- 751296-010V
1- 751171		CAM	C- 751689-010V
3- 751176		TOOTHED PULLY	C- 256201-040V
			C- 256202-040V
3- 751177		PULLEY	C- 751689-010V
4- 751180		ROLLER	C- 256199-040V
4- 751182		GASKET	C- 752960-010V
			C- 752971-010V
			C- 456459-020V
			C- 456460-020V
			C- 751900-010V
			C- 456459-030V
			C- 456460-030V
4- 751183		GASKET	C- 751900-010V
			C- 752960-010V
4- 751183		GASKET	C- 752971-010V
			C- 456459-020V
			C- 456460-020V
			C- 751900-010V
			C- 456459-030V
			C- 456460-030V
4- 751191		STOP LUG	C- 751900-010V
			RK- 491744-010V
			RK- 491789-010V
			RK- 491902-010V
			RK- 751561-010V
			RK- 491789-010V
			RK- 751561-010V
2- 751195		TUBE 90	C- 469366-020V

PART NO	LAST AM	DESCRIPTION	GROUP NO
			C- 469366-030V
2- 751196		TUBE 380	C- 469366-020V
			C- 469366-030V
3- 751197		TUBE 260 (261)	C- 469366-020V
			C- 469366-030V
3- 751198		TUBE 240 (241)	C- 469366-020V
			C- 469366-030V
4- 751199		TUBE 200	C- 469366-020V
4- 751201		TUBE 201	C- 469366-020V
RK- 751202-0101	10657 87-08-27	REB KIT STRIP GUARD	B- 648110-010V
4- 751203		DOCUMENT FOLDER	RK- 751202-010V
4- 751204		TUBE 310	C- 469366-020V
			C- 469366-030V
4- 751209		PLATE	RK- 751305-010V
			RK- 751307-010V
			RK- 751305-010V
			RK- 751307-010V
			C- 441486-030V
G1- 751212		ARM	C- 256197-030V
			C- 491814-010V
			C- 491815-010V
			C- 256197-040V
			C- 491814-010V
			C- 491815-010V
G2- 751213		BEARING BRACKET	C- 491815-010V
2- 751215		PIPE	C- 469452-030V
2- 751216		PIPE	C- 469452-030V
3- 751220		FILLER CAP	C- 751373-010V
3- 751221		PIPE	C- 751373-010V
3- 751222		SPACER	C- 751406-010V
4- 751223		LID	C- 751398-010V
RK- 751228-0101	12892 89-08-15	REB KIT STRIP GUARD	B- 648110-060V
			B- 648110-070V
4- 751229		DOCUMENT FOLDER	RK- 751228-010V
4- 751230		PLAIN BEARING	C- 441304-020V
			C- 441307-020V
			C- 441486-020V
			C- 441304-020V
			C- 441307-020V
			C- 441486-020V
			C- 272021-040V
			C- 441304-020V
			C- 441307-020V
			C- 441486-030V
			C- 456309-030V
			C- 272021-050V
4- 751231		PLAIN BEARING	C- 441486-020V
			C- 441486-030V
1- 751234		HEATING PIPE	RK- 751303-010V
2- 751235		INSULATION	C- 469452-030V
			C- 751800-020V
3- 751236		RAILING	C- 456459-020V
2- 751237		RAILING	C- 456459-020V
1- 751238		RAILING	C- 456459-020V
1- 751239		RAILING	C- 456459-020V
1- 751240		RAILING	C- 456459-020V
1- 751241		PLATFORM	C- 456457-020V
2- 751242		PLATFORM	C- 456457-020V
3- 751243		TOOTHED PULLY	C- 256173-030V
			C- 256173-040V
3- 751245		FLANGE	C- 256173-030V
			C- 256173-040V
3- 751246		HOSE	C- 469452-030V
3- 751247		HOSE	C- 469452-030V
3- 751248		HOSE	C- 469452-030V
1- 751250		PIPE	C- 469452-030V
1- 751251		PIPE	C- 469452-030V
4- 751252		STOP	CR- 256844-030V
4- 751253		STOP	CR- 256845-030V
4- 751254		ROLLER	C- 256199-030V
			C- 256199-040V
4- 751255		LID	RK- 751468-010V
2- 751256		RAIL	C- 456459-020V
2- 751257		RAIL	C- 456459-020V
4- 751258		STOP	CR- 256844-030V
4- 751259		STOP	CR- 256845-030V
1- 751263		PLATE	C- 456458-020V

PART NO	LAST AM	DESCRIPTION	GROUP NO
3- 751264		BRACKET	C- 441304-030V
4- 751265		SCREW	C- 441304-030V
4- 751266		SPACER	C- 441304-030V
3- 751267		BRACKET	C- 441307-030V
4- 751274		COMPRESSION SPRING	CR- 256436-040V
4- 751280		ARM	RK- 751470-010V
			C- 295262-050V
			RK- 751470-010V
2- 751281		AIR NOZZLE	RK- 751462-010V
3- 751282		AIR NOZZLE	C- 469501-030V
			RK- 751462-010V
3- 751283		ROLLER	C- 441307-030V
3- 751284		ROLLER	C- 441307-030V
4- 751287		PLATE	C- 441307-030V
4- 751288		PLATE	C- 441307-030V
4- 751292		BRACKET	RK- 751470-010V
			C- 256233-030V
			C- 256233-040V
			C- 256233-050V
			RK- 751470-010V
3- 751293		GASKET	C- 469501-030V
			RK- 751462-010V
			RK- 751487-010V
1- 751295		HOLDER	C- 441307-030V
RK- 751296-010V	12874 89-07-04	REB KIT STATION CHAIN	B- 648110-010V
4- 751297		DOCUMENT FOLDER	RK- 751296-010V
4- 751299		DOCUMENT FOLDER	RK- 751156-010V
4- 751301		DOCUMENT FOLDER	RK- 751157-010V
RK- 751303-0101	10428 87-04-27	REB KIT HOT AIR ELEMENT	B- 648110-010V
			B- 648110-060V
4- 751304		DOCUMENT FOLDER	RK- 751303-010V
RK- 751305-0101	12875 89-06-29	REB.DIVIDED FORMING RING	B- 648110-010V
			B- 648110-060V
			B- 648110-070V
4- 751306		DOCUMENT FOLDER	RK- 751305-010V
RK- 751307-0101	12876 89-07-04	REB.DIVIDED FORMING RING	B- 648110-060V
			B- 648110-070V
4- 751308		DOCUMENT FOLDER	RK- 751307-010V
2- 751309		RAILING	C- 456460-020V
RK- 751311-0101	10428 87-04-27	REB KIT HOT AIR ELEMENT	B- 648110-010V
			B- 648110-060V
4- 751312		DOCUMENT FOLDER	RK- 751311-010V
2- 751314		CONNECTION PIPE	C- 751317-010V
4- 751315		SPACER	C- 751317-010V
3- 751316		ELBOW PIPE	C- 751317-010V
			C- 751393-010V
C- 751317-010V	12103 88-08-18	CONNECTION PIPE	C- 491243-030V
C- 751317-0101	12103 88-08-18	CONNECTION PIPE	RK- 491591-030V
4- 751318		SHAFT	C- 441486-020V
			C- 441486-030V
			C- 441486-040V
4- 751320		SHIM	RK- 491539-010V
			RK- 751488-010V
			RK- 490877-010V
			RK- 751488-010V
			C- 491897-010V
			RK- 751488-010V
			C- 491897-010V
			RK- 751488-010V
			C- 491897-010V
			RK- 751488-010V
			RK- 751570-010V
			RK- 491539-010V
			RK- 751488-010V
3- 751321		CONNECTION BOX	C- 295839-020V
			RK- 751345-010V
4- 751322		BRACKET	C- 751478-010V
			RK- 751345-010V
4- 751323		BRAKE SHOE	C- 751478-010V
			RK- 751345-010V
4- 751324		HOLDER	C- 751478-010V
			RK- 751345-010V
4- 751325		BRACKET	C- 751478-010V
			RK- 751345-010V
4- 751326		BRACKET	C- 751478-010V
			RK- 751345-010V
4- 751329		WASHER	C- 456546-010V

PART NO	LAST AM	DESCRIPTION	GROUP NO
			C- 456546-020V
3- 751331		GASKET	RK- 752170-010V
C- 751332-0101	10058 87-08-06	BRACKET	C- 752173-010V
			C- 256014-040V
			C- 456459-020V
			C- 456459-030V
			C- 456460-020V
			C- 456460-030V
C- 751332-0101		BRACKET	C- 751900-010V
3- 751333		BRACKET	C- 752960-010V
4- 751334		SPACER	C- 752971-010V
			C- 441304-030V
1- 751337		BRACKET	C- 441102-020V
3- 751341		PLATE	C- 441304-030V
			C- 752030-010V
			RK- 751469-010V
			C- 271804-040V
3- 751342		PLATE	RK- 751574-010V
			RK- 751469-010V
			RK- 751469-010V
			C- 271804-040V
2- 751343		GABLE	RK- 751574-010V
4- 751344		SPACER	RK- 751469-010V
RK- 751345-0101	10687 87-09-04	BRAKE	RK- 751468-010V
			RK- 751468-010V
			RK- 751479-010V
			RK- 751546-010V
			RK- 751548-010V
			RK- 751589-010V
			RK- 751591-010V
			RK- 751595-010V
4- 751346		DOCUMENT FOLDER	RK- 751479-010V
3- 751350-0001		SHAFT	C- 232781-040V
3- 751350-0002		SHAFT	C- 232781-040V
3- 751350-0003		SHAFT	C- 232781-040V
4- 751351		DOCUMENT FOLDER	RK- 491590-030V
C- 751352-010V	13645 90-01-12	PEROXIDE HANDLING	B- 648106-090V
3- 751357		GUARD	C- 751373-010V
2- 751362		RETURN PIPE	C- 491207-020V
2- 751364		PUMP PIPE	C- 491207-020V
3- 751366		PIPE	C- 491207-020V
4- 751372		PIPE	C- 751410-010V
C- 751373-010V	13645 90-01-12	PEROXIDE TANK	C- 751352-010V
1- 751374		PEROXIDE TANK	C- 751373-010V
1- 751375		PIPE COIL	C- 751373-010V
2- 751376		INSULATING PLATE	C- 751373-010V
2- 751377		INSULATING PLATE	C- 751373-010V
2- 751378		INSULATING PLATE	C- 751373-010V
2- 751380		FILLING PIPE	C- 751373-010V
2- 751381		CONNECTION	C- 751373-010V
3- 751382		PROTECTION PIPE	C- 751373-010V
3- 751383		LEVEL TUBE	C- 751373-010V
4- 751384		GASKET	C- 751373-010V
C- 751393-0101	10582 89-11-15	PEROXIDE PUMP	C- 751373-010V
1- 751394		EXTENSION PIPE	C- 751393-010V
G2- 751395		FLANGE	C- 751393-010V
C- 751398-010V	13645 90-01-12	PEROXIDE TANK	C- 751352-010V
1- 751399		TANK	C- 751398-010V
3- 751400		CONNECTION PIPE	C- 751398-010V
4- 751402		WASHER	C- 751398-010V
4- 751403		BRACKET	C- 751398-010V
C- 751406-010V	13645 90-01-12	HOUSING	C- 751352-010V
1- 751407		FRAME	C- 751406-010V
C- 751410-0101	10582 89-11-15	VALVE PANEL	C- 751406-010V
2- 751411		HOLDER	C- 751410-010V
G3- 751456		HOLDER	C- 491976-020V
G3- 751457		BRACKET	C- 491976-020V
2- 751459		AIR NOZZLE	C- 469501-030V
			RK- 751462-010V
4- 751460		BEARING	C- 256237-050V
			C- 256237-060V
RK- 751461-010V	11982 89-11-20	REB.KIT BLOW-OFF NOZZLE	B- 648110-010V
			B- 648110-060V
RK- 751462-0101	12569 89-02-15	AIR NOZZLE	RK- 751461-010V
RK- 751462-0102	12569 89-02-15	AIR NOZZLE	RK- 751461-010V
RK- 751462-0103	12569 89-02-15	AIR NOZZLE	RK- 751461-010V
RK- 751462-0104	12569 89-02-15	AIR NOZZLE	RK- 751461-010V
RK- 751462-0105	12569 89-02-15	AIR NOZZLE	RK- 751461-010V
4- 751463		DOCUMENT FOLDER	RK- 751461-010V
3- 751464		BLOCK	RK- 491543-010V
			RK- 751636-010V
2- 751465		CONNECTION	C- 272408-040V
			C- 272408-050V
2- 751466		CONNECTION	C- 272408-040V
4- 751467		SHAFT	RK- 491744-010V
			C- 751088-010V
			C- 751088-020V
RK- 751468-0101	10585 87-10-17	CREASE WHEEL	RK- 491543-010V
			RK- 751569-010V
RK- 751469-0101	11050 87-11-27	COVER	RK- 491543-010V
			RK- 751636-010V
RK- 751470-0101	10981 87-11-25	CLEANING EQUIPMENT	RK- 491543-010V
			RK- 751569-010V
			RK- 751636-010V
2- 751472		CARTON STATION WITH BEVEL	RK- 550129-010V
G2- 751476		BRACKET	C- 491976-020V
4- 751477		PIN	C- 272021-040V
C- 751478-0101	10626 87-09-04	BRAKE	C- 272404-050V
			C- 272404-060V
RK- 751479-0101	12879 89-08-15	BRAKE POWER FEED ROLLER	B- 648110-010V
4- 751484		CLAMPING RING	C- 751928-010V
			C- 751959-010V
			C- 751928-010V
			C- 752960-010V
			C- 752971-010V
			C- 456459-020V
			C- 456460-020V
			C- 751900-010V
			C- 751934-010V
			C- 456459-030V
			C- 456460-030V
			C- 751900-010V
			C- 752958-010V
			C- 752959-010V
4- 751485		SCREW	C- 751928-010V
			C- 751959-010V
			C- 751928-010V
			C- 752960-010V
			C- 752971-010V
			C- 456459-020V
			C- 456460-020V
			C- 751900-010V
			C- 751934-010V
			C- 456459-030V
			C- 456460-030V
			C- 751900-010V
			C- 752958-010V
			C- 752959-010V
RK- 751487-0101	9100 87-06-23	START-UP KIT	RK- 751461-010V
RK- 751488-010V	10648 87-07-02	START UP KIT PHOTOCELL	RK- 491744-010V
			RK- 491789-010V
			RK- 491902-010V
RK- 751488-0101	10648 87-07-02	START UP KIT PHOTOCELL	RK- 491543-010V
			RK- 751561-010V
			RK- 751569-010V
			RK- 751636-010V
2- 751490		CARTON STATION WITH BEVEL	RK- 550129-010V
3- 751491		ROLLER	C- 441304-030V
3- 751492		ROLLER	C- 441304-030V
3- 751493		ROLLER	C- 441304-030V
3- 751494		ROLLER	C- 441304-030V
3- 751495		ROLLER	C- 441486-040V
3- 751496		ROLLER	C- 441486-040V
3- 751497		ROLLER	C- 441486-040V
3- 751498		ROLLER	C- 441486-040V
3- 751499		ROLLER	C- 441486-040V
3- 751500		ROLLER	C- 441486-040V
3- 751501		ROLLER	C- 441486-040V
3- 751502		ROLLER	C- 456309-040V
3- 751503		COUNTER ROLLER	C- 456309-040V
4- 751504		ROLLER	C- 441000-040V
			C- 441000-050V
			RK- 751202-010V
			RK- 751228-010V

PART NO	LAST AM	DESCRIPTION	GROUP NO
4- 751505		SHEET	C- 441000-040V
			C- 441000-050V
			RK- 751202-010V
			RK- 751228-010V
4- 751509		SLIDER	C- 752628-010V
4- 751510		SLIDER	C- 752628-010V
4- 751511		LUG	C- 752628-010V
4- 751514		ADJUSTING SCREW	C- 752628-010V
4- 751515		SHAFT	C- 752628-010V
1- 751518		COVER	C- 752244-010V
4- 751519		SHAFT	C- 752244-010V
4- 751522		PLATE	C- 752628-010V
2- 751525		BRACKET	C- 752244-010V
4- 751527-0001		ADJUSTING SCREW	C- 752247-010V
			C- 752627-010V
4- 751527-0003		ADJUSTING SCREW	C- 752628-010V
			C- 752247-010V
			C- 752627-010V
RK- 751546-0101	12883 89-08-15	BRAKE POWER FEED ROLLER	C- 752628-010V
			B- 648110-060V
4- 751547		DOCUMENT FOLDER	B- 648110-070V
RK- 751548-0101	12884 89-08-15	BRAKE POWER FEED ROLLER	RK- 751546-010V
			B- 648110-060V
4- 751549		DOCUMENT FOLDER	B- 648110-070V
G2- 751552		ARM	RK- 751548-010V
3- 751553		ARM	CR- 256436-050V
4- 751554-0001		SHAFT	CR- 256436-050V
4- 751554-0002		SHAFT	CR- 256436-050V
4- 751555		BUSHING	CR- 256436-050V
3- 751556		PNEUMATIC DIAGRAM	CR- 256436-050V
			RK- 751479-010V
3- 751556		PNEUMATIC DIAGRAM	RK- 751589-010V
			RK- 751591-010V
			RK- 751546-010V
			RK- 751548-010V
			RK- 751595-010V
			RK- 751546-010V
4- 751557		SLEEVE	RK- 751548-010V
RK- 751561-010V	11989 89-08-15	REB.KIT PHOTOCELL UNIT	RK- 751595-010V
			CR- 256436-050V
4- 751562		DOCUMENT FOLDER	B- 648110-060V
RK- 751569-0101	11985 89-08-15	REB.KIT PHOTOCELL UNIT	B- 648110-070V
			RK- 751561-010V
RK- 751570-0101	10784 87-11-26	PHOTOCELL UNIT	B- 648110-060V
G3- 751573		ARM	B- 648110-070V
RK- 751574-0101	10784 87-11-26	COVER	RK- 751569-010V
G2- 751575		RULERPART R	C- 456546-020V
G2- 751576		RULERPART L	RK- 751569-010V
2- 751577		RULERPART R	CR- 256204-050V
2- 751578		RULERPART L	CR- 256205-050V
4- 751579		ADJUSTING SCREW	CR- 256204-050V
			CR- 256205-050V
4- 751580		SHIM	CR- 256204-050V
			CR- 256205-050V
4- 751581		DOCUMENT FOLDER	RK- 751569-010V
2- 751588		BEARING	C- 272404-060V
RK- 751589-0101	12880 89-08-15	BRAKE POWER FEED ROLLER	B- 648110-010V
4- 751590		DOCUMENT FOLDER	RK- 751589-010V
RK- 751591-0101	12881 89-08-15	BRAKE POWER FEED ROLLER	B- 648110-010V
4- 751592		DOCUMENT FOLDER	RK- 751591-010V
RK- 751595-0101	12882 89-08-15	BRAKE POWER FEED ROLLER	B- 648110-060V
			B- 648110-070V
4- 751596		DOCUMENT FOLDER	RK- 751595-010V
1- 751598		BRACKET	C- 469452-030V
3- 751603		BRACKET	RK- 751307-010V
			C- 441488-030V
4- 751604		SPRING	C- 295402-020V
			C- 295667-030V
			C- 295402-020V
			C- 295667-030V
			C- 295402-020V
			C- 295667-030V
			C- 469091-020V
3- 751605		BRACKET	RK- 751305-010V
			C- 441488-030V

PART NO	LAST AM	DESCRIPTION	GROUP NO
3- 751616		FLOAT	RK- 520129-010V
			RK- 520130-010V
			RK- 520094-010V
			RK- 520096-010V
			RK- 520129-010V
			RK- 520130-010V
4- 751631		CONNECTION BOX	C- 451348-020V
RK- 751636-0101	11984 89-08-15	REB.KIT PHOTOCELL UNIT	B- 648110-010V
4- 751637		DOCUMENT FOLDER	RK- 751636-010V
3- 751638		PNEUMATIC DIAGRAM	RK- 751636-010V
4- 751659		ADJUSTING SCREW	RK- 491388-010V
			C- 491787-010V
			C- 491788-010V
			C- 491787-020V
			C- 491788-020V
4- 751659		ADJUSTING SCREW	RK- 491388-010V
3- 751660		PIPE	C- 271866-050V
3- 751661		PIPE	C- 271866-050V
3- 751662		PIPE	C- 271866-050V
3- 751663		PIPE	C- 271866-050V
3- 751664		PIPE	C- 271866-050V
3- 751665		PIPE	C- 271866-050V
3- 751666		PIPE	C- 271866-050V
2- 751667		TROUGH	C- 751691-010V
1- 751668		PLATE	C- 751691-010V
1- 751669		ARM	C- 751691-010V
2- 751670		BRACKET	C- 751691-010V
3- 751671		SHAFT	C- 751689-010V
3- 751672		SPACER SLEEVE	C- 751689-010V
2- 751673		COVER	C- 271804-040V
2- 751674		COVER	C- 751702-010V
4- 751679		SHAFT	C- 752173-010V
4- 751680		SCREW	C- 752173-010V
3- 751682		SHAFT	C- 751689-010V
4- 751684		STOP LUG	C- 272021-040V
			C- 272021-050V
C- 751689-010V	13632 89-11-17	CAM PACK	C- 751691-010V
C- 751691-0101	13632 89-11-17	IMPULSE TRANSMITTER	B- 648106-090V
2- 751692		TOUCH GUARD	C- 256014-040V
			C- 256014-050V
3- 751696		FOLDING BAR LEFT	C- 491259-010V
			C- 491259-020V
			C- 491259-010V
			RK- 751166-010V
3- 751697		FOLDING BAR RIGHT	C- 491259-010V
			C- 491259-020V
			C- 491259-010V
			RK- 751166-010V
4- 751698		HOLDER	C- 256014-040V
			C- 256014-050V
4- 751699		WASHER	C- 256014-040V
			C- 256014-050V
C- 751702-0101	14256 89-12-09	COVER	B- 648111-090V
3- 751703		SHAFT	C- 751689-010V
3- 751707		FOLDING BAR RIGHT	C- 491259-010V
			C- 491259-020V
			C- 491259-010V
			RK- 751166-010V
3- 751708		FOLDING BAR LEFT	C- 491259-010V
			C- 491259-020V
			C- 491259-010V
			RK- 751166-010V
3- 751709		FOLDING BAR RIGHT	C- 491259-010V
			C- 491259-020V
			C- 491259-010V
			RK- 751166-010V
3- 751710		FOLDING BAR LEFT	C- 491259-010V
			C- 491259-020V
			C- 491259-010V
			RK- 751166-010V
C- 751718-0101	12932 89-06-05	DATING WHEEL HOLDER	RK- 752638-010V
			C- 752645-010V
			C- 752646-010V
			C- 752913-010V
C- 751718-0101		DATING WHEEL HOLDER	C- 752914-010V
4- 751719		SPACER	RK- 520070-010V
2- 751722		PIPE-LINE	C- 469501-030V

PART NO	LAST AM	DESCRIPTION	GROUP NO
3- 751724		BLOCK	C- 272404-060V
3- 751725		PLATE	C- 271468-040V
4- 751727		SLIDER	C- 271468-040V
4- 751729		WASHER	C- 271468-040V
4- 751730		CLAMP RING	C- 272021-040V
			C- 272021-050V
3- 751731		BEARING COVER	RK- 752035-010V
			C- 256084-040V
3- 751732		BRACKET	RK- 752035-010V
			C- 256084-040V
3- 751733		HEATING PIPE	RK- 752035-010V
			C- 256095-040V
4- 751734		LID	RK- 752035-010V
4- 751735		GASKET	RK- 752035-010V
2- 751736		PIPE	RK- 752035-010V
			C- 256084-040V
2- 751737-0001		PIPE	RK- 752035-010V
2- 751737-0002		PIPE	RK- 752035-010V
4- 751740		STOP	RK- 752035-010V
			C- 256084-040V
3- 751741-0001		V-BELT PULLEY	C- 271128-040V
3- 751741-0002		V-BELT PULLEY	C- 271128-040V
3- 751741-0003		V-BELT PULLEY	C- 271128-040V
3- 751741-0004		V-BELT PULLEY	C- 271128-040V
3- 751742-0002		V-BELT PULLEY	C- 256173-040V
3- 751742-0003		V-BELT PULLEY	C- 256173-040V
3- 751743		PISTON	CR- 256212-040V
			CR- 256213-040V
			CR- 256212-040V
			CR- 256213-040V
			CR- 256212-050V
			CR- 256213-050V
1- 751745		CABLE CONDUIT	C- 456460-020V
			C- 456460-030V
2- 751756		LID	C- 752173-010V
2- 751757		BRACKET	C- 752173-010V
3- 751759		GASKET	C- 752173-010V
4- 751760		CYLINDER BRACKET	RK- 752035-010V
			C- 256084-040V
3- 751761		ARM	C- 256014-050V
4- 751762		SHAFT	C- 256014-050V
4- 751763		BRACKET	C- 256014-050V
4- 751769		SLEEVE	CR- 256212-040V
			CR- 256213-040V
			CR- 256212-040V
			CR- 256213-040V
			CR- 256212-050V
			CR- 256213-050V
1- 751770		CABLE CONDUIT	C- 456459-020V
C- 751796-010V	12422 89-05-23	JUMBO REEL EQUIPMENT	C- 77091-020V
C- 751800-010V	12419 89-01-19	COMPRESSOR UNIT	B- 648111-080V
C- 751800-020V	8833 89-12-02	COMPRESSOR UNIT	B- 648111-090V
1- 751801		BRACKET	C- 751800-010V
			C- 751800-020V
1- 751802		PIPE	C- 751800-010V
			C- 751800-020V
1- 751803		PIPE	C- 751800-010V
			C- 751800-020V
1- 751804		PIPE	C- 751800-010V
			C- 751800-020V
1- 751805		BRACKET	C- 751800-010V
			C- 751800-020V
3- 751806		LEG	C- 751860-010V
1- 751807		FRAME	C- 751860-010V
1- 751808		COVER	C- 751800-010V
			C- 751800-020V
3- 751809		PIPE	C- 751800-010V
			C- 751800-020V
3- 751810		PIPE	C- 751800-010V
			C- 751800-020V
4- 751811		PIPE	C- 751800-010V
			C- 751800-020V
3- 751812		PIPE	C- 751800-010V
			C- 751800-020V
3- 751813		PIPE	C- 751800-010V
			C- 751800-020V
1- 751814		TUBE	C- 491207-010V

PART NO	LAST AM	DESCRIPTION	GROUP NO
1- 751815		TUBE	C- 491207-010V
1- 751816		FRAME	C- 256843-040V
1- 751817		PEROXIDE TANK	C- 491243-030V
2- 751818		CONNECTION TUBE	C- 751317-010V
1- 751819		PLATE	C- 751860-010V
2- 751820		TUBE	C- 491207-010V
1- 751821		RETURN TUBE	C- 491207-010V
1- 751822		TUBE	C- 491207-010V
1- 751823		TUBE	C- 491207-010V
1- 751824		PIPE COIL	C- 491243-030V
3- 751825		CONNECTION	C- 491243-030V
3- 751826		BRACKET	C- 491243-030V
1- 751827		CABLE CONDUIT	C- 751900-010V
1- 751828		CONNECTION PIPE	C- 271866-040V
			C- 271866-050V
2- 751829		PLATE	C- 751860-010V
2- 751830		INSULATING PLATE	C- 491243-030V
2- 751831		INSULATING PLATE	C- 491243-030V
2- 751832		INSULATING PLATE	C- 491243-030V
2- 751833		INSULATING PLATE	C- 491243-030V
2- 751834		INSULATING PLATE	C- 491243-030V
2- 751835		GUSSET PLATE, LEFT	C- 751885-010V
4- 751836		TUBE	C- 271866-040V
2- 751837		TUBE	C- 271866-040V
1- 751838		TUBE	C- 271866-040V
			C- 271866-050V
3- 751839		TUBE	C- 271866-040V
			C- 271866-050V
2- 751840		TUBE	C- 271866-040V
			C- 271866-050V
1- 751841		TUBE	C- 271866-040V
			C- 271866-050V
2- 751842		TUBE	C- 271866-040V
			C- 271866-050V
2- 751843		TUBE	C- 271866-040V
			C- 271866-050V
3- 751844		BRACKET	C- 271866-040V
			C- 271866-050V
2- 751846		BRACKET	C- 491207-010V
1- 751847		MACHINE BODY	C- 256843-040V
			C- 256843-050V
1- 751848		CABLE CONDUIT	C- 751900-010V
2- 751849		DOOR	C- 469535-010V
1- 751850		FRAME	C- 751860-010V
1- 751851		PLATFORM	C- 751860-010V
1- 751852		PLATFORM	C- 751860-010V
1- 751853		PLATFORM	C- 751860-010V
2- 751854		PLATE	C- 752960-010V
			C- 752971-010V
			C- 751860-010V
			C- 751932-010V
			C- 456457-030V
2- 751855		PLATE	C- 751860-010V
			C- 752960-010V
			C- 752971-010V
			C- 751860-010V
			C- 456457-030V
2- 751856		PLATE	C- 751860-010V
			C- 752960-010V
			C- 752971-010V
			C- 751860-010V
1- 751857		PLATFORM	C- 751860-010V
1- 751858		PLATFORM	C- 751860-010V
1- 751859		PLATFORM	C- 751860-010V
C- 751860-010V	12423 89-02-13	PLATFORM-FRONT	B- 648102-080V
			B- 648102-090V
1- 751861		COVER	C- 751885-010V
4- 751862		COLUMN	C- 751860-010V
1- 751863		CABLE DUCT	C- 751860-010V
1- 751864		CABLE DUCT	C- 751860-010V
2- 751865		LID	C- 751860-010V
2- 751866		LID	C- 751860-010V
4- 751867		SPACER	C- 751860-010V
4- 751868		SPACER	C- 752312-010V
3- 751870		GUSSET PLATE UPPER	C- 751885-010V
3- 751871		GUSSET PLATE LOWER	C- 751885-010V
2- 751872		COVER PLATE	C- 751885-010V

PART NO	LAST AM	DESCRIPTION	GROUP NO
2- 751873		COVER PLATE	C- 751885-010V C- 271513-050V
2- 751874		COVER PLATE	C- 751885-010V C- 271513-050V
2- 751875		COVER PLATE, TOP	C- 751885-010V C- 751885-020V
2- 751876		PIPE	C- 491083-020V
4- 751877		CABLE DUCT	C- 271569-040V C- 271569-050V
2- 751878		CABLE DUCT	C- 751860-010V
2- 751879		LID	C- 751860-010V
2- 751880		TUBE	C- 271866-040V C- 271866-050V
2- 751881		TUBE	C- 271866-040V C- 271866-050V
3- 751882		COVER PLATE	C- 751885-010V
3- 751884		COVER PLATE	C- 751885-010V C- 271513-050V
C- 751885-0101	13218 89-06-27	COVER PLATE	C- 751885-020V B- 648106-080V
C- 751885-0201	14200 90-02-13	COVER PLATES	B- 648106-090V
1- 751886		PIPE	C- 491083-020V
2- 751887		HOLDER	C- 237776-040V
1- 751888		RAILING	C- 752960-010V C- 752971-010V C- 751900-010V C- 456459-030V
1- 751889		RAILING	C- 751900-010V C- 752960-010V C- 752971-010V C- 751900-010V C- 456459-030V
2- 751890		RAILING	C- 751900-010V C- 752959-010V C- 752960-010V C- 752971-010V C- 751900-010V C- 456459-030V
1- 751891		RAILING	C- 751900-010V C- 751934-010V C- 752958-010V C- 752959-010V
2- 751892-0001		RAILING	C- 751934-010V
2- 751892-0002		RAILING	C- 751934-010V
1- 751893		RAILING	C- 752960-010V C- 752971-010V C- 751900-010V
1- 751894		RAILING	C- 751900-010V
1- 751895		RAILING	C- 751900-010V C- 751934-010V
1- 751896		HOLDER	C- 751900-010V C- 752960-010V C- 752971-010V C- 751900-010V C- 456459-030V
1- 751897		RAILING	C- 751900-010V C- 751934-010V C- 752958-010V C- 752959-010V
1- 751898		RAIL RIGHT	C- 751959-010V C- 751934-010V C- 752958-010V C- 752959-010V
1- 751899		RAIL LEFT	C- 751959-010V C- 751934-010V C- 752958-010V C- 752959-010V
C- 751900-010V	12106 88-10-26	RAILING, FRONT	B- 648102-080V B- 648102-090V C- 751860-010V C- 751900-010V C- 751959-010V C- 752958-010V C- 752959-010V
1- 751901		PLATFORM	C- 751923-010V
1- 751902		RAILING	C- 751924-010V
1- 751903		RAILING	C- 751932-010V
1- 751904		SIDE PIECE	
1- 751905		SIDE PIECE	
1- 751906		FRAME	

PART NO	LAST AM	DESCRIPTION	GROUP NO
1- 751908		PLATFORM	C- 751932-010V C- 752958-010V C- 752959-010V C- 751959-010V C- 751932-010V C- 751932-010V C- 751932-010V C- 751932-010V C- 490947-020V C- 751932-010V C- 751932-010V C- 271866-040V C- 271866-050V C- 751932-010V C- 752958-010V C- 752959-010V C- 751932-010V C- 751924-010V C- 751923-010V C- 751932-010V C- 751932-010V C- 752958-010V C- 752959-010V C- 751932-010V C- 751959-010V C- 752958-010V C- 752959-010V C- 751932-010V C- 752958-010V C- 751932-010V C- 752958-010V C- 752959-010V C- 751932-010V C- 752958-010V C- 752959-010V C- 752971-010V C- 751900-010V C- 752959-010V C- 77091-020V C- 77091-030V C- 751932-010V C- 751932-010V C- 751932-010V
1- 751908		PLATFORM	
1- 751909		PLATFORM	
1- 751910		PLATFORM	
1- 751911		PLATFORM	
1- 751912		PLATFORM	
1- 751913		FRAME	
2- 751914		GUARD	
1- 751916		FRAME	
1- 751917		PLATFORM	
2- 751918		BRACKET	
1- 751919		LEG	
2- 751920		PLATE	
3- 751921-0001		STEP	
3- 751921-0002		STEP	
2- 751922		PLATE	
C- 751923-0101	12423 89-02-13	LADDER	
C- 751924-0101	12423 89-02-13	LADDER	
C- 751924-0102	12423 89-02-13	LADDER	
3- 751925		BRACKET	
2- 751926		BRACKET	
2- 751927		RAILING	
C- 751928-010V	12607 89-02-06	PLATFORM	
1- 751929		PLATFORM	
1- 751930		PLATFORM	
2- 751931		BRACKET	
C- 751932-010V	11733 88-11-23	PLATFORM REAR (WALLASSY.)	B- 648102-080V B- 648102-080V
C- 751934-010V	11733 88-11-23	RAILING REAR (WALLASSY.)	C- 751928-010V
1- 751936		LEG	C- 751928-010V
4- 751937		BRACKET	C- 751928-010V
1- 751938		BEAM	C- 751928-010V
2- 751940		BEAM	C- 751928-010V
3- 751941		BEAM	C- 751928-010V
1- 751942		PLATFORM	C- 751928-010V
2- 751943		PLATFORM	C- 751928-010V
1- 751944		PLATFORM	C- 751928-010V
1- 751945		PLATFORM	C- 751928-010V
2- 751946		PLATFORM	C- 751928-010V
1- 751948		RAILING	C- 751928-010V C- 752960-010V C- 752971-010V C- 751900-010V C- 751934-010V C- 456459-030V C- 751900-010V C- 752958-010V C- 752959-010V
1- 751948		RAILING	C- 751928-010V C- 751928-010V C- 751928-010V C- 752959-010V C- 751928-010V C- 752960-010V C- 752971-010V C- 751934-010V C- 456459-030V C- 752958-010V C- 751928-010V C- 751928-010V C- 752960-010V
3- 751949		RAILING	
1- 751950		RAILING	
3- 751951		RAILING	
1- 751952		RAILING	
1- 751953		RAILING	
1- 751954		RAILING	

PART NO	LAST AM	DESCRIPTION	GROUP NO
			C- 752971-010V
			C- 751900-010V
1- 751955		RAILING	C- 751928-010V
1- 751956		RAIL	C- 751928-010V
			C- 752960-010V
			C- 752971-010V
1- 751957		RAIL	C- 456459-030V
			C- 751928-010V
			C- 752960-010V
1- 751958		SIDE PIECE	C- 752971-010V
			C- 456459-030V
			C- 751928-010V
			C- 752960-010V
			C- 752971-010V
C- 751959-0101	12422 89-05-23	RAILING / PLATFORM	C- 456457-030V
2- 751960		COVER PLATE	C- 77091-020V
3- 751961		LEG	C- 271513-050V
3- 751962		LEG	C- 456458-030V
3- 751964		FLOAT	C- 456458-030V
			RK- 520129-010V
			RK- 520130-010V
			RK- 520094-010V
			RK- 520096-010V
			RK- 520129-010V
			RK- 520130-010V
3- 751965		TUBE SUPPORT	C- 441307-030V
C- 751968-010V	11717 89-06-27	PAPER GUIDE	C- 272404-060V
4- 751972		SPRING HOLDER	C- 751968-010V
2- 751979		RAIL	C- 272084-030V
4- 751980		HOLDER	C- 272084-030V
3- 751981		SLIDE	C- 272084-030V
4- 751982		LINK ARM	C- 272084-030V
3- 751984		STRUT	C- 272084-030V
4- 751986		SPACER RING	C- 752628-010V
2- 751994		PIPE	C- 271866-050V
4- 752001		RING	C- 458383-020V
3- 752002		BRACKET	C- 469452-030V
1- 752003		GUIDE	C- 752030-010V
4- 752004		BRACKET	C- 751928-010V
2- 752005		GABLE	C- 469366-020V
2- 752006		LID	C- 469366-020V
4- 752007		HOLDER	C- 76402-010V
G2- 752009		RULERPART R	CR- 256204-050V
2- 752010		RULERPART R	CR- 256204-050V
G2- 752011		RULERPART L	CR- 256205-050V
2- 752012		RULERPART L	CR- 256205-050V
4- 752013		ELBOW PIPE	C- 256237-050V
G2- 752014		RULERPART R	CR- 256204-050V
2- 752015		RULERPART R	CR- 256204-050V
G2- 752016		RULERPART L	CR- 256205-050V
2- 752017		RULERPART L	CR- 256205-050V
1- 752018		HOLDER	C- 752029-010V
4- 752019		FASTENER	C- 752029-010V
2- 752020		DOOR	C- 752042-010V
3- 752021		SHAFT	C- 752029-010V
4- 752022		SUPPORT	C- 752029-010V
1- 752023		MACHINE BODY	C- 752049-010V
4- 752026		BRACKET	C- 751928-010V
4- 752027		BRACKET	C- 751928-010V
C- 752029-0101	11776 88-06-14	CONV.UNREEL.D. JUMBO REEL	C- 752046-010V
C- 752030-0101	11778 88-06-14	BRAKE	C- 752046-010V
RK- 752035-0101	11865 89-09-27	CHANGE-OVER VALVE	RK- 533177-010V
			RK- 553820-010V
RK- 752035-0102	11865 89-09-27	CHANGE-OVER VALVE	RK- 533177-010V
			RK- 553820-010V
RK- 752035-0103	11865 89-09-27	CHANGE-OVER VALVE	RK- 553820-010V
RK- 752035-0104	11865 89-09-27	CHANGE-OVER VALVE	RK- 553820-010V
4- 752038		SHIM	C- 456309-040V
C- 752042-0101	11776 88-06-14	DOOR	C- 752046-010V
C- 752046-010V	12422 89-05-23	ROLLER UNIT	C- 751796-010V
4- 752047		BUSHING	C- 256238-040V
			C- 456309-030V
			C- 456309-040V
2- 752048-0002		CARTON STATION	RK- 550129-010V
C- 752049-0101	12764 89-05-30	MACHINE BODY	C- 752046-010V
4- 752051		SPLICING DEVICE	C- 751928-010V
2- 752052		PLATE	C- 456458-030V

PART NO	LAST AM	DESCRIPTION	GROUP NO
2- 752053		PLATE	C- 456458-030V
2- 752056		HOLDER	C- 752784-010V
4- 752057		STOP	C- 271017-030V
4- 752084		SPRING	C- 751968-010V
4- 752085		SPRING	C- 751968-010V
2- 752092		SIDE PLATE	C- 271114-040V
3- 752093		HOLDER	C- 271114-040V
4- 752098		LINK	C- 256237-050V
			C- 256237-060V
1- 752100		CABLE DUCT	C- 469366-020V
1- 752101		CABLE DUCT	C- 469368-020V
3- 752102		LID	C- 469366-020V
3- 752103		LID	C- 469366-020V
			C- 469366-030V
4- 752104		LOCK	C- 469366-020V
4- 752105		COMPRESSION SPRING	RK- 491388-010V
1- 752113		BEARING HOUSING	CR- 256204-050V
			CR- 256205-050V
4- 752115		PLUNGER	CR- 256204-050V
			CR- 256205-050V
3- 752116		CATCH	CR- 256204-040V
			CR- 256205-040V
			CR- 256204-040V
			CR- 256205-040V
			CR- 256204-050V
3- 752116		CATCH	CR- 256205-050V
3- 752117		CATCH	CR- 256212-040V
			CR- 256213-040V
			CR- 256212-040V
			CR- 256213-040V
			CR- 256212-050V
			CR- 256213-050V
2- 752125		CONNECTION BOX	C- 456435-030V
3- 752126		FORMING ROLLER	C- 441304-030V
3- 752127		FORMING ROLLER	C- 441304-030V
3- 752128		FORMING ROLLER	C- 441304-030V
3- 752129		FORMING ROLLER	C- 441307-030V
3- 752130		FORMING ROLLER	C- 441307-030V
3- 752131		FORMING ROLLER	C- 441486-040V
3- 752132		FORMING ROLLER	C- 441486-040V
3- 752133		FORMING ROLLER	C- 441486-040V
3- 752134		FORMING ROLLER	C- 441486-040V
3- 752135		FORMING ROLLER	C- 441486-040V
3- 752136		FORMING ROLLER	C- 441486-040V
3- 752137		FORMING ROLLER	C- 441486-040V
3- 752138		FORMING ROLLER	C- 456309-040V
3- 752140		COUNTER ROLLER	C- 456309-040V
3- 752141		FORMING ROLLER	C- 441304-030V
3- 752142		FORMING ROLLER	C- 441304-030V
3- 752143		FORMING ROLLER	C- 441304-030V
3- 752144		FORMING ROLLER	C- 441307-030V
3- 752145		FORMING ROLLER	C- 441307-030V
3- 752146		FORMING ROLLER	C- 441486-040V
3- 752147		FORMING ROLLER	C- 441486-040V
3- 752148		FORMING ROLLER	C- 441486-040V
3- 752149		FORMING ROLLER	C- 441486-040V
3- 752150		FORMING ROLLER	C- 441486-040V
3- 752151		FORMING ROLLER	C- 441486-040V
3- 752152		FORMING ROLLER	C- 441486-040V
3- 752153		FORMING ROLLER	C- 456309-040V
3- 752155		COUNTER ROLLER	C- 456309-040V
4- 752156		BUSHING	C- 441304-030V
			C- 441486-040V
4- 752169		SHAFT	CR- 256844-030V
			CR- 256845-030V
			CR- 256844-030V
			CR- 256845-030V
			CR- 256844-030V
			CR- 256845-030V
			CR- 256844-030V
			CR- 256845-030V
RK- 752170-0101	12171 88-09-14	REB. KIT VALVE PLUNGES	B- 648110-010V
			B- 648110-060V
			B- 648110-070V
4- 752171		DOCUMENT FOLDER	RK- 752170-010V
C- 752173-010V	13604 89-11-24	LID	C- 256014-050V
1- 752174		HEATING PIPE	C- 256055-060V

PART NO	LAST AM	DESCRIPTION	GROUP NO
			RK- 520096-010V
			RK- 520129-010V
			RK- 520130-010V
4- 752417		WASHER	C- 752173-010V
3- 752418		LEG	C- 456457-020V
3- 752419		BRACKET	C- 256084-040V
1- 752420		PLATE	C- 271909-050V
4- 752425		LINK	C- 752671-010V
			C- 752672-010V
2- 752426		PLATFORM RIGHT	C- 456457-020V
2- 752428		HOSE	C- 456836-030V
			C- 456836-040V
1- 752432		PNEUMATIC DIAGRAM	B- 648109-090V
1- 752433		PNEUMATIC DIAGRAM	B- 648109-090V
1- 752434		PNEUMATIC DIAGRAM	B- 648109-090V
1- 752435		PNEUMATIC DIAGRAM	B- 648109-090V
1- 752439		COVER	C- 469374-030V
1- 752440		BOX	C- 295470-040V
1- 752441		CABLE DUCT	C- 469374-030V
3- 752462		TRIMMING ROLLER PLUS	C- 77093-020V
3- 752463		TRIMMING ROLLER MINUS	C- 77093-020V
3- 752464		TRIMMING ROLLER PLUS	C- 77093-020V
3- 752465		TRIMMING ROLLER MINUS	C- 77093-020V
3- 752466		TRIMMING ROLLER PLUS	C- 77093-020V
3- 752467		TRIMMING ROLLER MINUS	C- 77093-020V
1- 752469		RAILING	C- 751928-010V
1- 752470		RAILING	C- 751928-010V
2- 752473		PAPER GUARD	C- 752474-010V
C- 752474-0101	12607 89-02-06	PAPER GUARD	C- 751928-010V
4- 752476		SCREW	CR- 256204-050V
4- 752476		SCREW	CR- 256205-050V
			CR- 256212-050V
			CR- 256213-050V
G1- 752485		SUPPORTING ARM	C- 272765-060V
2- 752489		INDUCTOR 180-250CC	C- 295523-030V
			CR- 256214-030V
			C- 295523-030V
			CR- 256214-030V
			C- 295523-030V
2- 752490		TEXT PLATE	RK- 520068-010V
4- 752491		CLAMP	C- 751691-010V
C- 752495-010V	12775 89-12-02	CONNECTION	C- 456836-040V
2- 752496		CLEANING PIPE	C- 752495-010V
3- 752497		NUT	C- 752495-010V
3- 752498		CATCH	C- 752495-010V
3- 752499		RING	C- 752495-010V
4- 752501		SLEEVE	RK- 752702-010V
1- 752502		PROTECTIVE COVER	C- 752567-010V
2- 752503		PROTECTIVE COVER	C- 752567-010V
2- 752504		COVER PLATE	C- 752567-010V
3- 752505		BRACKET	C- 752567-010V
1- 752510		GABLE	C- 456321-030V
			C- 456322-030V
1- 752511		GABLE	C- 456321-030V
			C- 456322-030V
2- 752512		BEARING BRACKET	C- 456321-030V
			C- 456322-030V
2- 752517		CLEANING PIPE	C- 752495-010V
4- 752519-0001		PIN	C- 272021-050V
4- 752519-0002		PIN	C- 272021-050V
3- 752521		CATCH	C- 752495-010V
2- 752526		PLATE	C- 752645-010V
			C- 752646-010V
			C- 752913-010V
2- 752527		BRACKET	C- 752914-010V
			C- 752645-010V
			C- 752646-010V
			C- 752913-010V
			C- 752914-010V
2- 752528		COVER	C- 752645-010V
			C- 752646-010V
			C- 752913-010V
3- 752529		BEARING COVER	C- 752914-010V
			C- 752645-010V
			C- 752646-010V
			C- 752913-010V
			C- 752914-010V

PART NO	LAST AM	DESCRIPTION	GROUP NO
4- 752530		SPROCKET	C- 752645-010V
			C- 752646-010V
			C- 752913-010V
			C- 752914-010V
4- 752531		BRACKET	C- 752645-010V
			C- 752646-010V
			C- 752913-010V
			C- 752914-010V
2- 752533		GUARD	C- 752645-010V
			C- 752646-010V
4- 752534		PLATE	C- 752645-010V
			C- 752646-010V
3- 752535		SHAFT	C- 752645-010V
			C- 752646-010V
			C- 752913-010V
			C- 752914-010V
3- 752536-0001		SHAFT	C- 752645-010V
			C- 752646-010V
			C- 752913-010V
			C- 752914-010V
3- 752536-0002		SHAFT	C- 752645-010V
			C- 752646-010V
			C- 752913-010V
			C- 752914-010V
3- 752537		BENDING ROLLER	C- 752645-010V
			C- 752646-010V
			C- 752913-010V
			C- 752914-010V
3- 752538		SHAFT	C- 752645-010V
			C- 752646-010V
			C- 752913-010V
			C- 752914-010V
3- 752539		PLATE	C- 752645-010V
			C- 752646-010V
4- 752541		BRACKET	C- 752645-010V
			C- 752646-010V
			C- 752913-010V
			C- 752914-010V
3- 752542-0001		BENDING ROLLER	C- 752645-010V
			C- 752646-010V
			C- 752913-010V
			C- 752914-010V
3- 752542-0002		BENDING ROLLER	C- 752645-010V
			C- 752646-010V
			C- 752913-010V
			C- 752914-010V
3- 752543-0001		SHAFT	C- 752645-010V
			C- 752646-010V
			C- 752913-010V
			C- 752914-010V
3- 752543-0002		SHAFT	C- 752645-010V
			C- 752646-010V
			C- 752913-010V
			C- 752914-010V
4- 752544-0001		SHIM	C- 752645-010V
			C- 752646-010V
			C- 752913-010V
			C- 752914-010V
4- 752544-0002		SHIM	C- 752645-010V
			C- 752646-010V
			C- 752913-010V
			C- 752914-010V
4- 752549		SPACER	C- 752244-010V
3- 752550		BRACKET	C- 752244-010V
2- 752552		PENDULUM ARM	C- 272084-030V
3- 752553		HOLDER	C- 272084-030V
4- 752554		SPACER	C- 491976-020V
3- 752555		HOLDER	C- 752049-010V
4- 752556		SPACER	C- 752671-010V
			C- 752672-010V
3- 752559		STOP PERF 1	C- 752671-010V
3- 752560		STOP PERF 2	C- 752672-010V
3- 752561		STOP PERF 1	C- 752671-010V
3- 752562		STOP PERF 2	C- 752672-010V
3- 752563		STOP PERF 1	C- 752671-010V
3- 752564		STOP PERF 2	C- 752672-010V
3- 752565		SPACER	C- 491976-020V

PART NO	LAST AM	DESCRIPTION	GROUP NO
4- 752175		STRUT	RK- 752035-010V
			C- 456555-030V
2- 752176		PROTECTIVE COVER	C- 272560-050V
2- 752178		CLAMP	C- 751968-010V
2- 752179		CLAMP	C- 751968-010V
2- 752180		GUIDING ARBOR	C- 751968-010V
2- 752181		GUIDING ARBOR	C- 751968-010V
2- 752182		GUIDING ARBOR	C- 751968-010V
3- 752183		SPRING HOLDER	C- 751968-010V
3- 752184		SPRING HOLDER	C- 751968-010V
4- 752185		SHAFT	C- 441486-040V
4- 752186-0001		SHAFT	C- 441307-030V
4- 752186-0002		SHAFT	C- 441304-030V
4- 752186-0003		SHAFT	C- 441486-040V
			C- 456309-040V
4- 752186-0004		SHAFT	C- 441307-030V
			C- 441486-040V
4- 752186-0005		SHAFT	C- 441304-030V
			C- 441486-040V
			C- 456309-040V
4- 752186-0006		SHAFT	C- 441304-030V
			C- 441486-040V
4- 752186-0007		SHAFT	C- 441486-040V
4- 752186-0008		SHAFT	C- 441304-030V
4- 752186-0009		SHAFT	C- 441304-030V
4- 752186-0010		SHAFT	C- 441307-030V
4- 752186-0011		SHAFT	C- 441307-030V
4- 752186-0012		SHAFT	C- 456309-040V
4- 752187		SHAFT	C- 441304-030V
4- 752191		ADAPTER	RK- 520068-010V
4- 752192		NUT	RK- 520068-010V
4- 752193		NUT	RK- 520071-010V
			RK- 520095-010V
			RK- 520071-010V
4- 752194		LUG	C- 752627-010V
			C- 752628-010V
4- 752195		LUG	C- 752247-010V
			C- 752627-010V
			C- 752628-010V
4- 752196		CLAMP	C- 752247-010V
			C- 752628-010V
G1- 752197		BRACKET	C- 752627-010V
4- 752199		PLATE	C- 752247-010V
			C- 752627-010V
			C- 752628-010V
G1- 752200		BRACKET	C- 752645-010V
			C- 752646-010V
			C- 752913-010V
			C- 752914-010V
1- 752206		PAPER SUPPORT	C- 272359-030V
1- 752207		PAPER SUPPORT	C- 272359-030V
1- 752208		PAPER SUPPORT	C- 272359-030V
G1- 752211		VOLUME FLAP 200S	CR- 256209-030V
			CR- 256210-030V
G1- 752212		VOLUME FLAP 200 CC	CR- 256209-030V
			CR- 256210-030V
2- 752213		BOTTOM PLATE	C- 441695-020V
G1- 752215		MACHINE BODY	C- 441695-020V
2- 752218		CONNECTION	C- 469501-030V
			RK- 751462-010V
1- 752219		HEAT EXCHANGER	C- 456976-040V
1- 752220		HEATING PIPE	C- 271181-040V
2- 752221		PIPE	C- 271181-040V
2- 752222		VALVE	C- 271169-040V
2- 752223		PIPE	C- 456976-040V
4- 752224		GASKET	C- 456976-040V
1- 752225		BEARING HOUSING	CR- 256204-050V
			CR- 256205-050V
1- 752226		BEARING HOUSING	CR- 256204-050V
			CR- 256205-050V
4- 752237		SPRING	C- 752645-010V
			C- 752646-010V
			C- 752913-010V
			C- 752914-010V
3- 752240		LID	C- 752645-010V
			C- 752646-010V

PART NO	LAST AM	DESCRIPTION	GROUP NO
4- 752243		WASHER	C- 752914-010V
C- 752244-010V	13966 89-12-04	PAPER GUARD	C- 752628-010V
4- 752245		SHIM	B- 648107-090V
4- 752246		SHIM	C- 456923-030V
C- 752247-010V	14273 90-02-06	FRAME DATING UNIT	C- 456923-030V
3- 752248		SHAFT	B- 648107-090V
4- 752249		WASHER	C- 256203-040V
3- 752250		BEARING COVER	C- 256203-040V
			C- 456321-030V
3- 752251		BEARING COVER	C- 456322-030V
			C- 456321-030V
3- 752252		BEARING COVER	C- 456322-030V
			C- 456321-030V
1- 752260		PLATE	C- 456322-030V
2- 752261		PIPE	C- 271909-050V
4- 752262		PIPE HOLDER	C- 271909-050V
4- 752263		PIPE HOLDER	C- 271909-050V
2- 752265		CABLE LEAD-IN PLATE	C- 271909-050V
1- 752266		SPACER PIECE	C- 295883-040V
4- 752267		BRACKET	C- 295883-040V
3- 752268		BRACKET	C- 456976-040V
4- 752269		CONNECTION BOX	C- 456976-040V
RK- 752270-010V	13577 89-09-22	TEMP.GUARD HYDR.OIL	RK- 752270-010V
			B- 648110-060V
RK- 752270-0101	13577 89-09-22	TEMP.GUARD HYDR.OIL	B- 648110-070V
4- 752271		DOCUMENT FOLDER	B- 648110-010V
3- 752282		CONNECTION RIGHT	RK- 752270-010V
3- 752283		CONNECTION LEFT	CR- 256212-050V
3- 752284		SHAFT	CR- 256213-050V
			CR- 256212-050V
1- 752285		CONNECTION BOX	CR- 256213-050V
4- 752288		SLEEVE	C- 295045-060V
			CR- 256204-050V
G4- 752289		CLAMP RIGHT	CR- 256205-050V
G4- 752290		CLAMP LEFT	CR- 256212-050V
G1- 752292		VOLUMEFLAP 180 CC	CR- 256213-050V
			CR- 256209-030V
3- 752297		TUBE SUPPORT	CR- 256210-030V
3- 752298		TUBE SUPPORT	C- 441307-030V
1- 752301		PLATFORM	C- 441307-030V
1- 752302		LEG	C- 751860-010V
			C- 751932-010V
			C- 752958-010V
1- 752303		PLATFORM	C- 752959-010V
2- 752304		PLATE	C- 751932-010V
2- 752305		PLATE	C- 751932-010V
1- 752306		RAILING	C- 751932-010V
1- 752307		RAILING	C- 751934-010V
			C- 751934-010V
2- 752308		BRACKET	C- 752959-010V
			C- 751932-010V
4- 752309		LEG	C- 752959-010V
4- 752310		LEG	C- 752312-010V
4- 752311		LEG	C- 752312-010V
C- 752312-0101	12194 88-12-06	MACHINERAISING-KIT	C- 752312-010V
			C- 77091-020V
4- 752313		BRACKET	C- 77091-030V
			C- 751800-010V
3- 752314		PLATE	C- 751800-020V
2- 752407		LOWER FILLING TUBE	C- 751885-010V
			RK- 520129-010V
			RK- 520130-010V
			RK- 520129-010V
			RK- 520130-010V
RK- 752408-010V	12208 89-01-24	REB KIT OVERL JAW SYSTEM	B- 648110-010V
4- 752409		DOCUMENT FOLDER	RK- 752408-010V
RK- 752410-010V	12208 89-01-24	REB KIT OVERL JAW SYSTEM	B- 648110-010V
4- 752411		DOCUMENT FOLDER	RK- 752410-010V
RK- 752412-010V	12208 89-01-24	REB KIT OVERL JAW SYSTEM	B- 648110-060V
			B- 648110-070V
4- 752413		DOCUMENT FOLDER	RK- 752412-010V
RK- 752414-010V	12208 89-01-24	REB KIT OVERL JAW SYSTEM	B- 648110-060V
			B- 648110-070V
4- 752415		DOCUMENT FOLDER	RK- 752414-010V
2- 752416		LOWER FILLING TUBE	RK- 520129-010V
			RK- 520130-010V

PART NO	LAST AM	DESCRIPTION	GROUP NO
2- 752566		PIPE	C- 491207-020V
C- 752567-010V	13806 89-11-22	PROTECTIVE COVER	C- 271513-050V
3- 752568		GUARD	C- 272028-040V
			C- 272028-050V
3- 752569		COVER	C- 272028-040V
			C- 272028-050V
4- 752571		WASHER	C- 441850-030V
4- 752574		END PIECE	CR- 256204-040V
			CR- 256205-040V
			CR- 256204-040V
			CR- 256205-040V
			CR- 256204-050V
			CR- 256205-050V
4- 752575		DOLLY	C- 295523-030V
			CR- 256204-040V
			CR- 256205-040V
			C- 295523-030V
			CR- 256204-040V
			CR- 256205-040V
			C- 295523-030V
			CR- 256204-050V
			CR- 256205-050V
			C- 295523-030V
2- 752576		CONTAINER	C- 272623-050V
4- 752591		DOCUMENT FOLDER	RK- 520067-010V
4- 752592		DOCUMENT FOLDER	RK- 520129-010V
4- 752593		DOCUMENT FOLDER	RK- 520130-010V
4- 752594		DOCUMENT FOLDER	RK- 520094-010V
4- 752595		DOCUMENT FOLDER	RK- 520096-010V
3- 752596		SHAFT	CR- 256209-020V
			CR- 256210-020V
			CR- 256209-020V
			CR- 256210-020V
			CR- 256209-020V
			CR- 256210-020V
			CR- 256209-020V
			CR- 256210-020V
3- 752598		SHAFT	CR- 256209-030V
			CR- 256210-030V
3- 752599		LUBRICATING PIPE	C- 271866-050V
3- 752600		LUBRICATING PIPE	C- 271866-050V
3- 752601		LUBRICATING PIPE	C- 271866-050V
3- 752602		LUBRICATING PIPE	C- 271866-050V
3- 752603		WASHER	C- 751691-010V
3- 752604		PIPE HOLDER	C- 751691-010V
G3- 752612-0001		CARRIER	CR- 256209-020V
			CR- 256210-020V
			CR- 256209-020V
			CR- 256210-020V
			CR- 256209-020V
			CR- 256210-020V
G3- 752612-0001		CARRIER	CR- 256209-020V
			CR- 256210-020V
			CR- 256209-020V
			CR- 256210-020V
			CR- 256209-020V
			CR- 256210-020V
			CR- 256209-030V
			CR- 256210-030V
G3- 752612-0002		CARRIER	CR- 256209-020V
			CR- 256210-020V
			CR- 256209-020V
			CR- 256210-020V
			CR- 256209-020V
			CR- 256210-020V
			CR- 256209-020V
			CR- 256210-020V
			CR- 256209-020V
			CR- 256210-020V
			CR- 256209-030V
			CR- 256210-030V
1- 752613		PIPE	C- 491207-020V
2- 752614		HOLDER	C- 751373-010V
4- 752615		SPACER	CR- 256209-030V
			CR- 256210-030V
2- 752621		HOLDER	C- 256873-040
4- 752622		STOP	C- 751691-010

PART NO	LAST AM	DESCRIPTION	GROUP NO
4- 752624		DOCUMENT FOLDER	RK- 752638-010V
C- 752627-010V	13248 89-09-06	BENDING ROLLER REAR	B- 648107-090V
C- 752628-010V	13966 89-12-04	BENDING ROLLER FRONT	B- 648107-090V
4- 752630		PLATE	C- 752628-010V
4- 752631		BRACKET	C- 752628-010V
4- 752632		ARM	C- 752628-010V
4- 752633		BRACKET	C- 752628-010V
4- 752634		SLEEVE	C- 752628-010V
4- 752635		STUD BOLT	C- 752628-010V
4- 752636		PLATE	C- 752628-010V
3- 752637-0001		BENDING ROLLER	C- 752247-010V
			C- 752627-010V
3- 752637-0002		BENDING ROLLER	C- 752247-010V
			C- 752627-010V
3- 752637-0003		BENDING ROLLER	C- 752247-010V
			C- 752627-010V
RK- 752638-0101	12932 89-06-05	DATING WHEEL HOLDER	B- 648110-010V
			B- 648110-060V
			B- 648110-070V
			B- 648110-080V
3- 752639		CLAMP	C- 752627-010V
3- 752642		BRACKET	C- 752645-010V
			C- 752646-010V
			C- 752913-010V
			C- 752914-010V
4- 752644		SCREW	C- 752645-010V
			C- 752646-010V
			C- 752913-010V
			C- 752914-010V
C- 752645-010V	14088 89-10-27	DATING UNIT TBA/9	B- 648107-090V
C- 752646-010V	14088 89-10-27	DATING UNIT TBA/9	B- 648107-090V
2- 752648		PLATE	C- 271513-050V
			C- 751885-020V
2- 752649		BRACKET	C- 256223-030V
4- 752650		PIN	C- 256223-030V
4- 752651		GUIDE RAIL	C- 256223-030V
3- 752652		PIPE	C- 271866-050V
2- 752653		CABLE CONDUIT	C- 752049-010V
4- 752654		SPACER	C- 752049-010V
4- 752655		PIN	C- 752664-010V
3- 752656		GUIDE PLATE	C- 752664-010V
3- 752657		SPACER SLEEVE	C- 752664-010V
4- 752658		LUG	C- 752664-010V
4- 752659		PIPE	C- 491207-020V
4- 752660		PIPE	C- 491207-020V
3- 752661		HOSE	C- 491207-020V
3- 752662		LUBRICATING PIPE	C- 271866-050V
3- 752663		LUBRICATING PIPE	C- 271866-050V
C- 752664-0101	12530 90-01-05	GUIDE	CR- 256712-050V
3- 752668		HOLDER	C- 76402-010V
C- 752669-010V	12383 90-02-10	HEAD SPACE BY LLF	C- 77091-020V
4- 752670		DOCUMENT FOLDER	C- 752669-010V
C- 752671-010V	12578 89-12-06	SHOCKABSORBER PERFORM.1	B- 648104-090V
C- 752672-010V	12578 89-12-06	SHOCKABSORBER PERFORM.2	B- 648104-090V
4- 752673		SPACER	C- 752671-010V
			C- 752672-010V
4- 752674-0001		SHIM	C- 491787-010V
			C- 491788-010V
			C- 491787-020V
			C- 491788-020V
4- 752674-0002		SHIM	B- 648109-060V
			B- 648109-090V
			B- 648109-060V
			B- 648109-090V
4- 752674-0003		SHIM	B- 648109-060V
			B- 648109-090V
			B- 648109-060V
			B- 648109-090V
4- 752674-0004		SHIM	B- 648109-090V
4- 752674-0005		SHIM	B- 648109-060V
			B- 648109-090V
			B- 648109-060V
			B- 648109-090V
4- 752674-0006		SHIM	C- 491787-010V
			C- 491788-010V
			C- 491787-020V

PART NO	LAST AM	DESCRIPTION	GROUP NO
4- 752674-0007		SHIM	B- 648109-080V
			B- 648109-090V
			B- 648109-080V
			B- 648109-090V
4- 752675		PIPE	RK- 752702-010V
			C- 272623-050V
4- 752676		PIPE	RK- 752702-010V
			C- 272623-050V
4- 752677		BACK PIECE	C- 491787-010V
			C- 491788-010V
			C- 491787-020V
4- 752678		SPRING PERF 1	C- 491788-020V
4- 752679		SPRING PERF 2	C- 752671-010V
4- 752680		SLEEVE	C- 752672-010V
			C- 752671-010V
4- 752681		WASHER	C- 752672-010V
4- 752681		WASHER	C- 752671-010V
4- 752685		PIN	C- 752672-010V
			C- 491787-010V
			C- 491788-010V
1- 752690		CAM	C- 491787-020V
2- 752691		PIPE	C- 491788-020V
3- 752692		PIPE	C- 751689-010V
1- 752695		MACHINE BODY	C- 272560-050V
3- 752696		PIPE	C- 272560-050V
1- 752697		PROTECTION PLATE	C- 295883-040V
RK- 752702-010V	12928 89-08-21	CONSTANT SPRAY VOLUME	C- 272623-050V
			C- 752244-010V
			B- 648110-060V
RK- 752702-0101	12928 89-08-21	CONSTANT SPRAY VOLUME	B- 648110-070V
4- 752711		PIPE	B- 648110-080V
2- 752723		PAPER GUIDE PLATE	B- 648110-010V
3- 752726		LUBRICATING PIPE	C- 272560-050V
1- 752727		LUBRICATING PIPE	C- 229400-060V
1- 752728		LUBRICATING PIPE	C- 271562-070V
RK- 752729-0102	13594 89-10-19	IMPROVED STRIP GUIDE	C- 271562-070V
			C- 271866-050V
			B- 648110-010V
4- 752730		DOCUMENT FOLDER	B- 648110-060V
4- 752741		PIPE	B- 648110-070V
2- 752742-0001		PIPE	B- 648110-080V
2- 752742-0002		PIPE	RK- 752729-010V
3- 752743		PLATE	RK- 553180-010V
3- 752744		SHAFT	C- 256084-040V
4- 752745		BEARING COVER	C- 256084-040V
2- 752746		BRACKET	C- 751088-020V
2- 752747		BRACKET	C- 751088-020V
2- 752748		BRACKET	C- 751088-020V
2- 752749		BRACKET	C- 752755-010V
4- 752750		HOLDER	C- 752755-010V
3- 752751		CABLE CONDUIT	C- 752755-010V
4- 752752		SPACER	C- 752755-010V
2- 752753		BENDING ROLLER	C- 752755-010V
2- 752754		BENDING ROLLER	C- 752755-010V
C- 752755-010V	14454 90-02-05	BENDING ROLLER	C- 752755-010V
3- 752756		SIDE PLATE	C- 256234-040V
3- 752757		SHAFT	B- 648101-090V
1- 752758		COLUMN	C- 752755-010V
1- 752759		COLUMN	C- 752755-010V
2- 752760		PAPER GUARD	C- 256233-050V
3- 752761		BRACKET	C- 256233-050V
1- 752762		CABLE DUCT	C- 256233-050V
4- 752765		SPACER RING	C- 271649-030V
1- 752766		PLATE	C- 469366-030V
4- 752767		TEMPLATE	C- 256199-040V
3- 752769		GUARD	C- 456458-030V
3- 752770		GUARD	C- 751689-010V
3- 752775		HOSE	C- 256234-040V
4- 752776		FLANGE	C- 256234-040V
2- 752777		PIPE	C- 271868-050V
2- 752778		PIPE	C- 256234-040V
2- 752779		PIPE	C- 256237-060V
4- 752780		ELBOW PIPE	C- 256237-060V
4- 752781		ELBOW PIPE	C- 256237-060V
			C- 256237-060V

PART NO	LAST AM	DESCRIPTION	GROUP NO
C- 752784-0101	13806 89-11-22	CONNECTION BOX	B- 648106-090V
1- 752785		PIPE	C- 271866-050V
1- 752786		PIPE	C- 271866-050V
1- 752787		PIPE	C- 271866-050V
1- 752788		PIPE	C- 271866-050V
1- 752789		PIPE	C- 271866-050V
1- 752790		PIPE	C- 271866-050V
1- 752791		PIPE	C- 271866-050V
2- 752792		PIPE	C- 271866-050V
2- 752793		PIPE	C- 271866-050V
2- 752794-0001		PIPE	C- 271866-050V
2- 752794-0002		PIPE	C- 271866-050V
2- 752794-0003		PIPE	C- 271866-050V
4- 752795		PIPE	C- 271866-050V
2- 752796		PLATE	C- 271513-050V
2- 752797		PLATE	C- 271513-050V
2- 752798		COVER PLATE	C- 271513-050V
1- 752799		PLATE	C- 752960-010V
			C- 752971-010V
			C- 456457-030V
1- 752800		PLATE	C- 752960-010V
			C- 752971-010V
			C- 456457-030V
2- 752801		PLATE	C- 752960-010V
			C- 752971-010V
			C- 456457-030V
1- 752802		CABLE DUCT	C- 752960-010V
			C- 752971-010V
			C- 456457-030V
1- 752803		LID	C- 752960-010V
			C- 752971-010V
			C- 456457-030V
2- 752804		COVER PLATE	C- 271513-050V
2- 752805		CABLE DUCT	C- 271513-050V
3- 752806		SPACER	C- 271513-050V
3- 752807		SPACER	C- 271513-050V
3- 752808		SPACER	C- 271513-050V
1- 752809		PIPE CONNECTION	C- 271866-050V
2- 752810		METERING DEVICE	C- 751398-010V
3- 752811		PIPE	C- 271866-050V
3- 752812		PIPE	C- 271866-050V
3- 752813		BRACKET	C- 271866-050V
4- 752857		INDICATOR	C- 272004-040V
2- 752861		PIPE	C- 271866-050V
1- 752862		PLATE	C- 752247-010V
3- 752863		BRACKET	C- 271866-050V
3- 752864		HOSE	C- 491207-020V
1- 752865		MACHINE BODY	C- 256843-050V
1- 752866		CABLE LEAD-IN PLATE	C- 295883-040V
G1- 752867		BENDING ROLLER BRACKET	C- 752247-010V
3- 752868		HOLDER	C- 752247-010V
3- 752869		HOLDER	C- 752247-010V
2- 752870		LEG	C- 752247-010V
2- 752871		LEG	C- 752247-010V
G3- 752872		BRACKET	C- 752247-010V
1- 752873		PLATFORM	C- 456457-030V
1- 752874		PLATFORM	C- 752960-010V
			C- 752971-010V
1- 752874		PLATFORM	C- 456457-030V
1- 752875		PLATFORM	C- 456457-030V
3- 752876		SHIM	C- 752960-010V
			C- 752971-010V
1- 752877		FRAME	C- 456457-030V
			C- 752960-010V
			C- 752971-010V
1- 752878		FRAME	C- 456457-030V
			C- 752960-010V
			C- 752971-010V
2- 752879		BEAM	C- 456457-030V
			C- 752960-010V
			C- 752971-010V
3- 752880		BEAM	C- 456457-030V
			C- 752960-010V
			C- 752971-010V
2- 752881		BEAM	C- 456457-030V
			C- 752960-010V
			C- 752971-010V

PART NO	LAST AM	DESCRIPTION	GROUP NO
777510-0101		SCISSORS	C- 77099-010V C- 456975-020V C- 250610-010V
777603-0100		PULLER	C- 456975-010V
777603-0300		PULLER	C- 76175-010V
779130-0102		PROTECTIVE GOGGLES	C- 76175-010V
779911-0101		PADLOCK	C- 531345-010V C- 76470-010V
783901-0106		SPIRIT LEVEL	C- 76591-010V C- 75467-020V

PART NO	LAST AM	DESCRIPTION	GROUP NO