EM

Electrical Manual

TBA/19 Tetra Brik Aseptic 020V

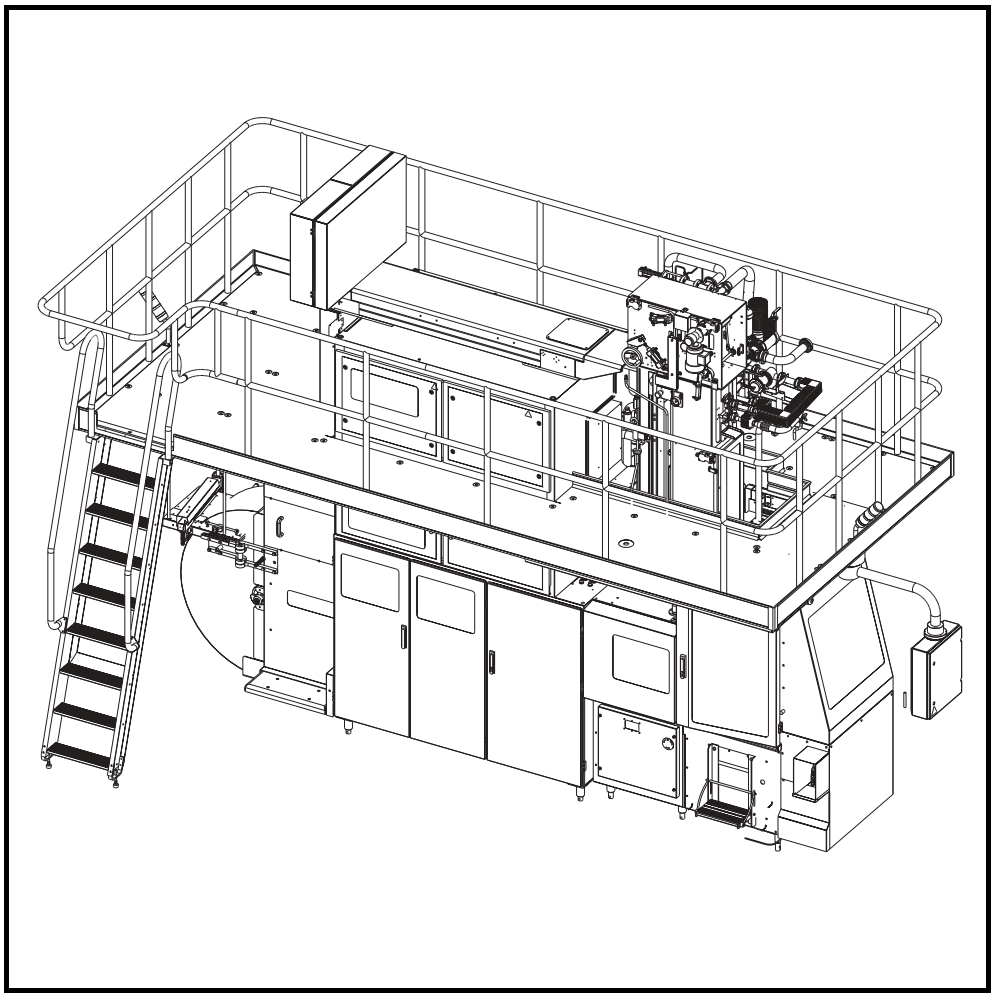

2.2818030012fro.fm

Tetra Pak

Doc No. EM-81803-0102

This document is valid for:

Series No/ Machine No Sign.

Tetra Brik Aseptic
TBA/19 020V
648160-2000

Options included:

Automatic Splicing Unit ASU19
648116-0100

Temperature Control Steam Barrier
1334841-0200

El. ECM No.: 119151

Valid from Series No.:

21204/00006

1 Introduction
2 Safety precautions
3 Electrical system description
4 Component location
5 Documents list
6 Position summary
7 Circuit diagram
8 Line summary
9 Cabinet terminal summary
10 Terminal strip overview
11 Cable connection list
12 Mains connections
13 Engineering change description
14 Program documents
15 Bills of material
16 Fuse panel label
17 Other information

Issue 2003-03

Doc No. EM-81803-0102

Tetra Pak

Tetra Pak Carton Ambient S.p.A.

2.281803012fro.fm

1 Introduction

To ensure maximum safety, always read the *Safety precautions* section before doing any work on the equipment or making any adjustments.

EM3.081803012int.fm

Table of contents

Equipment information 1-3
Document information 1-4
How to use the EM. 1-5
Numbering system for components 1-7
Optional equipment 1-9
How to trace a cable 1-10
How to trace a component 1-11
Supply voltage/Line connection order 1-16
How to trace a line 1-17
How to trace a terminal 1-18
Abbreviations and terminology. 1-21
Machine orientation 1-22

EM3.081803012int.fm

Equipment information

Purpose

The purpose of this Tetra Pak equipment is to pack liquid food products.

Manufacturer

Tetra Pak Carton Ambient S.p.A.
Via Delfini 1
411 00 MODENA
Italy

Service

Contact the nearest Tetra Pak service station.

Identification

The figure shows an example of the equipment sign. The sign carries data needed when contacting Tetra Pak concerning this specific equipment.

CE marking

This equipment complies with the basic health and safety regulations of the European Economic Area (EEA).

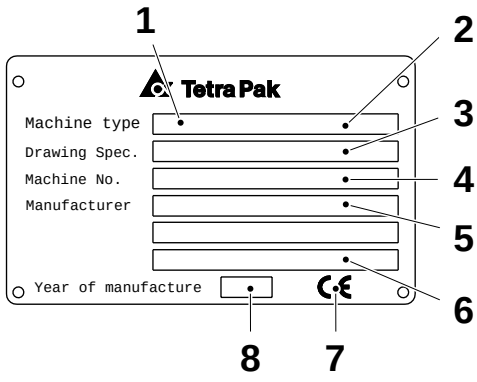

1 Machine type
2 Volume
3 Drawing specifications
4 Machine serial number
5 Manufacturer
6 (Designed by)
7 CE mark
8 Year of manufacture

EM3.081803012int.fm

Document information

Purpose of Electrical Manual (EM)

The purpose of this Electrical Manual is to provide service technicians and electricians with all information on the electrical equipment required for service and maintenance of this Tetra Pak equipment.

It is important to:

- keep the manual for the life of the equipment,
- pass the manual on to any subsequent holder or user of the equipment.

Design modifications

The directives in this document are in accordance with the design and construction of the equipment at the time it was delivered from the Tetra Pak production plant.

Technical publications

The technical publications for this equipment are:

- Electrical Manual (EM)
- Installation Manual (IM)
- Maintenance Manual (MM)
- Operation Manual (OM)
- Spare Parts Catalogue (SPC)

Additional copies can be ordered from the nearest Tetra Pak service station. When ordering technical publications, always quote the **document number**.

Copyright © 2003

Tetra Pak Carton Ambient

All rights reserved. No parts of this document may be reproduced or copied in any form or by any means without the written permission of Tetra Pak Carton Ambient.

EM3.081803012int.fm

How to use the EM

General

How to use the EM is an explanation of how to find your way through the chapters in the EM.

The chapters are divided as follows:

44954-**0001**	Documents list
44954-**0002**	Position summary
44954-**0003**	Circuit diagram
44954-**0004**	Line summary
44954-**0005**	Cabinet terminal summary
44954-**0006**	Terminal strip overview
44954-**0007**	Cable connection list
44954-**0008**	Mains connections
44954-**0009**	Mounting drawing (**optional**)
44954-**0099**	Engineering change description

The first page in each chapter is always a Table of Contents, listing all drawings included in the chapter.

The documents in the above-mentioned chapters are identified by:

- a document type number (1)
- a version number (2)
- a page number (3)

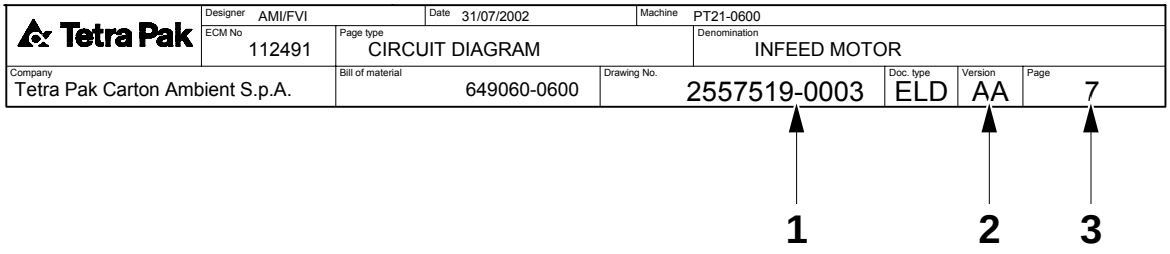

1 Document type number
2 Version number
3 Page number

The page number is the consecutive numbering of the pages which belong to the main number and is used as a reference in the diagrams.

(Cont'd)

(Cont'd)

In the **Circuit diagram** the first pages are reserved for distribution terminals and last pages are reserved for pre-connected cables (cables connected to spare terminals and reserved for future use).

The **Mains connection** diagram shows how the machine should be connected to the local supply, the dimensions of the connection cable and the connection of the matching transformer (when used).

Caution! Always follow local regulations regarding the dimensions of the connection cable.

The PLC-listing in the section **Program documents** consists of lists of blocks, lists of addresses and programme lists.

Enclosed are some examples of how to use the EM.

EM3.081803012int.fm

Numbering system for components

The position number is divided into three parts:

- location (1)
- function designation (2)
- running number (3).

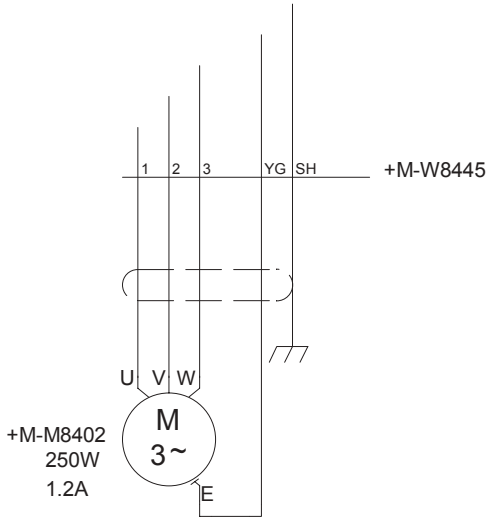

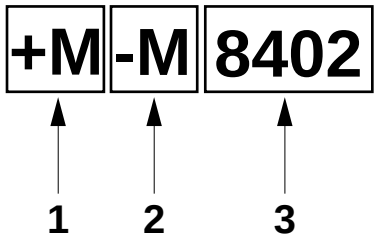

1 Location
2 Function designation (DT prefix)
3 Running number (counter)

Location (1)

This prefix shows the location of the component.

- the prefix +M indicates that the component is fitted on the machine, outside the electrical cabinet
- the prefix P indicates the TPOP
- the prefix +C indicates that the component is fitted on the electrical cabinet

Note! The location +C is considered as default and it's omitted on all the **Circuit diagram** pages.

(Cont'd)

EM3.081803012int.fm

(Cont'd)

Function designation (2)

The function designation is indicated in accordance with international standards, see table below.

Designation	Signification in electrical diagram
A	Assemblies, Subassemblies
B	Transducers
C	Capacitors
D	Binary element, Delay devices, Storage devices
E	Miscellaneous
F	Protective devices
G	Generators, Power supplies
H	Signalling devices
K	Relays, Contactors
L	Inductors, Reactors
M	Motors
N	Analogue elements
P	Measuring equipment, Testing equipment
Q	Switching devices for power circuits
R	Resistors
S	Switching devices for control circuits selectors
T	Transformers
U	Modulators, Changers
V	Tubes, Semiconductors
W	Transmission paths, Waveguide aerials
X	Terminals, Plugs, Sockets
Y	Electrically operated mechanical devices
Z	Terminations, Hybrids, Filters, Equalizers, Limiters

Running number (3)

The electrical components are numbered in a consecutive non-logical order.

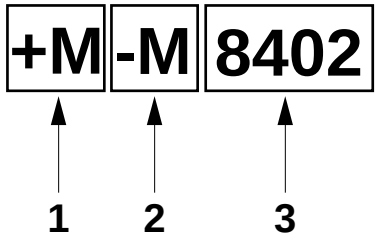

1 Location
2 Function designation (DT prefix)
3 Running number (counter)

EM3.081803012int.fm

Optional equipment

This prefix shows if the component belongs to specific optional equipment.

The legend for all optional equipment prefix is the *Abbreviations and terminology 1-21*.

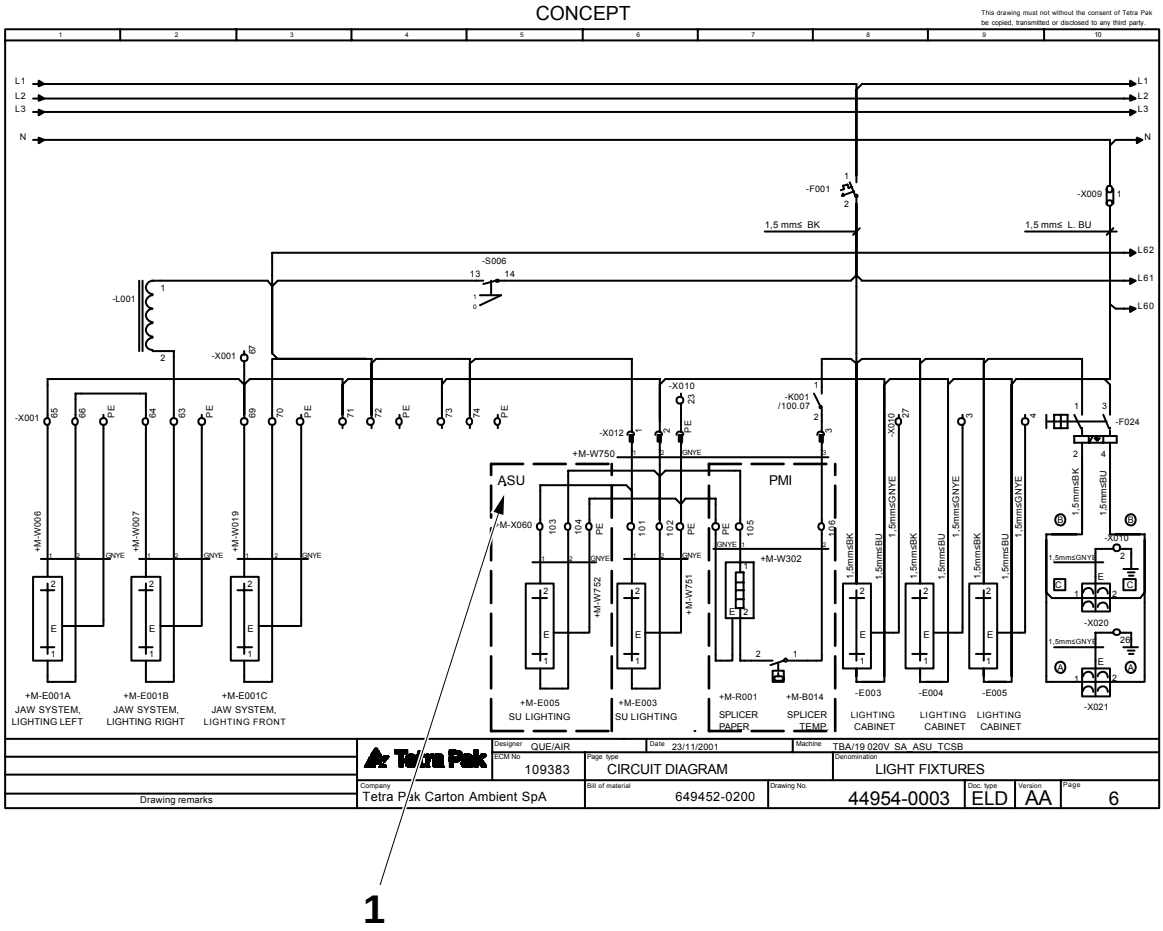

1

1 Optional equipment designation

How to trace a cable

Example: How to trace cable No. +M-W8202

a) Go to the **Cable Connection list**, see chapter 44954-0007.

b) On the right side of the table, find the circuit diagram reference page where the cable +M-W8202 is located (page 5, column 5).

Note! The cables are listed in alphanumerical order.

c) Go to page 005 in the **Circuit diagram**, see chapter 44954-0003.

d) Find the cable +M-W8202.

Note! In the cable connection list the spare cores are shown.

Cable Connection List of 2557519-0003

Cable	Core	From	To	Page.Col.	Option
+M-W8201	4	+F-X106:6	+C-X8201:6	005 .5	
+M-W8201	YG	+F-X106:	+C-X8201:	005 .5	
+M-W8202	1	+F-X206:1	+C-X8202:1	005 .5	
+M-W8202	2	+F-X206:2	+C-X8202:2	005 .5	
	3				
	4				
+M-W8202	5	+F-X206:5	+C-X8202:5	005 .5	
+M-W8202	6	+F-X206:6	+C-X8202:6	005 .5	
+M-W8202	7	+F-X206:7	+C-X8202:7	005 .5	
+M-W8202	8	+F-X206:8	+C-X8202:8	005 .5	
+M-W8202	9	+F-X206:9	+C-X8202:9	005 .5	
+M-W8202	10	+F-X206:10	+C-X8202:10	005 .5	
+M-W8202	11	+F-X206:11	+C-X8202:11	005 .5	
+M-W8202	YG	+F-X206:	+C-X8202:	005 .5	
+M-W8203	WH	+F-X206:23	+C-X8202:23	005 .5	

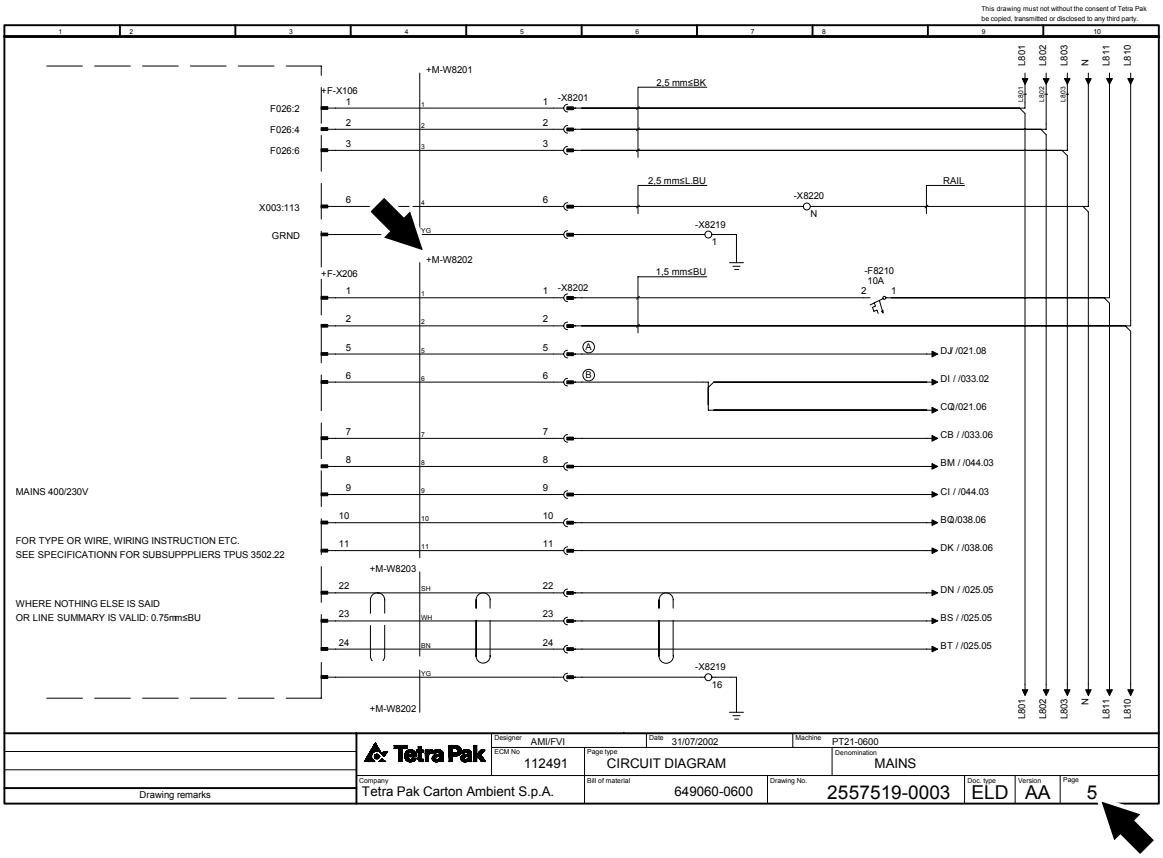

EM3.081803012int.fm

How to trace a component

Example 1: How to trace sensor +M-B8405

a) Go to the **Position summary**, see chapter 44954-0002.

b) On the right side of the table, find the circuit diagram reference page where the component +M-B8405 is located (page 35, column 4).

c) Go to page 35 in the **Circuit diagram**, see chapter 44954-0003.

d) Find the component +M-B8405.

e) Note the connections +M-X8402 :1, :2, :3.

f) Note the cable +M-W8423.

Position summary of 2557519-0003

Component	Page .Col.	Opt.	Component	Page ./	Opt.
+C-A8201	006 .7		+M-B8405	035 .4	
+C-A8202	021 .7		+M-B8408	037 .5	
+C-A8205	015 .4		+M-B8409	028 .4	
+C-A8210	016 .3		+M-B8411	028 .4	
+C-A8211	017 .4		+M-B8413	037 .5	
+C-A8212	017 .4		+M-B8414	028 .4	
+C-A8216	007 .5		+M-B8421	027 .4	
+C-A8233	008 .7		+M-B8422	028 .4	
+C-A8250	018 .7		+M-B8423	027 .4	
+C-A8251	017 .8		+M-B8424	027 .4	
+C-A8252	022 .6		+M-B8426	034 .3	
+C-A8301	028 .7		+M-B8427	041 .3	

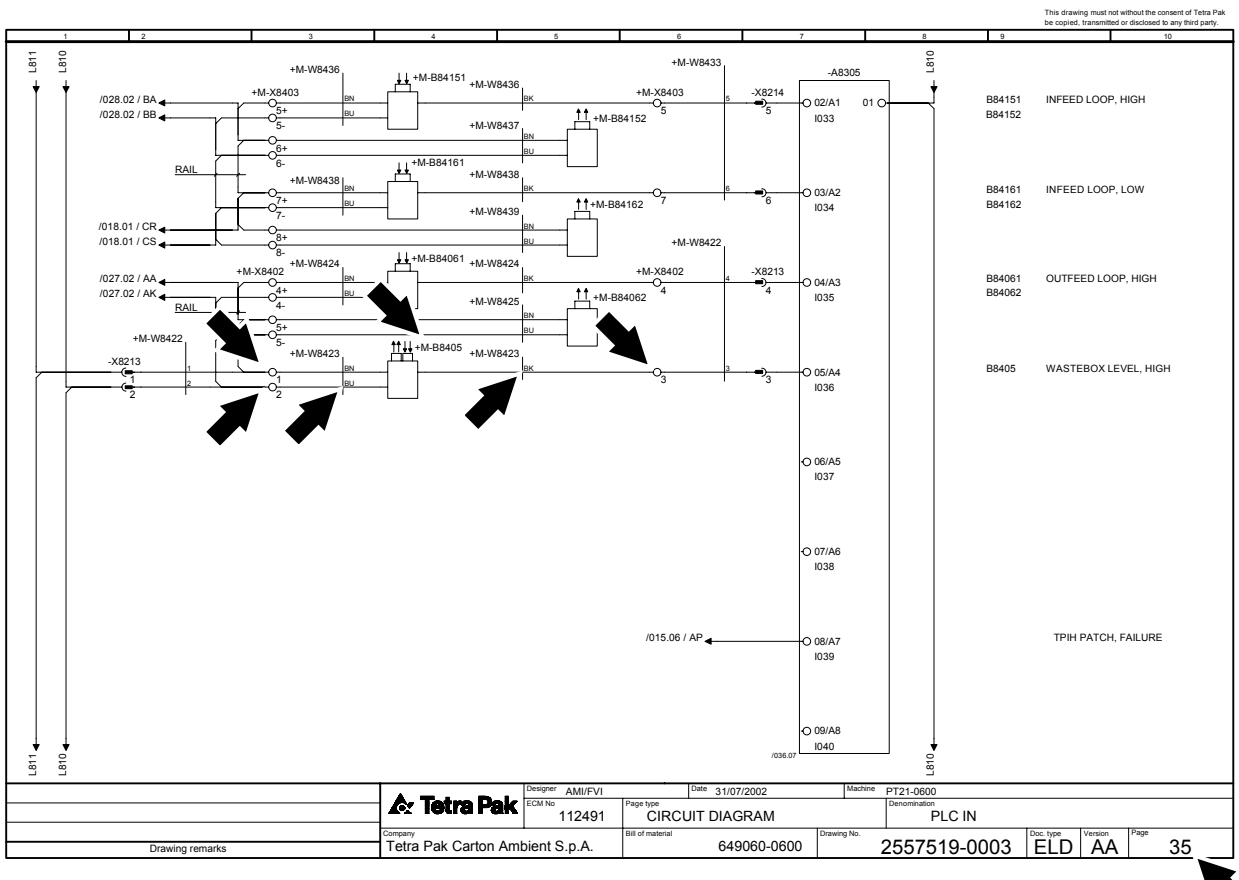

(Cont'd)

(Cont'd)

g) Go to the **Terminal strip overview**, see chapter 44954-0006.

h) Find the connections +M-X8402 :1, :2, :3 (on the right side of the table find the circuit diagram reference page where the connections are located).

Note! The **Terminal strip overview** shows how the sensor is connected (in this case via a connection box).

Terminal strip of 2557519-0003

+M-X8402

From	Cable	Internal Jumper	Terminal	External Jumper	Cable	To	Page.Col.	Option	Function text
+C-X8213:1	+M-W8422:1		1		+M-W8423:BN	+M-B8405:	035 .3		WASTEBOX LEVEL, HIGH
+C-X8213:2	+M-W8422:2		2		+M-W8423:BU	+M-B8405:	035 .3		WASTEBOX LEVEL, HIGH
+C-X8213:3	+M-W8422:3		3		+M-W8423:BK	+M-B8405:	035 .6		WASTEBOX LEVEL, HIGH
+C-X8213:4	+M-W8422:4		4		+M-W8424:BK	+M-B84061:	035 .6		OUTFEED LOOP, HIGH
			4+		+M-W8424:BN	+M-B84061:	035 .3		OUTFEED LOOP, HIGH
			4-		+M-W8424:BU	+M-B84061:	035 .3		OUTFEED LOOP, HIGH
			5						
			5+		+M-W8425:BN	+M-B84062:	035 .3		OUTFEED LOOP, HIGH
			5-		+M-W8425:BU	+M-B84062:	035 .3		OUTFEED LOOP, HIGH
+C-X8213:5	+M-W8422:5		6		+M-W8426:BK	+M-B84071:	027 .5		OUTFEED LOOP, LOW
			6+		+M-W8426:BN	+M-B84071:	027 .2		OUTFEED LOOP, LOW
			6-		+M-W8426:BU	+M-B84071:	027 .2		OUTFEED LOOP, LOW
			7						
			7+		+M-W8427:BN	+M-B84072:	027 .2		OUTFEED LOOP, LOW
			7-		+M-W8427:BU	+M-B84072:	027 .2		OUTFEED LOOP, LOW
+C-X8213:6	+M-W8422:6		8				040 .6		
			8+				040 .4		
			8-				040 .4		
+C-X8213:7	+M-W8422:7		9				040 .6		
			9+				040 .4		
			9-				040 .4		
+C-X8213:8	+M-W8422:8		10				040 .6		
			10+				040 .4		
			10-				040 .4		
+C-X8213:9	+M-W8422:9		11		+M-W8431:WH	+M-B8411:	028 .6		BLACK TAPE, DETECTED
			11+		+M-W8431:RD	+M-B8411:	028 .3		BLACK TAPE, DETECTED
			11-		+M-W8431:BK	+M-B8411:	028 .3		BLACK TAPE, DETECTED
+C-X8213:10	+M-W8422:10		12				040 .6		
			12+				040 .4		
			12-				040 .4		

EM3.081803012int.fm

Note! When a cable is supplied with the component (i.e. sensors and photocells) the pin configuration is removed from the symbol in the **Circuit diagram**. The connection information is kept from the cable cores.

(Cont'd)

(Cont'd)

i) The location +M indicates that the component is fitted on the machine.

j) Go to the **SPC Electrical Parts Index** chapter to find the position of the component B8405.

Pos	Part No	Description	Page No
A			
A602	90119-0063	OPTO-RELAY, DC/DC AMMS-10-1/30VDC	661, 663
A604	90119-0063	OPTO-RELAY, DC/DC AMMS-10-1/30VDC	661, 663
A605	90119-0063	OPTO-RELAY, DC/DC AMMS-10-1/30VDC	661, 663
A606	90119-0063	OPTO-RELAY, DC/DC AMMS-10-1/30VDC	661, 663
A607	90119-0104	OPTO COUPLER AMMS 50070	661, 663
A608	90119-0104	OPTO COUPLER AMMS 50070	661, 663
A609	90119-0104	OPTO COUPLER AMMS 50070	661, 663
A610	90119-0104	OPTO COUPLER AMMS 50070	661, 663
B			
B001	90044-0192	LIMIT SW. SZ2586.000	713, 715
B002	90044-0192	LIMIT SW. SZ2586.000	713, 715
B003	90044-0192	LIMIT SW. SZ2586.000	713, 715
B004	90044-0192	LIMIT SW. SZ2586.000	713, 715
B005	90044-0192	LIMIT SW. SZ2586.000	713, 715
B006	90044-0192	LIMIT SW. SZ2586.000	713, 715
B007	90044-0192	LIMIT SW. SZ2586.000	713, 715
B8405	90458-1114	BIMET. ELECTROMECH. THERMOSTAT K7H.020	703, 705
D			
D100	[illegible]1-0075	CPU363, SERIAL COMMUNICATION	665
E			
E004.1	90[illegible]4-0018	LIGHT FIXTURE, FK 130	713, 715
E004	90297-0011	FLUORESCENT TUBE, TDL 30W/840	713, 715
E005.1	90164-0018	LIGHT FIXTURE, FK 130	713, 715
E005	90297-0011	FLUORESCENT TUBE, TDL 30W/840	713, 715
E006	90457-0175	LIGHT FIXTURE, FLUO K SET 108	713, 715
F			
F001	90007-0129	CIRCUIT BREAKER, 1P 10 A K	767, 769
F002	90007-0129	CIRCUIT BREAKER, 1P 10 A K	761, 763
F004	90007-0129	CIRCUIT BREAKER, 1P 10 A K	767, 769
F005	90007-0128	CIRCUIT BREAKER, 1P 6 A K	767, 769
F006	90007-0146	CIRCUIT BREAKER, 3P 6 A K	761, 763
F007	90007-0149	CIRCUIT BREAKER, 3P 20 A K	767, 769
F008	90007-0129	CIRCUIT BREAKER, 1P 10 A K	767, 769
F009	90007-0129	CIRCUIT BREAKER, 1P 10 A K	767, 769
F010	37877-0300	HEATING BLOCK	553
F010	90007-0128	CIRCUIT BREAKER, 1P 6 A K	761, 763
F012	90007-0155	CIRCUIT BREAKER, 1P 0,5 A K	761, 763
F015	90007-0129	CIRCUIT BREAKER, 1P 10 A K	767, 769
F016	90007-0131	CIRCUIT BREAKER, 1P 16 A K	761, 763
F017	90007-0128	CIRCUIT BREAKER, 1P 6 A K	761, 763
F019	90007-0129	CIRCUIT BREAKER, 1P 10 A K	761, 763
F020	37894-0100	COUNTER RAIL	553
F021	90007-0155	CIRCUIT BREAKER, 1P 0,5 A K	761, 763
F024	90111-0172	EARTH FAULT BREAKER, F 362-25/0.03	761, 763
F025	90458-1448	MAGNETIC FUSE, S292 C100	761, 763
F027	90007-0129	CIRCUIT BREAKER, 1P 10 A K	761, 763
F030	90007-0155	CIRCUIT BREAKER, 1P 0,5 A K	761, 763
F030	450101-0200	TEARING DEVICE	553
F040	271626-0300	SUSPENSION ARM	553
F050	271641-0400	SPLICING TABLE	553
F100	90233-0027	TUBE FUSE, 16A	761, 763, 765
F100.1	90233-0303	FUSE HOLDER, ST10	765
F101	90233-0029	TUBE FUSE, 25A	765
F101.1	90233-0303	FUSE HOLDER, ST10	765
F102	90233-0027	TUBE FUSE, 16A	765
F102.1	90233-0304	FUSE HOLDER, ST10	765
F103	90233-0027	TUBE FUSE, 16A	765
F103.1	90233-0304	FUSE HOLDER, ST10	765
F104	90233-0027	TUBE FUSE, 16A	765
F104.1	90233-0303	FUSE HOLDER, ST10	765
F106	90233-0028	TUBE FUSE, 10A	765
F106.1	90233-0303	FUSE HOLDER, ST10	765
F107	90233-0028	TUBE FUSE, 10A	765
F107.1	90233-0303	FUSE HOLDER, ST10	765
G			
G001	90430-0326	FILTER 6SE3290-0BA87-0FB2	627, 629
G002	90430-0070	FREQ.CONV. 6SE3213-6CA40	627, 629
G003	90430-0326	FILTER 6SE3290-0BA87-0FB2	627, 629
G004	90430-0076	FREQ.CONV. 6SE3221-3DC40	627, 629
G005	90430-0326	FILTER 6SE3290-0BA87-0FB2	627, 629
G100	90031-0068	PLC, POWER SUPPLY	665
G101	90031-0068	PLC, POWER SUPPLY	667
G102	90031-0068	PLC, POWER SUPPLY	669
K			
K001	90075-0124	CONTACTOR, 4KW 24VDC	671, 673
K002	90075-0127	CONTACTOR, 4KW 24VDC	671, 673
K003	90458-2924	CONTACTOR 30KW COIL 24VDC	627, 629
K003.1	90458-2925	AUXILIARY CONTACT, DIL M820-XHI11-SI	627, 629
K004	90075-0128	CONTACTOR, 7,5KW 24VDC	671, 673
K005	90075-0125	CONTACTOR, 7,5KW 24VDC	671, 673
K006	90075-0125	CONTACTOR, 7,5KW 24VDC	671, 673
K007	90075-0124	CONTACTOR, 4KW 24VDC	671, 673

Machine Type Group Description Page No

EM3.081803012int.fm

(Cont'd)

(Cont'd)

Example 2: How to trace contactor +C-K8201

a) Go to the **Position summary**, see chapter 44954-0002.

b) On the right side of the table, find the circuit diagram reference page where the component +C-K8201 is located (page 43, column 4).

c) Go to page 43 in the **Circuit diagram**, see chapter 44954-0003.

d) Find the component +C-K8201.

e) Note the contact image on the right side and find the relative contacts page references.

+C-A8311	047 .1	+M-B8457	018 .3	+C-F8252	012 .6	+C-P8201	045 .4
+C-A8313	051 .1	+M-B84061	035 .4	+C-F8253	012 .9	+C-Q8201	006 .2
+C-B8201	041 .3	+M-B84062	035 .5	+C-G8301	010 .1	+C-R8301	025 .3
+C-B8202	033 .4	+M-B84071	027 .4	+C-G8302	010 .4	+M-R8401	012 .3
+M-B8401	021 .5	+M-B84072	027 .4	+C-G8303	010 .7	+M-R8452	012 .6
+M-B8402	021 .2	+M-B84151	035 .4	+M-H8401	011 .1	+M-R8453	012 .9
+M-B8403	021 .2	+M-B84152	035 .5	+C-HS820	045 .5	+C-S8201	038 .4
+M-B8404	033 .4	+M-B84161	035 .4	+C-K8201	043 .4	+C-S8202	021 .5

Tetra Pak | Designer AMI/FVI | Date 31/07/2002 | Machine PT21-0600
ECM No 112491 | Page type POSITION SUMMARY | Denomination POSITION SUMMARY
Company Tetra Pak Carton Ambient S.p.A. | Bill of material 649060-0600 | Drawing No. 2557519-0002 | Doc. type ELD | Version AA | Page 1
Drawing remarks

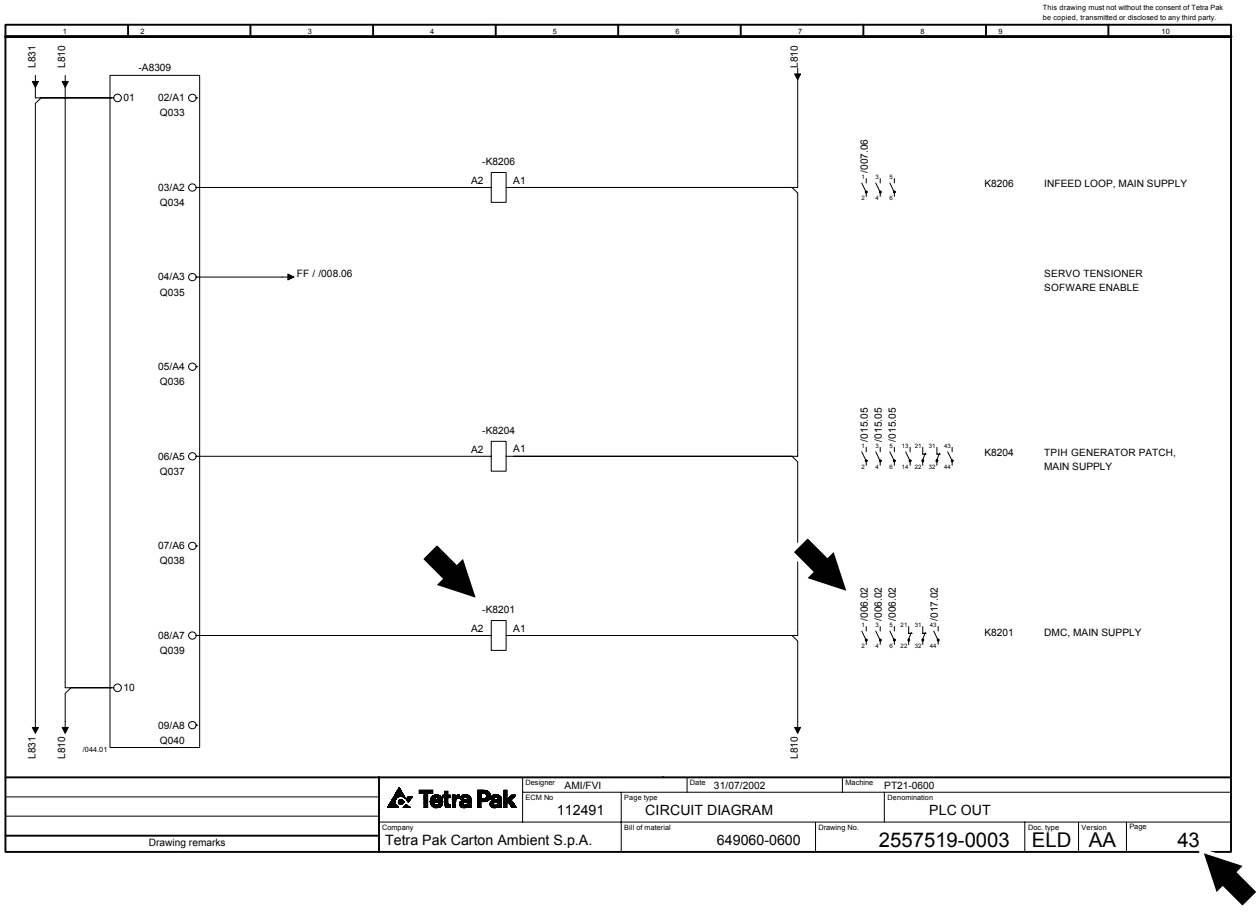

(Cont'd)

EM3.081803012int.fm

(Cont'd)

f) Go to page 6, column 2 in the **Circuit diagram**, see chapter 44954-0003.

g) Find the contacts +C-K8201.

Note! In case of master and slave component (i.e. coils and contacts), only the master is reported in the **Position summary**. The slave shows the page and the column reference of the master.

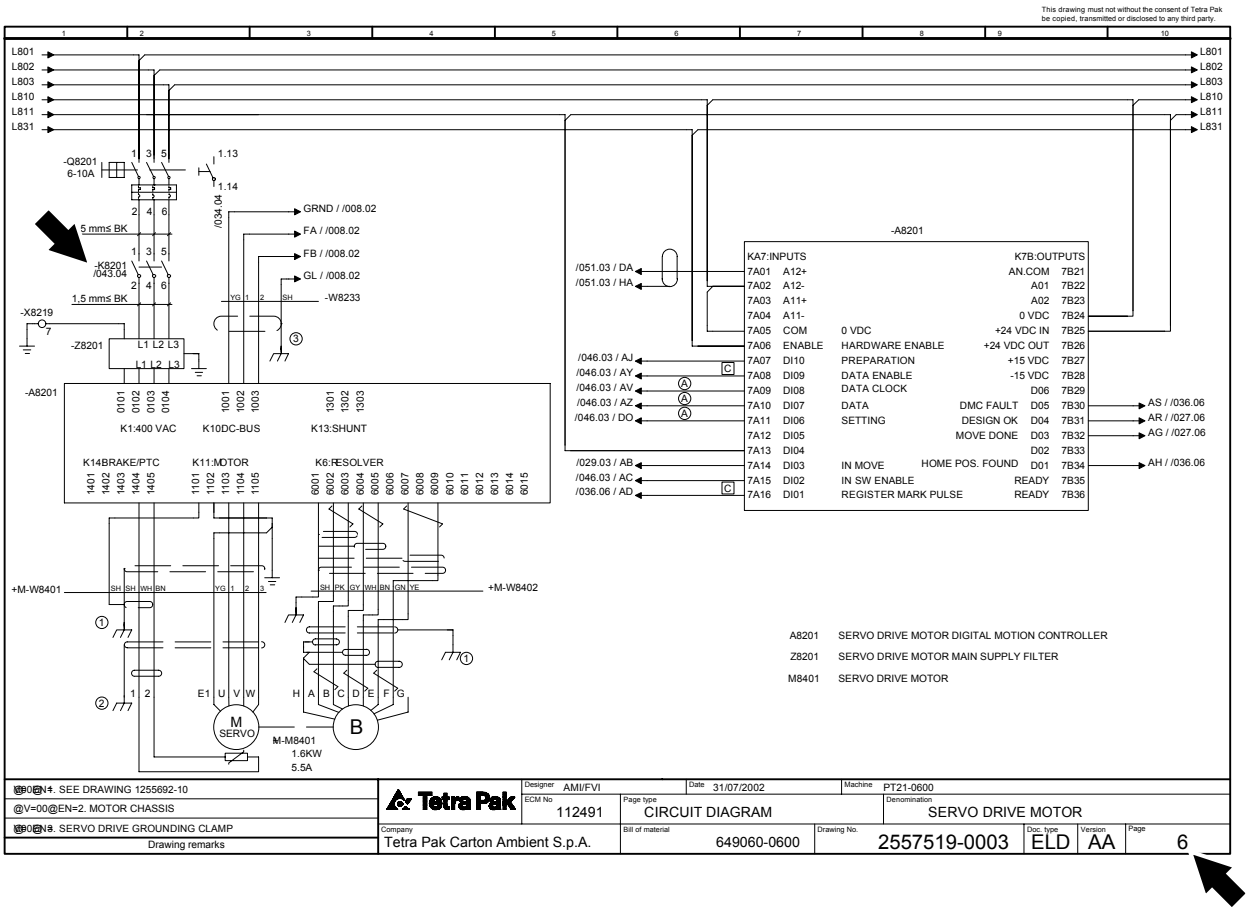

EM3.081803012int.fm

Supply voltage/Line connection order

The line connection order is shown in the **Line summary**, see chapter 44954-0004.

EM3.081803012int.fm

How to trace a line

Example: Line connection L810 to the component +C-A8305

a) Go to the **Circuit diagram**, see chapter 44954-0003.

b) Find the component +C-A8305 (Input module).

c) Note which terminal of +C-A8305 is connected to the line connection L810 (pin 01).

d) Go to the **Line summary**, see chapter 44954-0004.

e) Find the component terminal +C-A8305:01.

f) Note the relative upward line terminal connection order +C-XL810:7.

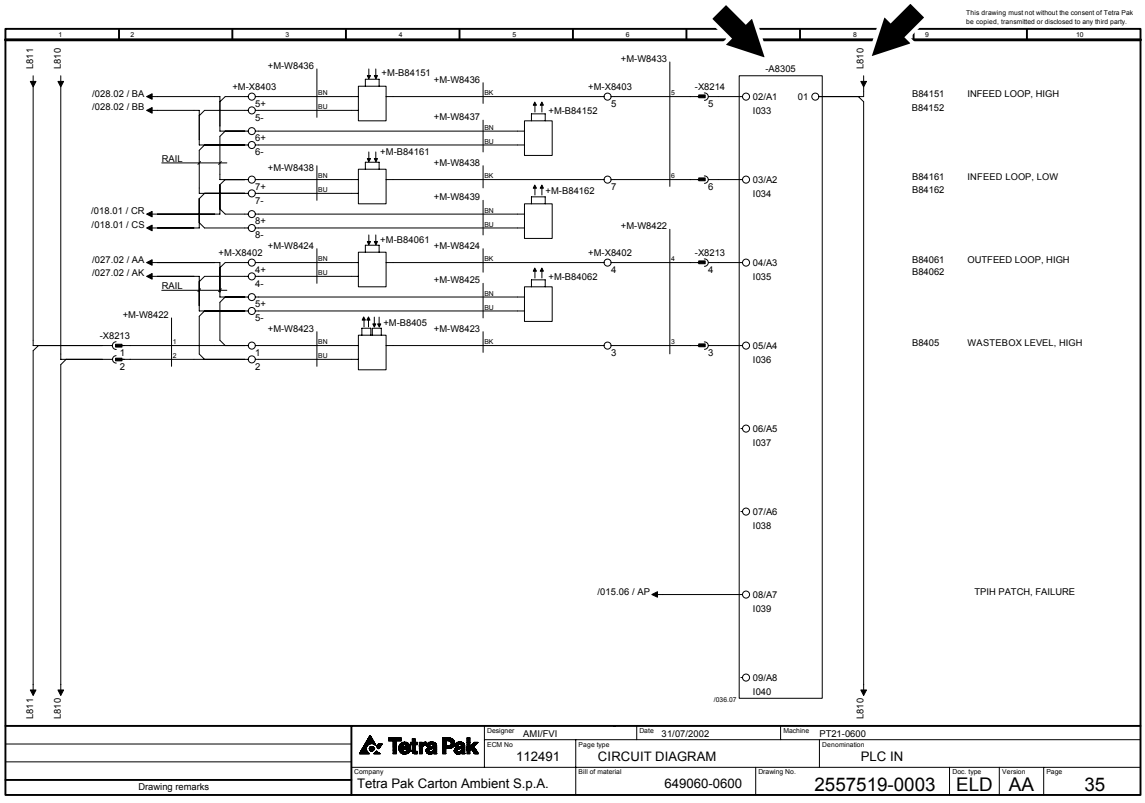

EM3.081803012int.fm

Line summary of 2557519-0003

Line	From	Page.Col.	To	Page.Col.	Area/Color	Opt.
L801	+C-X8201:1	005 .5	+C-F8201:1	007 .6	2.5 mm≤ BK	
L801	+C-F8201:1	007 .6	+C-F8207.1:1	015 .5		
L801	+C-F8207.1:1	015 .5	+C-F8211:1	010 .2		
L801	+C-F8211:1	010 .2	+C-Q8201:	006 .2		
L801	+C-Q8201:1	006 .2	+C-F8250:1	012 .3		
L802	+C-X8201:2	005 .5	+C-F8202:1	011 .1	2.5 mm≤ BK	
L802	+C-F8202:1	011 .1	+C-F8207.2:1	015 .5		
L802	+C-F8207.2:1	015 .5	+C-Q8203:	006 .2		
L803	+C-X8201:3	005 .5	+C-F8203:1	011 .7	2.5 mm≤ BK	
L803	+C-F8203:1	011 .7	+C-F8207.3:1	015 .5		
L803	+C-F8207.3:1	015 .5	+C-F8206:1	015 .3		
L803	+C-F8206:1	015 .3	+C-Q8205:	006 .2		
L810	+C-XL810:1	001 .1	+C-X8202:2	005 .5	1.50 mm≤ BU	
L810	+C-XL810:2	001 .1	+C-A8252:A2	022 .6	0.75 mm≤ BU	
L810	+C-A8252:A2	022 .6	+C-A8252:S24	022 .6		
L810	+C-XL810:3	001 .2	+C-XL810:4	001 .2	1.50 mm≤ BU	
L810	+C-XL810:5	001 .2	+C-A8211:18	017 .4	0.75 mm≤ BU	
L810	+C-A8211:18	017 .4	+C-A8301:01	027 .8		
L810	+C-A8301:01	027 .8	+C-A8211:20	017 .4		
L810	+C-A8211:20	017 .4	+C-A8212:18	017 .4		
L810	+C-A8212:18	017 .4	+C-A8212:20	017 .4		

	From	Page.Col.	To	Page.Col.	Area/Color	Opt.
	+C-A8303:10		+C-A8303:20	032 .1		
L810	+C-XL810:7	00	+C-A8304:01	033 .8	0.75 mm≤ BU	
L810	+C-A8304:01	033 .8	+C-A8305:01	035 .8		
L810	+C-A8305:01	035 .8	+C-A8306:01	037 .8		
L810	+C-XL810:8	001 .3	+C-A8309:10	043 .1	0.75 mm≤ BU	
L810	+C-A8309:10	043 .1	+C-A8309:20	044 .1		
L810	+C-A8309:20	044 .1	+C-A8310:10	045 .1		
L810	+C-A8310:10	045 .1	+C-A8310:20	046 .1		
L810	+C-A8310:20	046 .1	+C-A8313:18	051 .1		
L810	+C-A8313:18	051 .1	+C-A8311:10	047 .1		
L810	+C-A8311:10	047 .1	+C-A8311:20	048 .1		
L810	+C-XL810:9	001 .3	+C-K8206:A1	043 .4	0.75 mm≤ BU	
L810	+C-K8206:A1	043 .4	+C-K8207:10	044 .4		
L810	+C-K8207:10	044 .4	+C-K8208:10	044 .4		
L810	+C-K8208:10	044 .4	+C-K8209:10	044 .4		
L810	+C-K8209:10	044 .4	+C-K8214:10	045 .4		
L810	+C-K8214:10	045 .4	+C-K8250:10	047 .4		
L810	+C-XL810:10	001 .4	+C-K8213:4	012 .3	0.75 mm≤ BU	
L810	+C-K8213:4	012 .3	+C-K8252:4	012 .5		
L810	+C-K8252:4	012 .5	+C-K8253:4	012 .8		
L810	+C-XL810:11	001 .4	+C-K8201:A1	043 .4	0.75 mm≤ BU	

How to trace a terminal

Example 1: Terminal in the electrical cabinet +C-X8213:3

a) Go to the **Cabinet terminal summary**, see chapter 44954-0005.

b) Find the terminal +C-X8213:3.

c) On the right side of the table, find the circuit diagram reference page where the terminal +C-X8213:3 is located (page 35, column 7).

d) Go to the **Circuit diagram**, see chapter 44954-0003.

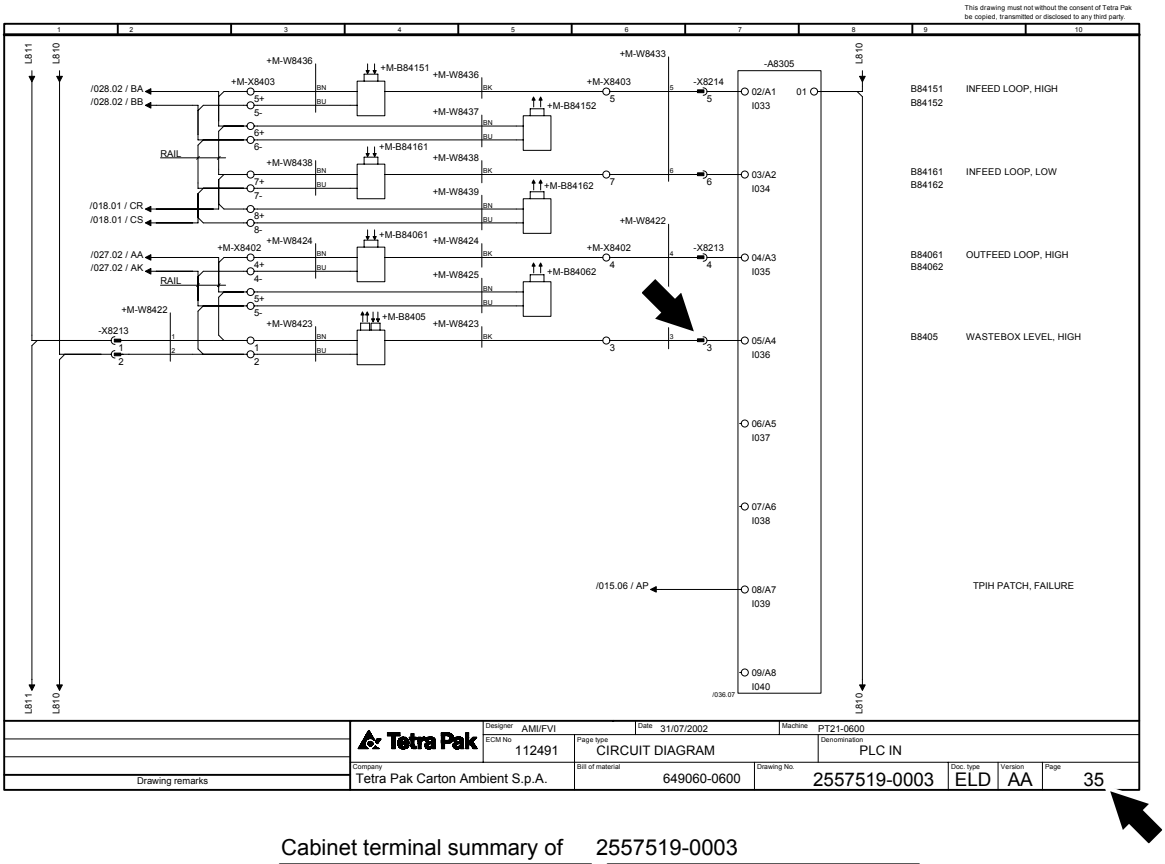

Cabinet terminal summary of 2557519-0003

Terminal	Page .Col.	Opt.
+C-X8212:15	032 .4	
+C-X8212:16		
+C-X8212:17	031 .3	
+C-X8212:18	031 .3	
+C-X8212:19	032 .8	
+C-X8212:20	039 .7	
+C-X8212:21	031 .7	
+C-X8212:22	031 .7	
+C-X8212:23	034 .2	
+C-X8212:24	034 .5	
+C-X8212:	031 .7	
+C-X8213:1	035 .1	
+C-X8213:2	035 .7	
+C-X8213:3	035 .7	
+C-X8213:4	035 .7	
+C-X8213:5	027 .6	
+C-X8213:6	040 .7	
+C-X8213:7	040 .7	
+C-X8213:8	040 .7	
+C-X8213:9	028 .6	
+C-X8213:10	040 .7	

Terminal	Page .Col.	Opt.
+C-X8214:7	018 .5	
+C-X8214:8	040 .7	
+C-X8214:9	040 .7	
+C-X8214:10	040 .7	
+C-X8214:	040 .7	
+C-X8215:1	011 .7	
+C-X8215:2	011 .8	
+C-X8215:3	011 .4	
+C-X8215:4	011 .4	
+C-X8215:5	011 .10	
+C-X8215:6	011 .9	
+C-X8215:	011 .9	
+C-X8216:1	027 .2	
+C-X8216:2	027 .2	
+C-X8216:3	027 .6	
+C-X8217:+	041 .4	
+C-X8217:-	041 .4	
+C-X8219:1	005 .7	
+C-X8219:2	053 .4	
+C-X8219:3	053 .4	
+C-X8219:4		

(Cont'd)

EM3.081803012int.fm

(Cont'd)

Example 2: Terminal outside the electrical cabinet +M-X8402:1, :2, :3

a) Go to the **Terminal strip overview**, see chapter 44954-0006.

b) Find the terminal strip page where +M-X8402 is located.

c) On the right side of the table, find the circuit diagram reference page where the terminals +M-X8402:1, :2, :3 are located (page 35, column 3).

d) Go to the **Circuit diagram**, see chapter 44954-0003.

e) Note the component connected +M-B8405.

Terminal str… 2557519-0003
+M-X8402

From	Cable	Terminal	External Jumper	Cable	To	Page.Col.	Option	Function text
+C-X8213:1	+M-W8422:1	1		+M-W8423:BN	+M-B8405:	035 .3		WASTEBOX LEVEL, HIGH
+C-X8213:2	+M-W8422:2	2		+M-W8423:BU	+M-B8405:	035 .3		WASTEBOX LEVEL, HIGH
+C-X8213:3	+M-W8422:3	3		+M-W8423:BK	+M-B8405:	035 .6		WASTEBOX LEVEL, HIGH
+C-X8213:4	+M-W8422:4	4		+M-W8424:BK	+M-B84061:	035 .6		OUTFEED LOOP, HIGH
		4+		+M-W8424:BN	+M-B84061:	035 .3		OUTFEED LOOP, HIGH
		4-		+M-W8424:BU	+M-B84061:	035 .3		OUTFEED LOOP, HIGH
		5						
		5+		+M-W8425:BN	+M-B84062:	035 .3		OUTFEED LOOP, HIGH
		5-		+M-W8425:BU	+M-B84062:	035 .3		OUTFEED LOOP, HIGH
+C-X8213:5	+M-W8422:5	6		+M-W8426:BK	+M-B84071:	027 .5		OUTFEED LOOP, LOW
		6+		+M-W8426:BN	+M-B84071:	027 .2		OUTFEED LOOP, LOW
		6-		+M-W8426:BU	+M-B84071:	027 .2		OUTFEED LOOP, LOW
		7						
		7+		+M-W8427:BN	+M-B84072:	027 .2		OUTFEED LOOP, LOW
		7-		+M-W8427:BU	+M-B84072:	027 .2		OUTFEED LOOP, LOW

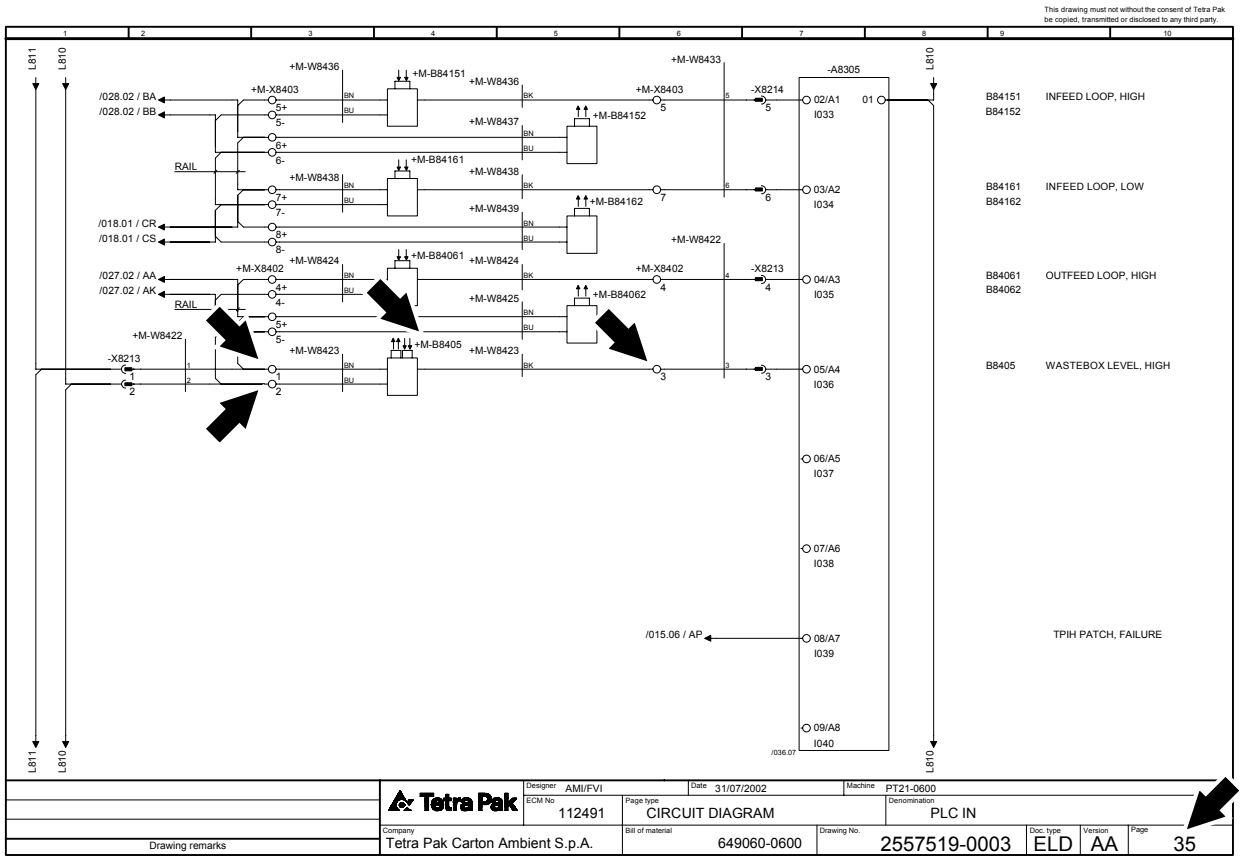

(Cont'd)

EM3.081803012int.fm

(Cont'd)

f) The location +M indicates that the component is fitted on the machine.

g) Go to the **SPC Electrical Parts Index** chapter to find the position of the component B8405.

Pos	Part No	Description	Page No
A			
A602	90119-0063	OPTO-RELAY, DC/DC AMMS-10-1/30VDC	661, 663
A604	90119-0063	OPTO-RELAY, DC/DC AMMS-10-1/30VDC	661, 663
A605	90119-0063	OPTO-RELAY, DC/DC AMMS-10-1/30VDC	661, 663
A606	90119-0063	OPTO-RELAY, DC/DC AMMS-10-1/30VDC	661, 663
A607	90119-0104	OPTO COUPLER AMMS 50070	661, 663
A608	90119-0104	OPTO COUPLER AMMS 50070	661, 663
A609	90119-0104	OPTO COUPLER AMMS 50070	661, 663
A610	90119-0104	OPTO COUPLER AMMS 50070	661, 663
B			
B001	90044-0192	LIMIT SW. SZ2586.000	713, 715
B002	90044-0192	LIMIT SW. SZ2586.000	713, 715
B003	90044-0192	LIMIT SW. SZ2586.000	713, 715
B004	90044-0192	LIMIT SW. SZ2586.000	713, 715
B005	90044-0192	LIMIT SW. SZ2586.000	713, 715
B006	90044-0192	LIMIT SW. SZ2586.000	713, 715
B007	90044-0192	LIMIT SW. SZ2586.000	713, 715
B8405	90458-1114	BIMET. ELECTROMECH. THERMOSTAT K7H.020	703, 705
D			
D100	[illegible]31-0075	CPU363, SERIAL COMMUNICATION	665
E			
E004.1	90164-0018	LIGHT FIXTURE, FK 130	713, 715
E004	90297-0011	FLUORESCENT TUBE, TDL 30W/840	713, 715
E005.1	90164-0018	LIGHT FIXTURE, FK 130	713, 715
E005	90297-0011	FLUORESCENT TUBE, TDL 30W/840	713, 715
E006	90457-0175	LIGHT FIXTURE, FLUO K SET 108	713, 715
F			
F001	90007-0129	CIRCUIT BREAKER, 1P 10 A K	767, 769
F002	90007-0129	CIRCUIT BREAKER, 1P 10 A K	761, 763
F004	90007-0129	CIRCUIT BREAKER, 1P 10 A K	767, 769
F005	90007-0128	CIRCUIT BREAKER, 1P 6 A K	767, 769
F006	90007-0146	CIRCUIT BREAKER, 3P 6 A K	761, 763
F007	90007-0149	CIRCUIT BREAKER, 3P 20 A K	767, 769
F008	90007-0129	CIRCUIT BREAKER, 1P 10 A K	767, 769
F009	90007-0129	CIRCUIT BREAKER, 1P 10 A K	767, 769
F010	37877-0300	HEATING BLOCK	553
F010	90007-0128	CIRCUIT BREAKER, 1P 6 A K	761, 763
F012	90007-0155	CIRCUIT BREAKER, 1P 0,5 A K	761, 763
F015	90007-0129	CIRCUIT BREAKER, 1P 10 A K	767, 769
F016	90007-0131	CIRCUIT BREAKER, 1P 16 A K	761, 763
F017	90007-0128	CIRCUIT BREAKER, 1P 6 A K	761, 763
F019	90007-0129	CIRCUIT BREAKER, 1P 10 A K	761, 763
F020	37894-0100	COUNTER RAIL	553
F021	90007-0155	CIRCUIT BREAKER, 1P 0,5 A K	761, 763
F024	90111-0172	EARTH FAULT BREAKER, F 362-25/0.03	761, 763
F025	90458-1448	MAGNETIC FUSE, S292 C100	761, 763
F027	90007-0129	CIRCUIT BREAKER, 1P 10 A K	761, 763
F030	90007-0155	CIRCUIT BREAKER, 1P 0,5 A K	761, 763
F030	450101-0200	TEARING DEVICE	553
F040	271626-0300	SUSPENSION ARM	553
F050	271641-0400	SPLICING TABLE	553
F100	90233-0027	TUBE FUSE, 16A	761, 763, 765
F100.1	90233-0303	FUSE HOLDER, ST10	765
F101	90233-0029	TUBE FUSE, 25A	765
F101.1	90233-0303	FUSE HOLDER, ST10	765
F102	90233-0027	TUBE FUSE, 16A	765
F102.1	90233-0304	FUSE HOLDER, ST10	765
F103	90233-0027	TUBE FUSE, 16A	765
F103.1	90233-0304	FUSE HOLDER, ST10	765
F104	90233-0027	TUBE FUSE, 16A	765
F104.1	90233-0303	FUSE HOLDER, ST10	765
F106	90233-0028	TUBE FUSE, 10A	765
F106.1	90233-0303	FUSE HOLDER, ST10	765
F107	90233-0028	TUBE FUSE, 10A	765
F107.1	90233-0303	FUSE HOLDER, ST10	765
G			
G001	90430-0326	FILTER 6SE3290-0BA87-0FB2	627, 629
G002	90430-0070	FREQ.CONV. 6SE3213-6CA40	627, 629
G003	90430-0326	FILTER 6SE3290-0BA87-0FB2	627, 629
G004	90430-0076	FREQ.CONV. 6SE3221-3DC40	627, 629
G005	90430-0326	FILTER 6SE3290-0BA87-0FB2	627, 629
G100	90031-0068	PLC, POWER SUPPLY	665
G101	90031-0068	PLC, POWER SUPPLY	667
G102	90031-0068	PLC, POWER SUPPLY	669
K			
K001	90075-0124	CONTACTOR, 4KW 24VDC	671, 673
K002	90075-0127	CONTACTOR, 4KW 24VDC	671, 673
K003	90458-2924	CONTACTOR 30KW COIL 24VDC	627, 629
K003.1	90458-2925	AUXILIARY CONTACT, DIL M820-XHI11-SI	627, 629
K004	90075-0128	CONTACTOR, 7,5KW 24VDC	671, 673
K005	90075-0125	CONTACTOR, 7,5KW 24VDC	671, 673
K006	90075-0125	CONTACTOR, 7,5KW 24VDC	671, 673
K007	90075-0124	CONTACTOR, 4KW 24VDC	671, 673

Abbreviations and terminology

AP	Aseptic Product	**OM**	Operation Manual
ASU	Automatic Strip Splicing Unit	**PC**	Personal Computer
ASSU	Automatic Strip Splicing Unit	**PLC**	Programmable Logic Controller
AW	Acidified Water (optional)	**PLMS**	Packaging Line Monitoring System
CAP	Counter Air Pressure	**PMI**	Packing material in-feed
CPU	Central Processing Unit	**PT**	Pull Tab (optional)
CS	Control System	**RH**	Right Hand
DCSM	Design Control System Multistep	**SA**	Strip Applicator
DMC	Digital Motion Controller	**SP**	Spare Part
EM	Electrical Manual	**SPC**	Spare Part Catalogue
EN	Norme Européenne (European standard)	**SS**	Short Stop
FCMM	Frequency Controlled Main Motor	**SSS**	Strip Splice Sensor
FCS	Filling Control System	**TCSB**	Temperature Controlled Steam Barrier
HD	Hard Disk	**TFD**	Tube Folding Device
HI	Headspace by injection	**TMCC2**	TetraPak Multipourpose Controller
HF	High Frequency	**TP**	Tetra Pak
IM	Installation Manual	**TPIH**	Tetra Pak Induction Heating
LED	Light Emitting Diode	**TPMS**	Tetra Pak Maintenance System
LS	Longitudinal Sealing	**TPOP**	Tetra Pak Operator panel
MC	Motion Controller	**TS**	Transversal sealing
MDCS	Motorized Design Control System	**WTC**	Web Tension Control (Pendulum)
MM	Maintenance Manual		

EM3.081803012int.fm

Machine orientation

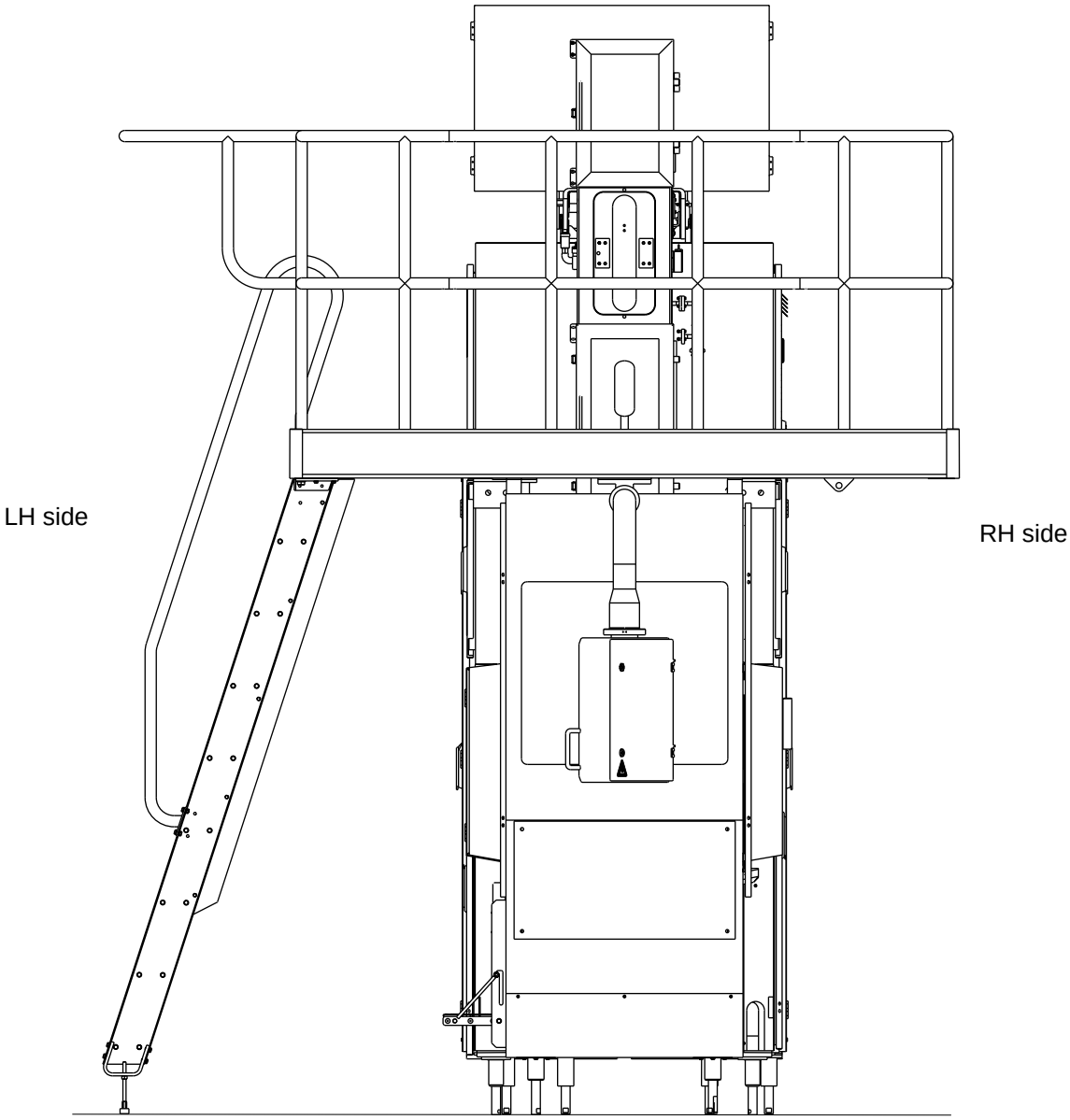

Front view of the machine

EM3.081803012int.fm

2 Safety precautions

To ensure maximum safety, always read this section carefully before doing any work on the equipment or making any adjustments.

EM1.1818030912sp.fm

Hazard information

General



Failure to observe information marked “DANGER!” **puts your life in danger**.



Failure to observe information marked “WARNING!” can result in **personal injury and/or serious damage to or destruction of equipment**.

Caution! Failure to observe information marked “Caution!” can result in **damage to equipment**.

EM1.181803012sp.fm

Mandatory signs

 **Wear eye protection**	 **Wear hearing protection**
 **Wear head protection**	 **Wear protective gloves**
 **Disinfect hands/gloves**	

EM1.1818030912sp.fm

Danger and warning signs

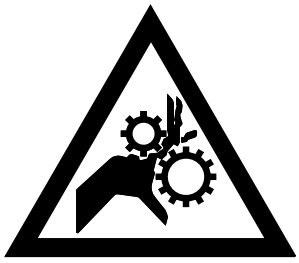

Risk of entanglement!



Risk of corrosion!

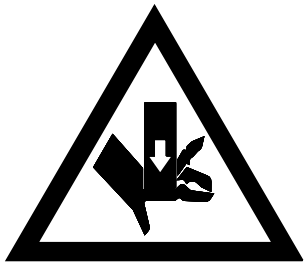

Risk of crushing!



Risk of cutting/amputation!



Risk of burns!

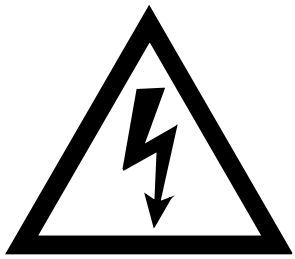

Risk of electrocution!

EM1.181803012sp.fm

(Cont'd)

(Cont'd)

 **Risk of crushing!**	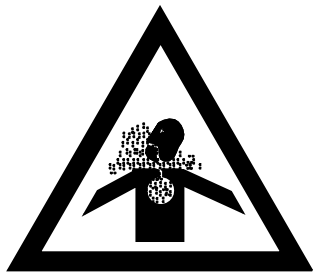 **Risk of intoxication!**
 **Risk of falling!**	

EM1.181803012sp.fm

Warning signs on the machine

Check the warning signs are readable. Replace any damaged or missing signs.

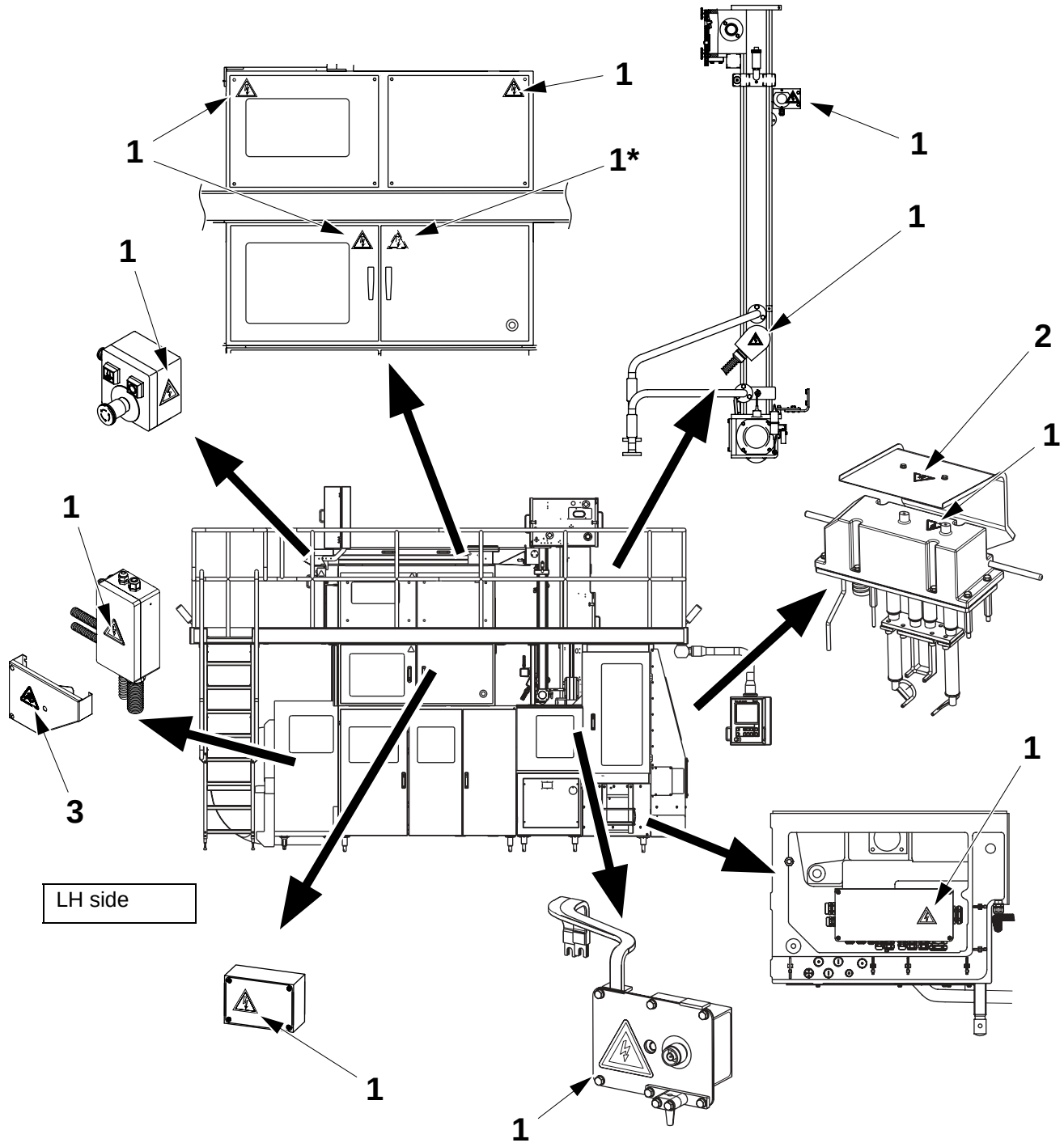

EM1.1818030012sp.fm

* Symbol located on the inside door

1 Risk of electrocution!
2 Risk of burns!
3 Risk of entanglement!

(Cont'd)

(Cont'd)

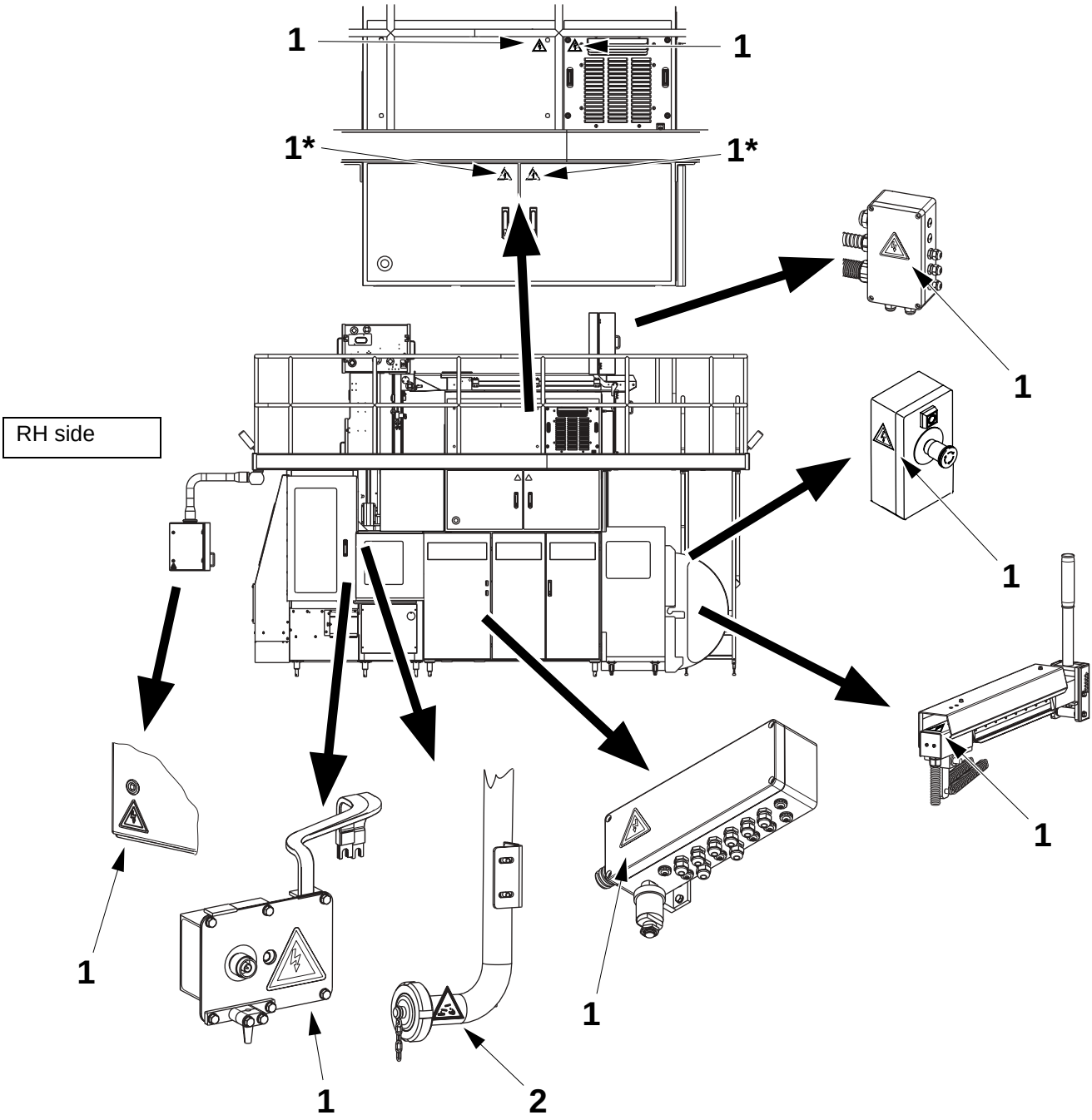

* Symbol located on the inside door

1 Risk of electrocution!
2 Risk of corrosion!

(Cont'd)

EM1.1818030912sp.fm

(Cont'd)

Warning signs on the ASU

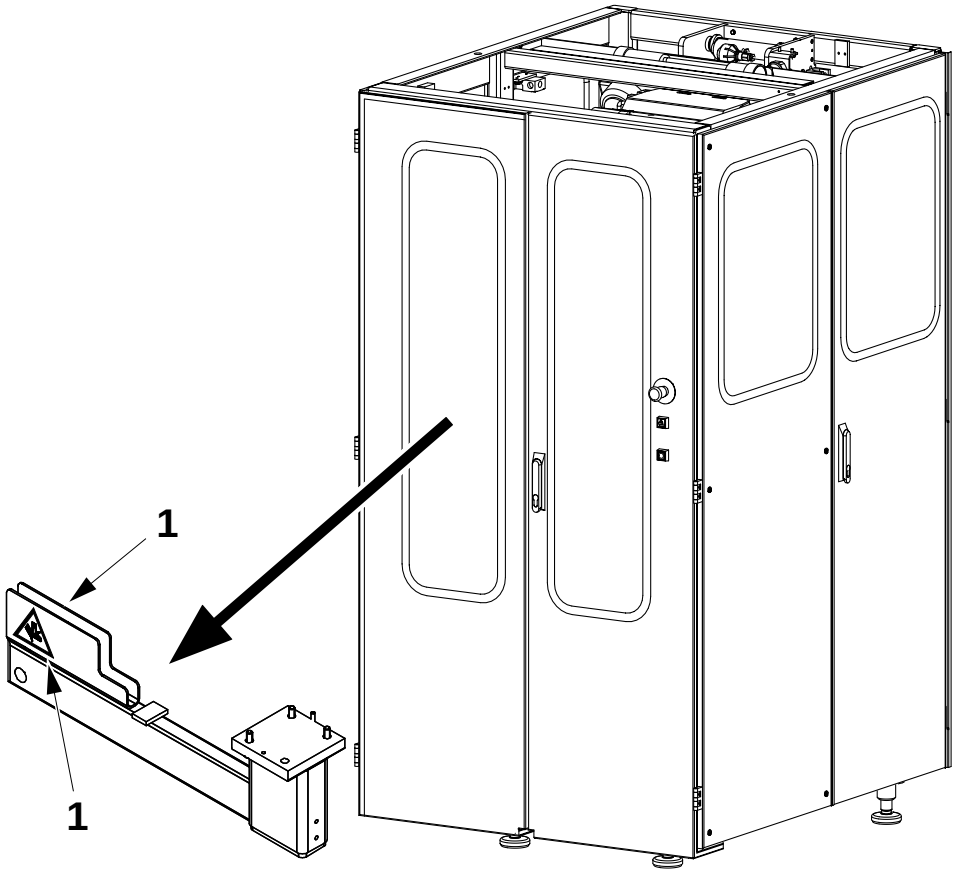

EM1.181803012sp.fm

1 Risk of crushing!

Personnel requirements



Risk of immediate danger to life!
Failure to follow the safety precautions will put your life in danger.
All personnel must regard all electrical equipment as live.

The work is to be carried out in such a way that there is no risk of injury to personnel.

General

During maintenance or service work, the service technician and the electrician are responsible not only for the machine, but for the safety of the personnel in the vicinity of the machine as well.

It is also the responsibility of the service technician and the electrician to ensure that the machine safety devices are fully operational before finishing the maintenance or service work.

Service technician

Only trained or instructed service technicians are allowed to work on the machine.

Service technicians may be:

- technicians employed by **Tetra Pak**

  Tetra Pak technicians are Tetra Pak employees who have completed training courses at the Tetra Pak Technical Training Centres or have equivalent knowledge.
- technicians employed by the **customer**

  Technicians employed by the customer must have the following skills:
  - capable of reading (English or native) technical information
  - able to understand technical drawings
  - basic knowledge of mechanics and electronics
  - basic knowledge of mathematics
  - capable of handling (special) tools.

(Cont'd)

EM1.181803012sp.fm

(Cont'd)

Electrician

Electricians should:

- be certified according to local regulations
- have experience of similar types of installations
- have proven skills in reading and working from drawings and cable lists
- have knowledge of local safety regulations for power and automation

Work with the electrical equipment in the machine must be performed by **skilled persons only.**

According to EN 60204-1:1997 clause 3.52 a skilled person is:

– *a person with relevant education and experience to enable him or her to perceive risks and to avoid hazards which electricity can create.*

Machine operator

Only trained or instructed persons are allowed to operate the machine.

The machine operator is an individual that has enough training and knowledge to run the equipment in the correct way.

Fork lift driver

Fork lift drivers should be certified according to local regulations.

The fork lift driver’s role during installation is:

- to unload the transport vehicle
- to plan and transport the machine or machine parts within the plant in a safe and smooth way
- to assist when assembling Tetra Pak equipment

EM1.181803012sp.fm



General safety precautions

Wear hearing protection while the equipment is running is recommended.

Hygiene

It is important to keep hands and/or gloves clean.

Disinfect hands and/or gloves before touching the packaging material, the strip(s) or any other equipment part that may come into contact with the product.

Clean the platforms, the ladder and the area around the equipment.

To avoid production faults, it is important that the packaging material and the strip(s) never touch the floor, the platform or the area around the equipment.

High voltage

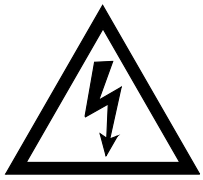

Work with parts marked with this symbol must be performed by **skilled or instructed** persons **only**.

Make sure that the mains power is disconnected before starting any work on electrical equipment marked with this symbol.

In case of accident, call for medical attention immediately.

EM1.181803012sp.fm

Electrical cabinet



There is high voltage in the electrical cabinet (up to 400 V).

Work inside the electrical cabinet must be performed by skilled or instructed persons only. Electrical cabinet doors locked with screws may be opened only by skilled or instructed persons.

During operation the voltage in the TPIH generator can be up to 2000 V (400 V when not in operation). In case of accident call for medical attention immediately.

Never open the TPIH generator. Remove and return the unit to an authorised service centre for servicing and repair.

With ASU

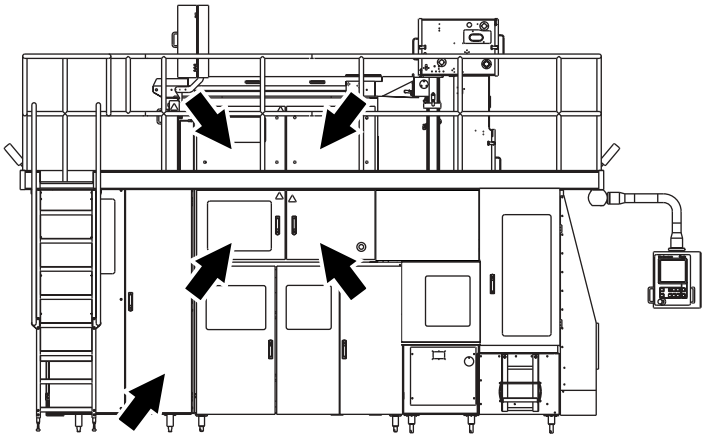

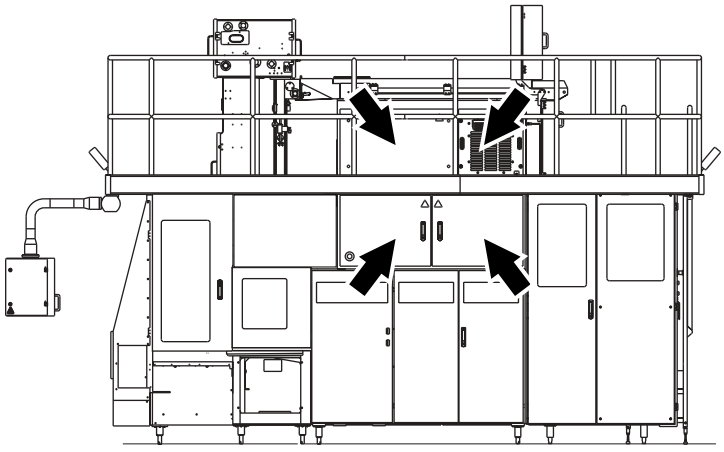

EM1.181803012sp.fm

(Cont'd)

(Cont'd)

With PMI

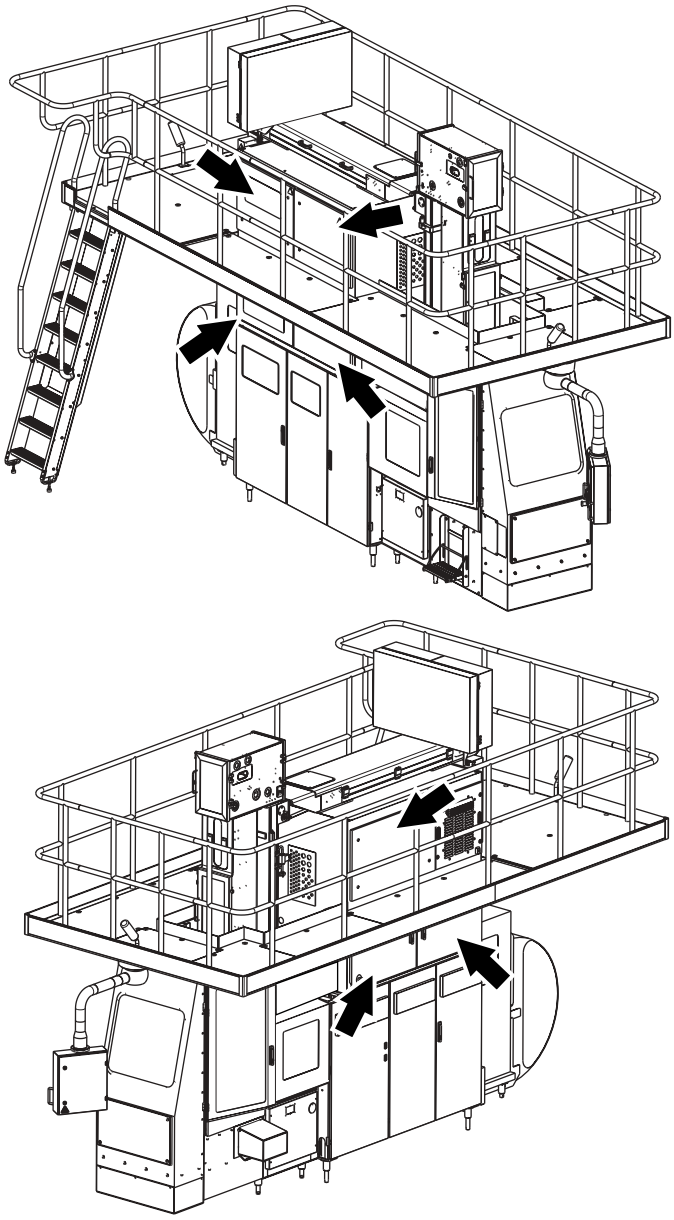

(Cont'd)

EM1.1818030012sp.fm

(Cont'd)



TPIH generator

There is high voltage in the electrical cabinet (up to 2000 V). In case of accident call for medical attention immediately.

Never open the TPIH generator. Remove and return the unit to an authorised service centre for servicing and repair.

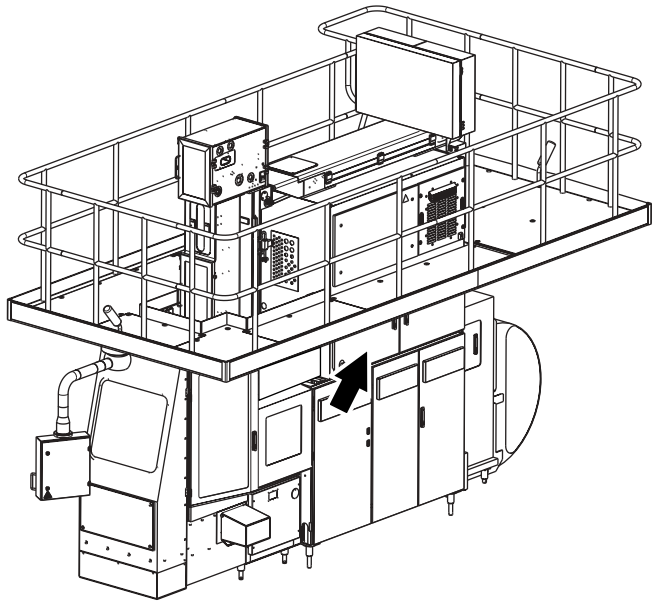

EM1.181803012sp.fm

Machine safety devices

Emergency stop buttons

Learn the position of the **Emergency stop** buttons in order to stop the equipment immediately in case of danger to people or damage to the equipment.

The **Emergency stop** does not disconnect the power at the main disconnection device.

Pushing the **Emergency stop** buttons will reset the equipment program to **Zero** position and deactivate all pneumatic cylinders.

With ASU

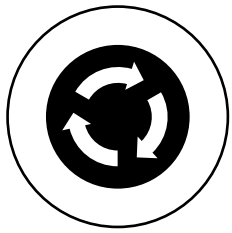

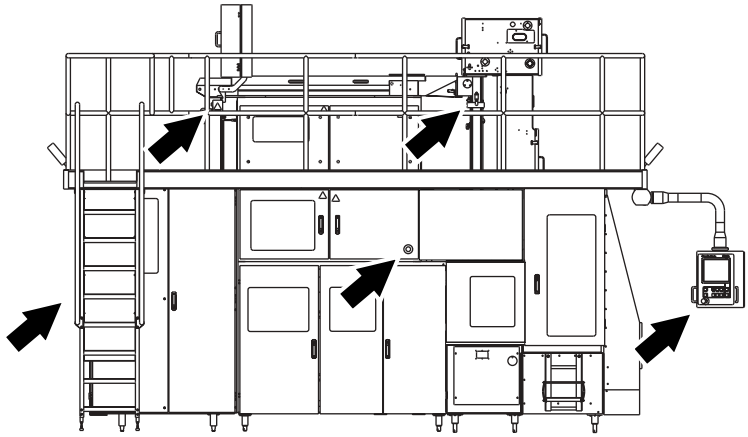

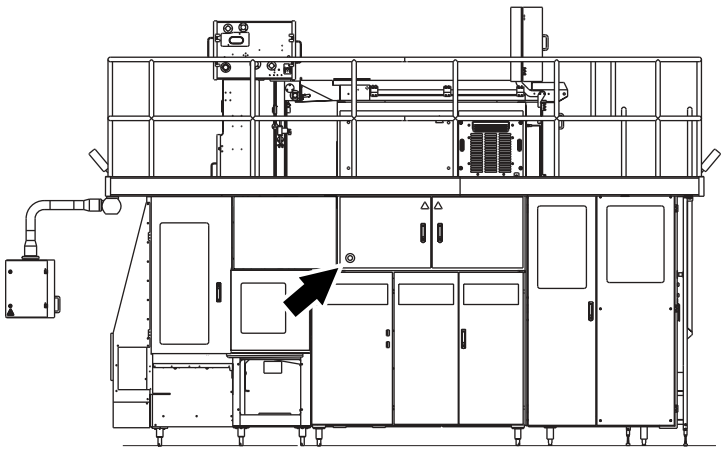

(Cont'd)

EM1.181803012sp.fm

(Cont'd)

With PMI

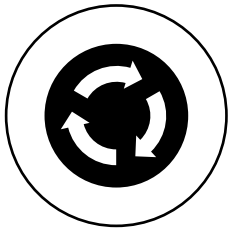

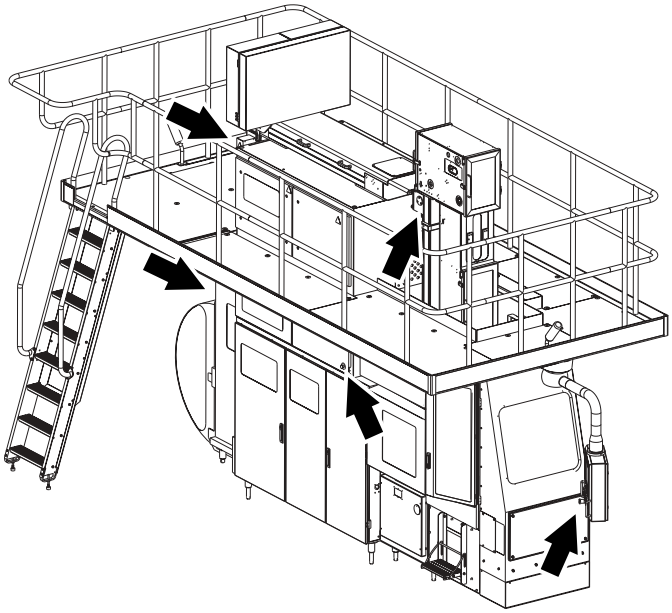

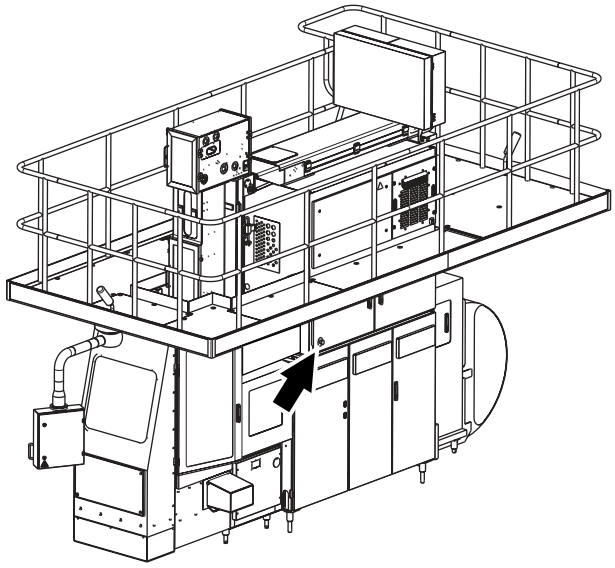

EM1.1818030012sp.fm

Doors, covers and guards

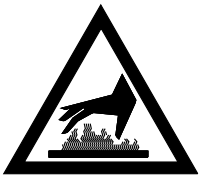

WARNING!

Make sure that all doors, covers and guards are in place and functioning.

Never remove covers or guards while the equipment is operating.



WARNING!

Certain doors, covers and guards are fitted with safety switches. These switches are part of the safety system and must **never** be bridged, by-passed or otherwise made non-operational.

Never stop the equipment by opening a door or cover protect with an interlocking device.

The equipment may perform a reciprocating movement during the first few seconds after a stop. Some equipment parts may also be hot.

In case of accident, call for medical attention.

With ASU

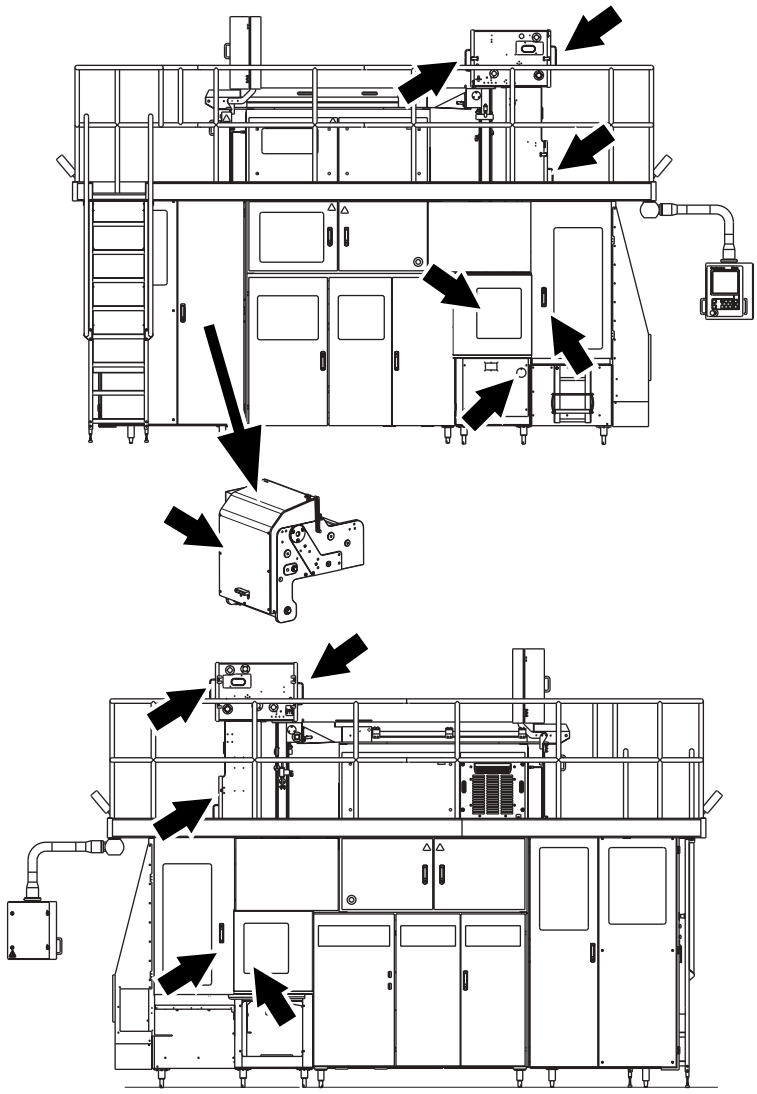

(Cont'd)

(Cont'd)

With PMI

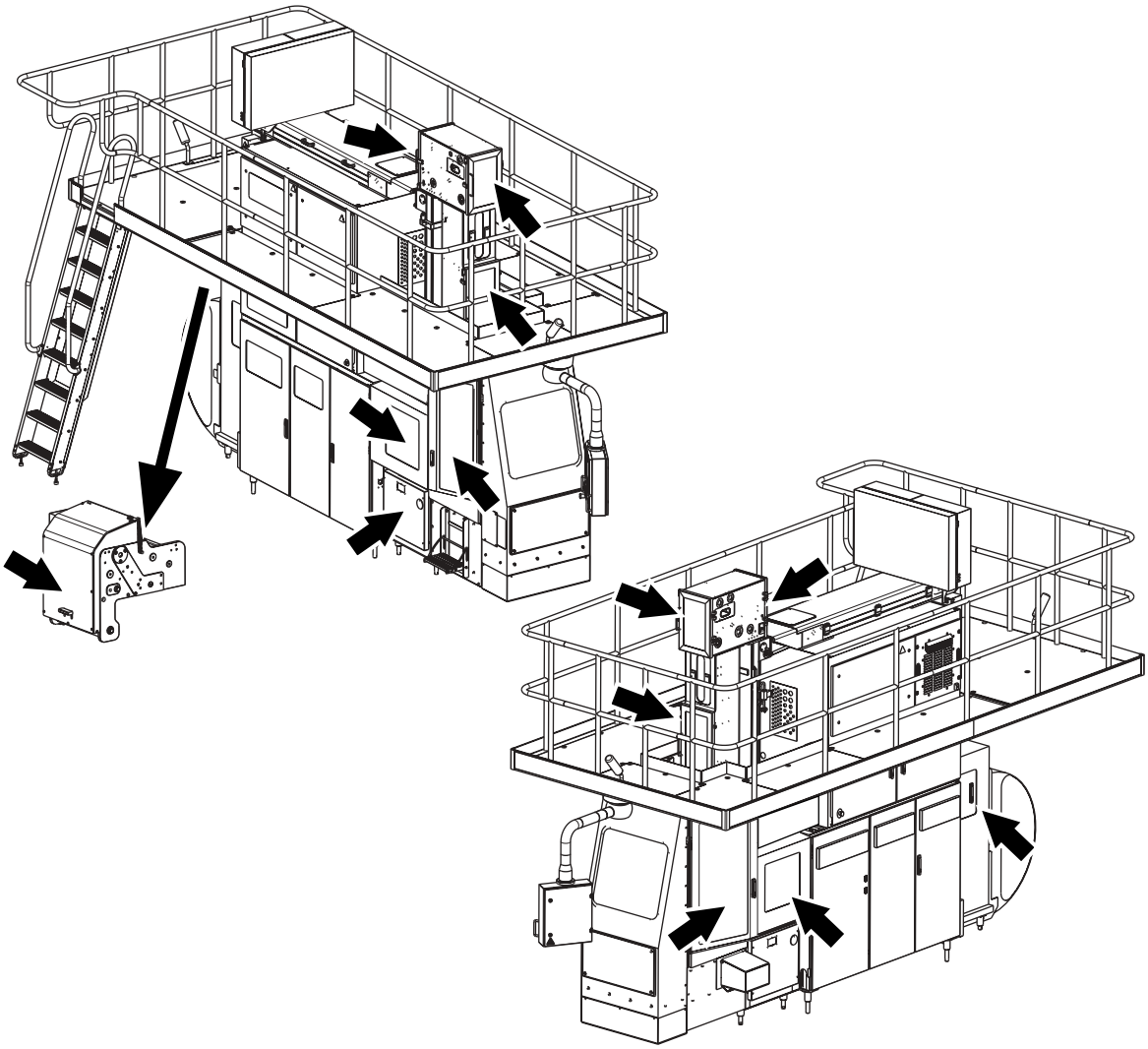

EM1.1818030012sp.fm

Chemical products



Risk of personal injury!
Certain chemical products are toxic and/or inflammable.
Carefully follow the instructions on the container label.

Follow the supplier's instructions for handling and disposal of the chemical products.

Personal protective equipment

- **Safety goggles**, TP No. 90303-0011
- **Apron**, TP No. 90303-0013
- **Shoes** made of PVC, PE plastic or rubber
- **Protective gloves** made of neoprene, TP No. 90303-0012

Before starting work with any chemical products, make sure that:

- the showers work
- a portable, TP No. 90303-6, or wall-mounted eyewash device is available at or near each machine site
- there are additional washing facilities

EM1.181803012sp.fm



General emergency procedures

If you accidentally **swallow** chemical products, drink large amounts of lukewarm water.

If you get splashes or vapour from chemical products in your **eyes**, wash your eyes thoroughly with lukewarm water for 15 minutes (keeping eyelids wide apart).

If chemical products come into contact with **skin** or **clothes**:

- rinse immediately with plenty of water
- if skin burns appear, call for medical attention immediately
- thoroughly wash clothes before wearing them again

If you experience irritation or pain due to having **inhaled** chemical products vapour:

- leave the affected area and get some fresh air
- if the symptoms get worse, call for medical attention

Hydrogen peroxide

The liquid used for sterilising the packaging material consist of 35% hydrogen peroxide (H_2O_2).



WARNING!

Hydrogen peroxide in liquid and gas form can cause irritation and injury if it comes into contact with the skin, mucous membranes, the eyes or clothes. Carefully follow the instructions on the can label.

Hydrogen peroxide can

HYDROGEN PEROXIDE:

- 35% w/w Aqueous Solution UN No. 2014
- Corrosive
- Oxidizing
- Causes burns. Contact with combustible materials may cause fire
- Keep in a cool place away from sources of heat
- Avoid contamination
- Wear suitable protective clothing, gloves, and eye/face protection
- After contact with skin, wash immediately with plenty of water and call for medical attention
- In case of contact with eyes, rinse immediately with plenty of water and call for medical attention
- In case of spillage or fire, drench with water

Reference: TP document No. M 1751.80

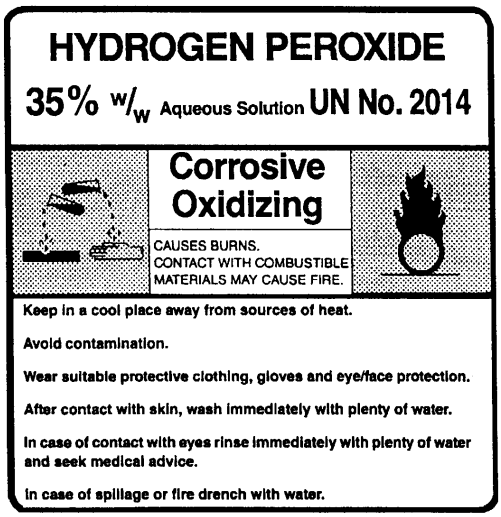

Example of can label

(Cont'd)

EM1.181803012sp.fm

(Cont'd)

Storage of hydrogen peroxide

Make sure that the area or room used for storage is:

- cool, clean and well ventilated
- shielded from direct sunlight
- free from combustible materials

Hydrogen peroxide must be stored only in its **original container** as delivered by the suppliers.

Keep the container upright and closed with a **proper ventilation cap** which allows oxygen to escape.

Pumps and other equipment used for hydrogen peroxide must be used **for this purpose only**.

Never put used hydrogen peroxide back into storage.

Disposal of hydrogen peroxide

Hydrogen peroxide should be sent for destruction by waste disposal specialists according to local regulations.



WARNING!

Risk of explosion!
Do not pour surplus hydrogen peroxide back into its original container. Hydrogen peroxide may decompose. In case of accident, call for medical attention immediately.

In some countries it is permitted to dilute hydrogen peroxide with water to a concentration below 1% and to dispose of it in the normal waste water drain. Hydrogen peroxide with a concentration below 1% is considered harmless.

Ink



Risk of personal injury!
Ink is inflammable and can be harmful if it comes into contact with the eyes or skin. Carefully follow the instructions on the container label.

Ink container

- INFLAMMABLE
- Avoid direct contact with the product
- Use gloves and goggles
- Care for good ventilation
- Propylene glycol mono methyl ether >30%
- Ethanol 1-5%
- SHAKE BEFORE USE

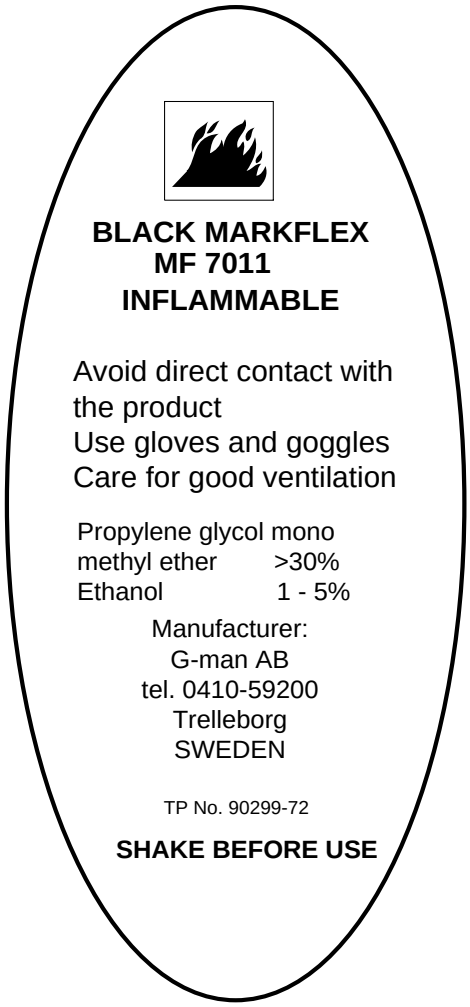

EM1.181803012sp.fm

Equipment for lifting and moving loads



WARNING!

Make sure that the capacity of the lifting equipment is adequate and that the equipment itself is in good working order.

If lifting tackle has to be joined to make up the necessary lengths, make sure that the joins are secure and have the same lifting capacity as the rest of the tackle.

Always engage the safety clip on lifting hooks to prevent the tackle from slipping off.

Use ropes or poles to steady and manoeuvre loads. Do **not** use hands or feet.

Make sure that the route and the destination are free from obstacles before moving a suspended load. It must be possible to lower the load to the floor quickly and safely in an emergency.

When depositing loads, keep the lifting equipment in place until the stability of the load has been checked.

EM1.181803012sp.fm

This page intentionally left blank

EM1.181803012sp.fm

3 Electrical system description

EM1.181803012en.fm

Table of contents

Safety system 3-3

EM1.181803012en.fm

Safety system

The safety system is controlled by two safety relay modules. When the modules are not in an safety condition, the two outputs are logically true.

An emergency condition is created by pressing the emergency buttons. An safety condition is created by opening doors fitted with safety switches, see section *Safety precautions*.

To reset the machine from the emergency condition, release the emergency stop buttons, push **Alarm reset** and wait for the PLC to perform a reset.

To reset the machine from the safety condition, correct the causes (for example close the door), push **Alarm reset** and wait for the PLC to perform a reset.

Some motors are provided with the double safety feature of electronic and electromechanical cutouts.

(Cont'd)

EM1.181803012en.fm

(Cont'd)

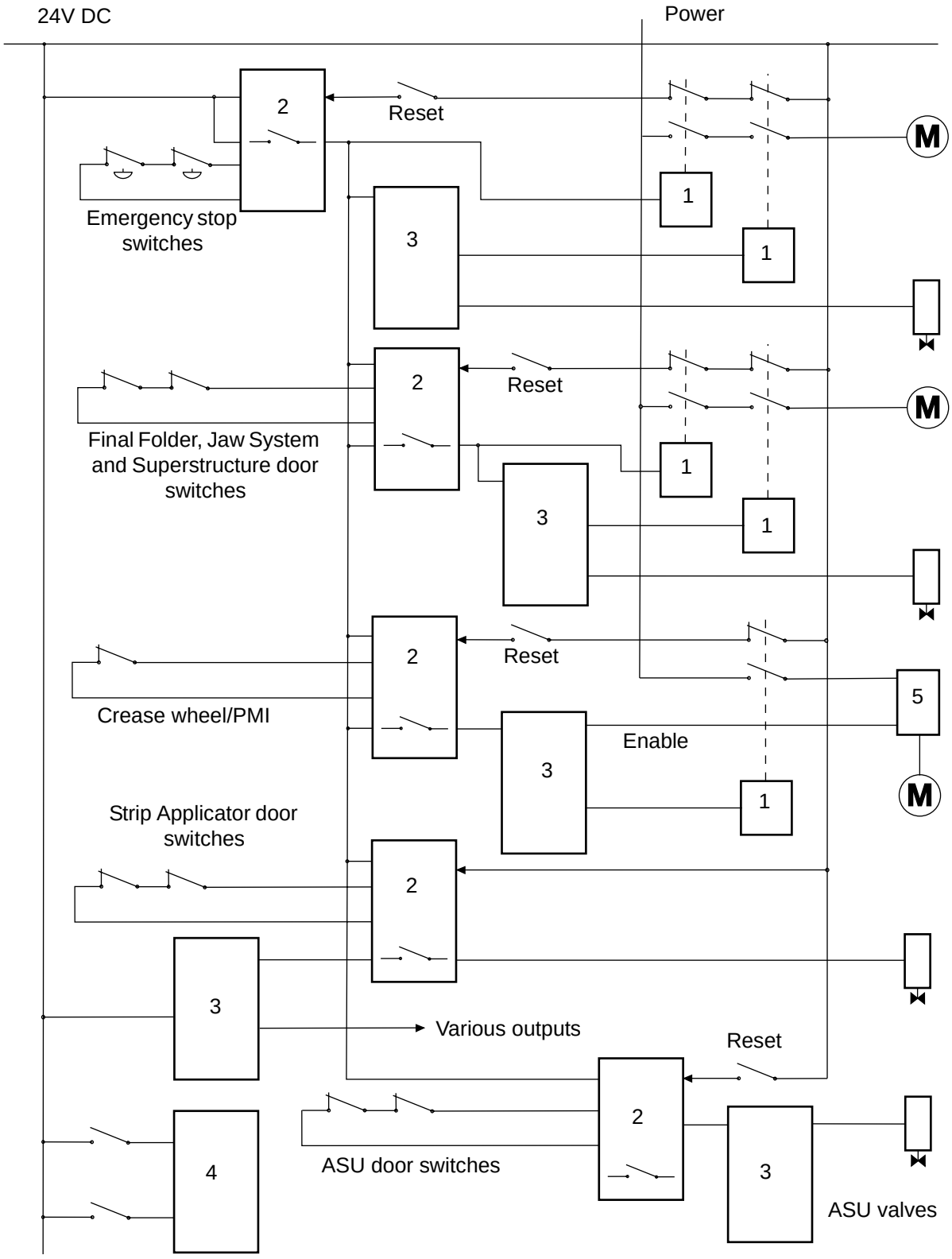

1 High-power relay (contactor)
2 Safety relay module
3 PLC output
4 PLC Input
5 Frequency converter

EM1.181803012en.fm

(Cont'd)

(Cont'd)

Safety relay module A 506 connection

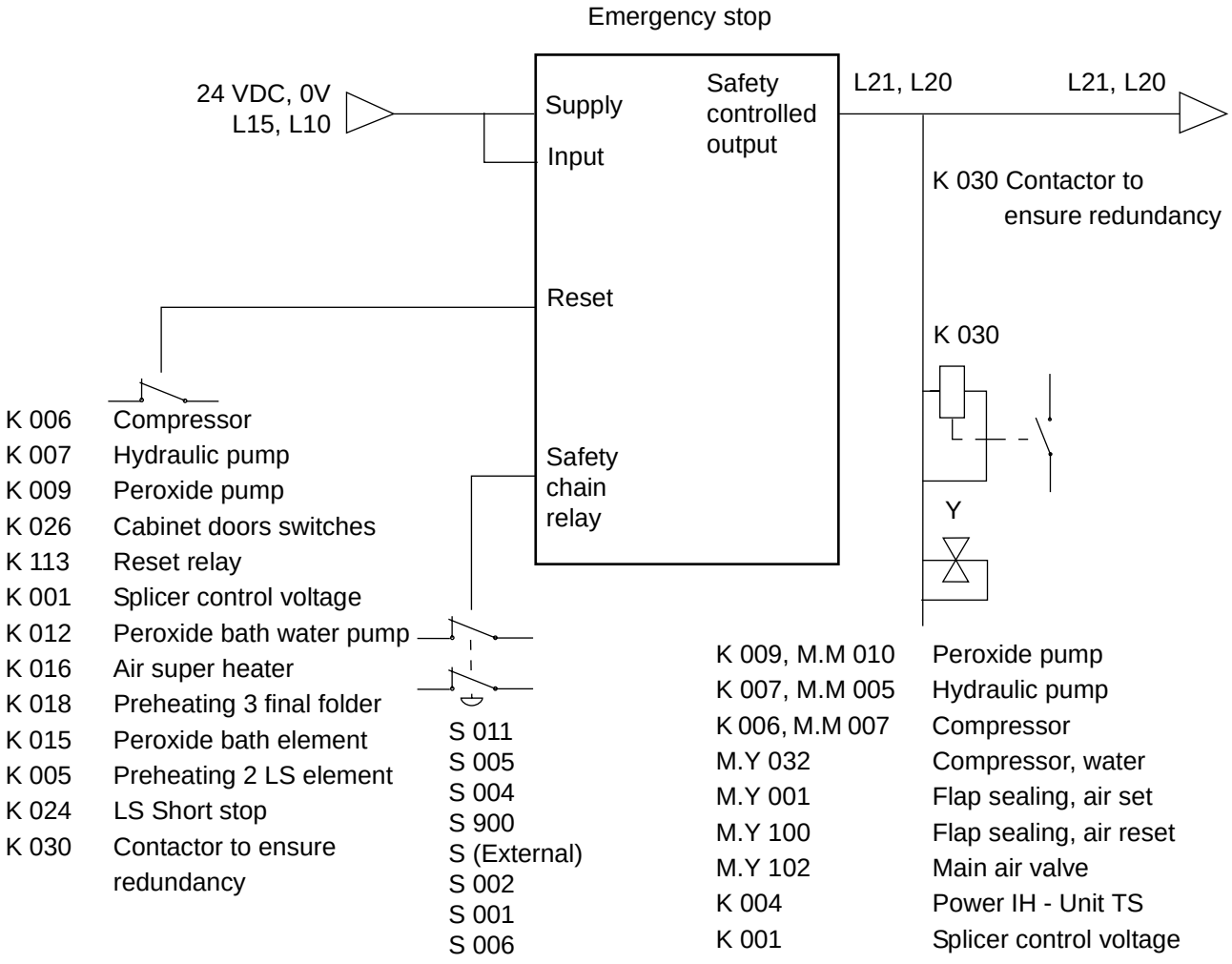

(Cont'd)

(Cont'd)

Safety relay module A 507 connection

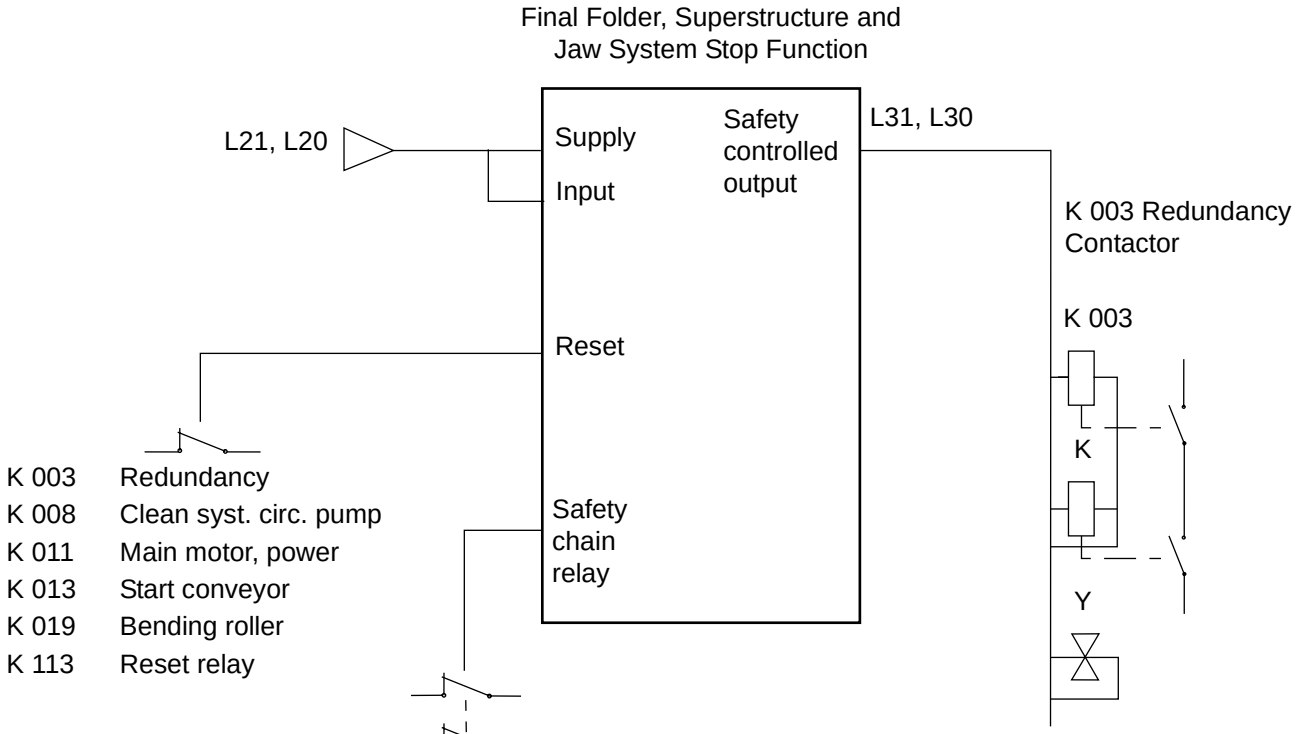

K 003	Redundancy
K 008	Clean syst. circ. pump
K 011	Main motor, power
K 013	Start conveyor
K 019	Bending roller
K 113	Reset relay

M.B 011
M.B 015
M.B 012
M.B 019
M.B 021A
M.B 021B
M.B 021C
M.B 010

Positive through PLC,
0V directly

M.Y 131	Press jaw right
K 029, M.M 029	Sterilisation roller
K 099	Press jaw enable
M.Y 132	Press jaw left
K 013, M.PLE 1	External conveyor
M.Y 027	Drop chute
M.Y 026	LS counter roll
M.Y 024	LS-element, movem.
M.Y 021	Air knife, squeezer roll
M.Y 020	Short stop
M.Y 029	Air blow bottom flaps
M.Y 177	Tube folding device
G 004	Main motor ramp down
K 019, M.M 019	Bending roller
K 011, M.M 001	Main motor
G 004	Main motor low speed
G 004	Main motor high speed
K 008, M.M 004	Clean unit circ. pump
M.Y 103	Pressure device
M.Y 030	Shut-off final folder
G 003	Bending roller enable
G 004	Main motor start command
A 500	Sealing pulse TS

EM1.181803012en.fm

(Cont'd)

(Cont'd)

Safety relay module A 512 connection

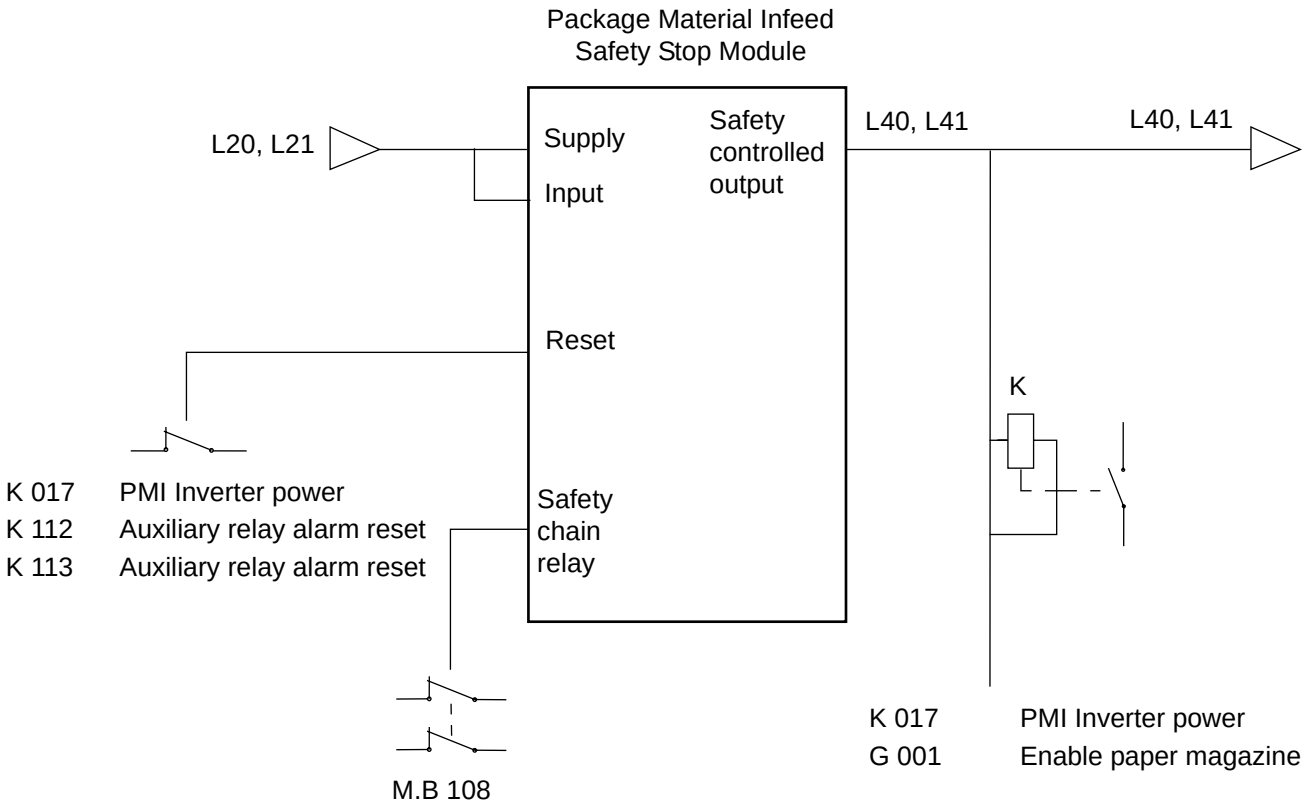

EM1.181803012en.fm

(Cont'd)

(Cont'd)

Safety relay module A 504 connection

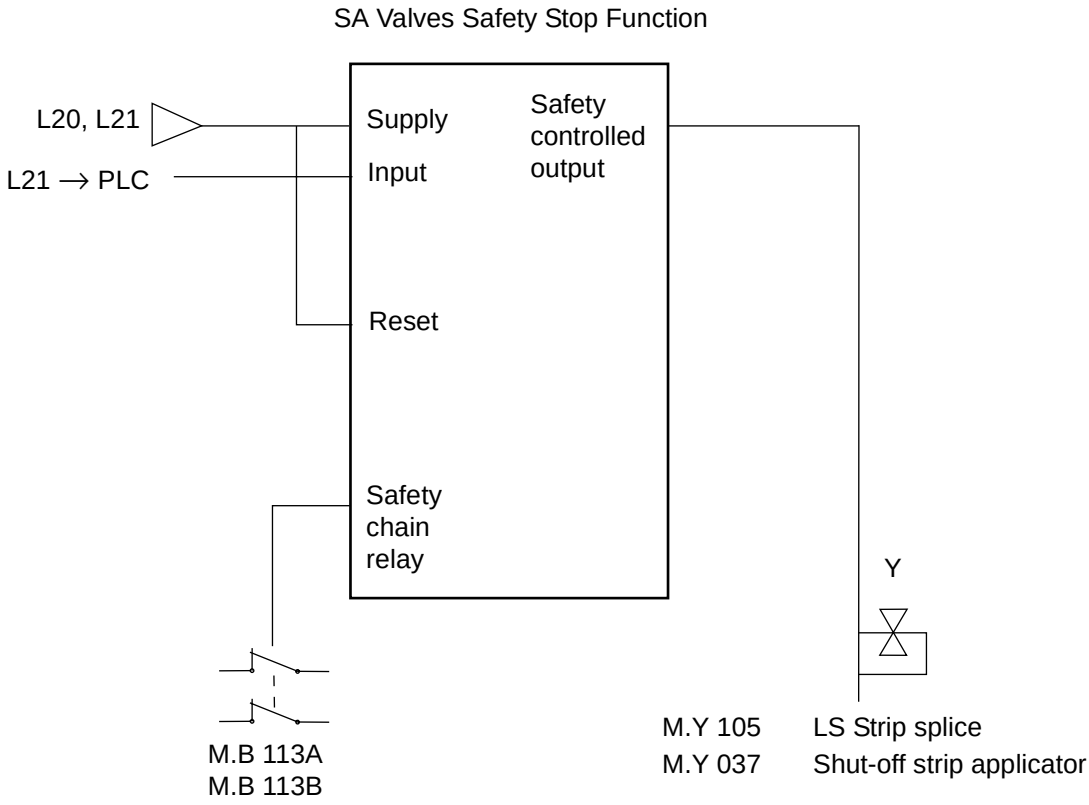

EM1.181803012en.fm

(Cont'd)

(Cont'd)

Safety relay module A 505 connection

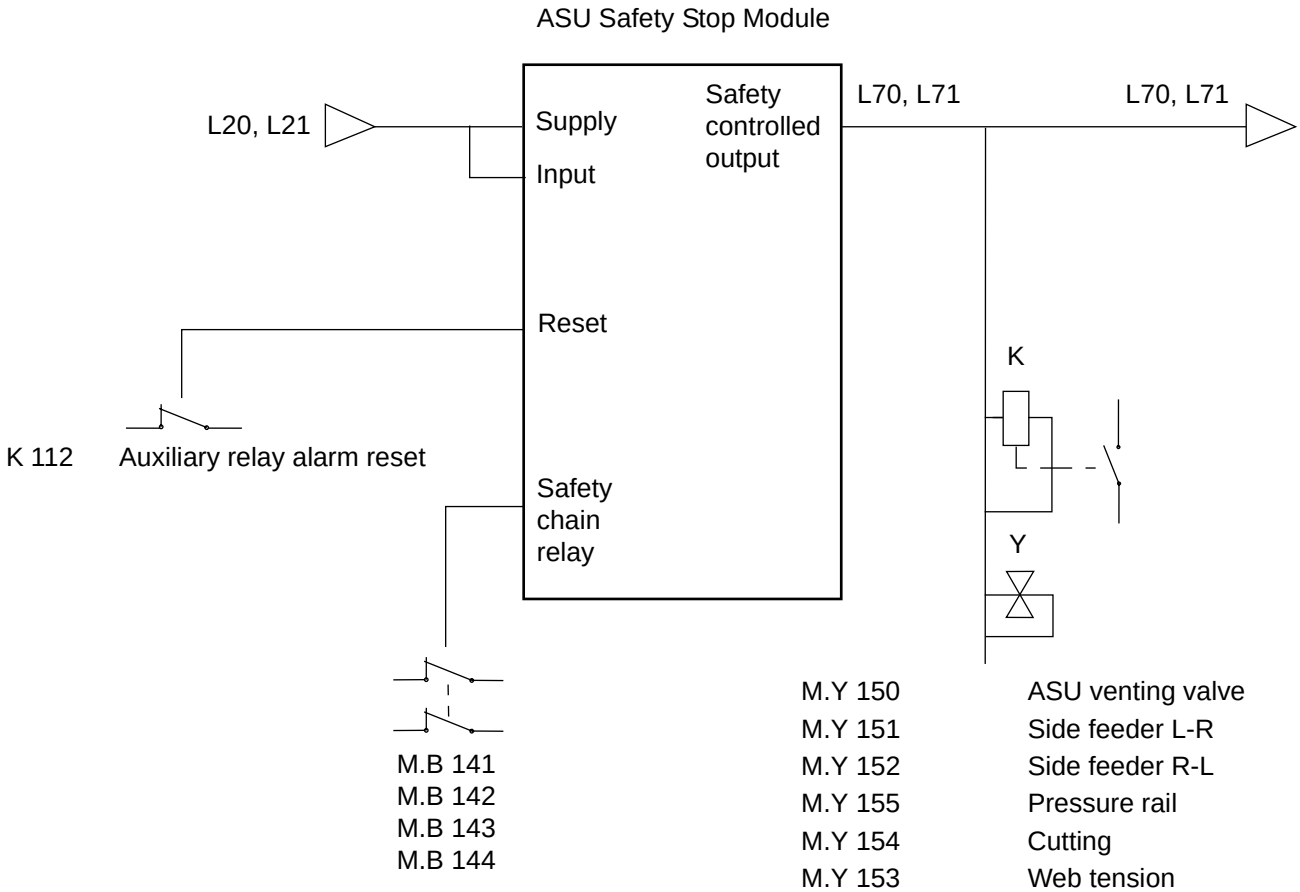

M.Y 150	ASU venting valve
M.Y 151	Side feeder L-R
M.Y 152	Side feeder R-L
M.Y 155	Pressure rail
M.Y 154	Cutting
M.Y 153	Web tension
K 205	ASU TPO bar
K 022	ASU TPO bar power

EM1.181803012en.fm

This page intentionally left blank

EM1.181803012en.fm

4 Component location

EM3.0TB048032en.fm

Table of contents

Components on the machine 4-3

EM3.0TB048032en.fm

Components on the machine

Note! See *SPC*, section *Electrical Parts Index.*

EM3.0TB048032en.fm

This page intentionally left blank

EM3.0TB048032en.fm

5 Documents list

EM3.0TB058032en.fm

Table of contents

Documents list 44954-0001

EM3.0TB058032en.fm

This drawing must not without the consent of Tetra Pak be copied, transmitted or disclosed to any third party.

RELEASED

Documents list

Drawing No	Page type	Denomination	Version
44954-0001:1	DOCUMENT LIST	DOCUMENT LIST	AB
44954-0001:2	DOCUMENT LIST	DOCUMENT LIST	AB
44954-0001:3	DOCUMENT LIST	DOCUMENT LIST	AB
44954-0001:4	DOCUMENT LIST	DOCUMENT LIST	AB
44954-0001:5	DOCUMENT LIST	DOCUMENT LIST	AB
44954-0002:1	POSITION SUMMARY	Device list: (+C-001 - +C-A511)	AB
44954-0002:2	POSITION SUMMARY	Device list: (+C-A512 - +C-K024)	AB
44954-0002:3	POSITION SUMMARY	Device list: (+C-K026 - +C-W080)	AB
44954-0002:4	POSITION SUMMARY	Device list: (+C-W081 - +M-B019)	AB
44954-0002:5	POSITION SUMMARY	Device list: (+M-B020 - +M-M019)	AB
44954-0002:6		Device list: (+M-M021 - +M-W352)	AB
44954-0002:7		Device list: (+M-W353 - +M-W953)	AB
44954-0002:8		Device list: (+M-W954 - +P-S903)	AB
44954-0002:9		Device list: (+P-S904 - +P-X901)	AB
44954-0003:1	CIRCUIT DIAGRAM	DISTRIBUTION TERMINALS	AB
44954-0003:2	CIRCUIT DIAGRAM	DISTRIBUTION TERMINALS	AB
44954-0003:3	CIRCUIT DIAGRAM	DISTRIBUTION TERMINALS	AB
44954-0003:4	CIRCUIT DIAGRAM	DISTRIBUTION TERMINALS	AB
44954-0003:5	CIRCUIT DIAGRAM	MAINS CONNECTION	AB
44954-0003:6	CIRCUIT DIAGRAM	LIGHT FIXTURES	AB
44954-0003:7	CIRCUIT DIAGRAM	ELEMENTS	AB
44954-0003:8	CIRCUIT DIAGRAM	ASU	AB
44954-0003:10	CIRCUIT DIAGRAM	ELEMENTS	AB
44954-0003:11	CIRCUIT DIAGRAM	POWER 48V	AB
44954-0003:12	CIRCUIT DIAGRAM	MOTORS	AB
44954-0003:13	CIRCUIT DIAGRAM	MOTORS	AB
44954-0003:14	CIRCUIT DIAGRAM	MOTORS	AB
44954-0003:15	CIRCUIT DIAGRAM	MOTORS	AB
44954-0003:16	CIRCUIT DIAGRAM	MOTORS	AB
44954-0003:24	CIRCUIT DIAGRAM	A012-MDCS	AB
44954-0003:29	CIRCUIT DIAGRAM	IH GENERATORS	AB
44954-0003:30	CIRCUIT DIAGRAM	CONTROL VOLTAGE, PLC POWER	AB
44954-0003:31	CIRCUIT DIAGRAM	REGULATORS	AB
44954-0003:32	CIRCUIT DIAGRAM	REGULATORS	AB
44954-0003:33	CIRCUIT DIAGRAM	REGULATORS	AB
44954-0003:34	CIRCUIT DIAGRAM	REGULATORS	AB
44954-0003:36	CIRCUIT DIAGRAM	REGULATORS	AB
44954-0003:37	CIRCUIT DIAGRAM	REGULATORS	AB
44954-0003:38	CIRCUIT DIAGRAM	REGULATORS	AB
44954-0003:44	CIRCUIT DIAGRAM	LEVEL MONITORS	AB
44954-0003:45	CIRCUIT DIAGRAM	LEVEL MONITORS	AB
44954-0003:46	CIRCUIT DIAGRAM	LEVEL MONITORS	AB
44954-0003:47	CIRCUIT DIAGRAM	FILLING CONTROL SYSTEM	AB
44954-0003:48	CIRCUIT DIAGRAM	PRINTED DESIGN CORRECTION	AB
44954-0003:49	CIRCUIT DIAGRAM	DESIGN CORRECTION ASU	AB
44954-0003:57	CIRCUIT DIAGRAM	STERILIZER	AB

Tetra Pak

Designer QUE/AIR
ECM No 119151
Date 11/06/2002
Denomination DOCUMENT LIST
Machine TBA/19 020V
Page Type DOCUMENT LIST
Document No. 44954-0001
Doc. type ELD
Version AB
Page 1
Company Tetra Pak Carton Ambient SpA
Drawing remarks

This drawing must not without the consent of Tetra Pak be copied, transmitted or disclosed to any third party.

RELEASED

Documents list

Drawing No	Page type	Denomination	Version
44954-0003:58	CIRCUIT DIAGRAM	PLE	AB
44954-0003:59	CIRCUIT DIAGRAM	PROCESS RECORDER	AB
44954-0003:60	CIRCUIT DIAGRAM	SA VALVE SAFETY STOP FUNCTION	AB
44954-0003:61	CIRCUIT DIAGRAM	ASU VALVE SAFETY STOP FUNCTION	AB
44954-0003:62	CIRCUIT DIAGRAM	EMERGENCY STOP FUNCTION	AB
44954-0003:63	CIRCUIT DIAGRAM	FF, SS AND JAW SYS. STOP FUNCTION	AB
44954-0003:66	CIRCUIT DIAGRAM	ASU SAFETY STOP FUNCTION	AB
44954-0003:72	CIRCUIT DIAGRAM	PLC-IN A102	AB
44954-0003:73	CIRCUIT DIAGRAM	PLC-IN A102	AB
44954-0003:74	CIRCUIT DIAGRAM	PLC-IN A103	AB
44954-0003:75	CIRCUIT DIAGRAM	PLC-IN A103	AB
44954-0003:76	CIRCUIT DIAGRAM	PLC-IN A104	AB
44954-0003:77	CIRCUIT DIAGRAM	PLC-IN A104	AB
44954-0003:78	CIRCUIT DIAGRAM	PLC-IN A105	AB
44954-0003:79	CIRCUIT DIAGRAM	PLC-IN A105	AB
44954-0003:80	CIRCUIT DIAGRAM	PLC-IN A106, FAST SCAN	AB
44954-0003:81	CIRCUIT DIAGRAM	PLC-IN A106, FAST SCAN	AB
44954-0003:82	CIRCUIT DIAGRAM	PLC-OUT A107, FAST SCAN	AB
44954-0003:83	CIRCUIT DIAGRAM	PLC-OUT A107, FAST SCAN	AB
44954-0003:84	CIRCUIT DIAGRAM	ANALOG-OUT MODULE	AB
44954-0003:85	CIRCUIT DIAGRAM	ANALOG-OUT MODULE	AB
44954-0003:90	CIRCUIT DIAGRAM	PLC-IN A111	AB
44954-0003:91	CIRCUIT DIAGRAM	PLC-IN A111	AB
44954-0003:92	CIRCUIT DIAGRAM	PLC-IN A112	AB
44954-0003:93	CIRCUIT DIAGRAM	PLC-IN A112	AB
44954-0003:94	CIRCUIT DIAGRAM	PLC-IN A113, PANEL INTERFACE	AB
44954-0003:95	CIRCUIT DIAGRAM	PLC-IN A113	AB
44954-0003:96	CIRCUIT DIAGRAM	PLC-OUT A114, VALVES	AB
44954-0003:97	CIRCUIT DIAGRAM	PLC-OUT A114	AB
44954-0003:98	CIRCUIT DIAGRAM	PLC-OUT A115	AB
44954-0003:99	CIRCUIT DIAGRAM	PLC-OUT A115	AB
44954-0003:100	CIRCUIT DIAGRAM	PLC-OUT A116, CONTACTORS	AB
44954-0003:101	CIRCUIT DIAGRAM	PLC-OUT A116, RELAYS	AB
44954-0003:102	CIRCUIT DIAGRAM	PLC-OUT A117, RELAYS	AB
44954-0003:103	CIRCUIT DIAGRAM	PLC-OUT A117, VALVES	AB
44954-0003:104	CIRCUIT DIAGRAM	PLC-OUT A118, VALVES	AB
44954-0003:105	CIRCUIT DIAGRAM	PLC-OUT A118, VALVES	AB
44954-0003:106	CIRCUIT DIAGRAM	PLC-OUT A119	AB
44954-0003:107	CIRCUIT DIAGRAM	PLC-OUT A119	AB
44954-0003:108	CIRCUIT DIAGRAM	PLC-OUT A120	AB
44954-0003:109	CIRCUIT DIAGRAM	PLC-OUT A120	AB
44954-0003:110	CIRCUIT DIAGRAM	PLC-OUT A121	AB
44954-0003:111	CIRCUIT DIAGRAM	PLC-OUT A121, VALVES	AB
44954-0003:114	CIRCUIT DIAGRAM	PLC-OUT A123	AB
44954-0003:115	CIRCUIT DIAGRAM	PLC-OUT A123	AB
44954-0003:116	CIRCUIT DIAGRAM	PLC-OUT A124	AB

Designer QUE/AIR
ECM No 119151
Date 11/06/2002
Denomination DOCUMENT LIST
Machine TBA/19 020V
Page Type DOCUMENT LIST
Document No. 44954-0001
Doc. type ELD
Version AB
Page 2
Company Tetra Pak Carton Ambient SpA
Drawing remarks

This drawing must not without the consent of Tetra Pak be copied, transmitted or disclosed to any third party.

RELEASED

Documents list

Drawing No	Page type	Denomination	Version
44954-0003:117	CIRCUIT DIAGRAM	PLC-OUT A124	AB
44954-0003:120	CIRCUIT DIAGRAM	PLC-IN A126	AB
44954-0003:121	CIRCUIT DIAGRAM	PLC-IN A126	AB
44954-0003:122	CIRCUIT DIAGRAM	PLC-IN A127	AB
44954-0003:123	CIRCUIT DIAGRAM	PLC-IN A127	AB
44954-0003:140	CIRCUIT DIAGRAM	PLMS	AB
44954-0003:141	CIRCUIT DIAGRAM	PLMS	AB
44954-0003:142	CIRCUIT DIAGRAM	GROUND CONNECTION	AB
44954-0003:143	CIRCUIT DIAGRAM	PRE-CONNECTED CABLES	AB
44954-0003:144	CIRCUIT DIAGRAM	PRE-CONNECTED CABLES	AB
44954-0004:1	LINE SUMMARY	LINE SUMMARY	AB
44954-0004:2	LINE SUMMARY	LINE SUMMARY	AB
44954-0004:3	LINE SUMMARY	LINE SUMMARY	AB
44954-0004:4	LINE SUMMARY	LINE SUMMARY	AB
44954-0004:5	LINE SUMMARY	LINE SUMMARY	AB
44954-0004:6	LINE SUMMARY	LINE SUMMARY	AB
44954-0004:7	LINE SUMMARY	LINE SUMMARY	AB
44954-0004:8	LINE SUMMARY	LINE SUMMARY	AB
44954-0004:9	LINE SUMMARY	LINE SUMMARY	AB
44954-0005:1	CABINET TERMINAL SUMMARY	CABINET TERMINAL SUMMARY	AB
44954-0005:2	CABINET TERMINAL SUMMARY	CABINET TERMINAL SUMMARY	AB
44954-0005:3	CABINET TERMINAL SUMMARY	CABINET TERMINAL SUMMARY	AB
44954-0005:4	CABINET TERMINAL SUMMARY	CABINET TERMINAL SUMMARY	AB
44954-0005:5	CABINET TERMINAL SUMMARY	CABINET TERMINAL SUMMARY	AB
44954-0005:6	CABINET TERMINAL SUMMARY	CABINET TERMINAL SUMMARY	AB
44954-0005:7	CABINET TERMINAL SUMMARY	CABINET TERMINAL SUMMARY	AB
44954-0005:8	CABINET TERMINAL SUMMARY	CABINET TERMINAL SUMMARY	AB
44954-0005:9	CABINET TERMINAL SUMMARY	CABINET TERMINAL SUMMARY	AB
44954-0005:10	CABINET TERMINAL SUMMARY	CABINET TERMINAL SUMMARY	AB
44954-0005:11	CABINET TERMINAL SUMMARY	CABINET TERMINAL SUMMARY	AB
44954-0005:12	CABINET TERMINAL SUMMARY	CABINET TERMINAL SUMMARY	AB
44954-0005:13	CABINET TERMINAL SUMMARY	CABINET TERMINAL SUMMARY	AB
44954-0005:14	CABINET TERMINAL SUMMARY	CABINET TERMINAL SUMMARY	AB
44954-0006:1	TERMINAL STRIP OVERVIEW	TERMINAL STRIP OVERVIEW	AB
44954-0006:2	TERMINAL STRIP OVERVIEW	TERMINAL STRIP OVERVIEW	AB
44954-0006:3	TERMINAL STRIP OVERVIEW	TERMINAL STRIP OVERVIEW	AB
44954-0006:4	TERMINAL STRIP OVERVIEW	TERMINAL STRIP OVERVIEW	AB
44954-0006:5	TERMINAL STRIP OVERVIEW	TERMINAL STRIP OVERVIEW	AB
44954-0006:6	TERMINAL STRIP OVERVIEW	TERMINAL STRIP OVERVIEW	AB
44954-0006:7	TERMINAL STRIP OVERVIEW	TERMINAL STRIP OVERVIEW	AB
44954-0006:8	TERMINAL STRIP OVERVIEW	TERMINAL STRIP OVERVIEW	AB
44954-0006:9	TERMINAL STRIP OVERVIEW	TERMINAL STRIP OVERVIEW	AB
44954-0006:10	TERMINAL STRIP OVERVIEW	TERMINAL STRIP OVERVIEW	AB
44954-0006:11	TERMINAL STRIP OVERVIEW	TERMINAL STRIP OVERVIEW	AB
44954-0006:12	TERMINAL STRIP OVERVIEW	TERMINAL STRIP OVERVIEW	AB
44954-0006:13	TERMINAL STRIP OVERVIEW	TERMINAL STRIP OVERVIEW	AB

Tetra Pak

Designer QUE/AIR
ECM No 119151
Date 11/06/2002
Denomination DOCUMENT LIST
Machine TBA/19 020V
Page Type DOCUMENT LIST
Document No. 44954-0001
Doc. type ELD
Version AB
Page 3

Company Tetra Pak Carton Ambient SpA

Drawing remarks

This drawing must not without the consent of Tetra Pak be copied, transmitted or disclosed to any third party.

RELEASED

Documents list

Drawing No	Page type	Denomination	Version
44954-0006:14	TERMINAL STRIP OVERVIEW	TERMINAL STRIP OVERVIEW	AB
44954-0006:15	TERMINAL STRIP OVERVIEW	TERMINAL STRIP OVERVIEW	AB
44954-0006:16	TERMINAL STRIP OVERVIEW	TERMINAL STRIP OVERVIEW	AB
44954-0006:17	TERMINAL STRIP OVERVIEW	TERMINAL STRIP OVERVIEW	AB
44954-0006:18	TERMINAL STRIP OVERVIEW	TERMINAL STRIP OVERVIEW	AB
44954-0006:19	TERMINAL STRIP OVERVIEW	TERMINAL STRIP OVERVIEW	AB
44954-0006:20	TERMINAL STRIP OVERVIEW	TERMINAL STRIP OVERVIEW	AB
44954-0006:21	TERMINAL STRIP OVERVIEW	TERMINAL STRIP OVERVIEW	AB
44954-0006:22	TERMINAL STRIP OVERVIEW	TERMINAL STRIP OVERVIEW	AB
44954-0006:23	TERMINAL STRIP OVERVIEW	TERMINAL STRIP OVERVIEW	AB
44954-0006:24	TERMINAL STRIP OVERVIEW	TERMINAL STRIP OVERVIEW	AB
44954-0006:25	TERMINAL STRIP OVERVIEW	TERMINAL STRIP OVERVIEW	AB
44954-0006:26	TERMINAL STRIP OVERVIEW	TERMINAL STRIP OVERVIEW	AB
44954-0006:27	TERMINAL STRIP OVERVIEW	TERMINAL STRIP OVERVIEW	AB
44954-0006:28	TERMINAL STRIP OVERVIEW	TERMINAL STRIP OVERVIEW	AB
44954-0006:29	TERMINAL STRIP OVERVIEW	TERMINAL STRIP OVERVIEW	AB
44954-0006:30	TERMINAL STRIP OVERVIEW	TERMINAL STRIP OVERVIEW	AB
44954-0006:31	TERMINAL STRIP OVERVIEW	TERMINAL STRIP OVERVIEW	AB
44954-0006:32	TERMINAL STRIP OVERVIEW	TERMINAL STRIP OVERVIEW	AB
44954-0006:33	TERMINAL STRIP OVERVIEW	TERMINAL STRIP OVERVIEW	AB
44954-0006:34	TERMINAL STRIP OVERVIEW	TERMINAL STRIP OVERVIEW	AB
44954-0006:35	TERMINAL STRIP OVERVIEW	TERMINAL STRIP OVERVIEW	AB
44954-0006:36	TERMINAL STRIP OVERVIEW	TERMINAL STRIP OVERVIEW	AB
44954-0006:37	TERMINAL STRIP OVERVIEW	TERMINAL STRIP OVERVIEW	AB
44954-0006:38	TERMINAL STRIP OVERVIEW	TERMINAL STRIP OVERVIEW	AB
44954-0006:39	TERMINAL STRIP OVERVIEW	TERMINAL STRIP OVERVIEW	AB
44954-0006:40	TERMINAL STRIP OVERVIEW	TERMINAL STRIP OVERVIEW	AB
44954-0006:41	TERMINAL STRIP OVERVIEW	TERMINAL STRIP OVERVIEW	AB
44954-0006:42	TERMINAL STRIP OVERVIEW	TERMINAL STRIP OVERVIEW	AB
44954-0006:43	TERMINAL STRIP OVERVIEW	TERMINAL STRIP OVERVIEW	AB
44954-0006:44	TERMINAL STRIP OVERVIEW	TERMINAL STRIP OVERVIEW	AB
44954-0006:45	TERMINAL STRIP OVERVIEW	TERMINAL STRIP OVERVIEW	AB
44954-0006:46	TERMINAL STRIP OVERVIEW	TERMINAL STRIP OVERVIEW	AB
44954-0006:47	TERMINAL STRIP OVERVIEW	TERMINAL STRIP OVERVIEW	AB
44954-0006:48	TERMINAL STRIP OVERVIEW	TERMINAL STRIP OVERVIEW	AB
44954-0006:49	TERMINAL STRIP OVERVIEW	TERMINAL STRIP OVERVIEW	AB
44954-0006:50	TERMINAL STRIP OVERVIEW	TERMINAL STRIP OVERVIEW	AB
44954-0006:51	TERMINAL STRIP OVERVIEW	TERMINAL STRIP OVERVIEW	AB
44954-0006:52	TERMINAL STRIP OVERVIEW	TERMINAL STRIP OVERVIEW	AB
44954-0006:53	TERMINAL STRIP OVERVIEW	TERMINAL STRIP OVERVIEW	AB
44954-0006:54	TERMINAL STRIP OVERVIEW	TERMINAL STRIP OVERVIEW	AB
44954-0006:55	TERMINAL STRIP OVERVIEW	TERMINAL STRIP OVERVIEW	AB
44954-0007:1	CABLE CONNECTION LIST	CABLE CONNECTION LIST	AB
44954-0007:2	CABLE CONNECTION LIST	CABLE CONNECTION LIST	AB
44954-0007:3	CABLE CONNECTION LIST	CABLE CONNECTION LIST	AB
44954-0007:4	CABLE CONNECTION LIST	CABLE CONNECTION LIST	AB

Designer QUE/AIR | Date 11/06/2002 | Machine TBA/19 020V | Page 4

ECM No 119151 | Denomination DOCUMENT LIST | Page Type DOCUMENT LIST | Document No. 44954-0001 | Doc. type ELD | Version AB

Tetra Pak

Company Tetra Pak Carton Ambient SpA

Drawing remarks

This drawing must not without the consent of Tetra Pak be copied, transmitted or disclosed to any third party.

RELEASED

Documents list

Drawing No	Page type	Denomination	Version
44954-0007:5	CABLE CONNECTION LIST	CABLE CONNECTION LIST	AB
44954-0007:6	CABLE CONNECTION LIST	CABLE CONNECTION LIST	AB
44954-0007:7	CABLE CONNECTION LIST	CABLE CONNECTION LIST	AB
44954-0007:8	CABLE CONNECTION LIST	CABLE CONNECTION LIST	AB
44954-0007:9	CABLE CONNECTION LIST	CABLE CONNECTION LIST	AB
44954-0007:10	CABLE CONNECTION LIST	CABLE CONNECTION LIST	AB
44954-0007:11	CABLE CONNECTION LIST	CABLE CONNECTION LIST	AB
44954-0007:12	CABLE CONNECTION LIST	CABLE CONNECTION LIST	AB
44954-0007:13	CABLE CONNECTION LIST	CABLE CONNECTION LIST	AB
44954-0007:14	CABLE CONNECTION LIST	CABLE CONNECTION LIST	AB
44954-0007:15	CABLE CONNECTION LIST	CABLE CONNECTION LIST	AB
44954-0007:16	CABLE CONNECTION LIST	CABLE CONNECTION LIST	AB
44954-0007:17	CABLE CONNECTION LIST	CABLE CONNECTION LIST	AB
44954-0007:18	CABLE CONNECTION LIST	CABLE CONNECTION LIST	AB
44954-0007:19	CABLE CONNECTION LIST	CABLE CONNECTION LIST	AB
44954-0007:20	CABLE CONNECTION LIST	CABLE CONNECTION LIST	AB
44954-0007:21	CABLE CONNECTION LIST	CABLE CONNECTION LIST	AB
44954-0008:001	MAINS CONNECTION	MAINS CONNECTION	AB
44954-0008:002	MAINS CONNECTION	MAINS CONNECTION	AB

Designer QUE/AIR
ECM No 119151
Date 11/06/2002
Denomination DOCUMENT LIST
Machine TBA/19 020V
Page Type DOCUMENT LIST
Document No. 44954-0001
Doc. type ELD
Version AB
Page 5
Company Tetra Pak Carton Ambient SpA
Drawing remarks

This page intentionally left blank

6 Position summary

EM3.0TB068032en.fm

Table of contents

Position summary 44954-0002

EM3.0TB068032en.fm

RELEASED

This drawing must not without the consent of Tetra Pak be copied, transmitted or disclosed to any third party.

Position summary of 44954-0003

Component	Page .Col.	Opt.
+C-001	98 .7	
+C-002	103 .7	
+C-003	96 .7	
+C-004	111 .7	
+C-005	84 .3	
+C-006	84 .3	
+C-007	84 .3	
+C-008	31 .5	
+C-009	31 .5	
+C-010	32 .5	
+C-011	32 .5	
+C-012	33 .5	
+C-013	33 .5	
+C-014	34 .5	
+C-015	36 .5	
+C-016	36 .5	
+C-017	37 .5	
+C-018	37 .5	
+C-019	38 .5	
+C-020	85 .2	
+C-021	85 .2	
+C-022	85 .2	
+C-023	85 .2	
+C-024	85 .3	
+C-025	48 .7	
+C-026	48 .7	
+C-027	48 .7	
+C-028	48 .7	

Component	Page .Col.	Opt.
+C-029	48 .7	
+C-030	15 .3	
+C-031	15 .8	
+C-034	24 .5	
+C-035	24 .6	
+C-036	24 .5	
+C-037	24 .5	
+C-038	24 .6	
+C-039	24 .6	
+C-040	16 .3	
+C-041	16 .3	
+C-042	15 .3	
+C-043	15 .8	
+C-044	14 .3	
+C-045	14 .8	
+C-046	14 .3	
+C-047	14 .8	
+C-048	14 .4	
+C-049	14 .9	
+C-050	15 .4	
+C-051	15 .9	
+C-052	16 .4	
+C-053	24 .2	
+C-054	59 .7	
+C-055	140 .4	
+C-056	114 .7	
+C-A012	24 .6	
+C-A013	24 .4	

Component	Page .Col.	Opt.
+C-A014	24 .7	
+C-A100	30 .9	
+C-A101	30 .9	
+C-A102	73 .7	
+C-A103	74 .7	
+C-A104	76 .7	
+C-A105	78 .7	
+C-A106	80 .7	
+C-A107	82 .1	
+C-A108	85 .1	
+C-A111	90 .7	
+C-A112	93 .7	
+C-A113	94 .7	
+C-A114	97 .1	
+C-A115	99 .1	
+C-A116	100 .1	
+C-A117	102 .1	
+C-A118	104 .1	
+C-A119	106 .1	
+C-A120	109 .1	
+C-A121	111 .1	
+C-A123	114 .1	
+C-A124	116 .1	
+C-A126	121 .7	
+C-A127	122 .8	
+C-A135	30 .9	
+C-A200	31 .5	
+C-A201	31 .5	

Component	Page .Col.	Opt.
+C-A202	32 .5	
+C-A203	32 .5	
+C-A204	33 .5	
+C-A205	33 .5	
+C-A206	34 .5	
+C-A212	36 .5	
+C-A213	36 .5	
+C-A214	37 .5	
+C-A215	37 .5	
+C-A217	38 .5	
+C-A300	44 .5	
+C-A301	44 .5	
+C-A302	45 .5	
+C-A303	45 .5	
+C-A305	46 .5	
+C-A307	46 .5	
+C-A310	47 .7	
+C-A400	48 .5	
+C-A450	140 .4	
+C-A452	140 .2	
+C-A454	140 .1	
+C-A500	29 .1	
+C-A501	29 .6	
+C-A504	60 .6	
+C-A505	61 .8	
+C-A506	62 .7	
+C-A507	63 .6	
+C-A511	49 .3	ASU

Drawing remarks

Tetra Pak

Designer	Date	Machine
QUE/AIR	11/06/2002	TBA/19 020V

ECM No	Denomination	Page Type
119151	POSITION SUMMARY	Device list: (+C-001 - +C-A511)

Company	Document No.	Doc. type	Version	Page
Tetra Pak Carton Ambient SpA	44954-0002	ELD	AB	1

This drawing must not without the consent of Tetra Pak be copied, transmitted or disclosed to any third party.

Position summary of 44954-0003

Component	Page .Col.	Opt.
+C-A512	66 .7	
+C-A600	116 .3	
+C-A601	116 .3	
+C-A602	116 .3	
+C-A604	58 .3	
+C-A605	107 .3	
+C-A606	107 .3	
+C-A607	117 .3	
+C-A608	117 .3	
+C-A609	82 .4	
+C-A610	82 .4	
+C-B001	78 .2	
+C-B002	78 .3	
+C-B003	78 .4	
+C-B004	78 .5	
+C-B005	78 .5	
+C-B006	78 .4	
+C-B007	78 .3	
+C-B008	78 .2	
+C-D100	30 .9	
+C-E003	6 .8	
+C-E004	6 .8	
+C-E005	6 .9	
+C-F001	6 .8	
+C-F002	7 .2	
+C-F004	15 .3	
+C-F005	30 .7	
+C-F008	16 .3	

Component	Page .Col.	Opt.
+C-F009	14 .2	
+C-F010	11 .9	
+C-F012	12 .9	
+C-F015	14 .8	ASU
+C-F016	8 .2	ASU
+C-F017	30 .5	
+C-F019	12 .2	
+C-F021	10 .4	
+C-F024	6 .10	
+C-F025	8 .2	ASU
+C-F027	11 .9	
+C-F030	11 .1	
+C-F034	30 .5	
+C-F104	10 .3	
+C-F106	7 .5	
+C-F107	7 .8	
+C-F102A	29 .2	
+C-F103A	29 .7	
+C-F100A+C	10 .6	
+C-F101A+C	10 .9	
+C-F006A-C	30 .4	
+C-F007A-C	15 .8	
+C-F100B	10 .6	
+C-F101B	10 .9	
+C-F102B	29 .2	
+C-F103B	29 .7	
+C-F100C	10 .7	
+C-F101C	10 .9	

Component	Page .Col.	Opt.
+C-F102C	29 .2	
+C-F103C	29 .7	
+C-G001	14 .2	
+C-G002	14 .7	ASU
+C-G003	15 .2	
+C-G004	15 .7	
+C-G005	16 .2	
+C-G100	30 .9	
+C-G101	30 .9	
+C-G102	30 .9	
+C-J010	5 .4	
+C-J011	15 .8	
+C-J014	15 .3	
+C-J015	5 .6	
+C-J016	15 .3	
+C-J018	73 .5	
+C-J019	82 .8	
+C-J020	98 .7	
+C-J024	11 .10	
+C-J025	48 .10	
+C-J026	47 .3	
+C-J028	16 .3	
+C-J029	16 .3	
+C-J032	15 .2	
+C-J157	24 .3	
+C-J161	6 .10	
+C-J162	6 .10	
+C-J163	8 .3	

Component	Page .Col.	Opt.
+C-J164	10 .5	
+C-J165	11 .10	
+C-J166	30 .10	
+C-J167	30 .10	
+C-J168	30 .10	
+C-J169	30 .7	
+C-J028	14 .8	
+C-J029	14 .8	
+C-K001	100 .7	
+C-K002	100 .7	
+C-K003	63 .7	
+C-K004	100 .7	
+C-K005	100 .7	
+C-K006	98 .7	
+C-K007	98 .7	
+C-K008	97 .7	
+C-K009	98 .7	
+C-K011	97 .7	
+C-K012	100 .7	
+C-K013	82 .8	
+C-K014	100 .7	
+C-K015	100 .7	
+C-K016	100 .7	
+C-K017	115 .7	
+C-K018	100 .7	
+C-K019	97 .7	
+C-K022	114 .6	ASU
+C-K024	99 .7	

Drawing remarks

Tetra Pak

Designer QUE/AIR | Date 11/06/2002 | Machine TBA/19 020V

ECM No 119151 | Denomination POSITION SUMMARY | Page Type Device list: (+C-A512 - +C-K024)

Company Tetra Pak Carton Ambient SpA | Document No. 44954-0002 | Doc. type ELD | Version AB | Page 2

RELEASED

This drawing must not without the consent of Tetra Pak be copied, transmitted or disclosed to any third party.

Position summary of 44954-0003

Component	Page .Col.	Opt.
+C-K026	78 .1	
+C-K028	11 .9	
+C-K029	82 .8	
+C-K030	62 .8	
+C-K097	100 .6	
+C-K098	102 .7	
+C-K099	82 .8	
+C-K100	102 .7	
+C-K101	101 .7	
+C-K102	101 .7	
+C-K103	102 .7	
+C-K104	101 .7	
+C-K105	101 .7	
+C-K106	101 .7	
+C-K107	101 .7	
+C-K110	102 .7	
+C-K112	102 .7	ASU
+C-K113	102 .7	
+C-K200	10 .3	
+C-K201	10 .6	
+C-K202	10 .6	
+C-K203	10 .8	
+C-K204	10 .9	
+C-K205	8 .2	ASU
+C-K206	10 .4	
+C-K210	7 .4	
+C-K211	7 .6	
+C-K212	7 .8	

Component	Page .Col.	Opt.
+C-K213	7 .10	
+C-K215	7 .2	
+C-K250	83 .7	
+C-K251	62 .8	
+C-K252	97 .7	
+C-K915	103 .7	TCSB
+C-L001	6 .2	
+C-M001	12 .4	
+C-M016	12 .2	
+C-P002	97 .7	
+C-P003	107 .7	
+C-P005	59 .6	
+C-PC001	140 .9	DO
+C-Q001	5 .2	
+C-Q006	12 .5	
+C-Q007	12 .7	
+C-Q008	13 .2	
+C-Q009	12 .8	
+C-Q016	13 .8	
+C-R007	47 .5	
+C-S001	62 .5	
+C-S002	62 .5	
+C-S003	72 .4	
+C-S004	73 .4	
+C-S006	6 .5	
+C-T001	30 .4	
+C-T004	11 .9	
+C-T005	8 .2	ASU

Component	Page .Col.	Opt.
+C-T006	10 .4	
+C-U001	142 .3	
+C-U002	142 .3	
+C-U003	142 .3	
+C-U004	142 .7	
+C-U005	142 .8	
+C-U006	142 .7	
+C-U007	142 .8	
+C-U008	142 .7	
+C-U009	142 .7	
+C-U010	142 .4	
+C-U011	142 .7	
+C-U012	142 .3	
+C-U013	142 .3	
+C-U014	142 .4	
+C-V001	30 .5	
+C-V007	62 .8	
+C-V008	63 .7	
+C-V009	78 .2	
+C-V010	62 .8	
+C-V011	100 .7	
+C-W033	31 .4	
+C-W034	31 .4	
+C-W035	32 .3	
+C-W036	32 .3	
+C-W037	32 .4	
+C-W038	33 .4	
+C-W039	33 .4	

Component	Page .Col.	Opt.
+C-W040	34 .4	
+C-W044	29 .6	
+C-W049	32 .5	
+C-W050	30 .10	
+C-W051	30 .10	
+C-W056	36 .4	
+C-W057	36 .4	
+C-W058	37 .4	
+C-W059	37 .4	
+C-W061	140 .3	
+C-W062	140 .3	
+C-W063	140 .5	
+C-W064	140 .3	
+C-W066	38 .4	
+C-W067	15 .2	
+C-W068	84 .3	
+C-W069	84 .3	ASU
+C-W070	32 .4	
+C-W071	33 .4	
+C-W072	34 .4	
+C-W073	31 .5	
+C-W074	31 .5	
+C-W075	32 .5	
+C-W076	32 .5	
+C-W077	33 .5	
+C-W078	33 .5	
+C-W079	34 .5	
+C-W080	36 .5	

Drawing remarks

Tetra Pak

Designer: QUE/AIR | Date: 11/06/2002 | Machine: TBA/19 020V

ECM No: 119151 | Denomination: POSITION SUMMARY | Page Type: Device list: (+C-K026 - +C-W080)

Company: Tetra Pak Carton Ambient SpA | Document No.: 44954-0002 | Doc. type: ELD | Version: AB | Page: 3

This drawing must not without the consent of Tetra Pak be copied, transmitted or disclosed to any third party.

Position summary of 44954-0003

Component	Page .Col.	Opt.
+C-W081	36 .5	
+C-W082	37 .5	
+C-W083	37 .5	
+C-W084	38 .5	
+C-W085	14 .2	
+C-W087	14 .7	ASU
+C-W088	85 .2	
+C-W098	12 .2	
+C-W099	24 .2	
+C-W121	30 .10	
+C-W122	30 .10	
+C-W123	30 .10	
+C-W124	29 .4	
+C-W125	29 .5	
+C-W126	29 .9	
+C-W127	48 .3	
+C-W305	11 .1	
+C-W335	143 .5	
+C-W391	142 .3	
+C-X001		
+C-X002		
+C-X003		
+C-X004		
+C-X005		
+C-X006		
+C-X007		
+C-X009		
+C-X010		

Component	Page .Col.	Opt.
+C-X011		
+C-X012		
+C-X013		
+C-X014		
+C-X015		
+C-X016		
+C-X017		
+C-X018		
+C-X019		
+C-X020	6 .10	
+C-X021	6 .10	
+C-X027		
+C-X073		
+C-X300		
+C-X301		
+C-X451		
+C-X452		
+C-X453		
+C-X455		
+C-X456		
+C-XL010		
+C-XL011		
+C-XL012		
+C-XL015		
+C-XL016		
+C-XL020		
+C-XL021		
+C-XL030		

Component	Page .Col.	Opt.
+C-XL031		
+C-XL040		
+C-XL041		
+C-XL050		
+C-XL051		
+C-XL060		
+C-XL061		
+C-XL062		
+C-XL080		
+C-XL081		
+C-Z001	5 .4	
+C-Z002	5 .6	
+C-Z003	5 .5	
+C-Z004	14 .2	
+C-Z005	14 .2	
+C-Z006	14 .7	
+C-Z007	14 .7	
+C-Z008	14 .2	
+C-Z010	15 .2	
+C-Z012	15 .3	
+C-Z013	15 .2	
+C-Z015	15 .8	
+C-Z016	15 .7	
+C-Z017	16 .2	
+C-Z018	16 .2	
+C-Z019	24 .2	
+C-Z020	24 .4	
+C-Z021	24 .5	

Component	Page .Col.	Opt.
+C-Z022	15 .9	
+C-Z009	14 .7	ASU
+DE-H001	57 .6	
+DE-K?001		
+DE-S008	58 .7	
+DE-U001	57 .5	
+DE-U002	57 .5	
+DE-U003	58 .6	
+DE-U004	57 .5	
+DE-U005	57 .5	
+DE-U006	57 .5	
+DE-U015	58 .7	
+DE-U017	92 .3	
+M-A451	140 .7	DO
+M-A452	49 .9	ASU
+M-B001	81 .2	
+M-B002	73 .4	
+M-B004	34 .2	
+M-B006	73 .3	
+M-B007	73 .4	
+M-B009	75 .5	
+M-B010	92 .5	
+M-B011	92 .2	
+M-B012	92 .5	
+M-B013	44 .2	
+M-B014	6 .7	PMI
+M-B015	92 .3	
+M-B019	92 .6	

Drawing remarks

Tetra Pak

Designer	Date	Machine
QUE/AIR	11/06/2002	TBA/19 020V

ECM No	Denomination	Page Type
119151	POSITION SUMMARY	Device list: (+C-W081 - +M-B019)

Company	Document No.	Doc. type	Version	Page
Tetra Pak Carton Ambient SpA	44954-0002	ELD	AB	4

RELEASED

This drawing must not without the consent of Tetra Pak be copied, transmitted or disclosed to any third party.

Position summary of 44954-0003

Component	Page .Col.	Opt.
+M-B020	80 .5	
+M-B030	73 .3	
+M-B032	74 .5	
+M-B034	45 .2	
+M-B038	31 .2	
+M-B039	32 .2	
+M-B040	31 .2	
+M-B043	44 .2	
+M-B044	74 .5	
+M-B045	76 .4	
+M-B046	75 .5	
+M-B047	75 .3	
+M-B050	33 .2	
+M-B051	75 .5	
+M-B053	75 .5	
+M-B055	33 .2	
+M-B061	75 .5	
+M-B062	76 .3	
+M-B063	75 .5	
+M-B064	45 .2	
+M-B071	80 .5	
+M-B072	36 .2	
+M-B073	36 .2	
+M-B074	37 .2	
+M-B075	37 .2	
+M-B079	38 .2	
+M-B085	46 .2	
+M-B094	80 .5	

Component	Page .Col.	Opt.
+M-B095	77 .3	
+M-B104	76 .5	
+M-B108	66 .3	
+M-B109	75 .5	
+M-B111	74 .5	
+M-B112	47 .2	
+M-B115	66 .5	PMI
+M-B116	46 .2	
+M-B117	91 .5	
+M-B119	91 .5	
+M-B120	91 .5	
+M-B132	48 .8	
+M-B134	48 .8	
+M-B141	61 .3	ASU
+M-B142	61 .4	ASU
+M-B143	61 .6	ASU
+M-B144	61 .7	ASU
+M-B146	122 .4	ASU
+M-B148	122 .6	ASU
+M-B149	122 .6	
+M-B150	122 .6	
+M-B151	122 .6	ASU
+M-B152	122 .6	ASU
+M-B154	122 .6	
+M-B155	123 .4	ASU
+M-B157	122 .6	
+M-B160	93 .5	
+M-B236	80 .5	

Component	Page .Col.	Opt.
+M-B080:1	48 .2	
+M-B153:1	123 .2	ASU
+M-B156:1	49 .8	ASU
+M-B080:2	48 .2	
+M-B153:2	123 .5	ASU
+M-B156:2	49 .8	ASU
+M-B016A	76 .3	
+M-B021A	92 .6	
+M-B037A	32 .2	
+M-B048A	76 .5	
+M-B091A	58 .7	
+M-B092A	121 .5	
+M-B093A	58 .7	
+M-B113A	60 .2	
+M-B016B	76 .6	
+M-B021B	92 .4	
+M-B037B	32 .2	
+M-B048B	76 .3	
+M-B091B	58 .8	
+M-B092B	121 .5	
+M-B093B	58 .8	
+M-B113B	60 .4	
+M-B021C	92 .2	
+M-DE001	140 .7	
+M-DE002	140 .7	
+M-E003	6 .6	
+M-E005	6 .5	ASU
+M-E001A	6 .1	

Component	Page .Col.	Opt.
+M-E001B	6 .2	
+M-E001C	6 .3	
+M-H034	116 .5	
+M-H035	116 .5	
+M-H040	116 .5	
+M-H034B	116 .5	
+M-H035B	107 .5	
+M-H034R	116 .5	
+M-H035R	116 .5	
+M-H010S	105 .4	ASU
+M-H033S	101 .4	
+M-H034Y	116 .5	
+M-H035Y	107 .5	
+M-J442	48 .7	
+M-J444	48 .7	
+M-L001	29 .2	
+M-L002	29 .2	
+M-L003	29 .7	
+M-M001	15 .8	
+M-M004	13 .2	
+M-M005	12 .7	
+M-M006	11 .1	
+M-M007	12 .5	
+M-M010	12 .8	
+M-M013	15 .2	
+M-M017	12 .9	
+M-M018	109 .5	
+M-M019	13 .8	

Drawing remarks

Tetra Pak

Designer: QUE/AIR	Date: 11/06/2002	Machine: TBA/19 020V	
ECM No: 119151	Denomination: POSITION SUMMARY	Page Type: Device list: (+M-B020 - +M-M019)	
Company: Tetra Pak Carton Ambient SpA	Document No.: 44954-0002	Doc. type: ELD	Version: AB / Page: 5

RELEASED

This drawing must not without the consent of Tetra Pak be copied, transmitted or disclosed to any third party.

Position summary of 44954-0003

Component	Page .Col.	Opt.
+M-M021	14 .2	
+M-M022	14 .7	
+M-M132	24 .4	
+M-M133	24 .6	
+M-MPLE001	16 .2	
+M-R001	6 .7	PMI
+M-R010	8 .2	ASU
+M-R032	10 .9	
+M-R033	10 .4	
+M-R034	10 .5	
+M-R035	10 .2	
+M-R036	10 .6	
+M-R037	7 .2	
+M-R005A	7 .4	
+M-R005B	7 .5	
+M-R005C	7 .8	
+M-R005D	7 .9	
+M-S003	123 .4	ASU
+M-S004	62 .4	
+M-S005	62 .2	
+M-S006	62 .4	ASU
+M-S007	72 .5	
+M-S008	72 .2	
+M-S009	72 .5	ASU
+M-S011	62 .3	
+M-S033	72 .5	
+M-S035	72 .5	
+M-S010H	90 .4	ASU

Component	Page .Col.	Opt.
+M-T001	29 .1	
+M-T002	29 .2	
+M-T003	29 .6	
+M-W005	13 .2	
+M-W006	6 .1	
+M-W007	6 .2	
+M-W009	116 .4	
+M-W010	92 .3	
+M-W011	92 .5	
+M-W013	44 .3	
+M-W015	74 .4	
+M-W017	76 .4	
+M-W019	6 .3	
+M-W021	91 .4	
+M-W022	91 .4	
+M-W023	16 .2	
+M-W024	16 .3	
+M-W025	58 .4	
+M-W028	58 .6	
+M-W029	58 .6	
+M-W064	140 .3	
+M-W100	106 .5	
+M-W101	15 .8	
+M-W102	92 .4	
+M-W103	80 .6	
+M-W104	76 .4	
+M-W105	76 .6	
+M-W106	104 .4	

Component	Page .Col.	Opt.
+M-W107	106 .5	
+M-W108	104 .7	
+M-W110	144 .2	
+M-W111	92 .5	
+M-W112	92 .3	
+M-W115	58 .6	
+M-W116	58 .6	
+M-W132	142 .3	
+M-W230	7 .3	
+M-W231	7 .5	
+M-W232	7 .7	
+M-W233	7 .9	
+M-W234	36 .4	
+M-W235	36 .4	
+M-W236	37 .4	
+M-W237	37 .4	
+M-W238	7 .3	
+M-W239	7 .5	
+M-W240	7 .7	
+M-W241	7 .9	
+M-W242	36 .3	
+M-W243	36 .3	
+M-W244	37 .3	
+M-W245	37 .3	
+M-W246	92 .2	
+M-W247	92 .3	
+M-W248	92 .4	
+M-W249	92 .6	

Component	Page .Col.	Opt.
+M-W250	58 .6	
+M-W251	58 .6	
+M-W252	121 .4	
+M-W253	121 .4	
+M-W290	142 .3	
+M-W291	142 .4	
+M-W301	12 .5	
+M-W302	6 .7	
+M-W303	45 .3	
+M-W304	12 .7	
+M-W308	12 .8	
+M-W312	12 .9	
+M-W316	82 .7	
+M-W317	82 .6	
+M-W320	73 .4	
+M-W321	73 .4	
+M-W322	73 .4	
+M-W325	104 .7	
+M-W327	48 .2	
+M-W332	103 .3	
+M-W333	143 .2	
+M-W334	96 .7	
+M-W342	105 .6	
+M-W345	104 .7	
+M-W348	98 .6	
+M-W349	117 .4	
+M-W350	117 .6	
+M-W352	103 .7	

Drawing remarks

Tetra Pak

Designer QUE/AIR | Date 11/06/2002 | Machine TBA/19 020V

ECM No 119151 | Denomination | Page Type Device list: (+M-M021 - +M-W352)

Company Tetra Pak Carton Ambient SpA | Document No. 44954-0002 | Doc. type ELD | Version AB | Page 6

RELEASED

This drawing must not without the consent of Tetra Pak be copied, transmitted or disclosed to any third party.

Position summary of 44954-0003

Component	Page .Col.	Opt.
+M-W353	81 .3	
+M-W354	105 .6	
+M-W355	76 .5	
+M-W356	73 .3	
+M-W360	77 .3	
+M-W361	109 .6	
+M-W370	29 .1	
+M-W371	29 .2	
+M-W372	29 .1	
+M-W373	29 .2	
+M-W380	47 .3	
+M-W401	10 .6	
+M-W402	7 .2	
+M-W403	10 .2	
+M-W404	15 .3	
+M-W405	46 .3	
+M-W406	34 .3	
+M-W407	31 .3	
+M-W408	31 .3	
+M-W409	32 .3	
+M-W410	32 .3	
+M-W411	33 .3	
+M-W412	33 .3	
+M-W413	91 .4	
+M-W414	76 .6	
+M-W415	76 .4	
+M-W416	92 .6	
+M-W417	92 .4	

Component	Page .Col.	Opt.
+M-W418	92 .3	
+M-W420	47 .2	
+M-W421	75 .4	
+M-W422	75 .4	
+M-W423	75 .2	
+M-W424	75 .6	
+M-W425	44 .3	
+M-W426	105 .3	
+M-W427	45 .3	
+M-W428	46 .3	
+M-W430	105 .6	
+M-W431	105 .3	
+M-W432	105 .4	
+M-W433	38 .3	
+M-W434	62 .4	
+M-W435	75 .4	
+M-W437	57 .4	
+M-W438	57 .4	
+M-W439	57 .4	
+M-W440	75 .4	
+M-W441	57 .4	
+M-W442	48 .7	
+M-W444	48 .7	
+M-W447	48 .2	
+M-W448	48 .2	
+M-W449	24 .5	
+M-W450	32 .3	
+M-W451	24 .5	

Component	Page .Col.	Opt.
+M-W452	10 .8	
+M-W454	80 .4	
+M-W455	80 .6	
+M-W456	76 .4	
+M-W458	93 .4	
+M-W459	13 .8	
+M-W601	29 .6	
+M-W602	10 .4	
+M-W605	101 .5	
+M-W607	74 .4	
+M-W608	75 .4	
+M-W609	75 .4	
+M-W610	74 .4	
+M-W615	101 .3	
+M-W620	80 .4	
+M-W630	10 .4	
+M-W631	10 .4	
+M-W750	6 .6	
+M-W751	6 .6	
+M-W752	6 .6	ASU
+M-W753	116 .4	
+M-W754	116 .6	
+M-W757	14 .2	
+M-W758	14 .8	ASU
+M-W759	61 .7	ASU
+M-W760	72 .3	ASU
+M-W762	61 .2	ASU
+M-W763	61 .4	ASU

Component	Page .Col.	Opt.
+M-W764	61 .6	ASU
+M-W765	61 .7	ASU
+M-W766	61 .6	ASU
+M-W767	122 .6	
+M-W768	122 .4	
+M-W769	122 .6	
+M-W770	122 .4	
+M-W771	122 .6	
+M-W772	122 .6	
+M-W773	122 .6	
+M-W775	123 .3	
+M-W776	123 .6	
+M-W777	122 .6	
+M-W779	123 .5	
+M-W780	62 .5	PMI
+M-W781	116 .4	ASU
+M-W782	123 .6	
+M-W786	49 .7	ASU
+M-W787	49 .7	ASU
+M-W788	66 .3	
+M-W790	66 .5	
+M-W800	62 .2	ASU
+M-W801	66 .5	ASU
+M-W802	60 .2	
+M-W803	60 .4	
+M-W951	140 .6	
+M-W952	140 .6	
+M-W953	141 .4	

Drawing remarks

Tetra Pak

Designer QUE/AIR | Date 11/06/2002 | Machine TBA/19 020V

ECM No 119151 | Denomination | Page Type Device list: (+M-W353 - +M-W953)

Company Tetra Pak Carton Ambient SpA | Document No. 44954-0002 | Doc. type ELD | Version AB | Page 7

This drawing must not without the consent of Tetra Pak be copied, transmitted or disclosed to any third party.

1	2	3	4	5	6	7	8	9	10

Position summary of 44954-0003

Component	Page .Col.	Opt.
+M-W954	58 .5	
+M-W955	121 .3	
+M-W958	58 .5	
+M-X002		
+M-X004		
+M-X006		
+M-X007		
+M-X008		
+M-X009		
+M-X010		
+M-X011		
+M-X020		
+M-X021		
+M-X022		
+M-X031		
+M-X032		
+M-X033		
+M-X034		
+M-X035		
+M-X038		
+M-X039		
+M-X040		
+M-X042		
+M-X050		
+M-X055		
+M-X060		
+M-X061		
+M-X062		

Component	Page .Col.	Opt.
+M-X071		
+M-X072		
+M-X073		
+M-X074		
+M-X075		
+M-X095		
+M-X107		
+M-X132		
+M-X134		
+M-X184		
+M-X212		
+M-X213		
+M-X214		
+M-X215		
+M-X217		
+M-X156 :1		
+M-X156 :2		
+M-X037 A		
+M-X037 B		
+M-Y001	98 .4	
+M-Y002	104 .4	
+M-Y003	104 .4	
+M-Y004	105 .5	
+M-Y005	104 .4	
+M-Y006	104 .4	
+M-Y007	103 .4	
+M-Y008	104 .4	
+M-Y009	103 .4	

Component	Page .Col.	Opt.
+M-Y017	103 .4	
+M-Y019	103 .4	
+M-Y020	96 .4	
+M-Y021	96 .4	
+M-Y022	104 .4	
+M-Y023	103 .4	
+M-Y024	96 .4	
+M-Y025	103 .4	
+M-Y026	96 .4	
+M-Y027	96 .4	
+M-Y029	104 .4	
+M-Y030	111 .4	
+M-Y031	104 .4	
+M-Y032	98 .6	
+M-Y033	105 .4	
+M-Y034	105 .4	
+M-Y035	105 .4	
+M-Y037	99 .5	
+M-Y039	105 .4	
+M-Y043	106 .4	
+M-Y051	103 .7	
+M-Y069	106 .4	
+M-Y086	103 .4	
+M-Y100	98 .4	
+M-Y102	98 .4	
+M-Y103	111 .4	
+M-Y105	98 .4	
+M-Y107	47 .2	

Component	Page .Col.	Opt.
+M-Y108	105 .4	
+M-Y129	96 .4	
+M-Y131	82 .6	
+M-Y132	82 .6	
+M-Y150	114 .5	
+M-Y151	114 .5	
+M-Y152	114 .5	
+M-Y153	114 .5	
+M-Y154	114 .5	
+M-Y155	114 .5	
+M-Y156	116 .5	
+M-Y157	116 .5	
+M-Y158	116 .5	
+M-Y159	116 .5	
+M-Y177	96 .4	
+M-Y184	48 .2	
+M-Y915	103 .4	TCSB
+M-Y052A	117 .5	
+M-Y052B	117 .5	
+P-A453	141 .2	
+P-H901S	108 .5	
+P-H907S	108 .5	
+P-H908S	108 .5	
+P-H911S	108 .5	
+P-H912S	108 .5	
+P-S900	62 .6	
+P-S902	94 .3	
+P-S903	94 .3	

Drawing remarks

Tetra Pak

Designer	Date	Machine
QUE/AIR	11/06/2002	TBA/19 020V

ECM No	Denomination	Page Type
119151		Device list: (+M-W954 - +P-S903)

Company	Document No.	Doc. type	Version	Page
Tetra Pak Carton Ambient SpA	44954-0002	ELD	AB	8

This drawing must not without the consent of Tetra Pak be copied, transmitted or disclosed to any third party.

1	2	3	4	5	6	7	8	9	10

Position summary of 44954-0003

Component	Page .Col.	Opt.
+P-S904	95 .3	
+P-S906	95 .3	
+P-S901H	94 .3	
+P-S907H	94 .5	
+P-S908H	94 .3	
+P-S911H	94 .5	
+P-S912H	94 .3	
+P-W018	62 .5	
+P-X453		
+P-X901		

Component	Page .Col.	Opt.

Component	Page .Col.	Opt.

Component	Page .Col.	Opt.

Drawing remarks

Tetra Pak

Designer	Date	Machine
QUE/AIR	11/06/2002	TBA/19 020V

ECM No	Denomination	Page Type
119151		Device list: (+P-S904 - +P-X901)

Company	Document No.	Doc. type	Version	Page
Tetra Pak Carton Ambient SpA	44954-0002	ELD	AB	9

This page intentionally left blank

7 Circuit diagram

EM3.0TB078032en.fm

Table of contents

Circuit diagram 44954-0003

EM3.0TB078032en.fm

RELEASED

This drawing must not without the consent of Tetra Pak
be copied, transmitted or disclosed to any third party.



	Tetra Pak	Designer QUE/AIR	Date 11/06/2002	Machine TBA/19 020V				
		ECM No 119151	Denomination CIRCUIT DIAGRAM	Page Type DISTRIBUTION TERMINALS				
Drawing remarks		Company Tetra Pak Carton Ambient SpA		Document No. 44954-0003	Doc. type ELD	Version AB	Page 1	

RELEASED

This drawing must not without the consent of Tetra Pak be copied, transmitted or disclosed to any third party.

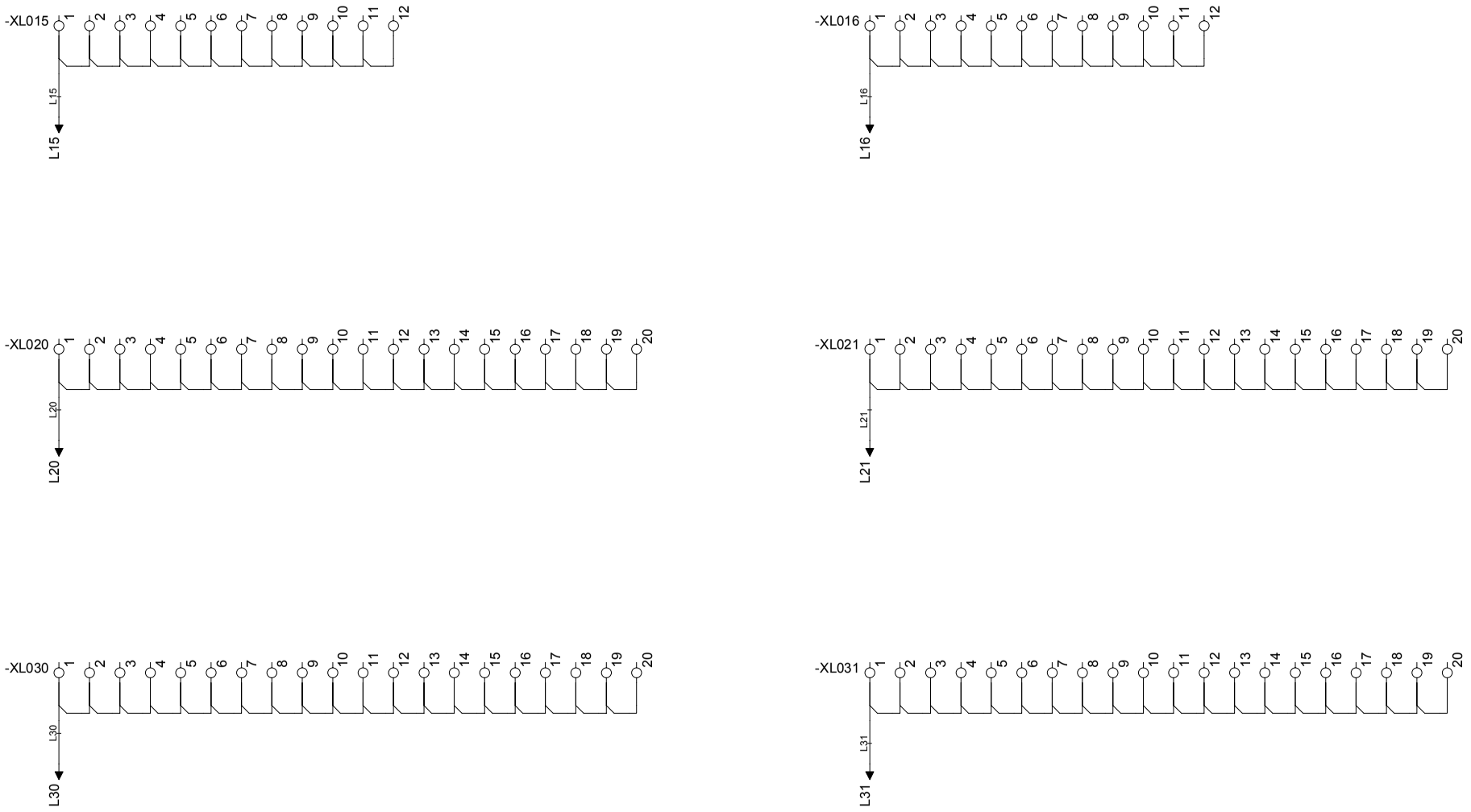

Drawing remarks	Tetra Pak	Designer QUE/AIR	Date 11/06/2002	Machine TBA/19 020V
		ECM No 119151	Denomination CIRCUIT DIAGRAM	Page Type DISTRIBUTION TERMINALS
		Company Tetra Pak Carton Ambient SpA	Document No. 44954-0003	Doc. type ELD / Version AB / Page 2

RELEASED

This drawing must not without the consent of Tetra Pak
be copied, transmitted or disclosed to any third party.

1	2	3	4	5	6	7	8	9	10

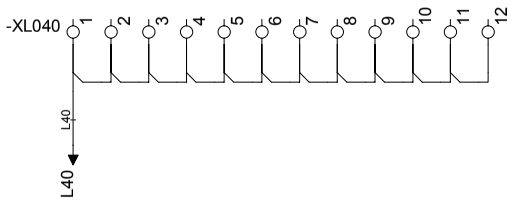

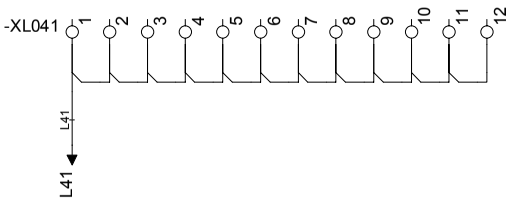

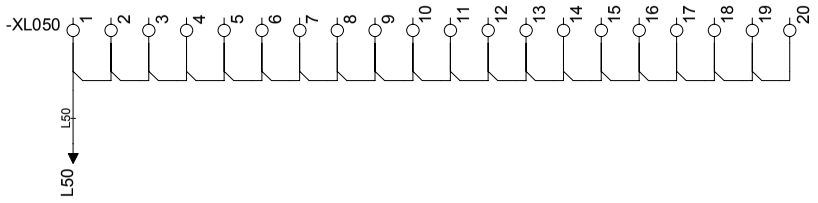

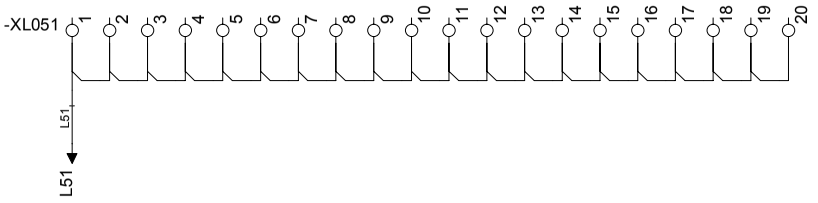

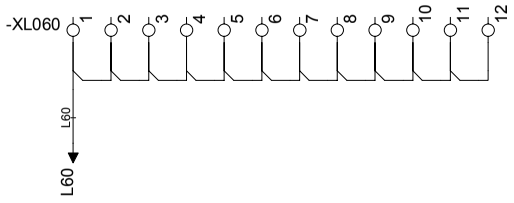

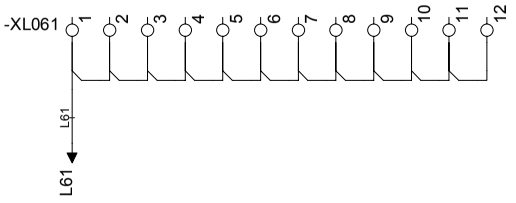

	Tetra Pak	Designer QUE/AIR	Date 11/06/2002	Machine TBA/19 020V		
		ECM No 119151	Denomination CIRCUIT DIAGRAM	Page Type DISTRIBUTION TERMINALS		
Drawing remarks	Company Tetra Pak Carton Ambient SpA		Document No. 44954-0003	Doc. type ELD	Version AB	Page 3

RELEASED

This drawing must not without the consent of Tetra Pak be copied, transmitted or disclosed to any third party.

1	2	3	4	5	6	7	8	9	10

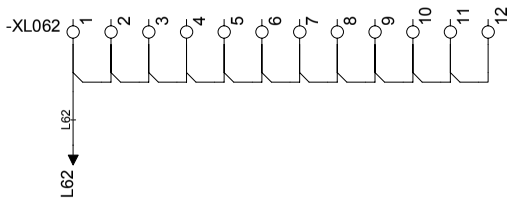

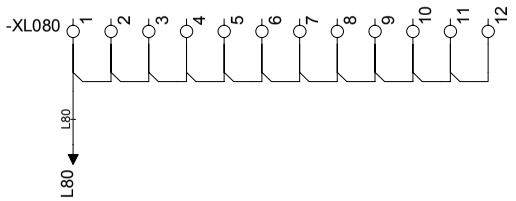

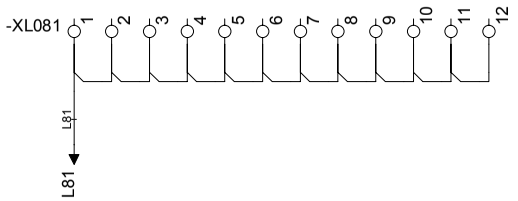

	Tetra Pak	Designer QUE/AIR	Date 11/06/2002	Machine TBA/19 020V		
		ECM No 119151	Denomination CIRCUIT DIAGRAM	Page Type DISTRIBUTION TERMINALS		
Drawing remarks	Company Tetra Pak Carton Ambient SpA		Document No. 44954-0003	Doc. type ELD	Version AB	Page 4

RELEASED

This drawing must not without the consent of Tetra Pak
be copied, transmitted or disclosed to any third party.

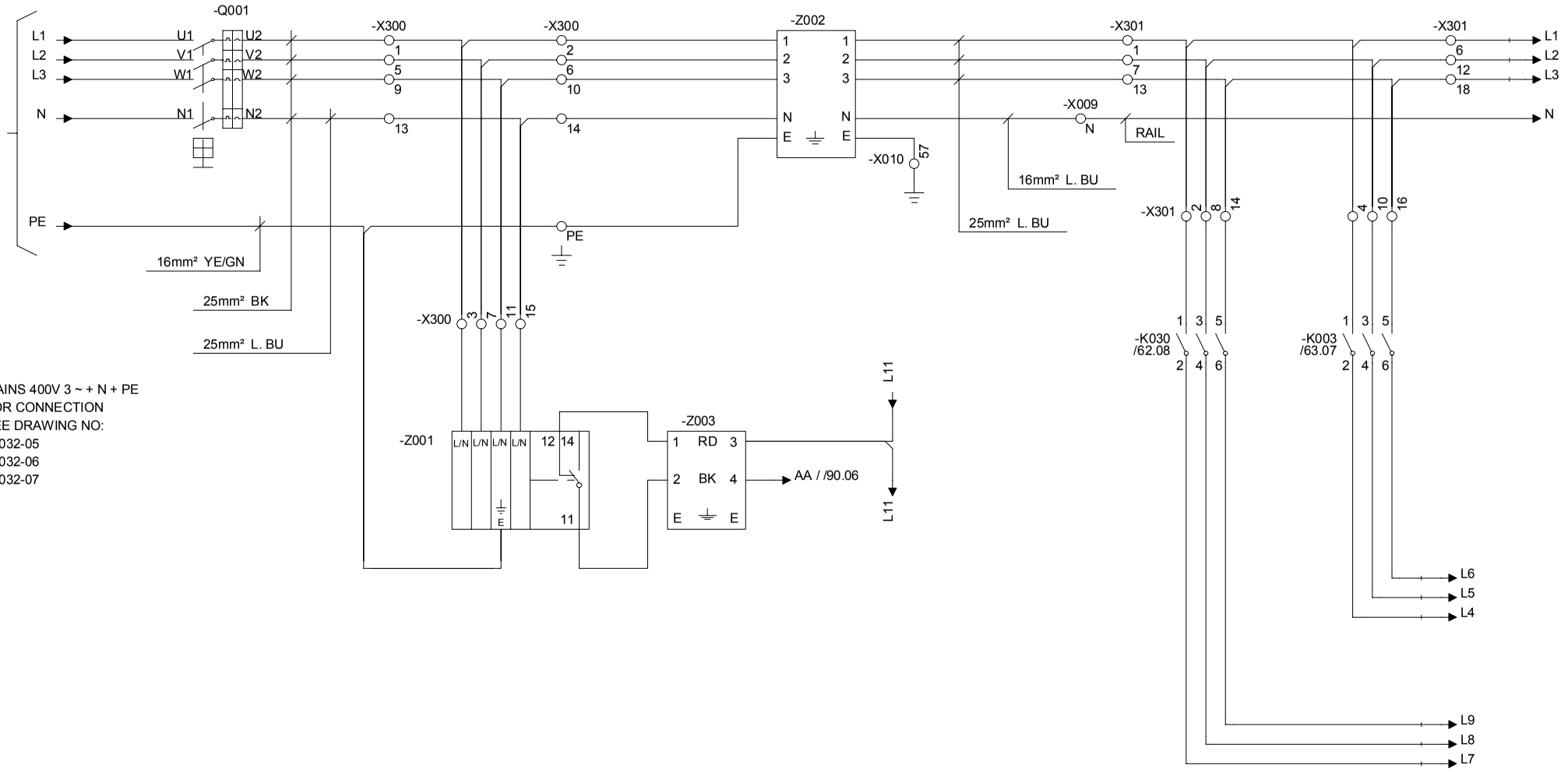

MAINS 400V 3 ~ + N + PE
FOR CONNECTION
SEE DRAWING NO:
62032-05
62032-06
62032-07

FOR TYPE OF WIRE, WIRING INSTRUCTIONS ETC.
SEE SPECIFICATIONS FOR SUBSUPPLIERS TPUS 3502.22

WHERE NOTHING ELSE IS SAID OR LINE SUMMARY IS VALID:0.75mm² BU
STAR OR BLUE MARKING MUST BE USED FOR SHOWING CONTINUOUS WIRE

	Tetra Pak	Designer QUE/AIR	Date 11/06/2002	Machine TBA/19 020V	
		ECM No 119151	Denomination CIRCUIT DIAGRAM	Page Type MAINS CONNECTION	
Drawing remarks		Company Tetra Pak Carton Ambient SpA	Document No. 44954-0003	Doc. type ELD	Version AB	Page 5

RELEASED

This drawing must not without the consent of Tetra Pak be copied, transmitted or disclosed to any third party.

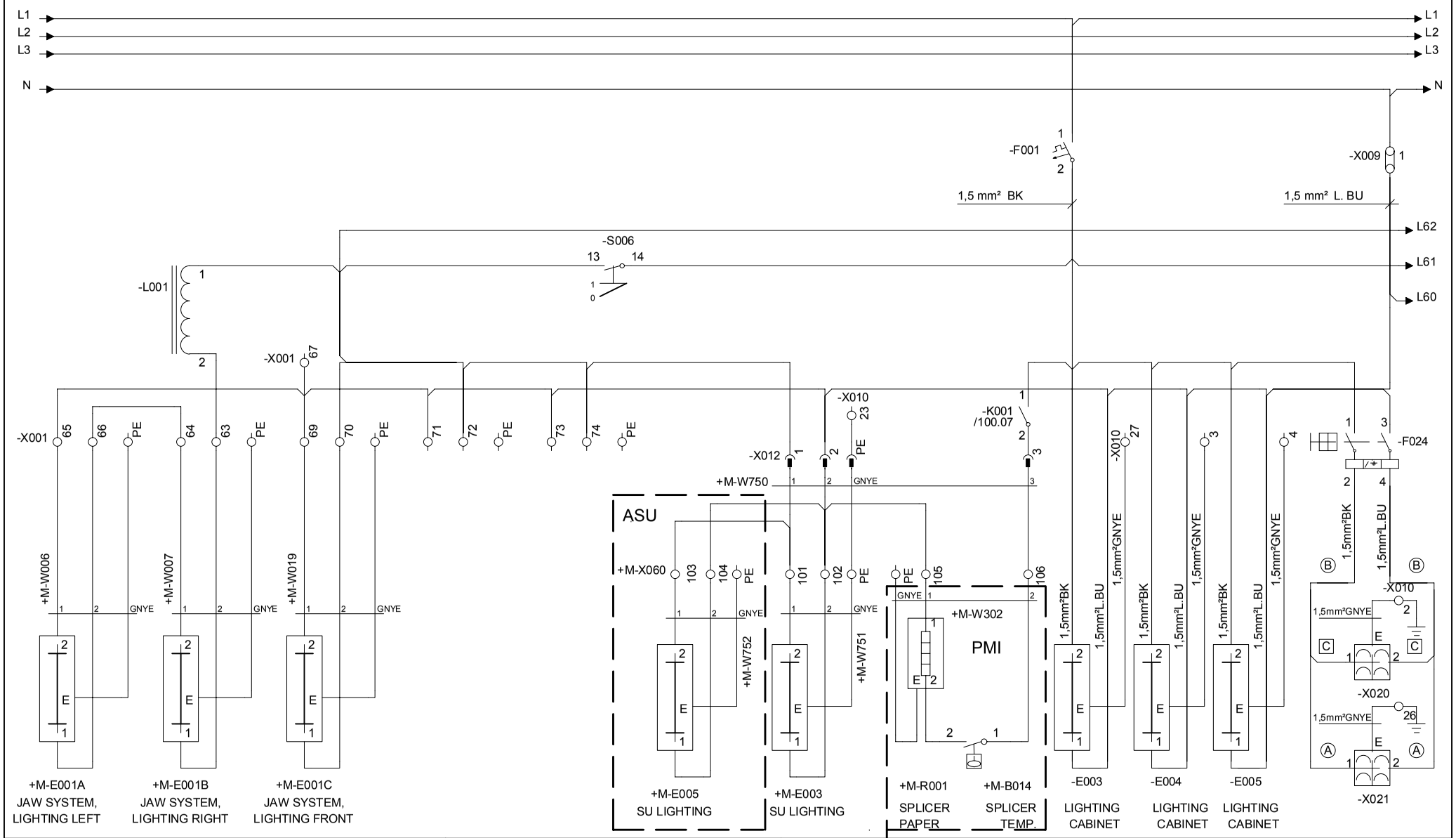

Drawing remarks	Tetra Pak	Designer QUE/AIR	Date 11/06/2002	Machine TBA/19 020V
		ECM No 119151	Denomination CIRCUIT DIAGRAM	Page Type LIGHT FIXTURES
	Company Tetra Pak Carton Ambient SpA	Document No. 44954-0003	Doc. type ELD	Version AB / Page 6

RELEASED

This drawing must not without the consent of Tetra Pak be copied, transmitted or disclosed to any third party.

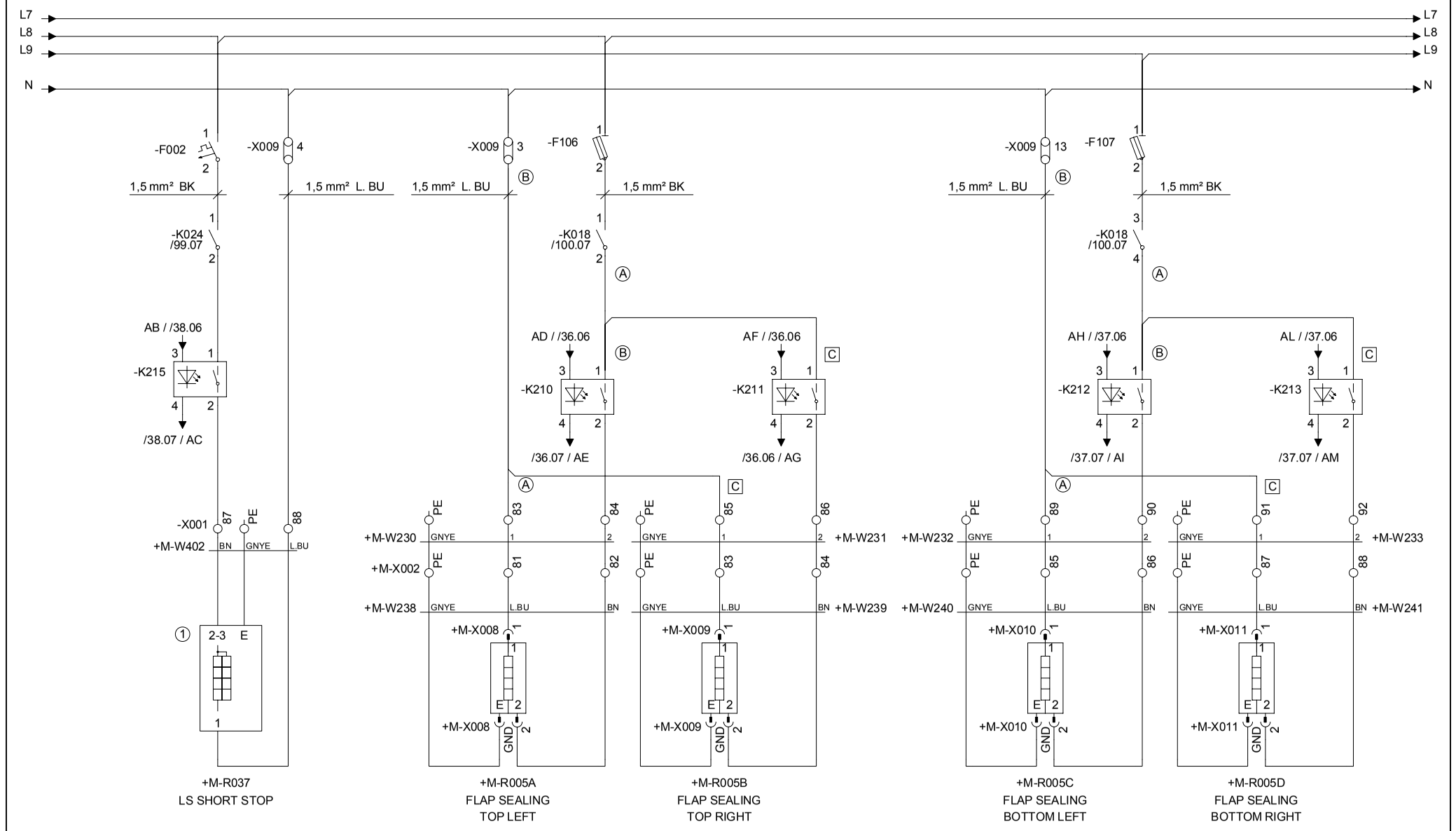

① ELEMENT PIN CONFIGURATION 1,2+3 = 1900W 1,2 = 1200W

1,3 = 700W 2,3 = 450W

Drawing remarks

Designer QUE/AIR	Date 11/06/2002	Machine TBA/19 020V		
ECM No 119151	Denomination CIRCUIT DIAGRAM	Page Type ELEMENTS		
Company Tetra Pak Carton Ambient SpA	Document No. 44954-0003	Doc. type ELD	Version AB	Page 7

RELEASED

This drawing must not without the consent of Tetra Pak be copied, transmitted or disclosed to any third party.

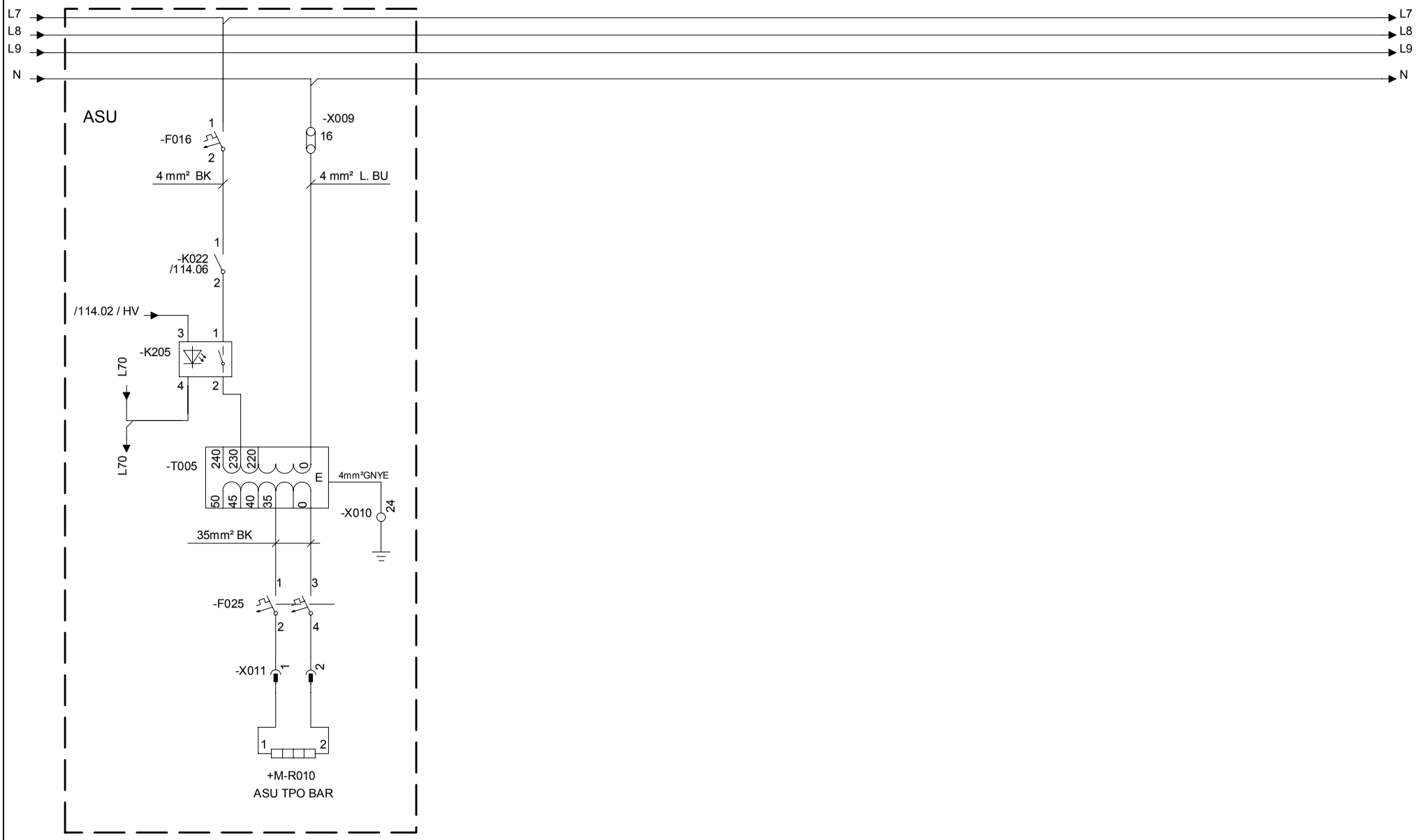

Drawing remarks	Tetra Pak	Designer QUE/AIR	Date 11/06/2002	Machine TBA/19 020V	
		ECM No 119151	Denomination CIRCUIT DIAGRAM	Page Type ASU	
	Company Tetra Pak Carton Ambient SpA	Document No. 44954-0003	Doc. type ELD	Version AB	Page 8

RELEASED

This drawing must not without the consent of Tetra Pak be copied, transmitted or disclosed to any third party.

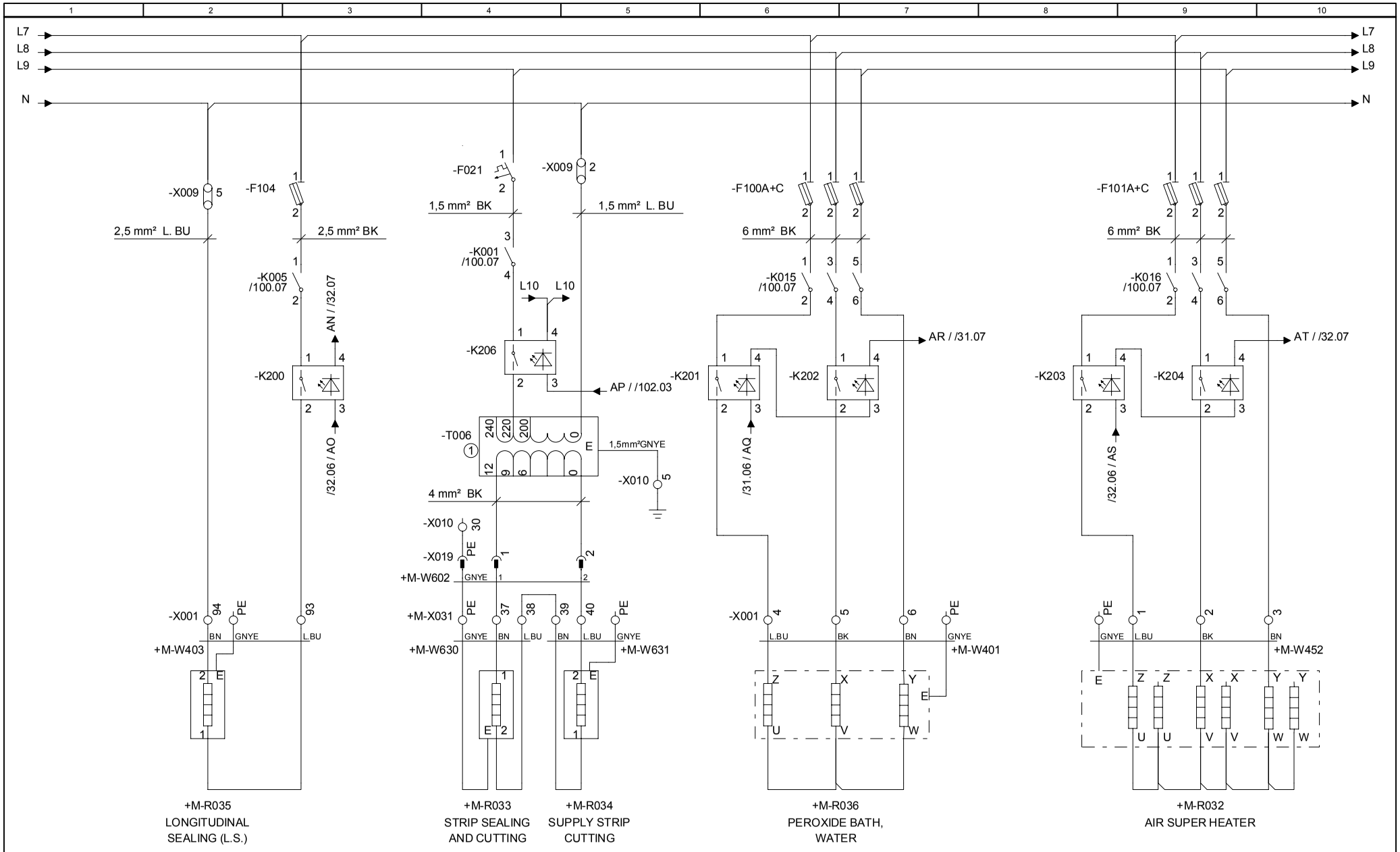

① THE CONNECTION OF THE PRIMARY MUST BE ADAPT THE TENSION OF APPROPRIATE NET.

Drawing remarks

Tetra Pak

Designer	QUE/AIR	Date	11/06/2002	Machine	TBA/19 020V
ECM No	119151	Denomination	CIRCUIT DIAGRAM	Page Type	ELEMENTS
Company	Tetra Pak Carton Ambient SpA	Document No.	44954-0003	Doc. type	ELD
				Version	AB
				Page	10

RELEASED

This drawing must not without the consent of Tetra Pak be copied, transmitted or disclosed to any third party.

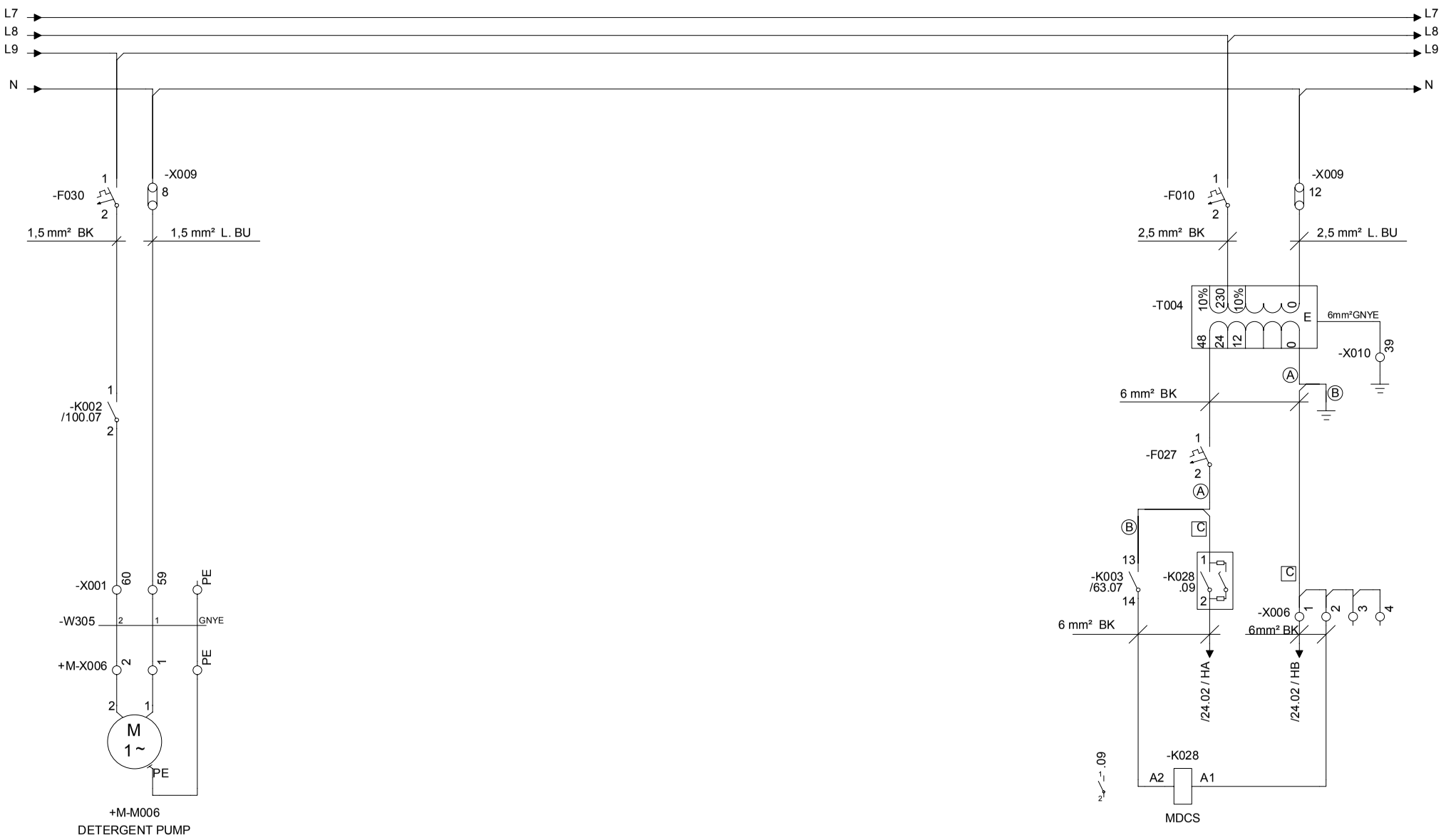

	Designer QUE/AIR	Date 11/06/2002	Machine TBA/19 020V		
	ECM No 119151	Denomination CIRCUIT DIAGRAM	Page Type POWER 48V		
Drawing remarks	Company Tetra Pak Carton Ambient SpA	Document No. 44954-0003	Doc. type ELD	Version AB	Page 11

RELEASED

This drawing must not without the consent of Tetra Pak be copied, transmitted or disclosed to any third party.

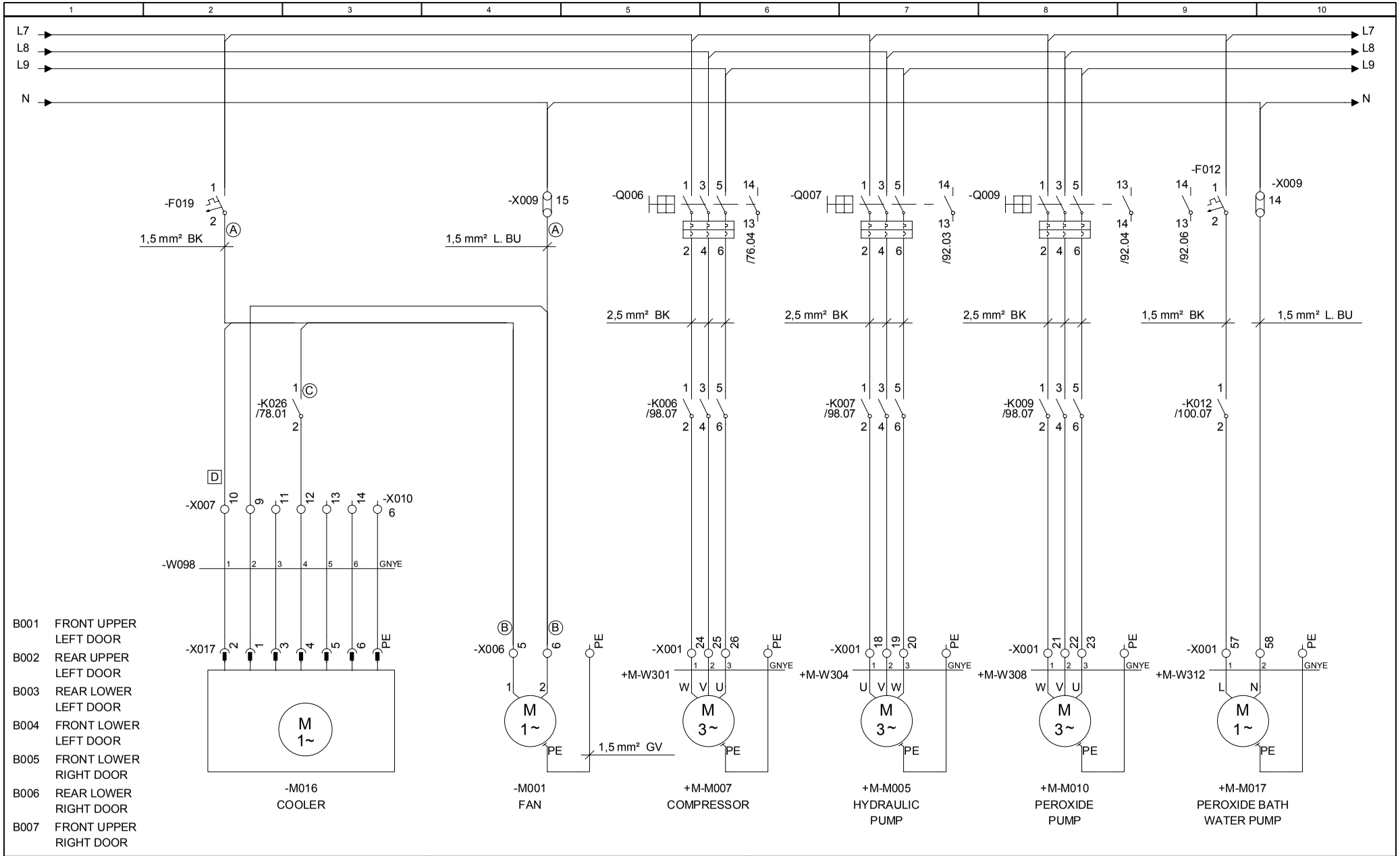

B001	FRONT UPPER LEFT DOOR
B002	REAR UPPER LEFT DOOR
B003	REAR LOWER LEFT DOOR
B004	FRONT LOWER LEFT DOOR
B005	FRONT LOWER RIGHT DOOR
B006	REAR LOWER RIGHT DOOR
B007	FRONT UPPER RIGHT DOOR

Drawing remarks

Tetra Pak

Designer: QUE/AIR	Date: 11/06/2002	Machine: TBA/19 020V	
ECM No: 119151	Denomination: CIRCUIT DIAGRAM	Page Type: MOTORS	
Company: Tetra Pak Carton Ambient SpA	Document No.: 44954-0003	Doc. type: ELD	Version: AB	Page: 12

RELEASED

This drawing must not without the consent of Tetra Pak be copied, transmitted or disclosed to any third party.

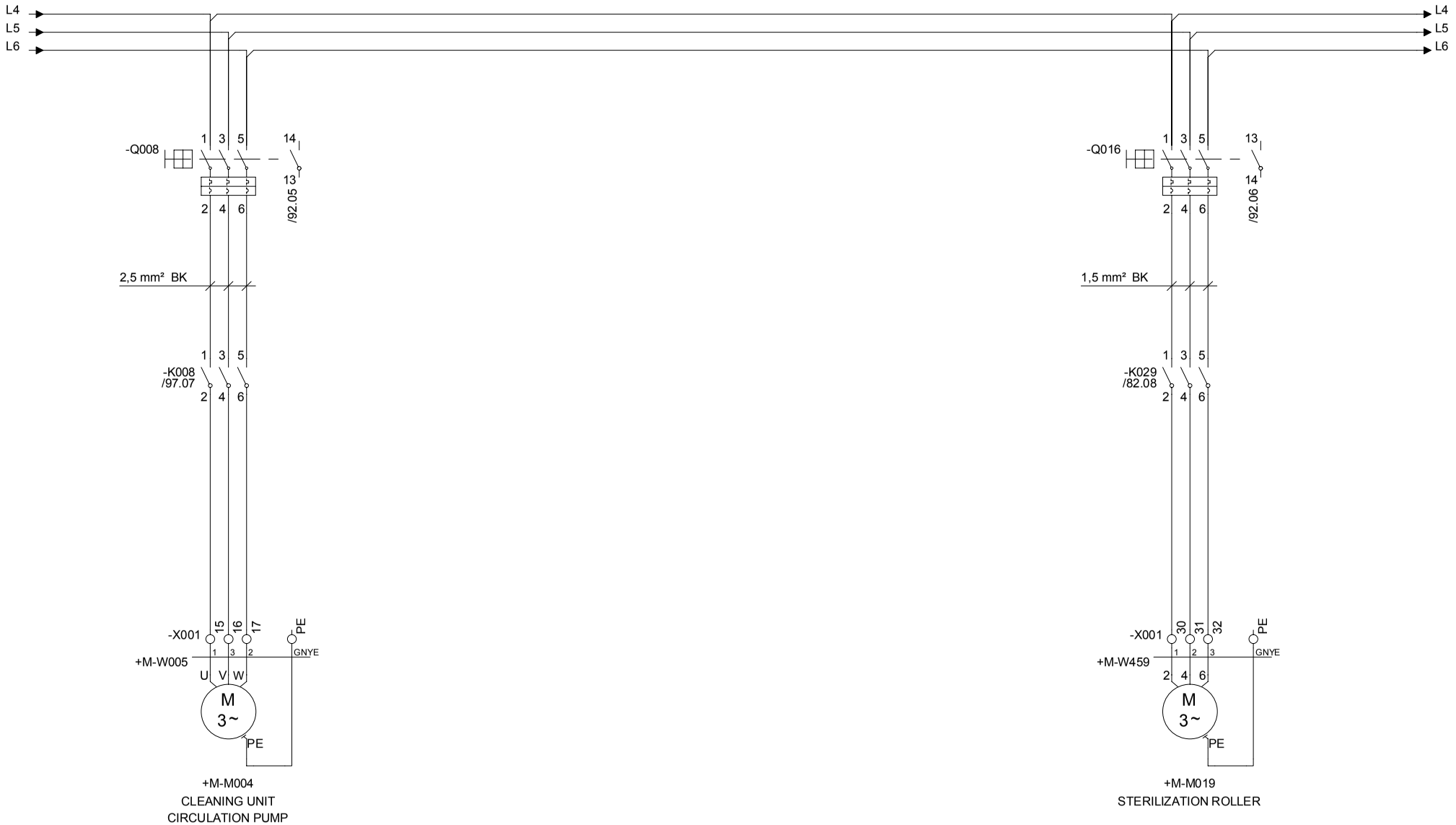

	Designer QUE/AIR	Date 11/06/2002	Machine TBA/19 020V		
Tetra Pak	ECM No 119151	Denomination CIRCUIT DIAGRAM	Page Type MOTORS		
Drawing remarks	Company Tetra Pak Carton Ambient SpA	Document No. 44954-0003	Doc. type ELD	Version AB	Page 13

RELEASED

This drawing must not without the consent of Tetra Pak be copied, transmitted or disclosed to any third party.

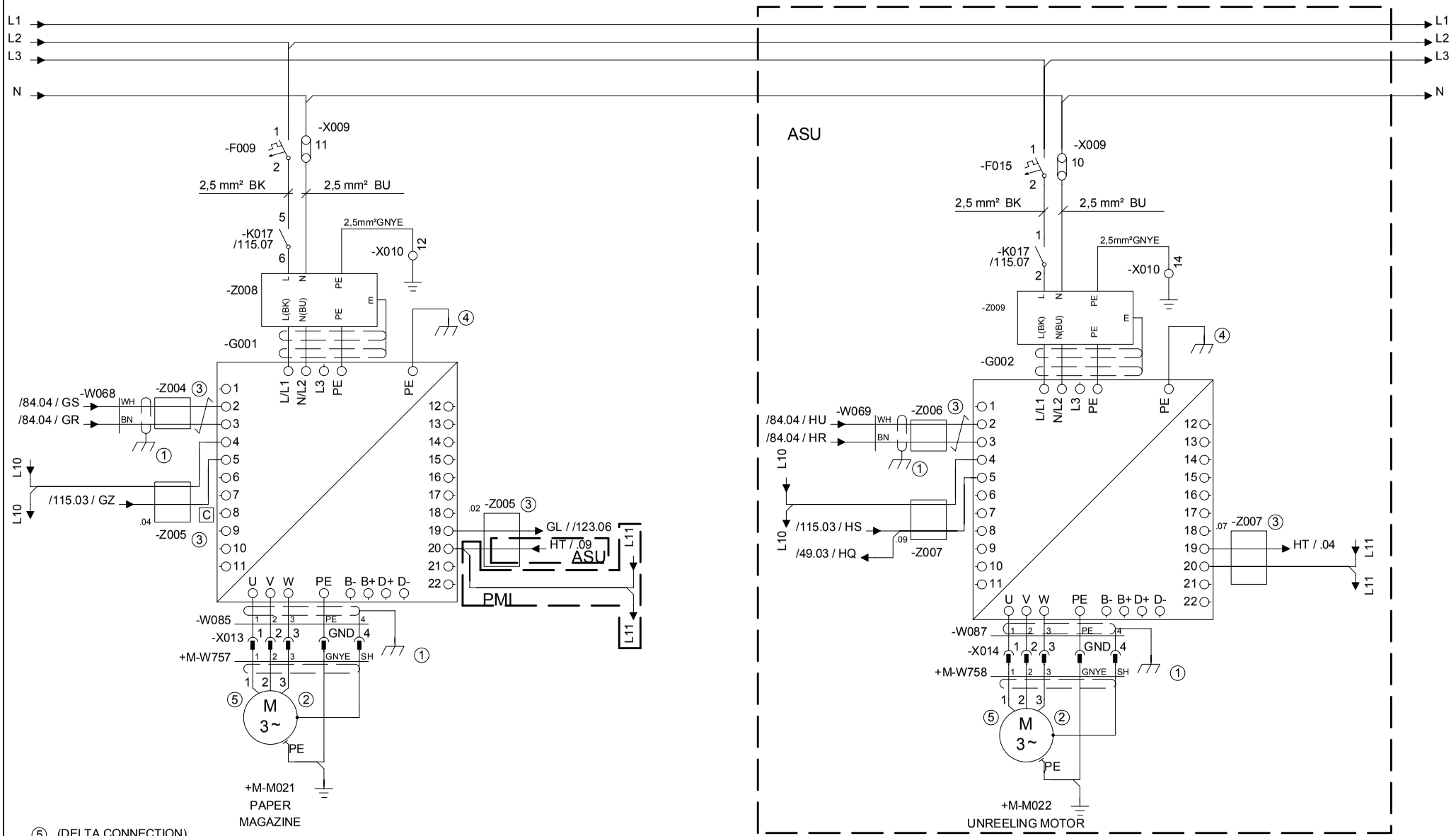

⑤ (DELTA CONNECTION)

① CONNECTED TO THE EARTH BAR.	Tetra Pak	Designer QUE/AIR	Date 11/06/2002	Machine TBA/19 020V
② THE SCREEN IS CONN. TO COMPR. GLAND.		ECM No 119151	Denomination CIRCUIT DIAGRAM	Page Type MOTORS
③ PASS THE WIRES THROUGH THE FERRITE TWICE.		Company Tetra Pak Carton Ambient SpA	Document No. 44954-0003	Doc. type ELD / Version AB / Page 14
④ CONNECTED TO THE Drawing remarks ILTER.				

RELEASED

This drawing must not without the consent of Tetra Pak be copied, transmitted or disclosed to any third party.

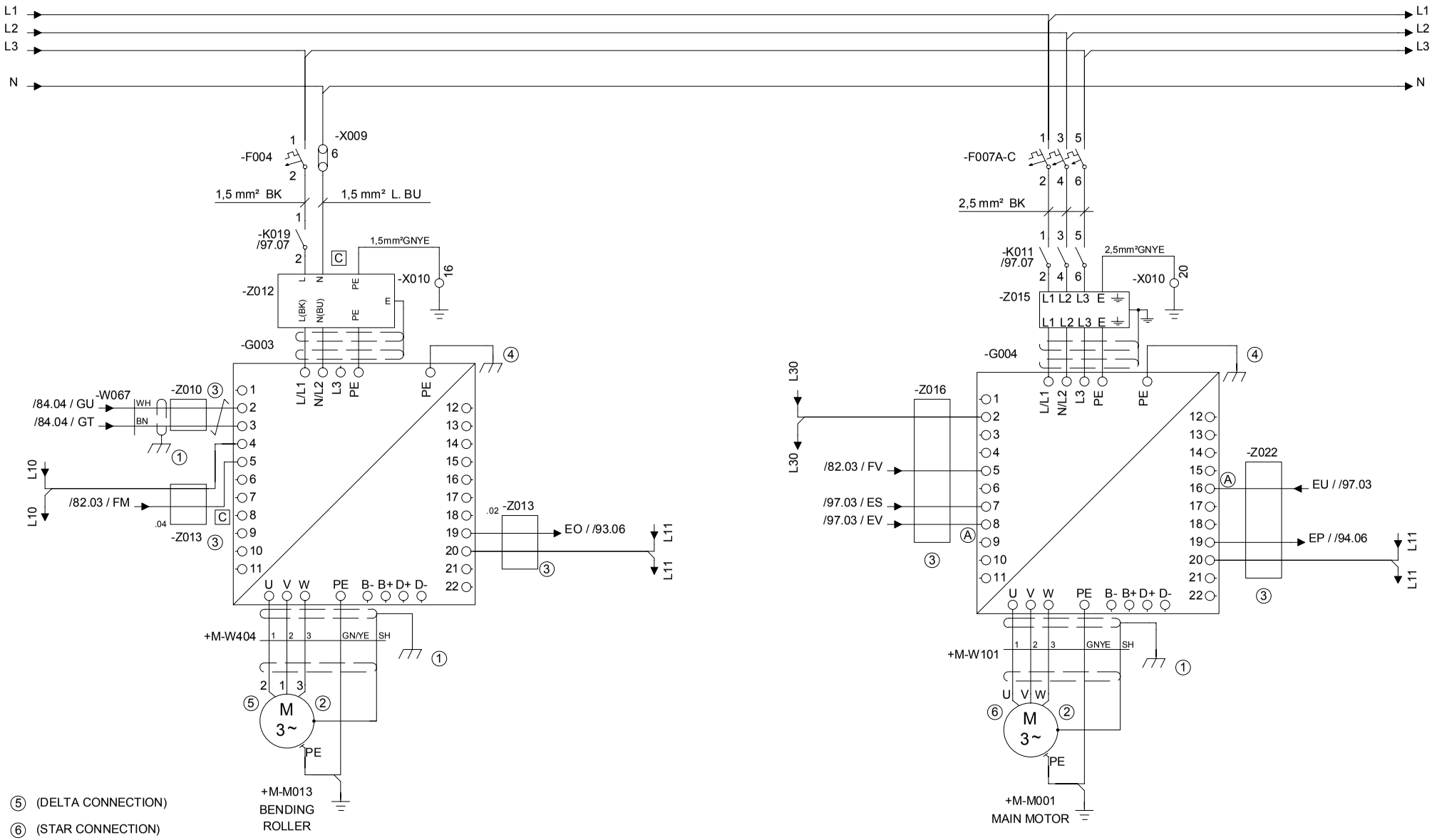

⑤ (DELTA CONNECTION)

⑥ (STAR CONNECTION)

① CONNECTED TO THE EARTH BAR BY CABLE CLAMP.

② THE SCREEN IS CONN. TO COMPR. GLAND.

③ PASS THE WIRES THROUGH THE FERRITE TWICE.

④ CONNECTED TO THE Drawing remarks SILTER.

Tetra Pak	Designer QUE/AIR	Date 11/06/2002	Machine TBA/19 020V				
	ECM No 119151	Denomination CIRCUIT DIAGRAM	Page Type MOTORS				
Company Tetra Pak Carton Ambient SpA		Document No. 44954-0003	Doc. type ELD	Version AB	Page 15		

RELEASED

This drawing must not without the consent of Tetra Pak be copied, transmitted or disclosed to any third party.

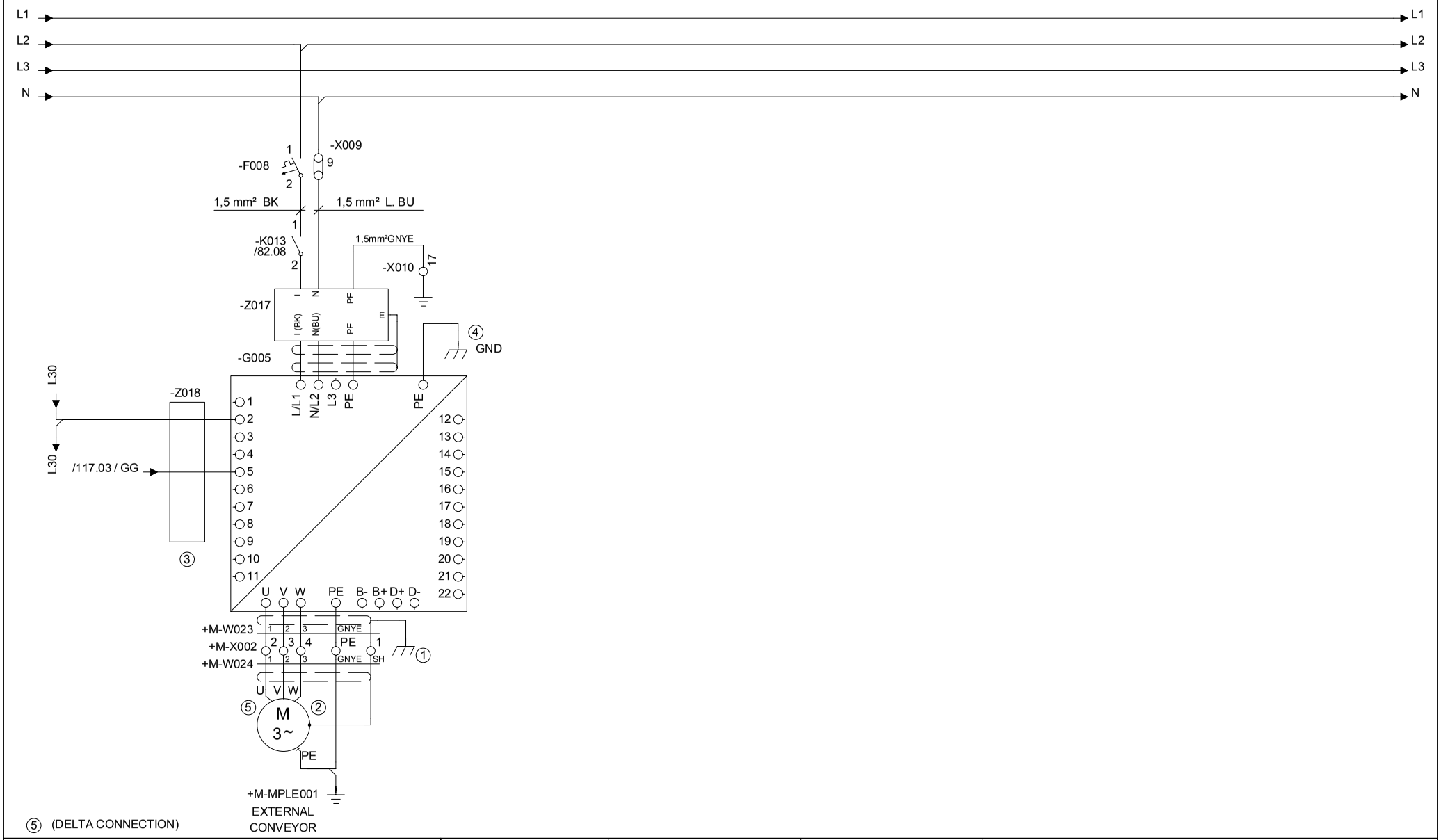

⑤ (DELTA CONNECTION)

① CONNECTED TO THE EARTH BAR.

② THE SCREEN IS CONN. TO COMPR. GLAND.

③ PASS THE WIRES THROUGH THE FERRITE TWICE.

④ CONNECTED TO THE Drawing remarks FILTER.

Tetra Pak	Designer QUE/AIR	Date 11/06/2002	Machine TBA/19 020V	
	ECM No 119151	Denomination CIRCUIT DIAGRAM	Page Type MOTORS	
Company Tetra Pak Carton Ambient SpA	Document No. 44954-0003	Doc. type ELD	Version AB	Page 16

RELEASED

This drawing must not without the consent of Tetra Pak be copied, transmitted or disclosed to any third party.

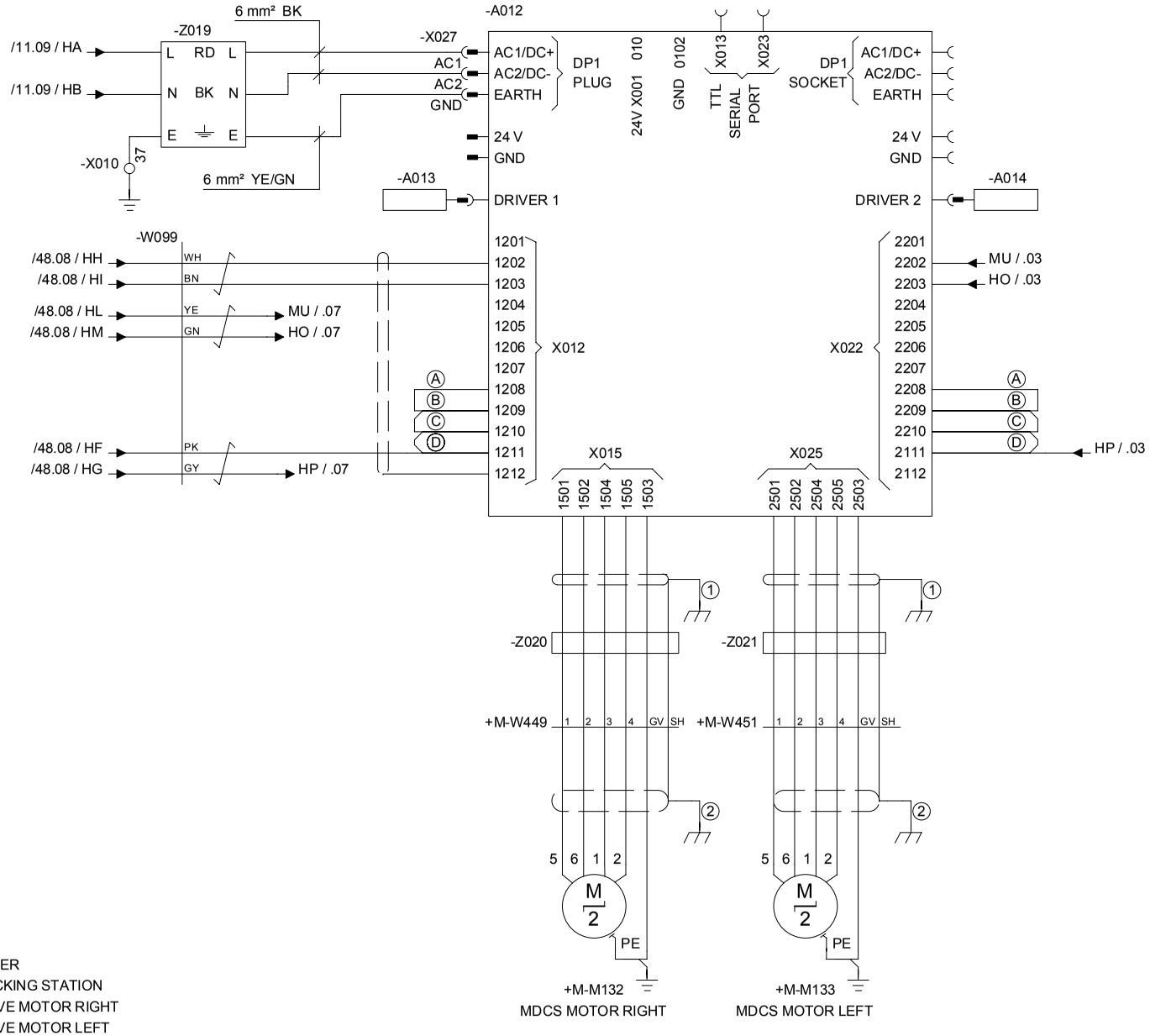

Z019 FILTER
A012 DOCKING STATION
A013 DRIVE MOTOR RIGHT
A014 DRIVE MOTOR LEFT

① SHIELD CONNECTED TO THE DOCKING STATION BY CLAMP.
② SHIELD CONNECTED TO THE CABLE GLAND.

Drawing remarks

Tetra Pak

Designer	Date	Machine
QUE/AIR	11/06/2002	TBA/19 020V

ECM No	Denomination	Page Type
119151	CIRCUIT DIAGRAM	A012-MDCS

Company	Document No.	Doc. type	Version	Page
Tetra Pak Carton Ambient SpA	44954-0003	ELD	AB	24

RELEASED

This drawing must not without the consent of Tetra Pak be copied, transmitted or disclosed to any third party.

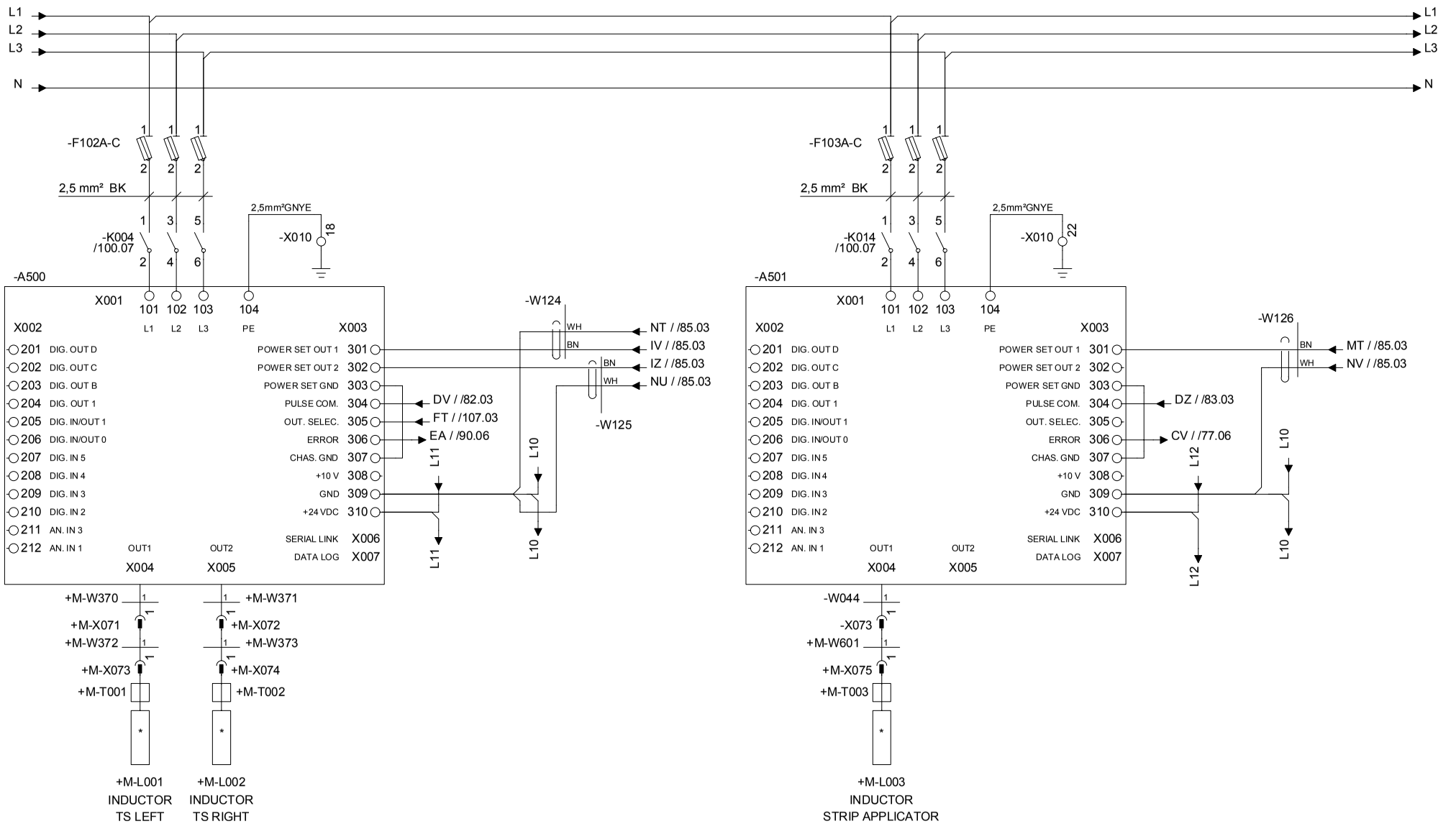

	Designer QUE/AIR	Date 11/06/2002	Machine TBA/19 020V	
Tetra Pak	ECM No 119151	Denomination CIRCUIT DIAGRAM	Page Type IH GENERATORS	
Drawing remarks	Company Tetra Pak Carton Ambient SpA	Document No. 44954-0003	Doc. type ELD	Version AB	Page 29

RELEASED

This drawing must not without the consent of Tetra Pak be copied, transmitted or disclosed to any third party.

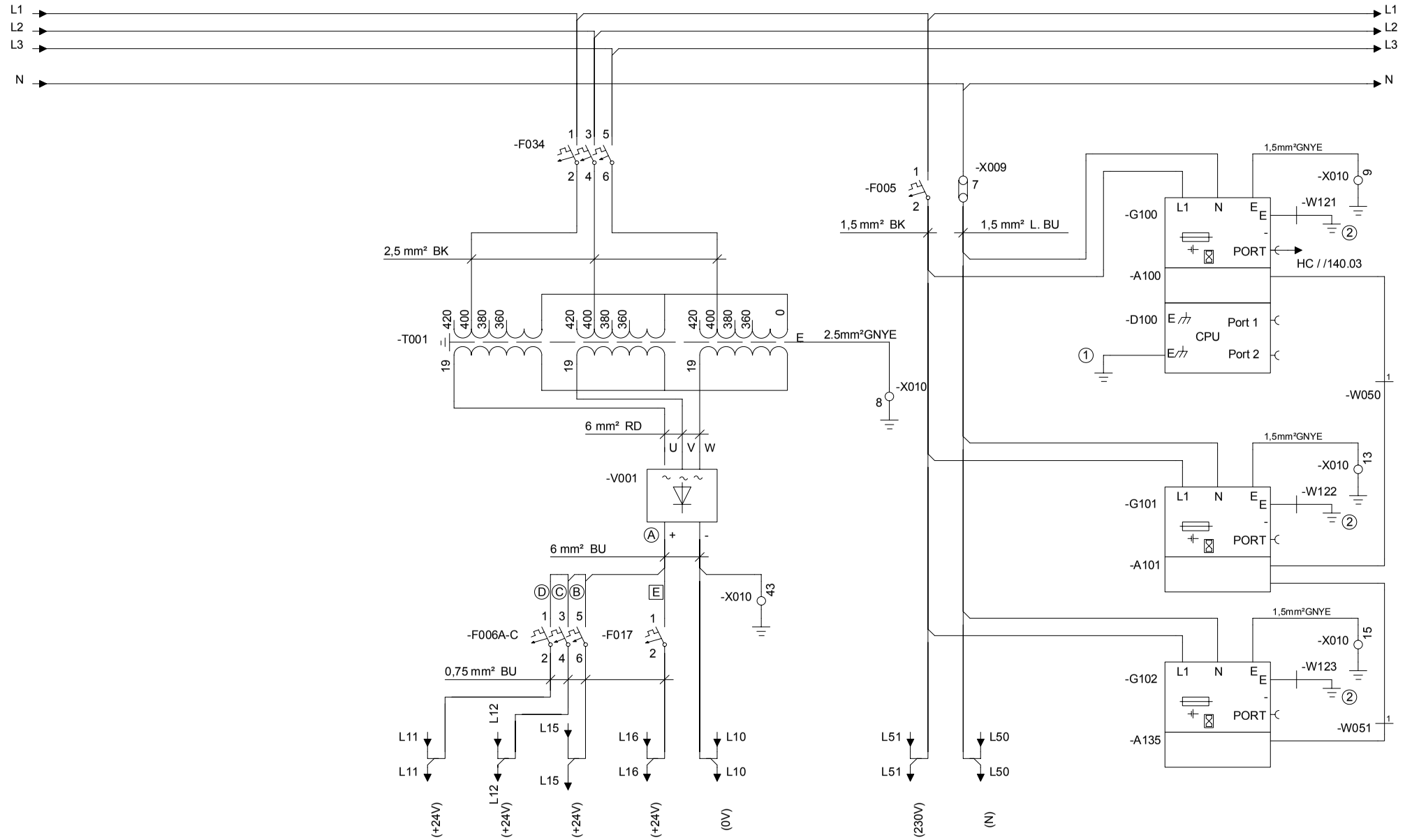

① CPU CONNECTED TO THE EARTH BAR.

② CONNECTION TO THE PLATE.

Drawing remarks

Tetra Pak

Designer QUE/AIR	Date 11/06/2002	Machine TBA/19 020V	
ECM No 119151	Denomination CIRCUIT DIAGRAM	Page Type CONTROL VOLTAGE, PLC POWER	
Company Tetra Pak Carton Ambient SpA	Document No. 44954-0003	Doc. type ELD	Version AB	Page 30

RELEASED

This drawing must not without the consent of Tetra Pak be copied, transmitted or disclosed to any third party.

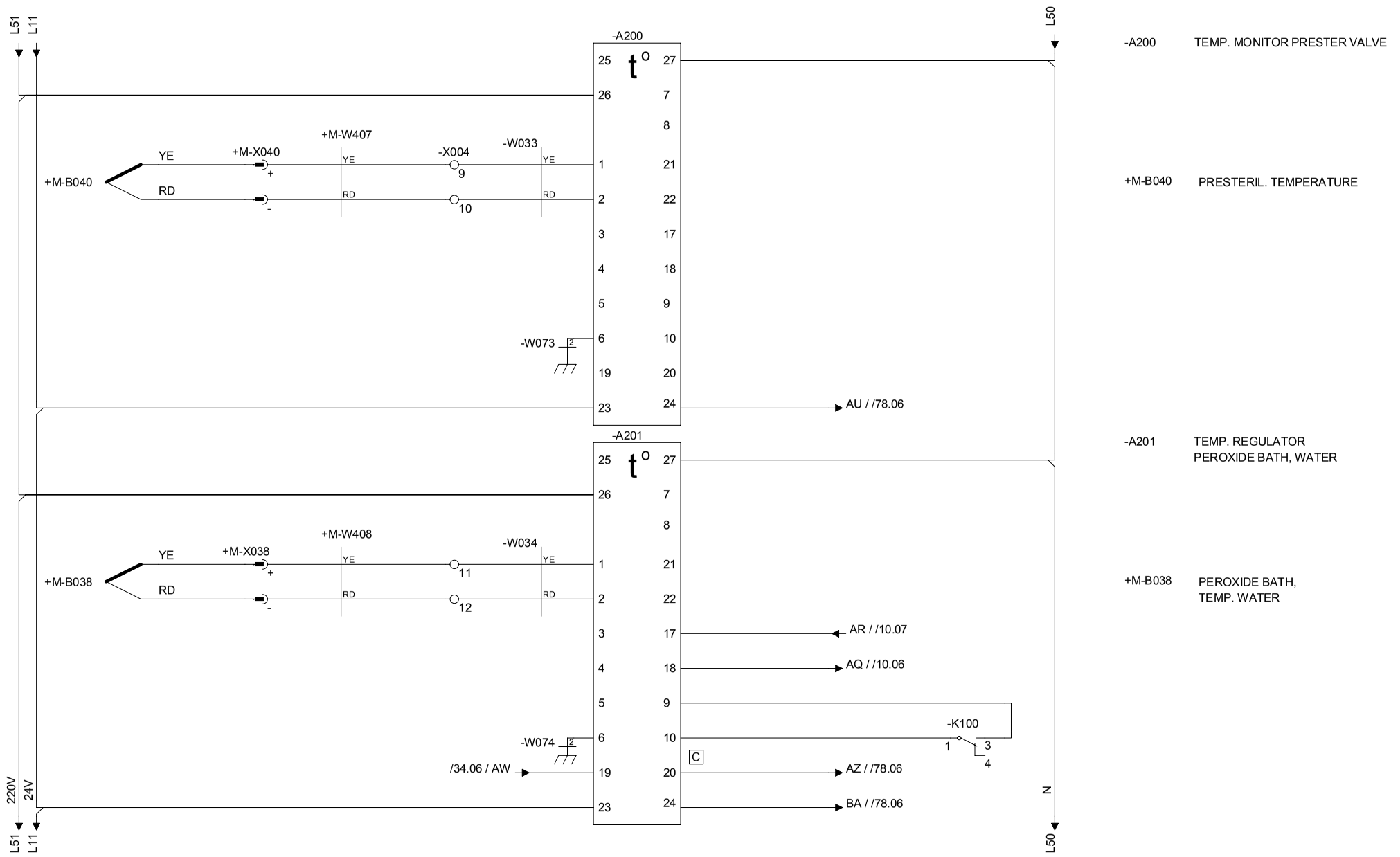

Drawing remarks	Tetra Pak	Designer QUE/AIR	Date 11/06/2002	Machine TBA/19 020V
		ECM No 119151	Denomination CIRCUIT DIAGRAM	Page Type REGULATORS
	Company Tetra Pak Carton Ambient SpA		Document No. 44954-0003	Doc. type ELD / Version AB / Page 31

RELEASED

This drawing must not without the consent of Tetra Pak be copied, transmitted or disclosed to any third party.

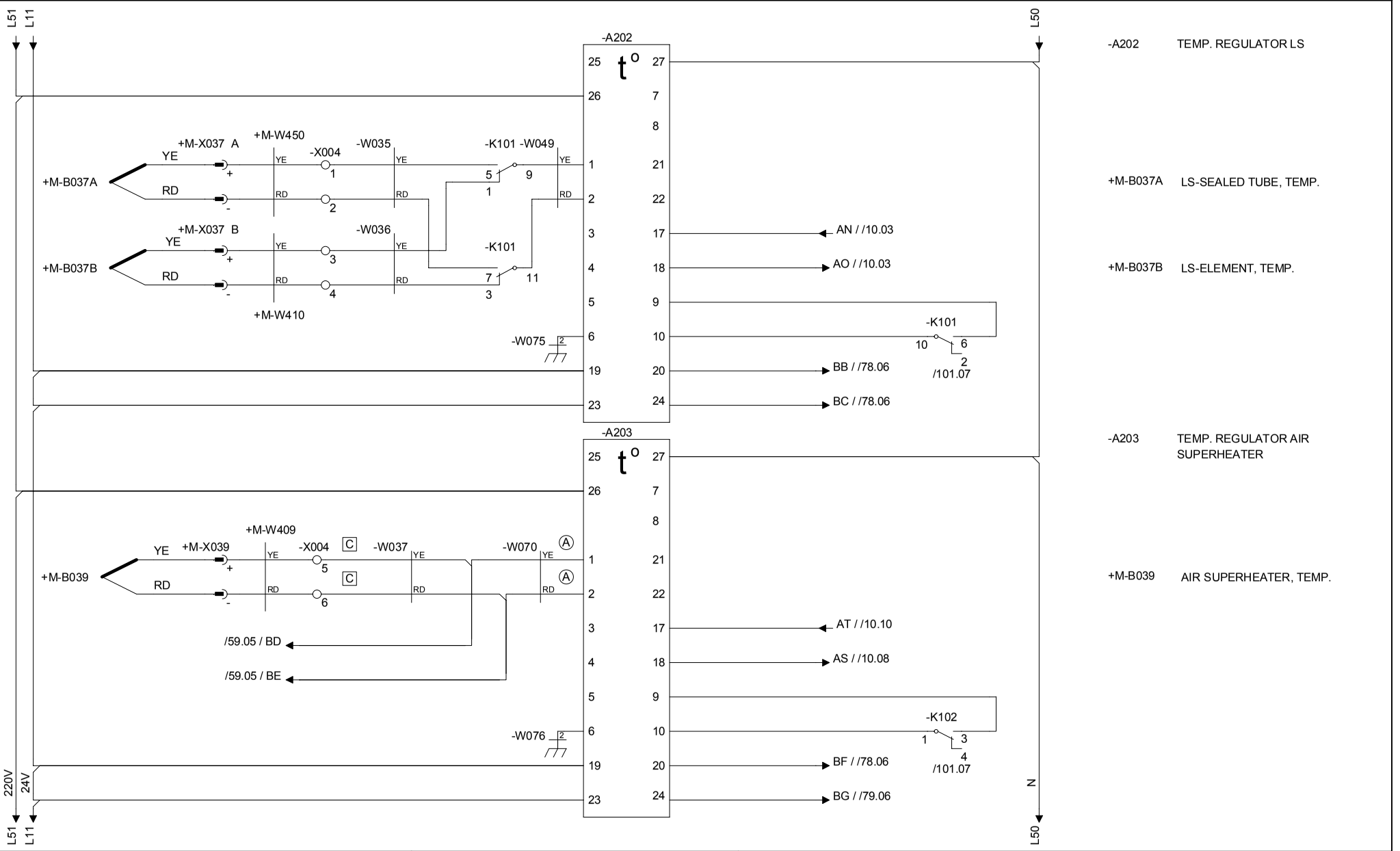

-A202 TEMP. REGULATOR LS

+M-B037A LS-SEALED TUBE, TEMP.

+M-B037B LS-ELEMENT, TEMP.

-A203 TEMP. REGULATOR AIR SUPERHEATER

+M-B039 AIR SUPERHEATER, TEMP.

Drawing remarks	Tetra Pak	Designer QUE/AIR	Date 11/06/2002	Machine TBA/19 020V			
		ECM No 119151	Denomination CIRCUIT DIAGRAM	Page Type REGULATORS			
	Company Tetra Pak Carton Ambient SpA		Document No. 44954-0003	Doc. type ELD	Version AB	Page 32	

RELEASED

This drawing must not without the consent of Tetra Pak be copied, transmitted or disclosed to any third party.

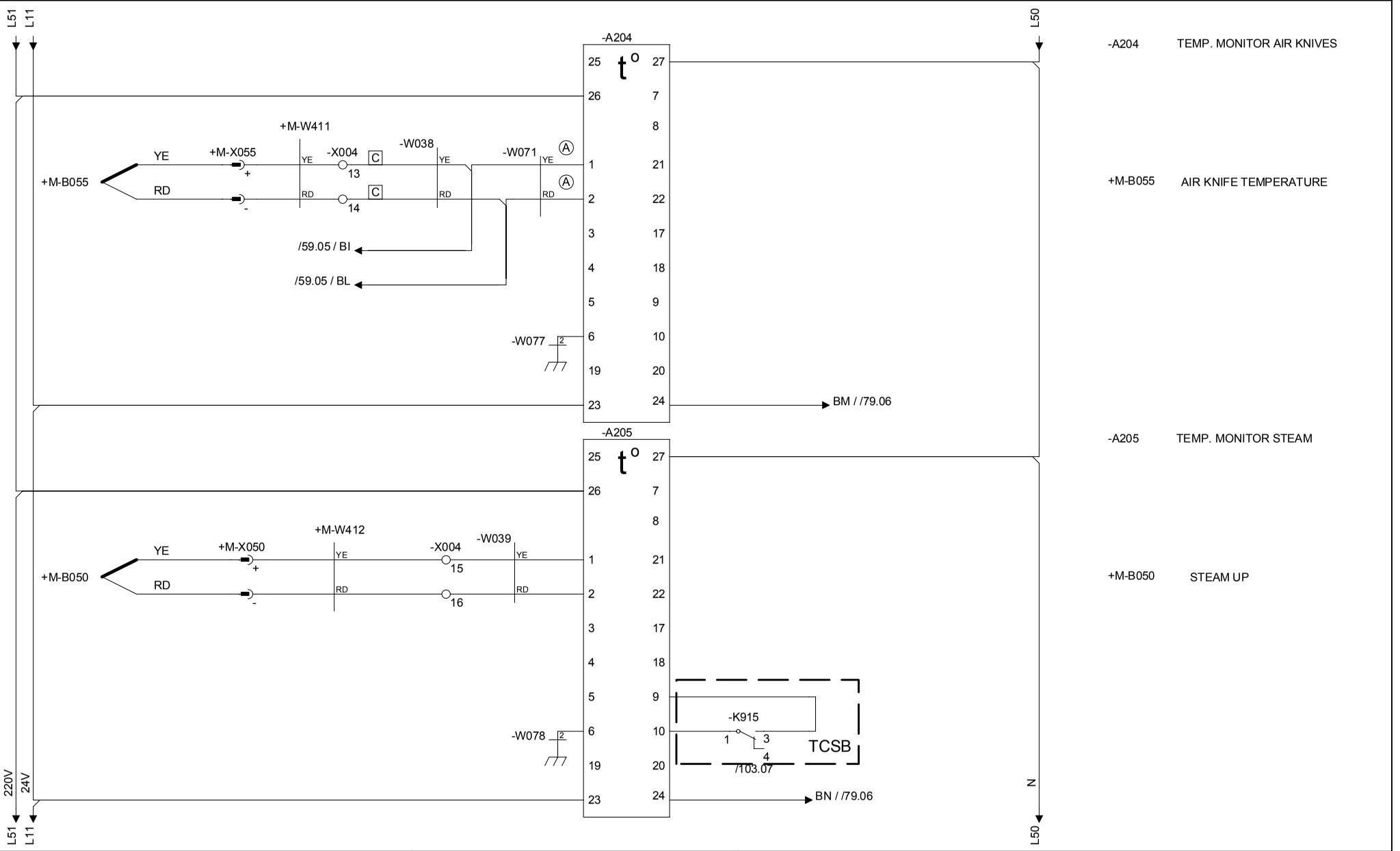

Drawing remarks	Tetra Pak	Designer QUE/AIR	Date 11/06/2002	Machine TBA/19 020V
		ECM No 119151	Denomination CIRCUIT DIAGRAM	Page Type REGULATORS
	Company Tetra Pak Carton Ambient SpA	Document No. 44954-0003	Doc. type ELD	Version AB / Page 33

RELEASED

This drawing must not without the consent of Tetra Pak be copied, transmitted or disclosed to any third party.

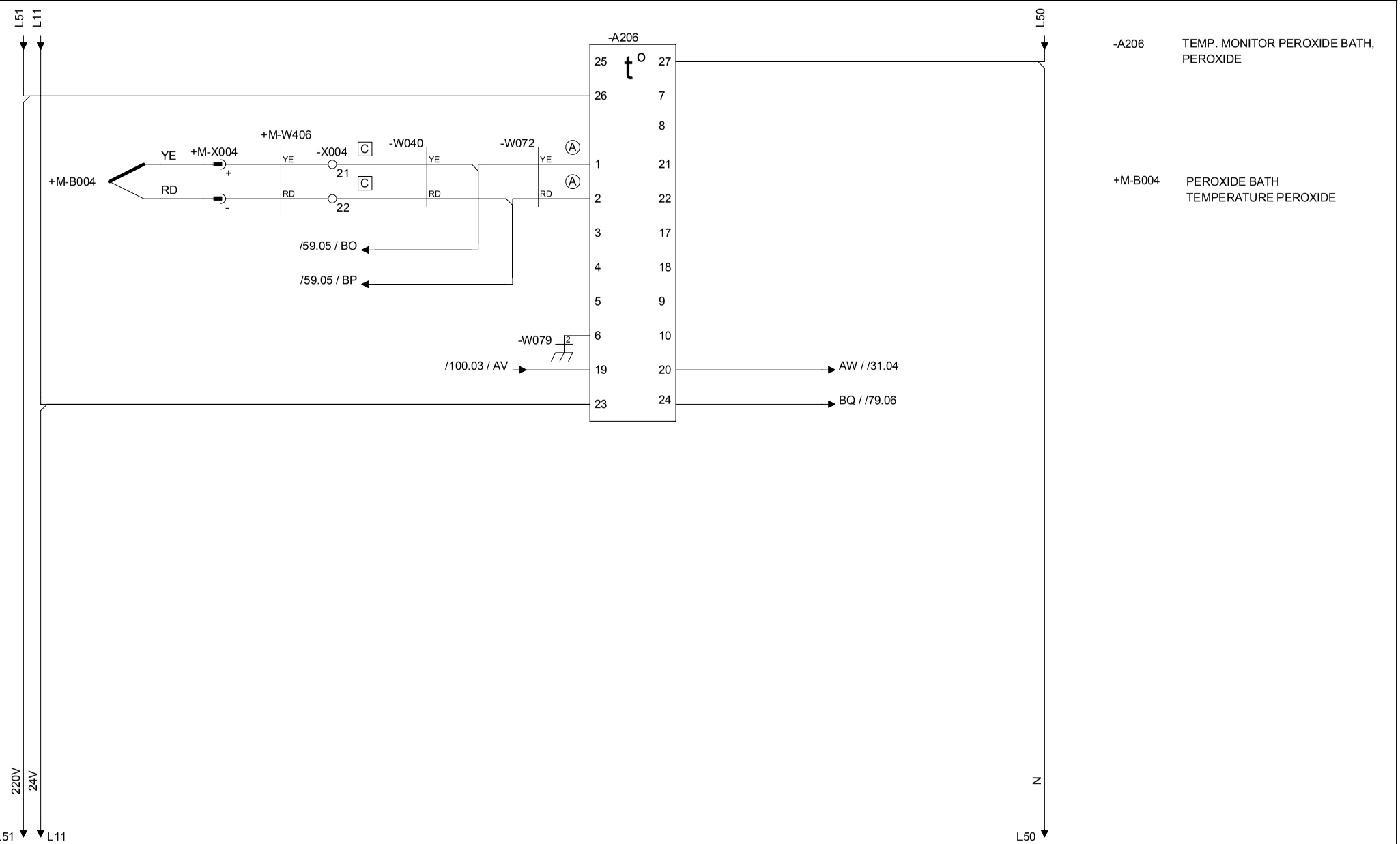

Drawing remarks	Tetra Pak	Designer QUE/AIR	Date 11/06/2002	Machine TBA/19 020V
		ECM No 119151	Denomination CIRCUIT DIAGRAM	Page Type REGULATORS
	Company Tetra Pak Carton Ambient SpA	Document No. 44954-0003	Doc. type ELD	Version AB / Page 34

RELEASED

This drawing must not without the consent of Tetra Pak be copied, transmitted or disclosed to any third party.

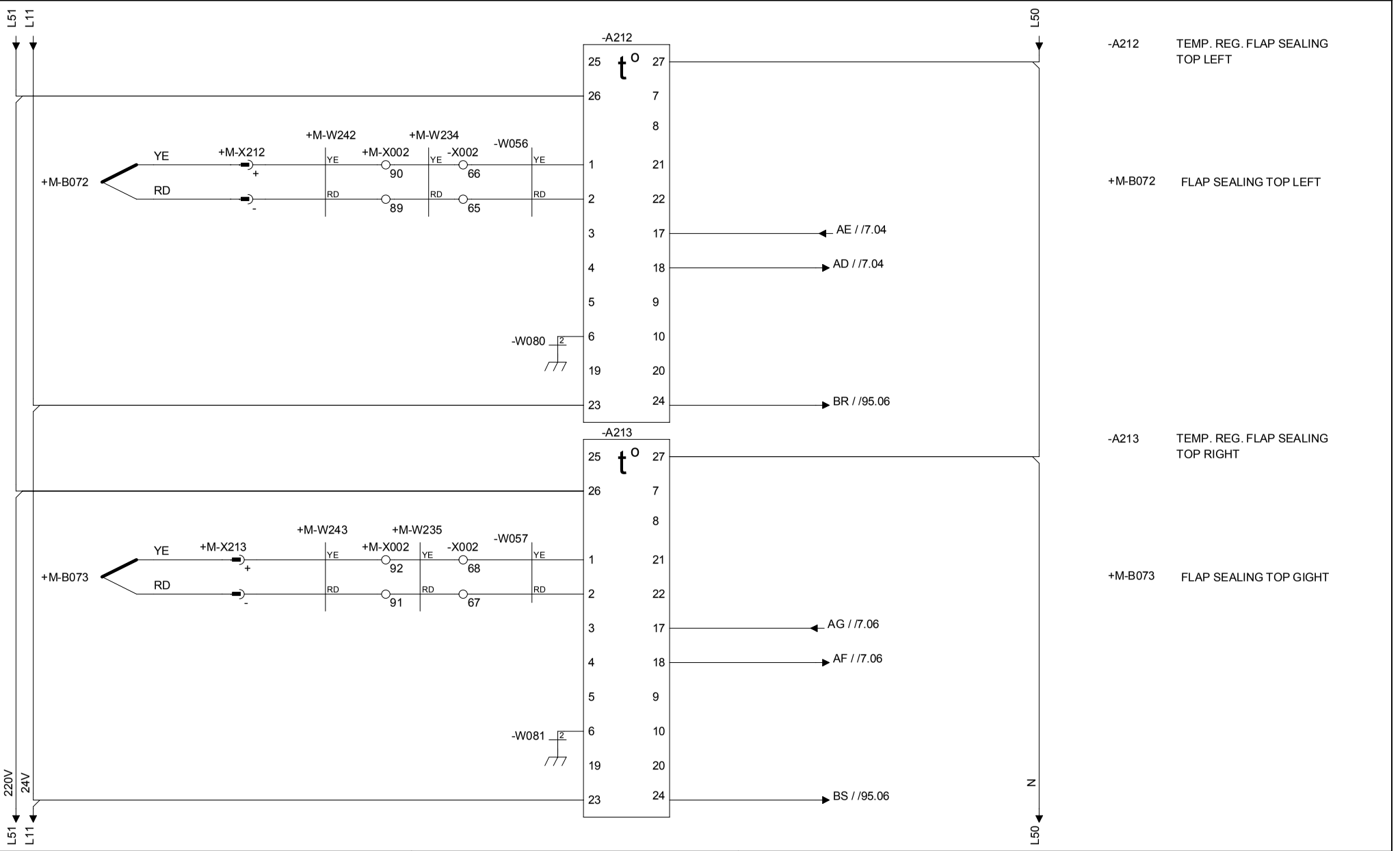

-A212 TEMP. REG. FLAP SEALING TOP LEFT

+M-B072 FLAP SEALING TOP LEFT

-A213 TEMP. REG. FLAP SEALING TOP RIGHT

+M-B073 FLAP SEALING TOP GIGHT

Drawing remarks	Tetra Pak	Designer QUE/AIR	Date 11/06/2002	Machine TBA/19 020V
		ECM No 119151	Denomination CIRCUIT DIAGRAM	Page Type REGULATORS
	Company Tetra Pak Carton Ambient SpA	Document No. 44954-0003	Doc. type ELD	Version AB / Page 36

RELEASED

This drawing must not without the consent of Tetra Pak be copied, transmitted or disclosed to any third party.

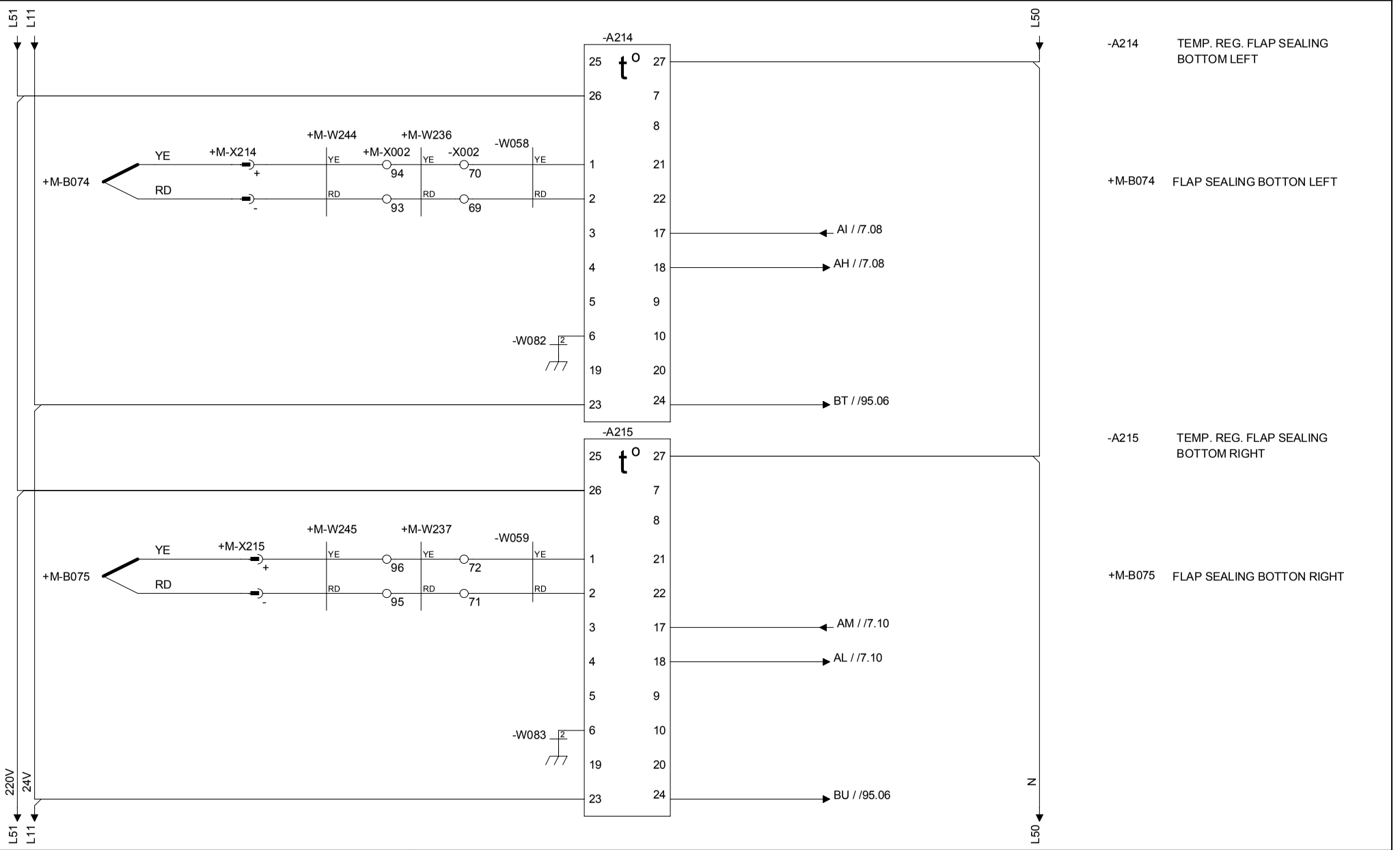

	Tetra Pak	Designer QUE/AIR	Date 11/06/2002	Machine TBA/19 020V			
		ECM No 119151	Denomination CIRCUIT DIAGRAM	Page Type REGULATORS			
Drawing remarks	Company Tetra Pak Carton Ambient SpA		Document No. 44954-0003	Doc. type ELD	Version AB	Page 37	

RELEASED

This drawing must not without the consent of Tetra Pak be copied, transmitted or disclosed to any third party.

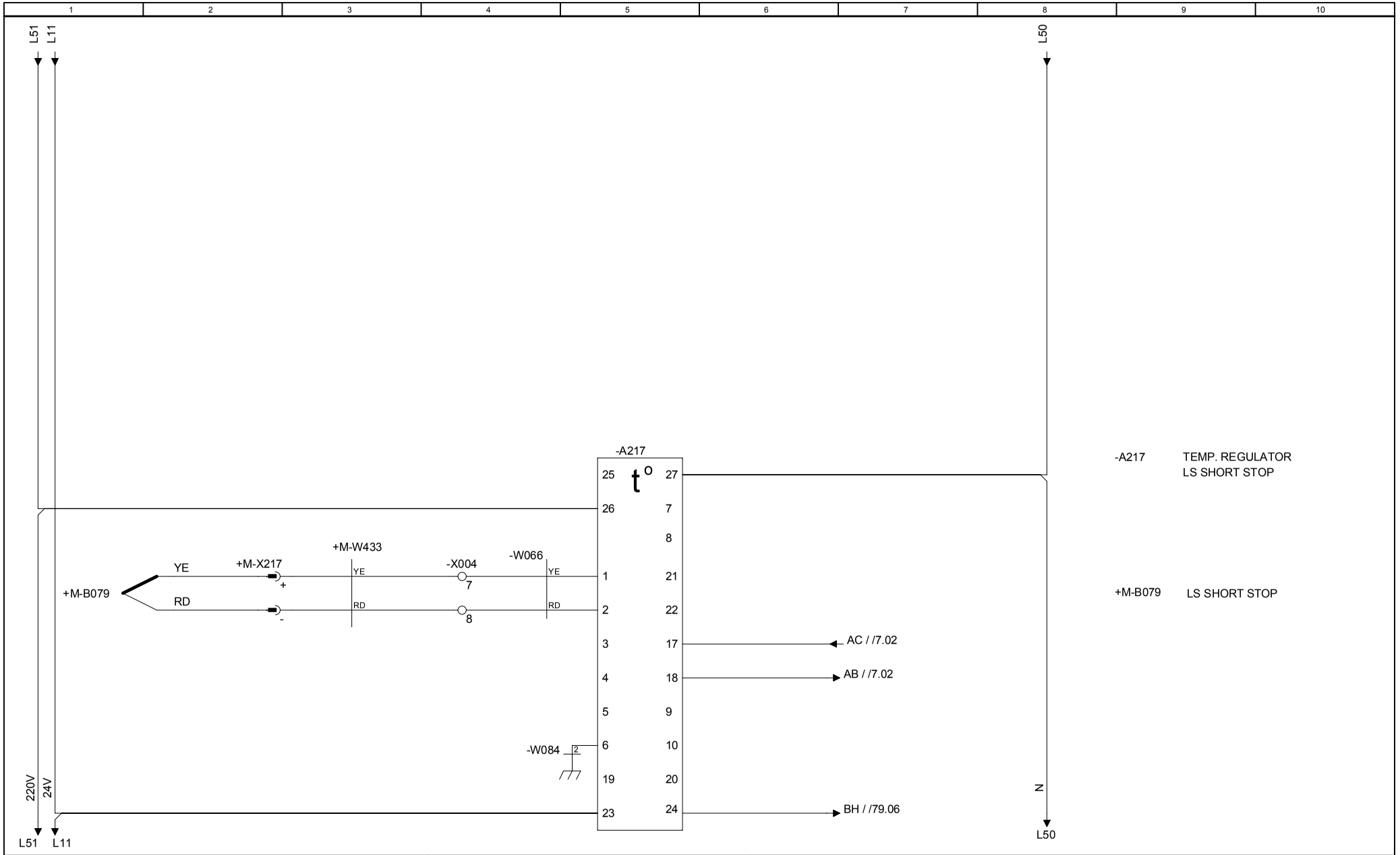

	Tetra Pak	Designer QUE/AIR	Date 11/06/2002	Machine TBA/19 020V	
		ECM No 119151	Denomination CIRCUIT DIAGRAM	Page Type REGULATORS	
Drawing remarks	Company Tetra Pak Carton Ambient SpA		Document No. 44954-0003	Doc. type ELD	Version AB	Page 38

RELEASED

This drawing must not without the consent of Tetra Pak be copied, transmitted or disclosed to any third party.

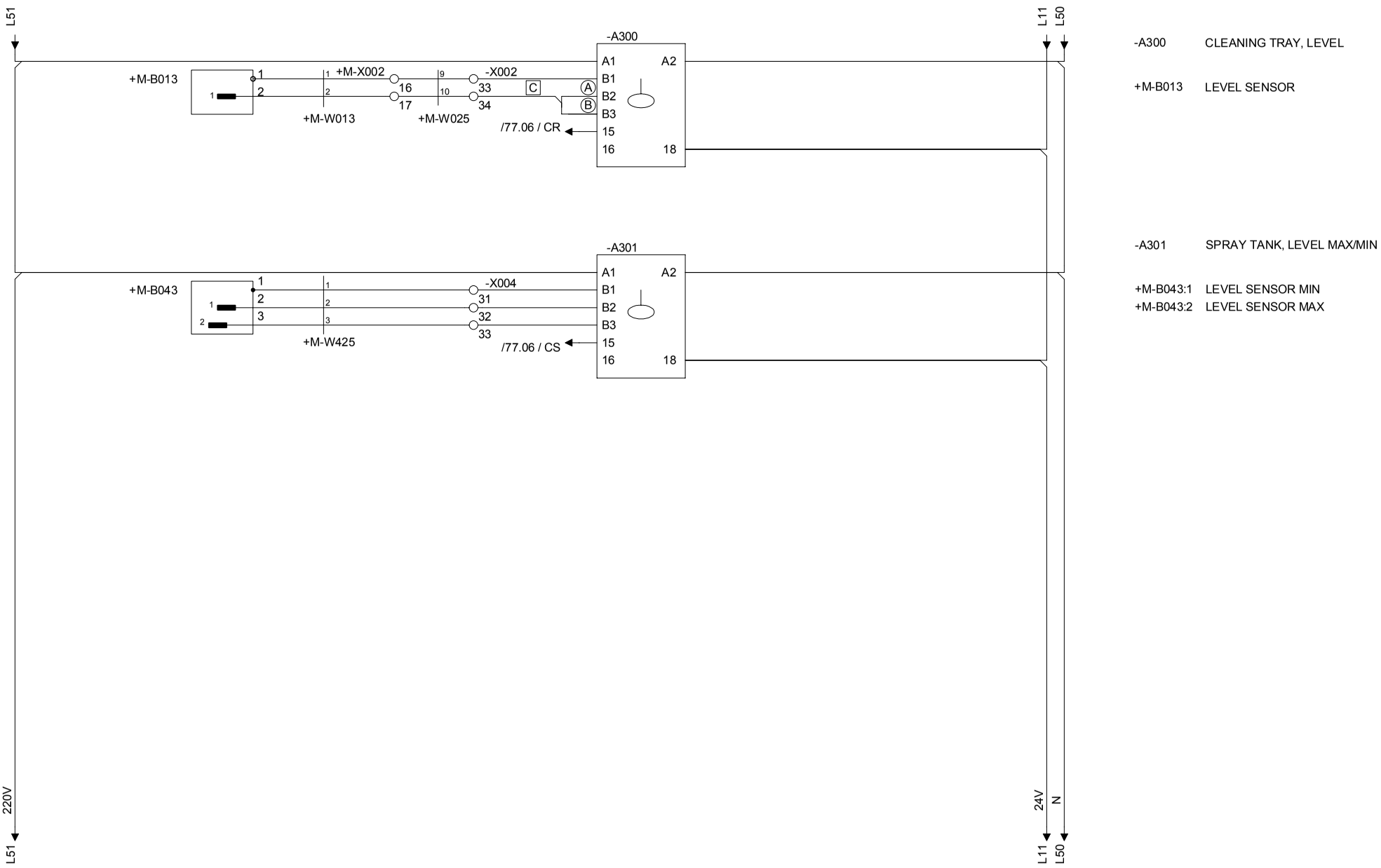

-A300 CLEANING TRAY, LEVEL

+M-B013 LEVEL SENSOR

-A301 SPRAY TANK, LEVEL MAX/MIN

+M-B043:1 LEVEL SENSOR MIN

+M-B043:2 LEVEL SENSOR MAX

Drawing remarks	Tetra Pak	Designer QUE/AIR	Date 11/06/2002	Machine TBA/19 020V			
		ECM No 119151	Denomination CIRCUIT DIAGRAM	Page Type LEVEL MONITORS			
	Company Tetra Pak Carton Ambient SpA		Document No. 44954-0003	Doc. type ELD	Version AB	Page 44	

RELEASED

This drawing must not without the consent of Tetra Pak be copied, transmitted or disclosed to any third party.

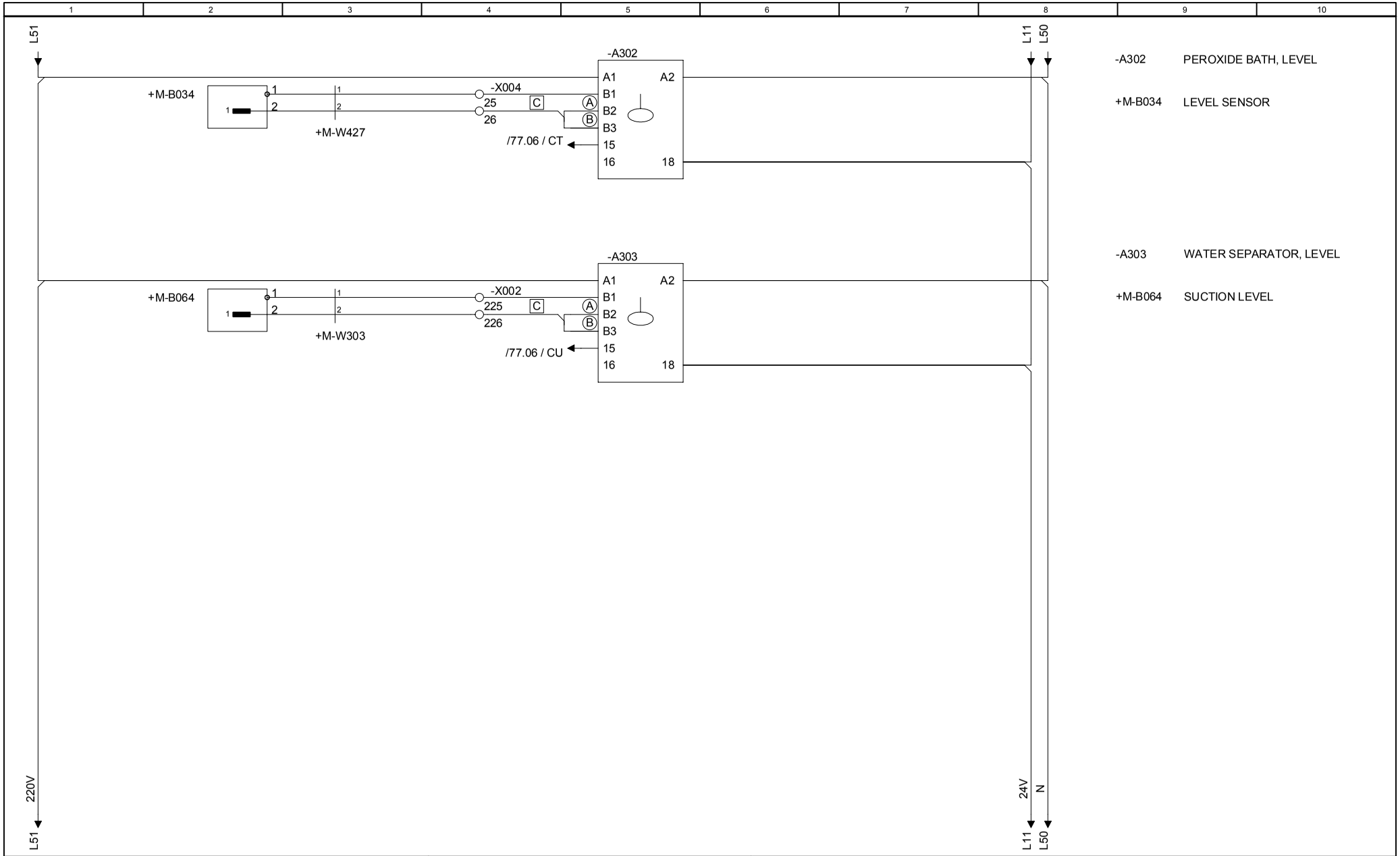

-A302 PEROXIDE BATH, LEVEL

+M-B034 LEVEL SENSOR

-A303 WATER SEPARATOR, LEVEL

+M-B064 SUCTION LEVEL

Drawing remarks	Tetra Pak	Designer QUE/AIR	Date 11/06/2002	Machine TBA/19 020V			
		ECM No 119151	Denomination CIRCUIT DIAGRAM	Page Type LEVEL MONITORS			
	Company Tetra Pak Carton Ambient SpA		Document No. 44954-0003	Doc. type ELD	Version AB	Page 45	

RELEASED

This drawing must not without the consent of Tetra Pak be copied, transmitted or disclosed to any third party.

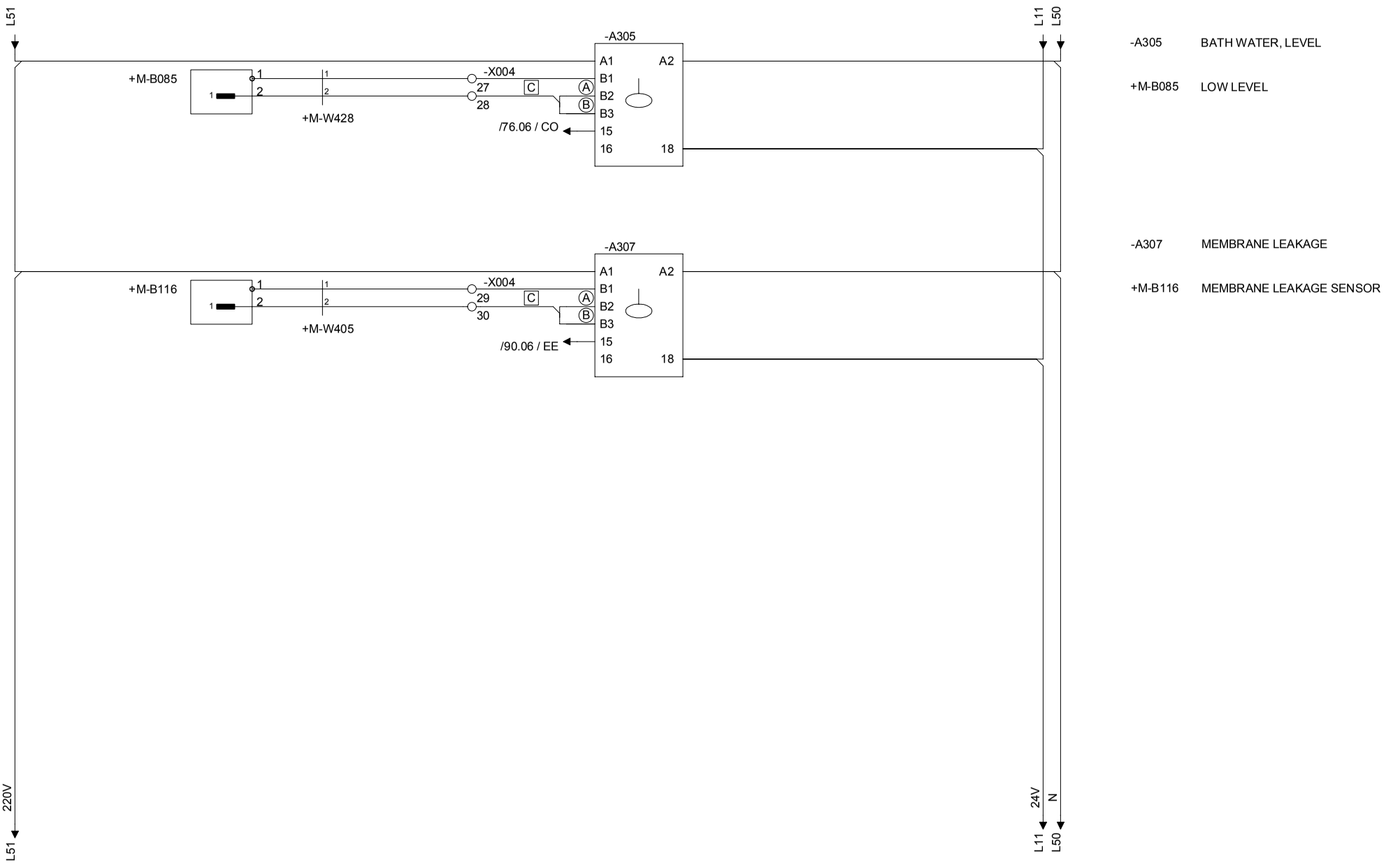

-A305 BATH WATER, LEVEL

+M-B085 LOW LEVEL

-A307 MEMBRANE LEAKAGE

+M-B116 MEMBRANE LEAKAGE SENSOR

Drawing remarks	Tetra Pak	Designer QUE/AIR	Date 11/06/2002	Machine TBA/19 020V			
		ECM No 119151	Denomination CIRCUIT DIAGRAM	Page Type LEVEL MONITORS			
	Company Tetra Pak Carton Ambient SpA		Document No. 44954-0003	Doc. type ELD	Version AB	Page 46	

RELEASED

This drawing must not without the consent of Tetra Pak be copied, transmitted or disclosed to any third party.

-A310:09	STERILIZATION	-A310 FRONT PANEL LED:01	FLASHES = NORM. OR PREF. START / ON = PRODUCTION
-A310:10	PRODUCTION	-A310 FRONT PANEL LED:02	ON = CLEANING
-A310:11	CLEANING	-A310 FRONT PANEL LED:03	ON = STERILISATION
-A310:12	PREFILLING	-A310 FRONT PANEL LED:04	FLASHES = OVERFILL. / ON = LEVEL IS 83%
-A310:13	FORCE DOWNLOAD	-A310 FRONT PANEL LED:05	ON = LEVEL IS 66%
-A310:14	COMM. SYSTEM: ENABLE	-A310 FRONT PANEL LED:06	ON = LEVEL IS 50%
-A310:15	COMM. SYSTEM: CLOCK	-A310 FRONT PANEL LED:07	ON = LEVEL IS 33%
-A310:16	COMM. SYSTEM: DATA	-A310 FRONT PANEL LED:08	FLASHES = LOW LEVEL / ON = LEVEL IS 10%

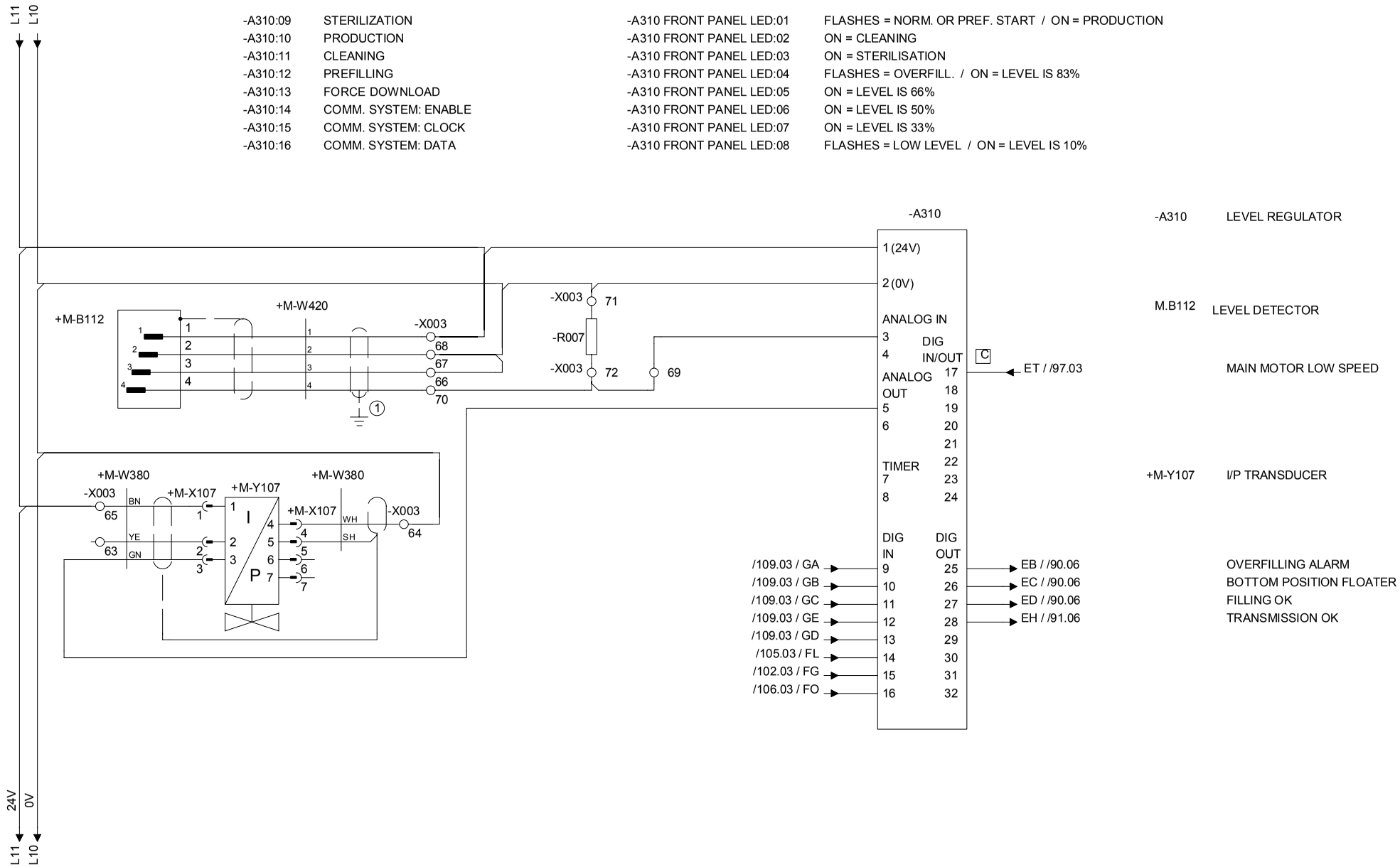

-A310 LEVEL REGULATOR

M.B112 LEVEL DETECTOR

MAIN MOTOR LOW SPEED

+M-Y107 I/P TRANSDUCER

OVERFILLING ALARM

BOTTOM POSITION FLOATER

FILLING OK

TRANSMISSION OK

① SHIELD CONNECTED TO THE RACK BY CABLE CLAMP.

Drawing remarks

Tetra Pak

Designer	QUE/AIR	Date	11/06/2002	Machine	TBA/19 020V
ECM No	119151	Denomination	CIRCUIT DIAGRAM	Page Type	FILLING CONTROL SYSTEM
Company	Tetra Pak Carton Ambient SpA	Document No.	44954-0003	Doc. type	ELD
				Version	AB
				Page	47

RELEASED

This drawing must not without the consent of Tetra Pak be copied, transmitted or disclosed to any third party.

-A400:21	DESIGN ENABLE	-A400 FRONT PANEL LED:01	REGISTER MARK DETECTION
-A400:22	VOLUME ENABLE	-A400 FRONT PANEL LED:02	DESIGN OK IN PRODUCTION
-A400:23	VOLUME CLOCK	-A400 FRONT PANEL LED:03	RH/LH STEPPER MOTOR PULSE
-A400:24	VOLUME DATA	-A400 FRONT PANEL LED:04	RH/LH MOTOR DIREC. ON = CW / OFF = CCW.
-A400:25	RIGHT STEP PULSE	-A400 FRONT PANEL LED:05	CYLINDER POSITION 19-25
-A400:26	LEFT STEP PULSE	-A400 FRONT PANEL LED:06	CYLINDER POSITION 12-18
-A400:27	DIRECTION	-A400 FRONT PANEL LED:07	CYLINDER POSITION 6-11
-A400:28	MDCS ALARM	-A400 FRONT PANEL LED:08	CYLINDER POSITION 0-5
-A400:30	REQU. VOLUMES VALUES		
-A400:31	PULSE PHOTOCELL DESIGN		
-A400:32	DESIGN OK		

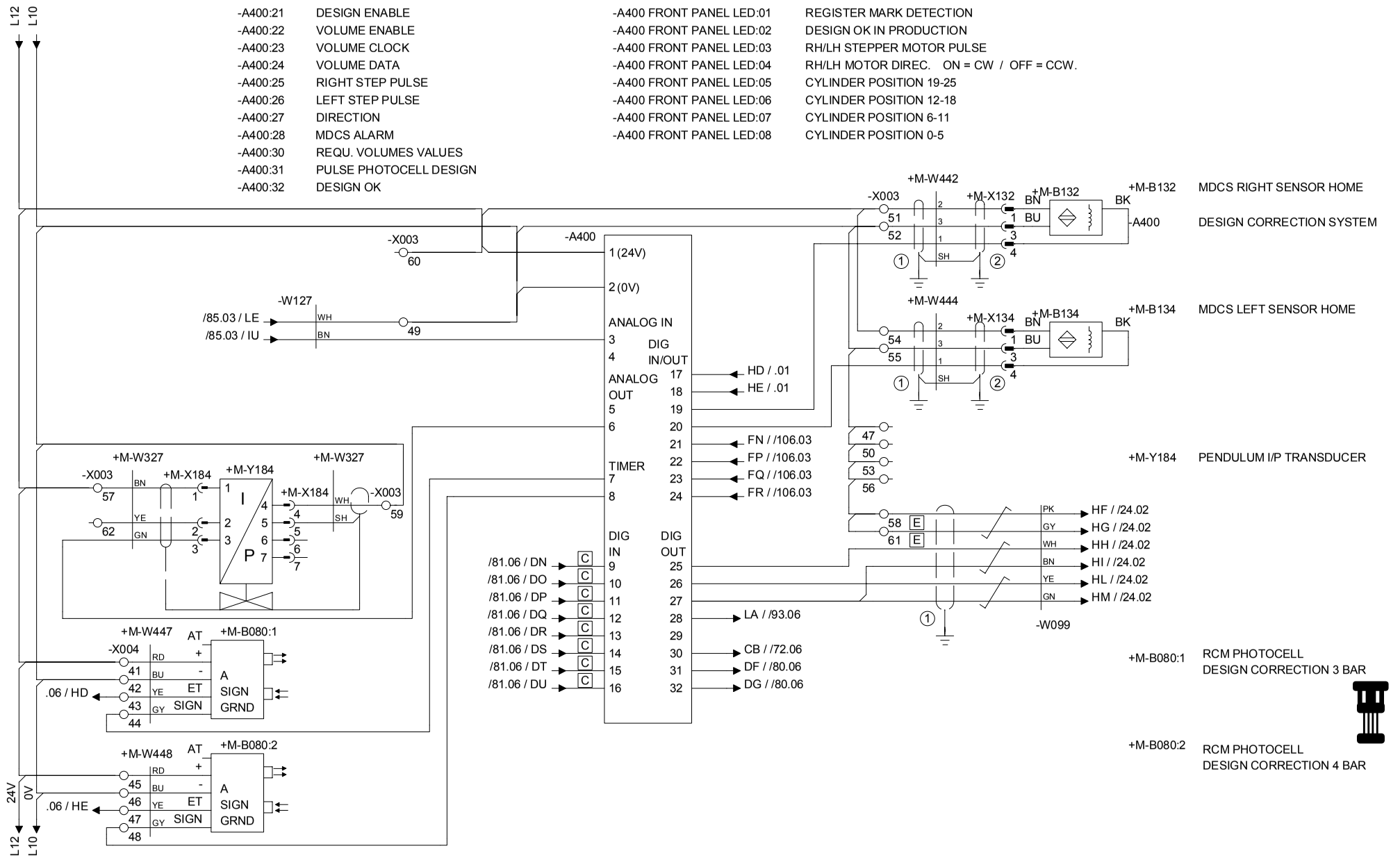

① SHIELD MUST BE CONN. TO THE RACK BY CLAMP.

② SHIELD MUST BE CONN. TO THE PLATE BY CLAMP.

Drawing remarks

Tetra Pak

Designer	QUE/AIR	Date	11/06/2002	Machine	TBA/19 020V
ECM No	119151	Denomination	CIRCUIT DIAGRAM	Page Type	PRINTED DESIGN CORRECTION
Company	Tetra Pak Carton Ambient SpA	Document No.	44954-0003	Doc. type	ELD
				Version	AB
				Page	48

RELEASED

This drawing must not without the consent of Tetra Pak
be copied, transmitted or disclosed to any third party.

ASU

A511 FRONT PANEL LED:01 REGISTER MARK PULSE 1
A511 FRONT PANEL LED:04 3 BAR PHOTOCELL
A511 FRONT PANEL LED:05 3 BAR PHOTOCELL

L10 L11 L12

-A511

1 (24V)
2 (0V)
ANALOG IN
3 DIG
4 IN/OUT
ANALOG 17
OUT 18
5 19
6 20
21
22
TIMER
7 23
8 24
DIG IN DIG OUT
/14.06 / HQ → 9 25
10 26
11 27 → HZ / /123.06
12 28
13 29
14 30
15 31
16 32

0V 24V 24V
L10 L11 L12

-X015
14
15
+M-W759

/116.07 / IA → +M-X060
27
29
30
+M-W786

/122.03 / BY ← BN
BU
GY
BK

+M-X156 :1 AT
2 +
1 -
3 ET
5 SIGN
4

+M-B156:1
A
SIGN
GRND

/122.02 / IB → 32
/122.02 / GF ← 31
16
17
33
34
+M-W759
+M-W787

+M-X156 :2 AT
2 +
1 -
3 ET
5 SIGN
4

+M-B156:2
A
SIGN
GRND

A511 DESIGN CORRECTION
SYSTEM ASU

M.B156:1 RCM PHOTOCELL
3 BARS DESIGN CORRECTION

M.B156:2 RCM PHOTOCELL
3 BARS DESIGN CORRECTION

Drawing remarks	Tetra Pak	Designer QUE/AIR	Date 11/06/2002	Machine TBA/19 020V	
		ECM No 119151	Denomination CIRCUIT DIAGRAM	Page Type DESIGN CORRECTION ASU	
	Company Tetra Pak Carton Ambient SpA		Document No. 44954-0003	Doc. type ELD	Version AB	Page 49

RELEASED

This drawing must not without the consent of Tetra Pak be copied, transmitted or disclosed to any third party.

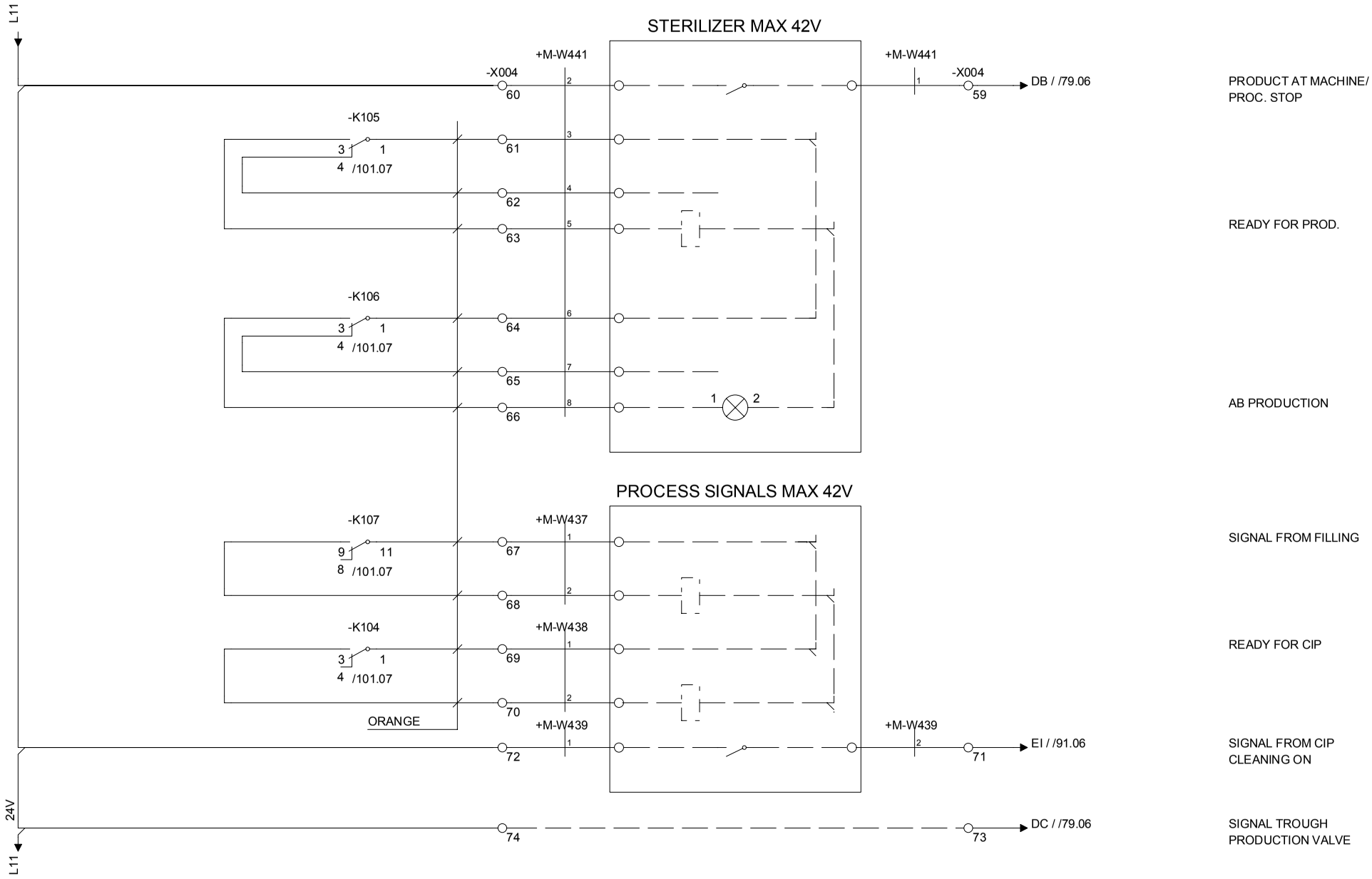

Drawing remarks	Tetra Pak	Designer QUE/AIR	Date 11/06/2002	Machine TBA/19 020V
		ECM No 119151	Denomination CIRCUIT DIAGRAM	Page Type STERILIZER
	Company Tetra Pak Carton Ambient SpA	Document No. 44954-0003	Doc. type ELD	Version AB / Page 57

RELEASED

This drawing must not without the consent of Tetra Pak be copied, transmitted or disclosed to any third party.

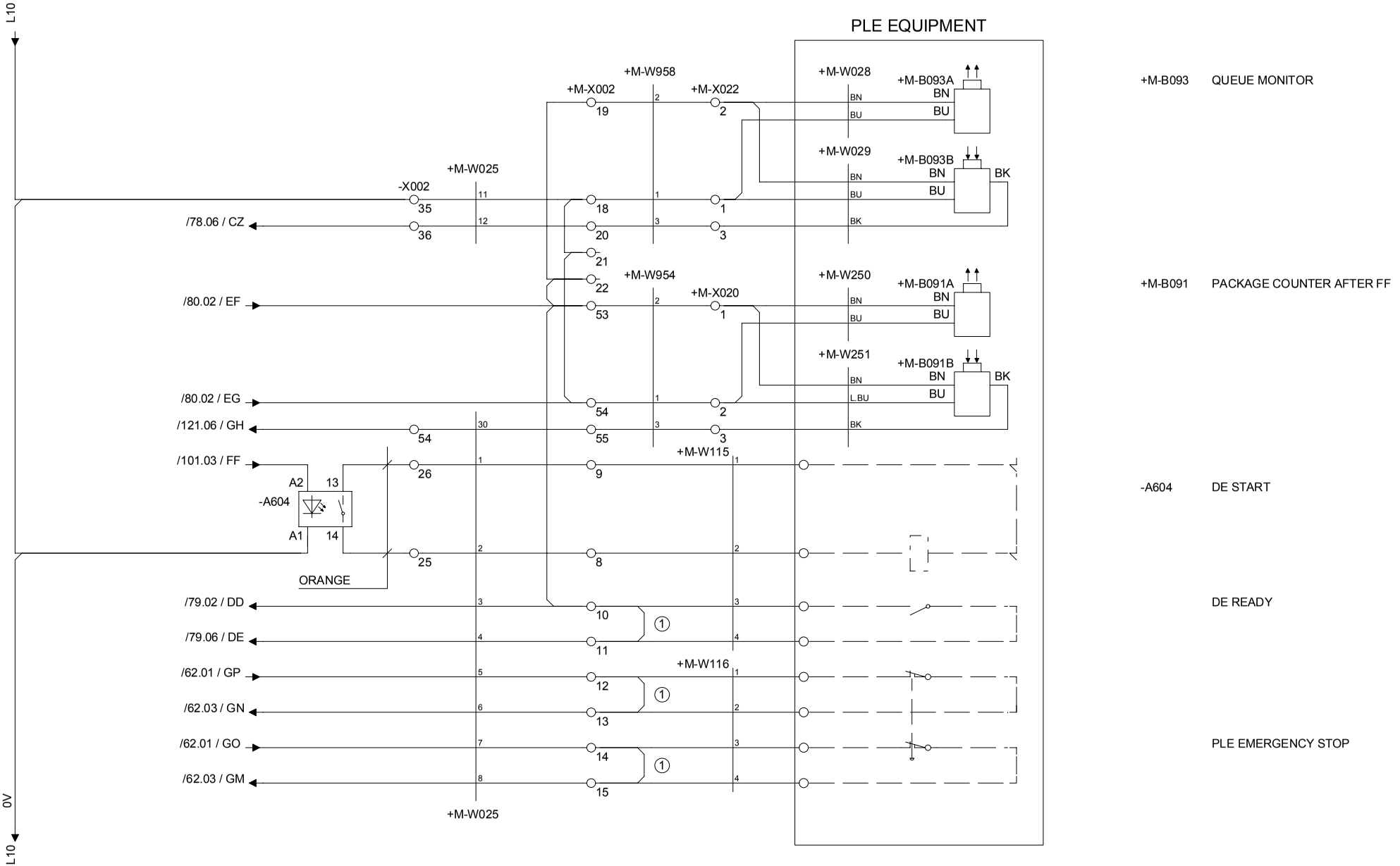

+M-B093 QUEUE MONITOR

+M-B091 PACKAGE COUNTER AFTER FF

-A604 DE START

DE READY

PLE EMERGENCY STOP

① REMOVE BRIDGE CONNECTION WHEN PLE-EQUIPMENT IS INSTALLED

Drawing remarks

Designer QUE/AIR	Date 11/06/2002	Machine TBA/19 020V					
ECM No 119151	Denomination CIRCUIT DIAGRAM	Page Type PLE					
Company Tetra Pak Carton Ambient SpA	Document No. 44954-0003	Doc. type ELD	Version AB	Page 58			

RELEASED

This drawing must not without the consent of Tetra Pak be copied, transmitted or disclosed to any third party.

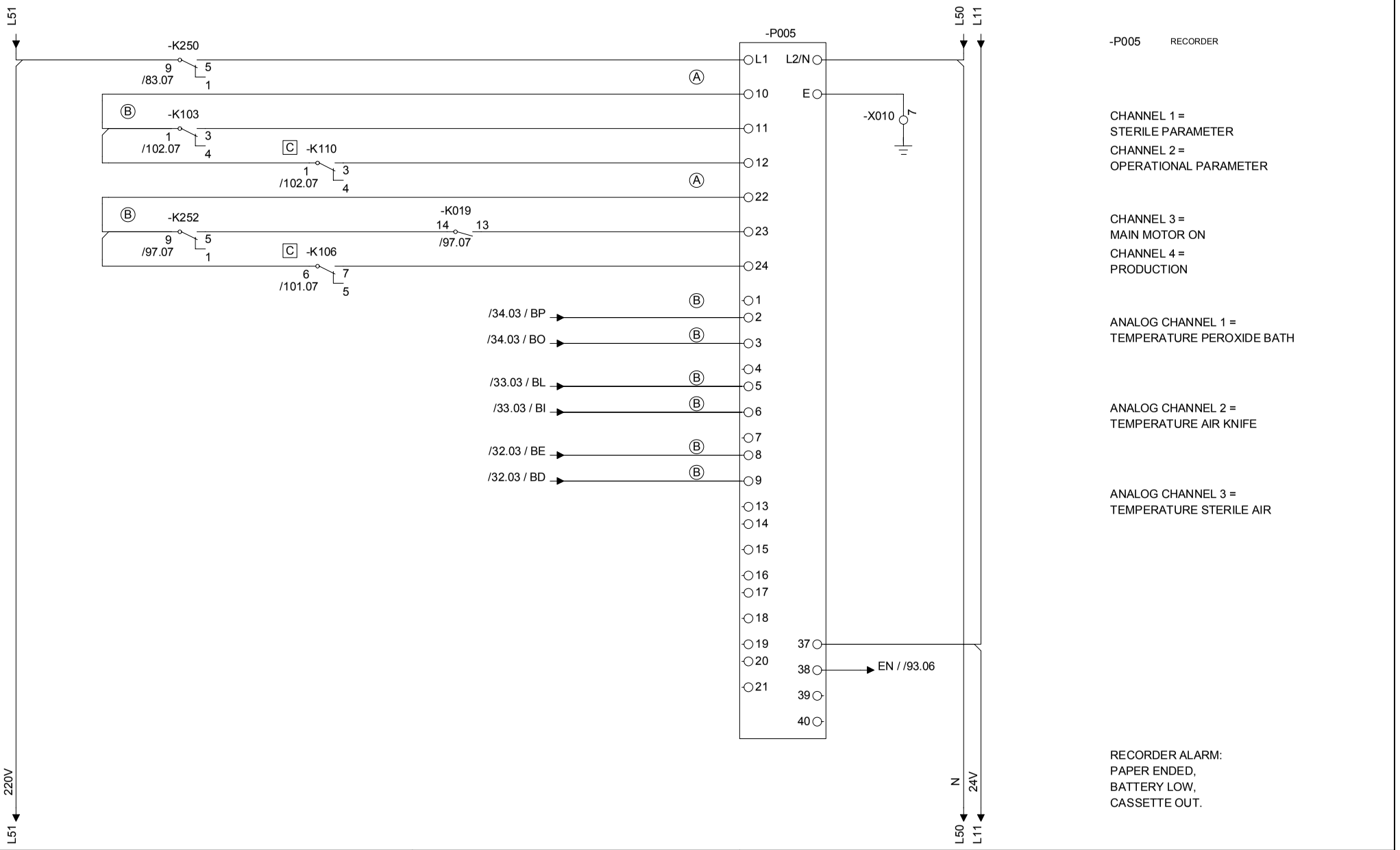

-P005 RECORDER

CHANNEL 1 =
STERILE PARAMETER
CHANNEL 2 =
OPERATIONAL PARAMETER

CHANNEL 3 =
MAIN MOTOR ON
CHANNEL 4 =
PRODUCTION

ANALOG CHANNEL 1 =
TEMPERATURE PEROXIDE BATH

ANALOG CHANNEL 2 =
TEMPERATURE AIR KNIFE

ANALOG CHANNEL 3 =
TEMPERATURE STERILE AIR

RECORDER ALARM:
PAPER ENDED,
BATTERY LOW,
CASSETTE OUT.

Drawing remarks	Tetra Pak	Designer QUE/AIR	Date 11/06/2002	Machine TBA/19 020V
		ECM No 119151	Denomination CIRCUIT DIAGRAM	Page Type PROCESS RECORDER
	Company Tetra Pak Carton Ambient SpA	Document No. 44954-0003	Doc. type ELD	Version AB / Page 59

RELEASED

This drawing must not without the consent of Tetra Pak be copied, transmitted or disclosed to any third party.

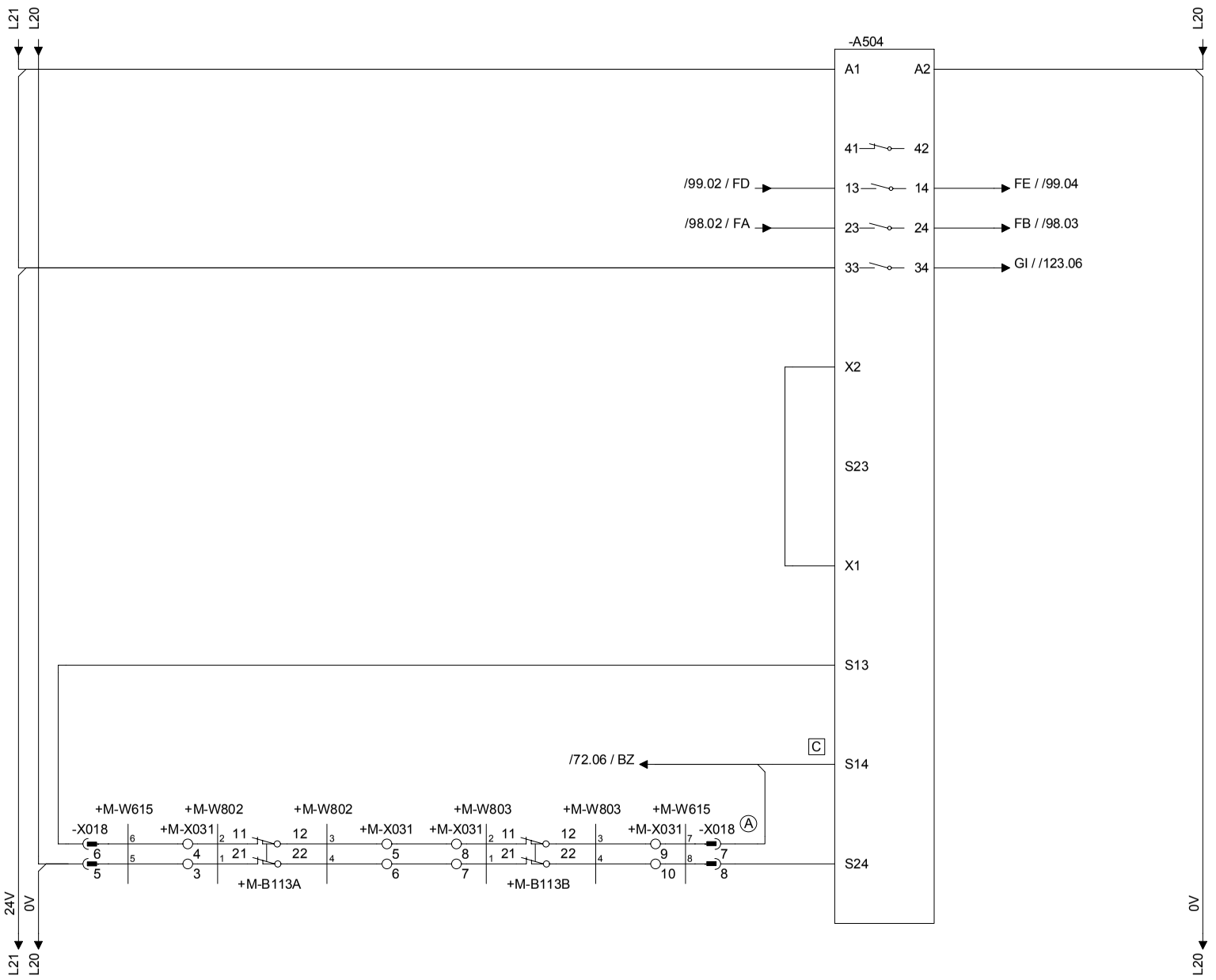

-A504 SA SAFETY STOP MODULE

SHUT-OFF STRIP APPLICATION

LS STRIP SPLICE

+M-B113A SPLICE UNIT, LEFT DOOR

+M-B113B SPLICE UNIT, RIGHT DOOR

Drawing remarks	Tetra Pak	Designer QUE/AIR	Date 11/06/2002	Machine TBA/19 020V			
		ECM No 119151	Denomination CIRCUIT DIAGRAM	Page Type SA VALVE SAFETY STOP FUNCTION			
	Company Tetra Pak Carton Ambient SpA		Document No. 44954-0003	Doc. type ELD	Version AB	Page 60	

RELEASED

This drawing must not without the consent of Tetra Pak be copied, transmitted or disclosed to any third party.

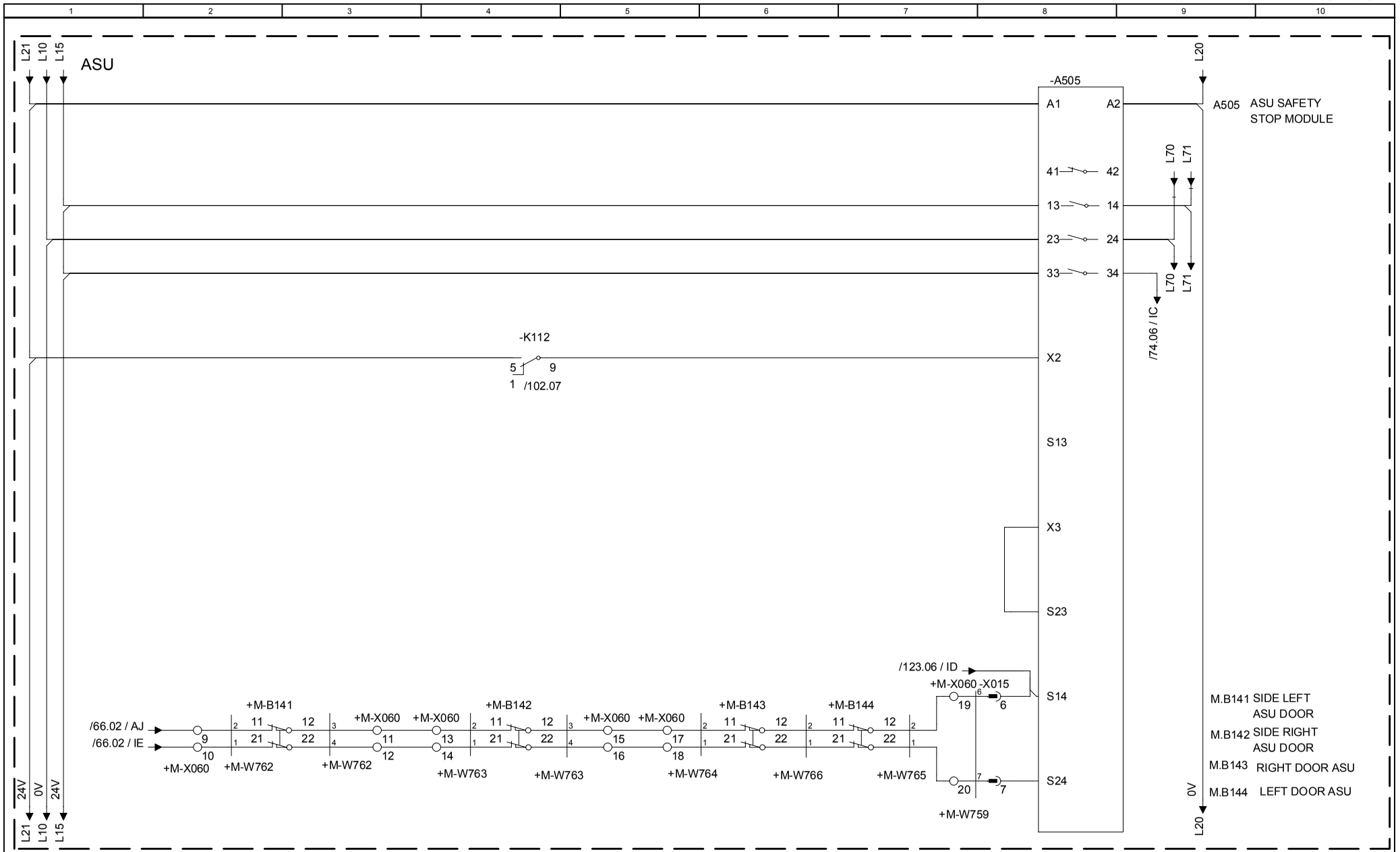

Drawing remarks	Tetra Pak	Designer QUE/AIR	Date 11/06/2002	Machine TBA/19 020V
		ECM No 119151	Denomination CIRCUIT DIAGRAM	Page Type ASU VALVE SAFETY STOP FUNCTION
	Company Tetra Pak Carton Ambient SpA	Document No. 44954-0003	Doc. type ELD	Version AB / Page 61

RELEASED

This drawing must not without the consent of Tetra Pak be copied, transmitted or disclosed to any third party.

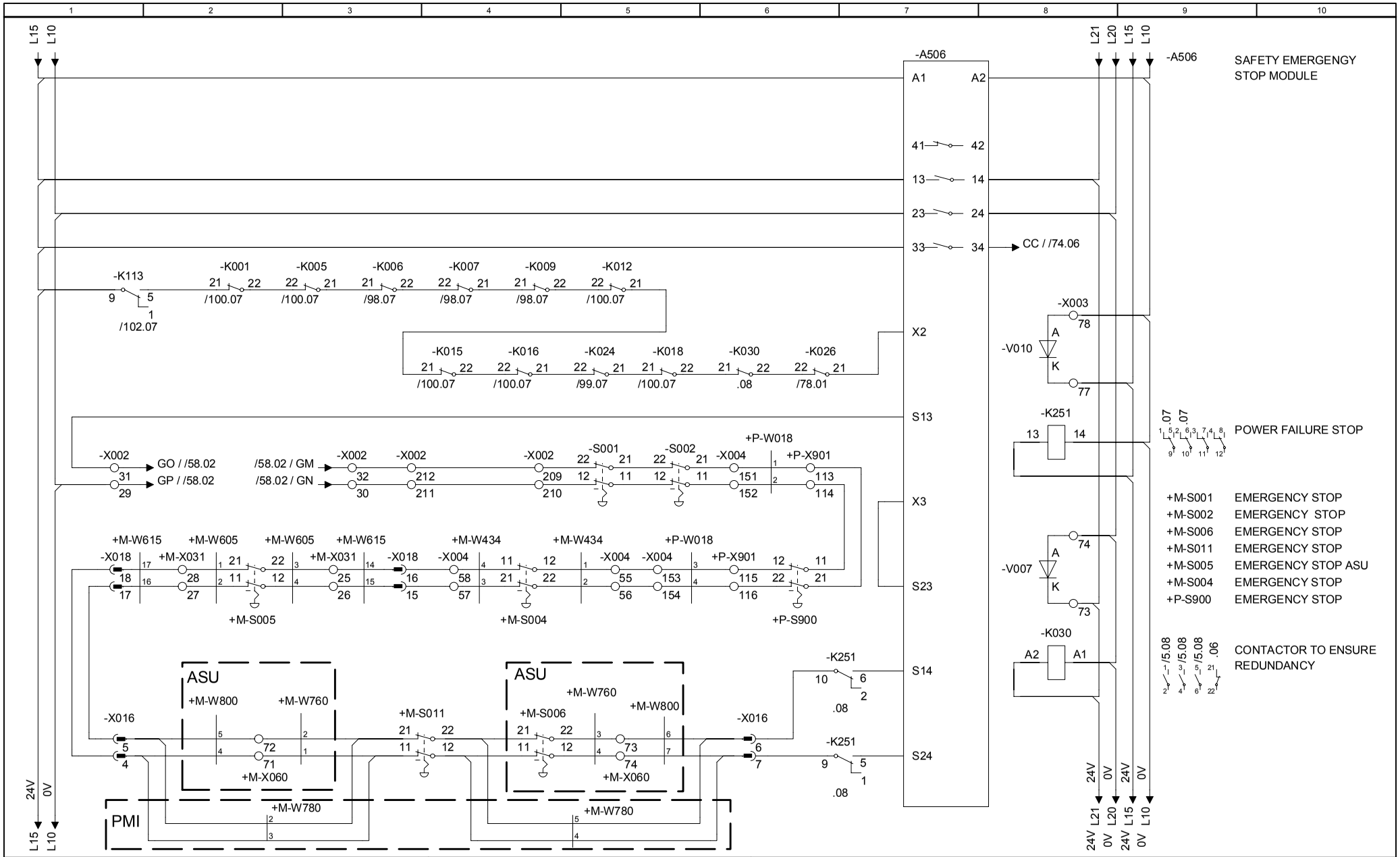

Drawing remarks	Tetra Pak	Designer QUE/AIR	Date 11/06/2002	Machine TBA/19 020V
		ECM No 119151	Denomination CIRCUIT DIAGRAM	Page Type EMERGENCY STOP FUNCTION
	Company Tetra Pak Carton Ambient SpA		Document No. 44954-0003	Doc. type ELD / Version AB / Page 62

RELEASED

This drawing must not without the consent of Tetra Pak be copied, transmitted or disclosed to any third party.

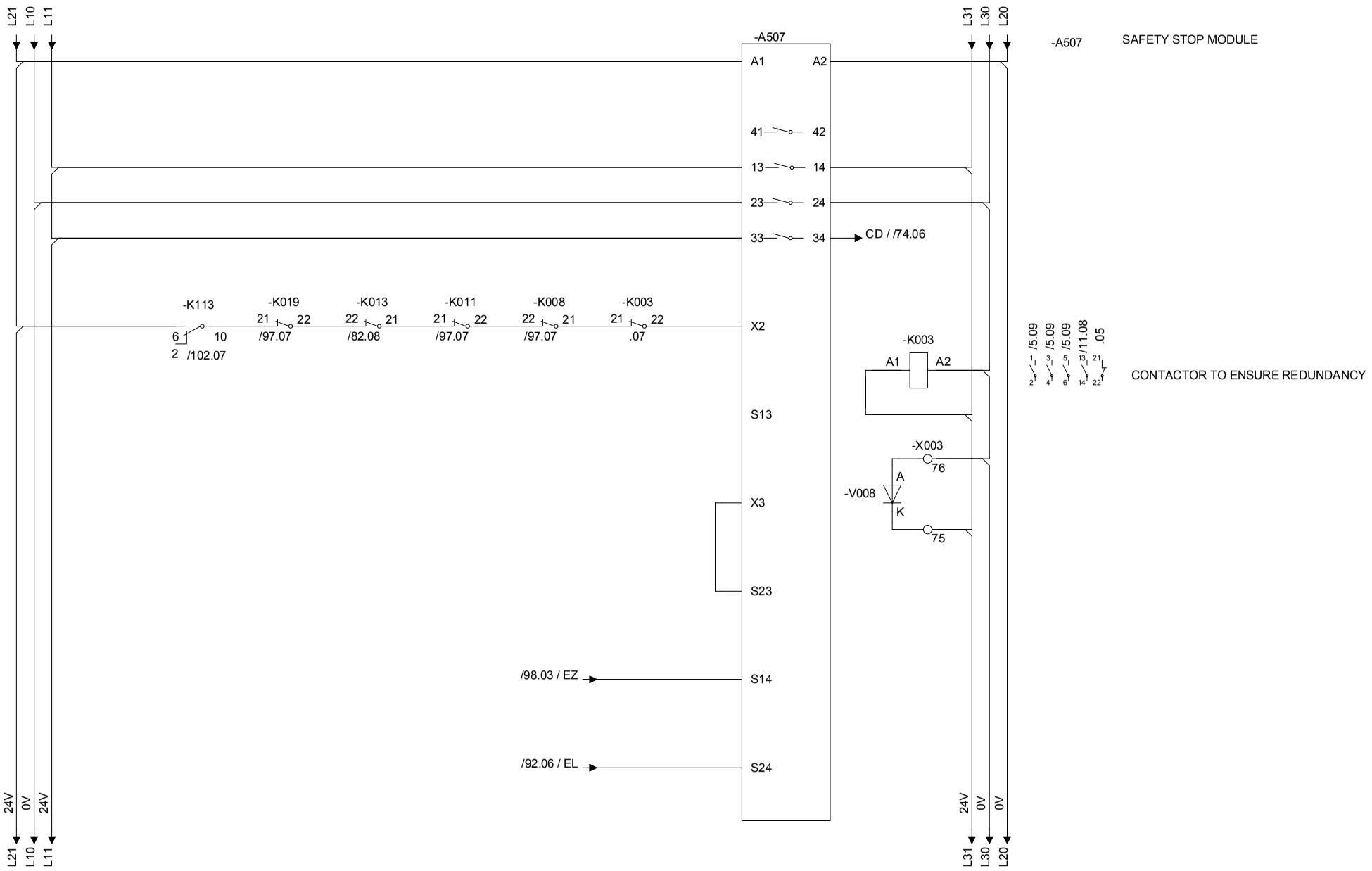

Drawing remarks	Tetra Pak	Designer QUE/AIR	Date 11/06/2002	Machine TBA/19 020V
		ECM No 119151	Denomination CIRCUIT DIAGRAM	Page Type FF, SS AND JAW SYS. STOP FUNCTION
	Company Tetra Pak Carton Ambient SpA		Document No. 44954-0003	Doc. type ELD / Version AB / Page 63

RELEASED

This drawing must not without the consent of Tetra Pak be copied, transmitted or disclosed to any third party.

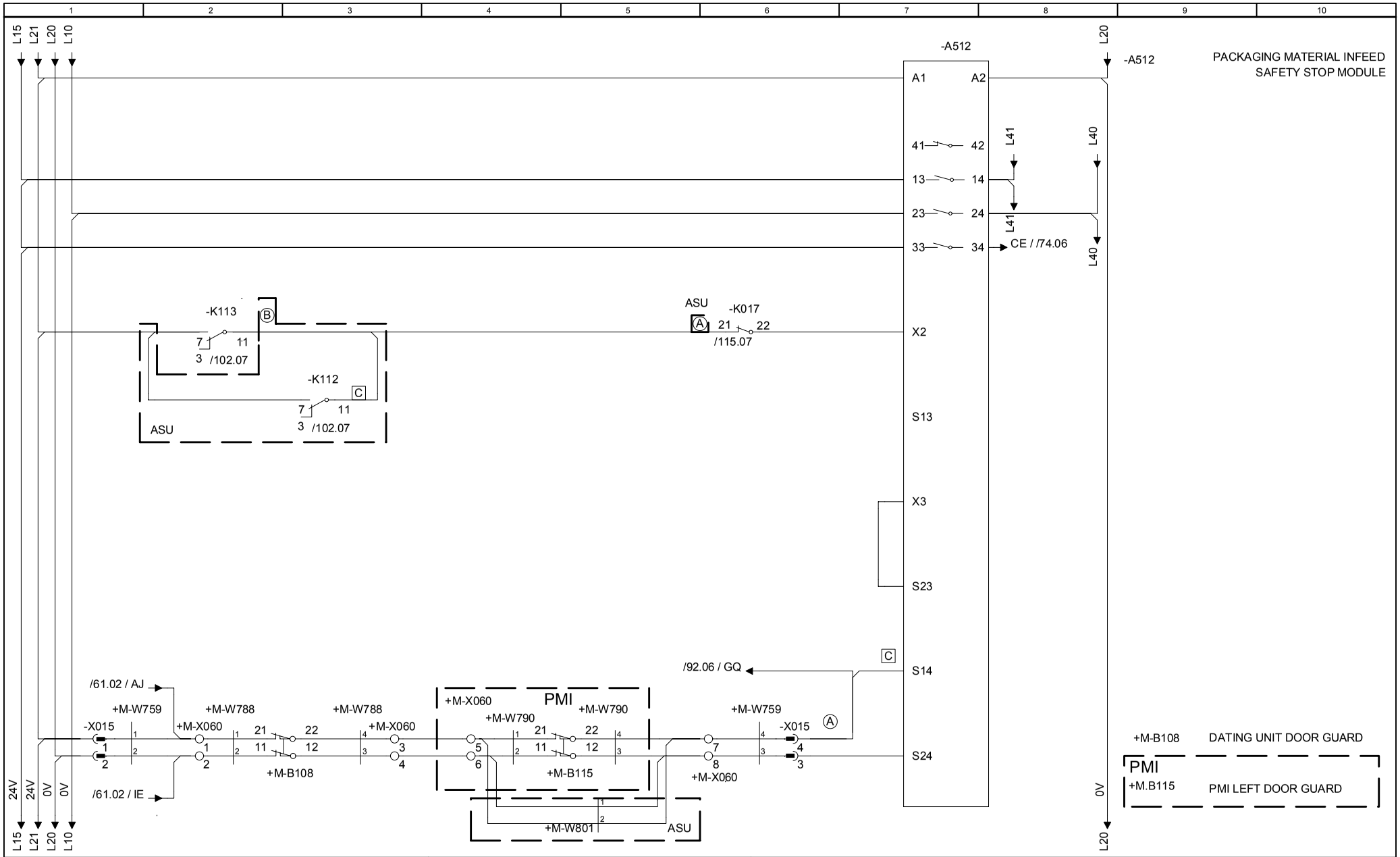

Drawing remarks	Tetra Pak	Designer QUE/AIR	Date 11/06/2002	Machine TBA/19 020V
		ECM No 119151	Denomination CIRCUIT DIAGRAM	Page Type ASU SAFETY STOP FUNCTION
	Company Tetra Pak Carton Ambient SpA	Document No. 44954-0003	Doc. type ELD	Version AB / Page 66

RELEASED

This drawing must not without the consent of Tetra Pak be copied, transmitted or disclosed to any third party.

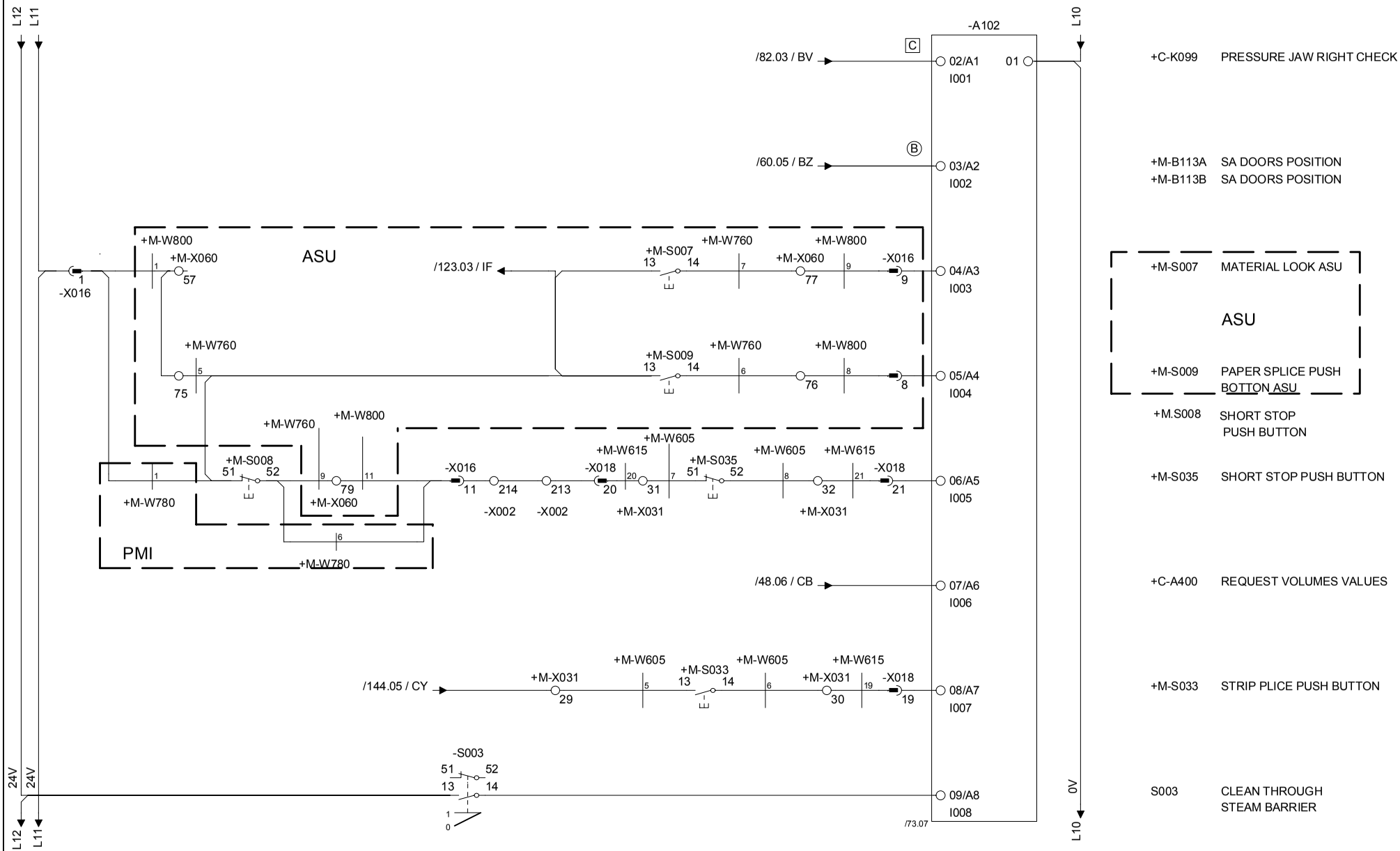

+C-K099 PRESSURE JAW RIGHT CHECK

+M-B113A SA DOORS POSITION
+M-B113B SA DOORS POSITION

+M-S007 MATERIAL LOOK ASU

ASU

+M-S009 PAPER SPLICE PUSH BOTTON ASU

+M.S008 SHORT STOP PUSH BUTTON

+M-S035 SHORT STOP PUSH BUTTON

+C-A400 REQUEST VOLUMES VALUES

+M-S033 STRIP PLICE PUSH BUTTON

S003 CLEAN THROUGH STEAM BARRIER

Drawing remarks	Tetra Pak	Designer QUE/AIR	Date 11/06/2002	Machine TBA/19 020V			
		ECM No 119151	Denomination CIRCUIT DIAGRAM	Page Type PLC-IN A102			
	Company Tetra Pak Carton Ambient SpA		Document No. 44954-0003	Doc. type ELD	Version AB	Page 72	

RELEASED

This drawing must not without the consent of Tetra Pak be copied, transmitted or disclosed to any third party.

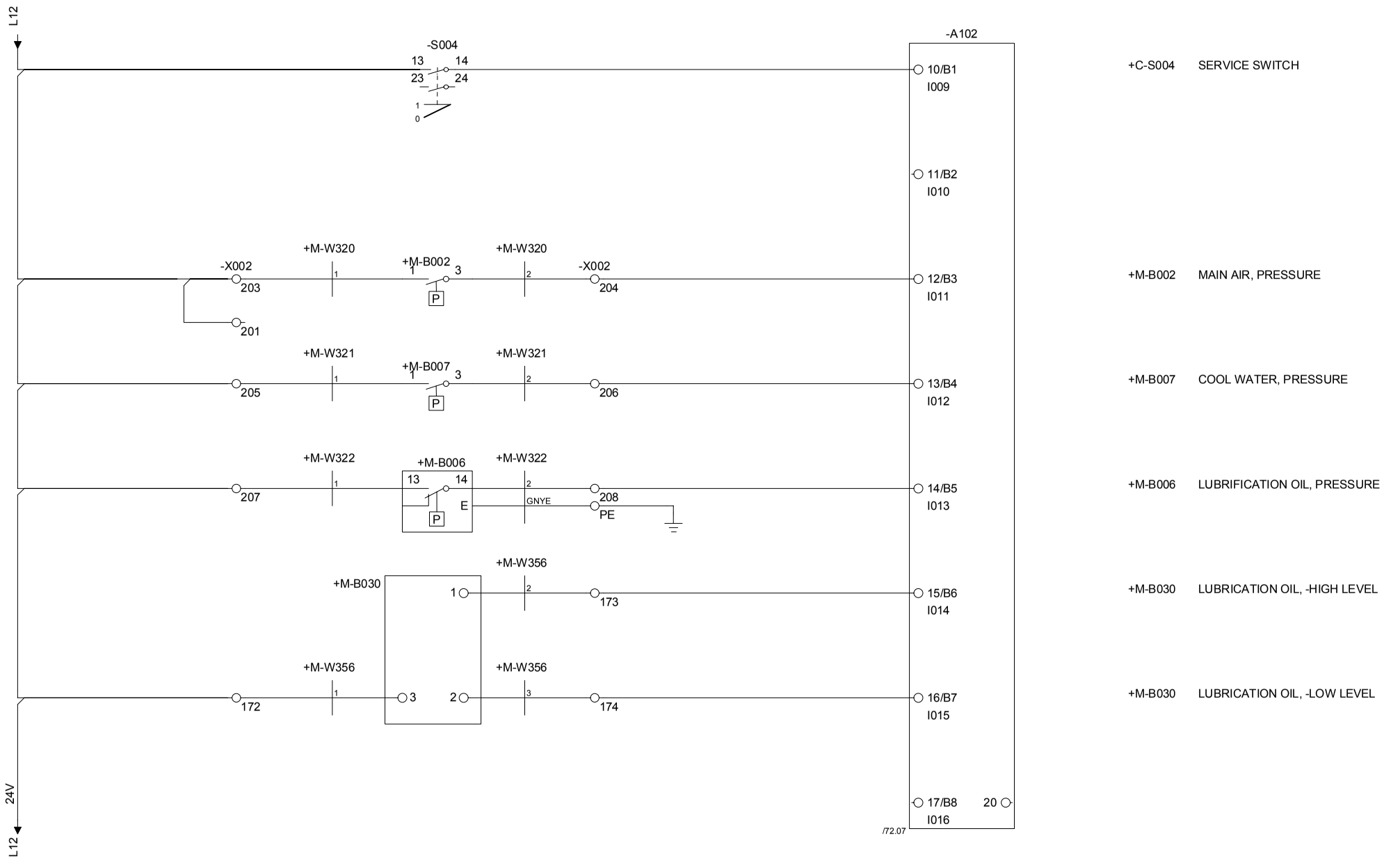

Drawing remarks	Tetra Pak	Designer QUE/AIR	Date 11/06/2002	Machine TBA/19 020V	
		ECM No 119151	Denomination CIRCUIT DIAGRAM	Page Type PLC-IN A102	
	Company Tetra Pak Carton Ambient SpA		Document No. 44954-0003	Doc. type ELD	Version AB	Page 73

RELEASED

This drawing must not without the consent of Tetra Pak be copied, transmitted or disclosed to any third party.

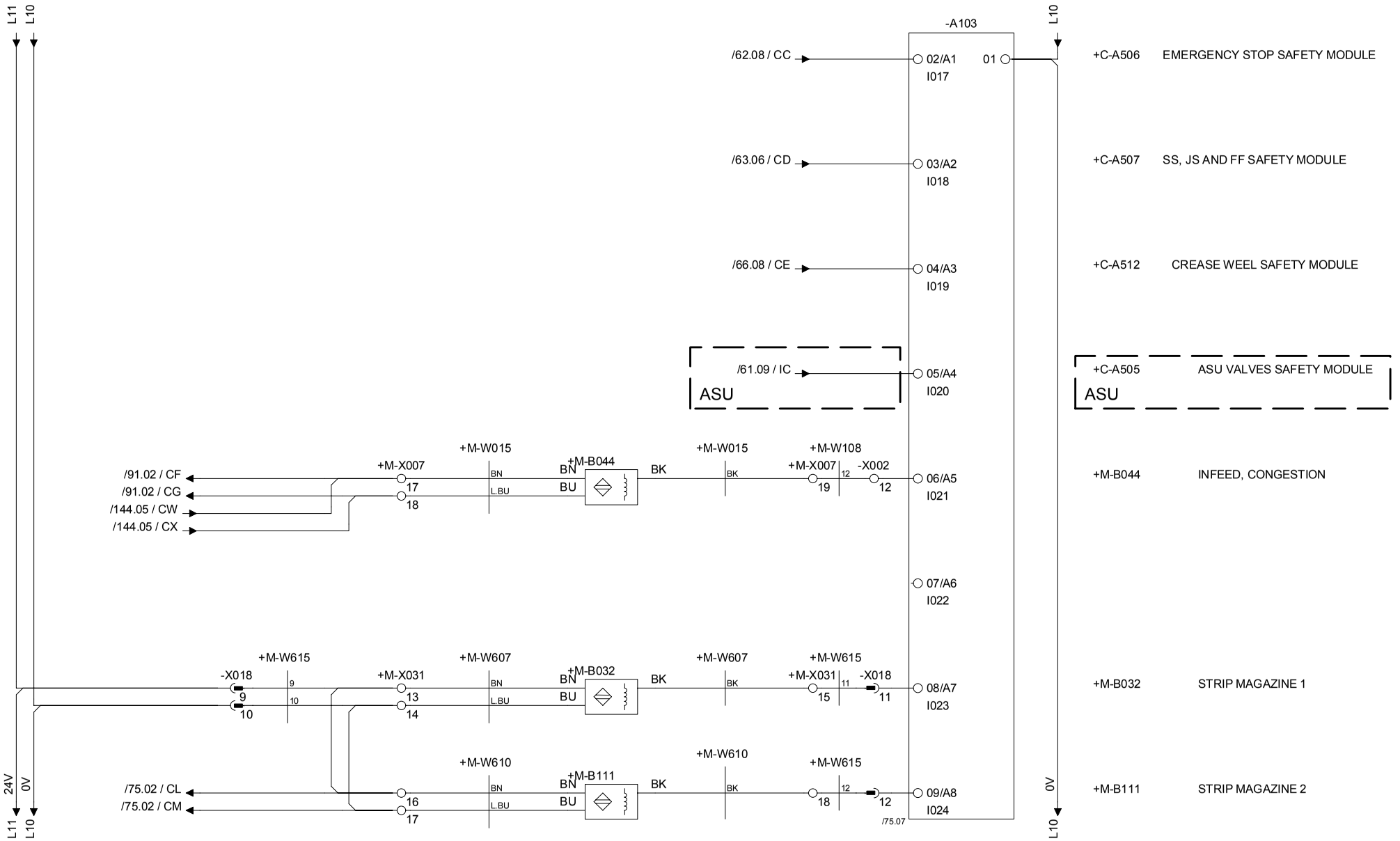

Drawing remarks	Tetra Pak	Designer QUE/AIR	Date 11/06/2002	Machine TBA/19 020V			
		ECM No 119151	Denomination CIRCUIT DIAGRAM	Page Type PLC-IN A103			
	Company Tetra Pak Carton Ambient SpA		Document No. 44954-0003	Doc. type ELD	Version AB	Page 74	

RELEASED

This drawing must not without the consent of Tetra Pak be copied, transmitted or disclosed to any third party.

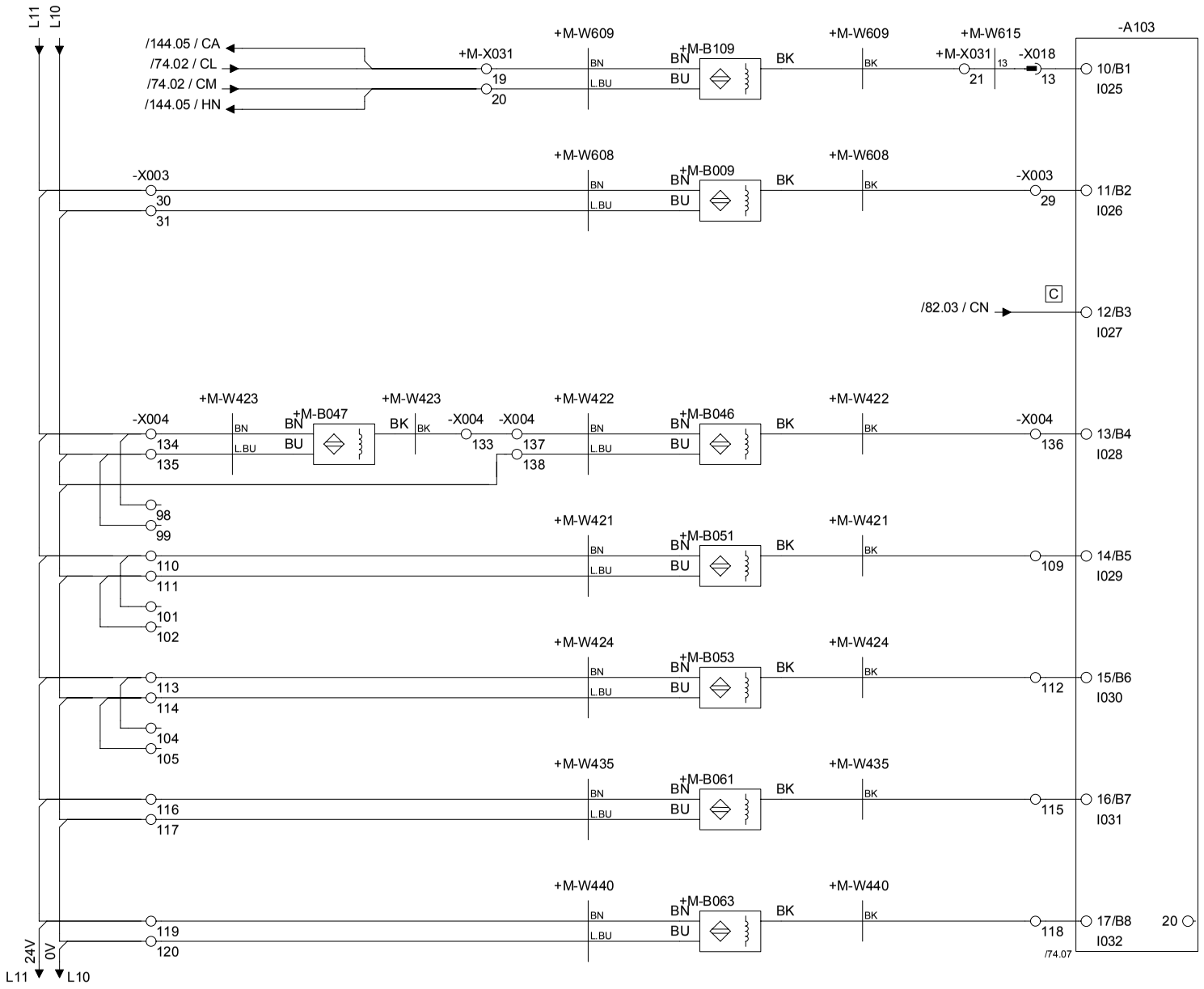

+M-B109	STRIP ROTATION GUARD
+M-B009	PAPER WEB
+C-K099	PRESSURE JAW LEFT CHECK
+M-B046	SQUEEZER ROLLER, POSITION
M.B047	AIR KNIFE, POSITION
+M-B051	PRODUCT PIPE, POSITION
+M-B053	STERILE AIR (B) VALVE, POSITION
+M-B061	CLEANING CUP, POSITION
+M-B063	CLEANING PIPE, POSITION

Drawing remarks

Tetra Pak

Designer QUE/AIR	Date 11/06/2002	Machine TBA/19 020V	
ECM No 119151	Denomination CIRCUIT DIAGRAM	Page Type PLC-IN A103	
Company Tetra Pak Carton Ambient SpA	Document No. 44954-0003	Doc. type ELD	Version AB	Page 75

RELEASED

This drawing must not without the consent of Tetra Pak be copied, transmitted or disclosed to any third party.

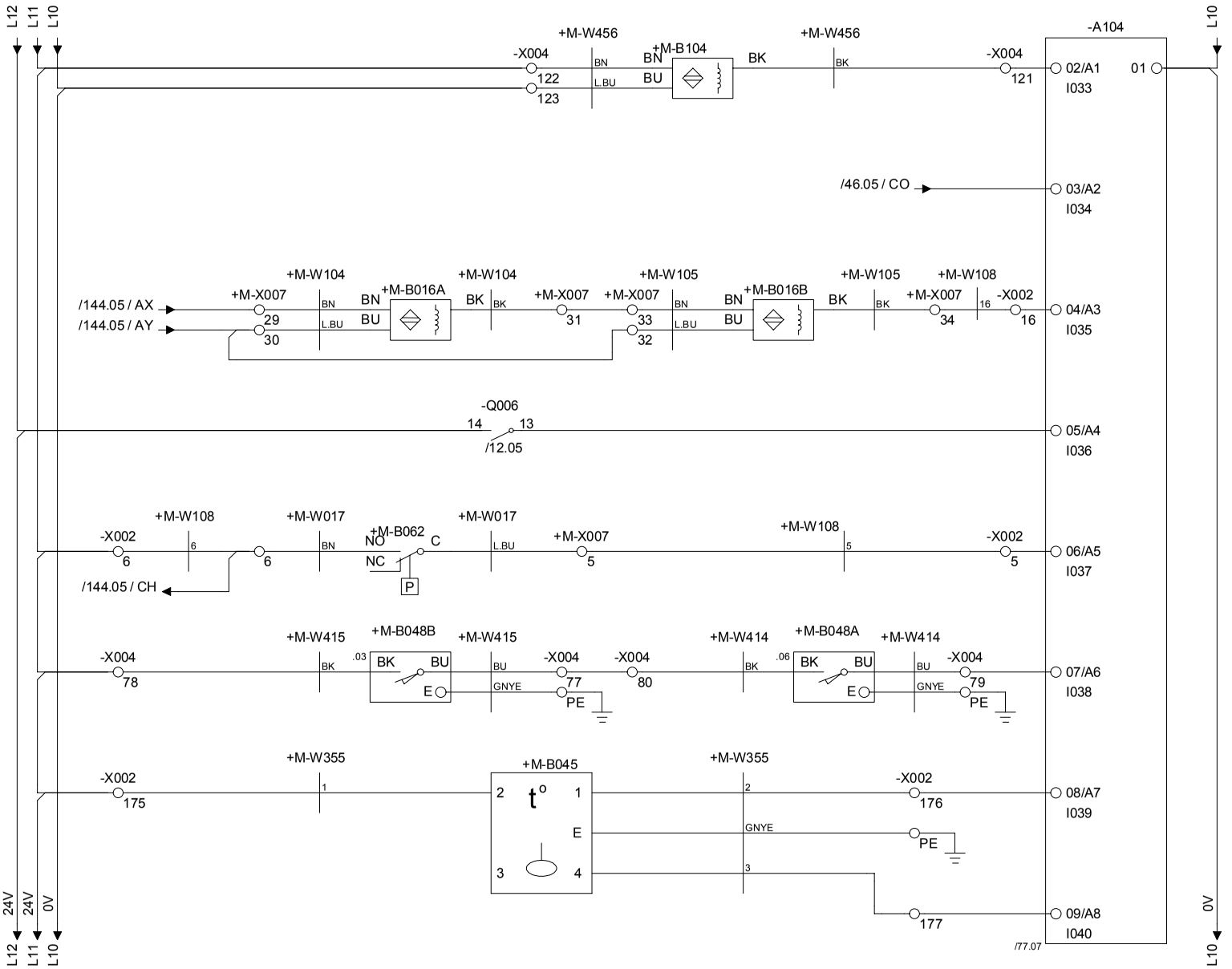

+M-B104 STERILE AIR PIPE, POSITION

+C-A305 BATH, WATER LEVEL

+M-B016B JAW SYSTEM OVERLOAD, RIGHT
+M-B016A JAW SYSTEM OVERLOAD, LEFT

+C-Q006 OVERLOAD PROTECTION COMPRESSOR

+M-B062 STERILE AIR, PRESSURE

+M-B048A PEROXIDE BATH BOTTOM COVER, POSITION FRONT
+M-B048B PEROXIDE BATH BOTTOM COVER, POSITION REAR

+M-B045 HYDRAULIC UNIT, LOW LEVEL

+M-B045 HYDRAULIC UNIT, TEMPERATURE

Drawing remarks	Tetra Pak	Designer QUE/AIR	Date 11/06/2002	Machine TBA/19 020V
		ECM No 119151	Denomination CIRCUIT DIAGRAM	Page Type PLC-IN A104
	Company Tetra Pak Carton Ambient SpA	Document No. 44954-0003	Doc. type ELD	Version AB	Page 76

RELEASED

This drawing must not without the consent of Tetra Pak be copied, transmitted or disclosed to any third party.

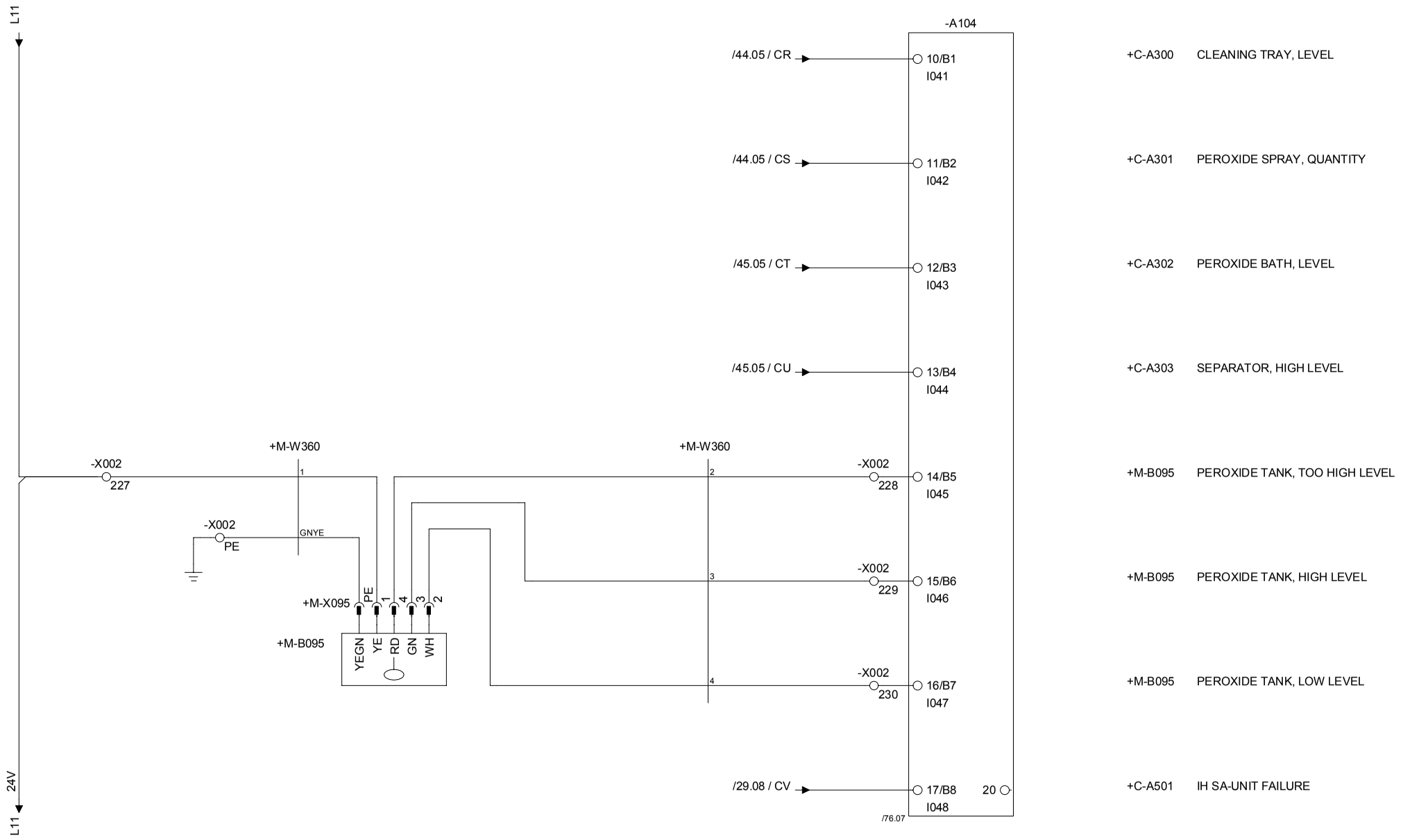

	Tetra Pak	Designer QUE/AIR	Date 11/06/2002	Machine TBA/19 020V			
		ECM No 119151	Denomination CIRCUIT DIAGRAM	Page Type PLC-IN A104			
Drawing remarks		Company Tetra Pak Carton Ambient SpA	Document No. 44954-0003	Doc. type ELD	Version AB	Page 77	

RELEASED

This drawing must not without the consent of Tetra Pak be copied, transmitted or disclosed to any third party.

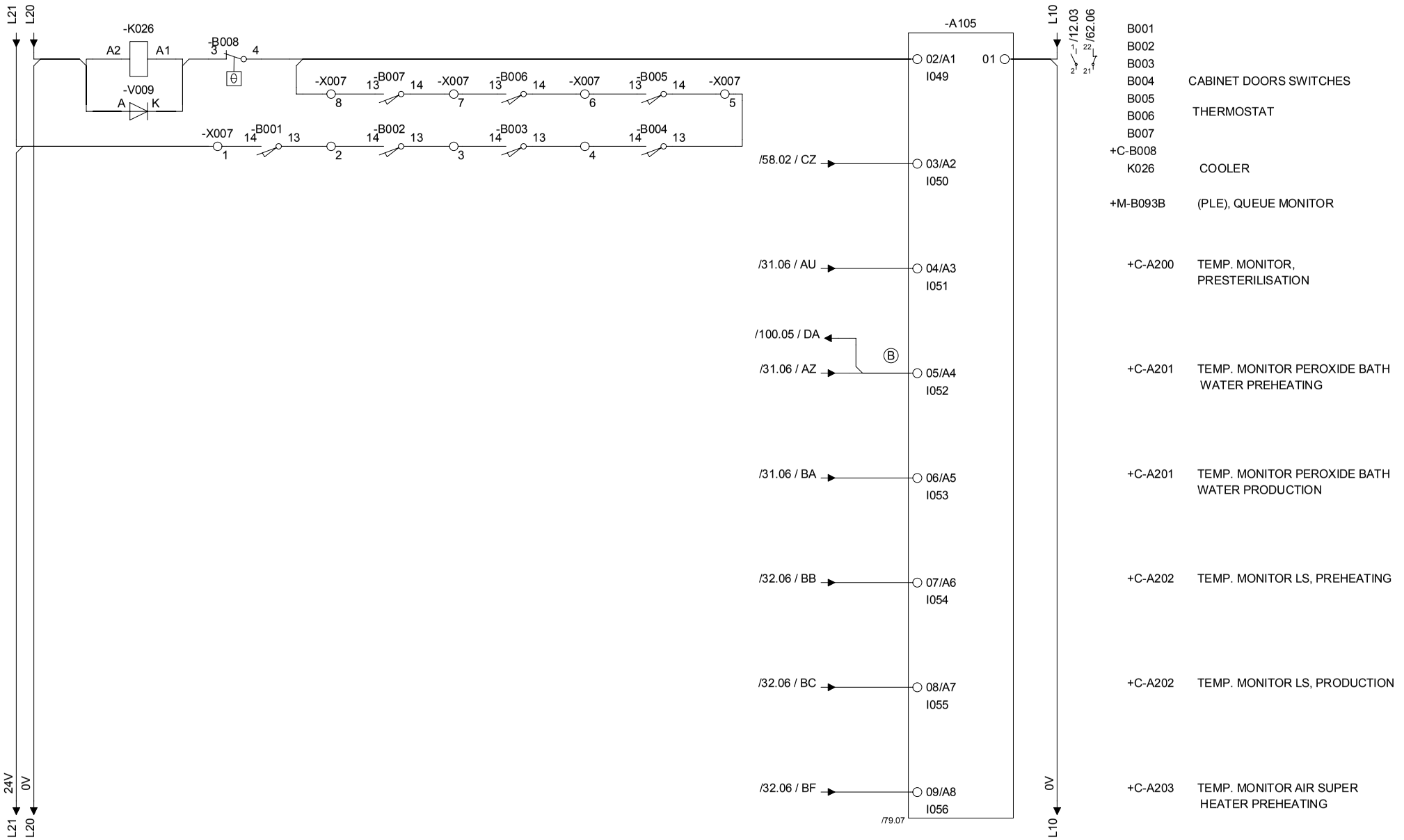

Drawing remarks	Tetra Pak	Designer QUE/AIR	Date 11/06/2002	Machine TBA/19 020V
		ECM No 119151	Denomination CIRCUIT DIAGRAM	Page Type PLC-IN A105
	Company Tetra Pak Carton Ambient SpA		Document No. 44954-0003	Doc. type ELD / Version AB / Page 78

RELEASED

This drawing must not without the consent of Tetra Pak be copied, transmitted or disclosed to any third party.

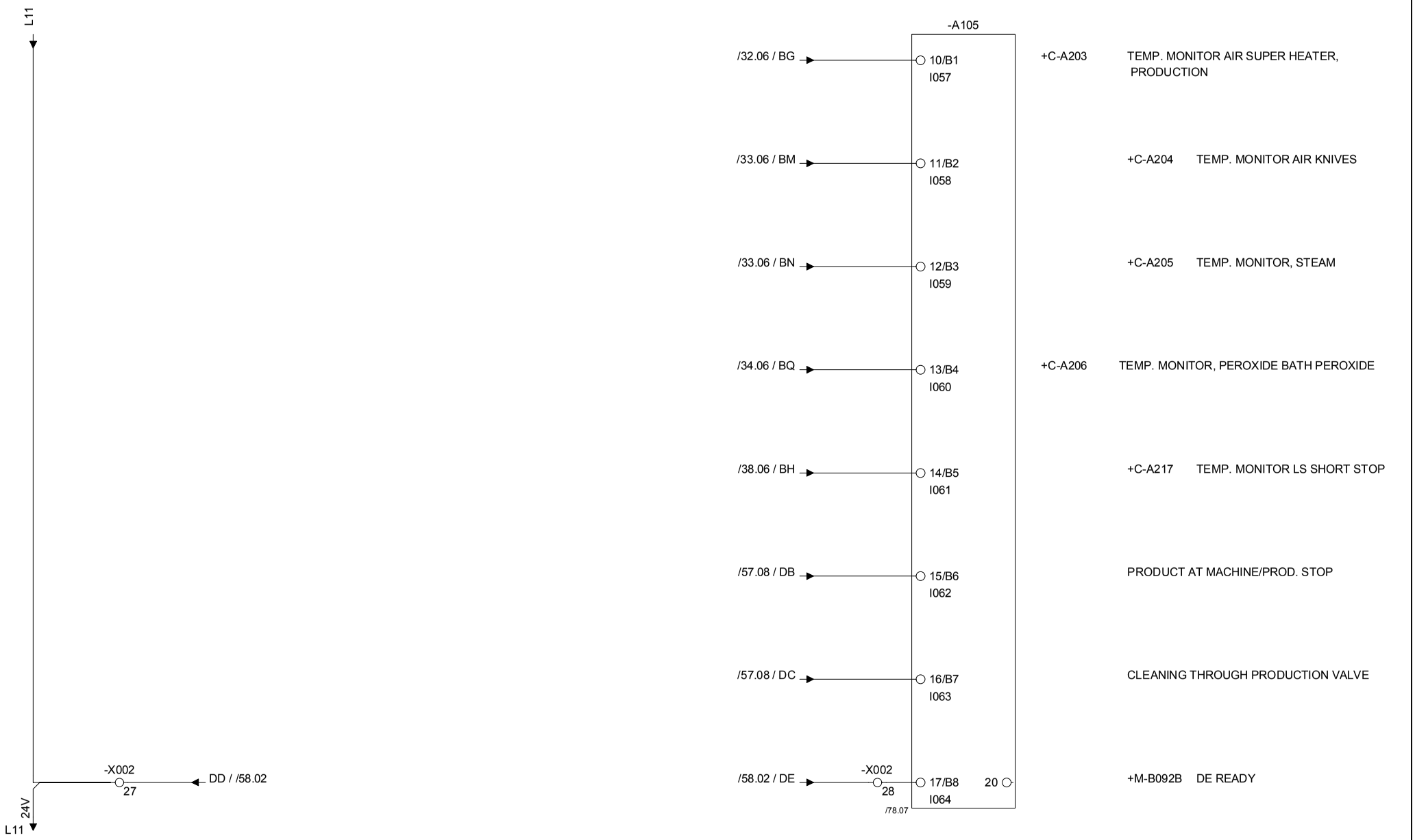

Drawing remarks	Tetra Pak	Designer QUE/AIR	Date 11/06/2002	Machine TBA/19 020V			
		ECM No 119151	Denomination CIRCUIT DIAGRAM	Page Type PLC-IN A105			
	Company Tetra Pak Carton Ambient SpA		Document No. 44954-0003	Doc. type ELD	Version AB	Page 79	

RELEASED

This drawing must not without the consent of Tetra Pak be copied, transmitted or disclosed to any third party.

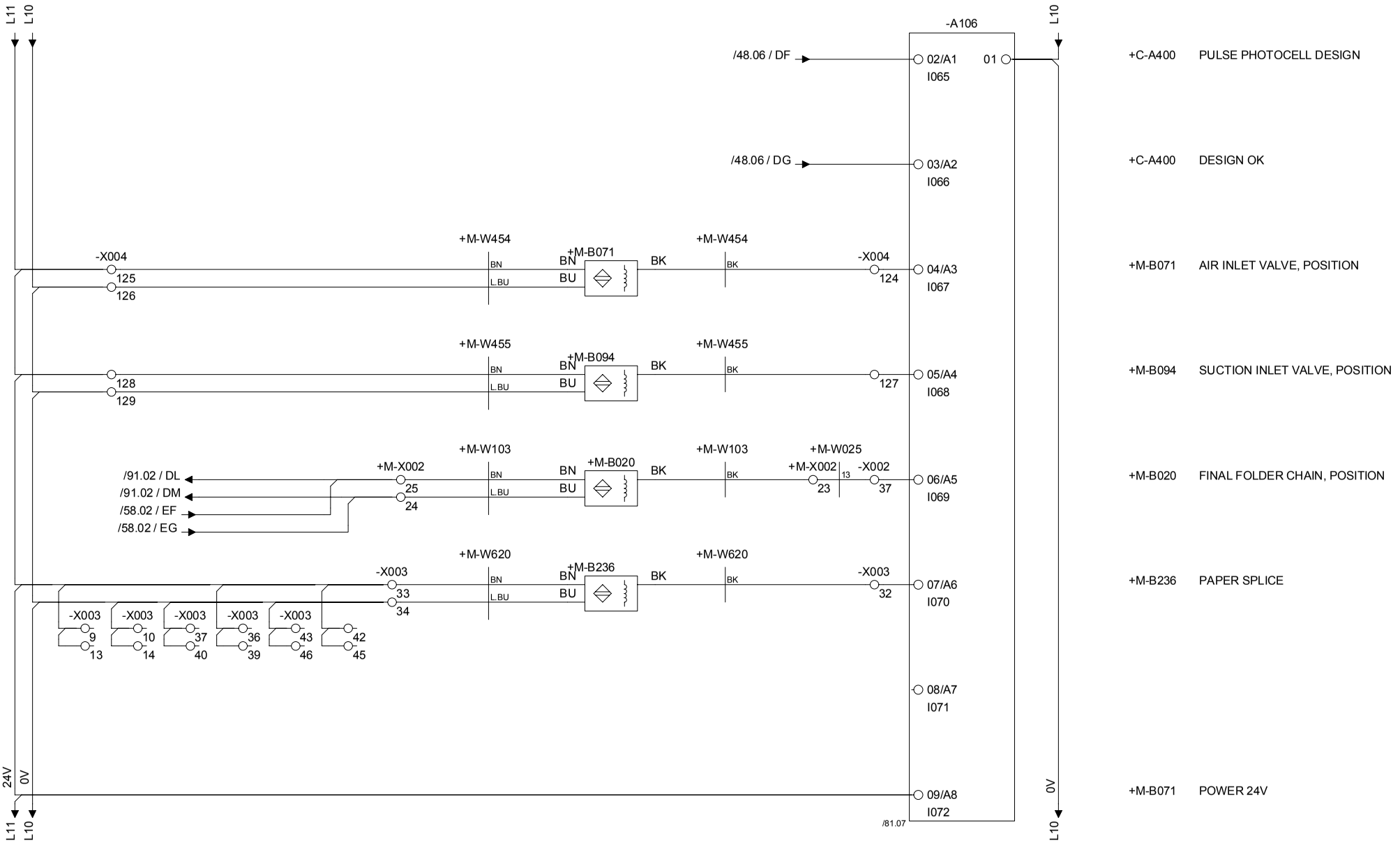

	Tetra Pak	Designer QUE/AIR	Date 11/06/2002	Machine TBA/19 020V	
		ECM No 119151	Denomination CIRCUIT DIAGRAM	Page Type PLC-IN A106, FAST SCAN	
Drawing remarks	Company Tetra Pak Carton Ambient SpA		Document No. 44954-0003	Doc. type ELD	Version AB	Page 80

RELEASED

This drawing must not without the consent of Tetra Pak be copied, transmitted or disclosed to any third party.

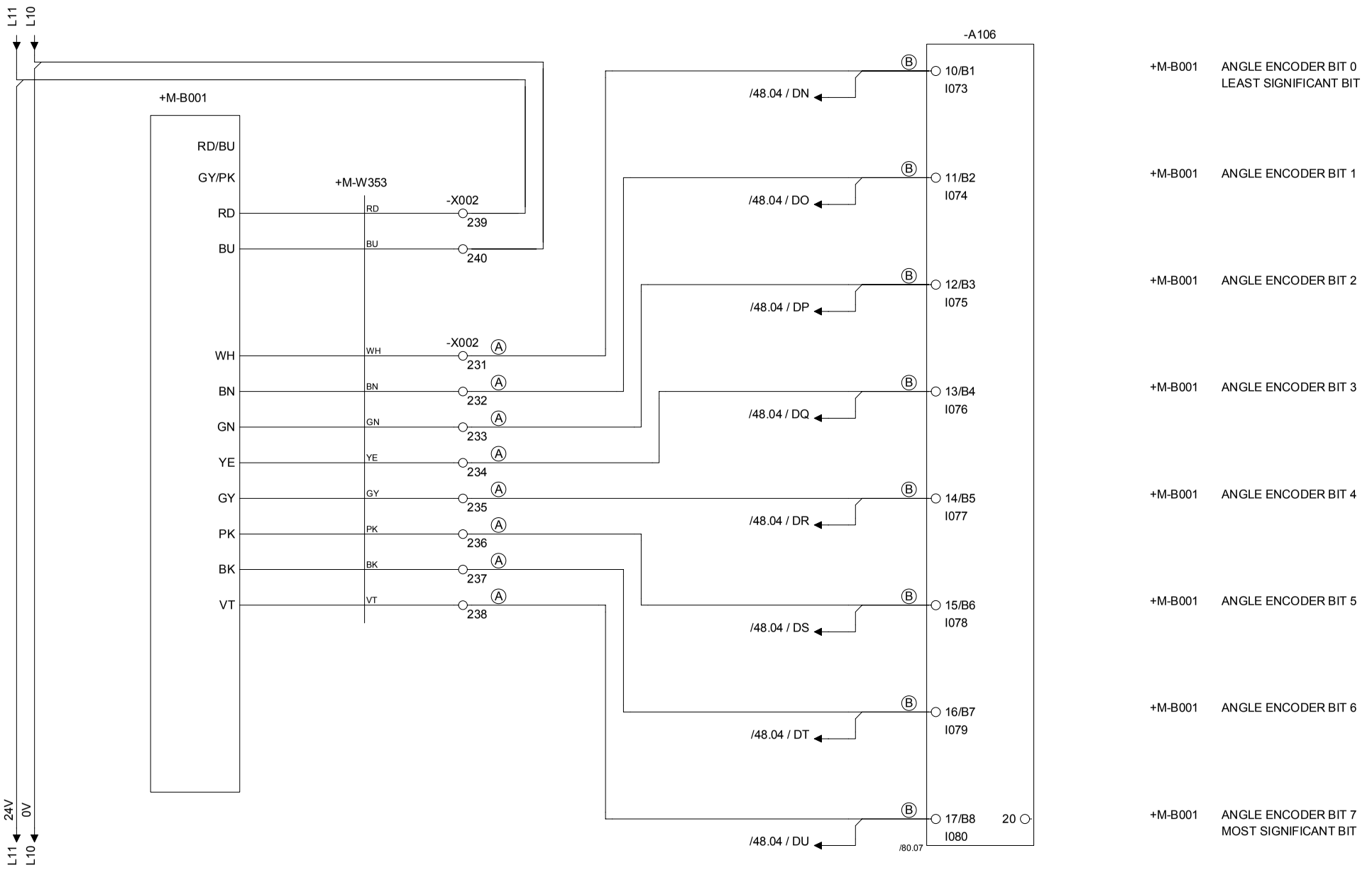

Drawing remarks	Tetra Pak	Designer QUE/AIR	Date 11/06/2002	Machine TBA/19 020V
		ECM No 119151	Denomination CIRCUIT DIAGRAM	Page Type PLC-IN A106, FAST SCAN
	Company Tetra Pak Carton Ambient SpA	Document No. 44954-0003	Doc. type ELD	Version AB / Page 81

RELEASED

This drawing must not without the consent of Tetra Pak be copied, transmitted or disclosed to any third party.

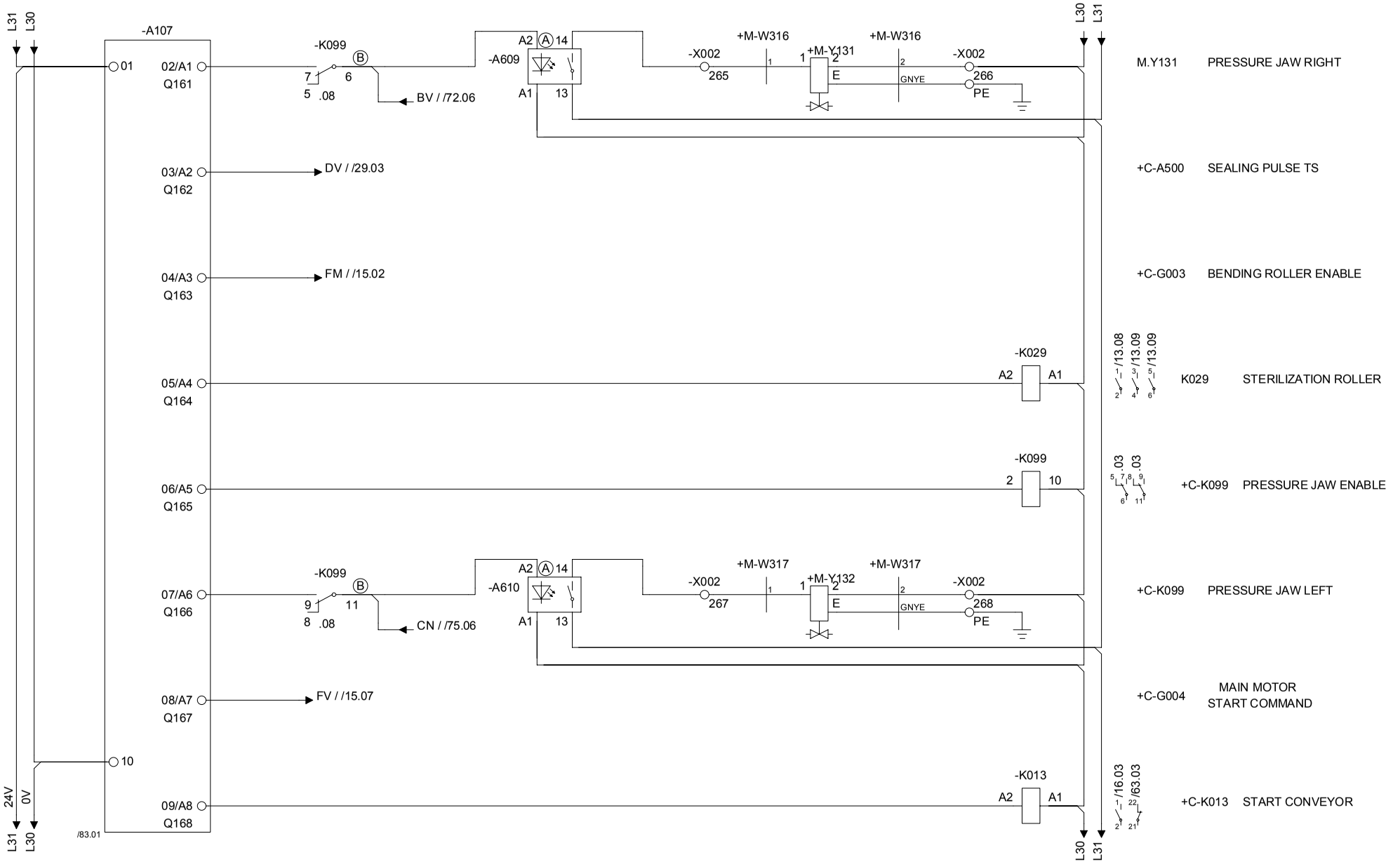

Drawing remarks	Tetra Pak	Designer QUE/AIR	Date 11/06/2002	Machine TBA/19 020V	
		ECM No 119151	Denomination CIRCUIT DIAGRAM	Page Type PLC-OUT A107, FAST SCAN	
	Company Tetra Pak Carton Ambient SpA	Document No. 44954-0003	Doc. type ELD	Version AB	Page 82

RELEASED

This drawing must not without the consent of Tetra Pak
be copied, transmitted or disclosed to any third party.

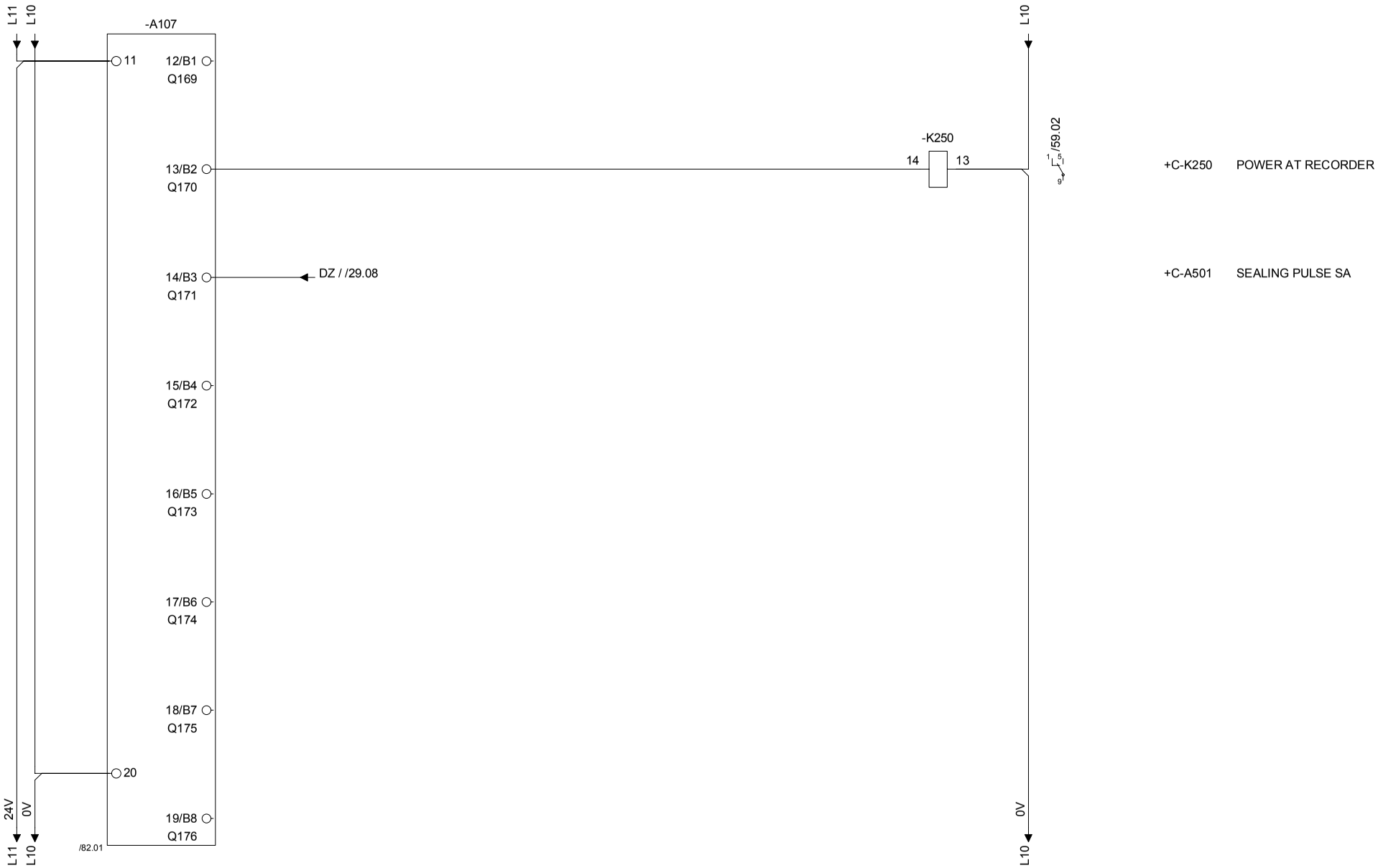

Drawing remarks	Tetra Pak	Designer QUE/AIR	Date 11/06/2002	Machine TBA/19 020V
		ECM No 119151	Denomination CIRCUIT DIAGRAM	Page Type PLC-OUT A107, FAST SCAN
	Company Tetra Pak Carton Ambient SpA	Document No. 44954-0003	Doc. type ELD	Version AB / Page 83

RELEASED

This drawing must not without the consent of Tetra Pak be copied, transmitted or disclosed to any third party.

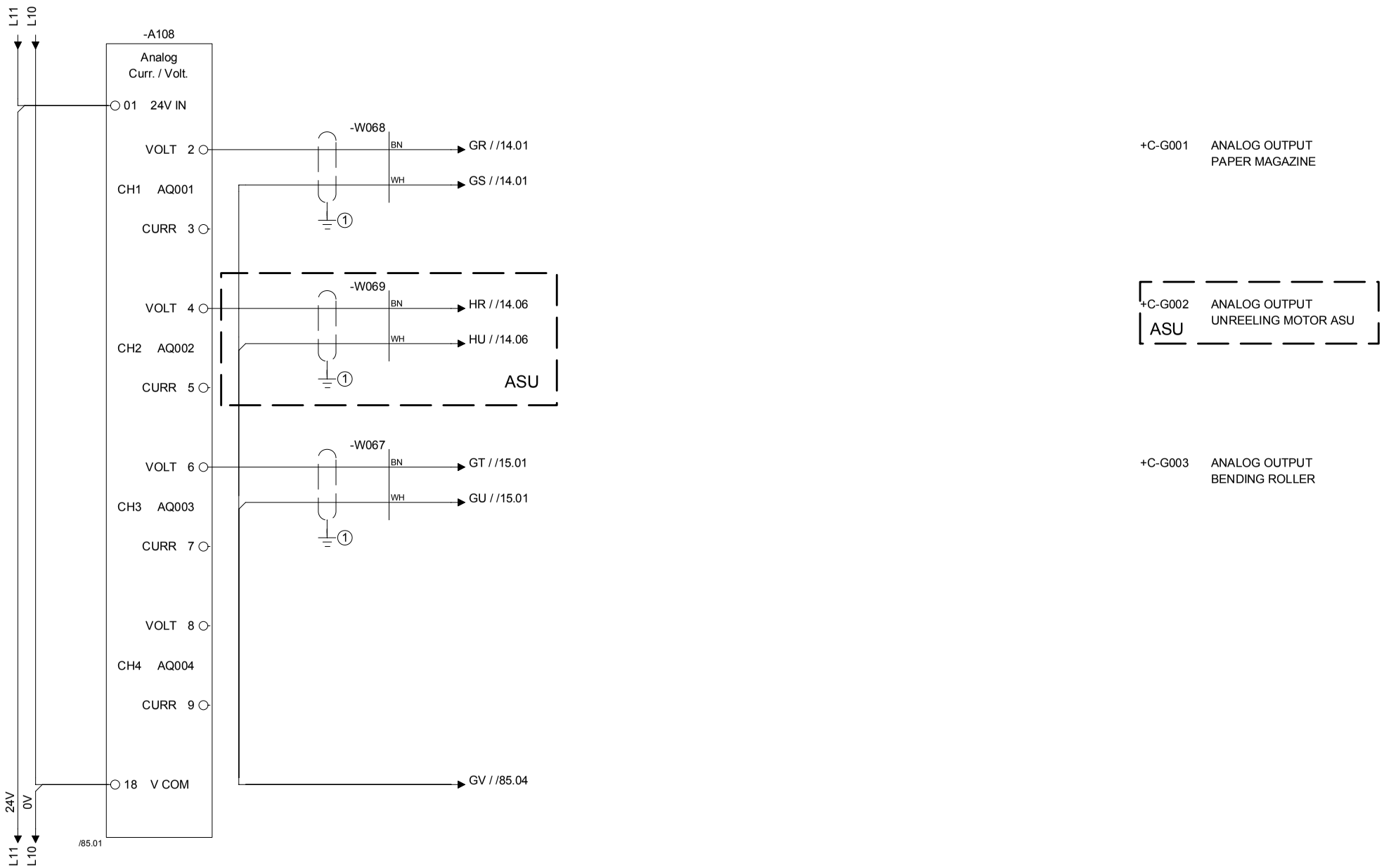

① SCREEN CONNECTED TO THE EARTH BAR BY CLAMP.

Drawing remarks

Tetra Pak

Designer QUE/AIR	Date 11/06/2002	Machine TBA/19 020V					
ECM No 119151	Denomination CIRCUIT DIAGRAM	Page Type ANALOG-OUT MODULE					
Company Tetra Pak Carton Ambient SpA	Document No. 44954-0003	Doc. type ELD	Version AB	Page 84			

RELEASED

This drawing must not without the consent of Tetra Pak be copied, transmitted or disclosed to any third party.

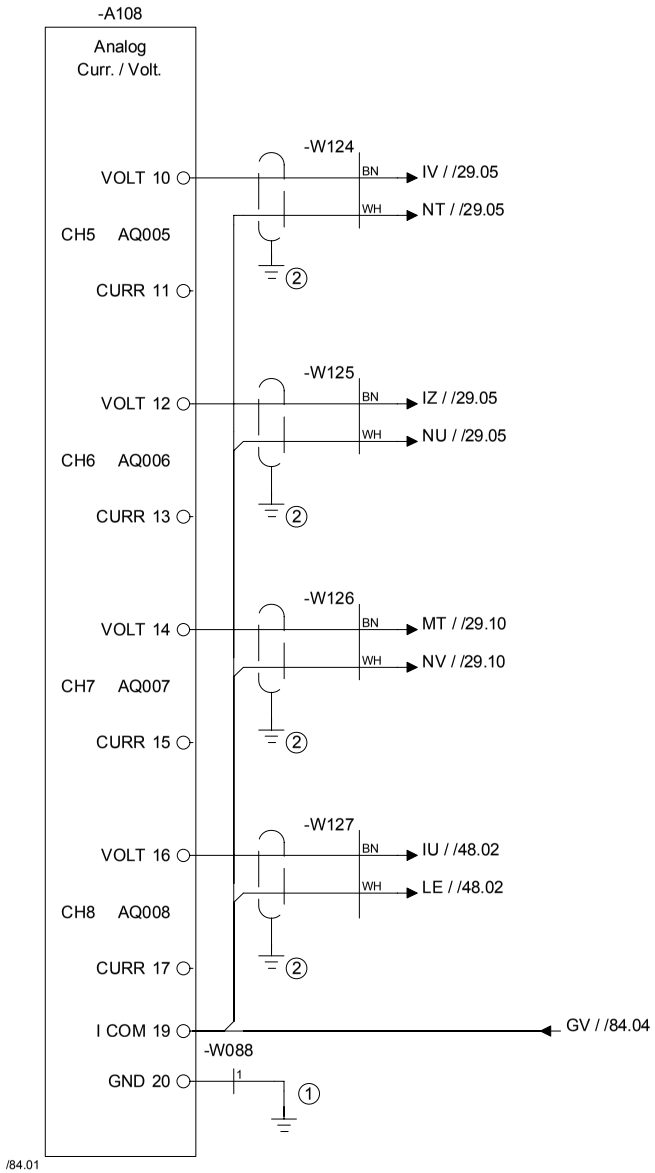

A500	LEFT TS POWER REGULATION	
A500	RIGHT TS POWER REGULATION	
A501	SA POWER REGULATION	
A400	DESIGN ADJUSTMENT	

① CABLE CONNECTED TO THE EARTH BAR BY SCREEW.

② SCREEN CONNECTED TO THE EARTH BAR BY CLAMP.

Drawing remarks

Tetra Pak

Designer QUE/AIR	Date 11/06/2002	Machine TBA/19 020V			
ECM No 119151	Denomination CIRCUIT DIAGRAM	Page Type ANALOG-OUT MODULE			
Company Tetra Pak Carton Ambient SpA	Document No. 44954-0003	Doc. type ELD	Version AB	Page 85	

RELEASED

This drawing must not without the consent of Tetra Pak be copied, transmitted or disclosed to any third party.

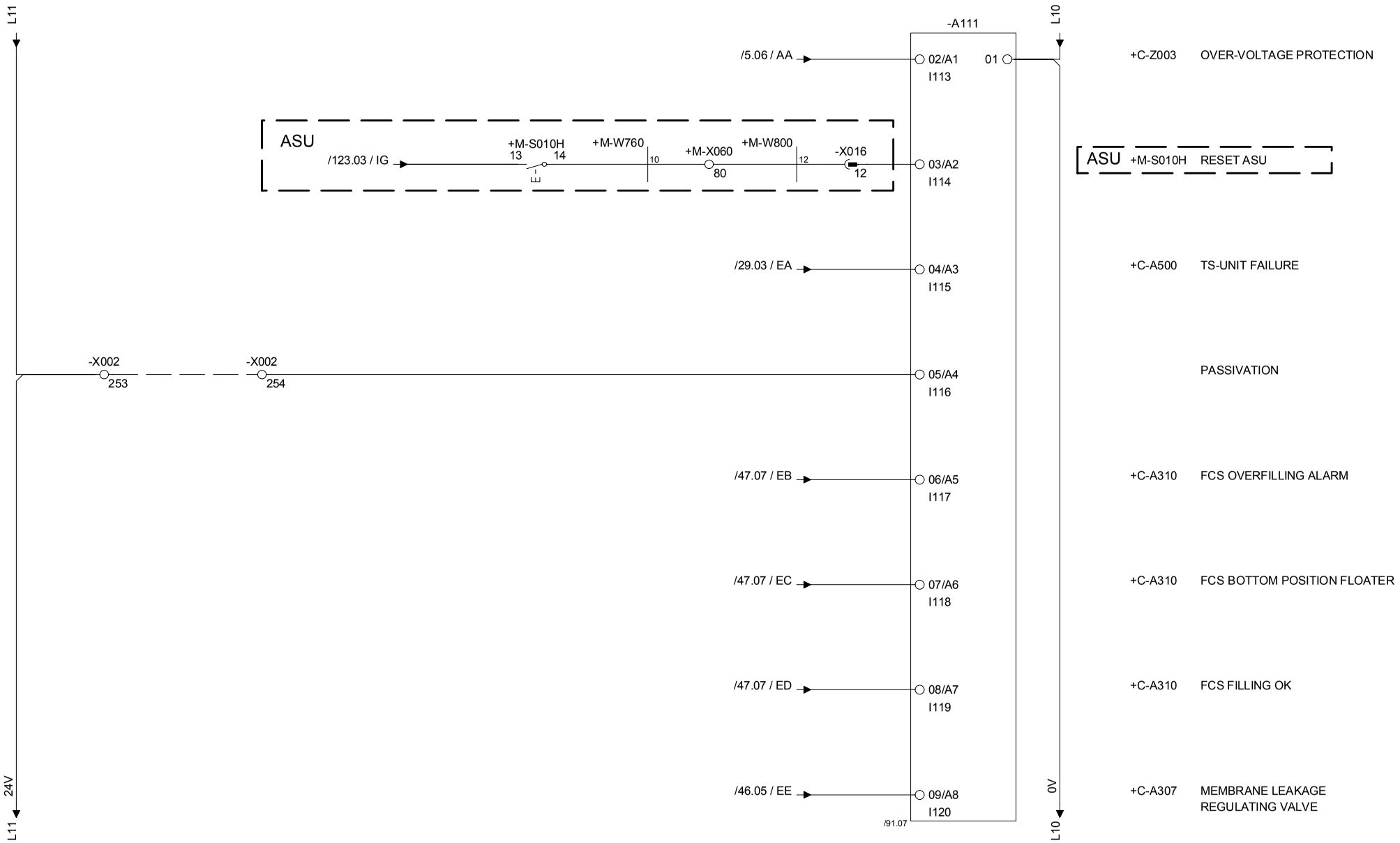

	Tetra Pak	Designer QUE/AIR	Date 11/06/2002	Machine TBA/19 020V	
		ECM No 119151	Denomination CIRCUIT DIAGRAM	Page Type PLC-IN A111	
Drawing remarks		Company Tetra Pak Carton Ambient SpA	Document No. 44954-0003	Doc. type ELD	Version AB	Page 90

RELEASED

This drawing must not without the consent of Tetra Pak be copied, transmitted or disclosed to any third party.

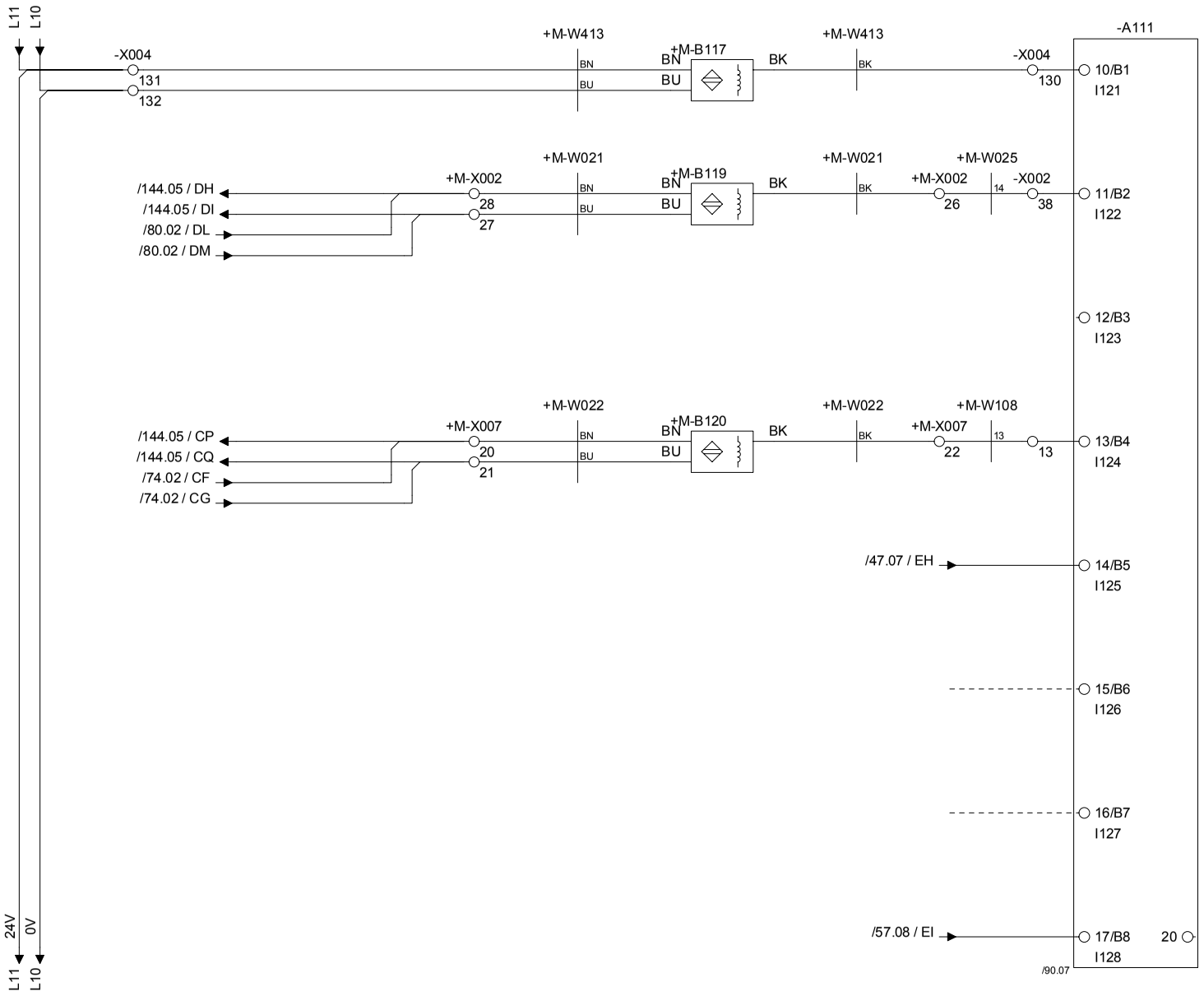

Drawing remarks	Tetra Pak	Designer QUE/AIR	Date 11/06/2002	Machine TBA/19 020V			
		ECM No 119151	Denomination CIRCUIT DIAGRAM	Page Type PLC-IN A111			
	Company Tetra Pak Carton Ambient SpA		Document No. 44954-0003	Doc. type ELD	Version AB	Page 91	

RELEASED

This drawing must not without the consent of Tetra Pak be copied, transmitted or disclosed to any third party.

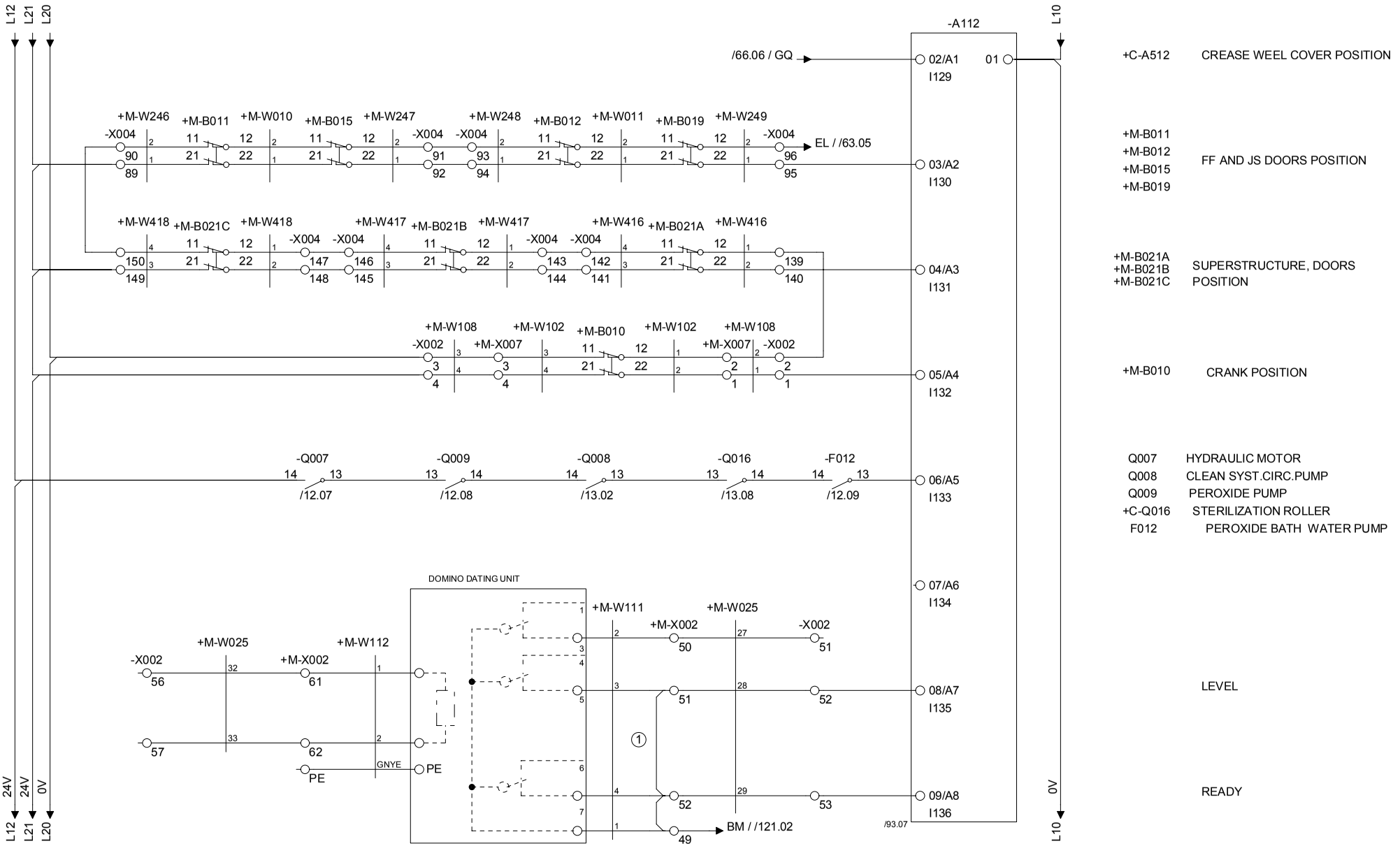

① REMOVE WHEN PLE IS INSTALLED.

Drawing remarks

Designer QUE/AIR	Date 11/06/2002	Machine TBA/19 020V			
ECM No 119151	Denomination CIRCUIT DIAGRAM	Page Type PLC-IN A112			
Company Tetra Pak Carton Ambient SpA	Document No. 44954-0003	Doc. type ELD	Version AB	Page 92	

RELEASED

This drawing must not without the consent of Tetra Pak be copied, transmitted or disclosed to any third party.

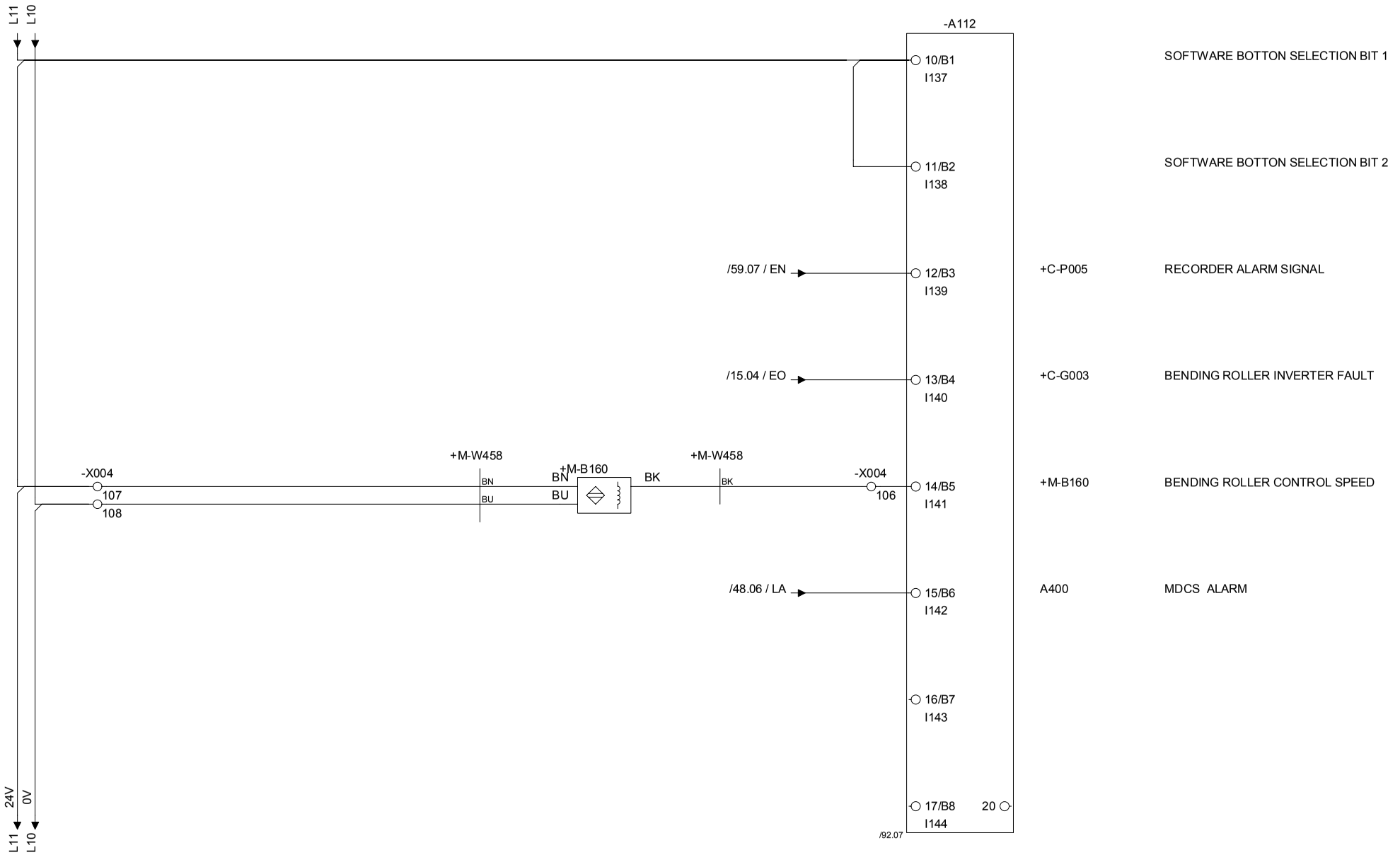

	Tetra Pak	Designer QUE/AIR	Date 11/06/2002	Machine TBA/19 020V			
		ECM No 119151	Denomination CIRCUIT DIAGRAM	Page Type PLC-IN A112			
Drawing remarks		Company Tetra Pak Carton Ambient SpA	Document No. 44954-0003	Doc. type ELD	Version AB	Page 93	

RELEASED

This drawing must not without the consent of Tetra Pak be copied, transmitted or disclosed to any third party.

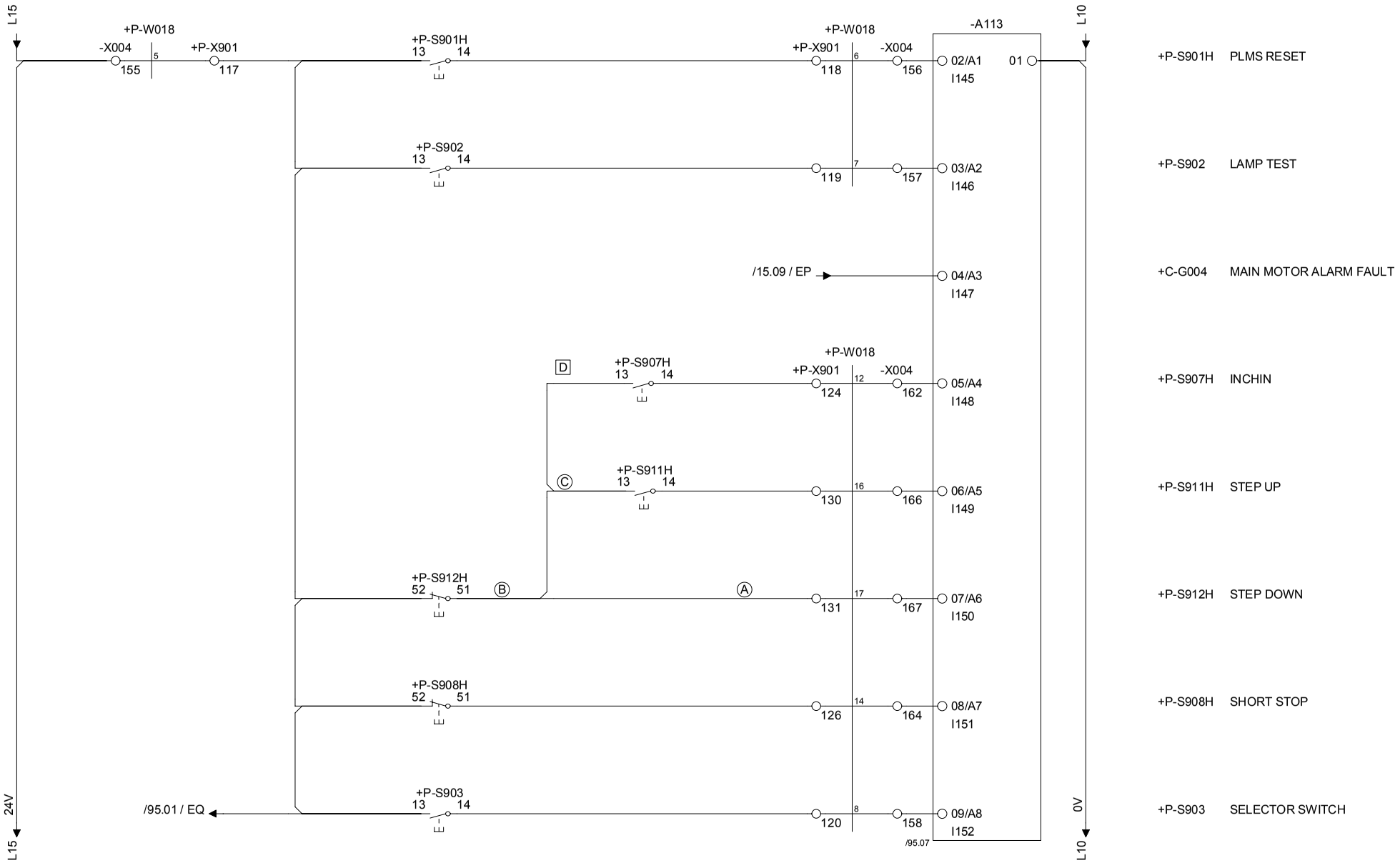

Drawing remarks	Tetra Pak	Designer QUE/AIR	Date 11/06/2002	Machine TBA/19 020V
		ECM No 119151	Denomination CIRCUIT DIAGRAM	Page Type PLC-IN A113, PANEL INTERFACE
	Company Tetra Pak Carton Ambient SpA		Document No. 44954-0003	Doc. type ELD / Version AB / Page 94

RELEASED

This drawing must not without the consent of Tetra Pak be copied, transmitted or disclosed to any third party.

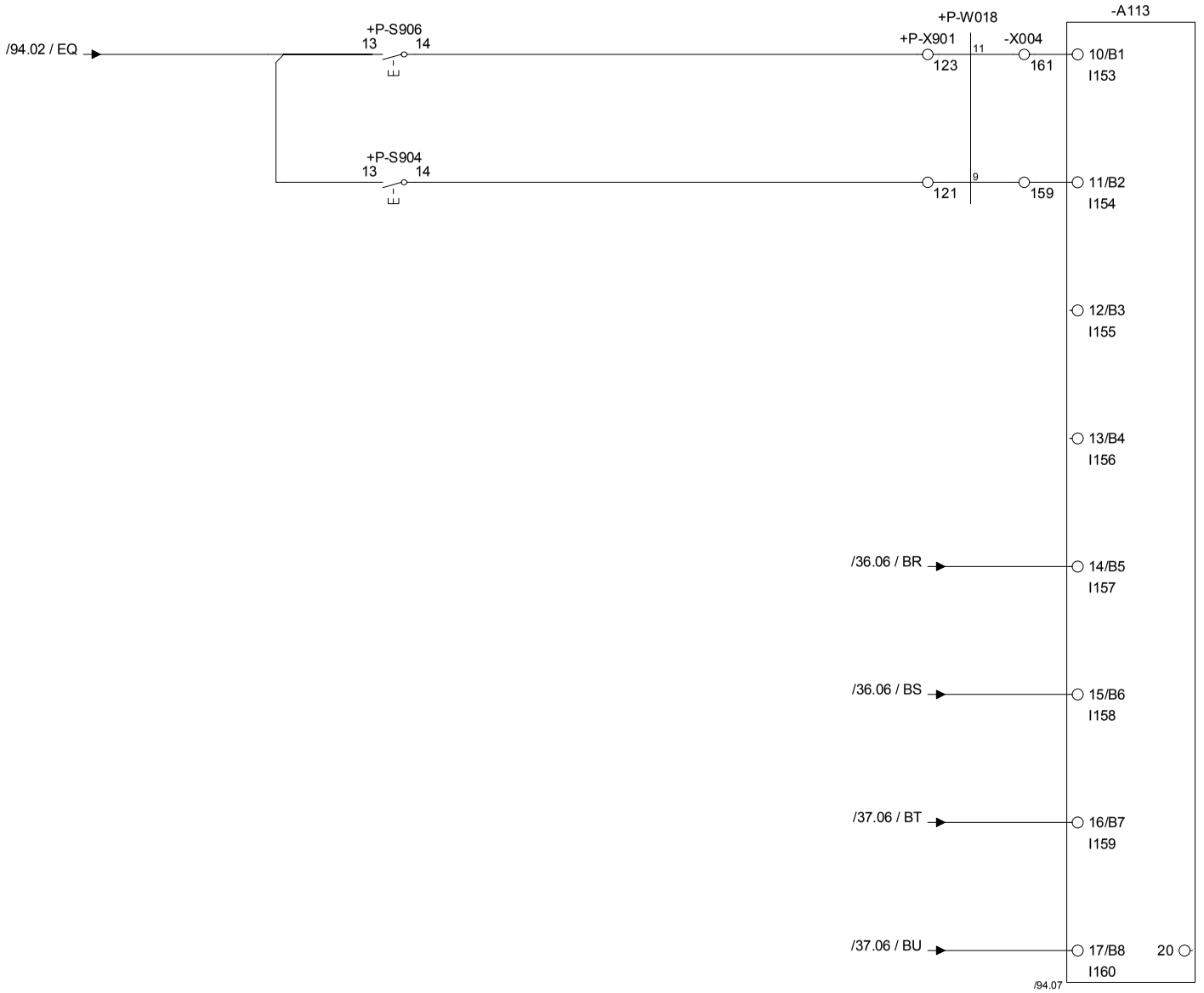

Drawing remarks	Tetra Pak	Designer QUE/AIR	Date 11/06/2002	Machine TBA/19 020V
		ECM No 119151	Denomination CIRCUIT DIAGRAM	Page Type PLC-IN A113
	Company Tetra Pak Carton Ambient SpA	Document No. 44954-0003	Doc. type ELD	Version AB / Page 95

RELEASED

This drawing must not without the consent of Tetra Pak be copied, transmitted or disclosed to any third party.

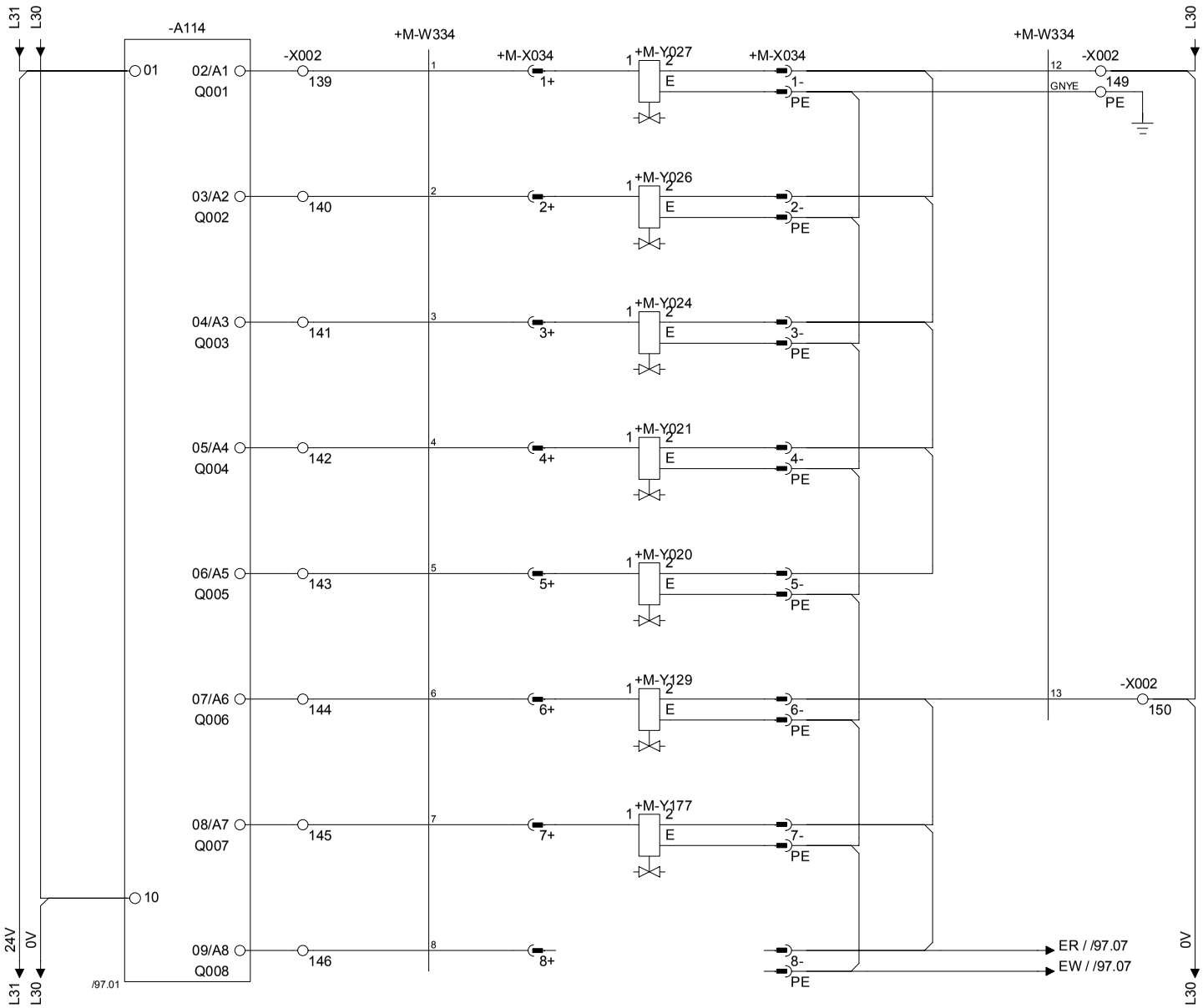

M.Y027 DROP CHUTE

M.Y026 LS COUTER ROLLER SHORT STOP

M.Y024 LS-ELEMENT,MOVEMENT

M.Y021 AIR KINFE SQUEEZER ROLLER

M.Y020 SHORT STOP ELEMENT, MOVEMENT

M.Y129 AIR BLOWING BOTTON FLAPS

M.Y177 TUBE FOLINDING DEVICE

Drawing remarks	Tetra Pak	Designer QUE/AIR	Date 11/06/2002	Machine TBA/19 020V			
		ECM No 119151	Denomination CIRCUIT DIAGRAM	Page Type PLC-OUT A114, VALVES			
	Company Tetra Pak Carton Ambient SpA		Document No. 44954-0003	Doc. type ELD	Version AB	Page 96	

RELEASED

This drawing must not without the consent of Tetra Pak be copied, transmitted or disclosed to any third party.

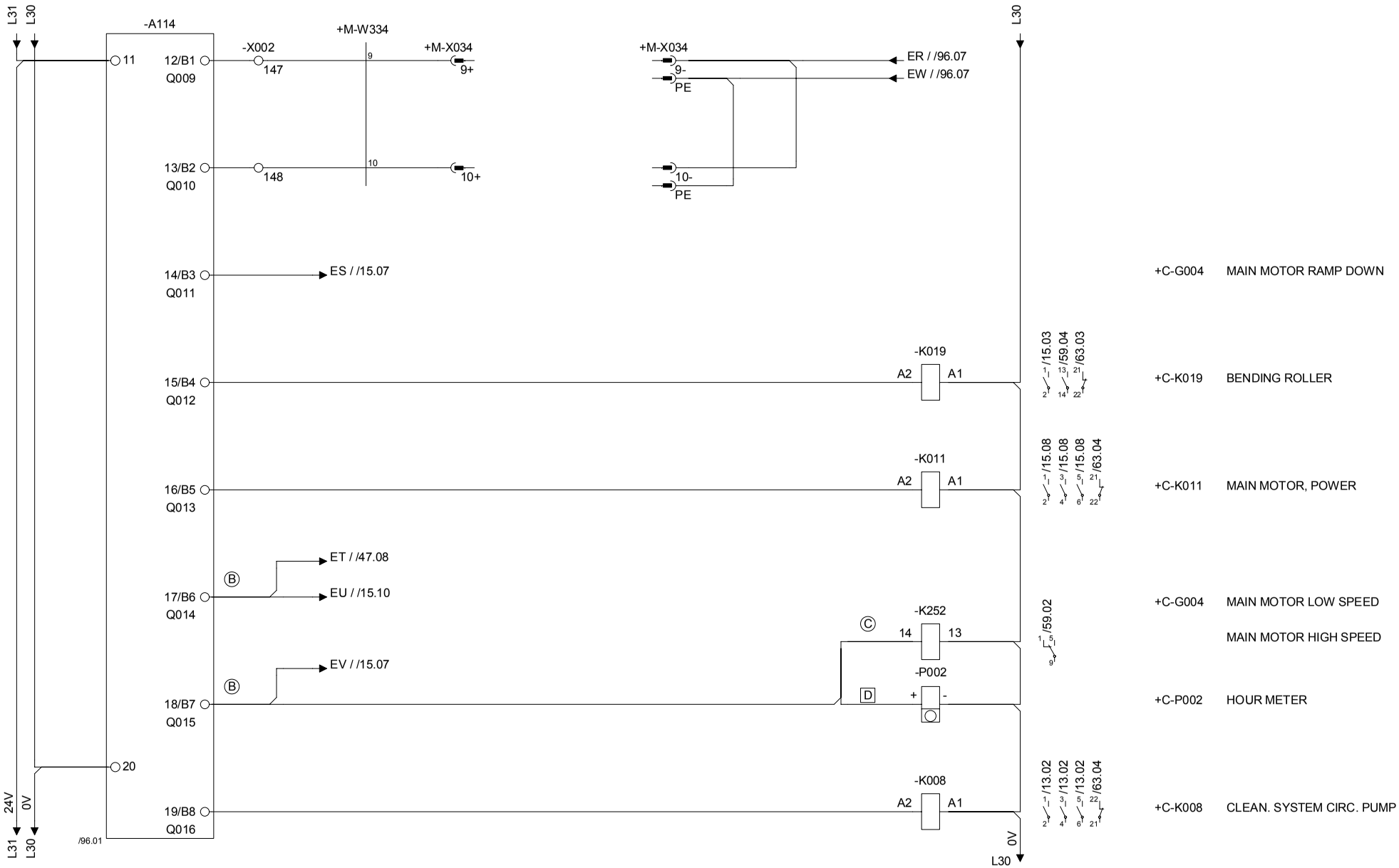

	Designer: QUE/AIR	Date: 11/06/2002	Machine: TBA/19 020V	
	ECM No: 119151	Denomination: CIRCUIT DIAGRAM	Page Type: PLC-OUT A114	
Drawing remarks	Company: Tetra Pak Carton Ambient SpA	Document No.: 44954-0003	Doc. type: ELD	Version: AB / Page: 97

RELEASED

This drawing must not without the consent of Tetra Pak be copied, transmitted or disclosed to any third party.

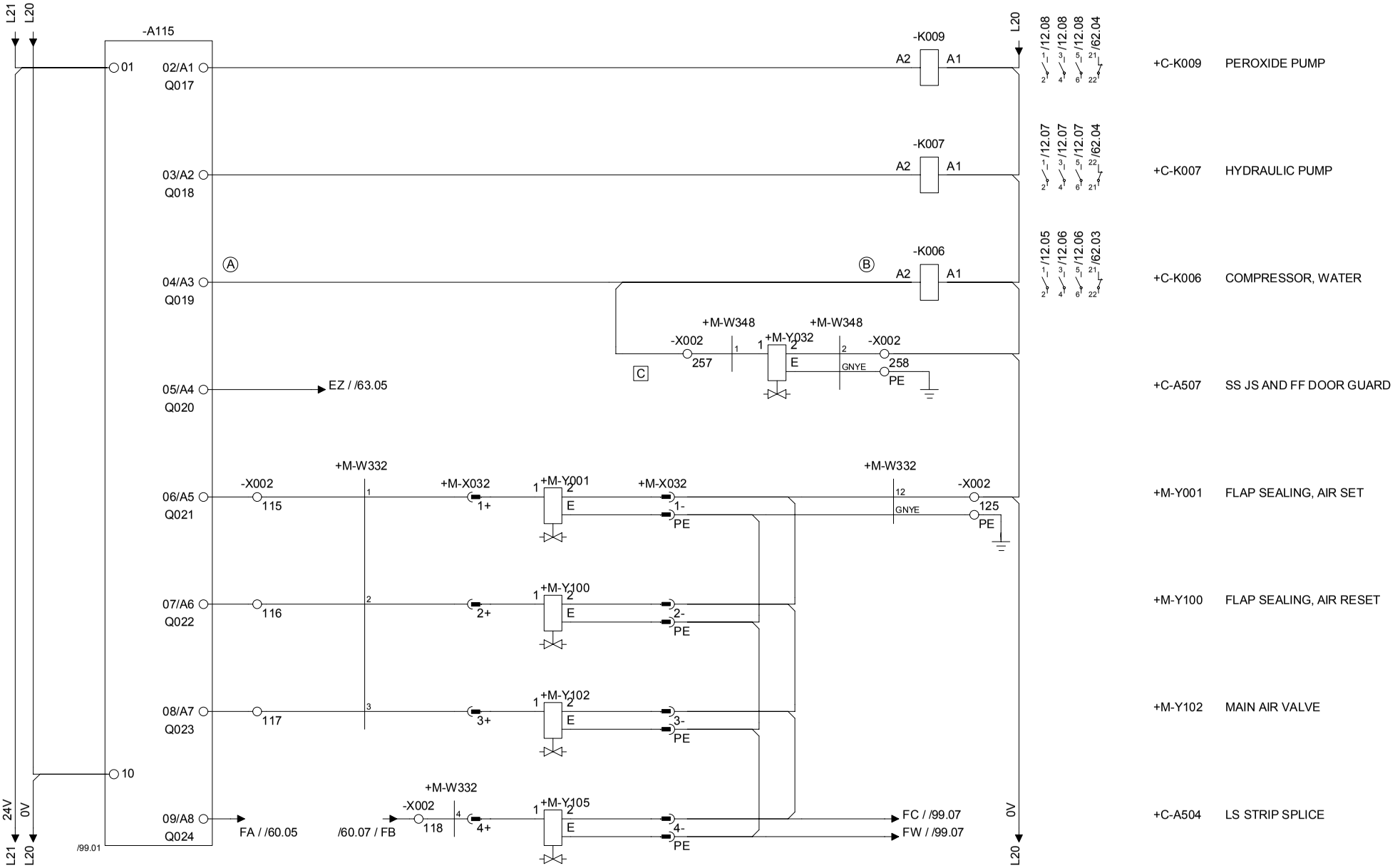

Drawing remarks	Tetra Pak	Designer QUE/AIR	Date 11/06/2002	Machine TBA/19 020V	
		ECM No 119151	Denomination CIRCUIT DIAGRAM	Page Type PLC-OUT A115	
	Company Tetra Pak Carton Ambient SpA		Document No. 44954-0003	Doc. type ELD	Version AB	Page 98

RELEASED

This drawing must not without the consent of Tetra Pak be copied, transmitted or disclosed to any third party.

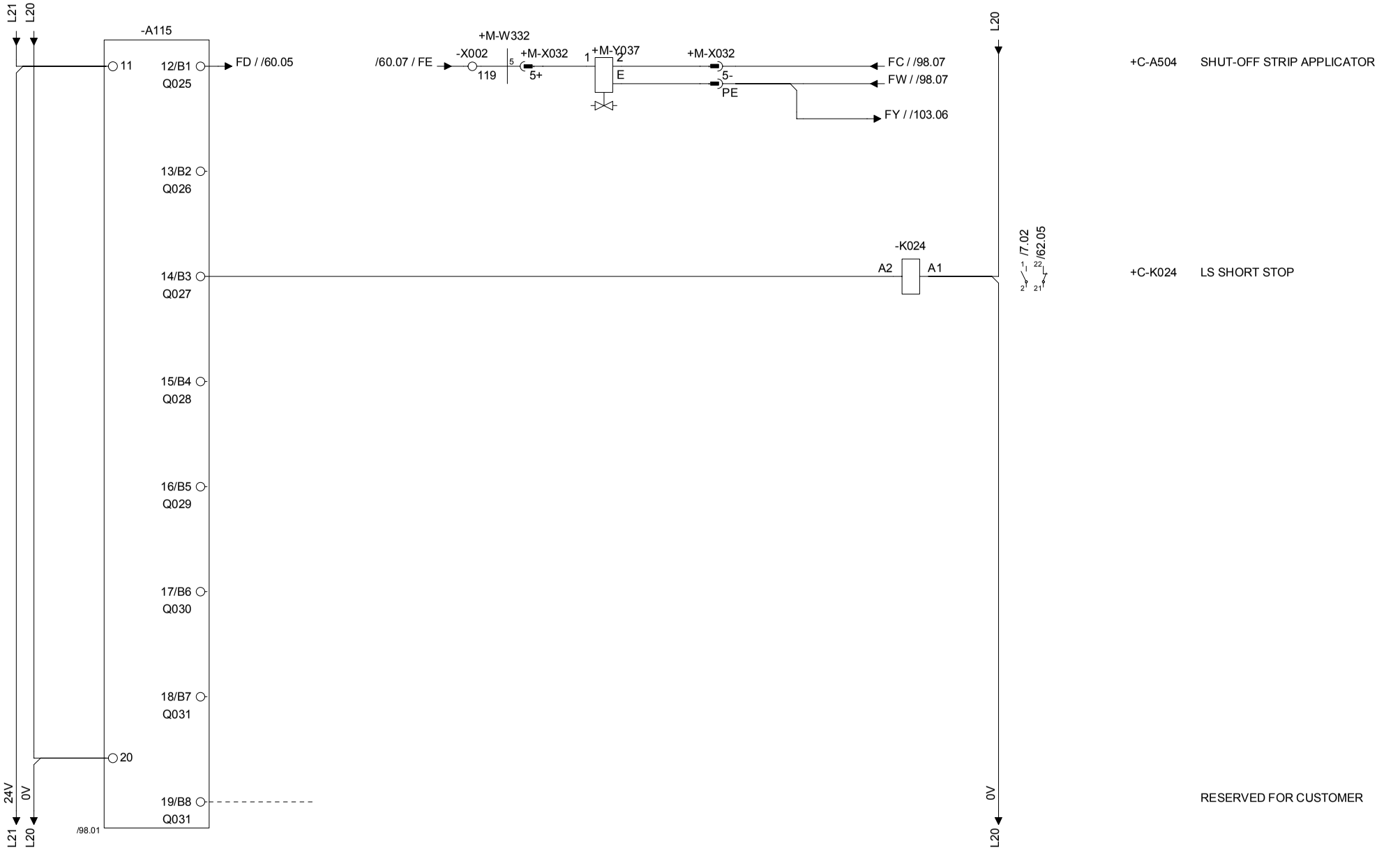

Drawing remarks	Tetra Pak	Designer QUE/AIR	Date 11/06/2002	Machine TBA/19 020V	
		ECM No 119151	Denomination CIRCUIT DIAGRAM	Page Type PLC-OUT A115	
	Company Tetra Pak Carton Ambient SpA		Document No. 44954-0003	Doc. type ELD	Version AB	Page 99

RELEASED

This drawing must not without the consent of Tetra Pak be copied, transmitted or disclosed to any third party.

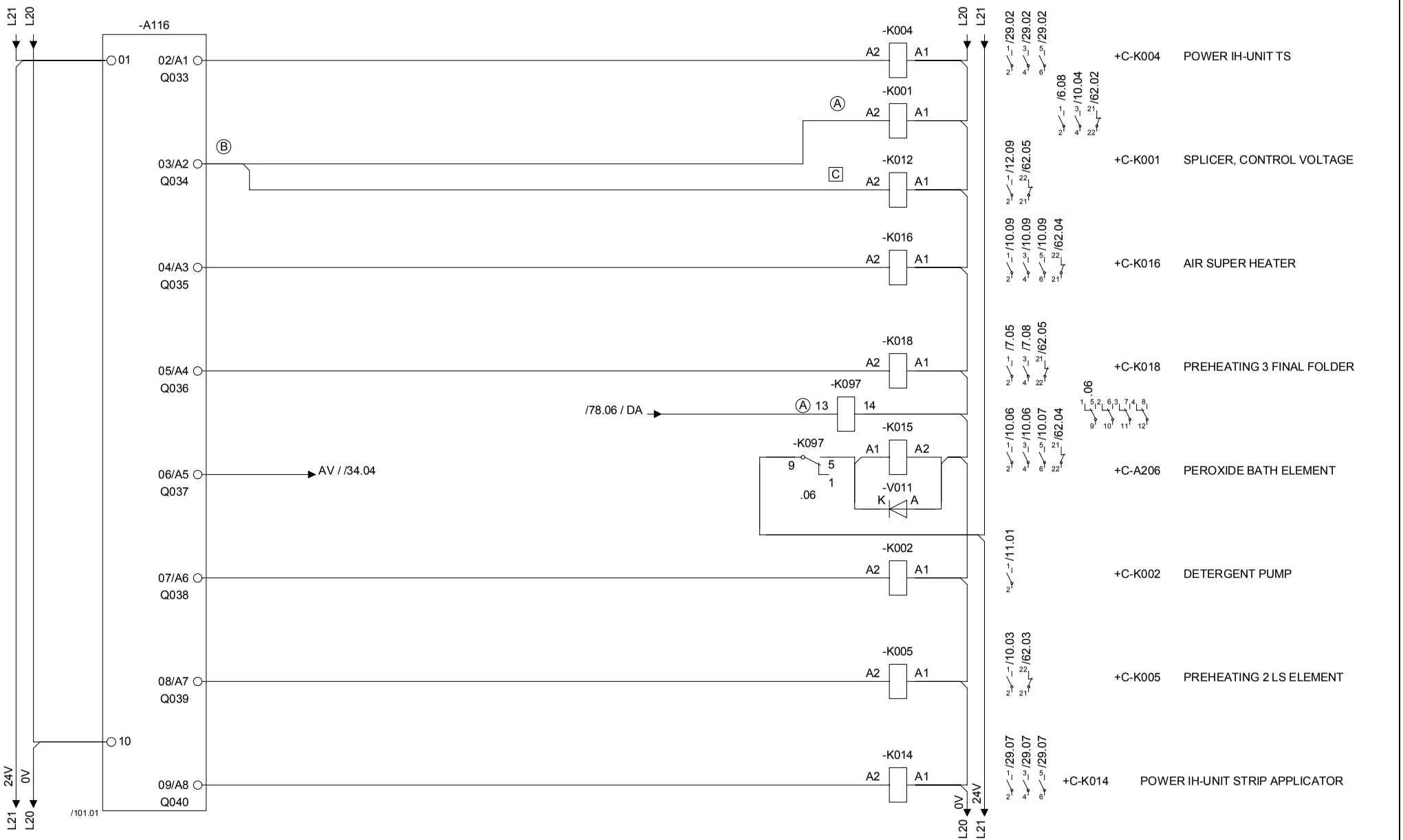

Drawing remarks	Tetra Pak	Designer QUE/AIR	Date 11/06/2002	Machine TBA/19 020V
		ECM No 119151	Denomination CIRCUIT DIAGRAM	Page Type PLC-OUT A116, CONTACTORS
	Company Tetra Pak Carton Ambient SpA		Document No. 44954-0003	Doc. type ELD / Version AB / Page 100

RELEASED

This drawing must not without the consent of Tetra Pak be copied, transmitted or disclosed to any third party.

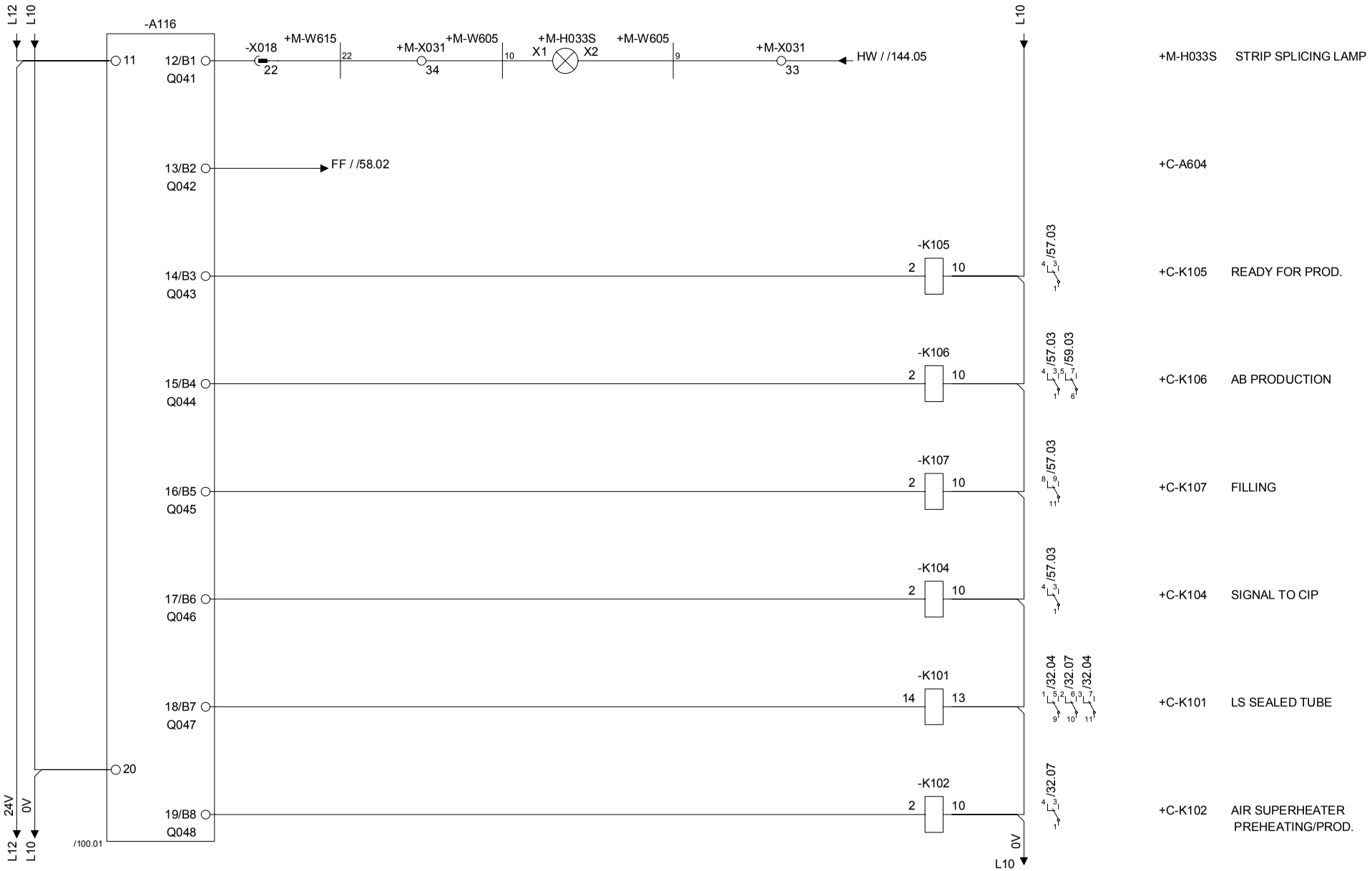

Drawing remarks	Tetra Pak	Designer QUE/AIR	Date 11/06/2002	Machine TBA/19 020V
		ECM No 119151	Denomination CIRCUIT DIAGRAM	Page Type PLC-OUT A116, RELAYS
	Company Tetra Pak Carton Ambient SpA	Document No. 44954-0003	Doc. type ELD	Version AB	Page 101

RELEASED

This drawing must not without the consent of Tetra Pak be copied, transmitted or disclosed to any third party.

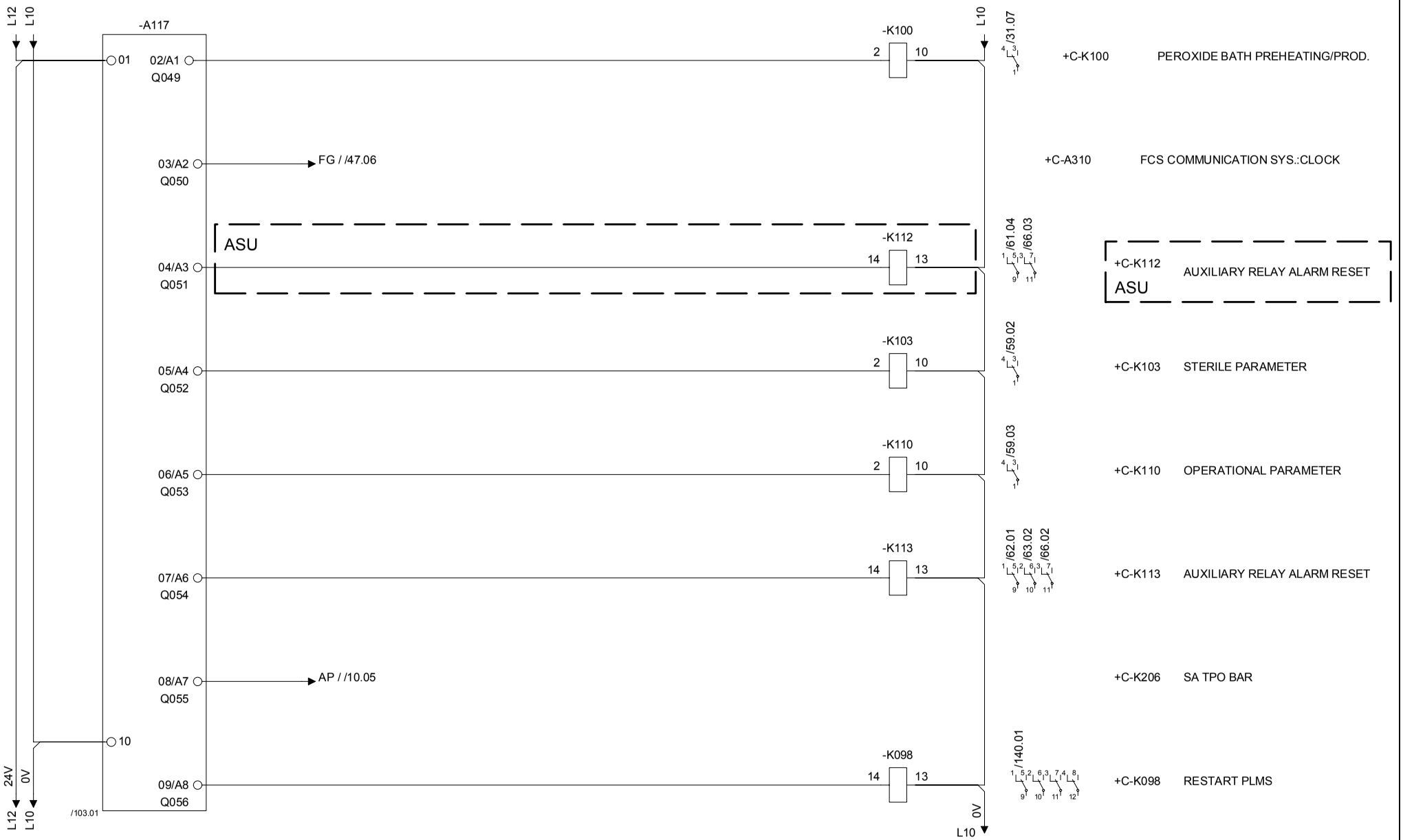

Drawing remarks	Tetra Pak	Designer QUE/AIR	Date 11/06/2002	Machine TBA/19 020V
		ECM No 119151	Denomination CIRCUIT DIAGRAM	Page Type PLC-OUT A117, RELAYS
	Company Tetra Pak Carton Ambient SpA	Document No. 44954-0003	Doc. type ELD	Version AB / Page 102

RELEASED

This drawing must not without the consent of Tetra Pak be copied, transmitted or disclosed to any third party.

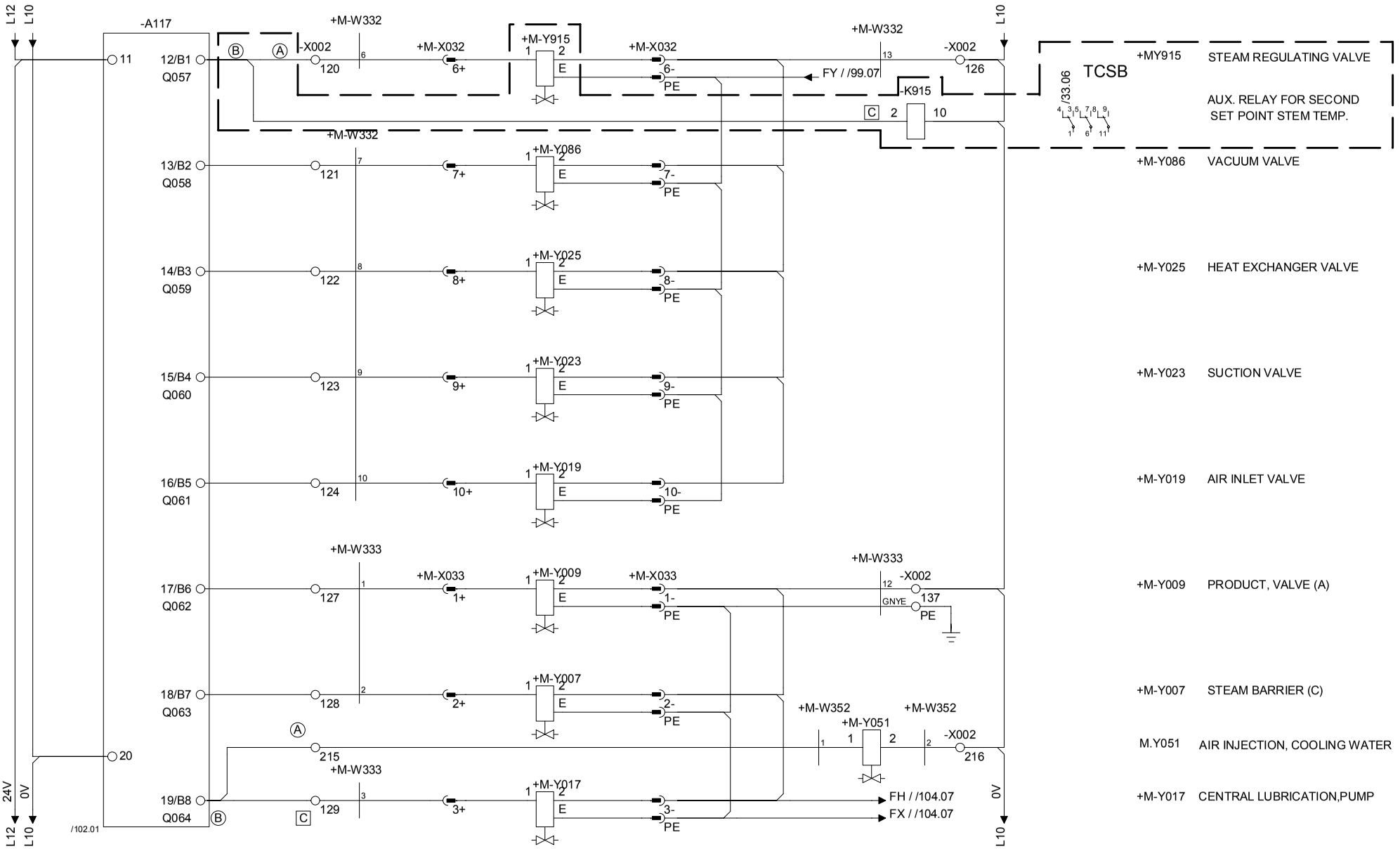

Drawing remarks	Tetra Pak	Designer QUE/AIR	Date 11/06/2002	Machine TBA/19 020V	
		ECM No 119151	Denomination CIRCUIT DIAGRAM	Page Type PLC-OUT A117, VALVES	
	Company Tetra Pak Carton Ambient SpA		Document No. 44954-0003	Doc. type ELD	Version AB	Page 103

RELEASED

This drawing must not without the consent of Tetra Pak be copied, transmitted or disclosed to any third party.

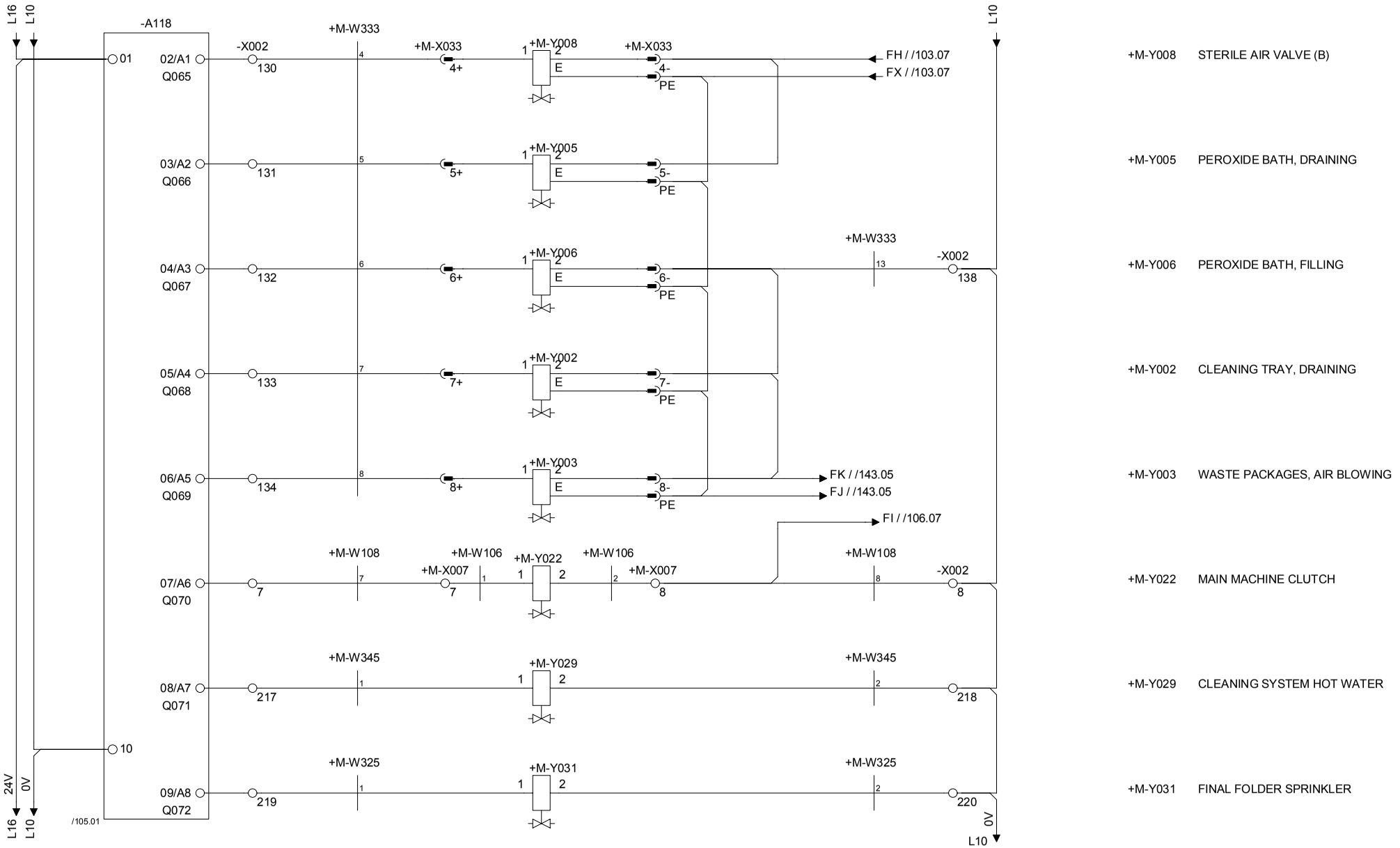

Drawing remarks	Tetra Pak	Designer QUE/AIR	Date 11/06/2002	Machine TBA/19 020V
		ECM No 119151	Denomination CIRCUIT DIAGRAM	Page Type PLC-OUT A118, VALVES
	Company Tetra Pak Carton Ambient SpA	Document No. 44954-0003	Doc. type ELD	Version AB / Page 104

RELEASED

This drawing must not without the consent of Tetra Pak be copied, transmitted or disclosed to any third party.

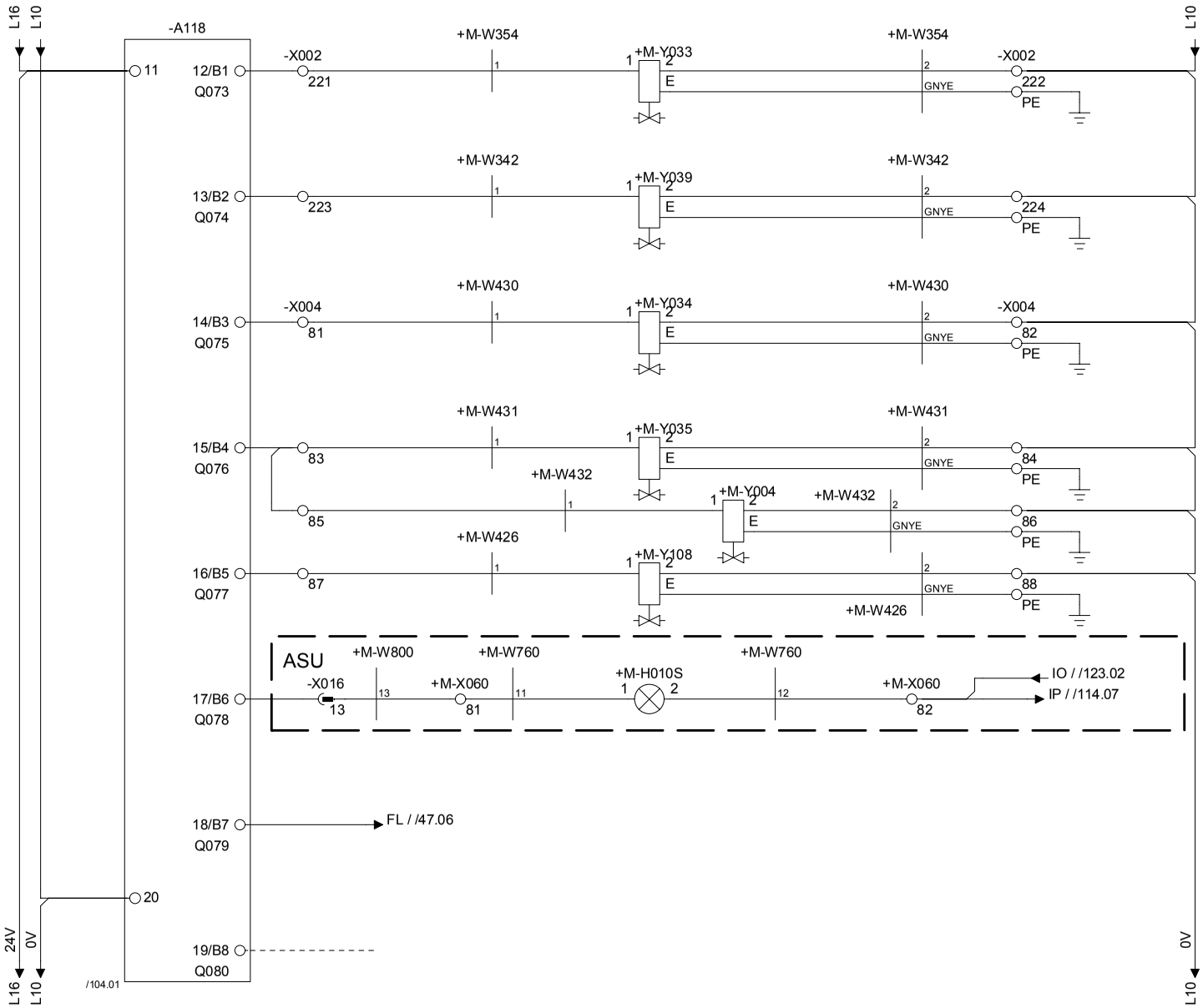

+M-Y033 COOLING WATER

+M-Y039 TUBE FLUSHING

+M-Y034 SPRAY TANK, FILLING

+M.Y035 SPRAY TANK, SPRAYING PEROXIDE

+M-Y004 SPRAY TANK, AIR

+M-Y108 TOP FILLING VALVE, PEROXIDE BATH

ASU M.H010S RESET ASU

+C-A310 FCS COMMUNICATION SYS.:ENABLE

RESERVED FOR CUSTOMER

Drawing remarks

Tetra Pak

Designer QUE/AIR	Date 11/06/2002	Machine TBA/19 020V		
ECM No 119151	Denomination CIRCUIT DIAGRAM	Page Type PLC-OUT A118, VALVES		
Company Tetra Pak Carton Ambient SpA	Document No. 44954-0003	Doc. type ELD	Version AB	Page 105

RELEASED

This drawing must not without the consent of Tetra Pak be copied, transmitted or disclosed to any third party.

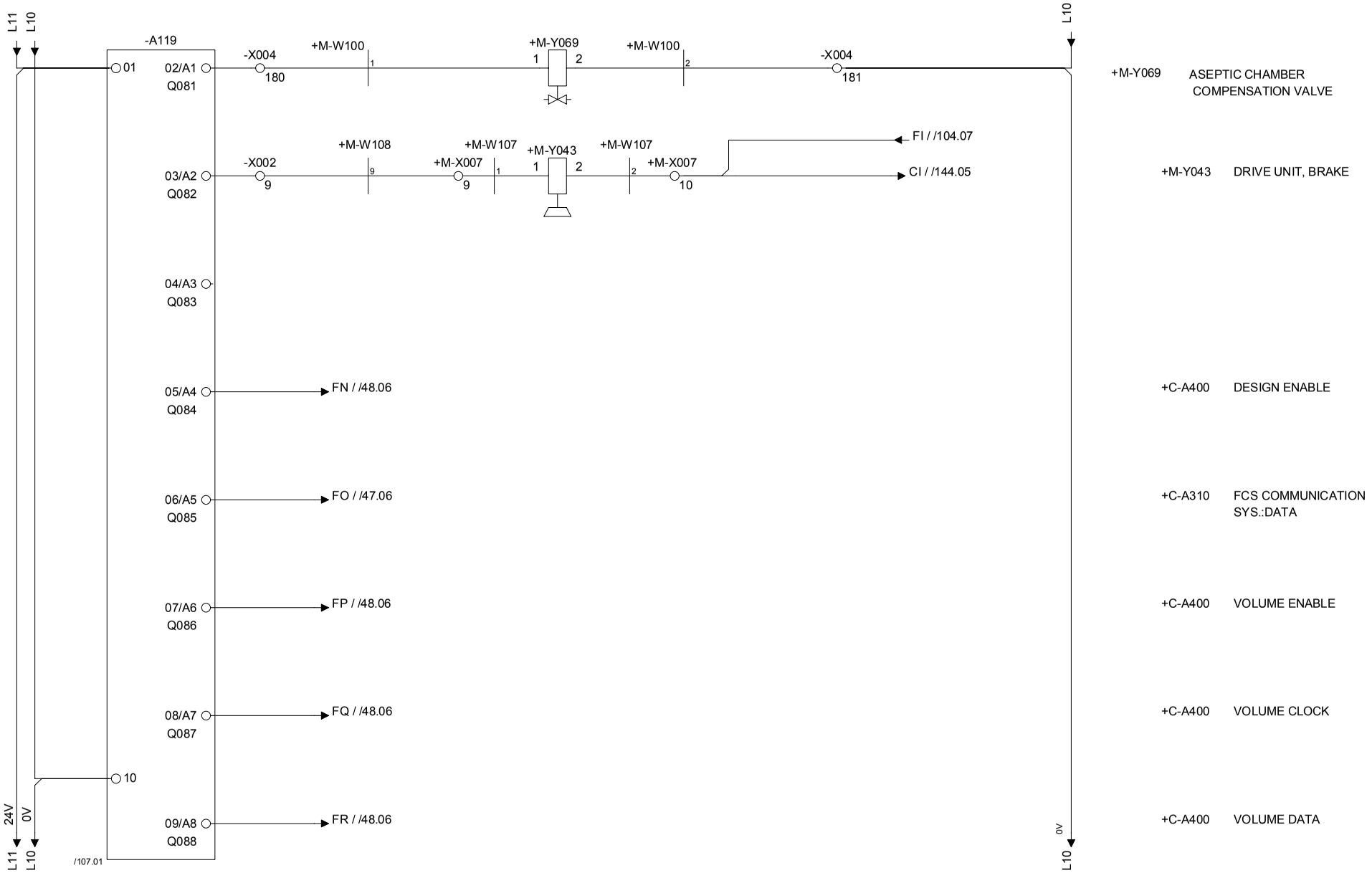

	Designer QUE/AIR	Date 11/06/2002	Machine TBA/19 020V	
Tetra Pak	ECM No 119151	Denomination CIRCUIT DIAGRAM	Page Type PLC-OUT A119	
Drawing remarks	Company Tetra Pak Carton Ambient SpA	Document No. 44954-0003	Doc. type ELD	Version AB	Page 106

RELEASED

This drawing must not without the consent of Tetra Pak be copied, transmitted or disclosed to any third party.

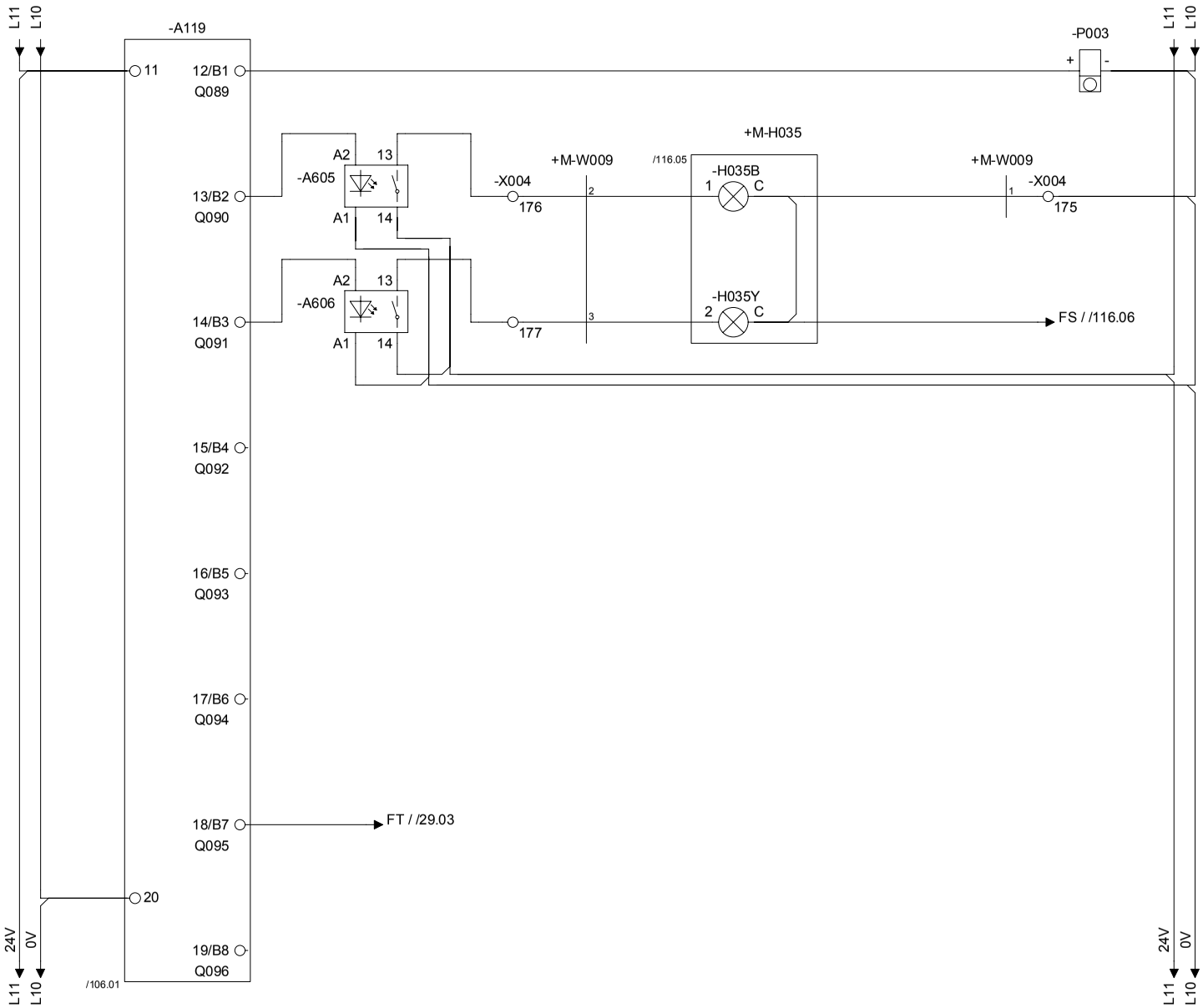

Drawing remarks	Tetra Pak	Designer QUE/AIR	Date 11/06/2002	Machine TBA/19 020V	
		ECM No 119151	Denomination CIRCUIT DIAGRAM	Page Type PLC-OUT A119	
	Company Tetra Pak Carton Ambient SpA		Document No. 44954-0003	Doc. type ELD	Version AB	Page 107

RELEASED

This drawing must not without the consent of Tetra Pak be copied, transmitted or disclosed to any third party.

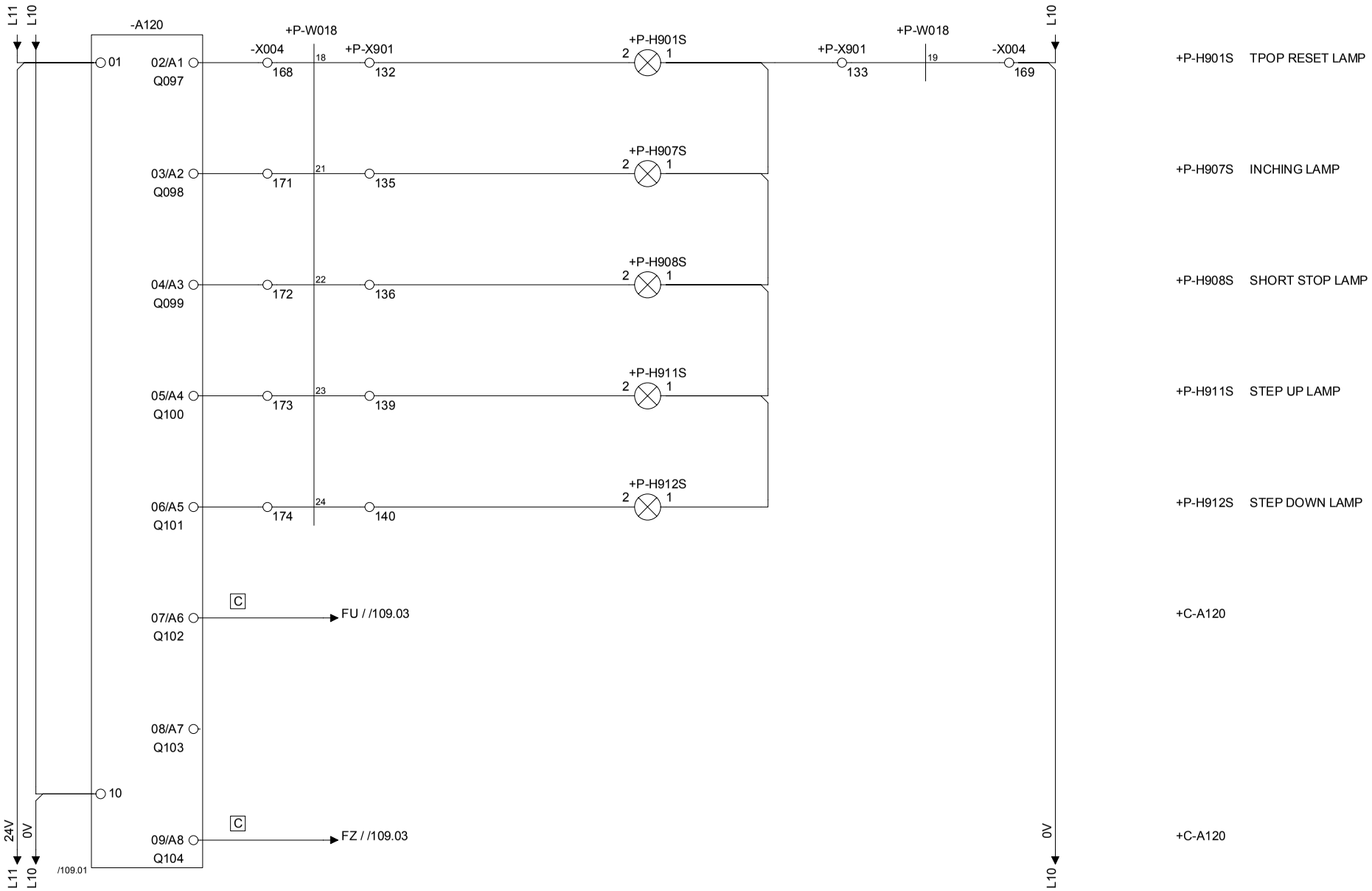

	Tetra Pak	Designer QUE/AIR	Date 11/06/2002	Machine TBA/19 020V	
		ECM No 119151	Denomination CIRCUIT DIAGRAM	Page Type PLC-OUT A120	
Drawing remarks		Company Tetra Pak Carton Ambient SpA	Document No. 44954-0003	Doc. type ELD	Version AB	Page 108

RELEASED

This drawing must not without the consent of Tetra Pak be copied, transmitted or disclosed to any third party.

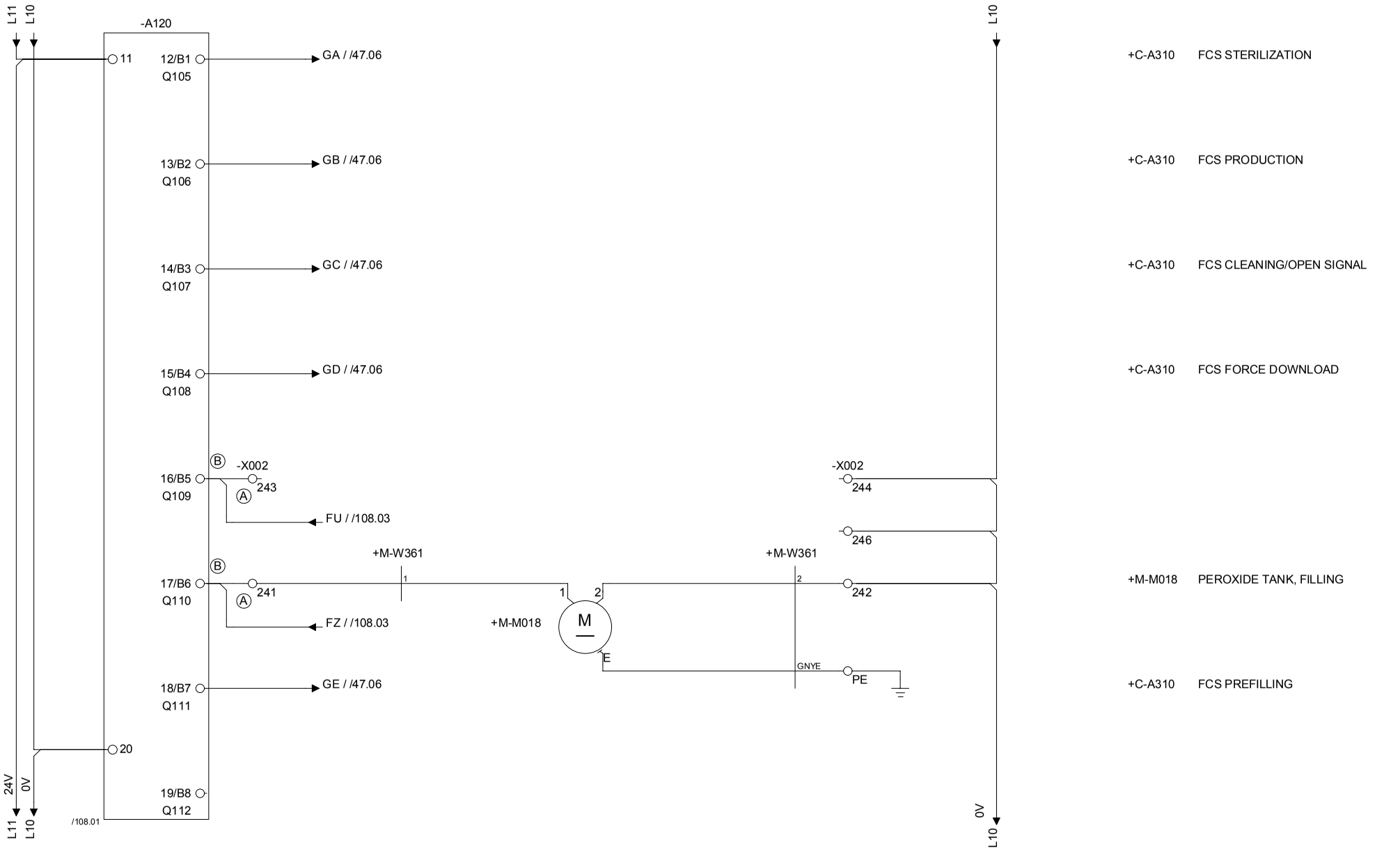

Drawing remarks	Tetra Pak	Designer QUE/AIR	Date 11/06/2002	Machine TBA/19 020V
		ECM No 119151	Denomination CIRCUIT DIAGRAM	Page Type PLC-OUT A120
	Company Tetra Pak Carton Ambient SpA	Document No. 44954-0003	Doc. type ELD	Version AB / Page 109

RELEASED

This drawing must not without the consent of Tetra Pak be copied, transmitted or disclosed to any third party.

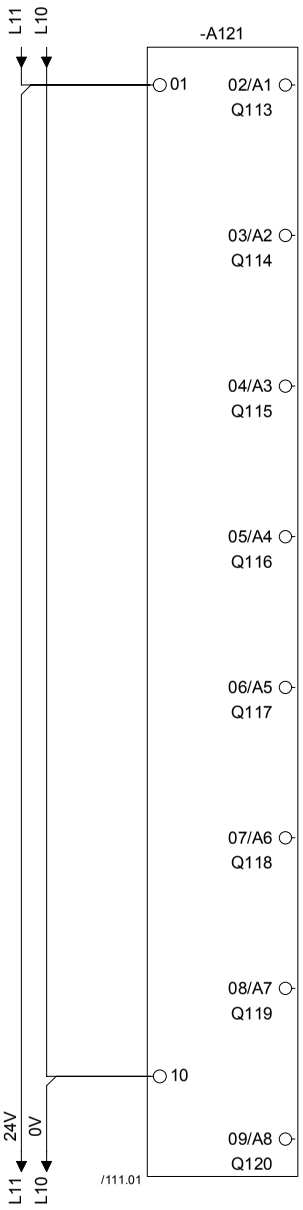

Drawing remarks	Tetra Pak	Designer QUE/AIR	Date 11/06/2002	Machine TBA/19 020V	
		ECM No 119151	Denomination CIRCUIT DIAGRAM	Page Type PLC-OUT A121	
	Company Tetra Pak Carton Ambient SpA		Document No. 44954-0003	Doc. type ELD	Version AB	Page 110

RELEASED

This drawing must not without the consent of Tetra Pak be copied, transmitted or disclosed to any third party.

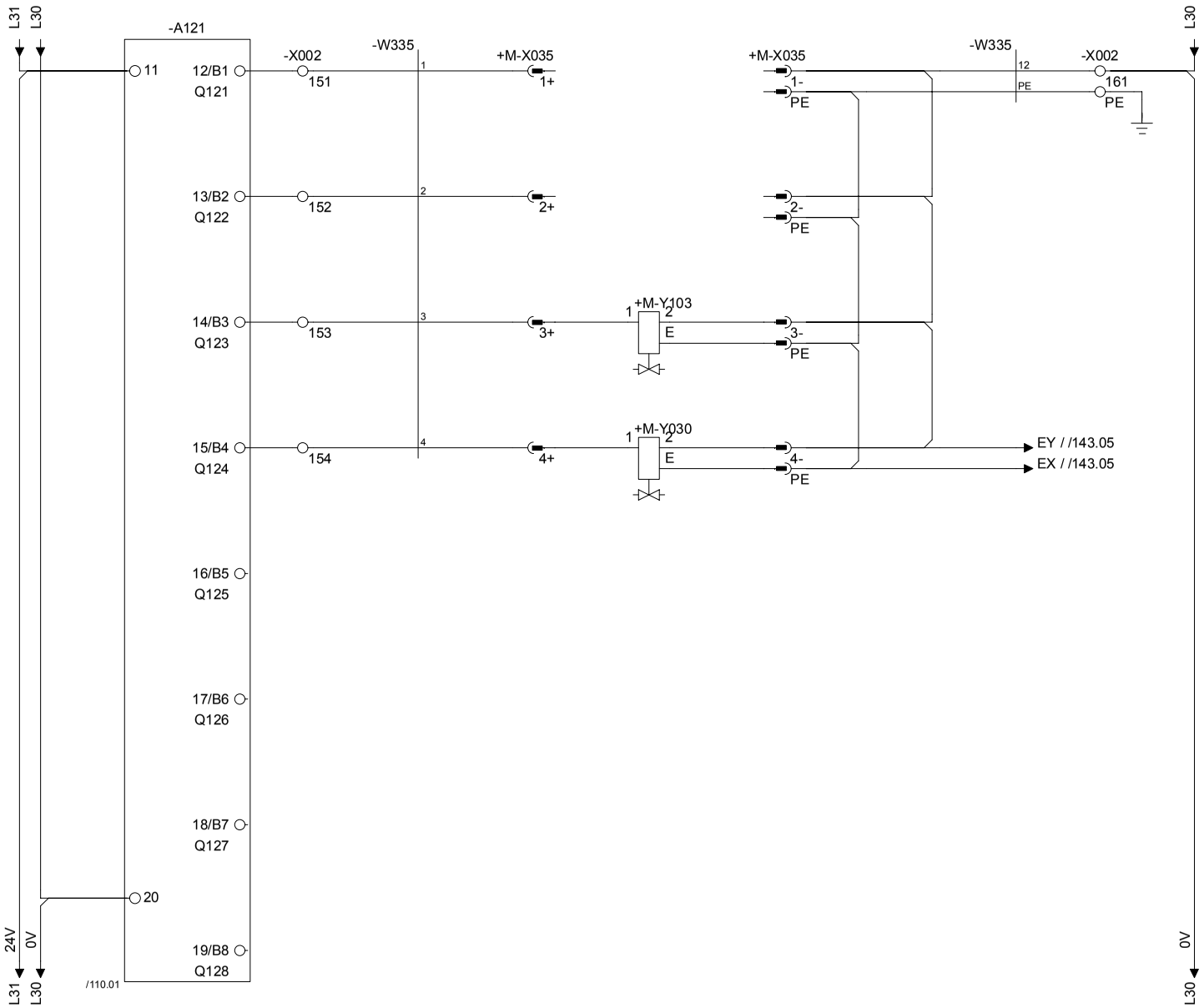

M.Y103 PRESSURE DEVICE

M.Y030 SHUT-OFF FINAL FOLDER

Drawing remarks	Tetra Pak	Designer QUE/AIR	Date 11/06/2002	Machine TBA/19 020V	
		ECM No 119151	Denomination CIRCUIT DIAGRAM	Page Type PLC-OUT A121, VALVES	
	Company Tetra Pak Carton Ambient SpA		Document No. 44954-0003	Doc. type ELD	Version AB	Page 111

RELEASED

This drawing must not without the consent of Tetra Pak be copied, transmitted or disclosed to any third party.

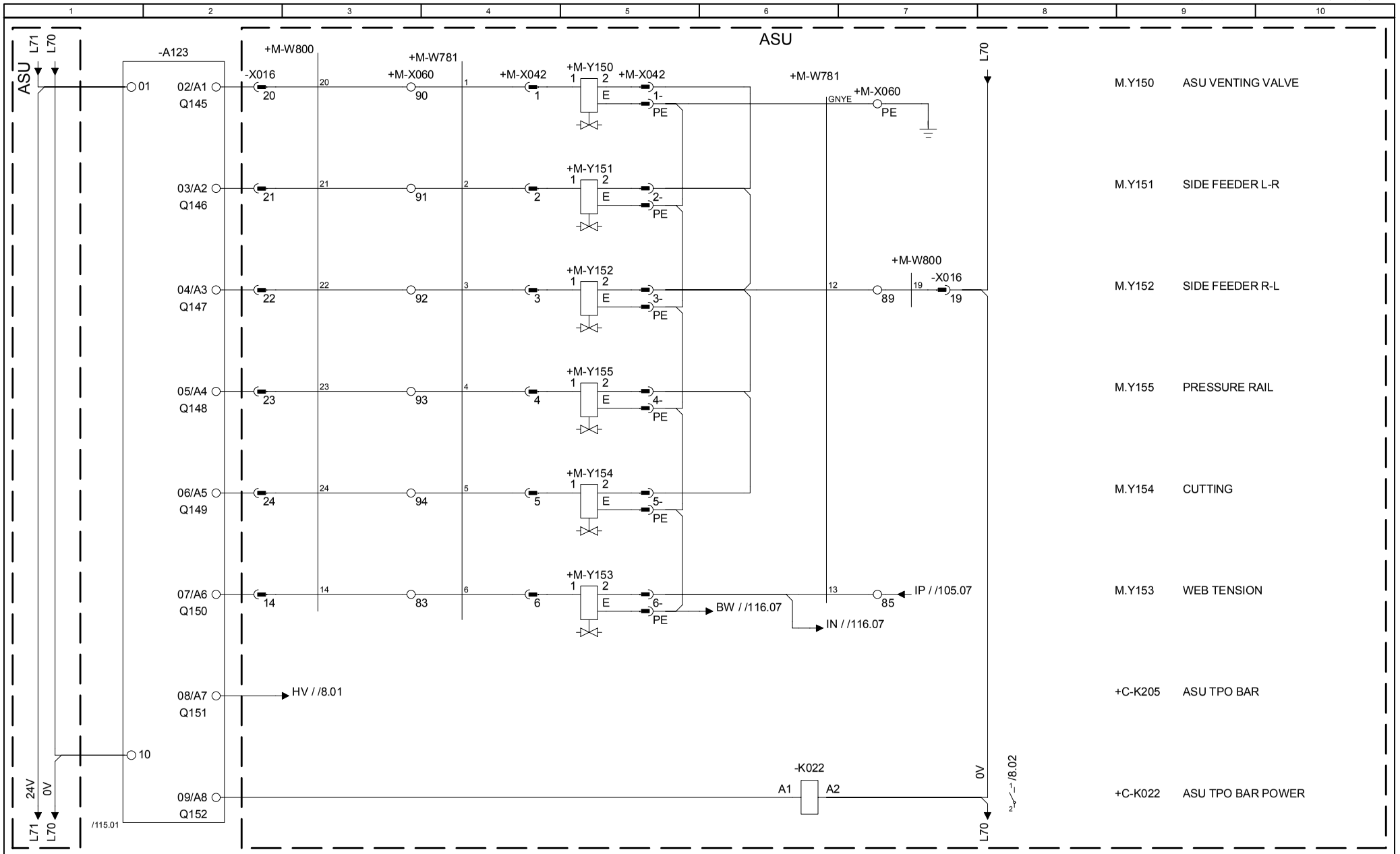

Drawing remarks	Tetra Pak	Designer QUE/AIR	Date 11/06/2002	Machine TBA/19 020V
		ECM No 119151	Denomination CIRCUIT DIAGRAM	Page Type PLC-OUT A123
	Company Tetra Pak Carton Ambient SpA		Document No. 44954-0003	Doc. type ELD / Version AB / Page 114

RELEASED

This drawing must not without the consent of Tetra Pak be copied, transmitted or disclosed to any third party.

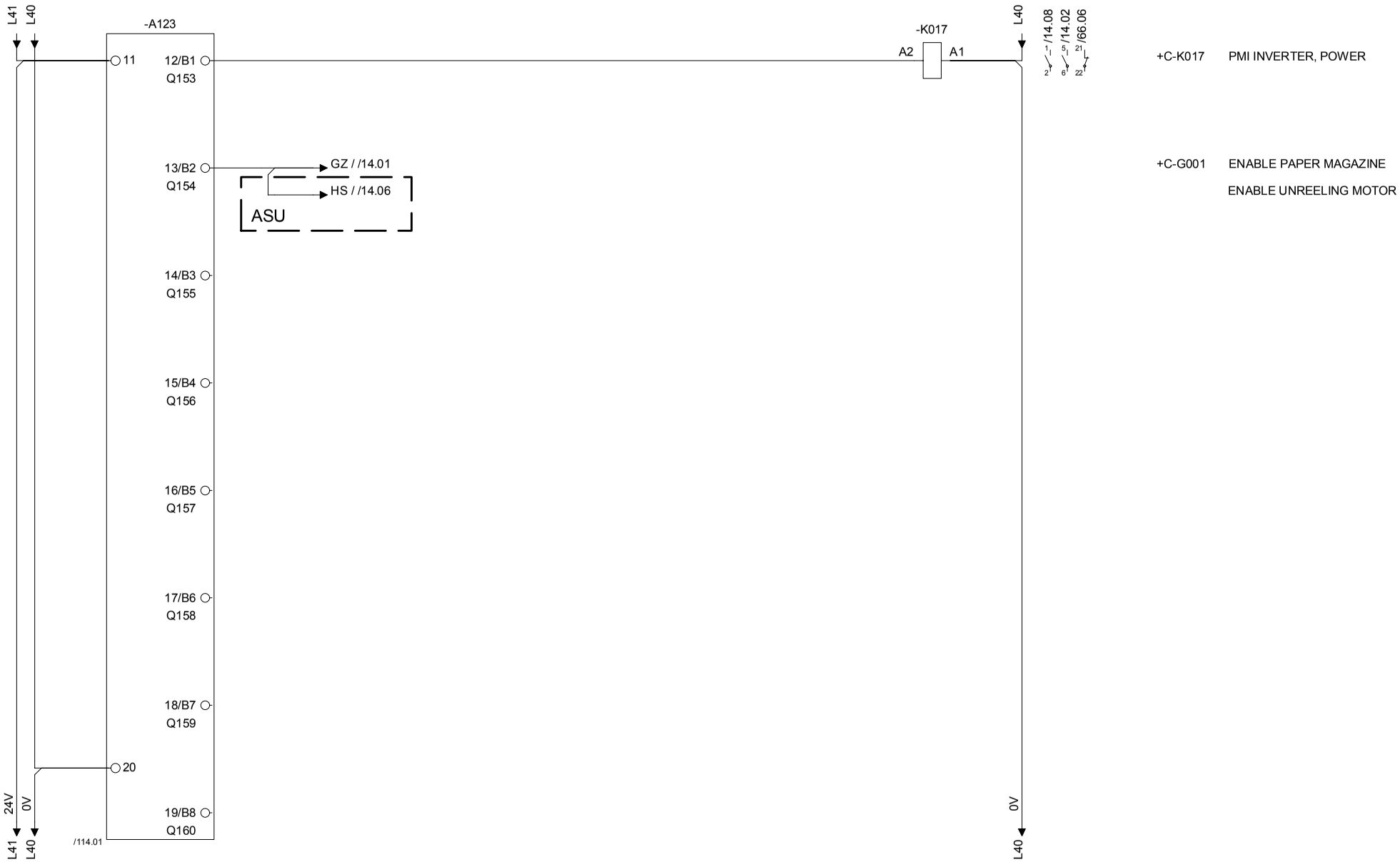

Drawing remarks	Tetra Pak	Designer QUE/AIR	Date 11/06/2002	Machine TBA/19 020V	
		ECM No 119151	Denomination CIRCUIT DIAGRAM	Page Type PLC-OUT A123	
	Company Tetra Pak Carton Ambient SpA		Document No. 44954-0003	Doc. type ELD	Version AB	Page 115

RELEASED

This drawing must not without the consent of Tetra Pak be copied, transmitted or disclosed to any third party.

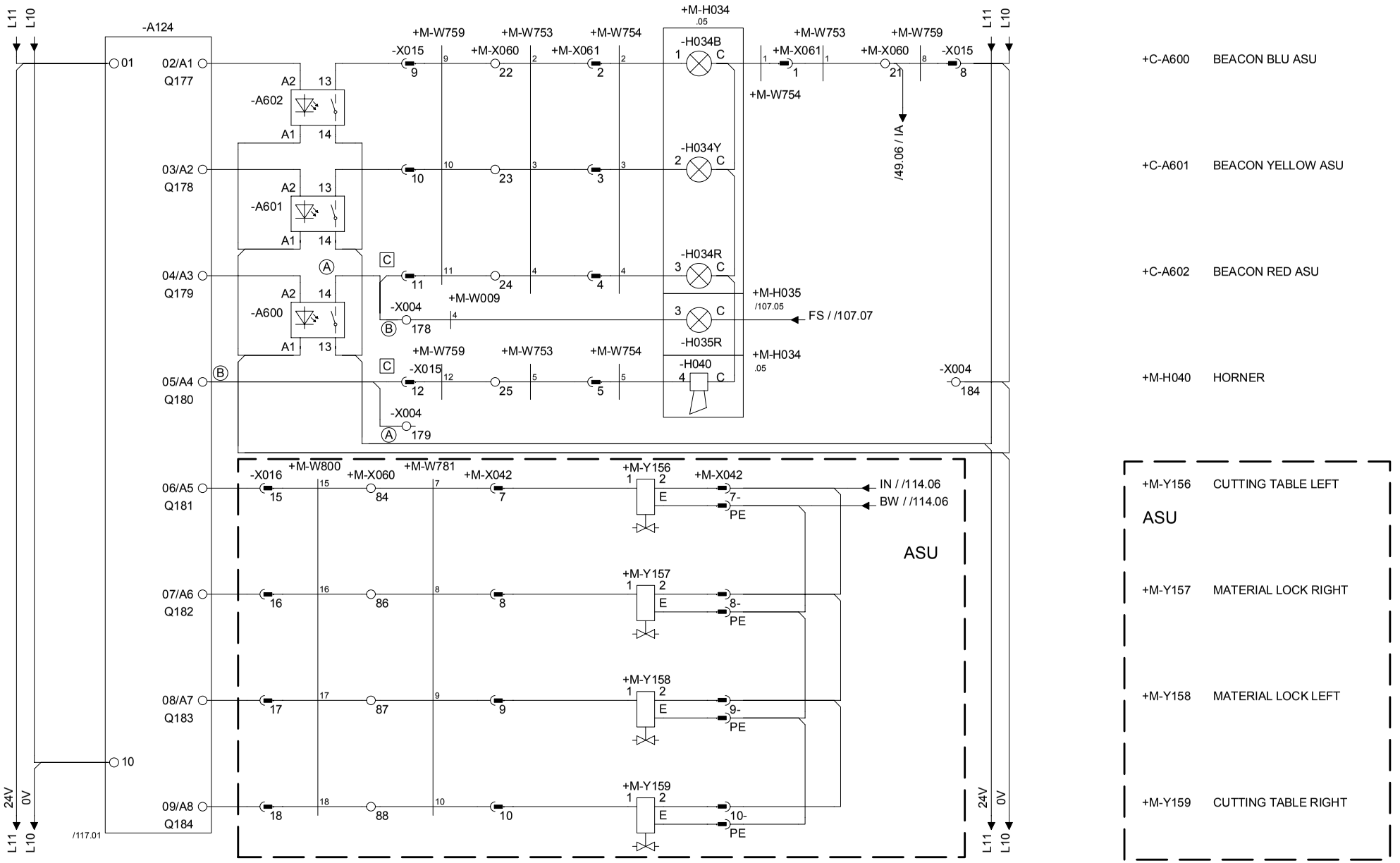

+C-A600 BEACON BLU ASU

+C-A601 BEACON YELLOW ASU

+C-A602 BEACON RED ASU

+M-H040 HORNER

+M-Y156 CUTTING TABLE LEFT

ASU

+M-Y157 MATERIAL LOCK RIGHT

+M-Y158 MATERIAL LOCK LEFT

+M-Y159 CUTTING TABLE RIGHT

Drawing remarks	Tetra Pak	Designer QUE/AIR	Date 11/06/2002	Machine TBA/19 020V			
		ECM No 119151	Denomination CIRCUIT DIAGRAM	Page Type PLC-OUT A124			
	Company Tetra Pak Carton Ambient SpA		Document No. 44954-0003	Doc. type ELD	Version AB	Page 116	

RELEASED

This drawing must not without the consent of Tetra Pak be copied, transmitted or disclosed to any third party.

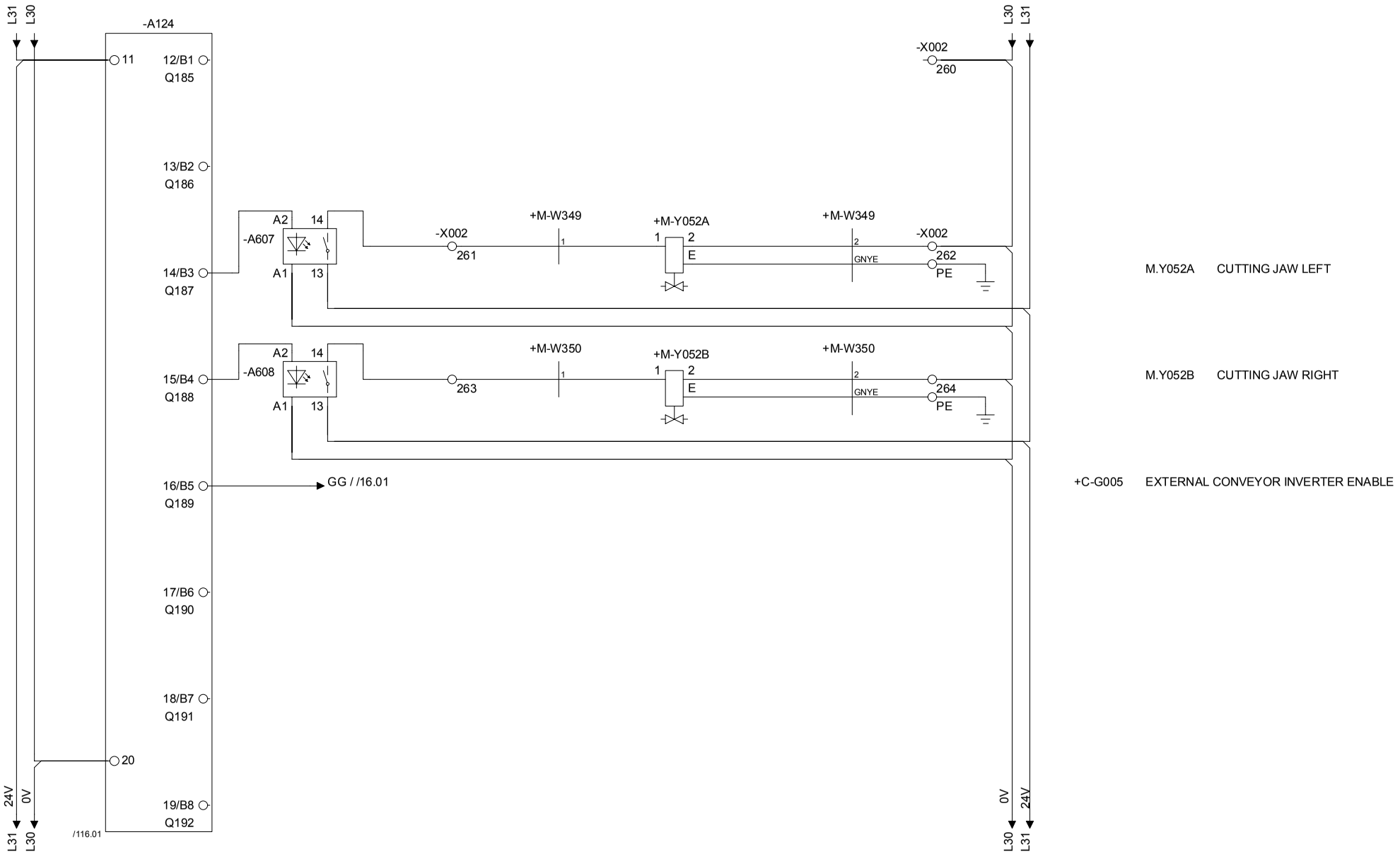

	Tetra Pak	Designer QUE/AIR	Date 11/06/2002	Machine TBA/19 020V			
		ECM No 119151	Denomination CIRCUIT DIAGRAM	Page Type PLC-OUT A124			
Drawing remarks		Company Tetra Pak Carton Ambient SpA		Document No. 44954-0003	Doc. type ELD	Version AB	Page 117

RELEASED

This drawing must not without the consent of Tetra Pak be copied, transmitted or disclosed to any third party.

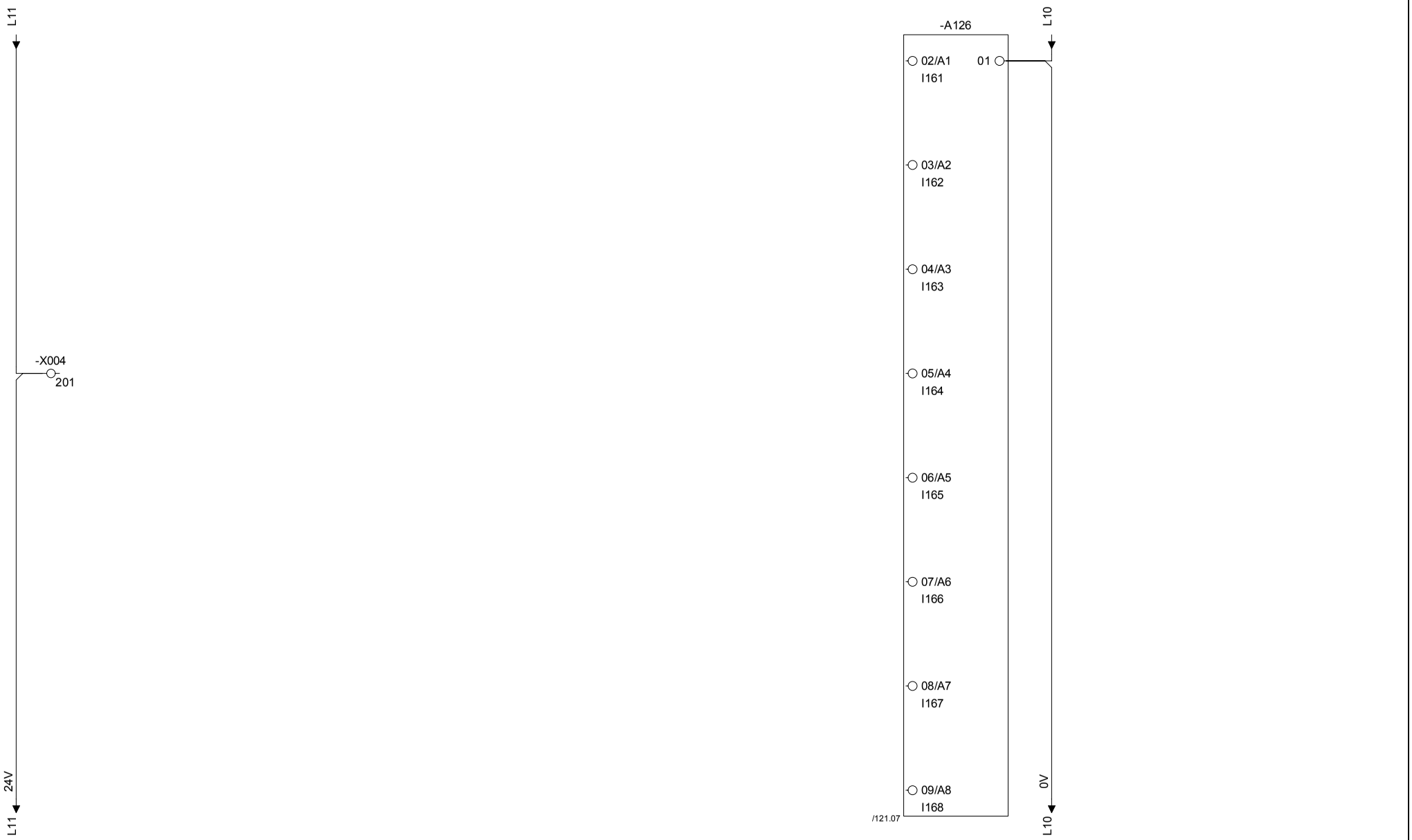

	Tetra Pak	Designer QUE/AIR	Date 11/06/2002	Machine TBA/19 020V	
		ECM No 119151	Denomination CIRCUIT DIAGRAM	Page Type PLC-IN A126	
Drawing remarks		Company Tetra Pak Carton Ambient SpA	Document No. 44954-0003	Doc. type ELD	Version AB	Page 120

RELEASED

This drawing must not without the consent of Tetra Pak be copied, transmitted or disclosed to any third party.

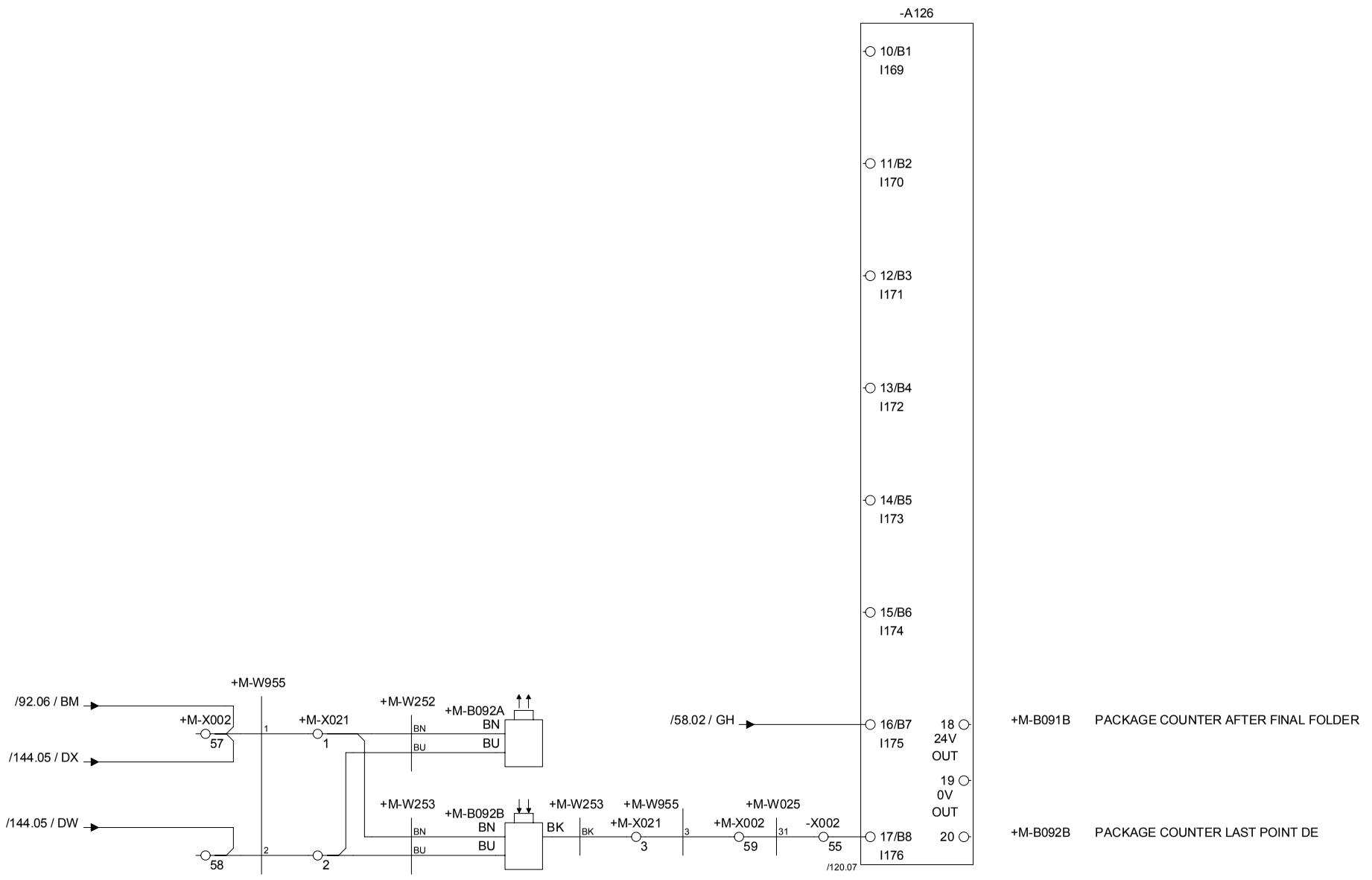

	Tetra Pak	Designer QUE/AIR	Date 11/06/2002	Machine TBA/19 020V			
		ECM No 119151	Denomination CIRCUIT DIAGRAM	Page Type PLC-IN A126			
Drawing remarks	Company Tetra Pak Carton Ambient SpA		Document No. 44954-0003	Doc. type ELD	Version AB	Page 121	

RELEASED

This drawing must not without the consent of Tetra Pak be copied, transmitted or disclosed to any third party.

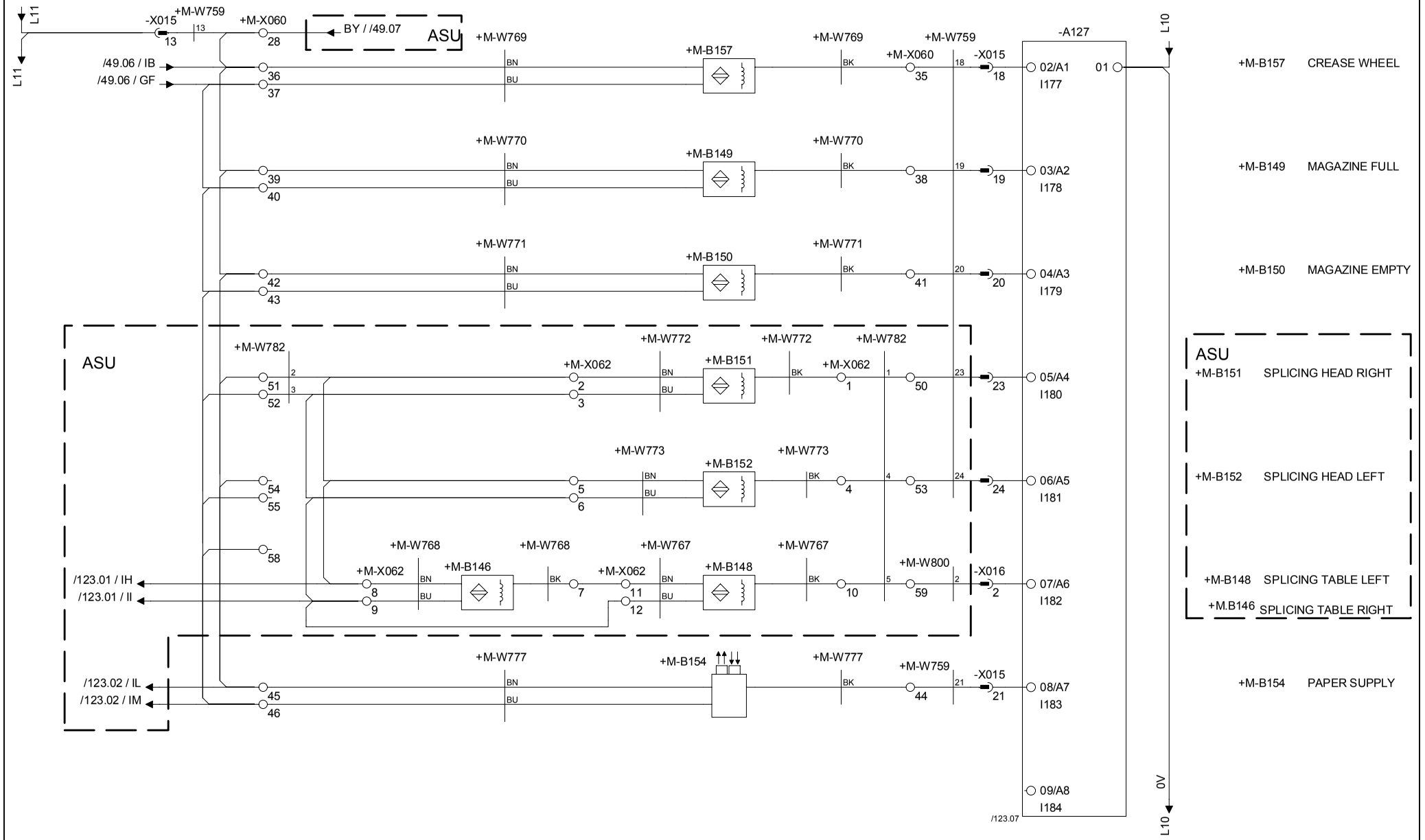

Drawing remarks	Tetra Pak	Designer QUE/AIR	Date 11/06/2002	Machine TBA/19 020V			
		ECM No 119151	Denomination CIRCUIT DIAGRAM	Page Type PLC-IN A127			
	Company Tetra Pak Carton Ambient SpA		Document No. 44954-0003	Doc. type ELD	Version AB	Page 122	

RELEASED

This drawing must not without the consent of Tetra Pak be copied, transmitted or disclosed to any third party.

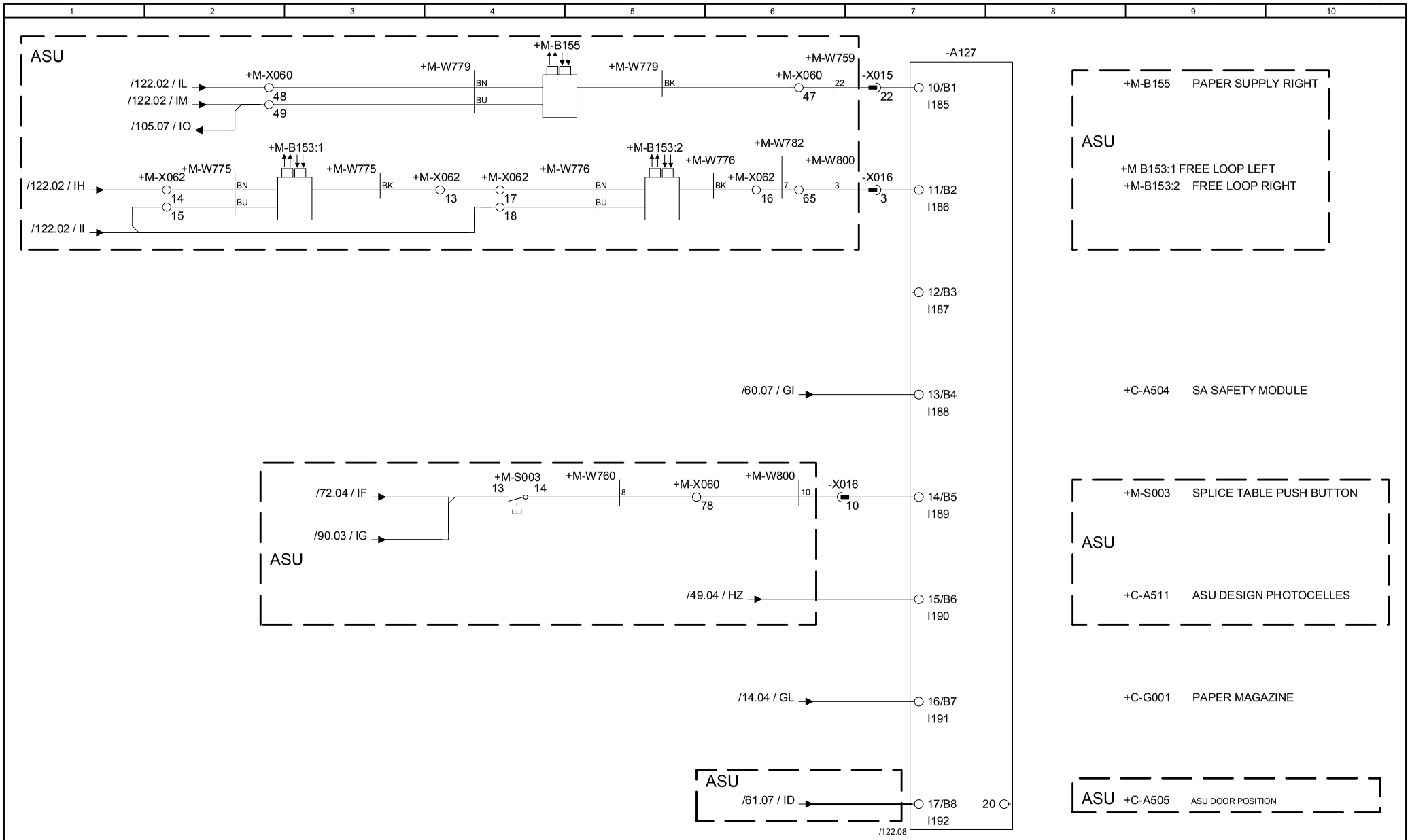

Drawing remarks	Tetra Pak	Designer QUE/AIR	Date 11/06/2002	Machine TBA/19 020V	
		ECM No 119151	Denomination CIRCUIT DIAGRAM	Page Type PLC-IN A127	
	Company Tetra Pak Carton Ambient SpA		Document No. 44954-0003	Doc. type ELD	Version AB	Page 123

RELEASED

This drawing must not without the consent of Tetra Pak be copied, transmitted or disclosed to any third party.

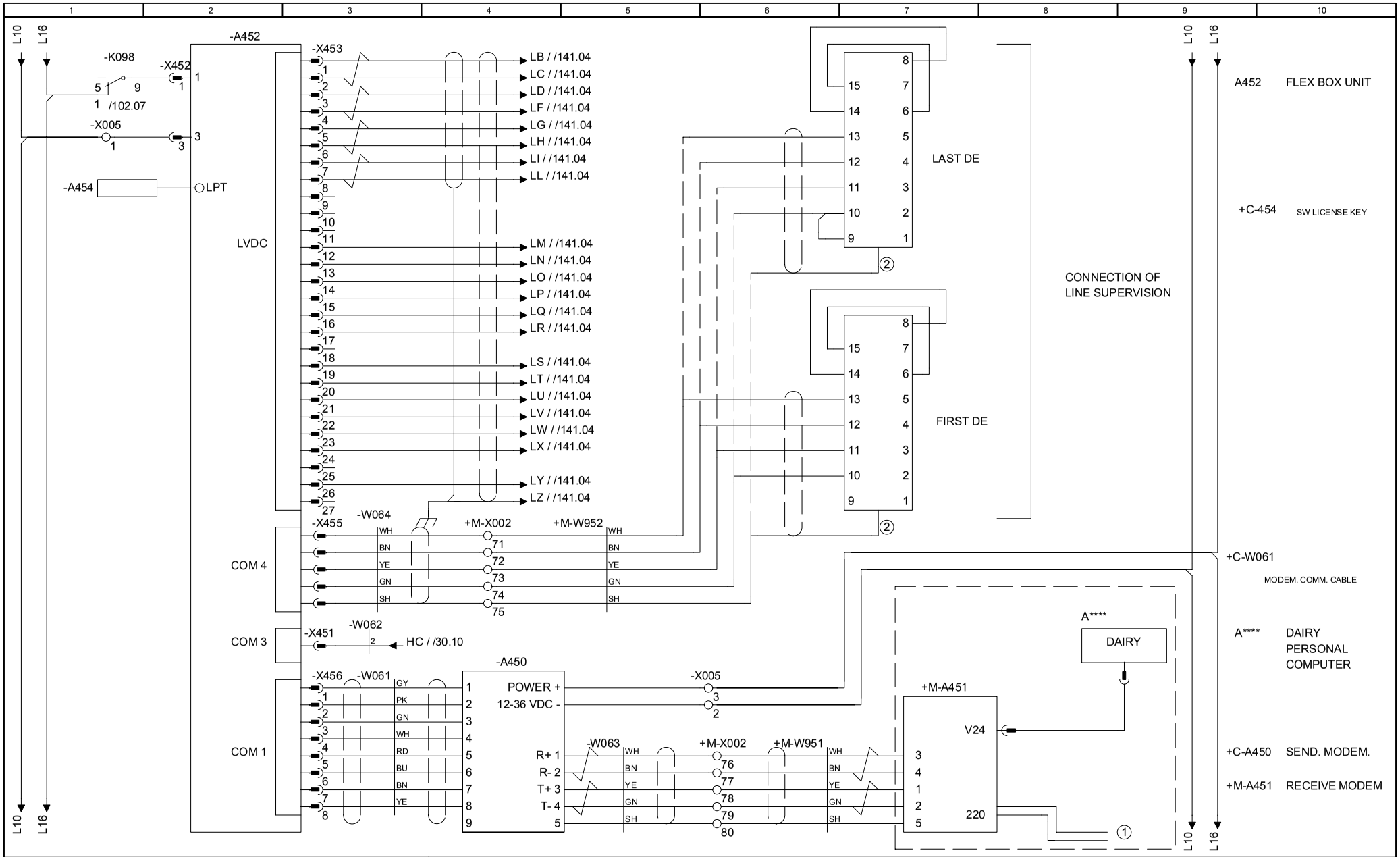

@V=00@EN=1.220V SUPPLY FROM THE DIARY	Tetra Pak	Designer QUE/AIR	Date 11/06/2002	Machine TBA/19 020V	
@V=00@EN=2. CONNECT TO THE GLAND		ECM No 119151	Denomination CIRCUIT DIAGRAM	Page Type PLMS	
Drawing remarks	Company Tetra Pak Carton Ambient SpA		Document No. 44954-0003	Doc. type ELD	Version AB / Page 140

This drawing must not without the consent of Tetra Pak be copied, transmitted or disclosed to any third party.

1	2	3	4	5	6	7	8	9	10

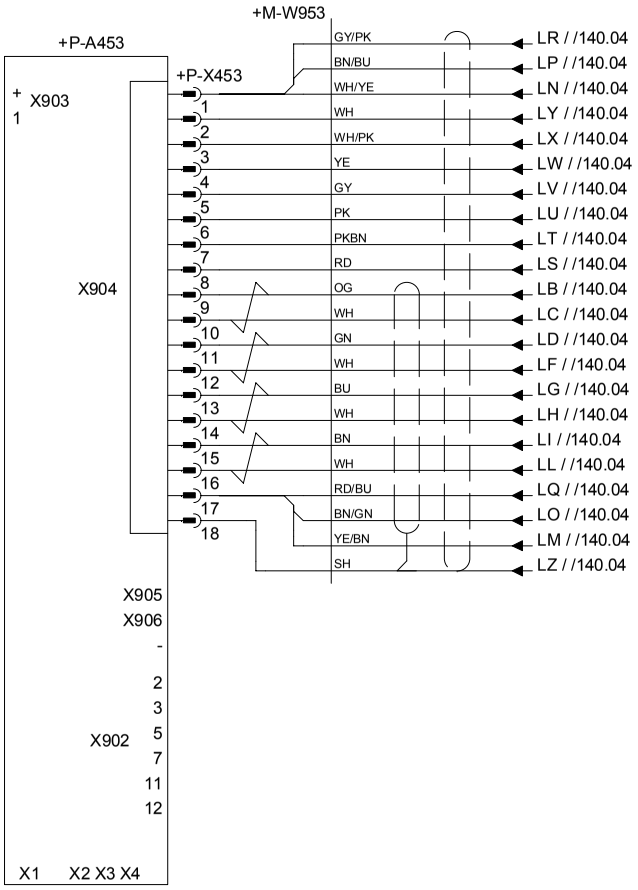

+P-A453 IR TOUCH UNIT

	Designer QUE/AIR	Date 11/06/2002	Machine TBA/19 020V		
	ECM No 119151	Denomination CIRCUIT DIAGRAM	Page Type PLMS		
Drawing remarks	Company Tetra Pak Carton Ambient SpA	Document No. 44954-0003	Doc. type ELD	Version AB	Page 141

RELEASED

This drawing must not without the consent of Tetra Pak be copied, transmitted or disclosed to any third party.

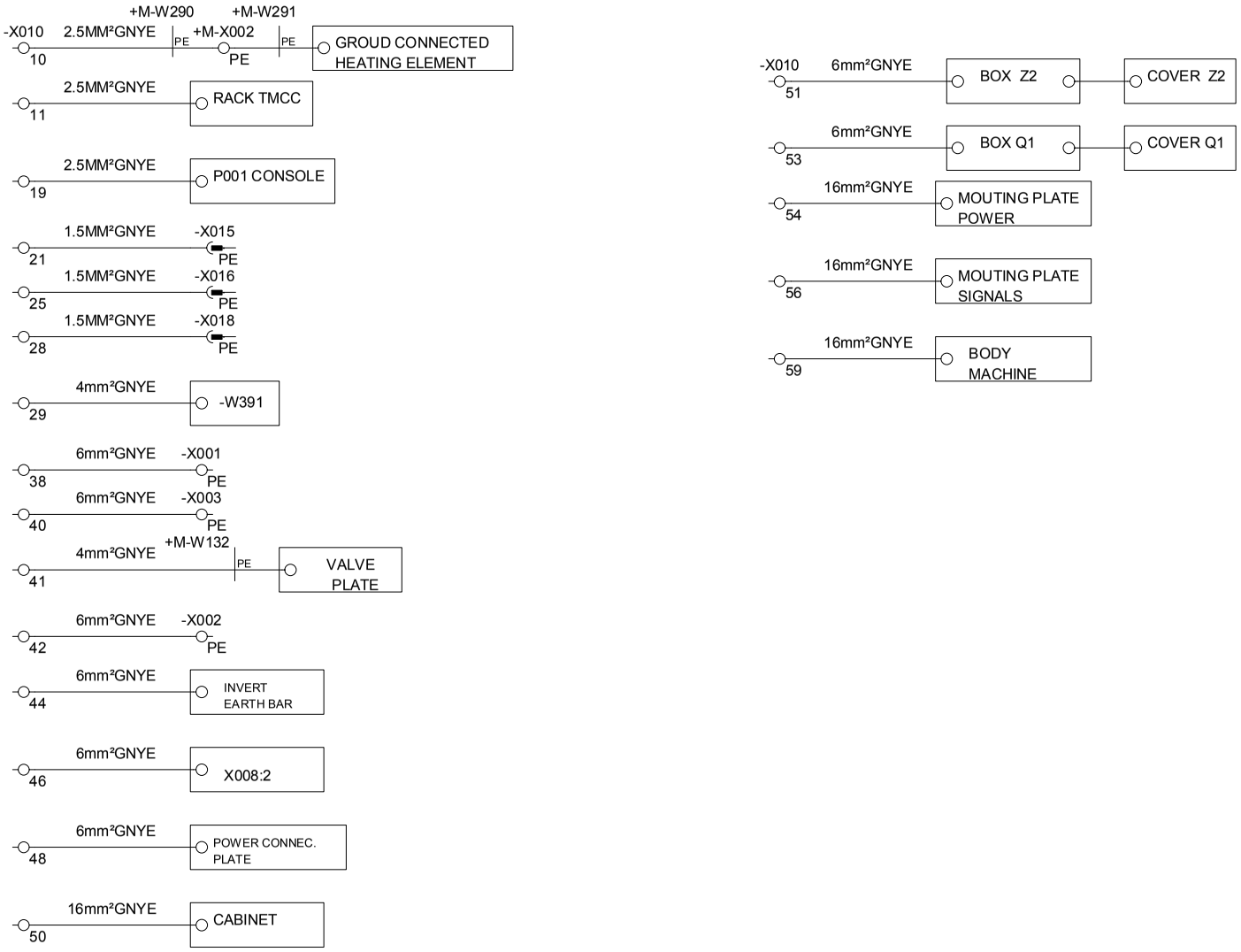

Drawing remarks	Tetra Pak	Designer QUE/AIR	Date 11/06/2002	Machine TBA/19 020V
		ECM No 119151	Denomination CIRCUIT DIAGRAM	Page Type GROUND CONNECTION
	Company Tetra Pak Carton Ambient SpA	Document No. 44954-0003	Doc. type ELD	Version AB / Page 142

RELEASED

This drawing must not without the consent of Tetra Pak be copied, transmitted or disclosed to any third party.

1	2	3	4	5	6	7	8	9	10

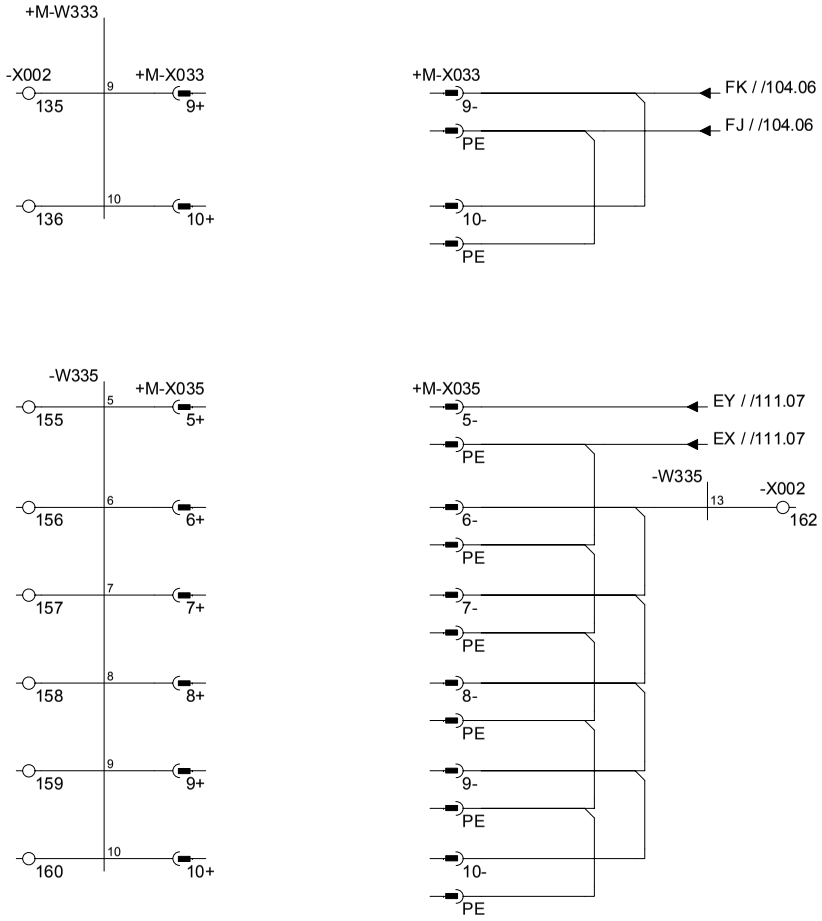

	Tetra Pak	Designer QUE/AIR	Date 11/06/2002	Machine TBA/19 020V	
		ECM No 119151	Denomination CIRCUIT DIAGRAM	Page Type PRE-CONNECTED CABLES	
Drawing remarks		Company Tetra Pak Carton Ambient SpA	Document No. 44954-0003	Doc. type ELD	Version AB	Page 143

RELEASED

This drawing must not without the consent of Tetra Pak be copied, transmitted or disclosed to any third party.

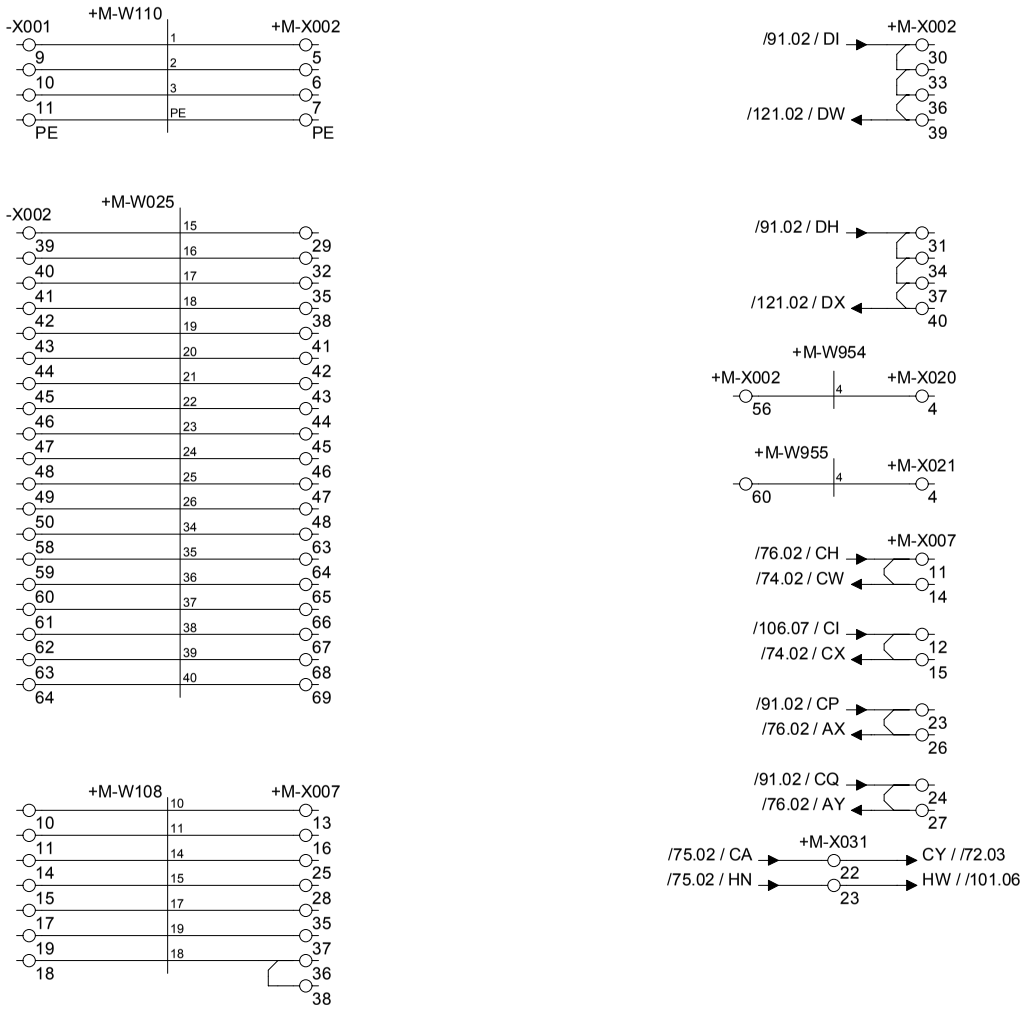

	Tetra Pak	Designer QUE/AIR	Date 11/06/2002	Machine TBA/19 020V	
		ECM No 119151	Denomination CIRCUIT DIAGRAM	Page Type PRE-CONNECTED CABLES	
Drawing remarks		Company Tetra Pak Carton Ambient SpA	Document No. 44954-0003	Doc. type ELD / Version AB	Page 144

8 Line summary

EM3.0TB088032en.fm

Table of contents

Line summary 44954-0004

EM3.0TB088032en.fm

RELEASED

This drawing must not without the consent of Tetra Pak be copied, transmitted or disclosed to any third party.

Line summary of 44954-0003

Line	From	Page.Col.	To	Page.Col.	Area/Color	Opt.
L1	+C-X301:6	5 .10	+C-F103A:1	29 .7		
L1	+C-F103A:1	29 .7	+C-F102A:1	29 .2		
L1	+C-F102A:1	29 .2	+C-F005:1	30 .7		
L1	+C-F005:1	30 .7	+C-F007A-C:1	15 .8		
L1	+C-F007A-C:1	15 .8	+C-F001:1	6 .8		
L1	+C-F001:1	6 .8	+C-F034:1	30 .5		
L2	+C-X301:12	5 .10	+C-F103B:1	29 .7		
L2	+C-F103B:1	29 .7	+C-F102B:1	29 .2		
L2	+C-F102B:1	29 .2	+C-F009:1	14 .2		
L2	+C-F009:1	14 .2	+C-F007A-C:3	15 .8		
L2	+C-F007A-C:3	15 .8	+C-F008:1	16 .3		
L2	+C-F008:1	16 .3	+C-F034:3	30 .5		
L3	+C-X301:18	5 .10	+C-F103C:1	29 .7		
L3	+C-F103C:1	29 .7	+C-F102C:1	29 .2		
L3	+C-F102C:1	29 .2	+C-F007A-C:5	15 .8		
L3	+C-F007A-C:5	15 .8	+C-F015:1	14 .8		ASU
L3	+C-F015:1	14 .8	+C-F004:1	15 .3		
L3	+C-F004:1	15 .3	+C-F034:5	30 .5		
L4	+C-K003:2	5 .9	+C-Q008:1	13 .2		
L4	+C-Q008:1	13 .2	+C-Q016:1	13 .8		
L5	+C-K003:4	5 .9	+C-Q008:3	13 .2		
L5	+C-Q008:3	13 .2	+C-Q016:3	13 .8		
L6	+C-K003:6	5 .9	+C-Q008:5	13 .2		
L6	+C-Q008:5	13 .2	+C-Q016:5	13 .8		
L7	+C-K030:2	5 .8	+C-F016:1	8 .2		ASU
L7	+C-F016:1	8 .2	+C-F019:1	12 .2		
L7	+C-F019:1	12 .2	+C-F012:1	12 .9		
L7	+C-F012:1	12 .9	+C-F101A+C:1	10 .9		

Line	From	Page.Col.	To	Page.Col.	Area/Color	Opt.
L7	+C-F101A+C:1	10 .9	+C-F100A+C:1	10 .6		
L7	+C-F100A+C:1	10 .6	+C-F104:1	10 .3		
L7	+C-F104:1	10 .3	+C-Q009:1	12 .8		
L7	+C-Q009:1	12 .8	+C-Q007:1	12 .7		
L7	+C-Q007:1	12 .7	+C-Q006:1	12 .5		
L8	+C-K030:4	5 .8	+C-F002:1	7 .2		
L8	+C-F002:1	7 .2	+C-F010:1	11 .9		
L8	+C-F010:1	11 .9	+C-F101B:1	10 .9		
L8	+C-F101B:1	10 .9	+C-F100B:1	10 .6		
L8	+C-F100B:1	10 .6	+C-F106:1	7 .5		
L8	+C-F106:1	7 .5	+C-Q009:3	12 .8		
L8	+C-Q009:3	12 .8	+C-Q007:3	12 .7		
L8	+C-Q007:3	12 .7	+C-Q006:3	12 .5		
L9	+C-K030:6	5 .8	+C-F030:1	11 .1		
L9	+C-F030:1	11 .1	+C-F021:1	10 .4		
L9	+C-F021:1	10 .4	+C-F101C:1	10 .9		
L9	+C-F101C:1	10 .9	+C-F100C:1	10 .7		
L9	+C-F100C:1	10 .7	+C-F107:1	7 .8		
L9	+C-F107:1	7 .8	+C-Q009:5	12 .8		
L9	+C-Q009:5	12 .8	+C-Q007:5	12 .7		
L9	+C-Q007:5	12 .7	+C-Q006:5	12 .5		
L10	+C-XL010:1	1 .1	+C-V001:-	30 .5	6mm² BU	
L10	+C-V001:-	30 .5	+C-X010:43	30 .6	6mm² GV	
L10	+C-XL010:2	1 .1	+C-A310:2	47 .7	0.75mm² BU	
L10	+C-XL010:3	1 .1	+C-A400:2	48 .5	0.75mm² BU	
L10	+C-XL010:4	1 .2	+C-A507:23	63 .6	0.75mm² BU	
L10	+C-XL010:6	1 .2	+C-P003:-	107 .7	0.75mm² BU	
L10	+C-XL010:7	1 .2	+C-A500:309	29 .3	0.75mm² BU	

Drawing remarks

Tetra Pak

Designer QUE/AIR | Date 11/06/2002 | Machine TBA/19 020V

ECM No 119151 | Denomination LINE SUMMARY | Page Type LINE SUMMARY

Company Tetra Pak Carton Ambient SpA | Document No. 44954-0004 | Doc. type ELD | Version AB | Page 1

This drawing must not without the consent of Tetra Pak be copied, transmitted or disclosed to any third party.

Line summary of 44954-0003

Line	From	Page.Col.	To	Page.Col.	Area/Color	Opt.
L10	+C-XL010:8	1 .2	+C-A501:309	29 .8	0.75mm² BU	
L10	+C-XL010:10	1 .3	+C-G003:4	15 .2	0.75mm² BU	
L10	+C-XL010:11	1 .3	+C-G001:4	14 .2	0.75mm² BU	
L10	+C-XL010:12	1 .3	+C-G002:4	14 .7	0.75mm² BU	ASU
L10	+C-XL010:13	1 .3	+C-A512:23	66 .7	0.75mm² BU	
L10	+C-XL010:14	1 .3	+C-X002:126	103 .7	0.75mm² BU	
L10	+C-X002:126	103 .7	+C-X002:137	103 .7		
L10	+C-X002:137	103 .7	+C-X002:138	104 .7		
L10	+C-XL010:15	1 .4	+C-X004:42	48 .1	2.5mm² BU	
L10	+C-X004:42	48 .1	+C-X004:46	48 .1		
L10	+C-X004:82	105 .7	+C-X004:84	105 .7		
L10	+C-X004:84	105 .7	+C-X004:86	105 .7		
L10	+C-X004:86	105 .7	+C-X004:88	105 .7		
L10	+C-X004:138	75 .4	+C-X004:135	75 .1		
L10	+C-X004:135	75 .1	+C-X004:132	91 .1		
L10	+C-X004:132	91 .1	+C-X004:129	80 .1		
L10	+C-X004:129	80 .1	+C-X004:126	80 .1		
L10	+C-X004:126	80 .1	+C-X004:123	76 .4		
L10	+C-X004:123	76 .4	+C-X004:120	75 .1		
L10	+C-X004:120	75 .1	+C-X004:117	75 .1		
L10	+C-X004:117	75 .1	+C-X004:114	75 .1		
L10	+C-X004:114	75 .1	+C-X004:111	75 .1		
L10	+C-X004:111	75 .1	+C-X004:108	93 .1		
L10	+C-X004:108	93 .1	+C-X004:105	75 .1		
L10	+C-X004:105	75 .1	+C-X004:102	75 .1		
L10	+C-X004:102	75 .1	+C-X004:99	75 .1		
L10	+C-XL010:16	1 .4	+C-X004:169	108 .7	2.5mm² BU	
L10	+C-X004:169	108 .7	+C-X004:175	107 .7		

Line	From	Page.Col.	To	Page.Col.	Area/Color	Opt.
L10	+C-X004:175	107 .7	+C-X004:181	106 .6		
L10	+C-X004:181	106 .6	+C-X004:184	116 .7		
L10	+C-X004:184	116 .7	+C-X005:1	140 .1		
L10	+C-X005:1	140 .1	+C-X005:2	140 .6		
L10	+C-XL010:18	1 .4	+C-X002:8	104 .7	0.75mm² BU	
L10	+C-X002:8	104 .7	+C-X002:29	62 .1		
L10	+C-X002:29	62 .1	+C-X002:35	58 .3		
L10	+C-X002:35	58 .3	+C-X002:216	103 .7		
L10	+C-X002:216	103 .7	+C-X002:218	104 .7		
L10	+C-X002:218	104 .7	+C-X002:220	104 .7		
L10	+C-X002:220	104 .7	+C-X002:222	105 .7		
L10	+C-X002:222	105 .7	+C-X002:224	105 .7		
L10	+C-X002:224	105 .7	+C-X002:240	81 .4		
L10	+C-X002:240	81 .4	+C-X002:242	109 .7		
L10	+C-X002:242	109 .7	+C-X002:244	109 .7		
L10	+C-X002:244	109 .7	+C-X002:246	109 .7		
L10	+C-XL010:19	1 .4	+C-X015:8	116 .7	0.75mm² BU	
L10	+C-XL010:20	1 .5	+C-X018:10	74 .2	0.75mm² BU	
L10	+C-XL010:21	1 .5	+C-A505:23	61 .8	0.75mm² BU	ASU
L10	+C-XL010:32	1 .7	+C-A103:01	74 .8	0.75mm² BU	
L10	+C-XL010:33	1 .7	+C-A104:01	76 .8	0.75mm² BU	
L10	+C-XL010:34	1 .7	+C-A105:01	78 .8	0.75mm² BU	
L10	+C-XL010:35	1 .7	+C-A106:01	80 .8	0.75mm² BU	
L10	+C-XL010:36	1 .7	+C-A107:20	83 .1	0.75mm² BU	
L10	+C-XL010:37	1 .8	+C-A111:01	90 .8	0.75mm² BU	
L10	+C-XL010:38	1 .8	+C-A112:01	92 .8	0.75mm² BU	
L10	+C-XL010:39	1 .8	+C-A119:10	106 .1	0.75mm² BU	
L10	+C-A119:10	106 .1	+C-A119:20	107 .1		

Drawing remarks

Tetra Pak

Designer	Date	Machine
QUE/AIR	11/06/2002	TBA/19 020V

ECM No	Denomination	Page Type
119151	LINE SUMMARY	LINE SUMMARY

Company	Document No.	Doc. type	Version	Page
Tetra Pak Carton Ambient SpA	44954-0004	ELD	AB	2

This drawing must not without the consent of Tetra Pak be copied, transmitted or disclosed to any third party.

Line summary of 44954-0003

Line	From	Page.Col.	To	Page.Col.	Area/Color	Opt.
L10	+C-XL010:40	1 .8	+C-A120:10	108 .1	0.75mm² BU	
L10	+C-A120:10	108 .1	+C-A120:20	109 .1		
L10	+C-XL010:41	1 .8	+C-A121:10	110 .1	0.75mm² BU	
L10	+C-XL010:42	1 .9	+C-A124:10	116 .1	0.75mm² BU	
L10	+C-XL010:44	1 .9	+C-A126:01	120 .8	0.75mm² BU	
L10	+C-XL010:45	1 .9	+C-A127:01	122 .8	0.75mm² BU	
L10	+C-XL010:46	1 .9	+C-A102:01	72 .8	0.75mm² BU	
L10	+C-XL010:47	1 .9	+C-A116:20	101 .1	0.75mm² BU	
L10	+C-XL010:48	1 .10	+C-A117:10	102 .1	0.75mm² BU	
L10	+C-A117:10	102 .1	+C-A117:20	103 .1		
L10	+C-XL010:49	1 .10	+C-A118:10	104 .1	0.75mm² BU	
L10	+C-A118:10	104 .1	+C-A118:20	105 .1		
L10	+C-XL010:50	1 .10	+C-A113:01	94 .8	0.75mm² BU	
L10	+C-XL010:51	1 .1	+C-A108:18	84 .1	0.75mm² BU	
L10	+C-A108:18	84 .1	+C-A108:19	85 .2		
L10	+C-A108:19	85 .2	+C-G001:2	14 .2		
L10	+C-G001:2	14 .2	+C-G002:2	14 .7		
L10	+C-G002:2	14 .7	+C-G003:2	15 .2		
L10	+C-XL010:52	1 .1	+C-A506:A2	62 .7	0.75mm² BU	
L10	+C-A506:A2	62 .7	+C-A506:23	62 .7		
L10	+C-XL010:54	1 .2	+C-A511:2	49 .3	0.75mm² BU	
L10	+C-XL010:55	1 .2	+C-A600:A1	116 .3	0.75mm² BU	
L10	+C-A600:A1	116 .3	+C-A601:A1	116 .3		
L10	+C-A601:A1	116 .3	+C-A602:A1	116 .3		
L10	+C-A602:A1	116 .3	+C-A604:A1	58 .3		
L10	+C-A604:A1	58 .3	+C-A605:A1	107 .3		
L10	+C-A605:A1	107 .3	+C-A606:A1	107 .3		
L10	+C-A606:A1	107 .3	+C-K250:13	83 .7		

Line	From	Page.Col.	To	Page.Col.	Area/Color	Opt.
L10	+C-XL010:56	1 .2	+C-K251:14	62 .8	0.75mm² BU	
L10	+C-XL010:57	1 .2	+C-K206:4	10 .4	0.75mm² BU	
L10	+C-XL010:58	1 .2	+C-K098:13	102 .7	0.75mm² BU	
L10	+C-K098:13	102 .7	+C-K101:13	101 .7		
L10	+C-K101:13	101 .7	+C-K112:13	102 .7		
L10	+C-K112:13	102 .7	+C-K113:13	102 .7		
L10	+C-XL010:59	1 .3	+C-K100:10	102 .7	0.75mm² BU	
L10	+C-K100:10	102 .7	+C-K102:10	101 .7		
L10	+C-K102:10	101 .7	+C-K103:10	102 .7		
L10	+C-K103:10	102 .7	+C-K104:10	101 .7		
L10	+C-XL010:60	1 .3	+C-K105:10	101 .7	0.75mm² BU	
L10	+C-K105:10	101 .7	+C-K106:10	101 .7		
L10	+C-K106:10	101 .7	+C-K107:10	101 .7		
L10	+C-K107:10	101 .7	+C-K110:10	102 .7		
L10	+C-K110:10	102 .7	+C-K915:10	103 .7		TCSB
L10	+C-XL010:61	1 .3	+C-X003:10	80 .2	0.75mm² BU	
L10	+C-X003:10	80 .2	+C-X003:14	80 .2		
L10	+C-X003:14	80 .2	+C-X003:31	75 .1		
L10	+C-X003:31	75 .1	+C-X003:34	80 .3		
L10	+C-X003:34	80 .3	+C-X003:37	80 .2		
L10	+C-X003:37	80 .2	+C-X003:40	80 .2		
L10	+C-X003:40	80 .2	+C-X003:43	80 .3		
L10	+C-X003:43	80 .3	+C-X003:46	80 .3		
L10	+C-X003:46	80 .3	+C-X003:49	48 .3		
L10	+C-X003:49	48 .3	+C-X003:52	48 .7		
L10	+C-X003:52	48 .7	+C-X003:55	48 .7		
L10	+C-X003:55	48 .7	+C-X003:58	48 .7		
L10	+C-X003:58	48 .7	+C-X003:61	48 .7		

Drawing remarks

Tetra Pak

Designer	Date	Machine
QUE/AIR	11/06/2002	TBA/19 020V

ECM No	Denomination	Page Type
119151	LINE SUMMARY	LINE SUMMARY

Company	Document No.	Doc. type	Version	Page
Tetra Pak Carton Ambient SpA	44954-0004	ELD	AB	3

This drawing must not without the consent of Tetra Pak be copied, transmitted or disclosed to any third party.

Line summary of 44954-0003

Line	From	Page.Col.	To	Page.Col.	Area/Color	Opt.
L10	+C-X003:61	48 .7	+C-X003:64	47 .3		
L10	+C-X003:64	47 .3	+C-X003:67	47 .4		
L10	+C-X003:67	47 .4	+C-X003:66	47 .4		
L10	+C-X003:66	47 .4	+C-X003:47	48 .7		
L10	+C-X003:47	48 .7	+C-X003:50	48 .7		
L10	+C-X003:50	48 .7	+C-X003:53	48 .7		
L10	+C-X003:53	48 .7	+C-X003:56	48 .7		
L10	+C-X003:56	48 .7	+C-X003:59	48 .3		
L10	+C-X003:59	48 .3	+C-X003:71	47 .5		
L10	+C-XL010:62	1 .3	+C-X003:78	62 .8	0.75mm² BU	
L11	+C-XL011:1	1 .1	+C-F006A-C:2	30 .4	0.75mm² BU	
L11	+C-XL011:2	1 .1	+C-A200:23	31 .5	0.75mm² BU	
L11	+C-A200:23	31 .5	+C-A201:23	31 .5		
L11	+C-A201:23	31 .5	+C-A202:19	32 .5		
L11	+C-A202:19	32 .5	+C-A202:23	32 .5		
L11	+C-A202:23	32 .5	+C-A203:19	32 .5		
L11	+C-A203:19	32 .5	+C-A203:23	32 .5		
L11	+C-A203:23	32 .5	+C-A204:23	33 .5		
L11	+C-A204:23	33 .5	+C-A205:23	33 .5		
L11	+C-XL011:3	1 .1	+C-A206:23	34 .5	0.75mm² BU	
L11	+C-A206:23	34 .5	+C-A212:23	36 .5		
L11	+C-A212:23	36 .5	+C-A213:23	36 .5		
L11	+C-A213:23	36 .5	+C-A214:23	37 .5		
L11	+C-A214:23	37 .5	+C-A215:23	37 .5		
L11	+C-A215:23	37 .5	+C-A217:23	38 .5		
L11	+C-XL011:4	1 .2	+C-A310:1	47 .7	0.75mm² BU	
L11	+C-XL011:5	1 .2	+C-G001:20	14 .4	0.75mm² BU	PMI
L11	+C-XL011:6	1 .2	+C-X015:13	122 .2	0.75mm² BU	

Line	From	Page.Col.	To	Page.Col.	Area/Color	Opt.
L11	+C-XL011:7	1 .2	+C-P005:37	59 .6	0.75mm² BU	
L11	+C-XL011:8	1 .2	+C-X018:9	74 .2	0.75mm² BU	
L11	+C-XL011:9	1 .3	+C-Z003:3	5 .5	0.75mm² BU	
L11	+C-XL011:10	1 .3	+C-A500:310	29 .3	0.75mm² BU	
L11	+C-XL011:11	1 .3	+C-G003:20	15 .4	0.75mm² BU	
L11	+C-XL011:12	1 .3	+C-G004:20	15 .9	0.75mm² BU	
L11	+C-X003:9	80 .1	+C-X003:13	80 .1		
L11	+C-X003:13	80 .1	+C-X003:30	75 .1	4mm² BU	
L11	+C-X003:30	75 .1	+C-X003:33	80 .3	4mm² BU	
L11	+C-X003:33	80 .3	+C-X003:36	80 .2		
L11	+C-X003:36	80 .2	+C-X003:39	80 .2		
L11	+C-X003:39	80 .2	+C-X003:42	80 .3		
L11	+C-X003:42	80 .3	+C-X003:45	80 .3		
L11	+C-X003:45	80 .3	+C-X003:65	47 .1		
L11	+C-X003:65	47 .1	+C-X003:68	47 .4		
L11	+C-XL011:14	1 .3	+C-X004:60	57 .4	2.5mm² BU	
L11	+C-X004:60	57 .4	+C-X004:72	57 .4		
L11	+C-X004:72	57 .4	+C-X004:74	57 .4		
L11	+C-X004:74	57 .4	+C-X004:78	76 .1		
L11	+C-X004:78	76 .1	+C-X004:134	75 .1		
L11	+C-X004:134	75 .1	+C-X004:131	91 .1		
L11	+C-X004:131	91 .1	+C-X004:128	80 .1		
L11	+C-X004:128	80 .1	+C-X004:125	80 .1		
L11	+C-X004:125	80 .1	+C-X004:122	76 .4		
L11	+C-X004:122	76 .4	+C-X004:119	75 .1		
L11	+C-X004:119	75 .1	+C-X004:116	75 .1		
L11	+C-X004:116	75 .1	+C-X004:113	75 .1		
L11	+C-X004:113	75 .1	+C-X004:110	75 .1		

Drawing remarks

Tetra Pak

Designer	Date	Machine
QUE/AIR	11/06/2002	TBA/19 020V

ECM No	Denomination	Page Type
119151	LINE SUMMARY	LINE SUMMARY

Company	Document No.	Doc. type	Version	Page
Tetra Pak Carton Ambient SpA	44954-0004	ELD	AB	4

This drawing must not without the consent of Tetra Pak be copied, transmitted or disclosed to any third party.

Line summary of 44954-0003

Line	From	Page.Col.	To	Page.Col.	Area/Color	Opt.
L11	+C-X004:110	75 .1	+C-X004:107	93 .1		
L11	+C-X004:107	93 .1	+C-X004:104	75 .1		
L11	+C-X004:104	75 .1	+C-X004:101	75 .1		
L11	+C-X004:101	75 .1	+C-X004:98	75 .1		
L11	+C-XL011:15	1 .4	+C-G002:20	14 .9	0.75mm² BU	ASU
L11	+C-XL011:16	1 .4	+C-X016:1	72 .1	0.75mm² BU	
L11	+C-XL011:17	1 .4	+C-A112:I137	93 .7	0.75mm² BU	
L11	+C-A112:I137	93 .7	+C-A112:I138	93 .7		
L11	+C-XL011:18	1 .4	+C-A507:13	63 .6	0.75mm² BU	
L11	+C-A507:13	63 .6	+C-A507:33	63 .6		
L11	+C-XL011:21	1 .5	+C-A108:01	84 .1	0.75mm² BU	
L11	+C-XL011:22	1 .5	+C-A106:I072	80 .7	0.75mm² BU	
L11	+C-XL011:23	1 .5	+C-A107:11	83 .1	0.75mm² BU	
L11	+C-XL011:24	1 .5	+C-A119:01	106 .1	0.75mm² BU	
L11	+C-A119:01	106 .1	+C-A119:11	107 .1		
L11	+C-XL011:25	1 .5	+C-A120:01	108 .1	0.75mm² BU	
L11	+C-A120:01	108 .1	+C-A120:11	109 .1		
L11	+C-XL011:26	1 .6	+C-A121:01	110 .1	0.75mm² BU	
L11	+C-XL011:27	1 .6	+C-A124:01	116 .1	0.75mm² BU	
L11	+C-XL011:28	1 .6	+C-X004:201	120 .1	0.75mm² BU	
L11	+C-XL011:29	1 .6	+C-A300:18	44 .5	0.75mm² BU	
L11	+C-A300:18	44 .5	+C-A301:18	44 .5		
L11	+C-A301:18	44 .5	+C-A302:18	45 .5		
L11	+C-A302:18	45 .5	+C-A303:18	45 .5		
L11	+C-A303:18	45 .5	+C-A305:18	46 .5		
L11	+C-A305:18	46 .5	+C-A307:18	46 .5		
L11	+C-XL011:30	1 .6	+C-X002:6	76 .1	0.75mm² BU	
L11	+C-X002:6	76 .1	+C-X002:27	79 .1		

Line	From	Page.Col.	To	Page.Col.	Area/Color	Opt.
L11	+C-X002:27	79 .1	+C-X002:175	76 .1		
L11	+C-X002:175	76 .1	+C-X002:227	77 .1		
L11	+C-X002:227	77 .1	+C-X002:239	81 .4		
L11	+C-X002:239	81 .4	+C-X002:253	90 .1		
L11	+C-XL011:33	1 .7	+C-A600:13	116 .3	0.75mm² BU	
L11	+C-A600:13	116 .3	+C-A601:14	116 .3		
L11	+C-A601:14	116 .3	+C-A602:14	116 .3		
L11	+C-A602:14	116 .3	+C-A605:14	107 .3		
L11	+C-A605:14	107 .3	+C-A606:14	107 .3		
L12	+C-XL012 :20	1 .5	+C-X002:174	73 .5	0.75mm² BU	
L12	+C-XL012 :1	1 .1	+C-F006A-C:4	30 .4	0.75mm² BU	
L12	+C-XL012 :2	1 .1	+C-A400:1	48 .5	0.75mm² BU	
L12	+C-XL012 :5	1 .2	+C-A501:310	29 .8	0.75mm² BU	
L12	+C-XL012 :6	1 .2	+C-Q006:14	76 .4	0.75mm² BU	
L12	+C-Q006:14	76 .4	+C-Q007:14	92 .3		
L12	+C-XL012 :7	1 .2	+C-S003:13	72 .4	0.75mm² BU	
L12	+C-S003:13	72 .4	+C-S004:13	73 .4		
L12	+C-XL012 :9	1 .3	+C-A511:1	49 .3	0.75mm² BU	ASU
L12	+C-XL012 :16	1 .4	+C-A116:11	101 .1	0.75mm² BU	
L12	+C-XL012 :17	1 .4	+C-A117:01	102 .1	0.75mm² BU	
L12	+C-A117:01	102 .1	+C-A117:11	103 .1		
L12	+C-XL012 :18	1 .4	+C-X003:51	48 .7	0.75mm² BU	
L12	+C-X003:51	48 .7	+C-X003:54	48 .7		
L12	+C-X003:54	48 .7	+C-X003:57	48 .1		
L12	+C-X003:57	48 .1	+C-X003:60	48 .3		
L12	+C-XL012 :19	1 .4	+C-X004:41	48 .1	0.75mm² BU	
L12	+C-X004:41	48 .1	+C-X004:45	48 .1		
L12	+C-XL012 :20	1 .5	+C-X002:174	73 .5	0.75mm² BU	

Drawing remarks

Tetra Pak

Designer	Date	Machine
QUE/AIR	11/06/2002	TBA/19 020V

ECM No	Denomination	Page Type
119151	LINE SUMMARY	LINE SUMMARY

Company	Document No.	Doc. type	Version	Page
Tetra Pak Carton Ambient SpA	44954-0004	ELD	AB	5

This drawing must not without the consent of Tetra Pak be copied, transmitted or disclosed to any third party.

Line summary of 44954-0003

Line	From	Page.Col.	To	Page.Col.	Area/Color	Opt.
L15	+C-XL015:1	2 .1	+C-F006A-C:6	30 .4	0.75mm² BU	
L15	+C-XL015:2	2 .1	+C-X003:77	62 .8	0.75mm² BU	
L15	+C-XL015:3	2 .1	+C-X004:155	94 .1	0.75mm² BU	
L15	+C-XL015:4	2 .2	+C-A505:13	61 .8	0.75mm² BU	
L15	+C-A505:13	61 .8	+C-A505:33	61 .8		
L15	+C-XL015:5	2 .2	+C-A512:13	66 .7	0.75mm² BU	
L15	+C-A512:13	66 .7	+C-A512:33	66 .7		
L15	+C-XL015:8	2 .2	+C-K113:9	62 .1	0.75mm² BU	
L15	+C-K113:9	62 .1	+C-K251:13	62 .8		
L15	+C-XL015:9	2 .3	+C-A506:A1	62 .7	0.75mm² BU	
L15	+C-A506:A1	62 .7	+C-A506:13	62 .7		
L15	+C-A506:13	62 .7	+C-A506:33	62 .7		
L16	+C-XL016:1	2 .6	+C-F017:2	30 .5	0.75mm² BU	
L16	+C-XL016:7	2 .7	+C-K098:1	140 .1	0.75mm² BU	
L16	+C-XL016:8	2 .7	+C-A118:01	104 .1	0.75mm² BU	
L16	+C-A118:01	104 .1	+C-A118:11	105 .1		
L16	+C-XL016:9	2 .7	+C-X005:3	140 .6	0.75mm² BU	
L20	+C-X002:3	92 .4	+C-X002:127	103 .3		
L20	+C-XL020:1	2 .1	+C-A507:A2	63 .6	0.75mm² BU	
L20	+C-A507:A2	63 .6	+C-A506:24	62 .7		
L20	+C-A506:24	62 .7	+C-A504:A2	60 .6		
L20	+C-XL020:2	2 .1	+C-K006:A1	98 .7	0.75mm² BU	
L20	+C-K006:A1	98 .7	+C-K007:A1	98 .7		
L20	+C-XL020:3	2 .1	+C-K001:A1	100 .7	0.75mm² BU	
L20	+C-K001:A1	100 .7	+C-K002:A1	100 .7		
L20	+C-K002:A1	100 .7	+C-K004:A1	100 .7		
L20	+C-K004:A1	100 .7	+C-K005:A1	100 .7		
L20	+C-K005:A1	100 .7	+C-K009:A1	98 .7		

Line	From	Page.Col.	To	Page.Col.	Area/Color	Opt.
L20	+C-K009:A1	98 .7	+C-K012:A1	100 .7		
L20	+C-K012:A1	100 .7	+C-K014:A1	100 .7		
L20	+C-K014:A1	100 .7	+C-V011:A	100 .7		
L20	+C-V011:A	100 .7	+C-K015:A2	100 .7		
L20	+C-K015:A2	100 .7	+C-K016:A1	100 .7		
L20	+C-K016:A1	100 .7	+C-K018:A1	100 .7		
L20	+C-K018:A1	100 .7	+C-K024:A1	99 .7		
L20	+C-K024:A1	99 .7	+C-V009:A	78 .2		
L20	+C-V009:A	78 .2	+C-K026:A2	78 .1		
L20	+C-K026:A2	78 .1	+C-K030:A1	62 .8		
L20	+C-XL020:4	2 .2	+C-K097:14	100 .6	0.75mm² BU	
L20	+C-XL020:5	2 .2	+C-X018:5	60 .1	0.75mm² BU	
L20	+C-XL020:6	2 .2	+C-A512:A2	66 .7	0.75mm² BU	
L20	+C-XL020:7	2 .2	+C-A505:A2	61 .8	0.75mm² BU	ASU
L20	+C-XL020:8	2 .2	+C-A115:10	98 .1	0.75mm² BU	
L20	+C-A115:10	98 .1	+C-A115:20	99 .1		
L20	+C-A115:20	99 .1	+C-A116:10	100 .1		
L20	+C-XL020:9	2 .3	+C-X015:2	66 .1	0.75mm² BU	
L20	+C-XL020:10	2 .3	+C-X003:74	62 .8	0.75mm² BU	
L20	+C-XL020:11	2 .3	+C-X002:3	92 .4	0.75mm² BU	
L20	+C-X002:3	92 .4	+C-X002:127	103 .3		
L21	+C-XL021:1	2 .6	+C-A504:A1	60 .6	0.75mm² BU	
L21	+C-A504:A1	60 .6	+C-A504:33	60 .6		
L21	+C-A504:33	60 .6	+C-A507:A1	63 .6		
L21	+C-A507:A1	63 .6	+C-A506:14	62 .7		
L21	+C-XL021:2	2 .6	+C-A505:A1	61 .8	0.75mm² BU	ASU
L21	+C-XL021:3	2 .6	+C-K112:5	61 .4	0.75mm² BU	ASU
L21	+C-K112:5	61 .4	+C-K112:7	66 .3		

Drawing remarks

Tetra Pak

Designer QUE/AIR | Date 11/06/2002 | Machine TBA/19 020V

ECM No 119151 | Denomination LINE SUMMARY | Page Type LINE SUMMARY

Company Tetra Pak Carton Ambient SpA | Document No. 44954-0004 | Doc. type ELD | Version AB | Page 6

This drawing must not without the consent of Tetra Pak be copied, transmitted or disclosed to any third party.

Line summary of 44954-0003

Line	From	Page.Col.	To	Page.Col.	Area/Color	Opt.
L21	+C-XL021:4	2 .6	+C-K030:A2	62 .8	0.75mm² BU	
L21	+C-XL021:5	2 .7	+C-K097:9	100 .6	0.75mm² BU	
L21	+C-XL021:6	2 .7	+C-A512:A1	66 .7	0.75mm² BU	
L21	+C-XL021:8	2 .7	+C-A115:01	98 .1	0.75mm² BU	
L21	+C-A115:01	98 .1	+C-A115:11	99 .1		
L21	+C-A115:11	99 .1	+C-A116:01	100 .1		
L21	+C-XL021:9	2 .7	+C-K113:6	63 .2	0.75mm² BU	
L21	+C-K113:6	63 .2	+C-K113:7	66 .2		
L21	+C-XL021:10	2 .8	+C-X004:89	92 .1	0.75mm² BU	
L21	+C-X004:89	92 .1	+C-X004:149	92 .1		
L21	+C-XL021:11	2 .8	+C-X002:4	92 .4	0.75mm² BU	
L21	+C-X002:4	92 .4	+C-X007:1	78 .2		
L21	+C-XL021:12	2 .8	+C-X003:73	62 .8	0.75mm² BU	
L21	+C-XL021:13	2 .8	+C-X015:1	66 .1	0.75mm² BU	
L30	+C-XL030:4	2 .2	+C-X002:151	111 .2	0.75mm² BU	
L30	+C-XL030:1	2 .1	+C-A507:24	63 .6	0.75mm² BU	
L30	+C-XL030:2	2 .1	+C-K003:A2	63 .7	0.75mm² BU	
L30	+C-K003:A2	63 .7	+C-K008:A1	97 .7		
L30	+C-K008:A1	97 .7	+C-K011:A1	97 .7		
L30	+C-K011:A1	97 .7	+C-K013:A1	82 .8		
L30	+C-K013:A1	82 .8	+C-K019:A1	97 .7		
L30	+C-K019:A1	97 .7	+C-K029:A1	82 .8		
L30	+C-XL030:3	2 .1	+C-P002:-	97 .7	0.75mm² BU	
L30	+C-XL030:4	2 .2	+C-X002:151	111 .2	0.75mm² BU	
L30	+C-XL030:5	2 .2	+C-G004:2	15 .7	0.75mm² BU	
L30	+C-XL030:6	2 .2	+C-A121:20	111 .1	0.75mm² BU	
L30	+C-XL030:7	2 .2	+C-X003:76	63 .7	0.75mm² BU	
L30	+C-XL030:8	2 .2	+C-A107:10	82 .1	0.75mm² BU	

Line	From	Page.Col.	To	Page.Col.	Area/Color	Opt.
L30	+C-XL030:9	2 .3	+C-A114:10	96 .1	0.75mm² BU	
L30	+C-A114:10	96 .1	+C-A114:20	97 .1		
L30	+C-XL030:10	2 .3	+C-A607:A1	117 .3	0.75mm² BU	
L30	+C-A607:A1	117 .3	+C-A608:A1	117 .3		
L30	+C-A608:A1	117 .3	+C-A609:A1	82 .4		
L30	+C-A609:A1	82 .4	+C-A610:A1	82 .4		
L30	+C-XL030:11	2 .3	+C-A124:20	117 .1	0.75mm² BU	
L30	+C-XL030:12	2 .3	+C-K099:10	82 .8	0.75mm² BU	
L30	+C-K099:10	82 .8	+C-K252:13	97 .7		
L30	+C-XL030:13	2 .3	+C-G005:2	16 .2	0.75mm² BU	
L31	+C-XL031:1	2 .6	+C-A507:14	63 .6	0.75mm² BU	
L31	+C-XL031:2	2 .6	+C-K003:A1	63 .7	0.75mm² BU	
L31	+C-XL031:8	2 .7	+C-A121:11	111 .1	0.75mm² BU	
L31	+C-XL031:9	2 .7	+C-A107:01	82 .1	0.75mm² BU	
L31	+C-XL031:10	2 .8	+C-A607:13	117 .3	0.75mm² BU	
L31	+C-A607:13	117 .3	+C-A608:13	117 .3		
L31	+C-A608:13	117 .3	+C-A609:13	82 .4		
L31	+C-A609:13	82 .4	+C-A610:13	82 .4		
L31	+C-XL031:11	2 .8	+C-A114:01	96 .1	0.75mm² BU	
L31	+C-A114:01	96 .1	+C-A114:11	97 .1		
L31	+C-XL031:12	2 .8	+C-A124:11	117 .1	0.75mm² BU	
L31	+C-XL031:14	2 .8	+C-X003:75	63 .7	0.75mm² BU	
L40	+C-XL040:1	3 .1	+C-A512:24	66 .7	0.75mm² BU	
L40	+C-XL040:2	3 .1	+C-A123:20	115 .1	0.75mm² BU	
L40	+C-XL040:4	3 .2	+C-K017:A1	115 .7	0.75mm² BU	
L41	+C-XL041:1	3 .6	+C-A123:11	115 .1	0.75mm² BU	
L41	+C-XL041:2	3 .6	+C-A512:14	66 .7	0.75mm² BU	
L50	+C-XL050:1	3 .1	+C-X009:7	30 .7	1.5 L.BU	

Drawing remarks

Tetra Pak

Designer	Date	Machine
QUE/AIR	11/06/2002	TBA/19 020V

ECM No	Denomination	Page Type
119151	LINE SUMMARY	LINE SUMMARY

Company	Document No.	Doc. type	Version	Page
Tetra Pak Carton Ambient SpA	44954-0004	ELD	AB	7

This drawing must not without the consent of Tetra Pak be copied, transmitted or disclosed to any third party.

Line summary of 44954-0003

Line	From	Page.Col.	To	Page.Col.	Area/Color	Opt.
L50	+C-XL050:2	3 .1	+C-A200:27	31 .5	1.5 L.BU	
L50	+C-A200:27	31 .5	+C-A201:27	31 .5		
L50	+C-A201:27	31 .5	+C-A202:27	32 .5		
L50	+C-A202:27	32 .5	+C-A203:27	32 .5		
L50	+C-A203:27	32 .5	+C-A204:27	33 .5		
L50	+C-A204:27	33 .5	+C-A205:27	33 .5		
L50	+C-XL050:3	3 .1	+C-A206:27	34 .5	1.5 L.BU	
L50	+C-A206:27	34 .5	+C-A212:27	36 .5		
L50	+C-A212:27	36 .5	+C-A213:27	36 .5		
L50	+C-A213:27	36 .5	+C-A214:27	37 .5		
L50	+C-A214:27	37 .5	+C-A215:27	37 .5		
L50	+C-A215:27	37 .5	+C-A217:27	38 .5		
L50	+C-XL050:4	3 .2	+C-P005:L2/N	59 .6	1.5 L.BU	
L50	+C-XL050:6	3 .2	+C-A300:A2	44 .5		
L50	+C-A300:A2	44 .5	+C-A301:A2	44 .5		
L50	+C-A301:A2	44 .5	+C-A302:A2	45 .5		
L50	+C-A302:A2	45 .5	+C-A303:A2	45 .5		
L50	+C-A303:A2	45 .5	+C-A305:A2	46 .5		
L50	+C-A305:A2	46 .5	+C-A307:A2	46 .5		
L50	+C-XL050:13	3 .3	+C-G100:N	30 .9	1.5 L.BU	
L50	+C-XL050:14	3 .3	+C-G101:N	30 .9	1.5 L.BU	
L50	+C-XL050:15	3 .4	+C-G102:N	30 .9	1.5 L.BU	
L51	+C-XL051:1	3 .6	+C-F005:2	30 .7	1.5 BK	
L51	+C-XL051:2	3 .6	+C-A200:26	31 .5	1.5 BK	
L51	+C-A200:26	31 .5	+C-A201:26	31 .5		
L51	+C-A201:26	31 .5	+C-A202:26	32 .5		
L51	+C-A202:26	32 .5	+C-A203:26	32 .5		
L51	+C-A203:26	32 .5	+C-A204:26	33 .5		

Line	From	Page.Col.	To	Page.Col.	Area/Color	Opt.
L51	+C-A204:26	33 .5	+C-A205:26	33 .5		
L51	+C-XL051:3	3 .6	+C-A206:26	34 .5	1.5 BK	
L51	+C-A206:26	34 .5	+C-A212:26	36 .5		
L51	+C-A212:26	36 .5	+C-A213:26	36 .5		
L51	+C-A213:26	36 .5	+C-A214:26	37 .5		
L51	+C-A214:26	37 .5	+C-A215:26	37 .5		
L51	+C-A215:26	37 .5	+C-A217:26	38 .5		
L51	+C-XL051:4	3 .6	+C-K250:9	59 .2	1.5 BK	
L51	+C-XL051:12	3 .8	+C-A300:A1	44 .5	1.5 BK	
L51	+C-A300:A1	44 .5	+C-A301:A1	44 .5		
L51	+C-A301:A1	44 .5	+C-A302:A1	45 .5		
L51	+C-A302:A1	45 .5	+C-A303:A1	45 .5		
L51	+C-A303:A1	45 .5	+C-A305:A1	46 .5		
L51	+C-A305:A1	46 .5	+C-A307:A1	46 .5		
L51	+C-XL051:13	3 .8	+C-G100:L1	30 .9	1.5 BK	
L51	+C-XL051:14	3 .8	+C-G101:L1	30 .9	1.5 BK	
L51	+C-XL051:15	3 .8	+C-G102:L1	30 .9	1.5 BK	
L60	+C-XL060:1	3 .1	+C-X009:1	6 .10	1.5 L.BU	
L60	+C-XL060:2	3 .1	+C-E004:1	6 .8	1.5 L.BU	
L60	+C-XL060:3	3 .1	+C-E005:1	6 .9	1.5 L.BU	
L60	+C-XL060:4	3 .2	+C-F024:3	6 .10	1.5 L.BU	
L60	+C-XL060:6	3 .2	+C-E003:1	6 .8	1.5 L.BU	
L60	+C-XL060:11	3 .3	+C-X012:2	6 .6	1.5 L.BU	
L60	+C-XL060:12	3 .3	+C-X001:65	6 .1	1.5 L.BU	
L60	+C-X001:65	6 .1	+C-X001:67	6 .3		
L60	+C-X001:67	6 .3	+C-X001:69	6 .3		
L60	+C-X001:69	6 .3	+C-X001:71	6 .3		
L60	+C-X001:71	6 .3	+C-X001:73	6 .4		

Drawing remarks

Tetra Pak

Designer	Date	Machine
QUE/AIR	11/06/2002	TBA/19 020V

ECM No	Denomination	Page Type
119151	LINE SUMMARY	LINE SUMMARY

Company	Document No.	Doc. type	Version	Page
Tetra Pak Carton Ambient SpA	44954-0004	ELD	AB	8

RELEASED

This drawing must not without the consent of Tetra Pak be copied, transmitted or disclosed to any third party.

Line summary of 44954-0003

Line	From	Page.Col.	To	Page.Col.	Area/Color	Opt.
L61	+C-XL061:1	3 .6	+C-F001:2	6 .8	1.5 BK	
L61	+C-XL061:2	3 .6	+C-E004:2	6 .8	1.5 BK	
L61	+C-XL061:3	3 .6	+C-E005:2	6 .9	1.5 BK	
L61	+C-XL061:4	3 .6	+C-F024:1	6 .10	1.5 BK	
L61	+C-XL061:5	3 .7	+C-S006:14	6 .5	1.5 BK	
L61	+C-XL061:6	3 .7	+C-E003:2	6 .8	1.5 BK	
L61	+C-XL061:8	3 .7	+C-K001:1	6 .8	1.5 BK	
L62	+C-XL062:1	4 .1	+C-S006:13	6 .5	1.5 BK	
L62	+C-XL062:2	4 .1	+C-L001:1	6 .2	1.5 BK	
L62	+C-XL062:11	4 .3	+C-X012:1	6 .6	1.5 BK	
L62	+C-XL062:12	4 .3	+C-X001:70	6 .3	1.5 BK	
L62	+C-X001:70	6 .3	+C-X001:72	6 .4		
L62	+C-X001:72	6 .4	+C-X001:74	6 .5		
L70	+C-A505:24	61 .8	+C-K205:4	8 .2	0.75mm² BU	
L70	+C-K205:4	8 .2	+C-K022:A2	114 .6		
L70	+C-K022:A2	114 .6	+C-A123:10	114 .1		
L70	+C-A123:10	114 .1	+C-X016:19	114 .7		
L71	+C-A505:14	61 .8	+C-A123:01	114 .1	0.75mm² BU	

Line	From	Page.Col.	To	Page.Col.	Area/Color	Opt.

Drawing remarks

Tetra Pak

Designer	Date	Machine
QUE/AIR	11/06/2002	TBA/19 020V

ECM No	Denomination	Page Type
119151	LINE SUMMARY	LINE SUMMARY

Company	Document No.	Doc. type	Version	Page
Tetra Pak Carton Ambient SpA	44954-0004	ELD	AB	9

This page intentionally left blank

9 Cabinet terminal summary

EM3.0TB098032en.fm

Table of contents

Cabinet terminal summary 44954-0005

EM3.0TB098032en.fm

RELEASED

This drawing must not without the consent of Tetra Pak be copied, transmitted or disclosed to any third party.

Cabinet terminal summary of 44954-0003

Terminal	Page .Col.	Opt.
+C-X001:1	10 .9	
+C-X001:2	10 .9	
+C-X001:3	10 .10	
+C-X001:4	10 .6	
+C-X001:5	10 .6	
+C-X001:6	10 .7	
+C-X001:7		
+C-X001:8		
+C-X001:9	144 .1	
+C-X001:10	144 .1	
+C-X001:11	144 .1	
+C-X001:12		
+C-X001:13		
+C-X001:14		
+C-X001:15	13 .2	
+C-X001:16	13 .2	
+C-X001:17	13 .2	
+C-X001:18	12 .7	
+C-X001:19	12 .7	
+C-X001:20	12 .7	
+C-X001:21	12 .8	
+C-X001:22	12 .8	
+C-X001:23	12 .8	
+C-X001:24	12 .5	
+C-X001:25	12 .6	
+C-X001:26	12 .6	
+C-X001:27		
+C-X001:28		

Terminal	Page .Col.	Opt.
+C-X001:29		
+C-X001:30	13 .8	
+C-X001:31	13 .9	
+C-X001:32	13 .9	
+C-X001:33		
+C-X001:34		
+C-X001:35		
+C-X001:36		
+C-X001:37		
+C-X001:38		
+C-X001:39		
+C-X001:40		
+C-X001:41		
+C-X001:42		
+C-X001:43		
+C-X001:44		
+C-X001:45		
+C-X001:46		
+C-X001:47		
+C-X001:48		
+C-X001:49		
+C-X001:50		
+C-X001:51		
+C-X001:52		
+C-X001:53		
+C-X001:54		
+C-X001:55		
+C-X001:56		

Terminal	Page .Col.	Opt.
+C-X001:57	12 .9	
+C-X001:58	12 .10	
+C-X001:59	11 .2	
+C-X001:60	11 .1	
+C-X001:61		
+C-X001:62		
+C-X001:63	6 .2	
+C-X001:64	6 .2	
+C-X001:65	6 .1	
+C-X001:66	6 .1	
+C-X001:67	6 .3	
+C-X001:68		
+C-X001:69	6 .3	
+C-X001:70	6 .3	
+C-X001:71	6 .3	
+C-X001:72	6 .4	
+C-X001:73	6 .4	
+C-X001:74	6 .5	
+C-X001:75		
+C-X001:76		
+C-X001:77		
+C-X001:78		
+C-X001:79		
+C-X001:80		
+C-X001:81		
+C-X001:82		
+C-X001:83	7 .4	
+C-X001:84	7 .5	

Terminal	Page .Col.	Opt.
+C-X001:85	7 .5	
+C-X001:86	7 .6	
+C-X001:87	7 .2	
+C-X001:88	7 .2	
+C-X001:89	7 .8	
+C-X001:90	7 .8	
+C-X001:91	7 .9	
+C-X001:92	7 .10	
+C-X001:93	10 .3	
+C-X001:94	10 .2	
+C-X001:95		
+C-X001:96		
+C-X001:97		
+C-X001:98		
+C-X001:99		
+C-X001:100		
+C-X001:101		
+C-X001:102		
+C-X001:103		
+C-X001:104		
+C-X001:105		
+C-X001:106		
+C-X001:107		
+C-X001:108		
+C-X001:109		
+C-X001:110		
+C-X001:PE	6 .1	
+C-X001:PE	6 .2	

Drawing remarks

Tetra Pak

Designer	Date	Machine
QUE/AIR	11/06/2002	TBA/19 020V

ECM No	Denomination	Page Type
119151	CABINET TERMINAL SUMMARY	CABINET TERMINAL SUMMARY

Company	Document No.	Doc. type	Version	Page
Tetra Pak Carton Ambient SpA	44954-0005	ELD	AB	1

RELEASED

This drawing must not without the consent of Tetra Pak be copied, transmitted or disclosed to any third party.

Cabinet terminal summary of 44954-0003

Terminal	Page .Col.	Opt.
+C-X001:PE	6 .3	
+C-X001:PE	6 .4	
+C-X001:PE	6 .5	
+C-X001:PE	7 .2	
+C-X001:PE	7 .3	
+C-X001:PE	7 .5	
+C-X001:PE	7 .7	
+C-X001:PE	7 .9	
+C-X001:PE	10 .2	
+C-X001:PE	10 .7	
+C-X001:PE	10 .8	
+C-X001:PE	11 .2	
+C-X001:PE	12 .6	
+C-X001:PE	12 .7	
+C-X001:PE	12 .9	
+C-X001:PE	12 .10	
+C-X001:PE	13 .3	
+C-X001:PE	13 .9	
+C-X001:PE	142 .3	
+C-X001:PE	144 .1	
+C-X002:1	92 .6	
+C-X002:2	92 .6	
+C-X002:3	92 .4	
+C-X002:4	92 .4	
+C-X002:5	76 .7	
+C-X002:6	76 .1	
+C-X002:7	104 .2	
+C-X002:8	104 .7	

Terminal	Page .Col.	Opt.
+C-X002:9	106 .2	
+C-X002:10	144 .1	
+C-X002:11	144 .1	
+C-X002:12	74 .7	
+C-X002:13	91 .7	
+C-X002:14	144 .1	
+C-X002:15	144 .1	
+C-X002:16	76 .7	
+C-X002:17	144 .1	
+C-X002:18	144 .1	
+C-X002:19	144 .1	
+C-X002:20		
+C-X002:21		
+C-X002:22		
+C-X002:23		
+C-X002:24		
+C-X002:25	58 .3	
+C-X002:26	58 .3	
+C-X002:27	79 .1	
+C-X002:28	79 .7	
+C-X002:29	62 .1	
+C-X002:30	62 .3	
+C-X002:31	62 .1	
+C-X002:32	62 .3	
+C-X002:33	44 .4	
+C-X002:34	44 .4	
+C-X002:35	58 .3	
+C-X002:36	58 .3	

Terminal	Page .Col.	Opt.
+C-X002:37	80 .7	
+C-X002:38	91 .7	
+C-X002:39	144 .1	
+C-X002:40	144 .1	
+C-X002:41	144 .1	
+C-X002:42	144 .1	
+C-X002:43	144 .1	
+C-X002:44	144 .1	
+C-X002:45	144 .1	
+C-X002:46	144 .1	
+C-X002:47	144 .1	
+C-X002:48	144 .1	
+C-X002:49	144 .1	
+C-X002:50	144 .1	
+C-X002:51	92 .6	
+C-X002:52	92 .6	
+C-X002:53	92 .6	
+C-X002:54	58 .3	
+C-X002:55	121 .7	
+C-X002:56	92 .2	
+C-X002:57	92 .2	
+C-X002:58	144 .1	
+C-X002:59	144 .1	
+C-X002:60	144 .1	
+C-X002:61	144 .1	
+C-X002:62	144 .1	
+C-X002:63	144 .1	
+C-X002:64	144 .1	

Terminal	Page .Col.	Opt.
+C-X002:65	36 .4	
+C-X002:66	36 .4	
+C-X002:67	36 .4	
+C-X002:68	36 .4	
+C-X002:69	37 .4	
+C-X002:70	37 .4	
+C-X002:71	37 .4	
+C-X002:72	37 .4	
+C-X002:73		
+C-X002:74		
+C-X002:75		
+C-X002:76		
+C-X002:77		
+C-X002:78		
+C-X002:79		
+C-X002:80		
+C-X002:81		
+C-X002:82		
+C-X002:83		
+C-X002:84		
+C-X002:85		
+C-X002:86		
+C-X002:87		
+C-X002:88		
+C-X002:89		
+C-X002:90		
+C-X002:91		
+C-X002:92		

Drawing remarks

Tetra Pak

Designer	Date	Machine
QUE/AIR	11/06/2002	TBA/19 020V

ECM No	Denomination	Page Type
119151	CABINET TERMINAL SUMMARY	CABINET TERMINAL SUMMARY

Company	Document No.	Doc. type	Version	Page
Tetra Pak Carton Ambient SpA	44954-0005	ELD	AB	2

This drawing must not without the consent of Tetra Pak be copied, transmitted or disclosed to any third party.

Cabinet terminal summary of 44954-0003

Terminal	Page .Col.	Opt.
+C-X002:93		
+C-X002:94		
+C-X002:95		
+C-X002:96		
+C-X002:97		
+C-X002:98		
+C-X002:99		
+C-X002:100		
+C-X002:101		
+C-X002:102		
+C-X002:103		
+C-X002:104		
+C-X002:105		
+C-X002:106		
+C-X002:107		
+C-X002:108		
+C-X002:109		
+C-X002:110		
+C-X002:111		
+C-X002:112		
+C-X002:113		
+C-X002:114		
+C-X002:115	98 .2	
+C-X002:116	98 .2	
+C-X002:117	98 .2	
+C-X002:118	98 .3	
+C-X002:119	99 .4	
+C-X002:120	103 .3	

Terminal	Page .Col.	Opt.
+C-X002:121	103 .3	
+C-X002:122	103 .3	
+C-X002:123	103 .3	
+C-X002:124	103 .3	
+C-X002:125	98 .7	
+C-X002:126	103 .7	
+C-X002:127	103 .3	
+C-X002:128	103 .3	
+C-X002:129	103 .3	
+C-X002:130	104 .2	
+C-X002:131	104 .2	
+C-X002:132	104 .2	
+C-X002:133	104 .2	
+C-X002:134	104 .2	
+C-X002:135	143 .1	
+C-X002:136	143 .1	
+C-X002:137	103 .7	
+C-X002:138	104 .7	
+C-X002:139	96 .2	
+C-X002:140	96 .2	
+C-X002:141	96 .2	
+C-X002:142	96 .2	
+C-X002:143	96 .2	
+C-X002:144	96 .2	
+C-X002:145	96 .2	
+C-X002:146	96 .2	
+C-X002:147	97 .2	
+C-X002:148	97 .2	

Terminal	Page .Col.	Opt.
+C-X002:149	96 .7	
+C-X002:150	96 .7	
+C-X002:151	111 .2	
+C-X002:152	111 .2	
+C-X002:153	111 .2	
+C-X002:154	111 .2	
+C-X002:155	143 .1	
+C-X002:156	143 .1	
+C-X002:157	143 .1	
+C-X002:158	143 .1	
+C-X002:159	143 .1	
+C-X002:160	143 .1	
+C-X002:161	111 .7	
+C-X002:162	143 .5	
+C-X002:163		
+C-X002:164		
+C-X002:165		
+C-X002:166		
+C-X002:167		
+C-X002:168		
+C-X002:169		
+C-X002:170		
+C-X002:171		
+C-X002:172	73 .2	
+C-X002:173	73 .5	
+C-X002:174	73 .5	
+C-X002:175	76 .1	
+C-X002:176	76 .6	

Terminal	Page .Col.	Opt.
+C-X002:177	76 .6	
+C-X002:178		
+C-X002:179		
+C-X002:180		
+C-X002:181		
+C-X002:182		
+C-X002:183		
+C-X002:184		
+C-X002:185		
+C-X002:186		
+C-X002:187		
+C-X002:188		
+C-X002:189		
+C-X002:190		
+C-X002:191		
+C-X002:192		
+C-X002:193		
+C-X002:194		
+C-X002:195		
+C-X002:196		
+C-X002:197		
+C-X002:198		
+C-X002:199		
+C-X002:200		
+C-X002:201	73 .2	
+C-X002:202		
+C-X002:203	73 .2	
+C-X002:204	73 .5	

Drawing remarks

Tetra Pak

Designer	Date	Machine
QUE/AIR	11/06/2002	TBA/19 020V

ECM No	Denomination	Page Type
119151	CABINET TERMINAL SUMMARY	CABINET TERMINAL SUMMARY

Company	Document No.	Doc. type	Version	Page
Tetra Pak Carton Ambient SpA	44954-0005	ELD	AB	3

RELEASED

This drawing must not without the consent of Tetra Pak be copied, transmitted or disclosed to any third party.

Cabinet terminal summary of 44954-0003

Terminal	Page .Col.	Opt.
+C-X002:205	73 .2	
+C-X002:206	73 .5	
+C-X002:207	73 .2	
+C-X002:208	73 .5	
+C-X002:209	62 .4	
+C-X002:210	62 .4	
+C-X002:211	62 .3	
+C-X002:212	62 .3	
+C-X002:213	72 .4	
+C-X002:214	72 .4	
+C-X002:215	103 .3	
+C-X002:216	103 .7	
+C-X002:217	104 .2	
+C-X002:218	104 .7	
+C-X002:219	104 .2	
+C-X002:220	104 .7	
+C-X002:221	105 .2	
+C-X002:222	105 .7	
+C-X002:223	105 .2	
+C-X002:224	105 .7	
+C-X002:225	45 .4	
+C-X002:226	45 .4	
+C-X002:227	77 .1	
+C-X002:228	77 .7	
+C-X002:229	77 .7	
+C-X002:230	77 .7	
+C-X002:231	81 .4	
+C-X002:232	81 .4	

Terminal	Page .Col.	Opt.
+C-X002:233	81 .4	
+C-X002:234	81 .4	
+C-X002:235	81 .4	
+C-X002:236	81 .4	
+C-X002:237	81 .4	
+C-X002:238	81 .4	
+C-X002:239	81 .4	
+C-X002:240	81 .4	
+C-X002:241	109 .2	
+C-X002:242	109 .7	
+C-X002:243	109 .2	
+C-X002:244	109 .7	
+C-X002:245		
+C-X002:246	109 .7	
+C-X002:247		
+C-X002:248		
+C-X002:249		
+C-X002:250		
+C-X002:251		
+C-X002:252		
+C-X002:253	90 .1	
+C-X002:254	90 .2	
+C-X002:255		
+C-X002:256		
+C-X002:257	98 .5	
+C-X002:258	98 .7	
+C-X002:259		
+C-X002:260	117 .7	

Terminal	Page .Col.	Opt.
+C-X002:261	117 .4	
+C-X002:262	117 .7	
+C-X002:263	117 .4	
+C-X002:264	117 .7	
+C-X002:265	82 .6	
+C-X002:266	82 .7	
+C-X002:267	82 .6	
+C-X002:268	82 .7	
+C-X002:269		
+C-X002:270		
+C-X002:271		
+C-X002:272		
+C-X002:273		
+C-X002:274		
+C-X002:275		
+C-X002:276		
+C-X002:277		
+C-X002:278		
+C-X002:279		
+C-X002:280		
+C-X002:281		
+C-X002:282		
+C-X002:283		
+C-X002:284		
+C-X002:285		
+C-X002:286		
+C-X002:287		
+C-X002:288		

Terminal	Page .Col.	Opt.
+C-X002:289		
+C-X002:290		
+C-X002:291		
+C-X002:292		
+C-X002:293		
+C-X002:294		
+C-X002:295		
+C-X002:296		
+C-X002:297		
+C-X002:298		
+C-X002:299		
+C-X002:300		
+C-X002:301		
+C-X002:302		
+C-X002:303		
+C-X002:304		
+C-X002:305		
+C-X002:306		
+C-X002:PE	76 .6	
+C-X002:PE	142 .3	
+C-X002:PE	98 .7	
+C-X002:PE	103 .7	
+C-X002:PE	96 .7	
+C-X002:PE	111 .7	
+C-X002:PE	117 .7	
+C-X002:PE	117 .7	
+C-X002:PE	73 .5	
+C-X002:PE	105 .7	

Drawing remarks

Tetra Pak

Designer	Date	Machine
QUE/AIR	11/06/2002	TBA/19 020V

ECM No	Denomination	Page Type
119151	CABINET TERMINAL SUMMARY	CABINET TERMINAL SUMMARY

Company	Document No.	Doc. type	Version	Page
Tetra Pak Carton Ambient SpA	44954-0005	ELD	AB	4

This drawing must not without the consent of Tetra Pak be copied, transmitted or disclosed to any third party.

Cabinet terminal summary of 44954-0003

Terminal	Page .Col.	Opt.
+C-X002:PE	105 .7	
+C-X002:PE	105 .7	
+C-X002:PE	105 .7	
+C-X002:PE	105 .7	
+C-X002:PE	105 .7	
+C-X002:PE	77 .2	
+C-X002:PE	109 .7	
+C-X002:PE	98 .7	
+C-X002:PE	82 .7	
+C-X002:PE	82 .7	
+C-X003:1		
+C-X003:2		
+C-X003:3		
+C-X003:4		
+C-X003:5		
+C-X003:6		
+C-X003:7		
+C-X003:8		
+C-X003:9	80 .1	
+C-X003:10	80 .2	
+C-X003:11		
+C-X003:12		
+C-X003:13	80 .1	
+C-X003:14	80 .2	
+C-X003:15		
+C-X003:16		
+C-X003:17		
+C-X003:18		

Terminal	Page .Col.	Opt.
+C-X003:19		
+C-X003:20		
+C-X003:21		
+C-X003:22		
+C-X003:23		
+C-X003:24		
+C-X003:25		
+C-X003:26		
+C-X003:27		
+C-X003:28		
+C-X003:29	75 .7	
+C-X003:30	75 .1	
+C-X003:31	75 .1	
+C-X003:32	80 .7	
+C-X003:33	80 .3	
+C-X003:34	80 .3	
+C-X003:35		
+C-X003:36	80 .2	
+C-X003:37	80 .2	
+C-X003:38		
+C-X003:39	80 .2	
+C-X003:40	80 .2	
+C-X003:41		
+C-X003:42	80 .3	
+C-X003:43	80 .3	
+C-X003:44		
+C-X003:45	80 .3	
+C-X003:46	80 .3	

Terminal	Page .Col.	Opt.
+C-X003:47	48 .7	
+C-X003:48		
+C-X003:49	48 .3	
+C-X003:50	48 .7	
+C-X003:51	48 .7	
+C-X003:52	48 .7	
+C-X003:53	48 .7	
+C-X003:54	48 .7	
+C-X003:55	48 .7	
+C-X003:56	48 .7	
+C-X003:57	48 .1	
+C-X003:58	48 .7	
+C-X003:59	48 .3	
+C-X003:60	48 .3	
+C-X003:61	48 .7	
+C-X003:62	48 .1	
+C-X003:63	47 .1	
+C-X003:64	47 .3	
+C-X003:65	47 .1	
+C-X003:66	47 .4	
+C-X003:67	47 .4	
+C-X003:68	47 .4	
+C-X003:69	47 .5	
+C-X003:70	47 .4	
+C-X003:71	47 .5	
+C-X003:72	47 .5	
+C-X003:73	62 .8	
+C-X003:74	62 .8	

Terminal	Page .Col.	Opt.
+C-X003:75	63 .7	
+C-X003:76	63 .7	
+C-X003:77	62 .8	
+C-X003:78	62 .8	
+C-X003:79		
+C-X003:80		
+C-X003:81		
+C-X003:82		
+C-X003:83		
+C-X003:84		
+C-X003:85		
+C-X003:86		
+C-X003:87		
+C-X003:88		
+C-X003:89		
+C-X003:90		
+C-X003:91		
+C-X003:92		
+C-X003:93		
+C-X003:94		
+C-X003:95		
+C-X003:96		
+C-X003:97		
+C-X003:98		
+C-X003:99		
+C-X003:100		
+C-X003:101		
+C-X003:102		

Drawing remarks

Tetra Pak

Designer	Date	Machine
QUE/AIR	11/06/2002	TBA/19 020V

ECM No	Denomination	Page Type
119151	CABINET TERMINAL SUMMARY	CABINET TERMINAL SUMMARY

Company	Document No.	Doc. type	Version	Page
Tetra Pak Carton Ambient SpA	44954-0005	ELD	AB	5

RELEASED

This drawing must not without the consent of Tetra Pak be copied, transmitted or disclosed to any third party.

Cabinet terminal summary of 44954-0003

Terminal	Page .Col.	Opt.
+C-X003:103		
+C-X003:104		
+C-X003:105		
+C-X003:106		
+C-X003:107		
+C-X003:108		
+C-X003:109		
+C-X003:110		
+C-X003:111		
+C-X003:112		
+C-X003:113		
+C-X003:114		
+C-X003:115		
+C-X003:116		
+C-X003:117		
+C-X003:118		
+C-X003:119		
+C-X003:120		
+C-X003:121		
+C-X003:122		
+C-X003:123		
+C-X003:124		
+C-X003:125		
+C-X003:126		
+C-X003:127		
+C-X003:128		
+C-X003:129		
+C-X003:130		

Terminal	Page .Col.	Opt.
+C-X003:131		
+C-X003:132		
+C-X003:PE	142 .3	
+C-X004:1	32 .3	
+C-X004:2	32 .3	
+C-X004:3	32 .3	
+C-X004:4	32 .3	
+C-X004:5	32 .3	
+C-X004:6	32 .3	
+C-X004:7	38 .4	
+C-X004:8	38 .4	
+C-X004:9	31 .4	
+C-X004:10	31 .4	
+C-X004:11	31 .4	
+C-X004:12	31 .4	
+C-X004:13	33 .3	
+C-X004:14	33 .3	
+C-X004:15	33 .4	
+C-X004:16	33 .4	
+C-X004:17		
+C-X004:18		
+C-X004:19		
+C-X004:20		
+C-X004:21	34 .3	
+C-X004:22	34 .3	
+C-X004:23		
+C-X004:24		
+C-X004:25	45 .4	

Terminal	Page .Col.	Opt.
+C-X004:26	45 .4	
+C-X004:27	46 .4	
+C-X004:28	46 .4	
+C-X004:29	46 .4	
+C-X004:30	46 .4	
+C-X004:31	44 .4	
+C-X004:32	44 .4	
+C-X004:33	44 .4	
+C-X004:34		
+C-X004:35		
+C-X004:36		
+C-X004:37		
+C-X004:38		
+C-X004:39		
+C-X004:40		
+C-X004:41	48 .1	
+C-X004:42	48 .1	
+C-X004:43	48 .1	
+C-X004:44	48 .1	
+C-X004:45	48 .1	
+C-X004:46	48 .1	
+C-X004:47	48 .1	
+C-X004:48	48 .1	
+C-X004:49		
+C-X004:50		
+C-X004:51		
+C-X004:52		
+C-X004:53		

Terminal	Page .Col.	Opt.
+C-X004:54		
+C-X004:55	62 .5	
+C-X004:56	62 .5	
+C-X004:57	62 .4	
+C-X004:58	62 .4	
+C-X004:59	57 .7	
+C-X004:60	57 .4	
+C-X004:61	57 .4	
+C-X004:62	57 .4	
+C-X004:63	57 .4	
+C-X004:64	57 .4	
+C-X004:65	57 .4	
+C-X004:66	57 .4	
+C-X004:67	57 .4	
+C-X004:68	57 .4	
+C-X004:69	57 .4	
+C-X004:70	57 .4	
+C-X004:71	57 .7	
+C-X004:72	57 .4	
+C-X004:73	57 .7	
+C-X004:74	57 .4	
+C-X004:75		
+C-X004:76		
+C-X004:77	76 .4	
+C-X004:78	76 .1	
+C-X004:79	76 .6	
+C-X004:80	76 .4	
+C-X004:81	105 .2	

Drawing remarks

Tetra Pak

Designer	Date	Machine
QUE/AIR	11/06/2002	TBA/19 020V

ECM No	Denomination	Page Type
119151	CABINET TERMINAL SUMMARY	CABINET TERMINAL SUMMARY

Company	Document No.	Doc. type	Version	Page
Tetra Pak Carton Ambient SpA	44954-0005	ELD	AB	6

RELEASED

This drawing must not without the consent of Tetra Pak be copied, transmitted or disclosed to any third party.

Cabinet terminal summary of 44954-0003

Terminal	Page .Col.	Opt.
+C-X004:82	105 .7	
+C-X004:83	105 .2	
+C-X004:84	105 .7	
+C-X004:85	105 .2	
+C-X004:86	105 .7	
+C-X004:87	105 .2	
+C-X004:88	105 .7	
+C-X004:89	92 .1	
+C-X004:90	92 .1	
+C-X004:91	92 .4	
+C-X004:92	92 .4	
+C-X004:93	92 .4	
+C-X004:94	92 .4	
+C-X004:95	92 .6	
+C-X004:96	92 .6	
+C-X004:97		
+C-X004:98	75 .1	
+C-X004:99	75 .1	
+C-X004:100		
+C-X004:101	75 .1	
+C-X004:102	75 .1	
+C-X004:103		
+C-X004:104	75 .1	
+C-X004:105	75 .1	
+C-X004:106	93 .7	
+C-X004:107	93 .1	
+C-X004:108	93 .1	
+C-X004:109	75 .7	

Terminal	Page .Col.	Opt.
+C-X004:110	75 .1	
+C-X004:111	75 .1	
+C-X004:112	75 .7	
+C-X004:113	75 .1	
+C-X004:114	75 .1	
+C-X004:115	75 .7	
+C-X004:116	75 .1	
+C-X004:117	75 .1	
+C-X004:118	75 .7	
+C-X004:119	75 .1	
+C-X004:120	75 .1	
+C-X004:121	76 .7	
+C-X004:122	76 .4	
+C-X004:123	76 .4	
+C-X004:124	80 .7	
+C-X004:125	80 .1	
+C-X004:126	80 .1	
+C-X004:127	80 .7	
+C-X004:128	80 .1	
+C-X004:129	80 .1	
+C-X004:130	91 .7	
+C-X004:131	91 .1	
+C-X004:132	91 .1	
+C-X004:133	75 .3	
+C-X004:134	75 .1	
+C-X004:135	75 .1	
+C-X004:136	75 .7	
+C-X004:137	75 .4	

Terminal	Page .Col.	Opt.
+C-X004:138	75 .4	
+C-X004:139	92 .6	
+C-X004:140	92 .6	
+C-X004:141	92 .5	
+C-X004:142	92 .5	
+C-X004:143	92 .4	
+C-X004:144	92 .4	
+C-X004:145	92 .3	
+C-X004:146	92 .3	
+C-X004:147	92 .3	
+C-X004:148	92 .3	
+C-X004:149	92 .1	
+C-X004:150	92 .1	
+C-X004:151	62 .6	
+C-X004:152	62 .6	
+C-X004:153	62 .5	
+C-X004:154	62 .5	
+C-X004:155	94 .1	
+C-X004:156	94 .7	
+C-X004:157	94 .7	
+C-X004:158	94 .7	
+C-X004:159	95 .7	
+C-X004:160		
+C-X004:161	95 .7	
+C-X004:162	94 .7	
+C-X004:163		
+C-X004:164	94 .7	
+C-X004:165		

Terminal	Page .Col.	Opt.
+C-X004:166	94 .7	
+C-X004:167	94 .7	
+C-X004:168	108 .2	
+C-X004:169	108 .7	
+C-X004:170		
+C-X004:171	108 .2	
+C-X004:172	108 .2	
+C-X004:173	108 .2	
+C-X004:174	108 .2	
+C-X004:175	107 .7	
+C-X004:176	107 .4	
+C-X004:177	107 .4	
+C-X004:178	116 .3	
+C-X004:179	116 .3	
+C-X004:180	106 .2	
+C-X004:181	106 .6	
+C-X004:182		
+C-X004:183		
+C-X004:184	116 .7	
+C-X004:185		
+C-X004:186		
+C-X004:187		
+C-X004:188		
+C-X004:189		
+C-X004:190		
+C-X004:191		
+C-X004:192		
+C-X004:193		

Drawing remarks

Tetra Pak

Designer	Date	Machine
QUE/AIR	11/06/2002	TBA/19 020V

ECM No	Denomination	Page Type
119151	CABINET TERMINAL SUMMARY	CABINET TERMINAL SUMMARY

Company	Document No.	Doc. type	Version	Page
Tetra Pak Carton Ambient SpA	44954-0005	ELD	AB	7

RELEASED

This drawing must not without the consent of Tetra Pak be copied, transmitted or disclosed to any third party.

Cabinet terminal summary of 44954-0003

Terminal	Page .Col.	Opt.
+C-X004:194		
+C-X004:195		
+C-X004:196		
+C-X004:197		
+C-X004:198		
+C-X004:199		
+C-X004:200		
+C-X004:201	120 .1	
+C-X004:202		
+C-X004:PE	76 .4	
+C-X004:PE	76 .6	
+C-X005:1	140 .1	
+C-X005:2	140 .6	
+C-X005:3	140 .6	
+C-X006:1	11 .9	
+C-X006:2	11 .10	
+C-X006:3	11 .10	
+C-X006:4	11 .10	
+C-X006:5	12 .4	
+C-X006:6	12 .4	
+C-X006:PE	12 .5	
+C-X007:1	78 .2	
+C-X007:2	78 .3	
+C-X007:3	78 .4	
+C-X007:4	78 .5	
+C-X007:5	78 .6	
+C-X007:6	78 .5	
+C-X007:7	78 .4	

Terminal	Page .Col.	Opt.
+C-X007:8	78 .3	
+C-X007:9	12 .2	
+C-X007:10	12 .2	
+C-X007:11	12 .2	
+C-X007:12	12 .3	
+C-X007:13	12 .3	
+C-X007:14	12 .3	
+C-X009:1	6 .10	
+C-X009:2	10 .5	
+C-X009:3	7 .4	
+C-X009:4	7 .2	
+C-X009:5	10 .2	
+C-X009:6	15 .3	
+C-X009:7	30 .7	
+C-X009:8	11 .2	
+C-X009:9	16 .3	
+C-X009:10	14 .8	
+C-X009:11	14 .3	
+C-X009:12	11 .9	
+C-X009:13	7 .8	
+C-X009:14	12 .10	
+C-X009:15	12 .4	
+C-X009:16	8 .3	
+C-X009:17		
+C-X009:18		
+C-X009:19		
+C-X009:20		
+C-X009:N	5 .7	

Terminal	Page .Col.	Opt.
+C-X010:1		
+C-X010:2	6 .10	
+C-X010:3	6 .9	
+C-X010:4	6 .9	
+C-X010:5	10 .5	
+C-X010:6	12 .3	
+C-X010:7	59 .7	
+C-X010:8	30 .7	
+C-X010:9	30 .10	
+C-X010:10	142 .2	
+C-X010:11	142 .2	
+C-X010:12	14 .3	
+C-X010:13	30 .10	
+C-X010:14	14 .8	ASU
+C-X010:15	30 .10	
+C-X010:16	15 .4	
+C-X010:17	16 .3	
+C-X010:18	29 .3	
+C-X010:19	142 .2	
+C-X010:20	15 .9	
+C-X010:21	142 .2	
+C-X010:22	29 .8	
+C-X010:23	6 .6	
+C-X010:24	8 .3	ASU
+C-X010:25	142 .2	
+C-X010:26	6 .10	
+C-X010:27	6 .8	
+C-X010:28	142 .2	

Terminal	Page .Col.	Opt.
+C-X010:29	142 .2	
+C-X010:30	10 .4	
+C-X010:31		
+C-X010:32		
+C-X010:33		
+C-X010:34		
+C-X010:35		
+C-X010:36		
+C-X010:37	24 .2	
+C-X010:38	142 .2	
+C-X010:39	11 .10	
+C-X010:40	142 .2	
+C-X010:41	142 .2	
+C-X010:42	142 .2	
+C-X010:43	30 .6	
+C-X010:44	142 .2	
+C-X010:45		
+C-X010:46	142 .2	
+C-X010:47		
+C-X010:48	142 .2	
+C-X010:49		
+C-X010:50	142 .2	
+C-X010:51	142 .6	
+C-X010:52		
+C-X010:53	142 .6	
+C-X010:54	142 .6	
+C-X010:55		
+C-X010:56	142 .6	

Drawing remarks

Tetra Pak

Designer	Date	Machine
QUE/AIR	11/06/2002	TBA/19 020V

ECM No	Denomination	Page Type
119151	CABINET TERMINAL SUMMARY	CABINET TERMINAL SUMMARY

Company	Document No.	Doc. type	Version	Page
Tetra Pak Carton Ambient SpA	44954-0005	ELD	AB	8

RELEASED

This drawing must not without the consent of Tetra Pak be copied, transmitted or disclosed to any third party.

Cabinet terminal summary of 44954-0003

Terminal	Page .Col.	Opt.
+C-X010:57	5 .6	
+C-X010:58		
+C-X010:59	142 .6	
+C-X010:60		
+C-X011:1	8 .2	ASU
+C-X011:2	8 .3	ASU
+C-X012:1	6 .6	
+C-X012:2	6 .6	
+C-X012:3	6 .8	
+C-X012:4		
+C-X012:PE	6 .6	
+C-X013:1	14 .2	
+C-X013:2	14 .2	
+C-X013:3	14 .2	
+C-X013:4	14 .3	
+C-X013:GND	14 .3	
+C-X014:1	14 .7	ASU
+C-X014:2	14 .8	ASU
+C-X014:3	14 .8	ASU
+C-X014:4	14 .8	ASU
+C-X014:GND	14 .8	ASU
+C-X015:1	66 .1	
+C-X015:2	66 .1	
+C-X015:3	66 .6	
+C-X015:4	66 .6	
+C-X015:6	61 .8	ASU
+C-X015:7	61 .8	ASU
+C-X015:8	116 .7	

Terminal	Page .Col.	Opt.
+C-X015:9	116 .3	
+C-X015:10	116 .3	
+C-X015:11	116 .3	
+C-X015:12	116 .3	
+C-X015:13	122 .2	
+C-X015:14	49 .6	ASU
+C-X015:15	49 .6	ASU
+C-X015:16	49 .6	ASU
+C-X015:17	49 .6	ASU
+C-X015:18	122 .7	
+C-X015:19	122 .7	
+C-X015:20	122 .7	
+C-X015:21	122 .7	
+C-X015:22	123 .7	
+C-X015:23	122 .7	
+C-X015:24	122 .7	
+C-X015:PE	142 .3	
+C-X016:1	72 .1	
+C-X016:2	122 .7	
+C-X016:3	123 .7	
+C-X016:4	62 .1	
+C-X016:5	62 .1	
+C-X016:6	62 .6	
+C-X016:7	62 .6	
+C-X016:8	72 .7	ASU
+C-X016:9	72 .7	ASU
+C-X016:10	123 .6	
+C-X016:11	72 .4	

Terminal	Page .Col.	Opt.
+C-X016:12	90 .7	ASU
+C-X016:13	105 .3	ASU
+C-X016:14	114 .2	ASU
+C-X016:15	116 .2	ASU
+C-X016:16	116 .2	ASU
+C-X016:17	116 .2	ASU
+C-X016:18	116 .2	ASU
+C-X016:19	114 .7	ASU
+C-X016:20	114 .2	ASU
+C-X016:21	114 .2	ASU
+C-X016:22	114 .2	ASU
+C-X016:23	114 .2	ASU
+C-X016:24	114 .2	ASU
+C-X016:PE	142 .3	
+C-X017:1	12 .2	
+C-X017:2	12 .2	
+C-X017:3	12 .2	
+C-X017:4	12 .3	
+C-X017:5	12 .3	
+C-X017:6	12 .3	
+C-X017:PE	12 .3	
+C-X018:1		
+C-X018:2		
+C-X018:3		
+C-X018:4		
+C-X018:5	60 .1	
+C-X018:6	60 .1	
+C-X018:7	60 .5	

Terminal	Page .Col.	Opt.
+C-X018:8	60 .5	
+C-X018:9	74 .2	
+C-X018:10	74 .2	
+C-X018:11	74 .7	
+C-X018:12	74 .7	
+C-X018:13	75 .7	
+C-X018:14		
+C-X018:15	62 .3	
+C-X018:16	62 .3	
+C-X018:17	62 .1	
+C-X018:18	62 .1	
+C-X018:19	72 .7	
+C-X018:20	72 .5	
+C-X018:21	72 .7	
+C-X018:22	101 .2	
+C-X018:23		
+C-X018:24		
+C-X018:PE	142 .3	
+C-X019:1	10 .4	
+C-X019:2	10 .5	
+C-X019:PE	10 .4	
+C-X027:AC1	24 .4	
+C-X027:AC2	24 .4	
+C-X027:GND	24 .4	
+C-X073:1	29 .7	
+C-X300:1	5 .3	
+C-X300:2	5 .4	
+C-X300:3	5 .4	

Drawing remarks

Tetra Pak

Designer	Date	Machine
QUE/AIR	11/06/2002	TBA/19 020V

ECM No	Denomination	Page Type
119151	CABINET TERMINAL SUMMARY	CABINET TERMINAL SUMMARY

Company	Document No.	Doc. type	Version	Page
Tetra Pak Carton Ambient SpA	44954-0005	ELD	AB	9

This drawing must not without the consent of Tetra Pak be copied, transmitted or disclosed to any third party.

Cabinet terminal summary of 44954-0003

Terminal	Page .Col.	Opt.
+C-X300:4		
+C-X300:5	5 .3	
+C-X300:6	5 .4	
+C-X300:7	5 .4	
+C-X300:8		
+C-X300:9	5 .3	
+C-X300:10	5 .4	
+C-X300:11	5 .4	
+C-X300:12		
+C-X300:13	5 .3	
+C-X300:14	5 .4	
+C-X300:15	5 .4	
+C-X300:16		
+C-X300:PE	5 .4	
+C-X301:1	5 .8	
+C-X301:2	5 .8	
+C-X301:3		
+C-X301:4	5 .9	
+C-X301:5		
+C-X301:6	5 .10	
+C-X301:7	5 .8	
+C-X301:8	5 .8	
+C-X301:9		
+C-X301:10	5 .9	
+C-X301:11		
+C-X301:12	5 .10	
+C-X301:13	5 .8	
+C-X301:14	5 .8	

Terminal	Page .Col.	Opt.
+C-X301:15		
+C-X301:16	5 .9	
+C-X301:17		
+C-X301:18	5 .10	
+C-X451:1	140 .3	
+C-X452:1	140 .2	
+C-X452:3	140 .2	
+C-X453 :1	140 .3	
+C-X453 :2	140 .3	
+C-X453 :3	140 .3	
+C-X453 :4	140 .3	
+C-X453 :5	140 .3	
+C-X453 :6	140 .3	
+C-X453 :7	140 .3	
+C-X453 :8	140 .3	
+C-X453 :9	140 .3	
+C-X453 :10	140 .3	
+C-X453 :11	140 .3	
+C-X453 :12	140 .3	
+C-X453 :13	140 .3	
+C-X453 :14	140 .3	
+C-X453 :15	140 .3	
+C-X453 :16	140 .3	
+C-X453 :17	140 .3	
+C-X453 :18	140 .3	
+C-X453 :19	140 .3	
+C-X453 :20	140 .3	
+C-X453 :21	140 .3	

Terminal	Page .Col.	Opt.
+C-X453 :22	140 .3	
+C-X453 :23	140 .3	
+C-X453 :24	140 .3	
+C-X453 :25	140 .3	
+C-X453 :26	140 .3	
+C-X453 :27	140 .3	
+C-X455 :1	140 .3	
+C-X455 :2	140 .3	
+C-X455 :3	140 .3	
+C-X455 :4	140 .3	
+C-X455 :5	140 .3	
+C-X456 :1	140 .3	
+C-X456 :2	140 .3	
+C-X456 :3	140 .3	
+C-X456 :4	140 .3	
+C-X456 :5	140 .3	
+C-X456 :6	140 .3	
+C-X456 :7	140 .3	
+C-X456 :8	140 .3	
+C-XL010:1	1 .1	
+C-XL010:2	1 .1	
+C-XL010:3	1 .1	
+C-XL010:4	1 .2	
+C-XL010:5	1 .2	
+C-XL010:6	1 .2	
+C-XL010:7	1 .2	
+C-XL010:8	1 .2	
+C-XL010:9	1 .3	

Terminal	Page .Col.	Opt.
+C-XL010:10	1 .3	
+C-XL010:11	1 .3	
+C-XL010:12	1 .3	
+C-XL010:13	1 .3	
+C-XL010:14	1 .3	
+C-XL010:15	1 .4	
+C-XL010:16	1 .4	
+C-XL010:17	1 .4	
+C-XL010:18	1 .4	
+C-XL010:19	1 .4	
+C-XL010:20	1 .5	
+C-XL010:21	1 .5	
+C-XL010:22	1 .5	
+C-XL010:23	1 .5	
+C-XL010:24	1 .5	
+C-XL010:25	1 .5	
+C-XL010:26	1 .6	
+C-XL010:27	1 .6	
+C-XL010:28	1 .6	
+C-XL010:29	1 .6	
+C-XL010:30	1 .6	
+C-XL010:31	1 .7	
+C-XL010:32	1 .7	
+C-XL010:33	1 .7	
+C-XL010:34	1 .7	
+C-XL010:35	1 .7	
+C-XL010:36	1 .7	
+C-XL010:37	1 .8	

Drawing remarks

Tetra Pak

Designer	Date	Machine
QUE/AIR	11/06/2002	TBA/19 020V

ECM No	Denomination	Page Type
119151	CABINET TERMINAL SUMMARY	CABINET TERMINAL SUMMARY

Company	Document No.	Doc. type	Version	Page
Tetra Pak Carton Ambient SpA	44954-0005	ELD	AB	10

RELEASED

This drawing must not without the consent of Tetra Pak be copied, transmitted or disclosed to any third party.

Cabinet terminal summary of 44954-0003

Terminal	Page .Col.	Opt.
+C-XL010:38	1 .8	
+C-XL010:39	1 .8	
+C-XL010:40	1 .8	
+C-XL010:41	1 .8	
+C-XL010:42	1 .9	
+C-XL010:43	1 .9	
+C-XL010:44	1 .9	
+C-XL010:45	1 .9	
+C-XL010:46	1 .9	
+C-XL010:47	1 .9	
+C-XL010:48	1 .10	
+C-XL010:49	1 .10	
+C-XL010:50	1 .10	
+C-XL010:51	1 .1	
+C-XL010:52	1 .1	
+C-XL010:53	1 .1	
+C-XL010:54	1 .2	
+C-XL010:55	1 .2	
+C-XL010:56	1 .2	
+C-XL010:57	1 .2	
+C-XL010:58	1 .2	
+C-XL010:59	1 .3	
+C-XL010:60	1 .3	
+C-XL010:61	1 .3	
+C-XL010:62	1 .3	
+C-XL010:63	1 .3	
+C-XL010:64	1 .3	
+C-XL010:65	1 .4	

Terminal	Page .Col.	Opt.
+C-XL010:66	1 .4	
+C-XL010:67	1 .4	
+C-XL010:68	1 .4	
+C-XL010:69	1 .4	
+C-XL010:70	1 .5	
+C-XL010:71	1 .5	
+C-XL010:72	1 .5	
+C-XL010:73	1 .5	
+C-XL010:74	1 .5	
+C-XL010:75	1 .5	
+C-XL010:76	1 .6	
+C-XL010:77	1 .6	
+C-XL010:78	1 .6	
+C-XL010:79	1 .6	
+C-XL010:80	1 .6	
+C-XL011:1	1 .1	
+C-XL011:2	1 .1	
+C-XL011:3	1 .1	
+C-XL011:4	1 .2	
+C-XL011:5	1 .2	
+C-XL011:6	1 .2	
+C-XL011:7	1 .2	
+C-XL011:8	1 .2	
+C-XL011:9	1 .3	
+C-XL011:10	1 .3	
+C-XL011:11	1 .3	
+C-XL011:12	1 .3	
+C-XL011:13	1 .3	

Terminal	Page .Col.	Opt.
+C-XL011:14	1 .3	
+C-XL011:15	1 .4	
+C-XL011:16	1 .4	
+C-XL011:17	1 .4	
+C-XL011:18	1 .4	
+C-XL011:19	1 .4	
+C-XL011:20	1 .5	
+C-XL011:21	1 .5	
+C-XL011:22	1 .5	
+C-XL011:23	1 .5	
+C-XL011:24	1 .5	
+C-XL011:25	1 .5	
+C-XL011:26	1 .6	
+C-XL011:27	1 .6	
+C-XL011:28	1 .6	
+C-XL011:29	1 .6	
+C-XL011:30	1 .6	
+C-XL011:31	1 .7	
+C-XL011:32	1 .7	
+C-XL011:33	1 .7	
+C-XL011:34	1 .7	
+C-XL011:35	1 .7	
+C-XL011:36	1 .7	
+C-XL011:37	1 .8	
+C-XL011:38	1 .8	
+C-XL011:39	1 .8	
+C-XL011:40	1 .8	
+C-XL012 :1	1 .1	

Terminal	Page .Col.	Opt.
+C-XL012 :2	1 .1	
+C-XL012 :3	1 .1	
+C-XL012 :4	1 .2	
+C-XL012 :5	1 .2	
+C-XL012 :6	1 .2	
+C-XL012 :7	1 .2	
+C-XL012 :8	1 .2	
+C-XL012 :9	1 .3	
+C-XL012 :10	1 .3	
+C-XL012 :11	1 .3	
+C-XL012 :12	1 .3	
+C-XL012 :13	1 .3	
+C-XL012 :14	1 .3	
+C-XL012 :15	1 .4	
+C-XL012 :16	1 .4	
+C-XL012 :17	1 .4	
+C-XL012 :18	1 .4	
+C-XL012 :19	1 .4	
+C-XL012 :20	1 .5	
+C-XL012 :21	1 .5	
+C-XL012 :22	1 .5	
+C-XL012 :23	1 .5	
+C-XL012 :24	1 .5	
+C-XL012 :25	1 .5	
+C-XL012 :26	1 .6	
+C-XL012 :27	1 .6	
+C-XL012 :28	1 .6	
+C-XL015:1	2 .1	

Drawing remarks

Tetra Pak

Designer	Date	Machine
QUE/AIR	11/06/2002	TBA/19 020V

ECM No	Denomination	Page Type
119151	CABINET TERMINAL SUMMARY	CABINET TERMINAL SUMMARY

Company	Document No.	Doc. type	Version	Page
Tetra Pak Carton Ambient SpA	44954-0005	ELD	AB	11

This drawing must not without the consent of Tetra Pak be copied, transmitted or disclosed to any third party.

Cabinet terminal summary of 44954-0003

Terminal	Page .Col.	Opt.
+C-XL015:2	2 .1	
+C-XL015:3	2 .1	
+C-XL015:4	2 .2	
+C-XL015:5	2 .2	
+C-XL015:6	2 .2	
+C-XL015:7	2 .2	
+C-XL015:8	2 .2	
+C-XL015:9	2 .3	
+C-XL015:10	2 .3	
+C-XL015:11	2 .3	
+C-XL015:12	2 .3	
+C-XL016:1	2 .6	
+C-XL016:2	2 .6	
+C-XL016:3	2 .6	
+C-XL016:4	2 .6	
+C-XL016:5	2 .7	
+C-XL016:6	2 .7	
+C-XL016:7	2 .7	
+C-XL016:8	2 .7	
+C-XL016:9	2 .7	
+C-XL016:10	2 .8	
+C-XL016:11	2 .8	
+C-XL016:12	2 .8	
+C-XL020:1	2 .1	
+C-XL020:2	2 .1	
+C-XL020:3	2 .1	
+C-XL020:4	2 .2	
+C-XL020:5	2 .2	

Terminal	Page .Col.	Opt.
+C-XL020:6	2 .2	
+C-XL020:7	2 .2	
+C-XL020:8	2 .2	
+C-XL020:9	2 .3	
+C-XL020:10	2 .3	
+C-XL020:11	2 .3	
+C-XL020:12	2 .3	
+C-XL020:13	2 .3	
+C-XL020:14	2 .3	
+C-XL020:15	2 .4	
+C-XL020:16	2 .4	
+C-XL020:17	2 .4	
+C-XL020:18	2 .4	
+C-XL020:19	2 .4	
+C-XL020:20	2 .5	
+C-XL021:1	2 .6	
+C-XL021:2	2 .6	
+C-XL021:3	2 .6	
+C-XL021:4	2 .6	
+C-XL021:5	2 .7	
+C-XL021:6	2 .7	
+C-XL021:7	2 .7	
+C-XL021:8	2 .7	
+C-XL021:9	2 .7	
+C-XL021:10	2 .8	
+C-XL021:11	2 .8	
+C-XL021:12	2 .8	
+C-XL021:13	2 .8	

Terminal	Page .Col.	Opt.
+C-XL021:14	2 .8	
+C-XL021:15	2 .8	
+C-XL021:16	2 .9	
+C-XL021:17	2 .9	
+C-XL021:18	2 .9	
+C-XL021:19	2 .9	
+C-XL021:20	2 .9	
+C-XL030:1	2 .1	
+C-XL030:2	2 .1	
+C-XL030:3	2 .1	
+C-XL030:4	2 .2	
+C-XL030:5	2 .2	
+C-XL030:6	2 .2	
+C-XL030:7	2 .2	
+C-XL030:8	2 .2	
+C-XL030:9	2 .3	
+C-XL030:10	2 .3	
+C-XL030:11	2 .3	
+C-XL030:12	2 .3	
+C-XL030:13	2 .3	
+C-XL030:14	2 .3	
+C-XL030:15	2 .4	
+C-XL030:16	2 .4	
+C-XL030:17	2 .4	
+C-XL030:18	2 .4	
+C-XL030:19	2 .4	
+C-XL030:20	2 .5	
+C-XL031:1	2 .6	

Terminal	Page .Col.	Opt.
+C-XL031:2	2 .6	
+C-XL031:3	2 .6	
+C-XL031:4	2 .6	
+C-XL031:5	2 .7	
+C-XL031:6	2 .7	
+C-XL031:7	2 .7	
+C-XL031:8	2 .7	
+C-XL031:9	2 .7	
+C-XL031:10	2 .8	
+C-XL031:11	2 .8	
+C-XL031:12	2 .8	
+C-XL031:13	2 .8	
+C-XL031:14	2 .8	
+C-XL031:15	2 .8	
+C-XL031:16	2 .9	
+C-XL031:17	2 .9	
+C-XL031:18	2 .9	
+C-XL031:19	2 .9	
+C-XL031:20	2 .9	
+C-XL040:1	3 .1	
+C-XL040:2	3 .1	
+C-XL040:3	3 .1	
+C-XL040:4	3 .2	
+C-XL040:5	3 .2	
+C-XL040:6	3 .2	
+C-XL040:7	3 .2	
+C-XL040:8	3 .2	
+C-XL040:9	3 .3	

Drawing remarks

Tetra Pak

Designer	Date	Machine
QUE/AIR	11/06/2002	TBA/19 020V

ECM No	Denomination	Page Type
119151	CABINET TERMINAL SUMMARY	CABINET TERMINAL SUMMARY

Company	Document No.	Doc. type	Version	Page
Tetra Pak Carton Ambient SpA	44954-0005	ELD	AB	12

This drawing must not without the consent of Tetra Pak be copied, transmitted or disclosed to any third party.

Cabinet terminal summary of 44954-0003

Terminal	Page .Col.	Opt.
+C-XL040:10	3 .3	
+C-XL040:11	3 .3	
+C-XL040:12	3 .3	
+C-XL041:1	3 .6	
+C-XL041:2	3 .6	
+C-XL041:3	3 .6	
+C-XL041:4	3 .6	
+C-XL041:5	3 .7	
+C-XL041:6	3 .7	
+C-XL041:7	3 .7	
+C-XL041:8	3 .7	
+C-XL041:9	3 .7	
+C-XL041:10	3 .8	
+C-XL041:11	3 .8	
+C-XL041:12	3 .8	
+C-XL050:1	3 .1	
+C-XL050:2	3 .1	
+C-XL050:3	3 .1	
+C-XL050:4	3 .2	
+C-XL050:5	3 .2	
+C-XL050:6	3 .2	
+C-XL050:7	3 .2	
+C-XL050:8	3 .2	
+C-XL050:9	3 .3	
+C-XL050:10	3 .3	
+C-XL050:11	3 .3	
+C-XL050:12	3 .3	
+C-XL050:13	3 .3	

Terminal	Page .Col.	Opt.
+C-XL050:14	3 .3	
+C-XL050:15	3 .4	
+C-XL050:16	3 .4	
+C-XL050:17	3 .4	
+C-XL050:18	3 .4	
+C-XL050:19	3 .4	
+C-XL050:20	3 .5	
+C-XL051:1	3 .6	
+C-XL051:2	3 .6	
+C-XL051:3	3 .6	
+C-XL051:4	3 .6	
+C-XL051:5	3 .7	
+C-XL051:6	3 .7	
+C-XL051:7	3 .7	
+C-XL051:8	3 .7	
+C-XL051:9	3 .7	
+C-XL051:10	3 .8	
+C-XL051:11	3 .8	
+C-XL051:12	3 .8	
+C-XL051:13	3 .8	
+C-XL051:14	3 .8	
+C-XL051:15	3 .8	
+C-XL051:16	3 .9	
+C-XL051:17	3 .9	
+C-XL051:18	3 .9	
+C-XL051:19	3 .9	
+C-XL051:20	3 .9	
+C-XL060:1	3 .1	

Terminal	Page .Col.	Opt.
+C-XL060:2	3 .1	
+C-XL060:3	3 .1	
+C-XL060:4	3 .2	
+C-XL060:5	3 .2	
+C-XL060:6	3 .2	
+C-XL060:7	3 .2	
+C-XL060:8	3 .2	
+C-XL060:9	3 .3	
+C-XL060:10	3 .3	
+C-XL060:11	3 .3	
+C-XL060:12	3 .3	
+C-XL061:1	3 .6	
+C-XL061:2	3 .6	
+C-XL061:3	3 .6	
+C-XL061:4	3 .6	
+C-XL061:5	3 .7	
+C-XL061:6	3 .7	
+C-XL061:7	3 .7	
+C-XL061:8	3 .7	
+C-XL061:9	3 .7	
+C-XL061:10	3 .8	
+C-XL061:11	3 .8	
+C-XL061:12	3 .8	
+C-XL062:1	4 .1	
+C-XL062:2	4 .1	
+C-XL062:3	4 .1	
+C-XL062:4	4 .2	
+C-XL062:5	4 .2	

Terminal	Page .Col.	Opt.
+C-XL062:6	4 .2	
+C-XL062:7	4 .2	
+C-XL062:8	4 .2	
+C-XL062:9	4 .3	
+C-XL062:10	4 .3	
+C-XL062:11	4 .3	
+C-XL062:12	4 .3	
+C-XL080:1	4 .1	
+C-XL080:2	4 .1	
+C-XL080:3	4 .1	
+C-XL080:4	4 .2	
+C-XL080:5	4 .2	
+C-XL080:6	4 .2	
+C-XL080:7	4 .2	
+C-XL080:8	4 .2	
+C-XL080:9	4 .3	
+C-XL080:10	4 .3	
+C-XL080:11	4 .3	
+C-XL080:12	4 .3	
+C-XL081:1	4 .6	
+C-XL081:2	4 .6	
+C-XL081:3	4 .6	
+C-XL081:4	4 .6	
+C-XL081:5	4 .7	
+C-XL081:6	4 .7	
+C-XL081:7	4 .7	
+C-XL081:8	4 .7	
+C-XL081:9	4 .7	

Drawing remarks

Tetra Pak

Designer	Date	Machine
QUE/AIR	11/06/2002	TBA/19 020V

ECM No	Denomination	Page Type
119151	CABINET TERMINAL SUMMARY	CABINET TERMINAL SUMMARY

Company	Document No.	Doc. type	Version	Page
Tetra Pak Carton Ambient SpA	44954-0005	ELD	AB	13

RELEASED

This drawing must not without the consent of Tetra Pak be copied, transmitted or disclosed to any third party.

Cabinet terminal summary of 44954-0003

Terminal	Page .Col.	Opt.
+C-XL081:10	4 .8	
+C-XL081:11	4 .8	
+C-XL081:12	4 .8	

Terminal	Page .Col.	Opt.

Terminal	Page .Col.	Opt.

Terminal	Page .Col.	Opt.

Drawing remarks

Tetra Pak

Designer QUE/AIR	Date 11/06/2002	Machine TBA/19 020V	
ECM No 119151	Denomination CABINET TERMINAL SUMMARY	Page Type CABINET TERMINAL SUMMARY	
Company Tetra Pak Carton Ambient SpA	Document No. 44954-0005	Doc. type ELD	Version AB	Page 14

10 Terminal strip overview

EM3.0TB108032en.fm

Table of contents

Terminal strip overview 44954-0006

EM3.0TB108032en.fm

RELEASED

This drawing must not without the consent of Tetra Pak be copied, transmitted or disclosed to any third party.

Terminal strip of 44954-0003

+M-X002

From	Cable	Internal Jumper	Terminal	External Jumper	Cable	To	Page.Col.	Option	Function text
GND:	-W023		1				16 .3		
+C-G005:U	-W023:1		2		-W024:1	+M-MPLE001:U	16 .2		EXTERNALCONVEYOR
+C-G005:V	-W023:2		3		-W024:2	+M-MPLE001:V	16 .2		EXTERNALCONVEYOR
+C-G005:W	-W023:3		4		-W024:3	+M-MPLE001:W	16 .3		EXTERNALCONVEYOR
+C-X001:9	-W110:1		5				144 .2		
+C-X001:10	-W110:2		6				144 .2		
+C-X001:11	-W110:3		7				144 .2		
+C-X002:25	-W025:2		8		-W115:2	+DE-U003:02	58 .5		
+C-X002:26	-W025:1		9		-W115:1	+DE-U003:01	58 .5		
+C-X002:27	-W025:3		10		-W115:3	+DE-U003:03	58 .5		
+C-X002:28	-W025:4		11		-W115:4	+DE-U003:04	58 .5		
+C-X002:29	-W025:5		12		-W116:1	+DE-U003:001	58 .5		
+C-X002:30	-W025:6		13		-W116:2	+DE-U003:002	58 .5		
+C-X002:31	-W025:7		14		-W116:3	+DE-U003:003	58 .5		
+C-X002:32	-W025:8		15		-W116:4	+DE-U003:004	58 .5		
+C-X002:33	-W025:9		16		-W013:1	+M-B013:1	44 .3		WATER SEPARATOR, LEVEL
+C-X002:34	-W025:10		17		-W013:2	+M-B013:2	44 .3		WATER SEPARATOR, LEVEL
+C-X002:35	-W025:11		18		-W958:1	+M-X022:1	58 .5		
			19		-W958:2	+M-X022:2	58 .5		
+C-X002:36	-W025:12		20		-W958:3	+M-X022:3	58 .5		
			21				58 .5		
			22				58 .5		
+C-X002:37	-W025:13		23		-W103:BK	+M-B020:BK	80 .6		FINAL FOLDER CHAIN POSITION
			24		-W103:L.BU	+M-B020:BU	80 .3		FINAL FOLDER CHAIN POSITION
			25		-W103:BN	+M-B020:BN	80 .3		FINAL FOLDER CHAIN POSITION
+C-X002:38	-W025:14		26		-W021:BK	+M-B119:BK	91 .6		OVERLOAD PROTECTION, OUTFEEDER
			27		-W021:BU	+M-B119:BU	91 .3		OVERLOAD PROTECTION, OUTFEEDER
			28		-W021:BN	+M-B119:BN	91 .3		OVERLOAD PROTECTION, OUTFEEDER
+C-X002:39	-W025:15		29				144 .2		
			30				144 .5		

@V=00@EN=REMOVE THE BRIGDE EXTERNAL WHEN PLE IS INSTALLED.

@V=00@EN=

@V=00@EN=

Drawing remarks

Tetra Pak

Designer	Date	Machine
QUE/AIR	11/06/2002	TBA/19 020V

ECM No	Denomination	Page Type
119151	TERMINAL STRIP OVERVIEW	TERMINAL STRIP OVERVIEW

Company	Document No.	Doc. type	Version	Page
Tetra Pak Carton Ambient SpA	44954-0006	ELD	AB	1

RELEASED

This drawing must not without the consent of Tetra Pak be copied, transmitted or disclosed to any third party.

Terminal strip of 44954-0003

+M-X002

From	Cable	Internal Jumper	Terminal	External Jumper	Cable	To	Page.Col.	Option	Function text
			31				144 .5		
+C-X002:40	-W025:16		32				144 .2		
			33				144 .5		
			34				144 .5		
+C-X002:41	-W025:17		35				144 .2		
			36				144 .5		
			37				144 .5		
+C-X002:42	-W025:18		38				144 .2		
			39				144 .5		
			40				144 .5		
+C-X002:43	-W025:19		41				144 .2		
+C-X002:44	-W025:20		42				144 .2		
+C-X002:45	-W025:21		43				144 .2		
+C-X002:46	-W025:22		44				144 .2		
+C-X002:47	-W025:23		45				144 .2		
+C-X002:48	-W025:24		46				144 .2		
+C-X002:49	-W025:25		47				144 .2		
+C-X002:50	-W025:26		48				144 .2		
			49		-W111:1	+DE-U017:002	92 .5		DOMINO DATING UNIT
+C-X002:51	-W025:27		50		-W111:2	+DE-U017:003	92 .5		DOMINO DATING UNIT
+C-X002:52	-W025:28		51		-W111:3	+DE-U017:005	92 .5		DOMINO DATING UNIT
+C-X002:53	-W025:29		52		-W111:4	+DE-U017:007	92 .5		DOMINO DATING UNIT
			53		-W954:2	+M-X020:1	58 .5		
			54		-W954:1	+M-X020:2	58 .5		
+C-X002:54	-W025:30		55		-W954:3	+M-X020:3	58 .5		
			56		-W954:4	+M-X020:4	144 .5		

@V=00@EN=REMOVE THE BRIGDE EXTERNAL WHEN PLE IS INSTALLED.

@V=00@EN=

@V=00@EN=

Drawing remarks

Tetra Pak

Designer	Date	Machine
QUE/AIR	11/06/2002	TBA/19 020V

ECM No	Denomination	Page Type
119151	TERMINAL STRIP OVERVIEW	TERMINAL STRIP OVERVIEW

Company	Document No.	Doc. type	Version	Page
Tetra Pak Carton Ambient SpA	44954-0006	ELD	AB	2

RELEASED

This drawing must not without the consent of Tetra Pak be copied, transmitted or disclosed to any third party.

Terminal strip of 44954-0003

+M-X002

From	Cable	Internal Jumper	Terminal	External Jumper	Cable	To	Page.Col.	Option	Function text
			57		-W955:1	+M-X021:1	121 .3		
			58		-W955:2	+M-X021:2	121 .3		
+C-X002:55	-W025:31		59		-W955:3	+M-X021:3	121 .6		
			60		-W955:4	+M-X021:4	144 .5		
+C-X002:56	-W025:32		61		-W112:1	+DE-U017:008	92 .3		DOMINO DATING UNIT
+C-X002:57	-W025:33		62		-W112:2	+DE-U017:009	92 .3		DOMINO DATING UNIT
+C-X002:58	-W025:34		63				144 .2		
+C-X002:59	-W025:35		64				144 .2		
+C-X002:60	-W025:36		65				144 .2		
+C-X002:61	-W025:37		66				144 .2		
+C-X002:62	-W025:38		67				144 .2		
+C-X002:63	-W025:39		68				144 .2		
+C-X002:64	-W025:40		69				144 .2		
			70						
+C-X455 :1	-W064:WH		71		-W952:WH	+M-DE002:13	140 .4		FIRST DE
+C-X455 :2	-W064:BN		72		-W952:BN	+M-DE002:12	140 .4		FIRST DE
+C-X455 :3	-W064:YE		73		-W952:YE	+M-DE002:11	140 .4		FIRST DE
+C-X455 :4	-W064:GN		74		-W952:GN	+M-DE002:10	140 .4		FIRST DE
+C-X455 :5	-W064:SH		75		-W952:SH	+M-DE002:	140 .4		FIRST DE
+C-A450:R+ 1	-W063:WH		76		-W951:WH	+M-A451:3	140 .6		RECEIVE MODEM
+C-A450:R- 2	-W063:BN		77		-W951:BN	+M-A451:4	140 .6		RECEIVE MODEM
+C-A450:T+ 3	-W063:YE		78		-W951:YE	+M-A451:1	140 .6		RECEIVE MODEM
+C-A450:T- 4	-W063:GN		79		-W951:GN	+M-A451:2	140 .6		RECEIVE MODEM
+C-A450:5	-W063:SH		80		-W951:SH	+M-A451:5	140 .6		RECEIVE MODEM
+C-X001:83	-W230:1		81		-W238:L.BU	+M-X008:1	7 .4		
+C-X001:84	-W230:2		82		-W238:BN	+M-X008:2	7 .5		
+C-X001:85	-W231:1		83		-W239:L.BU	+M-X009:1	7 .5		
+C-X001:86	-W231:2		84		-W239:BN	+M-X009:2	7 .6		
+C-X001:89	-W232:1		85		-W240:L.BU	+M-X010:1	7 .8		
+C-X001:90	-W232:2		86		-W240:BN	+M-X010:2	7 .8		

Drawing remarks

Tetra Pak

Designer	Date	Machine
QUE/AIR	11/06/2002	TBA/19 020V

ECM No	Denomination	Page Type
119151	TERMINAL STRIP OVERVIEW	TERMINAL STRIP OVERVIEW

Company	Document No.	Doc. type	Version	Page
Tetra Pak Carton Ambient SpA	44954-0006	ELD	AB	3

RELEASED

This drawing must not without the consent of Tetra Pak be copied, transmitted or disclosed to any third party.

Terminal strip of 44954-0003

+M-X002

From	Cable	Internal Jumper	Terminal	External Jumper	Cable	To	Page.Col.	Option	Function text
+C-X001:91	-W233:1		87		-W241:L.BU	+M-X011:1	7 .9		
+C-X001:92	-W233:2		88		-W241:BN	+M-X011:2	7 .10		
+C-X002:65	-W234:RD		89		-W242:RD	+M-X212:-	36 .3		
+C-X002:66	-W234:YE		90		-W242:YE	+M-X212:+	36 .3		
+C-X002:67	-W235:RD		91		-W243:RD	+M-X213 :-	36 .3		
+C-X002:68	-W235:YE		92		-W243:YE	+M-X213 :+	36 .3		
+C-X002:69	-W236:RD		93		-W244:RD	+M-X214 :-	37 .3		
+C-X002:70	-W236:YE		94		-W244:YE	+M-X214 :+	37 .3		
+C-X002:71	-W237:RD		95		-W245:RD	+M-X215 :-	37 .3		
+C-X002:72	-W237:YE		96		-W245:YE	+M-X215 :+	37 .3		
+C-X001:PE	-W230:GNYE		PE		-W238:GNYE	+M-X008:GND	7 .3		
+C-G005:PE	-W023:GNYE		PE		-W024:GNYE	+M-MPLE001:PE	16 .3		EXTERNALCONVEYOR
			PE		-W112:GNYE	+DE-U017:PE	92 .3		DOMINO DATING UNIT
+C-X001:PE	-W231:GNYE		PE		-W239:GNYE	+M-X009:GND	7 .5		
+C-X001:PE	-W232:GNYE		PE		-W240:GNYE	+M-X010:GND	7 .7		
+C-X001:PE	-W233:GNYE		PE		-W241:GNYE	+M-X011:GND	7 .9		
+C-X010:10	-W290:PE		PE		-W291:PE	+C-U014:	142 .3		
+C-X001:PE	-W110:PE		PE				144 .2		

Drawing remarks

Tetra Pak

Designer	Date	Machine
QUE/AIR	11/06/2002	TBA/19 020V

ECM No	Denomination	Page Type
119151	TERMINAL STRIP OVERVIEW	TERMINAL STRIP OVERVIEW

Company	Document No.	Doc. type	Version	Page
Tetra Pak Carton Ambient SpA	44954-0006	ELD	AB	4

RELEASED

This drawing must not without the consent of Tetra Pak be copied, transmitted or disclosed to any third party.

Terminal strip of 44954-0003

+M-X004

From	Cable	Internal Jumper	Terminal	External Jumper	Cable	To	Page.Col.	Option	Function text
+C-X004:21	-W406:YE		+		:YE	+M-B004:YE	34 .2		PEROXIDE BATHTEMPERATURE PEROXIDE
+C-X004:22	-W406:RD		-		:RD	+M-B004:RD	34 .2		PEROXIDE BATHTEMPERATURE PEROXIDE

Drawing remarks

Tetra Pak

Designer QUE/AIR	Date 11/06/2002	Machine TBA/19 020V	
ECM No 119151	Denomination TERMINAL STRIP OVERVIEW	Page Type TERMINAL STRIP OVERVIEW	
Company Tetra Pak Carton Ambient SpA	Document No. 44954-0006	Doc. type ELD	Version AB	Page 5

RELEASED

This drawing must not without the consent of Tetra Pak be copied, transmitted or disclosed to any third party.

1 2 3 4 5 6 7 8 9 10

Terminal strip of 44954-0003

+M-X006

From	Cable	Internal Jumper	Terminal	External Jumper	Cable	To	Page.Col.	Option	Function text
+C-X001:59	-W305:1		1			+M-M006:1	11 .2		DETERGENT PUMP
+C-X001:60	-W305:2		2			+M-M006:2	11 .1		DETERGENT PUMP
+C-X001:PE	-W305:GNYE		PE			+M-M006:PE	11 .2		DETERGENT PUMP

Drawing remarks

Tetra Pak

Designer QUE/AIR	Date 11/06/2002	Machine TBA/19 020V	
ECM No 119151	Denomination TERMINAL STRIP OVERVIEW	Page Type TERMINAL STRIP OVERVIEW	
Company Tetra Pak Carton Ambient SpA	Document No. 44954-0006	Doc. type ELD	Version AB	Page 6

RELEASED

This drawing must not without the consent of Tetra Pak be copied, transmitted or disclosed to any third party.

Terminal strip of 44954-0003

+M-X007

From	Cable	Internal Jumper	Terminal	External Jumper	Cable	To	Page.Col.	Option	Function text
+C-X002:1	-W108:1		1		-W102:2	+M-B010:22	92 .6		CRANK POSITION
+C-X002:2	-W108:2		2		-W102:1	+M-B010:12	92 .6		CRANK POSITION
+C-X002:3	-W108:3		3		-W102:3	+M-B010:11	92 .4		CRANK POSITION
+C-X002:4	-W108:4		4		-W102:4	+M-B010:21	92 .4		CRANK POSITION
+C-X002:5	-W108:5		5		-W017:L.BU	+M-B062:C	76 .4		STERILE AIR, PRESSURE
+C-X002:6	-W108:6		6		-W017:BN	+M-B062:NO	76 .2		STERILE AIR, PRESSURE
+C-X002:7	-W108:7		7		-W106:1	+M-Y022:1	104 .4		MAIN MACHINE CLUTCH
+C-X002:8	-W108:8		8		-W106:2	+M-Y022:2	104 .5		MAIN MACHINE CLUTCH
+C-X002:9	-W108:9		9		-W107:1	+M-Y043:1	106 .4		DRIVE UNIT, BRAKE
			10		-W107:2	+M-Y043:2	106 .5		DRIVE UNIT, BRAKE
			11				144 .5		
			12				144 .5		
+C-X002:10	-W108:10		13				144 .2		
			14				144 .5		
			15				144 .5		
+C-X002:11	-W108:11		16				144 .2		
			17		-W015:BN	+M-B044:BN	74 .3		INFEED, CONGESTION
			18		-W015:L.BU	+M-B044:BU	74 .3		INFEED, CONGESTION
+C-X002:12	-W108:12		19		-W015:BK	+M-B044:BK	74 .6		INFEED, CONGESTION
			20		-W022:BN	+M-B120:BN	91 .3		ENCODER/VOLUME CONTROL
			21		-W022:BU	+M-B120:BU	91 .3		ENCODER/VOLUME CONTROL
+C-X002:13	-W108:13		22		-W022:BK	+M-B120:BK	91 .6		ENCODER/VOLUME CONTROL
			23				144 .5		
			24				144 .5		
+C-X002:14	-W108:14		25				144 .2		
			26				144 .5		
			27				144 .5		
+C-X002:15	-W108:15		28				144 .2		
			29		-W104:BN	+M-B016A:BN	76 .2		JAW SYSTEM OVERLOAD, LEFT
			30		-W104:L.BU	+M-B016A:BU	76 .2		JAW SYSTEM OVERLOAD, LEFT

Drawing remarks

Tetra Pak

Designer QUE/AIR | Date 11/06/2002 | Machine TBA/19 020V

ECM No 119151 | Denomination TERMINAL STRIP OVERVIEW | Page Type TERMINAL STRIP OVERVIEW

Company Tetra Pak Carton Ambient SpA | Document No. 44954-0006 | Doc. type ELD | Version AB | Page 7

RELEASED

This drawing must not without the consent of Tetra Pak be copied, transmitted or disclosed to any third party.

1 2 3 4 5 6 7 8 9 10

Terminal strip of 44954-0003

+M-X007

From	Cable	Internal Jumper	Terminal	External Jumper	Cable	To	Page.Col.	Option	Function text
			31		-W104:BK	+M-B016A:BK	76 .4		JAW SYSTEM OVERLOAD, LEFT
			32		-W105:L.BU	+M-B016B:BU	76 .4		JAW SYSTEM OVERLOAD, RIGHT
			33		-W105:BN	+M-B016B:BN	76 .4		JAW SYSTEM OVERLOAD, RIGHT
+C-X002:16	-W108:16		34		-W105:BK	+M-B016B:BK	76 .6		JAW SYSTEM OVERLOAD, RIGHT
+C-X002:17	-W108:17		35				144 .2		
+C-X002:18	-W108:18		36				144 .2		
+C-X002:19	-W108:19		37				144 .2		
			38				144 .2		
			39						
			40						
			41						
			42						
			43						
			44						
			45						
			46						
			47						
			48						
			49						
			50						

Drawing remarks

Tetra Pak

Designer	Date	Machine
QUE/AIR	11/06/2002	TBA/19 020V

ECM No	Denomination	Page Type
119151	TERMINAL STRIP OVERVIEW	TERMINAL STRIP OVERVIEW

Company	Document No.	Doc. type	Version	Page
Tetra Pak Carton Ambient SpA	44954-0006	ELD	AB	8

RELEASED

This drawing must not without the consent of Tetra Pak be copied, transmitted or disclosed to any third party.

1 2 3 4 5 6 7 8 9 10

Terminal strip of 44954-0003

+M-X008

From	Cable	Internal Jumper	Terminal	External Jumper	Cable	To	Page.Col.	Option	Function text
+M-X002:81	-W238:L.BU		1				7 .4		
+M-X002:82	-W238:BN		2				7 .4		
+M-X002:PE	-W238:GNYE		GND				7 .4		

Drawing remarks

Tetra Pak

Designer	Date	Machine
QUE/AIR	11/06/2002	TBA/19 020V

ECM No	Denomination	Page Type
119151	TERMINAL STRIP OVERVIEW	TERMINAL STRIP OVERVIEW

Company	Document No.	Doc. type	Version	Page
Tetra Pak Carton Ambient SpA	44954-0006	ELD	AB	9

RELEASED

This drawing must not without the consent of Tetra Pak be copied, transmitted or disclosed to any third party.

1 2 3 4 5 6 7 8 9 10

Terminal strip of 44954-0003

+M-X009

From	Cable	Internal Jumper	Terminal	External Jumper	Cable	To	Page.Col.	Option	Function text
+M-X002:83	-W239:L.BU		1				7 .5		
+M-X002:84	-W239:BN		2				7 .6		
+M-X002:PE	-W239:GNYE		GND				7 .5		

Drawing remarks

Tetra Pak

Designer QUE/AIR	Date 11/06/2002	Machine TBA/19 020V	
ECM No 119151	Denomination TERMINAL STRIP OVERVIEW	Page Type TERMINAL STRIP OVERVIEW	
Company Tetra Pak Carton Ambient SpA	Document No. 44954-0006	Doc. type ELD	Version AB	Page 10

RELEASED

This drawing must not without the consent of Tetra Pak be copied, transmitted or disclosed to any third party.

1 2 3 4 5 6 7 8 9 10

Terminal strip of 44954-0003

+M-X010

From	Cable	Internal Jumper	Terminal	External Jumper	Cable	To	Page.Col.	Option	Function text
+M-X002:85	-W240:L.BU		1				7 .8		
+M-X002:86	-W240:BN		2				7 .8		
+M-X002:PE	-W240:GNYE		GND				7 .8		

Drawing remarks

Tetra Pak

Designer	Date	Machine
QUE/AIR	11/06/2002	TBA/19 020V

ECM No	Denomination	Page Type
119151	TERMINAL STRIP OVERVIEW	TERMINAL STRIP OVERVIEW

Company	Document No.	Doc. type	Version	Page
Tetra Pak Carton Ambient SpA	44954-0006	ELD	AB	11

RELEASED

This drawing must not without the consent of Tetra Pak be copied, transmitted or disclosed to any third party.

Terminal strip of 44954-0003

+M-X011

From	Cable	Internal Jumper	Terminal	External Jumper	Cable	To	Page.Col.	Option	Function text
+M-X002:87	-W241:L.BU		1				7 .9		
+M-X002:88	-W241:BN		2				7 .9		
+M-X002:PE	-W241:GNYE		GND				7 .9		

Drawing remarks

Tetra Pak

Designer	Date	Machine
QUE/AIR	11/06/2002	TBA/19 020V

ECM No	Denomination	Page Type
119151	TERMINAL STRIP OVERVIEW	TERMINAL STRIP OVERVIEW

Company	Document No.	Doc. type	Version	Page
Tetra Pak Carton Ambient SpA	44954-0006	ELD	AB	12

RELEASED

This drawing must not without the consent of Tetra Pak be copied, transmitted or disclosed to any third party.

Terminal strip of 44954-0003

+M-X020

From	Cable	Internal Jumper	Terminal	External Jumper	Cable	To	Page.Col.	Option	Function text
+M-X002:53	-W954:2		1		-W250:BN	+M-B091A:BN	58 .6		PACKAGE COUNTER AFTER FF
					-W251:BN	+M-B091B:BN			PACKAGE COUNTER AFTER FF
+M-X002:54	-W954:1		2		-W251:L.BU	+M-B091B:BU	58 .6		PACKAGE COUNTER AFTER FF
					-W250:BU	+M-B091A:BU			PACKAGE COUNTER AFTER FF
+M-X002:55	-W954:3		3		-W251:BK	+M-B091B:BK	58 .6		PACKAGE COUNTER AFTER FF
+M-X002:56	-W954:4		4				144 .5		
			5						
			6						
			7						
			8						

Drawing remarks

Tetra Pak

Designer	Date	Machine
QUE/AIR	11/06/2002	TBA/19 020V

ECM No	Denomination	Page Type
119151	TERMINAL STRIP OVERVIEW	TERMINAL STRIP OVERVIEW

Company	Document No.	Doc. type	Version	Page
Tetra Pak Carton Ambient SpA	44954-0006	ELD	AB	13

RELEASED

This drawing must not without the consent of Tetra Pak
be copied, transmitted or disclosed to any third party.

1 2 3 4 5 6 7 8 9 10

Terminal strip of 44954-0003

+M-X021

From	Cable	Internal Jumper	Terminal	External Jumper	Cable	To	Page.Col.	Option	Function text
+M-X002:57	-W955:1		1		-W252:BN	+M-B092A:BN	121 .3		PACKAGE COUNTER LAST POINT DE
					-W253:BN	+M-B092B:BN			PACKAGE COUNTER LAST POINT DE
+M-X002:58	-W955:2		2		-W253:BU	+M-B092B:BU	121 .3		PACKAGE COUNTER LAST POINT DE
					-W252:BU	+M-B092A:BU			PACKAGE COUNTER LAST POINT DE
+M-X002:59	-W955:3		3		-W253:BK	+M-B092B:BK	121 .6		PACKAGE COUNTER LAST POINT DE
+M-X002:60	-W955:4		4				144 .5		
			5						
			6						
			7						
			8						

Drawing remarks

Tetra Pak

Designer	Date	Machine
QUE/AIR	11/06/2002	TBA/19 020V

ECM No	Denomination	Page Type
119151	TERMINAL STRIP OVERVIEW	TERMINAL STRIP OVERVIEW

Company	Document No.	Doc. type	Version	Page
Tetra Pak Carton Ambient SpA	44954-0006	ELD	AB	14

RELEASED

This drawing must not without the consent of Tetra Pak be copied, transmitted or disclosed to any third party.

Terminal strip of 44954-0003

+M-X022

From	Cable	Internal Jumper	Terminal	External Jumper	Cable	To	Page.Col.	Option	Function text
+M-X002:18	-W958:1		1		-W029:BU	+M-B093B:BU	58 .6		QUEUE MONITOR
					-W028:BU	+M-B093A:BU			QUEUE MONITOR
+M-X002:19	-W958:2		2		-W028:BN	+M-B093A:BN	58 .6		QUEUE MONITOR
					-W029:BN	+M-B093B:BN			QUEUE MONITOR
+M-X002:20	-W958:3		3		-W029:BK	+M-B093B:BK	58 .6		QUEUE MONITOR

Drawing remarks

Tetra Pak

Designer QUE/AIR	Date 11/06/2002	Machine TBA/19 020V	
ECM No 119151	Denomination TERMINAL STRIP OVERVIEW	Page Type TERMINAL STRIP OVERVIEW	
Company Tetra Pak Carton Ambient SpA	Document No. 44954-0006	Doc. type ELD	Version AB	Page 15

RELEASED

This drawing must not without the consent of Tetra Pak be copied, transmitted or disclosed to any third party.

Terminal strip of 44954-0003

+M-X031

From	Cable	Internal Jumper	Terminal	External Jumper	Cable	To	Page.Col.	Option	Function text
			1						
			2						
+C-X018:5	-W615:5		3		-W802:1	+M-B113A:21	60 .2		SPLICE UNIT, LEFT DOOR
+C-X018:6	-W615:6		4		-W802:2	+M-B113A:11	60 .2		SPLICE UNIT, LEFT DOOR
			5		-W802:3	+M-B113A:12	60 .3		SPLICE UNIT, LEFT DOOR
			6		-W802:4	+M-B113A:22	60 .3		SPLICE UNIT, LEFT DOOR
			7		-W803:1	+M-B113B:21	60 .3		SPLICE UNIT, RIGHT DOOR
			8		-W803:2	+M-B113B:11	60 .3		SPLICE UNIT, RIGHT DOOR
+C-X018:7	-W615:7		9		-W803:3	+M-B113B:12	60 .5		SPLICE UNIT, RIGHT DOOR
+C-X018:8	-W615:8		10		-W803:4	+M-B113B:22	60 .5		SPLICE UNIT, RIGHT DOOR
			11						
			12						
+C-X018:9	-W615:9		13		-W607:BN	+M-B032:BN	74 .3		STRIP MAGAZINE 1
+C-X018:10	-W615:10		14		-W607:L.BU	+M-B032:BU	74 .3		STRIP MAGAZINE 1
+C-X018:11	-W615:11		15		-W607:BK	+M-B032:BK	74 .6		STRIP MAGAZINE 1
			16		-W610:BN	+M-B111:BN	74 .3		STRIP MAGAZINE 2
			17		-W610:L.BU	+M-B111:BU	74 .3		STRIP MAGAZINE 2
+C-X018:12	-W615:12		18		-W610:BK	+M-B111:BK	74 .6		STRIP MAGAZINE 2
			19		-W609:BN	+M-B109:BN	75 .3		STRIP MAGAZINE 1
			20		-W609:L.BU	+M-B109:BU	75 .3		STRIP MAGAZINE 1
+C-X018:13	-W615:13		21		-W609:BK	+M-B109:BK	75 .6		STRIP MAGAZINE 1
			22				144 .5		
			23				144 .5		
			24						
+C-X018:16	-W615:14		25		-W605:3	+M-S005:22	62 .3		EMERGENCY STOP
+C-X018:15	-W615:15		26		-W605:4	+M-S005:12	62 .3		EMERGENCY STOP
+C-X018:17	-W615:16		27		-W605:2	+M-S005:11	62 .2		EMERGENCY STOP
+C-X018:18	-W615:17		28		-W605:1	+M-S005:21	62 .2		EMERGENCY STOP
			29		-W605:5	+M-S033:13	72 .4		STRIP PLICE PUSH BUTTON
+C-X018:19	-W615:19		30		-W605:6	+M-S033:14	72 .6		STRIP PLICE PUSH BUTTON

Drawing remarks

Tetra Pak

Designer	Date	Machine
QUE/AIR	11/06/2002	TBA/19 020V

ECM No	Denomination	Page Type
119151	TERMINAL STRIP OVERVIEW	TERMINAL STRIP OVERVIEW

Company	Document No.	Doc. type	Version	Page
Tetra Pak Carton Ambient SpA	44954-0006	ELD	AB	16

RELEASED

This drawing must not without the consent of Tetra Pak be copied, transmitted or disclosed to any third party.

Terminal strip of 44954-0003

+M-X031

From	Cable	Internal Jumper	Terminal	External Jumper	Cable	To	Page.Col.	Option	Function text
+C-X018:20	-W615:20		31		-W605:7	+M-S035:51	72 .5		SHORT STOP PUSH BUTTON
+C-X018:21	-W615:21		32		-W605:8	+M-S035:52	72 .6		SHORT STOP PUSH BUTTON
			33		-W605:9	+M-H033S:X2	101 .6		STRIP SPLICING LAMP
+C-X018:22	-W615:22		34		-W605:10	+M-H033S:X1	101 .3		STRIP SPLICING LAMP
			35						
			36						
+C-X019:1	-W602:1		37		-W630:BN	+M-R033:1	10 .4		STRIP SEALINGAND CUTTING
			38		-W630:L.BU	+M-R033:2	10 .4		STRIP SEALINGAND CUTTING
			39		-W631:BN	+M-R034:1	10 .4		SUPPLY STRIPCUTTING
+C-X019:2	-W602:2		40		-W631:L.BU	+M-R034:2	10 .5		SUPPLY STRIPCUTTING
+C-X019:PE	-W602:GNYE		PE		-W630:GNYE	+M-R033:E	10 .4		STRIP SEALINGAND CUTTING
			PE		-W631:GNYE	+M-R034:E	10 .5		SUPPLY STRIPCUTTING

Drawing remarks

Tetra Pak

Designer QUE/AIR	Date 11/06/2002	Machine TBA/19 020V	
ECM No 119151	Denomination TERMINAL STRIP OVERVIEW	Page Type TERMINAL STRIP OVERVIEW	
Company Tetra Pak Carton Ambient SpA	Document No. 44954-0006	Doc. type ELD	Version AB	Page 17

RELEASED

This drawing must not without the consent of Tetra Pak be copied, transmitted or disclosed to any third party.

Terminal strip of 44954-0003

+M-X032

From	Cable	Internal Jumper	Terminal	External Jumper	Cable	To	Page.Col.	Option	Function text
+C-X002:115	-W332:1		1+			+M-Y001:1	98 .4		SS JS AND FF DOOR GUARD
+C-X002:125	-W332:12		1-			+M-Y001:2	98 .5		SS JS AND FF DOOR GUARD
+C-X002:116	-W332:2		2+			+M-Y100:1	98 .4		FLAP SEALING, AIR RESET
			2-			+M-Y100:2	98 .5		FLAP SEALING, AIR RESET
+C-X002:117	-W332:3		3+			+M-Y102:1	98 .4		MAIN AIR VALVE
			3-			+M-Y102:2	98 .5		MAIN AIR VALVE
+C-X002:118	-W332:4		4+			+M-Y105:1	98 .4		LS STRIP SPLICE
			4-			+M-Y105:2	98 .5		LS STRIP SPLICE
+C-X002:119	-W332:5		5+			+M-Y037:1	99 .4		SHUT-OFF STRIP APPLICATOR
			5-			+M-Y037:2	99 .6		SHUT-OFF STRIP APPLICATOR
+C-X002:120	-W332:6		6+			+M-Y915:1	103 .4	TCSB	STEAM REGULATING VALVE
+C-X002:126	-W332:13		6-			+M-Y915:2	103 .5	TCSB	STEAM REGULATING VALVE
+C-X002:121	-W332:7		7+			+M-Y086:1	103 .4		VACUUM VALVE
			7-			+M-Y086:2	103 .5		VACUUM VALVE
+C-X002:122	-W332:8		8+			+M-Y025:1	103 .4		HEAT EXCHANGER VALVE
			8-			+M-Y025:2	103 .5		HEAT EXCHANGER VALVE
+C-X002:123	-W332:9		9+			+M-Y023:1	103 .4		SUCTION VALVE
			9-			+M-Y023:2	103 .5		SUCTION VALVE
+C-X002:124	-W332:10		10+			+M-Y019:1	103 .4		AIR INLET VALVE
			10-			+M-Y019:2	103 .5		AIR INLET VALVE
+C-X002:PE	-W332:GNYE		PE			+M-Y001:E	98 .5		SS JS AND FF DOOR GUARD
			PE			+M-Y100:E	98 .5		FLAP SEALING, AIR RESET
			PE			+M-Y102:E	98 .5		MAIN AIR VALVE
			PE			+M-Y105:E	98 .5		LS STRIP SPLICE
			PE			+M-Y037:E	99 .6		SHUT-OFF STRIP APPLICATOR
			PE			+M-Y915:E	103 .5	TCSB	STEAM REGULATING VALVE
			PE			+M-Y086:E	103 .5		VACUUM VALVE
			PE			+M-Y025:E	103 .5		HEAT EXCHANGER VALVE
			PE			+M-Y023:E	103 .5		SUCTION VALVE
			PE			+M-Y019:E	103 .5		AIR INLET VALVE

Drawing remarks

Tetra Pak

Designer	Date	Machine
QUE/AIR	11/06/2002	TBA/19 020V

ECM No	Denomination	Page Type
119151	TERMINAL STRIP OVERVIEW	TERMINAL STRIP OVERVIEW

Company	Document No.	Doc. type	Version	Page
Tetra Pak Carton Ambient SpA	44954-0006	ELD	AB	18

RELEASED

This drawing must not without the consent of Tetra Pak be copied, transmitted or disclosed to any third party.

Terminal strip of 44954-0003

+M-X033

From	Cable	Internal Jumper	Terminal	External Jumper	Cable	To	Page.Col.	Option	Function text
+C-X002:127	-W333:1		1+			+M-Y009:1	103 .4		PRODUCT, VALVE (A)
+C-X002:137	-W333:12		1-			+M-Y009:2	103 .5		PRODUCT, VALVE (A)
+C-X002:128	-W333:2		2+			+M-Y007:1	103 .4		STEAM BARRIER (C)
			2-			+M-Y007:2	103 .5		STEAM BARRIER (C)
+C-X002:129	-W333:3		3+			+M-Y017:1	103 .4		CENTRAL LUBRIFICATION, PUMP
			3-			+M-Y017:2	103 .5		CENTRAL LUBRIFICATION, PUMP
+C-X002:130	-W333:4		4+			+M-Y008:1	104 .4		STERILE AIR VALVE (B)
			4-			+M-Y008:2	104 .5		STERILE AIR VALVE (B)
+C-X002:131	-W333:5		5+			+M-Y005:1	104 .4		PEROXIDE BATH, DRAINING
			5-			+M-Y005:2	104 .5		PEROXIDE BATH, DRAINING
+C-X002:132	-W333:6		6+			+M-Y006:1	104 .4		PEROXIDE BATH, FILLING
+C-X002:138	-W333:13		6-			+M-Y006:2	104 .5		PEROXIDE BATH, FILLING
+C-X002:133	-W333:7		7+			+M-Y002:1	104 .4		CLEANING TRAY, DRAINING
			7-			+M-Y002:2	104 .5		CLEANING TRAY, DRAINING
+C-X002:134	-W333:8		8+			+M-Y003:1	104 .4		WASTE PACKAGES, AIR BLOWING
			8-			+M-Y003:2	104 .5		WASTE PACKAGES, AIR BLOWING
+C-X002:135	-W333:9		9+				143 .2		
			9-				143 .3		
+C-X002:136	-W333:10		10+				143 .2		
			10-				143 .3		
+C-X002:PE	-W333:GNYE		PE			+M-Y009:E	103 .5		PRODUCT, VALVE (A)
			PE			+M-Y007:E	103 .5		STEAM BARRIER (C)
			PE			+M-Y017:E	103 .5		CENTRAL LUBRIFICATION, PUMP
			PE			+M-Y008:E	104 .5		STERILE AIR VALVE (B)
			PE			+M-Y005:E	104 .5		PEROXIDE BATH, DRAINING
			PE			+M-Y006:E	104 .5		PEROXIDE BATH, FILLING
			PE			+M-Y002:E	104 .5		CLEANING TRAY, DRAINING
			PE			+M-Y003:E	104 .5		WASTE PACKAGES, AIR BLOWING
			PE				143 .3		
			PE				143 .3		

Drawing remarks

Tetra Pak

Designer QUE/AIR | Date 11/06/2002 | Machine TBA/19 020V

ECM No 119151 | Denomination TERMINAL STRIP OVERVIEW | Page Type TERMINAL STRIP OVERVIEW

Company Tetra Pak Carton Ambient SpA | Document No. 44954-0006 | Doc. type ELD | Version AB | Page 19

RELEASED

This drawing must not without the consent of Tetra Pak be copied, transmitted or disclosed to any third party.

Terminal strip of 44954-0003

+M-X034

From	Cable	Internal Jumper	Terminal	External Jumper	Cable	To	Page.Col.	Option	Function text
+C-X002:139	-W334:1		1+			+M-Y027:1	96 .4		FLAP SEALING, AIR SET
+C-X002:149	-W334:12		1-			+M-Y027:2	96 .5		FLAP SEALING, AIR SET
+C-X002:140	-W334:2		2+			+M-Y026:1	96 .4		VACUUM VALVE
			2-			+M-Y026:2	96 .5		VACUUM VALVE
+C-X002:141	-W334:3		3+			+M-Y024:1	96 .4		MAIN AIR VALVE
			3-			+M-Y024:2	96 .5		MAIN AIR VALVE
+C-X002:142	-W334:4		4+			+M-Y021:1	96 .4		LS STRIP SPLICE
			4-			+M-Y021:2	96 .5		LS STRIP SPLICE
+C-X002:143	-W334:5		5+			+M-Y020:1	96 .4		AIR INLET VALVE
			5-			+M-Y020:2	96 .5		AIR INLET VALVE
+C-X002:144	-W334:6		6+			+M-Y129:1	96 .4		AIR BLOWING BOTTOM FLAPS
+C-X002:150	-W334:13		6-			+M-Y129:2	96 .5		AIR BLOWING BOTTOM FLAPS
+C-X002:145	-W334:7		7+			+M-Y177:1	96 .4		TUBE FOLDING DEVICE
			7-			+M-Y177:2	96 .5		TUBE FOLDING DEVICE
+C-X002:146	-W334:8		8+				96 .4		
			8-				96 .5		
+C-X002:147	-W334:9		9+				97 .4		
			9-				97 .5		
+C-X002:148	-W334:10		10+				97 .4		
			10-				97 .5		
+C-X002:PE	-W334:GNYE		PE			+M-Y027:E	96 .5		FLAP SEALING, AIR SET
			PE			+M-Y026:E	96 .5		VACUUM VALVE
			PE			+M-Y024:E	96 .5		MAIN AIR VALVE
			PE			+M-Y021:E	96 .5		LS STRIP SPLICE
			PE			+M-Y020:E	96 .5		AIR INLET VALVE
			PE			+M-Y129:E	96 .5		AIR BLOWING BOTTOM FLAPS
			PE			+M-Y177:E	96 .5		TUBE FOLDING DEVICE
			PE				96 .5		
			PE				97 .5		
			PE				97 .5		

Drawing remarks

Tetra Pak

Designer QUE/AIR | Date 11/06/2002 | Machine TBA/19 020V

ECM No 119151 | Denomination TERMINAL STRIP OVERVIEW | Page Type TERMINAL STRIP OVERVIEW

Company Tetra Pak Carton Ambient SpA | Document No. 44954-0006 | Doc. type ELD | Version AB | Page 20

RELEASED

This drawing must not without the consent of Tetra Pak be copied, transmitted or disclosed to any third party.

Terminal strip of 44954-0003

+M-X035

From	Cable	Internal Jumper	Terminal	External Jumper	Cable	To	Page.Col.	Option	Function text
+C-X002:151	-W335:1		1+				111 .4		
+C-X002:161	-W335:12		1-				111 .5		
+C-X002:152	-W335:2		2+				111 .4		
			2-				111 .5		
+C-X002:153	-W335:3		3+			+M-Y103:1	111 .4		PRESSURE DEVICE
			3-			+M-Y103:2	111 .5		PRESSURE DEVICE
+C-X002:154	-W335:4		4+			+M-Y030:1	111 .4		SHUT-OFF FINAL FOLDER
			4-			+M-Y030:2	111 .5		SHUT-OFF FINAL FOLDER
+C-X002:155	-W335:5		5+				143 .2		
			5-				143 .3		
+C-X002:156	-W335:6		6+				143 .2		
+C-X002:162	-W335:13		6-				143 .3		
+C-X002:157	-W335:7		7+				143 .2		
			7-				143 .3		
+C-X002:158	-W335:8		8+				143 .2		
			8-				143 .3		
+C-X002:159	-W335:9		9+				143 .2		
			9-				143 .3		
+C-X002:160	-W335:10		10+				143 .2		
			10-				143 .3		
+C-X002:PE	-W335:PE		PE				111 .5		
			PE				111 .5		
			PE			+M-Y103:E	111 .5		PRESSURE DEVICE
			PE			+M-Y030:E	111 .5		SHUT-OFF FINAL FOLDER
			PE				143 .3		
			PE				143 .3		
			PE				143 .3		
			PE				143 .3		
			PE				143 .3		
			PE				143 .3		

Drawing remarks

Tetra Pak

Designer	Date	Machine
QUE/AIR	11/06/2002	TBA/19 020V

ECM No	Denomination	Page Type
119151	TERMINAL STRIP OVERVIEW	TERMINAL STRIP OVERVIEW

Company	Document No.	Doc. type	Version	Page
Tetra Pak Carton Ambient SpA	44954-0006	ELD	AB	21

RELEASED

This drawing must not without the consent of Tetra Pak be copied, transmitted or disclosed to any third party.

1 2 3 4 5 6 7 8 9 10

Terminal strip of 44954-0003

+M-X037 A

From	Cable	Internal Jumper	Terminal	External Jumper	Cable	To	Page.Col.	Option	Function text
+C-X004:1	-W450:YE		+		:YE	+M-B037A:YE	32 .2		LS-SEALED TUBE, TEMP.
+C-X004:2	-W450:RD		-		:RD	+M-B037A:RD	32 .2		LS-SEALED TUBE, TEMP.

Drawing remarks

Tetra Pak

Designer QUE/AIR	Date 11/06/2002	Machine TBA/19 020V	
ECM No 119151	Denomination TERMINAL STRIP OVERVIEW	Page Type TERMINAL STRIP OVERVIEW	
Company Tetra Pak Carton Ambient SpA	Document No. 44954-0006	Doc. type ELD	Version AB	Page 22

RELEASED

This drawing must not without the consent of Tetra Pak be copied, transmitted or disclosed to any third party.

1 2 3 4 5 6 7 8 9 10

Terminal strip of 44954-0003

+M-X037 B

From	Cable	Internal Jumper	Terminal	External Jumper	Cable	To	Page.Col.	Option	Function text
+C-X004:3	-W410:YE		+		:YE	+M-B037B: YE	32 .2		LS-ELEMENT, TEMP.
+C-X004:4	-W410:RD		-		:RD	+M-B037B:RD	32 .2		LS-ELEMENT, TEMP.

Drawing remarks

Tetra Pak

Designer QUE/AIR	Date 11/06/2002	Machine TBA/19 020V	
ECM No 119151	Denomination TERMINAL STRIP OVERVIEW	Page Type TERMINAL STRIP OVERVIEW	
Company Tetra Pak Carton Ambient SpA	Document No. 44954-0006	Doc. type ELD	Version AB	Page 23

RELEASED

This drawing must not without the consent of Tetra Pak be copied, transmitted or disclosed to any third party.

Terminal strip of 44954-0003

+M-X038

From	Cable	Internal Jumper	Terminal	External Jumper	Cable	To	Page.Col.	Option	Function text
+C-X004:11	-W408:YE		+		:YE	+M-B038:YE	31 .2		PEROXIDE BATH,TEMP. WATER
+C-X004:12	-W408:RD		-		:RD	+M-B038:RD	31 .2		PEROXIDE BATH,TEMP. WATER

Drawing remarks

Tetra Pak

Designer QUE/AIR	Date 11/06/2002	Machine TBA/19 020V	
ECM No 119151	Denomination TERMINAL STRIP OVERVIEW	Page Type TERMINAL STRIP OVERVIEW	
Company Tetra Pak Carton Ambient SpA	Document No. 44954-0006	Doc. type ELD	Version AB	Page 24

RELEASED

This drawing must not without the consent of Tetra Pak be copied, transmitted or disclosed to any third party.

Terminal strip of 44954-0003

+M-X039

From	Cable	Internal Jumper	Terminal	External Jumper	Cable	To	Page.Col.	Option	Function text
+C-X004:5	-W409:YE		+		:YE	+M-B039:YE	32 .2		AIR SUPERHEATER, TEMP.
+C-X004:6	-W409:RD		-		:RD	+M-B039:RD	32 .2		AIR SUPERHEATER, TEMP.

Drawing remarks

Tetra Pak

Designer QUE/AIR	Date 11/06/2002	Machine TBA/19 020V	
ECM No 119151	Denomination TERMINAL STRIP OVERVIEW	Page Type TERMINAL STRIP OVERVIEW	
Company Tetra Pak Carton Ambient SpA	Document No. 44954-0006	Doc. type ELD	Version AB	Page 25

RELEASED

This drawing must not without the consent of Tetra Pak be copied, transmitted or disclosed to any third party.

Terminal strip of 44954-0003

+M-X040

From	Cable	Internal Jumper	Terminal	External Jumper	Cable	To	Page.Col.	Option	Function text
+C-X004:9	-W407:YE		+		:YE	+M-B040:YE	31 .2		PRESTERIL. TEMPERATURE
+C-X004:10	-W407:RD		-		:RD	+M-B040:RD	31 .2		PRESTERIL. TEMPERATURE

Drawing remarks

Tetra Pak

Designer	Date	Machine
QUE/AIR	11/06/2002	TBA/19 020V

ECM No	Denomination	Page Type
119151	TERMINAL STRIP OVERVIEW	TERMINAL STRIP OVERVIEW

Company	Document No.	Doc. type	Version	Page
Tetra Pak Carton Ambient SpA	44954-0006	ELD	AB	26

RELEASED

This drawing must not without the consent of Tetra Pak be copied, transmitted or disclosed to any third party.

Terminal strip of 44954-0003

+M-X042

From	Cable	Internal Jumper	Terminal	External Jumper	Cable	To	Page.Col.	Option	Function text
+M-X060:90	-W781:1		1			+M-Y150:1	114 .4	ASU	ASU VENTING VALVE
			1-			+M-Y150:2	114 .5	ASU	ASU VENTING VALVE
+M-X060:91	-W781:2		2			+M-Y151:1	114 .4	ASU	SIDE FEEDER L-R
			2-			+M-Y151:2	114 .5	ASU	SIDE FEEDER L-R
+M-X060:92	-W781:3		3			+M-Y152:1	114 .4	ASU	SIDE FEEDER R-L
+M-X060:89	-W781:12		3-			+M-Y152:2	114 .5	ASU	SIDE FEEDER R-L
+M-X060:93	-W781:4		4			+M-Y155:1	114 .4	ASU	PRESSURE RAIL
			4-			+M-Y155:2	114 .5	ASU	PRESSURE RAIL
+M-X060:94	-W781:5		5			+M-Y154:1	114 .4	ASU	CUTTING
			5-			+M-Y154:2	114 .5	ASU	CUTTING
+M-X060:83	-W781:6		6			+M-Y153:1	114 .4	ASU	WEB TENSION
+M-X060:85	-W781:13		6-			+M-Y153:2	114 .5	ASU	WEB TENSION
+M-X060:84	-W781:7		7			+M-Y156:1	116 .4	ASU	CUTTING TABLE LEFT
			7-			+M-Y156:2	116 .6	ASU	CUTTING TABLE LEFT
+M-X060:86	-W781:8		8			+M-Y157:1	116 .4	ASU	MATERIAL LOCK RIGHT
			8-			+M-Y157:2	116 .6	ASU	MATERIAL LOCK RIGHT
+M-X060:87	-W781:9		9			+M-Y158:1	116 .4	ASU	MATERIAL LOCK LEFT
			9-			+M-Y158:2	116 .6	ASU	MATERIAL LOCK LEFT
+M-X060:88	-W781:10		10			+M-Y159:1	116 .4	ASU	CUTING TABLE RIGHT
			10-			+M-Y159:2	116 .6	ASU	CUTING TABLE RIGHT
+M-X060:PE	-W781:GNYE		PE			+M-Y150:E	114 .5	ASU	ASU VENTING VALVE
			PE			+M-Y151:E	114 .5	ASU	SIDE FEEDER L-R
			PE			+M-Y152:E	114 .5	ASU	SIDE FEEDER R-L
			PE			+M-Y155:E	114 .5	ASU	PRESSURE RAIL
			PE			+M-Y154:E	114 .5	ASU	CUTTING
			PE			+M-Y153:E	114 .5	ASU	WEB TENSION
			PE			+M-Y156:E	116 .6	ASU	CUTTING TABLE LEFT
			PE			+M-Y157:E	116 .6	ASU	MATERIAL LOCK RIGHT
			PE			+M-Y158:E	116 .6	ASU	MATERIAL LOCK LEFT
			PE			+M-Y159:E	116 .6	ASU	CUTING TABLE RIGHT

Drawing remarks

Tetra Pak

Designer QUE/AIR | Date 11/06/2002 | Machine TBA/19 020V

ECM No 119151 | Denomination TERMINAL STRIP OVERVIEW | Page Type TERMINAL STRIP OVERVIEW

Company Tetra Pak Carton Ambient SpA | Document No. 44954-0006 | Doc. type ELD | Version AB | Page 27

RELEASED

This drawing must not without the consent of Tetra Pak be copied, transmitted or disclosed to any third party.

Terminal strip of 44954-0003

+M-X050

From	Cable	Internal Jumper	Terminal	External Jumper	Cable	To	Page.Col.	Option	Function text
+C-X004:15	-W412:YE		+		:YE	+M-B050:YE	33 .2		STEAM UP
+C-X004:16	-W412:RD		-		:RD	+M-B050:RD	33 .2		STEAM UP

Drawing remarks

Tetra Pak

Designer QUE/AIR	Date 11/06/2002	Machine TBA/19 020V	
ECM No 119151	Denomination TERMINAL STRIP OVERVIEW	Page Type TERMINAL STRIP OVERVIEW	
Company Tetra Pak Carton Ambient SpA	Document No. 44954-0006	Doc. type ELD	Version AB	Page 28

RELEASED

This drawing must not without the consent of Tetra Pak be copied, transmitted or disclosed to any third party.

Terminal strip of 44954-0003

+M-X055

From	Cable	Internal Jumper	Terminal	External Jumper	Cable	To	Page.Col.	Option	Function text
+C-X004:13	-W411:YE		+		:YE	+M-B055:YE	33 .2		AIR KNIFE TEMPERATURE
+C-X004:14	-W411:RD		-		:RD	+M-B055:RD	33 .2		AIR KNIFE TEMPERATURE

Drawing remarks

Tetra Pak

Designer QUE/AIR	Date 11/06/2002	Machine TBA/19 020V	
ECM No 119151	Denomination TERMINAL STRIP OVERVIEW	Page Type TERMINAL STRIP OVERVIEW	
Company Tetra Pak Carton Ambient SpA	Document No. 44954-0006	Doc. type ELD	Version AB	Page 29

RELEASED

This drawing must not without the consent of Tetra Pak be copied, transmitted or disclosed to any third party.

Terminal strip of 44954-0003

+M-X060

From	Cable	Internal Jumper	Terminal	External Jumper	Cable	To	Page.Col.	Option	Function text
+C-X015:1	-W759:1		1		-W788:1	+M-B108:21	66 .2		DATING UNIT DOOR GUARD
+C-X015:2	-W759:2		2		-W788:2	+M-B108:11	66 .2		DATING UNIT DOOR GUARD
			3		-W788:4	+M-B108:22	66 .3		DATING UNIT DOOR GUARD
			4		-W788:3	+M-B108:12	66 .3		DATING UNIT DOOR GUARD
			5		-W790:1	+M-B115:21	66 .4		PMI LEFT DOOR GUARD
			6		-W790:2	+M-B115:11	66 .4		PMI LEFT DOOR GUARD
+C-X015:4	-W759:4		7		-W790:4	+M-B115:22	66 .6		PMI LEFT DOOR GUARD
+C-X015:3	-W759:3		8		-W790:3	+M-B115:12	66 .6		PMI LEFT DOOR GUARD
			9		-W762:2	+M-B141:11	61 .2	ASU	SIDE LEFT ASU DOOR
			10		-W762:1	+M-B141:21	61 .2	ASU	SIDE LEFT ASU DOOR
			11		-W762:3	+M-B141:12	61 .3	ASU	SIDE LEFT ASU DOOR
			12		-W762:4	+M-B141:22	61 .3	ASU	SIDE LEFT ASU DOOR
			13		-W763:2	+M-B142:11	61 .4	ASU	SIDE RIGHT ASU DOOR
			14		-W763:1	+M-B142:21	61 .4	ASU	SIDE RIGHT ASU DOOR
			15		-W763:3	+M-B142:12	61 .5	ASU	SIDE RIGHT ASU DOOR
			16		-W763:4	+M-B142:22	61 .5	ASU	SIDE RIGHT ASU DOOR
			17		-W764:2	+M-B143:11	61 .5	ASU	RIGHT DOOR ASU
			18		-W764:1	+M-B143:21	61 .5	ASU	RIGHT DOOR ASU
+C-X015:6	-W759:6		19		-W765:2	+M-B144:12	61 .7	ASU	LEFT DOOR ASU
+C-X015:7	-W759:7		20		-W765:1	+M-B144:22	61 .7	ASU	LEFT DOOR ASU
+C-X015:8	-W759:8		21		-W753:1	+M-X061 :1	116 .7		
+C-X015:9	-W759:9		22		-W753:2	+M-X061 :2	116 .4		
+C-X015:10	-W759:10		23		-W753:3	+M-X061 :3	116 .4		
+C-X015:11	-W759:11		24		-W753:4	+M-X061 :4	116 .4		
+C-X015:12	-W759:12		25		-W753:5	+M-X061 :5	116 .4		
			26						

Drawing remarks

Tetra Pak

Designer	Date	Machine
QUE/AIR	11/06/2002	TBA/19 020V

ECM No	Denomination	Page Type
119151	TERMINAL STRIP OVERVIEW	TERMINAL STRIP OVERVIEW

Company	Document No.	Doc. type	Version	Page
Tetra Pak Carton Ambient SpA	44954-0006	ELD	AB	30

RELEASED

This drawing must not without the consent of Tetra Pak be copied, transmitted or disclosed to any third party.

Terminal strip of 44954-0003

+M-X060

From	Cable	Internal Jumper	Terminal	External Jumper	Cable	To	Page.Col.	Option	Function text
			27		-W786:BU	+M-X156 :1:3	49 .7	ASU	
+C-X015:13	-W759:13		28		-W786:BN	+M-X156 :1:1	122 .2		
+C-X015:14	-W759:14		29		-W786:GY	+M-X156 :1:5	49 .7	ASU	
+C-X015:15	-W759:15		30		-W786:BK	+M-X156 :1:4	49 .7	ASU	
			31		-W787:BU	+M-X156 :2:3	49 .7	ASU	
			32		-W787:BN	+M-X156 :2:1	49 .7	ASU	
+C-X015:16	-W759:16		33		-W787:GY	+M-X156 :2:5	49 .7	ASU	
+C-X015:17	-W759:17		34		-W787:BK	+M-X156 :2:4	49 .7	ASU	
+C-X015:18	-W759:18		35		-W769:BK	+M-B157:	122 .7		CREAZE WHEEL
			36		-W769:BN	+M-B157:	122 .2		CREAZE WHEEL
			37		-W769:BU	+M-B157:	122 .2		CREAZE WHEEL
+C-X015:19	-W759:19		38		-W770:BK	+M-B149:	122 .7		MAGAZINE FULL
			39		-W770:BN	+M-B149:	122 .2		MAGAZINE FULL
			40		-W770:BU	+M-B149:	122 .2		MAGAZINE FULL
+C-X015:20	-W759:20		41		-W771:BK	+M-B150:	122 .7		MAGAZINE EMPTY
			42		-W771:BN	+M-B150:	122 .2		MAGAZINE EMPTY
			43		-W771:BU	+M-B150:	122 .2		MAGAZINE EMPTY
+C-X015:21	-W759:21		44		-W777:BK	+M-B154:	122 .7		PAPER SUPPLY
			45		-W777:BN	+M-B154:	122 .2		PAPER SUPPLY
			46		-W777:BU	+M-B154:	122 .2		PAPER SUPPLY
+C-X015:22	-W759:22		47		-W779:BK	+M-B155:	123 .6	ASU	PAPER SUPPLY RIGHT
			48		-W779:BN	+M-B155:	123 .2	ASU	PAPER SUPPLY RIGHT
			49		-W779:BU	+M-B155:	123 .2	ASU	PAPER SUPPLY RIGHT
+C-X015:23	-W759:23		50		-W782:1	+M-X062 :1	122 .7	ASU	
			51		-W782:2	+M-X062 :2	122 .2	ASU	
			52		-W782:3	+M-X062 :3	122 .2	ASU	
+C-X015:24	-W759:24		53		-W782:4	+M-X062 :4	122 .7	ASU	
			54				122 .2		
			55				122 .2		
			56						

Drawing remarks

Tetra Pak

Designer	Date	Machine
QUE/AIR	11/06/2002	TBA/19 020V

ECM No	Denomination	Page Type
119151	TERMINAL STRIP OVERVIEW	TERMINAL STRIP OVERVIEW

Company	Document No.	Doc. type	Version	Page
Tetra Pak Carton Ambient SpA	44954-0006	ELD	AB	31

RELEASED

This drawing must not without the consent of Tetra Pak be copied, transmitted or disclosed to any third party.

Terminal strip of 44954-0003

+M-X060

From	Cable	Internal Jumper	Terminal	External Jumper	Cable	To	Page.Col.	Option	Function text
+C-X016:1	-W800:1		57				72 .2	ASU	
			58				122 .2		
+C-X016:2	-W800:2		59		-W782:5	+M-X062 :10	122 .7	ASU	
			60						
			61						
			62						
			63						
			64						
+C-X016:3	-W800:3		65		-W782:7	+M-X062 :16	123 .6	ASU	
			66						
			67						
			68						
			69						
			70						
+C-X016:4	-W800:4		71		-W760:1	+M-S011:11	62 .2		EMERGENCY STOP
+C-X016:5	-W800:5		72		-W760:2	+M-S011:21	62 .2		EMERGENCY STOP
+C-X016:6	-W800:6		73		-W760:3	+M-S006:22	62 .5		EMERGENCY STOP ASU
+C-X016:7	-W800:7		74		-W760:4	+M-S006:12	62 .5		EMERGENCY STOP ASU
			75		-W760:5	+M-S009:13	72 .2	ASU	PAPER SPLICE PUSHBOTTON ASU
+C-X016:8	-W800:8		76		-W760:6	+M-S009:14	72 .6	ASU	PAPER SPLICE PUSHBOTTON ASU
+M-S007:14	-W760:7		77				72 .6	ASU	
+C-X016:9	-W800:9								
+C-X016:10	-W800:10		78		-W760:8	+M-S003:14	123 .5	ASU	SPLICE TABLE PUSH BUTTON
+C-X016:11	-W800:11		79		-W760:9	+M-S008:52	72 .3	ASU	SHORT STOP PUSH BUTTON
+C-X016:12	-W800:12		80		-W760:10	+M-S010H:14	90 .6	ASU	RESET ASU
+C-X016:13	-W800:13		81		-W760:11	+M-H010S:1	105 .3	ASU	RESET ASU
			82		-W760:12	+M-H010S:2	105 .6	ASU	RESET ASU
+C-X016:14	-W800:14		83		-W781:6	+M-X042:6	114 .3	ASU	
+C-X016:15	-W800:15		84		-W781:7	+M-X042:7	116 .3	ASU	
			85		-W781:13	+M-X042:6-	114 .7	ASU	

Drawing remarks

Tetra Pak

Designer	Date	Machine
QUE/AIR	11/06/2002	TBA/19 020V

ECM No	Denomination	Page Type
119151	TERMINAL STRIP OVERVIEW	TERMINAL STRIP OVERVIEW

Company	Document No.	Doc. type	Version	Page
Tetra Pak Carton Ambient SpA	44954-0006	ELD	AB	32

RELEASED

This drawing must not without the consent of Tetra Pak be copied, transmitted or disclosed to any third party.

Terminal strip of 44954-0003

+M-X060

From	Cable	Internal Jumper	Terminal	External Jumper	Cable	To	Page.Col.	Option	Function text
+C-X016:16	-W800:16		86		-W781:8	+M-X042:8	116 .3	ASU	
+C-X016:17	-W800:17		87		-W781:9	+M-X042:9	116 .3	ASU	
+C-X016:18	-W800:18		88		-W781:10	+M-X042:10	116 .3	ASU	
+C-X016:19	-W800:19		89		-W781:12	+M-X042:3-	114 .7	ASU	
+C-X016:20	-W800:20		90		-W781:1	+M-X042:1	114 .3	ASU	
+C-X016:21	-W800:21		91		-W781:2	+M-X042:2	114 .3	ASU	
+C-X016:22	-W800:22		92		-W781:3	+M-X042:3	114 .3	ASU	
+C-X016:23	-W800:23		93		-W781:4	+M-X042:4	114 .3	ASU	
+C-X016:24	-W800:24		94		-W781:5	+M-X042:5	114 .3	ASU	
			95						
			96						
+C-X012:1	-W750:1		101		-W751:1	+M-E003:2	6 .6		SU LIGHTING
+C-X012:2	-W750:2		102		-W751:2	+M-E003:1	6 .6		SU LIGHTING
			103		-W752:1	+M-E005:2	6 .5	ASU	SU LIGHTING
			104		-W752:2	+M-E005:1	6 .5	ASU	SU LIGHTING
			105		-W302:1	+M-R001:1	6 .7		SPLICERPAPER
+C-X012:3	-W750:3		106		-W302:2	+M-B014:1	6 .8		SPLICER TEMP.
			PE		-W752:GNYE	+M-E005:E	6 .6	ASU	SU LIGHTING
+C-X012:PE	-W750:GNYE		PE		-W751:GNYE	+M-E003:E	6 .6		SU LIGHTING
			PE		-W302:GNYE	+M-R001:E	6 .7		SPLICERPAPER
GND:			PE		-W781:GNYE	+M-X042:PE	114 .7		

Drawing remarks

Tetra Pak

Designer	Date	Machine
QUE/AIR	11/06/2002	TBA/19 020V

ECM No	Denomination	Page Type
119151	TERMINAL STRIP OVERVIEW	TERMINAL STRIP OVERVIEW

Company	Document No.	Doc. type	Version	Page
Tetra Pak Carton Ambient SpA	44954-0006	ELD	AB	33

RELEASED

This drawing must not without the consent of Tetra Pak be copied, transmitted or disclosed to any third party.

Terminal strip of 44954-0003 +M-X061

From	Cable	Internal Jumper	Terminal	External Jumper	Cable	To	Page.Col.	Option	Function text
+M-X060:21	-W753:1		1		-W754:1	+M-H034B:C	116 .6		BEACON BLU ASU
+M-X060:22	-W753:2		2		-W754:2	+M-H034B:1	116 .5		BEACON BLU ASU
+M-X060:23	-W753:3		3		-W754:3	+M-H034Y:2	116 .5		BEACON YELLOW ASU
+M-X060:24	-W753:4		4		-W754:4	+M-H034R:3	116 .5		BEACON RED ASU
+M-X060:25	-W753:5		5		-W754:5	+M-H040:4	116 .5		HORNER
			6						

Drawing remarks

Tetra Pak

Designer	Date	Machine
QUE/AIR	11/06/2002	TBA/19 020V

ECM No	Denomination	Page Type
119151	TERMINAL STRIP OVERVIEW	TERMINAL STRIP OVERVIEW

Company	Document No.	Doc. type	Version	Page
Tetra Pak Carton Ambient SpA	44954-0006	ELD	AB	34

RELEASED

This drawing must not without the consent of Tetra Pak be copied, transmitted or disclosed to any third party.

Terminal strip of 44954-0003

+M-X062

From	Cable	Internal Jumper	Terminal	External Jumper	Cable	To	Page.Col.	Option	Function text
+M-X060:50	-W782:1		1		-W772:BK	+M-B151:	122 .6	ASU	SPLICING HEAD RIGHT
+M-X060:51	-W782:2		2		-W772:BN	+M-B151:	122 .5	ASU	SPLICING HEAD RIGHT
+M-X060:52	-W782:3		3		-W772:BU	+M-B151:	122 .5	ASU	SPLICING HEAD RIGHT
+M-X060:53	-W782:4		4		-W773:BK	+M-B152:	122 .6	ASU	SPLICING HEAD LEFT
			5		-W773:BN	+M-B152:	122 .5	ASU	SPLICING HEAD LEFT
			6		-W773:BU	+M-B152:	122 .5	ASU	SPLICING HEAD LEFT
			7		-W768:BK	+M-B146:	122 .5	ASU	SPLICING TABLE RIGHT
			8		-W768:BN	+M-B146:	122 .3	ASU	SPLICING TABLE RIGHT
			9		-W768:BU	+M-B146:	122 .3	ASU	SPLICING TABLE RIGHT
+M-X060:59	-W782:5		10		-W767:BK	+M-B148:	122 .6	ASU	SPLICING TABLE LEFT
			11		-W767:BN	+M-B148:	122 .5	ASU	SPLICING TABLE LEFT
			12		-W767:BU	+M-B148:	122 .5	ASU	SPLICING TABLE LEFT
			13		-W775:BK	+M-B153:1:	123 .4	ASU	FREE LOOP LEFT
			14		-W775:BN	+M-B153:1:	123 .2	ASU	FREE LOOP LEFT
			15		-W775:BU	+M-B153:1:	123 .2	ASU	FREE LOOP LEFT
+M-X060:65	-W782:7		16		-W776:BK	+M-B153:2:	123 .6	ASU	FREE LOOP RIGHT
			17		-W776:BN	+M-B153:2:	123 .4	ASU	FREE LOOP RIGHT
			18		-W776:BU	+M-B153:2:	123 .4	ASU	FREE LOOP RIGHT

Drawing remarks

Tetra Pak

Designer QUE/AIR	Date 11/06/2002	Machine TBA/19 020V	
ECM No 119151	Denomination TERMINAL STRIP OVERVIEW	Page Type TERMINAL STRIP OVERVIEW	
Company Tetra Pak Carton Ambient SpA	Document No. 44954-0006	Doc. type ELD	Version AB	Page 35

RELEASED

This drawing must not without the consent of Tetra Pak be copied, transmitted or disclosed to any third party.

Terminal strip of 44954-0003

+M-X071

From	Cable	Internal Jumper	Terminal	External Jumper	Cable	To	Page.Col.	Option	Function text
+C-A500:X004	-W370:1		1		-W372:1	+M-X073:1	29 .2		

Drawing remarks

Tetra Pak

Designer QUE/AIR	Date 11/06/2002	Machine TBA/19 020V	
ECM No 119151	Denomination TERMINAL STRIP OVERVIEW	Page Type TERMINAL STRIP OVERVIEW	
Company Tetra Pak Carton Ambient SpA	Document No. 44954-0006	Doc. type ELD	Version AB	Page 36

RELEASED

This drawing must not without the consent of Tetra Pak be copied, transmitted or disclosed to any third party.

1 2 3 4 5 6 7 8 9 10

Terminal strip of 44954-0003

+M-X072

From	Cable	Internal Jumper	Terminal	External Jumper	Cable	To	Page.Col.	Option	Function text
+C-A500:X005	-W371:1		1		-W373:1	+M-X074:1	29 .2		
			2						
			3						

Drawing remarks	Tetra Pak	Designer QUE/AIR	Date 11/06/2002	Machine TBA/19 020V
		ECM No 119151	Denomination TERMINAL STRIP OVERVIEW	Page Type TERMINAL STRIP OVERVIEW
	Company Tetra Pak Carton Ambient SpA	Document No. 44954-0006	Doc. type ELD	Version AB / Page 37

RELEASED

This drawing must not without the consent of Tetra Pak be copied, transmitted or disclosed to any third party.

1 2 3 4 5 6 7 8 9 10

Terminal strip of 44954-0003

+M-X073

From	Cable	Internal Jumper	Terminal	External Jumper	Cable	To	Page.Col.	Option	Function text
+M-X071 :1	-W372:1		1			+M-L001:	29 .2		INDUCTORTS LEFT

Drawing remarks

Tetra Pak

Designer	Date	Machine
QUE/AIR	11/06/2002	TBA/19 020V

ECM No	Denomination	Page Type
119151	TERMINAL STRIP OVERVIEW	TERMINAL STRIP OVERVIEW

Company	Document No.	Doc. type	Version	Page
Tetra Pak Carton Ambient SpA	44954-0006	ELD	AB	38

RELEASED

This drawing must not without the consent of Tetra Pak be copied, transmitted or disclosed to any third party.

1 2 3 4 5 6 7 8 9 10

Terminal strip of 44954-0003

+M-X074

From	Cable	Internal Jumper	Terminal	External Jumper	Cable	To	Page.Col.	Option	Function text
+M-X072:1	-W373:1		1			+M-L002:	29 .2		INDUCTORTS RIGHT

Drawing remarks

Tetra Pak

Designer	Date	Machine
QUE/AIR	11/06/2002	TBA/19 020V

ECM No	Denomination	Page Type
119151	TERMINAL STRIP OVERVIEW	TERMINAL STRIP OVERVIEW

Company	Document No.	Doc. type	Version	Page
Tetra Pak Carton Ambient SpA	44954-0006	ELD	AB	39

RELEASED

This drawing must not without the consent of Tetra Pak be copied, transmitted or disclosed to any third party.

1 2 3 4 5 6 7 8 9 10

Terminal strip of 44954-0003

+M-X075

From	Cable	Internal Jumper	Terminal	External Jumper	Cable	To	Page.Col.	Option	Function text
+C-X073:1	-W601:1		1			+M-L003:	29 .7		INDUCTORSTRIP APPLICATOR

Drawing remarks

Tetra Pak

Designer	Date	Machine
QUE/AIR	11/06/2002	TBA/19 020V

ECM No	Denomination	Page Type
119151	TERMINAL STRIP OVERVIEW	TERMINAL STRIP OVERVIEW

Company	Document No.	Doc. type	Version	Page
Tetra Pak Carton Ambient SpA	44954-0006	ELD	AB	40

RELEASED

This drawing must not without the consent of Tetra Pak be copied, transmitted or disclosed to any third party.

1 2 3 4 5 6 7 8 9 10

Terminal strip of 44954-0003

+M-X095

From	Cable	Internal Jumper	Terminal	External Jumper	Cable	To	Page.Col.	Option	Function text
+C-X002:227	-W360:1		1			+M-B095:YE	77 .3		PAPER SUPPLY
+C-X002:230	-W360:4		2			+M-B095:WH	77 .4		PAPER SUPPLY
+C-X002:229	-W360:3		3			+M-B095:GN	77 .3		PAPER SUPPLY
+C-X002:228	-W360:2		4			+M-B095:RD	77 .3		PAPER SUPPLY
+C-X002:PE	-W360:GNYE		PE			+M-B095:YEGN	77 .3		PAPER SUPPLY

Drawing remarks

Tetra Pak

Designer	Date	Machine
QUE/AIR	11/06/2002	TBA/19 020V

ECM No	Denomination	Page Type
119151	TERMINAL STRIP OVERVIEW	TERMINAL STRIP OVERVIEW

Company	Document No.	Doc. type	Version	Page
Tetra Pak Carton Ambient SpA	44954-0006	ELD	AB	41

RELEASED

This drawing must not without the consent of Tetra Pak be copied, transmitted or disclosed to any third party.

Terminal strip of 44954-0003

+M-X107

From	Cable	Internal Jumper	Terminal	External Jumper	Cable	To	Page.Col.	Option	Function text
+C-X003:65	-W380:BN		1				47 .2		
+C-X003:63	-W380:YE		2				47 .2		
+C-A310:5	-W380:GN		3				47 .2		
+C-X003:64	-W380:WH		4				47 .3		
+M-W380:	-W380:SH		5				47 .3		
			6				47 .3		
			7				47 .3		

Drawing remarks

Tetra Pak

Designer	Date	Machine
QUE/AIR	11/06/2002	TBA/19 020V

ECM No	Denomination	Page Type
119151	TERMINAL STRIP OVERVIEW	TERMINAL STRIP OVERVIEW

Company	Document No.	Doc. type	Version	Page
Tetra Pak Carton Ambient SpA	44954-0006	ELD	AB	42

RELEASED

This drawing must not without the consent of Tetra Pak be copied, transmitted or disclosed to any third party.

1 2 3 4 5 6 7 8 9 10

Terminal strip of 44954-0003

+M-X132

From	Cable	Internal Jumper	Terminal	External Jumper	Cable	To	Page.Col.	Option	Function text
+C-X003:51	-W442:2		1			+M-B132:BN	48 .8		MDCS RIGHT SENSOR HOME
+C-X003:52	-W442:3		3			+M-B132:BU	48 .8		MDCS RIGHT SENSOR HOME
+C-A400:19	-W442:1		4			+M-B132:BK	48 .8		MDCS RIGHT SENSOR HOME

Drawing remarks

Tetra Pak

Designer	Date	Machine
QUE/AIR	11/06/2002	TBA/19 020V

ECM No	Denomination	Page Type
119151	TERMINAL STRIP OVERVIEW	TERMINAL STRIP OVERVIEW

Company	Document No.	Doc. type	Version	Page
Tetra Pak Carton Ambient SpA	44954-0006	ELD	AB	43

RELEASED

This drawing must not without the consent of Tetra Pak be copied, transmitted or disclosed to any third party.

Terminal strip of 44954-0003

+M-X134

From	Cable	Internal Jumper	Terminal	External Jumper	Cable	To	Page.Col.	Option	Function text
+C-X003:54	-W444:2		1			+M-B134:BN	48 .8		MDCS LEFT SENSOR HOME
+C-X003:55	-W444:3		3			+M-B134:BU	48 .8		MDCS LEFT SENSOR HOME
+C-A400:20	-W444:1		4			+M-B134:BK	48 .8		MDCS LEFT SENSOR HOME

Drawing remarks

Tetra Pak

Designer QUE/AIR	Date 11/06/2002	Machine TBA/19 020V	
ECM No 119151	Denomination TERMINAL STRIP OVERVIEW	Page Type TERMINAL STRIP OVERVIEW	
Company Tetra Pak Carton Ambient SpA	Document No. 44954-0006	Doc. type ELD	Version AB	Page 44

RELEASED

This drawing must not without the consent of Tetra Pak be copied, transmitted or disclosed to any third party.

1 2 3 4 5 6 7 8 9 10

Terminal strip of 44954-0003

+M-X156 :1

From	Cable	Internal Jumper	Terminal	External Jumper	Cable	To	Page.Col.	Option	Function text
+M-X060:28	-W786:BN		1			+M-B156:1:+	49 .8	ASU	DESIGN CORRECTION
			2			+M-B156:1:AT	49 .8	ASU	DESIGN CORRECTION
+M-X060:27	-W786:BU		3			+M-B156:1:-	49 .8	ASU	DESIGN CORRECTION
+M-X060:30	-W786:BK		4			+M-B156:1:SIGN	49 .8	ASU	DESIGN CORRECTION
+M-X060:29	-W786:GY		5			+M-B156:1:ET	49 .8	ASU	DESIGN CORRECTION

Drawing remarks

Tetra Pak

Designer	Date	Machine
QUE/AIR	11/06/2002	TBA/19 020V

ECM No	Denomination	Page Type
119151	TERMINAL STRIP OVERVIEW	TERMINAL STRIP OVERVIEW

Company	Document No.	Doc. type	Version	Page
Tetra Pak Carton Ambient SpA	44954-0006	ELD	AB	45

RELEASED

This drawing must not without the consent of Tetra Pak be copied, transmitted or disclosed to any third party.

1 2 3 4 5 6 7 8 9 10

Terminal strip of 44954-0003

+M-X156 :2

From	Cable	Internal Jumper	Terminal	External Jumper	Cable	To	Page.Col.	Option	Function text
+M-X060:32	-W787:BN		1			+M-B156:2:+	49 .8	ASU	DESIGN CORRECTION
			2			+M-B156:2:AT	49 .8	ASU	DESIGN CORRECTION
+M-X060:31	-W787:BU		3			+M-B156:2:-	49 .8	ASU	DESIGN CORRECTION
+M-X060:34	-W787:BK		4			+M-B156:2:SIGN	49 .8	ASU	DESIGN CORRECTION
+M-X060:33	-W787:GY		5			+M-B156:2:ET	49 .8	ASU	DESIGN CORRECTION

Drawing remarks

Tetra Pak

Designer	Date	Machine
QUE/AIR	11/06/2002	TBA/19 020V

ECM No	Denomination	Page Type
119151	TERMINAL STRIP OVERVIEW	TERMINAL STRIP OVERVIEW

Company	Document No.	Doc. type	Version	Page
Tetra Pak Carton Ambient SpA	44954-0006	ELD	AB	46

RELEASED

This drawing must not without the consent of Tetra Pak be copied, transmitted or disclosed to any third party.

Terminal strip of 44954-0003

+M-X184

From	Cable	Internal Jumper	Terminal	External Jumper	Cable	To	Page.Col.	Option	Function text
+C-X003:57	-W327:BN		1				48 .2		
+C-X003:62	-W327:YE		2				48 .2		
+C-A400:6	-W327:GN		3				48 .2		
+C-X003:59	-W327:WH		4				48 .3		
+M-W327:	-W327:SH		5				48 .3		
			6				48 .3		
			7				48 .3		

Drawing remarks

Tetra Pak

Designer QUE/AIR	Date 11/06/2002	Machine TBA/19 020V	
ECM No 119151	Denomination TERMINAL STRIP OVERVIEW	Page Type TERMINAL STRIP OVERVIEW	
Company Tetra Pak Carton Ambient SpA	Document No. 44954-0006	Doc. type ELD	Version AB	Page 47

RELEASED

This drawing must not without the consent of Tetra Pak be copied, transmitted or disclosed to any third party.

Terminal strip of 44954-0003

+M-X212

From	Cable	Internal Jumper	Terminal	External Jumper	Cable	To	Page.Col.	Option	Function text
+M-X002:90	-W242:YE		+		:YE	+M-B072:YE	36 .2		FLAP SEALING TOP LEFT
+M-X002:89	-W242:RD		-		:RD	+M-B072:RD	36 .2		FLAP SEALING TOP LEFT

Drawing remarks

Tetra Pak

Designer QUE/AIR	Date 11/06/2002	Machine TBA/19 020V	
ECM No 119151	Denomination TERMINAL STRIP OVERVIEW	Page Type TERMINAL STRIP OVERVIEW	
Company Tetra Pak Carton Ambient SpA	Document No. 44954-0006	Doc. type ELD	Version AB	Page 48

RELEASED

This drawing must not without the consent of Tetra Pak be copied, transmitted or disclosed to any third party.

Terminal strip of 44954-0003 +M-X213

From	Cable	Internal Jumper	Terminal	External Jumper	Cable	To	Page.Col.	Option	Function text
+M-X002:92	-W243:YE		+		:YE	+M-B073:YE	36 .2		FLAP SEALING TOP GIGHT
+M-X002:91	-W243:RD		-		:RD	+M-B073:RD	36 .2		FLAP SEALING TOP GIGHT

Drawing remarks

Tetra Pak

Designer QUE/AIR	Date 11/06/2002	Machine TBA/19 020V	
ECM No 119151	Denomination TERMINAL STRIP OVERVIEW	Page Type TERMINAL STRIP OVERVIEW	
Company Tetra Pak Carton Ambient SpA	Document No. 44954-0006	Doc. type ELD	Version AB	Page 49

RELEASED

This drawing must not without the consent of Tetra Pak be copied, transmitted or disclosed to any third party.

Terminal strip of 44954-0003

+M-X214

From	Cable	Internal Jumper	Terminal	External Jumper	Cable	To	Page.Col.	Option	Function text
+M-X002:94	-W244:YE		+		:YE	+M-B074:YE	37 .2		FLAP SEALING BOTTON LEFT
+M-X002:93	-W244:RD		-		:RD	+M-B074:RD	37 .2		FLAP SEALING BOTTON LEFT

Drawing remarks

Tetra Pak

Designer QUE/AIR	Date 11/06/2002	Machine TBA/19 020V	
ECM No 119151	Denomination TERMINAL STRIP OVERVIEW	Page Type TERMINAL STRIP OVERVIEW	
Company Tetra Pak Carton Ambient SpA	Document No. 44954-0006	Doc. type ELD	Version AB	Page 50

RELEASED

This drawing must not without the consent of Tetra Pak be copied, transmitted or disclosed to any third party.

Terminal strip of 44954-0003 +M-X215

From	Cable	Internal Jumper	Terminal	External Jumper	Cable	To	Page.Col.	Option	Function text
+M-X002:96	-W245:YE		+		:YE	+M-B075:YE	37 .2		FLAP SEALING BOTTON RIGHT
+M-X002:95	-W245:RD		-		:RD	+M-B075:RD	37 .2		FLAP SEALING BOTTON RIGHT

Drawing remarks

Tetra Pak

Designer QUE/AIR	Date 11/06/2002	Machine TBA/19 020V	
ECM No 119151	Denomination TERMINAL STRIP OVERVIEW	Page Type TERMINAL STRIP OVERVIEW	
Company Tetra Pak Carton Ambient SpA	Document No. 44954-0006	Doc. type ELD	Version AB	Page 51

RELEASED

This drawing must not without the consent of Tetra Pak be copied, transmitted or disclosed to any third party.

Terminal strip of 44954-0003 +M-X217

From	Cable	Internal Jumper	Terminal	External Jumper	Cable	To	Page.Col.	Option	Function text
+C-X004:7	-W433:YE		+		:YE	+M-B079:YE	38 .2		LS SHORT STOP
+C-X004:8	-W433:RD		-		:RD	+M-B079:RD	38 .2		LS SHORT STOP

Drawing remarks

Tetra Pak

Designer QUE/AIR	Date 11/06/2002	Machine TBA/19 020V	
ECM No 119151	Denomination TERMINAL STRIP OVERVIEW	Page Type TERMINAL STRIP OVERVIEW	
Company Tetra Pak Carton Ambient SpA	Document No. 44954-0006	Doc. type ELD	Version AB	Page 52

RELEASED

This drawing must not without the consent of Tetra Pak be copied, transmitted or disclosed to any third party.

Terminal strip of 44954-0003

+P-X453

From	Cable	Internal Jumper	Terminal	External Jumper	Cable	To	Page.Col.	Option	Function text
+C-X453 :13	-W953:WH/YE		1				141 .3		
+C-X453 :17	-W953:GY/PK								
+C-X453 :15	-W953:BN/BU								
+C-X453 :26	-W953:WH		2				141 .3		
+C-X453 :24	-W953:WH/PK		3				141 .3		
+C-X453 :23	-W953:YE		4				141 .3		
+C-X453 :22	-W953:GY		5				141 .3		
+C-X453 :21	-W953:PK		6				141 .3		
+C-X453 :20	-W953:PKBN		7				141 .3		
+C-X453 :19	-W953:RD		8				141 .3		
+C-X453 :1	-W953:OG		9				141 .3		
+C-X453 :2	-W953:WH		10				141 .3		
+C-X453 :3	-W953:GN		11				141 .3		
+C-X453 :4	-W953:WH		12				141 .3		
+C-X453 :5	-W953:BU		13				141 .3		
+C-X453 :6	-W953:WH		14				141 .3		
+C-X453 :7	-W953:BN		15				141 .3		
+C-X453 :8	-W953:WH		16				141 .3		
+C-X453 :16	-W953:RD/BU		17				141 .3		
+C-X453 :12	-W953:YE/BN								
+C-X453 :14	-W953:BN/GN								
GND:	-W953:SH		18				141 .3		

Drawing remarks

Tetra Pak

Designer	Date	Machine
QUE/AIR	11/06/2002	TBA/19 020V

ECM No	Denomination	Page Type
119151	TERMINAL STRIP OVERVIEW	TERMINAL STRIP OVERVIEW

Company	Document No.	Doc. type	Version	Page
Tetra Pak Carton Ambient SpA	44954-0006	ELD	AB	53

RELEASED

This drawing must not without the consent of Tetra Pak be copied, transmitted or disclosed to any third party.

Terminal strip of 44954-0003

+P-X901

From	Cable	Internal Jumper	Terminal	External Jumper	Cable	To	Page.Col.	Option	Function text
+C-X004:151	-W018:1		113			+P-S900:21	62 .6		EMERGENCY STOP
+C-X004:152	-W018:2		114			+P-S900:11	62 .6		EMERGENCY STOP
+C-X004:153	-W018:3		115			+P-S900:12	62 .6		EMERGENCY STOP
+C-X004:154	-W018:4		116			+P-S900:22	62 .6		EMERGENCY STOP
+C-X004:155	-W018:5		117			+P-S901H:13	94 .2		PLMS RESET
+C-X004:156	-W018:6		118			+P-S901H:14	94 .6		PLMS RESET
+C-X004:157	-W018:7		119			+P-S902:14	94 .6		LAMP TEST
+C-X004:158	-W018:8		120			+P-S903:14	94 .6		SELECTOR SWITCH
+C-X004:159	-W018:9		121			+P-S904:14	95 .6		STATION CHAIN SPRINKLER
+C-X004:161	-W018:11		123			+P-S906:14	95 .6		DROP CHUTE OFF
+C-X004:162	-W018:12		124			+P-S907H:14	94 .6		INCHING
+C-X004:164	-W018:14		126			+P-S908H:51	94 .6		SHORT STOP
+C-X004:166	-W018:16		130			+P-S911H:14	94 .6		STEP UP
+C-X004:167	-W018:17		131			+P-S912H:51	94 .6		STEP DOWN
+C-X004:168	-W018:18		132			+P-H901S:2	108 .3		TPOP RESET LAMP
+C-X004:169	-W018:19		133			+P-H901S:1	108 .6		TPOP RESET LAMP
+C-X004:171	-W018:21		135			+P-H907S:2	108 .3		INCHING LAMP
+C-X004:172	-W018:22		136			+P-H908S:2	108 .3		SHORT STOP LAMP
+C-X004:173	-W018:23		139			+P-H911S:2	108 .3		STEP UP LAMP
+C-X004:174	-W018:24		140			+P-H912S:2	108 .3		STEP DOWN LAMP
			141						
			142						
			143						
			144						
			145						
			146						
			147						
			148						
			149						
			150						

Drawing remarks

Tetra Pak

Designer	Date	Machine
QUE/AIR	11/06/2002	TBA/19 020V

ECM No	Denomination	Page Type
119151	TERMINAL STRIP OVERVIEW	TERMINAL STRIP OVERVIEW

Company	Document No.	Doc. type	Version	Page
Tetra Pak Carton Ambient SpA	44954-0006	ELD	AB	54

RELEASED

This drawing must not without the consent of Tetra Pak be copied, transmitted or disclosed to any third party.

1 2 3 4 5 6 7 8 9 10

Terminal strip of 44954-0003

+P-X901

From	Cable	Internal Jumper	Terminal	External Jumper	Cable	To	Page.Col.	Option	Function text
			151						
			152						
			153						
			154						

Drawing remarks

Tetra Pak

Designer	Date	Machine
QUE/AIR	11/06/2002	TBA/19 020V

ECM No	Denomination	Page Type
119151	TERMINAL STRIP OVERVIEW	TERMINAL STRIP OVERVIEW

Company	Document No.	Doc. type	Version	Page
Tetra Pak Carton Ambient SpA	44954-0006	ELD	AB	55

This page intentionally left blank

11 Cable connection list

EM3.0TB118032en.fm

Table of contents

Cable connection list 44954-0007

EM3.0TB118032en.fm

RELEASED

This drawing must not without the consent of Tetra Pak be copied, transmitted or disclosed to any third party.

Cable Connection List of 44954-0003

Cable	Core	From	To	Page.Col.	Option
+C-W033	RD	+C-X004:10	+C-A200:2	31 .5	
+C-W033	YE	+C-X004:9	+C-A200:1	31 .5	
+C-W034	RD	+C-X004:12	+C-A201:2	31 .5	
+C-W034	YE	+C-X004:11	+C-A201:1	31 .5	
+C-W035	RD	+C-X004:2	+C-K101:7	32 .4	
+C-W035	YE	+C-X004:1	+C-K101:5	32 .4	
+C-W036	RD	+C-X004:4	+C-K101:3	32 .4	
+C-W036	YE	+C-X004:3	+C-K101:1	32 .4	
+C-W037	RD	+C-X004:6	+C-P005:8	32 .6	
+C-W037	YE	+C-X004:5	+C-P005:9	32 .6	
+C-W038	RD	+C-X004:14	+C-P005:5	33 .6	
+C-W038	YE	+C-X004:13	+C-P005:6	33 .6	
+C-W039	RD	+C-X004:16	+C-A205:2	33 .5	
+C-W039	YE	+C-X004:15	+C-A205:1	33 .5	
+C-W040	RD	+C-X004:22	+C-P005:2	34 .6	
+C-W040	YE	+C-X004:21	+C-P005:3	34 .6	
+C-W044	1	+C-X073:1	+C-A501:X004	29 .7	
+C-W049	RD	+C-K101:11	+C-A202:2	32 .5	
+C-W049	YE	+C-K101:9	+C-A202:1	32 .5	
+C-W050	1	+C-A100:1	+C-A100:1	30 .9	
+C-W051	1	+C-A100:1	+C-A100:2	30 .9	
+C-W056	RD	+C-X002:65	+C-A212:2	36 .5	
+C-W056	YE	+C-X002:66	+C-A212:1	36 .5	
+C-W057	RD	+C-X002:67	+C-A213:2	36 .5	
+C-W057	YE	+C-X002:68	+C-A213:1	36 .5	
+C-W058	RD	+C-X002:69	+C-A214:2	37 .5	
+C-W058	YE	+C-X002:70	+C-A214:1	37 .5	

Cable	Core	From	To	Page.Col.	Option
+C-W059	RD	+C-X002:71	+C-A215:2	37 .5	
+C-W059	YE	+C-X002:72	+C-A215:1	37 .5	
+C-W061	BN	+C-X456 :7	+C-A450:7	140 .4	
+C-W061	BU	+C-X456 :6	+C-A450:6	140 .4	
+C-W061	GN	+C-X456 :3	+C-A450:3	140 .4	
+C-W061	GY	+C-X456 :1	+C-A450:1	140 .4	
+C-W061	PK	+C-X456 :2	+C-A450:2	140 .4	
+C-W061	RD	+C-X456 :5	+C-A450:5	140 .4	
	SH				
	SH				
	SH				
	SH				
	SH				
+C-W061	WH	+C-X456 :4	+C-A450:4	140 .4	
+C-W061	YE	+C-X456 :8	+C-A450:8	140 .4	
+C-W062	2	+C-X451:1		.3	
+C-W063	BN	+M-X002:77	+C-A450:R- 2	140 .6	
+C-W063	GN	+M-X002:79	+C-A450:T- 4	140 .6	
+C-W063	SH	+M-X002:80	+C-A450:5	140 .6	
	SH				
+C-W063	WH	+M-X002:76	+C-A450:R+ 1	140 .6	
+C-W063	YE	+M-X002:78	+C-A450:T+ 3	140 .6	
+C-W064	BN	+C-X455 :2	+M-X002:72	140 .4	
+C-W064	GN	+C-X455 :4	+M-X002:74	140 .4	
+C-W064	SH	+C-X455 :5	+M-X002:75	140 .4	
	SH				
	SH				

Drawing remarks

Tetra Pak

Designer	Date	Machine
QUE/AIR	11/06/2002	TBA/19 020V

ECM No	Denomination	Page Type
119151	CABLE CONNECTION LIST	CABLE CONNECTION LIST

Company	Document No.	Doc. type	Version	Page
Tetra Pak Carton Ambient SpA	44954-0007	ELD	AB	1

This drawing must not without the consent of Tetra Pak be copied, transmitted or disclosed to any third party.

Cable Connection List of 44954-0003

Cable	Core	From	To	Page.Col.	Option
+C-W064	WH	+C-X455 :1	+M-X002:71	140 .4	
+C-W064	YE	+C-X455 :3	+M-X002:73	140 .4	
+C-W066	RD	+C-X004:8	+C-A217:2	38 .5	
+C-W066	YE	+C-X004:7	+C-A217:1	38 .5	
+C-W067	BN	+C-A108:AQ003	+C-G003:3	15 .2	
+C-W067	SH	+C-W067:	GND:	84 .3	
+C-W067	WH	+C-A108:19	+C-G003:2	15 .2	
+C-W068	BN	+C-A108:AQ001	+C-G001:3	14 .2	
+C-W068	SH	+C-W068:	GND:	84 .3	
+C-W068	WH	+C-A108:19	+C-G001:2	14 .2	
+C-W069	BN	+C-A108:AQ002	+C-G002:3	14 .2	ASU
+C-W069	SH	+C-W069:	GND:	84 .3	ASU
+C-W069	WH	+C-A108:19	+C-G002:2	14 .2	ASU
+C-W070	RD	+C-A203:2	+C-P005:8	32 .6	
+C-W070	YE	+C-A203:1	+C-P005:9	32 .6	
+C-W071	RD	+C-A204:2	+C-P005:5	33 .6	
+C-W071	YE	+C-A204:1	+C-P005:6	33 .6	
+C-W072	RD	+C-A206:2	+C-P005:2	34 .6	
+C-W072	YE	+C-A206:1	+C-P005:3	34 .6	
+C-W073	2	GND:	+C-A200:6	31 .5	
+C-W074	2	GND:	+C-A201:6	31 .5	
+C-W075	2	GND:	+C-A202:6	32 .5	
+C-W076	2	GND:	+C-A203:6	32 .5	
+C-W077	2	GND:	+C-A204:6	33 .5	
+C-W078	2	GND:	+C-A205:6	33 .5	
+C-W079	2	GND:	+C-A206:6	34 .5	
+C-W080	2	GND:	+C-A212:6	36 .5	

Cable	Core	From	To	Page.Col.	Option
+C-W081	2	GND:	+C-A213:6	36 .5	
+C-W082	2	GND:	+C-A214:6	37 .5	
+C-W083	2	GND:	+C-A215:6	37 .5	
+C-W084	2	GND:	+C-A217:6	38 .5	
+C-W085	1	+C-X013:1	+C-G001:U	14 .2	
+C-W085	2	+C-X013:2	+C-G001:V	14 .2	
+C-W085	3	+C-X013:3	+C-G001:W	14 .2	
+C-W085	4	+C-X013:4	GND:	14 .3	
+C-W085	PE	+C-X013:GND	+C-G001:PE	14 .3	
+C-W087	1	+C-X014:1	+C-G002:U	14 .7	ASU
+C-W087	2	+C-X014:2	+C-G002:V	14 .8	ASU
+C-W087	3	+C-X014:3	+C-G002:W	14 .8	ASU
+C-W087	4	+C-X014:4	GND:	14 .8	ASU
+C-W087	PE	+C-X014:GND	+C-G002:PE	14 .8	ASU
+C-W088	1	+C-A108:20	GND:	85 .2	
+C-W098	1	+C-X017:2	+C-X007:10	12 .2	
+C-W098	2	+C-X017:1	+C-X007:9	12 .2	
+C-W098	3	+C-X017:3	+C-X007:11	12 .2	
+C-W098	4	+C-X017:4	+C-X007:12	12 .3	
+C-W098	5	+C-X017:5	+C-X007:13	12 .3	
+C-W098	6	+C-X017:6	+C-X007:14	12 .3	
+C-W098	GNYE	+C-X017:PE	+C-X010:6	12 .3	
+C-W099	BN	+C-A400:27	+C-A012:1203	24 .5	
+C-W099	GN	+C-A400:27	+C-A012:2203	48 .6	
+C-W099	GY	+C-X003:61	+C-A012:2111	48 .6	
+C-W099	PK	+C-X003:58	+C-A012:1211	24 .7	
+C-W099	SH	+C-W099:	GND:	48 .7	

Drawing remarks

Tetra Pak

Designer	Date	Machine
QUE/AIR	11/06/2002	TBA/19 020V

ECM No	Denomination	Page Type
119151	CABLE CONNECTION LIST	CABLE CONNECTION LIST

Company	Document No.	Doc. type	Version	Page
Tetra Pak Carton Ambient SpA	44954-0007	ELD	AB	2

This drawing must not without the consent of Tetra Pak be copied, transmitted or disclosed to any third party.

Cable Connection List of 44954-0003

Cable	Core	From	To	Page.Col.	Option
	SH				
	SH				
+C-W099	WH	+C-A400:25	+C-A012:1202	24 .5	
+C-W099	YE	+C-A400:26	+C-A012:2202	48 .6	
+C-W124	BN	+C-A108:AQ005	+C-A500:301	29 .2	
+C-W124	SH	+C-W124:	GND:	85 .2	
+C-W124	WH	+C-A108:19	+C-A500:309	29 .2	
+C-W125	BN	+C-A108:AQ006	+C-A500:302	29 .2	
+C-W125	SH	+C-W125:	GND:	85 .2	
+C-W125	WH	+C-A108:19	+C-A500:309	29 .2	
+C-W126	BN	+C-A108:AQ007	+C-A501:301	29 .2	
+C-W126	SH	+C-W126:	GND:	85 .2	
+C-W126	WH	+C-A108:19	+C-A501:309	29 .2	
+C-W127	BN	+C-A400:3	+C-A108:AQ008	48 .2	
+C-W127	SH	GND:	+C-W127:	85 .2	
+C-W127	WH	+C-X003:49	+C-A108:19	48 .2	
+C-W305	1	+C-X001:59	+M-X006:1	11 .2	
+C-W305	2	+C-X001:60	+M-X006:2	11 .1	
+C-W305	GNYE	+C-X001:PE	+M-X006:PE	11 .2	
+C-W335	1	+C-X002:151	+M-X035:1+	111 .4	
+C-W335	2	+C-X002:152	+M-X035:2+	111 .4	
+C-W335	3	+C-X002:153	+M-X035:3+	111 .4	
+C-W335	4	+C-X002:154	+M-X035:4+	111 .4	
+C-W335	5	+C-X002:155	+M-X035:5+	143 .2	
+C-W335	6	+C-X002:156	+M-X035:6+	143 .2	
+C-W335	7	+C-X002:157	+M-X035:7+	143 .2	
+C-W335	8	+C-X002:158	+M-X035:8+	143 .2	

Cable	Core	From	To	Page.Col.	Option
+C-W335	9	+C-X002:159	+M-X035:9+	143 .2	
+C-W335	10	+C-X002:160	+M-X035:10+	143 .2	
	11				
+C-W335	12	+C-X002:161	+M-X035:1-	111 .7	
+C-W335	13	+C-X002:162	+M-X035:6-	143 .5	
+C-W335	PE	+C-X002:PE	+M-X035:PE	111 .7	
+M-W005	1	+C-X001:15	+M-M004:U	13 .2	
+M-W005	2	+C-X001:17	+M-M004:W	13 .2	
+M-W005	3	+C-X001:16	+M-M004:V	13 .2	
+M-W005	GNYE	+C-X001:PE	+M-M004:PE	13 .3	
+M-W006	1	+C-X001:65	+M-E001A:2	6 .1	
+M-W006	2	+C-X001:66	+M-E001A:1	6 .1	
+M-W006	GNYE	+C-X001:PE	+M-E001A:E	6 .1	
+M-W007	1	+C-X001:64	+M-E001B:2	6 .2	
+M-W007	2	+C-X001:63	+M-E001B:1	6 .2	
+M-W007	GNYE	+C-X001:PE	+M-E001B:E	6 .2	
+M-W009	1	+C-X004:175	+M-H035B:C	107 .7	
+M-W009	2	+C-X004:176	+M-H035B:1	107 .5	
+M-W009	3	+C-X004:177	+M-H035Y:2	107 .5	
+M-W009	4	+C-X004:178	+M-H035R:3	116 .5	
	5				
	6				
	GNYE				
+M-W010	1	+M-B011:22	+M-B015:21	92 .3	
+M-W010	2	+M-B011:12	+M-B015:11	92 .3	
+M-W011	1	+M-B012:22	+M-B019:21	92 .6	
+M-W011	2	+M-B012:12	+M-B019:11	92 .6	

Drawing remarks

Tetra Pak

Designer	Date	Machine
QUE/AIR	11/06/2002	TBA/19 020V

ECM No	Denomination	Page Type
119151	CABLE CONNECTION LIST	CABLE CONNECTION LIST

Company	Document No.	Doc. type	Version	Page
Tetra Pak Carton Ambient SpA	44954-0007	ELD	AB	3

RELEASED

This drawing must not without the consent of Tetra Pak be copied, transmitted or disclosed to any third party.

Cable Connection List of 44954-0003

Cable	Core	From	To	Page.Col.	Option
+M-W013	1	+M-X002:16	+M-B013:1	44 .3	
+M-W013	2	+M-X002:17	+M-B013:2	44 .3	
+M-W015	BK	+M-X007:19	+M-B044:BK	74 .6	
+M-W015	BN	+M-X007:17	+M-B044:BN	74 .5	
	GNYE				
+M-W015	L.BU	+M-X007:18	+M-B044:BU	74 .5	
+M-W017	BN	+M-X007:6	+M-B062:NO	76 .3	
	GNYE				
+M-W017	L.BU	+M-X007:5	+M-B062:C	76 .4	
+M-W019	1	+C-X001:69	+M-E001C:2	6 .3	
+M-W019	2	+C-X001:70	+M-E001C:1	6 .3	
+M-W019	GNYE	+C-X001:PE	+M-E001C:E	6 .3	
+M-W021	BK	+M-X002:26	+M-B119:BK	91 .6	
+M-W021	BN	+M-X002:28	+M-B119:BN	91 .5	
+M-W021	BU	+M-X002:27	+M-B119:BU	91 .5	
+M-W022	BK	+M-X007:22	+M-B120:BK	91 .6	
+M-W022	BN	+M-X007:20	+M-B120:BN	91 .5	
+M-W022	BU	+M-X007:21	+M-B120:BU	91 .5	
	GNYE				
+M-W023		+M-X002:1	GND:	16 .3	
+M-W023	1	+M-X002:2	+C-G005:U	16 .2	
+M-W023	2	+M-X002:3	+C-G005:V	16 .2	
+M-W023	3	+M-X002:4	+C-G005:W	16 .3	
+M-W023	GNYE	+M-X002:PE	+C-G005:PE	16 .3	
	SH				
+M-W024	1	+M-X002:2	+M-MPLE001:U	16 .2	
+M-W024	2	+M-X002:3	+M-MPLE001:V	16 .2	
+M-W024	3	+M-X002:4	+M-MPLE001:W	16 .3	
+M-W024	GNYE	+M-X002:PE	+M-MPLE001:PE	16 .3	
+M-W024	SH	+M-X002:1		.3	
+M-W025	1	+M-X002:9	+C-X002:26	58 .5	
+M-W025	2	+M-X002:8	+C-X002:25	58 .5	
+M-W025	3	+M-X002:10	+C-X002:27	58 .1	
+M-W025	4	+M-X002:11	+C-X002:28	58 .7	
+M-W025	5	+M-X002:12	+C-X002:29	58 .1	
+M-W025	6	+M-X002:13	+C-X002:30	58 .3	
+M-W025	7	+M-X002:14	+C-X002:31	58 .1	
+M-W025	8	+M-X002:15	+C-X002:32	58 .3	
+M-W025	9	+M-X002:16	+C-X002:33	44 .4	
+M-W025	10	+M-X002:17	+C-X002:34	44 .4	
+M-W025	11	+M-X002:18	+C-X002:35	58 .5	
+M-W025	12	+M-X002:20	+C-X002:36	58 .5	
+M-W025	13	+M-X002:23	+C-X002:37	80 .7	
+M-W025	14	+M-X002:26	+C-X002:38	91 .7	
+M-W025	15	+M-X002:29	+C-X002:39	144 .2	
+M-W025	16	+M-X002:32	+C-X002:40	144 .2	
+M-W025	17	+M-X002:35	+C-X002:41	144 .2	
+M-W025	18	+M-X002:38	+C-X002:42	144 .2	
+M-W025	19	+M-X002:41	+C-X002:43	144 .2	
+M-W025	20	+M-X002:42	+C-X002:44	144 .2	
+M-W025	21	+M-X002:43	+C-X002:45	144 .2	
+M-W025	22	+M-X002:44	+C-X002:46	144 .2	
+M-W025	23	+M-X002:45	+C-X002:47	144 .2	
+M-W025	24	+M-X002:46	+C-X002:48	144 .2	

Drawing remarks

Tetra Pak

Designer QUE/AIR | Date 11/06/2002 | Machine TBA/19 020V

ECM No 119151 | Denomination CABLE CONNECTION LIST | Page Type CABLE CONNECTION LIST

Company Tetra Pak Carton Ambient SpA | Document No. 44954-0007 | Doc. type ELD | Version AB | Page 4

This drawing must not without the consent of Tetra Pak be copied, transmitted or disclosed to any third party.

1	2	3	4	5	6	7	8	9	10

Cable Connection List of 44954-0003

Cable	Core	From	To	Page.Col.	Option
+M-W025	25	+M-X002:47	+C-X002:49	144 .2	
+M-W025	26	+M-X002:48	+C-X002:50	144 .2	
+M-W025	27	+M-X002:50	+C-X002:51	92 .6	
+M-W025	28	+M-X002:51	+C-X002:52	92 .6	
+M-W025	29	+M-X002:52	+C-X002:53	92 .6	
+M-W025	30	+M-X002:55	+C-X002:54	58 .5	
+M-W025	31	+M-X002:59	+C-X002:55	121 .7	
+M-W025	32	+M-X002:61	+C-X002:56	92 .3	
+M-W025	33	+M-X002:62	+C-X002:57	92 .3	
+M-W025	34	+M-X002:63	+C-X002:58	144 .2	
+M-W025	35	+M-X002:64	+C-X002:59	144 .2	
+M-W025	36	+M-X002:65	+C-X002:60	144 .2	
+M-W025	37	+M-X002:66	+C-X002:61	144 .2	
+M-W025	38	+M-X002:67	+C-X002:62	144 .2	
+M-W025	39	+M-X002:68	+C-X002:63	144 .2	
+M-W025	40	+M-X002:69	+C-X002:64	144 .2	
	GNYE				
+M-W028	BN	+M-X022:2	+M-B093A:BN	58 .7	
+M-W028	BU	+M-X022:1	+M-B093A:BU	58 .7	
+M-W029	BK	+M-X022:3	+M-B093B:BK	58 .8	
+M-W029	BN	+M-X022:2	+M-B093B:BN	58 .8	
+M-W029	BU	+M-X022:1	+M-B093B:BU	58 .8	
	GNYE				
	BN				
	GN				
	SH				
	SH				

Cable	Core	From	To	Page.Col.	Option
	WH				
	YE				
+M-W100	1	+C-X004:180	+M-Y069:1	106 .4	
+M-W100	2	+C-X004:181	+M-Y069:2	106 .6	
+M-W101	1	+C-G004:U	+M-M001:U	15 .8	
+M-W101	2	+C-G004:V	+M-M001:V	15 .8	
+M-W101	3	+C-G004:W	+M-M001:W	15 .8	
+M-W101	GNYE	+C-G004:PE	+M-M001:PE	15 .8	
+M-W101	SH		GND:	15	
+M-W102	1	+M-X007:2	+M-B010:12	92 .6	
+M-W102	2	+M-X007:1	+M-B010:22	92 .6	
+M-W102	3	+M-X007:3	+M-B010:11	92 .5	
+M-W102	4	+M-X007:4	+M-B010:21	92 .5	
	GNYE				
+M-W103	BK	+M-X002:23	+M-B020:BK	80 .6	
+M-W103	BN	+M-X002:25	+M-B020:BN	80 .5	
	GNYE				
+M-W103	L.BU	+M-X002:24	+M-B020:BU	80 .5	
+M-W104	BK	+M-X007:31	+M-B016A:BK	76 .4	
+M-W104	BN	+M-X007:29	+M-B016A:BN	76 .3	
	GNYE				
+M-W104	L.BU	+M-X007:30	+M-B016A:BU	76 .3	
+M-W105	BK	+M-X007:34	+M-B016B:BK	76 .6	
+M-W105	BN	+M-X007:33	+M-B016B:BN	76 .6	
	GNYE				
+M-W105	L.BU	+M-X007:32	+M-B016B:BU	76 .6	
+M-W106	1	+M-X007:7	+M-Y022:1	104 .4	

Drawing remarks

Tetra Pak

Designer	Date	Machine
QUE/AIR	11/06/2002	TBA/19 020V

ECM No	Denomination	Page Type
119151	CABLE CONNECTION LIST	CABLE CONNECTION LIST

Company	Document No.	Doc. type	Version	Page
Tetra Pak Carton Ambient SpA	44954-0007	ELD	AB	5

This drawing must not without the consent of Tetra Pak be copied, transmitted or disclosed to any third party.

1 2 3 4 5 6 7 8 9 10

Cable Connection List of 44954-0003

Cable	Core	From	To	Page.Col.	Option
+M-W106	2	+M-X007:8	+M-Y022:2	104 .5	
+M-W107	1	+M-X007:9	+M-Y043:1	106 .4	
+M-W107	2	+M-X007:10	+M-Y043:2	106 .5	
+M-W108	1	+M-X007:1	+C-X002:1	92 .6	
+M-W108	2	+M-X007:2	+C-X002:2	92 .6	
+M-W108	3	+M-X007:3	+C-X002:3	92 .4	
+M-W108	4	+M-X007:4	+C-X002:4	92 .4	
+M-W108	5	+M-X007:5	+C-X002:5	76 .7	
+M-W108	6	+M-X007:6	+C-X002:6	76 .2	
+M-W108	7	+M-X007:7	+C-X002:7	104 .4	
+M-W108	8	+M-X007:8	+C-X002:8	104 .7	
+M-W108	9	+M-X007:9	+C-X002:9	106 .4	
+M-W108	10	+M-X007:13	+C-X002:10	144 .2	
+M-W108	11	+M-X007:16	+C-X002:11	144 .2	
+M-W108	12	+M-X007:19	+C-X002:12	74 .7	
+M-W108	13	+M-X007:22	+C-X002:13	91 .7	
+M-W108	14	+M-X007:25	+C-X002:14	144 .2	
+M-W108	15	+M-X007:28	+C-X002:15	144 .2	
+M-W108	16	+M-X007:34	+C-X002:16	76 .7	
+M-W108	17	+M-X007:35	+C-X002:17	144 .2	
+M-W108	18	+M-X007:36	+C-X002:18	144 .2	
+M-W108	19	+M-X007:37	+C-X002:19	144 .2	
	20				
	21				
	22				
	23				
	24				

Cable	Core	From	To	Page.Col.	Option
	GNYE				
+M-W110	1	+C-X001:9	+M-X002:5	144 .2	
+M-W110	2	+C-X001:10	+M-X002:6	144 .2	
+M-W110	3	+C-X001:11	+M-X002:7	144 .2	
+M-W110	PE	+C-X001:PE	+M-X002:PE	144 .2	
+M-W111	1	+M-X002:49	+DE-U017:002	92 .5	
+M-W111	2	+M-X002:50	+DE-U017:003	92 .5	
+M-W111	3	+M-X002:51	+DE-U017:005	92 .5	
+M-W111	4	+M-X002:52	+DE-U017:007	92 .5	
	GNYE				
+M-W112	1	+M-X002:61	+DE-U017:008	92 .4	
+M-W112	2	+M-X002:62	+DE-U017:009	92 .4	
+M-W112	GNYE	+M-X002:PE	+DE-U017:PE	92 .4	
+M-W115	1	+M-X002:9	+DE-U003:01	58 .6	
+M-W115	2	+M-X002:8	+DE-U003:02	58 .6	
+M-W115	3	+M-X002:10	+DE-U003:03	58 .6	
+M-W115	4	+M-X002:11	+DE-U003:04	58 .6	
	GNYE				
+M-W116	1	+M-X002:12	+DE-U003:001	58 .6	
+M-W116	2	+M-X002:13	+DE-U003:002	58 .6	
+M-W116	3	+M-X002:14	+DE-U003:003	58 .6	
+M-W116	4	+M-X002:15	+DE-U003:004	58 .6	
	GNYE				
+M-W132	PE	+C-X010:41	+C-U010:001	142 .4	
+M-W230	1	+C-X001:83	+M-X002:81	7 .4	
+M-W230	2	+C-X001:84	+M-X002:82	7 .5	
+M-W230	GNYE	+C-X001:PE	+M-X002:PE	7 .3	

Drawing remarks

Tetra Pak

Designer	Date	Machine
QUE/AIR	11/06/2002	TBA/19 020V

ECM No	Denomination	Page Type
119151	CABLE CONNECTION LIST	CABLE CONNECTION LIST

Company	Document No.	Doc. type	Version	Page
Tetra Pak Carton Ambient SpA	44954-0007	ELD	AB	6

RELEASED

This drawing must not without the consent of Tetra Pak be copied, transmitted or disclosed to any third party.

Cable Connection List of 44954-0003

Cable	Core	From	To	Page.Col.	Option
+M-W231	1	+C-X001:85	+M-X002:83	7 .5	
+M-W231	2	+C-X001:86	+M-X002:84	7 .6	
+M-W231	GNYE	+C-X001:PE	+M-X002:PE	7 .5	
+M-W232	1	+C-X001:89	+M-X002:85	7 .8	
+M-W232	2	+C-X001:90	+M-X002:86	7 .8	
+M-W232	GNYE	+C-X001:PE	+M-X002:PE	7 .7	
+M-W233	1	+C-X001:91	+M-X002:87	7 .9	
+M-W233	2	+C-X001:92	+M-X002:88	7 .10	
+M-W233	GNYE	+C-X001:PE	+M-X002:PE	7 .9	
+M-W234	RD	+M-X002:89	+C-X002:65	36 .4	
+M-W234	YE	+M-X002:90	+C-X002:66	36 .4	
+M-W235	RD	+M-X002:91	+C-X002:67	36 .4	
+M-W235	YE	+M-X002:92	+C-X002:68	36 .4	
+M-W236	RD	+M-X002:93	+C-X002:69	37 .4	
+M-W236	YE	+M-X002:94	+C-X002:70	37 .4	
+M-W237	RD	+M-X002:95	+C-X002:71	37 .4	
+M-W237	YE	+M-X002:96	+C-X002:72	37 .4	
+M-W238	BN	+M-X002:82	+M-X008:2	7 .5	
+M-W238	GNYE	+M-X002:PE	+M-X008:GND	7 .4	
+M-W238	L.BU	+M-X002:81	+M-X008:1	7 .4	
+M-W239	BN	+M-X002:84	+M-X009:2	7 .6	
+M-W239	GNYE	+M-X002:PE	+M-X009:GND	7 .5	
+M-W239	L.BU	+M-X002:83	+M-X009:1	7 .5	
+M-W240	BN	+M-X002:86	+M-X010:2	7 .8	
+M-W240	GNYE	+M-X002:PE	+M-X010:GND	7 .8	
+M-W240	L.BU	+M-X002:85	+M-X010:1	7 .8	
+M-W241	BN	+M-X002:88	+M-X011:2	7 .10	

Cable	Core	From	To	Page.Col.	Option
+M-W241	GNYE	+M-X002:PE	+M-X011:GND	7 .9	
+M-W241	L.BU	+M-X002:87	+M-X011:1	7 .9	
+M-W242	RD	+M-X212:-	+M-X002:89	36 .3	
+M-W242	YE	+M-X212:+	+M-X002:90	36 .3	
+M-W243	RD	+M-X213 :-	+M-X002:91	36 .3	
+M-W243	YE	+M-X213 :+	+M-X002:92	36 .3	
+M-W244	RD	+M-X214 :-	+M-X002:93	37 .3	
+M-W244	YE	+M-X214 :+	+M-X002:94	37 .3	
+M-W245	RD	+M-X215 :-	+M-X002:95	37 .3	
+M-W245	YE	+M-X215 :+	+M-X002:96	37 .3	
+M-W246	1	+C-X004:89	+M-B011:21	92 .2	
+M-W246	2	+C-X004:90	+M-B011:11	92 .2	
+M-W247	1	+C-X004:92	+M-B015:22	92 .4	
+M-W247	2	+C-X004:91	+M-B015:12	92 .4	
+M-W248	1	+C-X004:94	+M-B012:21	92 .5	
+M-W248	2	+C-X004:93	+M-B012:11	92 .5	
+M-W249	1	+C-X004:95	+M-B019:22	92 .6	
+M-W249	2	+C-X004:96	+M-B019:12	92 .6	
+M-W250	BN	+M-X020:1	+M-B091A:BN	58 .7	
+M-W250	BU	+M-X020:2	+M-B091A:BU	58 .7	
+M-W251	BK	+M-X020:3	+M-B091B:BK	58 .8	
+M-W251	BN	+M-X020:1	+M-B091B:BN	58 .8	
	GNYE				
+M-W251	L.BU	+M-X020:2	+M-B091B:BU	58 .8	
+M-W252	BN	+M-X021:1	+M-B092A:BN	121 .5	
+M-W252	BU	+M-X021:2	+M-B092A:BU	121 .5	
+M-W253	BK	+M-X021:3	+M-B092B:BK	121 .6	

Drawing remarks

Tetra Pak

Designer	Date	Machine
QUE/AIR	11/06/2002	TBA/19 020V

ECM No	Denomination	Page Type
119151	CABLE CONNECTION LIST	CABLE CONNECTION LIST

Company	Document No.	Doc. type	Version	Page
Tetra Pak Carton Ambient SpA	44954-0007	ELD	AB	7

This drawing must not without the consent of Tetra Pak be copied, transmitted or disclosed to any third party.

1 2 3 4 5 6 7 8 9 10

Cable Connection List of 44954-0003

Cable	Core	From	To	Page.Col.	Option
+M-W253	BN	+M-X021:1	+M-B092B:BN	121 .5	
+M-W253	BU	+M-X021:2	+M-B092B:BU	121 .5	
+M-W290	PE	+C-X010:10	+M-X002:PE	142 .3	
+M-W291	PE	+M-X002:PE	+C-U014:	142 .4	
+M-W301	1	+C-X001:24	+M-M007:W	12 .5	
+M-W301	2	+C-X001:25	+M-M007:V	12 .6	
+M-W301	3	+C-X001:26	+M-M007:U	12 .6	
+M-W301	GNYE	+C-X001:PE	+M-M007:PE	12 .6	
+M-W302	1	+M-X060:105	+M-R001:1	6 .7	
+M-W302	2	+M-X060:106	+M-B014:1	6 .8	
+M-W302	GNYE	+M-X060:PE	+M-R001:E	6 .7	
+M-W303	1	+C-X002:225	+M-B064:1	45 .4	
+M-W303	2	+C-X002:226	+M-B064:2	45 .4	
+M-W304	1	+C-X001:18	+M-M005:U	12 .7	
+M-W304	2	+C-X001:19	+M-M005:V	12 .7	
+M-W304	3	+C-X001:20	+M-M005:W	12 .7	
+M-W304	GNYE	+C-X001:PE	+M-M005:PE	12 .7	
+M-W308	1	+C-X001:21	+M-M010:W	12 .8	
+M-W308	2	+C-X001:22	+M-M010:V	12 .8	
+M-W308	3	+C-X001:23	+M-M010:U	12 .8	
+M-W308	GNYE	+C-X001:PE	+M-M010:PE	12 .9	
+M-W312	1	+C-X001:57	+M-M017:L	12 .9	
+M-W312	2	+C-X001:58	+M-M017:N	12 .10	
+M-W312	GNYE	+C-X001:PE	+M-M017:PE	12 .10	
+M-W316	1	+C-X002:265	+M-Y131:1	82 .6	
+M-W316	2	+C-X002:266	+M-Y131:2	82 .7	
+M-W316	GNYE	+C-X002:PE	+M-Y131:E	82 .7	

Cable	Core	From	To	Page.Col.	Option
+M-W317	1	+C-X002:267	+M-Y132:1	82 .6	
+M-W317	2	+C-X002:268	+M-Y132:2	82 .7	
+M-W317	GNYE	+C-X002:PE	+M-Y132:E	82 .7	
+M-W320	1	+C-X002:203	+M-B002:1	73 .4	
+M-W320	2	+C-X002:204	+M-B002:3	73 .5	
	GNYE				
+M-W321	1	+C-X002:205	+M-B007:1	73 .4	
+M-W321	2	+C-X002:206	+M-B007:3	73 .5	
	GNYE				
+M-W322	1	+C-X002:207	+M-B006:13	73 .3	
+M-W322	2	+C-X002:208	+M-B006:14	73 .5	
+M-W322	GNYE	+C-X002:PE	+M-B006:E	73 .5	
+M-W325	1	+C-X002:219	+M-Y031:1	104 .4	
+M-W325	2	+C-X002:220	+M-Y031:2	104 .7	
	GNYE				
+M-W327	BN	+M-X184:1	+C-X003:57	48 .2	
+M-W327	GN	+M-X184:3	+C-A400:6	48 .5	
+M-W327	SH	+M-W327:		.3	
+M-W327	SH	+M-X184:5	+M-W327:	48 .3	
+M-W327	WH	+M-X184:4	+C-X003:59	48 .3	
+M-W327	YE	+M-X184:2	+C-X003:62	48 .2	
+M-W332	1	+C-X002:115	+M-X032:1+	98 .4	
+M-W332	2	+C-X002:116	+M-X032:2+	98 .4	
+M-W332	3	+C-X002:117	+M-X032:3+	98 .4	
+M-W332	4	+C-X002:118	+M-X032:4+	98 .4	
+M-W332	5	+C-X002:119	+M-X032:5+	99 .4	
	6				

Drawing remarks

Tetra Pak

Designer	Date	Machine
QUE/AIR	11/06/2002	TBA/19 020V

ECM No	Denomination	Page Type
119151	CABLE CONNECTION LIST	CABLE CONNECTION LIST

Company	Document No.	Doc. type	Version	Page
Tetra Pak Carton Ambient SpA	44954-0007	ELD	AB	8

RELEASED

This drawing must not without the consent of Tetra Pak be copied, transmitted or disclosed to any third party.

Cable Connection List of 44954-0003

Cable	Core	From	To	Page.Col.	Option
+M-W332	6	+C-X002:120	+M-X032:6+	103 .4	
+M-W332	7	+C-X002:121	+M-X032:7+	103 .4	
+M-W332	8	+C-X002:122	+M-X032:8+	103 .4	
+M-W332	9	+C-X002:123	+M-X032:9+	103 .4	
+M-W332	10	+C-X002:124	+M-X032:10+	103 .4	
+M-W332	12	+C-X002:125	+M-X032:1-	98 .7	
+M-W332	13	+C-X002:126	+M-X032:6-	103 .7	
+M-W332	GNYE	+C-X002:PE	+M-X032:PE	98 .7	
+M-W333	1	+C-X002:127	+M-X033:1+	103 .4	
+M-W333	2	+C-X002:128	+M-X033:2+	103 .4	
+M-W333	3	+C-X002:129	+M-X033:3+	103 .4	
+M-W333	4	+C-X002:130	+M-X033:4+	104 .4	
+M-W333	5	+C-X002:131	+M-X033:5+	104 .4	
+M-W333	6	+C-X002:132	+M-X033:6+	104 .4	
+M-W333	7	+C-X002:133	+M-X033:7+	104 .4	
+M-W333	8	+C-X002:134	+M-X033:8+	104 .4	
+M-W333	9	+C-X002:135	+M-X033:9+	143 .2	
+M-W333	10	+C-X002:136	+M-X033:10+	143 .2	
	11				
+M-W333	12	+C-X002:137	+M-X033:1-	103 .7	
+M-W333	13	+C-X002:138	+M-X033:6-	104 .7	
+M-W333	GNYE	+C-X002:PE	+M-X033:PE	103 .7	
+M-W334	1	+C-X002:139	+M-X034:1+	96 .4	
+M-W334	2	+C-X002:140	+M-X034:2+	96 .4	
+M-W334	3	+C-X002:141	+M-X034:3+	96 .4	
+M-W334	4	+C-X002:142	+M-X034:4+	96 .4	
+M-W334	5	+C-X002:143	+M-X034:5+	96 .4	

Cable	Core	From	To	Page.Col.	Option
+M-W334	6	+C-X002:144	+M-X034:6+	96 .4	
+M-W334	7	+C-X002:145	+M-X034:7+	96 .4	
+M-W334	8	+C-X002:146	+M-X034:8+	96 .4	
+M-W334	9	+C-X002:147	+M-X034:9+	97 .4	
+M-W334	10	+C-X002:148	+M-X034:10+	97 .4	
	11				
+M-W334	12	+C-X002:149	+M-X034:1-	96 .7	
+M-W334	13	+C-X002:150	+M-X034:6-	96 .7	
+M-W334	GNYE	+C-X002:PE	+M-X034:PE	96 .7	
+M-W342	1	+C-X002:223	+M-Y039:1	105 .4	
+M-W342	2	+C-X002:224	+M-Y039:2	105 .7	
+M-W342	GNYE	+C-X002:PE	+M-Y039:E	105 .7	
+M-W345	1	+C-X002:217	+M-Y029:1	104 .4	
+M-W345	2	+C-X002:218	+M-Y029:2	104 .7	
+M-W348	1	+C-X002:257	+M-Y032:1	98 .6	
+M-W348	2	+C-X002:258	+M-Y032:2	98 .7	
+M-W348	GNYE	+C-X002:PE	+M-Y032:E	98 .7	
+M-W349	1	+C-X002:261	+M-Y052A:1	117 .5	
+M-W349	2	+C-X002:262	+M-Y052A:2	117 .7	
+M-W349	GNYE	+C-X002:PE	+M-Y052A:E	117 .7	
+M-W350	1	+C-X002:263	+M-Y052B:1	117 .5	
+M-W350	2	+C-X002:264	+M-Y052B:2	117 .7	
+M-W350	GNYE	+C-X002:PE	+M-Y052B:E	117 .7	
+M-W352	1	+C-X002:215	+M-Y051:1	103 .7	
+M-W352	2	+C-X002:216	+M-Y051:2	103 .7	
+M-W353	BK	+C-X002:237	+M-B001:BK	81 .4	
+M-W353	BN	+C-X002:232	+M-B001:BN	81 .4	

Drawing remarks

Tetra Pak

Designer	Date	Machine
QUE/AIR	11/06/2002	TBA/19 020V

ECM No	Denomination	Page Type
119151	CABLE CONNECTION LIST	CABLE CONNECTION LIST

Company	Document No.	Doc. type	Version	Page
Tetra Pak Carton Ambient SpA	44954-0007	ELD	AB	9

RELEASED

This drawing must not without the consent of Tetra Pak be copied, transmitted or disclosed to any third party.

Cable Connection List of 44954-0003

Cable	Core	From	To	Page.Col.	Option
+M-W353	BU	+C-X002:240	+M-B001:BU	81 .4	
+M-W353	GN	+C-X002:233	+M-B001:GN	81 .4	
	GNYE				
+M-W353	GY	+C-X002:235	+M-B001:GY	81 .4	
+M-W353	PK	+C-X002:236	+M-B001:PK	81 .4	
+M-W353	RD	+C-X002:239	+M-B001:RD	81 .4	
+M-W353	VT	+C-X002:238	+M-B001:VT	81 .4	
+M-W353	WH	+C-X002:231	+M-B001:WH	81 .4	
+M-W353	YE	+C-X002:234	+M-B001:YE	81 .4	
+M-W354	1	+C-X002:221	+M-Y033:1	105 .4	
+M-W354	2	+C-X002:222	+M-Y033:2	105 .7	
+M-W354	GNYE	+C-X002:PE	+M-Y033:E	105 .7	
+M-W355	1	+C-X002:175	+M-B045:2	76 .4	
+M-W355	2	+C-X002:176	+M-B045:1	76 .6	
+M-W355	3	+C-X002:177	+M-B045:4	76 .6	
+M-W355	GNYE	+C-X002:PE	+M-B045:E	76 .6	
+M-W356	1	+C-X002:172	+M-B030:3	73 .3	
+M-W356	2	+C-X002:173	+M-B030:1	73 .5	
+M-W356	3	+C-X002:174	+M-B030:2	73 .5	
	GNYE				
+M-W360	1	+C-X002:227	+M-X095:1	77 .1	
+M-W360	2	+C-X002:228	+M-X095:4	77 .7	
+M-W360	3	+C-X002:229	+M-X095:3	77 .7	
+M-W360	4	+C-X002:230	+M-X095:2	77 .7	
+M-W360	GNYE	+C-X002:PE	+M-X095:PE	77 .2	
+M-W361	1	+C-X002:241	+M-M018:1	109 .2	
+M-W361	2	+C-X002:242	+M-M018:2	109 .7	

Cable	Core	From	To	Page.Col.	Option
+M-W361	GNYE	+C-X002:PE	+M-M018:E	109 .7	
+M-W370	1	+M-X071 :1	+C-A500:X004	29 .2	
+M-W371	1	+M-X072:1	+C-A500:X005	29 .2	
+M-W372	1	+M-X071 :1	+M-X073:1	29 .2	
+M-W373	1	+M-X072:1	+M-X074:1	29 .2	
+M-W380	BN	+M-X107:1	+C-X003:65	47 .2	
+M-W380	GN	+M-X107:3	+C-A310:5	47 .7	
+M-W380	SH	+M-W380:		.3	
+M-W380	SH	+M-X107:5	+M-W380:	47 .3	
+M-W380	WH	+M-X107:4	+C-X003:64	47 .3	
+M-W380	YE	+M-X107:2	+C-X003:63	47 .2	
+M-W401	BK	+C-X001:5	+M-R036:X	10 .6	
+M-W401	BN	+C-X001:6	+M-R036:Y	10 .7	
+M-W401	GNYE	+C-X001:PE	+M-R036:E	10 .7	
+M-W401	L.BU	+C-X001:4	+M-R036:Z	10 .6	
+M-W402	BN	+C-X001:87	+M-R037:2-3	7 .2	
+M-W402	GNYE	+C-X001:PE	+M-R037:E	7 .2	
+M-W402	L.BU	+C-X001:88	+M-R037:1	7 .2	
+M-W403	BN	+C-X001:94	+M-R035:2	10 .2	
+M-W403	GNYE	+C-X001:PE	+M-R035:E	10 .2	
+M-W403	L.BU	+C-X001:93	+M-R035:1	10 .3	
+M-W404	1	+C-G003:U	+M-M013:2	15 .2	
+M-W404	2	+C-G003:V	+M-M013:1	15 .3	
+M-W404	3	+C-G003:W	+M-M013:3	15 .3	
+M-W404	GN/YE	+C-G003:PE	+M-M013:PE	15 .3	
+M-W404	SH		GND:	15	
+M-W405	1	+C-X004:29	+M-B116:1	46 .4	

Drawing remarks

Tetra Pak

Designer	Date	Machine
QUE/AIR	11/06/2002	TBA/19 020V

ECM No	Denomination	Page Type
119151	CABLE CONNECTION LIST	CABLE CONNECTION LIST

Company	Document No.	Doc. type	Version	Page
Tetra Pak Carton Ambient SpA	44954-0007	ELD	AB	10

RELEASED

This drawing must not without the consent of Tetra Pak be copied, transmitted or disclosed to any third party.

Cable Connection List of 44954-0003

Cable	Core	From	To	Page.Col.	Option
+M-W405	2	+C-X004:30	+M-B116:2	46 .4	
+M-W406	RD	+M-X004:-	+C-X004:22	34 .3	
+M-W406	YE	+M-X004:+	+C-X004:21	34 .3	
+M-W407	RD	+M-X040:-	+C-X004:10	31 .4	
+M-W407	YE	+M-X040:+	+C-X004:9	31 .4	
+M-W408	RD	+M-X038 :-	+C-X004:12	31 .4	
+M-W408	YE	+M-X038 :+	+C-X004:11	31 .4	
+M-W409	RD	+M-X039 :-	+C-X004:6	32 .3	
+M-W409	YE	+M-X039 :+	+C-X004:5	32 .3	
+M-W410	RD	+M-X037 B:-	+C-X004:4	32 .3	
+M-W410	YE	+M-X037 B:+	+C-X004:3	32 .3	
+M-W411	RD	+M-X055:-	+C-X004:14	33 .3	
+M-W411	YE	+M-X055:+	+C-X004:13	33 .3	
+M-W412	RD	+M-X050:-	+C-X004:16	33 .4	
+M-W412	YE	+M-X050:+	+C-X004:15	33 .4	
+M-W413	BK	+C-X004:130	+M-B117:BK	91 .7	
+M-W413	BN	+C-X004:131	+M-B117:BN	91 .5	
+M-W413	BU	+C-X004:132	+M-B117:BU	91 .5	
	GNYE				
+M-W414	BK	+C-X004:80	+M-B048A:BK	76 .6	
+M-W414	BU	+C-X004:79	+M-B048A:BU	76 .6	
+M-W414	GNYE	+C-X004:PE	+M-B048A:E	76 .6	
+M-W415	BK	+C-X004:78	+M-B048B:BK	76 .3	
+M-W415	BU	+C-X004:77	+M-B048B:BU	76 .4	
+M-W415	GNYE	+C-X004:PE	+M-B048B:E	76 .4	
+M-W416	1	+C-X004:139	+M-B021A:12	92 .6	
+M-W416	2	+C-X004:140	+M-B021A:22	92 .6	

Cable	Core	From	To	Page.Col.	Option
+M-W416	3	+C-X004:141	+M-B021A:21	92 .6	
+M-W416	4	+C-X004:142	+M-B021A:11	92 .6	
	GNYE				
+M-W417	1	+C-X004:143	+M-B021B:12	92 .4	
+M-W417	2	+C-X004:144	+M-B021B:22	92 .4	
+M-W417	3	+C-X004:145	+M-B021B:21	92 .4	
+M-W417	4	+C-X004:146	+M-B021B:11	92 .4	
	GNYE				
+M-W418	1	+C-X004:147	+M-B021C:12	92 .3	
+M-W418	2	+C-X004:148	+M-B021C:22	92 .3	
+M-W418	3	+C-X004:149	+M-B021C:21	92 .2	
+M-W418	4	+C-X004:150	+M-B021C:11	92 .2	
	GNYE				
+M-W420	1	+C-X003:68	+M-B112:1	47 .4	
+M-W420	2	+C-X003:67	+M-B112:2	47 .4	
+M-W420	3	+C-X003:66	+M-B112:3	47 .4	
+M-W420	4	+C-X003:70	+M-B112:4	47 .4	
+M-W421	BK	+C-X004:109	+M-B051:BK	75 .7	
+M-W421	BN	+C-X004:110	+M-B051:BN	75 .5	
	GNYE				
+M-W421	L.BU	+C-X004:111	+M-B051:BU	75 .5	
+M-W422	BK	+C-X004:136	+M-B046:BK	75 .7	
+M-W422	BN	+C-X004:137	+M-B046:BN	75 .5	
	GNYE				
+M-W422	L.BU	+C-X004:138	+M-B046:BU	75 .5	
+M-W423	BK	+C-X004:133	+M-B047:BK	75 .3	
+M-W423	BN	+C-X004:134	+M-B047:BN	75 .3	

Drawing remarks

Tetra Pak

Designer QUE/AIR | Date 11/06/2002 | Machine TBA/19 020V

ECM No 119151 | Denomination CABLE CONNECTION LIST | Page Type CABLE CONNECTION LIST

Company Tetra Pak Carton Ambient SpA | Document No. 44954-0007 | Doc. type ELD | Version AB | Page 11

This drawing must not without the consent of Tetra Pak be copied, transmitted or disclosed to any third party.

1 2 3 4 5 6 7 8 9 10

Cable Connection List of 44954-0003

Cable	Core	From	To	Page.Col.	Option
	GNYE				
+M-W423	L.BU	+C-X004:135	+M-B047:BU	75 .3	
+M-W424	BK	+C-X004:112	+M-B053:BK	75 .7	
+M-W424	BN	+C-X004:113	+M-B053:BN	75 .5	
	GNYE				
+M-W424	L.BU	+C-X004:114	+M-B053:BU	75 .5	
+M-W425	1	+C-X004:31	+M-B043:1	44 .4	
+M-W425	2	+C-X004:32	+M-B043:2	44 .4	
+M-W425	3	+C-X004:33	+M-B043:3	44 .4	
	GNYE				
+M-W426	1	+C-X004:87	+M-Y108:1	105 .4	
+M-W426	2	+C-X004:88	+M-Y108:2	105 .7	
+M-W426	GNYE	+C-X002:PE	+M-Y108:E	105 .7	
+M-W427	1	+C-X004:25	+M-B034:1	45 .4	
+M-W427	2	+C-X004:26	+M-B034:2	45 .4	
+M-W428	1	+C-X004:27	+M-B085:1	46 .4	
+M-W428	2	+C-X004:28	+M-B085:2	46 .4	
+M-W430	1	+C-X004:81	+M-Y034:1	105 .4	
+M-W430	2	+C-X004:82	+M-Y034:2	105 .7	
+M-W430	GNYE	+C-X002:PE	+M-Y034:E	105 .7	
+M-W431	1	+C-X004:83	+M-Y035:1	105 .4	
+M-W431	2	+C-X004:84	+M-Y035:2	105 .7	
+M-W431	GNYE	+C-X002:PE	+M-Y035:E	105 .7	
+M-W432	1	+C-X004:85	+M-Y004:1	105 .5	
+M-W432	2	+C-X004:86	+M-Y004:2	105 .7	
+M-W432	GNYE	+C-X002:PE	+M-Y004:E	105 .7	
+M-W433	RD	+M-X217 :-	+C-X004:8	38 .4	

Cable	Core	From	To	Page.Col.	Option
+M-W433	YE	+M-X217 :+	+C-X004:7	38 .4	
+M-W434	1	+C-X004:55	+M-S004:12	62 .5	
+M-W434	2	+C-X004:56	+M-S004:22	62 .5	
+M-W434	3	+C-X004:57	+M-S004:21	62 .4	
+M-W434	4	+C-X004:58	+M-S004:11	62 .4	
	GNYE				
+M-W435	BK	+C-X004:115	+M-B061:BK	75 .7	
+M-W435	BN	+C-X004:116	+M-B061:BN	75 .5	
	GNYE				
+M-W435	L.BU	+C-X004:117	+M-B061:BU	75 .5	
+M-W437	1	+C-X004:67	+DE-U002:001	57 .5	
+M-W437	2	+C-X004:68	+DE-U002:002	57 .5	
	GNYE				
+M-W438	1	+C-X004:69	+DE-U002:003	57 .5	
+M-W438	2	+C-X004:70	+DE-U002:004	57 .5	
	GNYE				
+M-W439	1	+C-X004:72	+DE-U002:005	57 .5	
+M-W439	2	+C-X004:71	+DE-U002:006	57 .7	
	GNYE				
+M-W440	BK	+C-X004:118	+M-B063:BK	75 .7	
+M-W440	BN	+C-X004:119	+M-B063:BN	75 .5	
	GNYE				
+M-W440	L.BU	+C-X004:120	+M-B063:BU	75 .5	
+M-W441	1	+C-X004:59	+DE-U001:002	57 .7	
+M-W441	2	+C-X004:60	+DE-U001:001	57 .5	
+M-W441	3	+C-X004:61	+DE-U001:003	57 .5	
+M-W441	4	+C-X004:62	+DE-U001:004	57 .5	

Drawing remarks

Tetra Pak

Designer	Date	Machine
QUE/AIR	11/06/2002	TBA/19 020V

ECM No	Denomination	Page Type
119151	CABLE CONNECTION LIST	CABLE CONNECTION LIST

Company	Document No.	Doc. type	Version	Page
Tetra Pak Carton Ambient SpA	44954-0007	ELD	AB	12

This drawing must not without the consent of Tetra Pak be copied, transmitted or disclosed to any third party.

Cable Connection List of 44954-0003

Cable	Core	From	To	Page.Col.	Option
+M-W441	5	+C-X004:63	+DE-U001:005	57 .5	
+M-W441	6	+C-X004:64	+DE-U001:006	57 .5	
+M-W441	7	+C-X004:65	+DE-U001:007	57 .5	
+M-W441	8	+C-X004:66	+DE-U001:008	57 .5	
	9				
	10				
	11				
	12				
	GNYE				
+M-W442	1	+M-X132:4	+C-A400:19	48 .8	
+M-W442	2	+M-X132:1	+C-X003:51	48 .8	
+M-W442	3	+M-X132:3	+C-X003:52	48 .8	
	4				
	5				
	6				
	GNYE				
+M-W442	SH	+M-W442:	GND:	48 .7	
+M-W442	SH	+M-J442:	+M-W442:	48 .7	
+M-W444		+M-W444:	GND:	48 .7	
+M-W444	1	+M-X134:4	+C-A400:20	48 .8	
+M-W444	2	+M-X134:1	+C-X003:54	48 .8	
+M-W444	3	+M-X134:3	+C-X003:55	48 .8	
+M-W444	SH	+M-J444:	+M-W444:	48 .7	
+M-W447	BU	+C-X004:42	+M-B080:1:-	48 .2	
+M-W447	GY	+C-X004:44	+M-B080:1:SIGN	48 .2	
+M-W447	RD	+C-X004:41	+M-B080:1:+	48 .2	
+M-W447	YE	+C-X004:43	+M-B080:1:ET	48 .2	

Cable	Core	From	To	Page.Col.	Option
+M-W448	BU	+C-X004:46	+M-B080:2:-	48 .2	
+M-W448	GY	+C-X004:48	+M-B080:2:SIGN	48 .2	
+M-W448	RD	+C-X004:45	+M-B080:2:+	48 .2	
+M-W448	YE	+C-X004:47	+M-B080:2:ET	48 .2	
+M-W449	1	+C-A012:1501	+M-M132:5	24 .6	
+M-W449	2	+C-A012:1502	+M-M132:6	24 .6	
+M-W449	3	+C-A012:1504	+M-M132:1	24 .6	
+M-W449	4	+C-A012:1505	+M-M132:2	24 .6	
	GNYE				
+M-W449	GV	+C-A012:1503	+M-M132:PE	24 .6	
	SH				
+M-W449	SH	GND:	GND:	24 .5	
+M-W450	RD	+M-X037 A:-	+C-X004:2	32 .3	
+M-W450	YE	+M-X037 A:+	+C-X004:1	32 .3	
+M-W451	1	+C-A012:2501	+M-M133:5	24 .6	
+M-W451	2	+C-A012:2502	+M-M133:6	24 .6	
+M-W451	3	+C-A012:2504	+M-M133:1	24 .6	
+M-W451	4	+C-A012:2505	+M-M133:2	24 .6	
	GNYE				
+M-W451	GV	+C-A012:2503	+M-M133:PE	24 .6	
	SH				
+M-W451	SH	GND:	GND:	24 .6	
+M-W452	BK	+C-X001:2	+M-R032:X	10 .9	
+M-W452	BN	+C-X001:3	+M-R032:Y	10 .10	
+M-W452	GNYE	+C-X001:PE	+M-R032:E	10 .8	
+M-W452	L.BU	+C-X001:1	+M-R032:Z	10 .9	
+M-W454	BK	+C-X004:124	+M-B071:BK	80 .7	

Drawing remarks

Tetra Pak

Designer	Date	Machine
QUE/AIR	11/06/2002	TBA/19 020V

ECM No	Denomination	Page Type
119151	CABLE CONNECTION LIST	CABLE CONNECTION LIST

Company	Document No.	Doc. type	Version	Page
Tetra Pak Carton Ambient SpA	44954-0007	ELD	AB	13

This drawing must not without the consent of Tetra Pak be copied, transmitted or disclosed to any third party.

Cable Connection List of 44954-0003

Cable	Core	From	To	Page.Col.	Option
+M-W454	BN	+C-X004:125	+M-B071:BN	80 .5	
	GNYE				
+M-W454	L.BU	+C-X004:126	+M-B071:BU	80 .5	
+M-W455	BK	+C-X004:127	+M-B094:BK	80 .7	
+M-W455	BN	+C-X004:128	+M-B094:BN	80 .5	
	GNYE				
+M-W455	L.BU	+C-X004:129	+M-B094:BU	80 .5	
+M-W456	BK	+C-X004:121	+M-B104:BK	76 .7	
+M-W456	BN	+C-X004:122	+M-B104:BN	76 .5	
	GNYE				
+M-W456	L.BU	+C-X004:123	+M-B104:BU	76 .5	
+M-W458	BK	+C-X004:106	+M-B160:BK	93 .7	
+M-W458	BN	+C-X004:107	+M-B160:BN	93 .5	
+M-W458	BU	+C-X004:108	+M-B160:BU	93 .5	
	GNYE				
+M-W459	1	+C-X001:30	+M-M019:2	13 .8	
+M-W459	2	+C-X001:31	+M-M019:4	13 .9	
+M-W459	3	+C-X001:32	+M-M019:6	13 .9	
+M-W459	GNYE	+C-X001:PE	+M-M019:PE	13 .9	
+M-W601	1	+C-X073:1	+M-X075:1	29 .7	
+M-W602	1	+C-X019:1	+M-X031:37	10 .4	
+M-W602	2	+C-X019:2	+M-X031:40	10 .5	
+M-W602	GNYE	+C-X019:PE	+M-X031:PE	10 .4	
+M-W605	1	+M-X031:28	+M-S005:21	62 .2	
+M-W605	2	+M-X031:27	+M-S005:11	62 .2	
+M-W605	3	+M-X031:25	+M-S005:22	62 .3	
+M-W605	4	+M-X031:26	+M-S005:12	62 .3	

Cable	Core	From	To	Page.Col.	Option
+M-W605	5	+M-X031:29	+M-S033:13	72 .5	
+M-W605	6	+M-X031:30	+M-S033:14	72 .6	
+M-W605	7	+M-X031:31	+M-S035:51	72 .5	
+M-W605	8	+M-X031:32	+M-S035:52	72 .6	
+M-W605	9	+M-X031:33	+M-H033S:X2	101 .6	
+M-W605	10	+M-X031:34	+M-H033S:X1	101 .4	
	11				
	GNYE				
+M-W607	BK	+M-X031:15	+M-B032:BK	74 .6	
+M-W607	BN	+M-X031:13	+M-B032:BN	74 .5	
	GNYE				
+M-W607	L.BU	+M-X031:14	+M-B032:BU	74 .5	
+M-W608	BK	+C-X003:29	+M-B009:BK	75 .7	
+M-W608	BN	+C-X003:30	+M-B009:BN	75 .5	
	GNYE				
+M-W608	L.BU	+C-X003:31	+M-B009:BU	75 .5	
+M-W609	BK	+M-X031:21	+M-B109:BK	75 .6	
+M-W609	BN	+M-X031:19	+M-B109:BN	75 .5	
	GNYE				
+M-W609	L.BU	+M-X031:20	+M-B109:BU	75 .5	
+M-W610	BK	+M-X031:18	+M-B111:BK	74 .6	
+M-W610	BN	+M-X031:16	+M-B111:BN	74 .5	
	GNYE				
+M-W610	L.BU	+M-X031:17	+M-B111:BU	74 .5	
	1				
	2				
	3				

Drawing remarks

Tetra Pak

Designer	Date	Machine
QUE/AIR	11/06/2002	TBA/19 020V

ECM No	Denomination	Page Type
119151	CABLE CONNECTION LIST	CABLE CONNECTION LIST

Company	Document No.	Doc. type	Version	Page
Tetra Pak Carton Ambient SpA	44954-0007	ELD	AB	14

This drawing must not without the consent of Tetra Pak be copied, transmitted or disclosed to any third party.

Cable Connection List of 44954-0003

Cable	Core	From	To	Page.Col.	Option
	4				
+M-W615	5	+C-X018:5	+M-X031:3	60 .2	
+M-W615	6	+C-X018:6	+M-X031:4	60 .2	
+M-W615	7	+C-X018:7	+M-X031:9	60 .5	
+M-W615	8	+C-X018:8	+M-X031:10	60 .5	
+M-W615	9	+C-X018:9	+M-X031:13	74 .3	
+M-W615	10	+C-X018:10	+M-X031:14	74 .3	
+M-W615	11	+C-X018:11	+M-X031:15	74 .7	
+M-W615	12	+C-X018:12	+M-X031:18	74 .7	
+M-W615	13	+C-X018:13	+M-X031:21	75 .7	
+M-W615	14	+C-X018:16	+M-X031:25	62 .3	
+M-W615	15	+C-X018:15	+M-X031:26	62 .3	
+M-W615	16	+C-X018:17	+M-X031:27	62 .2	
+M-W615	17	+C-X018:18	+M-X031:28	62 .2	
	18				
+M-W615	19	+C-X018:19	+M-X031:30	72 .7	
+M-W615	20	+C-X018:20	+M-X031:31	72 .5	
+M-W615	21	+C-X018:21	+M-X031:32	72 .7	
+M-W615	22	+C-X018:22	+M-X031:34	101 .3	
	23				
	24				
	GNYE				
+M-W620	BK	+C-X003:32	+M-B236:BK	80 .7	
+M-W620	BN	+C-X003:33	+M-B236:BN	80 .5	
	GNYE				
+M-W620	L.BU	+C-X003:34	+M-B236:BU	80 .5	
+M-W630	BN	+M-X031:37	+M-R033:1	10 .4	

Cable	Core	From	To	Page.Col.	Option
+M-W630	GNYE	+M-X031:PE	+M-R033:E	10 .4	
+M-W630	L.BU	+M-X031:38	+M-R033:2	10 .4	
+M-W631	BN	+M-X031:39	+M-R034:1	10 .5	
+M-W631	GNYE	+M-X031:PE	+M-R034:E	10 .5	
+M-W631	L.BU	+M-X031:40	+M-R034:2	10 .5	
+M-W750	1	+C-X012:1	+M-X060:101	6 .6	
+M-W750	2	+C-X012:2	+M-X060:102	6 .6	
+M-W750	3	+C-X012:3	+M-X060:106	6 .8	
	4				
+M-W750	GNYE	+C-X012:PE	+M-X060:PE	6 .6	
+M-W751	1	+M-X060:101	+M-E003:2	6 .6	
+M-W751	2	+M-X060:102	+M-E003:1	6 .6	
+M-W751	GNYE	+M-X060:PE	+M-E003:E	6 .6	
+M-W752	1	+M-X060:103	+M-E005:2	6 .5	ASU
+M-W752	2	+M-X060:104	+M-E005:1	6 .5	ASU
+M-W752	GNYE	+M-X060:PE	+M-E005:E	6 .6	ASU
+M-W753	1	+M-X060:21	+M-X061 :1	116 .7	
+M-W753	2	+M-X060:22	+M-X061 :2	116 .5	
+M-W753	3	+M-X060:23	+M-X061 :3	116 .5	
+M-W753	4	+M-X060:24	+M-X061 :4	116 .5	
+M-W753	5	+M-X060:25	+M-X061 :5	116 .5	
	6				
	GNYE				
+M-W754	1	+M-X061 :1	+M-H034B:C	116 .6	
+M-W754	2	+M-X061 :2	+M-H034B:1	116 .5	
+M-W754	3	+M-X061 :3	+M-H034Y:2	116 .5	
+M-W754	4	+M-X061 :4	+M-H034R:3	116 .5	

Drawing remarks

Tetra Pak

Designer	Date	Machine
QUE/AIR	11/06/2002	TBA/19 020V

ECM No	Denomination	Page Type
119151	CABLE CONNECTION LIST	CABLE CONNECTION LIST

Company	Document No.	Doc. type	Version	Page
Tetra Pak Carton Ambient SpA	44954-0007	ELD	AB	15

This drawing must not without the consent of Tetra Pak be copied, transmitted or disclosed to any third party.

1 2 3 4 5 6 7 8 9 10

Cable Connection List of 44954-0003

Cable	Core	From	To	Page.Col.	Option
+M-W754	5	+M-X061 :5	+M-H040:4	116 .5	
	6				
	GNYE				
+M-W757	1	+C-X013:1	+M-M021:1	14 .2	
+M-W757	2	+C-X013:2	+M-M021:2	14 .2	
+M-W757	3	+C-X013:3	+M-M021:3	14 .2	
+M-W757	GNYE	+C-X013:GND	+M-M021:PE	14 .3	
+M-W757	SH	+C-X013:4		.3	
+M-W758	1	+C-X014:1	+M-M022:1	14 .7	ASU
+M-W758	2	+C-X014:2	+M-M022:2	14 .8	ASU
+M-W758	3	+C-X014:3	+M-M022:3	14 .8	ASU
+M-W758	GNYE	+C-X014:GND	+M-M022:PE	14 .8	ASU
+M-W758	SH	+C-X014:4		.8	ASU
+M-W759	1	+C-X015:1	+M-X060:1	66 .2	ASU
+M-W759	2	+C-X015:2	+M-X060:2	66 .2	ASU
+M-W759	3	+C-X015:3	+M-X060:8	66 .6	ASU
+M-W759	4	+C-X015:4	+M-X060:7	66 .6	ASU
	5				
+M-W759	6	+C-X015:6	+M-X060:19	61 .8	ASU
+M-W759	7	+C-X015:7	+M-X060:20	61 .8	ASU
+M-W759	8	+C-X015:8	+M-X060:21	116 .7	ASU
+M-W759	9	+C-X015:9	+M-X060:22	116 .4	ASU
+M-W759	10	+C-X015:10	+M-X060:23	116 .4	ASU
+M-W759	11	+C-X015:11	+M-X060:24	116 .4	ASU
+M-W759	12	+C-X015:12	+M-X060:25	116 .4	ASU
+M-W759	13	+C-X015:13	+M-X060:28	122 .2	ASU
+M-W759	14	+C-X015:14	+M-X060:29	49 .7	ASU

Cable	Core	From	To	Page.Col.	Option
+M-W759	15	+C-X015:15	+M-X060:30	49 .7	ASU
+M-W759	16	+C-X015:16	+M-X060:33	49 .7	ASU
+M-W759	17	+C-X015:17	+M-X060:34	49 .7	ASU
+M-W759	18	+C-X015:18	+M-X060:35	122 .7	ASU
+M-W759	19	+C-X015:19	+M-X060:38	122 .7	ASU
+M-W759	20	+C-X015:20	+M-X060:41	122 .7	ASU
+M-W759	21	+C-X015:21	+M-X060:44	122 .7	ASU
+M-W759	22	+C-X015:22	+M-X060:47	123 .7	ASU
+M-W759	23	+C-X015:23	+M-X060:50	122 .7	ASU
+M-W759	24	+C-X015:24	+M-X060:53	122 .7	ASU
	GNYE				
+M-W760	1	+M-X060:71	+M-S011:11	62 .3	ASU
+M-W760	2	+M-X060:72	+M-S011:21	62 .3	ASU
+M-W760	3	+M-X060:73	+M-S006:22	62 .5	ASU
+M-W760	4	+M-X060:74	+M-S006:12	62 .5	ASU
+M-W760	5	+M-X060:75	+M-S009:13	72 .5	ASU
+M-W760	6	+M-X060:76	+M-S009:14	72 .6	ASU
+M-W760	7	+M-X060:77	+M-S007:14	72 .6	ASU
+M-W760	8	+M-X060:78	+M-S003:14	123 .5	ASU
+M-W760	9	+M-X060:79	+M-S008:52	72 .3	ASU
+M-W760	10	+M-X060:80	+M-S010H:14	90 .6	ASU
+M-W760	11	+M-X060:81	+M-H010S:1	105 .4	ASU
+M-W760	12	+M-X060:82	+M-H010S:2	105 .6	ASU
	13				
	14				
	15				
	16				

Drawing remarks

Tetra Pak

Designer	Date	Machine
QUE/AIR	11/06/2002	TBA/19 020V

ECM No	Denomination	Page Type
119151	CABLE CONNECTION LIST	CABLE CONNECTION LIST

Company	Document No.	Doc. type	Version	Page
Tetra Pak Carton Ambient SpA	44954-0007	ELD	AB	16

This drawing must not without the consent of Tetra Pak be copied, transmitted or disclosed to any third party.

Cable Connection List of 44954-0003

Cable	Core	From	To	Page.Col.	Option
	17				
	18				
	19				
	20				
	21				
	22				
	23				
	24				
	GNYE				
+M-W762	1	+M-X060:10	+M-B141:21	61 .3	ASU
+M-W762	2	+M-X060:9	+M-B141:11	61 .3	ASU
+M-W762	3	+M-X060:11	+M-B141:12	61 .3	ASU
+M-W762	4	+M-X060:12	+M-B141:22	61 .3	ASU
+M-W763	1	+M-X060:14	+M-B142:21	61 .4	ASU
+M-W763	2	+M-X060:13	+M-B142:11	61 .4	ASU
+M-W763	3	+M-X060:15	+M-B142:12	61 .5	ASU
+M-W763	4	+M-X060:16	+M-B142:22	61 .5	ASU
+M-W764	1	+M-X060:18	+M-B143:21	61 .6	ASU
+M-W764	2	+M-X060:17	+M-B143:11	61 .6	ASU
+M-W765	1	+M-X060:20	+M-B144:22	61 .7	ASU
+M-W765	2	+M-X060:19	+M-B144:12	61 .7	ASU
+M-W766	1	+M-B143:22	+M-B144:21	61 .7	ASU
+M-W766	2	+M-B143:12	+M-B144:11	61 .7	ASU
+M-W767	BK	+M-X062 :10	+M-B148:	122 .6	
+M-W767	BN	+M-X062 :11	+M-B148:	122 .6	
+M-W767	BU	+M-X062 :12	+M-B148:	122 .6	
+M-W768	BK	+M-X062 :7	+M-B146:	122 .5	
+M-W768	BN	+M-X062 :8	+M-B146:	122 .4	
+M-W768	BU	+M-X062 :9	+M-B146:	122 .4	
+M-W769	BK	+M-X060:35	+M-B157:	122 .7	
+M-W769	BN	+M-X060:36	+M-B157:	122 .6	
+M-W769	BU	+M-X060:37	+M-B157:	122 .6	
+M-W770	BK	+M-X060:38	+M-B149:	122 .7	
+M-W770	BN	+M-X060:39	+M-B149:	122 .6	
+M-W770	BU	+M-X060:40	+M-B149:	122 .6	
+M-W771	BK	+M-X060:41	+M-B150:	122 .7	
+M-W771	BN	+M-X060:42	+M-B150:	122 .6	
+M-W771	BU	+M-X060:43	+M-B150:	122 .6	
+M-W772	BK	+M-X062 :1	+M-B151:	122 .6	
+M-W772	BN	+M-X062 :2	+M-B151:	122 .6	
+M-W772	BU	+M-X062 :3	+M-B151:	122 .6	
+M-W773	BK	+M-X062 :4	+M-B152:	122 .6	
+M-W773	BN	+M-X062 :5	+M-B152:	122 .6	
+M-W773	BU	+M-X062 :6	+M-B152:	122 .6	
+M-W775	BK	+M-X062 :13	+M-B153:1:	123 .4	
+M-W775	BN	+M-X062 :14	+M-B153:1:	123 .2	
+M-W775	BU	+M-X062 :15	+M-B153:1:	123 .2	
+M-W776	BK	+M-X062 :16	+M-B153:2:	123 .6	
+M-W776	BN	+M-X062 :17	+M-B153:2:	123 .5	
+M-W776	BU	+M-X062 :18	+M-B153:2:	123 .5	
+M-W777	BK	+M-X060:44	+M-B154:	122 .7	
+M-W777	BN	+M-X060:45	+M-B154:	122 .6	
+M-W777	BU	+M-X060:46	+M-B154:	122 .6	
+M-W779	BK	+M-X060:47	+M-B155:	123 .6	

Drawing remarks

Tetra Pak

Designer	Date	Machine
QUE/AIR	11/06/2002	TBA/19 020V

ECM No	Denomination	Page Type
119151	CABLE CONNECTION LIST	CABLE CONNECTION LIST

Company	Document No.	Doc. type	Version	Page
Tetra Pak Carton Ambient SpA	44954-0007	ELD	AB	17

RELEASED

This drawing must not without the consent of Tetra Pak be copied, transmitted or disclosed to any third party.

Cable Connection List of 44954-0003

Cable	Core	From	To	Page.Col.	Option
+M-W779	BN	+M-X060:48	+M-B155:	123 .4	
+M-W779	BU	+M-X060:49	+M-B155:	123 .4	
+M-W780	1	+C-X016:1	+M-S008:51	72 .2	PMI
+M-W780	2	+C-X016:5	+M-S011:21	62 .3	PMI
+M-W780	3	+C-X016:4	+M-S011:11	62 .3	PMI
+M-W780	4	+C-X016:7	+M-S011:12	62 .6	PMI
+M-W780	5	+C-X016:6	+M-S011:22	62 .6	PMI
+M-W780	6	+C-X016:11	+M-S008:52	72 .4	PMI
	GNYE				
+M-W781	1	+M-X060:90	+M-X042:1	114 .4	ASU
+M-W781	2	+M-X060:91	+M-X042:2	114 .4	ASU
+M-W781	3	+M-X060:92	+M-X042:3	114 .4	ASU
+M-W781	4	+M-X060:93	+M-X042:4	114 .4	ASU
+M-W781	5	+M-X060:94	+M-X042:5	114 .4	ASU
+M-W781	6	+M-X060:83	+M-X042:6	114 .4	ASU
+M-W781	7	+M-X060:84	+M-X042:7	116 .4	ASU
+M-W781	8	+M-X060:86	+M-X042:8	116 .4	ASU
+M-W781	9	+M-X060:87	+M-X042:9	116 .4	ASU
+M-W781	10	+M-X060:88	+M-X042:10	116 .4	ASU
	11				
+M-W781	12	+M-X060:89	+M-X042:3-	114 .7	ASU
+M-W781	13	+M-X060:85	+M-X042:6-	114 .7	ASU
+M-W781	GNYE	+M-X060:PE	+M-X042:PE	114 .7	ASU
+M-W782	1	+M-X060:50	+M-X062 :1	122 .7	
+M-W782	2	+M-X060:51	+M-X062 :2	122 .5	
+M-W782	3	+M-X060:52	+M-X062 :3	122 .5	
+M-W782	4	+M-X060:53	+M-X062 :4	122 .7	

Cable	Core	From	To	Page.Col.	Option
+M-W782	5	+M-X060:59	+M-X062 :10	122 .7	
	6				
+M-W782	7	+M-X060:65	+M-X062 :16	123 .6	
	8				
	9				
	10				
	11				
	GNYE				
+M-W786	BK	+M-X060:30	+M-X156 :1:4	49 .8	ASU
+M-W786	BN	+M-X060:28	+M-X156 :1:1	122 .8	ASU
+M-W786	BU	+M-X060:27	+M-X156 :1:3	49 .8	ASU
+M-W786	GY	+M-X060:29	+M-X156 :1:5	49 .8	ASU
+M-W787	BK	+M-X060:34	+M-X156 :2:4	49 .8	ASU
+M-W787	BN	+M-X060:32	+M-X156 :2:1	49 .8	ASU
+M-W787	BU	+M-X060:31	+M-X156 :2:3	49 .8	ASU
+M-W787	GY	+M-X060:33	+M-X156 :2:5	49 .8	ASU
+M-W788	1	+M-X060:1	+M-B108:21	66 .3	
+M-W788	2	+M-X060:2	+M-B108:11	66 .3	
+M-W788	3	+M-X060:4	+M-B108:12	66 .3	
+M-W788	4	+M-X060:3	+M-B108:22	66 .3	
	GNYE				
+M-W790	1	+M-X060:5	+M-B115:21	66 .5	
+M-W790	2	+M-X060:6	+M-B115:11	66 .5	
+M-W790	3	+M-X060:8	+M-B115:12	66 .6	
+M-W790	4	+M-X060:7	+M-B115:22	66 .6	
	GNYE				
+M-W800	1	+C-X016:1	+M-X060:57	72 .2	ASU

Drawing remarks

Tetra Pak

Designer	Date	Machine
QUE/AIR	11/06/2002	TBA/19 020V

ECM No	Denomination	Page Type
119151	CABLE CONNECTION LIST	CABLE CONNECTION LIST

Company	Document No.	Doc. type	Version	Page
Tetra Pak Carton Ambient SpA	44954-0007	ELD	AB	18

This drawing must not without the consent of Tetra Pak be copied, transmitted or disclosed to any third party.

Cable Connection List of 44954-0003

Cable	Core	From	To	Page.Col.	Option
+M-W800	2	+C-X016:2	+M-X060:59	122 .7	ASU
+M-W800	3	+C-X016:3	+M-X060:65	123 .7	ASU
+M-W800	4	+C-X016:4	+M-X060:71	62 .2	ASU
+M-W800	5	+C-X016:5	+M-X060:72	62 .2	ASU
+M-W800	6	+C-X016:6	+M-X060:73	62 .6	ASU
+M-W800	7	+C-X016:7	+M-X060:74	62 .6	ASU
+M-W800	8	+C-X016:8	+M-X060:76	72 .7	ASU
+M-W800	9	+C-X016:9	+M-X060:77	72 .7	ASU
+M-W800	10	+C-X016:10	+M-X060:78	123 .6	ASU
+M-W800	11	+C-X016:11	+M-X060:79	72 .4	ASU
+M-W800	12	+C-X016:12	+M-X060:80	90 .7	ASU
+M-W800	13	+C-X016:13	+M-X060:81	105 .3	ASU
+M-W800	14	+C-X016:14	+M-X060:83	114 .3	ASU
+M-W800	15	+C-X016:15	+M-X060:84	116 .3	ASU
+M-W800	16	+C-X016:16	+M-X060:86	116 .3	ASU
+M-W800	17	+C-X016:17	+M-X060:87	116 .3	ASU
+M-W800	18	+C-X016:18	+M-X060:88	116 .3	ASU
+M-W800	19	+C-X016:19	+M-X060:89	114 .7	ASU
+M-W800	20	+C-X016:20	+M-X060:90	114 .3	ASU
+M-W800	21	+C-X016:21	+M-X060:91	114 .3	ASU
+M-W800	22	+C-X016:22	+M-X060:92	114 .3	ASU
+M-W800	23	+C-X016:23	+M-X060:93	114 .3	ASU
+M-W800	24	+C-X016:24	+M-X060:94	114 .3	ASU
	GNYE				
+M-W801	1	+M-X060:6	+M-X060:8	66 .6	ASU
+M-W801	2	+M-X060:5	+M-X060:7	66 .6	ASU
+M-W802	1	+M-X031:3	+M-B113A:21	60 .2	

Cable	Core	From	To	Page.Col.	Option
+M-W802	2	+M-X031:4	+M-B113A:11	60 .2	
+M-W802	3	+M-X031:5	+M-B113A:12	60 .3	
+M-W802	4	+M-X031:6	+M-B113A:22	60 .3	
	GNYE				
+M-W803	1	+M-X031:7	+M-B113B:21	60 .4	
+M-W803	2	+M-X031:8	+M-B113B:11	60 .4	
+M-W803	3	+M-X031:9	+M-B113B:12	60 .5	
+M-W803	4	+M-X031:10	+M-B113B:22	60 .5	
	GNYE				
+M-W951	BN	+M-X002:77	+M-A451:4	140 .7	
+M-W951	GN	+M-X002:79	+M-A451:2	140 .7	
+M-W951	SH	+M-X002:80	+M-A451:5	140 .7	
	SH				
+M-W951	WH	+M-X002:76	+M-A451:3	140 .7	
+M-W951	YE	+M-X002:78	+M-A451:1	140 .7	
+M-W952	BN	+M-X002:72	+M-DE002:12	140 .7	
+M-W952	GN	+M-X002:74	+M-DE002:10	140 .7	
+M-W952	SH	+M-X002:75	+M-DE002:	140 .7	
	SH				
	SH				
+M-W952	WH	+M-X002:71	+M-DE002:13	140 .7	
+M-W952	YE	+M-X002:73	+M-DE002:11	140 .7	
	BK				
+M-W953	BN	+P-X453 :15	+C-X453 :7	140 .3	
+M-W953	BN/BU	+P-X453 :1	+C-X453 :15	140 .3	
+M-W953	BN/GN	+P-X453 :17	+C-X453 :14	140 .3	
+M-W953	BU	+P-X453 :13	+C-X453 :5	140 .3	

Drawing remarks

Tetra Pak

Designer	Date	Machine
QUE/AIR	11/06/2002	TBA/19 020V

ECM No	Denomination	Page Type
119151	CABLE CONNECTION LIST	CABLE CONNECTION LIST

Company	Document No.	Doc. type	Version	Page
Tetra Pak Carton Ambient SpA	44954-0007	ELD	AB	19

This drawing must not without the consent of Tetra Pak be copied, transmitted or disclosed to any third party.

Cable Connection List of 44954-0003

Cable	Core	From	To	Page.Col.	Option
+M-W953	GN	+P-X453 :11	+C-X453 :3	140 .3	
+M-W953	GY	+P-X453 :5	+C-X453 :22	140 .3	
	GY/BN				
	GY/GN				
+M-W953	GY/PK	+P-X453 :1	+C-X453 :17	140 .3	
+M-W953	OG	+P-X453 :9	+C-X453 :1	140 .3	
+M-W953	PK	+P-X453 :6	+C-X453 :21	140 .3	
+M-W953	PKBN	+P-X453 :7	+C-X453 :20	140 .3	
+M-W953	RD	+P-X453 :8	+C-X453 :19	140 .3	
+M-W953	RD/BU	+P-X453 :17	+C-X453 :16	140 .3	
+M-W953	SH	+P-X453 :18	GND:	140 .3	
	VT				
+M-W953	WH	+P-X453 :2	+C-X453 :26	140 .3	
+M-W953	WH	+P-X453 :16	+C-X453 :8	140 .3	
+M-W953	WH	+P-X453 :14	+C-X453 :6	140 .3	
+M-W953	WH	+P-X453 :12	+C-X453 :4	140 .3	
+M-W953	WH	+P-X453 :10	+C-X453 :2	140 .3	
+M-W953	WH/PK	+P-X453 :3	+C-X453 :24	140 .3	
+M-W953	WH/YE	+P-X453 :1	+C-X453 :13	140 .3	
+M-W953	YE	+P-X453 :4	+C-X453 :23	140 .3	
+M-W953	YE/BN	+P-X453 :17	+C-X453 :12	140 .3	
+M-W954	1	+M-X002:54	+M-X020:2	58 .6	
+M-W954	2	+M-X002:53	+M-X020:1	58 .6	
+M-W954	3	+M-X002:55	+M-X020:3	58 .6	
+M-W954	4	+M-X002:56	+M-X020:4	144 .5	
	GNYE				
+M-W955	1	+M-X002:57	+M-X021:1	121 .3	

Cable	Core	From	To	Page.Col.	Option
+M-W955	2	+M-X002:58	+M-X021:2	121 .3	
+M-W955	3	+M-X002:59	+M-X021:3	121 .6	
+M-W955	4	+M-X002:60	+M-X021:4	144 .5	
+M-W958	1	+M-X002:18	+M-X022:1	58 .6	
+M-W958	2	+M-X002:19	+M-X022:2	58 .6	
+M-W958	3	+M-X002:20	+M-X022:3	58 .6	
	4				
	GNYE				
+P-W018	1	+C-X004:151	+P-X901:113	62 .6	
+P-W018	2	+C-X004:152	+P-X901:114	62 .6	
+P-W018	3	+C-X004:153	+P-X901:115	62 .6	
+P-W018	4	+C-X004:154	+P-X901:116	62 .6	
+P-W018	5	+C-X004:155	+P-X901:117	94 .2	
+P-W018	6	+C-X004:156	+P-X901:118	94 .7	
+P-W018	7	+C-X004:157	+P-X901:119	94 .7	
+P-W018	8	+C-X004:158	+P-X901:120	94 .7	
+P-W018	9	+C-X004:159	+P-X901:121	95 .7	
	10				
+P-W018	11	+C-X004:161	+P-X901:123	95 .7	
+P-W018	12	+C-X004:162	+P-X901:124	94 .7	
	13				
+P-W018	14	+C-X004:164	+P-X901:126	94 .7	
	15				
+P-W018	16	+C-X004:166	+P-X901:130	94 .7	
+P-W018	17	+C-X004:167	+P-X901:131	94 .7	
+P-W018	18	+C-X004:168	+P-X901:132	108 .3	
+P-W018	19	+C-X004:169	+P-X901:133	108 .7	

Drawing remarks

Tetra Pak

Designer	Date	Machine
QUE/AIR	11/06/2002	TBA/19 020V

ECM No	Denomination	Page Type
119151	CABLE CONNECTION LIST	CABLE CONNECTION LIST

Company	Document No.	Doc. type	Version	Page
Tetra Pak Carton Ambient SpA	44954-0007	ELD	AB	20

RELEASED

This drawing must not without the consent of Tetra Pak be copied, transmitted or disclosed to any third party.

Cable Connection List of 44954-0003

Cable	Core	From	To	Page.Col.	Option
	20				
+P-W018	21	+C-X004:171	+P-X901:135	108 .3	
+P-W018	22	+C-X004:172	+P-X901:136	108 .3	
+P-W018	23	+C-X004:173	+P-X901:139	108 .3	
+P-W018	24	+C-X004:174	+P-X901:140	108 .3	
	GNYE				

Cable	Core	From	To	Page.Col.	Option

Drawing remarks

Tetra Pak

Designer QUE/AIR	Date 11/06/2002	Machine TBA/19 020V	
ECM No 119151	Denomination CABLE CONNECTION LIST	Page Type CABLE CONNECTION LIST	
Company Tetra Pak Carton Ambient SpA	Document No. 44954-0007	Doc. type ELD	Version AB	Page 21

This page intentionally left blank

12 Mains connections

EM3.0TB128032en.fm

Table of contents

Mains connections 44954-0008

EM3.0TB128032en.fm

RELEASED

This drawing must not without the consent of Tetra Pak
be copied, transmitted or disclosed to any third party.

1	2	3	4	5	6	7	8	9	10

MAIN VOLTAGE 200-600V EXCEPT 400/230V

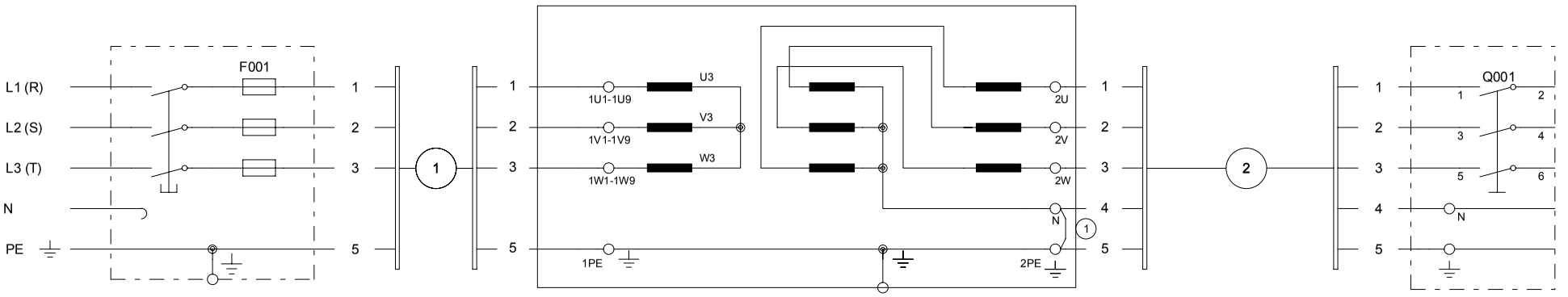

MAINS CUSTOMER'S FUSE BOX MATCHING TRANSFORMER CONNECTION FILLING MACHINE CONNECTION ACCORDING TO DIAGRAM "MAINS"

MAIN VOLTAGE 400/230V

AREA TO CABLE 4x25/16mm AND SETTING VALUE
OF Q001= 63/400 - SIZE OF F001=100A. (slow)

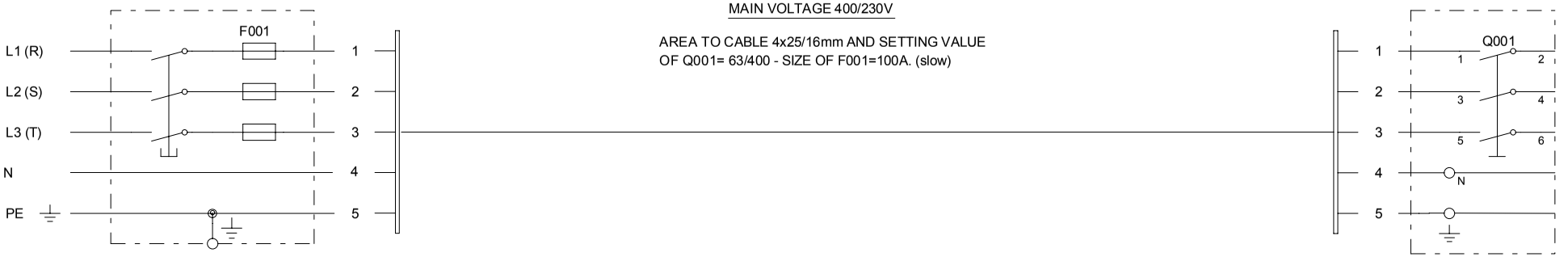

MAINS CUSTOMER'S FUSE BOX

ATTENTION: THIS IS A RECOMMANDATION TO ACHIEVE SELECTIVITY;
THE DIMENSIONING OF THE MAIN CABLE AND PROTECTIVE GROUNDING
HAS TO BE CARRIED OUT ACCORDING TO CURRENT LOCAL REGULATIONS.

FILLING MACHINE CONNECTION ACCORDING TO DIAGRAM "MAINS"

@V=00@EN=CAUTION THE PROTECTIVE EARTH CONNECTION MUST BE DONE
@V=00@EN= TO THE LOCAL RULES
@V=00@EN=1.MAKE THE BRIGED USING A CONNECTION AREA NOT SMALLER THEN 16mm
Drawing remarks

Tetra Pak

Designer	Date	Machine
QUE/AIR	11/06/2002	TBA/19 020V

ECM No	Denomination	Page Type
119151	MAINS CONNECTION	MAINS CONNECTION

Company	Document No.	Doc. type	Version	Page
Tetra Pak Carton Ambient SpA	44954-0008	ELD	AB	001

RELEASED

This drawing must not without the consent of Tetra Pak be copied, transmitted or disclosed to any third party.

1	2	3	4	5	6	7	8	9	10

MAIN VOLTAGE	FUSES (SLOW) ① F001	AREA TO CU CABLES NO. 1	AREA TO CU CABLES NO. 2	SETTING VALUE Q002	CONNECTIONS ON MATCHING TRANSFORMER		
V	A	mm²	mm²	A	MAINS	TAP	CONNECT
600/347 3x600	100	3x16/16	4x25/16	63/400	PHASE L1 PHASE L2 PHASE L3 N N GROUND PE	1U9 1V9 1W9 N ⏚	1U3 - U4 1V3 - V4 1W3 - W4
550/318 3x550	100	3x16/16	4x25/16	63/400	PHASE L1 PHASE L2 PHASE L3 N N GROUND PE	1U8 1V8 1W8 N ⏚	1U3 - U4 1V3 - V4 1W3 - W4
500/289 3x500	125	3x25/16	4x25/16	63/400	PHASE L1 PHASE L2 PHASE L3 N N GROUND PE	1U7 1V7 1W7 N ⏚	1U3 - U4 1V3 - V4 1W3 - W4
480/277 3x480	125	3x25/16	4x25/16	63/400	PHASE L1 PHASE L2 PHASE L3 N N GROUND PE	1U6 1V6 1W6 N ⏚	1U3 - U4 1V3 - V4 1W3 - W4
440/254 3x440	125	3x25/16	4x25/16	63/400	PHASE L1 PHASE L2 PHASE L3 N N GROUND PE	1U5 1V5 1W5 N ⏚	1U2 - U4 1V2 - V4 1W2 - W4
415/240 3x415	125	3x25/16	4x25/16	63/400	PHASE L1 PHASE L2 PHASE L3 N N GROUND PE	1U5 1V5 1W5 N ⏚	1U1 - U4 1V1 - V4 1W1 - W4
3x400 [3×380]	160	3x25/16	4x25/16	63/400	PHASE L1 PHASE L2 PHASE L3 N N GROUND PE	1U4 1V4 1W4 N ⏚	1U1 - U4 1V1 - V4 1W1 - W4
240/140 3x240	250	3x70/35	4x25/16	63/400	PHASE L1 PHASE L2 PHASE L3 N N GROUND PE	1U3 1V3 1W3 N ⏚	U3 - U4 1U3-1U6 V3 - V4 1V3-1V6 W3 - W4 1W3-1W6
220/127 3x220	250	3x70/35	4x25/16	63/400	PHASE L1 PHASE L2 PHASE L3 N N GROUND PE	1U2 1V2 1W2 N ⏚	U3 - U4 1U2-1U5 V3 - V4 1V2-1V5 W3 - W4 1W2-1W5
200/115 3x200	315	3x95/50	4x25/16	63/400	PHASE L1 PHASE L2 PHASE L3 N N GROUND PE	1U1 1V1 1W1 N ⏚	U3 - U4 1U1-1U4 V3 - V4 1V1-1V4 W3 - W4 1W1-1W4

MATCHING TRANSFORMER
90245-0024

Y/Z II-WIRED

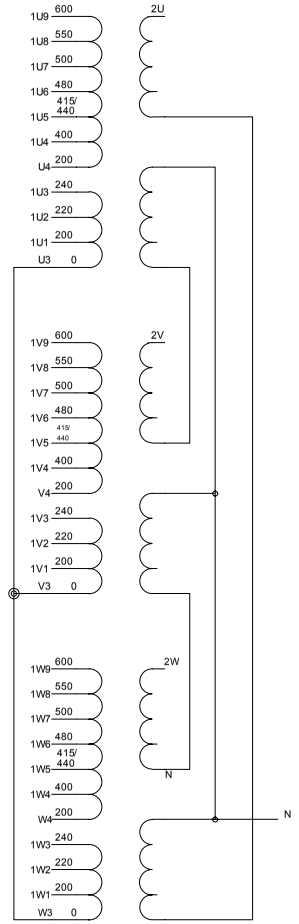

@V=00@EN=1. RECOMMENDED MAIN FUSE TO ACHIEVE SELECTIVITY

Drawing remarks

Tetra Pak

Designer	Date	Machine
QUE/AIR	11/06/2002	TBA/19 020V

ECM No	Denomination	Page Type
119151	MAINS CONNECTION	MAINS CONNECTION

Company	Document No.	Doc. type	Version	Page
Tetra Pak Carton Ambient SpA	44954-0008	ELD	AB	002

13 Engineering change description

EM3.0TB138032en.fm

Table of contents

Engineering change description. 44954-0099

EM3.0TB138032en.fm

ECM No.	Drawing No.	Alteration
72201	645452-0200	Documentation released.
73142	48643-01:02	The document is introduced.
	48643-02:02	The document is introduced.
	48643-05:02	The document is introduced.
	48643-06:02	The document is introduced.
	48643-07:02	The document is introduced.
	48643-08:02	The document is introduced.
	48643-09:02	The document is introduced.
	48643-10:02	The document is introduced.
	48643-11:02	The document is introduced.
	48643-13:02	The document is introduced.
	48643-14:02	The document is introduced.
	48643-15:02	The document is introduced.
	48643-16:02	The document is introduced.
	48643-17:02	The document is introduced.
	48643-18:02	The document is introduced.
	48643-19:02	The document is introduced.
	48643-21:02	The document is introduced.
	48643-22:02	The document is introduced.
	48643-23:02	The document is introduced.
	48643-24:02	The document is introduced.
	48643-25:02	The document is introduced.
	48643-26:02	The document is introduced.
	48643-27:02	The document is introduced.
	48643-28:02	The document is introduced.
	48643-34:02	The document is introduced.
	48643-35:02	The document is introduced.
	48643-36:02	The document is introduced.
	48643-37:02	The document is introduced.
	48643-38:02	The document is introduced.
	48643-40:02	The document is introduced.
	1511794:02	Alteration Messages is changed.
	1538212 AB	F104, F106, F107, F012, F019, F021, F010, F016, F027, Q006, Q007, Q009, Q005, Q008, Q016, F004 and F008 are moved left. F002 and F007 are moved right. F001, F009, F005 and F015 are moved down. F024, F017 and F025 are moved up. Q003 is deleted. F030, F031, F032, F011, Q015, F033 and F013 are added. “Extra equipment” note is removed.
98858	44954-02:03	Position summary is changed according to the circuit diagram.

This drawing must not without the consent of Tetra Pak be copied, transmitted or disclosed to any third party.

44954-05:03	K030 and X301 and their connections are added; K003 and its connections are imported from page 11.Connection references are changed.
44954-06:03	F001 connection reference is changed.
44954-07:03	F002, F106 and F107 line supplies and connection references are changed.
44954-08:03	F104, F021, F100 and F101 line supplies and connection references are changed.
44954-09:03	The page 09 is added.
44954-10:03	F019, Q006, Q007, Q009 AND F012 line supplies and connection references are changed.
44954-11:03	Q008, Q016 and F004 line supplies and connection references are changed. Bending roller and detergent pump, added.
44954-12:03	F007 and F008 line supplies and connection references are changed.
44954-13:03	F009 connection reference is changed.
44954-14:03	F012 and F103 connection references are changed.
44954-16:03	Q005 and F005 connection references are changed; W121, W122 and W123 EMC cables added. MDCS power connection moved to page 09.
44954-20:03	K915 is deleted.
44954-23:03	The cable between M.Y107 and X003 is changed.
44954-26:03	The cable W067 connection reference is changed.
44954-33:03	The cable between M.Y184 and X003 is changed.
44954-34:03	S001, S002, K030 and their connections added.
44954-35:03	K111 deleted.
44954-37:03	M.S033 changed to M.S003H.
44954-40:03	M.X031: 17sh 39 changed to sheet reference change M.X031: 17 sh 66
44954-41:03	M.B048B contact NC changed to NO.
44954-47:03	K111 and K013 contact deleted; A609 and A610 added.
44954-57:03	Q003 deleted.
44954-58:03	I139 sheet change.
44954-59:03	V002, K111, L10, P.S907H and P.S911H contacts, deleted.
44954-62:03	K019 sheet change.
44954-65:03	L10 and L12 changed L20 is L21.
44954-66:03	X018, M.X031 and M.H033S added.
44954-68:03	K915 deleted.
44954-71:03	X004:202 added.
44954-73:03	Q103 sheet reference.
44954-74:03	K115 added.

This drawing must not without the consent of Tetra Pak be copied, transmitted or disclosed to any third party.

44954-80:03	A603 deleted; A607 and A608 added.
44954-90:03	A123,20 is moved from terminal XL40,8 to XL40,9 .
44954-91:03	Terminal summary is changed according to circuit diagram.
44954-92:03	X027 sheet reference.
44954-96:03	Denomination changed.
44954-97:03	X016:1 deleted.
44954-98:03	Description changed.
44954-89:03	Denomination changed.
62031-24:03	M.Y037 added and M.Y915 deleted.
62031-31:03	M.Y051, M.Y029 and M.Y031 deleted.
62031-32:03	M.Y031, M.Y033 and M. Y039 changed.
62031-53:03	Changed M.BO48A and M.B048B with of the contactor NO.
62031-56:03	This page is changed.
62031-58:03	Changed wiring.
62031-75:03	This page is changed.
62063-77:03	M.S033 CHANGED TO M.S033H, M.S033H description corrected.
62031-94:03	This page is added.
1517494:03	Alteration Messages is changed.
1538212 AC	F012 is changed to 1 A and is moved left. F021 is moved right. F033 is moved down.
109383	IS RELEASED THE DOCUMENTATION IN EPLAN 21, V.ASU and TCSB IS ADDED TO THE STANDARD DOCUMENTATION.
44954-10:03	(NEW PAGE 12) F012 is changed.
44954-14:03	(NEW PAGE 29) R001,R002 and R003 are deleted
44954-26:03	(NEW PAGE 85) W124,W125,W126 and W127is added.
44954-33:03	(NEW PAGE 48) R005 is deleted Connection on A400:28 is added
44954-38:01	(NEW PAGE 73) S.007 is deleted.
44954-58:03	(NEW PAGE 93) S.005 is deleted. Connection on A112:I137/I138 are added.
44954-65:03	(NEW PAGE 100) K097 is added.

This drawing must not without the consent of Tetra Pak be copied, transmitted or disclosed to any third party.

44954-74:03	(NEW PAGE 109) K115 is deleted.
44954-90:03	A123,20 is moved from terminal XL40,9 to XL40,2.
48643-01:04	CROSS REFERENCE IS CHANGED. %I0142, %Q0041, %Q0163, %Q0167, %M0324, %M1321, %M1327, %M1328, %M1329, %M1633, %M1781, %R8363, %AQ005, %AQ006, %AQ007 AND %AQ008 NICK NAME AND REFERENCE DESCRIPTIONS ARE ADDED. %M0095, %M0103, %M0124, %M0226, %M0311, %M0432, %M3061, %M3123, %M3124, %M3142, %M3145, %M3146, %M3147, %M3162, %M3170, %M3171, %M3228, %M4010, %M4027, %M4028, %M4032, %T0191, %T0221, %R0043, %R0224, %R0511, %R0541, %R0567, %R0602, %R0635, %R0679, %R0768, %R0912, %R0931, %R8333, %R8334, %R8335, %R8336, %R8337, %R8338, %R8339, %R8340, %R8341, %R8342, %R8343, %R8344, %R8345, %R8346, %R8347, %R8348, %R8349, %R8350, %R8351, %R8352, %R8353, %R8354, %R8355, %R8356, %R8357, %R8500, %R8510, %R9548 %R9551 REFERENCE DESCRIPTIONS ARE ADDED. %I0177, %M0108, %M0256, %M1687, %M1697, %M1780, %R0031, %R0176, %R0704 AND %R8332 REFERENCE DESCRIPTIONS ARE CHANGED %Q0083 AND %Q0103 NICK NAME ARE DELETED AND REFERENCE DESCRIPTIONS ARE CHANGED. %M1300 NICK NAME IS ADDED AND REFERENCE DESCRIPTION IS CHANGED. %I0022, %I0169, %I0170, %Q0081, %Q0112, %Q0115, %Q0186, %M0175, %M0177, %M0200, %M0202, %M0237, %M0381, %M0382, %M1064, %M1760, %M3058, %M3059, %M3060, %M3065, %M3066, %M3073, %M3226, %M3227, %T0216, %R8591 AND %R8592 NICK NAME AND REFERENCE DESCRIPTIONS ARE DELETED. %M0040, %M0041, %M0042, %M0079, %M0099, %M0107, %M0111, %M0114, %M0115, %M0130, %M0137, %M0143, %M0178, %M0262, %M0267, %M0275, %M0353, %M0500, %M0501, %M0502, %M0528, %M0538, %T0024, %T0039, %T0043, %T0064, %T0081, %T0094, %T0096, %T0097, %T0130, %T0180, %T0181, %T0182, %T0183, %T0184, %R0020, %R0024, %R0099, %R0101, %R0104, %R0106, %R0108, %R0110, %R0112, %R0114, %R0151, %R0175, %R0180, %R0221, %R0240, %R0344, %R0382, %R0447, %R0515, %R0521, %R0557, %R0668, %R0734, %R1048, %R1049, %R1050, %R1053 AND %R9545 REFERENCE DESCRIPTIONS ARE CHANGED. %AQ001, %AQ002 AND %AQ003 NICK NAME ARE CHANGED RUNG 011: THE RUNG IS COMPLETELY CHANGED RUNG 042: %M0057 IS CHANGED TO %M0086

This drawing must not without the consent of Tetra Pak be copied, transmitted or disclosed to any third party.

	RUNG 055: -|/|- %M1987 IS REPLACED BY -|/|- %M0432
	RUNG 075: %T0191 IS ADDED
	RUNG 076: THE LABELS BLK37 AND BLK38 ARE INVERTED
48643-05:04	RUNG 011: TWO NEW RUNGS ADDED
	RUNG 012: %M0095 IS ADDED
	RUNG 014: THE RUNG IS MOVED BEFORE RUNG 16
48643-06:04	RUNG 013: -| |- %M0325 IS REPLACED BY -| |- %M0324
	RUNG 020: -|/|- %I0057 AND -| |- %M0108 ARE REPLACED BY -| |- %M0539, THE BRANCH IS CHANGED
	RUNG 020: A NEW RUNG IS ADDED
	RUNG 021: THIS RUNG IS MOVED BEFORE RUNG 020
	RUNG 021: -|/|- %M1687 IS REPLACED BY %M0324
48643-07:04	RUNG 005: IT IS MOVED THE BRANCH BEFORE %T0101
	RUNG 006: %M0337 IS REPLACED BY %M1793
	RUNG 016: THE RUNG IS EXPANDED AND CHANGED
	RUNG 019: A NEW RUNG IS ADDED
	RUNG 026: %T0090 AND %Q0015 ARE DELETED, %M0149 -|/|- IS ADDED
	RUNG 031: TWO RUNGS ARE DELETED
48643-08:04	RUNG 021: THE RUNG IS DELETED
48643-11:04	RUNG 010: %I0009 IS DELETED
48643-14:04	RUNG 008: THE RUNG IS EXPANDED AND CHANGED
	RUNG 019: A NEW RUNG IS ADDED

This drawing must not without the consent of Tetra Pak be copied, transmitted or disclosed to any third party.

	RUNG 020: %M0230 IS REMOVED, %M0510 IS REPLACED BY %M311
	RUNG 022: %M0510 IS REPLACED BY %M311
	RUNG 032: NEW RUNG IS ADDED
	RUNG 032: EXPANTION CONTACT IS ADDED IN PARALLEL TO %M0305; %M0337 THE BRANCH IS CHANGED; %M0338 IS REMOVED
	RUNG 033: CONST IS CHANGED FROM 40 TO 80
	RUNG 044: TWO NEW RUNGS ARE ADDED
	RUNG 046: CONST 10 IS REPLACED BY %R0567
	RUNG 047: THREE NEW RUNGS ARE ADDED
48643-15:04	RUNG 005: THE RUNG IS DELETED
	RUNG 006: %R0521 IS REPLACED BY CONST 014
	RUNG 024: %M0084 IS ADDED
	RUNG 038: %M0084 IS ADDED
	RUNG 040: THE RUNG IS DELETED
48643-16:04	RUNG 011: %Q0015 AND %Q0070 ARE ADDED
	RUNG 014: THE INSTRUCTION POSITIONS ARE CHANGED, TWO NEW BRANCHS ARE ADDED
48643-17:04	RUNG 004: THE RUNG IS REMOVED
	RUNG 005: -|/|- %I0138 AND -| |- %M3147 ARE ADDED
	RUNG 014: %M1987 IS REPLACED BY %M0432
	RUNG 018: %M1987 IS REPLACED BY %M0432
	RUNG 019: %M1987 IS REPLACED BY %M0432

This drawing must not without the consent of Tetra Pak be copied, transmitted or disclosed to any third party.

	RUNG 020: %M1987 IS REPLACED BY %M0432
	RUNG 020: NEW RUNG IS ADDED
48643-18:04	RUNG 015: -|/|- %I0138 AND -| |- %M3147 ARE ADDED
	RUNG 020: %M1987 IS REPLACED BY %M0432
	RUNG 029: -|/|- %I0137, -|/|- %I0138, -| |- %M3146 AND -| |- %M3147 ARE ADDED, %M1987 IS REPLACED BY %M0432
	RUNG 059: %M0353 IS REPLACED BY %M1780, %M1780 IS REPLACED BY %M1781
	RUNG 063: BOTH CONTACTS , -| |- %M1687 ARE REPLACED BY -| |- %M0324
	RUNG 068: 5 RUNGS ARE ADDED
	RUNG 069: THE RUNG IS COMPLETELY CHANGED
	RUNG 070: -|/|- %I0137 AND -| |- %M3146 ARE ADDED
	RUNG 071: TWO NEW RUNGS ADDED
	RUNG 072: 7 RUNGS ARE DELETED
	RUNG 079: A BRANCH IS ADDED IN PARALLEL TO %T0192
	RUNG 080: %T0191 AND %M3146 ARE ADDED
	RUNG 083: %T0192 IS REPLACED BY %T0191 AND %T0195 IS DELETED
	RUNG 092: -|/|- %I0137 AND -| |- %M3146 ARE ADDED, %M1780 IS REPLACED BY %M1781, %M1987 IS REPLACED BY %M0432
	RUNG 095: -|/|- %I0137 AND -| |- %M3146 ARE ADDED
	RUNG 102: THE RUNG IS ADDED
	RUNG 102: %M0226 IS ADDED
48643-19:04	RUNG 031: %M1302 IS REMOVED

This drawing must not without the consent of Tetra Pak be copied, transmitted or disclosed to any third party.

	RUNG 062: THE RUNG IS COMPLETELY CHANGED
	RUNG 064: THE RUNG IS ADDED
48643-21:04	RUNG 006: -| |- %S0008 IS REPLACED BY -|/|- %M1302
	RUNG 021: %M0083 IS ADDED
48643-22:04	RUNG 010: THE OUTPUT –(S)- %M1687 IS CHANGED TO –(SM)- AND A NEW BRANCH IS ADDED
	RUNG 011: THE OUTPUT –(S)- %M1687 IS CHANGED TO –(SM)- AND A NEW BRANCH IS ADDED
	RUNG 012: CONTACT AND OUTPUT %M1687 ARE REPLACED BY %M0324
	RUNG 013: %M1687 IS REPLACED BY %M0324
	RUNG 014: %M1687 IS REPLACED BY %M0324
	RUNG 028: -|/|- %M1698, -|/|- %M1706, -|/|- AND %T0132 %M0049 ARE ADDED
	RUNG 033: -|/|- %M1633 IS ADDED, %M1760 IS DELETED
	RUNG 034: %M1859 IS REMOVED
	RUNG 036: %M0081 AND %Q0015 ARE REMOVED
	RUNG 037: -|/|- %I0164 IS CHANGED TO -| |- %I0162 AND VICEVERSA. %M1304 IS DELETED. %M0081 AND %Q0015 ARE ADDED
	RUNG 045: -|/|- %M0353 IS REPLACED BY -|/|- %M1780
	RUNG 046: %M1859 IS ADDED
	RUNG 047: %M1859 IS ADDED
	RUNG 052: %M0090 AND %Q0015 ARE MOVED TO RUNG 053. %M0095 IS ADDED
	RUNG 053: %M0090 AND %Q0015 ARE IMPORTED FROM RUNG 052

This drawing must not without the consent of Tetra Pak be copied, transmitted or disclosed to any third party.

48643-24:04	RUNG 022: CONST 350 AND CONST 800 ARE CHANGED TO 1000
48643-25:04	RUNG 001: THE RUNG IS MOVED FROM RUNG 003
	RUNG 003: THE RUNG IS MOVED TO RUNG 001
	RUNG 008: ONE OF THE TWO %M0084 IS DELETED. OTHER %M0084 IS MOVED RIGHT
48643-26:04	RUNG 004: -| |- %M3228 IS ADDED
48643-28:04	RUNG 016: THE RUNG IS DELETED
	Rung 026: -|/|- %M1958 IS REPLACED BY -|/|- %M0184
	RUNG 030: OUTPUT %M1958 IS REPLACED BY %M0184 RUNG 030: 3 NEW RUNGS ARE ADDED
	RUNG 031: OUTPUT %M1958 IS REPLACED BY %M0184
	RUNG 032: A NEW RUNG IS ADDED
	RUNG 053: CONST 570 IS REPLACED BY %R8510
	RUNG 084: -|/|- %M1958 IS REPLACED BY -|/|- %M0184
	RUNG 093: TWO NEW RUNGS ARE ADDED
48643-34:04	RUNG 004: CONST 80 IS CHANGED TO CONST 0
	RUNG 004: CONST 406 IS CHANGED TO CONST 0
	RUNG 005: %R0680, %R0687, %R0694 ARE REPLACED BY %R0679, %R0686, %R0693 AND THE VALUES OF THE CONSTANTS ARE CONSEQUENTLY SHIFTED.
	RUNG 009: A NEW RUNG IS ADDED
	RUNG 010: CONST 2835 IS CHANGED TO CONST 80
	RUNG 010: MOVE INT BLOCK IS ADDED

This drawing must not without the consent of Tetra Pak be copied, transmitted or disclosed to any third party.

RUNG 011: THE RUNG IS DELETED AND REPLACED BY TWO NEW RUNGS

RUNG 012: CONST 4122 IS CHANGED TO CONST 80

RUNG 012: MOVE INT IS ADDED

RUNG 013: THE RUNG IS DELETED AND REPLACED BY TWO NEW RUNGS

RUNG 014: CONST 70 IS CHANGED TO CONST 0. CONST 406 IS CHANGED TO CONST 0. CONST E0C0 IS CHANGED TO F0C0

RUNG 015: %R0680, %R0687, %R0694 ARE REPLACED BY %R0679, %R0686, %R0693 AND THE VALUES OF THE CONSTANTS ARE CONSEQUENTLY SHIFTED.

RUNG 017: CONST E000 IS CHANGED TO CONST F000

RUNG 019: A NEW RUNG IS ADDED

RUNG 020: CONST 3607 IS CHANGED TO CONST 47. MOVE INT BLOCK IS ADDED

RUNG 021: THE RUNG IS DELETED AND REPLACED BY TWO NEW RUNGS

RUNG 022: CONST 5406 IS CHANGED TO CONST 32. MOVE INT IS ADDED

RUNG 023: THE RUNG IS DELETED AND REPLACED BY TWO NEW RUNGS

RUNG 024: CONST 90 IS CHANGED TO CONST 0
RUNG 024: CONST 406 IS CHANGED TO CONST 0

RUNG 025: %R0680, %R0687, %R0694 ARE REPLACED BY %R0679, %R0686, %R0693 AND THE VALUES OF THE CONSTANTS ARE CONSEQUENTLY SHIFTED.

RUNG 029: A NEW RUNG IS ADDED

RUNG 030: CONST 4120 IS CHANGED TO CONST 90
RUNG 030: MOVE INT BLOCK IS ADDED

This drawing must not without the consent of Tetra Pak be copied, transmitted or disclosed to any third party.

RUNG 031: THE RUNG IS DELETED AND REPLACED BY TWO NEW RUNGS

RUNG 032: CONST 6176 IS CHANGED TO CONST 90

RUNG 032: MOVE INT IS ADDED

RUNG 033: THE RUNG IS DELETED AND REPLACED BY TWO NEW RUNGS

RUNG 034: CONST 15 IS CHANGED TO CONST 0

RUNG 034: CONST 406 IS CHANGED TO CONST 0

RUNG 035: %R0680, %R0687, %R0694 ARE REPLACED BY %R0679, %R0686, %R0693 AND THE VALUES OF THE CONSTANTS ARE CONSEQUENTLY SHIFTED.

RUNG 039: A NEW RUNG IS ADDED

RUNG 040: CONST 4892 IS CHANGED TO CONST 15

RUNG 040: MOVE INT BLOCK IS ADDED

RUNG 041: THE RUNG IS DELETED AND REPLACED BY TWO NEW RUNGS

RUNG 042: CONST 7205 IS CHANGED TO CONST 15

RUNG 042: MOVE INT IS ADDED

RUNG 043: THE RUNG IS DELETED AND REPLACED BY TWO NEW RUNGS

RUNG 044: CONST 35 IS CHANGED TO CONST 0

RUNG 044: CONST 406 IS CHANGED TO CONST 0

RUNG 044: CONST FC20 IS CHANGED TO CONST FC60

RUNG 044: CONST 01C0 IS CHANGED TO CONST 00E0

RUNG 045: CONST 001C IS CHANGED TO CONST 000E

RUNG 045: %R0680, %R0687, %R0694 ARE REPLACED BY %R0679, %R0686, %R0693 AND THE VALUES OF THE CONSTANTS ARE CONSEQUENTLY SHIFTED.

RUNG 049: A NEW RUNG IS ADDED

This drawing must not without the consent of Tetra Pak be copied, transmitted or disclosed to any third party.

RUNG 050: CONST 5920 IS CHANGED TO CONST 125
RUNG 050: MOVE INT BLOCK IS ADDED

RUNG 051: THE RUNG IS DELETED AND REPLACED BY TWO NEW RUNGS

RUNG 052: CONST 4 IS CHANGED TO 30 AND CONST 8747 IS CHANGED TO CONST 102
RUNG 052: MOVE INT IS ADDED

RUNG 053: THE RUNG IS DELETED AND REPLACED BY TWO NEW RUNGS

RUNG 054: CONST 60 IS CHANGED TO CONST 0

RUNG 054: CONST 406 IS CHANGED TO CONST 0

RUNG 054: CONST 03C3 IS CHANGED TO CONST 0383

RUNG 054: CONST 3800 IS CHANGED TO CONST 1C00

RUNG 055: CONST 1C00 IS CHANGED TO CONST 0E00
RUNG 055: %R0680, %R0687, %R0694 ARE REPLACED BY %R0679, %R0686, %R0693 AND THE VALUES OF THE CONSTANTS ARE CONSEQUENTLY SHIFTED.

RUNG 059: A NEW RUNG IS ADDED

RUNG 060: CONST 20 IS CHANGED TO 30 AND CONST 5920 IS CHANGED TO CONST 37
RUNG 060: MOVE INT BLOCK IS ADDED

RUNG 061: THE RUNG IS DELETED AND REPLACED BY TWO NEW RUNGS

RUNG 062: CONST 8747 IS CHANGED TO CONST 22

RUNG 062: MOVE INT IS ADDED

RUNG 063: THE RUNG IS DELETED AND REPLACED BY TWO NEW RUNGS

RUNG 064: CONST 60 IS CHANGED TO CONST 0

This drawing must not without the consent of Tetra Pak be copied, transmitted or disclosed to any third party.

RUNG 064: CONST 406 IS CHANGED TO CONST 0

RUNG 064: CONST 03C0 IS CHANGED TO CONST 0078

RUNG 065: %R0680, %R0687, %R0694 ARE REPLACED BY %R0679, %R0686, %R0693 AND THE VALUES OF THE CONSTANTS ARE CONSEQUENTLY SHIFTED.

RUNG 067: CONST FF80 IS CHANGED TO FFF0

RUNG 069: A NEW RUNG IS ADDED

RUNG 070: CONST 5920 IS CHANGED TO CONST 80
RUNG 070: MOVE INT BLOCK IS ADDED

RUNG 071: THE RUNG IS DELETED AND REPLACED BY TWO NEW RUNGS

RUNG 072: CONST 11310 IS CHANGED TO CONST 80
RUNG 072: MOVE INT IS ADDED

RUNG 073: THE RUNG IS DELETED AND REPLACED BY TWO NEW RUNGS

RUNG 074: CONST 80 IS CHANGED TO CONST 0
RUNG 074: CONST 406 IS CHANGED TO CONST 0
RUNG 074: CONST FFE4 IS CHANGED TO CONST FFC4
RUNG 074: CONST 01FF IS CHANGED TO CONST 03FF
RUNG 074: CONST 1C00 IS CHANGED TO CONST 0000
RUNG 074: CONST 0 (IN3) IS CHANGED TO CONST 1C00

RUNG 075: %R0680, %R0687, %R0694 ARE REPLACED BY %R0679, %R0686, %R0693 AND THE VALUES OF THE CONSTANTS ARE CONSEQUENTLY SHIFTED.

RUNG 077: CONST FFFE IS CANGED TO FFFC AND CONST 01FF IS CHANGED TO 03FF

RUNG 079: A NEW RUNG IS ADDED

RUNG 080: CONST 9518 IS CHANGED TO CONST 125
RUNG 080: MOVE INT BLOCK IS ADDED

RUNG 081: THE RUNG IS DELETED AND REPLACED BY TWO NEW RUNGS

This drawing must not without the consent of Tetra Pak be copied, transmitted or disclosed to any third party.

RUNG 082: CONST 13885 IS CHANGED TO CONST 110
RUNG 082: MOVE INT IS ADDED

RUNG 083: THE RUNG IS DELETED AND REPLACED BY TWO NEW RUNGS

RUNG 084: CONST 110 IS CHANGED TO CONST 0
RUNG 084: CONST 406 IS CHANGED TO CONST 0
RUNG 084: CONST FFF1 IS CHANGED TO CONST FFF9
RUNG 084: CONST 00E0(IN6) IS CHANGED TO CONST 000F
RUNG 084: CONST 00E0(IN3) IS CHANGED TO CONST 0007

RUNG 085: CONST 01C0 IS CHANGED TO CONST 000E
RUNG 085: %R0680, %R0687, %R0694 ARE REPLACED BY %R0679, %R0686, %R0693 AND THE VALUES OF THE CONSTANTS ARE CONSEQUENTLY SHIFTED.

RUNG 087: CONST FFF0 IS CHANGED TO FFF8

RUNG 089: A NEW RUNG IS ADDED

RUNG 090: CONST 9518 IS CHANGED TO CONST 42
RUNG 090: MOVE INT BLOCK IS ADDED

RUNG 091: THE RUNG IS DELETED AND REPLACED BY TWO NEW RUNGS

RUNG 092: CONST 13885 IS CHANGED TO CONST 72
RUNG 092: MOVE INT IS ADDED

RUNG 093: THE RUNG IS DELETED AND REPLACED BY TWO NEW RUNGS

RUNG 094: CONST 85 IS CHANGED TO CONST 0
RUNG 094: CONST 406 IS CHANGED TO CONST 0

RUNG 095: %R0680, %R0687, %R0694 ARE REPLACED BY %R0679, %R0686, %R0693 AND THE VALUES OF THE CONSTANTS ARE CONSEQUENTLY SHIFTED.

RUNG 099: A NEW RUNG IS ADDED

RUNG 100: CONST 10033 IS CHANGED TO CONST 85
RUNG 100: MOVE INT BLOCK IS ADDED

This drawing must not without the consent of Tetra Pak be copied, transmitted or disclosed to any third party.

RUNG 101: THE RUNG IS DELETED AND REPLACED BY TWO NEW RUNGS

RUNG 102: CONST 14656 IS CHANGED TO CONST 85
RUNG 102: MOVE INT IS ADDED

RUNG 103: THE RUNG IS DELETED AND REPLACED BY TWO NEW RUNGS

RUNG 104: CONST 85 IS CHANGED TO CONST 0
RUNG 104: CONST 406 IS CHANGED TO CONST 0

RUNG 105: %R0680, %R0687, %R0694 ARE REPLACED BY %R0679, %R0686, %R0693 AND THE VALUES OF THE CONSTANTS ARE CONSEQUENTLY SHIFTED.

RUNG 109: A NEW RUNG IS ADDED

RUNG 110: CONST 10033 IS CHANGED TO CONST 85
RUNG 110: MOVE INT BLOCK IS ADDED

RUNG 111: THE RUNG IS DELETED AND REPLACED BY TWO NEW RUNGS

RUNG 112: CONST 14656 IS CHANGED TO CONST 85
RUNG 112: MOVE INT IS ADDED

RUNG 113: THE RUNG IS DELETED AND REPLACED BY TWO NEW RUNGS

RUNG 114: CONST 100 IS CHANGED TO CONST 0
RUNG 114: CONST 406 IS CHANGED TO CONST 0
RUNG 114: CONST C0E3 IS CHANGED TO CONST 80E3
RUNG 114: CONST C000 IS CHANGED TO CONST E000
RUNG 114: CONST 0001 IS CHANGED TO CONST 0000

RUNG 115: CONST 0007 IS CHANGED TO CONST 0003
RUNG 115: %R0680, %R0687, %R0694 ARE REPLACED BY %R0679, %R0686, %R0693 AND THE VALUES OF THE CONSTANTS ARE CONSEQUENTLY SHIFTED.
RUNG 115: %R0679 IS SET TO 8000

RUNG 119: A NEW RUNG IS ADDED

RUNG 120: CONST 25 IS CHANGED TO 35 CONST 11318 IS CHANGED TO CONST 17

This drawing must not without the consent of Tetra Pak be copied, transmitted or disclosed to any third party.

	RUNG 120: MOVE INT BLOCK IS ADDED
	RUNG 121: THE RUNG IS DELETED AND REPLACED BY TWO NEW RUNGS
	RUNG 122: CONST 16455 IS CHANGED TO CONST 17 RUNG 122: MOVE INT IS ADDED
	RUNG 123: THE RUNG IS DELETED AND REPLACED BY TWO NEW RUNGS
48643-35:04	RUNG 006: CONST 00000 IS CHANGED TO +00001
	RUNG 007: CONST +00001 IS CHANGED TO 00000
	RUNG 013: CONST IS CHANGED FROM +00001 TO 00000
	RUNG 018: COMMENT IS CHANGED
	RUNG 022: CONST IS CHANGED FROM +00000 TO 00001 AND CONST IS CHANGED FROM +00001 TO 00000
	RUNG 024: CONST +00001 IS CHANGED TO 00000
48643-37:04	RUNG 007: %M0049, %M0053 AND %T0016 ARE REPLACED BY %S0007
	RUNG 026: %Q0071 IS DELETED
	RUNG 040: THE COMMENT IS CHANGED
	RUNG 043: THE RUNG IS MOVED TO BLK38 RUNG138 RUNG 061: %M0084 IS ADDED
	RUNG 063: %M1064 IS REPLACED BY %M1080
	RUNG 082: -|/|- %M1679 IS DELETED,
	RUNG 085: -|/|- %M1633 IS ADDED,
	RUNG 086: -|/|- %M1760 IS DELETED
	RUNG 087: -|/|- %M1687 IS DELETED
	RUNG 088: -|/|- %M1820 IS DELETED

This drawing must not without the consent of Tetra Pak be copied, transmitted or disclosed to any third party.

RUNG 098: -|/|- %M1781 IS ADDED, -|/|- %M1907 IS DELETED

RUNG 099: -|/|- %M1907 AND -|/|- %M1679 ARE ADDED, THE RUNG IS EXPANDED

RUNG 102: TWO RUNGS ARE MOVED BEFORE RUNG 101

RUNG 103: -| |-%M1987 IS ADDED

RUNG 104: THE RUNG IS COMPLETELY CHANGED

RUNG 104: A NEW RUNG IS ADDED

RUNG 105: THE RUNG IS DELETED

RUNG 108: THE RUNG IS DELETED

RUNG 110: -|/|- %M1687 IS REPLACED BY %M0324

RUNG 110: NEW RUNG IS ADDED

RUNG 111: A NEW BRANCH IS ADDED: %T0214 COIL IS CHANGED FROM (^) TO (S)

RUNG 112: TWO RUNGS ARE ADDED

RUNG 115: 19 RUNGS ARE ADDED

48643-38:04

RUNG 009: %S007 IS REPLACED BY %T0212

RUNG 010: %S007 IS REPLACED BY %T0212, EQ_INT IS ADDED

RUNG 012: CONST 10 IS CHANGED TO CONST 5

RUNG 012: A NEW RUNG IS ADDED

RUNG 014: %S007 IS REPLACED BY %T0213

RUNG 015: %S007 IS REPLACED BY %T0213, EQ_INT IS ADDED

RUNG 017: THE COMMENT IS CHANGED

This drawing must not without the consent of Tetra Pak be copied, transmitted or disclosed to any third party.

RUNG 019: CONST 25 IS CHANGED TO CONST 5

RUNG 020: A NEW RUNG IS ADDED

RUNG 021: %S007 IS REPLACED BY %T0211

RUNG 022: %S007 IS REPLACED BY %T0211, EQ_INT IS ADDED

RUNG 025: -|/|- %Q0001 IS REPLACED BY -| |- %M0380

RUNG 028: -| |- %I0119 IS DELETED, -| |- %M0277 AND -| |- %M0056 ARE ADDED

RUNG 030: THE COMMENT IS CHANGED

RUNG 036: -|/|- %I0119 IS REPLACED BY -|/|- %M0277
RUNG 036: A NEW RUNG IS ADDED

RUNG 037: A NEW RUNG IS ADDED

RUNG 039: -| |- %T0032 IS REPLACED BY -| |- %M4027
RUNG 039: A NEW RUNG IS ADDED

RUNG 053: -| |- %M4025 AND -| |- %M0324 ARE ADDED

RUNG 054: %Q0001 IS REPLACED BY %M0310.
-|/|- %M1687 IS REPLACED BY -|/|- %M0324

RUNG 055: -| |- %M4024 IS DELETED, OUTPUT –( )- %M4024 IS CHANGED TO –(SM)-

RUNG 056: A NEW RUNG IS ADDED

RUNG 056: THE RUNG IS CHANGED

RUNG 057: %Q0001 IS CHANGED TO %M0320. -|/|- %I0005, -|/|- %I0150, -|/|- %I0151 AND -I I- %M3026 ARE ADDED.
CONST 30 IS CHANGED TO CONST 100

RUNG 059: -|/|- %M4024 IS ADDED

RUNG 062: -| |- %M1064 IS REPLACED BY -| |- %M0057, -| |- %M0086 IS ADDED

RUNG 063: CONST 30 IS CHANGED TO CONST 100

This drawing must not without the consent of Tetra Pak be copied, transmitted or disclosed to any third party.

RUNG 067: THE RUNG IS COMPLETELY CHANGED

RUNG 071: -| |- %I0128 AND -| |- %M1306 ARE ADDED

RUNG 071: -| |- %I0128 AND -| |- %M1306 ARE ADDED

RUNG 075: -|/|- %I0128 AND -| |- ,-|/|- %M1306 ARE ADDED

RUNG 078: %M4024 AND %M1687 ARE DELETED

RUNG 079: -|/|- %M3028 IS ADDED

RUNG 080: OUTPUT –(S)- %M3028 IS CHANGED TO –(SM)-

RUNG 081: -| |- %M0049, -|/|- %M0324 AND -| |- %M0057 ARE ADDED
RUNG 081: : OUTPUT –(R)- %M3028 IS CHANGED TO –(RM)-

RUNG 084: CONST 30 IS CHANGED TO CONST 100

RUNG 085: CONST 30 IS CHANGED TO CONST 100

RUNG 105: CONST 2400 IS CHANGED TO CONST 3000

RUNG 120: THE RUNG IS EXTENDED, -| |- %M0324 IS ADDED

RUNG 133: -| |- %M1064 IS REPLACED BY -| |- %M0057, -| |- %M0086 IS ADDED

RUNG 138: THE OLD RUNG BLK37 R43 IS ADDED

RUNG 143: -| |- %M1687 IS REPLACED BY -| |- %M0324

RUNG 149: %M0156 IS ADDED

RUNG 150: %M0156 IS DELETED

119151	44954-0001:AB	DOCUMENT LIST IS CHANGED ACCORDING TO ECM 109383.
	44954-0002:AB	POSITION SUMMARY IS CHANGED ACCORDING TO ECM 109383.

This drawing must not without the consent of Tetra Pak be copied, transmitted or disclosed to any third party.

44954-0003:06:AB	TERMINAL M-X060:105 AND 106 ARE PUT OUTSIDE DASHED LINE. THE BRIDGE OF THE GROUND M.X060 ARE REMOVED.
44954-0003:30:AB	QOO5 IS GHANGED WITH F034. WIRE AREA ON V001 CONNECTIONS IS CORRECTED. CONNECTION X010:1 IS CHANGED WITH X010:43.
44954-0003:44:AB	THE CABLE M.X025 IS CHANGED.
44954-0003:49:AB	M.X060:28 AND ITS CONNECTION ARE MOVED TO PAGE 122.
44954-0003:58:AB	CONNECTION +M-X002:54-53 IS REVERSING. THE CABLE M.W025 IS CHANGED.
44954-0003:60:AB	DUE TO NEW SAFETY RELAY.
44954-0003:61:AB	CONNECTION +M-X060:9-10 IS REVERSING . DUE TO NEW SAFETY RELAY.
44954-0003:62:AB	V007/V010 IS ADDED. DUE TO NEW SAFETY RELAY.
44954-0003:63:AB	V008 IS ADDED. DUE TO NEW SAFETY RELAY.
44954-0003:66:AB	+M-B115 DESCRIPTION IS CHANGED. DUE TO NEW SAFETY RELAY.
44954-0003:72:AB	+M-S007 IS ADDED.
44954-0003:76:AB	M.W108 IS ADDED.
44954-0003:78:AB	V009 IS ADDED.
44954-0003:92:AB	THE CABLE M.W025 IS CHANGED.
44954-0003:99:AB	+M-Y523 IS CHANGED WITH +M-Y037.
44954-0003:100:AB	K097 PIN NUMERATION IS CHANGED. V011 IS ADDED.
44954-0003:121:AB	CONNECTION +M-X002:58-57 IS REVERSED.
44954-0003:122:AB	M.X060:28 AND ITS CONNECTION ARE ADDED.
44954-0003:140:AB	THE PAGE IS SPLITTED IN TWO PAGES (140-141).
44954-0003:143:AB	NEW PAGE.
44954-0003:144:AB	NEW PAGE.
44954-0004:AB	LINE SUMMARY IS CHANGED ACCORDING TO ECM 109383.
44954-0005:AB	CABINET TERMINAL SUMMARY IS CHANGED ACCORDING TO ECM 109383.
44954-0006:AB	TERMINAL STRIP OVERVIEW IS CHANGED ACCORDING TO ECM 109383.
44954-0007:AB	CABLE CONNECTION LIST IS CHANGED ACCORDING TO ECM 109383.
44954-0099:AB	ENGINEERING CHANGE DESCRIPTION IS UPDATED.

This drawing must not without the consent of Tetra Pak be copied, transmitted or disclosed to any third party.

48643-01:05	A125, A128 AND A109 ARE ADDED IN THE CONFIGURATION. CROSS REFERENCE IS CHANGED. %I0071, %I0200, %I0201, %I0206, %I0207, %I0227, %M0254, %M1299, %M1889, %R0005, %R0387, %R0397, %R0690, %R0698, %R0699, %R0700, %R0704, %R0705, %R0706, %R0707, %R0715, %R0716, %R0717, %R0718, %R0719, %R0774, %R0775, %R0777, %R0778, %R0779, %R0780, %R0781, %R0785, %R0786, %R0787, %R0788, %R0789, %R9521, DESCRIPTIONS ARE CHANGED. %I0229, %I0230, %Q0171 NICK NAMES ARE CHANGED. %I0195, %I0231, %I0232, %Q0113, %Q0114, NICK NAME AND DESCRIPTIONS ARE CHANGED. %I0234, %Q0057, %Q0026, %Q0115, %Q0116, %Q0117, %Q0118, %Q0119, %M0125, %M0242, %M0243, %M0257, %M0299, %M0561, %M0562, %M0563, %M1901, %M1902, %M1988, %M4029, %T0013, %T0019, %T0142, %T0222, %T0232, %R0180, %R0237, %R0384, %R0406, %R0440, %R0442, %R0444, %R0446, %R0448, %R0776, %R9545, %AQ004 ARE ADDED. %Q0094, %Q0126, %Q0127, %Q0128, %M0260, %M0308, %M0329, %M4000, %M4001, %R8147 AND %R8306 ARE REMOVED. RUNG 032: %M0206 AND %M1308 ARE REMOVED. %M0081 AND %M0035 ARE IMPORTED FROM RUNG 33. RUNG EXPANSION IS REMOVED. RUNG 033: THE RUNG IS DELETED. RUNG 036: %I0149 AND %Q0015 ADDED. RUNG 042: %M0057 IS ADDED. RUNG 052: %M1790 AND %I0148 ARE MOVED TO RUNG 53. %I0052 IS IMPORTED FROM THE RUNG 53. RUNG 053: %I0052 IS MOVED TO RUNG 052. %M1790 AND %I0148 ARE IMPORTED FROM RUNG 052. %M0299 IS ADDED. RUNG 062: NEW RUNG 0IS ADDED. RUNG 075: TWO NEW RUNGS ARE ADDED.
48643-02:05	RUNG 021: %M0329 REPLACED BY %M1915
48643-05:05	RUNG 09: %T0142 AND %M1299 ARE ADDED.

This drawing must not without the consent of Tetra Pak be copied, transmitted or disclosed to any third party.

	RUNG 011: CONST IS CHANGED TO 780.
48643-07:05	RUNG 006: %M1303 AND %M0254 ARE REMOVED, 1303M IS REMOVED.
	RUNG 008: %M0254 CHANGED TO %M0242; %M0260 CHANGED TO %M0257; TWO MAIN BRANCH CHANGED.
	RUNG 013: %M1793 AFTER %T0101 IS ADDED.
	RUNG 020: %I007 IS ADDED.
	RUNG 026: %S0007 CHANGED TO %M1303 OFF CONTACT.
	RUNG 027: RUNG ADDED
	RUNG 027: %M1303 OFF CONTACT ADDED
	RUNG 028: RUNG ADDED
	RUNG 028: %Q0094 AND %Q0999 ARE REMOVED;%M0254 CHANGED FROM ON TO OFF CONTACT;%Q0014 AND %Q0015 ARE REMOVED
48643-08:05	THE BLOCK IS COMPLETELY CHANGED.
48643-09:05	RUNG 024: THE RUNG IS ADDED.
	RUNG 024: RUNG EXPANSION IS ADDED. %M0108 AND %M1299 ARE ADDED. %I0132 IS ADDED IN PARALLEL TO %I0131. %M1849 AND %T0214 ARE REMOVED.
	RUNG 025: TWO NEW RUNGS ARE ADDED.
48643-13:05	RUNG 006: %I0015 IS ADDED.
	RUNG 010: %M0038 IS REPLACED BY %M0299.
48643-16:05	RUNG 04: THE RUNG IS ADDED.
48643-18:05	RUNG 111: %T0002 IS ADDED.
	RUNG 112: A NEW RUNG IS ADDED.
	RUNG 113: %M0237 IS ADDED.

This drawing must not without the consent of Tetra Pak be copied, transmitted or disclosed to any third party.

	RUNG 114: %M0230 AND %I0119 ARE ADDED.
	RUNG 115: A NEW RUNG IS ADDED.
48643-19:05	RUNG 033: REGISTER NUMBER CHANGED; 3RD OR_WORD REMOVED; %M0098 REPLACED BY EXPANSION RUNG.
	RUNG 034: RUNG ADDED.
	RUNG 039: REGISTER %R0083 AND %R0084 CHANGED TO %R0082 AND %R0083;3RD OR_WORD REMOVED.
	RUNG 040: RUNG ADDED.
	RUNG 045: REGISTER NUMBER CHANGED; 3RD OR_WORD REMOVED.
	RUNG 041: %M0329 REPLACED BY %M1915.
	RUNG 048: REGISTER %R0083 AND %R0084 REPLACED BY %R0084 AND %R0085.
	RUNG 049: REGISTER %R0085 REPLACED BY %R0086; 2ND AND 3RD OR_WORD REMOVED.
48643-21:05	RUNG 06: %M1302 REMOVED.
48643-22:05	RUNG 016: %I0017 IS ADDED.
	RUNG 025: %I0231 CHANGE TO %I0232.
	RUNG 028: %I0231 OFF CONTACT,%I232,%M1303 ARE ADDED IN BRANCH.
	RUNG 033: THE RUNG IS COMPLETELY CHANGED.
	RUNG 034: THE RUNG IS COMPLETELY CHANGED.
	RUNG 035: THE RUNG IS COMPLETELY CHANGED.
	RUNG 036 THE RUNG IS COMPLETELY CHANGED.
	RUNG 037: THE RUNG IS REMOVED

This drawing must not without the consent of Tetra Pak be copied, transmitted or disclosed to any third party.

	RUNG 044: THE RUNG IS COMPLETELY CHANGED.
	RUNG 045: THE RUNG IS COMPLETELY CHANGED.
	RUNG 046: THE RUNG IS COMPLETELY CHANGED.
	RUNG 047: %M1635, %M1640 AND %M1859 REMOVED; %M1966 AND %M1956 ARE ADDED AND RUNG IS EXPANDED.
	RUNG 048: NEW RUNG IS ADDED.
48643-24:05	RUNG 08: %Q0999 AND %Q0094 IN BRANCH ARE REMOVED; %M0083 AFTER %I0178 IS REMOVED; %M0254 OFF CONTACT AND %M1303 IN SERIAL ARE ADDED; %M0083 OFF CONTACT IS ADDED AFTER %Q0070.
	RUNG 011: %M1966 IS REMOVED AND BEFORE %M1981 CONTACT %Q0153 IS ADDED; M170 IS MOVED AFTER %M1981; OUTPUT %M0561 IS ADDED IN BRANCH WITH %M0171 BEFORE %M0170.
48643-26:05	RUNG 004: %M0125, %T0030, %M0050, %M0307 AND %M0051 ARE ADDED.
	RUNG 006: %M0125, %I0010, %M0106 AND %M3228 ARE ADDED.
	RUNG 007: TWO NEW RUNGS ARE ADDED.
48643-28:05	RUNG 011: %Q0999 AND %Q0094 IN BRANCH ARE REMOVED; %M0083 AFTER %I0178 IS REMOVED; %M0254 OFF CONTACT AND %M1303 IN SERIAL ARE ADDED; %M0083 OFF CONTACT IS ADDED AFTER %Q0070.
	RUNG 025: %I0180 AND %I0181 ARE ADDED.
	RUNG 026: RUNG COMPLETELY CHANGED
	RUNG 027: THE RUNG IS REMOVED
	RUNG 046: %Q0148 IS MOVED AND %T0070, %M0190, :T0214 AND %T0004 ARE ADDED.
	RUNG 052: THE RUNG IS ADDED.

This drawing must not without the consent of Tetra Pak be copied, transmitted or disclosed to any third party.

	RUNG 052: %M0190, %I0181, %M0264 AND %I0180 ARE ADDED.
	RUNG 070: %M1973 IS ADDED.
48643-34:05	RUNG 018: %R0679 IN7 CHANGED TO 1C00H.
	RUNG 019: %R0701 IN2 CHANGED TO 1FF8H,IN6 CHANGED TO 0007H;%R0708 IN2 CHANGED TO C000H; IN3 CHANGED TO 000FH;%R0715 IN4 CHANGED TO 7800H.
48643-35:05	RUNG 006: CONST IS CHANGED TO 1.
	RUNG 007: CONST IS CHANGED TO 0.
	RUNG 024: CONST IS CHANGED TO 0.
48643-37:05	RUNG 032: %Q0113 IS REPLACED BY %Q0026
	RUNG 091: %M1902 IS ADDED
	RUNG 093: %M1889 IS ADDED
	RUNG 080 TO RUNG 093 ALARM SORTED
	RUNG 096 TO RUNG 098 ALARM SORTED
	RUNG 099: %M1679 CHANGED TO %M1982
	RUNG 112: %T0113 IS ADDED.
48643-38:05	RUNG 066: THREE RUNGS ARE REMOVED.
	RUNG 097: SEVEN NEW RUNGS ARE ADDED.
	RUNG 0106: THREE RUNGS ARE REMOVED.
	RUNG 0114: TWO NEW RUNGS ADDED.
	RUNG 0115: THREE RUNGS ARE REMOVED.
	RUNG 0121: %M4001 IS REMOVED.
	RUNG 0122: THE RUNG IS DELETED.

This drawing must not without the consent of Tetra Pak be copied, transmitted or disclosed to any third party.

	RUNG 0123: K98 IS CORRECTED TO K098.
1538212 AD	F012 is changed to 0.75 A. F010 is changed to 10A. Q005 is removed. F034 is added. Q008, Q016, Q015, F031, F033 and F013 are moved left.

This drawing must not without the consent of Tetra Pak be copied, transmitted or disclosed to any third party.

14 Program documents

EM3.0TB148032en.fm

Table of contents

Main + cross reference 48643-0001:05
1T001 fast scan 48643-0002:05
PLC program list 48643-0005:05
PLC program list 48643-0006:04
PLC program list 48643-0007:05
PLC program list 48643-0008:05
PLC program list 48643-0009:05
PLC program list 48643-0010:02
PLC program list 48643-0011:04
PLC program list 48643-0013:05
PLC program list 48643-0014:04
PLC program list 48643-0015:04
PLC program list 48643-0016:05
PLC program list 48643-0017:04
PLC program list 48643-0018:05
PLC program list 48643-0019:05
PLC program list 48643-0021:05
PLC program list 48643-0022:05
PLC program list 48643-0023:02
PLC program list 48643-0024:05
PLC program list 48643-0025:04
PLC program list 48643-0026:05
PLC program list 48643-0027:02
PLC program list 48643-0028:05
PLC program list 48643-0034:05
PLC program list 48643-0035:05
PLC program list 48643-0036:02
PLC program list 48643-0037:05
PLC program list 48643-0038:05
PLC program list 48643-0040:02

EM3.0TB148032en.fm

RACK 0 — PROGRAMMED CONFIGURATION

PS	1	2	3	4	5	6	7	8	9	10
PWR321	CPU363	MDL645	MDL645	MDL645	MDL645	MDL646	MDL742	ALG392	ALG442	
		I DC16	I DC16	I DC16	I DC16	I DC16	Q DC16	QALG8		
		RefAdr %I0001	RefAdr %I0017	RefAdr %I0033	RefAdr %I0049	RefAdr %I0065	RefAdr %Q0161	RefAdr %AQ001 %I0209	RefAdr AI0001 %AQ009 %I0217	

RACK 1 — PROGRAMMED CONFIGURATION

PS	1	2	3	4	5	6	7	8	9	10
PWR321	MDL645	MDL645	MDL645	MDL742	MDL742	MDL742	MDL742	MDL742	MDL742	MDL742
	I DC16	I DC16	I DC16	Q DC16	Q DC16	Q DC16	Q DC16	Q DC16	Q DC16	Q DC16
	RefAdr %I0113	RefAdr %I0129	RefAdr %I0145	RefAdr %Q0001	RefAdr %Q0017	RefAdr %Q0033	RefAdr %Q0049	RefAdr %Q0065	RefAdr %Q0081	RefAdr %Q0097

RACK 2 — PROGRAMMED CONFIGURATION

PS	1	2	3	4	5	6	7	8	9	10
PWR321	MDL742		MDL742	MDL742	MDL645	MDL645	MDL645	MDL645		
	Q DC16		Q DC16	Q DC16	I DC16	I DC16	I DC16	I DC16		
	RefAdr %Q0113		RefAdr %Q0145	RefAdr %Q0177	RefAdr %I0225	RefAdr %I0161	RefAdr %I0177	RefAdr %I0193		

INPUT (%I) GLOBAL CROSS REFERENCES

REF.	BLOCK	NICKNAME	REF. DESCRIPTION / CROSS REFERENCES
%I0001	BLK36	K099-06	Pressure jaw right check
			-] [- 34,38
			-]/[- 34
%I0002	BLK22	MB113	SA doors, position
			-]/[- 19
%I0003	BLK28	MS007	ASU Material lock
			-] [- 27,37,60
			-]/[- 61
%I0004	BLK28	MS009	ASU Splicing pushbutton
			-] [- 19,20
%I0005	BLK22	MS8-35	Short stop push buttons
			-] [- 33,37
	BLK28		-]/[- 37
	BLK38		-]/[- 62,64
%I0006	BLK17	A400-19	Request volumes values
			-]/[- 30
%I0007	BLK07	MS033	Strip splice push button
			-] [- 19,21
			-]/[- 20
%I0008	_MAIN	S003	Clean through steam barrier
			-] [- 65
%I0009	_MAIN	S004	Service switch
			-] [- 37,40
	BLK05		-] [- 8
			-]/[- 12
	BLK08		-] [- 31,33
	BLK09		-] [- 5,23,33
			-]/[- 28,34
	BLK11		-]/[- 6,7
	BLK13		-] [- 20
	BLK14		-]/[- 10
	BLK15		-] [- 27
			-]/[- 40
	BLK19		-]/[- 35,37
	BLK22		-] [- 5,36,43,49,52
			-]/[- 7,38
	BLK23		-] [- 5
	BLK26		-] [- 4
	BLK37		-] [- 49,55
			-]/[- 55
	BLK38		-] [- 27
			-]/[- 13,33,54,148,151
%I0010	BLK26	S007	Manual lubrication
			-] [- 4,6
%I0011	_MAIN	MB002	Main air pressure
			-] [- 27
	BLK05		-] [- 7
			-]/[- 7
	BLK23		-]/[- 5
	BLK26		-] [- 4
%I0012	_MAIN	MB007	Cooling water pressure
			-] [- 24
	BLK05		-]/[- 15,16,18
%I0013	BLK26	MB006	Lubrication oil pressure
			-] [- 21,22
			-]/[- 21
%I0015	_MAIN	MB30-2	Lubrication oil low level
			-] [- 32
	BLK13		-] [- 6
	BLK25		-] [- 8
	BLK26		-] [- 4,24
			-]/[- 23,24
%I0016	BLK14	S511	Selector small / big volume
			-] [- 46
			-]/[- 46
	BLK35		-] [- 12
			-]/[- 5
%I0017	_MAIN	A506Y14	Emergency stop safety module
			-]/[- 7
	BLK05		-] [- 18
	BLK10		-] [- 48
	BLK13		-] [- 12

REF.	BLOCK	NICKNAME	REF. DESCRIPTION / CROSS REFERENCES
	BLK22		-] [- 16,19,20,21,22,23,24,25,54
			-]/[- 26
	BLK26		-] [- 21
	BLK38		-]/[- 67
	BLK40		-] [- 7
%I0018	_MAIN	A507Y14	SS, JS and FF safety module
			-] [- 40,52
	BLK09		-]/[- 25
	BLK14		-]/[- 4
	BLK15		-] [- 22
	BLK16		-] [- 7
	BLK22		-] [- 31
			-]/[- 28
%I0019	BLK22	A512Y14	Crease weel safety module
			-]/[- 28
	BLK24		-] [- 12
	BLK28		-] [- 5,70
%I0020	BLK22	A505Y14	ASU safety module
			-]/[- 27,28
	BLK28		-] [- 4,15,21,26,34
			-]/[- 27,33
%I0021	BLK15	MB044	Infeed congestion
			-] [- 18
%I0023	BLK07	MB032	Strip magazine one
			-]/[- 19
%I0024	BLK07	MB111	Strip magazine two
			-]/[- 19
%I0025	BLK07	MB109	Strip rotation guard
			-] [- 25
%I0026	BLK14	MB009	Paper web
			-] [- 50,51
%I0027	BLK36	K099-11	Pressure jaw left check
			-] [- 35,38
			-]/[- 35
%I0028	BLK13	MB46-47	Pos. squeezer roller/air knife
			-] [- 35
			-]/[- 35
	BLK38		-]/[- 151
%I0029	BLK06	MB051	Product pipe, position
			-]/[- 28
	BLK18		-] [- 63
	BLK22		-] [- 52
	BLK25		-] [- 5
	BLK27		-] [- 30
			-]/[- 30
%I0030	_MAIN	MB053	Steril air (B) valve, position
			-] [- 39
	BLK09		-] [- 35
			-]/[- 35
	BLK18		-]/[- 40
%I0031	_MAIN	MB061	Cleaning cup, position
			-] [- 70
			-]/[- 27,70
	BLK25		-] [- 5
%I0032	_MAIN	MB063	Cleaning pipe, position
			-] [- 69
			-]/[- 27,69
	BLK22		-]/[- 52
	BLK25		-] [- 5
%I0033	_MAIN	MB104	Steril air pipe, position
			-] [- 27
	BLK06		-] [- 30
			-]/[- 29,30
	BLK25		-]/[- 5
%I0034	BLK10	A305-15	Bath, water level
			-] [- 51
			-]/[- 54
%I0035	BLK14	MB16A-B	Jaw system overload
			-]/[- 41
%I0036	_MAIN	Q006	Overload protection, compressor
			-] [- 28
	BLK06		-] [- 13
	BLK14		-] [- 43
%I0037	_MAIN	MB062	Sterile air, pressure
			-] [- 29

REF.	BLOCK	NICKNAME	REF. DESCRIPTION / CROSS REFERENCES
			-]/[- 27
	BLK06		-] [- 13,14,17
			-]/[- 14
%I0038	_MAIN	MB48A-B	Perox. bath bottom cover, posit.
			-] [- 39
	BLK10		-]/[- 46
%I0039	BLK13	MB045-1	Hydraul unit low level
			-]/[- 21
	BLK22		-] [- 33
%I0040	BLK13	MB045-4	Hydraul unit temperature
			-] [- 20
			-]/[- 22
	BLK22		-] [- 33
%I0041	BLK25	A300-15	Clean tray level
			-] [- 10,21
			-]/[- 22
%I0042	BLK09	A301-15	Peroxide spray, quantity
			-] [- 22
			-]/[- 19,21
%I0043	_MAIN	A302-15	Peroxide bath, level
			-]/[- 51
	BLK10		-] [- 35,43,44
			-]/[- 38
	BLK40		-] [- 6
			-]/[- 10
%I0044	BLK06	A303-15	Separator high level
			-] [- 16
%I0045	BLK10	MB95-4	Peroxide tank, too high level
			-] [- 32
	BLK40		-] [- 12
%I0046	_MAIN	MB95-3	Peroxide tank, high level
			-] [- 28
	BLK10		-] [- 19
			-]/[- 18
%I0047	BLK10	MB95-2	Peroxide tank, low level
			-] [- 25
			-]/[- 14,17,29,31
%I0048	BLK07	A501-06	IH SA-unit failure
			-]/[- 5
%I0049	BLK22	B001-07	Cabinet doors, position
			-]/[- 16
%I0050	BLK14	X02-13	Queue monitor
			-] [- 8
	BLK15		-] [- 39
%I0051	_MAIN	A200-24	Temp.mon.presterilisation
			-] [- 39
	BLK06		-] [- 19
	BLK27		-]/[- 26
	BLK37		-] [- 13
%I0052	_MAIN	A201-20	Temp.mon.perox.bath w., preheat.
			-] [- 51
	BLK10		-] [- 51
			-]/[- 50
%I0053	BLK10	A201-24	Temp.mon.perox.bath w., product.
			-]/[- 50
%I0054	_MAIN	A202-20	Temp.mon.LS preheating
			-] [- 32
	BLK37		-] [- 9
%I0055	BLK06	A202-24	Temp.mon.LS production
			-]/[- 8,12
%I0056	BLK06	A203-20	Temp.mon.airsuperheater preheat.
			-]/[- 21
%I0057	BLK06	A203-24	Temp.mon.airsuperheater product.
			-]/[- 20
%I0058	BLK06	A204-24	Temp.mon.air knives
			-] [- 11
	BLK13		-]/[- 40
	BLK38		-]/[- 151
%I0059	BLK05	A205-24	Temp.mon.steam
			-] [- 11
			-]/[- 9
%I0060	BLK10	A206-24	Temp.mon.peroxide bath peroxide
			-]/[- 45
%I0061	_MAIN	A217-24	Temp.mon.LS short stop
			-] [- 51

REF.	BLOCK	NICKNAME	REF. DESCRIPTION / CROSS REFERENCES
	BLK06		-]/[- 9
	BLK37		-] [- 35
%I0062	BLK11	X02-272	Product at machine/prod. stop
			-] [- 4
			-]/[- 9,10
	BLK18		-] [- 61
			-]/[- 61
%I0063	_MAIN	X02-286	Clean through production valve
			-] [- 65
			-]/[- 69
	BLK09		-]/[- 34
	BLK18		-] [- 40
	BLK25		-] [- 5
	BLK27		-] [- 22
			-]/[- 6,23
%I0064	BLK14	X002-1	PLE short stop
			-]/[- 10
%I0065	1T0001	A400-31	Pulse photocelles design
			FBIO 4
	BLK17		-] [- 6
			-]/[- 8
%I0066	BLK17	A400-32	Design ok
			-] [- 7,12,14
			-]/[- 14
	BLK18		-] [- 11
	BLK19		-] [- 55
			-]/[- 27
	BLK38		-]/[- 30
%I0067	BLK06	MB071	Air inlet valve, position
			-] [- 23
			-]/[- 23
%I0068	_MAIN	MB094	Suction valve, position
			-]/[- 27,46
	BLK06		-] [- 27
			-]/[- 27
%I0069	BLK15	MB020	Final folder chain pos.
			-] [- 4
%I0070	BLK19	MB236	Paper splice
			-]/[- 22
%I0071	1T0001	MB088	Tab detector
			-] [- 21
%I0072	_MAIN	L11_OK	Power 24v
			-] [- 25
			-]/[- 7
	BLK07		-] [- 19
	BLK22		-] [- 9
	BLK28		-] [- 18
%I0073	1T0001	X02-231	Angle encoder bit 0
			-] [- 12
			-]/[- 12
%I0074	1T0001	X02-233	Angle encoder bit 1
			-] [- 11
			-]/[- 11
%I0075	1T0001	X02-234	Angle encoder bit 2
			-] [- 10
			-]/[- 10
%I0076	1T0001	X02-235	Angle encoder bit 3
			-] [- 9
			-]/[- 9
%I0077	1T0001	X02-236	Angle encoder bit 4
			-] [- 8
			-]/[- 8
%I0078	1T0001	X02-237	Angle encoder bit 5
			-] [- 7
			-]/[- 7
%I0079	1T0001	X02-238	Angle encoder bit 6
			-] [- 6
			-]/[- 6
	BLK21		-]/[- 9
%I0080	1T0001	X02-240	Angle encoder bit 7
			-] [- 5
			FBIO 4
	BLK22		-] [- 37
			-]/[- 37
	BLK36		-] [- 42,45,47

REF.	BLOCK	NICKNAME	REF. DESCRIPTION / CROSS REFERENCES
			-]/[- 41,44,48
%I0113	BLK05	Z003-BK	Over-voltage protection
			-] [- 21
%I0114	BLK28	MS010H	ASU reset alarm push button
			-] [- 7
%I0115	BLK21	A500-06	TS unit failure
			-]/[- 6
%I0116	_MAIN	X002-24	Passivation
			-] [- 6
%I0117	BLK18	A310-25	FCS overfilling alarm
			-] [- 59
%I0118	_MAIN	A310-26	FCS Bottom position floater
			-]/[- 28
	BLK18		-] [- 40,41,42,57
			-]/[- 40
%I0119	BLK17	A310-27	FCS filling OK
			-] [- 4,10
	BLK18		-] [- 10,114,118
			-]/[- 39,116,117
%I0120	BLK18	A307-15	Membran leakage regulating valve
			-] [- 49
	BLK25		-]/[- 6
%I0121	_MAIN	MB117	Regulat valve open, position
			-] [- 40
	BLK18		-] [- 52,54
			-]/[- 53,54,55
%I0122	BLK14	MB119	Overload protection, outfeed
			-]/[- 11
%I0124	BLK36	MB120	Encoder/volume control
			-] [- 23
%I0125	BLK18	A310-28	FCS transmission OK
			-] [- 95
			-]/[- 93,94,96,103
%I0128	BLK38	X02-284	Signal from CIP cleaning ON
			-] [- 73,152
			-]/[- 77
%I0129	BLK22	MB108	Crease weel cover, position
			-]/[- 23
%I0130	BLK22	MB019	FF and JS doors, position
			-] [- 18
			-]/[- 22
%I0131	_MAIN	MB021	Superstructor door, position
			-] [- 10,12,39
	BLK09		-]/[- 25
	BLK22		-] [- 18,22
			-]/[- 21
	BLK23		-] [- 5
			-]/[- 7
%I0132	BLK09	MB010	Crank position
			-]/[- 25
	BLK13		-] [- 7
	BLK14		-] [- 14,16,23,24,36
	BLK22		-] [- 18,21
			-]/[- 20
%I0133	BLK10	Q03-Q09	Overload protecion, motors
			-] [- 51
	BLK14		-] [- 42
	BLK22		-] [- 31
	BLK40		-] [- 7
%I0135	BLK15	X002-20	Dating unit level
			-]/[- 41
%I0136	BLK15	X002-21	Dating unit ready
			-]/[- 40
%I0137	_MAIN	S005-14	FCS normal filling
			-] [- 11
			-]/[- 11
	BLK14		-]/[- 55
	BLK17		-] [- 4
	BLK18		-] [- 15,29,74,79
			-]/[- 29,74,75,79,92,95
	BLK37		-]/[- 119
%I0138	_MAIN	S005-24	FCS Pre-filling
			-] [- 11
			-]/[- 11
	BLK14		-]/[- 55

REF.	BLOCK	NICKNAME	REF. DESCRIPTION / CROSS REFERENCES
	BLK17		-]/[- 4
	BLK18		-] [- 29,74,75,79,92,95
			-]/[- 15,29,74,79
	BLK37		-]/[- 119
%I0139	BLK38	P005-38	Recorder alarm signal
			-] [- 155
%I0140	BLK16	G03-19	Bending roller inverter fault
			-]/[- 5
%I0141	BLK16	MB160	WTC control speed
			-] [- 4,12,13,15
			-]/[- 14,15
%I0142	BLK14	A400_28	MDCS sensors alarm
			-] [- 55
			-]/[- 54
%I0145	BLK37	PS_901H	PLMS reset
			-] [- 113
	BLK38		-] [- 124
%I0146	BLK37	PS_902	Lamp tests
			-] [- 78,95,117
			-]/[- 99
%I0147	BLK14	G04_19	Main motor inverter fault
			-]/[- 18
%I0148	_MAIN	PS_907H	Inching
			-] [- 11,52
			-]/[- 11
	BLK13		-] [- 5,7,12
	BLK14		-]/[- 5,28
	BLK15		-]/[- 11
	BLK18		-] [- 90
			-]/[- 95
	BLK38		-]/[- 59,135
%I0149	_MAIN	PS_911H	Step up
			-] [- 13,30,35,54
	BLK05		-]/[- 4
	BLK06		-] [- 7,13
			-]/[- 22
	BLK13		-] [- 12
	BLK17		-] [- 30
	BLK18		-] [- 31
	BLK22		-]/[- 38
	BLK25		-] [- 8
	BLK26		-] [- 4
	BLK38		-] [- 61,96,98
	BLK40		-] [- 7
%I0150	_MAIN	PS_912H	Step down
			-] [- 26,51
			-]/[- 14,41,42
	BLK13		-] [- 5
	BLK18		-]/[- 32
	BLK22		-] [- 37
	BLK25		-] [- 4,8
	BLK38		-]/[- 62,98
	BLK40		-] [- 7
%I0151	_MAIN	PS_908H	Short stop push buttom
			-] [- 13
	BLK13		-] [- 5
	BLK22		-] [- 33,37
	BLK38		-]/[- 62,64
%I0152	_MAIN	PS_903	Selector switch
			-] [- 10,59,69,70
			-]/[- 10,26
	BLK05		-] [- 10
	BLK06		-] [- 30
	BLK13		-] [- 10
			-]/[- 10
	BLK14		-] [- 31
			-]/[- 20
	BLK22		-] [- 37
			-]/[- 37
	BLK25		-] [- 4,8
			-]/[- 4,8
	BLK27		-] [- 22
	BLK37		-] [- 65,66,117
			-]/[- 45,67,117
%I0153	BLK19	PS_906	Drop chute off

REF.	BLOCK	NICKNAME	REF. DESCRIPTION / CROSS REFERENCES
			-]/[- 66
	BLK38		-] [- 54
%I0154	BLK15	PS_904	Station chain sprinkler
			-] [- 32
%I0157	BLK15	A212_24	Temp.monitor flap sealing Top L.
			-]/[- 28
%I0158	BLK15	A213_24	Temp.monitor flap sealing Top R.
			-]/[- 29
%I0159	BLK15	A214_24	Temp.monitor flap sealing Bot L.
			-]/[- 30
%I0160	BLK15	A215_24	Temp.monitor flap sealing Bot R.
			-]/[- 31
%I0161	BLK27	A510-15	Level Relay
			-] [- 11
			-]/[- 8
%I0162	BLK22	MB511	Nitrogen Pressure
			-] [- 36
	BLK27		-] [- 6
			-]/[- 29
%I0164	BLK22	MB512	Injection_off
			-]/[- 36
	BLK27		-] [- 7,8,10,11,12,14,17,19,21,22,23,24,28,29,30
			-]/[- 4,5,6,22,28,30
	BLK34		-] [- 10,23,36,49,62,75,88,101,114,127,140,153
%I0165	BLK27	MB513	Nozzle position
			-] [- 5,21
			-]/[- 14,28
%I0166	BLK27	MB517	Pipe in cleaning position
			-] [- 22
			-]/[- 4,19,22,28
%I0167	BLK27	MB519	Cup in cleaning position
			-]/[- 22,28
%I0168	BLK27	A518-24	Temp.monitor H.I. spray
			-] [- 24,26
%I0175	BLK38	MB91A-B	Package counter after FF
			-] [- 12,13
%I0176	BLK38	MB92A-B	Package counter last point DE
			-] [- 20
%I0177	BLK08	MB157	Crease wheel
			-] [- 85
	BLK24		-] [- 5
	BLK38		-] [- 7
%I0178	BLK24	MB149	Magazine full
			-] [- 8,19
			-]/[- 17,18
	BLK28		-] [- 11,85
			-]/[- 77,80,84
%I0179	BLK24	MB150	Magazine empty
			-] [- 9
	BLK28		-] [- 13
%I0180	BLK28	MB151	Splicing head right
			-] [- 17,25,28,52,58,59,60,65
			-]/[- 45
%I0181	BLK28	MB152	Splicing head left
			-] [- 17,25,28,52,58,59,60,64
			-]/[- 45
%I0182	BLK28	MB148	Cutting table
			-] [- 64,65
			-]/[- 14
%I0183	BLK24	MB154	Paper supply left
			-] [- 4
			-]/[- 7
	BLK28		-]/[- 17,28
%I0185	BLK28	MB155	Paper supply right
			-]/[- 17,28
%I0186	BLK28	MB153	Free loop
			-] [- 79
			-]/[- 81,82,83
%I0188	BLK07	A504Y14	SA safety module
			-] [- 17,18,19
			-]/[- 19,20,21
	BLK22		-]/[- 27,28
%I0189	BLK28	MB003	Splice table push button
			-] [- 63
%I0190	BLK28	A511-25	ASU design photocells

REF.	BLOCK	NICKNAME	REF. DESCRIPTION / CROSS REFERENCES
			-] [- 38
			-]/[- 12
%I0191	BLK24	G01-19	ASU inverters fault
			-]/[- 10
	BLK28		-]/[- 69
%I0192	BLK22	MB144	ASU doors, position
			-]/[- 24
%I0193	BLK08	MB060	Low level outer-patch magazine
			-] [- 54
			-]/[- 55
%I0194	BLK08	MB070	Pre-patch motion detector
			-] [- 56
%I0195	BLK08	MB065	Low level patch magazine
			-] [- 62
			-]/[- 63
%I0196	BLK08	MB067	Low level tab magazine
			-] [- 65
			-]/[- 66
%I0198	BLK08	MB086	Photoc. 1 black tape detect.
			-]/[- 77
	BLK19		-] [- 38
%I0199	BLK19	MB066	Outer-patch splicing detector
			-] [- 36
%I0200	BLK07	MB024	Infeed loop low sensor
			-]/[- 8
	BLK08		-] [- 6,19
			-]/[- 16,17,18
	BLK19		-] [- 50
			-]/[- 52
%I0201	BLK08	MB025	Infeed loop high sensor
			-]/[- 7
%I0202	BLK08	S021	PT exclusion
			-] [- 28
			-]/[- 26
	BLK37		-] [- 74
%I0203	BLK08	MB069	PT valve pressure
			-] [- 9
			-]/[- 5
%I0204	BLK08	A02B_30	Paper out of posit.
			-] [- 58
	BLK19		-]/[- 41
%I0205	BLK08	A216_24	Temp.ok outer-patch sealer
			-] [- 31,44
			-]/[- 71
	BLK37		-] [- 32
%I0206	BLK08	A209_24	Temp.ok patch pre-sealer
			-] [- 31,44
			-]/[- 71
	BLK37		-] [- 32
%I0207	BLK08	A210_24	Temp.ok patch final-sealer
			-] [- 31,44
			-]/[- 71
	BLK37		-] [- 32
%I0208	BLK08	A211_24	Temp.ok tab sealer
			-] [- 31,44
			-]/[- 71
	BLK37		-] [- 32
%I0225	BLK17	A02B_31	Request volumes values PT
			-] [- 30
%I0226	BLK08	A02B_34	Servo SW ok
			-] [- 43
%I0227	BLK08	A02B_35	Servo HW ok
			-] [- 41,42
%I0228	BLK08	A401_23	PT ready
			-] [- 30,36
			-]/[- 29,57,68,74
	BLK14		-] [- 52
%I0229	BLK08	A401_31	PT alarm bit 1
			-] [- 47
%I0230	BLK08	A401_32	PT alarm bit 2
			-] [- 48
%I0231	BLK08	A509Y24	PS safety relay on
			-] [- 29,38
	BLK22		-]/[- 28
%I0232	BLK08	A509Y14	PT door

```
REF.     BLOCK    NICKNAME   REF. DESCRIPTION / CROSS REFERENCES
-------  -------  --------  -------------------------------------
                            -] [- 11,58
         BLK22              -] [- 28
                            -]/[- 25
%I0234   BLK08    G006_19   PT infeed inverter fault
                            -]/[- 8
```

========= OUTPUT (%Q) GLOBAL CROSS REFERENCES

```
REF.     BLOCK    NICKNAME   REF. DESCRIPTION / CROSS REFERENCES
-------  -------  --------  -------------------------------------
%Q0001   _MAIN    MY027     Drop chute
                            -] [- 59
         BLK15              -] [- 19,23,37
         BLK19              -] [- 66
                            -]/[- 60,68
                            -( )  66
                            -(S)  67
         BLK21              -] [- 6
         BLK37              -] [- 60
                            -]/[- 59
         BLK38              -] [- 33
%Q0002   BLK13    MY026     LS counter roller short stop
                            -( )  31
%Q0003   BLK13    MY024     LS element movement
                            -] [- 31,33,34
                            -( )  26
%Q0004   BLK13    MY021     Air knife squez. roll. movement
                            -] [- 35
                            -]/[- 35
                            -( )  33
         BLK38              -] [- 151
%Q0005   BLK13    MY020     Short stop element, movement
                            -( )  25
%Q0006   BLK15    MY129     Air blowing bottom flaps
                            -( )  37
%Q0007   BLK16    MY177     Tube folding device
                            -] [- 18
         BLK18              -(SM) 117
                            -(RM) 118,120
%Q0011   BLK14    G04-07    Main motor ramp down
                            -] [- 26
                            -( )  27
%Q0012   BLK16    K019      WTC inverter power
                            -] [- 7,8
                            -( )  7
%Q0013   BLK14    K011      Main motor, power
                            -] [- 16,17,23,24
                            -( )  16
%Q0014   BLK07    G04-16    Main motor, low speed
                            -] [- 15,28,29,33
         BLK08              -] [- 21
         BLK13              -] [- 20
         BLK14              -] [- 26,49
                            -]/[- 25
                            -( )  23
         BLK15              -] [- 12,13,15
         BLK16              -] [- 4,6,17
         BLK19              -] [- 68
         BLK22              -]/[- 31,46
         BLK24              -] [- 8,21
         BLK25              -] [- 8
         BLK28              -] [- 11,84,89
         BLK36              -] [- 12,26
                            -]/[- 4,27
         BLK37              -] [- 58
                            -]/[- 57
         BLK38              -] [- 7
%Q0015   _MAIN    G04-08    Main motor, high speed
                            -] [- 35
                            -]/[- 41,42
         BLK07              -] [- 8,15,28,29
                            -]/[- 33
         BLK08              -] [- 18,21
         BLK10              -] [- 5
```

REF.	BLOCK	NICKNAME	REF. DESCRIPTION / CROSS REFERENCES
	BLK13		-] [- 20,26
			-]/[- 30
	BLK14		-] [- 12,22,25,26,44,45,49
			-]/[- 19,29,30,35,37
			-( ) 24
	BLK15		-] [- 12,14,15,24
	BLK16		-] [- 4,6,12,13,17
			-]/[- 15
	BLK18		-]/[- 84
	BLK19		-] [- 66,68
			-]/[- 69
	BLK21		-] [- 12
			-]/[- 13
	BLK22		-] [- 37,43,53
			-]/[- 31,36,46
	BLK24		-] [- 8,18,21
	BLK26		-] [- 9,10
	BLK28		-] [- 11,80,84,89
	BLK36		-] [- 4,12,26,27,28
	BLK37		-] [- 58
			-]/[- 57
	BLK38		-] [- 7,49
%Q0016	BLK25	K008	Clean. system circ. pump
			-( ) 19
%Q0017	BLK10	K009	Peroxide pump
			-( ) 34
	BLK40		-( ) 7
%Q0018	BLK05	K007	Hydraulic pump
			-] [- 8
	BLK13		-( ) 20
	BLK36		-] [- 43,46,47,48
%Q0019	BLK06	K006	Compressor
			-] [- 5,13,17
			-]/[- 14
			-( ) 13
	BLK23		-]/[- 8
%Q0020	BLK22	A507S14	SS-JS-FF door guards
			-( ) 18
%Q0021	BLK05	MY001	Flap sealing, air SET
			-]/[- 4
	BLK15		-] [- 26
			-( ) 27
%Q0022	BLK15	MY100	Flap sealing, air RESET
			-(/) 26
%Q0023	BLK05	MY102	Main air valve
			-] [- 5
			-]/[- 6
			-(/) 4
	BLK40		-( ) 5
%Q0024	BLK07	MY105	LS strip splice
			-( ) 23
%Q0025	BLK07	MY037	Shut-off, Strip Applicator
			-( ) 18
%Q0026	BLK08	K020	PT Heating element and stepper
			-] [- 71
			-( ) 70
	BLK37		-]/[- 32
%Q0027	_MAIN	K024	LS short stop
			-]/[- 51
	BLK06		-(S) 7
			-(R) 6
	BLK37		-]/[- 35
%Q0031	BLK28	MY160	ASU feeder cilinder emptying
			-( ) 71
%Q0033	BLK21	K004	Power IH unit TS
			-( ) 10
%Q0034	BLK05	K1-K12	Splicer contr./perox.b.water pum
			-] [- 8
	BLK06		-] [- 13
	BLK10		-] [- 51
			-( ) 48
%Q0035	BLK06	K016	Air super heater
			-] [- 21
			-( ) 17
%Q0036	BLK15	K018	Preheat 3 final folder

REF.	BLOCK	NICKNAME	REF. DESCRIPTION / CROSS REFERENCES
			-] [- 28,29,30,31
			-( ) 27
%Q0037	BLK10	K015	Peroxide bath, element
			-] [- 50
			-( ) 51
%Q0038	BLK25	K002	Detergent pump
			-( ) 18
%Q0039	BLK06	K005	Preheat 2 LS element
			-] [- 7
			-]/[- 6
			-( ) 5
%Q0040	BLK07	K014	Power IH-unit Strip applic.
			-] [- 4
			-( ) 6
%Q0041	BLK07	MH033S	Strip splicing lamp
			-( ) 20
%Q0042	BLK15	A604-A2	DE start
			-( ) 39
%Q0043	BLK11	K105	Ready for production
			-]/[- 5
			-( ) 6
%Q0044	BLK11	K106	AB production
			-( ) 7
%Q0045	BLK11	K107	Filling
			-( ) 8
%Q0046	_MAIN	K104	Signal to cip
			-]/[- 10,22
	BLK05		-] [- 10
	BLK09		-] [- 34
	BLK18		-] [- 40,46,50,53
	BLK25		-] [- 4,7
			-( ) 4
	BLK37		-] [- 71
			-]/[- 66
	BLK38		-] [- 73,77,152
			-]/[- 75
%Q0047	BLK06	K101	LS sealed tube
			-( ) 5
%Q0048	BLK06	K102	Air super heater preheating prod
			-]/[- 21
			-(SM) 18
			-(RM) 19
%Q0049	BLK10	K100	Peroxide bath preheating prod.
			-( ) 51
%Q0050	BLK18	A310-15	FCS communication sys.: clock
			-] [- 100
			-]/[- 100
			-(/) 100
%Q0051	BLK28	K112	ASU aux. reset relay
			-] [- 70
			-( ) 10
%Q0052	BLK38	K103	Sterile parameter
			-] [- 145
			-(SM) 148
			-(RM) 145,146,149
%Q0053	BLK38	K110	Operational parameter
			-( ) 152
%Q0054	BLK08	K113	Aux. relay alarm reset
			-] [- 11,31,35,39
	BLK14		-] [- 16
	BLK16		-] [- 7
	BLK22		-] [- 31,46
			-( ) 14
	BLK24		-] [- 12
	BLK40		-( ) 4
%Q0055	BLK07	K206-03	SA TPO bar
			-( ) 23
%Q0056	BLK38	K098-14	Restart plms
			-( ) 125
%Q0057	BLK09	K-MY915	High temperature steam barrier
			-( ) 27
%Q0058	BLK23	MY086	Vacuum valve
			-( ) 15
%Q0059	BLK06	MY025	Heat exchanger valve
			-( ) 12

REF.	BLOCK	NICKNAME	REF. DESCRIPTION / CROSS REFERENCES
%Q0060	BLK06	MY023	Suction valve
			-] [- 27
			-]/[- 27
			-( ) 26
%Q0061	BLK06	MY019	Air inlet valve
			-] [- 5,23
			-]/[- 22,23
			-(/) 22
%Q0062	BLK11	MY009	Product valve (A)
			-] [- 8
	BLK17		-]/[- 11
	BLK18		-] [- 33,45,59
			-( ) 40
	BLK27		-] [- 20,21,23
%Q0063	BLK09	MY007	Steam barrier valve (C)
			-]/[- 25
	BLK11		-] [- 10
	BLK18		-] [- 63,91
			-]/[- 92
			-(M) 63
%Q0064	BLK05	MY51-17	Air inj. cooling water/lubr.pump
			-] [- 8
	BLK26		-] [- 18,19
			-(/) 17
%Q0065	BLK09	MY008	Sterile air valve (B)
			-] [- 35
			-]/[- 24,35
			-( ) 34
	BLK13		-]/[- 40
%Q0066	BLK10	MY005	Peroxide bath, draining
			-] [- 37
			-( ) 37
	BLK40		-( ) 7
%Q0067	BLK10	MY006	Peroxide bath, filling
			-] [- 41
			-(/) 36
	BLK40		-( ) 7
			-(R) 9
%Q0068	BLK13	MY002	Cleaning tray, draining
			-( ) 39
	BLK15		-]/[- 36
	BLK25		-] [- 18
%Q0069	BLK19	MY003	Waste package, air blowing
			-( ) 68
			-(S) 69
%Q0070	BLK07	MY022	Main machine, clutch
			-] [- 15
	BLK08		-] [- 18
	BLK10		-] [- 5
	BLK13		-] [- 26
	BLK14		-] [- 52
			-(/) 14
	BLK15		-] [- 12
	BLK16		-] [- 4,6,12,13
			-]/[- 15
	BLK21		-] [- 12
			-]/[- 13
	BLK24		-] [- 8,18
	BLK28		-] [- 11,80,84
	BLK36		-] [- 28
%Q0071	BLK25	MY029	Cleaning system, hot water
			-] [- 18
			-]/[- 9
			-( ) 17
%Q0072	BLK15	MY031	Final folder sprinkler
			-] [- 33
			-( ) 35
			-(S) 36
%Q0073	BLK05	MY033	Cooling water
			-( ) 8
%Q0074	BLK13	MY039	Tube flushing
			-]/[- 36,38,39
			-( ) 34
%Q0075	BLK09	MY034	Spray tank, filling
			-( ) 9

REF.	BLOCK	NICKNAME	REF. DESCRIPTION / CROSS REFERENCES
	BLK27		-] [- 7
%Q0076	BLK09	MY04-35	Spray tank,spraying peroxide/air
			-( ) 20
%Q0077	BLK10	MY108	Top fil. valve, perox. bath
			-( ) 40
			-(S) 41
	BLK40		-( ) 7
%Q0078	BLK28	MH010S	ASU reset push button lamp
			-( ) 6
%Q0079	BLK18	A310-14	FCS communication sys.: enable
			-] [- 98,100,104,107
			-( ) 103
%Q0082	BLK14	MY043	Drive unit, brake
			-( ) 36
%Q0083	BLK07		WTC inverter enable (OLD)
			-] [- 8
	BLK16		-( ) 10
%Q0084	BLK17	A400-20	Design Enable
			-] [- 4
			-( ) 4
			-(R) 5
%Q0085	BLK18	A310-16	FCS communication sys.: data
			-( ) 109
%Q0086	BLK17	A400-22	Volume enable
			-] [- 26,28,31,34
			-( ) 30
%Q0087	BLK17	A400-23	Volume clock
			-] [- 28
			-]/[- 28
			-(/) 28
%Q0088	BLK17	A400-24	Volume data
			-( ) 37
%Q0089	BLK38	P003	Package counter production
			-( ) 12
%Q0090	BLK37	A605-A2	Blue Beacons
			-(/) 99
%Q0091	BLK37	A606-A2	Yellow Beacons
			-( ) 95
%Q0093	BLK14	P500	Hour meter small volume
			-( ) 46
%Q0095	BLK21	A500-05	Selection left/right IH switch
			-] [- 6
			-]/[- 6
			-( ) 9
%Q0096	BLK14	P501	Hour meter big volume
			-( ) 46
%Q0097	BLK38	PH901S	TPOP reset lamp
			-( ) 123
%Q0098	BLK13	PH907S	Inching lamp
			-( ) 10
%Q0099	BLK22	PH908S	Short Stop lamp
			-( ) 41
%Q0100	_MAIN	PH911S	Step-up lamp
			-( ) 11
%Q0101	_MAIN	PH912S	Step-down lamp
			-( ) 12
%Q0103	BLK14		Main motor start command (OLD)
			-( ) 26
%Q0104	BLK10	MM018	Peroxide tank, filling
			-] [- 20
			-( ) 21
%Q0105	BLK18	A310-09	FCS sterilization
			-]/[- 54
			-( ) 44
%Q0106	BLK18	A310-10	FCS production
			-] [- 78
			-]/[- 54
			-( ) 45
%Q0107	BLK18	A310-11	FCS cleaning/open signal
			-] [- 46
			-]/[- 5,54,118
			-( ) 46
%Q0108	BLK18	A310-13	FCS force download
			-] [- 93,94,96
			-(S) 84

REF.	BLOCK	NICKNAME	REF. DESCRIPTION / CROSS REFERENCES
			-(R) 96
%Q0110	BLK10	MMO18	Peroxide tank, filling
			-( ) 21
%Q0111	BLK18	A310-12	FCS pre-filling
			-] [- 40,41
			-(S) 39
			-(R) 43
	BLK37		-] [- 59
			-]/[- 57
%Q0113	BLK08	K032	PT infeed motor power
			-] [- 11,12
			-( ) 11
%Q0114	BLK08	K021	Power to DMC
			-] [- 41
			-(SM) 39
			-(RM) 40
%Q0115	BLK08	MY054	PT left side door lock
			-( ) 68
%Q0116	BLK08	A401_9	PT SW enable
			-] [- 30,35,36,45,58,68,74
			-]/[- 45
			-(SM) 31
			-(RM) 32
%Q0117	BLK08	A401_10	Sealing enable
			-] [- 27
			-( ) 26
%Q0118	BLK08	G006_5	PT infeed motor enable
			-( ) 14
%Q0119	BLK08	A002_06	PT HW enable
			-( ) 41
%Q0123	BLK15	MY103	Pressure Device
			-] [- 24,25
			-]/[- 37
			-(SM) 24
			-(RM) 25
%Q0124	BLK15	MY030	Shut-off Final Folder
			-( ) 22
%Q0129	BLK27	MY510	Spray tank filling
			-( ) 7
%Q0130	BLK27	MY511	Bypass
			-( ) 17
%Q0131	BLK27	MY513	Air Nitrogen
			-( ) 18
%Q0132	BLK27	MY514	On/Off
			-( ) 19
%Q0134	BLK27	MY516	Spray tank spraying
			-( ) 10
%Q0135	BLK27	MY517	Injection stop
			-( ) 21
%Q0145	BLK28	MY150	ASU venting valve
			-( ) 70
%Q0146	BLK28	MY151	Side feeder L->R
			-( ) 52
%Q0147	BLK28	MY152	Side feeder R->L
			-( ) 52
%Q0148	BLK28	MY155	Pressure rail
			-] [- 45,48
			-( ) 46
			-(S) 47
%Q0149	BLK28	MY154	Cutting
			-] [- 58
			-( ) 49
%Q0150	BLK28	MY153	Web tension
			-( ) 44
%Q0151	BLK28	K205-03	ASU TPO bar sealing pulse
			-( ) 54
			-(S) 55,56
%Q0152	BLK28	K022	ASU TPO bar power
			-( ) 53
%Q0153	BLK24	K017	Infeed motors power
			-] [- 11,12,13
			-( ) 12
	BLK28		-] [- 70,72
			-( ) 70
%Q0154	BLK24	G1-2_5	Enable infeed motors

REF.	BLOCK	NICKNAME	REF. DESCRIPTION / CROSS REFERENCES
			-( ) 15
	BLK28		-] [- 12,15,26
			-]/[- 20
			-( ) 75
%Q0161	1T0001	MY131	Pressure jaw right
			FBIO 23
	BLK36		-] [- 34
			-]/[- 34
			-( ) 46
%Q0162	1T0001	A500-04	Sealing pulse TS
			-( ) 20
%Q0163	BLK07	G03-05	WTC inverter enable
			-] [- 8
	BLK16		-( ) 10
%Q0164	BLK16	K029	Sterilization roller
			-( ) 23
%Q0165	BLK36	K099-02	Pressure jaw enable
			-( ) 40
%Q0166	BLK36	MY132	Pressure jaw left
			-] [- 35
			-]/[- 35
			-( ) 43
%Q0167	BLK14	G04-05	Main motor start command
			-( ) 26
%Q0168	BLK14	K013	Start conveyor
			-( ) 7
	BLK15		-] [- 39
%Q0170	BLK38	K250	Power at recorder
			-] [- 154
			-( ) 153
%Q0171	BLK07	A501-04	Sealing pulse SA
			-( ) 13
%Q0176	1T0001		FBIO 23
%Q0177	BLK37	A600-A2	Blue Beacons
			-(/) 99
%Q0178	BLK37	A601-A2	Yellow Beacons
			-]/[- 94
			-( ) 95
%Q0179	BLK37	A602-A2	Red Beacons
			-]/[- 77
			-( ) 78
%Q0180	BLK37	A603-A2	Horner
			-( ) 117
%Q0181	BLK28	MY156	Cutting table left
			-] [- 65
			-]/[- 65
			-( ) 67
%Q0182	BLK28	MY157	Material lock right
			-] [- 60
			-]/[- 28,60
			-(SM) 58,60
			-(RM) 33,59,60
%Q0183	BLK28	MY158	Material lock left
			-] [- 60
			-]/[- 28,60
			-(SM) 58,60
			-(RM) 33,59,60
%Q0184	BLK28	MY159	Cutting table right
			-] [- 64
			-]/[- 64
			-( ) 66
%Q0187	BLK36	MY052	Cutting jaw left
			-( ) 47
%Q0188	BLK36	MY053	Cutting jaw right
			-( ) 48
%Q0189	BLK14	G005-05	External conveyor inv. enable
			-] [- 8
			-( ) 6

========== INTERNAL (%M) GLOBAL CROSS REFERENCES

REF.	BLOCK	NICKNAME	REF. DESCRIPTION / CROSS REFERENCES
%M0001	1T0001	BIN0	LSB binary digit bit 0

REF.	BLOCK	NICKNAME	REF. DESCRIPTION / CROSS REFERENCES
			-( ) 12
			FBIO 13,22
	BLK19		FBIO 56,58
	BLK36		FBIO 21,25
	BLK37		FBIO 5
%M0002	1T0001	BIN1	Binary digit bit 1
			-] [- 12
			-]/[- 12
			-( ) 11
%M0003	1T0001	BIN2	Binary digit bit 2
			-] [- 11
			-]/[- 11
			-( ) 10
%M0004	1T0001	BIN3	Binary digit bit 3
			-] [- 10
			-]/[- 10
			-( ) 9
%M0005	1T0001	BIN4	Binary digit bit 4
			-] [- 9
			-]/[- 9
			-(M) 8
%M0006	1T0001	BIN5	Binary digit bit 5
			-] [- 8
			-]/[- 8
			-( ) 7
%M0007	1T0001	BIN6	Binary digit bit 6
			-] [- 7
			-]/[- 7
			-( ) 6
%M0008	1T0001	BIN7	Binary digit bit 7
			-] [- 6
			-]/[- 6
			-( ) 5
%M0017	BLK19	CHUT_ON	Drop chute angle sector
			-] [- 66
			-(^) 60
%M0018	BLK08	SYNC_P+	Drop chute out syncro. value P+
			-] [- 27,55,63,66,84
	BLK14		-] [- 38
	BLK17		-] [- 21
	BLK18		-] [- 61,89
	BLK19		-] [- 62,63,64
			-]/[- 59,66
			-(^) 61
	BLK36		-] [- 30
	BLK38		-] [- 54
%M0019	_MAIN	FILL	Filling angle sector
			-] [- 57
	BLK18		-( ) 28
%M0021	BLK15	MM-FF	Sync. MM-FF control angle
			-]/[- 11
			-( ) 10
%M0023	BLK11		Mem signal receiv sterili
			-(SM) 4
			-(RM) 5
	BLK37		-] [- 55
			-]/[- 55
%M0024	BLK11		No product during prod.
			-( ) 9
	BLK22		-]/[- 43
%M0025	_MAIN		P- L11_OK
			-] [- 22
	BLK22		-] [- 10
			-(v) 9
%M0027	BLK13	SRT_P+	Start sequenc P+
			-(^) 17
	BLK15		-] [- 5
	BLK18		-] [- 112
	BLK19		-] [- 4,6,8,10,12,14,16,18,20
%M0028	1T0001		TS sealing pulse
			-] [- 20
			-]/[- 19
			-( ) 18
%M0029	1T0001		TS sealing sector
			-] [- 16

REF.	BLOCK	NICKNAME	REF. DESCRIPTION / CROSS REFERENCES
			-]/[- 19
			-( ) 14
			-(S) 15
%M0030	1T0001		TS sealing on
			-] [- 18,19
			-]/[- 16
			-(SM) 16
			-(RM) 19
%M0031	BLK26		1st stroke during long lubricat.
			-]/[- 21
			-(v) 20
%M0033	_MAIN	SU_1080	Ok to step to p10/80 heat 1
			-] [- 26,59
			-]/[- 9
			-( ) 25
	BLK05		-]/[- 4
	BLK37		-] [- 45,65
%M0034	_MAIN	SU_20	Ok to step to pos 20 heat 2
			-]/[- 9
			-( ) 28
	BLK06		-] [- 13
	BLK37		-] [- 47
%M0035	_MAIN	SU_30	Ok to step to pos 30 tube
			-] [- 33,35
			-]/[- 9
			-( ) 32
	BLK13		-] [- 19
	BLK37		-] [- 49
%M0036	_MAIN	SU_40	Ok to step to pos 40 spray
			-] [- 41
			-]/[- 9
			-( ) 40
	BLK37		-] [- 52
%M0037	_MAIN	SU_50	Ok to step to pos 50 steril
			-] [- 47
			-]/[- 9
			-( ) 46
	BLK37		-] [- 54
%M0038	_MAIN	SU_60	Ok to step to pos 60 start
			-]/[- 9
			-( ) 52
	BLK13		-] [- 12
	BLK17		-] [- 30
	BLK37		-] [- 56
%M0039	_MAIN	SU_70	Ok to step to pos 70 product
			-] [- 57
			-]/[- 9
			-( ) 56
%M0049	_MAIN	POS00	Ladder pos 00
			-] [- 12,24,26,71
			-]/[- 16,18
			-(SM) 22
			FBIO 22,26,30,37,41,47,54,57,59
	BLK05		-] [- 4,18
	BLK06		-] [- 10
			-]/[- 30
	BLK07		-]/[- 6,18
	BLK08		-] [- 28,32
			-]/[- 11,38
	BLK09		-]/[- 35
	BLK10		-] [- 19
			-]/[- 48
	BLK13		-]/[- 35
	BLK14		-]/[- 16,23,24
	BLK15		-]/[- 32,41
	BLK16		-]/[- 7
	BLK18		-] [- 49
	BLK21		-]/[- 6
	BLK22		-] [- 6
			-]/[- 37
	BLK23		-] [- 4
	BLK24		-]/[- 6,7,12
	BLK26		-] [- 7
			-]/[- 21
	BLK27		-] [- 25

REF.	BLOCK	NICKNAME	REF. DESCRIPTION / CROSS REFERENCES
			-]/[- 18,19,21,29
	BLK28		-]/[- 5,70
	BLK37		-] [- 44
	BLK38		-] [- 58,60,83,85
			-]/[- 7,153
%M0050	_MAIN	POS10	Ladder pos 10
			-] [- 22,28,30,62,69,70,75,77
			-]/[- 16,18
			-(SM) 26
	BLK05		-] [- 10
	BLK06		-]/[- 22
	BLK07		-] [- 5
	BLK08		-] [- 28,31,33
	BLK10		-] [- 7,17
			-]/[- 31
	BLK13		-] [- 6
	BLK18		-] [- 57
	BLK21		-]/[- 6
	BLK24		-]/[- 6,7
	BLK26		-] [- 4
	BLK27		-] [- 4,17,22
	BLK37		-] [- 46
%M0051	_MAIN	POS20	Ladder pos 20
			-] [- 26,32,37,40
			-]/[- 16,17
			-(SM) 30
	BLK05		-]/[- 8
	BLK06		-] [- 5,11,12,18,26
			-]/[- 19,22
	BLK08		-] [- 28
			-]/[- 71
	BLK09		-]/[- 23
	BLK10		-] [- 43
	BLK13		-] [- 6
			-]/[- 31
	BLK22		-]/[- 52
	BLK26		-] [- 4
	BLK37		-] [- 48,49
			-]/[- 9
	BLK38		-] [- 57
%M0052	_MAIN	POS30	Ladder pos 30
			-] [- 30,39,40,41
			-]/[- 16,17
			-(SM) 37
	BLK05		-]/[- 8
	BLK06		-] [- 12,19
			-]/[- 19
	BLK09		-] [- 15,16,17,25
			-]/[- 23
	BLK10		-] [- 43
	BLK18		-] [- 55
	BLK19		-] [- 69
	BLK22		-]/[- 52
	BLK27		-] [- 5,25,26
	BLK37		-] [- 51,52
			-]/[- 13
%M0053	_MAIN	POS40	Machine ladder pos 40
			-] [- 42,46,47
			-]/[- 17
			-(SM) 41
	BLK05		-]/[- 10
	BLK06		-] [- 12
	BLK10		-] [- 5
	BLK11		-]/[- 10
	BLK13		-] [- 6,40
	BLK14		-]/[- 12
	BLK15		-] [- 22
	BLK18		-] [- 55
	BLK22		-]/[- 37
	BLK23		-] [- 10
	BLK26		-] [- 7
	BLK27		-] [- 19,21,24
	BLK37		-] [- 53
%M0054	_MAIN	POS50	Machine ladder pos 50
			-] [- 41,50,51,54

```
REF.     BLOCK    NICKNAME   REF. DESCRIPTION / CROSS REFERENCES
-------  -------  --------  -----------------------------------
                            -]/[- 19
                            -(SM) 47
         BLK06              -] [- 7,9
                            -]/[- 6
         BLK10              -] [- 44
         BLK13              -] [- 10,12
         BLK14              -] [- 8
         BLK17              -] [- 30
         BLK18              -] [- 91
                            -]/[- 6,118
         BLK37              -] [- 55
%M0055   _MAIN    POS60     Machine ladder pos 60
                            -] [- 10,41,47,56
                            -]/[- 19
                            -(SM) 54
         BLK08              -] [- 83
         BLK11              -] [- 9
         BLK13              -] [- 12
         BLK15              -] [- 34,35
         BLK17              -] [- 32
                            -]/[- 18,21
         BLK18              -] [- 23,25,26,27,105
                            -]/[- 31
         BLK22              -] [- 37
         BLK24              -]/[- 7
%M0056   _MAIN    POS70     Machine ladder pos 70
                            -] [- 10,54,59
                            -]/[- 19,41
                            -(SM) 57
         BLK08              -] [- 83
         BLK11              -] [- 7,9
         BLK13              -] [- 12
         BLK14              -] [- 10,23,38
         BLK15              -] [- 19,34,35
         BLK17              -] [- 4,5,7,12,24
                            -]/[- 9,14,15,16,18,21
         BLK18              -] [- 8,10,11,15,32,40,87
                            -]/[- 12,39,116
         BLK19              -] [- 39,60
         BLK22              -] [- 37
         BLK24              -]/[- 7
         BLK27              -] [- 21
         BLK37              -] [- 59
                            -]/[- 58
         BLK38              -] [- 19,30,38,43,46,54
%M0057   _MAIN    POS80     Machine ladder pos 80
                            -] [- 10,22,41,60,63,75,77
                            -]/[- 20,68
                            -(SM) 59
         BLK06              -]/[- 30
         BLK15              -] [- 22
         BLK18              -] [- 49,53,61
                            -]/[- 52
         BLK23              -] [- 4
         BLK24              -]/[- 6,7
         BLK27              -] [- 19,21,22,27
                            -]/[- 18
         BLK37              -] [- 62
         BLK38              -] [- 83,98,138
%M0065   _MAIN    POS0030   Machine ladder pos 00-30
                            -(/)  16
         BLK09              -] [- 5
         BLK15              -]/[- 27,40
         BLK18              -]/[- 61
         BLK24              -] [- 5
         BLK27              -] [- 19,21
                            -]/[- 15,30
%M0066   _MAIN    POS2040   Machine ladder pos 20-40
                            -(/)  17
         BLK06              -] [- 29
         BLK09              -] [- 34
         BLK18              -] [- 44
         BLK27              -] [- 17
%M0067   _MAIN    POS2080   Machine ladder pos 20-80
                            -]/[- 60
```

REF.	BLOCK	NICKNAME	REF. DESCRIPTION / CROSS REFERENCES
			-( ) 18
	BLK05		-] [- 8,10
	BLK06		-] [- 13,14,17
	BLK07		-] [- 5
	BLK08		-] [- 71,77
	BLK09		-] [- 23
	BLK10		-] [- 17,34
	BLK13		-] [- 31
	BLK15		-] [- 40
	BLK22		-]/[- 51
	BLK23		-] [- 6
			-]/[- 4
	BLK38		-] [- 114
%M0068	_MAIN	POS5070	Machine ladder pos 50-70
			-] [- 41
			-]/[- 20
			-(/) 19
	BLK06		-] [- 29
	BLK11		-] [- 6,10
	BLK13		-] [- 40
	BLK15		-] [- 22
	BLK27		-] [- 19
%M0069	_MAIN	POS5080	Machine ladder pos 50-80
			-(/) 20
	BLK10		-] [- 5
%M0070	BLK14	FILL_6K	Filling at reduced speed
			-] [- 23
	BLK18		-] [- 70,72
	BLK35		FBIO 25
%M0071	BLK18		LRF valve moving time
			-] [- 6
			-( ) 5
%M0074	BLK06		MEM. close heat ext v.
			-] [- 12
			-(SM) 10
			-(RM) 11
%M0075	BLK15		Sprinkler
			-] [- 34,35
			-( ) 32
			-(S) 33
%M0076	BLK07		Strip splice going on
			-] [- 16,22,23
			-]/[- 17
			-(SM) 19
			-(RM) 21
	BLK19		-] [- 28
	BLK38		-] [- 89
%M0077	BLK05		Water pressure delayed
			-] [- 17,18
			-( ) 16
	BLK23		-] [- 5
%M0078	BLK10		Bath temp W2 select
			-] [- 51,52
			-(S) 53
			-(R) 52
%M0080	_MAIN		Step up conditions OK
			-] [- 10
			-]/[- 12
			-(/) 9
%M0081	_MAIN		Short stop condit.
			-]/[- 10,32,51
	BLK19		-]/[- 43
	BLK22		-] [- 37
			-]/[- 36
			-(/) 36
	BLK38		-] [- 64
			-]/[- 65
%M0082	_MAIN	SHORTS	Machine pos. short stop
			-] [- 41,51
			-]/[- 59
	BLK06		-] [- 7,9
	BLK08		-]/[- 83
	BLK11		-]/[- 7,9
	BLK13		-] [- 6
			-]/[- 12

```
REF.     BLOCK    NICKNAME   REF. DESCRIPTION / CROSS REFERENCES
-------  -------  --------  -----------------------------------
         BLK14              -] [- 32
                            -]/[- 12,21,23,33
         BLK15              -]/[- 19,34,35
         BLK17              -] [- 21
         BLK18              -] [- 33,113
                            -]/[- 84
         BLK22              -] [- 37,38,40,41
                            -]/[- 38
                            -( )  37
         BLK37              -] [- 58,61
                            -]/[- 59
         BLK38              -] [- 137
                            -]/[- 65,136
%M0083   _MAIN    RDY_CLN   Machine pos ready for cleaning
                            -] [- 10,22,62,64,69,70,71
                            -]/[- 66
                            -( )  60
         1T0001             -]/[- 21
         BLK05              -] [- 10
         BLK06              -] [- 30
                            -]/[- 13,30
         BLK07              -] [- 33
                            -]/[- 8,18,30
         BLK08              -] [- 28,55,63,66
                            -]/[- 6,26,50,51
         BLK09              -] [- 5
         BLK10              -]/[- 48,49
         BLK13              -] [- 6
                            -]/[- 20
         BLK14              -]/[- 52
         BLK15              -]/[- 27
         BLK16              -]/[- 4
         BLK17              -] [- 21
         BLK23              -] [- 5
         BLK24              -]/[- 8
         BLK25              -] [- 5,8
                            -]/[- 9
         BLK27              -] [- 22
         BLK28              -]/[- 11
         BLK37              -] [- 66,67
                            -]/[- 26
%M0084   _MAIN    EXT_CLN   Machine in pos. extern. clean
                            -]/[- 10,22
         BLK07              -]/[- 15
         BLK08              -]/[- 11
         BLK13              -]/[- 6
         BLK14              -] [- 12,20
         BLK15              -] [- 36
                            -]/[- 23,37
         BLK16              -]/[- 7
         BLK19              -] [- 67
                            -]/[- 68
         BLK21              -]/[- 12
         BLK24              -]/[- 12
         BLK25              -] [- 8,9,19
                            -( )  8
         BLK26              -] [- 5
         BLK28              -]/[- 5,70
         BLK37              -] [- 26,69,117
                            -]/[- 60,67
         BLK38              -] [- 75
                            -]/[- 33
%M0085   _MAIN    INT_CLN   Machine pos internal cleaning
                            -(RM) 68
         BLK08              -]/[- 11
         BLK13              -]/[- 6
         BLK16              -]/[- 7
         BLK18              -] [- 63
         BLK24              -]/[- 12
         BLK25              -(SM) 4
         BLK28              -]/[- 5,70
%M0086   _MAIN    MCPOS80   Machine in pos.80 for >2 min
                            -] [- 18,41
                            -(/)  63
                            -(R)  64
```

REF.	BLOCK	NICKNAME	REF. DESCRIPTION / CROSS REFERENCES
	BLK07		-] [- 6
	BLK15		-] [- 22
	BLK18		-] [- 61
	BLK21		-] [- 6
	BLK27		-] [- 19
			-]/[- 21
	BLK37		-] [- 62
	BLK38		-] [- 138
%M0087	BLK15		Ready for sync FF/MM
			-] [- 8
			-(SM) 7
			-(RM) 8
%M0088	BLK22		Aux.mem for delayed jump 0
			-] [- 50
			-(/) 49
%M0089	_MAIN		Clean steam barrier space
			-] [- 67
			-(SM) 65
			-(RM) 66
	BLK18		-] [- 63
	BLK38		-] [- 73
			-]/[- 77
%M0090	_MAIN		Machine to pos. 00 delayed
			-] [- 54
	BLK13		-]/[- 12
	BLK22		-]/[- 53
			-(SM) 50
			-(RM) 51
%M0091	_MAIN		Machine to pos 00
			-] [- 22
			-]/[- 24
	BLK22		-(/) 54
	BLK38		-] [- 148
%M0092	_MAIN		Step dwn from pos 40
			-] [- 22,42,43
			-( ) 42
%M0093	_MAIN		Manual stop filling
			-] [- 10,54
			-]/[- 56
	BLK18		-] [- 92
			-]/[- 20,29,91
			-(S) 32
			-(R) 31
	BLK38		-] [- 95
%M0095	BLK05		Steam low temp. during drying
			-] [- 14
			-( ) 12
	BLK22		-]/[- 52
%M0096	BLK18		Valve A Opening after sh.stop
			-] [- 40
			-( ) 34
	BLK27		-] [- 21
%M0097	_MAIN		TS sealing on
			-] [- 36
	1T0001		-] [- 14,15,17,20
	BLK21		-(S) 11,12
			-(R) 13
%M0098	BLK19		Paper splice detected
			-] [- 25,33
			-(SM) 23
			-(RM) 26,34
	BLK38		-] [- 42
%M0100	_MAIN		Steam fault
			-]/[- 27,39
	BLK05		-] [- 10,13
			-( ) 9
	BLK09		-] [- 24,25
	BLK25		-]/[- 5
%M0101	BLK18		Valve A closing delay
			-] [- 40
			-( ) 33
%M0102	BLK07		Paper splice in LS sealer
			-] [- 13
			-( ) 10
%M0103	BLK05		Steam temper. 13 min dur. drying

REF.	BLOCK	NICKNAME	REF. DESCRIPTION / CROSS REFERENCES
			-]/[- 12
			-( ) 11
%M0106	BLK05		Long lubric.period ordered
			-]/[- 4,18
	BLK26		-] [- 6,9,10,11,12,13,14,20
			-]/[- 6
			-(SM) 4,5
			-(RM) 16
%M0108	BLK05		Spray full filled
			-] [- 10
			-]/[- 11
	BLK06		-] [- 20
			-]/[- 12,21,22
	BLK09		-] [- 27,28,33
			-]/[- 20,25
			-(SM) 23
			-(RM) 5
	BLK18		-] [- 63
	BLK37		-] [- 53
			-]/[- 53
%M0109	_MAIN		Drying after spraying
			-] [- 41,46,47
	BLK06		-] [- 8
	BLK07		-] [- 8
	BLK09		-(SM) 33
			-(RM) 6
	BLK10		-] [- 50
			-]/[- 51
	BLK18		-] [- 46,49
			-]/[- 44,55
	BLK21		-] [- 12
	BLK22		-] [- 10,11
	BLK23		-] [- 9
			-]/[- 10
	BLK27		-] [- 20
			-]/[- 17,21
	BLK37		-] [- 20
	BLK38		-] [- 146,147
%M0110	BLK14		Running time main motor
			-] [- 44
			-( ) 44
%M0112	BLK05		End drying P+
			-] [- 12
	BLK18		-] [- 46,73
	BLK38		-] [- 148
			-(^) 147
%M0118	BLK24		Paper in the cassette unit
			-] [- 5
			-]/[- 5,6
			-( ) 4
%M0121	BLK36		One scan time selected for cycle
			-] [- 20
			-( ) 15
%M0122	BLK36		Two scan time selected for cycle
			-] [- 20
			-( ) 14
%M0123	BLK36		Auxiliary memory MM high speed
			-] [- 4,5
			-( ) 4
%M0124	BLK14		MDCS sensor alarm p+
			-] [- 55
			-(^) 54
%M0125	BLK26		Autom. long lubric. time done
			-] [- 6
			-]/[- 4,6
			-(SM) 8
			-(RM) 7
%M0131	BLK16		Machine to 6000 p/h alarm enable
			-] [- 4
	BLK36		-] [- 29,37
			-( ) 28
%M0132	BLK36		4th package in tube sealing
			-] [- 33
			-( ) 31
%M0133	BLK36		7th package in tube sealing

REF.	BLOCK	NICKNAME	REF. DESCRIPTION / CROSS REFERENCES
			-] [- 33
			-( ) 32
%M0134	BLK36		Test during tube sealing
			-] [- 38
			-]/[- 36,40
			-( ) 33
%M0135	BLK36		Enable encoder monitoring
			-] [- 21,22
			-( ) 20
%M0136	BLK07		1/4 scan frequency
			-] [- 11,13
	BLK36		-] [- 19,20
			-]/[- 19
			-( ) 19
%M0138	_MAIN	ASYNCRO	Asyncronous filling
			-] [- 57
	BLK18		-] [- 116
			-]/[- 15
			-(/) 29
%M0140	BLK36		Correct angle detected
			-]/[- 29
			-(S) 25
			-(R) 24
%M0141	BLK36		Angle encoder correct value
			-]/[- 29
			-(S) 21,22
			-(R) 20
%M0142	BLK36		Angle detector P+
			-] [- 24,25
			-(^) 23
%M0144	BLK36		Catch right security
			-]/[- 36
			-( ) 34
%M0145	BLK36		Catch left security
			-]/[- 36
			-( ) 35
%M0146	BLK16		Too long loop
			-]/[- 15
			-( ) 14
%M0147	BLK16		WTC enable
			-] [- 10,12,15
			-( ) 6
%M0148	BLK16		Delay inverter enable
			-] [- 5,6
			-( ) 8
%M0149	BLK07		WTC still
			-]/[- 30
	BLK08		-]/[- 6
	BLK16		-]/[- 10
			-( ) 9
%M0150	BLK36		Left catch 1st angle sector
			-] [- 43
			-( ) 41
%M0151	BLK36		Left catch 2nd angle sector
			-] [- 43
			-( ) 42
%M0152	BLK36		Right catch 1st angle sector
			-] [- 46
			-( ) 44
%M0153	BLK36		Right catch 2nd angle sector
			-] [- 46
			-( ) 45
%M0155	BLK15		FF enable from drop chute
			-] [- 24
			-( ) 23
%M0156	BLK35	FDA_REC	Select for non-FDA requirements
			FBIO 24
	BLK38		-]/[- 156
%M0157	BLK28		ASU, cutting table right
			-] [- 66
			-(S) 64
			-(R) 64
%M0158	BLK28		ASU, cutting table left
			-] [- 67
			-(S) 65

REF.	BLOCK	NICKNAME	REF. DESCRIPTION / CROSS REFERENCES
			-(R) 65
%M0159	BLK37	AA_R	A-alarm Red present
			-] [- 103,106
			-(^) 101
%M0160	BLK37	AA_Y	A-alarm Yellow present
			-] [- 106
			-(^) 102
%M0161	BLK37	AA_LOCK	A-alarm lock to TPOP
			-]/[- 103
			-(S) 106
			-(R) 114
%M0162	BLK18		FCS scan time
			-] [- 99,100,106
			-]/[- 98,100
			-( ) 98
%M0163	BLK18		FCS volume data bit
			-] [- 101
			-]/[- 99,103
			-( ) 99
%M0164	BLK18		FCS interrupt transmission
			-] [- 99
			-( ) 101
%M0165	BLK18		FCS finish transmission
			-( ) 105
%M0166	BLK18		FCS clock shift volume bits
			-] [- 110
			-(v) 106
%M0167	BLK18		LRF valve opening conditions
			-] [- 46,64
			-]/[- 66
			-( ) 61
%M0168	BLK18		C valve closing conditions
			-]/[- 63
			-( ) 62
%M0169	BLK10		Top filling valve time
			-]/[- 39
			-( ) 39
%M0170	BLK24		Delay inverter enable
			-] [- 10,11
			-( ) 13
	BLK28		-] [- 21,23,26,69
			-( ) 72
%M0171	BLK13	PMI_EN	Paper Magazine Infeed enable
			-] [- 6
	BLK22		-] [- 36
	BLK24		-] [- 15,17,19
			-( ) 11
%M0173	BLK13	ASU_EN	Automatic Splacing Unit enable
			-] [- 6
	BLK22		-] [- 36
	BLK28		-] [- 26,34,75,79,82,84,85
			-]/[- 30,33
			-( ) 26
%M0176	BLK28	STOP_MT	Asu sequence stop motors
			-]/[- 38,39,40,48,86
			-(SM) 40,41
			-(RM) 43
%M0179	BLK24		Still magazine
			-]/[- 15
			-( ) 14
	BLK28		-]/[- 75
			-( ) 73
%M0180	BLK28		Still unreeling
			-]/[- 75
			-( ) 74
%M0181	BLK28		Too long loop
			-]/[- 82
			-( ) 81
%M0182	BLK28		Start magazine, free loop full
			-] [- 83,84
			-( ) 83
%M0183	BLK28		Magazine refilling on going
			-] [- 77,78
			-( ) 77
%M0184	BLK28	NOT_SPL	ASU sequence incomplete

REF.	BLOCK	NICKNAME	REF. DESCRIPTION / CROSS REFERENCES
			-] [- 32
			-]/[- 24,87
			-(SM) 30
			-(RM) 31
%M0186	BLK16		Start speed low enable
			-] [- 13,14,15
			-( ) 13
%M0189	BLK28	MTR_END	Packaging material end
			-] [- 17,18
			-( ) 17
%M0190	BLK28	ASU_ON	ASU splice sequence on
			-] [- 14,30,33,34,36,38,39,42,44,46,47,49,50,52,53,54,55,56,57,75,77,86,97
			-]/[- 12,21,26,37,43,45,79,81,82,84,85
			-( ) 34
	BLK38		-] [- 91
%M0191	BLK28		Auxiliary memory material lock
			-]/[- 60
			-(SM) 60
			-(RM) 61
%M0192	BLK28		ASU reset p.b. lamp aux memory
			-] [- 6
			-]/[- 4
			-(/) 5
%M0193	BLK24		Start speed low enable
			-] [- 18,19
			-( ) 18
	BLK28		-] [- 80,81,82,85
			-( ) 80
%M0196	BLK28		Start feeder movement
			-] [- 52,59
			-( ) 50
			-(S) 51
%M0198	BLK28	RES_ASU	Reset ASU alarm
			-] [- 15,26
			-( ) 24
%M0201	BLK40		-( ) 11
%M0203	BLK28	BARC_DT	ASU barcode detected
			-] [- 39,40
			-]/[- 38
			-( ) 39
%M0204	BLK28	END_ASU	End of asu sequence
			-] [- 28,31
			-]/[- 17,34,83
			-( ) 37
%M0205	BLK28	RES_LOC	Reset material lock
			-] [- 59
			-( ) 57
%M0206	BLK22	RUN_MOT	Doors ASU open and motor running
			-] [- 24,27
			-]/[- 24,28
	BLK28		-] [- 15
			-( ) 15
%M0207	BLK28	REQ_SPL	Request of splice
			-] [- 29,30,34
			-]/[- 26
			-( ) 21
%M0208	BLK40		-( ) 14
%M0209	BLK40		-( ) 15
%M0226	BLK18		Delay FCS communication enable
			-]/[- 103
			-( ) 102
%M0227	BLK18	NFILREQ	Normal fill. Force Downl.Request
			-] [- 84,93
			-(S) 79
			-(R) 96
%M0228	BLK17	CHGPROD	Product changed (select. switch)
			-]/[- 14
	BLK18		-] [- 20
			-(S) 79,80
			-(R) 82
%M0229	_MAIN	PRF_OFF	Prefilling condition forced OFF
			-] [- 11
			-]/[- 11
	BLK18		-]/[- 29,95
			-(S) 92

REF.	BLOCK	NICKNAME	REF. DESCRIPTION / CROSS REFERENCES
			-(R) 91
%M0230	_MAIN	PREFILL	Pre-filling selected
			-] [- 56,57
	BLK13		-] [- 15
			-]/[- 14
	BLK17		-]/[- 5
	BLK18		-] [- 39,40,42,113,115,118,119
			-]/[- 43,118
			-( ) 95
	BLK27		-] [- 21
%M0231	BLK14	MEM1DEK	Memory 1st BC in design
			-] [- 54
	BLK17		-] [- 8,23
			-(S) 7
			-(R) 9
%M0232	BLK17	CHK2DEK	Enable check 2nd BC in design
			-] [- 12
			-]/[- 23
			-(S) 8
			-(R) 9
%M0233	BLK17	FILSYNC	Level synchronized
			-] [- 4
	BLK18		-] [- 29
			-(S) 21
			-(R) 20
%M0234	BLK18	ENFILCK	Enable filling sector check
			-] [- 16,18
			-( ) 15
%M0235	BLK18	EN_PREF	Pre-filling enable
			-] [- 95
			-(SM) 94
			-(RM) 93
%M0236	BLK18	OK_PREF	OK for starting in Pre-filling
			-] [- 91
			-( ) 90
%M0237	BLK18		TFD disabled prefilling mode
			-] [- 119
			-]/[- 115,117
			-( ) 119
%M0238	BLK18	STPTOUT	Timeout stop mch. for bath dump
			-] [- 88,92
			-( ) 86
	BLK19		-] [- 6,12,18
%M0239	BLK18	DEKLATC	Design OK latch done
			-]/[- 11
			-(S) 11
			-(R) 12
%M0241	BLK18	PREFREQ	Pre-filling Force Downl. Request
			-] [- 84,94
			-(S) 80
			-(R) 96
%M0242	BLK07		Infeed PT drv. motor enable
			-] [- 8
	BLK08		-] [- 14,17,19
			-( ) 10
%M0243	BLK08		Delay inverter enable
			-] [- 8,10
			-( ) 12
%M0244	BLK18	DISFOLD	Folding device disabled
			-] [- 116
			-]/[- 118
			-( ) 116
%M0245	BLK18	FILLATC	Filling OK latch done
			-]/[- 10
			-(S) 10
			-(R) 12
%M0246	BLK18	FILL_OK	Level reached in set-point time
			-] [- 15,21
			-]/[- 20
			-( ) 14
%M0247	BLK18		Filling angle detected
			-] [- 28
			-( ) 24
%M0248	BLK18		Filling angle detected
			-] [- 28

REF.	BLOCK	NICKNAME	REF. DESCRIPTION / CROSS REFERENCES
			-( ) 25
%M0249	BLK18		Filling angle detected
			-] [- 28
			-( ) 26
%M0250	BLK08		Servo PW off
			-] [- 40
			-(/) 38
%M0251	_MAIN		PT on
			-] [- 10,32,51
	BLK08		-] [- 36,73
			-( ) 36
	BLK13		-] [- 6
	BLK19		-] [- 49
%M0252	BLK08		Servo HD alarm pulse
			-] [- 40,45
			-(v) 42
%M0253	BLK08		Servo SW alarm pulse
			-] [- 45
			-(v) 43
%M0254	BLK07		Still PT infeed
			-]/[- 30
	BLK08		-]/[- 14,79
			-( ) 13
	BLK24		-]/[- 8
	BLK28		-]/[- 11
%M0255	BLK07		Paper moving
			-] [- 17
			-( ) 15
	BLK08		-] [- 68,77
%M0256	BLK38		Aux memory for waste packages
			-] [- 50
			-]/[- 51
			-(SM) 51
			-(RM) 49
%M0257	BLK07		Start speed low enable
			-] [- 8
	BLK08		-] [- 16,18,19,29
			-( ) 18
%M0258	BLK08		Infeed PT drv. motor enable
			-] [- 16,17
			-( ) 16
	BLK19		-] [- 46
%M0259	BLK08		Sh.stop from PT
			-]/[- 35
			-(/) 35
	BLK13		-]/[- 6
	BLK22		-]/[- 35
%M0261	BLK08		Paper slipping
			-] [- 75
			-( ) 74
%M0263	BLK08		PT station enable
			-] [- 54,59,62,65,70
			-]/[- 31,55,63,66
			-(/) 27
			-(R) 28
	BLK19		-] [- 50
%M0264	BLK28		ASU aux. reset memory
			-] [- 4,10,24,25,51,52
			-(/) 9
%M0266	BLK08		PT stops in sequence
			-] [- 30
			-( ) 30
	BLK19		-]/[- 50,52
	BLK38		-]/[- 50,51
%M0271	BLK08		Outer-patch missing
			-] [- 59
			-( ) 58
%M0272	BLK13	INCHFIL	Inching for pre-filling start
			-] [- 15
	BLK18		-(S) 86
			-(R) 87
%M0273	BLK10		Machine stop delay
			-] [- 6
			-]/[- 17
			-( ) 5

REF.	BLOCK	NICKNAME	REF. DESCRIPTION / CROSS REFERENCES
%M0274	BLK18		High product level condition
			-] [- 36
			-]/[- 37
			-(S) 35
			-(R) 38
%M0276	BLK07		Short Stop from S.A.
			-(/) 34
	BLK13		-]/[- 6
	BLK22		-]/[- 35
%M0277	BLK17		Auxiliary memory FCS filling OK
			-] [- 12
			-(S) 10
			-(R) 11
	BLK38		-] [- 30
			-]/[- 38
%M0278	BLK18		FCS reset parameter after dray
			-] [- 74
			-]/[- 74,75
			-(^) 73
%M0299	_MAIN		OK conditions to sterile inching
			-( ) 52
	BLK13		-] [- 10
%M0300	_MAIN		Tube sealing going on
			-] [- 35,36
			-]/[- 10,26,33
			-( ) 35
	BLK08		-] [- 83
	BLK09		-]/[- 34
	BLK13		-]/[- 6
	BLK14		-] [- 12,31
	BLK17		-]/[- 21
	BLK19		-] [- 4,6,8
			-]/[- 27,41,44
	BLK21		-] [- 10,11
	BLK26		-] [- 4
	BLK36		-] [- 30,31,32
			-]/[- 30
	BLK37		-] [- 50,117
			-]/[- 48
%M0301	BLK18	FCS_RST	FCS rst param every produt 1=ON
			-] [- 73
	BLK35		FBIO 25
%M0303	BLK14		Clutch off after MM disable
			-] [- 14
			-( ) 13
%M0304	BLK14		Sync FF/MM at start prod.
			-] [- 12
			-]/[- 23,27
	BLK15		-] [- 10,11
			-]/[- 6
			-(SM) 8
			-(RM) 9
%M0305	BLK14		Brake at short stop
			-] [- 36
			-(SM) 32
			-(RM) 33
%M0306	BLK14		Aux. output clutch
			-] [- 12
			-]/[- 14,36
			-( ) 12
	BLK19		-] [- 68
%M0307	BLK13		Aux.output inching
			-( ) 7
	BLK14		-] [- 12,20,31
	BLK17		-]/[- 21
	BLK26		-] [- 4
	BLK37		-] [- 117
%M0309	BLK13		Inch conditions
			-] [- 10
			-( ) 7
%M0310	1T0001		Aux memory machine in production
			-]/[- 22
	BLK08		-] [- 84
			-]/[- 84
	BLK14		-] [- 21

```
REF.     BLOCK    NICKNAME   REF. DESCRIPTION / CROSS REFERENCES
-------  -------  --------  -----------------------------------
         BLK19              -] [- 55,62
                            -]/[- 56,57
                            -( )  55
         BLK38              -] [- 58,136
                            -]/[- 135
%M0311   BLK14              Main motor high speed delay
                            -] [- 25
                            -]/[- 23
                            -( )  21
%M0320   _MAIN    STARTQ    Start sequenc
                            -] [- 11,51
         BLK06              -] [- 25
         BLK07              -] [- 7
         BLK10              -] [- 6,29,35,36,37,39,42
                            -]/[- 10,17,18
         BLK13              -] [- 17,18,23,24,27,30,32,34
                            -]/[- 29
                            -( )  16
         BLK14              -] [- 7,12,23,36
                            -]/[- 29
         BLK15              -] [- 6
                            -]/[- 9
         BLK18              -] [- 34,47,63
                            -]/[- 84,86,90
         BLK21              -] [- 10
         BLK27              -] [- 21
                            -]/[- 18
         BLK37              -] [- 57,58,116
                            -]/[- 55,56
         BLK38              -] [- 59,135
                            -]/[- 62
%M0321   BLK13    STARTP    Pre-filling Start Sequence
                            -] [- 12,13,16
                            -]/[- 14,15
                            -( )  12
         BLK18              -] [- 40
                            -]/[- 38,43
%M0322   BLK13              LS roller out in start
                            -] [- 29
                            -]/[- 31
                            -( )  30
%M0324   BLK06    NO_PWR    Power failure
                            -] [- 13
                            -]/[- 20
         BLK18              -] [- 63
         BLK22              -] [- 12,13
                            -]/[- 14
                            -(S)  10,11
                            -(R)  12
         BLK37              -] [- 111
         BLK38              -] [- 57,125,149
                            -]/[- 58,60,83
%M0325   _MAIN    NOT_L11   Line L11-L10 not ok
                            -] [- 41
         BLK09              -] [- 7,29
         BLK11              -]/[- 10
         BLK18              -]/[- 79,80
         BLK22              -] [- 14,51
                            -( )  13
         BLK23              -] [- 5
         BLK27              -] [- 24
%M0326   _MAIN    NOT_L21   Line L21-L20
                            -(M)  7
         BLK05              -]/[- 7
         BLK06              -]/[- 13
         BLK10              -]/[- 34,48
         BLK13              -]/[- 20
         BLK14              -]/[- 6,7
         BLK26              -]/[- 23
%M0328   BLK10              Delay H2O2 bath water temp. alrm
                            -] [- 51
                            -]/[- 50
                            -( )  49
%M0336   _MAIN              Jump to pos.40 str.seq enable
                            -] [- 46
```

```
REF.     BLOCK    NICKNAME   REF. DESCRIPTION / CROSS REFERENCES
-------  -------  --------  -------------------------------------
                            -]/[- 41
         BLK22              -] [- 37
                            -( )  45
%M0337   _MAIN              Jaw alarm release clutch
                            -]/[- 32,46
         BLK13              -]/[- 6
         BLK14              -] [- 36
                            -]/[- 12
         BLK22              -]/[- 46
                            -(/)  47
         BLK25              -]/[- 8
%M0338   BLK13              M.Motor disable & keep clutch
                            -]/[- 7
         BLK14              -] [- 13,34
                            -]/[- 14,16,23,24,27
         BLK18              -]/[- 40
         BLK22              -] [- 37
                            -]/[- 31,33
                            -(/)  32
         BLK25              -]/[- 8
%M0348   BLK18              Wrong pos.reg valve
                            -]/[- 56
                            -( )  55
         BLK22              -]/[- 53
%M0350   BLK18              Start sequence 16 seconds
                            -] [- 46
                            -]/[- 63
                            -(/)  47
%M0351   BLK18              Open pos.mem regul. valve
                            -]/[- 56
                            -( )  54
         BLK25              -]/[- 5
%M0352   BLK18              Mem.go to intern.clean.
                            -] [- 54
                            -(SM) 51
                            -(RM) 52
%M0354   BLK18              Wrong pos.reg val.al. delay
                            -] [- 53
                            -]/[- 56
                            -( )  53
         BLK25              -]/[- 6
%M0355   _MAIN    CLN_CON   Ok for Clean. prod.  valve
                            -] [- 10
         BLK25              -] [- 4
                            -( )  6
%M0363   BLK37    R_CON     Red lamp conditions
                            -] [- 77,78,93,99,101
                            -]/[- 95,112
                            -( )  76
%M0364   BLK37    Y_CON     Yellow lamp conditions
                            -] [- 94,95,99,102,106,108
                            -(/)  93
%M0380   BLK19    REJECT    Package to be ejected
                            -]/[- 66
                            -(SM) 64
                            -(RM) 63
         BLK38              -] [- 27
                            -]/[- 54
%M0391   BLK17              Interrupt transmission
                            -] [- 27
                            -( )  29
%M0392   BLK17    SC_TIME   Scan time
                            -] [- 27,28,33
                            -]/[- 26,28
                            -( )  26
%M0393   BLK17              Volume data bit nr.64
                            -] [- 29
                            -]/[- 27,30
                            -( )  27
%M0394   BLK17              Clock shift volume bits
                            -] [- 38
                            -(v)  33
%M0397   BLK17              Finish transmission
                            -]/[- 30
                            -( )  32
```

REF.	BLOCK	NICKNAME	REF. DESCRIPTION / CROSS REFERENCES
%M0398	BLK37		Memory to set red lamp
			-] [- 77,78,93,99
			-]/[- 78,95
			-( ) 77
%M0399	BLK37		Memory to set yellow lamp
			-] [- 94,95,99,108
			-]/[- 95
			-( ) 94
%M0400	BLK13		Hydraulic pump delay off 1 sec
			-] [- 20
			-( ) 19
%M0402	_MAIN		Mem. door monitor
			-] [- 10,12
	BLK23		-] [- 5
			-(SM) 7
			-(RM) 8
	BLK37		-] [- 64
			-]/[- 63,64
%M0403	BLK07	RUN_MOT	Doors SA open and motor running
			-] [- 17,34
			-( ) 17
	BLK22		-] [- 19,27
			-]/[- 19,28
%M0404	BLK23		WEAC stop 5 or 15 minutes
			-] [- 7,15
			-( ) 14
	BLK37		-] [- 17,23,64
%M0405	BLK23		WEAC stop 5 minutes
			-] [- 4
			-( ) 6
%M0407	BLK09		WEAC stop 15 minutes
			-] [- 34
	BLK23		-]/[- 14
			-(SM) 10
			-(RM) 9
	BLK37		-] [- 17
			-]/[- 23
%M0410	BLK23		WEAC 5 minutes
			-] [- 5,14
			-( ) 12
%M0411	BLK23		WEAC 15 minutes
			-] [- 14
			-( ) 13
%M0416	_MAIN		WEAC stop on
			-] [- 10
			-]/[- 12,24,60
	BLK05		-] [- 17
			-]/[- 4
	BLK06		-] [- 13
			-]/[- 5,22
	BLK08		-] [- 28
	BLK09		-] [- 5,34
			-]/[- 20
	BLK10		-] [- 36
			-]/[- 48
	BLK15		-]/[- 27
	BLK23		-] [- 11,12,13,15
			-]/[- 9
			-(SM) 4
			-(RM) 5
	BLK37		-] [- 63,64
			-]/[- 17,23,44
	BLK38		-] [- 71,84
			-]/[- 85
%M0419	BLK10		Peroxide bath level delayed
			-] [- 35
			-]/[- 31,36,44
			-( ) 35
	BLK40		-]/[- 9
			-( ) 6
%M0420	BLK10		Tank H2O2 restore high level
			-] [- 20,30
			-]/[- 34
			-(SM) 18
			-(RM) 19

REF.	BLOCK	NICKNAME	REF. DESCRIPTION / CROSS REFERENCES
	BLK22		-]/[- 35
	BLK37		-]/[- 38
%M0421	BLK10		Tank H2O2 refilling during prod.
			-] [- 14,20,23,26
			-]/[- 40
			-(SM) 15
			-(RM) 14
%M0422	BLK10		Peroxide bath full in steril.
			-] [- 44
			-( ) 43
	BLK22		-]/[- 53
%M0423	_MAIN		Drain peroxide bath
			-]/[- 24
	BLK10		-]/[- 17,34
			-( ) 10
%M0424	BLK10		Tank H2O2 empty during product.
			-] [- 31
			-( ) 29
%M0425	BLK10		Tank H2O2 complete refilling
			-] [- 20,31,53
			-]/[- 34,52
			-(SM) 17
			-(RM) 19
	BLK22		-]/[- 35
	BLK37		-]/[- 41
%M0426	BLK10		Enable filling peroxide tank
			-] [- 14,15
			-( ) 12
			-(S) 13
%M0428	BLK10		P- peroxide bath drain
			-] [- 18
			-(v) 9
%M0431	_MAIN		Packages wrong design position
			-] [- 54
	BLK17		-] [- 13,20
			-( ) 14
%M0432	_MAIN		2.nd fill start attempt
			-]/[- 54
	BLK17		-] [- 19,20
			-]/[- 13
			-(S) 13
			-(R) 17,18
	BLK18		-] [- 92
			-]/[- 20,29,91
%M0441	BLK27	MEM_A	Memory A-valve
			-] [- 22,28
			-( ) 23
%M0442	BLK27	TEM_SPR	Temperature during spray
			-]/[- 12
			-(SM) 24
			-(RM) 25
%M0443	BLK25	CLE_POS	Cleaning position
			-] [- 4
	BLK27		-(SM) 27
			-(RM) 28
%M0444	BLK22	MALFUN_	Malfunction during spray
			-]/[- 52
	BLK27		-( ) 16
%M0445	BLK27		Temperature before spray
			-] [- 13
			-]/[- 5
			-( ) 26
%M0446	BLK27	TEM_MAL	Temperature malfunction
			-] [- 13,16
			-( ) 12
%M0447	BLK06		Product pipe in position
			-]/[- 28
	BLK18		-] [- 63
	BLK22		-] [- 52
	BLK25		-] [- 5
	BLK27		-( ) 30
%M0450	_MAIN	STEP1HI	Step-up cond. 1 for H.I.
			-] [- 28
	BLK27		-( ) 4
%M0451	_MAIN	STEP2HI	Step-up cond. 2 for H.I.

REF.	BLOCK	NICKNAME	REF. DESCRIPTION / CROSS REFERENCES
			-] [- 39
	BLK27		-( ) 5
%M0452	_MAIN	STEP3HI	Step-up cond. 3 for H.I.
			-] [- 46
	BLK27		-( ) 6
%M0453	BLK27		Air evacuation done
			-] [- 20
			-]/[- 18,21
			-( ) 20
%M0510	BLK17		Drop chute enable
			-] [- 12
			-( ) 12
	BLK18		-] [- 9,82,89
			-]/[- 89
	BLK19		-] [- 55,66
%M0525	BLK09		Spray finish
			-] [- 23
			-( ) 8
	BLK27		-] [- 12,19
%M0526	BLK09		Max fill time spray tank
			-] [- 19
			-( ) 18
%M0527	BLK09		Spray count control steam
			-] [- 20
			-( ) 10
%M0529	BLK06		Max empty time
			-]/[- 12
	BLK09		-] [- 22
			-( ) 11
	BLK27		-] [- 11
%M0530	BLK09		Spray pause time
			-] [- 25
			-( ) 12
	BLK16		-] [- 23
	BLK27		-] [- 10,24
%M0531	BLK09		Minimum emptying time
			-] [- 21
			-( ) 13
%M0532	BLK06		Air inlet tower on
			-]/[- 5,22
	BLK09		-( ) 14
%M0535	BLK09		Dry time over
			-] [- 26,33
			-]/[- 27
			-( ) 30
%M0536	BLK09		Close AP valve B
			-]/[- 34
			-( ) 31
	BLK15		-] [- 27
%M0537	BLK09		Run time drying
			-] [- 25
			-( ) 32
	BLK16		-] [- 23
%M0539	BLK06		Low temp.in product
			-] [- 21
			-( ) 20
	BLK22		-]/[- 49
%M0540	BLK06		Steril air pipe missing
			-( ) 29
	BLK22		-]/[- 53
%M0543	BLK13		Memory for emptying tube flush
			-] [- 38,39
			-(SM) 37
			-(RM) 38
%M0546	BLK09	SPRY_TM	Spray timer enable
			-] [- 8,9,10,11,12,13,14,18,25
			-(/) 5
%M0547	BLK06		Drying after spraying
			-] [- 4
	BLK09		-] [- 24,30,31,32
			-( ) 28
	BLK37		-]/[- 20
%M0561	BLK08		Paper mag.infeed enable no delay
			-] [- 9
	BLK24		-( ) 11

```
REF.     BLOCK    NICKNAME   REF. DESCRIPTION / CROSS REFERENCES
-------  -------  --------  -----------------------------------
%M0562   BLK08             Infeed PT dr.motor en. no delay
                           -] [- 35
                           -( )  10
%M0563   BLK08             Autom.Splic.Unit enable no delay
                           -] [- 10
         BLK28             -( )  26
%M0582   BLK08             Enable pre-patch control
                           -] [- 58
                           -( )  57
%M1025   BLK37    STEP_O   Tpop step 0 machine off
                           -( )  44
                           FBIO  72
         BLK38             -] [- 127
%M1026   BLK37    FIX1_L   Preheating 1 fix
                           -( )  46
         BLK38             -] [- 128
%M1027   BLK37    FIX2_L   Tube sealing fix
                           -( )  50
         BLK38             -] [- 129
%M1028   BLK37    FIX3_L   Spray fix
                           -]/[- 29
                           -( )  53
         BLK38             -] [- 131
%M1029   BLK37    FIX4_L   Signal to sterilizer fix
                           -( )  55
         BLK38             -] [- 133
%M1030   BLK37    FIX5_L   Start sequence fix
                           -( )  57
%M1031   BLK37    FIX6_L   Filling on fix
                           -( )  59
%M1032   BLK37    FIX7_L   Short Stop fix
                           -( )  61
%M1033   BLK37    FIX8_L   Weac on fix
                           -( )  63
         BLK38             -] [- 139
                           -]/[- 127
%M1034   BLK37    FIX9_L   Prepare cleaning machine fix
                           -] [- 68
                           -( )  67
%M1035   BLK37    FIX10_L  External cleaning fix
                           -( )  69
         BLK38             -] [- 142
%M1042   BLK37    FLH1_L   Preheating 1 flash
                           -( )  45
%M1043   BLK37    FLH2_L   Tube sealing flash
                           -( )  49
%M1044   BLK37    FLH3_L   Spray flash
                           -( )  52
%M1045   BLK37    FLH4_L   Signal to sterilizer flash
                           -( )  54
%M1046   BLK37    FLH5_L   Start sequence flash
                           -( )  56
%M1048   BLK37    FLH7_L   Short Stop flash
                           -( )  61
%M1051   BLK37    FLH10_L  External cleaning flash
                           -( )  68
%M1057   BLK37    STEP_0   Tpop step 0 machine off
                           -( )  44
%M1058   BLK37    FIX1_R   Preheating 2 fix
                           -( )  48
         BLK38             -] [- 128
%M1059   BLK37    FIX2_R   Heating 3 fix
                           -( )  51
         BLK38             -] [- 130
%M1060   BLK37    FIX3_R   Drying fix
                           -( )  53
         BLK38             -] [- 132
%M1061   BLK37    FIX4_R   Signal from sterilizer fix
                           -( )  55
         BLK38             -] [- 134
%M1062   BLK37    FIX5_R   Drive motor on fix
                           -( )  58
%M1063   BLK37    FIX6_R   Machine in production fix
                           -( )  60
%M1065   BLK37    FIX8_R   Ready for door opening fix
```

REF.	BLOCK	NICKNAME	REF. DESCRIPTION / CROSS REFERENCES
			-( ) 64
	BLK38		-] [- 140
			-]/[- 127
%M1066	BLK37	FIX9_R	Prepare cleaning valve fix
			-] [- 70
			-( ) 66
%M1067	BLK37	FIX10_R	Internal cleaning fix
			-( ) 71
	BLK38		-] [- 141
			-]/[- 142
%M1074	BLK37	FLH1_R	Preheating 2 flash
			-( ) 47
%M1077	BLK37	FLH4_R	Signal from sterilizer flash
			-( ) 55
%M1080	BLK37	FLH7_R	Production finish flash
			-( ) 62
%M1081	BLK37	FLH8_R	Ready for door opening flash
			-( ) 64
%M1082	BLK37	FLH9_R	Prepare cleaning valve flash
			-( ) 65
%M1083	BLK37	FLH10_R	Internal cleaning flash
			-( ) 70
%M1297	BLK35		PLMS, Option spare
			FBIO 19
	BLK37		FBIO 7
%M1298	BLK35		PLMS, Option spare
			FBIO 19
%M1299	BLK05	TCSB_OP	PLMS, Option T.C.S.B.
			-]/[- 9
	BLK09		-] [- 24,25,26,27
			-]/[- 25
	BLK35		FBIO 19
%M1300	BLK35	WD_OPT	PLMS, Option Wedge version
			FBIO 20
%M1301	BLK15	DDU_OPT	PLMS, Option Domino date unit
			-] [- 40,41
	BLK35		FBIO 20
%M1302	BLK08	PR_OPT	PLMS, Option Prisma version
			-] [- 71
			-]/[- 31,44,52
	BLK21		-] [- 8
			-]/[- 7
	BLK35		FBIO 20
	BLK37		-]/[- 32
%M1303	_MAIN	PT_OPT	PLMS, Option Pull-Tab
			-] [- 44
			-]/[- 10,32,51
	1T0001		-] [- 21
	BLK07		-] [- 8,27,29,30
			-]/[- 8,26,28,30,33
	BLK13		-]/[- 6
	BLK14		-]/[- 52
	BLK19		-]/[- 8,14,20,25,29,32
	BLK22		-] [- 25,28,43,46
	BLK24		-] [- 8
			-]/[- 8
	BLK28		-] [- 11
			-]/[- 11
	BLK35		FBIO 21
%M1304	_MAIN	HI_OPT	PLMS, Option H.I.
			-] [- 49
			-]/[- 28,39,46
	BLK06		-] [- 28
			-]/[- 28
	BLK18		-] [- 63
			-]/[- 63
	BLK22		-] [- 52
			-]/[- 52
	BLK25		-] [- 5
			-]/[- 4,5
	BLK35		FBIO 21
%M1305	BLK35	HL_OPT	PLMS, Option H.L.
			FBIO 21
%M1306	BLK35	HVA_OPT	PLMS, Option H.V.A.
			FBIO 22

REF.	BLOCK	NICKNAME	REF. DESCRIPTION / CROSS REFERENCES
	BLK38		-] [- 73,77
			-]/[- 77
%M1307	_MAIN	PMI_OPT	PLMS, Option spare
			-] [- 73
	BLK08		-]/[- 9
	BLK13		-]/[- 6
	BLK22		-]/[- 36
	BLK35		FBIO 22
%M1308	_MAIN	ASU_OPT	PLMS, Option A.S.U.
			-] [- 74
	BLK08		-]/[- 10
	BLK13		-]/[- 6
	BLK22		-] [- 24,28
			-]/[- 36
	BLK35		FBIO 22
%M1309	BLK35		PLMS, Option spare
			FBIO 23
%M1310	BLK35	SUP_OPT	PLMS, Option Line Supervision
			FBIO 23
	BLK38		-] [- 111,114
%M1311	BLK35		PLMS, Option spare
			FBIO 23
%M1312	BLK35		PLMS, Option spare
			FBIO 24
%M1313	BLK18	PH_7500	Speed at 7500 package hour
			-] [- 70,72
	BLK34		-] [- 14,27,40,53,66,79,92,105,118,131,144,157
			-]/[- 11,24,37,50,63,76,89,102,115,128,141,154
	BLK35		FBIO 24
	BLK37		FBIO 121
%M1314	BLK34	V_100B	Volume 100 Base
			-] [- 4,11,14
	BLK35		FBIO 5,12
%M1315	BLK34	V_125S	Volume 125 Slim
			-] [- 17,24,27
	BLK35		FBIO 5,12
%M1316	BLK34	V_160S	Volume 160 Slim
			-] [- 30,37,40
	BLK35		FBIO 6,13
%M1317	BLK34	V_180B	Volume 180 Base
			-] [- 43,50,53
	BLK35		FBIO 6,13
%M1318	BLK34	V_200B	Volume 200 Base
			-] [- 56,63,66
	BLK35		FBIO 6,13
%M1319	BLK34	V_200M	Volume 200 Mid
			-] [- 69,76,79
	BLK35		FBIO 7,14
%M1320	BLK34	V_200S	Volume 200 Slim
			-] [- 82,89,92
	BLK35		FBIO 7,14
%M1321	BLK35	V_236B	Volume 236 Base
			FBIO 7,14
%M1322	BLK34	V_250B	Volume 250 Base
			-] [- 95,102,105
	BLK35		FBIO 8,15
%M1323	BLK34	V_250S	Volume 250 Slim
			-] [- 108,115,118
	BLK35		FBIO 8,15
%M1324	BLK34	V_284B	Volume 284 Base
			-] [- 121,128,131
	BLK35		FBIO 8,15
%M1325	BLK34	V_300S	Volume 300 Slim
			-] [- 134,141,144
	BLK35		FBIO 9,16
%M1326	BLK34	V_330S	Volume 330 Slim
			-] [- 147,154,157
	BLK35		FBIO 9,16
%M1327	BLK35	V_200PR	Volume 200 Square Prisma
			FBIO 9,16
%M1328	BLK35	V_250PR	Volume 250 Square Prisma
			FBIO 10,17
%M1329	BLK35	V_330PR	Volume 330 Square Prisma
			FBIO 10,17
%M1497	BLK38		PLMS, Step off

REF.	BLOCK	NICKNAME	REF. DESCRIPTION / CROSS REFERENCES
			-( ) 127
			FBIO 143
%M1498	BLK38		PLMS, Preheating
			-( ) 128
%M1499	BLK38		PLMS, Tube sealing
			-( ) 129
%M1500	BLK38		PLMS, Heating 3
			-( ) 130
%M1501	BLK38		PLMS, Spray
			-( ) 131
%M1502	BLK38		PLMS, Drying
			-( ) 132
%M1503	BLK38		PLMS, Signal to sterilizer
			-( ) 133
%M1504	BLK38		PLMS, Signal from sterilizer
			-( ) 134
%M1505	BLK37		PLMS, Motor start
			-] [- 104
	BLK38		-]/[- 98,99
			-( ) 135
%M1506	BLK37		PLMS, Machine in production
			-] [- 104
	BLK38		-( ) 136
%M1507	BLK38		PLMS, Short stop on
			-( ) 137
%M1508	BLK38		PLMS, Production finish
			-( ) 138
%M1509	BLK38		PLMS, Wenting
			-( ) 139
%M1510	BLK38		PLMS, Ready for door opening
			-( ) 140
%M1511	BLK38		PLMS, CIP cleaning valve
			-( ) 141
%M1512	BLK38		PLMS, External cleaning
			-( ) 142
%M1601	BLK10	POX_1	Low temperature peroxide
			-] [- 45
			-( ) 45
	BLK22		-]/[- 36
	BLK37		-]/[- 79
			FBIO 103
	BLK38		-] [- 151
%M1602	BLK10	POX_2	Low level peroxide bath
			-] [- 44
			-( ) 44
	BLK22		-]/[- 36
	BLK37		-]/[- 79
	BLK40		-( ) 10
%M1603	_MAIN	POX_3	Low level peroxide bath, water
			-]/[- 24
	BLK10		-( ) 54
	BLK22		-]/[- 33
	BLK37		-]/[- 79
%M1604	BLK09	POX_4	Spray container low level
			-] [- 21
			-( ) 21
	BLK22		-]/[- 52
	BLK37		-]/[- 79
%M1605	BLK09	POX_5	Spray time out of limit
			-] [- 22
			-( ) 22
	BLK22		-]/[- 52
	BLK37		-]/[- 79
%M1606	_MAIN	POX_6	Spray tank filling fault
			-] [- 37
	BLK09		-] [- 19
			-( ) 19
	BLK37		-]/[- 79
%M1608	BLK10	POX_8	Low temp. peroxide bath, water
			-] [- 50
			-( ) 50
	BLK22		-]/[- 43
	BLK37		-]/[- 79
%M1609	_MAIN	POX_9	Too high level peroxide tank
			-]/[- 28

REF.	BLOCK	NICKNAME	REF. DESCRIPTION / CROSS REFERENCES
	BLK10		-]/[- 34
			-( ) 32
	BLK22		-]/[- 45
	BLK37		-]/[- 79
	BLK40		-( ) 12
%M1610	_MAIN	POX_10	Spray tank not filling
			-] [- 37
	BLK27		-] [- 9
			-]/[- 10
			-( ) 9
	BLK37		-]/[- 79
%M1611	BLK27	POX_11	Spray tank not spraying
			-] [- 11,16
			-( ) 11
	BLK37		-]/[- 80
%M1612	BLK27	POX_12	Temperature monitor spraying
			-] [- 13
			-( ) 13
	BLK37		-]/[- 80
%M1629	BLK10	POX_29	Tank H2O2 refilling insufficient
			-] [- 28
			-( ) 28
	BLK37		-]/[- 98
%M1630	BLK10	POX_30	Low level tank peroxide
			-] [- 31
			-]/[- 44
			-( ) 31
	BLK22		-]/[- 33
	BLK37		-]/[- 80
%M1633	BLK14	DRI_1	MDCS sensors alarm
			-] [- 56
			-( ) 55
	BLK22		-]/[- 35
	BLK37		-]/[- 80
%M1635	BLK14	DRI_3	Jaw sys. over-load.
			-( ) 41
	BLK22		-]/[- 44,47
	BLK37		-]/[- 80
%M1637	1T0001	DRI_5	Fault IH unit TS left
			-]/[- 20
	BLK21		-(SM) 6
			-(RM) 5
	BLK22		-]/[- 44
	BLK37		-]/[- 80
%M1638	1T0001	DRI_6	Fault IH unit TS right
			-]/[- 20
	BLK21		-(SM) 6
			-(RM) 5
	BLK22		-]/[- 44
	BLK37		-]/[- 80
%M1640	BLK22	DRI_8	Encoder Fault
			-]/[- 44,47
	BLK36		-] [- 29
			-( ) 29
	BLK37		-]/[- 80
%M1642	BLK22	DRI_10	Catches fault
			-]/[- 44
	BLK36		-] [- 37
			-]/[- 40
			-( ) 37
	BLK37		-]/[- 81
%M1652	BLK22	DRI_20	Malfunction during tube sealing
			-]/[- 44
	BLK36		-] [- 39
			-( ) 39
	BLK37		-]/[- 81
%M1665	BLK05	SERV_1	Low press. main water
			-( ) 15
			-(S) 17
	BLK22		-]/[- 45
	BLK37		-]/[- 81
%M1666	_MAIN	SERV_2	Low press. main air
			-]/[- 24
	BLK05		-] [- 7
			-( ) 7

REF.	BLOCK	NICKNAME	REF. DESCRIPTION / CROSS REFERENCES
	BLK22		-]/[- 53
	BLK24		-]/[- 12
	BLK28		-]/[- 5,70
	BLK37		-]/[- 81
%M1667	BLK14	SERV_3	Over-load motors
			-(/) 42
	BLK37		-]/[- 81
%M1672	BLK22	SERV_8	Pressure fault lubric. oil
			-]/[- 35
	BLK26		-(SM) 21
			-(RM) 22
	BLK37		-]/[- 81
%M1673	BLK26	SERV_9	Low level lubric. oil
			-( ) 23
	BLK37		-]/[- 96
%M1674	BLK05	SERV_10	Low pressure main water
			-( ) 18
	BLK13		-]/[- 20
	BLK37		-]/[- 96
%M1676	BLK13	SERV_12	Low level hydraul oil
			-( ) 21
	BLK37		-]/[- 81
%M1677	BLK13	SERV_13	Temp fault hydraulic oil
			-( ) 22
	BLK37		-]/[- 81
%M1679	BLK05	SERV_15	Over-voltage protection
			-(/) 21
	BLK37		-]/[- 96
%M1683	BLK27	SERV_19	Nitrogen gas low pressure
			-( ) 29
	BLK37		-]/[- 82
%M1686	BLK14	SERV_22	Inverter protection alarm
			-] [- 18
			-( ) 18
	BLK22		-]/[- 32
	BLK37		-]/[- 82
%M1687	BLK22	SERV_23	Power failure alarm
			-(SM) 10,11
%M1688	BLK22	SERV_24	Short stop for >5 min.
			-] [- 39
			-]/[- 45
			-( ) 39
	BLK37		-]/[- 82
%M1689	_MAIN	SERV_25	Too much time in pos20
			-] [- 34
			-( ) 34
	BLK22		-]/[- 53
	BLK37		-]/[- 82
%M1690	BLK37	SERV_26	Recorder alarm
			-]/[- 96
	BLK38		-] [- 156
			-( ) 155
%M1691	BLK05	SERV_27	Ovveride in the PLC program
			-(/) 20
	BLK37		-]/[- 96
%M1692	BLK22	SERV_28	Max run time lubric.fault
			-]/[- 35
	BLK26		-( ) 24
	BLK37		-]/[- 82
%M1694	BLK05	SERV_30	PLC fault
			-(/) 19
	BLK37		-]/[- 96
%M1695	BLK14	SERV_31	Speed fault main motor
			-] [- 40
			-( ) 40
	BLK22		-]/[- 45
	BLK37		-]/[- 82
%M1696	BLK22	SERV_32	Recorder alarm stop
			-]/[- 35
	BLK37		-]/[- 82
	BLK38		-( ) 156
%M1697	BLK22	SAF_1	Crease wheel cover alarm
			-( ) 23
	BLK37		-]/[- 82
	BLK38		-] [- 69

REF.	BLOCK	NICKNAME	REF. DESCRIPTION / CROSS REFERENCES
%M1698	BLK22	SAF_2	MSA door unit
			-]/[- 28
			-( ) 19
	BLK37		-]/[- 83
	BLK38		-] [- 69
%M1699	BLK22	SAF_3	Tower doors
			-( ) 21
	BLK37		-]/[- 83
	BLK38		-] [- 69
%M1702	BLK10	SAF_6	Bottom cover peroxide bath alarm
			-( ) 46
	BLK22		-]/[- 49
	BLK37		-]/[- 83
%M1703	BLK22	SAF_7	Crank guard alarm
			-( ) 20
	BLK37		-]/[- 83
%M1706	BLK22	SAF_10	Door guard ASU
			-]/[- 28
			-( ) 24
	BLK28		-]/[- 32
	BLK37		-]/[- 83
	BLK38		-] [- 69
%M1708	BLK22	SAF_12	Pulltab door guard
			-( ) 25
	BLK37		-]/[- 83
	BLK38		-] [- 69
%M1709	BLK22	SAF_13	Cabinet door alarm
			-( ) 16
	BLK37		-]/[- 96
%M1711	BLK22	SAF_15	Fault emerg. stop jaw rot
			-( ) 26
	BLK37		-] [- 76
%M1712	BLK22	SAF_16	FF door alarm
			-( ) 22
	BLK37		-]/[- 83
	BLK38		-] [- 69
%M1714	BLK22	SAF_18	Safety relay tripped
			-( ) 28
	BLK37		-]/[- 83
%M1723	BLK22	SAF_27	Safety relay ASU + MSA tripped
			-( ) 27
	BLK37		-]/[- 96
%M1724	BLK22	SAF_28	Door ASU open
			-( ) 24
	BLK28		-]/[- 32
	BLK37		-]/[- 96
%M1725	BLK22	SAF_29	Door MSA open
			-( ) 19
	BLK37		-]/[- 97
%M1727	BLK22	SAF_31	Service switch alarm
			-]/[- 53
			-( ) 7
	BLK37		-]/[- 84
%M1728	BLK22	SAF_32	Service switch ON
			-] [- 7
			-(SM) 5
			-(RM) 6
	BLK37		-]/[- 97
%M1731	BLK15	FFU_3	Final folder infeed congest
			-] [- 20
			-( ) 20
	BLK22		-]/[- 34
	BLK37		-]/[- 84
%M1732	BLK15	FFU_4	Rotat. fault FF
			-] [- 16
			-( ) 16
	BLK22		-]/[- 31
	BLK37		-]/[- 84
%M1734	BLK14	FFU_6	Memory overload outfeed
			-( ) 11
	BLK22		-]/[- 31
	BLK37		-]/[- 84
%M1736	BLK15	FFU_8	Flap sealing temp.Bottom left
			-( ) 30
	BLK22		-]/[- 34

REF.	BLOCK	NICKNAME	REF. DESCRIPTION / CROSS REFERENCES
	BLK37		-]/[- 84
%M1737	BLK15	FFU_9	Flap sealing temp.Bottom right
			-( ) 31
	BLK22		-]/[- 34
	BLK37		-]/[- 84
%M1738	BLK15	FFU_10	Flap sealing temp.Top left
			-( ) 28
	BLK22		-]/[- 34
	BLK37		-]/[- 84
%M1739	BLK15	FFU_11	Flap sealing temp.Top right
			-( ) 29
	BLK22		-]/[- 34
	BLK37		-]/[- 84
%M1740	BLK15	FFU_12	Alarm delay unsync. MM/FF
			-] [- 11
			-( ) 11
	BLK22		-]/[- 31
	BLK37		-]/[- 85
%M1757	BLK14	FFU_29	Dating unit alarm
			-] [- 4
	BLK15		-( ) 40
	BLK22		-]/[- 32
	BLK37		-]/[- 85
%M1758	BLK15	FFU_30	Dating unit supply
			-( ) 41
	BLK37		-]/[- 97
%M1759	BLK14	FFU_31	Queue conveyor alarm
			-( ) 10
	BLK22		-]/[- 34
	BLK37		-]/[- 85
%M1762	BLK18	FIL_2	Floater alarm during preheating
			-( ) 57
	BLK37		-]/[- 85
%M1763	BLK18	FIL_3	Product level during production
			-] [- 58
			-( ) 58
	BLK37		-]/[- 97
%M1766	BLK05	FIL_6	Steam temp. out of limit
			-( ) 10
	BLK37		-]/[- 97
%M1767	_MAIN	FIL_7	Steam low temperature 5 min.
			-]/[- 32
	BLK05		-] [- 14
			-( ) 14
	BLK22		-]/[- 43
	BLK37		-]/[- 85
%M1770	_MAIN	FIL_10	Membran leakage alarm
			-]/[- 24
	BLK18		-( ) 49
	BLK22		-]/[- 49
	BLK37		-]/[- 85
%M1774	BLK27	FIL_14	Nozzle not in position
			-] [- 15
			-( ) 14
	BLK37		-]/[- 85
%M1775	BLK27	FIL_15	Equipment not in position
			-( ) 22
	BLK37		-]/[- 85
%M1780	BLK18	FIL_20	Overfilling alarm
			-( ) 59
	BLK22		-]/[- 44
	BLK37		-]/[- 86
	BLK38		-] [- 37
%M1781	BLK18	FIL_21	Overfilling
			-] [- 92
			-( ) 59
	BLK37		-]/[- 97
%M1790	_MAIN	FIL_30	No prod. from process
			-]/[- 10,52
	BLK11		-( ) 10
	BLK37		-]/[- 86
%M1793	BLK07	MSA_1	Fault IH unit S. A.
			-] [- 5
			-]/[- 6,13
			-( ) 5

REF.	BLOCK	NICKNAME	REF. DESCRIPTION / CROSS REFERENCES
	BLK08		-]/[- 9
	BLK22		-]/[- 43,46
	BLK37		-]/[- 86
%M1795	BLK07	MSA_3	Broken strip
			-] [- 31
			-( ) 31
	BLK08		-]/[- 9
	BLK22		-]/[- 43,46
	BLK37		-]/[- 86
%M1810	BLK08	MSA_18	Paper magazine broken web
			-] [- 80
			-]/[- 34
			-( ) 80
	BLK37		-]/[- 86
%M1816	BLK07	MSA_24	Strip finished
			-] [- 20
			-]/[- 34
			-(SM) 19
			-(RM) 21
	BLK37		-]/[- 86
%M1819	BLK07	MSA_27	Low strip supply
			-] [- 19,20
			-]/[- 19
			-( ) 22
	BLK37		-]/[- 97
	BLK38		-]/[- 89
%M1820	BLK07	MSA_28	Cut the strip before cleaning
			-] [- 32
			-]/[- 34
			-( ) 32
	BLK37		-]/[- 86
%M1826	_MAIN	STE_2	Wrong pos. AP valve B
			-] [- 68
			-]/[- 27
	BLK09		-] [- 36
			-( ) 36
	BLK22		-]/[- 49
	BLK25		-]/[- 5
	BLK37		-]/[- 86
%M1827	BLK06	STE_3	High level separat
			-( ) 16
	BLK22		-]/[- 49
	BLK23		-] [- 5
	BLK37		-]/[- 87
%M1828	BLK06	STE_4	Low temp air heater
			-] [- 21
			-( ) 21
	BLK37		-]/[- 87
%M1829	_MAIN	STE_5	Air inlet valve wrong position
			-]/[- 27
	BLK06		-] [- 24
			-( ) 24
	BLK22		-]/[- 49
	BLK37		-]/[- 87
%M1830	BLK06	STE_6	Low press. steril air
			-] [- 15
			-( ) 15
	BLK22		-]/[- 49
	BLK37		-]/[- 87
%M1831	BLK18	STE_7	Wrong pos.reg valve alarm
			-]/[- 56
			-(/M) 56
	BLK37		-]/[- 87
%M1834	_MAIN	STE_10	Suction valve wrong pos.
			-]/[- 32,39
	BLK06		-] [- 27
			-( ) 27
	BLK22		-]/[- 44
	BLK37		-]/[- 87
%M1835	BLK06	STE_11	Wrong posit. product pipe
			-( ) 28
	BLK37		-]/[- 87
%M1838	BLK13	STE_14	Low temp air knife
			-] [- 40
			-( ) 40

REF.	BLOCK	NICKNAME	REF. DESCRIPTION / CROSS REFERENCES
	BLK22		-]/[- 36
	BLK37		-]/[- 87
%M1840	BLK14	STE_16	Overload compressor
			-(/) 43
	BLK22		-]/[- 54
	BLK37		-]/[- 88
%M1849	BLK09	STE_25	Sterility condiction fault
			-( ) 25
	BLK22		-]/[- 52
	BLK37		-]/[- 88
%M1858	BLK13	SUP_2	Air knife sq.roll wrong pos.
			-] [- 35
			-( ) 35
	BLK22		-]/[- 36
	BLK37		-]/[- 88
%M1859	BLK14	SUP_3	Superstructure broken web
			-] [- 53
			-( ) 53
	BLK22		-]/[- 45,47
	BLK37		-]/[- 88
%M1861	BLK06	SUP_5	Low temperature LS element
			-( ) 8
	BLK22		-]/[- 45
	BLK37		-]/[- 88
%M1866	BLK06	SUP_10	LS sh. stop heat alarm
			-] [- 9
			-( ) 9
	BLK22		-]/[- 43
	BLK37		-]/[- 88
%M1889	BLK08	PUL_1	PT Infeed loop empty
			-]/[- 29
			-( ) 7
	BLK37		-]/[- 88
%M1890	BLK08	PUL_2	Free- loop PT outfeed alarm
			-]/[- 33
			-( ) 49
	BLK37		-]/[- 88
%M1891	BLK08	PUL_3	Paper slipping
			-]/[- 29
			-( ) 75
	BLK37		-]/[- 89
%M1893	BLK08	PUL_5	PT bar- code photoc. alarm
			-]/[- 33
			-( ) 50
	BLK37		-]/[- 89
%M1894	BLK08	PUL_6	PT Servo motor alarm
			-]/[- 29
			-( ) 45
	BLK37		-]/[- 89
%M1896	BLK08	PUL_8	PT temperature patch pre-sealer
			-]/[- 35
			-( ) 71
	BLK37		-]/[- 89
%M1897	BLK08	PUL_9	PT temperat. patch final sealer
			-]/[- 35
			-( ) 71
	BLK37		-]/[- 89
%M1898	BLK08	PUL_10	PT temperature tab sealer
			-]/[- 35
			-( ) 71
	BLK37		-]/[- 89
%M1899	BLK08	PUL_11	PT temperat. outer-patch sealer
			-]/[- 35
			-( ) 71
	BLK37		-]/[- 89
%M1900	BLK08	PUL_12	PT black tape phot.malfunction
			-]/[- 33
			-( ) 77
	BLK37		-]/[- 89
%M1901	BLK08	PUL_13	Infeed PT drv. motor alarm
			-] [- 8
			-]/[- 11,34
			-( ) 8
%M1902	BLK08	PUL_14	PT broken web
			-]/[- 35

REF.	BLOCK	NICKNAME	REF. DESCRIPTION / CROSS REFERENCES
			-( ) 6
	BLK37		-]/[- 90
%M1905	BLK08	PUL_17	Low lvl patch magazine
			-( ) 62
	BLK37		-]/[- 98
%M1906	BLK08	PUL_18	Low lvl tab magazine
			-( ) 65
	BLK37		-]/[- 98
%M1907	BLK08	PUL_19	Low level outer-patch magazine
			-( ) 54
	BLK37		-]/[- 98
%M1911	_MAIN	PUL_23	Low pressure PT air
			-]/[- 24
	BLK08		-] [- 5
			-]/[- 9,29
			-( ) 5
	BLK37		-]/[- 90
%M1914	BLK08	PUL_26	Missing patch alarm
			-] [- 51
			-]/[- 29,30,33
			-( ) 51
	BLK37		-]/[- 90
%M1915	1T0001	PUL_27	Missing tab alarm
			-] [- 21
			-( ) 21
	BLK08		-]/[- 29,30,33
	BLK19		-] [- 43
	BLK37		-]/[- 90
%M1916	BLK08	PUL_28	Missing outer-patch alarm
			-] [- 59
			-]/[- 29,30,33
			-( ) 59
	BLK19		-] [- 35
	BLK37		-]/[- 90
%M1918	BLK08	PUL_30	Patch strip finish
			-]/[- 31,33
			-( ) 63
	BLK37		-]/[- 90
%M1919	BLK08	PUL_31	Tab strip finish
			-]/[- 31,33
			-( ) 66
	BLK37		-]/[- 90
%M1920	BLK08	PUL_32	Outer-patch strip finish
			-]/[- 31,33
			-( ) 55
	BLK37		-]/[- 90
%M1924	_MAIN	CLE_4	Wrong pos. clean. cup
			-] [- 70
			-( ) 70
	BLK37		-]/[- 91
%M1925	_MAIN	CLE_5	Wrong posit. clean. pipe
			-] [- 69
			-( ) 69
	BLK37		-]/[- 91
%M1927	BLK06	CLE_7	Steril air pipe wrong posit.
			-] [- 30
			-( ) 30
	BLK37		-]/[- 91
%M1931	BLK25	CLE_11	Fault filling clean. tray
			-] [- 9
			-]/[- 8
			-(S) 21,22
			-(R) 20
	BLK37		-] [- 26
			-]/[- 91
%M1933	_MAIN	CLE_13	Clean steam barrier
			-( ) 67
	BLK37		-]/[- 97
%M1954	BLK28	ASU_2	ASU photocells alarm
			-]/[- 4,26
			-(SM) 48
			-(RM) 25
	BLK37		-]/[- 91
%M1955	BLK28	ASU_3	ASU bar-code rotation monitor
			-] [- 12

REF.	BLOCK	NICKNAME	REF. DESCRIPTION / CROSS REFERENCES
			-( ) 12
	BLK37		-]/[- 98
%M1956	BLK08	ASU_4	ASU broken web
			-]/[- 9
	BLK22		-]/[- 43
	BLK28		-] [- 11
			-]/[- 4
			-( ) 11
	BLK37		-]/[- 91
%M1957	BLK08	ASU_5	ASU magazine empty/Short Stop
			-]/[- 9
	BLK22		-]/[- 33
	BLK28		-] [- 13
			-( ) 13
	BLK37		-]/[- 91
%M1958	BLK28	ASU_6	ASU sequence interrupted
			-( ) 32
	BLK37		-]/[- 91
%M1963	BLK28	ASU_11	ASU inverter alarm
			-] [- 69
			-]/[- 5,70
			-( ) 69
	BLK37		-]/[- 92
%M1964	BLK24	PMI_11	PMI inverter alarm
			-] [- 10
			-]/[- 12
			-( ) 10
	BLK37		-]/[- 93
%M1965	BLK08	PMI_12	PMI magazine empty
			-]/[- 9
	BLK22		-]/[- 33
	BLK24		-( ) 9
	BLK37		-]/[- 93
%M1966	BLK08	PMI_13	PMI broken web
			-]/[- 9
	BLK22		-]/[- 43
	BLK24		-] [- 8
			-( ) 8
	BLK37		-]/[- 93
%M1972	BLK28	ASU_20	ASU, cutting tables not in pos.
			-] [- 14
			-]/[- 4,26
			-( ) 14
	BLK37		-]/[- 92
%M1973	BLK28	ASU_21	Feeder not in position
			-]/[- 4,26,70,71
			-(SM) 45
			-(RM) 25
	BLK37		-]/[- 92
%M1979	BLK28	ASU_27	ASU packaging material finished
			-]/[- 4,26
			-(SM) 29
			-(RM) 27
	BLK37		-]/[- 92
%M1980	BLK28	ASU_28	ASU packaging not ready
			-] [- 29
			-(SM) 28
			-(RM) 27
	BLK37		-]/[- 98
%M1981	BLK24	PMI_28	PMI paper supply finish
			-]/[- 11
			-( ) 5
	BLK37		-]/[- 93
%M1982	BLK24	PMI_29	PMI paper supply low
			-] [- 5
			-( ) 6
			-(S) 7
	BLK37		-]/[- 99
%M1985	BLK17	DES_1	Photocell error
			-] [- 22
			-( ) 22
	BLK22		-]/[- 43
	BLK37		-]/[- 92
%M1986	BLK17	DES_2	Design correction alarm
			-] [- 20

REF.	BLOCK	NICKNAME	REF. DESCRIPTION / CROSS REFERENCES
			-( ) 20
	BLK22		-]/[- 45
	BLK37		-]/[- 92
%M1987	BLK17	DES_3	Design correction in wrong pos.
			-(^) 19
	BLK37		-] [- 102,106
			-]/[- 98
%M1988	BLK16	DES_4	WTC roller position out of limit
			-] [- 4
			-( ) 4
	BLK22		-]/[- 34
	BLK37		-]/[- 92
%M1994	BLK17	DES_10	Photocell malfunction
			-] [- 25
			-( ) 25
	BLK37		-]/[- 98
%M1999	BLK16	DES_15	WTC inverter alarm
			-] [- 5
			-]/[- 7
			-( ) 5
	BLK22		-]/[- 34
	BLK37		-]/[- 92
%M3001	BLK37		FBIO 109
%M3016	BLK38	PLMS_00	PLMS, First start seq.interrupt
			-( ) 62
%M3017	BLK38	PLMS_01	PLMS, All manual short stop
			-(S) 64
			-(R) 65
%M3018	BLK38	PLMS_02	PLMS, Step out from production
			-] [- 100
			-(S) 98
			-(R) 100
%M3019	BLK38	PLMS_03	PLMS, All emergency stop
			-( ) 67
%M3020	BLK38	PLMS_04	PLMS, All door guards
			-( ) 69
%M3021	BLK38	PLMS_05	PLMS, Weac
			-( ) 71
%M3022	BLK38	PLMS_06	PLMS, Cleaning+ steam barrier
			-( ) 73
%M3023	BLK38	PLMS_07	PLMS, External cleaning
			-( ) 75
%M3025	BLK38	PLMS_09	PLMS, Intermediate Cleaning
			-( ) 77
%M3026	BLK37	ATT_ON	Attendance time ON from PLC
			-] [- 104
	BLK38		-] [- 59,62,81
			-]/[- 60,82
			-(SM) 57
			-(RM) 58
%M3027	BLK38	PLMS_11	PLMS. Preparation phase
			-( ) 81
%M3028	BLK38	PLMS_12	PLMS, Production phase
			-] [- 79,80,84,85
			-]/[- 81
			-(SM) 82
			-(RM) 83
%M3029	BLK38	PLMS_13	PLMS, Production end from pos00
			-( ) 87
%M3030	BLK38	PLMS_14	PLMS, Production end from weac
			-( ) 86
%M3031	BLK38	PLMS_15	PLMS, Strip Splice
			-( ) 89
%M3032	BLK38	PLMS_16	PLMS, Packaging material splice
			-( ) 91
%M3033	BLK38	PLMS_17	PLMS, pack. mat. splice detected
			-( ) 93
%M3034	BLK38	PLMS_18	PLMS, Manual filling off
			-] [- 100
			-]/[- 98
			-(S) 96
			-(R) 100
%M3040	BLK38	PLMS_24	PLMS, PLMSDDE OK
			-] [- 120
%M3041	BLK38	PLMS_25	PLMS, test 1

REF.	BLOCK	NICKNAME	REF. DESCRIPTION / CROSS REFERENCES
			-( ) 102
%M3042	BLK38	PLMS_26	PLMS, test 2
			-( ) 103
%M3043	BLK38	PLMS_27	PLMS, test 3
			-( ) 104
%M3044	BLK38	PLMS_28	PLMS, test 4
			-( ) 105
%M3045	BLK38	PLMS_29	PLMS, test 5
			-( ) 106
%M3046	BLK38	PLMS_30	PLMS, test 6
			-( ) 107
%M3047	BLK38	PLMS_31	PLMS, test 7
			-( ) 108
%M3048	BLK38	PLMS_32	PLMS, test 8
			-( ) 109
%M3049	BLK38	ATTEND	PLMS, Attendance time ON by DDE
			-]/[- 58,60,83
%M3050	BLK37	RESET	Alarm reset from MMI
			-] [- 112
			-(R) 109
	BLK40		-] [- 4
%M3052	BLK38	TPOP_WD	Watch Dog to TPOP
			-( ) 116
%M3053	BLK38	PLC_WD	Watch Dog to PLC
			-] [- 119
			-]/[- 116,118
%M3061	BLK37		General default push button
			-] [- 123,125,127,129,131,133,135,136
			-(RM) 136
%M3062	BLK37		Open gen. def. parameters window
			-(S) 122
%M3063	BLK38	PLMS_47	Tba/19 to DE Enable
			-]/[- 113
			-( ) 111
%M3064	BLK38	PLMS_48	DE Communication signal
			-(S) 114
			-(R) 113
%M3123	BLK37		TS left TPIH default setting
			-] [- 125
			-(R) 125
%M3124	BLK37		TS right TPIH default setting
			-] [- 127
			-(RM) 127
%M3142	BLK37		Des. corr. default setting
			-] [- 131
			-(R) 131
%M3145	BLK18		New product
			-] [- 77
			-(RM) 76
%M3146	_MAIN		Pre-filling from TPOP
			-] [- 11
			-]/[- 11
	BLK18		-] [- 29,68,75,80,92,95
			-]/[- 74,79
	BLK37		-(RM) 119
%M3147	BLK17		Normal filling from TPOP
			-] [- 4
	BLK18		-] [- 15,29,74,79
			-]/[- 74,79
	BLK37		-(RM) 119
%M3162	BLK37		SA default splice time
			-] [- 133
			-(R) 133
%M3170	BLK37		SA TPIH default setting
			-] [- 129
			-(R) 129
%M3171	BLK37		ASU default splice time
			-] [- 135
			-(R) 135
%M3228	BLK26		Manual lubrication from TPOP
			-] [- 4,6
%M3278	BLK37		Pull-tab in bypass mode
			-( ) 74
%M4002	BLK38	COM_FLT	Communication fault
			-] [- 80,123,124

REF.	BLOCK	NICKNAME	REF. DESCRIPTION / CROSS REFERENCES
			-( ) 121
%M4003	BLK38	WD_PLMS	Watchdog PLMS DDE
			-] [- 121
			-( ) 120
%M4004	BLK38	WD=0	Watchdog = 0
			-] [- 121
			-( ) 118
%M4005	BLK38	WD=1	Watchdog = 1
			-] [- 121
			-( ) 119
%M4008	BLK38	TOSTORE	Packages to cold store
			-] [- 20
			-( ) 19
%M4010	BLK22		PLC initialized
			-] [- 45
	BLK37		-] [- 125,127,129,131,133,135,136
			-]/[- 122
			-(SM) 123
			-(RM) 121
%M4024	BLK38	SEQ_ON	PLMS, Start sequence ON
			-] [- 82
			-]/[- 64,81
			-(SM) 59
			-(RM) 60
%M4025	BLK38		Keep phase memory
			-] [- 57,59,82
			-]/[- 83
			-(S) 80
			-(R) 79
%M4027	BLK38		PLMS, paper splice detected P+
			-] [- 43
			-(^) 42
%M4028	BLK37		Start motor or prod. interr.
			-] [- 105,106
			-(^) 104
	BLK38		-] [- 98
%M4029	BLK38		PLMS, Manual filling off status
			-] [- 96,97,99
			-(S) 95
			-(R) 99
%M4032	BLK37		Alarm reset push button pressed
			-] [- 114
			-(S) 113
			-(R) 114
%M4051	BLK37		Set point L.S. temp preheating
			-] [- 11
			-]/[- 9
			-( ) 9
%M4052	BLK37		Set point temp pre-sterilization
			-] [- 15
			-]/[- 13
			-( ) 13
%M4055	BLK37		Set point H2O2 full refill. time
			-]/[- 41
			-( ) 41
%M4056	BLK37		Set point H2O2 short refil. time
			-]/[- 38
			-( ) 38
%M4057	BLK08		Set point temp. PT elements
			-] [- 71
	BLK37		-]/[- 32
			-( ) 32
%M4058	BLK06		Set point temp. Short Stop
			-] [- 9
	BLK37		-]/[- 35
			-( ) 35
%M4059	BLK06		Time out temp pre-sterilization
			-] [- 21
	BLK37		-( ) 15
%M4060	BLK06		Time out L.S. temp preheating
			-] [- 8
	BLK37		-( ) 11

========== TEMPORARY (%T) GLOBAL CROSS REFERENCES

REF.	BLOCK	NICKNAME	REF. DESCRIPTION / CROSS REFERENCES
%T0001	BLK10	DLY_20S	Start sequence delay 20 sec.
			-] [- 41
	BLK13		-] [- 20
			-( ) 18
	BLK18		-] [- 46
%T0002	_MAIN	DLY_10S	Start sequence delay 10 sec.
			-] [- 54
			-]/[- 10
	BLK10		-] [- 38
	BLK13		-( ) 27
	BLK14		-] [- 5,24,28,39
			-]/[- 38
	BLK18		-] [- 42,43,45,61,115
			-]/[- 113
	BLK22		-]/[- 37
	BLK38		-] [- 151
%T0003	BLK10		Machine stop pulse
			-] [- 7
			-]/[- 37
			-(v) 6
%T0004	_MAIN		P+ position10/ready for cleaning
			-] [- 61
			-(^) 62
	BLK08		-] [- 11,31,39
	BLK10		-] [- 49
	BLK14		-] [- 16
	BLK16		-] [- 7
	BLK24		-] [- 12
	BLK28		-] [- 45,70
%T0005	BLK13		Delay counter roller on
			-] [- 28
			-]/[- 31
			-(S) 29
			-(R) 28
%T0006	BLK14		Scan time clock freq.
			-] [- 36
	BLK36		-] [- 4,7,19,20
			-]/[- 18,19
			-( ) 18
%T0007	BLK13	DLY_8S	Sq.roll air knife 8.0 sec
			-] [- 33
			-( ) 32
%T0008	BLK10	DLY_4S5	Start sequence delay 4,5sec
			-] [- 41
	BLK13		-] [- 25
			-( ) 23
%T0009	BLK10	DLY_9S	Start sequence delay 9sec
			-] [- 45
	BLK13		-] [- 26
			-]/[- 25
			-( ) 24
	BLK14		-] [- 27
			-]/[- 36
%T0010	BLK36		Machine to 6000 p/h P+
			-]/[- 28
			-(^) 26
%T0011	BLK36		Machine to 7500 p/h P+
			-]/[- 28
			-(^) 27
%T0013	_MAIN		P++ pos.10/ready for cleaning
			-(^) 61
	BLK08		-] [- 35
%T0014	BLK22	SHTSTOP	Short stop for >4 minutes
			-] [- 41
			-( ) 40
	BLK37		-] [- 61
			-]/[- 61
%T0015	_MAIN		Delay filling valve start
			-] [- 56
	BLK18		-( ) 6
	BLK22		-]/[- 43
%T0016	_MAIN		Step up P+

REF.	BLOCK	NICKNAME	REF. DESCRIPTION / CROSS REFERENCES
			-] [- 26,35,37,41,47,59,75,77
			-(^) 13
	BLK06		-] [- 13
			-]/[- 22
	BLK10		-] [- 44
	BLK13		-] [- 12
	BLK19		-] [- 4,6,8
	BLK24		-] [- 5
	BLK25		-] [- 4,8
%T0017	_MAIN		Step down P+
			-] [- 22,26,30,41,42,47
			-]/[- 35
			-(^) 14
	BLK10		-] [- 7
	BLK23		-] [- 5
%T0018	BLK26		Long lubr. ready pulse
			-] [- 16
			-(v) 15
%T0019	BLK08		Crease wheel P+
			-] [- 86
			-(^) 85
%T0021	BLK25		Start circulation cycle, pump
			-] [- 19
			-]/[- 11,17
			-(S) 10
			-(R) 16
%T0022	BLK13	WATER	Hot water
			-] [- 39
	BLK15		-] [- 36
	BLK25		-] [- 17
			-]/[- 11,16
			-( ) 12
			-(S) 13,14,15
%T0023	BLK13	FILLING	Filling check cleaning tray
			-] [- 39
	BLK25		-( ) 11
%T0025	BLK36		50 cycles P+
			-] [- 8,9
			-(^) 7
%T0026	BLK22		Pulse short stop
			-] [- 37
			-(^) 30
%T0027	BLK17	DESIGNP	Output design puls
			-] [- 7,12,14,16,21
			-(^) 6
	BLK18		-] [- 23,25,26,27
	BLK19		-] [- 56,59
%T0028	BLK08	PAPER+	Output pulse rotation paper web
			-]/[- 79
	BLK14		-]/[- 52
			-(^) 50
%T0029	BLK08	PAPER-	Output pulse rotation paper web
			-]/[- 79
	BLK14		-]/[- 52
			-(v) 51
%T0030	BLK26	LUBPULS	Output pulse long lubrication
			-] [- 4,8,9
			-(^) 6
%T0031	BLK15	CONGEST	Out pulse infeed congestion
			-]/[- 19
			-(^) 18
%T0032	BLK07		Paper splice P-
			-]/[- 9
	BLK19		-] [- 23
			-(^) 22
	BLK38		-] [- 93
%T0033	BLK07		Strip guard 2.P+
			-] [- 32,33
			-( ) 33
%T0034	BLK10		Output pulse inching
			-] [- 44
	BLK13		-] [- 12
			-(^) 5
%T0035	BLK19		Load angle paper splice
			-] [- 25,33,41

REF.	BLOCK	NICKNAME	REF. DESCRIPTION / CROSS REFERENCES
			-(^) 24
%T0036	BLK18		One shot go to intern.clean.
			-] [- 51
			-(^) 50
%T0037	BLK17		Clock data move
			-] [- 36
			-(^) 34
%T0038	BLK17		Negative pulse volume enable
			-] [- 32
			-(v) 31
%T0040	BLK36		MM high speed P+
			-] [- 6,7
			-(^) 5
%T0041	BLK25		Total ext. clean time
			-]/[- 8
			-( ) 9
%T0042	BLK37		P- yellow alarms
			-] [- 112
			-(v) 108
%T0044	_MAIN		Pulse pos. 50
			-]/[- 51
			-(^) 50
%T0045	BLK26		Time lubric. period
			-] [- 9
			-( ) 9
%T0046	BLK26		1-st stroke lubric. valve
			-] [- 20
			-]/[- 17
			-( ) 10
%T0047	BLK26		2-nd stroke lubric. valve
			-]/[- 17
			-( ) 11
%T0048	BLK26		3-rd stroke lubric. valve
			-]/[- 17
			-( ) 12
%T0049	BLK26		4-th stroke lubric. valve
			-]/[- 17
			-( ) 13
%T0050	BLK26		5-th stroke lubric. valve
			-] [- 15
			-]/[- 17
			-( ) 14
%T0051	BLK10	BTH-CHK	Peroxide bath lvl_chk 9.8 sec.
			-] [- 31,44
			-( ) 42
%T0053	BLK07		1/8 scan frequency
			-] [- 12,13
			-]/[- 12
			-( ) 12
%T0054	BLK10		Low lvl peroxide bath at product
			-] [- 44
			-( ) 38
	BLK38		-] [- 151
%T0056	BLK09		Spray tank evacuat pos 30
			-] [- 20
			-( ) 16
	BLK27		-] [- 10
			-]/[- 19
%T0057	_MAIN		Spray tank evacuat finish
			-] [- 39
	BLK09		-( ) 17
%T0058	BLK14		Main motor alarm enable
			-] [- 18,27
			-( ) 17
%T0059	_MAIN		Off delay high speed
			-] [- 51
	BLK14		-( ) 19
	BLK18		-] [- 120
			-]/[- 119
	BLK19		-]/[- 69
%T0060	BLK14		Start delay low speed
			-] [- 23
			-( ) 20
	BLK37		-]/[- 117
%T0061	BLK14		Start delay high speed

REF.	BLOCK	NICKNAME	REF. DESCRIPTION / CROSS REFERENCES
			-] [- 24
			-( ) 31
	BLK37		-]/[- 117
%T0062	BLK14		Delay brake on
			-] [- 36
			-( ) 37
%T0063	BLK38		Operational time record.
			-] [- 150,152
			-(S) 151
			-(R) 150
%T0065	BLK23		Max. time WEAC on
			-] [- 5
			-( ) 11
%T0066	BLK15		Delay ready sync. MM/FF
			-] [- 7
			-( ) 6
%T0067	BLK07		Enable sealing pulse
			-] [- 8,13
			-( ) 8
	BLK08		-] [- 82
%T0068	BLK07		Strip guard P+
			-] [- 32,33
			-]/[- 30
			-(^) 25
%T0069	BLK07		1/4 scan frequency P+
			-] [- 12
			-]/[- 12
			-(^) 11
%T0070	BLK05		ASU reset alarm push button P+
			-]/[- 7
	BLK28		-] [- 45
			-]/[- 9,11,14,69
			-(^) 7
%T0071	_MAIN		Sterile air pressure P+
			-] [- 30
			-(^) 29
%T0072	_MAIN	TUB_RDY	Tube sealing ended
			-] [- 37
			-( ) 36
%T0073	BLK26		Check oil pressure off
			-] [- 21
			-(^) 18
%T0074	BLK26		Check oil pressure on
			-] [- 21,22
			-(v) 19
%T0075	BLK05		Main air pressure del. on
			-] [- 7
			-( ) 5
	BLK08		-] [- 5
%T0076	BLK05		Main air pressure del. off
			-] [- 7
			-( ) 6
%T0077	BLK19	NEWPACK	New package detected
			-] [- 65
			-( ) 62
	BLK38		-] [- 27,30,38
%T0078	BLK10		Pulse level check p-tank
			-] [- 24
			-(^) 23
%T0079	BLK10		Level check p-tank
			-] [- 27
			-(S) 24
			-(R) 25
%T0080	BLK10		Level check p-tank
			-] [- 27
			-(v) 26
%T0082	_MAIN	STEPDN	Step down delay 3 sec.
			-] [- 22
			-( ) 43
%T0083	BLK19		Black tape P-
			-] [- 39
			-(v) 38
%T0084	BLK14		Too high speed main motor
			-] [- 40
			-( ) 38

REF.	BLOCK	NICKNAME	REF. DESCRIPTION / CROSS REFERENCES
%T0085	BLK14		Monitor machine speed
			-] [- 38,40
			-]/[- 39
			-( ) 39
%T0086	BLK14		FF chain P+
			-] [- 29
	BLK15		-] [- 7,11,24
			-]/[- 15
			-(^) 4
%T0087	BLK14		Delay brake on
			-] [- 36
			-( ) 34
%T0088	BLK14	DLY_30S	Conveyor delay off 30 sec.
			-] [- 6,7
			-( ) 5
%T0089	BLK14		Stop delay main motor
			-] [- 24,27
			-(S) 28
			-(R) 29,30
	BLK37		-] [- 58
%T0090	BLK15		Delay rotat. monitor
			-] [- 15
			-]/[- 13,14
			-( ) 12
%T0092	BLK06	SUC-VAL	Suction valve delay off 10s
			-] [- 26
			-( ) 25
%T0095	BLK19		Outer-patch splicing detector P-
			-] [- 37
			-(v) 36
%T0099	BLK19		Start strip splice
			-] [- 29,44
			-(^) 28
	BLK38		-] [- 46
%T0100	_MAIN		Pulse signal to CIP off
			-] [- 70
	BLK25		-(v) 7
%T0101	BLK07		Delay alarm indication
			-] [- 5,13
			-( ) 4
%T0102	BLK10		Peroxide bath drain
			-] [- 9,10
			-( ) 8
%T0113	BLK13		Pulse slow flash
			-] [- 8
			-]/[- 8
			-(^) 9
	BLK37		-] [- 112
%T0114	_MAIN		Slow flash
			-] [- 11
	BLK13		-] [- 8,10
			-]/[- 8
			-( ) 8
%T0115	BLK06		Preheat LS element at drying
			-]/[- 5
			-( ) 4
%T0116	BLK10		Max time perox. tank filling P+
			-] [- 31
			-(^) 20
%T0117	BLK22	NOZ_AL	Nozzle alarm to pos.0
			-]/[- 53
	BLK27		-( ) 15
%T0126	BLK08		PT al. bit 1 one shot
			-] [- 49,51
			-]/[- 50
			-(v) 47
%T0127	BLK08		PT al. bit 2 one shot
			-] [- 50,51
			-]/[- 49
			-(v) 48
%T0129	BLK08		PT cond OK
			-]/[- 30,32
			-( ) 29
%T0132	BLK07		Alarm reset safety delay
			-] [- 17

```
REF.     BLOCK    NICKNAME   REF. DESCRIPTION / CROSS REFERENCES
-------  -------  --------  -------------------------------------
         BLK22              -] [- 14,15
                            -]/[- 28
                            -(S)  14
                            -(R)  15
         BLK37              -] [- 109
%T0133   1T0001             Barcode missing aux memory
                            -(S)  22
         BLK19              -] [- 57,59
                            -(R)  59
%T0134   BLK08              Enable sealing pulse P+
                            -] [- 83
                            -(^)  82
%T0135   BLK19              Start unreeling P+
                            -] [- 47
                            -(^)  46
%T0136   BLK08              New Package detect
                            -] [- 84
         BLK18              -] [- 89
         BLK19              -] [- 59,62
                            -( )  59
%T0137   BLK08              Pulse outerpatch motion detector
                            -]/[- 58
                            -(^)  56
%T0138   BLK08              PT ON P+
                            -]/[- 30
         BLK19              -] [- 50,52
                            -(^)  49
         BLK38              -] [- 50,51
%T0139   BLK19              PT ON Paper not in posit.
                            -] [- 50,52
                            -( )  52
%T0142   BLK05              Steam time decrease temperature
                            -]/[- 9
         BLK09              -(^)  26
%T0147   BLK18              Main Motor new stop delay value
                            -] [- 65
                            -(^)  64
%T0148   BLK08              Slip control enable
                            -] [- 74
                            -(S)  73
%T0149   BLK14              P+ Main motor ramp up 6000/7500
                            -(^)  25
         BLK19              -] [- 31
%T0185   BLK40              Passivation start sequence
                            -] [- 7,8,9,11,13
                            -]/[- 13
                            -( )  7
%T0191   _MAIN              Reset FCS parameter
                            -] [- 77
         BLK18              -] [- 68,69,70,72,76,79,80,83
                            -(S)  77
                            -(R)  76
         BLK34              -] [- 12,15,25,28,38,41,51,54,64,67,77,80,90,93,103,106,116,119,129,132,142,145,155,158
%T0192   BLK18              Normal filling select pulse
                            -] [- 77,79
                            -(^)  74
%T0193   BLK18              End of Production pulse
                            -] [- 91
                            -(v)  78
%T0194   BLK18              Pre-filling threshold reached
                            -] [- 43
                            -(v)  41
%T0195   BLK18              Pre-filling select pulse
                            -] [- 68,77,80
                            -(^)  75
%T0196   BLK18              Pre-fill. ended after start seq.
                            -] [- 58,92,112
                            -(^)  42
%T0197   BLK18    CHU_EN+   Drop chute enable pulse
                            -] [- 13,20,21,81
                            -(^)  9
%T0198   BLK13    SRTP_P+   Pre-filling start sequence pulse
                            -(^)  13
         BLK18              -] [- 35,36,37,39
%T0200   BLK13              Pulse for tube flush off
```

REF.	BLOCK	NICKNAME	REF. DESCRIPTION / CROSS REFERENCES
			-] [- 37
			-(^) 36
%T0203	BLK18	FCHBIT0	Binary hold_code
			-] [- 105
			-(v) 104
%T0204	BLK18	FCHBIT1	Binary hold_code
			-] [- 108
			-(^) 107
%T0211	BLK38	PKG_DE	Pkg.counter last point DE P+
			-] [- 22,23,24,25
			-(^) 20
%T0212	BLK38	PKG_IN+	Package in P+
			-] [- 8,9,10,11
			-(^) 7
%T0213	BLK38	PKG_OU+	Package out P+
			-] [- 14,15,16,17
			-(^) 13
%T0214	_MAIN	A_RESET	Pulse+ reset A-alarm lock
			-]/[- 34,69,70
	1T0001		-]/[- 21
	BLK05		-]/[- 7,14
	BLK06		-]/[- 9,15,21,24,27,30
	BLK07		-]/[- 5,31,32
	BLK08		-]/[- 5,8,51,59,80
	BLK09		-]/[- 19,21,22,36
	BLK10		-] [- 49
			-]/[- 20,28,31,44,45,50
	BLK13		-]/[- 35,40
	BLK14		-]/[- 18,40,53
	BLK15		-]/[- 11,16,20
	BLK16		-]/[- 4,5
	BLK17		-]/[- 20,22,25
	BLK18		-] [- 56
			-]/[- 58
	BLK21		-] [- 5
	BLK22		-] [- 14
			-]/[- 15,39
	BLK24		-]/[- 8,10
	BLK25		-] [- 20
	BLK27		-]/[- 9,11,13
	BLK28		-] [- 45
			-]/[- 9,11,12,13,14,69
	BLK36		-]/[- 29,37,39
	BLK37		-] [- 110,113
			-]/[- 77,94
			-(S) 112
			-(R) 110
%T0215	BLK38	PKGTOFF	Package to FFU
			-] [- 34
			-(v) 33
%T0217	BLK38	PRO_END	Production ended P+
			-] [- 86
			-(^) 84
%T0218	BLK38	PR_END	Production ended from pos00 P+
			-] [- 87
			-(^) 85
%T0219	BLK38		First start seq.interrupted P-
			-] [- 62
			-(v) 61
%T0220	BLK28		Splice table push button P+
			-] [- 64,65
			-(^) 63
%T0221	BLK38		Over filling, jump pos. 40 P+
			-] [- 39
			-(^) 37
%T0222	BLK08		P+ PT temperature ok
			-] [- 45
			-(^) 44
%T0232	BLK18		Filling OK P-
			-] [- 115,119
			-(v) 114
%T0253	BLK28		P+ alarm inverter enable
			-] [- 24
			-(^) 23
%T0254	BLK28	P-_MAN	Normal pulse manual start ASU

REF.	BLOCK	NICKNAME	REF. DESCRIPTION / CROSS REFERENCES
			-] [- 21,24
			-(v) 19
%T0255	BLK28	P+_5SEC	Splicing pushbutton greater 5sec
			-] [- 21,24,41
			-(^) 20
%T0256	BLK28	P+MTEND	P+ packaging material end
			-] [- 21
			-(^) 18

REGISTER (%R) GLOBAL CROSS REFERENCES

REF.	BLOCK	NICKNAME	REF. DESCRIPTION / CROSS REFERENCES
%R0001	BLK19		Package dump short stop
			FBIO 4
	BLK34		FBIO 4,10,17,23,30,36,43,49,56,62,69,75,82,88,95,101,108,114,121,127,134,140,147,153,161,162
%R0002	BLK19		Package dump short stop
			FBIO 4
%R0003	BLK19		Package dump short stop
			FBIO 5
%R0004	BLK19		Package dump short stop
			FBIO 5
%R0005	BLK19		Package dump start strip seal SA
			FBIO 8
%R0006	BLK19		Package dump start strip seal SA
			FBIO 8
%R0007	BLK19		Package dump start strip seal SA
			FBIO 9
%R0008	BLK19		Package dump start strip seal SA
			FBIO 9
	BLK34		FBIO 4,17,30,43,56,69,82,95,108,121,134,147
%R0009	BLK19		Package dump strip splice SA
			FBIO 29
%R0010	BLK19		Package dump strip splice SA
			FBIO 29
%R0011	BLK19		Package dump strip splice SA
			FBIO 29
%R0012	BLK19		Package dump strip splice SA
			FBIO 30
%R0023	BLK28		ASU splice stop motor time
			FBIO 38,40
%R0025	BLK10		Peroxide restore time
			FBIO 14,15
%R0028	BLK10		Low lvl tank product delay
			FBIO 29
%R0031	BLK14		MDCS sensor alarm counter
			FBIO 55,56
%R0034	BLK10		Drain. bath time
			FBIO 7,8,30
	BLK13		FBIO 28
%R0037	BLK10		Max time perox. tank filling
			FBIO 20,21
%R0040	BLK10		Low lvl peroxide bath pr delay
			FBIO 38
%R0043	BLK37		TPOP filling switch reset delay
			FBIO 119
%R0046	BLK09		Elapsed time POS30
			FBIO 15,16,17
%R0049	BLK14		Off delay low speed
			FBIO 19,34,35,37
	BLK19		FBIO 69
%R0052	BLK14		Monitor machine speed
			FBIO 39
%R0055	BLK14		Start delay high speed
			FBIO 31
%R0058	BLK14		Start delay low speed
			FBIO 20
%R0061	BLK14		Main motor, seconds
			FBIO 44,45
%R0064	BLK23		WEAC funct. on
			FBIO 11,12,13
%R0067	BLK07		Paper splice detected time
			FBIO 9,10
%R0068	BLK07		Paper splice double heat up.lim.

REF.	BLOCK	NICKNAME	REF. DESCRIPTION / CROSS REFERENCES
			FBIO 9,10
%R0070	1T0001		Time TS sealing pulse
			FBIO 16,18
%R0071	1T0001		Overtime TS sealing pulse
			FBIO 17,18
%R0072	BLK24		Paper supply delay
			FBIO 4
%R0075	BLK08		Black Tape alarm delay
			FBIO 77
%R0078	BLK10		Bath temp W2 select
			FBIO 52
%R0081	BLK19		Package dump
			FBIO 4,6,10,12,16,18,27,31,64,65
	BLK21		FBIO 11
%R0082	BLK19		Package dump
			FBIO 4,6,10,12,16,18,39
	BLK21		FBIO 11
%R0083	BLK19		Package dump
			FBIO 5,7,8,11,13,17,19,25,35,37,39,43
%R0084	BLK19		Package dump
			FBIO 5,7,8,11,13,14,17,19,20,25,29,35,37,40,41,43,50
%R0085	BLK19		Package dump
			FBIO 7,9,11,13,14,17,19,20,26,29,33,35,37,40,41,43,44,47,50
%R0086	BLK19		Package dump
			FBIO 9,15,21,26,29,33,42,44,47,51
%R0087	BLK19		Package dump
			FBIO 30,34,42,44,48
%R0088	BLK19		Package dump
			FBIO 34,45,48
%R0089	BLK19		Package dump
			FBIO 45
%R0092	BLK09		Delay reset drying
			FBIO 6
%R0100	_MAIN	SECTOR	Angle sector 0-127
			FBIO 36
	1T0001		FBIO 13,14,15
	BLK14		FBIO 32
	BLK15		FBIO 5,10
	BLK18		FBIO 23,27,35
	BLK19		FBIO 10,12,14,16,18,20,24,60,61,68
	BLK21		FBIO 11
	BLK22		FBIO 30
	BLK36		FBIO 41,42,44,45,47,48
	BLK38		FBIO 33
%R0118	BLK14		Delay clutch off after MM disab.
			FBIO 13
%R0121	BLK19		1 pack.dump before short stop
			FBIO 10
	BLK34		FBIO 161
%R0122	BLK19		1 pack.dump before short stop
			FBIO 10
%R0123	BLK19		1 pack.dump before short stop
			FBIO 11
%R0124	BLK19		1 pack.dump before short stop
			FBIO 11
%R0125	BLK19		1 pack.dump before short stop
			FBIO 11
%R0126	BLK19		1 pack.dump before short stop
			FBIO 14
%R0127	BLK19		1 pack.dump before short stop
			FBIO 14
%R0128	BLK19		1 pack.dump before short stop
			FBIO 15
%R0129	BLK19		1 pack.dump before short stop
			FBIO 16
	BLK34		FBIO 162
%R0130	BLK19		1 pack.dump before short stop
			FBIO 16
%R0131	BLK19		1 pack.dump before short stop
			FBIO 17
%R0132	BLK19		1 pack.dump before short stop
			FBIO 17
%R0133	BLK19		1 pack.dump before short stop
			FBIO 17
%R0134	BLK19		1 pack dump before short stop

REF.	BLOCK	NICKNAME	REF. DESCRIPTION / CROSS REFERENCES
			FBIO 20
%R0135	BLK19		1 pack dump before short stop
			FBIO 20
%R0136	BLK19		1 pack dump before short stop
			FBIO 21
%R0137	BLK36		Delay tube sealing monitoring
			FBIO 38
%R0140	BLK36		Packages counter in tube sealing
			FBIO 30,31,32
%R0143	BLK36		Encoder previous value
			FBIO 21
%R0144	BLK36		Encoder increment
			FBIO 21,22
%R0145	BLK36		Catches fault delay
			FBIO 36
%R0154	BLK36		Real angle detected
			FBIO 25
%R0158	BLK14		Delay main motor alarm enable
			FBIO 17
%R0161	BLK36		Scan time evaluation init value
			FBIO 6,8,9
%R0163	BLK36		0.1 msec init value
			FBIO 8,9
%R0164	BLK36		Scan time evaluation final value
			FBIO 7,8,9
%R0166	BLK36		0.1 msec final value
			FBIO 8,9
%R0167	BLK36		Scan time value
			FBIO 8,9,10,13,14,15
%R0168	BLK36		Angle degrees time
			FBIO 11,12,13,14,15
%R0169	BLK36		Three angle degrees time
			FBIO 11,12,13,14,15
%R0170	BLK34		Angle fill start
			FBIO 4,17,30,43,56,69,82,95,108,121,134,147
%R0172	BLK18		A-valve close delay
			FBIO 33
%R0173	BLK18		A-valve open delay
			FBIO 37
%R0174	BLK19		Load sector paper splice
			FBIO 24
%R0176	BLK28		ASU barcode delay
			FBIO 38
%R0177	BLK18		Time needed to set product. flow
			FBIO 81,82
%R0179	1T0001		TS start sealing sector
			FBIO 14
	BLK21		FBIO 7,8
%R0180	_MAIN		Paremeter to clear PLC-I/O fault
			FBIO 75,76
%R0181	BLK10		Delay alarm pos10 of peroxide
			FBIO 49
%R0184	BLK13		Max.time check air knife/sqee.r.
			FBIO 35
%R0187	BLK36		Two scan time
			FBIO 14
%R0188	BLK36		Four scan time
			FBIO 13
%R0189	BLK36		Angle degrees for selected cycle
			FBIO 13,14,15,16
%R0190	BLK36		Positive high limit
			FBIO 16,17,21
%R0191	BLK36		Positive low limit
			FBIO 16,17,21
%R0192	BLK36		Negative high limit
			FBIO 17,22
%R0193	BLK36		Negative low limit
			FBIO 17,22
%R0194	BLK36		Cycles counter
			FBIO 7
%R0200	BLK05		Main air press. delay
			FBIO 5
%R0203	BLK05		Main air press. delay
			FBIO 6
%R0206	BLK08		Package counter before disable

REF.	BLOCK	NICKNAME	REF. DESCRIPTION / CROSS REFERENCES
			FBIO 27
%R0215	BLK22		Delay check safety monitor
			FBIO 11
%R0218	BLK28		ASU aux. reset timer
			FBIO 8,9,51
%R0224	BLK14		Main motor high speed delay time
			FBIO 21
%R0227	_MAIN		Delay step up pulse
			FBIO 13
%R0250	BLK17		Counter bits volume data
			FBIO 27
%R0255	BLK17		Interrupt transm. time
			FBIO 29
%R0260	BLK17		Counter two transmission
			FBIO 32
%R0263	BLK16		Stop motor delay
			FBIO 6
%R0267	BLK18		Filling parameters aux. register
			FBIO 70,71,72
%R0268	BLK17		Repeat length register
			FBIO 36
%R0269	BLK34		Angle register
			FBIO 7,20,33,46,59,72,85,98,111,124,137,150
%R0270	BLK34		WTC fixed pressure working mode
			FBIO 9,22,35,48,61,74,87,100,113,126,139,152
%R0271	BLK17		Bit parameters to A400
			FBIO 35
%R0272	BLK17		Repeat length shift register
			FBIO 36,37,38
%R0276	BLK38		Delay switch off power recorder
			FBIO 153
%R0279	BLK38		Delay alarm at switch on record.
			FBIO 154
%R0283	BLK13		Hydraulic pump delay off time
			FBIO 19
%R0291	BLK10		Top filling valve time
			FBIO 12,13,39,40
%R0294	BLK18		Emptying tube
			FBIO 61,62
%R0297	BLK18		LRF Closing delay
			FBIO 45
%R0300	BLK17		Counter design false in prod
			FBIO 13,14
%R0301	BLK17		Preset n. of faulty packages
			FBIO 14,15,17
%R0305	_MAIN		Delay jump from pos20 to pos10
			FBIO 33
%R0338	BLK08		Enable time outer-patch control
			FBIO 57
%R0341	BLK15		Delay stop squeezer and pulldown
			FBIO 23
%R0347	BLK08		Pre-patch rotation monitor
			FBIO 58
%R0350	BLK08		Sh.stop outerpatch package count
			FBIO 55
%R0353	BLK18		Delay wrong pos.reg val.al.
			FBIO 53
%R0356	BLK18		Delay open pos.reg valve
			FBIO 54
%R0359	BLK16		Delay paper in loop
			FBIO 14
%R0362	BLK10		Too high level perox. tank time
			FBIO 32
%R0365	BLK40		Peroxide bath level delay
			FBIO 6
%R0368	BLK07		LS TPIH alarm delay
			FBIO 4
%R0371	BLK16		Aux speed register
			FBIO 16,17,18,19
%R0373	BLK16		Min speed value
			FBIO 19,20
%R0375	BLK16		Max speed value
			FBIO 19,21
%R0377	BLK16		WTC low speed precorrection
			FBIO 15,20

REF.	BLOCK	NICKNAME	REF. DESCRIPTION / CROSS REFERENCES
%R0379	BLK16		WTC high speed production
			FBIO 12,21
%R0384	BLK16		Delay WTC roll.pos. out of limit
			FBIO 4
%R0387	BLK08		PT delay inverter enable
			FBIO 16
%R0391	BLK08		Sh.stop tab mag package counter
			FBIO 66
%R0394	BLK08		Sh.Stop patch package counter
			FBIO 63
%R0397	BLK08		PT delay paper infeed broken
			FBIO 6,19
%R0400	BLK08		Release servo PW delay
			FBIO 38
%R0406	BLK08		PT delay inverter fault
			FBIO 12
%R0409	BLK28		Monitor bar-code ASU
			FBIO 12
%R0412	BLK16		Bend.roller inverter fault delay
			FBIO 8
%R0415	BLK24		Delay inverter enable
			FBIO 13
	BLK28		FBIO 72
%R0420	BLK24		Mag. high speed production
			FBIO 17,24
	BLK28		FBIO 84,92
%R0422	BLK24		Mag. low speed precorrection
			FBIO 19,23
	BLK28		FBIO 85,91
%R0427	BLK24		Delay paper in loop broken
			FBIO 8,19
	BLK28		FBIO 11,85
%R0430	BLK28		ASU unr. high speed production
			FBIO 78,79,95
%R0432	BLK28		ASU unr. low speed precorrection
			FBIO 82,94
%R0440	BLK08		Mag. high speed production
			FBIO 17,24
%R0442	BLK08		Mag. low speed precorrection
			FBIO 19,23
%R0444	BLK08		Aux. speed register
			FBIO 20,21,22
%R0446	BLK08		Min. speed value
			FBIO 22,23
%R0448	BLK08		Max. speed value
			FBIO 22,24
%R0460	BLK28		Delay paper in loop
			FBIO 81
%R0464	BLK17		Filling start time min.
			FBIO 5
	BLK18		FBIO 13
%R0465	BLK18		Filling start time max.
			FBIO 13,14
%R0466	BLK18		Filling set-point start time
			FBIO 13,18,83
%R0467	BLK18		Mch. in stop TMR for bath dump
			FBIO 86
%R0470	BLK18		Angle fill start current
			FBIO 16,17,18,19,23,69
%R0471	BLK18		NO package dump OK pre-filling
			FBIO 90
%R0472	BLK28	SEQ_TIM	Asu sequence time
			FBIO 36,38,40,42,44,46,47,49,50,54,55,56,57
%R0475	BLK28		ASU splicing pushbutton time
			FBIO 20
%R0478	BLK18		Filling time
			FBIO 10,13,81
%R0479	BLK18		Dekor time
			FBIO 11,16,18
%R0481	BLK18		Previous BC angle sector
			FBIO 23,27
%R0482	BLK18		Filling angle-Prev. angle dist
			FBIO 23,24,25,26
%R0483	BLK18		Actual angle-Filling angle dist.
			FBIO 23,24,25,26

REF.	BLOCK	NICKNAME	REF. DESCRIPTION / CROSS REFERENCES
%R0484	BLK18		Max. Dekor start time
			FBIO 14,16
%R0485	BLK18		Auxiliary A valve open delay
			FBIO 34,36,37
%R0487	BLK18		Package dump peroxide bath
			FBIO 88
	BLK19		FBIO 6
	BLK34		FBIO 7,20,33,46,59,72,85,98,111,124,137,150,163,164
%R0488	BLK19		Package dump peroxide bath
			FBIO 6
%R0489	BLK19		Package dump peroxide bath
			FBIO 7
%R0490	BLK19		Package dump peroxide bath
			FBIO 7
%R0491	BLK19		Package dump peroxide bath
			FBIO 7
%R0497	BLK22		Alarm reset
			FBIO 15
%R0500	BLK07		Start seq. for prod.
			FBIO 7
	BLK10		FBIO 27,29,42
	BLK13		FBIO 18,23,24,27,30,32
	BLK14		FBIO 9
	BLK18		FBIO 6,34,47,115,118
	BLK37		FBIO 116
	BLK38		FBIO 61
%R0503	BLK08		Paper slipping stop delay
			FBIO 74
%R0506	BLK22		Time in short stop pos.
			FBIO 38,40
%R0511	BLK34		TS TPIH default value
			FBIO 9,22,35,48,61,74,87,100,113,126,139,152
	BLK37		FBIO 125,127
%R0512	BLK18		LRF valve moving time
			FBIO 5
%R0518	BLK15		Sq.ext.clean prg.
			FBIO 36
	BLK19		FBIO 67
	BLK25		FBIO 9,12,13,14,15,18
	BLK26		FBIO 5
%R0522	BLK24		Aux speed register
			FBIO 20,21,22
	BLK28		FBIO 88,89,90,93
%R0524	BLK26		Timer sq. lubric.
			FBIO 9,10,11,12,13,14
%R0527	BLK07		Rotat. time
			FBIO 30
%R0528	BLK07		Rotation time selection
			FBIO 26,27,28,29,30
%R0530	BLK38		Delay record. steril param.
			FBIO 145,146
%R0533	BLK38		Operational time record
			FBIO 150
%R0536	BLK21		Tube sealing
			FBIO 11
%R0537	BLK08		Package length precorreted
			FBIO 23
	BLK16		FBIO 20
	BLK19		FBIO 57
	BLK24		FBIO 23
	BLK28		FBIO 91,94
	BLK34		FBIO 8,21,34,47,60,73,86,99,112,125,138,151
%R0539	BLK08		Repeat length register
			FBIO 24
	BLK16		FBIO 21
	BLK17		FBIO 36
	BLK19		FBIO 57
	BLK24		FBIO 24
	BLK28		FBIO 92,95
	BLK34		FBIO 8,21,34,47,60,73,86,99,112,125,138,151
%R0541	BLK34		SA TPIH default value
			FBIO 11,14,24,27,37,40,50,53,63,66,76,79,89,92,102,105,115,118,128,131,141,144,154,157
	BLK37		FBIO 129
%R0542	BLK07		Strip splice time
			FBIO 16,22,23

REF.	BLOCK	NICKNAME	REF. DESCRIPTION / CROSS REFERENCES
%R0545	BLK07		Reset TPIH power delay
			FBIO 6
%R0548	BLK09		Spray peroxide
			FBIO 7,8,9,10,11,12,13,14,18
	BLK27		FBIO 8
%R0551	BLK06		Drying after spray
			FBIO 4
	BLK09		FBIO 24,26,29,30,31,32
%R0554	1T0001		Delay enable sealing pulse
			FBIO 22
	BLK19		FBIO 56,57,58
%R0560	BLK07		Sealing pulse off delay
			FBIO 8
%R0566	BLK14		Delay alarm paper
			FBIO 52
%R0567	BLK14		Delay alarm paper preset value
			FBIO 48,49,52
%R0569	BLK08		Delay alarm paper
			FBIO 79
%R0572	BLK06		Alarm delay
			FBIO 23
%R0575	BLK25		Delay fill. clean. tray
			FBIO 10
%R0578	_MAIN		Delay ready for clean.
			FBIO 63
%R0581	BLK06		Delay stop suction valve
			FBIO 27
%R0584	BLK09		Delay B valve pos.
			FBIO 35
%R0587	BLK14		Stop conveyor
			FBIO 4,5,6
	BLK18		FBIO 33
%R0590	BLK14		Stop delay main motor
			FBIO 29
	BLK18		FBIO 65
%R0591	BLK14		PV Stop delay main motor
			FBIO 29
	BLK18		FBIO 65,66
%R0593	BLK14		Start delay rotat. monitor
			FBIO 52
	BLK15		FBIO 12
%R0596	BLK15		FF rotat. monitor
			FBIO 15
%R0597	BLK15		Delay time FF rotat. monitor
			FBIO 13,14,15
%R0602	BLK28		ASU splice counter
			FBIO 97
%R0605	BLK05		Delay alarm water press.
			FBIO 15,16
%R0608	BLK21		Delay TS sealing off
			FBIO 10
%R0611	BLK21		Delay TS off
			FBIO 13
%R0614	BLK17		Missing design marks
			FBIO 21,23,24
%R0617	BLK17		Delay time FF.rot. monitor
			FBIO 16,17
%R0620	_MAIN		Stop delay from pos 40
			FBIO 43
%R0623	BLK26		Max.run time lubric. fault
			FBIO 24
%R0626	BLK15		Delay heating off FF
			FBIO 26
%R0629	BLK06		Suction valve hose bath
			FBIO 25
%R0632	BLK05		Delay steam monitor
			FBIO 9,10,13
%R0635	BLK05		Stem temp. time during drying
			FBIO 11
%R0638	BLK13		Time of emptying tube flush
			FBIO 38
%R0641	BLK06		Alarm delay paper supply
			FBIO 16
%R0644	BLK24		Min speed value
			FBIO 22,23

REF.	BLOCK	NICKNAME	REF. DESCRIPTION / CROSS REFERENCES
	BLK28		FBIO 90,91,93,94
%R0646	BLK24		Max speed value
			FBIO 22,24
	BLK28		FBIO 90,92,93,95
%R0653	BLK36		Machine to 6000 p/h alarm delay
			FBIO 28
%R0656	BLK18		TFD opening delay
			FBIO 112,113,115,118
%R0659	BLK15		Delay congest monitor
			FBIO 19
%R0662	BLK15		Delay unsync. FF/MM
			FBIO 6
%R0665	BLK15		Sprinkler time
			FBIO 32,34,35
%R0674	BLK06		Sterile air press.
			FBIO 14
%R0679	BLK19		Package dump paper splice SA
			FBIO 25
	BLK34		FBIO 5,18,31,44,57,70,83,96,109,122,135,148
%R0680	BLK19		Package dump paper splice SA
			FBIO 25
%R0681	BLK19		Package dump paper splice SA
			FBIO 26
%R0682	BLK19		Package dump paper splice SA
			FBIO 26
%R0683	BLK19		Package dump miss tab/black tape
			FBIO 39,43
%R0684	BLK19		Package dump miss tab/black tape
			FBIO 39,43
%R0685	BLK19		Package dump miss tab/black tape
			FBIO 40,43
%R0686	BLK19		Free for future use
			FBIO 40
	BLK34		FBIO 5,18,31,44,57,70,83,96,109,122,135,148
%R0687	BLK19		Package dump outer-patch missing
			FBIO 35
%R0688	BLK19		Package dump outer-patch missing
			FBIO 35
%R0689	BLK19		Package dump outer-patch missing
			FBIO 35
%R0691	BLK19		Package dump outerpatch splicing
			FBIO 37
%R0692	BLK19		Package dump outerpatch splicing
			FBIO 37
%R0693	BLK19		Package dump outerpatch splicing
			FBIO 37
	BLK34		FBIO 5,18,31,44,57,70,83,96,109,122,135,148
%R0694	BLK19		Package dump posit. correct
			FBIO 41
%R0695	BLK19		Package dump posit. correct
			FBIO 41
%R0696	BLK19		Package dump posit. correct
			FBIO 42
%R0697	BLK19		Package dump posit. correct
			FBIO 42
%R0701	BLK08		Package dump PT on
			FBIO 83
	BLK34		FBIO 6,19,32,45,58,71,84,97,110,123,136,149
%R0708	BLK34		Package dump start strip seal PT
			FBIO 6,19,32,45,58,71,84,97,110,123,136,149
%R0715	BLK34		Package dump strip splice PT
			FBIO 6,19,32,45,58,71,84,97,110,123,136,149
%R0731	BLK14		Delay alarm conv. que.
			FBIO 8
%R0737	BLK25		Time clean tray fill.
			FBIO 10,11,21,22
%R0740	BLK22		Line L10 L11 not ok
			FBIO 12,13
	BLK37		FBIO 111
%R0744	BLK07		Paper splice double heat
			FBIO 10
	BLK34		FBIO 11,14,24,27,37,40,50,53,63,66,76,79,89,92,102,105,115,118,128,131,141,144,154,157
%R0755	BLK17		Elapsed time from POS70
			FBIO 5
	BLK18		FBIO 8,10,11,82

REF.	BLOCK	NICKNAME	REF. DESCRIPTION / CROSS REFERENCES
%R0758	BLK13		Pre-filling start sequence timer
			FBIO 16
%R0759	BLK13		Prefill. start sequence timer PV
			FBIO 14,15,16
%R0761	BLK18		Package dump for prefill. start
			FBIO 88,89,90
%R0768	BLK18		FCS counter bit volume data
			FBIO 102
%R0771	BLK08		Package dump PT on
			FBIO 83,84,86
	BLK19		FBIO 50
%R0772	BLK19		Package dump PT on
			FBIO 50
%R0773	BLK19		Package dump PT on
			FBIO 51
%R0774	BLK19		Package dump paper splice PT-PR
			FBIO 33
%R0775	BLK19		Package dump paper splice PT-PR
			FBIO 33
%R0776	BLK19		Package dump paper splice PT-PR
			FBIO 34
%R0777	BLK19		Package dump paper splice PT-PR
			FBIO 34
%R0778	BLK19		Package dump start strip seal PT
			FBIO 47
%R0779	BLK19		Package dump start strip seal PT
			FBIO 47
%R0780	BLK19		Package dump start strip seal PT
			FBIO 48
%R0781	BLK19		Package dump start strip seal PT
			FBIO 48
%R0785	BLK19		Package dump strip splice PT
			FBIO 44
%R0786	BLK19		Package dump strip splice PT
			FBIO 44
%R0787	BLK19		Package dumo strip splice PT
			FBIO 44
%R0788	BLK19		Package dump strip splice PT
			FBIO 45
%R0789	BLK19		Package dump strip splice PT
			FBIO 45
%R0792	BLK08		Synchronization FF speed
			FBIO 20
	BLK14		FBIO 22
	BLK16		FBIO 16
	BLK24		FBIO 20
	BLK28		FBIO 88
	BLK34		FBIO 11,14,24,27,37,40,50,53,63,66,76,79,89,92,102,105,115,118,128,131,141,144,154,157
	BLK36		FBIO 11
	BLK38		FBIO 5
%R0793	BLK15		Reset Pressure Device Value
			FBIO 25
%R0794	BLK14		Speed limit pack./min
			FBIO 38
%R0795	BLK14		Start braking at short stop
			FBIO 32
%R0796	BLK18		A-valve delay present sec x 0.1
			FBIO 6,112
%R0797	BLK18		LRF Closing preset
			FBIO 45
%R0798	BLK18		Start Flow(LSB)+Prod. Flow (MSB)
			FBIO 69
%R0881	BLK19		1 pack dump before short stop
			FBIO 12
	BLK34		FBIO 163
%R0882	BLK19		1 pack dump before short stop
			FBIO 12
%R0883	BLK19		1 pack dump before short stop
			FBIO 13
%R0884	BLK19		1 pack dump before short stop
			FBIO 13
%R0885	BLK19		1 pack dump before short stop
			FBIO 13
%R0886	BLK19		1 pack dump before short stop
			FBIO 18

REF.	BLOCK	NICKNAME	REF. DESCRIPTION / CROSS REFERENCES
	BLK34		FBIO 164
%R0887	BLK19		1 pack dump before short stop
			FBIO 18
%R0888	BLK19		1 pack dump before short stop
			FBIO 19
%R0889	BLK19		1 pack dump before short stop
			FBIO 19
%R0890	BLK19		1 pack dump before short stop
			FBIO 19
%R0897	BLK18		FCS counter bit volume data
			FBIO 99
%R0903	BLK18		FCS interrupt transmission time
			FBIO 101
%R0906	BLK18		FCS counter two transmission
			FBIO 105
%R0909	BLK18		Filling parameters to A310
			FBIO 70,72,108
	BLK34		FBIO 12,15,25,28,38,41,51,54,64,67,77,80,90,93,103,106,116,119,129,132,142,145,155,158
%R0912	BLK18		PID trigger level+bit parameter
			FBIO 68,70
%R0916	BLK34		Ramp time(LSB)+bit parameter
			FBIO 12,15,25,28,38,41,51,54,64,67,77,80,90,93,103,106,116,119,129,132,142,145,155,158
%R0917	BLK18		Filling start time+spare
			FBIO 83
	BLK34		FBIO 13,16,26,29,39,42,52,55,65,68,78,81,91,94,104,107,117,120,130,133,143,146,156,159
%R0918	BLK18		Filling param. in tx to A310
			FBIO 108,109,110
%R0928	BLK15		OFF delay DE start
			FBIO 39
%R0931	BLK18		Filling parameters aux. register
			FBIO 71,72
%R1021	BLK14		To high speed main motor
			FBIO 38
%R1024	BLK24		Low supply paper
			FBIO 5,6
%R1025	BLK24		Paper supply package counter
			FBIO 5
	BLK34		FBIO 7,20,33,46,59,72,85,98,111,124,137,150
%R1027	BLK15		Position FF msec
			FBIO 8
%R1030	BLK24		Paper supply, start count down
			FBIO 6
%R1031	BLK15		Position MM msec
			FBIO 5
%R1032	BLK15		Synchronization position MM/FF
			FBIO 5,8
%R1036	BLK15		Press. d.off delay in FF
			FBIO 25
%R1039	BLK40		Passivation time
			FBIO 8,9
%R1042	BLK40		Passivation time
			FBIO 13,14,15
%R8150	BLK37		Timer Time Left L.S.temp preheat
			FBIO 9,10
%R8153	BLK37		Timer alarm L.S. temp preheating
			FBIO 11
%R8156	BLK37		Timer Time Left temp pre-steril.
			FBIO 13,14
%R8159	BLK37		Timer alarm temp pre-sterilizat.
			FBIO 15
%R8162	BLK37		Timer ready for door opening
			FBIO 23,24
%R8165	BLK37		Timer Time Left tot.ext.cleaning
			FBIO 26,27
%R8168	BLK37		Timer Dry time over
			FBIO 20,21
%R8171	BLK37		Timer Time Left spray
			FBIO 29,30
%R8174	BLK37		Timer Time Left temp. PT element
			FBIO 32,33
%R8177	BLK37		Timer Time Left Short Stop
			FBIO 35,36
%R8180	BLK37		Timer Time Left WEAC 5 min.
			FBIO 17,18
%R8183	BLK37		Timer Time Left H2O2 refilling

REF.	BLOCK	NICKNAME	REF. DESCRIPTION / CROSS REFERENCES
			FBIO 38,39
%R8186	BLK37		Timer Time Left H2O2 refilling
			FBIO 41,42
%R8303	BLK38		Delay, DE communication
			FBIO 113
%R8312	BLK38		1st delay to DE enable
			FBIO 111
%R8315	BLK38		2nd delay to DE enable
			FBIO 111
%R8318	BLK38		Communication ON after 2 min.
			FBIO 111,114
%R8332	BLK37		Alarm Peroxide system
			FBIO 103
%R8358	BLK38		Ladder step PLMS
			FBIO 143
%R8359	BLK37		Ladder step left
			FBIO 72
%R8363	BLK37		Volume set
			FBIO 121
%R8367	BLK37	OPTIONS	Options Installed
			FBIO 7
%R8371	BLK38	PKG_IN	Package material in
			FBIO 8,9
%R8372	BLK38	PKG_OUT	Package material out
			FBIO 14,15
%R8373	BLK38	PKG_TCS	Packages to coldstore
			FBIO 22,23
%R8374	BLK38	WASTE	Waste, Total Tba/19
			FBIO 27,28
%R8375	BLK38	WST_DCS	Waste, Design correction system
			FBIO 30,31
%R8376	BLK38	PKG_FFU	Package into Final Folder
			FBIO 34,35
%R8377	BLK38	WST_FIL	Waste, Filling system
			FBIO 38,39,40
%R8378	BLK38	WST_SPL	Waste, Packaging material splice
			FBIO 43,44
%R8379	BLK38	WST_SAS	Waste, Strip Applicator splice
			FBIO 46,47
%R8381	BLK38	WST_PT	Waste, PT19
			FBIO 50,51,52
%R8382	BLK38	WST_MAN	Waste, Manually
			FBIO 54,55
%R8383	BLK38	MMI_IN1	1^Packs IN to MMI
			FBIO 10,11
%R8384	BLK38	MMI_IN2	2^Packs IN to MMI
			FBIO 10
%R8385	BLK38	MMI_OU1	1^Packs OUT to MMI
			FBIO 16,17
%R8386	BLK38	MMI_OU2	2^Packs OUT to MMI
			FBIO 16
%R8387	BLK38	MMI_DE1	1^Packs last point DE to MMI
			FBIO 24,25
%R8388	BLK38	MMI_DE2	2^Packs last point DE to MMI
			FBIO 24
%R8394	BLK38	PKGTRAY	Pakages per tray
			FBIO 21,22,25
%R8396	BLK38	MC_SPD	Machine speed
			FBIO 5
%R8400	BLK37		Timer Time Left L.S.temp preheat
			FBIO 10
%R8401	BLK37		Timer Time Left temp pre-steril.
			FBIO 14
%R8402	BLK37		Timer Time Left WEAC 5 min.
			FBIO 18
%R8403	BLK37		Timer Dry time over
			FBIO 21
%R8404	BLK37		Timer ready for door opening
			FBIO 24
%R8405	BLK37		Timer Time Left tot.ext.cleaning
			FBIO 27
%R8406	BLK37		Timer Time Left spray
			FBIO 30
%R8407	BLK37		Timer Time Left temp. PT element
			FBIO 33

REF.	BLOCK	NICKNAME	REF. DESCRIPTION / CROSS REFERENCES
%R8408	BLK37		Timer Time Left Short Stop
			FBIO 36
%R8409	BLK37		Timer Time Left H2O2 refilling
			FBIO 39
%R8410	BLK37		Timer Time Left H2O2 refilling
			FBIO 42
%R8500	BLK07		SA splice time
			FBIO 23
	BLK37		FBIO 133
%R8510	BLK28		ASU splice time
			FBIO 55
	BLK37		FBIO 135
%R8596	BLK37		Angle sector 0-127
			FBIO 5
%R9500	BLK38		Delay, 1 pkg.to cold store
			FBIO 19
%R9503	BLK38		Delay, 2 pkg.to cold store
			FBIO 19
%R9506	BLK38		Delay WD = 0
			FBIO 118
%R9512	BLK38		Delay WD = 1
			FBIO 119
%R9518	BLK38		Delay watchdog PLMS DDE
			FBIO 120
%R9521	BLK38		Delay, Manual fill. off/step out
			FBIO 100
%R9524	BLK38		Delay, restart TPOP
			FBIO 124
%R9527	BLK38		Photocells filter
			FBIO 13
%R9530	BLK38		Box filter
			FBIO 20
%R9533	BLK38		First start sequence interrupted
			FBIO 62
%R9536	BLK38		Production end signal to PLMS
			FBIO 86
%R9539	BLK38		Production end from 0 to PLMS
			FBIO 87
%R9542	BLK38		Delay pack. mat. splice detected
			FBIO 93
%R9545	BLK38		Delay, manual filling off
			FBIO 97
%R9548	BLK37		Start motor or prod. interr.time
			FBIO 105,114
%R9551	BLK38		PLMS, all door guards, time
			FBIO 69

ANALOG OUTPUT (%AQ) GLOBAL CROSS REFERENCES

REF.	BLOCK	NICKNAME	REF. DESCRIPTION / CROSS REFERENCES
%AQ001	BLK24	G001-3	Analog output magazine motor
			FBIO 14,16,17,19
	BLK28		FBIO 73,76,84,85,87
%AQ002	BLK28	G002-3	Analog output unreeling mot. ASU
			FBIO 74,76,79,82,86
%AQ003	BLK16	G003-3	Analog output WTC motor
			FBIO 9,11,12,15
%AQ004	BLK08	G006-3	Analog output PT infeed motor
			FBIO 13,15,17,19
%AQ005	BLK37	A500-1	Analog output TS TPIH left
			FBIO 125
%AQ006	BLK37	A500-2	Analog output TS TPIH right
			FBIO 127
%AQ007	BLK37	A501-1	Analog output SA TPIH
			FBIO 129
%AQ008	BLK37	A400-3	Analog output design correction
			FBIO 131

SYSTEM REFERENCE (%S) GLOBAL CROSS REFERENCES

REF.	BLOCK	NICKNAME	REF. DESCRIPTION / CROSS REFERENCES
%S0001	_MAIN	FST_SCN	-] [- 77
	BLK05	FST_SCN	-]/[- 4
	BLK17	FST_SCN	-] [- 35
	BLK18	FST_SCN	-] [- 102
	BLK22	FST_SCN	-] [- 11
	BLK25	FST_SCN	-] [- 9
	BLK28	FST_SCN	-] [- 8,28
	BLK37	FST_SCN	-] [- 26,122
	BLK38	FST_SCN	-] [- 21
%S0004	BLK27	T_100MS	-] [- 21
%S0005	_MAIN	T_SEC	-] [- 11,12
	BLK05	T_SEC	-] [- 11
	BLK07	T_SEC	-] [- 20
	BLK13	T_SEC	-] [- 9,10
	BLK14	T_SEC	-] [- 44
	BLK22	T_SEC	-] [- 14,41
	BLK25	T_SEC	-] [- 11
	BLK26	T_SEC	-] [- 24
	BLK28	T_SEC	-] [- 6,10
	BLK37	T_SEC	-] [- 9,13,17,20,23,26,29,32,35,38,41,78,95
			-]/[- 99
	BLK38	T_SEC	-] [- 123
	BLK40	T_SEC	-] [- 13
%S0007	_MAIN	ALW_ON	-] [- 23,31,38,45,48,53,55,58,72,78
	1T0001	ALW_ON	-] [- 4,13,23
	BLK07	ALW_ON	-] [- 10
	BLK08	ALW_ON	-] [- 13,15,20,22,23,24
			-]/[- 84,86
	BLK10	ALW_ON	-] [- 8,12,13,21
	BLK14	ALW_ON	-] [- 48
	BLK16	ALW_ON	-] [- 9,11,16,19,20,21
	BLK17	ALW_ON	-] [- 17,37
			-]/[- 38
	BLK18	ALW_ON	-] [- 62,109
			-]/[- 71,83,89,110
	BLK19	ALW_ON	-] [- 24,61
			-]/[- 65
	BLK22	ALW_ON	-] [- 30
	BLK24	ALW_ON	-] [- 14,16,20,22,23,24
	BLK25	ALW_ON	-] [- 12,13,14,15
	BLK28	ALW_ON	-] [- 73,74,76,88,90,91,92,93,94,95
			-]/[- 97
	BLK34	ALW_ON	-] [- 161,162,163,164
			-]/[- 161,163
	BLK35	ALW_ON	-] [- 19
	BLK36	ALW_ON	-] [- 11,13,14,15,16,17
	BLK37	ALW_ON	-] [- 5,7,10,14,18,21,24,27,30,33,36,39,42,72,121
	BLK38	ALW_ON	-] [- 5,28,31,35,40,44,47,52,55,143
			-]/[- 102,103,104,105,106,107,108,109
	BLK40	ALW_ON	-] [- 5,14,15
%S0009	BLK05	SY_FULL	-]/[- 20
%S0011	BLK05	OVR_PRE	-]/[- 20
%S0014	BLK05	PLC_BAT	-]/[- 19

IDENTIFIER NAME GLOBAL CROSS REFERENCES

IDENTIFIER	BLOCK	REF. DESCRIPTION / CROSS REFERENCES
BLK08	_MAIN	PULLTAB HANDLING
		CALL 44
BLK05	_MAIN	COMMON SUPPLY FUNCTION
		CALL 23
BLK06	_MAIN	HEATING POS 10-20
		CALL 31
BLK07	_MAIN	APPLICATION & SPLICING OF STRIP
		CALL 31
BLK09	_MAIN	SPRAY SEQUENCE
		CALL 45
BLK10	_MAIN	PEROXIDE HANDLING
		CALL 38
BLK11	_MAIN	SIGNAL TO STERILIZER

IDENTIFIER	BLOCK	REF. DESCRIPTION / CROSS REFERENCES
		CALL 48
BLK13	_MAIN	START SEQUENCE
		CALL 53
BLK14	_MAIN	DRIVE UNIT
		CALL 53
BLK15	_MAIN	FINAL FOLDER
		CALL 53
BLK17	_MAIN	DESIGN CORRECTION
		CALL 55
BLK18	_MAIN	FILLING SYSTEM
		CALL 55
BLK19	_MAIN	PACKAGE DUMPING
		CALL 58
BLK21	_MAIN	TRANSVERSAL SEALING
		CALL 58
BLK22	_MAIN	SHORT STOP
		CALL 58
BLK23	_MAIN	WORK ENVIROMENT ASEPTIC CHAMBER
		CALL 58
BLK25	_MAIN	INTERNAL/EXTERNAL CLEANING
		CALL 71
BLK26	_MAIN	LUBRICATION
		CALL 72
BLK24	_MAIN	PACKAGING MATERIAL INFEED
		CALL 73
BLK35	_MAIN	INITIALIZATION PARAMETERS
		CALL 77
BLK27	_MAIN	HEADSPACE BY INJECTION
		CALL 49
BLK28	_MAIN	AUTOMATIC SPLICING UNIT
		CALL 74
BLK36	_MAIN	ENCODER & JAW CONTROL
		CALL 38
BLK40	_MAIN	PASSIVATION
		CALL 6
BLK38	_MAIN	PLMS COMMUNICATION
		CALL 78
BLK34	_MAIN	VOLUME DEPENDENT VALUES
		CALL 77
BLK37	_MAIN	TPOP/BEACON WARNING & ALARMS
		CALL 78
BLK16	_MAIN	WEB TENSION CONTROL
		CALL 53

```
|[  START OF LD  PROGRAM E119151  ]      (* TBA/19-020V ECM119151           *)
|
|[     VARIABLE DECLARATIONS      ]
|
|[       BLOCK DECLARATIONS       ]

                +-------+
 .001 INTR 0001 |1T0001 |      LANG: LD  (* FAST SCAN,ENCODER AND SEALING    *)
                +-------+

                +-------+
        SUBR  2 | BLK05 |      LANG: LD  (* COMMON SUPPLY FUNCTION          *)
                +-------+

                +-------+
        SUBR  3 | BLK06 |      LANG: LD  (* HEATING POS 10-20              *)
                +-------+

                +-------+
        SUBR  4 | BLK07 |      LANG: LD  (* APPLICATION & SPLICING OF STRIP  *)
                +-------+

                +-------+
        SUBR  1 | BLK08 |      LANG: LD  (* PULLTAB HANDLING               *)
                +-------+

                +-------+
        SUBR  5 | BLK09 |      LANG: LD  (* SPRAY SEQUENCE                 *)
                +-------+

                +-------+
        SUBR  6 | BLK10 |      LANG: LD  (* PEROXIDE HANDLING              *)
                +-------+

                +-------+
        SUBR  7 | BLK11 |      LANG: LD  (* SIGNAL TO STERILIZER           *)
                +-------+

                +-------+
        SUBR  8 | BLK13 |      LANG: LD  (* START SEQUENCE                 *)
                +-------+

                +-------+
        SUBR  9 | BLK14 |      LANG: LD  (* DRIVE UNIT                     *)
                +-------+

                +-------+
        SUBR 10 | BLK15 |      LANG: LD  (* FINAL FOLDER                   *)
                +-------+

                +-------+
        SUBR 29 | BLK16 |      LANG: LD  (* WEB TENSION CONTROL            *)
                +-------+

                +-------+
        SUBR 11 | BLK17 |      LANG: LD  (* DESIGN CORRECTION              *)
                +-------+

                +-------+
        SUBR 12 | BLK18 |      LANG: LD  (* FILLING SYSTEM                 *)
                +-------+

                +-------+
        SUBR 13 | BLK19 |      LANG: LD  (* PACKAGE DUMPING                *)
                +-------+

                +-------+
        SUBR 14 | BLK21 |      LANG: LD  (* TRANSVERSAL SEALING            *)
                +-------+

                +-------+
        SUBR 15 | BLK22 |      LANG: LD  (* SHORT STOP                     *)
                +-------+

                +-------+
        SUBR 16 | BLK23 |      LANG: LD  (* WORK ENVIROMENT ASEPTIC CHAMBER *)
                +-------+
```

```
                +-------+
        SUBR 19 | BLK24 |       LANG: LD  (* PACKAGING MATERIAL INFEED       *)
                +-------+

                +-------+
        SUBR 17 | BLK25 |       LANG: LD  (* INTERNAL/EXTERNAL CLEANING      *)
                +-------+

                +-------+
        SUBR 18 | BLK26 |       LANG: LD  (* LUBRICATION                    *)
                +-------+

                +-------+
        SUBR 22 | BLK27 |       LANG: LD  (* HEADSPACE BY INJECTION         *)
                +-------+

                +-------+
        SUBR 23 | BLK28 |       LANG: LD  (* AUTOMATIC SPLICING UNIT         *)
                +-------+

                +-------+
        SUBR 27 | BLK34 |       LANG: LD  (* VOLUME DEPENDENT VALUES         *)
                +-------+

                +-------+
        SUBR 21 | BLK35 |       LANG: LD  (* INITIALIZATION PARAMETERS       *)
                +-------+

                +-------+
        SUBR 24 | BLK36 |       LANG: LD  (* ENCODER & JAW CONTROL           *)
                +-------+

                +-------+
        SUBR 28 | BLK37 |       LANG: LD  (* TPOP/BEACON WARNING & ALARMS     *)
                +-------+

                +-------+
        SUBR 26 | BLK38 |       LANG: LD  (* PLMS COMMUNICATION              *)
                +-------+

                +-------+
        SUBR 25 | BLK40 |       LANG: LD  (* PASSIVATION                     *)
                +-------+

|[     START OF PROGRAM LOGIC     ]
|
| (*************************************************************************)
| (* Adresses reserved for customer: %I126, %I127, %Q32, %Q80, %M464-%M479,   *)
| (*                                 %R997-%R1020.                           *)
| (*                                 %I513-%I528 (Extra module needed)       *)
| (*                                 %Q513-%Q528 (Extra module needed).      *)
| (*************************************************************************)
|
|X002-24                                                          << RUNG 6  STEP #0003 >>
|%I0116  +-------------+
+--] [---+ CALL  BLK40 +-----------------------------------------N-->> PRGEND
|        | (SUBROUTINE)|
|        +-------------+
|
*A506Y14                                                        NOT_L21  << RUNG 7  STEP #0006 >>
*%I0017                                                         %M0326
*--]/[--+-------------------------------------------------------------(M)-- (* Line L21-L20                    *)
*      |
*L11_OK |
*%I0072 |
*--]/[--+
*
* (*************************************************************************)
* (* Step up step down push button                                         *)
* (*************************************************************************)
*
```

REFERENCE	NICKNAME	REFERENCE DESCRIPTION	REFERENCE	NICKNAME	REFERENCE DESCRIPTION
%I0017	A506Y14	Emergency stop safety module	%M0326	NOT_L21	Line L21-L20
	BLK40	PASSIVATION		PRGEND	
%I0072	L11_OK	Power 24v	%I0116	X002-24	Passivation

BLOCK: MAIN FUNCTIONS AND CROSS REFERENCE LIST

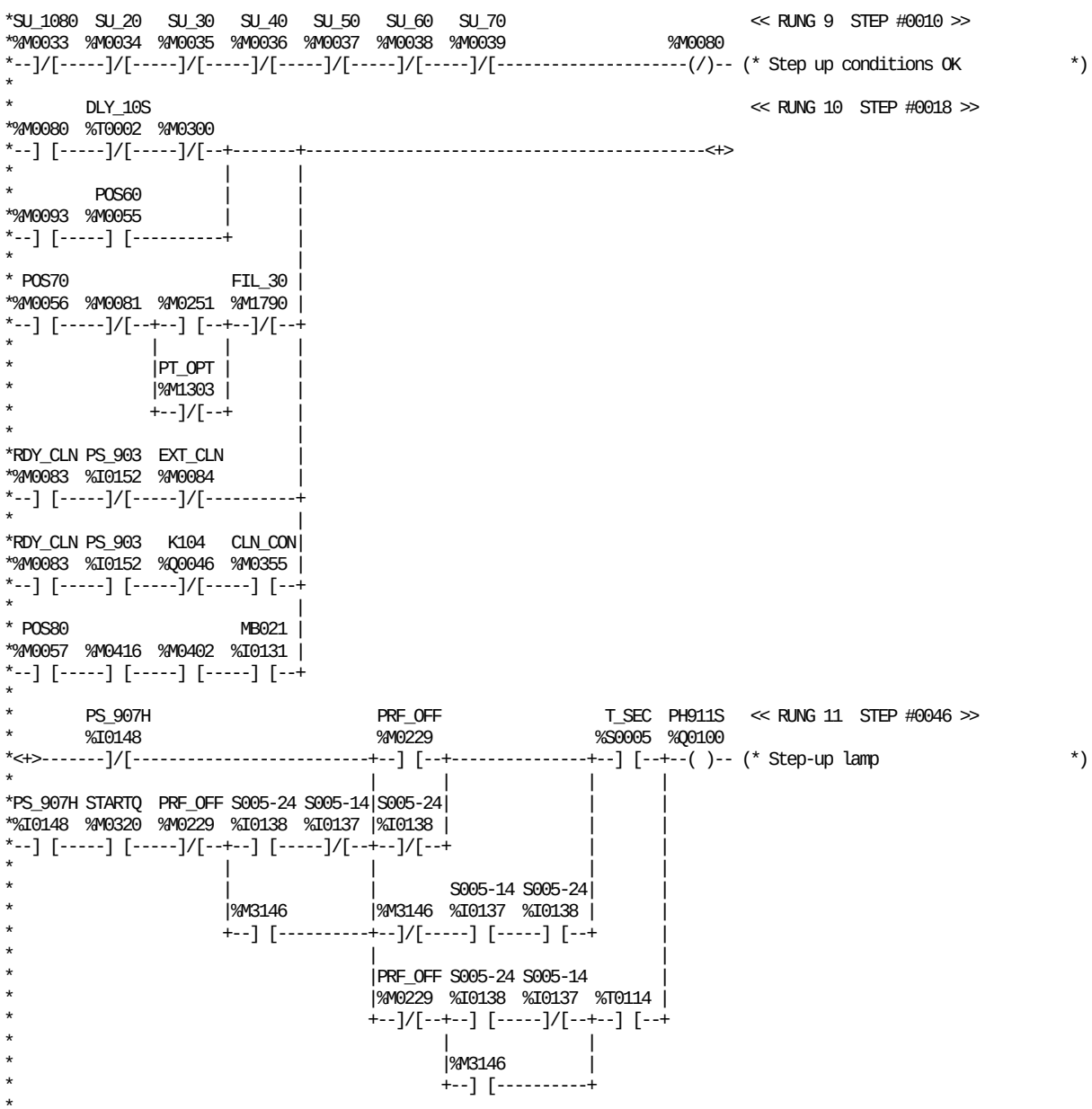

REFERENCE	NICKNAME	REFERENCE DESCRIPTION
%M0080		Step up conditions OK
%M0081		Short stop condit.
%M0093		Manual stop filling
%M0251		PT on
%M0300		Tube sealing going on
%M0402		Mem. door monitor
%M0416		WEAC stop on
%M3146		Pre-filling from TPOP
%T0114		Slow flash
%M0355	CLN_CON	Ok for Clean. prod. valve
%T0002	DLY_10S	Start sequence delay 10 sec.
%M0084	EXT_CLN	Machine in pos. extern. clean
%M1790	FIL_30	No prod. from process
%Q0046	K104	Signal to cip
%I0131	MB021	Superstructor door, position
%Q0100	PH911S	Step-up lamp
%M0055	POS60	Machine ladder pos 60
%M0056	POS70	Machine ladder pos 70

REFERENCE	NICKNAME	REFERENCE DESCRIPTION
%M0057	POS80	Machine ladder pos 80
%M0229	PRF_OFF	Prefilling condition forced OFF
%I0152	PS_903	Selector switch
%I0148	PS_907H	Inching
%M1303	PT_OPT	PLMS, Option Pull-Tab
%M0083	RDY_CLN	Machine pos ready for cleaning
%I0137	S005-14	FCS normal filling
%I0138	S005-24	FCS Pre-filling
%M0320	STARTQ	Start sequenc
%M0033	SU_1080	Ok to step to p10/80 heat 1
%M0034	SU_20	Ok to step to pos 20 heat 2
%M0035	SU_30	Ok to step to pos 30 tube
%M0036	SU_40	Ok to step to pos 40 spray
%M0037	SU_50	Ok to step to pos 50 steril
%M0038	SU_60	Ok to step to pos 60 start
%M0039	SU_70	Ok to step to pos 70 product
%S0005	T_SEC	

BLOCK: MAIN FUNCTIONS AND CROSS REFERENCE LIST

```
*                       POS00                                          PH912S   << RUNG 12  STEP #0072 >>
*%M0416                 %M0049  %M0080                                 %Q0101
*--]/[------------------+--] [-----]/[-----------------------------------( )-- (* Step-down lamp                  *)
*                      |
*        T_SEC   MB021 |
*%M0402  %S0005  %I0131 |
*--] [-----] [-----] [--+
*
*PS_911H PS_908H                                                              << RUNG 13  STEP #0080 >>
*%I0149  %I0151  +-----+                                               %T0016
*--] [-----] [---+ TMR +-------------------------------------------------(^)-- (* Step up P+                    *)
*               |0.10s|
*               |     |
*        CONST -+PV   |
*        +00007 |     |
*               +-----+
*
*               %R0227
*
*PS_912H                                                                      << RUNG 14  STEP #0084 >>
*%I0150                                                                %T0017
*--]/[-----------------------------------------------------------------(^)-- (* Step down P+                  *)
*
* (*************************************************************************)
* (* Position ladder                                                       *)
* (*************************************************************************)
*
* POS00   POS10   POS20   POS30                                         POS0030  << RUNG 16  STEP #0087 >>
*%M0049  %M0050  %M0051  %M0052                                        %M0065
*--]/[-----]/[-----]/[-----]/[-------------------------------------------(/)-- (* Machine ladder pos 00-30      *)
*
* POS20   POS30   POS40                                                 POS2040  << RUNG 17  STEP #0092 >>
*%M0051  %M0052  %M0053                                                %M0066
*--]/[-----]/[-----]/[-------------------------------------------------(/)-- (* Machine ladder pos 20-40      *)
*
*MCPOS80  POS00   POS10                                                 POS2080  << RUNG 18  STEP #0096 >>
*%M0086  %M0049  %M0050                                                %M0067
*--] [-----]/[-----]/[-------------------------------------------------( )-- (* Machine ladder pos 20-80      *)
*
* POS50   POS60   POS70                                                 POS5070  << RUNG 19  STEP #0100 >>
*%M0054  %M0055  %M0056                                                %M0068
*--]/[-----]/[-----]/[-------------------------------------------------(/)-- (* Machine ladder pos 50-70      *)
*
*POS5070  POS80                                                         POS5080  << RUNG 20  STEP #0104 >>
*%M0068  %M0057                                                        %M0069
*--]/[-----]/[-----------------------------------------------------------(/)-- (* Machine ladder pos 50-80      *)
*
* (*************************************************************************)
* (* Control sequence                                                      *)
* (*************************************************************************)
*
```

REFERENCE	NICKNAME	REFERENCE DESCRIPTION
%M0080		Step up conditions OK
%M0402		Mem. door monitor
%M0416		WEAC stop on
%T0016		Step up P+
%T0017		Step down P+
%R0227		Delay step up pulse
%I0131	MB021	Superstructor door, position
%M0086	MCPOS80	Machine in pos.80 for >2 min
%Q0101	PH912S	Step-down lamp
%M0049	POS00	Ladder pos 00
%M0065	POS0030	Machine ladder pos 00-30
%M0050	POS10	Ladder pos 10
%M0051	POS20	Ladder pos 20
%M0066	POS2040	Machine ladder pos 20-40

REFERENCE	NICKNAME	REFERENCE DESCRIPTION
%M0067	POS2080	Machine ladder pos 20-80
%M0052	POS30	Ladder pos 30
%M0053	POS40	Machine ladder pos 40
%M0054	POS50	Machine ladder pos 50
%M0068	POS5070	Machine ladder pos 50-70
%M0069	POS5080	Machine ladder pos 50-80
%M0055	POS60	Machine ladder pos 60
%M0056	POS70	Machine ladder pos 70
%M0057	POS80	Machine ladder pos 80
%I0151	PS_908H	Short stop push buttom
%I0149	PS_911H	Step up
%I0150	PS_912H	Step down
%S0005	T_SEC	

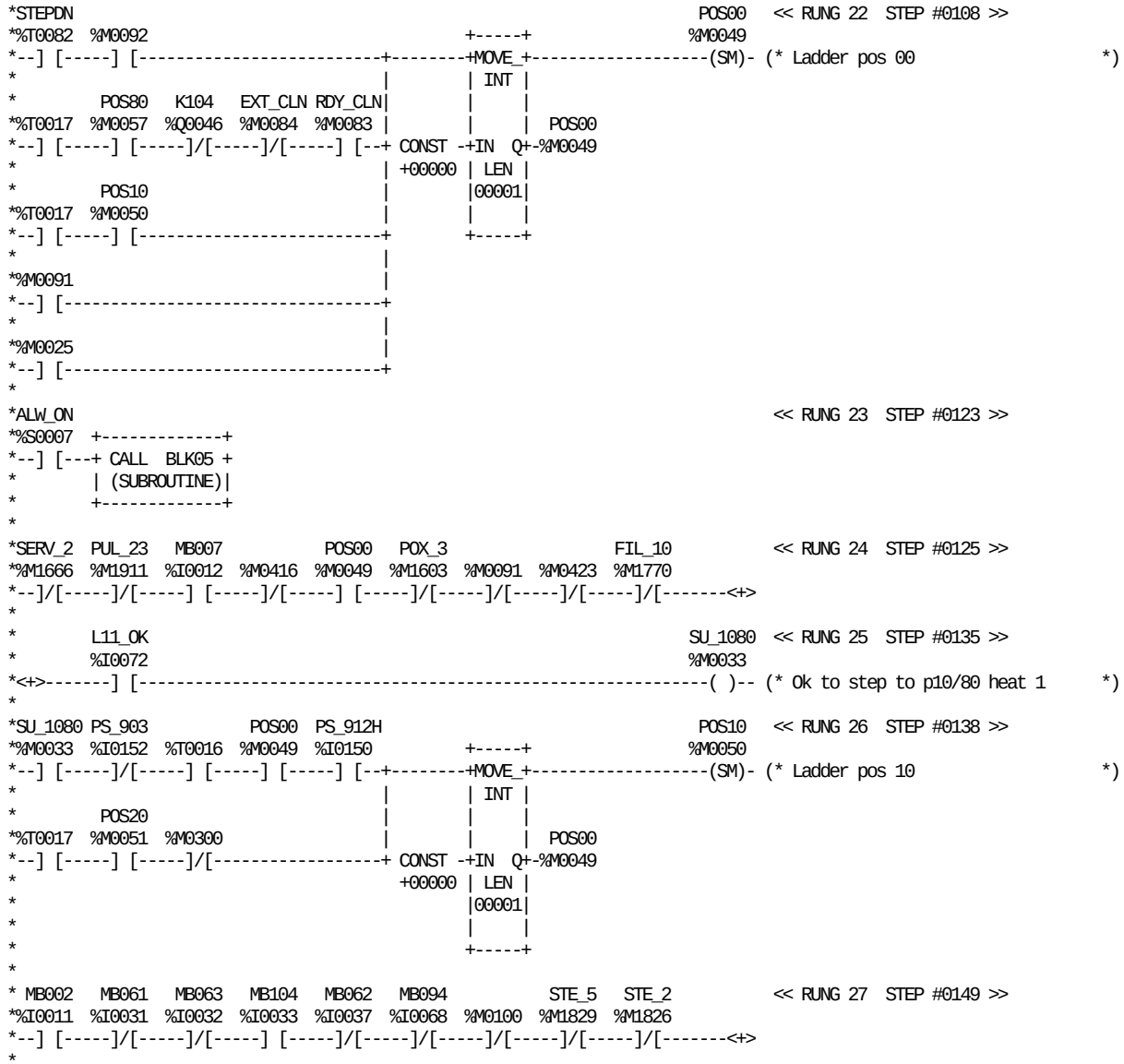

REFERENCE	NICKNAME	REFERENCE DESCRIPTION
%M0025		P- L11_OK
%M0091		Machine to pos 00
%M0092		Step dwn from pos 40
%M0100		Steam fault
%M0300		Tube sealing going on
%M0416		WEAC stop on
%M0423		Drain peroxide bath
%T0016		Step up P+
%T0017		Step down P+
%S0007	ALW_ON	
	BLK05	COMMON SUPPLY FUNCTION
%M0084	EXT_CLN	Machine in pos. extern. clean
%M1770	FIL_10	Membran leakage alarm
%Q0046	K104	Signal to cip
%I0072	L11_OK	Power 24v
%I0011	MB002	Main air pressure
%I0012	MB007	Cooling water pressure
%I0031	MB061	Cleaning cup, position

REFERENCE	NICKNAME	REFERENCE DESCRIPTION
%I0037	MB062	Sterile air, pressure
%I0032	MB063	Cleaning pipe, position
%I0068	MB094	Suction valve, position
%I0033	MB104	Steril air pipe, position
%M0049	POS00	Ladder pos 00
%M0050	POS10	Ladder pos 10
%M0051	POS20	Ladder pos 20
%M0057	POS80	Machine ladder pos 80
%M1603	POX_3	Low level peroxide bath, water
%I0152	PS_903	Selector switch
%I0150	PS_912H	Step down
%M1911	PUL_23	Low pressure PT air
%M0083	RDY_CLN	Machine pos ready for cleaning
%M1666	SERV_2	Low press. main air
%T0082	STEPDN	Step down delay 3 sec.
%M1826	STE_2	Wrong pos. AP valve B
%M1829	STE_5	Air inlet valve wrong position
%M0033	SU_1080	Ok to step to p10/80 heat 1

BLOCK: MAIN FUNCTIONS AND CROSS REFERENCE LIST

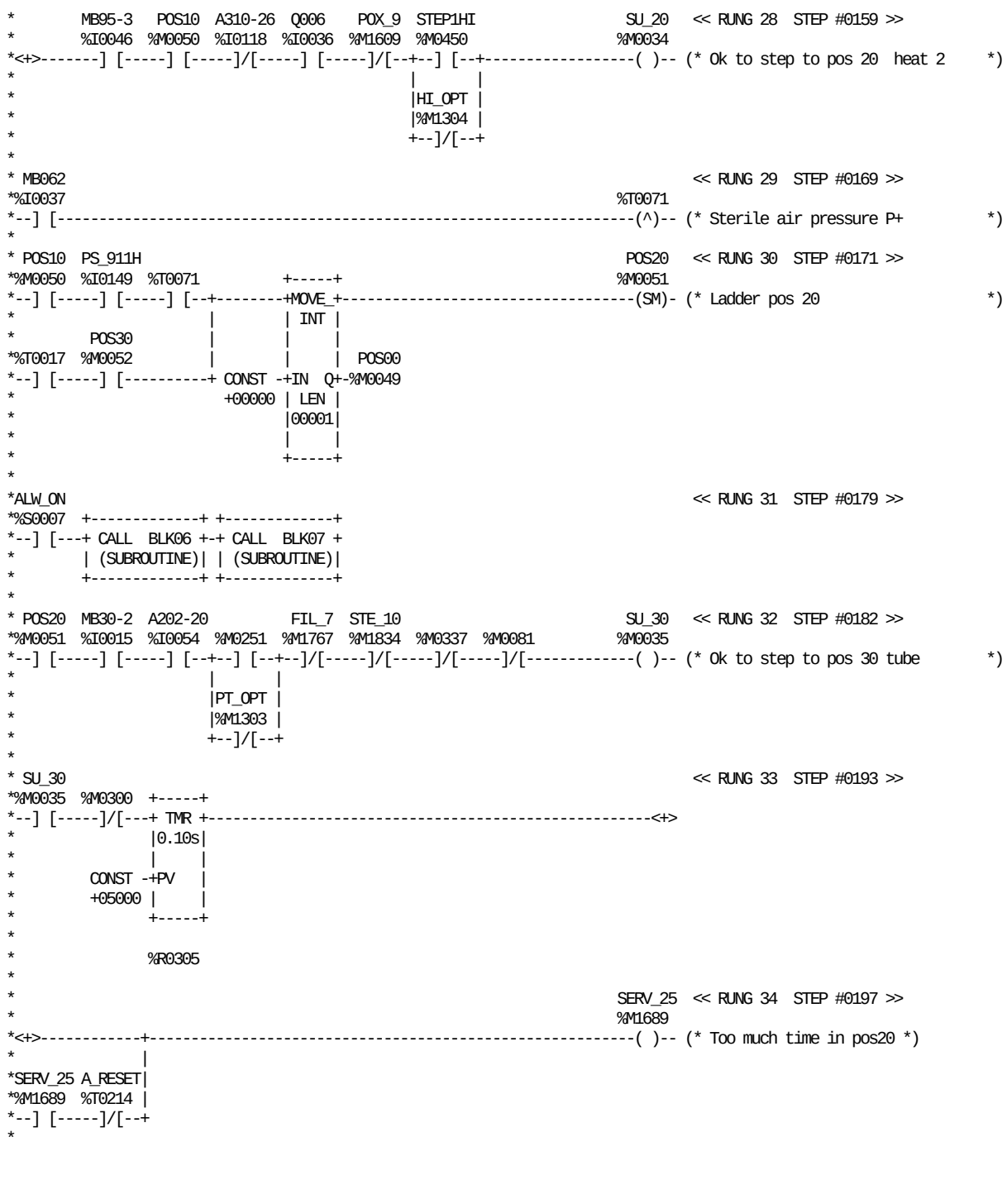

REFERENCE	NICKNAME	REFERENCE DESCRIPTION
%M0081		Short stop condit.
%M0251		PT on
%M0300		Tube sealing going on
%M0337		Jaw alarm release clutch
%T0017		Step down P+
%T0071		Sterile air pressure P+
%R0305		Delay jump from pos20 to pos10
%I0054	A202-20	Temp.mon.LS preheating
%I0118	A310-26	FCS Bottom position floater
%S0007	ALW_ON	
%T0214	A_RESET	Pulse+ reset A-alarm lock
	BLK06	HEATING POS 10-20
	BLK07	APPLICATION & SPLICING OF STRIP
%M1767	FIL_7	Steam low temperature 5 min.
%M1304	HI_OPT	PLMS, Option H.I.
%I0037	MB062	Sterile air, pressure

REFERENCE	NICKNAME	REFERENCE DESCRIPTION
%I0015	MB30-2	Lubrication oil low level
%I0046	MB95-3	Peroxide tank, high level
%M0049	POS00	Ladder pos 00
%M0050	POS10	Ladder pos 10
%M0051	POS20	Ladder pos 20
%M0052	POS30	Ladder pos 30
%M1609	POX_9	Too high level peroxide tank
%I0149	PS_911H	Step up
%M1303	PT_OPT	PLMS, Option Pull-Tab
%I0036	Q006	Overload protection, compressor
%M1689	SERV_25	Too much time in pos20
%M0450	STEP1HI	Step-up cond. 1 for H.I.
%M1834	STE_10	Suction valve wrong pos.
%M0034	SU_20	Ok to step to pos 20 heat 2
%M0035	SU_30	Ok to step to pos 30 tube

BLOCK: MAIN FUNCTIONS AND CROSS REFERENCE LIST

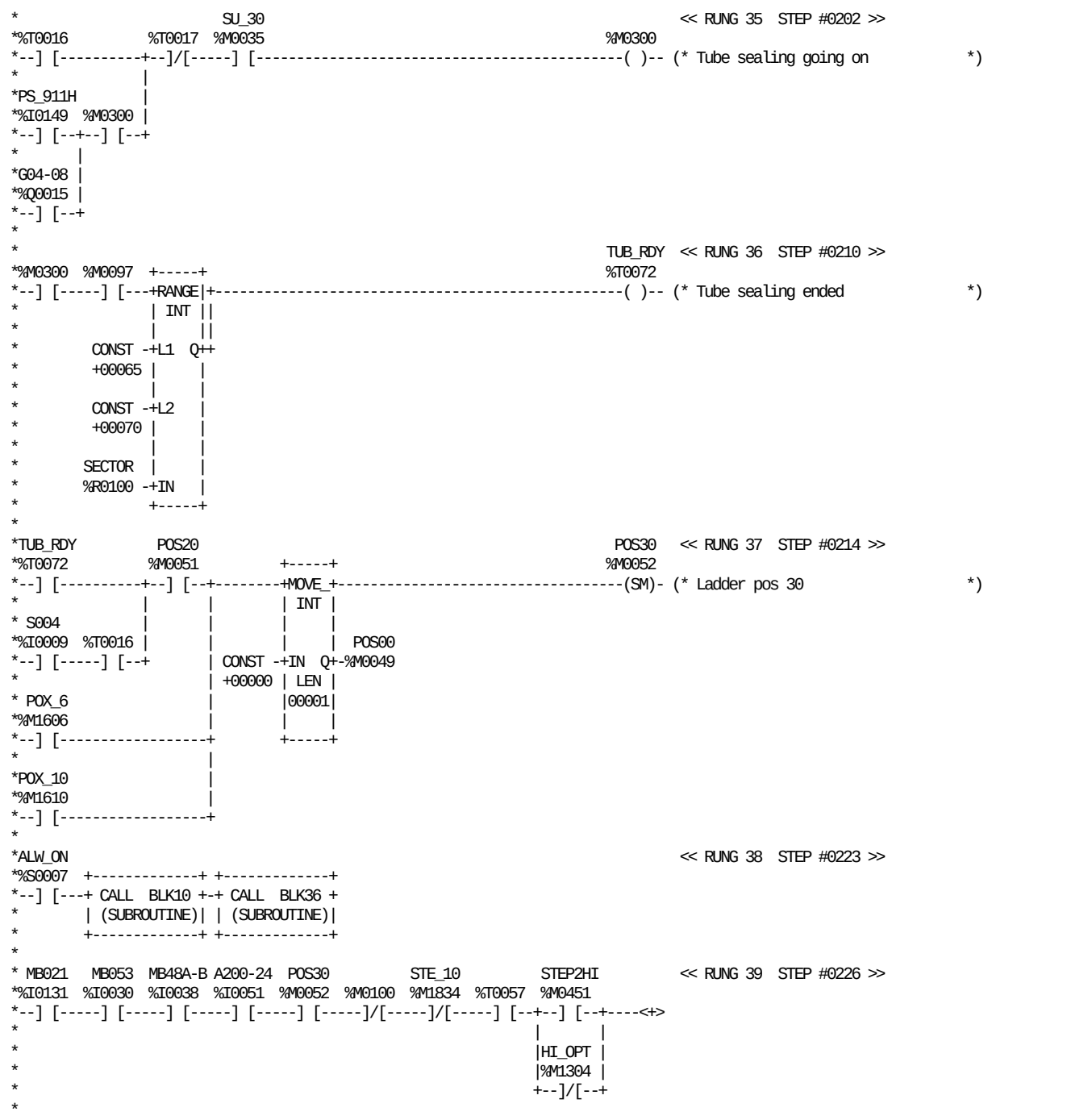

REFERENCE	NICKNAME	REFERENCE DESCRIPTION
%M0097		TS sealing on
%M0100		Steam fault
%M0300		Tube sealing going on
%T0016		Step up P+
%T0017		Step down P+
%T0057		Spray tank evacuat finish
%I0051	A200-24	Temp.mon.presterilisation
%S0007	ALW_ON	
	BLK10	PEROXIDE HANDLING
	BLK36	ENCODER & JAW CONTROL
%Q0015	G04-08	Main motor, high speed
%M1304	HI_OPT	PLMS, Option H.I.
%I0131	MB021	Superstructor door, position
%I0030	MB053	Steril air (B) valve, position

REFERENCE	NICKNAME	REFERENCE DESCRIPTION
%I0038	MB48A-B	Perox. bath bottom cover, posit.
%M0049	POS00	Ladder pos 00
%M0051	POS20	Ladder pos 20
%M0052	POS30	Ladder pos 30
%M1610	POX_10	Spray tank not filling
%M1606	POX_6	Spray tank filling fault
%I0149	PS_911H	Step up
%I0009	S004	Service switch
%R0100	SECTOR	Angle sector 0-127
%M0451	STEP2HI	Step-up cond. 2 for H.I.
%M1834	STE_10	Suction valve wrong pos.
%M0035	SU_30	Ok to step to pos 30 tube
%T0072	TUB_RDY	Tube sealing ended

BLOCK: MAIN FUNCTIONS AND CROSS REFERENCE LIST

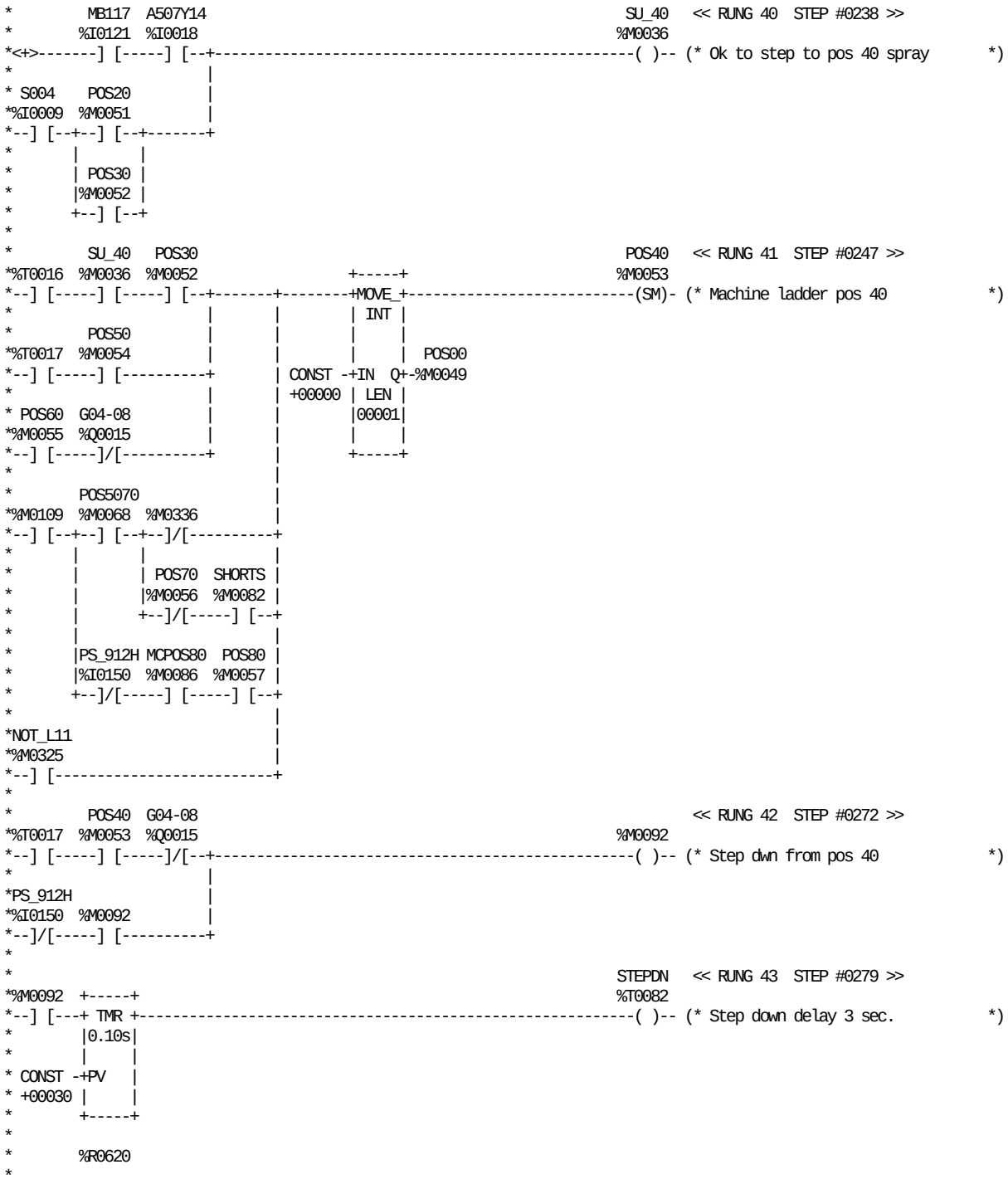

REFERENCE	NICKNAME	REFERENCE DESCRIPTION
%M0092		Step dwn from pos 40
%M0109		Drying after spraying
%M0336		Jump to pos.40 str.seq enable
%T0016		Step up P+
%T0017		Step down P+
%R0620		Stop delay from pos 40
%I0018	A507Y14	SS, JS and FF safety module
%Q0015	G04-08	Main motor, high speed
%I0121	MB117	Regulat valve open, position
%M0086	MCPOS80	Machine in pos.80 for >2 min
%M0325	NOT_L11	Line L11-L10 not ok
%M0049	POS00	Ladder pos 00
%M0051	POS20	Ladder pos 20

REFERENCE	NICKNAME	REFERENCE DESCRIPTION
%M0052	POS30	Ladder pos 30
%M0053	POS40	Machine ladder pos 40
%M0054	POS50	Machine ladder pos 50
%M0068	POS5070	Machine ladder pos 50-70
%M0055	POS60	Machine ladder pos 60
%M0056	POS70	Machine ladder pos 70
%M0057	POS80	Machine ladder pos 80
%I0150	PS_912H	Step down
%I0009	S004	Service switch
%M0082	SHORTS	Machine pos. short stop
%T0082	STEPDN	Step down delay 3 sec.
%M0036	SU_40	Ok to step to pos 40 spray

BLOCK: MAIN FUNCTIONS AND CROSS REFERENCE LIST

```
*PT_OPT                                                                 << RUNG 44  STEP #0282 >>
*%M1303  +-------------+
*--] [---+ CALL  BLK08 +
*        | (SUBROUTINE)|
*        +-------------+
*
*ALW_ON                                                                  << RUNG 45  STEP #0284 >>
*%S0007  +-------------+
*--] [---+ CALL  BLK09 +
*        | (SUBROUTINE)|
*        +-------------+
*
* MB094   POS40                          STEP3HI                         SU_50   << RUNG 46  STEP #0286 >>
*%I0068  %M0053  %M0336  %M0337  %M0109  %M0452                        %M0037
*--]/[-----] [-----] [-----]/[-----] [--+--] [--+-------------------------( )-- (* Ok to step to pos 50 steril      *)
*                                      |      |
*                                      |HI_OPT |
*                                      |%M1304 |
*                                      +--]/[--+
*
* SU_50   POS40                                                          POS50   << RUNG 47  STEP #0295 >>
*%M0037  %M0053  %T0016  %M0109         +-----+                        %M0054
*--] [-----] [-----] [-----] [--+--------+MOVE_+--------------------------(SM)- (* Machine ladder pos 50           *)
*                              |        | INT |
*         POS60                |        |     |
*%T0017  %M0055                 |        |     |  POS00
*--] [-----] [------------------+ CONST -+IN  Q+-%M0049
*                               +00000 | LEN |
*                                      |00001|
*                                      |     |
*                                      +-----+
*
*ALW_ON                                                                  << RUNG 48  STEP #0304 >>
*%S0007  +-------------+
*--] [---+ CALL  BLK11 +
*        | (SUBROUTINE)|
*        +-------------+
*
*HI_OPT                                                                  << RUNG 49  STEP #0306 >>
*%M1304  +-------------+
*--] [---+ CALL  BLK27 +
*        | (SUBROUTINE)|
*        +-------------+
*
* POS50                                                                  << RUNG 50  STEP #0308 >>
*%M0054                                                                 %T0044
*--] [-------------------------------------------------------------------(^)-- (* Pulse pos. 50                  *)
*
* POS50          A302-15         A217-24 PS_912H                A201-20         << RUNG 51  STEP #0310 >>
*%M0054  %M0251  %I0043  %T0059  %I0061  %I0150  %M0081  %T0044  %I0052
*--] [--+--] [--+--]/[-----] [--+--] [--+--] [-----]/[-----]/[-----] [-------<+>
*       |       |             |       |
*SHORTS |PT_OPT |STARTQ       | K024  |
*%M0082 |%M1303 |%M0320       |%Q0027 |
*--] [--+--]/[--+--] [----------+--]/[--+
*
```

REFERENCE	NICKNAME	REFERENCE DESCRIPTION	REFERENCE	NICKNAME	REFERENCE DESCRIPTION
%M0081		Short stop condit.		BLK11	SIGNAL TO STERILIZER
%M0109		Drying after spraying		BLK27	HEADSPACE BY INJECTION
%M0251		PT on	%M1304	HI_OPT	PLMS, Option H.I.
%M0336		Jump to pos.40 str.seq enable	%Q0027	K024	LS short stop
%M0337		Jaw alarm release clutch	%I0068	MB094	Suction valve, position
%T0016		Step up P+	%M0049	POS00	Ladder pos 00
%T0017		Step down P+	%M0053	POS40	Machine ladder pos 40
%T0044		Pulse pos. 50	%M0054	POS50	Machine ladder pos 50
%T0059		Off delay high speed	%M0055	POS60	Machine ladder pos 60
%I0052	A201-20	Temp.mon.perox.bath w., preheat.	%I0150	PS_912H	Step down
%I0061	A217-24	Temp.mon.LS short stop	%M1303	PT_OPT	PLMS, Option Pull-Tab
%I0043	A302-15	Peroxide bath, level	%M0082	SHORTS	Machine pos. short stop
%S0007	ALW_ON		%M0320	STARTQ	Start sequenc
	BLK08	PULLTAB HANDLING	%M0452	STEP3HI	Step-up cond. 3 for H.I.
	BLK09	SPRAY SEQUENCE	%M0037	SU_50	Ok to step to pos 50 steril

BLOCK: MAIN FUNCTIONS AND CROSS REFERENCE LIST

```
*       A507Y14 FIL_30                                                SU_60   << RUNG 52  STEP #0327 >>
*       %I0018  %M1790                                               %M0038
*<+>-------] [--+--]/[--+-----------------------------------------------( )-- (* Ok to step to pos 60 start       *)
*              |     |
*              |PS_907H|
*              |%I0148 |
*              +--] [--+
*              |
*              |                                                     %M0299
*              +-----------------------------------------------------( )-- (* OK conditions to sterile inching *)
*
*ALW_ON                                                                      << RUNG 53  STEP #0336 >>
*%S0007  +-------------+ +-------------+ +-------------+ +-------------+
*--] [---+ CALL  BLK13 +-+ CALL  BLK14 +-+ CALL  BLK15 +-+ CALL  BLK16 +
*       | (SUBROUTINE)| | (SUBROUTINE)| | (SUBROUTINE)| | (SUBROUTINE)|
*       +-------------+ +-------------+ +-------------+ +-------------+
*
*PS_911H DLY_10S  POS50                                                SU_60   << RUNG 54  STEP #0341 >>
*%I0149  %T0002  %M0054         +-----+                               %M0055
*--] [-----] [-----] [--+--------+MOVE_+-----------------------------------(SM)- (* Machine ladder pos 60           *)
*                      |        | INT |
* POS70                |        |     |
*%M0056  %M0431  %M0432 |        |     |  POS00
*--] [--+--] [-----]/[--+ CONST -+IN  Q+-%M0049
*       |               | +00000 | LEN |
*       |               |        |00001|
*       |%M0093         |        |     |
*       +--] [----------+        +-----+
*       |               |
*       |%M0090         |
*       +--] [----------+
*
*ALW_ON                                                                      << RUNG 55  STEP #0353 >>
*%S0007  +-------------+ +-------------+
*--] [---+ CALL  BLK17 +-+ CALL  BLK18 +
*       | (SUBROUTINE)| | (SUBROUTINE)|
*       +-------------+ +-------------+
*
*               POS60                                                 SU_70   << RUNG 56  STEP #0356 >>
*%T0015  %M0093  %M0055                                               %M0039
*--] [--+--]/[-----] [-----------------------------------------------------( )-- (* Ok to step to pos 70 product     *)
*       |
*PREFILL|
*%M0230 |
*--] [--+
*
* FILL    SU_70                                                        POS70   << RUNG 57  STEP #0361 >>
*%M0019  %M0039  +-----+                                              %M0056
*--] [--+--] [---+MOVE_+-----------------------------------------------------(SM)- (* Machine ladder pos 70           *)
*       |        | INT |
*ASYNCRO|        |     |
*%M0138 |        |     |  POS00
*--] [--+ CONST -+IN  Q+-%M0049
*       | +00000 | LEN |
*PREFILL|        |00001|
*%M0230 |        |     |
*--] [--+        +-----+
*
```

REFERENCE	NICKNAME	REFERENCE DESCRIPTION
%M0090		Machine to pos. 00 delayed
%M0093		Manual stop filling
%M0299		OK conditions to sterile inching
%M0431		Packages wrong design position
%M0432		2.nd fill start attempt
%T0015		Delay filling valve start
%I0018	A507Y14	SS, JS and FF safety module
%S0007	ALW_ON	
%M0138	ASYNCRO	Asyncronous filling
	BLK13	START SEQUENCE
	BLK14	DRIVE UNIT
	BLK15	FINAL FOLDER
	BLK16	WEB TENSION CONTROL
	BLK17	DESIGN CORRECTION
	BLK18	FILLING SYSTEM
%T0002	DLY_10S	Start sequence delay 10 sec.
%M0019	FILL	Filling angle sector
%M1790	FIL_30	No prod. from process
%M0049	POS00	Ladder pos 00
%M0054	POS50	Machine ladder pos 50
%M0055	POS60	Machine ladder pos 60
%M0056	POS70	Machine ladder pos 70
%M0230	PREFILL	Pre-filling selected
%I0148	PS_907H	Inching
%I0149	PS_911H	Step up
%M0038	SU_60	Ok to step to pos 60 start
%M0039	SU_70	Ok to step to pos 70 product

BLOCK: MAIN FUNCTIONS AND CROSS REFERENCE LIST

```
*ALW_ON                                                                  << RUNG 58  STEP #0367 >>
*%S0007  +-------------+ +-------------+ +-------------+ +-------------+
*--] [---+ CALL  BLK19 +-+ CALL  BLK21 +-+ CALL  BLK22 +-+ CALL  BLK23 +
*        | (SUBROUTINE)| | (SUBROUTINE)| | (SUBROUTINE)| | (SUBROUTINE)|
*        +-------------+ +-------------+ +-------------+ +-------------+
*
*SU_1080         PS_903                                          POS80   << RUNG 59  STEP #0372 >>
*%M0033  %T0016  %I0152                +-----+                  %M0057
*--] [-----] [-----] [----------+--------+MOVE_+-------------------------(SM)- (* Machine ladder pos 80           *)
*                               |        | INT |
* POS70          SHORTS   MY027 |        |     |
*%M0056  %T0016  %M0082  %Q0001 |        |     |  POS00
*--] [-----] [-----]/[-----] [--+ CONST -+IN  Q+-%M0049
*                               +00000 | LEN |
*                                      |00001|
*                                      |     |
*                                      +-----+
*
* POS80          POS2080                                         RDY_CLN  << RUNG 60  STEP #0382 >>
*%M0057  %M0416  %M0067                                          %M0083
*--] [-----]/[-----]/[-----------------------------------------------( )-- (* Machine pos ready for cleaning   *)
*
*%T0004                                                          %T0013   << RUNG 61  STEP #0386 >>
*--] [-------------------------------------------------------------------(^)-- (* P++ pos.10/ready for cleaning    *)
*
* POS10                                                                   << RUNG 62  STEP #0388 >>
*%M0050                                                          %T0004
*--] [--+----------------------------------------------------------------(^)-- (* P+ position10/ready for cleaning *)
*       |
*RDY_CLN|
*%M0083 |
*--] [--+
*
* POS80                                                          MCPOS80  << RUNG 63  STEP #0391 >>
*%M0057  +-----+                                                 %M0086
*--] [---+ TMR +-----------------------------------------------------------(/)-- (* Machine in pos.80 for >2 min     *)
*        |0.10s|
*        |     |
* CONST -+PV   |
* +01200 |     |
*        +-----+
*
*        %R0578
*
*RDY_CLN                                                         MCPOS80  << RUNG 64  STEP #0394 >>
*%M0083                                                          %M0086
*--] [-------------------------------------------------------------------(R)-- (* Machine in pos.80 for >2 min     *)
*
* S003                                                                   << RUNG 65  STEP #0396 >>
*%I0008                                                          %M0089
*--] [--+----------------------------------------------------------------(SM)- (* Clean steam barrier space       *)
*       |
*X02-286|
*%I0063 |
*--] [--+
*
*RDY_CLN                                                                 << RUNG 66  STEP #0399 >>
*%M0083                                                          %M0089
*--]/[-------------------------------------------------------------------(RM)- (* Clean steam barrier space       *)
*
```

REFERENCE	NICKNAME	REFERENCE DESCRIPTION
%M0089		Clean steam barrier space
%M0416		WEAC stop on
%T0004		P+ position10/ready for cleaning
%T0013		P++ pos.10/ready for cleaning
%T0016		Step up P+
%R0578		Delay ready for clean.
%S0007	ALW_ON	
	BLK19	PACKAGE DUMPING
	BLK21	TRANSVERSAL SEALING
	BLK22	SHORT STOP
	BLK23	WORK ENVIROMENT ASEPTIC CHAMBER
%M0086	MCPOS80	Machine in pos.80 for >2 min

REFERENCE	NICKNAME	REFERENCE DESCRIPTION
%Q0001	MY027	Drop chute
%M0049	POS00	Ladder pos 00
%M0050	POS10	Ladder pos 10
%M0067	POS2080	Machine ladder pos 20-80
%M0056	POS70	Machine ladder pos 70
%M0057	POS80	Machine ladder pos 80
%I0152	PS_903	Selector switch
%M0083	RDY_CLN	Machine pos ready for cleaning
%I0008	S003	Clean through steam barrier
%M0082	SHORTS	Machine pos. short stop
%M0033	SU_1080	Ok to step to p10/80 heat 1
%I0063	X02-286	Clean through production valve

BLOCK: MAIN FUNCTIONS AND CROSS REFERENCE LIST

```
*                                                                    CLE_13   << RUNG 67  STEP #0401 >>
*%M0089                                                             %M1933
*--] [-------------------------------------------------------------------( )-- (* Clean steam barrier              *)
*
* POS80                                                              INT_CLN  << RUNG 68  STEP #0403 >>
*%M0057                                                             %M0085
*--]/[--+----------------------------------------------------------------(RM)- (* Machine pos internal cleaning    *)
*      |
* STE_2 |
*%M1826 |
*--] [--+
*
* POS10   MB063                                                      CLE_5   << RUNG 69  STEP #0406 >>
*%M0050  %I0032                                                     %M1925
*--] [-----] [------------------+-------------------------------------( )-- (* Wrong posit. clean. pipe        *)
*                               |
*RDY_CLN PS_903   MB063  X02-286|
*%M0083  %I0152  %I0032  %I0063 |
*--] [-----] [-----]/[-----]/[--+
*                               |
* CLE_5  A_RESET                |
*%M1925  %T0214                 |
*--] [-----]/[------------------+
*
* MB061  PS_903  RDY_CLN                                            CLE_4   << RUNG 70  STEP #0417 >>
*%I0031  %I0152  %M0083                                            %M1924
*--]/[--+--] [--+--] [--+-----------------------------------------------( )-- (* Wrong pos. clean. cup           *)
*       |      |       |
*       |%T0100 |       |
*       +--] [--+       |
*                       |
* MB061   POS10         |
*%I0031  %M0050         |
*--] [-----] [----------+
*                       |
* CLE_4  A_RESET        |
*%M1924  %T0214         |
*--] [-----]/[----------+
*
*RDY_CLN                                                                    << RUNG 71  STEP #0429 >>
*%M0083  +-------------+
*--] [--++ CALL  BLK25 +
*       || (SUBROUTINE)|
* POS00 |+-------------+
*%M0049 |
*--] [--+
*
*ALW_ON                                                                     << RUNG 72  STEP #0432 >>
*%S0007  +-------------+
*--] [---+ CALL  BLK26 +
*        | (SUBROUTINE)|
*        +-------------+
*
*PMI_OPT                                                                    << RUNG 73  STEP #0434 >>
*%M1307  +-------------+
*--] [---+ CALL  BLK24 +
*        | (SUBROUTINE)|
*        +-------------+
*
```

REFERENCE	NICKNAME	REFERENCE DESCRIPTION
%M0089		Clean steam barrier space
%T0100		Pulse signal to CIP off
%S0007	ALW_ON	
%T0214	A_RESET	Pulse+ reset A-alarm lock
	BLK24	PACKAGING MATERIAL INFEED
	BLK25	INTERNAL/EXTERNAL CLEANING
	BLK26	LUBRICATION
%M1933	CLE_13	Clean steam barrier
%M1924	CLE_4	Wrong pos. clean. cup
%M1925	CLE_5	Wrong posit. clean. pipe
%M0085	INT_CLN	Machine pos internal cleaning

REFERENCE	NICKNAME	REFERENCE DESCRIPTION
%I0031	MB061	Cleaning cup, position
%I0032	MB063	Cleaning pipe, position
%M1307	PMI_OPT	PLMS, Option spare
%M0049	POS00	Ladder pos 00
%M0050	POS10	Ladder pos 10
%M0057	POS80	Machine ladder pos 80
%I0152	PS_903	Selector switch
%M0083	RDY_CLN	Machine pos ready for cleaning
%M1826	STE_2	Wrong pos. AP valve B
%I0063	X02-286	Clean through production valve

```
*ASU_OPT                                                          << RUNG 74  STEP #0436 >>
*%M1308  +-------------+
*--] [---+ CALL  BLK28 +
*        | (SUBROUTINE)|
*        +-------------+
*
*         POS10                                                   << RUNG 75  STEP #0438 >>
*%T0016  %M0050          +-----+                 +-----+
*--] [--+--] [--+--------+MOVE_+-----------------+ SVC_+----------------------<+>
*       |       |        | INT |                 | REQ |
*       | POS80 |        |     |                 |     |
*       |%M0057 |        |     |                 |     |
*       +--] [--+ CONST -+IN  Q+-%R0180   CONST -+FNC  |
*                +00000 | LEN |           00014 |     |
*                       |00001|                 |     |
*                       |     |                 |     |
*                       +-----+        %R0180 -+PARM |
*                                              +-----+
*
*        +-----+                +-----+                           << RUNG 76  STEP #0445 >>
*<+>-----+MOVE_+----------------+ SVC_+-
*        | INT |                | REQ |
*        |     |                |     |
* CONST -+IN  Q+-%R0180   CONST -+FNC  |
* +00001 | LEN |           00014 |     |
*        |00001|                 |     |
*        |     |                 |     |
*        +-----+        %R0180 -+PARM |
*                               +-----+
*
*         POS10                                                   << RUNG 77  STEP #0448 >>
*%T0016  %M0050  +-------------+ +-------------+
*--] [--+--] [--++ CALL  BLK35 +-+ CALL  BLK34 +
*       |       || (SUBROUTINE)| | (SUBROUTINE)|
*       | POS80 |+-------------+ +-------------+
*       |%M0057 |
*       +--] [--+
*              |
*FST_SCN        |
*%S0001         |
*--] [----------+
*              |
*%T0191         |
*--] [----------+
*
*ALW_ON                                                            << RUNG 78  STEP #0456 >>
*%S0007  +-------------+ +-------------+
*--] [---+ CALL  BLK38 +-+ CALL  BLK37 +
*        | (SUBROUTINE)| | (SUBROUTINE)|
*        +-------------+ +-------------+
*
+PRGEND :(nested)                                                 << RUNG 79  STEP #0459 >>
|
|[      END OF PROGRAM LOGIC      ]
|
```

REFERENCE	NICKNAME	REFERENCE DESCRIPTION
%T0016		Step up P+
%T0191		Reset FCS parameter
%R0180		Paremeter to clear PLC-I/O fault
%S0007	ALW_ON	
%M1308	ASU_OPT	PLMS, Option A.S.U.
	BLK28	AUTOMATIC SPLICING UNIT
	BLK34	VOLUME DEPENDENT VALUES
	BLK35	INITIALIZATION PARAMETERS
	BLK37	TPOP/BEACON WARNING & ALARMS
	BLK38	PLMS COMMUNICATION
%S0001	FST_SCN	
%M0050	POS10	Ladder pos 10
%M0057	POS80	Machine ladder pos 80
	PRGEND	

BLOCK: MAIN FUNCTIONS AND CROSS REFERENCE LIST

```
|[  START LD SUBROUTINE  1T0001   ]
|
|[     VARIABLE DECLARATIONS      ]
|
|[   START OF SUBROUTINE LOGIC    ]
|
|ALW_ON                                                          << RUNG 4  STEP #0002 >>
|%S0007  +-----+
+--] [---+DO_IO+-
|        |     |
|A400-31 |     |
|%I0065 -+ST   |
|        |     |
|X02-240 |     |
|%I0080 -+END  |
|        |     |
| CONST -+ALT  |
|   0006 +-----+
|
|X02-240                                                          BIN7    << RUNG 5  STEP #0004 >>
|%I0080                                                          %M0008
+--] [-----------------------------------------------------------------( )-- (* Binary digit bit 7              *)
|
| BIN7   X02-238                                                  BIN6    << RUNG 6  STEP #0006 >>
|%M0008  %I0079                                                  %M0007
+--] [-----]/[--+-------------------------------------------------------( )-- (* Binary digit bit 6              *)
|               |
| BIN7   X02-238|
|%M0008  %I0079 |
+--]/[-----] [--+
|
| BIN6   X02-237                                                  BIN5    << RUNG 7  STEP #0012 >>
|%M0007  %I0078                                                  %M0006
+--] [-----]/[--+-------------------------------------------------------( )-- (* Binary digit bit 5              *)
|               |
| BIN6   X02-237|
|%M0007  %I0078 |
+--]/[-----] [--+
|
| BIN5   X02-236                                                  BIN4    << RUNG 8  STEP #0018 >>
|%M0006  %I0077                                                  %M0005
+--] [-----]/[--+-------------------------------------------------------(M)-- (* Binary digit bit 4              *)
|               |
| BIN5   X02-236|
|%M0006  %I0077 |
+--]/[-----] [--+
|
| BIN4   X02-235                                                  BIN3    << RUNG 9  STEP #0024 >>
|%M0005  %I0076                                                  %M0004
+--] [-----]/[--+-------------------------------------------------------( )-- (* Binary digit bit 3              *)
|               |
| BIN4   X02-235|
|%M0005  %I0076 |
+--]/[-----] [--+
|
| BIN3   X02-234                                                  BIN2    << RUNG 10  STEP #0030 >>
|%M0004  %I0075                                                  %M0003
+--] [-----]/[--+-------------------------------------------------------( )-- (* Binary digit bit 2              *)
|               |
| BIN3   X02-234|
|%M0004  %I0075 |
+--]/[-----] [--+
|
```

REFERENCE	NICKNAME	REFERENCE DESCRIPTION	REFERENCE	NICKNAME	REFERENCE DESCRIPTION
%I0065	A400-31	Pulse photocelles design	%M0008	BIN7	Binary digit bit 7
%S0007	ALW_ON		%I0075	X02-234	Angle encoder bit 2
%M0003	BIN2	Binary digit bit 2	%I0076	X02-235	Angle encoder bit 3
%M0004	BIN3	Binary digit bit 3	%I0077	X02-236	Angle encoder bit 4
%M0005	BIN4	Binary digit bit 4	%I0078	X02-237	Angle encoder bit 5
%M0006	BIN5	Binary digit bit 5	%I0079	X02-238	Angle encoder bit 6
%M0007	BIN6	Binary digit bit 6	%I0080	X02-240	Angle encoder bit 7

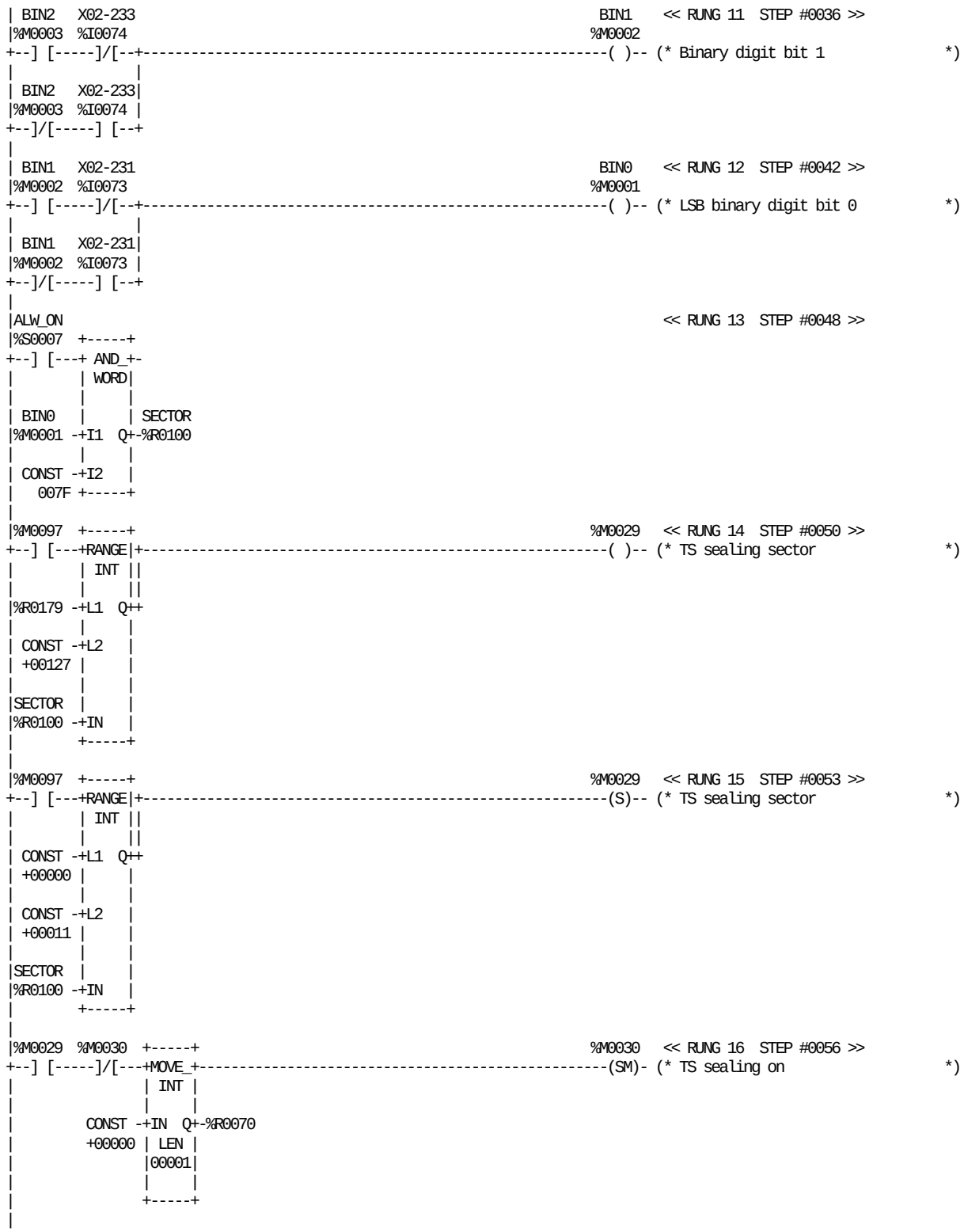

REFERENCE	NICKNAME	REFERENCE DESCRIPTION
%M0029		TS sealing sector
%M0030		TS sealing on
%M0097		TS sealing on
%R0070		Time TS sealing pulse
%R0179		TS start sealing sector
%S0007	ALW_ON	

REFERENCE	NICKNAME	REFERENCE DESCRIPTION
%M0001	BIN0	LSB binary digit bit 0
%M0002	BIN1	Binary digit bit 1
%M0003	BIN2	Binary digit bit 2
%R0100	SECTOR	Angle sector 0-127
%I0073	X02-231	Angle encoder bit 0
%I0074	X02-233	Angle encoder bit 1

BLOCK: 1T0001 FAST SCAN, ENCODER AND SEALING

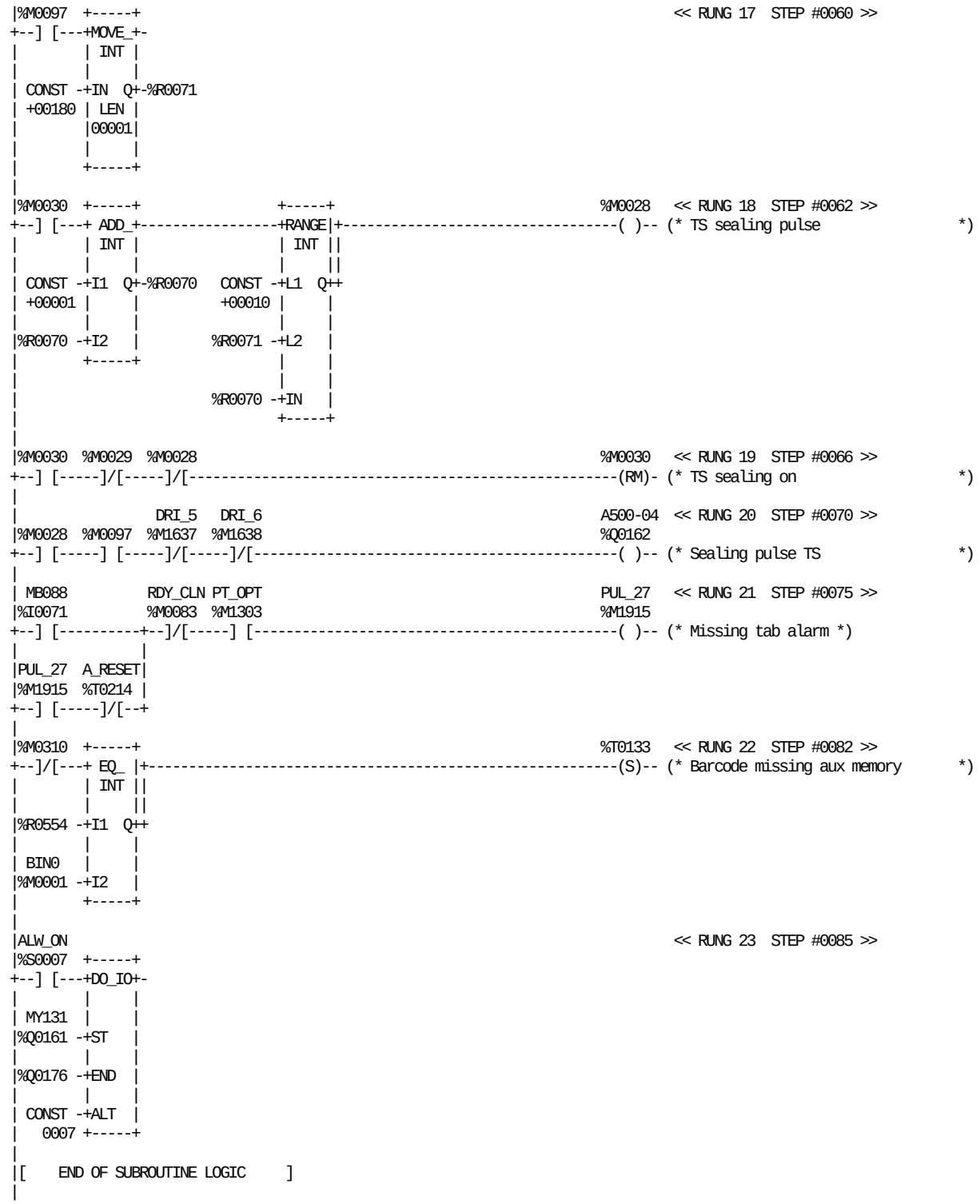

REFERENCE	NICKNAME	REFERENCE DESCRIPTION
%Q0176		
%M0028		TS sealing pulse
%M0029		TS sealing sector
%M0030		TS sealing on
%M0097		TS sealing on
%M0310		Aux memory machine in production
%T0133		Barcode missing aux memory
%R0070		Time TS sealing pulse
%R0071		Overtime TS sealing pulse
%R0554		Delay enable sealing pulse
%Q0162	A500-04	Sealing pulse TS

REFERENCE	NICKNAME	REFERENCE DESCRIPTION
%S0007	ALW_ON	
%T0214	A_RESET	Pulse+ reset A-alarm lock
%M0001	BIN0	LSB binary digit bit 0
%M1637	DRI_5	Fault IH unit TS left
%M1638	DRI_6	Fault IH unit TS right
%I0071	MB088	Tab detector
%Q0161	MY131	Pressure jaw right
%M1303	PT_OPT	PLMS, Option Pull-Tab
%M1915	PUL_27	Missing tab alarm
%M0083	RDY_CLN	Machine pos ready for cleaning

This page intentionally left blank

```
|[  START LD SUBROUTINE   BLK05   ]
|
|[     VARIABLE DECLARATIONS      ]
|
|[   START OF SUBROUTINE LOGIC    ]
|
|PS_911H  POS00                  MY001  FST_SCN                          MY102   << RUNG 4  STEP #0002 >>
|%I0149  %M0049  %M0106  %M0416  %Q0021  %S0001                         %Q0023
+--]/[--+--] [-----]/[-----]/[-----]/[-----]/[-----------------------------(/)-- (* Main air valve                  *)
|       |
|SU_1080|
|%M0033 |
+--]/[--+
|
| MY102                                                                          << RUNG 5  STEP #0010 >>
|%Q0023  +-----+                                                         %T0075
+--] [---+ TMR +-------------------------------------------------------------( )-- (* Main air pressure del. on       *)
|        |0.10s|
|        |     |
| CONST -+PV   |
| +00050 |     |
|        +-----+
|
|        %R0200
|
| MY102                                                                          << RUNG 6  STEP #0013 >>
|%Q0023  +-----+                                                         %T0076
+--]/[---+ TMR +-------------------------------------------------------------( )-- (* Main air pressure del. off      *)
|        |0.10s|
|        |     |
| CONST -+PV   |
| +00060 |     |
|        +-----+
|
|        %R0203
|
| MB002                  NOT_L21                                         SERV_2   << RUNG 7  STEP #0016 >>
|%I0011  %T0075          %M0326                                          %M1666
+--]/[-----] [--+-------+--]/[-----------------------------------------------( )-- (* Low press. main air            *)
|               |       |
| MB002         |       |
|%I0011  %T0076 |       |
+--] [-----] [--+       |
|               |       |
|SERV_2  A_RESET        |
|%M1666  %T0214  %T0070 |
+--] [-----]/[-----]/[--+
|
```

REFERENCE	NICKNAME	REFERENCE DESCRIPTION
%M0106		Long lubric.period ordered
%M0416		WEAC stop on
%T0070		ASU reset alarm push button P+
%T0075		Main air pressure del. on
%T0076		Main air pressure del. off
%R0200		Main air press. delay
%R0203		Main air press. delay
%T0214	A_RESET	Pulse+ reset A-alarm lock
%S0001	FST_SCN	

REFERENCE	NICKNAME	REFERENCE DESCRIPTION
%I0011	MB002	Main air pressure
%Q0021	MY001	Flap sealing, air SET
%Q0023	MY102	Main air valve
%M0326	NOT_L21	Line L21-L20
%M0049	POS00	Ladder pos 00
%I0149	PS_911H	Step up
%M1666	SERV_2	Low press. main air
%M0033	SU_1080	Ok to step to p10/80 heat 1

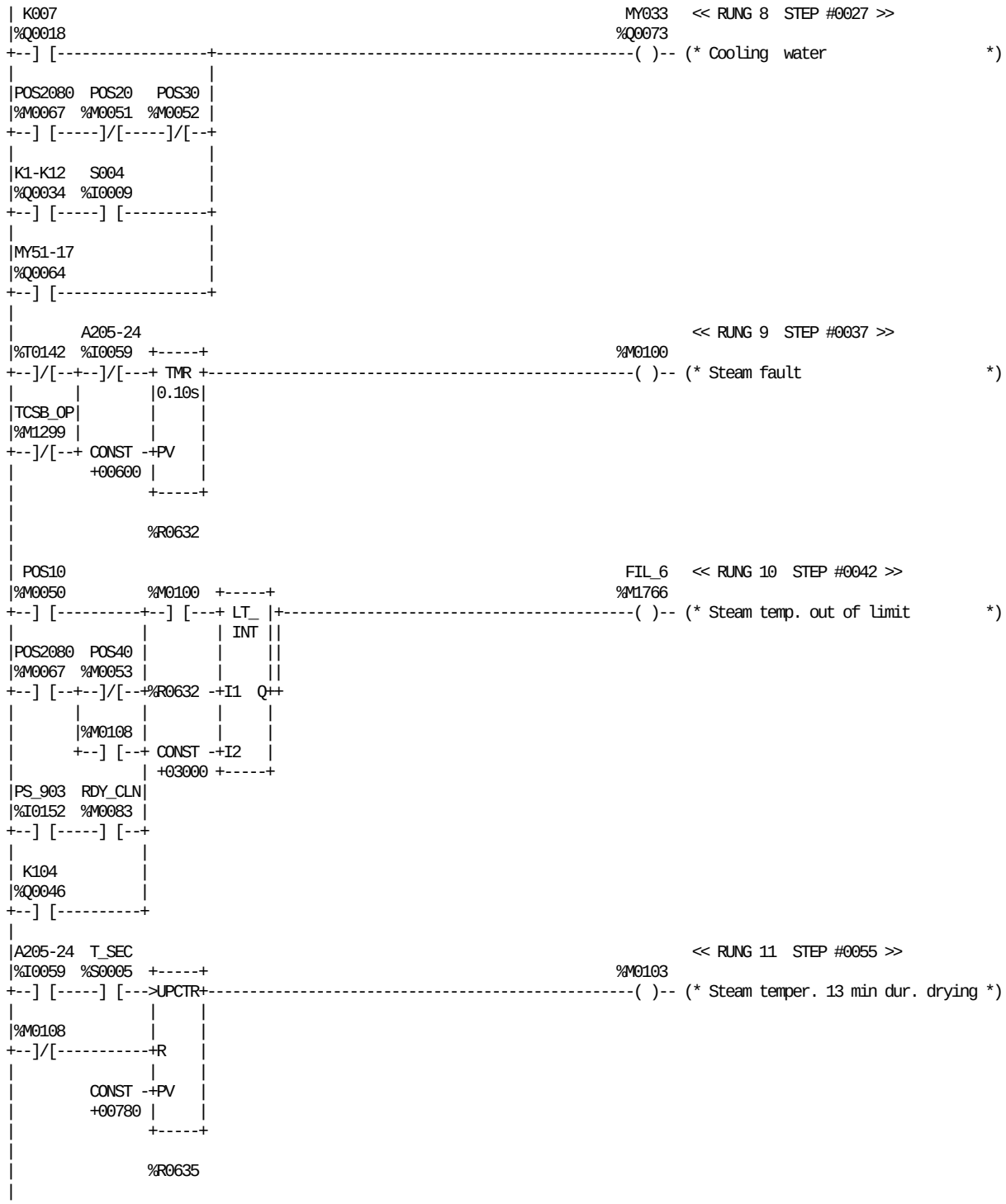

REFERENCE	NICKNAME	REFERENCE DESCRIPTION
%M0100		Steam fault
%M0103		Steam temper. 13 min dur. drying
%M0108		Spray full filled
%T0142		Steam time decrease temperature
%R0632		Delay steam monitor
%R0635		Stem temp. time during drying
%I0059	A205-24	Temp.mon.steam
%M1766	FIL_6	Steam temp. out of limit
%Q0018	K007	Hydraulic pump
%Q0034	K1-K12	Splicer contr./perox.b.water pum
%Q0046	K104	Signal to cip
%Q0073	MY033	Cooling water

REFERENCE	NICKNAME	REFERENCE DESCRIPTION
%Q0064	MY51-17	Air inj. cooling water/lubr.pump
%M0050	POS10	Ladder pos 10
%M0051	POS20	Ladder pos 20
%M0067	POS2080	Machine ladder pos 20-80
%M0052	POS30	Ladder pos 30
%M0053	POS40	Machine ladder pos 40
%I0152	PS_903	Selector switch
%M0083	RDY_CLN	Machine pos ready for cleaning
%I0009	S004	Service switch
%M1299	TCSB_OP	PLMS, Option T.C.S.B.
%S0005	T_SEC	

BLOCK: 05 COMMON SUPPLY FUNCTION

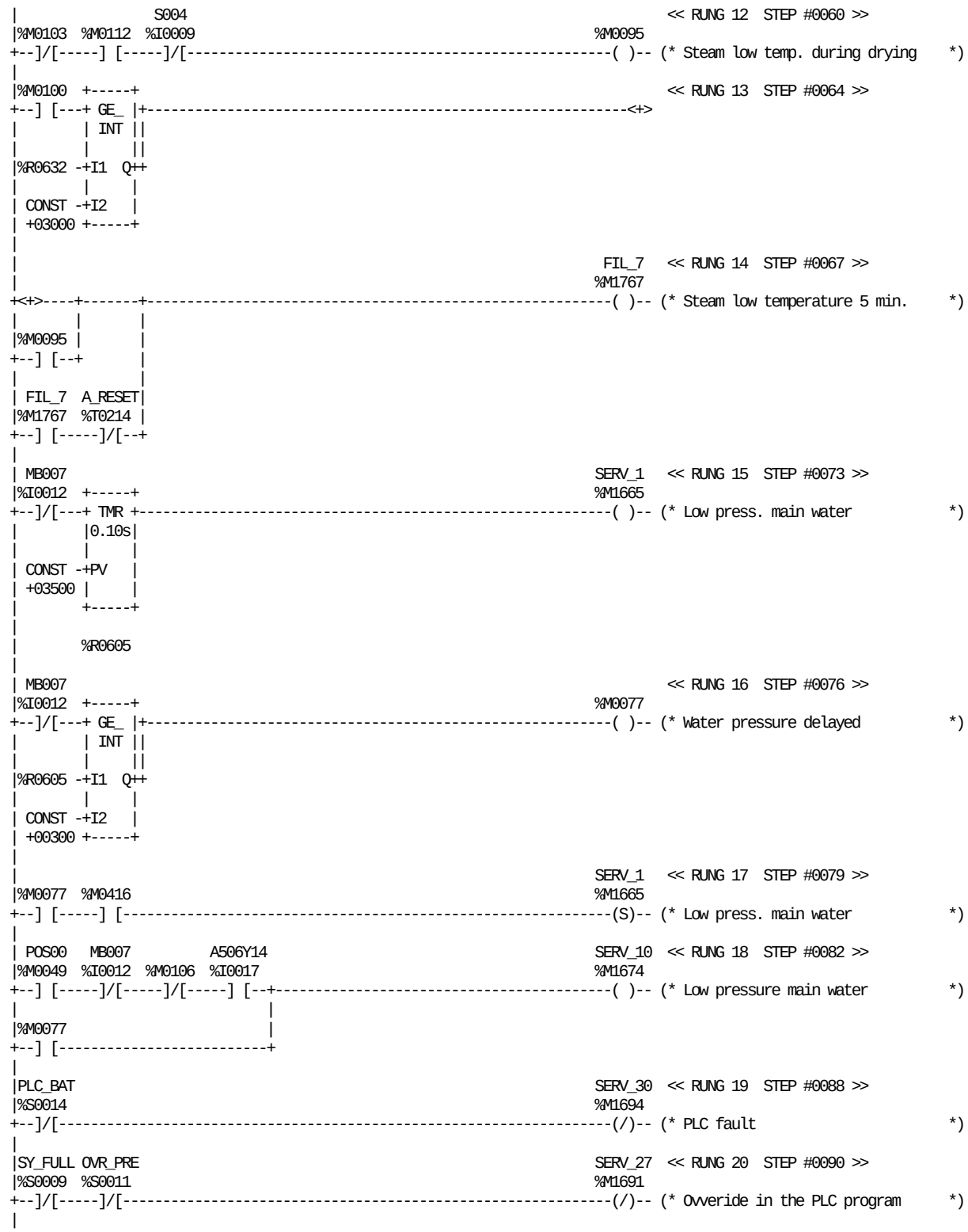

REFERENCE	NICKNAME	REFERENCE DESCRIPTION	REFERENCE	NICKNAME	REFERENCE DESCRIPTION
%M0077		Water pressure delayed	%M1767	FIL_7	Steam low temperature 5 min.
%M0095		Steam low temp. during drying	%I0012	MB007	Cooling water pressure
%M0100		Steam fault	%S0011	OVR_PRE	
%M0103		Steam temper. 13 min dur. drying	%S0014	PLC_BAT	
%M0106		Long lubric.period ordered	%M0049	POS00	Ladder pos 00
%M0112		End drying P+	%I0009	S004	Service switch
%M0416		WEAC stop on	%M1665	SERV_1	Low press. main water
%R0605		Delay alarm water press.	%M1674	SERV_10	Low pressure main water
%R0632		Delay steam monitor	%M1691	SERV_27	Ovveride in the PLC program
%I0017	A506Y14	Emergency stop safety module	%M1694	SERV_30	PLC fault
%T0214	A_RESET	Pulse+ reset A-alarm lock	%S0009	SY_FULL	

BLOCK: 05 COMMON SUPPLY FUNCTION

```
|Z003-BK                                                          SERV_15  << RUNG 21  STEP #0093 >>
|%I0113                                                          %M1679
+--] [-----------------------------------------------------------------(/)-- (* Over-voltage protection          *)
|
|[    END OF SUBROUTINE LOGIC     ]
|
```

REFERENCE NICKNAME		REFERENCE DESCRIPTION	REFERENCE NICKNAME		REFERENCE DESCRIPTION
%M1679	SERV_15	Over-voltage protection	%I0113	Z003-BK	Over-voltage protection

```
|[  START LD SUBROUTINE   BLK06   ]
|
|[     VARIABLE DECLARATIONS      ]
|
|[   START OF SUBROUTINE LOGIC    ]
|
|%M0547  +-----+                                                %T0115   << RUNG 4  STEP #0002 >>
+--] [---+ LE_ |+-------------------------------------------------------( )-- (* Preheat LS element at drying     *)
|        | INT ||
|        |     ||
|%R0551 -+I1  Q++
|        |     |
| CONST -+I2   |
| +03000 +-----+
|
| K006    MY019                                                  K005    << RUNG 5  STEP #0005 >>
|%Q0019  %Q0061  %M0416  %T0115  %M0532                         %Q0039
+--] [-----] [--+--]/[-----]/[-----]/[-----------------------------------( )-- (* Preheat 2 LS element            *)
|               |
|               | POS20                                          K101
|               |%M0051                                         %Q0047
|               +--] [-----------------------------------------------( )-- (* LS sealed  tube                *)
|
| POS50                                                          K024    << RUNG 6  STEP #0015 >>
|%M0054                                                         %Q0027
+--]/[--+-------------------------------------------------------------(R)-- (* LS short stop                  *)
|       |
| K005  |
|%Q0039 |
+--]/[--+
|
|PS_911H  POS50   K005                                           K024    << RUNG 7  STEP #0018 >>
|%I0149  %M0054  %Q0039                                         %Q0027
+--] [-----] [--+--] [-----------------------------------------------(S)-- (* LS short stop                  *)
|               |
|SHORTS         |
|%M0082         |
+--] [----------+
|
|                                                                SUP_5   << RUNG 8  STEP #0023 >>
|%M4060                                                         %M1861
+--] [----------+-------------------------------------------------------( )-- (* Low temperature LS element      *)
|               |
|A202-24        |
|%I0055  %M0109 |
+--]/[-----] [--+
|
| POS50          A217-24                                         SUP_10   << RUNG 9  STEP #0028 >>
|%M0054  %M4058  %I0061                                         %M1866
+--] [--+--] [--+--]/[-------------------------------------------------( )-- (* LS sh. stop heat alarm          *)
|       |       |
|SHORTS |       |
|%M0082 |       |
+--] [--+       |
|               |
|SUP_10  A_RESET|
|%M1866  %T0214 |
+--] [-----]/[--+
|
| POS00                                                                  << RUNG 10  STEP #0036 >>
|%M0049                                                         %M0074
+--] [-----------------------------------------------------------------(SM)- (* MEM. close heat ext v.          *)
|
```

REFERENCE	NICKNAME	REFERENCE DESCRIPTION	REFERENCE	NICKNAME	REFERENCE DESCRIPTION
%M0074		MEM. close heat ext v.	%Q0039	K005	Preheat 2 LS element
%M0109		Drying after spraying	%Q0019	K006	Compressor
%M0416		WEAC stop on	%Q0027	K024	LS short stop
%M0532		Air inlet tower on	%Q0047	K101	LS sealed tube
%M0547		Drying after spraying	%Q0061	MY019	Air inlet valve
%M4058		Set point temp. Short Stop	%M0049	POS00	Ladder pos 00
%M4060		Time out L.S. temp preheating	%M0051	POS20	Ladder pos 20
%T0115		Preheat LS element at drying	%M0054	POS50	Machine ladder pos 50
%R0551		Drying after spray	%I0149	PS_911H	Step up
%I0055	A202-24	Temp.mon.LS production	%M0082	SHORTS	Machine pos. short stop
%I0061	A217-24	Temp.mon.LS short stop	%M1866	SUP_10	LS sh. stop heat alarm
%T0214	A_RESET	Pulse+ reset A-alarm lock	%M1861	SUP_5	Low temperature LS element

BLOCK: 06 HEATING POS 10-20

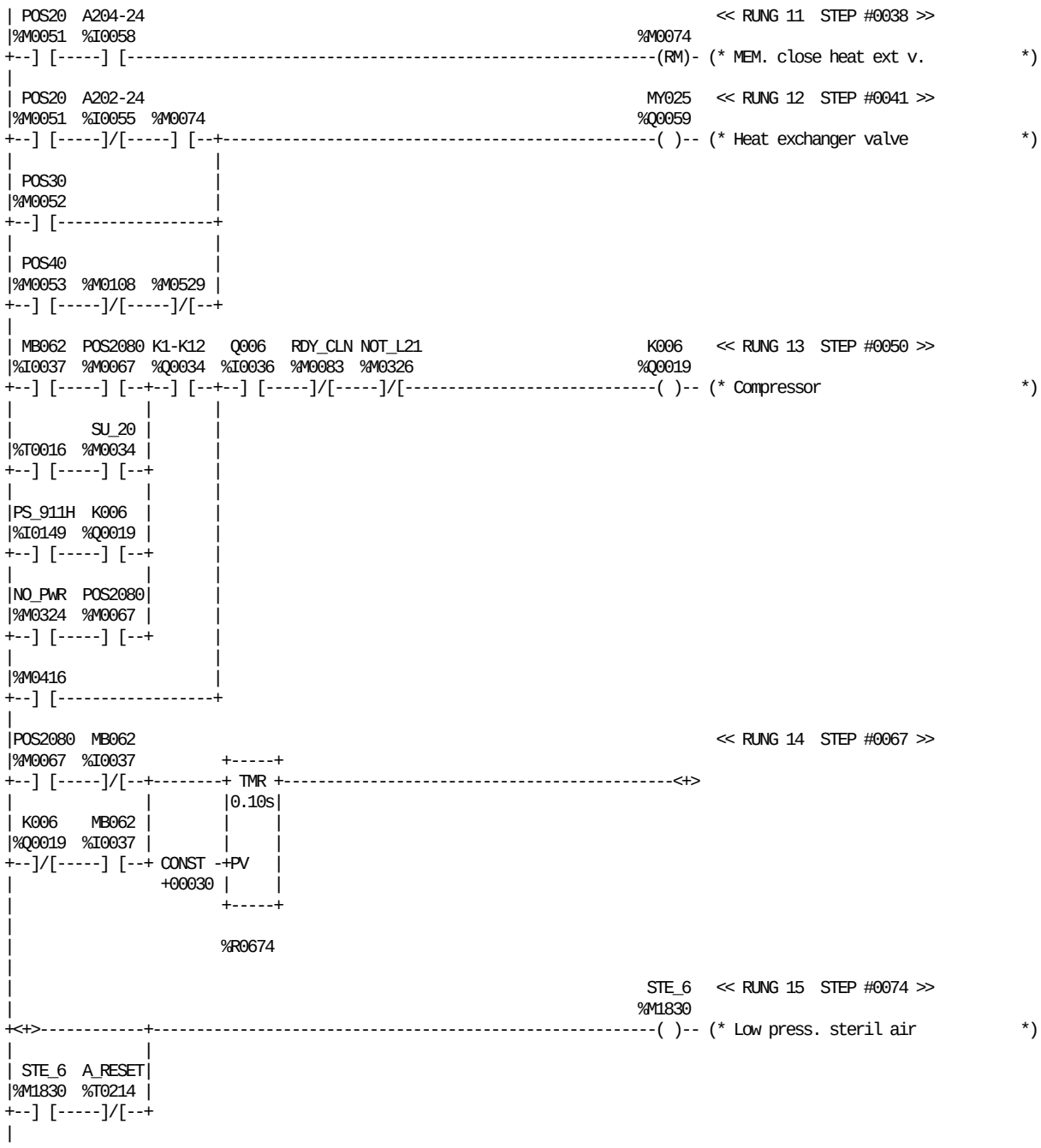

REFERENCE	NICKNAME	REFERENCE DESCRIPTION	REFERENCE	NICKNAME	REFERENCE DESCRIPTION
%M0074		MEM. close heat ext v.	%Q0059	MY025	Heat exchanger valve
%M0108		Spray full filled	%M0326	NOT_L21	Line L21-L20
%M0416		WEAC stop on	%M0324	NO_PWR	Power failure
%M0529		Max empty time	%M0051	POS20	Ladder pos 20
%T0016		Step up P+	%M0067	POS2080	Machine ladder pos 20-80
%R0674		Sterile air press.	%M0052	POS30	Ladder pos 30
%I0055	A202-24	Temp.mon.LS production	%M0053	POS40	Machine ladder pos 40
%I0058	A204-24	Temp.mon.air knives	%I0149	PS_911H	Step up
%T0214	A_RESET	Pulse+ reset A-alarm lock	%I0036	Q006	Overload protection, compressor
%Q0019	K006	Compressor	%M0083	RDY_CLN	Machine pos ready for cleaning
%Q0034	K1-K12	Splicer contr./perox.b.water pum	%M1830	STE_6	Low press. steril air
%I0037	MB062	Sterile air, pressure	%M0034	SU_20	Ok to step to pos 20 heat 2

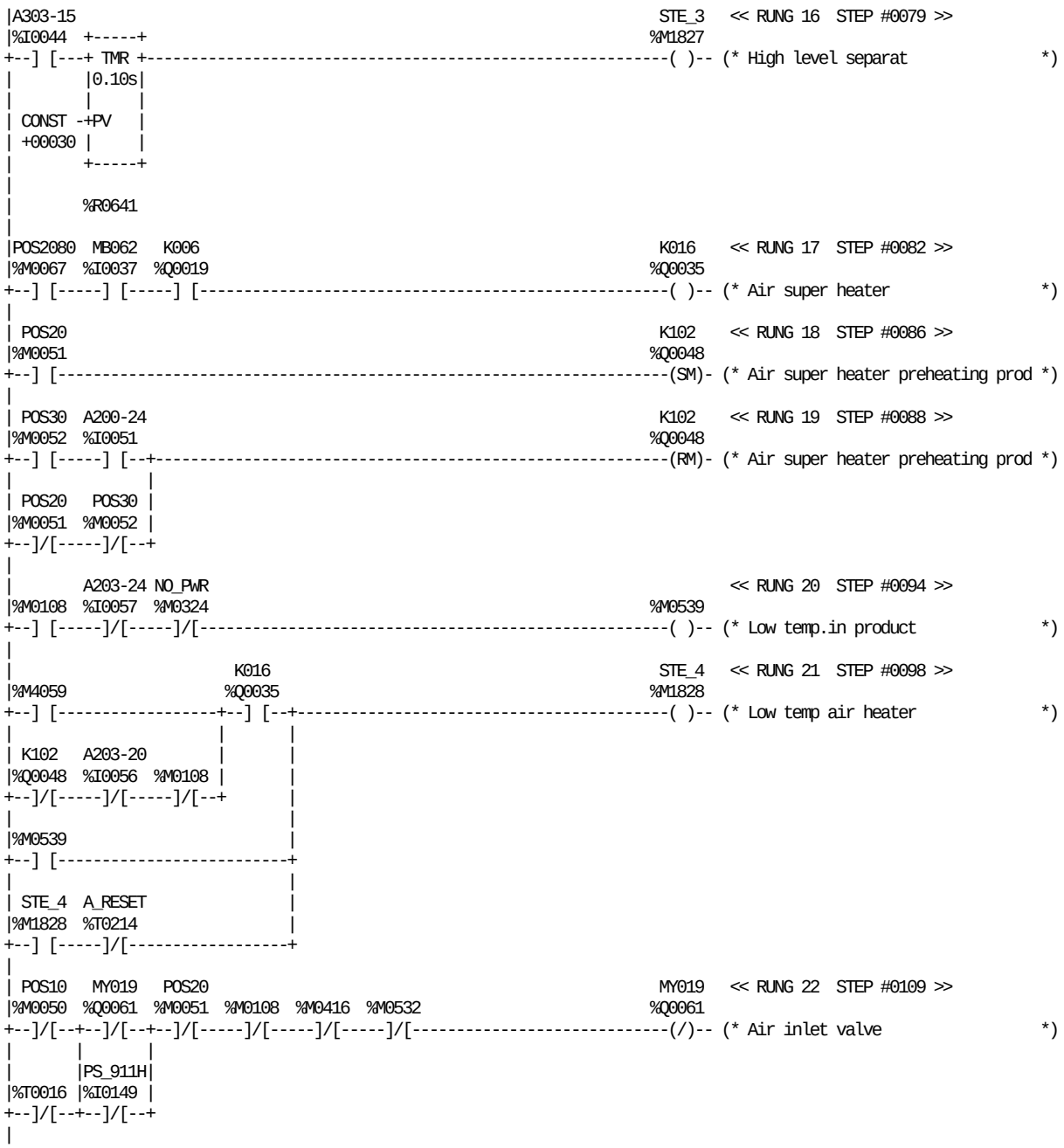

REFERENCE	NICKNAME	REFERENCE DESCRIPTION	REFERENCE	NICKNAME	REFERENCE DESCRIPTION
%M0108		Spray full filled	%Q0035	K016	Air super heater
%M0416		WEAC stop on	%Q0048	K102	Air super heater preheating prod
%M0532		Air inlet tower on	%I0037	MB062	Sterile air, pressure
%M0539		Low temp.in product	%Q0061	MY019	Air inlet valve
%M4059		Time out temp pre-sterilization	%M0324	NO_PWR	Power failure
%T0016		Step up P+	%M0050	POS10	Ladder pos 10
%R0641		Alarm delay paper supply	%M0051	POS20	Ladder pos 20
%I0051	A200-24	Temp.mon.presterilisation	%M0067	POS2080	Machine ladder pos 20-80
%I0056	A203-20	Temp.mon.airsuperheater preheat.	%M0052	POS30	Ladder pos 30
%I0057	A203-24	Temp.mon.airsuperheater product.	%I0149	PS_911H	Step up
%I0044	A303-15	Separator high level	%M1827	STE_3	High level separat
%T0214	A_RESET	Pulse+ reset A-alarm lock	%M1828	STE_4	Low temp air heater
%Q0019	K006	Compressor			

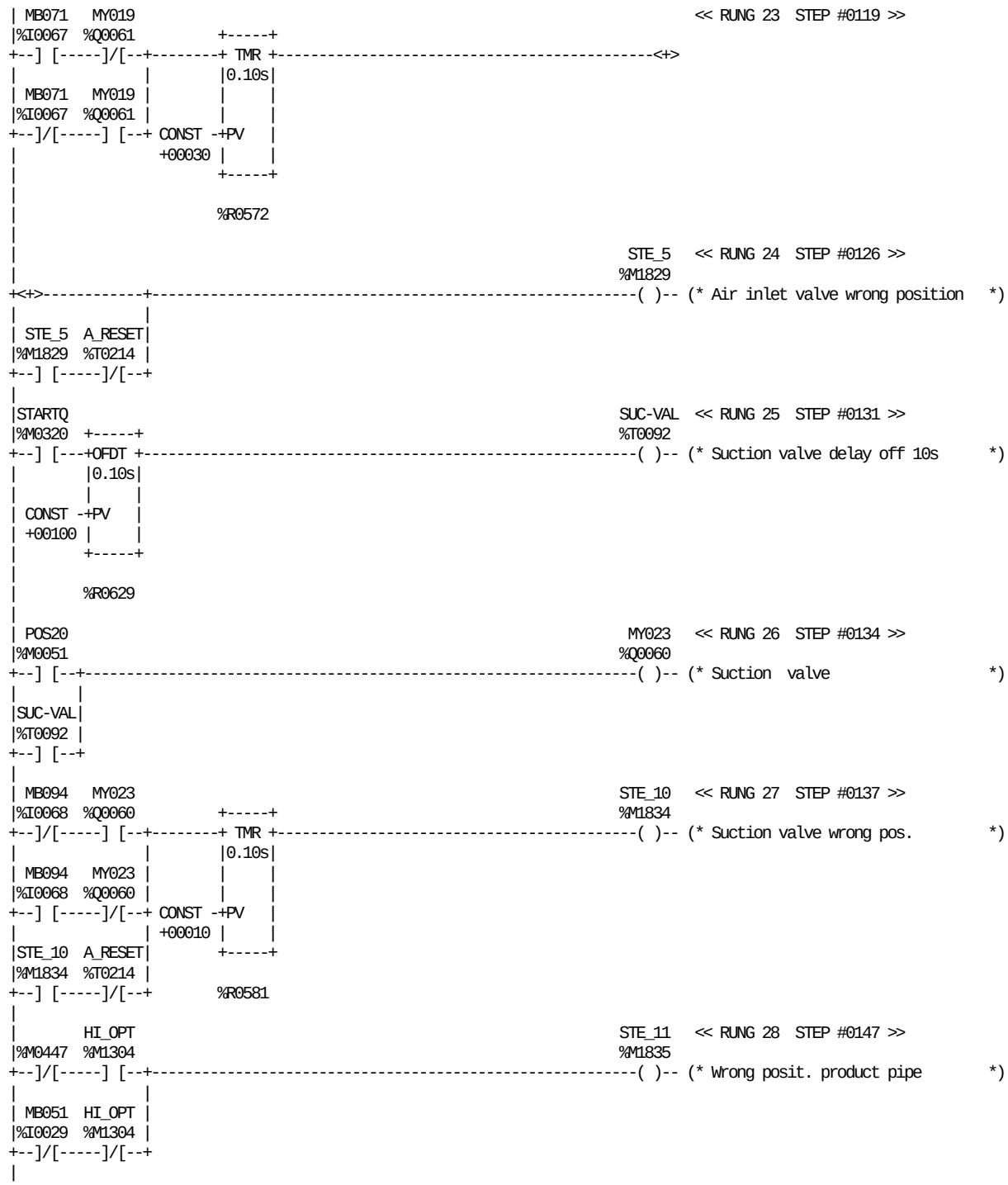

REFERENCE	NICKNAME	REFERENCE DESCRIPTION
%M0447		Product pipe in position
%R0572		Alarm delay
%R0581		Delay stop suction valve
%R0629		Suction valve hose bath
%T0214	A_RESET	Pulse+ reset A-alarm lock
%M1304	HI_OPT	PLMS, Option H.I.
%I0029	MB051	Product pipe, position
%I0067	MB071	Air inlet valve, position
%I0068	MB094	Suction valve, position

REFERENCE	NICKNAME	REFERENCE DESCRIPTION
%Q0061	MY019	Air inlet valve
%Q0060	MY023	Suction valve
%M0051	POS20	Ladder pos 20
%M0320	STARTQ	Start sequenc
%M1834	STE_10	Suction valve wrong pos.
%M1835	STE_11	Wrong posit. product pipe
%M1829	STE_5	Air inlet valve wrong position
%T0092	SUC-VAL	Suction valve delay off 10s

BLOCK: 06 HEATING POS 10-20

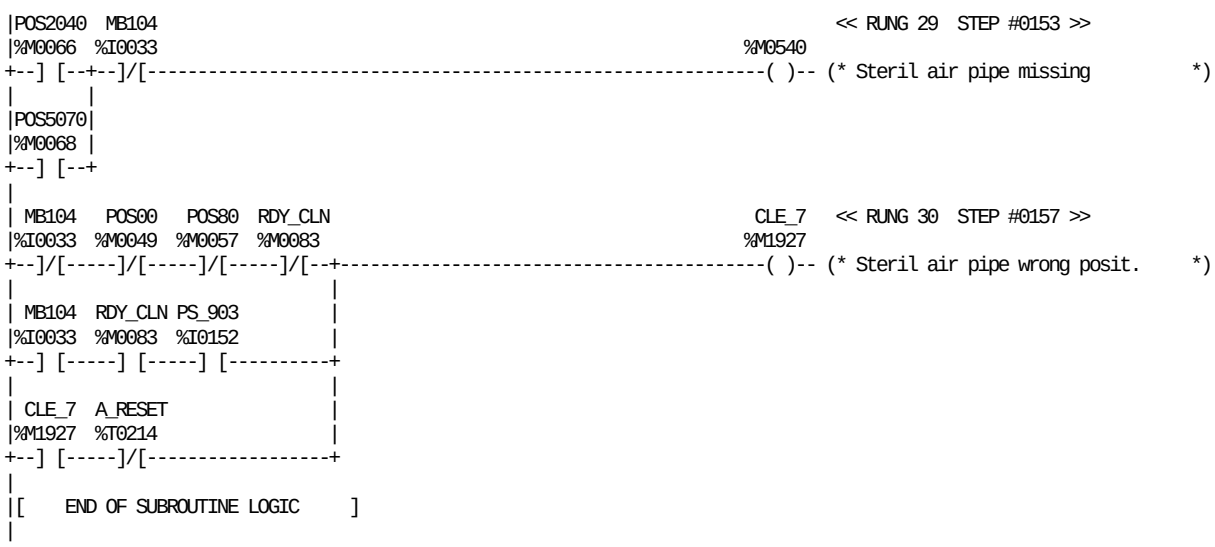

REFERENCE	NICKNAME	REFERENCE DESCRIPTION	REFERENCE	NICKNAME	REFERENCE DESCRIPTION
%M0540		Steril air pipe missing	%M0066	POS2040	Machine ladder pos 20-40
%T0214	A_RESET	Pulse+ reset A-alarm lock	%M0068	POS5070	Machine ladder pos 50-70
%M1927	CLE_7	Steril air pipe wrong posit.	%M0057	POS80	Machine ladder pos 80
%I0033	MB104	Steril air pipe, position	%I0152	PS_903	Selector switch
%M0049	POS00	Ladder pos 00	%M0083	RDY_CLN	Machine pos ready for cleaning

This page intentionally left blank

```
|[  START LD SUBROUTINE   BLK07   ]
|
|[     VARIABLE DECLARATIONS      ]
|
|[   START OF SUBROUTINE LOGIC    ]
|
| K014                                                                  << RUNG 4  STEP #0002 >>
|%Q0040  +-----+                                                  %T0101
+--] [---+ TMR +-----------------------------------------------------------( )-- (* Delay alarm indication          *)
|        |0.10s|
|        |     |
| CONST -+PV   |
| +00010 |     |
|        +-----+
|
|        %R0368
|
| POS10          A501-06                                           MSA_1   << RUNG 5  STEP #0005 >>
|%M0050  %T0101  %I0048                                           %M1793
+--] [--+--] [-----]/[--+-------------------------------------------------( )-- (* Fault IH unit S. A.             *)
|       |               |
|POS2080|               |
|%M0067 |               |
+--] [--+               |
|                       |
| MSA_1  A_RESET        |
|%M1793  %T0214         |
+--] [-----]/[----------+
|
| POS00   MSA_1  MCPOS80                                            K014    << RUNG 6  STEP #0013 >>
|%M0049  %M1793  %M0086  +-----+                                  %Q0040
+--]/[-----]/[-----] [---+OFDT +-----------------------------------------( )-- (* Power IH-unit Strip applic.      *)
|                        |0.01s|
|                        |     |
|                 CONST -+PV   |
|                 +00150 |     |
|                        +-----+
|
|                        %R0545
|
|STARTQ                                                                 << RUNG 7  STEP #0018 >>
|%M0320  +-----+
+--] [---+ GE_ |+-------------------------------------------------------------<+>
|        | INT ||
|        |     ||
|%R0500 -+I1  Q++
|        |     |
| CONST -+I2   |
| +00094 +-----+
|
```

REFERENCE	NICKNAME	REFERENCE DESCRIPTION
%T0101		Delay alarm indication
%R0368		LS TPIH alarm delay
%R0500		Start seq. for prod.
%R0545		Reset TPIH power delay
%I0048	A501-06	IH SA-unit failure
%T0214	A_RESET	Pulse+ reset A-alarm lock
%Q0040	K014	Power IH-unit Strip applic.

REFERENCE	NICKNAME	REFERENCE DESCRIPTION
%M0086	MCPOS80	Machine in pos.80 for >2 min
%M1793	MSA_1	Fault IH unit S. A.
%M0049	POS00	Ladder pos 00
%M0050	POS10	Ladder pos 10
%M0067	POS2080	Machine ladder pos 20-80
%M0320	STARTQ	Start sequenc

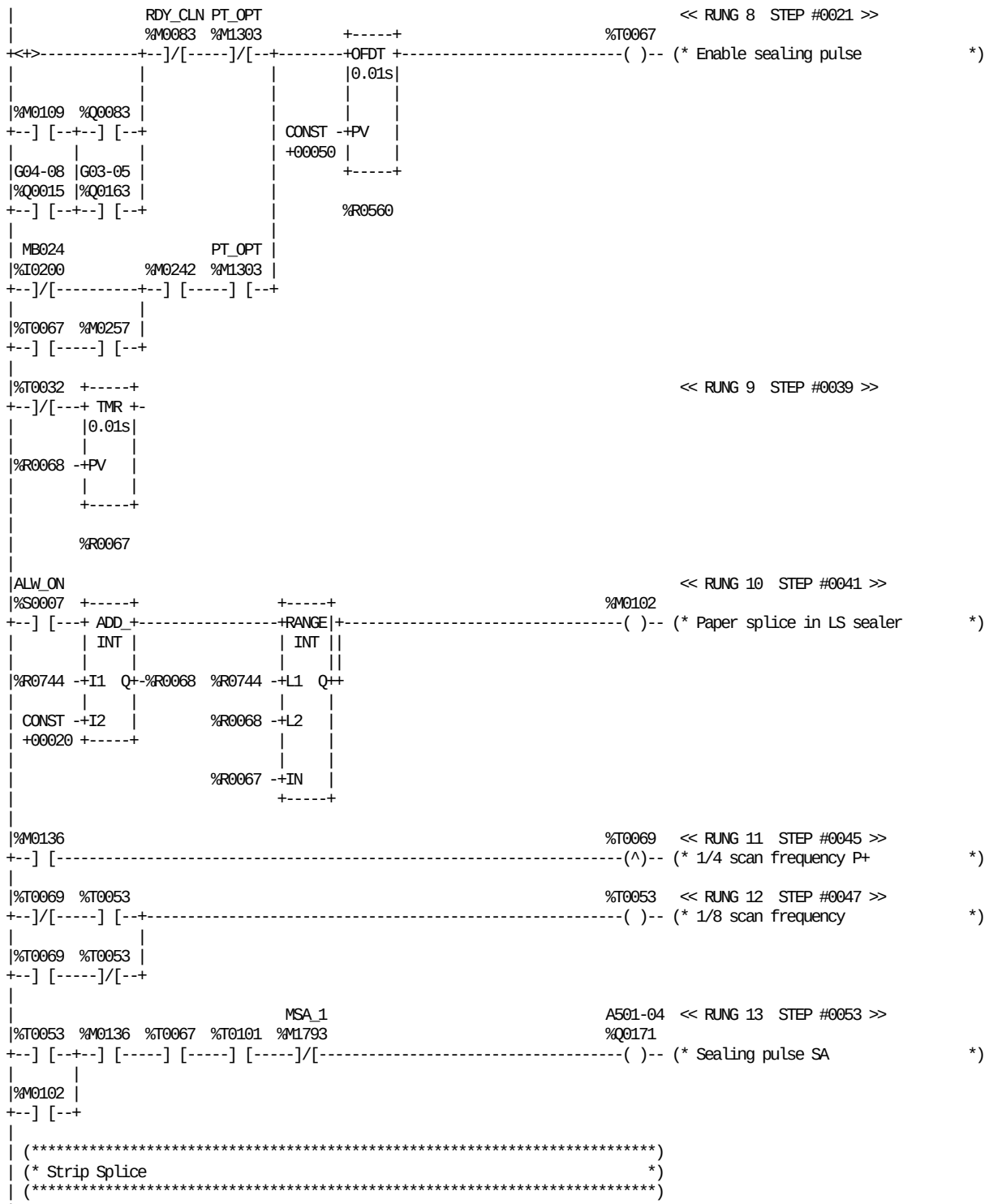

REFERENCE	NICKNAME	REFERENCE DESCRIPTION	REFERENCE	NICKNAME	REFERENCE DESCRIPTION
%Q0083		WTC inverter enable (OLD)	%R0068		Paper splice double heat up.lim.
%M0102		Paper splice in LS sealer	%R0560		Sealing pulse off delay
%M0109		Drying after spraying	%R0744		Paper splice double heat
%M0136		1/4 scan frequency	%Q0171	A501-04	Sealing pulse SA
%M0242		Infeed PT drv. motor enable	%S0007	ALW_ON	
%M0257		Start speed low enable	%Q0163	G03-05	WTC inverter enable
%T0032		Paper splice P-	%Q0015	G04-08	Main motor, high speed
%T0053		1/8 scan frequency	%I0200	MB024	Infeed loop low sensor
%T0067		Enable sealing pulse	%M1793	MSA_1	Fault IH unit S. A.
%T0069		1/4 scan frequency P+	%M1303	PT_OPT	PLMS, Option Pull-Tab
%T0101		Delay alarm indication	%M0083	RDY_CLN	Machine pos ready for cleaning
%R0067		Paper splice detected time			

BLOCK: 07 APPLICATION & SPLICING OF STRIP

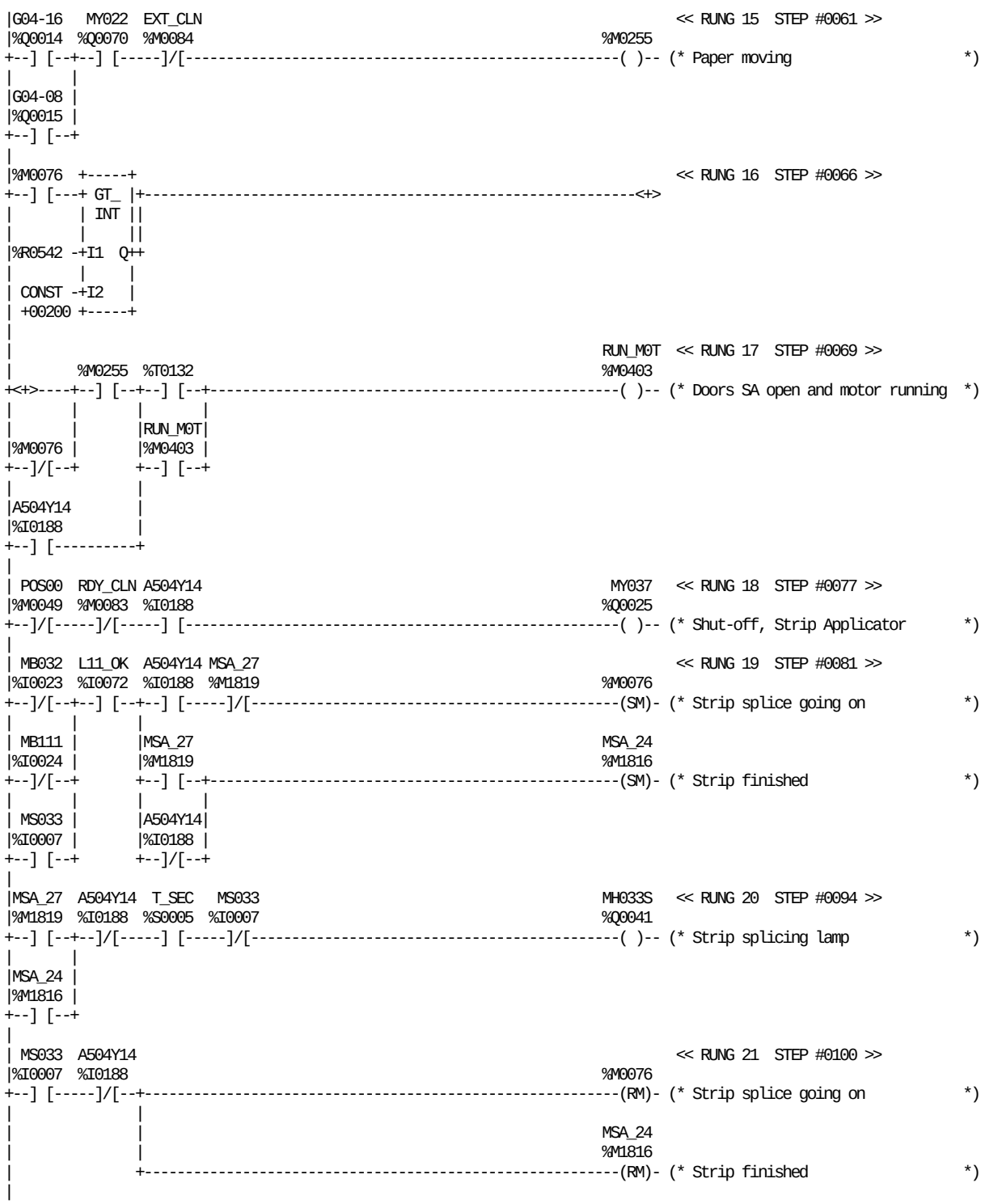

REFERENCE	NICKNAME	REFERENCE DESCRIPTION
%M0076		Strip splice going on
%M0255		Paper moving
%T0132		Alarm reset safety delay
%R0542		Strip splice time
%I0188	A504Y14	SA safety module
%M0084	EXT_CLN	Machine in pos. extern. clean
%Q0015	G04-08	Main motor, high speed
%Q0014	G04-16	Main motor, low speed
%I0072	L11_OK	Power 24v
%I0023	MB032	Strip magazine one
%I0024	MB111	Strip magazine two

REFERENCE	NICKNAME	REFERENCE DESCRIPTION
%Q0041	MH033S	Strip splicing lamp
%I0007	MS033	Strip splice push button
%M1816	MSA_24	Strip finished
%M1819	MSA_27	Low strip supply
%Q0070	MY022	Main machine, clutch
%Q0025	MY037	Shut-off, Strip Applicator
%M0049	POS00	Ladder pos 00
%M0083	RDY_CLN	Machine pos ready for cleaning
%M0403	RUN_M0T	Doors SA open and motor running
%S0005	T_SEC	

BLOCK: 07 APPLICATION & SPLICING OF STRIP

```
|                                                                  MSA_27   << RUNG 22  STEP #0104 >>
|%M0076  +-----+                                                   %M1819
+--] [---+ TMR +-----------------------------------------------------( )-- (* Low strip supply              *)
|        |0.01s|
|        |     |
| CONST -+PV   |
| +02000 |     |
|        +-----+
|
|        %R0542
|
|                                                                  K206-03  << RUNG 23  STEP #0107 >>
|%M0076  +-----+                                                   %Q0055
+--] [---+RANGE|+-----------------------------------------------------( )-- (* SA TPO bar                   *)
|        | INT ||
|        |     ||                                                   MY105
|        |     ||                                                  %Q0024
| CONST -+L1  Q++-----------------------------------------------------( )-- (* LS strip splice              *)
| +00001 |     |
|        |     |
|%R8500 -+L2   |
|        |     |
|%R0542 -+IN   |
|        +-----+
|
| (*************************************************************************)
| (* Strip rotation guard                                                  *)
| (*************************************************************************)
|
| MB109                                                                      << RUNG 25  STEP #0112 >>
|%I0025                                                            %T0068
+--] [-----------------------------------------------------------------(^)-- (* Strip guard P+              *)
|
|PT_OPT                                                                      << RUNG 26  STEP #0114 >>
|%M1303  +-----+
+--]/[---+MOVE_+-
|        | INT |
|        |     |
| CONST -+IN  Q+-%R0528
| +00007 | LEN |
|        |00001|
|        |     |
|        +-----+
|
|PT_OPT                                                                      << RUNG 27  STEP #0116 >>
|%M1303  +-----+
+--] [---+MOVE_+-
|        | INT |
|        |     |
| CONST -+IN  Q+-%R0528
| +00015 | LEN |
|        |00001|
|        |     |
|        +-----+
|
|PT_OPT  G04-16  G04-08                                                      << RUNG 28  STEP #0118 >>
|%M1303  %Q0014  %Q0015  +-----+
+--]/[-----] [-----] [---+MOVE_+-
|                        | INT |
|                        |     |
|                CONST -+IN  Q+-%R0528
|                +00010 | LEN |
|                       |00001|
|                       |     |
|                       +-----+
|
```

REFERENCE	NICKNAME	REFERENCE DESCRIPTION	REFERENCE	NICKNAME	REFERENCE DESCRIPTION
%M0076		Strip splice going on	%Q0014	G04-16	Main motor, low speed
%T0068		Strip guard P+	%Q0055	K206-03	SA TPO bar
%R0528		Rotation time selection	%I0025	MB109	Strip rotation guard
%R0542		Strip splice time	%M1819	MSA_27	Low strip supply
%R8500		SA splice time	%Q0024	MY105	LS strip splice
%Q0015	G04-08	Main motor, high speed	%M1303	PT_OPT	PLMS, Option Pull-Tab

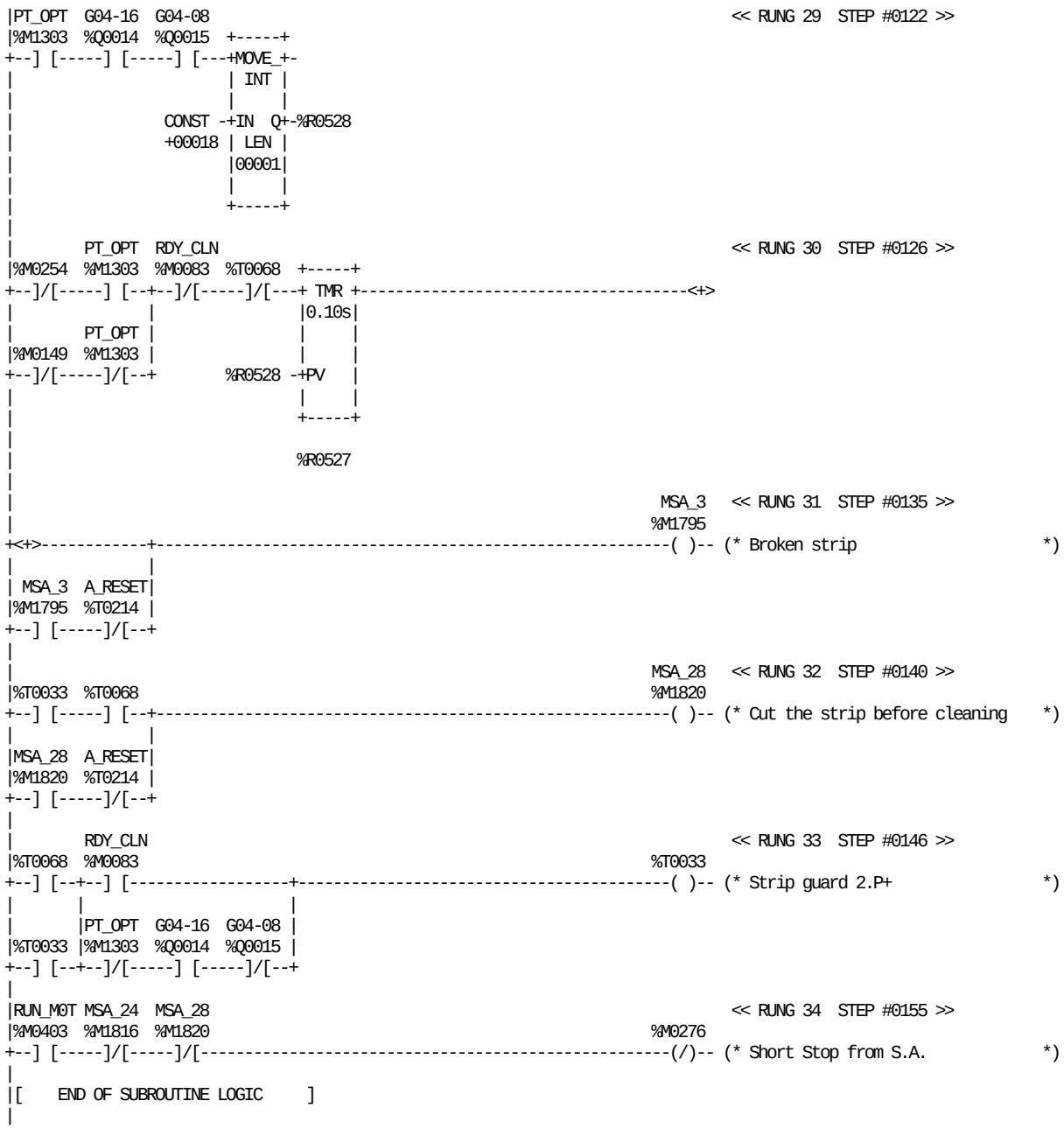

REFERENCE	NICKNAME	REFERENCE DESCRIPTION	REFERENCE	NICKNAME	REFERENCE DESCRIPTION
%M0149		WTC still	%Q0015	G04-08	Main motor, high speed
%M0254		Still PT infeed	%Q0014	G04-16	Main motor, low speed
%M0276		Short Stop from S.A.	%M1816	MSA_24	Strip finished
%T0033		Strip guard 2.P+	%M1820	MSA_28	Cut the strip before cleaning
%T0068		Strip guard P+	%M1795	MSA_3	Broken strip
%R0527		Rotat. time	%M1303	PT_OPT	PLMS, Option Pull-Tab
%R0528		Rotation time selection	%M0083	RDY_CLN	Machine pos ready for cleaning
%T0214	A_RESET	Pulse+ reset A-alarm lock	%M0403	RUN_M0T	Doors SA open and motor running

This page intentionally left blank

```
|[  START LD SUBROUTINE   BLK08   ]
|
|[     VARIABLE DECLARATIONS      ]
|
|[   START OF SUBROUTINE LOGIC    ]
|
| (*************************************************************************)
| (* Infeed PT drive motor                                                 *)
| (*************************************************************************)
|
|        MB069                                                  PUL_23   << RUNG 5  STEP #0003 >>
|%T0075  %I0203                                                 %M1911
+--] [-----]/[--+-------------------------------------------------( )-- (* Low pressure PT air             *)
|               |
|PUL_23  A_RESET|
|%M1911  %T0214 |
+--] [-----]/[--+
|
|        MB024  RDY_CLN                                         PUL_14   << RUNG 6  STEP #0009 >>
|%M0149  %I0200  %M0083  +-----+                                %M1902
+--]/[-----] [-----]/[---+ TMR +-----------------------------------( )-- (* PT broken web                  *)
|                        |0.01s|
|                        |     |
|                 CONST -+PV   |
|                 +00300 |     |
|                        +-----+
|
|                        %R0397
|
| MB025                                                          PUL_1   << RUNG 7  STEP #0014 >>
|%I0201                                                         %M1889
+--]/[-------------------------------------------------------------( )-- (* PT Infeed loop empty            *)
|
|       G006_19                                                 PUL_13   << RUNG 8  STEP #0016 >>
|%M0243  %I0234                                                 %M1901
+--] [-----]/[--+-------------------------------------------------( )-- (* Infeed PT drv. motor alarm      *)
|               |
|PUL_13  A_RESET|
|%M1901  %T0214 |
+--] [-----]/[--+
|
| MSA_3   MSA_1  PMI_12   ASU_5         PUL_23   ASU_4  PMI_13   MB069          << RUNG 9  STEP #0022 >>
|%M1795  %M1793  %M1965  %M1957  %M0561  %M1911  %M1956  %M1966  %I0203
+--]/[-----]/[-----]/[-----]/[--+--] [--+--]/[-----]/[-----]/[-----] [-------<+>
|                               |     |
|                               |PMI_OPT|
|                               |%M1307 |
|                               +--]/[--+
|
|       %M0563  %M0243                                          %M0242   << RUNG 10  STEP #0034 >>
+<+>----+--] [--+--] [-------------------------------------------( )-- (* Infeed PT drv. motor enable     *)
|       |       |
|       |ASU_OPT|
|       |%M1308 |                                               %M0562
|       +--]/[--+-------------------------------------------------( )-- (* Infeed PT dr.motor en. no delay  *)
|
```

REFERENCE	NICKNAME	REFERENCE DESCRIPTION
%M0149		WTC still
%M0242		Infeed PT drv. motor enable
%M0243		Delay inverter enable
%M0561		Paper mag.infeed enable no delay
%M0562		Infeed PT dr.motor en. no delay
%M0563		Autom.Splic.Unit enable no delay
%T0075		Main air pressure del. on
%R0397		PT delay paper infeed broken
%M1956	ASU_4	ASU broken web
%M1957	ASU_5	ASU magazine empty/Short Stop
%M1308	ASU_OPT	PLMS, Option A.S.U.
%T0214	A_RESET	Pulse+ reset A-alarm lock
%I0234	G006_19	PT infeed inverter fault

REFERENCE	NICKNAME	REFERENCE DESCRIPTION
%I0200	MB024	Infeed loop low sensor
%I0201	MB025	Infeed loop high sensor
%I0203	MB069	PT valve pressure
%M1793	MSA_1	Fault IH unit S. A.
%M1795	MSA_3	Broken strip
%M1965	PMI_12	PMI magazine empty
%M1966	PMI_13	PMI broken web
%M1307	PMI_OPT	PLMS, Option spare
%M1889	PUL_1	PT Infeed loop empty
%M1901	PUL_13	Infeed PT drv. motor alarm
%M1902	PUL_14	PT broken web
%M1911	PUL_23	Low pressure PT air
%M0083	RDY_CLN	Machine pos ready for cleaning

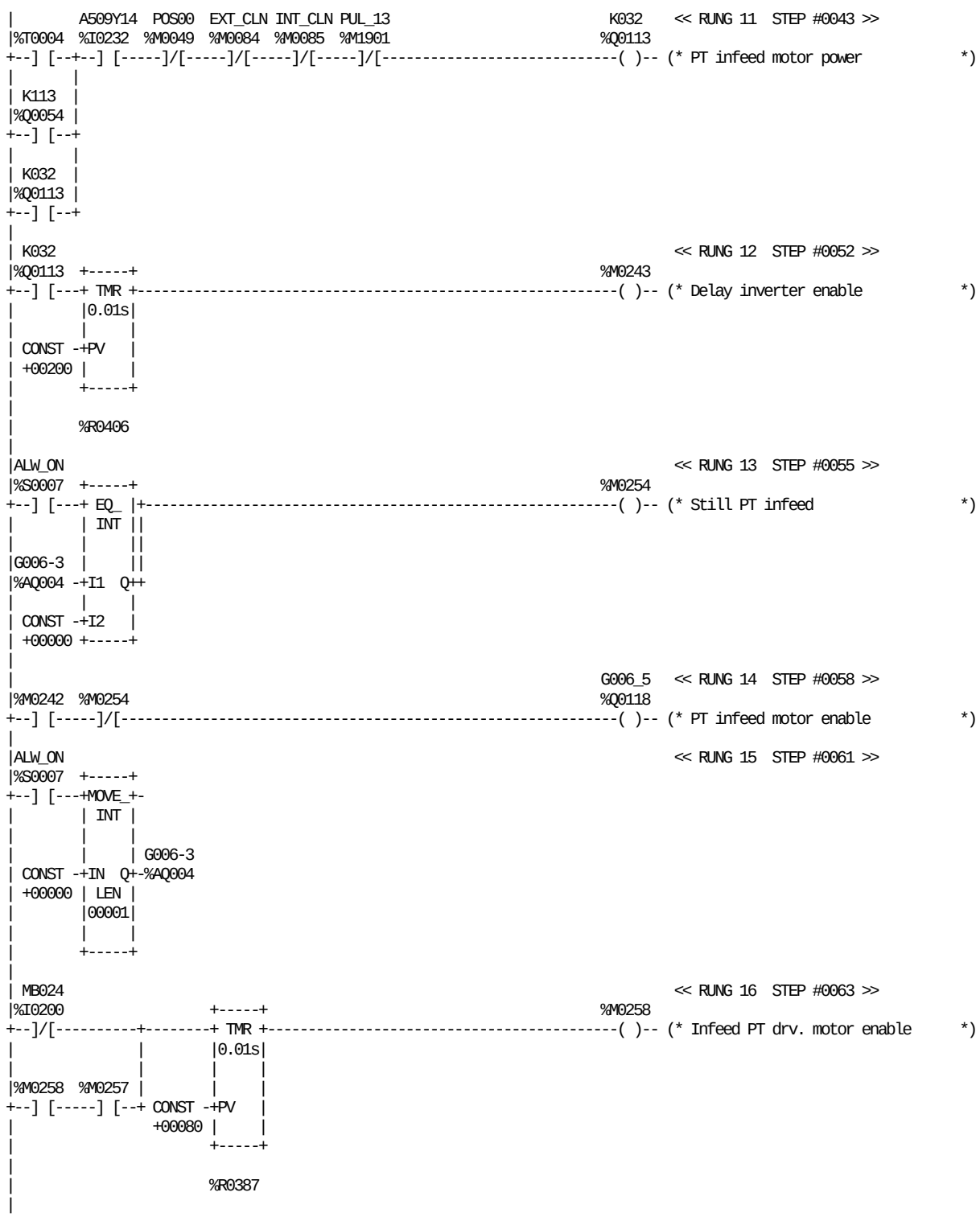

REFERENCE	NICKNAME	REFERENCE DESCRIPTION	REFERENCE	NICKNAME	REFERENCE DESCRIPTION
%M0242		Infeed PT drv. motor enable	%M0084	EXT_CLN	Machine in pos. extern. clean
%M0243		Delay inverter enable	%AQ004	G006-3	Analog output PT infeed motor
%M0254		Still PT infeed	%Q0118	G006_5	PT infeed motor enable
%M0257		Start speed low enable	%M0085	INT_CLN	Machine pos internal cleaning
%M0258		Infeed PT drv. motor enable	%Q0113	K032	PT infeed motor power
%T0004		P+ position10/ready for cleaning	%Q0054	K113	Aux. relay alarm reset
%R0387		PT delay inverter enable	%I0200	MB024	Infeed loop low sensor
%R0406		PT delay inverter fault	%M0049	POS00	Ladder pos 00
%I0232	A509Y14	PT door	%M1901	PUL_13	Infeed PT drv. motor alarm
%S0007	ALW_ON				

BLOCK: 08 PULLTAB HANDLING

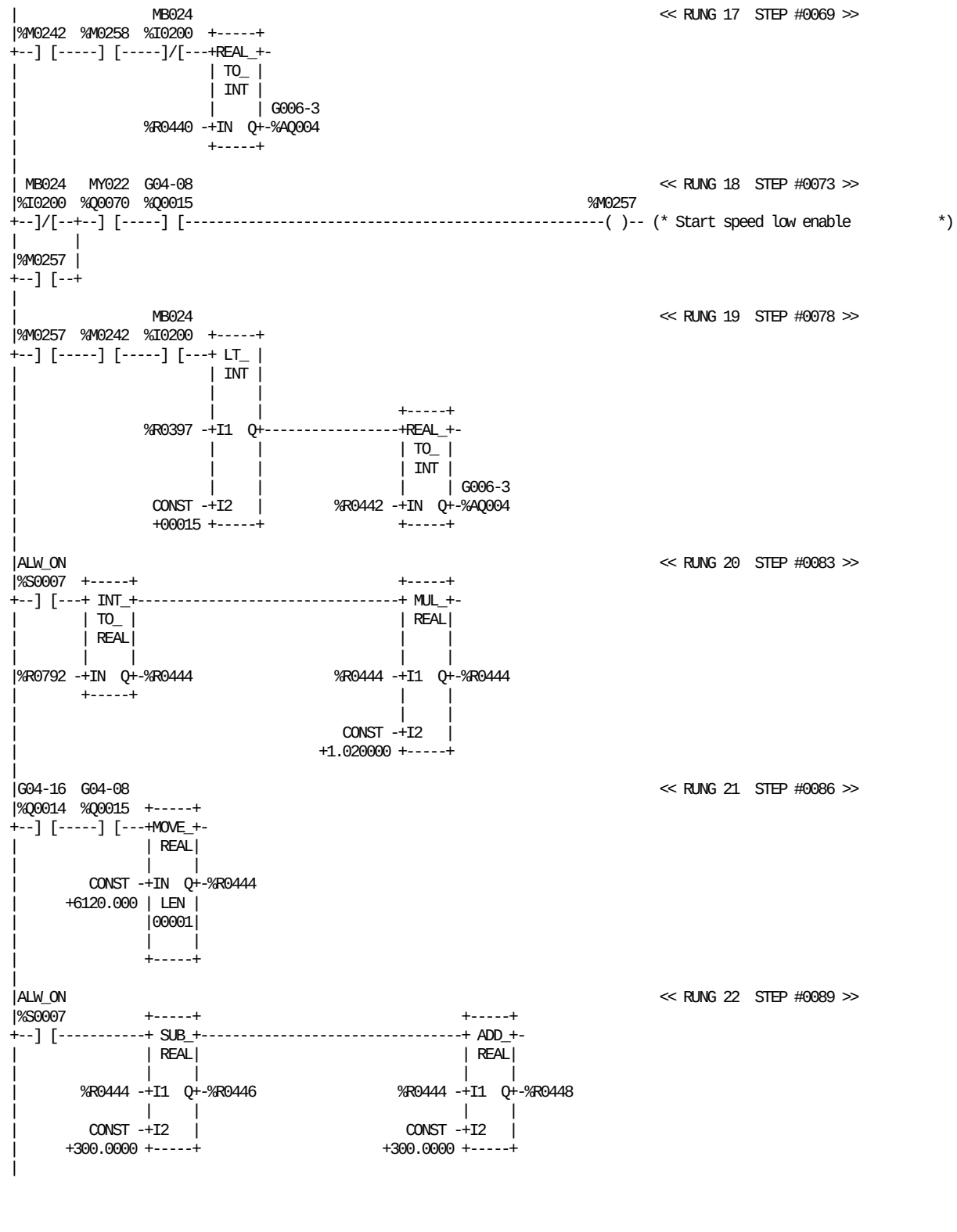

REFERENCE NICKNAME	REFERENCE DESCRIPTION	REFERENCE NICKNAME	REFERENCE DESCRIPTION
%M0242	Infeed PT drv. motor enable	%R0448	Max. speed value
%M0257	Start speed low enable	%R0792	Synchronization FF speed
%M0258	Infeed PT drv. motor enable	%S0007 ALW_ON	
%R0397	PT delay paper infeed broken	%AQ004 G006-3	Analog output PT infeed motor
%R0440	Mag. high speed production	%Q0015 G04-08	Main motor, high speed
%R0442	Mag. low speed precorrection	%Q0014 G04-16	Main motor, low speed
%R0444	Aux. speed register	%I0200 MB024	Infeed loop low sensor
%R0446	Min. speed value	%Q0070 MY022	Main machine, clutch

BLOCK: 08 PULLTAB HANDLING

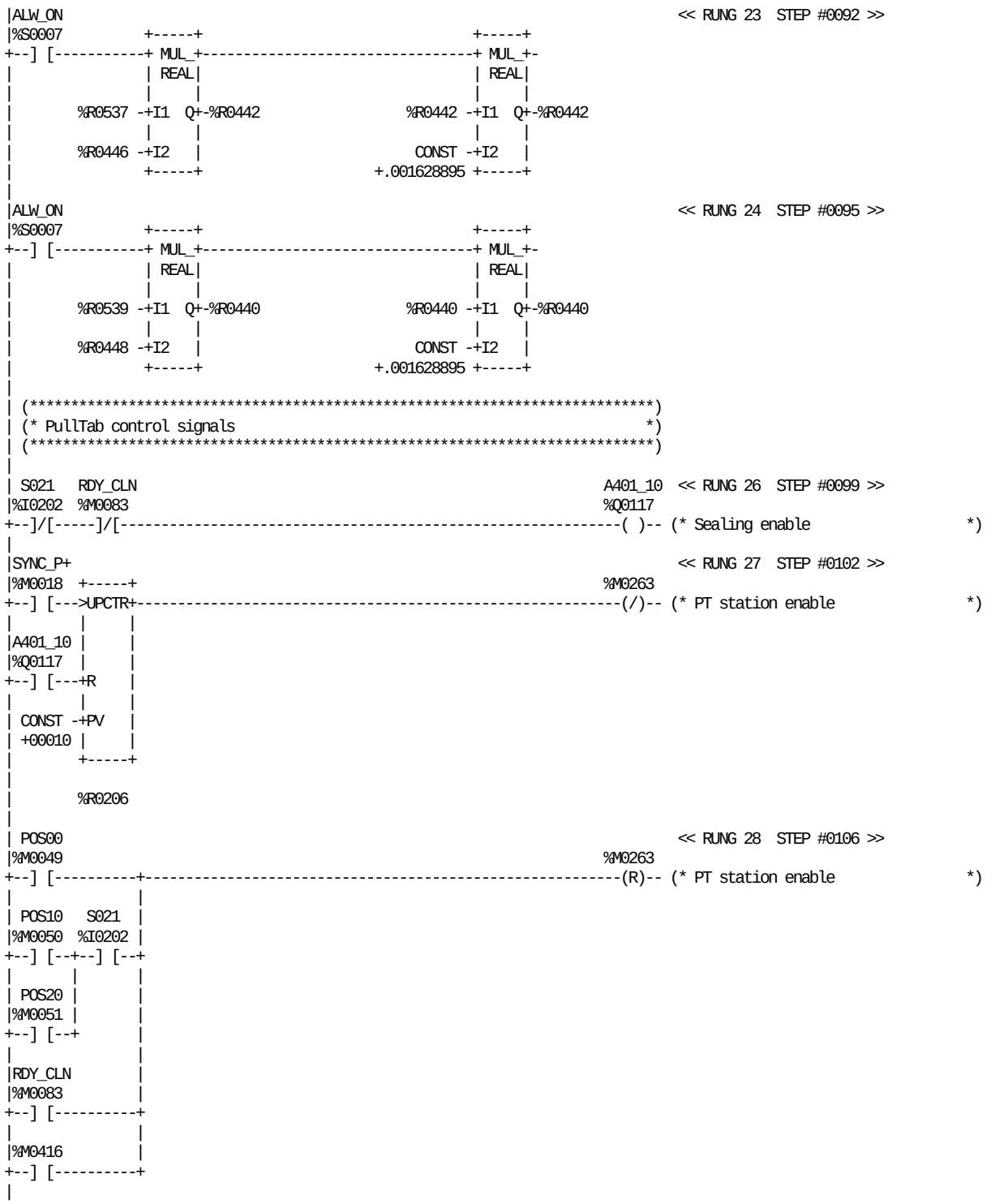

REFERENCE	NICKNAME	REFERENCE DESCRIPTION
%M0263		PT station enable
%M0416		WEAC stop on
%R0206		Package counter before disable
%R0440		Mag. high speed production
%R0442		Mag. low speed precorrection
%R0446		Min. speed value
%R0448		Max. speed value
%R0537		Package length precorreted
%R0539		Repeat length register

REFERENCE	NICKNAME	REFERENCE DESCRIPTION
%Q0117	A401_10	Sealing enable
%S0007	ALW_ON	
%M0049	POS00	Ladder pos 00
%M0050	POS10	Ladder pos 10
%M0051	POS20	Ladder pos 20
%M0083	RDY_CLN	Machine pos ready for cleaning
%I0202	S021	PT exclusion
%M0018	SYNC_P+	Drop chute out syncro. value P+

BLOCK: 08 PULLTAB HANDLING

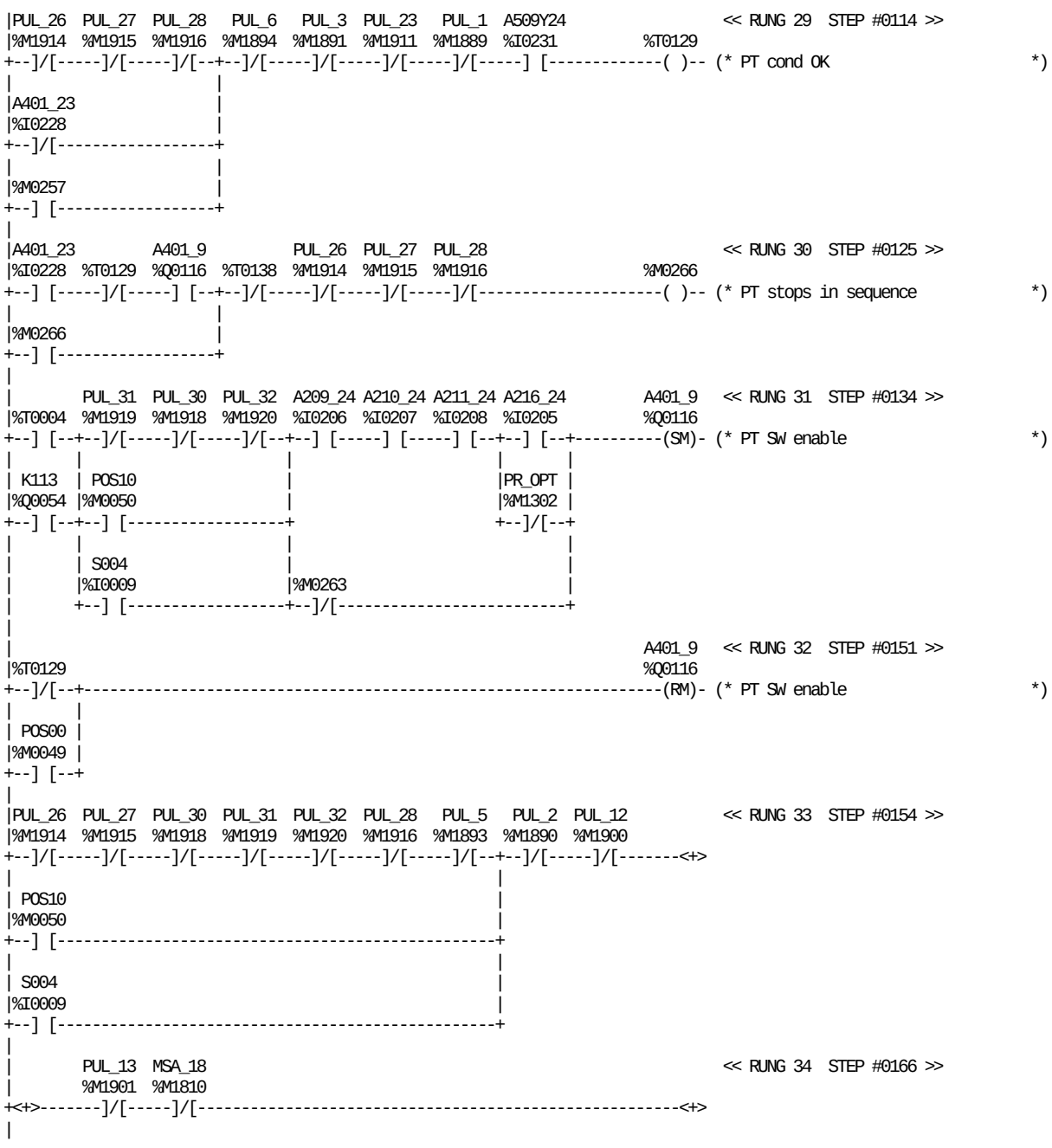

REFERENCE	NICKNAME	REFERENCE DESCRIPTION
%M0257		Start speed low enable
%M0263		PT station enable
%M0266		PT stops in sequence
%T0004		P+ position10/ready for cleaning
%T0129		PT cond OK
%T0138		PT ON P+
%I0206	A209_24	Temp.ok patch pre-sealer
%I0207	A210_24	Temp.ok patch final-sealer
%I0208	A211_24	Temp.ok tab sealer
%I0205	A216_24	Temp.ok outer-patch sealer
%I0228	A401_23	PT ready
%Q0116	A401_9	PT SW enable
%I0231	A509Y24	PS safety relay on
%Q0054	K113	Aux. relay alarm reset
%M1810	MSA_18	Paper magazine broken web
%M0049	POS00	Ladder pos 00
%M0050	POS10	Ladder pos 10

REFERENCE	NICKNAME	REFERENCE DESCRIPTION
%M1302	PR_OPT	PLMS, Option Prisma version
%M1889	PUL_1	PT Infeed loop empty
%M1900	PUL_12	PT black tape phot.malfunction
%M1901	PUL_13	Infeed PT drv. motor alarm
%M1890	PUL_2	Free- loop PT outfeed alarm
%M1911	PUL_23	Low pressure PT air
%M1914	PUL_26	Missing patch alarm
%M1915	PUL_27	Missing tab alarm
%M1916	PUL_28	Missing outer-patch alarm
%M1891	PUL_3	Paper slipping
%M1918	PUL_30	Patch strip finish
%M1919	PUL_31	Tab strip finish
%M1920	PUL_32	Outer-patch strip finish
%M1893	PUL_5	PT bar- code photoc. alarm
%M1894	PUL_6	PT Servo motor alarm
%I0009	S004	Service switch

BLOCK: 08 PULLTAB HANDLING

```
|       A401_9          PUL_8   PUL_9  PUL_10  PUL_11         PUL_14          << RUNG 35  STEP #0170 >>
|       %Q0116  %M0259  %M1896  %M1897  %M1898  %M1899  %M0562  %M1902  %M0259
+<+>-------] [--+--]/[--+--]/[-----]/[-----]/[-----]/[-----] [-----]/[-----(/)-- (* Sh.stop from PT                *)
|              |     |
|              | K113  |
|              |%Q0054 |
|              +--] [--+
|              |     |
|              |%T0013 |
|              +--] [--+
|
|A401_23 A401_9                                                                 << RUNG 36  STEP #0183 >>
|%I0228  %Q0116                                                        %M0251
+--] [--+--] [-------------------------------------------------------------( )-- (* PT on                        *)
|       |
|%M0251 |
+--] [--+
|
| (*************************************************************************)
| (* Servo power on sequence                                               *)
| (*************************************************************************)
|
|A509Y24  POS00                                                                 << RUNG 38  STEP #0188 >>
|%I0231  %M0049  +-----+                                               %M0250
+--] [-----]/[---+OFDT +-------------------------------------------------(/)-- (* Servo PW off                   *)
|               |0.01s|
|               |     |
|        CONST -+PV   |
|        +00050 |     |
|               +-----+
|
|               %R0400
|
| K113                                                                   K021   << RUNG 39  STEP #0192 >>
|%Q0054                                                                 %Q0114
+--] [--+-------------------------------------------------------------------(SM)- (* Power to DMC               *)
|       |
|%T0004 |
+--] [--+
|
|                                                                        K021   << RUNG 40  STEP #0195 >>
|%M0250                                                                 %Q0114
+--] [--+-------------------------------------------------------------------(RM)- (* Power to DMC               *)
|       |
|%M0252 |
+--] [--+
|
| K021   A02B_35                                                       A002_06  << RUNG 41  STEP #0198 >>
|%Q0114  %I0227                                                        %Q0119
+--] [-----] [-------------------------------------------------------------( )-- (* PT HW enable               *)
|
|A02B_35                                                                        << RUNG 42  STEP #0201 >>
|%I0227                                                                %M0252
+--] [-------------------------------------------------------------------(v)-- (* Servo HD alarm pulse         *)
|
|A02B_34                                                                        << RUNG 43  STEP #0203 >>
|%I0226                                                                %M0253
+--] [-------------------------------------------------------------------(v)-- (* Servo SW alarm pulse         *)
|
```

REFERENCE	NICKNAME	REFERENCE DESCRIPTION
%M0250		Servo PW off
%M0251		PT on
%M0252		Servo HD alarm pulse
%M0253		Servo SW alarm pulse
%M0259		Sh.stop from PT
%M0562		Infeed PT dr.motor en. no delay
%T0004		P+ position10/ready for cleaning
%T0013		P++ pos.10/ready for cleaning
%R0400		Release servo PW delay
%Q0119	A002_06	PT HW enable
%I0226	A02B_34	Servo SW ok
%I0227	A02B_35	Servo HW ok

REFERENCE	NICKNAME	REFERENCE DESCRIPTION
%I0228	A401_23	PT ready
%Q0116	A401_9	PT SW enable
%I0231	A509Y24	PS safety relay on
%Q0114	K021	Power to DMC
%Q0054	K113	Aux. relay alarm reset
%M0049	POS00	Ladder pos 00
%M1898	PUL_10	PT temperature tab sealer
%M1899	PUL_11	PT temperat. outer-patch sealer
%M1902	PUL_14	PT broken web
%M1896	PUL_8	PT temperature patch pre-sealer
%M1897	PUL_9	PT temperat. patch final sealer

BLOCK: 08 PULLTAB HANDLING

```
|A216_24 A209_24 A210_24 A211_24                                          << RUNG 44  STEP #0205 >>
|%I0205  %I0206  %I0207  %I0208                                  %T0222
+--] [--+--] [-----] [-----] [-----------------------------------------(^)-- (* P+ PT temperature ok             *)
|       |
|PR_OPT |
|%M1302 |
+--]/[--+
|
|        A401_9                                                    PUL_6   << RUNG 45  STEP #0211 >>
|%M0252  %Q0116                                                   %M1894
+--] [--+--] [--+-------------------------------------------------------( )-- (* PT Servo motor alarm            *)
|       |       |
|%M0253 |       |
+--] [--+       |
|               |
|        A401_9 |
|%T0222  %Q0116 |
+--] [-----]/[--+
|
| (*************************************************************************)
| (* TMCC Handling                                                        *)
| (*************************************************************************)
|
|A401_31                                                                  << RUNG 47  STEP #0219 >>
|%I0229                                                           %T0126
+--] [-----------------------------------------------------------------(v)-- (* PT al. bit 1 one shot           *)
|
|A401_32                                                                  << RUNG 48  STEP #0221 >>
|%I0230                                                           %T0127
+--] [-----------------------------------------------------------------(v)-- (* PT al. bit 2 one shot           *)
|
|                                                                  PUL_2   << RUNG 49  STEP #0223 >>
|%T0126  %T0127                                                   %M1890
+--] [-----]/[-------------------------------------------------------( )-- (* Free- loop PT outfeed alarm     *)
|
|                RDY_CLN                                           PUL_5   << RUNG 50  STEP #0226 >>
|%T0126  %T0127  %M0083                                           %M1893
+--]/[-----] [-----]/[-----------------------------------------------( )-- (* PT bar- code photoc. alarm      *)
|
|                RDY_CLN                                          PUL_26   << RUNG 51  STEP #0230 >>
|%T0126  %T0127  %M0083                                           %M1914
+--] [-----] [--+--]/[-----------------------------------------------( )-- (* Missing patch alarm            *)
|               |
|PUL_26  A_RESET|
|%M1914  %T0214 |
+--] [-----]/[--+
|
|PR_OPT                                                                   << RUNG 52  STEP #0237 >>
|%M1302
+--]/[-----------------------------------------------------------N-->>  PATCH
|
* (*************************************************************************)
* (* Outer-patch checking                                                 *)
* (*************************************************************************)
*
* MB060                                                           PUL_19   << RUNG 54  STEP #0240 >>
*%I0193  %M0263                                                  %M1907
*--] [-----] [-----------------------------------------------------( )-- (* Low level outer-patch magazine  *)
*
```

REFERENCE	NICKNAME	REFERENCE DESCRIPTION
%M0252		Servo HD alarm pulse
%M0253		Servo SW alarm pulse
%M0263		PT station enable
%T0126		PT al. bit 1 one shot
%T0127		PT al. bit 2 one shot
%T0222		P+ PT temperature ok
%I0206	A209_24	Temp.ok patch pre-sealer
%I0207	A210_24	Temp.ok patch final-sealer
%I0208	A211_24	Temp.ok tab sealer
%I0205	A216_24	Temp.ok outer-patch sealer
%I0229	A401_31	PT alarm bit 1
%I0230	A401_32	PT alarm bit 2

REFERENCE	NICKNAME	REFERENCE DESCRIPTION
%Q0116	A401_9	PT SW enable
%T0214	A_RESET	Pulse+ reset A-alarm lock
%I0193	MB060	Low level outer-patch magazine
	PATCH	
%M1302	PR_OPT	PLMS, Option Prisma version
%M1907	PUL_19	Low level outer-patch magazine
%M1890	PUL_2	Free- loop PT outfeed alarm
%M1914	PUL_26	Missing patch alarm
%M1893	PUL_5	PT bar- code photoc. alarm
%M1894	PUL_6	PT Servo motor alarm
%M0083	RDY_CLN	Machine pos ready for cleaning

BLOCK: 08 PULLTAB HANDLING

```
*SYNC_P+                                                                PUL_32   << RUNG 55  STEP #0243 >>
*%M0018          +-----+                                                %M1920
*--] [------------>UPCTR+-------------------------------------------------( )-- (* Outer-patch strip finish        *)
*                |     |
*%M0263          |     |
*--]/[--+--------+R    |
*       |        |     |
* MB060 |        |     |
*%I0193 |        |     |
*--]/[--+ CONST -+PV   |
*       | +00300 |     |
*RDY_CLN|        +-----+
*%M0083 |
*--] [--+        %R0350
*
* MB070                                                                  << RUNG 56  STEP #0249 >>
*%I0194                                                                 %T0137
*--] [-------------------------------------------------------------------(^)-- (* Pulse outerpatch motion detector *)
*
*A401_23                                                                << RUNG 57  STEP #0251 >>
*%I0228  +-----+                                                        %M0582
*--]/[---+OFDT +-------------------------------------------------------( )-- (* Enable pre-patch control        *)
*       |0.01s|
*       |     |
* CONST -+PV   |
* +00080 |     |
*        +-----+
*
*        %R0338
*
*A02B_30 A401_9  A509Y14                                                 << RUNG 58  STEP #0254 >>
*%I0204  %Q0116  %I0232  %T0137  %M0582  +-----+                        %M0271
*--] [-----] [-----] [-----]/[-----] [---+ TMR +-------------------------( )-- (* Outer-patch missing             *)
*                                       |0.10s|
*                                       |     |
*                                CONST -+PV   |
*                                +00014 |     |
*                                       +-----+
*
*                                       %R0347
*
*                                                                       PUL_28   << RUNG 59  STEP #0261 >>
*%M0271  %M0263                                                         %M1916
*--] [-----] [--+-------------------------------------------------------( )-- (* Missing outer-patch alarm       *)
*              |
*PUL_28  A_RESET|
*%M1916  %T0214 |
*--] [-----]/[--+
*
+ PATCH :(nested)                                                       << RUNG 60  STEP #0267 >>
|
| (*************************************************************************)
| (* Patch checking                                                       *)
| (*************************************************************************)
|
| MB065                                                                 PUL_17   << RUNG 62  STEP #0269 >>
|%I0195  %M0263                                                         %M1905
+--] [-----] [-------------------------------------------------------------( )-- (* Low lvl patch magazine          *)
|
```

REFERENCE	NICKNAME	REFERENCE DESCRIPTION
%M0263		PT station enable
%M0271		Outer-patch missing
%M0582		Enable pre-patch control
%T0137		Pulse outerpatch motion detector
%R0338		Enable time outer-patch control
%R0347		Pre-patch rotation monitor
%R0350		Sh.stop outerpatch package count
%I0204	A02B_30	Paper out of posit.
%I0228	A401_23	PT ready
%Q0116	A401_9	PT SW enable
%I0232	A509Y14	PT door

REFERENCE	NICKNAME	REFERENCE DESCRIPTION
%T0214	A_RESET	Pulse+ reset A-alarm lock
%I0193	MB060	Low level outer-patch magazine
%I0195	MB065	Low level patch magazine
%I0194	MB070 PATCH	Pre-patch motion detector
%M1905	PUL_17	Low lvl patch magazine
%M1916	PUL_28	Missing outer-patch alarm
%M1920	PUL_32	Outer-patch strip finish
%M0083	RDY_CLN	Machine pos ready for cleaning
%M0018	SYNC_P+	Drop chute out syncro. value P+

```
|SYNC_P+                                                          PUL_30   << RUNG 63  STEP #0272 >>
|%M0018          +-----+                                         %M1918
+--] [----------->UPCTR+-------------------------------------------( )-- (* Patch strip finish              *)
|                |     |
|%M0263          |     |
+--]/[--+--------+R    |
|       |        |     |
| MB065 |        |     |
|%I0195 |        |     |
+--]/[--+ CONST -+PV   |
|       | +00625 |     |
|RDY_CLN|        +-----+
|%M0083 |
+--] [--+       %R0394
|
| (*************************************************************************)
| (* Tab checking                                                          *)
| (*************************************************************************)
|
| MB067                                                           PUL_18   << RUNG 65  STEP #0279 >>
|%I0196  %M0263                                                   %M1906
+--] [-----] [-----------------------------------------------------( )-- (* Low lvl tab magazine           *)
|
|SYNC_P+                                                          PUL_31   << RUNG 66  STEP #0282 >>
|%M0018          +-----+                                         %M1919
+--] [----------->UPCTR+-------------------------------------------( )-- (* Tab strip finish               *)
|                |     |
|%M0263          |     |
+--]/[--+--------+R    |
|       |        |     |
| MB067 |        |     |
|%I0196 |        |     |
+--]/[--+ CONST -+PV   |
|       | +00714 |     |
|RDY_CLN|        +-----+
|%M0083 |
+--] [--+       %R0391
|
| (*************************************************************************)
| (* Pulltab door looker                                                   *)
| (*************************************************************************)
|
|A401_9  A401_23                                                   MY054   << RUNG 68  STEP #0289 >>
|%Q0116  %I0228                                                   %Q0115
+--] [-----]/[--+-------------------------------------------------( )-- (* PT left side door lock         *)
|               |
|%M0255         |
+--] [----------+
|
| (*************************************************************************)
| (* Patch & Tab heating element                                          *)
| (*************************************************************************)
|
|                                                                  K020    << RUNG 70  STEP #0294 >>
|%M0263                                                           %Q0026
+--] [-----------------------------------------------------------------( )-- (* PT Heating element and stepper  *)
|
```

REFERENCE	NICKNAME	REFERENCE DESCRIPTION	REFERENCE	NICKNAME	REFERENCE DESCRIPTION
%M0255		Paper moving	%I0196	MB067	Low level tab magazine
%M0263		PT station enable	%Q0115	MY054	PT left side door lock
%R0391		Sh.stop tab mag package counter	%M1906	PUL_18	Low lvl tab magazine
%R0394		Sh.Stop patch package counter	%M1918	PUL_30	Patch strip finish
%I0228	A401_23	PT ready	%M1919	PUL_31	Tab strip finish
%Q0116	A401_9	PT SW enable	%M0083	RDY_CLN	Machine pos ready for cleaning
%Q0026	K020	PT Heating element and stepper	%M0018	SYNC_P+	Drop chute out syncro. value P+
%I0195	MB065	Low level patch magazine			

BLOCK: 08 PULLTAB HANDLING

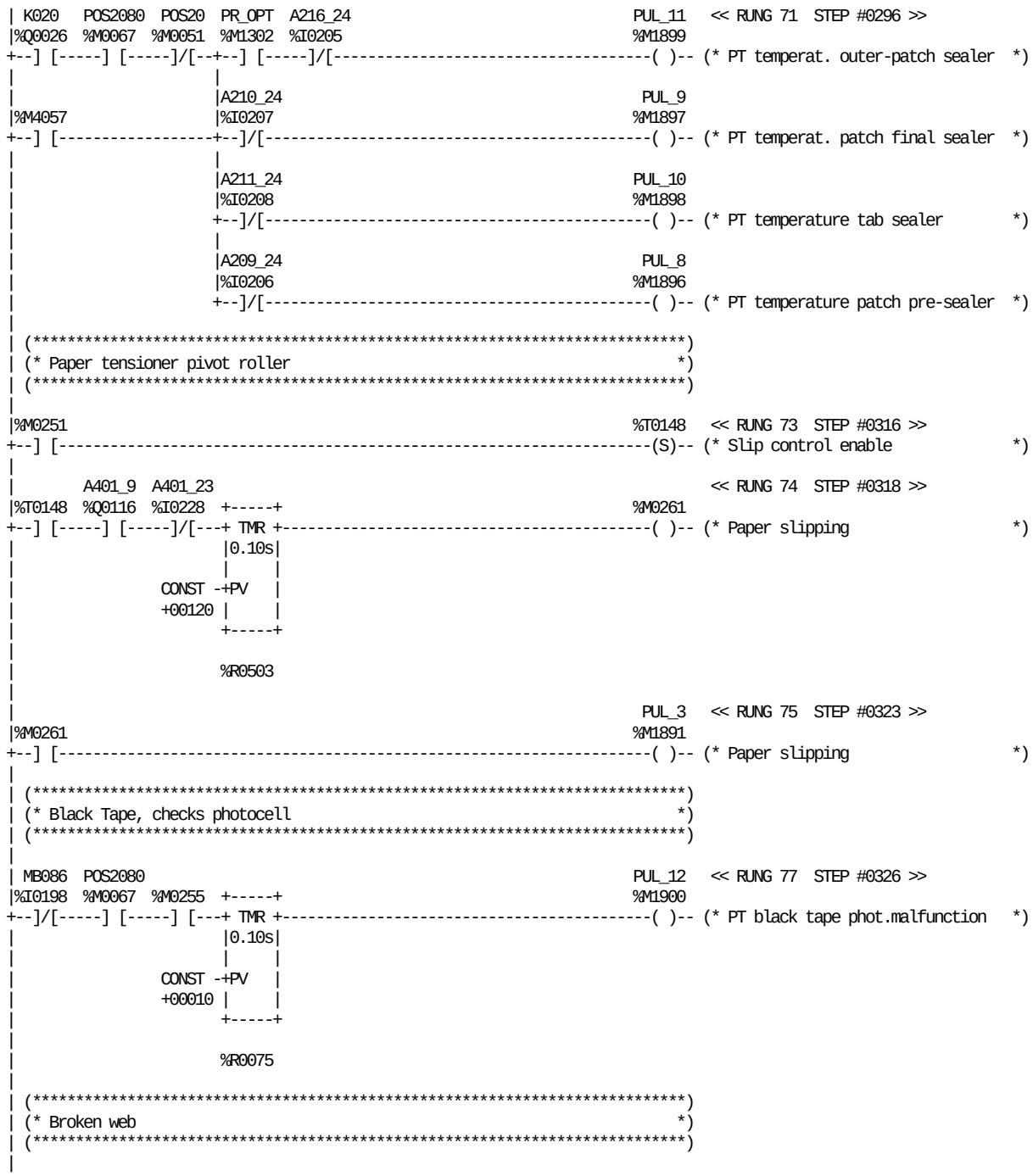

REFERENCE	NICKNAME	REFERENCE DESCRIPTION	REFERENCE	NICKNAME	REFERENCE DESCRIPTION
%M0251		PT on	%Q0116	A401_9	PT SW enable
%M0255		Paper moving	%Q0026	K020	PT Heating element and stepper
%M0261		Paper slipping	%I0198	MB086	Photoc. 1 black tape detect.
%M4057		Set point temp. PT elements	%M0051	POS20	Ladder pos 20
%T0148		Slip control enable	%M0067	POS2080	Machine ladder pos 20-80
%R0075		Black Tape alarm delay	%M1302	PR_OPT	PLMS, Option Prisma version
%R0503		Paper slipping stop delay	%M1898	PUL_10	PT temperature tab sealer
%I0206	A209_24	Temp.ok patch pre-sealer	%M1899	PUL_11	PT temperat. outer-patch sealer
%I0207	A210_24	Temp.ok patch final-sealer	%M1900	PUL_12	PT black tape phot.malfunction
%I0208	A211_24	Temp.ok tab sealer	%M1891	PUL_3	Paper slipping
%I0205	A216_24	Temp.ok outer-patch sealer	%M1896	PUL_8	PT temperature patch pre-sealer
%I0228	A401_23	PT ready	%M1897	PUL_9	PT temperat. patch final sealer

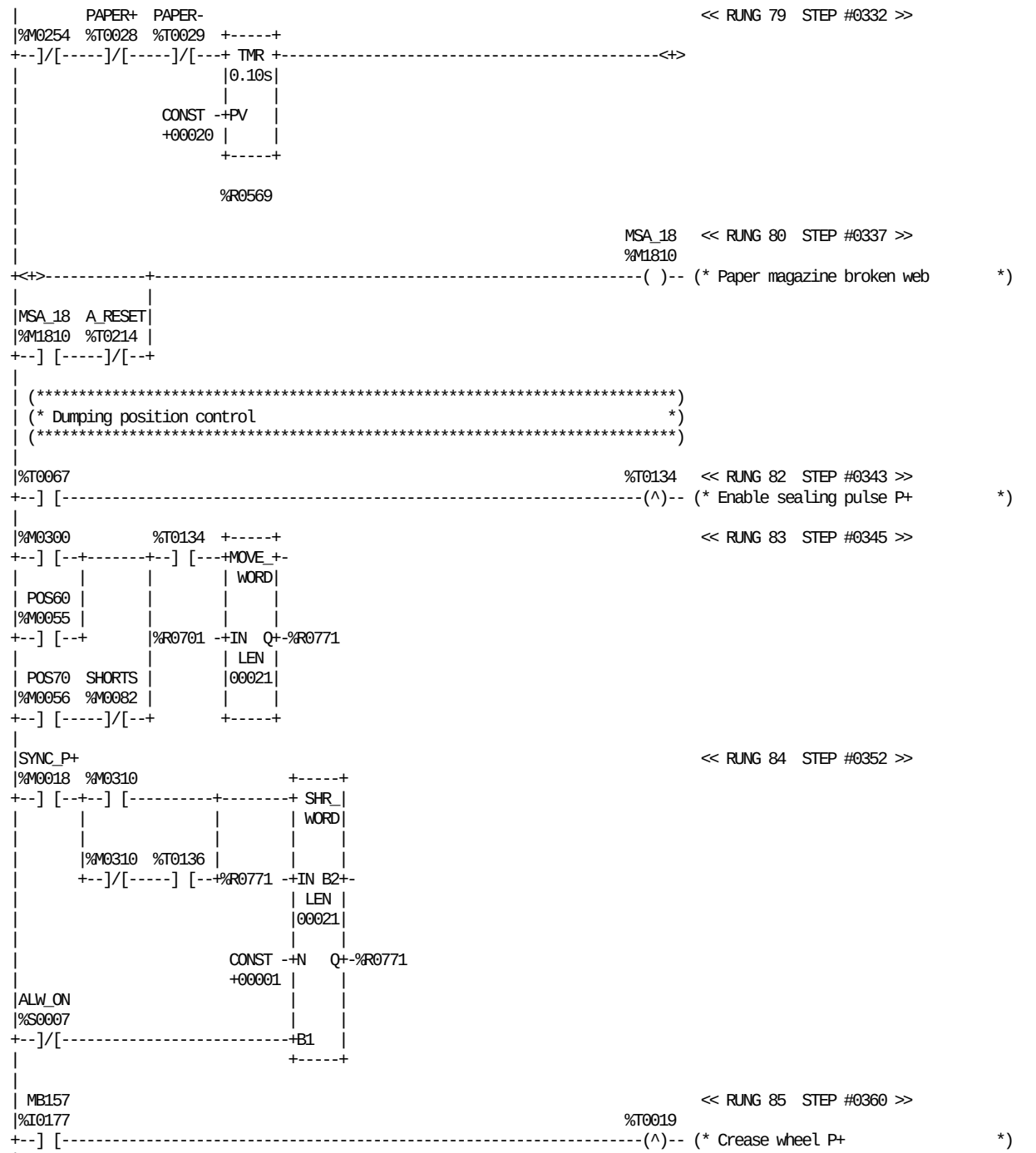

REFERENCE NICKNAME	REFERENCE DESCRIPTION	REFERENCE NICKNAME	REFERENCE DESCRIPTION
%M0254	Still PT infeed	%S0007 ALW_ON	
%M0300	Tube sealing going on	%T0214 A_RESET	Pulse+ reset A-alarm lock
%M0310	Aux memory machine in production	%I0177 MB157	Crease wheel
%T0019	Crease wheel P+	%M1810 MSA_18	Paper magazine broken web
%T0067	Enable sealing pulse	%T0028 PAPER+	Output pulse rotation paper web
%T0134	Enable sealing pulse P+	%T0029 PAPER-	Output pulse rotation paper web
%T0136	New Package detect	%M0055 POS60	Machine ladder pos 60
%R0569	Delay alarm paper	%M0056 POS70	Machine ladder pos 70
%R0701	Package dump PT on	%M0082 SHORTS	Machine pos. short stop
%R0771	Package dump PT on	%M0018 SYNC_P+	Drop chute out syncro. value P+



REFERENCE NICKNAME	REFERENCE DESCRIPTION	REFERENCE NICKNAME	REFERENCE DESCRIPTION
%T0019	Crease wheel P+	%S0007 ALW_ON	
%R0771	Package dump PT on		

BLOCK: 08 PULLTAB HANDLING

```
|[  START LD SUBROUTINE   BLK09   ]
|
|[     VARIABLE DECLARATIONS      ]
|
|[   START OF SUBROUTINE LOGIC    ]
|
| (*************************************************************************)
| (* Dry sequence                                                          *)
| (*************************************************************************)
|
|POS0030                                                    SPRY_TM  << RUNG 5  STEP #0003 >>
|%M0065                                                     %M0546
+--] [--+-------------------------------------------------------(/)-- (* Spray timer enable              *)
|       |
|RDY_CLN|
|%M0083 |                                                   %M0108
+--] [--+-------------------------------------------------------(RM)- (* Spray full filled              *)
|       |
|%M0416 |
+--] [--+-------------------------------------------------------<+>
|       |
| S004  |
|%I0009 |
+--] [--+
|
|       +-----+                                               %M0109   << RUNG 6  STEP #0010 >>
+<+>-----+ TMR +-------------------------------------------------(RM)- (* Drying after spraying          *)
|       |0.10s|
|       |     |
| CONST -+PV   |
| +00040 |     |
|       +-----+
|
|       %R0092
|
|NOT_L11                                                                << RUNG 7  STEP #0013 >>
|%M0325  +-----+
+--] [---+MOVE_+-
|       | INT |
|       |     |
| CONST -+IN  Q+-%R0548
| +01120 | LEN |
|       |00001|
|       |     |
|       +-----+
|
|SPRY_TM                                                                << RUNG 8  STEP #0015 >>
|%M0546  +-----+                                              %M0525
+--] [---+ TMR +-------------------------------------------------( )-- (* Spray finish                   *)
|       |0.10s|
|       |     |
| CONST -+PV   |
| +01120 |     |
|       +-----+
|
|       %R0548
|
```

REFERENCE	NICKNAME	REFERENCE DESCRIPTION
%M0108		Spray full filled
%M0109		Drying after spraying
%M0416		WEAC stop on
%M0525		Spray finish
%R0092		Delay reset drying
%R0548		Spray peroxide

REFERENCE	NICKNAME	REFERENCE DESCRIPTION
%M0325	NOT_L11	Line L11-L10 not ok
%M0065	POS0030	Machine ladder pos 00-30
%M0083	RDY_CLN	Machine pos ready for cleaning
%I0009	S004	Service switch
%M0546	SPRY_TM	Spray timer enable

```
|SPRY_TM                                                          MY034   << RUNG 9  STEP #0018 >>
|%M0546  +-----+                                                 %Q0075
+--] [---+RANGE|+-----------------------------------------------------( )-- (* Spray tank, filling             *)
|        | INT ||
|        |     ||
| CONST -+L1  Q++
| +00030 |     |
|        |     |
| CONST -+L2   |
| +00110 |     |
|        |     |
|%R0548 -+IN   |
|        +-----+
|
|SPRY_TM                                                                  << RUNG 10  STEP #0021 >>
|%M0546  +-----+                                                 %M0527
+--] [---+RANGE|+-----------------------------------------------------( )-- (* Spray count control steam       *)
|        | INT ||
|        |     ||
| CONST -+L1  Q++
| +00110 |     |
|        |     |
| CONST -+L2   |
| +01120 |     |
|        |     |
|%R0548 -+IN   |
|        +-----+
|
|SPRY_TM                                                                  << RUNG 11  STEP #0024 >>
|%M0546  +-----+                                                 %M0529
+--] [---+RANGE|+-----------------------------------------------------( )-- (* Max empty time                  *)
|        | INT ||
|        |     ||
| CONST -+L1  Q++
| +00510 |     |
|        |     |
| CONST -+L2   |
| +01100 |     |
|        |     |
|%R0548 -+IN   |
|        +-----+
|
|SPRY_TM                                                                  << RUNG 12  STEP #0027 >>
|%M0546  +-----+                                                 %M0530
+--] [---+RANGE|+-----------------------------------------------------( )-- (* Spray pause time               *)
|        | INT ||
|        |     ||
| CONST -+L1  Q++
| +00110 |     |
|        |     |
| CONST -+L2   |
| +01090 |     |
|        |     |
|%R0548 -+IN   |
|        +-----+
|
|SPRY_TM                                                                  << RUNG 13  STEP #0030 >>
|%M0546  +-----+                                                 %M0531
+--] [---+RANGE|+-----------------------------------------------------( )-- (* Minimum emptying time          *)
|        | INT ||
|        |     ||
| CONST -+L1  Q++
| +00111 |     |
|        |     |
| CONST -+L2   |
| +00200 |     |
|        |     |
|%R0548 -+IN   |
|        +-----+
|
```

REFERENCE	NICKNAME	REFERENCE DESCRIPTION	REFERENCE	NICKNAME	REFERENCE DESCRIPTION
%M0527		Spray count control steam	%R0548		Spray peroxide
%M0529		Max empty time	%Q0075	MY034	Spray tank, filling
%M0530		Spray pause time	%M0546	SPRY_TM	Spray timer enable
%M0531		Minimum emptying time			

BLOCK: 09 SPRAY SEQUENCE

```
|SPRY_TM                                                          << RUNG 14  STEP #0033 >>
|%M0546  +-----+                                                %M0532
+--] [---+RANGE|+-------------------------------------------------( )-- (* Air inlet tower on              *)
|        | INT ||
|        |     ||
| CONST -+L1  Q++
| +00110 |     |
|        |     |
| CONST -+L2   |
| +00500 |     |
|        |     |
|%R0548 -+IN   |
|        +-----+
|
| POS30                                                           << RUNG 15  STEP #0036 >>
|%M0052  +-----+
+--] [---+ TMR +-
|        |0.10s|
|        |     |
| CONST -+PV   |
| +18000 |     |
|        +-----+
|
|        %R0046
|
| POS30                                                           << RUNG 16  STEP #0038 >>
|%M0052  +-----+                                                %T0056
+--] [---+RANGE|+-------------------------------------------------( )-- (* Spray tank evacuat pos 30       *)
|        | INT ||
|        |     ||
| CONST -+L1  Q++
| +00001 |     |
|        |     |
| CONST -+L2   |
| +00900 |     |
|        |     |
|%R0046 -+IN   |
|        +-----+
|
| POS30                                                           << RUNG 17  STEP #0041 >>
|%M0052  +-----+                                                %T0057
+--] [---+ GE_ |+-------------------------------------------------( )-- (* Spray tank evacuat finish       *)
|        | INT ||
|        |     ||
|%R0046 -+I1  Q++
|        |     |
| CONST -+I2   |
| +00910 +-----+
|
|SPRY_TM                                                          << RUNG 18  STEP #0044 >>
|%M0546  +-----+                                                %M0526
+--] [---+ EQ_ |+-------------------------------------------------( )-- (* Max fill time spray tank        *)
|        | INT ||
|        |     ||
|%R0548 -+I1  Q++
|        |     |
| CONST -+I2   |
| +00110 +-----+
|
|A301-15                                                           POX_6   << RUNG 19  STEP #0047 >>
|%I0042  %M0526                                                 %M1606
+--]/[-----] [--+-------------------------------------------------( )-- (* Spray tank filling fault       *)
|               |
| POX_6  A_RESET|
|%M1606  %T0214 |
+--] [-----]/[--+
|
```

REFERENCE	NICKNAME	REFERENCE DESCRIPTION	REFERENCE	NICKNAME	REFERENCE DESCRIPTION
%M0526		Max fill time spray tank	%I0042	A301-15	Peroxide spray, quantity
%M0532		Air inlet tower on	%T0214	A_RESET	Pulse+ reset A-alarm lock
%T0056		Spray tank evacuat pos 30	%M0052	POS30	Ladder pos 30
%T0057		Spray tank evacuat finish	%M1606	POX_6	Spray tank filling fault
%R0046		Elapsed time POS30	%M0546	SPRY_TM	Spray timer enable
%R0548		Spray peroxide			

BLOCK: 09 SPRAY SEQUENCE

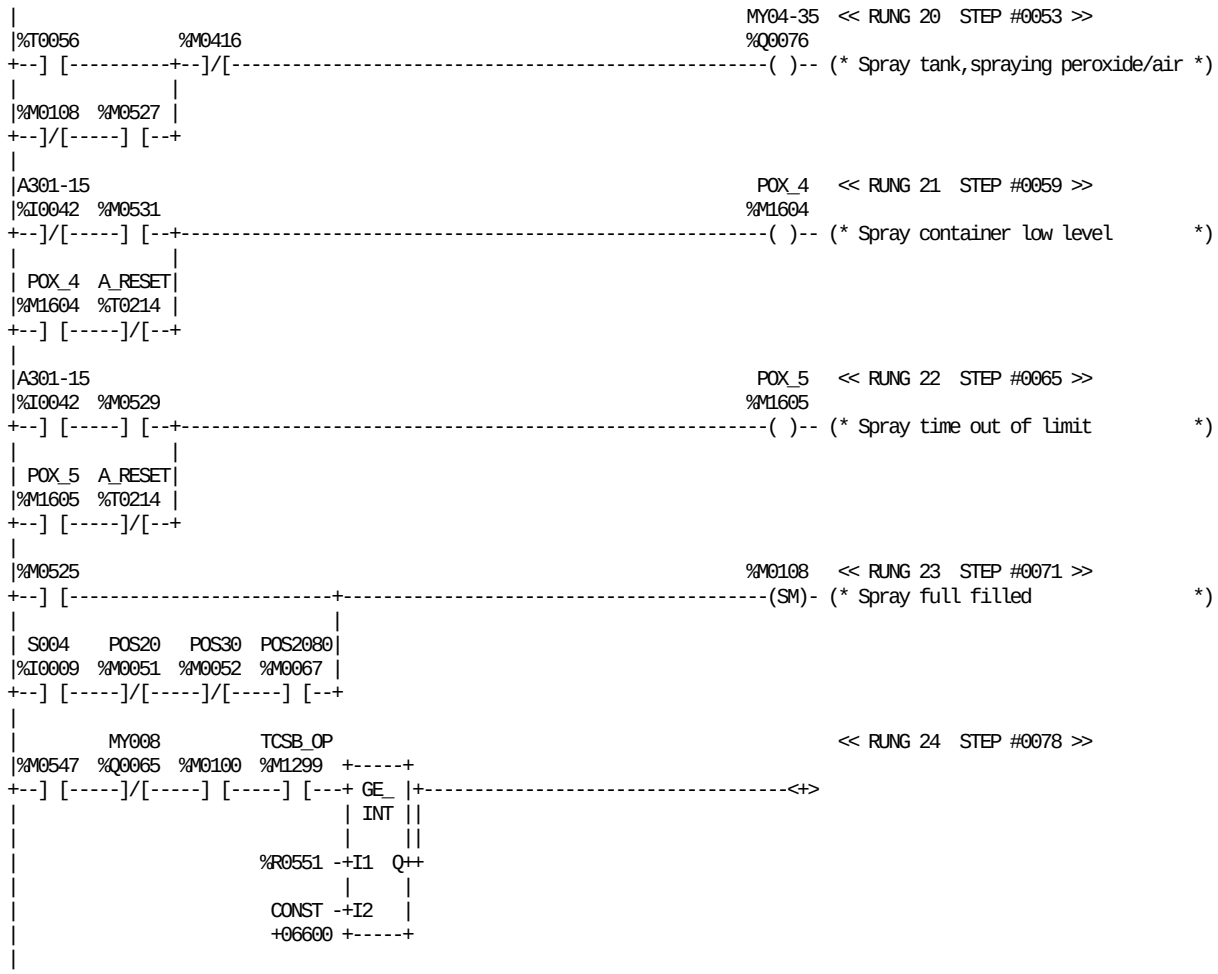

REFERENCE	NICKNAME	REFERENCE DESCRIPTION
%M0100		Steam fault
%M0108		Spray full filled
%M0416		WEAC stop on
%M0525		Spray finish
%M0527		Spray count control steam
%M0529		Max empty time
%M0531		Minimum emptying time
%M0547		Drying after spraying
%T0056		Spray tank evacuat pos 30
%R0551		Drying after spray
%I0042	A301-15	Peroxide spray, quantity

REFERENCE	NICKNAME	REFERENCE DESCRIPTION
%T0214	A_RESET	Pulse+ reset A-alarm lock
%Q0065	MY008	Sterile air valve (B)
%Q0076	MY04-35	Spray tank,spraying peroxide/air
%M0051	POS20	Ladder pos 20
%M0067	POS2080	Machine ladder pos 20-80
%M0052	POS30	Ladder pos 30
%M1604	POX_4	Spray container low level
%M1605	POX_5	Spray time out of limit
%I0009	S004	Service switch
%M1299	TCSB_OP	PLMS, Option T.C.S.B.

BLOCK: 09 SPRAY SEQUENCE

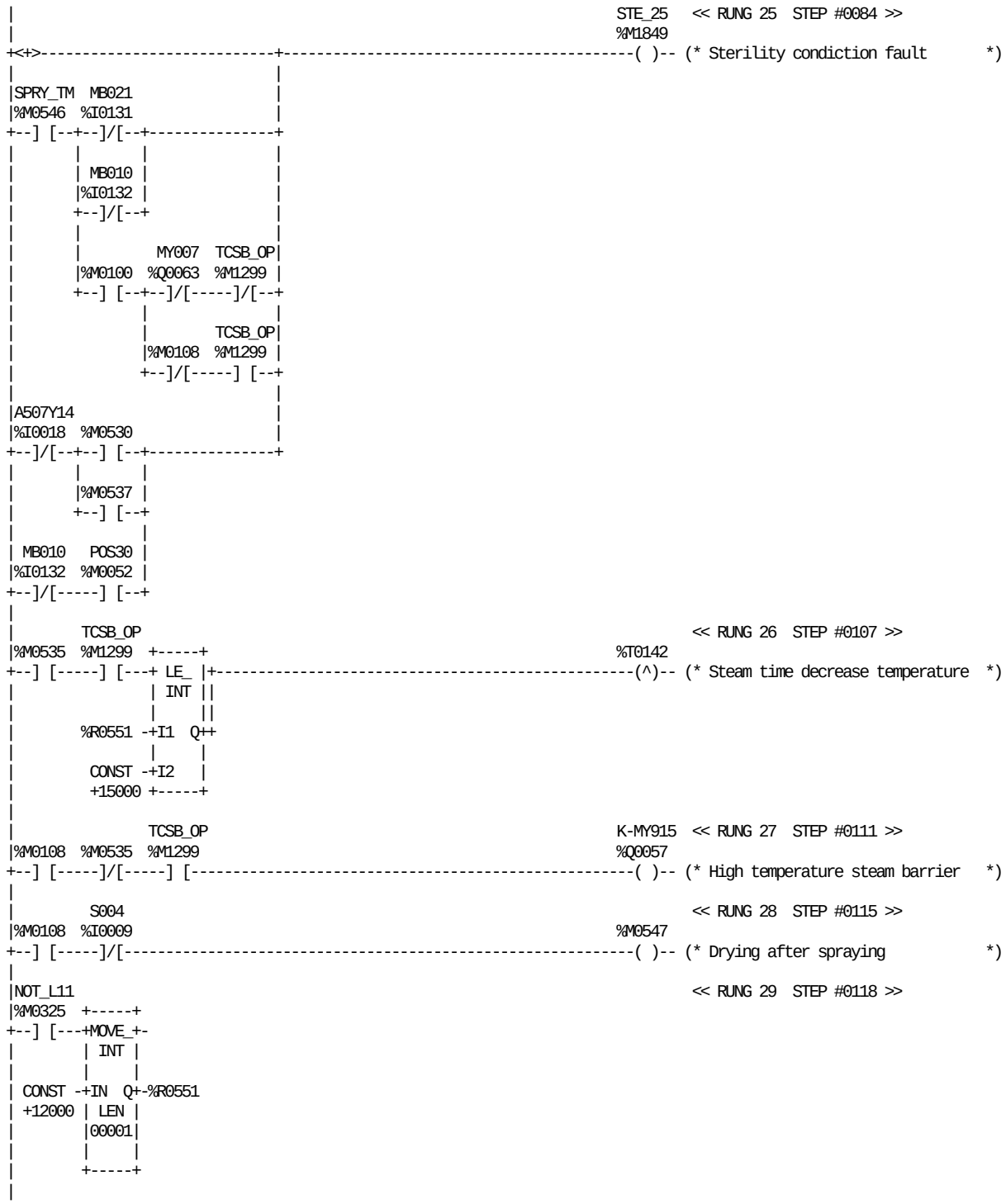

REFERENCE	NICKNAME	REFERENCE DESCRIPTION	REFERENCE	NICKNAME	REFERENCE DESCRIPTION
%M0100		Steam fault	%I0132	MB010	Crank position
%M0108		Spray full filled	%I0131	MB021	Superstructor door, position
%M0530		Spray pause time	%Q0063	MY007	Steam barrier valve (C)
%M0535		Dry time over	%M0325	NOT_L11	Line L11-L10 not ok
%M0537		Run time drying	%M0052	POS30	Ladder pos 30
%M0547		Drying after spraying	%I0009	S004	Service switch
%T0142		Steam time decrease temperature	%M0546	SPRY_TM	Spray timer enable
%R0551		Drying after spray	%M1849	STE_25	Sterility condiction fault
%I0018	A507Y14	SS, JS and FF safety module	%M1299	TCSB_OP	PLMS, Option T.C.S.B.
%Q0057	K-MY915	High temperature steam barrier			

BLOCK: 09 SPRAY SEQUENCE

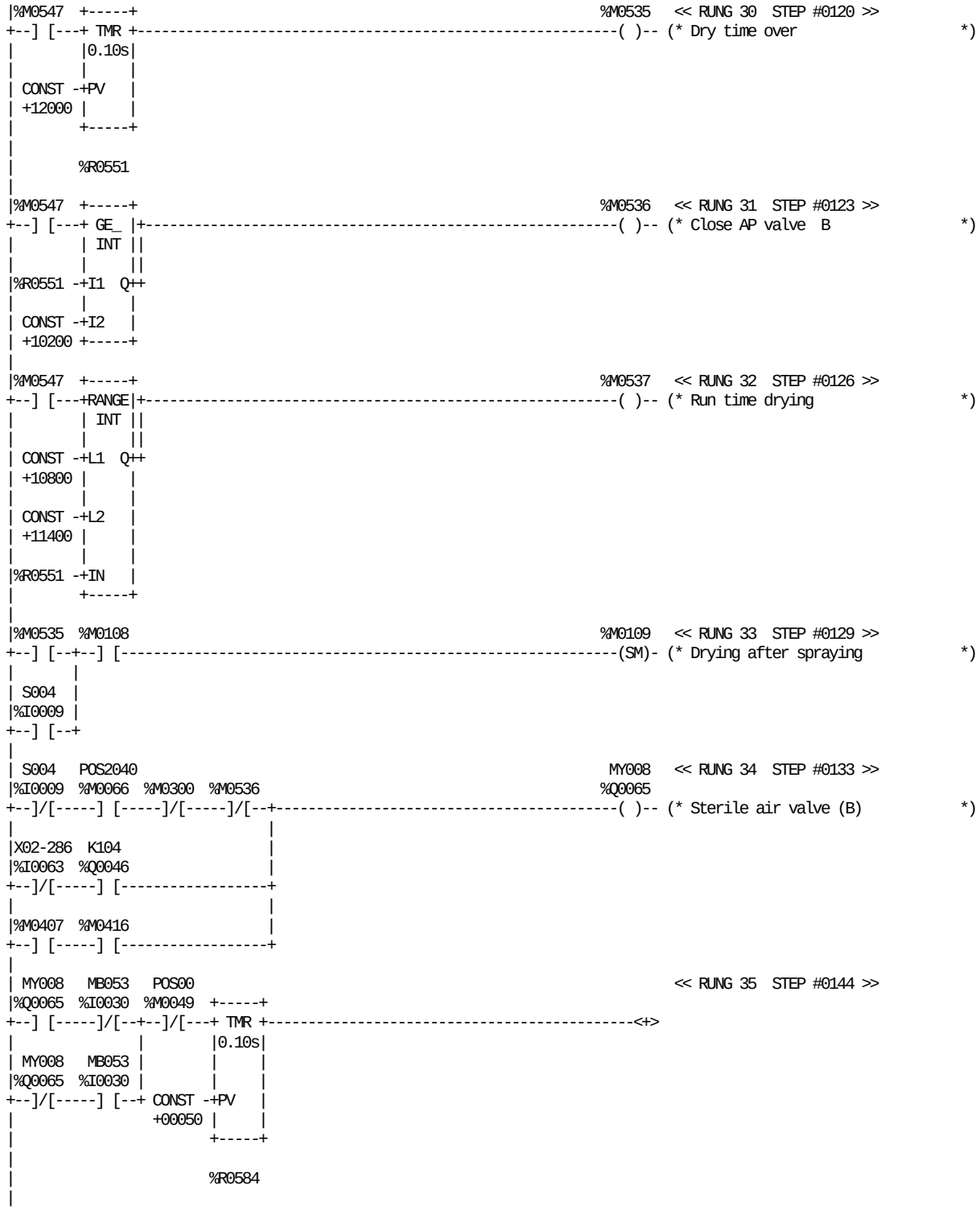

REFERENCE	NICKNAME	REFERENCE DESCRIPTION	REFERENCE	NICKNAME	REFERENCE DESCRIPTION
%M0108		Spray full filled	%R0551		Drying after spray
%M0109		Drying after spraying	%R0584		Delay B valve pos.
%M0300		Tube sealing going on	%Q0046	K104	Signal to cip
%M0407		WEAC stop 15 minutes	%I0030	MB053	Steril air (B) valve, position
%M0416		WEAC stop on	%Q0065	MY008	Sterile air valve (B)
%M0535		Dry time over	%M0049	POS00	Ladder pos 00
%M0536		Close AP valve B	%M0066	POS2040	Machine ladder pos 20-40
%M0537		Run time drying	%I0009	S004	Service switch
%M0547		Drying after spraying	%I0063	X02-286	Clean through production valve

BLOCK: 09 SPRAY SEQUENCE

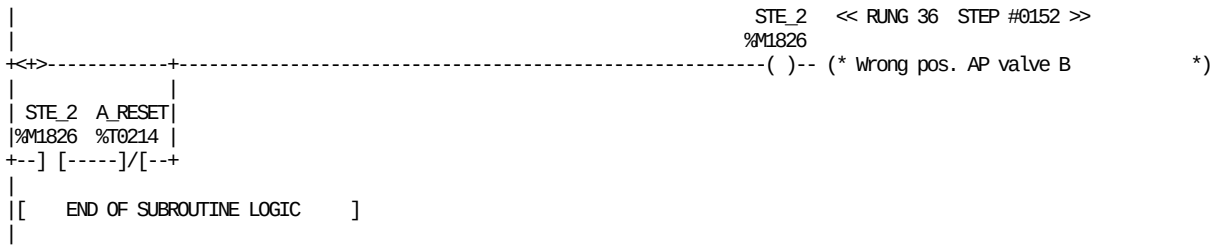

REFERENCE NICKNAME	REFERENCE DESCRIPTION	REFERENCE NICKNAME	REFERENCE DESCRIPTION
%T0214 A_RESET	Pulse+ reset A-alarm lock	%M1826 STE_2	Wrong pos. AP valve B

This page intentionally left blank

```
|[  START LD SUBROUTINE   BLK10   ]
|
|[     VARIABLE DECLARATIONS      ]
|
|[   START OF SUBROUTINE LOGIC    ]
|
| (*****************************************************************************)
| (* Drying peroxide bath                                                     *)
| (*****************************************************************************)
|
| POS40  G04-08   MY022                                                 << RUNG 5  STEP #0003 >>
|%M0053  %Q0015  %Q0070                                          %M0273
+--] [--+--] [-----] [-------------------------------------------------( )-- (* Machine stop delay              *)
|       |
|POS5080|
|%M0069 |
+--] [--+
|
|STARTQ                                                                 << RUNG 6  STEP #0008 >>
|%M0320                                                          %T0003
+--] [--+-------------------------------------------------------------(v)-- (* Machine stop pulse              *)
|       |
|%M0273 |
+--] [--+
|
|%T0003                 +-----+                                         << RUNG 7  STEP #0011 >>
+--] [----------+--------+OFDT +-
|               |        |0.10s|
|         POS10 |        |     |
|%T0017  %M0050 |        |     |
+--] [-----] [--+ CONST -+PV   |
|                +01200 |     |
|                       +-----+
|
|                       %R0034
|
|ALW_ON                                                                 << RUNG 8  STEP #0016 >>
|%S0007  +-----+                                                 %T0102
+--] [---+ LT_ |+-------------------------------------------------------( )-- (* Peroxide bath drain            *)
|        | INT ||
|        |     ||
|%R0034 -+I1  Q++
|        |     |
| CONST -+I2   |
| +00600 +-----+
|
|%T0102                                                          %M0428   << RUNG 9  STEP #0019 >>
+--] [-------------------------------------------------------------(v)-- (* P- peroxide bath drain          *)
|
|        STARTQ                                                         << RUNG 10  STEP #0021 >>
|%T0102  %M0320                                                  %M0423
+--] [-----]/[-------------------------------------------------------( )-- (* Drain peroxide bath            *)
|
| (*****************************************************************************)
| (* Refilling peroxide tank during production                             *)
| (*****************************************************************************)
|
```

REFERENCE	NICKNAME	REFERENCE DESCRIPTION	REFERENCE	NICKNAME	REFERENCE DESCRIPTION
%M0273		Machine stop delay	%S0007	ALW_ON	
%M0423		Drain peroxide bath	%Q0015	G04-08	Main motor, high speed
%M0428		P- peroxide bath drain	%Q0070	MY022	Main machine, clutch
%T0003		Machine stop pulse	%M0050	POS10	Ladder pos 10
%T0017		Step down P+	%M0053	POS40	Machine ladder pos 40
%T0102		Peroxide bath drain	%M0069	POS5080	Machine ladder pos 50-80
%R0034		Drain. bath time	%M0320	STARTQ	Start sequenc

```
|ALW_ON                                                                  << RUNG 12  STEP #0025 >>
|%S0007  +-----+                                                %M0426
+--] [---+RANGE|+-------------------------------------------------------( )-- (* Enable filling peroxide tank     *)
|        | INT ||
|        |     ||
| CONST -+L1  Q++
| +01100 |     |
|        |     |
| CONST -+L2   |
| +01200 |     |
|        |     |
|%R0291 -+IN   |
|        +-----+
|
|ALW_ON                                                                  << RUNG 13  STEP #0028 >>
|%S0007  +-----+                                                %M0426
+--] [---+RANGE|+-------------------------------------------------------(S)-- (* Enable filling peroxide tank     *)
|        | INT ||
|        |     ||
| CONST -+L1  Q++
| +02900 |     |
|        |     |
| CONST -+L2   |
| +03000 |     |
|        |     |
|%R0291 -+IN   |
|        +-----+
|
|MB95-2                                                                  << RUNG 14  STEP #0031 >>
|%I0047  %M0426          +-----+                                 %M0421
+--]/[-----] [--+--------+ TMR +-----------------------------------------(RM)- (* Tank H2O2 refilling during prod. *)
|               |        |0.10s|
|               |        |     |
|%M0421         |        |     |
+--] [----------+ CONST -+PV   |
|                 +00100 |     |
|                        +-----+
|
|                        %R0025
|
|%M0426  +-----+                                                 %M0421   << RUNG 15  STEP #0036 >>
+--] [---+ GE_ |+-------------------------------------------------------(SM)- (* Tank H2O2 refilling during prod. *)
|        | INT ||
|        |     ||
|%R0025 -+I1  Q++
|        |     |
| CONST -+I2   |
| +00030 +-----+
|
| (*************************************************************************)
| (* Restore high level into peroxide tank                                 *)
| (*************************************************************************)
|
|MB95-2  POS2080 STARTQ                                                  << RUNG 17  STEP #0040 >>
|%I0047  %M0067  %M0320  %M0273  %M0423                          %M0425
+--]/[-----] [-----]/[-----]/[--+--]/[-----------------------------------(SM)- (* Tank H2O2 complete refilling     *)
|                               |
| POS10                         |
|%M0050                         |
+--] [--------------------------+
|
|MB95-3  STARTQ                                                          << RUNG 18  STEP #0047 >>
|%I0046  %M0320  %M0428                                          %M0420
+--]/[-----]/[-----] [-------------------------------------------------(SM)- (* Tank H2O2 restore high level     *)
|
```

REFERENCE	NICKNAME	REFERENCE DESCRIPTION	REFERENCE	NICKNAME	REFERENCE DESCRIPTION
%M0273		Machine stop delay	%R0291		Top filling valve time
%M0420		Tank H2O2 restore high level	%S0007	ALW_ON	
%M0421		Tank H2O2 refilling during prod.	%I0047	MB95-2	Peroxide tank, low level
%M0423		Drain peroxide bath	%I0046	MB95-3	Peroxide tank, high level
%M0425		Tank H2O2 complete refilling	%M0050	POS10	Ladder pos 10
%M0426		Enable filling peroxide tank	%M0067	POS2080	Machine ladder pos 20-80
%M0428		P- peroxide bath drain	%M0320	STARTQ	Start sequenc
%R0025		Peroxide restore time			

BLOCK: 10 PEROXIDE HANDLING

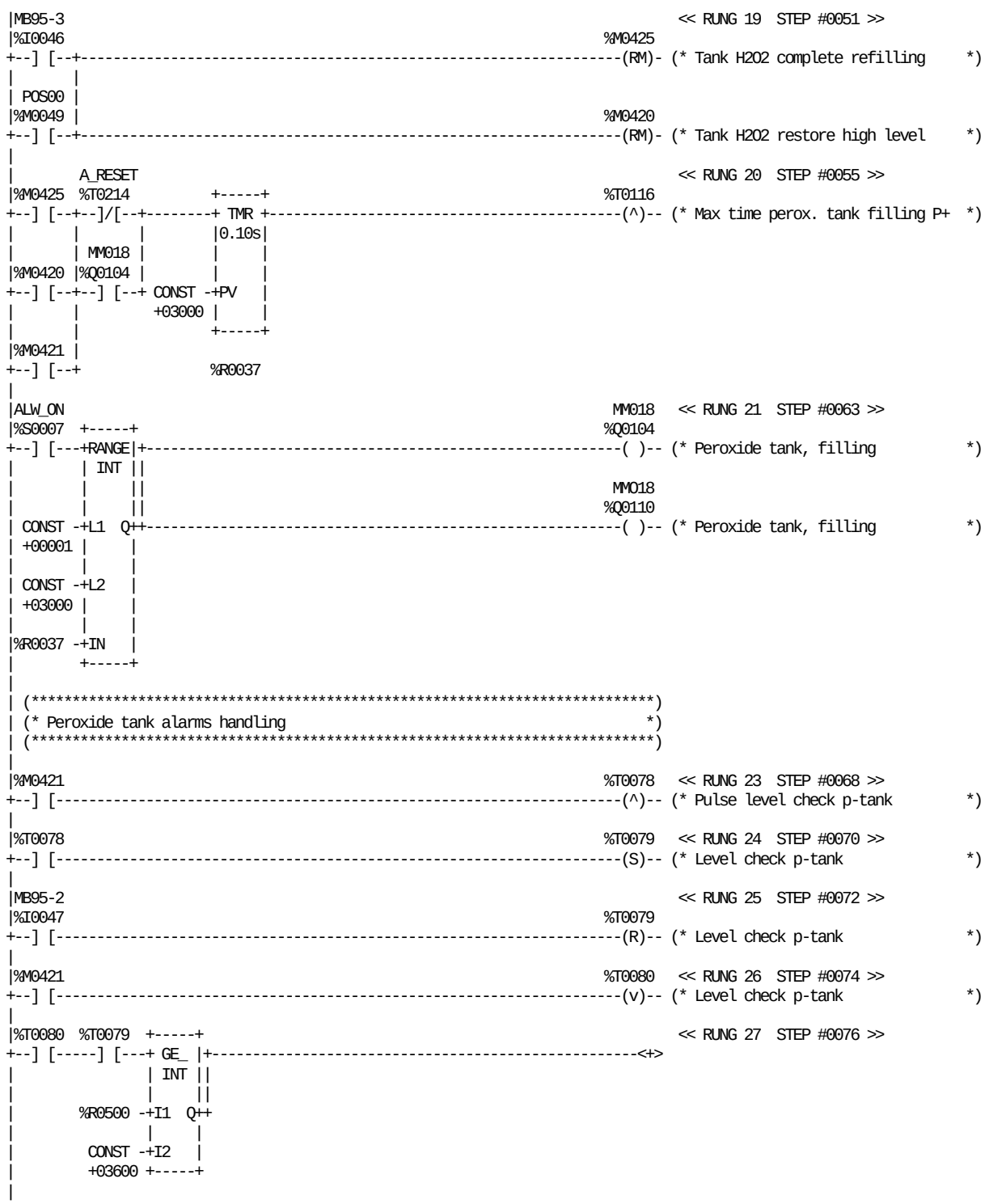

REFERENCE NICKNAME	REFERENCE DESCRIPTION	REFERENCE NICKNAME	REFERENCE DESCRIPTION
%M0420	Tank H2O2 restore high level	%R0500	Start seq. for prod.
%M0421	Tank H2O2 refilling during prod.	%S0007 ALW_ON	
%M0425	Tank H2O2 complete refilling	%T0214 A_RESET	Pulse+ reset A-alarm lock
%T0078	Pulse level check p-tank	%I0047 MB95-2	Peroxide tank, low level
%T0079	Level check p-tank	%I0046 MB95-3	Peroxide tank, high level
%T0080	Level check p-tank	%Q0104 MM018	Peroxide tank, filling
%T0116	Max time perox. tank filling P+	%Q0110 MM018	Peroxide tank, filling
%R0037	Max time perox. tank filling	%M0049 POS00	Ladder pos 00

BLOCK: 10 PEROXIDE HANDLING

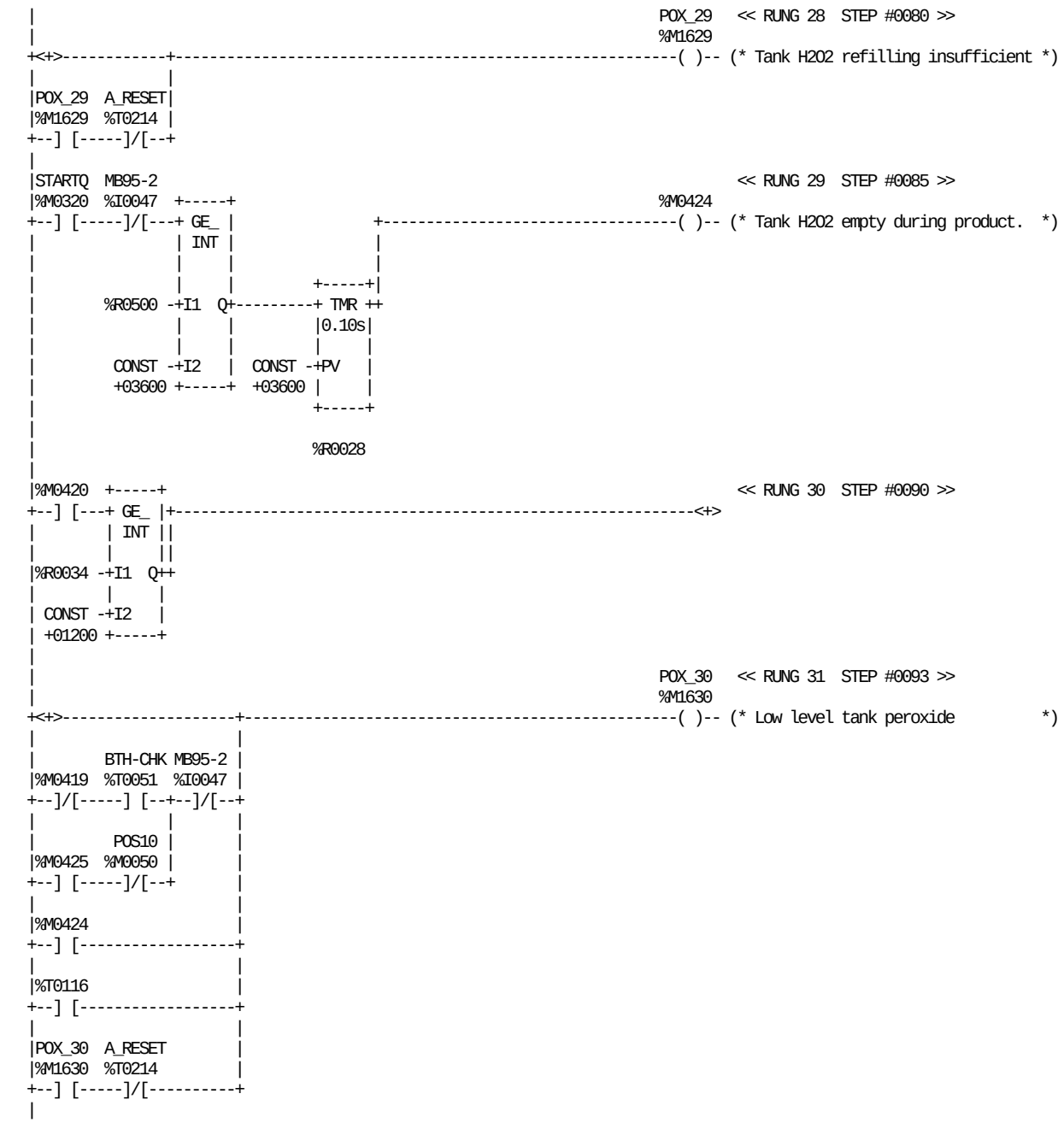

REFERENCE	NICKNAME	REFERENCE DESCRIPTION	REFERENCE	NICKNAME	REFERENCE DESCRIPTION
%M0419		Peroxide bath level delayed	%T0214	A_RESET	Pulse+ reset A-alarm lock
%M0420		Tank H2O2 restore high level	%T0051	BTH-CHK	Peroxide bath lvl_chk 9.8 sec.
%M0424		Tank H2O2 empty during product.	%I0047	MB95-2	Peroxide tank, low level
%M0425		Tank H2O2 complete refilling	%I0045	MB95-4	Peroxide tank, too high level
%T0116		Max time perox. tank filling P+	%M0050	POS10	Ladder pos 10
%R0028		Low lvl tank product delay	%M1629	POX_29	Tank H2O2 refilling insufficient
%R0034		Drain. bath time	%M1630	POX_30	Low level tank peroxide
%R0362		Too high level perox. tank time	%M1609	POX_9	Too high level peroxide tank
%R0500		Start seq. for prod.	%M0320	STARTQ	Start sequenc

BLOCK: 10 PEROXIDE HANDLING

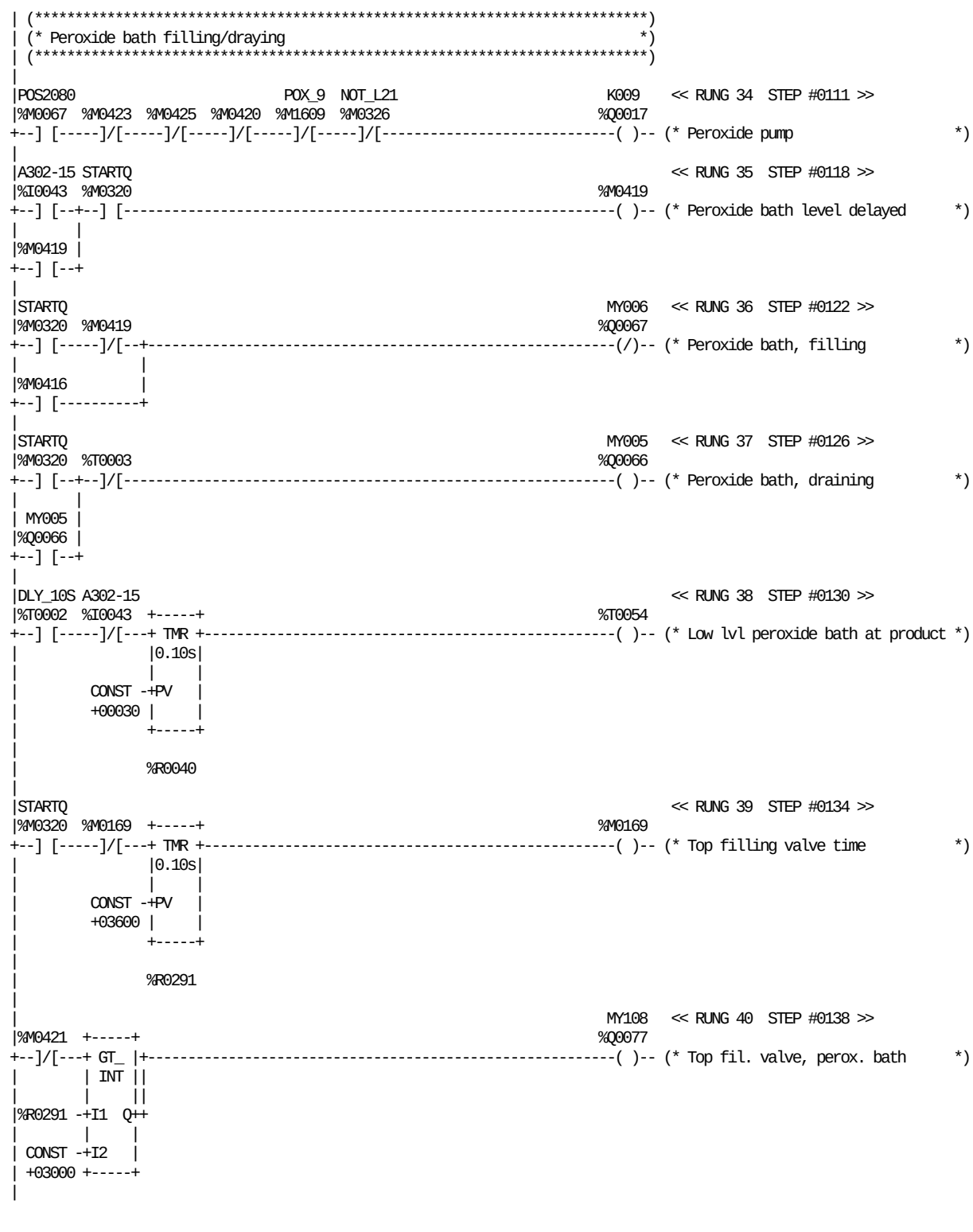

REFERENCE NICKNAME	REFERENCE DESCRIPTION	REFERENCE NICKNAME	REFERENCE DESCRIPTION
%M0169	Top filling valve time	%I0043 A302-15	Peroxide bath, level
%M0416	WEAC stop on	%T0002 DLY_10S	Start sequence delay 10 sec.
%M0419	Peroxide bath level delayed	%Q0017 K009	Peroxide pump
%M0420	Tank H2O2 restore high level	%Q0066 MY005	Peroxide bath, draining
%M0421	Tank H2O2 refilling during prod.	%Q0067 MY006	Peroxide bath, filling
%M0423	Drain peroxide bath	%Q0077 MY108	Top fil. valve, perox. bath
%M0425	Tank H2O2 complete refilling	%M0326 NOT_L21	Line L21-L20
%T0003	Machine stop pulse	%M0067 POS2080	Machine ladder pos 20-80
%T0054	Low lvl peroxide bath at product	%M1609 POX_9	Too high level peroxide tank
%R0040	Low lvl peroxide bath pr delay	%M0320 STARTQ	Start sequenc
%R0291	Top filling valve time		

BLOCK: 10 PEROXIDE HANDLING

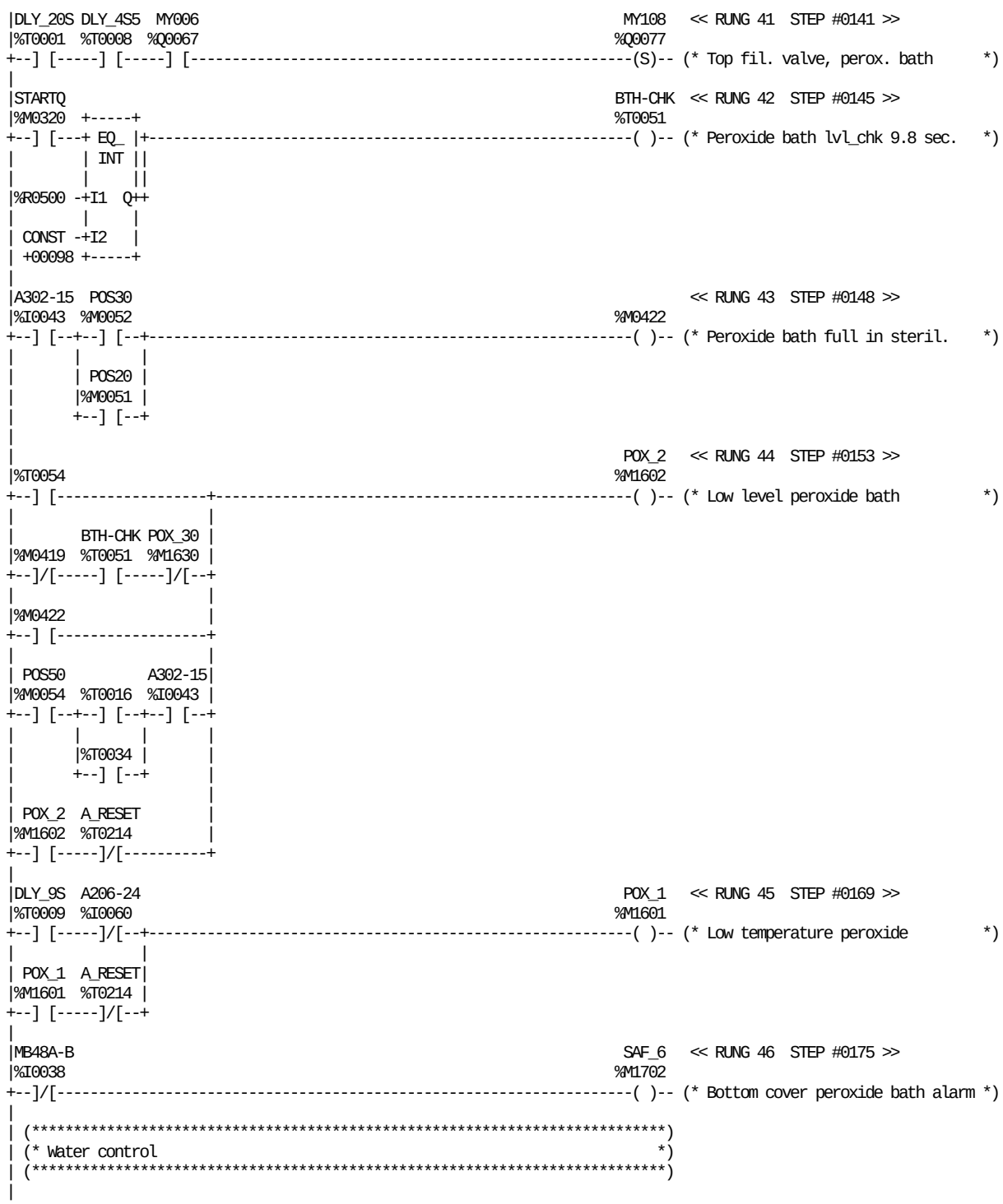

REFERENCE	NICKNAME	REFERENCE DESCRIPTION	REFERENCE	NICKNAME	REFERENCE DESCRIPTION
%M0419		Peroxide bath level delayed	%T0009	DLY_9S	Start sequence delay 9sec
%M0422		Peroxide bath full in steril.	%I0038	MB48A-B	Perox. bath bottom cover, posit.
%T0016		Step up P+	%Q0067	MY006	Peroxide bath, filling
%T0034		Output pulse inching	%Q0077	MY108	Top fil. valve, perox. bath
%T0054		Low lvl peroxide bath at product	%M0051	POS20	Ladder pos 20
%R0500		Start seq. for prod.	%M0052	POS30	Ladder pos 30
%I0060	A206-24	Temp.mon.peroxide bath peroxide	%M0054	POS50	Machine ladder pos 50
%I0043	A302-15	Peroxide bath, level	%M1601	POX_1	Low temperature peroxide
%T0214	A_RESET	Pulse+ reset A-alarm lock	%M1602	POX_2	Low level peroxide bath
%T0051	BTH-CHK	Peroxide bath lvl_chk 9.8 sec.	%M1630	POX_30	Low level tank peroxide
%T0001	DLY_20S	Start sequence delay 20 sec.	%M1702	SAF_6	Bottom cover peroxide bath alarm
%T0008	DLY_4S5	Start sequence delay 4,5sec	%M0320	STARTQ	Start sequenc

```
| POS00  RDY_CLN        A506Y14 NOT_L21                                  K1-K12   << RUNG 48  STEP #0178 >>
|%M0049  %M0083  %M0416  %I0017  %M0326                                  %Q0034
+--]/[-----]/[-----]/[-----] [-----]/[-----------------------------------( )-- (* Splicer contr./perox.b.water pum *)
|
|       RDY_CLN                                                                 << RUNG 49  STEP #0184 >>
|%T0004  %M0083         +-----+                                          %M0328
+--] [-----]/[--+--------+OFDT +-----------------------------------------( )-- (* Delay H2O2 bath water temp. alrm *)
|               |        |0.10s|
|A_RESET        |        |     |
|%T0214         |        |     |
+--] [----------+ CONST -+PV   |
|                 +00003 |     |
|                        +-----+
|
|                        %R0181
|
|       A201-24                                                           POX_8   << RUNG 50  STEP #0189 >>
|%M0109  %I0053                                                          %M1608
+--] [-----]/[----------+-----------------------------------------------( )-- (* Low temp. peroxide bath, water   *)
|                       |
|A201-20  K015          |
|%I0052  %Q0037  %M0328 |
+--]/[-----] [-----]/[--+
|                       |
| POX_8  A_RESET        |
|%M1608  %T0214         |
+--] [-----]/[----------+
|
|K1-K12  A305-15 A201-20 Q03-Q09                                          K015    << RUNG 51  STEP #0199 >>
|%Q0034  %I0034  %I0052  %I0133                                          %Q0037
+--] [-----] [--+--] [--+--] [-----------------------------------------( )-- (* Peroxide bath, element          *)
|               |      |
|               |%M0328 |
|               +--] [--+
|               |
|               |                                                         K100
|               |%M0109                                                  %Q0049
|               +--]/[--+-----------------------------------------------( )-- (* Peroxide bath preheating prod.   *)
|               |       |
|               |%M0078 |
|               +--] [--+
|
|%M0078  %M0425  +-----+                                                 %M0078   << RUNG 52  STEP #0212 >>
+--] [-----]/[---+ TMR +-----------------------------------------------(R)-- (* Bath temp W2 select             *)
|                |0.10s|
|                |     |
|         CONST -+PV   |
|         +06000 |     |
|                +-----+
|
|                %R0078
|
|%M0425                                                                  %M0078   << RUNG 53  STEP #0216 >>
+--] [-----------------------------------------------------------------(S)-- (* Bath temp W2 select             *)
|
|A305-15                                                                  POX_3   << RUNG 54  STEP #0218 >>
|%I0034                                                                  %M1603
+--]/[-----------------------------------------------------------------( )-- (* Low level peroxide bath, water   *)
|
|[    END OF SUBROUTINE LOGIC     ]
|
```

REFERENCE	NICKNAME	REFERENCE DESCRIPTION
%M0078		Bath temp W2 select
%M0109		Drying after spraying
%M0328		Delay H2O2 bath water temp. alrm
%M0416		WEAC stop on
%M0425		Tank H2O2 complete refilling
%T0004		P+ position10/ready for cleaning
%R0078		Bath temp W2 select
%R0181		Delay alarm pos10 of peroxide
%I0052	A201-20	Temp.mon.perox.bath w., preheat.
%I0053	A201-24	Temp.mon.perox.bath w., product.
%I0034	A305-15	Bath, water level

REFERENCE	NICKNAME	REFERENCE DESCRIPTION
%I0017	A506Y14	Emergency stop safety module
%T0214	A_RESET	Pulse+ reset A-alarm lock
%Q0037	K015	Peroxide bath, element
%Q0034	K1-K12	Splicer contr./perox.b.water pum
%Q0049	K100	Peroxide bath preheating prod.
%M0326	NOT_L21	Line L21-L20
%M0049	POS00	Ladder pos 00
%M1603	POX_3	Low level peroxide bath, water
%M1608	POX_8	Low temp. peroxide bath, water
%I0133	Q03-Q09	Overload protecion, motors
%M0083	RDY_CLN	Machine pos ready for cleaning

BLOCK: 10 PEROXIDE HANDLING

This page intentionally left blank

```
|[  START LD SUBROUTINE   BLK11   ]
|
|[     VARIABLE DECLARATIONS      ]
|
|[   START OF SUBROUTINE LOGIC    ]
|
|X02-272                                                                  << RUNG 4  STEP #0002 >>
|%I0062                                                              %M0023
+--] [-------------------------------------------------------------------(SM)- (* Mem signal receiv sterili       *)
|
| K105                                                                    << RUNG 5  STEP #0004 >>
|%Q0043                                                              %M0023
+--]/[-------------------------------------------------------------------(RM)- (* Mem signal receiv sterili       *)
|
|POS5070  S004                                                        K105    << RUNG 6  STEP #0006 >>
|%M0068  %I0009                                                      %Q0043
+--] [-----]/[-----------------------------------------------------------( )-- (* Ready for production            *)
|
| S004    POS70  SHORTS                                               K106    << RUNG 7  STEP #0009 >>
|%I0009  %M0056  %M0082                                              %Q0044
+--]/[-----] [-----]/[---------------------------------------------------( )-- (* AB production                  *)
|
| MY009                                                               K107    << RUNG 8  STEP #0013 >>
|%Q0062                                                              %Q0045
+--] [-----------------------------------------------------------------( )-- (* Filling                        *)
|
| POS60  X02-272 SHORTS                                                   << RUNG 9  STEP #0015 >>
|%M0055  %I0062  %M0082                                              %M0024
+--] [--+--]/[-----]/[---------------------------------------------------( )-- (* No product during prod.        *)
|       |
| POS70 |
|%M0056 |
+--] [--+
|
|POS5070        X02-272 NOT_L11                                       FIL_30   << RUNG 10  STEP #0020 >>
|%M0068         %I0062  %M0325                                        %M1790
+--] [----------+--]/[-----]/[-------------------------------------------( )-- (* No prod. from process         *)
|               |
| POS40   MY007 |
|%M0053  %Q0063 |
+--] [-----] [--+
|
|[    END OF SUBROUTINE LOGIC     ]
|
```

REFERENCE	NICKNAME	REFERENCE DESCRIPTION	REFERENCE	NICKNAME	REFERENCE DESCRIPTION
%M0023		Mem signal receiv sterili	%M0325	NOT_L11	Line L11-L10 not ok
%M0024		No product during prod.	%M0053	POS40	Machine ladder pos 40
%M1790	FIL_30	No prod. from process	%M0068	POS5070	Machine ladder pos 50-70
%Q0043	K105	Ready for production	%M0055	POS60	Machine ladder pos 60
%Q0044	K106	AB production	%M0056	POS70	Machine ladder pos 70
%Q0045	K107	Filling	%I0009	S004	Service switch
%Q0063	MY007	Steam barrier valve (C)	%M0082	SHORTS	Machine pos. short stop
%Q0062	MY009	Product valve (A)	%I0062	X02-272	Product at machine/prod. stop

BLOCK: 11 SIGNAL TO STERILIZER

This page intentionally left blank

```
|[  START LD SUBROUTINE   BLK13   ]
|
|[     VARIABLE DECLARATIONS      ]
|
|[   START OF SUBROUTINE LOGIC    ]
|
| (*************************************************************************)
| (* Inching                                                               *)
| (*************************************************************************)
|
|PS_907H PS_912H PS_908H                                                    << RUNG 5  STEP #0003 >>
|%I0148  %I0150  %I0151                                          %T0034
+--] [-----] [-----] [-------------------------------------------------(^)-- (* Output pulse inching            *)
|
| POS10          MB30-2  ASU_EN  PMI_EN                                     << RUNG 6  STEP #0007 >>
|%M0050          %I0015  %M0173  %M0171  %M0276  %M0259  %M0251  %M0337
+--] [----------+--] [--+--] [--+--] [--+--]/[--+--]/[-----] [--+--]/[--+----<+>
|               |       |       |       |       |              |       |
| POS20         |       |ASU_OPT|PMI_OPT|       |PT_OPT        |       |
|%M0051  %M0300 |       |%M1308 |%M1307 |       |%M1303        |       |
+--] [-----]/[--+       +--]/[--+--]/[--+       +--]/[----------+       |
|               |                                                      |
|RDY_CLN EXT_CLN INT_CLN|                                              |
|%M0083  %M0084  %M0085 |                                              |
+--] [-----]/[-----]/[--+                                              |
|                                                                      |
| POS40                                                                |
|%M0053                                                                |
+--] [---------------------------------------------------------------+
|                                                                      |
|SHORTS                                                                |
|%M0082                                                                |
+--] [---------------------------------------------------------------+
|
|        MB010          PS_907H                                            << RUNG 7  STEP #0031 >>
|       %I0132  %M0338  %I0148                                   %M0307
+<+>-------] [-----]/[--+--] [-----------------------------------------( )-- (* Aux.output inching            *)
|                       |
|                       |                                        %M0309
|                       +-----------------------------------------( )-- (* Inch conditions               *)
|
|%T0113  %T0114                                                  %T0114   << RUNG 8  STEP #0039 >>
+--] [-----]/[--+-------------------------------------------------( )-- (* Slow flash                     *)
|              |
|%T0113  %T0114 |
+--]/[-----] [--+
|
| T_SEC                                                                    << RUNG 9  STEP #0045 >>
|%S0005                                                          %T0113
+--] [-------------------------------------------------------------------(^)-- (* Pulse slow flash             *)
|
```

REFERENCE	NICKNAME	REFERENCE DESCRIPTION
%M0251		PT on
%M0259		Sh.stop from PT
%M0276		Short Stop from S.A.
%M0300		Tube sealing going on
%M0307		Aux.output inching
%M0309		Inch conditions
%M0337		Jaw alarm release clutch
%M0338		M.Motor disable & keep clutch
%T0034		Output pulse inching
%T0113		Pulse slow flash
%T0114		Slow flash
%M0173	ASU_EN	Automatic Splacing Unit enable
%M1308	ASU_OPT	PLMS, Option A.S.U.
%M0084	EXT_CLN	Machine in pos. extern. clean
%M0085	INT_CLN	Machine pos internal cleaning

REFERENCE	NICKNAME	REFERENCE DESCRIPTION
%I0132	MB010	Crank position
%I0015	MB30-2	Lubrication oil low level
%M0171	PMI_EN	Paper Magazine Infeed enable
%M1307	PMI_OPT	PLMS, Option spare
%M0050	POS10	Ladder pos 10
%M0051	POS20	Ladder pos 20
%M0053	POS40	Machine ladder pos 40
%I0148	PS_907H	Inching
%I0151	PS_908H	Short stop push buttom
%I0150	PS_912H	Step down
%M1303	PT_OPT	PLMS, Option Pull-Tab
%M0083	RDY_CLN	Machine pos ready for cleaning
%M0082	SHORTS	Machine pos. short stop
%S0005	T_SEC	

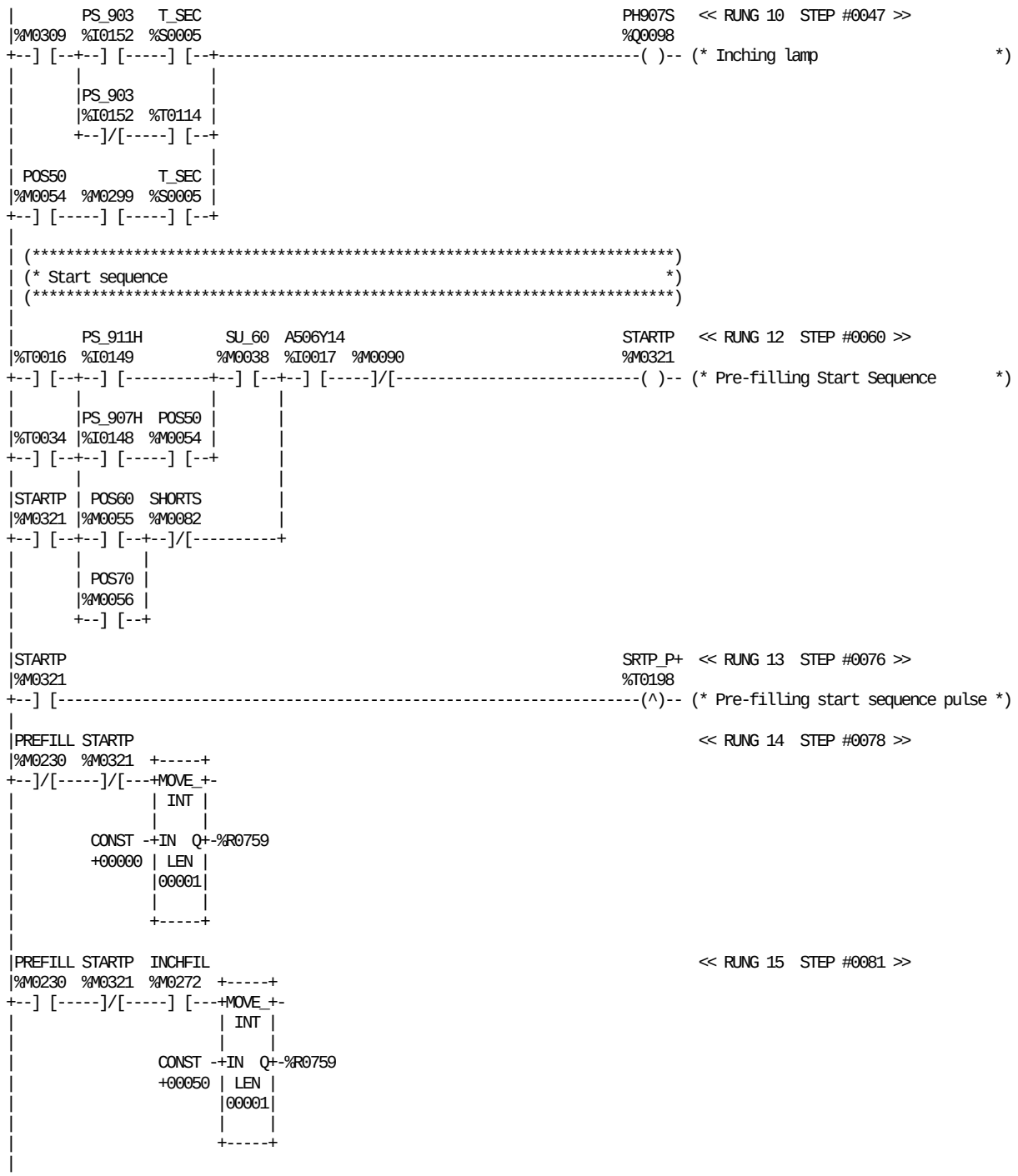

REFERENCE	NICKNAME	REFERENCE DESCRIPTION
%M0090		Machine to pos. 00 delayed
%M0299		OK conditions to sterile inching
%M0309		Inch conditions
%T0016		Step up P+
%T0034		Output pulse inching
%T0114		Slow flash
%R0759		Prefill. start sequence timer PV
%I0017	A506Y14	Emergency stop safety module
%M0272	INCHFIL	Inching for pre-filling start
%Q0098	PH907S	Inching lamp
%M0054	POS50	Machine ladder pos 50

REFERENCE	NICKNAME	REFERENCE DESCRIPTION
%M0055	POS60	Machine ladder pos 60
%M0056	POS70	Machine ladder pos 70
%M0230	PREFILL	Pre-filling selected
%I0152	PS_903	Selector switch
%I0148	PS_907H	Inching
%I0149	PS_911H	Step up
%M0082	SHORTS	Machine pos. short stop
%T0198	SRTP_P+	Pre-filling start sequence pulse
%M0321	STARTP	Pre-filling Start Sequence
%M0038	SU_60	Ok to step to pos 60 start
%S0005	T_SEC	

BLOCK: 13 START SEQUENCE

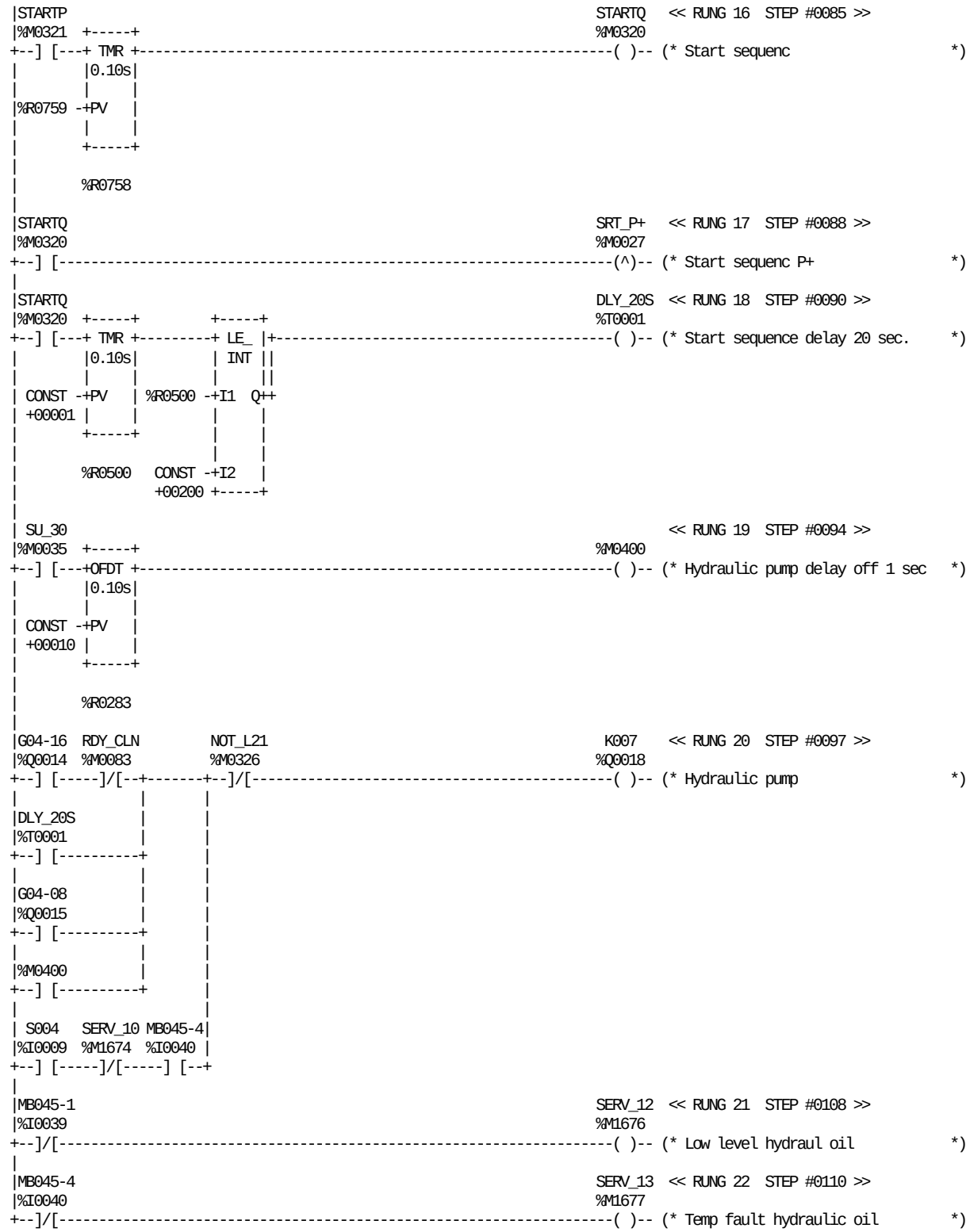

REFERENCE	NICKNAME	REFERENCE DESCRIPTION	REFERENCE	NICKNAME	REFERENCE DESCRIPTION
%M0400		Hydraulic pump delay off 1 sec	%M0326	NOT_L21	Line L21-L20
%R0283		Hydraulic pump delay off time	%M0083	RDY_CLN	Machine pos ready for cleaning
%R0500		Start seq. for prod.	%I0009	S004	Service switch
%R0758		Pre-filling start sequence timer	%M1674	SERV_10	Low pressure main water
%R0759		Prefill. start sequence timer PV	%M1676	SERV_12	Low level hydraul oil
%T0001	DLY_20S	Start sequence delay 20 sec.	%M1677	SERV_13	Temp fault hydraulic oil
%Q0015	G04-08	Main motor, high speed	%M0027	SRT_P+	Start sequenc P+
%Q0014	G04-16	Main motor, low speed	%M0321	STARTP	Pre-filling Start Sequence
%Q0018	K007	Hydraulic pump	%M0320	STARTQ	Start sequenc
%I0039	MB045-1	Hydraul unit low level	%M0035	SU_30	Ok to step to pos 30 tube
%I0040	MB045-4	Hydraul unit temperature			

BLOCK: 13 START SEQUENCE

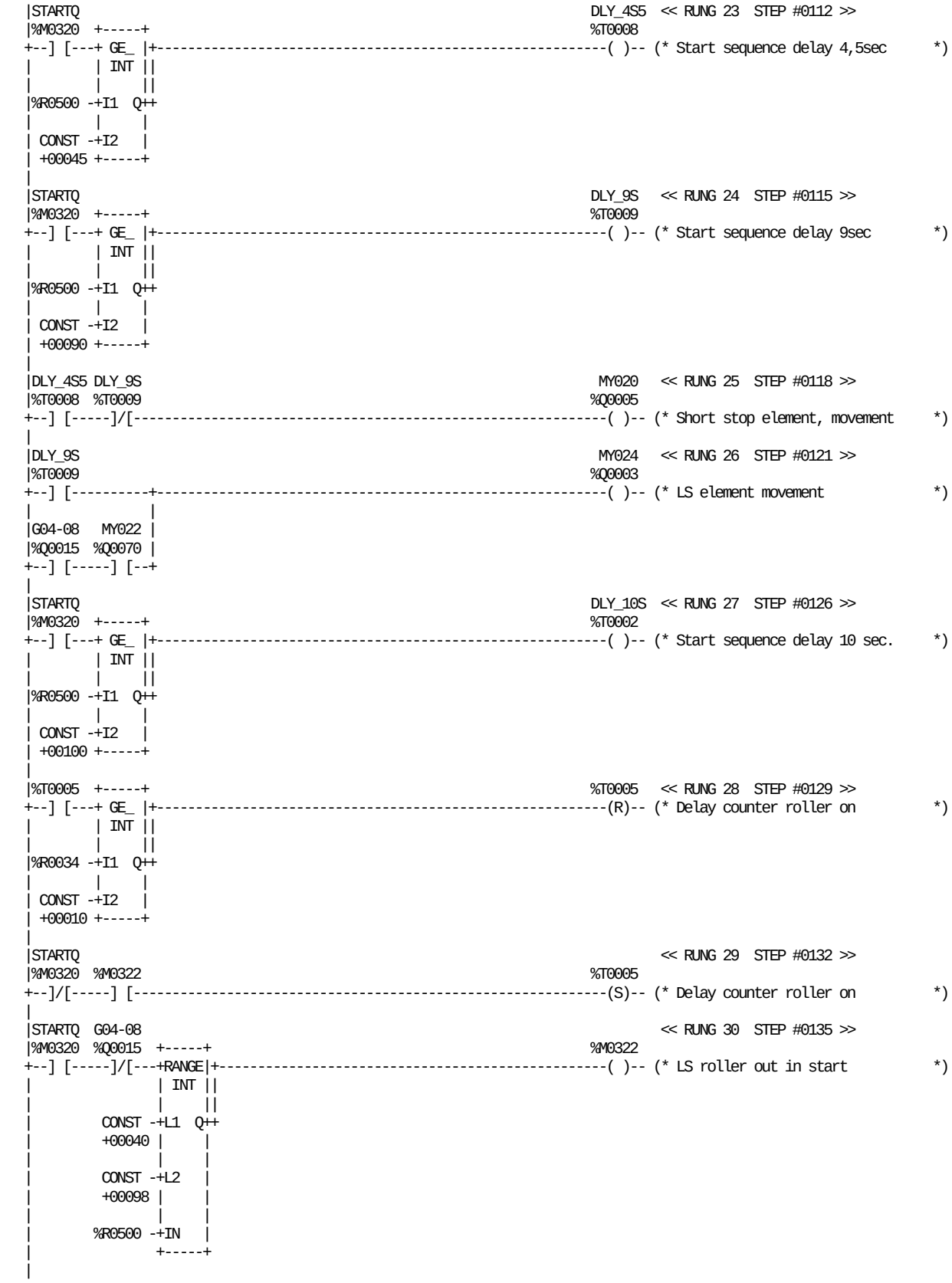

REFERENCE	NICKNAME	REFERENCE DESCRIPTION	REFERENCE	NICKNAME	REFERENCE DESCRIPTION
%M0322		LS roller out in start	%T0009	DLY_9S	Start sequence delay 9sec
%T0005		Delay counter roller on	%Q0015	G04-08	Main motor, high speed
%R0034		Drain. bath time	%Q0005	MY020	Short stop element, movement
%R0500		Start seq. for prod.	%Q0070	MY022	Main machine, clutch
%T0002	DLY_10S	Start sequence delay 10 sec.	%Q0003	MY024	LS element movement
%T0008	DLY_4S5	Start sequence delay 4,5sec	%M0320	STARTQ	Start sequenc

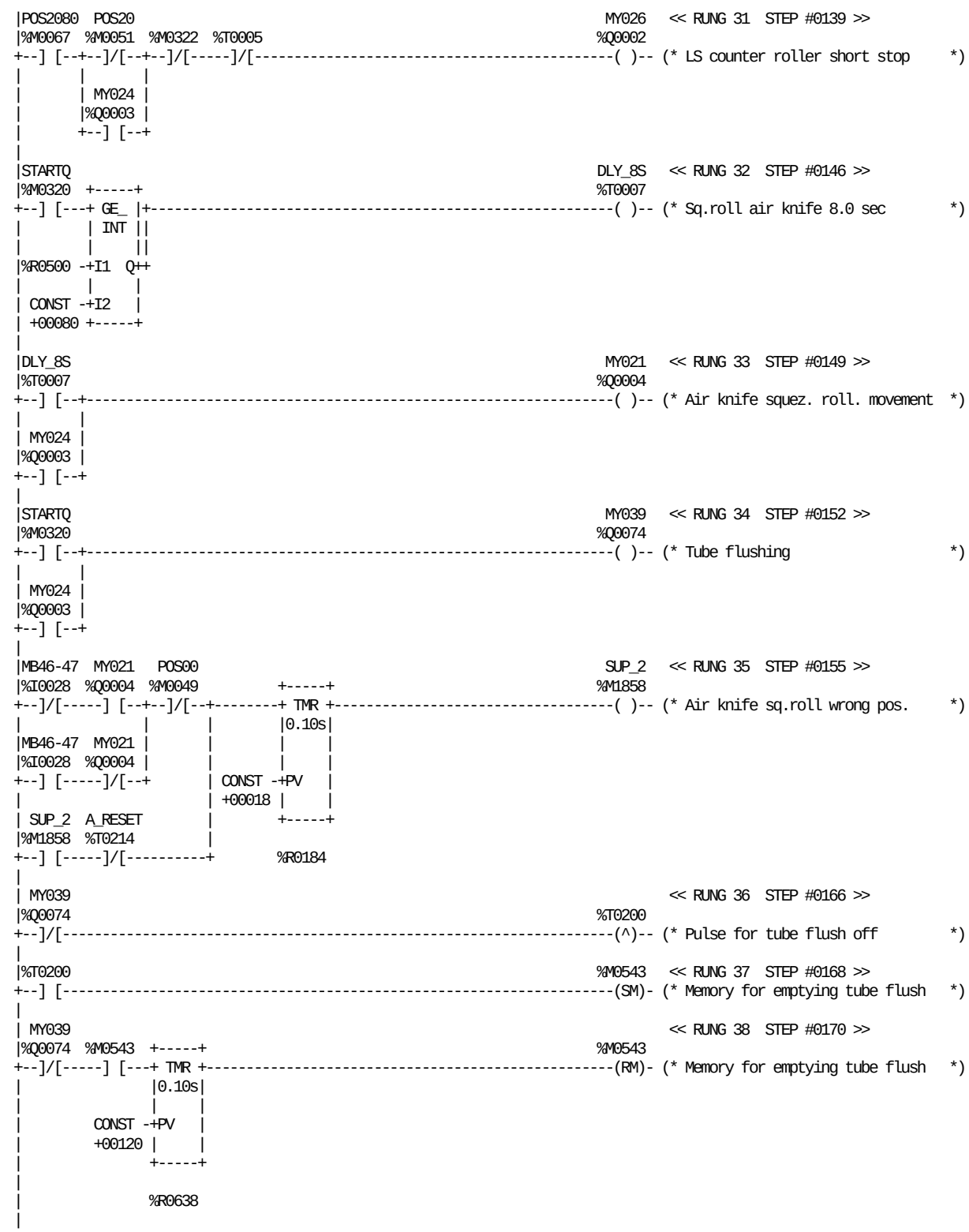

REFERENCE	NICKNAME	REFERENCE DESCRIPTION	REFERENCE	NICKNAME	REFERENCE DESCRIPTION
%M0322		LS roller out in start	%Q0004	MY021	Air knife squez. roll. movement
%M0543		Memory for emptying tube flush	%Q0003	MY024	LS element movement
%T0005		Delay counter roller on	%Q0002	MY026	LS counter roller short stop
%T0200		Pulse for tube flush off	%Q0074	MY039	Tube flushing
%R0184		Max.time check air knife/sqee.r.	%M0049	POS00	Ladder pos 00
%R0500		Start seq. for prod.	%M0051	POS20	Ladder pos 20
%R0638		Time of emptying tube flush	%M0067	POS2080	Machine ladder pos 20-80
%T0214	A_RESET	Pulse+ reset A-alarm lock	%M0320	STARTQ	Start sequenc
%T0007	DLY_8S	Sq.roll air knife 8.0 sec	%M1858	SUP_2	Air knife sq.roll wrong pos.
%I0028	MB46-47	Pos. squeezer roller/air knife			

BLOCK: 13 START SEQUENCE

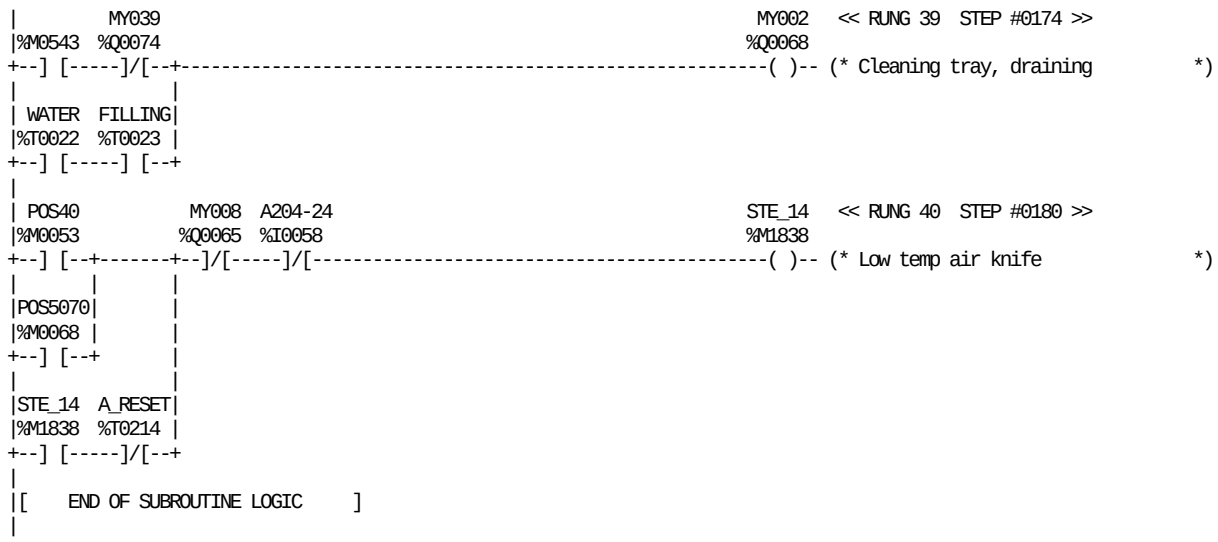

REFERENCE	NICKNAME	REFERENCE DESCRIPTION
%M0543		Memory for emptying tube flush
%I0058	A204-24	Temp.mon.air knives
%T0214	A_RESET	Pulse+ reset A-alarm lock
%T0023	FILLING	Filling check cleaning tray
%Q0068	MY002	Cleaning tray, draining
%Q0065	MY008	Sterile air valve (B)

REFERENCE	NICKNAME	REFERENCE DESCRIPTION
%Q0074	MY039	Tube flushing
%M0053	POS40	Machine ladder pos 40
%M0068	POS5070	Machine ladder pos 50-70
%M1838	STE_14	Low temp air knife
%T0022	WATER	Hot water

BLOCK: 13 START SEQUENCE

```
|[  START LD SUBROUTINE   BLK14   ]
|
|[     VARIABLE DECLARATIONS      ]
|
|[   START OF SUBROUTINE LOGIC    ]
|
|A507Y14                                                          << RUNG 4  STEP #0002 >>
|%I0018          +-----+
+--]/[--+--------+MOVE_+-
|       |        | INT |
|FFU_29 |        |     |
|%M1757 |        |     |
+--] [--+ CONST -+IN  Q+-%R0587
|         +00300 | LEN |
|                |00001|
|                |     |
|                +-----+
|
|DLY_10S PS_907H                                          DLY_30S  << RUNG 5  STEP #0005 >>
|%T0002  %I0148  +-----+                                  %T0088
+--] [-----]/[---+OFDT +-----------------------------------------( )-- (* Conveyor delay off 30 sec.       *)
|                |0.10s|
|                |     |
|         CONST -+PV   |
|         +00300 |     |
|                +-----+
|
|                %R0587
|
|DLY_30S NOT_L21                                          G005-05  << RUNG 6  STEP #0009 >>
|%T0088  %M0326  +-----+                                  %Q0189
+--] [-----]/[---+ LE_ |+-----------------------------------------( )-- (* External conveyor inv. enable    *)
|                | INT ||
|                |     ||
|        %R0587 -+I1  Q++
|                |     |
|         CONST -+I2   |
|         +00280 +-----+
|
|DLY_30S NOT_L21                                           K013    << RUNG 7  STEP #0013 >>
|%T0088  %M0326                                           %Q0168
+--] [--+--]/[-----------------------------------------------------( )-- (* Start conveyor                 *)
|       |
|STARTQ |
|%M0320 |
+--] [--+
|
|G005-05 X02-13                                                   << RUNG 8  STEP #0017 >>
|%Q0189  %I0050  +-----+
+--] [--+--] [---+ TMR +-----------------------------------------------------<+>
|       |        |0.10s|
| POS50 |        |     |
|%M0054 |        |     |
+--] [--+ CONST -+PV   |
|         +00050 |     |
|                +-----+
|
|                %R0731
|
|        +-----+                                                  << RUNG 9  STEP #0022 >>
+<+>-----+ GE_ |+-----------------------------------------------------------<+>
|        | INT ||
|        |     ||
|%R0500 -+I1  Q++
|        |     |
| CONST -+I2   |
| +00250 +-----+
|
```

REFERENCE	NICKNAME	REFERENCE DESCRIPTION	REFERENCE	NICKNAME	REFERENCE DESCRIPTION
%R0500		Start seq. for prod.	%Q0189	G005-05	External conveyor inv. enable
%R0587		Stop conveyor	%Q0168	K013	Start conveyor
%R0731		Delay alarm conv. que.	%M0326	NOT_L21	Line L21-L20
%I0018	A507Y14	SS, JS and FF safety module	%M0054	POS50	Machine ladder pos 50
%T0002	DLY_10S	Start sequence delay 10 sec.	%I0148	PS_907H	Inching
%T0088	DLY_30S	Conveyor delay off 30 sec.	%M0320	STARTQ	Start sequenc
%M1757	FFU_29	Dating unit alarm	%I0050	X02-13	Queue monitor

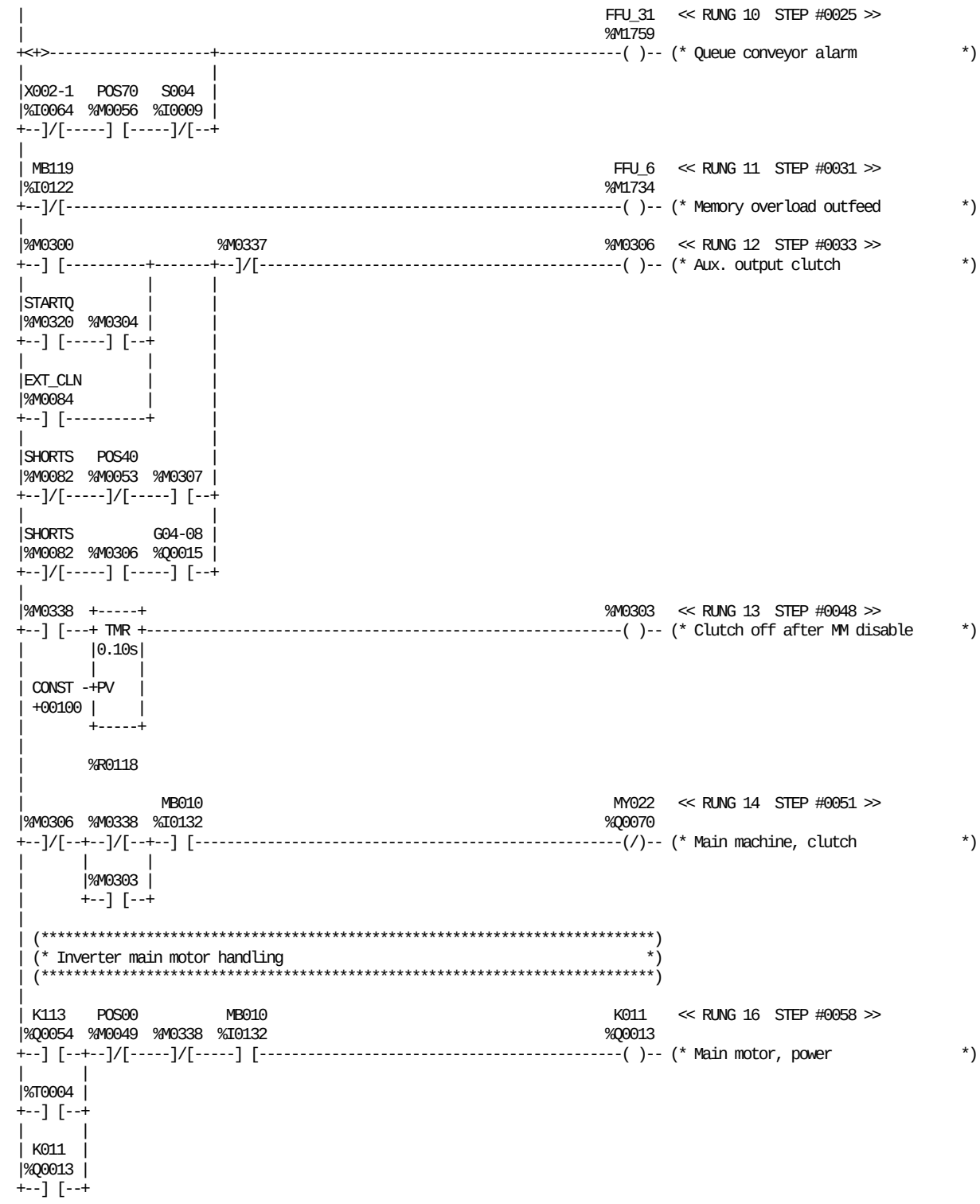

REFERENCE	NICKNAME	REFERENCE DESCRIPTION
%M0300		Tube sealing going on
%M0303		Clutch off after MM disable
%M0304		Sync FF/MM at start prod.
%M0306		Aux. output clutch
%M0307		Aux.output inching
%M0337		Jaw alarm release clutch
%M0338		M.Motor disable & keep clutch
%T0004		P+ position10/ready for cleaning
%R0118		Delay clutch off after MM disab.
%M0084	EXT_CLN	Machine in pos. extern. clean
%M1759	FFU_31	Queue conveyor alarm
%M1734	FFU_6	Memory overload outfeed
%Q0015	G04-08	Main motor, high speed

REFERENCE	NICKNAME	REFERENCE DESCRIPTION
%Q0013	K011	Main motor, power
%Q0054	K113	Aux. relay alarm reset
%I0132	MB010	Crank position
%I0122	MB119	Overload protection, outfeed
%Q0070	MY022	Main machine, clutch
%M0049	POS00	Ladder pos 00
%M0053	POS40	Machine ladder pos 40
%M0056	POS70	Machine ladder pos 70
%I0009	S004	Service switch
%M0082	SHORTS	Machine pos. short stop
%M0320	STARTQ	Start sequenc
%I0064	X002-1	PLE short stop

BLOCK: 14 DRIVE UNIT

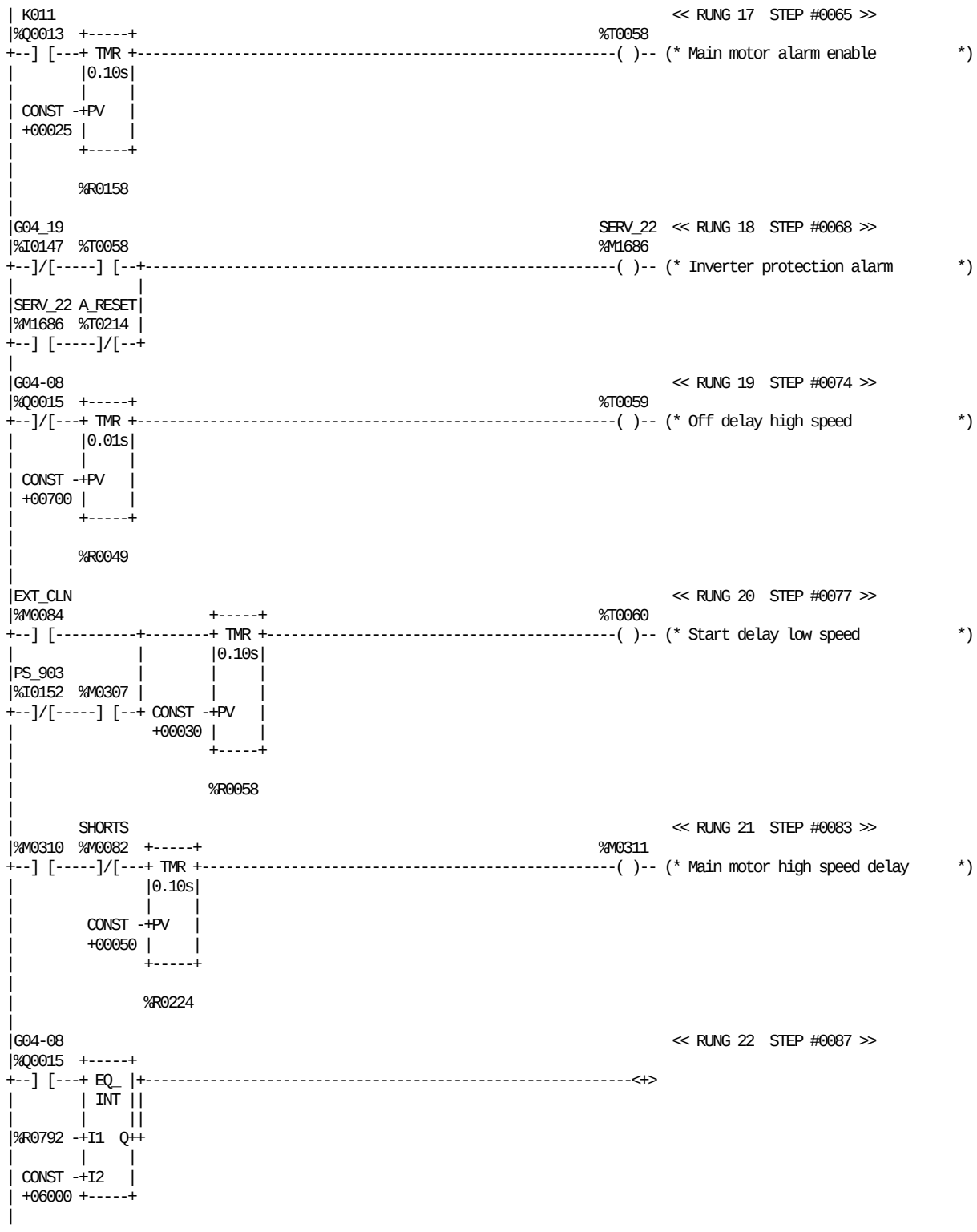

REFERENCE	NICKNAME	REFERENCE DESCRIPTION	REFERENCE	NICKNAME	REFERENCE DESCRIPTION
%M0307		Aux.output inching	%R0792		Synchronization FF speed
%M0310		Aux memory machine in production	%T0214	A_RESET	Pulse+ reset A-alarm lock
%M0311		Main motor high speed delay	%M0084	EXT_CLN	Machine in pos. extern. clean
%T0058		Main motor alarm enable	%Q0015	G04-08	Main motor, high speed
%T0059		Off delay high speed	%I0147	G04_19	Main motor inverter fault
%T0060		Start delay low speed	%Q0013	K011	Main motor, power
%R0049		Off delay low speed	%I0152	PS_903	Selector switch
%R0058		Start delay low speed	%M1686	SERV_22	Inverter protection alarm
%R0158		Delay main motor alarm enable	%M0082	SHORTS	Machine pos. short stop
%R0224		Main motor high speed delay time			

BLOCK: 14 DRIVE UNIT

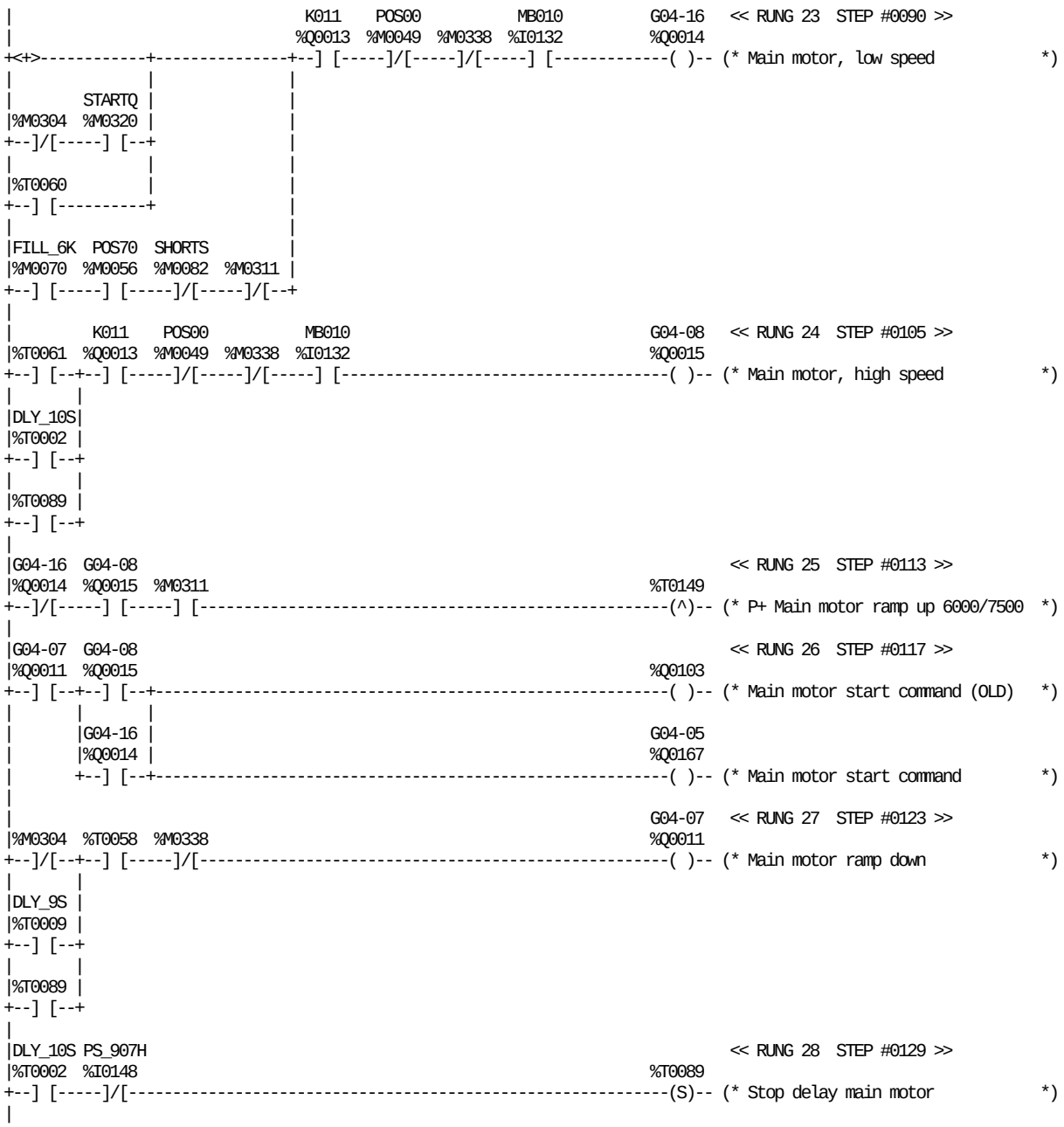

REFERENCE	NICKNAME	REFERENCE DESCRIPTION	REFERENCE	NICKNAME	REFERENCE DESCRIPTION
%Q0103		Main motor start command (OLD)	%Q0167	G04-05	Main motor start command
%M0304		Sync FF/MM at start prod.	%Q0011	G04-07	Main motor ramp down
%M0311		Main motor high speed delay	%Q0015	G04-08	Main motor, high speed
%M0338		M.Motor disable & keep clutch	%Q0014	G04-16	Main motor, low speed
%T0058		Main motor alarm enable	%Q0013	K011	Main motor, power
%T0060		Start delay low speed	%I0132	MB010	Crank position
%T0061		Start delay high speed	%M0049	POS00	Ladder pos 00
%T0089		Stop delay main motor	%M0056	POS70	Machine ladder pos 70
%T0149		P+ Main motor ramp up 6000/7500	%I0148	PS_907H	Inching
%T0002	DLY_10S	Start sequence delay 10 sec.	%M0082	SHORTS	Machine pos. short stop
%T0009	DLY_9S	Start sequence delay 9sec	%M0320	STARTQ	Start sequenc
%M0070	FILL_6K	Filling at reduced speed			

BLOCK: 14 DRIVE UNIT

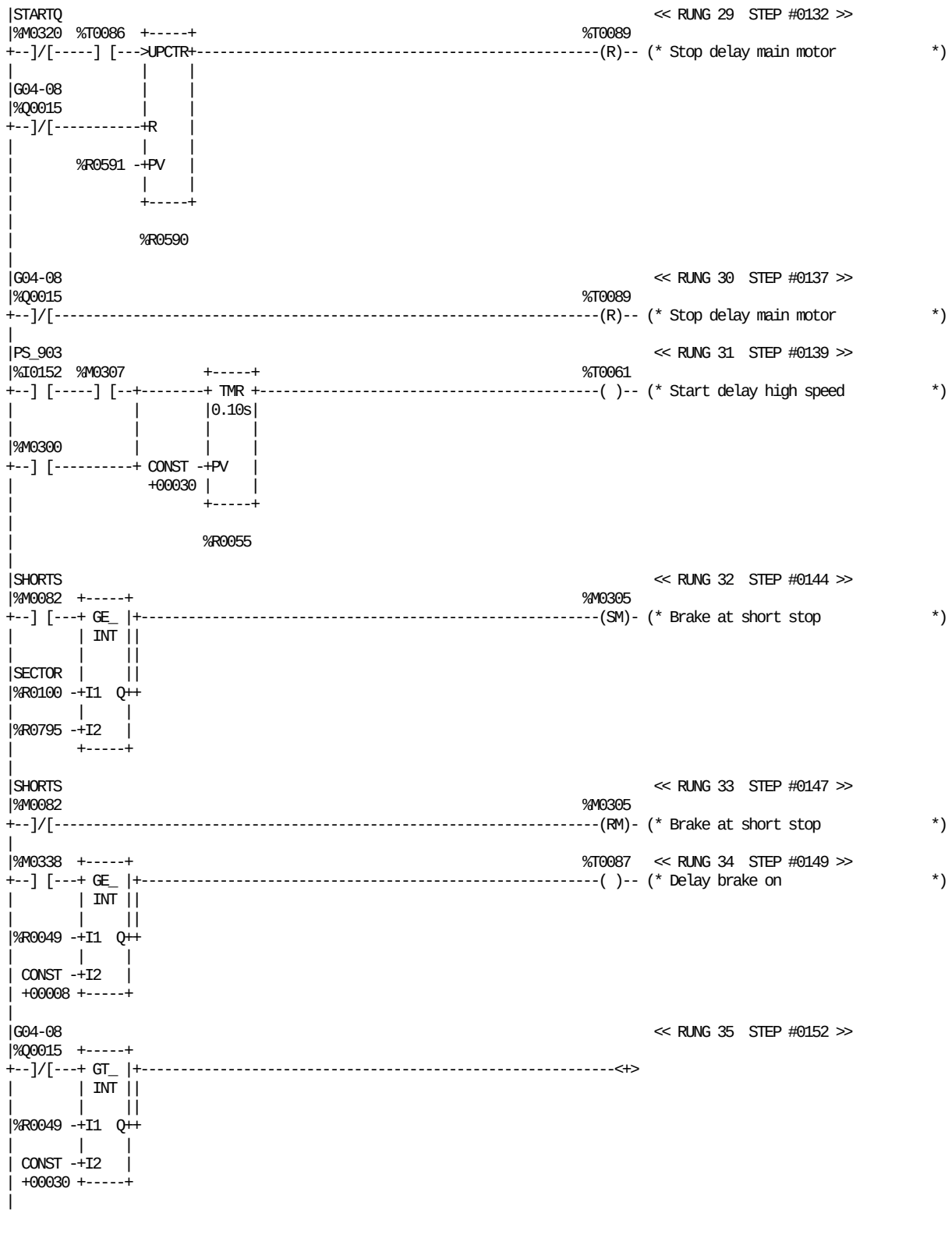

REFERENCE	NICKNAME	REFERENCE DESCRIPTION	REFERENCE	NICKNAME	REFERENCE DESCRIPTION
%M0300		Tube sealing going on	%R0055		Start delay high speed
%M0305		Brake at short stop	%R0590		Stop delay main motor
%M0307		Aux.output inching	%R0591		PV Stop delay main motor
%M0338		M.Motor disable & keep clutch	%R0795		Start braking at short stop
%T0061		Start delay high speed	%Q0015	G04-08	Main motor, high speed
%T0086		FF chain P+	%I0152	PS_903	Selector switch
%T0087		Delay brake on	%R0100	SECTOR	Angle sector 0-127
%T0089		Stop delay main motor	%M0082	SHORTS	Machine pos. short stop
%R0049		Off delay low speed	%M0320	STARTQ	Start sequenc

BLOCK: 14 DRIVE UNIT

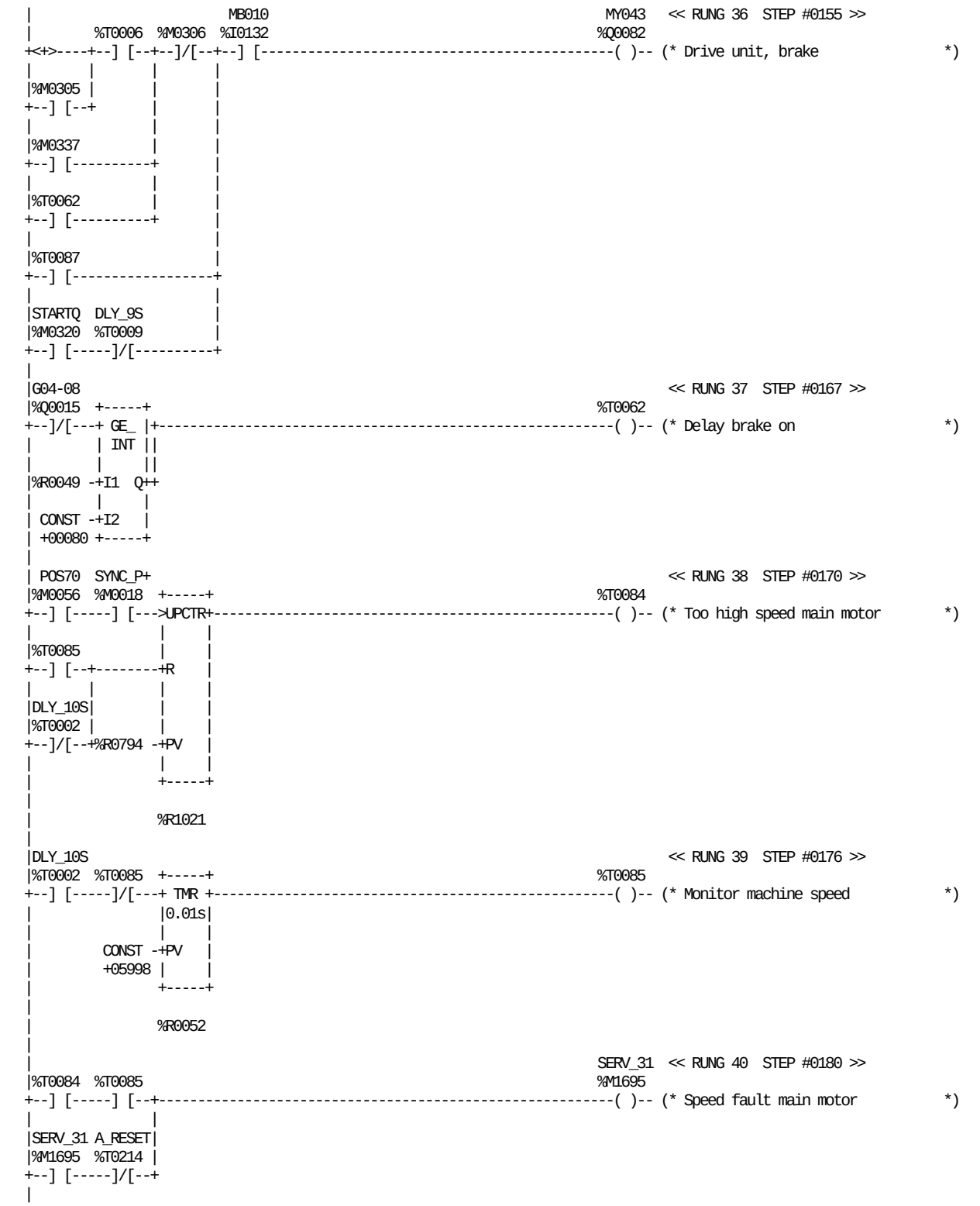

REFERENCE	NICKNAME	REFERENCE DESCRIPTION	REFERENCE	NICKNAME	REFERENCE DESCRIPTION
%M0305		Brake at short stop	%R1021		To high speed main motor
%M0306		Aux. output clutch	%T0214	A_RESET	Pulse+ reset A-alarm lock
%M0337		Jaw alarm release clutch	%T0002	DLY_10S	Start sequence delay 10 sec.
%T0006		Scan time clock freq.	%T0009	DLY_9S	Start sequence delay 9sec
%T0062		Delay brake on	%Q0015	G04-08	Main motor, high speed
%T0084		Too high speed main motor	%I0132	MB010	Crank position
%T0085		Monitor machine speed	%Q0082	MY043	Drive unit, brake
%T0087		Delay brake on	%M0056	POS70	Machine ladder pos 70
%R0049		Off delay low speed	%M1695	SERV_31	Speed fault main motor
%R0052		Monitor machine speed	%M0320	STARTQ	Start sequenc
%R0794		Speed limit pack./min	%M0018	SYNC_P+	Drop chute out syncro. value P+

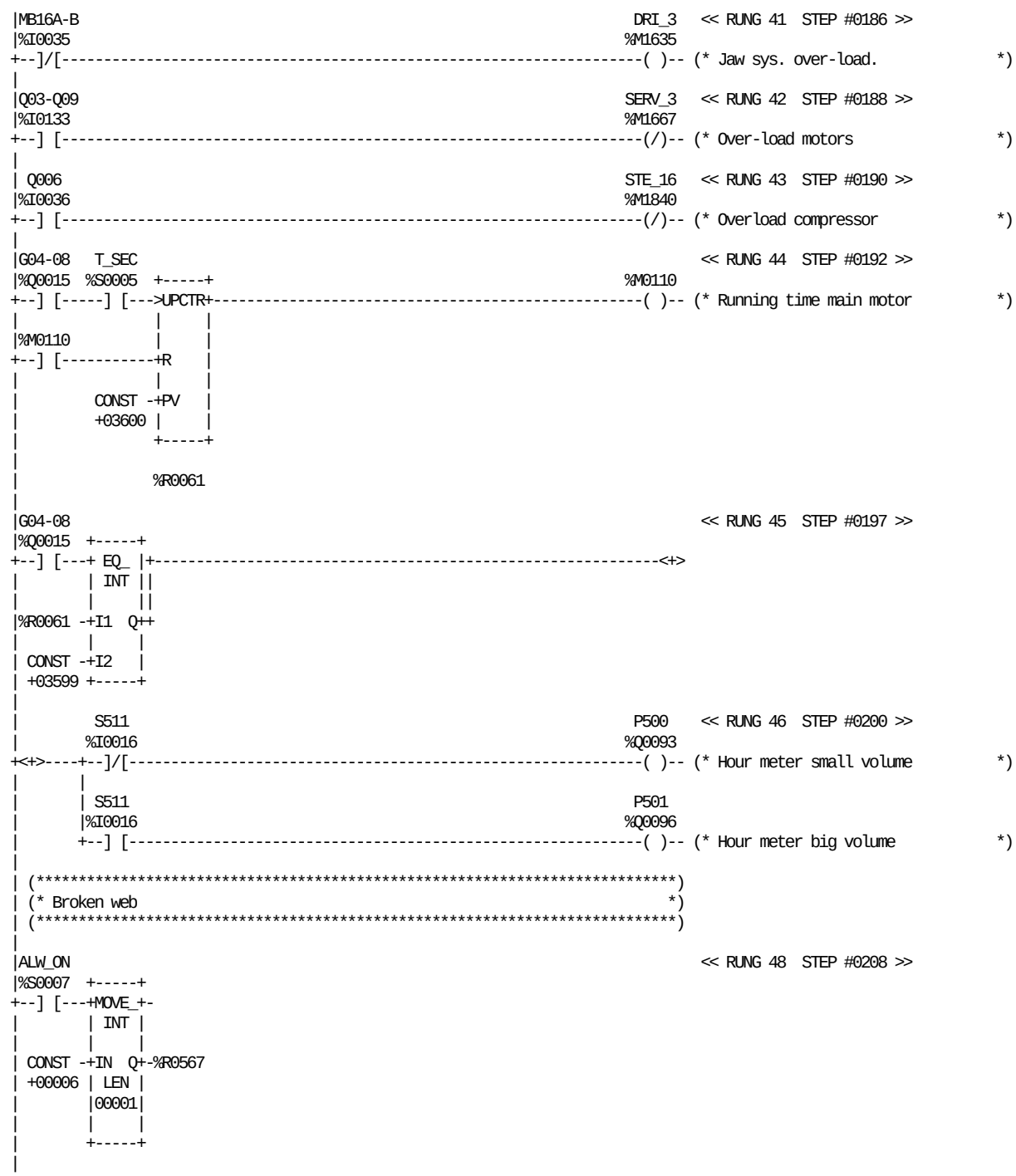

REFERENCE	NICKNAME	REFERENCE DESCRIPTION
%M0110		Running time main motor
%R0061		Main motor, seconds
%R0567		Delay alarm paper preset value
%S0007	ALW_ON	
%M1635	DRI_3	Jaw sys. over-load.
%Q0015	G04-08	Main motor, high speed
%I0035	MB16A-B	Jaw system overload
%Q0093	P500	Hour meter small volume

REFERENCE	NICKNAME	REFERENCE DESCRIPTION
%Q0096	P501	Hour meter big volume
%I0036	Q006	Overload protection, compressor
%I0133	Q03-Q09	Overload protecion, motors
%I0016	S511	Selector small / big volume
%M1667	SERV_3	Over-load motors
%M1840	STE_16	Overload compressor
%S0005	T_SEC	

BLOCK: 14 DRIVE UNIT

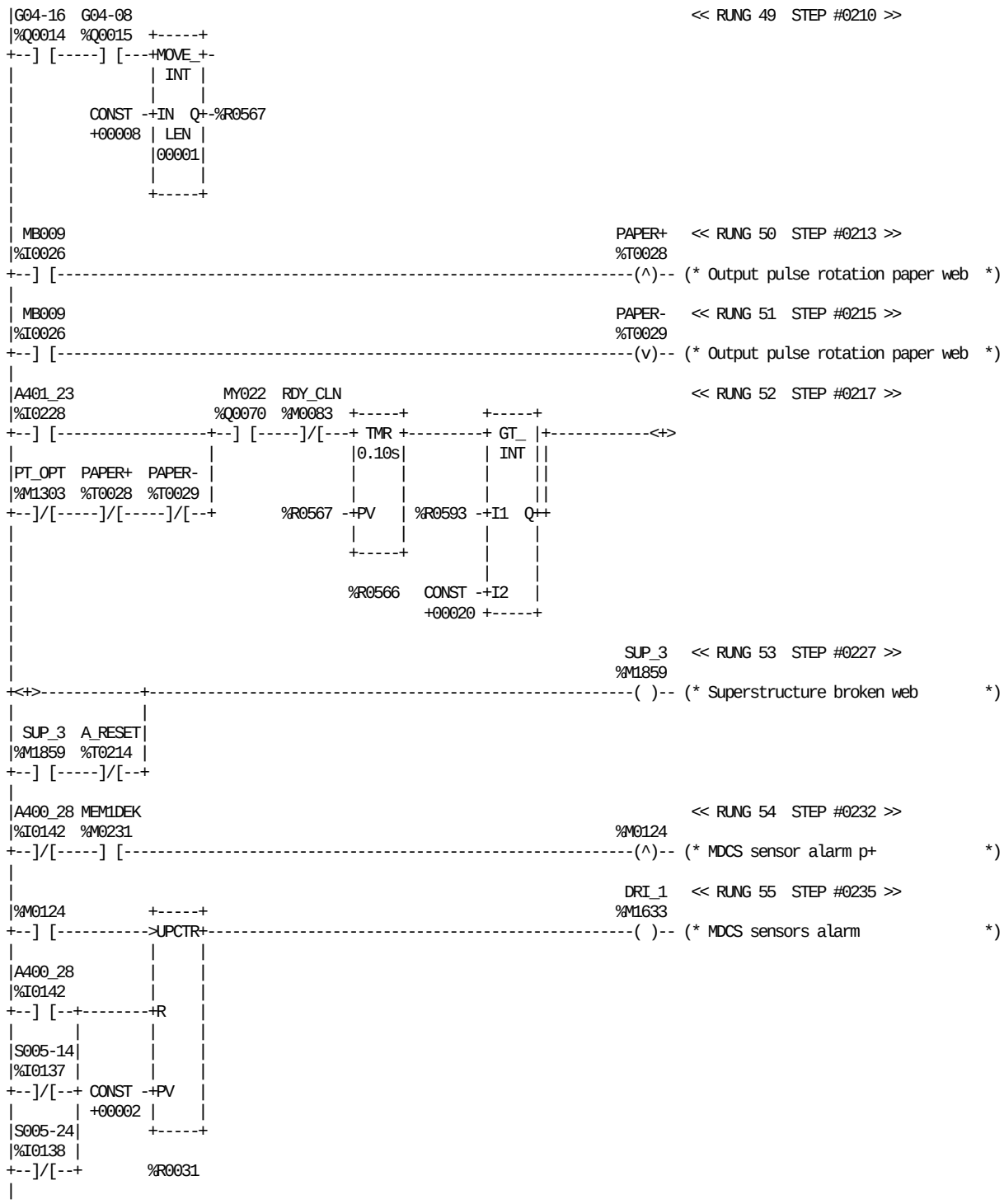

REFERENCE	NICKNAME	REFERENCE DESCRIPTION
%M0124		MDCS sensor alarm p+
%R0031		MDCS sensor alarm counter
%R0566		Delay alarm paper
%R0567		Delay alarm paper preset value
%R0593		Start delay rotat. monitor
%I0142	A400_28	MDCS sensors alarm
%I0228	A401_23	PT ready
%T0214	A_RESET	Pulse+ reset A-alarm lock
%M1633	DRI_1	MDCS sensors alarm
%Q0015	G04-08	Main motor, high speed
%Q0014	G04-16	Main motor, low speed

REFERENCE	NICKNAME	REFERENCE DESCRIPTION
%I0026	MB009	Paper web
%M0231	MEM1DEK	Memory 1st BC in design
%Q0070	MY022	Main machine, clutch
%T0028	PAPER+	Output pulse rotation paper web
%T0029	PAPER-	Output pulse rotation paper web
%M1303	PT_OPT	PLMS, Option Pull-Tab
%M0083	RDY_CLN	Machine pos ready for cleaning
%I0137	S005-14	FCS normal filling
%I0138	S005-24	FCS Pre-filling
%M1859	SUP_3	Superstructure broken web

BLOCK: 14 DRIVE UNIT

| DRI_1 << RUNG 56 STEP #0241 >>

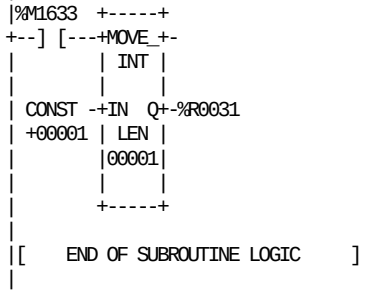

[END OF SUBROUTINE LOGIC]

REFERENCE NICKNAME	REFERENCE DESCRIPTION	REFERENCE NICKNAME	REFERENCE DESCRIPTION
%R0031	MDCS sensor alarm counter	%M1633 DRI_1	MDCS sensors alarm

BLOCK: 14 DRIVE UNIT

This page intentionally left blank

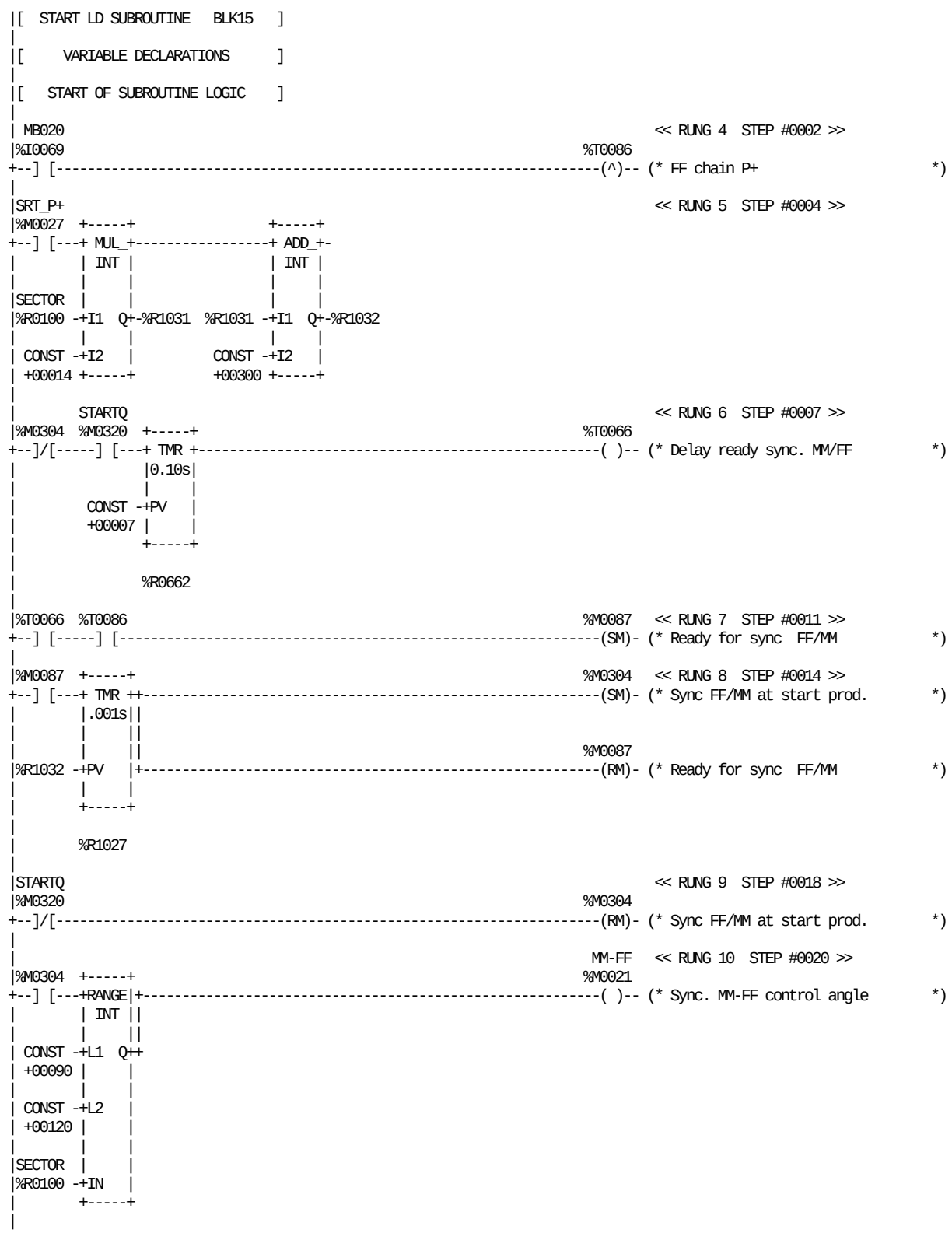

REFERENCE	NICKNAME	REFERENCE DESCRIPTION
%M0087		Ready for sync FF/MM
%M0304		Sync FF/MM at start prod.
%T0066		Delay ready sync. MM/FF
%T0086		FF chain P+
%R0662		Delay unsync. FF/MM
%R1027		Position FF msec
%R1031		Position MM msec
%R1032		Synchronization position MM/FF
%I0069	MB020	Final folder chain pos.
%M0021	MM-FF	Sync. MM-FF control angle
%R0100	SECTOR	Angle sector 0-127
%M0027	SRT_P+	Start sequenc P+
%M0320	STARTQ	Start sequenc

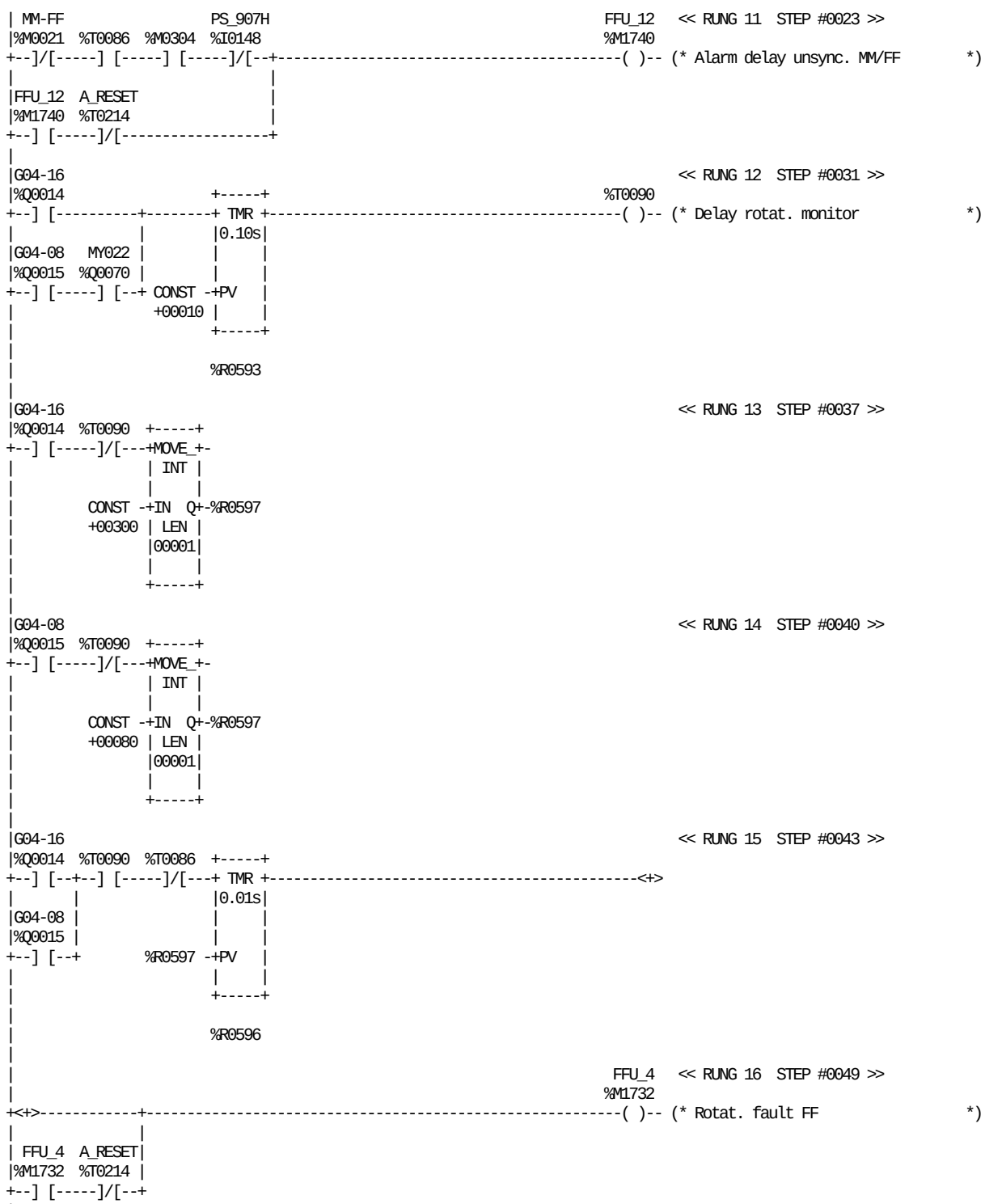

REFERENCE	NICKNAME	REFERENCE DESCRIPTION	REFERENCE	NICKNAME	REFERENCE DESCRIPTION
%M0304		Sync FF/MM at start prod.	%M1740	FFU_12	Alarm delay unsync. MM/FF
%T0086		FF chain P+	%M1732	FFU_4	Rotat. fault FF
%T0090		Delay rotat. monitor	%Q0015	G04-08	Main motor, high speed
%R0593		Start delay rotat. monitor	%Q0014	G04-16	Main motor, low speed
%R0596		FF rotat. monitor	%M0021	MM-FF	Sync. MM-FF control angle
%R0597		Delay time FF rotat. monitor	%Q0070	MY022	Main machine, clutch
%T0214	A_RESET	Pulse+ reset A-alarm lock	%I0148	PS_907H	Inching

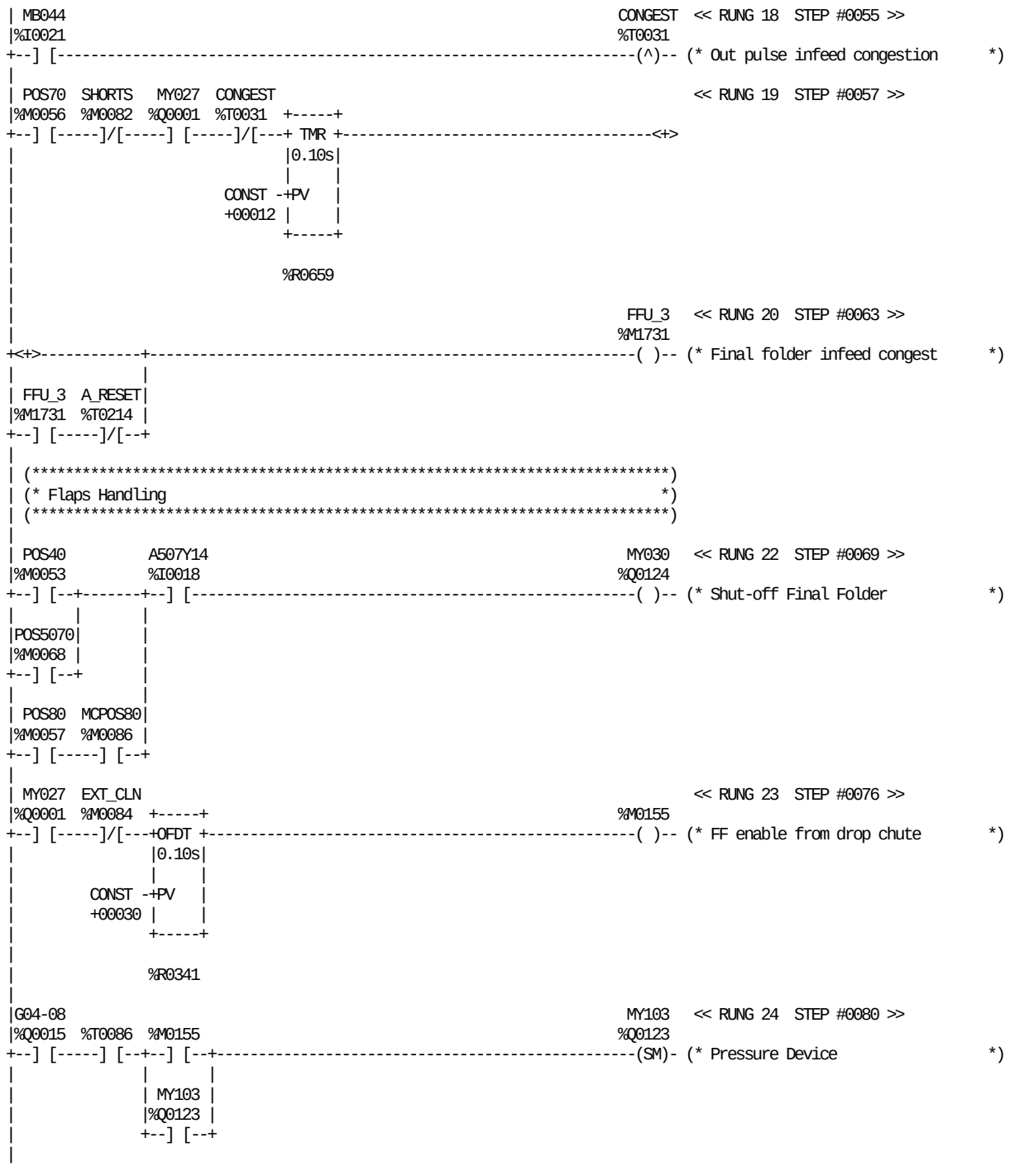

REFERENCE	NICKNAME	REFERENCE DESCRIPTION	REFERENCE	NICKNAME	REFERENCE DESCRIPTION
%M0155		FF enable from drop chute	%I0021	MB044	Infeed congestion
%T0086		FF chain P+	%M0086	MCPOS80	Machine in pos.80 for >2 min
%R0341		Delay stop squeezer and pulldown	%Q0001	MY027	Drop chute
%R0659		Delay congest monitor	%Q0124	MY030	Shut-off Final Folder
%I0018	A507Y14	SS, JS and FF safety module	%Q0123	MY103	Pressure Device
%T0214	A_RESET	Pulse+ reset A-alarm lock	%M0053	POS40	Machine ladder pos 40
%T0031	CONGEST	Out pulse infeed congestion	%M0068	POS5070	Machine ladder pos 50-70
%M0084	EXT_CLN	Machine in pos. extern. clean	%M0056	POS70	Machine ladder pos 70
%M1731	FFU_3	Final folder infeed congest	%M0057	POS80	Machine ladder pos 80
%Q0015	G04-08	Main motor, high speed	%M0082	SHORTS	Machine pos. short stop

```
| MY103                                                                  MY103   << RUNG 25  STEP #0086 >>
|%Q0123  +-----+                                                        %Q0123
+--] [---+ TMR +-----------------------------------------------------------(RM)- (* Pressure Device                 *)
|        |0.01s|
|        |     |
|%R0793 -+PV   |
|        |     |
|        +-----+
|
|        %R1036
|
| MY001                                                                  MY100   << RUNG 26  STEP #0089 >>
|%Q0021  +-----+                                                        %Q0022
+--] [---+OFDT +-----------------------------------------------------------(/)-- (* Flap sealing, air RESET        *)
|        |0.10s|
|        |     |
| CONST -+PV   |
| +06000 |     |
|        +-----+
|
|        %R0626
|
|                                                                        MY001   << RUNG 27  STEP #0092 >>
|%M0536                                                                 %Q0021
+--] [--------------------------+-----------------------------------------( )-- (* Flap sealing, air SET          *)
|                                |
| S004   POS0030 RDY_CLN         |                                       K018
|%I0009  %M0065  %M0083  %M0416  |                                      %Q0036
+--] [-----]/[-----]/[-----]/[--+-----------------------------------------( )-- (* Preheat 3 final folder         *)
|
|A212_24  K018                                                          FFU_10   << RUNG 28  STEP #0100 >>
|%I0157  %Q0036                                                         %M1738
+--]/[-----] [-----------------------------------------------------------( )-- (* Flap sealing temp.Top left      *)
|
|A213_24  K018                                                          FFU_11   << RUNG 29  STEP #0103 >>
|%I0158  %Q0036                                                         %M1739
+--]/[-----] [-----------------------------------------------------------( )-- (* Flap sealing temp.Top right     *)
|
|A214_24  K018                                                           FFU_8   << RUNG 30  STEP #0106 >>
|%I0159  %Q0036                                                         %M1736
+--]/[-----] [-----------------------------------------------------------( )-- (* Flap sealing temp.Bottom left   *)
|
|A215_24  K018                                                           FFU_9   << RUNG 31  STEP #0109 >>
|%I0160  %Q0036                                                         %M1737
+--]/[-----] [-----------------------------------------------------------( )-- (* Flap sealing temp.Bottom right  *)
|
|PS_904   POS00                                                                 << RUNG 32  STEP #0112 >>
|%I0154  %M0049  +-----+                                                %M0075
+--] [-----]/[---+MOVE_+-----------------------------------------------------( )-- (* Sprinkler                      *)
|               | INT |
|               |     |
|         CONST -+IN  Q+-%R0665
|         +00000 | LEN |
|                |00001|
|                |     |
|                +-----+
|
| MY031                                                                         << RUNG 33  STEP #0116 >>
|%Q0072                                                                 %M0075
+--] [-----------------------------------------------------------------------(S)-- (* Sprinkler                      *)
|
```

REFERENCE	NICKNAME	REFERENCE DESCRIPTION
%M0075		Sprinkler
%M0416		WEAC stop on
%M0536		Close AP valve B
%R0626		Delay heating off FF
%R0665		Sprinkler time
%R0793		Reset Pressure Device Value
%R1036		Press. d.off delay in FF
%I0157	A212_24	Temp.monitor flap sealing Top L.
%I0158	A213_24	Temp.monitor flap sealing Top R.
%I0159	A214_24	Temp.monitor flap sealing Bot L.
%I0160	A215_24	Temp.monitor flap sealing Bot R.
%M1738	FFU_10	Flap sealing temp.Top left
%M1739	FFU_11	Flap sealing temp.Top right
%M1736	FFU_8	Flap sealing temp.Bottom left
%M1737	FFU_9	Flap sealing temp.Bottom right
%Q0036	K018	Preheat 3 final folder
%Q0021	MY001	Flap sealing, air SET
%Q0072	MY031	Final folder sprinkler
%Q0022	MY100	Flap sealing, air RESET
%Q0123	MY103	Pressure Device
%M0049	POS00	Ladder pos 00
%M0065	POS0030	Machine ladder pos 00-30
%I0154	PS_904	Station chain sprinkler
%M0083	RDY_CLN	Machine pos ready for cleaning
%I0009	S004	Service switch

```
| POS60  SHORTS                                                                 << RUNG 34  STEP #0118 >>
|%M0055  %M0082          +-----+         +-----+
+--] [--+--]/[--+--------+ TMR +---------+MOVE_+-
|       |       |        |0.10s|         | INT |
| POS70 |       |        |     |         |     |
|%M0056 |       |        |     |         |     |
+--] [--+       | CONST -+PV   |  CONST -+IN  Q+-%R0665
|               | +06130 |     |  +00130 | LEN |
|               |        +-----+         |00001|
|%M0075         |                        |     |
+--] [----------+       %R0665          +-----+
|
| POS60  SHORTS                                                    MY031   << RUNG 35  STEP #0124 >>
|%M0055  %M0082          +-----+                                  %Q0072
+--] [--+--]/[--+--------+ LT_ |+-----------------------------------------( )-- (* Final folder sprinkler          *)
|       |       |        | INT ||
| POS70 |       |        |     ||
|%M0056 |       |        |     ||
+--] [--+       |%R0665 -+I1  Q++
|               |        |     |
|%M0075         |        |     |
+--] [----------+ CONST -+I2   |
|                 +00250 +-----+
|
|EXT_CLN  MY002   WATER                                            MY031   << RUNG 36  STEP #0130 >>
|%M0084  %Q0068  %T0022  +-----+                                  %Q0072
+--] [-----]/[-----] [---+ LT_ |+-----------------------------------------(S)-- (* Final folder sprinkler          *)
|                        | INT ||
|                        |     ||
|                %R0518 -+I1  Q++
|                        |     |
|                 CONST -+I2   |
|                 +07400 +-----+
|
| MY103   MY027  EXT_CLN                                           MY129   << RUNG 37  STEP #0135 >>
|%Q0123  %Q0001  %M0084                                           %Q0006
+--]/[-----] [-----]/[-------------------------------------------------( )-- (* Air blowing bottom flaps        *)
|
| (*****************************************************************************)
| (* Distribution equipment and dating unit signals interface                 *)
| (*****************************************************************************)
|
|X02-13   K013                                                     A604-A2  << RUNG 39  STEP #0140 >>
|%I0050  %Q0168  +-----+                                          %Q0042
+--] [-----] [---+OFDT +-------------------------------------------------( )-- (* DE start                        *)
|                |0.10s|
|                |     |
|         CONST -+PV   |
|         +00160 |     |
|                +-----+
|
|                %R0928
|
|X002-21 POS2080 POS0030  S004   DDU_OPT                           FFU_29   << RUNG 40  STEP #0144 >>
|%I0136  %M0067  %M0065  %I0009  %M1301                           %M1757
+--]/[-----] [-----]/[-----]/[-----] [-------------------------------------( )-- (* Dating unit alarm              *)
|
|X002-20  POS00  DDU_OPT                                           FFU_30   << RUNG 41  STEP #0150 >>
|%I0135  %M0049  %M1301                                           %M1758
+--]/[-----]/[-----] [-------------------------------------------------( )-- (* Dating unit supply              *)
|
|[    END OF SUBROUTINE LOGIC     ]
```

REFERENCE	NICKNAME	REFERENCE DESCRIPTION	REFERENCE	NICKNAME	REFERENCE DESCRIPTION
%M0075		Sprinkler	%Q0123	MY103	Pressure Device
%R0518		Sq.ext.clean prg.	%Q0006	MY129	Air blowing bottom flaps
%R0665		Sprinkler time	%M0049	POS00	Ladder pos 00
%R0928		OFF delay DE start	%M0065	POS0030	Machine ladder pos 00-30
%Q0042	A604-A2	DE start	%M0067	POS2080	Machine ladder pos 20-80
%M1301	DDU_OPT	PLMS, Option Domino date unit	%M0055	POS60	Machine ladder pos 60
%M0084	EXT_CLN	Machine in pos. extern. clean	%M0056	POS70	Machine ladder pos 70
%M1757	FFU_29	Dating unit alarm	%I0009	S004	Service switch
%M1758	FFU_30	Dating unit supply	%M0082	SHORTS	Machine pos. short stop
%Q0168	K013	Start conveyor	%T0022	WATER	Hot water
%Q0068	MY002	Cleaning tray, draining	%I0135	X002-20	Dating unit level
%Q0001	MY027	Drop chute	%I0136	X002-21	Dating unit ready
%Q0072	MY031	Final folder sprinkler	%I0050	X02-13	Queue monitor

This page intentionally left blank

```
|[  START LD SUBROUTINE   BLK16   ]
|
|[     VARIABLE DECLARATIONS      ]
|
|[   START OF SUBROUTINE LOGIC    ]
|
|G04-08   MY022  RDY_CLN  MB160                                          DES_4   << RUNG 4  STEP #0002 >>
|%Q0015  %Q0070  %M0083  %I0141  %M0131         +-----+                 %M1988
+--] [--+--] [-----]/[-----] [-----] [--+--------+ TMR +-------------------( )-- (* WTC roller position out of limit *)
|       |                              |        |0.10s|
|G04-16 |                              |        |     |
|%Q0014 |                              |        |     |
+--] [--+                              | CONST -+PV   |
|                                      | +00040 |     |
| DES_4  A_RESET                       |        +-----+
|%M1988  %T0214                        |
+--] [-----]/[-------------------------+        %R0384
|
|       G03-19                                                           DES_15   << RUNG 5  STEP #0013 >>
|%M0148  %I0140                                                          %M1999
+--] [-----]/[--+-------------------------------------------------------( )-- (* WTC inverter alarm              *)
|               |
|DES_15  A_RESET|
|%M1999  %T0214 |
+--] [-----]/[--+
|
|G04-08   MY022                                                                  << RUNG 6  STEP #0019 >>
|%Q0015  %Q0070  %M0148  +-----+                                         %M0147
+--] [--+--] [-----] [---+OFDT +---------------------------------------( )-- (* WTC enable                     *)
|       |               |0.01s|
|G04-16 |               |     |
|%Q0014 |               |     |
+--] [--+        CONST -+PV   |
|                +00150 |     |
|                       +-----+
|
|                       %R0263
|
|       A507Y14  POS00  EXT_CLN INT_CLN DES_15                            K019    << RUNG 7  STEP #0025 >>
|%T0004  %I0018  %M0049  %M0084  %M0085  %M1999                          %Q0012
+--] [--+--] [-----]/[-----]/[-----]/[-----]/[-----------------------------( )-- (* WTC inverter power              *)
|       |
| K113  |
|%Q0054 |
+--] [--+
|       |
| K019  |
|%Q0012 |
+--] [--+
|
| K019                                                                           << RUNG 8  STEP #0034 >>
|%Q0012  +-----+                                                         %M0148
+--] [---+ TMR +-------------------------------------------------------( )-- (* Delay inverter enable          *)
|        |0.01s|
|        |     |
| CONST -+PV   |
| +00200 |     |
|        +-----+
|
|        %R0412
|
```

REFERENCE	NICKNAME	REFERENCE DESCRIPTION	REFERENCE	NICKNAME	REFERENCE DESCRIPTION
%M0131		Machine to 6000 p/h alarm enable	%M0084	EXT_CLN	Machine in pos. extern. clean
%M0147		WTC enable	%I0140	G03-19	Bending roller inverter fault
%M0148		Delay inverter enable	%Q0015	G04-08	Main motor, high speed
%T0004		P+ position10/ready for cleaning	%Q0014	G04-16	Main motor, low speed
%R0263		Stop motor delay	%M0085	INT_CLN	Machine pos internal cleaning
%R0384		Delay WTC roll.pos. out of limit	%Q0012	K019	WTC inverter power
%R0412		Bend.roller inverter fault delay	%Q0054	K113	Aux. relay alarm reset
%I0018	A507Y14	SS, JS and FF safety module	%I0141	MB160	WTC control speed
%T0214	A_RESET	Pulse+ reset A-alarm lock	%Q0070	MY022	Main machine, clutch
%M1999	DES_15	WTC inverter alarm	%M0049	POS00	Ladder pos 00
%M1988	DES_4	WTC roller position out of limit	%M0083	RDY_CLN	Machine pos ready for cleaning

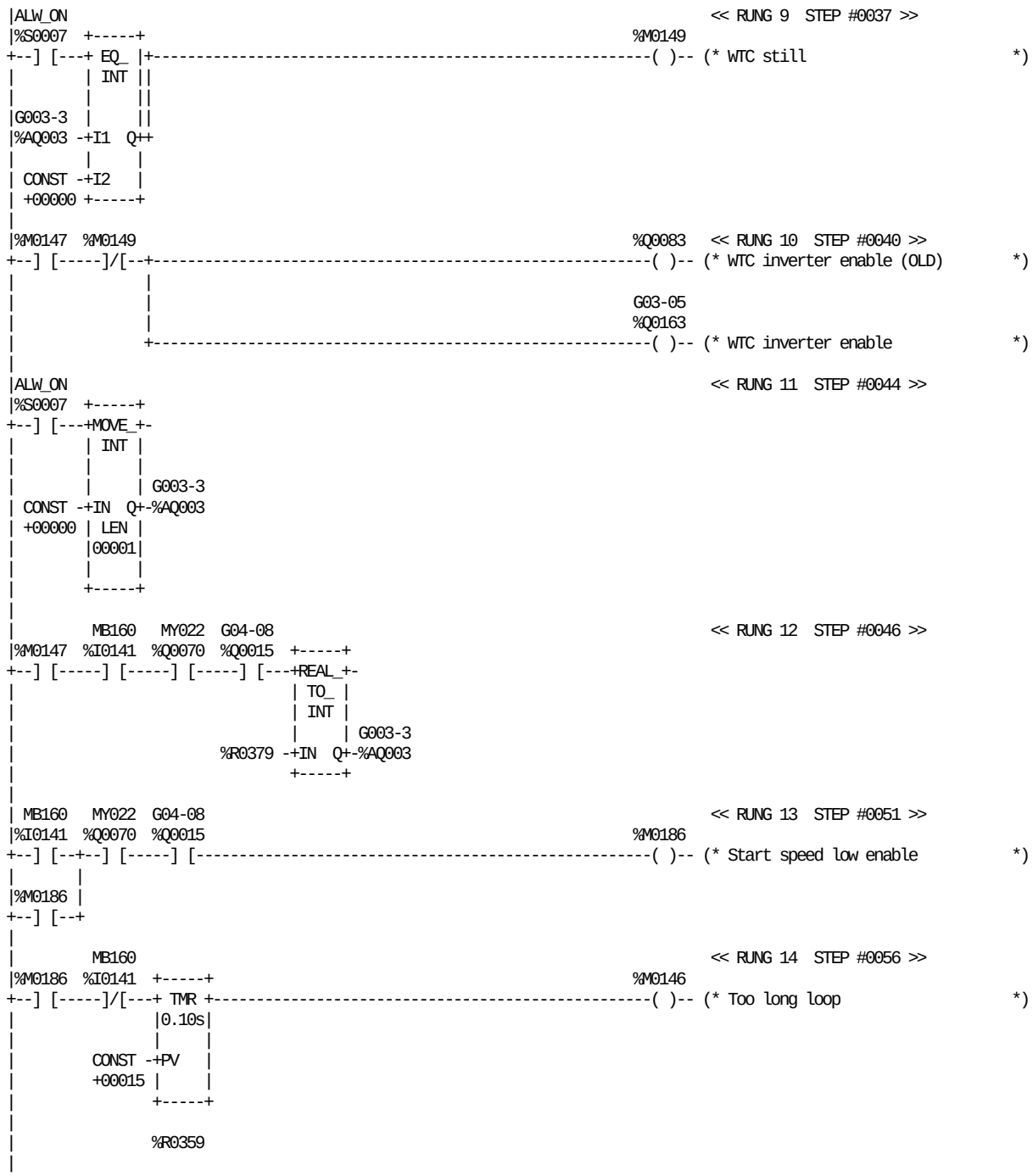

REFERENCE	NICKNAME	REFERENCE DESCRIPTION
%Q0083		WTC inverter enable (OLD)
%M0146		Too long loop
%M0147		WTC enable
%M0149		WTC still
%M0186		Start speed low enable
%R0359		Delay paper in loop
%R0379		WTC high speed production

REFERENCE	NICKNAME	REFERENCE DESCRIPTION
%S0007	ALW_ON	
%AQ003	G003-3	Analog output WTC motor
%Q0163	G03-05	WTC inverter enable
%Q0015	G04-08	Main motor, high speed
%I0141	MB160	WTC control speed
%Q0070	MY022	Main machine, clutch

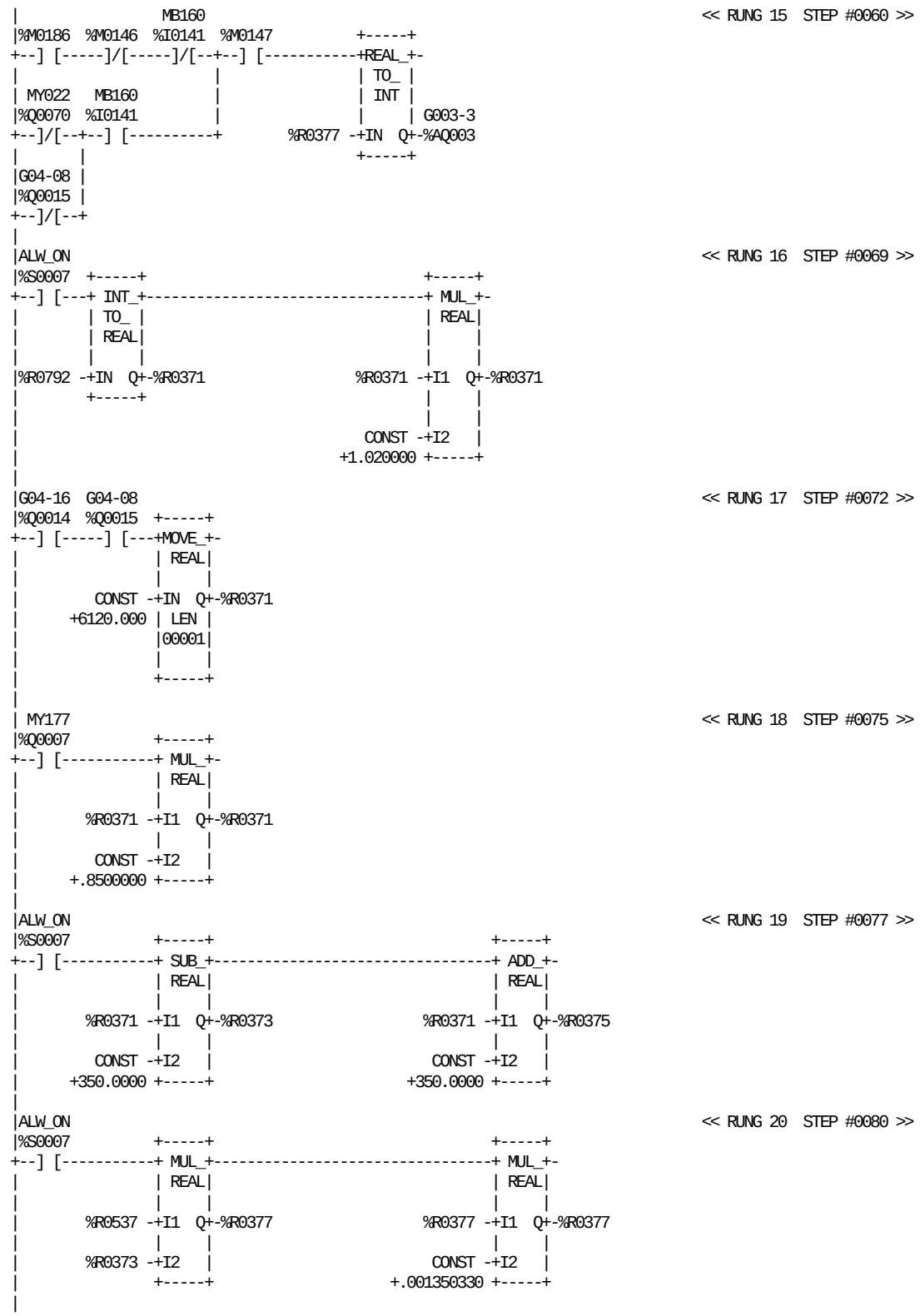

REFERENCE NICKNAME	REFERENCE DESCRIPTION	REFERENCE NICKNAME	REFERENCE DESCRIPTION
%M0146	Too long loop	%R0792	Synchronization FF speed
%M0147	WTC enable	%S0007 ALW_ON	
%M0186	Start speed low enable	%AQ003 G003-3	Analog output WTC motor
%R0371	Aux speed register	%Q0015 G04-08	Main motor, high speed
%R0373	Min speed value	%Q0014 G04-16	Main motor, low speed
%R0375	Max speed value	%I0141 MB160	WTC control speed
%R0377	WTC low speed precorrection	%Q0070 MY022	Main machine, clutch
%R0537	Package length precorreted	%Q0007 MY177	Tube folding device

BLOCK: 16 WEB TENSION CONTROL

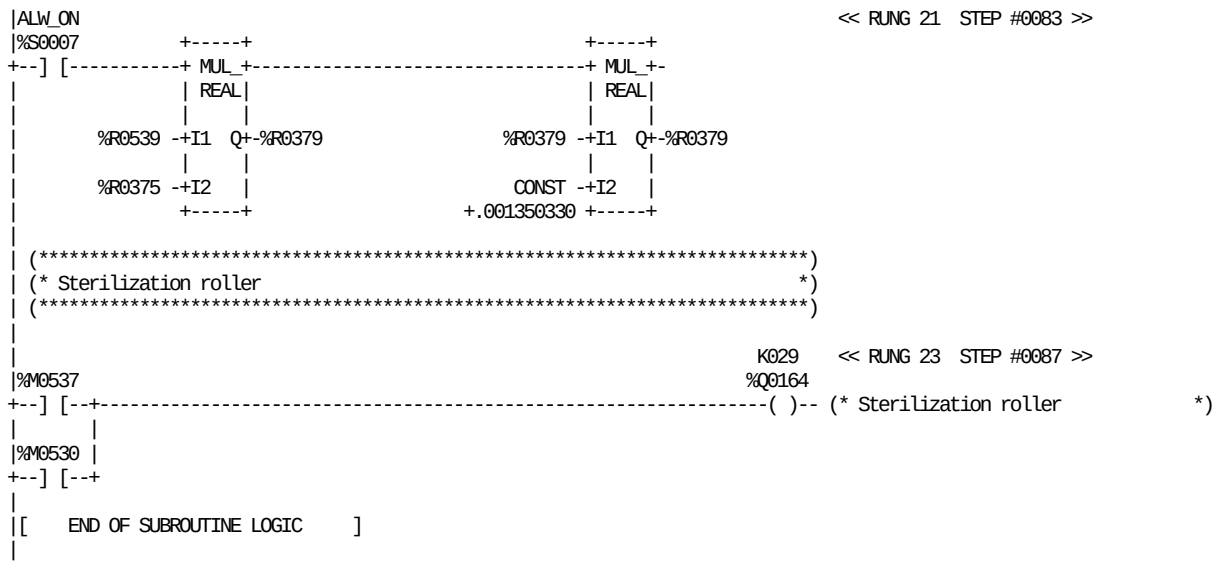

REFERENCE NICKNAME	REFERENCE DESCRIPTION	REFERENCE NICKNAME	REFERENCE DESCRIPTION
%M0530	Spray pause time	%R0539	Repeat length register
%M0537	Run time drying	%S0007 ALW_ON	
%R0375	Max speed value	%Q0164 K029	Sterilization roller
%R0379	WTC high speed production		

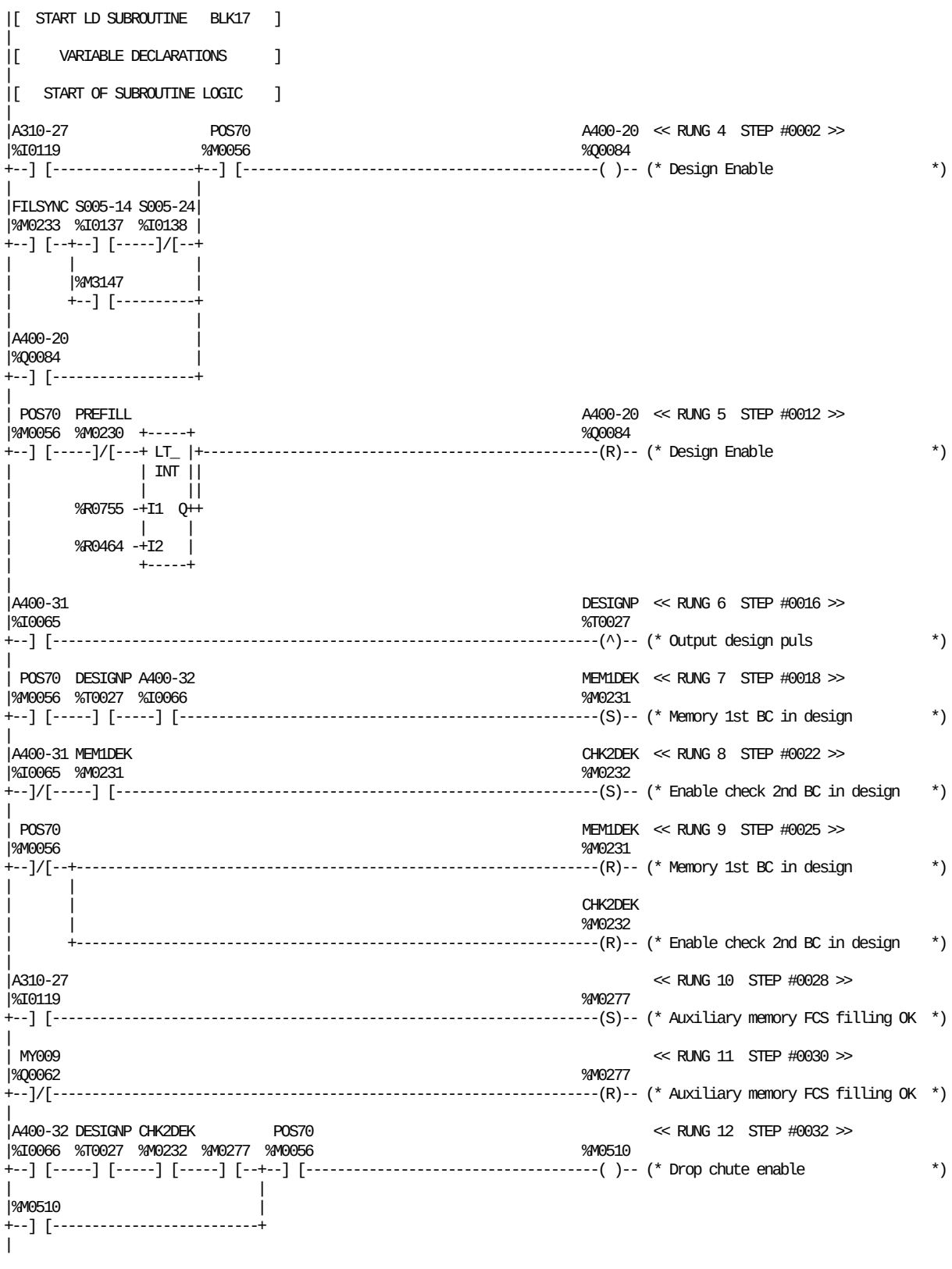

REFERENCE	NICKNAME	REFERENCE DESCRIPTION	REFERENCE	NICKNAME	REFERENCE DESCRIPTION
%M0277		Auxiliary memory FCS filling OK	%M0232	CHK2DEK	Enable check 2nd BC in design
%M0510		Drop chute enable	%T0027	DESIGNP	Output design puls
%M3147		Normal filling from TPOP	%M0233	FILSYNC	Level synchronized
%R0464		Filling start time min.	%M0231	MEM1DEK	Memory 1st BC in design
%R0755		Elapsed time from POS70	%Q0062	MY009	Product valve (A)
%I0119	A310-27	FCS filling OK	%M0056	POS70	Machine ladder pos 70
%Q0084	A400-20	Design Enable	%M0230	PREFILL	Pre-filling selected
%I0065	A400-31	Pulse photocelles design	%I0137	S005-14	FCS normal filling
%I0066	A400-32	Design ok	%I0138	S005-24	FCS Pre-filling

BLOCK: 17 DESIGN CORRECTION

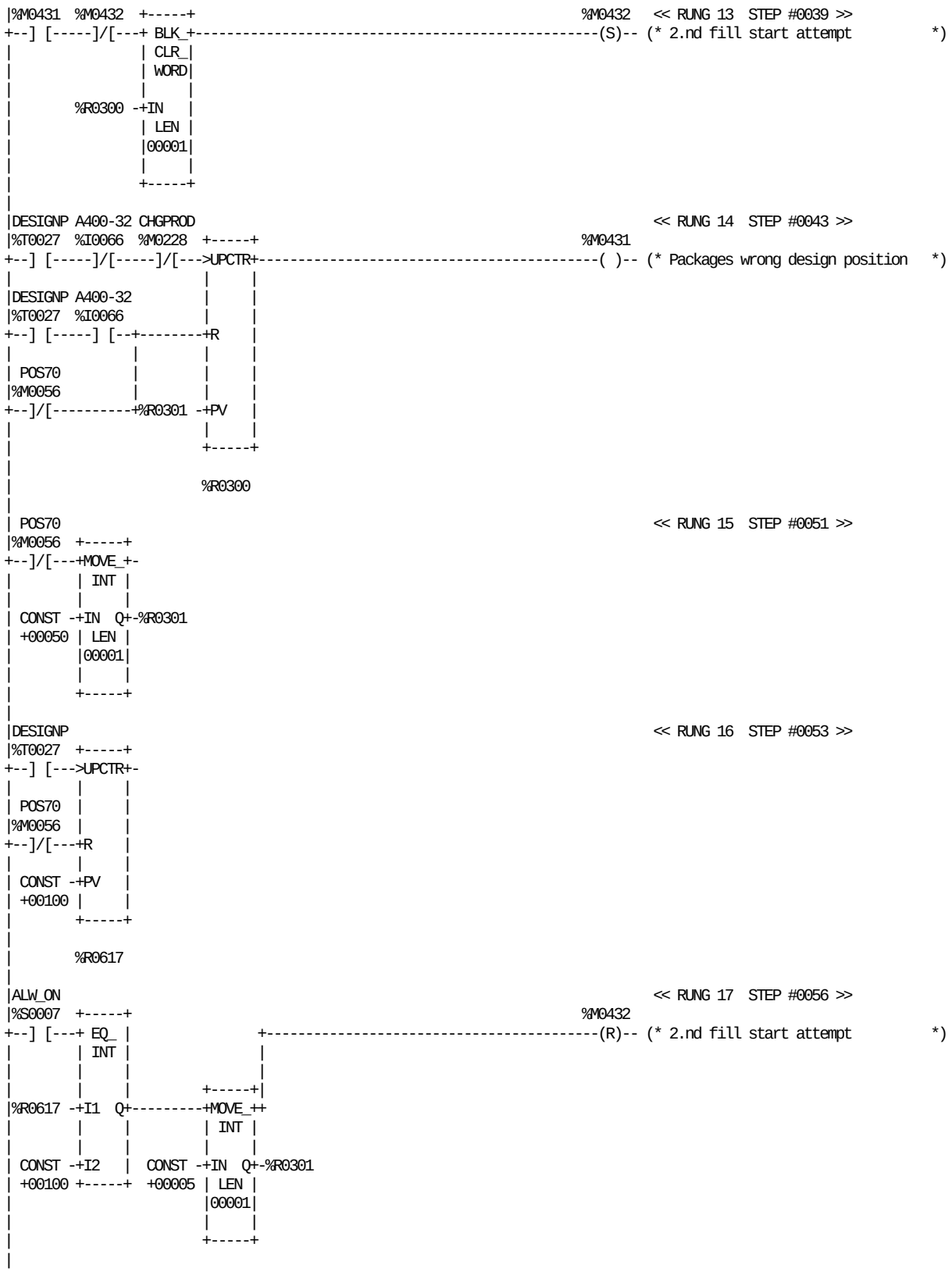

REFERENCE	NICKNAME	REFERENCE DESCRIPTION	REFERENCE	NICKNAME	REFERENCE DESCRIPTION
%M0431		Packages wrong design position	%I0066	A400-32	Design ok
%M0432		2.nd fill start attempt	%S0007	ALW_ON	
%R0300		Counter design false in prod	%M0228	CHGPROD	Product changed (select. switch)
%R0301		Preset n. of faulty packages	%T0027	DESIGNP	Output design puls
%R0617		Delay time FF.rot. monitor	%M0056	POS70	Machine ladder pos 70

BLOCK: 17 DESIGN CORRECTION

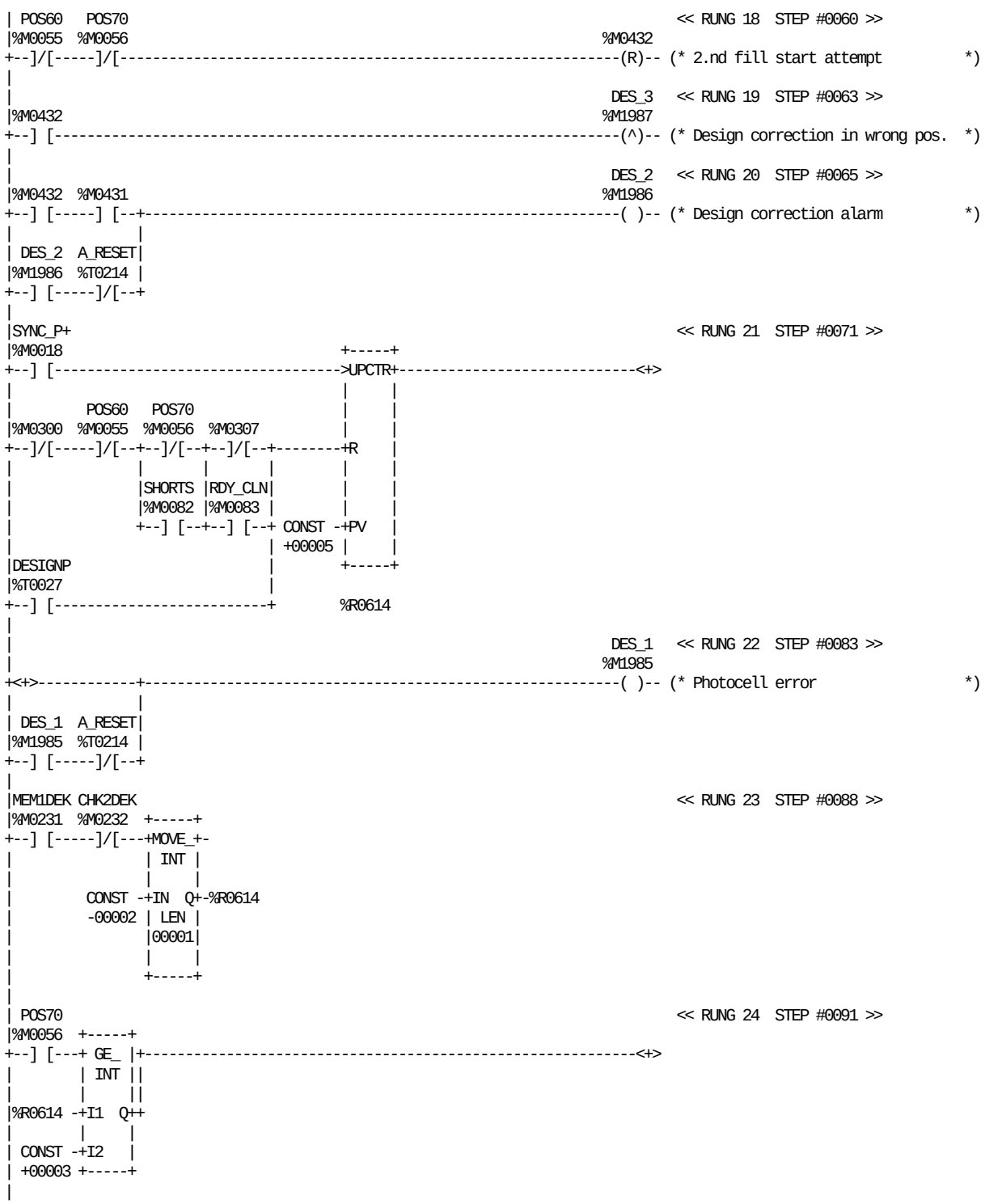

<< RUNG 18 STEP #0060 >>
<< RUNG 19 STEP #0063 >>
<< RUNG 20 STEP #0065 >>
<< RUNG 21 STEP #0071 >>
<< RUNG 22 STEP #0083 >>
<< RUNG 23 STEP #0088 >>
<< RUNG 24 STEP #0091 >>

REFERENCE	NICKNAME	REFERENCE DESCRIPTION
%M0300		Tube sealing going on
%M0307		Aux.output inching
%M0431		Packages wrong design position
%M0432		2.nd fill start attempt
%R0614		Missing design marks
%T0214	A_RESET	Pulse+ reset A-alarm lock
%M0232	CHK2DEK	Enable check 2nd BC in design
%T0027	DESIGNP	Output design puls
%M1985	DES_1	Photocell error

REFERENCE	NICKNAME	REFERENCE DESCRIPTION
%M1986	DES_2	Design correction alarm
%M1987	DES_3	Design correction in wrong pos.
%M0231	MEM1DEK	Memory 1st BC in design
%M0055	POS60	Machine ladder pos 60
%M0056	POS70	Machine ladder pos 70
%M0083	RDY_CLN	Machine pos ready for cleaning
%M0082	SHORTS	Machine pos. short stop
%M0018	SYNC_P+	Drop chute out syncro. value P+

BLOCK: 17 DESIGN CORRECTION

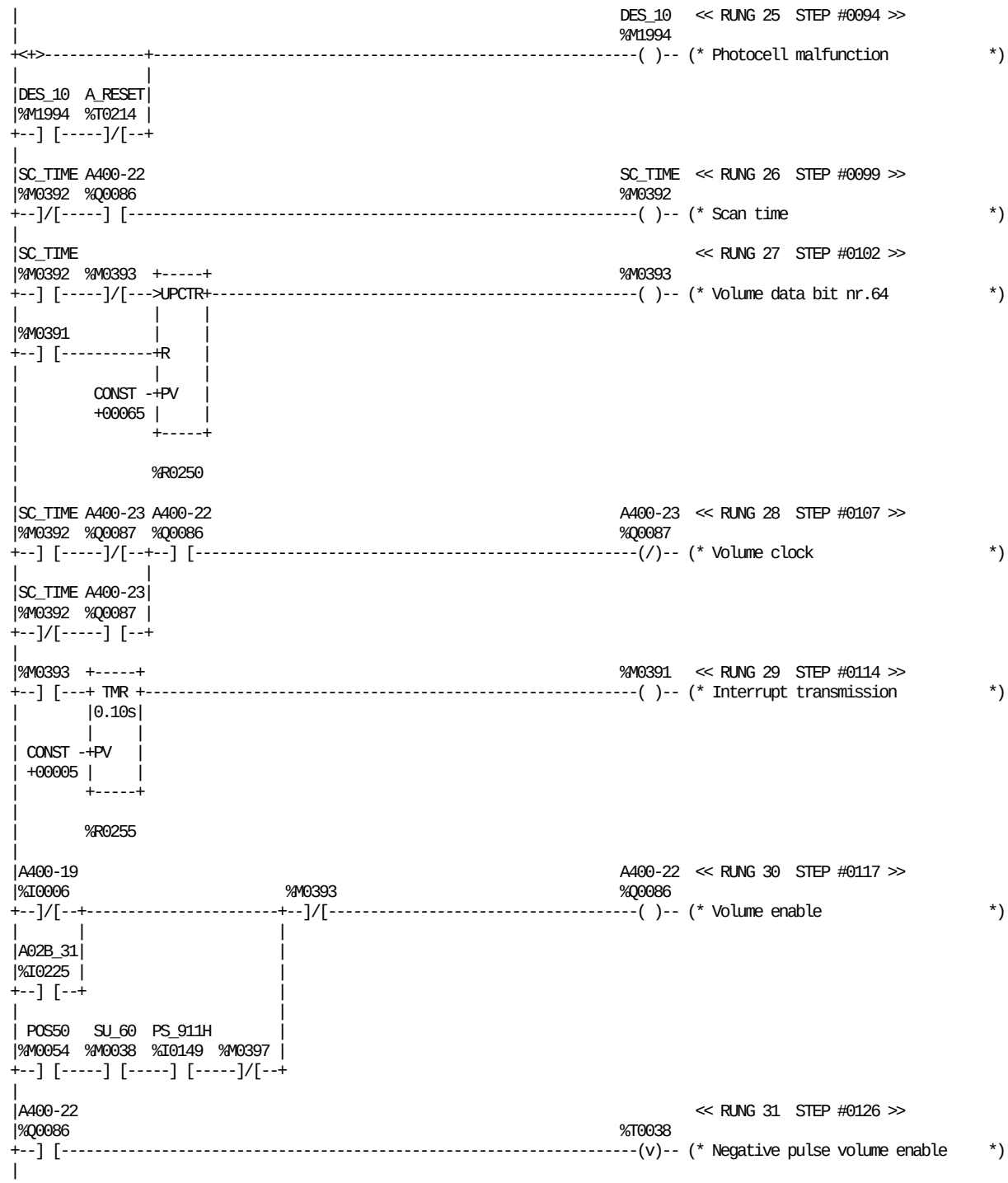

REFERENCE	NICKNAME	REFERENCE DESCRIPTION	REFERENCE	NICKNAME	REFERENCE DESCRIPTION
%M0391		Interrupt transmission	%Q0086	A400-22	Volume enable
%M0393		Volume data bit nr.64	%Q0087	A400-23	Volume clock
%M0397		Finish transmission	%T0214	A_RESET	Pulse+ reset A-alarm lock
%T0038		Negative pulse volume enable	%M1994	DES_10	Photocell malfunction
%R0250		Counter bits volume data	%M0054	POS50	Machine ladder pos 50
%R0255		Interrupt transm. time	%I0149	PS_911H	Step up
%I0225	A02B_31	Request volumes values PT	%M0392	SC_TIME	Scan time
%I0006	A400-19	Request volumes values	%M0038	SU_60	Ok to step to pos 60 start

BLOCK: 17 DESIGN CORRECTION

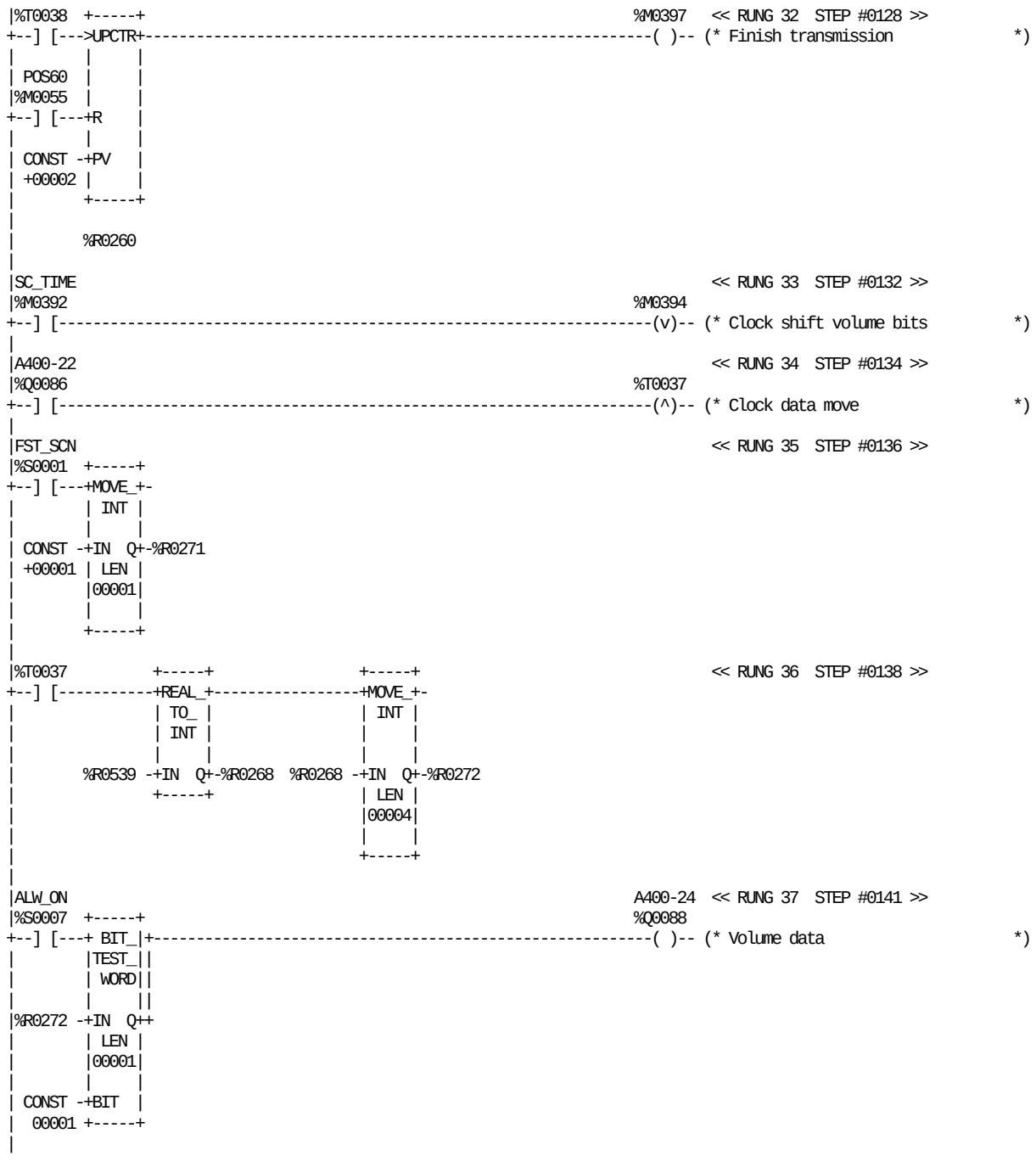

REFERENCE	NICKNAME	REFERENCE DESCRIPTION
%M0394		Clock shift volume bits
%M0397		Finish transmission
%T0037		Clock data move
%T0038		Negative pulse volume enable
%R0260		Counter two transmission
%R0268		Repeat length register
%R0271		Bit parameters to A400
%R0272		Repeat length shift register
%R0539		Repeat length register
%Q0086	A400-22	Volume enable
%Q0088	A400-24	Volume data
%S0007	ALW_ON	
%S0001	FST_SCN	
%M0055	POS60	Machine ladder pos 60
%M0392	SC_TIME	Scan time

BLOCK: 17 DESIGN CORRECTION



REFERENCE NICKNAME	REFERENCE DESCRIPTION	REFERENCE NICKNAME	REFERENCE DESCRIPTION
%M0394	Clock shift volume bits	%S0007 ALW_ON	
%R0272	Repeat length shift register		

BLOCK: 17 DESIGN CORRECTION

```
|[  START LD SUBROUTINE   BLK18   ]
|
|[     VARIABLE DECLARATIONS      ]
|
|[   START OF SUBROUTINE LOGIC    ]
|
| (*************************************************************************)
| (* Filling sequence                                                      *)
| (*************************************************************************)
|
|A310-11                                                                    << RUNG 5  STEP #0003 >>
|%Q0107  +-----+                                                  %M0071
+--]/[---+ TMR +-----------------------------------------------------( )-- (* LRF valve moving time           *)
|        |0.10s|
|        |     |
| CONST -+PV   |
| +00020 |     |
|        +-----+
|
|        %R0512
|
|         POS50                                                             << RUNG 6  STEP #0006 >>
|%M0071  %M0054  +-----+                                          %T0015
+--] [-----]/[---+ GE_ |+-------------------------------------------------( )-- (* Delay filling valve start       *)
|                | INT ||
|                |     ||
|        %R0500 -+I1  Q++
|                |     |
|        %R0796 -+I2   |
|                +-----+
|
| (*************************************************************************)
| (* Filling sector calculating to have the design OK in filling time      *)
| (*************************************************************************)
|
| POS70                                                                     << RUNG 8  STEP #0011 >>
|%M0056  +-----+
+--] [---+ TMR +-
|        |0.10s|
|        |     |
| CONST -+PV   |
| +00000 |     |
|        +-----+
|
|        %R0755
|
|                                                                 CHU_EN+  << RUNG 9  STEP #0013 >>
|%M0510                                                           %T0197
+--] [-----------------------------------------------------------------(^)-- (* Drop chute enable pulse        *)
|
|A310-27 FILLATC  POS70                                           FILLATC  << RUNG 10  STEP #0015 >>
|%I0119  %M0245  %M0056  +-----+                +-----+           %M0245
+--] [-----]/[-----] [---+MOVE_+----------------+ ADD_+-----------(S)-- (* Filling OK latch done           *)
|                        | INT |                | INT |
|                        |     |                |     |
|                %R0755 -+IN  Q+-%R0478  %R0478 -+I1  Q+-%R0478
|                        | LEN |                |     |
|                        |00001|                |     |
|                        |     |                |     |
|                        +-----+         CONST -+I2   |
|                                        +00000 +-----+
|
```

REFERENCE	NICKNAME	REFERENCE DESCRIPTION	REFERENCE	NICKNAME	REFERENCE DESCRIPTION
%M0071		LRF valve moving time	%R0796		A-valve delay present sec x 0.1
%M0510		Drop chute enable	%Q0107	A310-11	FCS cleaning/open signal
%T0015		Delay filling valve start	%I0119	A310-27	FCS filling OK
%R0478		Filling time	%T0197	CHU_EN+	Drop chute enable pulse
%R0500		Start seq. for prod.	%M0245	FILLATC	Filling OK latch done
%R0512		LRF valve moving time	%M0054	POS50	Machine ladder pos 50
%R0755		Elapsed time from POS70	%M0056	POS70	Machine ladder pos 70

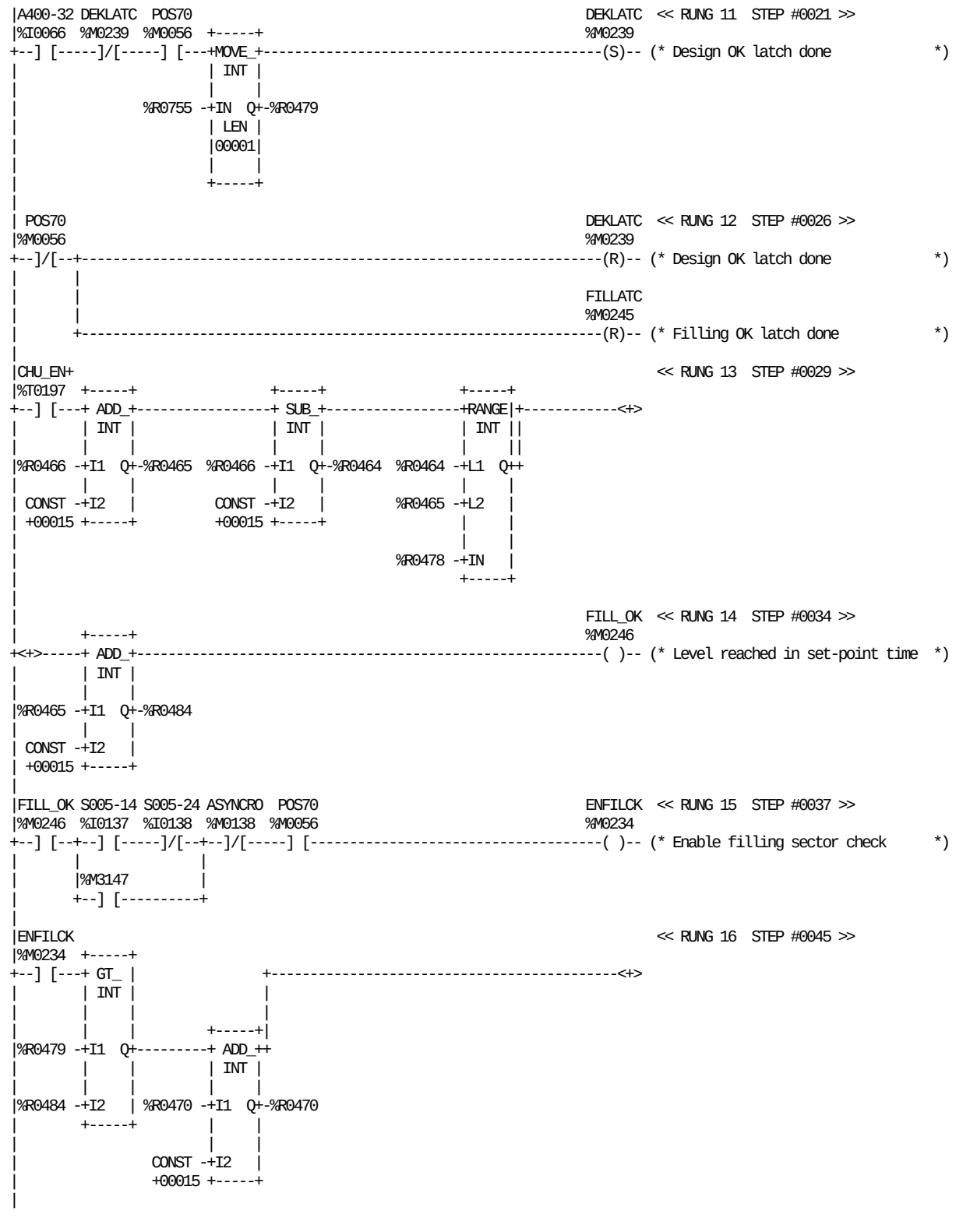

REFERENCE	NICKNAME	REFERENCE DESCRIPTION
%M3147		Normal filling from TPOP
%R0464		Filling start time min.
%R0465		Filling start time max.
%R0466		Filling set-point start time
%R0470		Angle fill start current
%R0478		Filling time
%R0479		Dekor time
%R0484		Max. Dekor start time
%R0755		Elapsed time from POS70
%I0066	A400-32	Design ok

REFERENCE	NICKNAME	REFERENCE DESCRIPTION
%M0138	ASYNCRO	Asyncronous filling
%T0197	CHU_EN+	Drop chute enable pulse
%M0239	DEKLATC	Design OK latch done
%M0234	ENFILCK	Enable filling sector check
%M0245	FILLATC	Filling OK latch done
%M0246	FILL_OK	Level reached in set-point time
%M0056	POS70	Machine ladder pos 70
%I0137	S005-14	FCS normal filling
%I0138	S005-24	FCS Pre-filling

```
|       +-----+                                                    << RUNG 17  STEP #0049 >>
+<+>-----+ MOD_+-
|        | INT |
|        |     |
|%R0470 -+I1  Q+-%R0470
|        |     |
| CONST -+I2   |
| +00128 +-----+
|
|ENFILCK                                                           << RUNG 18  STEP #0051 >>
|%M0234  +-----+
+--] [---+ LT_ |               +-------------------------------------------<+>
|        | INT |               |
|        |     |               |
|        |     |        +-----+|
|%R0479 -+I1  Q+--------+ ADD_++
|        |     |         | INT |
|        |     |         |     |
|%R0466 -+I2   | %R0470 -+I1  Q+-%R0470
|        +-----+         |     |
|                        |     |
|                CONST -+I2   |
|                +00113 +-----+
|
|       +-----+                                                    << RUNG 19  STEP #0055 >>
+<+>-----+ MOD_+-
|        | INT |
|        |     |
|%R0470 -+I1  Q+-%R0470
|        |     |
| CONST -+I2   |
| +00128 +-----+
|
|CHU_EN+ FILL_OK                                          FILSYNC  << RUNG 20  STEP #0057 >>
|%T0197  %M0246  %M0093  %M0432                           %M0233
+--] [-----]/[-----]/[-----]/[--+-----------------------------------(R)-- (* Level synchronized              *)
|                               |
|CHGPROD                        |
|%M0228                         |
+--] [---------------------------+
|
|CHU_EN+ FILL_OK                                          FILSYNC  << RUNG 21  STEP #0063 >>
|%T0197  %M0246                                           %M0233
+--] [-----] [-------------------------------------------------------------(S)-- (* Level synchronized              *)
|
| (*****************************************************************************)
| (* FILLING ANGLE DETECTION                                                   *)
| (*****************************************************************************)
|
|DESIGNP  POS60                                                    << RUNG 23  STEP #0067 >>
|%T0027  %M0055  +-----+                +-----+
+--] [-----] [---+ SUB_+----------------+ SUB_+-----------------------------<+>
|                | INT |                | INT |
|                |     |                |     |
|                |     |        SECTOR  |     |
|       %R0470 -+I1  Q+-%R0482  %R0100 -+I1  Q+-%R0483
|                |     |                |     |
|       %R0481 -+I2   |        %R0470 -+I2   |
|                +-----+                +-----+
|
```

REFERENCE	NICKNAME	REFERENCE DESCRIPTION	REFERENCE	NICKNAME	REFERENCE DESCRIPTION
%M0093		Manual stop filling	%M0228	CHGPROD	Product changed (select. switch)
%M0432		2.nd fill start attempt	%T0197	CHU_EN+	Drop chute enable pulse
%R0466		Filling set-point start time	%T0027	DESIGNP	Output design puls
%R0470		Angle fill start current	%M0234	ENFILCK	Enable filling sector check
%R0479		Dekor time	%M0246	FILL_OK	Level reached in set-point time
%R0481		Previous BC angle sector	%M0233	FILSYNC	Level synchronized
%R0482		Filling angle-Prev. angle dist	%M0055	POS60	Machine ladder pos 60
%R0483		Actual angle-Filling angle dist.	%R0100	SECTOR	Angle sector 0-127

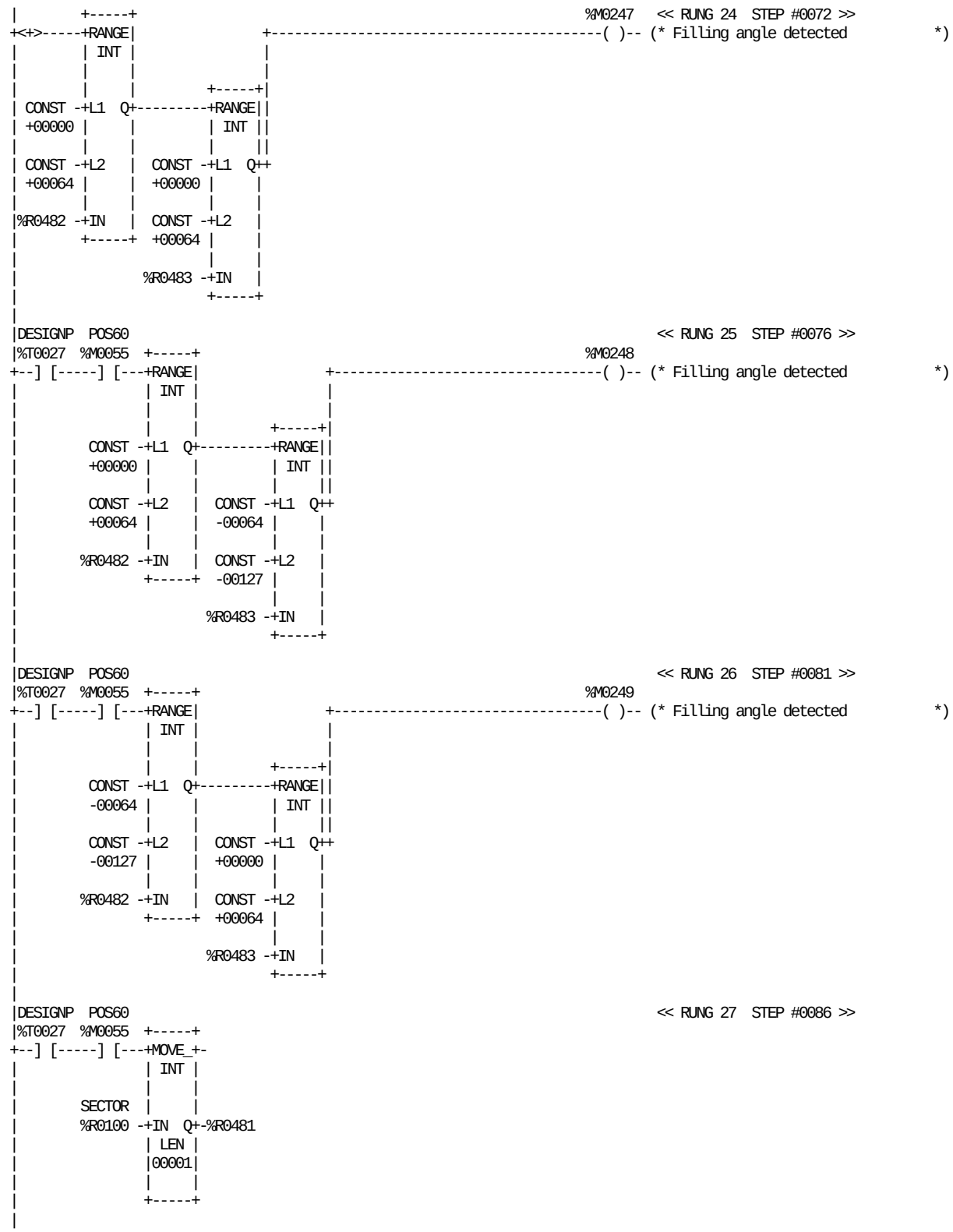

REFERENCE NICKNAME	REFERENCE DESCRIPTION	REFERENCE NICKNAME	REFERENCE DESCRIPTION
%M0247	Filling angle detected	%R0483	Actual angle-Filling angle dist.
%M0248	Filling angle detected	%T0027 DESIGNP	Output design puls
%M0249	Filling angle detected	%M0055 POS60	Machine ladder pos 60
%R0481	Previous BC angle sector	%R0100 SECTOR	Angle sector 0-127
%R0482	Filling angle-Prev. angle dist		

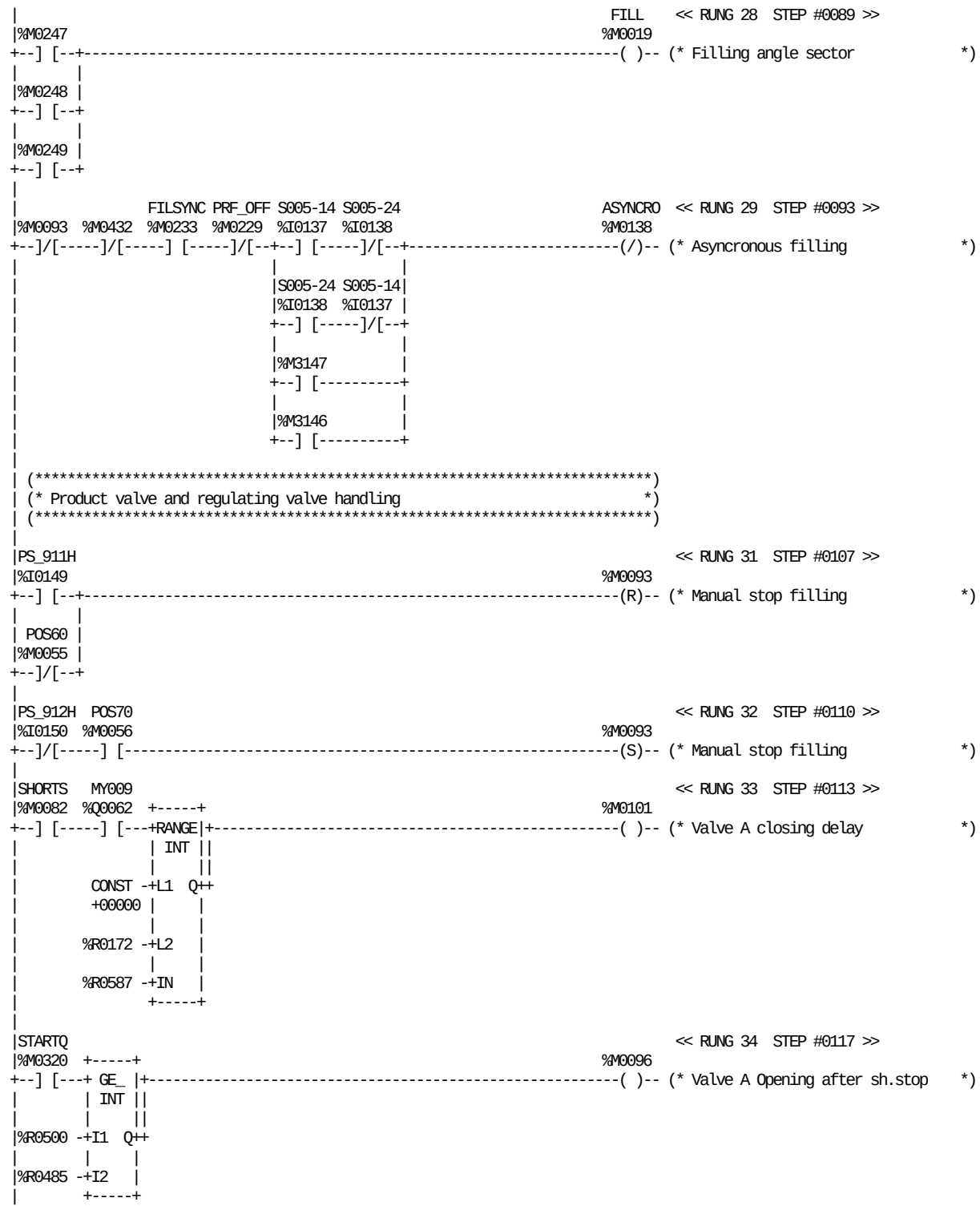

REFERENCE NICKNAME	REFERENCE DESCRIPTION	REFERENCE NICKNAME	REFERENCE DESCRIPTION
%M0093	Manual stop filling	%M0138 ASYNCRO	Asyncronous filling
%M0096	Valve A Opening after sh.stop	%M0019 FILL	Filling angle sector
%M0101	Valve A closing delay	%M0233 FILSYNC	Level synchronized
%M0247	Filling angle detected	%Q0062 MY009	Product valve (A)
%M0248	Filling angle detected	%M0055 POS60	Machine ladder pos 60
%M0249	Filling angle detected	%M0056 POS70	Machine ladder pos 70
%M0432	2.nd fill start attempt	%M0229 PRF_OFF	Prefilling condition forced OFF
%M3146	Pre-filling from TPOP	%I0149 PS_911H	Step up
%M3147	Normal filling from TPOP	%I0150 PS_912H	Step down
%R0172	A-valve close delay	%I0137 S005-14	FCS normal filling
%R0485	Auxiliary A valve open delay	%I0138 S005-24	FCS Pre-filling
%R0500	Start seq. for prod.	%M0082 SHORTS	Machine pos. short stop
%R0587	Stop conveyor	%M0320 STARTQ	Start sequenc

BLOCK: 18 FILLING SYSTEM

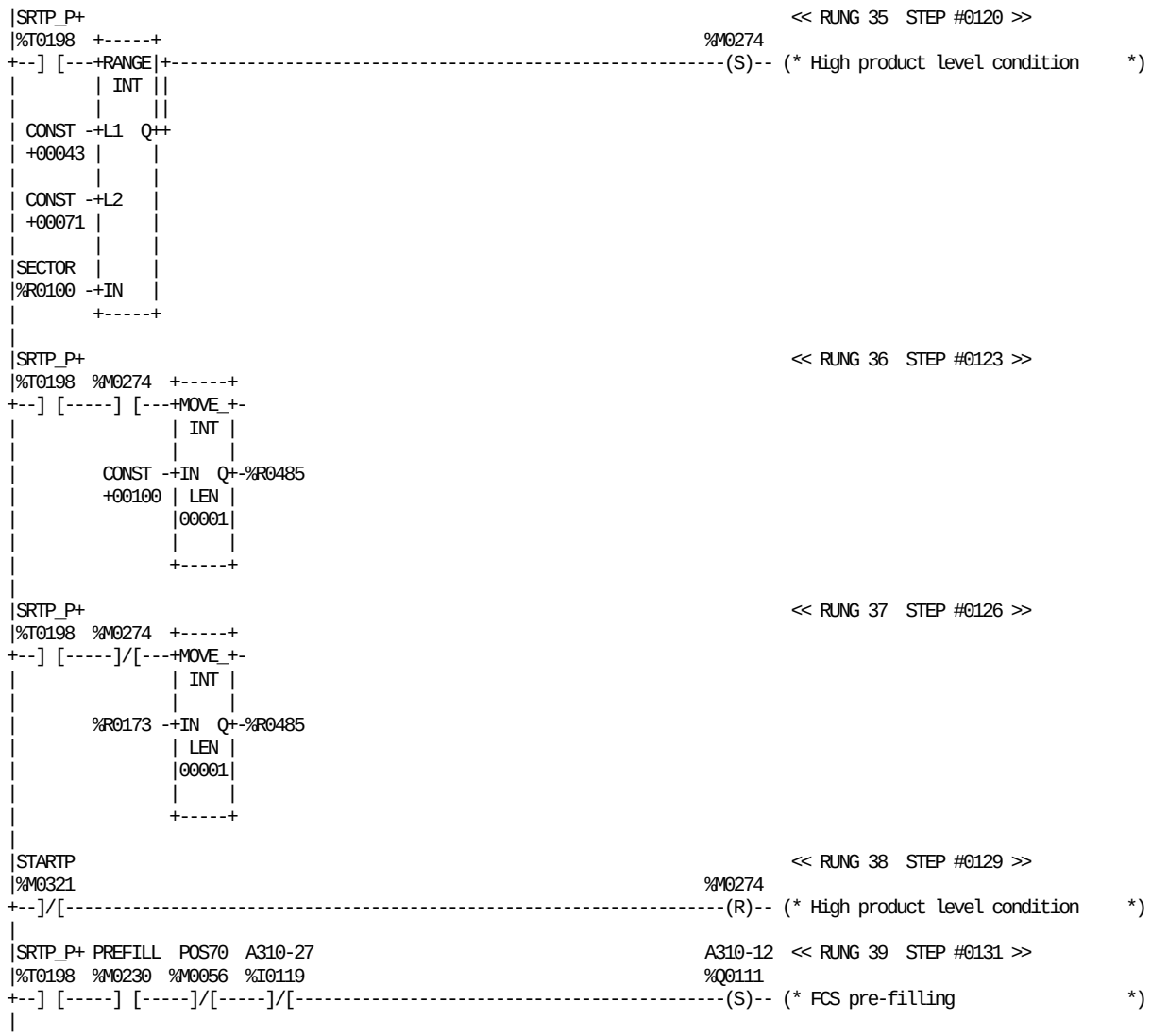

REFERENCE	NICKNAME	REFERENCE DESCRIPTION	REFERENCE	NICKNAME	REFERENCE DESCRIPTION
%M0274		High product level condition	%M0056	POS70	Machine ladder pos 70
%R0173		A-valve open delay	%M0230	PREFILL	Pre-filling selected
%R0485		Auxiliary A valve open delay	%R0100	SECTOR	Angle sector 0-127
%Q0111	A310-12	FCS pre-filling	%T0198	SRTP_P+	Pre-filling start sequence pulse
%I0119	A310-27	FCS filling OK	%M0321	STARTP	Pre-filling Start Sequence

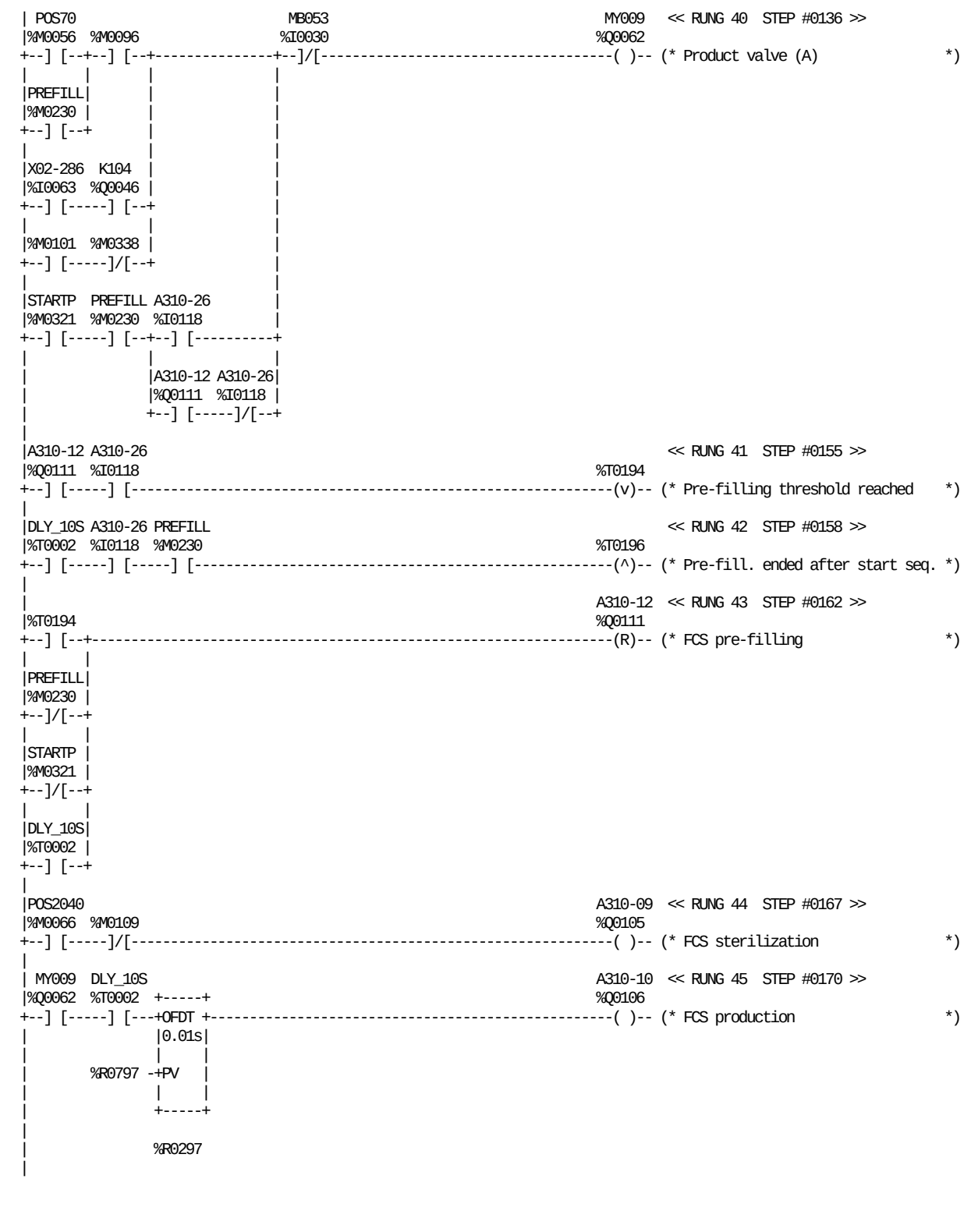

REFERENCE	NICKNAME	REFERENCE DESCRIPTION
%M0096		Valve A Opening after sh.stop
%M0101		Valve A closing delay
%M0109		Drying after spraying
%M0338		M.Motor disable & keep clutch
%T0194		Pre-filling threshold reached
%T0196		Pre-fill. ended after start seq.
%R0297		LRF Closing delay
%R0797		LRF Closing preset
%Q0105	A310-09	FCS sterilization
%Q0106	A310-10	FCS production
%Q0111	A310-12	FCS pre-filling

REFERENCE	NICKNAME	REFERENCE DESCRIPTION
%I0118	A310-26	FCS Bottom position floater
%T0002	DLY_10S	Start sequence delay 10 sec.
%Q0046	K104	Signal to cip
%I0030	MB053	Steril air (B) valve, position
%Q0062	MY009	Product valve (A)
%M0066	POS2040	Machine ladder pos 20-40
%M0056	POS70	Machine ladder pos 70
%M0230	PREFILL	Pre-filling selected
%M0321	STARTP	Pre-filling Start Sequence
%I0063	X02-286	Clean through production valve

BLOCK: 18 FILLING SYSTEM

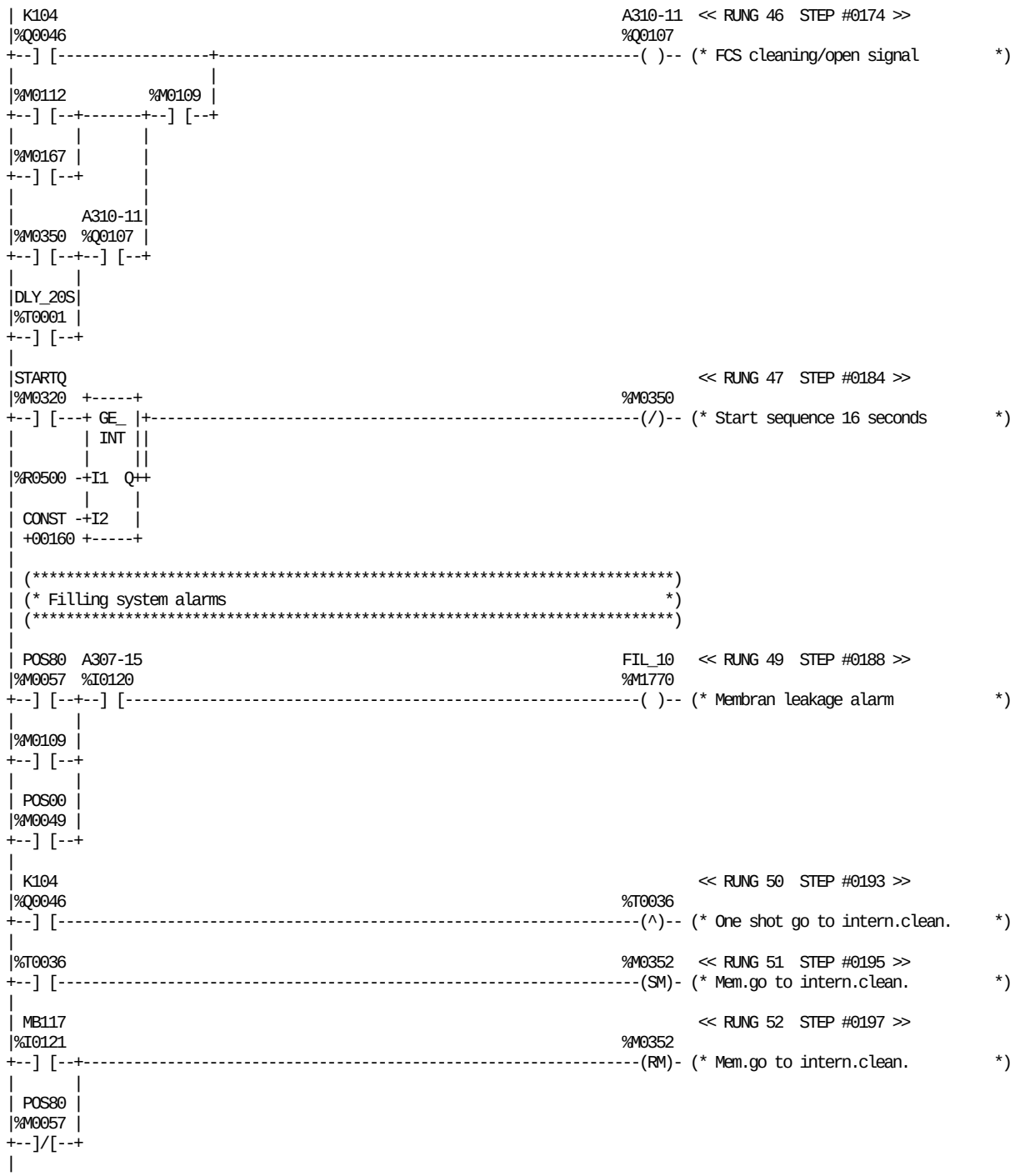

REFERENCE	NICKNAME	REFERENCE DESCRIPTION	REFERENCE	NICKNAME	REFERENCE DESCRIPTION
%M0109		Drying after spraying	%Q0107	A310-11	FCS cleaning/open signal
%M0112		End drying P+	%T0001	DLY_20S	Start sequence delay 20 sec.
%M0167		LRF valve opening conditions	%M1770	FIL_10	Membran leakage alarm
%M0350		Start sequence 16 seconds	%Q0046	K104	Signal to cip
%M0352		Mem.go to intern.clean.	%I0121	MB117	Regulat valve open, position
%T0036		One shot go to intern.clean.	%M0049	POS00	Ladder pos 00
%R0500		Start seq. for prod.	%M0057	POS80	Machine ladder pos 80
%I0120	A307-15	Membran leakage regulating valve	%M0320	STARTQ	Start sequenc

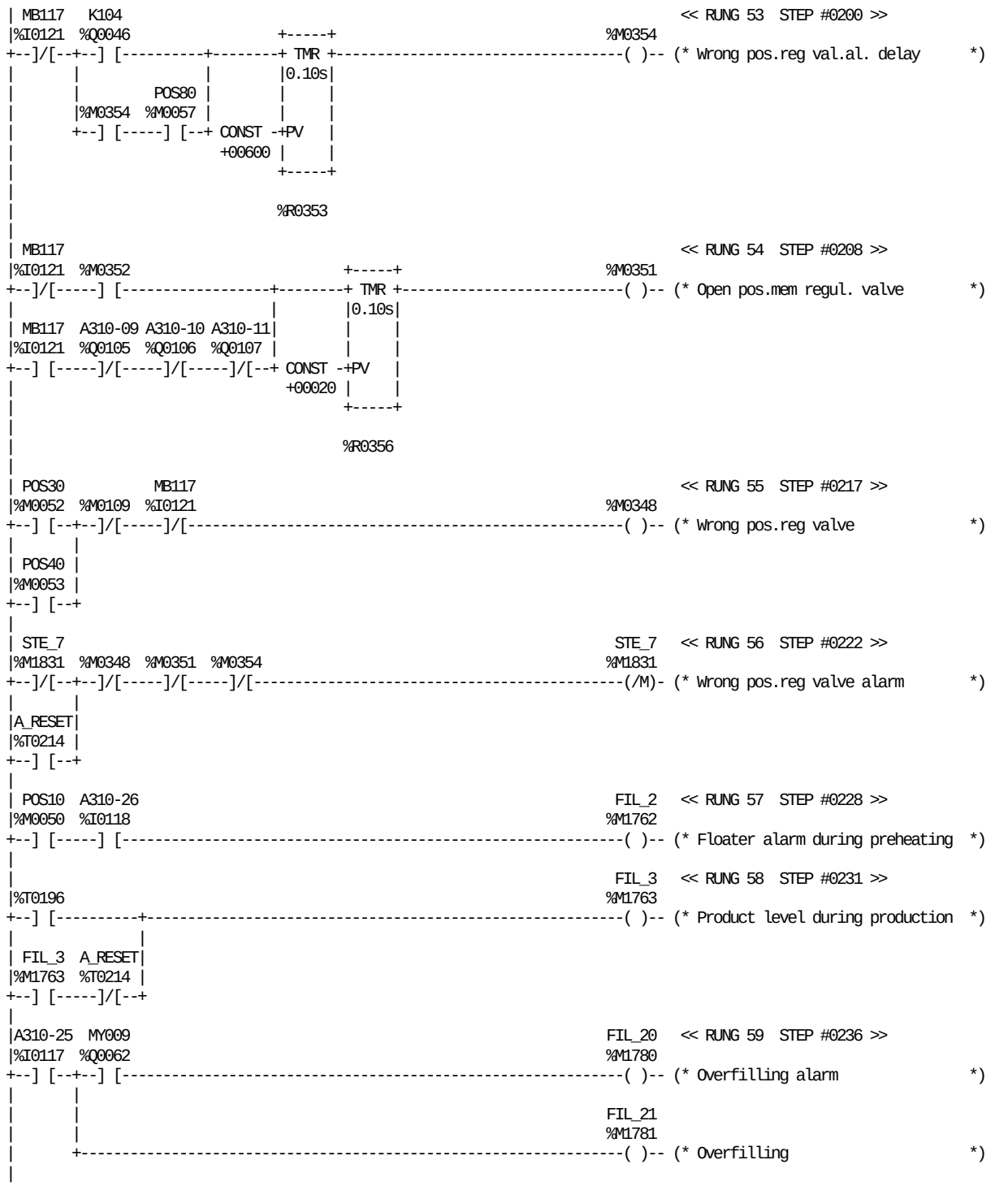

REFERENCE	NICKNAME	REFERENCE DESCRIPTION	REFERENCE	NICKNAME	REFERENCE DESCRIPTION
%M0109		Drying after spraying	%T0214	A_RESET	Pulse+ reset A-alarm lock
%M0348		Wrong pos.reg valve	%M1762	FIL_2	Floater alarm during preheating
%M0351		Open pos.mem regul. valve	%M1780	FIL_20	Overfilling alarm
%M0352		Mem.go to intern.clean.	%M1781	FIL_21	Overfilling
%M0354		Wrong pos.reg val.al. delay	%M1763	FIL_3	Product level during production
%T0196		Pre-fill. ended after start seq.	%Q0046	K104	Signal to cip
%R0353		Delay wrong pos.reg val.al.	%I0121	MB117	Regulat valve open, position
%R0356		Delay open pos.reg valve	%Q0062	MY009	Product valve (A)
%Q0105	A310-09	FCS sterilization	%M0050	POS10	Ladder pos 10
%Q0106	A310-10	FCS production	%M0052	POS30	Ladder pos 30
%Q0107	A310-11	FCS cleaning/open signal	%M0053	POS40	Machine ladder pos 40
%I0117	A310-25	FCS overfilling alarm	%M0057	POS80	Machine ladder pos 80
%I0118	A310-26	FCS Bottom position floater	%M1831	STE_7	Wrong pos.reg valve alarm

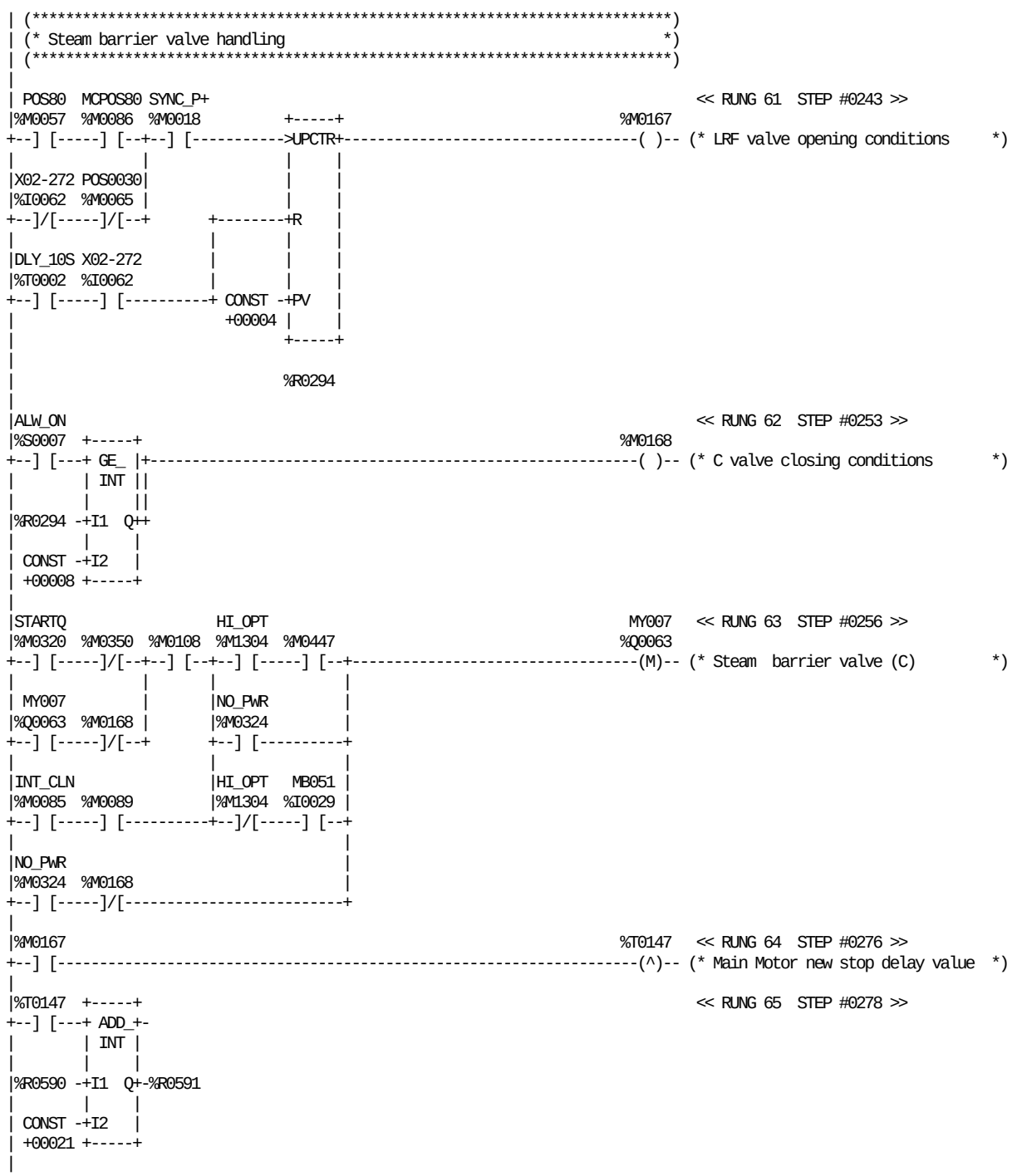

REFERENCE	NICKNAME	REFERENCE DESCRIPTION
%M0089		Clean steam barrier space
%M0108		Spray full filled
%M0167		LRF valve opening conditions
%M0168		C valve closing conditions
%M0350		Start sequence 16 seconds
%M0447		Product pipe in position
%T0147		Main Motor new stop delay value
%R0294		Emptying tube
%R0590		Stop delay main motor
%R0591		PV Stop delay main motor
%S0007	ALW_ON	
%T0002	DLY_10S	Start sequence delay 10 sec.

REFERENCE	NICKNAME	REFERENCE DESCRIPTION
%M1304	HI_OPT	PLMS, Option H.I.
%M0085	INT_CLN	Machine pos internal cleaning
%I0029	MB051	Product pipe, position
%M0086	MCPOS80	Machine in pos.80 for >2 min
%Q0063	MY007	Steam barrier valve (C)
%M0324	NO_PWR	Power failure
%M0065	POS0030	Machine ladder pos 00-30
%M0057	POS80	Machine ladder pos 80
%M0320	STARTQ	Start sequenc
%M0018	SYNC_P+	Drop chute out syncro. value P+
%I0062	X02-272	Product at machine/prod. stop

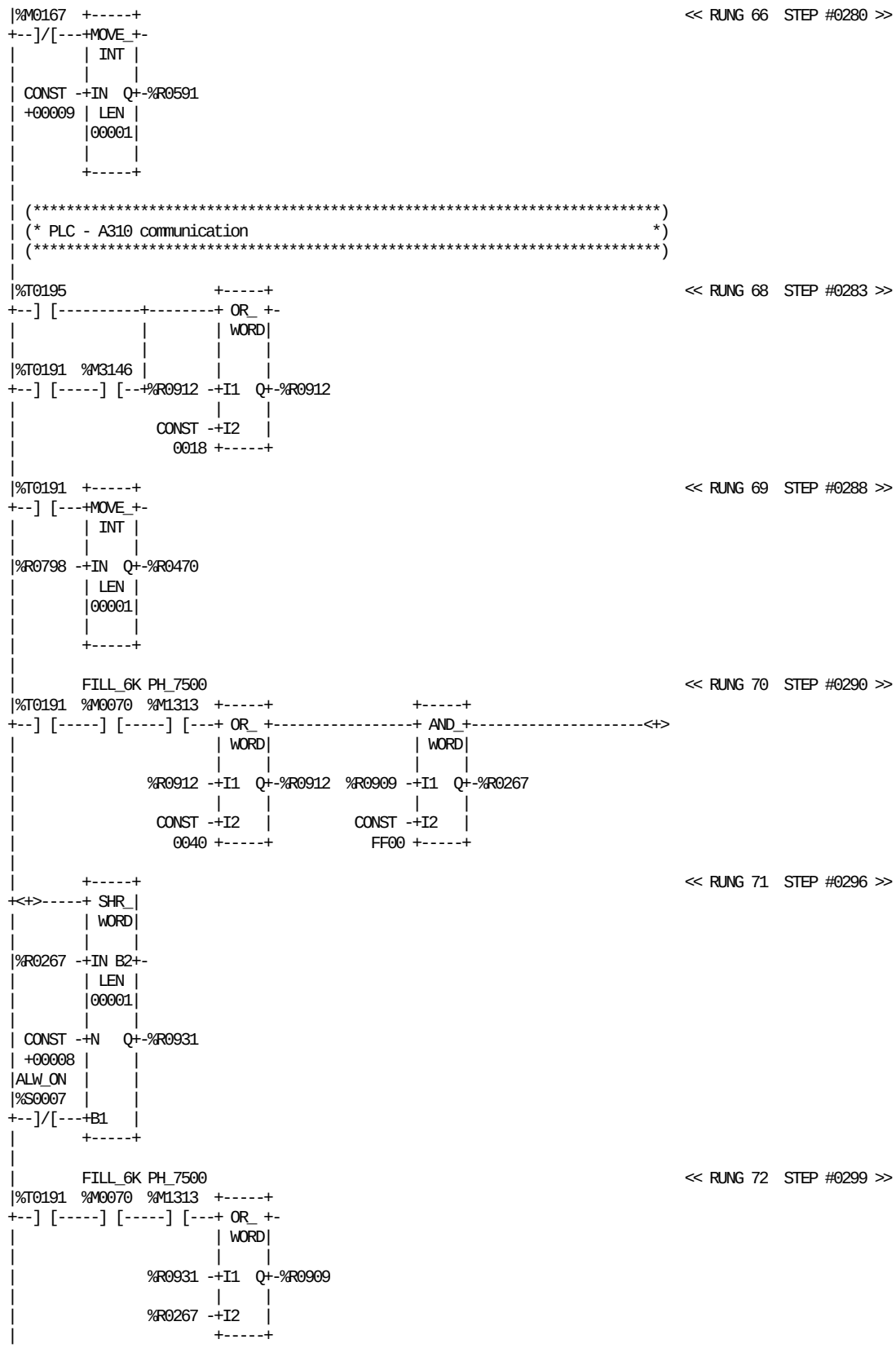

<< RUNG 66 STEP #0280 >>

<< RUNG 68 STEP #0283 >>

<< RUNG 69 STEP #0288 >>

<< RUNG 70 STEP #0290 >>

<< RUNG 71 STEP #0296 >>

<< RUNG 72 STEP #0299 >>

REFERENCE	NICKNAME	REFERENCE DESCRIPTION	REFERENCE	NICKNAME	REFERENCE DESCRIPTION
%M0167		LRF valve opening conditions	%R0798		Start Flow(LSB)+Prod. Flow (MSB)
%M3146		Pre-filling from TPOP	%R0909		Filling parameters to A310
%T0191		Reset FCS parameter	%R0912		PID trigger level+bit parameter
%T0195		Pre-filling select pulse	%R0931		Filling parameters aux. register
%R0267		Filling parameters aux. register	%S0007	ALW_ON	
%R0470		Angle fill start current	%M0070	FILL_6K	Filling at reduced speed
%R0591		PV Stop delay main motor	%M1313	PH_7500	Speed at 7500 package hour

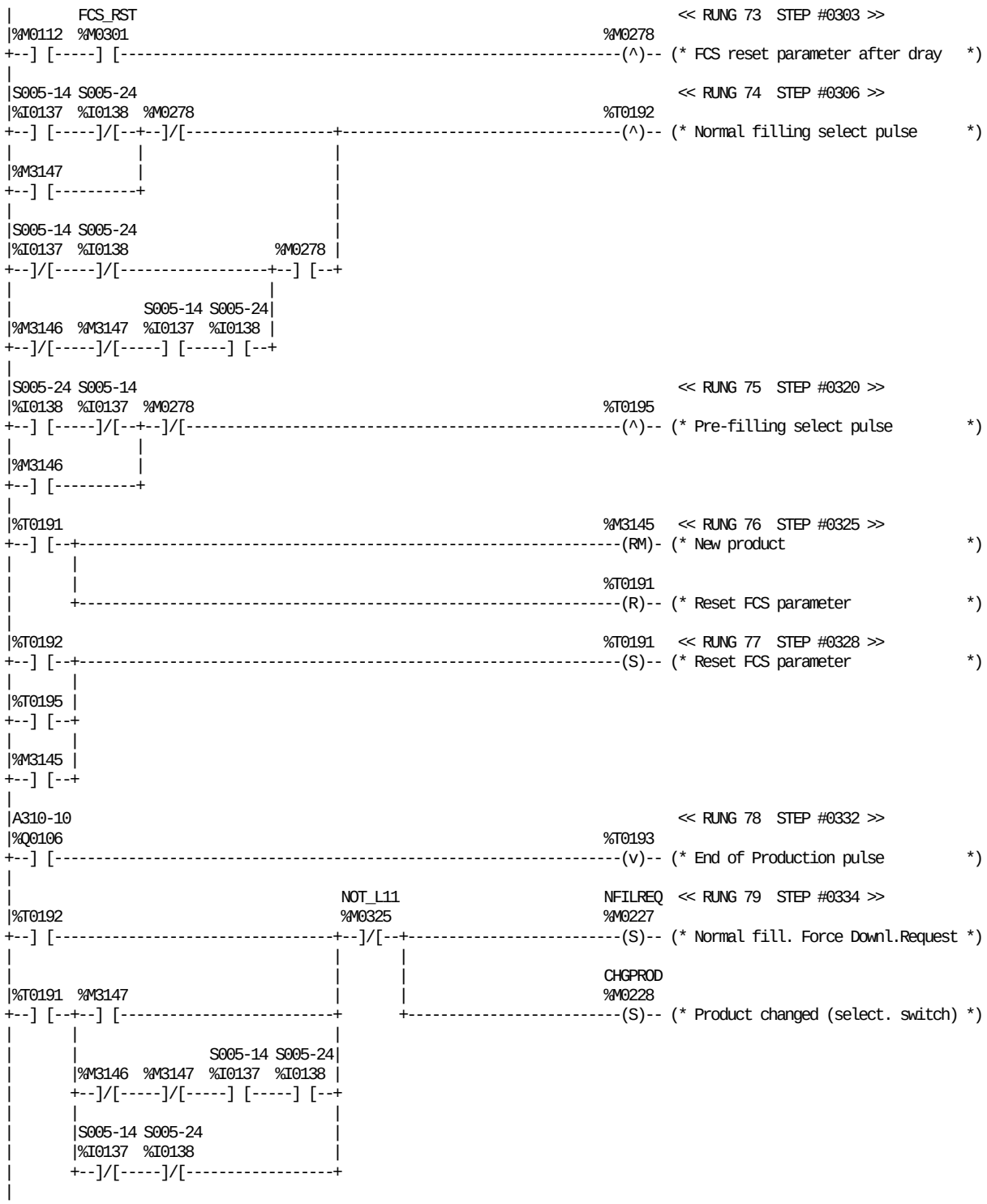

REFERENCE NICKNAME	REFERENCE DESCRIPTION	REFERENCE NICKNAME		REFERENCE DESCRIPTION
%M0112	End drying P+	%T0195		Pre-filling select pulse
%M0278	FCS reset parameter after dray	%Q0106	A310-10	FCS production
%M3145	New product	%M0228	CHGPROD	Product changed (select. switch)
%M3146	Pre-filling from TPOP	%M0301	FCS_RST	FCS rst param every produt 1=ON
%M3147	Normal filling from TPOP	%M0227	NFILREQ	Normal fill. Force Downl.Request
%T0191	Reset FCS parameter	%M0325	NOT_L11	Line L11-L10 not ok
%T0192	Normal filling select pulse	%I0137	S005-14	FCS normal filling
%T0193	End of Production pulse	%I0138	S005-24	FCS Pre-filling

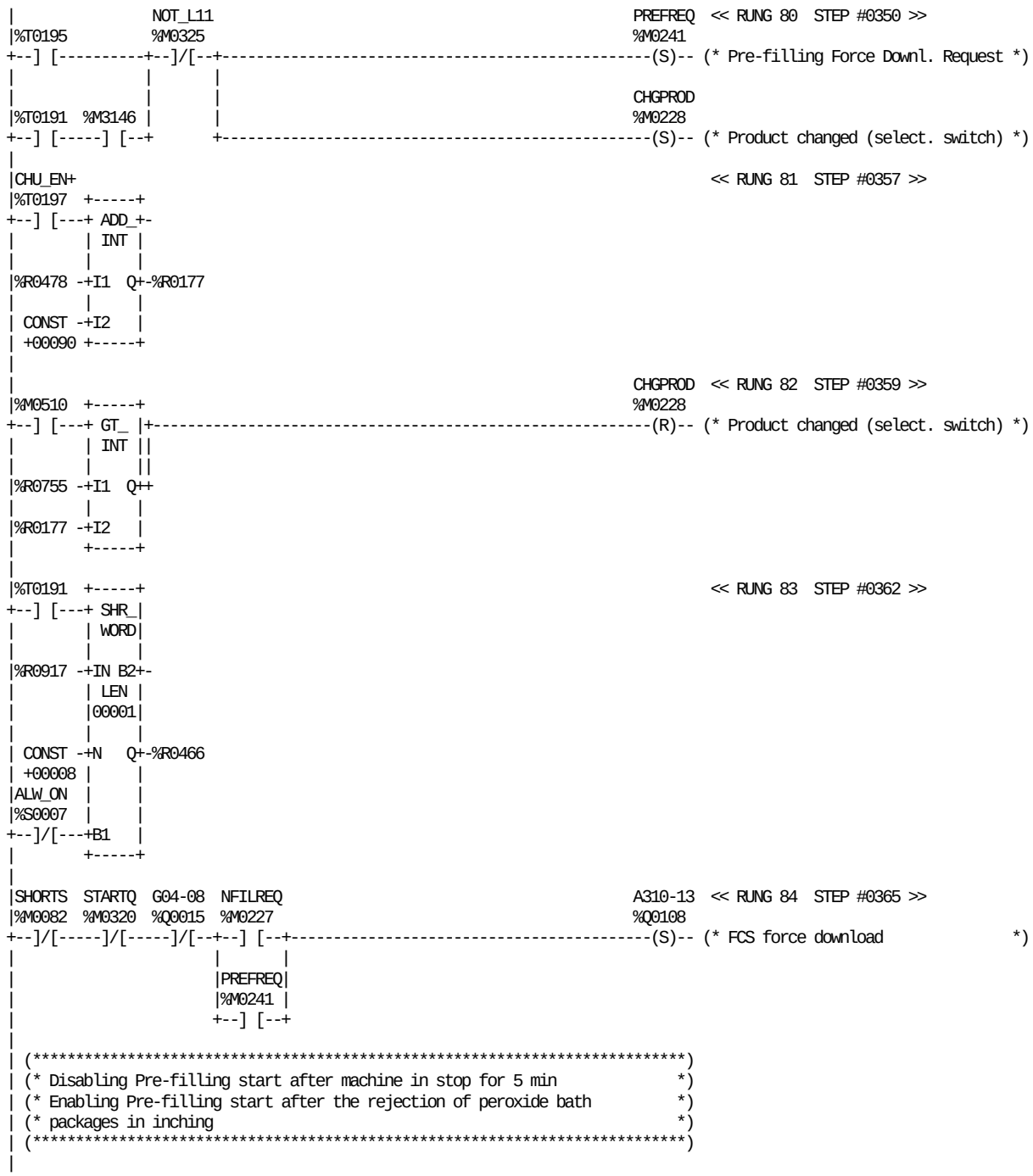

REFERENCE	NICKNAME	REFERENCE DESCRIPTION	REFERENCE	NICKNAME	REFERENCE DESCRIPTION
%M0510		Drop chute enable	%S0007	ALW_ON	
%M3146		Pre-filling from TPOP	%M0228	CHGPROD	Product changed (select. switch)
%T0191		Reset FCS parameter	%T0197	CHU_EN+	Drop chute enable pulse
%T0195		Pre-filling select pulse	%Q0015	G04-08	Main motor, high speed
%R0177		Time needed to set product. flow	%M0227	NFILREQ	Normal fill. Force Downl.Request
%R0466		Filling set-point start time	%M0325	NOT_L11	Line L11-L10 not ok
%R0478		Filling time	%M0241	PREFREQ	Pre-filling Force Downl. Request
%R0755		Elapsed time from POS70	%M0082	SHORTS	Machine pos. short stop
%R0917		Filling start time+spare	%M0320	STARTQ	Start sequenc
%Q0108	A310-13	FCS force download			

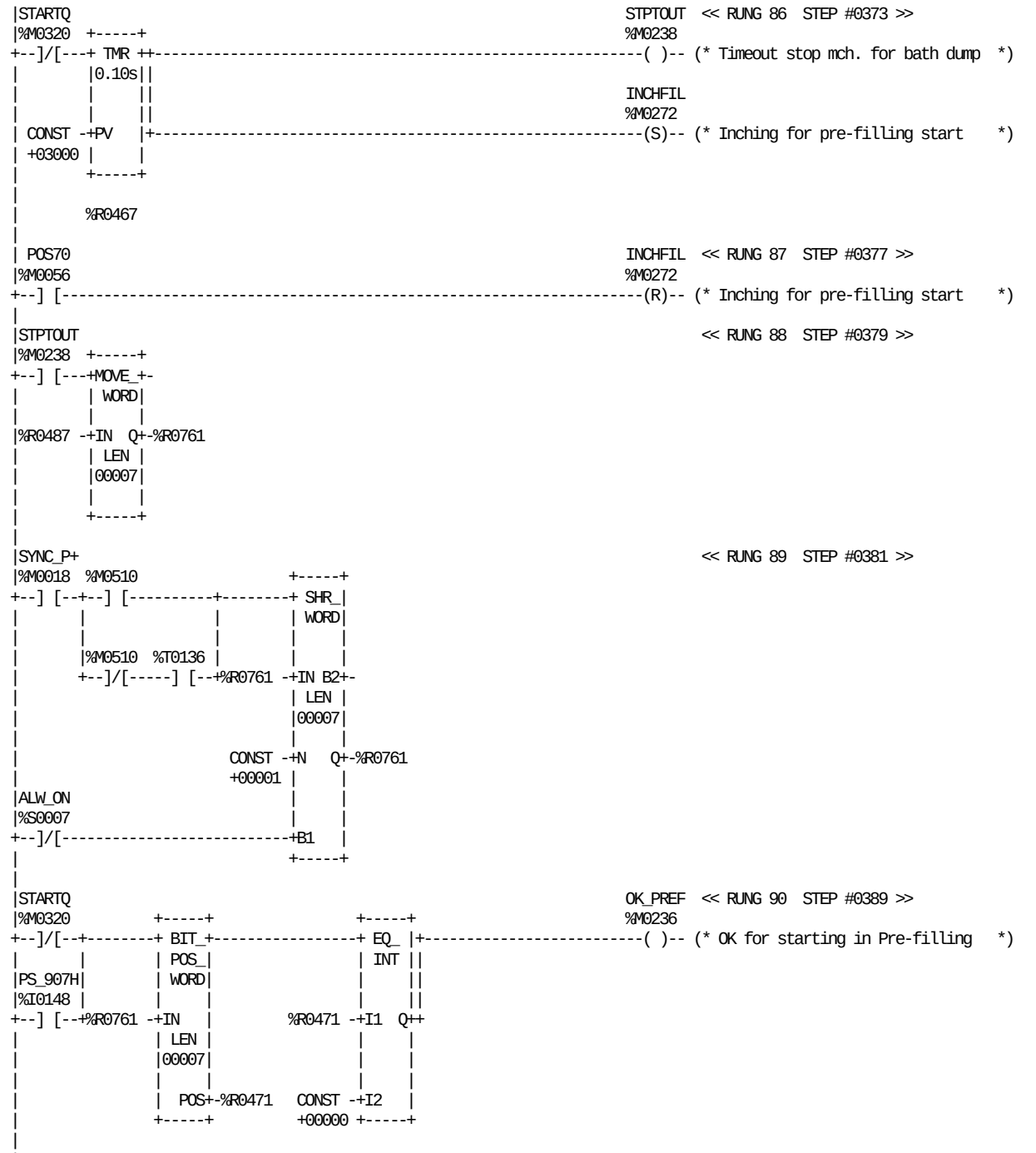

REFERENCE	NICKNAME	REFERENCE DESCRIPTION	REFERENCE	NICKNAME	REFERENCE DESCRIPTION
%M0093		Manual stop filling	%M0272	INCHFIL	Inching for pre-filling start
%M0432		2.nd fill start attempt	%Q0063	MY007	Steam barrier valve (C)
%M0510		Drop chute enable	%M0236	OK_PREF	OK for starting in Pre-filling
%T0136		New Package detect	%M0054	POS50	Machine ladder pos 50
%T0193		End of Production pulse	%M0056	POS70	Machine ladder pos 70
%R0467		Mch. in stop TMR for bath dump	%M0229	PRF_OFF	Prefilling condition forced OFF
%R0471		NO package dump OK pre-filling	%I0148	PS_907H	Inching
%R0487		Package dump peroxide bath	%M0320	STARTQ	Start sequenc
%R0761		Package dump for prefill. start	%M0238	STPTOUT	Timeout stop mch. for bath dump
%S0007	ALW_ON		%M0018	SYNC_P+	Drop chute out syncro. value P+

```
|       S005-24 S005-14                                                PRF_OFF  << RUNG 92  STEP #0402 >>
|%M0093  %I0138  %I0137                                                %M0229
+--] [--+--] [-----]/[--+-------------------------------------------------(S)-- (* Prefilling condition forced OFF  *)
|       |              |
| MY007 |              |
|%Q0063 |%M3146        |
+--]/[--+--] [----------+
|       |
|%M0432 |
+--] [--+
|       |
|%T0196 |
+--] [--+
|       |
|STPTOUT|
|%M0238 |
+--] [--+
|       |
|FIL_21 |
|%M1781 |
+--] [--+
|
|NFILREQ A310-28 A310-13                                               EN_PREF  << RUNG 93  STEP #0413 >>
|%M0227  %I0125  %Q0108                                                %M0235
+--] [-----]/[-----] [-----------------------------------------------------(RM)- (* Pre-filling enable               *)
|
|PREFREQ A310-28 A310-13                                               EN_PREF  << RUNG 94  STEP #0417 >>
|%M0241  %I0125  %Q0108                                                %M0235
+--] [-----]/[-----] [-----------------------------------------------------(SM)- (* Pre-filling enable               *)
|
|EN_PREF A310-28 PS_907H PRF_OFF S005-24 S005-14                       PREFILL  << RUNG 95  STEP #0421 >>
|%M0235  %I0125  %I0148  %M0229  %I0138  %I0137                        %M0230
+--] [-----] [-----]/[-----]/[--+--] [-----]/[--+-------------------------( )-- (* Pre-filling selected             *)
|                              |              |
|                              |%M3146        |
|                              +--] [----------+
|
|A310-28 A310-13                                                       A310-13  << RUNG 96  STEP #0430 >>
|%I0125  %Q0108                                                        %Q0108
+--]/[-----] [--+-------------------------------------------------------(R)-- (* FCS force download               *)
|               |
|               |                                                      NFILREQ
|               |                                                      %M0227
|               +-------------------------------------------------------(R)-- (* Normal fill. Force Downl.Request *)
|               |
|               |                                                      PREFREQ
|               |                                                      %M0241
|               +-------------------------------------------------------(R)-- (* Pre-filling Force Downl. Request *)
|
| (*************************************************************************)
| (* Communication protocol                                               *)
| (*************************************************************************)
|
|       A310-14                                                                 << RUNG 98  STEP #0436 >>
|%M0162  %Q0079                                                        %M0162
+--]/[-----] [-----------------------------------------------------------( )-- (* FCS scan time                   *)
|
```

REFERENCE	NICKNAME	REFERENCE DESCRIPTION	REFERENCE	NICKNAME	REFERENCE DESCRIPTION
%M0093		Manual stop filling	%Q0063	MY007	Steam barrier valve (C)
%M0162		FCS scan time	%M0227	NFILREQ	Normal fill. Force Downl.Request
%M0432		2.nd fill start attempt	%M0230	PREFILL	Pre-filling selected
%M3146		Pre-filling from TPOP	%M0241	PREFREQ	Pre-filling Force Downl. Request
%T0196		Pre-fill. ended after start seq.	%M0229	PRF_OFF	Prefilling condition forced OFF
%Q0108	A310-13	FCS force download	%I0148	PS_907H	Inching
%Q0079	A310-14	FCS communication sys.: enable	%I0137	S005-14	FCS normal filling
%I0125	A310-28	FCS transmission OK	%I0138	S005-24	FCS Pre-filling
%M0235	EN_PREF	Pre-filling enable	%M0238	STPTOUT	Timeout stop mch. for bath dump
%M1781	FIL_21	Overfilling			

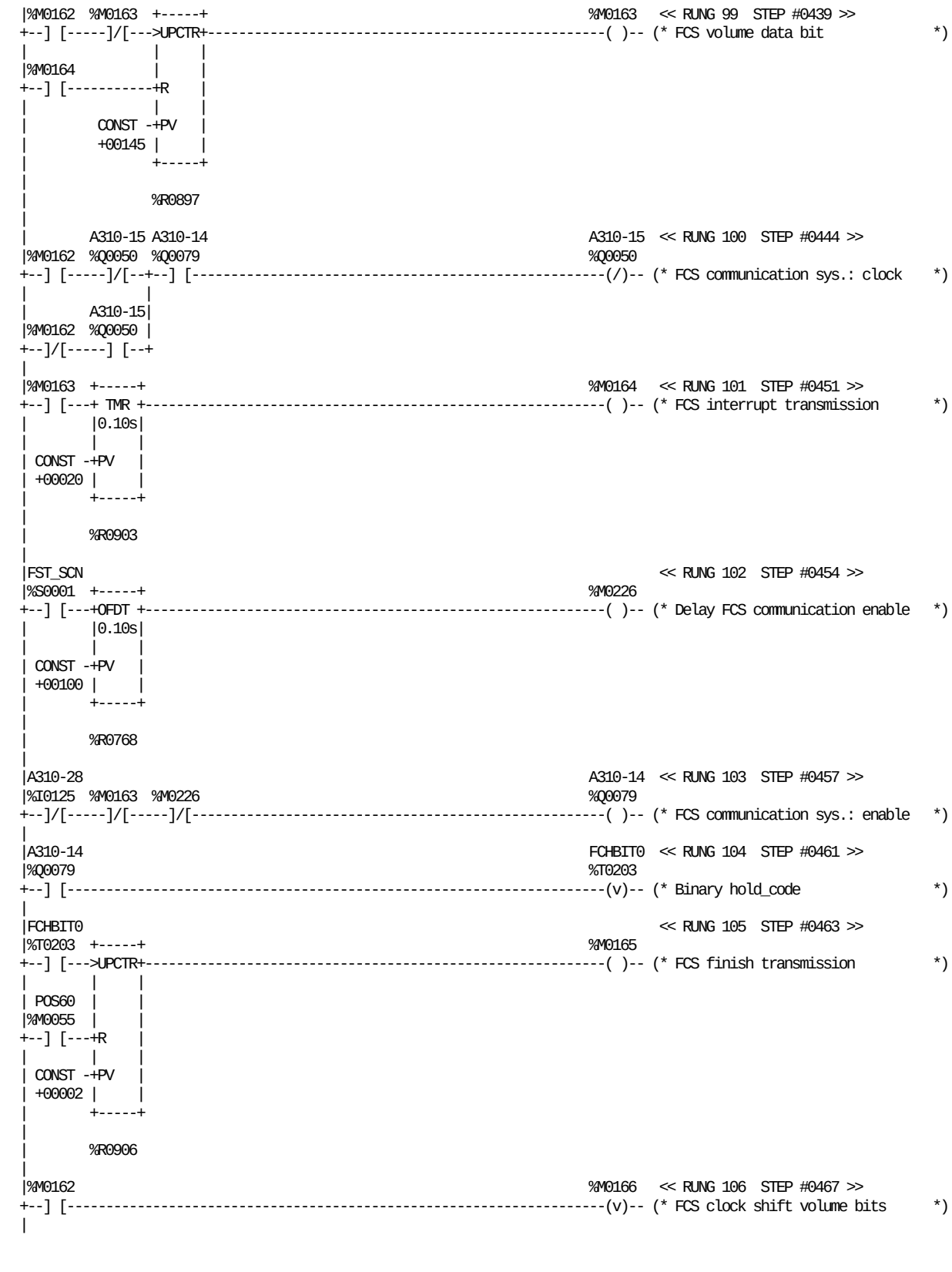

REFERENCE	NICKNAME	REFERENCE DESCRIPTION	REFERENCE	NICKNAME	REFERENCE DESCRIPTION
%M0162		FCS scan time	%R0903		FCS interrupt transmission time
%M0163		FCS volume data bit	%R0906		FCS counter two transmission
%M0164		FCS interrupt transmission	%Q0079	A310-14	FCS communication sys.: enable
%M0165		FCS finish transmission	%Q0050	A310-15	FCS communication sys.: clock
%M0166		FCS clock shift volume bits	%I0125	A310-28	FCS transmission OK
%M0226		Delay FCS communication enable	%T0203	FCHBIT0	Binary hold_code
%R0768		FCS counter bit volume data	%S0001	FST_SCN	
%R0897		FCS counter bit volume data	%M0055	POS60	Machine ladder pos 60

BLOCK: 18 FILLING SYSTEM

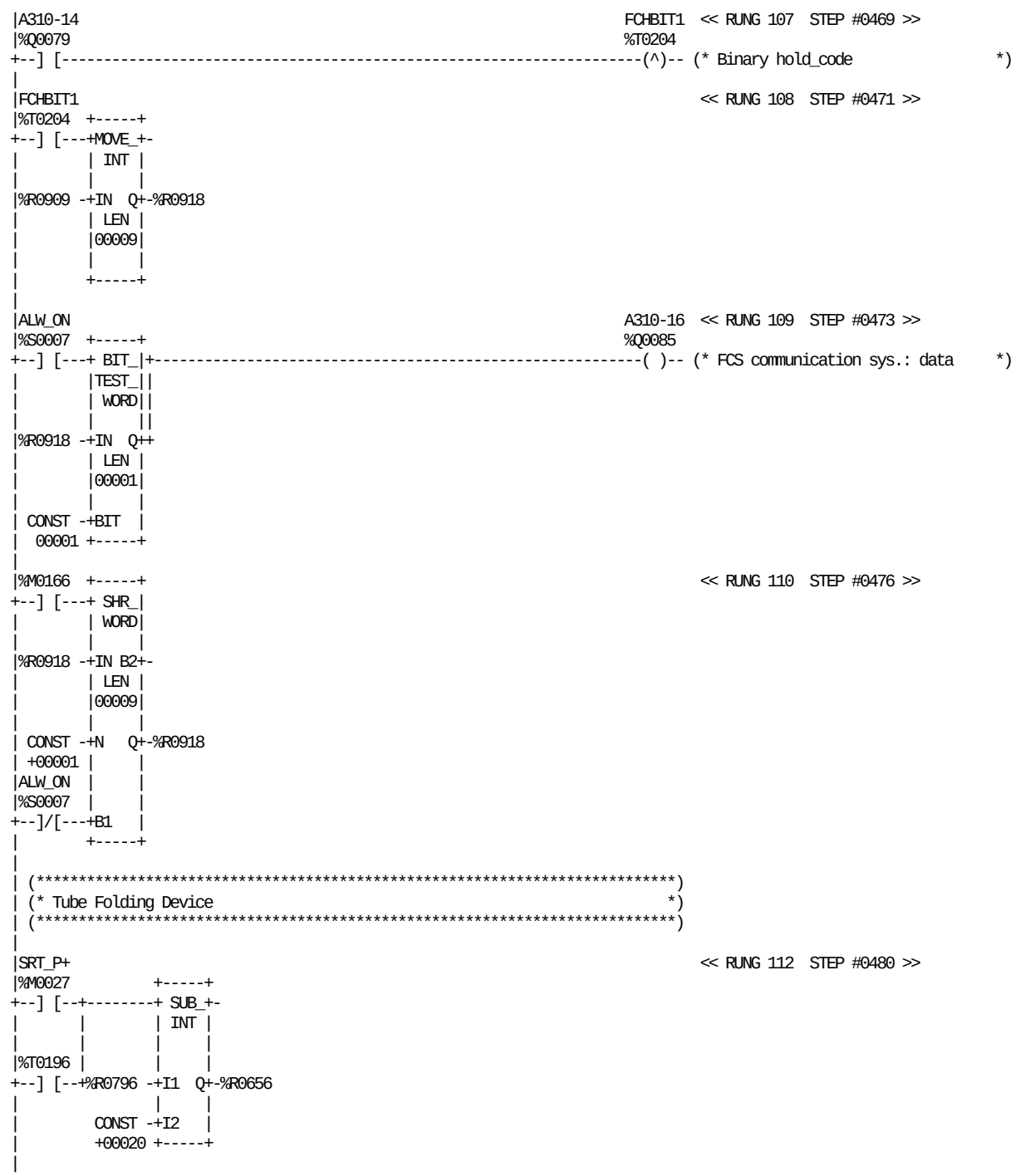

REFERENCE	NICKNAME	REFERENCE DESCRIPTION	REFERENCE	NICKNAME	REFERENCE DESCRIPTION
%M0166		FCS clock shift volume bits	%Q0079	A310-14	FCS communication sys.: enable
%T0196		Pre-fill. ended after start seq.	%Q0085	A310-16	FCS communication sys.: data
%R0656		TFD opening delay	%S0007	ALW_ON	
%R0796		A-valve delay present sec x 0.1	%T0204	FCHBIT1	Binary hold_code
%R0909		Filling parameters to A310	%M0027	SRT_P+	Start sequenc P+
%R0918		Filling param. in tx to A310			

```
|PREFILL DLY_10S                                                    << RUNG 113  STEP #0483 >>
|%M0230  %T0002  +-----+
+--] [--+--]/[---+MOVE_+-
|       |        | INT |
|SHORTS |        |     |
|%M0082 |        |     |
+--] [--+ CONST -+IN  Q+-%R0656
|         +00100 | LEN |
|                |00001|
|                |     |
|                +-----+
|
|A310-27                                                            << RUNG 114  STEP #0487 >>
|%I0119                                                    %T0232
+--] [-------------------------------------------------------------(v)-- (* Filling OK P-                  *)
|
|       PREFILL DLY_10S                                             << RUNG 115  STEP #0489 >>
|%T0232  %M0230  %T0002  %M0237  +-----+
+--] [-----] [-----] [-----]/[---+ ADD_+-
|                               | INT |
|                               |     |
|                       %R0500 -+I1  Q+-%R0656
|                               |     |
|                        CONST -+I2   |
|                        +00050 +-----+
|
| POS70  ASYNCRO A310-27                                   DISFOLD  << RUNG 116  STEP #0494 >>
|%M0056  %M0138  %I0119                                    %M0244
+--]/[-----] [--+--]/[-----------------------------------------------( )-- (* Folding device disabled        *)
|               |
|DISFOLD        |
|%M0244         |
+--] [----------+
|
|A310-27                                                    MY177   << RUNG 117  STEP #0499 >>
|%I0119  %M0237                                            %Q0007
+--]/[-----]/[-------------------------------------------------------------(SM)- (* Tube folding device            *)
|
|A310-11  POS50  DISFOLD PREFILL                            MY177   << RUNG 118  STEP #0502 >>
|%Q0107  %M0054  %M0244  %M0230         +-----+             %Q0007
+--]/[-----]/[-----]/[-----]/[--+-------+ GE_ |+-------------------------(RM)- (* Tube folding device            *)
|                               |       | INT ||
|A310-27 PREFILL                |       |     ||
|%I0119  %M0230                 |       |     ||
+--] [-----] [------------------+%R0500 -+I1  Q++
|                                       |     |
|                                %R0656 -+I2   |
|                                       +-----+
|
|       PREFILL                                                     << RUNG 119  STEP #0511 >>
|%T0232  %M0230  %T0059                                    %M0237
+--] [--+--] [-----]/[-----------------------------------------------( )-- (* TFD disabled prefilling mode    *)
|       |
|%M0237 |
+--] [--+
|
|                                                           MY177   << RUNG 120  STEP #0516 >>
|%T0059                                                    %Q0007
+--] [-------------------------------------------------------------(RM)- (* Tube folding device            *)
|
|[    END OF SUBROUTINE LOGIC     ]
|
```

REFERENCE	NICKNAME	REFERENCE DESCRIPTION
%M0237		TFD disabled prefilling mode
%T0059		Off delay high speed
%T0232		Filling OK P-
%R0500		Start seq. for prod.
%R0656		TFD opening delay
%Q0107	A310-11	FCS cleaning/open signal
%I0119	A310-27	FCS filling OK
%M0138	ASYNCRO	Asyncronous filling
%M0244	DISFOLD	Folding device disabled
%T0002	DLY_10S	Start sequence delay 10 sec.
%Q0007	MY177	Tube folding device
%M0054	POS50	Machine ladder pos 50
%M0056	POS70	Machine ladder pos 70
%M0230	PREFILL	Pre-filling selected
%M0082	SHORTS	Machine pos. short stop

```
|[  START LD SUBROUTINE   BLK19   ]
|
|[     VARIABLE DECLARATIONS      ]
|
|[   START OF SUBROUTINE LOGIC    ]
|
|SRT_P+                                                              << RUNG 4  STEP #0002 >>
|%M0027                 +-----+               +-----+
+--] [----------+--------+ OR_ +---------------+ OR_ +---------------------<+>
|               |        | WORD|               | WORD|
|               |        |     |               |     |
|%T0016  %M0300 |        |     |               |     |
+--] [-----] [--+%R0081 -+I1  Q+-%R0081  %R0082 -+I1  Q+-%R0082
|               |        |     |               |     |
|               %R0001 -+I2   |        %R0002 -+I2   |
|                       +-----+               +-----+
|
|       +-----+                +-----+                                 << RUNG 5  STEP #0009 >>
+<+>-----+ OR_ +----------------+ OR_ +-
|        | WORD|                | WORD|
|        |     |                |     |
|%R0083 -+I1  Q+-%R0083  %R0084 -+I1  Q+-%R0084
|        |     |                |     |
|%R0003 -+I2   |        %R0004 -+I2   |
|        +-----+                +-----+
|
|SRT_P+          STPTOUT                                             << RUNG 6  STEP #0012 >>
|%M0027          %M0238  +-----+               +-----+
+--] [----------+--] [---+ OR_ +---------------+ OR_ +---------------------<+>
|               |        | WORD|               | WORD|
|               |        |     |               |     |
|%T0016  %M0300 |        |     |               |     |
+--] [-----] [--+%R0081 -+I1  Q+-%R0081  %R0082 -+I1  Q+-%R0082
|                        |     |               |     |
|                %R0487 -+I2   |        %R0488 -+I2   |
|                        +-----+               +-----+
|
|       +-----+                +-----+               +-----+           << RUNG 7  STEP #0020 >>
+<+>-----+ OR_ +----------------+ OR_ +---------------+ OR_ +-
|        | WORD|                | WORD|               | WORD|
|        |     |                |     |               |     |
|%R0083 -+I1  Q+-%R0083  %R0084 -+I1  Q+-%R0084  %R0085 -+I1  Q+-%R0085
|        |     |                |     |               |     |
|%R0489 -+I2   |        %R0490 -+I2   |        %R0491 -+I2   |
|        +-----+                +-----+               +-----+
|
|SRT_P+          PT_OPT                                              << RUNG 8  STEP #0024 >>
|%M0027          %M1303  +-----+               +-----+
+--] [----------+--]/[---+ OR_ +---------------+ OR_ +---------------------<+>
|               |        | WORD|               | WORD|
|               |        |     |               |     |
|%T0016  %M0300 |        |     |               |     |
+--] [-----] [--+%R0083 -+I1  Q+-%R0083  %R0084 -+I1  Q+-%R0084
|                        |     |               |     |
|                %R0005 -+I2   |        %R0006 -+I2   |
|                        +-----+               +-----+
|
```

REFERENCE NICKNAME	REFERENCE DESCRIPTION	REFERENCE NICKNAME	REFERENCE DESCRIPTION
%M0300	Tube sealing going on	%R0084	Package dump
%T0016	Step up P+	%R0085	Package dump
%R0001	Package dump short stop	%R0487	Package dump peroxide bath
%R0002	Package dump short stop	%R0488	Package dump peroxide bath
%R0003	Package dump short stop	%R0489	Package dump peroxide bath
%R0004	Package dump short stop	%R0490	Package dump peroxide bath
%R0005	Package dump start strip seal SA	%R0491	Package dump peroxide bath
%R0006	Package dump start strip seal SA	%M1303 PT_OPT	PLMS, Option Pull-Tab
%R0081	Package dump	%M0027 SRT_P+	Start sequenc P+
%R0082	Package dump	%M0238 STPTOUT	Timeout stop mch. for bath dump
%R0083	Package dump		

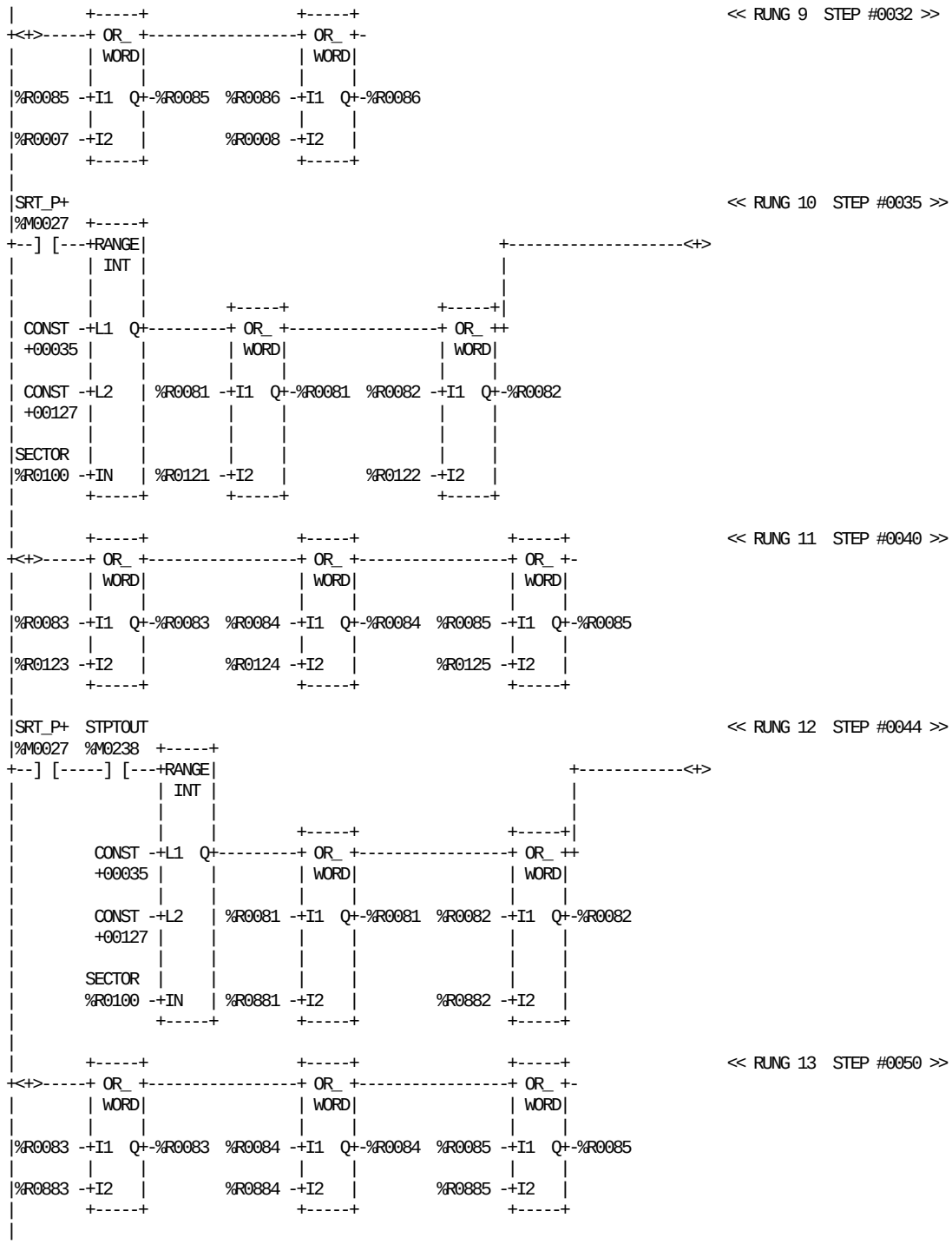

REFERENCE NICKNAME	REFERENCE DESCRIPTION
%R0007	Package dump start strip seal SA
%R0008	Package dump start strip seal SA
%R0081	Package dump
%R0082	Package dump
%R0083	Package dump
%R0084	Package dump
%R0085	Package dump
%R0086	Package dump
%R0121	1 pack.dump before short stop
%R0122	1 pack.dump before short stop
%R0123	1 pack.dump before short stop

REFERENCE NICKNAME		REFERENCE DESCRIPTION
%R0124		1 pack.dump before short stop
%R0125		1 pack.dump before short stop
%R0881		1 pack dump before short stop
%R0882		1 pack dump before short stop
%R0883		1 pack dump before short stop
%R0884		1 pack dump before short stop
%R0885		1 pack dump before short stop
%R0100	SECTOR	Angle sector 0-127
%M0027	SRT_P+	Start sequenc P+
%M0238	STPTOUT	Timeout stop mch. for bath dump

BLOCK: 19 PACKAGE DUNPING

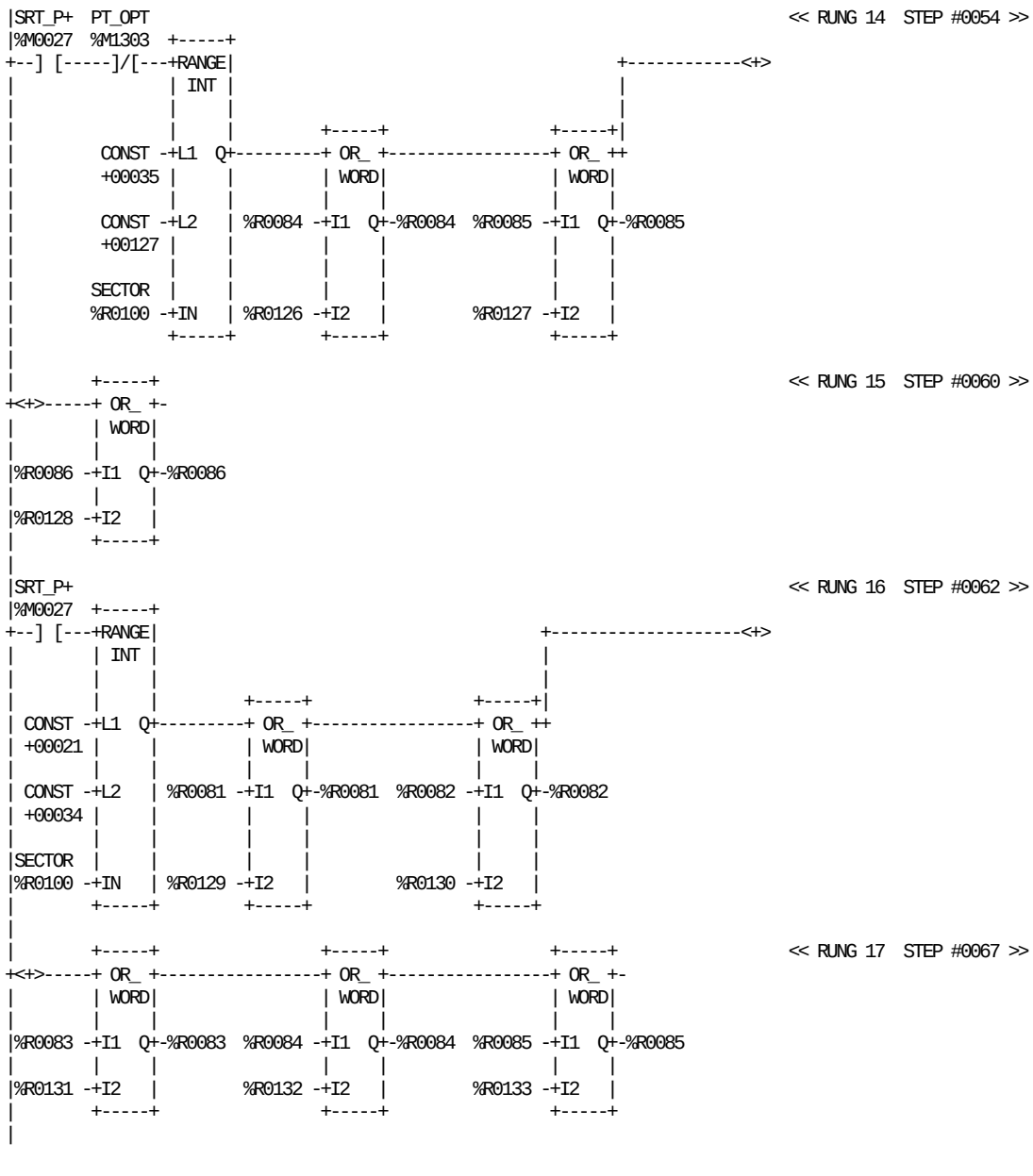

REFERENCE NICKNAME	REFERENCE DESCRIPTION	REFERENCE NICKNAME	REFERENCE DESCRIPTION
%R0081	Package dump	%R0129	1 pack.dump before short stop
%R0082	Package dump	%R0130	1 pack.dump before short stop
%R0083	Package dump	%R0131	1 pack.dump before short stop
%R0084	Package dump	%R0132	1 pack.dump before short stop
%R0085	Package dump	%R0133	1 pack.dump before short stop
%R0086	Package dump	%M1303 PT_OPT	PLMS, Option Pull-Tab
%R0126	1 pack.dump before short stop	%R0100 SECTOR	Angle sector 0-127
%R0127	1 pack.dump before short stop	%M0027 SRT_P+	Start sequenc P+
%R0128	1 pack.dump before short stop		

BLOCK: 19 PACKAGE DUNPING

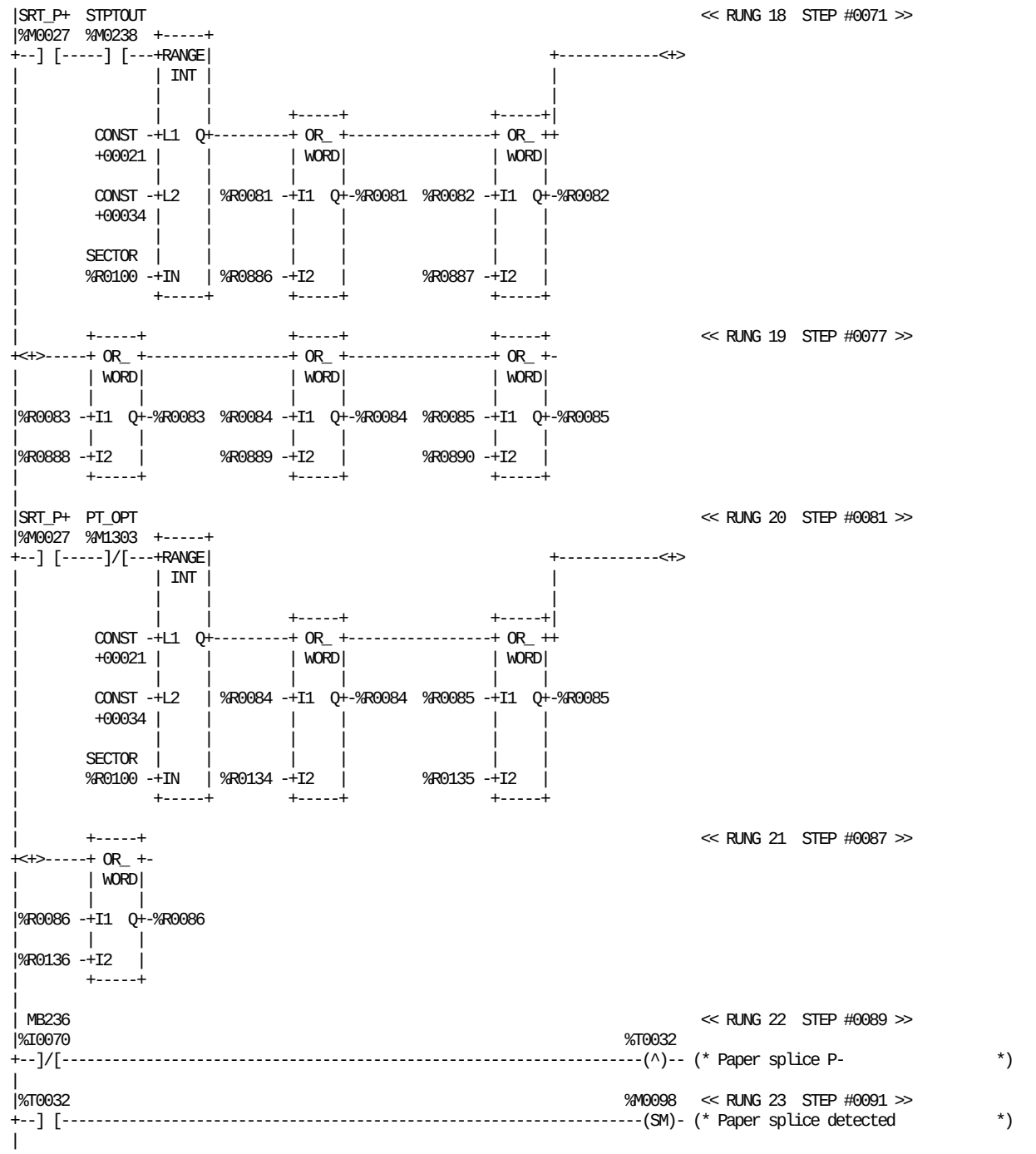

REFERENCE	NICKNAME	REFERENCE DESCRIPTION
%M0098		Paper splice detected
%T0032		Paper splice P-
%R0081		Package dump
%R0082		Package dump
%R0083		Package dump
%R0084		Package dump
%R0085		Package dump
%R0086		Package dump
%R0134		1 pack dump before short stop
%R0135		1 pack dump before short stop
%R0136		1 pack dump before short stop

REFERENCE	NICKNAME	REFERENCE DESCRIPTION
%R0886		1 pack dump before short stop
%R0887		1 pack dump before short stop
%R0888		1 pack dump before short stop
%R0889		1 pack dump before short stop
%R0890		1 pack dump before short stop
%I0070	MB236	Paper splice
%M1303	PT_OPT	PLMS, Option Pull-Tab
%R0100	SECTOR	Angle sector 0-127
%M0027	SRT_P+	Start sequenc P+
%M0238	STPTOUT	Timeout stop mch. for bath dump

BLOCK: 19 PACKAGE DUNPING

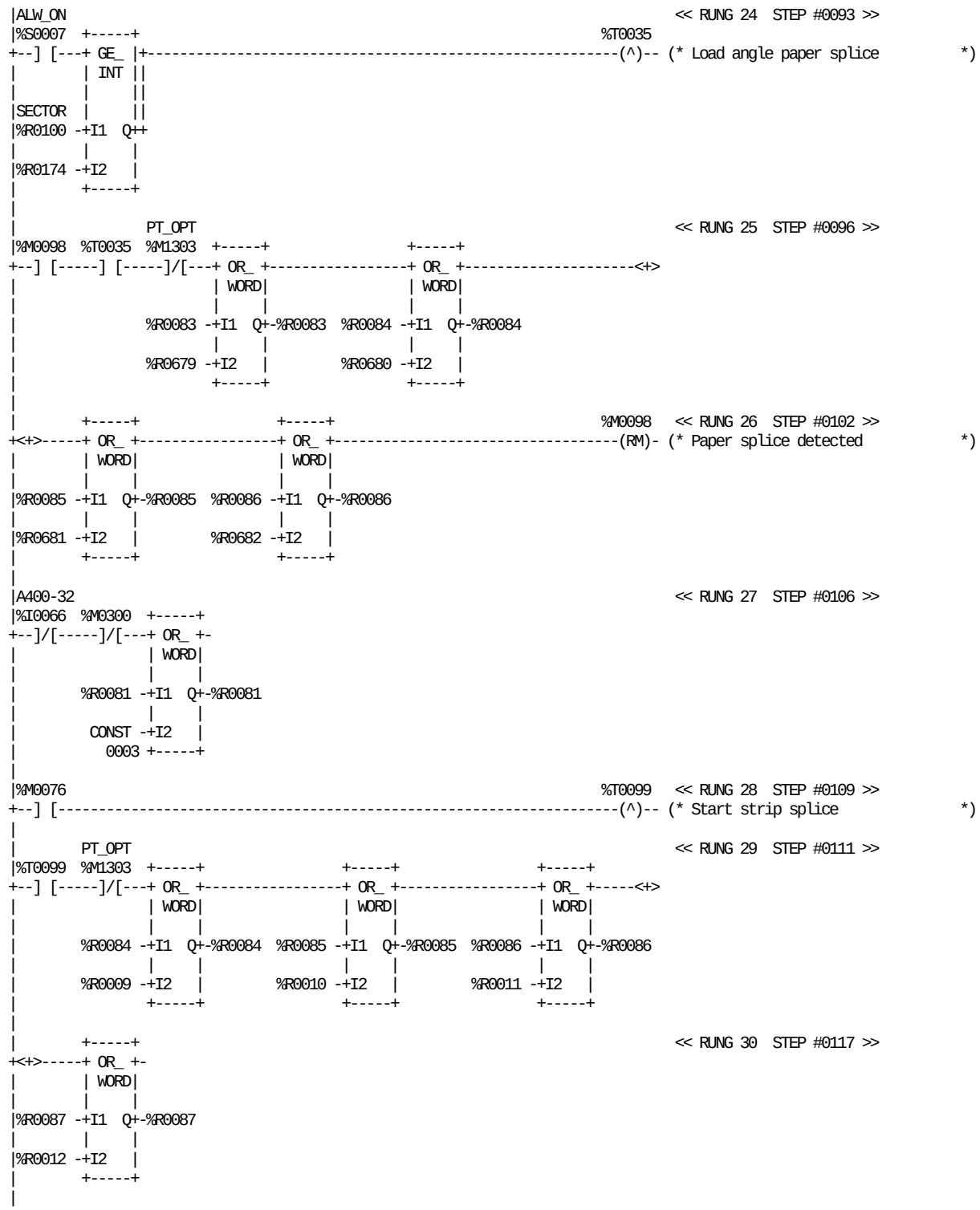

REFERENCE NICKNAME	REFERENCE DESCRIPTION	REFERENCE NICKNAME	REFERENCE DESCRIPTION
%M0076	Strip splice going on	%R0085	Package dump
%M0098	Paper splice detected	%R0086	Package dump
%M0300	Tube sealing going on	%R0087	Package dump
%T0035	Load angle paper splice	%R0174	Load sector paper splice
%T0099	Start strip splice	%R0679	Package dump paper splice SA
%R0009	Package dump strip splice SA	%R0680	Package dump paper splice SA
%R0010	Package dump strip splice SA	%R0681	Package dump paper splice SA
%R0011	Package dump strip splice SA	%R0682	Package dump paper splice SA
%R0012	Package dump strip splice SA	%I0066 A400-32	Design ok
%R0081	Package dump	%S0007 ALW_ON	
%R0083	Package dump	%M1303 PT_OPT	PLMS, Option Pull-Tab
%R0084	Package dump	%R0100 SECTOR	Angle sector 0-127

BLOCK: 19 PACKAGE DUNPING

```
|%T0149  +-----+                                                    << RUNG 31  STEP #0119 >>
+--] [---+ OR_ +-
|        | WORD|
|        |     |
|%R0081 -+I1  Q+-%R0081
|        |     |
| CONST -+I2   |
|   0004 +-----+
|
|PT_OPT                                                             << RUNG 32  STEP #0121 >>
|%M1303
+--]/[-------------------------------------------------------------N-->>  DUMP
|
*%M0098  %T0035  +-----+                +-----+                    << RUNG 33  STEP #0123 >>
*--] [-----] [---+ OR_ +----------------+ OR_ +----------------------------<+>
*                | WORD|                | WORD|
*                |     |                |     |
*        %R0085 -+I1  Q+-%R0085  %R0086 -+I1  Q+-%R0086
*                |     |                |     |
*        %R0774 -+I2   |         %R0775 -+I2   |
*                +-----+                +-----+
*
*        +-----+                +-----+                        %M0098   << RUNG 34  STEP #0128 >>
*<+>-----+ OR_ +----------------+ OR_ +-----------------------------------(RM)- (* Paper splice detected           *)
*        | WORD|                | WORD|
*        |     |                |     |
*%R0087 -+I1  Q+-%R0087  %R0088 -+I1  Q+-%R0088
*        |     |                |     |
*%R0776 -+I2   |         %R0777 -+I2   |
*        +-----+                +-----+
*
*PUL_28   S004                                                     << RUNG 35  STEP #0132 >>
*%M1916  %I0009  +-----+                +-----+                +-----+
*--] [-----]/[---+ OR_ +----------------+ OR_ +----------------+ OR_ +-
*                | WORD|                | WORD|                | WORD|
*                |     |                |     |                |     |
*        %R0083 -+I1  Q+-%R0083  %R0084 -+I1  Q+-%R0084  %R0085 -+I1  Q+-%R0085
*                |     |                |     |                |     |
*        %R0687 -+I2   |         %R0688 -+I2   |         %R0689 -+I2   |
*                +-----+                +-----+                +-----+
*
* MB066                                                            << RUNG 36  STEP #0137 >>
*%I0199                                                        %T0095
*--] [-----------------------------------------------------------------(v)-- (* Outer-patch splicing detector P- *)
*
*         S004                                                     << RUNG 37  STEP #0139 >>
*%T0095  %I0009  +-----+                +-----+                +-----+
*--] [-----]/[---+ OR_ +----------------+ OR_ +----------------+ OR_ +-
*                | WORD|                | WORD|                | WORD|
*                |     |                |     |                |     |
*        %R0083 -+I1  Q+-%R0083  %R0084 -+I1  Q+-%R0084  %R0085 -+I1  Q+-%R0085
*                |     |                |     |                |     |
*        %R0691 -+I2   |         %R0692 -+I2   |         %R0693 -+I2   |
*                +-----+                +-----+                +-----+
*
* MB086                                                            << RUNG 38  STEP #0144 >>
*%I0198                                                        %T0083
*--] [-----------------------------------------------------------------(v)-- (* Black tape P-                   *)
*
```

REFERENCE NICKNAME	REFERENCE DESCRIPTION	REFERENCE NICKNAME	REFERENCE DESCRIPTION
%M0098	Paper splice detected	%R0689	Package dump outer-patch missing
%T0035	Load angle paper splice	%R0691	Package dump outerpatch splicing
%T0083	Black tape P-	%R0692	Package dump outerpatch splicing
%T0095	Outer-patch splicing detector P-	%R0693	Package dump outerpatch splicing
%T0149	P+ Main motor ramp up 6000/7500	%R0774	Package dump paper splice PT-PR
%R0081	Package dump	%R0775	Package dump paper splice PT-PR
%R0083	Package dump	%R0776	Package dump paper splice PT-PR
%R0084	Package dump	%R0777	Package dump paper splice PT-PR
%R0085	Package dump	DUMP	
%R0086	Package dump	%I0199 MB066	Outer-patch splicing detector
%R0087	Package dump	%I0198 MB086	Photoc. 1 black tape detect.
%R0088	Package dump	%M1303 PT_OPT	PLMS, Option Pull-Tab
%R0687	Package dump outer-patch missing	%M1916 PUL_28	Missing outer-patch alarm
%R0688	Package dump outer-patch missing	%I0009 S004	Service switch

BLOCK: 19 PACKAGE DUNPING

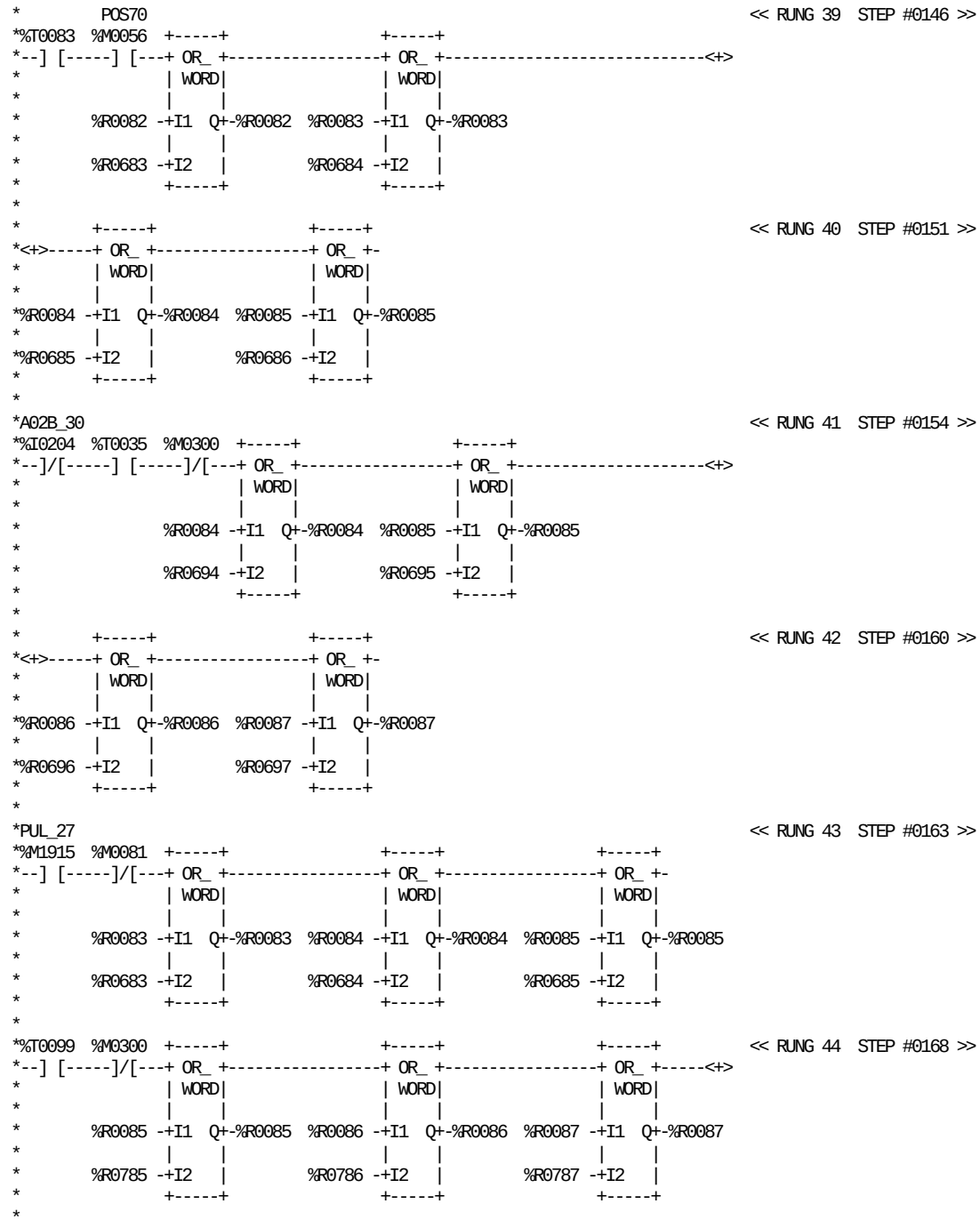

REFERENCE NICKNAME	REFERENCE DESCRIPTION
%M0081	Short stop condit.
%M0300	Tube sealing going on
%T0035	Load angle paper splice
%T0083	Black tape P-
%T0099	Start strip splice
%R0082	Package dump
%R0083	Package dump
%R0084	Package dump
%R0085	Package dump
%R0086	Package dump
%R0087	Package dump
%R0683	Package dump miss tab/black tape
%R0684	Package dump miss tab/black tape

REFERENCE NICKNAME		REFERENCE DESCRIPTION
%R0685		Package dump miss tab/black tape
%R0686		Free for future use
%R0694		Package dump posit. correct
%R0695		Package dump posit. correct
%R0696		Package dump posit. correct
%R0697		Package dump posit. correct
%R0785		Package dump strip splice PT
%R0786		Package dump strip splice PT
%R0787		Package dumo strip splice PT
%I0204	A02B_30	Paper out of posit.
%M0056	POS70	Machine ladder pos 70
%M1915	PUL_27	Missing tab alarm

BLOCK: 19 PACKAGE DUNPING

```
*       +-----+                +-----+                                    << RUNG 45  STEP #0174 >>
*<+>-----+ OR_ +----------------+ OR_ +-
*       | WORD|                | WORD|
*       |     |                |     |
*%R0088 -+I1  Q+-%R0088  %R0089 -+I1  Q+-%R0089
*       |     |                |     |
*%R0788 -+I2   |        %R0789 -+I2   |
*       +-----+                +-----+
*
*%M0258                                                          %T0135   << RUNG 46  STEP #0177 >>
*--] [-------------------------------------------------------------------(^)-- (* Start unreeling P+ *)
*
*%T0135  +-----+                +-----+                                    << RUNG 47  STEP #0179 >>
*--] [---+ OR_ +----------------+ OR_ +-----------------------------------<+>
*       | WORD|                | WORD|
*       |     |                |     |
*%R0085 -+I1  Q+-%R0085  %R0086 -+I1  Q+-%R0086
*       |     |                |     |
*%R0778 -+I2   |        %R0779 -+I2   |
*       +-----+                +-----+
*
*       +-----+                +-----+                                    << RUNG 48  STEP #0183 >>
*<+>-----+ OR_ +----------------+ OR_ +-
*       | WORD|                | WORD|
*       |     |                |     |
*%R0087 -+I1  Q+-%R0087  %R0088 -+I1  Q+-%R0088
*       |     |                |     |
*%R0780 -+I2   |        %R0781 -+I2   |
*       +-----+                +-----+
*
*%M0251                                                          %T0138   << RUNG 49  STEP #0186 >>
*--] [-------------------------------------------------------------------(^)-- (* PT ON P+                        *)
*
*                MB024                                                    << RUNG 50  STEP #0188 >>
*%T0138  %M0266  %I0200  %M0263  +-----+                +-----+
*--] [-----]/[--+--] [-----] [---+ OR_ +----------------+ OR_ +------------<+>
*               |                | WORD|                | WORD|
*               |                |     |                |     |
*%T0139         |                |     |                |     |
*--] [----------+       %R0084 -+I1  Q+-%R0084  %R0085 -+I1  Q+-%R0085
*                               |     |                |     |
*                       %R0771 -+I2   |        %R0772 -+I2   |
*                               +-----+                +-----+
*
*       +-----+                                                          << RUNG 51  STEP #0196 >>
*<+>-----+ OR_ +-
*       | WORD|
*       |     |
*%R0086 -+I1  Q+-%R0086
*       |     |
*%R0773 -+I2   |
*       +-----+
*
*                MB024                                                   << RUNG 52  STEP #0198 >>
*%T0138  %M0266  %I0200                                          %T0139
*--] [-----]/[--+--]/[-------------------------------------------------( )-- (* PT ON Paper not in posit.       *)
*               |
*%T0139         |
*--] [----------+
*
+ DUMP  :(nested)                                                        << RUNG 53  STEP #0203 >>
|
```

REFERENCE NICKNAME	REFERENCE DESCRIPTION	REFERENCE NICKNAME	REFERENCE DESCRIPTION
%M0251	PT on	%R0089	Package dump
%M0258	Infeed PT drv. motor enable	%R0771	Package dump PT on
%M0263	PT station enable	%R0772	Package dump PT on
%M0266	PT stops in sequence	%R0773	Package dump PT on
%T0135	Start unreeling P+	%R0778	Package dump start strip seal PT
%T0138	PT ON P+	%R0779	Package dump start strip seal PT
%T0139	PT ON Paper not in posit.	%R0780	Package dump start strip seal PT
%R0084	Package dump	%R0781	Package dump start strip seal PT
%R0085	Package dump	%R0788	Package dump strip splice PT
%R0086	Package dump	%R0789	Package dump strip splice PT
%R0087	Package dump	DUMP	
%R0088	Package dump	%I0200 MB024	Infeed loop low sensor

BLOCK: 19 PACKAGE DUNPING

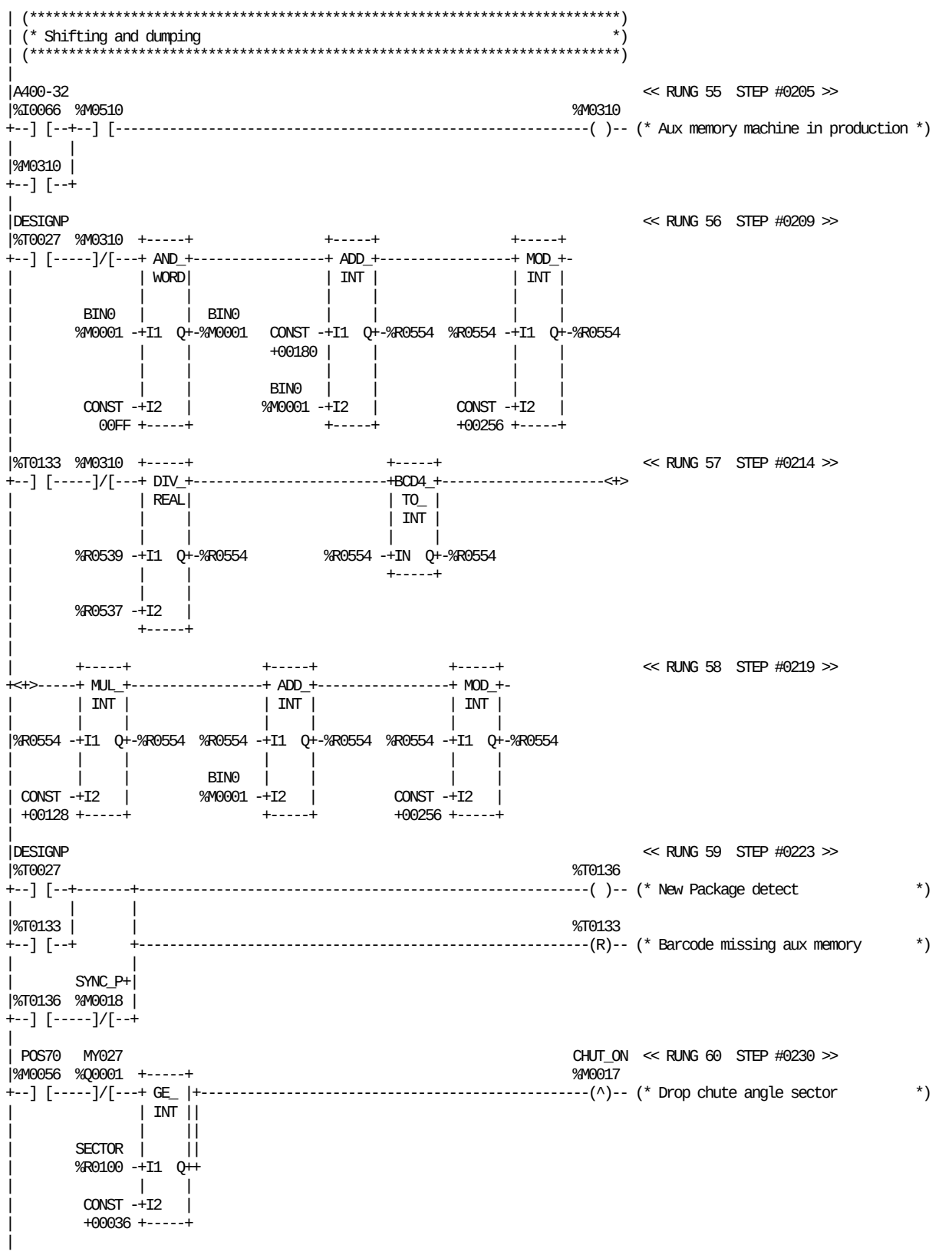

REFERENCE	NICKNAME	REFERENCE DESCRIPTION	REFERENCE	NICKNAME	REFERENCE DESCRIPTION
%M0310		Aux memory machine in production	%M0001	BIN0	LSB binary digit bit 0
%M0510		Drop chute enable	%M0017	CHUT_ON	Drop chute angle sector
%T0133		Barcode missing aux memory	%T0027	DESIGNP	Output design puls
%T0136		New Package detect	%Q0001	MY027	Drop chute
%R0537		Package length precorreted	%M0056	POS70	Machine ladder pos 70
%R0539		Repeat length register	%R0100	SECTOR	Angle sector 0-127
%R0554		Delay enable sealing pulse	%M0018	SYNC_P+	Drop chute out syncro. value P+
%I0066	A400-32	Design ok			

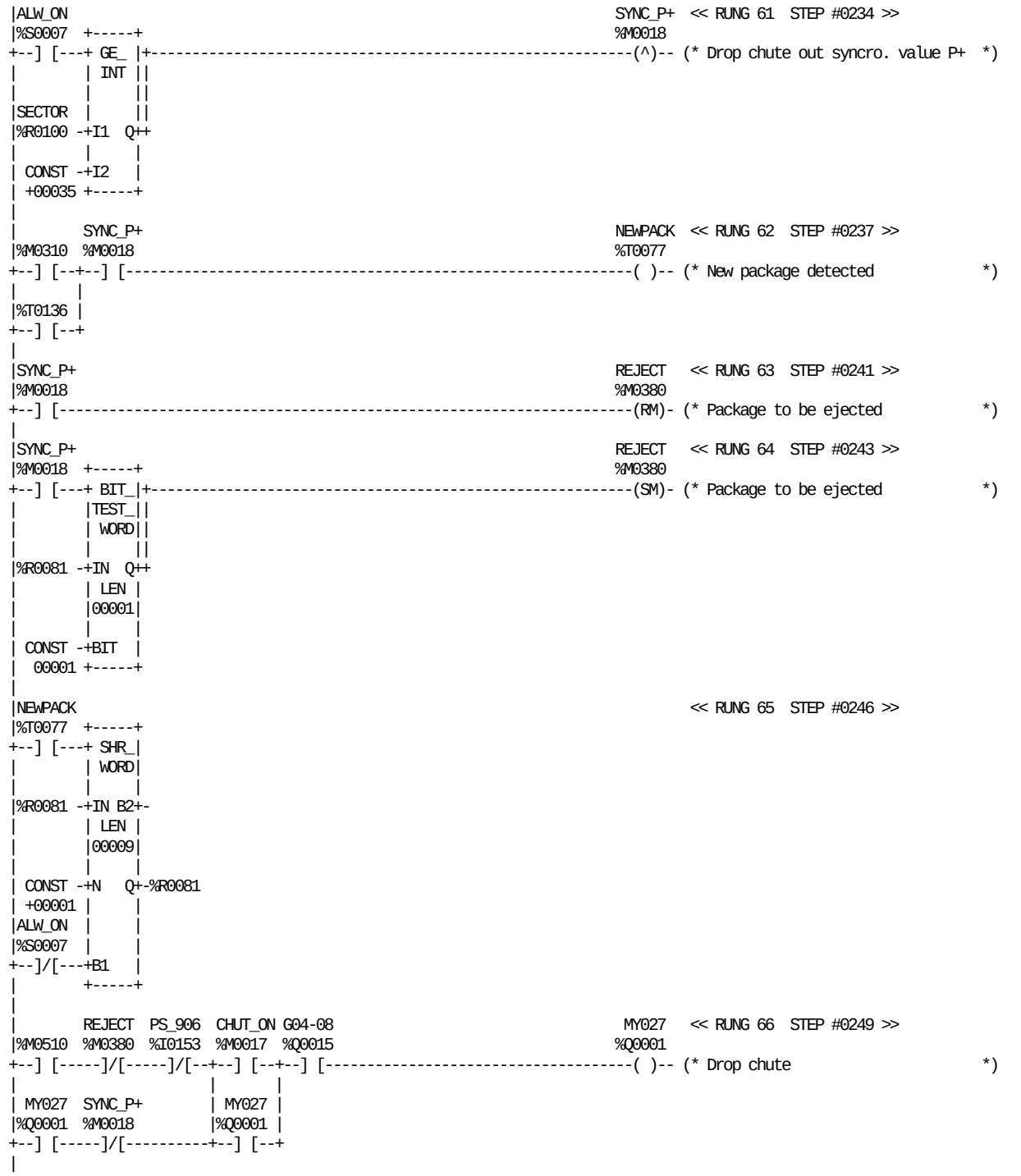

REFERENCE	NICKNAME	REFERENCE DESCRIPTION	REFERENCE	NICKNAME	REFERENCE DESCRIPTION
%M0310		Aux memory machine in production	%Q0001	MY027	Drop chute
%M0510		Drop chute enable	%T0077	NEWPACK	New package detected
%T0136		New Package detect	%I0153	PS_906	Drop chute off
%R0081		Package dump	%M0380	REJECT	Package to be ejected
%S0007	ALW_ON		%R0100	SECTOR	Angle sector 0-127
%M0017	CHUT_ON	Drop chute angle sector	%M0018	SYNC_P+	Drop chute out syncro. value P+
%Q0015	G04-08	Main motor, high speed			

BLOCK: 19 PACKAGE DUNPING

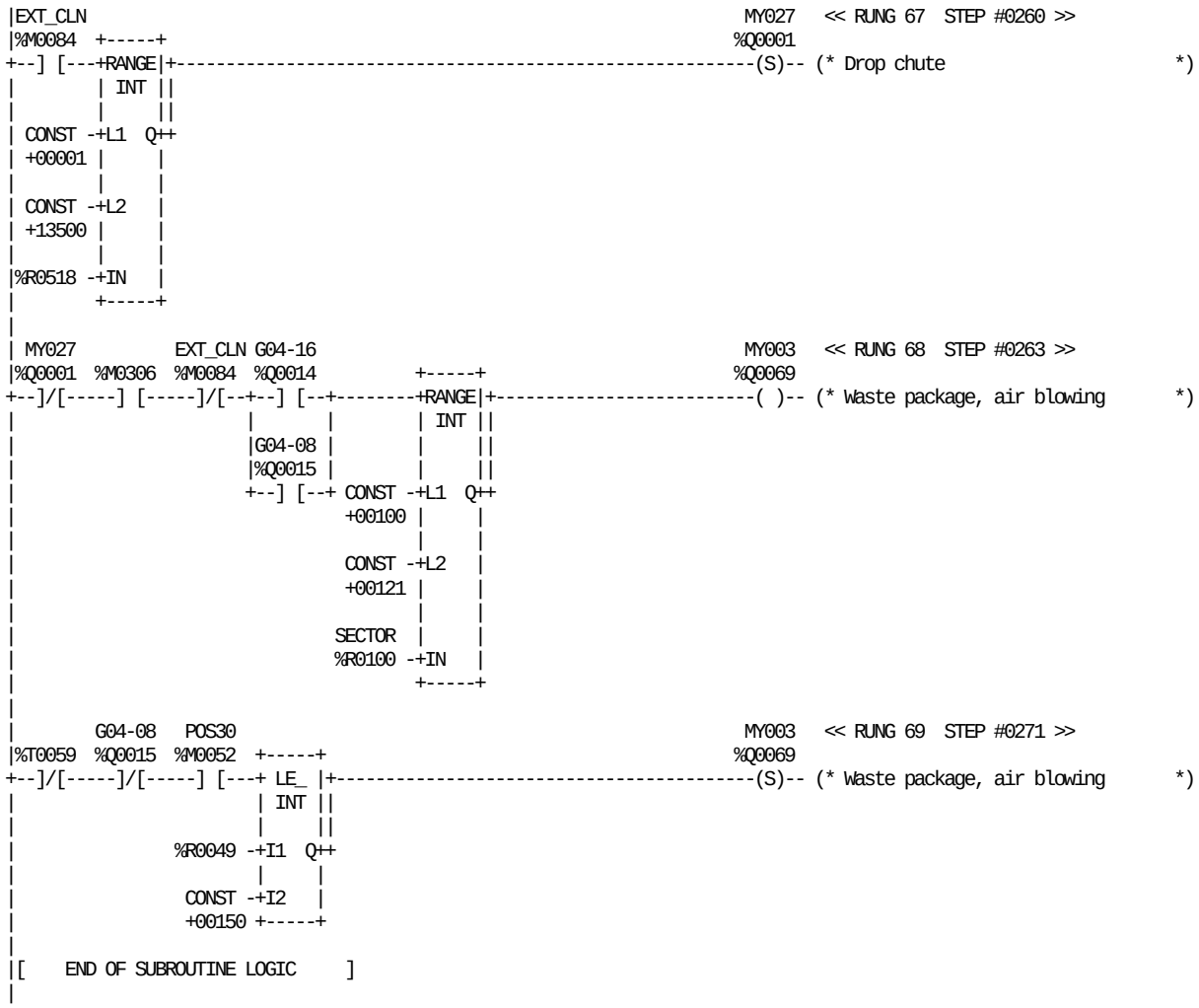

REFERENCE	NICKNAME	REFERENCE DESCRIPTION
%M0306		Aux. output clutch
%T0059		Off delay high speed
%R0049		Off delay low speed
%R0518		Sq.ext.clean prg.
%M0084	EXT_CLN	Machine in pos. extern. clean
%Q0015	G04-08	Main motor, high speed

REFERENCE	NICKNAME	REFERENCE DESCRIPTION
%Q0014	G04-16	Main motor, low speed
%Q0069	MY003	Waste package, air blowing
%Q0001	MY027	Drop chute
%M0052	POS30	Ladder pos 30
%R0100	SECTOR	Angle sector 0-127

This page intentionally left blank

```
|[  START LD SUBROUTINE   BLK21   ]
|
|[     VARIABLE DECLARATIONS      ]
|
|[   START OF SUBROUTINE LOGIC    ]
|
| (*************************************************************************)
| (* Transversal sealing                                                   *)
| (*************************************************************************)
|
|A_RESET                                                          DRI_5   << RUNG 5  STEP #0003 >>
|%T0214                                                          %M1637
+--] [--+-------------------------------------------------------(RM)- (* Fault IH unit TS left           *)
|       |
|       |                                                       DRI_6
|       |                                                      %M1638
|       +-------------------------------------------------------(RM)- (* Fault IH unit TS right          *)
|
| MY027  A500-06  POS00   POS10  MCPOS80 A500-05                  DRI_5   << RUNG 6  STEP #0006 >>
|%Q0001  %I0115  %M0049  %M0050  %M0086  %Q0095                  %M1637
+--] [-----]/[-----]/[-----]/[-----] [--+--] [-------------------(SM)- (* Fault IH unit TS left           *)
|                                      |
|                                      |A500-05                  DRI_6
|                                      |%Q0095                  %M1638
|                                      +--]/[-------------------(SM)- (* Fault IH unit TS right          *)
|
|PR_OPT                                                                   << RUNG 7  STEP #0017 >>
|%M1302  +-----+
+--]/[---+MOVE_+-
|        | INT |
|        |     |
| CONST -+IN  Q+-%R0179
| +00087 | LEN |
|        |00001|
|        |     |
|        +-----+
|
|PR_OPT                                                                   << RUNG 8  STEP #0019 >>
|%M1302  +-----+
+--] [---+MOVE_+-
|        | INT |
|        |     |
| CONST -+IN  Q+-%R0179
| +00085 | LEN |
|        |00001|
|        |     |
|        +-----+
|
|X02-238                                                          A500-05  << RUNG 9  STEP #0021 >>
|%I0079                                                          %Q0095
+--]/[-------------------------------------------------------------( )-- (* Selection left/right IH switch  *)
|
|STARTQ                                                           K004    << RUNG 10  STEP #0023 >>
|%M0320          +-----+                                         %Q0033
+--] [--+--------+OFDT +-----------------------------------------( )-- (* Power IH unit TS               *)
|       |        |0.10s|
|       |        |     |
|%M0300 |        |     |
+--] [--+ CONST -+PV   |
|         +00110 |     |
|                +-----+
|
|                %R0608
|
```

REFERENCE	NICKNAME	REFERENCE DESCRIPTION	REFERENCE	NICKNAME	REFERENCE DESCRIPTION
%M0300		Tube sealing going on	%Q0033	K004	Power IH unit TS
%R0179		TS start sealing sector	%M0086	MCPOS80	Machine in pos.80 for >2 min
%R0608		Delay TS sealing off	%Q0001	MY027	Drop chute
%Q0095	A500-05	Selection left/right IH switch	%M0049	POS00	Ladder pos 00
%I0115	A500-06	TS unit failure	%M0050	POS10	Ladder pos 10
%T0214	A_RESET	Pulse+ reset A-alarm lock	%M1302	PR_OPT	PLMS, Option Prisma version
%M1637	DRI_5	Fault IH unit TS left	%M0320	STARTQ	Start sequenc
%M1638	DRI_6	Fault IH unit TS right	%I0079	X02-238	Angle encoder bit 6

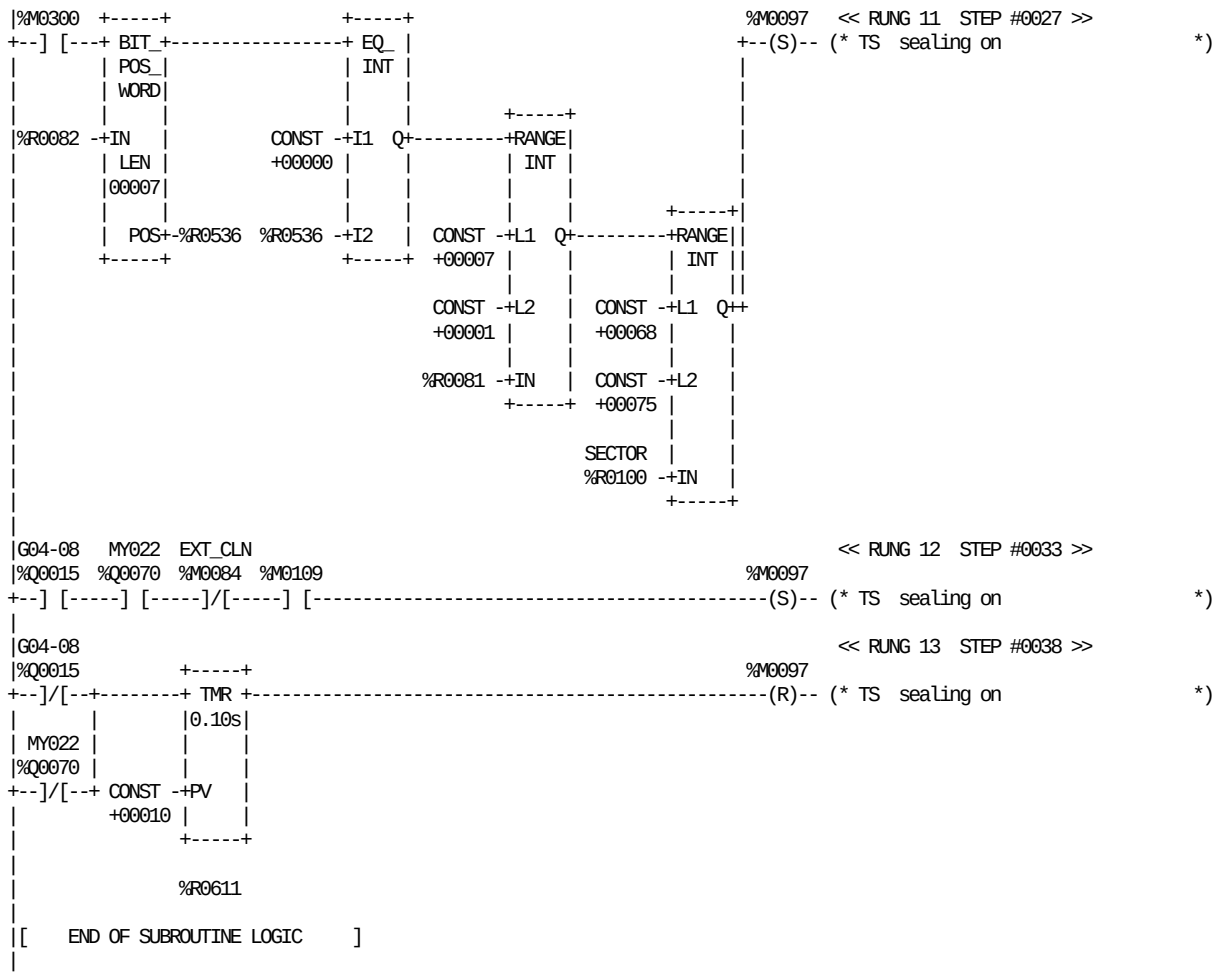

REFERENCE	NICKNAME	REFERENCE DESCRIPTION
%M0097		TS sealing on
%M0109		Drying after spraying
%M0300		Tube sealing going on
%R0081		Package dump
%R0082		Package dump
%R0536		Tube sealing

REFERENCE	NICKNAME	REFERENCE DESCRIPTION
%R0611		Delay TS off
%M0084	EXT_CLN	Machine in pos. extern. clean
%Q0015	G04-08	Main motor, high speed
%Q0070	MY022	Main machine, clutch
%R0100	SECTOR	Angle sector 0-127

BLOCK: 21 TRANSVERSAL SEALING

```
|[  START LD SUBROUTINE   BLK22   ]
|
|[     VARIABLE DECLARATIONS      ]
|
|[   START OF SUBROUTINE LOGIC    ]
|
| (*************************************************************************)
| (* Service key handling                                                  *)
| (*************************************************************************)
|
| S004                                                          SAF_32   << RUNG 5  STEP #0003 >>
|%I0009                                                        %M1728
+--] [-------------------------------------------------------------(SM)- (* Service switch ON              *)
|
| POS00                                                         SAF_32   << RUNG 6  STEP #0005 >>
|%M0049                                                        %M1728
+--] [-------------------------------------------------------------(RM)- (* Service switch ON              *)
|
| S004   SAF_32                                                 SAF_31   << RUNG 7  STEP #0007 >>
|%I0009  %M1728                                                %M1727
+--]/[-----] [-----------------------------------------------------( )-- (* Service switch alarm           *)
|
| (*************************************************************************)
| (* Power failure handling                                                *)
| (*************************************************************************)
|
|L11_OK                                                                    << RUNG 9  STEP #0011 >>
|%I0072                                                        %M0025
+--] [-------------------------------------------------------------(v)-- (* P- L11_OK                      *)
|
|                                                              SERV_23  << RUNG 10  STEP #0013 >>
|%M0025  %M0109                                                %M1687
+--] [-----] [--+------------------------------------------------(SM)- (* Power failure alarm            *)
|              |
|              |                                               NO_PWR
|              |                                               %M0324
|              +------------------------------------------------(S)-- (* Power failure                  *)
|
|FST_SCN                                                       SERV_23  << RUNG 11  STEP #0017 >>
|%S0001  %M0109  +-----+        +-----+                        %M1687
+--] [-----] [---+ SVC_+--------+RANGE|+---------------------------(SM)- (* Power failure alarm            *)
|                | REQ |        | INT ||
|                |     |        |     ||                       NO_PWR
|                |     |        |     ||                       %M0324
|         CONST -+FNC  |  CONST -+L1  Q++---------------------------(S)-- (* Power failure                  *)
|          00029 |     |  +00000 |     |
|                |     |        |     |
|        %R0215 -+PARM |  CONST -+L2   |
|                +-----+  +00004 |     |
|                         |     |
|                       %R0215 -+IN   |
|                               +-----+
|
|NO_PWR                                                        NO_PWR   << RUNG 12  STEP #0023 >>
|%M0324  +-----+                                               %M0324
+--] [---+ TMR +------------------------------------------------------(R)-- (* Power failure                  *)
|        |0.10s|
|        |     |
| CONST -+PV   |
| +00100 |     |
|        +-----+
|
|        %R0740
|
```

REFERENCE	NICKNAME	REFERENCE DESCRIPTION	REFERENCE	NICKNAME	REFERENCE DESCRIPTION
%M0025		P- L11_OK	%M0324	NO_PWR	Power failure
%M0109		Drying after spraying	%M0049	POS00	Ladder pos 00
%R0215		Delay check safety monitor	%I0009	S004	Service switch
%R0740		Line L10 L11 not ok	%M1727	SAF_31	Service switch alarm
%S0001	FST_SCN		%M1728	SAF_32	Service switch ON
%I0072	L11_OK	Power 24v	%M1687	SERV_23	Power failure alarm

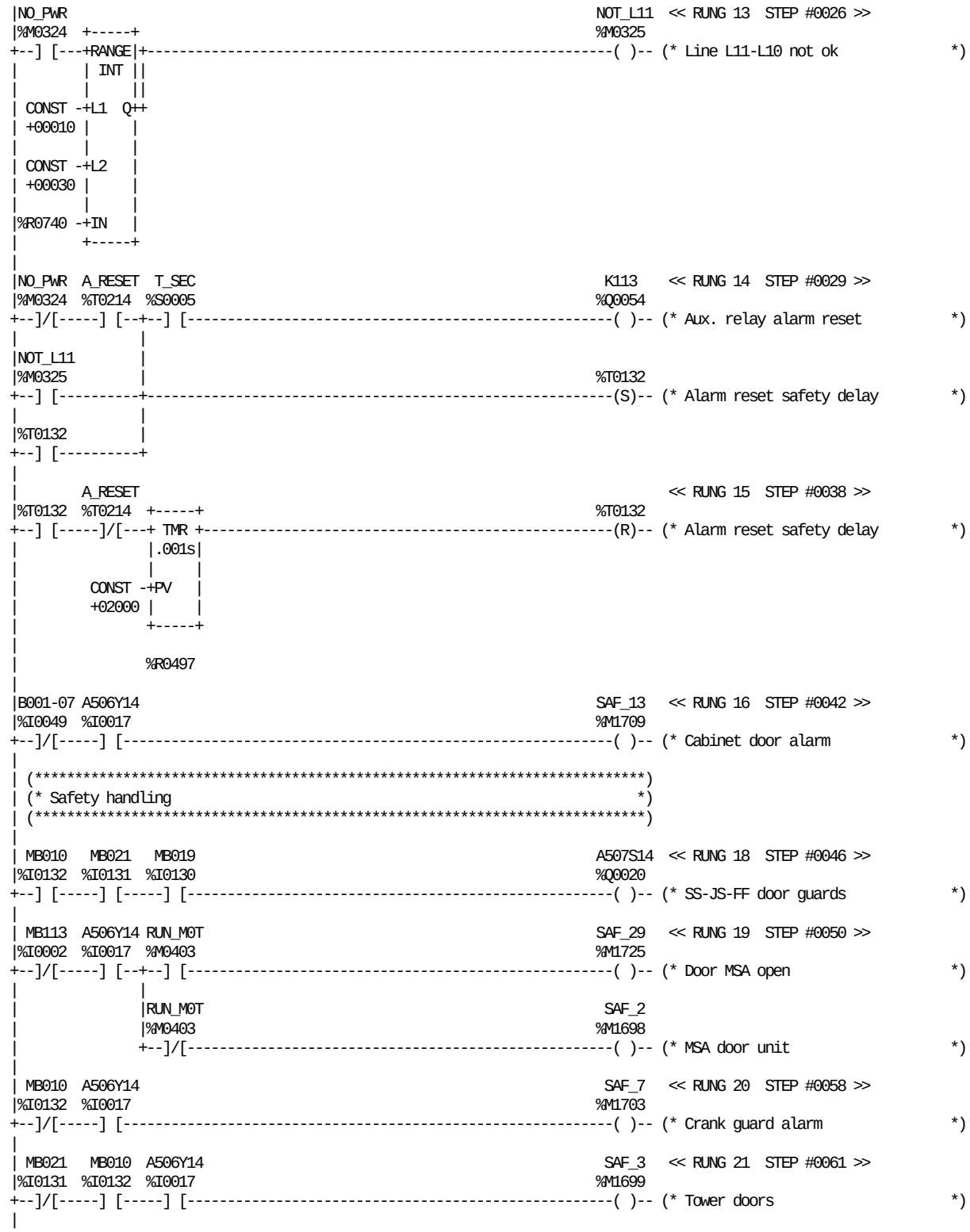

REFERENCE	NICKNAME	REFERENCE DESCRIPTION
%T0132		Alarm reset safety delay
%R0497		Alarm reset
%R0740		Line L10 L11 not ok
%I0017	A506Y14	Emergency stop safety module
%Q0020	A507S14	SS-JS-FF door guards
%T0214	A_RESET	Pulse+ reset A-alarm lock
%I0049	B001-07	Cabinet doors, position
%Q0054	K113	Aux. relay alarm reset
%I0132	MB010	Crank position
%I0130	MB019	FF and JS doors, position
%I0131	MB021	Superstructor door, position

REFERENCE	NICKNAME	REFERENCE DESCRIPTION
%I0002	MB113	SA doors, position
%M0325	NOT_L11	Line L11-L10 not ok
%M0324	NO_PWR	Power failure
%M0403	RUN_M0T	Doors SA open and motor running
%M1709	SAF_13	Cabinet door alarm
%M1698	SAF_2	MSA door unit
%M1725	SAF_29	Door MSA open
%M1699	SAF_3	Tower doors
%M1703	SAF_7	Crank guard alarm
%S0005	T_SEC	

BLOCK: 22 SHORT STOP

```
| MB019   MB021  A506Y14                                                SAF_16   << RUNG 22  STEP #0065 >>
|%I0130  %I0131  %I0017                                                %M1712
+--]/[-----] [-----] [-------------------------------------------------( )-- (* FF door alarm                    *)
|
| MB108  A506Y14                                                        SAF_1   << RUNG 23  STEP #0069 >>
|%I0129  %I0017                                                        %M1697
+--]/[-----] [-------------------------------------------------------------( )-- (* Crease wheel cover alarm      *)
|
|ASU_OPT  MB144  A506Y14 RUN_MOT                                       SAF_28   << RUNG 24  STEP #0072 >>
|%M1308  %I0192  %I0017  %M0206                                        %M1724
+--] [-----]/[-----] [--+--] [-----------------------------------------( )-- (* Door ASU open                    *)
|                       |
|                       |RUN_MOT                                     SAF_10
|                       |%M0206                                      %M1706
|                       +--]/[-----------------------------------------( )-- (* Door guard ASU                 *)
|
|A509Y14 A506Y14 PT_OPT                                                SAF_12   << RUNG 25  STEP #0081 >>
|%I0232  %I0017  %M1303                                                %M1708
+--]/[-----] [-----] [-------------------------------------------------( )-- (* Pulltab door guard             *)
|
|A506Y14                                                               SAF_15   << RUNG 26  STEP #0085 >>
|%I0017                                                                %M1711
+--]/[-----------------------------------------------------------------( )-- (* Fault emerg. stop jaw rot      *)
|
|A504Y14 RUN_M0T                                                       SAF_27   << RUNG 27  STEP #0087 >>
|%I0188  %M0403                                                        %M1723
+--]/[-----] [--+-------------------------------------------------------( )-- (* Safety relay ASU + MSA tripped  *)
|               |
|A505Y14 RUN_MOT|
|%I0020  %M0206 |
+--]/[-----] [--+
|
|A504Y14 RUN_M0T  SAF_2                                                SAF_18   << RUNG 28  STEP #0093 >>
|%I0188  %M0403  %M1698         %T0132                                 %M1714
+--]/[-----]/[-----]/[----------+--]/[-----------------------------------( )-- (* Safety relay tripped          *)
|                               |
|A505Y14 RUN_MOT SAF_10  ASU_OPT|
|%I0020  %M0206  %M1706  %M1308 |
+--]/[-----]/[-----]/[-----] [--+
|                               |
|A507Y14                        |
|%I0018                         |
+--]/[--------------------------+
|                               |
|A512Y14                        |
|%I0019                         |
+--]/[--------------------------+
|                               |
|A509Y24 A509Y14 PT_OPT         |
|%I0231  %I0232  %M1303         |
+--]/[-----] [-----] [----------+
|
| (*****************************************************************************)
| (* Short stop                                                                 *)
| (*****************************************************************************)
|
```

REFERENCE	NICKNAME	REFERENCE DESCRIPTION
%T0132		Alarm reset safety delay
%I0188	A504Y14	SA safety module
%I0020	A505Y14	ASU safety module
%I0017	A506Y14	Emergency stop safety module
%I0018	A507Y14	SS, JS and FF safety module
%I0232	A509Y14	PT door
%I0231	A509Y24	PS safety relay on
%I0019	A512Y14	Crease weel safety module
%M1308	ASU_OPT	PLMS, Option A.S.U.
%I0130	MB019	FF and JS doors, position
%I0131	MB021	Superstructor door, position
%I0129	MB108	Crease weel cover, position
%I0192	MB144	ASU doors, position

REFERENCE	NICKNAME	REFERENCE DESCRIPTION
%M1303	PT_OPT	PLMS, Option Pull-Tab
%M0403	RUN_M0T	Doors SA open and motor running
%M0206	RUN_MOT	Doors ASU open and motor running
%M1697	SAF_1	Crease wheel cover alarm
%M1706	SAF_10	Door guard ASU
%M1708	SAF_12	Pulltab door guard
%M1711	SAF_15	Fault emerg. stop jaw rot
%M1712	SAF_16	FF door alarm
%M1714	SAF_18	Safety relay tripped
%M1698	SAF_2	MSA door unit
%M1723	SAF_27	Safety relay ASU + MSA tripped
%M1724	SAF_28	Door ASU open

BLOCK: 22 SHORT STOP

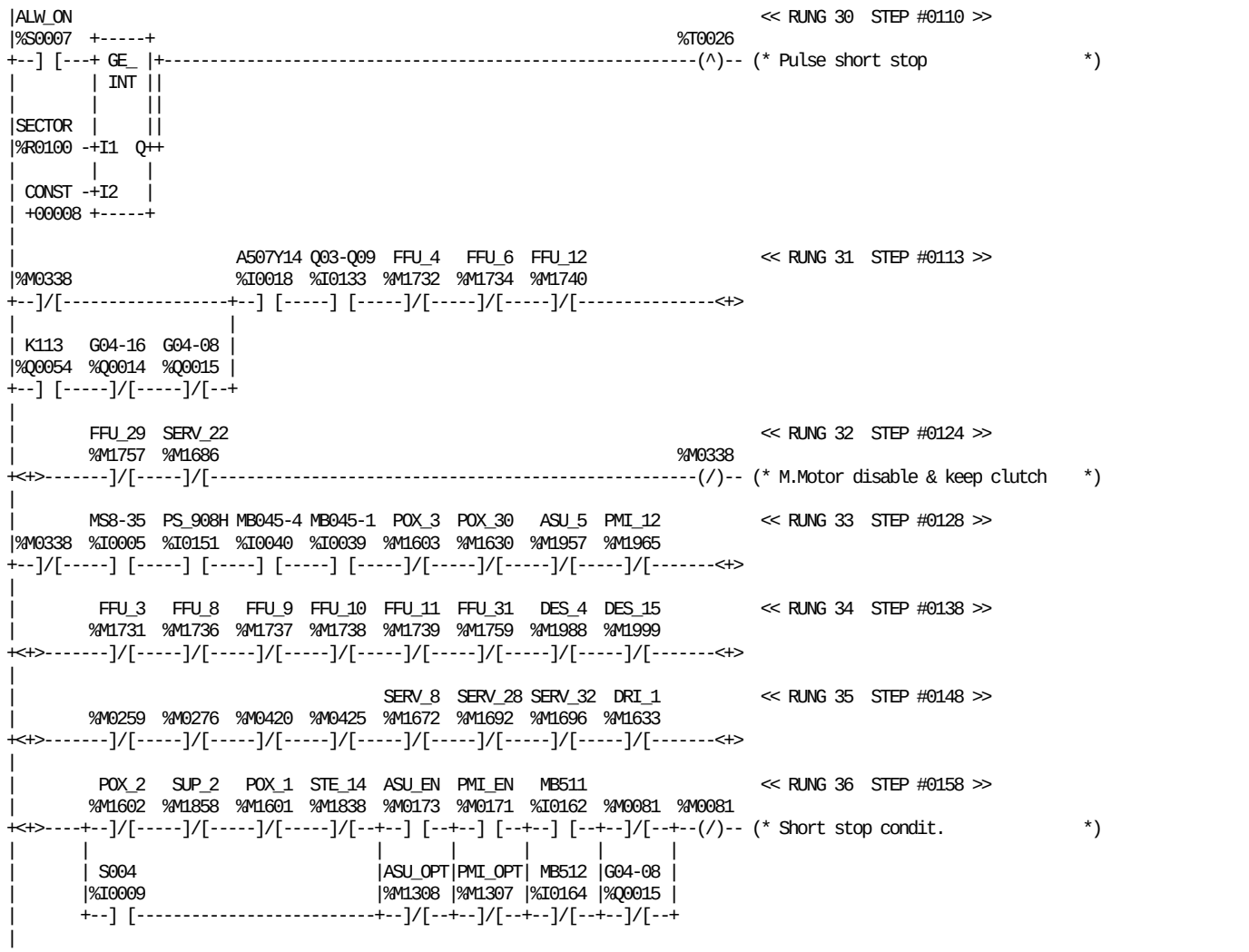

REFERENCE	NICKNAME	REFERENCE DESCRIPTION
%M0081		Short stop condit.
%M0259		Sh.stop from PT
%M0276		Short Stop from S.A.
%M0338		M.Motor disable & keep clutch
%M0420		Tank H2O2 restore high level
%M0425		Tank H2O2 complete refilling
%T0026		Pulse short stop
%I0018	A507Y14	SS, JS and FF safety module
%S0007	ALW_ON	
%M1957	ASU_5	ASU magazine empty/Short Stop
%M0173	ASU_EN	Automatic Splacing Unit enable
%M1308	ASU_OPT	PLMS, Option A.S.U.
%M1999	DES_15	WTC inverter alarm
%M1988	DES_4	WTC roller position out of limit
%M1633	DRI_1	MDCS sensors alarm
%M1738	FFU_10	Flap sealing temp.Top left
%M1739	FFU_11	Flap sealing temp.Top right
%M1740	FFU_12	Alarm delay unsync. MM/FF
%M1757	FFU_29	Dating unit alarm
%M1731	FFU_3	Final folder infeed congest
%M1759	FFU_31	Queue conveyor alarm
%M1732	FFU_4	Rotat. fault FF
%M1734	FFU_6	Memory overload outfeed
%M1736	FFU_8	Flap sealing temp.Bottom left
%M1737	FFU_9	Flap sealing temp.Bottom right

REFERENCE	NICKNAME	REFERENCE DESCRIPTION
%Q0015	G04-08	Main motor, high speed
%Q0014	G04-16	Main motor, low speed
%Q0054	K113	Aux. relay alarm reset
%I0039	MB045-1	Hydraul unit low level
%I0040	MB045-4	Hydraul unit temperature
%I0162	MB511	Nitrogen Pressure
%I0164	MB512	Injection_off
%I0005	MS8-35	Short stop push buttons
%M1965	PMI_12	PMI magazine empty
%M0171	PMI_EN	Paper Magazine Infeed enable
%M1307	PMI_OPT	PLMS, Option spare
%M1601	POX_1	Low temperature peroxide
%M1602	POX_2	Low level peroxide bath
%M1603	POX_3	Low level peroxide bath, water
%M1630	POX_30	Low level tank peroxide
%I0151	PS_908H	Short stop push buttom
%I0133	Q03-Q09	Overload protecion, motors
%I0009	S004	Service switch
%R0100	SECTOR	Angle sector 0-127
%M1686	SERV_22	Inverter protection alarm
%M1692	SERV_28	Max run time lubric.fault
%M1696	SERV_32	Recorder alarm stop
%M1672	SERV_8	Pressure fault lubric. oil
%M1838	STE_14	Low temp air knife
%M1858	SUP_2	Air knife sq.roll wrong pos.

BLOCK: 22 SHORT STOP

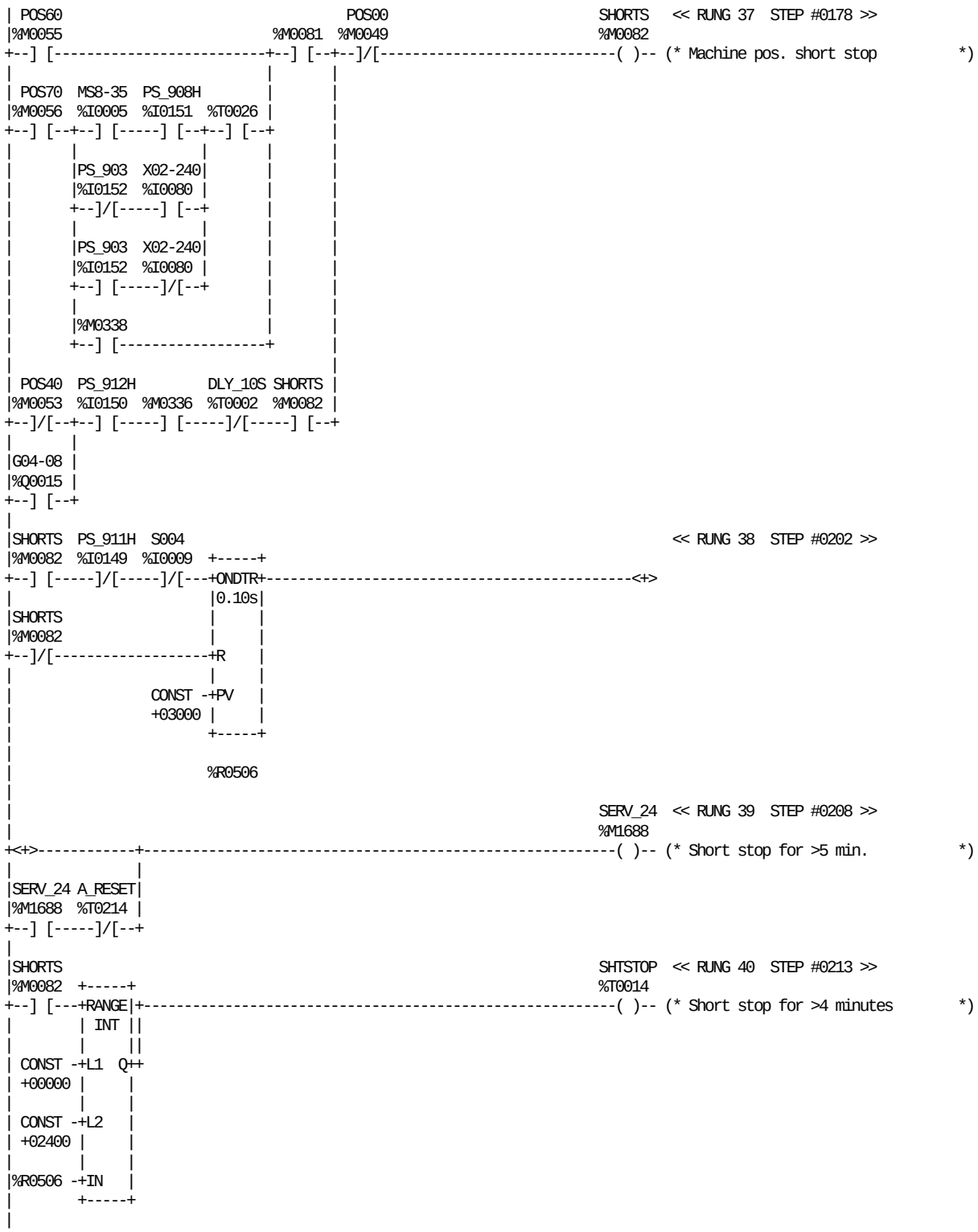

REFERENCE	NICKNAME	REFERENCE DESCRIPTION	REFERENCE	NICKNAME	REFERENCE DESCRIPTION
%M0081		Short stop condit.	%M0055	POS60	Machine ladder pos 60
%M0336		Jump to pos.40 str.seq enable	%M0056	POS70	Machine ladder pos 70
%M0338		M.Motor disable & keep clutch	%I0152	PS_903	Selector switch
%T0026		Pulse short stop	%I0151	PS_908H	Short stop push buttom
%R0506		Time in short stop pos.	%I0149	PS_911H	Step up
%T0214	A_RESET	Pulse+ reset A-alarm lock	%I0150	PS_912H	Step down
%T0002	DLY_10S	Start sequence delay 10 sec.	%I0009	S004	Service switch
%Q0015	G04-08	Main motor, high speed	%M1688	SERV_24	Short stop for >5 min.
%I0005	MS8-35	Short stop push buttons	%M0082	SHORTS	Machine pos. short stop
%M0049	POS00	Ladder pos 00	%T0014	SHTSTOP	Short stop for >4 minutes
%M0053	POS40	Machine ladder pos 40	%I0080	X02-240	Angle encoder bit 7

BLOCK: 22 SHORT STOP

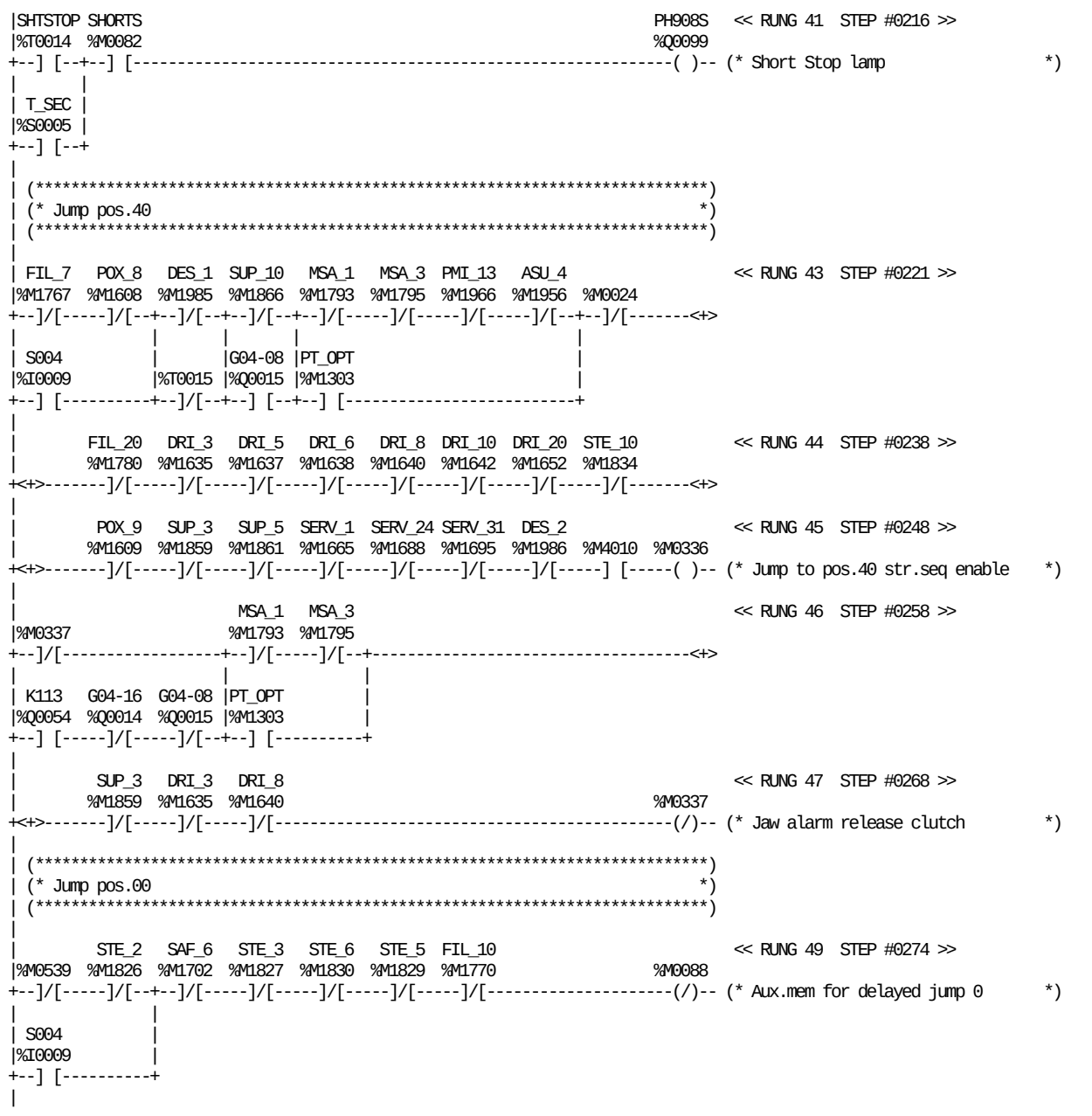

REFERENCE	NICKNAME	REFERENCE DESCRIPTION
%M0024		No product during prod.
%M0088		Aux.mem for delayed jump 0
%M0336		Jump to pos.40 str.seq enable
%M0337		Jaw alarm release clutch
%M0539		Low temp.in product
%M4010		PLC initialized
%T0015		Delay filling valve start
%M1956	ASU_4	ASU broken web
%M1985	DES_1	Photocell error
%M1986	DES_2	Design correction alarm
%M1642	DRI_10	Catches fault
%M1652	DRI_20	Malfunction during tube sealing
%M1635	DRI_3	Jaw sys. over-load.
%M1637	DRI_5	Fault IH unit TS left
%M1638	DRI_6	Fault IH unit TS right
%M1640	DRI_8	Encoder Fault
%M1770	FIL_10	Membran leakage alarm
%M1780	FIL_20	Overfilling alarm
%M1767	FIL_7	Steam low temperature 5 min.
%Q0015	G04-08	Main motor, high speed
%Q0014	G04-16	Main motor, low speed
%Q0054	K113	Aux. relay alarm reset
%M1793	MSA_1	Fault IH unit S. A.
%M1795	MSA_3	Broken strip
%Q0099	PH908S	Short Stop lamp
%M1966	PMI_13	PMI broken web
%M1608	POX_8	Low temp. peroxide bath, water
%M1609	POX_9	Too high level peroxide tank
%M1303	PT_OPT	PLMS, Option Pull-Tab
%I0009	S004	Service switch
%M1702	SAF_6	Bottom cover peroxide bath alarm
%M1665	SERV_1	Low press. main water
%M1688	SERV_24	Short stop for >5 min.
%M1695	SERV_31	Speed fault main motor
%M0082	SHORTS	Machine pos. short stop
%T0014	SHTSTOP	Short stop for >4 minutes
%M1834	STE_10	Suction valve wrong pos.
%M1826	STE_2	Wrong pos. AP valve B
%M1827	STE_3	High level separat
%M1829	STE_5	Air inlet valve wrong position
%M1830	STE_6	Low press. steril air
%M1866	SUP_10	LS sh. stop heat alarm
%M1859	SUP_3	Superstructure broken web
%M1861	SUP_5	Low temperature LS element
%S0005	T_SEC	

BLOCK: 22 SHORT STOP

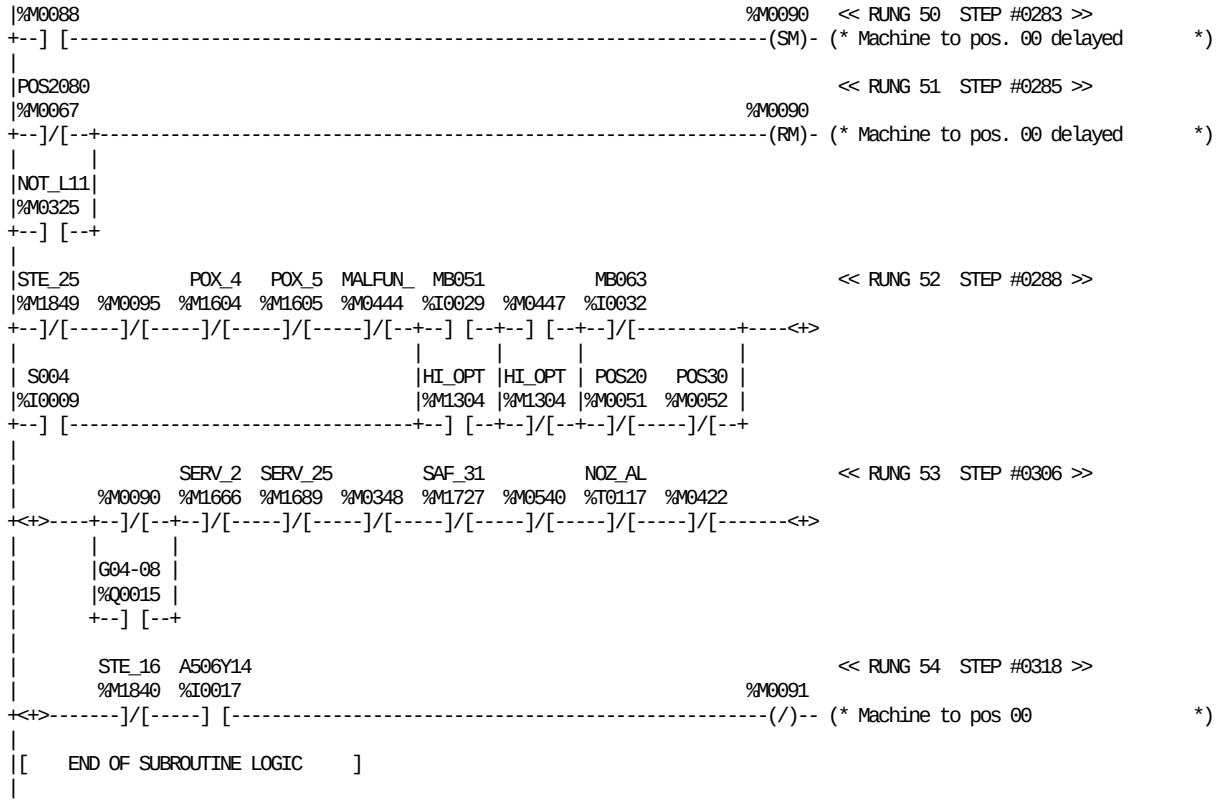

REFERENCE	NICKNAME	REFERENCE DESCRIPTION
%M0088		Aux.mem for delayed jump 0
%M0090		Machine to pos. 00 delayed
%M0091		Machine to pos 00
%M0095		Steam low temp. during drying
%M0348		Wrong pos.reg valve
%M0422		Peroxide bath full in steril.
%M0447		Product pipe in position
%M0540		Steril air pipe missing
%I0017	A506Y14	Emergency stop safety module
%Q0015	G04-08	Main motor, high speed
%M1304	HI_OPT	PLMS, Option H.I.
%M0444	MALFUN_	Malfunction during spray
%I0029	MB051	Product pipe, position
%I0032	MB063	Cleaning pipe, position

REFERENCE	NICKNAME	REFERENCE DESCRIPTION
%M0325	NOT_L11	Line L11-L10 not ok
%T0117	NOZ_AL	Nozzle alarm to pos.0
%M0051	POS20	Ladder pos 20
%M0067	POS2080	Machine ladder pos 20-80
%M0052	POS30	Ladder pos 30
%M1604	POX_4	Spray container low level
%M1605	POX_5	Spray time out of limit
%I0009	S004	Service switch
%M1727	SAF_31	Service switch alarm
%M1666	SERV_2	Low press. main air
%M1689	SERV_25	Too much time in pos20
%M1840	STE_16	Overload compressor
%M1849	STE_25	Sterility condiction fault

BLOCK: 22 SHORT STOP

This page intentionally left blank

```
|[  START LD SUBROUTINE   BLK23   ]
|
|[     VARIABLE DECLARATIONS      ]
|
|[   START OF SUBROUTINE LOGIC    ]
|
| POS00                                                                  << RUNG 4  STEP #0002 >>
|%M0049         %M0405                                          %M0416
+--] [----------+--] [-------------------------------------------------(SM)- (* WEAC stop on                    *)
|             |
| POS80  POS2080|
|%M0057  %M0067 |
+--] [-----]/[--+
|
| MB021                                                                  << RUNG 5  STEP #0008 >>
|%I0131  %T0017  %M0402                                          %M0416
+--] [-----] [-----] [--+-------------------------------------------------(RM)- (* WEAC stop on                    *)
|                       |
| MB002                 |
|%I0011                 |
+--]/[------------------+
|                       |
| STE_3                 |
|%M1827                 |
+--] [------------------+
|                       |
|%M0077                 |
+--] [------------------+
|                       |
|RDY_CLN                |
|%M0083                 |
+--] [------------------+
|                       |
|%T0065                 |
+--] [------------------+
|                       |
|         S004          |
|%M0410  %I0009         |
+--] [-----] [----------+
|                       |
|NOT_L11                |
|%M0325                 |
+--] [------------------+
|
|POS2080                                                                 << RUNG 6  STEP #0021 >>
|%M0067                                                          %M0405
+--] [-----------------------------------------------------------------( )-- (* WEAC stop 5 minutes            *)
|
| MB021                                                                  << RUNG 7  STEP #0023 >>
|%I0131  %M0404                                                  %M0402
+--]/[-----] [-----------------------------------------------------------(SM)- (* Mem. door monitor             *)
|
| K006                                                                   << RUNG 8  STEP #0026 >>
|%Q0019                                                          %M0402
+--]/[-----------------------------------------------------------------(RM)- (* Mem. door monitor             *)
|
|%M0416                                                          %M0407   << RUNG 9  STEP #0028 >>
+--]/[--+--------------------------------------------------------------(RM)- (* WEAC stop 15 minutes           *)
|       |
|%M0109 |
+--] [--+
|
```

REFERENCE	NICKNAME	REFERENCE DESCRIPTION	REFERENCE	NICKNAME	REFERENCE DESCRIPTION
%M0077		Water pressure delayed	%Q0019	K006	Compressor
%M0109		Drying after spraying	%I0011	MB002	Main air pressure
%M0402		Mem. door monitor	%I0131	MB021	Superstructor door, position
%M0404		WEAC stop 5 or 15 minutes	%M0325	NOT_L11	Line L11-L10 not ok
%M0405		WEAC stop 5 minutes	%M0049	POS00	Ladder pos 00
%M0407		WEAC stop 15 minutes	%M0067	POS2080	Machine ladder pos 20-80
%M0410		WEAC 5 minutes	%M0057	POS80	Machine ladder pos 80
%M0416		WEAC stop on	%M0083	RDY_CLN	Machine pos ready for cleaning
%T0017		Step down P+	%I0009	S004	Service switch
%T0065		Max. time WEAC on	%M1827	STE_3	High level separat

```
| POS40                                                                    << RUNG 10  STEP #0031 >>
|%M0053  %M0109                                                  %M0407
+--] [-----]/[-----------------------------------------------------------(SM)- (* WEAC stop 15 minutes            *)
|
|%M0416  +-----+                                                 %T0065   << RUNG 11  STEP #0034 >>
+--] [---+ TMR +-----------------------------------------------------------( )-- (* Max. time WEAC on             *)
|        |0.10s|
|        |     |
| CONST -+PV   |
| +32000 |     |
|        +-----+
|
|        %R0064
|
|%M0416  +-----+                                                 %M0410   << RUNG 12  STEP #0037 >>
+--] [---+ GE_ |+-----------------------------------------------------------( )-- (* WEAC 5 minutes                *)
|        | INT ||
|        |     ||
|%R0064 -+I1  Q++
|        |     |
| CONST -+I2   |
| +03000 +-----+
|
|%M0416  +-----+                                                 %M0411   << RUNG 13  STEP #0040 >>
+--] [---+ GE_ |+-----------------------------------------------------------( )-- (* WEAC 15 minutes               *)
|        | INT ||
|        |     ||
|%R0064 -+I1  Q++
|        |     |
| CONST -+I2   |
| +09000 +-----+
|
|%M0410  %M0407                                                  %M0404   << RUNG 14  STEP #0043 >>
+--] [-----]/[--+-----------------------------------------------------------( )-- (* WEAC stop 5 or 15 minutes    *)
|               |
|%M0411         |
+--] [----------+
|
|                                                                 MY086   << RUNG 15  STEP #0047 >>
|%M0416  %M0404                                                  %Q0058
+--] [-----] [-----------------------------------------------------------( )-- (* Vacuum valve                  *)
|
|[    END OF SUBROUTINE LOGIC     ]
|
```

REFERENCE NICKNAME	REFERENCE DESCRIPTION	REFERENCE NICKNAME		REFERENCE DESCRIPTION
%M0109	Drying after spraying	%M0416		WEAC stop on
%M0404	WEAC stop 5 or 15 minutes	%T0065		Max. time WEAC on
%M0407	WEAC stop 15 minutes	%R0064		WEAC funct. on
%M0410	WEAC 5 minutes	%Q0058	MY086	Vacuum valve
%M0411	WEAC 15 minutes	%M0053	POS40	Machine ladder pos 40

BLOCK: 23 WORK ENVIROMENT ASEPTIC CHAMBER

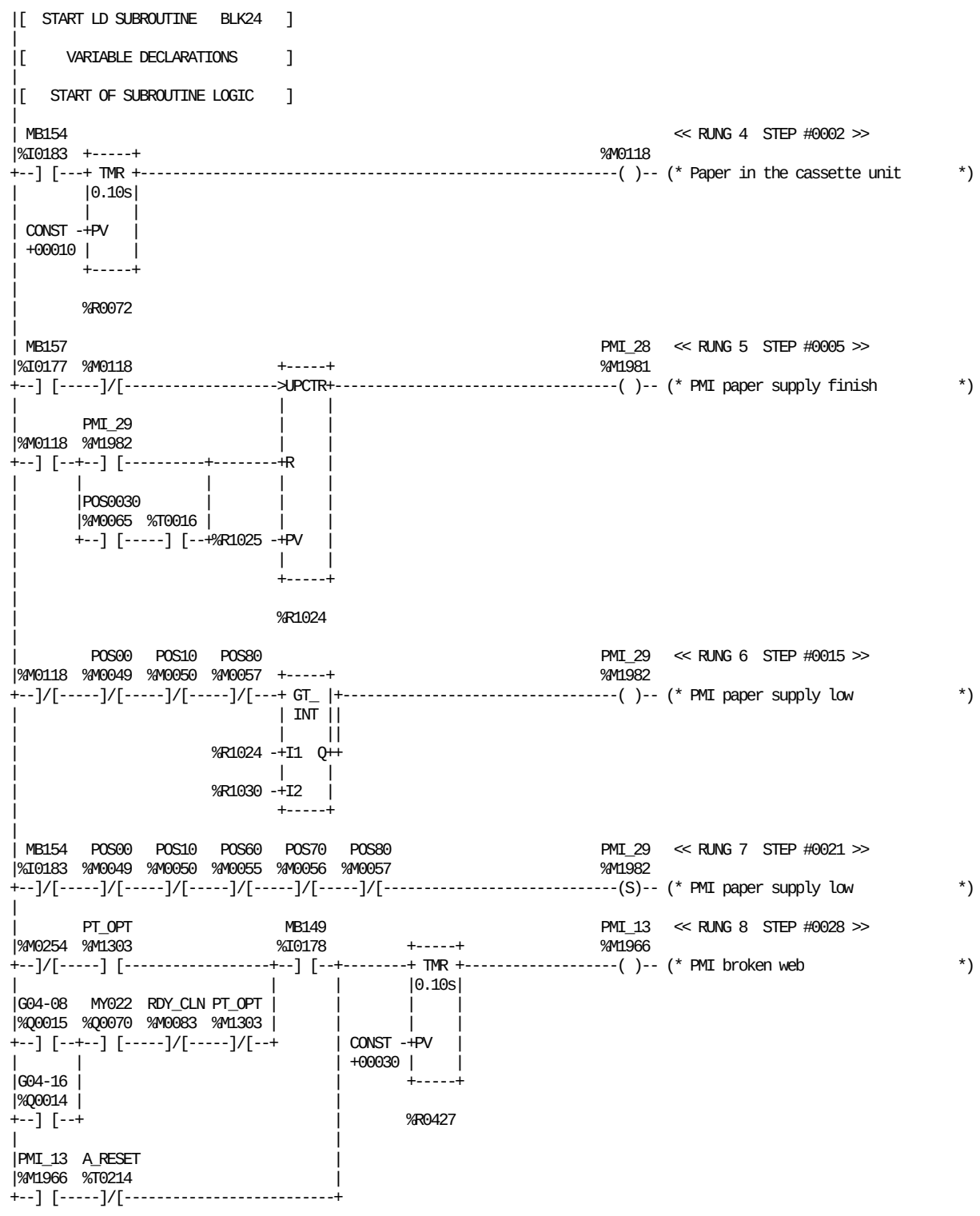

REFERENCE	NICKNAME	REFERENCE DESCRIPTION	REFERENCE	NICKNAME	REFERENCE DESCRIPTION
%M0118		Paper in the cassette unit	%I0177	MB157	Crease wheel
%M0254		Still PT infeed	%Q0070	MY022	Main machine, clutch
%T0016		Step up P+	%M1966	PMI_13	PMI broken web
%R0072		Paper supply delay	%M1981	PMI_28	PMI paper supply finish
%R0427		Delay paper in loop broken	%M1982	PMI_29	PMI paper supply low
%R1024		Low supply paper	%M0049	POS00	Ladder pos 00
%R1025		Paper supply package counter	%M0065	POS0030	Machine ladder pos 00-30
%R1030		Paper supply, start count down	%M0050	POS10	Ladder pos 10
%T0214	A_RESET	Pulse+ reset A-alarm lock	%M0055	POS60	Machine ladder pos 60
%Q0015	G04-08	Main motor, high speed	%M0056	POS70	Machine ladder pos 70
%Q0014	G04-16	Main motor, low speed	%M0057	POS80	Machine ladder pos 80
%I0178	MB149	Magazine full	%M1303	PT_OPT	PLMS, Option Pull-Tab
%I0183	MB154	Paper supply left	%M0083	RDY_CLN	Machine pos ready for cleaning

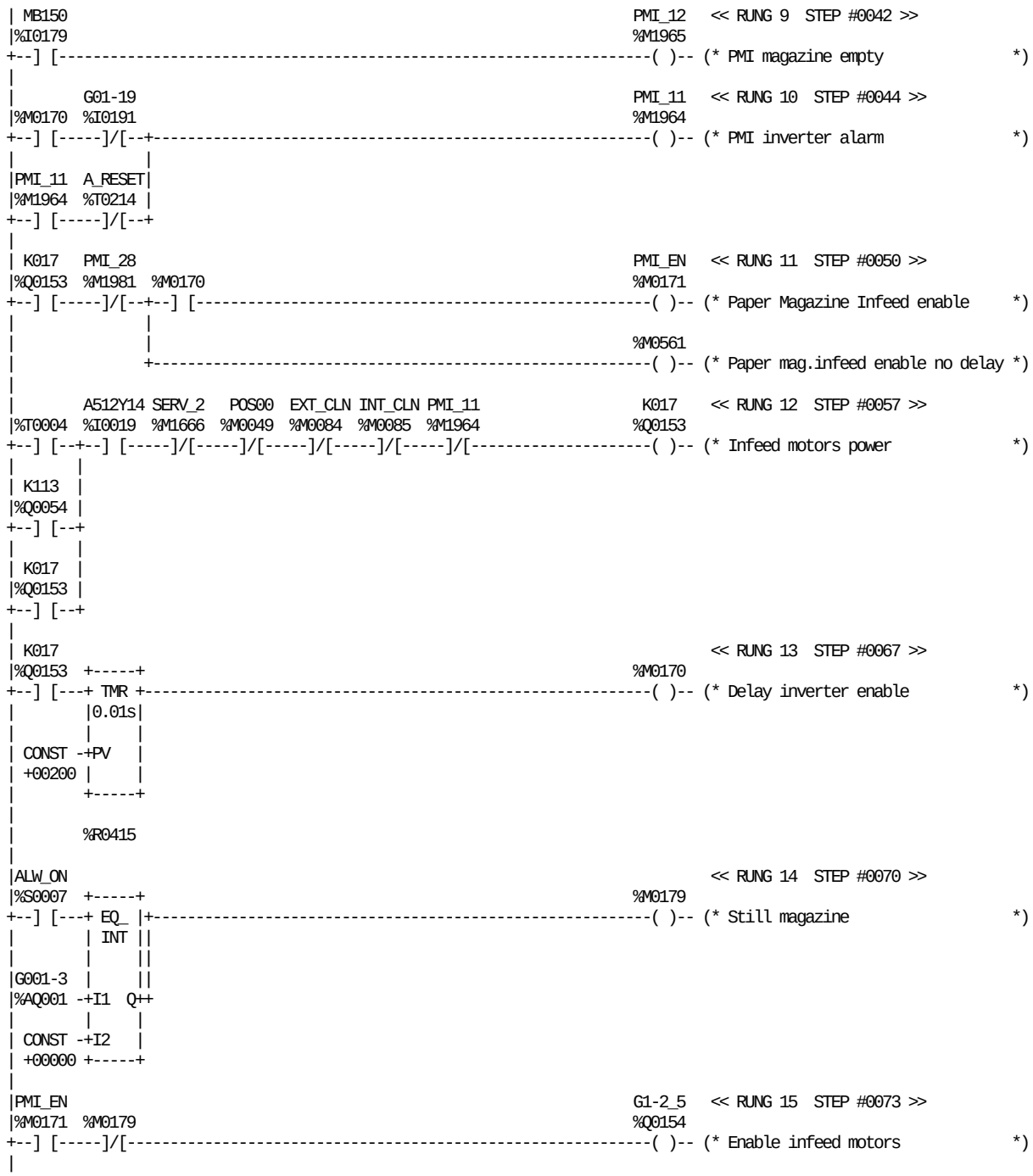

REFERENCE	NICKNAME	REFERENCE DESCRIPTION
%M0170		Delay inverter enable
%M0179		Still magazine
%M0561		Paper mag.infeed enable no delay
%T0004		P+ position10/ready for cleaning
%R0415		Delay inverter enable
%I0019	A512Y14	Crease weel safety module
%S0007	ALW_ON	
%T0214	A_RESET	Pulse+ reset A-alarm lock
%M0084	EXT_CLN	Machine in pos. extern. clean
%AQ001	G001-3	Analog output magazine motor
%I0191	G01-19	ASU inverters fault

REFERENCE	NICKNAME	REFERENCE DESCRIPTION
%Q0154	G1-2_5	Enable infeed motors
%M0085	INT_CLN	Machine pos internal cleaning
%Q0153	K017	Infeed motors power
%Q0054	K113	Aux. relay alarm reset
%I0179	MB150	Magazine empty
%M1964	PMI_11	PMI inverter alarm
%M1965	PMI_12	PMI magazine empty
%M1981	PMI_28	PMI paper supply finish
%M0171	PMI_EN	Paper Magazine Infeed enable
%M0049	POS00	Ladder pos 00
%M1666	SERV_2	Low press. main air

BLOCK: 24 PACKAGING MATERIAL INFEED

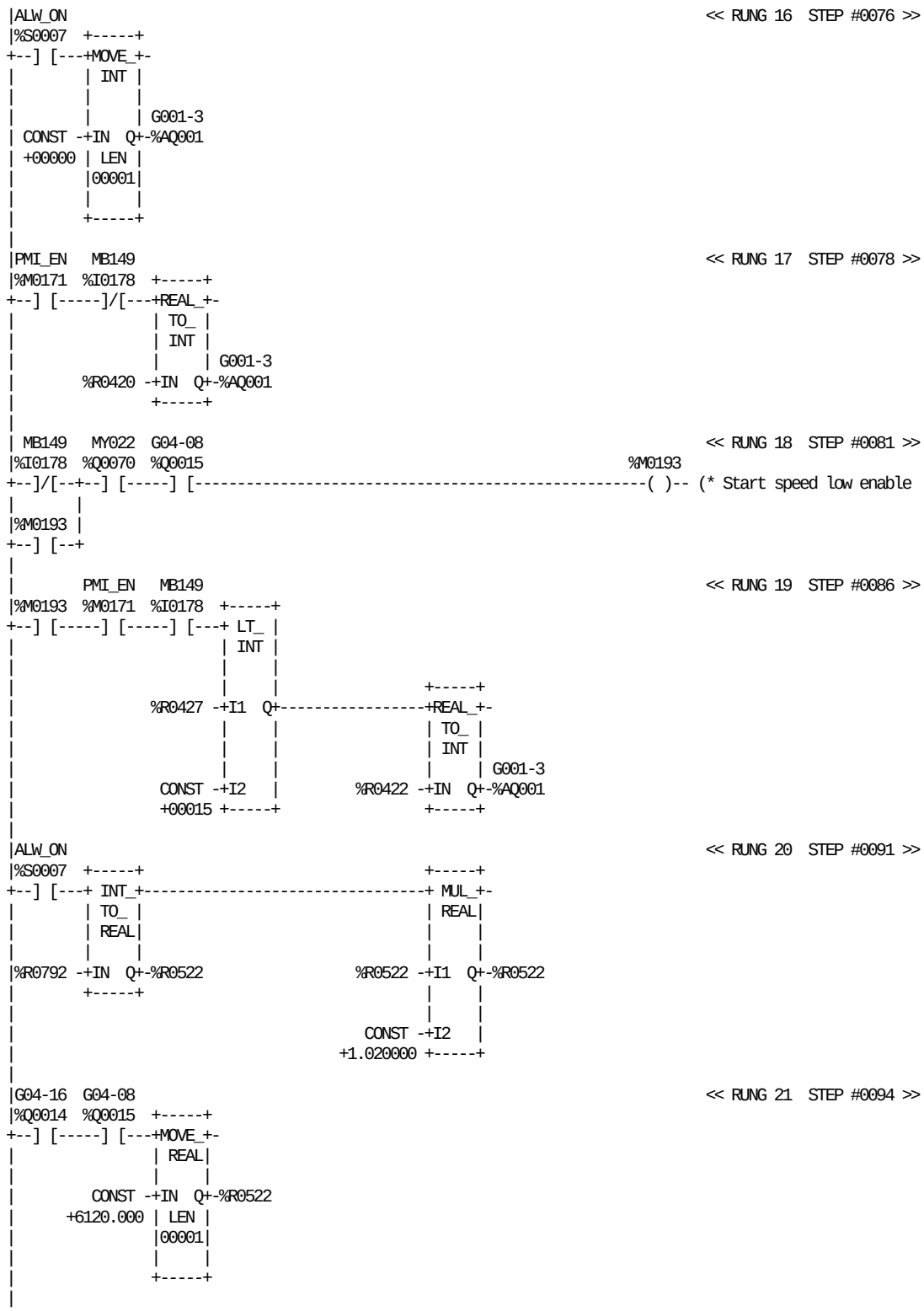

REFERENCE	NICKNAME	REFERENCE DESCRIPTION	REFERENCE	NICKNAME	REFERENCE DESCRIPTION
%M0193		Start speed low enable	%AQ001	G001-3	Analog output magazine motor
%R0420		Mag. high speed production	%Q0015	G04-08	Main motor, high speed
%R0422		Mag. low speed precorrection	%Q0014	G04-16	Main motor, low speed
%R0427		Delay paper in loop broken	%I0178	MB149	Magazine full
%R0522		Aux speed register	%Q0070	MY022	Main machine, clutch
%R0792		Synchronization FF speed	%M0171	PMI_EN	Paper Magazine Infeed enable
%S0007	ALW_ON				

BLOCK: 24 PACKAGING MATERIAL INFEED

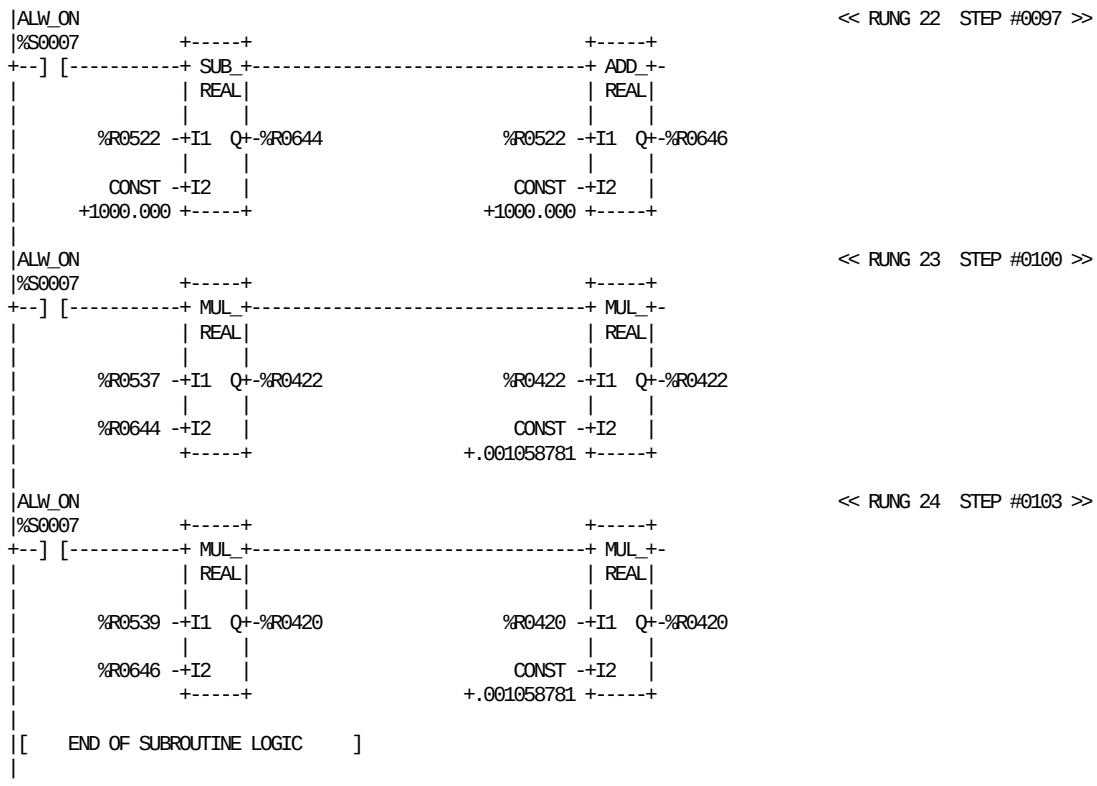

REFERENCE NICKNAME	REFERENCE DESCRIPTION	REFERENCE NICKNAME	REFERENCE DESCRIPTION
%R0420	Mag. high speed production	%R0539	Repeat length register
%R0422	Mag. low speed precorrection	%R0644	Min speed value
%R0522	Aux speed register	%R0646	Max speed value
%R0537	Package length precorreted	%S0007 ALW_ON	

BLOCK: 24 PACKAGING MATERIAL INFEED

```
|[  START LD SUBROUTINE   BLK25   ]
|
|[     VARIABLE DECLARATIONS      ]
|
|[   START OF SUBROUTINE LOGIC    ]
|
|        PS_903  CLN_CON CLE_POS                                      K104    << RUNG 4  STEP #0002 >>
|%T0016  %I0152  %M0355  %M0443                                     %Q0046
+--] [-----] [--+--] [--+--] [--+-----------------------------------------( )-- (* Signal to cip                  *)
|               |       |      |
|PS_912H  K104  |       |HI_OPT |                                    INT_CLN
|%I0150  %Q0046 |       |%M1304 |                                    %M0085
+--] [--+--] [--+       +--]/[--+-----------------------------------(SM)- (* Machine pos internal cleaning    *)
|       |
|PS_903 |
|%I0152 |
+--]/[--+
|
| MB063           MB051   MB061   MB104  RDY_CLN  STE_2                        << RUNG 5  STEP #0014 >>
|%I0032  %M0447  %I0029  %I0031  %I0033  %M0083  %M1826  %M0100  %M0351
+--] [--+--] [--+--] [--+--] [-----]/[-----] [-----]/[-----]/[-----]/[-------<+>
|       |       |      |
|X02-286|HI_OPT |HI_OPT |
|%I0063 |%M1304 |%M1304 |
+--] [--+--]/[--+--] [--+
|
|               A307-15                                               CLN_CON  << RUNG 6  STEP #0029 >>
|       %M0354  %I0120                                               %M0355
+<+>-------]/[-----]/[-----------------------------------------------------( )-- (* Ok for Clean. prod.  valve       *)
|
| K104                                                                        << RUNG 7  STEP #0033 >>
|%Q0046                                                               %T0100
+--] [-------------------------------------------------------------------(v)-- (* Pulse signal to CIP off          *)
|
|        PS_903          MB30-2                 CLE_11  RDY_CLN        EXT_CLN  << RUNG 8  STEP #0035 >>
|%T0016  %I0152          %I0015  %M0337  %M0338  %M1931  %M0083  %T0041  %M0084
+--] [-----]/[----------+--] [-----]/[-----]/[-----]/[-----] [-----]/[-----( )-- (* Machine in pos. extern. clean    *)
|                       |
|PS_911H PS_912H EXT_CLN|
|%I0149  %I0150  %M0084 |
+--] [--+--] [--+--] [--+
|       |      |
|G04-16 |PS_903 |
|%Q0014 |%I0152 |
+--] [--+--] [--+
|
```

REFERENCE	NICKNAME	REFERENCE DESCRIPTION	REFERENCE	NICKNAME	REFERENCE DESCRIPTION
%M0100		Steam fault	%M1304	HI_OPT	PLMS, Option H.I.
%M0337		Jaw alarm release clutch	%M0085	INT_CLN	Machine pos internal cleaning
%M0338		M.Motor disable & keep clutch	%Q0046	K104	Signal to cip
%M0351		Open pos.mem regul. valve	%I0029	MB051	Product pipe, position
%M0354		Wrong pos.reg val.al. delay	%I0031	MB061	Cleaning cup, position
%M0447		Product pipe in position	%I0032	MB063	Cleaning pipe, position
%T0016		Step up P+	%I0033	MB104	Steril air pipe, position
%T0041		Total ext. clean time	%I0015	MB30-2	Lubrication oil low level
%T0100		Pulse signal to CIP off	%I0152	PS_903	Selector switch
%I0120	A307-15	Membran leakage regulating valve	%I0149	PS_911H	Step up
%M1931	CLE_11	Fault filling clean. tray	%I0150	PS_912H	Step down
%M0443	CLE_POS	Cleaning position	%M0083	RDY_CLN	Machine pos ready for cleaning
%M0355	CLN_CON	Ok for Clean. prod. valve	%M1826	STE_2	Wrong pos. AP valve B
%M0084	EXT_CLN	Machine in pos. extern. clean	%I0063	X02-286	Clean through production valve
%Q0014	G04-16	Main motor, low speed			

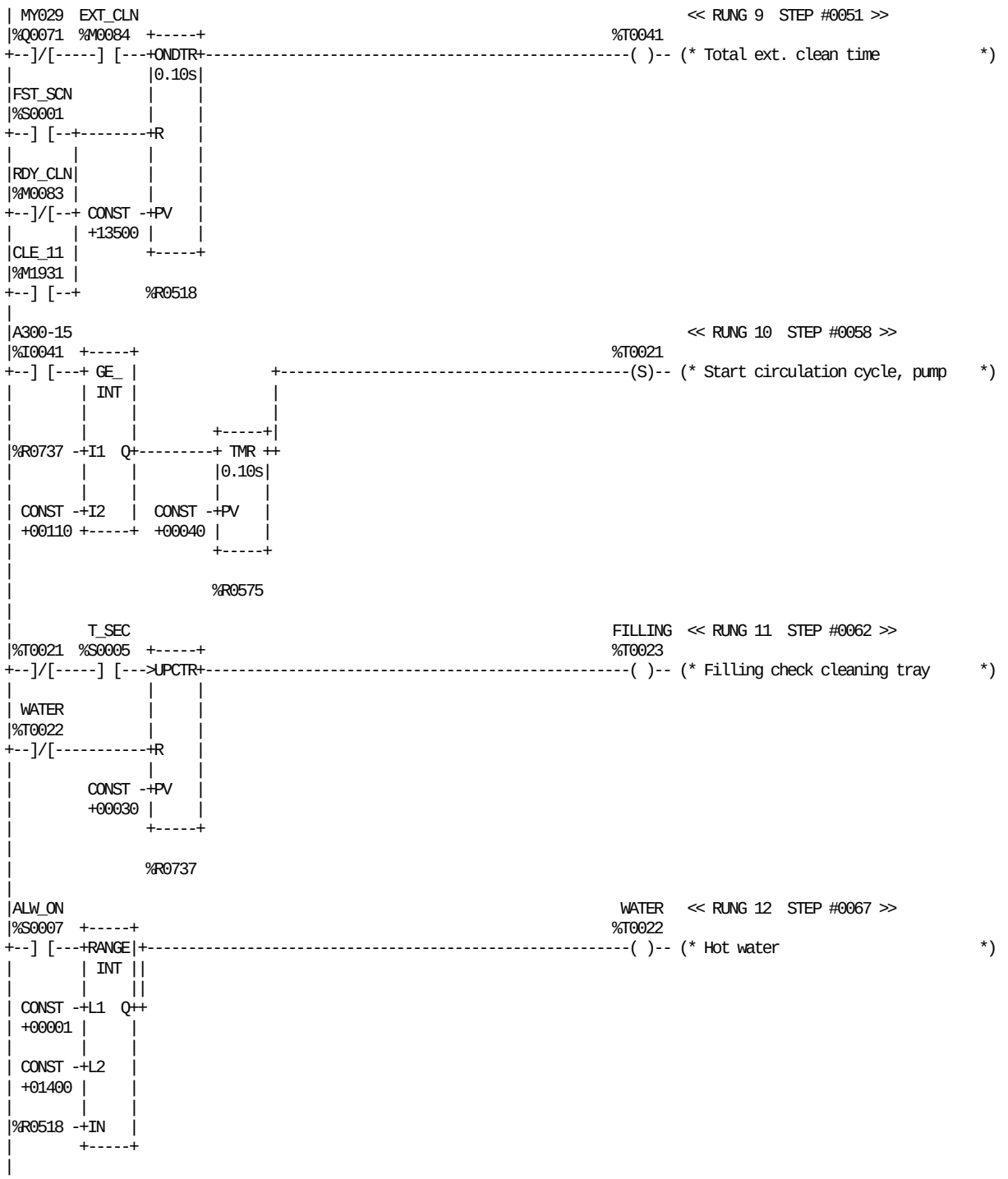

REFERENCE	NICKNAME	REFERENCE DESCRIPTION
%T0021		Start circulation cycle, pump
%T0041		Total ext. clean time
%R0518		Sq.ext.clean prg.
%R0575		Delay fill. clean. tray
%R0737		Time clean tray fill.
%I0041	A300-15	Clean tray level
%S0007	ALW_ON	
%M1931	CLE_11	Fault filling clean. tray

REFERENCE	NICKNAME	REFERENCE DESCRIPTION
%M0084	EXT_CLN	Machine in pos. extern. clean
%T0023	FILLING	Filling check cleaning tray
%S0001	FST_SCN	
%Q0071	MY029	Cleaning system, hot water
%M0083	RDY_CLN	Machine pos ready for cleaning
%S0005	T_SEC	
%T0022	WATER	Hot water

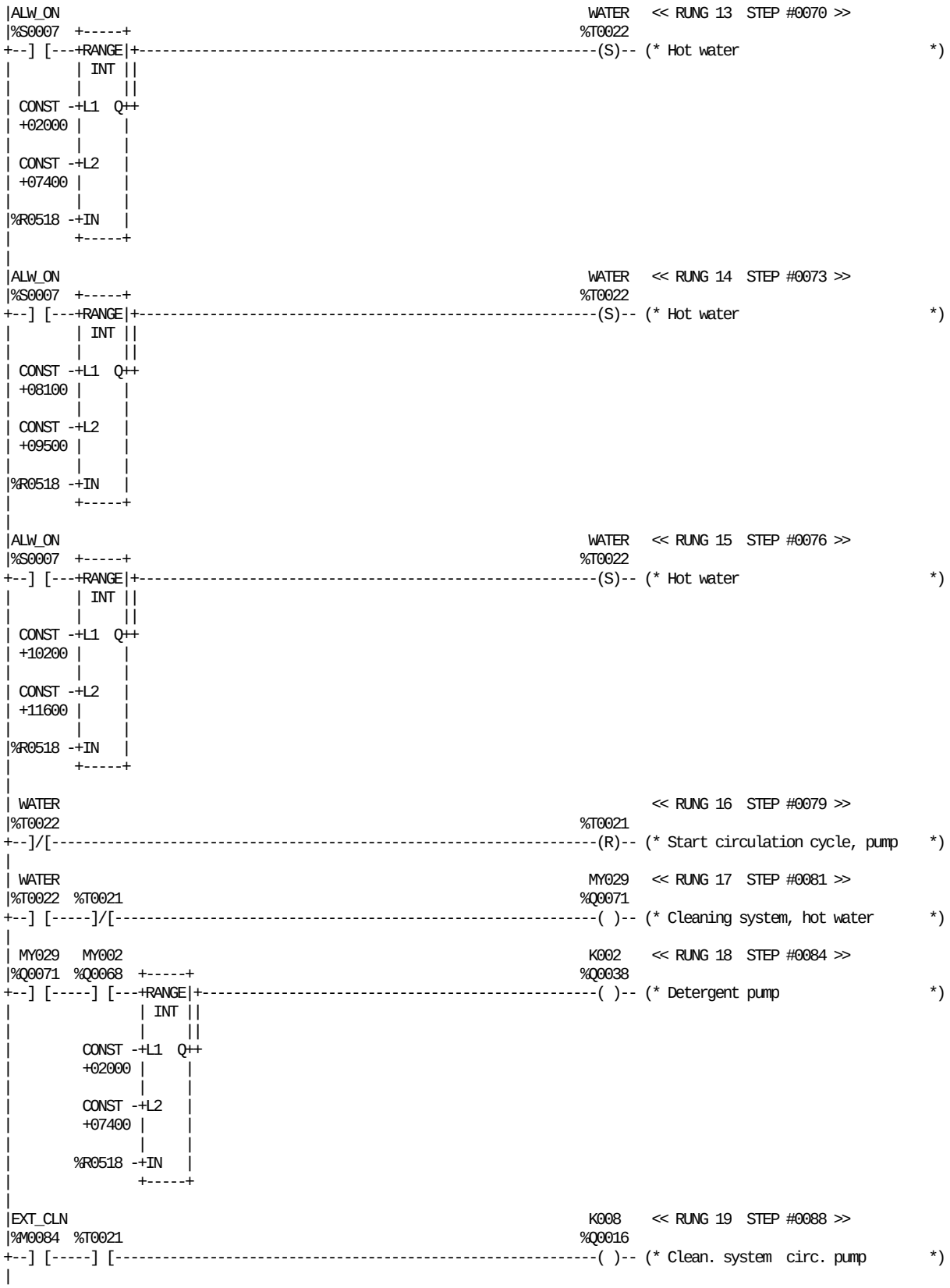

REFERENCE	NICKNAME	REFERENCE DESCRIPTION	REFERENCE	NICKNAME	REFERENCE DESCRIPTION
%T0021		Start circulation cycle, pump	%Q0016	K008	Clean. system circ. pump
%R0518		Sq.ext.clean prg.	%Q0068	MY002	Cleaning tray, draining
%S0007	ALW_ON		%Q0071	MY029	Cleaning system, hot water
%M0084	EXT_CLN	Machine in pos. extern. clean	%T0022	WATER	Hot water
%Q0038	K002	Detergent pump			

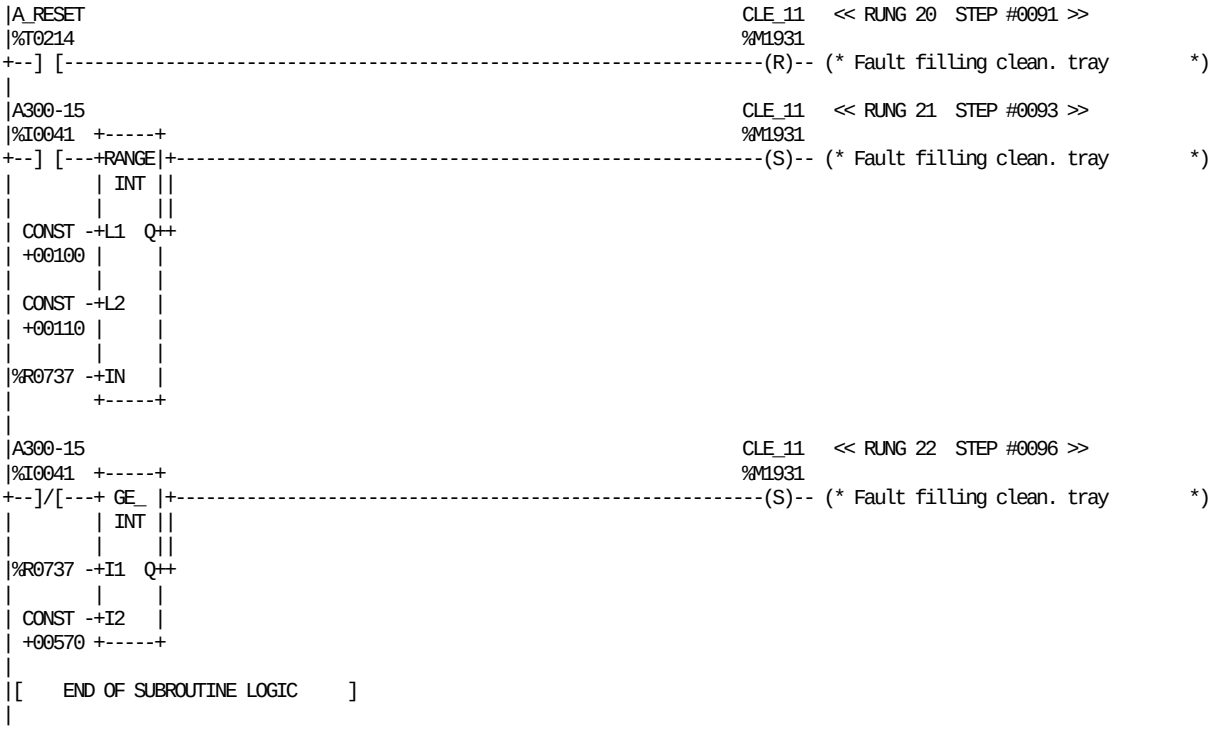

REFERENCE	NICKNAME	REFERENCE DESCRIPTION	REFERENCE	NICKNAME	REFERENCE DESCRIPTION
%R0737		Time clean tray fill.	%T0214	A_RESET	Pulse+ reset A-alarm lock
%I0041	A300-15	Clean tray level	%M1931	CLE_11	Fault filling clean. tray

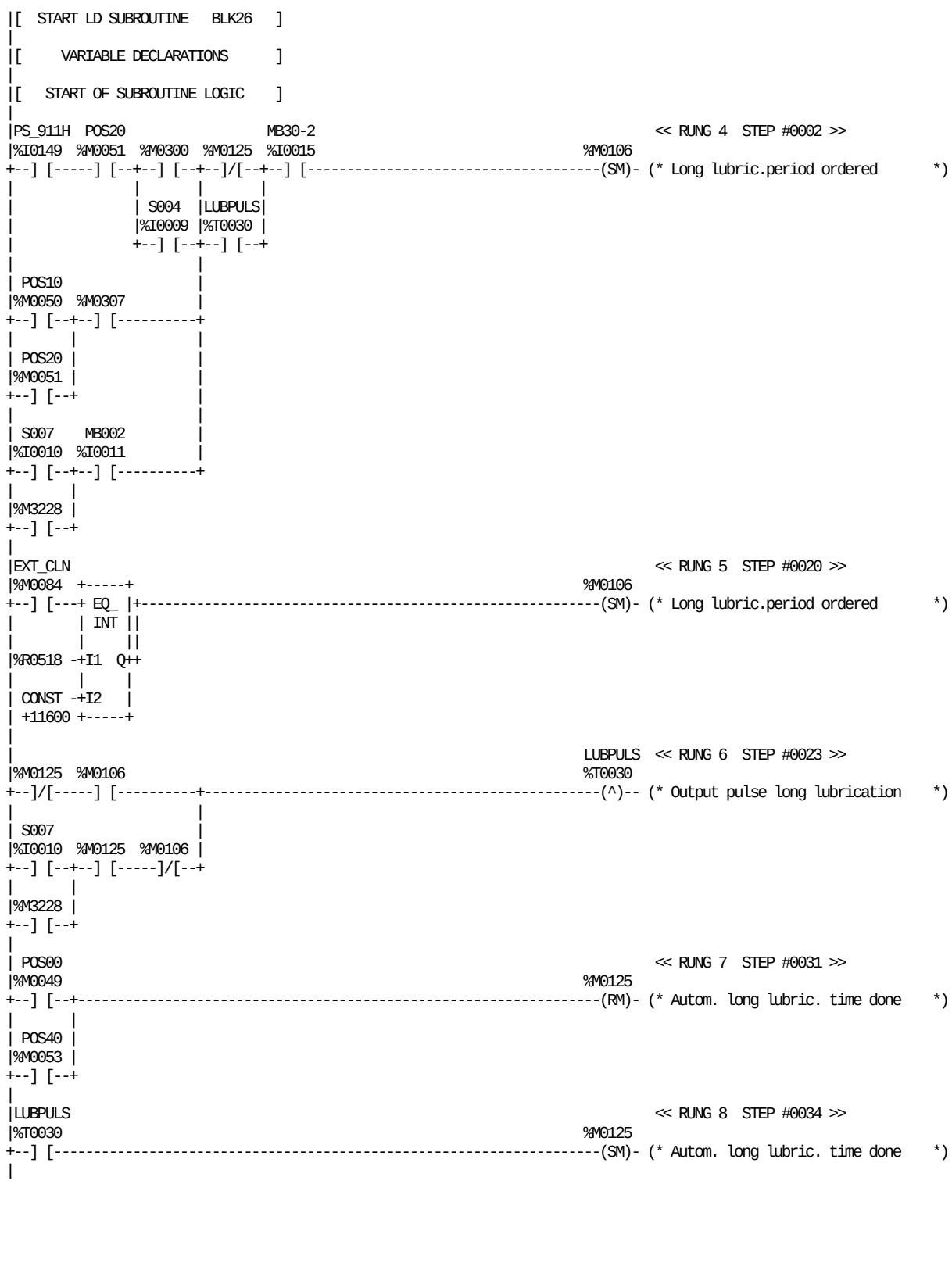

REFERENCE	NICKNAME	REFERENCE DESCRIPTION	REFERENCE	NICKNAME	REFERENCE DESCRIPTION
%M0106		Long lubric.period ordered	%I0015	MB30-2	Lubrication oil low level
%M0125		Autom. long lubric. time done	%M0049	POS00	Ladder pos 00
%M0300		Tube sealing going on	%M0050	POS10	Ladder pos 10
%M0307		Aux.output inching	%M0051	POS20	Ladder pos 20
%M3228		Manual lubrication from TPOP	%M0053	POS40	Machine ladder pos 40
%R0518		Sq.ext.clean prg.	%I0149	PS_911H	Step up
%M0084	EXT_CLN	Machine in pos. extern. clean	%I0009	S004	Service switch
%T0030	LUBPULS	Output pulse long lubrication	%I0010	S007	Manual lubrication
%I0011	MB002	Main air pressure			

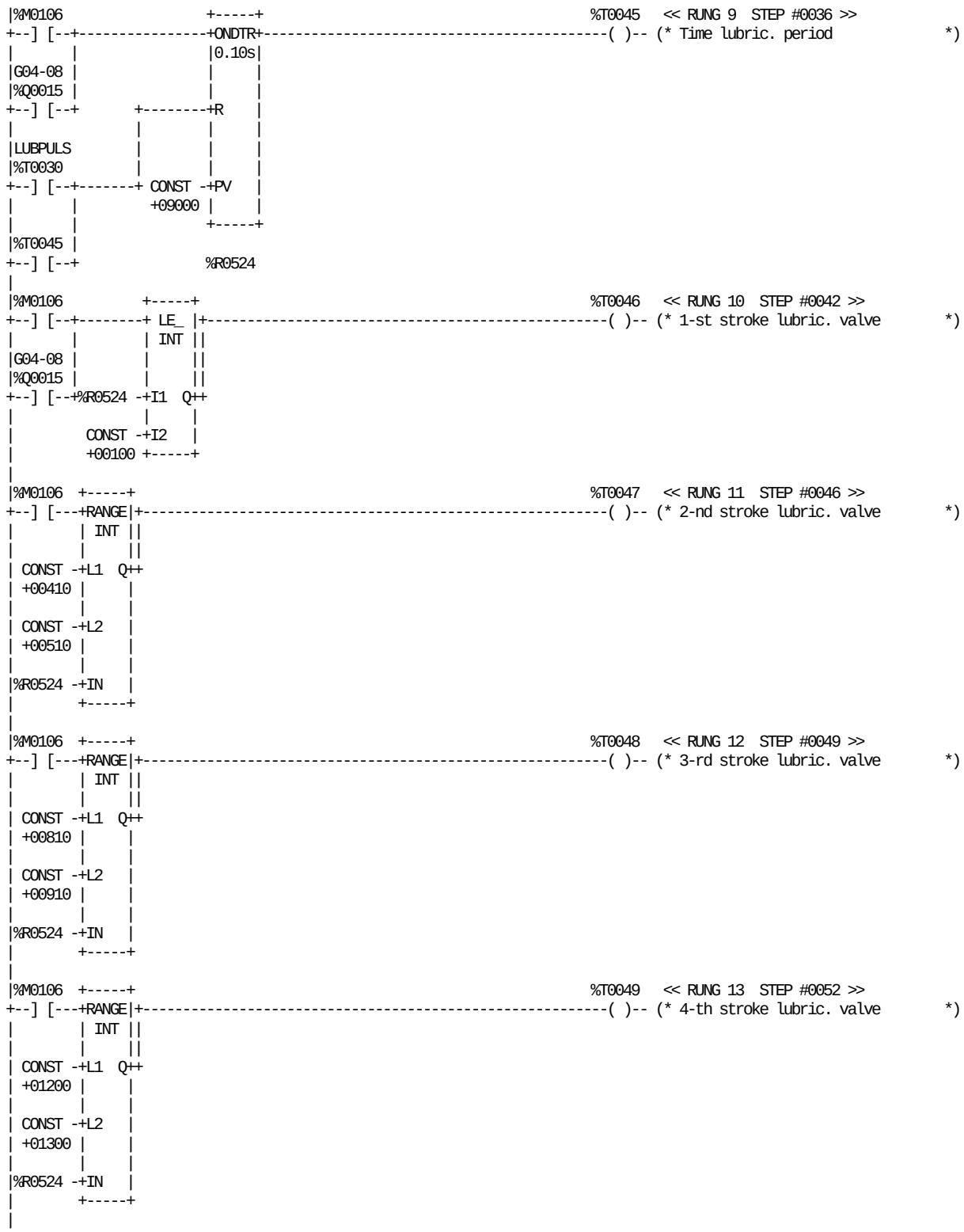

REFERENCE NICKNAME	REFERENCE DESCRIPTION	REFERENCE NICKNAME	REFERENCE DESCRIPTION
%M0106	Long lubric.period ordered	%T0049	4-th stroke lubric. valve
%T0045	Time lubric. period	%R0524	Timer sq. lubric.
%T0046	1-st stroke lubric. valve	%Q0015 G04-08	Main motor, high speed
%T0047	2-nd stroke lubric. valve	%T0030 LUBPULS	Output pulse long lubrication
%T0048	3-rd stroke lubric. valve		

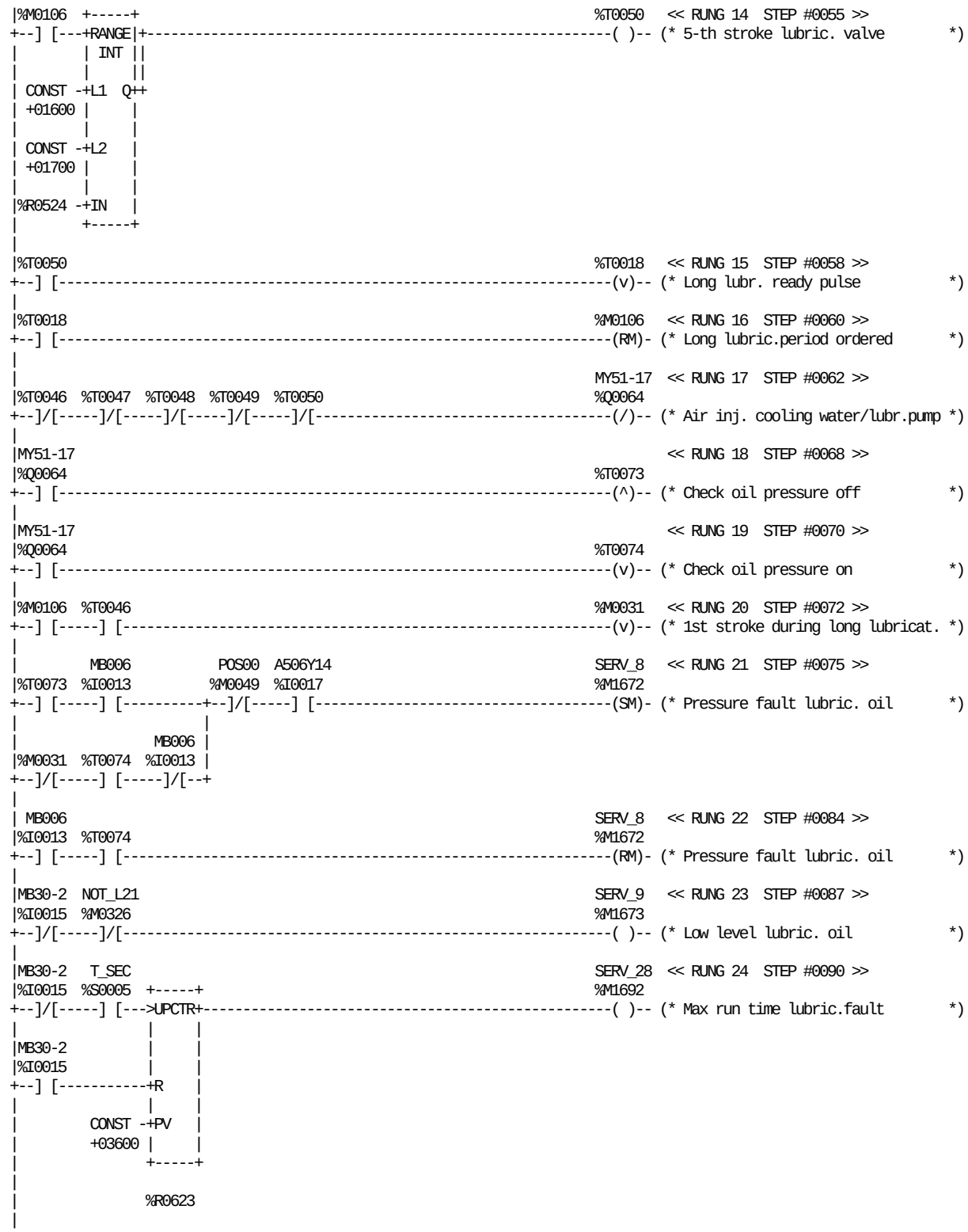

REFERENCE NICKNAME	REFERENCE DESCRIPTION	REFERENCE NICKNAME	REFERENCE DESCRIPTION
%M0031	1st stroke during long lubricat.	%R0623	Max.run time lubric. fault
%M0106	Long lubric.period ordered	%I0017 A506Y14	Emergency stop safety module
%T0018	Long lubr. ready pulse	%I0013 MB006	Lubrication oil pressure
%T0046	1-st stroke lubric. valve	%I0015 MB30-2	Lubrication oil low level
%T0047	2-nd stroke lubric. valve	%Q0064 MY51-17	Air inj. cooling water/lubr.pump
%T0048	3-rd stroke lubric. valve	%M0326 NOT_L21	Line L21-L20
%T0049	4-th stroke lubric. valve	%M0049 POS00	Ladder pos 00
%T0050	5-th stroke lubric. valve	%M1692 SERV_28	Max run time lubric.fault
%T0073	Check oil pressure off	%M1672 SERV_8	Pressure fault lubric. oil
%T0074	Check oil pressure on	%M1673 SERV_9	Low level lubric. oil
%R0524	Timer sq. lubric.	%S0005 T_SEC	

BLOCK: 26 LUBRICATION

```
|[    END OF SUBROUTINE LOGIC     ]
|
```

```
|[  START LD SUBROUTINE   BLK27   ]
|
|[     VARIABLE DECLARATIONS      ]
|
|[   START OF SUBROUTINE LOGIC    ]
|
| MB512   POS10                                                    STEP1HI  << RUNG 4  STEP #0002 >>
|%I0164  %M0050                                                    %M0450
+--]/[--+--] [-----------------------------------------------------------( )-- (* Step-up cond. 1 for H.I.        *)
|       |
| MB517 |
|%I0166 |
+--]/[--+
|
| MB512   POS30                                                    STEP2HI  << RUNG 5  STEP #0006 >>
|%I0164  %M0052  %M0445                                            %M0451
+--]/[--+--] [-----]/[-----------------------------------------------------( )-- (* Step-up cond. 2 for H.I.        *)
|       |
| MB513 |
|%I0165 |
+--] [--+
|
| MB512                                                            STEP3HI  << RUNG 6  STEP #0011 >>
|%I0164                                                            %M0452
+--]/[----------+-----------------------------------------------------------( )-- (* Step-up cond. 3 for H.I.        *)
|               |
| MB511  X02-286|
|%I0162  %I0063 |
+--] [-----]/[--+
|
| MB512   MY034                                                     MY510   << RUNG 7  STEP #0016 >>
|%I0164  %Q0075                                                    %Q0129
+--] [-----] [-----------------------------------------------------------( )-- (* Spray tank filling             *)
|
| MB512  A510-15                                                           << RUNG 8  STEP #0019 >>
|%I0164  %I0161  +-----+
+--] [-----]/[---+ EQ_ |+-------------------------------------------------<+>
|               | INT ||
|               |     ||
|       %R0548 -+I1  Q++
|               |     |
|        CONST -+I2   |
|        +00100 +-----+
|
|                                                                  POX_10   << RUNG 9  STEP #0023 >>
|                                                                  %M1610
+<+>-----------+-----------------------------------------------------------( )-- (* Spray tank not filling         *)
|              |
|POX_10  A_RESET|
|%M1610  %T0214 |
+--] [-----]/[--+
|
| MB512  POX_10                                                     MY516   << RUNG 10  STEP #0028 >>
|%I0164  %M1610  %M0530                                            %Q0134
+--] [-----]/[--+--] [--+-----------------------------------------------( )-- (* Spray tank spraying             *)
|               |     |
|               |%T0056 |
|               +--] [--+
|
```

REFERENCE	NICKNAME	REFERENCE DESCRIPTION	REFERENCE	NICKNAME	REFERENCE DESCRIPTION
%M0445		Temperature before spray	%Q0075	MY034	Spray tank, filling
%M0530		Spray pause time	%Q0129	MY510	Spray tank filling
%T0056		Spray tank evacuat pos 30	%Q0134	MY516	Spray tank spraying
%R0548		Spray peroxide	%M0050	POS10	Ladder pos 10
%I0161	A510-15	Level Relay	%M0052	POS30	Ladder pos 30
%T0214	A_RESET	Pulse+ reset A-alarm lock	%M1610	POX_10	Spray tank not filling
%I0162	MB511	Nitrogen Pressure	%M0450	STEP1HI	Step-up cond. 1 for H.I.
%I0164	MB512	Injection_off	%M0451	STEP2HI	Step-up cond. 2 for H.I.
%I0165	MB513	Nozzle position	%M0452	STEP3HI	Step-up cond. 3 for H.I.
%I0166	MB517	Pipe in cleaning position	%I0063	X02-286	Clean through production valve

BLOCK: 27 HEADSPACE BY INJECTION

```
| MB512  A510-15                                                    POX_11   << RUNG 11  STEP #0034 >>
|%I0164  %I0161  %M0529                                            %M1611
+--] [-----] [-----] [--+-------------------------------------------( )-- (* Spray tank not spraying         *)
|                       |
|POX_11  A_RESET        |
|%M1611  %T0214         |
+--] [-----]/[----------+
|
| MB512  TEM_SPR                                                    TEM_MAL  << RUNG 12  STEP #0041 >>
|%I0164  %M0442  %M0525                                            %M0446
+--] [-----]/[-----] [-------------------------------------------------( )-- (* Temperature malfunction         *)
|
|TEM_MAL                                                           POX_12   << RUNG 13  STEP #0045 >>
|%M0446                                                            %M1612
+--] [--+-------+-------------------------------------------------( )-- (* Temperature monitor spraying    *)
|       |       |
|%M0445 |       |
+--] [--+       |
|               |
|POX_12  A_RESET|
|%M1612  %T0214 |
+--] [-----]/[--+
|
| MB512   MB513                                                    FIL_14   << RUNG 14  STEP #0051 >>
|%I0164  %I0165                                                    %M1774
+--] [-----]/[-----------------------------------------------------( )-- (* Nozzle not in position          *)
|
|FIL_14  POS0030                                                   NOZ_AL   << RUNG 15  STEP #0054 >>
|%M1774  %M0065                                                    %T0117
+--] [-----]/[-----------------------------------------------------( )-- (* Nozzle alarm to pos.0           *)
|
|POX_11                                                            MALFUN_  << RUNG 16  STEP #0057 >>
|%M1611                                                            %M0444
+--] [--+-------------------------------------------------------------( )-- (* Malfunction during spray        *)
|       |
|TEM_MAL|
|%M0446 |
+--] [--+
|
| POS10          MB512                                              MY511   << RUNG 17  STEP #0060 >>
|%M0050         %I0164                                             %Q0130
+--] [----------+--] [-------------------------------------------------( )-- (* Bypass                        *)
|                |
|POS2040         |
|%M0066  %M0109  |
+--] [-----]/[--+
|
| POS00   POS80          STARTQ                                     MY513   << RUNG 18  STEP #0066 >>
|%M0049  %M0057  %M0453  %M0320                                    %Q0131
+--]/[-----]/[-----]/[-----]/[-----------------------------------------( )-- (* Air Nitrogen                  *)
|
```

REFERENCE	NICKNAME	REFERENCE DESCRIPTION
%M0109		Drying after spraying
%M0445		Temperature before spray
%M0453		Air evacuation done
%M0525		Spray finish
%M0529		Max empty time
%I0161	A510-15	Level Relay
%T0214	A_RESET	Pulse+ reset A-alarm lock
%M1774	FIL_14	Nozzle not in position
%M0444	MALFUN_	Malfunction during spray
%I0164	MB512	Injection_off
%I0165	MB513	Nozzle position
%Q0130	MY511	Bypass

REFERENCE	NICKNAME	REFERENCE DESCRIPTION
%Q0131	MY513	Air Nitrogen
%T0117	NOZ_AL	Nozzle alarm to pos.0
%M0049	POS00	Ladder pos 00
%M0065	POS0030	Machine ladder pos 00-30
%M0050	POS10	Ladder pos 10
%M0066	POS2040	Machine ladder pos 20-40
%M0057	POS80	Machine ladder pos 80
%M1611	POX_11	Spray tank not spraying
%M1612	POX_12	Temperature monitor spraying
%M0320	STARTQ	Start sequenc
%M0446	TEM_MAL	Temperature malfunction
%M0442	TEM_SPR	Temperature during spray

BLOCK: 27 HEADSPACE BY INJECTION

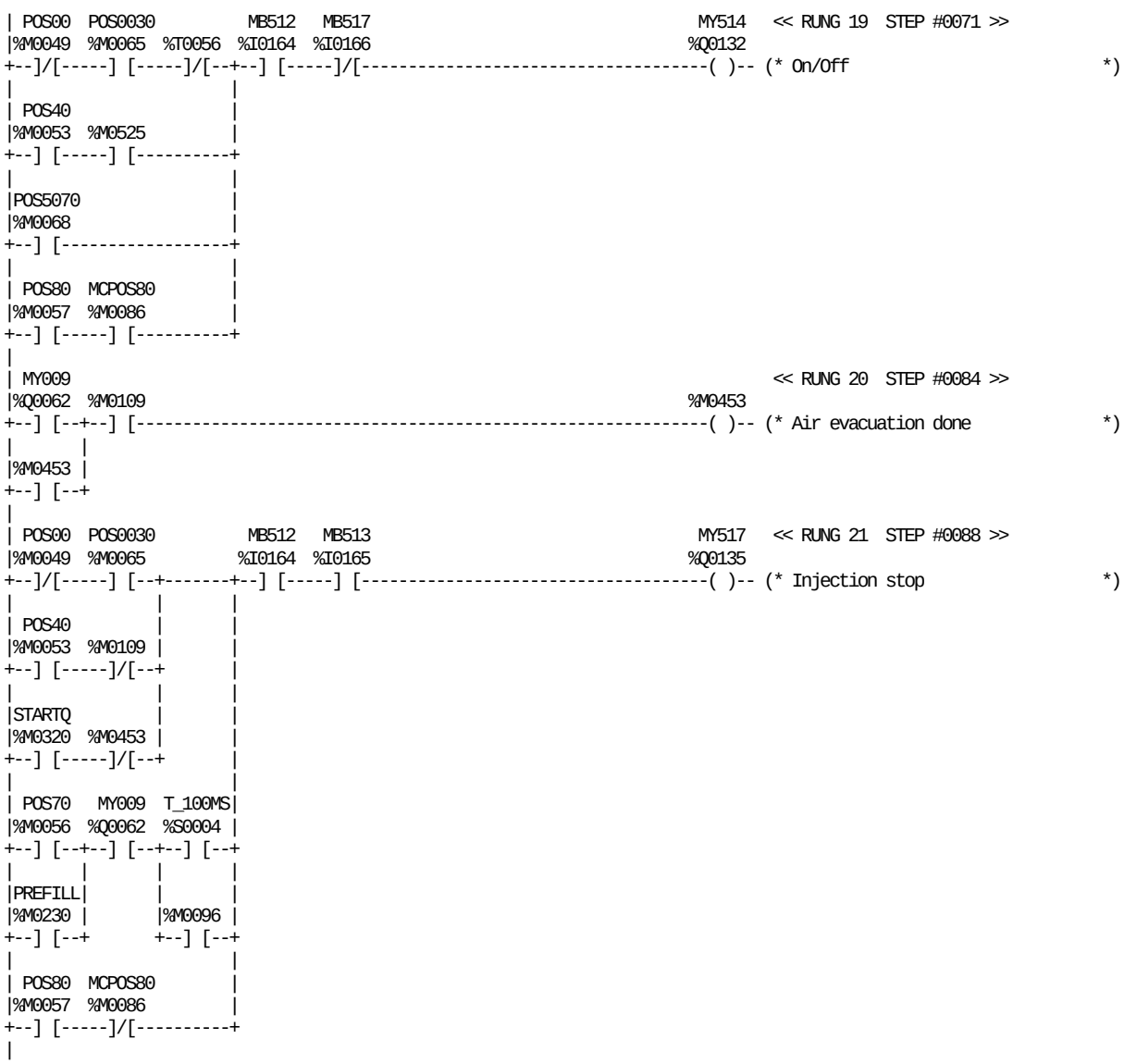

REFERENCE	NICKNAME	REFERENCE DESCRIPTION
%M0096		Valve A Opening after sh.stop
%M0109		Drying after spraying
%M0453		Air evacuation done
%M0525		Spray finish
%T0056		Spray tank evacuat pos 30
%I0164	MB512	Injection_off
%I0165	MB513	Nozzle position
%I0166	MB517	Pipe in cleaning position
%M0086	MCPOS80	Machine in pos.80 for >2 min
%Q0062	MY009	Product valve (A)
%Q0132	MY514	On/Off

REFERENCE	NICKNAME	REFERENCE DESCRIPTION
%Q0135	MY517	Injection stop
%M0049	POS00	Ladder pos 00
%M0065	POS0030	Machine ladder pos 00-30
%M0053	POS40	Machine ladder pos 40
%M0068	POS5070	Machine ladder pos 50-70
%M0056	POS70	Machine ladder pos 70
%M0057	POS80	Machine ladder pos 80
%M0230	PREFILL	Pre-filling selected
%M0320	STARTQ	Start sequenc
%S0004	T_100MS	

BLOCK: 27 HEADSPACE BY INJECTION

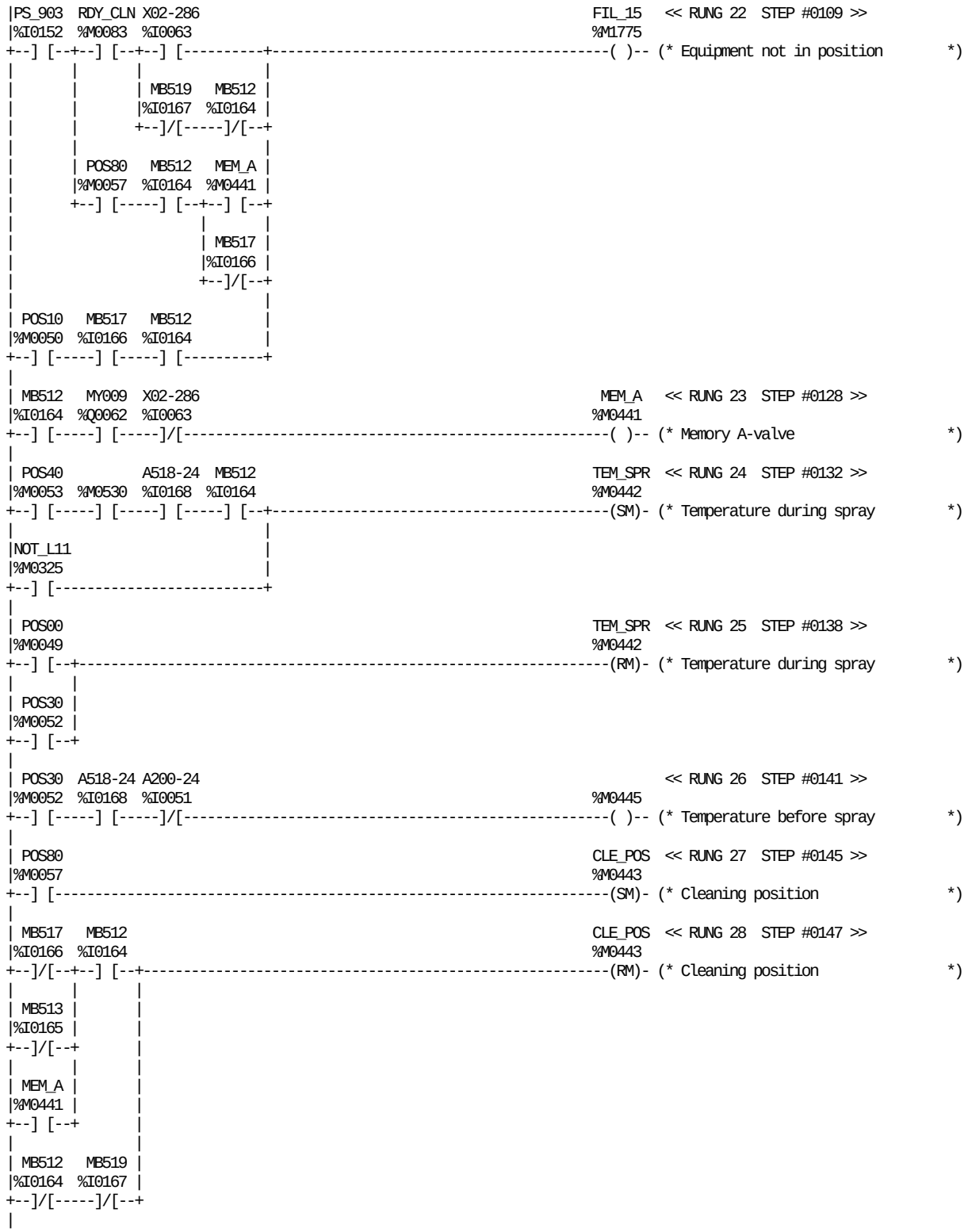

REFERENCE	NICKNAME	REFERENCE DESCRIPTION	REFERENCE	NICKNAME	REFERENCE DESCRIPTION
%M0445		Temperature before spray	%Q0062	MY009	Product valve (A)
%M0530		Spray pause time	%M0325	NOT_L11	Line L11-L10 not ok
%I0051	A200-24	Temp.mon.presterilisation	%M0049	POS00	Ladder pos 00
%I0168	A518-24	Temp.monitor H.I. spray	%M0050	POS10	Ladder pos 10
%M0443	CLE_POS	Cleaning position	%M0052	POS30	Ladder pos 30
%M1775	FIL_15	Equipment not in position	%M0053	POS40	Machine ladder pos 40
%I0164	MB512	Injection_off	%M0057	POS80	Machine ladder pos 80
%I0165	MB513	Nozzle position	%I0152	PS_903	Selector switch
%I0166	MB517	Pipe in cleaning position	%M0083	RDY_CLN	Machine pos ready for cleaning
%I0167	MB519	Cup in cleaning position	%M0442	TEM_SPR	Temperature during spray
%M0441	MEM_A	Memory A-valve	%I0063	X02-286	Clean through production valve

BLOCK: 27 HEADSPACE BY INJECTION

```
| POS00   MB512   MB511                                              SERV_19  << RUNG 29  STEP #0155 >>
|%M0049  %I0164  %I0162                                              %M1683
+--]/[-----] [-----]/[-------------------------------------------------------( )-- (* Nitrogen gas low pressure       *)
|
| MB051   MB512                                                             << RUNG 30  STEP #0159 >>
|%I0029  %I0164                                                      %M0447
+--] [--+--]/[--+-------------------------------------------------------( )-- (* Product pipe in position        *)
|       |       |
|       |POS0030|
|       |%M0065 |
|       +--]/[--+
|               |
| MB051   MB512 |
|%I0029  %I0164 |
+--]/[-----] [--+
|
|[    END OF SUBROUTINE LOGIC     ]
|
```

REFERENCE	NICKNAME	REFERENCE DESCRIPTION
%M0447		Product pipe in position
%I0029	MB051	Product pipe, position
%I0162	MB511	Nitrogen Pressure
%I0164	MB512	Injection_off

REFERENCE	NICKNAME	REFERENCE DESCRIPTION
%M0049	POS00	Ladder pos 00
%M0065	POS0030	Machine ladder pos 00-30
%M1683	SERV_19	Nitrogen gas low pressure

BLOCK: 27 HEADSPACE BY INJECTION

This page intentionally left blank

```
|[  START LD SUBROUTINE   BLK28   ]
|
|[     VARIABLE DECLARATIONS      ]
|
|[   START OF SUBROUTINE LOGIC    ]
|
|        A505Y14  ASU_4  ASU_21   ASU_2  ASU_20  ASU_27                        << RUNG 4  STEP #0002 >>
|%M0264  %I0020  %M1956  %M1973  %M1954  %M1972  %M1979
+--] [--+--] [-----]/[-----]/[-----]/[-----]/[-----]/[-----------------------<+>
|       |
|%M0192 |
+--]/[--+
|
|        A512Y14 SERV_2  ASU_11   POS00  INT_CLN EXT_CLN                       << RUNG 5  STEP #0011 >>
|        %I0019  %M1666  %M1963  %M0049  %M0085  %M0084                %M0192
+<+>-------] [-----]/[-----]/[-----]/[-----]/[-----]/[--------------------(/)-- (* ASU reset p.b. lamp aux memory   *)
|
|         T_SEC                                                         MH010S   << RUNG 6  STEP #0019 >>
|%M0192  %S0005                                                         %Q0078
+--] [-----] [-------------------------------------------------------------( )-- (* ASU reset push button lamp       *)
|
|MS010H                                                                         << RUNG 7  STEP #0022 >>
|%I0114                                                                 %T0070
+--] [-----------------------------------------------------------------------(^)-- (* ASU reset alarm push button P+   *)
|
|FST_SCN                                                                        << RUNG 8  STEP #0024 >>
|%S0001  +-----+
+--] [---+MOVE_+-
|        | INT |
|        |     |
| CONST -+IN  Q+-%R0218
| +02000 | LEN |
|        |00001|
|        |     |
|        +-----+
|
|        A_RESET                                                                << RUNG 9  STEP #0026 >>
|%T0070  %T0214  +-----+                                                %M0264
+--]/[-----]/[---+ TMR +-------------------------------------------------(/)-- (* ASU aux. reset memory            *)
|                |.001s|
|                |     |
|         CONST -+PV   |
|         +02000 |     |
|                +-----+
|
|                %R0218
|
|         T_SEC                                                          K112    << RUNG 10  STEP #0030 >>
|%M0264  %S0005                                                         %Q0051
+--] [-----] [-------------------------------------------------------------( )-- (* ASU aux. reset relay            *)
|
```

REFERENCE	NICKNAME	REFERENCE DESCRIPTION	REFERENCE	NICKNAME	REFERENCE DESCRIPTION
%M0192		ASU reset p.b. lamp aux memory	%M1956	ASU_4	ASU broken web
%M0264		ASU aux. reset memory	%T0214	A_RESET	Pulse+ reset A-alarm lock
%T0070		ASU reset alarm push button P+	%M0084	EXT_CLN	Machine in pos. extern. clean
%R0218		ASU aux. reset timer	%S0001	FST_SCN	
%I0020	A505Y14	ASU safety module	%M0085	INT_CLN	Machine pos internal cleaning
%I0019	A512Y14	Crease weel safety module	%Q0051	K112	ASU aux. reset relay
%M1963	ASU_11	ASU inverter alarm	%Q0078	MH010S	ASU reset push button lamp
%M1954	ASU_2	ASU photocells alarm	%I0114	MS010H	ASU reset alarm push button
%M1972	ASU_20	ASU, cutting tables not in pos.	%M0049	POS00	Ladder pos 00
%M1973	ASU_21	Feeder not in position	%M1666	SERV_2	Low press. main air
%M1979	ASU_27	ASU packaging material finished	%S0005	T_SEC	

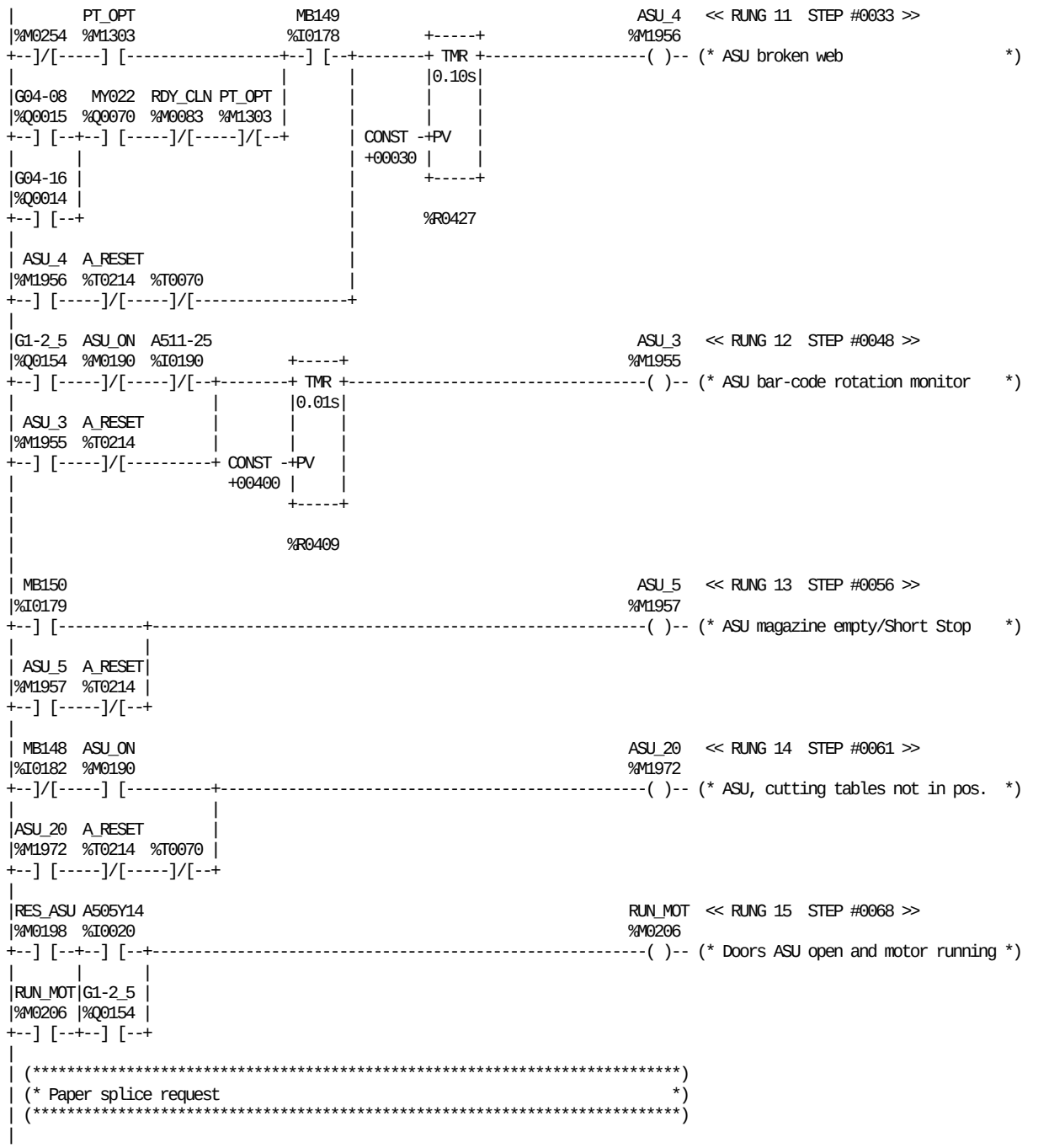

REFERENCE	NICKNAME	REFERENCE DESCRIPTION	REFERENCE	NICKNAME	REFERENCE DESCRIPTION
%M0254		Still PT infeed	%Q0015	G04-08	Main motor, high speed
%T0070		ASU reset alarm push button P+	%Q0014	G04-16	Main motor, low speed
%R0409		Monitor bar-code ASU	%Q0154	G1-2_5	Enable infeed motors
%R0427		Delay paper in loop broken	%I0182	MB148	Cutting table
%I0020	A505Y14	ASU safety module	%I0178	MB149	Magazine full
%I0190	A511-25	ASU design photocells	%I0179	MB150	Magazine empty
%M1972	ASU_20	ASU, cutting tables not in pos.	%Q0070	MY022	Main machine, clutch
%M1955	ASU_3	ASU bar-code rotation monitor	%M1303	PT_OPT	PLMS, Option Pull-Tab
%M1956	ASU_4	ASU broken web	%M0083	RDY_CLN	Machine pos ready for cleaning
%M1957	ASU_5	ASU magazine empty/Short Stop	%M0198	RES_ASU	Reset ASU alarm
%M0190	ASU_ON	ASU splice sequence on	%M0206	RUN_MOT	Doors ASU open and motor running
%T0214	A_RESET	Pulse+ reset A-alarm lock			

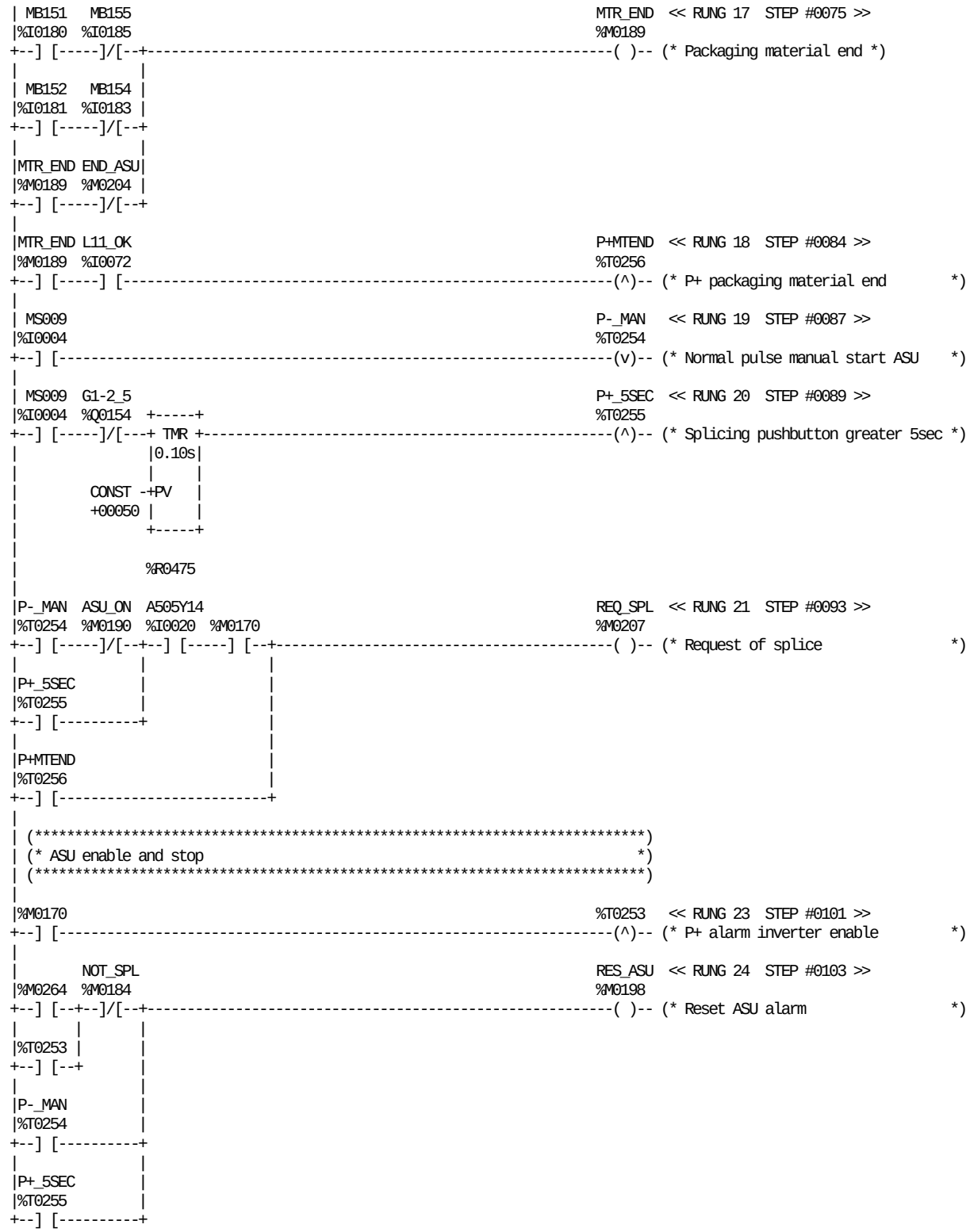

REFERENCE	NICKNAME	REFERENCE DESCRIPTION
%M0170		Delay inverter enable
%M0264		ASU aux. reset memory
%T0253		P+ alarm inverter enable
%R0475		ASU splicing pushbutton time
%I0020	A505Y14	ASU safety module
%M0190	ASU_ON	ASU splice sequence on
%M0204	END_ASU	End of asu sequence
%Q0154	G1-2_5	Enable infeed motors
%I0072	L11_OK	Power 24v
%I0180	MB151	Splicing head right
%I0181	MB152	Splicing head left
%I0183	MB154	Paper supply left
%I0185	MB155	Paper supply right
%I0004	MS009	ASU Splicing pushbutton
%M0189	MTR_END	Packaging material end
%M0184	NOT_SPL	ASU sequence incomplete
%T0256	P+MTEND	P+ packaging material end
%T0255	P+_5SEC	Splicing pushbutton greater 5sec
%T0254	P-_MAN	Normal pulse manual start ASU
%M0207	REQ_SPL	Request of splice
%M0198	RES_ASU	Reset ASU alarm

BLOCK: 28 AUTOMATI SPLICING UNIT

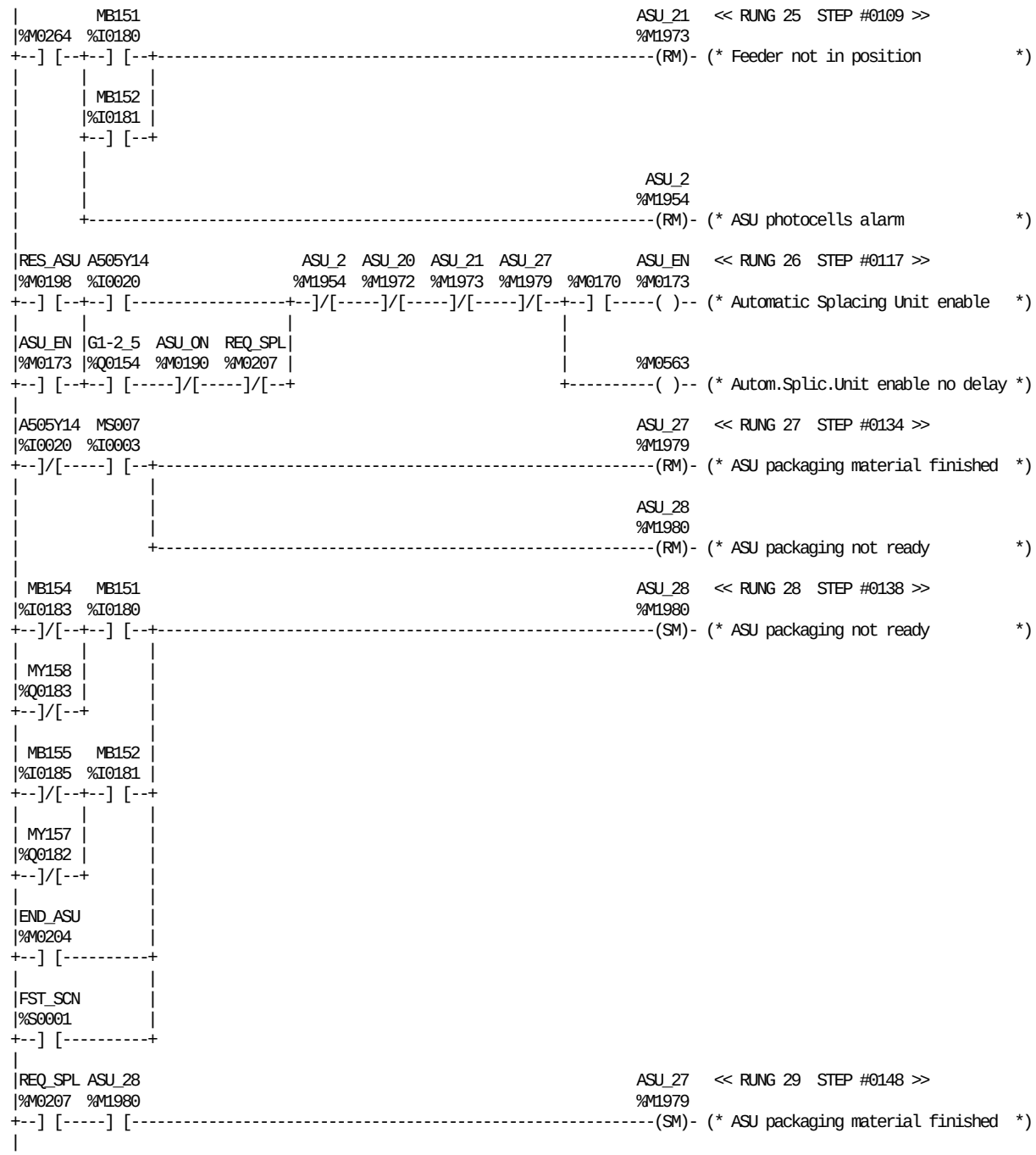

REFERENCE	NICKNAME	REFERENCE DESCRIPTION
%M0170		Delay inverter enable
%M0264		ASU aux. reset memory
%M0563		Autom.Splic.Unit enable no delay
%I0020	A505Y14	ASU safety module
%M1954	ASU_2	ASU photocells alarm
%M1972	ASU_20	ASU, cutting tables not in pos.
%M1973	ASU_21	Feeder not in position
%M1979	ASU_27	ASU packaging material finished
%M1980	ASU_28	ASU packaging not ready
%M0173	ASU_EN	Automatic Splacing Unit enable
%M0190	ASU_ON	ASU splice sequence on
%M0204	END_ASU	End of asu sequence

REFERENCE	NICKNAME	REFERENCE DESCRIPTION
%S0001	FST_SCN	
%Q0154	G1-2_5	Enable infeed motors
%I0180	MB151	Splicing head right
%I0181	MB152	Splicing head left
%I0183	MB154	Paper supply left
%I0185	MB155	Paper supply right
%I0003	MS007	ASU Material lock
%Q0182	MY157	Material lock right
%Q0183	MY158	Material lock left
%M0207	REQ_SPL	Request of splice
%M0198	RES_ASU	Reset ASU alarm

BLOCK: 28 AUTOMATI SPLICING UNIT

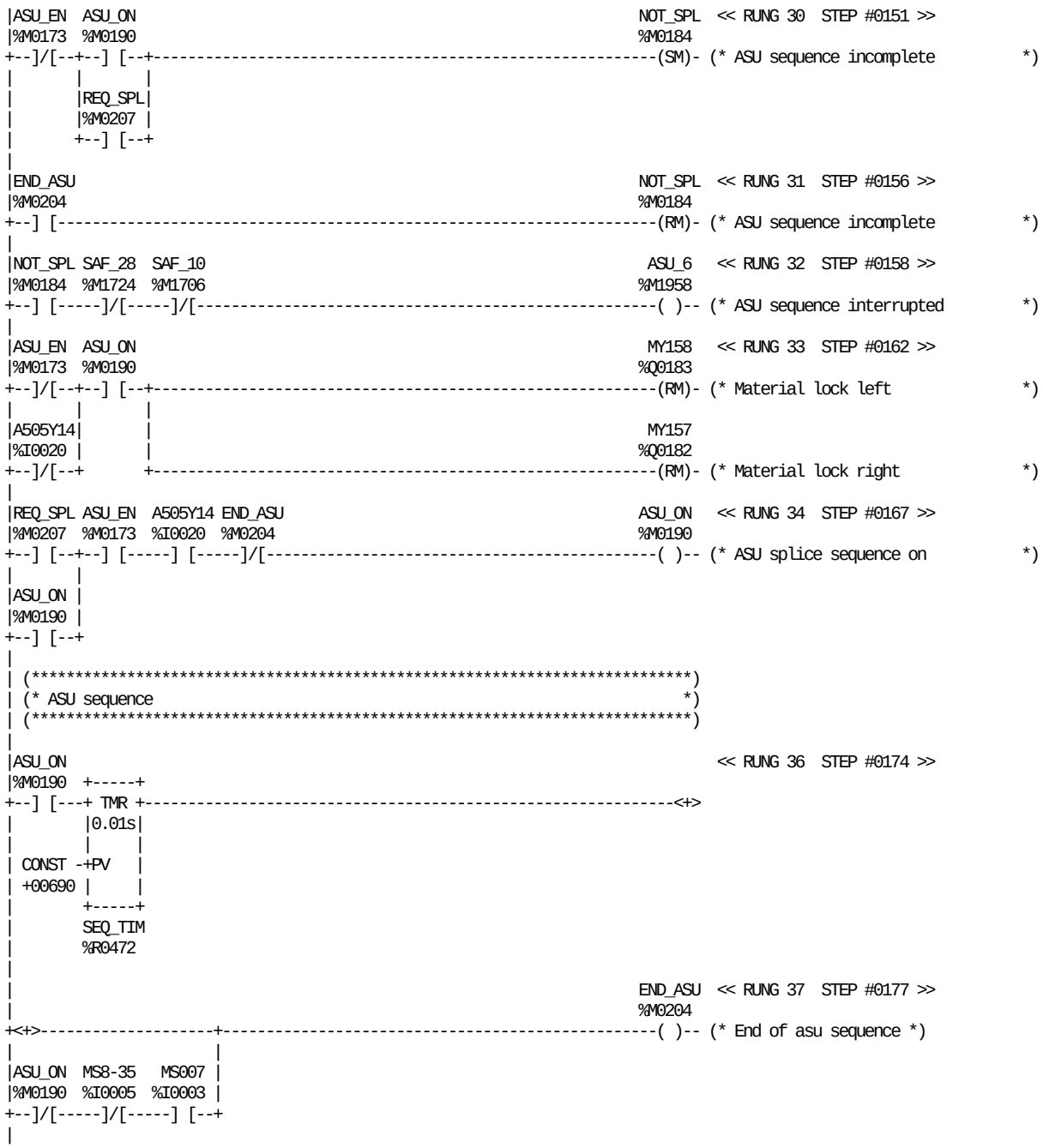

REFERENCE	NICKNAME	REFERENCE DESCRIPTION	REFERENCE	NICKNAME	REFERENCE DESCRIPTION
%I0020	A505Y14	ASU safety module	%Q0182	MY157	Material lock right
%M1958	ASU_6	ASU sequence interrupted	%Q0183	MY158	Material lock left
%M0173	ASU_EN	Automatic Splacing Unit enable	%M0184	NOT_SPL	ASU sequence incomplete
%M0190	ASU_ON	ASU splice sequence on	%M0207	REQ_SPL	Request of splice
%M0204	END_ASU	End of asu sequence	%M1706	SAF_10	Door guard ASU
%I0003	MS007	ASU Material lock	%M1724	SAF_28	Door ASU open
%I0005	MS8-35	Short stop push buttons	%R0472	SEQ_TIM	Asu sequence time

BLOCK: 28 AUTOMATI SPLICING UNIT

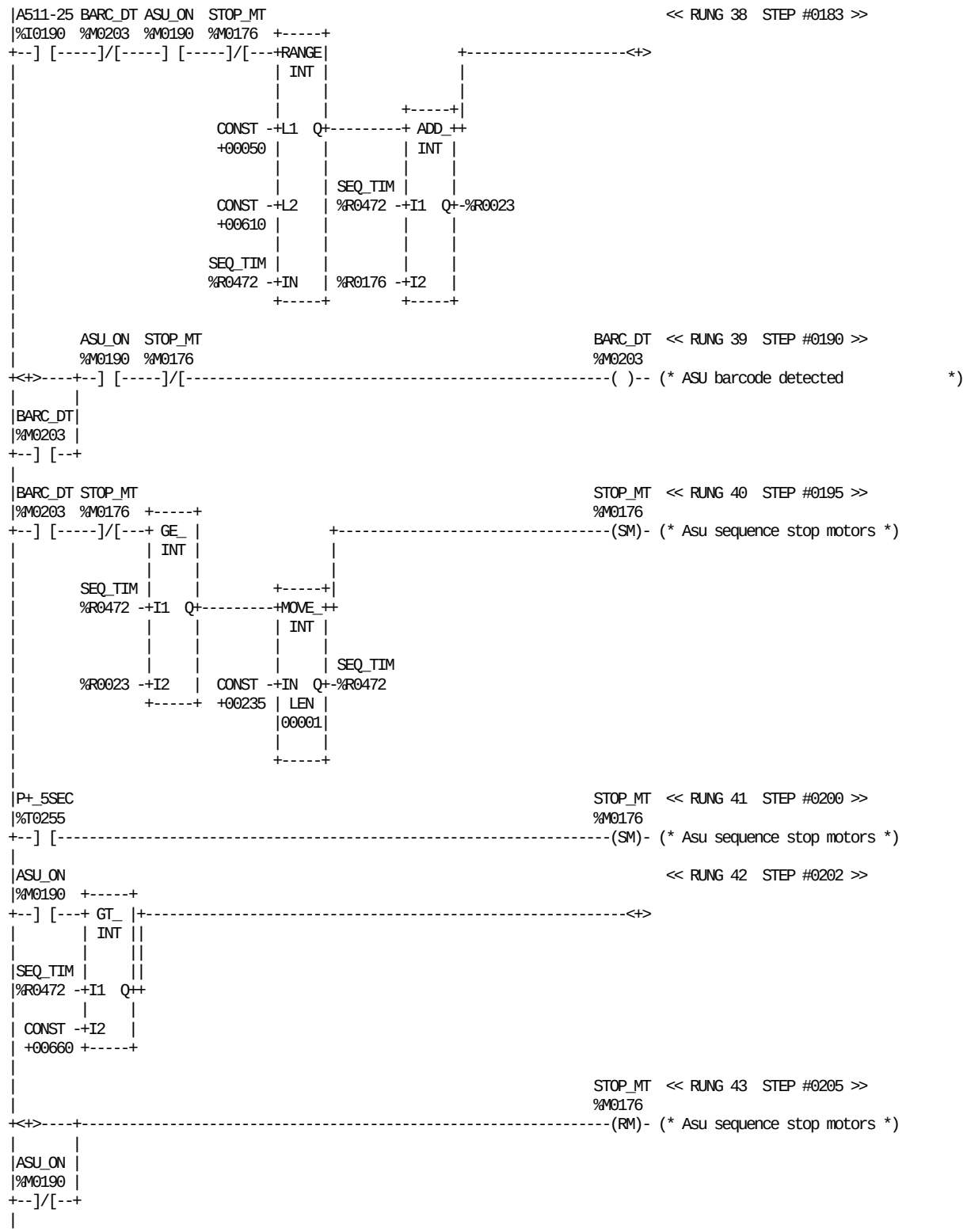

REFERENCE	NICKNAME	REFERENCE DESCRIPTION	REFERENCE	NICKNAME	REFERENCE DESCRIPTION
%R0023		ASU splice stop motor time	%M0203	BARC_DT	ASU barcode detected
%R0176		ASU barcode delay	%T0255	P+_5SEC	Splicing pushbutton greater 5sec
%I0190	A511-25	ASU design photocells	%R0472	SEQ_TIM	Asu sequence time
%M0190	ASU_ON	ASU splice sequence on	%M0176	STOP_MT	Asu sequence stop motors

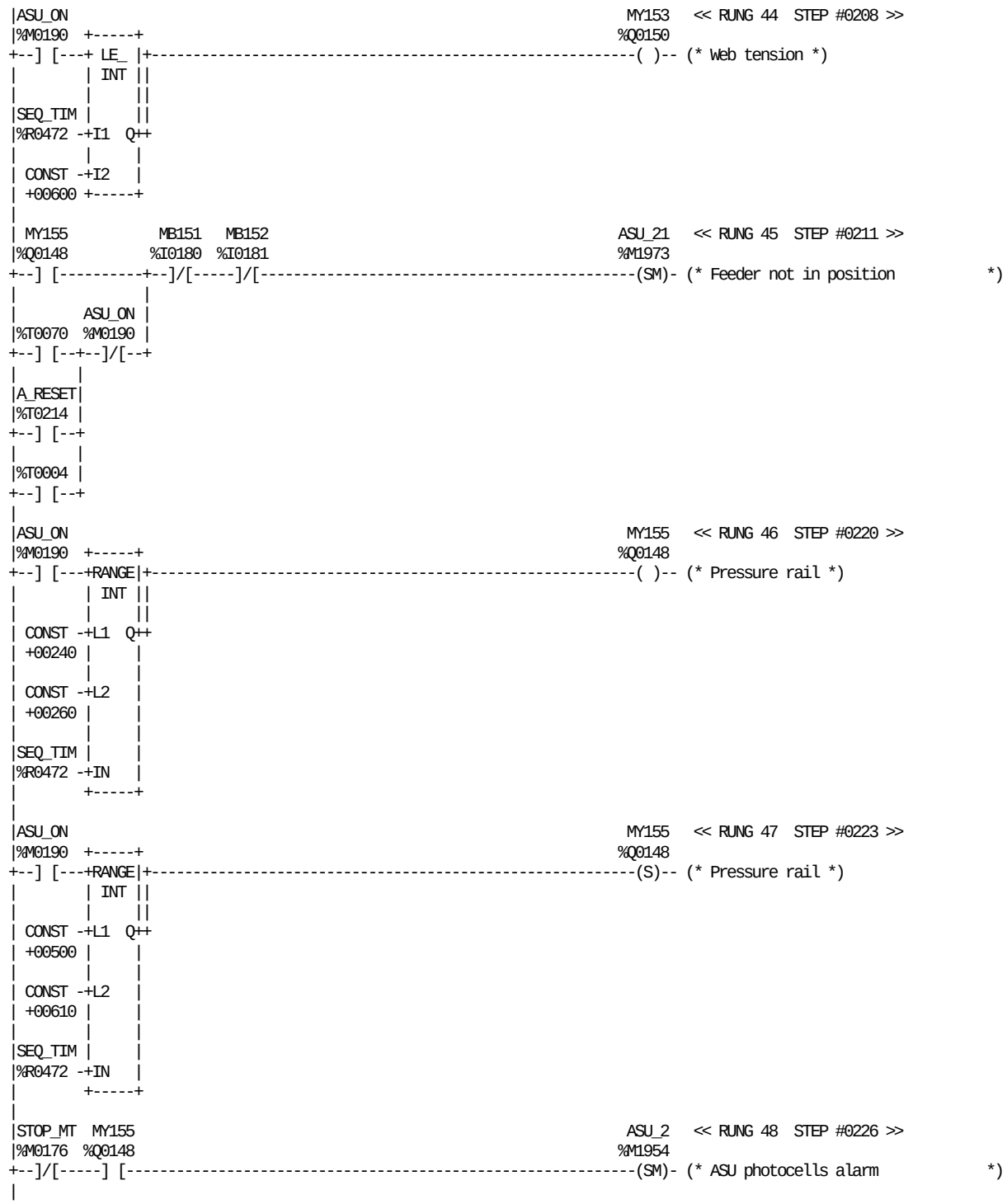

REFERENCE	NICKNAME	REFERENCE DESCRIPTION	REFERENCE	NICKNAME	REFERENCE DESCRIPTION
%T0004		P+ position10/ready for cleaning	%I0180	MB151	Splicing head right
%T0070		ASU reset alarm push button P+	%I0181	MB152	Splicing head left
%M1954	ASU_2	ASU photocells alarm	%Q0150	MY153	Web tension
%M1973	ASU_21	Feeder not in position	%Q0148	MY155	Pressure rail
%M0190	ASU_ON	ASU splice sequence on	%R0472	SEQ_TIM	Asu sequence time
%T0214	A_RESET	Pulse+ reset A-alarm lock	%M0176	STOP_MT	Asu sequence stop motors

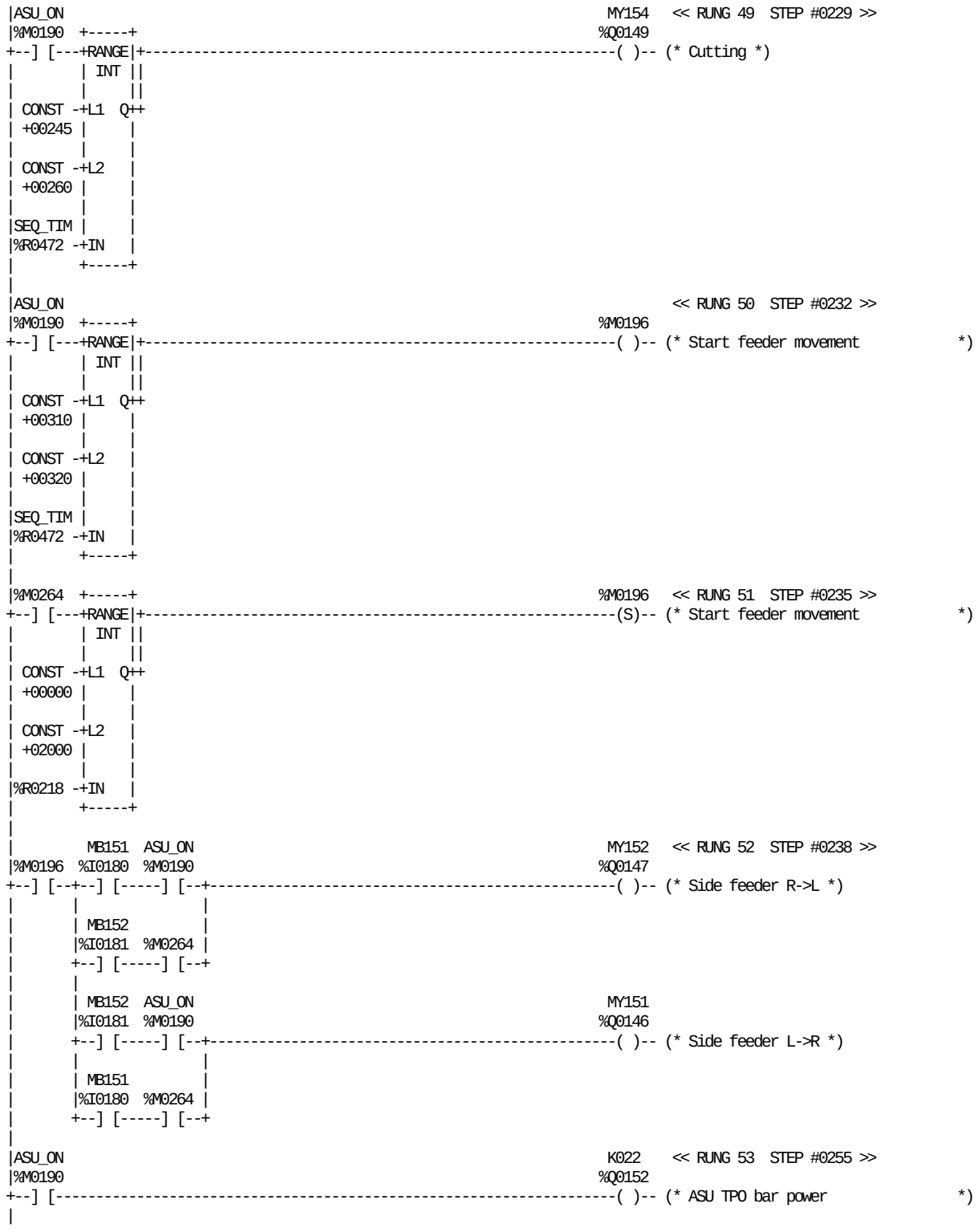

REFERENCE	NICKNAME	REFERENCE DESCRIPTION	REFERENCE	NICKNAME	REFERENCE DESCRIPTION
%M0196		Start feeder movement	%I0181	MB152	Splicing head left
%M0264		ASU aux. reset memory	%Q0146	MY151	Side feeder L->R
%R0218		ASU aux. reset timer	%Q0147	MY152	Side feeder R->L
%M0190	ASU_ON	ASU splice sequence on	%Q0149	MY154	Cutting
%Q0152	K022	ASU TPO bar power	%R0472	SEQ_TIM	Asu sequence time
%I0180	MB151	Splicing head right			

BLOCK: 28 AUTOMATI SPLICING UNIT

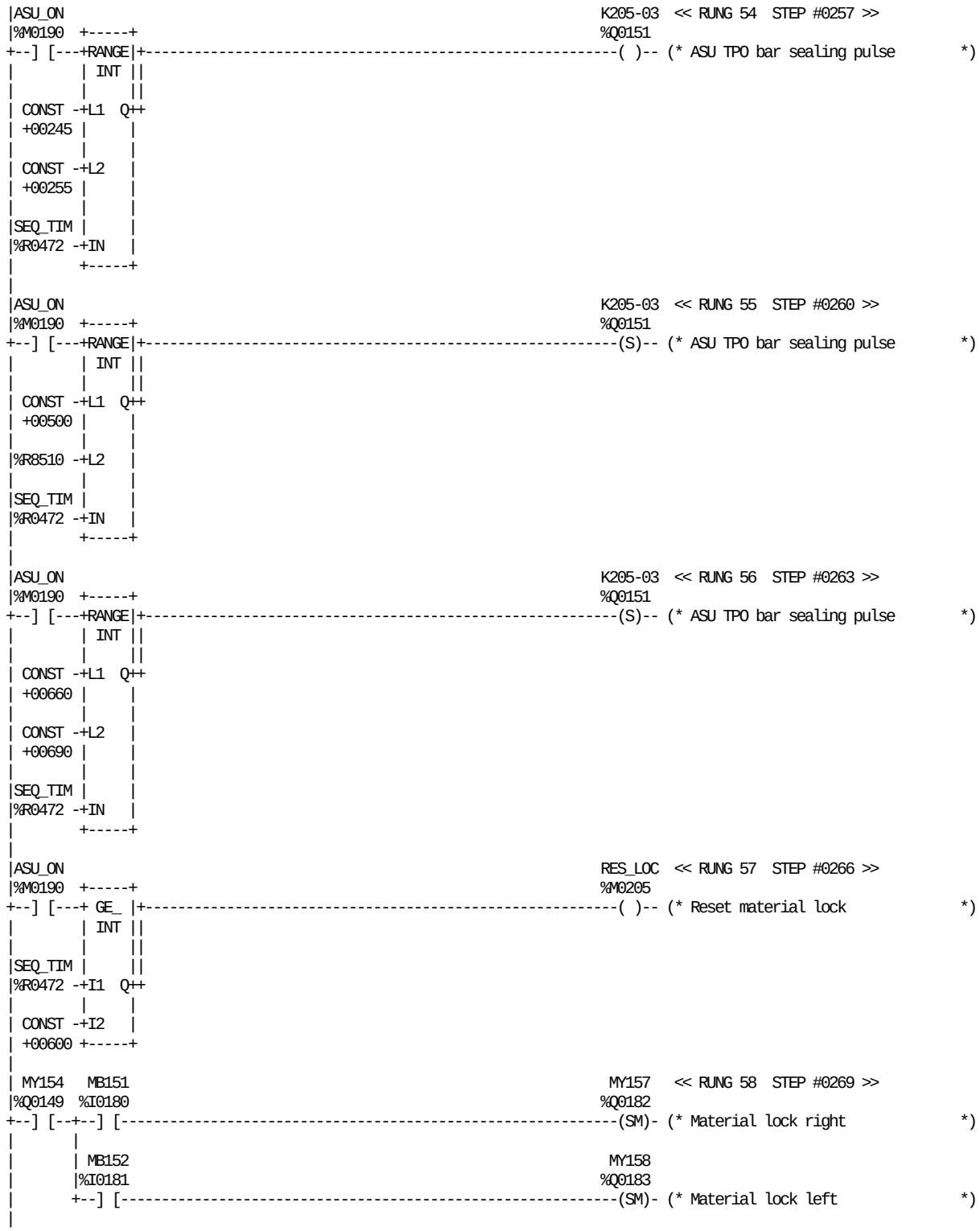

REFERENCE	NICKNAME	REFERENCE DESCRIPTION	REFERENCE	NICKNAME	REFERENCE DESCRIPTION
%R8510		ASU splice time	%Q0149	MY154	Cutting
%M0190	ASU_ON	ASU splice sequence on	%Q0182	MY157	Material lock right
%Q0151	K205-03	ASU TPO bar sealing pulse	%Q0183	MY158	Material lock left
%I0180	MB151	Splicing head right	%M0205	RES_LOC	Reset material lock
%I0181	MB152	Splicing head left	%R0472	SEQ_TIM	Asu sequence time

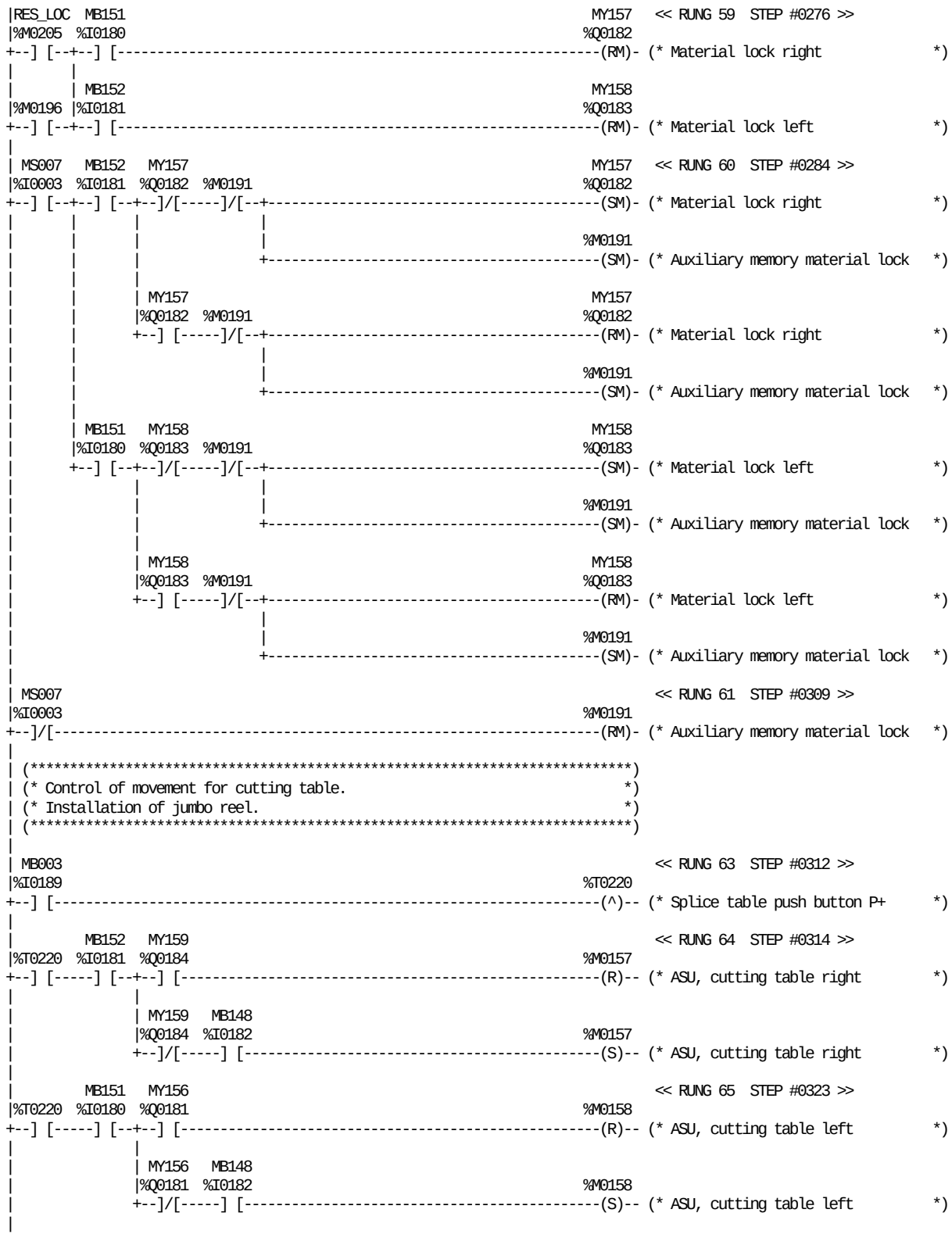

REFERENCE	NICKNAME	REFERENCE DESCRIPTION	REFERENCE	NICKNAME	REFERENCE DESCRIPTION
%M0157		ASU, cutting table right	%I0181	MB152	Splicing head left
%M0158		ASU, cutting table left	%I0003	MS007	ASU Material lock
%M0191		Auxiliary memory material lock	%Q0181	MY156	Cutting table left
%M0196		Start feeder movement	%Q0182	MY157	Material lock right
%T0220		Splice table push button P+	%Q0183	MY158	Material lock left
%I0189	MB003	Splice table push button	%Q0184	MY159	Cutting table right
%I0182	MB148	Cutting table	%M0205	RES_LOC	Reset material lock
%I0180	MB151	Splicing head right			

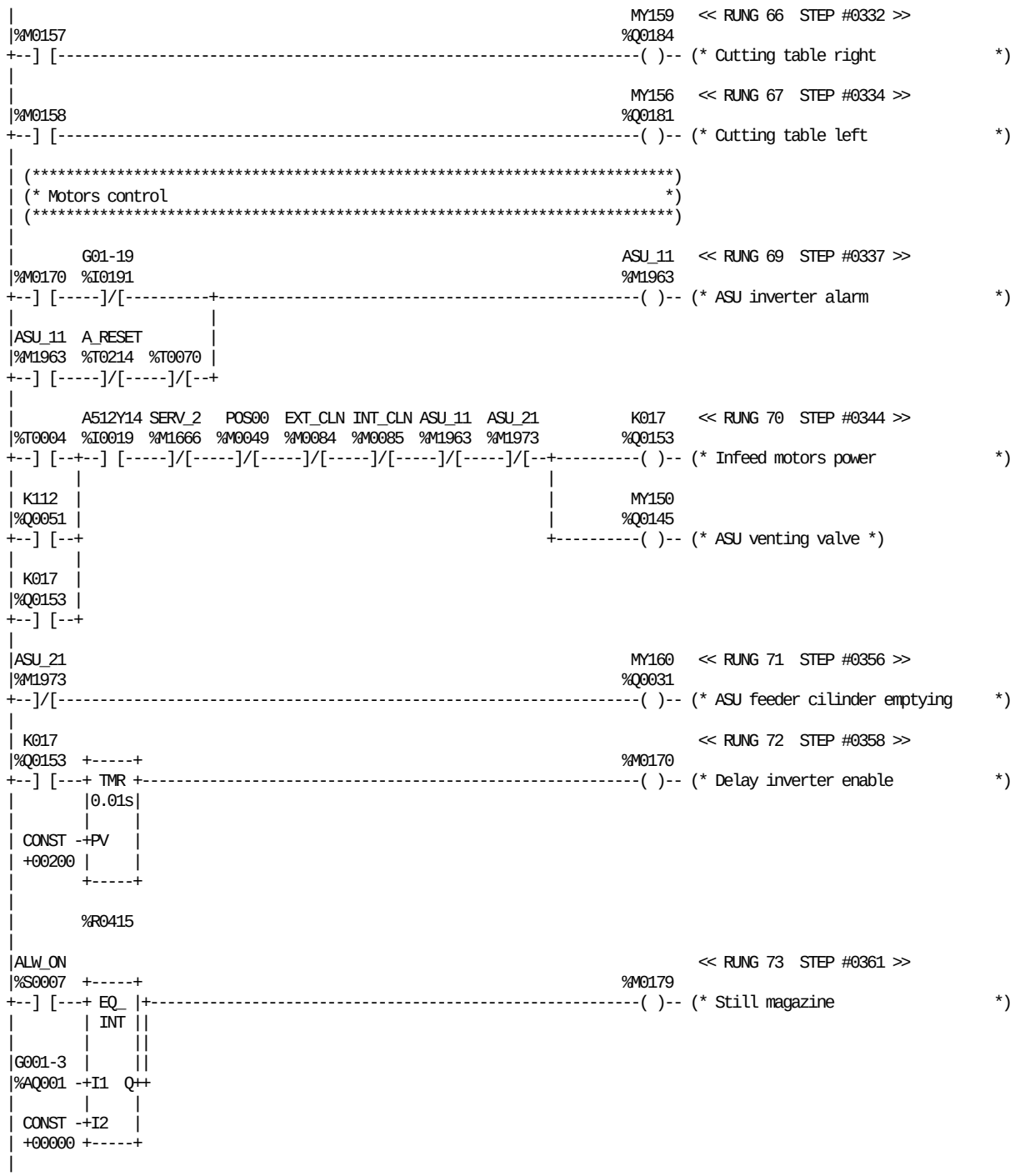

REFERENCE	NICKNAME	REFERENCE DESCRIPTION	REFERENCE	NICKNAME	REFERENCE DESCRIPTION
%M0157		ASU, cutting table right	%M0084	EXT_CLN	Machine in pos. extern. clean
%M0158		ASU, cutting table left	%AQ001	G001-3	Analog output magazine motor
%M0170		Delay inverter enable	%I0191	G01-19	ASU inverters fault
%M0179		Still magazine	%M0085	INT_CLN	Machine pos internal cleaning
%T0004		P+ position10/ready for cleaning	%Q0153	K017	Infeed motors power
%T0070		ASU reset alarm push button P+	%Q0051	K112	ASU aux. reset relay
%R0415		Delay inverter enable	%Q0145	MY150	ASU venting valve
%I0019	A512Y14	Crease weel safety module	%Q0181	MY156	Cutting table left
%S0007	ALW_ON		%Q0184	MY159	Cutting table right
%M1963	ASU_11	ASU inverter alarm	%Q0031	MY160	ASU feeder cilinder emptying
%M1973	ASU_21	Feeder not in position	%M0049	POS00	Ladder pos 00
%T0214	A_RESET	Pulse+ reset A-alarm lock	%M1666	SERV_2	Low press. main air

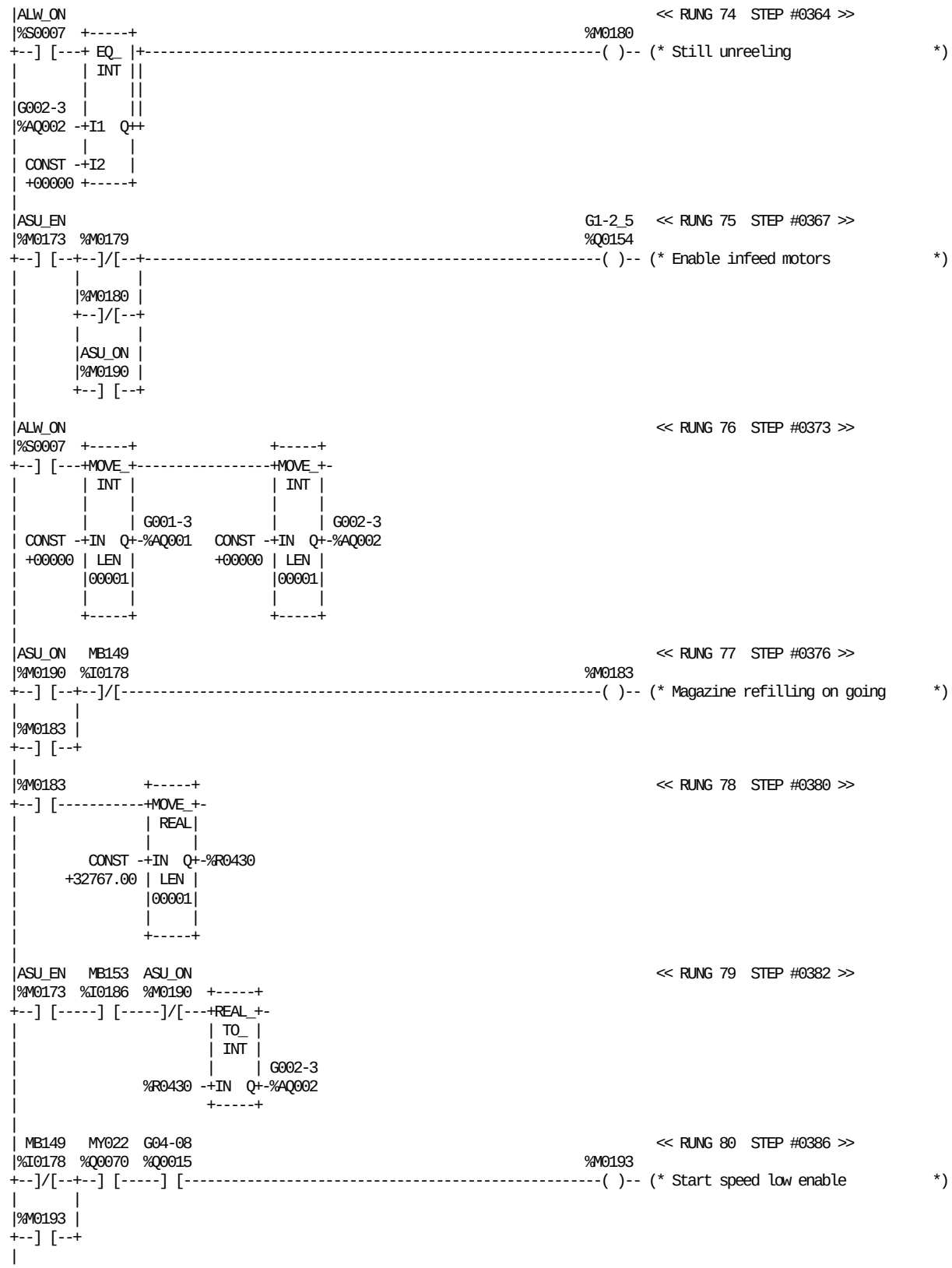

REFERENCE	NICKNAME	REFERENCE DESCRIPTION	REFERENCE	NICKNAME	REFERENCE DESCRIPTION
%M0179		Still magazine	%AQ001	G001-3	Analog output magazine motor
%M0180		Still unreeling	%AQ002	G002-3	Analog output unreeling mot. ASU
%M0183		Magazine refilling on going	%Q0015	G04-08	Main motor, high speed
%M0193		Start speed low enable	%Q0154	G1-2_5	Enable infeed motors
%R0430		ASU unr. high speed production	%I0178	MB149	Magazine full
%S0007	ALW_ON		%I0186	MB153	Free loop
%M0173	ASU_EN	Automatic Splacing Unit enable	%Q0070	MY022	Main machine, clutch
%M0190	ASU_ON	ASU splice sequence on			

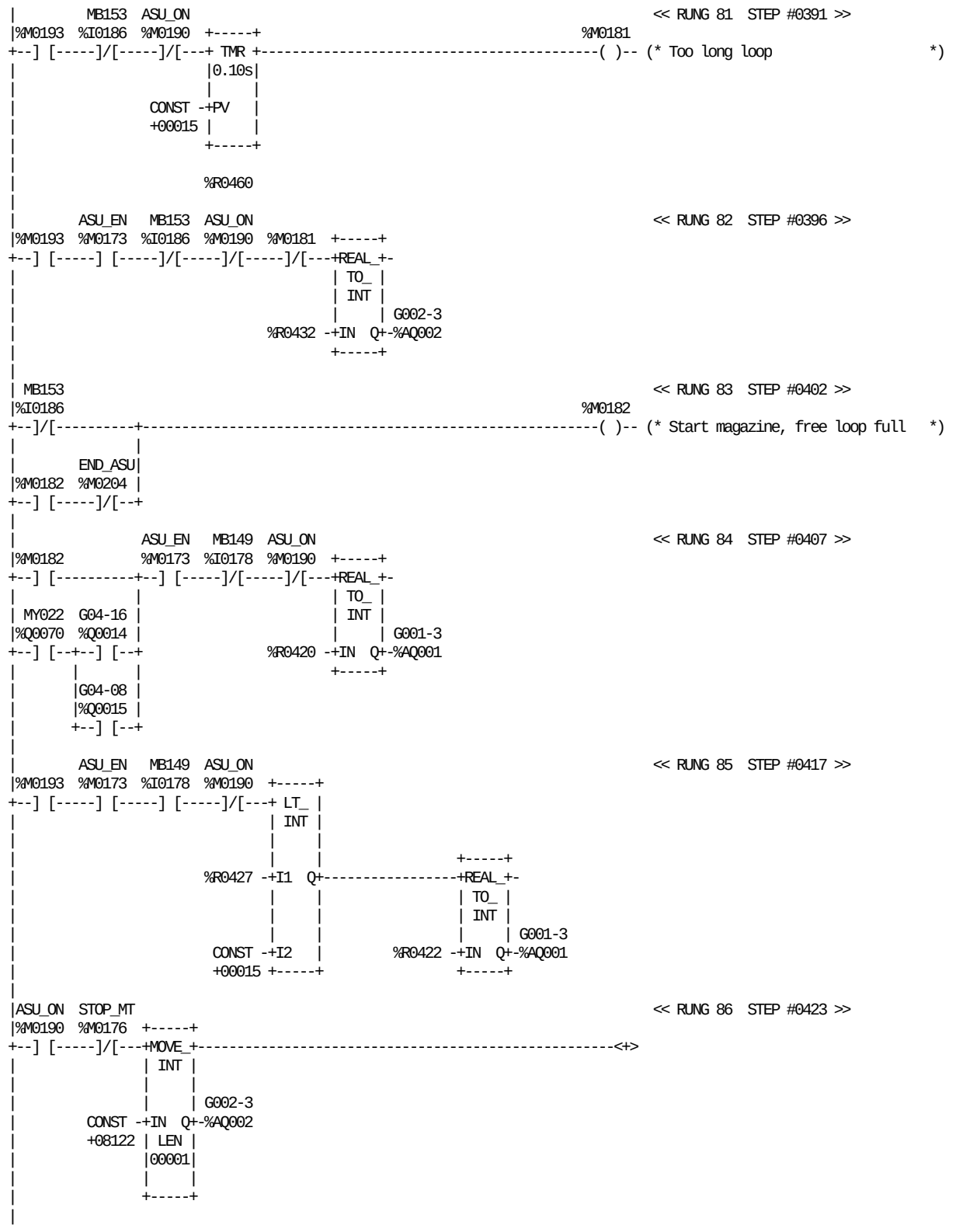

REFERENCE	NICKNAME	REFERENCE DESCRIPTION
%M0181		Too long loop
%M0182		Start magazine, free loop full
%M0193		Start speed low enable
%R0420		Mag. high speed production
%R0422		Mag. low speed precorrection
%R0427		Delay paper in loop broken
%R0432		ASU unr. low speed precorrection
%R0460		Delay paper in loop
%M0173	ASU_EN	Automatic Splacing Unit enable
%M0190	ASU_ON	ASU splice sequence on

REFERENCE	NICKNAME	REFERENCE DESCRIPTION
%M0204	END_ASU	End of asu sequence
%AQ001	G001-3	Analog output magazine motor
%AQ002	G002-3	Analog output unreeling mot. ASU
%Q0015	G04-08	Main motor, high speed
%Q0014	G04-16	Main motor, low speed
%I0178	MB149	Magazine full
%I0186	MB153	Free loop
%Q0070	MY022	Main machine, clutch
%M0176	STOP_MT	Asu sequence stop motors

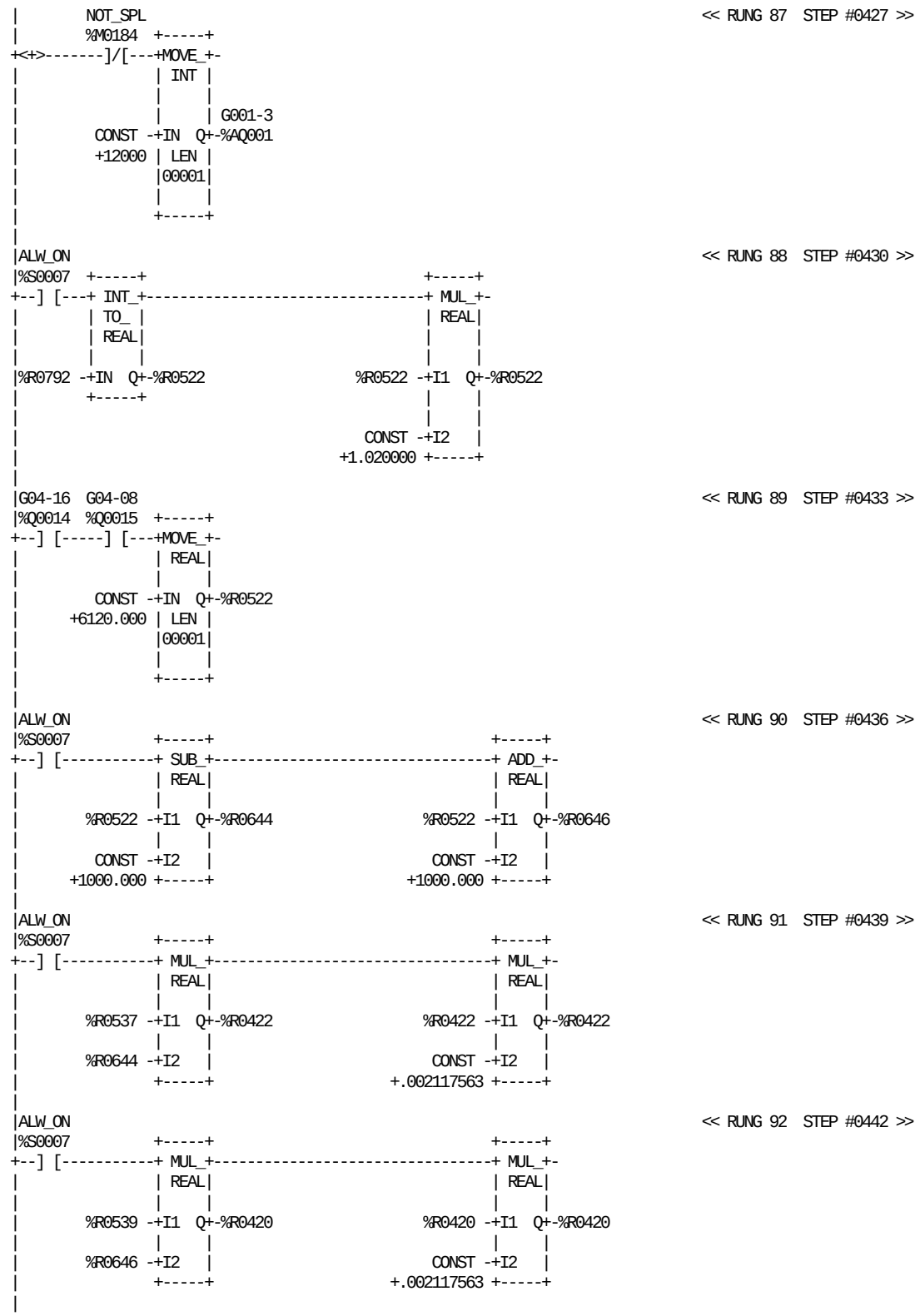

REFERENCE	NICKNAME	REFERENCE DESCRIPTION
%R0420		Mag. high speed production
%R0422		Mag. low speed precorrection
%R0522		Aux speed register
%R0537		Package length precorreted
%R0539		Repeat length register
%R0644		Min speed value
%R0646		Max speed value

REFERENCE	NICKNAME	REFERENCE DESCRIPTION
%R0792		Synchronization FF speed
%S0007	ALW_ON	
%AQ001	G001-3	Analog output magazine motor
%Q0015	G04-08	Main motor, high speed
%Q0014	G04-16	Main motor, low speed
%M0184	NOT_SPL	ASU sequence incomplete

```
|ALW_ON                                                                 << RUNG 93  STEP #0445 >>
|%S0007          +-----+                                 +-----+
+--] [-----------+ SUB_+---------------------------------+ ADD_+-
|                | REAL|                                 | REAL|
|                |     |                                 |     |
|        %R0522 -+I1  Q+-%R0644                 %R0522 -+I1  Q+-%R0646
|                |     |                                 |     |
|         CONST -+I2   |                          CONST -+I2   |
|      +1000.000 +-----+                       +1000.000 +-----+
|
|ALW_ON                                                                 << RUNG 94  STEP #0448 >>
|%S0007          +-----+                                 +-----+
+--] [-----------+ MUL_+---------------------------------+ MUL_+-
|                | REAL|                                 | REAL|
|                |     |                                 |     |
|        %R0537 -+I1  Q+-%R0432                 %R0432 -+I1  Q+-%R0432
|                |     |                                 |     |
|        %R0644 -+I2   |                          CONST -+I2   |
|                +-----+                       +.001433427 +-----+
|
|ALW_ON                                                                 << RUNG 95  STEP #0451 >>
|%S0007          +-----+                                 +-----+
+--] [-----------+ MUL_+---------------------------------+ MUL_+-
|                | REAL|                                 | REAL|
|                |     |                                 |     |
|        %R0539 -+I1  Q+-%R0430                 %R0430 -+I1  Q+-%R0430
|                |     |                                 |     |
|        %R0646 -+I2   |                          CONST -+I2   |
|                +-----+                       +.001433427 +-----+
|
| (*************************************************************************)
| (* Counter of automatic splicing                                        *)
| (*************************************************************************)
|
|ASU_ON                                                                 << RUNG 97  STEP #0455 >>
|%M0190  +-----+
+--] [---->UPCTR+-
|        |     |
|ALW_ON  |     |
|%S0007  |     |
+--]/[---+R    |
|        |     |
| CONST -+PV   |
| +32767 |     |
|        +-----+
|
|        %R0602
|
|[    END OF SUBROUTINE LOGIC     ]
|
```

REFERENCE NICKNAME	REFERENCE DESCRIPTION	REFERENCE NICKNAME	REFERENCE DESCRIPTION
%R0430	ASU unr. high speed production	%R0602	ASU splice counter
%R0432	ASU unr. low speed precorrection	%R0644	Min speed value
%R0522	Aux speed register	%R0646	Max speed value
%R0537	Package length precorreted	%S0007 ALW_ON	
%R0539	Repeat length register	%M0190 ASU_ON	ASU splice sequence on

This page intentionally left blank

```
|[  START LD SUBROUTINE   BLK34   ]
|
|[     VARIABLE DECLARATIONS      ]
|
|[   START OF SUBROUTINE LOGIC    ]
|
|V_100B                                                                  << RUNG 4  STEP #0002 >>
|%M1314  +-----+                +-----+                +-----+
+--] [---+BLKMV+----------------+BLKMV+----------------+BLKMV+-------------<+>
|        | INT |                | WORD|                | WORD|
|        |     |                |     |                |     |
| CONST -+IN1 Q+-%R0170   CONST -+IN1 Q+-%R0001   CONST -+IN1 Q+-%R0008
| +00000 |     |            1E07 |     |            000F |     |
|        |     |                 |     |                 |     |
| CONST -+IN2  |          CONST -+IN2  |          CONST -+IN2  |
| +00000 |     |            8600 |     |            0000 |     |
|        |     |                 |     |                 |     |
| CONST -+IN3  |          CONST -+IN3  |          CONST -+IN3  |
| +00003 |     |            FFFF |     |            0000 |     |
|        |     |                 |     |                 |     |
| CONST -+IN4  |          CONST -+IN4  |          CONST -+IN4  |
| +00104 |     |            07FF |     |            0000 |     |
|        |     |                 |     |                 |     |
| CONST -+IN5  |          CONST -+IN5  |          CONST -+IN5  |
| +00064 |     |            0000 |     |            3800 |     |
|        |     |                 |     |                 |     |
| CONST -+IN6  |          CONST -+IN6  |          CONST -+IN6  |
| +00000 |     |            0000 |     |            0000 |     |
|        |     |                 |     |                 |     |
| CONST -+IN7  |          CONST -+IN7  |          CONST -+IN7  |
| +00000 +-----+            8000 +-----+            0000 +-----+
|
|        +-----+                +-----+                +-----+                 << RUNG 5  STEP #0007 >>
+<+>-----+BLKMV+----------------+BLKMV+----------------+BLKMV+-------------<+>
|        | WORD|                | WORD|                | WORD|
|        |     |                |     |                |     |
| CONST -+IN1 Q+-%R0679   CONST -+IN1 Q+-%R0686   CONST -+IN1 Q+-%R0693
|   0000 |     |              0000 |     |              0000 |     |
|        |     |                   |     |                   |     |
| CONST -+IN2  |          CONST -+IN2  |          CONST -+IN2  |
|   0000 |     |              0000 |     |              0000 |     |
|        |     |                   |     |                   |     |
| CONST -+IN3  |          CONST -+IN3  |          CONST -+IN3  |
|   0000 |     |              0000 |     |              0000 |     |
|        |     |                   |     |                   |     |
| CONST -+IN4  |          CONST -+IN4  |          CONST -+IN4  |
|   0038 |     |              0000 |     |              0000 |     |
|        |     |                   |     |                   |     |
| CONST -+IN5  |          CONST -+IN5  |          CONST -+IN5  |
|   0000 |     |              0000 |     |              0000 |     |
|        |     |                   |     |                   |     |
| CONST -+IN6  |          CONST -+IN6  |          CONST -+IN6  |
|   0000 |     |              0000 |     |              0000 |     |
|        |     |                   |     |                   |     |
| CONST -+IN7  |          CONST -+IN7  |          CONST -+IN7  |
|   0000 +-----+              0000 +-----+              0000 +-----+
|
```

REFERENCE NICKNAME	REFERENCE DESCRIPTION	REFERENCE NICKNAME	REFERENCE DESCRIPTION
%R0001	Package dump short stop	%R0686	Free for future use
%R0008	Package dump start strip seal SA	%R0693	Package dump outerpatch splicing
%R0170	Angle fill start	%M1314 V_100B	Volume 100 Base
%R0679	Package dump paper splice SA		

BLOCK: 34 VOLUME DEPENDENT VALUES

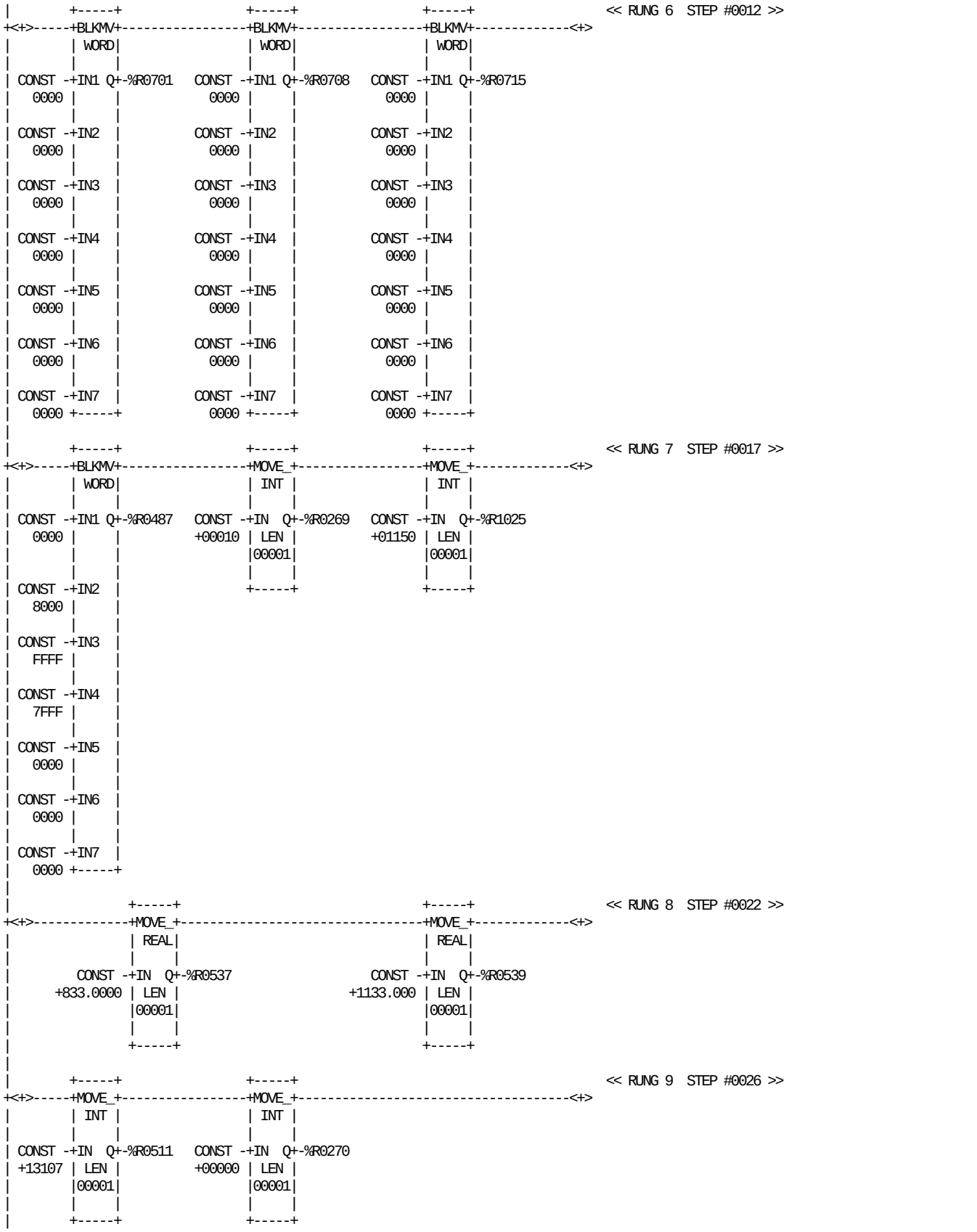

<< RUNG 6 STEP #0012 >>

<< RUNG 7 STEP #0017 >>

<< RUNG 8 STEP #0022 >>

<< RUNG 9 STEP #0026 >>

REFERENCE NICKNAME	REFERENCE DESCRIPTION	REFERENCE NICKNAME	REFERENCE DESCRIPTION
%R0269	Angle register	%R0539	Repeat length register
%R0270	WTC fixed pressure working mode	%R0701	Package dump PT on
%R0487	Package dump peroxide bath	%R0708	Package dump start strip seal PT
%R0511	TS TPIH default value	%R0715	Package dump strip splice PT
%R0537	Package length precorreted	%R1025	Paper supply package counter

BLOCK: 34 VOLUME DEPENDENT VALUES

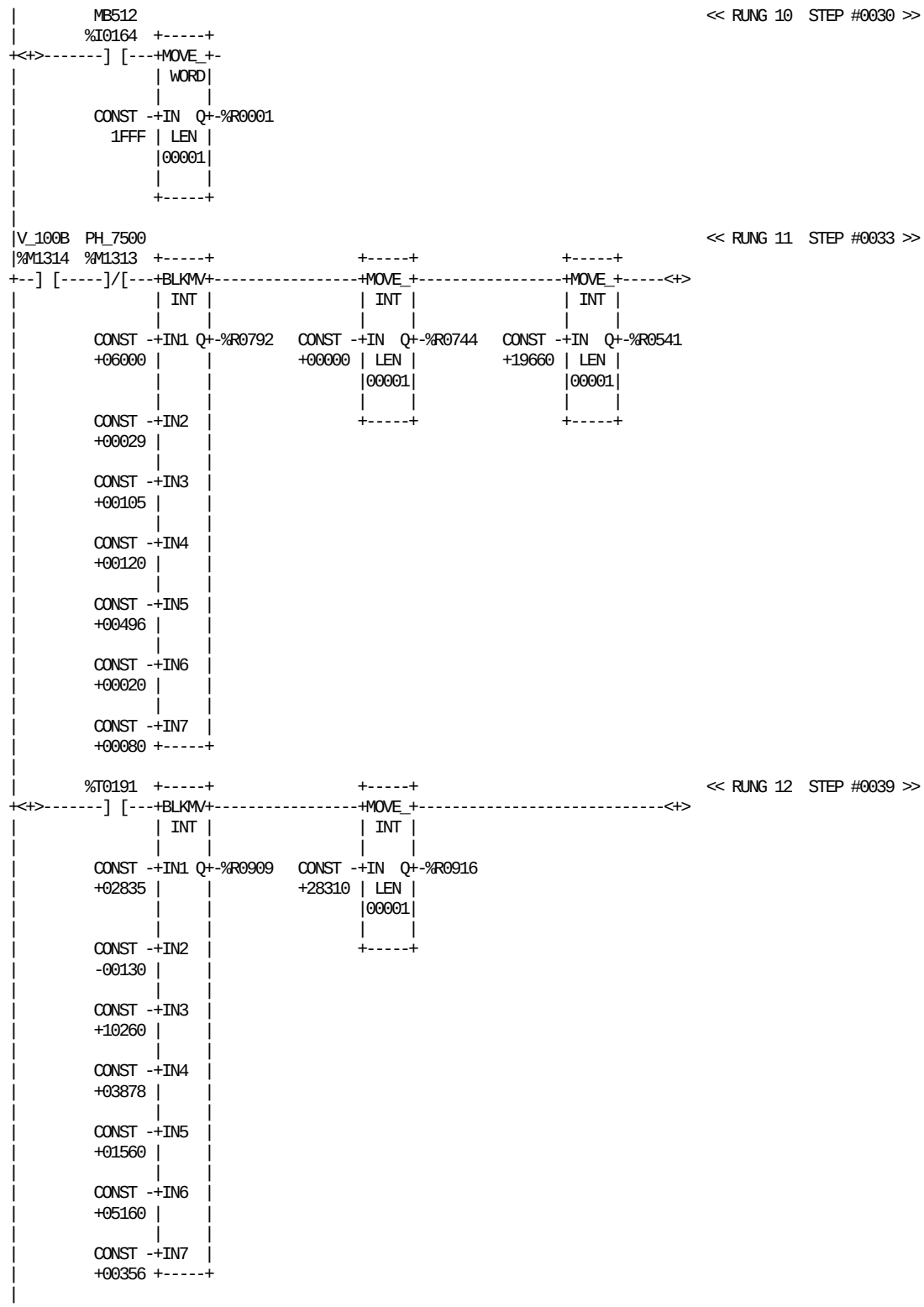

REFERENCE NICKNAME	REFERENCE DESCRIPTION	REFERENCE NICKNAME	REFERENCE DESCRIPTION
%T0191	Reset FCS parameter	%R0909	Filling parameters to A310
%R0001	Package dump short stop	%R0916	Ramp time(LSB)+bit parameter
%R0541	SA TPIH default value	%I0164 MB512	Injection_off
%R0744	Paper splice double heat	%M1313 PH_7500	Speed at 7500 package hour
%R0792	Synchronization FF speed	%M1314 V_100B	Volume 100 Base

BLOCK: 34 VOLUME DEPENDENT VALUES

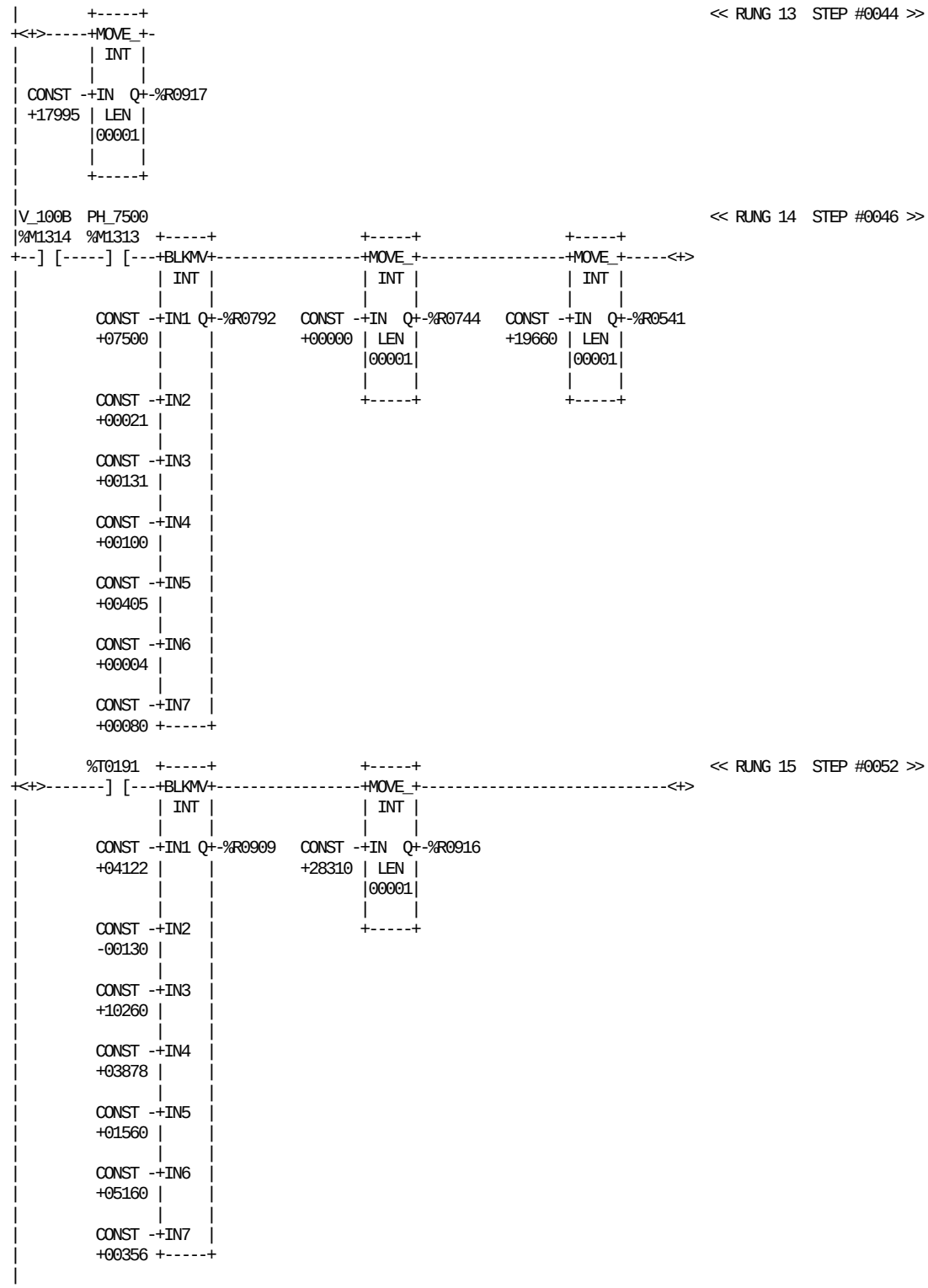

REFERENCE NICKNAME		REFERENCE DESCRIPTION	REFERENCE NICKNAME		REFERENCE DESCRIPTION
%T0191		Reset FCS parameter	%R0916		Ramp time(LSB)+bit parameter
%R0541		SA TPIH default value	%R0917		Filling start time+spare
%R0744		Paper splice double heat	%M1313	PH_7500	Speed at 7500 package hour
%R0792		Synchronization FF speed	%M1314	V_100B	Volume 100 Base
%R0909		Filling parameters to A310			

BLOCK: 34 VOLUME DEPENDENT VALUES

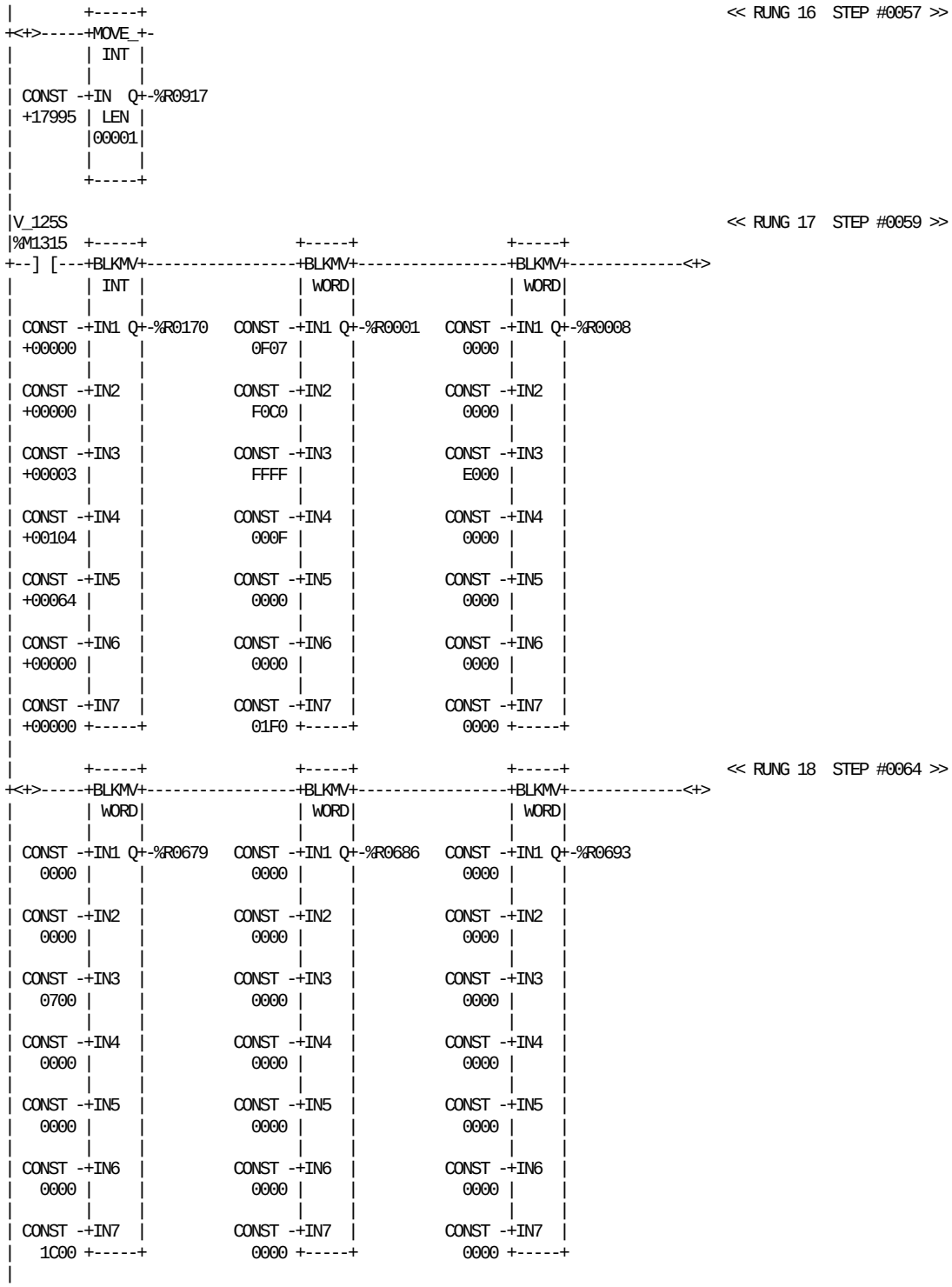

REFERENCE NICKNAME	REFERENCE DESCRIPTION	REFERENCE NICKNAME	REFERENCE DESCRIPTION
%R0001	Package dump short stop	%R0686	Free for future use
%R0008	Package dump start strip seal SA	%R0693	Package dump outerpatch splicing
%R0170	Angle fill start	%R0917	Filling start time+spare
%R0679	Package dump paper splice SA	%M1315 V_125S	Volume 125 Slim

BLOCK: 34 VOLUME DEPENDENT VALUES

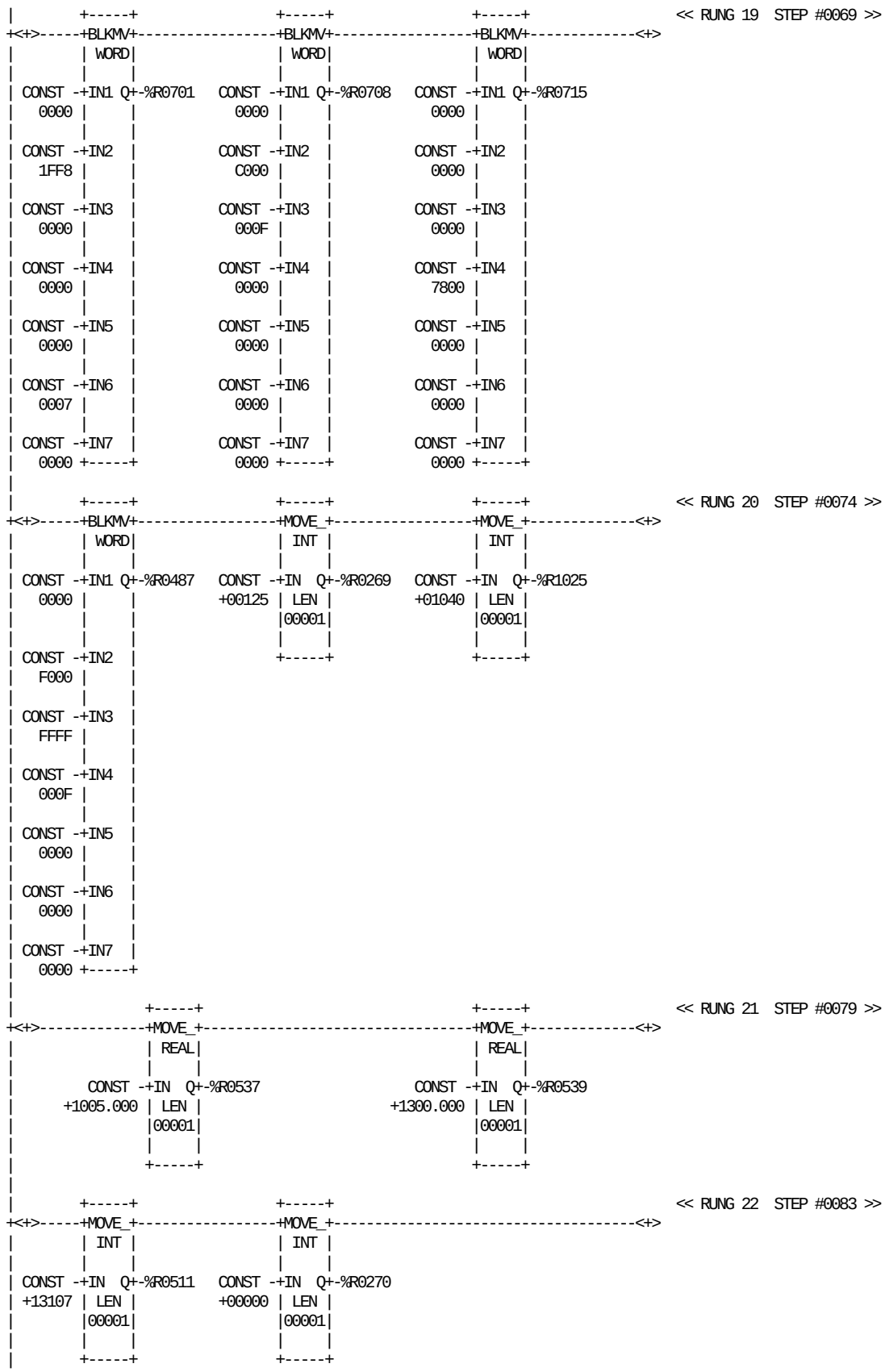

REFERENCE NICKNAME	REFERENCE DESCRIPTION	REFERENCE NICKNAME	REFERENCE DESCRIPTION
%R0269	Angle register	%R0539	Repeat length register
%R0270	WTC fixed pressure working mode	%R0701	Package dump PT on
%R0487	Package dump peroxide bath	%R0708	Package dump start strip seal PT
%R0511	TS TPIH default value	%R0715	Package dump strip splice PT
%R0537	Package length precorreted	%R1025	Paper supply package counter

BLOCK: 34 VOLUME DEPENDENT VALUES

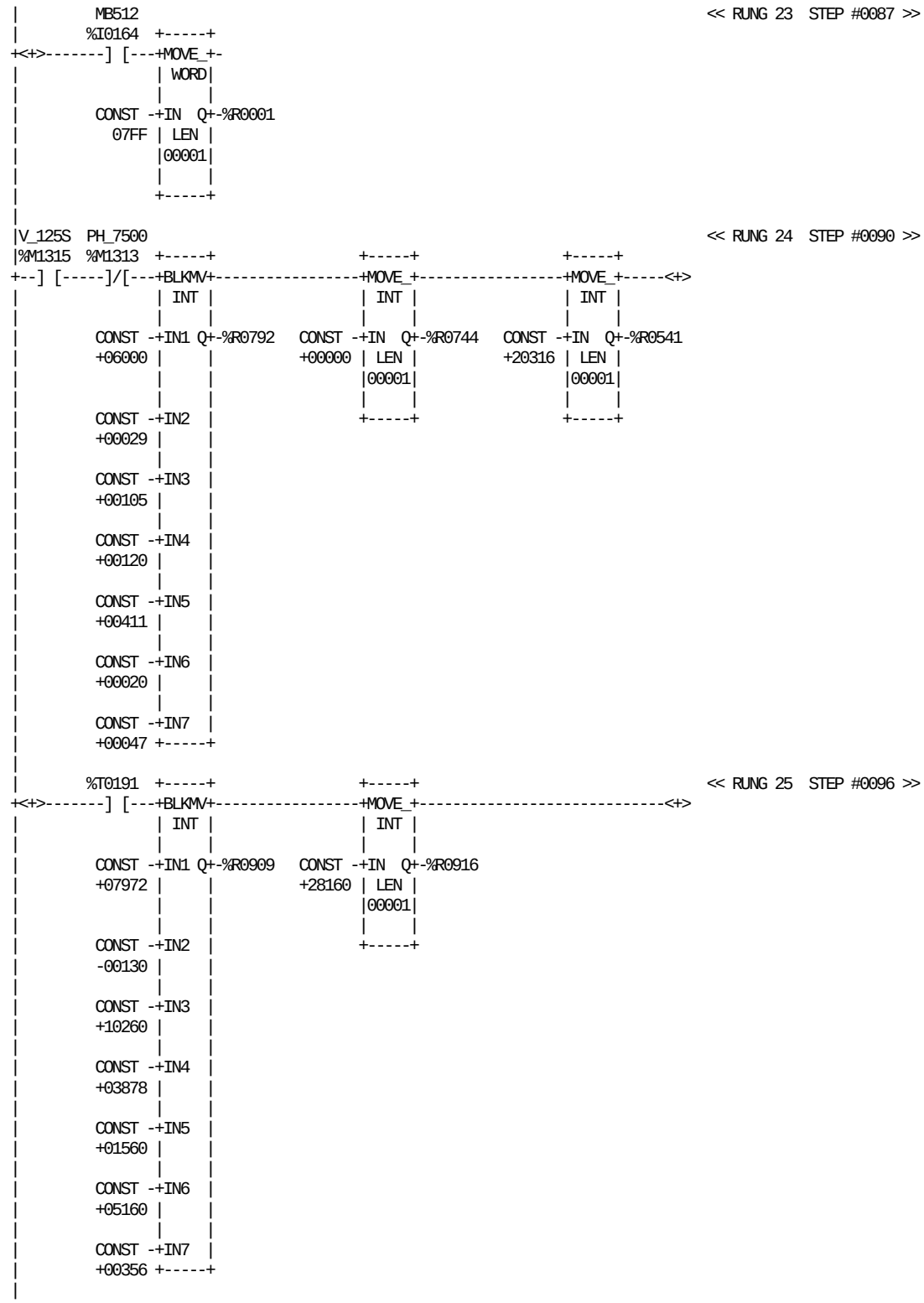

REFERENCE NICKNAME	REFERENCE DESCRIPTION	REFERENCE NICKNAME	REFERENCE DESCRIPTION
%T0191	Reset FCS parameter	%R0909	Filling parameters to A310
%R0001	Package dump short stop	%R0916	Ramp time(LSB)+bit parameter
%R0541	SA TPIH default value	%I0164 MB512	Injection_off
%R0744	Paper splice double heat	%M1313 PH_7500	Speed at 7500 package hour
%R0792	Synchronization FF speed	%M1315 V_125S	Volume 125 Slim

BLOCK: 34 VOLUME DEPENDENT VALUES

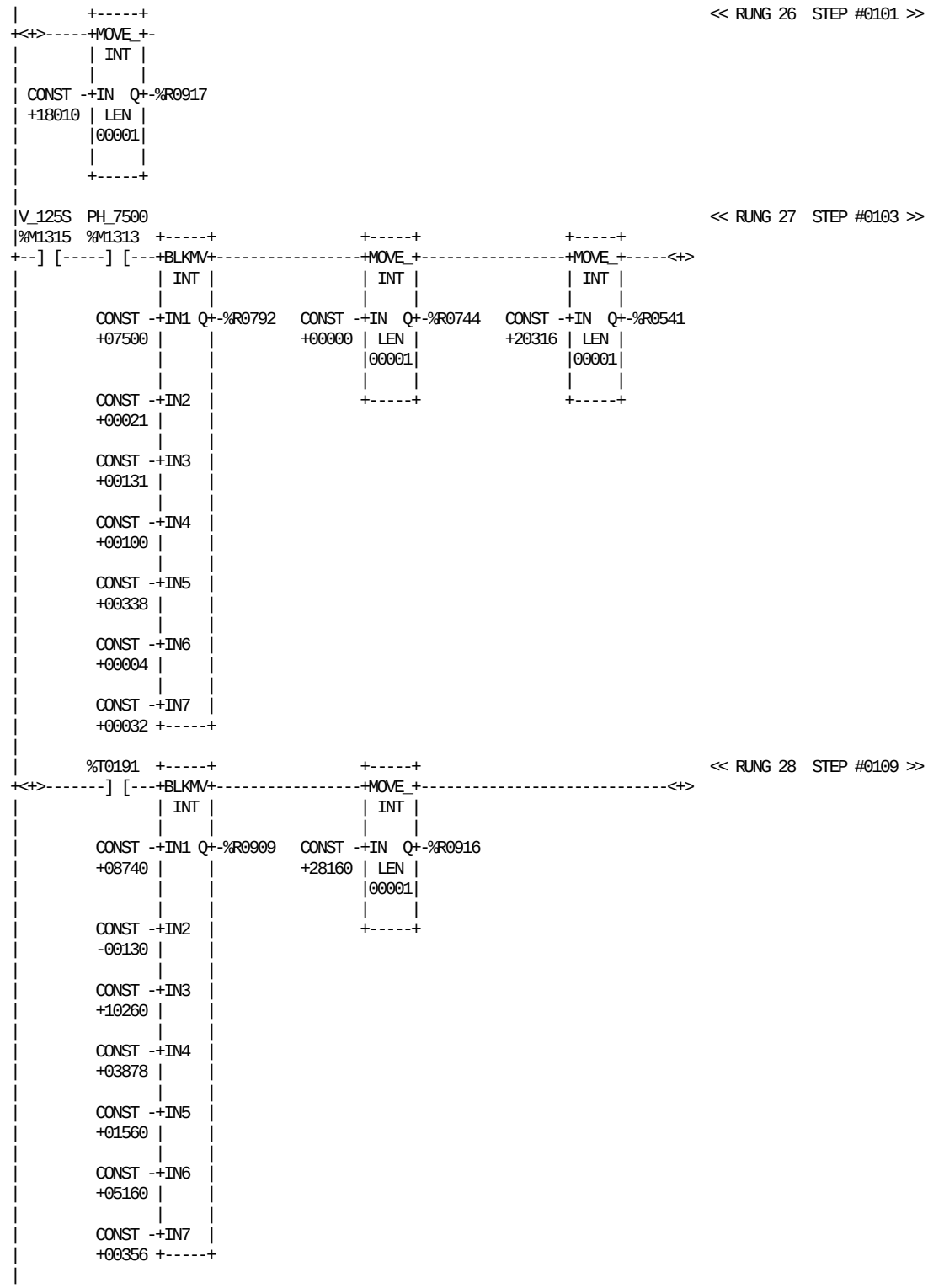

REFERENCE NICKNAME		REFERENCE DESCRIPTION	REFERENCE NICKNAME		REFERENCE DESCRIPTION
%T0191		Reset FCS parameter	%R0916		Ramp time(LSB)+bit parameter
%R0541		SA TPIH default value	%R0917		Filling start time+spare
%R0744		Paper splice double heat	%M1313	PH_7500	Speed at 7500 package hour
%R0792		Synchronization FF speed	%M1315	V_125S	Volume 125 Slim
%R0909		Filling parameters to A310			

BLOCK: 34 VOLUME DEPENDENT VALUES

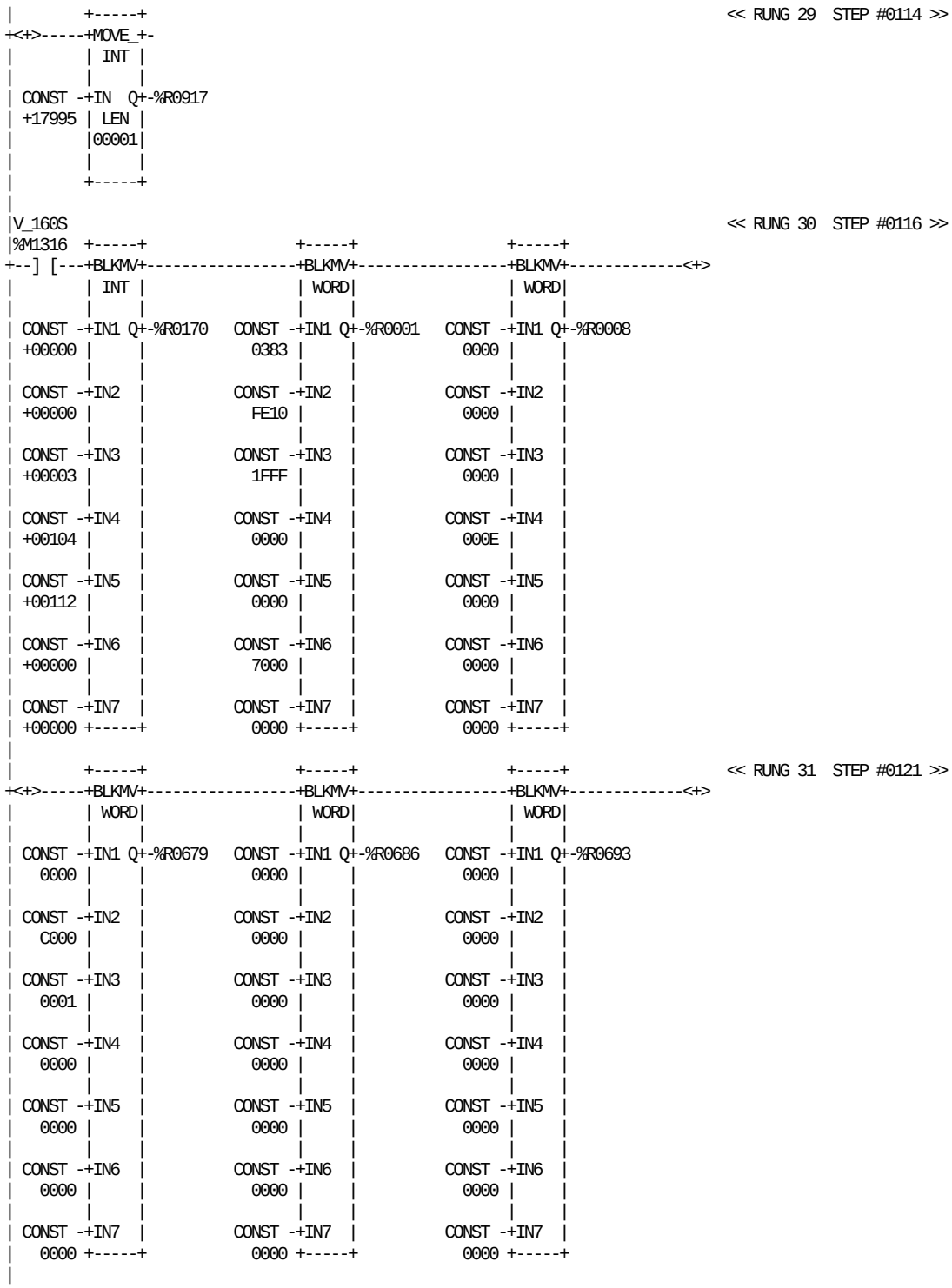

REFERENCE NICKNAME	REFERENCE DESCRIPTION	REFERENCE NICKNAME	REFERENCE DESCRIPTION
%R0001	Package dump short stop	%R0686	Free for future use
%R0008	Package dump start strip seal SA	%R0693	Package dump outerpatch splicing
%R0170	Angle fill start	%R0917	Filling start time+spare
%R0679	Package dump paper splice SA	%M1316 V_160S	Volume 160 Slim

BLOCK: 34 VOLUME DEPENDENT VALUES

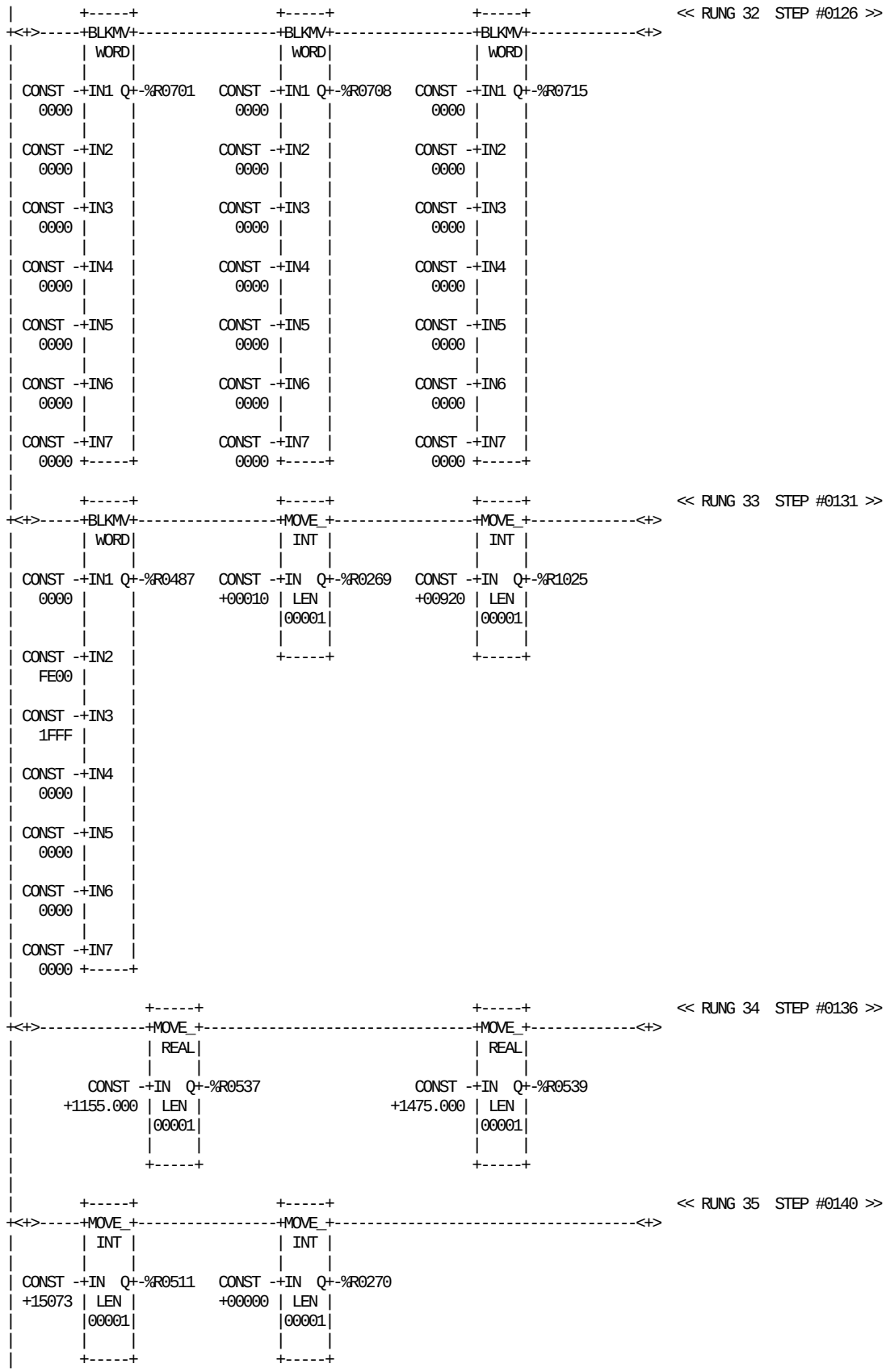

REFERENCE NICKNAME	REFERENCE DESCRIPTION	REFERENCE NICKNAME	REFERENCE DESCRIPTION
%R0269	Angle register	%R0539	Repeat length register
%R0270	WTC fixed pressure working mode	%R0701	Package dump PT on
%R0487	Package dump peroxide bath	%R0708	Package dump start strip seal PT
%R0511	TS TPIH default value	%R0715	Package dump strip splice PT
%R0537	Package length precorreted	%R1025	Paper supply package counter

BLOCK: 34 VOLUME DEPENDENT VALUES

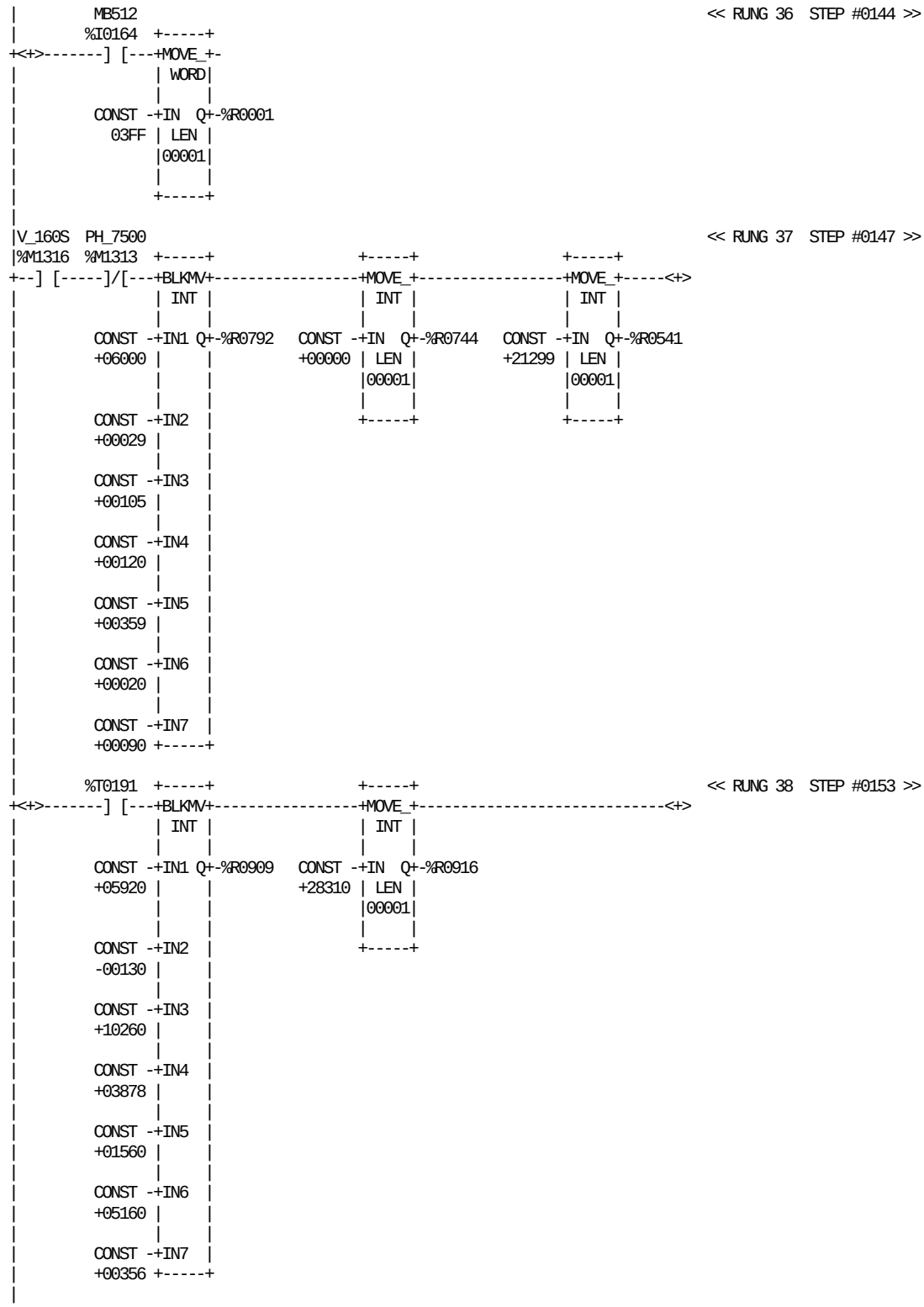

REFERENCE NICKNAME		REFERENCE DESCRIPTION	REFERENCE NICKNAME		REFERENCE DESCRIPTION
%T0191		Reset FCS parameter	%R0909		Filling parameters to A310
%R0001		Package dump short stop	%R0916		Ramp time(LSB)+bit parameter
%R0541		SA TPIH default value	%I0164	MB512	Injection_off
%R0744		Paper splice double heat	%M1313	PH_7500	Speed at 7500 package hour
%R0792		Synchronization FF speed	%M1316	V_160S	Volume 160 Slim

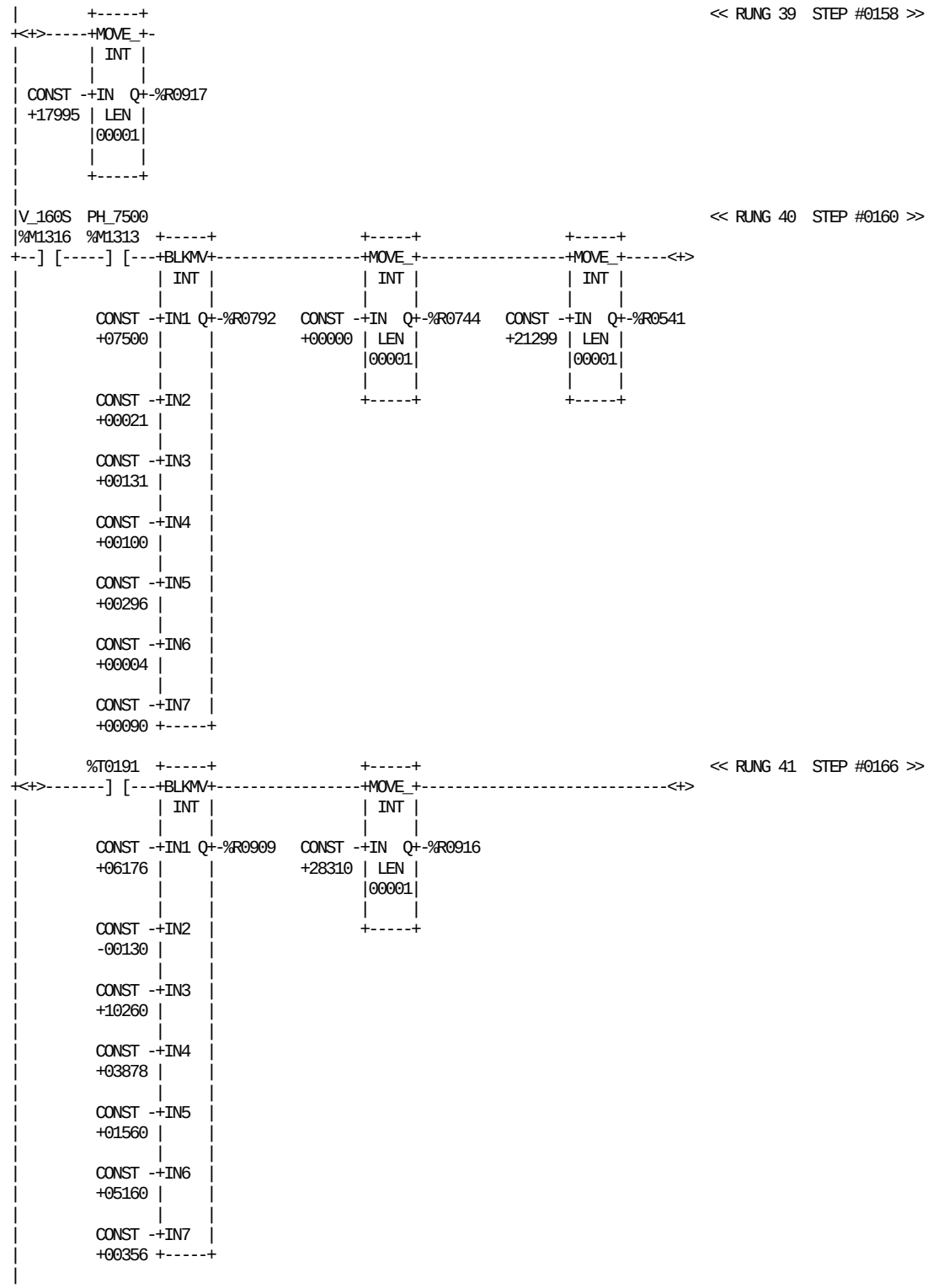

REFERENCE NICKNAME		REFERENCE DESCRIPTION	REFERENCE NICKNAME		REFERENCE DESCRIPTION
%T0191		Reset FCS parameter	%R0916		Ramp time(LSB)+bit parameter
%R0541		SA TPIH default value	%R0917		Filling start time+spare
%R0744		Paper splice double heat	%M1313	PH_7500	Speed at 7500 package hour
%R0792		Synchronization FF speed	%M1316	V_160S	Volume 160 Slim
%R0909		Filling parameters to A310			

BLOCK: 34 VOLUME DEPENDENT VALUES

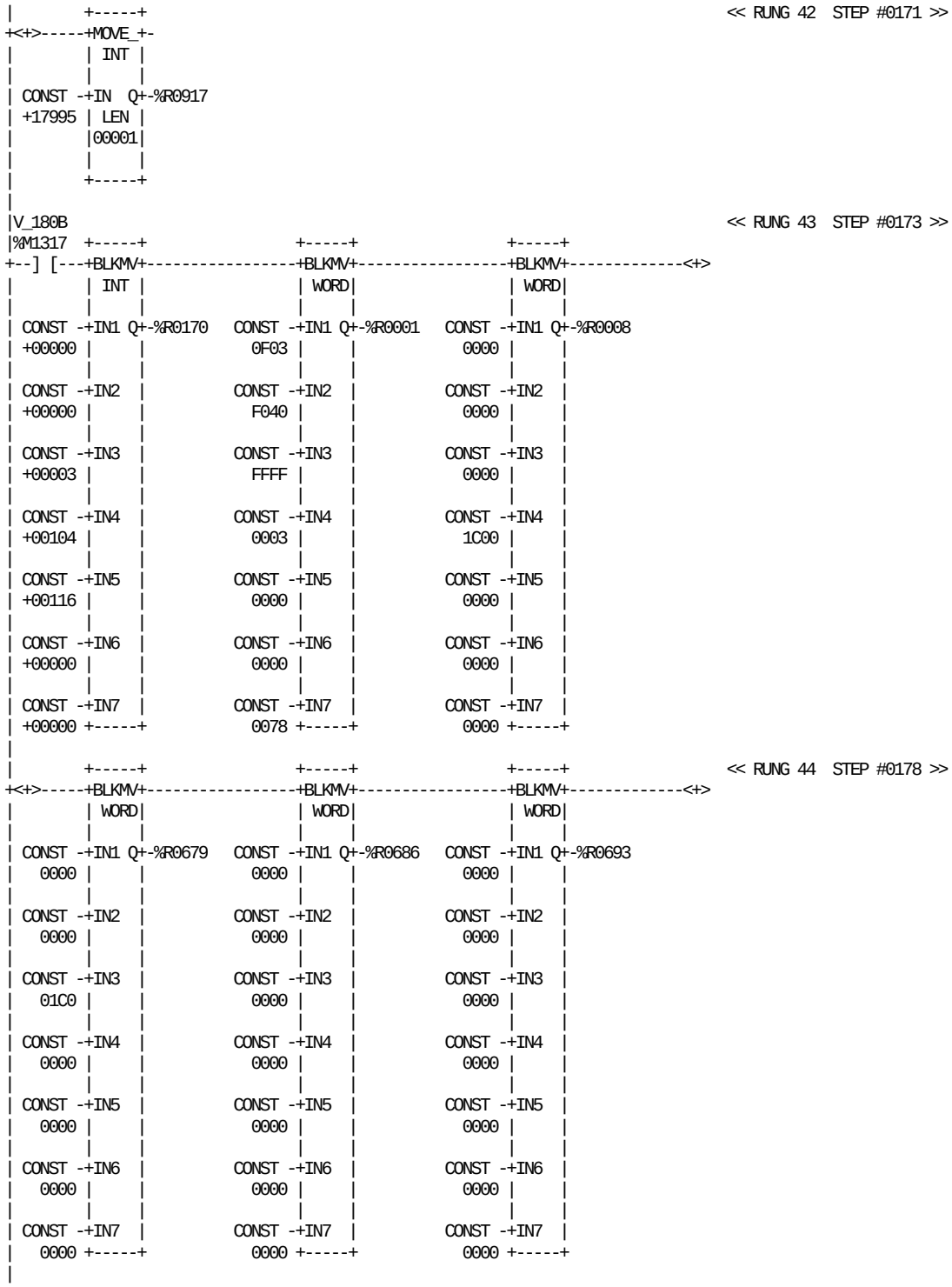

REFERENCE NICKNAME	REFERENCE DESCRIPTION	REFERENCE NICKNAME	REFERENCE DESCRIPTION
%R0001	Package dump short stop	%R0686	Free for future use
%R0008	Package dump start strip seal SA	%R0693	Package dump outerpatch splicing
%R0170	Angle fill start	%R0917	Filling start time+spare
%R0679	Package dump paper splice SA	%M1317 V_180B	Volume 180 Base

BLOCK: 34 VOLUME DEPENDENT VALUES

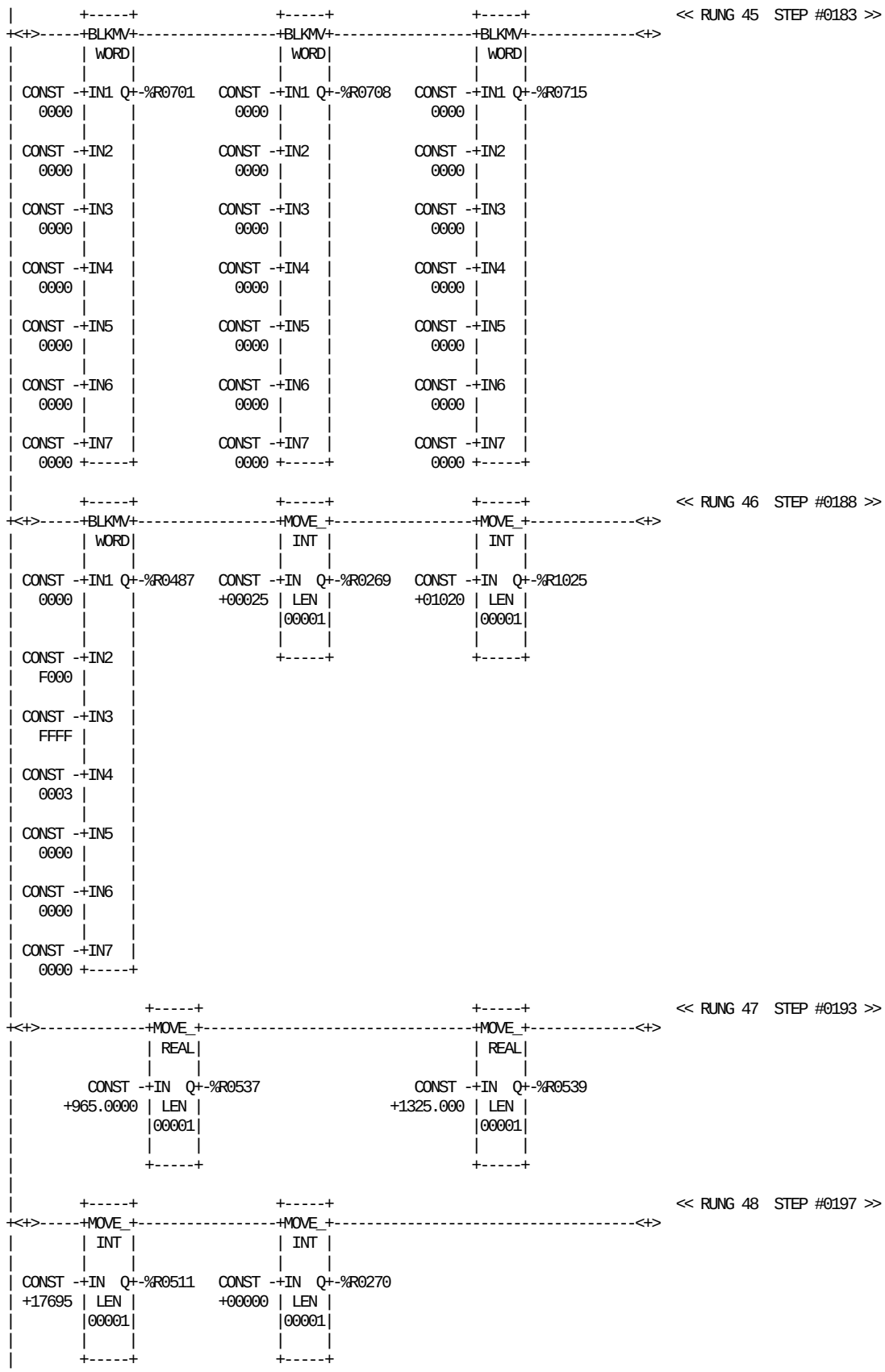

REFERENCE NICKNAME	REFERENCE DESCRIPTION	REFERENCE NICKNAME	REFERENCE DESCRIPTION
%R0269	Angle register	%R0539	Repeat length register
%R0270	WTC fixed pressure working mode	%R0701	Package dump PT on
%R0487	Package dump peroxide bath	%R0708	Package dump start strip seal PT
%R0511	TS TPIH default value	%R0715	Package dump strip splice PT
%R0537	Package length precorreted	%R1025	Paper supply package counter

BLOCK: 34 VOLUME DEPENDENT VALUES

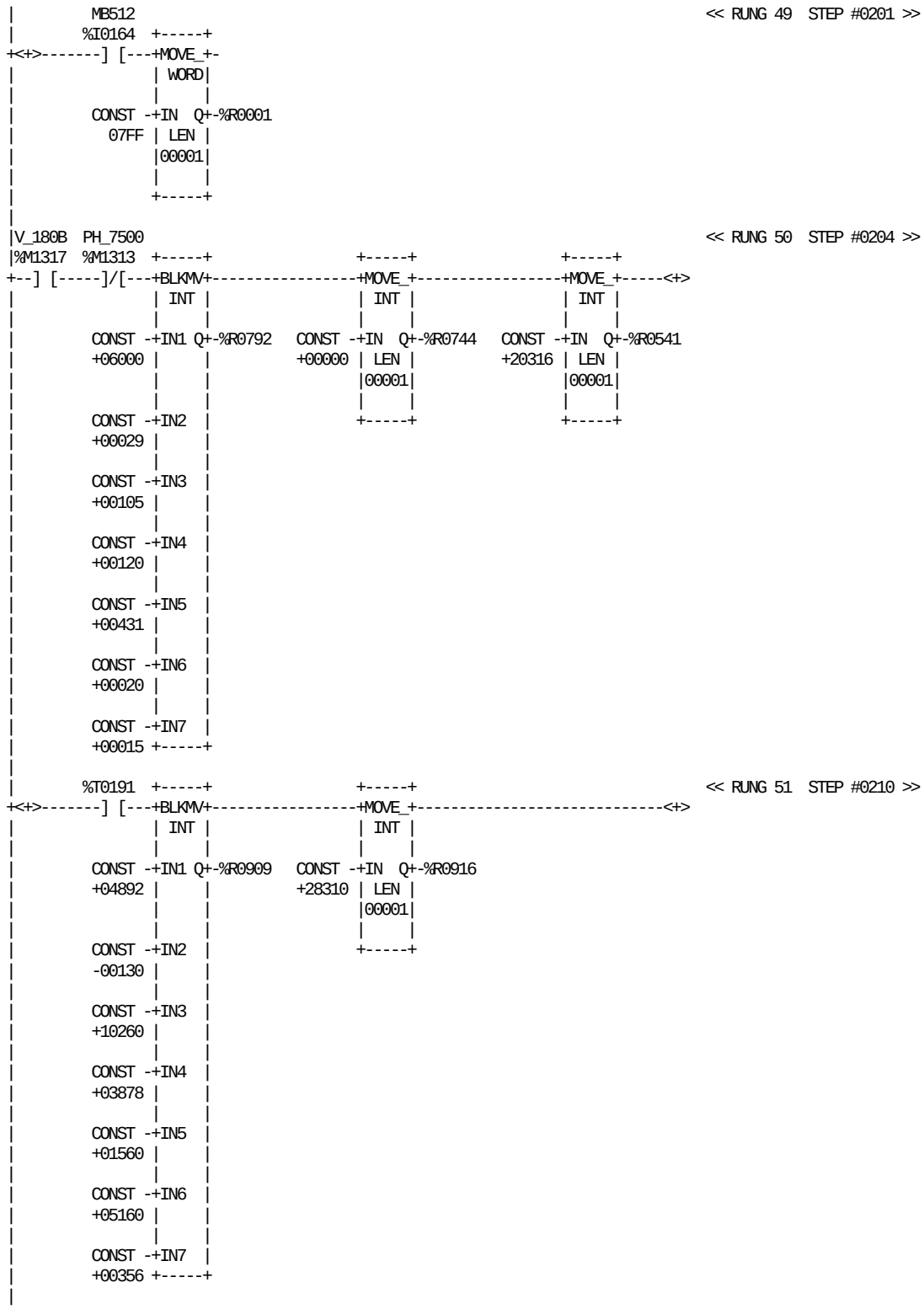

REFERENCE NICKNAME	REFERENCE DESCRIPTION	REFERENCE NICKNAME	REFERENCE DESCRIPTION
%T0191	Reset FCS parameter	%R0909	Filling parameters to A310
%R0001	Package dump short stop	%R0916	Ramp time(LSB)+bit parameter
%R0541	SA TPIH default value	%I0164 MB512	Injection_off
%R0744	Paper splice double heat	%M1313 PH_7500	Speed at 7500 package hour
%R0792	Synchronization FF speed	%M1317 V_180B	Volume 180 Base

BLOCK: 34 VOLUME DEPENDENT VALUES

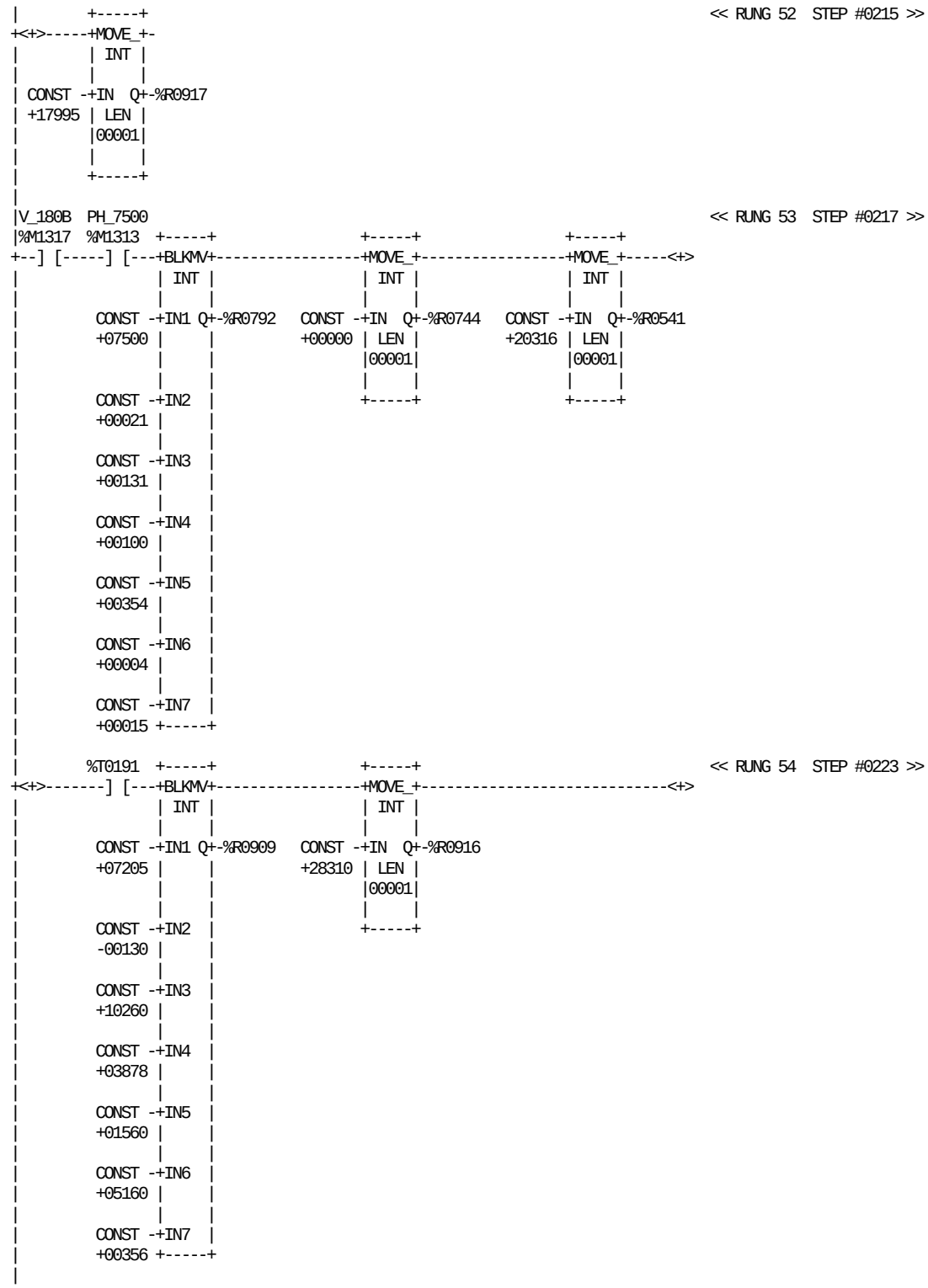

REFERENCE NICKNAME		REFERENCE DESCRIPTION	REFERENCE NICKNAME		REFERENCE DESCRIPTION
%T0191		Reset FCS parameter	%R0916		Ramp time(LSB)+bit parameter
%R0541		SA TPIH default value	%R0917		Filling start time+spare
%R0744		Paper splice double heat	%M1313	PH_7500	Speed at 7500 package hour
%R0792		Synchronization FF speed	%M1317	V_180B	Volume 180 Base
%R0909		Filling parameters to A310			

BLOCK: 34 VOLUME DEPENDENT VALUES

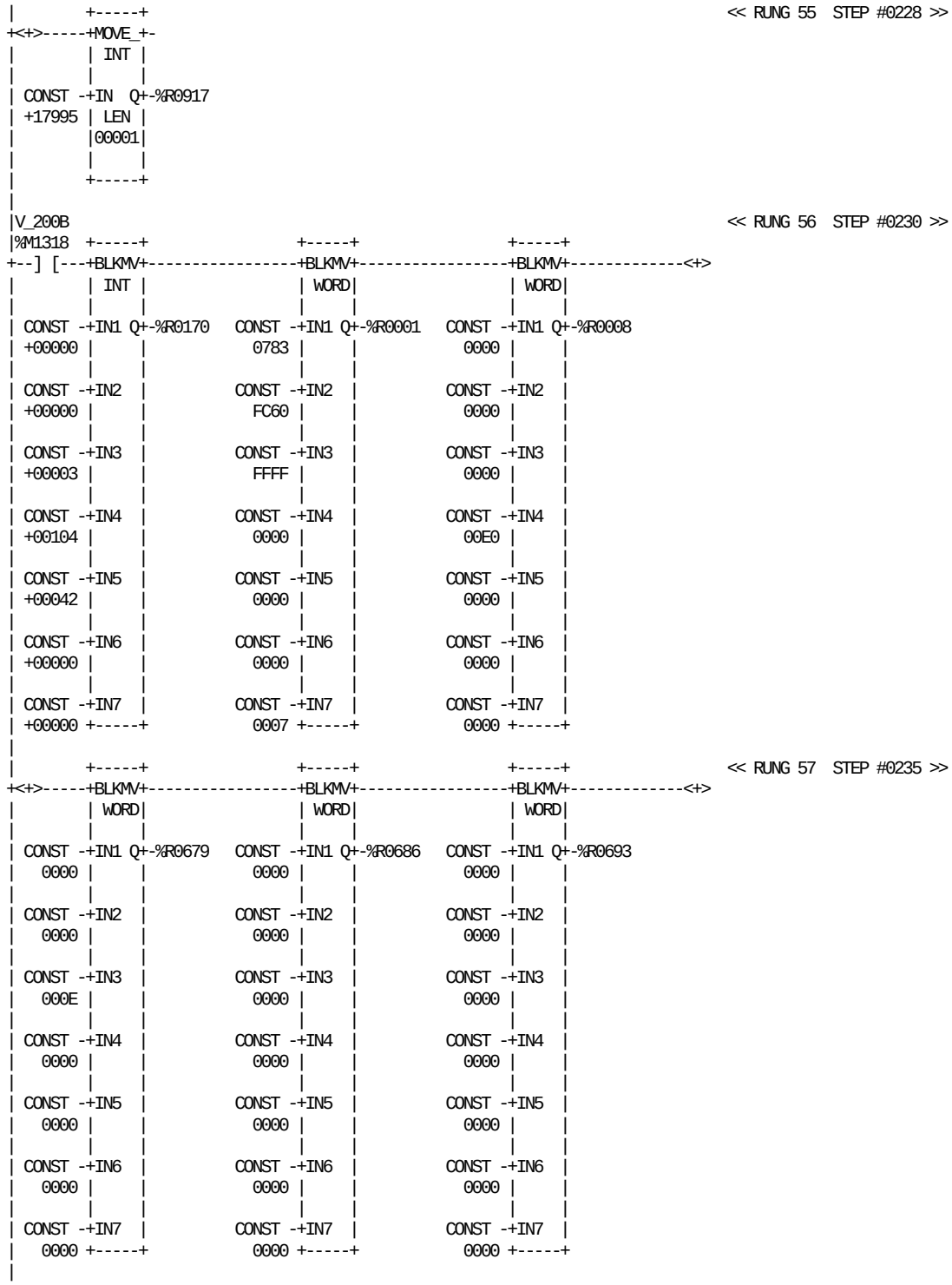

REFERENCE NICKNAME	REFERENCE DESCRIPTION	REFERENCE NICKNAME	REFERENCE DESCRIPTION
%R0001	Package dump short stop	%R0686	Free for future use
%R0008	Package dump start strip seal SA	%R0693	Package dump outerpatch splicing
%R0170	Angle fill start	%R0917	Filling start time+spare
%R0679	Package dump paper splice SA	%M1318 V_200B	Volume 200 Base

BLOCK: 34 VOLUME DEPENDENT VALUES

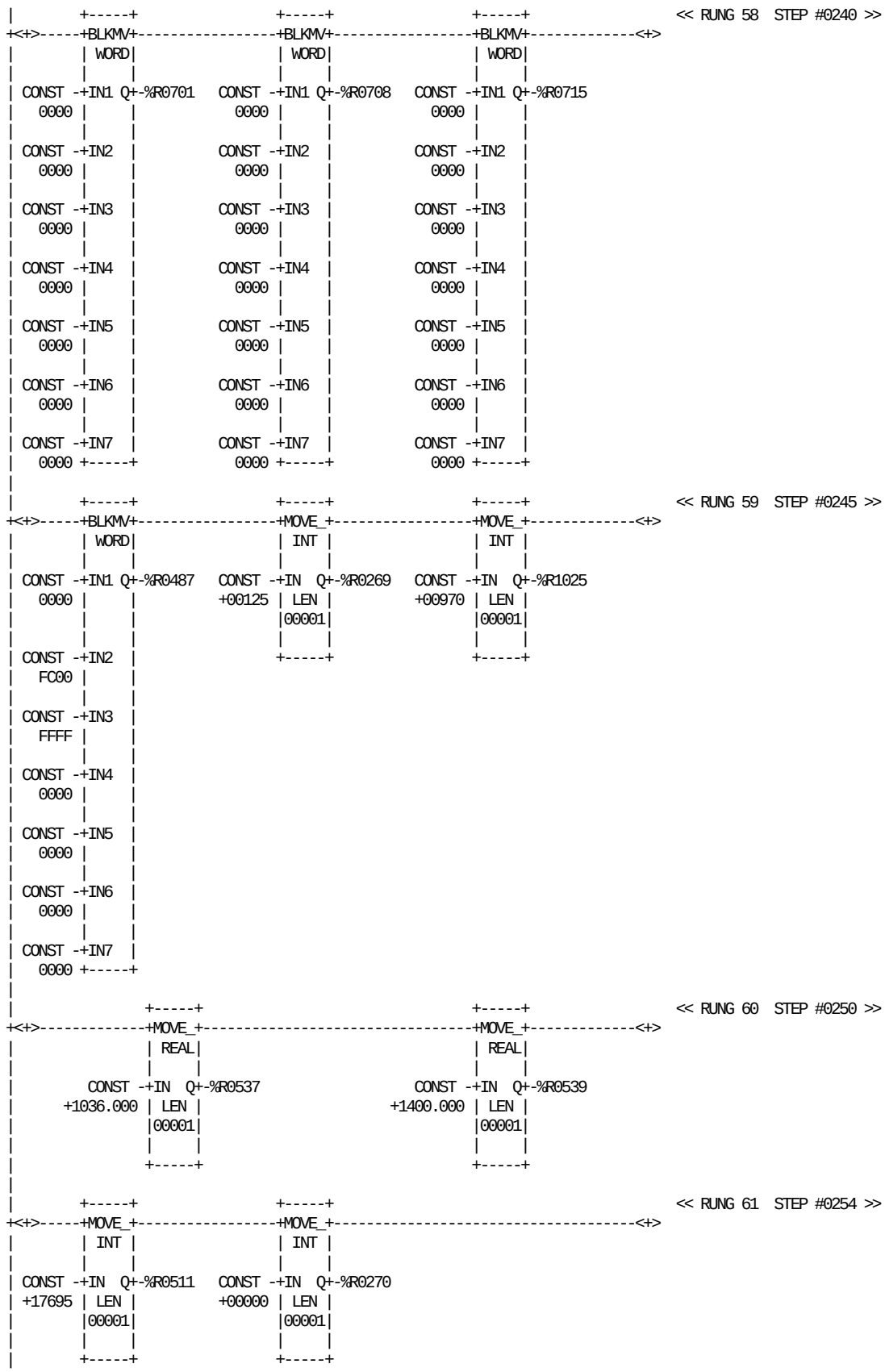

<< RUNG 58 STEP #0240 >>

<< RUNG 59 STEP #0245 >>

<< RUNG 60 STEP #0250 >>

<< RUNG 61 STEP #0254 >>

REFERENCE NICKNAME	REFERENCE DESCRIPTION	REFERENCE NICKNAME	REFERENCE DESCRIPTION
%R0269	Angle register	%R0539	Repeat length register
%R0270	WTC fixed pressure working mode	%R0701	Package dump PT on
%R0487	Package dump peroxide bath	%R0708	Package dump start strip seal PT
%R0511	TS TPIH default value	%R0715	Package dump strip splice PT
%R0537	Package length precorreted	%R1025	Paper supply package counter

BLOCK: 34 VOLUME DEPENDENT VALUES

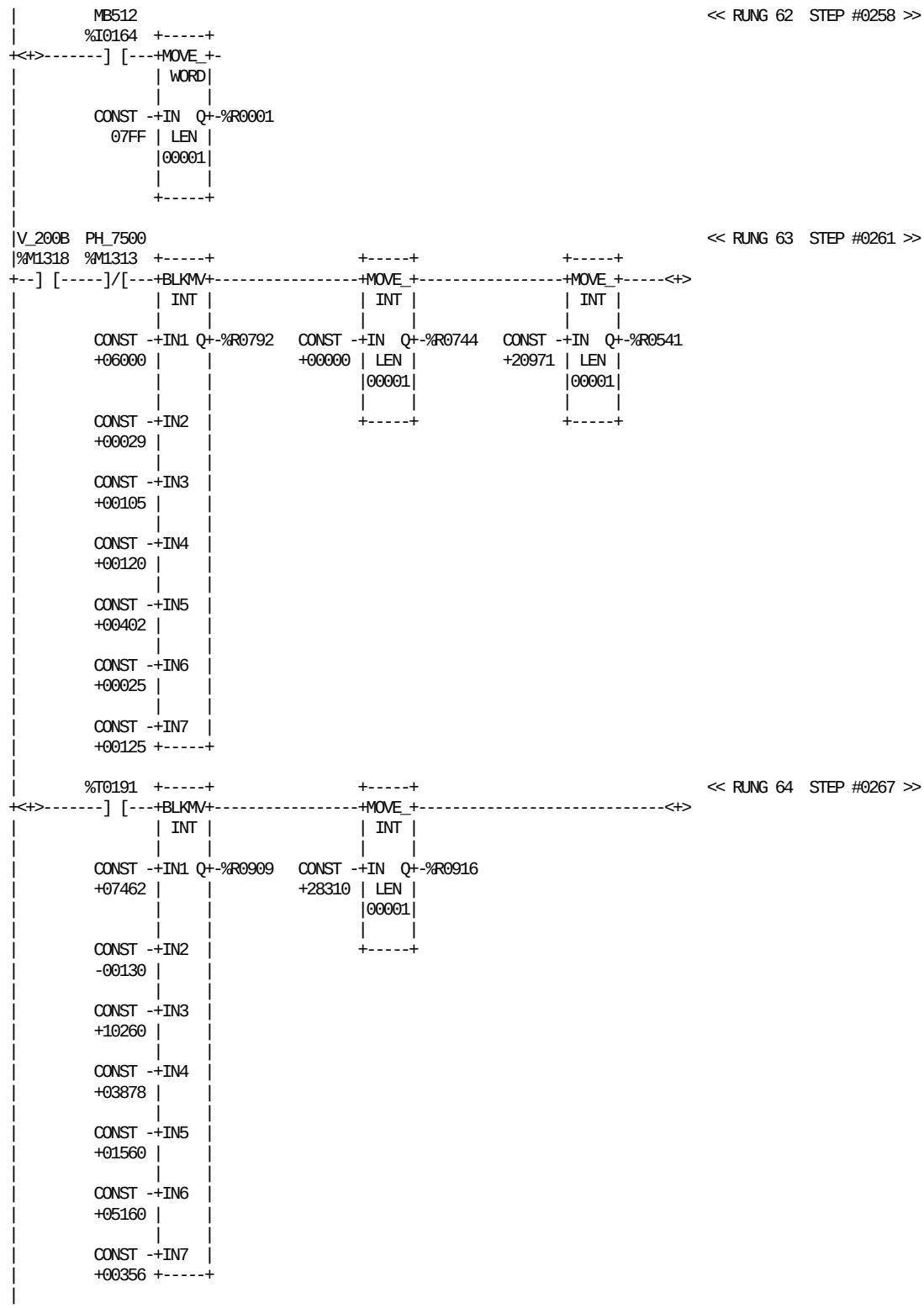

REFERENCE NICKNAME	REFERENCE DESCRIPTION	REFERENCE NICKNAME	REFERENCE DESCRIPTION
%T0191	Reset FCS parameter	%R0909	Filling parameters to A310
%R0001	Package dump short stop	%R0916	Ramp time(LSB)+bit parameter
%R0541	SA TPIH default value	%I0164 MB512	Injection_off
%R0744	Paper splice double heat	%M1313 PH_7500	Speed at 7500 package hour
%R0792	Synchronization FF speed	%M1318 V_200B	Volume 200 Base

BLOCK: 34 VOLUME DEPENDENT VALUES

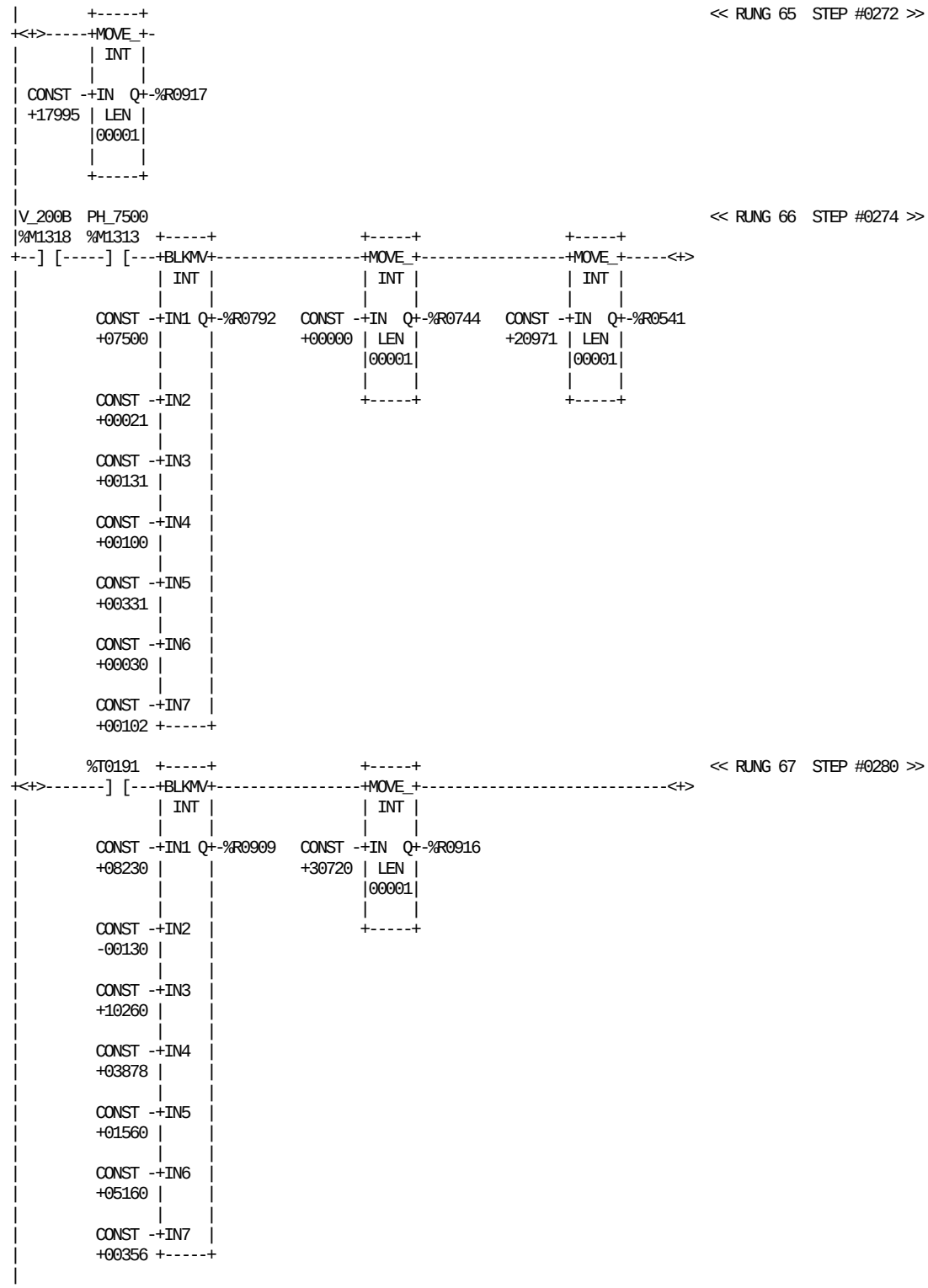

REFERENCE NICKNAME		REFERENCE DESCRIPTION	REFERENCE NICKNAME		REFERENCE DESCRIPTION
%T0191		Reset FCS parameter	%R0916		Ramp time(LSB)+bit parameter
%R0541		SA TPIH default value	%R0917		Filling start time+spare
%R0744		Paper splice double heat	%M1313	PH_7500	Speed at 7500 package hour
%R0792		Synchronization FF speed	%M1318	V_200B	Volume 200 Base
%R0909		Filling parameters to A310			

BLOCK: 34 VOLUME DEPENDENT VALUES

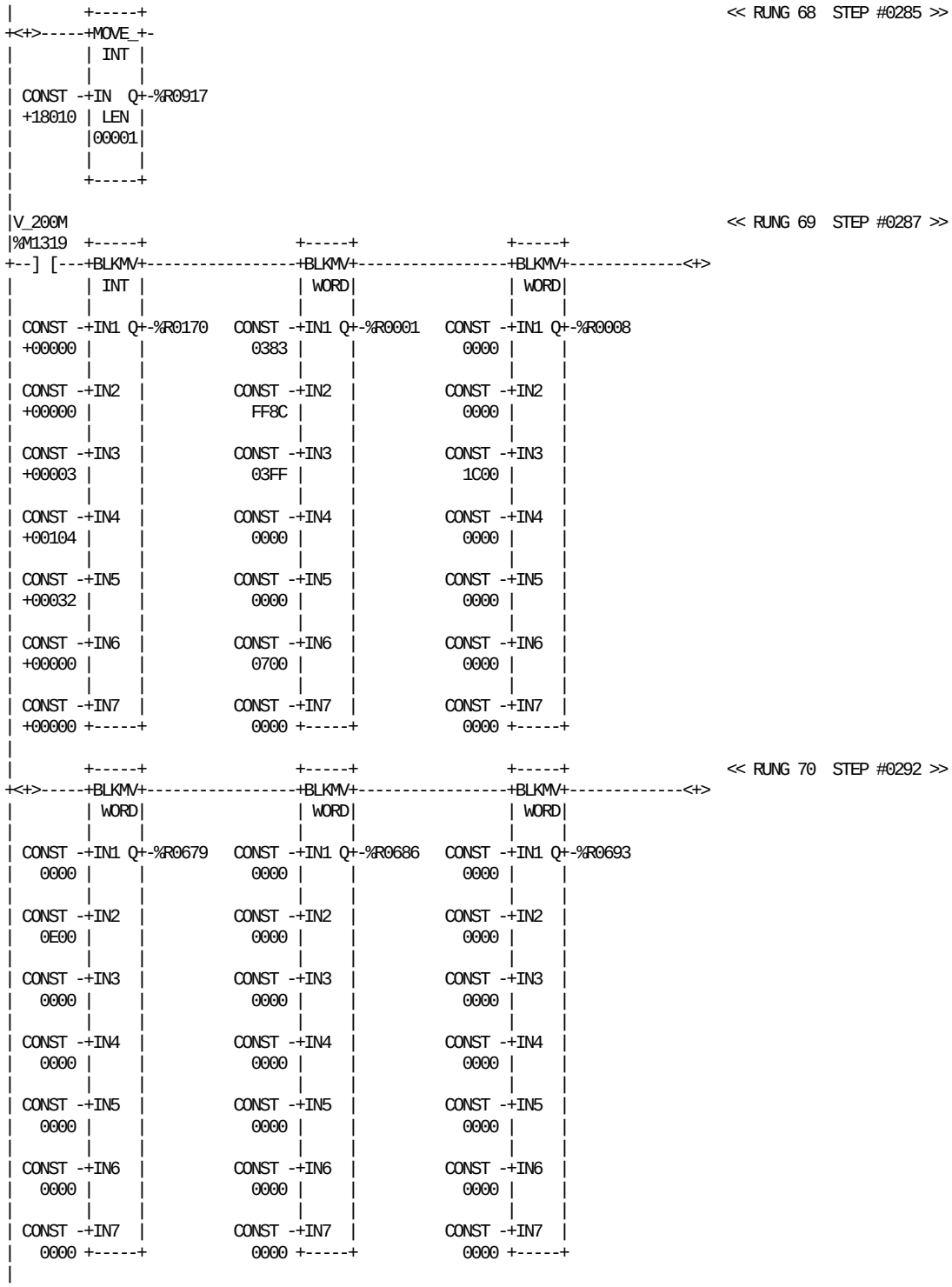

REFERENCE NICKNAME	REFERENCE DESCRIPTION	REFERENCE NICKNAME	REFERENCE DESCRIPTION
%R0001	Package dump short stop	%R0686	Free for future use
%R0008	Package dump start strip seal SA	%R0693	Package dump outerpatch splicing
%R0170	Angle fill start	%R0917	Filling start time+spare
%R0679	Package dump paper splice SA	%M1319 V_200M	Volume 200 Mid

BLOCK: 34 VOLUME DEPENDENT VALUES

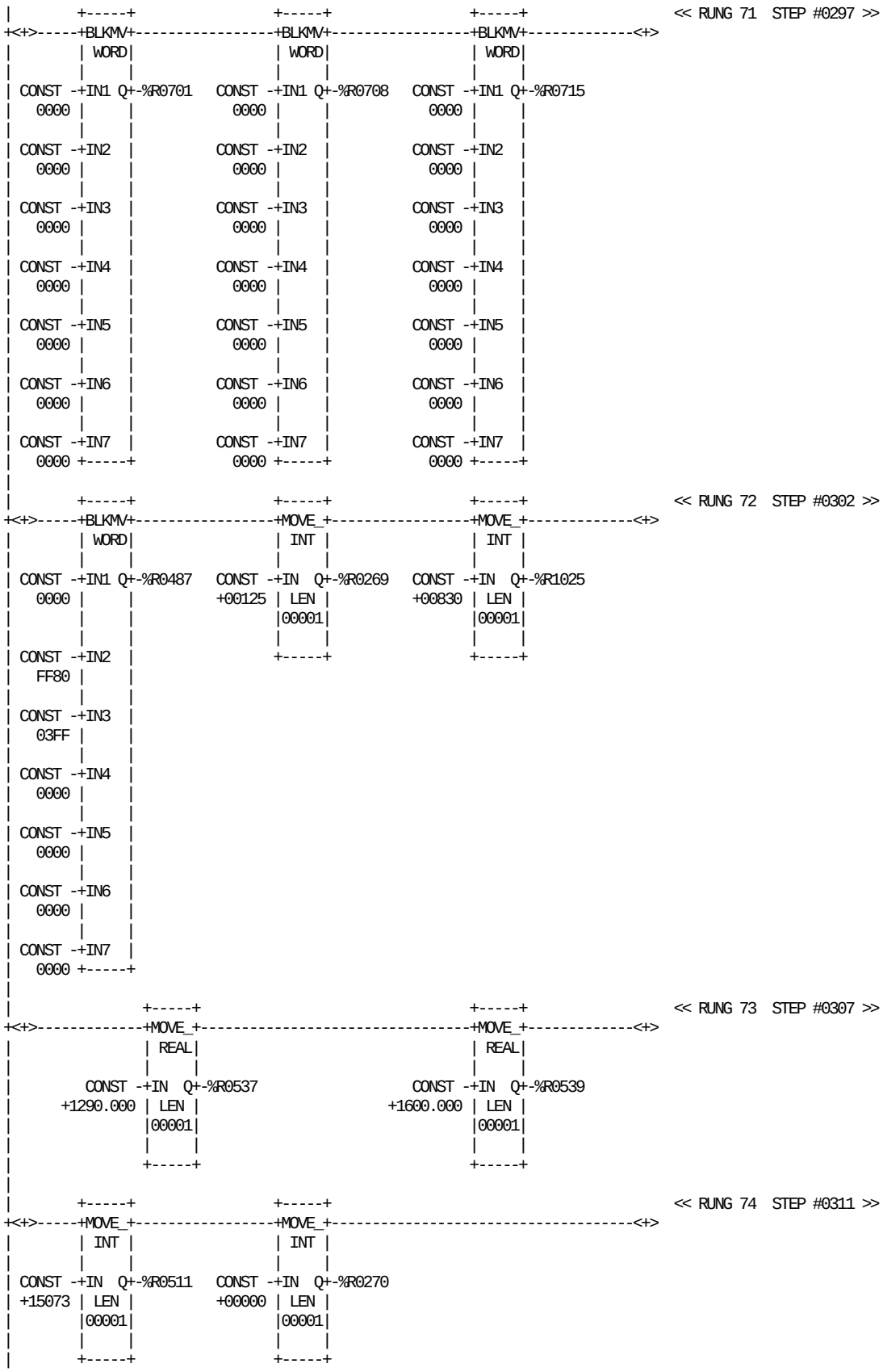

REFERENCE NICKNAME	REFERENCE DESCRIPTION	REFERENCE NICKNAME	REFERENCE DESCRIPTION
%R0269	Angle register	%R0539	Repeat length register
%R0270	WTC fixed pressure working mode	%R0701	Package dump PT on
%R0487	Package dump peroxide bath	%R0708	Package dump start strip seal PT
%R0511	TS TPIH default value	%R0715	Package dump strip splice PT
%R0537	Package length precorreted	%R1025	Paper supply package counter

BLOCK: 34 VOLUME DEPENDENT VALUES

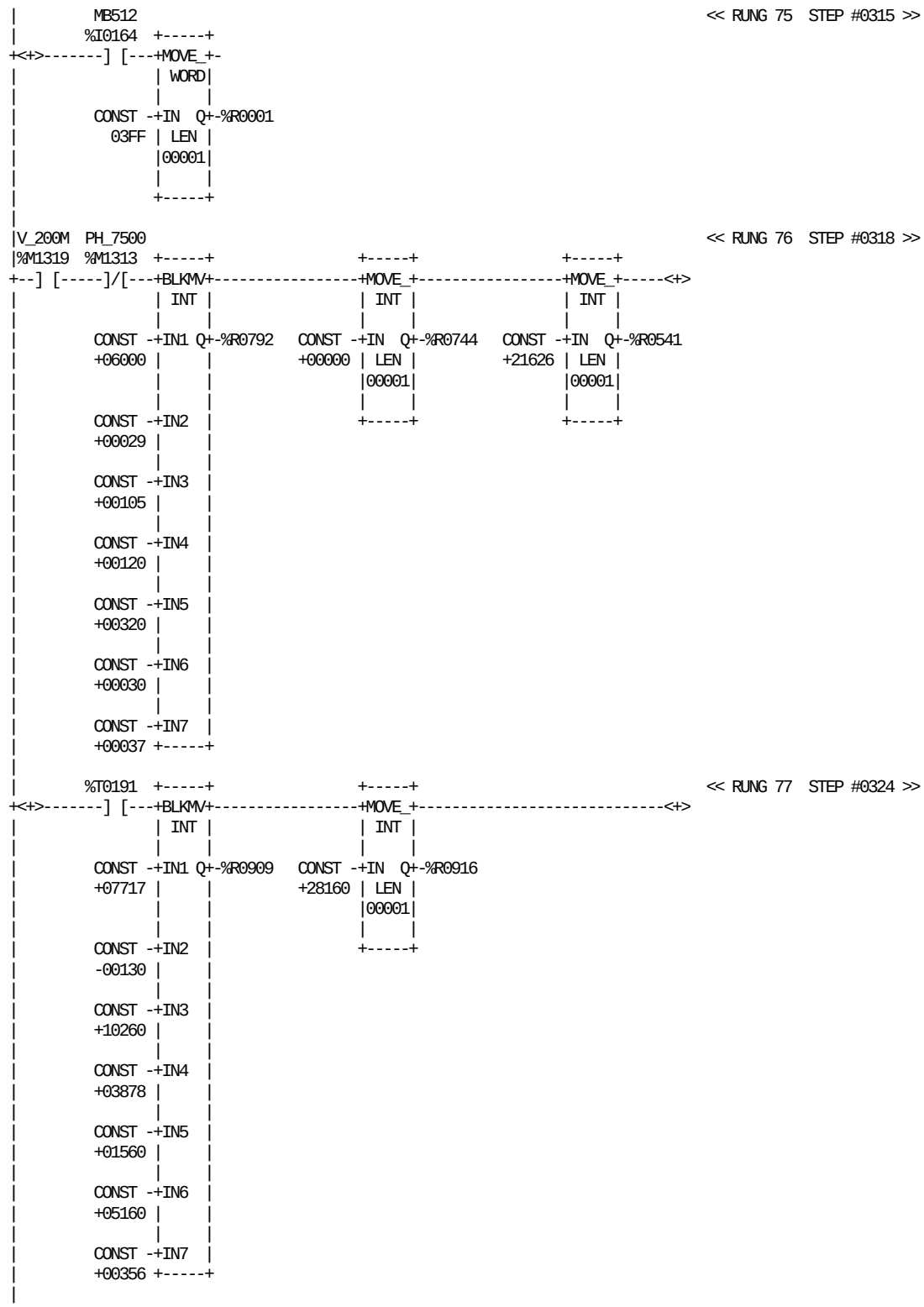

REFERENCE NICKNAME	REFERENCE DESCRIPTION	REFERENCE NICKNAME	REFERENCE DESCRIPTION
%T0191	Reset FCS parameter	%R0909	Filling parameters to A310
%R0001	Package dump short stop	%R0916	Ramp time(LSB)+bit parameter
%R0541	SA TPIH default value	%I0164 MB512	Injection_off
%R0744	Paper splice double heat	%M1313 PH_7500	Speed at 7500 package hour
%R0792	Synchronization FF speed	%M1319 V_200M	Volume 200 Mid

BLOCK: 34 VOLUME DEPENDENT VALUES

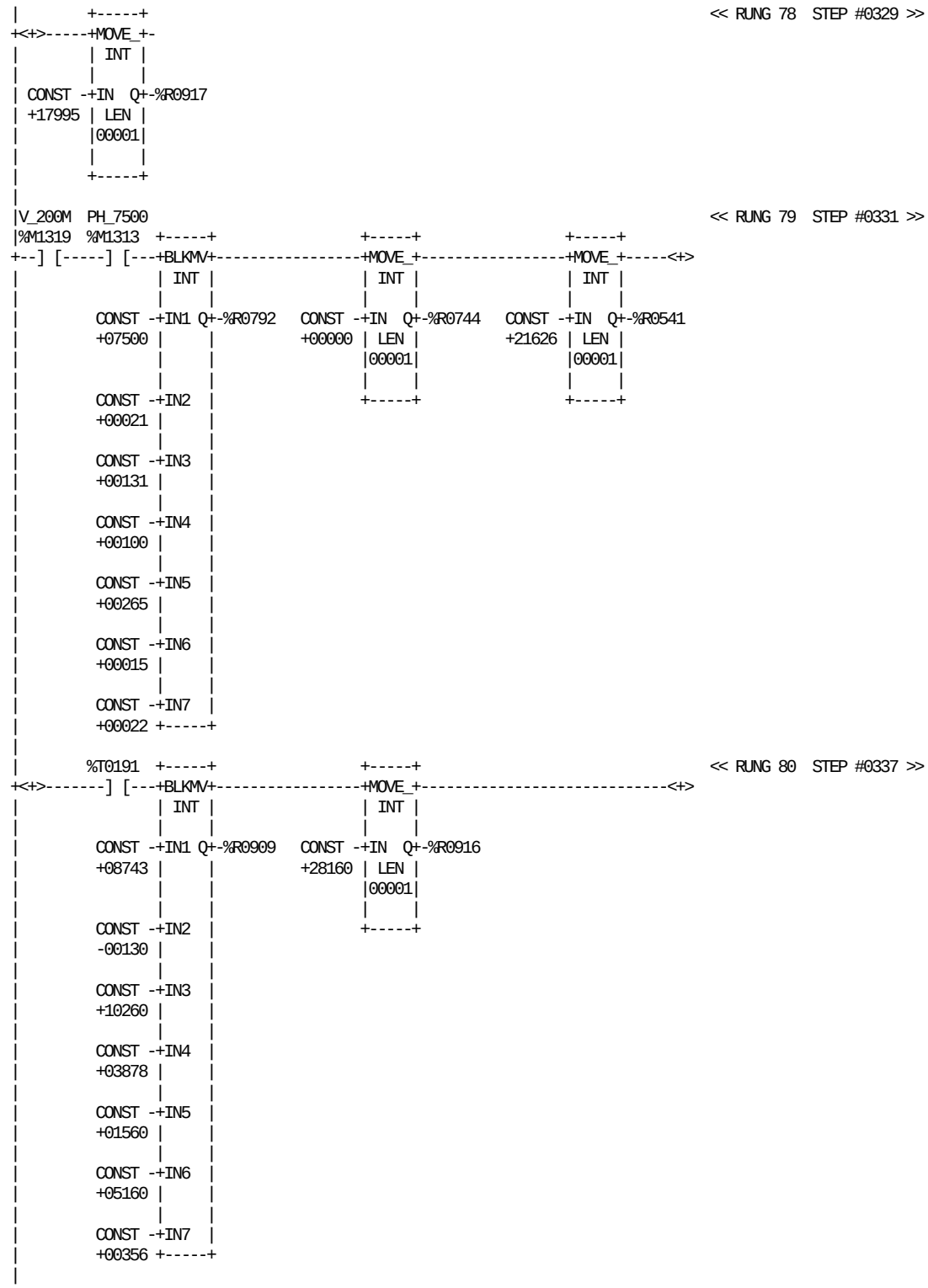

REFERENCE NICKNAME		REFERENCE DESCRIPTION	REFERENCE NICKNAME		REFERENCE DESCRIPTION
%T0191		Reset FCS parameter	%R0916		Ramp time(LSB)+bit parameter
%R0541		SA TPIH default value	%R0917		Filling start time+spare
%R0744		Paper splice double heat	%M1313	PH_7500	Speed at 7500 package hour
%R0792		Synchronization FF speed	%M1319	V_200M	Volume 200 Mid
%R0909		Filling parameters to A310			

BLOCK: 34 VOLUME DEPENDENT VALUES

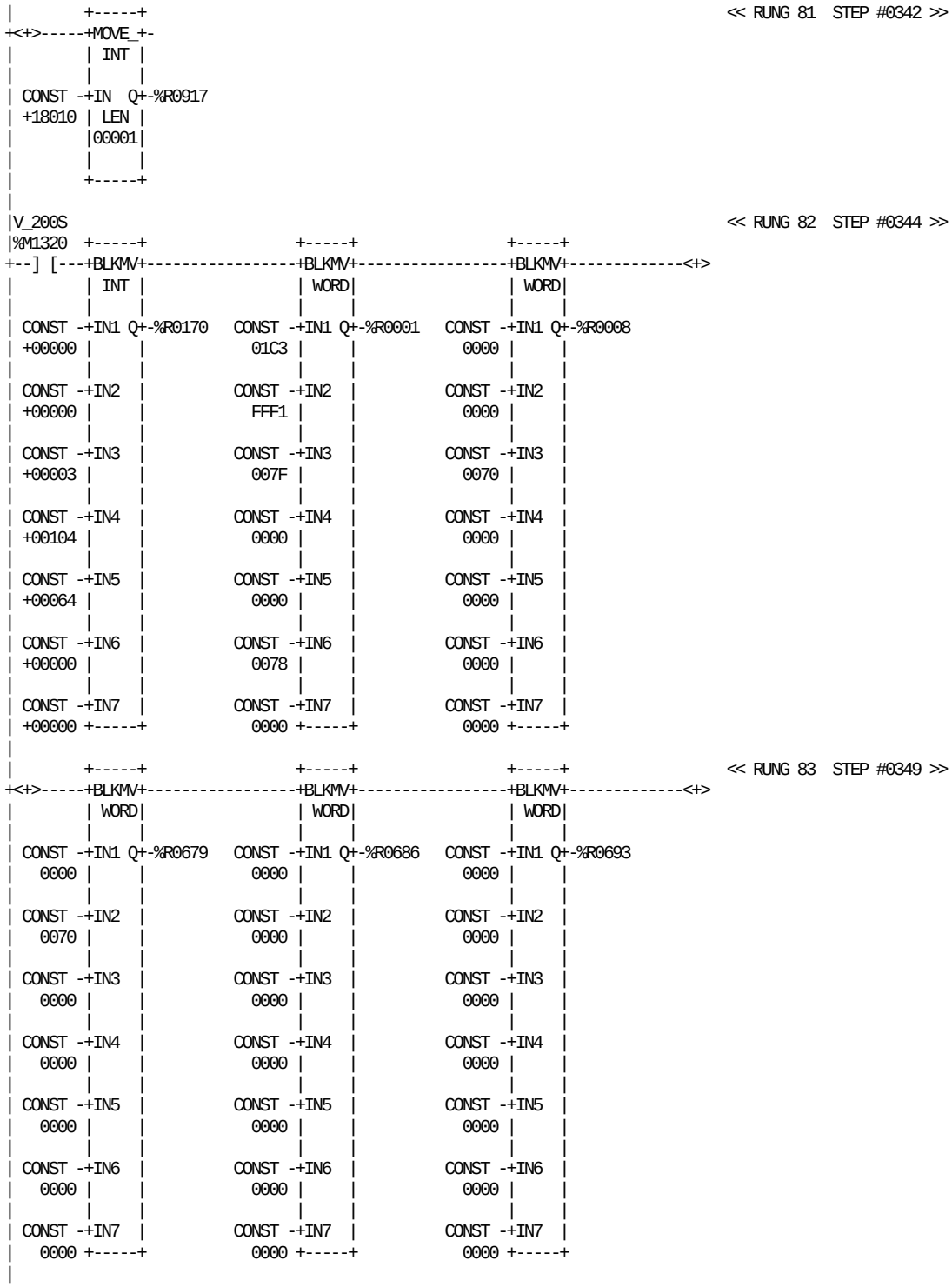

REFERENCE NICKNAME	REFERENCE DESCRIPTION	REFERENCE NICKNAME	REFERENCE DESCRIPTION
%R0001	Package dump short stop	%R0686	Free for future use
%R0008	Package dump start strip seal SA	%R0693	Package dump outerpatch splicing
%R0170	Angle fill start	%R0917	Filling start time+spare
%R0679	Package dump paper splice SA	%M1320 V_200S	Volume 200 Slim

BLOCK: 34 VOLUME DEPENDENT VALUES

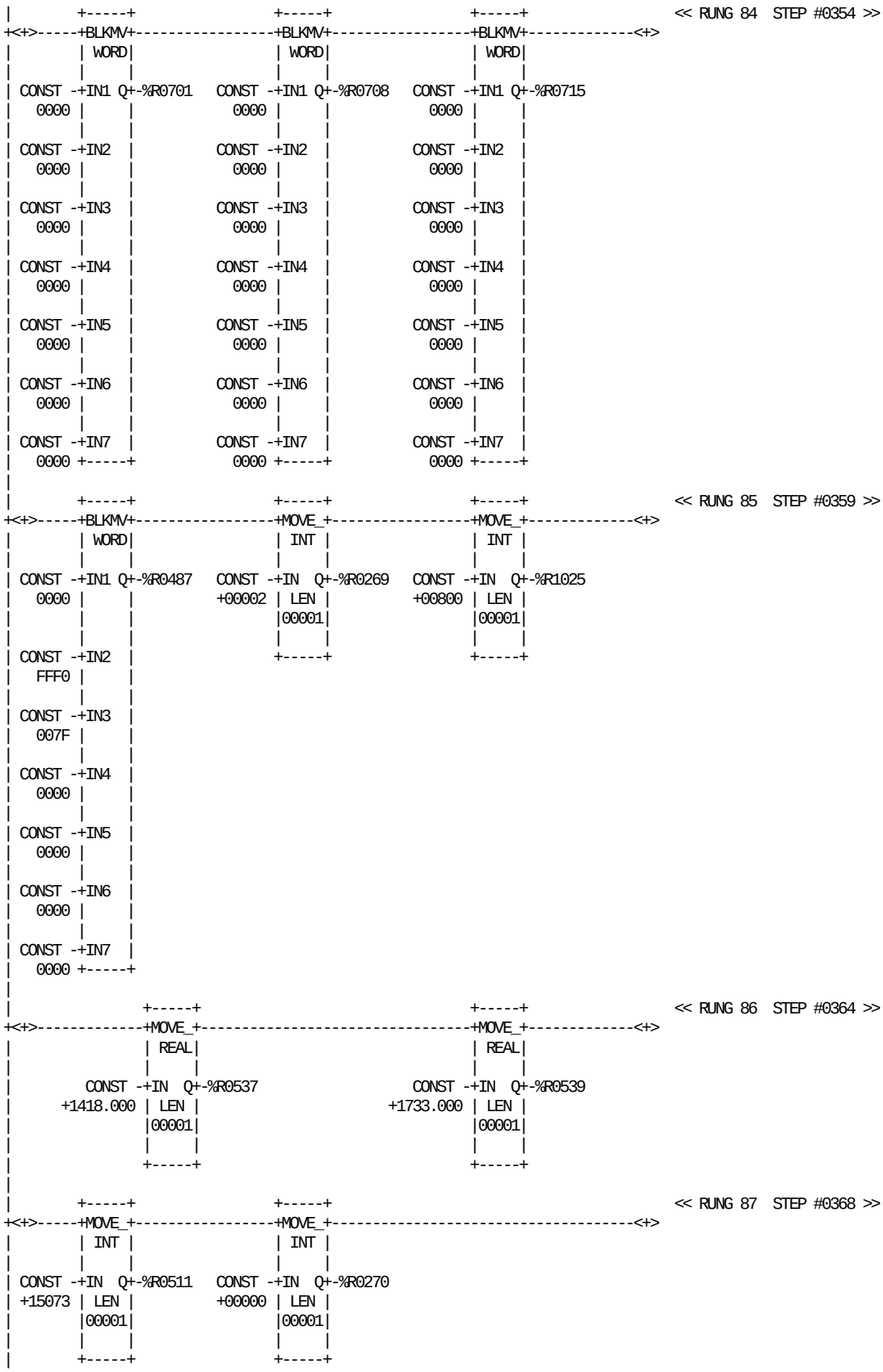

REFERENCE NICKNAME	REFERENCE DESCRIPTION	REFERENCE NICKNAME	REFERENCE DESCRIPTION
%R0269	Angle register	%R0539	Repeat length register
%R0270	WTC fixed pressure working mode	%R0701	Package dump PT on
%R0487	Package dump peroxide bath	%R0708	Package dump start strip seal PT
%R0511	TS TPIH default value	%R0715	Package dump strip splice PT
%R0537	Package length precorreted	%R1025	Paper supply package counter

BLOCK: 34 VOLUME DEPENDENT VALUES

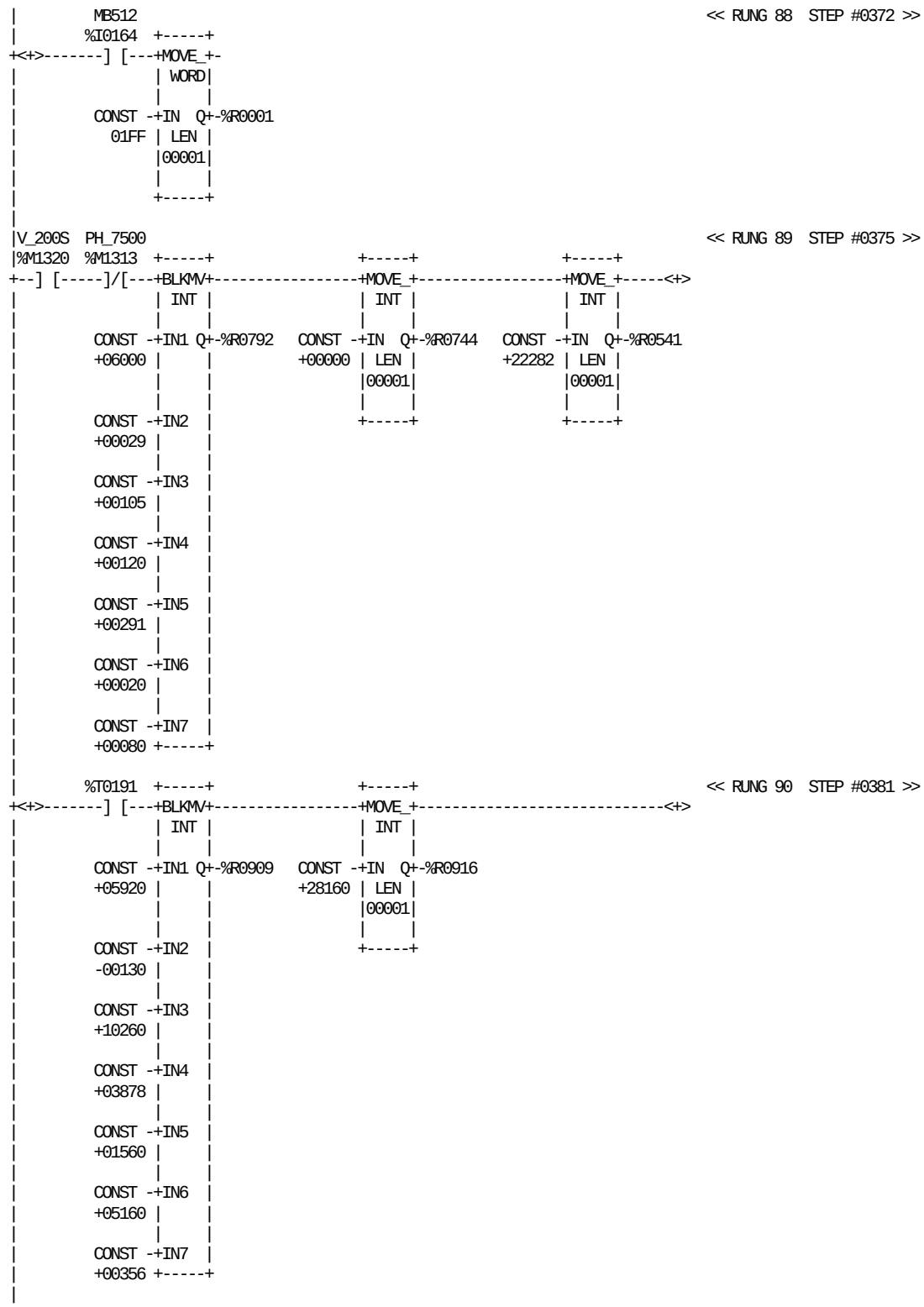

REFERENCE NICKNAME	REFERENCE DESCRIPTION	REFERENCE NICKNAME		REFERENCE DESCRIPTION
%T0191	Reset FCS parameter	%R0909		Filling parameters to A310
%R0001	Package dump short stop	%R0916		Ramp time(LSB)+bit parameter
%R0541	SA TPIH default value	%I0164	MB512	Injection_off
%R0744	Paper splice double heat	%M1313	PH_7500	Speed at 7500 package hour
%R0792	Synchronization FF speed	%M1320	V_200S	Volume 200 Slim

BLOCK: 34 VOLUME DEPENDENT VALUES

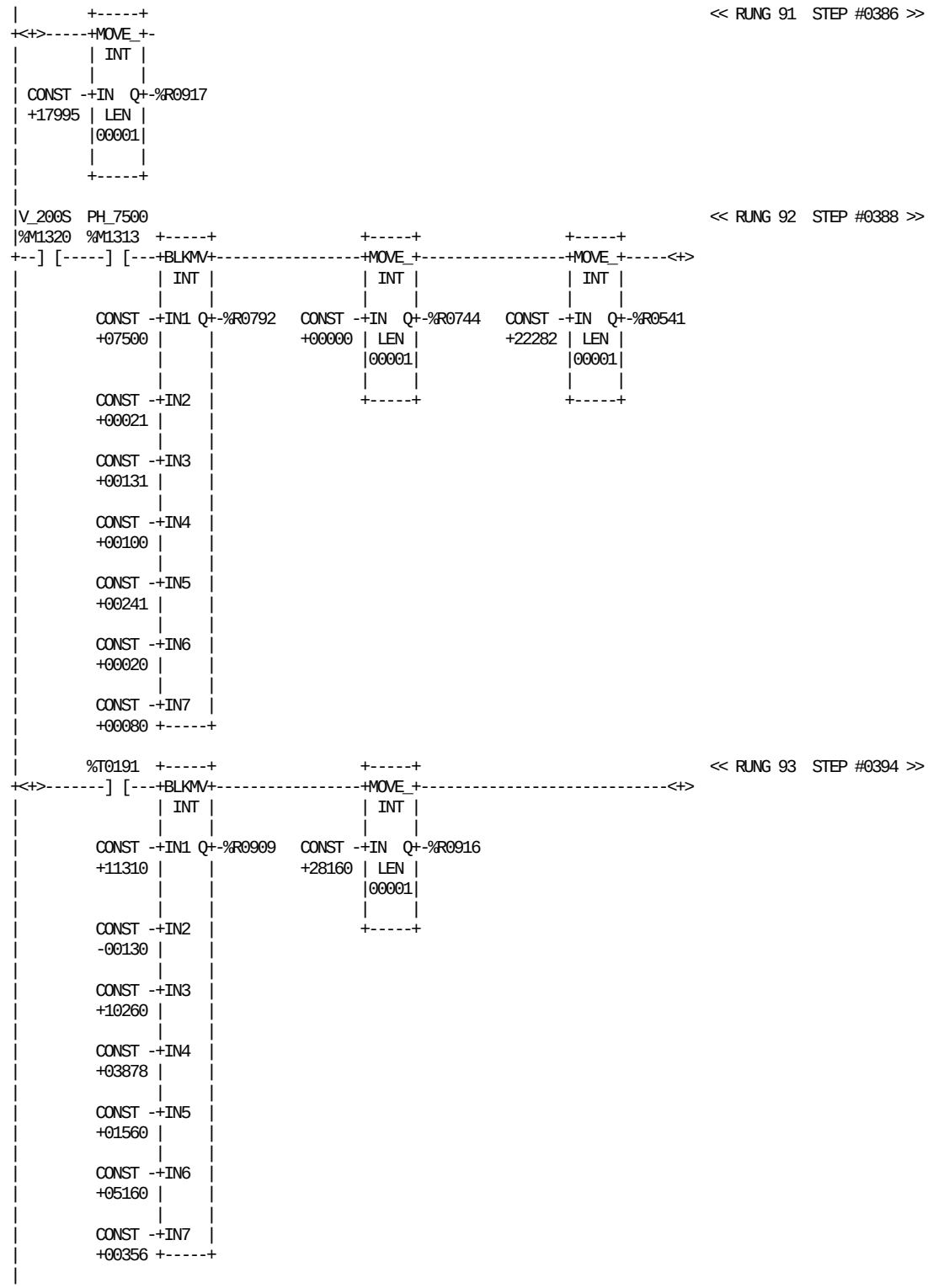

REFERENCE NICKNAME		REFERENCE DESCRIPTION	REFERENCE NICKNAME		REFERENCE DESCRIPTION
%T0191		Reset FCS parameter	%R0916		Ramp time(LSB)+bit parameter
%R0541		SA TPIH default value	%R0917		Filling start time+spare
%R0744		Paper splice double heat	%M1313	PH_7500	Speed at 7500 package hour
%R0792		Synchronization FF speed	%M1320	V_200S	Volume 200 Slim
%R0909		Filling parameters to A310			

BLOCK: 34 VOLUME DEPENDENT VALUES

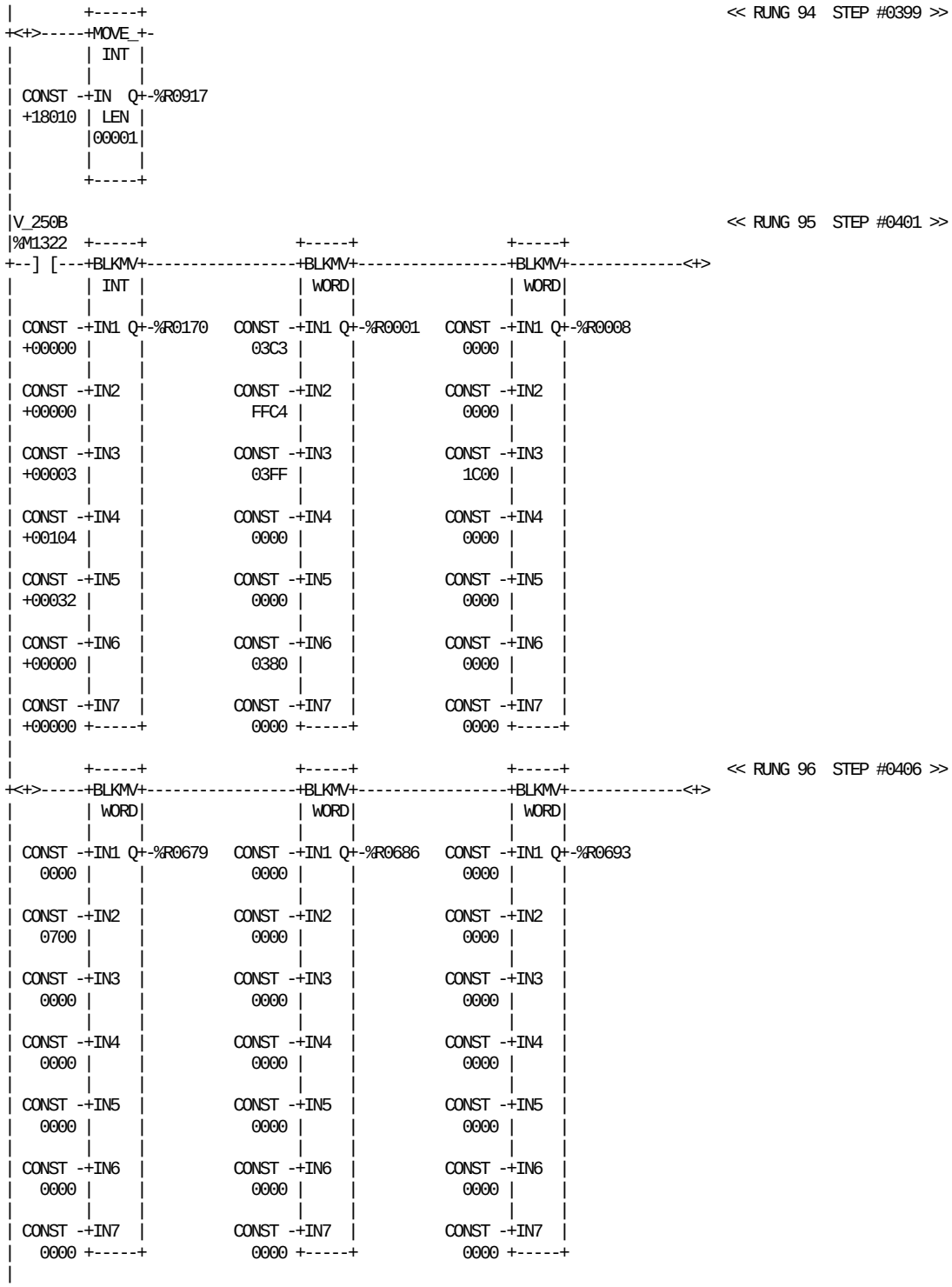

REFERENCE NICKNAME	REFERENCE DESCRIPTION	REFERENCE NICKNAME	REFERENCE DESCRIPTION
%R0001	Package dump short stop	%R0686	Free for future use
%R0008	Package dump start strip seal SA	%R0693	Package dump outerpatch splicing
%R0170	Angle fill start	%R0917	Filling start time+spare
%R0679	Package dump paper splice SA	%M1322 V_250B	Volume 250 Base

BLOCK: 34 VOLUME DEPENDENT VALUES

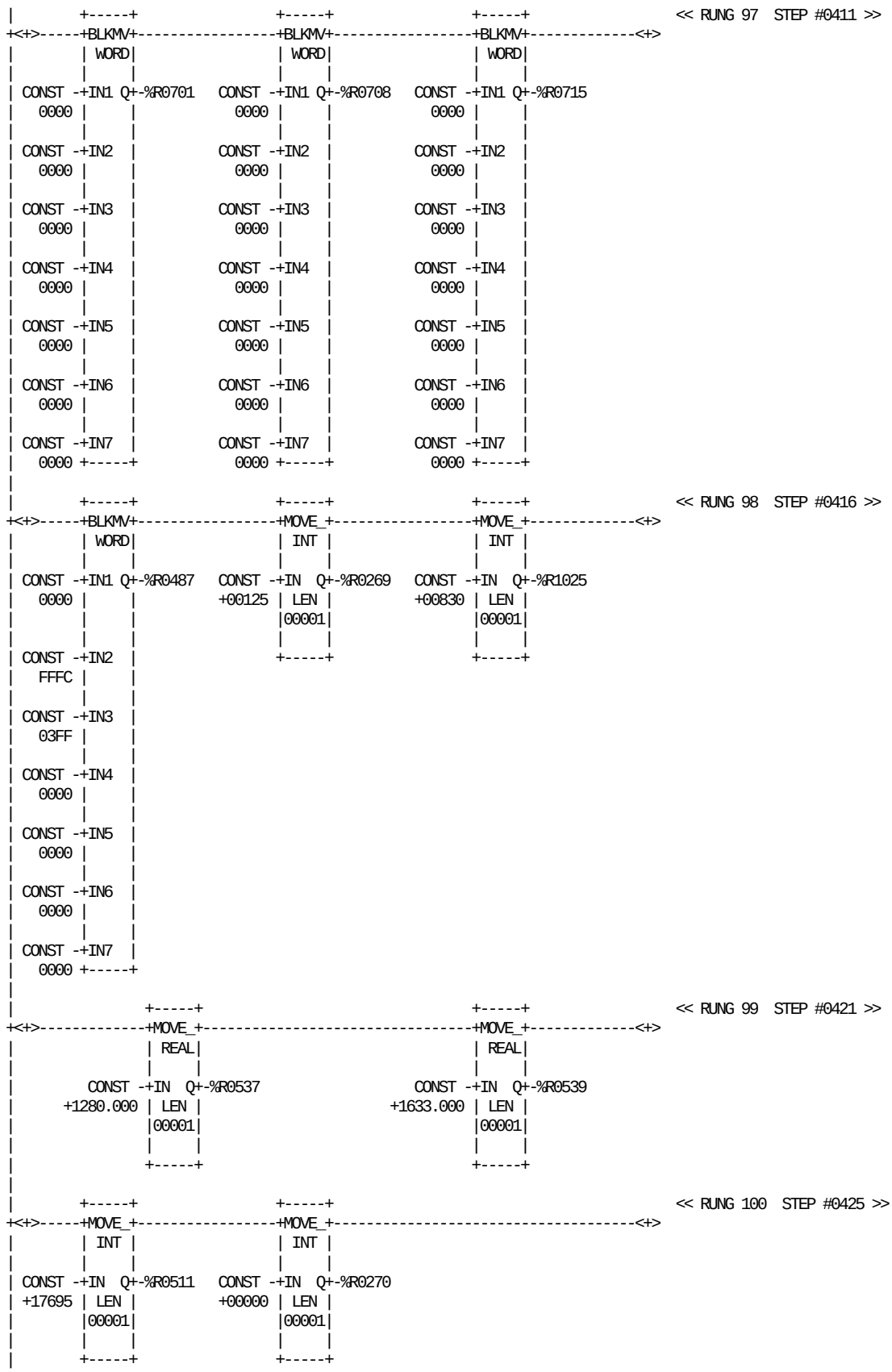

REFERENCE NICKNAME	REFERENCE DESCRIPTION	REFERENCE NICKNAME	REFERENCE DESCRIPTION
%R0269	Angle register	%R0539	Repeat length register
%R0270	WTC fixed pressure working mode	%R0701	Package dump PT on
%R0487	Package dump peroxide bath	%R0708	Package dump start strip seal PT
%R0511	TS TPIH default value	%R0715	Package dump strip splice PT
%R0537	Package length precorreted	%R1025	Paper supply package counter

BLOCK: 34 VOLUME DEPENDENT VALUES

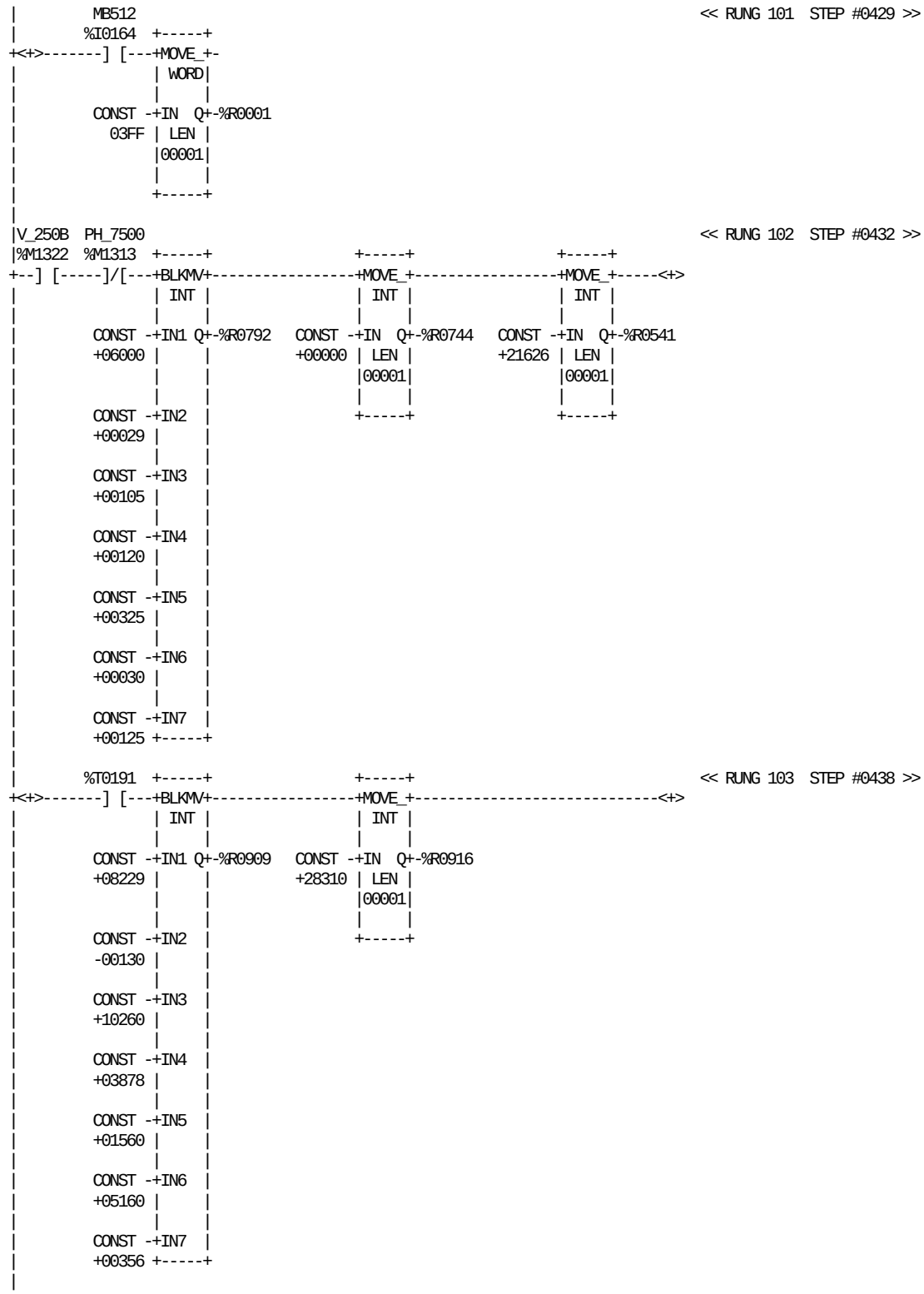

REFERENCE NICKNAME	REFERENCE DESCRIPTION	REFERENCE NICKNAME		REFERENCE DESCRIPTION
%T0191	Reset FCS parameter	%R0909		Filling parameters to A310
%R0001	Package dump short stop	%R0916		Ramp time(LSB)+bit parameter
%R0541	SA TPIH default value	%I0164	MB512	Injection_off
%R0744	Paper splice double heat	%M1313	PH_7500	Speed at 7500 package hour
%R0792	Synchronization FF speed	%M1322	V_250B	Volume 250 Base

BLOCK: 34 VOLUME DEPENDENT VALUES

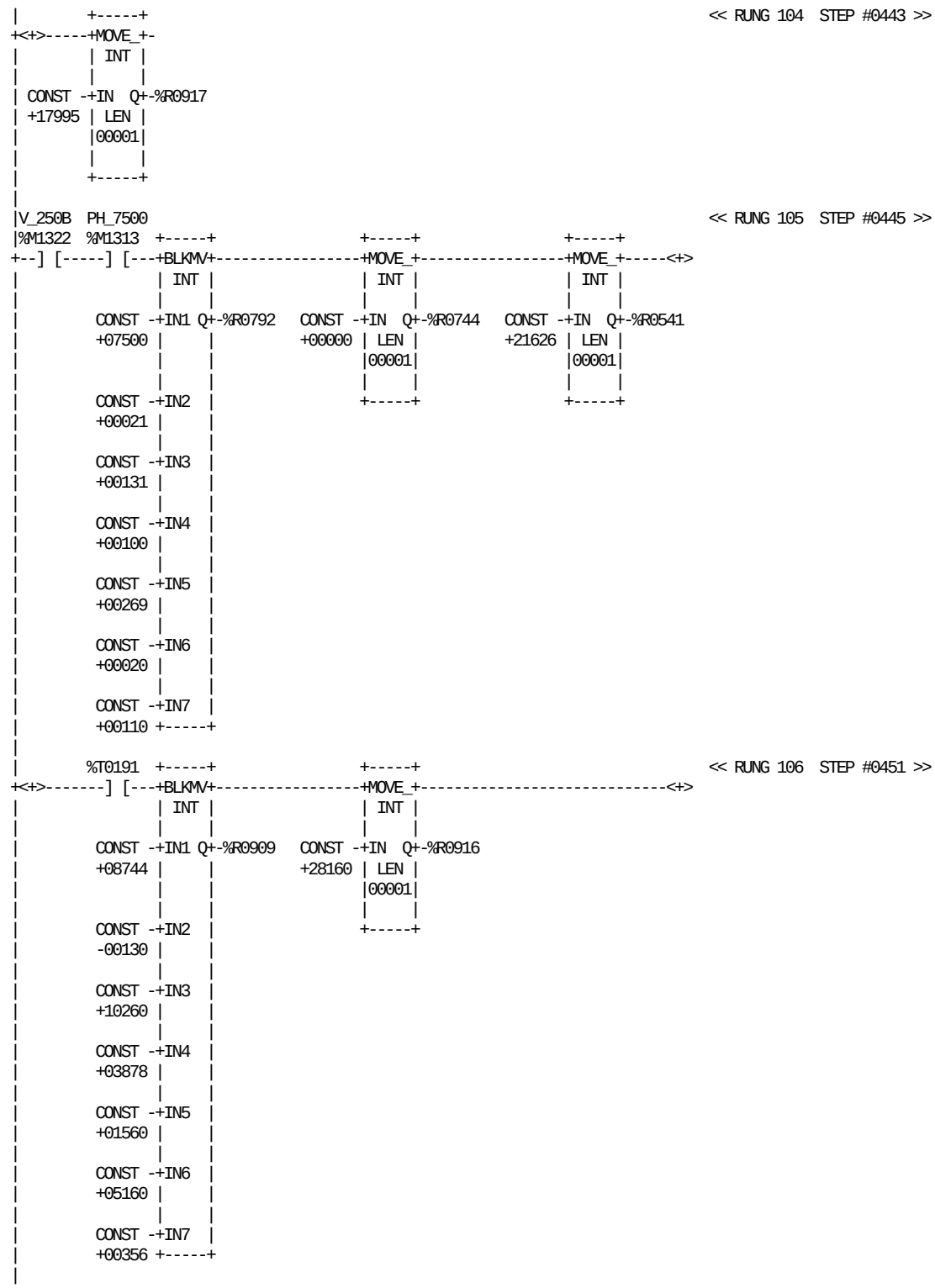

REFERENCE NICKNAME		REFERENCE DESCRIPTION
%T0191		Reset FCS parameter
%R0541		SA TPIH default value
%R0744		Paper splice double heat
%R0792		Synchronization FF speed
%R0909		Filling parameters to A310
%R0916		Ramp time(LSB)+bit parameter
%R0917		Filling start time+spare
%M1313	PH_7500	Speed at 7500 package hour
%M1322	V_250B	Volume 250 Base

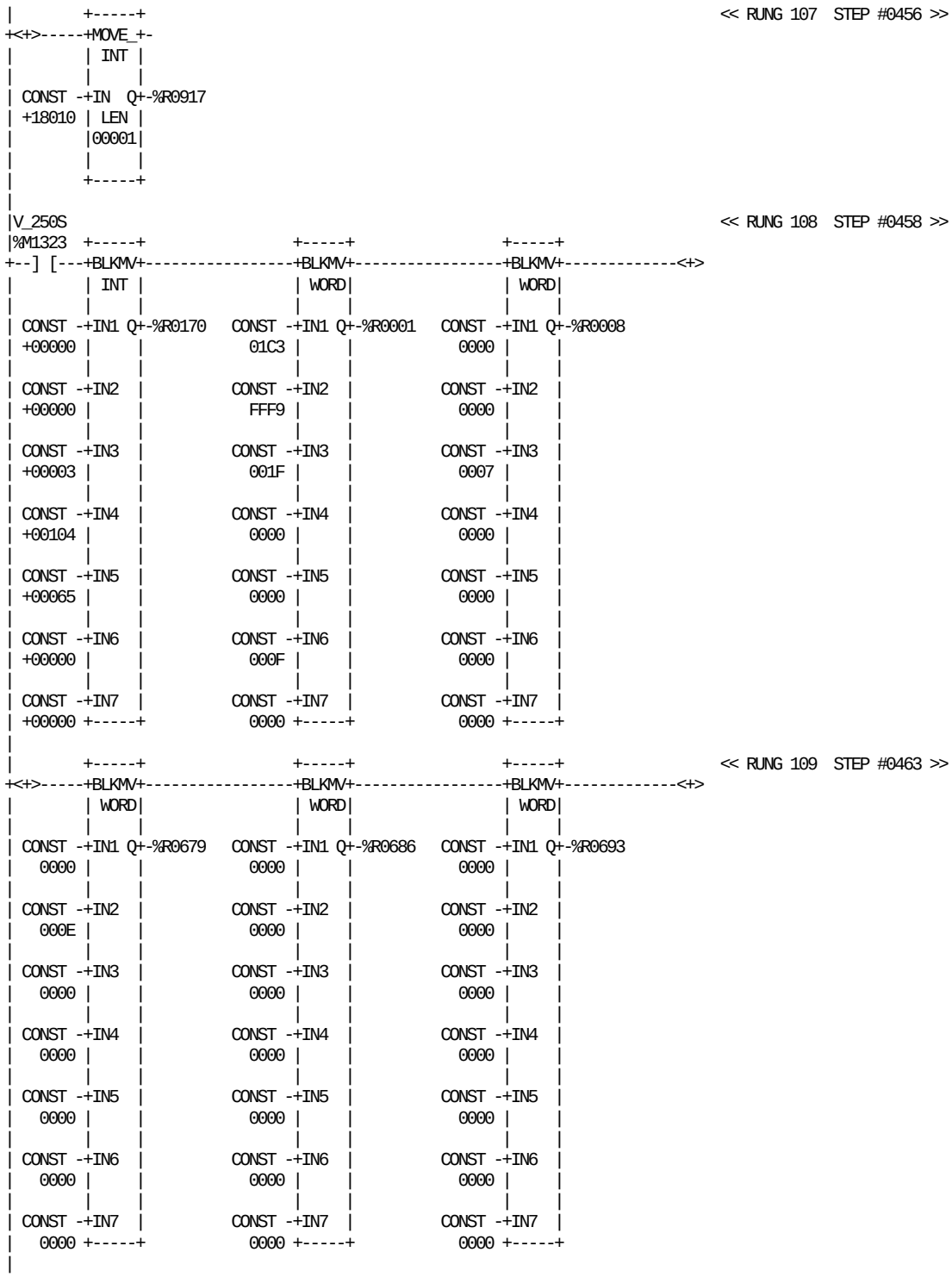

REFERENCE NICKNAME	REFERENCE DESCRIPTION	REFERENCE NICKNAME	REFERENCE DESCRIPTION
%R0001	Package dump short stop	%R0686	Free for future use
%R0008	Package dump start strip seal SA	%R0693	Package dump outerpatch splicing
%R0170	Angle fill start	%R0917	Filling start time+spare
%R0679	Package dump paper splice SA	%M1323 V_250S	Volume 250 Slim

BLOCK: 34 VOLUME DEPENDENT VALUES

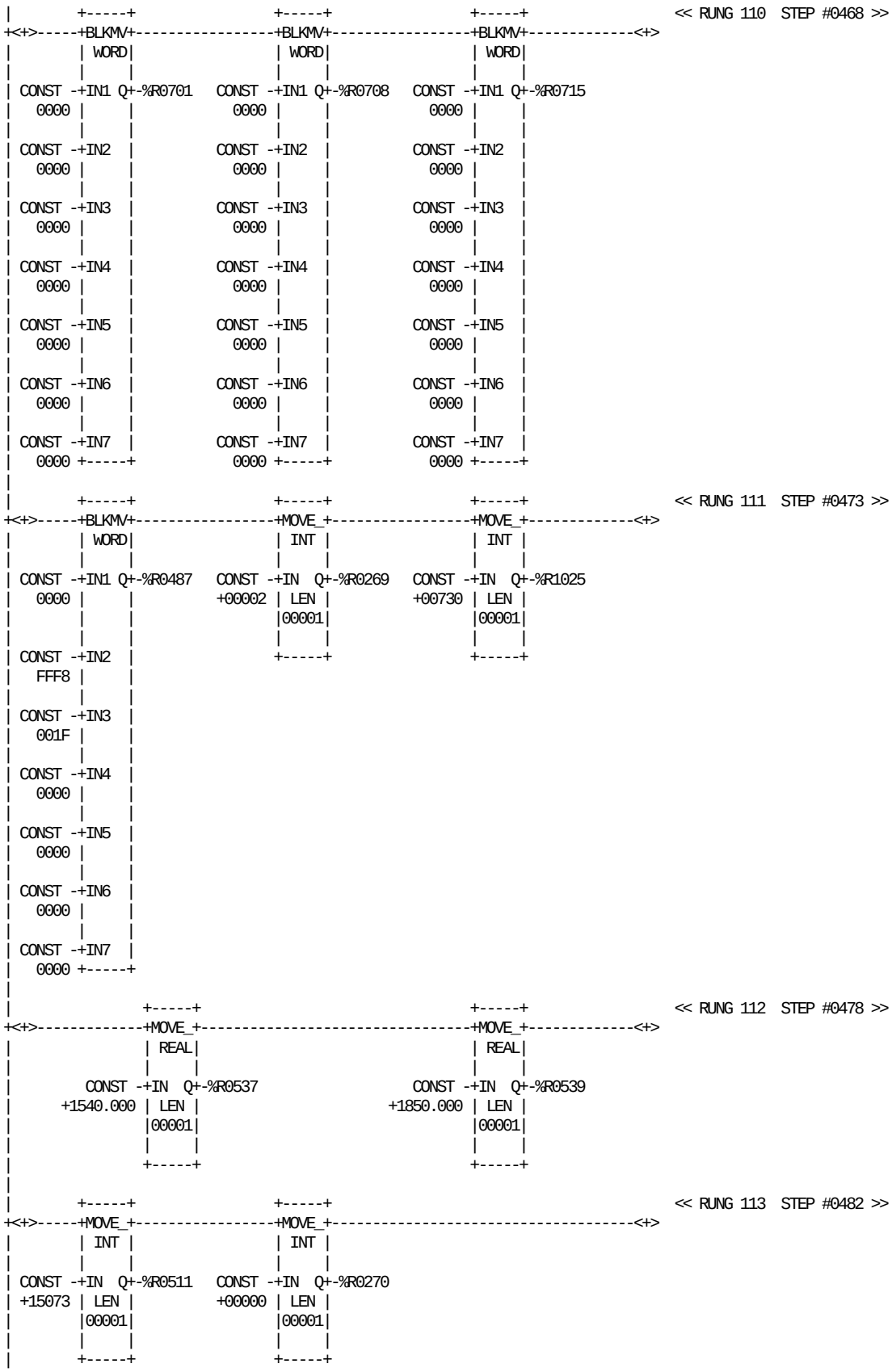

REFERENCE NICKNAME	REFERENCE DESCRIPTION	REFERENCE NICKNAME	REFERENCE DESCRIPTION
%R0269	Angle register	%R0539	Repeat length register
%R0270	WTC fixed pressure working mode	%R0701	Package dump PT on
%R0487	Package dump peroxide bath	%R0708	Package dump start strip seal PT
%R0511	TS TPIH default value	%R0715	Package dump strip splice PT
%R0537	Package length precorreted	%R1025	Paper supply package counter

BLOCK: 34 VOLUME DEPENDENT VALUES

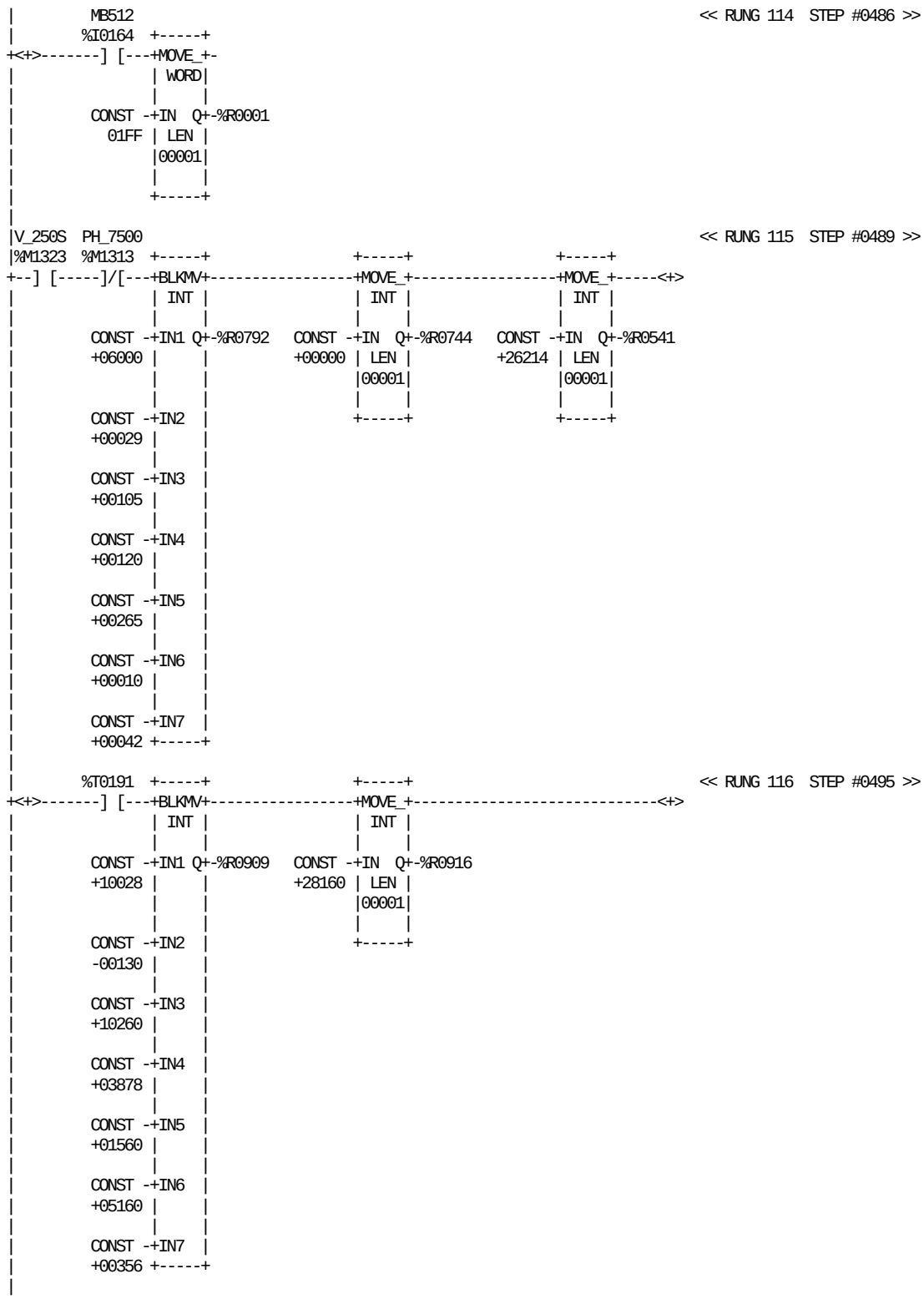

REFERENCE NICKNAME	REFERENCE DESCRIPTION	REFERENCE NICKNAME	REFERENCE DESCRIPTION
%T0191	Reset FCS parameter	%R0909	Filling parameters to A310
%R0001	Package dump short stop	%R0916	Ramp time(LSB)+bit parameter
%R0541	SA TPIH default value	%I0164 MB512	Injection_off
%R0744	Paper splice double heat	%M1313 PH_7500	Speed at 7500 package hour
%R0792	Synchronization FF speed	%M1323 V_250S	Volume 250 Slim

BLOCK: 34 VOLUME DEPENDENT VALUES

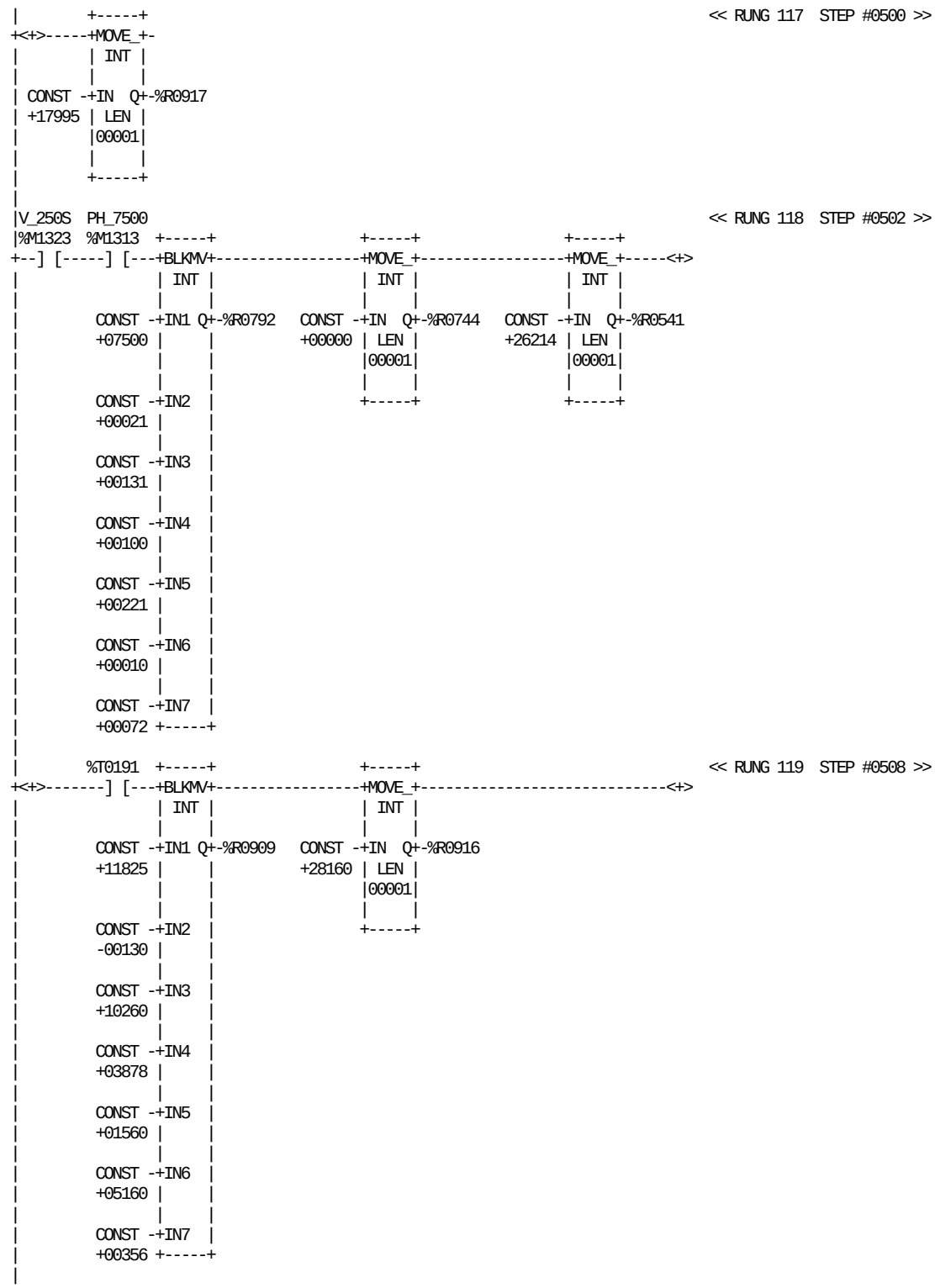

REFERENCE NICKNAME	REFERENCE DESCRIPTION	REFERENCE NICKNAME	REFERENCE DESCRIPTION
%T0191	Reset FCS parameter	%R0916	Ramp time(LSB)+bit parameter
%R0541	SA TPIH default value	%R0917	Filling start time+spare
%R0744	Paper splice double heat	%M1313 PH_7500	Speed at 7500 package hour
%R0792	Synchronization FF speed	%M1323 V_250S	Volume 250 Slim
%R0909	Filling parameters to A310		

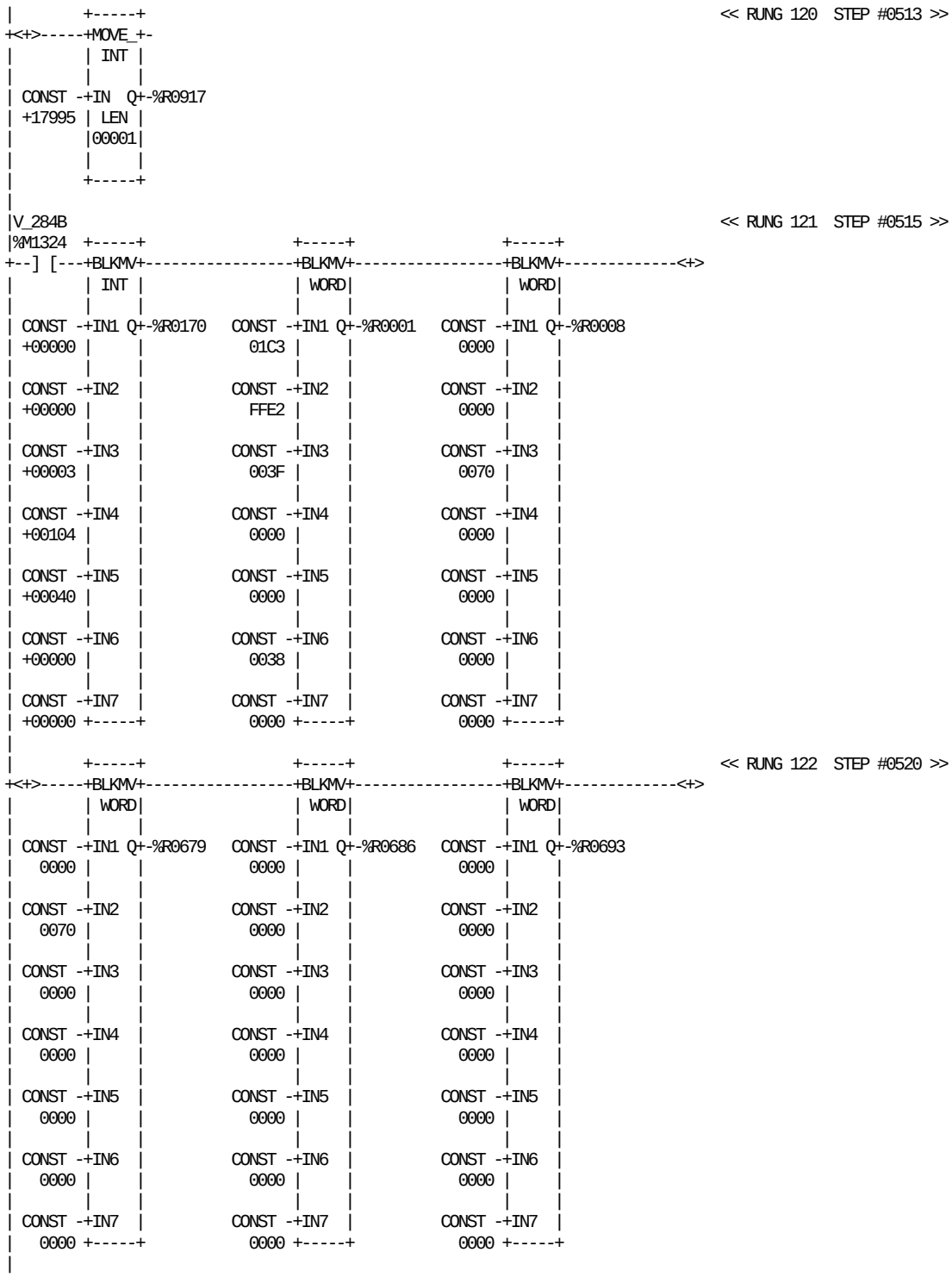

REFERENCE NICKNAME	REFERENCE DESCRIPTION	REFERENCE NICKNAME	REFERENCE DESCRIPTION
%R0001	Package dump short stop	%R0686	Free for future use
%R0008	Package dump start strip seal SA	%R0693	Package dump outerpatch splicing
%R0170	Angle fill start	%R0917	Filling start time+spare
%R0679	Package dump paper splice SA	%M1324 V_284B	Volume 284 Base

BLOCK: 34 VOLUME DEPENDENT VALUES

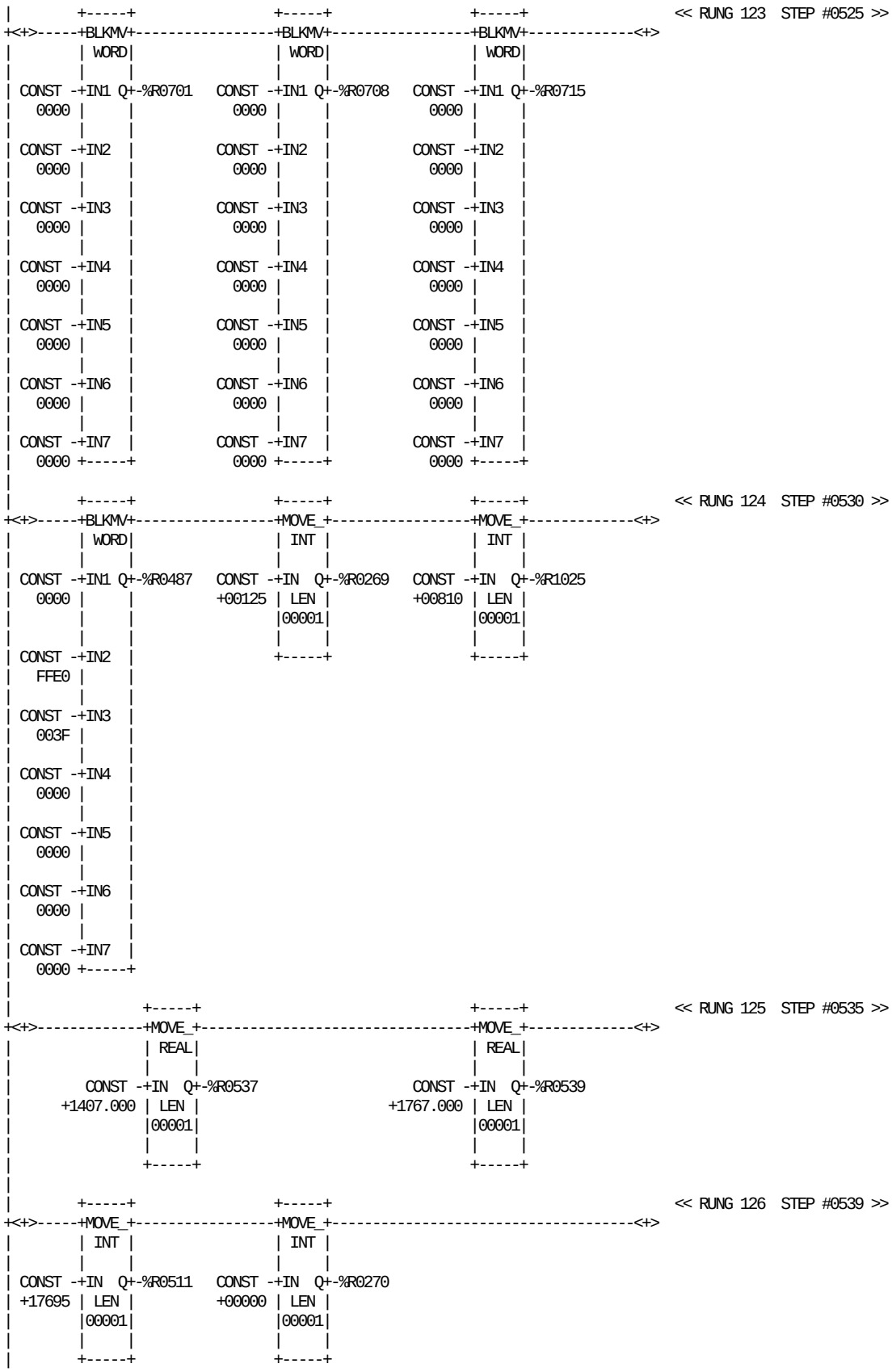

REFERENCE NICKNAME	REFERENCE DESCRIPTION	REFERENCE NICKNAME	REFERENCE DESCRIPTION
%R0269	Angle register	%R0539	Repeat length register
%R0270	WTC fixed pressure working mode	%R0701	Package dump PT on
%R0487	Package dump peroxide bath	%R0708	Package dump start strip seal PT
%R0511	TS TPIH default value	%R0715	Package dump strip splice PT
%R0537	Package length precorreted	%R1025	Paper supply package counter

BLOCK: 34 VOLUME DEPENDENT VALUES

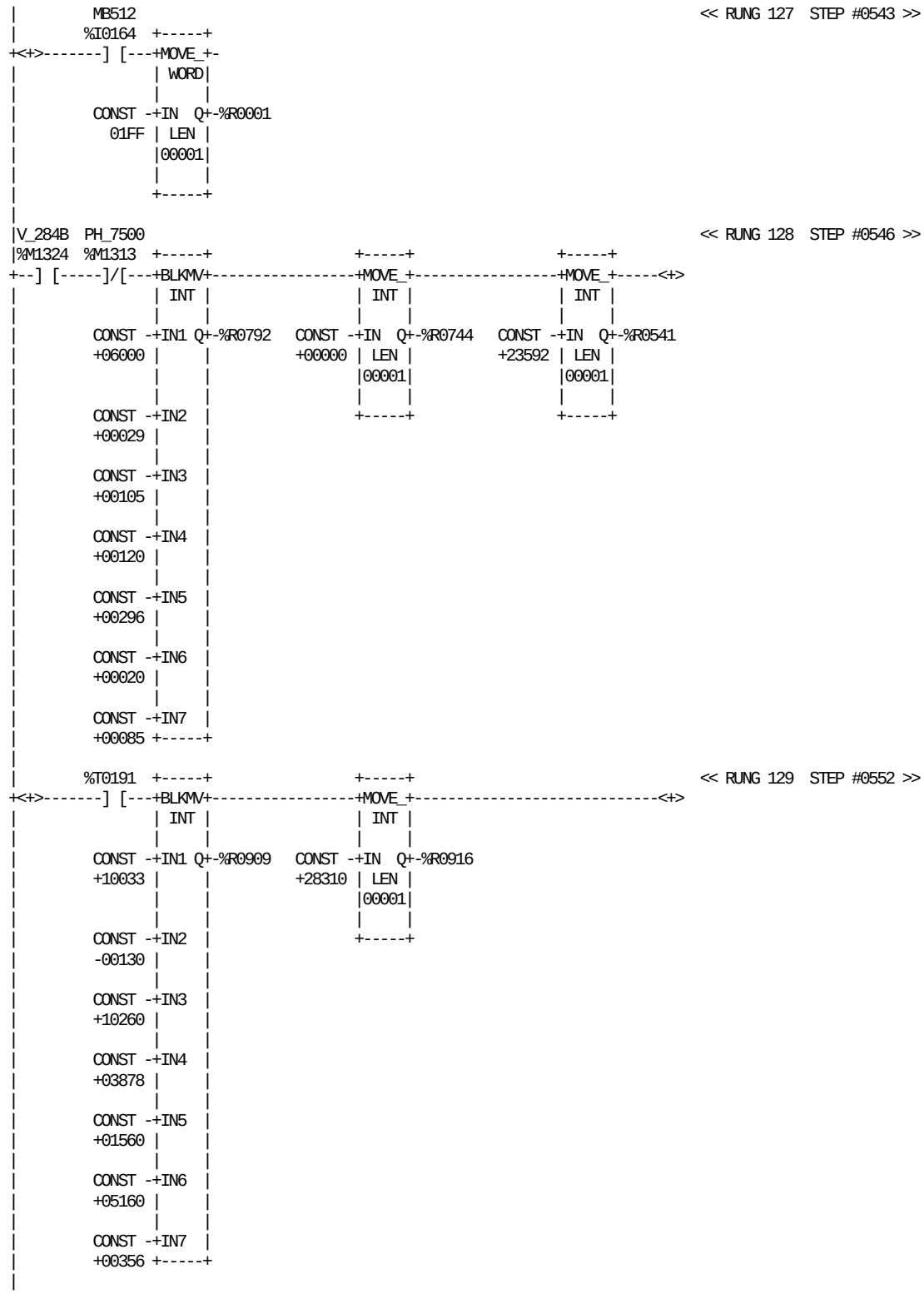

REFERENCE NICKNAME	REFERENCE DESCRIPTION	REFERENCE NICKNAME		REFERENCE DESCRIPTION
%T0191	Reset FCS parameter	%R0909		Filling parameters to A310
%R0001	Package dump short stop	%R0916		Ramp time(LSB)+bit parameter
%R0541	SA TPIH default value	%I0164	MB512	Injection_off
%R0744	Paper splice double heat	%M1313	PH_7500	Speed at 7500 package hour
%R0792	Synchronization FF speed	%M1324	V_284B	Volume 284 Base

BLOCK: 34 VOLUME DEPENDENT VALUES

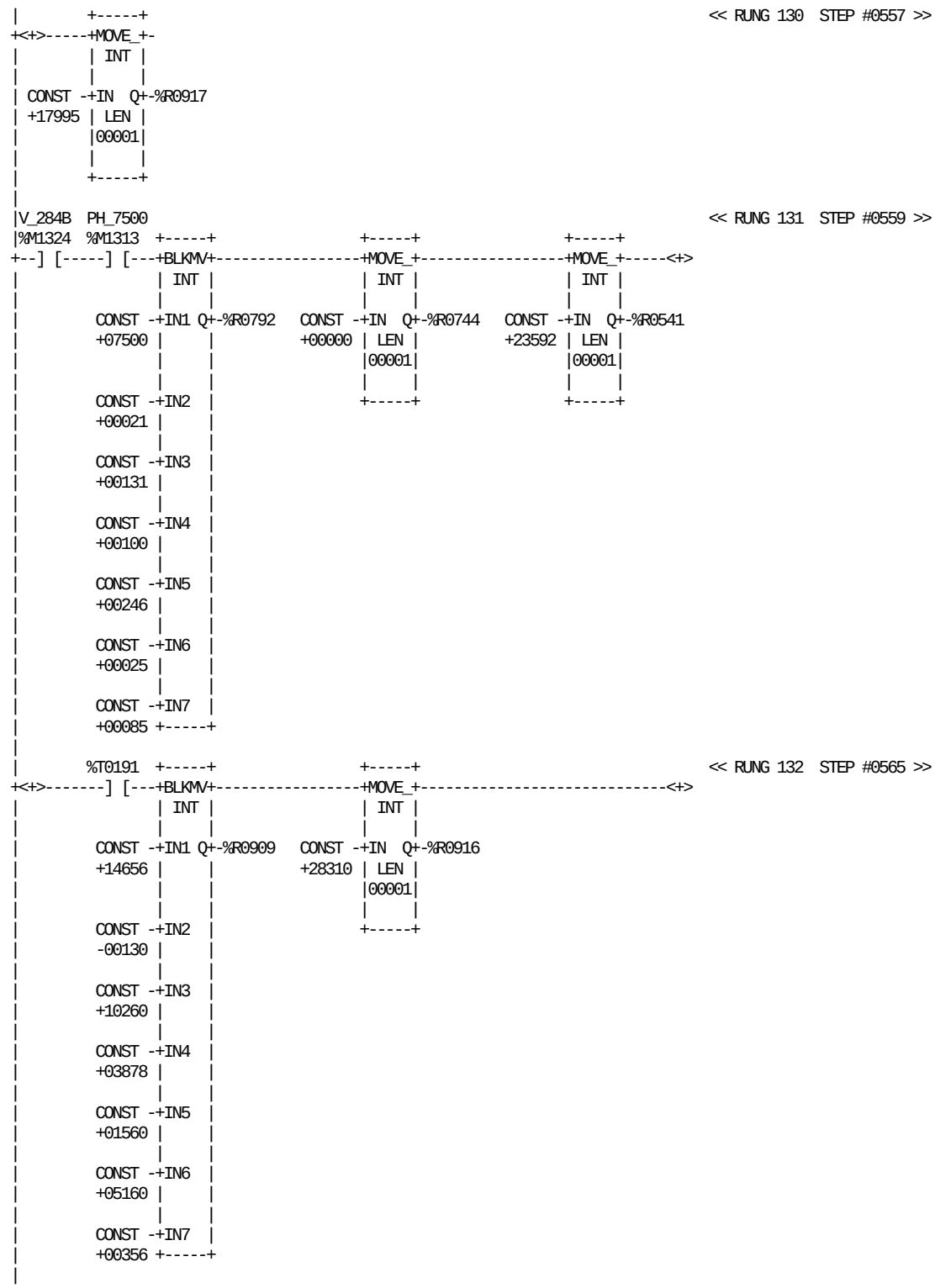

REFERENCE NICKNAME		REFERENCE DESCRIPTION
%T0191		Reset FCS parameter
%R0541		SA TPIH default value
%R0744		Paper splice double heat
%R0792		Synchronization FF speed
%R0909		Filling parameters to A310
%R0916		Ramp time(LSB)+bit parameter
%R0917		Filling start time+spare
%M1313	PH_7500	Speed at 7500 package hour
%M1324	V_284B	Volume 284 Base

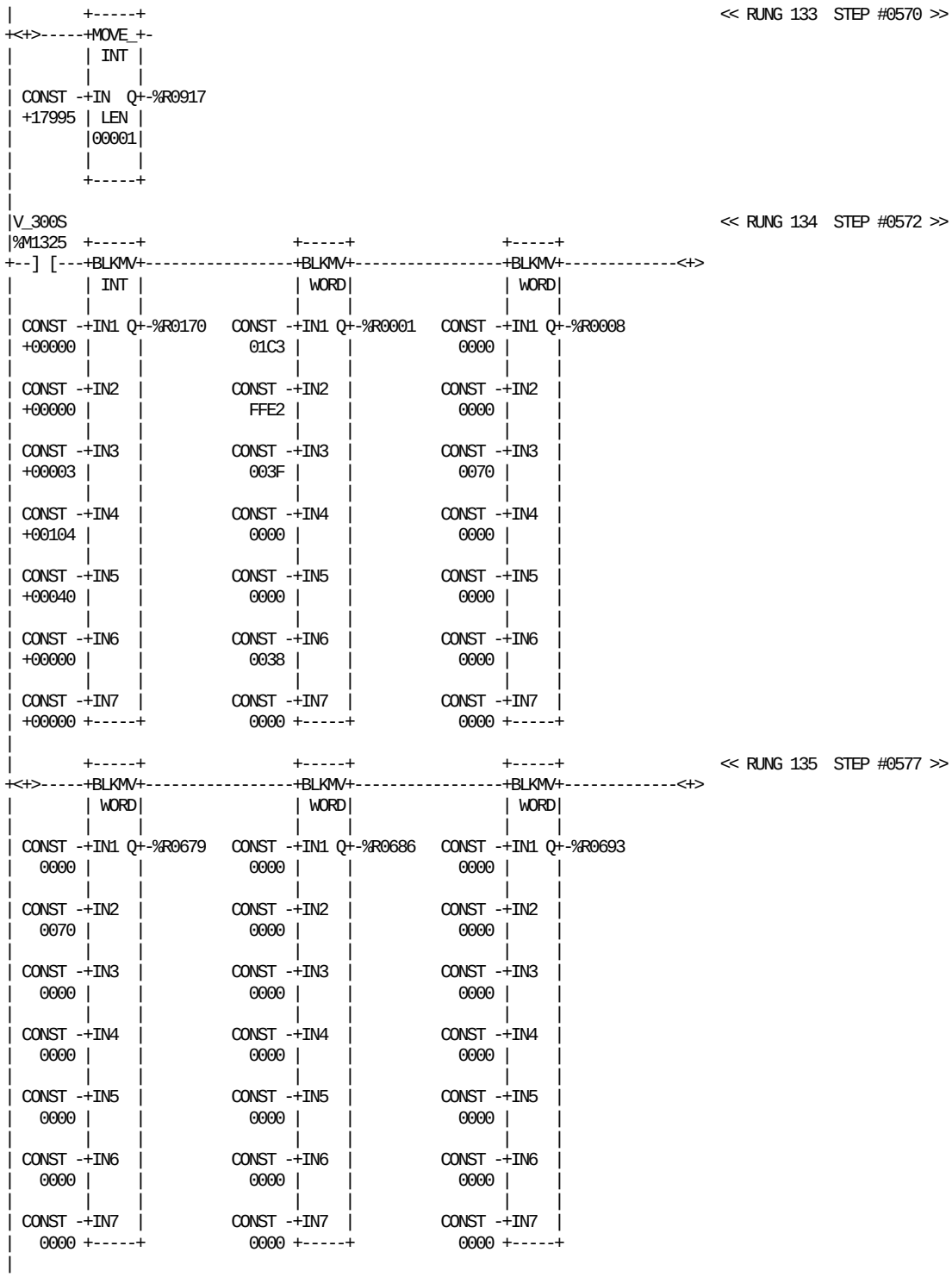

REFERENCE NICKNAME	REFERENCE DESCRIPTION	REFERENCE NICKNAME	REFERENCE DESCRIPTION
%R0001	Package dump short stop	%R0686	Free for future use
%R0008	Package dump start strip seal SA	%R0693	Package dump outerpatch splicing
%R0170	Angle fill start	%R0917	Filling start time+spare
%R0679	Package dump paper splice SA	%M1325 V_300S	Volume 300 Slim

BLOCK: 34 VOLUME DEPENDENT VALUES

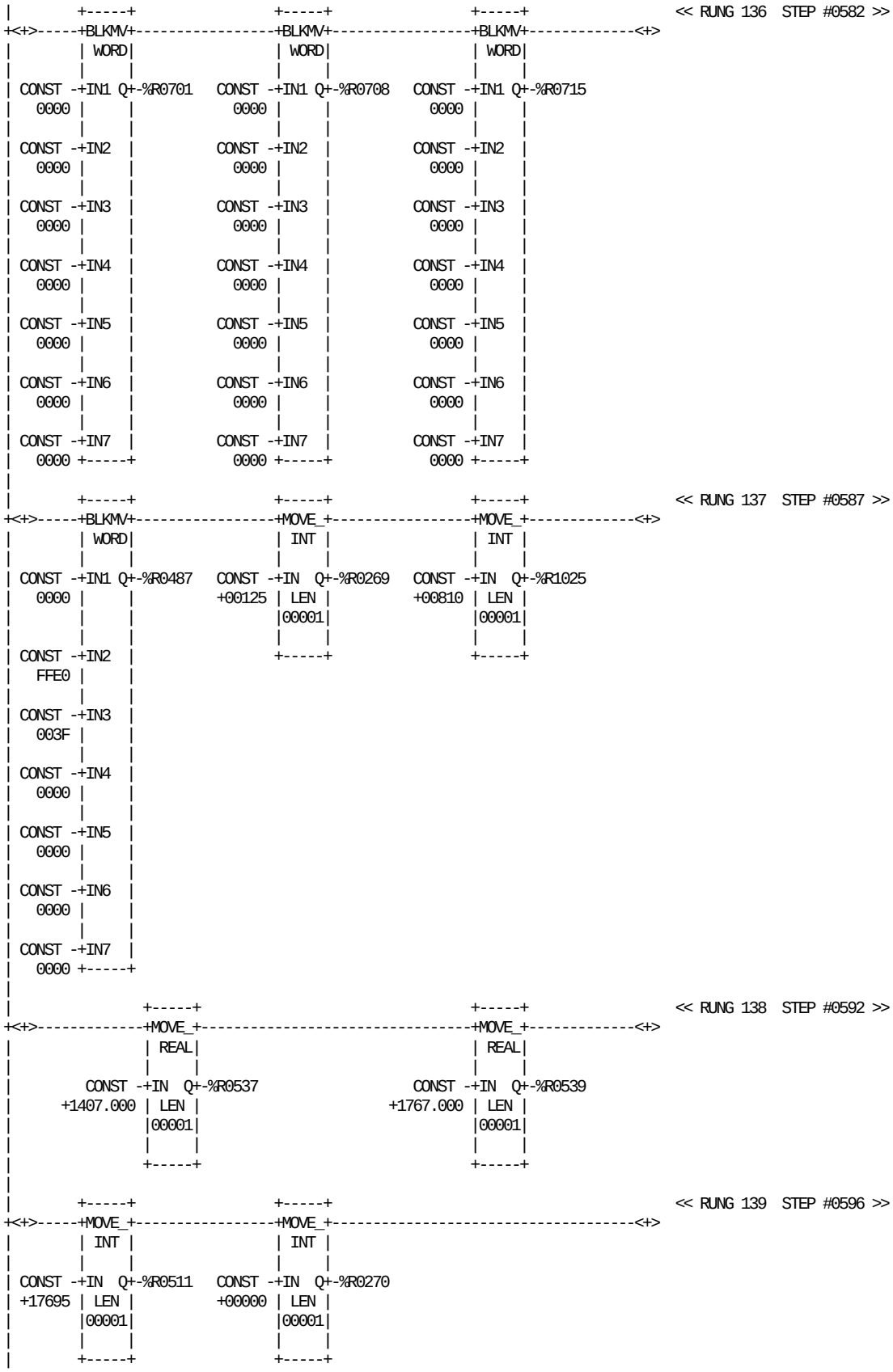

REFERENCE NICKNAME	REFERENCE DESCRIPTION	REFERENCE NICKNAME	REFERENCE DESCRIPTION
%R0269	Angle register	%R0539	Repeat length register
%R0270	WTC fixed pressure working mode	%R0701	Package dump PT on
%R0487	Package dump peroxide bath	%R0708	Package dump start strip seal PT
%R0511	TS TPIH default value	%R0715	Package dump strip splice PT
%R0537	Package length precorreted	%R1025	Paper supply package counter

BLOCK: 34 VOLUME DEPENDENT VALUES

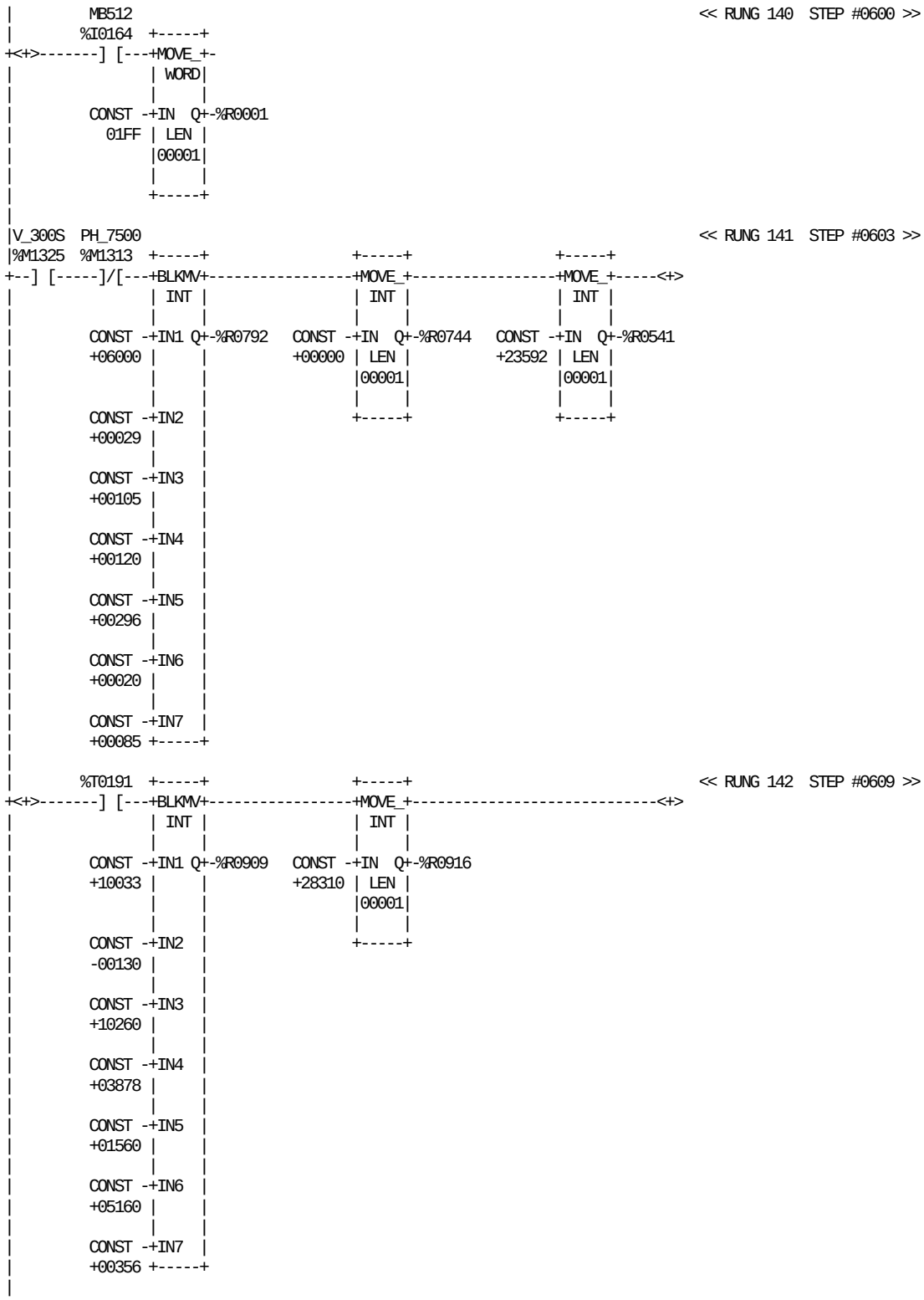

REFERENCE NICKNAME	REFERENCE DESCRIPTION	REFERENCE NICKNAME		REFERENCE DESCRIPTION
%T0191	Reset FCS parameter	%R0909		Filling parameters to A310
%R0001	Package dump short stop	%R0916		Ramp time(LSB)+bit parameter
%R0541	SA TPIH default value	%I0164	MB512	Injection_off
%R0744	Paper splice double heat	%M1313	PH_7500	Speed at 7500 package hour
%R0792	Synchronization FF speed	%M1325	V_300S	Volume 300 Slim

BLOCK: 34 VOLUME DEPENDENT VALUES

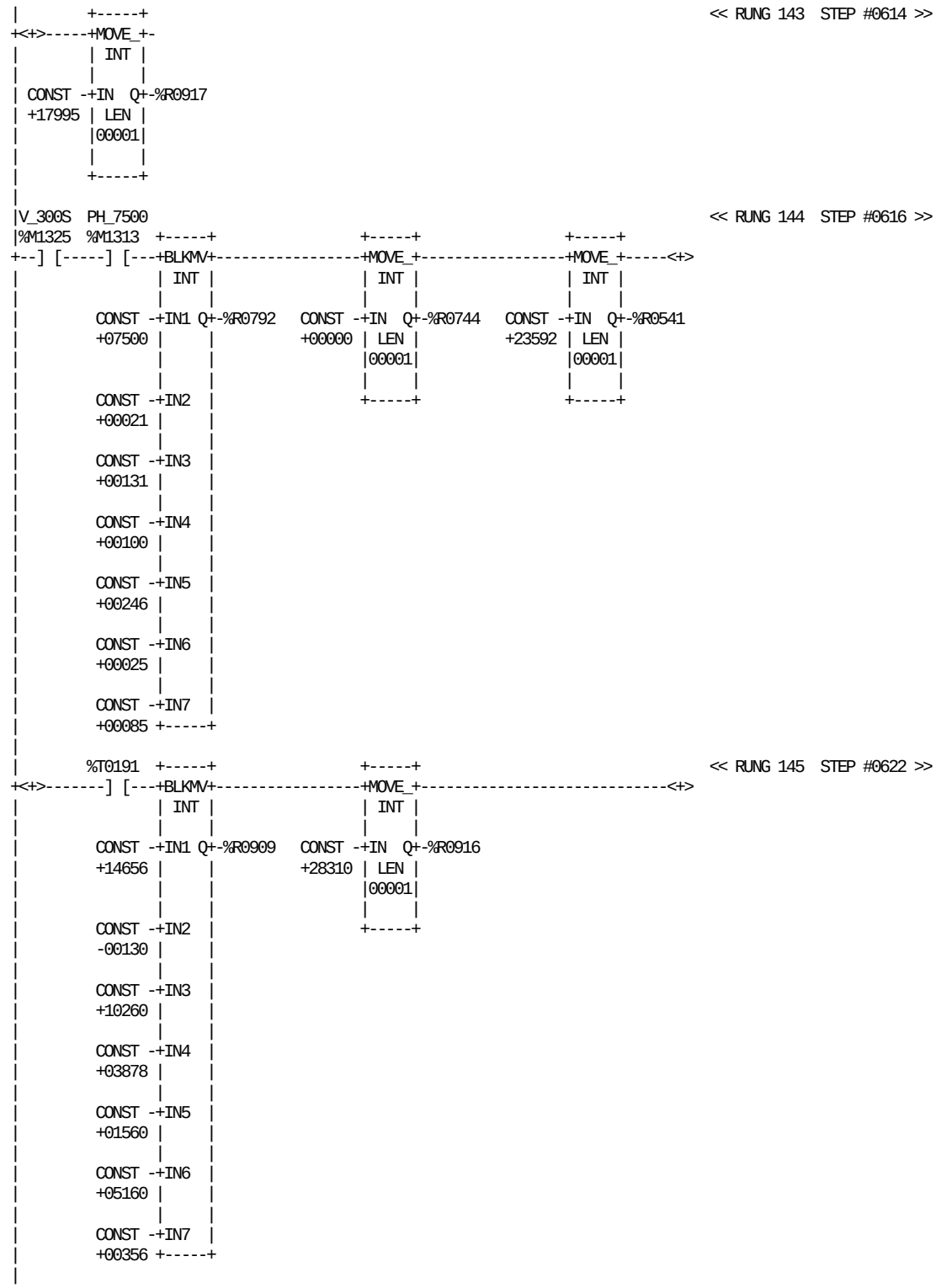

REFERENCE NICKNAME		REFERENCE DESCRIPTION	REFERENCE NICKNAME		REFERENCE DESCRIPTION
%T0191		Reset FCS parameter	%R0916		Ramp time(LSB)+bit parameter
%R0541		SA TPIH default value	%R0917		Filling start time+spare
%R0744		Paper splice double heat	%M1313	PH_7500	Speed at 7500 package hour
%R0792		Synchronization FF speed	%M1325	V_300S	Volume 300 Slim
%R0909		Filling parameters to A310			

BLOCK: 34 VOLUME DEPENDENT VALUES

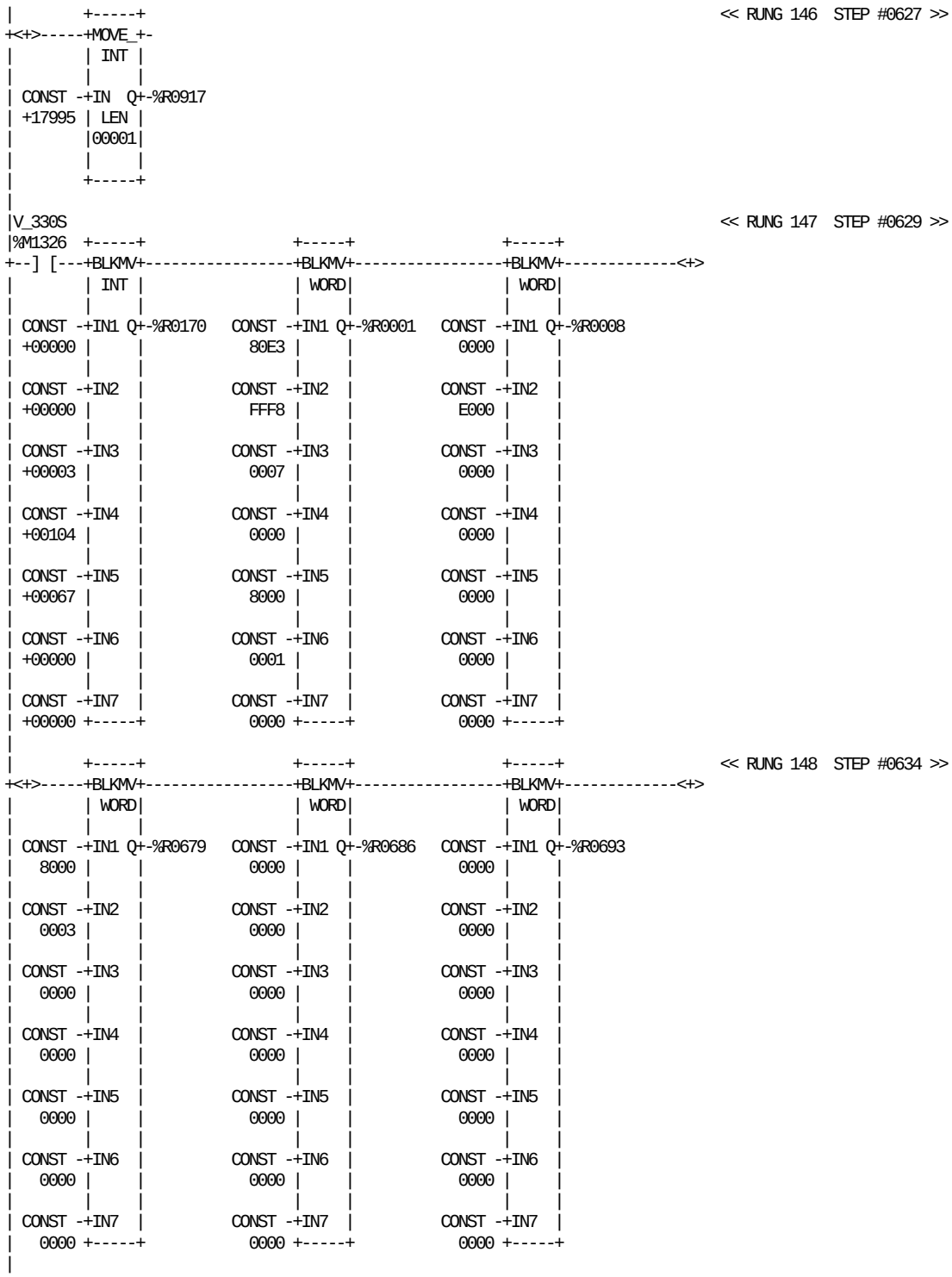

REFERENCE NICKNAME	REFERENCE DESCRIPTION	REFERENCE NICKNAME	REFERENCE DESCRIPTION
%R0001	Package dump short stop	%R0686	Free for future use
%R0008	Package dump start strip seal SA	%R0693	Package dump outerpatch splicing
%R0170	Angle fill start	%R0917	Filling start time+spare
%R0679	Package dump paper splice SA	%M1326 V_330S	Volume 330 Slim

BLOCK: 34 VOLUME DEPENDENT VALUES

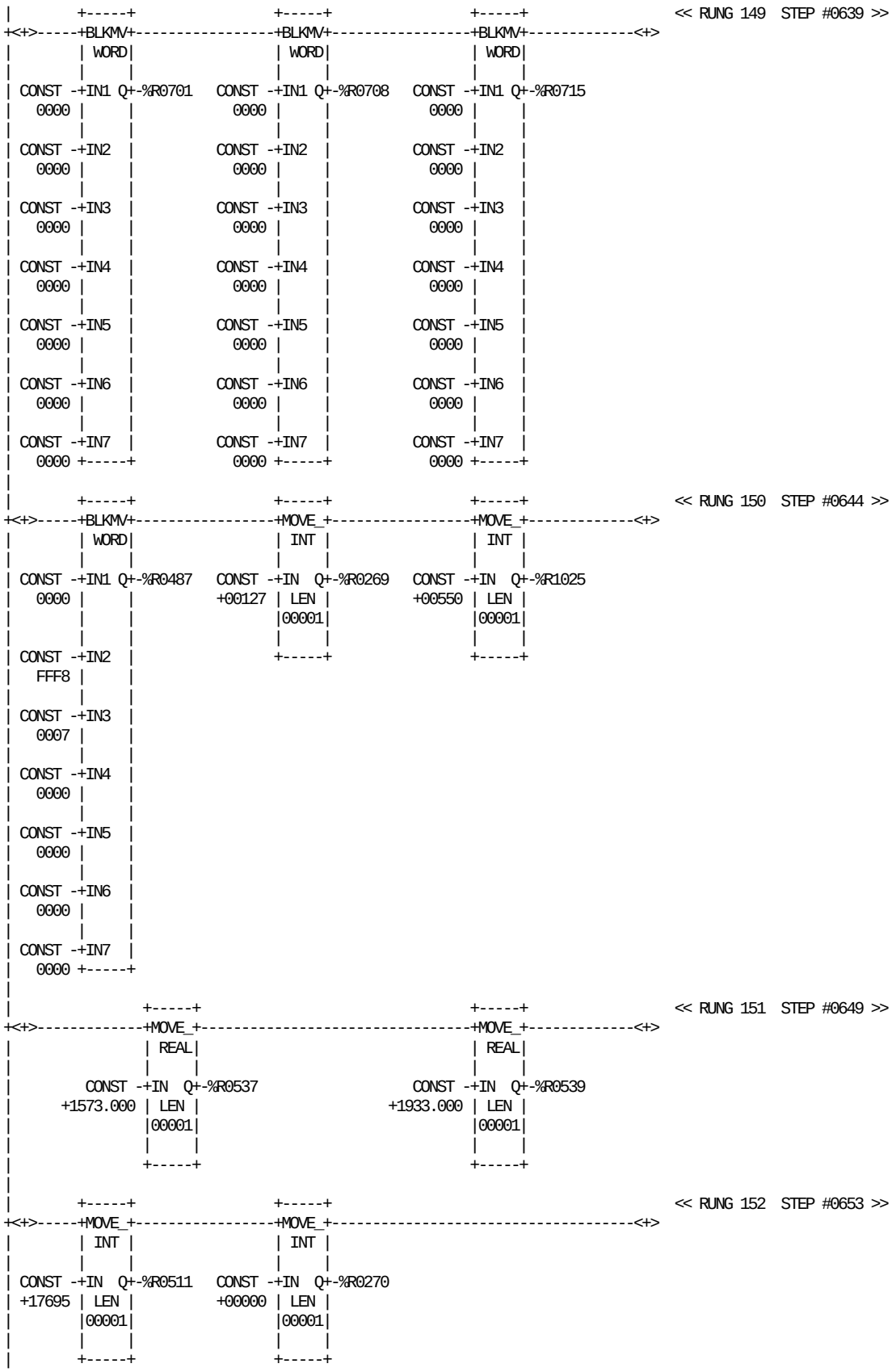

REFERENCE NICKNAME	REFERENCE DESCRIPTION	REFERENCE NICKNAME	REFERENCE DESCRIPTION
%R0269	Angle register	%R0539	Repeat length register
%R0270	WTC fixed pressure working mode	%R0701	Package dump PT on
%R0487	Package dump peroxide bath	%R0708	Package dump start strip seal PT
%R0511	TS TPIH default value	%R0715	Package dump strip splice PT
%R0537	Package length precorreted	%R1025	Paper supply package counter

BLOCK: 34 VOLUME DEPENDENT VALUES

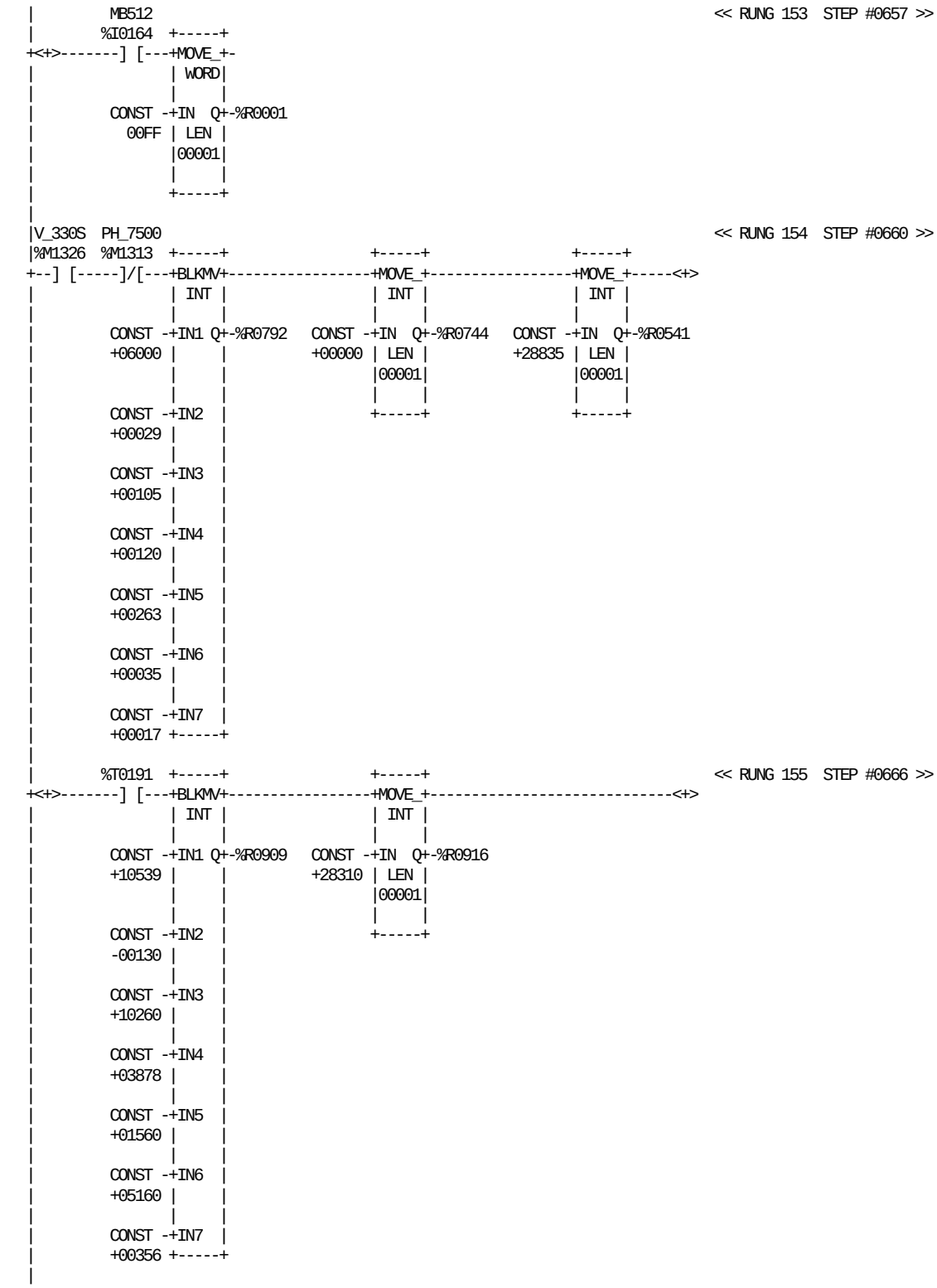

REFERENCE NICKNAME		REFERENCE DESCRIPTION	REFERENCE NICKNAME		REFERENCE DESCRIPTION
%T0191		Reset FCS parameter	%R0909		Filling parameters to A310
%R0001		Package dump short stop	%R0916		Ramp time(LSB)+bit parameter
%R0541		SA TPIH default value	%I0164	MB512	Injection_off
%R0744		Paper splice double heat	%M1313	PH_7500	Speed at 7500 package hour
%R0792		Synchronization FF speed	%M1326	V_330S	Volume 330 Slim

BLOCK: 34 VOLUME DEPENDENT VALUES

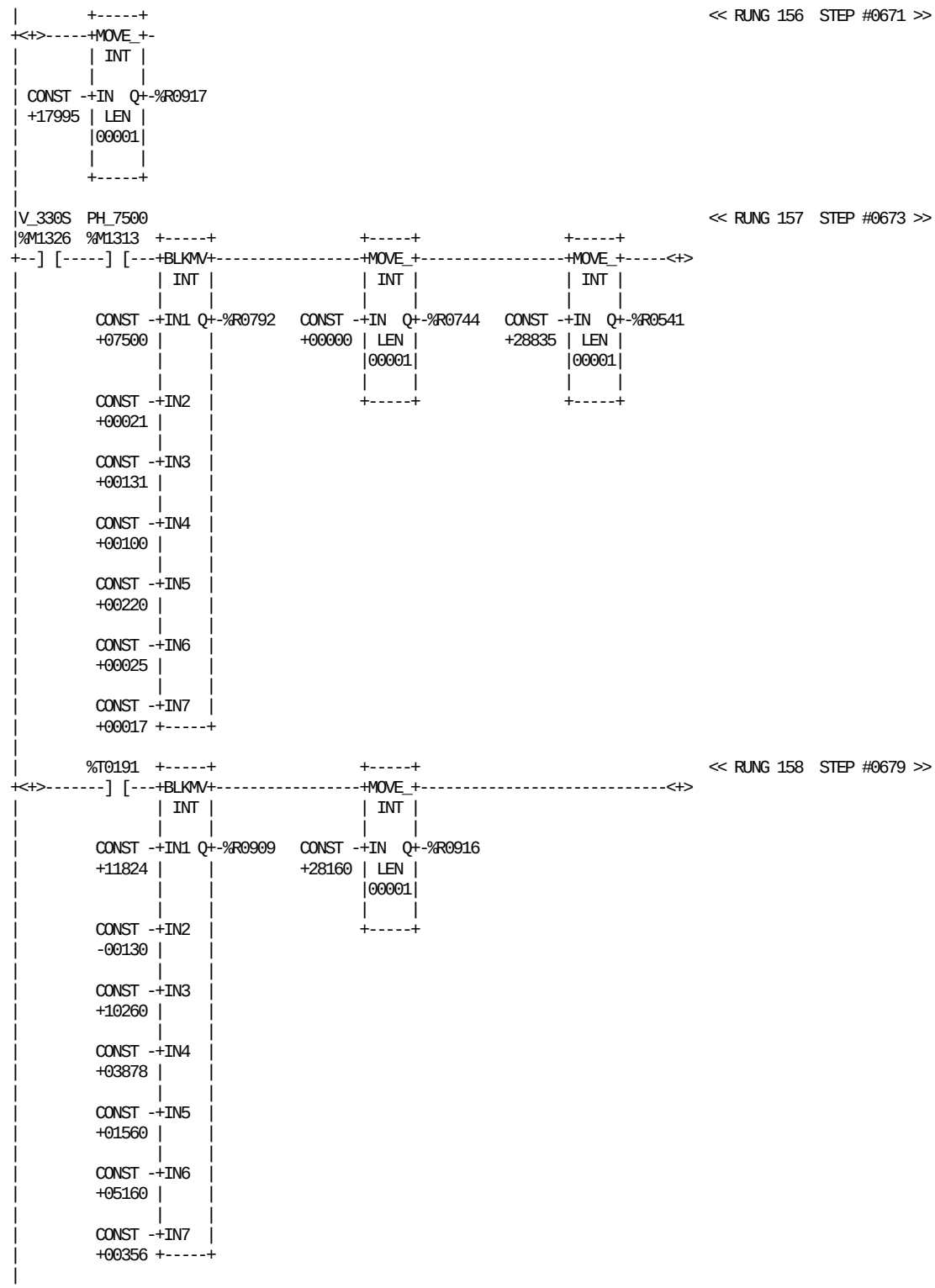

REFERENCE NICKNAME		REFERENCE DESCRIPTION	REFERENCE NICKNAME		REFERENCE DESCRIPTION
%T0191		Reset FCS parameter	%R0916		Ramp time(LSB)+bit parameter
%R0541		SA TPIH default value	%R0917		Filling start time+spare
%R0744		Paper splice double heat	%M1313	PH_7500	Speed at 7500 package hour
%R0792		Synchronization FF speed	%M1326	V_330S	Volume 330 Slim
%R0909		Filling parameters to A310			

BLOCK: 34 VOLUME DEPENDENT VALUES

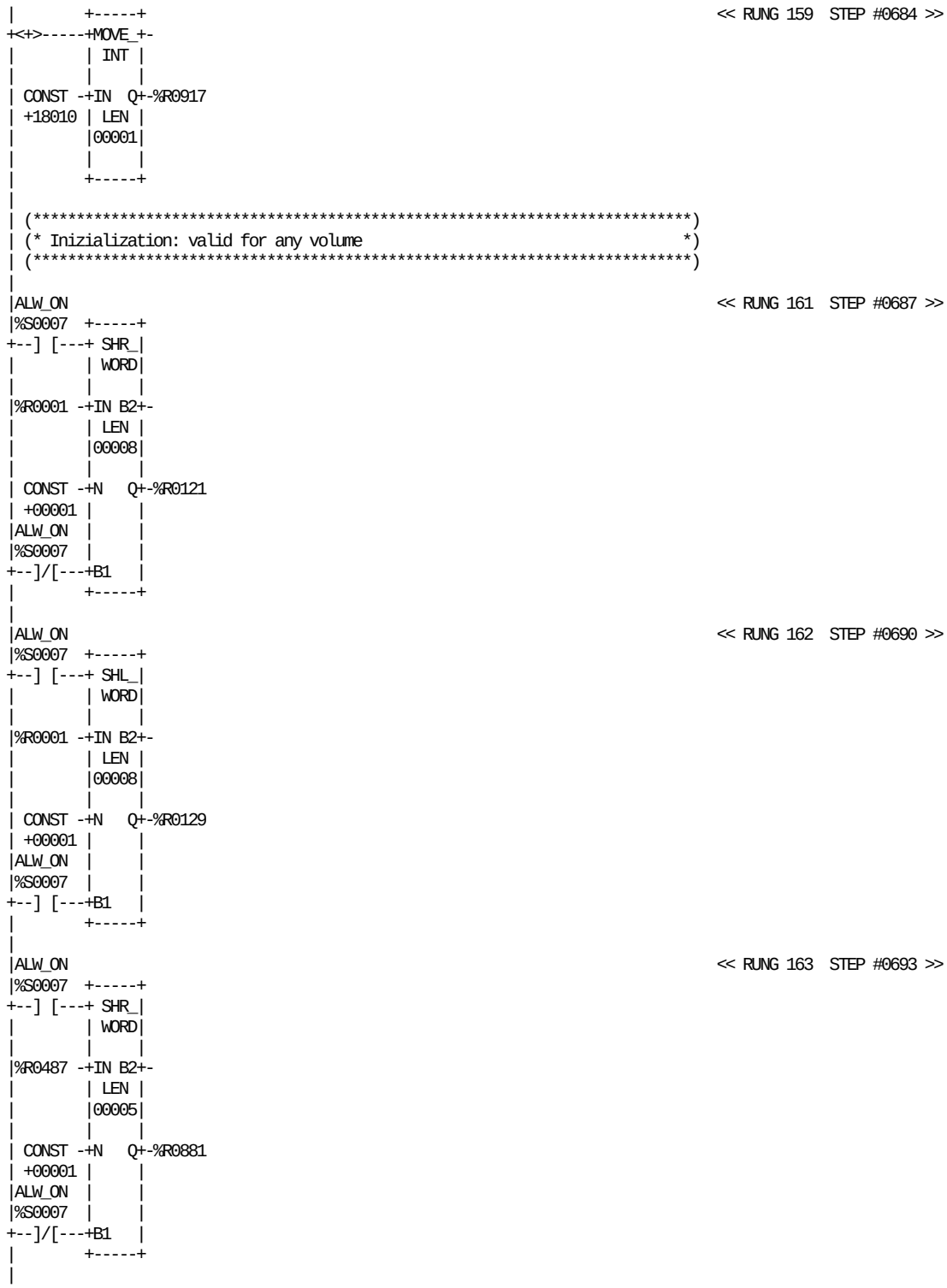

REFERENCE NICKNAME	REFERENCE DESCRIPTION	REFERENCE NICKNAME	REFERENCE DESCRIPTION
%R0001	Package dump short stop	%R0881	1 pack dump before short stop
%R0121	1 pack.dump before short stop	%R0917	Filling start time+spare
%R0129	1 pack.dump before short stop	%S0007 ALW_ON	
%R0487	Package dump peroxide bath		

BLOCK: 34 VOLUME DEPENDENT VALUES



<< RUNG 164 STEP #0696 >>

REFERENCE NICKNAME	REFERENCE DESCRIPTION	REFERENCE NICKNAME	REFERENCE DESCRIPTION
%R0487	Package dump peroxide bath	%S0007 ALW_ON	
%R0886	1 pack dump before short stop		

BLOCK: 34 VOLUME DEPENDENT VALUES

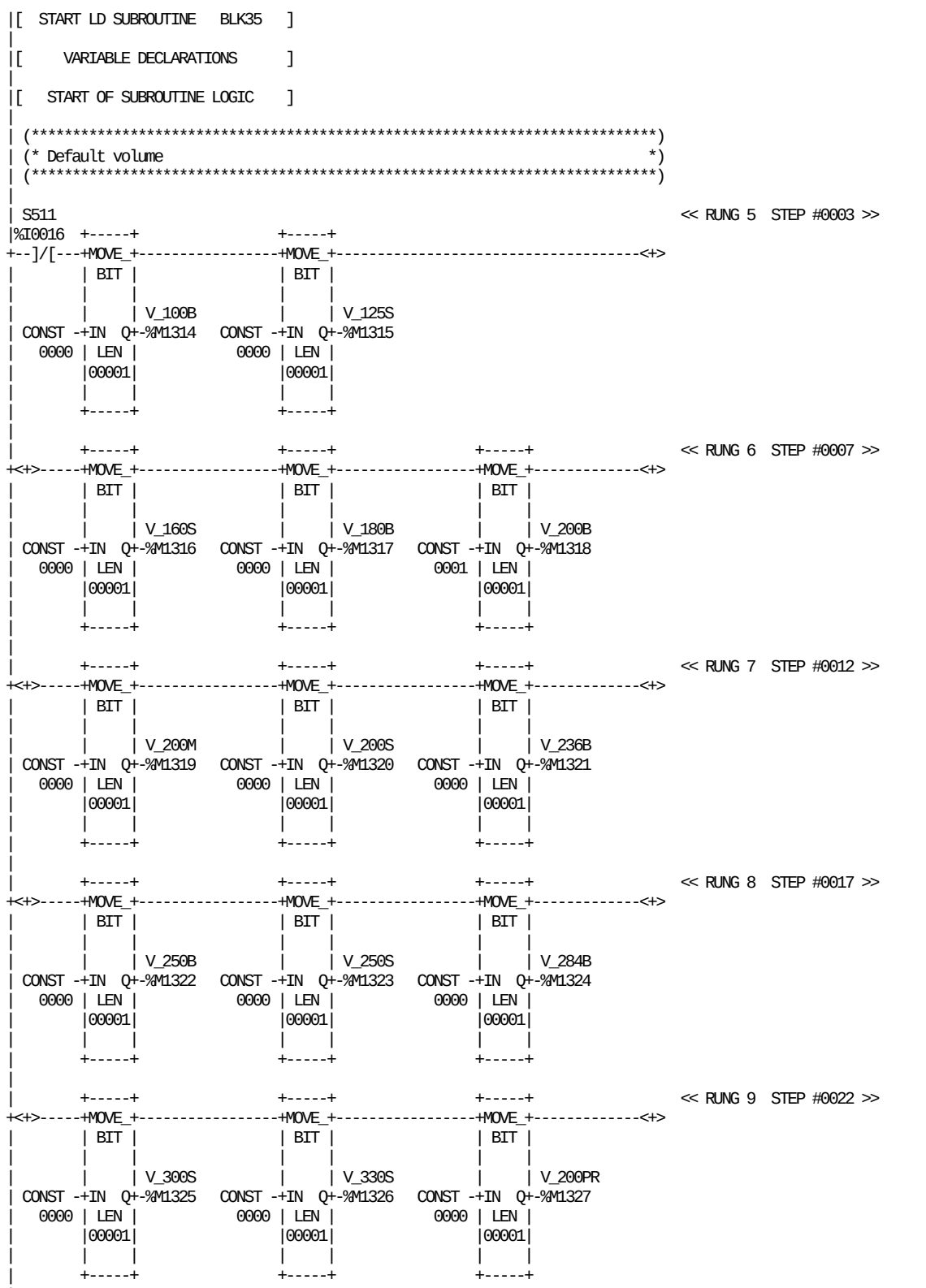

REFERENCE	NICKNAME	REFERENCE DESCRIPTION	REFERENCE	NICKNAME	REFERENCE DESCRIPTION
%I0016	S511	Selector small / big volume	%M1320	V_200S	Volume 200 Slim
%M1314	V_100B	Volume 100 Base	%M1321	V_236B	Volume 236 Base
%M1315	V_125S	Volume 125 Slim	%M1322	V_250B	Volume 250 Base
%M1316	V_160S	Volume 160 Slim	%M1323	V_250S	Volume 250 Slim
%M1317	V_180B	Volume 180 Base	%M1324	V_284B	Volume 284 Base
%M1318	V_200B	Volume 200 Base	%M1325	V_300S	Volume 300 Slim
%M1319	V_200M	Volume 200 Mid	%M1326	V_330S	Volume 330 Slim
%M1327	V_200PR	Volume 200 Square Prisma			

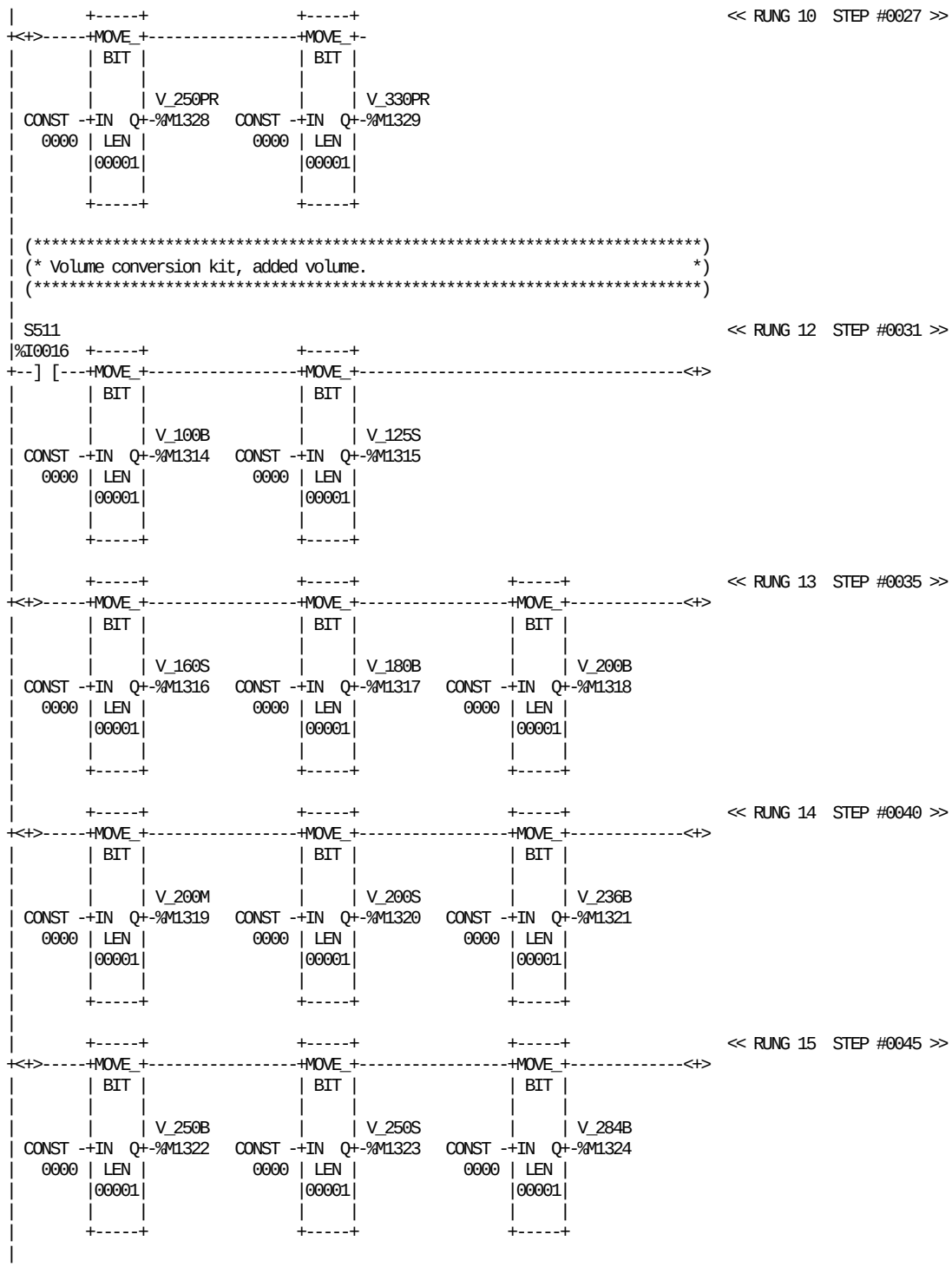

REFERENCE	NICKNAME	REFERENCE DESCRIPTION	REFERENCE	NICKNAME	REFERENCE DESCRIPTION
%I0016	S511	Selector small / big volume	%M1320	V_200S	Volume 200 Slim
%M1314	V_100B	Volume 100 Base	%M1321	V_236B	Volume 236 Base
%M1315	V_125S	Volume 125 Slim	%M1322	V_250B	Volume 250 Base
%M1316	V_160S	Volume 160 Slim	%M1328	V_250PR	Volume 250 Square Prisma
%M1317	V_180B	Volume 180 Base	%M1323	V_250S	Volume 250 Slim
%M1318	V_200B	Volume 200 Base	%M1324	V_284B	Volume 284 Base
%M1319	V_200M	Volume 200 Mid	%M1329	V_330PR	Volume 330 Square Prisma

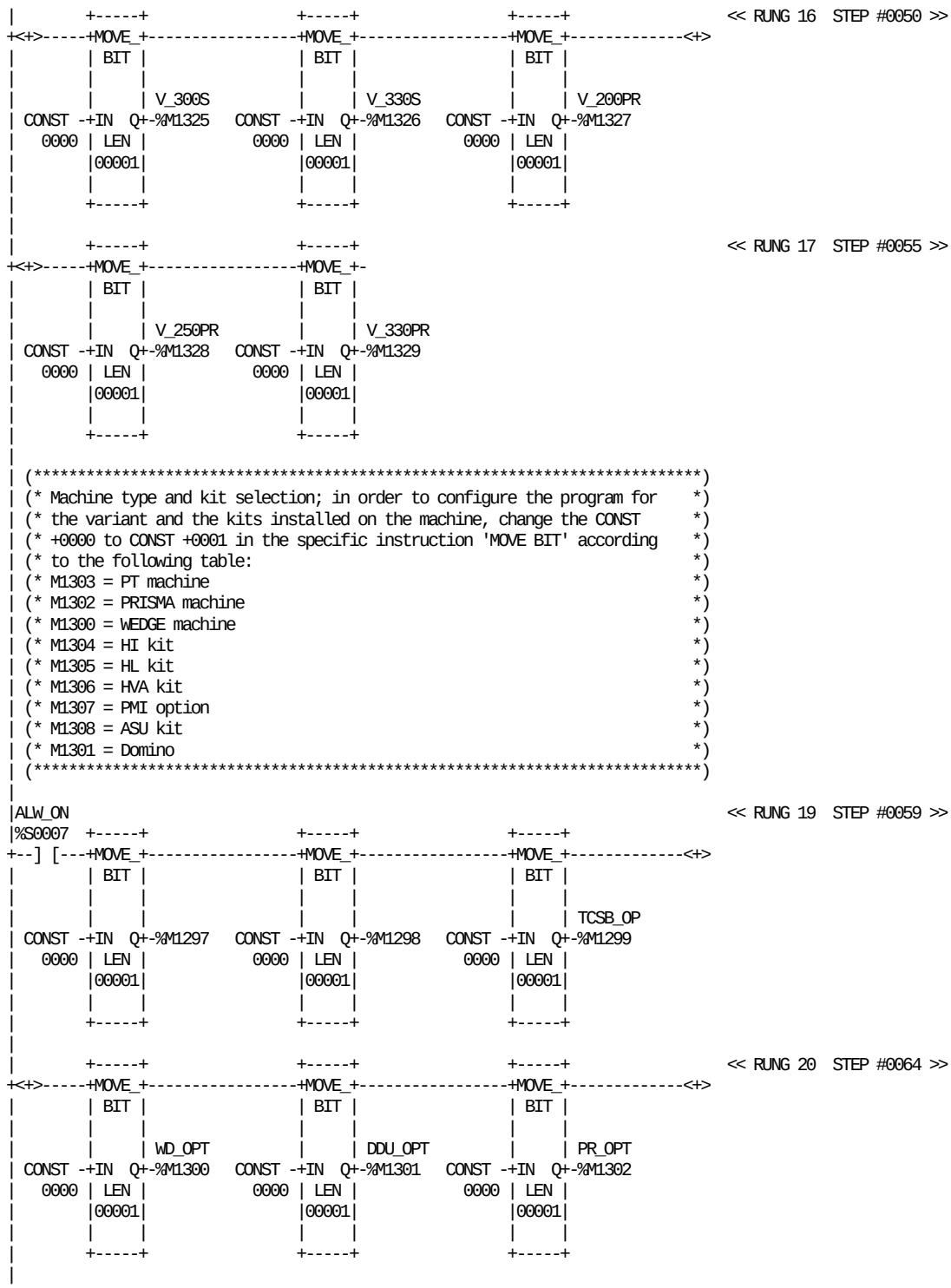

REFERENCE	NICKNAME	REFERENCE DESCRIPTION	REFERENCE	NICKNAME	REFERENCE DESCRIPTION
%M1297		PLMS, Option spare	%M1327	V_200PR	Volume 200 Square Prisma
%M1298		PLMS, Option spare	%M1328	V_250PR	Volume 250 Square Prisma
%S0007	ALW_ON		%M1325	V_300S	Volume 300 Slim
%M1301	DDU_OPT	PLMS, Option Domino date unit	%M1329	V_330PR	Volume 330 Square Prisma
%M1302	PR_OPT	PLMS, Option Prisma version	%M1326	V_330S	Volume 330 Slim
%M1299	TCSB_OP	PLMS, Option T.C.S.B.	%M1300	WD_OPT	PLMS, Option Wedge version

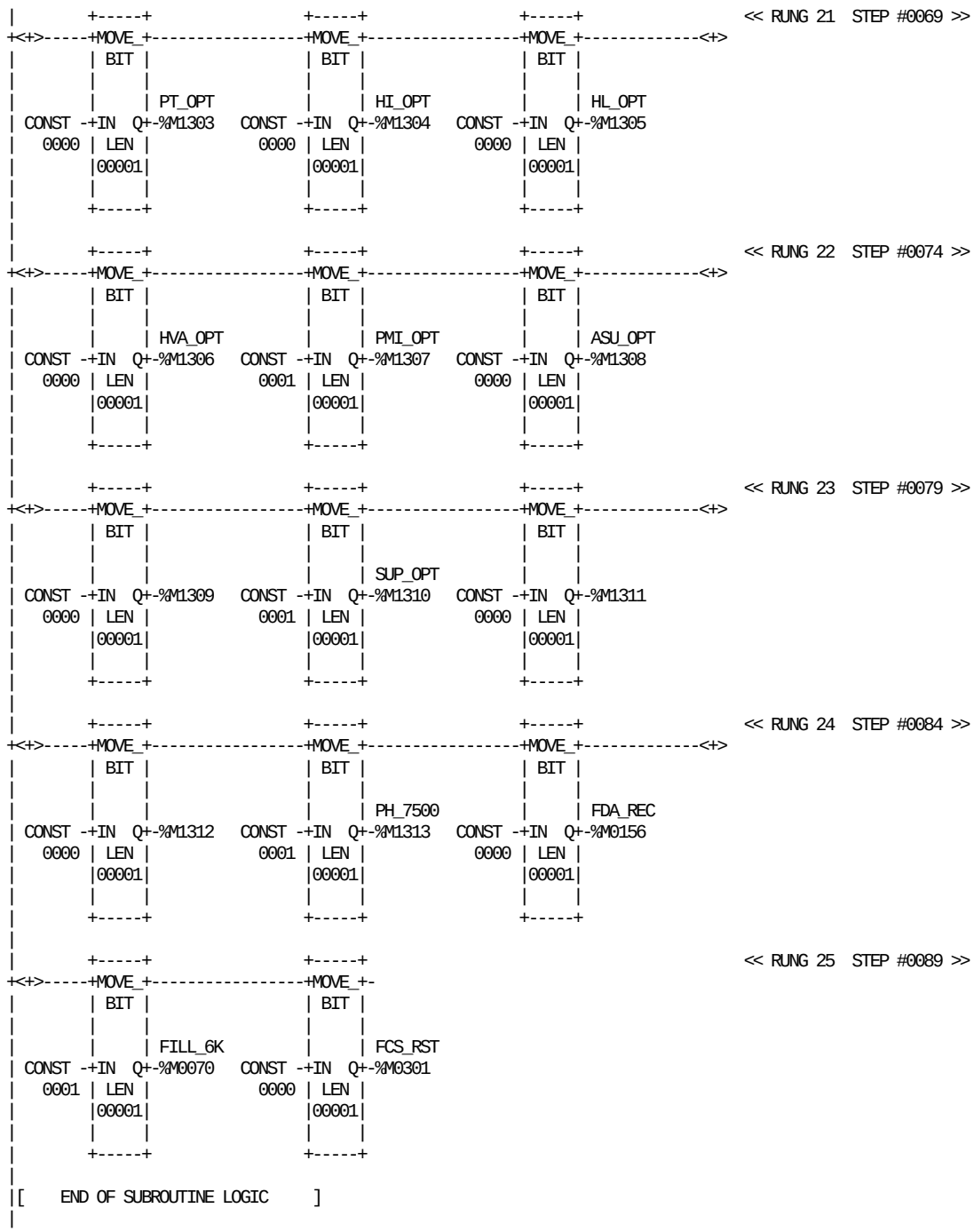

REFERENCE	NICKNAME	REFERENCE DESCRIPTION	REFERENCE	NICKNAME	REFERENCE DESCRIPTION
%M1309		PLMS, Option spare	%M1304	HI_OPT	PLMS, Option H.I.
%M1311		PLMS, Option spare	%M1305	HL_OPT	PLMS, Option H.L.
%M1312		PLMS, Option spare	%M1306	HVA_OPT	PLMS, Option H.V.A.
%M1308	ASU_OPT	PLMS, Option A.S.U.	%M1313	PH_7500	Speed at 7500 package hour
%M0301	FCS_RST	FCS rst param every produt 1=ON	%M1307	PMI_OPT	PLMS, Option spare
%M0156	FDA_REC	Select for non-FDA requirements	%M1303	PT_OPT	PLMS, Option Pull-Tab
%M0070	FILL_6K	Filling at reduced speed	%M1310	SUP_OPT	PLMS, Option Line Supervision

BLOCK: 35 INITIALIZATION PARAMETERS

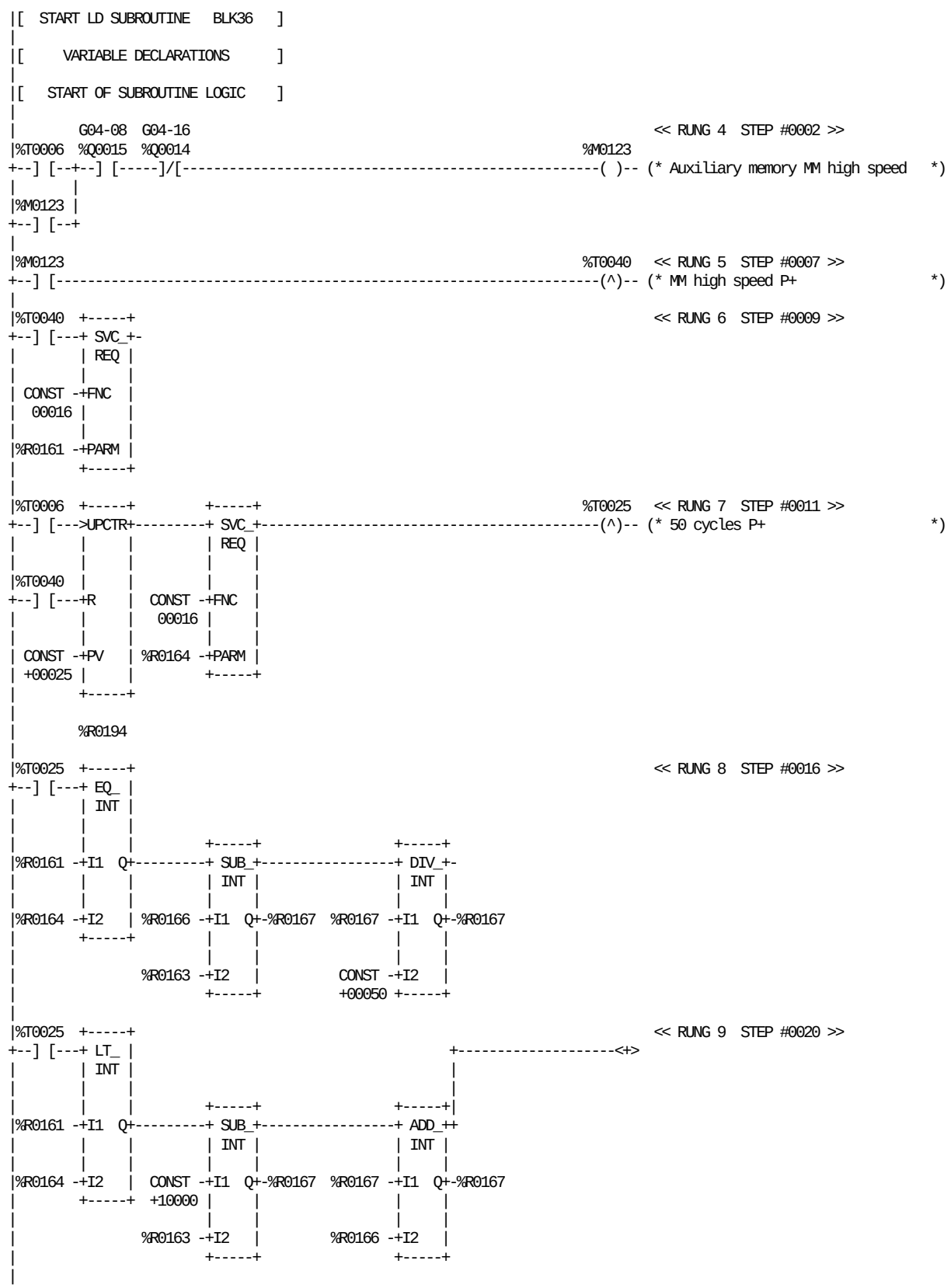

REFERENCE NICKNAME	REFERENCE DESCRIPTION	REFERENCE NICKNAME	REFERENCE DESCRIPTION
%M0123	Auxiliary memory MM high speed	%R0164	Scan time evaluation final value
%T0006	Scan time clock freq.	%R0166	0.1 msec final value
%T0025	50 cycles P+	%R0167	Scan time value
%T0040	MM high speed P+	%R0194	Cycles counter
%R0161	Scan time evaluation init value	%Q0015 G04-08	Main motor, high speed
%R0163	0.1 msec init value	%Q0014 G04-16	Main motor, low speed

BLOCK: 36 ENCODER & JAW CONTROL

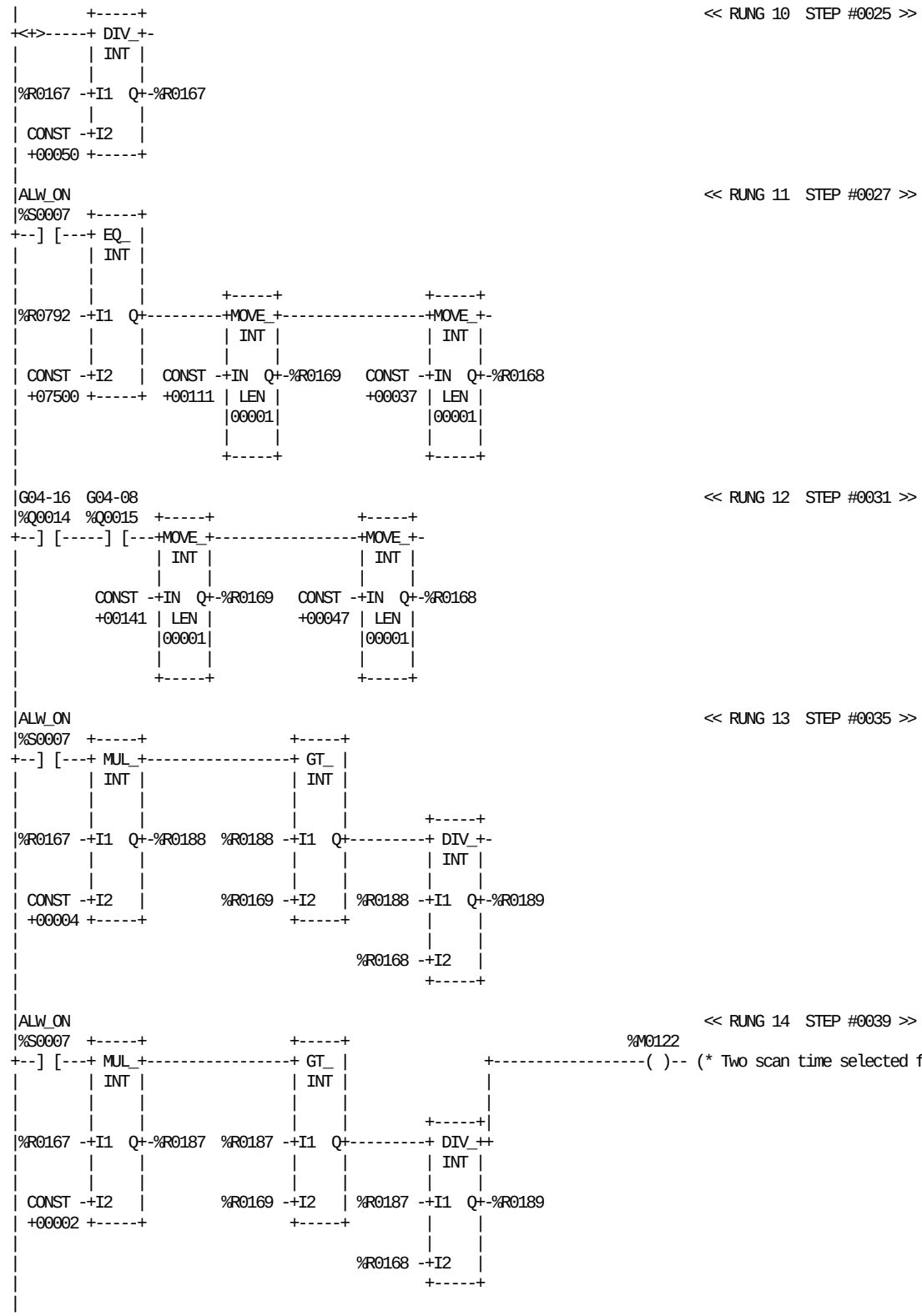

REFERENCE NICKNAME	REFERENCE DESCRIPTION	REFERENCE NICKNAME	REFERENCE DESCRIPTION
%M0122	Two scan time selected for cycle	%R0189	Angle degrees for selected cycle
%R0167	Scan time value	%R0792	Synchronization FF speed
%R0168	Angle degrees time	%S0007 ALW_ON	
%R0169	Three angle degrees time	%Q0015 G04-08	Main motor, high speed
%R0187	Two scan time	%Q0014 G04-16	Main motor, low speed
%R0188	Four scan time		

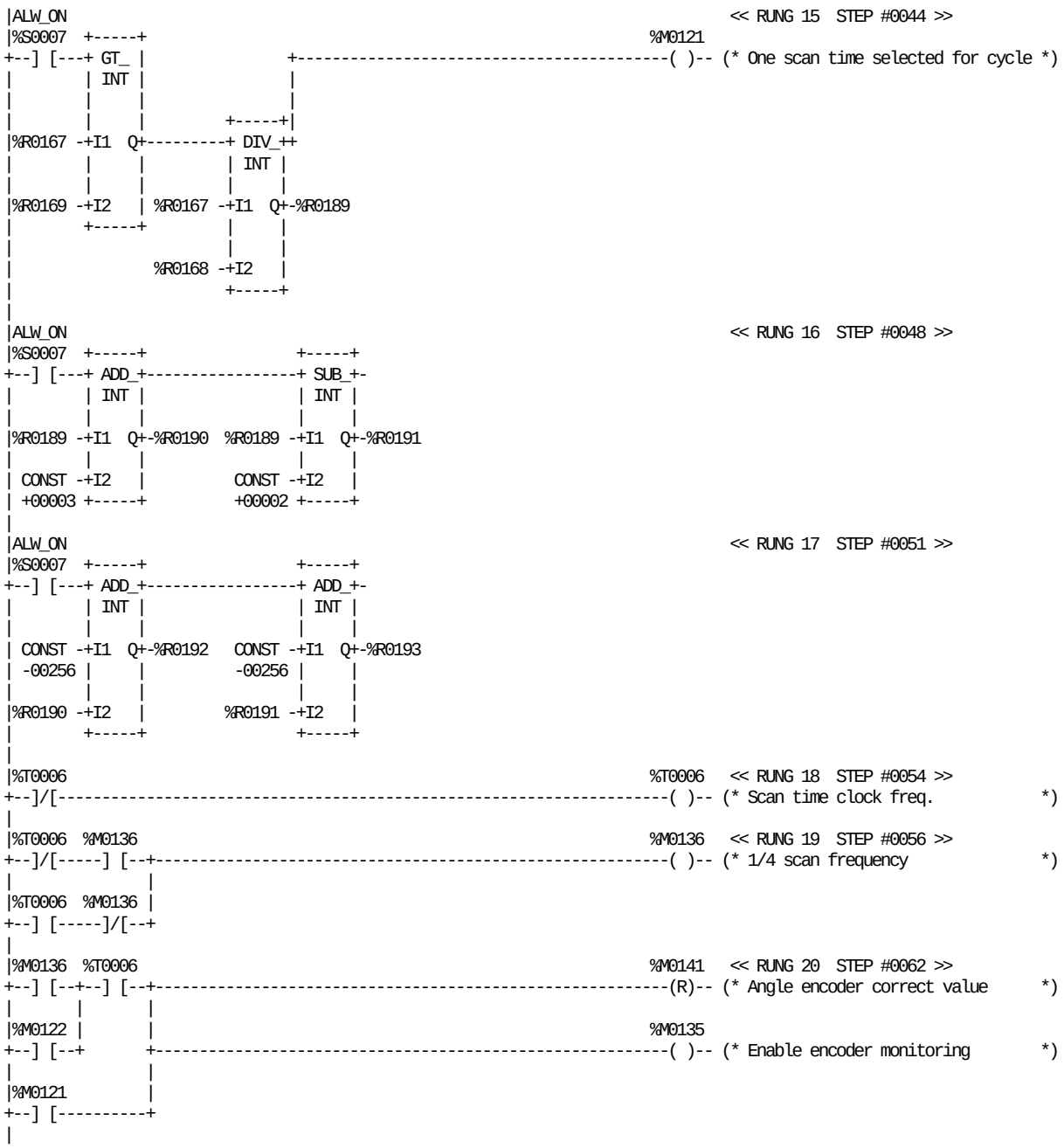

REFERENCE NICKNAME	REFERENCE DESCRIPTION	REFERENCE NICKNAME	REFERENCE DESCRIPTION
%M0121	One scan time selected for cycle	%R0169	Three angle degrees time
%M0122	Two scan time selected for cycle	%R0189	Angle degrees for selected cycle
%M0135	Enable encoder monitoring	%R0190	Positive high limit
%M0136	1/4 scan frequency	%R0191	Positive low limit
%M0141	Angle encoder correct value	%R0192	Negative high limit
%T0006	Scan time clock freq.	%R0193	Negative low limit
%R0167	Scan time value	%S0007 ALW_ON	
%R0168	Angle degrees time		

BLOCK: 36 ENCODER & JAW CONTROL

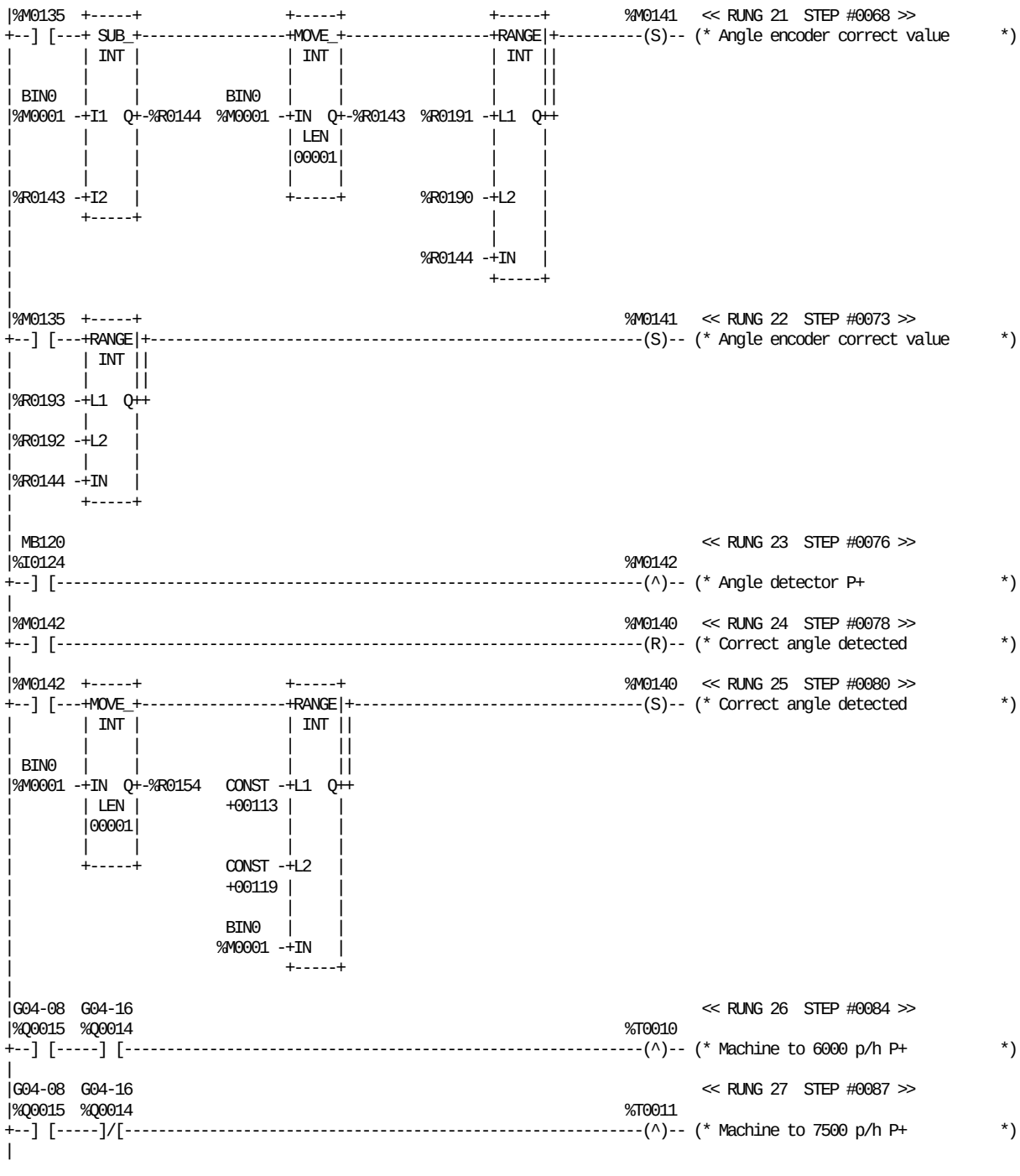

REFERENCE	NICKNAME	REFERENCE DESCRIPTION
%M0135		Enable encoder monitoring
%M0140		Correct angle detected
%M0141		Angle encoder correct value
%M0142		Angle detector P+
%T0010		Machine to 6000 p/h P+
%T0011		Machine to 7500 p/h P+
%R0143		Encoder previous value
%R0144		Encoder increment
%R0154		Real angle detected

REFERENCE	NICKNAME	REFERENCE DESCRIPTION
%R0190		Positive high limit
%R0191		Positive low limit
%R0192		Negative high limit
%R0193		Negative low limit
%M0001	BIN0	LSB binary digit bit 0
%Q0015	G04-08	Main motor, high speed
%Q0014	G04-16	Main motor, low speed
%I0124	MB120	Encoder/volume control

BLOCK: 36 ENCODER & JAW CONTROL

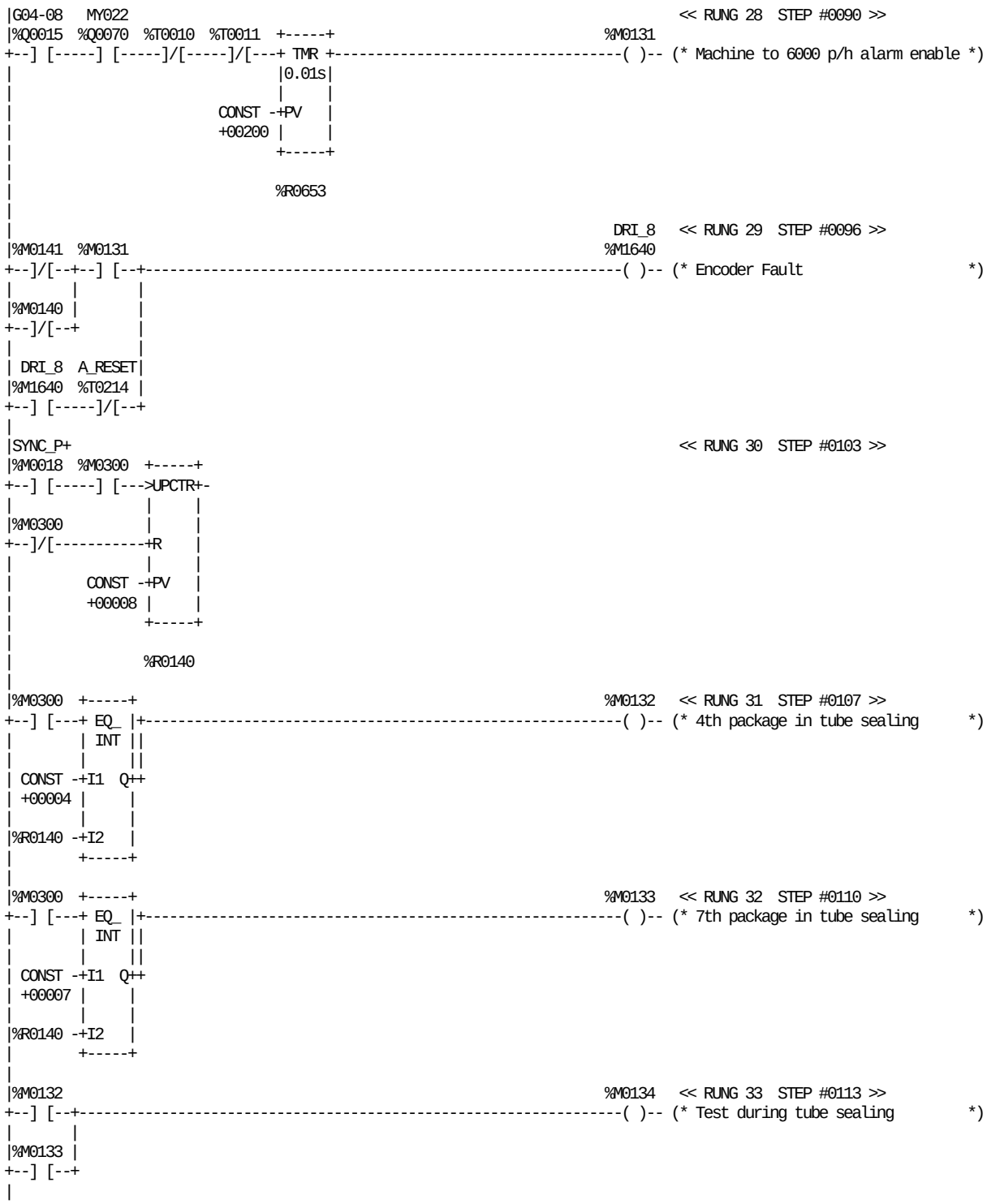

REFERENCE	NICKNAME	REFERENCE DESCRIPTION	REFERENCE	NICKNAME	REFERENCE DESCRIPTION
%M0131		Machine to 6000 p/h alarm enable	%T0011		Machine to 7500 p/h P+
%M0132		4th package in tube sealing	%R0140		Packages counter in tube sealing
%M0133		7th package in tube sealing	%R0653		Machine to 6000 p/h alarm delay
%M0134		Test during tube sealing	%T0214	A_RESET	Pulse+ reset A-alarm lock
%M0140		Correct angle detected	%M1640	DRI_8	Encoder Fault
%M0141		Angle encoder correct value	%Q0015	G04-08	Main motor, high speed
%M0300		Tube sealing going on	%Q0070	MY022	Main machine, clutch
%T0010		Machine to 6000 p/h P+	%M0018	SYNC_P+	Drop chute out syncro. value P+

BLOCK: 36 ENCODER & JAW CONTROL

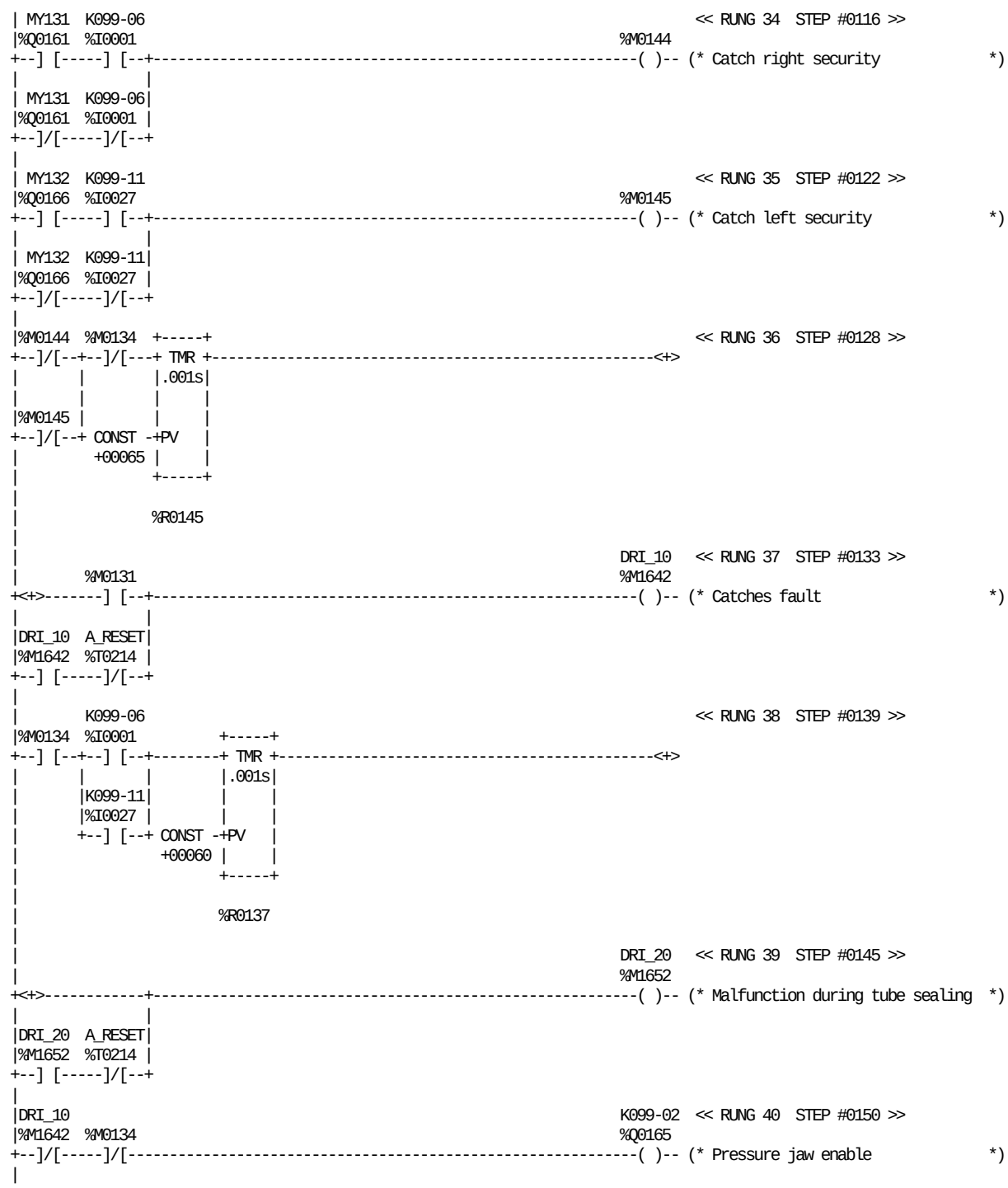

REFERENCE	NICKNAME	REFERENCE DESCRIPTION	REFERENCE	NICKNAME	REFERENCE DESCRIPTION
%M0131		Machine to 6000 p/h alarm enable	%M1642	DRI_10	Catches fault
%M0134		Test during tube sealing	%M1652	DRI_20	Malfunction during tube sealing
%M0144		Catch right security	%Q0165	K099-02	Pressure jaw enable
%M0145		Catch left security	%I0001	K099-06	Pressure jaw right check
%R0137		Delay tube sealing monitoring	%I0027	K099-11	Pressure jaw left check
%R0145		Catches fault delay	%Q0161	MY131	Pressure jaw right
%T0214	A_RESET	Pulse+ reset A-alarm lock	%Q0166	MY132	Pressure jaw left

BLOCK: 36 ENCODER & JAW CONTROL

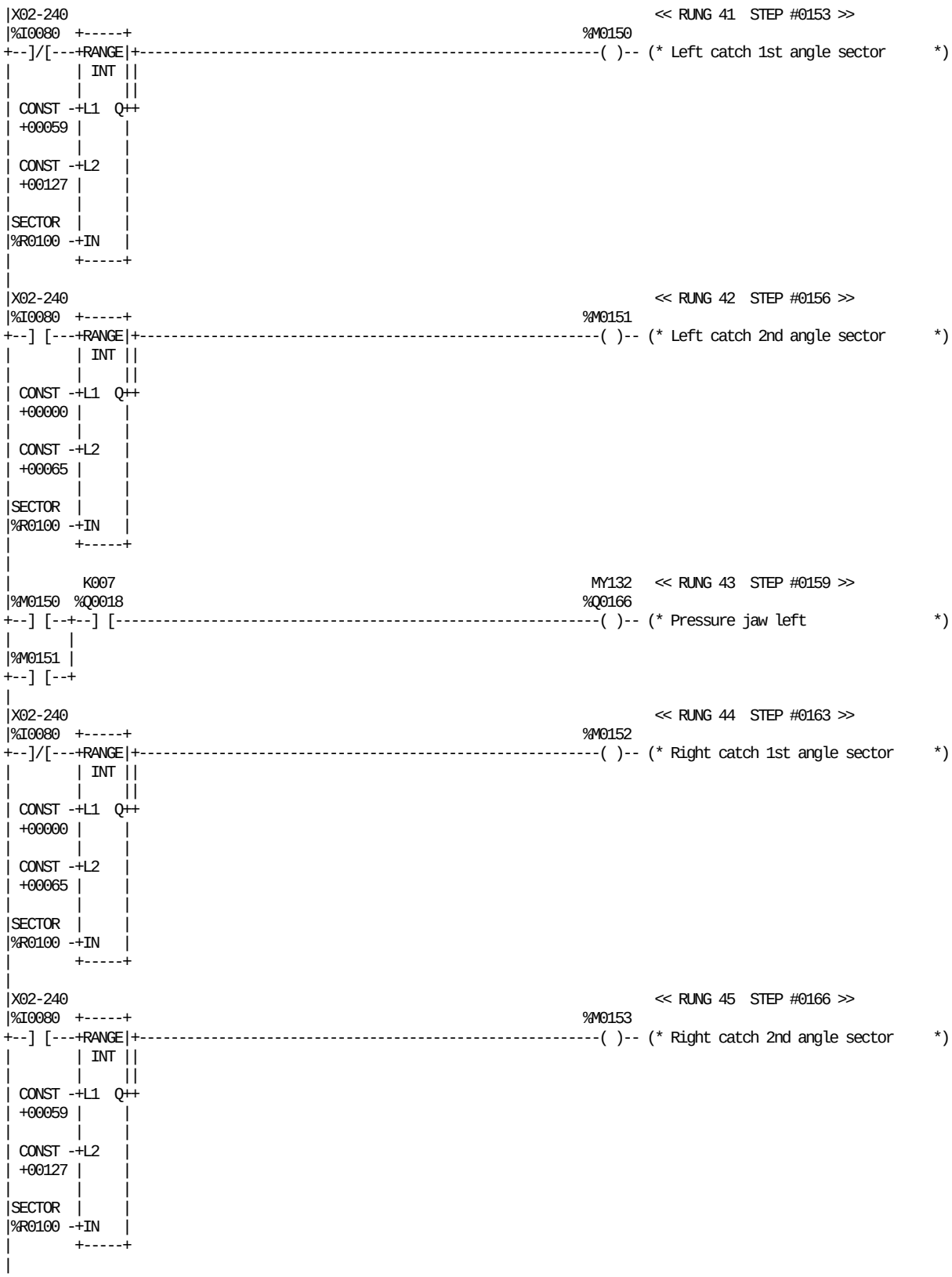

REFERENCE	NICKNAME	REFERENCE DESCRIPTION	REFERENCE	NICKNAME	REFERENCE DESCRIPTION
%M0150		Left catch 1st angle sector	%Q0018	K007	Hydraulic pump
%M0151		Left catch 2nd angle sector	%Q0166	MY132	Pressure jaw left
%M0152		Right catch 1st angle sector	%R0100	SECTOR	Angle sector 0-127
%M0153		Right catch 2nd angle sector	%I0080	X02-240	Angle encoder bit 7

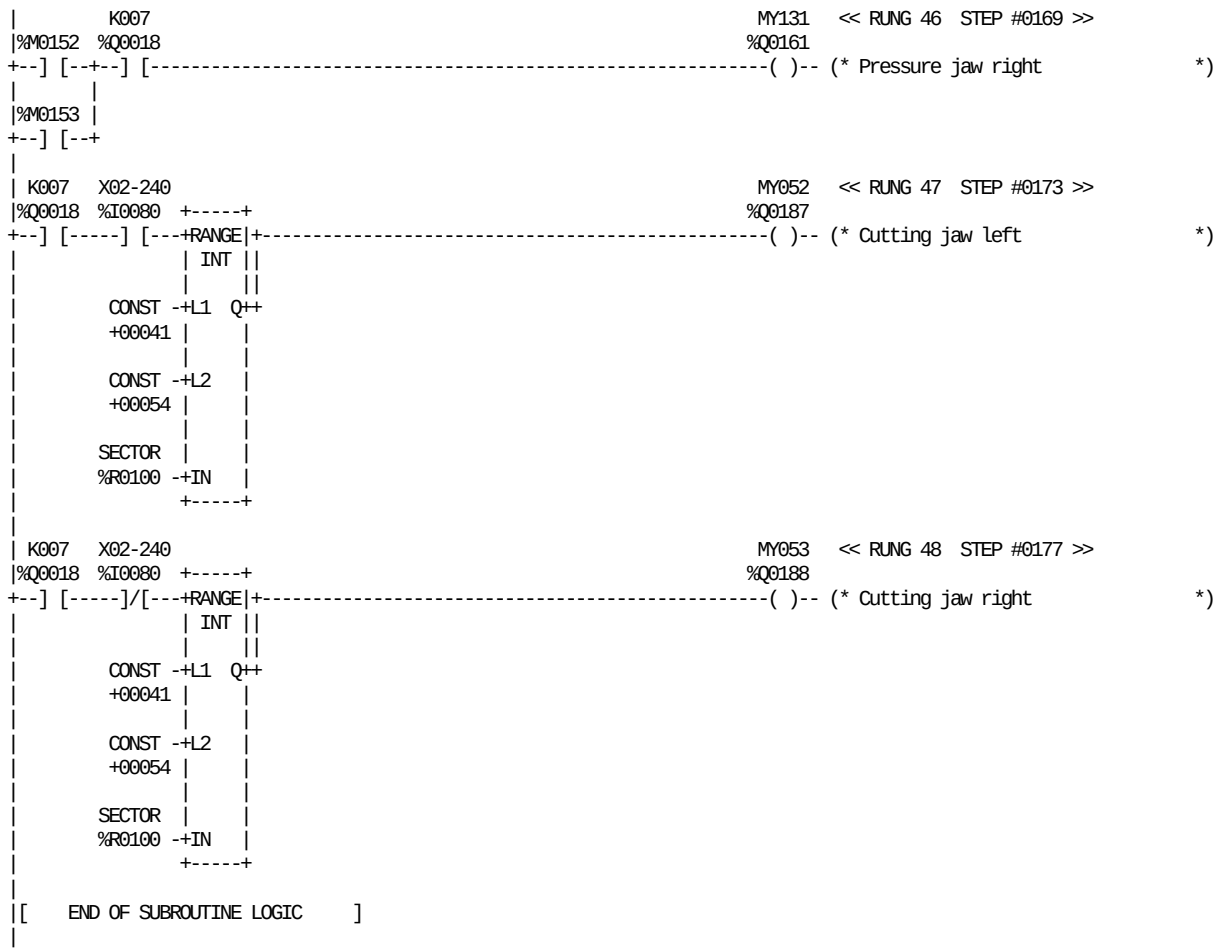

REFERENCE	NICKNAME	REFERENCE DESCRIPTION	REFERENCE	NICKNAME	REFERENCE DESCRIPTION
%M0152		Right catch 1st angle sector	%Q0188	MY053	Cutting jaw right
%M0153		Right catch 2nd angle sector	%Q0161	MY131	Pressure jaw right
%Q0018	K007	Hydraulic pump	%R0100	SECTOR	Angle sector 0-127
%Q0187	MY052	Cutting jaw left	%I0080	X02-240	Angle encoder bit 7

BLOCK: 36 ENCODER & JAW CONTROL

```
|[  START LD SUBROUTINE   BLK37   ]
|
|[     VARIABLE DECLARATIONS      ]
|
|[   START OF SUBROUTINE LOGIC    ]
|
| (*************************************************************************)
| (* Angle encoder transfer to TPOP                                       *)
| (*************************************************************************)
|
|ALW_ON                                                          << RUNG 5  STEP #0003 >>
|%S0007  +-----+
+--] [---+ AND_+-
|        | WORD|
|        |     |
| BIN0   |     |
|%M0001 -+I1  Q+-%R8596
|        |     |
| CONST -+I2   |
|   00FF +-----+
|
| (*************************************************************************)
| (* Options transfer to TPOP                                              *)
| (*************************************************************************)
|
|ALW_ON                                                          << RUNG 7  STEP #0006 >>
|%S0007  +-----+
+--] [---+MOVE_+-
|        | WORD|
|        |     |
|        |     | OPTIONS
|%M1297 -+IN  Q+-%R8367
|        | LEN |
|        |00001|
|        |     |
|        +-----+
|
| (*************************************************************************)
| (* Temp monitor L.S. Preheating                                          *)
| (*************************************************************************)
|
| T_SEC                                                          << RUNG 9  STEP #0009 >>
|%S0005  %M4051  +-----+                                  %M4051
+--] [-----]/[--->UPCTR+-------------------------------------------------( )-- (* Set point L.S. temp preheating   *)
|                |     |
|A202-20         |     |
|%I0054          |     |
+--] [--+--------+R    |
|       |        |     |
| POS20 |        |     |
|%M0051 |        |     |
+--]/[--+ CONST -+PV   |
|         +00599 |     |
|                +-----+
|
|                %R8150
|
|ALW_ON                                                          << RUNG 10  STEP #0015 >>
|%S0007  +-----+
+--] [---+ SUB_+-
|        | INT |
|        |     |
| CONST -+I1  Q+-%R8400
| +00600 |     |
|        |     |
|%R8150 -+I2   |
|        +-----+
|
```

REFERENCE	NICKNAME	REFERENCE DESCRIPTION	REFERENCE	NICKNAME	REFERENCE DESCRIPTION
%M1297		PLMS, Option spare	%S0007	ALW_ON	
%M4051		Set point L.S. temp preheating	%M0001	BIN0	LSB binary digit bit 0
%R8150		Timer Time Left L.S.temp preheat	%R8367	OPTIONS	Options Installed
%R8400		Timer Time Left L.S.temp preheat	%M0051	POS20	Ladder pos 20
%R8596		Angle sector 0-127	%S0005	T_SEC	
%I0054	A202-20	Temp.mon.LS preheating			

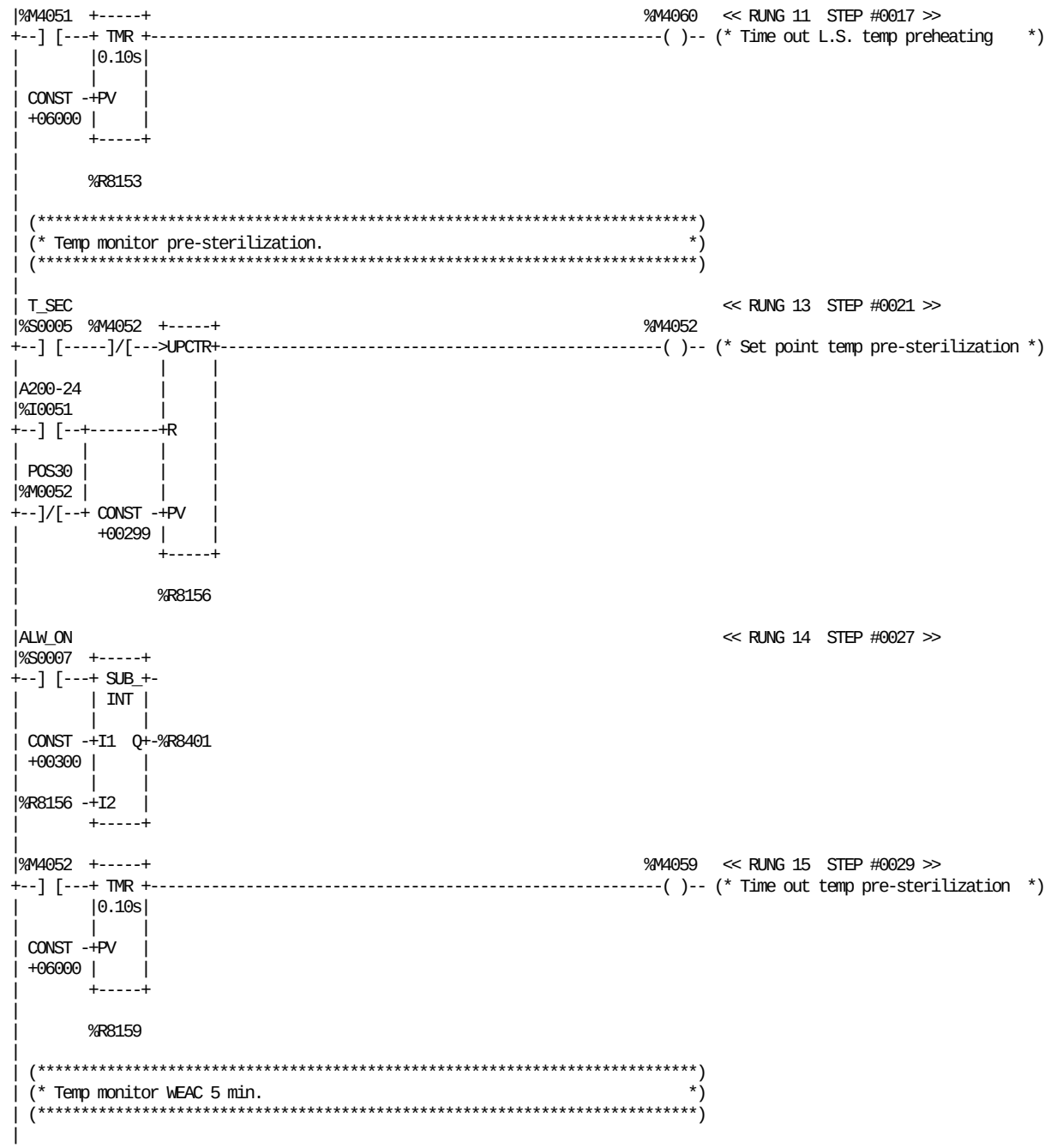

REFERENCE NICKNAME	REFERENCE DESCRIPTION	REFERENCE NICKNAME		REFERENCE DESCRIPTION
%M4051	Set point L.S. temp preheating	%R8159		Timer alarm temp pre-sterilizat.
%M4052	Set point temp pre-sterilization	%R8401		Timer Time Left temp pre-steril.
%M4059	Time out temp pre-sterilization	%I0051	A200-24	Temp.mon.presterilisation
%M4060	Time out L.S. temp preheating	%S0007	ALW_ON	
%R8153	Timer alarm L.S. temp preheating	%M0052	POS30	Ladder pos 30
%R8156	Timer Time Left temp pre-steril.	%S0005	T_SEC	

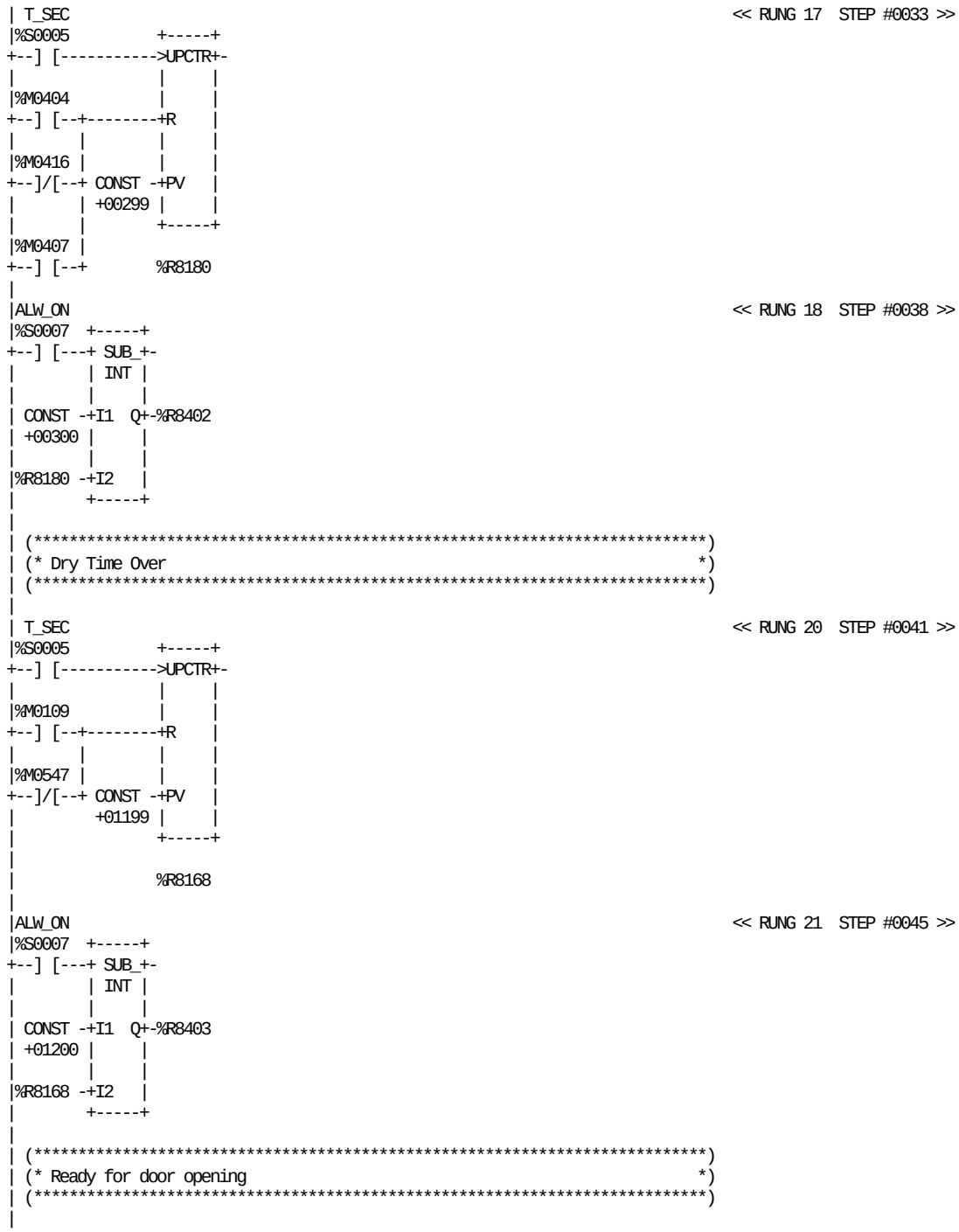

REFERENCE NICKNAME	REFERENCE DESCRIPTION	REFERENCE NICKNAME	REFERENCE DESCRIPTION
%M0109	Drying after spraying	%R8180	Timer Time Left WEAC 5 min.
%M0404	WEAC stop 5 or 15 minutes	%R8402	Timer Time Left WEAC 5 min.
%M0407	WEAC stop 15 minutes	%R8403	Timer Dry time over
%M0416	WEAC stop on	%S0007 ALW_ON	
%M0547	Drying after spraying	%S0005 T_SEC	
%R8168	Timer Dry time over		

```
| T_SEC                                                                << RUNG 23  STEP #0048 >>
|%S0005          +-----+
+--] [------------>UPCTR+-
|                |     |
|%M0404          |     |
+--] [--+--------+R    |
|       |        |     |
|%M0416 |        |     |
+--]/[--+ CONST -+PV   |
|       | +00899 |     |
|       |        +-----+
|%M0407 |
+--]/[--+        %R8162
|
|ALW_ON                                                                << RUNG 24  STEP #0053 >>
|%S0007  +-----+
+--] [---+ SUB_+-
|        | INT |
|        |     |
| CONST -+I1  Q+-%R8404
| +00900 |     |
|        |     |
|%R8162 -+I2   |
|        +-----+
|
| (*************************************************************************)
| (* Total external cleaning                                               *)
| (*************************************************************************)
|
| T_SEC  EXT_CLN                                                       << RUNG 26  STEP #0056 >>
|%S0005  %M0084  +-----+
+--] [-----] [--->UPCTR+-
|               |     |
|FST_SCN        |     |
|%S0001         |     |
+--] [--+--------+R    |
|       |        |     |
|RDY_CLN|        |     |
|%M0083 |        |     |
+--]/[--+ CONST -+PV   |
|       | +02519 |     |
|CLE_11 |        +-----+
|%M1931 |
+--] [--+        %R8165
|
|ALW_ON                                                                << RUNG 27  STEP #0062 >>
|%S0007  +-----+
+--] [---+ SUB_+-
|        | INT |
|        |     |
| CONST -+I1  Q+-%R8405
| +02520 |     |
|        |     |
|%R8165 -+I2   |
|        +-----+
|
| (*************************************************************************)
| (* Time for spray                                                        *)
| (*************************************************************************)
|
```

REFERENCE	NICKNAME	REFERENCE DESCRIPTION
%M0404		WEAC stop 5 or 15 minutes
%M0407		WEAC stop 15 minutes
%M0416		WEAC stop on
%R8162		Timer ready for door opening
%R8165		Timer Time Left tot.ext.cleaning
%R8404		Timer ready for door opening
%R8405		Timer Time Left tot.ext.cleaning

REFERENCE	NICKNAME	REFERENCE DESCRIPTION
%S0007	ALW_ON	
%M1931	CLE_11	Fault filling clean. tray
%M0084	EXT_CLN	Machine in pos. extern. clean
%S0001	FST_SCN	
%M0083	RDY_CLN	Machine pos ready for cleaning
%S0005	T_SEC	

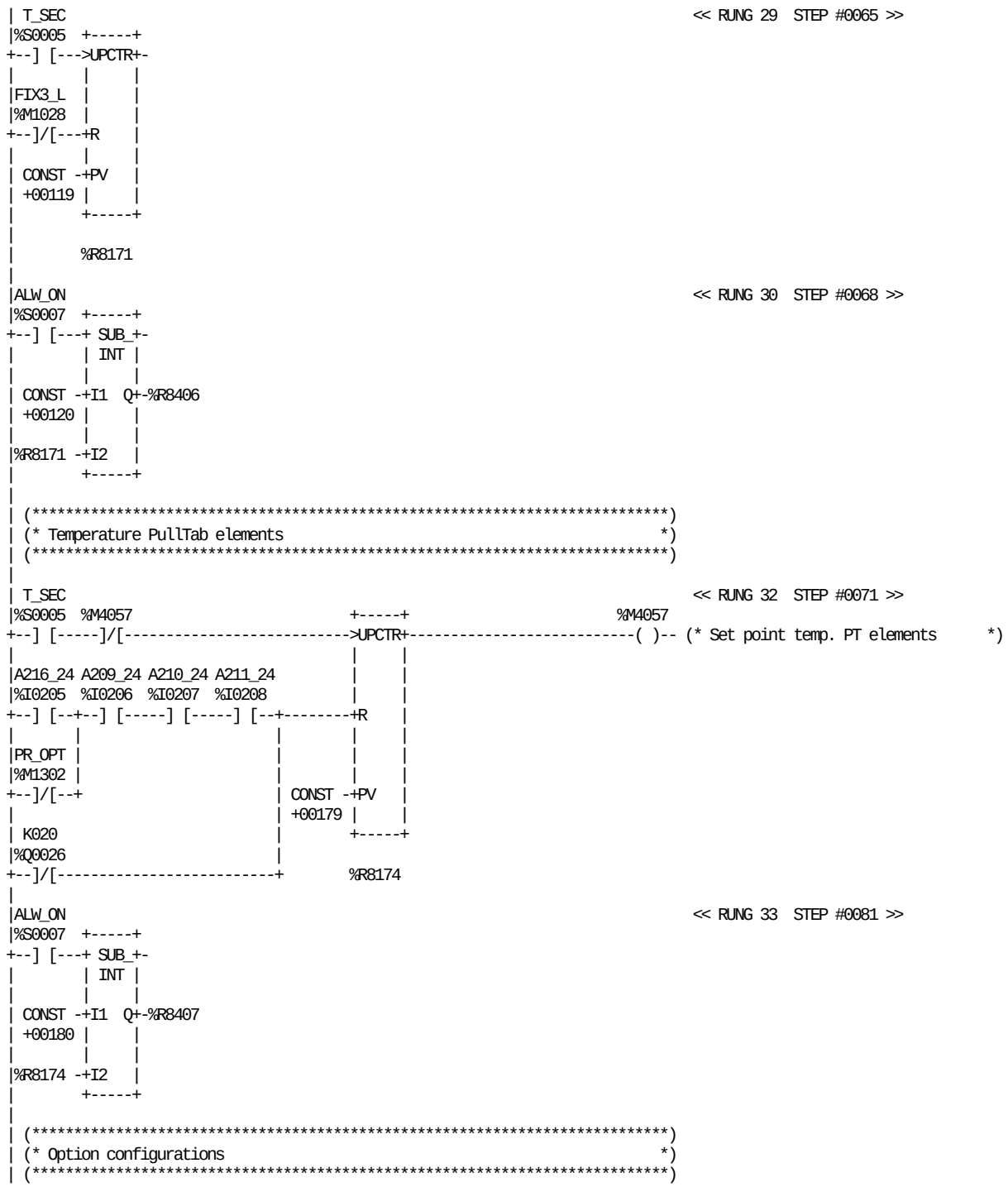

REFERENCE	NICKNAME	REFERENCE DESCRIPTION	REFERENCE	NICKNAME	REFERENCE DESCRIPTION
%M4057		Set point temp. PT elements	%I0208	A211_24	Temp.ok tab sealer
%R8171		Timer Time Left spray	%I0205	A216_24	Temp.ok outer-patch sealer
%R8174		Timer Time Left temp. PT element	%S0007	ALW_ON	
%R8406		Timer Time Left spray	%M1028	FIX3_L	Spray fix
%R8407		Timer Time Left temp. PT element	%Q0026	K020	PT Heating element and stepper
%I0206	A209_24	Temp.ok patch pre-sealer	%M1302	PR_OPT	PLMS, Option Prisma version
%I0207	A210_24	Temp.ok patch final-sealer	%S0005	T_SEC	

BLOCK: 37 TPOP/BEACON WARNING & ALARMS

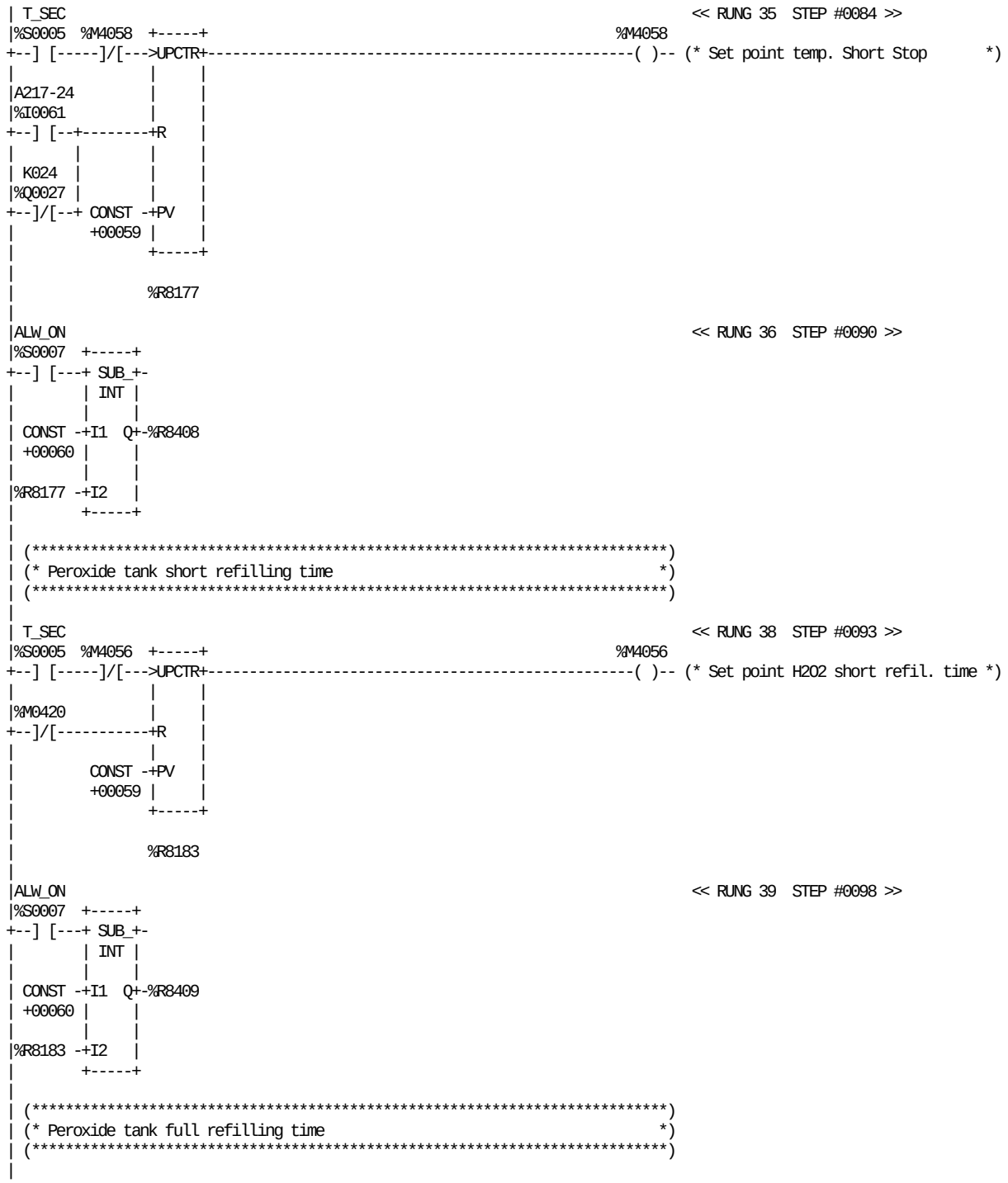

REFERENCE NICKNAME	REFERENCE DESCRIPTION	REFERENCE NICKNAME		REFERENCE DESCRIPTION
%M0420	Tank H2O2 restore high level	%R8409		Timer Time Left H2O2 refilling
%M4056	Set point H2O2 short refil. time	%I0061	A217-24	Temp.mon.LS short stop
%M4058	Set point temp. Short Stop	%S0007	ALW_ON	
%R8177	Timer Time Left Short Stop	%Q0027	K024	LS short stop
%R8183	Timer Time Left H2O2 refilling	%S0005	T_SEC	
%R8408	Timer Time Left Short Stop			

BLOCK: 37 TPOP/BEACON WARNING & ALARMS

```
| T_SEC                                                                  << RUNG 41  STEP #0101 >>
|%S0005  %M4055  +-----+                                          %M4055
+--] [-----]/[--->UPCTR+-------------------------------------------------( )-- (* Set point H2O2 full refill. time *)
|                |     |
|%M0425          |     |
+--]/[-----------+R    |
|                |     |
|         CONST -+PV   |
|         +01199 |     |
|                +-----+
|
|                %R8186
|
|ALW_ON                                                                  << RUNG 42  STEP #0106 >>
|%S0007  +-----+
+--] [---+ SUB_+-
|        | INT |
|        |     |
| CONST -+I1  Q+-%R8410
| +01200 |     |
|        |     |
|%R8186 -+I2   |
|        +-----+
|
| (*************************************************************************)
| (* Machine ladder display                                                *)
| (*************************************************************************)
|
| POS00                                                            STEP_O   << RUNG 44  STEP #0109 >>
|%M0049  %M0416                                                    %M1025
+--] [-----]/[--+-------------------------------------------------------( )-- (* Tpop step 0 machine off         *)
|               |
|               |                                                  STEP_0
|               |                                                  %M1057
|               +-------------------------------------------------------( )-- (* Tpop step 0 machine off         *)
|
|SU_1080 PS_903                                                    FLH1_L   << RUNG 45  STEP #0113 >>
|%M0033  %I0152                                                    %M1042
+--] [-----]/[-------------------------------------------------------------( )-- (* Preheating 1 flash              *)
|
| POS10                                                            FIX1_L   << RUNG 46  STEP #0116 >>
|%M0050                                                            %M1026
+--] [-------------------------------------------------------------------( )-- (* Preheating 1 fix                *)
|
| SU_20                                                            FLH1_R   << RUNG 47  STEP #0118 >>
|%M0034                                                            %M1074
+--] [-------------------------------------------------------------------( )-- (* Preheating 2 flash              *)
|
| POS20                                                            FIX1_R   << RUNG 48  STEP #0120 >>
|%M0051  %M0300                                                    %M1058
+--] [-----]/[-------------------------------------------------------------( )-- (* Preheating 2 fix                *)
|
| SU_30                                                            FLH2_L   << RUNG 49  STEP #0123 >>
|%M0035                                                            %M1043
+--] [----------+-------------------------------------------------------( )-- (* Tube sealing flash              *)
|               |
| S004    POS20 |
|%I0009  %M0051 |
+--] [-----] [--+
|
```

REFERENCE	NICKNAME	REFERENCE DESCRIPTION
%M0300		Tube sealing going on
%M0416		WEAC stop on
%M0425		Tank H2O2 complete refilling
%M4055		Set point H2O2 full refill. time
%R8186		Timer Time Left H2O2 refilling
%R8410		Timer Time Left H2O2 refilling
%S0007	ALW_ON	
%M1026	FIX1_L	Preheating 1 fix
%M1058	FIX1_R	Preheating 2 fix
%M1042	FLH1_L	Preheating 1 flash
%M1074	FLH1_R	Preheating 2 flash
%M1043	FLH2_L	Tube sealing flash

REFERENCE	NICKNAME	REFERENCE DESCRIPTION
%M0049	POS00	Ladder pos 00
%M0050	POS10	Ladder pos 10
%M0051	POS20	Ladder pos 20
%I0152	PS_903	Selector switch
%I0009	S004	Service switch
%M1057	STEP_0	Tpop step 0 machine off
%M1025	STEP_O	Tpop step 0 machine off
%M0033	SU_1080	Ok to step to p10/80 heat 1
%M0034	SU_20	Ok to step to pos 20 heat 2
%M0035	SU_30	Ok to step to pos 30 tube
%S0005	T_SEC	

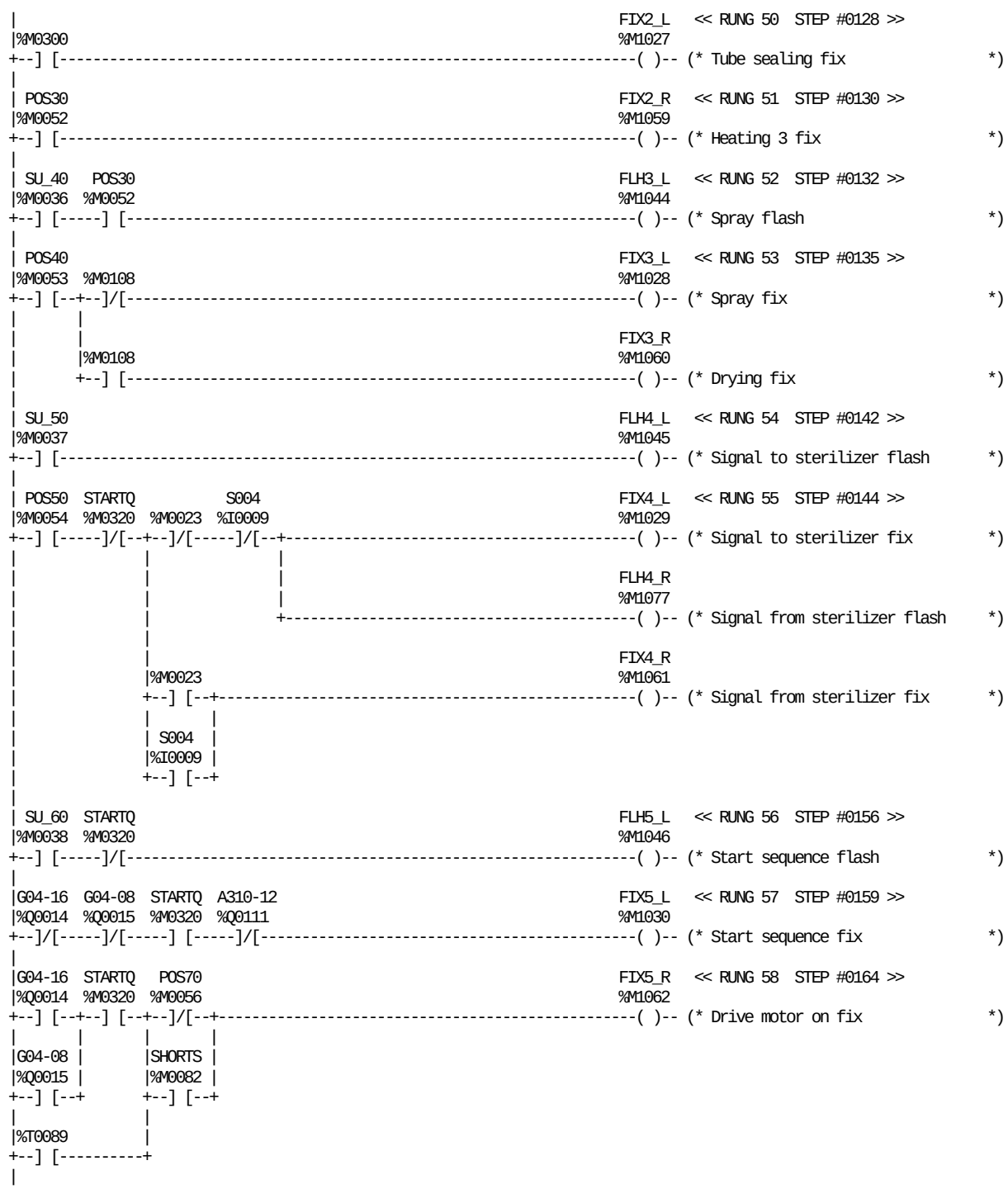

REFERENCE	NICKNAME	REFERENCE DESCRIPTION	REFERENCE	NICKNAME	REFERENCE DESCRIPTION
%M0023		Mem signal receiv sterili	%M1077	FLH4_R	Signal from sterilizer flash
%M0108		Spray full filled	%M1046	FLH5_L	Start sequence flash
%M0300		Tube sealing going on	%Q0015	G04-08	Main motor, high speed
%T0089		Stop delay main motor	%Q0014	G04-16	Main motor, low speed
%Q0111	A310-12	FCS pre-filling	%M0052	POS30	Ladder pos 30
%M1027	FIX2_L	Tube sealing fix	%M0053	POS40	Machine ladder pos 40
%M1059	FIX2_R	Heating 3 fix	%M0054	POS50	Machine ladder pos 50
%M1028	FIX3_L	Spray fix	%M0056	POS70	Machine ladder pos 70
%M1060	FIX3_R	Drying fix	%I0009	S004	Service switch
%M1029	FIX4_L	Signal to sterilizer fix	%M0082	SHORTS	Machine pos. short stop
%M1061	FIX4_R	Signal from sterilizer fix	%M0320	STARTQ	Start sequenc
%M1030	FIX5_L	Start sequence fix	%M0036	SU_40	Ok to step to pos 40 spray
%M1062	FIX5_R	Drive motor on fix	%M0037	SU_50	Ok to step to pos 50 steril
%M1044	FLH3_L	Spray flash	%M0038	SU_60	Ok to step to pos 60 start
%M1045	FLH4_L	Signal to sterilizer flash			

BLOCK: 37 TPOP/BEACON WARNING & ALARMS

```
|SHORTS   POS70   MY027                                          FIX6_L   << RUNG 59  STEP #0172 >>
|%M0082  %M0056  %Q0001                                          %M1031
+--]/[-----] [-----]/[--+-----------------------------------------( )-- (* Filling on fix                *)
|                       |
|A310-12                |
|%Q0111                 |
+--] [------------------+
|
| MY027  EXT_CLN                                                 FIX6_R   << RUNG 60  STEP #0177 >>
|%Q0001  %M0084                                                  %M1063
+--] [-----]/[-----------------------------------------------------( )-- (* Machine in production fix    *)
|
|SHORTS  SHTSTOP                                                 FLH7_L   << RUNG 61  STEP #0180 >>
|%M0082  %T0014                                                  %M1048
+--] [--+--]/[-----------------------------------------------------( )-- (* Short Stop flash            *)
|       |
|       |SHTSTOP                                                 FIX7_L
|       |%T0014                                                  %M1032
|       +--] [-----------------------------------------------------( )-- (* Short Stop fix              *)
|
| POS80  MCPOS80                                                 FLH7_R   << RUNG 62  STEP #0187 >>
|%M0057  %M0086                                                  %M1080
+--] [-----] [-----------------------------------------------------( )-- (* Production finish flash      *)
|
|                                                                FIX8_L   << RUNG 63  STEP #0190 >>
|%M0416  %M0402                                                  %M1033
+--] [-----]/[-----------------------------------------------------( )-- (* Weac on fix                 *)
|
|                                                                FLH8_R   << RUNG 64  STEP #0193 >>
|%M0416  %M0404  %M0402                                          %M1081
+--] [-----] [--+--]/[-------------------------------------------( )-- (* Ready for door opening flash  *)
|               |
|               |                                                FIX8_R
|               |%M0402                                          %M1065
|               +--] [-------------------------------------------( )-- (* Ready for door opening fix   *)
|
|SU_1080 PS_903                                                  FLH9_R   << RUNG 65  STEP #0201 >>
|%M0033  %I0152                                                  %M1082
+--] [-----] [-----------------------------------------------------( )-- (* Prepare cleaning valve flash  *)
|
|RDY_CLN PS_903   K104                                           FIX9_R   << RUNG 66  STEP #0204 >>
|%M0083  %I0152  %Q0046                                          %M1066
+--] [-----] [-----]/[-------------------------------------------( )-- (* Prepare cleaning valve fix    *)
|
|RDY_CLN PS_903  EXT_CLN                                         FIX9_L   << RUNG 67  STEP #0208 >>
|%M0083  %I0152  %M0084                                          %M1034
+--] [-----]/[-----]/[-------------------------------------------( )-- (* Prepare cleaning machine fix  *)
|
|FIX9_L                                                          FLH10_L  << RUNG 68  STEP #0212 >>
|%M1034                                                          %M1051
+--] [-----------------------------------------------------------( )-- (* External cleaning flash      *)
|
|EXT_CLN                                                         FIX10_L  << RUNG 69  STEP #0214 >>
|%M0084                                                          %M1035
+--] [-----------------------------------------------------------( )-- (* External cleaning fix        *)
|
|FIX9_R                                                          FLH10_R  << RUNG 70  STEP #0216 >>
|%M1066                                                          %M1083
+--] [-----------------------------------------------------------( )-- (* Internal cleaning flash      *)
|
```

REFERENCE	NICKNAME	REFERENCE DESCRIPTION
%M0402		Mem. door monitor
%M0404		WEAC stop 5 or 15 minutes
%M0416		WEAC stop on
%Q0111	A310-12	FCS pre-filling
%M0084	EXT_CLN	Machine in pos. extern. clean
%M1035	FIX10_L	External cleaning fix
%M1031	FIX6_L	Filling on fix
%M1063	FIX6_R	Machine in production fix
%M1032	FIX7_L	Short Stop fix
%M1033	FIX8_L	Weac on fix
%M1065	FIX8_R	Ready for door opening fix
%M1034	FIX9_L	Prepare cleaning machine fix
%M1066	FIX9_R	Prepare cleaning valve fix
%M1051	FLH10_L	External cleaning flash
%M1083	FLH10_R	Internal cleaning flash

REFERENCE	NICKNAME	REFERENCE DESCRIPTION
%M1048	FLH7_L	Short Stop flash
%M1080	FLH7_R	Production finish flash
%M1081	FLH8_R	Ready for door opening flash
%M1082	FLH9_R	Prepare cleaning valve flash
%Q0046	K104	Signal to cip
%M0086	MCPOS80	Machine in pos.80 for >2 min
%Q0001	MY027	Drop chute
%M0056	POS70	Machine ladder pos 70
%M0057	POS80	Machine ladder pos 80
%I0152	PS_903	Selector switch
%M0083	RDY_CLN	Machine pos ready for cleaning
%M0082	SHORTS	Machine pos. short stop
%T0014	SHTSTOP	Short stop for >4 minutes
%M0033	SU_1080	Ok to step to p10/80 heat 1

BLOCK: 37 TPOP/BEACON WARNING & ALARMS

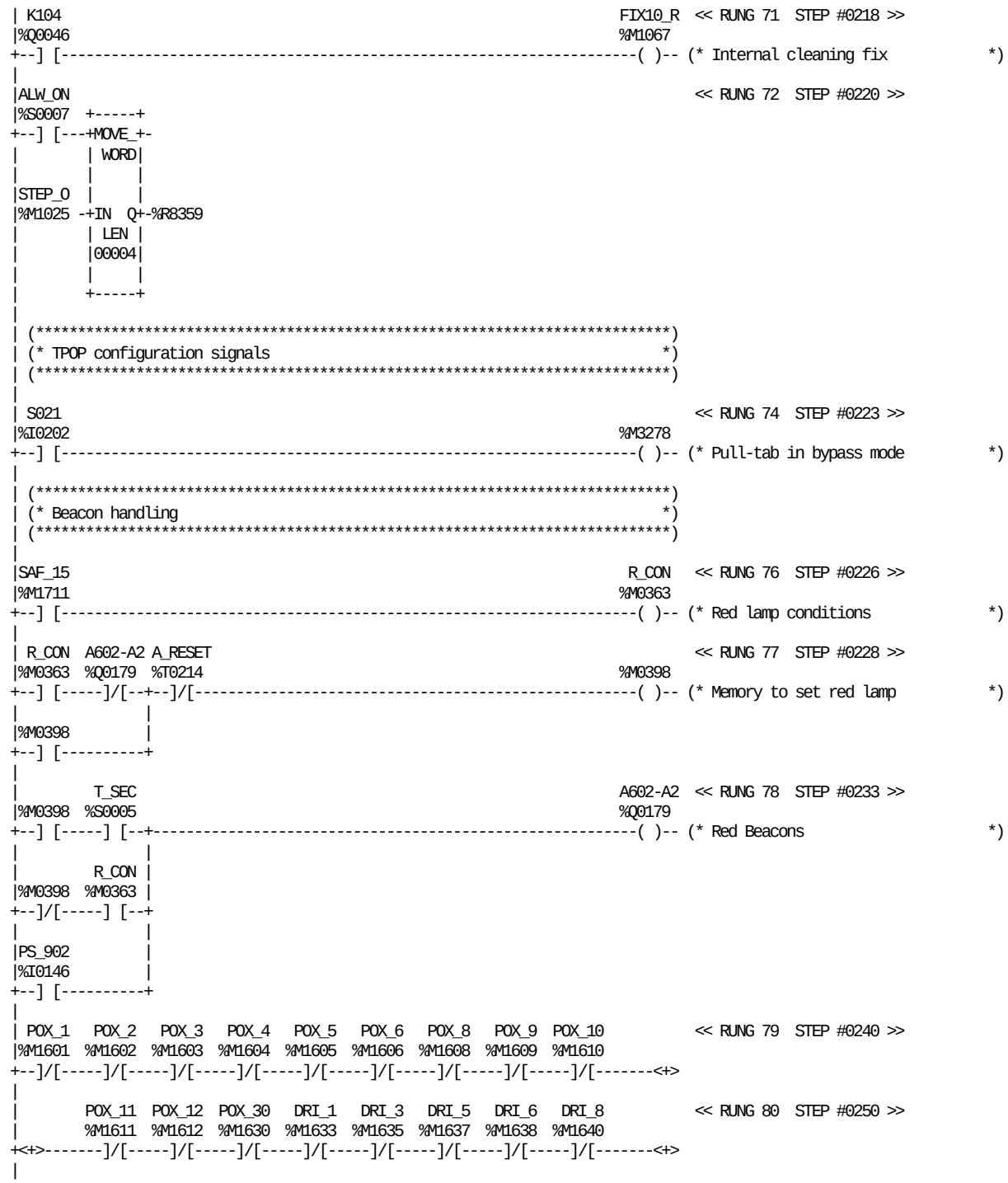

REFERENCE	NICKNAME	REFERENCE DESCRIPTION
%M0398		Memory to set red lamp
%M3278		Pull-tab in bypass mode
%R8359		Ladder step left
%Q0179	A602-A2	Red Beacons
%S0007	ALW_ON	
%T0214	A_RESET	Pulse+ reset A-alarm lock
%M1633	DRI_1	MDCS sensors alarm
%M1635	DRI_3	Jaw sys. over-load.
%M1637	DRI_5	Fault IH unit TS left
%M1638	DRI_6	Fault IH unit TS right
%M1640	DRI_8	Encoder Fault
%M1067	FIX10_R	Internal cleaning fix
%Q0046	K104	Signal to cip
%M1601	POX_1	Low temperature peroxide
%M1610	POX_10	Spray tank not filling
%M1611	POX_11	Spray tank not spraying
%M1612	POX_12	Temperature monitor spraying
%M1602	POX_2	Low level peroxide bath
%M1603	POX_3	Low level peroxide bath, water
%M1630	POX_30	Low level tank peroxide
%M1604	POX_4	Spray container low level
%M1605	POX_5	Spray time out of limit
%M1606	POX_6	Spray tank filling fault
%M1608	POX_8	Low temp. peroxide bath, water
%M1609	POX_9	Too high level peroxide tank
%I0146	PS_902	Lamp tests
%M0363	R_CON	Red lamp conditions
%I0202	S021	PT exclusion
%M1711	SAF_15	Fault emerg. stop jaw rot
%M1025	STEP_0	Tpop step 0 machine off
%S0005	T_SEC	

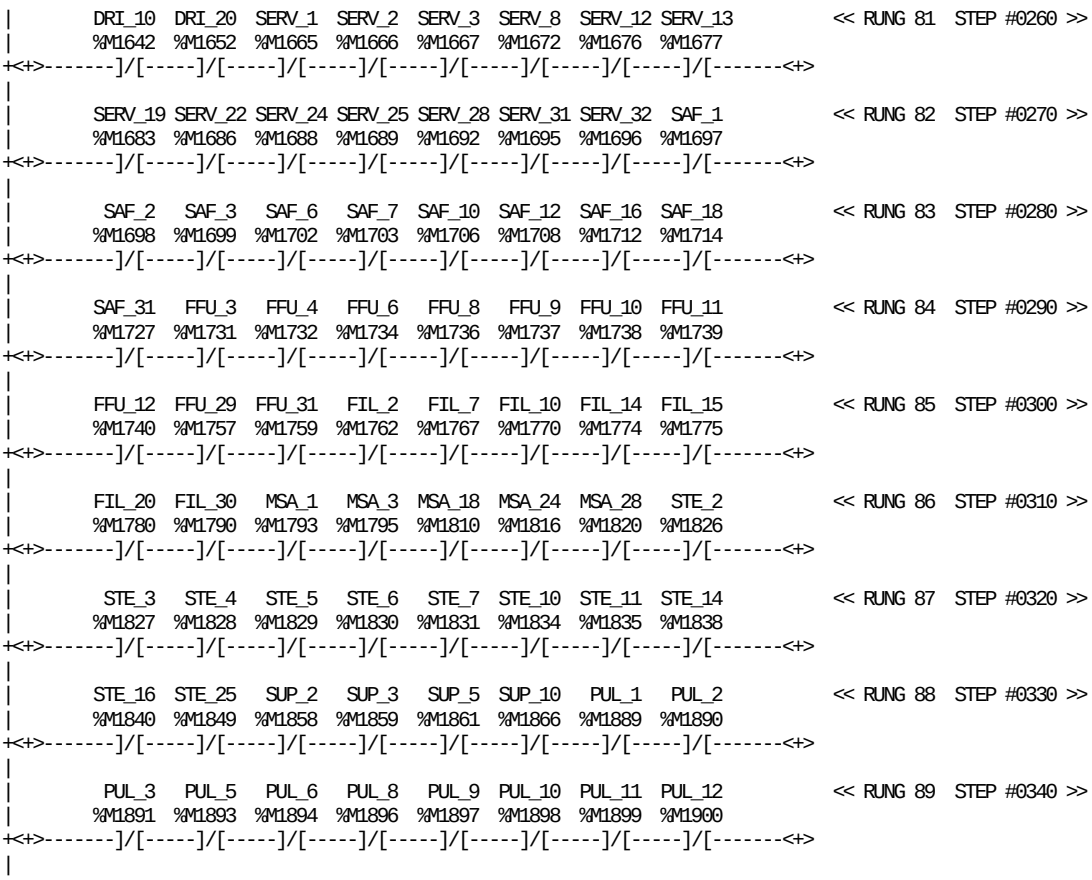

REFERENCE	NICKNAME	REFERENCE DESCRIPTION
%M1642	DRI_10	Catches fault
%M1652	DRI_20	Malfunction during tube sealing
%M1738	FFU_10	Flap sealing temp.Top left
%M1739	FFU_11	Flap sealing temp.Top right
%M1740	FFU_12	Alarm delay unsync. MM/FF
%M1757	FFU_29	Dating unit alarm
%M1731	FFU_3	Final folder infeed congest
%M1759	FFU_31	Queue conveyor alarm
%M1732	FFU_4	Rotat. fault FF
%M1734	FFU_6	Memory overload outfeed
%M1736	FFU_8	Flap sealing temp.Bottom left
%M1737	FFU_9	Flap sealing temp.Bottom right
%M1770	FIL_10	Membran leakage alarm
%M1774	FIL_14	Nozzle not in position
%M1775	FIL_15	Equipment not in position
%M1762	FIL_2	Floater alarm during preheating
%M1780	FIL_20	Overfilling alarm
%M1790	FIL_30	No prod. from process
%M1767	FIL_7	Steam low temperature 5 min.
%M1793	MSA_1	Fault IH unit S. A.
%M1810	MSA_18	Paper magazine broken web
%M1816	MSA_24	Strip finished
%M1820	MSA_28	Cut the strip before cleaning
%M1795	MSA_3	Broken strip
%M1889	PUL_1	PT Infeed loop empty
%M1898	PUL_10	PT temperature tab sealer
%M1899	PUL_11	PT temperat. outer-patch sealer
%M1900	PUL_12	PT black tape phot.malfunction
%M1890	PUL_2	Free- loop PT outfeed alarm
%M1891	PUL_3	Paper slipping
%M1893	PUL_5	PT bar- code photoc. alarm
%M1894	PUL_6	PT Servo motor alarm
%M1896	PUL_8	PT temperature patch pre-sealer
%M1897	PUL_9	PT temperat. patch final sealer
%M1697	SAF_1	Crease wheel cover alarm
%M1706	SAF_10	Door guard ASU
%M1708	SAF_12	Pulltab door guard
%M1712	SAF_16	FF door alarm
%M1714	SAF_18	Safety relay tripped
%M1698	SAF_2	MSA door unit
%M1699	SAF_3	Tower doors
%M1727	SAF_31	Service switch alarm
%M1702	SAF_6	Bottom cover peroxide bath alarm
%M1703	SAF_7	Crank guard alarm
%M1665	SERV_1	Low press. main water
%M1676	SERV_12	Low level hydraul oil
%M1677	SERV_13	Temp fault hydraulic oil
%M1683	SERV_19	Nitrogen gas low pressure
%M1666	SERV_2	Low press. main air
%M1686	SERV_22	Inverter protection alarm
%M1688	SERV_24	Short stop for >5 min.
%M1689	SERV_25	Too much time in pos20
%M1692	SERV_28	Max run time lubric.fault
%M1667	SERV_3	Over-load motors
%M1695	SERV_31	Speed fault main motor
%M1696	SERV_32	Recorder alarm stop
%M1672	SERV_8	Pressure fault lubric. oil
%M1834	STE_10	Suction valve wrong pos.
%M1835	STE_11	Wrong posit. product pipe
%M1838	STE_14	Low temp air knife
%M1840	STE_16	Overload compressor
%M1826	STE_2	Wrong pos. AP valve B
%M1849	STE_25	Sterility condiction fault
%M1827	STE_3	High level separat
%M1828	STE_4	Low temp air heater
%M1829	STE_5	Air inlet valve wrong position
%M1830	STE_6	Low press. steril air
%M1831	STE_7	Wrong pos.reg valve alarm
%M1866	SUP_10	LS sh. stop heat alarm
%M1858	SUP_2	Air knife sq.roll wrong pos.
%M1859	SUP_3	Superstructure broken web
%M1861	SUP_5	Low temperature LS element

BLOCK: 37 TPOP/BEACON WARNING & ALARMS

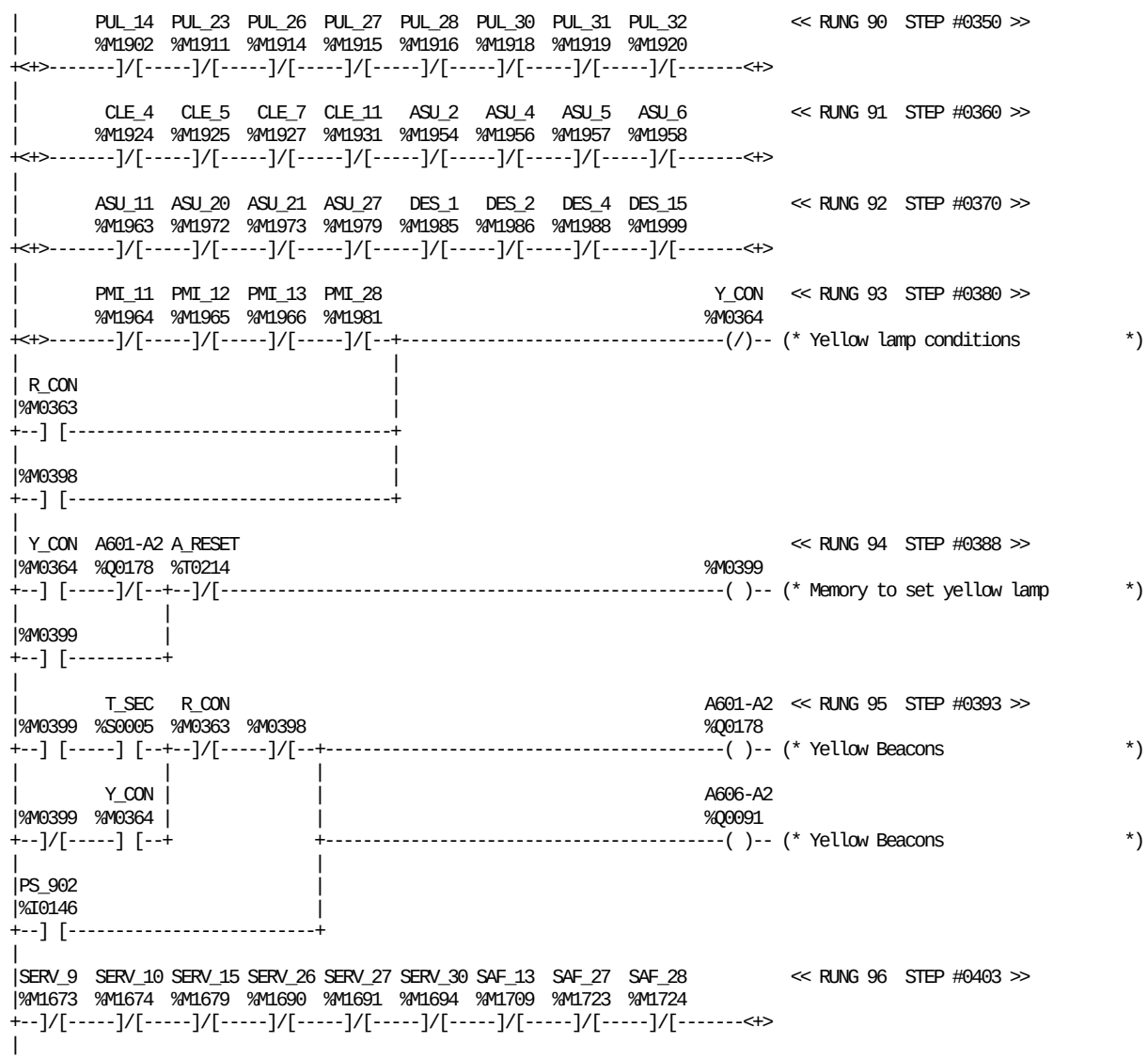

REFERENCE	NICKNAME	REFERENCE DESCRIPTION
%M0398		Memory to set red lamp
%M0399		Memory to set yellow lamp
%Q0178	A601-A2	Yellow Beacons
%Q0091	A606-A2	Yellow Beacons
%M1963	ASU_11	ASU inverter alarm
%M1954	ASU_2	ASU photocells alarm
%M1972	ASU_20	ASU, cutting tables not in pos.
%M1973	ASU_21	Feeder not in position
%M1979	ASU_27	ASU packaging material finished
%M1956	ASU_4	ASU broken web
%M1957	ASU_5	ASU magazine empty/Short Stop
%M1958	ASU_6	ASU sequence interrupted
%T0214	A_RESET	Pulse+ reset A-alarm lock
%M1931	CLE_11	Fault filling clean. tray
%M1924	CLE_4	Wrong pos. clean. cup
%M1925	CLE_5	Wrong posit. clean. pipe
%M1927	CLE_7	Steril air pipe wrong posit.
%M1985	DES_1	Photocell error
%M1999	DES_15	WTC inverter alarm
%M1986	DES_2	Design correction alarm
%M1988	DES_4	WTC roller position out of limit
%M1964	PMI_11	PMI inverter alarm
%M1965	PMI_12	PMI magazine empty

REFERENCE	NICKNAME	REFERENCE DESCRIPTION
%M1966	PMI_13	PMI broken web
%M1981	PMI_28	PMI paper supply finish
%I0146	PS_902	Lamp tests
%M1902	PUL_14	PT broken web
%M1911	PUL_23	Low pressure PT air
%M1914	PUL_26	Missing patch alarm
%M1915	PUL_27	Missing tab alarm
%M1916	PUL_28	Missing outer-patch alarm
%M1918	PUL_30	Patch strip finish
%M1919	PUL_31	Tab strip finish
%M1920	PUL_32	Outer-patch strip finish
%M0363	R_CON	Red lamp conditions
%M1709	SAF_13	Cabinet door alarm
%M1723	SAF_27	Safety relay ASU + MSA tripped
%M1724	SAF_28	Door ASU open
%M1674	SERV_10	Low pressure main water
%M1679	SERV_15	Over-voltage protection
%M1690	SERV_26	Recorder alarm
%M1691	SERV_27	Ovveride in the PLC program
%M1694	SERV_30	PLC fault
%M1673	SERV_9	Low level lubric. oil
%S0005	T_SEC	
%M0364	Y_CON	Yellow lamp conditions

BLOCK: 37 TPOP/BEACON WARNING & ALARMS

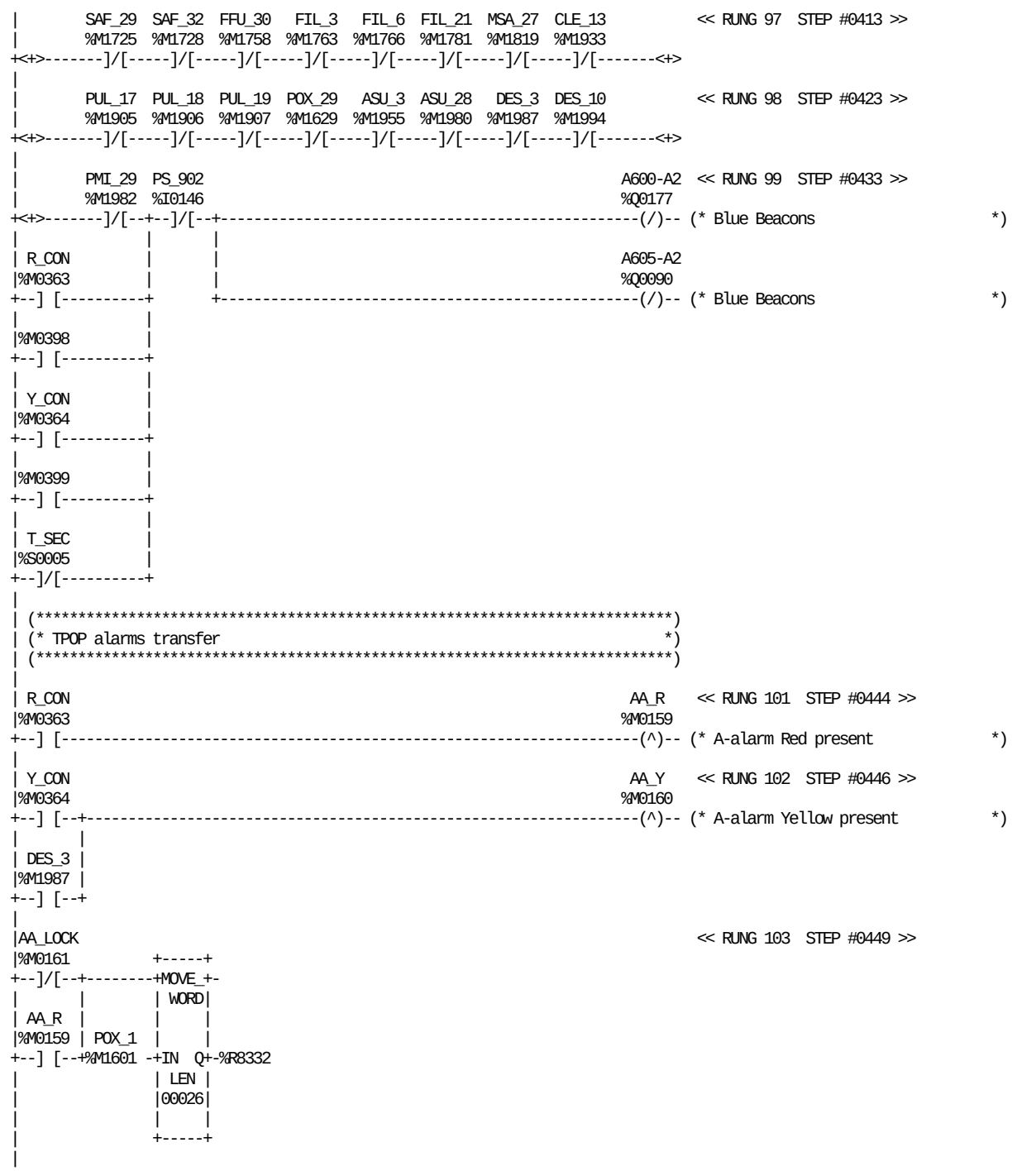

REFERENCE	NICKNAME	REFERENCE DESCRIPTION
%M0398		Memory to set red lamp
%M0399		Memory to set yellow lamp
%R8332		Alarm Peroxide system
%Q0177	A600-A2	Blue Beacons
%Q0090	A605-A2	Blue Beacons
%M0161	AA_LOCK	A-alarm lock to TPOP
%M0159	AA_R	A-alarm Red present
%M0160	AA_Y	A-alarm Yellow present
%M1980	ASU_28	ASU packaging not ready
%M1955	ASU_3	ASU bar-code rotation monitor
%M1933	CLE_13	Clean steam barrier
%M1994	DES_10	Photocell malfunction
%M1987	DES_3	Design correction in wrong pos.
%M1758	FFU_30	Dating unit supply
%M1781	FIL_21	Overfilling
%M1763	FIL_3	Product level during production
%M1766	FIL_6	Steam temp. out of limit
%M1819	MSA_27	Low strip supply
%M1982	PMI_29	PMI paper supply low
%M1601	POX_1	Low temperature peroxide
%M1629	POX_29	Tank H2O2 refilling insufficient
%I0146	PS_902	Lamp tests
%M1905	PUL_17	Low lvl patch magazine
%M1906	PUL_18	Low lvl tab magazine
%M1907	PUL_19	Low level outer-patch magazine
%M0363	R_CON	Red lamp conditions
%M1725	SAF_29	Door MSA open
%M1728	SAF_32	Service switch ON
%S0005	T_SEC	
%M0364	Y_CON	Yellow lamp conditions

BLOCK: 37 TPOP/BEACON WARNING & ALARMS

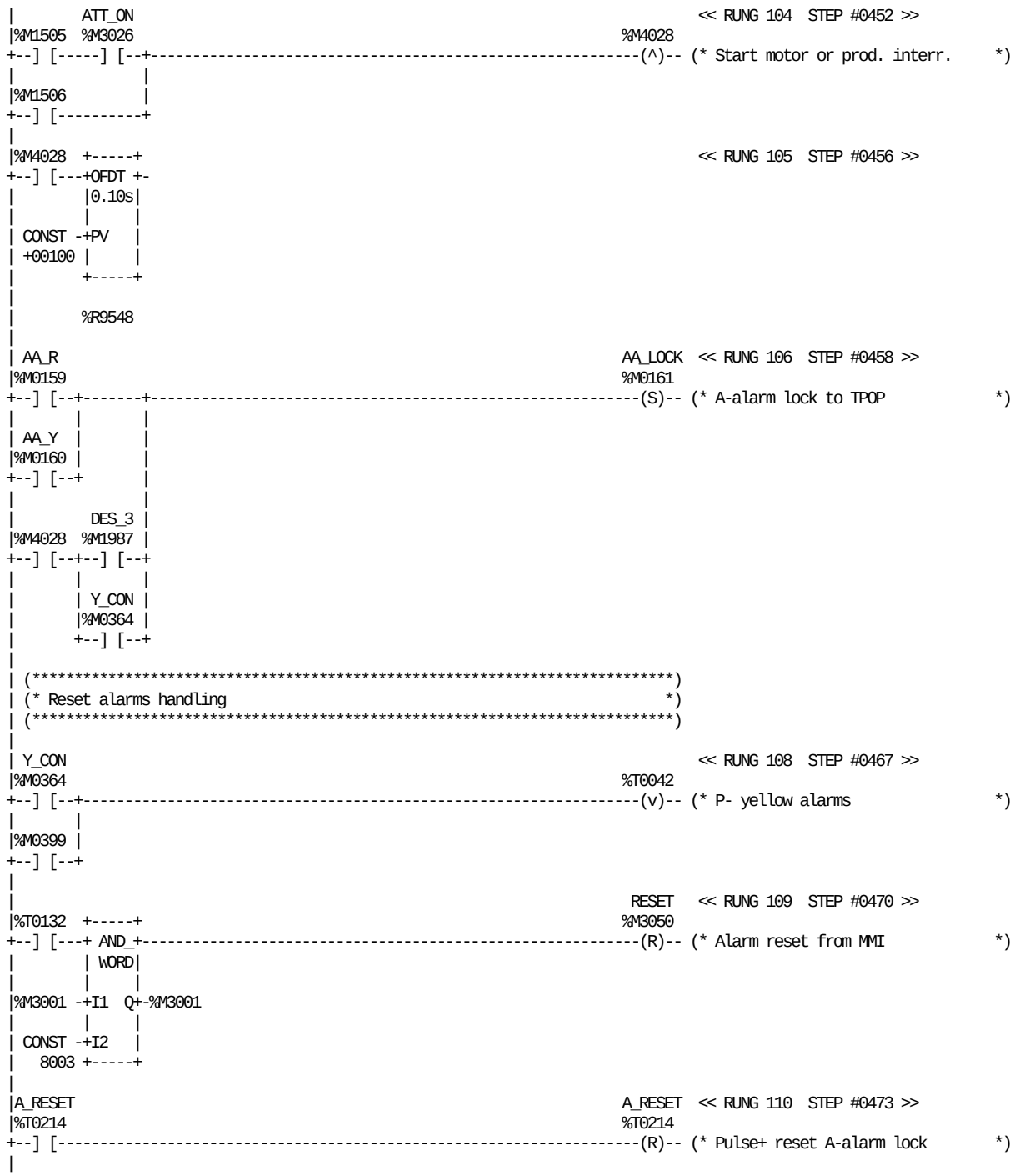

REFERENCE	NICKNAME	REFERENCE DESCRIPTION	REFERENCE	NICKNAME	REFERENCE DESCRIPTION
%M0399		Memory to set yellow lamp	%M0161	AA_LOCK	A-alarm lock to TPOP
%M1505		PLMS, Motor start	%M0159	AA_R	A-alarm Red present
%M1506		PLMS, Machine in production	%M0160	AA_Y	A-alarm Yellow present
%M3001			%M3026	ATT_ON	Attendance time ON from PLC
%M4028		Start motor or prod. interr.	%T0214	A_RESET	Pulse+ reset A-alarm lock
%T0042		P- yellow alarms	%M1987	DES_3	Design correction in wrong pos.
%T0132		Alarm reset safety delay	%M3050	RESET	Alarm reset from MMI
%R9548		Start motor or prod. interr.time	%M0364	Y_CON	Yellow lamp conditions

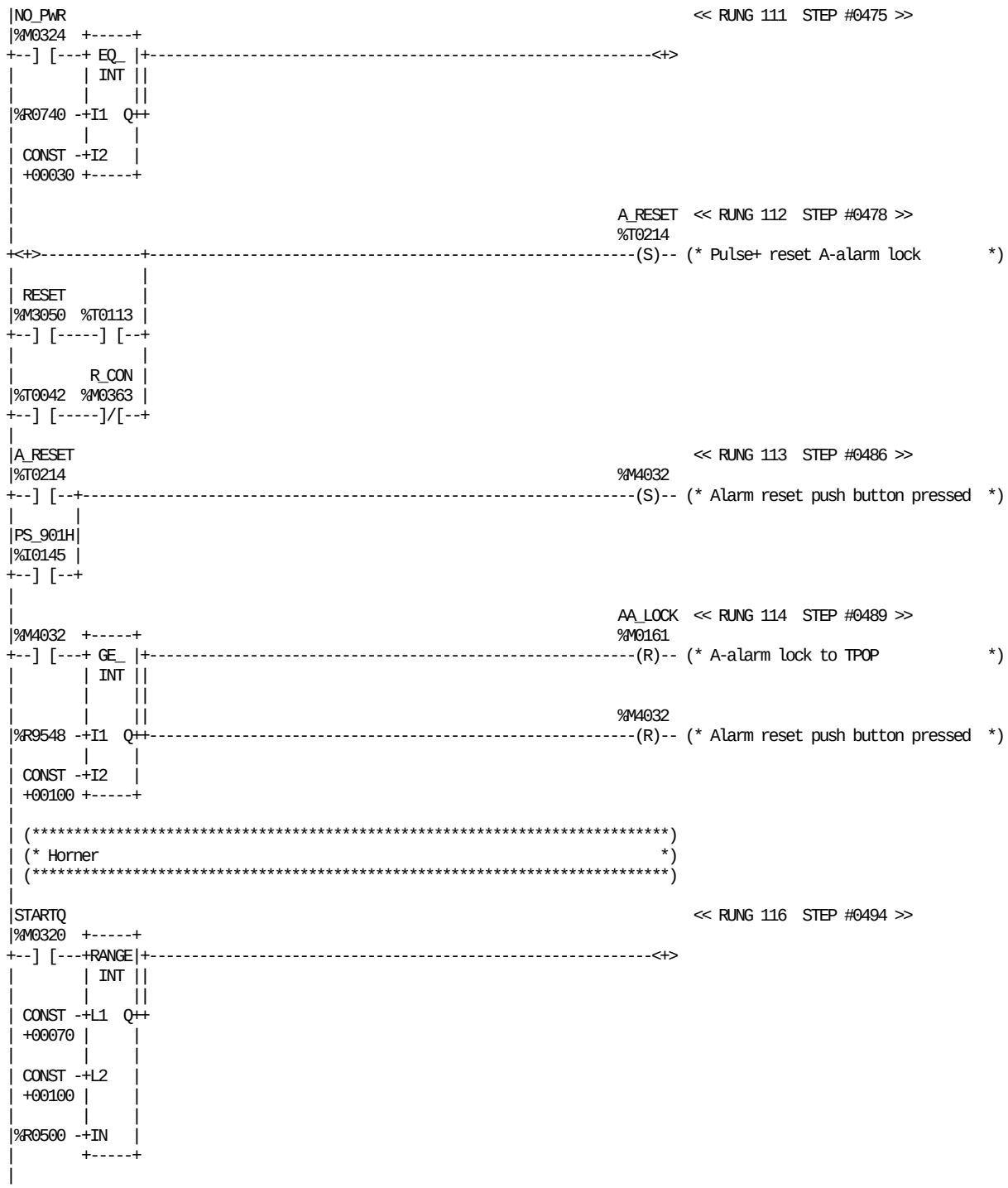

REFERENCE	NICKNAME	REFERENCE DESCRIPTION	REFERENCE	NICKNAME	REFERENCE DESCRIPTION
%M4032		Alarm reset push button pressed	%T0214	A_RESET	Pulse+ reset A-alarm lock
%T0042		P- yellow alarms	%M0324	NO_PWR	Power failure
%T0113		Pulse slow flash	%I0145	PS_901H	PLMS reset
%R0500		Start seq. for prod.	%M3050	RESET	Alarm reset from MMI
%R0740		Line L10 L11 not ok	%M0363	R_CON	Red lamp conditions
%R9548		Start motor or prod. interr.time	%M0320	STARTQ	Start sequenc
%M0161	AA_LOCK	A-alarm lock to TPOP			

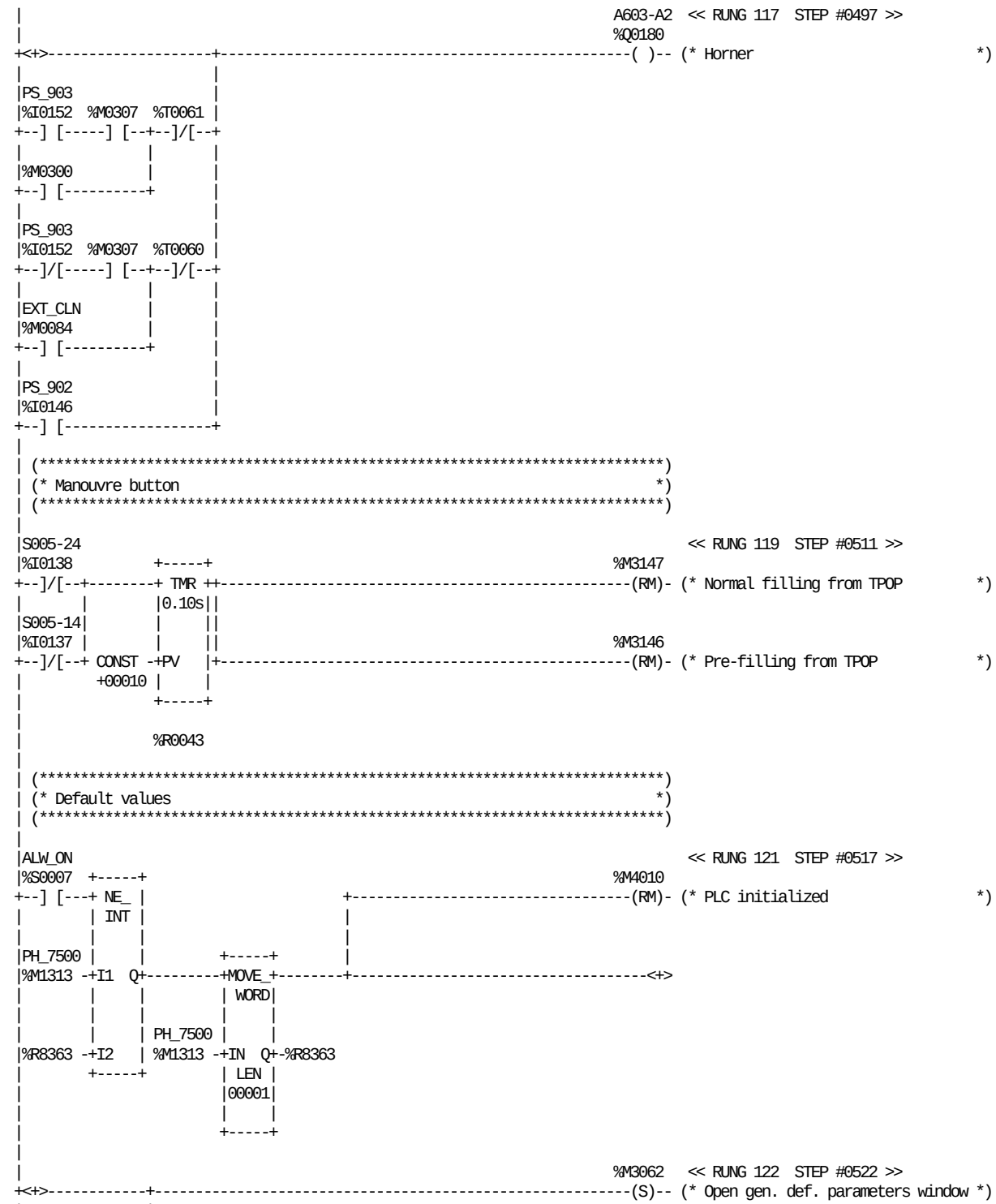

REFERENCE NICKNAME	REFERENCE DESCRIPTION	REFERENCE NICKNAME	REFERENCE DESCRIPTION
%M0300	Tube sealing going on	%Q0180 A603-A2	Horner
%M0307	Aux.output inching	%S0007 ALW_ON	
%M3062	Open gen. def. parameters window	%M0084 EXT_CLN	Machine in pos. extern. clean
%M3146	Pre-filling from TPOP	%S0001 FST_SCN	
%M3147	Normal filling from TPOP	%M1313 PH_7500	Speed at 7500 package hour
%M4010	PLC initialized	%I0146 PS_902	Lamp tests
%T0060	Start delay low speed	%I0152 PS_903	Selector switch
%T0061	Start delay high speed	%I0137 S005-14	FCS normal filling
%R0043	TPOP filling switch reset delay	%I0138 S005-24	FCS Pre-filling
%R8363	Volume set		

BLOCK: 37 TPOP/BEACON WARNING & ALARMS

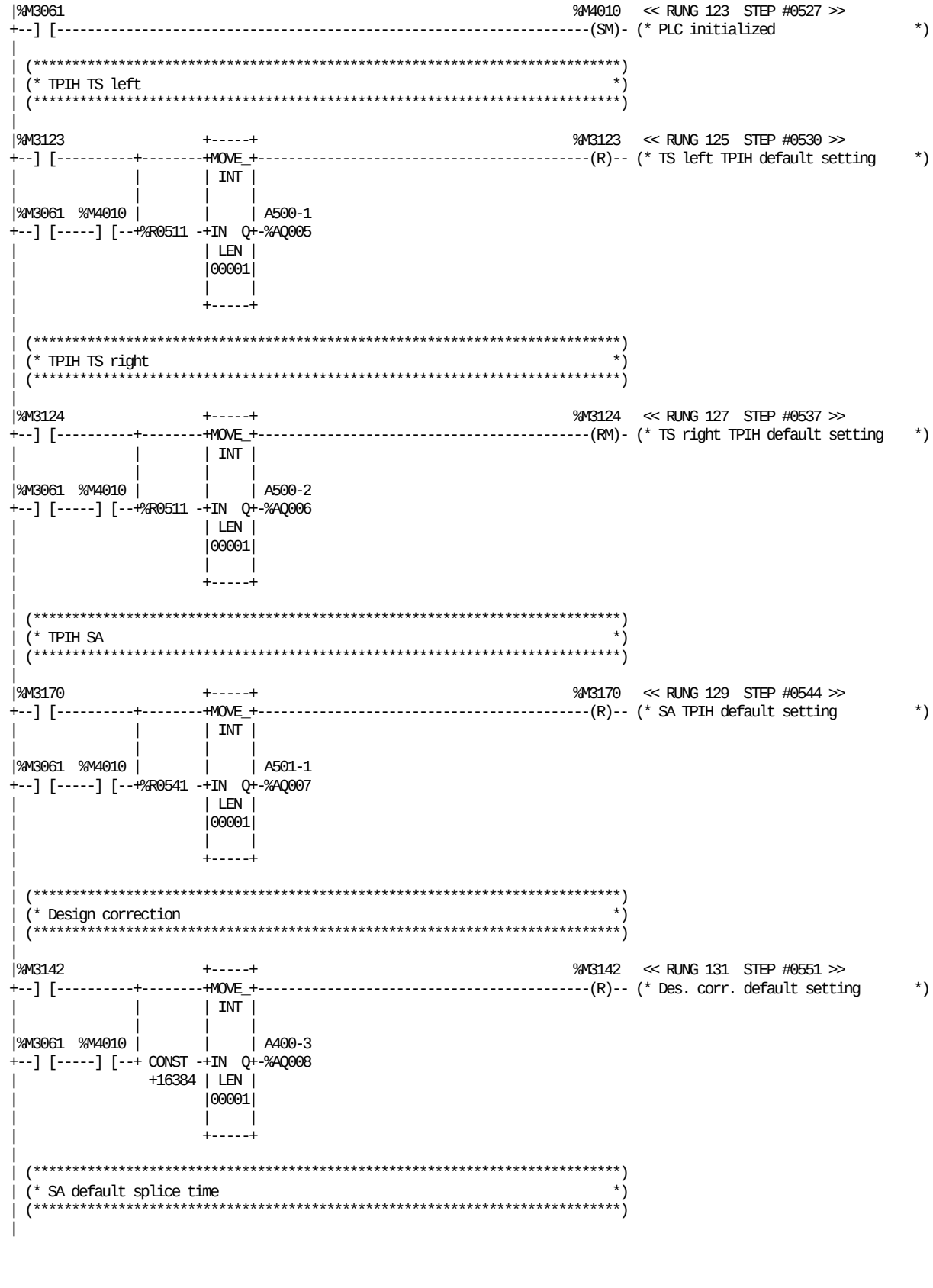

REFERENCE NICKNAME	REFERENCE DESCRIPTION	REFERENCE NICKNAME		REFERENCE DESCRIPTION
%M3061	General default push button	%R0511		TS TPIH default value
%M3123	TS left TPIH default setting	%R0541		SA TPIH default value
%M3124	TS right TPIH default setting	%AQ008	A400-3	Analog output design correction
%M3142	Des. corr. default setting	%AQ005	A500-1	Analog output TS TPIH left
%M3170	SA TPIH default setting	%AQ006	A500-2	Analog output TS TPIH right
%M4010	PLC initialized	%AQ007	A501-1	Analog output SA TPIH

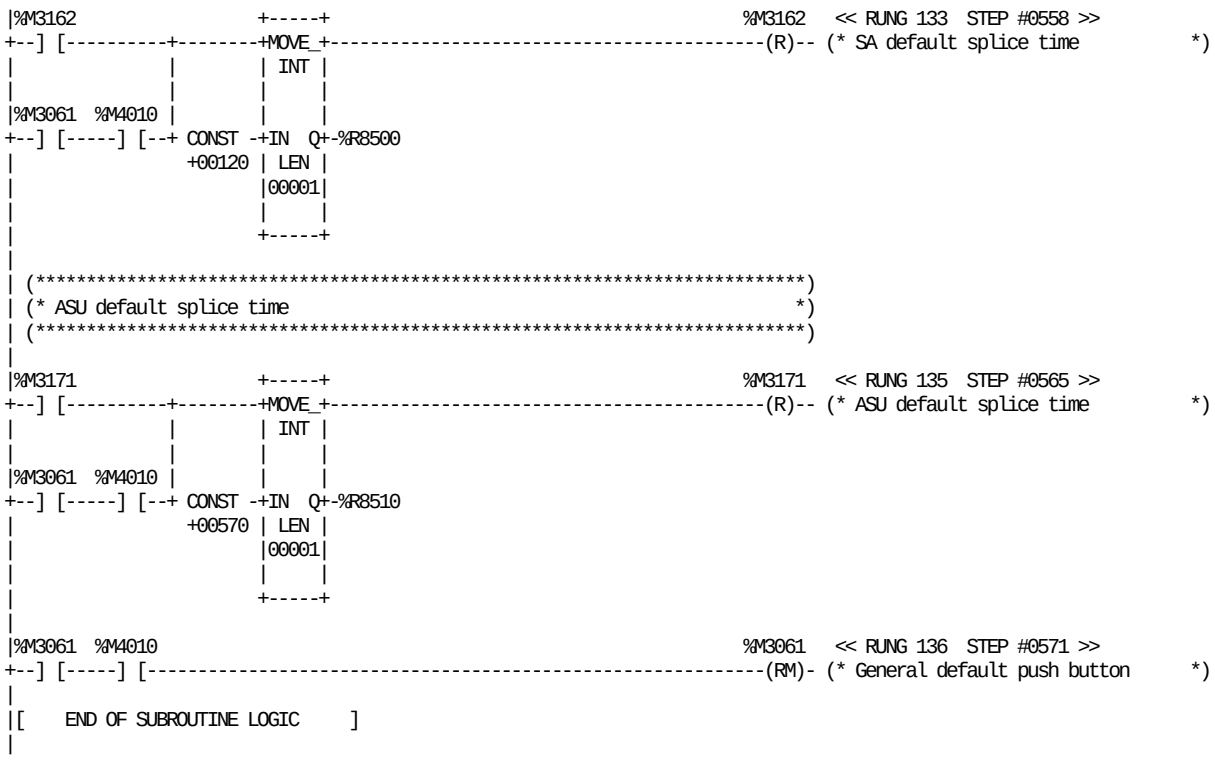

REFERENCE NICKNAME	REFERENCE DESCRIPTION	REFERENCE NICKNAME	REFERENCE DESCRIPTION
%M3061	General default push button	%M4010	PLC initialized
%M3162	SA default splice time	%R8500	SA splice time
%M3171	ASU default splice time	%R8510	ASU splice time

```
|[  START LD SUBROUTINE   BLK38   ]
|
|[     VARIABLE DECLARATIONS      ]
|
|[   START OF SUBROUTINE LOGIC    ]
|
| (*************************************************************************)
| (* Manual step down from production signal to TPOP                       *)
| (*************************************************************************)
|
|ALW_ON                                                          << RUNG 5  STEP #0003 >>
|%S0007  +-----+
+--] [---+MOVE_+-
|        | INT |
|        |     |
|        |     | MC_SPD
|%R0792 -+IN  Q+-%R8396
|        | LEN |
|        |00001|
|        |     |
|        +-----+
|
| (*************************************************************************)
| (* Counter number of packages in and out of the machine                  *)
| (*************************************************************************)
|
| POS00  G04-16   MB157                                    PKG_IN+  << RUNG 7  STEP #0006 >>
|%M0049  %Q0014  %I0177                                    %T0212
+--]/[--+--] [--+--] [-------------------------------------------------(^)-- (* Package in P+                  *)
|       |     |
|       |G04-08 |
|       |%Q0015 |
|       +--] [--+
|
|PKG_IN+                                                         << RUNG 8  STEP #0012 >>
|%T0212  +-----+
+--] [---+ ADD_+-
|        | INT |
|        |     |
|PKG_IN  |     | PKG_IN
|%R8371 -+I1  Q+-%R8371
|        |     |
| CONST -+I2   |
| +00001 +-----+
|
|PKG_IN+                                                         << RUNG 9  STEP #0014 >>
|%T0212  +-----+
+--] [---+ EQ_ |
|        | INT |
|        |     |
|PKG_IN  |     |        +-----+
|%R8371 -+I1  Q+--------+MOVE_+-
|        |     |        | INT |
|        |     |        |     |
|        |     |        |     | PKG_IN
| CONST -+I2   |  CONST -+IN  Q+-%R8371
| +32767 +-----+  +00000 | LEN |
|                        |00001|
|                        |     |
|                        +-----+
|
```

REFERENCE	NICKNAME	REFERENCE DESCRIPTION	REFERENCE	NICKNAME	REFERENCE DESCRIPTION
%R0792		Synchronization FF speed	%R8396	MC_SPD	Machine speed
%S0007	ALW_ON		%R8371	PKG_IN	Package material in
%Q0015	G04-08	Main motor, high speed	%T0212	PKG_IN+	Package in P+
%Q0014	G04-16	Main motor, low speed	%M0049	POS00	Ladder pos 00
%I0177	MB157	Crease wheel			

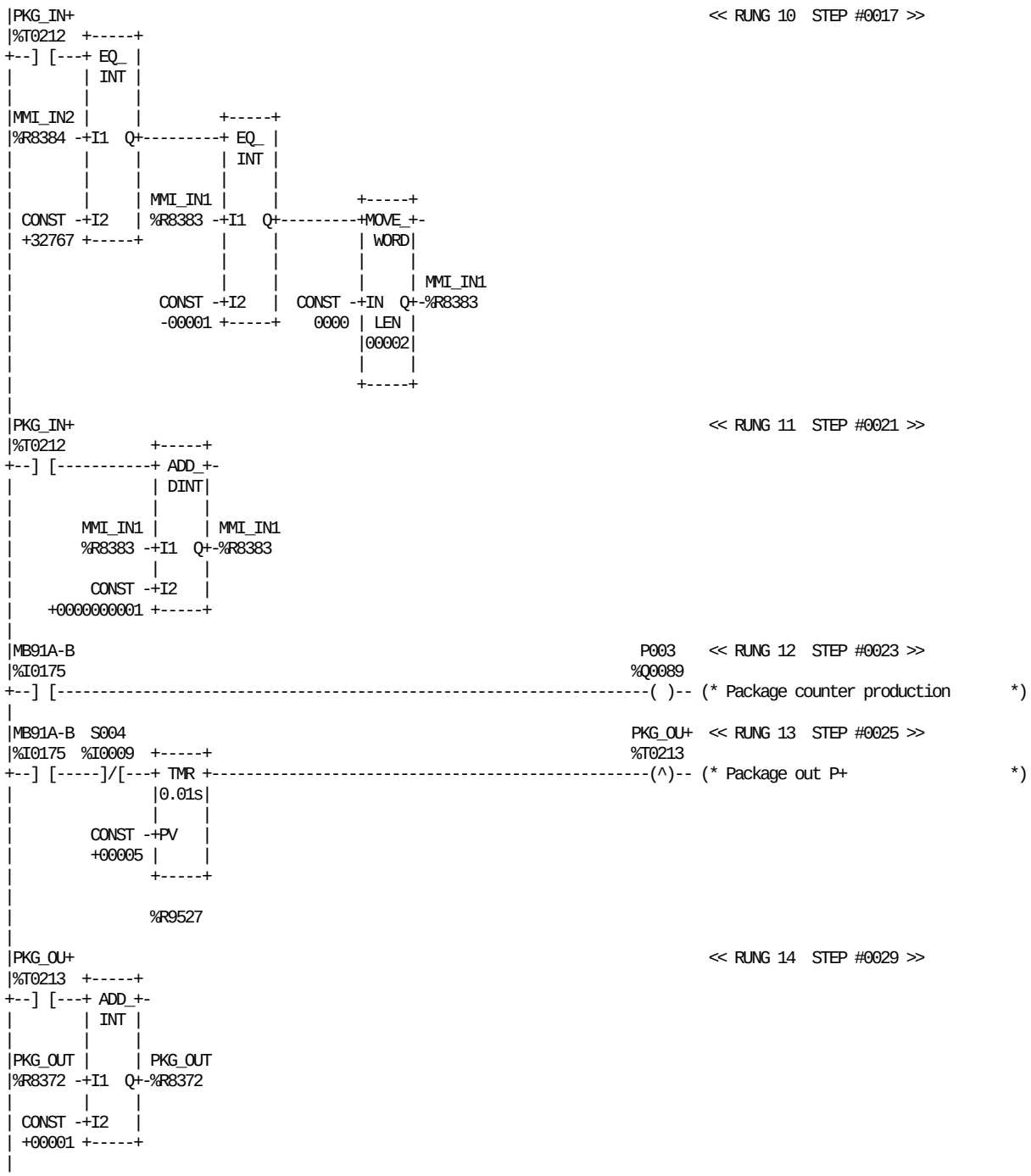

REFERENCE	NICKNAME	REFERENCE DESCRIPTION	REFERENCE	NICKNAME	REFERENCE DESCRIPTION
%R9527		Photocells filter	%T0212	PKG_IN+	Package in P+
%I0175	MB91A-B	Package counter after FF	%T0213	PKG_OU+	Package out P+
%R8383	MMI_IN1	1^Packs IN to MMI	%R8372	PKG_OUT	Package material out
%R8384	MMI_IN2	2^Packs IN to MMI	%I0009	S004	Service switch
%Q0089	P003	Package counter production			

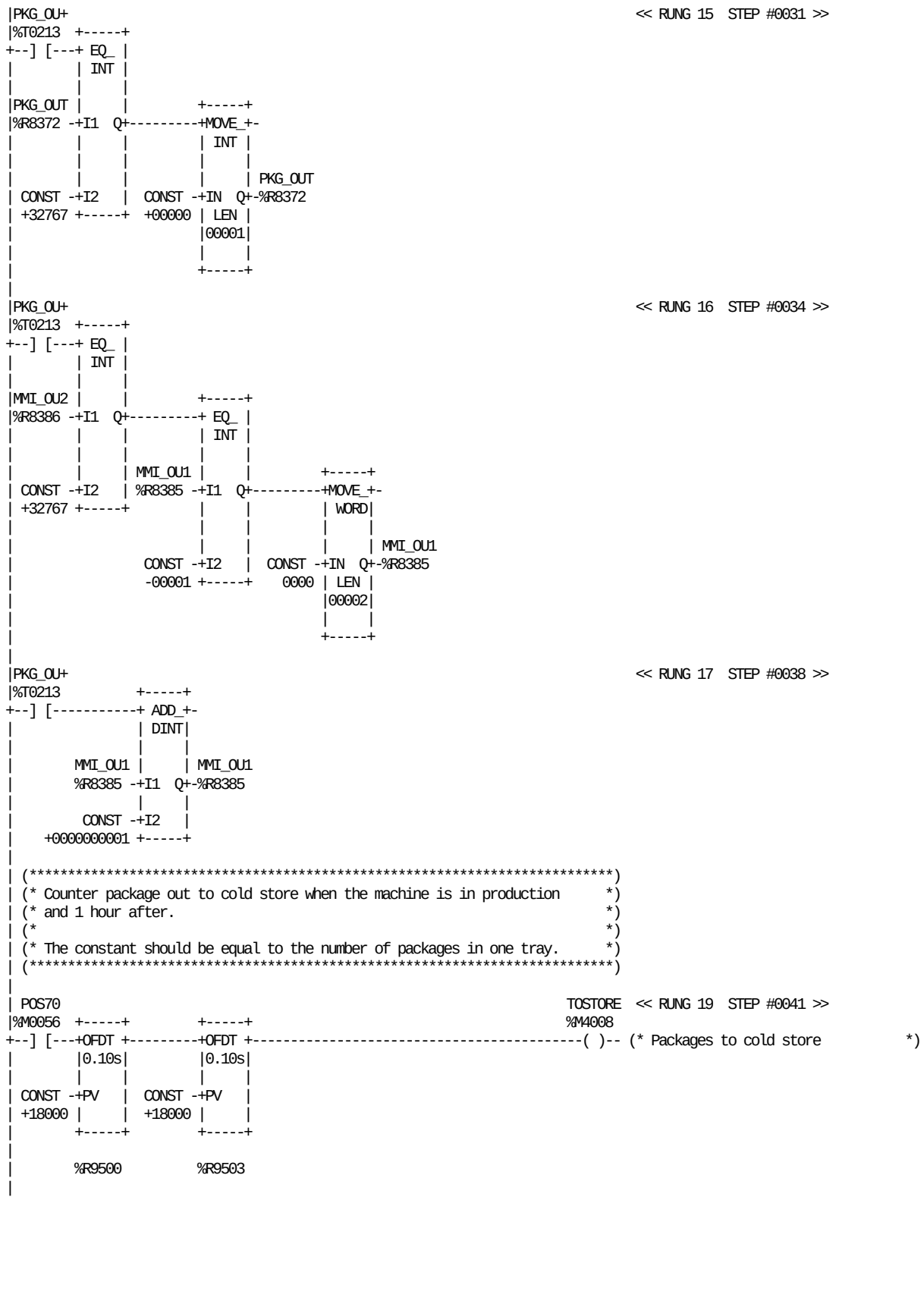

REFERENCE	NICKNAME	REFERENCE DESCRIPTION	REFERENCE	NICKNAME	REFERENCE DESCRIPTION
%R9500		Delay, 1 pkg.to cold store	%T0213	PKG_OU+	Package out P+
%R9503		Delay, 2 pkg.to cold store	%R8372	PKG_OUT	Package material out
%R8385	MMI_OU1	1^Packs OUT to MMI	%M0056	POS70	Machine ladder pos 70
%R8386	MMI_OU2	2^Packs OUT to MMI	%M4008	TOSTORE	Packages to cold store

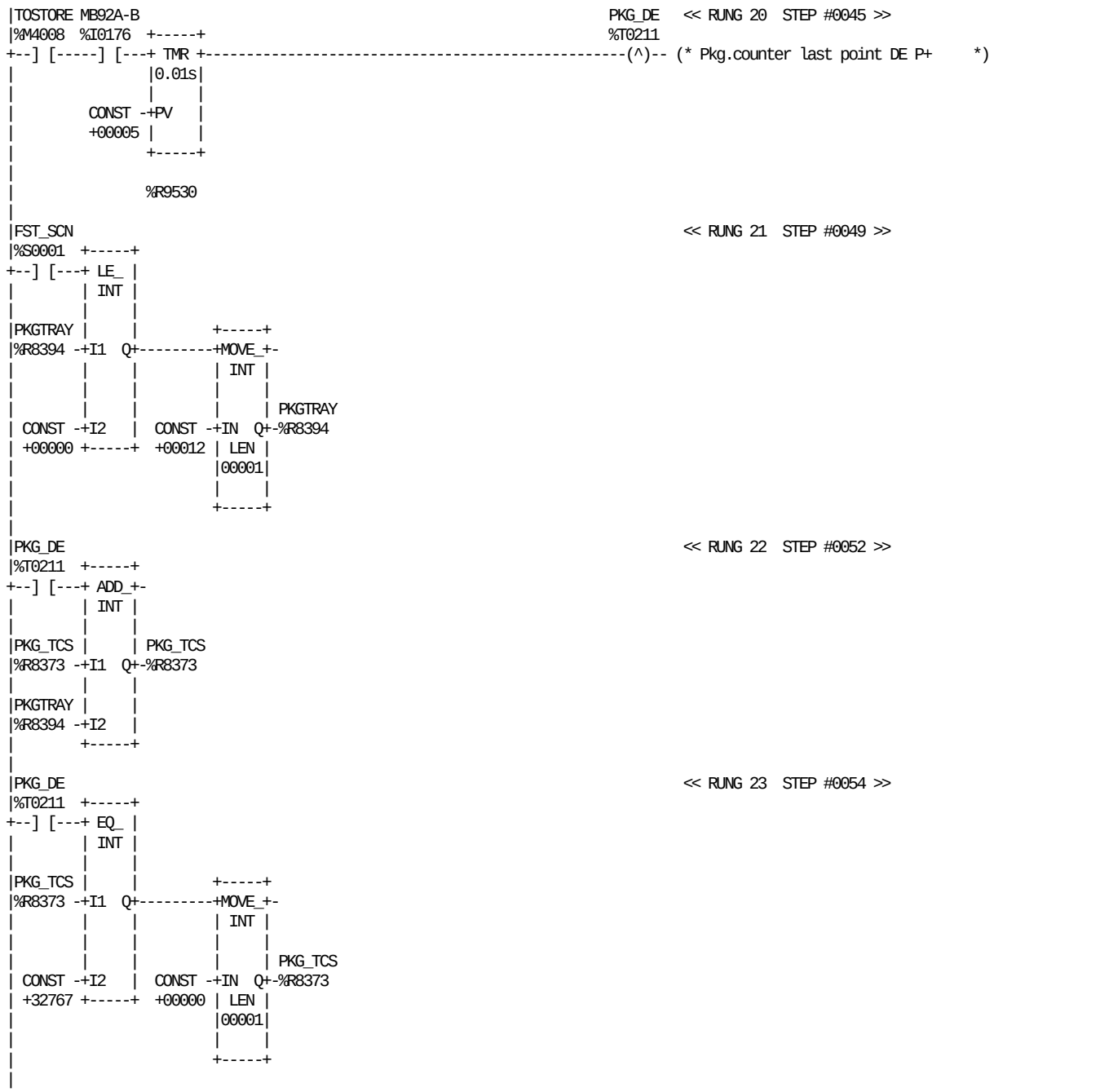

REFERENCE	NICKNAME	REFERENCE DESCRIPTION	REFERENCE	NICKNAME	REFERENCE DESCRIPTION
%R9530		Box filter	%T0211	PKG_DE	Pkg.counter last point DE P+
%S0001	FST_SCN		%R8373	PKG_TCS	Packages to coldstore
%I0176	MB92A-B	Package counter last point DE	%M4008	TOSTORE	Packages to cold store
%R8394	PKGTRAY	Pakages per tray			

BLOCK: 38 PLMS COMMUNICATION

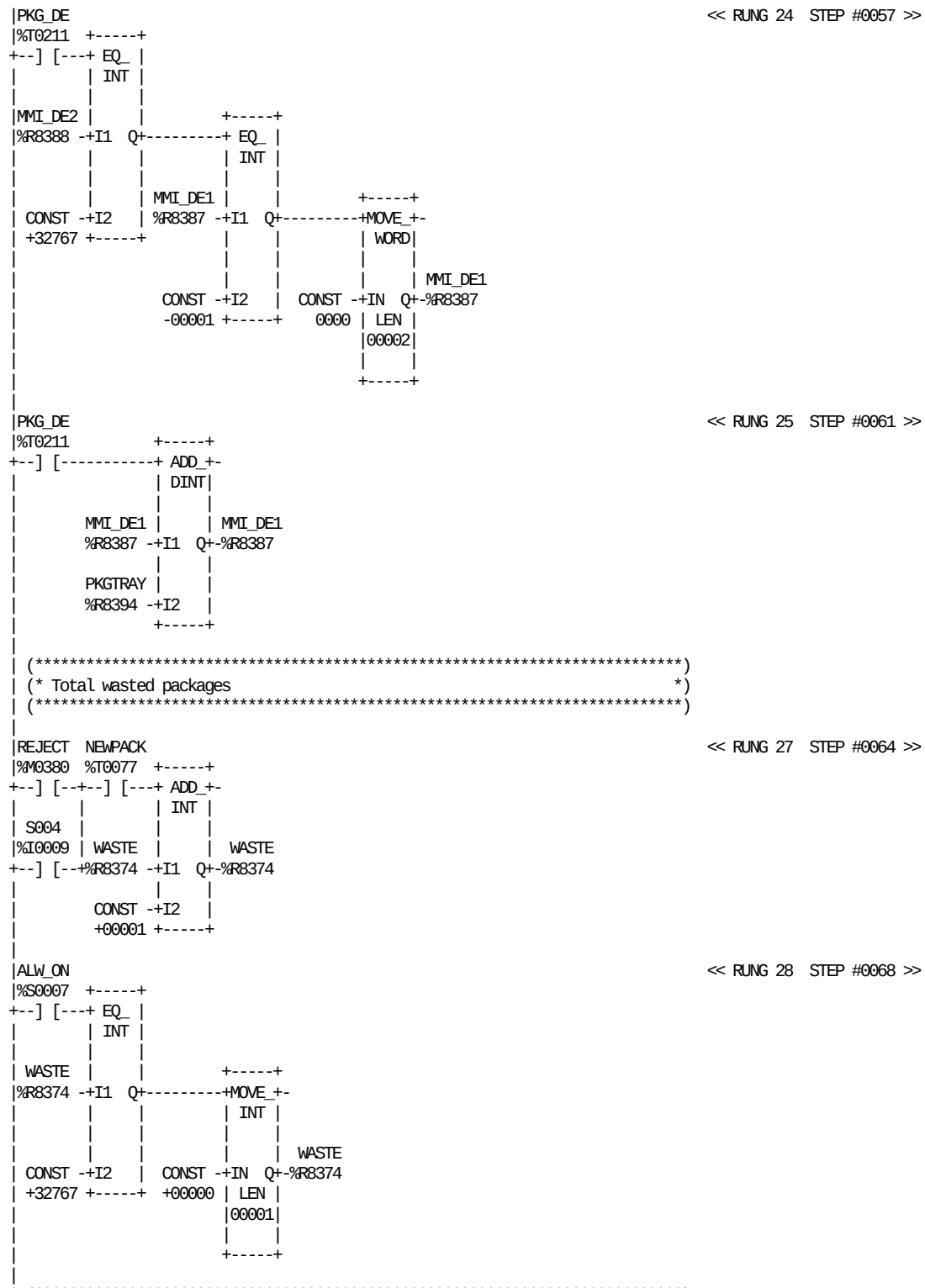

REFERENCE	NICKNAME	REFERENCE DESCRIPTION	REFERENCE	NICKNAME	REFERENCE DESCRIPTION
%S0007	ALW_ON		%T0211	PKG_DE	Pkg.counter last point DE P+
%R8387	MMI_DE1	1^Packs last point DE to MMI	%M0380	REJECT	Package to be ejected
%R8388	MMI_DE2	2^Packs last point DE to MMI	%I0009	S004	Service switch
%T0077	NEWPACK	New package detected	%R8374	WASTE	Waste, Total Tba/19
%R8394	PKGTRAY	Pakages per tray			

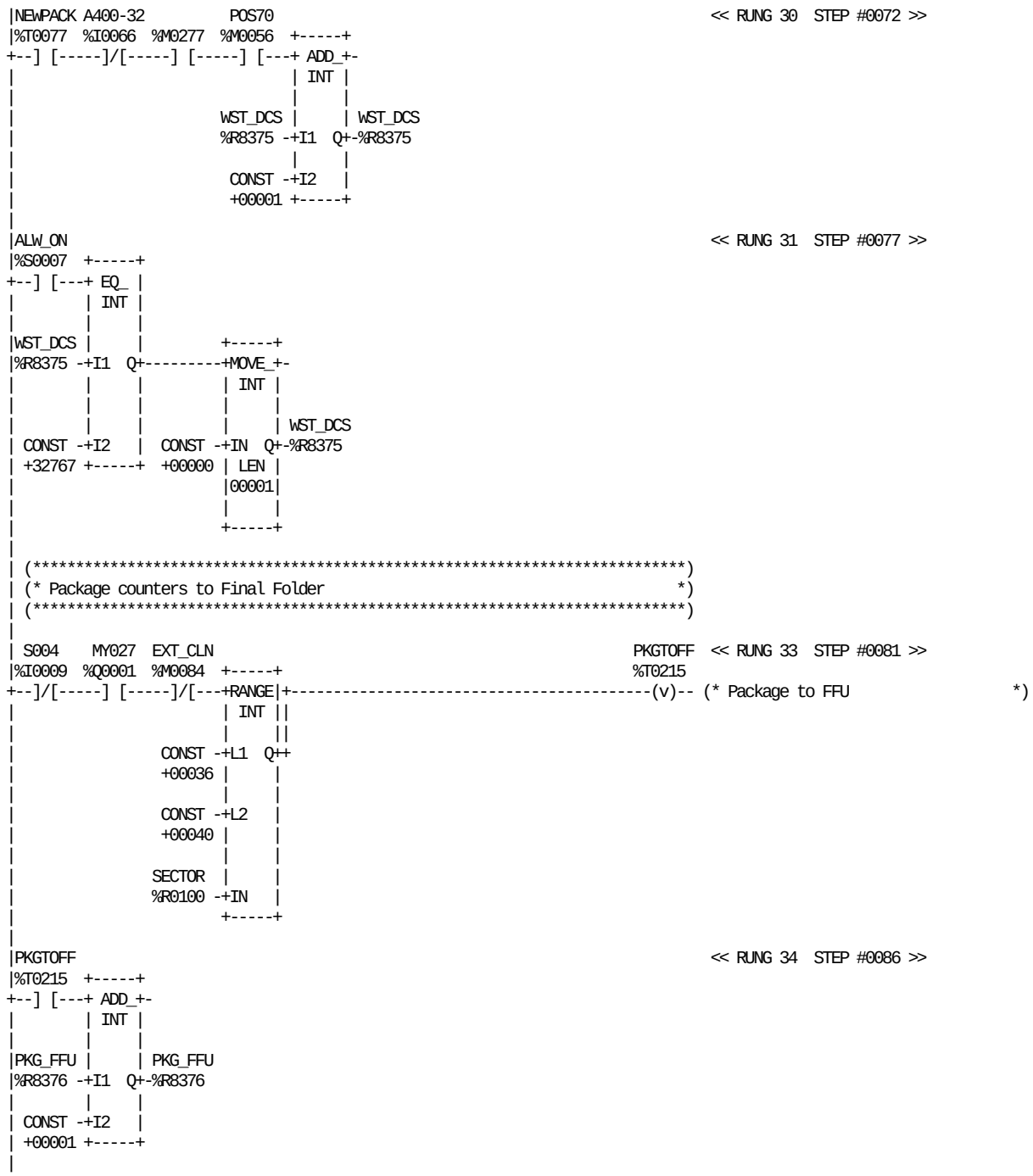

REFERENCE	NICKNAME	REFERENCE DESCRIPTION	REFERENCE	NICKNAME	REFERENCE DESCRIPTION
%M0277		Auxiliary memory FCS filling OK	%T0215	PKGTOFF	Package to FFU
%I0066	A400-32	Design ok	%R8376	PKG_FFU	Package into Final Folder
%S0007	ALW_ON		%M0056	POS70	Machine ladder pos 70
%M0084	EXT_CLN	Machine in pos. extern. clean	%I0009	S004	Service switch
%Q0001	MY027	Drop chute	%R0100	SECTOR	Angle sector 0-127
%T0077	NEWPACK	New package detected	%R8375	WST_DCS	Waste, Design correction system

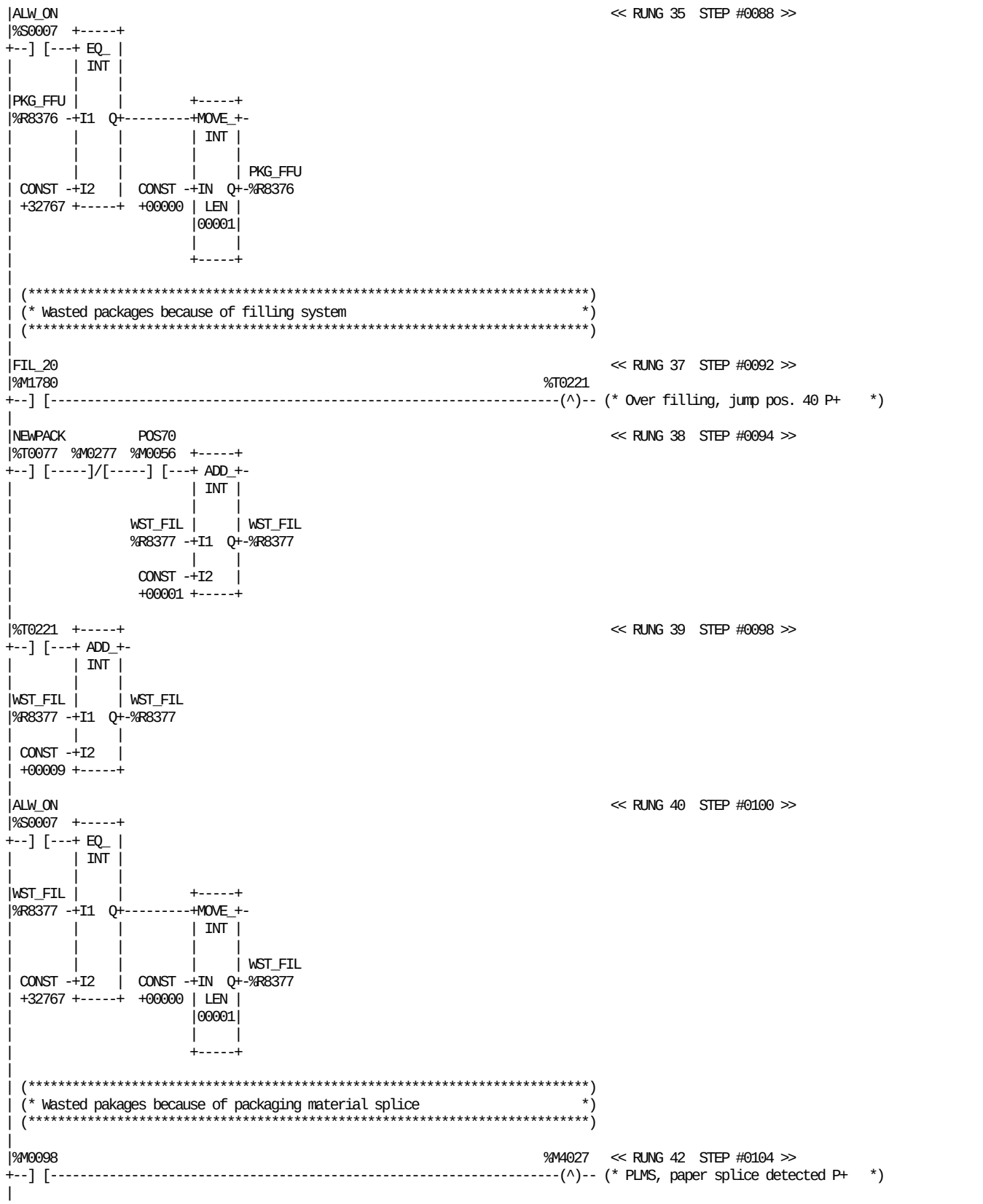

REFERENCE	NICKNAME	REFERENCE DESCRIPTION	REFERENCE	NICKNAME	REFERENCE DESCRIPTION
%M0098		Paper splice detected	%M1780	FIL_20	Overfilling alarm
%M0277		Auxiliary memory FCS filling OK	%T0077	NEWPACK	New package detected
%M4027		PLMS, paper splice detected P+	%R8376	PKG_FFU	Package into Final Folder
%T0221		Over filling, jump pos. 40 P+	%M0056	POS70	Machine ladder pos 70
%S0007	ALW_ON		%R8377	WST_FIL	Waste, Filling system

BLOCK: 38 PLMS COMMUNICATION

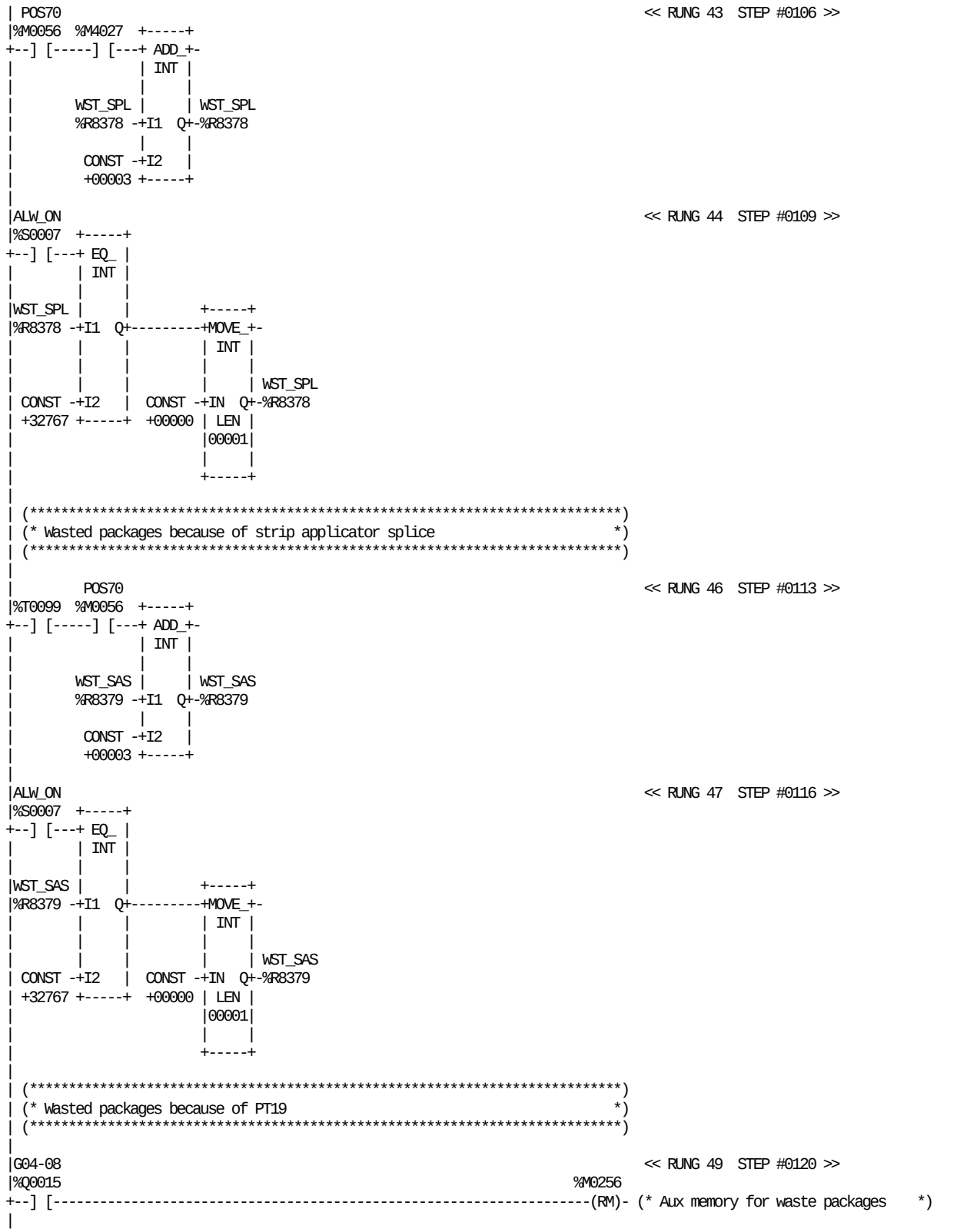

REFERENCE	NICKNAME	REFERENCE DESCRIPTION	REFERENCE	NICKNAME	REFERENCE DESCRIPTION
%M0256		Aux memory for waste packages	%Q0015	G04-08	Main motor, high speed
%M4027		PLMS, paper splice detected P+	%M0056	POS70	Machine ladder pos 70
%T0099		Start strip splice	%R8379	WST_SAS	Waste, Strip Applicator splice
%S0007	ALW_ON		%R8378	WST_SPL	Waste, Packaging material splice

BLOCK: 38 PLMS COMMUNICATION

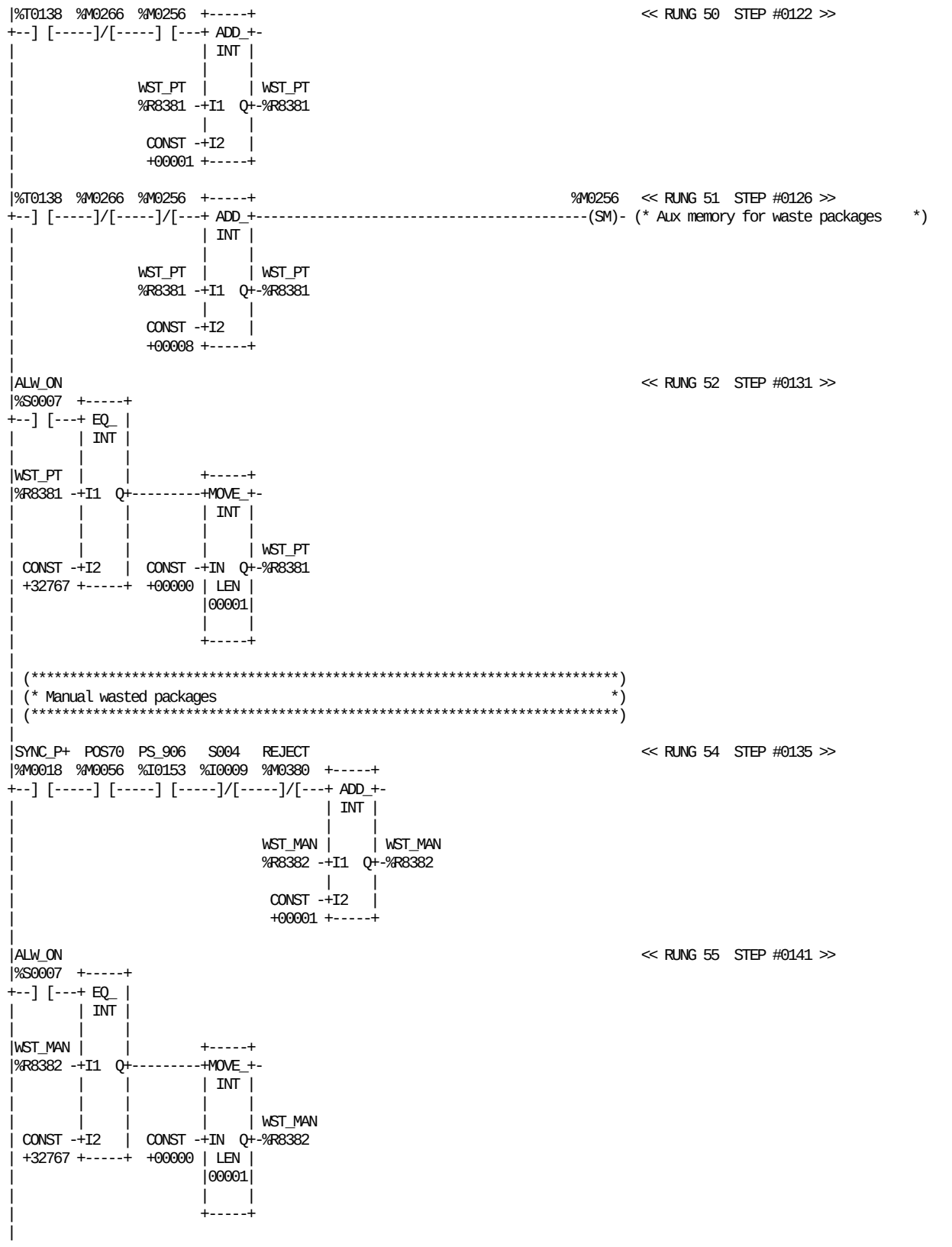

REFERENCE	NICKNAME	REFERENCE DESCRIPTION	REFERENCE	NICKNAME	REFERENCE DESCRIPTION
%M0256		Aux memory for waste packages	%M0380	REJECT	Package to be ejected
%M0266		PT stops in sequence	%I0009	S004	Service switch
%T0138		PT ON P+	%M0018	SYNC_P+	Drop chute out syncro. value P+
%S0007	ALW_ON		%R8382	WST_MAN	Waste, Manually
%M0056	POS70	Machine ladder pos 70	%R8381	WST_PT	Waste, PT19
%I0153	PS_906	Drop chute off			

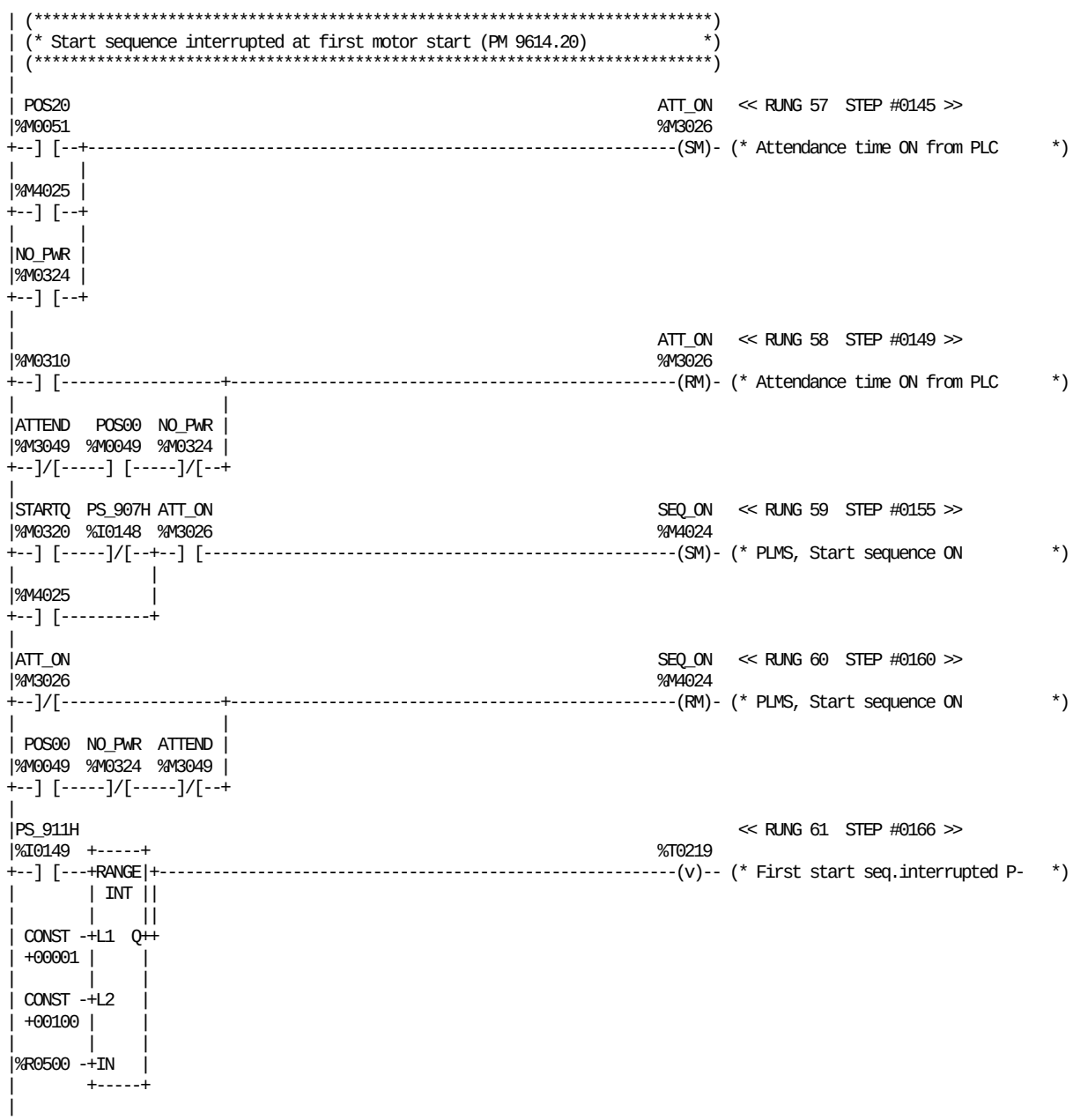

REFERENCE	NICKNAME	REFERENCE DESCRIPTION	REFERENCE	NICKNAME	REFERENCE DESCRIPTION
%M0310		Aux memory machine in production	%M0049	POS00	Ladder pos 00
%M4025		Keep phase memory	%M0051	POS20	Ladder pos 20
%T0219		First start seq.interrupted P-	%I0148	PS_907H	Inching
%R0500		Start seq. for prod.	%I0149	PS_911H	Step up
%M3049	ATTEND	PLMS, Attendance time ON by DDE	%M4024	SEQ_ON	PLMS, Start sequence ON
%M3026	ATT_ON	Attendance time ON from PLC	%M0320	STARTQ	Start sequenc
%M0324	NO_PWR	Power failure			

BLOCK: 38 PLMS COMMUNICATION

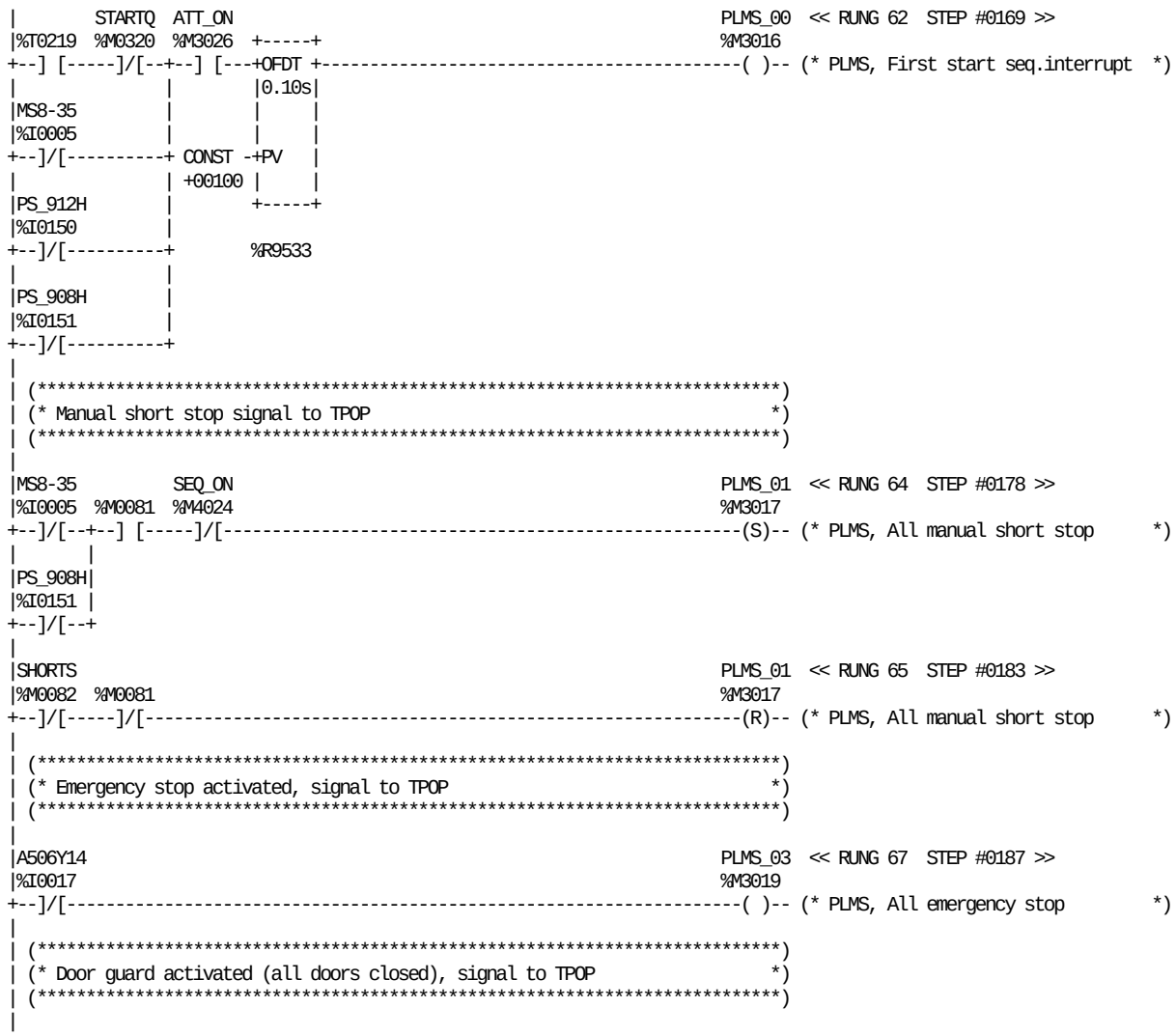

REFERENCE	NICKNAME	REFERENCE DESCRIPTION	REFERENCE	NICKNAME	REFERENCE DESCRIPTION
%M0081		Short stop condit.	%M3017	PLMS_01	PLMS, All manual short stop
%T0219		First start seq.interrupted P-	%M3019	PLMS_03	PLMS, All emergency stop
%R9533		First start sequence interrupted	%I0151	PS_908H	Short stop push buttom
%I0017	A506Y14	Emergency stop safety module	%I0150	PS_912H	Step down
%M3026	ATT_ON	Attendance time ON from PLC	%M4024	SEQ_ON	PLMS, Start sequence ON
%I0005	MS8-35	Short stop push buttons	%M0082	SHORTS	Machine pos. short stop
%M3016	PLMS_00	PLMS, First start seq.interrupt	%M0320	STARTQ	Start sequenc

BLOCK: 38 PLMS COMMUNICATION

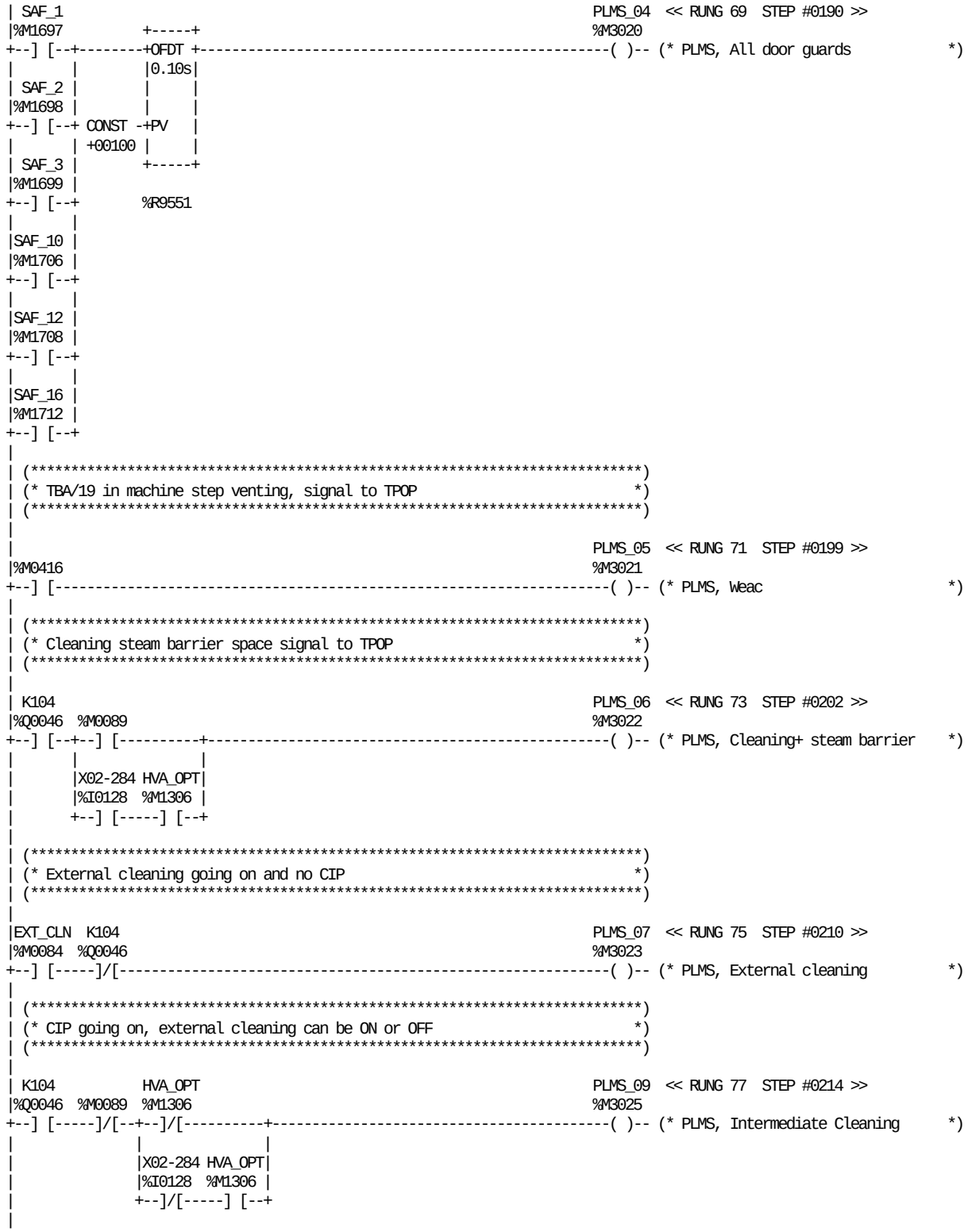

REFERENCE	NICKNAME	REFERENCE DESCRIPTION	REFERENCE	NICKNAME	REFERENCE DESCRIPTION
%M0089		Clean steam barrier space	%M3023	PLMS_07	PLMS, External cleaning
%M0416		WEAC stop on	%M3025	PLMS_09	PLMS, Intermediate Cleaning
%R9551		PLMS, all door guards, time	%M1697	SAF_1	Crease wheel cover alarm
%M0084	EXT_CLN	Machine in pos. extern. clean	%M1706	SAF_10	Door guard ASU
%M1306	HVA_OPT	PLMS, Option H.V.A.	%M1708	SAF_12	Pulltab door guard
%Q0046	K104	Signal to cip	%M1712	SAF_16	FF door alarm
%M3020	PLMS_04	PLMS, All door guards	%M1698	SAF_2	MSA door unit
%M3021	PLMS_05	PLMS, Weac	%M1699	SAF_3	Tower doors
%M3022	PLMS_06	PLMS, Cleaning+ steam barrier	%I0128	X02-284	Signal from CIP cleaning ON

```
| (*************************************************************************)
| (* Preparation phase and Production phase (PM9614.20)                    *)
| (*************************************************************************)
|
|PLMS_12                                                          << RUNG 79  STEP #0223 >>
|%M3028                                                    %M4025
+--] [-----------------------------------------------------------(R)-- (* Keep phase memory          *)
|
|PLMS_12 COM_FLT                                                  << RUNG 80  STEP #0225 >>
|%M3028  %M4002                                            %M4025
+--] [-----] [-----------------------------------------------------(S)-- (* Keep phase memory          *)
|
|SEQ_ON  ATT_ON  PLMS_12                                   PLMS_11  << RUNG 81  STEP #0228 >>
|%M4024  %M3026  %M3028                                    %M3027
+--]/[-----] [-----]/[-------------------------------------------------( )-- (* PLMS. Preparation phase   *)
|
|SEQ_ON                                                    PLMS_12  << RUNG 82  STEP #0232 >>
|%M4024                                                    %M3028
+--] [----------+-------------------------------------------------------(SM)- (* PLMS, Production phase    *)
|               |
|       ATT_ON  |
|%M4025  %M3026 |
+--] [-----]/[--+
|
| POS00  NO_PWR  ATTEND                                    PLMS_12  << RUNG 83  STEP #0237 >>
|%M0049  %M0324  %M3049  %M4025                            %M3028
+--] [-----]/[--+--]/[-----]/[-----------------------------------------(RM)- (* PLMS, Production phase    *)
|               |
| POS80         |
|%M0057         |
+--] [----------+
|
|       PLMS_12                                            PRO_END  << RUNG 84  STEP #0243 >>
|%M0416  %M3028                                            %T0217
+--] [-----] [-----------------------------------------------------(^)-- (* Production ended P+        *)
|
| POS00          PLMS_12                                   PR_END   << RUNG 85  STEP #0246 >>
|%M0049  %M0416  %M3028                                    %T0218
+--] [-----]/[-----] [-------------------------------------------------(^)-- (* Production ended from pos00 P+  *)
|
|PRO_END                                                   PLMS_14  << RUNG 86  STEP #0250 >>
|%T0217  +-----+                                           %M3030
+--] [---+OFDT +-------------------------------------------------------( )-- (* PLMS, Production end from weac  *)
|        |0.10s|
|        |     |
| CONST -+PV   |
| +00100 |     |
|        +-----+
|
|        %R9536
|
|PR_END                                                    PLMS_13  << RUNG 87  STEP #0253 >>
|%T0218  +-----+                                           %M3029
+--] [---+OFDT +-------------------------------------------------------( )-- (* PLMS, Production end from pos00  *)
|        |0.10s|
|        |     |
| CONST -+PV   |
| +00100 |     |
|        +-----+
|
|        %R9539
|
| (*************************************************************************)
| (* Strip Splice signal to TPOP                                           *)
| (*************************************************************************)
|
```

REFERENCE	NICKNAME	REFERENCE DESCRIPTION	REFERENCE	NICKNAME	REFERENCE DESCRIPTION
%M0416		WEAC stop on	%M3028	PLMS_12	PLMS, Production phase
%M4025		Keep phase memory	%M3029	PLMS_13	PLMS, Production end from pos00
%R9536		Production end signal to PLMS	%M3030	PLMS_14	PLMS, Production end from weac
%R9539		Production end from 0 to PLMS	%M0049	POS00	Ladder pos 00
%M3049	ATTEND	PLMS, Attendance time ON by DDE	%M0057	POS80	Machine ladder pos 80
%M3026	ATT_ON	Attendance time ON from PLC	%T0217	PRO_END	Production ended P+
%M4002	COM_FLT	Communication fault	%T0218	PR_END	Production ended from pos00 P+
%M0324	NO_PWR	Power failure	%M4024	SEQ_ON	PLMS, Start sequence ON
%M3027	PLMS_11	PLMS. Preparation phase			

```
|       MSA_27                                                          PLMS_15  << RUNG 89  STEP #0257 >>
|%M0076  %M1819                                                        %M3031
+--] [-----]/[-----------------------------------------------------------( )-- (* PLMS, Strip Splice              *)
|
| (*************************************************************************)
| (* Paper splice signal to TPOP                                         *)
| (*************************************************************************)
|
|ASU_ON                                                                 PLMS_16  << RUNG 91  STEP #0261 >>
|%M0190                                                                 %M3032
+--] [-----------------------------------------------------------------( )-- (* PLMS, Packaging material splice  *)
|
| (*************************************************************************)
| (* Paper splice detected signal to TPOP                                 *)
| (*************************************************************************)
|
|                                                                       PLMS_17  << RUNG 93  STEP #0264 >>
|%T0032  +-----+                                                        %M3033
+--] [---+OFDT +-----------------------------------------------------------( )-- (* PLMS, pack. mat. splice detected *)
|        |0.10s|
|        |     |
| CONST -+PV   |
| +00100 |     |
|        +-----+
|
|        %R9542
|
| (*************************************************************************)
| (* Manual step down from production signal to TPOP                       *)
| (*************************************************************************)
|
|%M0093                                                                 %M4029   << RUNG 95  STEP #0268 >>
+--] [-----------------------------------------------------------------(S)-- (* PLMS, Manual filling off status  *)
|
|       PS_911H                                                         PLMS_18  << RUNG 96  STEP #0270 >>
|%M4029  %I0149                                                         %M3034
+--] [-----] [-----------------------------------------------------------(S)-- (* PLMS, Manual filling off        *)
|
|%M4029  +-----+                                                                << RUNG 97  STEP #0273 >>
+--] [---+ TMR +-------------------------------------------------------------<+>
|        |0.10s|
|        |     |
| CONST -+PV   |
| +00070 |     |
|        +-----+
|
|        %R9545
|
|                        PLMS_18                                        PLMS_02  << RUNG 98  STEP #0276 >>
|                        %M3034                                         %M3018
+<+>--------------------+--]/[-----------------------------------------(S)-- (* PLMS, Step out from production   *)
|                       |
| POS80          PS_911H|
|%M0057  %M4028  %I0149 |
+--] [-----] [-----] [--+
|                       |
|                PS_912H|
|%M4028  %M1505  %I0150 |
+--] [-----]/[-----]/[--+
|
|%M4029  %M1505                                                         %M4029   << RUNG 99  STEP #0287 >>
+--] [-----]/[-----------------------------------------------------------(R)-- (* PLMS, Manual filling off status  *)
|
```

REFERENCE	NICKNAME	REFERENCE DESCRIPTION	REFERENCE	NICKNAME	REFERENCE DESCRIPTION
%M0076		Strip splice going on	%M1819	MSA_27	Low strip supply
%M0093		Manual stop filling	%M3018	PLMS_02	PLMS, Step out from production
%M1505		PLMS, Motor start	%M3031	PLMS_15	PLMS, Strip Splice
%M4028		Start motor or prod. interr.	%M3032	PLMS_16	PLMS, Packaging material splice
%M4029		PLMS, Manual filling off status	%M3033	PLMS_17	PLMS, pack. mat. splice detected
%T0032		Paper splice P-	%M3034	PLMS_18	PLMS, Manual filling off
%R9542		Delay pack. mat. splice detected	%M0057	POS80	Machine ladder pos 80
%R9545		Delay, manual filling off	%I0149	PS_911H	Step up
%M0190	ASU_ON	ASU splice sequence on	%I0150	PS_912H	Step down

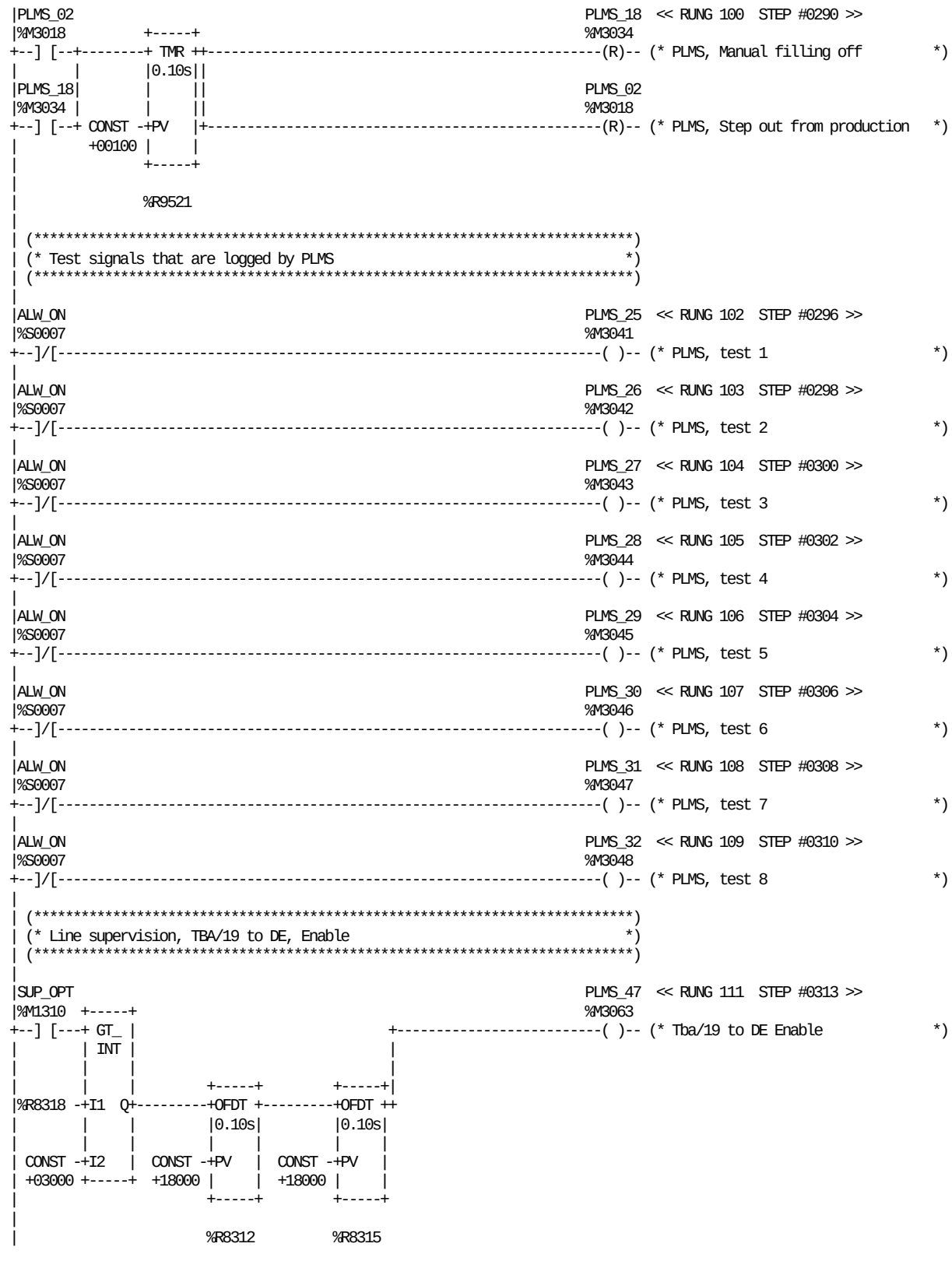

REFERENCE	NICKNAME	REFERENCE DESCRIPTION
%R8312		1st delay to DE enable
%R8315		2nd delay to DE enable
%R8318		Communication ON after 2 min.
%R9521		Delay, Manual fill. off/step out
%S0007	ALW_ON	
%M3018	PLMS_02	PLMS, Step out from production
%M3034	PLMS_18	PLMS, Manual filling off
%M3041	PLMS_25	PLMS, test 1
%M3042	PLMS_26	PLMS, test 2
%M3043	PLMS_27	PLMS, test 3
%M3044	PLMS_28	PLMS, test 4
%M3045	PLMS_29	PLMS, test 5
%M3046	PLMS_30	PLMS, test 6
%M3047	PLMS_31	PLMS, test 7
%M3048	PLMS_32	PLMS, test 8
%M3063	PLMS_47	Tba/19 to DE Enable
%M1310	SUP_OPT	PLMS, Option Line Supervision

```
| (*************************************************************************)
| (* DE communication                                                      *)
| (*************************************************************************)
|
|PLMS_47                                                    PLMS_48  << RUNG 113  STEP #0319 >>
|%M3063  +-----+                                           %M3064
+--]/[---+ TMR +-----------------------------------------------(R)-- (* DE Communication signal         *)
|        |0.10s|
|        |     |
| CONST -+PV   |
| +00600 |     |
|        +-----+
|
|        %R8303
|
|SUP_OPT POS2080                                            PLMS_48  << RUNG 114  STEP #0322 >>
|%M1310  %M0067  +-----+                                    %M3064
+--] [-----] [---+ TMR +-----------------------------------------------(S)-- (* DE Communication signal         *)
|                |0.10s|
|                |     |
|         CONST -+PV   |
|         +01200 |     |
|                +-----+
|
|                %R8318
|
| (*************************************************************************)
| (* Watchdog logic GEF-TPOP                                               *)
| (*************************************************************************)
|
|PLC_WD                                                     TPOP_WD  << RUNG 116  STEP #0327 >>
|%M3053                                                     %M3052
+--]/[-------------------------------------------------------------------( )-- (* Watch Dog to TPOP              *)
|
| (*************************************************************************)
| (* Watchdog for TPOP communication supervisor                           *)
| (*************************************************************************)
|
|PLC_WD                                                      WD=0    << RUNG 118  STEP #0330 >>
|%M3053  +-----+                                            %M4004
+--]/[---+ TMR +-----------------------------------------------( )-- (* Watchdog = 0                    *)
|        |0.10s|
|        |     |
| CONST -+PV   |
| +00200 |     |
|        +-----+
|
|        %R9506
|
|PLC_WD                                                      WD=1    << RUNG 119  STEP #0333 >>
|%M3053  +-----+                                            %M4005
+--] [---+ TMR +-----------------------------------------------( )-- (* Watchdog = 1                    *)
|        |0.10s|
|        |     |
| CONST -+PV   |
| +00200 |     |
|        +-----+
|
|        %R9512
|
```

REFERENCE	NICKNAME	REFERENCE DESCRIPTION	REFERENCE	NICKNAME	REFERENCE DESCRIPTION
%R8303		Delay, DE communication	%M3064	PLMS_48	DE Communication signal
%R8318		Communication ON after 2 min.	%M0067	POS2080	Machine ladder pos 20-80
%R9506		Delay WD = 0	%M1310	SUP_OPT	PLMS, Option Line Supervision
%R9512		Delay WD = 1	%M3052	TPOP_WD	Watch Dog to TPOP
%M3053	PLC_WD	Watch Dog to PLC	%M4004	WD=0	Watchdog = 0
%M3063	PLMS_47	Tba/19 to DE Enable	%M4005	WD=1	Watchdog = 1

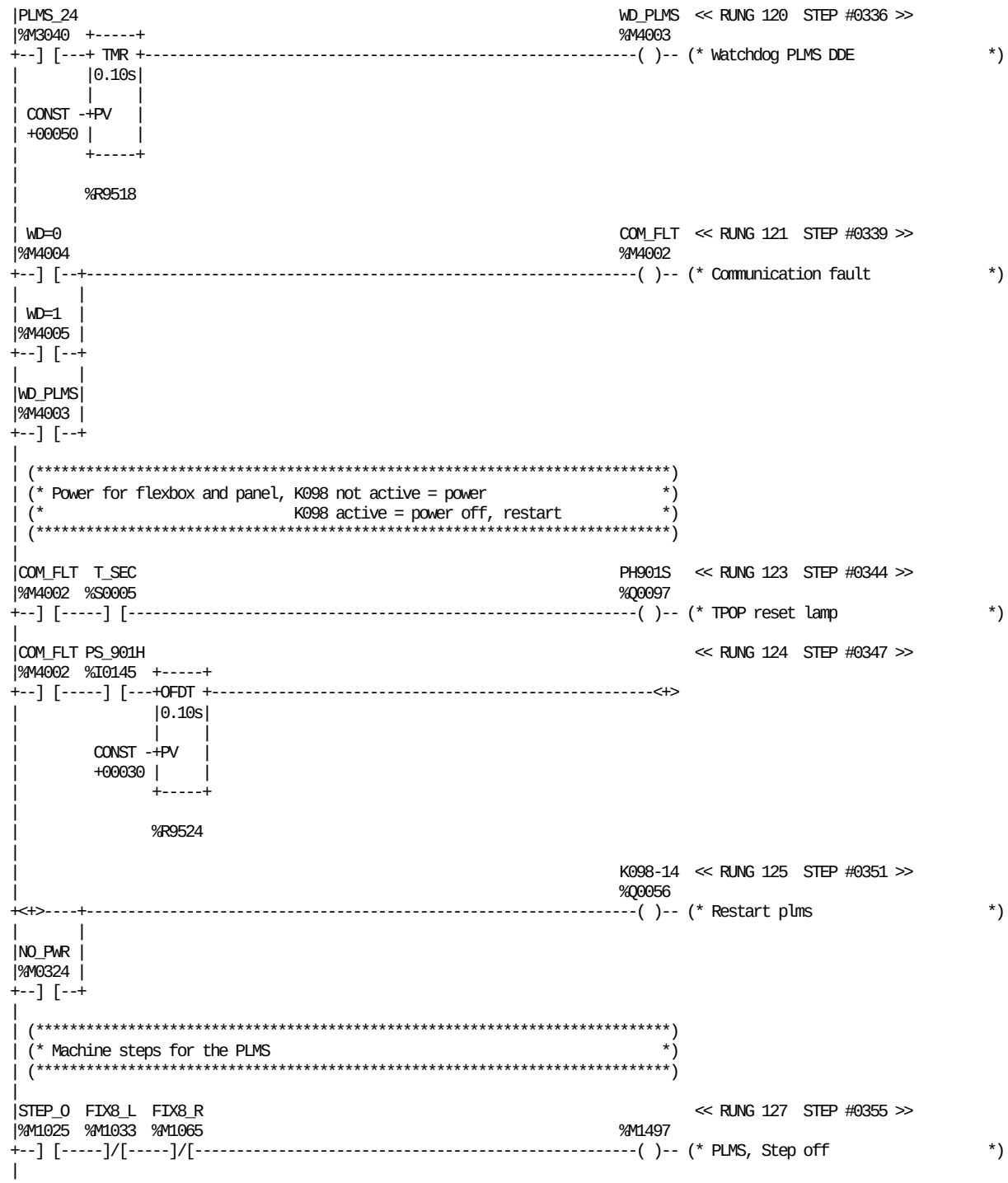

REFERENCE	NICKNAME	REFERENCE DESCRIPTION	REFERENCE	NICKNAME	REFERENCE DESCRIPTION
%M1497		PLMS, Step off	%Q0097	PH901S	TPOP reset lamp
%R9518		Delay watchdog PLMS DDE	%M3040	PLMS_24	PLMS, PLMSDDE OK
%R9524		Delay, restart TPOP	%I0145	PS_901H	PLMS reset
%M4002	COM_FLT	Communication fault	%M1025	STEP_0	Tpop step 0 machine off
%M1033	FIX8_L	Weac on fix	%S0005	T_SEC	
%M1065	FIX8_R	Ready for door opening fix	%M4004	WD=0	Watchdog = 0
%Q0056	K098-14	Restart plms	%M4005	WD=1	Watchdog = 1
%M0324	NO_PWR	Power failure	%M4003	WD_PLMS	Watchdog PLMS DDE

BLOCK: 38 PLMS COMMUNICATION

```
|FIX1_L                                                              << RUNG 128  STEP #0359 >>
|%M1026                                                        %M1498
+--] [--+-------------------------------------------------------------( )-- (* PLMS, Preheating                *)
|       |
|FIX1_R |
|%M1058 |
+--] [--+
|
|FIX2_L                                                              << RUNG 129  STEP #0362 >>
|%M1027                                                        %M1499
+--] [-------------------------------------------------------------( )-- (* PLMS, Tube sealing               *)
|
|FIX2_R                                                              << RUNG 130  STEP #0364 >>
|%M1059                                                        %M1500
+--] [-------------------------------------------------------------( )-- (* PLMS, Heating 3                  *)
|
|FIX3_L                                                              << RUNG 131  STEP #0366 >>
|%M1028                                                        %M1501
+--] [-------------------------------------------------------------( )-- (* PLMS, Spray                      *)
|
|FIX3_R                                                              << RUNG 132  STEP #0368 >>
|%M1060                                                        %M1502
+--] [-------------------------------------------------------------( )-- (* PLMS, Drying                     *)
|
|FIX4_L                                                              << RUNG 133  STEP #0370 >>
|%M1029                                                        %M1503
+--] [-------------------------------------------------------------( )-- (* PLMS, Signal to sterilizer       *)
|
|FIX4_R                                                              << RUNG 134  STEP #0372 >>
|%M1061                                                        %M1504
+--] [-------------------------------------------------------------( )-- (* PLMS, Signal from sterilizer     *)
|
|STARTQ          PS_907H                                             << RUNG 135  STEP #0374 >>
|%M0320  %M0310  %I0148                                        %M1505
+--] [-----]/[-----]/[---------------------------------------------( )-- (* PLMS, Motor start                *)
|
|        SHORTS                                                      << RUNG 136  STEP #0378 >>
|%M0310  %M0082                                                %M1506
+--] [-----]/[-------------------------------------------------------( )-- (* PLMS, Machine in production      *)
|
|SHORTS                                                              << RUNG 137  STEP #0381 >>
|%M0082                                                        %M1507
+--] [-------------------------------------------------------------( )-- (* PLMS, Short stop on              *)
|
| POS80  MCPOS80                                                     << RUNG 138  STEP #0383 >>
|%M0057  %M0086                                                %M1508
+--] [-----] [-----------------------------------------------------( )-- (* PLMS, Production finish          *)
|
|FIX8_L                                                              << RUNG 139  STEP #0386 >>
|%M1033                                                        %M1509
+--] [-------------------------------------------------------------( )-- (* PLMS, Wenting                    *)
|
|FIX8_R                                                              << RUNG 140  STEP #0388 >>
|%M1065                                                        %M1510
+--] [-------------------------------------------------------------( )-- (* PLMS, Ready for door opening     *)
|
|FIX10_R                                                             << RUNG 141  STEP #0390 >>
|%M1067                                                        %M1511
+--] [-------------------------------------------------------------( )-- (* PLMS, CIP cleaning valve         *)
```

REFERENCE	NICKNAME	REFERENCE DESCRIPTION	REFERENCE	NICKNAME	REFERENCE DESCRIPTION
%M0310		Aux memory machine in production	%M1026	FIX1_L	Preheating 1 fix
%M1498		PLMS, Preheating	%M1058	FIX1_R	Preheating 2 fix
%M1499		PLMS, Tube sealing	%M1027	FIX2_L	Tube sealing fix
%M1500		PLMS, Heating 3	%M1059	FIX2_R	Heating 3 fix
%M1501		PLMS, Spray	%M1028	FIX3_L	Spray fix
%M1502		PLMS, Drying	%M1060	FIX3_R	Drying fix
%M1503		PLMS, Signal to sterilizer	%M1029	FIX4_L	Signal to sterilizer fix
%M1504		PLMS, Signal from sterilizer	%M1061	FIX4_R	Signal from sterilizer fix
%M1505		PLMS, Motor start	%M1033	FIX8_L	Weac on fix
%M1506		PLMS, Machine in production	%M1065	FIX8_R	Ready for door opening fix
%M1507		PLMS, Short stop on	%M0086	MCPOS80	Machine in pos.80 for >2 min
%M1508		PLMS, Production finish	%M0057	POS80	Machine ladder pos 80
%M1509		PLMS, Wenting	%I0148	PS_907H	Inching
%M1510		PLMS, Ready for door opening	%M0082	SHORTS	Machine pos. short stop
%M1511		PLMS, CIP cleaning valve	%M0320	STARTQ	Start sequenc
%M1067	FIX10_R	Internal cleaning fix			

```
|FIX10_L FIX10_R                                                          << RUNG 142  STEP #0392 >>
|%M1035  %M1067                                                  %M1512
+--] [-----]/[-----------------------------------------------------------( )-- (* PLMS, External cleaning          *)
|
|ALW_ON                                                                   << RUNG 143  STEP #0395 >>
|%S0007  +-----+
+--] [---+MOVE_+-
|        | WORD|
|        |     |
|%M1497 -+IN  Q+-%R8358
|        | LEN |
|        |00001|
|        |     |
|        +-----+
|
| (*************************************************************************)
| (* Recorder                                                              *)
| (*************************************************************************)
|
| K103                                                             K103    << RUNG 145  STEP #0398 >>
|%Q0052  +-----+                                                  %Q0052
+--] [---+ TMR +-----------------------------------------------------------(RM)- (* Sterile parameter              *)
|        |0.10s|
|        |     |
| CONST -+PV   |
| +03000 |     |
|        +-----+
|
|        %R0530
|
|                                                                  K103    << RUNG 146  STEP #0401 >>
|%M0109  +-----+                                                  %Q0052
+--] [---+ GE_ |+-----------------------------------------------------------(RM)- (* Sterile parameter              *)
|        | INT ||
|        |     ||
|%R0530 -+I1  Q++
|        |     |
| CONST -+I2   |
| +00300 +-----+
|
|%M0109                                                           %M0112   << RUNG 147  STEP #0404 >>
+--] [-----------------------------------------------------------------(^)-- (* End drying P+                    *)
|
| S004                                                             K103    << RUNG 148  STEP #0406 >>
|%I0009  %M0091                                                   %Q0052
+--]/[--+--] [--+-----------------------------------------------------------(SM)- (* Sterile parameter              *)
|       |       |
|       |%M0112 |
|       +--] [--+
|
|NO_PWR                                                            K103    << RUNG 149  STEP #0411 >>
|%M0324                                                           %Q0052
+--] [-----------------------------------------------------------------(RM)- (* Sterile parameter              *)
|
|%T0063  +-----+                                                  %T0063   << RUNG 150  STEP #0413 >>
+--] [---+ TMR +-----------------------------------------------------------(R)-- (* Operational time record.       *)
|        |0.10s|
|        |     |
| CONST -+PV   |
| +03000 |     |
|        +-----+
|
|        %R0533
|
```

REFERENCE	NICKNAME	REFERENCE DESCRIPTION	REFERENCE	NICKNAME	REFERENCE DESCRIPTION
%M0091		Machine to pos 00	%R8358		Ladder step PLMS
%M0109		Drying after spraying	%S0007	ALW_ON	
%M0112		End drying P+	%M1035	FIX10_L	External cleaning fix
%M1497		PLMS, Step off	%M1067	FIX10_R	Internal cleaning fix
%M1512		PLMS, External cleaning	%Q0052	K103	Sterile parameter
%T0063		Operational time record.	%M0324	NO_PWR	Power failure
%R0530		Delay record. steril param.	%I0009	S004	Service switch
%R0533		Operational time record			

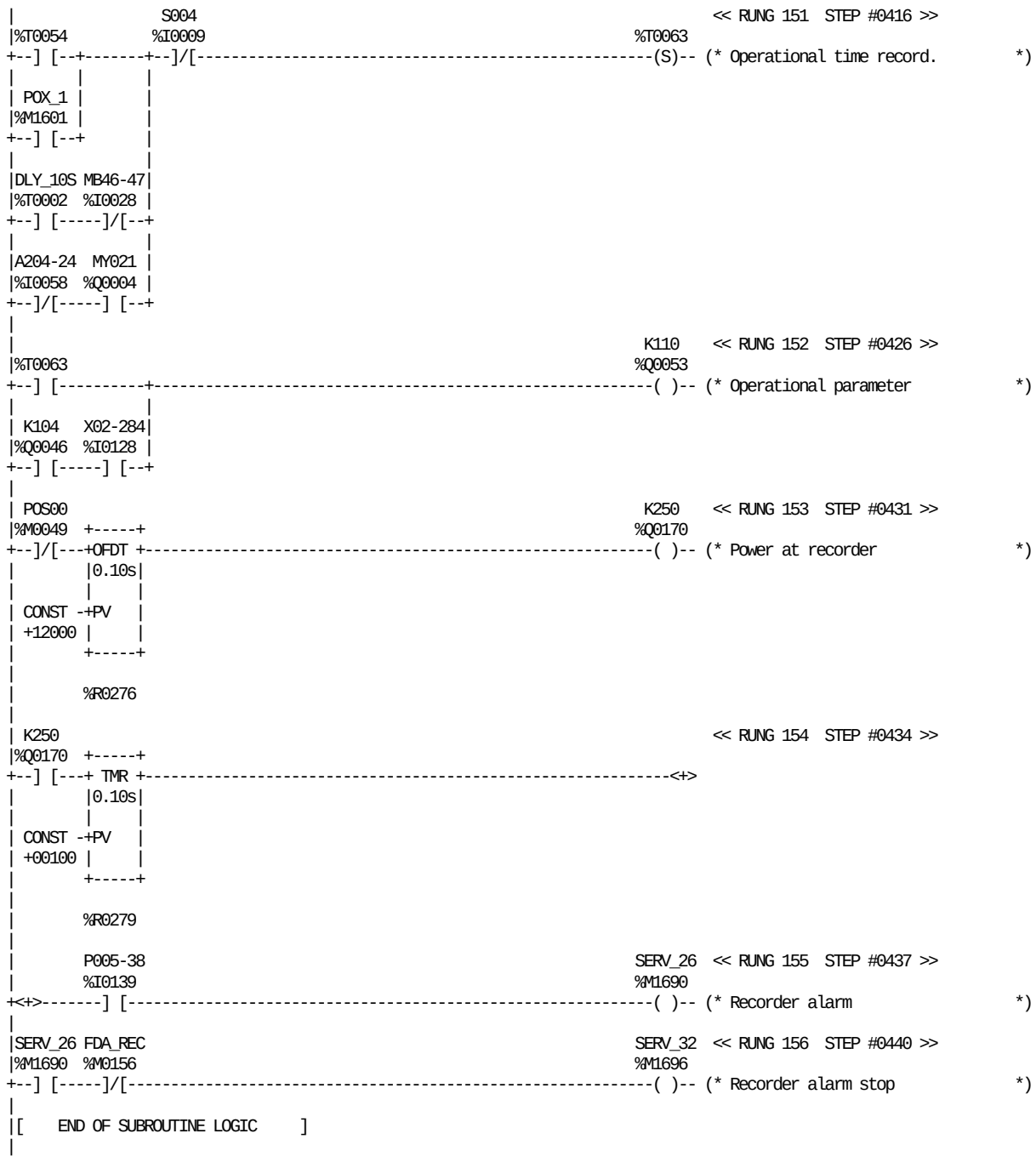

REFERENCE	NICKNAME	REFERENCE DESCRIPTION	REFERENCE	NICKNAME	REFERENCE DESCRIPTION
%T0054		Low lvl peroxide bath at product	%I0028	MB46-47	Pos. squeezer roller/air knife
%T0063		Operational time record.	%Q0004	MY021	Air knife squez. roll. movement
%R0276		Delay switch off power recorder	%I0139	P005-38	Recorder alarm signal
%R0279		Delay alarm at switch on record.	%M0049	POS00	Ladder pos 00
%I0058	A204-24	Temp.mon.air knives	%M1601	POX_1	Low temperature peroxide
%T0002	DLY_10S	Start sequence delay 10 sec.	%I0009	S004	Service switch
%M0156	FDA_REC	Select for non-FDA requirements	%M1690	SERV_26	Recorder alarm
%Q0046	K104	Signal to cip	%M1696	SERV_32	Recorder alarm stop
%Q0053	K110	Operational parameter	%I0128	X02-284	Signal from CIP cleaning ON
%Q0170	K250	Power at recorder			

```
|[  START LD SUBROUTINE   BLK40   ]
|
|[     VARIABLE DECLARATIONS      ]
|
|[   START OF SUBROUTINE LOGIC    ]
|
| RESET                                                          K113    << RUNG 4  STEP #0002 >>
|%M3050                                                        %Q0054
+--] [-------------------------------------------------------------------( )-- (* Aux. relay alarm reset          *)
|
|ALW_ON                                                          MY102   << RUNG 5  STEP #0004 >>
|%S0007                                                        %Q0023
+--] [-------------------------------------------------------------------( )-- (* Main air valve                 *)
|
|A302-15                                                                 << RUNG 6  STEP #0006 >>
|%I0043  +-----+                                               %M0419
+--] [---+ TMR +-------------------------------------------------------( )-- (* Peroxide bath level delayed     *)
|        |0.01s|
|        |     |
| CONST -+PV   |
| +00030 |     |
|        +-----+
|
|        %R0365
|
|PS_911H PS_912H Q03-Q09 A506Y14                                 MY005   << RUNG 7  STEP #0009 >>
|%I0149  %I0150  %I0133  %I0017                                %Q0066
+--] [--+--] [-----] [-----] [--+-------------------------------------( )-- (* Peroxide bath, draining         *)
|       |                        |
|       |                        |                              K009
|%T0185 |                        |                             %Q0017
+--] [--+                        +-------------------------------------( )-- (* Peroxide pump                  *)
|                                |
|                                |                             %T0185
|                                +-------------------------------------( )-- (* Passivation start sequence      *)
|                                |
|                                |                              MY108
|                                |                             %Q0077
|                                +-------------------------------------( )-- (* Top fil. valve, perox. bath     *)
|                                |
|                                |                              MY006
|                                |                             %Q0067
|                                +-------------------------------------( )-- (* Peroxide bath, filling          *)
|
|%T0185  +-----+         +-----+                                        << RUNG 8  STEP #0019 >>
+--] [---+ TMR +---------+MOVE_+-
|        |0.10s|         | INT |
|        |     |         |     |
| CONST -+PV   |  CONST -+IN  Q+-%R1039
| +01800 |     |  +00600 | LEN |
|        +-----+         |00001|
|                        |     |
|        %R1039          +-----+
|
```

REFERENCE	NICKNAME	REFERENCE DESCRIPTION
%M0419		Peroxide bath level delayed
%T0185		Passivation start sequence
%R0365		Peroxide bath level delay
%R1039		Passivation time
%I0043	A302-15	Peroxide bath, level
%I0017	A506Y14	Emergency stop safety module
%S0007	ALW_ON	
%Q0017	K009	Peroxide pump
%Q0054	K113	Aux. relay alarm reset

REFERENCE	NICKNAME	REFERENCE DESCRIPTION
%Q0066	MY005	Peroxide bath, draining
%Q0067	MY006	Peroxide bath, filling
%Q0023	MY102	Main air valve
%Q0077	MY108	Top fil. valve, perox. bath
%I0149	PS_911H	Step up
%I0150	PS_912H	Step down
%I0133	Q03-Q09	Overload protecion, motors
%M3050	RESET	Alarm reset from MMI

```
|                                                                    MY006   << RUNG 9  STEP #0022 >>
|%T0185  %M0419  +-----+                                           %Q0067
+--] [-----]/[---+RANGE|+-------------------------------------------------(R)-- (* Peroxide bath, filling          *)
|                | INT ||
|                |     ||
|         CONST -+L1  Q++
|         +00000 |     |
|                |     |
|         CONST -+L2   |
|         +00098 |     |
|                |     |
|        %R1039 -+IN   |
|                +-----+
|
|A302-15                                                            POX_2   << RUNG 10  STEP #0026 >>
|%I0043                                                            %M1602
+--]/[-------------------------------------------------------------------( )-- (* Low level peroxide bath         *)
|
|%T0185                                                            %M0201   << RUNG 11  STEP #0028 >>
+--] [-------------------------------------------------------------------( )--
|
|MB95-4                                                             POX_9   << RUNG 12  STEP #0030 >>
|%I0045                                                            %M1609
+--] [-------------------------------------------------------------------( )-- (* Too high level peroxide tank    *)
|
|         T_SEC                                                            << RUNG 13  STEP #0032 >>
|%T0185  %S0005  +-----+
+--] [-----] [--->UPCTR+-
|               |     |
|%T0185         |     |
+--]/[----------+R    |
|               |     |
|              -+PV   |
|               |     |
|               +-----+
|
|               %R1042
|
|ALW_ON                                                                    << RUNG 14  STEP #0036 >>
|%S0007  +-----+                                                   %M0208
+--] [---+ GE_ |+-------------------------------------------------------( )--
|        | INT ||
|        |     ||
|%R1042 -+I1  Q++
|        |     |
| CONST -+I2   |
| +00300 +-----+
|
|ALW_ON                                                                    << RUNG 15  STEP #0039 >>
|%S0007  +-----+                                                   %M0209
+--] [---+ GE_ |+-------------------------------------------------------( )--
|        | INT ||
|        |     ||
|%R1042 -+I1  Q++
|        |     |
| CONST -+I2   |
| +07200 +-----+
|
|[    END OF SUBROUTINE LOGIC     ]
|
```

REFERENCE	NICKNAME	REFERENCE DESCRIPTION	REFERENCE	NICKNAME	REFERENCE DESCRIPTION
%M0201			%I0043	A302-15	Peroxide bath, level
%M0208			%S0007	ALW_ON	
%M0209			%I0045	MB95-4	Peroxide tank, too high level
%M0419		Peroxide bath level delayed	%Q0067	MY006	Peroxide bath, filling
%T0185		Passivation start sequence	%M1602	POX_2	Low level peroxide bath
%R1039		Passivation time	%M1609	POX_9	Too high level peroxide tank
%R1042		Passivation time	%S0005	T_SEC	

15 Bills of material

EM3.0TB158032en.fm

Table of contents

Electrical equipment (ECM 117537) 649452-0200

Software (ECM 124639) 42413-0200

Electrical document (ECM 119626) 42416-0200

EM3.0TB158032en.fm

ECM	72201	P86148(L81824)	P104226(L103427)	P117537(L109844)
Release date	2001.10.24	2001.12.19	2002.04.12	2002.11.06

Position	Sp	SH	Description	As	Size	Identity	DTp	Prt	Vs	Unit	Column quantity All
0010			Software	X	A4	42413-0200				PC	1
			* PLMS Off-Line	X		1254471-0401					
			* TMCC programme	X	A4	2589442-0001					
			* TMCC programme	X	A4	2589438-0001					
			* PLMS BASIC PROGRAM	X		47932-0601					
			* PLMS DDE	X		48621-0501					
			* TPOP HMI	X		48756-0003					
			* TMCC programme	X	A4	2589434-0001					
			* PLMS Config	X	A4	48757-0003					
			* PLMS DOS WINDOWS	X		47962-0401					
			* PLMS INTOUCH RUNTIME PROGRAM	X		47936-0201					
			* PLC-PROGRAMME LIST	X		48643-0005					
0020			ELECTRICAL DOCUMENT	X	A4	42416-0200				PC	1

ECM	P81825(L81824)	P104223(L103427)	P114544(L109844)	P124639(L121419)
Release date	2001.12.19	2002.04.12	2002.11.06	2003.02.04

Variant: Column Global dependency
ZA TBA NOPT ASU

Position	Sp	SH	Description	As	Size	Identity	DTp	Prt	Vs	Unit	Column All	quantity ZA
A511.2			TMCC programme I n t e r n a l c o m m e n t RMD NP REGISTER MARK DECODE NEW PHOTOCELL	X	A4	2589434-0001				PC		1
0020			PLMS Off-Line	X		1254471-0401				PC	1	
A310.1			TMCC programme I n t e r n a l c o m m e n t FCS19 FILLING CONTROL SYSTEM TBA/19	X	A4	2589442-0001				PC	1	
A400.1			TMCC programme I n t e r n a l c o m m e n t MDCS19 MOTORIZED DESIGN CONTROL SYSTEM TBA/19	X	A4	2589438-0001				PC	1	
A452.1			PLMS BASIC PROGRAM	X		47932-0601				PC	1	
A452.2			PLMS DDE	X		48621-0501				PC	1	
A452.3			TPOP HMI	X		48756-0003				PC	1	
A452.4			PLMS Config	X	A4	48757-0003				PC	1	
A452.5			PLMS DOS WINDOWS	X		47962-0401				PC	1	
A452.6			PLMS INTOUCH RUNTIME PROGRAM	X		47936-0201				PC	1	
D100.1			PLC-PROGRAMME LIST	X		48643-0005				PC	1	
0010			PLMS Receive	Y		1190007-0302				PC	1	
0030			UM Document Serial Comunication only En			82197-0103				PC	1	

General remark

ALL DOCUMENTS HAVE TO BE DISTRIBUITED WITH SIZE A4. LIST 649452-0200, 42413-0200 AND LIST 42416-0200 HAVE TO BE DELIVERED WITH THE BELOW MENTIONED DOCUMENTS.

ECM	72201	P83285(L81824)	P103422(L103427)	P114678(L109844)	P119626(L121419)
Release date	2001.10.24	2001.12.19	2002.04.12	2002.11.06	2003.02.04

Position	Sp	SH	Description	As	Size	Identity	DTp	Prt	Vs	Unit	Column quantity All
0010			DOCUMENTS LIST	A4-		44954-0001	ELD	000	AB		x
0020			POSITION SUMMARY	A4-		44954-0002	ELD	000	AB		x
0030			CIRCUIT DIAGRAM	A4-		44954-0003	ELD	000	AB		x
0040			LINE SUMMARY	A4-		44954-0004	ELD	000	AB		x
0050			CABINET TERMINAL SUMMARY	A4-		44954-0005	ELD	000	AB		x
0060			TERMINAL STRIP OVERVIEW	A4-		44954-0006	ELD	000	AB		x
0070			CABLE CONNECTION LIST	A4-		44954-0007	ELD	000	AB		x
0080			MAINS CONNECTION	A4-		44954-0008	ELD	000	AB		x
0090			ENGINEERING CHANGE DESCRIPTION	A4-		44954-0099	ELD	000	AB		x
0301			MAIN + CROSS REFERENCE	A4-		48643-0001	ELD	005	AA		x
0302			1T001 FAST SCAN	A4-		48643-0002	ELD	005	AA		x
0305			PLC PROGRAM LIST	A4-		48643-0005	ELD	005	AA		x
0306			PLC PROGRAM LIST	A4-		48643-0006	ELD	004	AA		x
0307			PLC PROGRAM LIST	A4-		48643-0007	ELD	005	AA		x
0308			PLC PROGRAM LIST	A4-		48643-0008	ELD	005	AA		x
0309			PLC PROGRAM LIST	A4-		48643-0009	ELD	005	AA		x
0310			PLC PROGRAM LIST	A4-		48643-0010	ELD	002	AA		x
0311			PLC PROGRAM LIST	A4-		48643-0011	ELD	004	AA		x
0313			PLC PROGRAM LIST	A4-		48643-0013	ELD	005	AA		x
0314			PLC PROGRAM LIST	A4-		48643-0014	ELD	004	AA		x
0315			PLC PROGRAM LIST	A4-		48643-0015	ELD	004	AA		x
0316			PLC PROGRAM LIST	A4-		48643-0016	ELD	005	AA		x
0317			PLC PROGRAM LIST	A4-		48643-0017	ELD	004	AA		x
0318			PLC PROGRAM LIST	A4-		48643-0018	ELD	005	AA		x
0319			PLC PROGRAM LIST	A4-		48643-0019	ELD	005	AA		x
0321			PLC PROGRAM LIST	A4-		48643-0021	ELD	005	AA		x
0322			PLC PROGRAM LIST	A4-		48643-0022	ELD	005	AA		x
0323			PLC PROGRAM LIST	A4-		48643-0023	ELD	002	AA		x
0324			PLC PROGRAM LIST	A4-		48643-0024	ELD	005	AA		x

Position	Sp	SH	Description	As	Size	Identity	DTp	Prt	Vs	Unit	Column quantity All
0325			PLC PROGRAM LIST	A4-		48643-0025	ELD	004	AA		x
0326			PLC PROGRAM LIST	A4-		48643-0026	ELD	005	AA		x
0327			PLC PROGRAM LIST	A4-		48643-0027	ELD	002	AA		x
0328			PLC PROGRAM LIST	A4-		48643-0028	ELD	005	AA		x
0334			PLC PROGRAM LIST	A4-		48643-0034	ELD	005	AA		x
0335			PLC PROGRAM LIST	A4-		48643-0035	ELD	005	AA		x
0336			PLC PROGRAM LIST	A4-		48643-0036	ELD	002	AA		x
0337			PLC PROGRAM LIST	A4-		48643-0037	ELD	005	AA		x
0338			PLC PROGRAM LIST	A4-		48643-0038	ELD	005	AA		x
0340			PLC PROGRAM LIST	A4-		48643-0040	ELD	002	AA		x
0800			FUSE BOARD	A2-		1538212-0000	DRA	000	AD		x

**********This is the Last Page**********

16 Fuse panel label

EM3.0TB168032en.fm

Table of contents

Fuse board 1538212-0000

EM3.0TB168032en.fm

This drawing must not without the consent of Tetra Pak be copied, transmitted or disclosed to any third party.

MATERIAL
25um PLASTIC-COATED PAPER

ADHESIVE
ACRYLIC SELF ADHESIVE REAR SIDE

THE SING IS WHITE COLORED WITH BLACK LINES

SILK-SCREEN PROGRESS

CHANGED

COMPRESSOR	Q006
	50Hz/9A/40°C
	60Hz/8.5A/40°C
HYDRAULIC	Q007
PUMP	50Hz/2,9A/40°C
	60Hz/2,9A/40°C
PEROXIDE	Q009
PUMP	50Hz/1,5A/40°C
	60Hz/1,6A/40°C
CLEANING SYSTEM	Q008
CIRCULATION VALVE	50Hz/6.4A/40°C
	60Hz/8.2A/40°C
STERILIZATION	Q016
	50Hz/0.25A/40°C
	60Hz/0.25A/40°C
BELT	Q015
	50Hz/0.6A/40° C
BRAKE	60Hz/0.6A/40° C
PRE-PATCH/DOS.VALVE MOTOR	F031 10A
PT INFEED MOTOR	F033 10A
PT SERVO MOTOR	F013 A 6A
	F013 B 6A
	F013 C 6A
CONTROL	F034 A 2A
	F034 B 2A
TRASFORMER	F034 C 2A
WALL SOCKET LIGHT FIXTURES	F001 10A
EXTERNAL CONVEYOR	F008 10A
BENDING ROLLER	F004 10A
MAIN	F007 A 20A
	F007 B 20A
MOTOR	F007 C 20A
220V AC PLC	F005 6A
PAPER MAGAZINE	F009 10A
UNREALING MOTOR	F015 10A

F104 16A	LS
F106 10A	FLAP SEALING
F107 10A	FLAP SEALING
F100 A 16A	PEROXIDE
F100 B 16A	BATH
F100 C 16A	WATERS
F101 A 25A	AIR
F101 B 25A	SUPER
F101 C 25A	HEATER
F102 A 16A	TPIH
F102 B 16A	
F102 C 16A	TS
F103 A 16A	TPIH
F103 B 16A	
F103 C 16A	SA
F012 0,75A	PEROXIDE BATH,WATER PUMP
F010 10A	POWER 48V
F021 0,5A	SA TPO BAR
F019 10A	COOLER
F002 10A	SHORT STOP
F030 0,5A	DETERGENT PUMP
F016 16A	ASU TPO BAR TRANSFORMER
F025 A 100A	ASU TPO BAR
F025 B 100A	
F032 10A	PATCH PRE SEALER/TAB SEALER
F011 10A	PT ELEMENTS
F027 10A	MDCS
F024 25A 0,03	WALL SOCKET
F017 6A	CONTROL VOLT. 24V DC
F006 A 6A	CONTROL
F006 B 6A	VOLTAGE
F006 C 6A	24V DC

ECN 119568 1538212

Release Level	released	ECN No	119568	Pro/PDM Revision Drawing	Model 1:22
Marked with PART NUMBER		Unless otherwise stated SHARP EDGES BROKEN		Surface Roughness	
Method/Site	NO/- B 2103.10	Scale	1:1		
Material	SEE ABOVE	Surface Treatment			1:24
Designer	ATN	Date	2002-11-27	Denomination	SIGN
Company	Tetra Pak Carton Ambient SpA				ETICHETTA
Tetra Pak		Drawing No	1538212	Document Type	DRA
				Version	AD
				Page	1(1)

Pro/ENGINEER - A2

This page intentionally left blank

17 Other information

EM3.0TB178032en.fm

This page intentionally left blank

EM3.0TB178032en.fm

Tetra Pak

EM binder labels. 30mm Halfwidth *Note! This page is generated **automatically**. using the **variable definitions** made in the **front page** file!!*

TBA/19 Tetra Brik Aseptic 020V
648160-2000
Issue 2003-03 Doc No. EM-81803-0102

TBA/19 Tetra Brik Aseptic 020V
648160-2000
Issue 2003-03 Doc No. EM-81803-0102

TBA/19 Tetra Brik Aseptic 020V
648160-2000
Issue 2003-03 Doc No. EM-81803-0102

TBA/19 Tetra Brik Aseptic 020V
648160-2000
Issue 2003-03 Doc No. EM-81803-0102

TBA/19 Tetra Brik Aseptic 020V
648160-2000
Issue 2003-03 Doc No. EM-81803-0102

TBA/19 Tetra Brik Aseptic 020V
648160-2000
Issue 2003-03 Doc No. EM-81803-0102

TBA/19 Tetra Brik Aseptic 020V
648160-2000
Issue 2003-03 Doc No. EM-81803-0102

TBA/19 Tetra Brik Aseptic 020V
648160-2000
Issue 2003-03 Doc No. EM-81803-0102

TBA/19 Tetra Brik Aseptic 020V
648160-2000
Issue 2003-03 Doc No. EM-81803-0102

TBA/19 Tetra Brik Aseptic 020V
648160-2000
Issue 2003-03 Doc No. EM-81803-0102

TBA/19 Tetra Brik Aseptic 020V
648160-2000
Issue 2003-03 Doc No. EM-81803-0102

TBA/19 Tetra Brik Aseptic 020V
648160-2000
Issue 2003-03 Doc No. EM-81803-0102

TBA/19 Tetra Brik Aseptic 020V
648160-2000
Issue 2003-03 Doc No. EM-81803-0102

TBA/19 Tetra Brik Aseptic 020V
648160-2000
Issue 2003-03 Doc No. EM-81803-0102

*EM binder labels. 40 mm Full width Note! This page is generated **automatically** using the **variable definitions** made in the **front page** file!!*

TBA/19 Tetra Brik Aseptic 020V
648160-2000

Issue 2003-03 Doc No. EM-81803-0102

TBA/19 Tetra Brik Aseptic 020V
648160-2000

Issue 2003-03 Doc No. EM-81803-0102

TBA/19 Tetra Brik Aseptic 020V
648160-2000

Issue 2003-03 Doc No. EM-81803-0102

TBA/19 Tetra Brik Aseptic 020V
648160-2000

Issue 2003-03 Doc No. EM-81803-0102

TBA/19 Tetra Brik Aseptic 020V
648160-2000

Issue 2003-03 Doc No. EM-81803-0102

TBA/19 Tetra Brik Aseptic 020V
648160-2000

Issue 2003-03 Doc No. EM-81803-0102

TBA/19 Tetra Brik Aseptic 020V
648160-2000

Issue 2003-03 Doc No. EM-81803-0102

TBA/19 Tetra Brik Aseptic 020V
648160-2000

Issue 2003-03 Doc No. EM-81803-0102

TBA/19 Tetra Brik Aseptic 020V
648160-2000

Issue 2003-03 Doc No. EM-81803-0102

TBA/19 Tetra Brik Aseptic 020V
648160-2000

Issue 2003-03 Doc No. EM-81803-0102

TBA/19 Tetra Brik Aseptic 020V
648160-2000

Issue 2003-03 Doc No. EM-81803-0102