SPC
Spare Parts Catalogue

TBA/19 020V

648160-2000

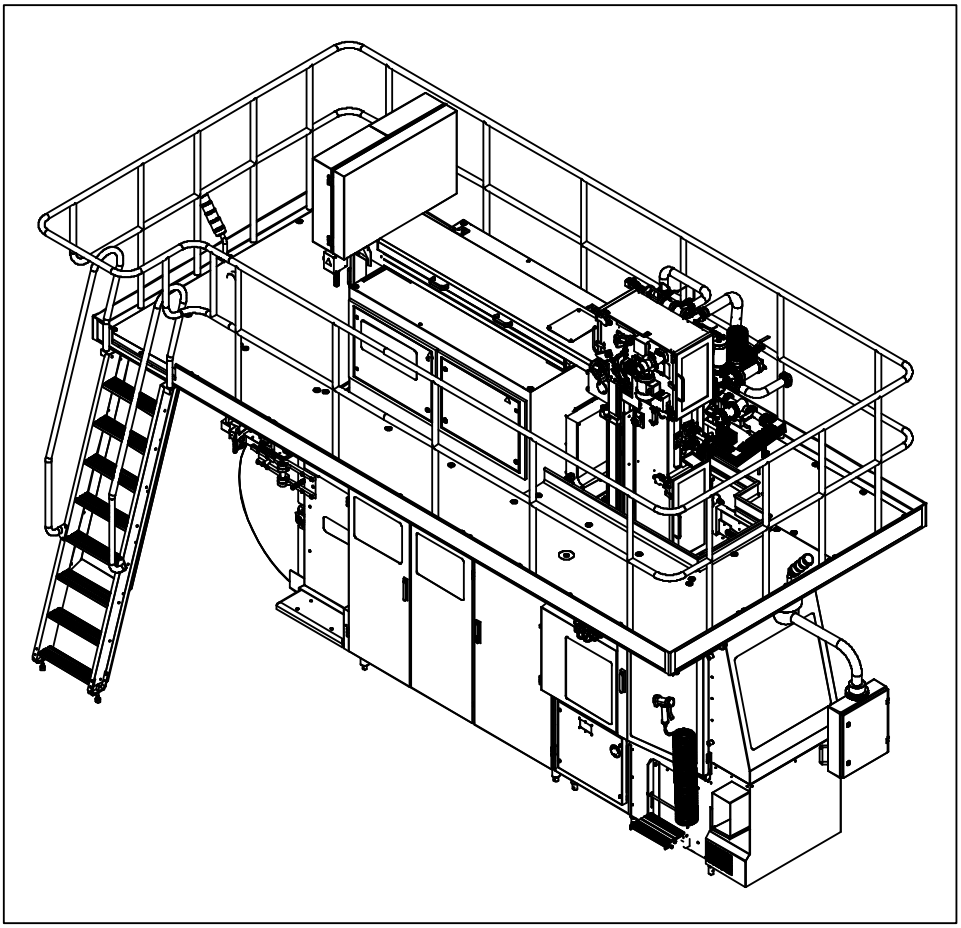

Tetra Pak

Doc. No: SPC-81656-0105

Main Groups of the Machine

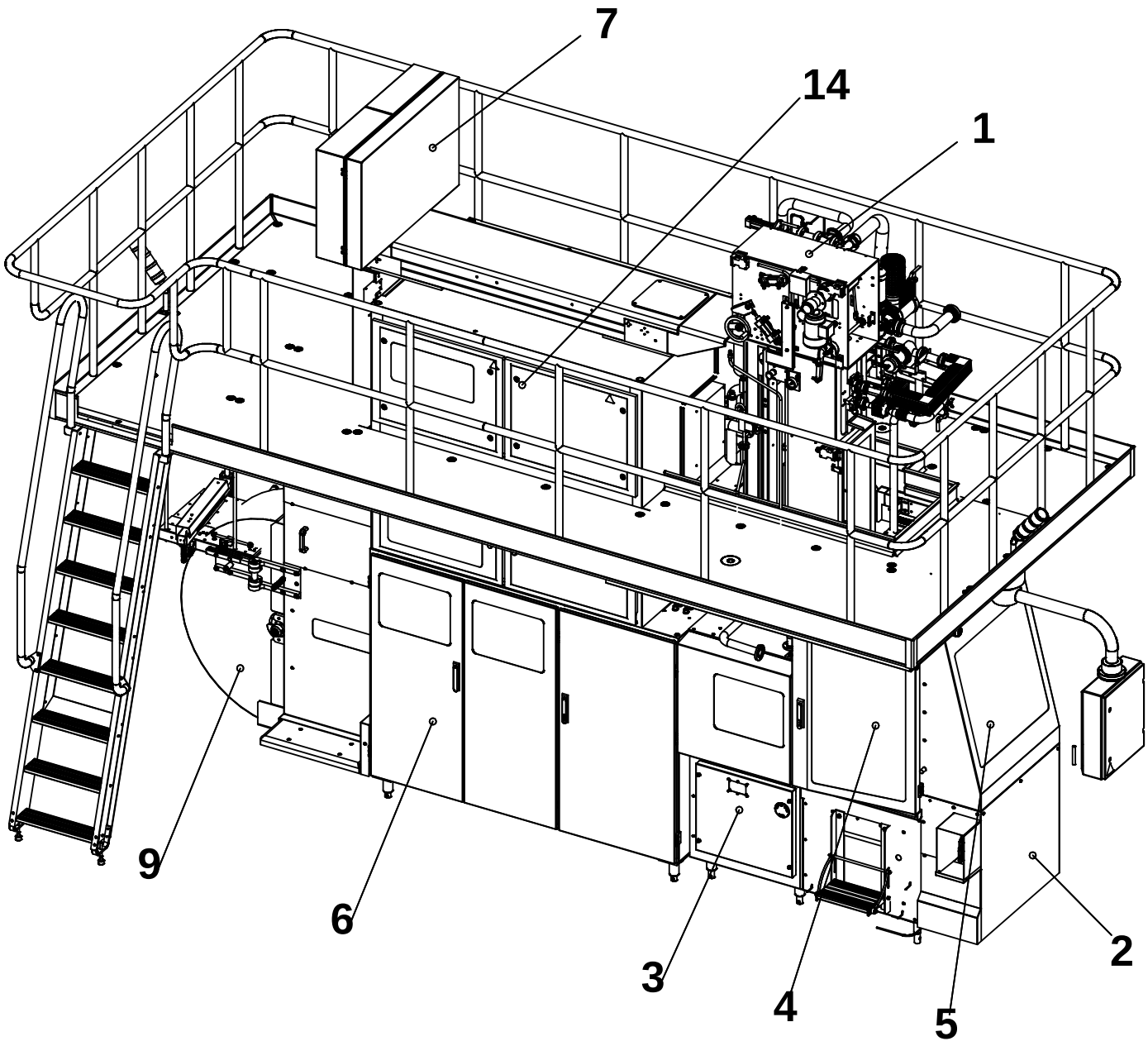

1 - Superstructure TBA/19 020v
2 - Machine Body
3 - Drive
4 - Jaw System
5 - Final Folder
6 - Service Unit
7 - Strip Applicator
9 - Packaging Material Infeed
14 - El. Cabinet

For the correct machine data, check your machine specification, supplied with the machine!

This document is valid for:

Series No/Machine No Sign.

SPC
Spare Parts Catalogue

Tetra Brik Aseptic
TBA/19 020V
648160-2000

Valid from machine series No.:
21204/00006

Table of Content:

Introduction ..... , **5**

Superstructure TBA/19 020v
B-648111-1200 ..... , **9**

Machine Body
B-648102-1200 ..... , **143**

Drive
B-648103-1100 ..... , **209**

Jaw System
B-648104-1200 ..... , **243**

Final Folder
B-648105-1200 ..... , **323**

Service Unit
B-648106-1200 ..... , **391**

Strip Applicator
B-648107-1200 ..... , **481**

Packaging Material Infeed
B-648156-0100 ..... , **535**

Regular Accessories
B-648109-1200 ..... , **607**

El. Cabinet
B-648114-0100 ..... , **645**

Part Number Index ..... , **785**

Electrical Parts Index ..... , **847**

Doc. No: SPC-81656-0105

Issue 2003-05

Tetra Pak

Tetra Pak Carton Ambient S.p.A.

General information

Manufacturer

This machine is produced by:
Tetra Pak Carton Ambient S.p.A.
Via Delfini 1
41100 Modena /Italy

Document producer

This document has been produced by:
Tetra Pak Carton Ambient S.p.A.
Technical Publications
Via Delfini 1
41100 Modena /Italy

Number of pages

This document contains totally **858 pages**, including the first **8** introduction pages.

Copyright © 2003 Tetra Pak Carton Ambient S.p.A.

All rights reserved. No parts of this document may be reproduced or copied in any forms or by any means, without written permission from Tetra Pak Carton Ambient S.p.A..

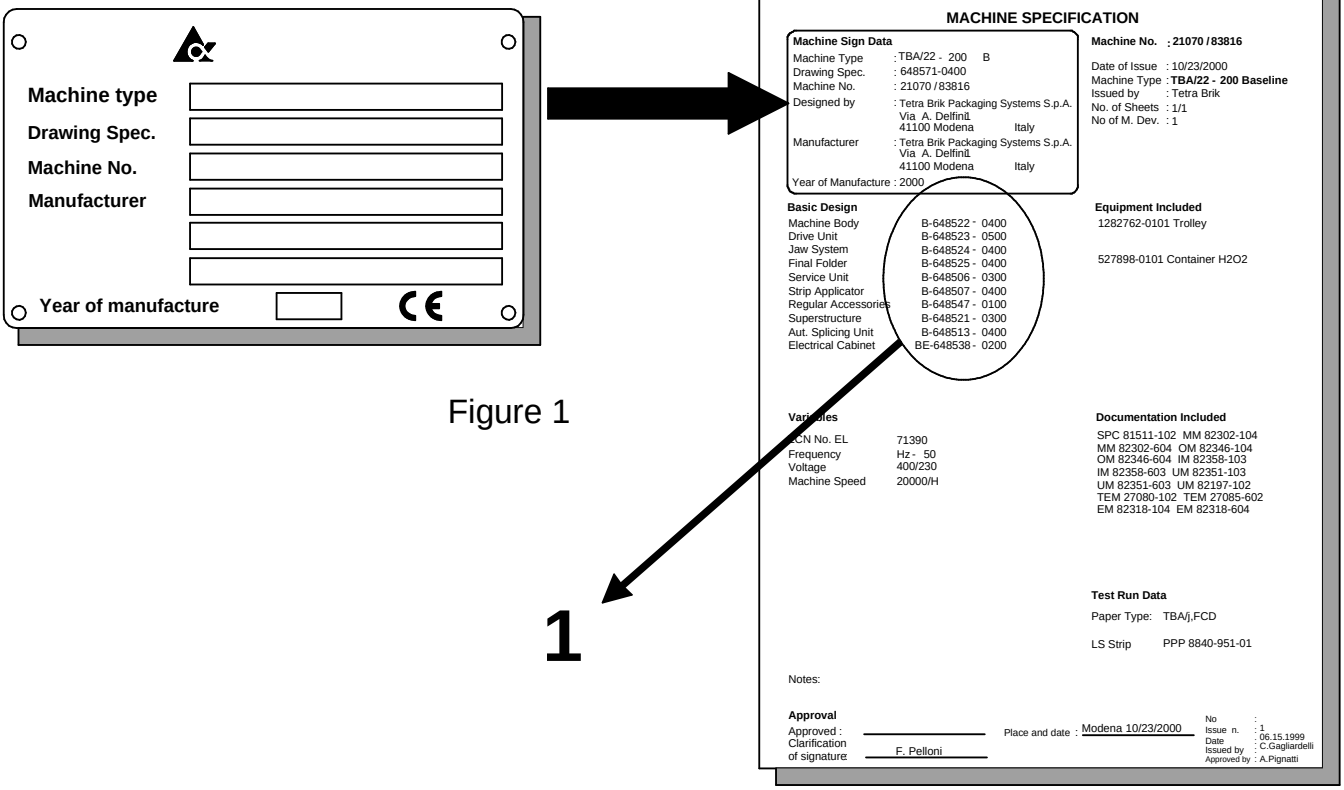

Figure 1

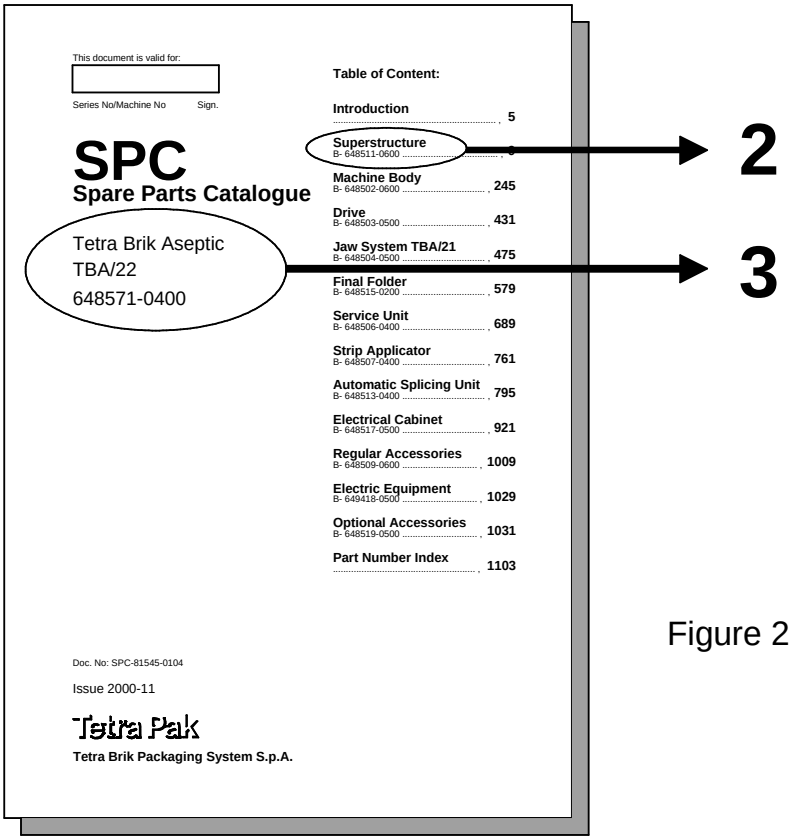

Figure 2

Figure 3 A-648571-0400

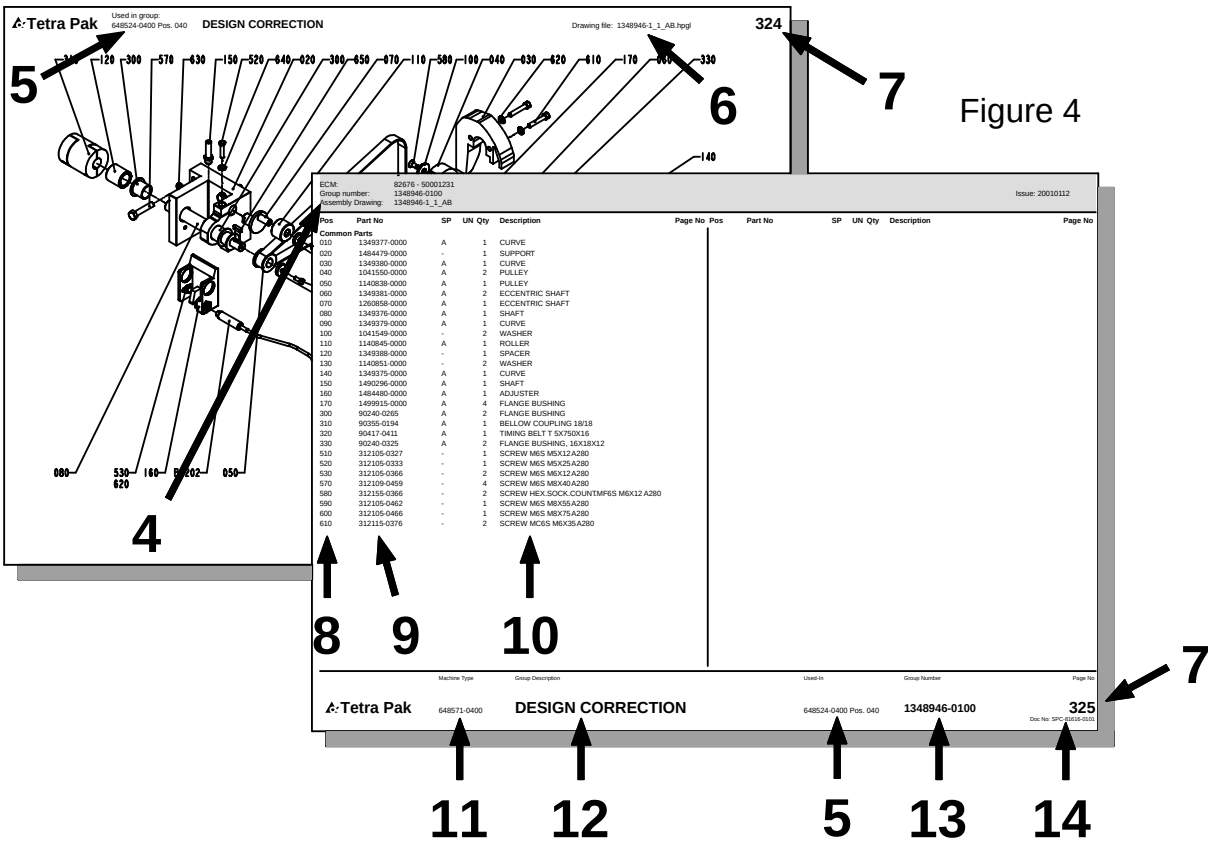

Figure 4

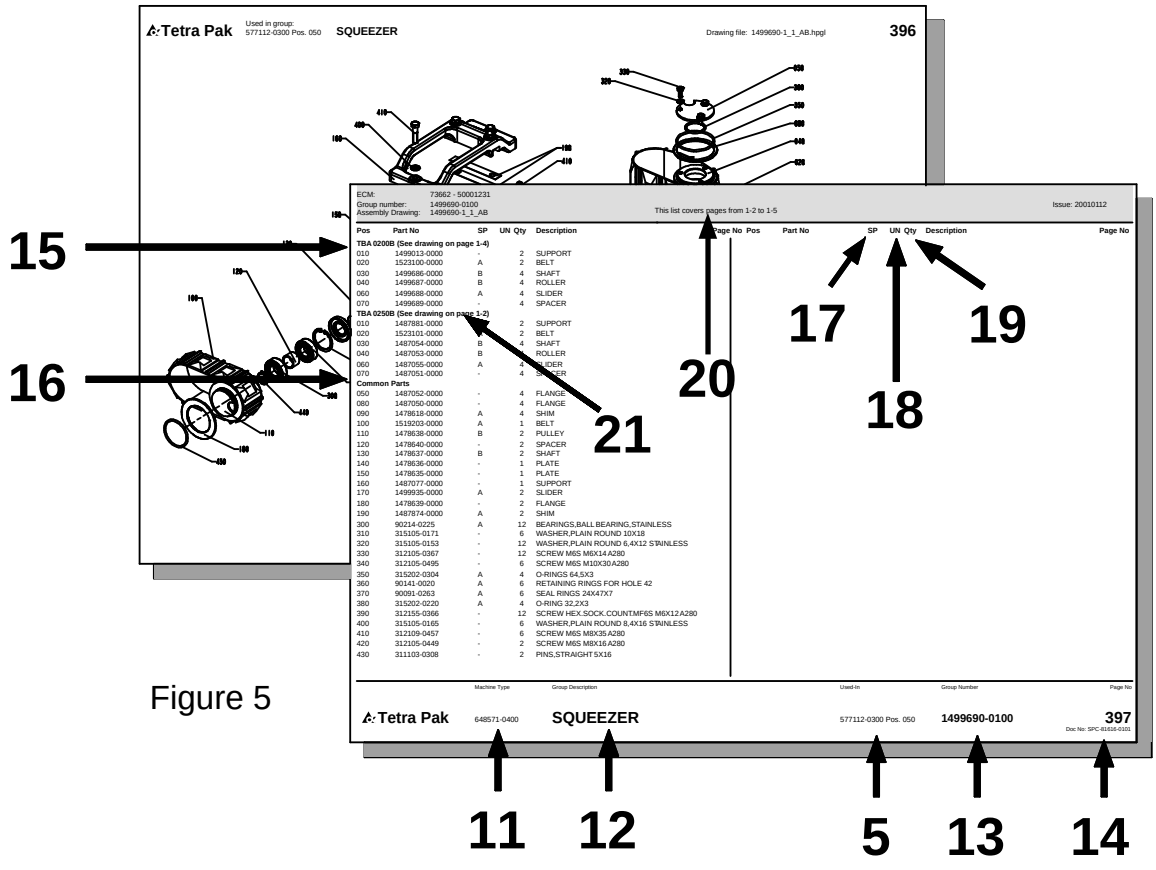

Figure 5

General information

Service

When ordering spare parts for your machine, contact the nearest Tetra Pak service station.

Machine identification

This machine plate is an example of the type of machine plate, attached to the machine frame. The plate carries data needed when contacting Tetra Pak concerning this particular machine **(see Figure 1)**.

Purpose of the Spare Parts Catalogue.

The purpose of the Spare Parts Catalogue (SPC) is to provide the technicians and contact personnel with information on how to find and order spare parts for maintenance and service of the machine.
For instructions of how to replace parts and adjust machine setup, see the Maintenance Manual (MM).

Delivered documentation

The technical documentation delivered with this machine is stated in the Machine Specification.
Note! If any of these documents is missing, it must be reported in the document **Start Up Machine Quality Report**. For more information, see chapter 8 Preparation for Commissioning in the Installation Manual.
It is important that you keep these documents for the life of the equipment, and pass the documents on to any subsequent holder or user of the equipment.

Design modification

The content of this document is in accordance with the design and construction of the machine at the time it was delivered from the Tetra Pak machine production facility.

Further copies

Additional copies can be ordered from the nearest Tetra Pak service station. When ordering technical publications, always quote the document number printed on the front cover of the document concerned.

Tetra Pak Part numbering system

The third and forth digits in the sub-number, specify one unique group which can be ordered. If the forth digit is replaced by a "0", the number combination only points to a bill-of-material document.
The first and second digits in the sub-number, specify the development step (model) of the machine or group.
(see fig. 3)
Main number of machine /group /article, depending on level.
Prefix, giving information about level, eg.
A = Machine
B = Main section (*)
C = Groups and subgroups
*) Customized distribution machines are registered as B-level as well.

How to find the correct Spare Part Number

A. Check that the data on your machine sign, and /or machine specification, corresponds with the catalogue.
(see fig.1)

1) Main groups of the machine

B. The second catalogue sheet contains a table of content for the main groups, included in the catalogue. The information regarding machine and main group status MUST correspond with your machine specification.
Locate and choose the main groups page number (1), in which you want to search for spare parts.
(see fig. 2)

2) Main group

3) Machine type

C. Search in the main group illustration, the item number, which may hold your wanted spare part. Go to the text page below and find the page number for the actual group. **(see fig. 4)**

4) Internal information, such as latest Engineering Change, Bill-of-Material included in the catalogue page and the Assembly Drawing required
5) Used-In reference to next higher level in the machine structure
6) Assembly drawing number including the archive file extension
7) Continuous page numbering through the document
8) Pos number corresponding to illustration
9) Group or article number.
10) Group or article description. The letter “B” in front of some article numbers indicates that this article contains other parts, directly listed below the B-article. Letter “A” indicates a subgroup number with an own page directly after the actual page.
11) Machine type including development status
12) Group description
13) Group number (bill-of-material) including development status
14) Document number

D. Continue to the found page number, and search in the illustration for your spare part. Go to the text row for the found item number, and read the part number. Take eventual variant headings in consideration; if you are unsure, read your machine specification. **(see fig. 5)**

15) Variant heading, eg volume, left /right etc.
16) Heading for common parts
17a) SP = Code for articles, which are included into various spare part kits. (from R3 source)
A = Critical Spare Part
B = Non - Critical Spares Part
C = Don't stop function, can bypassed
D = Seldom break, long time production

17b) SP = Code for articles, which are included into various spare part kits. (from AS400 source)
U = Starting-up kit supplied on machine delivery
P = Production kit to be held at production site workshop
S = Service kit to be held at service stations store
C = Central depot kit to be available at the central store

18) UN = Short code for measure units, eg mm, kg etc.
19) Qty = Number of items needed in the complete assembly.

E. Some Groups in the Catalogue may span over multiple pages, due to long text pages and/ or need of multiple drawings.
When this occurs, a note (*This list covers pages from x-2 to x-5*) is written in the text page header.

20) List length information

F. When the list has more then one variant, a page reference to the right drawing is given by the note *(See drawing on page: x-2)* after the variant heading.

21) Drawing reference information

SPC
Spare Parts Catalogue

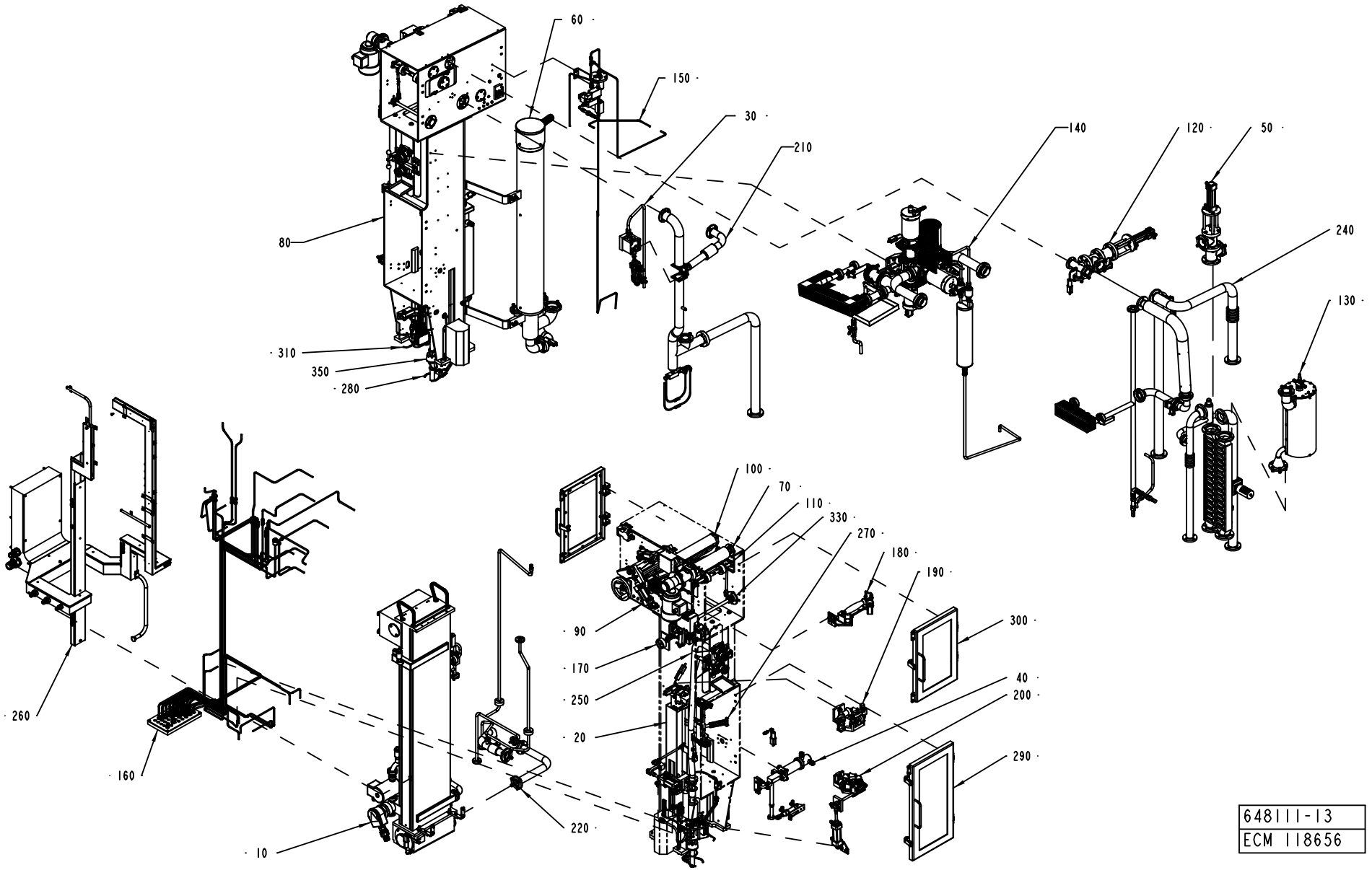
60
150
30
210
140
120
50
240
130
80
310
350
280
100
70
110
330
270
180
190
300
90
170
250
20
40
200
290
260
160
10
220
648111-13
ECM 118656

ECM: 118658 - 20030113
Group number: 648111-1200
Assembly Drawing: 648111-13_1_AA

Pos	Part No	SP	UN	Qty	Description	Page No
-						
010	A256014-0800	-		1	BATH	**13, 15, 17**
020	A256055-0700	-		1	HOT AIR ELEMENT	**19**
030	A256084-0700	-		1	CHANGE-OVER VALVE	**21**
040	A256095-0700	-		1	HOT AIR ELEMENT	**23**
050	A271169-0500	-		1	VALVE	**25**
060	A271181-0600	-		1	AIR SUPER-HEATER	**27**
070	A272004-0500	-		1	BENDING ROLLER	**29**
080	A272021-0800	-		1	ASEPTIC CHAMBER	**31, 33**
090	A272024-0500	A		1	CALENDER ROLLER	**35**
100	A272025-0400	-		1	AIR KNIFE	**37**
110	A272028-0800	-		1	BENDING ROLLER	**39**
120	A272337-0600	-		1	VALVE	**41**
130	A272407-0400	-		1	GENERATOR	**43**
140	A272560-0800	-		1	PRODUCT VALVE	**45, 47**
150	A272623-0700	-		1	SPRAY SYSTEM	**65**
160	A295045-0900	-		1	PIPE WORK-PNEUMATIC	**67, 69**
170	A441304-0400	-		1	MOVABLE FORMING RING	**71, 73, 75, 77**
180	A441307-0300	-		1	UPPER TUBE SUPPORT	**79, 81, 83**
190	A441486-0400	-		1	DIVIDED FORMING RING	**87, 89, 91**
200	A456309-0600	-		1	LOWER FORMING RING	**93, 95**
210	A456555-0600	-		1	SUCTION PIPE	**97**
220	A456556-0400	-		1	PEROXIDE PIPE	**99**
230	A456836-0600	-		1	CLEANING SYSTEM	**101**
240	A456976-0700	-		1	HEAT EXCHANGER	**105**
250	A469091-0500	-		1	FILLER TUBE	**109**
260	A469374-0600	-		1	CABLE TRENCH	**111**
270	A469501-0400	-		1	AIR NOZZLE	**115**
280	A469781-0400	-		1	TUBE FLUSHING DEVICE	**117**
290	A491570-0200	-		1	DOOR	**121**
300	A491579-0200	-		1	DOOR	**123**
310	A491976-0300	-		1	PHOTOCELL UNIT	**125, 127**
320	A579625-0100	-		1	PROTECTIVE GRATING	**129, 131**
330	A1539920-0200	-		1	PENDULUM	**133**
350	A925991-0200	-		1	LEVEL PROBE	**137**

Pos	Part No	SP	UN	Qty	Description	Page No

Machine Type | Group Description | Used-In | Group Number | Page No

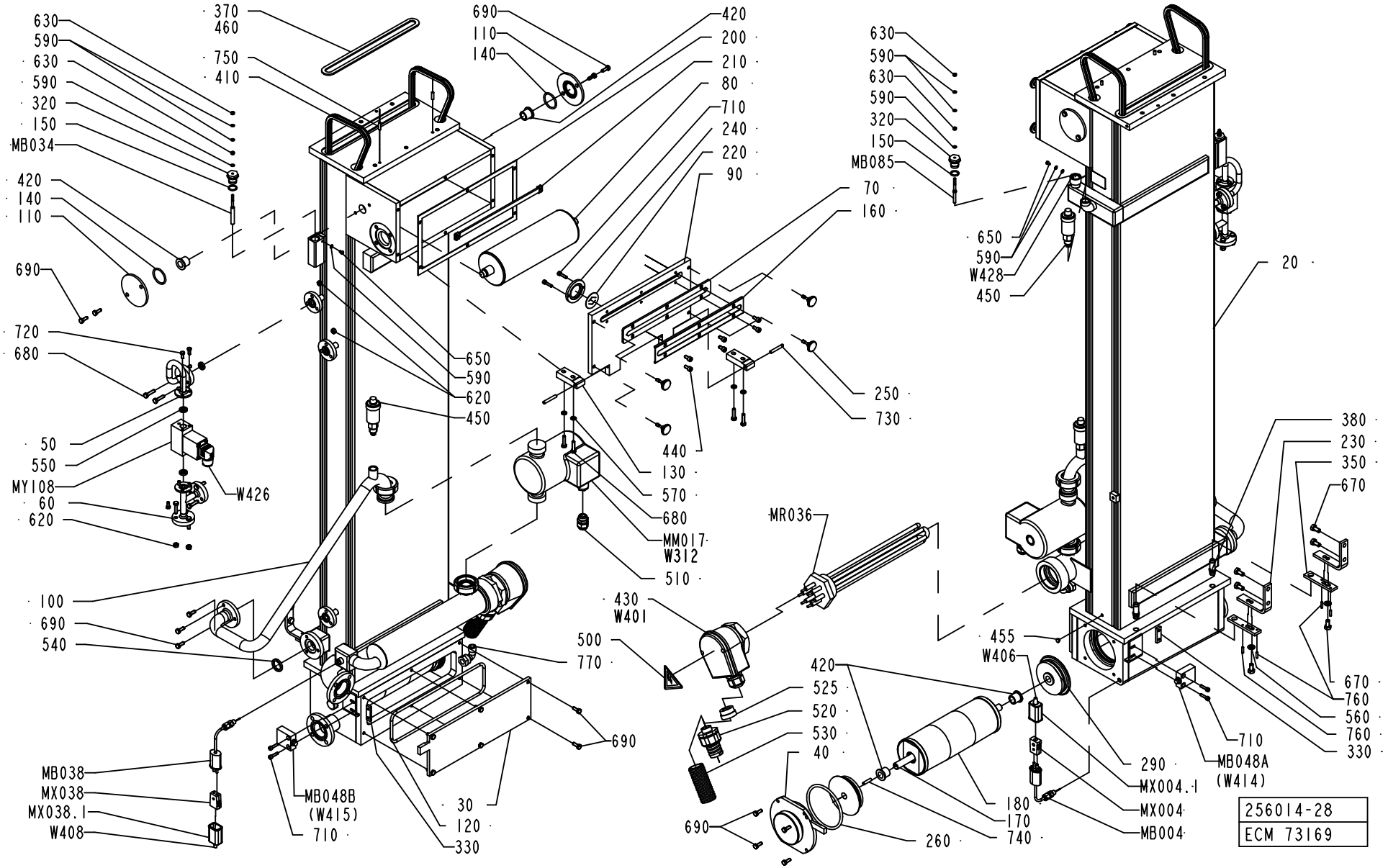
630
590
630
590
320
150
MB034
420
140
110
690
720
680
50
550
MY108
60
620
100
690
540
MB038
MX038
MX038.1
W408
370
460
750
410
690
110
140
650
590
620
450
MB048B
(W415)
710
30
120
330
690
420
200
210
80
710
240
220
90
70
160
250
730
440
130
570
680
MM017
W312
510
500
770
690
MR036
430
W401
420
525
520
530
40
690
180
170
740
260
630
590
630
590
320
150
MB085
650
590
W428
450
20
380
230
350
670
455
W406
670
760
560
760
330
710
290
MB048A
(W414)
MX004.1
MX004
MB004
256014-28
ECM 73169

ECM: 114409 - 20020930
Group number: 256014-0800
Assembly Drawing: 256014-28_1_AA

This list covers pages from 12 to 17

Pos	Part No	SP	UN	Qty	Description	Page No
NOPT TBA 0100B, NOPT TBA 0200M, NOPT TBA 0200S, NOPT TBA 0125S, NOPT TBA 0160S, NOPT TBA 0180B, NOPT TBA 0200B, NOPT TBA 0250B, NOPT TBA 0330S						
MB034	567070-0019	-		1	ELECTRODE	
NOPT TBA 0250S, NOPT TBA 0284B, NOPT TBA 0300S						
MB034	567070-0011	-		1	ELECTRODE	
Common Parts						
020	1296855-0000	-		1	BATH	
030	578492-0000	-		1	LID	
040	578491-0000	-		1	LID	
050	1490840-0000	-		1	PIPE	
060	1490839-0000	-		1	PIPE	
070	273954-0000	A		1	SEAL	
080	1282581-0000	A		1	BENDING ROLLER	
090	582433-0000	-		1	LID	
100	2528094-0000	-		1	PIPE	
110	578490-0000	-		2	LID	
120	578494-0000	-		1	O-RING	
130	979559-0000	-		2	HINGE	
140	927422-0014	B		2	O-RING 34.2X3 SILICON	
150	927421-0004	B		2	O-RING 15.3X2.4 SILICON	
160	456784-0000	-		1	LID	
170	578493-0000	A		1	SHAFT	
180	566191-0000	A		1	BENDING ROLLER	
200	751331-0000	A		1	GASKET	
210	456995-0000	-		1	CARRIER	
220	273937-0000	A		1	DIAPHRAGM	
230	456472-0000	-		2	ANGLE	
240	469982-0000	-		1	WASHER	
250	751680-0000	-		4	SCREW	
260	578495-0000	A		1	O-RING	
290	578486-0000	-		2	WHEEL	
320	560931-0000	-		2	BRACKET	
330	490890-0000	-		2	NUT PLATE	
350	456474-0000	-		2	ADJUSTMENT PLATE	
370	256005-0000	A		1	GASKET	
380	247248-0000	-		2	PIN	
410	90288-0066	-		2	ROLLER CHAIN, SINGLE 3/8 -365	
420	90240-0146	A		4	FLANGE BUSHING,15X21X20 MM	
430	90206-0326	-		1	JUNCTION BOX FOR 90206-56	
440	312115-0366	-		1	SCREW ISO4762 M6X12 A4	
450	90187-0105	-		2	PURGING VALVE, G3/8 FOR WATER	
455	90261-0071	-		1	PLUG, BLIND, PLASTIC, NO. GPN500B58	
460	90153-0016	-		1	ADHESIVE,TUBE 100G RHODORSIL CAF 3	
470	90153-0023	-		1	ADHESIVE, SILICON 251470 TUB 90CC	
500	90194-0016	-		1	ETIKETT	
510	352103-0106	-		1	CABLE GLAND, ST 11, PR18,6/PG11	
520	353243-0006	-		1	EXTENDED WITHOUT INSERT, PG16	
525	353249-0016	-		1	INSERT, SINGEL HOLE, EK 155/18	
530	90152-0070	-	MM	800	METAL HOSE, 32,5X26, UL 2621	
540	315229-0103	A		1	GASKETS, 23,1X30,1X3,7 MM 1" FDA	
550	315229-0101	A		3	GASKETS, 10,4X17,4X3,7 MM 1/2" FDA	
560	315105-0165	-		2	WASHER ISO 7089-8-200 HV-A4	
570	315105-0153	-		4	WASHER ISO 7089-6-200 HV-A4	
590	315105-0136	-		9	WASHER ISO 7089-4-200 HV-A4	
620	312605-0316	-		9	HEXAGON NUT, M6M M6 A280	
630	312605-0312	-		4	HEXAGON NUT, M6M M4 A280	
650	312125-0285	-		2	SCREW SLOT.PAN HD. MCS 4X6 A480	
670	312105-0449	-		6	SCREW M6S ISO 4017 M8X16 A480	
680	312105-0372	-		13	SCREW M6S ISO 4017 M6X25 A480	
690	312105-0368	-		17	SCREW M6S M6X16 A280	
710	312115-0331	-		6	SCREW ISO4762 M5X20 A4	
720	312105-0327	-		6	SCREW M6S ISO 4017 M5X12 A480	
730	311103-0361	-		2	PARALLELL PIN, M6, 6X40 MM	
740	311103-0355	-		1	PARALLELL PIN, M6, 6X25 MM	
750	311103-0310	-		2	PARALLELL PIN, M6, 5X20 MM	
760	311103-0270	-		4	PARALLELL PIN, M6, 4X16 MM	
770	342732-0110	-		1	ELBOW PIPE JOINT, EXT.THREAD,D=12MM-G3/8	
MB004	90326-0052	A		1	THERMO ELEMENT	
MB038	90326-0052	A		1	THERMO ELEMENT	
MB048A	90044-0084	A		1	LIMIT SW. 14 CE1-4	
MB048B	90044-0084	A		1	LIMIT SW. 14 CE1-4	
MB085	979500-0001	-		1	ELECTRODE	
MM017	2526863-0000	A		1	PUMP	
MR036	B90206-0070	A		1	HEATING ELEMENT 6000W 380/220V	
	90269-0308	-		*1*	*GASKET 59X68X3 MM*	
	90206-0326	-		*1*	*JUNCTION BOX FOR 90206-56*	
MX004	90326-0020	-		1	PLUG, FEMALE YELLOW CR-AL	
MX004.1	90326-0012	-		1	PROTECTIVE COVER, T31A4618	
MX038	90326-0020	-		1	PLUG, FEMALE YELLOW CR-AL	
MX038.1	90326-0012	-		1	PROTECTIVE COVER, T31A4618	
MY108	B544906-0000	A		1	SOLENOID VALVE	
	90042-0465	-		*1*	*O-RING VITON 17,17X1,78*	

Machine Type | Group Description | Used-In | Group Number | Page No

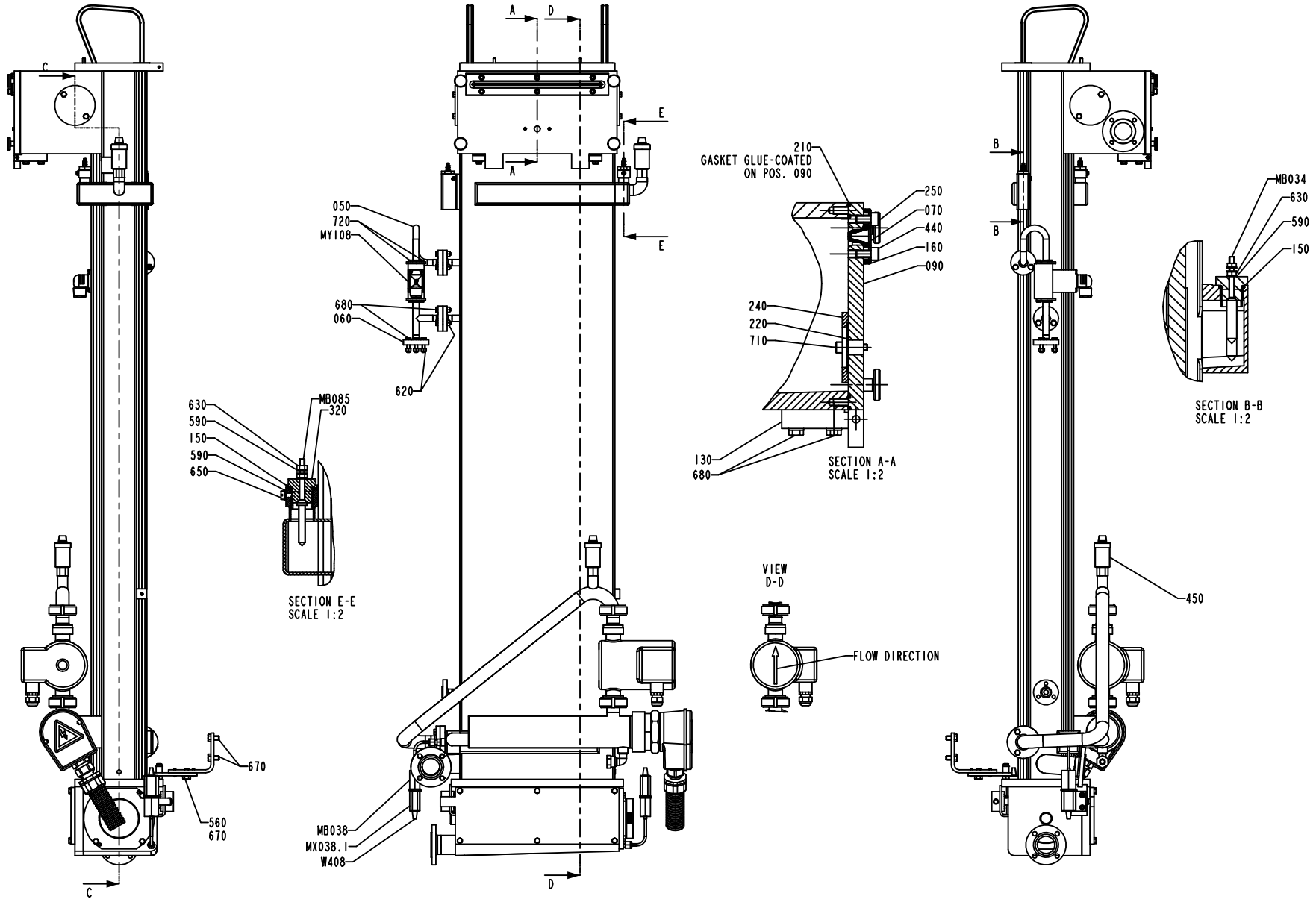
C
A
D
E
050
720
MY108
680
060
620
630
590
150
590
650
MB085
320
SECTION E-E
SCALE 1:2
210
GASKET GLUE-COATED
ON POS. 090
250
070
440
160
090
240
220
710
130
680
SECTION A-A
SCALE 1:2
B
MB034
630
590
150
SECTION B-B
SCALE 1:2
VIEW
D-D
FLOW DIRECTION
450
670
560
670
MB038
MX038.1
W408

Pos	Part No	SP	UN	Qty	Description	Page No
Common Parts (Cont'd)						
W312	351150-0412	-	M	3	CABLE OLFLEX 3X1,5 MM2 LIGHT/GREY	
W401	351120-0167	-	M	3	CABLE SIHF 4X6MM2 GREEN/YELLOW	
W406	90220-0059	-	M	3	THERMOCOUPLE CABLE K/ 2X0,81MM2	
W408	90220-0059	-	M	3	THERMOCOUPLE CABLE K/ 2X0,81MM2	
W426	351150-0403	-	M	3	CABLE OLFLEX 3X0,75 MM2 LIGHT/GREY	
W427	351150-0431	-	M	3	CABLE OLFLEX 2X0,75 MM2 LIGHT/GREY	
W428	351150-0431	-	M	3	CABLE OLFLEX 2X0,75 MM2 LIGHT/GREY	

Pos	Part No	SP	UN	Qty	Description	Page No

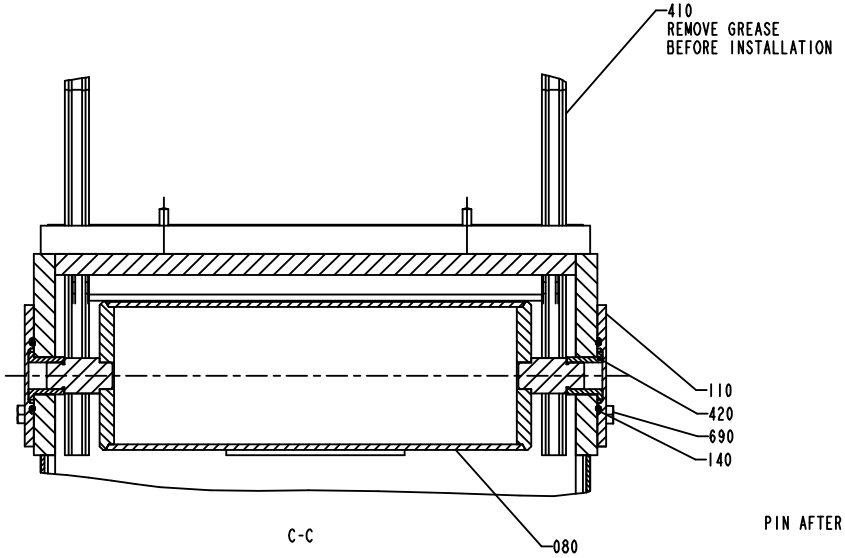
410
REMOVE GREASE
BEFORE INSTALLATION
110
420
690
140
080
C-C

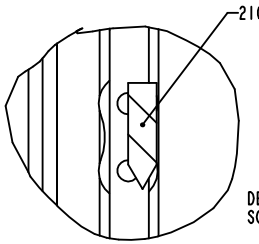
210
DETAIL A
SCALE 2:1

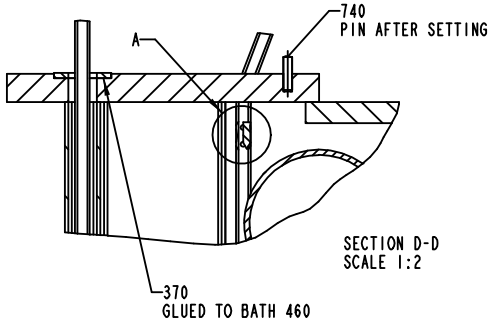
740
PIN AFTER SETTING
A
SECTION D-D
SCALE 1:2
370
GLUED TO BATH 460

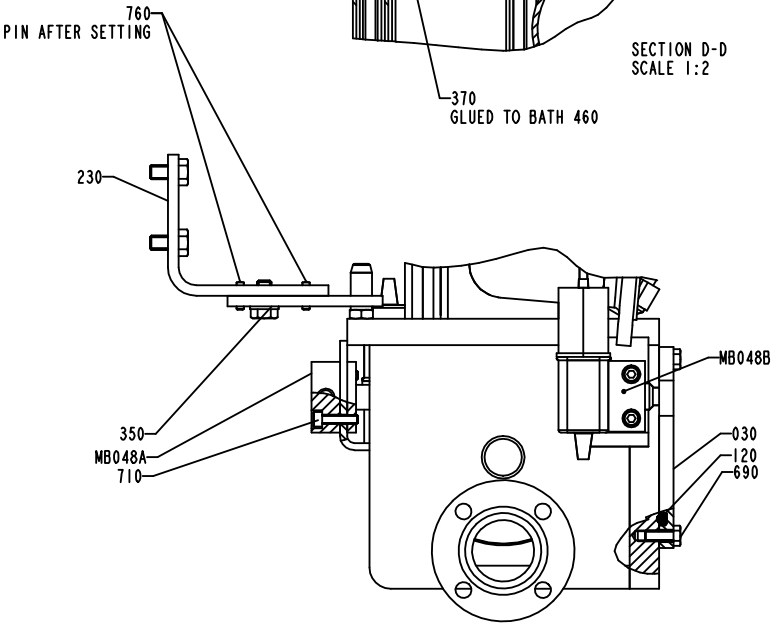
760
PIN AFTER SETTING
230
MB048B
350
MB048A
710
030
120
690

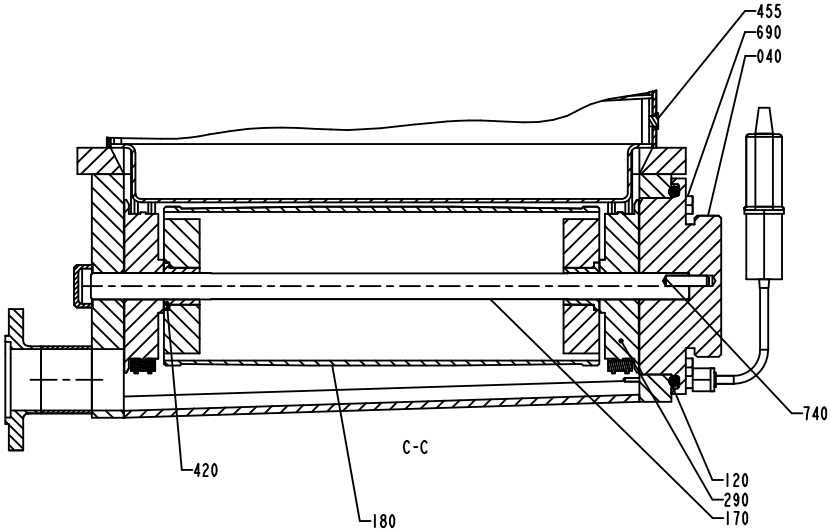
455
690
040
740
420
C-C
180
120
290
170

Pos	Part No	SP	UN	Qty	Description	Page No
SEE PREVIOUS LISTS PAGES: 13, 15.						

Pos	Part No	SP	UN	Qty	Description	Page No

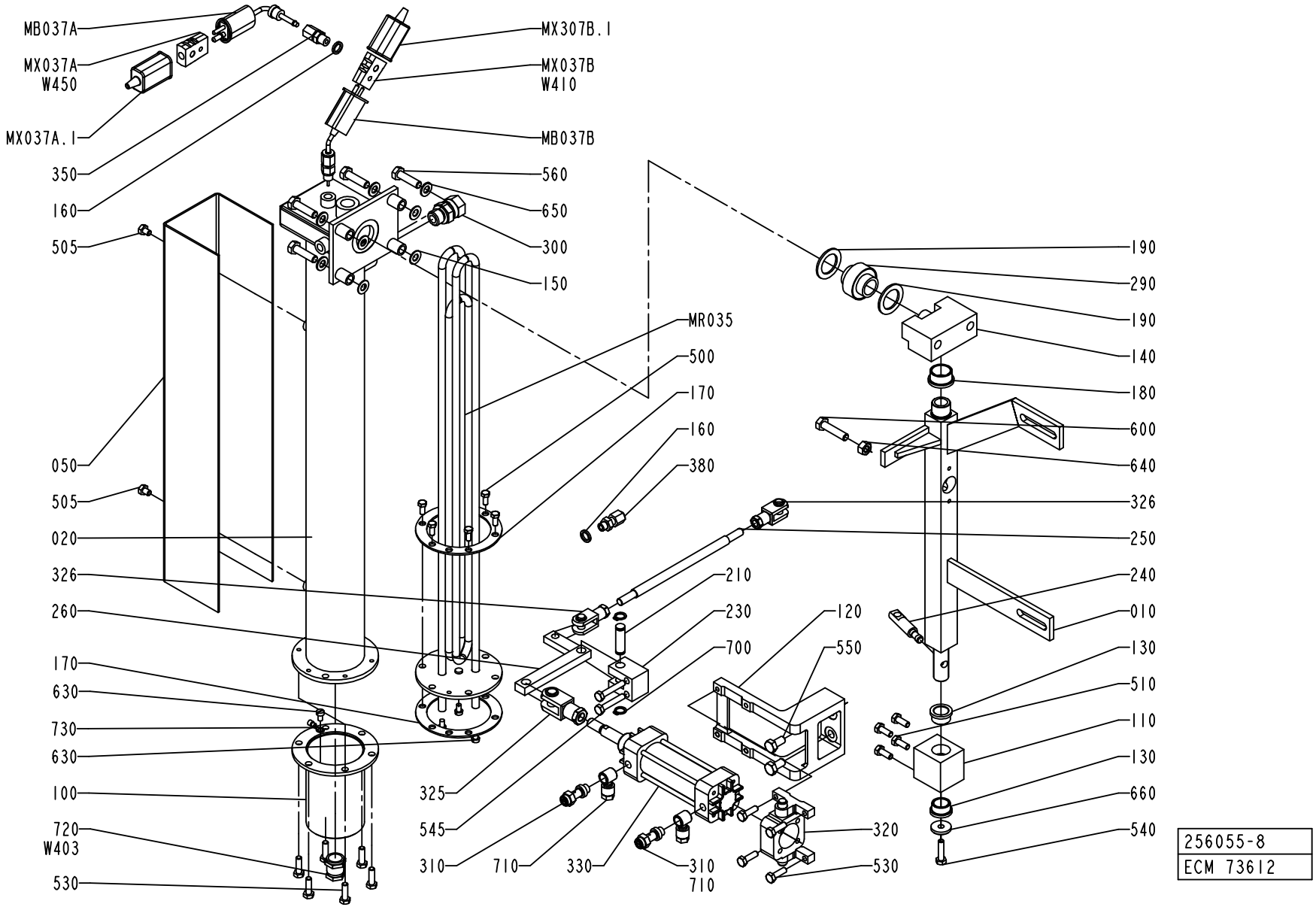
MB037A
MX037A W450
MX037A.1
350
160
505
MX307B.1
MX037B W410
MB037B
560
650
300
150
MR035
500
170
160
380
050
505
020
326
260
170
630
730
630
100
720 W403
530
325
545
310
710
330
310 710
320
530
190
290
190
140
180
600
640
326
250
240
010
130
510
110
130
660
540
210
230
700
120
550
256055-8
ECM 73612

ECM: 114562 - 20020930
Group number: 256055-0700
Assembly Drawing: 256055-8_1_AA

Pos	Part No	SP	UN	Qty	Description	Page No
-						
010	491169-0000	-		1	PIVOT ARM	
020	752174-0000	-		1	HEATING PIPE	
050	1260743-0000	-		1	HEAT GUARD	
100	491170-0000	-		1	COVER	
110	491171-0000	-		1	BEARING BLOCK	
120	978736-0000	-		1	BRACKET	
130	271269-0000	B		2	BUSHING	
140	272286-0000	-		1	AXLE SUPPORT	
150	751019-0000	B		8	WASHER	
160	273429-0000	B		2	WASHER	
170	751020-0000	A		2	GASKET	
180	295909-0000	B		1	BUSHING	
190	751023-0000	B		2	GASKET	
210	491931-0000	A		1	SHAFT	
220	491172-0000	B		1	GASKET	
230	491173-0000	-		1	BRACKET	
240	491174-0000	A		1	ARM	
250	491175-0000	A		1	LINK	
260	491177-0000	-		1	ARM	
290	491487-0000	B		1	BUSHING	
300	90030-0187	-		1	CONN. STR. GA-12-G3/8	
310	90235-0274	-		2	THROTTLE CHECK VALVES,G1/8"	
320	90239-0460	-		1	BRACKET	
325	90239-0516	-		1	ROD END, CLEVIS WITH AXLE M10X1,25	
326	90239-0532	-		2	ROD END, CLEVIS WITH AXLE M8X1,25	
330	B90239-0779	A		1	CYLINDER	
	90239-0442	*C*		*1*	*SEAL KIT*	
350	90326-0017	-		1	GLAND 1/8".REPL.BY 90326-306	
380	90326-0304	-		1	LEAD IN, 9041-15-KS-UB60	
500	312105-0327	-		2	SCREW M6S ISO 4017 M5X12 A480	
505	312105-0362	-		2	SCREW M6S ISO 4017 M6X8 A480	
510	312105-0368	-		4	SCREW M6S M6X16 A280	
530	312105-0370	-		10	SCREW M6S ISO 4017 M6X20 A480	
540	312105-0372	-		1	SCREW M6S ISO 4017 M6X25 A480	
545	312105-0376	-		2	SCREW M6S ISO 4014 M6X35 A480	
550	312105-0449	-		2	SCREW M6S ISO 4017 M8X16 A480	
560	312105-0455	-		4	SCREW M6S ISO 4017 M8X30 A480	
580	312105-0462	-		2	SCREW M6S ISO 4014 M8X55 A480	
600	312109-0457	-		1	SCREW M6S ISO 4017 M8X35 A480	
620	312125-0226	-		3	SCREW PAN HEAD MCS M3X12 SS	
630	312125-0323	-		1	SCREW PAN HEAD MCS M5X8 SS	
640	312605-0318	-		1	HEXAGON NUT, M6M M8 A280	
650	315105-0165	-		4	WASHER ISO 7089-8-200 HV-A4	
660	315125-0153	-		1	WASHER TBRSB 6,4X22X4 A4	
670	315125-0165	-		2	WASHER TBRSB 8,4X26X5 A4	
700	90141-0016	-		2	RETAIN. RING, 10	
710	342797-0121	-		2	CONN. BANJO, RINGPIECE 6-1/8	
720	352100-0106	-		1	CABLE GLANR.18,6-10,5	
730	353101-0132	-		1	CABLE SHOE, RING ø5,3MM	
MB037A	B90326-0048	A		1	THERMOCOUPLE, 12826-31	
	90326-0304	*-*		*1*	*LEAD IN, 9041-15-KS-UB60*	
MB037B	90326-0057	A		1	THERMOCOUPLE, CR-AL	
MR035	441804-0000	A		1	COIL HEATER	
MX037A	90326-0020	-		1	PLUG, FEMALE YELLOW CR-AL	
MX037A.1	90326-0012	-		1	PROTECTIVE COVER, T31A4618	
MX037B.1	90326-0012	-		1	PROTECTIVE COVER, T31A4618	
W403	351120-0145	-	M	6	CABLE SIHF 3X2,5MM2 GREEN/YELLOW	
W410	90220-0059	A	MM	3500	THERMOCOUPLE CABLE K/ 2X0,81MM2	
W450	90220-0059	A	MM	3500	THERMOCOUPLE CABLE K/ 2X0,81MM2	

Machine Type | Group Description | Used-In | Group Number | Page No

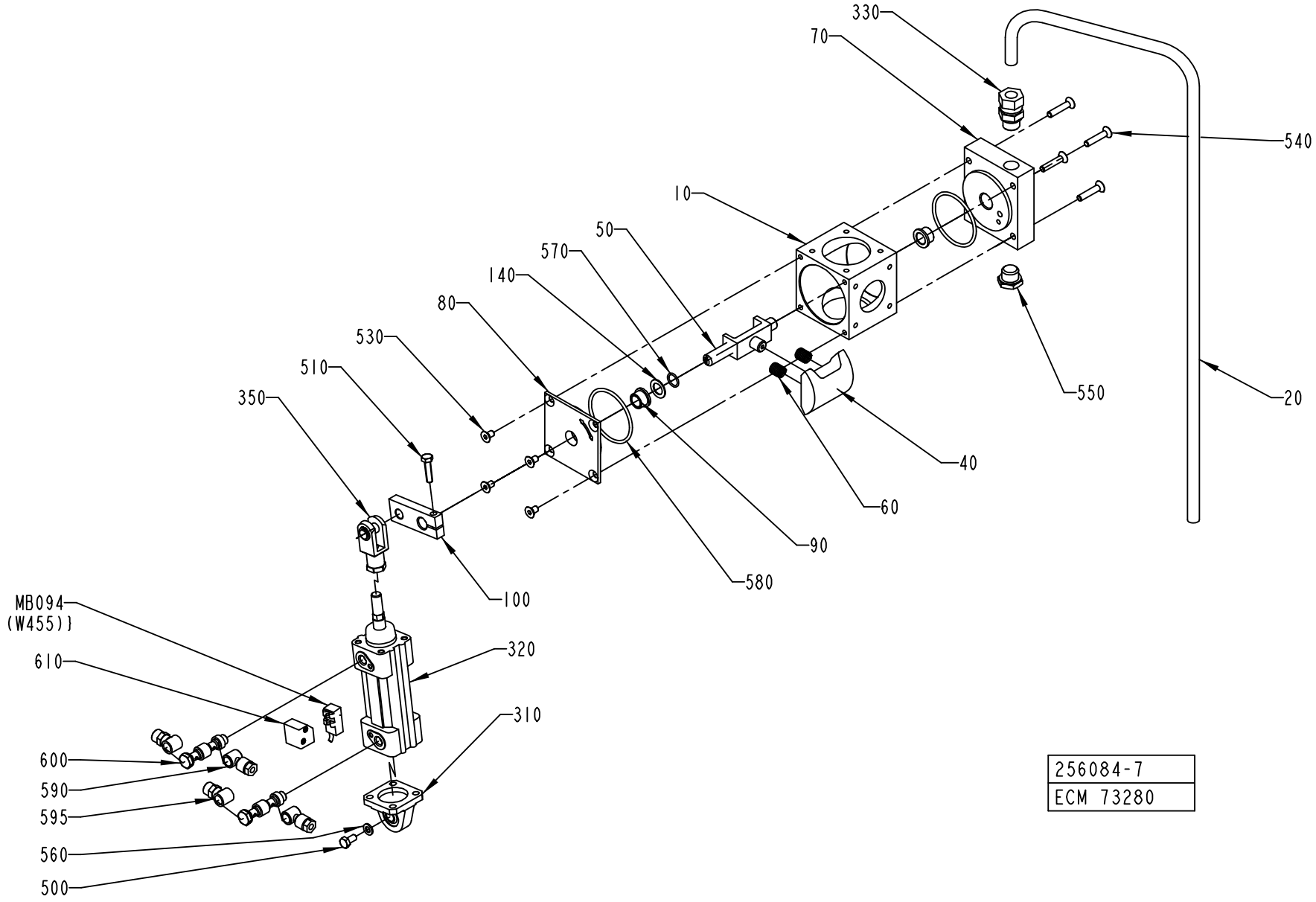
330
70
540
10
50
570
140
80
530
510
350
550
20
40
60
90
580
100
MB094
(W455))
610
320
310
600
590
595
560
500
256084-7
ECM 73280

ECM: 114416 - 20020930
Group number: 256084-0700
Assembly Drawing: 256084-7_1_AA

Pos	Part No	SP	UN	Qty	Description	Page No
-						
010	B255870-0000	-		1	VALVE HOUSING	
0010	*1282023-0002*	*-*		*1*	*CAST WORKPIECE*	
020	1519934-0000	-		1	PIPE	
040	979722-0000	A		1	BLOCK	
050	751732-0000	-		1	BRACKET	
060	21521-0000	A		2	COMPRESSION SPRING	
070	751731-0000	-		1	BEARING COVER	
080	441957-0000	-		1	BEARING COVER	
090	255875-0000	B		2	BUSHING	
100	2527337-0000	-		1	CYLINDER BRACKET	
140	266737-0000	-		1	WASHER	
310	90450-0756	-		1	BRACKET, REAR EYE 32	
320	90450-0328	A		1	DOUBLE ACTING,PROFILE CYL32-25	
330	90030-0187	-		1	CONN. STR. GA-12-G3/8	
350	90239-0516	-		1	ROD END, CLEVIS WITH AXLE M10X1,25	
500	312105-0366	-		1	SCREW M6S M6X12 A280	
510	312105-0372	-		1	SCREW M6S ISO 4017 M6X25 A480	
530	312155-0364	-		4	SCREW EN 10642 MF6S M6X10 A480	
540	312155-0374	-		4	SCREW EN 10642 MF6S M6X30 A480	
550	90330-0029	-		1	PLUG, EXT. G-THREAD, R-236R3/8	
560	315105-0153	-		1	WASHER ISO 7089-6-200 HV-A4	
570	315204-0110	A		1	O-RING 12,1X1,6 MM	
580	315204-0302	A		2	O-RING 54,5X3 MM	
590	342797-0121	-		2	CONN. BANJO, RINGPIECE 6-1/8	
595	342980-0113	-		2	BANJO-CONNECTION,RING 6/4-G1/8"	
600	342980-0313	-		2	BANJO-HOLLOW BOLT COUPL,EXT.THR.02-G1/8"	
610	90450-0669	-		1	SENSOR, BRACKET SERIES 168	
MB094	90044-0116	A		1	CYLINDER,SENSOR	

Pos	Part No	SP	UN	Qty	Description	Page No

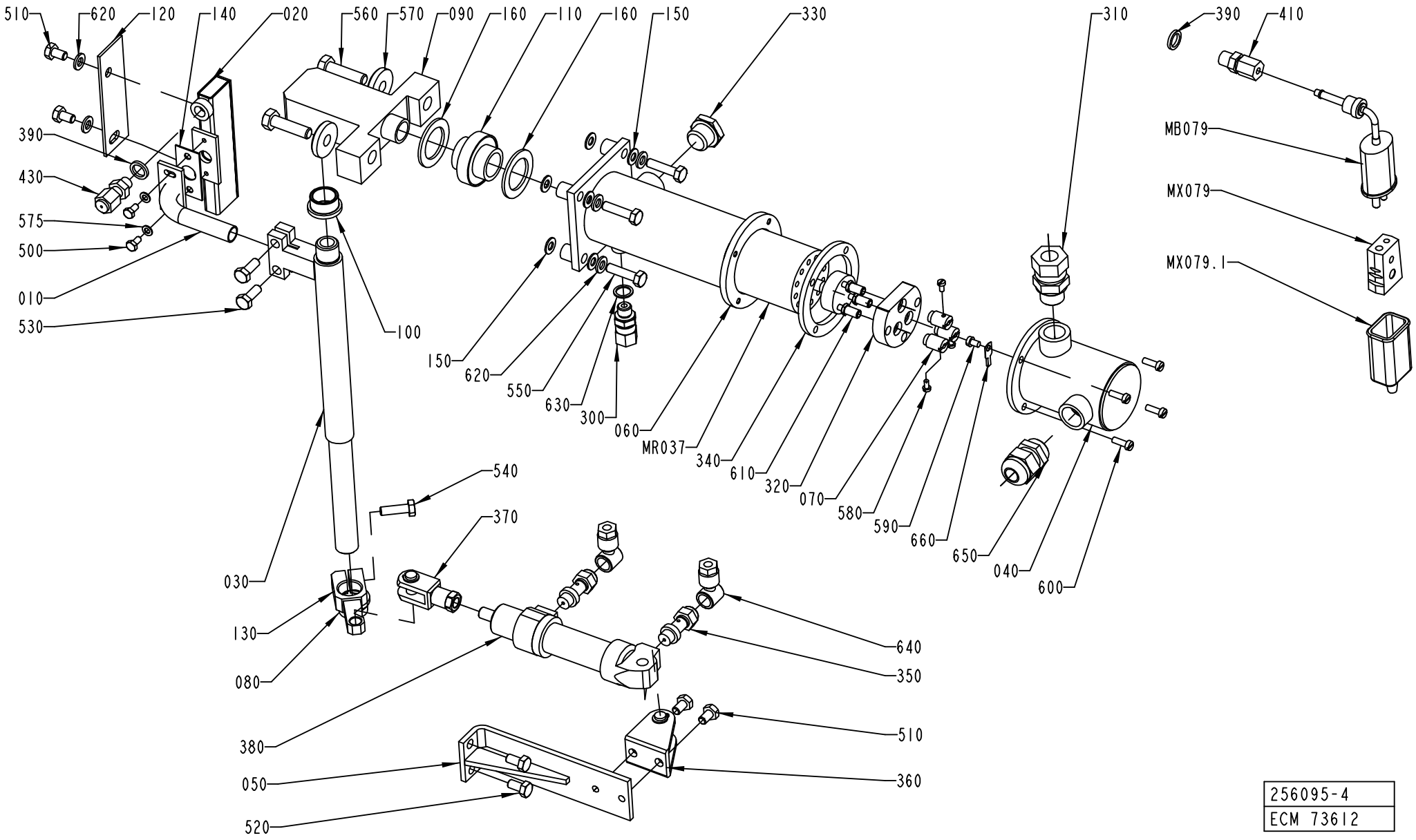

256095-4
ECM 73612

ECM: 114545 - 20020930
Group number: 256095-0700
Assembly Drawing: 256095-4_1_AA

Pos	Part No	SP	UN	Qty	Description	Page No
TBA 0125S, TBA 0100B						
010	571533-0000	-		1	BRACKET	
TBA 0160S, TBA 0250S, TBA 0200S, TBA 0200M						
010	571532-0000	-		1	BRACKET	
TBA 0330S, TBA 0300S, TBA 0180B, TBA 0200B, TBA 0284B, TBA 0250B						
010	256112-0000	-		1	BRACKET	
Common Parts						
020	1524662-0000	A		1	AIR NOZZLE	
030	272948-0003	-		1	SHAFT	
040	491223-0000	A		1	COVER	
050	491224-0000	-		1	BRACKET	
060	751733-0000	A		1	HEATING PIPE	
070	266739-0000	B		3	CABLE GLAND	
080	271269-0000	B		1	BUSHING	
090	272287-0000	-		1	AXLE SUPPORT	
100	295910-0000	B		1	BUSHING	
110	295936-0000	B		1	BUSHING	
120	491097-0000	A		1	HEAT GUARD	
130	491545-0000	-		1	BRACKET	
140	751015-0000	B		1	GASKET	
150	751018-0000	B		8	WASHER	
160	751023-0000	B		2	GASKET	
300	90030-0184	-		1	CONN. STR. GA-6-G1/8	
310	90030-0187	-		1	CONN. STR. GA-12-G3/8	
320	B90125-0020	-		1	PLATE	
	294464-0000	*A*		*1*	*BASE PLATE*	
	270927-0000	*A*		*3*	*SCREW*	
	270926-0000	*A*		*6*	*NUT*	
330	90330-0029	-		1	PLUG, EXT. G-THREAD, R-236R3/8	
340	90206-0322	B		1	GASKET	
350	90235-0274	-		2	THROTTLE CHECK VALVES,G1/8"	
360	90239-0487	-		1	REAR,CLEVIS,MINI-ISO 20-25	
370	90239-0532	-		1	ROD END, CLEVIS WITH AXLE M8X1,25	
380	90239-0847	A		1	DOUBLE ACTING, MINI-ISO, CYL.20-50	
390	273429-0000	-		2	WASHER	
410	90326-0306	-		1	GLAND FITTING 9041-45-KS-KR.1/8" D=4,5MM	
430	90326-0304	-		1	LEAD IN, 9041-15-KS-UB60	
500	312105-0287	-		2	SCREW M6S ISO4017 M4X8 A480	
510	312105-0364	-		4	SCREW M6S ISO 4017 M6X10 A480	
520	312105-0366	-		2	SCREW M6S M6X12 A280	
530	312105-0368	-		2	SCREW M6S M6X16 A280	
540	312105-0370	-		1	SCREW M6S ISO 4017 M6X20 A480	
550	312105-0372	-		4	SCREW M6S ISO 4017 M6X25 A480	
560	312105-0455	-		2	SCREW M6S ISO 4017 M8X30 A480	
570	315125-0165	-		2	WASHER TBRSB 8,4X26X5 A4	
575	315105-0136	-		2	WASHER ISO 7089-4-200 HV-A4	
580	312125-0220	-		3	SKRUV SLOT.PAN HD. MCS 3X6 A480	
590	312125-0285	-		1	SCREW SLOT.PAN HD. MCS 4X6 A480	
600	312125-0291	-		4	SCREW PAN HEAD MCS M4X12 SS	
610	312145-0228	-		3	SCREW COUNTERS.SLOT.HD. MFS 3X16 SS	
620	315105-0153	-		6	WASHER ISO 7089-6-200 HV-A4	
630	315234-0109	-		1	WASHER,PL.RND.CU.10,3/13,5 H=1,0	
640	342797-0121	-		2	CONN. BANJO, RINGPIECE 6-1/8	
650	352103-0106	-		1	CABLE GLAND, ST 11, PR18,6/PG11	
660	353104-0130	-		1	CABLE SHOEYAV 025 M 4*	
MBO79	B90326-0048	-		1	THERMOCOUPLE, 12826-31	
	90326-0304	*-*		*1*	*LEAD IN, 9041-15-KS-UB60*	
MR037	90206-0031	A		1	HEATING ELEMENT 700+1200W,220V	
MX079.1	90326-0012	-		1	PROTECTIVE COVER, T31A4618	
MXO79	90326-0020	-		1	PLUG, FEMALE YELLOW CR-AL	
W402	351120-0144	-	M	6	CABLE SIHF 3X1,5MM2 GREEN/YELLOW	
W433	90220-0059	-	M	6	THERMOCOUPLE CABLE K/ 2X0,81MM2	

Machine Type | Group Description | Used-In | Group Number | Page No

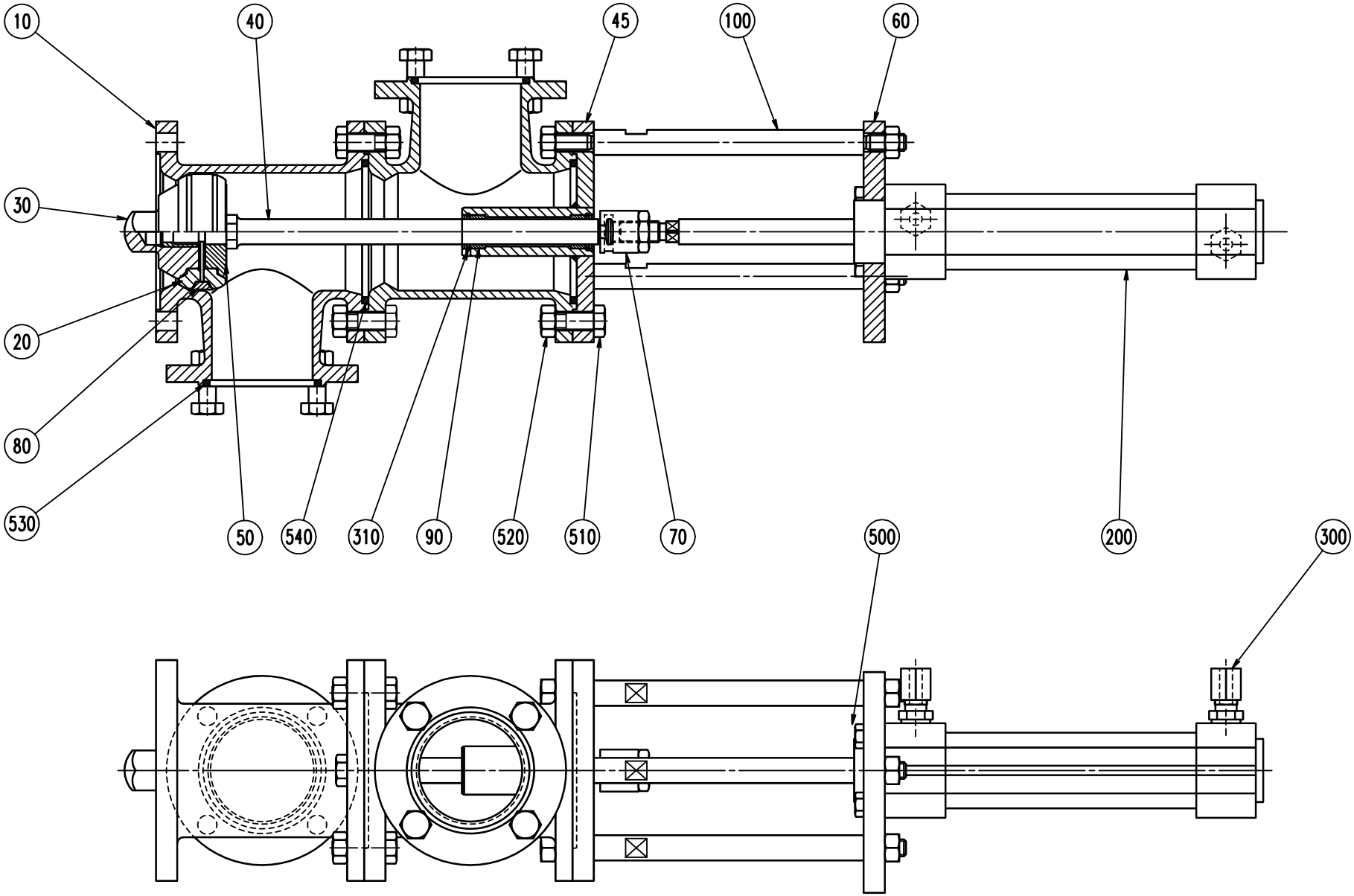
10
40
45
100
60
30
20
80
530
50
540
310
90
520
510
70
200
500
300

ECM: 114630 - 20020930
Group number: 271169-0500
Assembly Drawing: 271169-5_1_AA

Pos	Part No	SP	UN	Qty	Description	Page No
-						
010	1036194-0000	-		2	T-PIPE	
020	530589-0000	A		2	SEAL RING	
030	530590-0000	A		1	VALVE CONE	
040	1036188-0000	-		1	SHAFT	
045	1036189-0000	-		1	SPINDLE GUIDE	
050	1036191-0000	-		1	SEAL HOLDER	
060	1036193-0000	-		1	CYLINDER BRACKET	
070	441871-0000	A		1	PENDULUM SUSPENSION	
080	530599-0000	A		1	RING	
090	532349-0000	A		2	PLAIN BEARING	
100	1036192-0000	-		3	SPACER ROD	
200	90450-0281	A		1	DOUBLE ACTING,PROF.CYL 32-80	
300	90030-0184	B		2	CONN. STR. GA-6-G1/8	
310	90141-0022	A		2	SNAP RING B 16	
500	312105-0370	-		4	SCREW M6S ISO 4017 M6X20 A480	
510	312105-0453	-		17	SCREW M6S ISO 4017 M8X25 A480	
520	312605-0318	-		23	HEXAGON NUT, M6M M8 A280	
530	315229-0205	B		2	GASKET 47,5X55,5X3,7 MM 2"	
540	315229-0206	B		2	GASKET 60,2X68,2X3,7 MM 2"1/2	

Pos	Part No	SP	UN	Qty	Description	Page No

Machine Type Group Description Used-In Group Number Page No

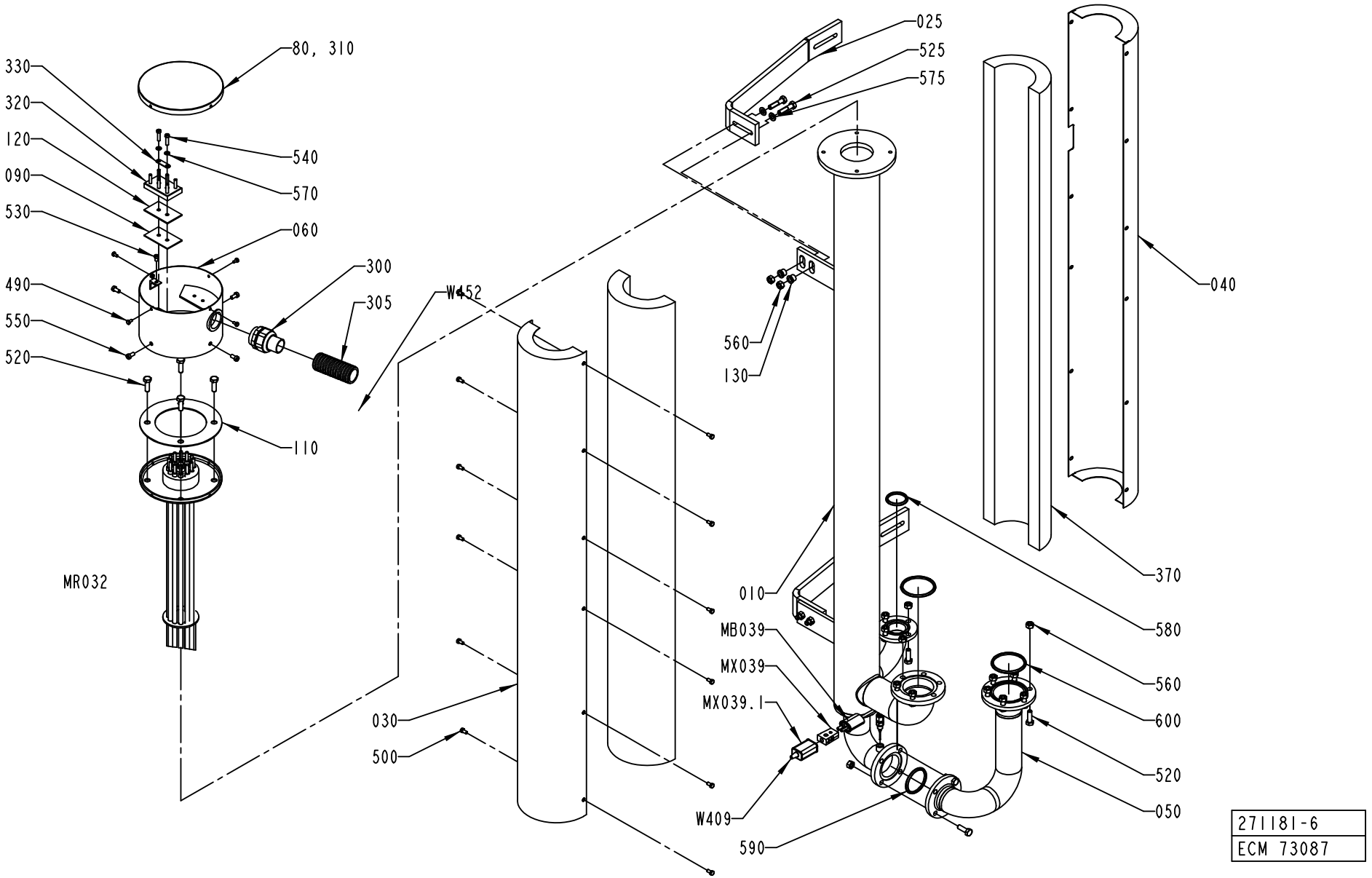
80, 310
330
320
120
090
530
540
570
060
490
550
520
300
305
W452
110
MR032
025
525
575
040
560
130
370
010
580
MB039
MX039
MX039.1
560
600
520
050
030
500
W409
590
271181-6
ECM 73087

ECM: 114405 - 20020930
Group number: 271181-0600
Assembly Drawing: 271181-6_1_AA

Pos	Part No	SP	UN	Qty	Description	Page No
NOHI						
050	1519482-0000	-		1	PIPE	
Common Parts						
010	1519483-0000	-		1	HEATING PIPE	
025	1519484-0000	-		2	SUPPORT	
030	1296849-0000	-		1	DISCHARGE TRAY	
040	1296850-0000	-		1	DISCHARGE TRAY	
060	B451430-0000	-		1	CONNECTION HOUS.(MINOR)	
	312605-0312	*-*		*4*	*HEXAGON NUT, M6M M4 A280*	
080	29876-0000	-		1	COVER	
090	30298-0000	A		1	INSULATION	
100	491305-0000	-		1	CONN.DIAGRAM AIR SUPERH.	
110	531731-0000	A		1	GASKET	
120	751009-0000	A		1	INSULATION	
130	1519601-0000	-		2	BUSHING	
300	90012-0126	-		1	NORMAL WITHOUT INSERT, PG29	
305	90152-0070	-	MM	1700	METAL HOSE, 32,5X26, UL 2621	
310	90153-0020	-	ML	1	ADHESIVE, BOSTIK 1782 125ML	
320	90195-0028	A		1	TERM.BLOCK 6-POLE STEATIT	
330	90195-0029	-		3	CONN. LINK NO324 FOR -28	
370	90411-0005	-	MM	1100	INSULATOR	
490	312105-0287	-		4	SCREW M6S ISO4017 M4X8 A480	
500	312105-0325	-		12	SCREW M6S ISO 4017 M5X10 A480	
510	312105-0451	-		2	SCREW M6S ISO 4017 M8X20 A480	
520	312105-0453	-		26	SCREW M6S ISO 4017 M8X25 A480	
525	312105-0457	-		4	SCREW M6S ISO 4014 M8X35 A480	
530	312125-0323	-		1	SCREW PAN HEAD MCS M5X8 SS	
540	312125-0331	-		2	SCREW PAN HEAD MCS M5X20 SS	
550	312125-0366	-		4	SCREW PAN HEAD MCS M6X12 SS	
560	312605-0318	-		30	HEXAGON NUT, M6M M8 A280	
570	315105-0146	-		2	WASHER ISO 7089-5-200 HV-A4	
575	315105-0165	-		4	WASHER ISO 7089-8-200 HV-A4	
580	315229-0204	B		1	GASKET 34,8X42,8X3,7 MM 1"1/2	
590	315229-0205	B		1	GASKET 47,5X55,5X3,7 MM 2"	
600	315229-0206	B		3	GASKET 60,2X68,2X3,7 MM 2"1/2	
MB039	90326-0051	A		1	THERMOCOUPLE, 12826-33	
MR032	B449939-0001	A		1	HEATING ELEMENT 15KW	
	449938-0003	*C*		*2*	*HEATING PIPE*	
	449938-0002	*C*		*2*	*HEATING PIPE*	
	449938-0001	*C*		*2*	*HEATING PIPE*	
MX039	90326-0020	-		1	PLUG, FEMALE YELLOW CR-AL	
MX039.1	90326-0012	-		1	PROTECTIVE COVER, T31A4618	
W409	90220-0059	A	M	4	THERMOCOUPLE CABLE K/ 2X0,81MM2	
W452	351120-0168	-	M	6	CABLE SIHF 4X10MM2 GREEN/YELLOW	

Machine Type | Group Description | Used-In | Group Number | Page No

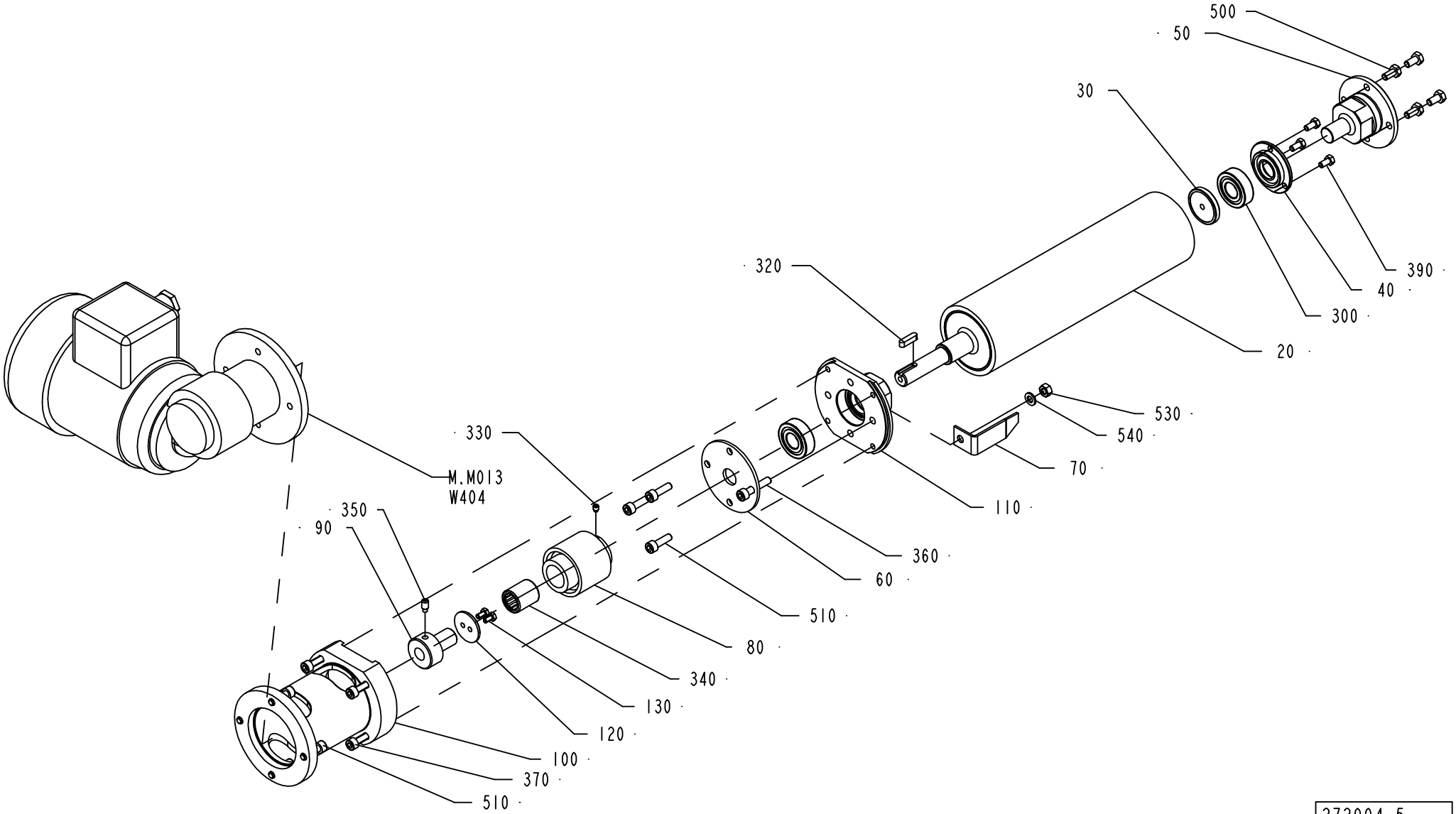

272004-5
ECM 73552

ECM: 107170 - 20021104
Group number: 272004-0500
Assembly Drawing: 272004-5_1_AA

Pos	Part No	SP	UN	Qty	Description	Page No
TBA 0125S, TBA 0100B						
070	752859-0000	A		1	POINTER	
TBA 0160S, TBA 0200S						
070	752858-0000	A		1	POINTER	
TBA 0250S, TBA 0200M						
070	574415-0000	A		1	INDICATOR 250S	
TBA 0330S, TBA 0300S, TBA 0180B, TBA 0200B, TBA 0284B, TBA 0250B						
070	752857-0000	A		1	POINTER	
Common Parts						
020	1548284-0000	A		1	ROLLER	
030	1490407-0000	-		1	WASHER	
040	1548275-0000	-		1	SEAL COVER	
050	1548056-0000	-		1	AXLE SUPPORT	
060	250590-0000	-		1	BEARING COVER	
080	90458-2841	-		1	SHAFT COUPLING 22,225H9/15	
090	1334234-0000	-		1	HUB	
100	1523228-0000	-		1	FLANGE	
110	2501542-0000	-		1	AXLE SUPPORT	
120	250592-0000	-		1	WASHER	
130	312105-0287	-		2	SCREW M6S ISO4017 M4X8 A480	
300	90458-1704	B		2	BALL BEARING, 15X35X11 MM	
320	315705-0201	-		1	PARALLEL KEY W. ROUND ENDS 5X5X20 MM	
330	312311-0321	-		1	SCREW ISO4028 M5X6 FZB	
340	90348-0007	-		1	FREE WHEEL COUPLING	
350	312311-0366	-		1	SCREW ISO4028 M6X12 FZB	
360	312115-0374	-		1	SCREW ISO4762 M6X30 A4	
370	312115-0372	-		4	SCREW ISO4762 M6X25 A4	
380	90069-0600	-		1	GEARS, WORM MOTOR ODM90-60KE5	
390	312105-0325	-		3	SCREW M6S ISO 4017 M5X10 A480	
500	312105-0366	-		4	SCREW M6S M6X12 A280	
510	312115-0370	-		7	SCREW ISO4762 M6X20 A4	
530	312605-0316	-		1	HEXAGON NUT, M6M M6 A280	
540	315105-0153	-		1	WASHER ISO 7089-6-200 HV-A4	
M.M013	90069-0600	A		1	GEARS, WORM MOTOR ODM90-60KE5	
W404	90220-0104	-	M	4	SCR. CABLE 4X1,5MM2	

Pos	Part No	SP	UN	Qty	Description	Page No

Machine Type | Group Description | Used-In | Group Number | Page No

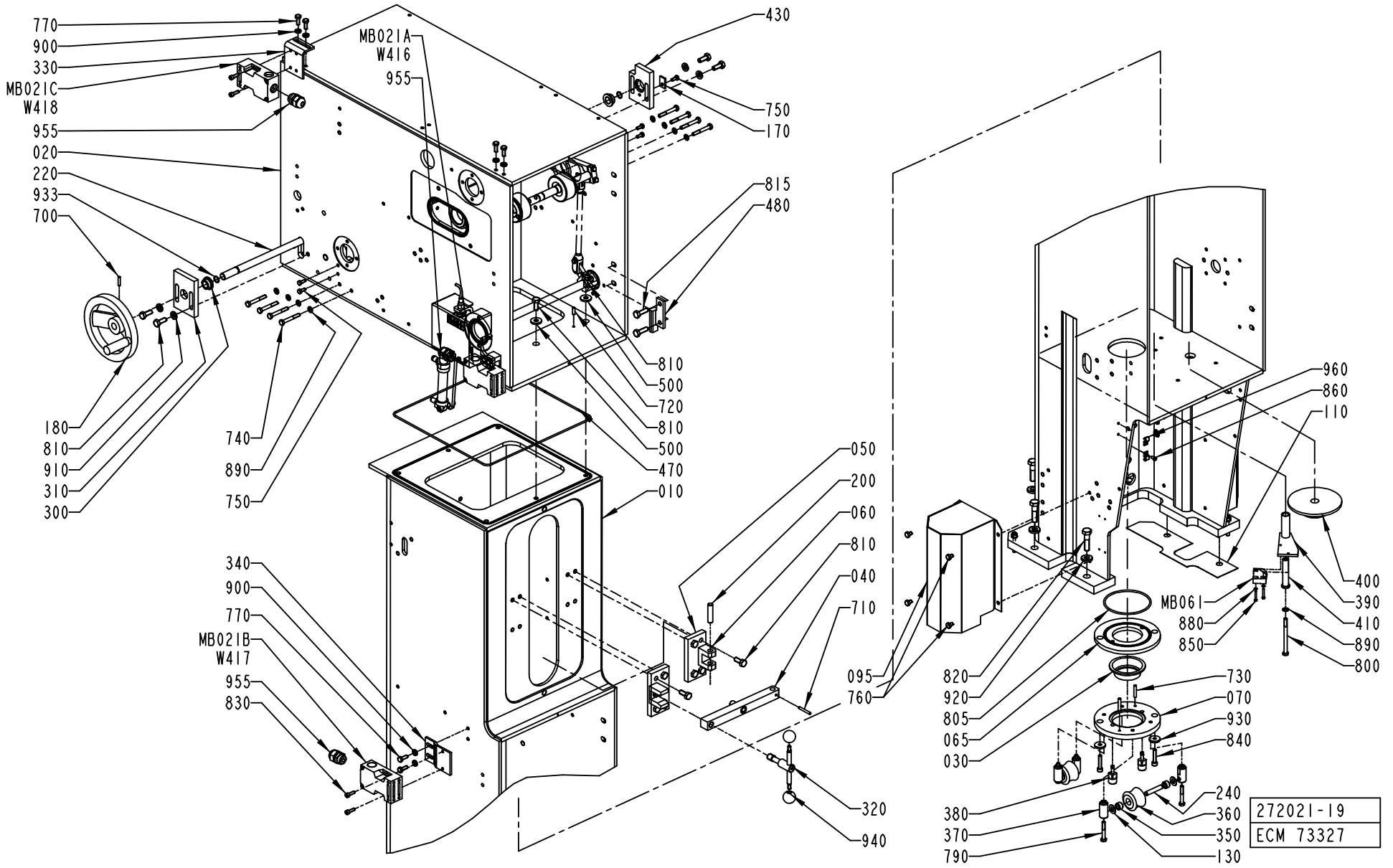
770
900
330
MB021C
W418
955
020
220
933
700
180
810
910
310
300
740
890
750
MB021A
W416
955
430
750
170
815
480
810
500
720
810
500
470
010
340
900
770
MB021B
W417
955
830
050
200
060
810
040
710
095
760
320
940
960
860
110
400
390
410
890
800
MB061
880
850
820
920
805
065
030
730
070
930
840
240
360
350
130
380
370
790
272021-19
ECM 73327

ECM: 114407 - 20020930
Group number: 272021-0800
Assembly Drawing: 272021-19_1_AA

This list covers pages from 30 to 33

Pos	Part No	SP	UN	Qty	Description	Page No
TBA 0125S, TBA 0100B						
030	490900-0000	B		1	SEALING RING	
065	571537-0000	-		1	RING	
070	571538-0000	-		1	RING	
240	490903-0000	-		2	SHAFT	
350	751230-0000	B		4	PLAIN BEARING	
360	441876-0000	A		2	ROLL	
370	490902-0000	-		4	AXLE SUPPORT	
380	571540-0000	-		2	PIN	
730	311103-0313	-		2	CYLINDRICACP M6 5X28 RFR	
805	315204-0309	B		1	O-RING 89,5X3 MM	
840	312115-0374	-		2	SCREW ISO4762 M6X30 A4	
TBA 0160S, TBA 0200S						
030	490901-0000	B		1	SEAL	
065	571537-0000	-		1	RING	
070	571539-0000	-		1	RING	
240	490903-0000	-		2	SHAFT	
350	751230-0000	B		4	PLAIN BEARING	
360	456996-0000	A		2	ROLLER	
370	490902-0000	-		4	AXLE SUPPORT	
380	571540-0000	-		2	PIN	
730	311103-0313	-		2	CYLINDRICACP M6 5X28 RFR	
805	315204-0309	B		1	O-RING 89,5X3 MM	
840	312115-0374	-		2	SCREW ISO4762 M6X30 A4	
TBA 0250S, TBA 0200M						
030	574336-0000	B		1	SEAL	
065	574334-0000	-		1	RING	
070	574335-0000	-		1	RING	
240	490903-0000	-		2	SHAFT	
350	751230-0000	B		4	PLAIN BEARING	
360	574333-0000	A		2	ROLL	
370	490902-0000	-		4	AXLE SUPPORT	
380	571540-0000	-		2	PIN	
730	311103-0313	-		2	CYLINDRICACP M6 5X28 RFR	
805	315204-0309	B		1	O-RING 89,5X3 MM	
840	312115-0374	-		2	SCREW ISO4762 M6X30 A4	
TBA 0330S, TBA 0300S, TBA 0180B, TBA 0200B, TBA 0284B, TBA 0250B						
030	273953-0000	B		1	SEAL	
070	456794-0000	-		1	RING	
240	263655-0006	-		2	SHAFT	
360	456796-0000	A		2	ROLLER	
370	456797-0000	-		4	AXLE SUPPORT	
380	752519-0002	-		2	PIN	
730	311103-0310	-		2	PARALLELL PIN, M6, 5X20 MM	
840	312115-0370	-		2	SCREW ISO4762 M6X20 A4	
Common Parts						
010	1523494-0000	-		1	PILLAR	
020	978865-0000	-		1	HOUSE	
030	929286-0000	B		1	SEAL	
040	295426-0000	-		1	CAP	
050	295427-0000	-		1	LOCK	
060	295428-0000	-		1	HINGE	
095	490964-0000	-		2	COVER	
110	1523158-0001	-		1	SHIM	
110	1523158-0002	-		1	SHIM	
110	1523158-0003	-		1	SHIM	
130	2033-0007	-		8	WASHER	
140	247349-0000	-		2	STEERING	
150	491602-0000	-		2	GASKET HOLDER	
170	978872-0000	-		1	LOCK WASHER	
180	247358-0000	-		1	SHIFTER HANDLE	
190	255986-0000	-		2	WHEEL	
200	256163-0000	-		1	SHAFT	
210	247357-0000	-		2	SPROCKET	
220	751131-0000	-		1	SHAFT	
230	256170-0000	-		2	DRIP PLATE	
250	267033-0000	-		2	WASHER	
260	271863-0000	-		2	SHAFT	
270	271864-0000	-		2	WASHER	
280	272002-0000	-		1	PROTECTIVE COVER LEFT	
290	272003-0000	-		1	PROTECTIVE COVER RIGHT	
300	279008-0000	-		2	BUSHING	
310	978870-0000	-		1	BEARING PLATE	
320	295429-0000	-		1	HANDLE	
330	978532-0000	-		1	BRACKET	
340	978531-0000	-		1	BRACKET	
360	929284-0000	A		2	ROLLER	
390	979962-0000	-		1	ARM	
400	751730-0000	-		1	LOCKING CIRCLIP	
410	979961-0000	-		1	PIVOT PIN	

Machine Type Group Description Used-In Group Number Page No

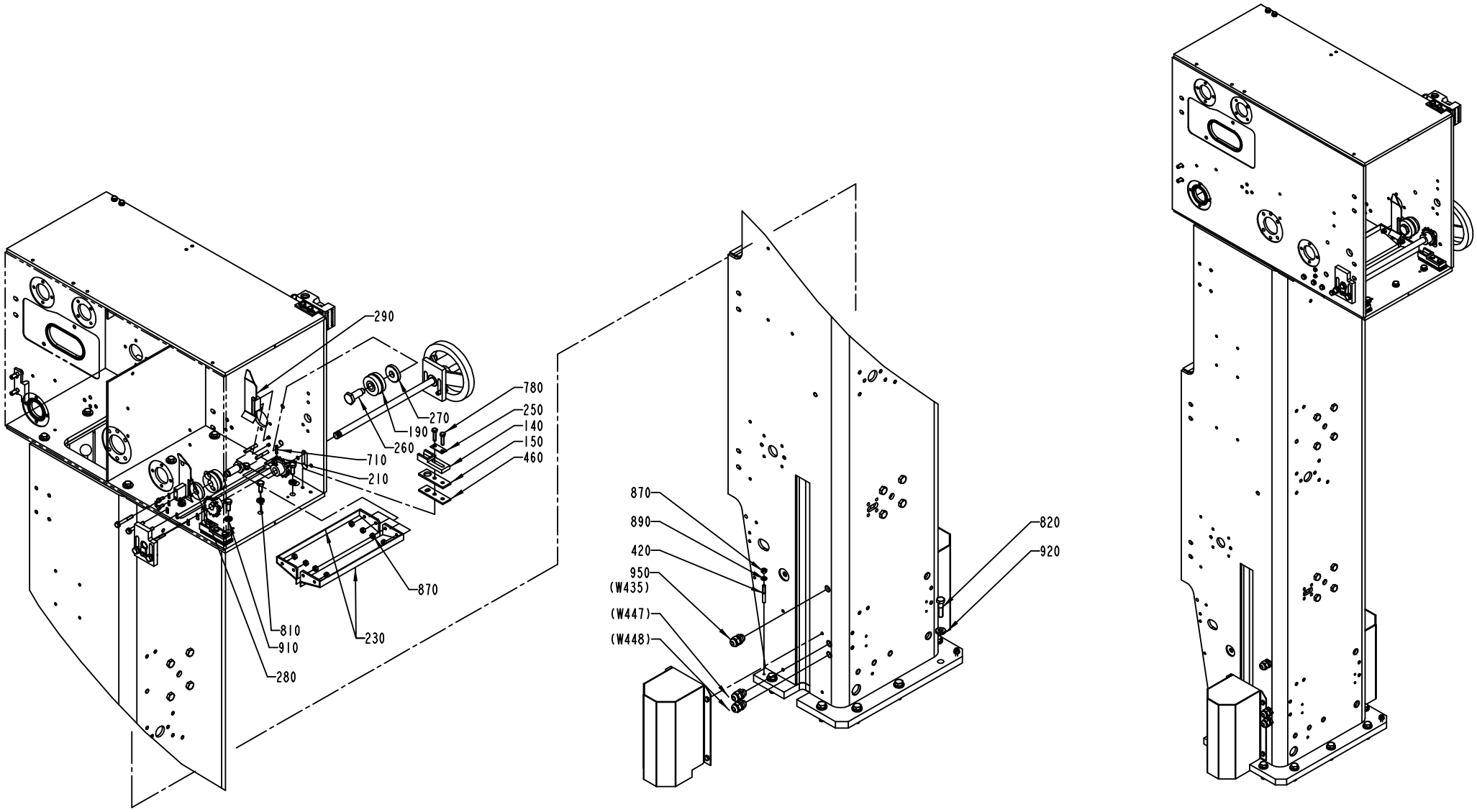
290
780
250
140
150
460
270
190
260
710
210
870
810
910
280
230
870
890
420
950
(W435)
(W447)
(W448)
820
920

ECM: 114407 - 20020930
Group number: 272021-0800
Assembly Drawing: 272021-19_2_AA

This list covers pages from 30 to 33

Pos	Part No	SP	UN	Qty	Description	Page No
Common Parts (Cont'd)						
420	B469159-0000	-		2	PIN	
	311103-0369	-		*1*	*PARALLELL PIN, M6, 6X60 MM*	
430	978871-0000	-		1	BEARING PLATE	
460	491128-0000	A		2	GASKET	
470	491418-0002	-		1	O-RING	
480	751684-0000	-		1	STOP LUG	
500	28036-0000	-		6	WASHER	
605	90044-0310	B		1	KEY FOR SAFETY SWITCH, AZ 15/16 B1	
700	311112-0256	-		1	SPRING PIN, ISO 8752 4X20-C	
710	311112-0262	-		3	SPRING PIN, ISO 8752 4X32-C	
720	311103-0308	-		2	PARALLELL PIN, M6, 5X16 MM	
740	312105-0379	-		8	SCREW M6S ISO 4014 M6X45 A480	
750	312105-0327	-		5	SCREW M6S ISO 4017 M5X12 A480	
760	312105-0362	-		8	SCREW M6S ISO 4017 M6X8 A480	
770	312105-0368	-		6	SCREW M6S M6X16 A280	
780	312105-0372	-		4	SCREW M6S ISO 4017 M6X25 A480	
790	312105-0378	-		4	SCREW M6S ISO 4014 M6X40 A480	
800	312105-0386	-		1	SCREW M6S ISO 4014 M6X80 A480	
810	312105-0451	-		24	SCREW M6S ISO 4017 M8X20 A480	
815	312105-0453	-		2	SCREW M6S ISO 4017 M8X25 A480	
820	312105-0499	-		7	SCREW M6S ISO 4014 M10X40 A480	
830	312115-0329	-		6	SCREW ISO4762 M5X16 A4	
850	312125-0230	-		2	SPåRSKRUV MCS M3X20 SS	
860	312125-0287	-		4	SCREW PAN HEAD MCS M4X8 SS	
870	312605-0316	-		10	HEXAGON NUT, M6M M6 A280	
880	315105-0124	-		2	WASHER ISO 7089-3-200 HV-A4	
890	315105-0153	-		19	WASHER ISO 7089-6-200 HV-A4	
900	315115-0153	-		6	WASHER PLAIN, TBRB 6,4/12 H=3	
910	315115-0165	-		10	WASHER PLAIN, TBRB 8,4/16 H=3	
920	315115-0173	-		7	WASHER PLAIN, TBRB 10,5/22 H=4	
930	315125-0153	-		2	WASHER TBRSB 6,4X22X4 A4	
933	315204-0109	A		2	O-RING 11,1X1,6 MM	
940	318800-0103	-		2	HANDLES,SPHERICAL KNOB,INT.THRE.,D.25-M6	
950	352103-0101	-		3	KABELFöRSKR. ST 9, PR15,2/PG9	
955	352103-0105	-		3	CABLE GLAND, STR 11, PR 18,6/PG11	
960	352110-0100	-		4	CABLE CLIPS, D=5-7 MM	
MB021A	90044-0139	B		1	KEY SAF.SW. AZ16-02 ZVR K-2254	
MB021B	90044-0139	B		1	KEY SAF.SW. AZ16-02 ZVR K-2254	
MB021C	90044-0139	B		1	KEY SAF.SW. AZ16-02 ZVR K-2254	
MB061	90044-0104	A		1	PROX.SWITCH IFM IN 3002	
W416	351150-0405	-	M	6	CABLE OLFLEX 5X0,75 MM2 LIGHT/GREY	
W417	351150-0405	-	M	6	CABLE OLFLEX 5X0,75 MM2 LIGHT/GREY	
W418	351150-0405	-	M	6	CABLE OLFLEX 5X0,75 MM2 LIGHT/GREY	

Machine Type	Group Description	Used-In	Group Number	Page No

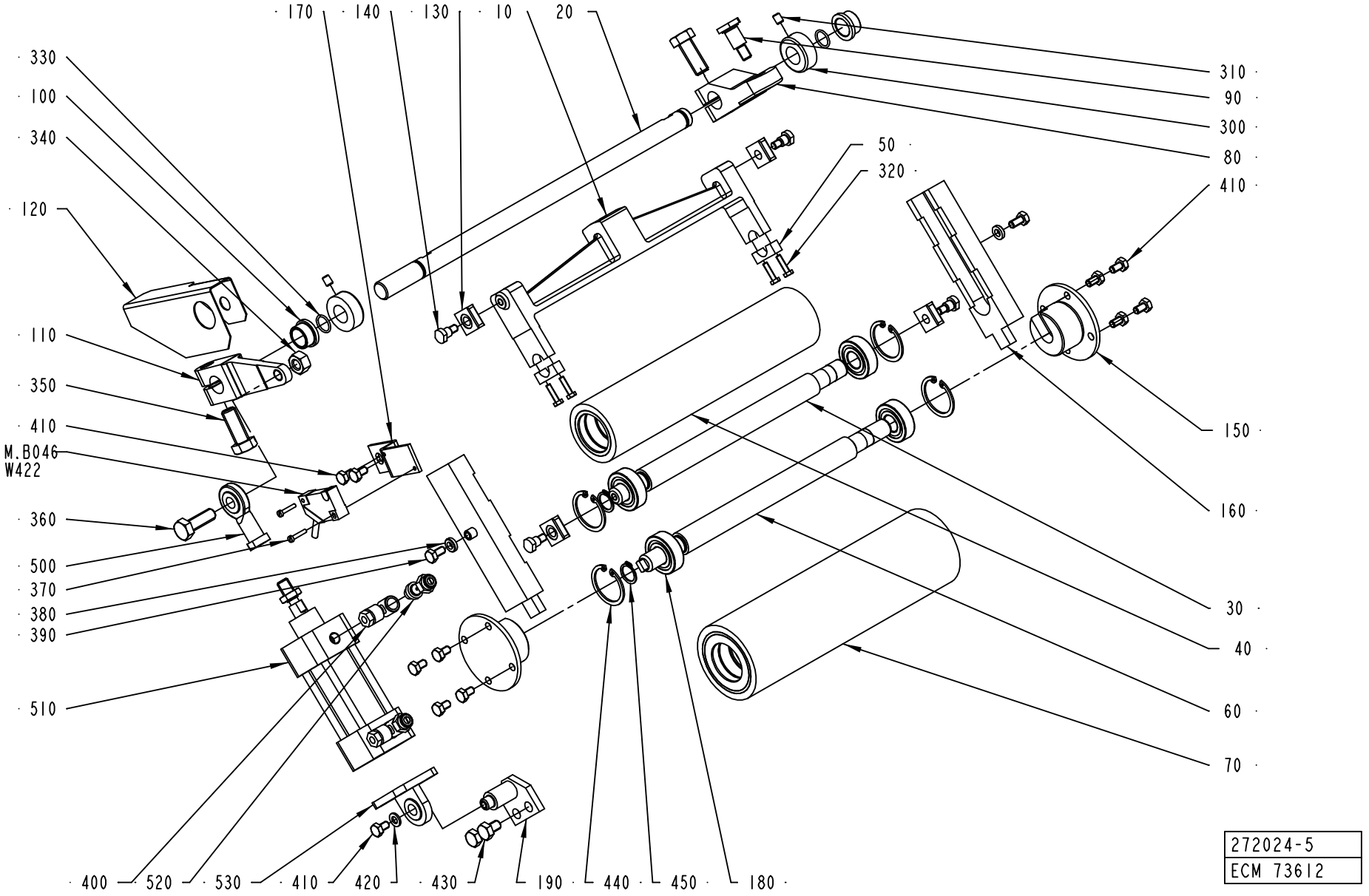
170
140
130
10
20
330
100
340
120
110
350
410
M.B046
W422
360
500
370
380
390
510
400
520
530
410
420
430
190
440
450
180
310
90
300
80
410
50
320
150
160
30
40
60
70
272024-5
ECM 73612

ECM: 107171 - 20021104
Group number: 272024-0500
Assembly Drawing: 272024-5_1_AA

Pos	Part No	SP	UN	Qty	Description	Page No
-						
010	1538103-0000	-		1	FORK	
020	751132-0000	A		1	SHAFT	
030	1538102-0000	A		1	SHAFT	
040	1538097-0000	A		1	CALENDER ROLLER	
050	1538098-0000	-		2	CLAMP	
060	1538099-0000	A		1	SHAFT	
070	1538096-0000	A		1	CALENDER ROLLER	
080	272927-0000	-		1	PRESSURE ARM	
090	271898-0000	B		1	SCREW	
100	271269-0000	A		2	BUSHING	
110	441904-0000	-		1	ARM	
120	978462-0000	-		1	PROTECTION PLATE	
130	1538104-0000	A		4	GUIDE	
140	271899-0000	B		4	SCREW	
150	566697-0000	-		2	AXLE SUPPORT	
160	566696-0000	A		2	GUIDE CONSOLE	
170	272033-0000	-		1	BRACKET	
180	90458-1704	A		4	BALL BEARING, 15X35X11 MM	
190	441578-0002	-		1	CYLINDER BRACKET	
300	315742-0112	-		2	COLLAR, 16/32, H=12	
310	312318-0362	-		2	SCREW ISO4029 M6X8 A4	
320	312105-0293	-		4	SCREW M6S ISO 4017 M4X16 A480	
330	315204-0111	A		2	O-RING 13,1X1,6 MM	
340	312605-0320	-		1	HEXAGON NUT, M6M M10 A280	
350	312105-0536	-		2	SCREW M6S ISO 4017 M12X30 A480	
360	312105-0495	-		1	SCREW M6S ISO 4017 M10X30 A480	
370	312125-0228	-		2	SCREW PAN HEAD MCS M3X16 A480	
380	315115-0153	-		2	WASHER PLAIN, TBRB 6,4/12 H=3	
390	312105-0366	-		2	SCREW M6S M6X12 A280	
400	342797-0121	-		2	CONN. BANJO, RINGPIECE 6-1/8	
410	312105-0364	-		11	SCREW M6S ISO 4017 M6X10 A480	
420	315105-0153	-		3	WASHER ISO 7089-6-200 HV-A4	
430	312105-0447	-		2	SCREW M6S ISO 4017 M8X12 A480	
440	315753-0124	-		4	RETAIN. RING, 35	
450	315751-0112	-		2	RETAIN. RING, 15	
500	90239-0405	-		1	ROD END,BALL JOINT EYE M10X1,25	
510	B90239-0773	A		1	CYLINDER	
	90239-0442	*C*		*1*	*SEAL KIT*	
520	90235-0274	-		2	THROTTLE CHECK VALVES,G1/8"	
530	90239-0453	-		1	BRACKET	
MB046	90044-0104	A		1	PROX.SWITCH IFM IN 3002	

Pos	Part No	SP	UN	Qty	Description	Page No

Machine Type | Group Description | Used-In | Group Number | Page No

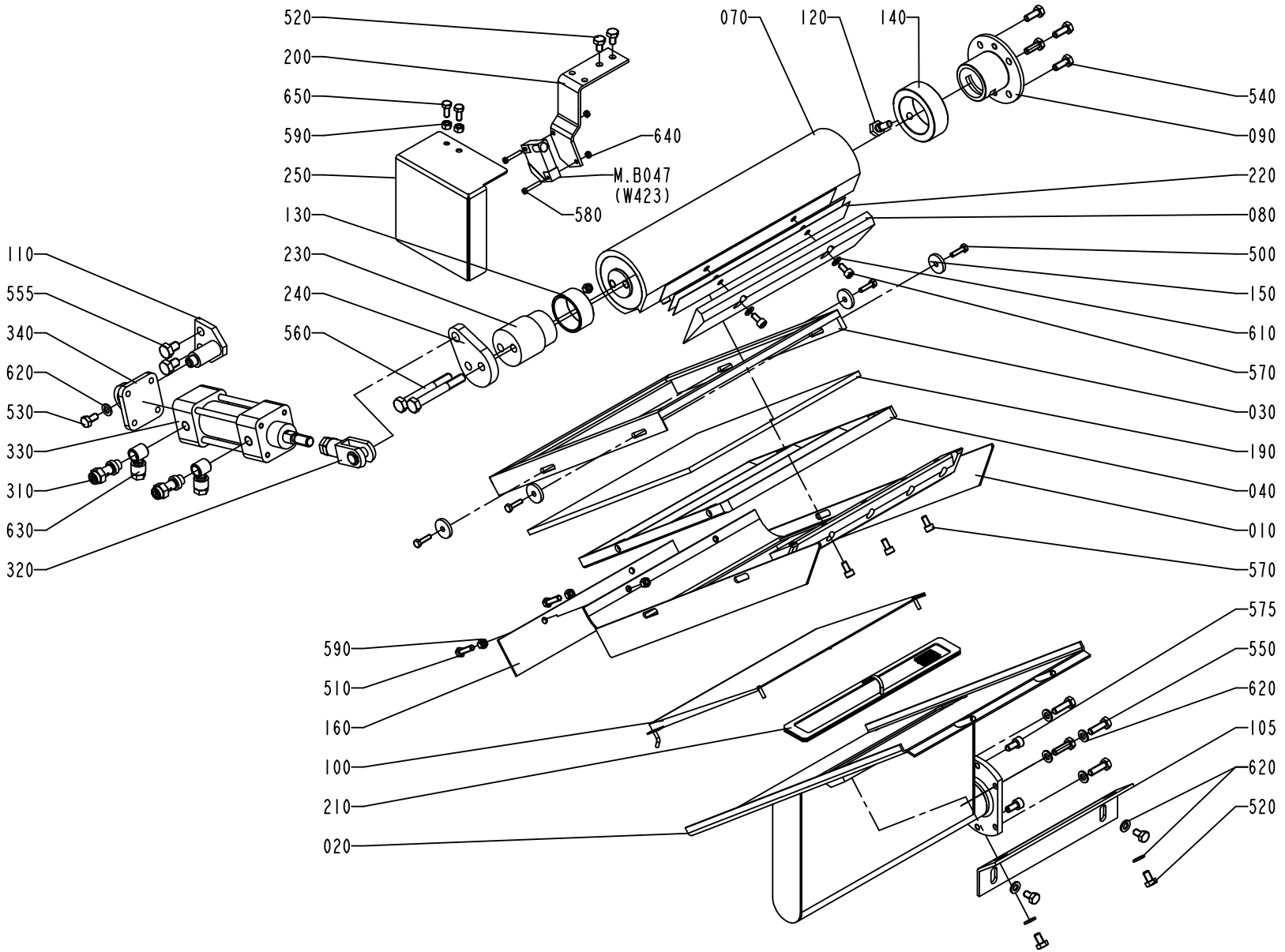
520
200
650
590
250
130
230
240
560
640
M.B047
(W423)
580
070
120
140
540
090
220
080
500
150
610
570
030
190
040
010
570
575
550
620
105
620
520
110
555
340
620
530
330
310
630
320
590
510
160
100
210
020
272025-5
ECM 73657

ECM: 114403 - 20020930
Group number: 272025-0400
Assembly Drawing: 272025-5_1_AA

Pos	Part No	SP	UN	Qty	Description	Page No
TBA 0125S, TBA 0100B						
010	271824-0000	-		1	AIR KNIFE, MOVABLE	
020	271825-0000	-		1	FIXED AIR KNIFE	
030	271941-0001	-		1	FRAME	
040	271942-0001	-		1	AIR GUIDE	
070	272026-0001	-		1	AIR DISTRIBUTOR	
080	271820-0001	-		1	STEERING RAIL	
100	272140-0001	-		1	HEAD PLATE	
160	271827-0001	-		1	HEAD PLATE	
190	272027-0001	-		1	GLASS PANE	
210	272141-0001	B		1	FILTER	
220	272329-0001	-		2	LACE	
570	312115-0325	-		5	SCREW ISO4762 M5X10 A4	
TBA 0330S, TBA 0300S, TBA 0180B, TBA 0160S, TBA 0200B, TBA 0250S, TBA 0284B, TBA 0200S, TBA 0200M, TBA 0250B						
010	272022-0000	-		1	AIR KNIFE, MOVABLE	
020	272023-0000	-		1	FIXED AIR KNIFE	
030	271941-0002	-		1	FRAME	
040	271942-0002	-		1	AIR GUIDE	
070	272026-0002	-		1	AIR DISTRIBUTOR	
080	271820-0002	-		1	STEERING RAIL	
100	272140-0002	-		1	HEAD PLATE	
160	271827-0002	-		1	HEAD PLATE	
190	272027-0002	-		1	GLASS PANE	
210	272141-0002	B		1	FILTER	
220	272329-0002	-		3	LACE	
570	312115-0325	-		7	SCREW ISO4762 M5X10 A4	
Common Parts						
090	271858-0000	-		1	FLANGE	
105	272464-0000	-		1	ANGLE BRACKET	
110	441578-0001	-		1	CYLINDER BRACKET	
120	255995-0000	-		1	SCREW	
130	751165-0000	-		1	BUSHING	
140	256022-0000	-		1	BUSHING	
150	263311-0000	-		4	WASHER	
200	1524653-0000	-		1	BRACKET	
230	441576-0000	-		1	SPACER	
240	1524654-0000	-		1	ARM	
250	1524655-0000	-		1	PROTECTION PLATE	
310	90235-0274	-		2	THROTTLE CHECK VALVES,G1/8"	
320	90239-0516	-		1	ROD END, CLEVIS WITH AXLE M10X1,25	
330	B90239-0773	A		1	CYLINDER	
	90239-0442	*C*		*1*	*SEAL KIT*	
340	90239-0453	-		1	BRACKET	
500	312105-0293	-		4	SCREW M6S ISO 4017 M4X16 A480	
510	312105-0331	-		2	SCREW M6S ISO 4017 M5X20 A480	
520	312105-0364	-		6	SCREW M6S ISO 4017 M6X10 A480	
530	312105-0366	-		1	SCREW M6S M6X12 A280	
540	312105-0368	-		4	SCREW M6S M6X16 A280	
550	312105-0370	-		4	SCREW M6S ISO 4017 M6X20 A480	
555	312105-0447	-		2	SCREW M6S ISO 4017 M8X12 A480	
560	312105-0464	-		2	SCREW M6S ISO 4014 M8X65 A480	
575	312115-0366	-		2	SCREW ISO4762 M6X12 A4	
580	312125-0230	-		2	SPåRSKRUV MCS M3X20 SS	
590	312605-0314	-		6	HEXAGON NUT, M6M M5 A280	
610	315105-0146	-		2	WASHER ISO 7089-5-200 HV-A4	
620	315105-0153	-		9	WASHER ISO 7089-6-200 HV-A4	
630	342797-0121	-		2	CONN. BANJO, RINGPIECE 6-1/8	
640	312605-0310	-		2	HEXAGON NUT, M6M M3 A280	
650	312105-0327	-		2	SCREW M6S ISO 4017 M5X12 A480	
MB047	90044-0104	A		1	PROX.SWITCH IFM IN 3002	

Machine Type | Group Description | Used-In | Group Number | Page No

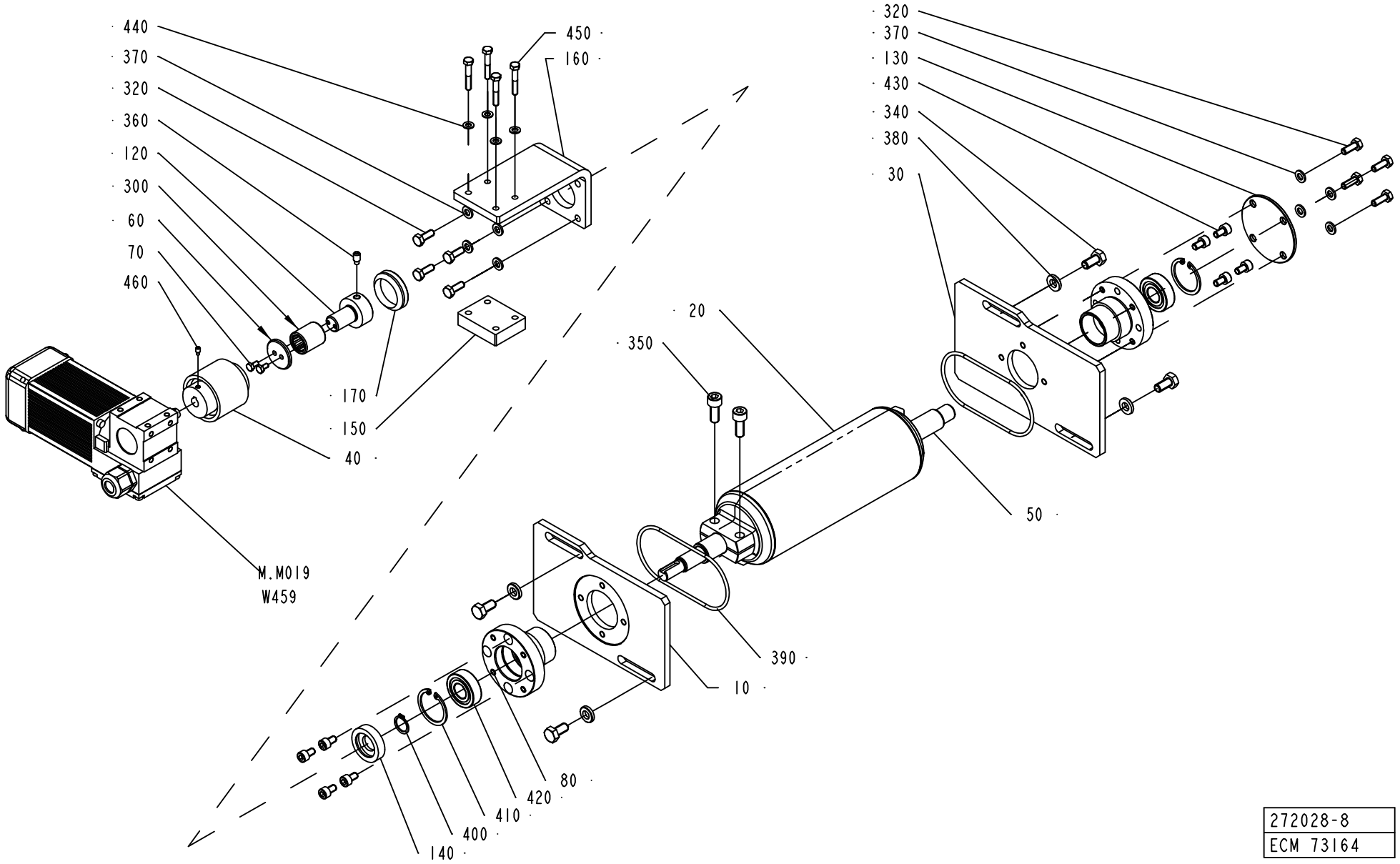

272028-8
ECM 73164

ECM: 107172 - 20021104
Group number: 272028-0800
Assembly Drawing: 272028-8_1_AA

Pos	Part No	SP	UN	Qty	Description	Page No
TBA 0125S 6000/H, TBA 0125S 7500/H, TBA 0100B 7500/H						
010	1524780-0000	-		1	PLATE	
020	441547-0000	A		1	BENDING ROLLER	
030	572157-0000	-		1	BEARING PANEL	
TBA 0160S 6000/H, TBA 0160S 7500/H, TBA 0200S 6000/H, TBA 0200S 7500/H						
010	1524780-0000	-		1	PLATE	
020	1260483-0000	A		1	BENDING ROLLER	
030	572157-0000	-		1	BEARING PANEL	
TBA 0250S 6000/H, TBA 0250S 7500/H, TBA 0200M 7500/H						
010	1524780-0000	-		1	PLATE	
020	1260478-0000	A		1	BENDING ROLLER	
030	572157-0000	-		1	BEARING PANEL	
TBA 0330S 7500/H, TBA 0300S 6000/H, TBA 0300S 7500/H, TBA 0180B 6000/H, TBA 0180B 7500/H, TBA 0200B 6000/H, TBA 0200B 7500/H, TBA 0250B 6000/H, TBA 0250B 7500/H, TBA 0284B 7500/H, TBA 0284B 6000/H						
010	1524805-0000	-		1	PLATE	
020	441546-0000	A		1	BENDING ROLLER	
030	572158-0000	-		1	BEARING PANEL	
Common Parts						
040	90458-2840	-		1	SHAFT COUPLING 22,225H9/9	
050	2522249-0000	-		1	SHAFT	
060	250592-0000	-		1	WASHER	
070	312105-0287	-		2	SCREW M6S ISO4017 M4X8 A480	
080	1539997-0000	-		2	AXLE SUPPORT	
120	1334234-0000	-		1	HUB	
130	1548143-0000	-		1	END PLATE	
140	1558403-0000	-		1	DISC	
150	2508256-0000	-		1	SPACER	
160	2522248-0000	-		1	BRACKET	
170	315220-0167	B		1	V-RINGS 27X35X10,5 MM V-30S	
300	90348-0007	B		1	FREE WHEEL COUPLING	
320	312105-0368	-		8	SCREW M6S M6X16 A280	
340	312105-0449	-		4	SCREW M6S ISO 4017 M8X16 A480	
350	312115-0451	-		2	SCREW ISO4762 M8X20 A4	
360	312311-0366	-		1	SCREW ISO4028 M6X12 FZB	
370	315105-0153	-		8	WASHER ISO 7089-6-200 HV-A4	
380	315115-0165	-		4	WASHER PLAIN, TBRB 8,4/16 H=3	
390	315204-0309	B		2	O-RING 89,5X3 MM	
400	315751-0112	-		1	RETAIN. RING, 15	
410	315753-0124	-		2	RETAIN. RING, 35	
420	90458-1704	B		2	BALL BEARING, 15X35X11 MM	
430	312115-0364	-		8	SCREW ISO4762 M6X10 A4	
440	315105-0146	-		4	WASHER ISO 7089-5-200 HV-A4	
450	312105-0331	-		4	SCREW M6S ISO 4017 M5X20 A480	
460	312311-0287	-		1	SCREW ISO4028 M4X8 FZB	
MM019	90458-1879	A		1	GEARS, WORM MOTOR 528V--L06-B01	
W459	351150-0413	-	M	4	CABLE OLFLEX 4X1,5 MM2 LIGHT/GREY	

Machine Type Group Description Used-In Group Number Page No

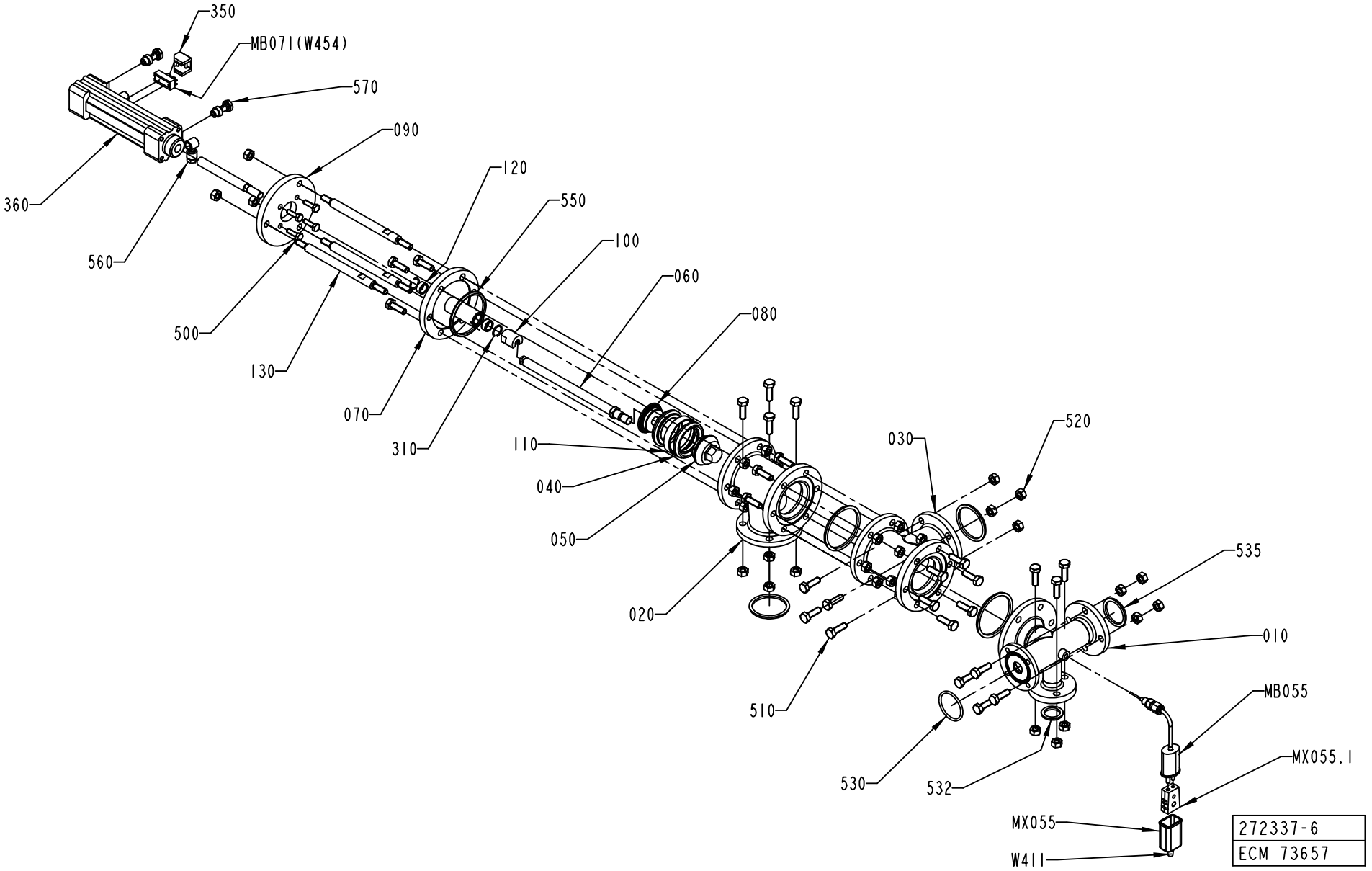
350
MB071(W454)
570
090
120
550
100
060
080
360
560
500
130
070
310
110
040
050
020
030
520
535
010
MB055
MX055.1
510
530
532
MX055
W411
272337-6
ECM 73657

ECM: 114631 - 20020930
Group number: 272337-0600
Assembly Drawing: 272337-6_1_AA

Pos	Part No	SP	UN	Qty	Description	Page No
-						
010	978996-0000	-		1	BRANCH PIPE	
020	1036187-0000	-		1	T-PIPE	
030	1036194-0000	-		1	T-PIPE	
040	530589-0000	A		2	SEAL RING	
050	530590-0000	A		1	VALVE CONE	
060	1036188-0000	-		1	SHAFT	
070	1036189-0000	B		1	SPINDLE GUIDE	
080	1036191-0000	A		1	SEAL HOLDER	
090	1036193-0000	-		1	CYLINDER BRACKET	
100	441871-0000	A		1	PENDULUM SUSPENSION	
110	530599-0000	A		1	RING	
120	532349-0000	A		2	PLAIN BEARING	
130	1036192-0000	-		3	SPACER ROD	
310	90141-0022	B		2	SNAP RING B 16	
350	90450-0669	A		1	SENSOR, BRACKET SERIES 168	
360	90450-0281	A		1	DOUBLE ACTING,PROF.CYL 32-80	
500	312105-0370	-		4	SCREW M6S ISO 4017 M6X20 A480	
510	312105-0453	-		30	SCREW M6S ISO 4017 M8X25 A480	
520	312605-0318	-		36	HEXAGON NUT, M6M M8 A280	
530	315204-0223	B		1	O-RING 39,2X3 MM	
532	315229-0203	B		1	GASKET 34,8X42,8X3,7 MM 1"1/2	
535	315229-0204	B		1	GASKET 34,8X42,8X3,7 MM 1"1/2	
540	315229-0205	B		2	GASKET 47,5X55,5X3,7 MM 2"	
550	315229-0206	B		3	GASKET 60,2X68,2X3,7 MM 2"1/2	
560	342797-0121	-		2	CONN. BANJO, RINGPIECE 6-1/8	
570	342980-0303	-		2	BANJO-HOLLOW BOLT COUPL,EXT.THR.01-G1/8"	
MB055	90326-0051	A		1	THERMOCOUPLE, 12826-33	
MB071	90457-0047	A		1	SENSOR 2750-1-5111-1 W.ADAPTER PNP	
MX055	90326-0020	-		1	PLUG, FEMALE YELLOW CR-AL	
MX055.1	90326-0012	-		1	PROTECTIVE COVER, T31A4618	
W411	90220-0059	-	M	5	THERMOCOUPLE CABLE K/ 2X0,81MM2	

Pos	Part No	SP	UN	Qty	Description	Page No

Machine Type | Group Description | Used-In | Group Number | Page No

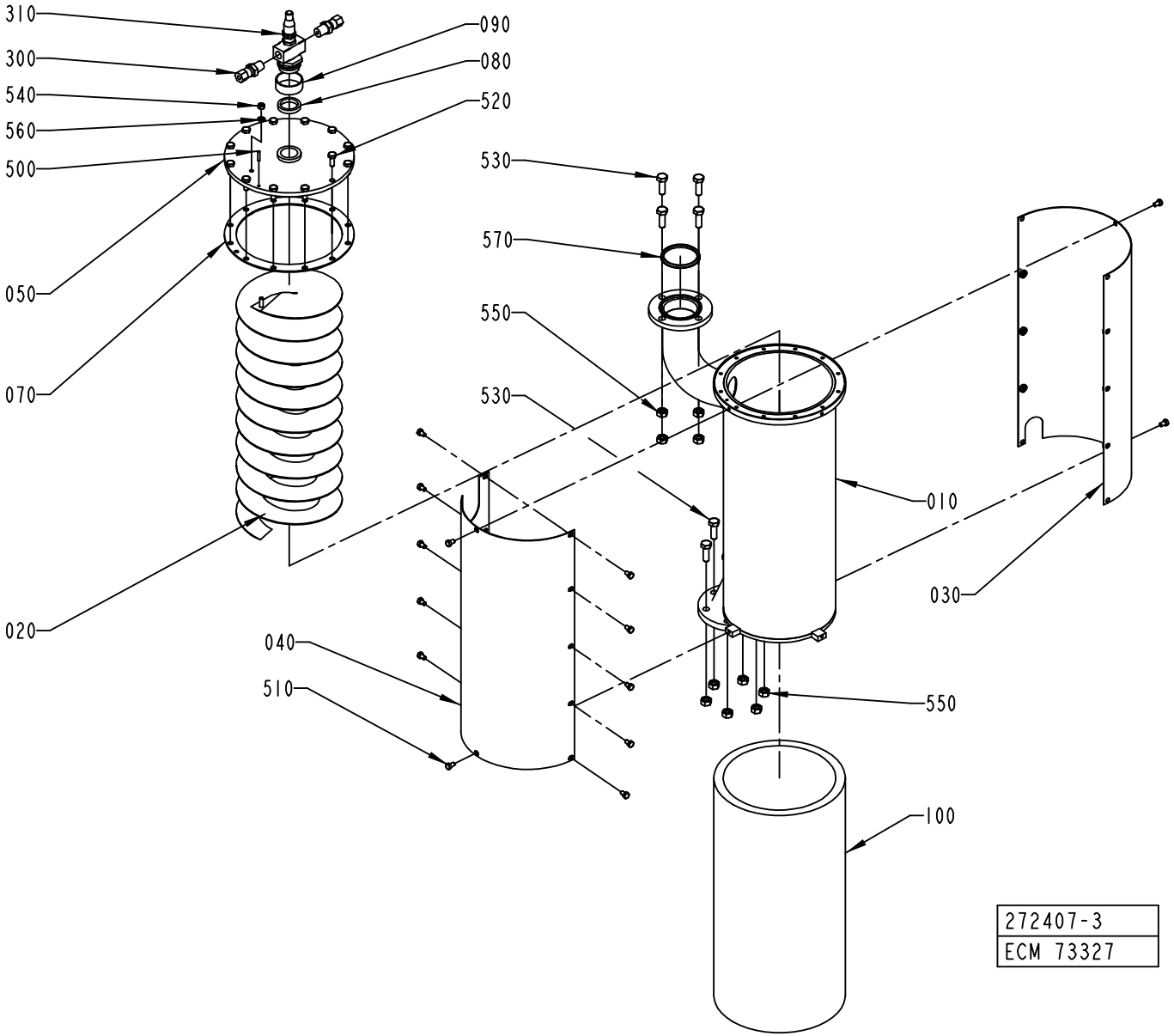
310
300
540
560
500
050
070
020
090
080
520
530
570
550
530
010
030
040
510
550
100
272407-3
ECM 73327

ECM: 114543 - 20020930
Group number: 272407-0400
Assembly Drawing: 272407-3_1_AC

Pos	Part No	SP	UN	Qty	Description	Page No
-						
010	978879-0000	-		1	CONTAINER	
020	272325-0000	-		1	SPIRAL	
030	978971-0000	-		1	DISCHARGE TRAY	
040	978972-0000	-		1	DISCHARGE TRAY	
050	272275-0000	-		1	LID	
070	272277-0000	A		2	GASKET	
080	12242-0001	A		1	GASKET 32X25X5,5	
090	295993-0000	A		1	GASKET HOLDER	
100	441501-0000	A		1	INSULATION	
300	90030-0062	A		2	CONN. STR. GE 6-1/4-18 NPTF	
310	B90424-0017	A		1	SPRAY NOZZLE	
	90424-0304	*C*		*1*	*GASKET*	
	90424-0303	*C*		*1*	*GASKET*	
	90424-0302	*C*		*1*	*GASKET*	
	90424-0301	*C*		*1*	*SLEEVE*	
500	311103-0236	-		1	PARALLELL PIN, M6, 3X16 MM	
510	312105-0323	-		14	SKRUV M6S ISO 4017 M5X8 A480	
520	312105-0368	-		12	SCREW M6S M6X16 A280	
530	312105-0453	-		10	SCREW M6S ISO 4017 M8X25 A480	
540	312605-0314	-		1	HEXAGON NUT, M6M M5 A280	
550	312605-0318	-		10	HEXAGON NUT, M6M M8 A280	
560	315105-0146	-		1	WASHER ISO 7089-5-200 HV-A4	
570	315229-0205	A		1	GASKET 47,5X55,5X3,7 MM 2"	

Pos	Part No	SP	UN	Qty	Description	Page No

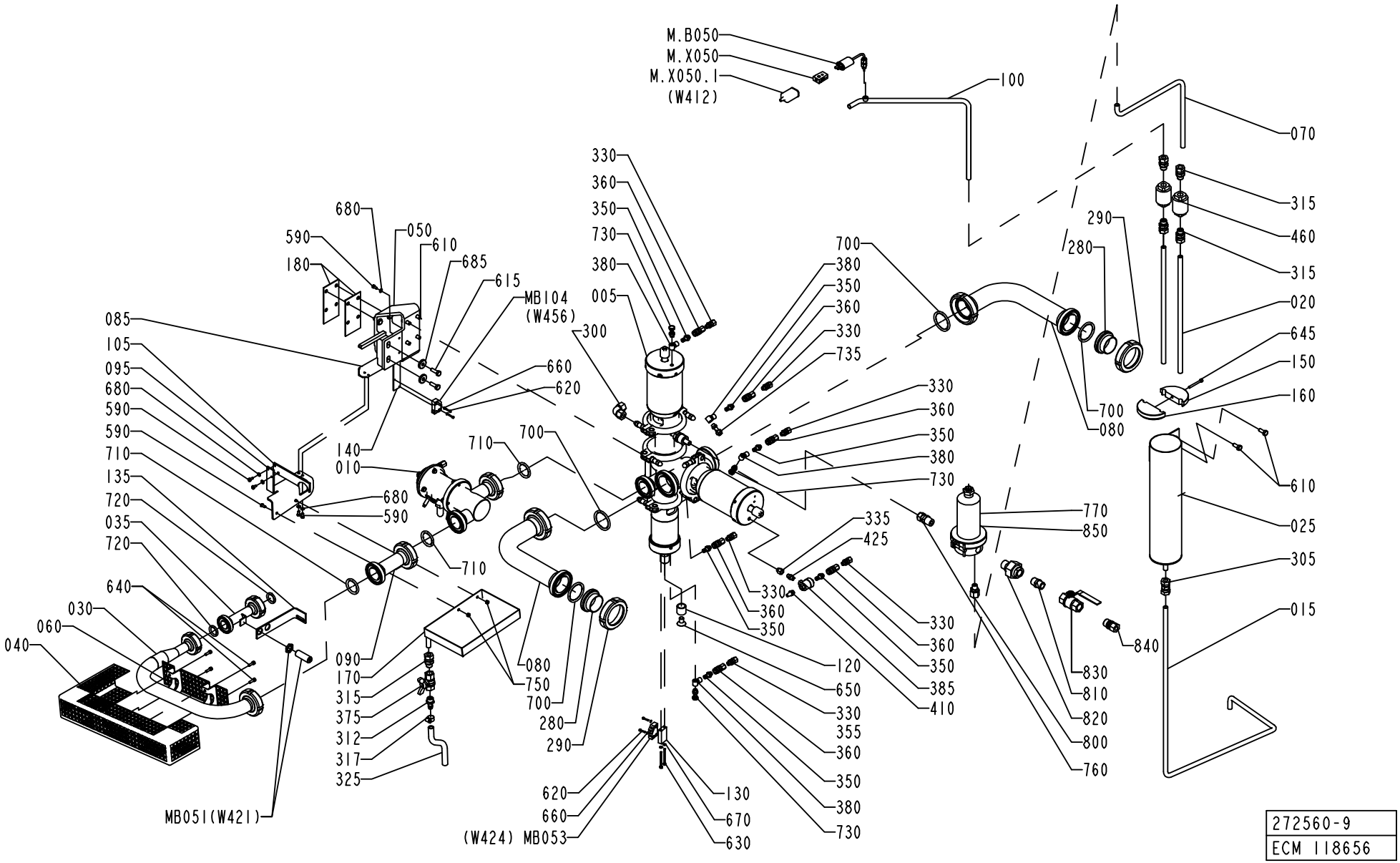

272560-9
ECM 118656

ECM: 117184 - 20030113
Group number: 272560-0800
Assembly Drawing: 272560-9_1_AB

This list covers pages from 44 to 47

Pos	Part No	SP	UN	Qty	Description	Page No
NOTCSB (See drawing on page: 44)						
070	1317263-0000	-		1	PIPE	
760	90030-0213	-		1	CONN. STR. M12 MSC1/2K-316 EXT. TAPPERED	
770	B90277-0055	-		1	FILTER HOUSING / MDS 4463 G 08 H	
	90277-0339	-		*1*	*O-RING, ACS0272 EU FOR PALL FILTER*	
800	90030-0088	-		1	CONN. STR., 12-R1/4, EXT. THREAD	
810	90330-0021	-		1	NIPPLES, EXT. THREAD. R-207R1/2	
820	90330-0106	-		1	PIPE COUPLING	
830	90187-0082	-		1	BALL VALVE G1/2	
840	90030-0109	-		1	CONN. STR., 12-R1/2, EXT. THREAD	
850	90337-0315	-		1	FILTERINSERT / MCS 4463	
TCSB (See drawing on page: 46)						
070	2565490-0000	-		1	PIPE	
075	1539237-0000	-		1	PIPE	
190	A1334841-0200	-		1	T.C.S.B. UNIT	**49**
860	342737-0204	-		1	CONN. ELBOW W-6 LRFR	
Common Parts						
005	A576434-0200	-		1	AP-VALVE 51-38	**51**
010	A927205-0200	-		1	REGULATING VALVE	**63**
015	1519756-0000	-		1	PIPE	
020	1512411-0000	-		2	PIPE	
025	1317257-0000	-		1	CONTAINER	
030	1519969-0000	-		1	PIPE	
035	1317756-0000	-		1	PIPE	
040	1348476-0000	-		1	TOUCH GUARD	
050	577360-0000	-		1	CANTILEVER	
060	1348636-0000	-		1	TOUCH GUARD	
080	1519936-0000	-		2	PIPE	
085	926914-0000	-		1	BRACKET	
090	1317663-0000	-		1	PIPE	
095	1317896-0000	-		1	BRACKET	
100	1519757-0000	-		1	PIPE	
105	1317903-0000	-		1	BRACKET	
120	440647-0000	-		1	SLEEVE	
130	440731-0000	-		1	PLATE	
135	1317905-0000	-		1	BRACKET	
140	578480-0000	-		1	BRACKET	
150	1317262-0000	-		1	COVER	
160	1512377-0000	-		1	COVER	
170	1317399-0000	-		1	TANK	
180	490985-0000	-		2	SPACER SHEET	
280	90217-0207	-		2	ASEPT. MALE FITTING ISO, 03-32-456/42	
290	90217-0209	-		2	UNION NUT, 2 APV, 07-01-426/17	
300	90030-0096	-		1	CONN. ELBOW W-12	
305	90030-0106	-		1	CONN. PIPE G-12	
312	90163-0041	-		1	HOSE NIPPLE, EXT.THR. 3/8-12 MM	
315	90030-0187	-		5	CONN. STR. GA-12-G3/8	
317	342991-0101	-		1	HOSE CLIP,WORM DRIVE TYPE (13)-16	
325	90166-0138	-	M	3	HOSE	
330	90030-0184	-		6	CONN. STR. GA-6-G1/8	
335	90030-0212	-		1	NIPPLES, REDUSING, INT. THR. NO. 2521	
350	90163-0057	-		6	NIPPLE 1/8" BRASS	
355	90157-0037	-	L	1	SEALING COMPOUND	
360	90163-0062	-		6	QUICK COUPLING, (F) 5053-1/8	
375	90187-0089	-		1	BALL VALVE G3/8, NPBR	
380	90224-0308	-		4	CONN. BANJO, ART. NO. 2023-1/8-1/8	
385	90235-0259	-		1	VALVE	
410	90328-0003	A		1	SILENCER	
425	90330-0032	-		1	NIPPLES, EXT. THREAD. ISO 7/1 R1/8-R1/8	
460	B90360-0020	-		2	STEAM TRAP / MK36/51 3/8"	
	90360-0310	-		*1*	*CAPSULE, FOR STEAM TRAP 90360-20*	
	90360-0309	-		*1*	*STRAINER, FOR STEAM TRAP 90360-20*	
590	312105-0325	-		8	SCREW M6S ISO 4017 M5X10 A480	
610	312105-0451	-		10	SCREW M6S ISO 4017 M8X20 A480	
615	312105-0453	-		2	SCREW M6S ISO 4017 M8X25 A480	
620	312115-0228	-		4	SCREW ISO4762 M3X16 A4	
630	312115-0305	-		2	SCREW ISO4762 M4X50 A4	
640	312115-0329	-		5	SCREW ISO4762 M5X16 A4	
645	312115-0340	-		1	SCREW ISO4762 M5X45 A4	
650	312155-0532	-		1	SCREW EN 10642 MF6S M12X20 A480	
660	315105-0124	-		4	WASHER ISO 7089-3-200 HV-A4	
670	315105-0136	-		2	WASHER ISO 7089-4-200 HV-A4	
680	315105-0146	-		8	WASHER ISO 7089-5-200 HV-A4	
685	315125-0165	-		2	WASHER TBRSB 8,4X26X5 A4	
700	90217-0349	A		4	GASKET 48,4X59,8X4 MM	
710	90217-0348	A		3	GASKET 35,4X46,8X4 MM	
720	90217-0347	A		2	GASKET 32X22,6X3,6 MM	
730	342980-0303	-		3	BANJO-HOLLOW BOLT COUPL,EXT.THR.01-G1/8"	
735	90235-0274	-		1	THROTTLE CHECK VALVES,G1/8"	
750	312605-0314	-		2	HEXAGON NUT, M6M M5 A280	
MB050	90326-0089	A		1	THERMOCOUPLE, 5110-089-000	
MB051	90458-0676	A		1	PROXIMITY SWITCH,E2EG-X5B1-6M	

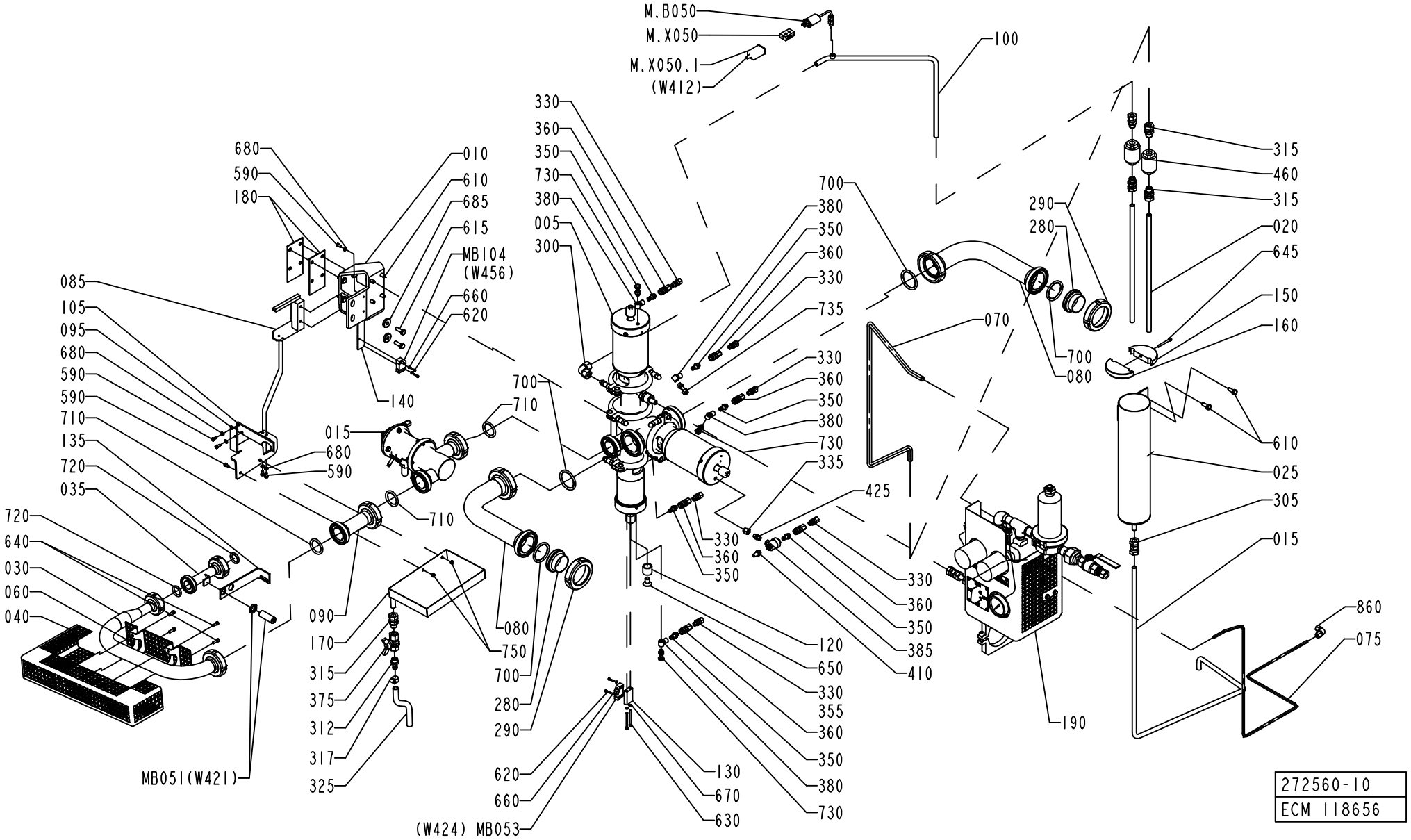

272560-10
ECM 118656

Pos	Part No	SP	UN	Qty	Description	Page No
Common Parts (Cont'd)						
MB053	90044-0194	A		1	PROX.SW. IN5329/IN3002-BPKG	
MB104	90044-0194	A		1	PROX.SW. IN5329/IN3002-BPKG	
MX050	90326-0020	-		1	PLUG, FEMALE YELLOW CR-AL	
MX050.1	90326-0012	-		1	PROTECTIVE COVER, T31A4618	
W412	90220-0059	A	M	5	THERMOCOUPLE CABLE K/ 2X0,81MM2	

Pos	Part No	SP	UN	Qty	Description	Page No

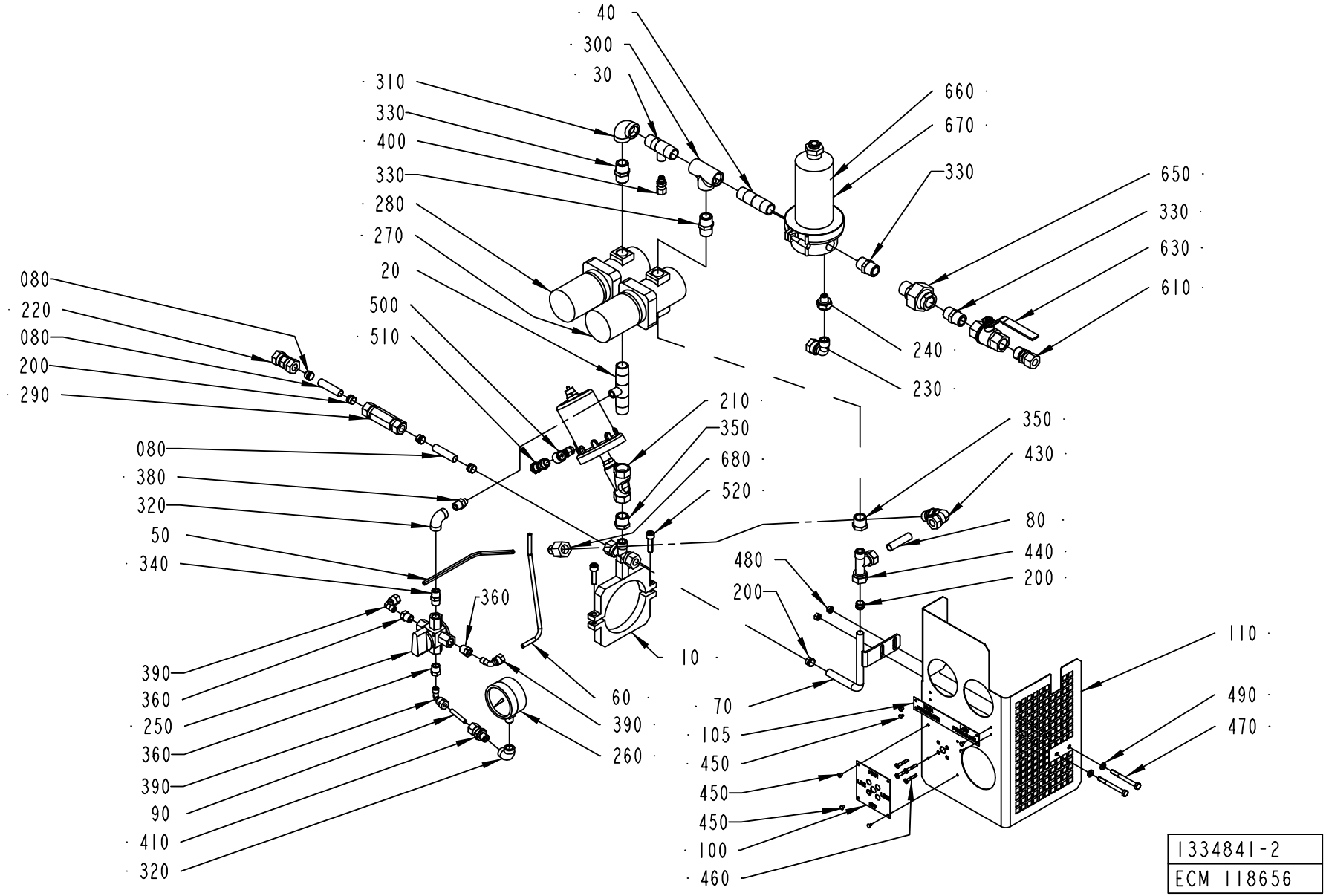
40
300
30
310
330
400
330
280
270
20
500
510
660
670
330
650
330
630
610
240
230
080
220
080
200
290
080
380
320
50
340
210
350
680
520
350
430
80
440
200
480
200
360
10
390
360
250
360
390
90
410
320
60
390
260
70
105
450
450
450
100
460
110
490
470
1334841-2
ECM 118656

ECM: 118772 - 20030113
Group number: 1334841-0200
Assembly Drawing: 1334841-2_1_AB

Pos	Part No	SP	UN	Qty	Description	Page No
-						
010	1260443-0000	-		1	CLAMP HOLDER	
020	1260261-0000	-		1	T-PIPE	
030	1260262-0000	-		1	T-PIPE	
040	1260263-0000	-		1	PIPE	
050	1532583-0000	-		1	PIPE	
060	1260265-0000	-		1	PIPE	
070	1260266-0000	-		1	PIPE	
080	1260267-0000	-		3	PIPE	
090	1260268-0000	-		1	PIPE	
100	1255924-0000	-		1	LABEL	
105	1279456-0000	-		1	LABEL	
110	1255925-0000	-		1	COVER	
200	90030-0110	-		3	ACCESSORIES, FERRULE 12	
210	90235-0261	-		1	ANGLE SEAT VALVE G1/2, N.C. DN13	
220	90030-0106	-		1	CONN. PIPE G-12	
230	90030-0115	-		1	CONN. ELBOW WA 12-R3/8	
240	90030-0170	-		1	REDUCER 2521-1/4"X3/8"	
250	90187-0112	C		1	COCK VALVE, G1/4, 4-WAY, VITON	
260	90043-0082	C		1	PRESSURE GAUGE, 2740, D=63 MM	
270	90113-0064	C		1	PRESSURE REGULATOR	
280	90113-0063	C		1	PRESSURE REGULATOR	
290	90230-0025	-		1	NON-RETURN VALVE, 12MM, L=85	
300	90330-0049	-		1	T-PIPE, INT. THREAD, R-221R1/2	
310	90330-0020	-		1	ELBOW, 90 INT. THREAD, R-2221/2	
320	90330-0081	-		2	ELBOW, 90 INT. THREAD, R-222R1/4	
330	90330-0021	-		4	NIPPLES, EXT. THREAD. R-207R1/2	
340	90330-0043	-		1	NIPPLES, EXT. THREAD. R-207R1/4	
350	90330-0048	-		2	BUSHING, INT/EXT. THR. R1/2-RP3/8	
360	90330-0025	-		3	BUSHING, INT/EXT. THR. R1/4-RP1/8	
380	90330-0013	-		1	NIPPLES, EXT. THREAD. ISO 7/1 R1/4-R1/8	
390	90030-0137	-		3	CONN. ELBOW WA 6-R1/8	
400	90030-0051	-		1	CONN. STR., 6-R1/8, EXT. THREAD	
410	90030-0092	-		1	STRAIGHT CONN., 6-R1/4,EXT. TAPPERED	
420	90144-0073	-		2	TREBOFLON-TAPE W=13MM	
430	90030-0136	-		1	ADJUSTABLE ELBOW CONNECTION,EXT 12-G3/8	
440	342751-0215	-		1	CONN. L-PIPE, EXT. LE-12-R3/8	
450	311521-0142	-		8	BLANK RIVET 3,2X6	
460	312155-0297	-		4	SCREW EN 10642 MF6S M4X25 A480	
470	312105-0382	-		2	SCREW M6S ISO 4014 M6X60 A480	
480	312605-0316	-		2	HEXAGON NUT, M6M M6 A280	
490	315105-0153	-		2	WASHER ISO 7089-6-200 HV-A4	
500	342797-0122	-		1	CONN. BANJO, RINGPIECE 6-1/4	
510	342980-0304	-		1	BANJO-HOLLOW BOLT COUPL,EXT.THR.01-G1/4"	
520	312115-0455	-		2	SCREW ISO4762 M8X30 A4	
610	90030-0109	-		1	CONN. STR., 12-R1/2, EXT. THREAD	
630	90187-0082	-		1	BALL VALVE G1/2	
650	90330-0106	-		1	PIPE COUPLING	
660	90337-0315	-		1	FILTERINSERT / MCS 4463	
670	B90277-0055	-		1	FILTER HOUSING / MDS 4463 G 08 H	
	90277-0339	-		*1*	*O-RING, ACS0272 EU FOR PALL FILTER*	
680	90030-0348	-		1	CONN. STR., 6-G3/8, INT. THREAD	

Machine Type	Group Description	Used-In	Group Number	Page No

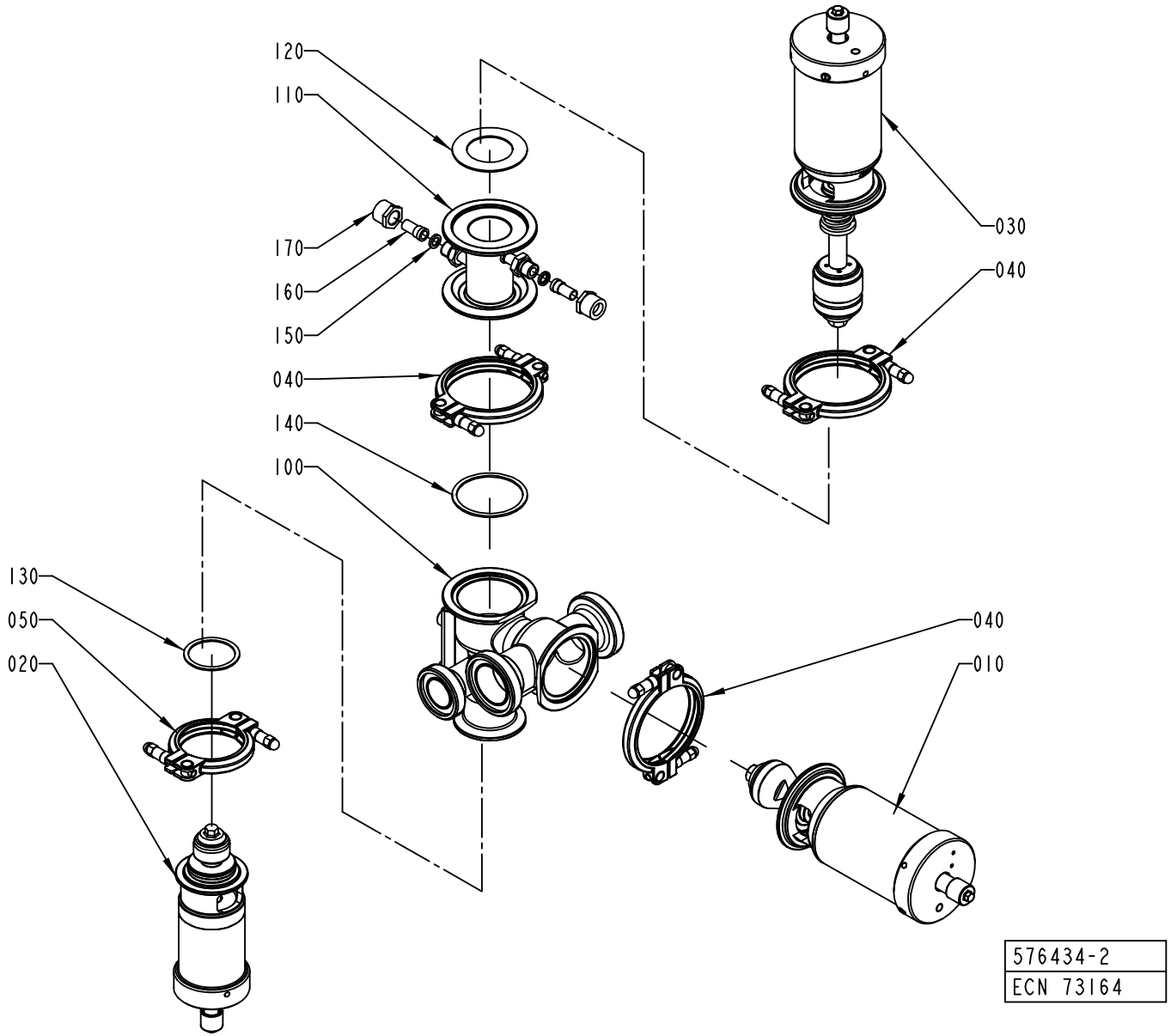
120
110
170
160
150
040
140
100
130
050
020
030
040
040
010
576434-2
ECN 73164

ECM: 114406 - 20020930
Group number: 576434-0200
Assembly Drawing: 576434-2_1_AA

Pos	Part No	SP	UN	Qty	Description	Page No
-						
010	A576436-0100	-		1	A-CYLINDER	**53**
020	A576438-0100	-		1	B-CYLINDER	**55**
030	A576437-0100	-		1	C-CYLINDER	**57**
040	A541163-0200	-		3	CLAMP RING	**59**
050	A541164-0200	-		1	CLAMP RING	**61**
100	1523057-0000	A		1	AP-VALVE-BODY (51-38)	
110	567018-0000	A		1	STEAM HOUSE	
120	539212-0000	A		1	GASKET	
130	90207-0365	A		1	GASKET	
140	90207-0363	A		1	GASKET	
150	90091-0266	A		2	SEAL RING 10,4X16,3X2,5 MM	
160	90030-0336	-		2	CONN. STRAIGHT, 316L-12M-BVCO-3	
170	90030-0338	-		2	NUT, PIPE & CONNECTORS, SS-8-BVCO-4	

Pos	Part No	SP	UN	Qty	Description	Page No

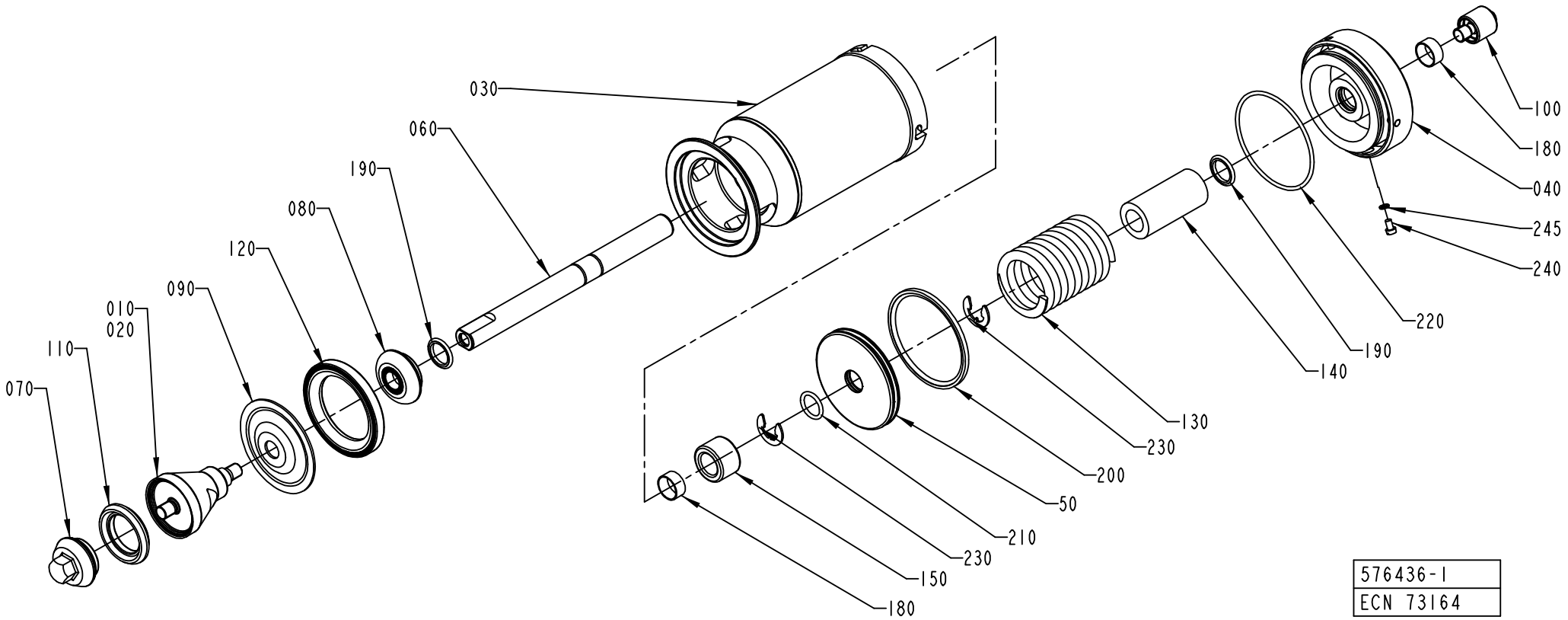
030
060
190
080
120
090
010
020
110
070
100
180
040
245
240
220
190
140
130
230
200
50
210
230
150
180
576436-1
ECN 73164

ECM: 114402 - 20020930
Group number: 576436-0100
Assembly Drawing: 576436-1_1_AB

Pos	Part No	SP	UN	Qty	Description	Page No
2"						
010	530592-0000	A		1	SEAL RING HOLDER	
3"						
010	530595-0000	A		1	SEAL RING HOLDER	
Common Parts						
030	576439-0000	-		1	CYLINDER HOUSING	
040	576440-0000	-		1	END SECTION	
050	576441-0000	A		1	PISTON	
060	576446-0000	A		1	PISTON ROD	
070	530590-0000	A		1	VALVE CONE	
080	541166-0000	A		1	WASHER	
090	533169-0000	A		1	DIAPHRAGM	
100	553607-0000	-		1	SLEEVE	
110	530589-0000	A		1	SEAL RING	
120	440655-0000	A		1	RING	
130	440663-0000	A		1	COMPRESSION SPRING	
140	576448-0000	-		1	SPACER	
150	576449-0000	-		1	SPACER	
180	90091-0238	A		2	WEAR RING 20X22X10 MM	
190	90091-0237	A		2	ROD SEAL, GLIDORING 20X27,5X3 MM	
200	90091-0336	A		1	PISTON SEAL, GLIDORING 79X90X4 MM	
210	315204-0215	A		1	O-RING 19,2X3 MM	
220	315202-0308	A		1	O-RING 84,5X3 MM	
230	315754-0113	-		2	LOCKING WAE 15	
240	312125-0323	-		1	SCREW PAN HEAD MCS M5X8 SS	
245	315233-0101	-		1	WASHER PL.RND.NYL.5,2/8,H=1	

Pos	Part No	SP	UN	Qty	Description	Page No

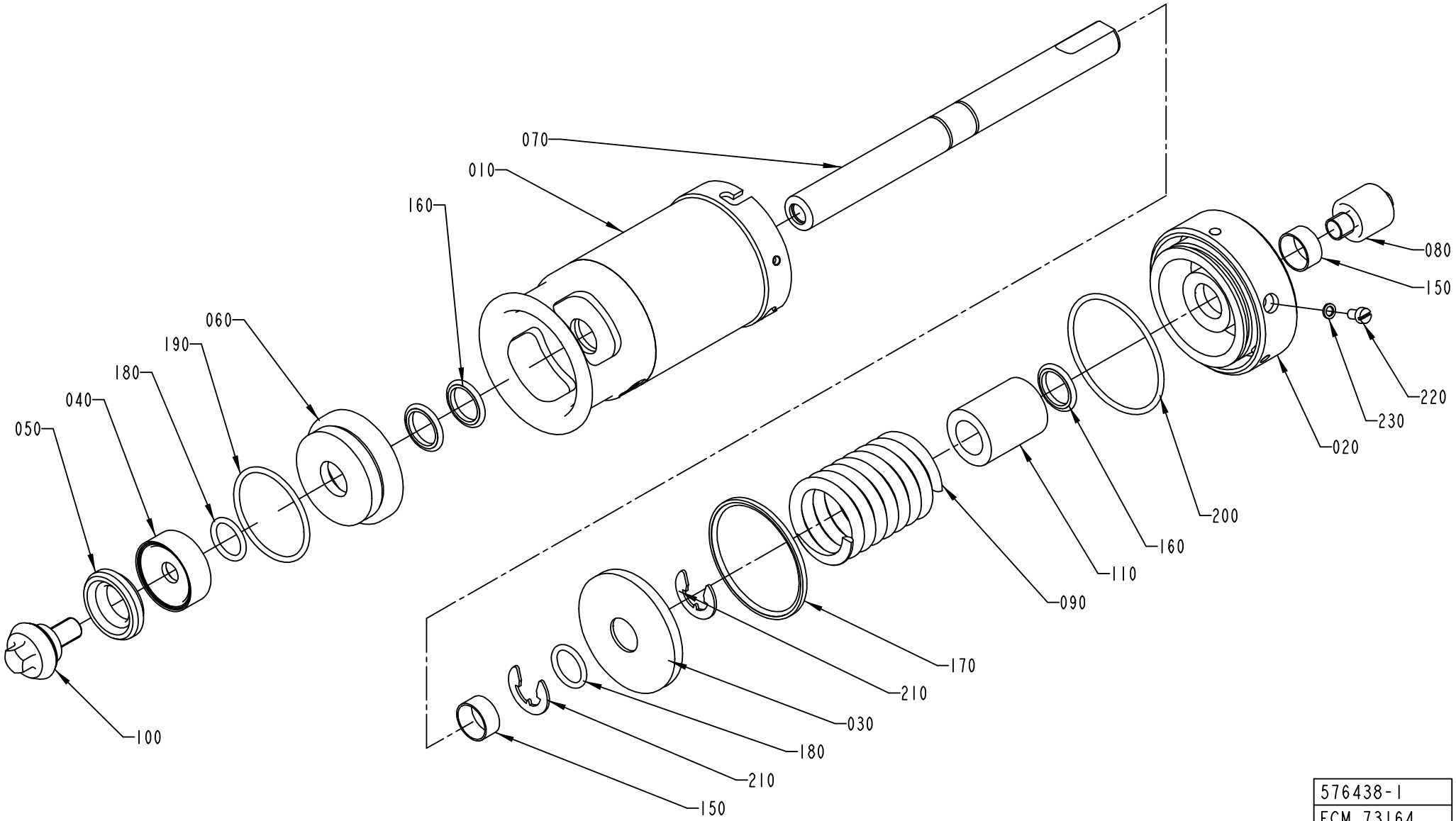

576438-1
ECM 73164

ECM: 114410 - 20020930
Group number: 576438-0100
Assembly Drawing: 576438-1_1_AB

Pos	Part No	SP	UN	Qty	Description	Page No
-						
010	576443-0000	-		1	CYLINDER HOUSING	
020	576444-0000	-		1	END SECTION	
030	576445-0000	A		1	PISTON	
040	530587-0000	A		1	WASHER	
050	530588-0000	A		1	SEAL RING	
060	556133-0000	-		1	SEALING WASHER	
070	576447-0000	A		1	PISTON ROD	
080	553607-0000	-		1	SLEEVE	
090	440662-0000	A		1	COMPRESSION SPRING	
100	476185-0000	A		1	VALVE CONE	
110	576451-0000	-		1	SPACER	
150	90091-0238	A		2	WEAR RING 20X22X10 MM	
160	90091-0237	A		3	ROD SEAL, GLIDORING 20X27,5X3 MM	
170	90091-0335	A		1	PISTON SEAL,GLIDORING 62,5X70X3 MM	
180	315204-0215	A		2	O-RING 19,2X3 MM	
190	315204-0301	A		1	O-RING 49,5X3 MM	
200	315202-0304	A		1	O-RING 64,5X3 MM	
210	315754-0113	-		2	LOCKING WAE 15	
220	312125-0323	-		1	SCREW PAN HEAD MCS M5X8 SS	
230	315233-0101	-		1	WASHER PL.RND.NYL.5,2/8,H=1	

Pos	Part No	SP	UN	Qty	Description	Page No

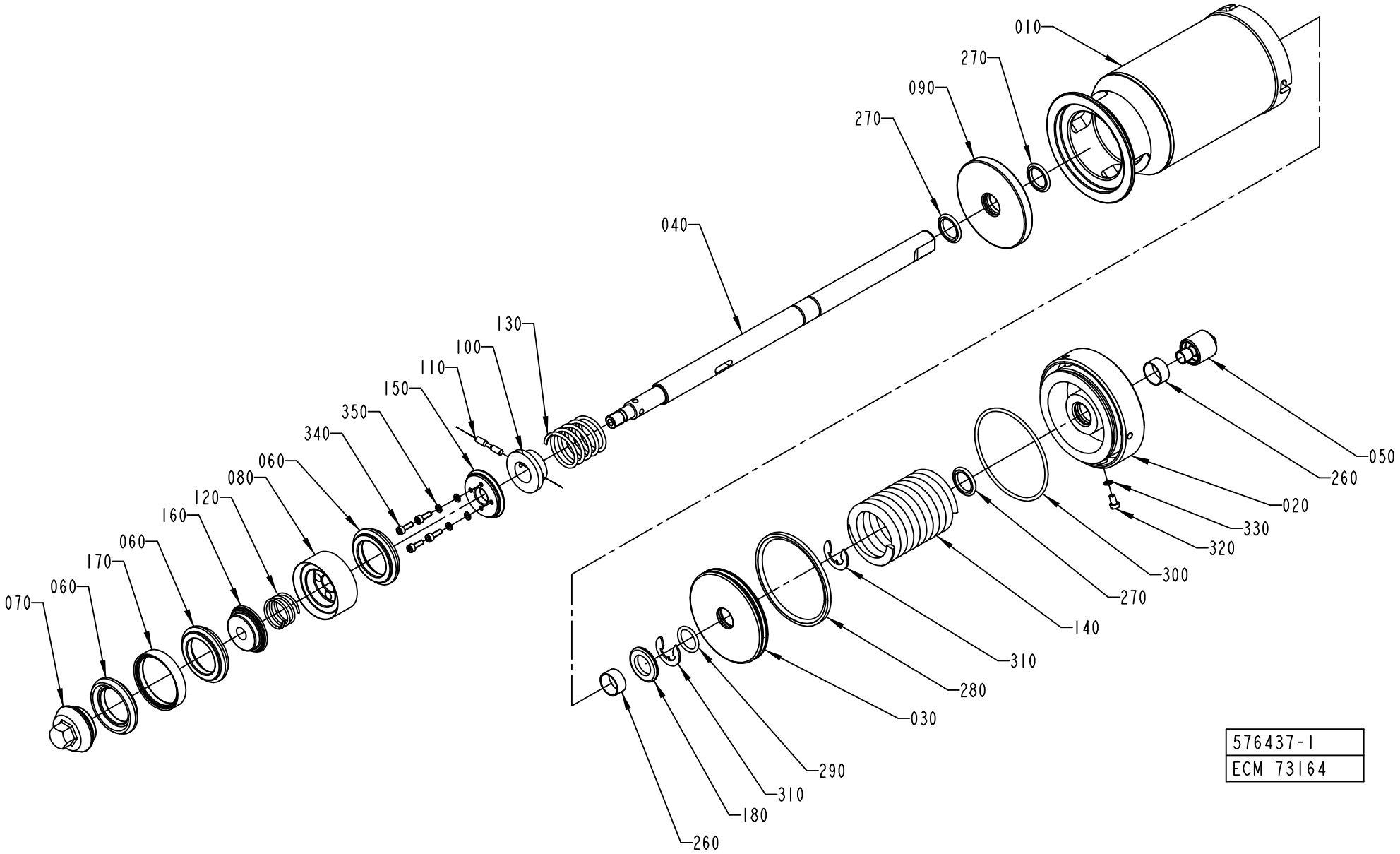
010
270
090
270
040
130
100
110
150
350
340
060
080
120
160
060
170
060
070
050
260
020
330
320
300
270
140
310
280
030
290
310
180
260
576437-1
ECM 73164

ECM: 114415 - 20020930
Group number: 576437-0100
Assembly Drawing: 576437-1_1_AB

Pos	Part No	SP	UN	Qty	Description	Page No
-						
010	576439-0000	-		1	CYLINDER HOUSING	
020	576440-0000	-		1	END SECTION	
030	576441-0000	A		1	PISTON	
040	576442-0000	A		1	PISTON ROD	
050	553607-0000	-		1	SLEEVE	
060	530589-0000	A		3	SEAL RING	
070	530590-0000	A		1	VALVE CONE	
080	530591-0000	-		1	HOLDER	
090	555458-0000	-		1	SEALING WASHER	
100	440650-0000	-		1	WASHER	
110	440659-0000	-		1	CYLINDRICAL PIN	
120	440660-0000	A		1	COMPRESSION SPRING	
130	440661-0000	A		1	COMPRESSION SPRING	
140	440663-0000	A		1	COMPRESSION SPRING	
150	530597-0000	-		1	WASHER	
160	530598-0000	-		1	WASHER	
170	530599-0000	-		2	RING	
180	576450-0000	-		1	SPACER	
260	90091-0238	A		2	WEAR RING 20X22X10 MM	
270	90091-0237	A		3	ROD SEAL, GLIDORING 20X27,5X3 MM	
280	90091-0336	A		1	PISTON SEAL, GLIDORING 79X90X4 MM	
290	315204-0215	A		1	O-RING 19,2X3 MM	
300	315202-0308	A		1	O-RING 84,5X3 MM	
310	315754-0113	-		2	LOCKING WAE 15	
320	312125-0323	-		1	SCREW PAN HEAD MCS M5X8 SS	
330	315233-0101	-		1	WASHER PL.RND.NYL.5,2/8,H=1	
340	312115-0291	-		4	SCREW ISO4762 M4X12 A4	
350	315402-0136	-		4	LOCK WASHER FBB 4,1	

Pos	Part No	SP	UN	Qty	Description	Page No

Machine Type | Group Description | Used-In | Group Number | Page No

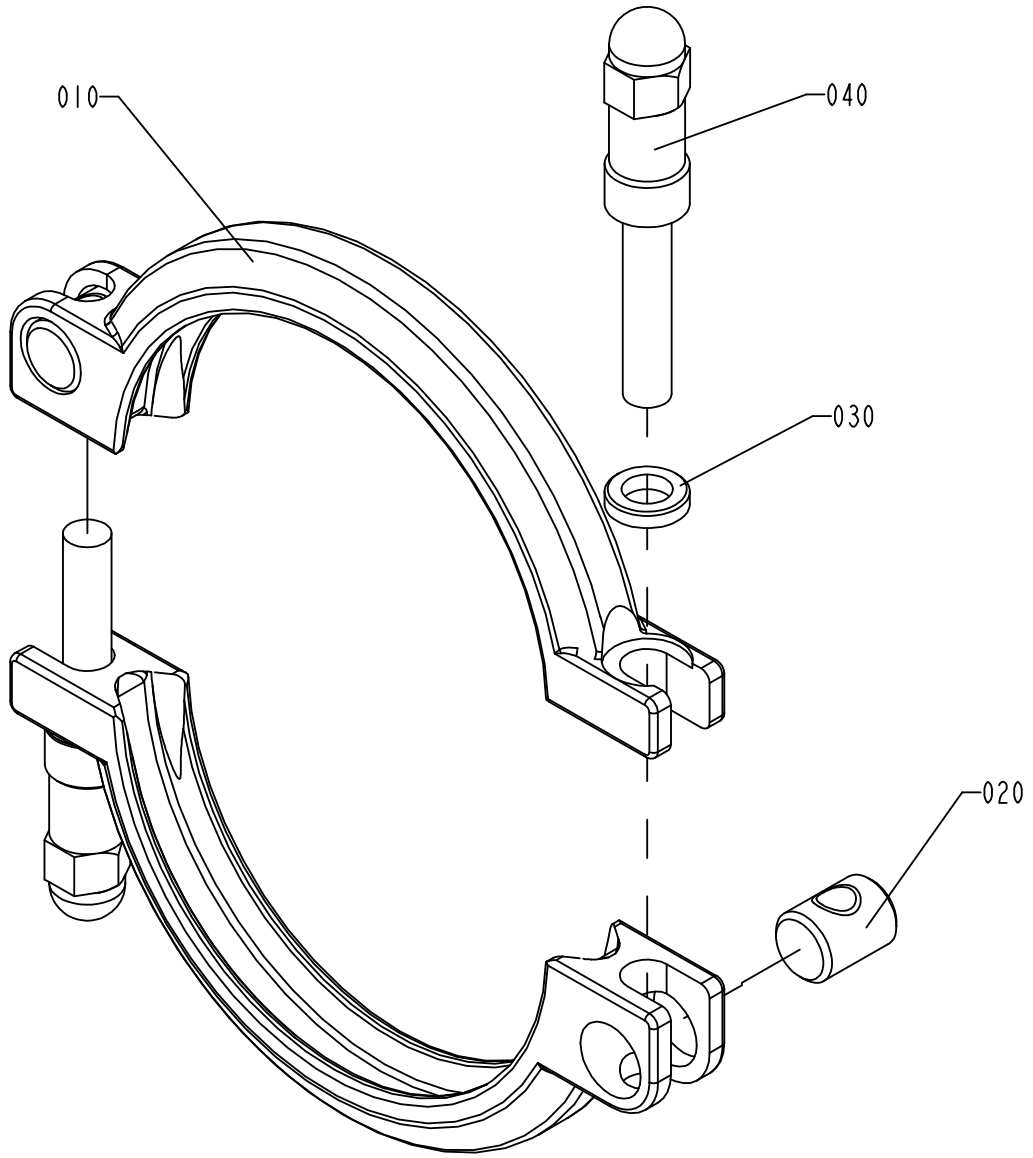

S-541163-2
ECN 71956

ECM: 114417 - 20020930
Group number: 541163-0200
Assembly Drawing: 541163-2_1_AB

Pos	Part No	SP	UN	Qty	Description	Page No
-						
010	532117-0000	A		2	CLAMP RING	
020	497748-0000	A		2	PIN	
030	541165-0000	A		2	WASHER	
040	554162-0000	A		2	SCREW	

Pos	Part No	SP	UN	Qty	Description	Page No

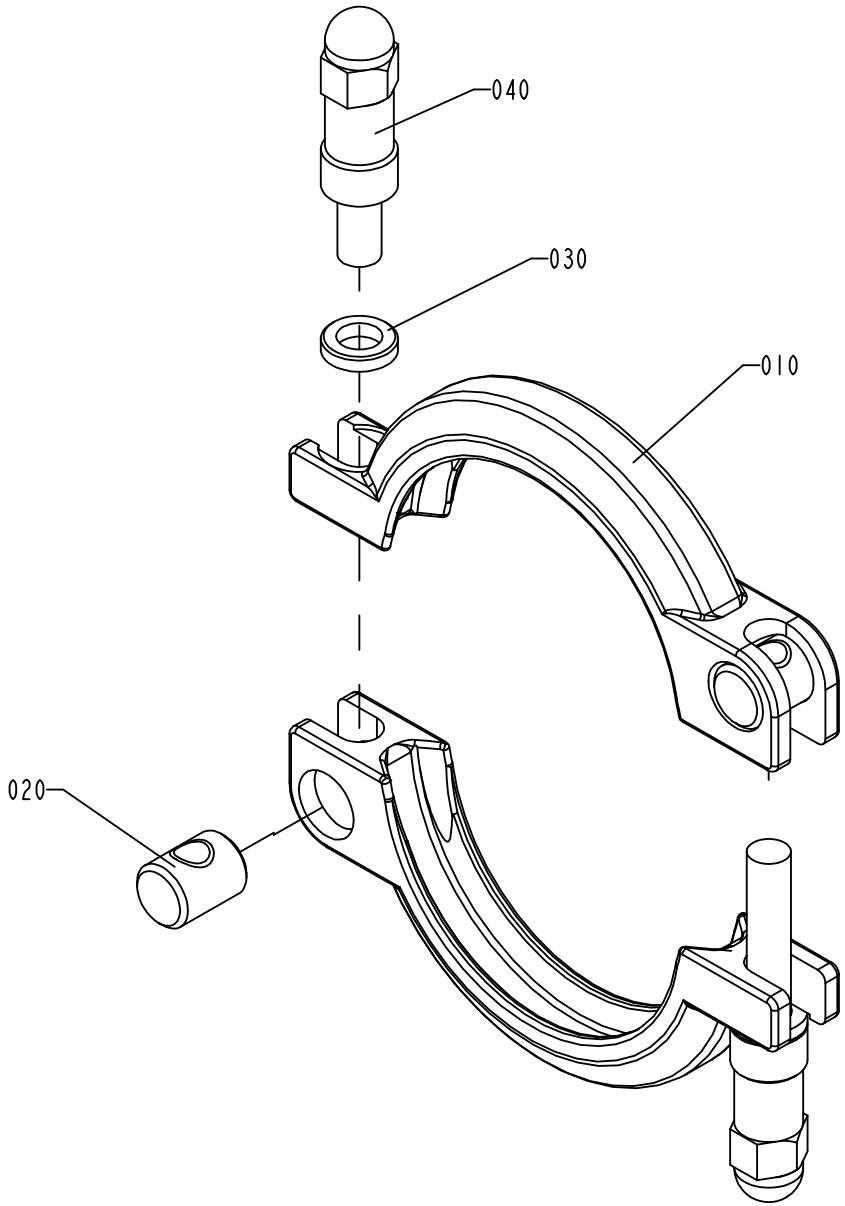

S-541164-2
ECN 71956

ECM: 81910 - 20000814
Group number: 541164-0200
Assembly Drawing: 541164-2_1_AB

Pos	Part No	SP	UN	Qty	Description	Page No
-						
010	532118-0000	A		2	CLAMP RING	
020	497748-0000	A		2	PIN	
030	541165-0000	A		2	WASHER	
040	554162-0000	A		2	SCREW	

Pos	Part No	SP	UN	Qty	Description	Page No

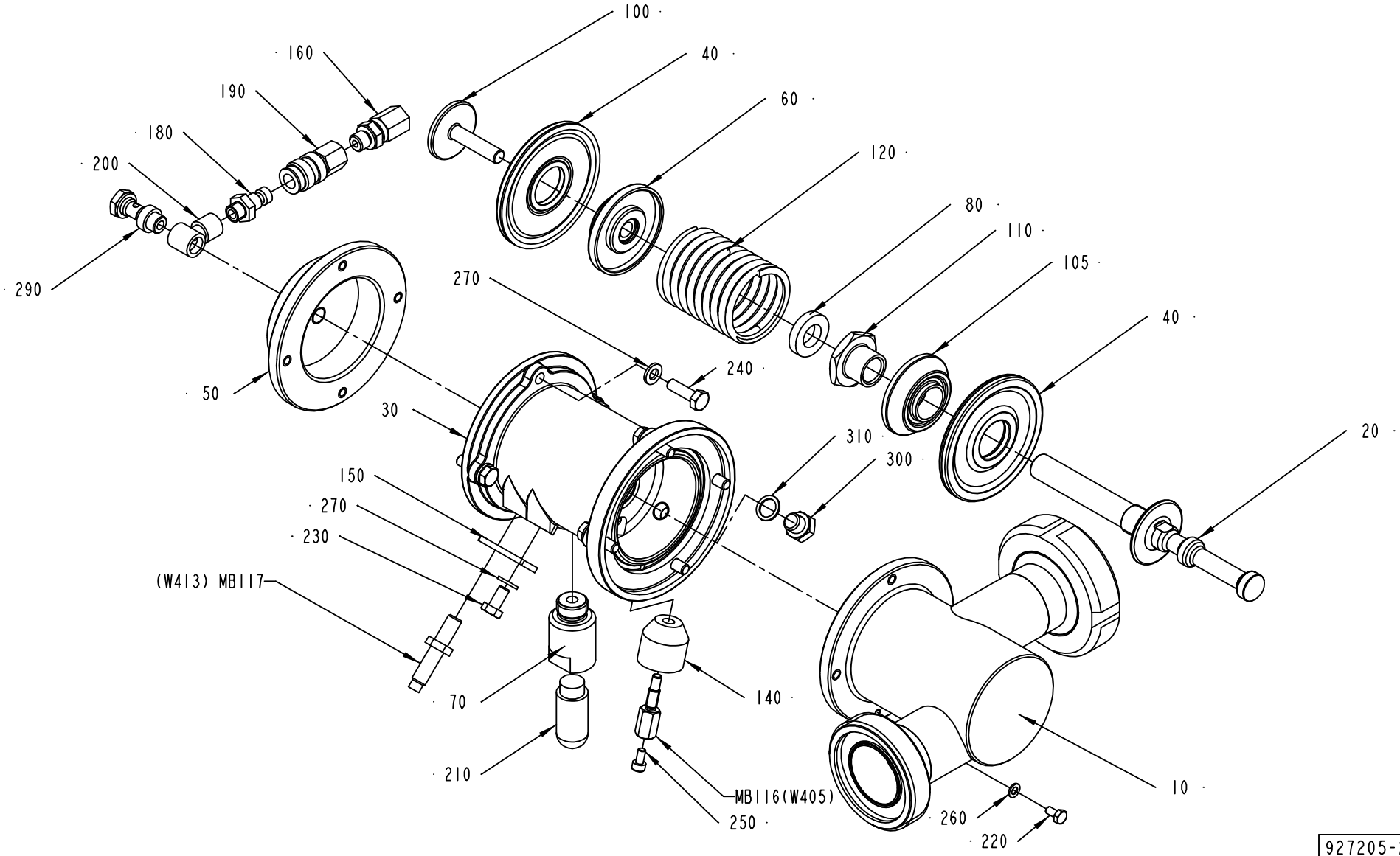

927205-2
ECM 73164

ECM: 114557 - 20020930
Group number: 927205-0200
Assembly Drawing: 927205-2_1_AA

Pos	Part No	SP	UN	Qty	Description	Page No
-						
010	1519937-0000	-		1	REGULATOR BODY	
020	927007-0000	A		1	SHUTTER	
030	927194-0000	-		1	BODY	
040	925998-0000	A		2	DIAPHRAGM	
050	927203-0000	-		1	COVER	
060	926906-0000	-		1	SPACER	
070	927044-0000	-		1	SPACER	
080	736514-0000	A		1	SHOCK ABSORBER	
100	926907-0000	-		1	SCREW	
105	1511600-0000	-		1	SPACER	
110	979434-0000	-		1	FERRULE	
120	926909-0000	A		1	COMPRESSION SPRING	
140	1478813-0000	-		1	SPACER	
150	926934-0000	-		1	SUPPORT	
160	90030-0089	-		1	STRAIGHT CONNECTION	
180	90163-0057	-		1	NIPPLE 1/8" BRASS	
190	90163-0062	-		1	QUICK COUPLING, (F) 5053-1/8	
200	90224-0308	-		1	CONN. BANJO, ART. NO. 2023-1/8-1/8	
210	90328-0026	A		1	SILENCER G1/4	
220	312105-0287	-		1	SCREW M6S ISO4017 M4X8 A480	
230	312105-0366	-		1	SCREW M6S M6X12 A280	
240	312105-0370	-		8	SCREW M6S ISO 4017 M6X20 A480	
250	312115-0287	-		1	SCREW ISO4762 M4X8 A4	
260	315105-0136	-		1	WASHER ISO 7089-4-200 HV-A4	
270	315105-0153	-		9	WASHER ISO 7089-6-200 HV-A4	
290	342980-0303	-		1	BANJO-HOLLOW BOLT COUPL,EXT.THR.01-G1/8"	
300	90330-0066	-		1	PLUG, EXT. G-THREAD, G1/8	
310	315233-0109	-		1	WASHER PL.RND.NYL.10,3/14,H=1	
MB116	1478814-0000	A		1	SENSOR	
MB117	90044-0145	A		1	PROX.SW. 922 AAIY-A9P-050-LZ876	
W405	351150-0431	-	M	5	CABLE OLFLEX 2X0,75 MM2 LIGHT/GREY	

Pos	Part No	SP	UN	Qty	Description	Page No

Machine Type | Group Description | Used-In | Group Number | Page No

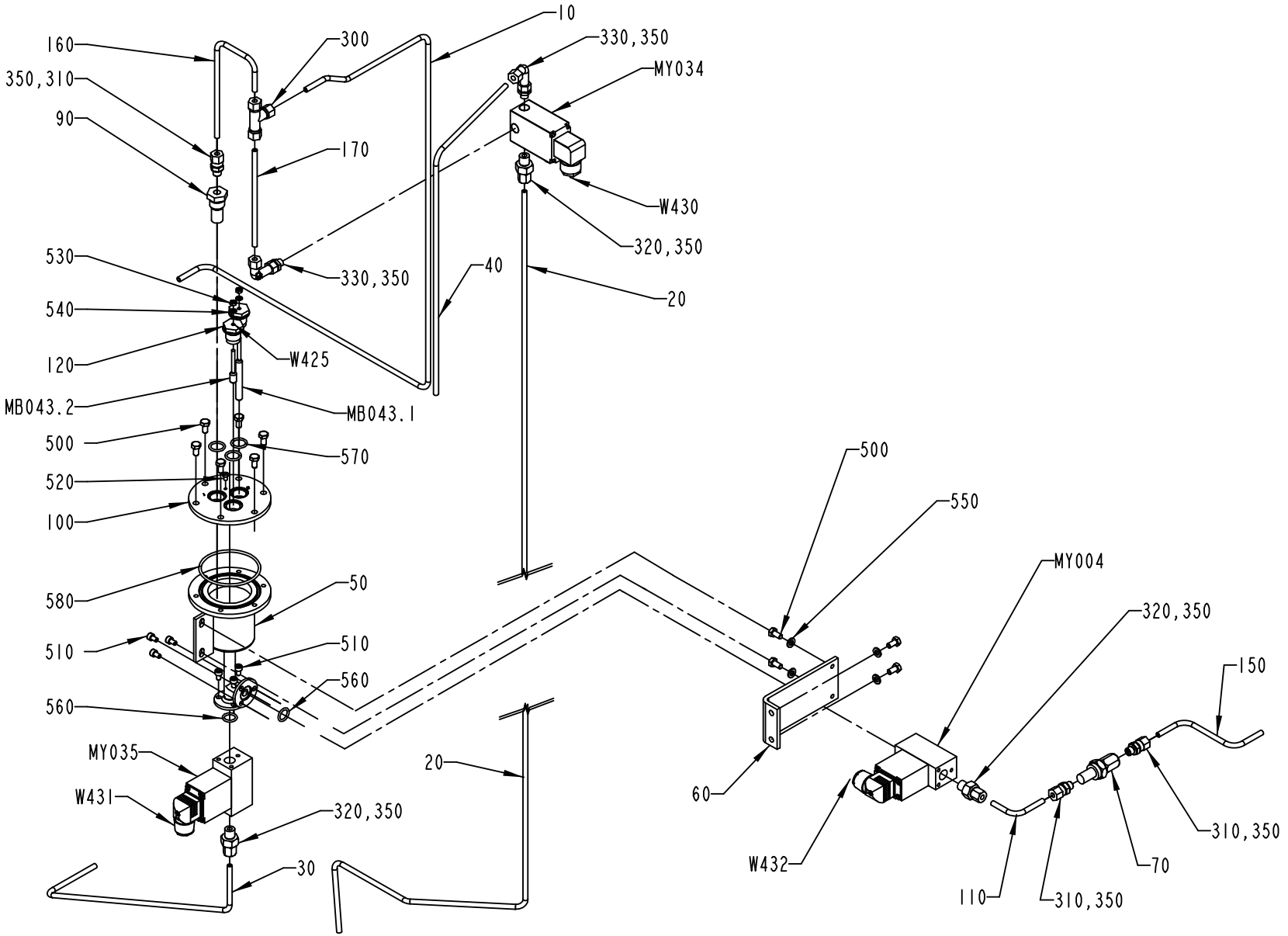

272623-7
ECM 73087

ECM: 114558 - 20020930
Group number: 272623-0700
Assembly Drawing: 272623-7_1_AA

Pos	Part No	SP	UN	Qty	Description	Page No
NOHI						
020	1517493-0000	-		1	PIPE	
Common Parts						
010	1517494-0000	-		1	PIPE	
030	1517495-0000	-		1	PIPE	
040	578019-0000	-		1	TUBE40	
050	752576-0000	A		1	CONTAINER	
060	272844-0000	-		1	BRACKET	
070	B484196-0000	B		1	FILTER	
	484197-0000	*-*		*1*	*FILTER*	
090	450833-0000	B		1	FILTER	
100	450837-0000	-		1	LID	
110	456900-0000	-		1	PIPE	
120	560931-0000	B		2	BRACKET	
150	578026-0000	-		1	PIPE	
160	752675-0000	-		1	PIPE	
170	752676-0000	-		1	PIPE	
300	90030-0076	-		1	CONN. T-PIPE T-6	
310	90030-0184	-		3	CONN. STR. GA-6-G1/8	
320	90030-0202	-		3	CONN. STR., 6-G1/4, EXT. THREAD	
330	90030-0203	-		2	ADJUSTABLE ELBOW CONNECTION,EXT 6-G1/4	
350	90144-0073	-		1	TREBOFLON-TAPE W=13MM	
500	312105-0366	-		10	SCREW M6S M6X12 A280	
510	312115-0323	-		6	SCREW ISO4762 M5X8 A4	
520	312125-0285	-		1	SCREW SLOT.PAN HD. MCS 4X6 A480	
530	312605-0312	-		6	HEXAGON NUT, M6M M4 A280	
540	315105-0136	-		6	WASHER ISO 7089-4-200 HV-A4	
550	315105-0153	-		4	WASHER ISO 7089-6-200 HV-A4	
560	927421-0003	B		2	O-RING 13.3X2.4 SILICON	
570	927421-0004	B		3	O-RING 15.3X2.4 SILICON	
580	927422-0011	B		1	O-RING 69.5X3 SILICON	
MB043.1	567070-0010	A		1	ELECTRODE	
MB043.2	567070-0013	A		1	ELECTRODE	
MY004	B544906-0000	A		1	SOLENOID VALVE	
	90042-0465	*-*		*1*	*O-RING VITON 17,17X1,78*	
	90042-0464	*-*		*1*	*DIAPHRAGM VITON 1211321*	
MY034	B90042-0171	A		1	SOLENOID VALVE BUERKERT	
	90042-0466	*C*		*1*	*DIAPHRAGM 330.95.2 VITON*	
MY035	B544906-0000	A		1	SOLENOID VALVE	
	90042-0465	*-*		*1*	*O-RING VITON 17,17X1,78*	
	90042-0464	*-*		*1*	*DIAPHRAGM VITON 1211321*	

Pos	Part No	SP	UN	Qty	Description	Page No
W425	351150-0404	-	M	5	CABLE OLFLEX 4X0,75 MM2 LIGHT/GREY	
W430	351150-0403	-	M	4	CABLE OLFLEX 3X0,75 MM2 LIGHT/GREY	
W431	351150-0403	-	M	4	CABLE OLFLEX 3X0,75 MM2 LIGHT/GREY	
W432	351150-0403	-	M	4	CABLE OLFLEX 3X0,75 MM2 LIGHT/GREY	

Machine Type Group Description Used-In Group Number Page No

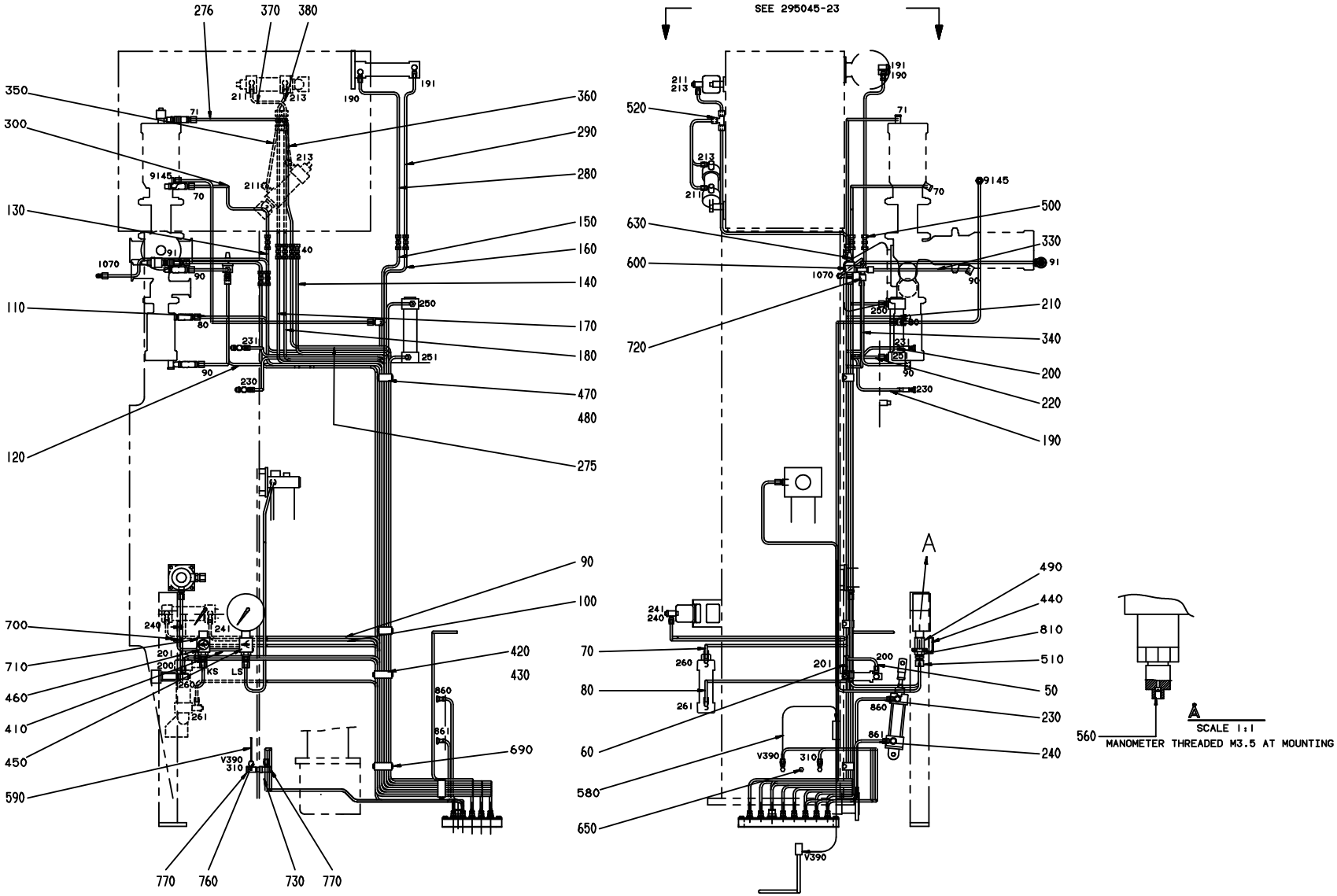

REMARK

ALL PIPES MARKED WITH CONNECTION NUMBER
IN BOTH ENDS.MARKING SLEEVE 359000-XXXX.

ECM: 114555 - 20020930
Group number: 295045-0900
Assembly Drawing: 295045-22_1_AA

This list covers pages from 66 to 69

Pos	Part No	SP	UN	Qty	Description	Page No
-						
020	2502197-0000	-		1	PIPE	
030	2502198-0000	-		1	PIPE	
050	577782-0000	-		1	TUBE 200	
060	577783-0000	-		1	TUBE 201	
070	577784-0000	-		1	TUBE260	
080	577785-0000	-		1	TUBE 261	
090	577786-0000	-		1	TUBE 240	
100	577787-0000	-		1	TUBE 241	
110	577788-0000	-		1	TUBE 80	
120	577789-0000	-		1	TUBE 90	
130	577790-0000	-		1	TUBE 70	
140	577791-0000	-		1	TUBE 40	
150	578002-0000	-		1	TUBE 190	
160	578003-0000	-		1	TUBE 191	
170	578004-0000	-		1	TUBE 211	
180	578005-0000	-		1	TUBE 213	
190	1524666-0000	-		1	TUBE 230	
200	1524667-0000	-		1	TUBE 231	
210	578008-0000	-		1	TUBE 250	
220	578009-0000	-		1	TUBE 251	
230	1524665-0000	-		1	TUBE 860	
240	1524664-0000	-		1	TUBE 861	
250	578013-0000	-		2	TUBE 213 AND 211	
260	578015-0000	-		1	TUBE 1071	
270	1524669-0000	-		1	PIPE	
275	580363-0000	-		1	PIPE 71	
276	580364-0000	-		1	PIPE 71	
277	581015-0000	-		1	PIPE 91	
278	581016-0000	-		1	PIPE 91	
279	1524663-0000	-		1	TUBE 55	
280	578017-0000	-		1	TUBE 190	
290	578018-0000	-		1	TUBE 191	
300	578020-0000	-		1	TUBE 70	
310	578021-0000	-		1	TUBE 1071	
320	1512356-0000	-		1	CONNECTION DEVICE	
330	577541-0000	-		1	TUBE 90	
340	577542-0000	-		1	TUBE 90	
350	578022-0000	-		1	TUBE 211	
360	578023-0000	-		1	TUBE 213	
370	1524672-0000	-		1	TUBE 211	
380	1524671-0000	-		1	TUBE 210	
390	578030-0000	-		2	GASKET	
400	1524670-0000	-		1	PIPE	
410	1524673-0000	-		1	BRACKET	
420	295604-0000	-		3	CRAMP	
430	295605-0000	-		3	BRACKET	
440	464173-0000	-		2	LABEL HOLDER	
450	464174-0000	-		1	SIGN	
460	464175-0000	-		1	SIGN	
470	578027-0000	-		3	CRAMP	
480	578028-0000	-		3	BRACKET	
490	1524674-0000	-		2	REDUCTION SLEEVE	
495	1539250-0000	-		1	SPACER	
496	1539237-0000	-		1	PIPE	
497	1539238-0000	-		1	PIPE	
500	90030-0075	-		9	PIPE CONNECTION G-6	
510	90030-0092	-		2	STRAIGHT CONN., 6-R1/4,EXT. TAPPERED	
520	90030-0164	-		2	CONN. T-PIPE T6-LL	
550	90043-0034	A		2	PRESSURE GAUGE	
560	90043-0302	-		2	SCREW	
580	90166-0119	-	MM	2100	HOSE PUR 4/6 BLACK	
590	90166-0132	-	MM	1500	TUBE 6 MM PA,TRANSP.	
600	90235-0259	A		1	VALVE	
630	90328-0003	A		1	SILENCER	
690	312105-0364	-		12	SCREW M6S ISO 4017 M6X10 A480	
700	312105-0368	-		2	SCREW M6S M6X16 A280	
710	312502-0120	-		4	DRIVE SCREW ROUND HEAD KDS 0X5	
720	342751-0204	-		1	CONN. L-PIPE, EXT. LE-6-R1/8	
730	342797-0121	-		2	CONN. BANJO, RINGPIECE 6-1/8	
740	90457-0087	-		1	BULKHEAD CONNECTOR 12 MM	
750	90457-0086	-		38	BULKHEAD CONNECTOR 6MM	
760	342980-0113	-		2	BANJO-CONNECTION,RING 6/4-G1/8"	
770	342980-0303	-		4	BANJO-HOLLOW BOLT COUPL,EXT.THR.01-G1/8"	
780	359000-0404	-		12	MARKING COLLAR PA2/4 "4" YELLOW	
780	359000-0405	-		8	MARKING CO2/4"5"	
780	359000-0406	-		14	MARKING COLLAR PA2/4 "6" YELLOW	
780	359000-0407	-		12	MARKING COLLAR PA2/4 "7" YELLOW	
780	359000-0408	-		12	MARKING COLLAR PA2/4 "8" YELLOW	
780	359000-0409	-		18	MARKING COLLAR PA2/4 "9" YELLOW	
780	359000-0400	-		61	MARKING CO2/4"0"	
780	359000-0401	-		63	MARKING COLLAR 2/4 "1" YELLOW	
780	359000-0402	-		44	MARKING COLLAR 2/4 "2" YELLOW	
780	359000-0771	-		4	MARKING CO2/4"V"	

Machine Type | Group Description | Used-In | Group Number | Page No

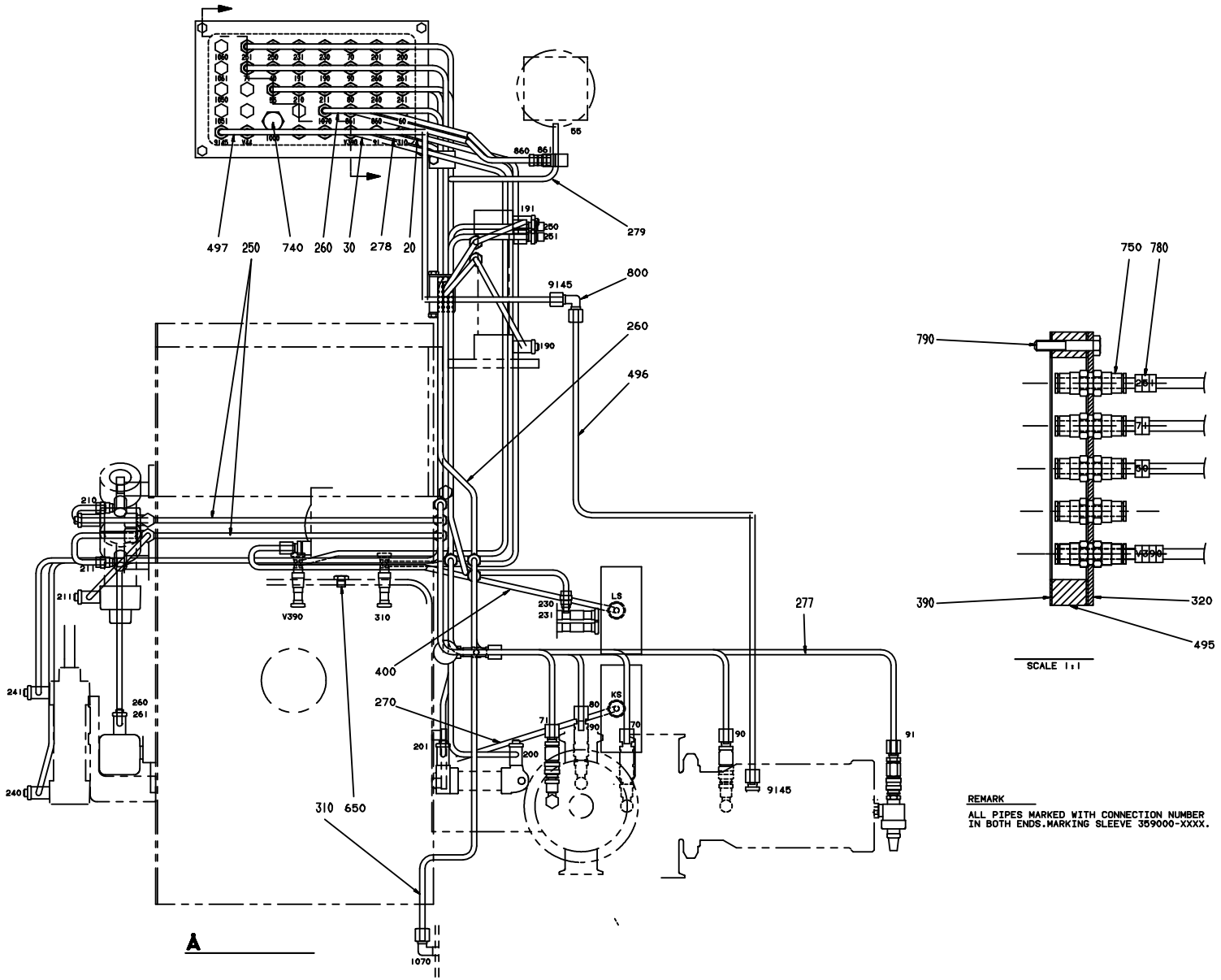
497
250
740
260
30
278
20
279
800
260
496
277
400
270
310
650
A
750
780
790
390
320
495
SCALE 1:1
REMARK
ALL PIPES MARKED WITH CONNECTION NUMBER IN BOTH ENDS.MARKING SLEEVE 359000-XXXX.

ECM: 114555 - 20020930
Group number: 295045-0900
Assembly Drawing: 295045-23_1_AA

This list covers pages from 66 to 69

Pos	Part No	SP	UN	Qty	Description	Page No
- (Cont'd)						
780	359000-0403	-		12	MARKING COLLAR PA2/4 "3" YELLOW	
790	312109-0376	-		4	SCREW M6S ISO 4017 M6X35 A480	
800	342737-0204	-		1	CONN. ELBOW W-6 LRFR	
810	90099-0131	-		2	NUT HEX. M16X2 SS	

Pos	Part No	SP	UN	Qty	Description	Page No

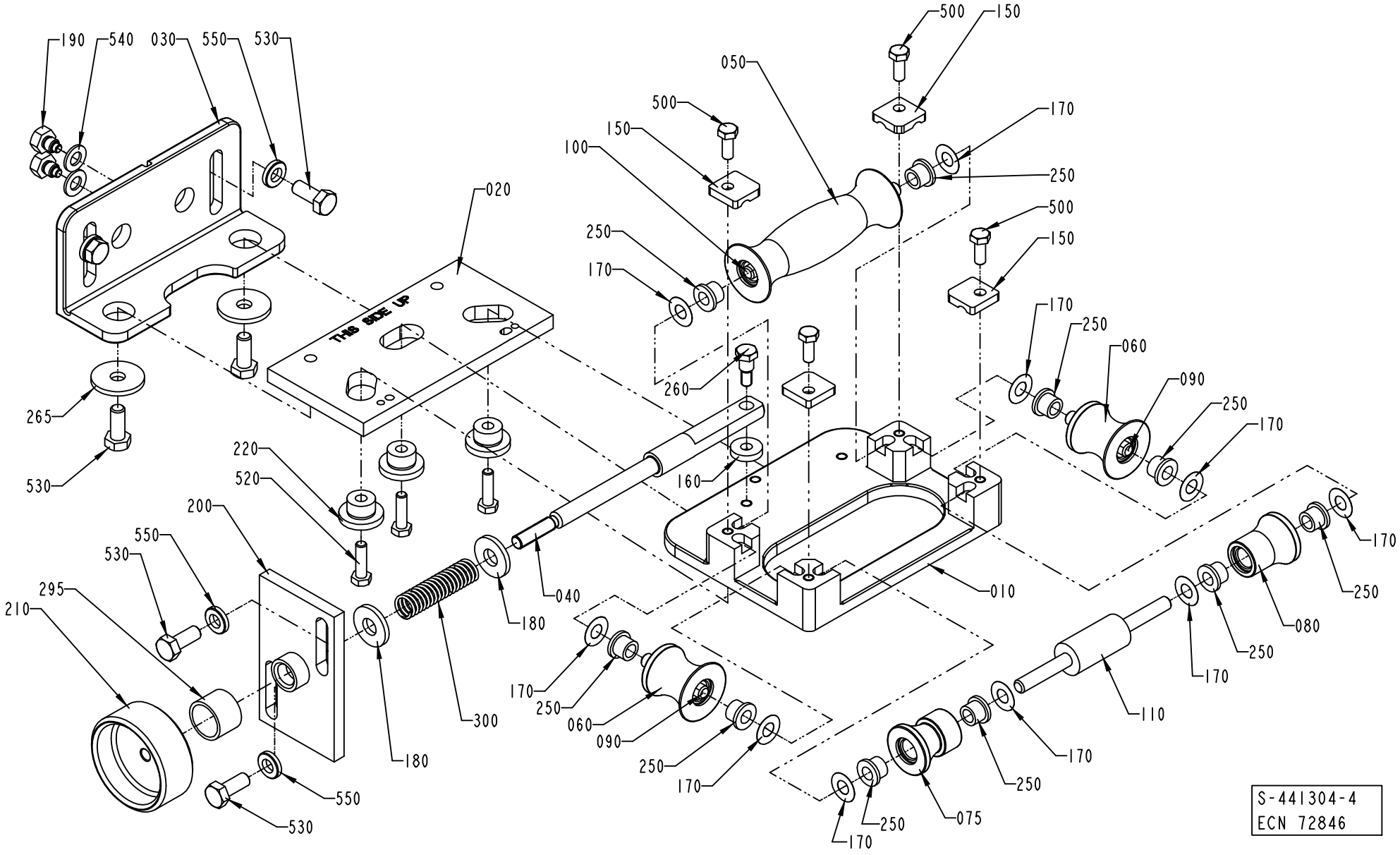
190
540
030
550
530
020
THIS SIDE UP
265
530
220
520
200
550
530
295
210
180
300
180
550
530
040
180
170
250
060
090
250
170
260
160
050
500
150
100
500
150
170
250
170
500
150
170
250
060
090
250
170
010
170
250
080
250
170
110
170
250
075
250
170
250
170
S-441304-4
ECN 72846

ECM: 124856 - 20030121
Group number: 441304-0400
Assembly Drawing: 441304-4_1_AD

This list covers pages from 70 to 77

Pos	Part No	SP	UN	Qty	Description	Page No
TBA 0125S, TBA 0100B (See drawing on page: 76)						
010	B456905-0000	-		1	FASTENING PLATE	
0010	*1282582-0000*	*-*		*1*	*CAST WORKPIECE*	
030	571536-0000	-		1	CANTILEVER	
050	752141-0000	A		1	FORMING ROLLER	
060	752142-0000	A		2	FORMING ROLLER	
075	1296912-0000	A		1	ROLL	
080	752143-0000	A		1	FORMING ROLLER	
090	752186-0002	A		2	SHAFT	
100	752186-0008	A		1	SHAFT	
110	752186-0006	A		2	SHAFT	
140	456907-0000	A		2	LOCK PLATE	
250	90240-0172	A		6	FLANGE BUSHING, 8X12X10 MM	
255	752156-0000	A		4	FLANGE BUSHING	
500	312105-0332	-		6	SCREW M6S ISO 4017 M5X22 A480	
TBA 0160S, TBA 0200S (See drawing on page: 72)						
010	B456905-0000	-		1	FASTENING PLATE	
0010	*1282582-0000*	*-*		*1*	*CAST WORKPIECE*	
030	571535-0000	-		1	CANTILEVER	
050	752126-0000	A		1	FORMING ROLLER	
060	752127-0000	A		2	FORMING ROLLER	
075	1296914-0000	A		1	ROLL	
080	752128-0000	A		1	FORMING ROLLER	
090	752186-0002	A		2	SHAFT	
100	752186-0008	A		1	SHAFT	
110	752186-0006	A		2	SHAFT	
140	456907-0000	A		2	LOCK PLATE	
250	90240-0172	A		6	FLANGE BUSHING, 8X12X10 MM	
255	752156-0000	A		4	FLANGE BUSHING	
500	312105-0332	-		6	SCREW M6S ISO 4017 M5X22 A480	
TBA 0250S, TBA 0200M (See drawing on page: 74)						
010	B574404-0000	-		1	BRACKET	
0010	*1282582-0000*	*-*		*1*	*CAST WORKPIECE*	
030	571535-0000	-		1	CANTILEVER	
050	574479-0000	A		1	ROLL	
060	574480-0000	A		2	ROLL	
075	1296915-0000	A		1	ROLL	
080	574481-0000	A		1	ROLL	
090	752186-0002	A		2	SHAFT	
100	752186-0008	A		1	SHAFT	
110	752186-0006	A		2	SHAFT	
140	1279087-0000	A		2	LOCKING PLATE	
250	90240-0172	A		6	FLANGE BUSHING, 8X12X10 MM	
255	752156-0000	A		4	FLANGE BUSHING	
500	312105-0332	-		6	SCREW M6S ISO 4017 M5X22 A480	
TBA 0330S, TBA 0300S, TBA 0180B, TBA 0200B, TBA 0284B, TBA 0250B (See drawing on page: 70)						
010	978792-0000	-		1	PLATE	
030	571535-0000	-		1	CANTILEVER	
050	751491-0000	A		1	ROLL	
060	751492-0000	A		2	ROLL	
075	1296913-0000	A		1	ROLL	
080	751494-0000	A		1	ROLL	
090	752186-0005	A		2	SHAFT	
100	752186-0009	A		1	SHAFT	
110	752187-0000	A		1	SHAFT	
250	90240-0172	A		10	FLANGE BUSHING, 8X12X10 MM	
500	312105-0368	-		4	SCREW M6S M6X16 A280	
Common Parts						
020	751333-0000	-		1	SETTING PLATE	
040	256309-0000	A		1	SHAFT	
150	1279091-0000	A		4	LOCKING PLATE	
160	256312-0000	A		1	WASHER	
170	2033-0011	A		10	WASHER	
180	26490-0000	A		2	WASHER	
190	256280-0000	-		2	DOWEL	
200	571534-0000	-		1	PLATE	
210	257090-0000	A		1	SHIFTER HANDLE	
220	751334-0000	A		3	SPACER	
260	456042-0000	A		1	SCREW	
265	28037-0000	A		2	WASHER	
295	491153-0000	A		1	COMPRESSION GLAND	
300	90335-0008	A		1	COMP. SPRING 22490, 1,6X14,1X115	
520	312105-0371	-		3	SCREW M6S ISO 4017 M6X22 A480	
530	312105-0451	-		6	SCREW M6S ISO 4017 M8X20 A480	
540	315105-0165	-		2	WASHER ISO 7089-8-200 HV-A4	
550	315115-0165	-		4	WASHER PLAIN, TBRB 8,4/16 H=3	

Machine Type | Group Description | Used-In | Group Number | Page No

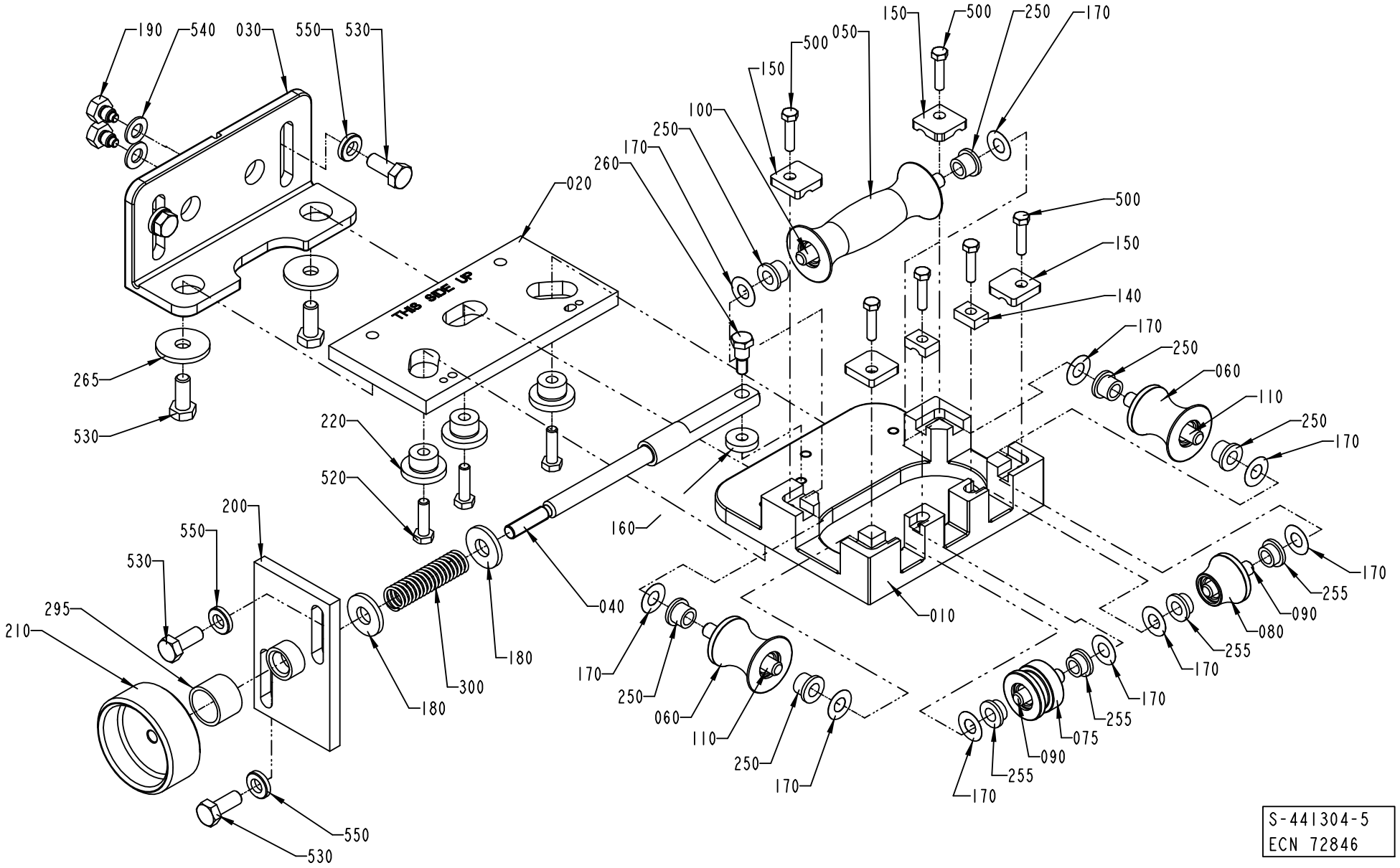
190
540
030
550
530
020
THIS SIDE UP
265
530
220
520
200
550
530
295
210
180
300
180
160
040
150
500
050
150
500
250
170
100
250
170
260
500
150
140
170
250
060
110
250
170
010
170
250
060
110
250
170
170
255
090
080
170
255
170
075
255
090
255
170
550
530
S-441304-5
ECN 72846

ECM: 124856 - 20030121
Group number: 441304-0400
Assembly Drawing: 441304-5_1_AD

This list covers pages from 70 to 77

Pos	Part No	SP	UN	Qty	Description	Page No
TBA 0125S, TBA 0100B (See drawing on page: 76)						
010	B456905-0000	-		1	FASTENING PLATE	
0010	*1282582-0000*	*-*		*1*	*CAST WORKPIECE*	
030	571536-0000	-		1	CANTILEVER	
050	752141-0000	A		1	FORMING ROLLER	
060	752142-0000	A		2	FORMING ROLLER	
075	1296912-0000	A		1	ROLL	
080	752143-0000	A		1	FORMING ROLLER	
090	752186-0002	A		2	SHAFT	
100	752186-0008	A		1	SHAFT	
110	752186-0006	A		2	SHAFT	
140	456907-0000	A		2	LOCK PLATE	
250	90240-0172	A		6	FLANGE BUSHING, 8X12X10 MM	
255	752156-0000	A		4	FLANGE BUSHING	
500	312105-0332	-		6	SCREW M6S ISO 4017 M5X22 A480	
TBA 0160S, TBA 0200S (See drawing on page: 72)						
010	B456905-0000	-		1	FASTENING PLATE	
0010	*1282582-0000*	*-*		*1*	*CAST WORKPIECE*	
030	571535-0000	-		1	CANTILEVER	
050	752126-0000	A		1	FORMING ROLLER	
060	752127-0000	A		2	FORMING ROLLER	
075	1296914-0000	A		1	ROLL	
080	752128-0000	A		1	FORMING ROLLER	
090	752186-0002	A		2	SHAFT	
100	752186-0008	A		1	SHAFT	
110	752186-0006	A		2	SHAFT	
140	456907-0000	A		2	LOCK PLATE	
250	90240-0172	A		6	FLANGE BUSHING, 8X12X10 MM	
255	752156-0000	A		4	FLANGE BUSHING	
500	312105-0332	-		6	SCREW M6S ISO 4017 M5X22 A480	
TBA 0250S, TBA 0200M (See drawing on page: 74)						
010	B574404-0000	-		1	BRACKET	
0010	*1282582-0000*	*-*		*1*	*CAST WORKPIECE*	
030	571535-0000	-		1	CANTILEVER	
050	574479-0000	A		1	ROLL	
060	574480-0000	A		2	ROLL	
075	1296915-0000	A		1	ROLL	
080	574481-0000	A		1	ROLL	
090	752186-0002	A		2	SHAFT	
100	752186-0008	A		1	SHAFT	
110	752186-0006	A		2	SHAFT	
140	1279087-0000	A		2	LOCKING PLATE	
250	90240-0172	A		6	FLANGE BUSHING, 8X12X10 MM	
255	752156-0000	A		4	FLANGE BUSHING	
500	312105-0332	-		6	SCREW M6S ISO 4017 M5X22 A480	
TBA 0330S, TBA 0300S, TBA 0180B, TBA 0200B, TBA 0284B, TBA 0250B (See drawing on page: 70)						
010	978792-0000	-		1	PLATE	
030	571535-0000	-		1	CANTILEVER	
050	751491-0000	A		1	ROLL	
060	751492-0000	A		2	ROLL	
075	1296913-0000	A		1	ROLL	
080	751494-0000	A		1	ROLL	
090	752186-0005	A		2	SHAFT	
100	752186-0009	A		1	SHAFT	
110	752187-0000	A		1	SHAFT	
250	90240-0172	A		10	FLANGE BUSHING, 8X12X10 MM	
500	312105-0368	-		4	SCREW M6S M6X16 A280	
Common Parts						
020	751333-0000	-		1	SETTING PLATE	
040	256309-0000	A		1	SHAFT	
150	1279091-0000	A		4	LOCKING PLATE	
160	256312-0000	A		1	WASHER	
170	2033-0011	A		10	WASHER	
180	26490-0000	A		2	WASHER	
190	256280-0000	-		2	DOWEL	
200	571534-0000	-		1	PLATE	
210	257090-0000	A		1	SHIFTER HANDLE	
220	751334-0000	A		3	SPACER	
260	456042-0000	A		1	SCREW	
265	28037-0000	A		2	WASHER	
295	491153-0000	A		1	COMPRESSION GLAND	
300	90335-0008	A		1	COMP. SPRING 22490, 1,6X14,1X115	
520	312105-0371	-		3	SCREW M6S ISO 4017 M6X22 A480	
530	312105-0451	-		6	SCREW M6S ISO 4017 M8X20 A480	
540	315105-0165	-		2	WASHER ISO 7089-8-200 HV-A4	
550	315115-0165	-		4	WASHER PLAIN, TBRB 8,4/16 H=3	

Machine Type | Group Description | Used-In | Group Number | Page No

MOVABLE FORMING RING

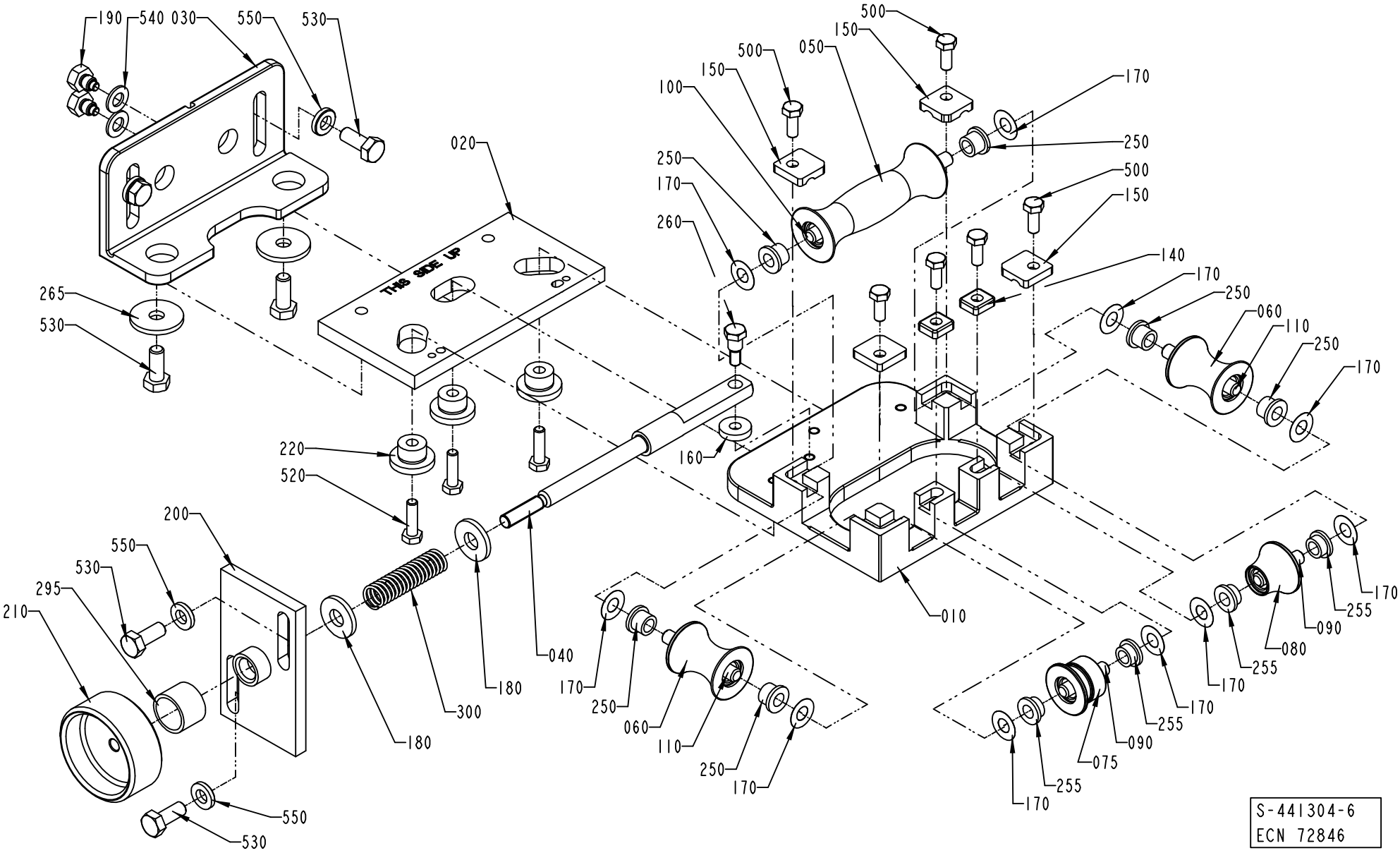

ECM: 124856 - 20030121
Group number: 441304-0400
Assembly Drawing: 441304-6_1_AD

This list covers pages from 70 to 77

Pos	Part No	SP	UN	Qty	Description	Page No
TBA 0125S, TBA 0100B (See drawing on page: 76)						
010	B456905-0000	-		1	FASTENING PLATE	
0010	*1282582-0000*	*-*		*1*	*CAST WORKPIECE*	
030	571536-0000	-		1	CANTILEVER	
050	752141-0000	A		1	FORMING ROLLER	
060	752142-0000	A		2	FORMING ROLLER	
075	1296912-0000	A		1	ROLL	
080	752143-0000	A		1	FORMING ROLLER	
090	752186-0002	A		2	SHAFT	
100	752186-0008	A		1	SHAFT	
110	752186-0006	A		2	SHAFT	
140	456907-0000	A		2	LOCK PLATE	
250	90240-0172	A		6	FLANGE BUSHING, 8X12X10 MM	
255	752156-0000	A		4	FLANGE BUSHING	
500	312105-0332	-		6	SCREW M6S ISO 4017 M5X22 A480	
TBA 0160S, TBA 0200S (See drawing on page: 72)						
010	B456905-0000	-		1	FASTENING PLATE	
0010	*1282582-0000*	*-*		*1*	*CAST WORKPIECE*	
030	571535-0000	-		1	CANTILEVER	
050	752126-0000	A		1	FORMING ROLLER	
060	752127-0000	A		2	FORMING ROLLER	
075	1296914-0000	A		1	ROLL	
080	752128-0000	A		1	FORMING ROLLER	
090	752186-0002	A		2	SHAFT	
100	752186-0008	A		1	SHAFT	
110	752186-0006	A		2	SHAFT	
140	456907-0000	A		2	LOCK PLATE	
250	90240-0172	A		6	FLANGE BUSHING, 8X12X10 MM	
255	752156-0000	A		4	FLANGE BUSHING	
500	312105-0332	-		6	SCREW M6S ISO 4017 M5X22 A480	
TBA 0250S, TBA 0200M (See drawing on page: 74)						
010	B574404-0000	-		1	BRACKET	
0010	*1282582-0000*	*-*		*1*	*CAST WORKPIECE*	
030	571535-0000	-		1	CANTILEVER	
050	574479-0000	A		1	ROLL	
060	574480-0000	A		2	ROLL	
075	1296915-0000	A		1	ROLL	
080	574481-0000	A		1	ROLL	
090	752186-0002	A		2	SHAFT	
100	752186-0008	A		1	SHAFT	
110	752186-0006	A		2	SHAFT	
140	1279087-0000	A		2	LOCKING PLATE	
250	90240-0172	A		6	FLANGE BUSHING, 8X12X10 MM	
255	752156-0000	A		4	FLANGE BUSHING	
500	312105-0332	-		6	SCREW M6S ISO 4017 M5X22 A480	
TBA 0330S, TBA 0300S, TBA 0180B, TBA 0200B, TBA 0284B, TBA 0250B (See drawing on page: 70)						
010	978792-0000	-		1	PLATE	
030	571535-0000	-		1	CANTILEVER	
050	751491-0000	A		1	ROLL	
060	751492-0000	A		2	ROLL	
075	1296913-0000	A		1	ROLL	
080	751494-0000	A		1	ROLL	
090	752186-0005	A		2	SHAFT	
100	752186-0009	A		1	SHAFT	
110	752187-0000	A		1	SHAFT	
250	90240-0172	A		10	FLANGE BUSHING, 8X12X10 MM	
500	312105-0368	-		4	SCREW M6S M6X16 A280	
Common Parts						
020	751333-0000	-		1	SETTING PLATE	
040	256309-0000	A		1	SHAFT	
150	1279091-0000	A		4	LOCKING PLATE	
160	256312-0000	A		1	WASHER	
170	2033-0011	A		10	WASHER	
180	26490-0000	A		2	WASHER	
190	256280-0000	-		2	DOWEL	
200	571534-0000	-		1	PLATE	
210	257090-0000	A		1	SHIFTER HANDLE	
220	751334-0000	A		3	SPACER	
260	456042-0000	A		1	SCREW	
265	28037-0000	A		2	WASHER	
295	491153-0000	A		1	COMPRESSION GLAND	
300	90335-0008	A		1	COMP. SPRING 22490, 1,6X14,1X115	
520	312105-0371	-		3	SCREW M6S ISO 4017 M6X22 A480	
530	312105-0451	-		6	SCREW M6S ISO 4017 M8X20 A480	
540	315105-0165	-		2	WASHER ISO 7089-8-200 HV-A4	
550	315115-0165	-		4	WASHER PLAIN, TBRB 8,4/16 H=3	

Machine Type | Group Description | Used-In | Group Number | Page No

MOVABLE FORMING RING

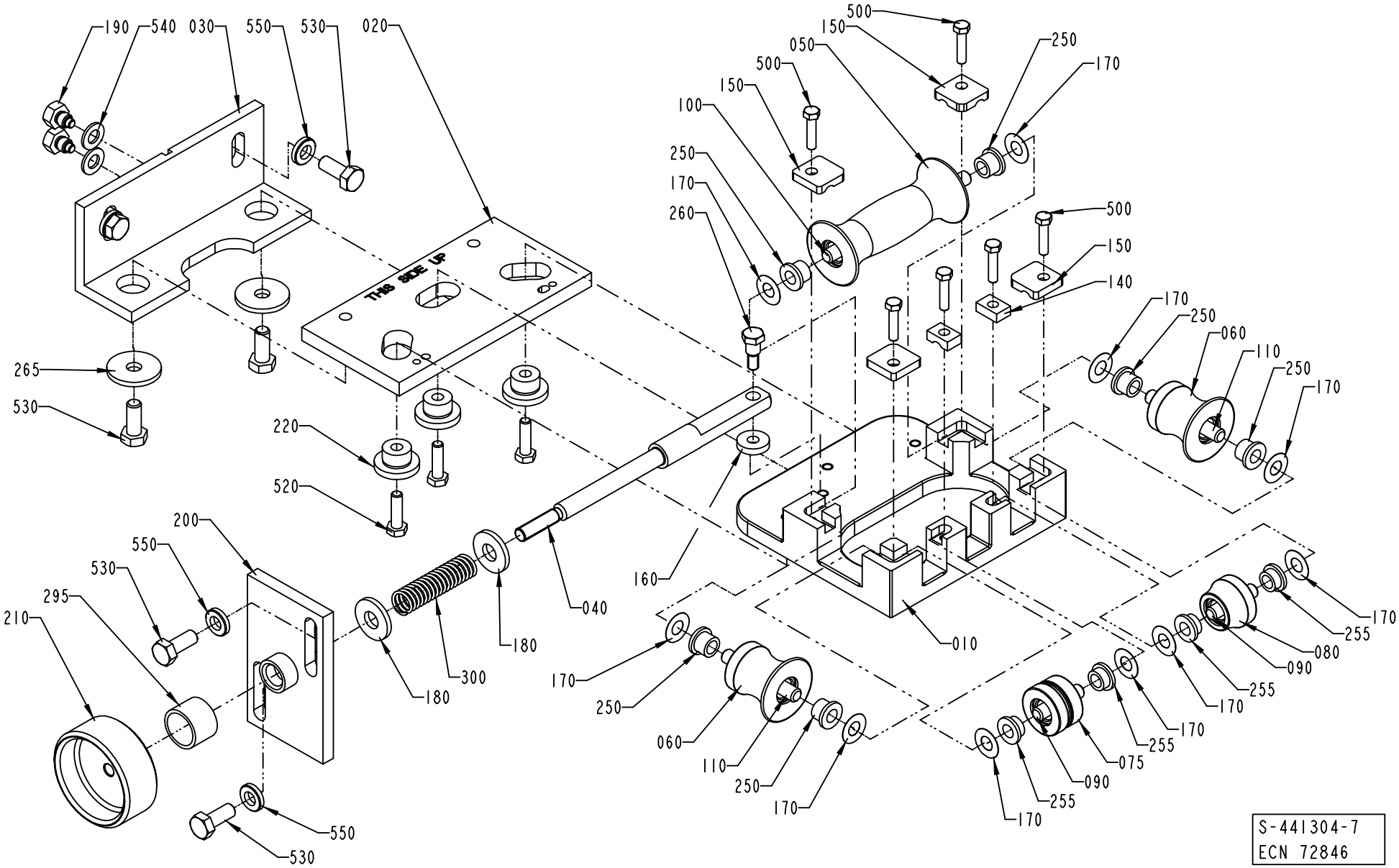

ECM: 124856 - 20030121
Group number: 441304-0400
Assembly Drawing: 441304-7_1_AB

This list covers pages from 70 to 77

Pos	Part No	SP	UN	Qty	Description	Page No
TBA 0125S, TBA 0100B (See drawing on page: 76)						
010	B456905-0000	-		1	FASTENING PLATE	
0010	*1282582-0000*	*-*		*1*	*CAST WORKPIECE*	
030	571536-0000	-		1	CANTILEVER	
050	752141-0000	A		1	FORMING ROLLER	
060	752142-0000	A		2	FORMING ROLLER	
075	1296912-0000	A		1	ROLL	
080	752143-0000	A		1	FORMING ROLLER	
090	752186-0002	A		2	SHAFT	
100	752186-0008	A		1	SHAFT	
110	752186-0006	A		2	SHAFT	
140	456907-0000	A		2	LOCK PLATE	
250	90240-0172	A		6	FLANGE BUSHING, 8X12X10 MM	
255	752156-0000	A		4	FLANGE BUSHING	
500	312105-0332	-		6	SCREW M6S ISO 4017 M5X22 A480	
TBA 0160S, TBA 0200S (See drawing on page: 72)						
010	B456905-0000	-		1	FASTENING PLATE	
0010	*1282582-0000*	*-*		*1*	*CAST WORKPIECE*	
030	571535-0000	-		1	CANTILEVER	
050	752126-0000	A		1	FORMING ROLLER	
060	752127-0000	A		2	FORMING ROLLER	
075	1296914-0000	A		1	ROLL	
080	752128-0000	A		1	FORMING ROLLER	
090	752186-0002	A		2	SHAFT	
100	752186-0008	A		1	SHAFT	
110	752186-0006	A		2	SHAFT	
140	456907-0000	A		2	LOCK PLATE	
250	90240-0172	A		6	FLANGE BUSHING, 8X12X10 MM	
255	752156-0000	A		4	FLANGE BUSHING	
500	312105-0332	-		6	SCREW M6S ISO 4017 M5X22 A480	
TBA 0250S, TBA 0200M (See drawing on page: 74)						
010	B574404-0000	-		1	BRACKET	
0010	*1282582-0000*	*-*		*1*	*CAST WORKPIECE*	
030	571535-0000	-		1	CANTILEVER	
050	574479-0000	A		1	ROLL	
060	574480-0000	A		2	ROLL	
075	1296915-0000	A		1	ROLL	
080	574481-0000	A		1	ROLL	
090	752186-0002	A		2	SHAFT	
100	752186-0008	A		1	SHAFT	
110	752186-0006	A		2	SHAFT	
140	1279087-0000	A		2	LOCKING PLATE	
250	90240-0172	A		6	FLANGE BUSHING, 8X12X10 MM	
255	752156-0000	A		4	FLANGE BUSHING	
500	312105-0332	-		6	SCREW M6S ISO 4017 M5X22 A480	
TBA 0330S, TBA 0300S, TBA 0180B, TBA 0200B, TBA 0284B, TBA 0250B (See drawing on page: 70)						
010	978792-0000	-		1	PLATE	
030	571535-0000	-		1	CANTILEVER	
050	751491-0000	A		1	ROLL	
060	751492-0000	A		2	ROLL	
075	1296913-0000	A		1	ROLL	
080	751494-0000	A		1	ROLL	
090	752186-0005	A		2	SHAFT	
100	752186-0009	A		1	SHAFT	
110	752187-0000	A		1	SHAFT	
250	90240-0172	A		10	FLANGE BUSHING, 8X12X10 MM	
500	312105-0368	-		4	SCREW M6S M6X16 A280	
Common Parts						
020	751333-0000	-		1	SETTING PLATE	
040	256309-0000	A		1	SHAFT	
150	1279091-0000	A		4	LOCKING PLATE	
160	256312-0000	A		1	WASHER	
170	2033-0011	A		10	WASHER	
180	26490-0000	A		2	WASHER	
190	256280-0000	-		2	DOWEL	
200	571534-0000	-		1	PLATE	
210	257090-0000	A		1	SHIFTER HANDLE	
220	751334-0000	A		3	SPACER	
260	456042-0000	A		1	SCREW	
265	28037-0000	A		2	WASHER	
295	491153-0000	A		1	COMPRESSION GLAND	
300	90335-0008	A		1	COMP. SPRING 22490, 1,6X14,1X115	
520	312105-0371	-		3	SCREW M6S ISO 4017 M6X22 A480	
530	312105-0451	-		6	SCREW M6S ISO 4017 M8X20 A480	
540	315105-0165	-		2	WASHER ISO 7089-8-200 HV-A4	
550	315115-0165	-		4	WASHER PLAIN, TBRB 8,4/16 H=3	

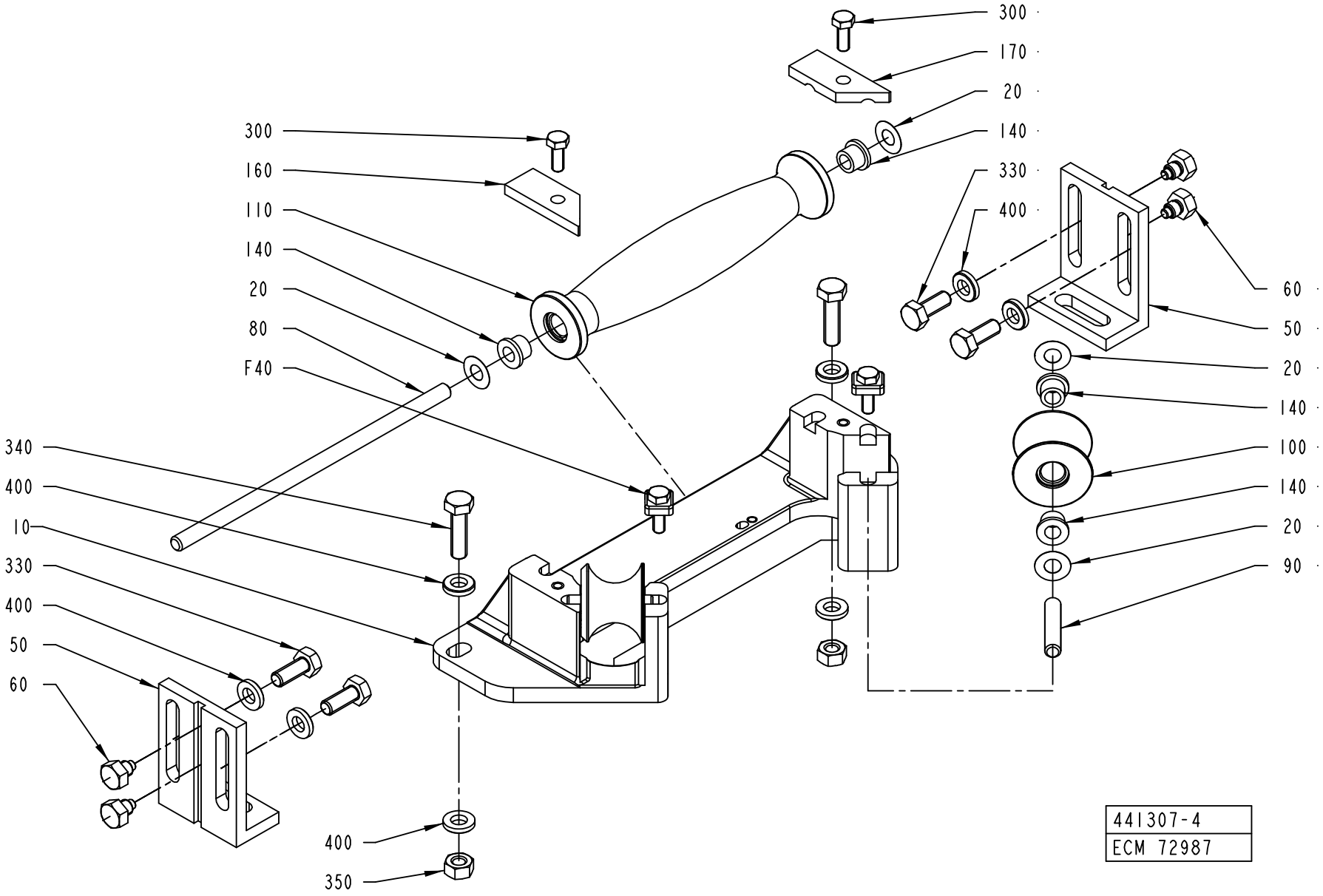
300
170
20
140
330
400
60
50
20
140
100
140
20
90
300
160
110
140
20
80
F40
340
400
10
330
400
50
60
400
350
441307-4
ECM 72987

ECM: 124857 - 20030121
Group number: 441307-0300
Assembly Drawing: 441307-4_1_AC

This list covers pages from 78 to 83

Pos	Part No	SP	UN	Qty	Description	Page No
TBA 0125S, TBA 0100B (See drawing on page: 80)						
010	469078-0000	-		1	HOLDER	
050	256279-0000	-		2	ANGLE	
080	752186-0010	A		1	SHAFT	
090	752186-0001	A		2	SHAFT	
100	752145-0000	A		2	FORMING ROLLER	
110	752144-0000	A		1	FORMING ROLLER	
160	1279089-0000	A		1	LOCKING PLATE	
170	1279088-0000	A		1	LOCKING PLATE	
290	312105-0368	-		2	SCREW M6S M6X16 A280	
345	312105-0457	-		2	SCREW M6S ISO 4014 M8X35 A480	
TBA 0160S, TBA 0200S (See drawing on page: 82)						
010	B469041-0000	-		1	HOLDER	
0010	*1282583-0000*	*-*		*1*	*CAST WORKPIECE*	
050	469047-0000	-		2	ANGLE	
080	752186-0010	A		1	SHAFT	
090	752186-0004	A		2	SHAFT	
100	752130-0000	A		2	FORMING ROLLER	
110	752129-0000	A		1	FORMING ROLLER	
160	1279089-0000	A		1	LOCKING PLATE	
170	1279088-0000	A		1	LOCKING PLATE	
300	312105-0368	-		2	SCREW M6S M6X16 A280	
340	312105-0455	-		2	SCREW M6S ISO 4017 M8X30 A480	
TBA 0180B (See drawing on page: 78)						
010	978791-0000	-		1	HOLDER	
050	751267-0000	-		2	CANTILEVER	
080	752186-0011	A		1	SHAFT	
090	752186-0004	A		2	SHAFT	
160	751287-0000	A		1	PLATE	
170	751288-0000	A		1	PLATE	
300	312105-0368	-		2	SCREW M6S M6X16 A280	
340	312105-0455	-		2	SCREW M6S ISO 4017 M8X30 A480	
TBA 0250S, TBA 0200M (See drawing on page: 82)						
010	B574416-0000	-		1	BRACKET	
0010	*1282583-0000*	*-*		*1*	*CAST WORKPIECE*	
050	469047-0000	-		2	ANGLE	
080	752186-0010	A		1	SHAFT	
090	752186-0012	A		2	SHAFT	
100	574418-0000	A		2	ROLL	
110	574417-0000	A		1	ROLL	
160	1279089-0000	A		1	LOCKING PLATE	
170	1279088-0000	A		1	LOCKING PLATE	
300	312105-0368	-		2	SCREW M6S M6X16 A280	
340	312105-0455	-		2	SCREW M6S ISO 4017 M8X30 A480	
TBA 0330S, TBA 0300S, TBA 0200B, TBA 0284B, TBA 0250B (See drawing on page: 78)						
010	978791-0000	-		1	HOLDER	
050	751267-0000	-		2	CANTILEVER	
080	752186-0011	A		1	SHAFT	
090	752186-0004	A		2	SHAFT	
100	751284-0000	A		2	ROLL	
110	751283-0000	A		1	ROLL	
160	751287-0000	A		1	PLATE	
170	751288-0000	A		1	PLATE	
300	312105-0368	-		2	SCREW M6S M6X16 A280	
340	312105-0455	-		2	SCREW M6S ISO 4017 M8X30 A480	
Common Parts						
020	2033-0011	A		6	WASHER	
040	A565462-0100	A		1	LOCK PLATE	**85**
060	256280-0000	-		4	DOWEL	
140	90240-0172	A		6	FLANGE BUSHING, 8X12X10 MM	
330	312105-0451	-		4	SCREW M6S ISO 4017 M8X20 A480	
350	312605-0318	-		2	HEXAGON NUT, M6M M8 A280	
400	315115-0165	-		8	WASHER PLAIN, TBRB 8,4/16 H=3	

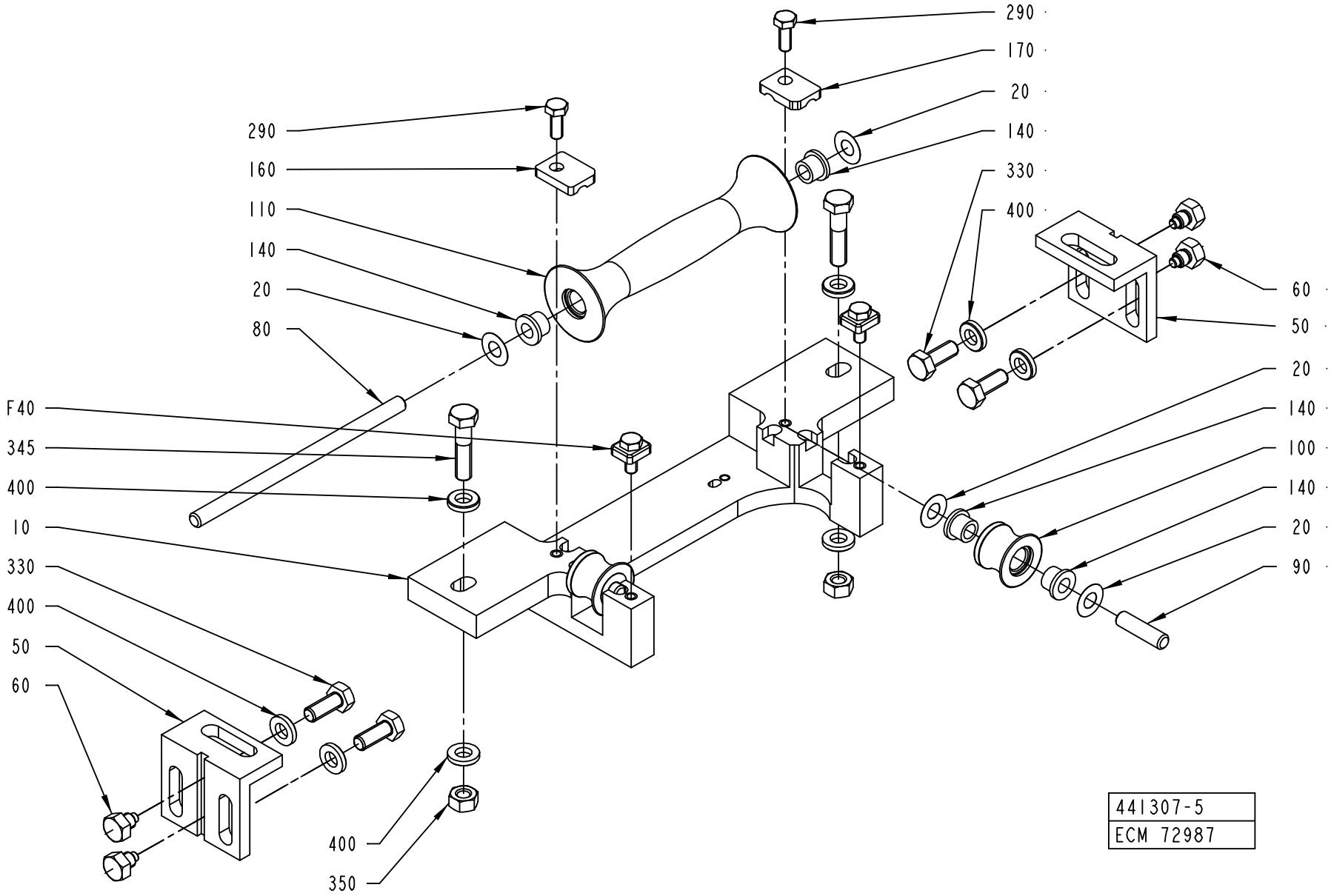
290
170
20
140
330
400
60
50
20
140
100
140
20
90
290
160
110
140
20
80
F40
345
400
10
330
400
50
60
400
350
441307-5
ECM 72987

ECM: 124857 - 20030121
Group number: 441307-0300
Assembly Drawing: 441307-5_1_AC

This list covers pages from 78 to 83

Pos	Part No	SP	UN	Qty	Description	Page No
TBA 0125S, TBA 0100B (See drawing on page: 80)						
010	469078-0000	-		1	HOLDER	
050	256279-0000	-		2	ANGLE	
080	752186-0010	A		1	SHAFT	
090	752186-0001	A		2	SHAFT	
100	752145-0000	A		2	FORMING ROLLER	
110	752144-0000	A		1	FORMING ROLLER	
160	1279089-0000	A		1	LOCKING PLATE	
170	1279088-0000	A		1	LOCKING PLATE	
290	312105-0368	-		2	SCREW M6S M6X16 A280	
345	312105-0457	-		2	SCREW M6S ISO 4014 M8X35 A480	
TBA 0160S, TBA 0200S (See drawing on page: 82)						
010	B469041-0000	-		1	HOLDER	
0010	*1282583-0000*	*-*		*1*	*CAST WORKPIECE*	
050	469047-0000	-		2	ANGLE	
080	752186-0010	A		1	SHAFT	
090	752186-0004	A		2	SHAFT	
100	752130-0000	A		2	FORMING ROLLER	
110	752129-0000	A		1	FORMING ROLLER	
160	1279089-0000	A		1	LOCKING PLATE	
170	1279088-0000	A		1	LOCKING PLATE	
300	312105-0368	-		2	SCREW M6S M6X16 A280	
340	312105-0455	-		2	SCREW M6S ISO 4017 M8X30 A480	
TBA 0180B (See drawing on page: 78)						
010	978791-0000	-		1	HOLDER	
050	751267-0000	-		2	CANTILEVER	
080	752186-0011	A		1	SHAFT	
090	752186-0004	A		2	SHAFT	
160	751287-0000	A		1	PLATE	
170	751288-0000	A		1	PLATE	
300	312105-0368	-		2	SCREW M6S M6X16 A280	
340	312105-0455	-		2	SCREW M6S ISO 4017 M8X30 A480	
TBA 0250S, TBA 0200M (See drawing on page: 82)						
010	B574416-0000	-		1	BRACKET	
0010	*1282583-0000*	*-*		*1*	*CAST WORKPIECE*	
050	469047-0000	-		2	ANGLE	
080	752186-0010	A		1	SHAFT	
090	752186-0012	A		2	SHAFT	
100	574418-0000	A		2	ROLL	
110	574417-0000	A		1	ROLL	
160	1279089-0000	A		1	LOCKING PLATE	
170	1279088-0000	A		1	LOCKING PLATE	
300	312105-0368	-		2	SCREW M6S M6X16 A280	
340	312105-0455	-		2	SCREW M6S ISO 4017 M8X30 A480	
TBA 0330S, TBA 0300S, TBA 0200B, TBA 0284B, TBA 0250B (See drawing on page: 78)						
010	978791-0000	-		1	HOLDER	
050	751267-0000	-		2	CANTILEVER	
080	752186-0011	A		1	SHAFT	
090	752186-0004	A		2	SHAFT	
100	751284-0000	A		2	ROLL	
110	751283-0000	A		1	ROLL	
160	751287-0000	A		1	PLATE	
170	751288-0000	A		1	PLATE	
300	312105-0368	-		2	SCREW M6S M6X16 A280	
340	312105-0455	-		2	SCREW M6S ISO 4017 M8X30 A480	
Common Parts						
020	2033-0011	A		6	WASHER	
040	A565462-0100	A		1	LOCK PLATE	**85**
060	256280-0000	-		4	DOWEL	
140	90240-0172	A		6	FLANGE BUSHING, 8X12X10 MM	
330	312105-0451	-		4	SCREW M6S ISO 4017 M8X20 A480	
350	312605-0318	-		2	HEXAGON NUT, M6M M8 A280	
400	315115-0165	-		8	WASHER PLAIN, TBRB 8,4/16 H=3	

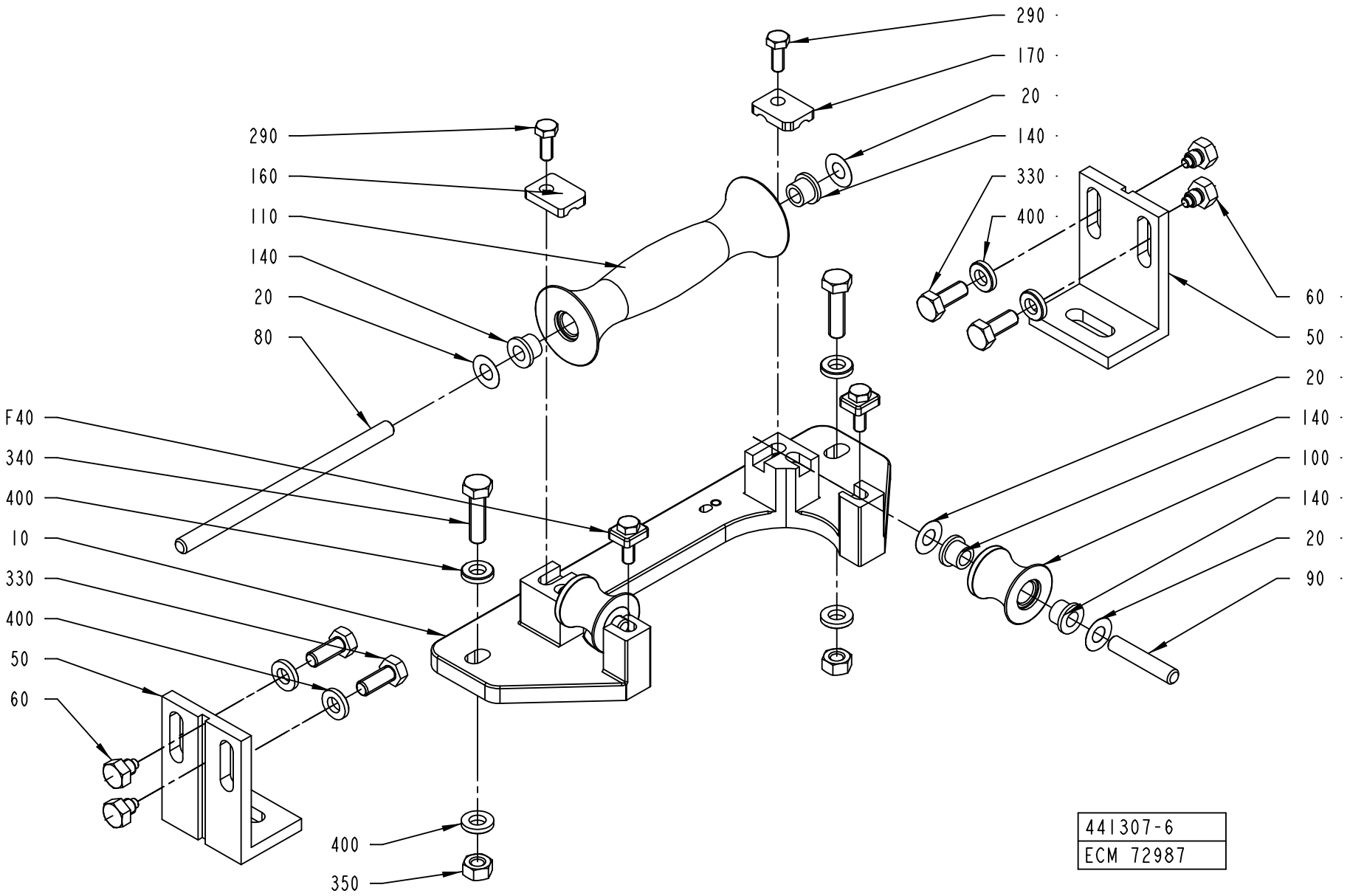
290
170
20
140
330
400
60
50
290
160
110
140
20
80
F40
340
400
10
330
400
50
60
20
140
100
140
20
90
400
350
441307-6
ECM 72987

ECM: 124857 - 20030121
Group number: 441307-0300
Assembly Drawing: 441307-6_1_AC

This list covers pages from 78 to 83

Pos	Part No	SP	UN	Qty	Description	Page No
TBA 0125S, TBA 0100B (See drawing on page: 80)						
010	469078-0000	-		1	HOLDER	
050	256279-0000	-		2	ANGLE	
080	752186-0010	A		1	SHAFT	
090	752186-0001	A		2	SHAFT	
100	752145-0000	A		2	FORMING ROLLER	
110	752144-0000	A		1	FORMING ROLLER	
160	1279089-0000	A		1	LOCKING PLATE	
170	1279088-0000	A		1	LOCKING PLATE	
290	312105-0368	-		2	SCREW M6S M6X16 A280	
345	312105-0457	-		2	SCREW M6S ISO 4014 M8X35 A480	
TBA 0160S, TBA 0200S (See drawing on page: 82)						
010	B469041-0000	-		1	HOLDER	
0010	*1282583-0000*	*-*		*1*	*CAST WORKPIECE*	
050	469047-0000	-		2	ANGLE	
080	752186-0010	A		1	SHAFT	
090	752186-0004	A		2	SHAFT	
100	752130-0000	A		2	FORMING ROLLER	
110	752129-0000	A		1	FORMING ROLLER	
160	1279089-0000	A		1	LOCKING PLATE	
170	1279088-0000	A		1	LOCKING PLATE	
300	312105-0368	-		2	SCREW M6S M6X16 A280	
340	312105-0455	-		2	SCREW M6S ISO 4017 M8X30 A480	
TBA 0180B (See drawing on page: 78)						
010	978791-0000	-		1	HOLDER	
050	751267-0000	-		2	CANTILEVER	
080	752186-0011	A		1	SHAFT	
090	752186-0004	A		2	SHAFT	
160	751287-0000	A		1	PLATE	
170	751288-0000	A		1	PLATE	
300	312105-0368	-		2	SCREW M6S M6X16 A280	
340	312105-0455	-		2	SCREW M6S ISO 4017 M8X30 A480	
TBA 0250S, TBA 0200M (See drawing on page: 82)						
010	B574416-0000	-		1	BRACKET	
0010	*1282583-0000*	*-*		*1*	*CAST WORKPIECE*	
050	469047-0000	-		2	ANGLE	
080	752186-0010	A		1	SHAFT	
090	752186-0012	A		2	SHAFT	
100	574418-0000	A		2	ROLL	
110	574417-0000	A		1	ROLL	
160	1279089-0000	A		1	LOCKING PLATE	
170	1279088-0000	A		1	LOCKING PLATE	
300	312105-0368	-		2	SCREW M6S M6X16 A280	
340	312105-0455	-		2	SCREW M6S ISO 4017 M8X30 A480	
TBA 0330S, TBA 0300S, TBA 0200B, TBA 0284B, TBA 0250B (See drawing on page: 78)						
010	978791-0000	-		1	HOLDER	
050	751267-0000	-		2	CANTILEVER	
080	752186-0011	A		1	SHAFT	
090	752186-0004	A		2	SHAFT	
100	751284-0000	A		2	ROLL	
110	751283-0000	A		1	ROLL	
160	751287-0000	A		1	PLATE	
170	751288-0000	A		1	PLATE	
300	312105-0368	-		2	SCREW M6S M6X16 A280	
340	312105-0455	-		2	SCREW M6S ISO 4017 M8X30 A480	
Common Parts						
020	2033-0011	A		6	WASHER	
040	A565462-0100	A		1	LOCK PLATE	**85**
060	256280-0000	-		4	DOWEL	
140	90240-0172	A		6	FLANGE BUSHING, 8X12X10 MM	
330	312105-0451	-		4	SCREW M6S ISO 4017 M8X20 A480	
350	312605-0318	-		2	HEXAGON NUT, M6M M8 A280	
400	315115-0165	-		8	WASHER PLAIN, TBRB 8,4/16 H=3	

This page is intentionally left blank.

ECM: 114548 - 20020930
Group number: 565462-0100
Assembly Drawing:

Pos	Part No	SP	UN	Qty	Description	Page No
TBA 0125S, TBA 0100B						
020	312105-0368	-		2	SCREW M6S M6X16 A280	
TBA 0330S, TBA 0300S, TBA 0180B, TBA 0160S, TBA 0200B, TBA 0250S, TBA 0284B, TBA 0200S, TBA 0200M, TBA 0250B						
020	312105-0370	-		2	SCREW M6S ISO 4017 M6X20 A480	
Common Parts						
010	1279087-0000	A		2	LOCKING PLATE	

Pos	Part No	SP	UN	Qty	Description	Page No

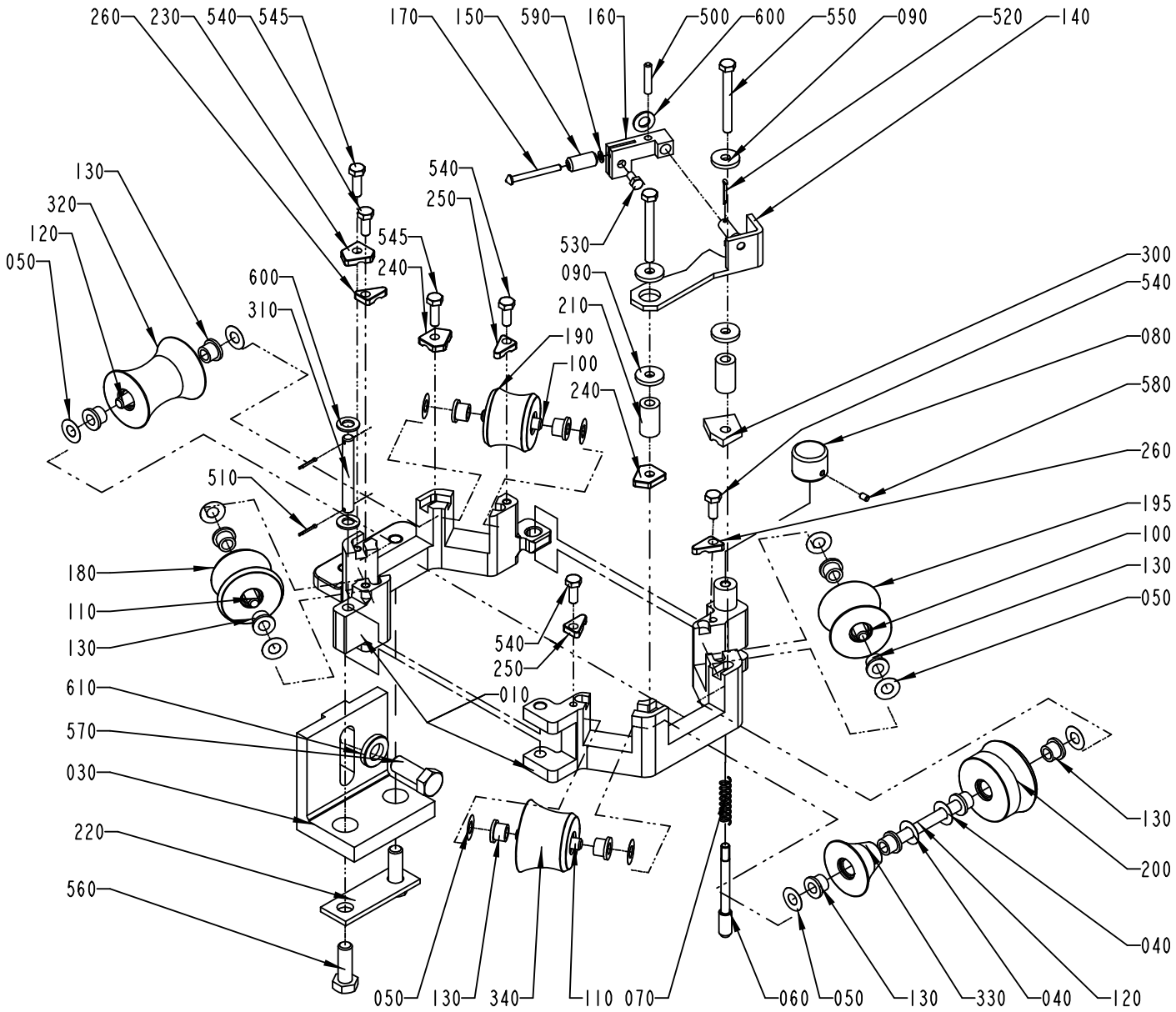

S-441486-7
ECN 72751

ECM: 124859 - 20030121
Group number: 441486-0400
Assembly Drawing: 441486-7_1_AC

This list covers pages from 86 to 91

Pos	Part No	SP	UN	Qty	Description	Page No
TBA 0125S, TBA 0100B (See drawing on page: 88)						
010	469745-0000	-		1	BRACKET	
050	2033-0011	A		14	WASHER	
100	752186-0003	A		4	SHAFT	
120	752186-0006	A		1	SHAFT	
125	752185-0000	A		1	SHAFT	
130	90240-0172	A		12	FLANGE BUSHING, 8X12X10 MM	
180	752147-0000	A		1	FORMING ROLLER	
190	752148-0000	A		1	FORMING ROLLER	
195	752150-0000	A		1	FORMING ROLLER	
200	752151-0000	A		1	FORMING ROLLER	
300	456872-0000	A		1	LOCK PLATE	
320	752146-0000	A		1	FORMING ROLLER	
330	752152-0000	A		1	FORMING ROLLER	
340	752149-0000	A		1	FORMING ROLLER	
350	752156-0000	A		2	FLANGE BUSHING	
535	312105-0329	-		4	SCREW M6S ISO 4017 M5X16 A480	
536	312105-0332	-		4	SCREW M6S ISO 4017 M5X22 A480	
600	315105-0165	-		2	WASHER ISO 7089-8-200 HV-A4	
TBA 0160S, TBA 0200S (See drawing on page: 88)						
010	469745-0000	-		1	BRACKET	
050	2033-0011	A		14	WASHER	
100	752186-0003	A		4	SHAFT	
120	752186-0006	A		1	SHAFT	
125	752185-0000	A		1	SHAFT	
130	90240-0172	A		12	FLANGE BUSHING, 8X12X10 MM	
180	752132-0000	A		1	FORMING ROLLER	
190	752133-0000	A		1	FORMING ROLLER	
195	752135-0000	A		1	FORMING ROLLER	
200	752136-0000	A		1	FORMING ROLLER	
300	456872-0000	A		1	LOCK PLATE	
320	752131-0000	A		1	FORMING ROLLER	
330	752137-0000	A		1	FORMING ROLLER	
340	752134-0000	A		1	FORMING ROLLER	
350	752156-0000	A		2	FLANGE BUSHING	
535	312105-0329	-		4	SCREW M6S ISO 4017 M5X16 A480	
536	312105-0332	-		4	SCREW M6S ISO 4017 M5X22 A480	
600	315105-0165	-		2	WASHER ISO 7089-8-200 HV-A4	
TBA 0250S, TBA 0200M (See drawing on page: 90)						
010	574396-0000	-		1	BRACKET	
050	2033-0011	A		14	WASHER	
090	257175-0000	A		4	WASHER	
100	752186-0004	A		4	SHAFT	
120	752186-0006	A		1	SHAFT	
125	574395-0000	A		1	SHAFT	
130	90240-0172	A		12	FLANGE BUSHING, 8X12X10 MM	
140	574456-0000	-		1	BRACKET	
150	451117-0000	A		1	ROLL	
160	451148-0000	-		1	BRACKET	
170	451149-0000	A		1	SHAFT	
180	574397-0000	A		1	ROLL	
190	574399-0000	A		1	ROLL	
195	574400-0000	A		1	ROLL	
200	574401-0000	A		1	ROLL	
210	456181-0000	-		2	SPACER	
300	574393-0000	A		1	LOCK PLATE	
320	574398-0000	A		1	ROLL	
330	574402-0000	A		1	ROLL	
340	574403-0000	A		1	ROLL	
350	752156-0000	A		2	FLANGE BUSHING	
500	311103-0312	-		1	PARALLELL PIN, M6, 5X25 MM	
520	311411-0165	-		1	SPLIT PIN SP2,5X16RFR	
530	312105-0325	-		1	SCREW M6S ISO 4017 M5X10 A480	
535	312105-0329	-		4	SCREW M6S ISO 4017 M5X16 A480	
536	312105-0332	-		2	SCREW M6S ISO 4017 M5X22 A480	
550	312105-0381	-		2	SCREW M6S ISO 4014 M6X55 A480	
590	315105-0136	-		1	WASHER ISO 7089-4-200 HV-A4	
600	315105-0165	-		3	WASHER ISO 7089-8-200 HV-A4	
TBA 0330S, TBA 0300S, TBA 0180B, TBA 0200B, TBA 0284B, TBA 0250B (See drawing on page: 86)						
010	978790-0000	-		1	BRACKET	
040	2033-0008	A		2	WASHER	
050	2033-0011	A		12	WASHER	
090	257175-0000	A		4	WASHER	
100	752186-0004	A		2	SHAFT	
110	752186-0005	A		2	SHAFT	
120	752186-0007	A		2	SHAFT	
130	90240-0172	A		14	FLANGE BUSHING, 8X12X10 MM	
140	441918-0000	-		1	BRACKET	
150	451117-0000	A		1	ROLL	
160	451148-0000	-		1	BRACKET	
170	451149-0000	A		1	SHAFT	

Machine Type | Group Description | Used-In | Group Number | Page No

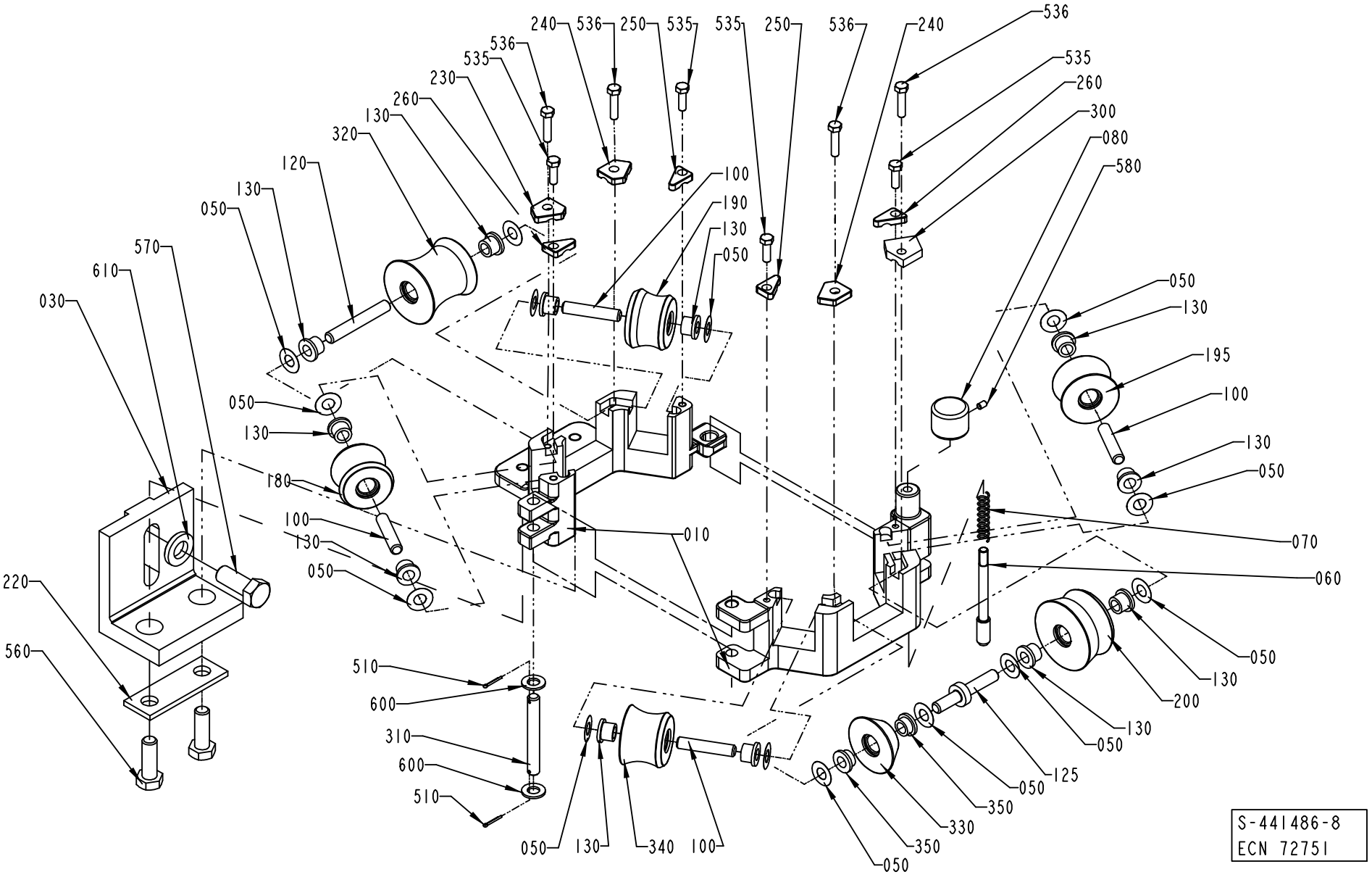
240
536
250
535
535
250
536
240
536
535
260
300
080
580
536
535
230
260
130
320
120
130
050
100
190
130
050
570
610
030
050
130
180
100
130
050
010
070
060
050
130
200
130
050
125
050
350
330
350
050
220
560
510
600
310
600
510
050
130
340
100
050
130
195
100
130
050
S-441486-8
ECN 72751

Pos	Part No	SP	UN	Qty	Description	Page No
TBA 0330S, TBA 0300S, TBA 0180B, TBA 0200B, TBA 0284B, TBA 0250B (Cont'd) (See drawing on page: 86)						
180	751499-0000	A		1	ROLL	
190	751497-0000	A		1	ROLL	
195	751496-0000	A		1	ROLL	
200	751495-0000	A		1	ROLL	
210	456181-0000	-		2	SPACER	
300	456199-0000	A		1	LOCK PLATE	
320	751498-0000	A		1	ROLL	
330	751501-0000	A		1	ROLL	
340	751500-0000	A		1	ROLL	
500	311103-0312	-		1	PARALLELL PIN, M6, 5X25 MM	
520	311411-0165	-		1	SPLIT PIN SP2,5X16RFR	
530	312105-0325	-		1	SCREW M6S ISO 4017 M5X10 A480	
540	312105-0368	-		4	SCREW M6S M6X16 A280	
545	312105-0370	-		2	SCREW M6S ISO 4017 M6X20 A480	
550	312105-0381	-		2	SCREW M6S ISO 4014 M6X55 A480	
590	315105-0136	-		1	WASHER ISO 7089-4-200 HV-A4	
600	315105-0165	-		3	WASHER ISO 7089-8-200 HV-A4	
Common Parts						
030	456230-0000	-		1	ANGLE BRACKET	
060	35918-0000	A		1	SHAFT	
070	35919-0000	A		1	COMPRESSION SPRING	
080	36325-0000	-		1	KNOB	
220	456182-0000	-		1	PLATE	
230	1279086-0000	A		1	LOCKING PLATE	
240	1279090-0000	A		2	LOCKING PLATE	
250	1279093-0000	A		2	LOCKING PLATE	
260	1279094-0000	A		2	LOCKING PLATE	
310	751318-0000	A		1	SHAFT	
510	311411-0150	-		2	SPLIT PIN SP2X12RFR	
560	312105-0495	-		2	SCREW M6S ISO 4017 M10X30 A480	
570	312105-0536	-		1	SCREW M6S ISO 4017 M12X30 A480	
580	312318-0285	-		1	SCREW ISO4029 M4X6 A4	
610	315115-0178	-		1	WASHER PLAIN, TBRB 13/24 H=4	

Pos	Part No	SP	UN	Qty	Description	Page No

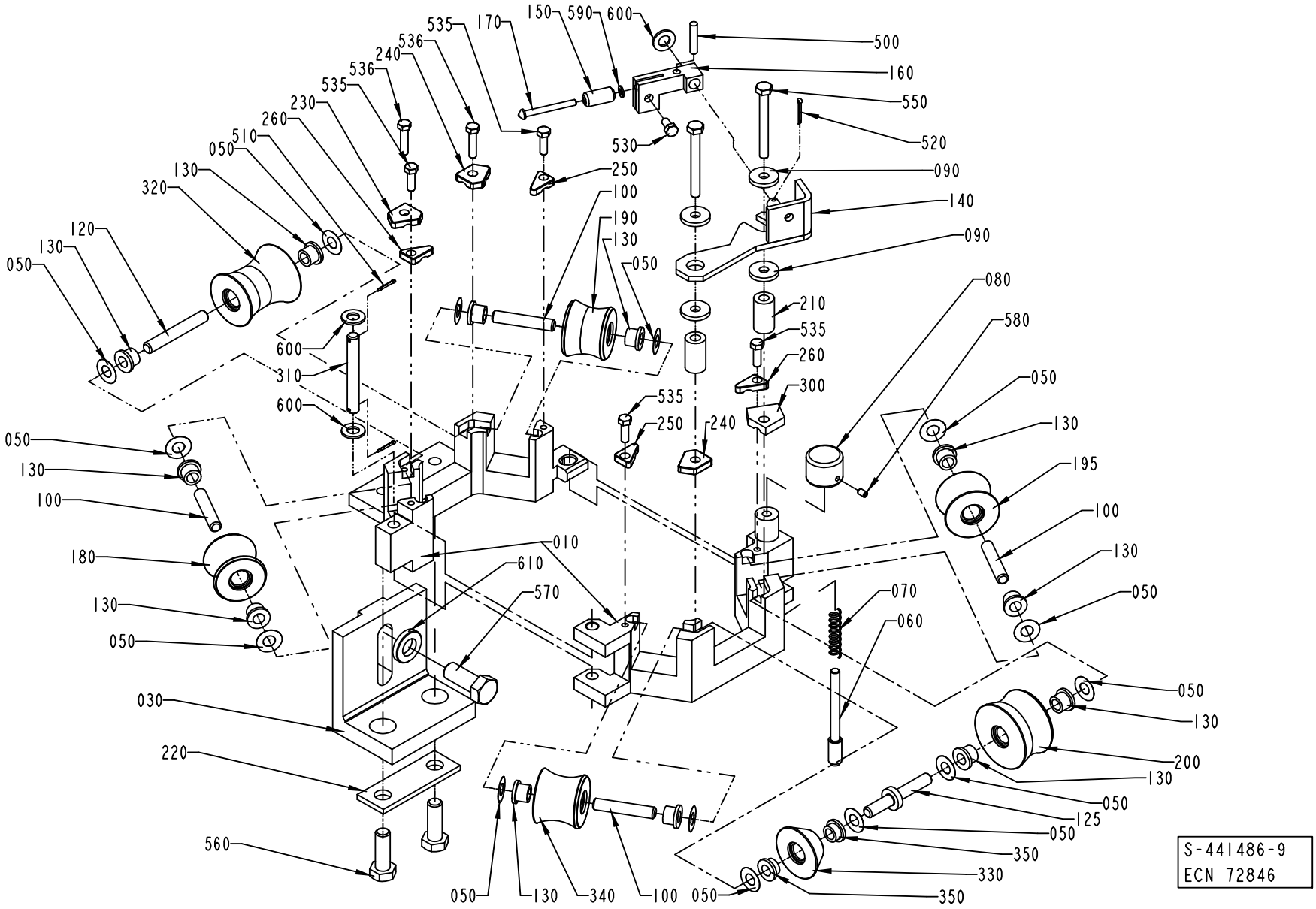
S-441486-9
ECN 72846

ECM: 124859 - 20030121
Group number: 441486-0400
Assembly Drawing: 441486-9_1_AC

This list covers pages from 86 to 91

Pos	Part No	SP	UN	Qty	Description	Page No	Pos	Part No	SP	UN	Qty	Description	Page No

SEE PREVIOUS LISTS PAGES: 87, 89.

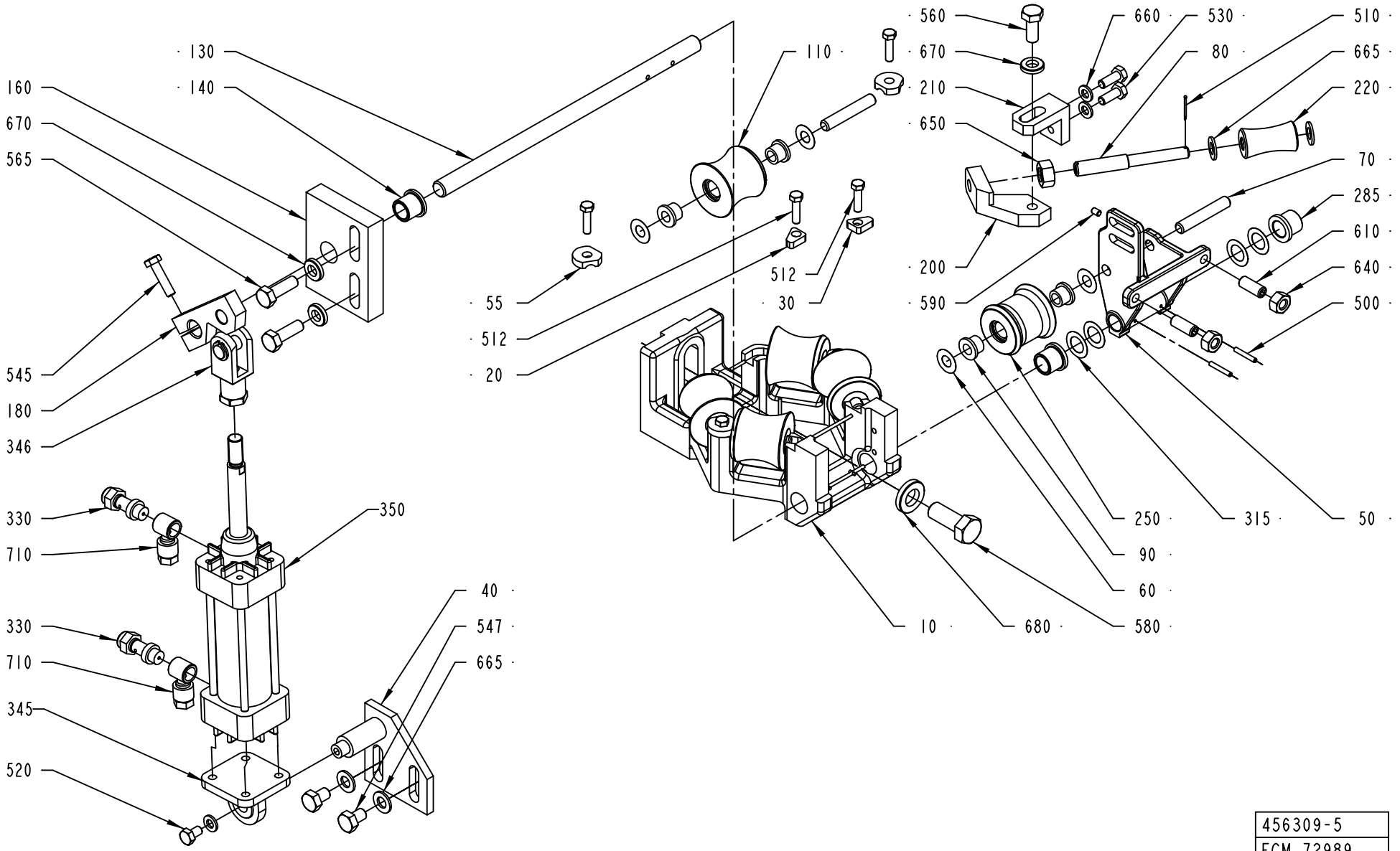

456309-5
ECM 72989

ECM: 114549 - 20020930
Group number: 456309-0600
Assembly Drawing: 456309-5_1_AC

This list covers pages from 92 to 95

Pos	Part No	SP	UN	Qty	Description	Page No
TBA 0125S, TBA 0100B (See drawing on page: 94)						
010	456837-0000	-		1	HOLDER	
050	257041-0000	-		1	FORK	
070	752186-0003	-		4	SHAFT	
075	752186-0012	-		2	SHAFT	
110	752153-0000	A		5	FORMING ROLLER	
140	255970-0000	A		3	BUSHING	
160	571544-0000	-		1	BEARING PLATE	
250	B752155-0000	A		1	COUNTER ROLLER	
	90166-0179	*-*	*M*	*1*	*SHRINKABLE HOSE*	
512	312105-0331	-		2	SCREW M6S ISO 4017 M5X20 A480	
540	312105-0370	-		4	SCREW M6S ISO 4017 M6X20 A480	
600	312318-0368	-		2	SCREW ISO4029 M6X16 A4	
630	312605-0316	-		2	HEXAGON NUT, M6M M6 A280	
TBA 0160S, TBA 0200S (See drawing on page: 94)						
010	456837-0000	-		1	HOLDER	
050	257041-0000	-		1	FORK	
070	752186-0003	-		4	SHAFT	
075	752186-0012	-		2	SHAFT	
110	752138-0000	A		5	FORMING ROLLER	
140	255970-0000	A		3	BUSHING	
160	571544-0000	-		1	BEARING PLATE	
250	B752140-0000	A		1	COUNTER ROLLER	
	90166-0179	*-*	*M*	*1*	*SHRINKABLE HOSE*	
512	312105-0331	-		2	SCREW M6S ISO 4017 M5X20 A480	
540	312105-0370	-		4	SCREW M6S ISO 4017 M6X20 A480	
600	312318-0368	-		2	SCREW ISO4029 M6X16 A4	
630	312605-0316	-		2	HEXAGON NUT, M6M M6 A280	
TBA 0250S, TBA 0200M (See drawing on page: 94)						
010	574337-0000	-		1	BRACKET	
050	574341-0000	-		1	FORK	
070	752186-0003	-		1	SHAFT	
075	752186-0004	-		5	SHAFT	
110	574346-0000	A		5	ROLL	
140	255970-0000	A		3	BUSHING	
160	571544-0000	-		1	BEARING PLATE	
250	574347-0000	A		1	COUNTER ROLLER	
512	312105-0331	-		2	SCREW M6S ISO 4017 M5X20 A480	
540	312105-0370	-		4	SCREW M6S ISO 4017 M6X20 A480	
600	312318-0368	-		2	SCREW ISO4029 M6X16 A4	
630	312605-0316	-		2	HEXAGON NUT, M6M M6 A280	
TBA 0330S, TBA 0300S, TBA 0180B, TBA 0200B, TBA 0284B, TBA 0250B (See drawing on page: 92)						
010	490518-0000	-		1	HOLDER	
050	257040-0000	-		1	FORK	
070	752186-0005	-		6	SHAFT	
110	751502-0000	A		5	ROLLER	
140	255970-0000	A		1	BUSHING	
160	571543-0000	-		1	BEARING PLATE	
250	B751503-0000	A		1	COUNTER ROLLER	
	90166-0179	*-*	*M*	*1*	*SHRINKABLE HOSE*	
285	752047-0000	A		2	BUSHING	
512	312105-0331	-		6	SCREW M6S ISO 4017 M5X20 A480	
610	312318-0451	-		2	SCREW ISO4029 M8X20 A4	
640	312605-0318	-		2	HEXAGON NUT, M6M M8 A280	
Common Parts						
020	1279095-0000	A		1	LOCKING PLATE	
030	1279096-0000	A		1	LOCKING PLATE	
040	491022-0000	-		1	CYLINDER BRACKET	
055	1279092-0000	A		4	LOCKING PLATE	
060	2033-0011	A		12	WASHER	
080	239440-0000	-		1	SHAFT	
090	90240-0172	A		12	FLANGE BUSHING, 8X12X10 MM	
130	255969-0000	-		1	SHAFT	
180	441483-0000	-		1	CYLINDER BRACKET	
200	257042-0000	-		1	BRACKET	
210	257043-0000	-		1	ANGLE BRACKET	
220	257044-0000	A		1	ROLL	
315	752038-0000	-		4	SHIM	
330	90235-0274	-		2	THROTTLE CHECK VALVES,G1/8"	
345	90239-0453	-		1	BRACKET	
346	90239-0516	-		1	ROD END, CLEVIS WITH AXLE M10X1,25	
350	B90239-0779	A		1	CYLINDER	
	90239-0442	*C*		*1*	*SEAL KIT*	
500	311103-0238	-		2	CYLINDERPINNE M6, 3X20 MM	
510	311411-0140	-		1	SPLIT PIN SP1,6X16RFR	
520	312105-0364	-		1	SCREW M6S ISO 4017 M6X10 A480	
530	312105-0368	-		2	SCREW M6S M6X16 A280	
545	312105-0372	-		1	SCREW M6S ISO 4017 M6X25 A480	
547	312105-0447	-		2	SCREW M6S ISO 4017 M8X12 A480	
560	312105-0451	-		1	SCREW M6S ISO 4017 M8X20 A480	

Machine Type | Group Description | Used-In | Group Number | Page No

LOWER FORMING RING

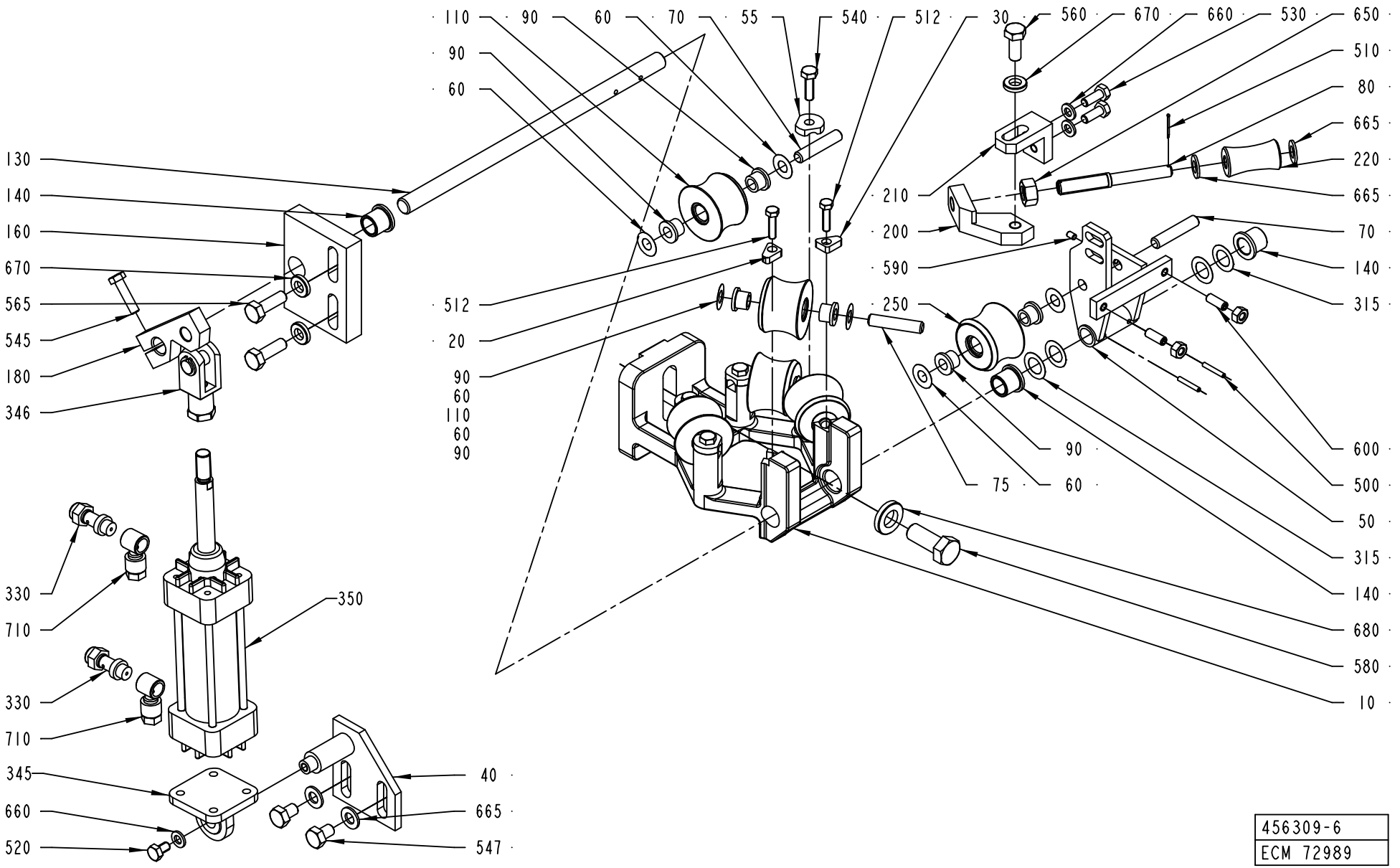

456309-6
ECM 72989

ECM: 114549 - 20020930
Group number: 456309-0600
Assembly Drawing: 456309-6_1_AD

This list covers pages from 92 to 95

Pos	Part No	SP	UN	Qty	Description	Page No
Common Parts (Cont'd)						
565	312105-0453	-		2	SCREW M6S ISO 4017 M8X25 A480	
580	312105-0536	-		1	SCREW M6S ISO 4017 M12X30 A480	
590	312318-0285	-		1	SCREW ISO4029 M4X6 A4	
650	312605-0320	-		1	HEXAGON NUT, M6M M10 A280	
660	315105-0153	-		3	WASHER ISO 7089-6-200 HV-A4	
665	315105-0165	-		4	WASHER ISO 7089-8-200 HV-A4	
670	315115-0165	-		3	WASHER PLAIN, TBRB 8,4/16 H=3	
680	315115-0178	-		1	WASHER PLAIN, TBRB 13/24 H=4	
710	342797-0121	-		2	CONN. BANJO, RINGPIECE 6-1/8	

Pos	Part No	SP	UN	Qty	Description	Page No

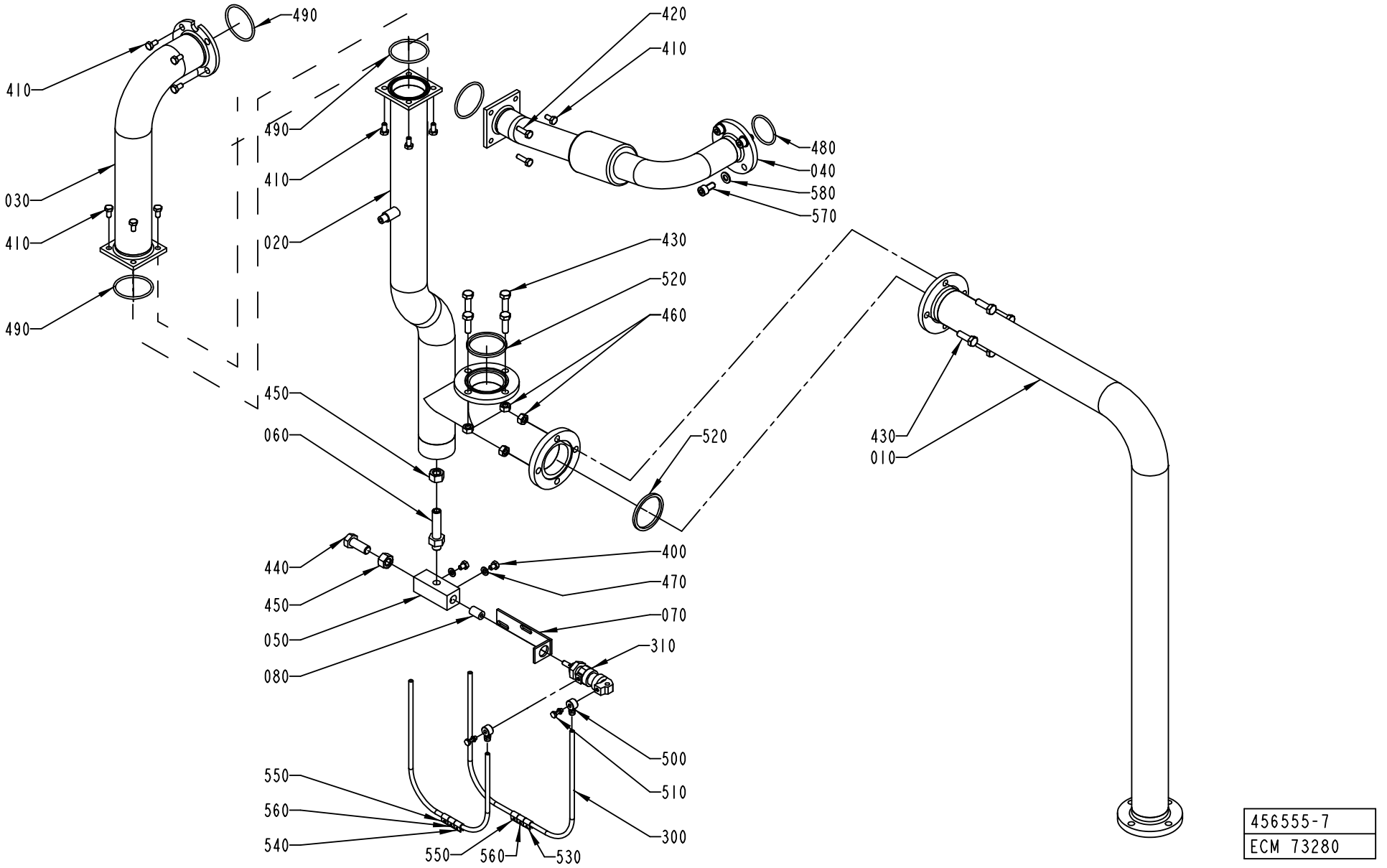
490
410
490
420
410
480
040
580
570
410
030
410
490
020
430
520
460
450
060
520
430
010
440
450
050
080
400
470
070
310
500
510
300
550
560
540
550
560
530
456555-7
ECM 73280

ECM: 114559 - 20020930
Group number: 456555-0600
Assembly Drawing: 456555-7_1_AA

Pos	Part No	SP	UN	Qty	Description	Page No
-						
010	1519401-0000	-		1	SUCTION PIPE	
020	1519402-0000	-		1	SUCTION PIPE	
030	1519403-0000	-		1	SUCTION PIPE	
040	2528095-0000	-		1	PIPE	
050	572487-0000	-		1	THROTTLING	
060	566669-0000	-		1	NIPPLE	
070	572485-0000	-		1	BRACKET	
080	572486-0000	-		1	PISTON	
300	90166-0124	-	MM	2000	TUBE 6 MM PA,TRANSP.	
310	90239-0840	A		1	DOUBLE ACTING, MINI-ISO, CYL.16-12	
400	312105-0362	-		2	SCREW M6S ISO 4017 M6X8 A480	
410	312105-0366	-		14	SCREW M6S M6X12 A280	
420	312105-0370	-		2	SCREW M6S ISO 4017 M6X20 A480	
430	312105-0453	-		8	SCREW M6S ISO 4017 M8X25 A480	
440	312105-0536	-		1	SCREW M6S ISO 4017 M12X30 A480	
450	312605-0322	-		2	HEXAGON NUT, M6M M12 A280	
460	312605-0318	-		8	HEXAGON NUT, M6M M8 A280	
470	315105-0153	-		2	WASHER ISO 7089-6-200 HV-A4	
480	927422-0015	A		1	O-RING 39.2X3 SILICON	
490	927422-0008	A		4	O-RING 49.5X3 SILICON	
500	342980-0111	-		2	BANJO-CONNECTION,RING 6/4-M5	
510	B342980-0301	-		2	BANJO-HOLLOW BOLT COUPL.,EXT.THREA.01-M5	
	315233-0101	*C*		*1*	*WASHER PL.RND.NYL.5,2/8,H=1*	
520	315229-0105	A		2	GASKETS, 48,5X55,5X3,7 MM 2" FDA	
530	359000-0400	-		1	MARKING CO2/4"0"	
540	359000-0401	-		1	MARKING COLLAR 2/4 "1" YELLOW	
550	359000-0402	-		2	MARKING COLLAR 2/4 "2" YELLOW	
560	359000-0403	-		2	MARKING COLLAR PA2/4 "3" YELLOW	
570	312115-0449	-		4	SCREW ISO4762 M8X16 A4	
580	315105-0165	-		4	WASHER ISO 7089-8-200 HV-A4	

Pos	Part No	SP	UN	Qty	Description	Page No

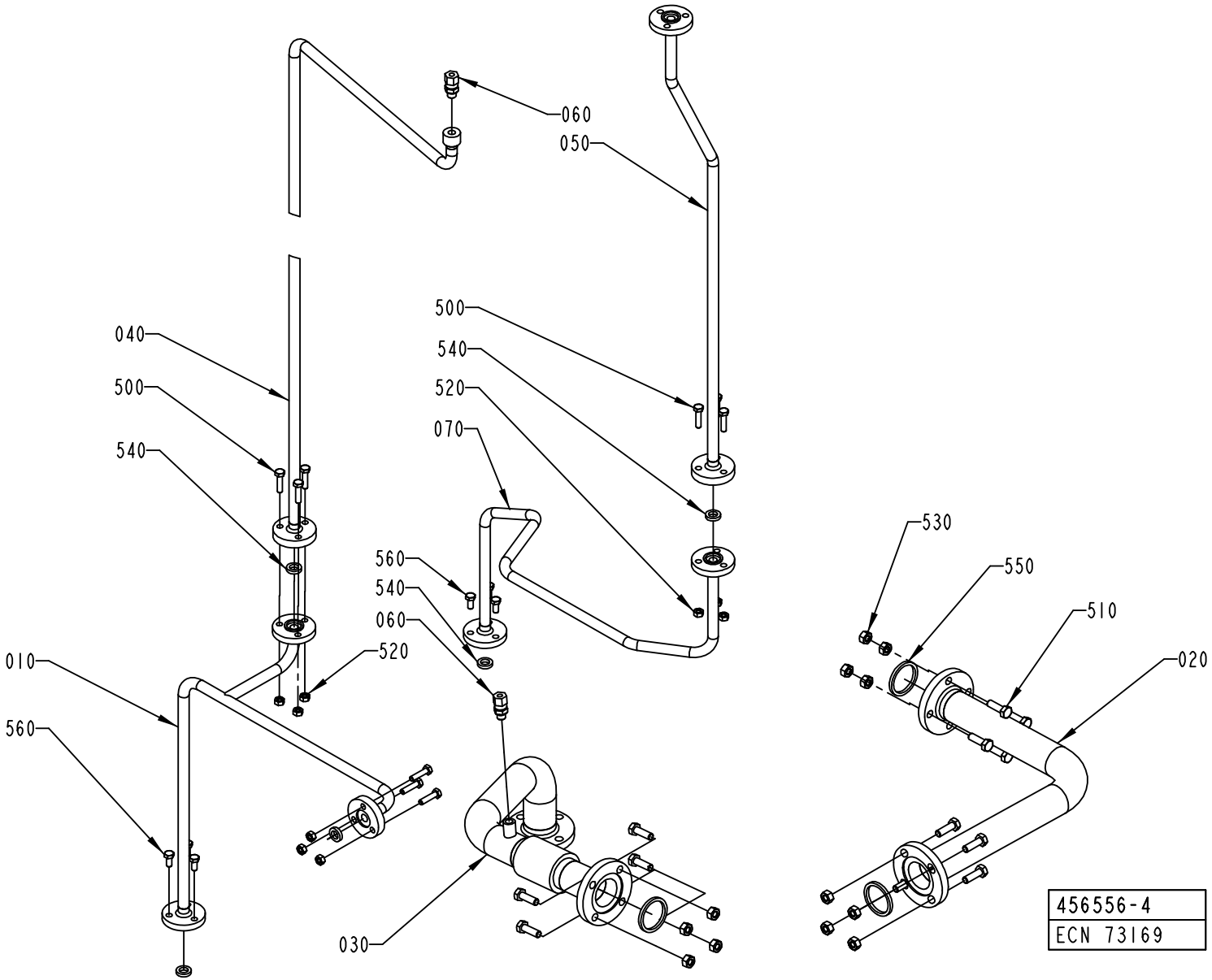
060
050
040
500
540
500
540
520
070
560
540
060
520
010
560
030
530
550
510
020
456556-4
ECN 73169

ECM: 114553 - 20020930
Group number: 456556-0400
Assembly Drawing: 456556-4_1_AA

Pos	Part No	SP	UN	Qty	Description	Page No
-						
010	1523049-0000	-		1	PIPE	
020	1523050-0000	-		1	PIPE	
030	1523051-0000	-		1	PIPE	
040	1523052-0000	-		1	PIPE	
050	1523053-0000	-		1	PIPE	
060	90030-0184	-		2	CONN. STR. GA-6-G1/8	
070	1548315-0000	-		1	PIPE	
500	312105-0372	-		9	SCREW M6S ISO 4017 M6X25 A480	
510	312105-0453	-		8	SCREW M6S ISO 4017 M8X25 A480	
520	312605-0316	-		9	HEXAGON NUT, M6M M6 A280	
530	312605-0318	-		12	HEXAGON NUT, M6M M8 A280	
540	315229-0101	A		5	GASKETS, 10,4X17,4X3,7 MM 1/2" FDA	
550	315229-0104	A		3	GASKETS, 35,8X42,8X3,7 MM 1"1/2 FD	
560	312105-0367	-		6	SCREW M6S M6X14 A280	

Pos	Part No	SP	UN	Qty	Description	Page No

Machine Type | Group Description | Used-In | Group Number | Page No

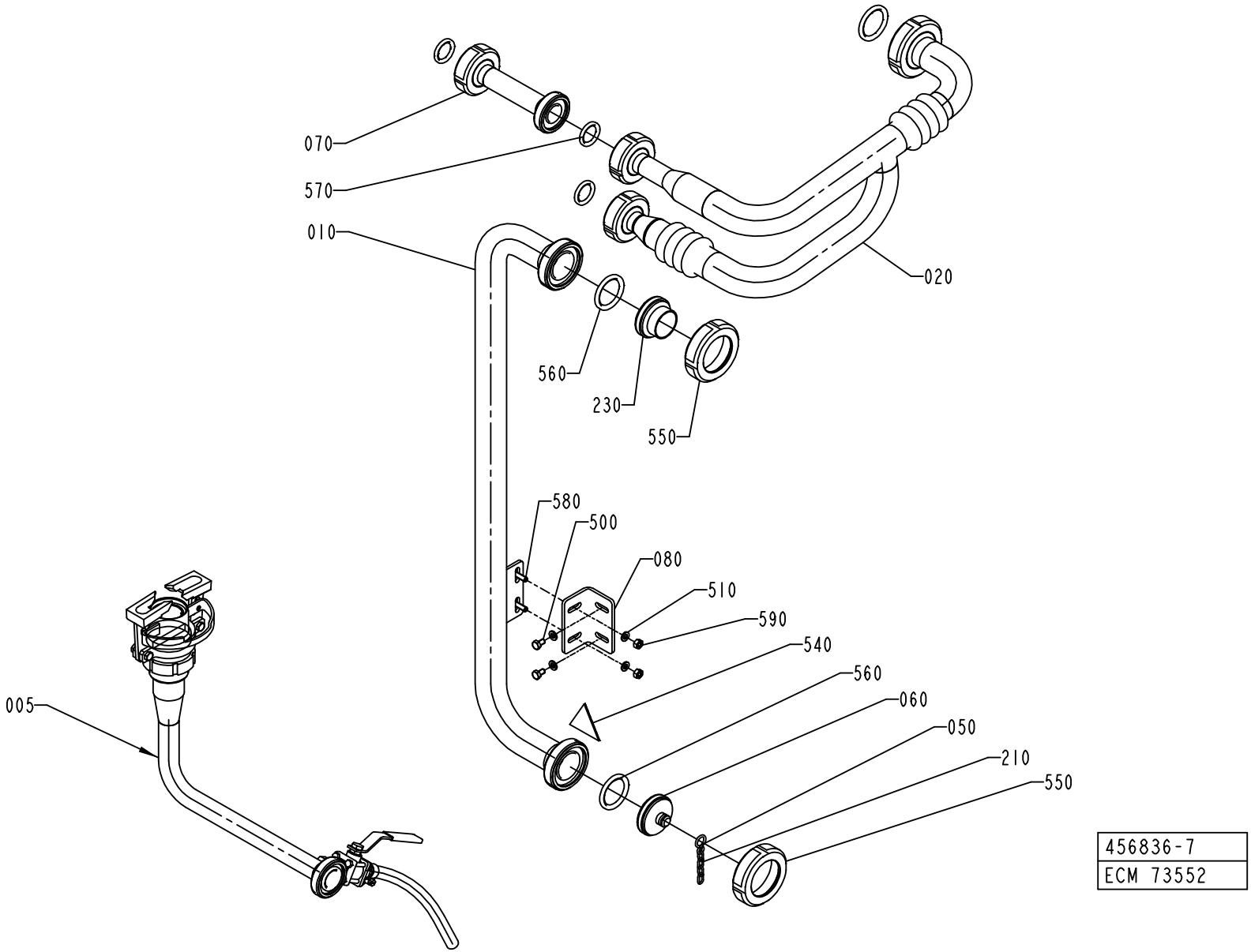
070
570
010
020
560
230
550
580
500
080
510
590
540
560
060
050
210
550
005
456836-7
ECM 73552

ECM: 114418 - 20020930
Group number: 456836-0600
Assembly Drawing: 456836-7_1_AA

Pos	Part No	SP	UN	Qty	Description	Page No
-						
005	A752495-0300	-		1	ATTACHMENT	**103**
010	1523365-0000	-		1	PIPE	
020	1523366-0000	-		1	PIPE	
050	209183-0000	-		1	RING	
060	1523364-0000	-		1	LID	
070	1524878-0000	-		1	PIPE	
080	1548833-0000	-		1	BRACKET	
210	90155-0008	-	MM	300	HANGER CHAIN, 18	
230	90217-0204	-		1	ASEPT. MALE FITTING ISO, 03-32-406/42	
500	312105-0364	-		2	SCREW M6S ISO 4017 M6X10 A480	
510	315105-0153	-		6	WASHER ISO 7089-6-200 HV-A4	
540	359705-0003	A		1	WARNING SIGN ISO, DANGEROUS CHEMICALS	
550	90217-0206	-		2	UNION NUT, 1 1/2 APV, 07-01-376/17	
560	90217-0348	A		3	GASKET 35,4X46,8X4 MM	
570	90217-0347	A		3	GASKET 32X22,6X3,6 MM	
580	312105-0370	-		2	SCREW M6S ISO 4017 M6X20 A480	
590	312605-0316	-		2	HEXAGON NUT, M6M M6 A280	

Pos	Part No	SP	UN	Qty	Description	Page No

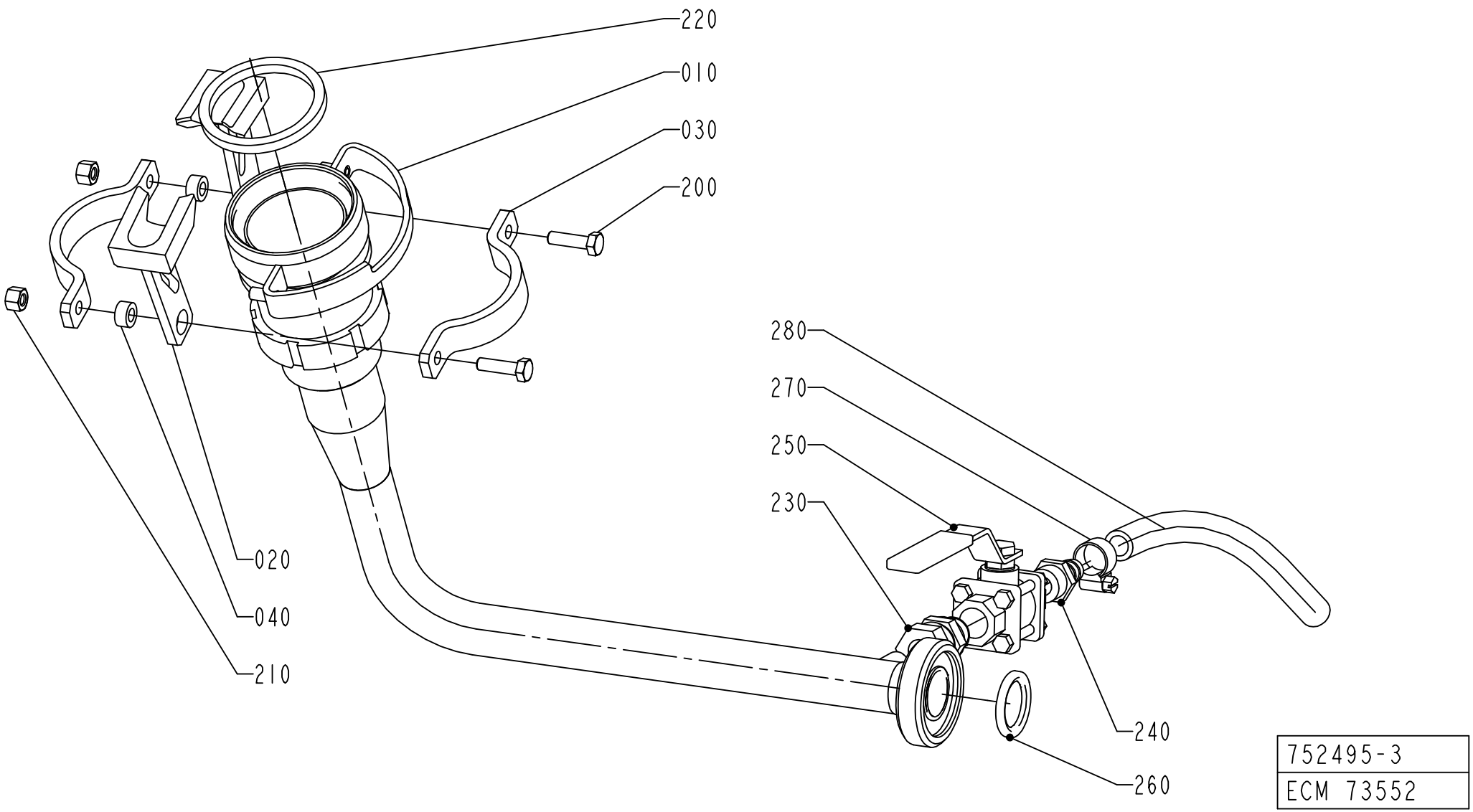
220
010
030
200
280
270
250
230
020
040
210
240
260
752495-3
ECM 73552

ECM: 114408 - 20020930
Group number: 752495-0300
Assembly Drawing: 752495-3_1_AA

Pos	Part No	SP	UN	Qty	Description	Page No
TBA 0160S, TBA 0125S, TBA 0100B, TBA 0200S						
010	1499408-0000	-		1	CLEANING PIPE	
020	979728-0000	-		2	CATCH	
220	315229-0104	A		1	GASKETS, 35,8X42,8X3,7 MM 1"1/2 FD	
TBA 0250S, TBA 0200M						
010	1519938-0000	-		1	CLEANING PIPE	
020	579771-0000	-		2	CATCH	
220	12242-0003	A		1	GASKET 48X38X5,5	
TBA 0330S, TBA 0300S, TBA 0180B, TBA 0200B, TBA 0284B, TBA 0250B						
010	1512123-0000	-		1	CLEANING PIPE	
020	579637-0000	-		2	CATCH	
220	12242-0005	A		1	GASKET 61X51X5,5	
Common Parts						
030	752499-0000	-		2	RING	
040	553586-0000	-		2	SPACER	
200	312105-0371	-		2	SCREW M6S ISO 4017 M6X22 A480	
210	312811-0316	-		2	NUT HEX.LOCK HELI COIL MID GRIP M6 SS	
230	90030-0187	-		1	CONN. STR. GA-12-G3/8	
240	90163-0041	-		1	HOSE NIPPLE, EXT.THR. 3/8-12 MM	
250	90187-0051	-		1	BALL VALVE G3/8 PTFE	
260	90217-0347	A		1	GASKET 32X22,6X3,6 MM	
270	342991-0101	-		1	HOSE CLIP,WORM DRIVE TYPE (13)-16	
280	90166-0138	-	MM	1500	HOSE	

Pos	Part No	SP	UN	Qty	Description	Page No

Machine Type | Group Description | Used-In | Group Number | Page No

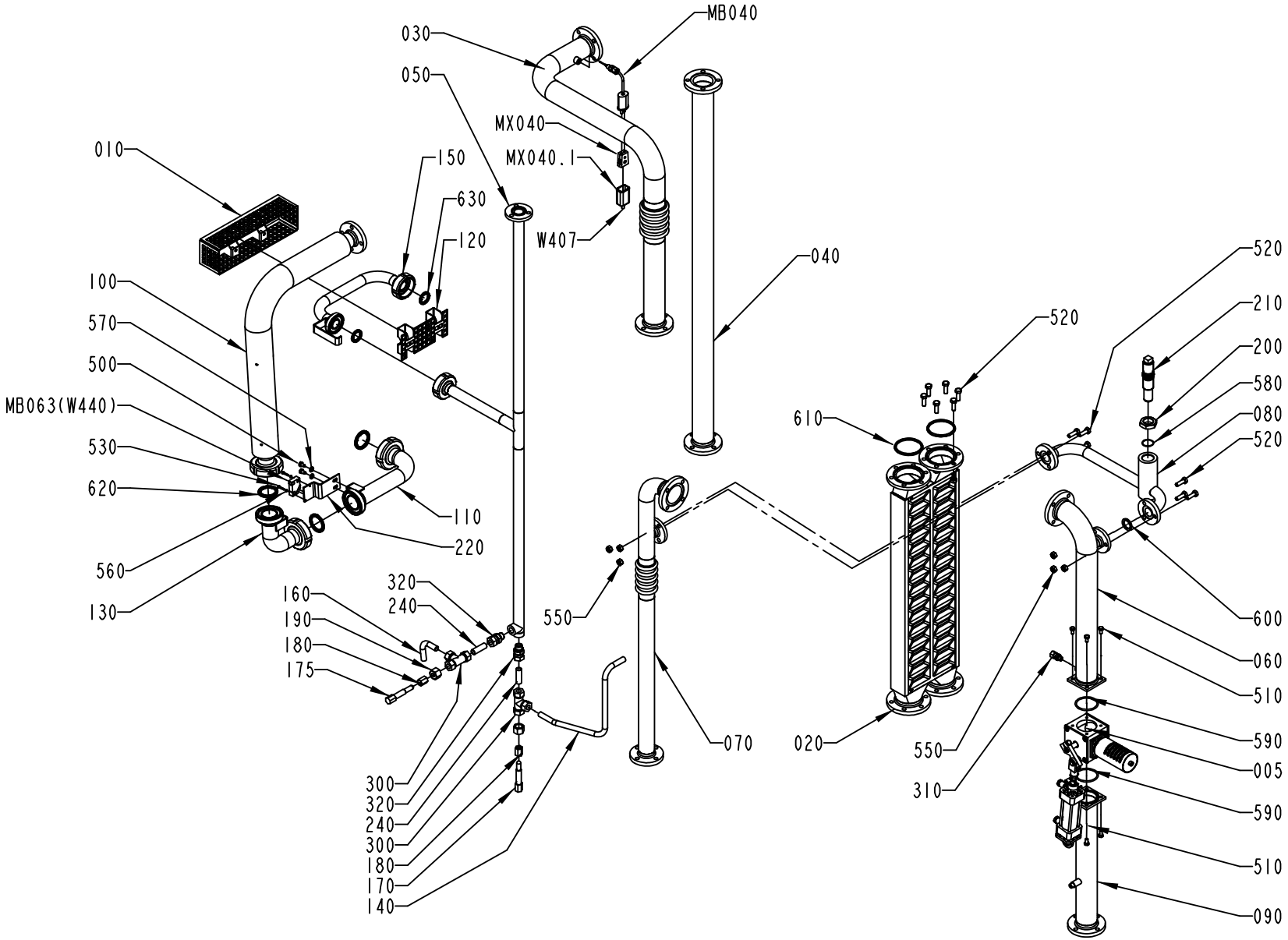

456976-13
ECM 73280

ECM: 114554 - 20020930
Group number: 456976-0700
Assembly Drawing: 456976-13_1_AA

Pos	Part No	SP	UN	Qty	Description	Page No
-						
005	A476859-0300	-		1	WEAC-VALVE	**107**
010	1348477-0000	-		1	TOUCH GUARD	
020	978838-0000	-		1	HEAT EXCHANGER	
030	1519380-0000	-		1	PIPE	
040	1519381-0000	-		1	PIPE	
050	1519382-0000	-		1	PIPE	
060	1519383-0000	-		1	PIPE	
070	979028-0000	-		1	PIPE	
080	979031-0000	-		1	PIPE	
090	1519384-0000	-		1	PIPE	
100	1519385-0000	-		1	PIPE	
110	1519386-0000	-		1	PIPE	
120	1348637-0000	-		1	TOUCH GUARD	
130	1519387-0000	-		1	PIPE	
140	1260481-0000	-		1	PIPE	
150	1519388-0000	-		1	PIPE	
160	1260480-0000	-		1	PIPE	
170	209145-0000	-		1	THROTTLE SCREW	
175	1478767-0000	-		1	THROTTLE SCREW	
180	209146-0000	-		2	BARRIER NUT	
190	279589-0000	-		2	NUT	
200	442237-0000	-		1	NUT	
210	490998-0000	-		1	THROTTLE SCREW	
220	979109-0000	-		1	HOLDER	
240	1260489-0000	-		2	PIPE	
300	90030-0058	-		2	CONN. T-PIPE T-12	
310	90030-0184	-		1	CONN. STR. GA-6-G1/8	
320	90030-0187	-		2	CONN. STR. GA-12-G3/8	
500	312105-0364	-		2	SCREW M6S ISO 4017 M6X10 A480	
510	312105-0366	-		8	SCREW M6S M6X12 A280	
520	312105-0453	-		12	SCREW M6S ISO 4017 M8X25 A480	
530	312115-0228	-		2	SCREW ISO4762 M3X16 A4	
540	312115-0329	-		4	SCREW ISO4762 M5X16 A4	
550	312605-0318	-		12	HEXAGON NUT, M6M M8 A280	
560	315105-0124	-		2	WASHER ISO 7089-3-200 HV-A4	
570	315105-0153	-		2	WASHER ISO 7089-6-200 HV-A4	
580	315204-0119	A		1	O-RING 25,1X1,6 MM	
590	315204-0301	A		2	O-RING 49,5X3 MM	
600	315229-0203	A		2	GASKET 34,8X42,8X3,7 MM 1"1/2	
610	315229-0206	A		2	GASKET 60,2X68,2X3,7 MM 2"1/2	
620	90217-0348	A		3	GASKET 35,4X46,8X4 MM	
630	90217-0347	A		2	GASKET 32X22,6X3,6 MM	
MB040	90326-0051	A		1	THERMOCOUPLE, 12826-33	
MB063	90044-0194	A		1	PROX.SW. IN5329/IN3002-BPKG	
MX040	90326-0020	-		1	PLUG, FEMALE YELLOW CR-AL	
MX040.1	90326-0012	-		1	PROTECTIVE COVER, T31A4618	
W407	90220-0059	-	M	5	THERMOCOUPLE CABLE K/ 2X0,81MM2	

Machine Type | Group Description | Used-In | Group Number | Page No

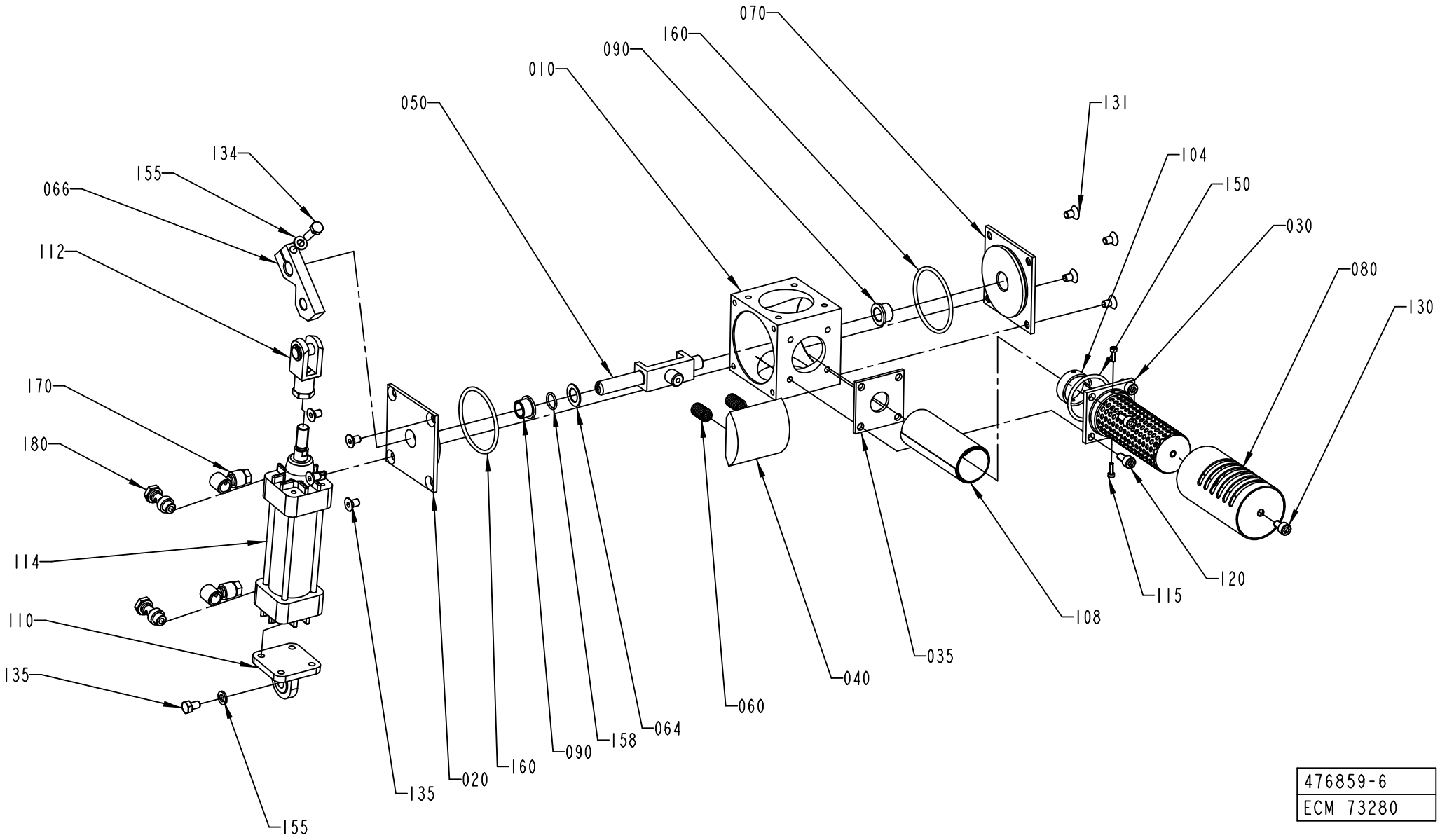

476859-6
ECM 73280

ECM: 114638 - 20020930
Group number: 476859-0300
Assembly Drawing: 476859-6_1_AC

Pos	Part No	SP	UN	Qty	Description	Page No
-						
010	B578031-0000	-		1	VALVE HOUSING	
0010	*1282023-0002*	*-*		*1*	*CAST WORKPIECE*	
020	255874-0000	-		1	BEARING COVER	
030	466477-0000	-		1	INNER PIPE	
035	979953-0000	-		1	WASHER	
040	466479-0000	B		1	PIECE	
050	555541-0000	A		1	BRACKET	
060	21521-0000	A		2	COMPRESSION SPRING	
064	266737-0000	-		1	WASHER	
066	441483-0000	A		1	CYLINDER BRACKET	
070	255874-0000	A		1	BEARING COVER	
080	466478-0000	-		1	OUTER PIPE	
090	255875-0000	B		2	BUSHING	
104	466483-0000	-		1	CLAMPING PIECE	
108	466484-0000	-		1	NET	
110	90239-0453	-		1	BRACKET	
112	90239-0516	-		1	ROD END, CLEVIS WITH AXLE M10X1,25	
114	B90239-0779	A		1	CYLINDER	
	90239-0442	*C*		*1*	*SEAL KIT*	
115	312115-0224	-		2	SCREW ISO4762 M3X10 A4	
120	312115-0366	-		4	SCREW ISO4762 M6X12 A4	
130	312115-0364	-		1	SCREW ISO4762 M6X10 A4	
131	312155-0364	-		8	SCREW EN 10642 MF6S M6X10 A480	
134	312105-0370	-		1	SCREW M6S ISO 4017 M6X20 A480	
135	312105-0364	-		1	SCREW M6S ISO 4017 M6X10 A480	
150	315204-0222	-		1	O-RING 36,2X3 MM	
155	315105-0153	-		2	WASHER ISO 7089-6-200 HV-A4	
158	315204-0110	-		1	O-RING 12,1X1,6 MM	
160	315204-0302	B		2	O-RING 54,5X3 MM	
170	342797-0121	-		2	CONN. BANJO, RINGPIECE 6-1/8	
180	342980-0303	-		2	BANJO-HOLLOW BOLT COUPL,EXT.THR.01-G1/8"	

Pos	Part No	SP	UN	Qty	Description	Page No

Machine Type | Group Description | Used-In | Group Number | Page No

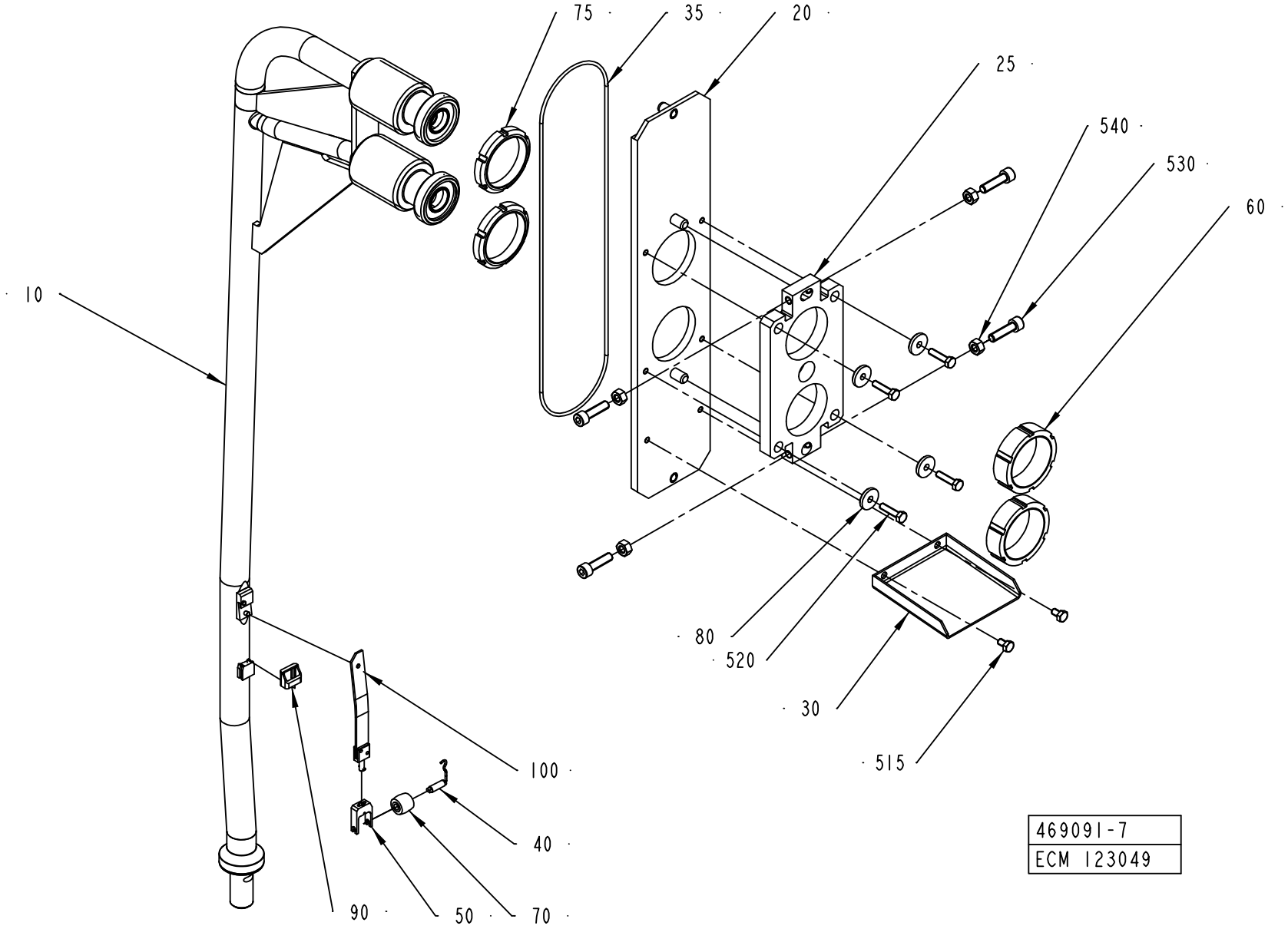
75
35
20
25
540
530
60
10
80
520
30
515
100
40
90
50
70
469091-7
ECM 123049

ECM: 122727 - 20030227
Group number: 469091-0500
Assembly Drawing: 469091-7_1_AB

Pos	Part No	SP	UN	Qty	Description	Page No
TBA 0125S, TBA 0100B						
010	1317914-0000	A		1	UPPER FILLING TUBE	
040	255977-0000	A		1	SHAFT	
050	255978-0000	A		1	FORK	
070	272479-0000	A		1	PRESSURE ROLLER	
090	491441-0000	A		1	HOOD	
100	1285580-0000	A		1	SPRING	
TBA 0160S, TBA 0200S						
010	1317914-0000	A		1	UPPER FILLING TUBE	
040	255977-0000	A		1	SHAFT	
050	255978-0000	A		1	FORK	
070	272479-0000	A		1	PRESSURE ROLLER	
090	295377-0001	A		1	HOOD	
100	1285580-0000	A		1	SPRING	
TBA 0250S, TBA 0200M						
010	1558442-0000	A		1	UPPER FILLING TUBE	
040	255977-0000	A		1	SHAFT	
050	255978-0000	A		1	FORK	
070	272479-0000	A		1	PRESSURE ROLLER	
090	295377-0001	A		1	HOOD	
100	1285580-0000	A		1	SPRING	
TBA 0330S, TBA 0300S, TBA 0180B, TBA 0200B, TBA 0284B, TBA 0250B						
010	1317989-0000	A		1	UPPER FILLING TUBE	
040	295376-0000	A		1	SHAFT	
050	568583-0000	A		1	FORK	
070	257330-0000	A		1	PRESSURE ROLLER	
090	295377-0002	A		1	HOOD	
100	1317991-0000	A		1	SPRING	
Common Parts						
020	1523222-0000	-		1	PLATE	
025	1523225-0000	-		1	FASTENING PLATE	
030	295984-0000	-		1	DRIP GUARD	
035	491418-0001	A		1	O-RING	
060	1523223-0000	-		2	NUT	
075	1523224-0000	-		2	NUT	
080	315125-0153	-		4	WASHER TBRSB 6,4X22X4 A4	
515	312105-0364	-		2	SCREW M6S ISO 4017 M6X10 A480	
520	312105-0372	-		4	SCREW M6S ISO 4017 M6X25 A480	
530	312115-0455	-		4	SCREW ISO4762 M8X30 A4	
540	312605-0318	-		4	HEXAGON NUT, M6M M8 A280	

Machine Type Group Description Used-In Group Number Page No

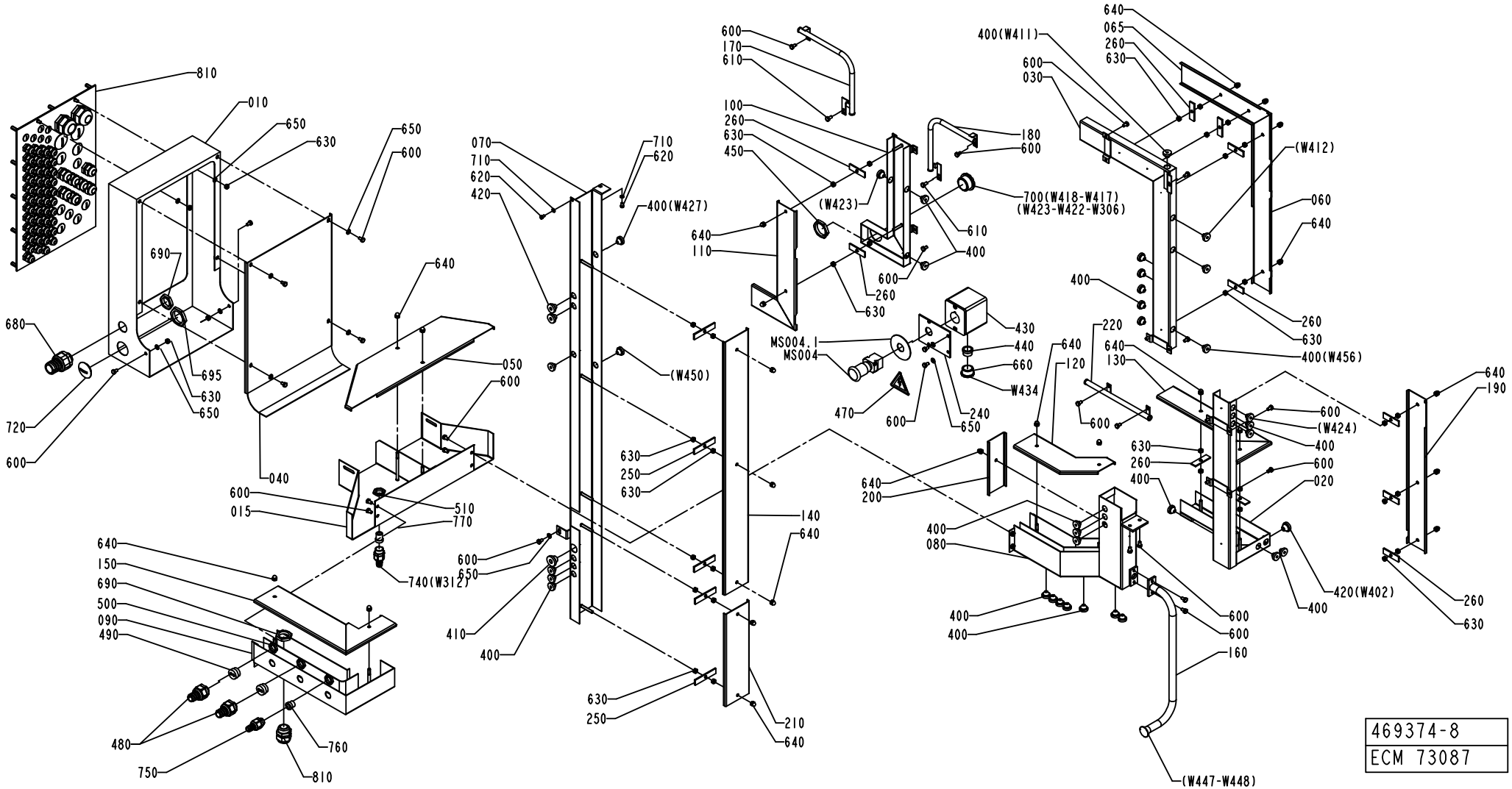

469374-8
ECM 73087

ECM: 114413 - 20020930
Group number: 469374-0600
Assembly Drawing: 469374-8_1_AA

Pos	Part No	SP	UN	Qty	Description	Page No
NOHI						
720	90002-0010	-		1	BLANK-OFF PLUG, PR 37 SKINDICHT-BLK29	
Common Parts						
010	1517268-0000	-		1	CABLE TRENCH	
015	1517269-0000	-		1	CABLE TRENCH	
020	577462-0000	-		1	CABLE TRENCH	
030	577463-0000	-		1	CABLE TRENCH	
040	1517270-0000	-		1	LID	
050	1517271-0000	-		1	LID	
060	1334768-0000	-		1	LID	
065	1334769-0000	-		1	LID	
070	2526845-0000	-		1	CABLE TRENCH	
080	2526847-0000	-		1	CABLE TRENCH	
090	2526848-0000	-		1	CABLE TRENCH	
100	2526843-0000	-		1	CABLE TRENCH	
110	2526844-0000	-		1	LID	
120	577467-0000	-		1	LID	
130	577468-0000	-		1	LID	
140	578035-0000	-		1	LID	
150	2526846-0000	-		1	LID	
160	578500-0000	-		1	PIPE	
170	978540-0000	-		1	CABLE CONDUIT	
180	978541-0000	-		1	CABLE CONDUIT	
190	577469-0000	-		1	LID	
200	577470-0000	-		1	LID	
210	578496-0000	-		1	LID	
220	978539-0000	-		1	CABLE CONDUIT	
240	979547-0000	-		1	BRACKET	
250	272945-0000	-		5	LOCK	
260	295466-0000	-		11	LOCK	
400	90015-0020	-		34	LEAD-IN, TET5-7, E-1458016	
410	90015-0021	-		1	LEAD-IN, TET10-14, E-1458023	
420	90015-0023	-		3	LEAD-IN, TET7-10, E-1458019	
430	90066-0013	A		1	PUSH BUTTON BOX XB2-SAS 11	
440	90089-0003	-		1	REDUCING SLEEVE, PR22,5/PR18,6	
450	90099-0011	-		1	NUT PR 37 BRASS	
470	90194-0016	A		1	ETIKETT	
480	90457-0146	-		2	EXTENDED WITHOUT INSERT,	
490	90457-0147	-		2	GLAND, INSERT, MULTI HOLE, 2X7	
500	90099-0117	-		3	NUT, PR 18,6 (PG11)	
510	90099-0118	-		1	NUT, PR 20,4 (PG13,5)	
600	312105-0364	-		32	SCREW M6S ISO 4017 M6X10 A480	
610	312105-0366	-		2	SCREW M6S M6X12 A280	
620	312125-0323	-		2	SCREW PAN HEAD MCS M5X8 SS	
630	312605-0316	-		36	HEXAGON NUT, M6M M6 A280	
640	312705-0316	-		23	NUT HEX. DOMED CAP MHM-6 M6 A280	
650	315105-0153	-		11	WASHER ISO 7089-6-200 HV-A4	
660	352101-0106	-		1	LEAD-IN, PR28,3/PG21, E-1457528	
680	353243-0007	-		1	EXTENDED WITHOUT INSERT, PG21	
690	90099-0119	-		2	NUT, PR 28,3 (PG21)	
695	90099-0120	-		1	MUTTER PR 37 (PG29)	
700	352101-0107	-		1	LEAD-IN, PR37/PG29, E-1457537	
710	315105-0146	-		2	WASHER ISO 7089-5-200 HV-A4	
740	B353242-0001	-		1	NORMAL WITHOUT INSERT, PG13,5	
	353249-0065	*-*		*1*	*INSERT, SINGEL HOLE, E152/09*	
750	353243-0002	-		1	EXTENDED WITHOUT INSERT, PG11	
760	353249-0010	-		1	INSERT, SINGEL HOLE, EK 152/11	
770	353249-0065	-		1	INSERT, SINGEL HOLE, E152/09	
810	A1511786-0100	-		1	TOWER CABLE INLETS	**113**
MS004	90064-0124	A		1	SWITCH, EM. STOP, ZB2-BS844+ZB2-BZ1045	
MS004.1	486826-0001	A		1	SIGN "EMERGENCY STOP"	
W434	351150-0405	-	M	4	CABLE OLFLEX 5X0,75 MM2 LIGHT/GREY	

Machine Type | Group Description | Used-In | Group Number | Page No

TOWER CABLE INLETS

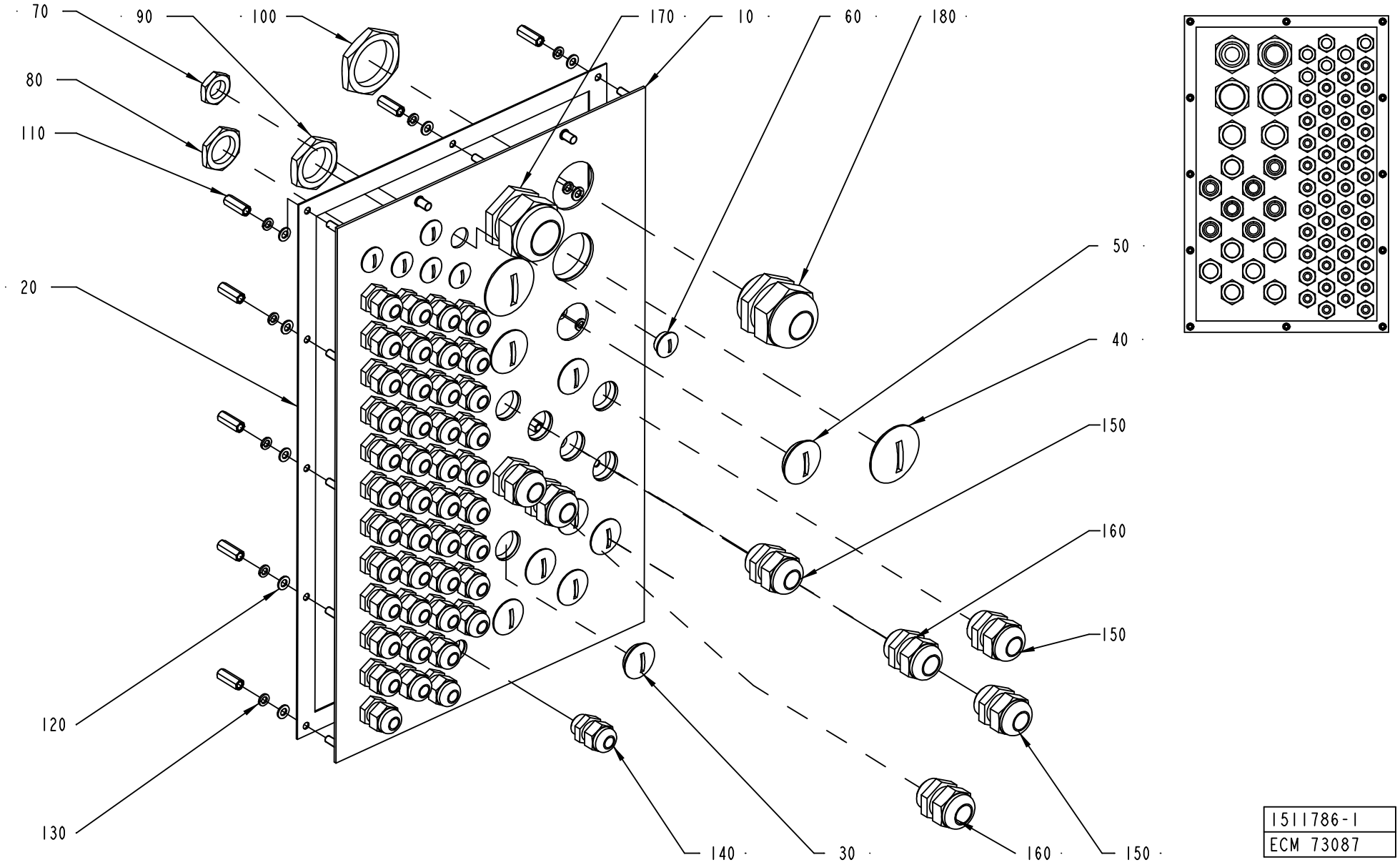

ECM: 93717 - 20020211
Group number: 1511786-0100
Assembly Drawing: 1511786-1_1_AB

Pos	Part No	SP	UN	Qty	Description	Page No
-						
010	1511835-0000	-		1	PLATE	
020	1511836-0000	-		1	GASKET	
030	90002-0004	-		7	BLANK-OFF PLUG, PR 22,5 SKINDICHT-BLK16	
040	90002-0010	-		2	BLANK-OFF PLUG, PR 37 SKINDICHT-BLK29	
050	90002-0012	-		2	BLANK-OFF PLUG, PR 28,3 SKINDICHT-BLK21	
060	90002-0013	-		6	BLANK-OFF PLUG, PR 15,2 SKINDICHT-BLK9	
070	90099-0104	-		50	NUT, PR 15,2 (PG9)	
080	90099-0110	-		14	NUT, PR 22,5 (PG16)	
090	90099-0119	-		2	NUT, PR 28,3 (PG21)	
100	90099-0120	-		4	MUTTER PR 37 (PG29)	
110	1517676-0000	-		12	SPACER	
120	315105-0146	-		12	WASHER ISO 7089-5-200 HV-A4	
130	315402-0146	-		12	LOCK WASHER FBB 5,1	
140	352103-0101	-		44	KABELFöRSKR. ST 9, PR15,2/PG9	
150	352103-0110	-		5	CABLE GLAND, STR 16, PR22,5/PG16	
160	352103-0111	-		2	CABLE GLAND, ST 16, PR22,5/PG16	
170	352103-0121	-		1	CABLE GLAND, ST 29, PR37,0/PG29	
180	352103-0120	-		1	CABLE GLAND, STR 29, PR37,0/PG29	

Pos	Part No	SP	UN	Qty	Description	Page No

Machine Type | Group Description | Used-In | Group Number | Page No

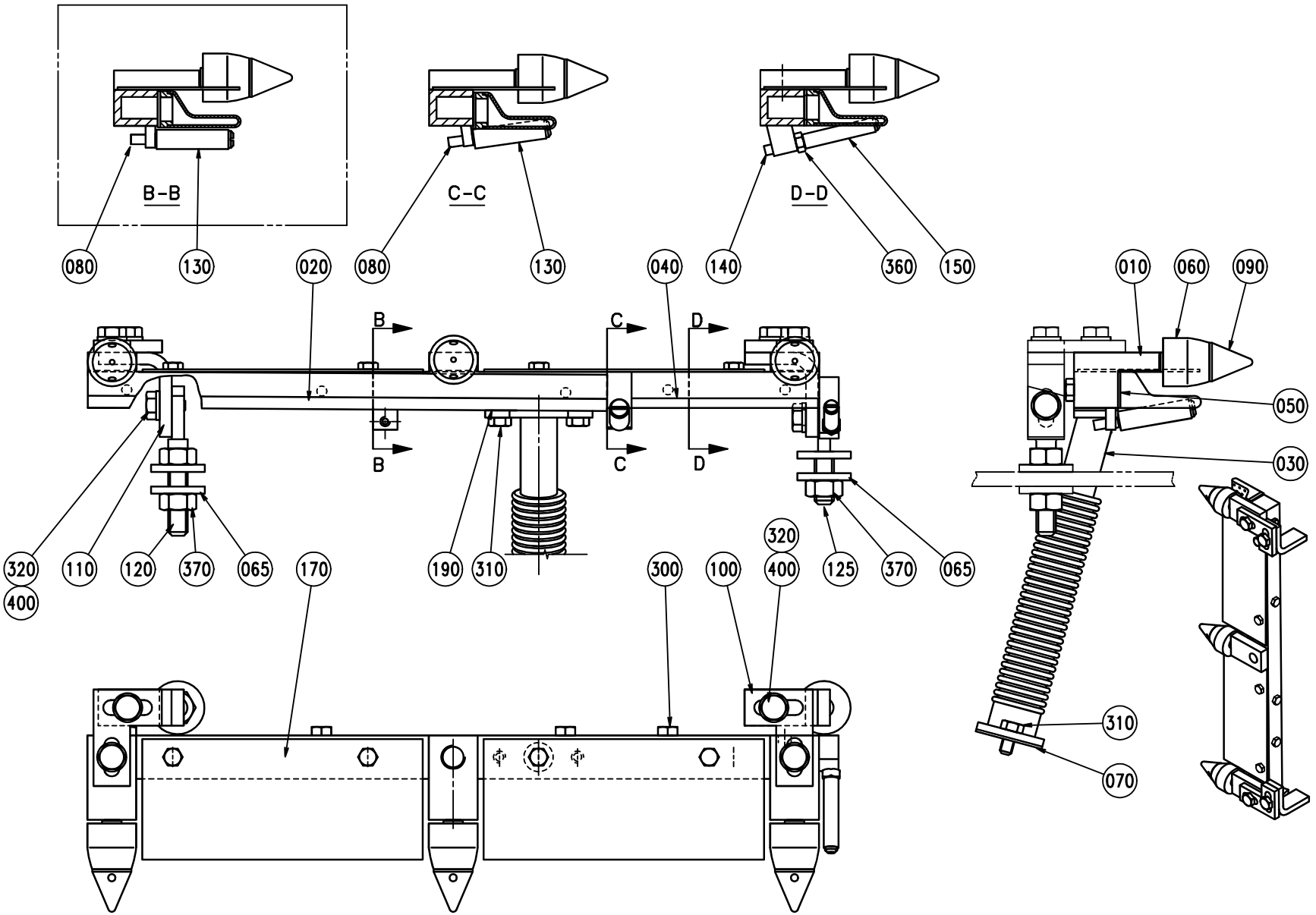
B-B
C-C
D-D
080
130
020
080
130
040
140
360
150
010
060
090
050
030
B
B
C
C
D
D
320
400
110
120
370
065
170
190
310
300
100
320
400
125
370
065
310
070

ECM: 124922 - 20030121
Group number: 469501-0400
Assembly Drawing: 469501-4_1_AA

Pos	Part No	SP	UN	Qty	Description	Page No
TBA 0160S, TBA 0125S, TBA 0100B, TBA 0250S, TBA 0200S, TBA 0200M						
080	256899-0000	-		2	SHAFT	
130	469461-0000	B		2	ROLL	
TBA 0330S, TBA 0300S, TBA 0180B, TBA 0200B, TBA 0284B, TBA 0250B						
080	256899-0000	-		1	SHAFT	
130	469461-0000	B		1	ROLL	
Common Parts						
010	752218-0000	-		1	ATTACHMENT	
020	568577-0000	A		1	AIR NOZZLE	
030	751722-0000	-		1	PIPE-LINE	
040	568578-0000	A		1	AIR NOZZLE	
050	568581-0000	-		1	DISTRIBUTOR WING	
060	6161-0000	B		3	ROLL	
065	28036-0000	-		4	WASHER	
070	751010-0000	B		1	GASKET	
090	272095-0000	-		3	SHAFT	
100	469458-0000	-		2	BRACKET	
110	469459-0000	-		2	BRACKET	
120	469460-0000	-		1	BRACKET	
125	491143-0000	-		1	BRACKET	
140	469463-0000	-		1	SHAFT	
150	469464-0000	B		1	ROLL	
170	469466-0000	-		2	PLATE	
190	751024-0000	B		1	GASKET	
300	312105-0287	-		4	SCREW M6S ISO4017 M4X8 A480	
310	312105-0325	-		4	SCREW M6S ISO 4017 M5X10 A480	
315	312105-0333	-		5	SCREW M6S ISO 4017 M5X25 A480	
320	312105-0366	-		6	SCREW M6S M6X12 A280	
360	312605-0312	-		1	HEXAGON NUT, M6M M4 A280	
370	312605-0318	-		3	HEXAGON NUT, M6M M8 A280	
400	315105-0153	-		6	WASHER ISO 7089-6-200 HV-A4	

Pos	Part No	SP	UN	Qty	Description	Page No

TUBE FLUSHING DEVICE

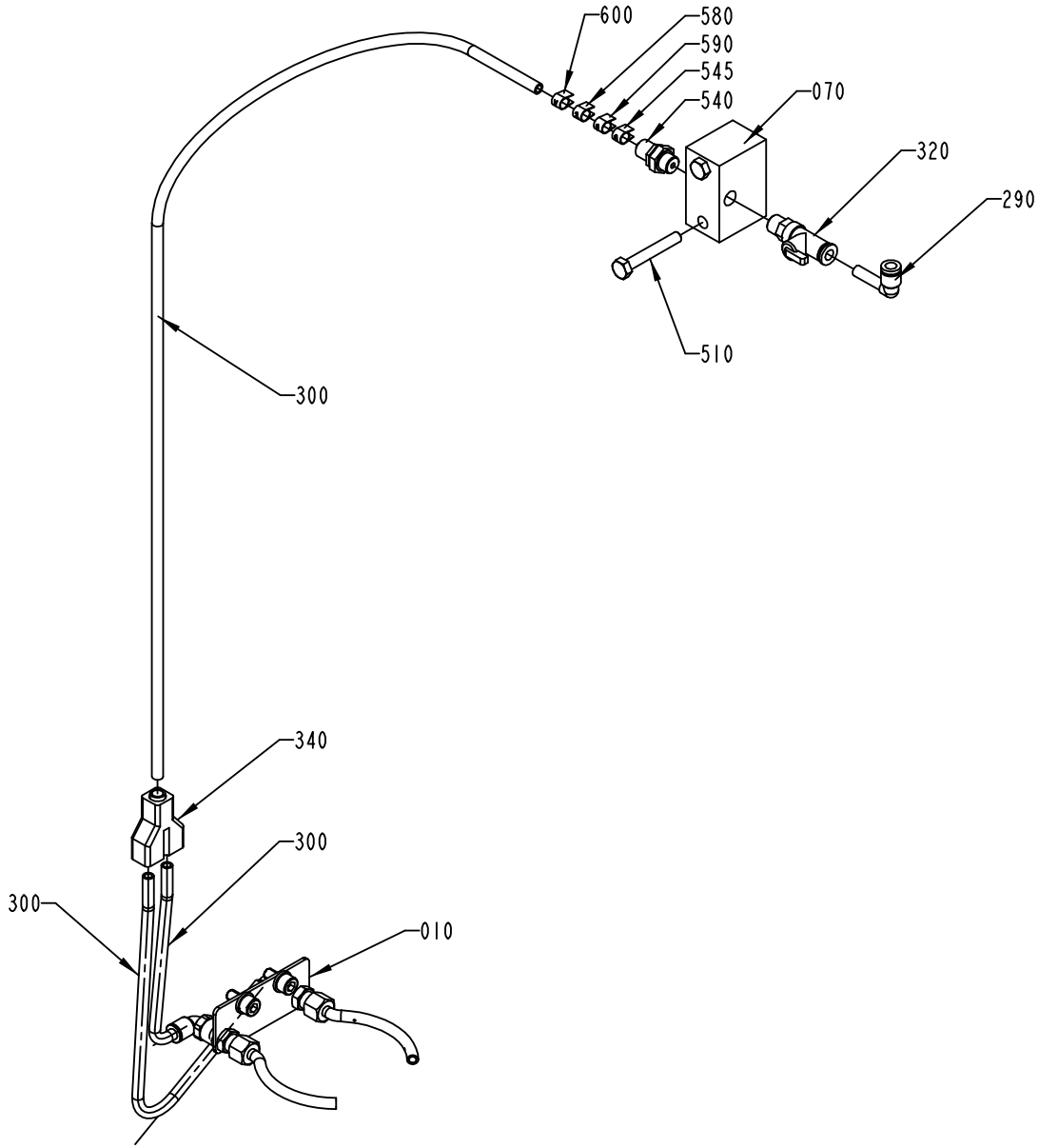

469781-7
ECM 73612

ECM: 114628 - 20020930
Group number: 469781-0400
Assembly Drawing: 469781-7_1_AA

Pos	Part No	SP	UN	Qty	Description	Page No
-						
010	A1558128-0100	-		1	NOZZLE	**119**
070	271509-0000	-		1	JUNCTION BLOCK	
290	342722-0197	-		1	STRAIGHT COUPLING	
300	90166-0119	A	MM	500	HOSE PUR 4/6 BLACK	
320	90235-0723	-		1	THROTTLE VALVE	
340	90055-0100	-		1	Y-CONNECTION, 6-6	
510	312105-0378	-		2	SCREW M6S ISO 4014 M6X40 A480	
540	342921-0113	-		1	STRAIGHT COUPLING,EXT.THREADED 6/4-G1/8"	
545	359000-0400	-		1	MARKING CO2/4"0"	
580	359000-0403	-		1	MARKING COLLAR PA2/4 "3" YELLOW	
590	359000-0409	-		1	MARKING COLLAR PA2/4 "9" YELLOW	
600	359000-0771	-		1	MARKING CO2/4"V"	

Pos	Part No	SP	UN	Qty	Description	Page No

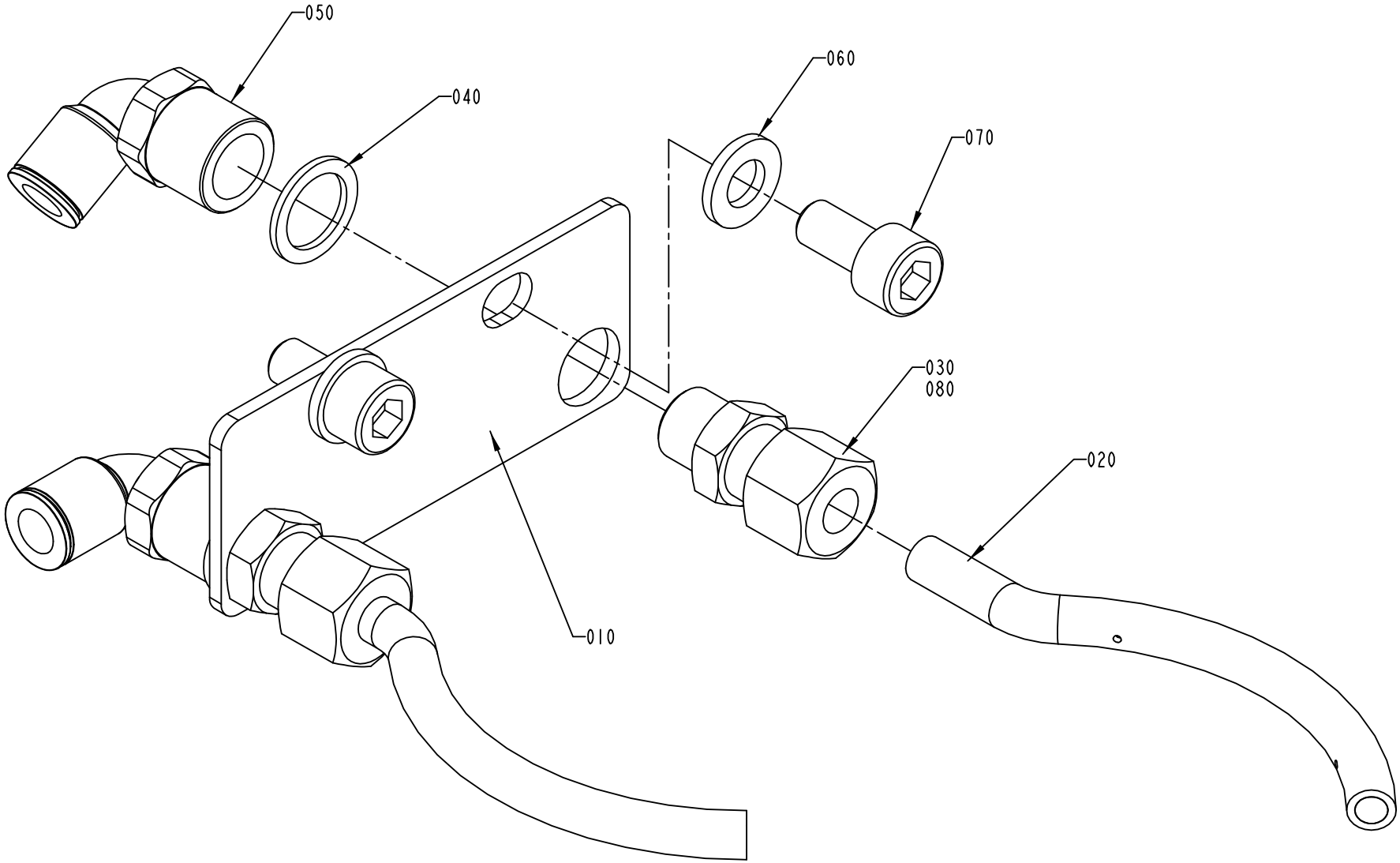

1558128-1
ECN 73612

ECM: 93720 - 20020211
Group number: 1558128-0100
Assembly Drawing: 1558128-1_1_AA

Pos	Part No	SP	UN	Qty	Description	Page No
-						
010	2500293-0000	-		1	PLATE	
020	2500294-0000	-		2	PIPE	
030	90458-2039	-		2	CONN. STR., 6-R1/8, EXT. THREAD	
040	315233-0109	-		2	WASHER PL.RND.NYL.10,3/14,H=1	
050	90458-2040	-		2	ELBOW PIPE JOINT, INT.THREAD, G1/8"D=6MM	
060	315105-0153	-		2	WASHER ISO 7089-6-200 HV-A4	
070	312115-0366	-		2	SCREW ISO4762 M6X12 A4	
080	90157-0016	-	ML	1	LOCKING FLUID	

Pos	Part No	SP	UN	Qty	Description	Page No

Machine Type | Group Description | Used-In | Group Number | Page No

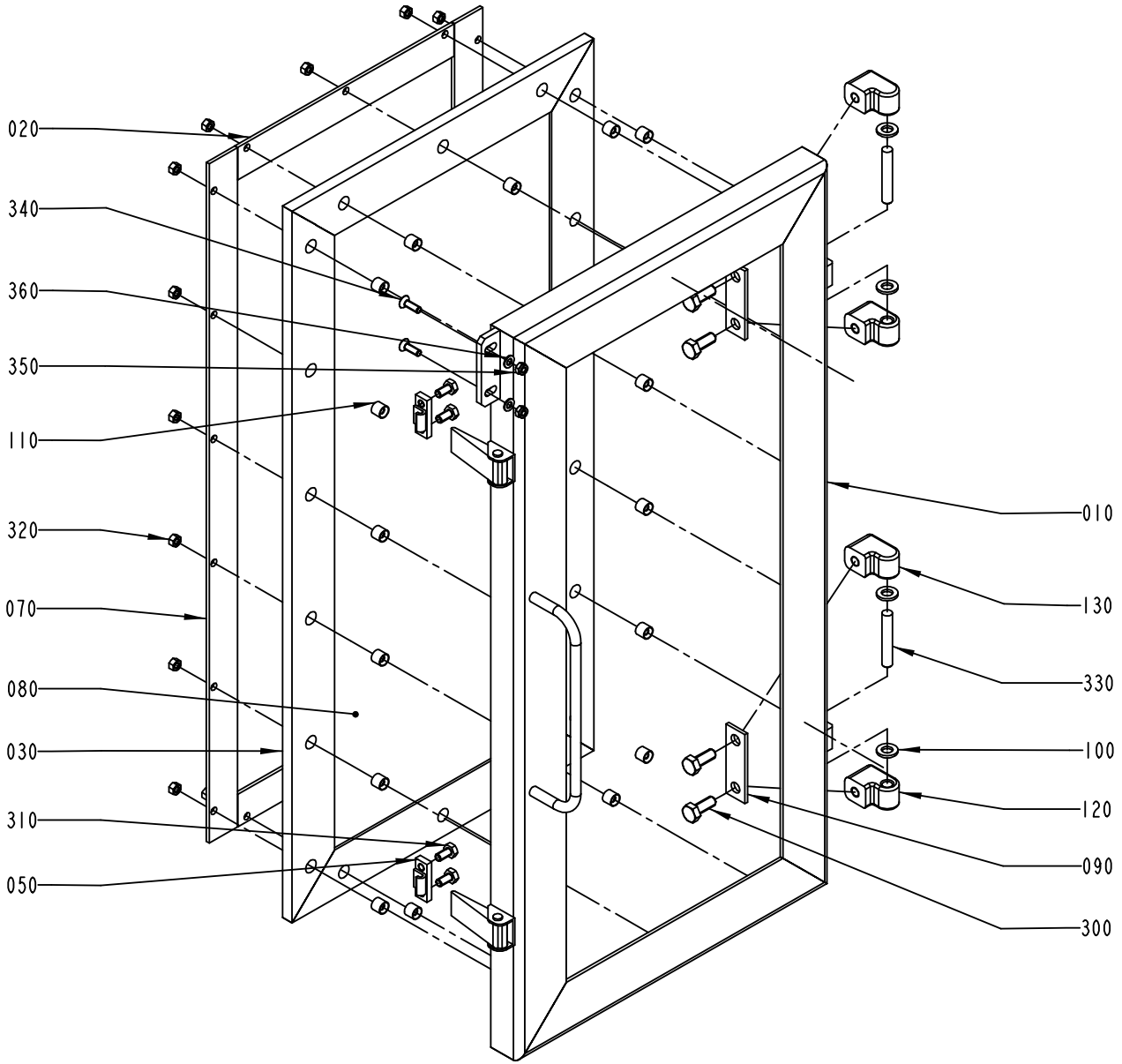

S-491570-2
ECN 72398

ECM: 72766 - 19990728
Group number: 491570-0200
Assembly Drawing: 491570-2_1_AB

Pos	Part No	SP	UN	Qty	Description	Page No
-						
010	978542-0000	-		1	FRAME	
020	272780-0000	-		2	COVER SLIP	
030	272785-0000	C		1	RUBBER STRIP	
050	271860-0000	D		2	CLAMP BLOCK	
070	272782-0000	-		2	COVER SLIP	
080	272783-0003	D		1	GLASS PANE	
090	441737-0000	D		2	WASHER	
100	441739-0000	D		4	WASHER	
110	441718-0000	-		18	SPACER	
120	441740-0000	D		2	HINGE FLANGE	
130	441741-0000	D		2	HINGE FLANGE	
300	312105-0451	-		4	SCREW M6S ISO 4017 M8X20 A480	
310	312105-0366	-		4	SCREW M6S M6X12 A280	
320	312605-0314	-		18	HEXAGON NUT, M6M M5 A280	
330	311103-0413	-		2	PARALLELL PIN, M6, 8X50 MM	
340	312155-0329	-		2	SCREW EN 10642 MF6S M5X16 A480	
350	312812-0314	-		2	HEXAGON NUT, NY-LOCK M5 A480	
360	315105-0146	-		2	WASHER ISO 7089-5-200 HV-A4	

Pos	Part No	SP	UN	Qty	Description	Page No

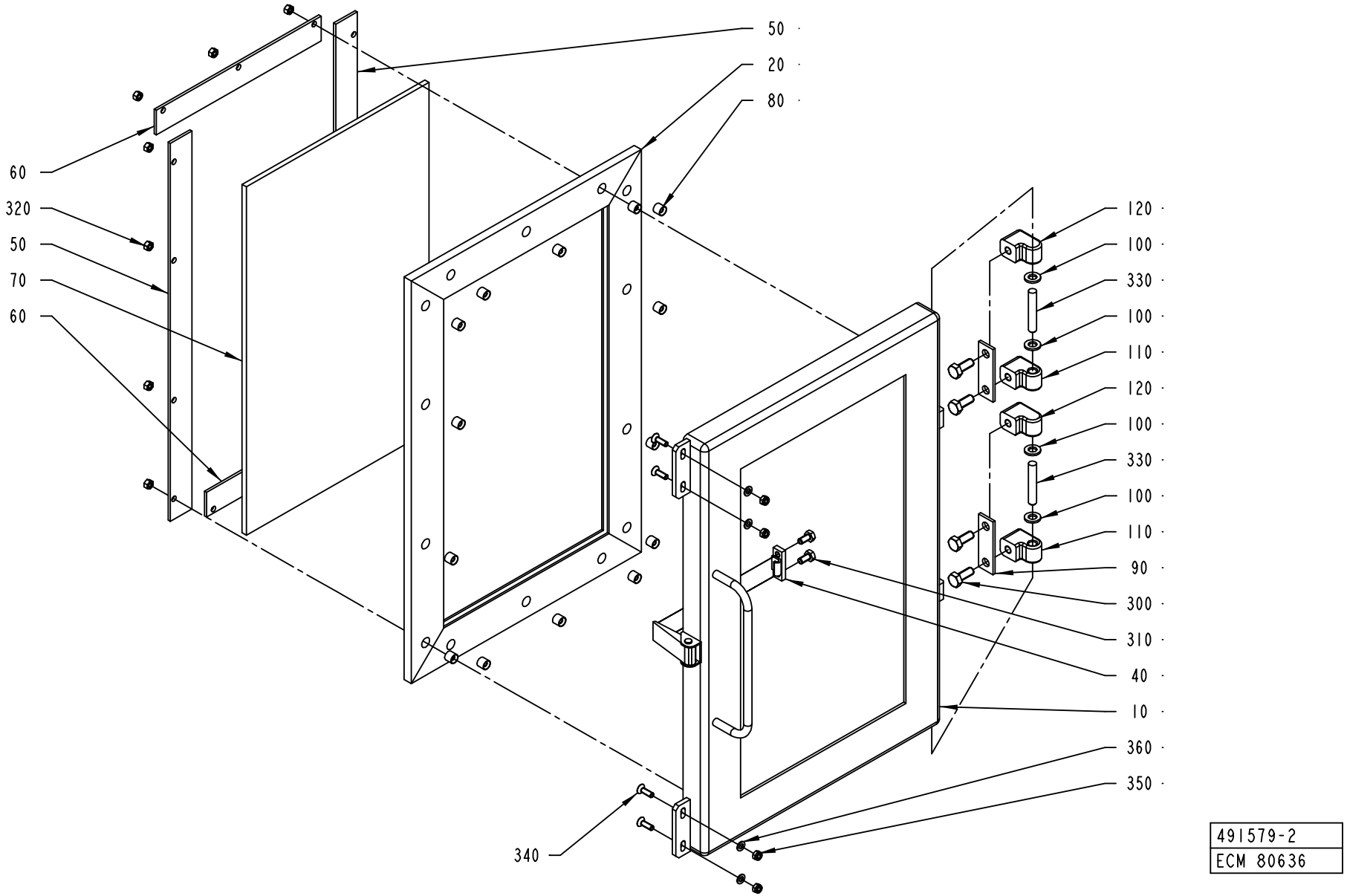
50
20
80
60
320
50
70
60
120
100
330
100
110
120
100
330
100
110
90
300
310
40
10
360
350
340
491579-2
ECM 80636

ECM: 114420 - 20020930
Group number: 491579-0200
Assembly Drawing: 491579-2_1_AB

Pos	Part No	SP	UN	Qty	Description	Page No
-						
010	978543-0000	-		1	FRAME	
020	272784-0002	A		1	RUBBER STRIP	
040	271860-0000	A		1	CLAMP BLOCK	
050	272781-0002	-		2	COVER SLIP	
060	272782-0000	-		2	COVER SLIP	
070	272783-0002	A		1	GLASS PANE	
080	441718-0000	A		14	SPACER	
090	441737-0000	A		2	WASHER	
100	441739-0000	A		4	WASHER	
110	441740-0000	A		2	HINGE FLANGE	
120	441741-0000	A		2	HINGE FLANGE	
300	312105-0451	-		4	SCREW M6S ISO 4017 M8X20 A480	
310	312105-0366	-		2	SCREW M6S M6X12 A280	
320	312605-0314	-		14	HEXAGON NUT, M6M M5 A280	
330	311103-0413	-		2	PARALLELL PIN, M6, 8X50 MM	
340	312155-0329	-		4	SCREW EN 10642 MF6S M5X16 A480	
350	312812-0314	-		4	HEXAGON NUT, NY-LOCK M5 A480	
360	315105-0146	-		4	WASHER ISO 7089-5-200 HV-A4	

Pos	Part No	SP	UN	Qty	Description	Page No

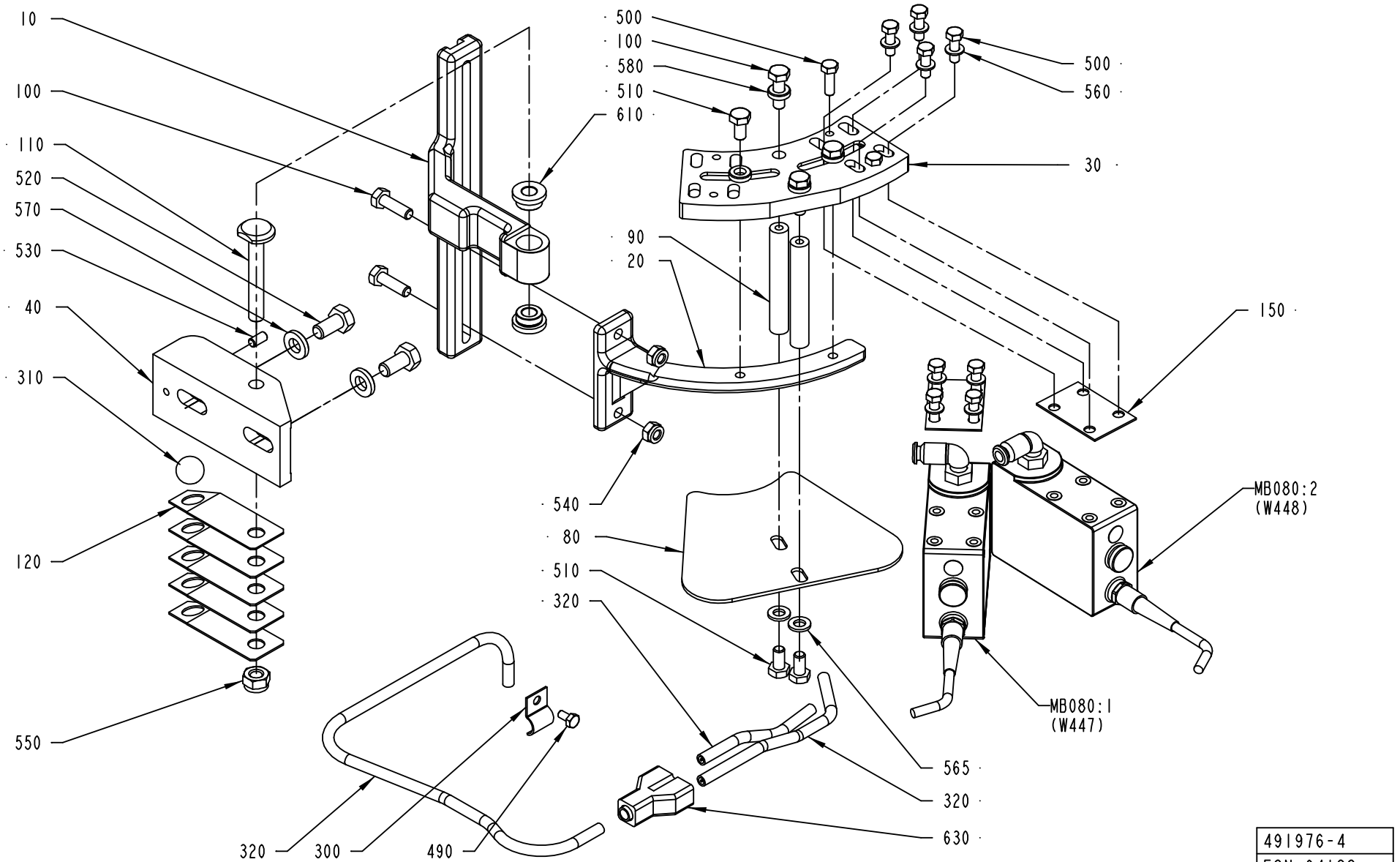

491976-4
ECN 94182

ECM: 114561 - 20020930
Group number: 491976-0300
Assembly Drawing: 491976-4_1_AC

This list covers pages from 124 to 127

Pos	Part No	SP	UN	Qty	Description	Page No
TBA 0160S, TBA 0125S, TBA 0100B, TBA 0250S, TBA 0200S, TBA 0200M (See drawing on page: 126)						
010	751456-0000	-		1	HOLDER	
020	751476-0000	-		1	CANTILEVER	
030	491880-0000	-		1	FASTENING PLATE	
060	752554-0000	-		4	SPACER	
080	1260487-0000	-		1	PLATE	
090	1260491-0000	-		2	NUT	
100	312105-0370	-		4	SCREW M6S ISO 4017 M6X20 A480	
170	312109-0335	-		8	SCREW M6S ISO 4017 M5X30 A480	
500	312105-0329	-		2	SCREW M6S ISO 4017 M5X16 A480	
510	312105-0366	-		4	SCREW M6S M6X12 A280	
580	315115-0153	-		4	WASHER PLAIN, TBRB 6,4/12 H=3	
TBA 0330S, TBA 0300S, TBA 0180B, TBA 0200B, TBA 0284B, TBA 0250B (See drawing on page: 124)						
010	751456-0000	-		1	HOLDER	
020	751457-0000	-		1	CANTILEVER	
030	978735-0000	-		1	FASTENING PLATE	
080	1260486-0000	-		1	PLATE	
090	1260490-0000	-		2	NUT	
100	312105-0370	-		4	SCREW M6S ISO 4017 M6X20 A480	
150	536374-0000	-		2	WASHER	
500	312105-0329	-		10	SCREW M6S ISO 4017 M5X16 A480	
510	312105-0366	-		4	SCREW M6S M6X12 A280	
580	315115-0153	-		4	WASHER PLAIN, TBRB 6,4/12 H=3	
Common Parts						
040	490876-0000	-		1	BRACKET	
110	457367-0000	A		1	SHAFT	
120	457368-0000	A		5	SPRING	
300	90074-0001	-		1	CABLE CLIPS, D=10 MM	
310	90090-0016	-		1	BALL, D=15 MM	
320	90166-0132	-	MM	750	TUBE 6 MM PA,TRANSP.	
490	312105-0287	-		1	SCREW M6S ISO4017 M4X8 A480	
520	312105-0449	-		2	SCREW M6S ISO 4017 M8X16 A480	
530	312318-0325	-		1	SCREW ISO4029 M5X10 A4	
540	312812-0316	-		2	HEXAGON NUT, NY-LOCK M6 A480	
550	312812-0318	-		1	HEXAGON NUT, NY-LOCK M8 A480	
560	315105-0146	-		8	WASHER ISO 7089-5-200 HV-A4	
565	315105-0153	-		2	WASHER ISO 7089-6-200 HV-A4	
570	315115-0165	-		2	WASHER PLAIN, TBRB 8,4/16 H=3	
610	321101-0143	-		2	FLANGE BUSHING, 8X14X8 MM	
630	90055-0100	-		1	Y-CONNECTION, 6-6	

Pos	Part No	SP	UN	Qty	Description	Page No
MB080:1	B90458-0601	A		1	PHOTOCELL, SICK PHOTOCELL 1	
	342732-0102	-		*1*	*ELBOW PIPE JOINT, EXT.THREAD, D=6MM-G1/8*	
MB080:2	B90458-0601	A		1	PHOTOCELL, SICK PHOTOCELL 1	
	342732-0102	-		*1*	*ELBOW PIPE JOINT, EXT.THREAD, D=6MM-G1/8*	

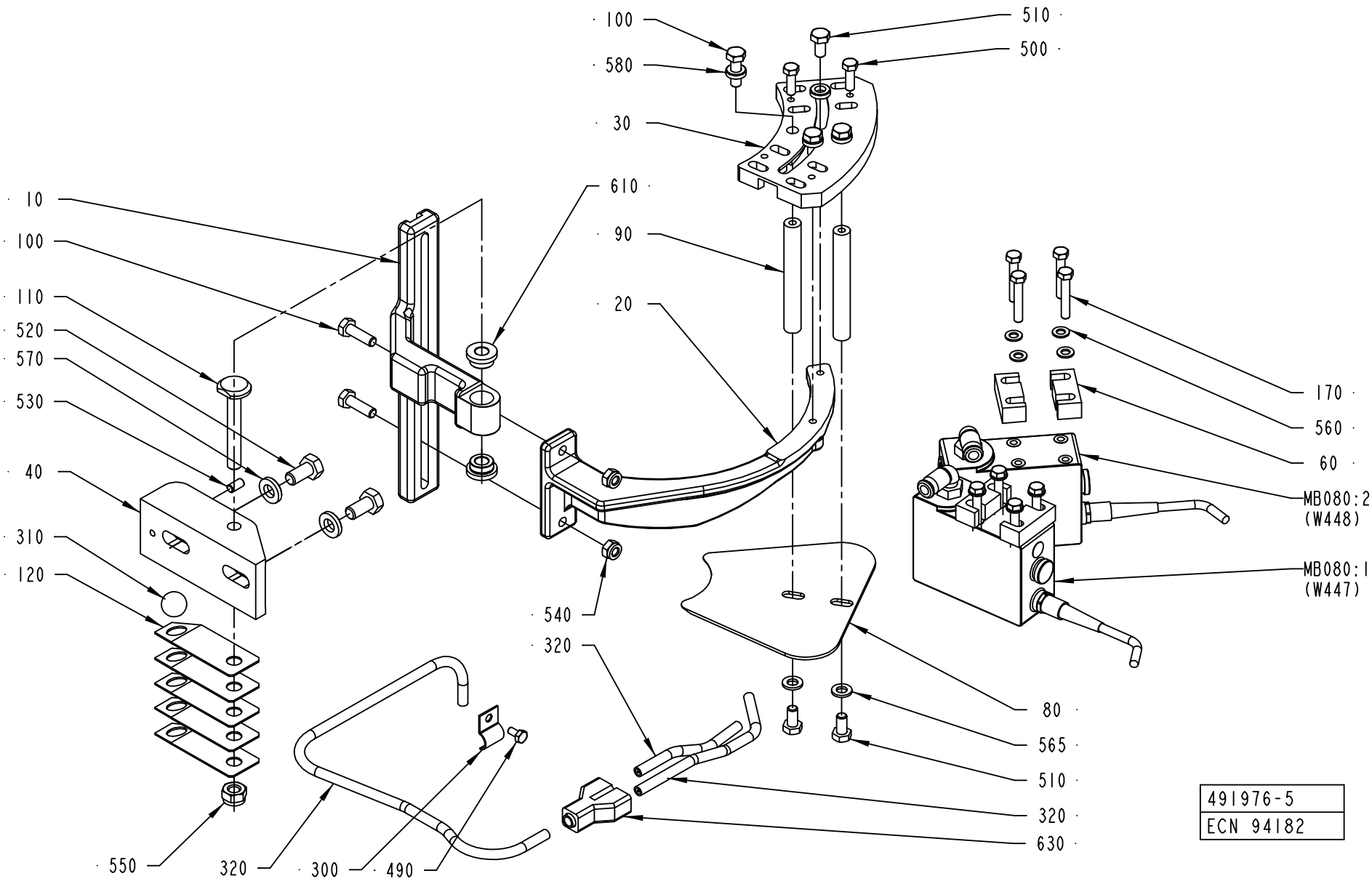
100
580
30
610
90
20
510
500
10
100
110
520
570
530
40
310
120
540
320
170
560
60
MB080:2
(W448)
MB080:1
(W447)
80
565
510
320
630
550
320
300
490
491976-5
ECN 94182

ECM: 114561 - 20020930
Group number: 491976-0300
Assembly Drawing: 491976-5_1_AC

This list covers pages from 124 to 127

Pos	Part No	SP	UN	Qty	Description	Page No
TBA 0160S, TBA 0125S, TBA 0100B, TBA 0250S, TBA 0200S, TBA 0200M (See drawing on page: 126)						
010	751456-0000	-		1	HOLDER	
020	751476-0000	-		1	CANTILEVER	
030	491880-0000	-		1	FASTENING PLATE	
060	752554-0000	-		4	SPACER	
080	1260487-0000	-		1	PLATE	
090	1260491-0000	-		2	NUT	
100	312105-0370	-		4	SCREW M6S ISO 4017 M6X20 A480	
170	312109-0335	-		8	SCREW M6S ISO 4017 M5X30 A480	
500	312105-0329	-		2	SCREW M6S ISO 4017 M5X16 A480	
510	312105-0366	-		4	SCREW M6S M6X12 A280	
580	315115-0153	-		4	WASHER PLAIN, TBRB 6,4/12 H=3	
TBA 0330S, TBA 0300S, TBA 0180B, TBA 0200B, TBA 0284B, TBA 0250B (See drawing on page: 124)						
010	751456-0000	-		1	HOLDER	
020	751457-0000	-		1	CANTILEVER	
030	978735-0000	-		1	FASTENING PLATE	
080	1260486-0000	-		1	PLATE	
090	1260490-0000	-		2	NUT	
100	312105-0370	-		4	SCREW M6S ISO 4017 M6X20 A480	
150	536374-0000	-		2	WASHER	
500	312105-0329	-		10	SCREW M6S ISO 4017 M5X16 A480	
510	312105-0366	-		4	SCREW M6S M6X12 A280	
580	315115-0153	-		4	WASHER PLAIN, TBRB 6,4/12 H=3	
Common Parts						
040	490876-0000	-		1	BRACKET	
110	457367-0000	A		1	SHAFT	
120	457368-0000	A		5	SPRING	
300	90074-0001	-		1	CABLE CLIPS, D=10 MM	
310	90090-0016	-		1	BALL, D=15 MM	
320	90166-0132	-	MM	750	TUBE 6 MM PA,TRANSP.	
490	312105-0287	-		1	SCREW M6S ISO4017 M4X8 A480	
520	312105-0449	-		2	SCREW M6S ISO 4017 M8X16 A480	
530	312318-0325	-		1	SCREW ISO4029 M5X10 A4	
540	312812-0316	-		2	HEXAGON NUT, NY-LOCK M6 A480	
550	312812-0318	-		1	HEXAGON NUT, NY-LOCK M8 A480	
560	315105-0146	-		8	WASHER ISO 7089-5-200 HV-A4	
565	315105-0153	-		2	WASHER ISO 7089-6-200 HV-A4	
570	315115-0165	-		2	WASHER PLAIN, TBRB 8,4/16 H=3	
610	321101-0143	-		2	FLANGE BUSHING, 8X14X8 MM	
630	90055-0100	-		1	Y-CONNECTION, 6-6	

Pos	Part No	SP	UN	Qty	Description	Page No
MB080:1	B90458-0601	A		1	PHOTOCELL, SICK PHOTOCELL 1	
	342732-0102	-		*1*	*ELBOW PIPE JOINT, EXT.THREAD, D=6MM-G1/8*	
MB080:2	B90458-0601	A		1	PHOTOCELL, SICK PHOTOCELL 1	
	342732-0102	-		*1*	*ELBOW PIPE JOINT, EXT.THREAD, D=6MM-G1/8*	

Machine Type | Group Description | Used-In | Group Number | Page No

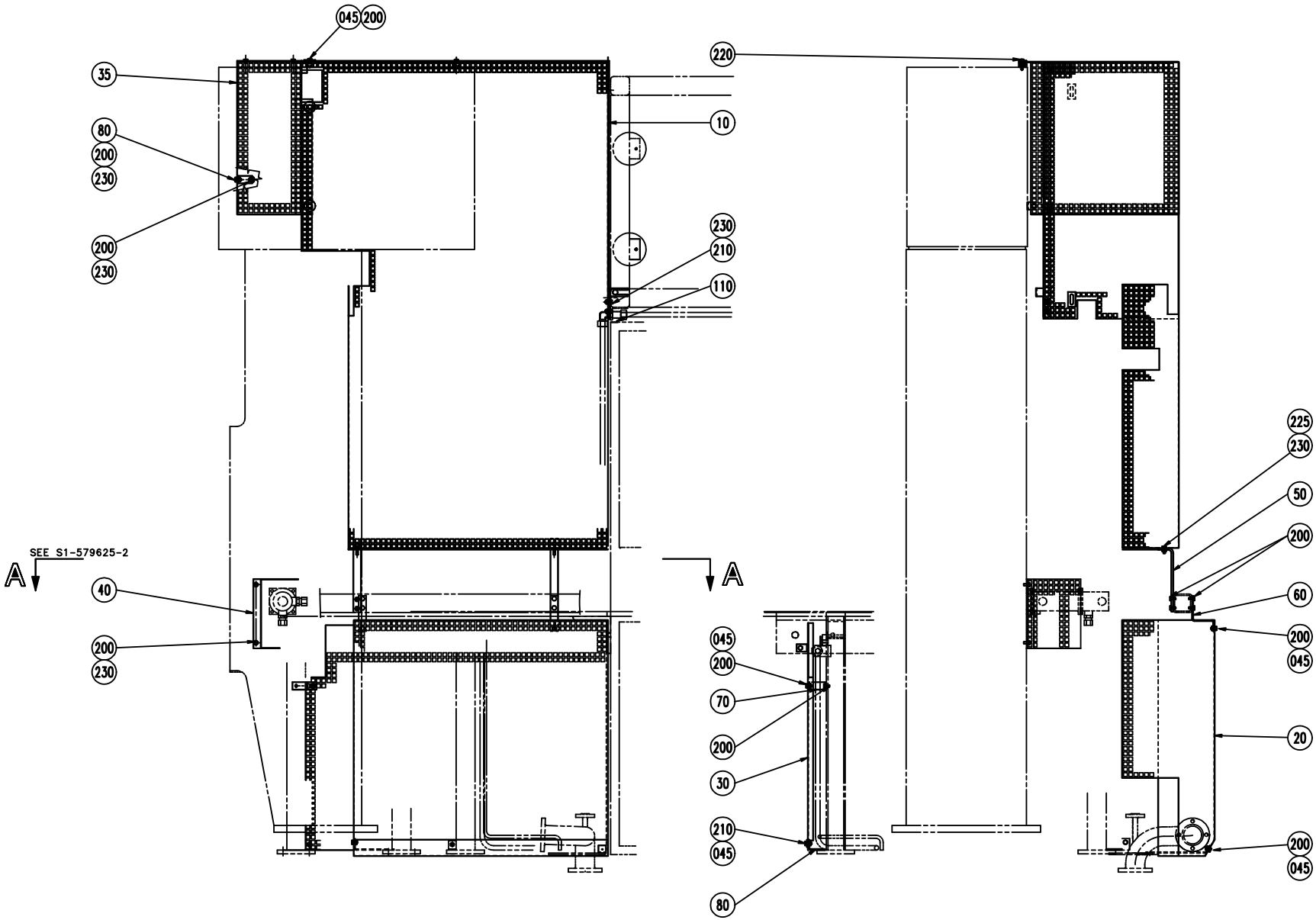
045
200
35
80
200
230
200
230
10
230
210
110
220
SEE S1-579625-2
A
A
40
200
230
045
200
70
200
30
210
045
80
225
230
50
200
60
200
045
20
200
045

ECM: 70918 - 19970718
Group number: 579625-0100
Assembly Drawing: 579625-1_1_AD

This list covers pages from 128 to 131

Pos	Part No	SP	UN	Qty	Description	Page No
-						
010	579626-0000	-		1	TOUCH GUARD	
020	579627-0000	-		1	TOUCH GUARD	
030	579628-0000	-		1	TOUCH GUARD	
035	979506-0000	-		1	TOUCH GUARD	
040	579629-0000	-		1	TOUCH GUARD	
045	315125-0153	-		9	WASHER TBRSB 6,4X22X4 A4	
050	579630-0000	-		2	BRACKET	
060	579631-0000	-		2	BRACKET	
070	579632-0000	-		1	BRACKET	
080	579633-0000	-		2	BRACKET	
090	579634-0000	-		1	BRACKET	
100	579635-0000	-		1	BRACKET	
110	579636-0000	-		1	BRACKET	
200	312105-0366	-		22	SCREW M6S M6X12 A280	
210	312105-0368	-		4	SCREW M6S M6X16 A280	
220	312105-0372	-		4	SCREW M6S ISO 4017 M6X25 A480	
225	312902-0316	-		2	NUT HEX. LEFT THREAD, M6 A280	
230	315105-0153	-		12	WASHER ISO 7089-6-200 HV-A4	

Pos	Part No	SP	UN	Qty	Description	Page No

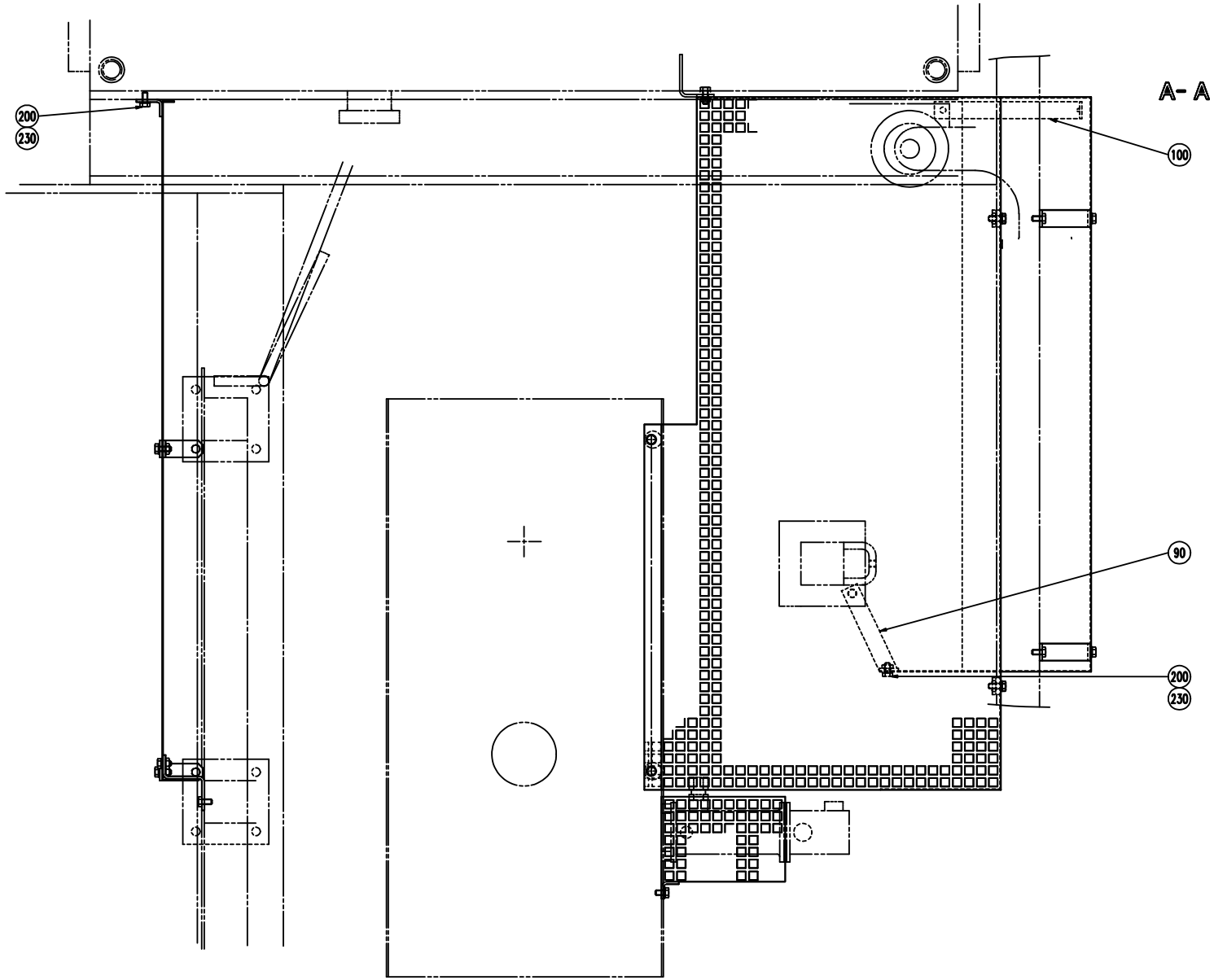
A- A
200
230
100
90
200
230

ECM: 70918 - 19970718
Group number: 579625-0100
Assembly Drawing: 579625-2_1_AA

This list covers pages from 128 to 131

Pos	Part No	SP	UN	Qty	Description	Page No
-						
010	579626-0000	-		1	TOUCH GUARD	
020	579627-0000	-		1	TOUCH GUARD	
030	579628-0000	-		1	TOUCH GUARD	
035	979506-0000	-		1	TOUCH GUARD	
040	579629-0000	-		1	TOUCH GUARD	
045	315125-0153	-		9	WASHER TBRSB 6,4X22X4 A4	
050	579630-0000	-		2	BRACKET	
060	579631-0000	-		2	BRACKET	
070	579632-0000	-		1	BRACKET	
080	579633-0000	-		2	BRACKET	
090	579634-0000	-		1	BRACKET	
100	579635-0000	-		1	BRACKET	
110	579636-0000	-		1	BRACKET	
200	312105-0366	-		22	SCREW M6S M6X12 A280	
210	312105-0368	-		4	SCREW M6S M6X16 A280	
220	312105-0372	-		4	SCREW M6S ISO 4017 M6X25 A480	
225	312902-0316	-		2	NUT HEX. LEFT THREAD, M6 A280	
230	315105-0153	-		12	WASHER ISO 7089-6-200 HV-A4	

Pos	Part No	SP	UN	Qty	Description	Page No

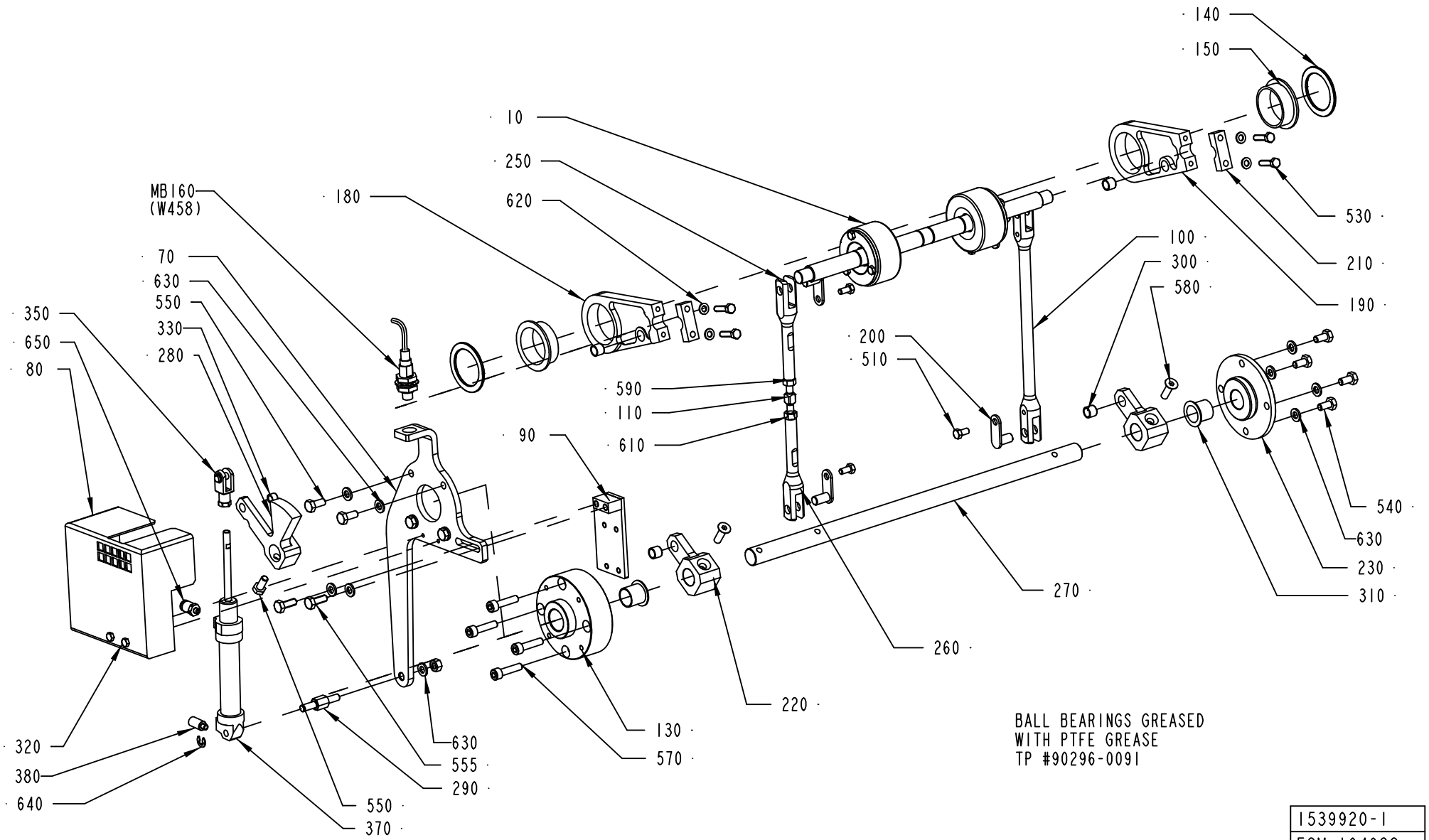

1539920-1
ECM 104628

ECM: 112177 - 20020930
Group number: 1539920-0200
Assembly Drawing: 1539920-1_1_AB

Pos	Part No	SP	UN	Qty	Description	Page No
-						
010	A1548010-0200	-		1	PENDULUM ROLLER	**135**
070	1524829-0000	-		1	PLATE	
080	2510532-0000	-		1	PROTECTION	
090	1524814-0000	-		1	BRACKET	
100	1548003-0000	-		1	LINK	
110	1548006-0000	-		1	ADJUSTING SCREW	
130	1548059-0000	-		1	AXLE SUPPORT	
140	1548141-0000	-		2	WASHER	
150	1548142-0000	B		2	BUSHING	
180	1548147-0000	-		1	PLATE	
190	1548148-0000	-		1	PLATE	
200	1548152-0000	-		4	PIN	
210	1548225-0000	-		2	CLAMP	
220	1548276-0000	-		2	LEVER	
230	1548277-0000	-		1	FLANGE	
250	1548004-0001	-		1	LINK	
260	1548004-0002	-		1	LINK	
270	1548005-0000	-		1	SHAFT	
280	1548532-0000	-		1	LEVER	
290	1524830-0000	-		1	SHAFT	
300	90458-0824	-		4	BUSHING, 8X10X8 MM	
310	90458-0825	-		2	FLANGE BUSHING,16X18X17 MM	
320	312105-0301	-		2	SCREW M6S ISO 4017 M4X35 A480	
330	90458-1790	-		1	BUSHING, 6X8X6 MM	
350	90239-0489	-		1	ROD END, CLEVIS WITH AXLE M6X1,25	
360	90296-0091	-		1	LUBRICATION GREASE	
370	90239-0817	-		1	DOUBLE ACTING, MINI-ISO, CYL.16-50	
380	90328-0020	-		1	SILENCER	
510	312105-0325	-		4	SCREW M6S ISO 4017 M5X10 A480	
530	312105-0331	-		4	SCREW M6S ISO 4017 M5X20 A480	
540	312105-0366	-		4	SCREW M6S M6X12 A280	
550	312105-0367	-		5	SCREW M6S M6X14 A280	
555	312105-0368	-		4	SCREW M6S M6X16 A280	
570	312115-0372	-		4	SCREW ISO4762 M6X25 A4	
580	312155-0370	-		2	SCREW EN 10642 MF6S M6X20 A480	
590	312605-0316	-		2	HEXAGON NUT, M6M M6 A280	
610	312902-0316	-		1	NUT HEX. LEFT THREAD, M6 A280	
620	315105-0146	-		4	WASHER ISO 7089-5-200 HV-A4	
630	315105-0153	-		11	WASHER ISO 7089-6-200 HV-A4	
640	315755-0107	-		1	LOCKING WASHER 5	
650	342722-0197	-		2	STRAIGHT COUPLING	

Pos	Part No	SP	UN	Qty	Description	Page No
MB160	90458-0675	B		1	PROXIMITY SENSOR, E2EG-X5MB1-5M	

Machine Type	Group Description	Used-In	Group Number	Page No

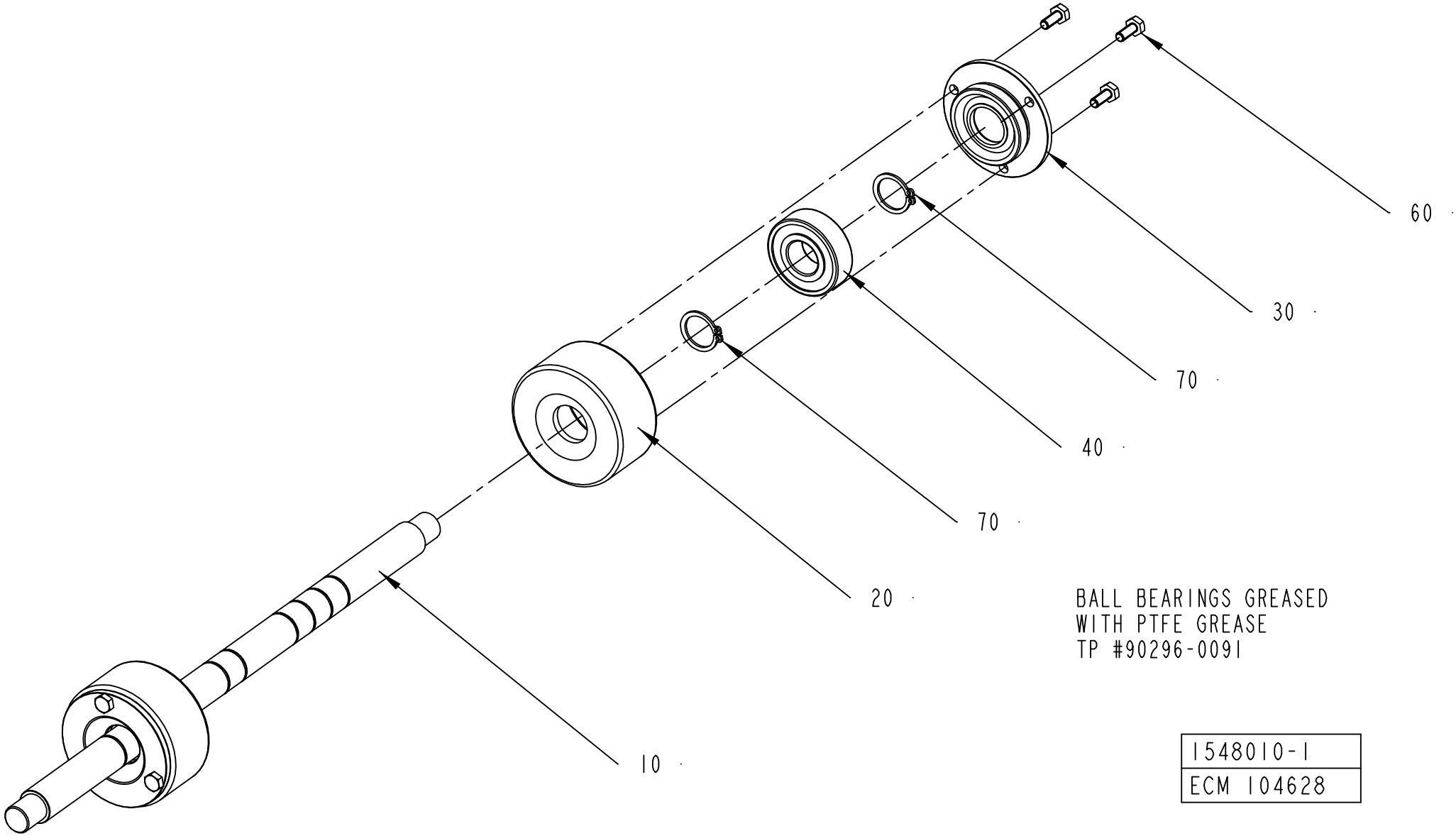
60
30
70
40
70
20
10
BALL BEARINGS GREASED
WITH PTFE GREASE
TP #90296-0091
1548010-1
ECM 104628

ECM: 112174 - 20020930
Group number: 1548010-0200
Assembly Drawing: 1548010-1_1_AB

Pos	Part No	SP	UN	Qty	Description	Page No
-						
010	1539996-0000	-		1	SHAFT	
020	1548052-0000	-		2	ROLLER	
030	1548053-0000	-		2	COVER	
040	90458-1704	-		2	BALL BEARING, 15X35X11 MM	
050	90296-0091	-		1	LUBRICATION GREASE	
060	312105-0289	-		6	SCREW M6S ISO 4017 M4X10 A480	
070	315751-0112	-		4	RETAIN. RING, 15	

Pos	Part No	SP	UN	Qty	Description	Page No

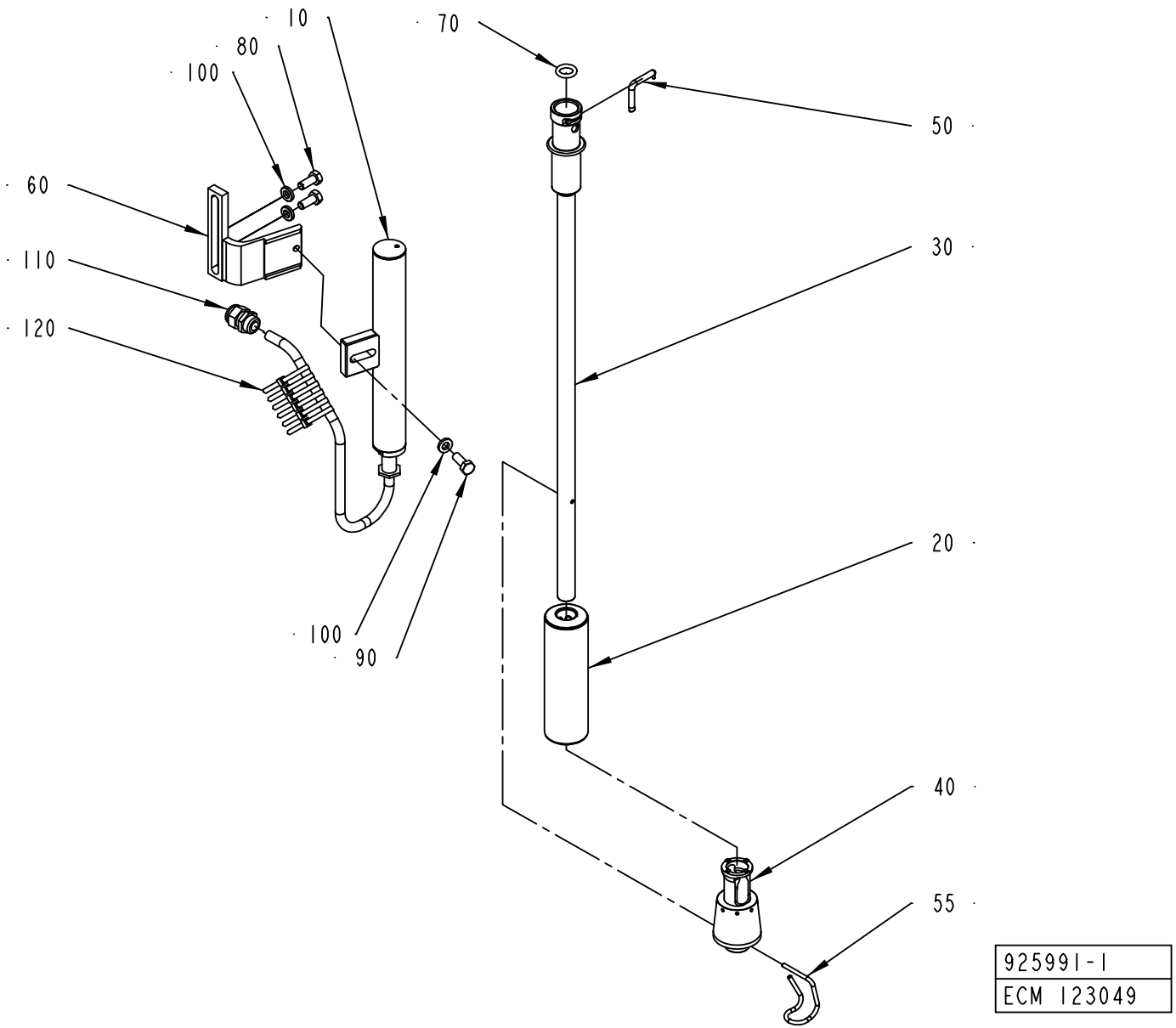
10
70
80
100
50
60
30
110
120
20
100
90
40
55
925991-1
ECM 123049

ECM: 122728 - 20030227
Group number: 925991-0200
Assembly Drawing: 925991-1_1_AF

Pos	Part No	SP	UN	Qty	Description	Page No
TBA 0125S, TBA 0100B						
020	979330-0000	A		1	FLOATER	
030	2527717-0000	A		1	FILLING PIPE	
040	2510541-0000	A		1	PRESSURE FLANGE	
055	2506432-0000	A		1	LOCKING FINGER	
TBA 0160S, TBA 0200S						
020	979330-0000	A		1	FLOATER	
030	2527707-0000	A		1	FILLING PIPE	
040	2527708-0000	A		1	PRESSURE FLANGE	
055	2506432-0000	A		1	LOCKING FINGER	
TBA 0180B, TBA 0200B						
020	979326-0000	A		1	FLOAT	
030	2524342-0000	A		1	FILLING PIPE	
040	1548332-0000	A		1	PRESSURE FLANGE	
055	2506433-0000	A		1	LOCKING FINGER	
TBA 0200M						
020	979330-0000	A		1	FLOATER	
030	2524341-0000	A		1	FILLING PIPE	
040	1558444-0000	A		1	PRESSURE FLANGE	
055	2506432-0000	A		1	LOCKING FINGER	
TBA 0250B						
020	979326-0000	A		1	FLOAT	
030	2524343-0000	A		1	FILLING PIPE	
040	1558446-0000	A		1	PRESSURE FLANGE	
055	2506433-0000	A		1	LOCKING FINGER	
TBA 0250S						
020	979330-0000	A		1	FLOATER	
030	1558443-0000	A		1	FILLING PIPE	
040	1558444-0000	A		1	PRESSURE FLANGE	
055	2506432-0000	A		1	LOCKING FINGER	
TBA 0300S, TBA 0284B						
020	979326-0000	A		1	FLOAT	
030	2527706-0000	A		1	FILLING PIPE	
040	2514301-0000	A		1	PRESSURE FLANGE	
055	2506433-0000	A		1	LOCKING FINGER	
TBA 0330S						
020	979326-0000	A		1	FLOAT	
030	2527710-0000	A		1	FILLING PIPE	
040	2514301-0000	A		1	PRESSURE FLANGE	
055	2506433-0000	A		1	LOCKING FINGER	
Common Parts						
010	A42062-0200	A		1	LEVEL PROBE	**139**
050	2506530-0000	A		1	LOCKING FINGER	
060	979368-0000	-		1	HOLDER	
070	90459-2045	A		1	O-RING 14X4 MM	
080	312105-0451	-		2	SCREW M6S ISO 4017 M8X20 A480	
090	312105-0452	-		1	SCREW M6S ISO 4017 M8X22 A480	
100	315115-0165	-		3	WASHER PLAIN, TBRB 8,4/16 H=3	
110	352103-0106	-		1	CABLE GLAND, ST 11, PR18,6/PG11	
120	352113-0102	-		6	CLIP-STRIP, BLACK 188X4,8 MM	

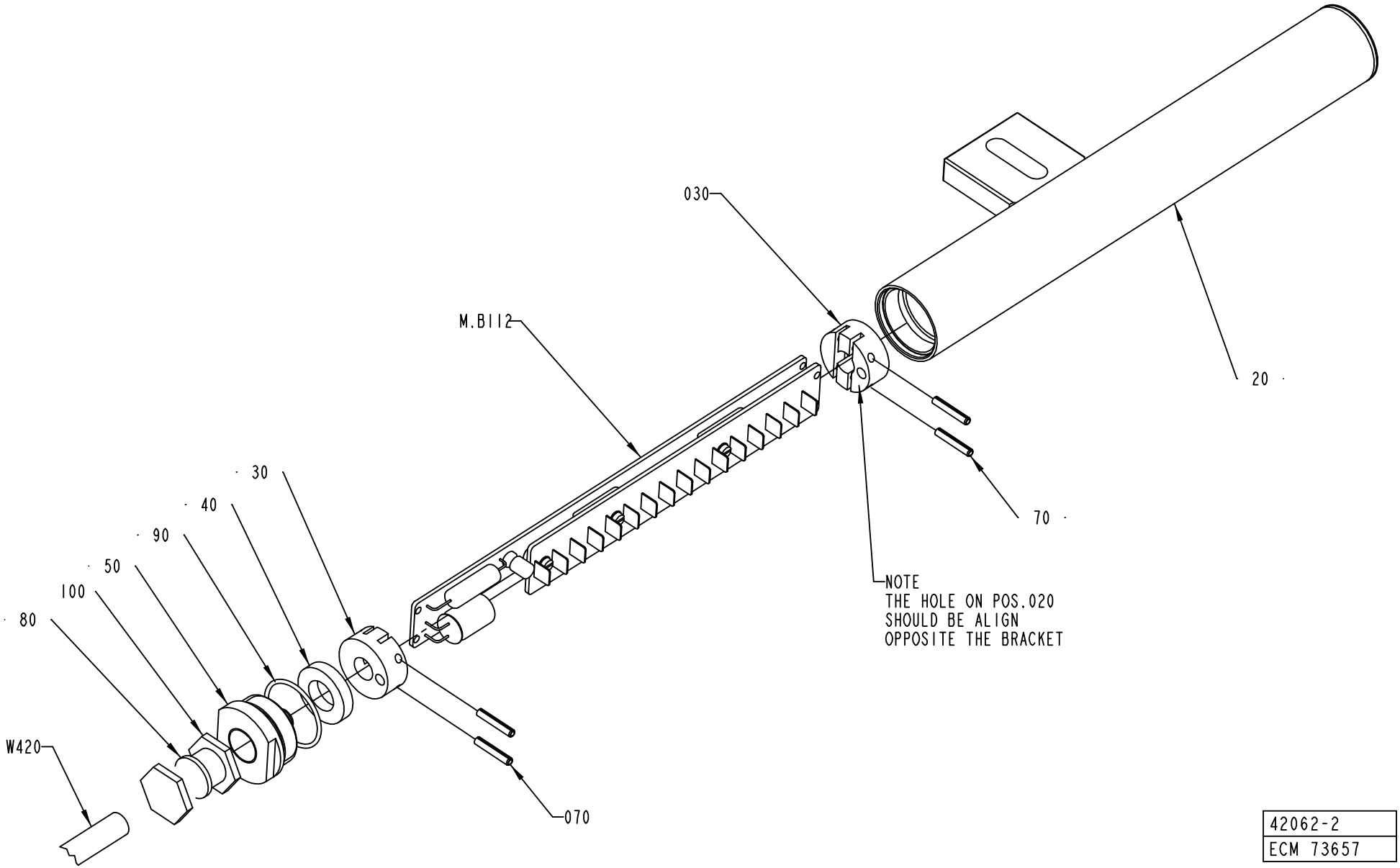

42062-2
ECM 73657

ECM: 73657 - 20020226
Group number: 42062-0200
Assembly Drawing: 42062-2_1_AA

Pos	Part No	SP	UN	Qty	Description	Page No
TBA/19						
020	925999-0000	-		1	PROTECTION PIPE	
Common Parts						
030	925877-0000	-		2	SUPPORT	
040	736514-0000	-		1	SHOCK ABSORBER	
050	926820-0000	-		1	PLUG	
070	311111-0209	-		4	PIN, STRAIGHT SLOTTED SPRING FRP 3X18	
080	315105-0171	-		1	WASHER PLAIN, BRB, 10/18,H=2	
090	315202-0120	-		1	O-RING 27,1X1,6 MM	
100	90012-0119	-		1	GLAND, EXTENDED WITH INSERT, PG9	
MB112	A42063-0100	-		1	LEVEL DETECTOR	**141**
W420	90220-0085	-	M	6	CABLES, MULTI-CONDUCTOR SCREENED	

Pos	Part No	SP	UN	Qty	Description	Page No

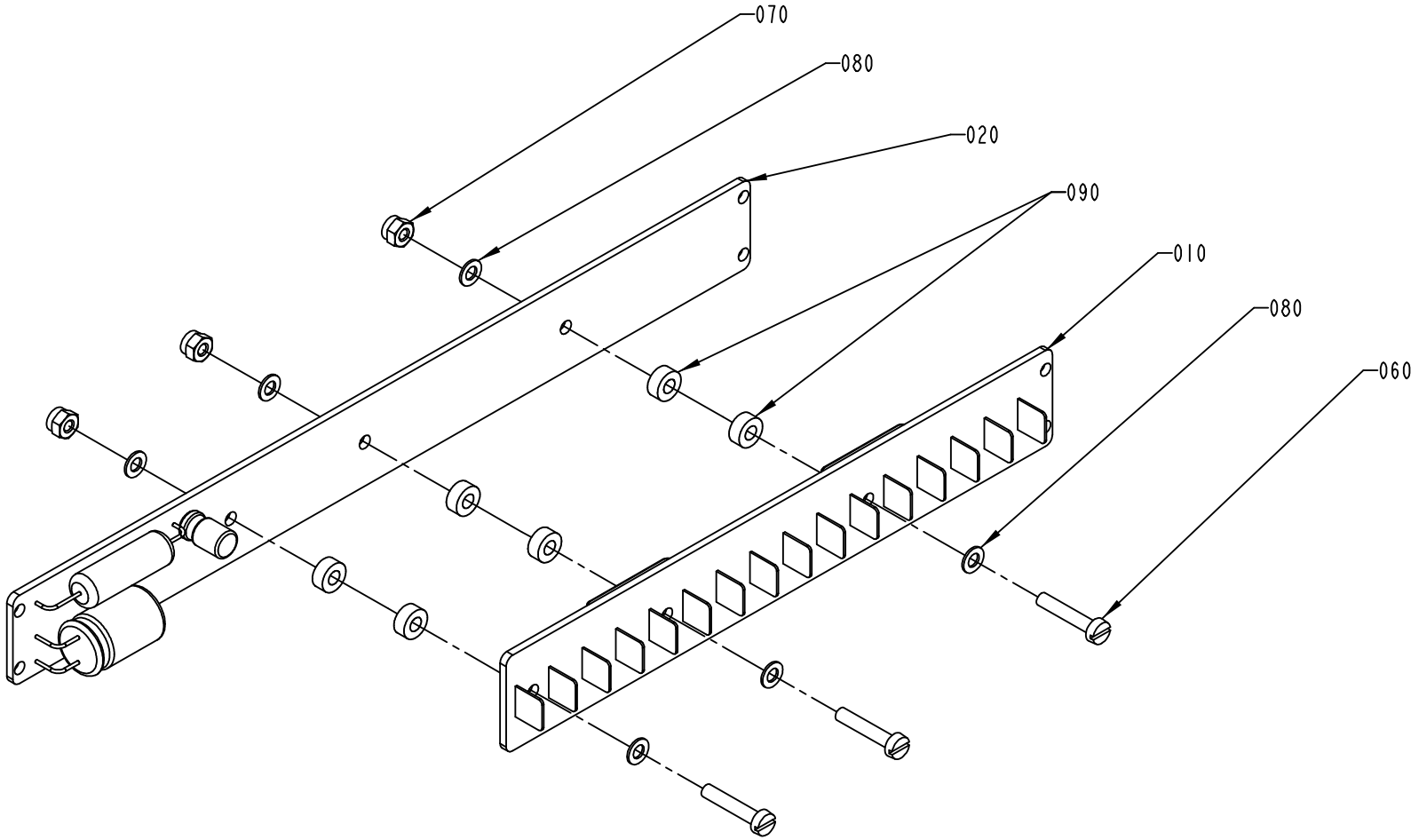

S-42063-I
ECN 72792

ECM: 114546 - 20020930
Group number: 42063-0100
Assembly Drawing: 42063-1_1_AA

Pos	Part No	SP	UN	Qty	Description	Page No
-						
010	A42067-0100	-		1	SENSOR BOARD	
020	A42068-0100	-		1	CONVERTER BOARD	
060	312125-0228	-		3	SCREW PAN HEAD MCS M3X16 A480	
070	312812-0310	-		3	HEXAGON NUT, NY-LOCK M3 A480	
080	315105-0124	-		6	WASHER ISO 7089-3-200 HV-A4	
090	90005-0143	-		6	SPACER 3,3/7, H=3	

Pos	Part No	SP	UN	Qty	Description	Page No

Tetra Pak

SPC
Spare Parts Catalogue

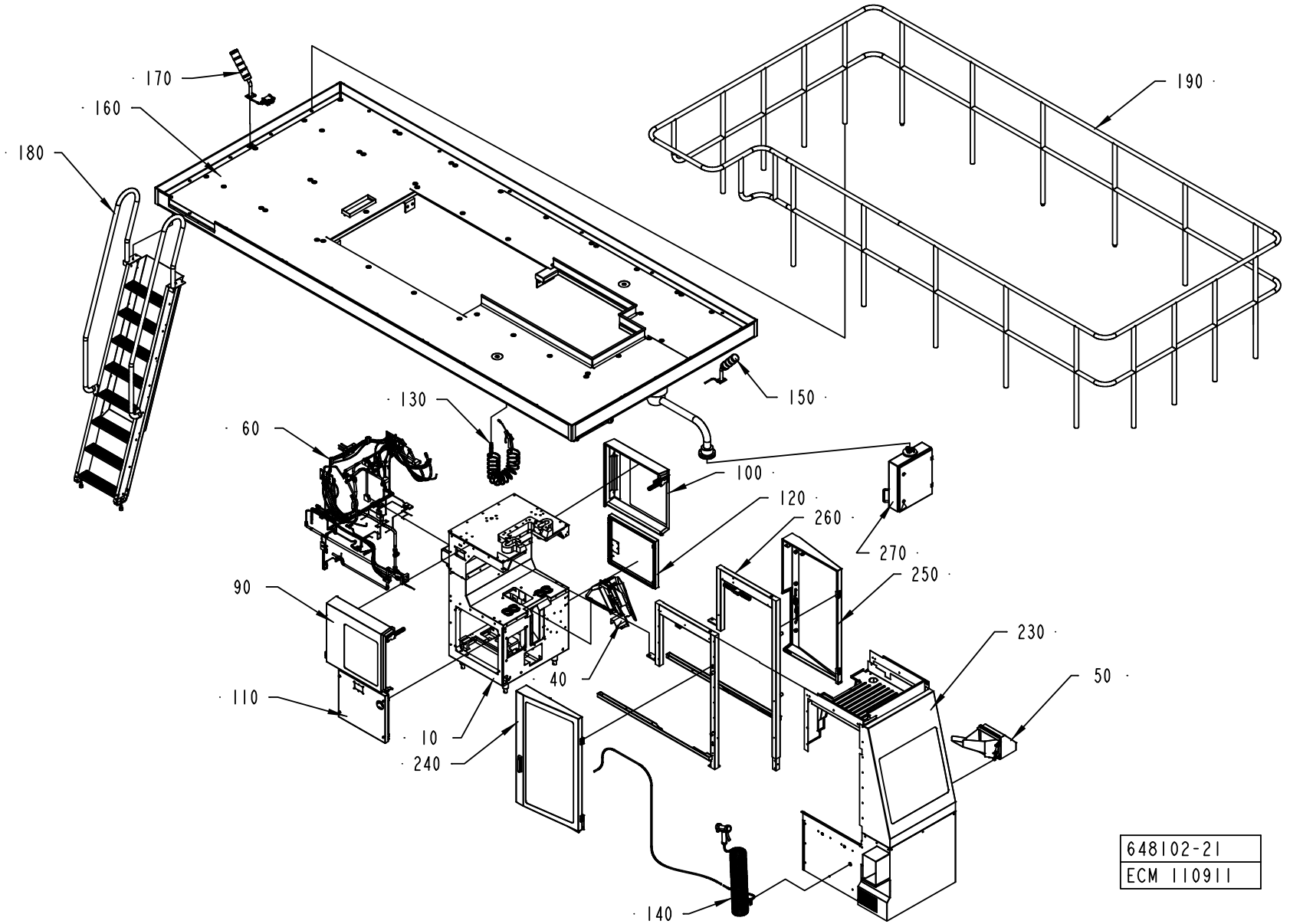
170
160
180
190
150
130
60
100
120
260
270
250
90
230
50
40
110
10
240
140
648102-21
ECM 110911

ECM: 111737 - 20030113
Group number: 648102-1200
Assembly Drawing: 648102-21_1_AB

Pos	Part No	SP	UN	Qty	Description	Page No
-						
010	A1532584-0100	-		1	MACHINE BODY	**147**
040	A2526338-0100	-		1	DROP CHUTE	**153, 155**
050	A2552699-0100	-		1	DISCHARGE CHUTE	**157**
060	A1548576-0100	-		1	PIPE WORK	**159, 161, 163**
090	A2552694-0100	-		1	DOOR	**169**
100	A2552695-0100	-		1	DOOR	**171**
110	A256665-0200	-		1	HATCH	**173**
120	A1296815-0100	-		1	HATCH	**175**
130	A271414-0300	-		1	AIR JET GUN	**177**
140	A271387-0400	-		1	SPRAY GUN	**179**
150	A1519086-0100	-		1	LAMP	**181**
160	A1512660-0100	-		1	PLATFORM	**183, 185**
170	A1549603-0100	-		1	LAMP	**191**
180	A598762-0200	-		1	LADDER	**193**
190	A1519602-0100	-		1	RAILING	**195**
230	A2552700-0100	-		1	COVER PLATES	**197**
240	A2552680-0100	-		1	DOOR	**201**
250	A2552681-0100	-		1	DOOR	**203**
260	A2553830-0100	-		1	FRAME	**205**
270	A1364345-0300	-		1	TPOP PANEL 12"	**207**

Pos	Part No	SP	UN	Qty	Description	Page No

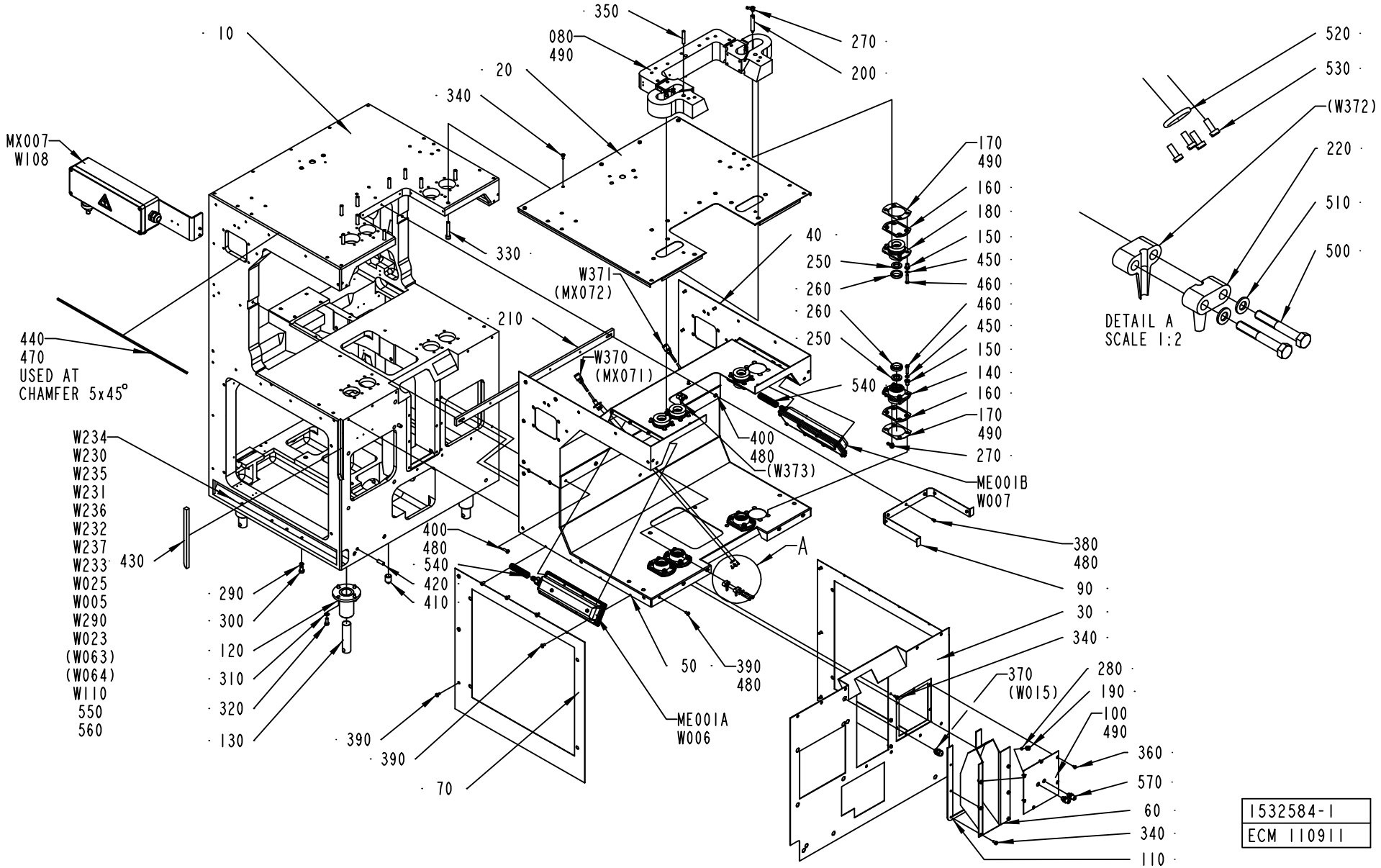
10
350
080
490
270
200
20
340
MX007
W108
330
W371
(MX072)
210
W370
(MX071)
440
470
USED AT
CHAMFER 5x45°
W234
W230
W235
W231
W236
W232
W237
W233
W025
W005
W290
W023
(W063)
(W064)
W110
550
560
430
290
300
120
310
320
130
400
480
540
420
410
390
390
70
50
390
480
ME001A
W006
A
40
250
260
260
250
540
400
480
(W373)
170
490
160
180
150
450
460
460
450
150
140
160
170
490
270
ME001B
W007
380
480
90
30
340
370
(W015)
280
190
100
490
360
570
60
340
110
520
530
(W372)
220
510
500
DETAIL A
SCALE 1:2
1532584-1
ECM 110911

ECM: 111716 - 20030113
Group number: 1532584-0100
Assembly Drawing: 1532584-1_1_AB

Pos	Part No	SP	UN	Qty	Description	Page No
-						
0010	1523754-0000	-		1	MACHINE BODY	
0020	1523755-0000	-		1	COVERING PLATE	
0030	1523756-0000	-		1	COVER	
0040	1523757-0000	-		1	PLATE	
0050	1523758-0000	-		1	PLATE	
0060	1523759-0000	-		1	COVER	
0070	1523760-0000	-		1	FRONT PLATE	
0080	572294-0000	-		1	COLLAR	
0090	441677-0000	-		1	FRONT PLATE	
0100	2556246-0000	-		1	HATCH	
0110	1195428-0000	B		1	GASKET	
0120	469095-0000	-		4	HOLDER	
0130	469096-0000	-		4	LEG	
0140	441217-0000	B		4	BUSHING LOWER	
0150	751085-0000	B		32	BUSHING	
0160	441593-0000	B		8	GASKET	
0170	441221-0000	B		8	WASHER	
0180	441218-0000	B		4	BUSHING UPPER	
0190	441077-0000	B		1	NOZZLE BRACKET	
0200	469937-0000	-		4	PIPE	
0210	441212-0000	-		1	HOLDER	
0220	1282426-0000	B		4	CLIP	
0250	315259-0102	B		8	FELT SEAL 22-47 MM	
0260	90091-0106	B		8	SCRAPER 30X40X10 MM	
0270	90137-0010	-		8	BANJO CONN. M6, D=2,5 MM	
0280	90424-0027	-		1	SPRAY NOZZLE TIP, 8613-8V-TC	
0290	315233-0109	-		8	WASHER PL.RND.NYL.10,3/14,H=1	
0300	312105-0489	-		8	SCREW M6S ISO 4017 M10X16 A480	
0310	315105-0165	-		16	WASHER ISO 7089-8-200 HV-A4	
0320	312105-0451	-		16	SCREW M6S ISO 4017 M8X20 A480	
0330	312115-0503	-		10	SCREW ISO4762 M10X60 A4	
0340	312105-0366	-		14	SCREW M6S M6X12 A280	
0350	311103-0415	-		3	PARALLELL PIN, CP, M6, 8X55 MM	
0360	312155-0325	-		6	SCREW EN 10642 MF6S M5X10 A480	
0370	352103-0100	-		1	CABLE GLAND, STR 9, PR15,2/PG9	
0380	312125-0323	-		7	SCREW PAN HEAD MCS M5X8 SS	
0390	90287-0075	-		38	SCREW SLOT. PAN HEAD LKCS M6X12	
0400	90287-0076	-		2	SCREW SLOT. PAN HEAD LKCS M6X20	
0410	90087-0002	-		3	PIPE PLUG	
0420	311103-0458	-		2	PARALLELL PIN, M6, 10X30 MM	
0430	90143-0010	B	MM	260	STRIP	
0440	90143-0012	B	MM	1900	STRIP	
0450	315105-0153	-		32	WASHER ISO 7089-6-200 HV-A4	
0460	312105-0374	-		32	SCREW M6S ISO 4014 M6X30 A480	
0470	90153-0017	-	KG	1	ADHESIVE, 2963 TUBE 160G	
0480	90157-0016	-	L	1	LOCKING FLUID	
0490	90157-0022	-	ML	1	SEALING COMPOUND	
0500	312105-0337	-		4	SCREW M6S ISO 4014 M5X35 A480	
0510	315105-0146	-		4	WASHER ISO 7089-5-200 HV-A4	
0520	315202-0211	B		2	O-RING 13,3X2,4 MM	
0530	312125-0222	-		8	SPåRSKRUV MCS M3X8 SS	
540	90152-0059	-	M	6	SPIRAL CONDUIT, 18X12, UL 1211	
550	90152-0051	-	M	8	SPIRAL CONDUIT, 25X18, UL 1816	
560	90152-0070	-	M	2	METAL HOSE, 32,5X26, UL 2621	
570	342768-0102	-		2	BULKHEAD CONNECTOR, 6 MM	
ME001A	A441534-0200	-		1	LIGHT FIXTURE	**149**
ME001B	A441534-0200	-		1	LIGHT FIXTURE	**149**
MX007	A456827-0400	-		1	CONNECTION BOX	**151**
W005	351150-0418	-	M	7	CABLE OLFLEX 4X2,5 MM2 LIGHT/GREY	
W006	351150-0412	-	M	4	CABLE OLFLEX 3X1,5 MM2 LIGHT/GREY	
W007	351150-0412	-	M	3	CABLE OLFLEX 3X1,5 MM2 LIGHT/GREY	
W023	90220-0104	-	M	8	SCR. CABLE 4X1,5MM2	
W025	351150-0428	-	M	6	CABLE OLFLEX 41X0,75 MM2 LIGHT/GREY	
W108	351150-0425	-	M	4	CABLE OLFLEX 25X0,75 MM2 LIGHT/GREY	
W110	351150-0413	-	M	6	CABLE OLFLEX 4X1,5 MM2 LIGHT/GREY	
W230	351150-0412	-	M	6	CABLE OLFLEX 3X1,5 MM2 LIGHT/GREY	
W231	351150-0412	-	M	6	CABLE OLFLEX 3X1,5 MM2 LIGHT/GREY	
W232	351150-0412	-	M	6	CABLE OLFLEX 3X1,5 MM2 LIGHT/GREY	
W233	351150-0412	-	M	6	CABLE OLFLEX 3X1,5 MM2 LIGHT/GREY	
W234	90220-0034	A	M	6	THERMOCOUPLE CABLE K/ 2X0,5MM2	
W235	90220-0034	A	M	6	THERMOCOUPLE CABLE K/ 2X0,5MM2	
W236	90220-0034	A	M	6	THERMOCOUPLE CABLE K/ 2X0,5MM2	
W237	90220-0034	A	M	6	THERMOCOUPLE CABLE K/ 2X0,5MM2	
W290	351162-0106	-	M	8	CABLE AWM 1X4 MM2 YELLOW-GREEN	
W370	551969-0006	A		1	COAXIAL CABLES	
W371	551969-0006	A		1	COAXIAL CABLES	

Machine Type | Group Description | Used-In | Group Number | Page No

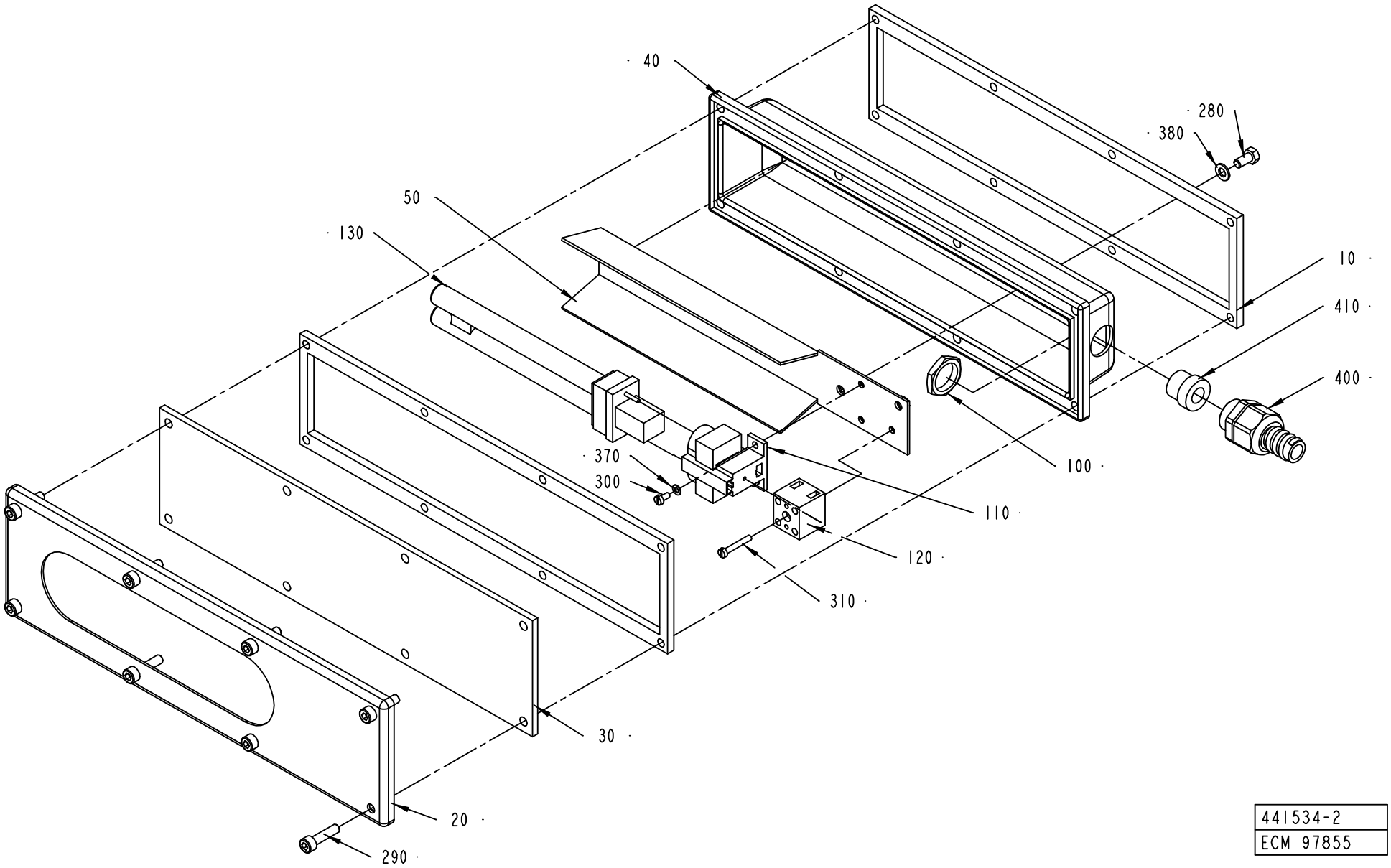

441534-2
ECM 97855

ECM: 106638 - 20020313
Group number: 441534-0200
Assembly Drawing: 441534-2_1_AA

Pos	Part No	SP	UN	Qty	Description	Page No
-						
010	441536-0000	B		2	GASKET	
020	456263-0000	-		1	SHEET	
030	456264-0000	-		1	GLASS	
040	B469336-0000	-		1	COVER	
	456260-0000	*-*		*1*	*COVER*	
050	B469337-0000	-		1	REFLECTOR	
	312605-0314	*-*		*2*	*HEXAGON NUT, M6M M5 A280*	
100	90099-0002	-		1	NUT PR 18,6 BRASS	
110	90164-0301	-		1	HOLDING FIXTURE	
120	90195-0020	-		1	TERMINAL BLOCK, 1977.2	
130	90297-0006	B		1	FLUORESCENT TUBE, PL9	
280	312105-0325	-		2	SCREW M6S ISO 4017 M5X10 A480	
290	312115-0331	-		8	SCREW ISO4762 M5X20 A4	
300	312125-0220	-		2	SKRUV SLOT.PAN HD. MCS 3X6 A480	
310	312125-0230	-		1	SPåRSKRUV MCS M3X20 SS	
370	315105-0124	-		2	WASHER ISO 7089-3-200 HV-A4	
380	315105-0146	-		2	WASHER ISO 7089-5-200 HV-A4	
400	353243-0002	-		1	EXTENDED WITHOUT INSERT, PG11	
410	353249-0009	-		1	INSERT, SINGEL HOLE, EK 152/9	

Pos	Part No	SP	UN	Qty	Description	Page No

Machine Type	Group Description	Used-In	Group Number	Page No

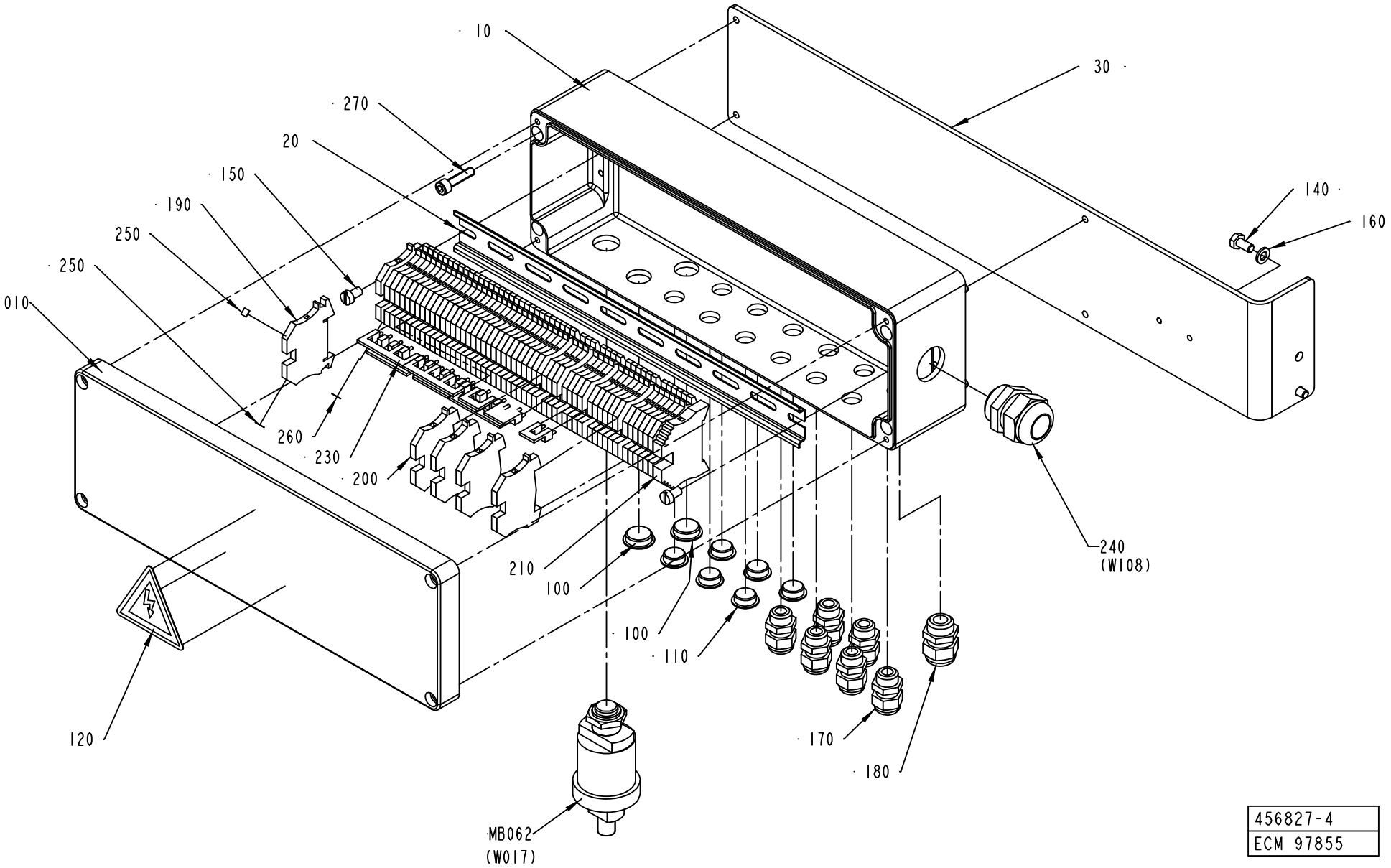

456827-4
ECM 97855

ECM: 115733 - 20020930
Group number: 456827-0400
Assembly Drawing: 456827-4_1_AA

Pos	Part No	SP	UN	Qty	Description	Page No
-						
010	1512667-0000	-		1	CONNECTION BOX	
020	578676-0000	-		1	RAIL	
030	1512840-0000	-		1	BRACKET	
100	90002-0009	-		2	BLANK-OFF PLUG, PR 18.6 SKINDICHT-BLK11	
110	90002-0013	-		6	BLANK-OFF PLUG, PR 15,2 SKINDICHT-BLK9	
120	90194-0016	A		1	ETIKETT	
140	312105-0366	-		2	SCREW M6S M6X12 A280	
150	312125-0364	-		2	SCREW SLOT.PAN HD. MCS 6X10 A480	
160	315105-0153	-		2	WASHER ISO 7089-6-200 HV-A4	
170	352103-0101	-		6	KABELFöRSKR. ST 9, PR15,2/PG9	
180	352103-0106	-		1	CABLE GLAND, ST 11, PR18,6/PG11	
190	353021-0212	-		50	FEED THROUGH TERMINAL, 10200.0	
200	353024-0204	-		5	EARTH TERMINAL WPE 2,5	
210	353031-0203	-		1	END SUPPORT, WEW 35/2	
230	353034-0030	-		6	BRIDGE CONNECTOR WQV 2,5/10, 10544.6	
240	352103-0116	-		1	KABELFöRSKR. ST 21, PR28,3/PG21	
250	359011-0807	-		2	MARKING PLATES 5-FW 1-50	
260	359011-0819	-		1	MARKING PLATES 5-GW (EARTH)	
270	312115-0372	-		4	SCREW ISO4762 M6X25 A4	
MB062	90274-0045	A		1	PRESSURE GUARD, 14 KPA	

Pos	Part No	SP	UN	Qty	Description	Page No

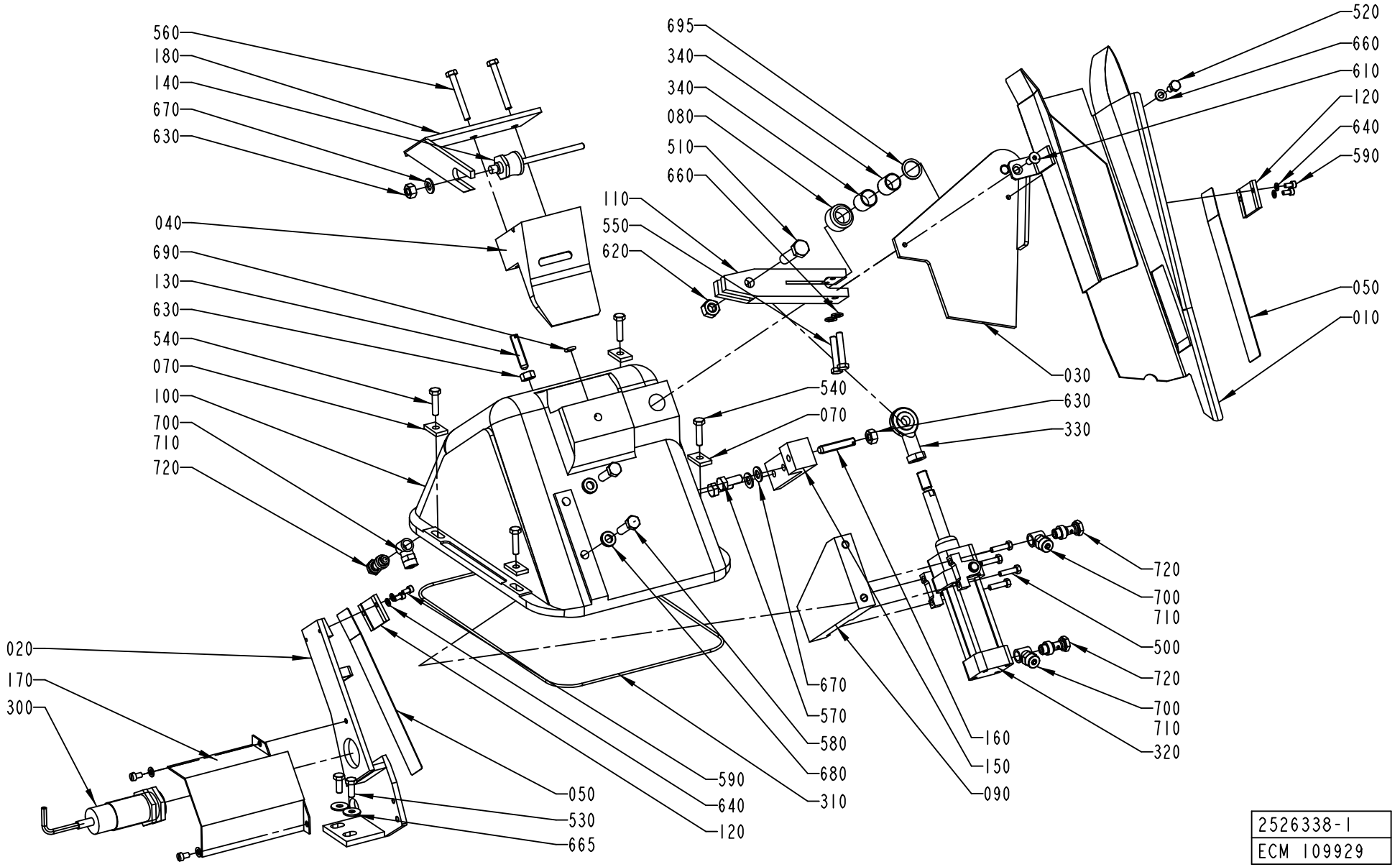

2526338-1
ECM 109929

ECM: 118410 - 20030113
Group number: 2526338-0100
Assembly Drawing: 2526338-1_1_AB

This list covers pages from 152 to 155

Pos	Part No	SP	UN	Qty	Description	Page No
TBA 0100B						
010	2526310-0000	B		1	DROP CHUTE	
020	2522107-0000	B		1	HEAD PLATE	
040	255942-0000	B		1	SLIDER	
050	2526327-0000	A		2	LEAF SPRING	
170	295075-0000	-		1	PROTECTION	
560	312105-0380	-		2	SCREW M6S ISO 4014 M6X50 A480	
TBA 0125S						
010	2526300-0000	B		1	DROP CHUTE	
020	2506323-0000	B		1	HEAD PLATE	
040	255942-0000	B		1	SLIDER	
050	2526323-0000	A		2	LEAF SPRING	
170	295075-0000	-		1	PROTECTION	
560	312105-0380	-		2	SCREW M6S ISO 4014 M6X50 A480	
TBA 0160S						
010	2526303-0000	B		1	DROP CHUTE	
020	2522109-0000	B		1	HEAD PLATE	
040	469502-0000	B		1	SLIDER	
050	2526325-0000	A		2	LEAF SPRING	
170	295075-0000	-		1	PROTECTION	
560	312105-0380	-		2	SCREW M6S ISO 4014 M6X50 A480	
TBA 0180B						
010	2526305-0000	B		1	DROP CHUTE	
020	2506322-0000	B		1	HEAD PLATE	
040	295097-0000	B		1	SLIDER	
050	2526324-0000	A		2	LEAF SPRING	
170	295075-0000	-		1	PROTECTION	
560	312105-0380	-		2	SCREW M6S ISO 4014 M6X50 A480	
TBA 0200B						
010	2526306-0000	B		1	DROP CHUTE	
020	2506321-0000	B		1	HEAD PLATE	
040	295097-0000	B		1	SLIDER	
050	2526324-0000	A		2	LEAF SPRING	
170	295075-0000	-		1	PROTECTION	
560	312105-0380	-		2	SCREW M6S ISO 4014 M6X50 A480	
TBA 0200M						
010	2526311-0000	B		1	DROP CHUTE	
020	2522105-0000	B		1	HEAD PLATE	
040	574449-0000	B		1	SLIDER	
050	2526328-0000	A		2	LEAF SPRING	
170	574452-0000	-		1	PROTECTION	
560	312105-0380	-		2	SCREW M6S ISO 4014 M6X50 A480	
TBA 0200S						
010	2526301-0000	B		1	DROP CHUTE	
020	2504445-0000	B		1	PLATE	
040	469502-0000	B		1	SLIDER	
050	2526323-0000	A		2	LEAF SPRING	
170	295075-0000	-		1	PROTECTION	
560	312105-0380	-		2	SCREW M6S ISO 4014 M6X50 A480	
TBA 0250B						
010	2526308-0000	B		1	DROP CHUTE	
020	2506319-0000	B		1	HEAD PLATE	
040	295097-0000	B		1	SLIDER	
050	2526324-0000	A		2	LEAF SPRING	
170	295075-0000	-		1	PROTECTION	
560	312105-0380	-		2	SCREW M6S ISO 4014 M6X50 A480	
TBA 0250S						
010	2526302-0000	B		1	DROP CHUTE	
020	2522106-0000	B		1	HEAD PLATE	
040	574449-0000	B		1	SLIDER	
050	2526325-0000	A		2	LEAF SPRING	
170	574452-0000	-		1	PROTECTION	
560	312105-0380	-		2	SCREW M6S ISO 4014 M6X50 A480	
TBA 0300S, TBA 0284B						
010	2526309-0000	B		1	DROP CHUTE	
020	2506324-0000	B		1	HEAD PLATE	
040	295097-0000	B		1	SLIDER	
050	2526326-0000	A		2	LEAF SPRING	
170	295075-0000	-		1	PROTECTION	
560	312105-0380	-		2	SCREW M6S ISO 4014 M6X50 A480	
TBA 0330S						
010	2526304-0000	B		1	DROP CHUTE	
020	2522108-0000	B		1	HEAD PLATE	
040	979938-0000	B		1	SLIDER	

Machine Type | Group Description | Used-In | Group Number | Page No

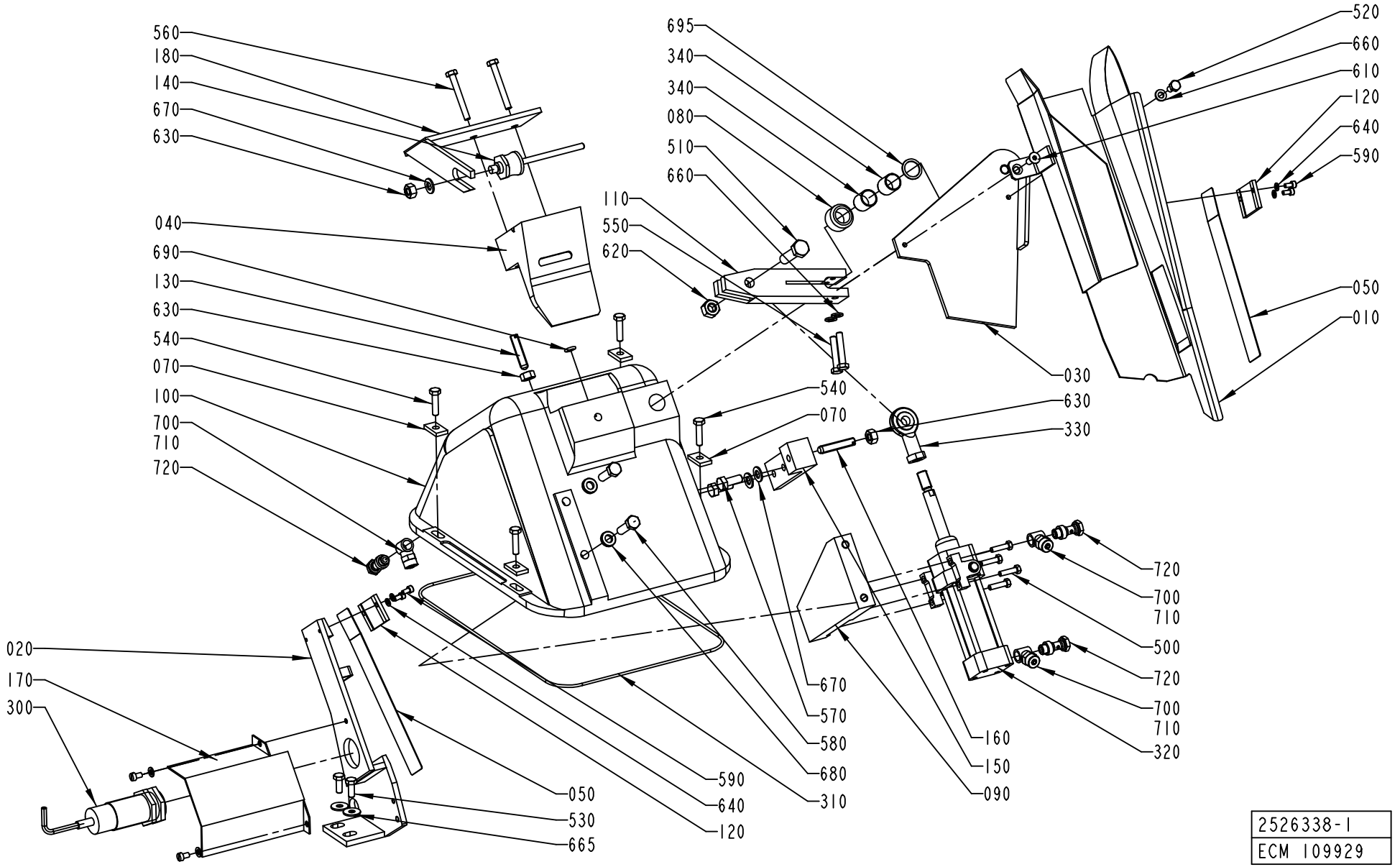

2526338-1
ECM 109929

Pos	Part No	SP	UN	Qty	Description	Page No
TBA 0330S (Cont'd)						
050	2526329-0000	A		2	LEAF SPRING	
170	574452-0000	-		1	PROTECTION	
560	312109-0378	-		2	SCREW M6S ISO4017 M6X40 A480	
Common Parts						
030	2547232-0000	-		1	PIVOT ARM	
070	255939-0000	-		4	WASHER	
080	255940-0000	-		1	SPACER	
090	255943-0000	-		1	HOLDER	
100	271163-0000	-		1	CANTILEVER	
110	272600-0000	-		1	ARM	
120	2522110-0000	-		2	PLATE	
130	272602-0000	-		1	SCREW	
140	272742-0000	B		1	FINGER	
150	272852-0000	-		1	HOLDER	
160	272853-0000	-		1	SCREW	
180	295399-0000	-		1	HOLDER	
300	90458-0256	A		1	PROXIMITY SWITCH IIA 3010-BPKG/6M	
310	90161-0001	B	MM	1500	O-RING MATERIAL 3 MM	
320	90450-0033	A		1	CYLINDER	
330	90239-0405	B		1	ROD END,BALL JOINT EYE M10X1,25	
340	90240-0073	B		2	BEARING BUSHING W/O FL, 16X18X20 MM	
500	312101-0331	-		4	SCREW M6S M5X20 FZB	
510	312101-0499	-		1	SCREW M6S M10X40 FZB	
520	312105-0366	-		1	SCREW M6S M6X12 A280	
530	312105-0368	-		2	SCREW M6S M6X16 A280	
540	312105-0372	-		4	SCREW M6S ISO 4017 M6X25 A480	
550	312105-0376	-		2	SCREW M6S ISO 4014 M6X35 A480	
570	312105-0451	-		2	SCREW M6S ISO 4017 M8X20 A480	
580	312105-0455	-		2	SCREW M6S ISO 4017 M8X30 A480	
590	312115-0287	-		4	SCREW ISO4762 M4X8 A4	
600	312125-0323	-		2	SCREW PAN HEAD MCS M5X8 SS	
610	312155-0368	-		1	SCREW EN 10642 MF6S M6X16 A480	
620	312601-0320	-		1	NUT M6M 10-8 FZB	
630	312605-0318	-		4	HEXAGON NUT, M6M M8 A280	
640	315105-0136	-		4	WASHER ISO 7089-4-200 HV-A4	
650	315105-0146	-		2	WASHER ISO 7089-5-200 HV-A4	
660	315105-0153	-		3	WASHER ISO 7089-6-200 HV-A4	
665	90005-0060	-		2	WASHER PLAIN, RBS 6,4/M6)/18,H=1,5	
670	315105-0165	-		3	WASHER ISO 7089-8-200 HV-A4	
680	315115-0165	-		2	WASHER PLAIN, TBRB 8,4/16 H=3	
690	315202-0206	B		1	O-RING 7,3X2,4 MM	
695	315233-0111	-		1	WASHER PL.RND.NYL.17/22,H=1	
700	342903-0121	-		3	NUT WITH SPRING 8/6-M12X1	
710	342980-0121	-		3	BANJO-CONNECTION,RING 8/6-G1/8"	
720	342980-0303	-		3	BANJO-HOLLOW BOLT COUPL,EXT.THR.01-G1/8"	

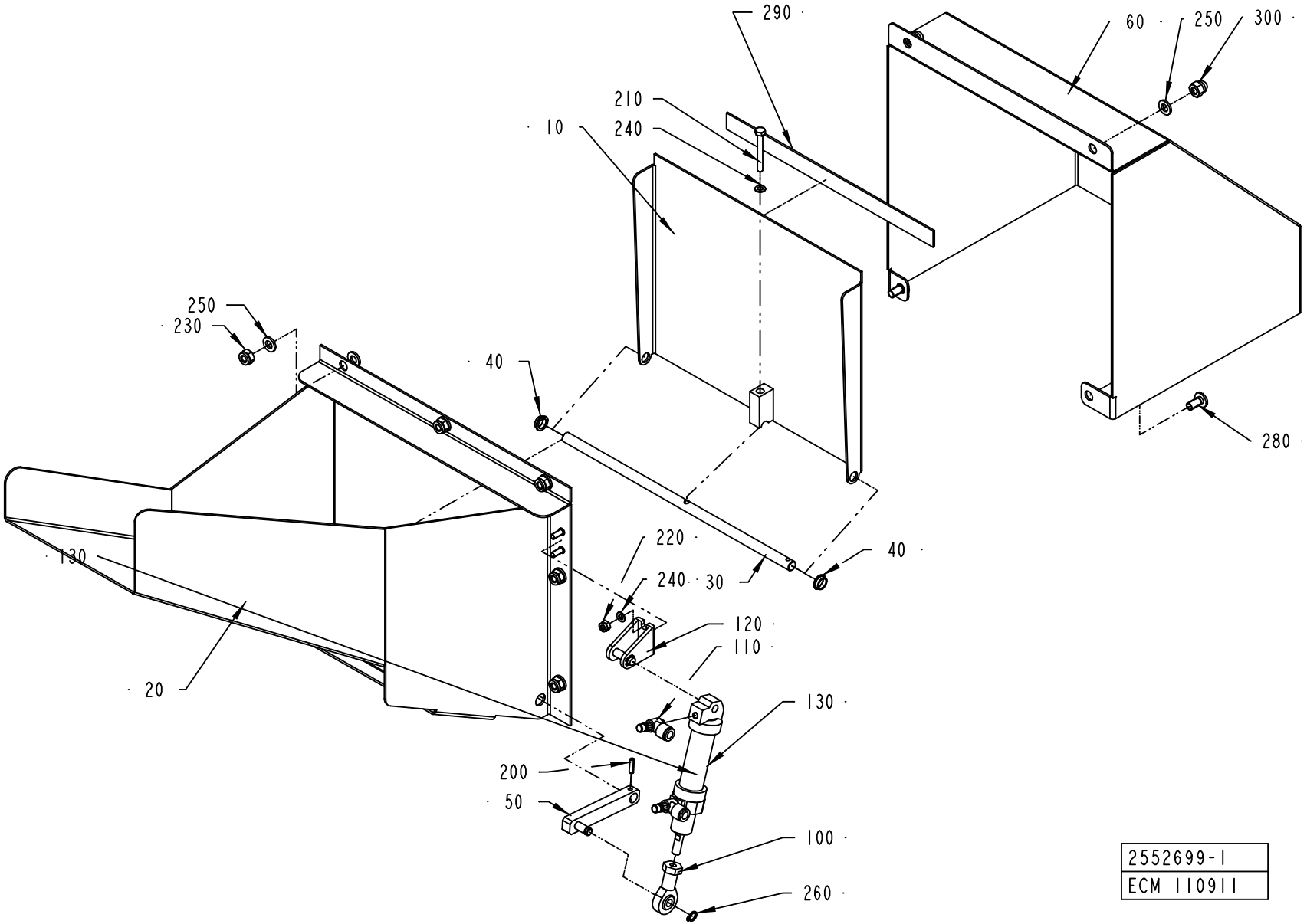
290
60
250
300
210
10
240
250
230
40
280
130
220
40
240
30
120
110
20
130
200
50
100
260
2552699-1
ECM 110911

ECM: 110917 - 20030113
Group number: 2552699-0100
Assembly Drawing: 2552699-1_1_AA

Pos	Part No	SP	UN	Qty	Description	Page No
-						
010	2552697-0000	-		1	LID	
020	2552698-0000	-		1	DISCHARGE CHUTE	
030	2552712-0000	-		1	SHAFT	
040	2552713-0000	-		2	BUSHING	
050	2552714-0000	-		1	BRACKET	
060	2554975-0000	-		1	COVER	
100	90115-0173	B		1	ROD END, ID=6 MM, M6X1	
110	90235-0844	-		2	THROTTLE CHECK VALVE, M5, MANUAL, 6MM	
120	90239-0486	-		1	REAR,CLEVIS,MINI-ISO 16	
130	90239-0842	B		1	DOUBLE ACTING, MINI-ISO, CYL.16-50	
200	311112-0206	-		1	SPRING PIN, ISO 8752 3X12-C	
210	312105-0301	-		1	SCREW M6S ISO 4017 M4X35 A480	
220	312812-0312	-		2	HEXAGON NUT, NY-LOCK M4 A480	
230	312812-0316	-		7	HEXAGON NUT, NY-LOCK M6 A480	
240	315105-0136	-		3	WASHER ISO 7089-4-200 HV-A4	
250	315105-0153	-		9	WASHER ISO 7089-6-200 HV-A4	
260	315751-0103	-		1	RETAIN. RING, 6	
280	90287-0075	-		2	SCREW SLOT. PAN HEAD LKCS M6X12	
290	90458-0145	-		1	SEALING, 3X15 MM CLOSED CELL SPONGE	
300	312705-0316	-		2	NUT HEX. DOMED CAP MHM-6 M6 A280	

Pos	Part No	SP	UN	Qty	Description	Page No

Machine Type | Group Description | Used-In | Group Number | Page No

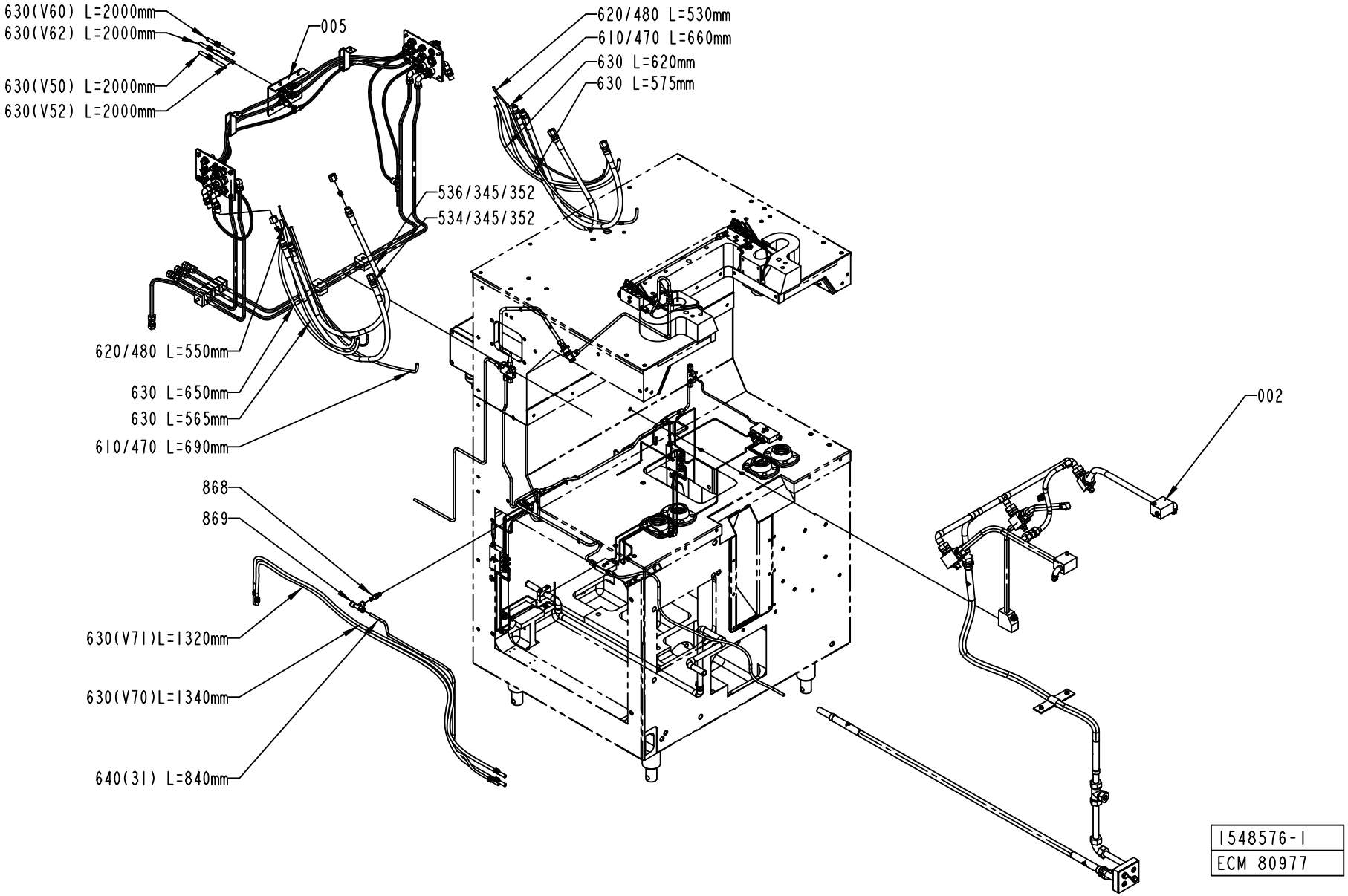
630(V60) L=2000mm
630(V62) L=2000mm
630(V50) L=2000mm
630(V52) L=2000mm
005
620/480 L=530mm
610/470 L=660mm
630 L=620mm
630 L=575mm
536/345/352
534/345/352
620/480 L=550mm
630 L=650mm
630 L=565mm
610/470 L=690mm
002
868
869
630(V71)L=1320mm
630(V70)L=1340mm
640(31) L=840mm
1548576-1
ECM 80977

ECM: 115744 - 20020930
Group number: 1548576-0100
Assembly Drawing: 1548576-1_1_AA

This list covers pages from 158 to 163

Pos	Part No	SP	UN	Qty	Description	Page No
-						
002	A271261-0700	-		1	CLEANING SYSTEM	**165**
005	A1523829-0100	-		1	DISTRIBUTOR BLOCK	**167**
010	491854-0000	-		1	PIPE WATER	
020	979486-0000	-		1	LUBRICATING PIPE	
060	469133-0000	-		1	PIPE	
070	469132-0000	-		1	PIPE	
075	469131-0000	-		2	LACE	
090	271622-0000	-		1	LACE	
100	271623-0000	-		1	LACE	
120	295986-0000	-		1	HOLDER	
130	456407-0000	-		1	LACE	
140	491390-0000	-		1	PIPE CENTRAL LUBRICATION	
150	491859-0000	-		1	HOLDER	
160	491860-0000	-		1	HOLDER	
310	90028-0001	-		5	CONE 5/32"	
320	90028-0020	-		22	CONE TUBE 2,5MM	
330	90028-0021	-		5	CONE TUBE 4 MM	
340	90030-0051	-		1	CONN. STR., 6-R1/8, EXT. THREAD	
345	90030-0098	-		8	ACCESSORIES, FERRULE 8	
347	90136-0002	-		2	PLUG 5/16"24	
350	90030-0162	-		3	CONN. STR. 6-M10X1, EXT. THREAD	
352	342703-0208	-		8	NUT, PIPES & CONNECTORS,NUT M-8 SS	
355	90030-0200	-		2	CONN. ELBOW, 6-M10X1, EXT.THREAD	
360	90032-0014	-		1	DISTR. BLOCK & DIST.5/16-24UNF X6	
370	90032-0026	-		1	DISTR. BLOCK, 5/16-24UNF X2	
390	90032-0030	-		1	DISTR. BLOCK, 5/16-24UNF X3	
391	90032-0031	-		1	DISTR. BLOCK, 5/16-24UNF X5	
400	90032-0038	-		1	BLOCK 2 WAYS	
410	90032-0039	-		5	BLOCK 4 WAYS	
420	90090-0008	-		2	BALL, D=7,1 MM	
430	90092-0052	-		10	METERING VALVE 10 MM3	
440	90092-0053	-		12	METERING VALVE 30 MM3	
450	90134-0003	B		5	BUSHING	
470	90134-0030	-		2	SLEEVE FOR PLASTIC TUBE	
480	90134-0031	-		6	SLEEVE FOR PLASTIC TUBE	
490	B90134-0034	-		11	NIPPLE	
	90030-0101	-		*1*	*TAPER*	
500	90134-0038	-		7	BUSHING/NUT INLET/OUTLET 4 MM	
510	90134-0039	-		22	BUSHING VALVE CONNECTION 2,5 MM	
534	90148-0037	-		2	HOSE	
536	90148-0038	-		2	HOSE	
540	90151-0001	-	MM	2200	BRASS PIPE DI=2,6 MM	
550	90266-0019	-	MM	7000	PIPE	
560	90165-0002	-		2	CLIP	
590	90165-0022	-		2	PIPE CLIP, FOR TUBE D=2,5 MM, B-3570	
600	90165-0023	-		2	CLIP	
605	90165-0039	-		1	PIPE CLAMP, RSGU 1.15/12, D=15 MM	
610	90166-0108	-	MM	2100	TUBE 6 MM PA,TRANSP.	
620	90166-0109	-	MM	1080	TUBE 4 MM PA,TRANSP.	
630	90166-0118	-	M	13	TUBE 8 MM PA BLACK	
640	90166-0081	-	MM	840	TUBE 6 MM PA BLUE	
650	90266-0006	-	MM	3400	TUBE	
660	312101-0337	-		2	SCREW M6S M5X35 FZB	
790	312115-0289	-		2	SCREW ISO4762 M4X10 A4	
800	312105-0295	-		8	SCREW M6S ISO4017 M4X20 A480	
805	312121-0289	-		1	SCREW SLOT.PAN HD. MCS 4X10 FZB	
810	312105-0297	-		10	SCREW M6S ISO 4017 M4X25 A480	
820	312105-0372	-		2	SCREW M6S ISO 4017 M6X25 A480	
840	312125-0287	-		6	SCREW PAN HEAD MCS M4X8 SS	
845	312125-0323	-		1	SCREW PAN HEAD MCS M5X8 SS	
854	315101-0146	-		2	WASHER PLAIN, BRB, 5,3/10 H=1	
860	315234-0109	-		1	WASHER,PL.RND.CU.10,3/13,5 H=1,0	
865	342727-0102	-		1	CONN. PIPE G-6-LFZB	
867	90165-0065	-		1	PIPE CLAMP, RSGU 1.8/9, D=8 MM	
868	342716-0203	-		1	REDUCER 6-8	
869	342748-0103	-		1	T-CONNECTION 8MM	
870	342767-0100	-		1	CONN. BULKHEAD G1/8	
880	342797-0121	-		1	CONN. BANJO, RINGPIECE 6-1/8	
890	342980-0303	-		1	BANJO-HOLLOW BOLT COUPL,EXT.THR.01-G1/8"	
900	352113-0101	-		10	CLIP STRIP, 92X2,5 MM	
910	359000-0400	-		5	MARKING CO2/4"0"	
920	359000-0401	-		3	MARKING COLLAR 2/4 "1" YELLOW	
930	359000-0402	-		2	MARKING COLLAR 2/4 "2" YELLOW	
940	359000-0403	-		1	MARKING COLLAR PA2/4 "3" YELLOW	
951	359000-0405	-		2	MARKING CO2/4"5"	
952	359000-0406	-		2	MARKING COLLAR PA2/4 "6" YELLOW	
965	359000-0407	-		4	MARKING COLLAR PA2/4 "7" YELLOW	
990	359000-0771	-		8	MARKING CO2/4"V"	

Machine Type | Group Description | Used-In | Group Number | Page No

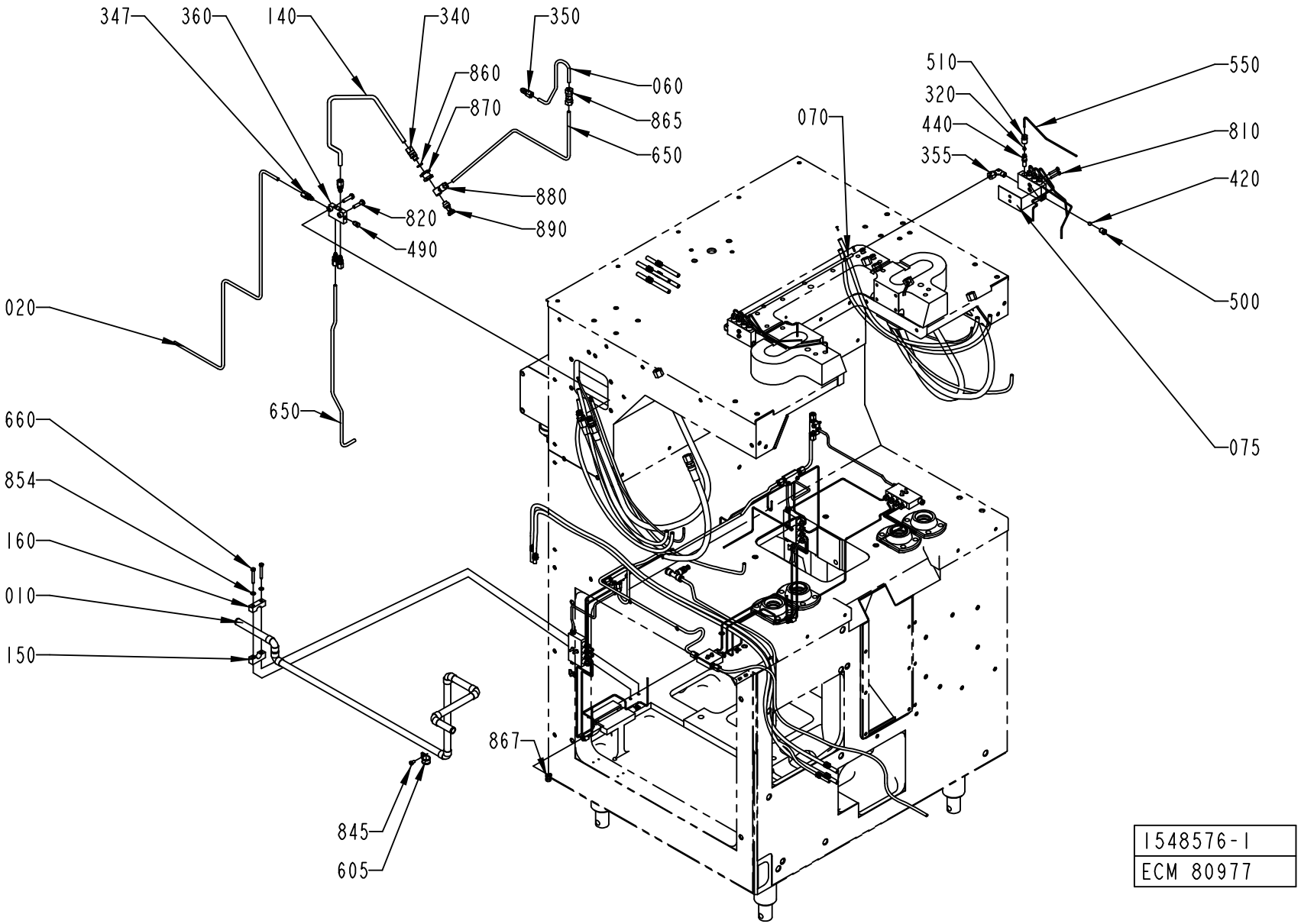
347
360
140
340
350
860
870
060
865
650
880
890
820
490
020
650
660
854
160
010
150
867
845
605
510
320
440
355
070
550
810
420
500
075
1548576-1
ECM 80977

ECM: 115744 - 20020930
Group number: 1548576-0100
Assembly Drawing: 1548576-1_2_AA

This list covers pages from 158 to 163

Pos	Part No	SP	UN	Qty	Description	Page No
-						
002	A271261-0700	-		1	CLEANING SYSTEM	**165**
005	A1523829-0100	-		1	DISTRIBUTOR BLOCK	**167**
010	491854-0000	-		1	PIPE WATER	
020	979486-0000	-		1	LUBRICATING PIPE	
060	469133-0000	-		1	PIPE	
070	469132-0000	-		1	PIPE	
075	469131-0000	-		2	LACE	
090	271622-0000	-		1	LACE	
100	271623-0000	-		1	LACE	
120	295986-0000	-		1	HOLDER	
130	456407-0000	-		1	LACE	
140	491390-0000	-		1	PIPE CENTRAL LUBRICATION	
150	491859-0000	-		1	HOLDER	
160	491860-0000	-		1	HOLDER	
310	90028-0001	-		5	CONE 5/32"	
320	90028-0020	-		22	CONE TUBE 2,5MM	
330	90028-0021	-		5	CONE TUBE 4 MM	
340	90030-0051	-		1	CONN. STR., 6-R1/8, EXT. THREAD	
345	90030-0098	-		8	ACCESSORIES, FERRULE 8	
347	90136-0002	-		2	PLUG 5/16"24	
350	90030-0162	-		3	CONN. STR. 6-M10X1, EXT. THREAD	
352	342703-0208	-		8	NUT, PIPES & CONNECTORS,NUT M-8 SS	
355	90030-0200	-		2	CONN. ELBOW, 6-M10X1, EXT.THREAD	
360	90032-0014	-		1	DISTR. BLOCK & DIST.5/16-24UNF X6	
370	90032-0026	-		1	DISTR. BLOCK, 5/16-24UNF X2	
390	90032-0030	-		1	DISTR. BLOCK, 5/16-24UNF X3	
391	90032-0031	-		1	DISTR. BLOCK, 5/16-24UNF X5	
400	90032-0038	-		1	BLOCK 2 WAYS	
410	90032-0039	-		5	BLOCK 4 WAYS	
420	90090-0008	-		2	BALL, D=7,1 MM	
430	90092-0052	-		10	METERING VALVE 10 MM3	
440	90092-0053	-		12	METERING VALVE 30 MM3	
450	90134-0003	B		5	BUSHING	
470	90134-0030	-		2	SLEEVE FOR PLASTIC TUBE	
480	90134-0031	-		6	SLEEVE FOR PLASTIC TUBE	
490	B90134-0034	-		11	NIPPLE	
	90030-0101	-		*1*	*TAPER*	
500	90134-0038	-		7	BUSHING/NUT INLET/OUTLET 4 MM	
510	90134-0039	-		22	BUSHING VALVE CONNECTION 2,5 MM	
534	90148-0037	-		2	HOSE	
536	90148-0038	-		2	HOSE	
540	90151-0001	-	MM	2200	BRASS PIPE DI=2,6 MM	
550	90266-0019	-	MM	7000	PIPE	
560	90165-0002	-		2	CLIP	
590	90165-0022	-		2	PIPE CLIP, FOR TUBE D=2,5 MM, B-3570	
600	90165-0023	-		2	CLIP	
605	90165-0039	-		1	PIPE CLAMP, RSGU 1.15/12, D=15 MM	
610	90166-0108	-	MM	2100	TUBE 6 MM PA,TRANSP.	
620	90166-0109	-	MM	1080	TUBE 4 MM PA,TRANSP.	
630	90166-0118	-	M	13	TUBE 8 MM PA BLACK	
640	90166-0081	-	MM	840	TUBE 6 MM PA BLUE	
650	90266-0006	-	MM	3400	TUBE	
660	312101-0337	-		2	SCREW M6S M5X35 FZB	
790	312115-0289	-		2	SCREW ISO4762 M4X10 A4	
800	312105-0295	-		8	SCREW M6S ISO4017 M4X20 A480	
805	312121-0289	-		1	SCREW SLOT.PAN HD. MCS 4X10 FZB	
810	312105-0297	-		10	SCREW M6S ISO 4017 M4X25 A480	
820	312105-0372	-		2	SCREW M6S ISO 4017 M6X25 A480	
840	312125-0287	-		6	SCREW PAN HEAD MCS M4X8 SS	
845	312125-0323	-		1	SCREW PAN HEAD MCS M5X8 SS	
854	315101-0146	-		2	WASHER PLAIN, BRB, 5,3/10 H=1	
860	315234-0109	-		1	WASHER,PL.RND.CU.10,3/13,5 H=1,0	
865	342727-0102	-		1	CONN. PIPE G-6-LFZB	
867	90165-0065	-		1	PIPE CLAMP, RSGU 1.8/9, D=8 MM	
868	342716-0203	-		1	REDUCER 6-8	
869	342748-0103	-		1	T-CONNECTION 8MM	
870	342767-0100	-		1	CONN. BULKHEAD G1/8	
880	342797-0121	-		1	CONN. BANJO, RINGPIECE 6-1/8	
890	342980-0303	-		1	BANJO-HOLLOW BOLT COUPL,EXT.THR.01-G1/8"	
900	352113-0101	-		10	CLIP STRIP, 92X2,5 MM	
910	359000-0400	-		5	MARKING CO2/4"0"	
920	359000-0401	-		3	MARKING COLLAR 2/4 "1" YELLOW	
930	359000-0402	-		2	MARKING COLLAR 2/4 "2" YELLOW	
940	359000-0403	-		1	MARKING COLLAR PA2/4 "3" YELLOW	
951	359000-0405	-		2	MARKING CO2/4"5"	
952	359000-0406	-		2	MARKING COLLAR PA2/4 "6" YELLOW	
965	359000-0407	-		4	MARKING COLLAR PA2/4 "7" YELLOW	
990	359000-0771	-		8	MARKING CO2/4"V"	

Machine Type | Group Description | Used-In | Group Number | Page No

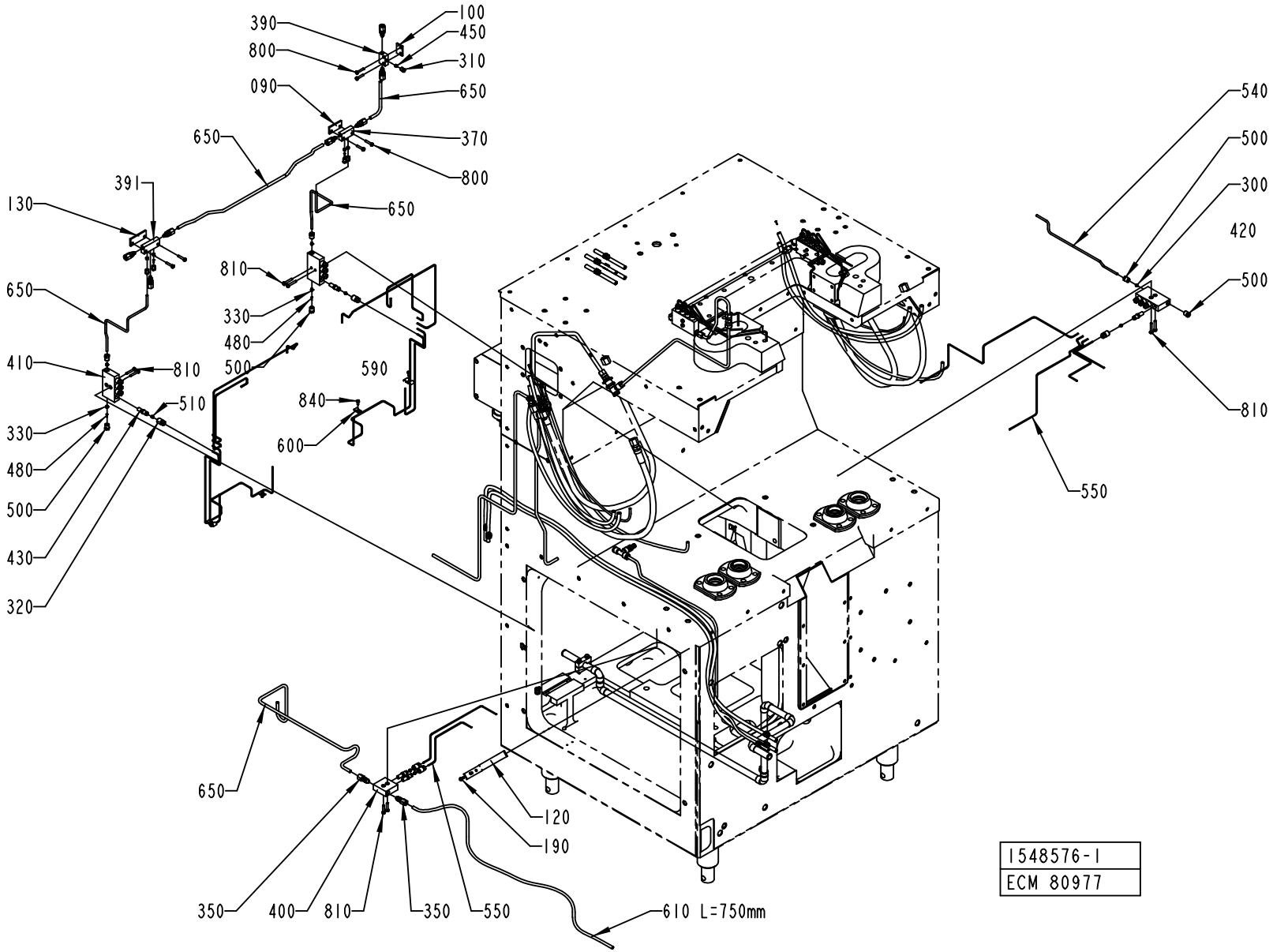
390
800
090
650
650
391
130
650
410
810
330
480
500
430
320
100
450
310
650
370
800
650
810
330
480
500
590
840
600
510
540
500
300
420
500
810
550
650
350
400
810
350
550
120
190
610 L=750mm
1548576-1
ECM 80977

ECM: 115744 - 20020930
Group number: 1548576-0100
Assembly Drawing: 1548576-1_3_AA

This list covers pages from 158 to 163

Pos	Part No	SP	UN	Qty	Description	Page No
-						
002	A271261-0700	-		1	CLEANING SYSTEM	**165**
005	A1523829-0100	-		1	DISTRIBUTOR BLOCK	**167**
010	491854-0000	-		1	PIPE WATER	
020	979486-0000	-		1	LUBRICATING PIPE	
060	469133-0000	-		1	PIPE	
070	469132-0000	-		1	PIPE	
075	469131-0000	-		2	LACE	
090	271622-0000	-		1	LACE	
100	271623-0000	-		1	LACE	
120	295986-0000	-		1	HOLDER	
130	456407-0000	-		1	LACE	
140	491390-0000	-		1	PIPE CENTRAL LUBRICATION	
150	491859-0000	-		1	HOLDER	
160	491860-0000	-		1	HOLDER	
310	90028-0001	-		5	CONE 5/32"	
320	90028-0020	-		22	CONE TUBE 2,5MM	
330	90028-0021	-		5	CONE TUBE 4 MM	
340	90030-0051	-		1	CONN. STR., 6-R1/8, EXT. THREAD	
345	90030-0098	-		8	ACCESSORIES, FERRULE 8	
347	90136-0002	-		2	PLUG 5/16"24	
350	90030-0162	-		3	CONN. STR. 6-M10X1, EXT. THREAD	
352	342703-0208	-		8	NUT, PIPES & CONNECTORS,NUT M-8 SS	
355	90030-0200	-		2	CONN. ELBOW, 6-M10X1, EXT.THREAD	
360	90032-0014	-		1	DISTR. BLOCK & DIST.5/16-24UNF X6	
370	90032-0026	-		1	DISTR. BLOCK, 5/16-24UNF X2	
390	90032-0030	-		1	DISTR. BLOCK, 5/16-24UNF X3	
391	90032-0031	-		1	DISTR. BLOCK, 5/16-24UNF X5	
400	90032-0038	-		1	BLOCK 2 WAYS	
410	90032-0039	-		5	BLOCK 4 WAYS	
420	90090-0008	-		2	BALL, D=7,1 MM	
430	90092-0052	-		10	METERING VALVE 10 MM3	
440	90092-0053	-		12	METERING VALVE 30 MM3	
450	90134-0003	B		5	BUSHING	
470	90134-0030	-		2	SLEEVE FOR PLASTIC TUBE	
480	90134-0031	-		6	SLEEVE FOR PLASTIC TUBE	
490	B90134-0034	-		11	NIPPLE	
	90030-0101	-		*1*	*TAPER*	
500	90134-0038	-		7	BUSHING/NUT INLET/OUTLET 4 MM	
510	90134-0039	-		22	BUSHING VALVE CONNECTION 2,5 MM	
534	90148-0037	-		2	HOSE	
536	90148-0038	-		2	HOSE	
540	90151-0001	-	MM	2200	BRASS PIPE DI=2,6 MM	
550	90266-0019	-	MM	7000	PIPE	
560	90165-0002	-		2	CLIP	
590	90165-0022	-		2	PIPE CLIP, FOR TUBE D=2,5 MM, B-3570	
600	90165-0023	-		2	CLIP	
605	90165-0039	-		1	PIPE CLAMP, RSGU 1.15/12, D=15 MM	
610	90166-0108	-	MM	2100	TUBE 6 MM PA,TRANSP.	
620	90166-0109	-	MM	1080	TUBE 4 MM PA,TRANSP.	
630	90166-0118	-	M	13	TUBE 8 MM PA BLACK	
640	90166-0081	-	MM	840	TUBE 6 MM PA BLUE	
650	90266-0006	-	MM	3400	TUBE	
660	312101-0337	-		2	SCREW M6S M5X35 FZB	
790	312115-0289	-		2	SCREW ISO4762 M4X10 A4	
800	312105-0295	-		8	SCREW M6S ISO4017 M4X20 A480	
805	312121-0289	-		1	SCREW SLOT.PAN HD. MCS 4X10 FZB	
810	312105-0297	-		10	SCREW M6S ISO 4017 M4X25 A480	
820	312105-0372	-		2	SCREW M6S ISO 4017 M6X25 A480	
840	312125-0287	-		6	SCREW PAN HEAD MCS M4X8 SS	
845	312125-0323	-		1	SCREW PAN HEAD MCS M5X8 SS	
854	315101-0146	-		2	WASHER PLAIN, BRB, 5,3/10 H=1	
860	315234-0109	-		1	WASHER,PL.RND.CU.10,3/13,5 H=1,0	
865	342727-0102	-		1	CONN. PIPE G-6-LFZB	
867	90165-0065	-		1	PIPE CLAMP, RSGU 1.8/9, D=8 MM	
868	342716-0203	-		1	REDUCER 6-8	
869	342748-0103	-		1	T-CONNECTION 8MM	
870	342767-0100	-		1	CONN. BULKHEAD G1/8	
880	342797-0121	-		1	CONN. BANJO, RINGPIECE 6-1/8	
890	342980-0303	-		1	BANJO-HOLLOW BOLT COUPL,EXT.THR.01-G1/8"	
900	352113-0101	-		10	CLIP STRIP, 92X2,5 MM	
910	359000-0400	-		5	MARKING CO2/4"0"	
920	359000-0401	-		3	MARKING COLLAR 2/4 "1" YELLOW	
930	359000-0402	-		2	MARKING COLLAR 2/4 "2" YELLOW	
940	359000-0403	-		1	MARKING COLLAR PA2/4 "3" YELLOW	
951	359000-0405	-		2	MARKING CO2/4"5"	
952	359000-0406	-		2	MARKING COLLAR PA2/4 "6" YELLOW	
965	359000-0407	-		4	MARKING COLLAR PA2/4 "7" YELLOW	
990	359000-0771	-		8	MARKING CO2/4"V"	

Machine Type | Group Description | Used-In | Group Number | Page No

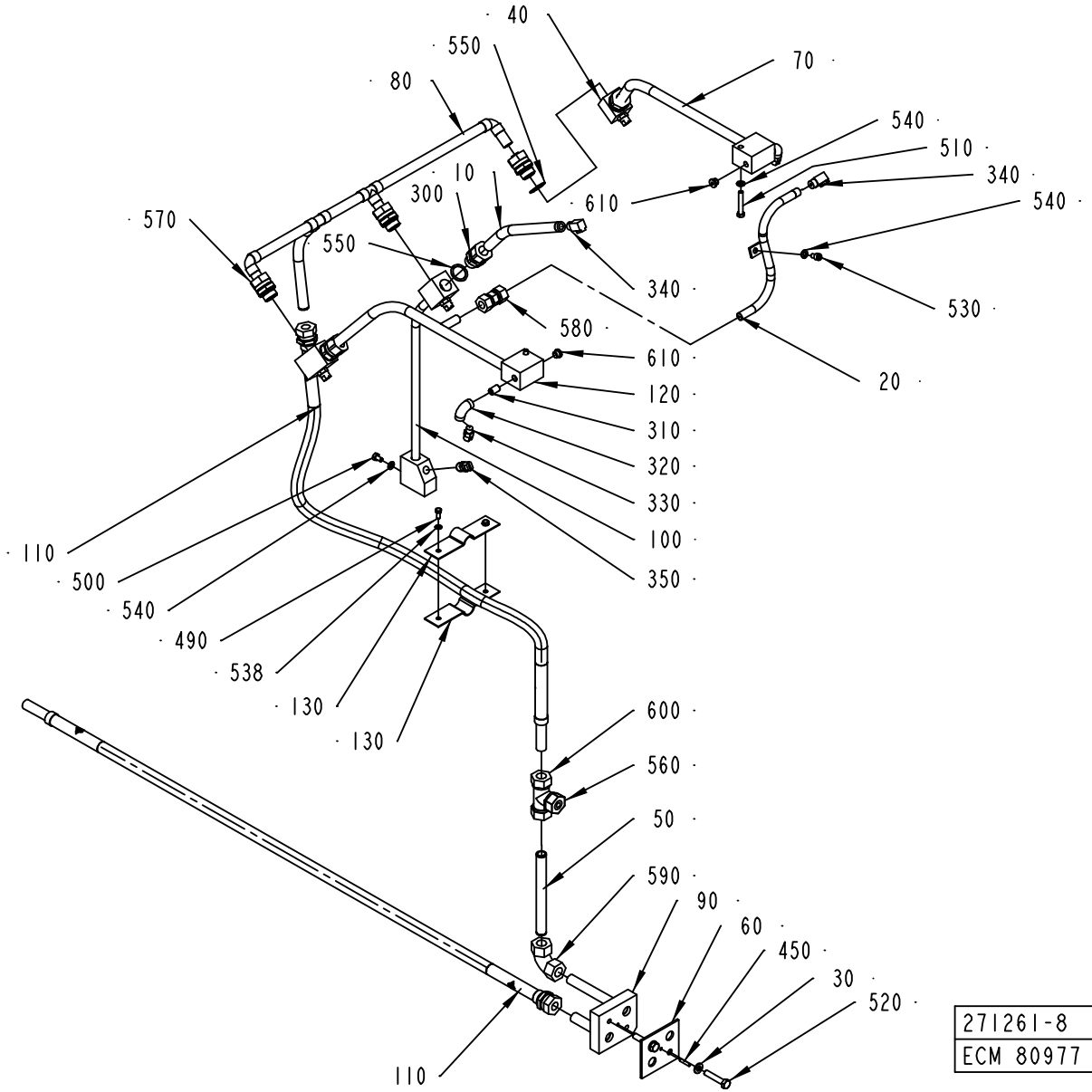
40
550
80
70
540
510
340
540
10
300
610
570
550
340
530
580
610
20
120
310
320
330
100
350
110
500
540
490
538
130
130
600
560
50
590
90
60
450
30
520
110
271261-8
ECM 80977

ECM: 115732 - 20020930
Group number: 271261-0700
Assembly Drawing: 271261-8_1_AA

Pos	Part No	SP	UN	Qty	Description	Page No
TBA 0125S, TBA 0100B						
010	271121-0000	-		1	FORCE SPRING	
020	456129-0001	-		1	FORCE SPRING	
TBA 0330S, TBA 0300S, TBA 0180B, TBA 0160S, TBA 0200B, TBA 0250S, TBA 0284B, TBA 0200S, TBA 0200M, TBA 0250B						
010	295985-0000	-		1	FORCE SPRING	
020	456129-0002	-		1	FORCE SPRING	
Common Parts						
030	18542-0000	-		2	WASHER	
040	257190-0000	-		2	SEPARATION BLOCK	
050	272679-0000	-		1	PIPE	
060	295417-0000	-		1	GASKET	
070	295785-0000	-		1	FORCE SPRING	
080	295978-0000	-		1	PIPE	
090	578091-0000	-		1	BRANCH PIPE	
100	441665-0000	-		1	FORCE SPRING	
110	469146-0000	-		2	HOSE	
120	456128-0000	-		1	FORCE SPRING	
130	2516972-0000	-		2	HOSE HOLDER	
300	90030-0151	-		3	CONN. STR.,15-R1/2, EXT. THREAD	
310	90330-0097	-		2	NIPPLES, EXT. THREAD, G1/8	
320	90330-0099	-		2	ELBOW, 90 INT. THREAD, R-222R1/8	
330	90424-0032	B		2	SPRAY NOZZLE 95 DEG	
340	90424-0033	B		2	SPRAY NOZZLE 76 DEG	
350	90424-0035	B		4	SPRAY NOZZLE 95 DEG	
450	311103-0272	-		1	PARALLELL PIN, M6, 4X20 MM	
490	312105-0327	-		2	SCREW M6S ISO 4017 M5X12 A480	
500	312105-0364	-		1	SCREW M6S ISO 4017 M6X10 A480	
510	312105-0378	-		2	SCREW M6S ISO 4014 M6X40 A480	
520	312105-0459	-		2	SCREW M6S ISO 4014 M8X40 A480	
530	312115-0364	-		1	SCREW ISO4762 M6X10 A4	
538	315105-0146	-		2	WASHER ISO 7089-5-200 HV-A4	
540	315105-0153	-		4	WASHER ISO 7089-6-200 HV-A4	
550	315233-0113	-		6	WASHER PL.RND.NYL.21,4/27,H=1,2	
560	342710-0115	-		1	REDUCTION RBM 16/8	
570	342720-0114	-		3	CONN. STR. GA-15-G1/2	
580	342726-0109	-		1	CONN. PIPE G-12	
590	342736-0114	-		1	CONN. ELBOW W-15	
600	342746-0114	-		1	CONN. T-PIPE T-15	
610	342713-0209	-		2	PLUG, EXT THREAD HEX SOCKET 8638-00-180	

Pos	Part No	SP	UN	Qty	Description	Page No

Machine Type | Group Description | Used-In | Group Number | Page No

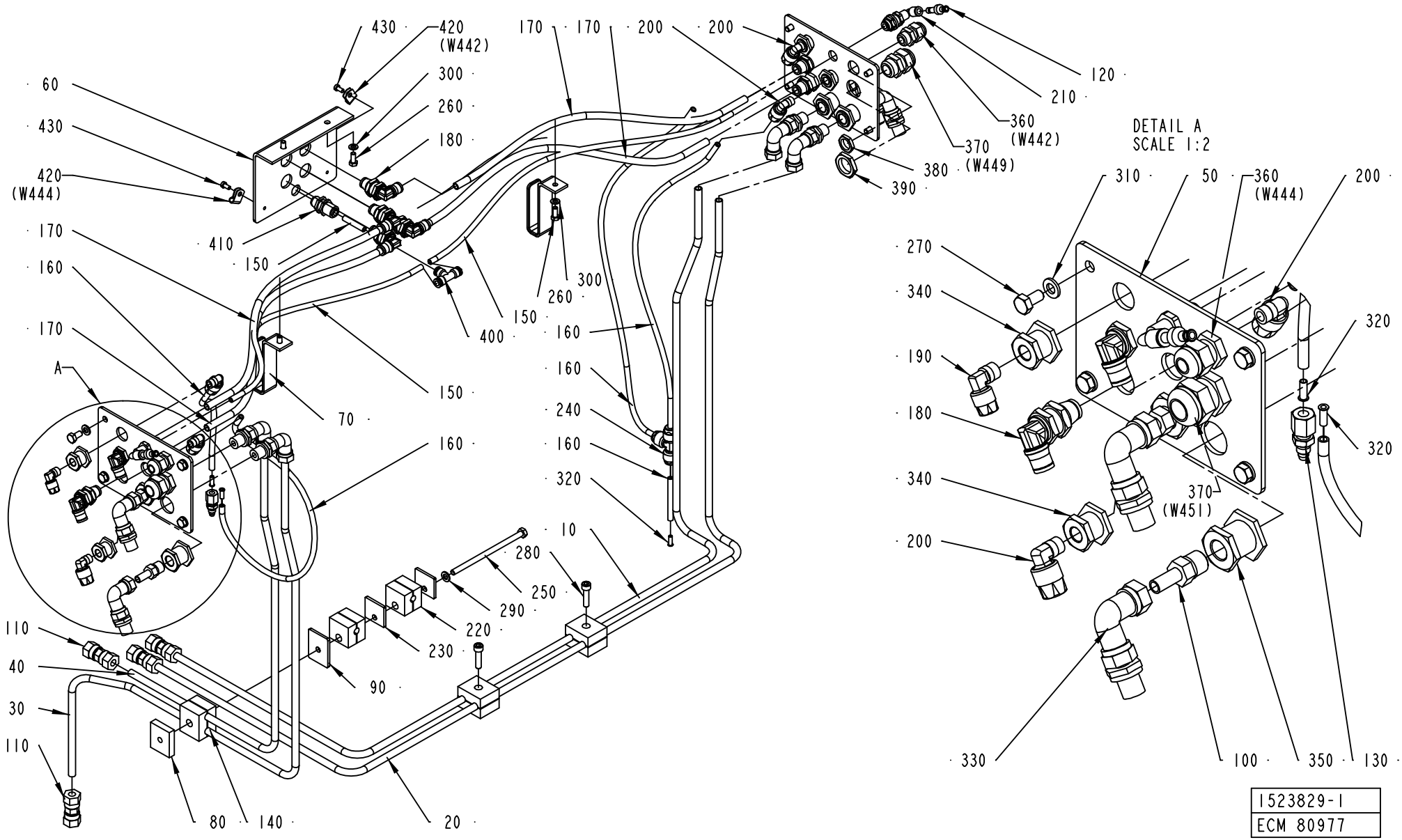
430
420 (W442)
170
170
200
200
120
210
60
430
420 (W444)
300
260
180
360 (W442)
370
380 (W449)
390
DETAIL A
SCALE 1:2
310
50
360 (W444)
200
270
340
190
180
340
200
320
320
370 (W451)
330
100
350
130
410
150
170
160
170
A
400
150
300
260
160
160
240
160
320
10
280
250
290
220
230
90
150
70
160
110
40
30
110
80
140
20
1523829-1
ECM 80977

ECM: 115735 - 20020930
Group number: 1523829-0100
Assembly Drawing: 1523829-1_1_AA

Pos	Part No	SP	UN	Qty	Description	Page No
-						
010	1523433-0000	-		1	PIPE	
020	1523434-0000	-		1	PIPE	
030	1523431-0000	-		1	PIPE	
040	1523432-0000	-		1	PIPE	
050	1523383-0000	-		2	CONNECTION PLATE	
060	1523384-0000	-		1	CONNECTION PLATE	
070	1523832-0000	-		2	HOSE HOLDER	
080	1523886-0000	-		1	SPACER PLATE	
090	1523887-0000	-		1	SPACER PLATE	
100	90030-0065	-		4	PIPE CONNECTION	
110	90030-0091	-		4	CONN. PIPE G-8	
120	342716-0202	-		2	REDUCER 4-6	
130	B90134-0034	B		1	NIPPLE	
	90030-0101	*-*		*1*	*TAPER*	
140	90165-0099	-		3	PIPE CLAMP, DOUBLE, RBP-108, D=8 MM	
150	90166-0081	-	M	3	TUBE 6 MM PA BLUE	
160	90166-0108	-	M	2	TUBE 6 MM PA,TRANSP.	
170	90166-0118	-	M	2	TUBE 8 MM PA BLACK	
180	90457-0178	B		8	EQUAL BULKHEAD ELBOW CONNECTOR 36390800	
190	90457-0179	-		2	ELBOW COUPLING 6179 04 10	
200	90457-0180	-		6	ELBOW COUPLING 6179 06 10	
210	90457-0181	-		2	EQUAL BULKHEAD ELBOW CONNECTOR 31390600	
220	B90457-0182	-		2	PIPE CLAMP, D=8 MM, RAPOD8X	
	90457-0183	*-*		*1*	*COVER PLATE DPA0X, FOR 90457-0182*	
230	90457-0183	-		2	COVER PLATE DPA0X, FOR 90457-0182	
240	90457-0184	-		1	T-CONNECTION 6 MM 6104 06 00	
250	312101-0392	-		1	SCREW M6S M6X110 FZB	
260	312105-0327	-		4	SCREW M6S ISO 4017 M5X12 A480	
270	312105-0366	-		8	SCREW M6S M6X12 A280	
280	312115-0372	-		2	SCREW ISO4762 M6X25 A4	
290	315101-0153	-		1	WASHER PLAIN, BRB, 6,4/12 H=1,5	
300	315105-0146	-		4	WASHER ISO 7089-5-200 HV-A4	
310	315105-0153	-		8	WASHER ISO 7089-6-200 HV-A4	
320	342706-0130	A		3	ACCESSORIES, INSERT SLEEVE 6 MM	
330	342738-0208	-		8	ADJUSTABLE ELBOW CONNECTION,EXT 8-G1/4	
340	342767-0100	-		4	CONN. BULKHEAD G1/8	
350	342767-0104	-		4	CONN. BULKHEAD G1/4	
360	352103-0101	-		2	KABELFöRSKR. ST 9, PR15,2/PG9	
370	352103-0108	-		2	CABLE GLAND, ST 13,5 , PR20,4/PG13,5	
380	90099-0001	-		2	MUTTER PR 15,2 MäSSING	
390	90099-0087	-		2	NUT PR=20,4	
400	342748-0102	-		1	T-CONNECTION 6MM	
410	342768-0102	-		1	BULKHEAD CONNECTOR, 6 MM	
420	90458-1489	-		2	CABLE CLIPS, D=4,75 MM	
430	312125-0287	-		2	SCREW PAN HEAD MCS M4X8 SS	

Machine Type | Group Description | Used-In | Group Number | Page No

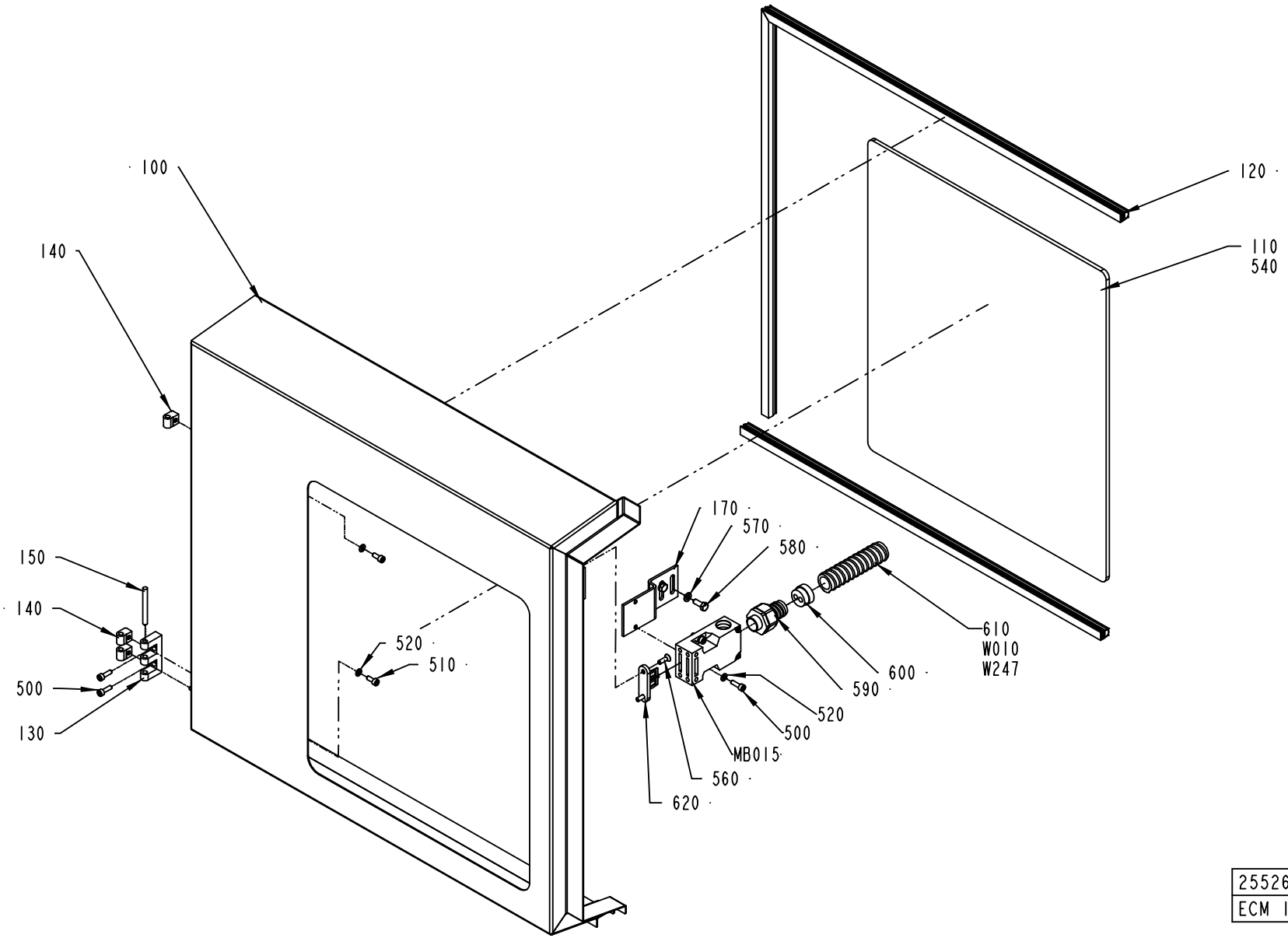

2552694-1
ECM 110911

ECM: 110918 - 20030113
Group number: 2552694-0100
Assembly Drawing: 2552694-1_1_AA

Pos	Part No	SP	UN	Qty	Description	Page No
-						
100	2552693-0000	-		1	DOOR	
110	2553350-0000	-		1	GLASS	
120	90143-0068	B	M	2	RUBBERSTRIP EMKA 1011-06	
130	1035792-0000	-		1	E-HINGE	
140	1035794-0000	-		3	BLOCKING PIECE	
150	988685-0000	-		1	PIN	
170	1511437-0000	-		1	BRACKET	
500	312115-0329	-		4	SCREW ISO4762 M5X16 A4	
510	312115-0327	-		3	SCREW ISO4762 M5X12 A4	
520	315105-0146	-		5	WASHER ISO 7089-5-200 HV-A4	
540	90157-0041	-		1	SEALING COMPOUND	
560	312155-0329	-		2	SCREW EN 10642 MF6S M5X16 A480	
570	315105-0153	-		2	WASHER ISO 7089-6-200 HV-A4	
580	312105-0368	-		2	SCREW M6S M6X16 A280	
590	90458-0430	-		1	EXTENDED WITHOUT INSERT, M20X1,5	
600	90457-0147	-		1	GLAND, INSERT, MULTI HOLE, 2X7	
610	90152-0051	-	M	1	SPIRAL CONDUIT, 25X18, UL 1816	
620	90044-0310	-		1	KEY FOR SAFETY SWITCH, AZ 15/16 B1	
MB015	90459-0472	A		1	KEY SAF.SW. AZ 16 02ZVRK-M20-2152-2254	
W010	351150-0431	-	M	1	CABLE OLFLEX 2X0,75 MM2 LIGHT/GREY	
W247	351150-0431	-	M	6	CABLE OLFLEX 2X0,75 MM2 LIGHT/GREY	

Pos	Part No	SP	UN	Qty	Description	Page No

Machine Type | Group Description | Used-In | Group Number | Page No

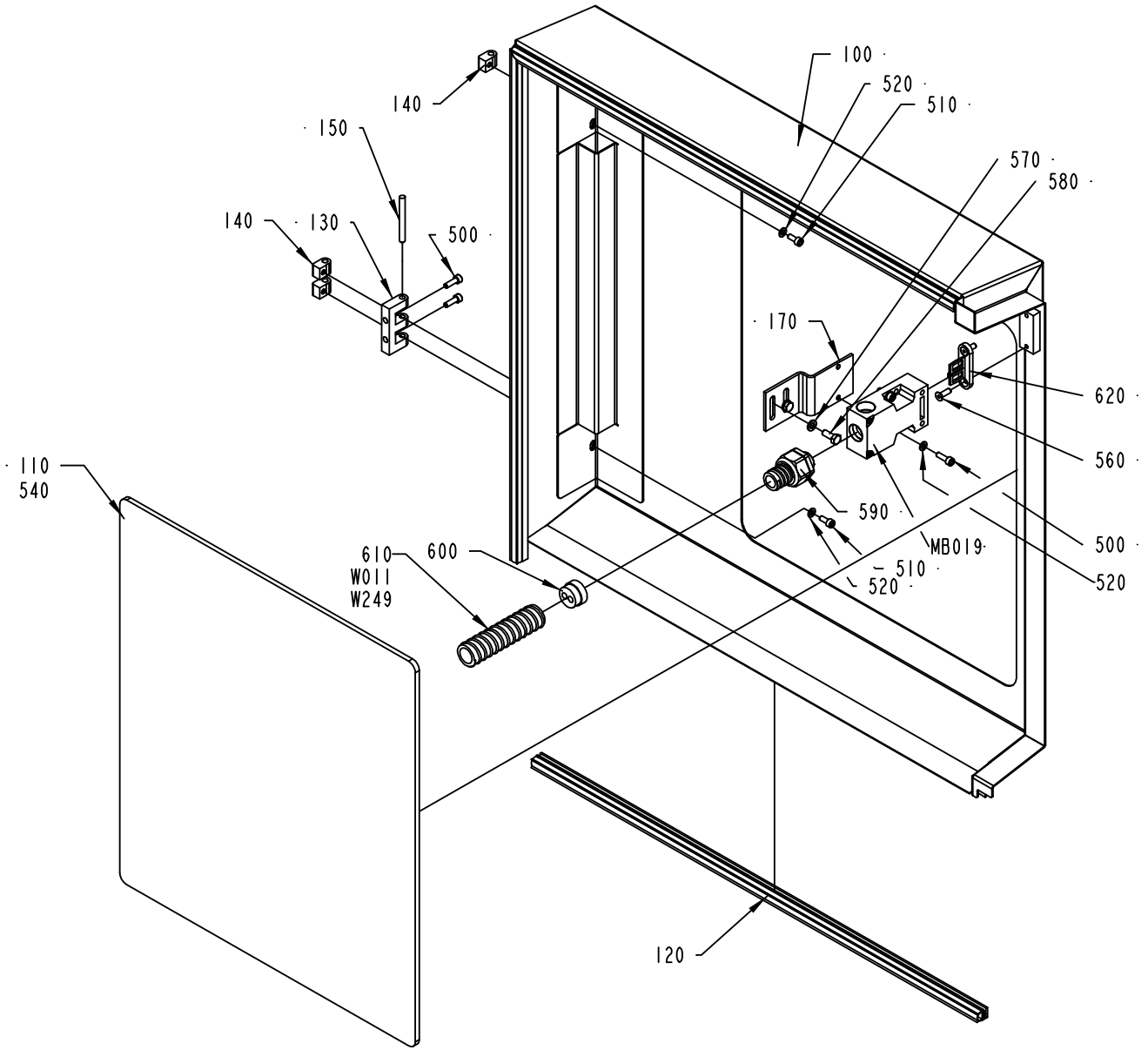

2552695-1
ECM 110911

ECM: 110919 - 20030113
Group number: 2552695-0100
Assembly Drawing: 2552695-1_1_AA

Pos	Part No	SP	UN	Qty	Description	Page No
-						
100	2552696-0000	-		1	DOOR	
110	2553350-0000	-		1	GLASS	
120	90143-0068	B	M	2	RUBBERSTRIP EMKA 1011-06	
130	1035792-0000	-		1	E-HINGE	
140	1035794-0000	-		3	BLOCKING PIECE	
150	988685-0000	-		1	PIN	
170	1511437-0000	-		1	BRACKET	
500	312115-0329	-		4	SCREW ISO4762 M5X16 A4	
510	312115-0327	-		3	SCREW ISO4762 M5X12 A4	
520	315105-0146	-		5	WASHER ISO 7089-5-200 HV-A4	
540	90157-0041	-		1	SEALING COMPOUND	
560	312155-0329	-		2	SCREW EN 10642 MF6S M5X16 A480	
570	315105-0153	-		2	WASHER ISO 7089-6-200 HV-A4	
580	312105-0368	-		2	SCREW M6S M6X16 A280	
590	90458-0430	-		1	EXTENDED WITHOUT INSERT, M20X1,5	
600	90457-0147	-		1	GLAND, INSERT, MULTI HOLE, 2X7	
610	90152-0051	-	M	1	SPIRAL CONDUIT, 25X18, UL 1816	
620	90044-0310	-		1	KEY FOR SAFETY SWITCH, AZ 15/16 B1	
MB019	90459-0472	A		1	KEY SAF.SW. AZ 16 02ZVRK-M20-2152-2254	
W011	351150-0431	-	M	1	CABLE OLFLEX 2X0,75 MM2 LIGHT/GREY	
W249	351150-0431	-	M	7	CABLE OLFLEX 2X0,75 MM2 LIGHT/GREY	

Pos	Part No	SP	UN	Qty	Description	Page No

Machine Type | Group Description | Used-In | Group Number | Page No

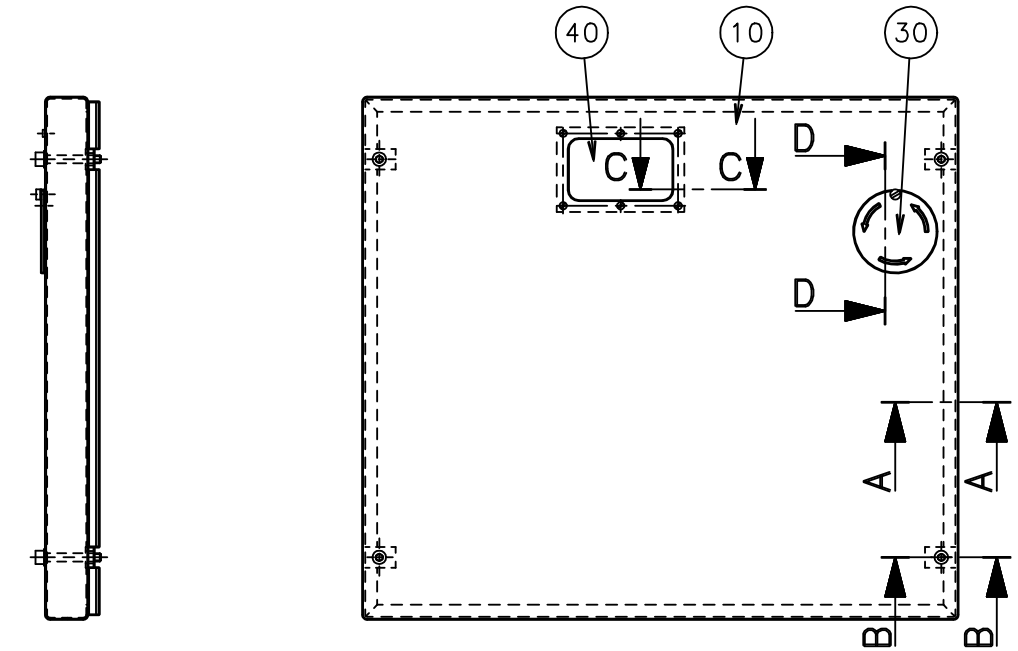

A-A
scale 1:2

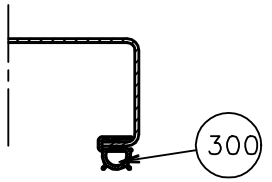

B-B
scale 1:2

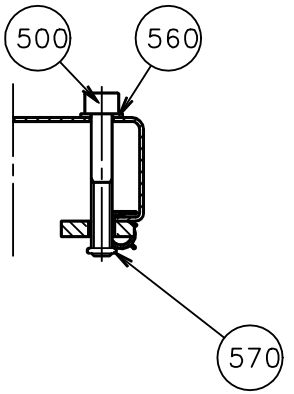

C-C
scale 1:1

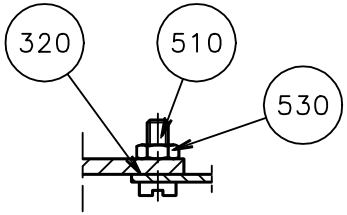

D-D
scale 1:1

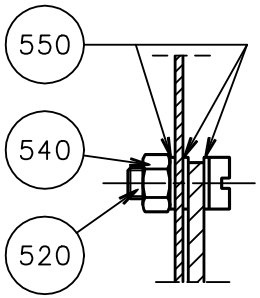

ECN 71482

ECM: 123414 - 20030120
Group number: 256665-0200
Assembly Drawing: 256665-4_1_AC

Pos	Part No	SP	UN	Qty	Description	Page No
-						
010	1279044-0000	-		1	HATCH	
030	469964-0000	-		1	LID	
040	257231-0000	-		1	WINDOW	
300	90143-0068	B	MM	2200	RUBBERSTRIP EMKA 1011-06	
320	90157-0022	-	L		SEALING COMPOUND	
500	312115-0463	-		4	SCREW ISO4762 M8X60 A4	
510	312125-0291	-		6	SCREW PAN HEAD MCS M4X12 SS	
520	312125-0329	-		1	SCREW PAN HEAD MCS M5X16 SS	
530	312605-0312	-		6	HEXAGON NUT, M6M M4 A280	
540	312810-0314	-		1	HEXAGON NUT, NY-LOCK M5 FZB	
550	315105-0146	-		3	WASHER ISO 7089-5-200 HV-A4	
560	315105-0165	-		4	WASHER ISO 7089-8-200 HV-A4	
570	315202-0105	B		4	O-RING 7,1X1,6 MM	

Pos	Part No	SP	UN	Qty	Description	Page No

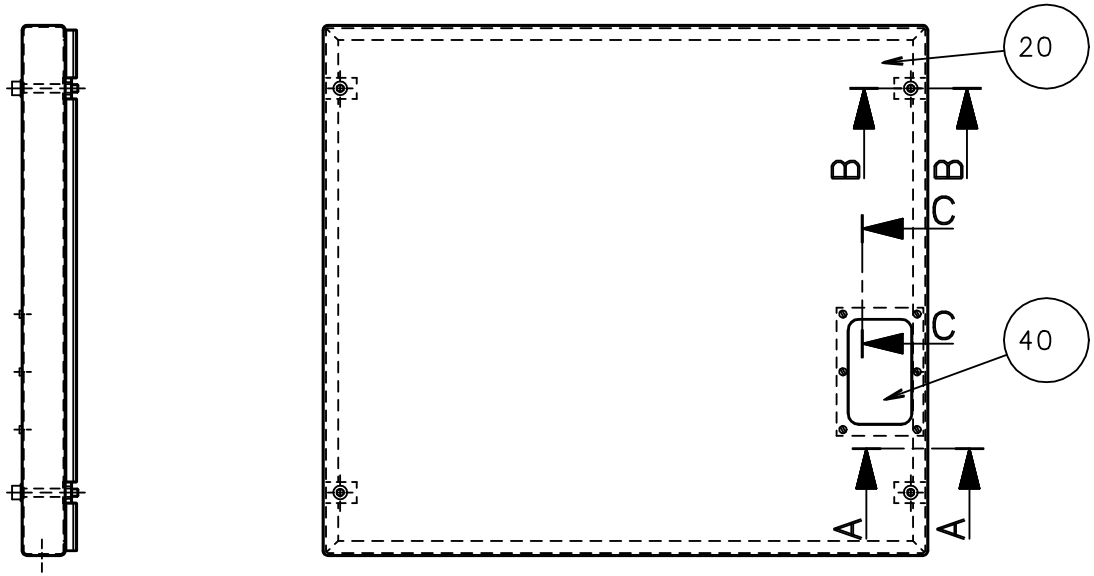

B–B
scale 1:2

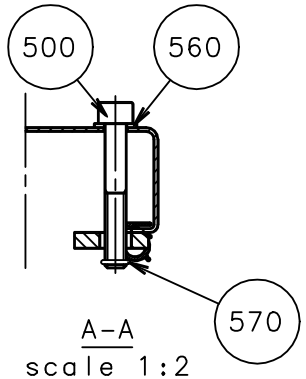

A–A
scale 1:2

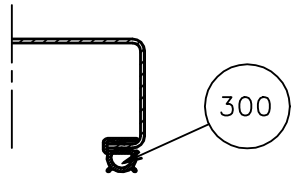

C–C
scale 2:1

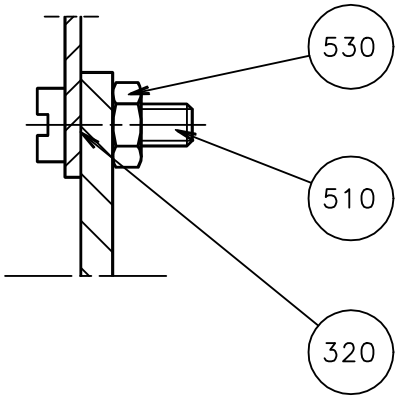

ECN 71730

ECM: 123444 - 20030120
Group number: 1296815-0100
Assembly Drawing: 1296815-1_1_AB

Pos	Part No	SP	UN	Qty	Description	Page No
-						
020	1279045-0000	-		1	HATCH	
040	257231-0000	-		1	WINDOW	
300	90143-0068	B	MM	2200	RUBBERSTRIP EMKA 1011-06	
320	90157-0022	-	L		SEALING COMPOUND	
500	312115-0463	-		4	SCREW ISO4762 M8X60 A4	
510	312125-0291	-		6	SCREW PAN HEAD MCS M4X12 SS	
530	312605-0312	-		6	HEXAGON NUT, M6M M4 A280	
560	315105-0165	-		4	WASHER ISO 7089-8-200 HV-A4	
570	315202-0105	B		4	O-RING 7,1X1,6 MM	

Pos	Part No	SP	UN	Qty	Description	Page No

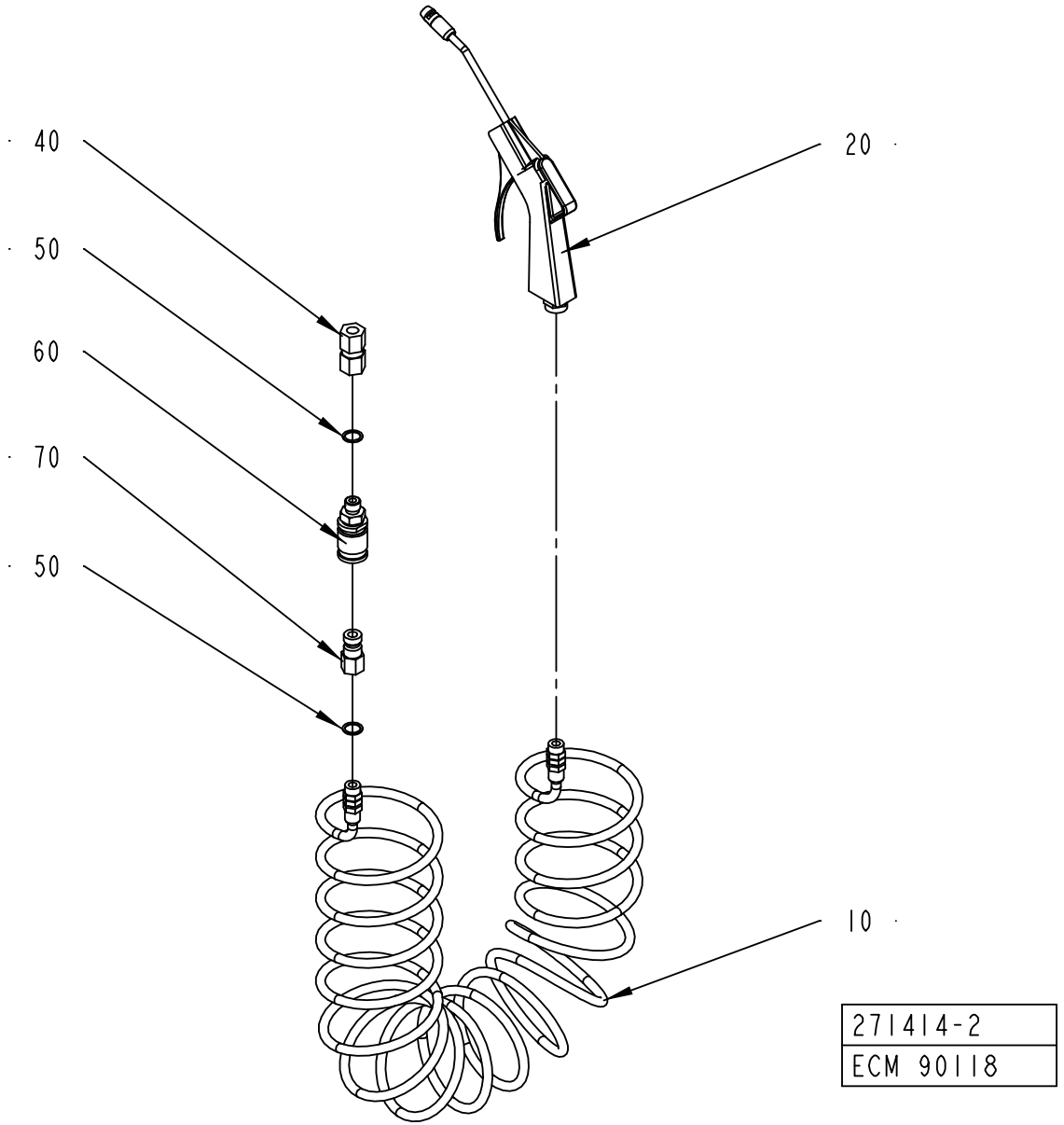
40
50
60
70
50
20
10
271414-2
ECM 90118

ECM: 115731 - 20020930
Group number: 271414-0300
Assembly Drawing: 271414-2_1_AA

Pos	Part No	SP	UN	Qty	Description	Page No
-						
010	90152-0016	B		1	HOSE (SPIRAL)	
020	90243-0061	B		1	AIR GUN, CEJN SERIE 204 ED: 90459-0173	
040	342725-0108	-		1	CONN. STR. PIPE GI-10-G1/4	
050	315233-0110	-		2	WASHER PL.RND.NYL.13,3/17,H=1	
060	B90163-0013	-		1	QUICK COUPLING, (F) LP 006-0-WR013-01-2	
	90163-0301	*-*		*1*	*GASKET VITON REPL.BY 90163-312*	
070	90163-0015	-		1	QUICK COUPLING, (M) LP-006-1-WR513	

Pos	Part No	SP	UN	Qty	Description	Page No

Machine Type | Group Description | Used-In | Group Number | Page No

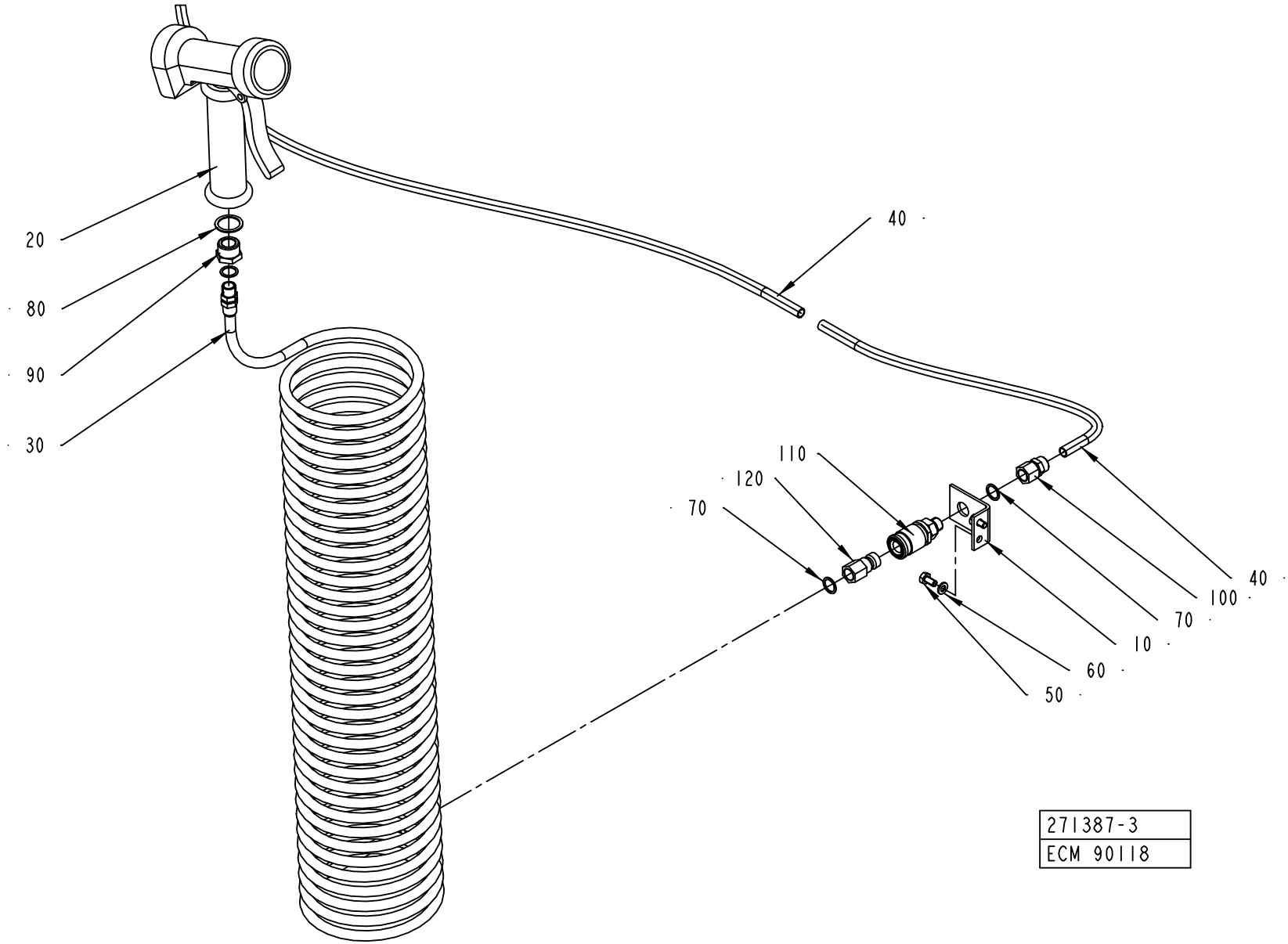
20
80
90
30
40
110
120
70
40
100
70
10
60
50
271387-3
ECM 90118

ECM: 115745 - 20020930
Group number: 271387-0400
Assembly Drawing: 271387-3_1_AA

Pos	Part No	SP	UN	Qty	Description	Page No
-						
010	2524394-0000	-		1	BRACKET	
020	90426-0003	B		1	HAND SHOWER	
030	90152-0017	B		1	HOSE (SPIRAL)	
040	90166-0135	-	M	2	TUBE 10 MM PA BLACK	
050	312105-0366	-		2	SCREW M6S M6X12 A280	
060	315105-0153	-		2	WASHER ISO 7089-6-200 HV-A4	
070	315233-0110	-		3	WASHER PL.RND.NYL.13,3/17,H=1	
080	315233-0113	-		1	WASHER PL.RND.NYL.21,4/27,H=1,2	
090	342701-0205	-		1	BUSHING,INT./EXT.G-THREAD G1/2"-G1/4"	
100	342923-0132	-		1	STRAIGHT COUPL.,INT.THREADED 10/8-G1/4"	
110	B90163-0013	-		1	QUICK COUPLING, (F) LP 006-0-WR013-01-2	
	90163-0301	*-*		*1*	*GASKET VITON REPL.BY 90163-312*	
120	90163-0015	-		1	QUICK COUPLING, (M) LP-006-1-WR513	

Pos	Part No	SP	UN	Qty	Description	Page No

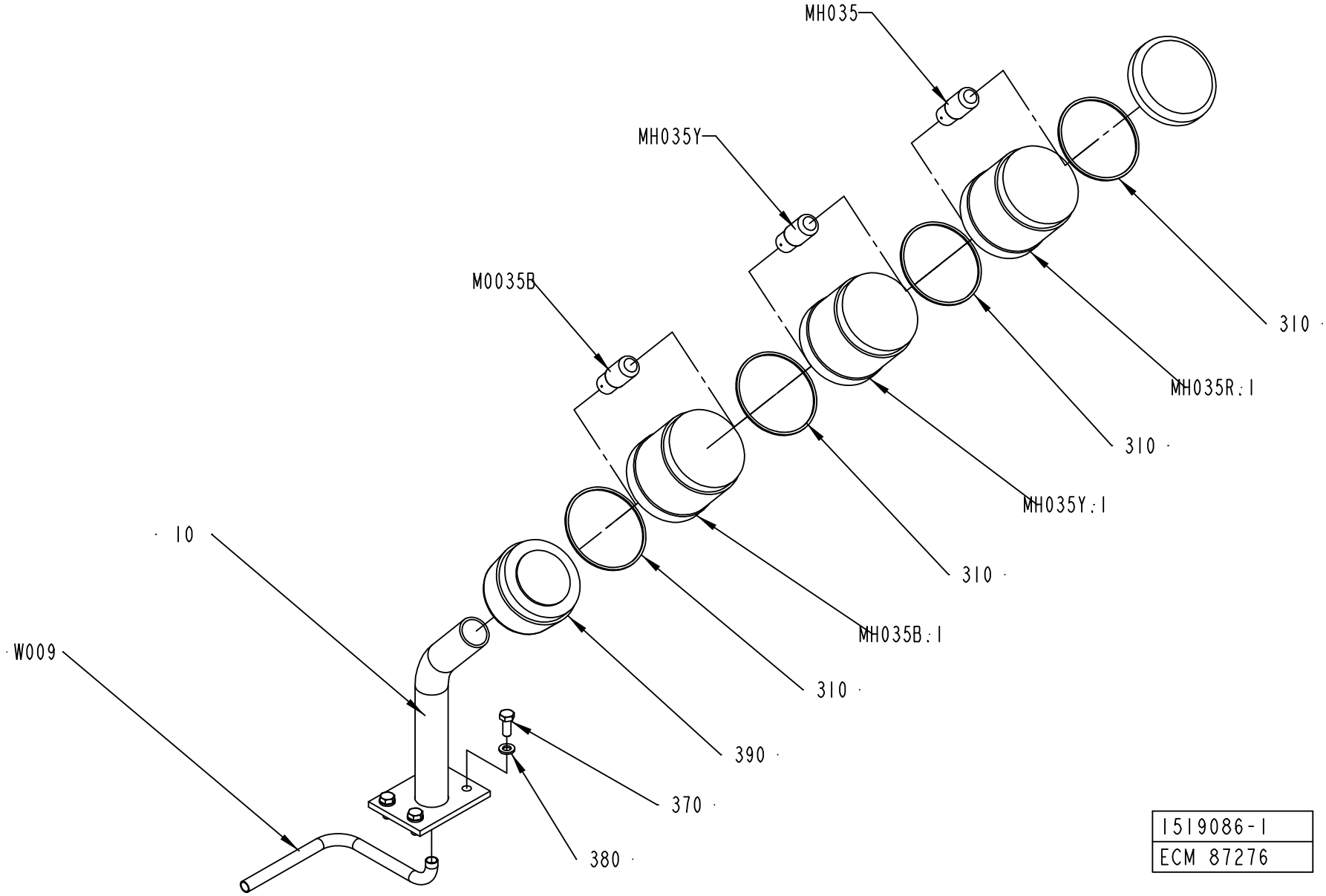
MH035
MH035Y
M0035B
310
MH035R:1
310
MH035Y:1
310
MH035B:1
310
10
W009
390
370
380
1519086-1
ECM 87276

ECM: 115741 - 20020930
Group number: 1519086-0100
Assembly Drawing: 1519086-1_1_AA

Pos	Part No	SP	UN	Qty	Description	Page No
-						
010	1517248-0000	-		1	BRACKET	
310	90419-0307	B		4	GASKET	
370	312105-0368	-		4	SCREW M6S M6X16 A280	
380	315105-0153	-		4	WASHER ISO 7089-6-200 HV-A4	
390	90458-0292	-		1	BASE, KT70-1001	
MH035B	90036-0068	B		1	BULB 6.5W 24V	
MH035B.1	90458-0295	-		1	LIGHT ELEMENT, BLUE, KL70-401L	
MH035R	90036-0068	B		1	BULB 6.5W 24V	
MH035R.1	90458-0293	-		1	LIGHT ELEMENT, RED, KL70-401R	
MH035Y	90036-0068	B		1	BULB 6.5W 24V	
MH035Y.1	90458-0294	-		1	LIGHT ELEMENT, YELLOW, KL70-401Y	
W009	351150-0406	-	M	5	CABLE OLFLEX 7X0,75 MM2 LIGHT/GREY	

Pos	Part No	SP	UN	Qty	Description	Page No

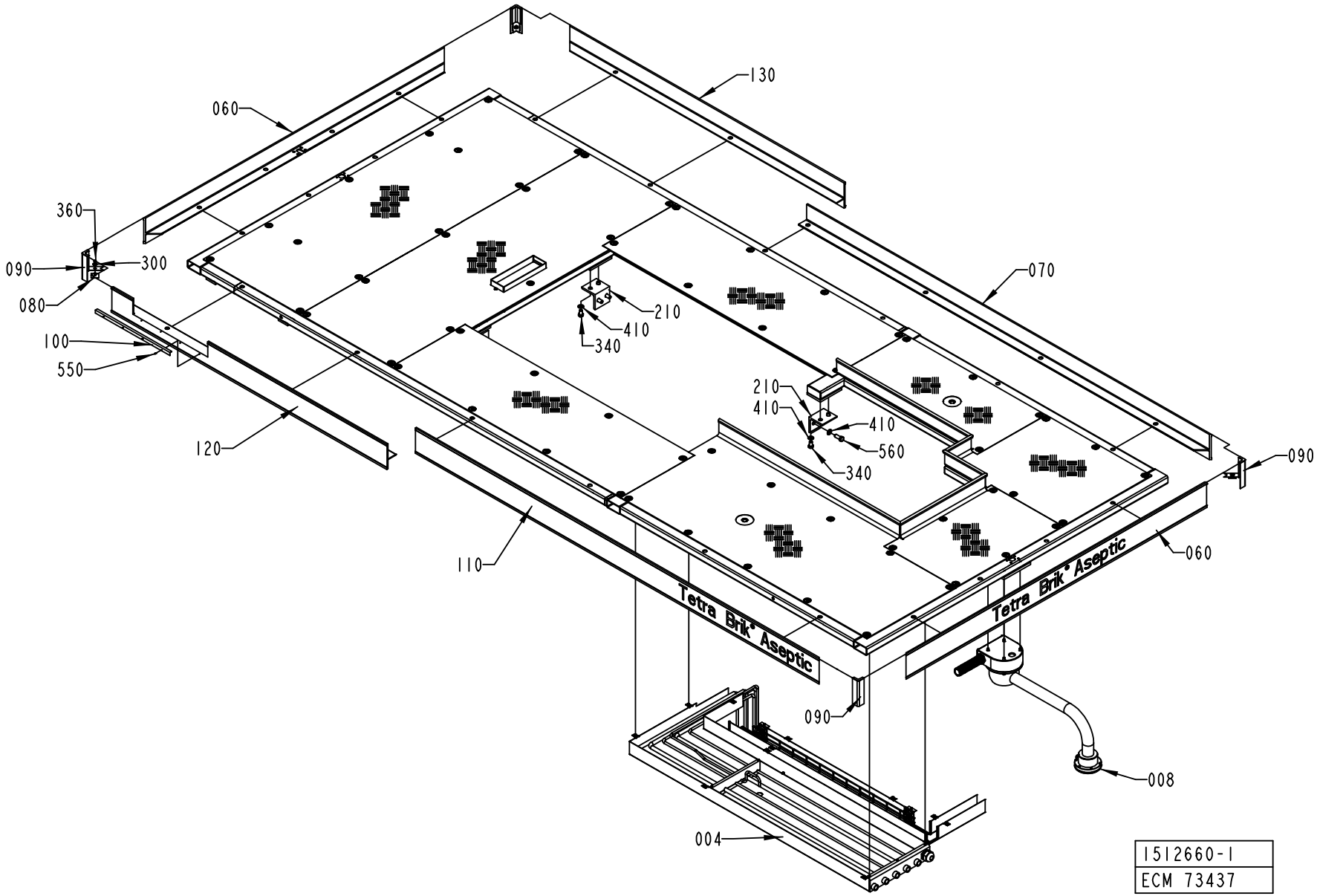
130
060
360
090
300
080
100
550
120
070
210
410
340
210
410
410
560
340
090
060
110
Tetra Brik Aseptic
Tetra Brik Aseptic
090
008
004
1512660-1
ECM 73437

ECM: 106646 - 20020313
Group number: 1512660-0100
Assembly Drawing: 1512660-1_1_AA

This list covers pages from 182 to 185

Pos	Part No	SP	UN	Qty	Description	Page No
LEFT						
120	1512643-0000	-		1	TOE PLATE	
130	1512666-0000	-		1	TOE PLATE	
RIGHT						
120	2514018-0000	-		1	TOP TIE PLATE	
130	2512805-0000	-		1	TOE PLATE	
Common Parts						
004	A2500214-0100	-		1	PIPE WORK	**187**
008	A2500332-0100	-		1	PIVOT ARM	**189**
010	1512350-0000	-		1	PLATFORM	
020	1512351-0000	-		1	PLATFORM	
030	1512631-0000	-		2	CHECKER PLATE	
040	1512632-0000	-		1	CHECKER PLATE	
050	1512633-0000	-		1	CHECKER PLATE	
060	1512640-0000	-		2	TOE PLATE	
070	1512641-0000	-		1	TOE PLATE	
080	1254028-0000	-		4	FASTENING PLATE	
090	1254027-0000	-		4	CORNER STRIP	
100	2506646-0000	-		1	STRIP	
110	1512642-0000	-		1	TOE PLATE	
140	1512845-0000	-		1	CHECKER PLATE	
150	1512846-0000	-		1	CHECKER PLATE	
160	1512847-0000	-		1	BRACKET	
180	2506608-0000	-		4	PLATE	
190	2506609-0000	-		4	PLATE	
200	1512851-0000	-		1	COVER	
210	1517249-0000	-		4	BRACKET	
220	2505282-0000	-		1	CHECKER PLATE	
230	2505236-0000	-		1	PLATFORM	
300	38087-0000	-		4	WASHER	
310	312105-0371	-		2	SCREW M6S ISO 4017 M6X22 A480	
320	312105-0648	-		4	SCREW M6S M16X150 A280	
340	312105-0622	-		8	SCREW M6S ISO 4017 M16X25 A480	
360	312605-0316	-		6	HEXAGON NUT, M6M M6 A280	
370	312812-0324	-		4	HEXAGON NUT, NY-LOCK M16 A480	
380	312105-0534	-		16	SCREW M6S ISO 4017 M12X25 A480	
390	315105-0153	-		4	WASHER ISO 7089-6-200 HV-A4	
410	315105-0186	-		24	WASHER ISO 7089-16-200 HV-A4	
420	315105-0178	-		16	WASHER ISO 7089-12-200 HV-A4	
510	90458-0072	-		66	SCREW, HEX.SOCK.BUTTON HEAD M6X12	
520	90458-0073	-		66	WASHER 6,4/30, H=1,5	
540	352103-0106	-		1	CABLE GLAND, ST 11, PR18,6/PG11	
550	312502-0221	-		4	DRIVE SCREW ROUND HEAD KDS 4X6	
560	312105-0628	-		8	SCREW M6S ISO 4017 M16X40 A480	
570	90143-0076	-	MM	7300	PROFILE	

Machine Type | Group Description | Used-In | Group Number | Page No

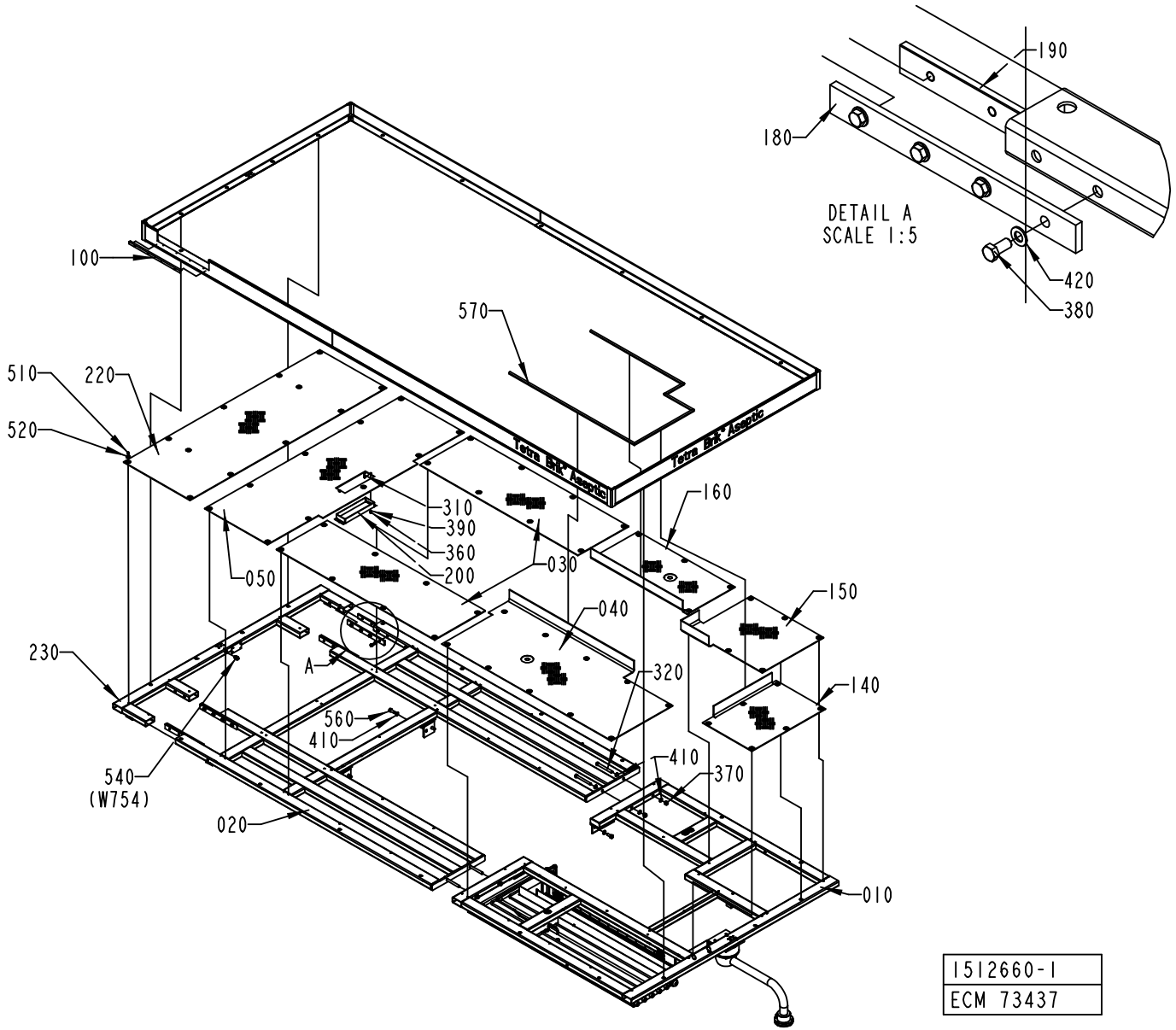

1512660-1
ECM 73437

ECM: 106646 - 20020313
Group number: 1512660-0100
Assembly Drawing: 1512660-1_2_AA

This list covers pages from 182 to 185

Pos	Part No	SP	UN	Qty	Description	Page No
LEFT						
120	1512643-0000	-		1	TOE PLATE	
130	1512666-0000	-		1	TOE PLATE	
RIGHT						
120	2514018-0000	-		1	TOP TIE PLATE	
130	2512805-0000	-		1	TOE PLATE	
Common Parts						
004	A2500214-0100	-		1	PIPE WORK	**187**
008	A2500332-0100	-		1	PIVOT ARM	**189**
010	1512350-0000	-		1	PLATFORM	
020	1512351-0000	-		1	PLATFORM	
030	1512631-0000	-		2	CHECKER PLATE	
040	1512632-0000	-		1	CHECKER PLATE	
050	1512633-0000	-		1	CHECKER PLATE	
060	1512640-0000	-		2	TOE PLATE	
070	1512641-0000	-		1	TOE PLATE	
080	1254028-0000	-		4	FASTENING PLATE	
090	1254027-0000	-		4	CORNER STRIP	
100	2506646-0000	-		1	STRIP	
110	1512642-0000	-		1	TOE PLATE	
140	1512845-0000	-		1	CHECKER PLATE	
150	1512846-0000	-		1	CHECKER PLATE	
160	1512847-0000	-		1	BRACKET	
180	2506608-0000	-		4	PLATE	
190	2506609-0000	-		4	PLATE	
200	1512851-0000	-		1	COVER	
210	1517249-0000	-		4	BRACKET	
220	2505282-0000	-		1	CHECKER PLATE	
230	2505236-0000	-		1	PLATFORM	
300	38087-0000	-		4	WASHER	
310	312105-0371	-		2	SCREW M6S ISO 4017 M6X22 A480	
320	312105-0648	-		4	SCREW M6S M16X150 A280	
340	312105-0622	-		8	SCREW M6S ISO 4017 M16X25 A480	
360	312605-0316	-		6	HEXAGON NUT, M6M M6 A280	
370	312812-0324	-		4	HEXAGON NUT, NY-LOCK M16 A480	
380	312105-0534	-		16	SCREW M6S ISO 4017 M12X25 A480	
390	315105-0153	-		4	WASHER ISO 7089-6-200 HV-A4	
410	315105-0186	-		24	WASHER ISO 7089-16-200 HV-A4	
420	315105-0178	-		16	WASHER ISO 7089-12-200 HV-A4	
510	90458-0072	-		66	SCREW, HEX.SOCK.BUTTON HEAD M6X12	
520	90458-0073	-		66	WASHER 6,4/30, H=1,5	
540	352103-0106	-		1	CABLE GLAND, ST 11, PR18,6/PG11	
550	312502-0221	-		4	DRIVE SCREW ROUND HEAD KDS 4X6	
560	312105-0628	-		8	SCREW M6S ISO 4017 M16X40 A480	
570	90143-0076	-	MM	7300	PROFILE	

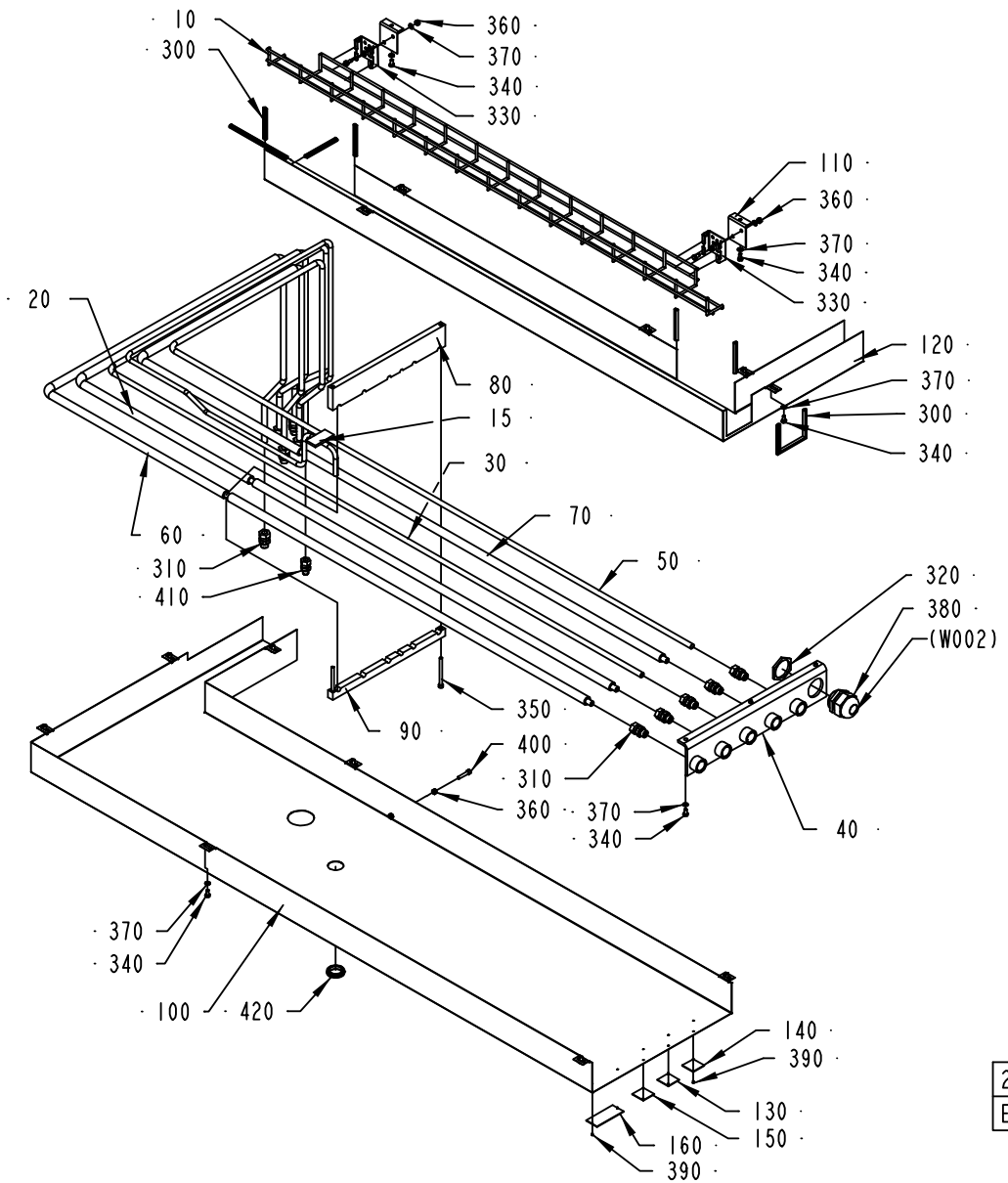

2500214-1
ECM 110911

ECM: 111717 - 20030113
Group number: 2500214-0100
Assembly Drawing: 2500214-1_1_AB

Pos	Part No	SP	UN	Qty	Description	Page No
-						
010	2500218-0000	-		1	CABLE TRENCH	
015	2523703-0000	-		1	PIPE	
020	1286000-0000	-		1	PIPE	
030	1296854-0000	-		1	PIPE	
040	1334694-0000	-		1	CONNECTION PLATE	
050	1350307-0000	-		1	PIPE	
060	1350308-0000	-		1	PIPE	
070	1350309-0000	-		1	PIPE	
080	1350472-0000	-		1	HOLDER	
090	1350473-0000	-		1	HOLDER	
100	2500215-0000	-		1	CABLE DUCT	
110	2500217-0000	-		2	BRACKET	
120	2500216-0000	-		1	CABLE DUCT	
130	273455-0000	-		1	LABEL (COLD WATER)	
140	273456-0000	-		1	SIGN	
150	273458-0000	-		1	LABEL (AIR)	
160	2555070-0000	-		1	SIGN	
300	90143-0060	-	M	1	EDGE STRIP 9,5X6,3MM BLACK PVC	
310	90030-0187	-		10	CONN. STR. GA-12-G3/8	
320	90099-0085	-		1	NUT	
330	90181-0190	-		2	CABLE DUCT, WALL BRACKET, B4 MINI	
340	312105-0366	-		21	SCREW M6S M6X12 A280	
350	312115-0385	-		2	SCREW ISO4762 M6X75 A4	
360	312605-0316	-		5	HEXAGON NUT, M6M M6 A280	
370	315105-0153	-		21	WASHER ISO 7089-6-200 HV-A4	
380	352103-0122	-		1	CABLE GLAND, ST 36, PR47,0/PG36	
390	312502-0120	-		8	DRIVE SCREW ROUND HEAD KDS 0X5	
400	312115-0374	-		1	SCREW ISO4762 M6X30 A4	
410	90030-0186	-		1	CONN. STR. GA-10-G1/4	
420	90459-1066	-		1	LEAD-IN, BUSHING, DA 300/350/10	

Pos	Part No	SP	UN	Qty	Description	Page No

Machine Type | Group Description | Used-In | Group Number | Page No

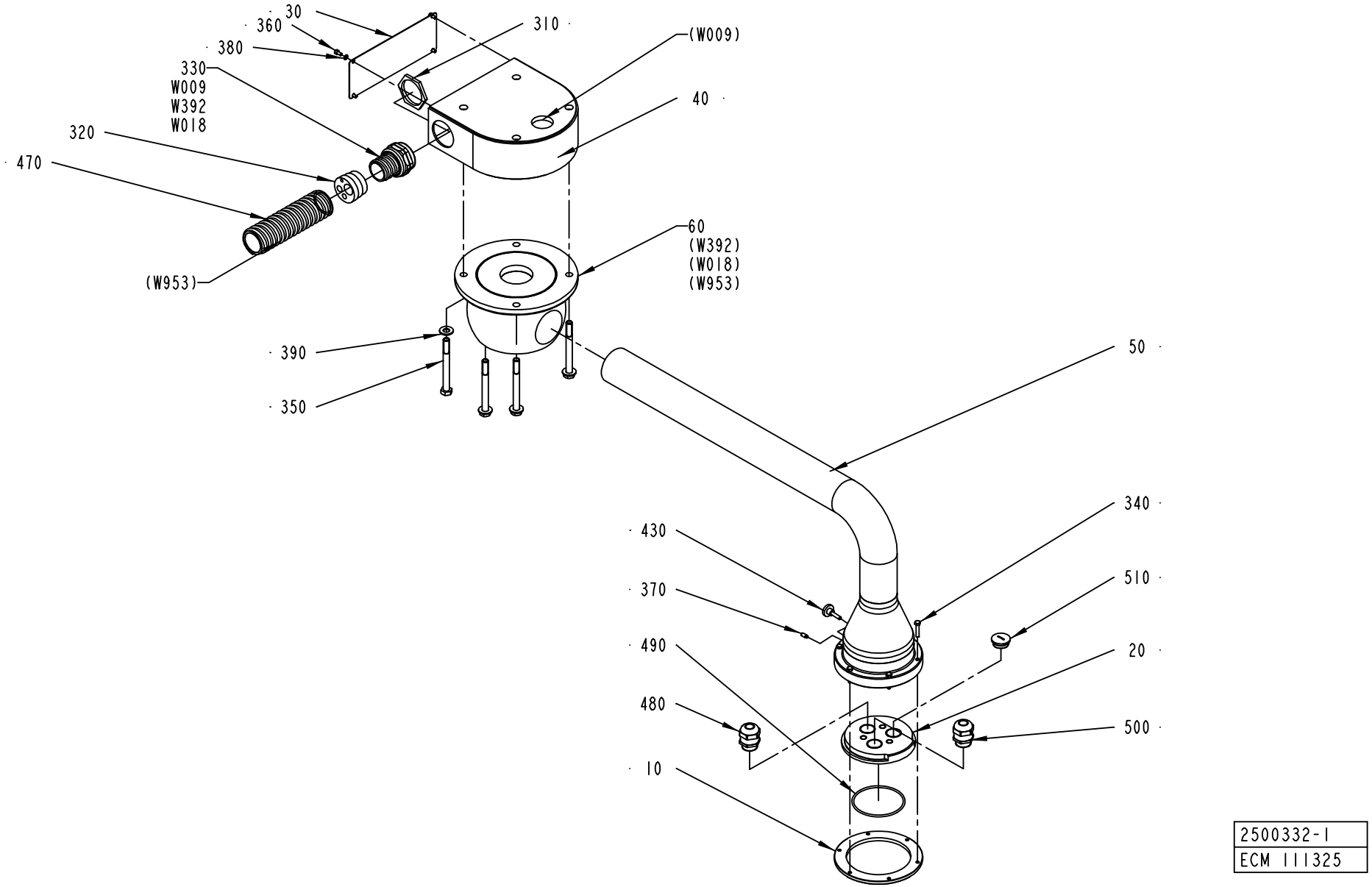
30
360
380
330
W009
W392
W018
320
470
(W953)
310
(W009)
40
60
(W392)
(W018)
(W953)
390
350
50
340
430
370
510
490
20
480
500
10
2500332-1
ECM 111325

ECM: 111327 - 20021111
Group number: 2500332-0100
Assembly Drawing: 2500332-1_1_AB

Pos	Part No	SP	UN	Qty	Description	Page No
-						
010	1558949-0000	-		1	PLATE	
020	2500261-0000	-		1	FIXING RING	
030	1539113-0000	-		1	COVER	
040	2500259-0000	-		1	BRACKET	
050	2500260-0000	-		1	ARM	
060	90458-1958	-		1	ARTICULATION, 300DEG WITH STOP	
310	90099-0085	-		1	NUT	
320	90457-0029	-		1	INSERT, MULTI HOLE, E156M5,9,11,19	
330	90457-0031	-		1	NORMAL WITHOUT INSERT, PG 36	
340	312105-0333	-		6	SCREW M6S ISO 4017 M5X25 A480	
350	312105-0511	-		4	SCREW M6S ISO 4014 M10X100 A480	
360	312115-0287	-		4	SCREW ISO4762 M4X8 A4	
370	312311-0327	-		1	SCREW ISO4028 M5X12 FZB	
380	315105-0136	-		4	WASHER ISO 7089-4-200 HV-A4	
390	315105-0173	-		4	WASHER ISO 7089-10-200 HV-A4	
430	318860-0106	-		1	KNOB, ADJUST.HI.EXT.THREAD, NO 8324-3674	
470	90152-0060	-	M	4	SPIRAL CONDUIT, 42X35, UL3529	
480	90458-0308	-		1	CABLE GLAND, M25X1,5, NO.5311 1030	
490	315202-0307	B		1	O-RING 79,5X3 MM	
500	90458-0307	-		1	CABLE GLAND, M20X1,5, NO.5311 1020	
510	90458-1308	-		1	BLIND PLUG CIRCULAR, M20X1,5 514GFK/220	
W009	351150-0406	-	M	6	CABLE OLFLEX 7X0,75 MM2 LIGHT/GREY	
W018	90458-2557	-	M	7	CABLE OLFLEX 25X1 MM2	
W392	351162-0106	-	M	7	CABLE AWM 1X4 MM2 YELLOW-GREEN	

Pos	Part No	SP	UN	Qty	Description	Page No

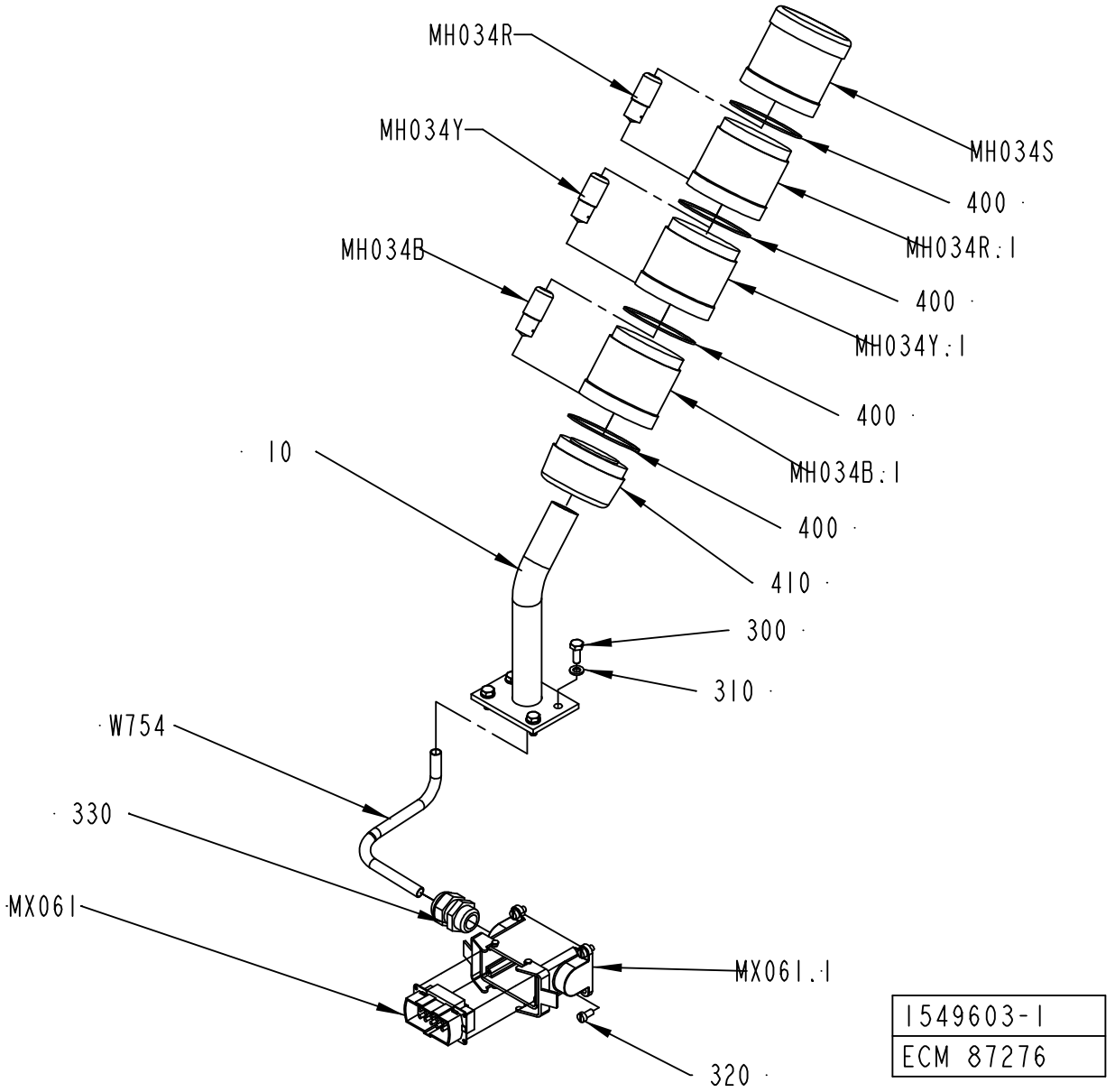
MH034R
MH034Y
MH034B
10
W754
330
MX061
MH034S
400
MH034R:1
400
MH034Y:1
400
MH034B:1
400
410
300
310
MX061:1
320
1549603-1
ECM 87276

ECM: 115742 - 20020930
Group number: 1549603-0100
Assembly Drawing: 1549603-1_1_AA

Pos	Part No	SP	UN	Qty	Description	Page No
-						
10	1517248-0000	-		1	BRACKET	
300	312105-0368	-		4	SCREW M6S M6X16 A280	
310	315105-0153	-		4	WASHER ISO 7089-6-200 HV-A4	
320	312125-0325	-		4	SCREW SLOT.PAN HD. MCS 5X10 A480	
330	352103-0110	-		1	CABLE GLAND, STR 16, PR22,5/PG16	
400	90419-0307	B		4	GASKET	
410	90458-0292	-		1	BASE, KT70-1001	
MH034B	90036-0068	B		1	BULB 6.5W 24V	
MH034B.1	90458-0295	-		1	LIGHT ELEMENT, BLUE, KL70-401L	
MH034R	90036-0068	B		1	BULB 6.5W 24V	
MH034R.1	90458-0293	-		1	LIGHT ELEMENT, RED, KL70-401R	
MH034S	90458-0302	-		1	SIREN WITH ADJUSTABLE VOLUME KS 70-3004	
MH034Y	90036-0068	B		1	BULB 6.5W 24V	
MH034Y.1	90458-0294	-		1	LIGHT ELEMENT, YELLOW, KL70-401Y	
MX061	90110-0216	-		1	MALE INSERT 70 310 1040 0	
MX061.1	90458-2418	-		1	CHASSI HOUSING 10-POLE, 70.331.1028.0	
W754	351150-0406	-	M	2	CABLE OLFLEX 7X0,75 MM2 LIGHT/GREY	

Pos	Part No	SP	UN	Qty	Description	Page No

Machine Type | Group Description | Used-In | Group Number | Page No

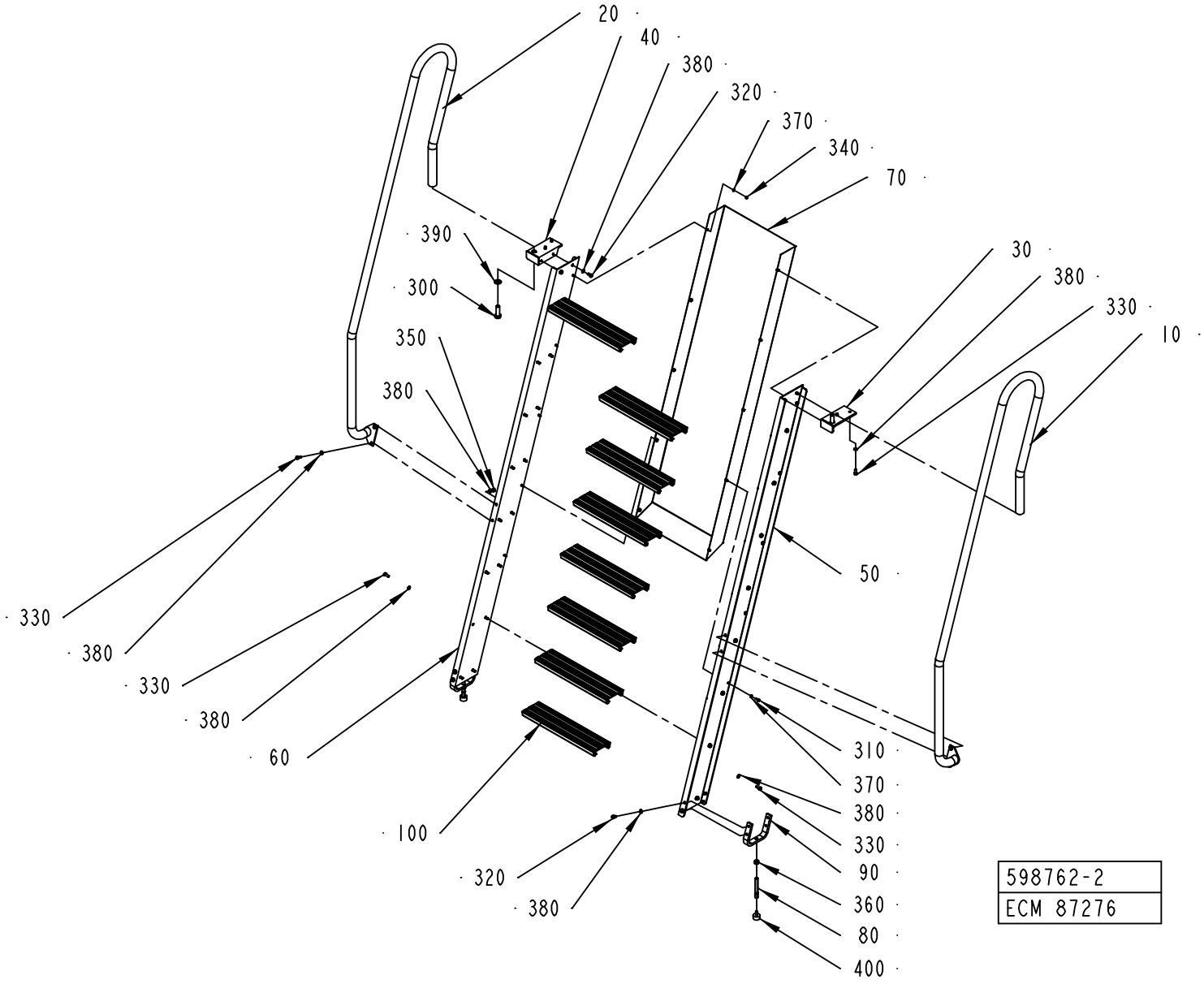
20
40
380
320
370
340
70
390
300
350
380
30
380
330
10
50
330
380
330
380
60
100
320
380
310
370
380
330
90
360
80
400
598762-2
ECM 87276

ECM: 87278 - 20011220
Group number: 598762-0200
Assembly Drawing: 598762-2_1_AA

Pos	Part No	SP	UN	Qty	Description	Page No
-						
010	597874-0000	-		1	RAIL RIGHT	
020	597875-0000	-		1	RAIL LEFT	
030	597888-0000	-		1	BRACKET	
040	597889-0000	-		1	BRACKET	
050	2527513-0000	-		1	SIDE PIECE	
060	2527514-0000	-		1	SIDE PIECE	
070	2514112-0000	-		1	COVER	
080	B441905-0000	-		2	RETARD PIN	
	312911-0126	*-*		*1*	*HELI-COIL M8X1,5D*	
090	979966-0000	-		2	BRACKET	
100	441679-0000	-		8	STAIR	
300	312101-0630	-		2	SCREW M6S M16X50 FZB	
310	312105-0368	-		10	SCREW M6S M6X16 A280	
320	312105-0449	-		12	SCREW M6S ISO 4017 M8X16 A480	
330	312105-0451	-		40	SCREW M6S ISO 4017 M8X20 A480	
340	312605-0316	-		10	HEXAGON NUT, M6M M6 A280	
350	312605-0318	-		4	HEXAGON NUT, M6M M8 A280	
360	312605-0322	-		2	HEXAGON NUT, M6M M12 A280	
370	315105-0153	-		20	WASHER ISO 7089-6-200 HV-A4	
380	315105-0165	-		56	WASHER ISO 7089-8-200 HV-A4	
390	315105-0186	-		2	WASHER ISO 7089-16-200 HV-A4	
400	90347-0004	-		2	VIBRATION DAMPER D=30 TH=M8 H=17 H2=21MM	

Pos	Part No	SP	UN	Qty	Description	Page No

Machine Type | Group Description | Used-In | Group Number | Page No

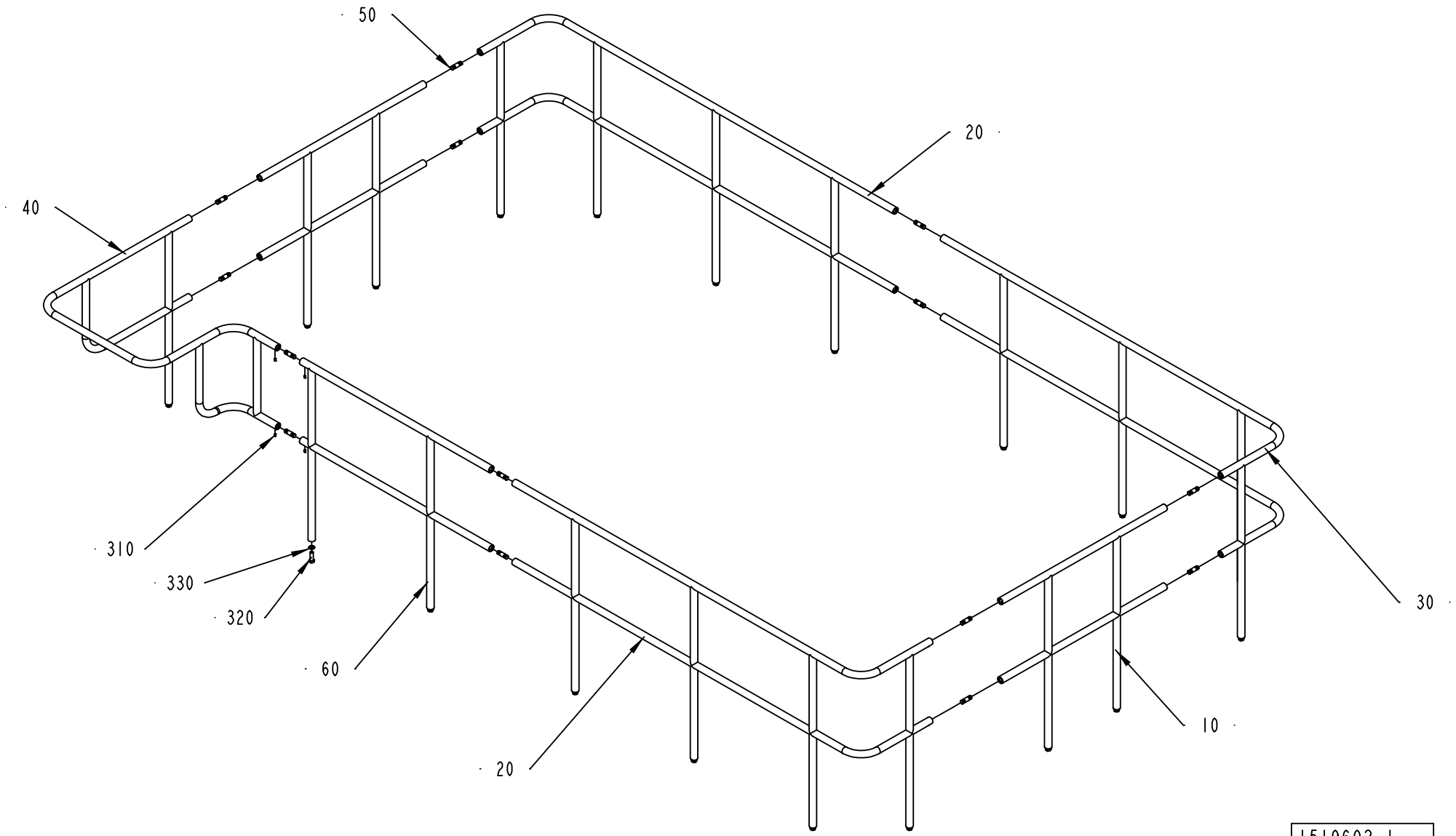

1519602-1
ECM 73437

ECM: 111429 - 20020930
Group number: 1519602-0100
Assembly Drawing: 1519602-1_1_AA

Pos	Part No	SP	UN	Qty	Description	Page No
LEFT						
020	1512636-0000	-		2	RAILING	
030	1512637-0000	-		1	RAILING	
040	1512638-0000	-		1	RAILING	
RIGHT						
020	1512636-0000	-		1	RAILING	
030	1512637-0000	-		2	RAILING	
040	2510767-0000	-		1	RAILING	
Common Parts						
010	1512635-0000	-		2	RAILING	
050	2555063-0000	-		14	PIN	
060	1538924-0000	-		1	RAILING	
310	312318-0447	-		28	SCREW ISO4029 M8X12 A4	
320	312105-0630	-		19	SCREW M6S ISO 4017 M16X50 A480	
330	315105-0186	-		19	WASHER ISO 7089-16-200 HV-A4	

Pos	Part No	SP	UN	Qty	Description	Page No

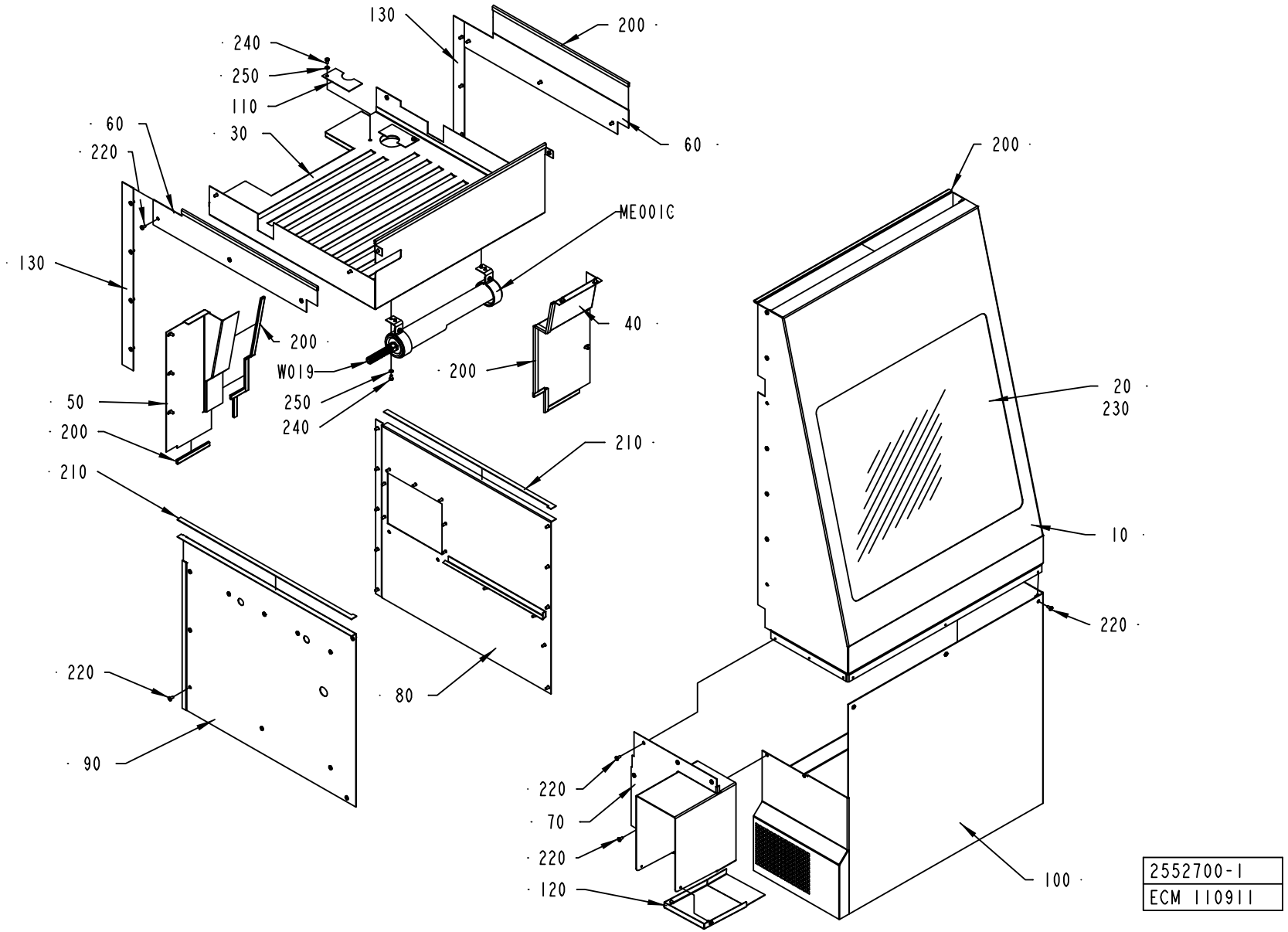
130
200
240
250
110
60
30
60
220
ME001C
130
200
40
W019
200
250
240
50
200
210
210
220
80
90
200
20
230
10
220
220
70
220
120
100
2552700-1
ECM 110911

ECM: 110920 - 20030113
Group number: 2552700-0100
Assembly Drawing: 2552700-1_1_AA

Pos	Part No	SP	UN	Qty	Description	Page No
-						
010	2552705-0000	-		1	FRONT COVER	
020	1549608-0000	-		1	GLASS PANE	
030	2552701-0000	-		1	TOP SECTION	
040	2552702-0000	-		1	COVER	
050	2552703-0000	-		1	COVER	
060	2552704-0000	-		2	COVER PLATE	
070	2552710-0000	-		1	COVER	
080	2552708-0000	-		1	COVERING PLATE	
090	2552709-0000	-		1	COVERING PLATE	
100	2552706-0000	-		1	COVER	
110	2552707-0000	-		2	COVER PLATE	
120	2552711-0000	-		1	COVER	
130	2553895-0000	-		2	COVER	
200	90143-0059	-	MM	4500	SEAL STRIP 4610069	
210	90458-0145	-		1	SEALING, 3X15 MM CLOSED CELL SPONGE	
220	90287-0075	-		74	SCREW SLOT. PAN HEAD LKCS M6X12	
230	90157-0041	-		1	SEALING COMPOUND	
240	312105-0364	-		6	SCREW M6S ISO 4017 M6X10 A480	
250	315105-0153	-		6	WASHER ISO 7089-6-200 HV-A4	
ME001C	A595430-0200	-		1	LIGHT FIXTURE	**199**
W019	351150-0412	-	M	6	CABLE OLFLEX 3X1,5 MM2 LIGHT/GREY	

Pos	Part No	SP	UN	Qty	Description	Page No

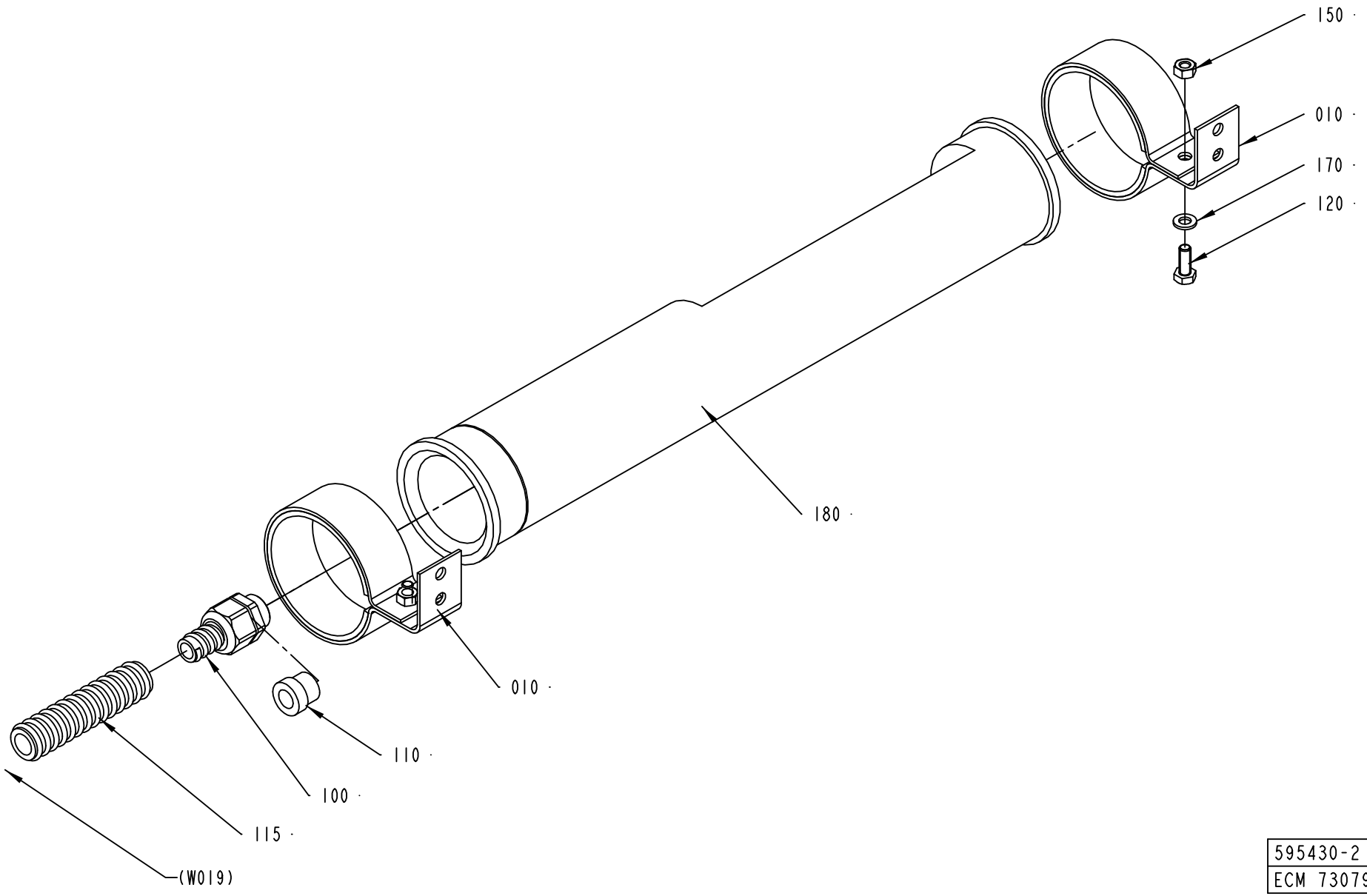

595430-2
ECM 73079

ECM: 115743 - 20020930
Group number: 595430-0200
Assembly Drawing: 595430-2_1_AA

Pos	Part No	SP	UN	Qty	Description	Page No
-						
10	1140129-0000	-		2	HOLDER	
100	353243-0002	-		1	EXTENDED WITHOUT INSERT, PG11	
110	353249-0010	-		1	INSERT, SINGEL HOLE, EK 152/11	
115	90152-0059	-	MM	2150	SPIRAL CONDUIT, 18X12, UL 1211	
120	312105-0368	-		2	SCREW M6S M6X16 A280	
150	312605-0316	-		2	HEXAGON NUT, M6M M6 A280	
170	315105-0153	-		2	WASHER ISO 7089-6-200 HV-A4	
180	B90164-0015	B		1	LIGHT FIXTURE, DWDCV111B/230V 50HZ	
	90297-0007	*B*		*1*	*FLUORESCENT TUBE, PL11*	

Pos	Part No	SP	UN	Qty	Description	Page No

Machine Type	Group Description	Used-In	Group Number	Page No

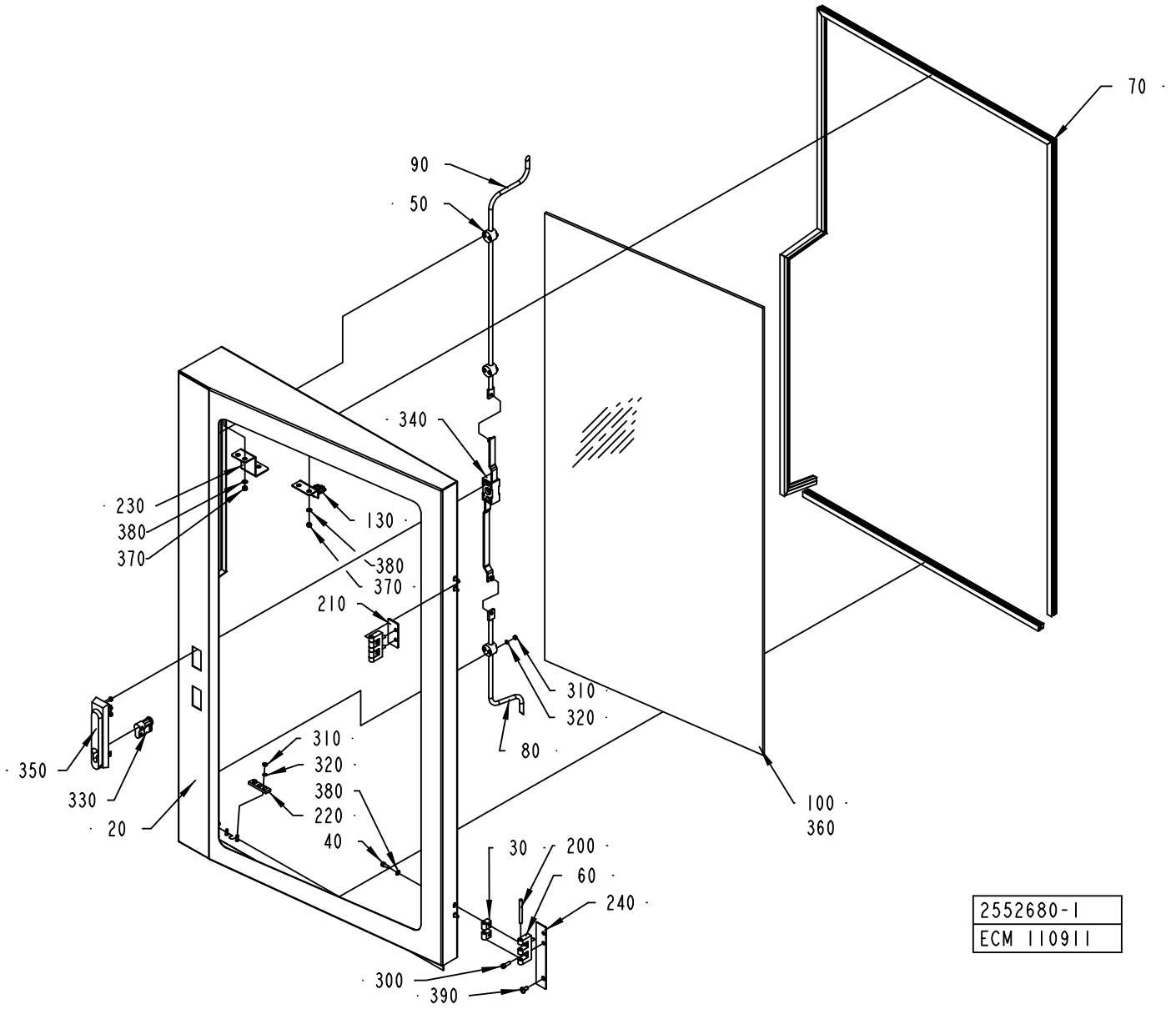
70
90
50
340
230
380
370
130
380
370
210
310
320
80
310
320
380
220
40
350
330
20
100
360
30
200
60
240
300
390
2552680-1
ECM 110911

ECM: 110921 - 20030113
Group number: 2552680-0100
Assembly Drawing: 2552680-1_1_AA

Pos	Part No	SP	UN	Qty	Description	Page No
-						
020	2552691-0000	-		1	DOOR	
030	1035794-0000	-		4	BLOCKING PIECE	
040	312115-0327	-		4	SCREW ISO4762 M5X12 A4	
050	1129274-0000	-		3	GUIDE LUG	
060	1035792-0000	-		2	E-HINGE	
070	90143-0068	B	M	3	RUBBERSTRIP EMKA 1011-06	
080	2552683-0000	-		1	LOCKING ARM	
090	2552682-0000	-		1	LOCKING ARM	
100	2552679-0000	-		1	GLASS PANE	
130	2552686-0000	-		1	KEY	
200	988685-0000	-		2	PIN	
210	2552687-0000	-		1	SPACER	
220	2552688-0000	-		1	GUIDE BRACKET	
230	2554959-0000	-		1	GUIDE	
240	2556243-0000	-		1	SPACER	
300	312115-0329	-		4	SCREW ISO4762 M5X16 A4	
310	312605-0312	-		8	HEXAGON NUT, M6M M4 A280	
320	315105-0136	-		8	WASHER ISO 7089-4-200 HV-A4	
330	90237-0128	-		1	LOCK CYLINDER, 1109-U3	
340	90237-0153	-		1	LOCK HOUSING, 1121-U26-0B	
350	90237-0176	-		1	TURNING HANDLE	
360	90157-0041	-		1	SEALING COMPOUND	
370	312812-0314	-		4	HEXAGON NUT, NY-LOCK M5 A480	
380	315105-0146	-		8	WASHER ISO 7089-5-200 HV-A4	
390	90287-0075	-		1	SCREW SLOT. PAN HEAD LKCS M6X12	

Pos	Part No	SP	UN	Qty	Description	Page No

Machine Type | Group Description | Used-In | Group Number | Page No

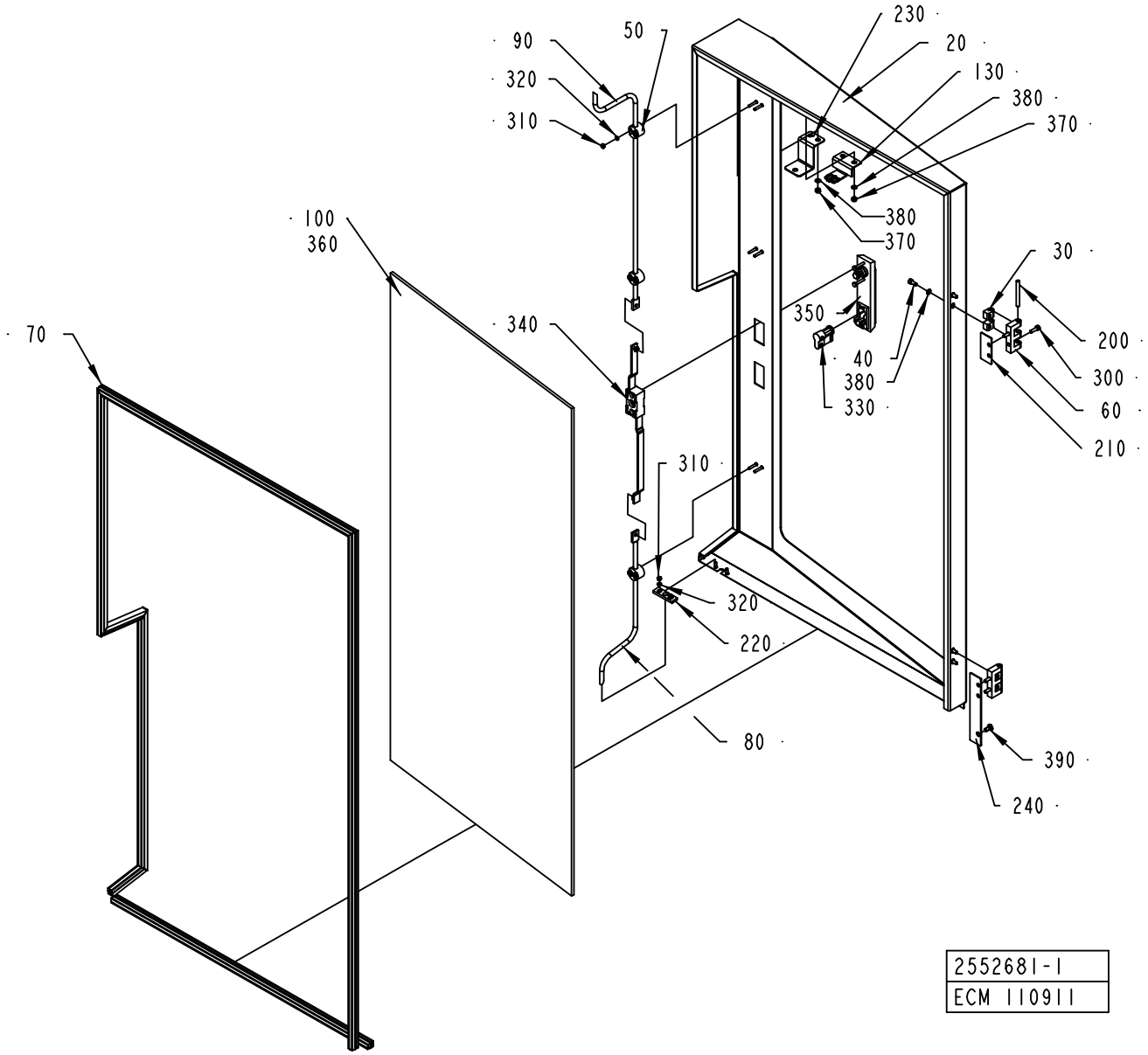
90
320
310
50
230
20
130
380
370
380
370
30
100
360
70
340
350
40
380
330
200
300
60
210
310
320
220
80
390
240
2552681-1
ECM 110911

ECM: 110922 - 20030113
Group number: 2552681-0100
Assembly Drawing: 2552681-1_1_AA

Pos	Part No	SP	UN	Qty	Description	Page No
-						
020	2552692-0000	-		1	DOOR	
030	1035794-0000	-		4	BLOCKING PIECE	
040	312115-0327	-		4	SCREW ISO4762 M5X12 A4	
050	1129274-0000	-		3	GUIDE LUG	
060	1035792-0000	-		2	E-HINGE	
070	90143-0068	B	M	3	RUBBERSTRIP EMKA 1011-06	
080	2552683-0000	-		1	LOCKING ARM	
090	2552682-0000	-		1	LOCKING ARM	
100	2552679-0000	-		1	GLASS PANE	
130	2552686-0000	-		1	KEY	
200	988685-0000	-		2	PIN	
210	2552687-0000	-		1	SPACER	
220	2552688-0000	-		1	GUIDE BRACKET	
230	2554959-0000	-		1	GUIDE	
240	2556243-0000	-		1	SPACER	
300	312115-0329	-		4	SCREW ISO4762 M5X16 A4	
310	312605-0312	-		8	HEXAGON NUT, M6M M4 A280	
320	315105-0136	-		8	WASHER ISO 7089-4-200 HV-A4	
330	90237-0128	-		1	LOCK CYLINDER, 1109-U3	
340	90237-0153	-		1	LOCK HOUSING, 1121-U26-0B	
350	90237-0176	-		1	TURNING HANDLE	
360	90157-0041	-		1	SEALING COMPOUND	
370	312812-0314	-		4	HEXAGON NUT, NY-LOCK M5 A480	
380	315105-0146	-		8	WASHER ISO 7089-5-200 HV-A4	
390	90287-0075	-		1	SCREW SLOT. PAN HEAD LKCS M6X12	

Pos	Part No	SP	UN	Qty	Description	Page No

Machine Type | Group Description | Used-In | Group Number | Page No

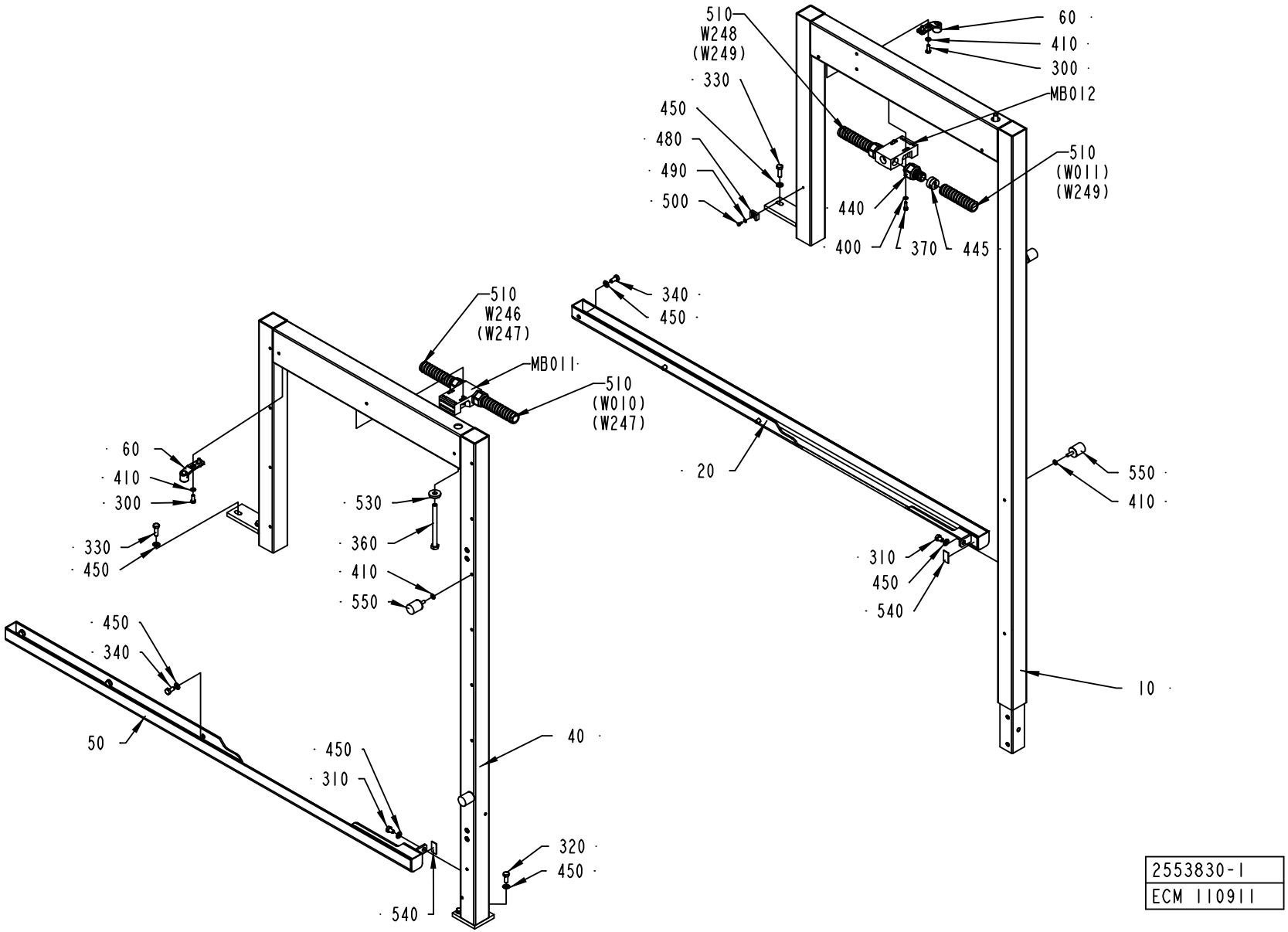

2553830-1
ECM 110911

ECM: 110923 - 20030113
Group number: 2553830-0100
Assembly Drawing: 2553830-1_1_AA

Pos	Part No	SP	UN	Qty	Description	Page No
-						
010	2553831-0000	-		1	FRAME	
020	2552685-0000	-		1	CHUTE	
040	2553832-0000	-		1	FRAME	
050	2552684-0000	-		1	CHUTE	
060	1538868-0000	-		2	BRACKET	
300	312105-0368	-		4	SCREW M6S M6X16 A280	
310	312105-0447	-		2	SCREW M6S ISO 4017 M8X12 A480	
320	312105-0451	-		2	SCREW M6S ISO 4017 M8X20 A480	
330	312105-0453	-		4	SCREW M6S ISO 4017 M8X25 A480	
340	312105-0449	-		6	SCREW M6S ISO 4017 M8X16 A480	
360	312105-0515	-		2	SCREW M6S ISO 4014 M10X120 A480	
370	312115-0329	-		4	SCREW ISO4762 M5X16 A4	
400	315105-0146	-		4	WASHER ISO 7089-5-200 HV-A4	
410	315105-0153	-		8	WASHER ISO 7089-6-200 HV-A4	
440	90458-0430	-		4	EXTENDED WITHOUT INSERT, M20X1,5	
445	90457-0147	-		4	GLAND, INSERT, MULTI HOLE, 2X7	
450	315105-0165	-		14	WASHER ISO 7089-8-200 HV-A4	
480	352113-0204	-		2	ANCHOR PLATES FOR STRIPS, TYPE TM3S25-M	
490	315105-0136	-		2	WASHER ISO 7089-4-200 HV-A4	
500	312125-0287	-		2	SCREW PAN HEAD MCS M4X8 SS	
510	90152-0051	-	M	6	SPIRAL CONDUIT, 25X18, UL 1816	
530	315125-0173	-		2	WASHER TBRSB 10,5X28X6 A4	
540	90458-0145	-		1	SEALING, 3X15 MM CLOSED CELL SPONGE	
550	90459-1060	-		4	VIBRATION DAMPER, T15688	
MB011	90459-0472	A		1	KEY SAF.SW. AZ 16 02ZVRK-M20-2152-2254	
MB012	90459-0472	A		1	KEY SAF.SW. AZ 16 02ZVRK-M20-2152-2254	
W246	351150-0431	-	M	5	CABLE OLFLEX 2X0,75 MM2 LIGHT/GREY	
W248	351150-0431	-	M	6	CABLE OLFLEX 2X0,75 MM2 LIGHT/GREY	

Pos	Part No	SP	UN	Qty	Description	Page No

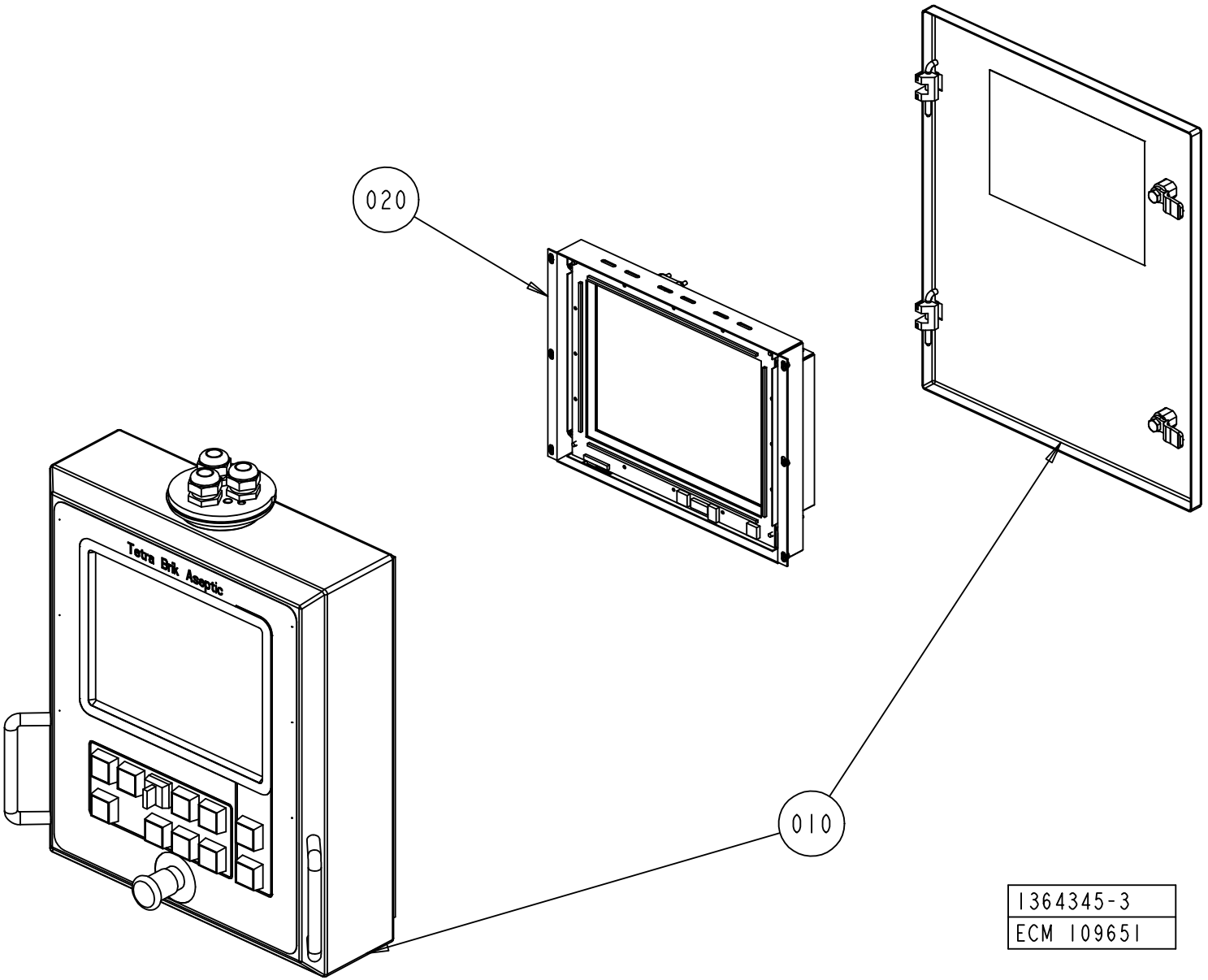

1364345-3
ECM 109651

ECM: 120877 - 20021126
Group number: 1364345-0300
Assembly Drawing: 1364345-3_1_AA

Pos	Part No	SP	UN	Qty	Description	Page No
TBA/19-0200						
010	1364346-0302	-		1	PANEL UNIT 12"	
Common Parts						
020	B1348707-0101	-		1	DISPLAY UNIT 12"	
010	*90041-0099*	*A*		*1*	*IR TOUCH PCB, 12.1" , IRT 12I1-V2.1*	
020	*90041-0104*	*-*		*1*	*CHASSIS FOR TOUCH, 12,1" , M0089A39*	
030	*90041-0093*	*A*		*1*	*DISPLAY, TOSHIBA 12,1"*	
040	*1348708-0000*	*-*		*1*	*COVER PLATE*	
050	*1348709-0000*	*-*		*1*	*COVER PLATE*	
060	*90041-0079*	*A*		*1*	*ADAPTER BACKLIGHT, 50000007*	
070	*90041-0078*	*A*		*1*	*REMOTE COMMUNIKATION LINK BOARD,E000014B*	
080	*90041-0103*	*A*		*1*	*DATA CABLE DISPLAY, E000018B*	
090	*90316-0022*	*-*		*3*	*SPACER NUT DSNF M3060X20*	
100	*90041-0082*	*A*		*1*	*CABLE, DISPLAY POWER, 2223-0022-018*	
120	*90316-0023*	*-*		*4*	*SPACER NUT DSM M3055X8*	
130	*312605-0310*	*-*		*15*	*HEXAGON NUT, M6M M3 A280*	
140	*312125-0220*	*-*		*11*	*SKRUV SLOT.PAN HD. MCS 3X6 A480*	
150	*90220-0302*	*-*		*1*	*CLAMP FOR SCR.CABLE, 16MM, 55-016-89*	
160	*90220-0304*	*-*		*5*	*CLAMP FOR SCR.CABLE, 24MM,*	
170	*315105-0136*	*-*		*24*	*WASHER ISO 7089-4-200 HV-A4*	
180	*312125-0299*	*-*		*6*	*SCREW PAN HEAD MCS M4X30 SS*	
190	*312605-0312*	*-*		*20*	*HEXAGON NUT, M6M M4 A280*	
200	*B1129570-0000*	*-*		*1*	*LDS, LVDS TERMINAL 1*	
	90194-0154	*-*		*1*	*TERM. MARKING LABEL KIT, BLA-BSTB, 1-24*	
	90110-0282	*-*		*1*	*PLINTH, BLA18, 128336*	
210	*315105-0124*	*-*		*18*	*WASHER ISO 7089-3-200 HV-A4*	
220	*90316-0029*	*-*		*4*	*SPACER NUT, M3X16*	
230	*90316-0030*	*-*		*4*	*ELASTIC SCREW, 15060002*	
240	*90144-0074*	*-*		*1*	*SHIELDING SEAL STRIP EMC, 3,17X3,17 MM*	
250	*312115-0222*	*-*		*9*	*SCREW ISO4762 M3X8 A4*	

Pos	Part No	SP	UN	Qty	Description	Page No

Tetra Pak

SPC
Spare Parts Catalogue

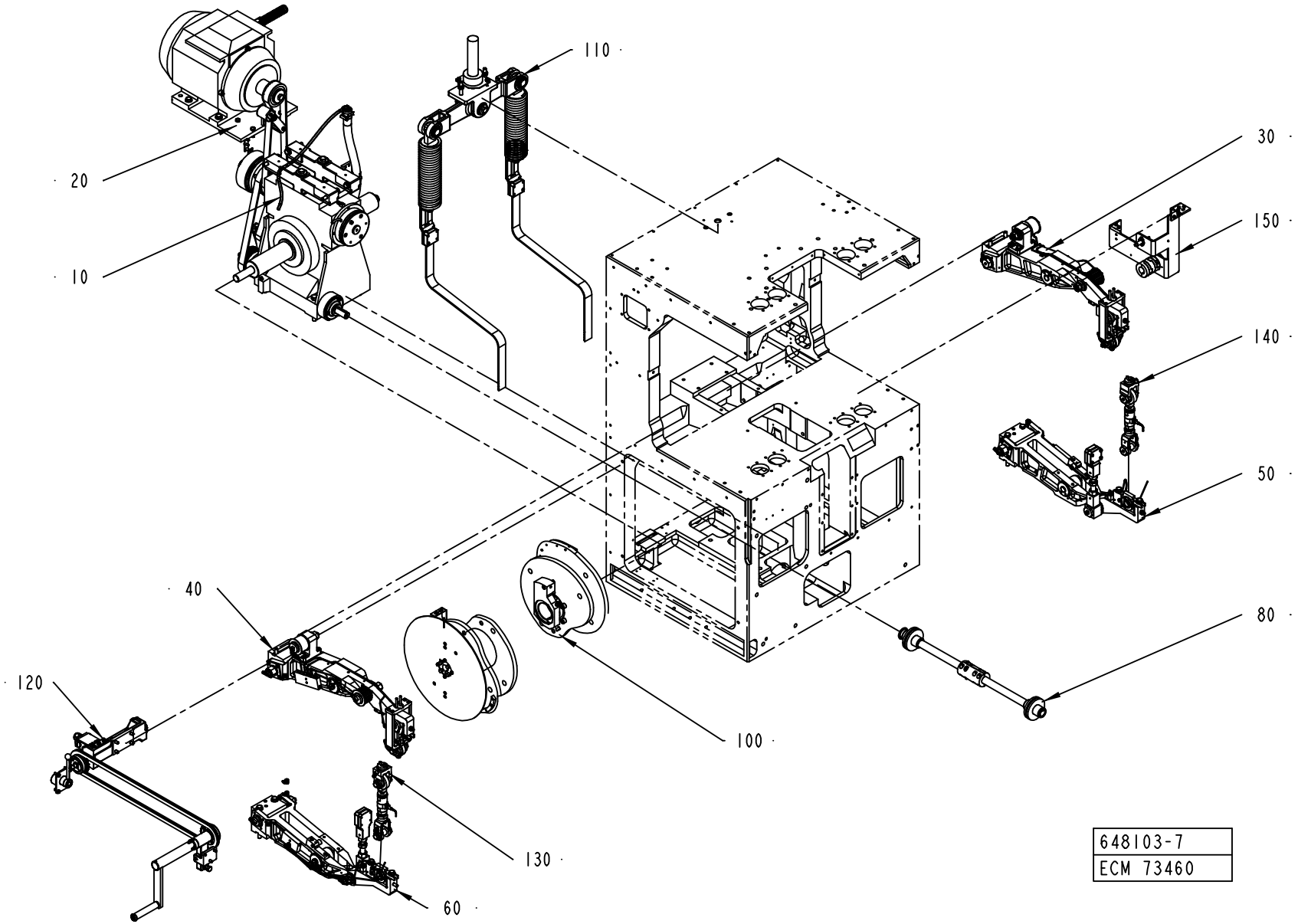
110
20
10
30
150
140
50
80
40
120
100
130
60
648103-7
ECM 73460

ECM: 73460 - 20011220
Group number: 648103-1100
Assembly Drawing: 648103-7_1_AA

Pos	Part No	SP	UN	Qty	Description	Page No
-						
010	A256173-0600	-		1	WORM GEAR	**213**
020	A1523210-0100	-		1	MOTOR	**215**
030	A256197-0500	-		1	ARM	**217**
040	A929438-0100	-		1	ARM	**219**
050	A491814-0300	-		1	SLEWING BRACKET RIGHT	**221**
060	A491815-0300	-		1	SLEWING BRACKET LEFT	**223**
080	A256200-0300	-		1	INTERMEDIARY SHAFT	**225**
100	A256202-0700	-		1	CURVE PACK	**227, 229**
110	A2506790-0100	-		1	HOLD-DOWN DEVICE	**231**
120	A1512286-0100	-		1	CRANK	**235**
130	A1490120-0100	-		1	DISCONNECTION LINK LEFT	**237**
140	A1539766-0100	-		1	DISCONNECTION LINK RIGHT	**239**
150	A1512284-0100	-		1	ANGLE ENCODER	**241**

Pos	Part No	SP	UN	Qty	Description	Page No

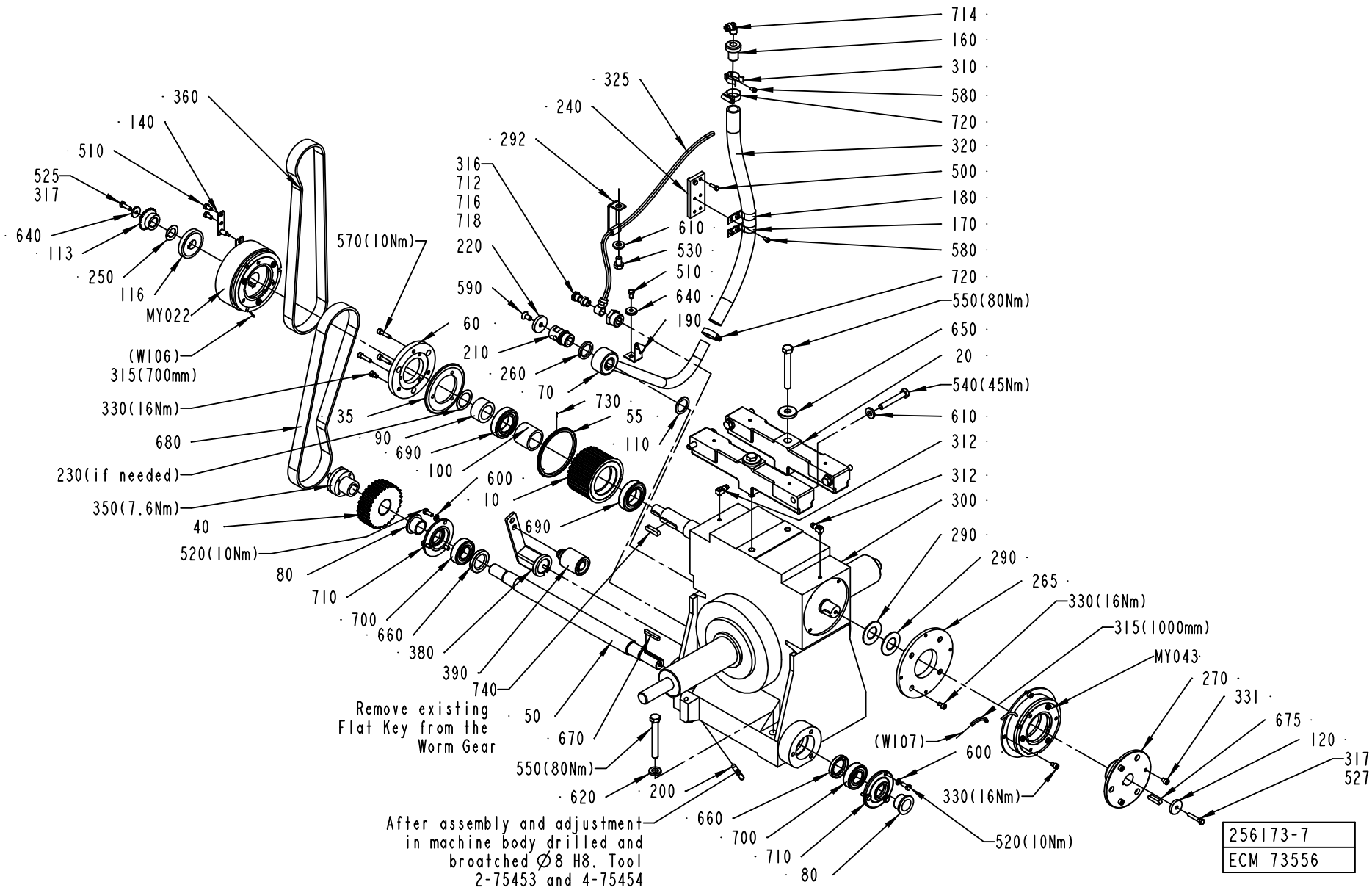
714
160
310
580
720
320
500
180
170
580
720
550(80Nm)
650
20
540(45Nm)
610
312
312
300
290
290
265
330(16Nm)
315(1000mm)
MY043
270
331
675
120
317
527
325
240
292
316
712
716
718
220
590
60
210
260
70
730
55
110
610
530
510
640
190
360
140
510
525
317
640
113
250
116
MY022
(W106)
315(700mm)
570(10Nm)
330(16Nm)
680
230(if needed)
350(7.6Nm)
40
520(10Nm)
80
710
700
660
380
390
740
35
90
690
100
600
10
690
Remove existing
Flat Key from the
Worm Gear
50
670
550(80Nm)
620
200
After assembly and adjustment
in machine body drilled and
broatched Ø8 H8. Tool
2-75453 and 4-75454
660
700
710
80
(W107)
600
330(16Nm)
520(10Nm)
256173-7
ECM 73556

ECM: 115563 - 20020930
Group number: 256173-0600
Assembly Drawing: 256173-7_1_AA

Pos	Part No	SP	UN	Qty	Description	Page No
-						
010	1524018-0000	A		1	TIMING BELT PULLEY	
020	441356-0000	-		2	BRACKET	
035	751245-0000	-		1	FLANGE	
040	256176-0000	-		1	GEAR WHEEL	
050	256177-0000	-		1	SHAFT	
055	2518410-0000	-		1	FLANGE	
060	256178-0000	-		1	FIXING RING	
070	272372-0000	-		1	HOUSE	
080	256179-0000	-		2	SPACER SLEEVE	
090	2527651-0000	-		1	SPACER	
100	256181-0000	-		1	SPACER PIPE	
110	257174-0000	-		1	SEALING WASHER	
113	257179-0000	B		1	GEAR WHEEL	
116	491409-0000	-		1	WASHER	
120	271689-0000	-		1	WASHER	
140	2527652-0000	-		1	ARM	
160	272376-0000	-		1	SHUTTER	
170	272377-0001	-		1	CRAMP	
180	272377-0002	-		1	CRAMP	
190	272388-0000	-		1	CRAMP	
200	295140-0000	-		2	PIN	
210	295766-0000	-		1	SCREW	
220	295767-0000	-		1	SEALING WASHER	
230	441024-0000	-		1	LACE	
240	441360-0000	-		1	PLATE	
250	491410-0000	-		1	LACE	
260	456934-0000	-		1	SEALING WASHER	
265	469999-0000	-		1	FLANGE	
270	491274-0000	-		1	HUB	
290	90016-0010	-		2	DISC SPRINGS,50X25,4X2	
292	469867-0000	-		1	HOSE HOLDER	
300	90457-0151	A		1	WORM GEAR UCZ 151 SIZE 125 39:1	
310	90074-0026	-		1	PIPE CLIP FOR TUBE D=24-35 MM	
312	90134-0058	-		2	CONNECTION	
315	90142-0005	-	MM	1500	HOSE	
316	90144-0073	-	MM	1	TREBOFLON-TAPE W=13MM	
317	90157-0016	-	ML	1	LOCKING FLUID	
320	90166-0060	-	MM	530	HOSE 19/26-27 REINF.PVC	
325	90166-0133	-	MM	500	TUBE 8 MM PA,TRANSP.	
330	90287-0081	-		11	SCREW MC6S M6X10 129	
331	312115-0362	-		6	SCREW ISO4762 M6X8 A4	
334	90296-0068	-	G	1	GREASE UNIWAY LI62 CARTRID.400GR	
336	90296-0075	-	L	4	OIL 54322-320 ACC TO M 1254.322	
350	90208-0120	-		1	CONE CLAMP. ELEMENT 22/32, L=25	
360	90417-0076	A		1	TIMING BELT T10X920X25 POLYURETH	
380	90457-0127	A		1	TENSIONER, TYPE SE-F-15	
390	90457-0128	A		1	CLAMPING ROLL	
500	312101-0329	-		2	SCREW M6S M5X16 FZB	
510	312101-0366	-		3	SCREW M6S M6X12 FZB	
520	312101-0368	-		6	SCREW M6S M6X16 FZB	
525	312101-0370	-		1	SCREW M6S M6X20 FZB	
527	312101-0376	-		1	SCREW M6S M6X35 FZB	
530	312101-0489	-		1	SCREW M6S M10X16 FZB	
540	312101-0504	-		4	SCREW M6S M10X65 FZB	
550	312101-0550	-		6	SCREW M6S M12X90 FZB	
570	312115-0372	-		3	SCREW ISO4762 M6X25 A4	
580	312121-0323	-		5	SCREW SLOT.PAN HD. MCS 5X8 FZB	
590	312155-0449	-		1	SCREW EN 10642 MF6S M8X16 A480	
600	315101-0153	-		6	WASHER PLAIN, BRB, 6,4/12 H=1,5	
610	315111-0173	-		5	WASHER PLAIN, TBRB 10,5/22 H=4	
620	315111-0178	-		4	WASHER PLAIN, TBRB 13/24 H=4	
640	315121-0153	-		2	WASHER PLAIN, TBRSB 6,4/22 H=4	
650	315121-0178	-		2	WASHER PLAIN, TBRSB 13/36 H=6	
660	315221-0169	-		2	RADIAL SEAL 30X47X7 MM	
670	315701-0239	-		1	PARALLEL KEY W. ROUND ENDS 6X6X40 MM	
675	315701-0268	-		1	PARALLEL KEY W. ROUND ENDS 8X7X32 MM	
680	90458-1591	A		1	TIMING BELT T10X1000X25 POLYURETHANE	
690	321308-0207	A		2	BALL BEARING, 2 SEALS, 35X62X14 MM	
700	321313-0105	A		2	BALL BEAR. 2 SEALS 25X52X15MM	
710	321600-0114	-		2	SEAL COVER LL3052	
712	342701-0208	-		1	BUSHING, INT/EXT. G-THREAD NO. 3/4-1/4	
714	342930-0122	-		1	ELBOW 90 COUPL.,EXT.THREAD 8/6-R1/4"	
716	342980-0122	-		1	BANJO-CONNECTION,RING 8/6-G1/4"	
718	342980-0304	-		1	BANJO-HOLLOW BOLT COUPL,EXT.THR.01-G1/4"	
720	342991-0104	-		2	HOSE CLIP,WORM DRIVE TYPE (23)-27	
730	311102-0153	-		3	PARALLELL PIN, CP, M6, 1,5X10 MM	
740	315705-0269	-		1	PARALLEL KEY W. ROUND ENDS 8X7X35 MM	
MY022	90458-2200	A		1	ELECTROMAGNETIC CLUTCH, 30 MM/24 VDC	
MY043	90432-0023	A		1	BRAKE ORTLINGHAUS	

Machine Type	Group Description	Used-In	Group Number	Page No

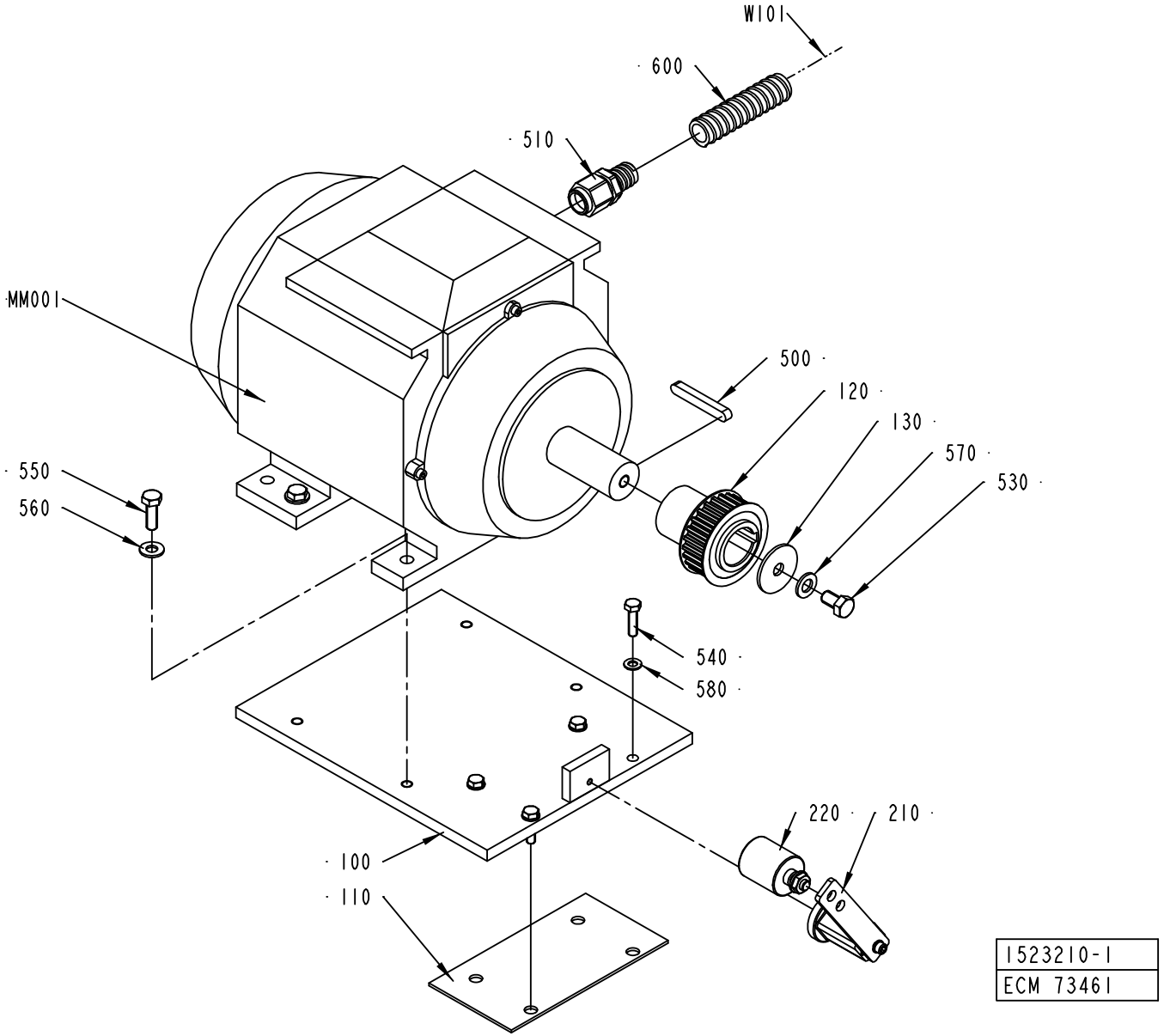
W101
600
510
MM001
500
120
130
570
530
550
560
540
580
220
210
100
110
1523210-1
ECM 73461

ECM: 115435 - 20020930
Group number: 1523210-0100
Assembly Drawing: 1523210-1_1_AA

Pos	Part No	SP	UN	Qty	Description	Page No
-						
100	1517230-0000	-		1	BRACKET	
110	1517231-0000	-		1	RUBBER SHIM	
120	1523215-0000	-		1	TIMING PULLEY	
130	1523211-0000	-		1	WASHER	
210	90457-0127	A		1	TENSIONER, TYPE SE-F-15	
220	90457-0128	A		1	CLAMPING ROLL	
500	315705-0307	-		1	PARALLEL KEY W. ROUND ENDS 10X8X70 MM	
510	90458-0450	-		1	GLAND, M25X1,5, NO. 2255416S08UL16	
530	312105-0532	-		1	SCREW M6S ISO 4017 M12X20 A480	
540	312105-0455	-		4	SCREW M6S ISO 4017 M8X30 A480	
550	312105-0495	-		4	SCREW M6S ISO 4017 M10X30 A480	
560	315105-0173	-		4	WASHER ISO 7089-10-200 HV-A4	
570	315105-0178	-		1	WASHER ISO 7089-12-200 HV-A4	
580	315105-0165	-		4	WASHER ISO 7089-8-200 HV-A4	
600	90152-0051	-	MM	2200	SPIRAL CONDUIT, 25X18, UL 1816	
MM001	90457-0172	A		1	MOTOR 3GAA 131001-ASA	
W101	90220-0105	-	M	6	SCR. CABLE 4X2,5MM2	

Pos	Part No	SP	UN	Qty	Description	Page No

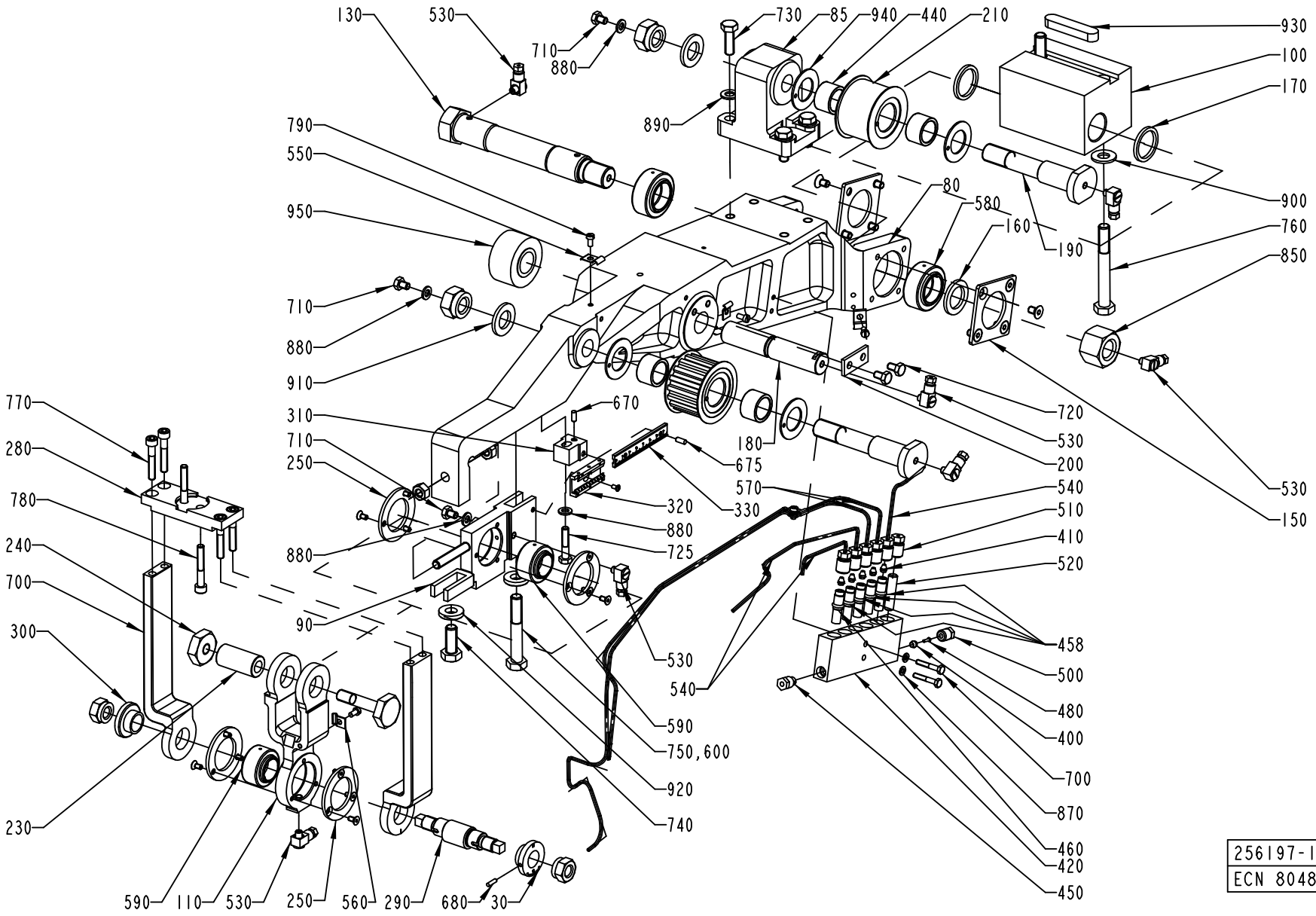

256197-19
ECN 80488

ECM: 115427 - 20020930
Group number: 256197-0500
Assembly Drawing: 256197-19_1_AA

Pos	Part No	SP	UN	Qty	Description	Page No
-						
030	272459-0000	-		1	WASHER	
080	751212-0000	-		1	ARM	
085	272442-0000	-		1	CANTILEVER	
090	978275-0000	-		1	BEARING HOLDER	
100	272455-0000	-		1	BEARING BRACKET	
110	272456-0000	-		1	LINK	
120	272457-0000	-		2	BOW CLAMP	
130	295770-0000	-		1	AXLE BOLT	
140	256421-0000	-		1	PULLEY	
150	256422-0000	-		2	WASHER	
160	256426-0001	-		1	WASHER	
170	256426-0002	-		2	WASHER	
180	256427-0000	-		1	SHAFT	
190	490916-0000	-		2	AXLE PIN	
200	256472-0000	-		1	WASHER	
210	257306-0000	-		1	ROLL	
220	257308-0000	-		1	SCREW	
230	257309-0000	-		1	SHAFT	
240	257310-0000	-		1	NUT	
250	257311-0000	-		4	CAP	
280	272116-0000	-		1	CAP	
290	272458-0000	-		1	ECCENTRIC SHAFT	
300	272461-0000	-		1	WASHER	
310	978272-0000	-		1	BRACKET	
320	1484792-0000	-		1	SCALE	
330	1484791-0000	-		1	SCALE	
400	90028-0021	A		1	CONE TUBE 4 MM	
410	90028-0020	A		5	CONE TUBE 2,5MM	
420	90032-0040	-		1	BLOCK 6 WAYS	
440	321531-0248	B		4	NEEDLE SLEEVE W/O CONE 20X26X16	
450	90087-0019	-		1	PLUG M10X1 STAINLESS	
458	90092-0052	A		4	METERING VALVE 10 MM3	
460	90092-0053	A		1	METERING VALVE 30 MM3	
480	90134-0031	A		1	SLEEVE FOR PLASTIC TUBE	
500	90134-0038	-		1	BUSHING/NUT INLET/OUTLET 4 MM	
510	90134-0039	-		6	BUSHING VALVE CONNECTION 2,5 MM	
520	90134-0052	-		1	PLUG DOSING BLOCK	
530	90134-0058	-		7	CONNECTION	
540	90266-0019	-	MM	550	PIPE	
550	90165-0002	-		3	CLIP	
560	90165-0022	-		2	PIPE CLIP, FOR TUBE D=2,5 MM, B-3570	
570	90166-0143	-	MM	1100	TUBE 2,5 MM PA,TRANSP.	
580	90240-0048	A		2	PLAIN BEAR,SELF ADJ.SPHER. 25X42X20 MM	
590	90240-0050	A		2	PLAIN BEAR,SELF ADJ. 20X35X24	
600	90157-0016	-		1	LOCKING FLUID	
670	311101-0267	-		1	PARALLELL PIN, CP, H6, 4X10 MM	
675	311103-0267	-		1	PARALLELL PIN, M6, 4X10 MM	
680	311303-0234	-		1	SLOTTED PIRPB3X12FZB	
700	312101-0297	-		2	SCREW M6S M4X25 FZB	
710	312101-0362	-		3	SCREW M6S M6X8 FZB	
720	312101-0364	-		2	SCREW M6S M6X10 FZB	
725	312105-0374	-		1	SCREW M6S ISO 4014 M6X30 A480	
730	312101-0453	-		4	SCREW M6S M8X25 FZB	
740	312101-0493	-		1	SCREW M6S M10X25 FZB	
750	312101-0504	-		1	SCREW M6S M10X65 FZB	
760	312101-0507	-		2	SCREW M6S M10X80 FZB	
770	312111-0376	-		4	SCREW HEX.SOCK.HD.MC6S-TT 6X35 88 FZB	
780	312111-0378	-		2	SCREW HEX.SOCK.HD.MC6S-TT 6X40 88 FZB	
790	312121-0287	-		5	SCREW SLOT.PAN HD. MCS 4X8 FZB	
795	312145-0220	-		1	SCREW COUNTERS.SLOT.HD. MFS 3X6 SS	
800	312151-0287	-		12	SCREW HEX.SOCK.COUNT.MF6S 4X8 FZB	
810	312151-0364	-		8	SCREW HEX.SOCK.COUNT.MF6S 6X10 FZB	
820	312601-0318	-		2	NUT M6M8FZB	
830	312811-0322	-		2	NUT HEX.LOCK HELI COIL MID GRIP M12 SS	
840	312811-0324	-		2	NUT HEX.LOCK HELI COIL MID GRIP M16 SS	
850	312811-0326	-		1	NUT HEX.LOCK HELI COIL MID GRIP M20 SS	
870	315101-0136	-		2	BRICKA, BRB, 4,3/8 H=0,8	
880	315101-0153	-		4	WASHER PLAIN, BRB, 6,4/12 H=1,5	
890	315101-0165	-		4	WASHER PLAIN, BRB, 8,4/16 H=1,5	
900	315101-0173	-		2	WASHER PLAIN, BRB, 10,5/22 H=2	
910	315101-0186	-		2	WASHER PLAIN, BRB, 17/30 H=3	
920	315111-0173	-		2	WASHER PLAIN, TBRB 10,5/22 H=4	
930	315701-0335	-		1	PARALLEL KEY W. ROUND ENDS 12X8X56 MM	
940	321129-0137	-		4	THRUST WASHER, 22/38X1,5	
950	321576-0260	A		1	BEAR.ROLLER, 2 SEALS 20X47X25	

Machine Type | Group Description | Used-In | Group Number | Page No

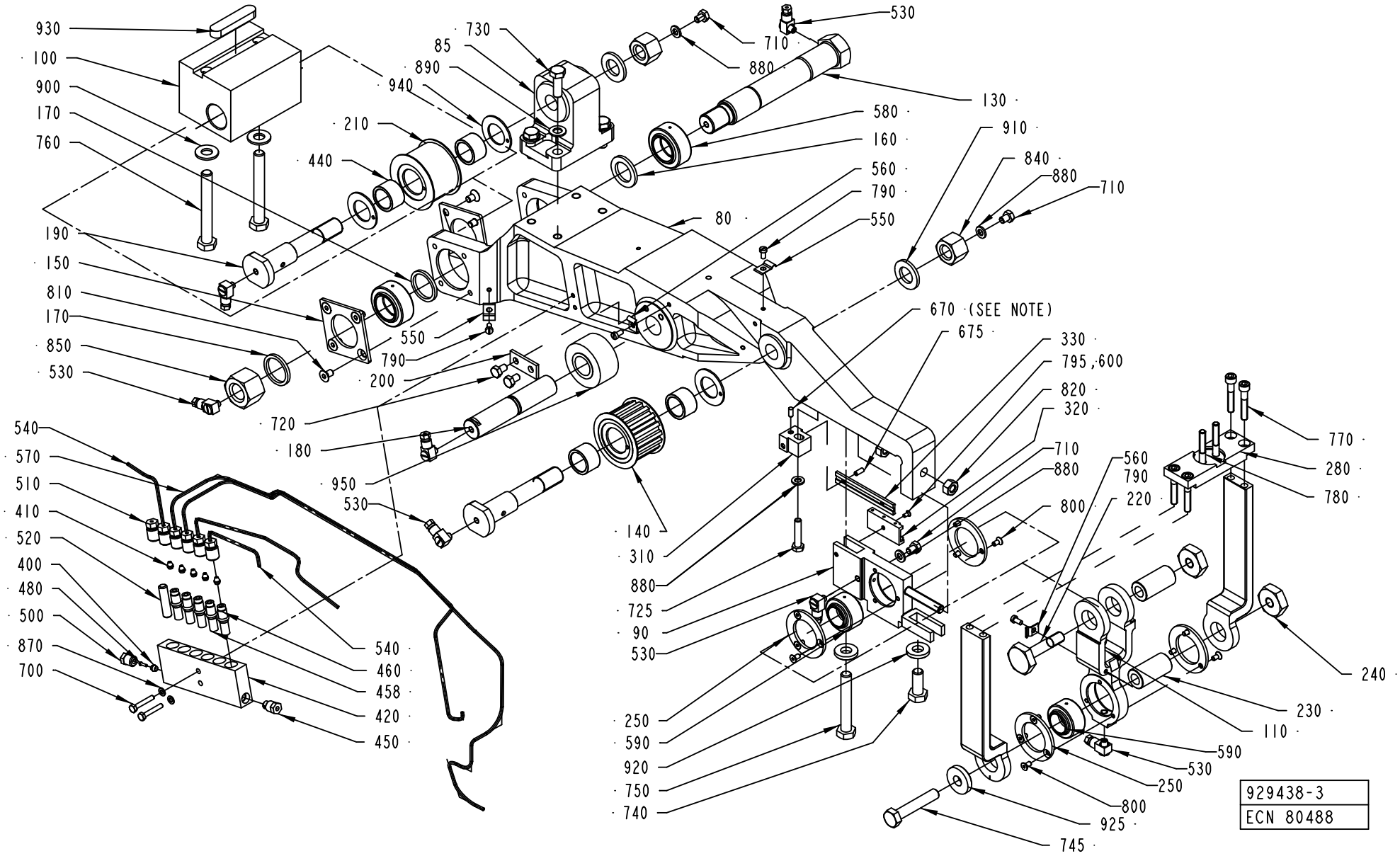
930
100
900
170
760
730
85
890
940
210
440
190
150
810
170
850
530
550
790
200
720
180
950
530
540
570
510
410
520
400
480
500
870
700
540
460
458
420
450
530
710
880
130
580
160
560
790
550
80
910
840
880
710
670 (SEE NOTE)
675
330
795,600
820
320
710
880
800
140
310
880
725
90
530
250
590
920
750
740
560
790
220
770
280
780
240
230
110
590
530
250
800
925
745
929438-3
ECN 80488

ECM: 115428 - 20020930
Group number: 929438-0100
Assembly Drawing: 929438-3_1_AA

Pos	Part No	SP	UN	Qty	Description	Page No
-						
080	751212-0000	-		1	ARM	
085	272442-0000	-		1	CANTILEVER	
090	978275-0000	-		1	BEARING HOLDER	
100	272455-0000	-		1	BEARING BRACKET	
110	272456-0000	-		1	LINK	
120	272457-0000	-		2	BOW CLAMP	
130	295770-0000	-		1	AXLE BOLT	
140	256421-0000	-		1	PULLEY	
150	256422-0000	-		2	WASHER	
160	256426-0001	-		1	WASHER	
170	256426-0002	-		2	WASHER	
180	256427-0000	-		1	SHAFT	
190	490916-0000	-		2	AXLE PIN	
200	256472-0000	-		1	WASHER	
210	257306-0000	-		1	ROLL	
220	257308-0000	-		1	SCREW	
230	257309-0000	-		2	SHAFT	
240	257310-0000	-		2	NUT	
250	257311-0000	-		4	CAP	
280	272116-0000	-		1	CAP	
310	978272-0000	-		1	BRACKET	
320	1484792-0000	-		1	SCALE	
330	1484791-0000	-		1	SCALE	
400	90028-0021	A		1	CONE TUBE 4 MM	
410	90028-0020	A		5	CONE TUBE 2,5MM	
420	90032-0040	-		1	BLOCK 6 WAYS	
440	321531-0248	B		4	NEEDLE SLEEVE W/O CONE 20X26X16	
450	90087-0019	-		1	PLUG M10X1 STAINLESS	
458	90092-0052	A		4	METERING VALVE 10 MM3	
460	90092-0053	A		1	METERING VALVE 30 MM3	
480	90134-0031	A		1	SLEEVE FOR PLASTIC TUBE	
500	90134-0038	-		1	BUSHING/NUT INLET/OUTLET 4 MM	
510	90134-0039	-		6	BUSHING VALVE CONNECTION 2,5 MM	
520	90134-0052	-		1	PLUG DOSING BLOCK	
530	90134-0058	-		7	CONNECTION	
540	90266-0019	-	MM	550	PIPE	
550	90165-0002	-		3	CLIP	
560	90165-0022	-		2	PIPE CLIP, FOR TUBE D=2,5 MM, B-3570	
570	90166-0143	-	MM	1100	TUBE 2,5 MM PA,TRANSP.	
580	90240-0048	A		2	PLAIN BEAR,SELF ADJ.SPHER. 25X42X20 MM	
590	90240-0050	A		2	PLAIN BEAR,SELF ADJ. 20X35X24	
600	90157-0016	-		1	LOCKING FLUID	
670	311101-0267	-		1	PARALLELL PIN, CP, H6, 4X10 MM	
675	311103-0267	-		1	PARALLELL PIN, M6, 4X10 MM	
700	312101-0297	-		2	SCREW M6S M4X25 FZB	
710	312101-0362	-		3	SCREW M6S M6X8 FZB	
720	312101-0364	-		2	SCREW M6S M6X10 FZB	
725	312105-0374	-		1	SCREW M6S ISO 4014 M6X30 A480	
730	312101-0453	-		4	SCREW M6S M8X25 FZB	
740	312101-0493	-		1	SCREW M6S M10X25 FZB	
745	312101-0502	-		1	SCREW M6S M10X55 FZB	
750	312101-0504	-		1	SCREW M6S M10X65 FZB	
760	312101-0507	-		2	SCREW M6S M10X80 FZB	
770	312111-0376	-		4	SCREW HEX.SOCK.HD.MC6S-TT 6X35 88 FZB	
780	312111-0378	-		2	SCREW HEX.SOCK.HD.MC6S-TT 6X40 88 FZB	
790	312121-0287	-		5	SCREW SLOT.PAN HD. MCS 4X8 FZB	
795	312145-0220	-		1	SCREW COUNTERS.SLOT.HD. MFS 3X6 SS	
800	312151-0287	-		12	SCREW HEX.SOCK.COUNT.MF6S 4X8 FZB	
810	312151-0364	-		8	SCREW HEX.SOCK.COUNT.MF6S 6X10 FZB	
820	312601-0318	-		2	NUT M6M8FZB	
840	312811-0324	-		2	NUT HEX.LOCK HELI COIL MID GRIP M16 SS	
850	312811-0326	-		1	NUT HEX.LOCK HELI COIL MID GRIP M20 SS	
870	315101-0136	-		2	BRICKA, BRB, 4,3/8 H=0,8	
880	315101-0153	-		4	WASHER PLAIN, BRB, 6,4/12 H=1,5	
890	315101-0165	-		4	WASHER PLAIN, BRB, 8,4/16 H=1,5	
900	315101-0173	-		2	WASHER PLAIN, BRB, 10,5/22 H=2	
910	315101-0186	-		2	WASHER PLAIN, BRB, 17/30 H=3	
920	315111-0173	-		2	WASHER PLAIN, TBRB 10,5/22 H=4	
925	315121-0173	-		1	WASHER PLAIN, TBRSB 10,5/28 H=6	
930	315701-0335	-		1	PARALLEL KEY W. ROUND ENDS 12X8X56 MM	
940	321129-0137	-		4	THRUST WASHER, 22/38X1,5	
950	321576-0260	A		1	BEAR.ROLLER, 2 SEALS 20X47X25	

Machine Type | Group Description | Used-In | Group Number | Page No

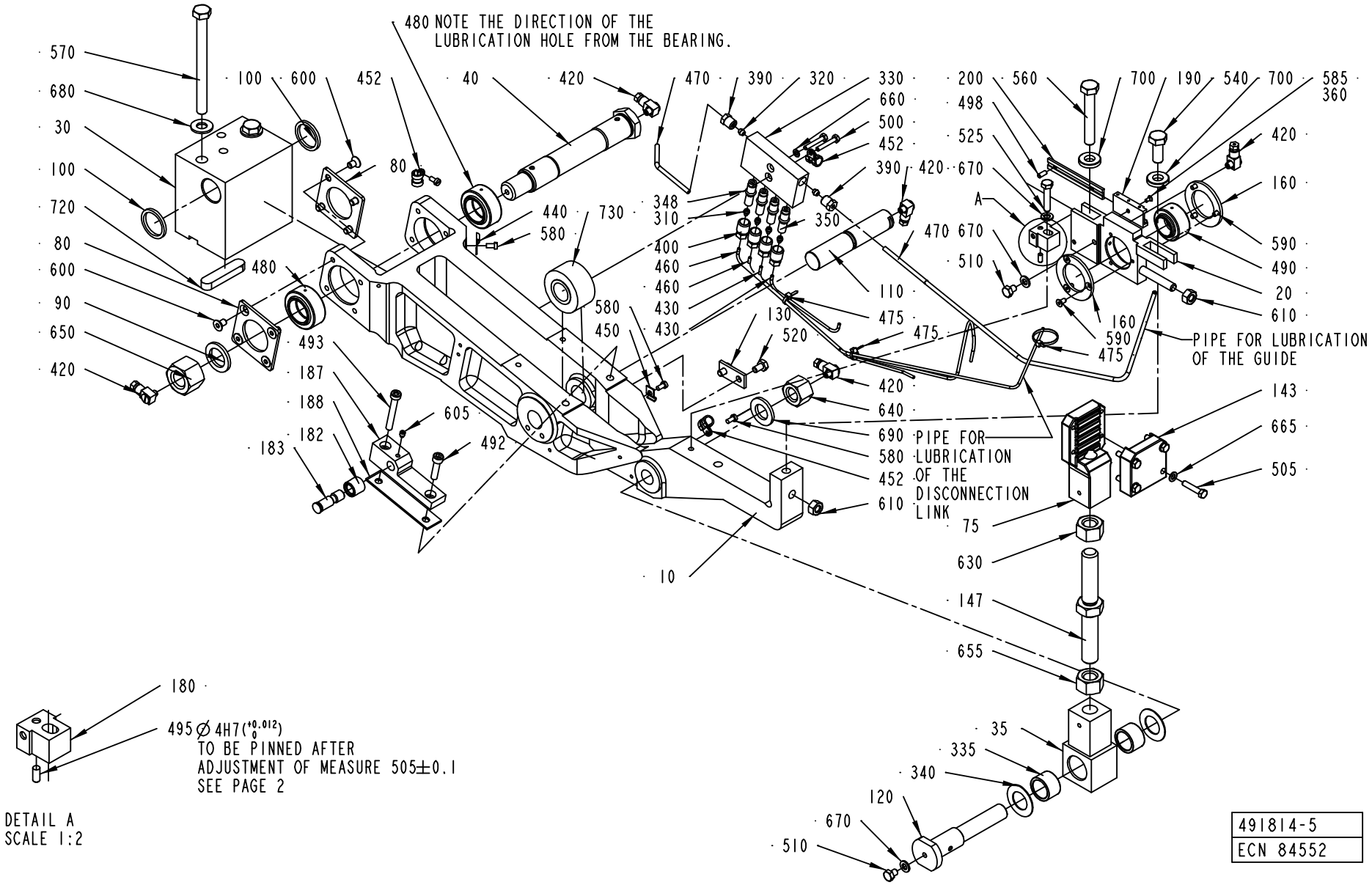

491814-5
ECN 84552

ECM: 115561 - 20020930
Group number: 491814-0300
Assembly Drawing: 491814-5_1_AA

Pos	Part No	SP	UN	Qty	Description	Page No
-						
0010	751212-0000	-		1	ARM	
0020	978275-0000	-		1	BEARING HOLDER	
0030	256418-0000	-		1	BEARING BRACKET	
0035	256515-0000	-		1	END PIECE	
0040	272462-0000	-		1	AXLE BOLT	
0075	272607-0000	-		1	BELT HOLDER	
0080	256422-0000	-		2	WASHER	
0090	256426-0001	-		1	WASHER	
0100	256426-0002	-		2	WASHER	
0110	256427-0000	-		1	SHAFT	
0120	490916-0000	-		1	AXLE PIN	
0130	256472-0000	-		1	WASHER	
0143	256516-0000	-		1	CAP	
0147	256517-0000	-		1	SCREW	
0160	257311-0000	-		2	CAP	
0180	978272-0000	-		1	BRACKET	
0182	491165-0000	A		1	ROLL	
0183	491166-0000	-		1	SHAFT	
0187	751078-0000	-		1	BRACKET RIGHT	
0188	491319-0000	-		2	LACE	
0190	1484792-0000	-		1	SCALE	
0200	1484791-0000	-		1	SCALE	
0310	90028-0020	A		4	CONE TUBE 2,5MM	
0320	90028-0021	A		2	CONE TUBE 4 MM	
0330	90032-0039	-		1	BLOCK 4 WAYS	
0335	321531-0248	B		2	NEEDLE SLEEVE W/O CONE 20X26X16	
0340	90083-0016	-		2	PLATE FOR AXK 2035	
0348	90092-0052	A		3	METERING VALVE 10 MM3	
0350	90092-0053	A		1	METERING VALVE 30 MM3	
0360	90157-0016	-	L	1	LOCKING FLUID	
0390	90134-0038	-		2	BUSHING/NUT INLET/OUTLET 4 MM	
0400	90134-0039	-		4	BUSHING VALVE CONNECTION 2,5 MM	
0420	90134-0058	A		5	CONNECTION	
0430	90266-0019	-	MM	350	PIPE	
0440	90165-0002	-		1	CLIP	
0450	90165-0022	-		1	PIPE CLIP, FOR TUBE D=2,5 MM, B-3570	
0452	90165-0065	-		3	PIPE CLAMP, RSGU 1.8/9, D=8 MM	
0460	90166-0143	-	MM	1100	TUBE 2,5 MM PA,TRANSP.	
0470	90166-0109	-	MM	700	TUBE 4 MM PA,TRANSP.	
0475	352113-0101	-		3	CLIP STRIP, 92X2,5 MM	
0480	90240-0048	A		2	PLAIN BEAR,SELF ADJ.SPHER. 25X42X20 MM	
0490	90240-0050	A		1	PLAIN BEAR,SELF ADJ. 20X35X24	
0492	90287-0143	-		1	SCREW MC6S M6X25 129	
0493	90287-0144	-		1	SCREW MC6S M6X35 129	
0495	311101-0267	-		1	PARALLELL PIN, CP, H6, 4X10 MM	
0498	311103-0267	-		1	PARALLELL PIN, M6, 4X10 MM	
0500	312101-0297	-		2	SCREW M6S M4X25 FZB	
0505	312101-0333	-		4	SCREW M6S M5X25 FZB	
0510	312101-0362	-		2	SCREW M6S M6X8 FZB	
0520	312101-0364	-		2	SCREW M6S M6X10 FZB	
0525	312105-0374	-		1	SCREW M6S ISO 4014 M6X30 A480	
0540	312101-0493	-		1	SCREW M6S M10X25 FZB	
0560	312101-0504	-		1	SCREW M6S M10X65 FZB	
0570	312101-0515	-		2	SCREW M6S M10X120 FZB	
0580	312121-0287	-		4	SCREW SLOT.PAN HD. MCS 4X8 FZB	
0585	312145-0220	-		1	SCREW COUNTERS.SLOT.HD. MFS 3X6 SS	
0590	312151-0287	-		6	SCREW HEX.SOCK.COUNT.MF6S 4X8 FZB	
0600	312151-0364	-		8	SCREW HEX.SOCK.COUNT.MF6S 6X10 FZB	
0605	312311-0321	-		1	SCREW ISO4028 M5X6 FZB	
0610	312601-0318	-		2	NUT M6M8FZB	
0630	312601-0324	-		1	NUT M6M 16-8 FZB	
0640	312811-0324	-		1	NUT HEX.LOCK HELI COIL MID GRIP M16 SS	
0650	312811-0326	-		1	NUT HEX.LOCK HELI COIL MID GRIP M20 SS	
0655	312901-0324	-		1	NUT M6M16VFZB	
0660	315101-0136	-		1	BRICKA, BRB, 4,3/8 H=0,8	
0665	315101-0146	-		4	WASHER PLAIN, BRB, 5,3/10 H=1	
0670	315101-0153	-		3	WASHER PLAIN, BRB, 6,4/12 H=1,5	
0680	315101-0173	-		2	WASHER PLAIN, BRB, 10,5/22 H=2	
0690	315101-0186	-		1	WASHER PLAIN, BRB, 17/30 H=3	
0700	315111-0173	-		2	WASHER PLAIN, TBRB 10,5/22 H=4	
0720	315701-0335	-		1	PARALLEL KEY W. ROUND ENDS 12X8X56 MM	
0730	321576-0260	A		1	BEAR.ROLLER, 2 SEALS 20X47X25	

Machine Type | Group Description | Used-In | Group Number | Page No

SLEWING BRACKET LEFT

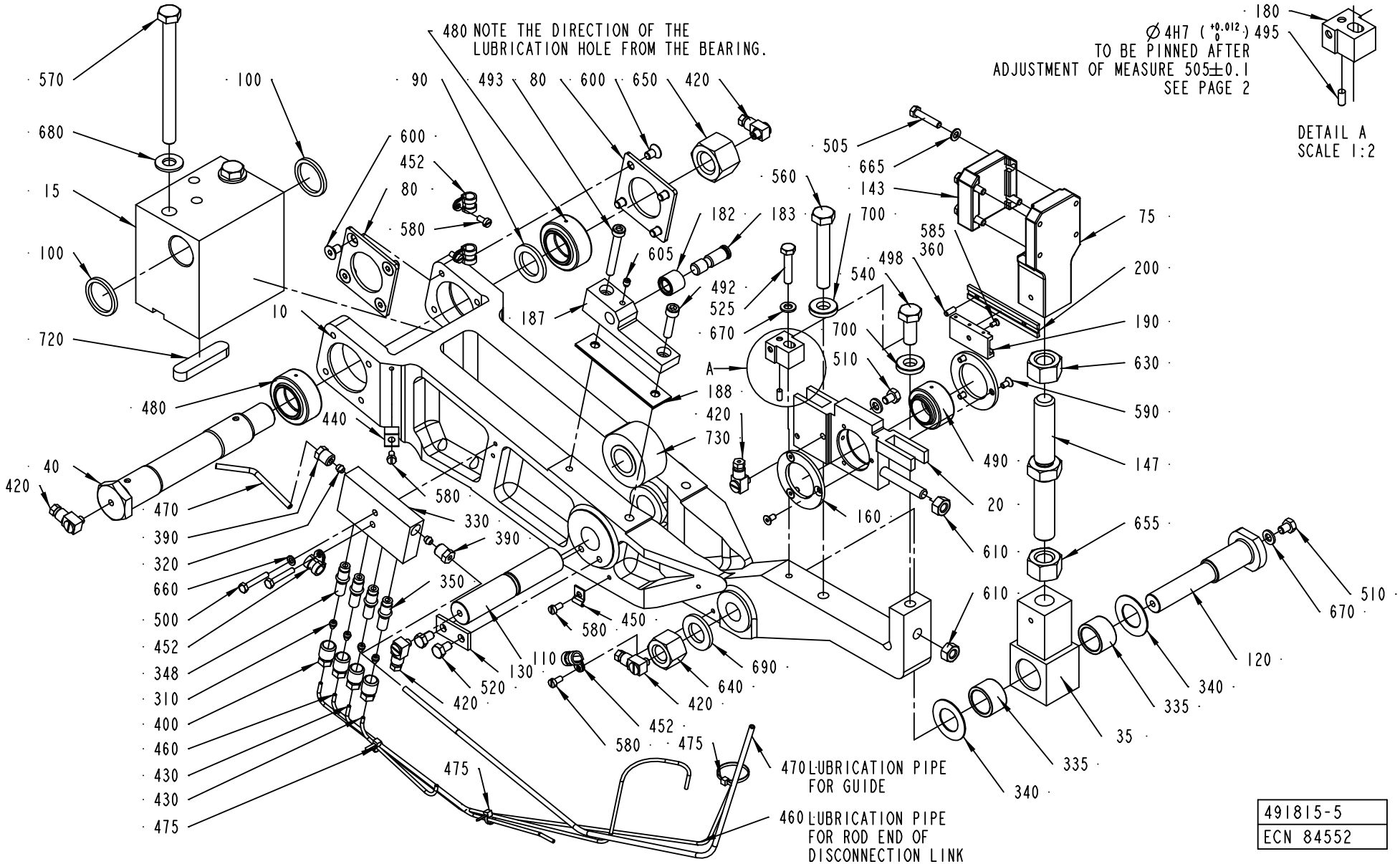

491815-5
ECN 84552

ECM: 115562 - 20020930
Group number: 491815-0300
Assembly Drawing: 491815-5_1_AA

Pos	Part No	SP	UN	Qty	Description	Page No
-						
0010	751212-0000	-		1	ARM	
0015	256418-0000	-		1	BEARING BRACKET	
0020	978275-0000	-		1	BEARING HOLDER	
0035	256515-0000	-		1	END PIECE	
0040	272462-0000	-		1	AXLE BOLT	
0075	272607-0000	-		1	BELT HOLDER	
0080	256422-0000	-		2	WASHER	
0090	256426-0001	-		1	WASHER	
0100	256426-0002	-		2	WASHER	
0110	256427-0000	-		1	SHAFT	
0120	490916-0000	-		1	AXLE PIN	
0130	256472-0000	-		1	WASHER	
0143	256516-0000	-		1	CAP	
0147	256517-0000	-		1	SCREW	
0160	257311-0000	-		2	CAP	
0180	978272-0000	-		1	BRACKET	
0182	491165-0000	A		1	ROLL	
0183	491166-0000	A		1	SHAFT	
0187	751079-0000	-		1	BRACKET LEFT	
0188	491319-0000	-		2	LACE	
0190	1484792-0000	-		1	SCALE	
0200	1484791-0000	-		1	SCALE	
0310	90028-0020	A		4	CONE TUBE 2,5MM	
0320	90028-0021	A		2	CONE TUBE 4 MM	
0330	90032-0039	-		1	BLOCK 4 WAYS	
0335	321531-0248	B		2	NEEDLE SLEEVE W/O CONE 20X26X16	
0340	90083-0016	-		2	PLATE FOR AXK 2035	
0348	90092-0052	A		3	METERING VALVE 10 MM3	
0350	90092-0053	A		1	METERING VALVE 30 MM3	
0360	90157-0016	-		1	LOCKING FLUID	
0390	90134-0038	-		2	BUSHING/NUT INLET/OUTLET 4 MM	
0400	90134-0039	-		4	BUSHING VALVE CONNECTION 2,5 MM	
0420	90134-0058	A		5	CONNECTION	
0430	90266-0019	-	MM	350	PIPE	
0440	90165-0002	-		1	CLIP	
0450	90165-0022	-		1	PIPE CLIP, FOR TUBE D=2,5 MM, B-3570	
0452	90165-0065	-		4	PIPE CLAMP, RSGU 1.8/9, D=8 MM	
0460	90166-0143	-	MM	1100	TUBE 2,5 MM PA,TRANSP.	
0470	90166-0109	-	MM	700	TUBE 4 MM PA,TRANSP.	
0475	352113-0101	-		3	CLIP STRIP, 92X2,5 MM	
0480	90240-0048	A		2	PLAIN BEAR,SELF ADJ.SPHER. 25X42X20 MM	
0490	90240-0050	A		1	PLAIN BEAR,SELF ADJ. 20X35X24	
0492	90287-0143	-		1	SCREW MC6S M6X25 129	
0493	90287-0144	-		1	SCREW MC6S M6X35 129	
0495	311101-0267	-		1	PARALLELL PIN, CP, H6, 4X10 MM	
0498	311103-0267	-		1	PARALLELL PIN, M6, 4X10 MM	
0500	312101-0297	-		2	SCREW M6S M4X25 FZB	
0505	312101-0333	-		4	SCREW M6S M5X25 FZB	
0510	312101-0362	-		2	SCREW M6S M6X8 FZB	
0520	312101-0364	-		2	SCREW M6S M6X10 FZB	
0525	312105-0374	-		1	SCREW M6S ISO 4014 M6X30 A480	
0540	312101-0493	-		1	SCREW M6S M10X25 FZB	
0560	312101-0504	-		1	SCREW M6S M10X65 FZB	
0570	312101-0515	-		2	SCREW M6S M10X120 FZB	
0580	312121-0287	-		5	SCREW SLOT.PAN HD. MCS 4X8 FZB	
0585	312145-0220	-		1	SCREW COUNTERS.SLOT.HD. MFS 3X6 SS	
0590	312151-0287	-		6	SCREW HEX.SOCK.COUNT.MF6S 4X8 FZB	
0600	312151-0364	-		8	SCREW HEX.SOCK.COUNT.MF6S 6X10 FZB	
0605	312311-0321	-		1	SCREW ISO4028 M5X6 FZB	
0610	312601-0318	-		2	NUT M6M8FZB	
0630	312601-0324	-		1	NUT M6M 16-8 FZB	
0640	312811-0324	-		1	NUT HEX.LOCK HELI COIL MID GRIP M16 SS	
0650	312811-0326	-		1	NUT HEX.LOCK HELI COIL MID GRIP M20 SS	
0655	312901-0324	-		1	NUT M6M16VFZB	
0660	315101-0136	-		1	BRICKA, BRB, 4,3/8 H=0,8	
0665	315101-0146	-		4	WASHER PLAIN, BRB, 5,3/10 H=1	
0670	315101-0153	-		3	WASHER PLAIN, BRB, 6,4/12 H=1,5	
0680	315101-0173	-		2	WASHER PLAIN, BRB, 10,5/22 H=2	
0690	315101-0186	-		1	WASHER PLAIN, BRB, 17/30 H=3	
0700	315111-0173	-		2	WASHER PLAIN, TBRB 10,5/22 H=4	
0720	315701-0335	-		1	PARALLEL KEY W. ROUND ENDS 12X8X56 MM	
0730	321576-0260	A		1	BEAR.ROLLER, 2 SEALS 20X47X25	

Machine Type | Group Description | Used-In | Group Number | Page No

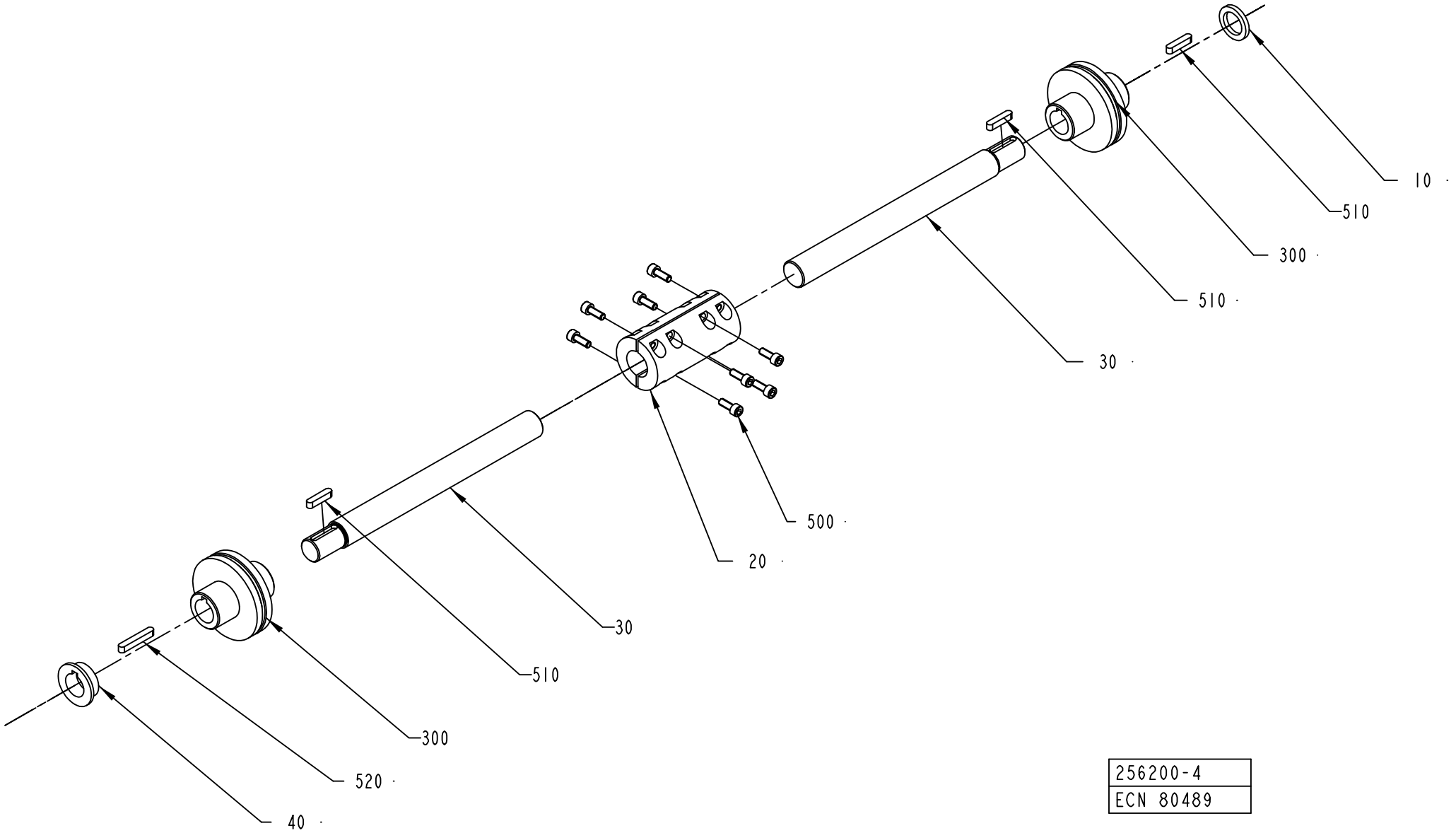

256200-4
ECN 80489

ECM: 119095 - 20021213
Group number: 256200-0300
Assembly Drawing: 256200-4_1_AB

Pos	Part No	SP	UN	Qty	Description	Page No
TBA						
030	441339-0000	-		2	SHAFT	
Common Parts						
010	272857-0000	-		1	RING	
020	295983-0000	-		1	CONNECTION	
040	441720-0000	-		1	SPACER	
300	90355-0048	A		2	TORQUE RIGID COUPLING, 22X22 MM	
500	312111-0368	-		8	SCREW HEX.SOCK.HD.MC6S-TT 6X16 88 FZB	
510	315701-0235	-		3	PARALLEL KEY W. ROUND ENDS 6X6X28 MM	
520	315701-0239	-		1	PARALLEL KEY W. ROUND ENDS 6X6X40 MM	

Pos	Part No	SP	UN	Qty	Description	Page No

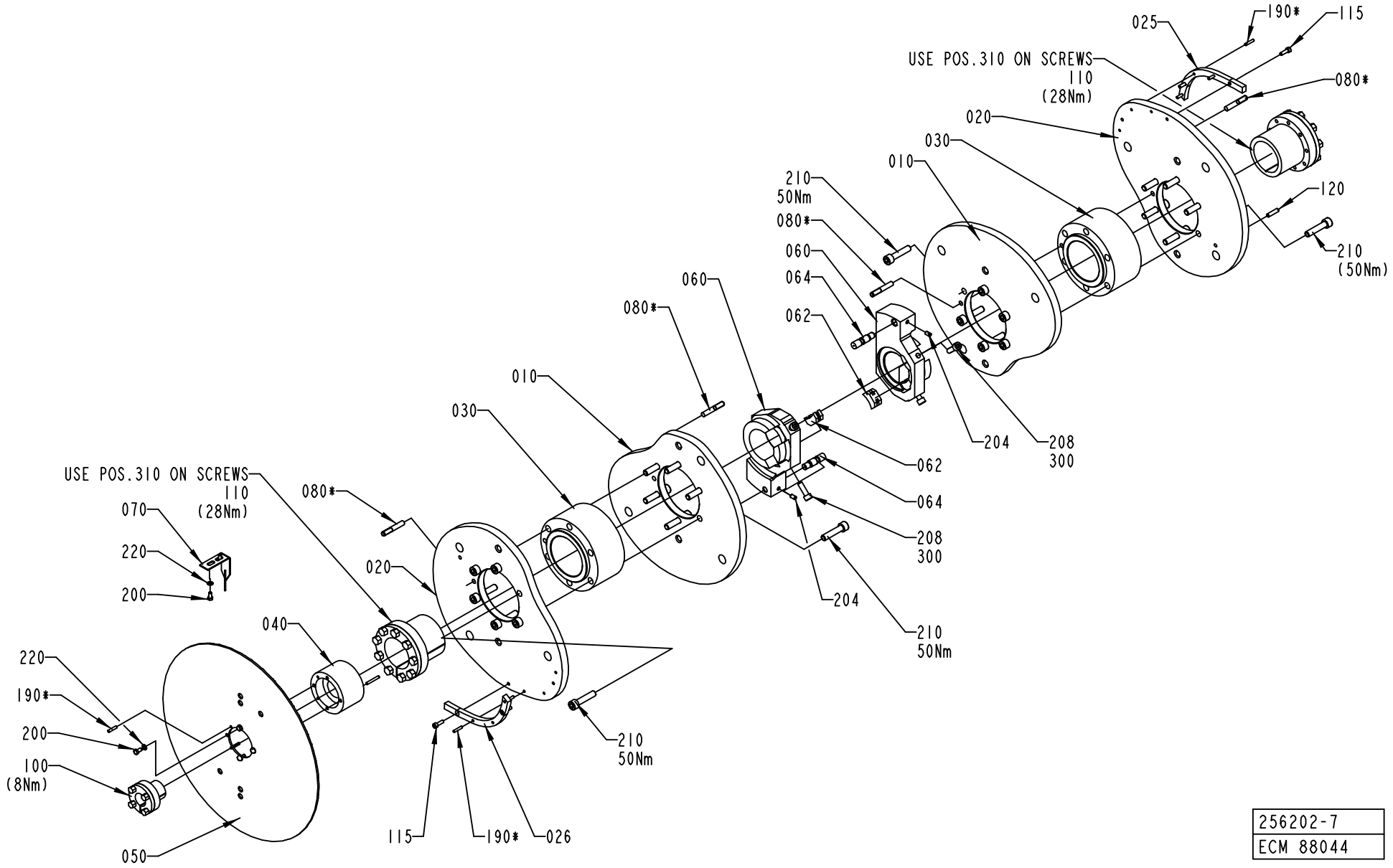
025
190*
115
USE POS.310 ON SCREWS
110
(28Nm)
080*
020
030
010
210
50Nm
080*
060
064
062
120
210
(50Nm)
060
080*
010
030
062
064
208
300
204
208
300
204
210
50Nm
USE POS.310 ON SCREWS
110
(28Nm)
070
220
200
080*
020
040
220
190*
200
100
(8Nm)
050
115
190*
026
210
50Nm
256202-7
ECM 88044

ECM: 115430 - 20020930
Group number: 256202-0700
Assembly Drawing: 256202-7_1_AA

This list covers pages from 226 to 229

Pos	Part No	SP	UN	Qty	Description	Page No
TBA 0100B						
010	979778-0000	A		2	YOKE CAM 100	
020	979779-0000	A		2	ARM CAM 100	
025	979780-0000	A		1	CAM SEGMENT R 100	
026	979781-0000	A		1	CAM SEGMENT L 100	
210	312115-0500	-		24	SCREW ISO4762 M10X45 A4	
230	315101-0173	-		24	WASHER PLAIN, BRB, 10,5/22 H=2	
TBA 0125S						
010	978793-0000	A		2	YOKECURVE 125ML	
020	978794-0000	A		2	ARMCURVE 125ML	
025	978795-0000	A		1	CAMSEGMENT R	
026	978796-0000	A		1	CAMSEGMENT L	
192	311103-0276	-		1	PARALLELL PIN, M6, 4X30 MM	
210	312115-0500	-		24	SCREW ISO4762 M10X45 A4	
230	315101-0173	-		24	WASHER PLAIN, BRB, 10,5/22 H=2	
300	90157-0016	-		1	LOCKING FLUID	
TBA 0160S						
010	577217-0000	A		2	YOKECAM 160ML	
020	577218-0000	A		2	ARMCAM 160ML	
025	577219-0000	A		1	CAMSEGMENT R	
026	577220-0000	A		1	CAMSEGMENT L	
210	312115-0500	-		24	SCREW ISO4762 M10X45 A4	
230	315101-0173	-		24	WASHER PLAIN, BRB, 10,5/22 H=2	
TBA 0180B						
010	469369-0000	A		2	YOKECAM 180ML	
020	469370-0000	A		2	ARMCAM 180ML	
025	491918-0000	A		1	CAMSEGMENT R	
026	491919-0000	A		1	CAMSEGMENT L	
210	312115-0500	-		24	SCREW ISO4762 M10X45 A4	
230	315101-0173	-		24	WASHER PLAIN, BRB, 10,5/22 H=2	
TBA 0200B						
010	978768-0000	A		2	YOKECURVE200ML	
020	978769-0000	A		2	ARMCURVE 200ML	
025	978770-0000	A		1	CAMSEGMENTL	
026	978771-0000	A		1	CAMSEGMENTL	
192	311103-0276	-		1	PARALLELL PIN, M6, 4X30 MM	
210	312115-0500	-		24	SCREW ISO4762 M10X45 A4	
230	315101-0173	-		24	WASHER PLAIN, BRB, 10,5/22 H=2	
300	90157-0016	-		1	LOCKING FLUID	
TBA 0200M						
010	1282310-0000	A		2	YOKE CAM 200ML MID	
020	1282309-0000	A		2	ARM CAM 200 ML MID	
025	1282312-0000	A		1	CAM SEGMENT R	
026	1282311-0000	A		1	CAM SEGMENT L	
210	312115-0500	-		22	SCREW ISO4762 M10X45 A4	
230	315101-0173	-		22	WASHER PLAIN, BRB, 10,5/22 H=2	
TBA 0200S						
010	978772-0000	A		2	YOKECURVE 200SL	
020	978773-0000	A		2	ARMCURVE 200SL	
025	978774-0000	A		1	CAMSEGMENT R	
026	978775-0000	A		1	CAMSEGMENT L	
192	311103-0276	-		1	PARALLELL PIN, M6, 4X30 MM	
210	312115-0500	-		22	SCREW ISO4762 M10X45 A4	
230	315101-0173	-		22	WASHER PLAIN, BRB, 10,5/22 H=2	
300	90157-0016	-		1	LOCKING FLUID	
TBA 0250B						
010	978776-0000	A		2	YOKECURVE 250ML	
020	978777-0000	A		2	ARMCURVE 250ML	
025	978778-0000	A		1	CAMSEGMENT R	
026	978779-0000	A		1	CAMSEGMENT L	
192	311103-0276	-		1	PARALLELL PIN, M6, 4X30 MM	
210	312115-0500	-		24	SCREW ISO4762 M10X45 A4	
230	315101-0173	-		24	WASHER PLAIN, BRB, 10,5/22 H=2	
300	90157-0016	-		1	LOCKING FLUID	
TBA 0250S						
010	580356-0000	A		2	YOKECAM 250ML SLIM	
020	580357-0000	A		2	ARMCAM 250ML SLIM	
025	580359-0000	A		1	CAM SEGMENT R	
026	580358-0000	A		1	CAM SEGMENT L	
210	312115-0500	-		22	SCREW ISO4762 M10X45 A4	
230	315101-0173	-		22	WASHER PLAIN, BRB, 10,5/22 H=2	
TBA 0300S, TBA 0284B						
010	581533-0000	A		2	YOKE CAM 284ML	
020	581534-0000	A		2	ARM CAM 284ML	
025	581535-0000	A		1	CAMSEGMENT R 284ML	

Machine Type Group Description Used-In Group Number Page No

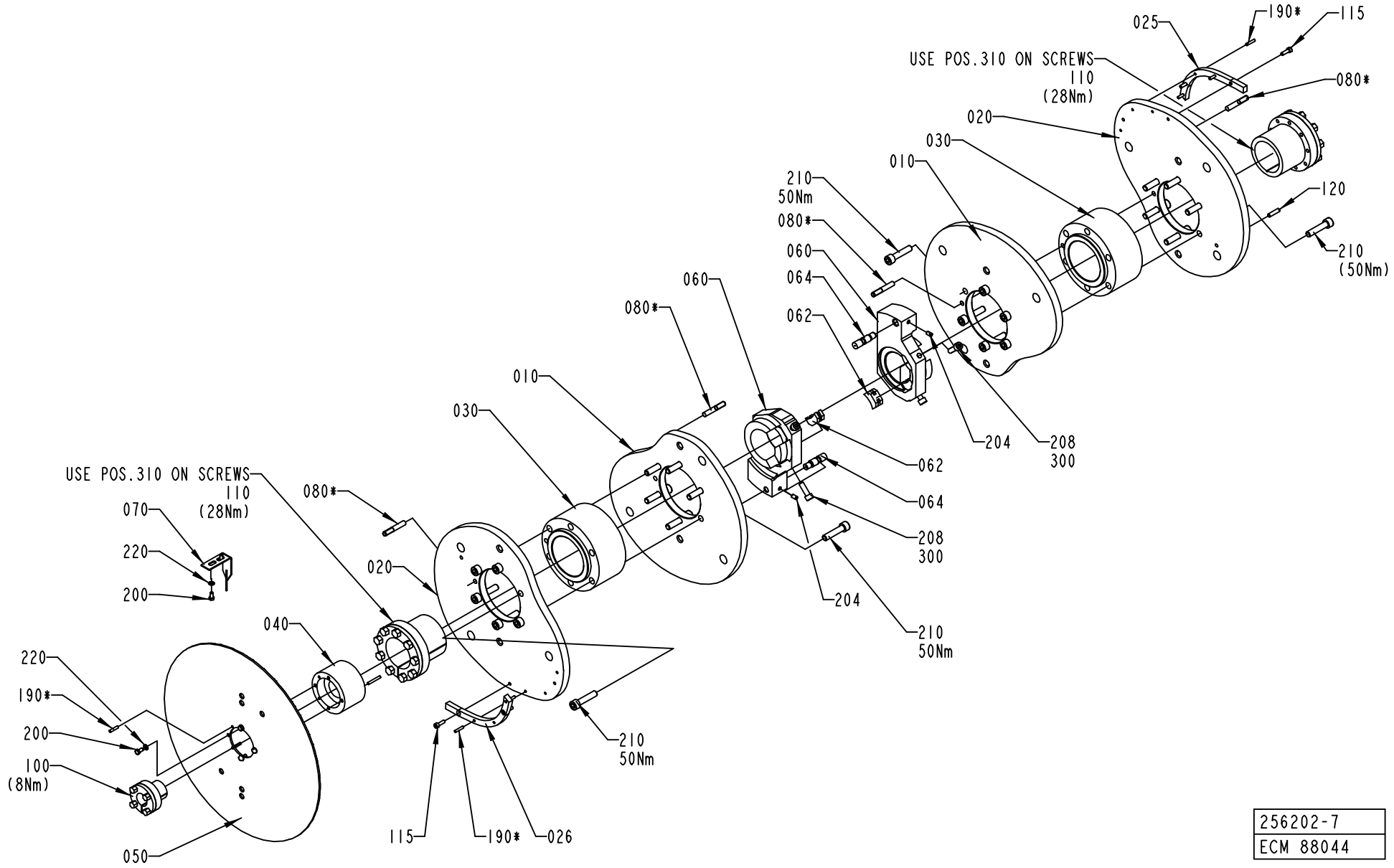
025
190*
115
USE POS.310 ON SCREWS
110
(28Nm)
080*
020
030
010
210
50Nm
080*
060
064
062
120
210
(50Nm)
060
080*
010
030
062
064
208
300
204
208
300
204
210
50Nm
USE POS.310 ON SCREWS
110
(28Nm)
070
220
200
080*
020
040
220
190*
200
100
(8Nm)
050
115
190*
026
210
50Nm
256202-7
ECM 88044

Pos	Part No	SP	UN	Qty	Description	Page No
TBA 0300S, TBA 0284B (Cont'd)						
026	581536-0000	A		1	CAMSEGMENT L 284ML	
192	311103-0276	-		1	PARALLELL PIN, M6, 4X30 MM	
210	312115-0500	-		22	SCREW ISO4762 M10X45 A4	
230	315101-0173	-		22	WASHER PLAIN, BRB, 10,5/22 H=2	
300	90157-0016	-		1	LOCKING FLUID	
TBA 0330S						
010	582197-0000	A		2	YOKE CAM 330S	
020	582195-0000	A		2	ARM CAM 330S	
025	582199-0000	A		1	CAM SEGMENT RIGHT	
026	582200-0000	A		1	CAM SEGMENT LEFT	
210	312115-0500	-		24	SCREW ISO4762 M10X45 A4	
230	315101-0173	-		24	WASHER PLAIN, BRB, 10,5/22 H=2	
Common Parts						
030	456744-0000	-		2	HUB	
040	1523828-0000	-		1	SPACER	
050	2504952-0000	-		1	PROTRACTOR	
060	978609-0000	-		2	ALIGNMENT TEMPLATE	
062	752774-0000	-		4	PLUNGER	
064	978262-0000	-		2	GUIDE PIN	
070	271007-0000	-		1	POINTER	
080	295140-0000	-		4	PIN	
090	978340-0000	-		1	SPACER	
100	90208-0080	A		1	CLAMPING ELEMENT WITH SLEEVE, 25X34 MM	
110	90208-0091	A		2	CLAMPING ELEMENT WITH SLEEVE, 60X77 MM	
115	90287-0145	-		4	SCREW MC6S M5X16 129	
120	929444-0000	-		1	PIN	
190	311103-0272	-		6	PARALLELL PIN, M6, 4X20 MM	
200	312101-0325	-		6	SCREW M6S M5X10 FZB	
204	312318-0364	-		2	SCREW ISO4029 M6X10 A4	
208	312115-0453	-		4	SCREW ISO4762 M8X25 A4	
220	315101-0146	-		6	WASHER PLAIN, BRB, 5,3/10 H=1	

Pos	Part No	SP	UN	Qty	Description	Page No

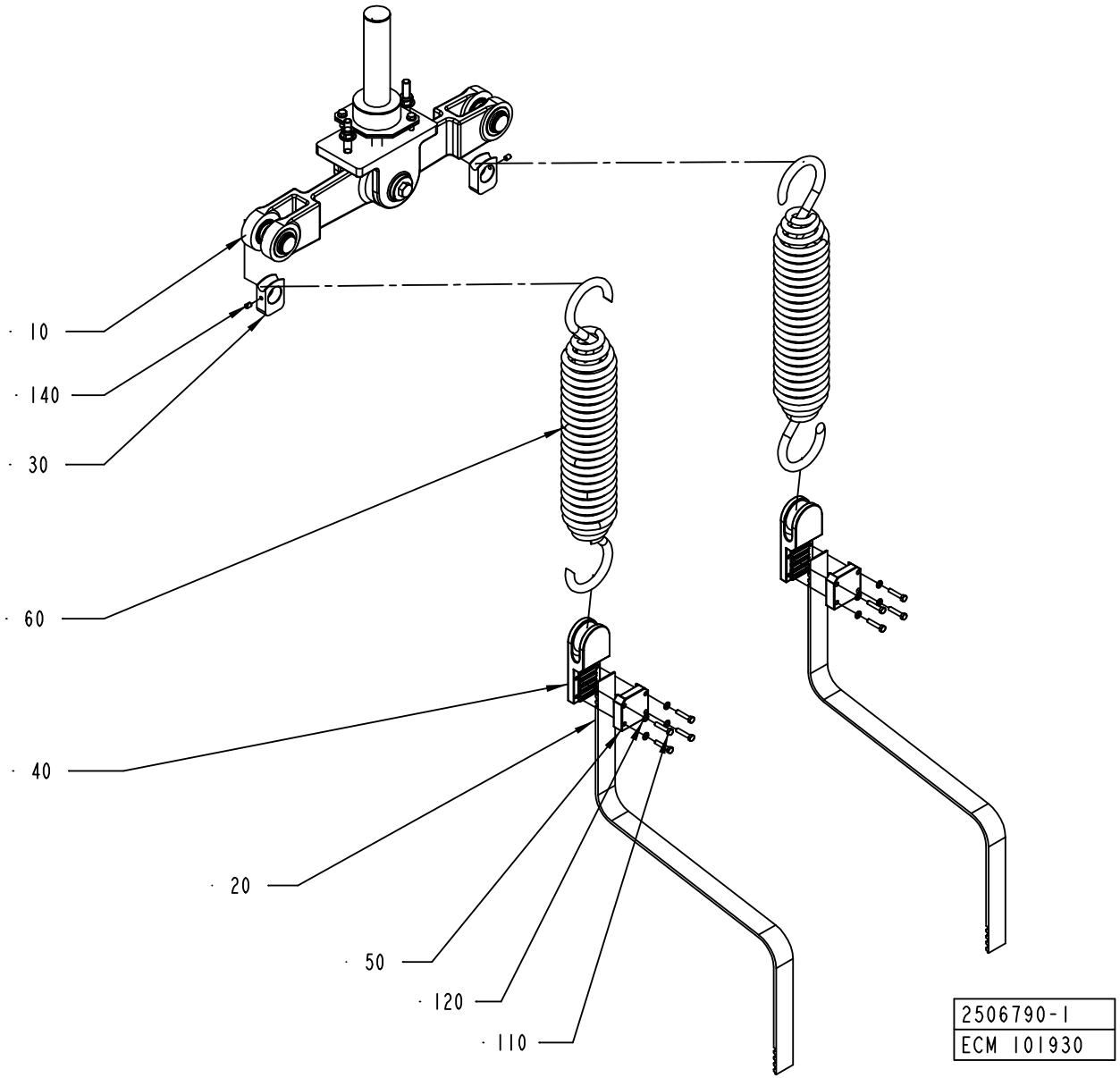
· 10
· 140
· 30
· 60
· 40
· 20
· 50
· 120
· 110
2506790-1
ECM 101930

ECM: 115433 - 20020930
Group number: 2506790-0100
Assembly Drawing: 2506790-1_1_AC

Pos	Part No	SP	UN	Qty	Description	Page No
TBA 0180B, TBA 0160S, TBA 0200B, TBA 0125S, TBA 0100B						
020	1539248-0001	A		2	TIMING BELT	
TBA 0250S, TBA 0200M						
020	1539248-0003	A		2	TIMING BELT	
TBA 0300S, TBA 0284B, TBA 0200S, TBA 0250B						
020	1539248-0002	A		2	TIMING BELT	
TBA 0330S						
020	1539248-0005	A		2	TIMING BELT	
Common Parts						
010	A2507014-0100	-		1	ROCKER ARM	**233**
030	2519460-0000	-		2	SPRING BRACKET	
040	272608-0000	-		2	BELT HOLDER	
050	256516-0000	-		2	CAP	
060	441353-0000	A		2	TENSION SPRING	
110	312101-0333	-		8	SCREW M6S M5X25 FZB	
120	315101-0146	-		8	WASHER PLAIN, BRB, 5,3/10 H=1	
140	312318-0362	-		2	SCREW ISO4029 M6X8 A4	

Pos	Part No	SP	UN	Qty	Description	Page No

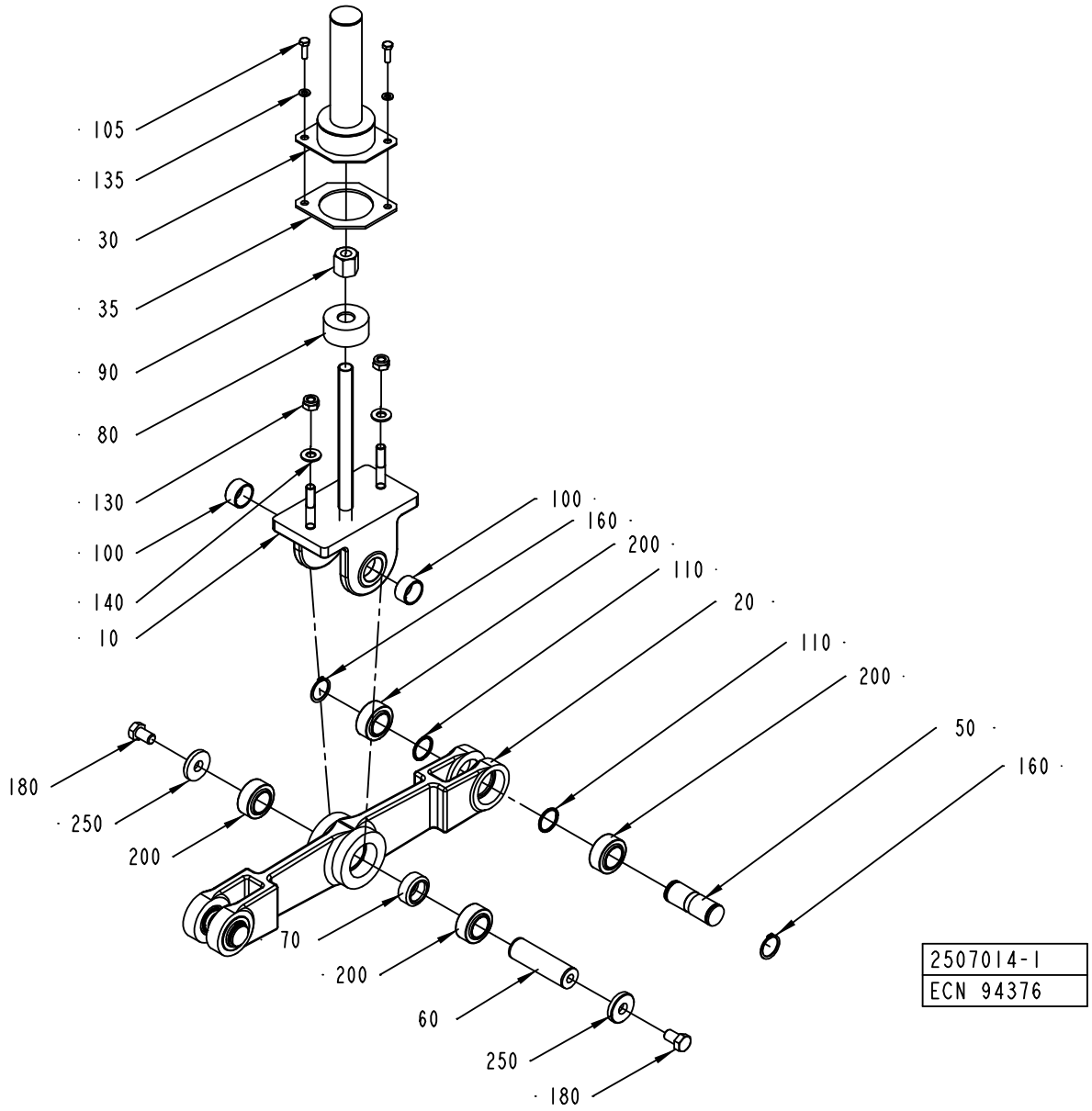
105
135
30
35
90
80
130
100
140
10
100
160
200
110
20
110
200
50
160
180
250
200
70
200
60
250
180
2507014-1
ECN 94376

ECM: 115560 - 20020930
Group number: 2507014-0100
Assembly Drawing: 2507014-1_1_AA

Pos	Part No	SP	UN	Qty	Description	Page No
-						
010	1484457-0000	-		1	BRACKET	
020	1484454-0000	-		1	ROCKER ARM	
030	579623-0000	-		1	PROTECTIVE CASING	
035	579624-0000	-		1	GASKET	
050	1484456-0000	-		2	SHAFT	
060	1484452-0000	-		1	SHAFT	
070	1484453-0000	-		1	SPACER	
080	978207-0000	-		1	SPACER PIPE	
090	978209-0000	-		1	NUT	
100	1484455-0000	-		2	SPACER	
105	312105-0370	-		2	SCREW M6S ISO 4017 M6X20 A480	
110	1484461-0000	-		4	SPACER	
130	312812-0320	-		2	HEXAGON NUT, NY-LOCK M10 A480	
135	315105-0153	-		2	WASHER ISO 7089-6-200 HV-A4	
140	315105-0173	-		2	WASHER ISO 7089-10-200 HV-A4	
160	315751-0119	-		4	RETAIN. RING, 25	
180	312105-0532	-		2	SCREW M6S ISO 4017 M12X20 A480	
200	90457-0188	B		6	BEARING 25X42X20 MM	
250	315121-0178	-		2	WASHER PLAIN, TBRSB 13/36 H=6	

Pos	Part No	SP	UN	Qty	Description	Page No

Machine Type | Group Description | Used-In | Group Number | Page No

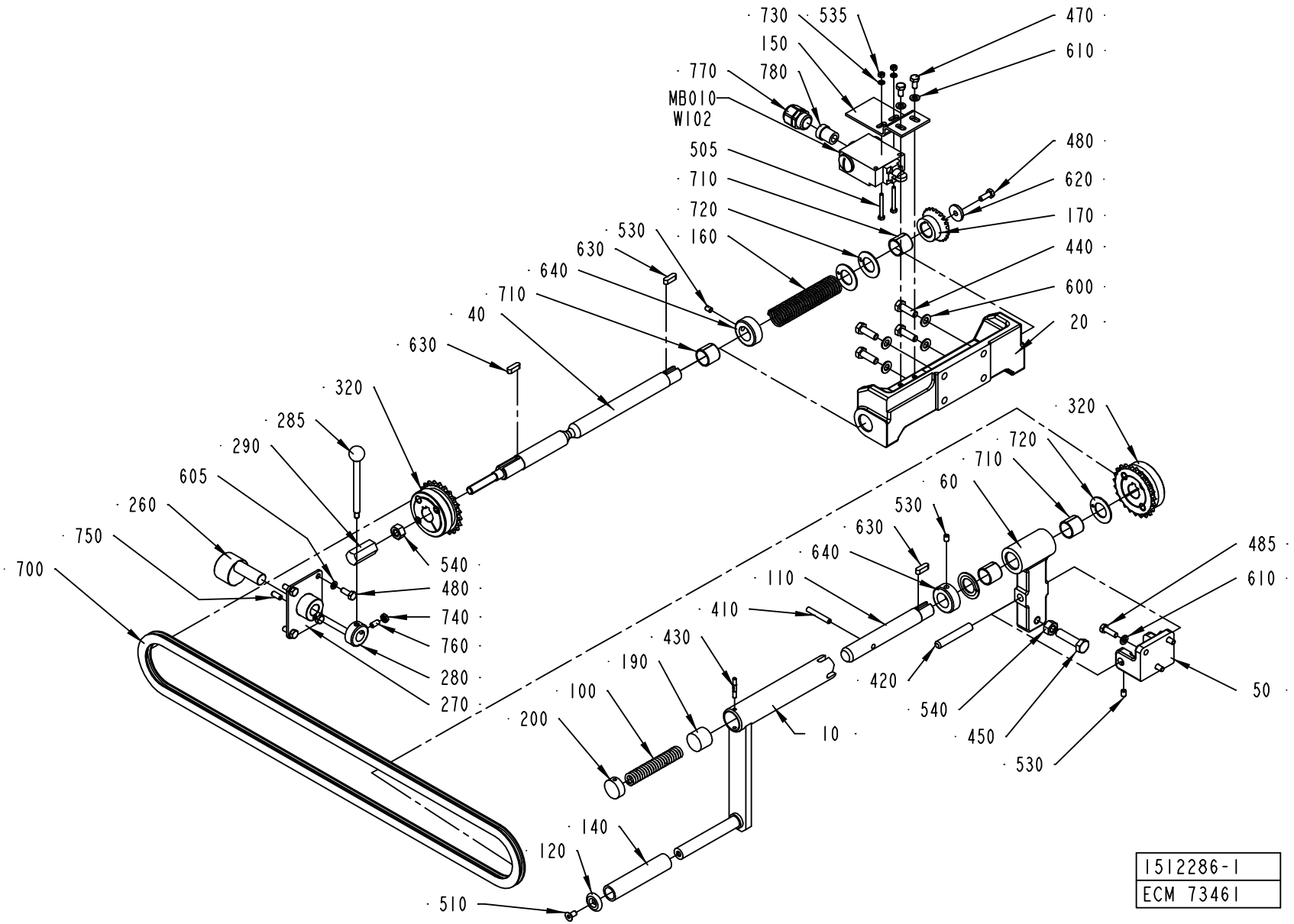
730
535
470
610
150
780
770
MB010
W102
505
480
620
710
720
170
160
530
440
630
640
600
710
40
20
630
320
320
285
720
290
710
605
60
530
260
630
485
750
640
610
700
110
540
480
410
740
760
430
280
190
420
540
270
100
50
200
10
450
530
140
120
510
1512286-1
ECM 73461

ECM: 115429 - 20020930
Group number: 1512286-0100
Assembly Drawing: 1512286-1_1_AA

Pos	Part No	SP	UN	Qty	Description	Page No
-						
010	257326-0000	-		1	CRANK	
020	272664-0000	-		1	CANTILEVER	
040	1517984-0000	-		1	SHAFT	
050	272736-0000	-		1	CANTILEVER	
060	272737-0000	-		1	BRACKET	
100	12228-0000	-		1	COMPRESSION SPRING	
110	256812-0000	-		1	SHAFT	
120	256814-0000	-		1	WASHER	
140	256816-0000	-		1	PIPE	
150	1517983-0000	-		1	BRACKET	
160	256828-0000	-		1	SPRING	
170	257179-0000	B		1	GEAR WHEEL	
190	257327-0000	-		1	SLIDER	
200	257328-0000	-		1	END PIECE	
260	1512355-0000	-		1	ECCENTRIC SHAFT	
270	1512354-0000	-		1	BRACKET	
280	1517985-0000	-		1	SETTING RING	
285	90458-1590	-		1	KNOB WITH SHAFT, M6	
290	1517986-0000	-		1	SCREW BUSHING	
320	90344-0022	-		2	SPROCKET	
410	311103-0361	-		1	PARALLELL PIN, M6, 6X40 MM	
420	311103-0470	-		1	PARALLELL PIN, M6, 10X60 MM	
430	311307-0275	-		1	SLOTTED PIRPD4X28FZB	
440	312105-0453	-		4	SCREW M6S ISO 4017 M8X25 A480	
450	312104-0499	-		1	SCREW M6S M10X40H FZB	
470	312105-0366	-		2	SCREW M6S M6X12 A280	
480	312105-0368	-		5	SCREW M6S M6X16 A280	
485	312105-0370	-		3	SCREW M6S ISO 4017 M6X20 A480	
505	312105-0301	-		2	SCREW M6S ISO 4017 M4X35 A480	
510	312155-0366	-		1	SCREW EN 10642 MF6S M6X12 A480	
530	312318-0362	-		3	SCREW ISO4029 M6X8 A4	
535	312605-0312	-		2	HEXAGON NUT, M6M M4 A280	
540	312605-0320	-		2	HEXAGON NUT, M6M M10 A280	
600	315101-0165	-		4	WASHER PLAIN, BRB, 8,4/16 H=1,5	
605	315105-0146	-		4	WASHER ISO 7089-5-200 HV-A4	
610	315105-0153	-		5	WASHER ISO 7089-6-200 HV-A4	
620	315125-0153	-		1	WASHER TBRSB 6,4X22X4 A4	
630	315705-0232	-		3	PARALLEL KEY W. ROUND ENDS 6X6X20 MM	
640	315742-0116	-		2	COLLAR, 20/36, H=13	
700	318201-0150	-		1	ROLLER CHAIN, SINGLE 3/8 -150	
710	321141-0260	-		4	BEARING BUSHING W/O FL, 20X23X20 MM	
720	321130-0260	-		4	THRUST WASHER, 20X36X1,5 MM	
730	315105-0136	-		2	WASHER ISO 7089-4-200 HV-A4	
740	312625-0316	-		1	HEXAGON THIN NUT, EN 24035 ML6M M6 A4	
750	90287-0163	-		1	SCREW SPRINGLOAD. SLOTTED HEAD M6X14	
760	312318-0366	-		1	SCREW ISO4029 M6X12 A4	
770	353240-0003	-		1	NORMAL WITHOUT INSERT, PG 13,5	
780	353249-0065	-		1	INSERT, SINGEL HOLE, E152/09	
MB010	90044-0151	A		1	LIMIT SW. GLEB24C	
W102	351150-0405	-	MM	1500	CABLE OLFLEX 5X0,75 MM2 LIGHT/GREY	

Machine Type | Group Description | Used-In | Group Number | Page No

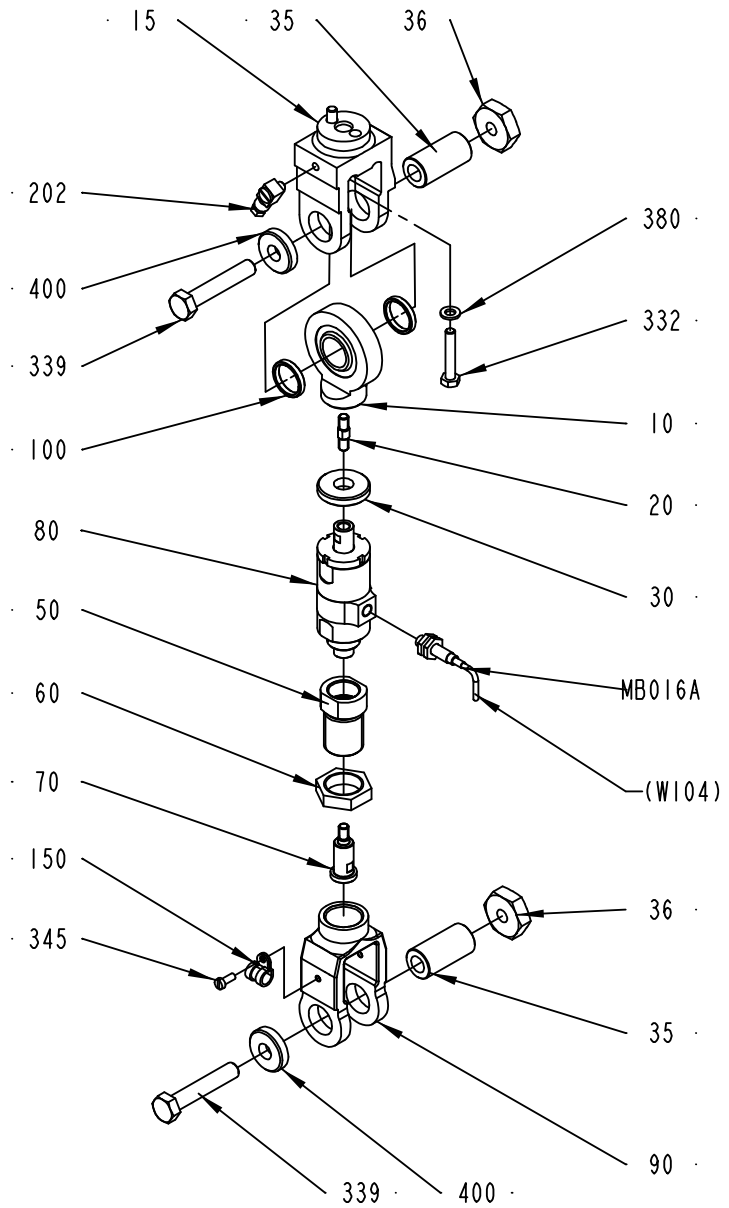

1490120-1
ECN 98301

ECM: 125569 - 20030127
Group number: 1490120-0100
Assembly Drawing: 1490120-1_1_AA

Pos	Part No	SP	UN	Qty	Description	Page No
-						
010	1490113-0000	B		1	LINK HEAD	
015	272472-0000	-		1	END PIECE	
020	1490114-0000	-		1	PIN	
030	1498194-0000	-		1	SPACER	
035	257309-0000	-		2	SHAFT	
036	257310-0000	-		2	NUT	
050	1490116-0000	-		1	SPACER	
060	1490117-0000	-		1	NUT	
070	1490119-0000	-		1	SHAFT	
080	1548313-0000	A		1	FORCE LIMITING DEVICE	
090	1490118-0000	-		1	LINK	
100	1490133-0000	-		2	SPACER	
150	90165-0065	-		1	PIPE CLAMP, RSGU 1.8/9, D=8 MM	
202	90134-0068	-		1	CONNECTION	
332	312101-0376	-		2	SCREW M6S M6X35 FZB	
339	312101-0502	-		2	SCREW M6S M10X55 FZB	
345	312101-0289	-		1	SCREW M6S M4X10 FZB	
380	315101-0153	-		2	WASHER PLAIN, BRB, 6,4/12 H=1,5	
400	315121-0173	-		2	WASHER PLAIN, TBRSB 10,5/28 H=6	
MB016A	90458-0138	A		1	PROX.SW. E2EG-X1R5B1-5M	

Pos	Part No	SP	UN	Qty	Description	Page No

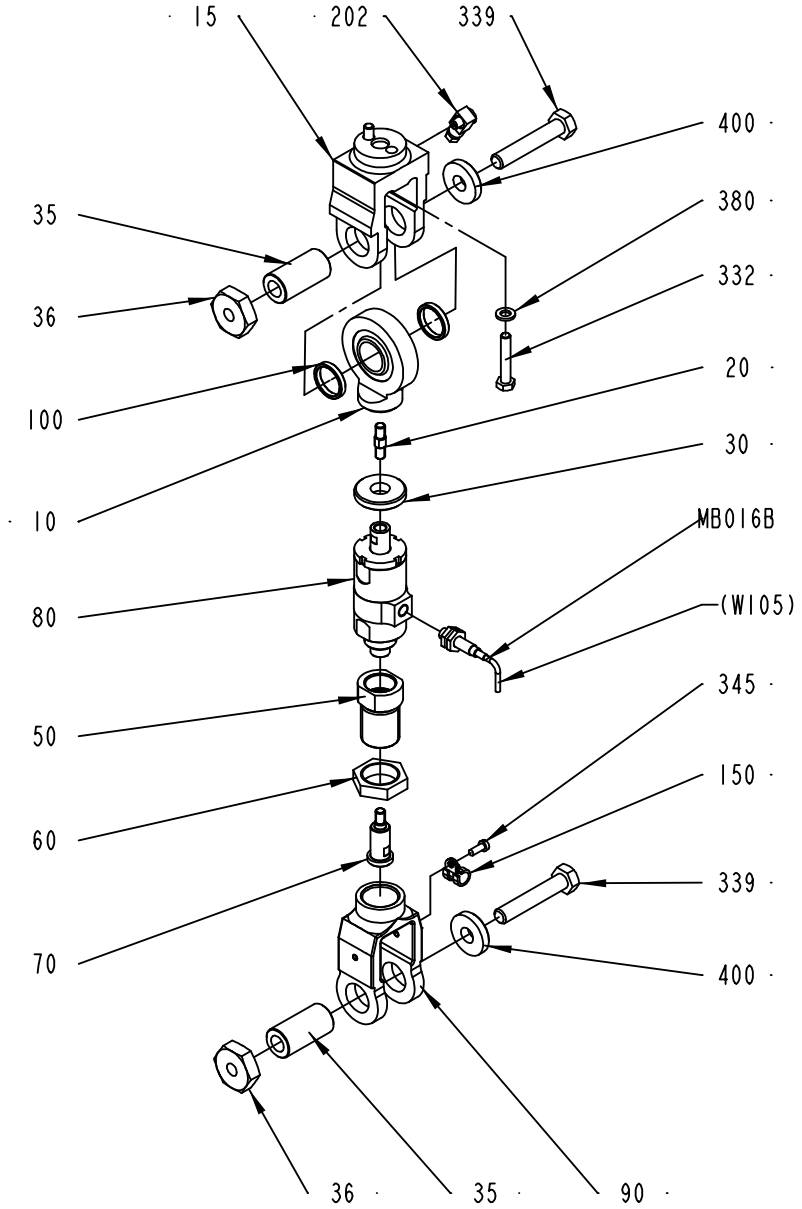

1539766-1
ECN 98301

ECM: 125570 - 20030127
Group number: 1539766-0100
Assembly Drawing: 1539766-1_1_AA

Pos	Part No	SP	UN	Qty	Description	Page No
-						
010	1490113-0000	B		1	LINK HEAD	
015	272472-0000	-		1	END PIECE	
020	1490114-0000	-		1	PIN	
030	1498194-0000	-		1	SPACER	
035	257309-0000	-		2	SHAFT	
036	257310-0000	-		2	NUT	
050	1490116-0000	-		1	SPACER	
060	1490117-0000	-		1	NUT	
070	1490119-0000	-		1	SHAFT	
080	1548313-0000	A		1	FORCE LIMITING DEVICE	
090	1490118-0000	-		1	LINK	
100	1490133-0000	-		2	SPACER	
150	90165-0065	-		1	PIPE CLAMP, RSGU 1.8/9, D=8 MM	
202	90134-0068	-		1	CONNECTION	
332	312101-0376	-		2	SCREW M6S M6X35 FZB	
339	312101-0502	-		2	SCREW M6S M10X55 FZB	
345	312101-0289	-		1	SCREW M6S M4X10 FZB	
380	315101-0153	-		2	WASHER PLAIN, BRB, 6,4/12 H=1,5	
400	315121-0173	-		2	WASHER PLAIN, TBRSB 10,5/28 H=6	
MB016B	90458-0138	A		1	PROX.SW. E2EG-X1R5B1-5M	

Pos	Part No	SP	UN	Qty	Description	Page No

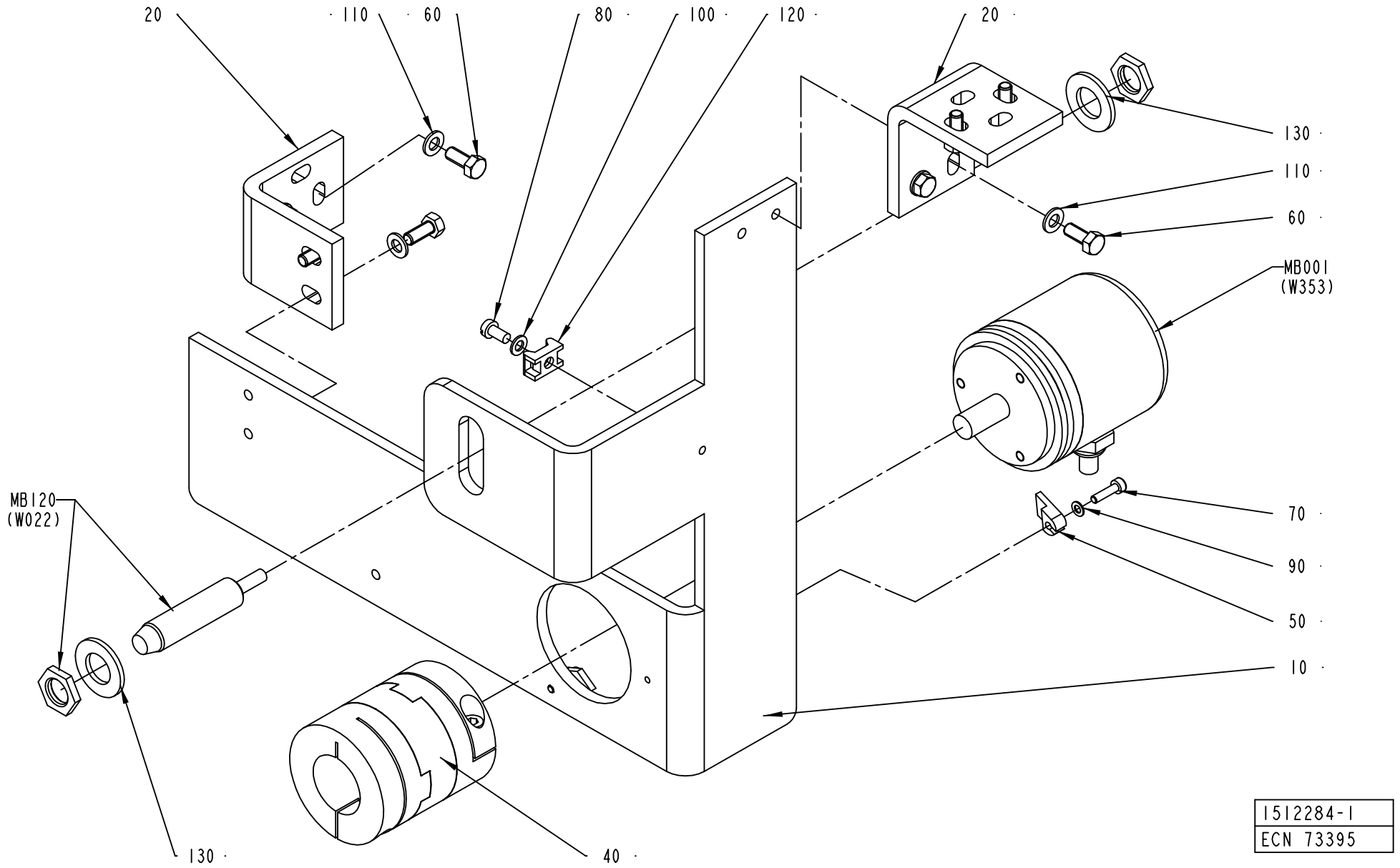
20
110
60
80
100
120
20
130
110
60
MB001
(W353)
MB120
(W022)
70
90
50
10
130
40
1512284-1
ECN 73395

ECM: 115426 - 20020930
Group number: 1512284-0100
Assembly Drawing: 1512284-1_1_AA

Pos	Part No	SP	UN	Qty	Description	Page No
-						
010	1523151-0000	-		1	BRACKET	
020	1523152-0000	-		2	ANGLE ENCODER	
040	90457-0150	A		1	FLEXIBLE COUPLING, 10X25 MM	
050	90457-0162	-		1	CLAMPING ELEMENT, 00203005	
060	312105-0327	-		8	SCREW M6S ISO 4017 M5X12 A480	
070	312115-0226	-		3	SCREW ISO4762 M3X12 A4	
080	312125-0287	-		2	SCREW PAN HEAD MCS M4X8 SS	
090	315105-0124	-		3	WASHER ISO 7089-3-200 HV-A4	
100	315105-0136	-		2	WASHER ISO 7089-4-200 HV-A4	
110	315105-0146	-		8	WASHER ISO 7089-5-200 HV-A4	
120	352113-0205	-		2	ANCHOR PLATES FOR STRIPS, TYPE TM2S8-C10	
130	315105-0178	-		2	WASHER ISO 7089-12-200 HV-A4	
MB001	90061-0027	A		1	ANGLE ENCODER 670900035	
MB120	90044-0124	A		1	PROX.SW. 922AB2XM-A9P-050-LZ-876	

Pos	Part No	SP	UN	Qty	Description	Page No

Tetra Pak

SPC
Spare Parts Catalogue

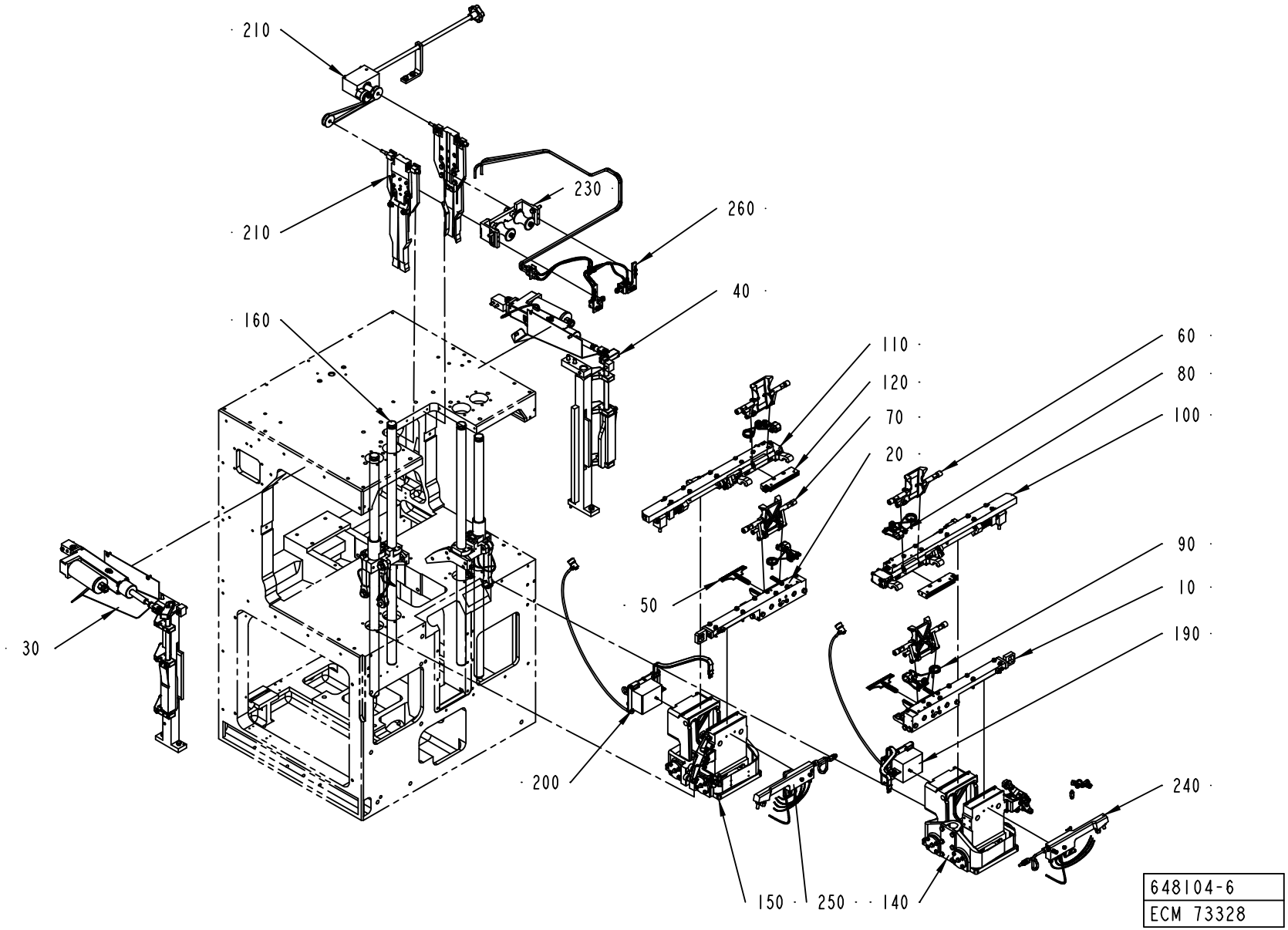
210
210
230
260
40
160
110
120
70
20
60
80
100
50
30
90
10
190
200
240
150
250
140
648104-6
ECM 73328

ECM: 113335 - 20020930
Group number: 648104-1200
Assembly Drawing: 648104-6_1_AA

Pos	Part No	SP	UN	Qty	Description	Page No
-						
010	A256204-0600	-		1	CUTTING JAW	**247, 249**
020	A256205-0600	-		1	CUTTING JAW	**251, 253**
030	A1512305-0100	-		1	MOTORIZED DESIGN CONTROL SYSTEM, LEFT	**255, 257**
040	A1512306-0100	-		1	MOTORIZED DESIGN CONTROL SYSTEM, RIGHT	**259**
						261
050	A256208-0400	-		1	KNIFE HOLDER	**263, 265, 267**
060	A1519427-0100	-		2	VOLUME FLAP	**269, 271**
070	A1549581-0100	-		2	VOLUME FLAP	**273, 275**
080	A752671-0100	-		2	SHOCK ABSORBER	**277, 279**
090	A752672-0100	-		2	SHOCK ABSORBER	**281, 283**
100	A256212-0600	-		1	PRESSURE JAW	**285, 287**
110	A256213-0600	-		1	PRESSURE JAW	**289, 291**
120	A256214-0400	-		2	PRESSURE RAIL	**293**
140	A256951-0500	-		1	YOKE RIGHT	**295, 297**
150	A256952-0500	-		1	YOKE LEFT	**299, 301**
160	A256217-0500	-		1	GUIDE	**303**
190	A572642-0200	-		1	TRANSFER	**305**
200	A572643-0200	-		1	TRANSFER	**307**
210	A1519117-0100	-		1	VOLUME ADJUSTER	**309**
230	A1511403-0100	-		1	SUPPORT ROLLER	**313**
240	A257381-0300	-		1	MANIFOLD RIGHT	**315**
250	A257382-0300	-		1	MANIFOLD LEFT	**317**
260	A1511069-0100	-		1	TUBE FOLDING DEVICE	**319**
300	A295523-0400	-		1	START-UP KIT	**321**

Pos	Part No	SP	UN	Qty	Description	Page No

Machine Type | Group Description | Used-In | Group Number | Page No

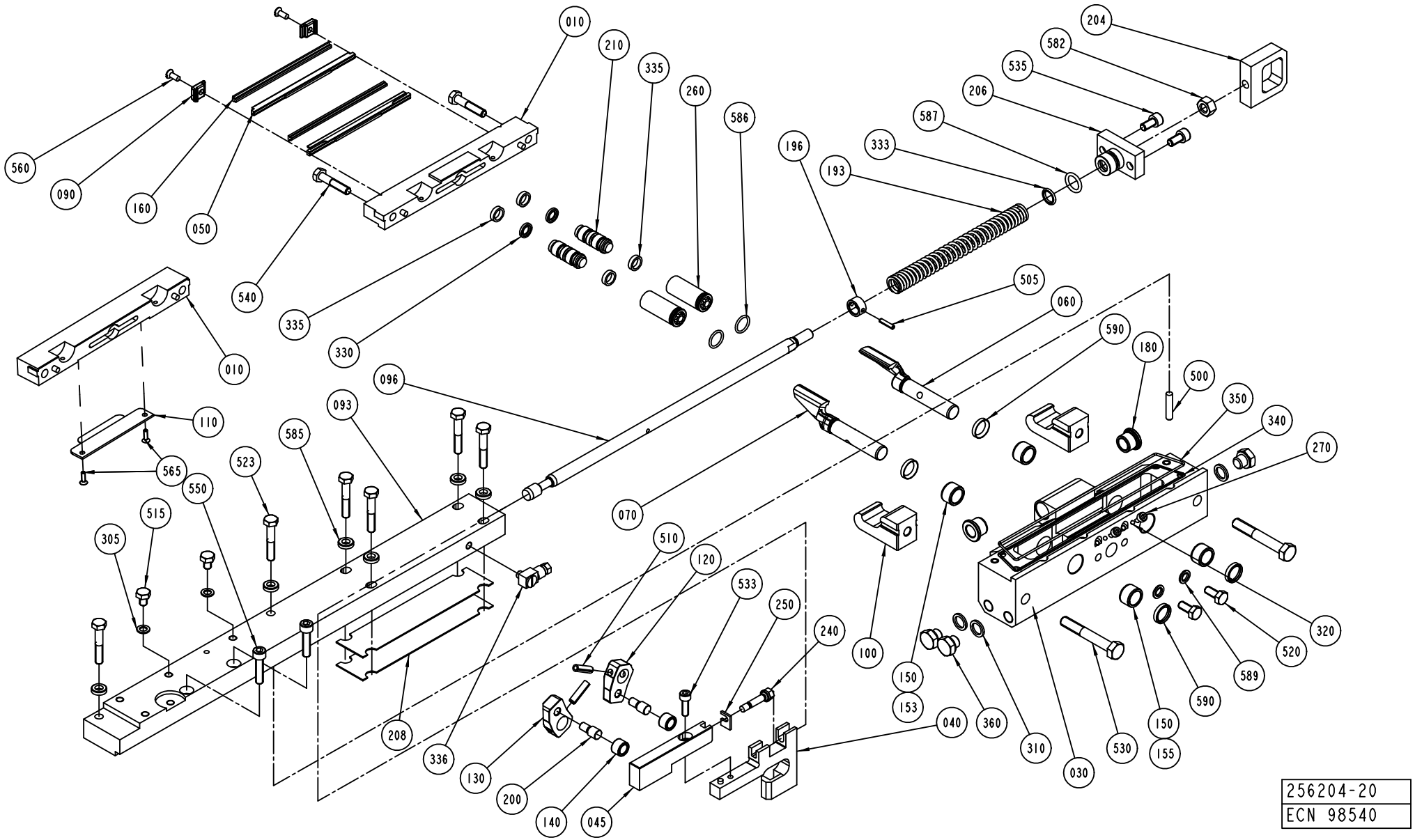
010
210
335
260
586
204
582
535
206
587
333
193
196
560
090
160
050
540
335
330
010
505
060
590
180
500
350
340
270
096
093
110
565
585
523
550
515
305
070
510
120
533
250
240
100
150
153
040
360
310
030
530
150
155
590
589
520
320
208
336
130
200
140
045
256204-20
ECN 98540

TBA 0125S, TBA 0100B

Pos	Part No	SP	UN	Qty	Description	Page No
010	256487-0000	A		1	CUTTING JAW	
030	1478222-0000	A		1	BEARING HOUSING	
040	752014-0000	A		1	RULERPART R	
045	752015-0000	A		1	RULERPART R	
050	1110829-0000	A		2	CUTTING RAIL	
060	272420-0000	A		1	FOLDING FLAP	
070	272421-0000	A		1	FOLDING FLAP	
090	272427-0000	A		2	BRACKET	
100	978745-0000	A		2	CATCH	
120	2527724-0000	A		1	CARRIER	
130	272416-0000	A		1	CARRIER	
150	33408-0000	A		4	BEARING	
160	1520577-0001	A		2	DOLLY	
180	1517641-0000	A		2	FLANGE BUSHING	
540	312105-0374	-		2	SCREW M6S ISO 4014 M6X30 A480	
550	312115-0372	-		2	SCREW ISO4762 M6X25 A4	
560	312145-0289	-		2	SCREW COUNTERS.SLOT.HD. MFS 4X10 SS	
585	315115-0153	-		6	WASHER PLAIN, TBRB 6,4/12 H=3	

TBA 0160S, TBA 0200S

Pos	Part No	SP	UN	Qty	Description	Page No
010	441727-0000	A		1	CUTTING JAW	
030	1478224-0000	A		1	BEARING HOUSING	
040	752009-0000	A		1	RULERPART R	
045	752010-0000	A		1	RULERPART R	
050	1110820-0000	A		2	CUTTING RAIL	
060	272424-0000	A		1	FOLDING FLAP	
070	272425-0000	A		1	FOLDING FLAP	
090	1348053-0000	A		2	BRACKET	
093	978715-0000	A		1	CARRIER RIGHT	
100	978745-0000	A		2	CATCH	
120	272419-0000	A		1	CARRIER	
130	272419-0000	A		1	CARRIER	
150	33408-0000	A		4	BEARING	
160	1110391-0000	A		2	DOLLY	
180	1517641-0000	A		2	FLANGE BUSHING	
540	312115-0370	-		2	SCREW ISO4762 M6X20 A4	
550	312105-0376	-		2	SCREW M6S ISO 4014 M6X35 A480	
560	312145-0291	-		2	SCREW COUNT.SLOT.HD. 4X12 A4	
585	315115-0153	-		8	WASHER PLAIN, TBRB 6,4/12 H=3	

TBA 0250S, TBA 0200M

Pos	Part No	SP	UN	Qty	Description	Page No
010	574386-0000	A		1	CUTTING JAW	
030	1478225-0000	A		1	BEARING HOUSING	
040	574369-0000	A		1	CARRIER RULER RIGHT	
045	574370-0000	A		1	CARRIER RULER RIGHT	
050	1110820-0000	A		2	CUTTING RAIL	
060	272424-0000	A		1	FOLDING FLAP	
070	272425-0000	A		1	FOLDING FLAP	
090	1348053-0000	A		2	BRACKET	
093	978715-0000	A		1	CARRIER RIGHT	
100	978745-0000	A		2	CATCH	
120	272419-0000	A		1	CARRIER	
130	272419-0000	A		1	CARRIER	
150	33408-0000	A		4	BEARING	
160	1110391-0000	A		2	DOLLY	
180	1517641-0000	A		2	FLANGE BUSHING	
540	312115-0370	-		2	SCREW ISO4762 M6X20 A4	
550	312105-0376	-		2	SCREW M6S ISO 4014 M6X35 A480	
560	312145-0291	-		2	SCREW COUNT.SLOT.HD. 4X12 A4	
585	315115-0153	-		8	WASHER PLAIN, TBRB 6,4/12 H=3	

TBA 0330S, TBA 0300S, TBA 0180B, TBA 0200B, TBA 0284B, TBA 0250B

Pos	Part No	SP	UN	Qty	Description	Page No
010	256769-0000	A		1	CUTTING JAW	
030	1478223-0000	A		1	BEARING HOUSING	
040	751575-0000	A		1	RULERPART R	
045	751577-0000	A		1	RULERPART R	
050	1110820-0000	A		2	CUTTING RAIL	
060	272422-0000	A		1	FOLDING FLAP	
070	272423-0000	A		1	FOLDING FLAP	
090	1348053-0000	A		2	BRACKET	
093	978715-0000	A		1	CARRIER RIGHT	
100	978745-0000	A		2	CATCH	
120	272419-0000	A		1	CARRIER	
130	272419-0000	A		1	CARRIER	
150	33408-0000	A		4	BEARING	
160	1110391-0000	A		2	DOLLY	
180	1517641-0000	A		2	FLANGE BUSHING	
540	312115-0370	-		2	SCREW ISO4762 M6X20 A4	
550	312105-0376	-		2	SCREW M6S ISO 4014 M6X35 A480	
560	312145-0291	-		2	SCREW COUNT.SLOT.HD. 4X12 A4	
585	315115-0153	-		8	WASHER PLAIN, TBRB 6,4/12 H=3	

Common Parts

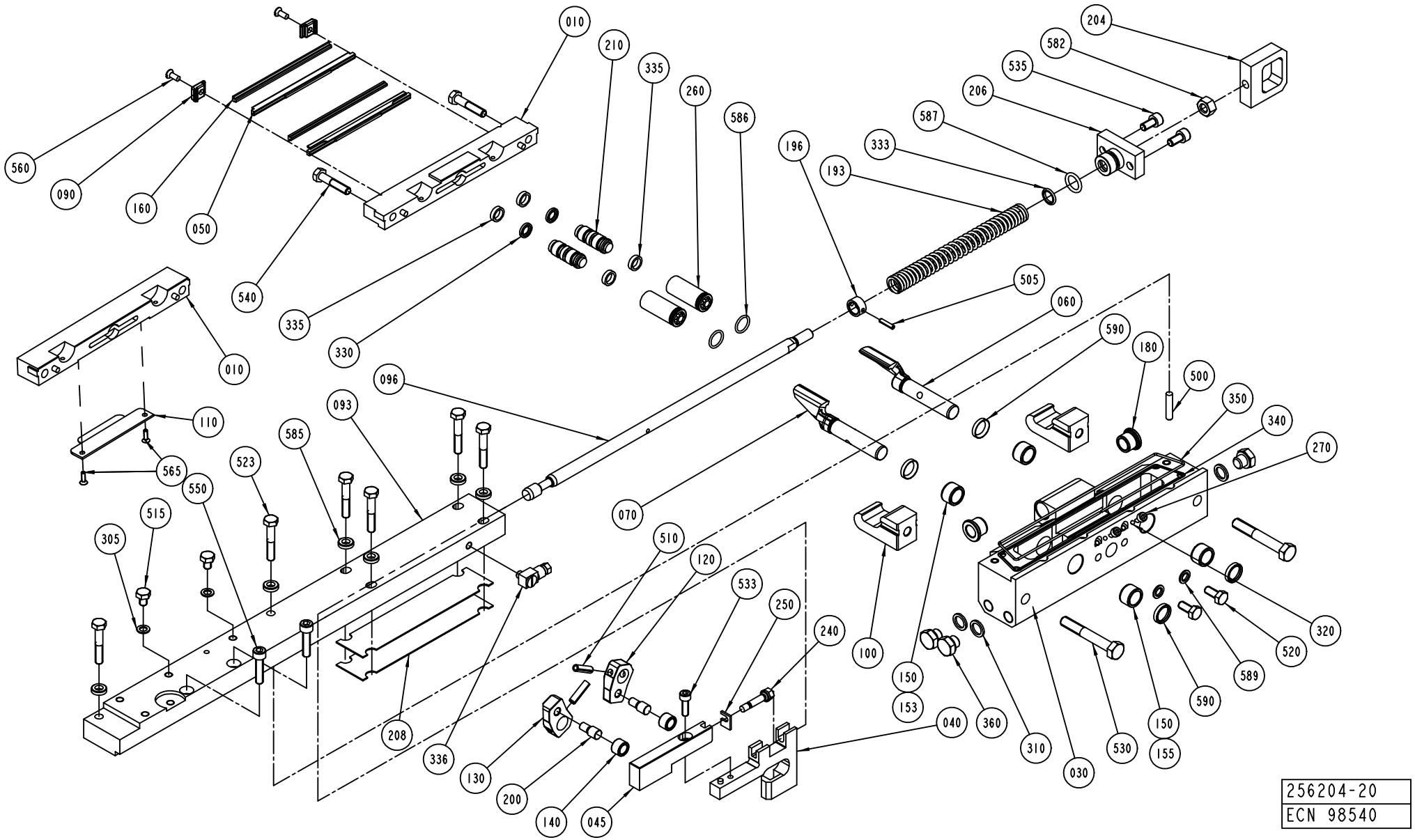
560
090
160
050
540
010
010
110
565
550
515
305
523
585
093
096
335
330
010
210
335
260
586
196
193
333
587
206
535
582
204
505
060
590
180
500
350
340
270
320
520
589
590
150
155
530
030
310
360
040
045
140
200
130
336
208
070
510
120
533
250
240
100
150
153
256204-20
ECN 98540

Pos	Part No	SP	UN	Qty	Description	Page No
Common Parts (Cont'd)						
096	256659-0000	A		1	OPERATING ROD	
140	22463-0000	A		2	ROLL	
193	255742-0000	A		1	COMPRESSION SPRING	
196	255801-0000	B		1	RETAINING RING	
200	256607-0000	A		2	AXLE PIN	
204	256626-0000	A		1	EAR	
206	256706-0000	A		1	BEARING PLATE	
208	257362-0000	B		2	LACE	
210	752115-0000	A		2	PLUNGER	
240	751579-0000	A		1	ADJUSTING SCREW	
250	751580-0000	B		1	SHIM	
260	752288-0000	B		2	SLEEVE	
270	752476-0000	B		2	SCREW	
305	315237-0106	-		2	WASHER,PL.RND.AL.6/10,H=1	
310	315237-0109	-		3	WASHER,PL.RND.AL.10/14,H=1,5	
320	315211-0101	-		2	GASKET BOLT HEAD 4,5X7X1 MM M4	
330	90091-0216	B		2	PISTON SEAL, GLIDORING 7,1X12X2,2 MM	
333	90091-0091	A		1	ROD SEAL, GLIDORING 10X14X1,7 MM	
335	90091-0169	A		4	WEAR RING 12X15X3,2 MM	
336	90134-0058	-		1	CONNECTION	
340	90153-0015	-	KG	1	ADHESIVE,LOCTITE IS 496/CYANOLOT 303	
350	90242-0093	A	MM	450	O-RING MATERIAL 1,5 MM	
360	90330-0066	-		3	PLUG, EXT. G-THREAD, G1/8	
500	311103-0312	-		1	PARALLELL PIN, M6, 5X25 MM	
505	311111-0207	-		1	PIN, STRAIGHT SLOTTED SPRING FRP 3X14	
510	311111-0308	-		2	PIN, STRAIGHT SLOTTED SPRING FRP 5X20	
515	312105-0362	-		2	SCREW M6S ISO 4017 M6X8 A480	
520	312105-0367	-		2	SCREW M6S M6X14 A280	
523	312105-0376	-		6	SCREW M6S ISO 4014 M6X35 A480	
530	312105-0462	-		2	SCREW M6S ISO 4014 M8X55 A480	
533	312115-0329	-		1	SCREW ISO4762 M5X16 A4	
535	312115-0366	-		2	SCREW ISO4762 M6X12 A4	
582	312605-0318	-		1	HEXAGON NUT, M6M M8 A280	
586	315202-0110	B		2	O-RING 12,1X1,6 MM	
587	315202-0265	B		1	O-RING 12,3X2,4 MM	
589	315211-0103	A		2	GASKET BOLT HEAD 6,7X11X1 MM M6	
590	315230-0157	B		4	BEARING SEAL 12X16X3 MM	

Pos	Part No	SP	UN	Qty	Description	Page No

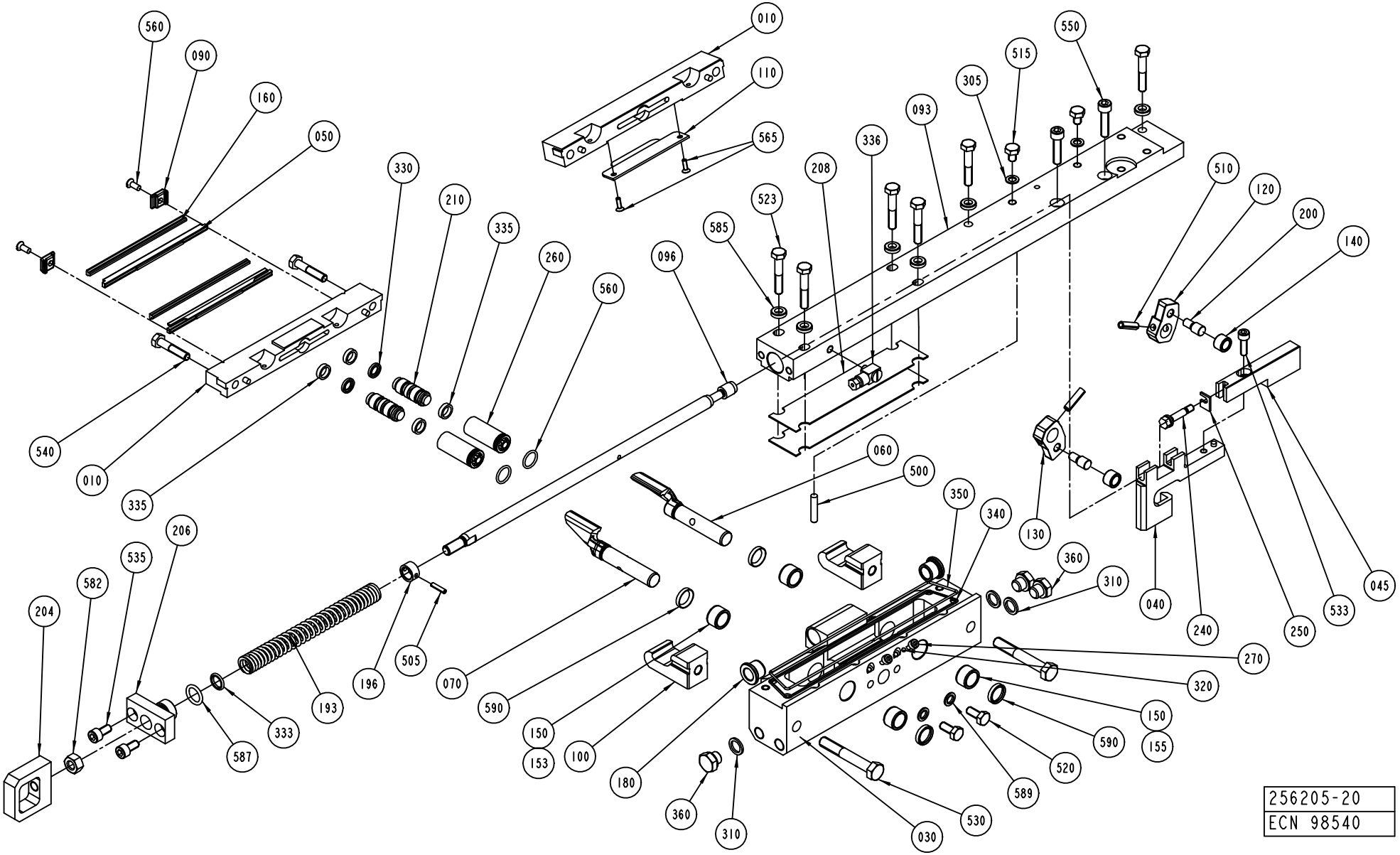

256205-20
ECN 98540

ECM: 115644 - 20020930
Group number: 256205-0600
Assembly Drawing: 256205-20_1_AD

This list covers pages from 250 to 253

Pos	Part No	SP	UN	Qty	Description	Page No
TBA 0125S, TBA 0100B						
010	256487-0000	A		1	CUTTING JAW	
030	1478222-0000	A		1	BEARING HOUSING	
040	752016-0000	A		1	RULERPART L	
045	752017-0000	A		1	RULERPART L	
050	1110829-0000	A		2	CUTTING RAIL	
060	272420-0000	A		1	FOLDING FLAP	
070	272421-0000	A		1	FOLDING FLAP	
090	272427-0000	A		2	BRACKET	
093	979763-0000	A		1	CARRIER LEFT 100	
100	978745-0000	A		2	CATCH	
120	2527724-0000	A		1	CARRIER	
130	272416-0000	A		1	CARRIER	
150	33408-0000	A		4	BEARING	
160	1520577-0001	A		2	DOLLY	
180	1517641-0000	A		2	FLANGE BUSHING	
540	312105-0374	-		2	SCREW M6S ISO 4014 M6X30 A480	
550	312115-0372	-		2	SCREW ISO4762 M6X25 A4	
560	312145-0289	-		2	SCREW COUNTERS.SLOT.HD. MFS 4X10 SS	
585	315115-0153	-		6	WASHER PLAIN, TBRB 6,4/12 H=3	
TBA 0160S, TBA 0200S						
010	441727-0000	A		1	CUTTING JAW	
030	1478224-0000	A		1	BEARING HOUSING	
040	752011-0000	A		1	RULERPART L	
045	752012-0000	A		1	RULERPART L	
050	1110820-0000	A		2	CUTTING RAIL	
060	272424-0000	A		1	FOLDING FLAP	
070	272425-0000	A		1	FOLDING FLAP	
090	1348053-0000	A		2	BRACKET	
093	978714-0000	A		1	CARRIER LEFT	
100	978745-0000	A		2	CATCH	
120	272419-0000	A		1	CARRIER	
130	272419-0000	A		1	CARRIER	
150	33408-0000	A		4	BEARING	
160	1110391-0000	A		2	DOLLY	
180	1517641-0000	A		2	FLANGE BUSHING	
540	312115-0370	-		2	SCREW ISO4762 M6X20 A4	
550	312105-0376	-		2	SCREW M6S ISO 4014 M6X35 A480	
560	312145-0291	-		2	SCREW COUNT.SLOT.HD. 4X12 A4	
585	315115-0153	-		8	WASHER PLAIN, TBRB 6,4/12 H=3	

Pos	Part No	SP	UN	Qty	Description	Page No
TBA 0250S, TBA 0200M						
010	574386-0000	A		1	CUTTING JAW	
030	1478225-0000	A		1	BEARING HOUSING	
040	574371-0000	A		1	CARRIER RULER LEFT	
045	574372-0000	A		1	CARRIER RULER LEFT	
050	1110820-0000	A		2	CUTTING RAIL	
060	272424-0000	A		1	FOLDING FLAP	
070	272425-0000	A		1	FOLDING FLAP	
090	1348053-0000	A		2	BRACKET	
093	978714-0000	A		1	CARRIER LEFT	
100	978745-0000	A		2	CATCH	
120	272419-0000	A		1	CARRIER	
130	272419-0000	A		1	CARRIER	
150	33408-0000	A		4	BEARING	
160	1110391-0000	A		2	DOLLY	
180	1517641-0000	A		2	FLANGE BUSHING	
540	312115-0370	-		2	SCREW ISO4762 M6X20 A4	
550	312105-0376	-		2	SCREW M6S ISO 4014 M6X35 A480	
560	312145-0291	-		2	SCREW COUNT.SLOT.HD. 4X12 A4	
585	315115-0153	-		8	WASHER PLAIN, TBRB 6,4/12 H=3	
TBA 0330S, TBA 0300S, TBA 0180B, TBA 0200B, TBA 0284B, TBA 0250B						
010	256769-0000	A		1	CUTTING JAW	
030	1478223-0000	A		1	BEARING HOUSING	
040	751576-0000	A		1	RULERPART L	
045	751578-0000	A		1	RULERPART L	
050	1110820-0000	A		2	CUTTING RAIL	
060	272422-0000	A		1	FOLDING FLAP	
070	272423-0000	A		1	FOLDING FLAP	
090	1348053-0000	A		2	BRACKET	
093	978714-0000	A		1	CARRIER LEFT	
100	978745-0000	A		2	CATCH	
120	272419-0000	A		1	CARRIER	
130	272419-0000	A		1	CARRIER	
150	33408-0000	A		4	BEARING	
160	1110391-0000	A		2	DOLLY	
180	1517641-0000	A		2	FLANGE BUSHING	
540	312115-0370	-		2	SCREW ISO4762 M6X20 A4	
550	312105-0376	-		2	SCREW M6S ISO 4014 M6X35 A480	
560	312145-0291	-		2	SCREW COUNT.SLOT.HD. 4X12 A4	
585	315115-0153	-		8	WASHER PLAIN, TBRB 6,4/12 H=3	

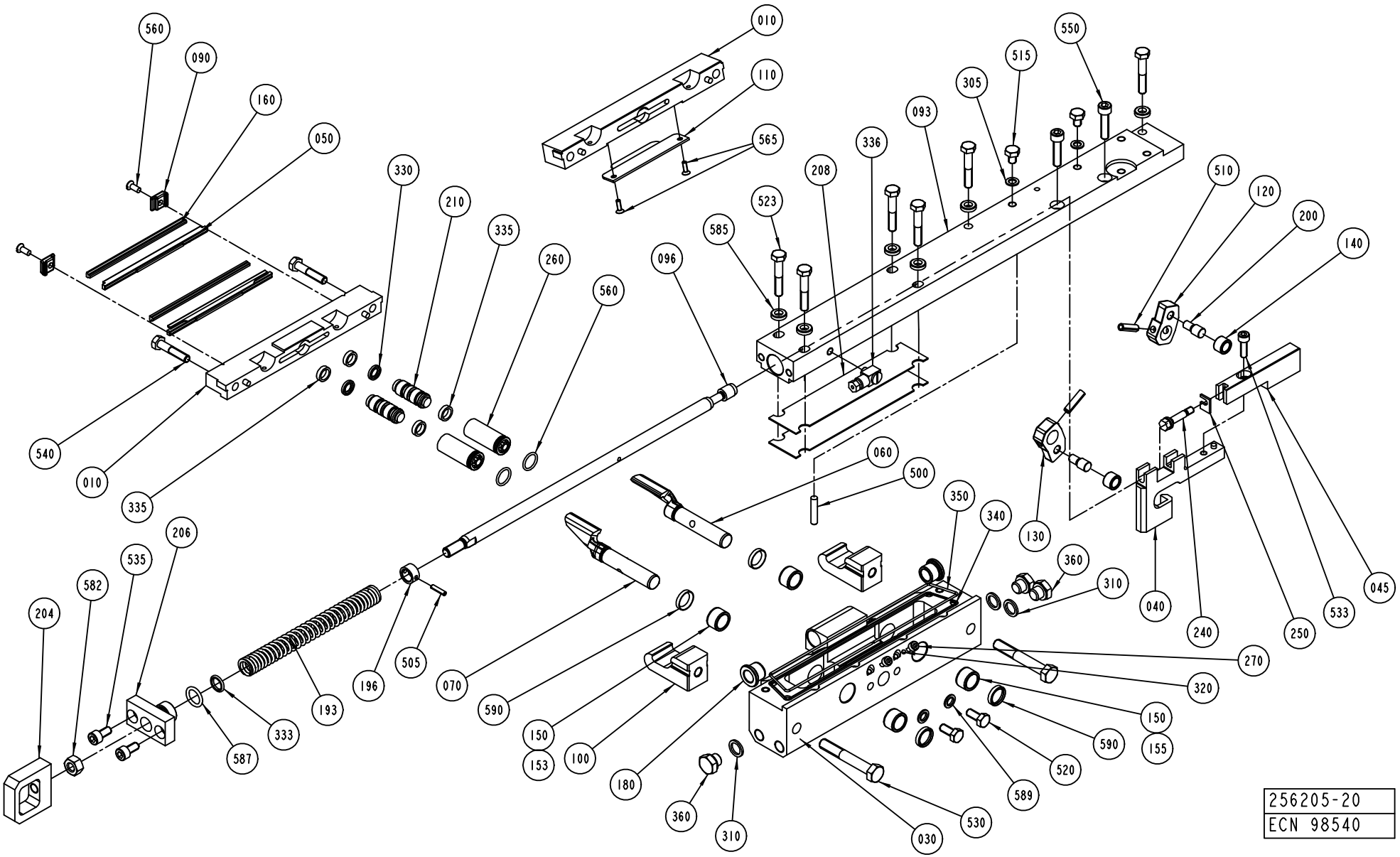
560
090
160
050
330
210
335
260
560
010
335
540
010
110
565
096
585
523
208
336
093
305
515
550
510
120
200
140
060
500
350
340
130
360
310
040
240
250
533
045
270
320
150
590
155
520
589
530
030
360
310
180
150
153
100
590
070
505
196
193
333
587
204
582
535
206
256205-20
ECN 98540

Pos	Part No	SP	UN	Qty	Description	Page No
Common Parts (Cont'd)						
096	256659-0000	A		1	OPERATING ROD	
140	22463-0000	A		2	ROLL	
193	255742-0000	A		1	COMPRESSION SPRING	
196	255801-0000	B		1	RETAINING RING	
200	256607-0000	A		2	AXLE PIN	
204	256626-0000	A		1	EAR	
206	256706-0000	A		1	BEARING PLATE	
208	257362-0000	B		2	LACE	
210	752115-0000	A		2	PLUNGER	
240	751579-0000	A		1	ADJUSTING SCREW	
250	751580-0000	B		1	SHIM	
260	752288-0000	B		2	SLEEVE	
270	752476-0000	B		2	SCREW	
305	315237-0106	-		2	WASHER,PL.RND.AL.6/10,H=1	
310	315237-0109	-		3	WASHER,PL.RND.AL.10/14,H=1,5	
320	315211-0101	-		2	GASKET BOLT HEAD 4,5X7X1 MM M4	
330	90091-0216	A		2	PISTON SEAL, GLIDORING 7,1X12X2,2 MM	
333	90091-0091	A		1	ROD SEAL, GLIDORING 10X14X1,7 MM	
335	90091-0169	A		4	WEAR RING 12X15X3,2 MM	
336	90134-0058	-		1	CONNECTION	
340	90153-0015	-	KG	1	ADHESIVE,LOCTITE IS 496/CYANOLOT 303	
350	90242-0093	B	MM	450	O-RING MATERIAL 1,5 MM	
360	90330-0066	-		3	PLUG, EXT. G-THREAD, G1/8	
500	311103-0312	B		1	PARALLELL PIN, M6, 5X25 MM	
505	311111-0207	-		1	PIN, STRAIGHT SLOTTED SPRING FRP 3X14	
510	311111-0308	-		2	PIN, STRAIGHT SLOTTED SPRING FRP 5X20	
515	312105-0362	-		2	SCREW M6S ISO 4017 M6X8 A480	
520	312105-0367	-		2	SCREW M6S M6X14 A280	
523	312105-0376	-		6	SCREW M6S ISO 4014 M6X35 A480	
530	312105-0462	-		2	SCREW M6S ISO 4014 M8X55 A480	
533	312115-0329	-		1	SCREW ISO4762 M5X16 A4	
535	312115-0366	-		2	SCREW ISO4762 M6X12 A4	
582	312605-0318	-		1	HEXAGON NUT, M6M M8 A280	
586	315202-0110	B		2	O-RING 12,1X1,6 MM	
587	315202-0265	B		1	O-RING 12,3X2,4 MM	
589	315211-0103	B		2	GASKET BOLT HEAD 6,7X11X1 MM M6	
590	315230-0157	B		4	BEARING SEAL 12X16X3 MM	

Pos	Part No	SP	UN	Qty	Description	Page No

MOTORIZED DESIGN CONTROL SYSTEM, LEFT

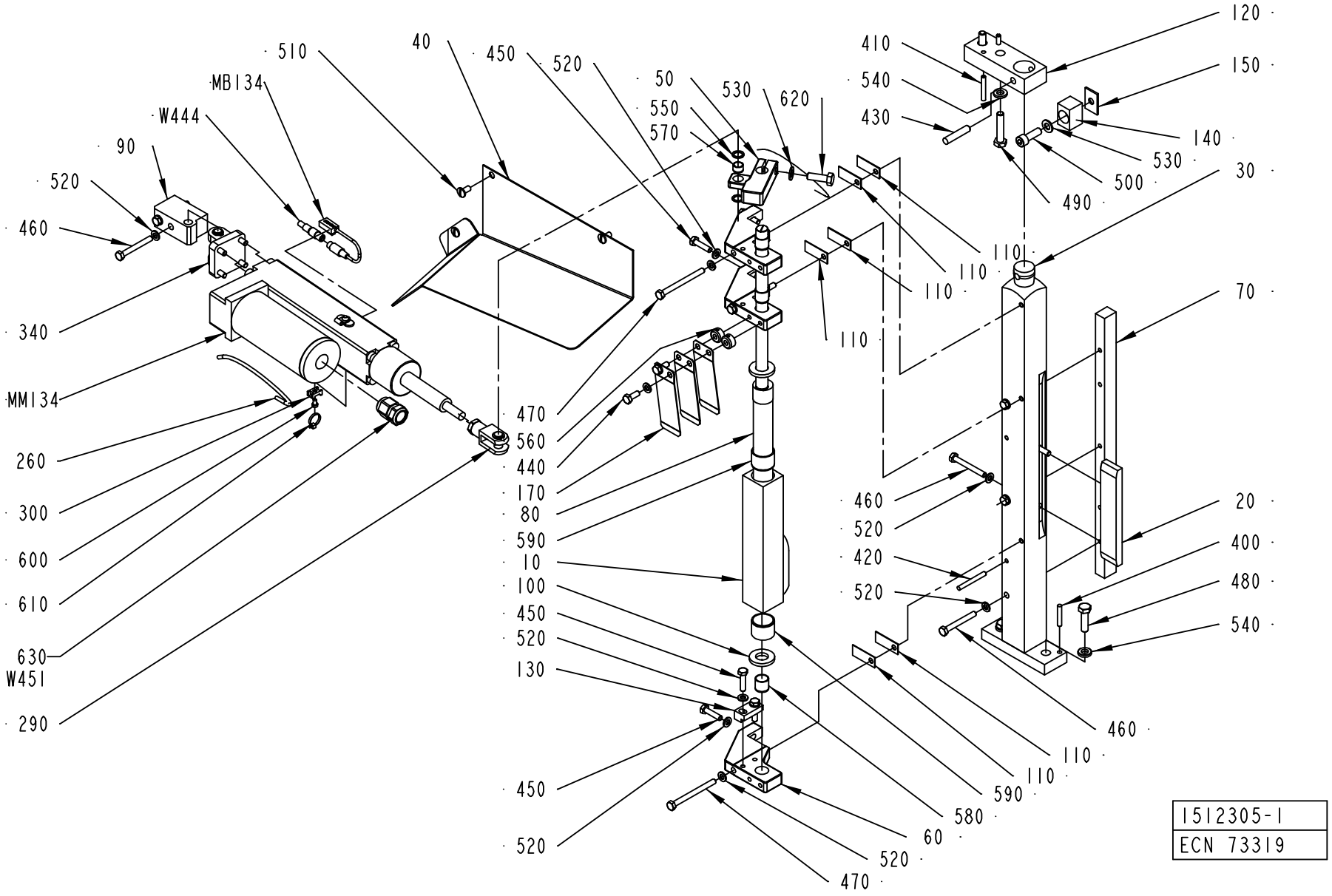

1512305-1
ECN 73319

ECM: 113339 - 20020930
Group number: 1512305-0100
Assembly Drawing: 1512305-1_1_AA

This list covers pages from 254 to 257

Pos	Part No	SP	UN	Qty	Description	Page No
TBA 0100B						
010	979770-0000	B		1	FOLDING FLAP CAM 100	
020	979771-0000	B		1	COUNTER CAM 100	
TBA 0160S						
010	577225-0000	B		1	FOLDING FLAP CAM	
020	272640-0006	B		1	COUNTER CAM	
TBA 0180B						
010	456760-0010	B		1	FOLDING FLAP CAM 200B & 125S	
020	272640-0007	B		1	COUNTER CAM	
TBA 0200B, TBA 0125S						
010	456760-0010	B		1	FOLDING FLAP CAM 200B & 125S	
020	272640-0005	B		1	COUNTER CAM	
TBA 0200M						
010	456760-0011	B		1	FOLDING FLAP CAM 250B	
020	272640-0009	B		1	COUNTER CAM	
TBA 0200S						
010	456760-0003	B		1	FOLDING FLAP CAM 200S	
020	272640-0009	B		1	COUNTER CAM	
TBA 0250B						
010	456760-0011	B		1	FOLDING FLAP CAM 250B	
020	272640-0002	B		1	COUNTER CAM	
TBA 0250S						
010	574494-0000	B		1	FOLDING FLAP CAM	
020	272640-0009	B		1	COUNTER CAM	
TBA 0300S, TBA 0284B						
010	456760-0012	B		1	FOLDING FLAP CAM	
020	272640-0002	B		1	COUNTER CAM	
TBA 0330S						
010	582162-0000	B		1	FOLDING FLAP CAM	
020	272640-0001	B		1	COUNTER CAM	
Common Parts						
030	272642-0000	-		1	PILLAR	
040	2514041-0000	-		1	PROTECTION	
050	929402-0000	-		1	ARM	
060	272491-0000	-		3	BRACKET	
070	272645-0000	-		1	RAIL	
080	272654-0000	B		1	ECCENTRIC SHAFT	
090	2512787-0000	-		1	HOLDER	
100	256621-0000	-		2	WASHER	
110	256705-0000	B		6	LACE	
120	256707-0000	-		1	BRACKET	
130	271284-0000	-		1	BLOCKING PIECE	
140	978184-0000	B		1	STOPPER	
150	978185-0000	B		1	SHIM	
170	257334-0000	B		3	LEAF SPRING	
260	90166-0095	-	MM	250	TUBE 4 MM PA BLUE	
290	90239-0357	B		1	ROD END, CLEVIS WITH AXLE M10X1,25	
300	352113-0205	-		1	ANCHOR PLATES FOR STRIPS, TYPE TM2S8-C10	
340	90450-0654	B		1	BRACKET,REAR,EYE WITH AXLE 32	
400	311103-0314	-		2	PARALLELL PIN, M6, 5X30 MM	
410	311103-0316	-		2	PARALLELL PIN, M6, 5X35 MM	
420	311103-0320	-		2	PARALLELL PIN, CP, M6, 5X45 MM	
430	311103-0409	-		1	PARALLELL PIN, M6, 8X40 MM	
440	312105-0368	-		2	SCREW M6S M6X16 A280	
450	312105-0372	-		5	SCREW M6S ISO 4017 M6X25 A480	
460	312105-0380	-		7	SCREW M6S ISO 4014 M6X50 A480	
470	312105-0384	-		3	SCREW M6S ISO 4014 M6X70 A480	
480	312105-0455	-		2	SCREW M6S ISO 4017 M8X30 A480	
490	312105-0459	-		2	SCREW M6S ISO 4014 M8X40 A480	
500	312115-0453	-		1	SCREW ISO4762 M8X25 A4	
510	90287-0075	-		3	SCREW SLOT. PAN HEAD LKCS M6X12	
520	315105-0153	-		17	WASHER ISO 7089-6-200 HV-A4	
530	315105-0165	-		2	WASHER ISO 7089-8-200 HV-A4	
540	315115-0165	-		4	WASHER PLAIN, TBRB 8,4/16 H=3	
550	315233-0109	-		2	WASHER PL.RND.NYL.10,3/14,H=1	
560	315742-0102	B		2	COLLAR, 6/16, H=8	
570	321120-0098	B		1	BEARING BUSHING W/O FL, 10/12X8	
580	321120-0118	B		3	BEARBUSHING W/O FL 14X16X15	
590	321120-0153	B		2	BEARBUSHING W/O FL 24X27X20	
600	312125-0285	-		1	SCREW SLOT.PAN HD. MCS 4X6 A480	
610	352113-0101	-		1	CLIP STRIP, 92X2,5 MM	
620	312105-0453	-		1	SCREW M6S ISO 4017 M8X25 A480	
630	90458-0438	-		1	GLAND, EXTENDED WITH INSERT, M20X1,5	
MB134	90450-0747	-		1	INTERMEDIATE PLATE	

Machine Type | Group Description | Used-In | Group Number | Page No

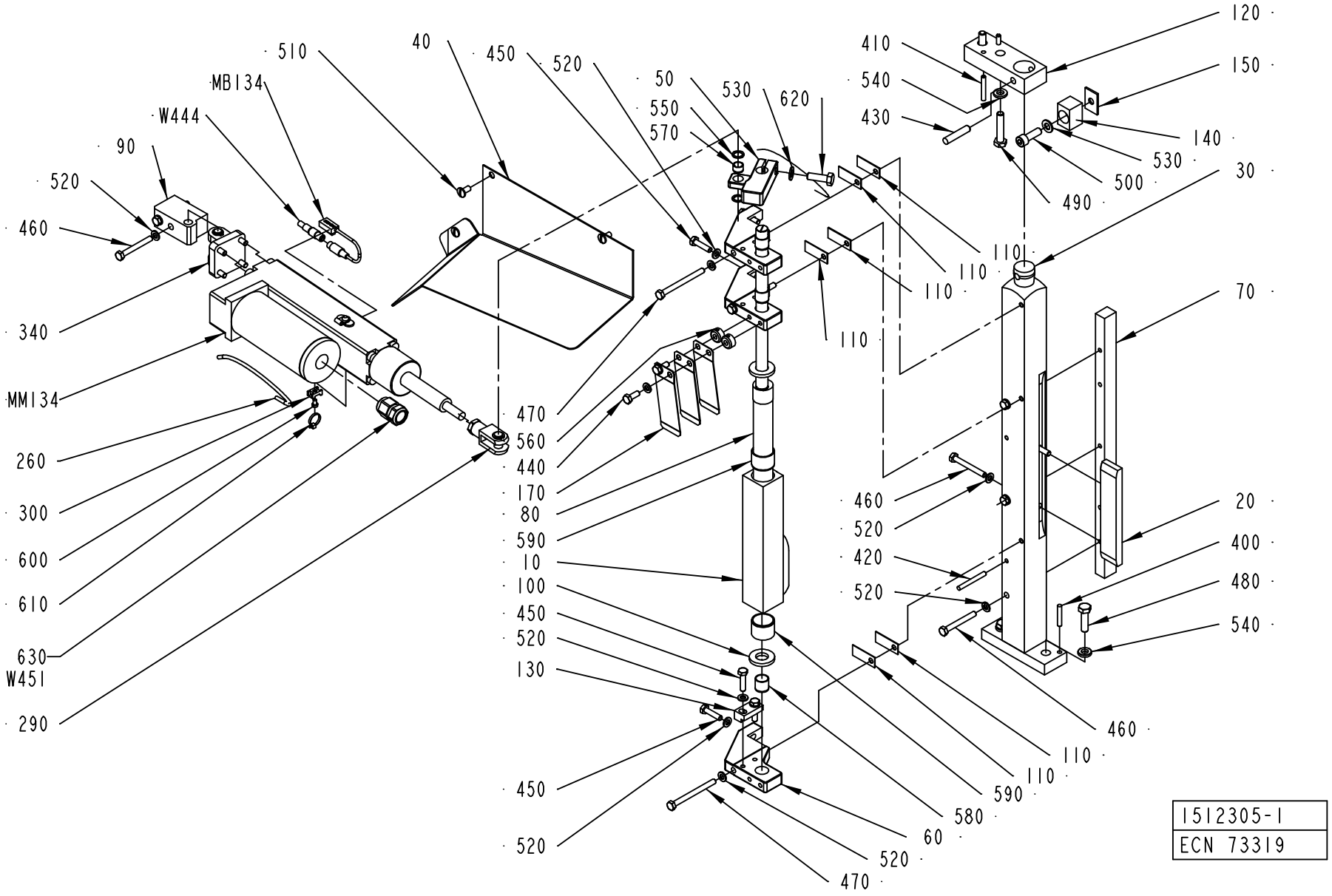

1512305-1
ECN 73319

Pos	Part No	SP	UN	Qty	Description	Page No
Common Parts (Cont'd)						
MM134	90458-1301	A		1	CYLINDER ETS32-M10NA2X-FM50-AEUM1D	
W444	90458-1298	A		1	CONNECTOR AND CABLE 403000E 18M 080	
W451	90220-0107	-	M	3	SCR. CABLE 5X0,75MM2	

Pos	Part No	SP	UN	Qty	Description	Page No

MOTORIZED DESIGN CONTROL SYSTEM, RIGHT

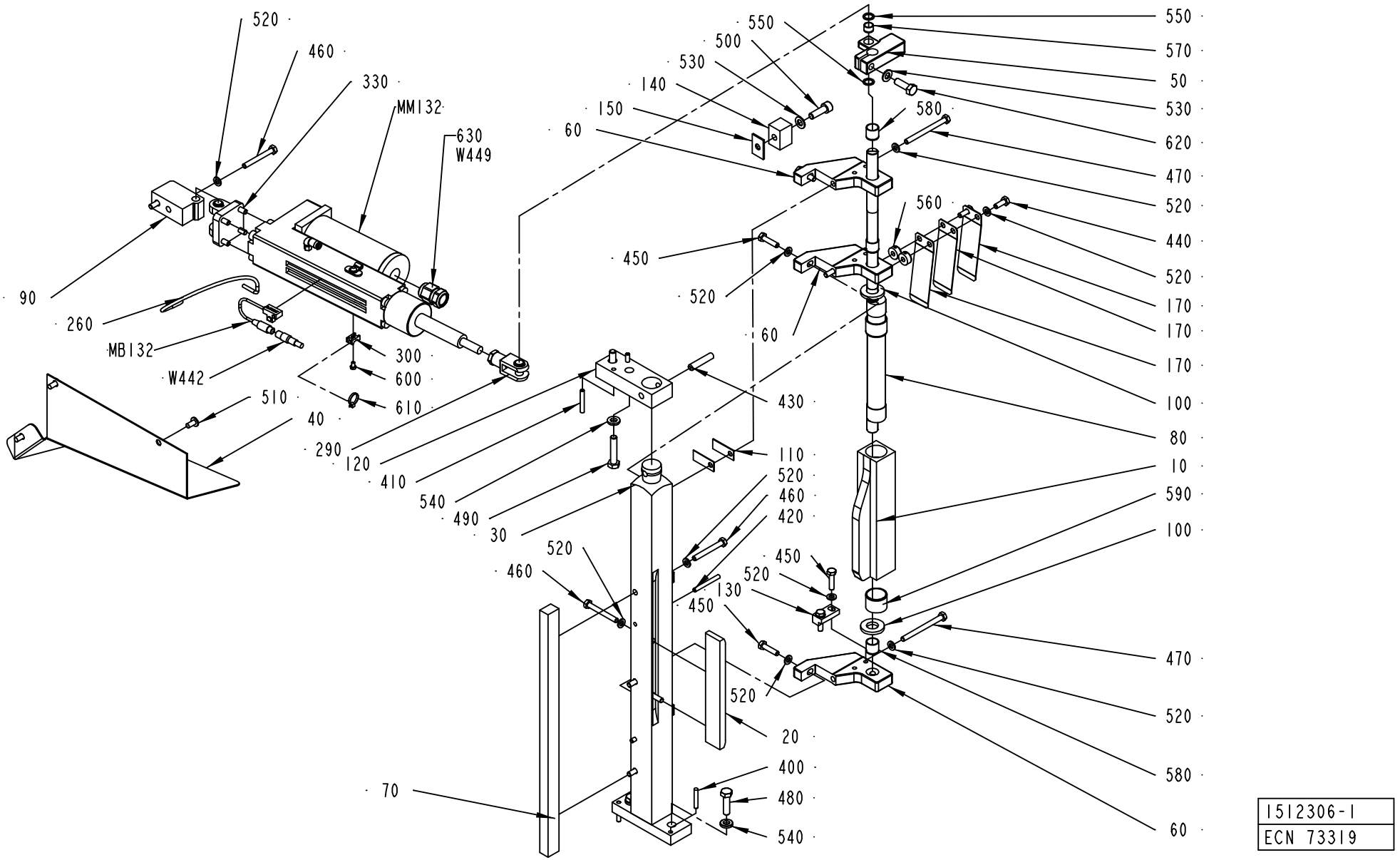

1512306-1
ECN 73319

ECM: 113340 - 20020930
Group number: 1512306-0100
Assembly Drawing: 1512306-1_1_AA

This list covers pages from 258 to 261

Pos	Part No	SP	UN	Qty	Description	Page No
TBA 0100B						
010	979770-0000	B		1	FOLDING FLAP CAM 100	
020	979771-0000	B		1	COUNTER CAM 100	
TBA 0160S						
010	577225-0000	B		1	FOLDING FLAP CAM	
020	272640-0006	B		1	COUNTER CAM	
TBA 0180B						
010	456760-0010	B		1	FOLDING FLAP CAM 200B & 125S	
020	272640-0007	B		1	COUNTER CAM	
TBA 0200B, TBA 0125S						
010	456760-0010	B		1	FOLDING FLAP CAM 200B & 125S	
020	272640-0005	B		1	COUNTER CAM	
TBA 0200M						
010	456760-0011	B		1	FOLDING FLAP CAM 250B	
020	272640-0009	B		1	COUNTER CAM	
TBA 0200S						
010	456760-0003	B		1	FOLDING FLAP CAM 200S	
020	272640-0009	B		1	COUNTER CAM	
TBA 0250B						
010	456760-0011	B		1	FOLDING FLAP CAM 250B	
020	272640-0002	B		1	COUNTER CAM	
TBA 0250S						
010	574494-0000	B		1	FOLDING FLAP CAM	
020	272640-0009	B		1	COUNTER CAM	
TBA 0300S, TBA 0284B						
010	456760-0012	B		1	FOLDING FLAP CAM	
020	272640-0002	B		1	COUNTER CAM	
TBA 0330S						
010	582162-0000	B		1	FOLDING FLAP CAM	
020	272640-0001	B		1	COUNTER CAM	
Common Parts						
030	272641-0000	-		1	PILLAR	
040	2514042-0000	-		1	PROTECTION	
050	929402-0000	-		1	ARM	
060	272491-0000	-		3	BRACKET	
070	272645-0000	-		1	RAIL	
080	272654-0000	B		1	ECCENTRIC SHAFT	
090	2512787-0000	-		1	HOLDER	
100	256621-0000	-		2	WASHER	
110	256705-0000	B		6	LACE	
120	256707-0000	-		1	BRACKET	
130	271284-0000	-		1	BLOCKING PIECE	
140	978184-0000	B		1	STOPPER	
150	978185-0000	B		1	SHIM	
170	257334-0000	B		3	LEAF SPRING	
260	90166-0095	-	MM	250	TUBE 4 MM PA BLUE	
290	90239-0357	B		1	ROD END, CLEVIS WITH AXLE M10X1,25	
300	352113-0205	-		1	ANCHOR PLATES FOR STRIPS, TYPE TM2S8-C10	
340	90450-0654	B		1	BRACKET,REAR,EYE WITH AXLE 32	
400	311103-0314	-		2	PARALLELL PIN, M6, 5X30 MM	
410	311103-0316	-		2	PARALLELL PIN, M6, 5X35 MM	
420	311103-0320	-		2	PARALLELL PIN, CP, M6, 5X45 MM	
430	311103-0409	-		1	PARALLELL PIN, M6, 8X40 MM	
440	312105-0368	-		2	SCREW M6S M6X16 A280	
450	312105-0372	-		5	SCREW M6S ISO 4017 M6X25 A480	
460	312105-0380	-		7	SCREW M6S ISO 4014 M6X50 A480	
470	312105-0384	-		3	SCREW M6S ISO 4014 M6X70 A480	
480	312105-0455	-		2	SCREW M6S ISO 4017 M8X30 A480	
490	312105-0459	-		2	SCREW M6S ISO 4014 M8X40 A480	
500	312115-0453	-		1	SCREW ISO4762 M8X25 A4	
510	90287-0075	-		3	SCREW SLOT. PAN HEAD LKCS M6X12	
520	315105-0153	-		17	WASHER ISO 7089-6-200 HV-A4	
530	315105-0165	-		2	WASHER ISO 7089-8-200 HV-A4	
540	315115-0165	-		4	WASHER PLAIN, TBRB 8,4/16 H=3	
550	315233-0109	-		2	WASHER PL.RND.NYL.10,3/14,H=1	
560	315742-0102	B		2	COLLAR, 6/16, H=8	
570	321120-0098	B		1	BEARING BUSHING W/O FL, 10/12X8	
580	321120-0118	B		3	BEARBUSHING W/O FL 14X16X15	
590	321120-0153	B		2	BEARBUSHING W/O FL 24X27X20	
600	312125-0285	-		1	SCREW SLOT.PAN HD. MCS 4X6 A480	
610	352113-0101	-		1	CLIP STRIP, 92X2,5 MM	
620	312105-0453	-		1	SCREW M6S ISO 4017 M8X25 A480	
630	90458-0438	-		1	GLAND, EXTENDED WITH INSERT, M20X1,5	
MB132	90458-0747	A		1	SENSOR FOR CYLINDER, SMH-1PC	

Machine Type | Group Description | Used-In | Group Number | Page No

MOTORIZED DESIGN CONTROL SYSTEM, RIGHT

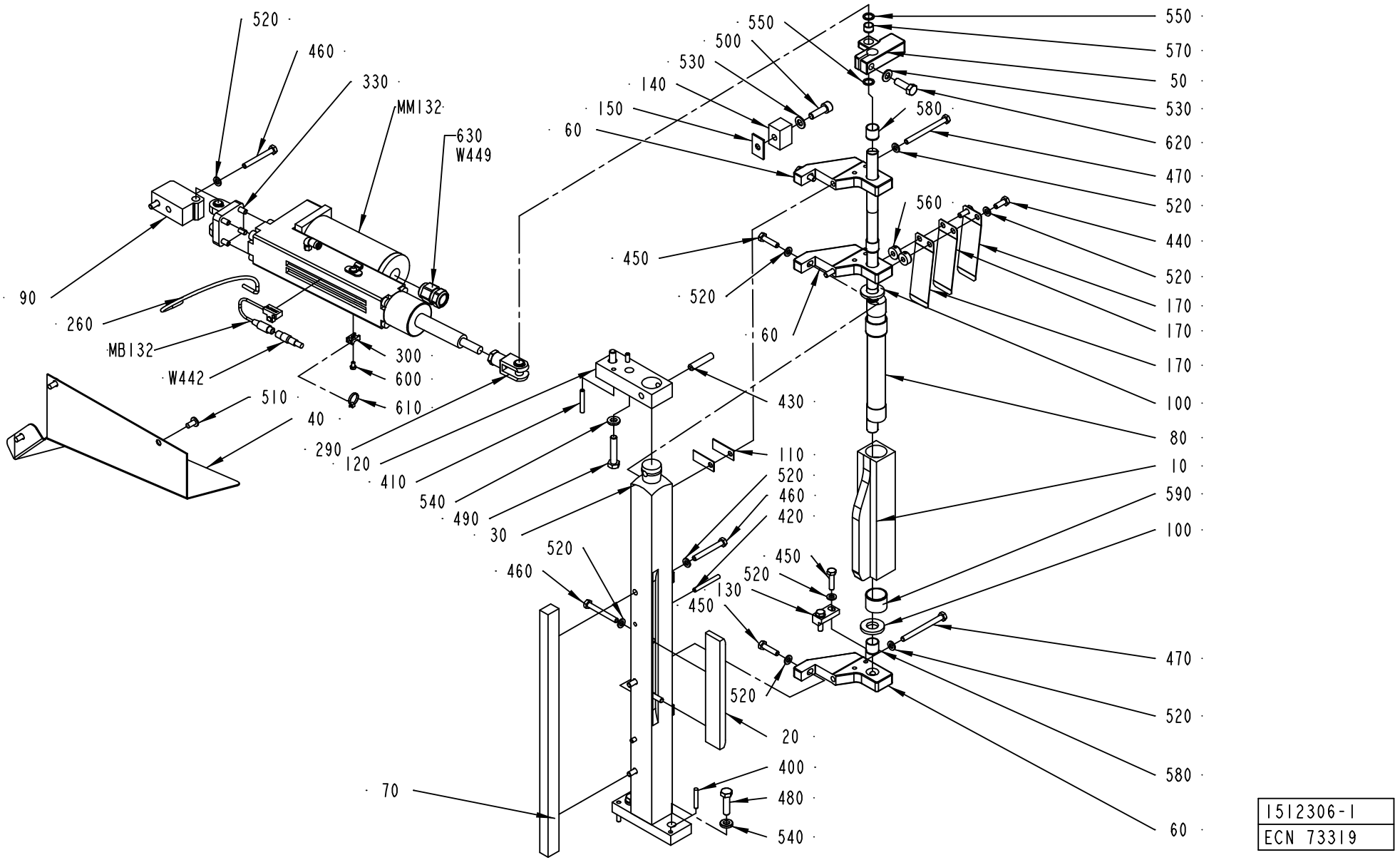

1512306-1
ECN 73319

Pos	Part No	SP	UN	Qty	Description	Page No
Common Parts (Cont'd)						
MM132	90458-1301	A		1	CYLINDER ETS32-M10NA2X-FM50-AEUM1D	
W442	90458-1298	A		1	CONNECTOR AND CABLE 403000E 18M 080	
W449	90220-0107	-	M	4	SCR. CABLE 5X0,75MM2	

Pos	Part No	SP	UN	Qty	Description	Page No

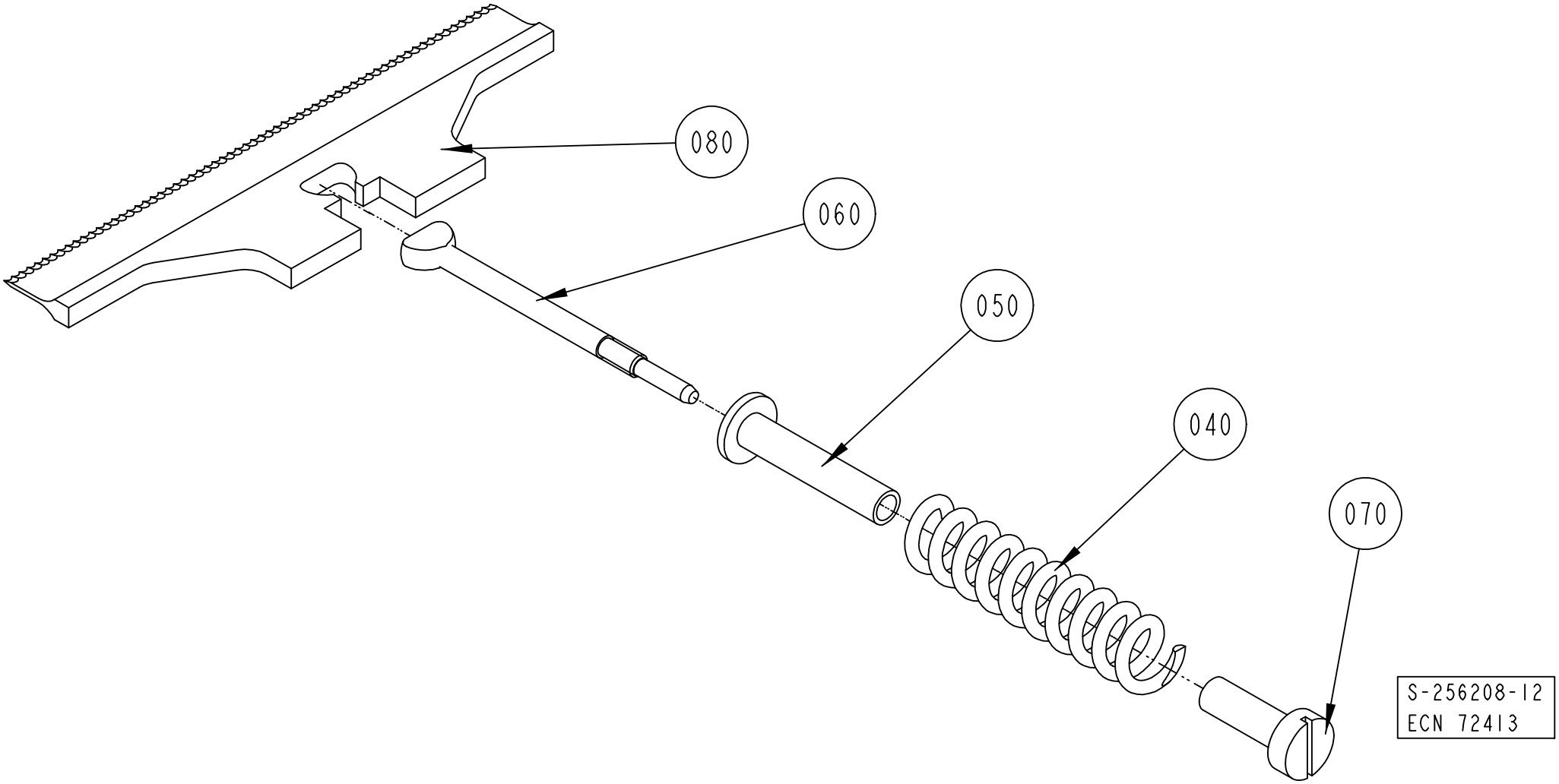
080
060
050
040
070
S-256208-12
ECN 72413

Pos	Part No	SP	UN	Qty	Description	Page No
TBA 0125S IH, TBA 0100B IH (See drawing on page: 264)						
080	1282645-0000	A		1	KNIFE	
TBA 0160S IH, TBA 0250S IH, TBA 0200M IH, TBA 0200S IH (See drawing on page: 266)						
080	1282647-0000	A		1	KNIFE	
TBA 0330S IH, TBA 0300S IH, TBA 0180B IH, TBA 0250B IH, TBA 0284B IH, TBA 0200B IH (See drawing on page: 262)						
080	1282646-0000	A		1	KNIFE	
Common Parts						
040	441726-0000	A		1	COMPRESSION SPRING	
050	272753-0000	A		1	STEERING	
060	456009-0000	A		1	LINK	
070	272755-0000	A		1	NUT	

Pos	Part No	SP	UN	Qty	Description	Page No

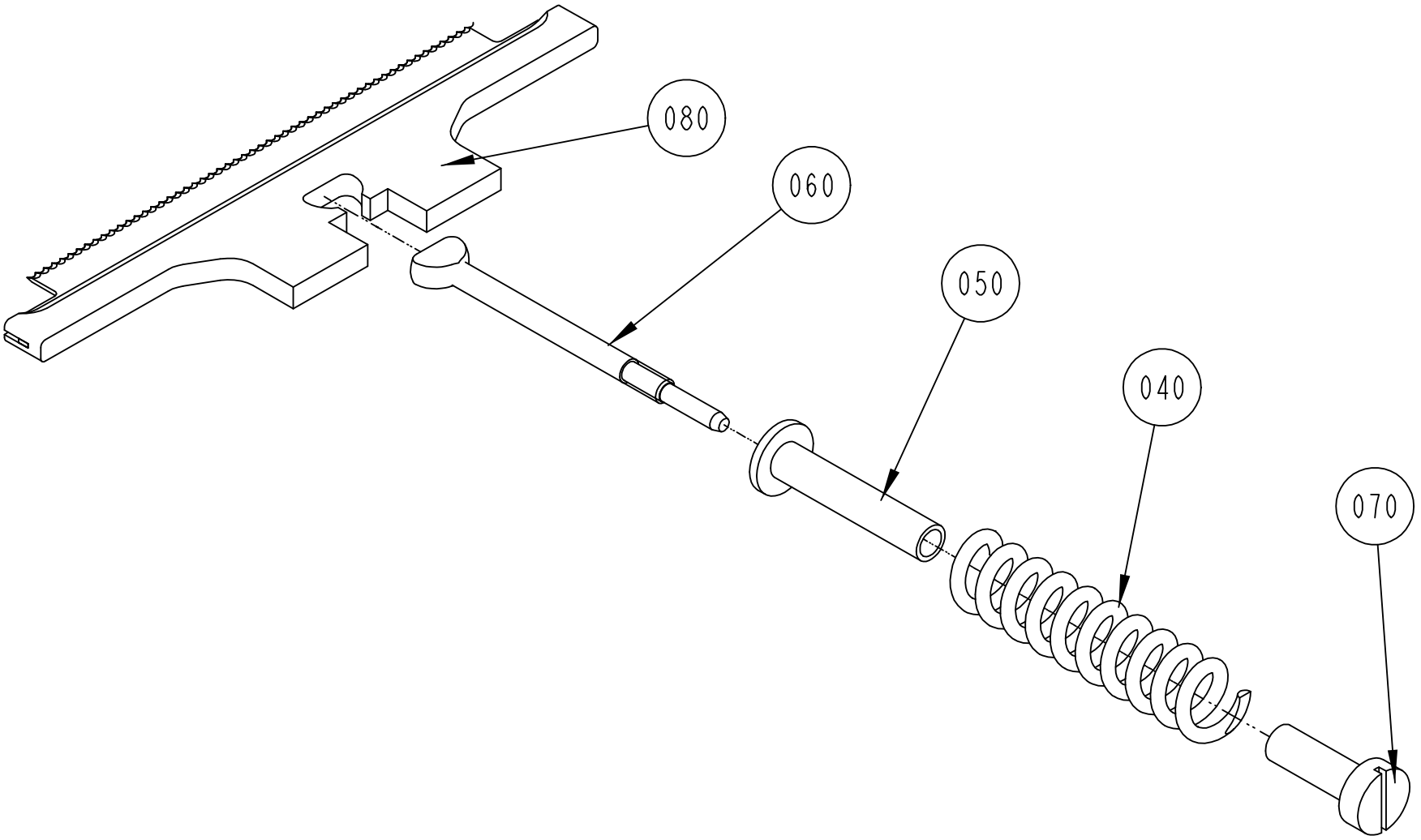

S-256208-13
ECN 72413

Pos	Part No	SP	UN	Qty	Description	Page No
TBA 0125S IH, TBA 0100B IH (See drawing on page: 264)						
080	1282645-0000	A		1	KNIFE	
TBA 0160S IH, TBA 0250S IH, TBA 0200M IH, TBA 0200S IH (See drawing on page: 266)						
080	1282647-0000	A		1	KNIFE	
TBA 0330S IH, TBA 0300S IH, TBA 0180B IH, TBA 0250B IH, TBA 0284B IH, TBA 0200B IH (See drawing on page: 262)						
080	1282646-0000	A		1	KNIFE	
Common Parts						
040	441726-0000	A		1	COMPRESSION SPRING	
050	272753-0000	A		1	STEERING	
060	456009-0000	A		1	LINK	
070	272755-0000	A		1	NUT	

Pos	Part No	SP	UN	Qty	Description	Page No

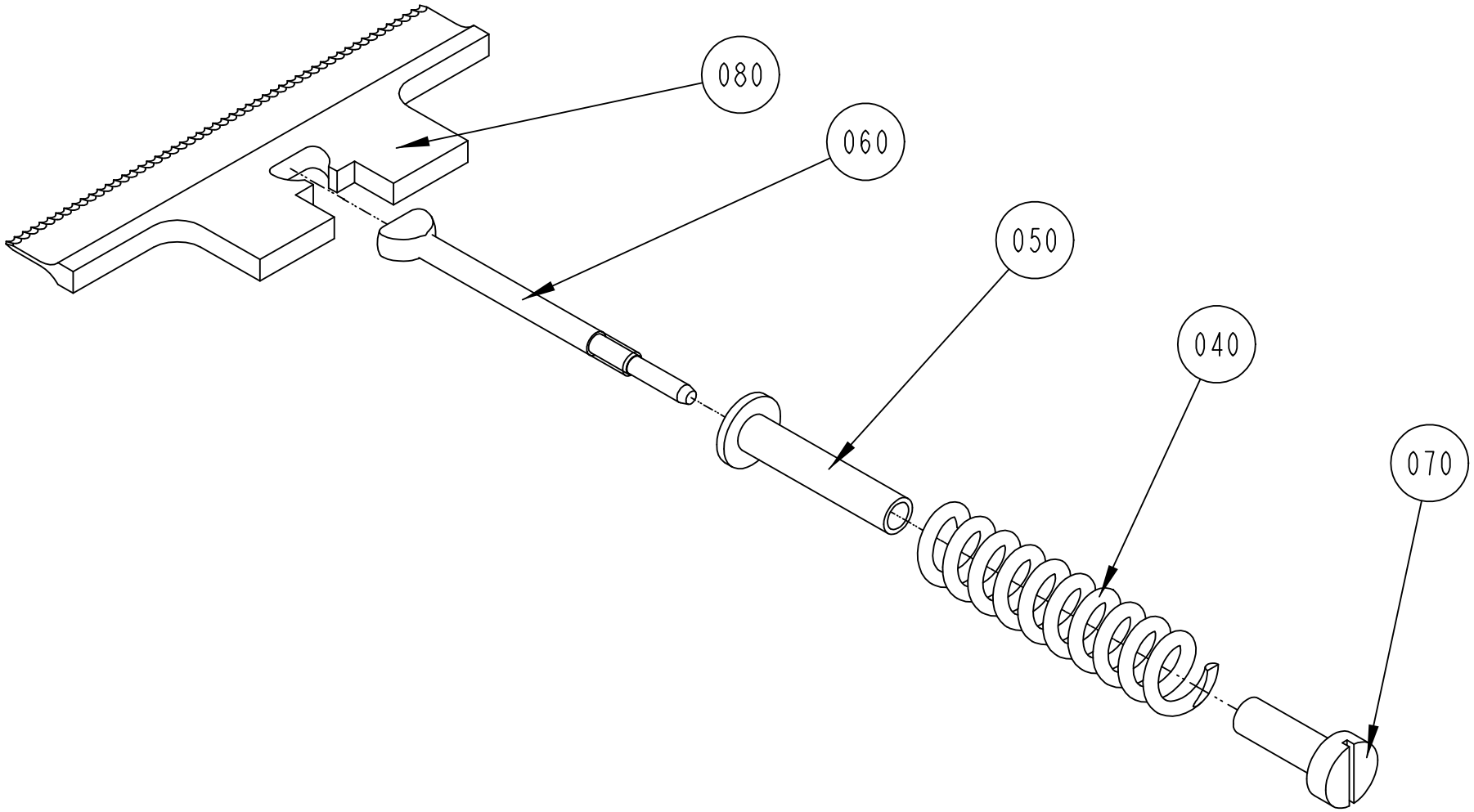

S-256208-14
ECN 72413

Pos	Part No	SP	UN	Qty	Description	Page No
TBA 0125S IH, TBA 0100B IH (See drawing on page: 264)						
080	1282645-0000	A		1	KNIFE	
TBA 0160S IH, TBA 0250S IH, TBA 0200M IH, TBA 0200S IH (See drawing on page: 266)						
080	1282647-0000	A		1	KNIFE	
TBA 0330S IH, TBA 0300S IH, TBA 0180B IH, TBA 0250B IH, TBA 0284B IH, TBA 0200B IH (See drawing on page: 262)						
080	1282646-0000	A		1	KNIFE	
Common Parts						
040	441726-0000	A		1	COMPRESSION SPRING	
050	272753-0000	A		1	STEERING	
060	456009-0000	A		1	LINK	
070	272755-0000	A		1	NUT	

Pos	Part No	SP	UN	Qty	Description	Page No

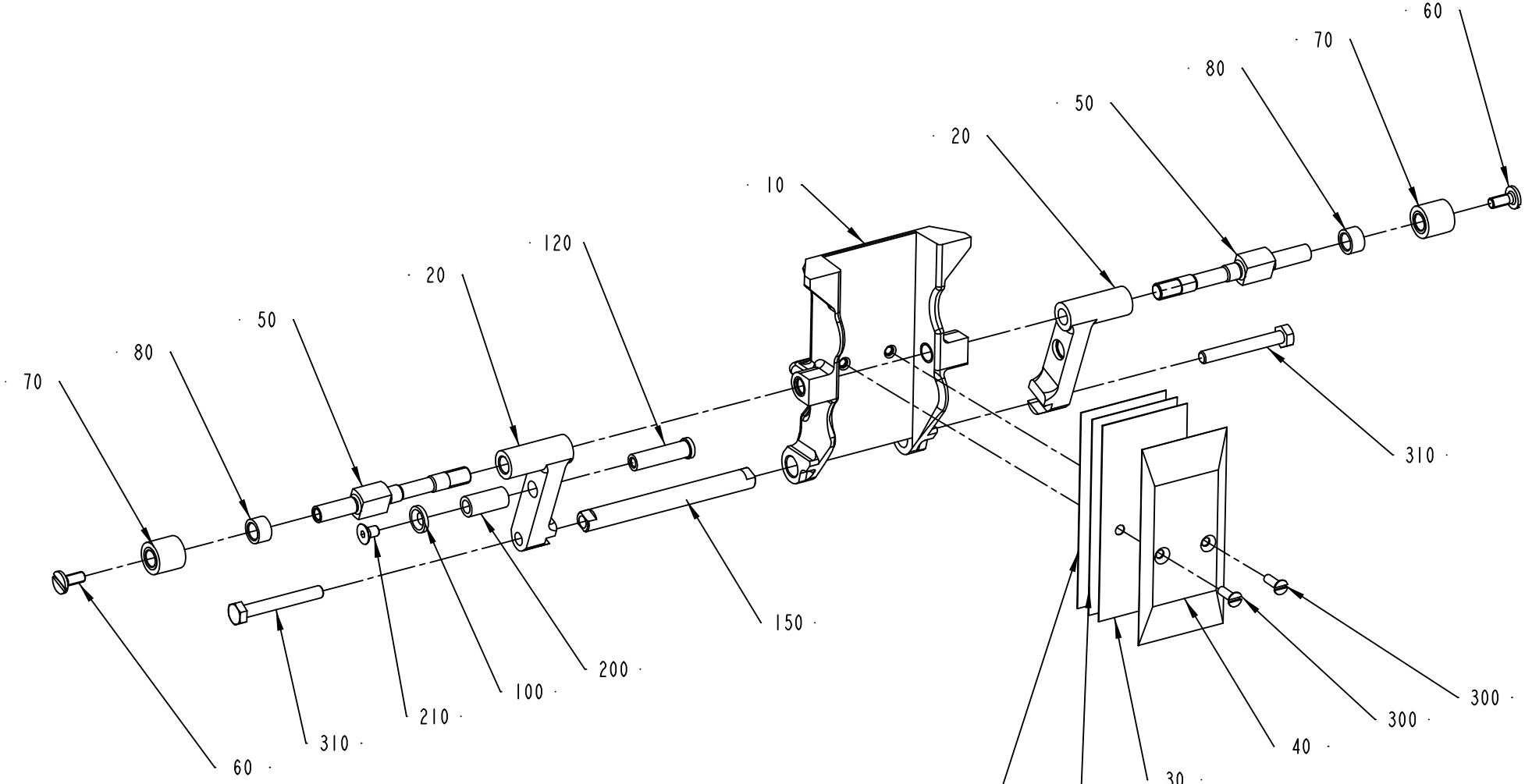

1519427-1
ECN 83326

ECM: 119391 - 20030113
Group number: 1519427-0100
Assembly Drawing: 1519427-1_1_AA

This list covers pages from 268 to 271

Pos	Part No	SP	UN	Qty	Description	Page No
TBA 0100B (See drawing on page: 270)						
010	979751-0000	A		1	VOLUME FLAP 100	
020	1538942-0000	A		2	CARRIER	
030	979754-0000	A		3	VOLUME SHIM 100	
040	979755-0000	A		1	VOLUME BULGE 100	
050	979756-0000	A		2	SHAFT	
080	979757-0000	-		2	SPACER	
TBA 0125S (See drawing on page: 268)						
010	256849-0000	A		1	VOLUMEFLAP 125 ML	
020	1519374-0001	A		2	CARRIER	
030	272987-0000	A		3	VOLUME SHIM	
040	491868-0000	A		1	VOLUME BULGE	
050	752598-0000	A		2	SHAFT	
080	752615-0000	-		2	SPACER	
100	1519377-0000	-		1	WASHER	
120	1519376-0000	A		1	AXLE PIN	
210	312155-0323	-		1	SCREW EN 10642 MF6S M5X8 A480	
TBA 0160S (See drawing on page: 268)						
010	577211-0000	A		1	VOLUMEFLAP 160 ML	
020	1519374-0001	A		2	CARRIER	
030	577212-0000	A		3	VOLUME SHIM	
040	577213-0000	A		1	VOLUME BULGE 160 ML	
050	752598-0000	A		2	SHAFT	
080	752615-0000	-		2	SPACER	
100	1519377-0000	-		1	WASHER	
120	1519376-0000	A		1	AXLE PIN	
210	312155-0323	-		1	SCREW EN 10642 MF6S M5X8 A480	
TBA 0180B (See drawing on page: 268)						
010	752292-0000	A		1	VOLUMEFLAP 180 ML	
020	1519374-0002	A		2	CARRIER	
030	272986-0004	A		3	VOLUME SHIM	
040	272988-0004	A		1	VOLUME BULGE	
050	752598-0000	A		2	SHAFT	
080	752615-0000	-		2	SPACER	
100	1519377-0000	-		1	WASHER	
120	1519376-0000	A		1	AXLE PIN	
210	312155-0323	-		1	SCREW EN 10642 MF6S M5X8 A480	
TBA 0200B (See drawing on page: 268)						
010	752212-0000	A		1	VOLUME FLAP 200 ML	
020	1519374-0001	A		2	CARRIER	
030	272986-0003	A		3	VOLUME SHIM	
040	456005-0003	A		1	VOLUME BULGE	
050	752598-0000	A		2	SHAFT	
080	752615-0000	-		2	SPACER	
100	1519377-0000	-		1	WASHER	
120	1519376-0000	A		1	AXLE PIN	
210	312155-0323	-		1	SCREW EN 10642 MF6S M5X8 A480	
TBA 0200M (See drawing on page: 268)						
020	1519374-0001	A		2	CARRIER	
030	979861-0000	A		3	VOLUME SHIM	
040	979860-0000	A		1	VOLUME BULGE	
050	752598-0000	A		2	SHAFT	
080	752615-0000	-		2	SPACER	
100	1519377-0000	-		1	WASHER	
120	1519376-0000	A		1	AXLE PIN	
210	312155-0323	-		1	SCREW EN 10642 MF6S M5X8 A480	
TBA 0200S (See drawing on page: 268)						
010	752999-0000	A		1	VOLUME FLAP 200S	
020	1519374-0001	A		2	CARRIER	
030	272991-0000	A		3	VOLUME SHIM	
040	272990-0000	A		1	VOLUME BULGE	
050	752598-0000	A		2	SHAFT	
080	752615-0000	-		2	SPACER	
100	1519377-0000	-		1	WASHER	
120	1519376-0000	A		1	AXLE PIN	
210	312155-0323	-		1	SCREW EN 10642 MF6S M5X8 A480	
TBA 0250B (See drawing on page: 268)						
010	978366-0000	A		1	VOLUME FLAP 250 ML	
020	1519374-0001	A		2	CARRIER	
030	272986-0001	A		3	VOLUME SHIM	
040	456005-0001	A		1	VOLUME BULGE	
050	752598-0000	A		2	SHAFT	
080	752615-0000	-		2	SPACER	
100	1519377-0000	-		1	WASHER	
120	1519376-0000	A		1	AXLE PIN	
210	312155-0323	-		1	SCREW EN 10642 MF6S M5X8 A480	

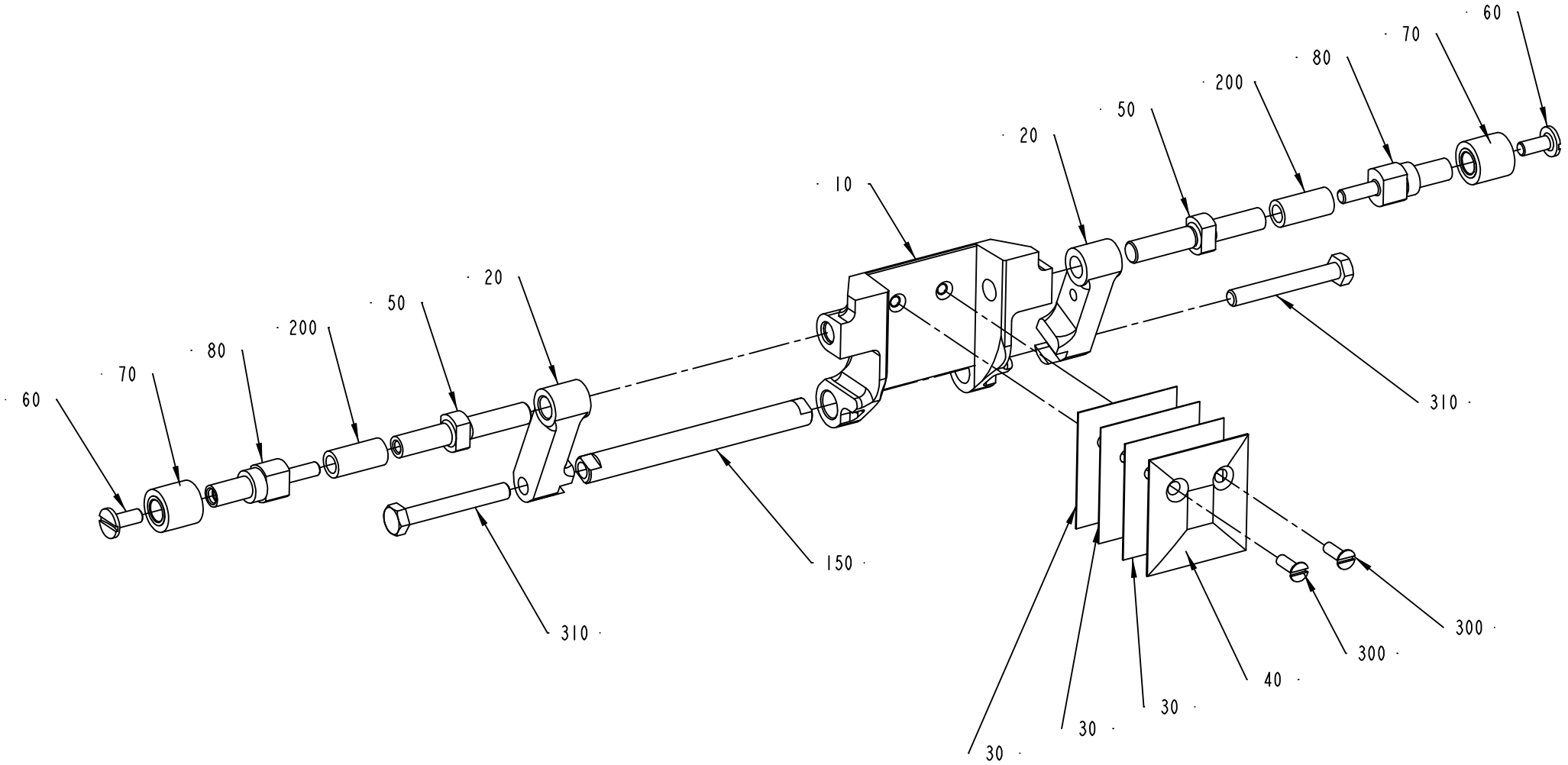

1519427-3
ECN 83326

Pos	Part No	SP	UN	Qty	Description	Page No
TBA 0250S (Cont'd) (See drawing on page: 268)						
010	574365-0000	A		1	VOLUMEFLAP 250S	
020	1519374-0001	A		2	CARRIER	
030	574366-0000	A		3	VOLUME SHIM	
040	574367-0000	A		1	VOLUME BULGE	
050	752598-0000	A		2	SHAFT	
080	752615-0000	-		2	SPACER	
100	1519377-0000	-		1	WASHER	
120	1519376-0000	A		1	AXLE PIN	
210	312155-0323	-		1	SCREW EN 10642 MF6S M5X8 A480	
TBA 0284B (See drawing on page: 268)						
010	978031-0000	A		1	VOLUMEFLAP 284 ML	
020	1519374-0001	A		2	CARRIER	
030	272986-0005	A		3	VOLUME SHIM	
040	752739-0000	A		1	VOLUME BULGE	
050	752598-0000	A		2	SHAFT	
080	752615-0000	-		2	SPACER	
100	1519377-0000	-		1	WASHER	
120	1519376-0000	A		1	AXLE PIN	
210	312155-0323	-		1	SCREW EN 10642 MF6S M5X8 A480	
TBA 0300S (See drawing on page: 268)						
010	978031-0000	A		1	VOLUMEFLAP 284 ML	
020	1519374-0001	A		2	CARRIER	
030	272986-0003	A		3	VOLUME SHIM	
040	979792-0000	A		1	VOLUME BULGE	
050	752598-0000	A		2	SHAFT	
080	752615-0000	-		2	SPACER	
100	1519377-0000	-		1	WASHER	
120	1519376-0000	A		1	AXLE PIN	
210	312155-0323	-		1	SCREW EN 10642 MF6S M5X8 A480	
TBA 0330S (See drawing on page: 268)						
010	582163-0000	A		1	VOLUME FLAP 330S	
020	1519374-0001	A		2	CARRIER	
030	272986-0006	A		3	VOLUME SHIM 330S	
040	979931-0000	A		1	VOLUME BULGE	
050	752598-0000	A		2	SHAFT	
080	752615-0000	-		2	SPACER	
100	1519377-0000	-		1	WASHER	
120	1519376-0000	A		1	AXLE PIN	
210	312155-0323	-		1	SCREW EN 10642 MF6S M5X8 A480	
Common Parts						
060	256859-0000	-		2	SCREW	
070	256860-0000	A		2	ROLL	
150	1519375-0001	A		1	SHAFT	
200	90166-0159	B	MM	25	RUBBER HOSE	
300	312145-0291	-		2	SCREW COUNT.SLOT.HD. 4X12 A4	
310	312105-0379	-		2	SCREW M6S ISO 4014 M6X45 A480	

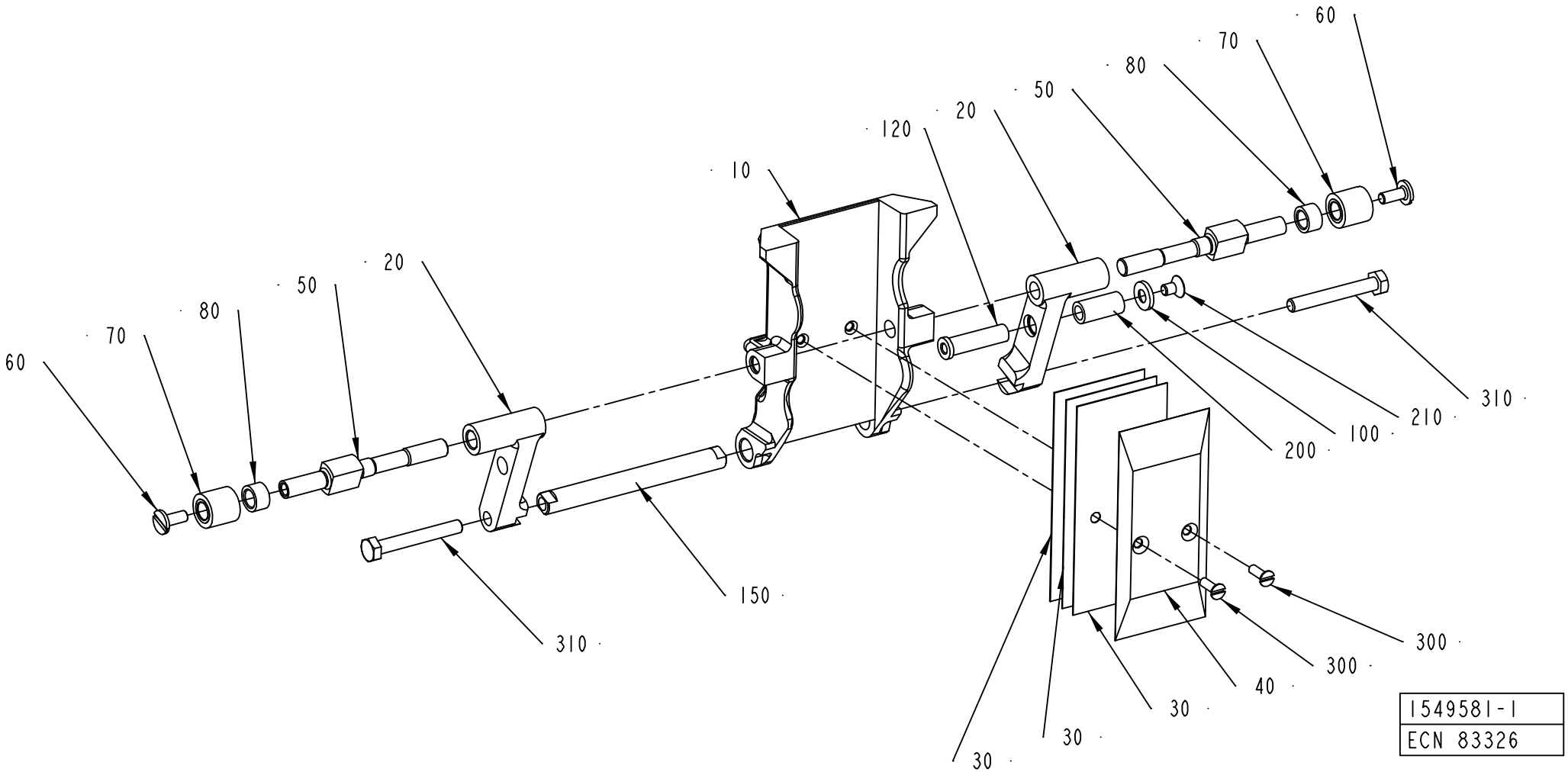
60
70
80
50
20
10
120
20
50
80
70
60
310
150
310
200
100
210
310
300
300
40
30
30
30
1549581-1
ECN 83326

ECM: 119338 - 20030113
Group number: 1549581-0100
Assembly Drawing: 1549581-1_1_AA

This list covers pages from 272 to 275

Pos	Part No	SP	UN	Qty	Description	Page No
TBA 0100B (See drawing on page: 274)						
010	979751-0000	A		1	VOLUME FLAP 100	
020	1538942-0000	A		2	CARRIER	
030	979754-0000	A		3	VOLUME SHIM 100	
040	979755-0000	A		1	VOLUME BULGE 100	
050	979756-0000	A		2	SHAFT	
080	979757-0000	-		2	SPACER	
TBA 0125S (See drawing on page: 272)						
010	256849-0000	A		1	VOLUMEFLAP 125 ML	
020	1519374-0001	A		2	CARRIER	
030	272987-0000	A		3	VOLUME SHIM	
040	491868-0000	A		1	VOLUME BULGE	
050	752598-0000	A		2	SHAFT	
080	752615-0000	-		2	SPACER	
100	1519377-0000	-		1	WASHER	
120	1519376-0000	A		1	AXLE PIN	
210	312155-0323	-		1	SCREW EN 10642 MF6S M5X8 A480	
TBA 0160S (See drawing on page: 272)						
010	577211-0000	A		1	VOLUMEFLAP 160 ML	
020	1519374-0001	A		2	CARRIER	
030	577212-0000	A		3	VOLUME SHIM	
040	577213-0000	A		1	VOLUME BULGE 160 ML	
050	752598-0000	A		2	SHAFT	
080	752615-0000	-		2	SPACER	
100	1519377-0000	-		1	WASHER	
120	1519376-0000	A		1	AXLE PIN	
210	312155-0323	-		1	SCREW EN 10642 MF6S M5X8 A480	
TBA 0180B (See drawing on page: 272)						
010	752292-0000	A		1	VOLUMEFLAP 180 ML	
020	1519374-0002	A		2	CARRIER	
030	272986-0004	A		3	VOLUME SHIM	
040	272988-0004	A		1	VOLUME BULGE	
050	752598-0000	A		2	SHAFT	
080	752615-0000	-		2	SPACER	
100	1519377-0000	-		1	WASHER	
120	1519376-0000	A		1	AXLE PIN	
210	312155-0323	-		1	SCREW EN 10642 MF6S M5X8 A480	
TBA 0200B (See drawing on page: 272)						
010	752212-0000	A		1	VOLUME FLAP 200 ML	
020	1519374-0001	A		2	CARRIER	
030	272986-0003	A		3	VOLUME SHIM	
040	456005-0003	A		1	VOLUME BULGE	
050	752598-0000	A		2	SHAFT	
080	752615-0000	-		2	SPACER	
100	1519377-0000	-		1	WASHER	
120	1519376-0000	A		1	AXLE PIN	
210	312155-0323	-		1	SCREW EN 10642 MF6S M5X8 A480	
TBA 0200M (See drawing on page: 272)						
020	1519374-0001	A		2	CARRIER	
030	979861-0000	A		3	VOLUME SHIM	
040	979860-0000	A		1	VOLUME BULGE	
050	752598-0000	A		2	SHAFT	
080	752615-0000	-		2	SPACER	
100	1519377-0000	-		1	WASHER	
120	1519376-0000	A		1	AXLE PIN	
210	312155-0323	-		1	SCREW EN 10642 MF6S M5X8 A480	
TBA 0200S (See drawing on page: 272)						
010	752999-0000	A		1	VOLUME FLAP 200S	
020	1519374-0001	A		2	CARRIER	
030	272991-0000	A		3	VOLUME SHIM	
040	272990-0000	A		1	VOLUME BULGE	
050	752598-0000	A		2	SHAFT	
080	752615-0000	-		2	SPACER	
100	1519377-0000	-		1	WASHER	
120	1519376-0000	A		1	AXLE PIN	
210	312155-0323	-		1	SCREW EN 10642 MF6S M5X8 A480	
TBA 0250B (See drawing on page: 272)						
010	978366-0000	A		1	VOLUME FLAP 250 ML	
020	1519374-0001	A		2	CARRIER	
030	272986-0001	A		3	VOLUME SHIM	
040	456005-0001	A		1	VOLUME BULGE	
050	752598-0000	A		2	SHAFT	
080	752615-0000	-		2	SPACER	
100	1519377-0000	-		1	WASHER	
120	1519376-0000	A		1	AXLE PIN	
210	312155-0323	-		1	SCREW EN 10642 MF6S M5X8 A480	

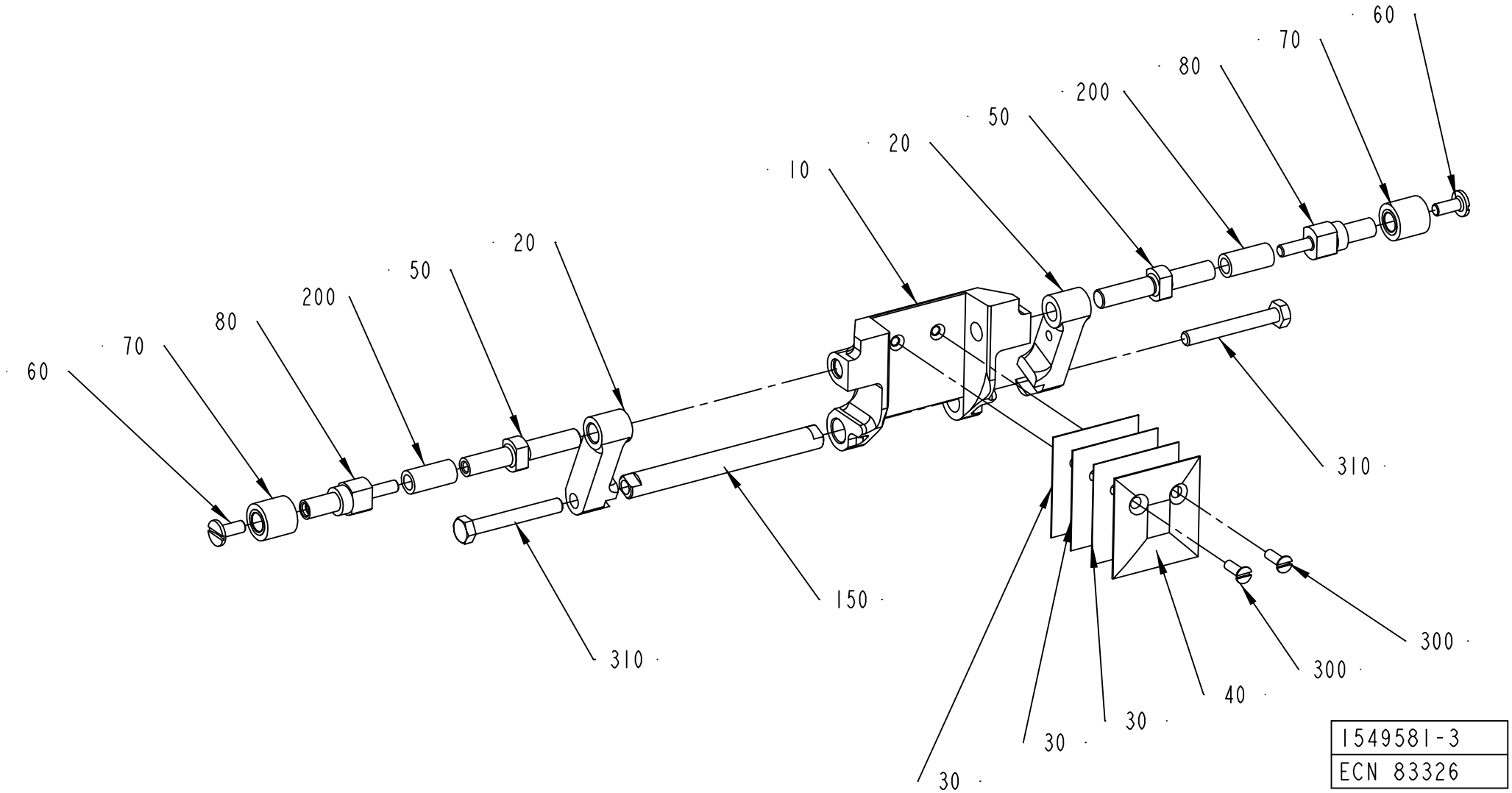
60
70
80
200
50
20
10
20
50
200
80
70
60
310
150
310
300
300
40
30
30
30
1549581-3
ECN 83326

Pos	Part No	SP	UN	Qty	Description	Page No
TBA 0250S (Cont'd) (See drawing on page: 272)						
010	574365-0000	A		1	VOLUMEFLAP 250S	
020	1519374-0001	A		2	CARRIER	
030	574366-0000	A		3	VOLUME SHIM	
040	574367-0000	A		1	VOLUME BULGE	
050	752598-0000	A		2	SHAFT	
080	752615-0000	-		2	SPACER	
100	1519377-0000	-		1	WASHER	
120	1519376-0000	A		1	AXLE PIN	
210	312155-0323	-		1	SCREW EN 10642 MF6S M5X8 A480	
TBA 0284B (See drawing on page: 272)						
010	978031-0000	A		1	VOLUMEFLAP 284 ML	
020	1519374-0001	A		2	CARRIER	
030	272986-0005	A		3	VOLUME SHIM	
040	752739-0000	A		1	VOLUME BULGE	
050	752598-0000	A		2	SHAFT	
080	752615-0000	-		2	SPACER	
100	1519377-0000	-		1	WASHER	
120	1519376-0000	A		1	AXLE PIN	
210	312155-0323	-		1	SCREW EN 10642 MF6S M5X8 A480	
TBA 0300S (See drawing on page: 272)						
010	978031-0000	A		1	VOLUMEFLAP 284 ML	
020	1519374-0001	A		2	CARRIER	
030	272986-0003	A		3	VOLUME SHIM	
040	979792-0000	A		1	VOLUME BULGE	
050	752598-0000	A		2	SHAFT	
080	752615-0000	-		2	SPACER	
100	1519377-0000	-		1	WASHER	
120	1519376-0000	A		1	AXLE PIN	
210	312155-0323	-		1	SCREW EN 10642 MF6S M5X8 A480	
TBA 0330S (See drawing on page: 272)						
010	582163-0000	A		1	VOLUME FLAP 330S	
020	1519374-0001	A		2	CARRIER	
030	272986-0006	A		3	VOLUME SHIM 330S	
040	979931-0000	A		1	VOLUME BULGE	
050	752598-0000	A		2	SHAFT	
080	752615-0000	-		2	SPACER	
100	1519377-0000	-		1	WASHER	
120	1519376-0000	A		1	AXLE PIN	
210	312155-0323	-		1	SCREW EN 10642 MF6S M5X8 A480	
Common Parts						
060	256859-0000	-		2	SCREW	
070	256860-0000	A		2	ROLL	
150	1519375-0001	A		1	SHAFT	
200	90166-0159	B	MM	25	RUBBER HOSE	
300	312145-0291	-		2	SCREW COUNT.SLOT.HD. 4X12 A4	
310	312105-0379	-		2	SCREW M6S ISO 4014 M6X45 A480	

SHOCK ABSORBER

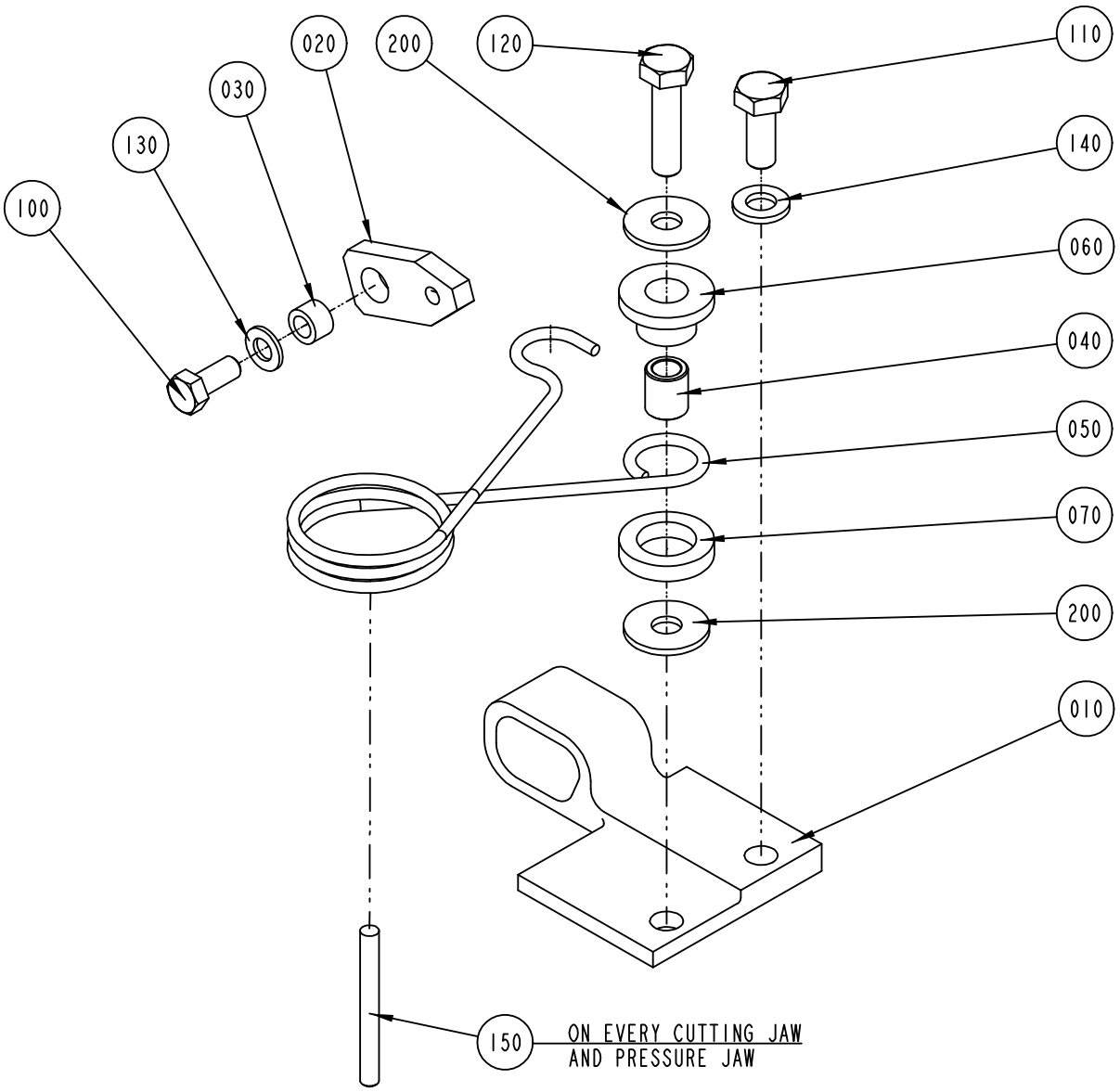

S-752671-1
ECN 72593

ECM: 115645 - 20020930
Group number: 752671-0100
Assembly Drawing: 752671-1_1_AC

This list covers pages from 276 to 279

Pos	Part No	SP	UN	Qty	Description	Page No
TBA 0100B (See drawing on page: 278)						
010	979758-0000	A		1	STOP PERF 1	
040	979760-0000	B		1	SPACER	
050	752678-0000	A		1	SPRING PERF 1	
060	979761-0000	B		1	SLEEVE	
070	752681-0000	B		1	WASHER	
110	312155-0368	-		2	SCREW EN 10642 MF6S M6X16 A480	
150	311103-0278	-		1	PARALLELL PIN, M6, 4X35 MM	
TBA 0125S (See drawing on page: 276)						
010	752563-0000	A		1	STOP PERF 1	
040	752673-0000	B		1	SPACER	
050	752678-0000	A		1	SPRING PERF 1	
060	752680-0000	B		1	SLEEVE	
070	752681-0000	B		1	WASHER	
110	312105-0368	-		1	SCREW M6S M6X16 A280	
120	312105-0372	-		1	SCREW M6S ISO 4017 M6X25 A480	
140	315105-0153	-		1	WASHER ISO 7089-6-200 HV-A4	
150	311103-0280	-		1	PARALLELL PIN, M6, 4X40 MM	
200	90005-0060	-		2	WASHER PLAIN, RBS 6,4/M6)/18,H=1,5	
TBA 0180B (See drawing on page: 276)						
010	752561-0000	A		1	STOP PERF 1	
040	752673-0000	B		1	SPACER	
050	752678-0000	A		1	SPRING PERF 1	
060	752680-0000	B		1	SLEEVE	
070	752681-0000	B		1	WASHER	
110	312105-0368	-		1	SCREW M6S M6X16 A280	
120	312105-0372	-		1	SCREW M6S ISO 4017 M6X25 A480	
140	315105-0153	-		1	WASHER ISO 7089-6-200 HV-A4	
150	311103-0280	-		1	PARALLELL PIN, M6, 4X40 MM	
200	90005-0060	-		2	WASHER PLAIN, RBS 6,4/M6)/18,H=1,5	
TBA 0330S, TBA 0300S, TBA 0160S, TBA 0200B, TBA 0250S, TBA 0284B, TBA 0200S, TBA 0200M, TBA 0250B (See drawing on page: 276)						
010	752559-0000	A		1	STOP PERF 1	
040	752673-0000	B		1	SPACER	
050	752678-0000	A		1	SPRING PERF 1	
060	752680-0000	B		1	SLEEVE	
070	752681-0000	B		1	WASHER	
110	312105-0368	-		1	SCREW M6S M6X16 A280	
120	312105-0372	-		1	SCREW M6S ISO 4017 M6X25 A480	
140	315115-0153	-		1	WASHER PLAIN, TBRB 6,4/12 H=3	
150	311103-0280	-		1	PARALLELL PIN, M6, 4X40 MM	
200	90005-0060	-		2	WASHER PLAIN, RBS 6,4/M6)/18,H=1,5	
Common Parts						
020	752425-0000	A		1	LINK	
030	752556-0000	B		1	SPACER	
100	312105-0327	-		1	SCREW M6S ISO 4017 M5X12 A480	
130	315105-0146	-		1	WASHER ISO 7089-5-200 HV-A4	

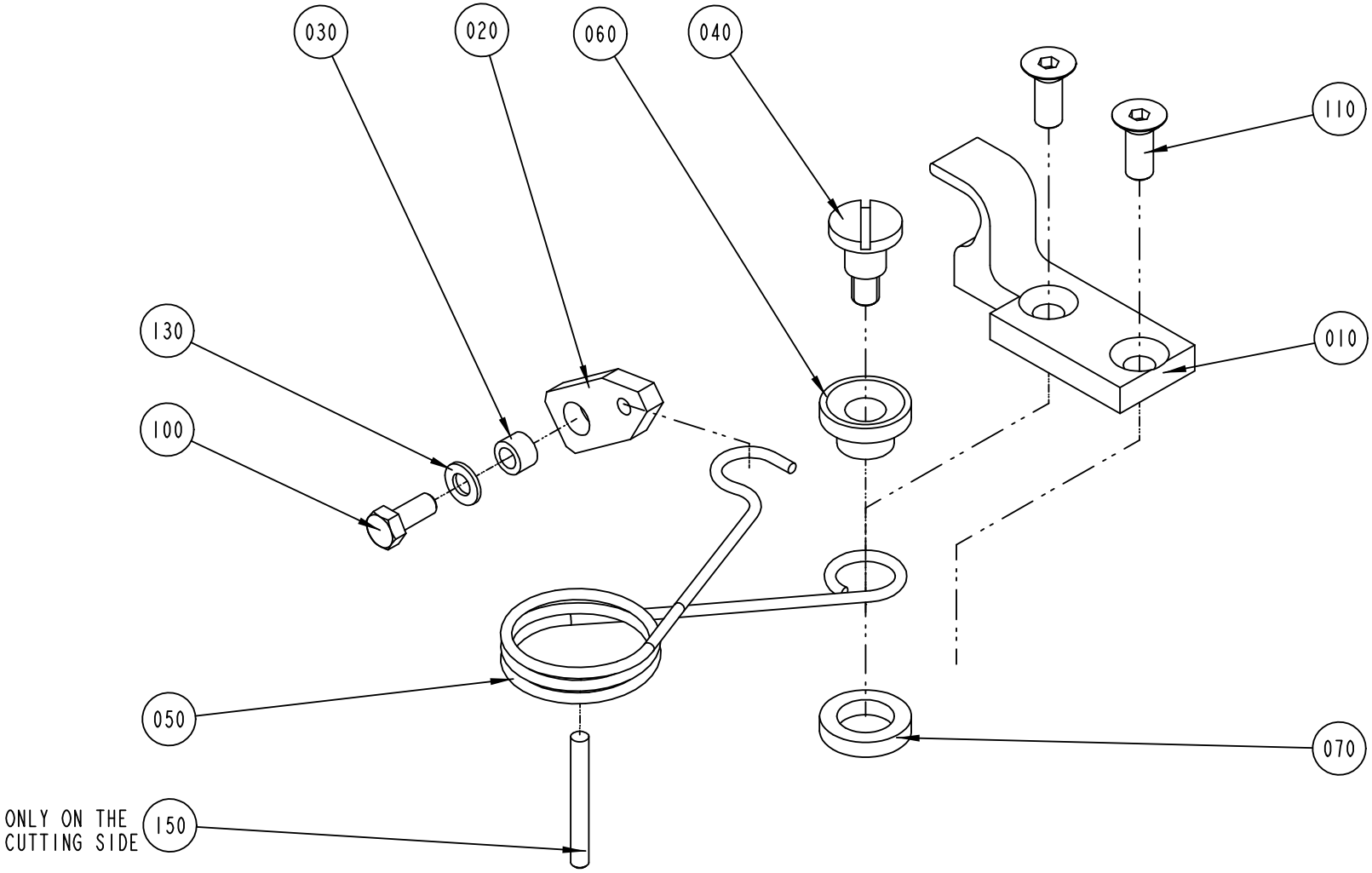

S-752671-2
ECN 72593

ECM: 115645 - 20020930
Group number: 752671-0100
Assembly Drawing: 752671-2_1_AB

This list covers pages from 276 to 279

Pos	Part No	SP	UN	Qty	Description	Page No
TBA 0100B (See drawing on page: 278)						
010	979758-0000	A		1	STOP PERF 1	
040	979760-0000	B		1	SPACER	
050	752678-0000	A		1	SPRING PERF 1	
060	979761-0000	B		1	SLEEVE	
070	752681-0000	B		1	WASHER	
110	312155-0368	-		2	SCREW EN 10642 MF6S M6X16 A480	
150	311103-0278	-		1	PARALLELL PIN, M6, 4X35 MM	
TBA 0125S (See drawing on page: 276)						
010	752563-0000	A		1	STOP PERF 1	
040	752673-0000	B		1	SPACER	
050	752678-0000	A		1	SPRING PERF 1	
060	752680-0000	B		1	SLEEVE	
070	752681-0000	B		1	WASHER	
110	312105-0368	-		1	SCREW M6S M6X16 A280	
120	312105-0372	-		1	SCREW M6S ISO 4017 M6X25 A480	
140	315105-0153	-		1	WASHER ISO 7089-6-200 HV-A4	
150	311103-0280	-		1	PARALLELL PIN, M6, 4X40 MM	
200	90005-0060	-		2	WASHER PLAIN, RBS 6,4/M6)/18,H=1,5	
TBA 0180B (See drawing on page: 276)						
010	752561-0000	A		1	STOP PERF 1	
040	752673-0000	B		1	SPACER	
050	752678-0000	A		1	SPRING PERF 1	
060	752680-0000	B		1	SLEEVE	
070	752681-0000	B		1	WASHER	
110	312105-0368	-		1	SCREW M6S M6X16 A280	
120	312105-0372	-		1	SCREW M6S ISO 4017 M6X25 A480	
140	315105-0153	-		1	WASHER ISO 7089-6-200 HV-A4	
150	311103-0280	-		1	PARALLELL PIN, M6, 4X40 MM	
200	90005-0060	-		2	WASHER PLAIN, RBS 6,4/M6)/18,H=1,5	
TBA 0330S, TBA 0300S, TBA 0160S, TBA 0200B, TBA 0250S, TBA 0284B, TBA 0200S, TBA 0200M, TBA 0250B (See drawing on page: 276)						
010	752559-0000	A		1	STOP PERF 1	
040	752673-0000	B		1	SPACER	
050	752678-0000	A		1	SPRING PERF 1	
060	752680-0000	B		1	SLEEVE	
070	752681-0000	B		1	WASHER	
110	312105-0368	-		1	SCREW M6S M6X16 A280	
120	312105-0372	-		1	SCREW M6S ISO 4017 M6X25 A480	
140	315115-0153	-		1	WASHER PLAIN, TBRB 6,4/12 H=3	
150	311103-0280	-		1	PARALLELL PIN, M6, 4X40 MM	
200	90005-0060	-		2	WASHER PLAIN, RBS 6,4/M6)/18,H=1,5	
Common Parts						
020	752425-0000	A		1	LINK	
030	752556-0000	B		1	SPACER	
100	312105-0327	-		1	SCREW M6S ISO 4017 M5X12 A480	
130	315105-0146	-		1	WASHER ISO 7089-5-200 HV-A4	

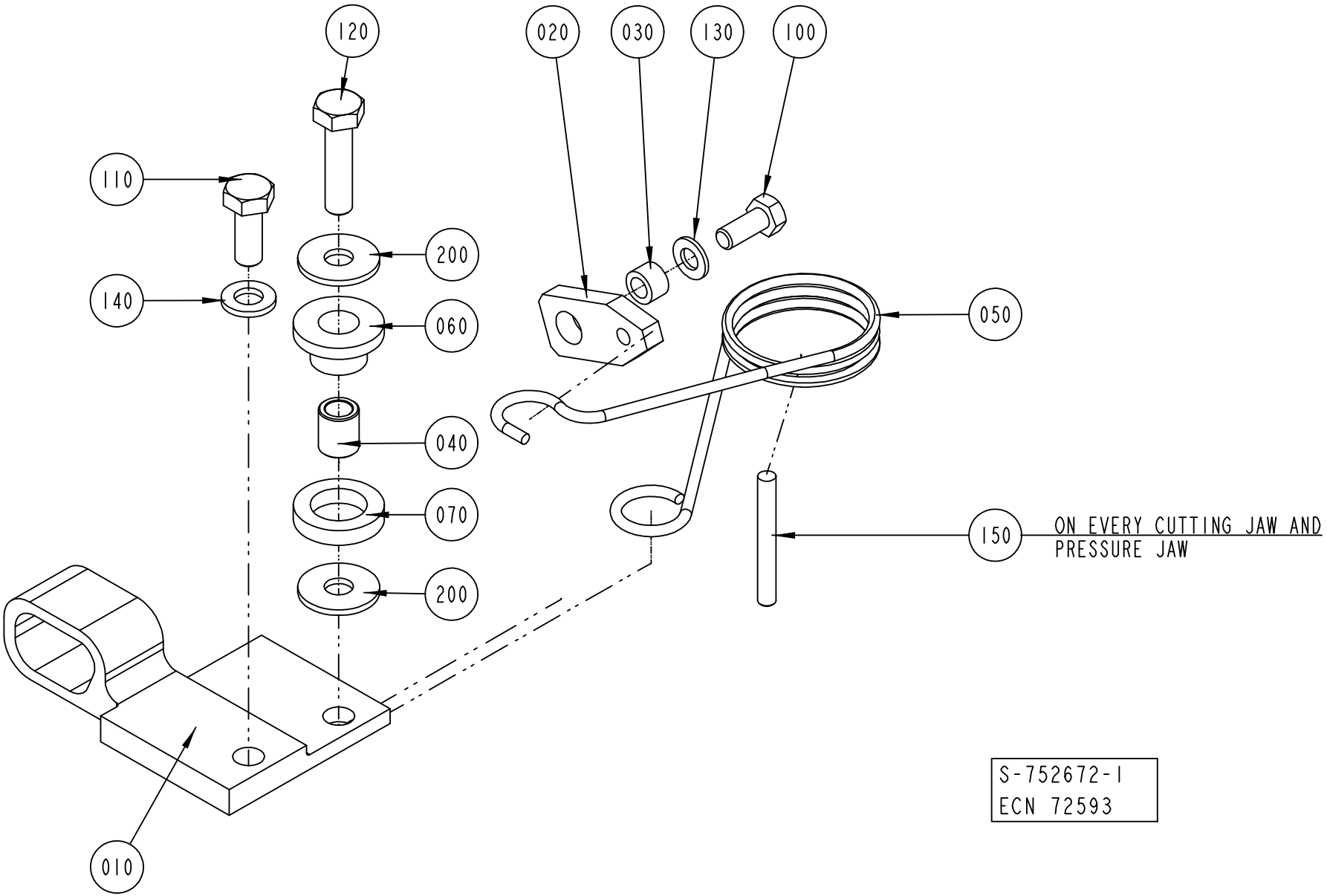
120
020
030
130
100
110
200
140
060
050
040
070
150
ON EVERY CUTTING JAW AND PRESSURE JAW
200
010
S-752672-1
ECN 72593

ECM: 115646 - 20020930
Group number: 752672-0100
Assembly Drawing: 752672-1_1_AC

This list covers pages from 280 to 283

Pos	Part No	SP	UN	Qty	Description	Page No
TBA 0100B (See drawing on page: 282)						
010	979759-0000	A		1	STOP PERF 2	
040	979760-0000	B		1	SPACER	
050	752679-0000	A		1	SPRING PERF 2	
060	979761-0000	B		1	SLEEVE	
070	752681-0000	B		1	WASHER	
110	312155-0368	-		2	SCREW EN 10642 MF6S M6X16 A480	
150	311103-0278	-		1	PARALLELL PIN, M6, 4X35 MM	
TBA 0125S (See drawing on page: 280)						
010	752564-0000	A		1	STOP PERF 2	
040	752673-0000	B		1	SPACER	
050	752679-0000	A		1	SPRING PERF 2	
060	752680-0000	B		1	SLEEVE	
070	752681-0000	B		1	WASHER	
110	312105-0368	-		1	SCREW M6S M6X16 A280	
120	312105-0372	-		1	SCREW M6S ISO 4017 M6X25 A480	
140	315105-0153	-		1	WASHER ISO 7089-6-200 HV-A4	
150	311103-0280	-		1	PARALLELL PIN, M6, 4X40 MM	
200	90005-0060	-		2	WASHER PLAIN, RBS 6,4/M6)/18,H=1,5	
TBA 0180B (See drawing on page: 280)						
010	752562-0000	A		1	STOP PERF 2	
040	752673-0000	B		1	SPACER	
050	752679-0000	A		1	SPRING PERF 2	
060	752680-0000	B		1	SLEEVE	
070	752681-0000	B		1	WASHER	
110	312105-0368	-		1	SCREW M6S M6X16 A280	
120	312105-0372	-		1	SCREW M6S ISO 4017 M6X25 A480	
140	315105-0153	-		1	WASHER ISO 7089-6-200 HV-A4	
150	311103-0280	-		1	PARALLELL PIN, M6, 4X40 MM	
200	90005-0060	-		2	WASHER PLAIN, RBS 6,4/M6)/18,H=1,5	
TBA 0330S, TBA 0300S, TBA 0160S, TBA 0200B, TBA 0250S, TBA 0284B, TBA 0200S, TBA 0200M, TBA 0250B (See drawing on page: 280)						
010	752560-0000	A		1	STOP PERF 2	
040	752673-0000	B		1	SPACER	
050	752679-0000	A		1	SPRING PERF 2	
060	752680-0000	B		1	SLEEVE	
070	752681-0000	B		1	WASHER	
110	312105-0368	-		1	SCREW M6S M6X16 A280	
120	312105-0372	-		1	SCREW M6S ISO 4017 M6X25 A480	
140	315115-0153	-		1	WASHER PLAIN, TBRB 6,4/12 H=3	
150	311103-0280	-		1	PARALLELL PIN, M6, 4X40 MM	
200	90005-0060	-		2	WASHER PLAIN, RBS 6,4/M6)/18,H=1,5	
Common Parts						
020	752425-0000	A		1	LINK	
030	752556-0000	B		1	SPACER	
100	312105-0327	-		1	SCREW M6S ISO 4017 M5X12 A480	
130	315105-0146	-		1	WASHER ISO 7089-5-200 HV-A4	

Machine Type | Group Description | Used-In | Group Number | Page No

SHOCK ABSORBER

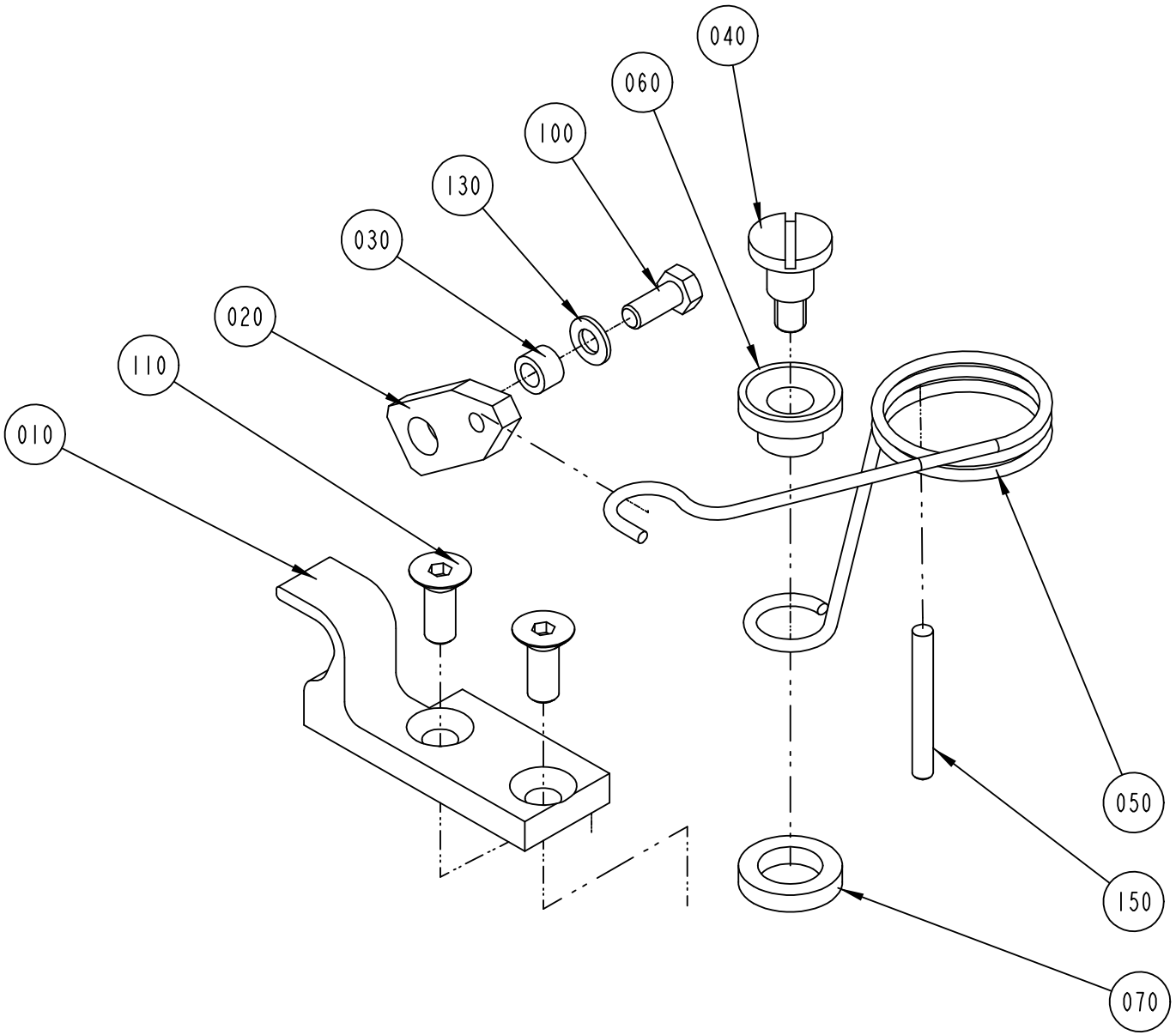

S-752672-2
ECN 72593

ECM: 115646 - 20020930
Group number: 752672-0100
Assembly Drawing: 752672-2_1_AB

This list covers pages from 280 to 283

Pos	Part No	SP	UN	Qty	Description	Page No
TBA 0100B (See drawing on page: 282)						
010	979759-0000	A		1	STOP PERF 2	
040	979760-0000	B		1	SPACER	
050	752679-0000	A		1	SPRING PERF 2	
060	979761-0000	B		1	SLEEVE	
070	752681-0000	B		1	WASHER	
110	312155-0368	-		2	SCREW EN 10642 MF6S M6X16 A480	
150	311103-0278	-		1	PARALLELL PIN, M6, 4X35 MM	
TBA 0125S (See drawing on page: 280)						
010	752564-0000	A		1	STOP PERF 2	
040	752673-0000	B		1	SPACER	
050	752679-0000	A		1	SPRING PERF 2	
060	752680-0000	B		1	SLEEVE	
070	752681-0000	B		1	WASHER	
110	312105-0368	-		1	SCREW M6S M6X16 A280	
120	312105-0372	-		1	SCREW M6S ISO 4017 M6X25 A480	
140	315105-0153	-		1	WASHER ISO 7089-6-200 HV-A4	
150	311103-0280	-		1	PARALLELL PIN, M6, 4X40 MM	
200	90005-0060	-		2	WASHER PLAIN, RBS 6,4/M6)/18,H=1,5	
TBA 0180B (See drawing on page: 280)						
010	752562-0000	A		1	STOP PERF 2	
040	752673-0000	B		1	SPACER	
050	752679-0000	A		1	SPRING PERF 2	
060	752680-0000	B		1	SLEEVE	
070	752681-0000	B		1	WASHER	
110	312105-0368	-		1	SCREW M6S M6X16 A280	
120	312105-0372	-		1	SCREW M6S ISO 4017 M6X25 A480	
140	315105-0153	-		1	WASHER ISO 7089-6-200 HV-A4	
150	311103-0280	-		1	PARALLELL PIN, M6, 4X40 MM	
200	90005-0060	-		2	WASHER PLAIN, RBS 6,4/M6)/18,H=1,5	
TBA 0330S, TBA 0300S, TBA 0160S, TBA 0200B, TBA 0250S, TBA 0284B, TBA 0200S, TBA 0200M, TBA 0250B (See drawing on page: 280)						
010	752560-0000	A		1	STOP PERF 2	
040	752673-0000	B		1	SPACER	
050	752679-0000	A		1	SPRING PERF 2	
060	752680-0000	B		1	SLEEVE	
070	752681-0000	B		1	WASHER	
110	312105-0368	-		1	SCREW M6S M6X16 A280	
120	312105-0372	-		1	SCREW M6S ISO 4017 M6X25 A480	
140	315115-0153	-		1	WASHER PLAIN, TBRB 6,4/12 H=3	
150	311103-0280	-		1	PARALLELL PIN, M6, 4X40 MM	
200	90005-0060	-		2	WASHER PLAIN, RBS 6,4/M6)/18,H=1,5	
Common Parts						
020	752425-0000	A		1	LINK	
030	752556-0000	B		1	SPACER	
100	312105-0327	-		1	SCREW M6S ISO 4017 M5X12 A480	
130	315105-0146	-		1	WASHER ISO 7089-5-200 HV-A4	

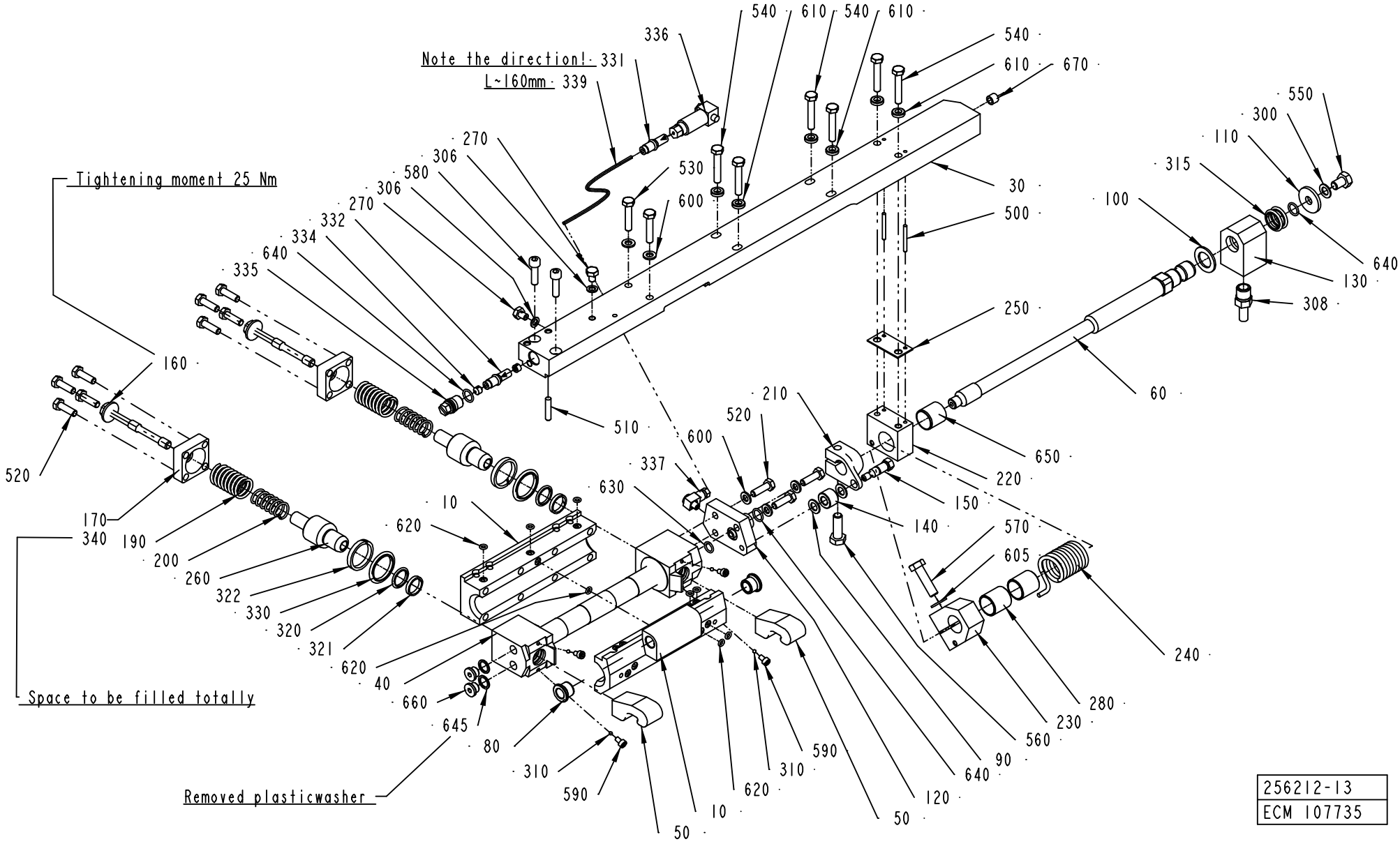
Note the direction! L~160mm
Tightening moment 25 Nm
Space to be filled totally
Removed plasticwasher
256212-13
ECM 107735

ECM: 109871 - 20030113
Group number: 256212-0600
Assembly Drawing: 256212-13_1_AD

This list covers pages from 284 to 287

Pos	Part No	SP	UN	Qty	Description	Page No
TBA 0100B						
010	2552528-0000	A		1	BEARING HOUSING	
030	979764-0000	A		1	CARRIER RIGHT 100	
080	1517641-0000	A		2	FLANGE BUSHING	
TBA 0125S						
010	2552528-0000	A		1	BEARING HOUSING	
030	979793-0000	A		1	CARRIER	
080	1517641-0000	A		2	FLANGE BUSHING	
TBA 0160S, TBA 0200S						
010	2552530-0000	A		1	BEARING HOUSING	
030	979793-0000	A		1	CARRIER	
080	1517641-0000	A		2	FLANGE BUSHING	
TBA 0250S, TBA 0200M						
010	2552527-0000	A		1	BEARING HOUSING	
030	979793-0000	A		1	CARRIER	
080	1517641-0000	A		2	FLANGE BUSHING	
TBA 0330S, TBA 0300S, TBA 0180B, TBA 0200B, TBA 0284B, TBA 0250B						
010	2552529-0000	A		1	BEARING HOUSING	
030	979793-0000	A		1	CARRIER	
080	1517641-0000	A		2	FLANGE BUSHING	
Common Parts						
040	490940-0000	B		1	CYLINDER	
050	978746-0000	A		2	CATCH	
060	752284-0000	B		1	SHAFT	
090	256557-0001	B		2	WASHER	
100	256557-0002	B		1	WASHER	
110	256557-0003	B		1	WASHER	
120	752282-0000	B		1	CONNECTION RIGHT	
130	441385-0000	B		1	HUB	
140	256576-0000	A		1	ROLL	
150	441764-0000	A		1	SHAFT	
160	257249-0000	A		2	SCREW	
170	257250-0000	-		2	LID	
190	490942-0000	A		2	COMPRESSION SPRING	
200	490943-0000	A		2	COMPRESSION SPRING	
210	752289-0000	A		1	CLAMP RIGHT	
220	272501-0000	A		1	BRACKET RIGHT	
230	272503-0000	A		1	CLAMPING PIECE	
240	456311-0000	A		1	TORSION SPRING RIGHT	
250	272506-0000	B		1	LACE	
260	751743-0000	B		2	PISTON	
270	441355-0000	-		2	BLEEDING SCREW	
280	751769-0000	B		2	SLEEVE	
300	315237-0107	-		1	WASHER,PL.RND.AL.8/14,H=1	
306	315237-0106	-		2	WASHER,PL.RND.AL.6/10,H=1	
308	90030-0065	-		1	PIPE CONNECTION	
310	90090-0005	-		4	BALL, D=3 MM	
315	90091-0089	B		2	ROD SEAL, GLIDORING 16X22X2,5 MM	
320	90091-0214	B		2	ROD SEAL, GLIDORING 16X20,9X2,2 MM	
321	90091-0162	B		2	WEAR RING 16X19X3,2 MM	
322	90091-0170	B		2	WEAR RING 25X30X4,2 MM	
330	90091-0215	B		2	ROD SEAL, GLIDORING 25X32,5X3,2 MM	
331	90092-0052	A		1	METERING VALVE 10 MM3	
332	90092-0053	-		1	METERING VALVE 30 MM3	
334	90134-0042	-		2	SPACER DOSING VALVE	
335	90134-0045	-		1	PLUG M12X1	
336	90134-0047	-		1	CONNECTION FOR DOSING VALVE	
337	90134-0058	-		1	CONNECTION	
339	90166-0143	-	MM	160	TUBE 2,5 MM PA,TRANSP.	
340	90296-0068	-	G	25	GREASE UNIWAY LI62 CARTRID.400GR	
500	311103-0242	B		2	PARALLELL PIN, M6, 3X30 MM	
510	311103-0312	B		1	PARALLELL PIN, M6, 5X25 MM	
520	312105-0370	-		11	SCREW M6S ISO 4017 M6X20 A480	
530	312105-0374	-		2	SCREW M6S ISO 4014 M6X30 A480	
540	312105-0376	-		6	SCREW M6S ISO 4014 M6X35 A480	
550	312105-0447	-		1	SCREW M6S ISO 4017 M8X12 A480	
560	312105-0453	-		1	SCREW M6S ISO 4017 M8X25 A480	
570	312105-0455	-		1	SCREW M6S ISO 4017 M8X30 A480	
580	312115-0371	-		2	SCREW ISO4762 M6X22 A4	
590	752476-0000	B		4	SCREW	
600	315105-0153	-		5	WASHER ISO 7089-6-200 HV-A4	
605	315105-0165	-		1	WASHER ISO 7089-8-200 HV-A4	
610	315115-0153	-		6	WASHER PLAIN, TBRB 6,4/12 H=3	
620	315202-0102	B		8	O-RING 4,1X1,6 MM	
630	315202-0106	B		1	O-RING 8,1X1,6 MM	
640	315202-0108	B		3	O-RING 10,1X1,6 MM	
645	315234-0109	B		2	WASHER,PL.RND.CU.10,3/13,5 H=1,0	
650	321120-0132	B		1	BEARBUSHING W/O FL 18X20X20	
660	342713-0209	-		2	PLUG, EXT THREAD HEX SOCKET 8638-00-180	

Machine Type | Group Description | Used-In | Group Number | Page No

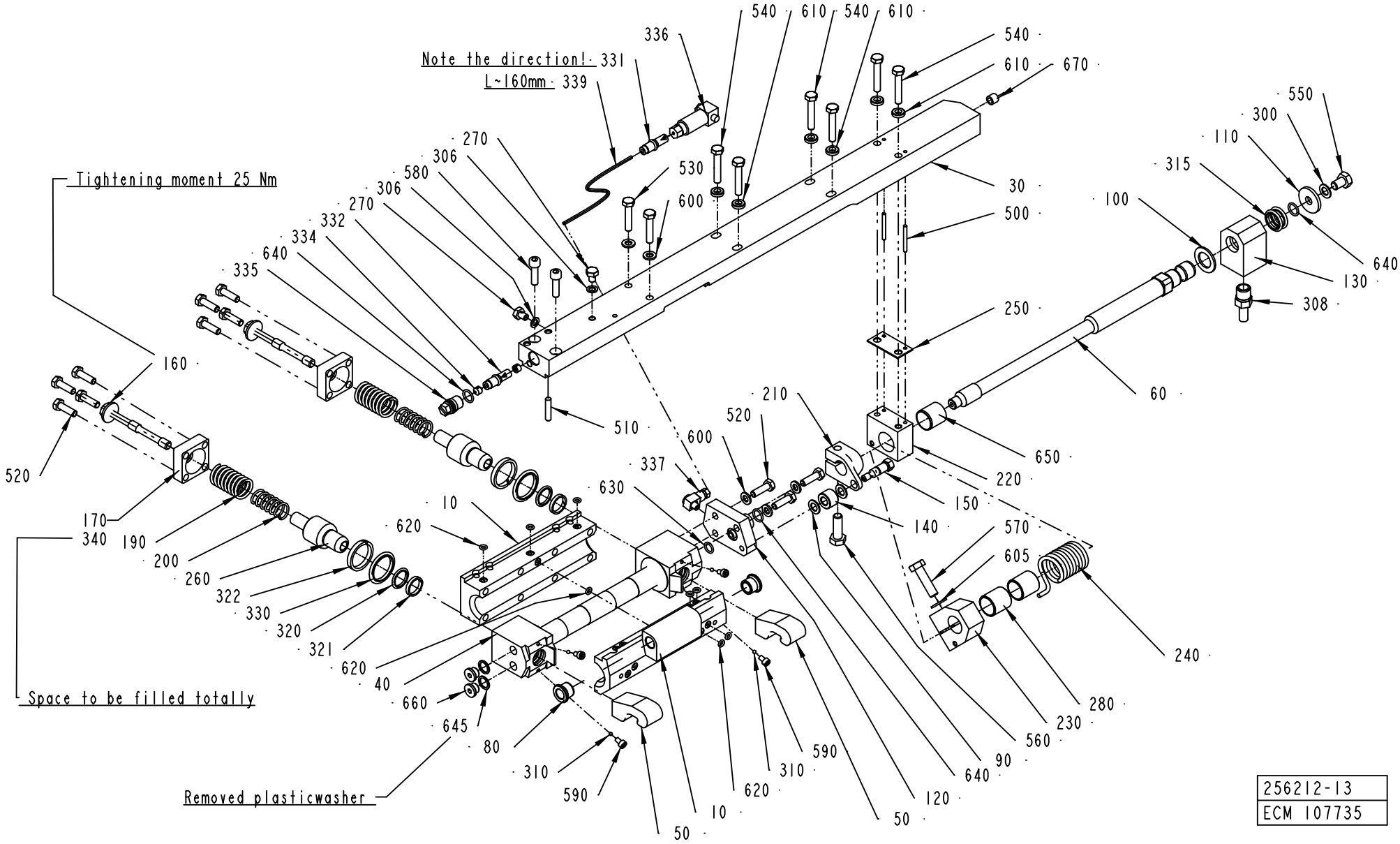
Note the direction! L~160mm
Tightening moment 25 Nm
Space to be filled totally
Removed plasticwasher
256212-13
ECM 107735

Pos	Part No	SP	UN	Qty	Description	Page No
Common Parts (Cont'd)						
670	2545249-0000	-		1	TEFLON HOSE	

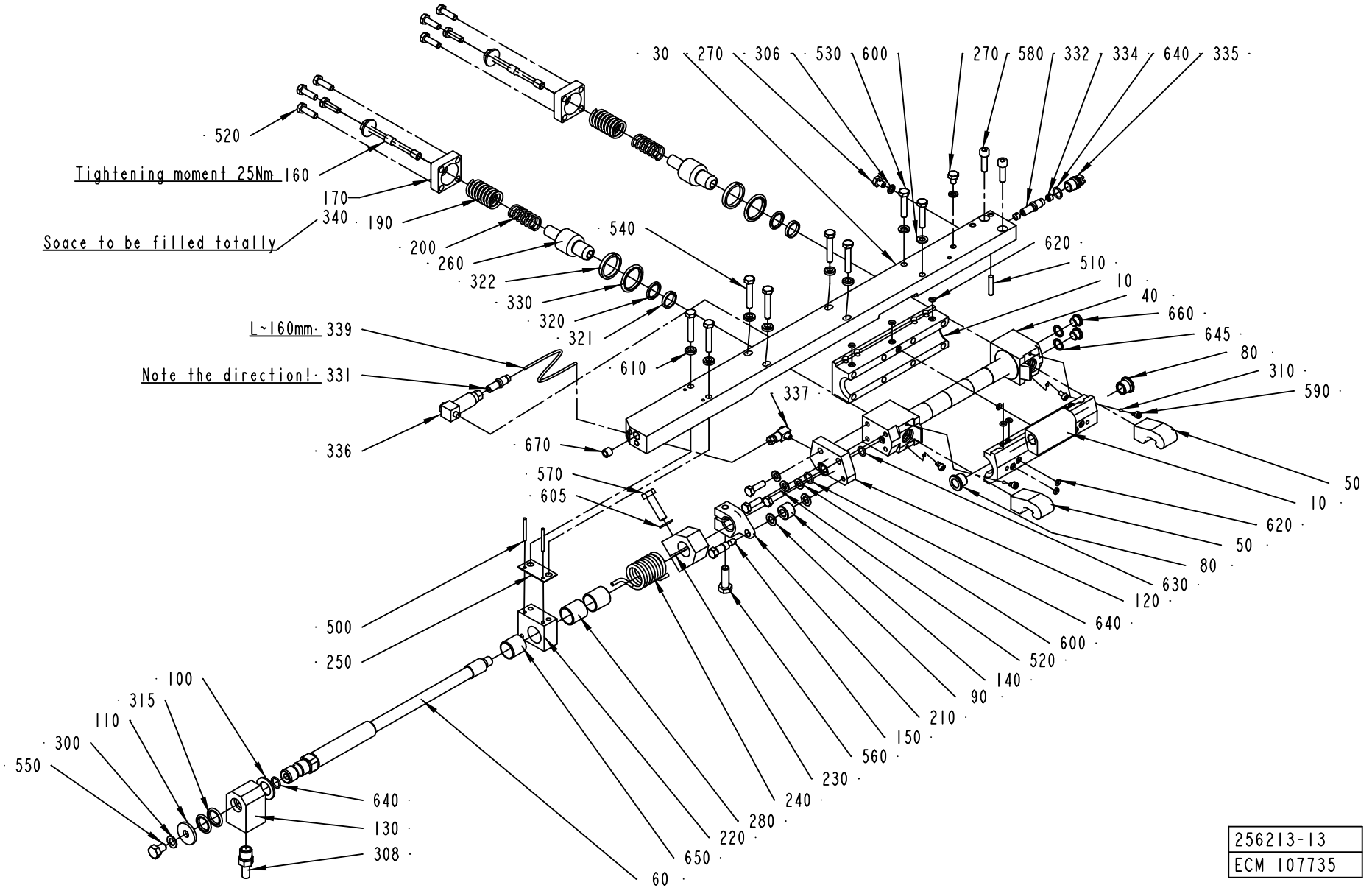
30
270
306
530
600
270
580
332
334
640
335
520
Tightening moment 25Nm
160
170
340
190
Space to be filled totally
200
260
322
330
320
321
540
620
510
10
40
660
645
80
310
590
L~160mm
339
Note the direction!
331
336
610
337
670
570
605
50
10
620
50
80
630
120
640
600
520
140
90
210
150
560
230
240
280
220
650
60
500
250
100
315
110
300
550
640
130
308
256213-13
ECM 107735

ECM: 109872 - 20030113
Group number: 256213-0600
Assembly Drawing: 256213-13_1_AD

This list covers pages from 288 to 291

Pos	Part No	SP	UN	Qty	Description	Page No
TBA 0100B						
010	2552528-0000	A		1	BEARING HOUSING	
030	979765-0000	A		1	CARRIER LEFT 100	
080	1517641-0000	A		2	FLANGE BUSHING	
TBA 0125S						
010	2552528-0000	A		1	BEARING HOUSING	
030	979794-0000	A		1	CARRIER	
080	1517641-0000	A		2	FLANGE BUSHING	
TBA 0160S, TBA 0200S						
010	2552530-0000	A		1	BEARING HOUSING	
030	979794-0000	A		1	CARRIER	
080	1517641-0000	A		2	FLANGE BUSHING	
TBA 0250S, TBA 0200M						
010	2552527-0000	A		1	BEARING HOUSING	
030	979794-0000	A		1	CARRIER	
080	1517641-0000	A		2	FLANGE BUSHING	
TBA 0330S, TBA 0300S, TBA 0180B, TBA 0200B, TBA 0284B, TBA 0250B						
010	2552529-0000	A		1	BEARING HOUSING	
030	979794-0000	A		1	CARRIER	
080	1517641-0000	A		2	FLANGE BUSHING	
Common Parts						
040	490940-0000	B		1	CYLINDER	
050	978746-0000	A		2	CATCH	
060	752284-0000	B		1	SHAFT	
090	256557-0001	B		2	WASHER	
100	256557-0002	B		1	WASHER	
110	256557-0003	B		1	WASHER	
120	752283-0000	B		1	CONNECTION LEFT	
130	441385-0000	B		1	HUB	
140	256576-0000	A		1	ROLL	
150	441764-0000	A		1	SHAFT	
160	257249-0000	A		2	SCREW	
170	257250-0000	-		2	LID	
190	490942-0000	A		2	COMPRESSION SPRING	
200	490943-0000	A		2	COMPRESSION SPRING	
210	752290-0000	A		1	CLAMP LEFT	
220	272502-0000	A		1	BRACKET LEFT	
230	272503-0000	A		1	CLAMPING PIECE	
240	456312-0000	A		1	TORSION SPRING LEFT	
250	272506-0000	B		1	LACE	
260	751743-0000	B		2	PISTON	
270	441355-0000	-		2	BLEEDING SCREW	
280	751769-0000	B		2	SLEEVE	
300	315237-0107	-		1	WASHER,PL.RND.AL.8/14,H=1	
306	315237-0106	-		2	WASHER,PL.RND.AL.6/10,H=1	
308	90030-0065	-		1	PIPE CONNECTION	
310	90090-0005	-		4	BALL, D=3 MM	
315	90091-0089	B		2	ROD SEAL, GLIDORING 16X22X2,5 MM	
320	90091-0214	B		2	ROD SEAL, GLIDORING 16X20,9X2,2 MM	
321	90091-0162	B		2	WEAR RING 16X19X3,2 MM	
322	90091-0170	B		2	WEAR RING 25X30X4,2 MM	
330	90091-0215	B		2	ROD SEAL, GLIDORING 25X32,5X3,2 MM	
331	90092-0052	A		1	METERING VALVE 10 MM3	
332	90092-0053	-		1	METERING VALVE 30 MM3	
334	90134-0042	-		2	SPACER DOSING VALVE	
335	90134-0045	-		1	PLUG M12X1	
336	90134-0047	-		1	CONNECTION FOR DOSING VALVE	
337	90134-0058	-		1	CONNECTION	
339	90166-0143	-	MM	160	TUBE 2,5 MM PA,TRANSP.	
340	90296-0068	-	G	25	GREASE UNIWAY LI62 CARTRID.400GR	
500	311103-0242	B		2	PARALLELL PIN, M6, 3X30 MM	
510	311103-0312	B		1	PARALLELL PIN, M6, 5X25 MM	
520	312105-0370	-		11	SCREW M6S ISO 4017 M6X20 A480	
530	312105-0374	-		2	SCREW M6S ISO 4014 M6X30 A480	
540	312105-0376	-		6	SCREW M6S ISO 4014 M6X35 A480	
550	312105-0447	-		1	SCREW M6S ISO 4017 M8X12 A480	
560	312105-0453	-		1	SCREW M6S ISO 4017 M8X25 A480	
570	312105-0455	-		1	SCREW M6S ISO 4017 M8X30 A480	
580	312115-0371	-		2	SCREW ISO4762 M6X22 A4	
590	752476-0000	B		4	SCREW	
600	315105-0153	-		5	WASHER ISO 7089-6-200 HV-A4	
605	315105-0165	-		1	WASHER ISO 7089-8-200 HV-A4	
610	315115-0153	-		6	WASHER PLAIN, TBRB 6,4/12 H=3	
620	315202-0102	B		8	O-RING 4,1X1,6 MM	
630	315202-0106	B		1	O-RING 8,1X1,6 MM	
640	315202-0108	B		3	O-RING 10,1X1,6 MM	
645	315234-0109	B		2	WASHER,PL.RND.CU.10,3/13,5 H=1,0	
650	321120-0132	B		1	BEARBUSHING W/O FL 18X20X20	
660	342713-0209	-		2	PLUG, EXT THREAD HEX SOCKET 8638-00-180	

Machine Type | Group Description | Used-In | Group Number | Page No

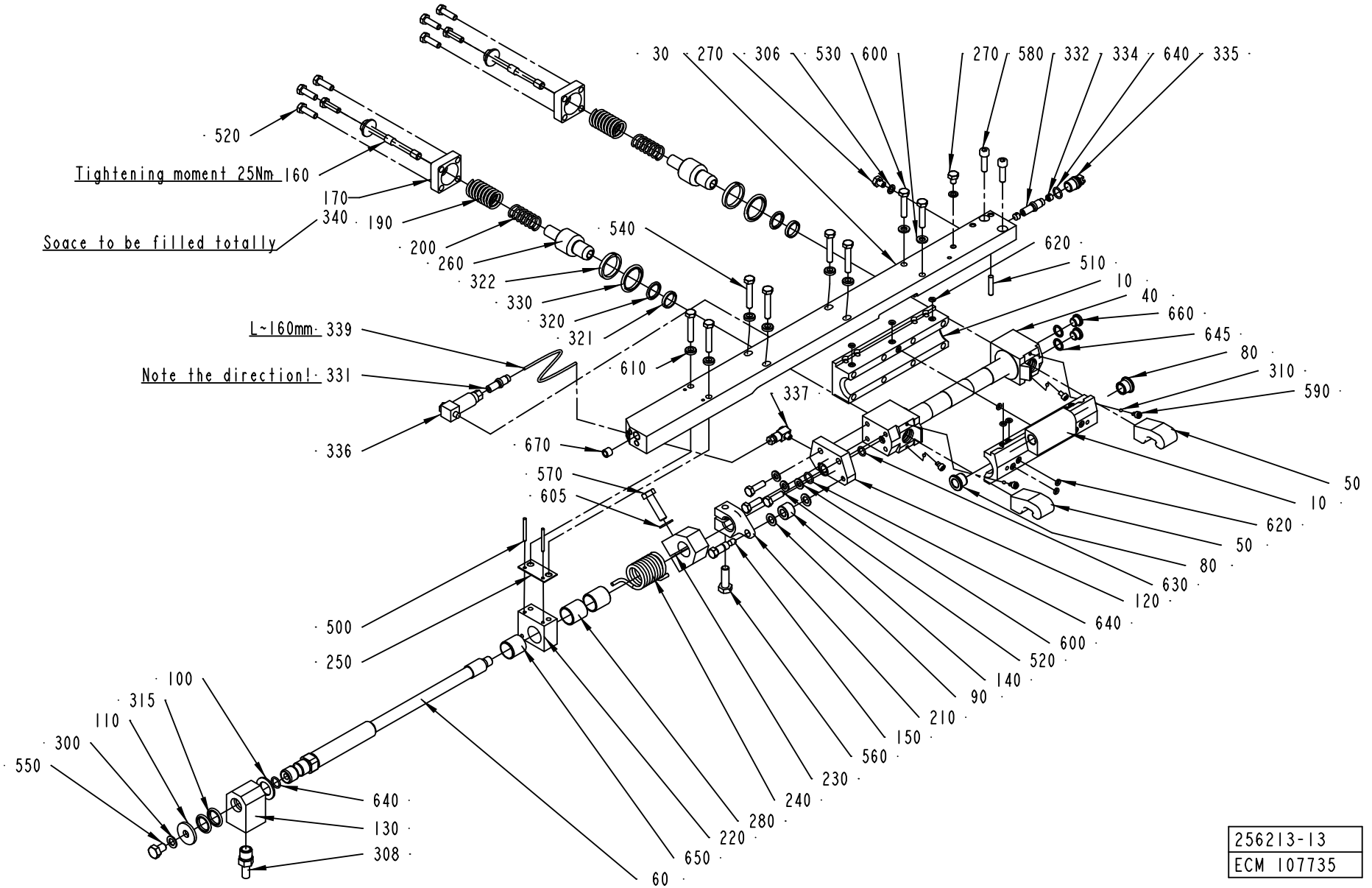
30
270
306
530
600
270
580
332
334
640
335
520
Tightening moment 25Nm
160
170
340
190
Space to be filled totally
200
260
322
330
320
321
540
620
510
10
40
660
645
80
310
590
L~160mm
339
Note the direction!
331
336
610
337
670
570
605
50
10
620
50
80
630
120
640
600
520
140
90
210
150
560
230
240
280
220
650
60
500
250
100
315
110
300
550
640
130
308
256213-13
ECM 107735

Pos	Part No	SP	UN	Qty	Description	Page No
Common Parts (Cont'd)						
670	2545249-0000	-		1	TEFLON HOSE	

Pos	Part No	SP	UN	Qty	Description	Page No

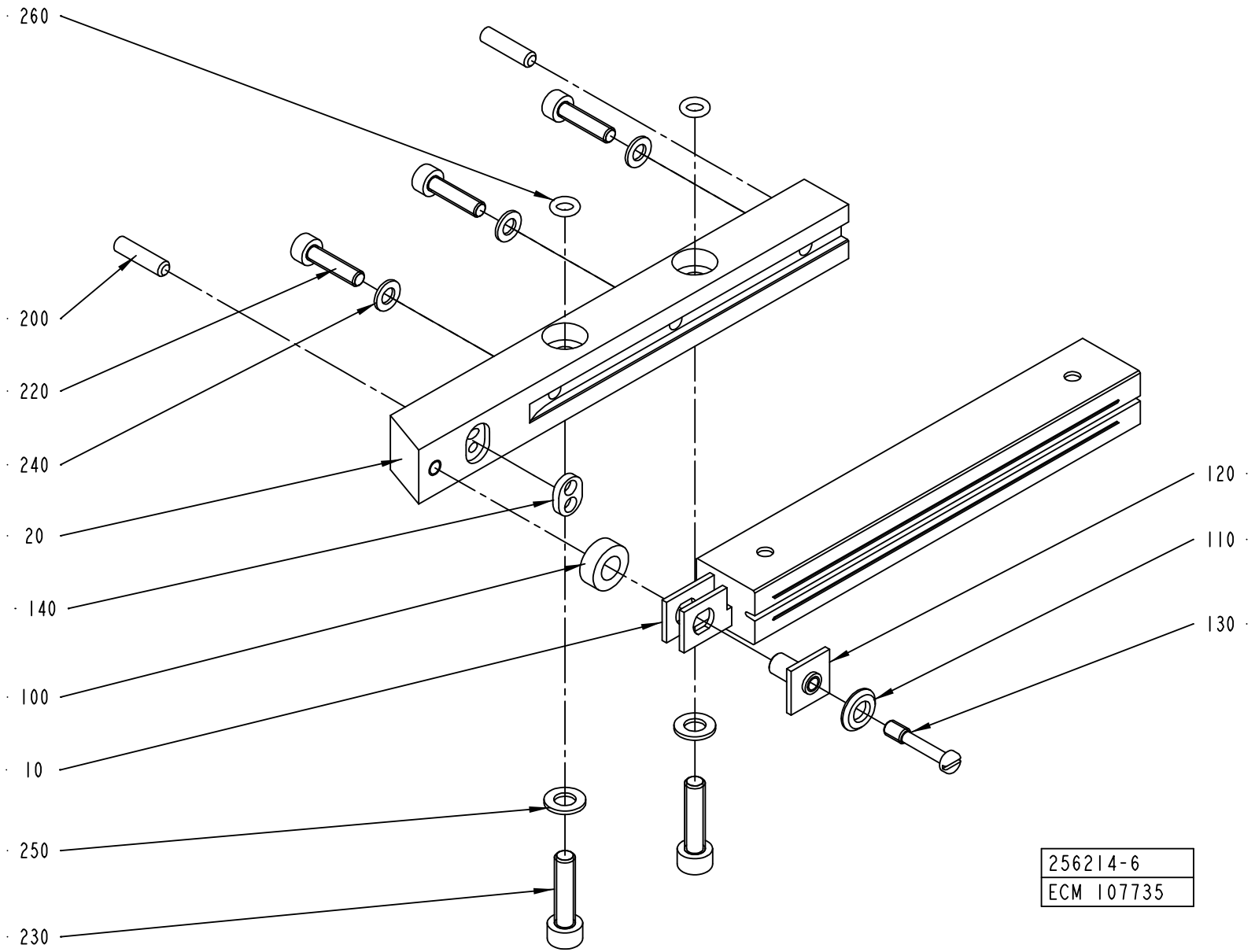
260
200
220
240
20
140
100
10
250
230
120
110
130
256214-6
ECM 107735

ECM: 125611 - 20030127
Group number: 256214-0400
Assembly Drawing: 256214-6_1_AD

Pos	Part No	SP	UN	Qty	Description	Page No
TBA 0125S, TBA 0100B (See drawing on page: 292)						
010	1110530-0000	A		1	INDUCTOR	
020	2527135-0000	A		1	RAIL (TITANIUM)	
220	312115-0293	-		3	SCREW ISO4762 M4X16 A4	
230	312105-0329	-		2	SCREW M6S ISO 4017 M5X16 A480	
240	315105-0136	-		3	WASHER ISO 7089-4-200 HV-A4	
250	315105-0146	-		2	WASHER ISO 7089-5-200 HV-A4	
TBA 0160S, TBA 0200S (See drawing on page: 292)						
010	1110532-0000	A		1	INDUCTOR	
020	2527137-0000	A		1	RAIL (TITANIUM)	
220	312115-0293	-		2	SCREW ISO4762 M4X16 A4	
230	312115-0331	-		2	SCREW ISO4762 M5X20 A4	
240	315105-0136	-		2	WASHER ISO 7089-4-200 HV-A4	
250	315105-0146	-		2	WASHER ISO 7089-5-200 HV-A4	
260	315202-0102	B		2	O-RING 4,1X1,6 MM	
TBA 0250S, TBA 0200M (See drawing on page: 292)						
010	1110535-0000	A		1	INDUCTOR	
020	2527137-0000	A		1	RAIL (TITANIUM)	
220	312115-0293	-		2	SCREW ISO4762 M4X16 A4	
230	312115-0331	-		2	SCREW ISO4762 M5X20 A4	
240	315105-0136	-		2	WASHER ISO 7089-4-200 HV-A4	
250	315105-0146	-		2	WASHER ISO 7089-5-200 HV-A4	
260	315202-0102	B		2	O-RING 4,1X1,6 MM	
TBA 0330S, TBA 0300S, TBA 0180B, TBA 0200B, TBA 0284B, TBA 0250B (See drawing on page: 292)						
010	1110534-0000	A		1	INDUCTOR	
020	2527136-0000	A		1	RAIL	
220	312115-0293	-		3	SCREW ISO4762 M4X16 A4	
230	312115-0331	-		2	SCREW ISO4762 M5X20 A4	
240	315105-0136	-		3	WASHER ISO 7089-4-200 HV-A4	
250	315105-0146	-		2	WASHER ISO 7089-5-200 HV-A4	
260	315202-0102	B		2	O-RING 4,1X1,6 MM	
Common Parts						
100	32644-0000	B		1	WASHER	
110	256882-0000	B		1	WASHER	
120	271846-0000	B		1	INSULATION NUT	
130	271848-0000	B		1	SCREW	
140	491681-0000	B		1	GASKET	
200	311103-0270	-		2	PARALLELL PIN, M6, 4X16 MM	

Pos	Part No	SP	UN	Qty	Description	Page No

Machine Type	Group Description	Used-In	Group Number	Page No

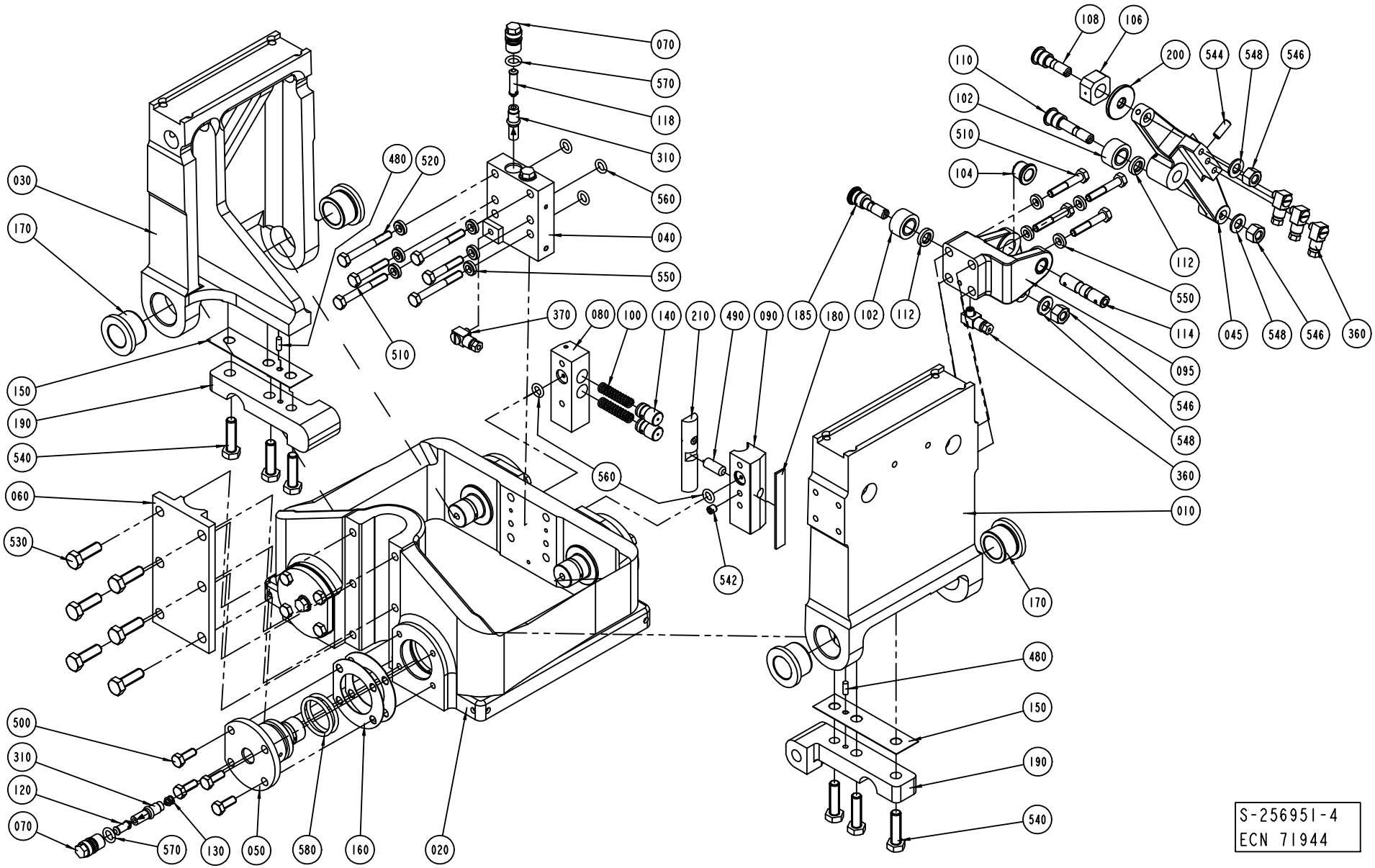
030
170
150
190
540
060
530
500
310
120
070
570
130
050
580
160
020
480
520
510
070
570
118
310
560
040
550
370
080
100
140
210
490
090
185
180
102
112
560
542
108
106
110
102
510
104
200
544
548
546
112
550
114
095
546
548
360
045
548
546
360
010
170
480
150
190
540
S-256951-4
ECN 71944

ECM: 113354 - 20020930
Group number: 256951-0500
Assembly Drawing: 256951-4_1_AB

This list covers pages from 294 to 297

Pos	Part No	SP	UN	Qty	Description	Page No
TBA IH						
030	562120-0000	A		1	ARM PRESSURE JAW	
Common Parts						
010	255609-0000	A		1	ARM CUTTING JAW	
020	B256834-0000	A		1	YOKE	
	312911-0126	-		*6*	*HELI-COIL M8X1,5D*	
	312911-0118	-		*18*	*HELI-COIL M6X1,5D*	
040	256953-0000	-		1	BLOCK RIGHT	
045	272492-0000	A		1	ARM RIGHT	
050	272454-0000	B		4	PIVOT PIN	
060	256082-0000	-		1	CAP	
070	256829-0000	B		6	SCREW	
080	256870-0000	-		1	BRACKET	
090	491349-0000	-		1	BEARING SEAT	
095	272496-0000	-		1	BRACKET RIGHT	
100	20239-0000	A		2	COMPRESSION SPRING	
102	22475-0000	A		2	CURVE ROLLER	
104	255653-0000	A		2	FLANGE BUSHING	
106	256628-0000	A		1	PIECE	
108	256629-0001	A		1	AXLE PIN	
110	256629-0003	A		1	AXLE PIN	
112	256704-0000	A		2	WASHER	
114	256710-0000	A		1	SHAFT	
118	256831-0001	A		2	SPACER	
120	256831-0002	A		4	SPACER	
130	256831-0003	A		4	SPACER	
140	256889-0000	A		2	PLUNGER	
150	256890-0000	B		2	LACE	
160	256891-0000	B		6	LACE	
170	257213-0000	A		4	BUSHING	
180	257317-0000	B		1	LACE	
185	271100-0000	A		1	DOWEL	
190	272415-0000	-		2	ARM	
200	441706-0000	-		1	WASHER	
210	491350-0000	A		1	SLIDER	
310	90092-0052	A		6	METERING VALVE 10 MM3	
360	90134-0058	-		4	CONNECTION	
370	90134-0068	-		1	CONNECTION	
480	311103-0268	-		2	PARALLELL PIN, M6, 4X12 MM	
490	311103-0401	-		1	PARALLELL PIN, M6, 8X20 MM	
500	312105-0368	-		16	SCREW M6S M6X16 A280	
510	312105-0376	-		6	SCREW M6S ISO 4014 M6X35 A480	
520	312105-0380	-		4	SCREW M6S ISO 4014 M6X50 A480	
530	312105-0453	-		6	SCREW M6S ISO 4017 M8X25 A480	
540	312105-0455	-		6	SCREW M6S ISO 4017 M8X30 A480	
542	312318-0360	-		1	SCREW ISO4029 M6X6 A4	
544	312318-0368	-		1	SCREW ISO4029 M6X16 A4	
546	312811-0318	-		3	NUT HEX.LOCK HELI COIL M8 SS	
548	315105-0165	-		3	WASHER ISO 7089-8-200 HV-A4	
550	315115-0153	-		10	WASHER PLAIN, TBRB 6,4/12 H=3	
560	315202-0206	A		5	O-RING 7,3X2,4 MM	
570	315202-0207	A		6	O-RING 8,3X2,4 MM	
580	315202-0219	A		8	O-RING 29,2X3 MM	

Machine Type | Group Description | Used-In | Group Number | Page No

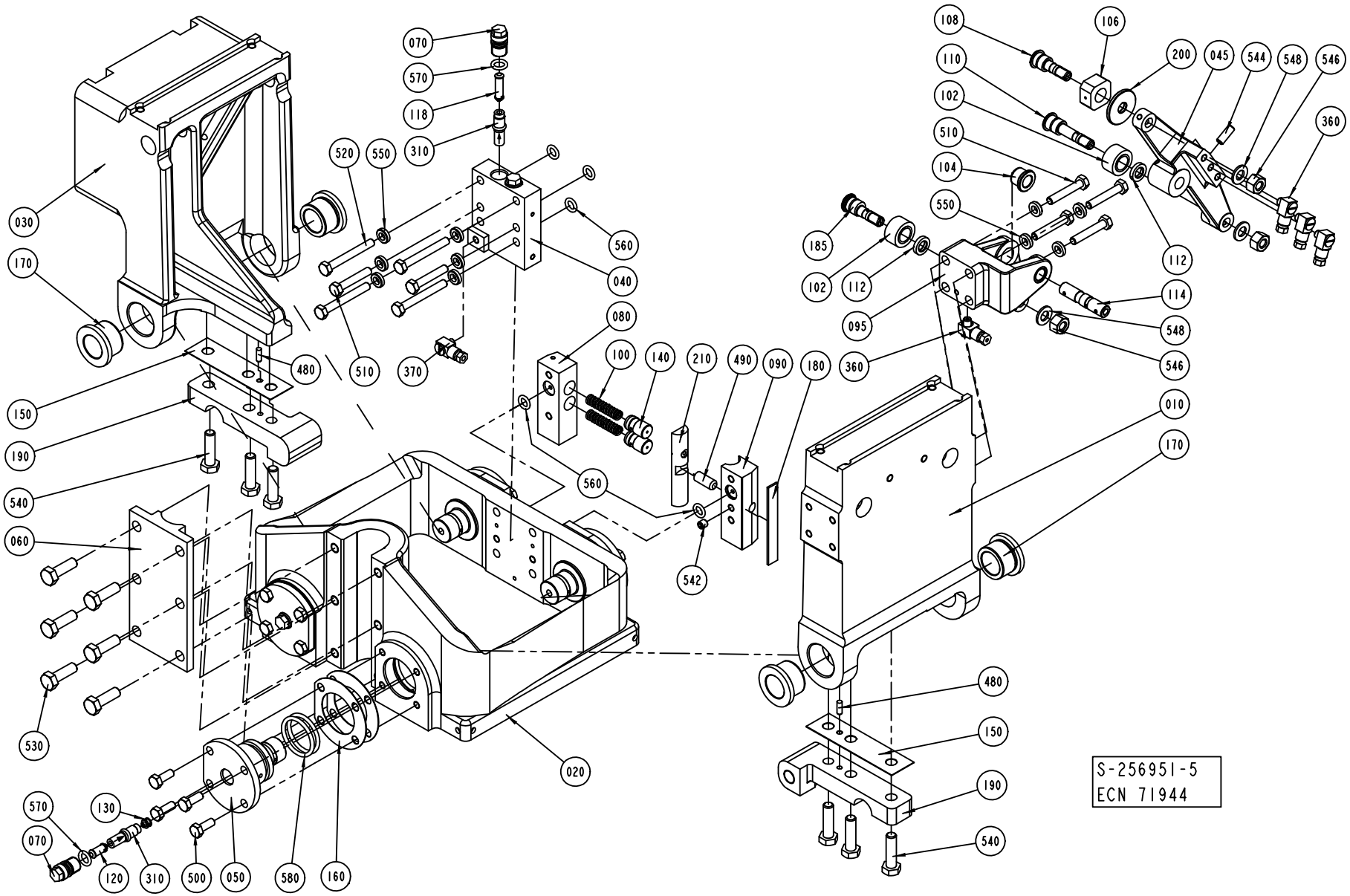
070
570
118
310
520
550
560
040
030
170
080
100
140
210
490
090
180
480
510
370
150
190
540
060
530
560
542
020
570
130
070
120
310
500
050
580
160
108
106
110
200
045
544
548
546
102
510
104
550
360
185
102
112
095
360
112
114
548
546
010
170
480
150
190
540
S-256951-5
ECN 71944

ECM: 113354 - 20020930
Group number: 256951-0500
Assembly Drawing: 256951-5_1_AC

This list covers pages from 294 to 297

Pos	Part No	SP	UN	Qty	Description	Page No
TBA IH						
030	562120-0000	A		1	ARM PRESSURE JAW	
Common Parts						
010	255609-0000	A		1	ARM CUTTING JAW	
020	B256834-0000	A		1	YOKE	
	312911-0126	-		*6*	*HELI-COIL M8X1,5D*	
	312911-0118	-		*18*	*HELI-COIL M6X1,5D*	
040	256953-0000	-		1	BLOCK RIGHT	
045	272492-0000	A		1	ARM RIGHT	
050	272454-0000	B		4	PIVOT PIN	
060	256082-0000	-		1	CAP	
070	256829-0000	B		6	SCREW	
080	256870-0000	-		1	BRACKET	
090	491349-0000	-		1	BEARING SEAT	
095	272496-0000	-		1	BRACKET RIGHT	
100	20239-0000	A		2	COMPRESSION SPRING	
102	22475-0000	A		2	CURVE ROLLER	
104	255653-0000	A		2	FLANGE BUSHING	
106	256628-0000	A		1	PIECE	
108	256629-0001	A		1	AXLE PIN	
110	256629-0003	A		1	AXLE PIN	
112	256704-0000	A		2	WASHER	
114	256710-0000	A		1	SHAFT	
118	256831-0001	A		2	SPACER	
120	256831-0002	A		4	SPACER	
130	256831-0003	A		4	SPACER	
140	256889-0000	A		2	PLUNGER	
150	256890-0000	B		2	LACE	
160	256891-0000	B		6	LACE	
170	257213-0000	A		4	BUSHING	
180	257317-0000	B		1	LACE	
185	271100-0000	A		1	DOWEL	
190	272415-0000	-		2	ARM	
200	441706-0000	-		1	WASHER	
210	491350-0000	A		1	SLIDER	
310	90092-0052	A		6	METERING VALVE 10 MM3	
360	90134-0058	-		4	CONNECTION	
370	90134-0068	-		1	CONNECTION	
480	311103-0268	-		2	PARALLELL PIN, M6, 4X12 MM	
490	311103-0401	-		1	PARALLELL PIN, M6, 8X20 MM	
500	312105-0368	-		16	SCREW M6S M6X16 A280	
510	312105-0376	-		6	SCREW M6S ISO 4014 M6X35 A480	
520	312105-0380	-		4	SCREW M6S ISO 4014 M6X50 A480	
530	312105-0453	-		6	SCREW M6S ISO 4017 M8X25 A480	
540	312105-0455	-		6	SCREW M6S ISO 4017 M8X30 A480	
542	312318-0360	-		1	SCREW ISO4029 M6X6 A4	
544	312318-0368	-		1	SCREW ISO4029 M6X16 A4	
546	312811-0318	-		3	NUT HEX.LOCK HELI COIL M8 SS	
548	315105-0165	-		3	WASHER ISO 7089-8-200 HV-A4	
550	315115-0153	-		10	WASHER PLAIN, TBRB 6,4/12 H=3	
560	315202-0206	A		5	O-RING 7,3X2,4 MM	
570	315202-0207	A		6	O-RING 8,3X2,4 MM	
580	315202-0219	A		8	O-RING 29,2X3 MM	

Machine Type | Group Description | Used-In | Group Number | Page No

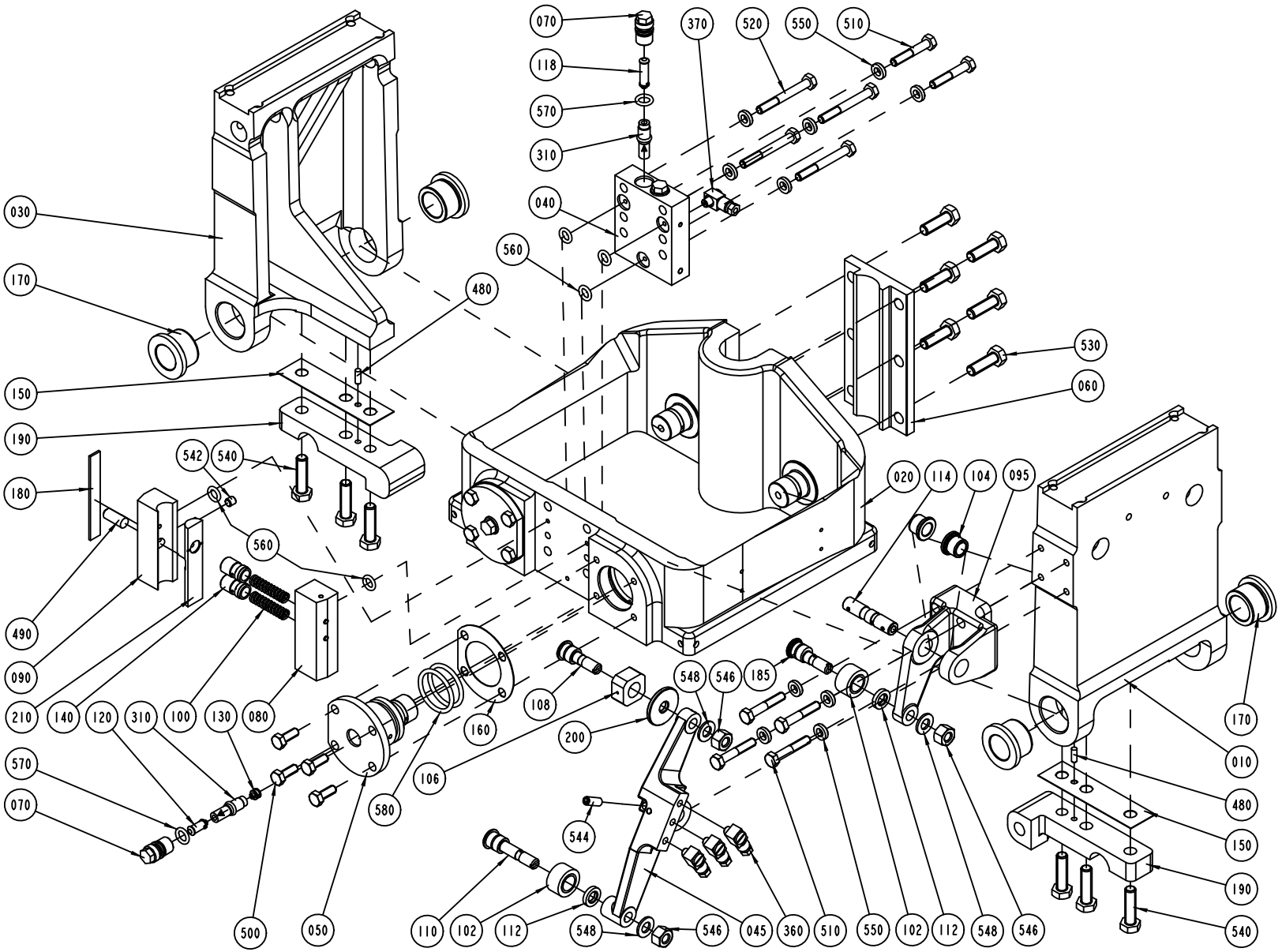

S-256952-4
ECN 71944

ECM: 113353 - 20020930
Group number: 256952-0500
Assembly Drawing: 256952-4_1_AB

This list covers pages from 298 to 301

Pos	Part No	SP	UN	Qty	Description	Page No
TBA IH						
030	562120-0000	A		1	ARM PRESSURE JAW	
Common Parts						
010	255609-0000	A		1	ARM CUTTING JAW	
020	B256834-0000	A		1	YOKE	
	312911-0126	-		*6*	*HELI-COIL M8X1,5D*	
	312911-0118	-		*18*	*HELI-COIL M6X1,5D*	
040	256954-0000	-		1	BLOCK LEFT	
045	272493-0000	A		1	ARM LEFT	
050	272454-0000	B		4	PIVOT PIN	
060	256082-0000	-		1	CAP	
070	256829-0000	B		6	SCREW	
080	256870-0000	-		1	BRACKET	
090	491349-0000	-		1	BEARING SEAT	
095	272497-0000	-		1	BRACKET LEFT	
100	20239-0000	A		2	COMPRESSION SPRING	
102	22475-0000	A		2	CURVE ROLLER	
104	255653-0000	A		2	FLANGE BUSHING	
106	256628-0000	A		1	PIECE	
108	256629-0001	A		1	AXLE PIN	
110	256629-0003	A		1	AXLE PIN	
112	256704-0000	A		2	WASHER	
114	256710-0000	A		1	SHAFT	
118	256831-0001	A		2	SPACER	
120	256831-0002	A		4	SPACER	
130	256831-0003	A		4	SPACER	
140	256889-0000	A		2	PLUNGER	
150	256890-0000	B		2	LACE	
160	256891-0000	B		6	LACE	
170	257213-0000	A		4	BUSHING	
180	257317-0000	B		1	LACE	
185	271100-0000	A		1	DOWEL	
190	272415-0000	-		2	ARM	
200	441706-0000	-		1	WASHER	
210	491350-0000	A		1	SLIDER	
310	90092-0052	A		6	METERING VALVE 10 MM3	
360	90134-0058	-		4	CONNECTION	
370	90134-0068	-		1	CONNECTION	
480	311103-0268	-		2	PARALLELL PIN, M6, 4X12 MM	
490	311103-0401	-		1	PARALLELL PIN, M6, 8X20 MM	
500	312105-0368	-		16	SCREW M6S M6X16 A280	
510	312105-0376	-		6	SCREW M6S ISO 4014 M6X35 A480	
520	312105-0380	-		4	SCREW M6S ISO 4014 M6X50 A480	
530	312105-0453	-		6	SCREW M6S ISO 4017 M8X25 A480	
540	312105-0455	-		6	SCREW M6S ISO 4017 M8X30 A480	
542	312318-0360	-		1	SCREW ISO4029 M6X6 A4	
544	312318-0368	-		1	SCREW ISO4029 M6X16 A4	
546	312811-0318	-		3	NUT HEX.LOCK HELI COIL M8 SS	
548	315105-0165	-		3	WASHER ISO 7089-8-200 HV-A4	
550	315115-0153	-		10	WASHER PLAIN, TBRB 6,4/12 H=3	
560	315202-0206	A		5	O-RING 7,3X2,4 MM	
570	315202-0207	A		6	O-RING 8,3X2,4 MM	
580	315202-0219	A		8	O-RING 29,2X3 MM	

Machine Type | Group Description | Used-In | Group Number | Page No

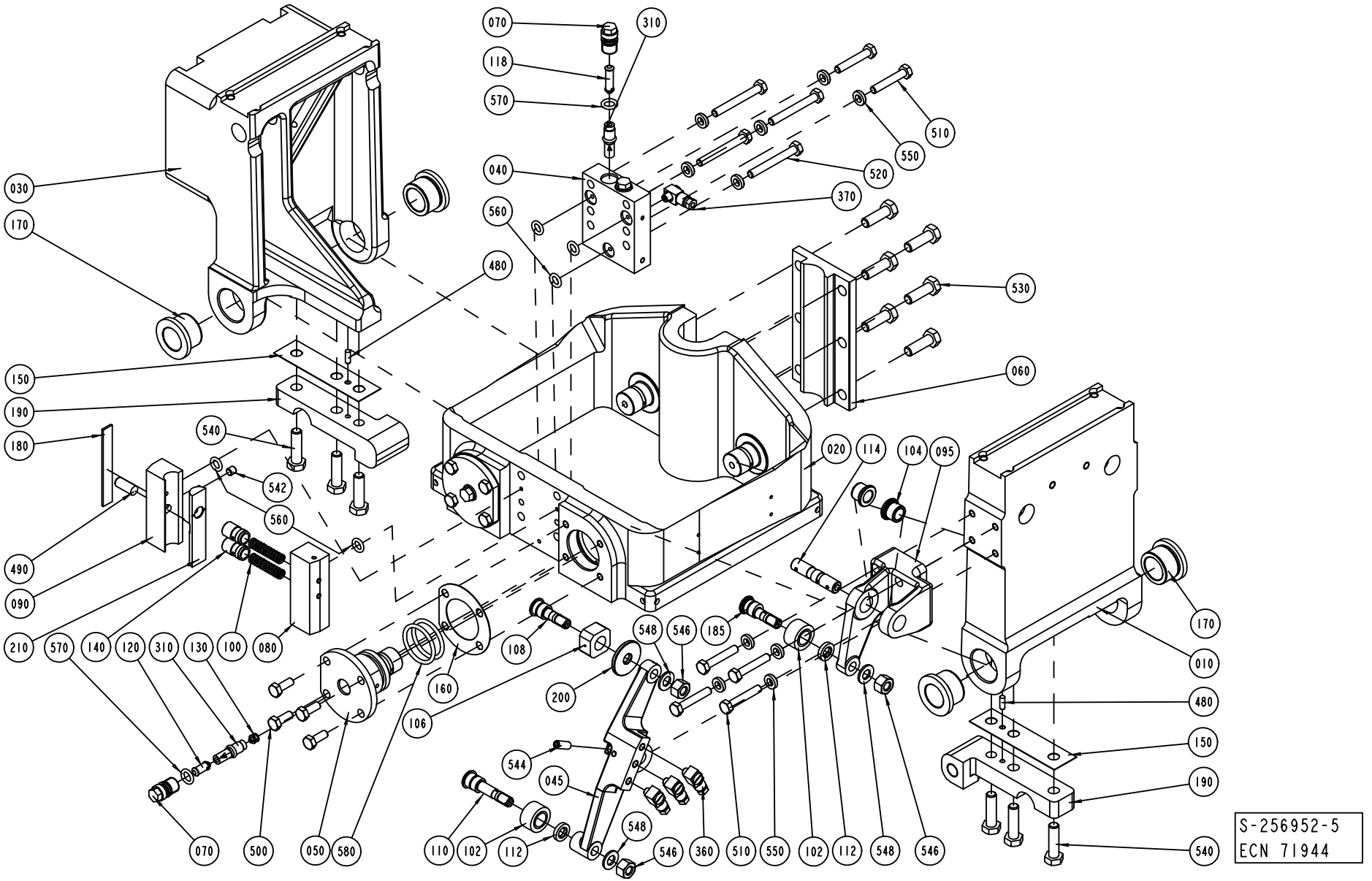

S-256952-5
ECN 71944

ECM: 113353 - 20020930
Group number: 256952-0500
Assembly Drawing: 256952-5_1_AC

This list covers pages from 298 to 301

Pos	Part No	SP	UN	Qty	Description	Page No
TBA IH						
030	562120-0000	A		1	ARM PRESSURE JAW	
Common Parts						
010	255609-0000	A		1	ARM CUTTING JAW	
020	B256834-0000	A		1	YOKE	
	312911-0126	-		*6*	*HELI-COIL M8X1,5D*	
	312911-0118	-		*18*	*HELI-COIL M6X1,5D*	
040	256954-0000	-		1	BLOCK LEFT	
045	272493-0000	A		1	ARM LEFT	
050	272454-0000	B		4	PIVOT PIN	
060	256082-0000	-		1	CAP	
070	256829-0000	B		6	SCREW	
080	256870-0000	-		1	BRACKET	
090	491349-0000	-		1	BEARING SEAT	
095	272497-0000	-		1	BRACKET LEFT	
100	20239-0000	A		2	COMPRESSION SPRING	
102	22475-0000	A		2	CURVE ROLLER	
104	255653-0000	A		2	FLANGE BUSHING	
106	256628-0000	A		1	PIECE	
108	256629-0001	A		1	AXLE PIN	
110	256629-0003	A		1	AXLE PIN	
112	256704-0000	A		2	WASHER	
114	256710-0000	A		1	SHAFT	
118	256831-0001	A		2	SPACER	
120	256831-0002	A		4	SPACER	
130	256831-0003	A		4	SPACER	
140	256889-0000	A		2	PLUNGER	
150	256890-0000	B		2	LACE	
160	256891-0000	B		6	LACE	
170	257213-0000	A		4	BUSHING	
180	257317-0000	B		1	LACE	
185	271100-0000	A		1	DOWEL	
190	272415-0000	-		2	ARM	
200	441706-0000	-		1	WASHER	
210	491350-0000	A		1	SLIDER	
310	90092-0052	A		6	METERING VALVE 10 MM3	
360	90134-0058	-		4	CONNECTION	
370	90134-0068	-		1	CONNECTION	
480	311103-0268	-		2	PARALLELL PIN, M6, 4X12 MM	
490	311103-0401	-		1	PARALLELL PIN, M6, 8X20 MM	
500	312105-0368	-		16	SCREW M6S M6X16 A280	
510	312105-0376	-		6	SCREW M6S ISO 4014 M6X35 A480	
520	312105-0380	-		4	SCREW M6S ISO 4014 M6X50 A480	
530	312105-0453	-		6	SCREW M6S ISO 4017 M8X25 A480	
540	312105-0455	-		6	SCREW M6S ISO 4017 M8X30 A480	
542	312318-0360	-		1	SCREW ISO4029 M6X6 A4	
544	312318-0368	-		1	SCREW ISO4029 M6X16 A4	
546	312811-0318	-		3	NUT HEX.LOCK HELI COIL M8 SS	
548	315105-0165	-		3	WASHER ISO 7089-8-200 HV-A4	
550	315115-0153	-		10	WASHER PLAIN, TBRB 6,4/12 H=3	
560	315202-0206	A		5	O-RING 7,3X2,4 MM	
570	315202-0207	A		6	O-RING 8,3X2,4 MM	
580	315202-0219	A		8	O-RING 29,2X3 MM	

Machine Type | Group Description | Used-In | Group Number | Page No

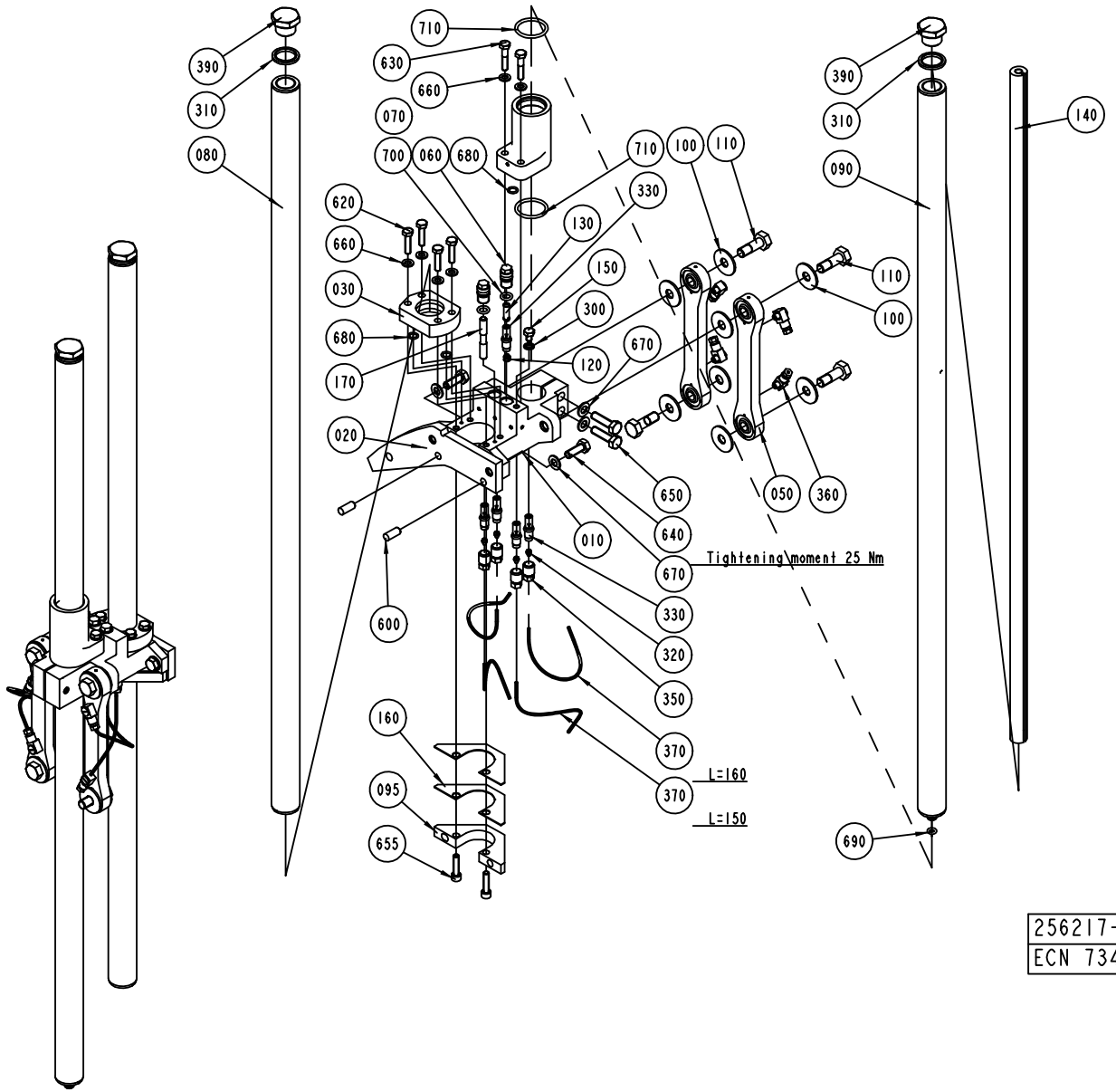
390
310
080
710
630
660
070
700
060
680
620
660
030
680
170
020
600
160
095
655
710
100
110
330
130
150
300
670
120
650
640
670
330
320
350
370
370
L=160
L=150
Tightening\moment 25 Nm
390
310
090
140
110
100
050
360
690
256217-4
ECN 73446

ECM: 118409 - 20030113
Group number: 256217-0500
Assembly Drawing: 256217-4_1_AD

Pos	Part No	SP	UN	Qty	Description	Page No
TBA 0300S, TBA 0180B, TBA 0160S, TBA 0200B, TBA 0125S, TBA 0100B, TBA 0250S, TBA 0200S, TBA 0200M, TBA 0250B						
095	441750-0000	B		2	YOKE	
160	441751-0000	B		4	LACE	
600	311103-0401	-		4	PARALLELL PIN, M6, 8X20 MM	
640	312105-0452	-		4	SCREW M6S ISO 4017 M8X22 A480	
655	312115-0372	-		4	SCREW ISO4762 M6X25 A4	
670	315105-0165	-		8	WASHER ISO 7089-8-200 HV-A4	
TBA 0330S, TBA 0284B						
095	441750-0000	B		2	YOKE	
160	441751-0000	B		4	LACE	
600	311103-0401	-		4	PARALLELL PIN, M6, 8X20 MM	
640	312105-0452	-		4	SCREW M6S ISO 4017 M8X22 A480	
655	312115-0372	-		4	SCREW ISO4762 M6X25 A4	
670	315105-0165	-		8	WASHER ISO 7089-8-200 HV-A4	
Common Parts						
010	2514091-0000	A		2	BRACKET	
015	2514090-0000	-		2	FORCE PLATE	
020	1538039-0000	A		2	CURVE	
030	456002-0000	B		2	BEARING	
050	441031-0000	A		4	LINK BEARING	
060	256829-0000	B		4	SCREW	
070	272490-0000	B		2	SLEEVE	
080	441269-0000	A		2	GUIDE	
090	441268-0000	A		2	GUIDE	
100	256738-0000	B		16	WASHER	
110	256739-0000	A		8	SCREW	
120	256831-0003	B		2	SPACER	
130	256831-0004	B		2	SPACER	
140	272840-0000	B		2	ROD	
150	441355-0000	B		2	BLEEDING SCREW	
170	456004-0000	B		2	SPACER	
300	90005-0003	B		2	GASKET BOLT HEAD 6,7X11X1 MM M6	
310	90005-0014	B		4	GASKET BOLT HEAD 21,5X28,6X2,5 MM G1/2"	
320	90028-0020	B		8	CONE TUBE 2,5MM	
330	90092-0052	A		10	METERING VALVE 10 MM3	
350	90134-0039	-		8	BUSHING VALVE CONNECTION 2,5 MM	
360	90134-0058	-		8	CONNECTION	
370	90166-0143	-	MM	1160	TUBE 2,5 MM PA,TRANSP.	
390	90330-0037	-		4	PLUG, EXT. G-THREAD, G1/2	
620	312105-0372	-		8	SCREW M6S ISO 4017 M6X25 A480	
630	312105-0374	-		4	SCREW M6S ISO 4014 M6X30 A480	
650	312105-0460	-		4	SCREW M6S ISO 4014 M8X45 A480	
660	315105-0153	-		12	WASHER ISO 7089-6-200 HV-A4	
680	315202-0106	B		6	O-RING 8,1X1,6 MM	
690	315202-0204	B		2	O-RING 5,3X2,4 MM	
700	315202-0207	B		4	O-RING 8,3X2,4 MM	
710	315202-0219	B		4	O-RING 29,2X3 MM	

Machine Type | Group Description | Used-In | Group Number | Page No

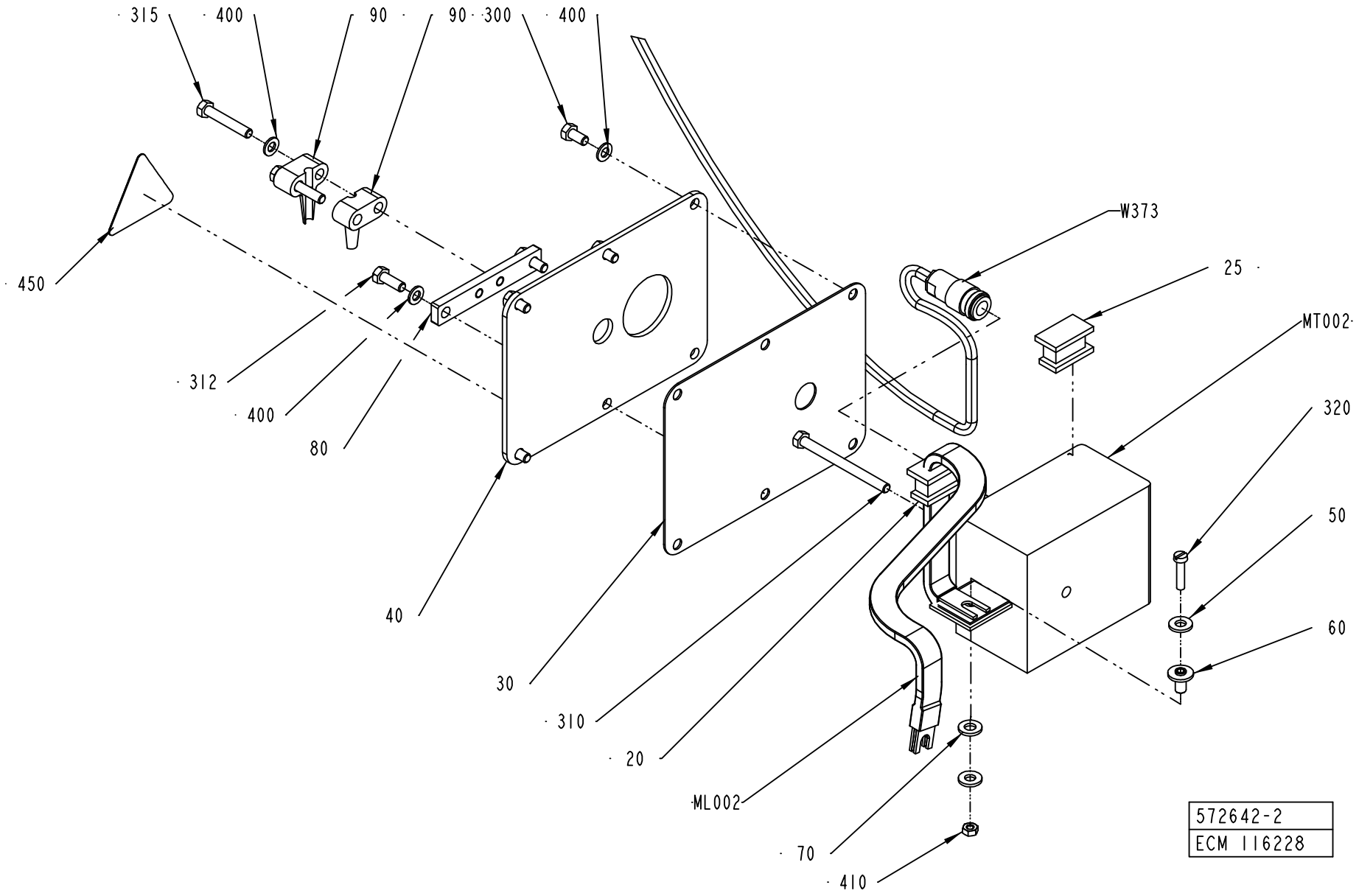
315
400
90
90
300
400
450
312
400
80
40
30
310
20
ML002
70
410
W373
25
MT002
320
50
60
572642-2
ECM 116228

ECM: 116302 - 20030113
Group number: 572642-0200
Assembly Drawing: 572642-2_1_AB

Pos	Part No	SP	UN	Qty	Description	Page No
TBA 0125S, TBA 0100B						
ML002	2554961-0000	A		1	BUSBAR RIGHT	
MT002	67379-0262	A		1	TRANSFORMER	
TBA 0160S, TBA 0200S						
ML002	571871-0000	A		1	BUSBAR,RIGHT	
MT002	67379-0254	A		1	TRANSFORMER	
TBA 0330S, TBA 0300S, TBA 0180B, TBA 0200B, TBA 0284B, TBA 0250B						
ML002	571871-0000	A		1	BUSBAR,RIGHT	
MT002	67379-0264	A		1	TRANSFORMER	
TBA 0200M, TBA 0250S						
ML002	571871-0000	A		1	BUSBAR,RIGHT	
MT002	67379-0265	A		1	TRANSFORMER	
Common Parts						
020	571873-0000	A		1	SEAL	
025	571874-0000	A		1	SEALING PLUG	
030	562119-0000	B		1	GASKET	
040	562118-0000	-		1	LID	
050	28509-0000	-		2	BRICKA	
060	32544-0000	B		1	INSULATION NUT	
070	32079-0000	B		1	WASHER	
080	578104-0000	-		1	SHEET	
090	1282426-0000	B		2	CLIP	
300	312105-0325	-		4	SCREW M6S ISO 4017 M5X10 A480	
310	312101-0343	-		1	SCREW M6S M5X60 FZB	
312	312105-0328	-		2	SCREW M6S ISO 4017 M5X14 A480	
315	312105-0335	-		2	SCREW M6S ISO 4014 M5X30 A480	
320	312122-0294	-		1	SCREW SLOT.PAN HD. MCS 4X18 BR NP	
400	315105-0146	-		8	WASHER ISO 7089-5-200 HV-A4	
410	312602-0312	-		1	HEXAGON NUT, EN 24032 M6M M4 NIPLBR	
450	359705-0015	-		1	WARNING SIGN ISO, RISK OF ELECTRIC SHOCK	
W373	1548155-0000	A		1	COAXIAL CABLE	

Pos	Part No	SP	UN	Qty	Description	Page No

Machine Type | Group Description | Used-In | Group Number | Page No

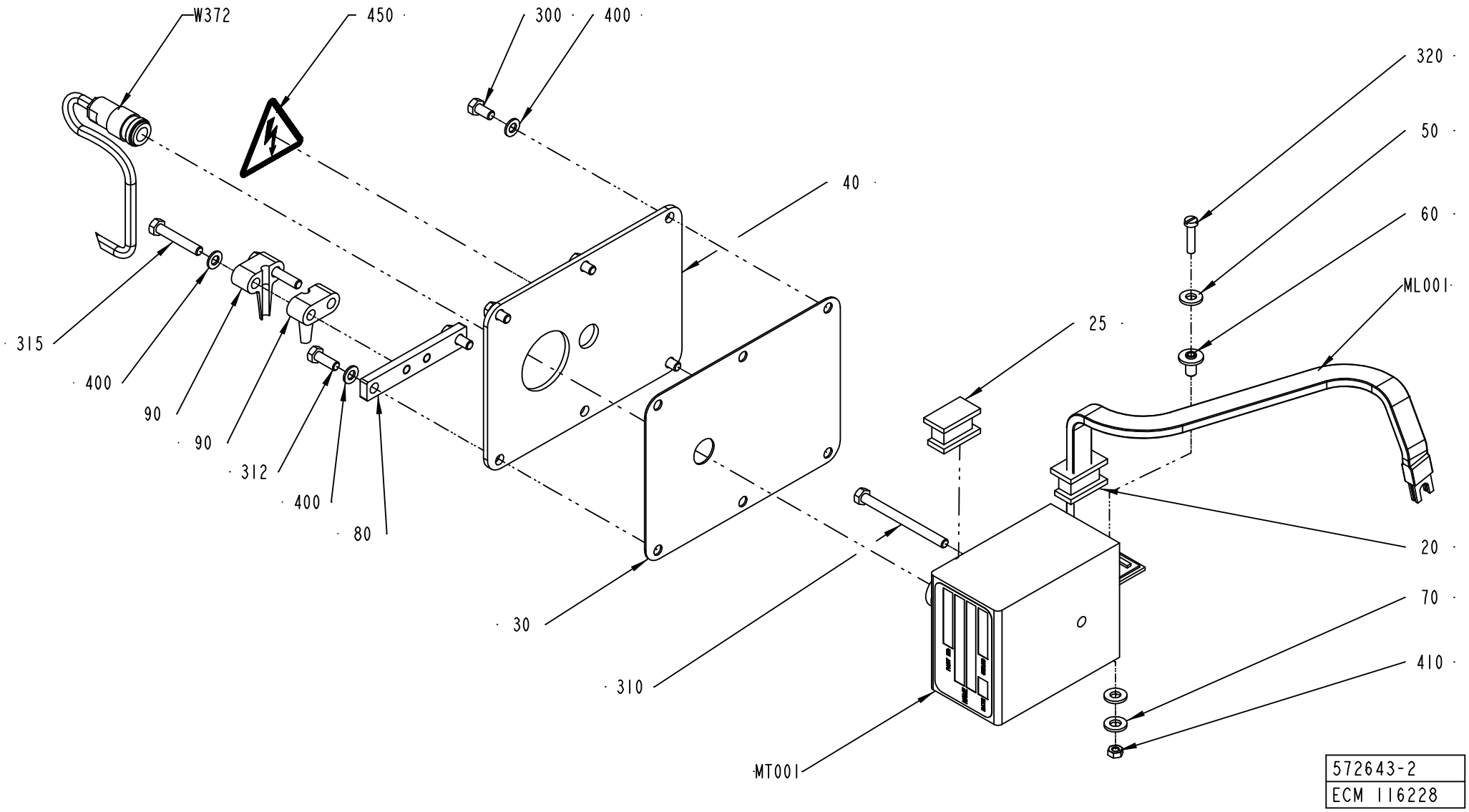
W372
450
300
400
320
50
60
ML001
40
315
400
90
90
312
400
80
25
30
310
MT001
20
70
410
572643-2
ECM 116228

ECM: 116303 - 20030113
Group number: 572643-0200
Assembly Drawing: 572643-2_1_AB

Pos	Part No	SP	UN	Qty	Description	Page No
TBA 0125S, TBA 0100B						
ML001	2554960-0000	A		1	BUSBAR LEFT	
MT001	67379-0262	A		1	TRANSFORMER	
TBA 0160S , TBA 0200S						
ML001	571872-0000	A		1	BUSBAR,LEFT	
MT001	67379-0254	A		1	TRANSFORMER	
TBA 0330S, TBA 0300S, TBA 0180B, TBA 0200B, TBA 0284B, TBA 0250B						
ML001	571872-0000	A		1	BUSBAR,LEFT	
MT001	67379-0264	A		1	TRANSFORMER	
TBA 0200M, TBA 0250S						
ML001	571872-0000	A		1	BUSBAR,LEFT	
MT001	67379-0265	A		1	TRANSFORMER	
Common Parts						
020	571873-0000	A		1	SEAL	
025	571874-0000	A		1	SEALING PLUG	
030	562119-0000	B		1	GASKET	
040	562118-0000	-		1	LID	
050	28509-0000	-		2	BRICKA	
060	32544-0000	B		1	INSULATION NUT	
070	32079-0000	B		1	WASHER	
080	578104-0000	-		1	SHEET	
090	1282426-0000	B		2	CLIP	
300	312105-0325	-		4	SCREW M6S ISO 4017 M5X10 A480	
310	312101-0343	-		1	SCREW M6S M5X60 FZB	
312	312105-0328	-		2	SCREW M6S ISO 4017 M5X14 A480	
315	312105-0335	-		2	SCREW M6S ISO 4014 M5X30 A480	
320	312122-0294	-		1	SCREW SLOT.PAN HD. MCS 4X18 BR NP	
400	315105-0146	-		8	WASHER ISO 7089-5-200 HV-A4	
410	312602-0312	-		1	HEXAGON NUT, EN 24032 M6M M4 NIPLBR	
450	359705-0015	-		1	WARNING SIGN ISO, RISK OF ELECTRIC SHOCK	
W372	1548155-0000	A		1	COAXIAL CABLE	

Pos	Part No	SP	UN	Qty	Description	Page No

Machine Type | Group Description | Used-In | Group Number | Page No

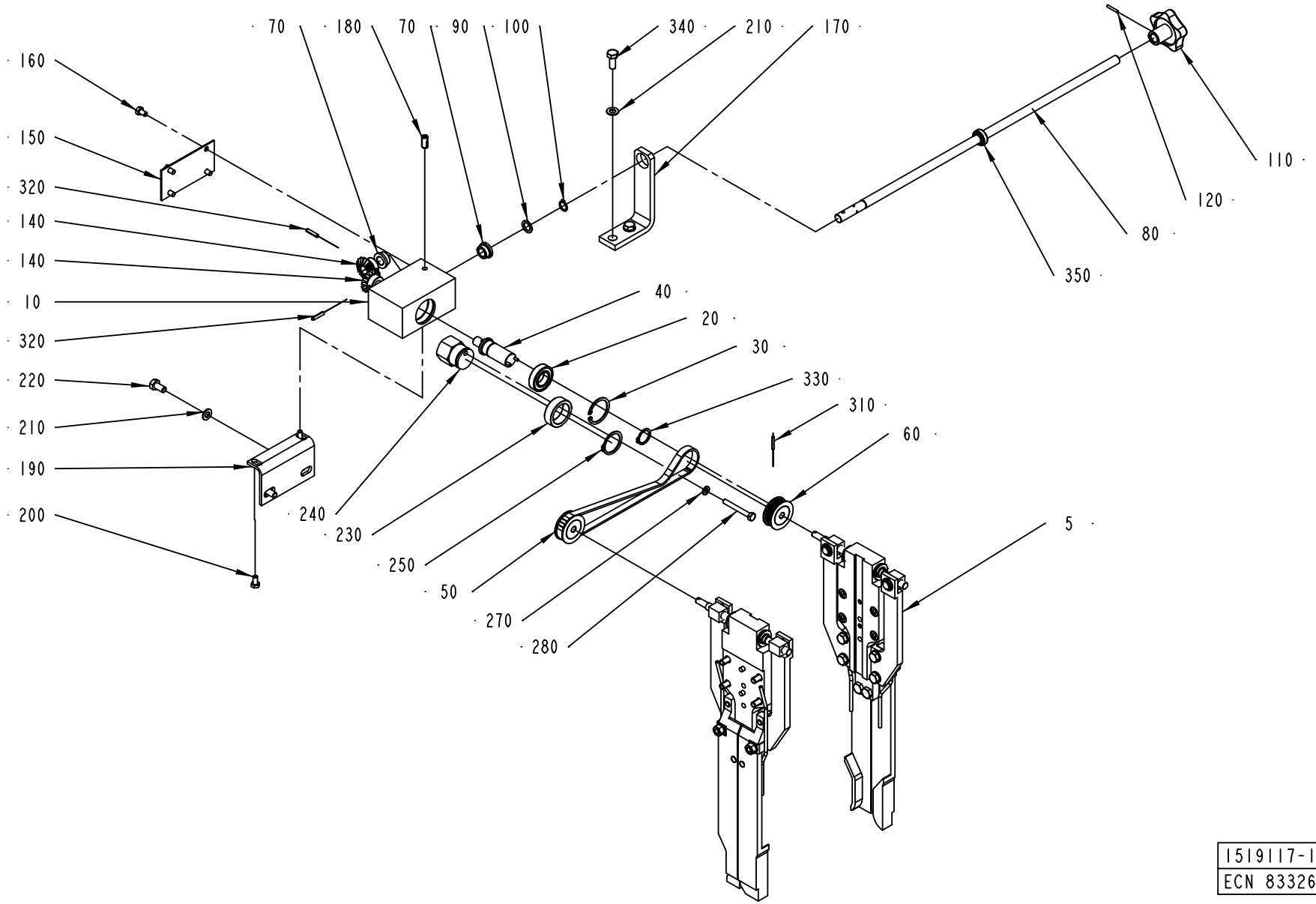

1519117-1
ECN 83326

ECM: 113350 - 20020930
Group number: 1519117-0100
Assembly Drawing: 1519117-1_1_AA

Pos	Part No	SP	UN	Qty	Description	Page No
-						
005	A1519118-0100	-		1	VOLUM CURVE PIECE	**311**
010	1539105-0000	-		1	BOX	
020	90214-0166	B		1	BALL BEARING, 2 SEALS, 20X37X12 MM	
030	315752-0125	-		1	RETAINING RING FOR HOLE, 37X1,5 MM	
040	1539106-0000	-		1	SHAFT	
050	1539107-0000	B		1	TIMING BELT	
060	1539108-0000	B		2	TIMING BELT PULLEY	
070	321101-0172	B		2	FLANGE BUS 12F7X10	
080	1539109-0000	-		1	SHAFT	
090	90005-0047	-		1	WASHER,PL.RND.CU.12,2/ H=1,5	
100	315751-0109	-		1	RETAIN. RING, 12	
110	240797-0000	-		1	HANDLE	
120	311103-0238	-		1	CYLINDERPINNE M6, 3X20 MM	
140	293610-0000	B		2	GEAR WHEEL	
150	1539110-0000	-		1	LID	
160	312105-0364	-		4	SCREW M6S ISO 4017 M6X10 A480	
170	1539111-0000	-		1	SUPPORT	
180	90458-1517	-		1	SCREW SPRINGLOAD. SOCK. HEX HEAD M8X18	
190	1539112-0000	-		1	SUPPORT	
200	312105-0366	-		2	SCREW M6S M6X12 A280	
210	315105-0165	-		4	WASHER ISO 7089-8-200 HV-A4	
220	312105-0449	-		2	SCREW M6S ISO 4017 M8X16 A480	
230	1538948-0000	-		1	ECCENTRIC	
240	1538949-0000	-		1	ECCENTRIC	
250	315751-0122	-		1	RETAIN. RING, 30	
270	315105-0153	-		1	WASHER ISO 7089-6-200 HV-A4	
280	312105-0380	-		1	SCREW M6S ISO 4014 M6X50 A480	
310	90258-0031	-		1	PIN, STRAIGHT SLOTTED SPRING FRP 3X20	
320	311112-0256	-		2	SPRING PIN, ISO 8752 4X20-C	
330	315751-0116	-		1	RETAIN. RING, 20	
340	312105-0451	-		2	SCREW M6S ISO 4017 M8X20 A480	
350	90240-0152	B		1	PLAIN BEAR,SELF ADJ.SPHER.12X22X10 MM	

Pos	Part No	SP	UN	Qty	Description	Page No

Machine Type | Group Description | Used-In | Group Number | Page No

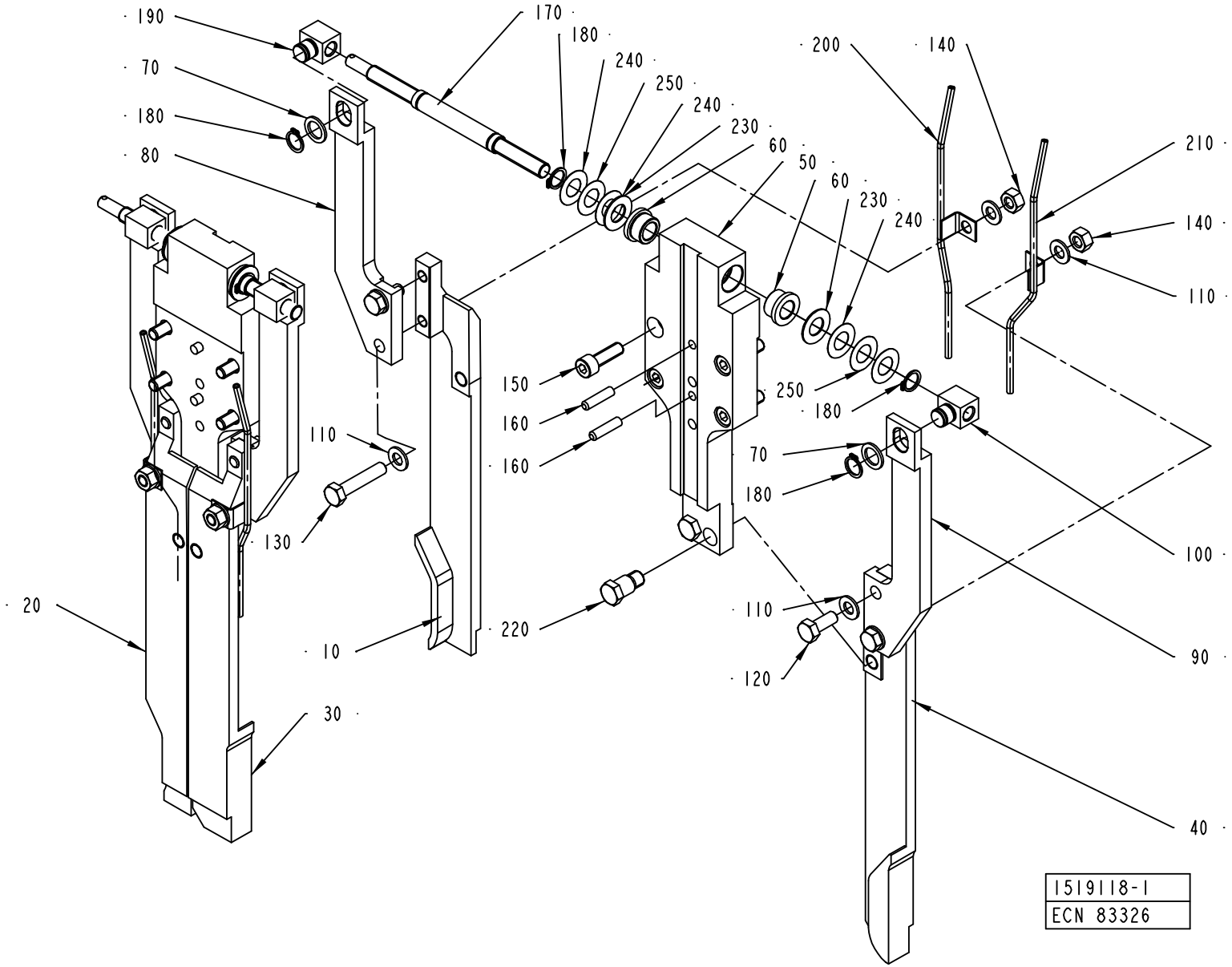
190
70
180
80
170
180
240
250
240
230
60
50
60
230
240
200
140
210
140
110
150
160
160
110
130
20
10
220
250
180
70
180
110
120
100
90
30
40
1519118-1
ECN 83326

ECM: 110619 - 20030113
Group number: 1519118-0100
Assembly Drawing: 1519118-1_1_AA

Pos	Part No	SP	UN	Qty	Description	Page No
TBA 0100B						
010	979772-0000	A		1	VOLUME CAM L 100	
020	979774-0000	A		1	VOLUME CAM R 100	
030	979773-0000	A		1	VOLUME CAM L WIDE 100	
040	979775-0000	A		1	VOLUME CAM R WIDE 100	
TBA 0125S						
010	1490235-0000	A		1	VOLUME CAM	
020	1490236-0000	A		1	VOLUME CAM	
030	1490237-0000	A		1	VOLUME CAM, WIDE	
040	1490238-0000	A		1	VOLUME CAM, WIDE	
TBA 0160S						
010	2506638-0000	A		1	VOLUME CAM	
020	2506639-0000	A		1	VOLUME CAM	
030	2506640-0000	A		1	VOLUME CAM	
040	2506641-0000	A		1	VOLUME CAM	
TBA 0180B						
010	272956-0000	A		1	VOLUME CAM LEFT	
020	272964-0000	A		1	VOLUME CAM RIGHT	
030	272965-0000	A		1	VOLUME CAM LEFT, WIDE	
040	272967-0000	A		1	VOLUME CAM RIGHT, WIDE	
TBA 0200B						
010	1490239-0000	A		1	VOLUME CAM	
020	1490240-0000	A		1	VOLUME CAM	
030	1490239-0000	A		1	VOLUME CAM	
040	1490240-0000	A		1	VOLUME CAM	
TBA 0200M, TBA 0250B						
010	1282315-0000	A		1	VOLUME CAM LEFT	
020	1282316-0000	A		1	VOLUME CAM RIGHT	
030	1282315-0000	A		1	VOLUME CAM LEFT	
040	1282316-0000	A		1	VOLUME CAM RIGHT	
TBA 0200S						
010	2506645-0000	A		1	VOLUME CAM	
020	2506643-0000	A		1	VOLUME CAM	
030	2506642-0000	A		1	VOLUME CAM	
040	2506644-0000	A		1	VOLUME CAM	

Pos	Part No	SP	UN	Qty	Description	Page No
TBA 0250S						
010	2553111-0000	A		1	CAM	
020	2553110-0000	A		1	CAM	
30	2553111-0000	A		1	CAM	
40	2553110-0000	A		1	CAM	
TBA 0300S, TBA 0284B						
010	272949-0000	A		1	VOLUME CAM LEFT	
020	272957-0000	A		1	VOLUME CAM RIGHT	
030	272949-0000	A		1	VOLUME CAM LEFT	
040	272957-0000	A		1	VOLUME CAM RIGHT	
TBA 0330S						
010	582166-0000	A		1	VOLUME CAM L 330S	
020	582164-0000	A		1	VOLUME CAM R 330S	
030	582167-0000	A		1	VOLUME CAM L WIDE 330S	
040	582165-0000	A		1	VOLUME CAM R WIDE 330S	
Common Parts						
050	1539101-0000	-		2	BRACKET	
060	321101-0173	B		4	FLANGE BUS 12F7X12	
070	90005-0047	B		4	WASHER,PL.RND.CU.12,2/ H=1,5	
080	1539102-0000	-		2	ARM	
090	1539103-0000	-		2	ARM	
100	1519134-0000	B		2	JOINT	
110	315105-0165	-		12	WASHER ISO 7089-8-200 HV-A4	
120	312155-0451	-		4	SCREW EN 10642 MF6S M8X20 A480	
130	312155-0459	-		4	SCREW EN 10642 MF6S M8X40 A480	
140	312605-0318	-		4	HEXAGON NUT, M6M M8 A280	
150	312115-0453	-		8	SCREW ISO4762 M8X25 A4	
160	311103-0355	-		4	PARALLELL PIN, M6, 6X25 MM	
170	1539104-0000	B		2	SPINDLE	
180	315751-0109	-		8	RETAIN. RING, 12	
190	1519133-0000	B		2	JOINT	
200	441759-0000	B		2	PIPE LEFT	
210	441758-0000	B		2	PIPE RIGHT	
220	272973-0000	B		4	DOWEL	
230	1755-0001	B		4	WASHER	
240	1755-0002	B		8	WASHER	
250	1755-0003	B		4	WASHER	
300	90157-0021	-	KG		LOCKING FLUID	

SUPPORT ROLLER

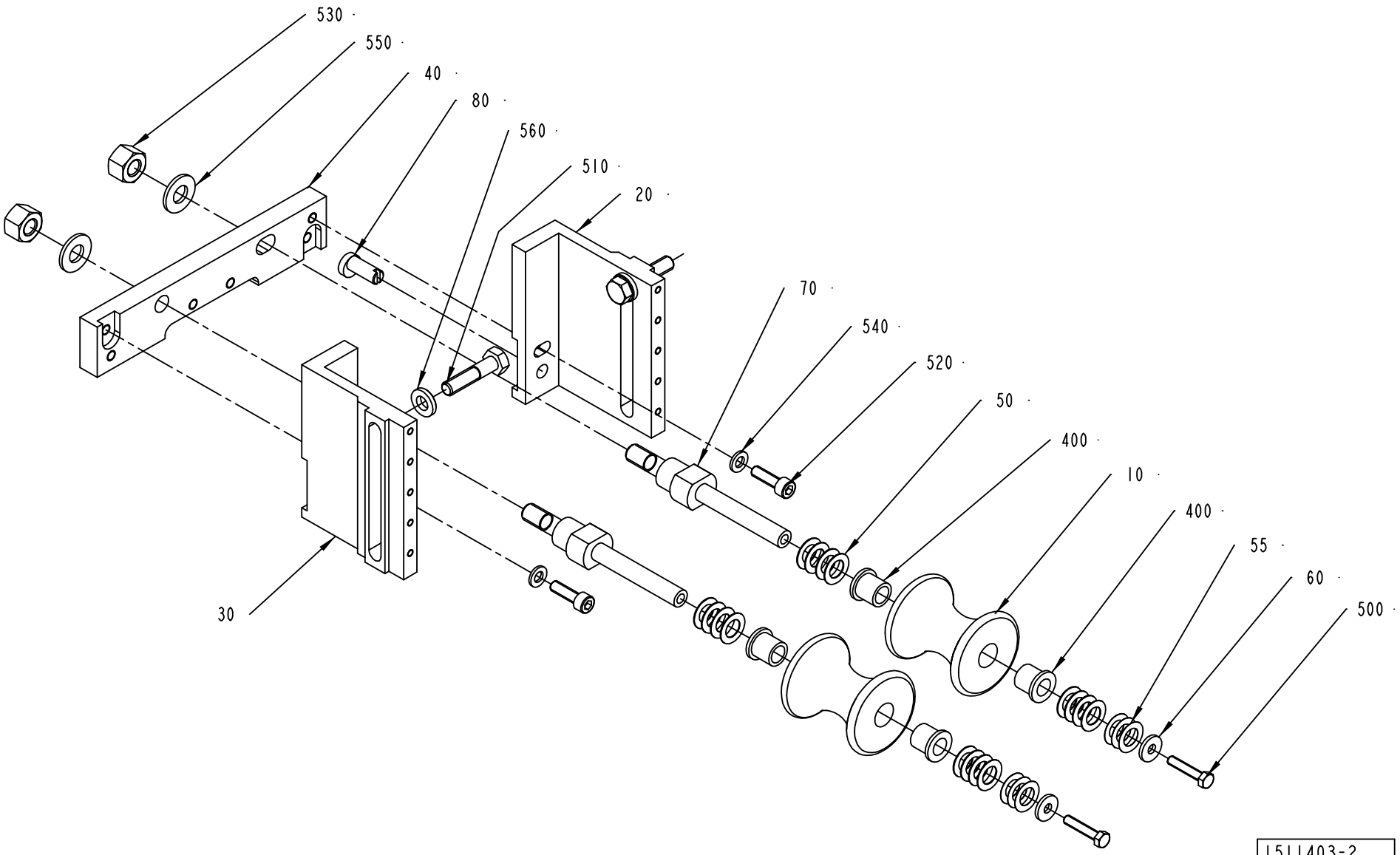

ECM: 116315 - 20020930
Group number: 1511403-0100
Assembly Drawing: 1511403-2_1_AA

Pos	Part No	SP	UN	Qty	Description	Page No
NOPT TBA 0100B IH, NOPT TBA 0125S IH						
010	978758-0000	B		2	ROLLER 125ML	
040	1511405-0003	-		1	BRACKET	
NOPT TBA 0200M IH, NOPT TBA 0250S IH						
010	574385-0000	B		2	ROLLER TBA250SL	
040	1511405-0001	-		1	BRACKET	
NOPT TBA 0200S IH, NOPT TBA 0160S IH						
010	978760-0000	B		2	ROLLER TBA200SL	
040	1511405-0004	-		1	BRACKET	
NOPT TBA 0200B IH, NOPT TBA 0180B IH, NOPT TBA 0330S IH, NOPT TBA 0250B IH, NOPT TBA 0284B IH, NOPT TBA 0300S IH						
010	978757-0000	B		2	ROLLER 180-284ML	
040	1511405-0002	-		1	BRACKET	
Common Parts						
020	1511406-0000	-		1	BRACKET	
030	1511407-0000	-		1	BRACKET	
050	2033-0009	-		16	WASHER	
055	2033-0014	-		6	WASHER	
060	27815-0000	-		2	WASHER	
070	978756-0000	A		2	PIN	
080	1511404-0000	B		1	ECCENTRIC SHAFT	
400	90240-0180	B		4	FLANGE BUSHING 10X14X15MM	
500	312105-0333	-		2	SCREW M6S ISO 4017 M5X25 A480	
510	312105-0457	-		2	SCREW M6S ISO 4014 M8X35 A480	
520	312115-0370	-		2	SCREW ISO4762 M6X20 A4	
530	312811-0320	-		2	NUT HEX.LOCK HELI COIL MID GRIP M10 SS	
540	315105-0153	-		2	WASHER ISO 7089-6-200 HV-A4	
550	315105-0173	-		2	WASHER ISO 7089-10-200 HV-A4	
560	315115-0165	-		2	WASHER PLAIN, TBRB 8,4/16 H=3	

Pos	Part No	SP	UN	Qty	Description	Page No

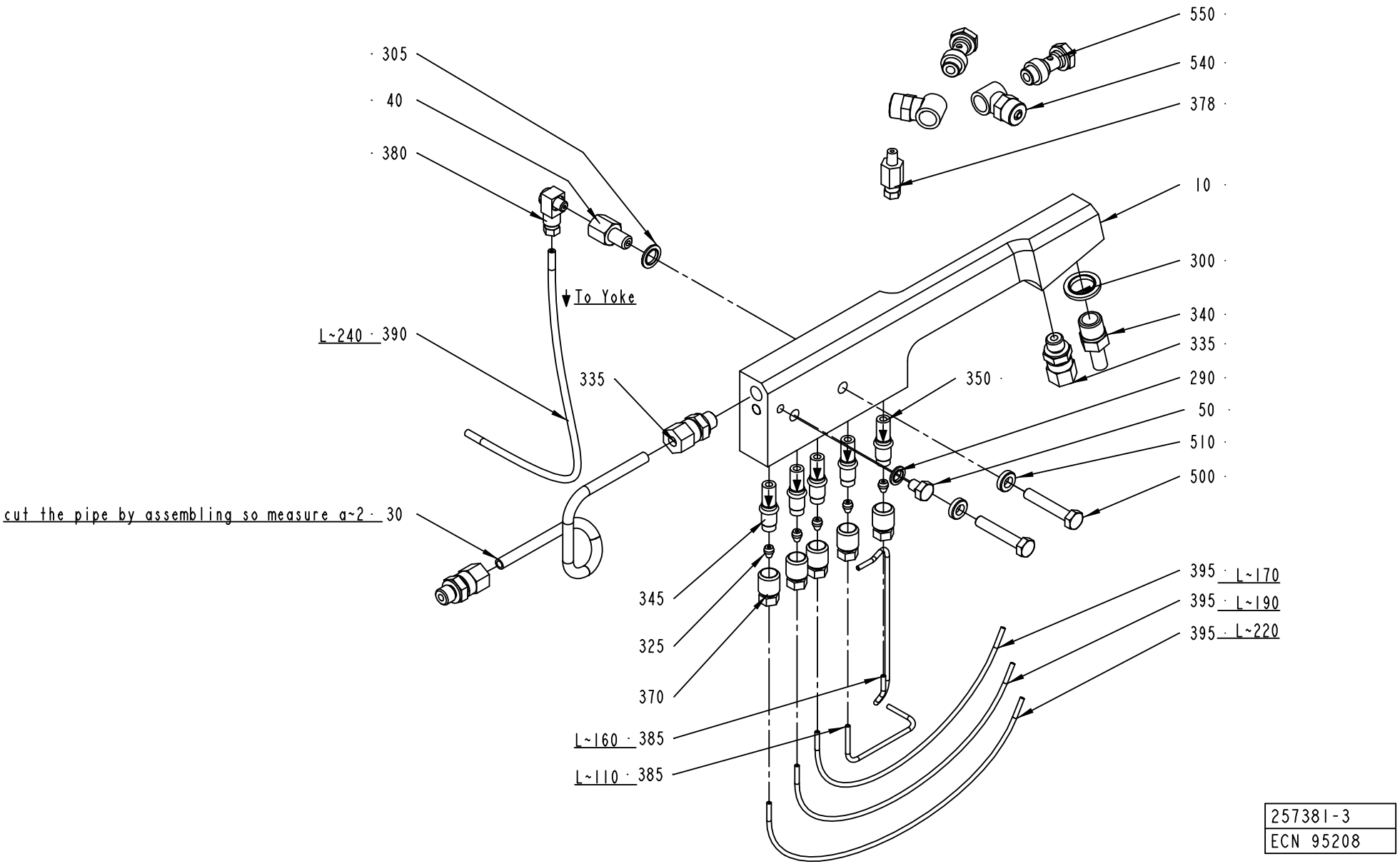
305
40
380
To Yoke
L~240 390
335
cut the pipe by assembling so measure a~2 30
345
325
370
L~160 385
L~110 385
550
540
378
10
300
340
335
290
50
510
500
350
395 L~170
395 L~190
395 L~220
257381-3
ECN 95208

ECM: 123353 - 20030102
Group number: 257381-0300
Assembly Drawing: 257381-3_1_AC

Pos	Part No	SP	UN	Qty	Description	Page No
-						
010	456017-0000	A		1	HOSE HOLDER RIGHT	
030	257379-0000	B		1	HYDRAULIC PIPE RIGHT	
040	257000-0000	-		1	NIPPLE	
050	441355-0000	-		1	BLEEDING SCREW	
290	90005-0003	B		1	GASKET BOLT HEAD 6,7X11X1 MM M6	
300	90005-0005	B		1	GASKET BOLT HEAD 13,7X20,6X2,1 MM G1/4"	
305	90005-0007	B		1	GASKET BOLT HEAD 8,7X14X1 MM M8	
325	90028-0020	-		5	CONE TUBE 2,5MM	
335	90030-0184	-		3	CONN. STR. GA-6-G1/8	
340	90030-0065	-		1	PIPE CONNECTION	
345	90092-0052	A		4	METERING VALVE 10 MM3	
350	90092-0053	A		1	METERING VALVE 30 MM3	
370	90134-0039	-		5	BUSHING VALVE CONNECTION 2,5 MM	
378	90134-0066	-		1	CONNECTION M6 TUBE 4 MM	
380	90134-0068	-		1	CONNECTION	
385	90266-0019	-	MM	270	PIPE	
390	90166-0109	-	MM	240	TUBE 4 MM PA,TRANSP.	
395	90166-0143	-	MM	580	TUBE 2,5 MM PA,TRANSP.	
500	312105-0376	-		2	SCREW M6S ISO 4014 M6X35 A480	
510	315115-0153	-		2	WASHER PLAIN, TBRB 6,4/12 H=3	
540	342980-0121	-		2	BANJO-CONNECTION,RING 8/6-G1/8"	
550	342980-0303	-		2	BANJO-HOLLOW BOLT COUPL,EXT.THR.01-G1/8"	

Pos	Part No	SP	UN	Qty	Description	Page No

Machine Type | Group Description | Used-In | Group Number | Page No

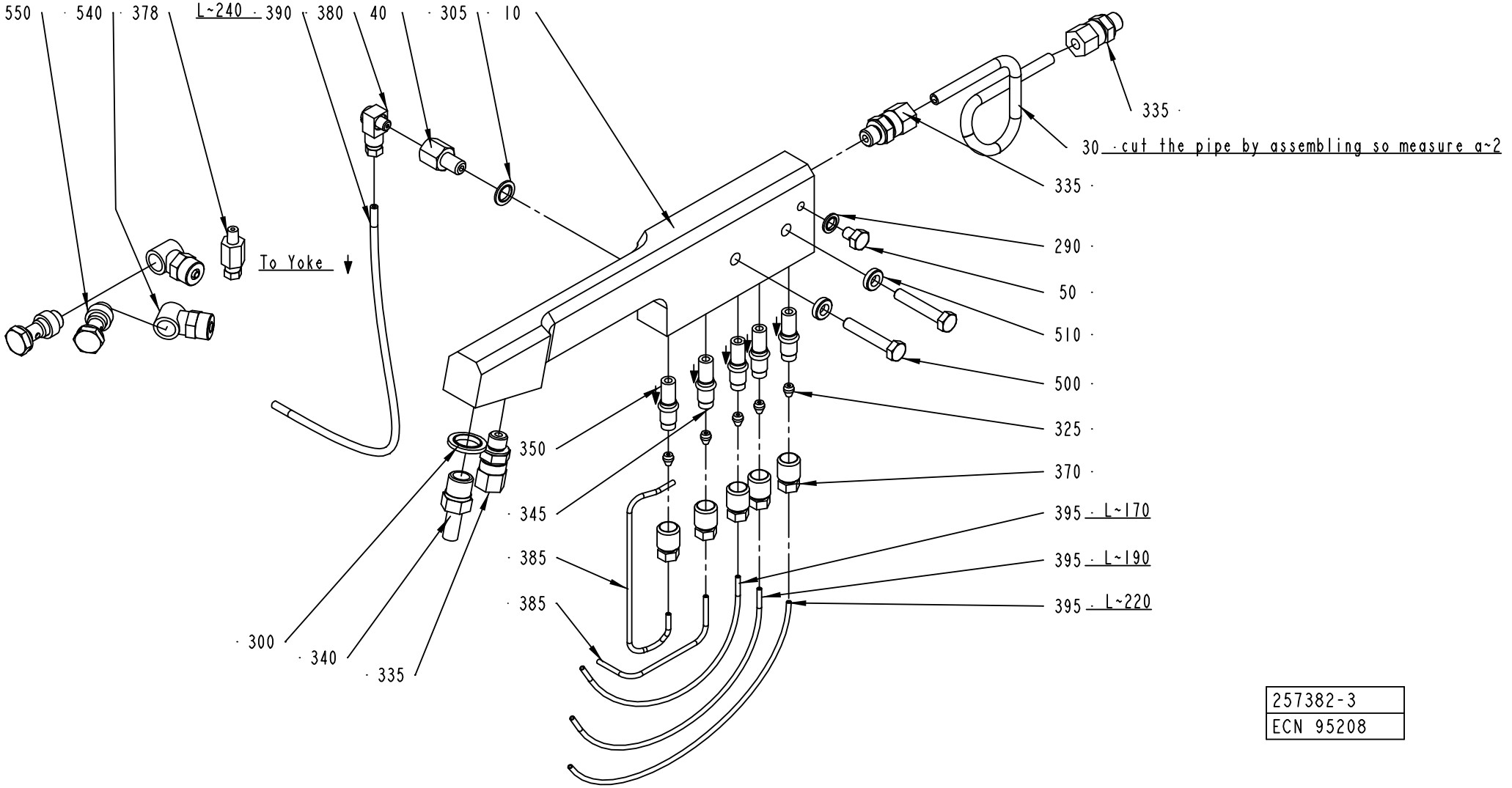

257382-3
ECN 95208

ECM: 123354 - 20030102
Group number: 257382-0300
Assembly Drawing: 257382-3_1_AC

Pos	Part No	SP	UN	Qty	Description	Page No
-						
010	456018-0000	A		1	HOSE HOLDER LEFT	
030	257380-0000	B		1	HYDRAULIC PIPE LEFT	
040	257000-0000	-		1	NIPPLE	
050	441355-0000	-		1	BLEEDING SCREW	
290	90005-0003	B		1	GASKET BOLT HEAD 6,7X11X1 MM M6	
300	90005-0005	B		1	GASKET BOLT HEAD 13,7X20,6X2,1 MM G1/4"	
305	90005-0007	B		1	GASKET BOLT HEAD 8,7X14X1 MM M8	
325	90028-0020	-		5	CONE TUBE 2,5MM	
335	90030-0184	-		3	CONN. STR. GA-6-G1/8	
340	90030-0065	-		1	PIPE CONNECTION	
345	90092-0052	A		4	METERING VALVE 10 MM3	
350	90092-0053	A		1	METERING VALVE 30 MM3	
370	90134-0039	-		5	BUSHING VALVE CONNECTION 2,5 MM	
378	90134-0066	-		1	CONNECTION M6 TUBE 4 MM	
380	90134-0068	-		1	CONNECTION	
385	90266-0019	-	MM	270	PIPE	
390	90166-0109	-	MM	240	TUBE 4 MM PA,TRANSP.	
395	90166-0143	-	MM	580	TUBE 2,5 MM PA,TRANSP.	
500	312105-0376	-		2	SCREW M6S ISO 4014 M6X35 A480	
510	315115-0153	-		2	WASHER PLAIN, TBRB 6,4/12 H=3	
540	342980-0121	-		2	BANJO-CONNECTION,RING 8/6-G1/8"	
550	342980-0303	-		2	BANJO-HOLLOW BOLT COUPL,EXT.THR.01-G1/8"	

Pos	Part No	SP	UN	Qty	Description	Page No

Machine Type | Group Description | Used-In | Group Number | Page No

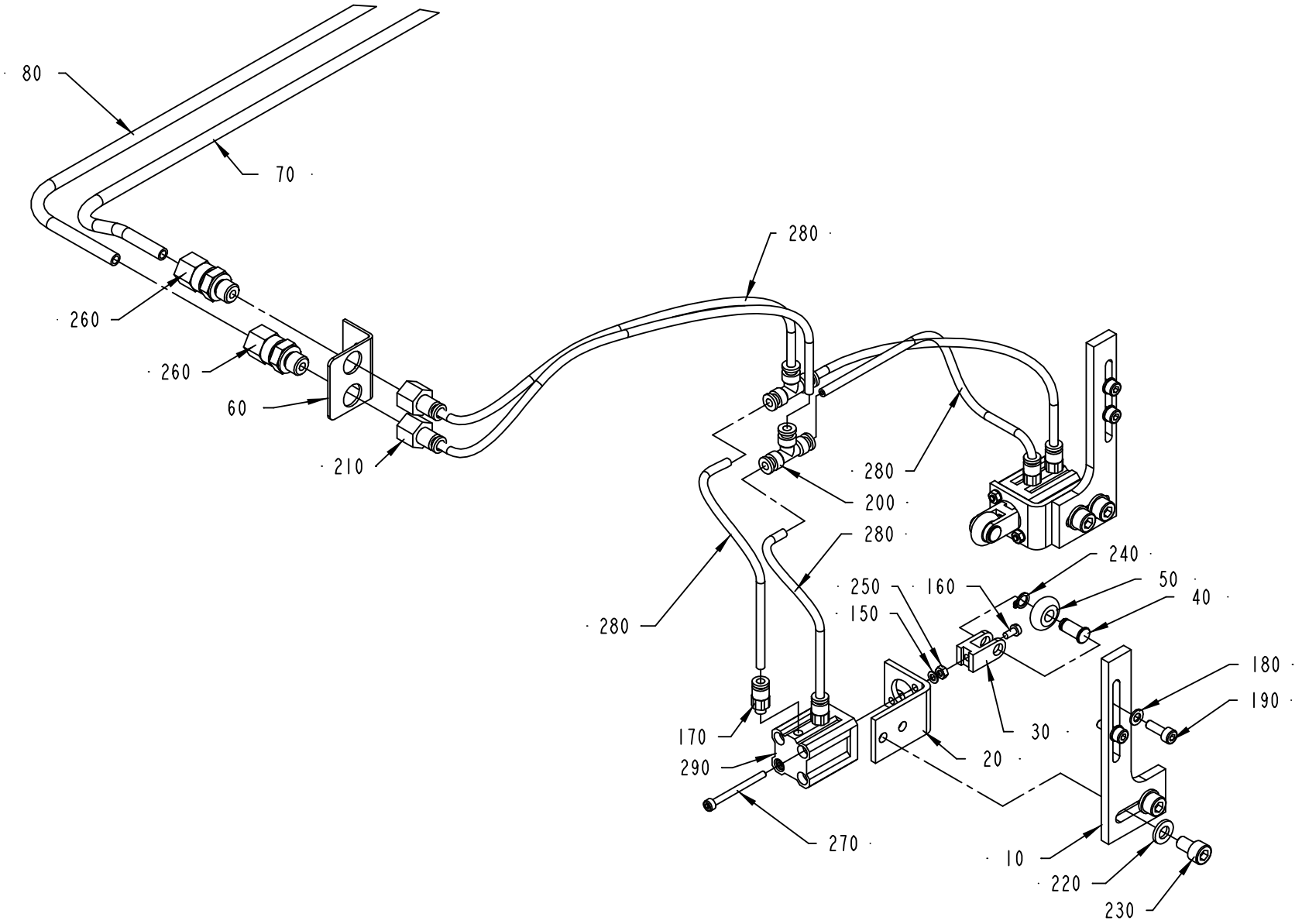

1511069-1
ECM 73438

ECM: 113349 - 20020930
Group number: 1511069-0100
Assembly Drawing: 1511069-1_1_AA

Pos	Part No	SP	UN	Qty	Description	Page No
-						
010	1549540-0000	-		2	BRACKET	
020	1558130-0000	-		2	BRACKET	
030	1558124-0000	B		2	FORK HEAD	
040	1490932-0000	B		2	SHAFT	
050	1490931-0000	B		2	WHEEL	
060	1558129-0000	-		1	BRACKET	
070	1558127-0000	-		1	PIPE	
080	1558126-0000	-		1	PIPE	
150	315105-0124	-		4	WASHER ISO 7089-3-200 HV-A4	
160	312125-0220	-		2	SKRUV SLOT.PAN HD. MCS 3X6 A480	
170	90458-2954	-		4	ELBOW PIPE JOINT, EXT.THREAD, D=4MM M5	
180	315105-0136	-		4	WASHER ISO 7089-4-200 HV-A4	
190	312115-0291	-		4	SCREW ISO4762 M4X12 A4	
200	342748-0100	-		2	T-CONNECTION 4MM	
210	342770-0101	-		2	STRAIGHT COUPLING INT, D=4 MM - G1/8	
220	315105-0153	-		4	WASHER ISO 7089-6-200 HV-A4	
230	312115-0364	-		4	SCREW ISO4762 M6X10 A4	
240	315751-0103	-		2	RETAIN. RING, 6	
250	312605-0310	-		4	HEXAGON NUT, M6M M3 A280	
260	90030-0184	-		2	CONN. STR. GA-6-G1/8	
270	90457-0937	-		4	SCREW MC6S M3X40 A480	
280	90166-0095	-	M	1	TUBE 4 MM PA BLUE	
290	90459-0251	B		2	DOUBLE ACTING, COMPACT, CYL 12-15	

Pos	Part No	SP	UN	Qty	Description	Page No

Machine Type | Group Description | Used-In | Group Number | Page No

This page is intentionally left blank.

ECM: 92423 - 20011113
Group number: 295523-0400
Assembly Drawing:

Pos	Part No	SP	UN	Qty	Description	Page No
TBA 0125S, TBA 0100B						
020	1110530-0000	-		2	INDUCTOR	
040	1520577-0001	-		4	DOLLY	
TBA 0160S, TBA 0200S						
025	1110532-0000	-		2	INDUCTOR	
055	1110391-0000	-		4	DOLLY	
TBA 0250S, TBA 0200M						
028	1110535-0000	-		2	INDUCTOR	
055	1110391-0000	-		4	DOLLY	
TBA 0330S, TBA 0300S, TBA 0180B, TBA 0200B, TBA 0284B, TBA 0250B						
010	1110534-0000	-		2	INDUCTOR	
055	1110391-0000	-		4	DOLLY	

Pos	Part No	SP	UN	Qty	Description	Page No

Tetra Pak

SPC
Spare Parts Catalogue

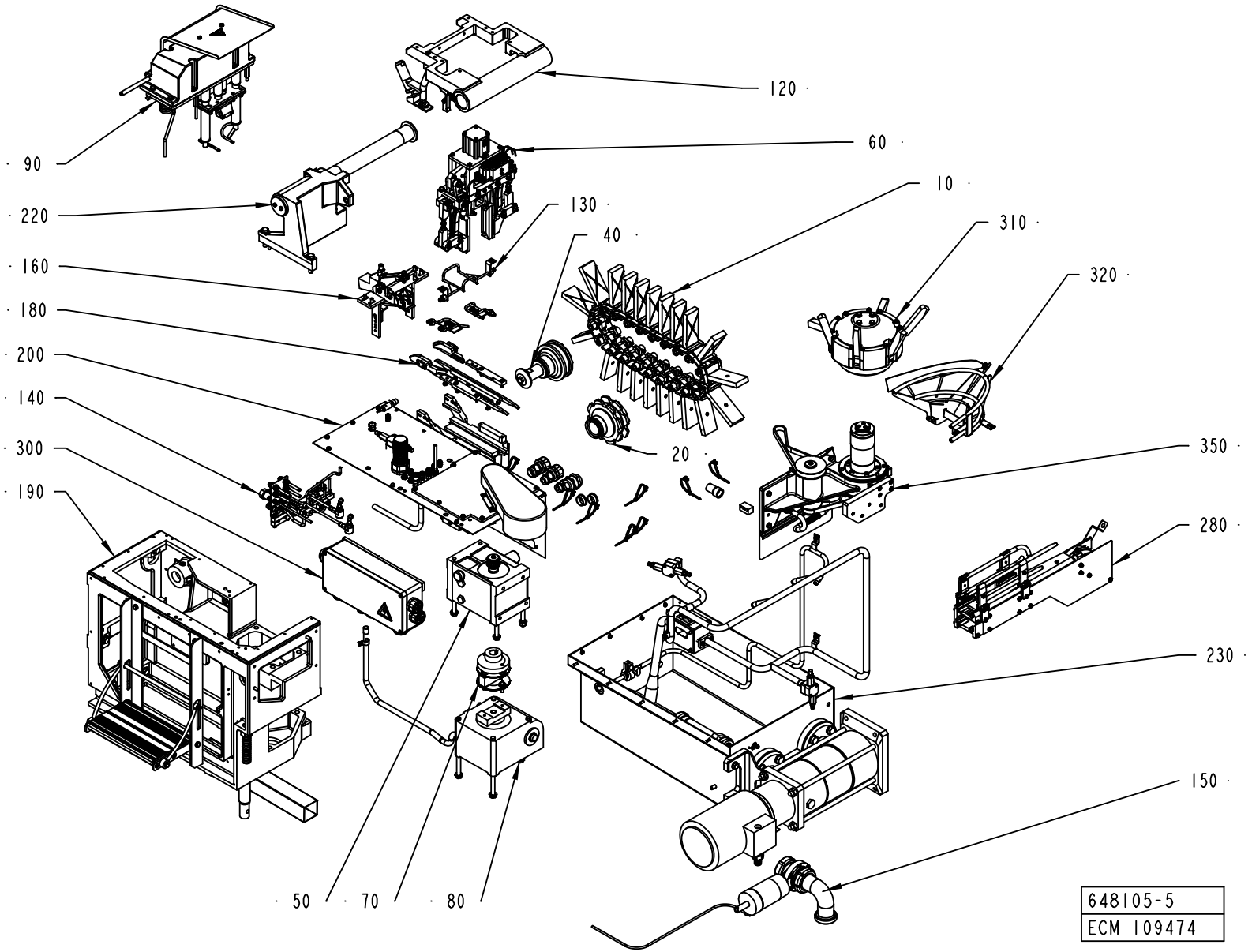
90
220
160
180
200
140
300
190
120
60
10
130
40
310
320
20
350
280
230
150
50
70
80
648105-5
ECM 109474

ECM: 112780 - 20030113
Group number: 648105-1200
Assembly Drawing: 648105-5_1_AB

Pos	Part No	SP	UN	Qty	Description	Page No
-						
010	A1317526-0100	A		1	STATION CHAIN	**327**
020	A491850-0100	-		1	DRIVE WHEEL	**329**
040	A491846-0300	-		1	TENSION SPROCKET	**331**
050	A256410-0900	-		1	INDEXING UNIT	**333**
060	A2523725-0100	-		1	PRESSURE DEVICE	**335, 337**
070	A256437-0200	-		1	DISC COUPLING	**341**
080	A256438-0300	-		1	WORM GEAR	**343**
090	A1539968-0100	-		1	FLAP HEATER	**345, 347**
120	A1548000-0100	-		1	FRAME	**349**
130	A1539970-0100	-		1	FOLDING BAR	**351**
140	A456455-0600	-		1	PIPE WORK	**353**
150	A256674-0500	-		1	BOTTOM VALVE	**355**
160	A1539975-0100	-		1	FORMING UNIT	**357**
180	A1539969-0100	-		1	GUIDE	**359**
190	A441695-0500	-		1	MACHINE BODY	**361**
200	A1539995-0100	-		1	CANTILEVER	**365**
220	A1539949-0100	-		1	FIXING UNIT	**371**
230	A2544980-0100	-		1	CLEANING SYSTEM	**373**
280	A2500233-0100	-		1	CONVEYOR	**377**
300	A441850-0700	-		1	CABLE	**379**
310	A1539265-0100	-		1	OUTFEED UNIT	**385**
320	A2544961-0100	-		1	RAIL	**387**
350	A2530400-0100	-		1	TRASMISSION UNIT	**389**

Pos	Part No	SP	UN	Qty	Description	Page No

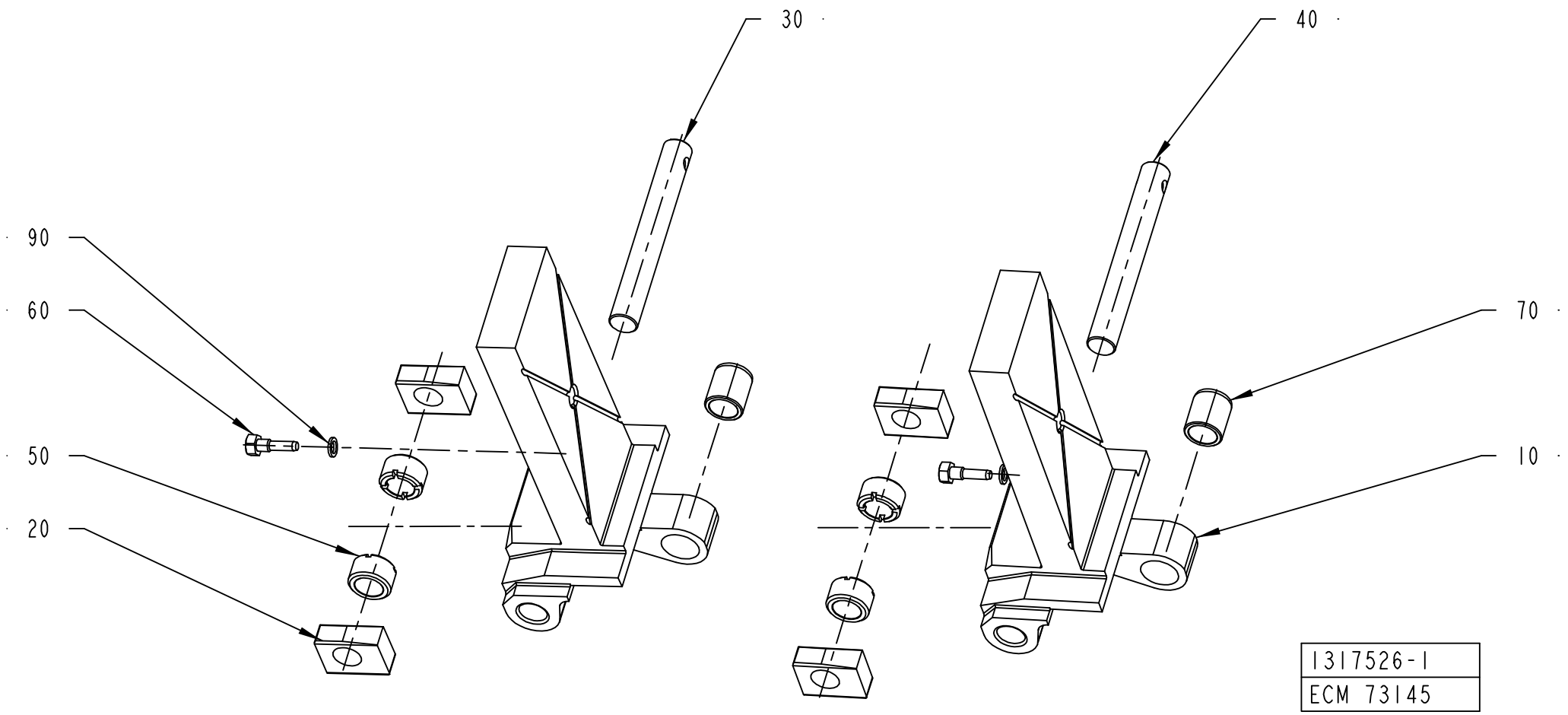
30
40
90
60
70
50
10
20
1317526-1
ECM 73145

ECM: 115050 - 20030113
Group number: 1317526-0100
Assembly Drawing: 1317526-1_1_AC

Pos	Part No	SP	UN	Qty	Description	Page No
TBA 0100B						
010	1296313-0000	A		21	CARTON STATION	
TBA 0125S						
010	1296312-0000	A		21	CARTON STATION WITH BEVEL	
TBA 0160S						
010	1296311-0000	A		21	CARTON STATION WITH BEVEL	
TBA 0180B						
010	1296310-0006	A		21	CARTON STATION WITH BEVEL	
TBA 0200B						
010	1296310-0004	A		21	CARTON STATION WITH BEVEL	
TBA 0200M						
010	1282435-0002	A		21	CARTON STATION	
TBA 0200S						
010	1282444-0000	A		21	CARTON STATION WITH BEVEL	
TBA 0250B						
010	1296310-0002	A		21	CARTON STATION WITH BEVEL	
TBA 0250S						
010	1282435-0001	A		21	CARTON STATION	
TBA 0300S, TBA 0284B						
010	1296310-0001	A		21	CARTON STATION WITH BEVEL	
TBA 0330S						
010	1296310-0007	A		21	CARTON STATION WITH BEVEL	
Common Parts						
020	491227-0000	A		42	SLIDER	
030	491228-0001	A		18	SHAFT	
040	491228-0002	A		3	SHAFT	
050	491229-0000	A		42	BUSHING	
060	491230-0000	A		21	GRUB SCREW	
070	491231-0000	A		21	BUSHING	
090	315233-0101	A		21	WASHER PL.RND.NYL.5,2/8,H=1	

Pos	Part No	SP	UN	Qty	Description	Page No

Machine Type | Group Description | Used-In | Group Number | Page No

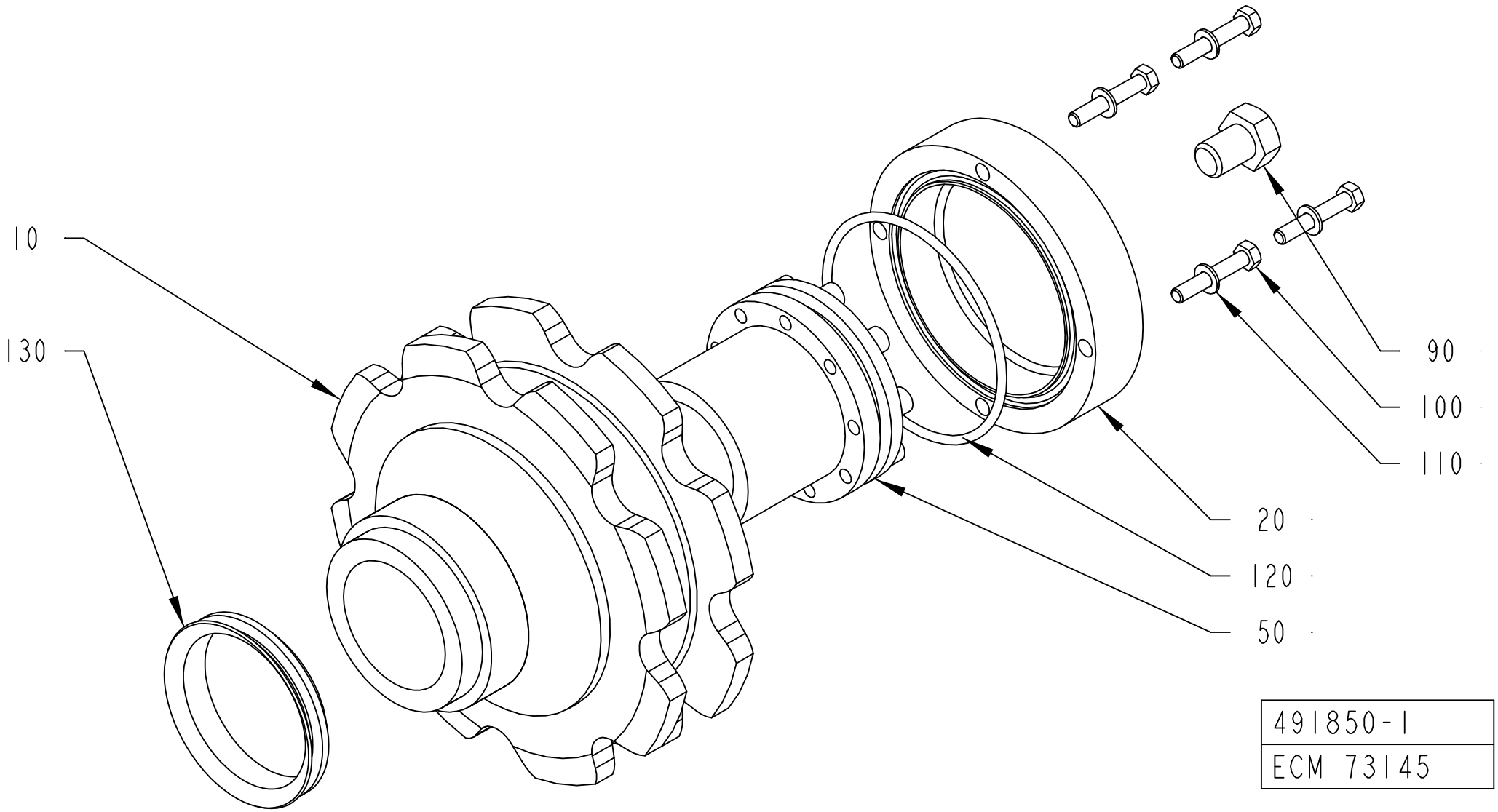
10
130
90
100
110
20
120
50
491850-1
ECM 73145

ECM: 113156 - 20020731
Group number: 491850-0100
Assembly Drawing: 491850-1_1_AC

Pos	Part No	SP	UN	Qty	Description	Page No
TBA 0330S, TBA 0300S, TBA 0180B, TBA 0160S, TBA 0200B, TBA 0125S, TBA 0100B, TBA 0250S, TBA 0284B, TBA 0200S, TBA 0200M, TBA 0250B						
010	491258-0000	A		1	DRIVE WHEEL	
Common Parts						
020	491851-0000	A		1	LID	
050	90208-0031	A		1	BUSHING	
090	312101-0530	-		1	SCREW M6S M12X16 FZB	
100	312105-0335	-		4	SCREW M6S ISO 4014 M5X30 A480	
110	315105-0146	-		4	WASHER ISO 7089-5-200 HV-A4	
120	315202-0306	A		1	O-RING 74,5X3 MM	
130	315220-0210	A		1	V-RINGS 54X64X13 MM V-60S	

Pos	Part No	SP	UN	Qty	Description	Page No

TENSION SPROCKET

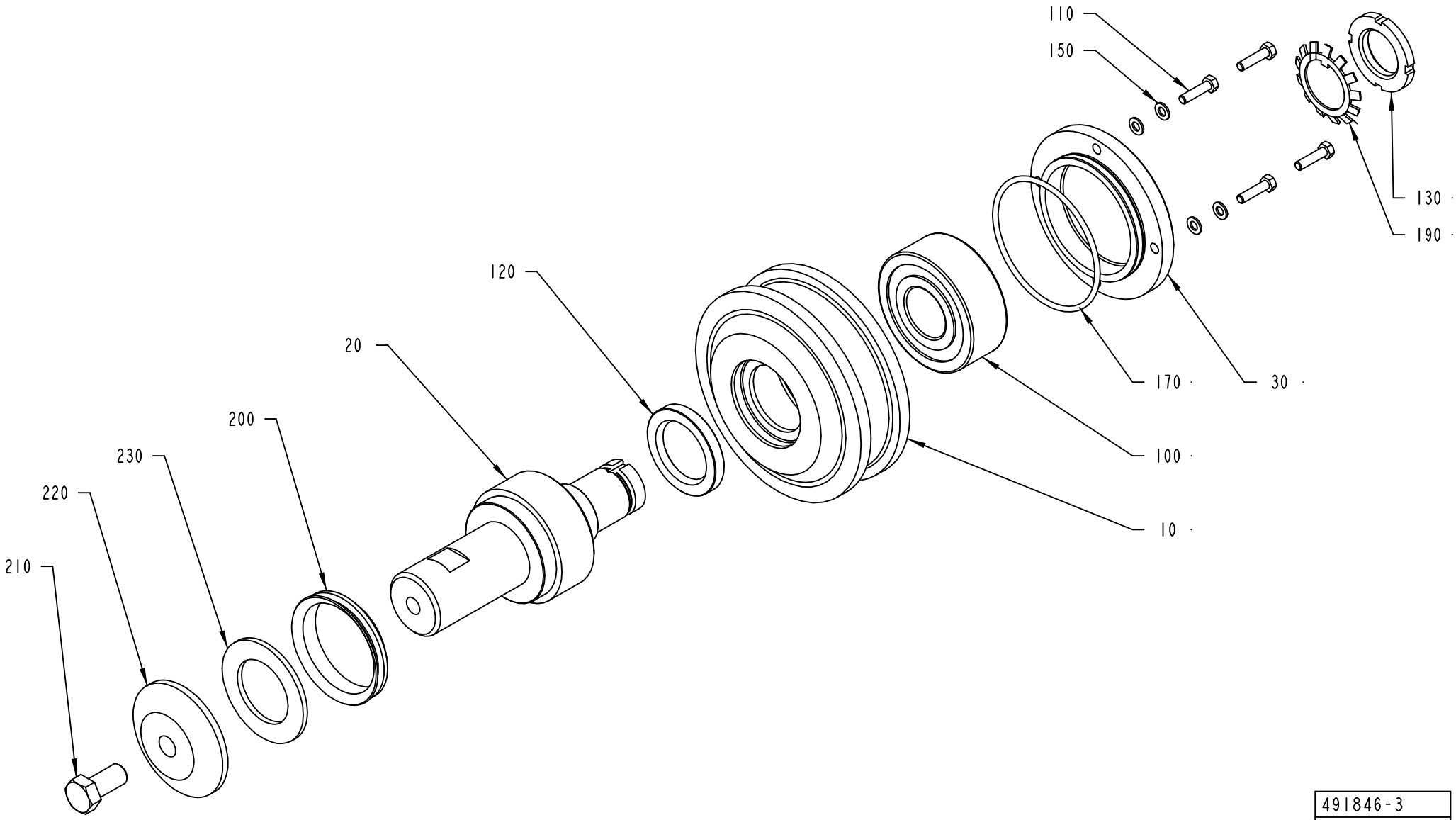

491846-3
ECM 73145

ECM: 113164 - 20020731
Group number: 491846-0300
Assembly Drawing: 491846-3_1_AA

Pos	Part No	SP	UN	Qty	Description	Page No
-						
010	1282022-0000	B		1	TENSION SPROCKET	
020	1490928-0000	A		1	SHAFT	
030	491291-0000	-		1	LID	
100	90214-0122	A		1	BALL BEARING, 30X72X27 MM	
105	90296-0070	-		1	GREASE	
110	312105-0331	-		4	SCREW M6S ISO 4017 M5X20 A480	
120	315221-0177	B		1	RADIAL SEAL 35X52X7 MM	
130	312805-0106	-		1	NUT ROUND WITH SLOTS M30X1,5 FE	
150	315105-0146	-		4	WASHER ISO 7089-5-200 HV-A4	
170	315202-0306	B		1	O-RING 74,5X3 MM	
190	315410-0106	-		1	LOCK WASHER MB 6 D=30 H=1,25	
200	315220-0210	B		1	V-RINGS 54X64X13 MM V-60S	
210	312105-0534	-		1	SCREW M6S ISO 4017 M12X25 A480	
220	1279701-0000	-		1	WASHER	
230	1517506-0000	-		1	SHIM	

Pos	Part No	SP	UN	Qty	Description	Page No

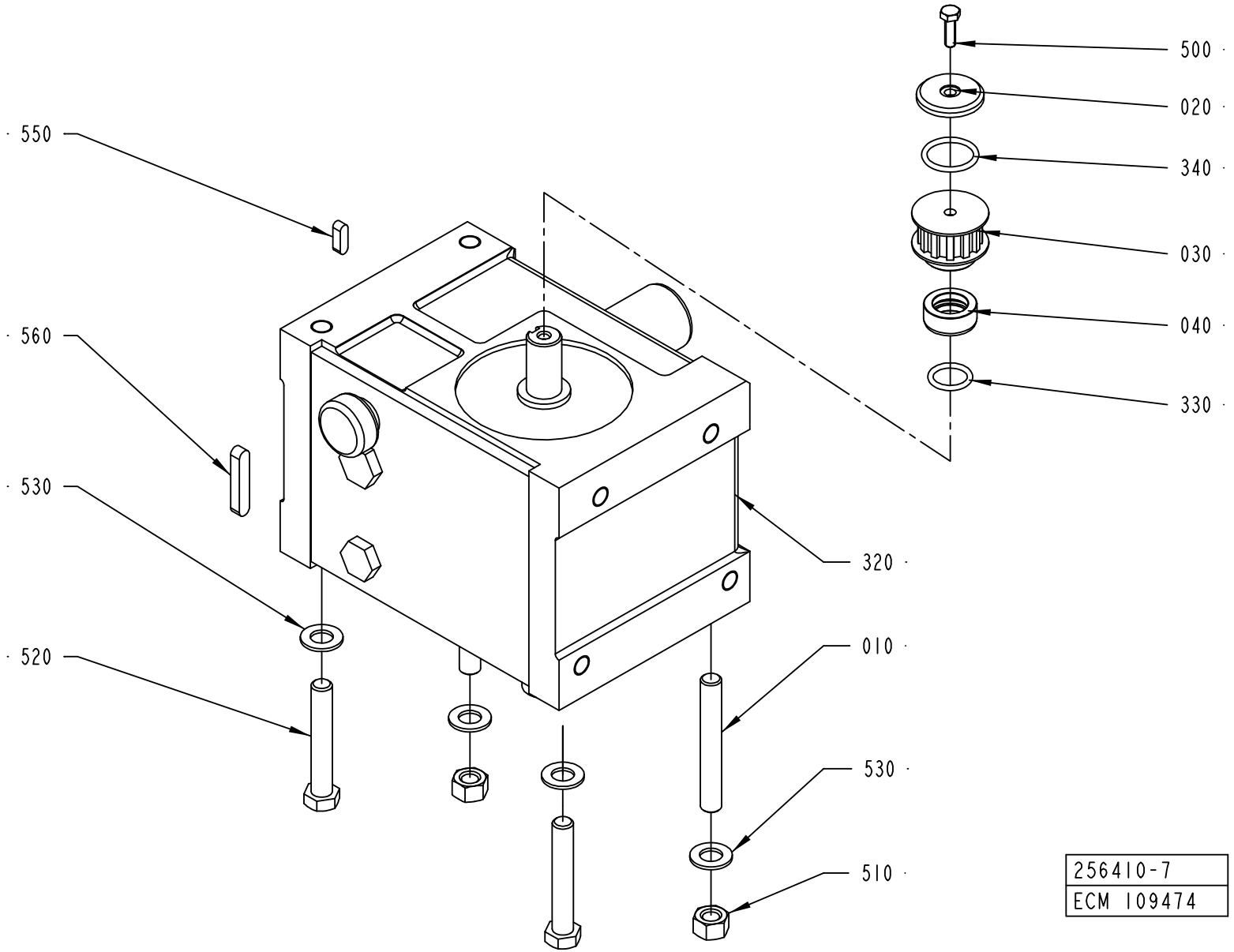
500
020
340
030
040
330
550
560
530
520
320
010
530
510
256410-7
ECM 109474

ECM: 112858 - 20030113
Group number: 256410-0900
Assembly Drawing: 256410-7_1_AB

Pos	Part No	SP	UN	Qty	Description	Page No
-						
010	1511487-0000	-		2	STUD SCREW	
020	1539261-0000	-		1	WASHER	
030	1539301-0000	A		1	TOOTHED PULLEY	
040	1539302-0000	-		1	SPACER	
310	90296-0073	-	L	2	OIL	
320	90458-1721	A		1	INDEXING GEAR, 10707205	
330	315202-0215	B		1	O-RING 19,2X3 MM	
340	315202-0218	B		1	O-RING 26,2X3 MM	
500	312105-0370	-		1	SCREW M6S ISO 4017 M6X20 A480	
510	312605-0322	-		2	HEXAGON NUT, M6M M12 A280	
520	312105-0547	-		2	SCREW M6S ISO 4014 M12X75 A480	
530	315105-0178	-		4	WASHER ISO 7089-12-200 HV-A4	
550	315705-0232	-		1	PARALLEL KEY W. ROUND ENDS 6X6X20 MM	
560	315705-0271	-		1	PARALLEL KEY W. ROUND ENDS 8X7X45 MM	

Pos	Part No	SP	UN	Qty	Description	Page No

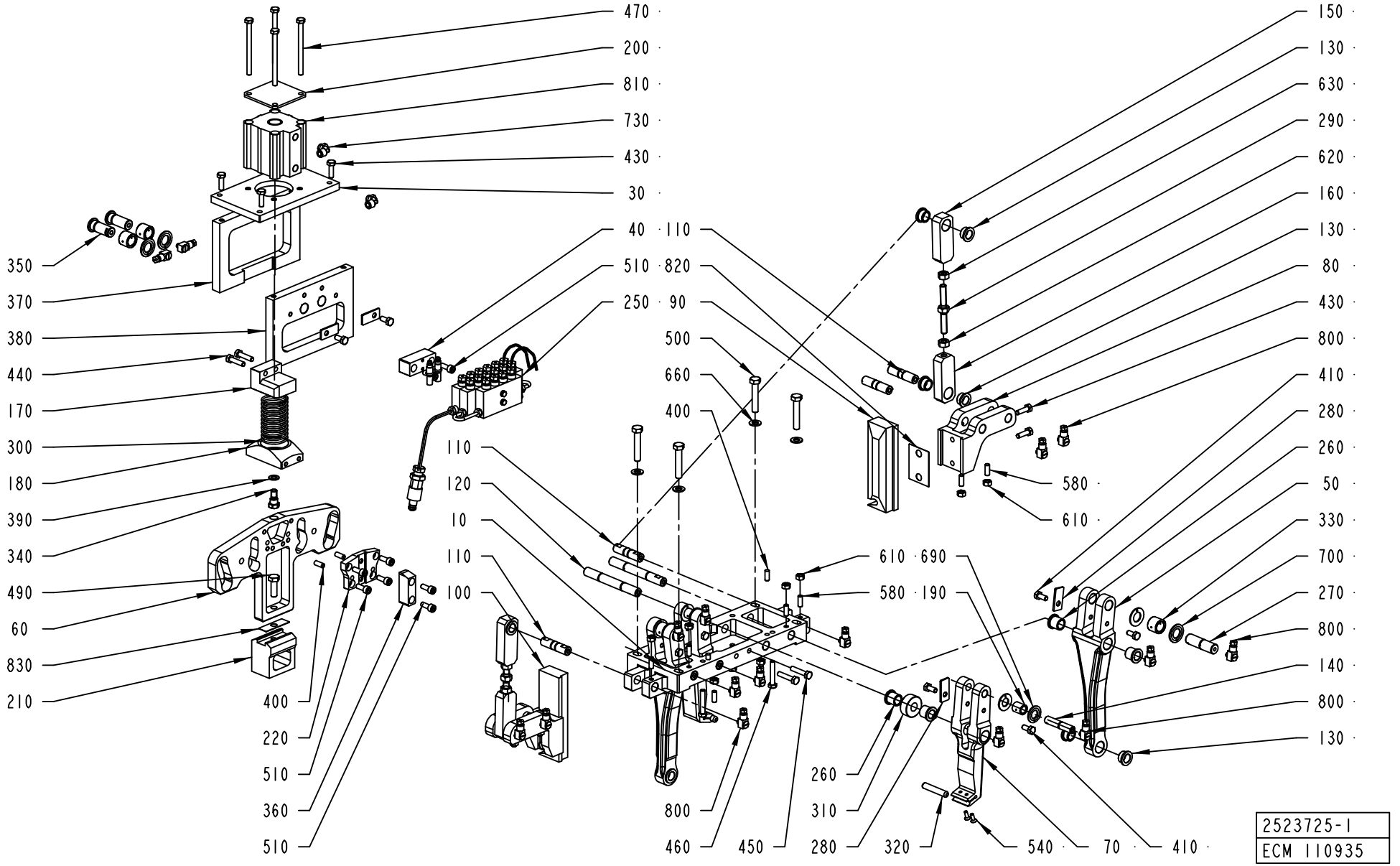
470
200
810
730
430
30
40
510
250
110
820
90
500
660
400
110
120
10
110
100
350
370
380
440
170
300
180
390
340
490
60
830
210
400
220
510
360
510
800
460
450
260
310
280
320
540
70
410
150
130
630
290
620
160
130
80
430
800
410
280
260
50
330
700
270
800
140
800
130
580
610
610
690
580
190
2523725-1
ECM 110935

ECM: 110997 - 20030107
Group number: 2523725-0100
Assembly Drawing: 2523725-1_1_AB

This list covers pages from 334 to 337

Pos	Part No	SP	UN	Qty	Description	Page No
TBA 0100B						
070	2523732-0001	A		2	LEVER	
090	1511027-0001	B		1	BLOCK	
100	1511028-0001	B		1	BLOCK	
210	2552734-0001	B		1	BLOCK	
TBA 0125S						
070	2523732-0002	A		2	LEVER	
090	1511027-0002	B		1	BLOCK	
100	1511028-0002	B		1	BLOCK	
210	2552734-0002	B		1	BLOCK	
TBA 0160S						
070	2523732-0003	A		2	LEVER	
090	1511027-0003	B		1	BLOCK	
100	1511028-0003	B		1	BLOCK	
210	2554977-0001	B		1	BLOCK	
TBA 0180B						
070	2523732-0004	A		2	LEVER	
090	1511027-0004	B		1	BLOCK	
100	1511028-0004	B		1	BLOCK	
210	2524579-0004	B		1	BLOCK	
TBA 0200B						
070	2523732-0005	A		2	LEVER	
090	1511027-0005	B		1	BLOCK	
100	1511028-0005	B		1	BLOCK	
210	2524579-0005	B		1	BLOCK	
TBA 0200M						
070	2523732-0006	A		2	LEVER	
090	1511027-0006	B		1	BLOCK	
100	1511028-0006	B		1	BLOCK	
210	2554977-0002	B		1	BLOCK	
TBA 0200S						
070	2523732-0007	A		2	LEVER	
090	1511027-0007	B		1	BLOCK	
100	1511028-0007	B		1	BLOCK	
210	2554977-0003	B		1	BLOCK	

Pos	Part No	SP	UN	Qty	Description	Page No
TBA 0250B						
070	2523732-0008	A		2	LEVER	
090	1511027-0008	B		1	BLOCK	
100	1511028-0008	B		1	BLOCK	
210	2524579-0008	B		1	BLOCK	
TBA 0250S						
070	2523732-0009	A		2	LEVER	
090	1511027-0009	B		1	BLOCK	
100	1511028-0009	B		1	BLOCK	
210	2554977-0004	B		1	BLOCK	
TBA 0300S, TBA 0284B						
070	2523732-0010	A		2	LEVER	
090	1511027-0010	B		1	BLOCK	
100	1511028-0010	B		1	BLOCK	
210	2524579-0010	B		1	BLOCK	
TBA 0330S						
070	2523732-0011	A		2	LEVER	
090	1511027-0011	B		1	BLOCK	
100	1511028-0011	B		1	BLOCK	
210	2524579-0011	B		1	BLOCK	
Common Parts						
010	2552733-0000	-		1	PLATE	
030	2552720-0000	-		1	PLATE	
040	2552729-0000	-		1	SUPPORT	
050	2523730-0000	-		2	LEVER	
060	2552721-0000	A		1	CAM	
080	2524578-0000	-		2	HOLDER	
110	2523736-0000	A		6	SHAFT	
120	2523737-0000	A		4	SHAFT	
130	2523738-0000	B		12	BUSHING	
140	2523739-0000	A		2	SHAFT	
150	2523740-0000	-		2	LEVER	
160	2523741-0000	-		2	LEVER	
170	2552723-0000	-		1	SPRING BRACKET	
180	2552732-0000	-		1	SPRING BRACKET	
190	2523744-0000	A		2	ROLLER	
200	2523745-0000	-		1	PLATE	
220	2552724-0000	-		1	SUPPORT	

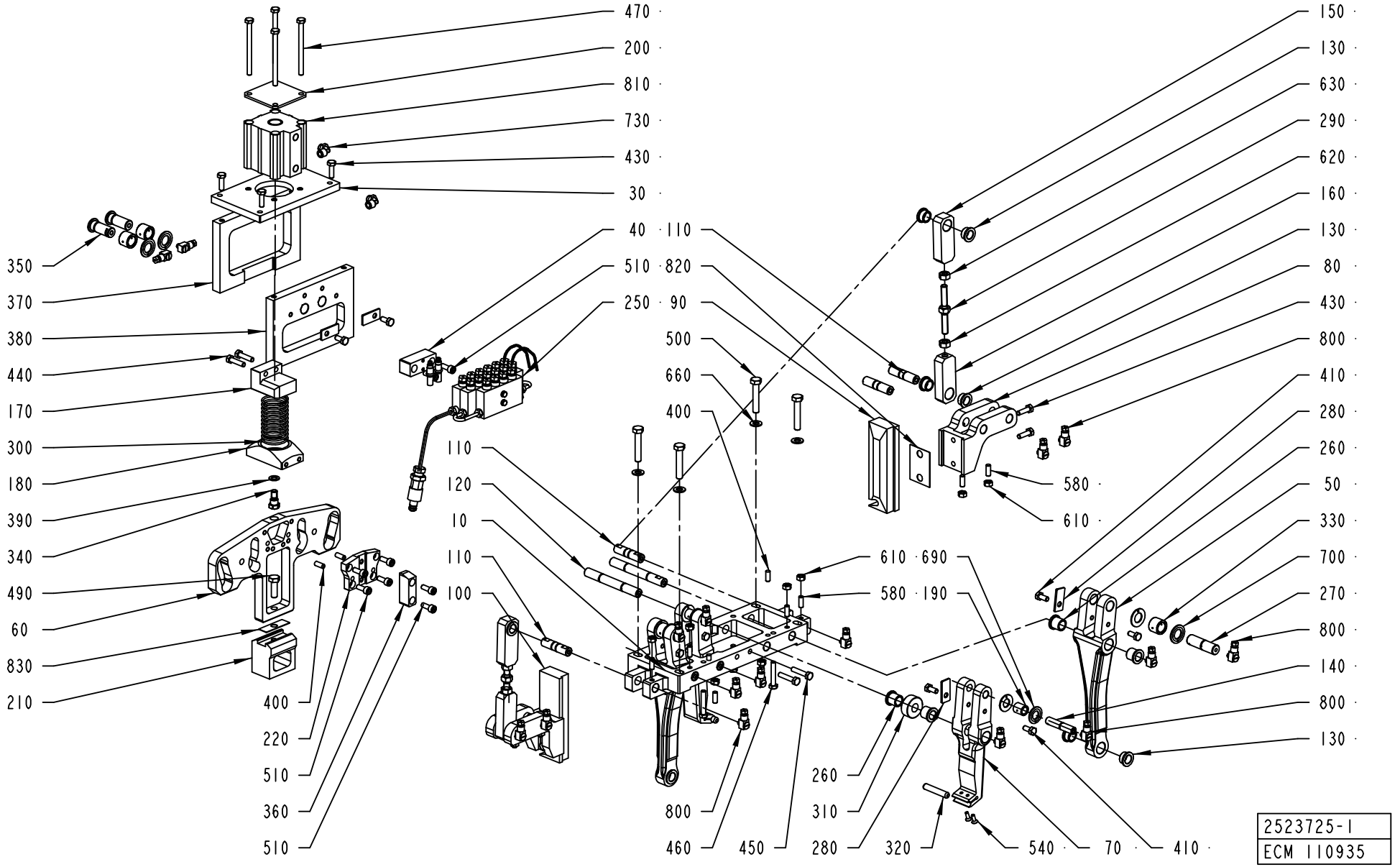
470
200
810
730
430
30
40
510
250
110
820
90
500
660
400
110
120
10
110
100
350
370
380
440
170
300
180
390
340
490
60
830
210
400
220
510
360
510
800
460
450
260
310
280
320
540
70
410
150
130
630
290
620
160
130
80
430
800
410
280
260
50
330
700
270
800
140
800
130
580
610
610
690
580
190
2523725-1
ECM 110935

Pos	Part No	SP	UN	Qty	Description	Page No
Common Parts (Cont'd)						
250	A2502424-0100	-		1	LUBRICATION	**339**
260	1144507-0000	B		8	BUSHING	
270	1144508-0000	A		2	AXLE PIN	
280	1144521-0000	-		6	CLAMP	
290	1144916-0000	-		2	ADJUSTING SCREW	
300	1195044-0000	B		1	SPRING	
310	1195054-0000	A		2	ROLLER	
320	1511021-0000	-		2	SHAFT	
330	2526249-0000	A		4	ROLLER	
340	2552722-0000	-		1	AXLE PIN	
350	2552725-0000	-		2	AXLE PIN	
360	2552726-0000	-		1	GUIDE	
370	2552727-0000	-		1	PLATE	
380	2552728-0000	-		1	PLATE	
390	2552731-0000	-		1	WASHER	
400	311103-0351	-		4	PARALLELL PIN, M6, 6X16 MM	
410	312105-0367	-		10	SCREW M6S M6X14 A280	
430	312105-0370	-		8	SCREW M6S ISO 4017 M6X20 A480	
440	312105-0372	-		2	SCREW M6S ISO 4017 M6X25 A480	
450	312105-0374	-		2	SCREW M6S ISO 4014 M6X30 A480	
460	312105-0376	-		4	SCREW M6S ISO 4014 M6X35 A480	
470	312105-0386	-		4	SCREW M6S ISO 4014 M6X80 A480	
490	312105-0453	-		1	SCREW M6S ISO 4017 M8X25 A480	
500	312105-0460	-		4	SCREW M6S ISO 4014 M8X45 A480	
510	312115-0368	-		8	SCREW ISO4762 M6X16 A4	
540	312155-0291	-		4	SCREW EN 10642 MF6S M4X12 A480	
580	312318-0368	-		10	SCREW ISO4029 M6X16 A4	
610	312605-0316	-		10	HEXAGON NUT, M6M M6 A280	
620	312605-0318	-		2	HEXAGON NUT, M6M M8 A280	
630	312902-0318	-		2	NUT HEX. LEFT THREAD, M8 A280	
660	315105-0165	-		4	WASHER ISO 7089-8-200 HV-A4	
690	321130-0180	B		4	THRUST WASHER, 12X24X1,5 MM	
700	321130-0200	B		6	THRUST WASHER, 14X26X1,5 MM	
730	90458-2956	-		2	ELBOW PIPE JOINT, EXT.THREAD, D=6MM-G1/8	
800	90134-0058	-		16	CONNECTION	
810	90450-0434	A		1	DOUBLE ACTING, COMPACT, CYL 50-30	
820	2527454-0000	-		6	SHIM	
830	2530401-0000	-		3	SHIM	

Pos	Part No	SP	UN	Qty	Description	Page No

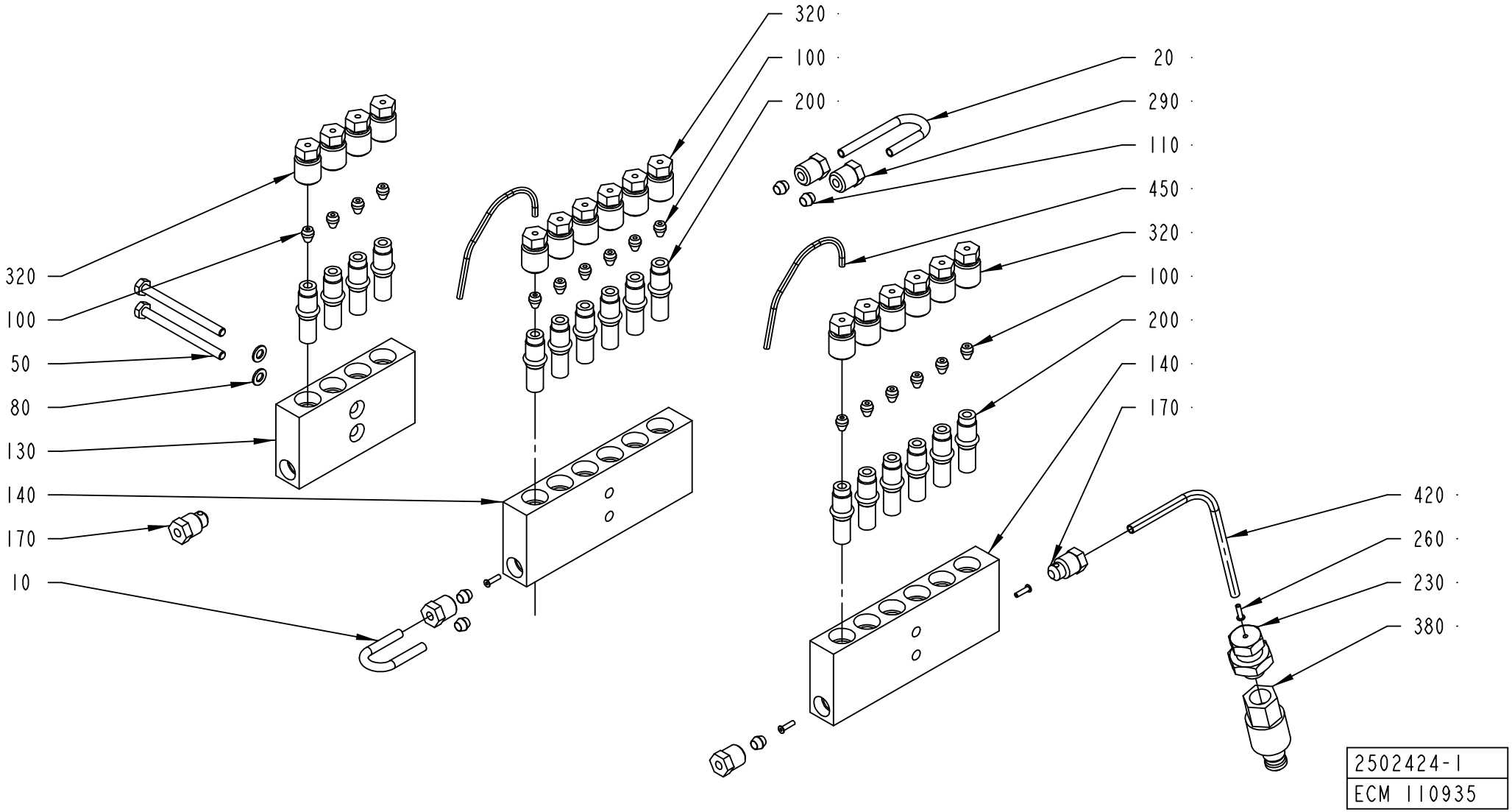
320
100
50
80
130
140
170
10
320
100
200
20
290
110
450
320
100
200
140
170
420
260
230
380
2502424-1
ECM 110935

ECM: 112343 - 20030107
Group number: 2502424-0100
Assembly Drawing: 2502424-1_1_AB

Pos	Part No	SP	UN	Qty	Description	Page No
-						
010	979557-0000	-		1	CONNECTING PIPE	
020	1512442-0000	-		1	CONNECTING PIPE	
050	312101-0305	-		2	SCREW M6S M4X50 FZB	
080	315105-0136	-		2	WASHER ISO 7089-4-200 HV-A4	
100	90028-0020	-		16	CONE TUBE 2,5MM	
110	90028-0021	-		5	CONE TUBE 4 MM	
130	90032-0039	-		1	BLOCK 4 WAYS	
140	90032-0040	-		2	BLOCK 6 WAYS	
170	90087-0019	-		2	PLUG M10X1 STAINLESS	
200	90092-0052	B		16	METERING VALVE 10 MM3	
230	90134-0004	-		1	PIPE CONNECTION R1/8	
260	90134-0031	-		4	SLEEVE FOR PLASTIC TUBE	
290	90134-0038	-		4	BUSHING/NUT INLET/OUTLET 4 MM	
320	90134-0039	-		16	BUSHING VALVE CONNECTION 2,5 MM	
380	90163-0048	-		1	NIPPLE LP-004-2-WR 510-23-1	
420	90166-0109	-	M	1	TUBE 4 MM PA,TRANSP.	
450	90166-0143	-	M	2	TUBE 2,5 MM PA,TRANSP.	

Pos	Part No	SP	UN	Qty	Description	Page No

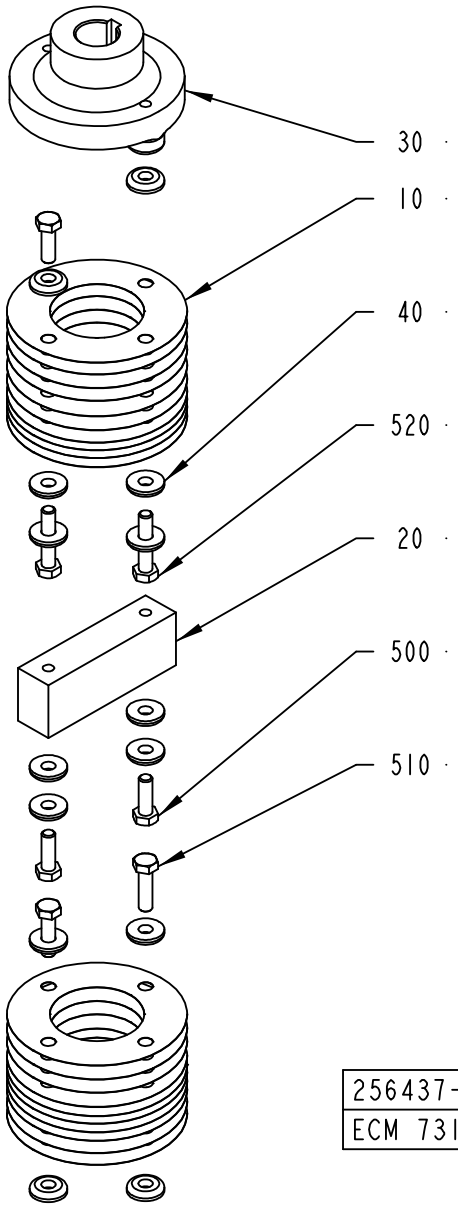

256437-2
ECM 73145

ECM: 102661 - 20020109
Group number: 256437-0200
Assembly Drawing: 256437-2_1_AC

Pos	Part No	SP	UN	Qty	Description	Page No
-						
010	31559-0000	A		20	SPRING PLATE	
020	272746-0000	B		1	ROD	
030	272747-0000	B		1	CONNECTION	
040	31553-0001	-		14	WASHER	
500	312101-0453	-		4	SCREW M6S M8X25 FZB	
510	312101-0455	-		2	SCREW M6S M8X30 FZB	
520	312101-0459	-		2	SCREW M6S M8X40 FZB	

Pos	Part No	SP	UN	Qty	Description	Page No

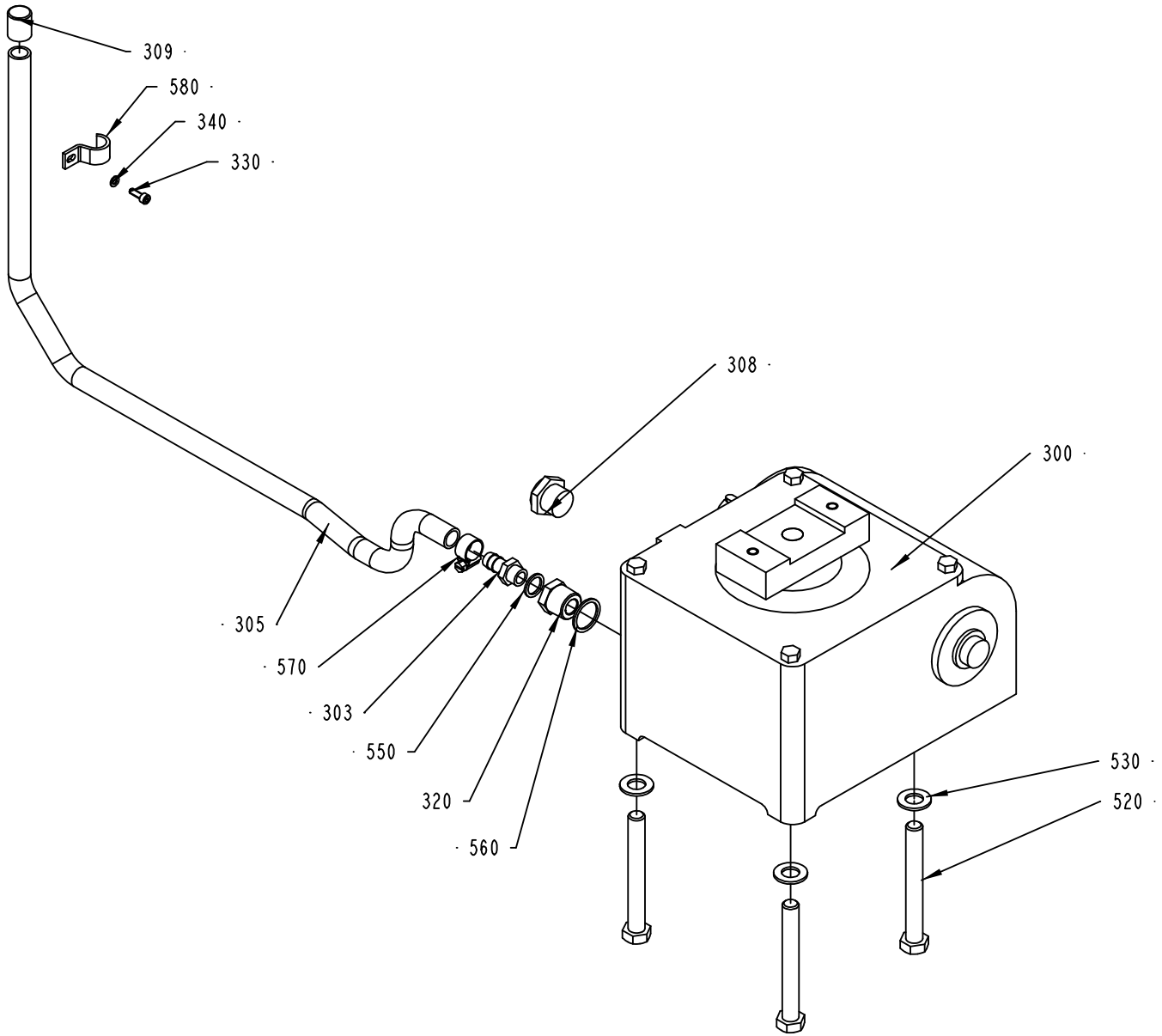

256438-6
ECM 103837

ECM: 103619 - 20020527
Group number: 256438-0300
Assembly Drawing: 256438-6_1_AD

Pos	Part No	SP	UN	Qty	Description	Page No
-						
300	90056-0071	A		1	WORM GEAR	
303	90163-0052	-		1	HOSE NIPPLE, EXT.THR. 1/4-12 MM	
305	90166-0113	-	MM	800	HOSE	
308	90257-0002	-		1	FILTER PLUG, NO. 8145-00-120 TYP F12	
309	90261-0073	-		1	PLUG, BLIND, PLASTIC, NO. GPN250/15	
310	90296-0073	-	L	2	OIL	
320	90330-0085	-		1	BUSHING, INT/EXT. THR. R1/2-RP1/4	
330	312115-0291	-		1	SCREW ISO4762 M4X12 A4	
340	315105-0136	-		1	WASHER ISO 7089-4-200 HV-A4	
520	312101-0552	-		3	SCREW M6S M12X100 FZB	
530	315101-0178	-		3	WASHER PLAIN, BRB, 13/24 H=2	
550	315234-0110	-		1	WASHER,PL.RND.CU.13,5/18 H=1,5	
560	315234-0113	-		1	WASHER PL.RND.CU.21,3//26 H=1,5	
570	342991-0101	-		1	HOSE CLIP,WORM DRIVE TYPE (13)-16	
580	352110-0103	-		1	CABLE CLIPS, D=14-20 MM	

Pos	Part No	SP	UN	Qty	Description	Page No

Machine Type | Group Description | Used-In | Group Number | Page No

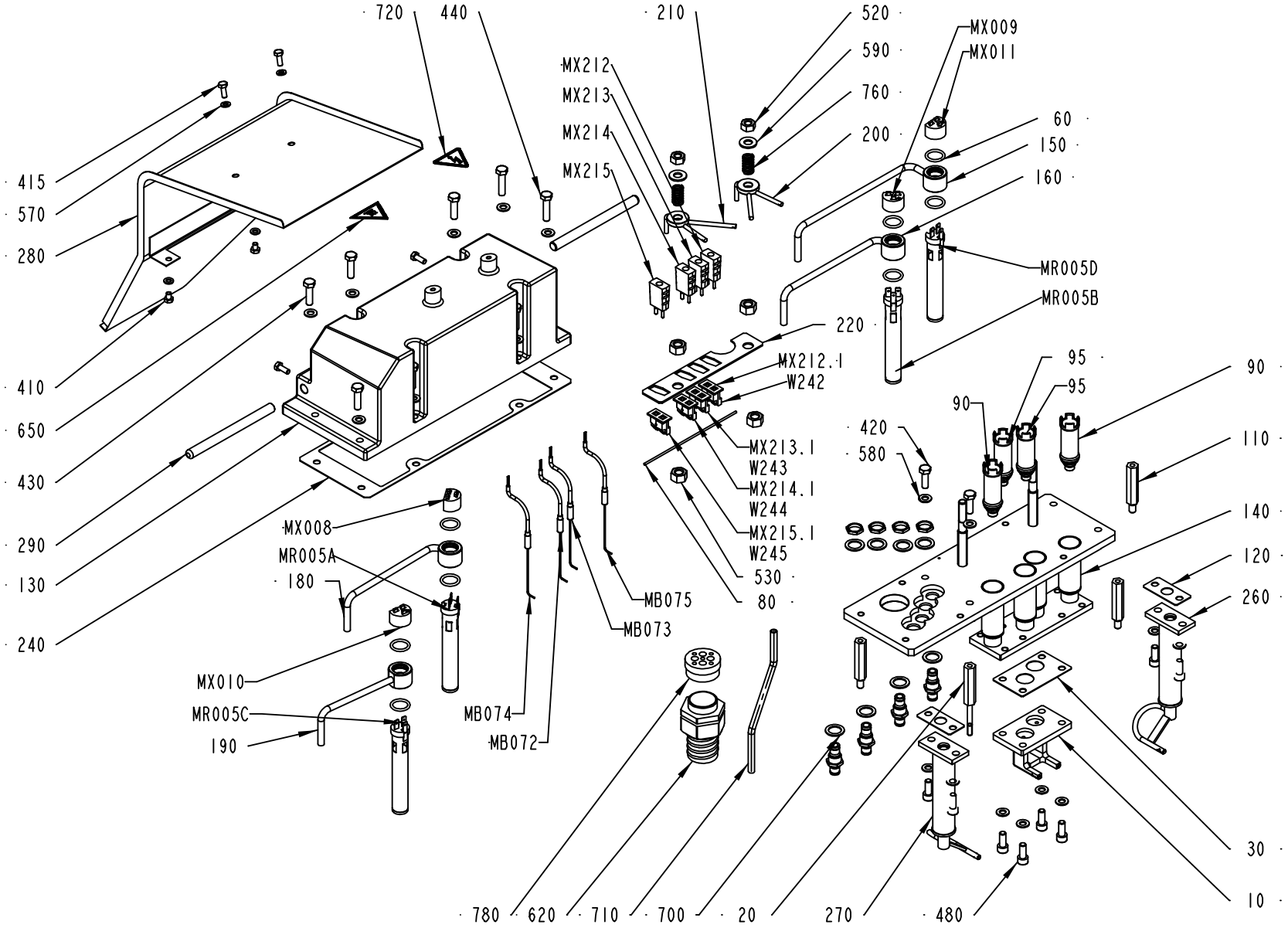

1539968-1
ECM 103837

Pos	Part No	SP	UN	Qty	Description	Page No
TBA 0100B						
010	1539964-0001	A		1	AIR NOZZLE	
260	1519307-0000	A		1	AIR NOZZLE	
270	1519308-0000	A		1	AIR NOZZLE	
TBA 0125S						
010	1539964-0002	A		1	AIR NOZZLE	
260	1519307-0000	A		1	AIR NOZZLE	
270	1519308-0000	A		1	AIR NOZZLE	
TBA 0160S						
010	1539964-0003	A		1	AIR NOZZLE	
260	1519318-0000	A		1	AIR NOZZLE	
270	1519319-0000	A		1	AIR NOZZLE	
TBA 0180B						
010	1539964-0004	A		1	AIR NOZZLE	
260	1519313-0000	A		1	AIR NOZZLE	
270	1519314-0000	A		1	AIR NOZZLE	
TBA 0200B						
010	1539964-0005	A		1	AIR NOZZLE	
260	1519313-0000	A		1	AIR NOZZLE	
270	1519314-0000	A		1	AIR NOZZLE	
TBA 0200M						
010	1539964-0006	A		1	AIR NOZZLE	
260	1517504-0000	A		1	AIR NOZZLE	
270	1517505-0000	A		1	AIR NOZZLE	
TBA 0200S						
010	1539964-0007	A		1	AIR NOZZLE	
260	1519318-0000	A		1	AIR NOZZLE	
270	1519319-0000	A		1	AIR NOZZLE	
TBA 0250B						
010	1539964-0008	A		1	AIR NOZZLE	
260	1519313-0000	A		1	AIR NOZZLE	
270	1519314-0000	A		1	AIR NOZZLE	
TBA 0250S						
010	1539964-0009	A		1	AIR NOZZLE	
260	1517504-0000	A		1	AIR NOZZLE	
270	1517505-0000	A		1	AIR NOZZLE	
TBA 0300S, TBA 0284B						
010	1539964-0010	A		1	AIR NOZZLE	
260	1519313-0000	A		1	AIR NOZZLE	
270	1519314-0000	A		1	AIR NOZZLE	
TBA 0330S						
010	1539964-0011	A		1	AIR NOZZLE	
260	1519313-0000	A		1	AIR NOZZLE	
270	1519314-0000	A		1	AIR NOZZLE	
Common Parts						
020	1539966-0000	-		1	BRACKET	
030	1539967-0000	B		1	GASKET	
060	927422-0001	B		8	O-RING 19.2X3 SILICON	
080	1144059-0000	-		1	WIRE	
090	1144122-0000	-		2	REDUCTION	
095	2552081-0000	-		2	REDUCTION	
110	1279702-0000	-		3	BRACKET	
120	1296415-0000	B		2	GASKET	
130	1498216-0000	-		1	LID	
140	1498217-0000	-		1	HEATING CHAMBER	
150	1498218-0000	-		1	PIPE	
160	1498219-0000	-		1	PIPE	
180	1498220-0000	-		1	PIPE	
190	1498221-0000	-		1	PIPE	
200	1498222-0000	-		1	PLATE	
210	1498223-0000	-		1	PLATE	
220	1498224-0000	-		1	PLATE	
230	2528198-0000	-		1	PLATE	
240	1498233-0000	B		1	GASKET	
290	2528199-0000	-		2	HANDLE	
400	312105-0368	-		2	SCREW M6S M6X16 A280	
410	312105-0362	-		2	SCREW M6S ISO 4017 M6X8 A480	
420	312105-0453	-		2	SCREW M6S ISO 4017 M8X25 A480	
430	312105-0455	-		6	SCREW M6S ISO 4017 M8X30 A480	
440	312109-0457	-		2	SCREW M6S ISO 4017 M8X35 A480	
480	312115-0451	-		7	SCREW ISO4762 M8X20 A4	
520	312605-0320	-		2	HEXAGON NUT, M6M M10 A280	
530	312605-0322	-		4	HEXAGON NUT, M6M M12 A280	

Machine Type | Group Description | Used-In | Group Number | Page No

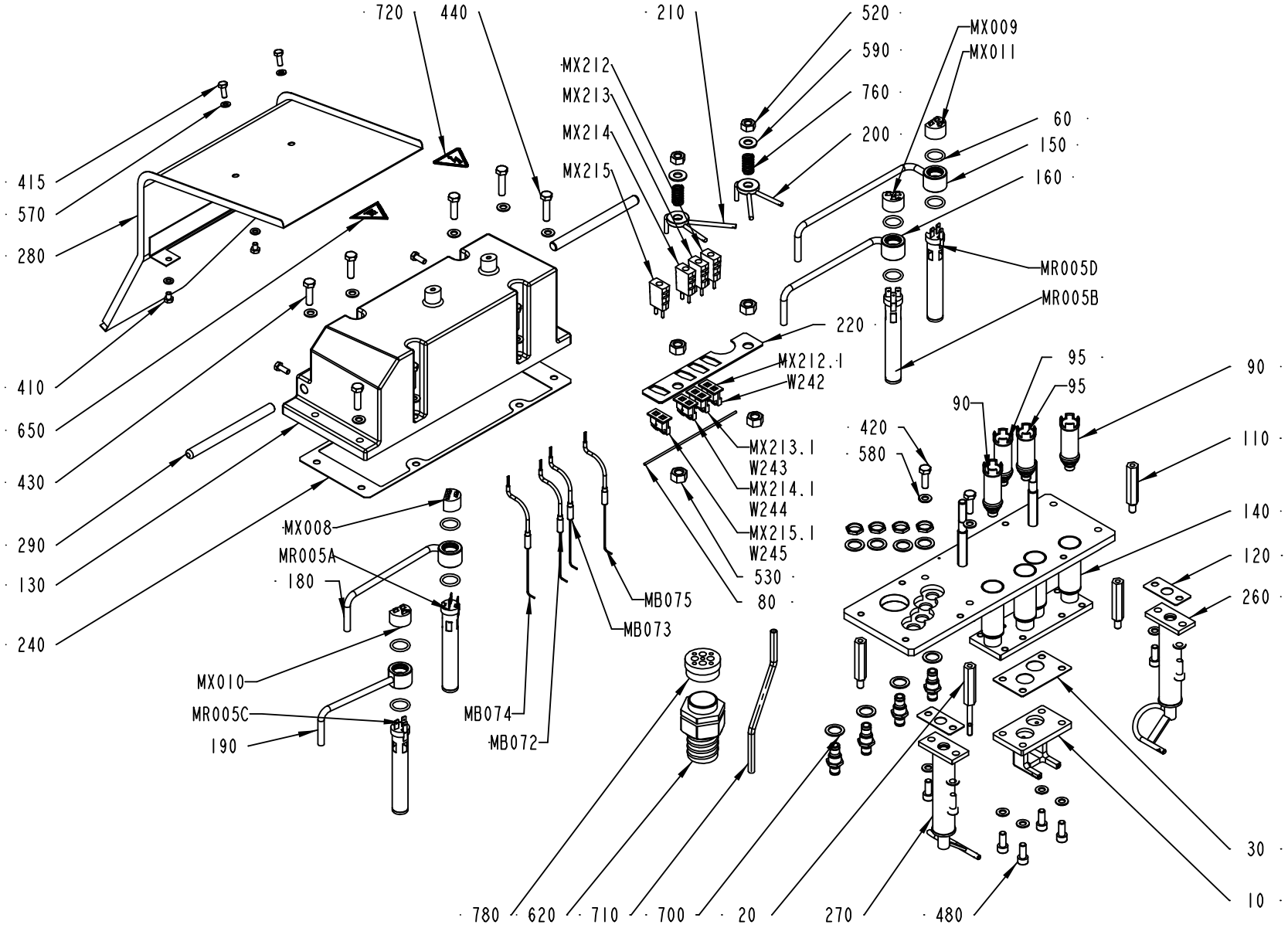

1539968-1
ECM 103837

Pos	Part No	SP	UN	Qty	Description	Page No
Common Parts (Cont'd)						
570	315105-0153	-		4	WASHER ISO 7089-6-200 HV-A4	
580	315105-0165	-		17	WASHER ISO 7089-8-200 HV-A4	
590	315105-0173	-		2	WASHER ISO 7089-10-200 HV-A4	
620	353244-0007	-		1	EXTENDED WITHOUT INSERT, HIGH TEMP, PG29	
650	359705-0007	A		1	WARNING SIGN ISO, HOT SURFACE	
700	2552073-0000	-		8	SEAL	
710	90166-0133	-	M	1	TUBE 8 MM PA,TRANSP.	
720	359705-0015	A		1	WARNING SIGN ISO, RISK OF ELECTRIC SHOCK	
760	90335-0036	-		2	COMP. SPRING 22450, 1,6X14,1X24	
770	90457-0141	-		4	BULKHEAD CONNECTOR, 8MM	
780	90457-0199	B		1	INSERT EK 156M 5X5/4X9	
MB072	90326-0080	A		1	THERMOCOUPLE, 5110080-000	
MB073	90326-0080	A		1	THERMOCOUPLE, 5110080-000	
MB074	90326-0080	A		1	THERMOCOUPLE, 5110080-000	
MB075	90326-0080	A		1	THERMOCOUPLE, 5110080-000	
MR005A	1144159-0000	A		1	HEATING ELEMENT (1100 W)	
MR005B	1144159-0000	A		1	HEATING ELEMENT (1100 W)	
MR005C	1144159-0000	A		1	HEATING ELEMENT (1100 W)	
MR005D	1144159-0000	A		1	HEATING ELEMENT (1100 W)	
MX008	1036443-0000	-		1	CONTACT UNIT	
MX009	1036443-0000	-		1	CONTACT UNIT	
MX010	1036443-0000	-		1	CONTACT UNIT	
MX011	1036443-0000	-		1	CONTACT UNIT	
MX212	90326-0022	-		1	PLUG, MALE YELLOW CR-AL	
MX212,1	90326-0077	-		1	CONTACT	
MX213	90326-0022	-		1	PLUG, MALE YELLOW CR-AL	
MX213,1	90326-0077	-		1	CONTACT	
MX214	90326-0022	-		1	PLUG, MALE YELLOW CR-AL	
MX214,1	90326-0077	-		1	CONTACT	
MX215	90326-0022	-		1	PLUG, MALE YELLOW CR-AL	
MX215,1	90326-0077	-		1	CONTACT	
W238	90220-0034	A	MM	2500	THERMOCOUPLE CABLE K/ 2X0,5MM2	
W239	90220-0034	A	MM	2500	THERMOCOUPLE CABLE K/ 2X0,5MM2	
W240	90220-0034	A	MM	2500	THERMOCOUPLE CABLE K/ 2X0,5MM2	
W241	90220-0034	A	MM	2500	THERMOCOUPLE CABLE K/ 2X0,5MM2	
W242	351120-0144	-	MM	2500	CABLE SIHF 3X1,5MM2 GREEN/YELLOW	
W243	351120-0144	-	MM	2500	CABLE SIHF 3X1,5MM2 GREEN/YELLOW	
W244	351120-0144	-	MM	2500	CABLE SIHF 3X1,5MM2 GREEN/YELLOW	
W245	351120-0144	-	MM	2500	CABLE SIHF 3X1,5MM2 GREEN/YELLOW	

Pos	Part No	SP	UN	Qty	Description	Page No

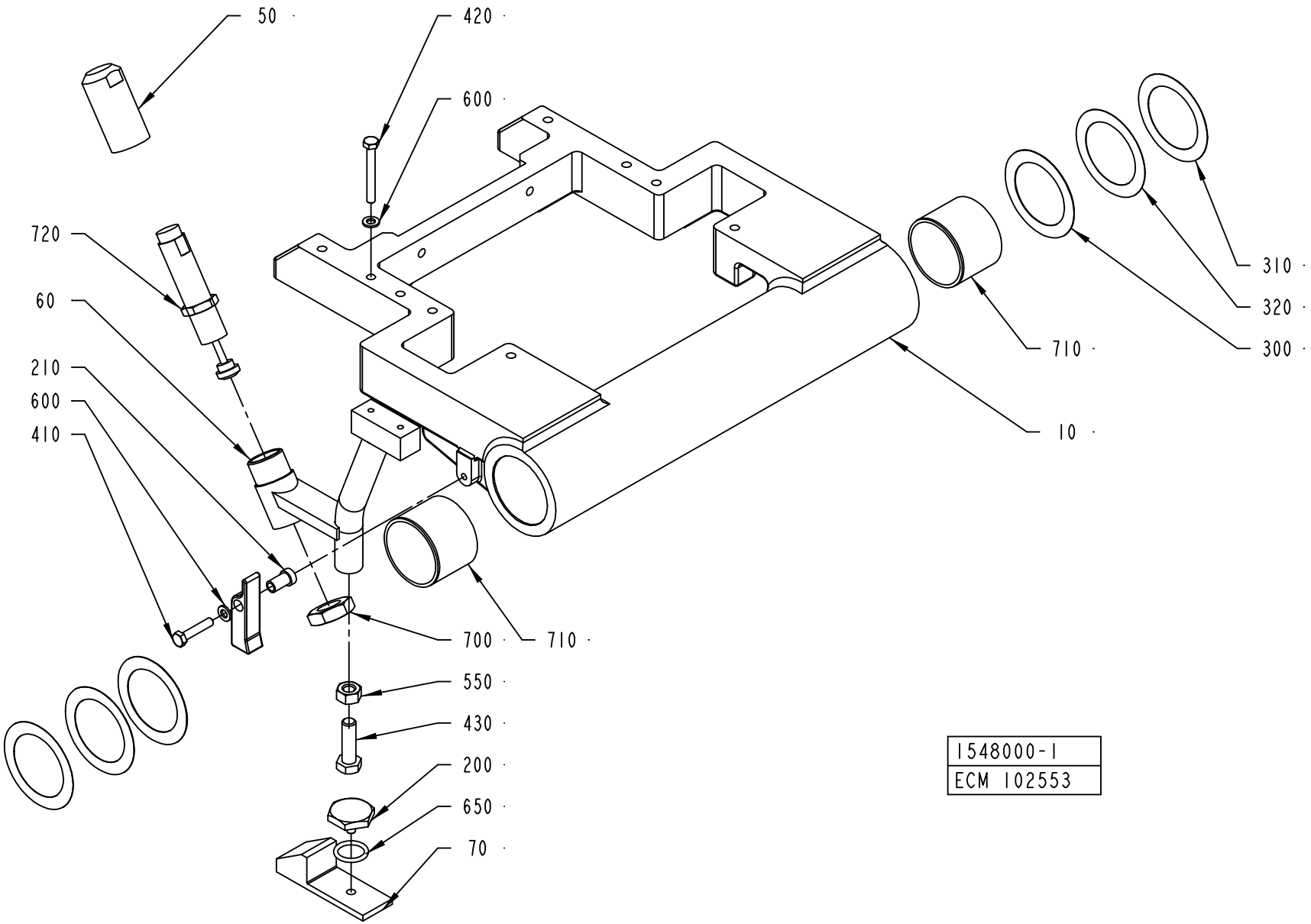
50
420
600
720
60
210
600
410
310
320
300
710
10
700
710
550
430
200
650
70
1548000-1
ECM 102553

ECM: 113160 - 20020731
Group number: 1548000-0100
Assembly Drawing: 1548000-1_1_AA

Pos	Part No	SP	UN	Qty	Description	Page No
-						
010	1539296-0000	-		1	PIVOT ARM	
050	1512128-0000	-		1	PLUG	
060	1512129-0000	-		1	BRACKET	
070	1512133-0000	-		1	STOP	
200	272997-0000	-		1	STOPPER	
210	295205-0000	-		1	SPACER SLEEVE	
220	295206-0000	B		1	FLAP	
300	295204-0001	B		2	SHIM	
310	295204-0002	B		2	SHIM	
320	295204-0003	B		2	SHIM	
410	312105-0374	-		1	SCREW M6S ISO 4014 M6X30 A480	
420	312105-0380	-		1	SCREW M6S ISO 4014 M6X50 A480	
430	312105-0497	-		1	SCREW M6S ISO 4017 M10X35 A480	
550	312605-0320	-		1	HEXAGON NUT, M6M M10 A280	
600	315105-0153	-		2	WASHER ISO 7089-6-200 HV-A4	
650	315202-0215	B		1	O-RING 19,2X3 MM	
700	90099-0057	-		1	NUT HEX. M20X1,5	
710	90240-0094	A		2	BEARING BUSHING W/O FL, 50X55X40 MM	
720	90347-0189	A		1	SHOCK ABSORBER, 370-050-400	

Pos	Part No	SP	UN	Qty	Description	Page No

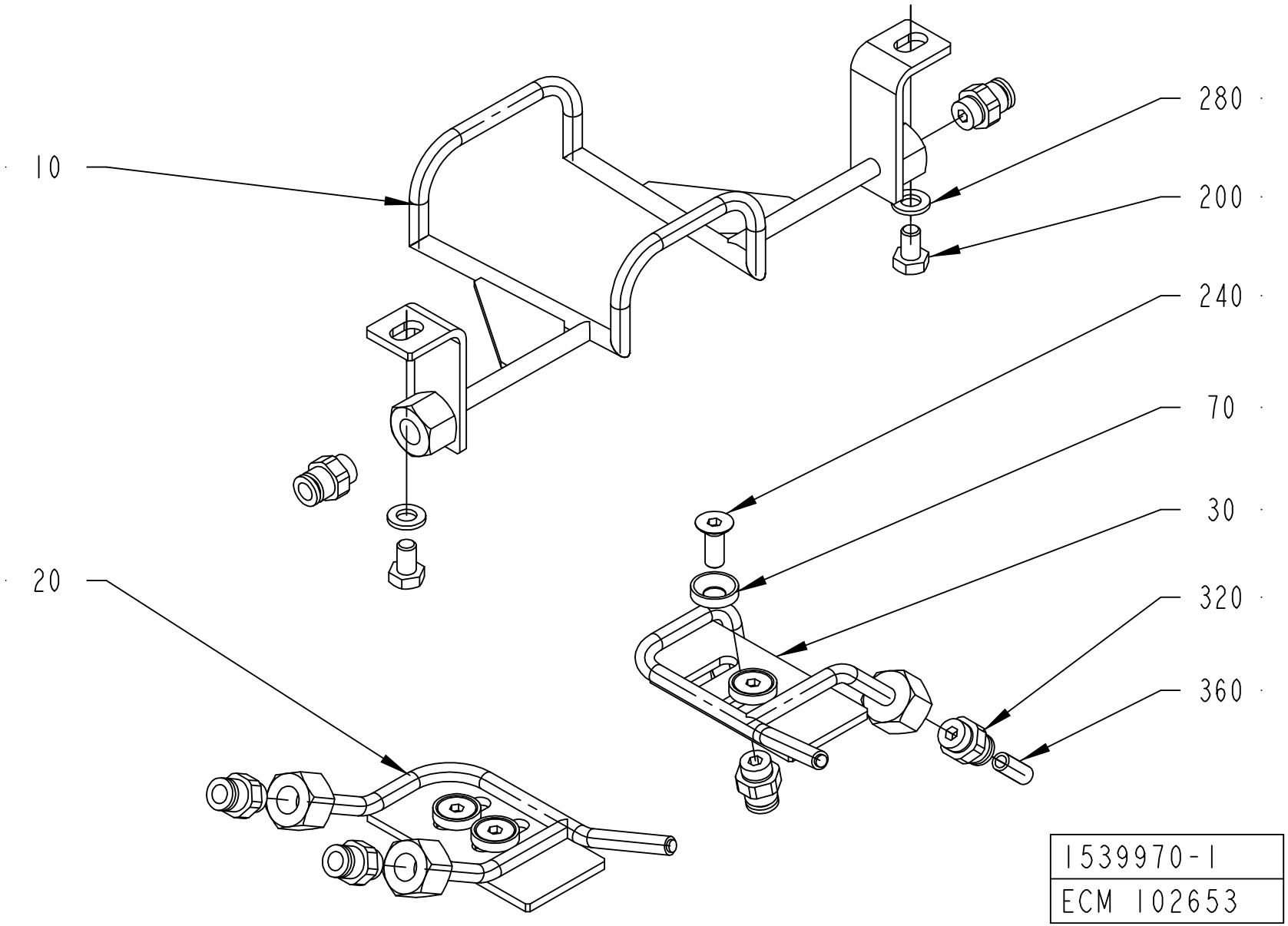
10
20
280
200
240
70
30
320
360
1539970-1
ECM 102653

ECM: 113158 - 20020731
Group number: 1539970-0100
Assembly Drawing: 1539970-1_1_AA

Pos	Part No	SP	UN	Qty	Description	Page No
TBA 0100B						
010	2500243-0000	A		1	PIPE	
TBA 0125S						
010	1558200-0000	A		1	PIPE	
TBA 0160S						
010	2500244-0000	A		1	PIPE	
TBA 0180B						
010	2500245-0000	A		1	PIPE	
TBA 0200B						
010	1558196-0000	A		1	PIPE	
TBA 0200M						
010	1558201-0000	A		1	PIPE	
TBA 0200S						
010	1558203-0000	A		1	PIPE	
TBA 0250B						
010	2500246-0000	A		1	PIPE	
TBA 0250S						
010	1539972-0000	A		1	PIPE	
TBA 0300S, TBA 0284B						
010	2500247-0000	A		1	PIPE	
TBA 0330S						
010	2500248-0000	A		1	PIPE	
Common Parts						
020	1558192-0000	A		1	PIPE	
030	1558193-0000	A		1	PIPE	
070	1317228-0000	A		4	WASHER	
200	312105-0364	-		2	SCREW M6S ISO 4017 M6X10 A480	
240	312155-0368	-		4	SCREW EN 10642 MF6S M6X16 A480	
280	315105-0153	-		2	WASHER ISO 7089-6-200 HV-A4	
320	342722-0202	-		6	PIPE COUPLING 1/8" D=6MM	
360	90166-0108	-	MM	3500	TUBE 6 MM PA,TRANSP.	

Pos	Part No	SP	UN	Qty	Description	Page No

Machine Type | Group Description | Used-In | Group Number | Page No

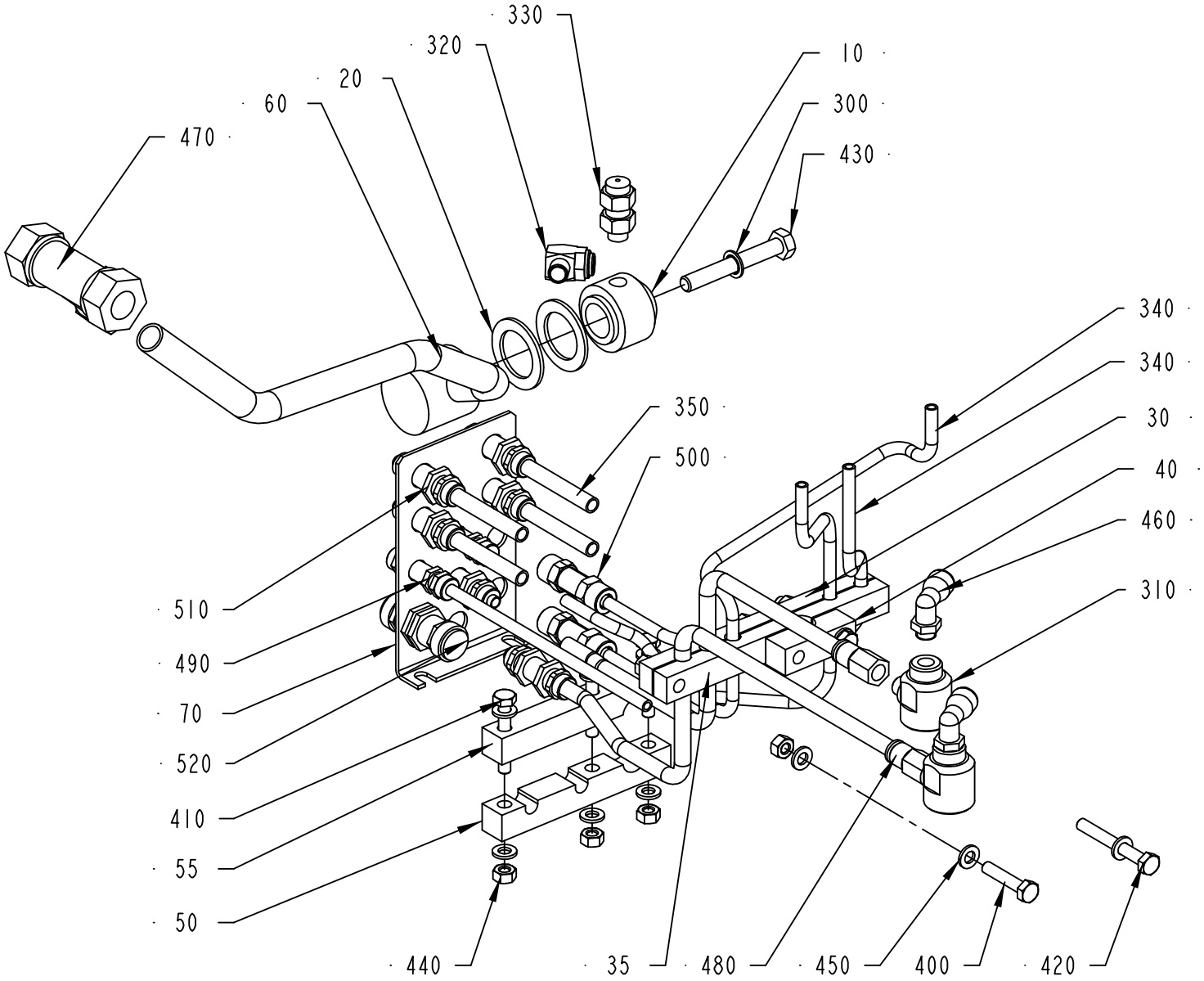

456455-5
ECM 103837

ECM: 113161 - 20020731
Group number: 456455-0600
Assembly Drawing: 456455-5_1_AB

Pos	Part No	SP	UN	Qty	Description	Page No
-						
010	272191-0000	-		1	DISTRIBUTOR	
020	256907-0000	B		2	WASHER	
030	456853-0001	-		1	PIPE CLAMP	
035	456853-0002	-		1	PIPE CLAMP	
040	456853-0003	-		1	PIPE CLAMP	
050	456854-0001	-		1	CRAMP	
055	456854-0002	-		1	CRAMP	
060	1511887-0000	-		1	DISTRIBUTOR	
070	1517519-0000	-		1	PLATE	
300	90005-0007	B		1	GASKET BOLT HEAD 8,7X14X1 MM M8	
310	90235-0206	-		2	QUICK EXHAUST VALVE, SEU-1/8	
320	90424-0009	A		1	SPRAY NOZZLE 103 DEG	
330	90424-0016	A		1	SPRAY NOZZLE 103 DEG R 1/8 GG8W	
340	90166-0089	-	M	2	HOSE 4/6.2 PE BLUE	
350	90166-0090	-	M	2	HOSE 6/8.4 PE BLUE	
400	312105-0374	-		1	SCREW M6S ISO 4014 M6X30 A480	
410	312105-0378	-		3	SCREW M6S ISO 4014 M6X40 A480	
420	312105-0380	-		2	SCREW M6S ISO 4014 M6X50 A480	
430	312105-0463	-		1	SCREW M6S ISO 4014 M8X60 A480	
440	312605-0316	-		7	HEXAGON NUT, M6M M6 A280	
450	315105-0153	-		13	WASHER ISO 7089-6-200 HV-A4	
460	90458-2964	-		2	ELBOW PIPE JOINT, EXT.THREAD, D=8MM-G1/8	
470	342746-0114	-		1	CONN. T-PIPE T-15	
480	342770-0107	-		2	STRAIGHT COUPLING INT, D=8 MM - G1/8	
490	342960-0112	-		2	BULKHEAD COUPLING 6/4	
500	342960-0121	-		2	BULKHEAD COUPLING 8/6-6/4	
510	342960-0122	-		6	BULKHEAD COUPLING 8/6	
520	342960-0133	-		1	BULKHEAD COUPLING 10/8	

Pos	Part No	SP	UN	Qty	Description	Page No

Machine Type | Group Description | Used-In | Group Number | Page No

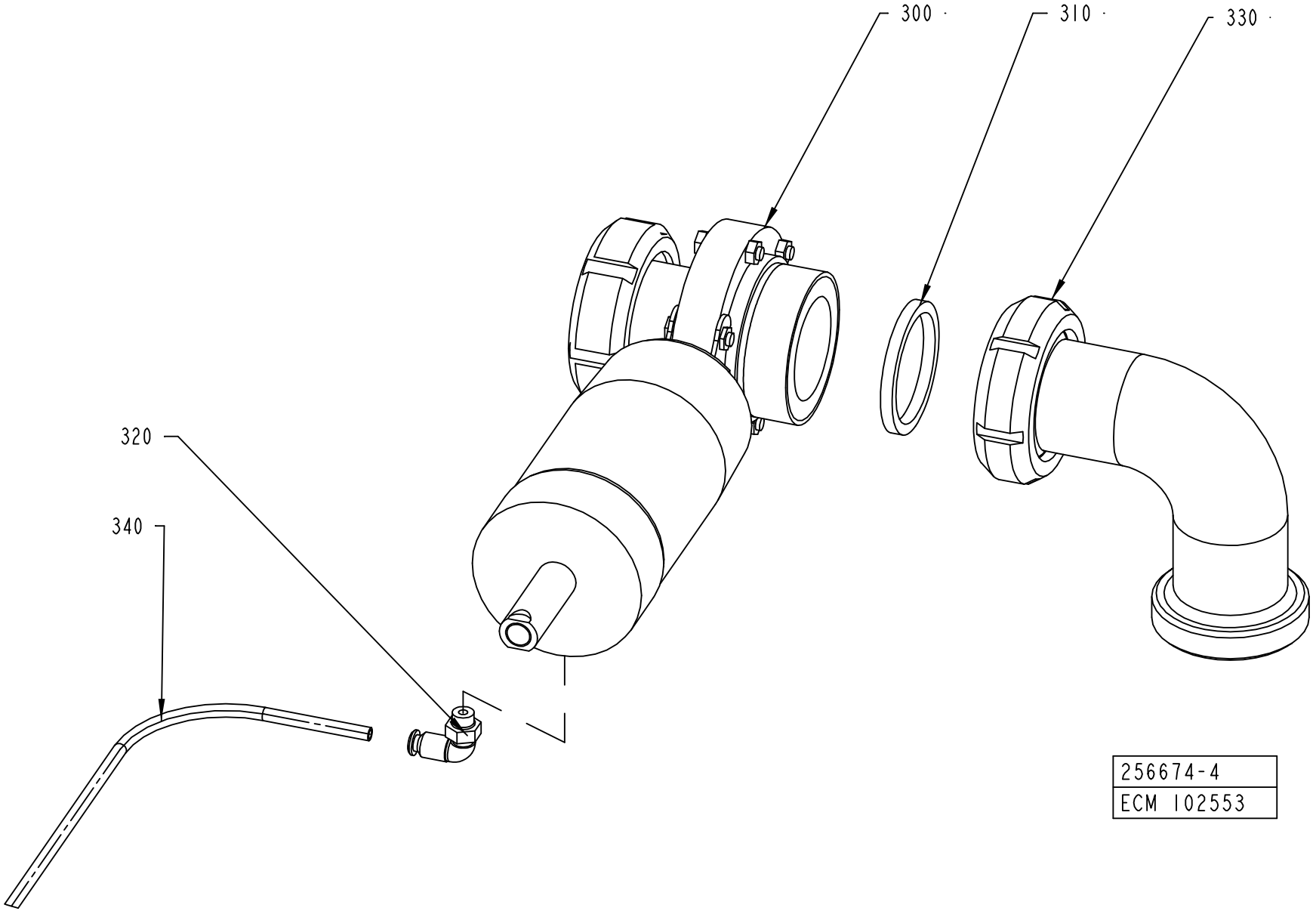
300
310
330
320
340
256674-4
ECM 102553

ECM: 113947 - 20030113
Group number: 256674-0500
Assembly Drawing: 256674-4_1_AA

Pos	Part No	SP	UN	Qty	Description	Page No
-						
300	90457-0132	-		1	VALVE, BUTTERFLY, N.O. ZVF1200BSAAO	
310	315250-0104	B		1	GASKET 61X51X5,5 MM	
320	90458-2956	-		1	ELBOW PIPE JOINT, EXT.THREAD, D=6MM-G1/8	
330	342807-0104	-		1	PIPE ELBOW 90 DEGR. SMS1220, D=51 MM	
340	90166-0089	-	M	1	HOSE 4/6.2 PE BLUE	

Pos	Part No	SP	UN	Qty	Description	Page No

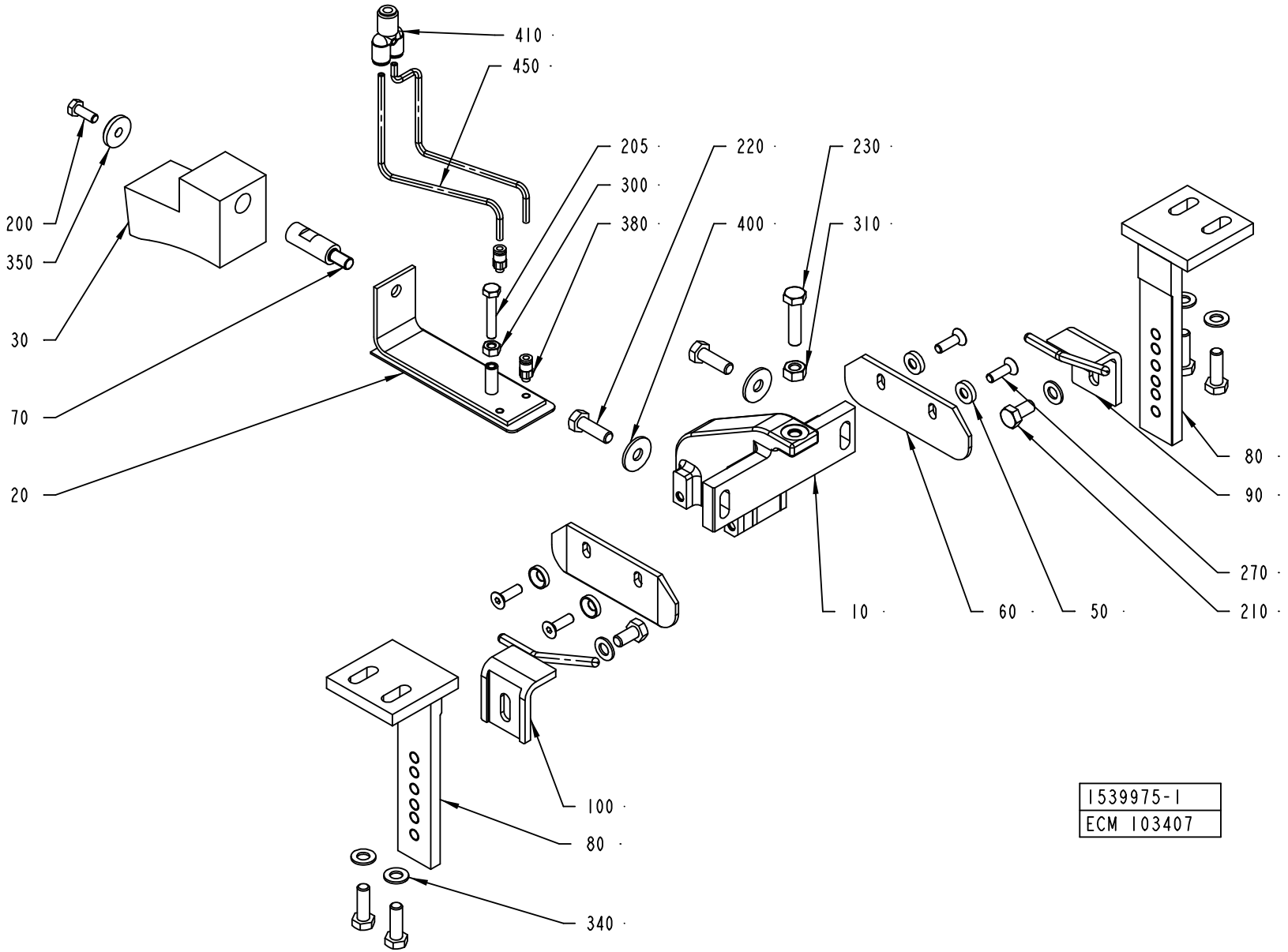
410
450
205
300
380
220
400
230
310
200
350
30
70
20
80
90
270
210
10
60
50
100
80
340
1539975-1
ECM 103407

ECM: 113159 - 20020731
Group number: 1539975-0100
Assembly Drawing: 1539975-1_1_AB

Pos	Part No	SP	UN	Qty	Description	Page No
TBA 0100B						
010	1558190-0001	-		1	HOLDER	
020	1558202-0001	A		1	PRESSURE PLATE	
030	1558205-0000	B		1	BLOCK	
TBA 0125S						
010	1558190-0002	-		1	HOLDER	
020	1558202-0001	A		1	PRESSURE PLATE	
030	1558198-0000	A		1	BLOCK	
TBA 0160S						
010	1558190-0003	-		1	HOLDER	
020	1558202-0001	A		1	PRESSURE PLATE	
030	1558206-0000	A		1	BLOCK	
TBA 0180B						
010	1558190-0004	-		1	HOLDER	
020	1558202-0004	A		1	PRESSURE PLATE	
030	1558207-0000	A		1	BLOCK	
TBA 0200B						
010	1558190-0005	-		1	HOLDER	
020	1558202-0003	A		1	PRESSURE PLATE	
030	1558197-0000	A		1	BLOCK	
TBA 0200M						
010	1558190-0006	-		1	HOLDER	
020	1558202-0002	A		1	PRESSURE PLATE	
030	1558199-0000	A		1	BLOCK	
TBA 0200S						
010	1558190-0007	-		1	HOLDER	
020	1558202-0001	A		1	PRESSURE PLATE	
030	1558204-0000	A		1	BLOCK	
205	312105-0379	-		1	SCREW M6S ISO 4014 M6X45 A480	
TBA 0250B						
010	1558190-0008	-		1	HOLDER	
020	1558202-0003	A		1	PRESSURE PLATE	
030	1558208-0000	A		1	BLOCK	
TBA 0250S						
010	1558190-0009	-		1	HOLDER	
020	1558202-0002	A		1	PRESSURE PLATE	
030	1539789-0000	A		1	BLOCK	
205	312105-0376	-		1	SCREW M6S ISO 4014 M6X35 A480	
TBA 0300S, TBA 0284B						
010	1558190-0010	-		1	HOLDER	
020	1558202-0004	A		1	PRESSURE PLATE	
030	2500241-0000	A		1	BLOCK	
TBA 0330S						
010	1558190-0011	-		1	HOLDER	
020	1558202-0003	A		1	PRESSURE PLATE	
030	2500242-0000	A		1	BLOCK	
Common Parts						
050	1317228-0000	-		4	WASHER	
060	1558191-0000	B		2	PLATE	
070	1539792-0000	A		1	PIN	
080	1523505-0000	-		2	SUPPORT	
090	1539976-0000	A		1	GUIDE	
100	1539977-0000	A		1	GUIDE	
200	312105-0368	-		1	SCREW M6S M6X16 A280	
210	312105-0449	-		2	SCREW M6S ISO 4017 M8X16 A480	
220	312105-0453	-		6	SCREW M6S ISO 4017 M8X25 A480	
230	312105-0457	-		1	SCREW M6S ISO 4014 M8X35 A480	
270	312155-0370	-		4	SCREW EN 10642 MF6S M6X20 A480	
300	312605-0316	-		1	HEXAGON NUT, M6M M6 A280	
310	312605-0318	-		1	HEXAGON NUT, M6M M8 A280	
340	315105-0165	-		6	WASHER ISO 7089-8-200 HV-A4	
350	315125-0153	-		1	WASHER TBRSB 6,4X22X4 A4	
380	342722-0198	-		2	STRAIGHT COUPLING	
400	90005-0116	-		2	WASHER PLAIN ROUND 8,4(M8)/24, H=2	
410	90055-0154	-		1	HOSE COUPLING	
450	90166-0095	-	MM	2000	TUBE 4 MM PA BLUE	

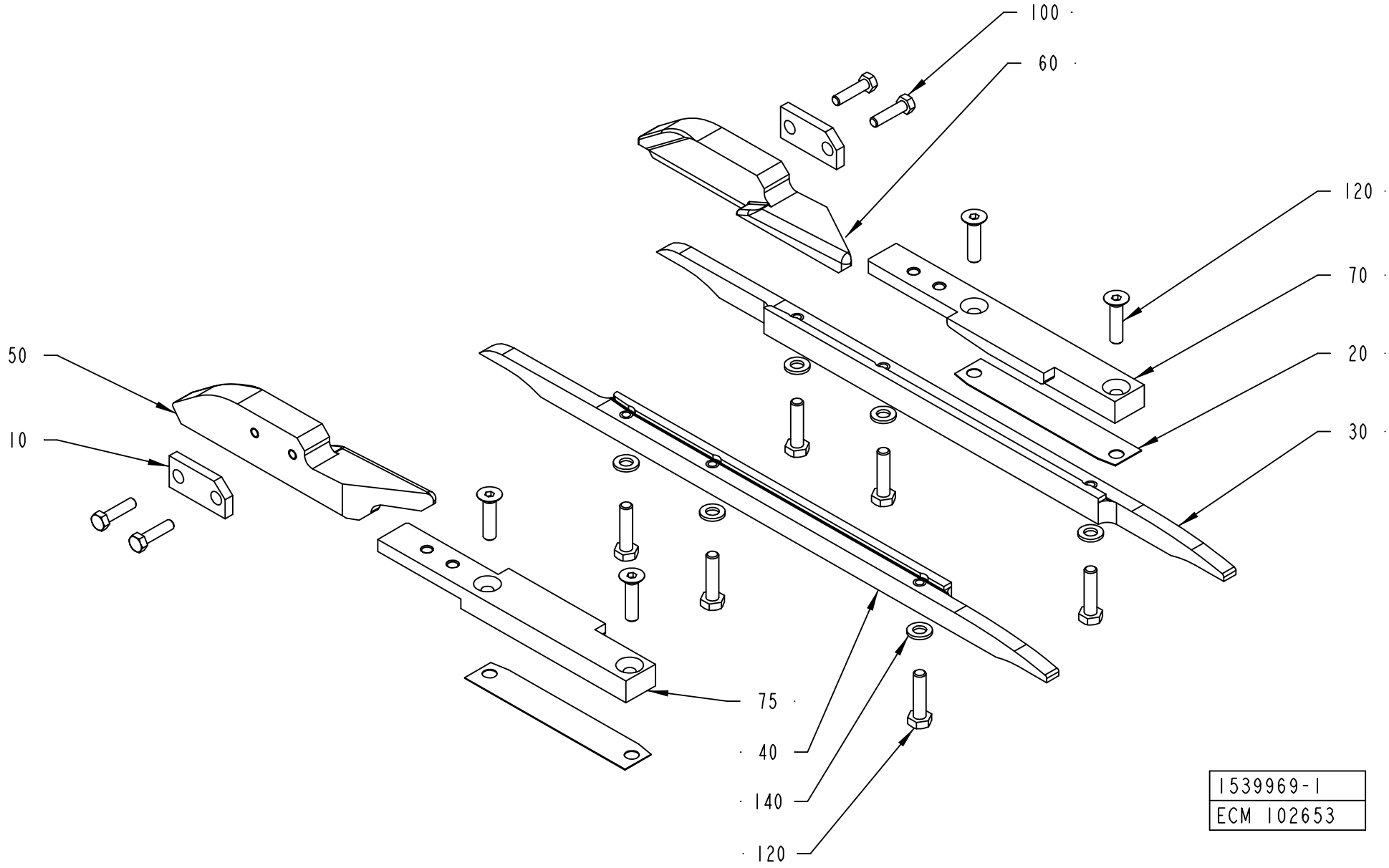
100
60
120
70
20
30
50
10
75
40
140
120
1539969-1
ECM 102653

ECM: 107863 - 20020311
Group number: 1539969-0100
Assembly Drawing: 1539969-1_1_AA

Pos	Part No	SP	UN	Qty	Description	Page No
TBA 0125S, TBA 0100B						
050	1558194-0004	-		1	FOLDING BAR	
060	1558195-0004	-		1	FOLDING BAR	
TBA 0160S, TBA 0200S						
050	1558194-0001	-		1	FOLDING BAR	
060	1558195-0001	-		1	FOLDING BAR	
TBA 0250S, TBA 0200M						
050	1558194-0003	-		1	FOLDING BAR	
060	1558195-0003	-		1	FOLDING BAR	
TBA 0330S, TBA 0300S, TBA 0180B, TBA 0200B, TBA 0284B, TBA 0250B						
050	1558194-0002	-		1	FOLDING BAR	
060	1558195-0002	-		1	FOLDING BAR	
Common Parts						
010	295729-0000	-		2	WASHER	
020	491266-0000	-		4	SHIM	
030	751109-0000	B		1	RAIL RIGHT	
040	751110-0000	B		1	RAIL LEFT	
070	2526343-0000	B		1	PLATE	
075	2526344-0000	B		1	PLATE	
100	312105-0331	-		4	SCREW M6S ISO 4017 M5X20 A480	
110	312105-0362	-		2	SCREW M6S ISO 4017 M6X8 A480	
120	312105-0372	-		6	SCREW M6S ISO 4017 M6X25 A480	
130	312155-0372	-		4	SCREW EN 10642 MF6S M6X25 A480	
140	315105-0153	-		6	WASHER ISO 7089-6-200 HV-A4	

Pos	Part No	SP	UN	Qty	Description	Page No

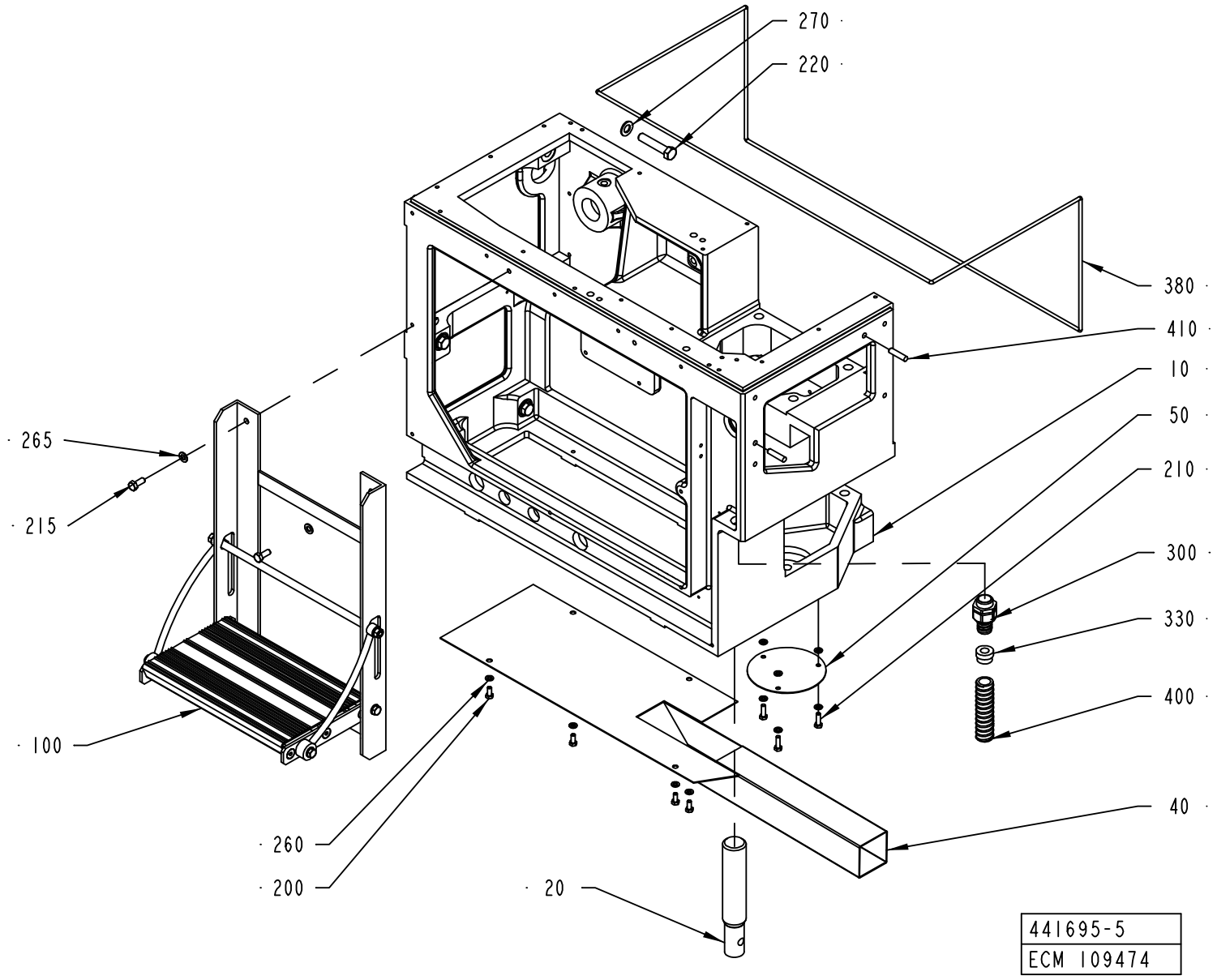
270
220
380
410
10
50
210
300
330
400
40
265
215
100
260
200
20
441695-5
ECM 109474

ECM: 110046 - 20030113
Group number: 441695-0500
Assembly Drawing: 441695-5_1_AC

Pos	Part No	SP	UN	Qty	Description	Page No
-						
010	1539960-0000	-		1	MACHINE BODY	
020	272673-0000	-		1	LEG	
040	1519416-0000	-		1	BOTTOM PLATE	
050	272743-0000	-		1	LID	
100	A1519426-0100	-		1	STAIR	**363**
200	312105-0367	-		4	SCREW M6S M6X14 A280	
210	312105-0370	-		3	SCREW M6S ISO 4017 M6X20 A480	
215	312105-0451	-		2	SCREW M6S ISO 4017 M8X20 A480	
220	312105-0544	-		6	SCREW M6S ISO 4014 M12X60 A480	
260	315105-0153	-		7	WASHER ISO 7089-6-200 HV-A4	
265	315105-0165	-		2	WASHER ISO 7089-8-200 HV-A4	
270	315105-0178	-		6	WASHER ISO 7089-12-200 HV-A4	
300	90458-0431	-		1	EXTENDED WITHOUT INSERT, M25X1,5	
330	353249-0013	-		1	INSERT, SINGEL HOLE, EK 154/13	
380	90143-0028	-	M	2	STRIP	
400	90152-0051	-	M	1	SPIRAL CONDUIT, 25X18, UL 1816	
410	311103-0407	-		2	PARALLELL PIN, M6, 8X35 MM	

Pos	Part No	SP	UN	Qty	Description	Page No

Machine Type | Group Description | Used-In | Group Number | Page No

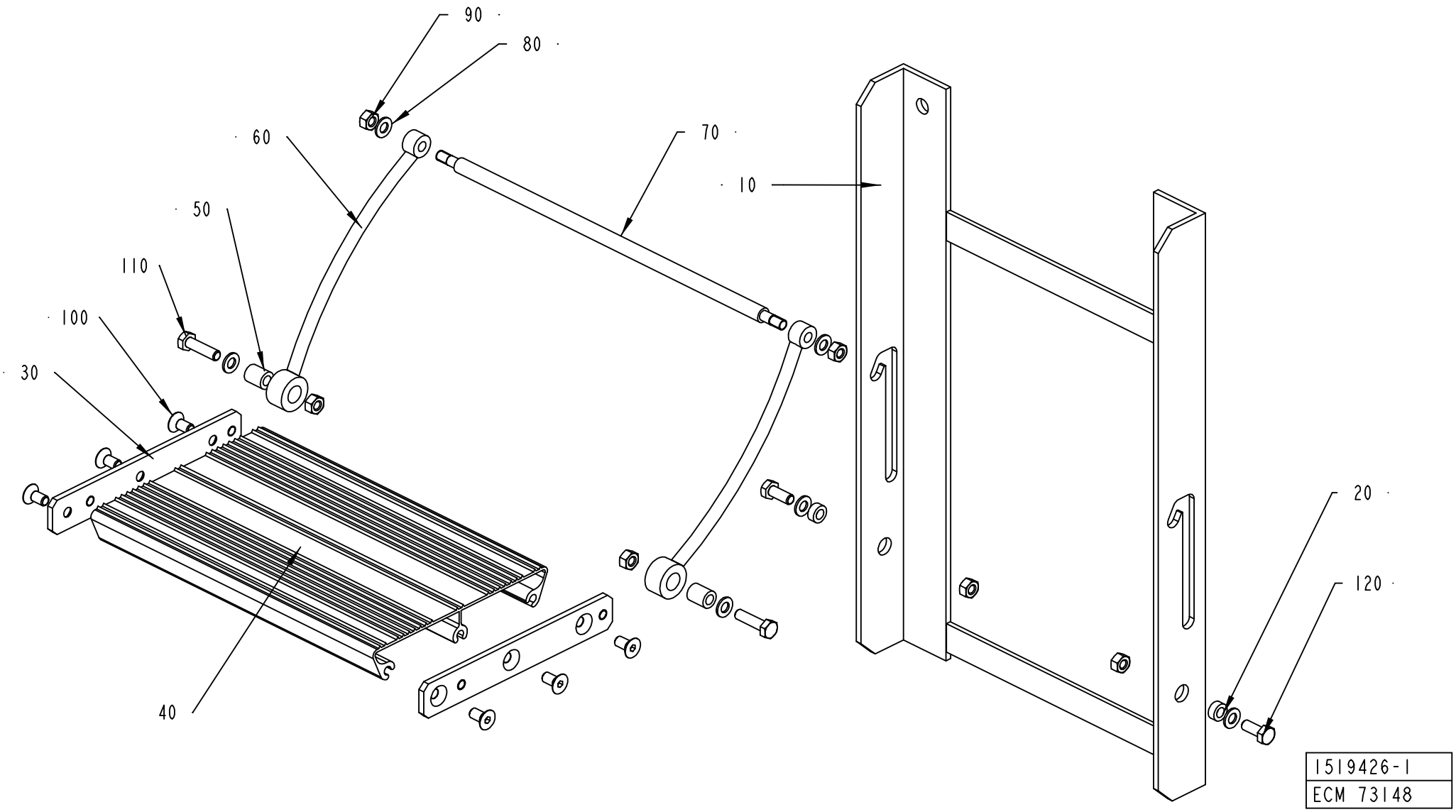
90
80
60
70
10
50
110
100
30
20
120
40
1519426-1
ECM 73148

ECM: 73148 - 20011221
Group number: 1519426-0100
Assembly Drawing: 1519426-1_1_AA

Pos	Part No	SP	UN	Qty	Description	Page No
-						
010	1519423-0000	-		1	SUPPORT	
020	1519421-0000	-		2	BUSHING	
030	1519418-0000	-		2	PLATE	
040	1519417-0000	-		1	STAIR	
050	1519422-0000	-		2	BUSHING	
060	1519424-0000	-		2	SUPPORT	
070	1519425-0000	-		1	SPACER	
080	315105-0165	-		6	WASHER ISO 7089-8-200 HV-A4	
090	312605-0318	-		6	HEXAGON NUT, M6M M8 A280	
100	312155-0449	-		6	SCREW EN 10642 MF6S M8X16 A480	
110	312105-0455	-		2	SCREW M6S ISO 4017 M8X30 A480	
120	312105-0451	-		2	SCREW M6S ISO 4017 M8X20 A480	

Pos	Part No	SP	UN	Qty	Description	Page No

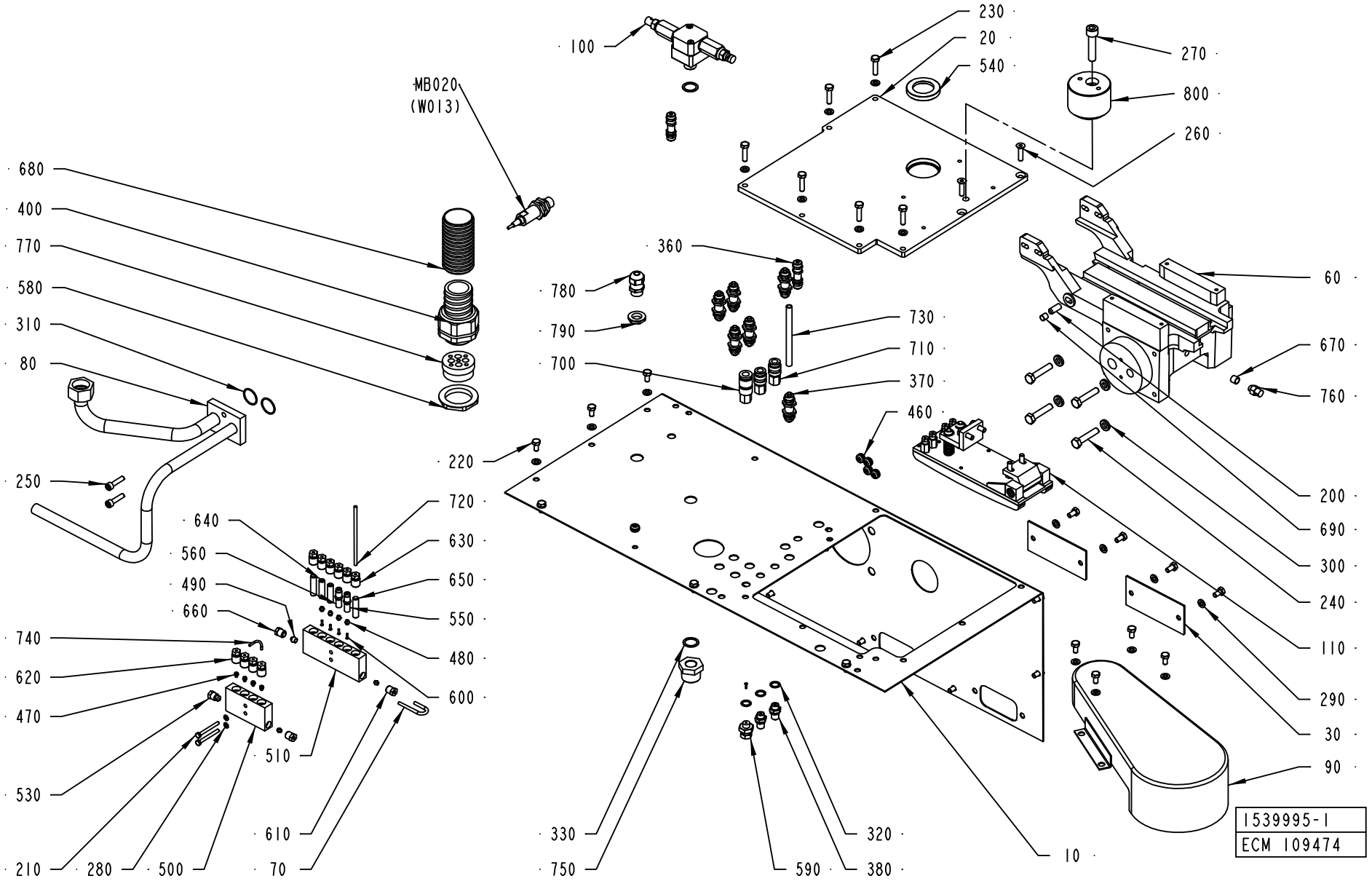
100
MB020
(W013)
230
20
540
270
800
260
680
400
770
580
310
80
360
780
790
700
730
710
370
460
60
670
760
200
690
300
240
110
290
30
90
250
220
720
630
650
550
480
600
640
560
490
660
740
620
470
530
210
280
500
510
610
70
330
750
590
320
380
10
1539995-1
ECM 109474

ECM: 110047 - 20030113
Group number: 1539995-0100
Assembly Drawing: 1539995-1_1_AC

Pos	Part No	SP	UN	Qty	Description	Page No
-						
010	1539943-0000	-		1	SHIELD PLATE	
020	2544966-0000	-		1	PLATE	
030	1539957-0000	-		2	PLATE	
060	1498245-0000	-		1	SUPPORTING ARM	
070	1512442-0000	-		1	CONNECTING PIPE	
080	1512448-0000	-		1	PIPE CONNECTION	
090	1539953-0000	-		1	PROTECTIVE COVER	
100	A441811-0100	-		1	ROTOR	**367**
110	A1255876-0200	-		1	CHAIN TENSIONER	**369**
200	311103-0401	-		1	PARALLELL PIN, M6, 8X20 MM	
210	312105-0303	-		2	SCREW M6S ISO 4017 M4X40 A480	
220	312105-0366	-		24	SCREW M6S M6X12 A280	
230	312105-0372	-		6	SCREW M6S ISO 4017 M6X25 A480	
240	312105-0459	-		4	SCREW M6S ISO 4014 M8X40 A480	
250	312115-0372	-		2	SCREW ISO4762 M6X25 A4	
260	312155-0372	-		2	SCREW EN 10642 MF6S M6X25 A480	
270	312115-0500	-		1	SCREW ISO4762 M10X45 A4	
280	315105-0136	-		2	WASHER ISO 7089-4-200 HV-A4	
290	315105-0153	-		30	WASHER ISO 7089-6-200 HV-A4	
300	315111-0165	-		4	WASHER PLAIN, TBRB 8,4/16 H=3	
310	315202-0118	B		2	O-RING 22,1X1,6 MM	
320	315233-0109	-		3	WASHER PL.RND.NYL.10,3/14,H=1	
330	315233-0111	-		2	WASHER PL.RND.NYL.17/22,H=1	
360	342960-0112	-		2	BULKHEAD COUPLING 6/4	
370	342960-0122	-		6	BULKHEAD COUPLING 8/6	
380	342921-0113	-		2	STRAIGHT COUPLING,EXT.THREADED 6/4-G1/8"	
400	90458-0459	-		1	EXTENDED WITHOUT INSERT, HIGH TEMP, 40X1	
460	90015-0028	-		5	LEAD-IN BUSHING	
470	90028-0020	-		4	CONE TUBE 2,5MM	
480	90028-0021	-		6	CONE TUBE 4 MM	
490	90028-0025	-		1	CONE TUBE 6 MM	
500	90032-0039	-		1	BLOCK 4 WAYS	
510	90032-0040	-		1	BLOCK 6 WAYS	
530	90087-0019	-		1	PLUG M10X1 STAINLESS	
540	90091-0306	B		1	RADIAL SEAL 30X47X7 MM DUST LIP	
550	90092-0053	B		1	METERING VALVE 30 MM3	
560	90092-0054	B		1	METERING VALVE 50 MM3	
580	90458-0326	-		1	NUT, M40X1,5	
590	90134-0004	-		1	PIPE CONNECTION R1/8	
600	90134-0031	-		5	SLEEVE FOR PLASTIC TUBE	
610	90134-0038	-		2	BUSHING/NUT INLET/OUTLET 4 MM	
620	90134-0039	-		4	BUSHING VALVE CONNECTION 2,5 MM	
630	90134-0040	-		6	BUSHING VALVE CONNECTION 4 MM	
640	90134-0051	-		2	SPACING COLLAR DOSING BLOCK	
650	90134-0052	-		2	PLUG DOSING BLOCK	
660	90134-0055	-		1	BUSHING/NUT INLET/OUTLET 6 MM	
670	90144-0073	-	MM	1	TREBOFLON-TAPE W=13MM	
680	90152-0070	B	M	1	METAL HOSE, 32,5X26, UL 2621	
690	90157-0022	-		1	SEALING COMPOUND	
700	90163-0046	-		1	SLEEVE LP-004-0-WR 0510-21-1 BRASS	
710	90163-0062	-		2	QUICK COUPLING, (F) 5053-1/8	
720	90166-0109	-	M	2	TUBE 4 MM PA,TRANSP.	
730	90166-0013	-	M	2	TUBE 8 MM PA BLUE	
740	90166-0143	-	M	2	TUBE 2,5 MM PA,TRANSP.	
750	90330-0078	-		1	BUSHING, INT/EXT. THR. R3/4-RP3/8	
760	90424-0010	B		1	SPRAY NOZZLE 142 DEG BSPT 1/4 K5	
770	90457-0199	-		1	INSERT EK 156M 5X5/4X9	
780	90458-0314	B		1	CABLE GLAND, M16X1,5, NO.5311 1110	
790	90458-0322	-		1	NUT, M16X1,5	
800	90458-0220	-		1	TENSION ROLLER, M40/60-0-M EXCENTRIC	
MB020	90458-0894	A		1	PROXIMITY SENSOR E2E2-X10MB1-5M	

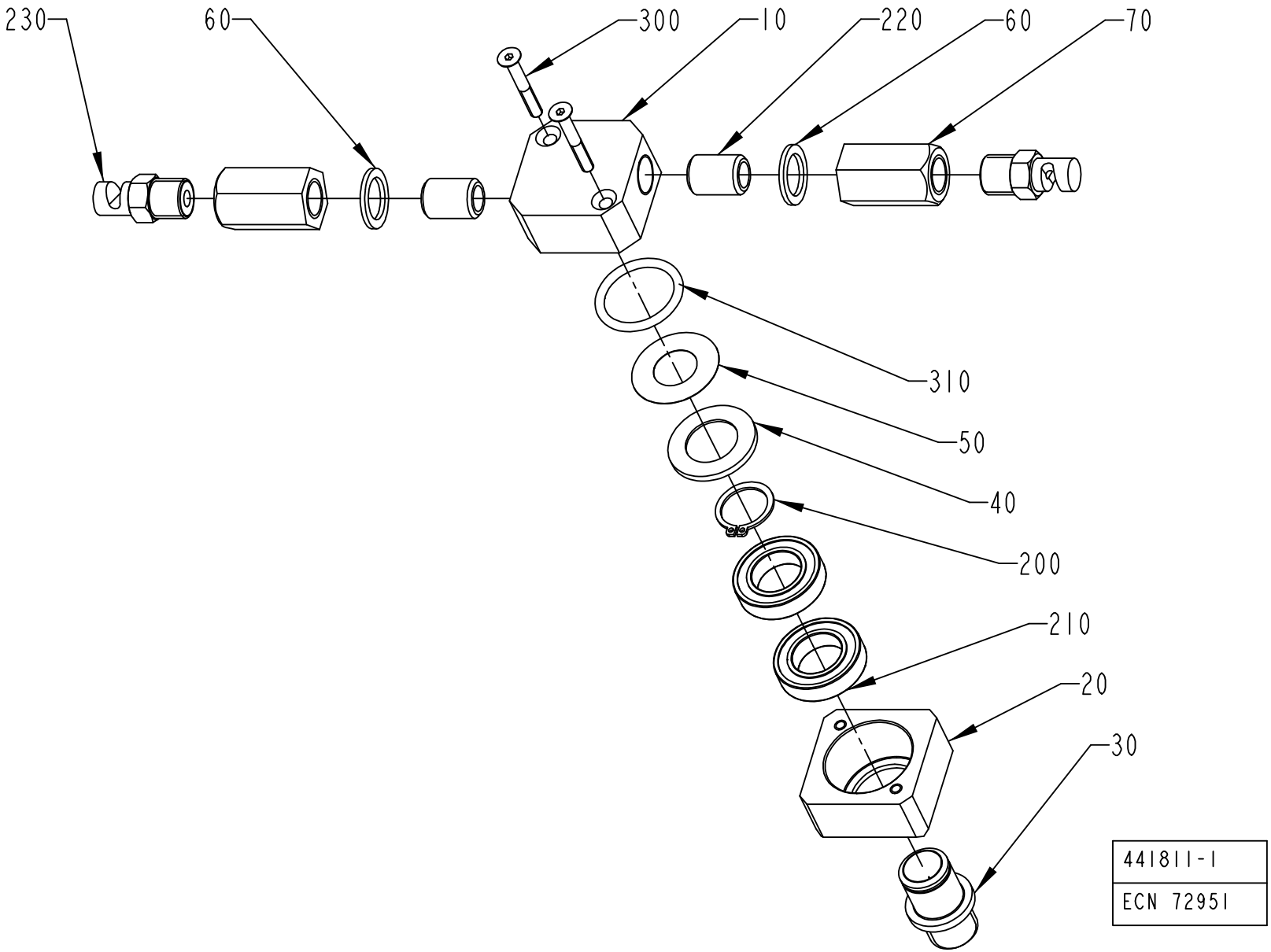
230
60
300
10
220
60
70
310
50
40
200
210
20
30
441811-1
ECN 72951

ECM: 113162 - 20020731
Group number: 441811-0100
Assembly Drawing: 441811-1_1_AB

Pos	Part No	SP	UN	Qty	Description	Page No
-						
010	441792-0000	-		1	HEAD	
020	441793-0000	-		1	BEARING HOUSING	
030	441794-0000	B		1	PIVOT PIN	
040	441795-0000	B		1	WASHER	
050	441796-0000	B		1	SEAL	
060	441797-0000	B		2	SHIM	
070	441800-0000	-		2	STRAIGHT FITTING	
200	90141-0017	-		1	SPåRRING 17	
210	90214-0092	B		2	BALL BEARING, 17X30X7 MM	
220	90330-0101	-		2	NIPPLES, EXT. THREAD, G1/4	
230	90424-0025	A		2	SPRAY NOZZLE 145 DEG	
300	312155-0299	-		2	SCREW EN 10642 MF6S M4X30 A480	
310	315202-0217	B		1	O-RING 24,2X3 MM	

Pos	Part No	SP	UN	Qty	Description	Page No

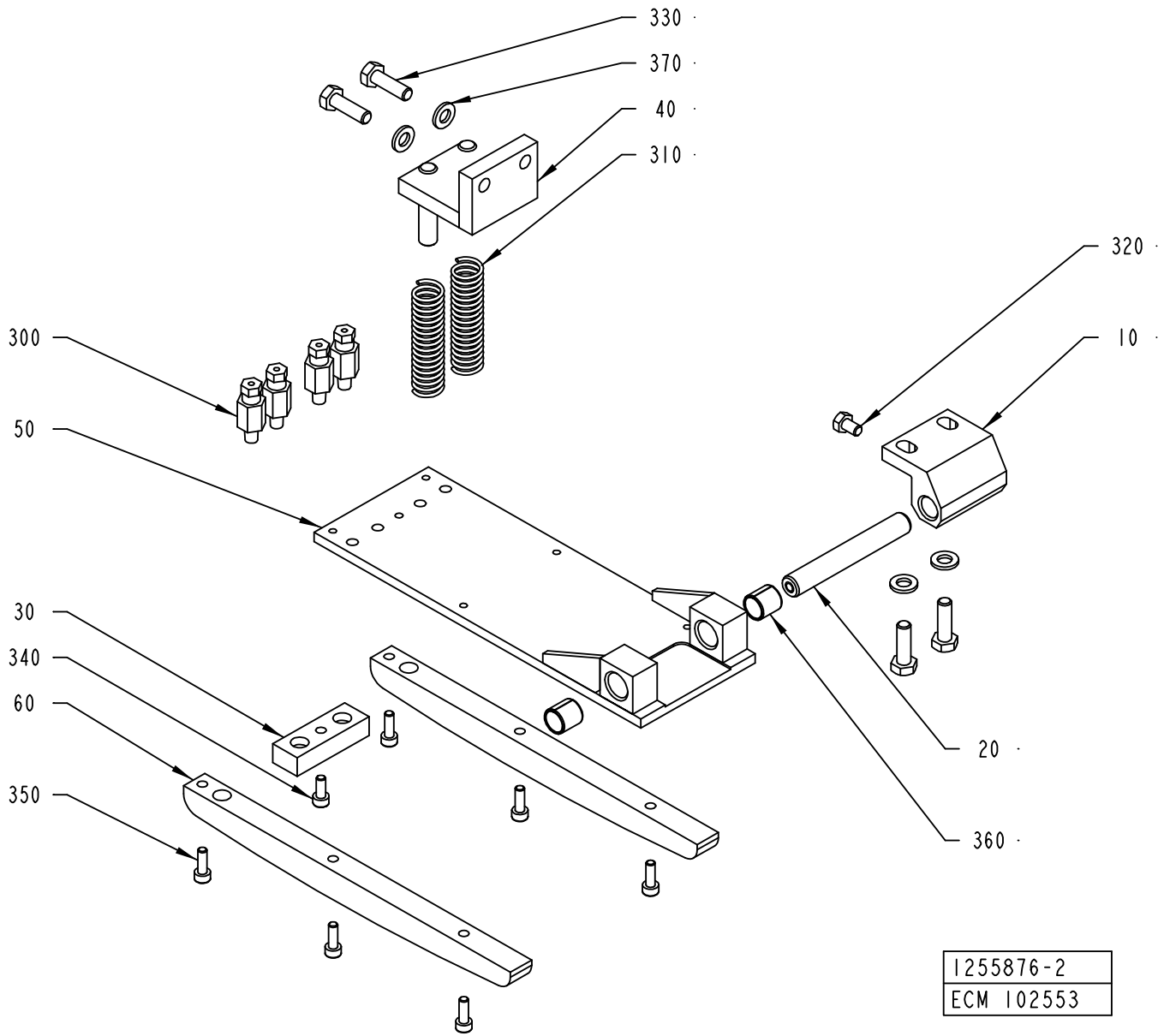
330
370
40
310
320
10
300
50
30
340
60
350
20
360
1255876-2
ECM 102553

ECM: 113152 - 20020731
Group number: 1255876-0200
Assembly Drawing: 1255876-2_1_AA

Pos	Part No	SP	UN	Qty	Description	Page No
-						
010	1195454-0000	B		1	BRACKET	
020	1195456-0000	B		1	SHAFT	
030	1334721-0000	-		1	BLOCK	
040	1346933-0000	B		1	BRACKET	
050	1512443-0000	B		1	PLATE CHOKE	
060	1512444-0000	B		2	GUIDE RAIL	
300	90134-0065	-		4	CONNECTION M6 TUBE 2,5 MM	
310	90335-0055	B		2	COMP. SPRING 22470, 1,6X14,1X53,5	
320	312105-0323	-		1	SKRUV M6S ISO 4017 M5X8 A480	
330	312105-0370	-		4	SCREW M6S ISO 4017 M6X20 A480	
340	312115-0289	-		1	SCREW ISO4762 M4X10 A4	
350	312115-0291	-		6	SCREW ISO4762 M4X12 A4	
360	321141-0142	B		2	BEARING BUSHING W/O FL, 10X12X12 MM	
370	315105-0153	-		4	WASHER ISO 7089-6-200 HV-A4	

Pos	Part No	SP	UN	Qty	Description	Page No

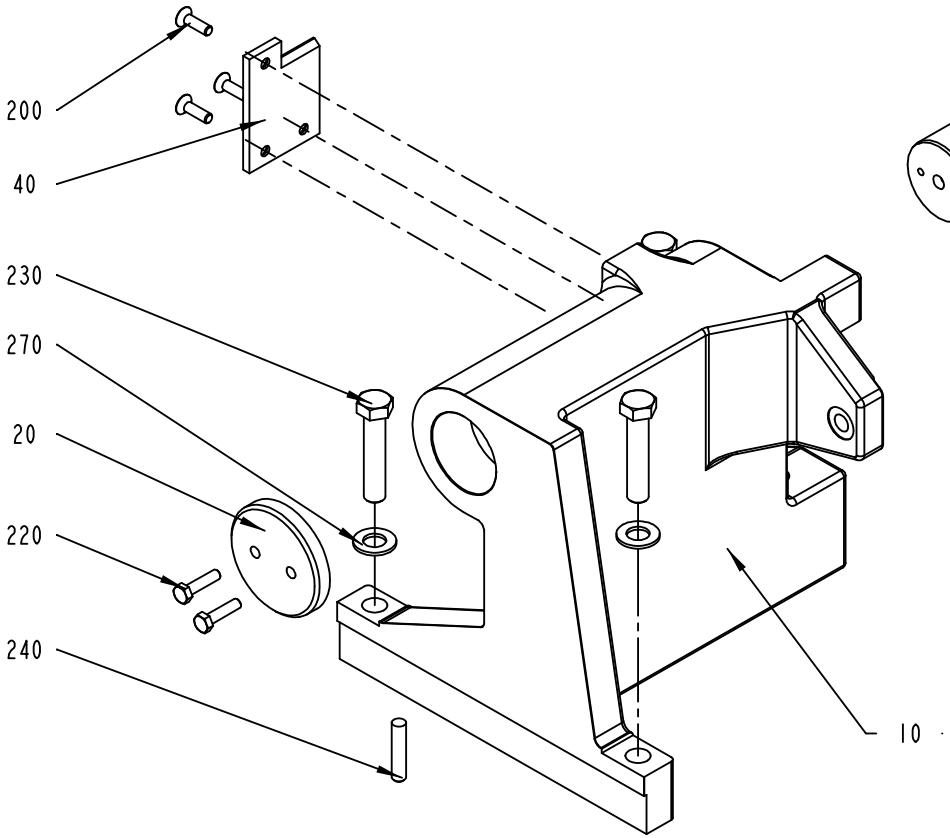

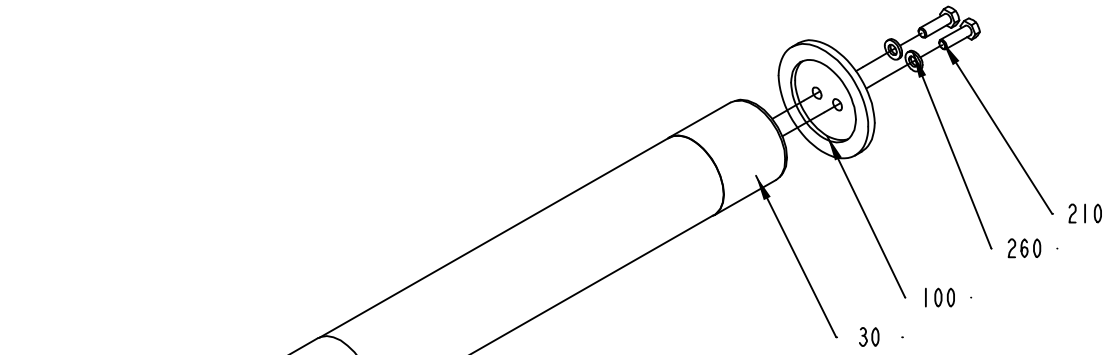

1539949-1
ECM 103407

ECM: 104089 - 20020226
Group number: 1539949-0100
Assembly Drawing: 1539949-1_1_AB

Pos	Part No	SP	UN	Qty	Description	Page No
-						
010	1539951-0000	-		1	HOUSE	
020	1539950-0000	-		1	WASHER	
030	1539948-0000	-		1	SHAFT	
040	1539965-0000	-		1	PLATE	
100	295203-0000	-		1	LID	
200	312155-0370	-		3	SCREW EN 10642 MF6S M6X20 A480	
210	312105-0370	-		2	SCREW M6S ISO 4017 M6X20 A480	
220	312105-0372	-		2	SCREW M6S ISO 4017 M6X25 A480	
230	312105-0544	-		3	SCREW M6S ISO 4014 M12X60 A480	
240	311103-0409	-		2	PARALLELL PIN, M6, 8X40 MM	
260	315105-0153	-		2	WASHER ISO 7089-6-200 HV-A4	
270	315105-0178	-		3	WASHER ISO 7089-12-200 HV-A4	

Pos	Part No	SP	UN	Qty	Description	Page No

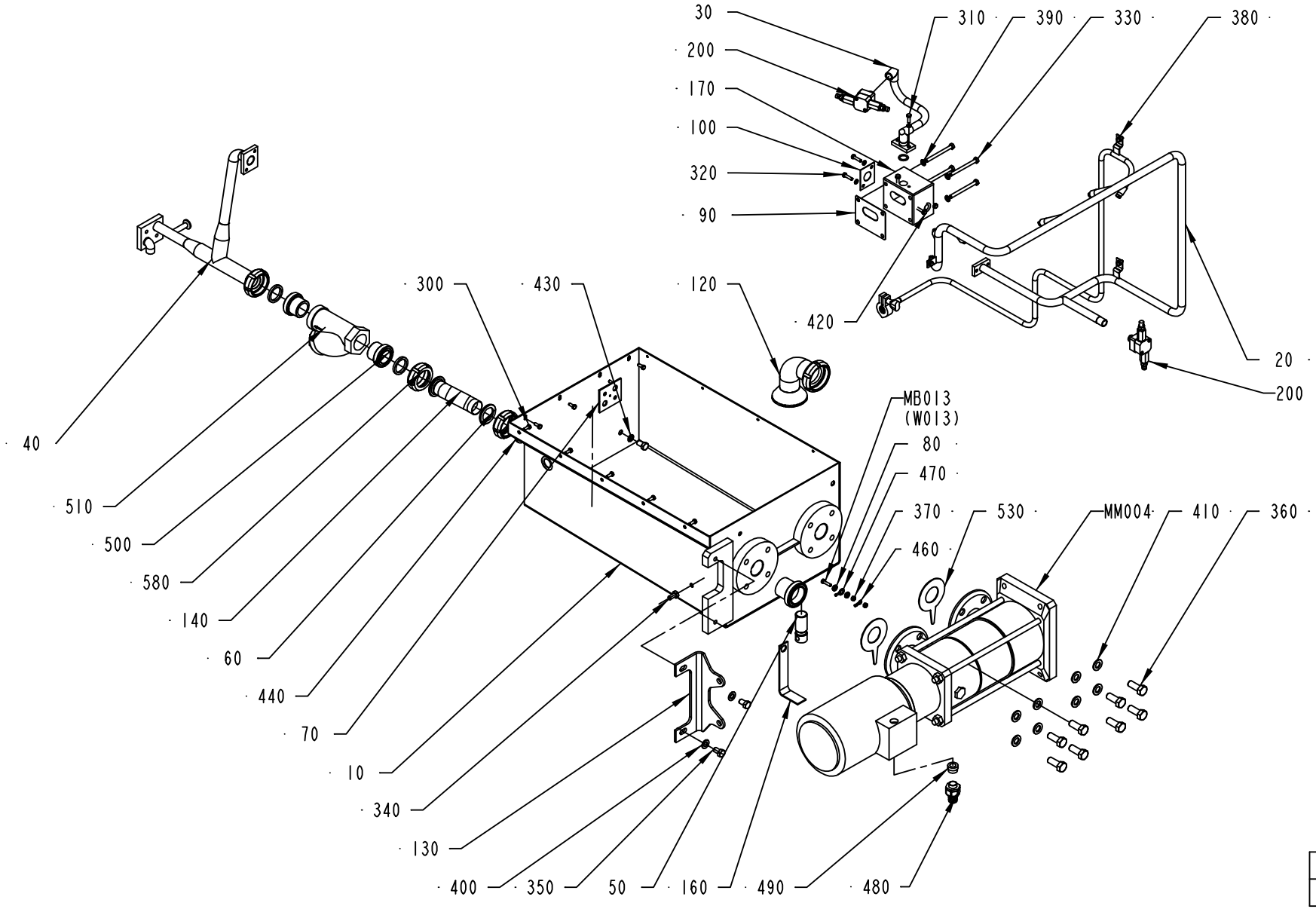

2544980-1
ECM 109474

ECM: 110048 - 20030113
Group number: 2544980-0100
Assembly Drawing: 2544980-1_1_AA

Pos	Part No	SP	UN	Qty	Description	Page No
50HZ						
MM004	90457-0131	B		1	PUMP SV805 R22T 50HZ	
60HZ						
MM004	90458-2762	B		1	PUMP SV805 R406T 60HZ	
Common Parts						
010	2544960-0000	-		1	CLEANING BASIN	
020	A2544981-0100	-		1	CLEANING CIRCUIT	**375**
030	1539947-0000	-		1	PIPE	
040	2544959-0000	-		1	PIPE	
050	256641-0000	-		1	LEG	
060	271435-0000	-		1	WASHER	
070	295417-0000	-		1	GASKET	
080	295434-0000	-		2	BUSHING	
090	456395-0000	B		1	GASKET	
100	456396-0000	B		1	GASKET	
120	1511291-0000	-		1	CURVE	
130	1511293-0000	-		1	BRACKET	
140	1511294-0000	-		1	CLEANING PIPE	
160	1512440-0000	-		1	BRACKET	
170	1517523-0000	-		1	BLOCK	
200	A441811-0100	-		2	ROTOR	**367**
300	312105-0368	-		9	SCREW M6S M6X16 A280	
310	312105-0370	-		2	SCREW M6S ISO 4017 M6X20 A480	
320	312105-0372	-		4	SCREW M6S ISO 4017 M6X25 A480	
330	312105-0469	-		4	SCREW M6S ISO 4014 M8X90 A480	
340	312105-0491	-		1	SCREW M6S ISO 4017 M10X20 A480	
350	312105-0532	-		3	SCREW M6S ISO 4017 M12X20 A480	
360	312105-0628	-		8	SCREW M6S ISO 4017 M16X40 A480	
370	312605-0316	-		2	HEXAGON NUT, M6M M6 A280	
380	315105-0153	-		6	WASHER ISO 7089-6-200 HV-A4	
390	315105-0165	-		4	WASHER ISO 7089-8-200 HV-A4	
400	315105-0178	-		2	WASHER ISO 7089-12-200 HV-A4	
410	315105-0186	-		8	WASHER ISO 7089-16-200 HV-A4	
420	315202-0215	-		2	O-RING 19,2X3 MM	
430	315211-0107	-		1	GASKET BOLT HEAD 12,7X18X1,5 MM M12	
440	315250-0103	B		3	GASKET 48X38X5,5 MM	
460	353101-0123	-		1	CABLE SHOE 0,5-1,5MM2 RED	
470	353101-0126	-		1	CABLE SHOE	
480	90458-0430	-		1	EXTENDED WITHOUT INSERT, M20X1,5	
490	353249-0014	-		1	INSERT, SINGEL HOLE, EK 154/16	
500	90217-0041	-		2	NIPPLE LKBN, RD 60-6 - R1 1/2 M	
510	B90415-0022	-		1	FILTER / R1 1/2" TYP. 1012	
	90415-0320	*C*		*1*	*FILTER INSERT*	
530	90458-2199	B		2	GASKET, LOWARA 168061340	
580	342803-0103	-		2	UNION NUT, RD 60-6 (SMS 38)	
MB013	312105-0372	-		1	SCREW M6S ISO 4017 M6X25 A480	
W013	351150-0431	-	M	1	CABLE OLFLEX 2X0,75 MM2 LIGHT/GREY	

Machine Type | Group Description | Used-In | Group Number | Page No

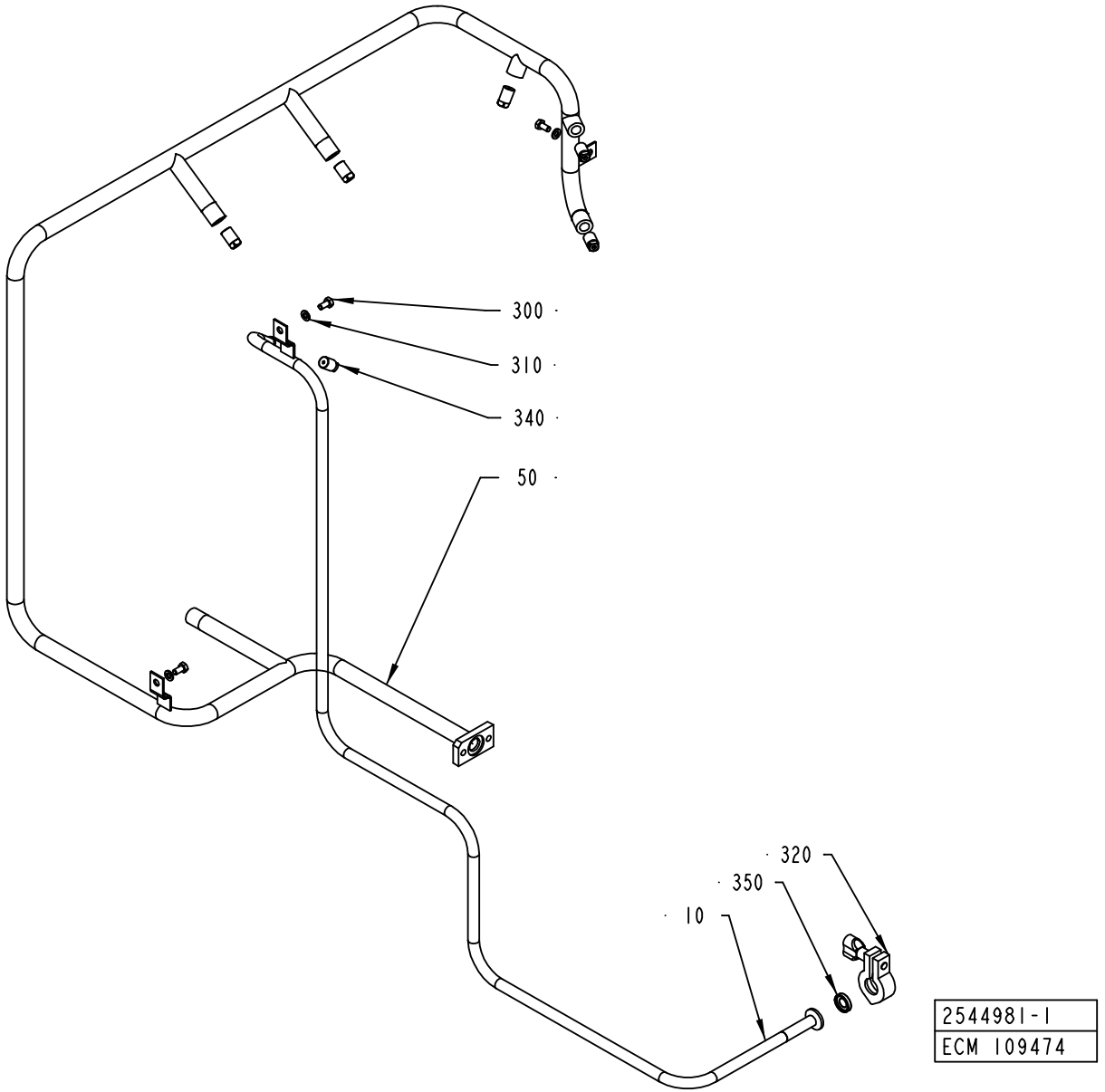
300
310
340
50
320
350
10
2544981-1
ECM 109474

ECM: 110049 - 20030113
Group number: 2544981-0100
Assembly Drawing: 2544981-1_1_AA

Pos	Part No	SP	UN	Qty	Description	Page No
-						
010	1517510-0000	-		1	PIPE	
050	2544979-0000	-		1	PIPE	
300	312105-0366	-		3	SCREW M6S M6X12 A280	
310	315105-0153	-		3	WASHER ISO 7089-6-200 HV-A4	
320	342840-0101	-		1	CLAMP, 12,7 AND 19,1 MM 3-A PCS+PMCS	
340	90424-0070	B		6	SPRAY NOZZLE 61 DEG	
350	342850-0101	B		1	GASKET, FDA, 3-A, 1/2	

Pos	Part No	SP	UN	Qty	Description	Page No

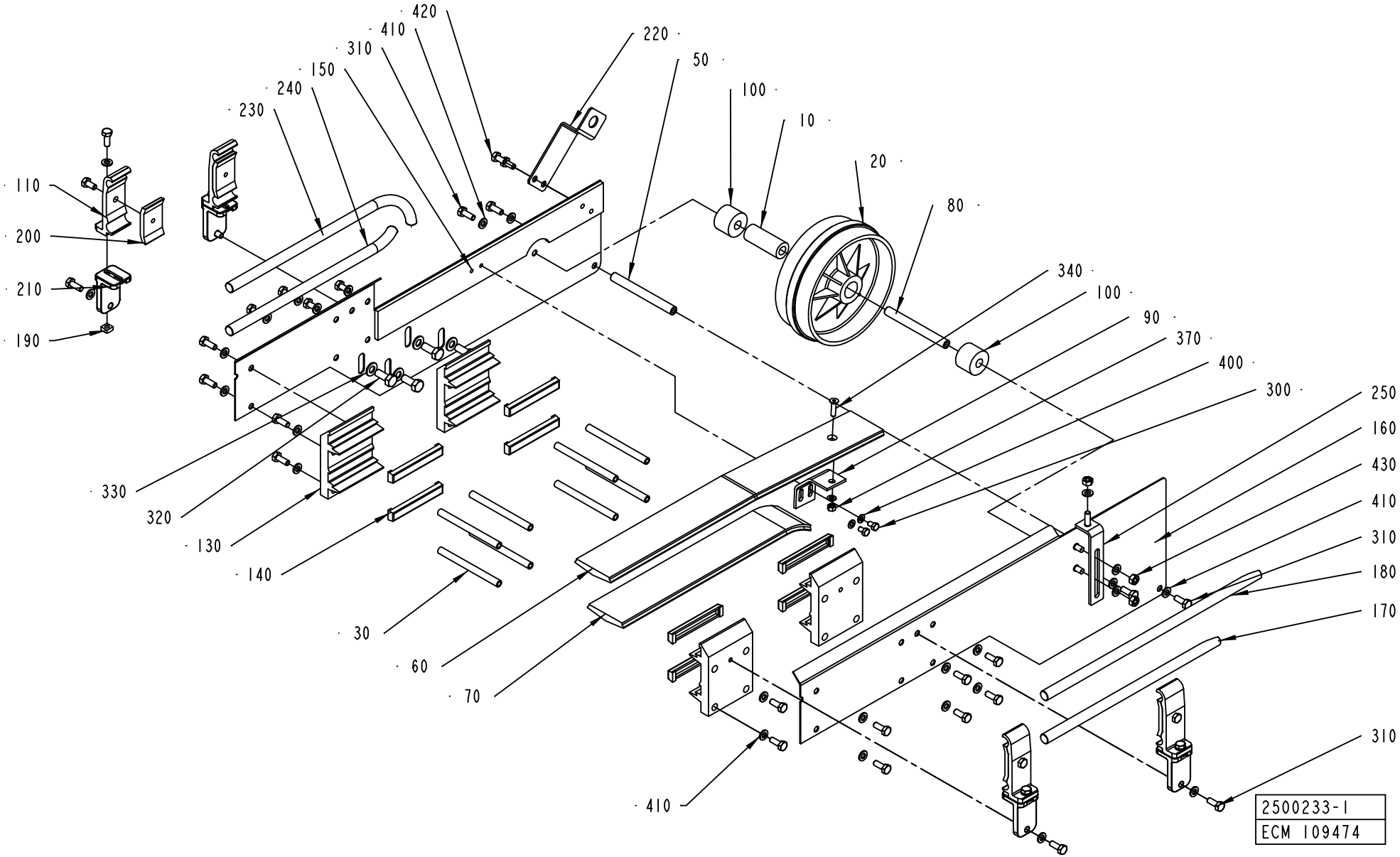
420
410
310
150
240
230
220
50
100
10
20
80
110
200
210
190
340
100
90
370
400
300
250
160
430
410
310
180
170
330
320
130
140
30
60
70
410
310
2500233-1
ECM 109474

ECM: 110051 - 20030113
Group number: 2500233-0100
Assembly Drawing: 2500233-1_1_AB

Pos	Part No	SP	UN	Qty	Description	Page No
-						
010	229207-0000	B		1	BEARING SLEEVE	
020	245039-0000	B		1	GUIDE WHEEL	
030	476220-0000	-		8	SPACER	
050	1091683-0000	-		1	SPACER	
060	1091684-0000	B		1	RAIL	
070	1091685-0000	B		1	RAIL	
080	1091686-0000	B		1	SPACER	
090	1091719-0000	-		1	BRACKET	
100	1144943-0000	-		2	SPACER	
110	1366726-0000	-		4	HOLDER	
130	457696-0001	-		4	JOINT PIECE	
140	466074-0002	B		8	SLIDER	
150	2500234-0000	-		1	PLATE	
160	2500235-0000	-		1	PLATE	
170	2500236-0000	B		1	RAIL	
180	2500237-0000	B		1	RAIL	
190	1359565-0000	-		4	NUT	
200	1366727-0000	-		4	CLAMP	
210	2559121-0000	-		4	BRACKET	
220	2511668-0000	-		1	SUPPORT	
230	2518102-0000	B		1	RAIL	
240	2518103-0000	B		1	RAIL	
250	2546226-0000	-		1	SUPPORT	
300	312105-0323	-		2	SKRUV M6S ISO 4017 M5X8 A480	
310	312105-0368	-		26	SCREW M6S M6X16 A280	
320	312105-0451	-		4	SCREW M6S ISO 4017 M8X20 A480	
330	315105-0165	-		4	WASHER ISO 7089-8-200 HV-A4	
340	312155-0331	-		1	SCREW EN 10642 MF6S M5X20 A480	
370	312605-0314	-		1	HEXAGON NUT, M6M M5 A280	
400	315105-0146	-		3	WASHER ISO 7089-5-200 HV-A4	
410	315105-0153	-		33	WASHER ISO 7089-6-200 HV-A4	
420	312105-0366	-		8	SCREW M6S M6X12 A280	
430	312605-0316	-		3	HEXAGON NUT, M6M M6 A280	

Pos	Part No	SP	UN	Qty	Description	Page No

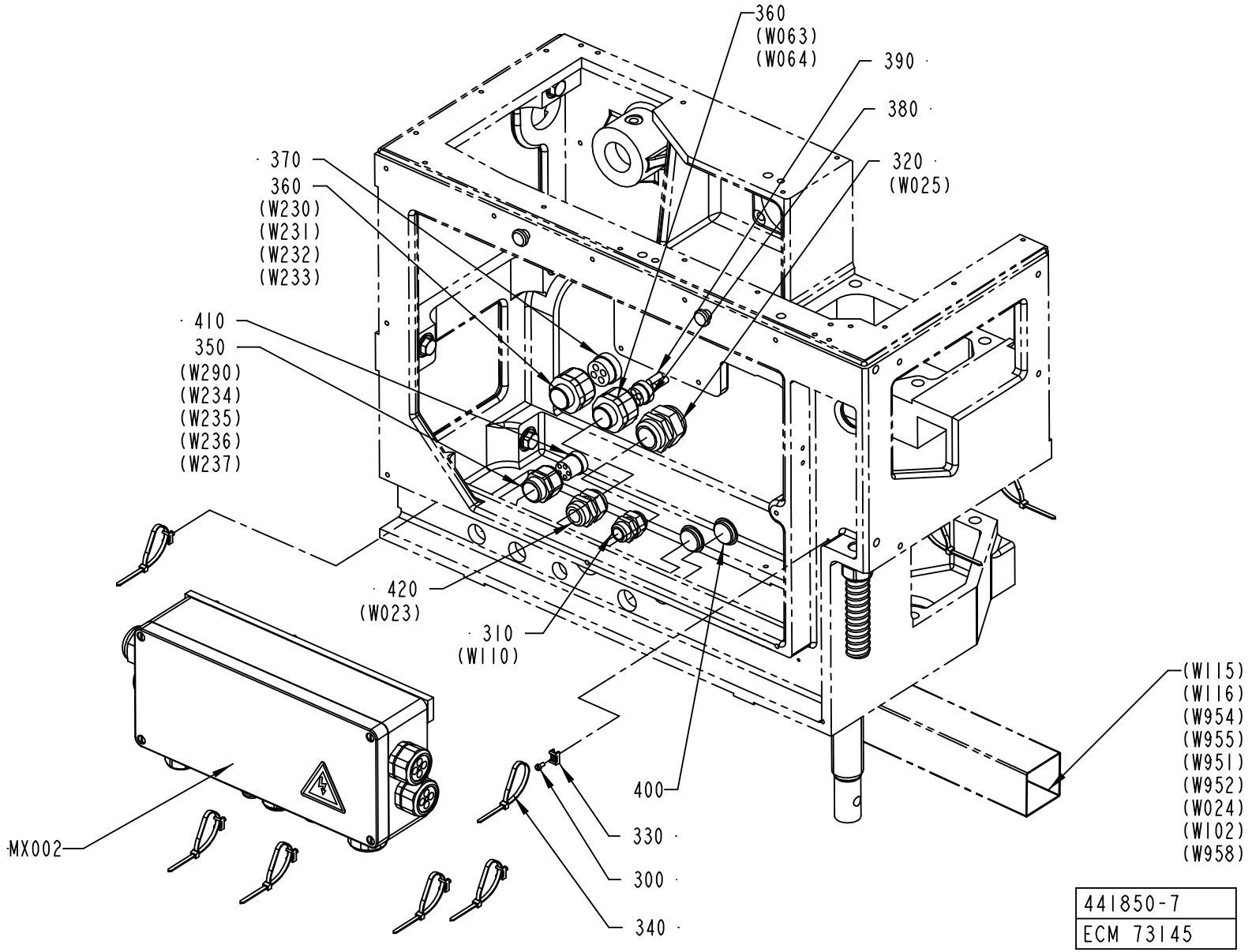
360
(W063)
(W064)
390
380
320
(W025)
370
360
(W230)
(W231)
(W232)
(W233)
410
350
(W290)
(W234)
(W235)
(W236)
(W237)
420
(W023)
310
(W110)
(W115)
(W116)
(W954)
(W955)
(W951)
(W952)
(W024)
(W102)
(W958)
400
330
300
340
MX002
441850-7
ECM 73145

ECM: 96554 - 20020109
Group number: 441850-0700
Assembly Drawing: 441850-7_1_AA

Pos	Part No	SP	UN	Qty	Description	Page No
-						
300	312125-0287	-		8	SCREW PAN HEAD MCS M4X8 SS	
310	352103-0111	-		1	CABLE GLAND, ST 16, PR22,5/PG16	
320	352103-0121	-		1	CABLE GLAND, ST 29, PR37,0/PG29	
330	352113-0205	-		8	ANCHOR PLATES FOR STRIPS, TYPE TM2S8-C10	
340	352113-0102	-		8	CLIP-STRIP, BLACK 188X4,8 MM	
350	353240-0005	-		1	NORMAL WITHOUT INSERT, PG 21	
360	353241-0003	-		2	EXTENDED WITHOUT INSERT, PG 21	
370	353249-0037	-		1	INSERT, MULTI HOLE, EK155M4X8	
380	353249-0084	-		1	INSERT, MULTI HOLE, EK 154M4X7,5	
390	353249-0307	-		2	SEALING PIN, 7,5X20	
400	90002-0012	-		2	BLANK-OFF PLUG, PR 28,3 SKINDICHT-BLK21	
410	90457-0028	-		1	INSERT, MULTI HOLE, E154M5X5	
420	352103-0115	-		1	CABLE GLAND, STR 21, PR28,3/PG21	
MX002	A2506331-0200	-		1	CONNECTION BOX	**381, 383**

Pos	Part No	SP	UN	Qty	Description	Page No

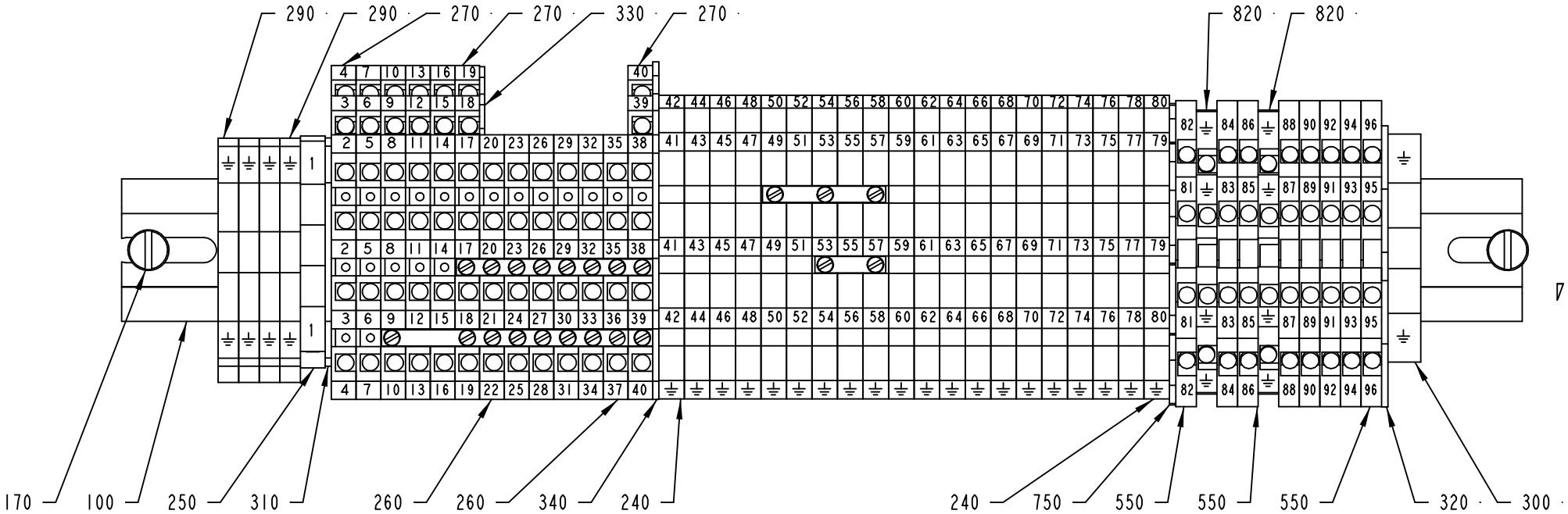

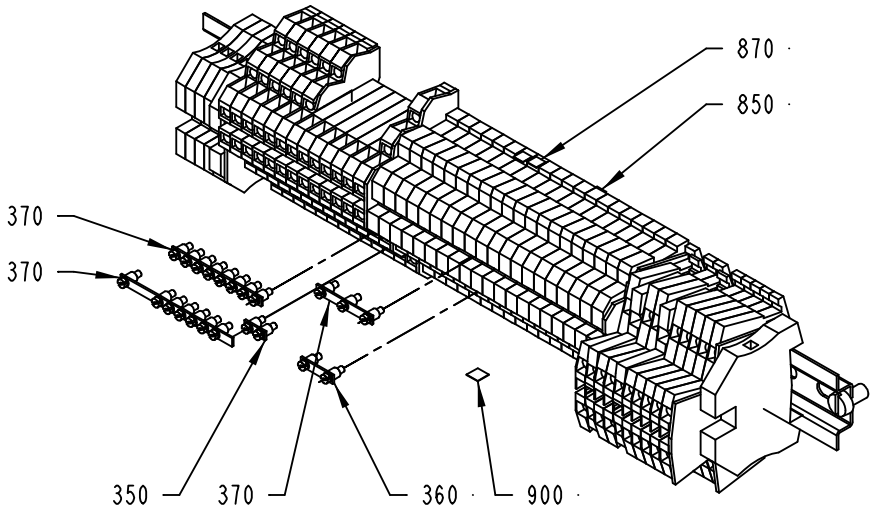

MX002

2506331-1
ECN 93276

ECM: 94021 - 20020109
Group number: 2506331-0200
Assembly Drawing: 2506331-1_1_AA

This list covers pages from 380 to 383

Pos	Part No	SP	UN	Qty	Description	Page No
-						
0010	1255874-0000	-		1	SPACER	
0030	2506332-0000	-		1	BOX	
0100	353042-0005	-	MM	340	RAIL TS 35/7.5	
0130	312115-0366	-		2	SCREW ISO4762 M6X12 A4	
0140	312115-0372	-		2	SCREW ISO4762 M6X25 A4	
0170	312125-0364	-		2	SCREW SLOT.PAN HD. MCS 6X10 A480	
0200	352103-0106	-		1	CABLE GLAND, ST 11, PR18,6/PG11	
0210	352103-0121	-		1	CABLE GLAND, ST 29, PR37,0/PG29	
0240	353021-0132	-		20	TERMINALS,TRIPLE-LEVEL, DLD 2,5/PE	
0250	353021-0213	-		1	FEED THROUGH TERMINAL, 10201.0	
0260	353021-0301	-		6	TERMINALS,TRIPLE-LEVEL, DLI 2,5/35 PA	
0270	353021-0302	-		7	TERMINALS,TRIPLE-LEVEL, DLD 2,5/35 PA	
0290	353024-0204	-		4	EARTH TERMINAL WPE 2,5	
0300	353024-0206	-		1	EARTH TERMINAL, 1010.2	
0310	353032-0004	-		1	END PLATE WAP 2,5-10 BEIGE	
0320	353032-0009	-		1	END PLATE, WAP 16/35	
0330	353032-0013	-		1	END PLATE, 13818.6	
0340	353032-0302	-		1	END PLATE WAP	
0350	353034-0401	-		1	BRIDGE CONNECTOR Q2, 13125.0	
0360	353034-0402	-		1	BRIDGE CONNECTOR Q3, 13126.0	
0370	353034-0404	-		3	BRIDGE CONNECTOR Q10, 13131.0	
0385	353240-0004	-		2	NORMAL WITHOUT INSERT, PG 16	
0390	353240-0005	-		3	NORMAL WITHOUT INSERT, PG 21	
0400	353240-0006	-		4	FöRSKRUVNING, PG 29	
0420	353241-0005	-		1	EXTENDED WITHOUT INSERT, PG 13,5	
0430	353241-0007	-		1	EXTENDED WITHOUT INSERT, PG 16/21	
0460	90458-0147	-		1	GLAND, INSERT, MULTI HOLE, 2X6,5	
0470	353249-0051	-		1	INSERT, MULTI HOLE, E154M4X8	
0480	353249-0059	-		1	GLAND, INSERT, MULTI HOLE, 4X8	
0490	353249-0060	-		1	INSERT, MULTI HOLE, E155M2X13	
0500	353249-0084	-		1	INSERT, MULTI HOLE, EK 154M4X7,5	
0550	90077-0113	-		8	FEED THROUGH TERMINAL, 10-00102150-1	
0600	90194-0016	-		1	ETIKETT	
0650	90457-0027	-		2	INSERT, MULTI HOLE, E155M1X5/4X9	
0700	90457-0030	-		1	INSERT, MULTI HOLE, EK155M4X9	
0750	90457-0051	-		1	END PLATE	
0820	90458-1136	-		2	TERMINAL BLOCK, 103630	
0830	90458-1906	-		2	GLAND, INSERT, MULTI HOLE, 4X5	
0850	359011-0807	-		2	MARKING PLATES 5-FW 1-50	
0870	359011-0808	-		2	MARKING PLATES 5-FW 51-100	
0900	359011-0818	-		1	SYMBOL 5-GW (-) 50PC	
1000	353249-0304	-		3	SEALING PIN, 6X25	
1010	353249-0308	-		2	SEALING PIN, 8X20	
1020	353249-0309	-		1	SEALING PIN, 9,3X20	
1070	90002-0004	-		1	BLANK-OFF PLUG, PR 22,5 SKINDICHT-BLK16	
1080	90002-0009	-		1	BLANK-OFF PLUG, PR 18.6 SKINDICHT-BLK11	
1090	90002-0010	-		1	BLANK-OFF PLUG, PR 37 SKINDICHT-BLK29	

Machine Type | Group Description | Used-In | Group Number | Page No

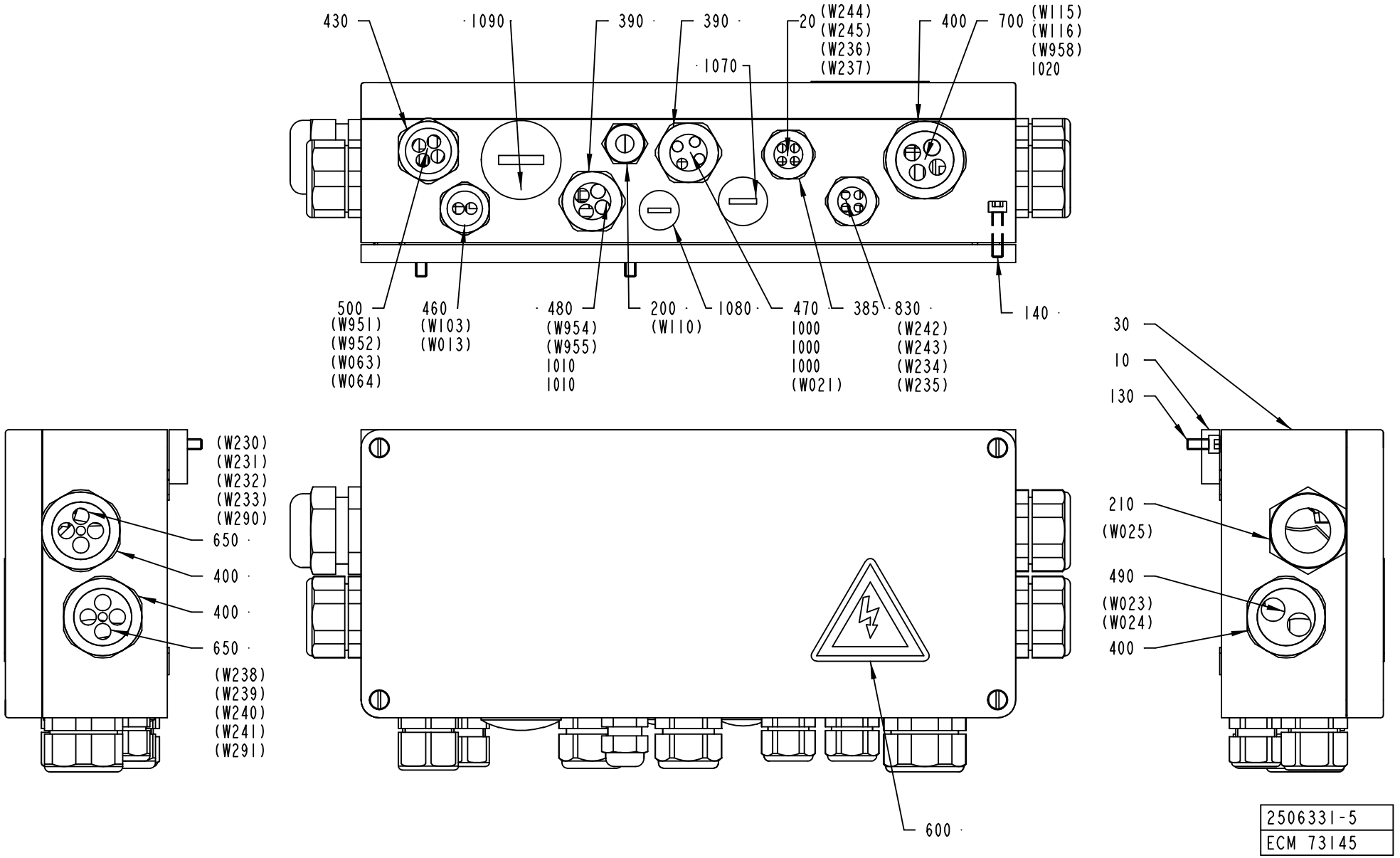

2506331-5
ECM 73145

ECM: 94021 - 20020109
Group number: 2506331-0200
Assembly Drawing: 2506331-5_1_AA

This list covers pages from 380 to 383

Pos	Part No	SP	UN	Qty	Description	Page No
-						
0010	1255874-0000	-		1	SPACER	
0030	2506332-0000	-		1	BOX	
0100	353042-0005	-	MM	340	RAIL TS 35/7.5	
0130	312115-0366	-		2	SCREW ISO4762 M6X12 A4	
0140	312115-0372	-		2	SCREW ISO4762 M6X25 A4	
0170	312125-0364	-		2	SCREW SLOT.PAN HD. MCS 6X10 A480	
0200	352103-0106	-		1	CABLE GLAND, ST 11, PR18,6/PG11	
0210	352103-0121	-		1	CABLE GLAND, ST 29, PR37,0/PG29	
0240	353021-0132	-		20	TERMINALS,TRIPLE-LEVEL, DLD 2,5/PE	
0250	353021-0213	-		1	FEED THROUGH TERMINAL, 10201.0	
0260	353021-0301	-		6	TERMINALS,TRIPLE-LEVEL, DLI 2,5/35 PA	
0270	353021-0302	-		7	TERMINALS,TRIPLE-LEVEL, DLD 2,5/35 PA	
0290	353024-0204	-		4	EARTH TERMINAL WPE 2,5	
0300	353024-0206	-		1	EARTH TERMINAL, 1010.2	
0310	353032-0004	-		1	END PLATE WAP 2,5-10 BEIGE	
0320	353032-0009	-		1	END PLATE, WAP 16/35	
0330	353032-0013	-		1	END PLATE, 13818.6	
0340	353032-0302	-		1	END PLATE WAP	
0350	353034-0401	-		1	BRIDGE CONNECTOR Q2, 13125.0	
0360	353034-0402	-		1	BRIDGE CONNECTOR Q3, 13126.0	
0370	353034-0404	-		3	BRIDGE CONNECTOR Q10, 13131.0	
0385	353240-0004	-		2	NORMAL WITHOUT INSERT, PG 16	
0390	353240-0005	-		3	NORMAL WITHOUT INSERT, PG 21	
0400	353240-0006	-		4	FöRSKRUVNING, PG 29	
0420	353241-0005	-		1	EXTENDED WITHOUT INSERT, PG 13,5	
0430	353241-0007	-		1	EXTENDED WITHOUT INSERT, PG 16/21	
0460	90458-0147	-		1	GLAND, INSERT, MULTI HOLE, 2X6,5	
0470	353249-0051	-		1	INSERT, MULTI HOLE, E154M4X8	
0480	353249-0059	-		1	GLAND, INSERT, MULTI HOLE, 4X8	
0490	353249-0060	-		1	INSERT, MULTI HOLE, E155M2X13	
0500	353249-0084	-		1	INSERT, MULTI HOLE, EK 154M4X7,5	
0550	90077-0113	-		8	FEED THROUGH TERMINAL, 10-00102150-1	
0600	90194-0016	-		1	ETIKETT	
0650	90457-0027	-		2	INSERT, MULTI HOLE, E155M1X5/4X9	
0700	90457-0030	-		1	INSERT, MULTI HOLE, EK155M4X9	
0750	90457-0051	-		1	END PLATE	
0820	90458-1136	-		2	TERMINAL BLOCK, 103630	
0830	90458-1906	-		2	GLAND, INSERT, MULTI HOLE, 4X5	
0850	359011-0807	-		2	MARKING PLATES 5-FW 1-50	
0870	359011-0808	-		2	MARKING PLATES 5-FW 51-100	
0900	359011-0818	-		1	SYMBOL 5-GW (-) 50PC	
1000	353249-0304	-		3	SEALING PIN, 6X25	
1010	353249-0308	-		2	SEALING PIN, 8X20	
1020	353249-0309	-		1	SEALING PIN, 9,3X20	
1070	90002-0004	-		1	BLANK-OFF PLUG, PR 22,5 SKINDICHT-BLK16	
1080	90002-0009	-		1	BLANK-OFF PLUG, PR 18.6 SKINDICHT-BLK11	
1090	90002-0010	-		1	BLANK-OFF PLUG, PR 37 SKINDICHT-BLK29	

Machine Type | Group Description | Used-In | Group Number | Page No

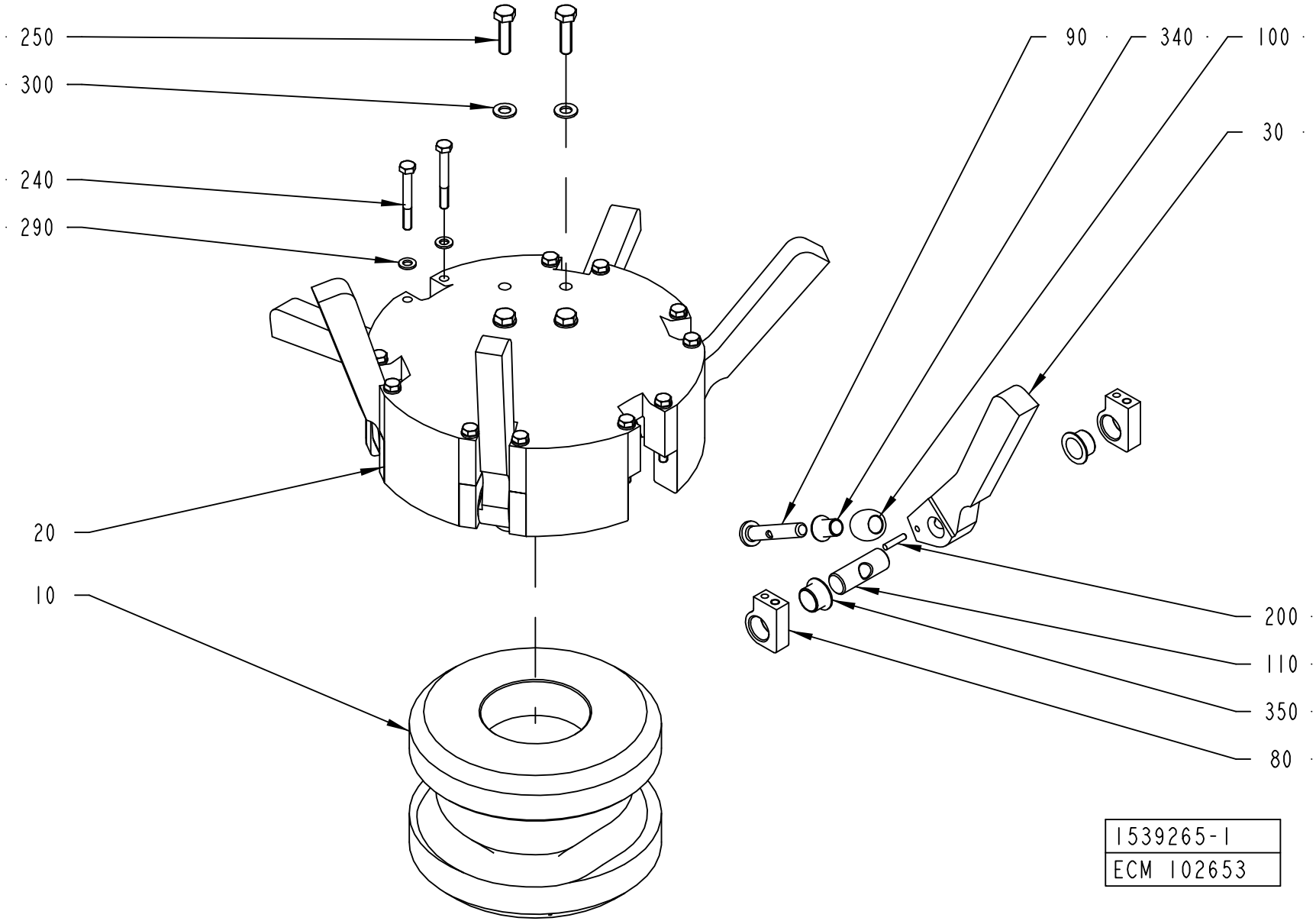
250
300
240
290
20
10
90
340
100
30
200
110
350
80
1539265-1
ECM 102653

ECM: 113965 - 20030113
Group number: 1539265-0100
Assembly Drawing: 1539265-1_1_AA

Pos	Part No	SP	UN	Qty	Description	Page No
TBA 0100B						
030	1549186-0000	A		6	CARRIER	
TBA 0125S						
030	1549184-0000	A		6	CARRIER	
TBA 0160S						
030	2502192-0000	A		6	CARRIER	
TBA 0180B						
030	1549193-0000	A		6	CARRIER	
TBA 0200B						
030	1549183-0000	A		6	CARRIER	
TBA 0200M						
030	1549190-0000	A		6	CARRIER	
TBA 0200S						
030	1549182-0000	A		6	CARRIER	
TBA 0250B						
030	1549187-0000	A		6	CARRIER	
TBA 0250S						
030	1539268-0000	A		6	CARRIER	
TBA 0300S, TBA 0284B						
030	2502194-0000	A		6	CARRIER	
TBA 0330S						
030	1549191-0000	A		6	CARRIER	
Common Parts						
010	1539266-0000	A		1	CAM	
020	1539267-0000	-		1	DRUM	
080	1260065-0000	A		12	BRACKET	
090	1260068-0000	A		6	SHAFT	
100	1260069-0000	A		6	ROLLER	
110	1260070-0000	A		6	SHAFT	
200	311103-0272	A		6	PARALLELL PIN, M6, 4X20 MM	
240	312105-0380	-		12	SCREW M6S ISO 4014 M6X50 A480	
250	312105-0455	-		4	SCREW M6S ISO 4017 M8X30 A480	
290	315105-0153	-		12	WASHER ISO 7089-6-200 HV-A4	
300	315105-0165	-		4	WASHER ISO 7089-8-200 HV-A4	
340	90240-0331	A		6	FLANGE BUSHING, 10X12X17 MM	
350	90240-0332	A		12	FLANGE BUSHING, 16X18X12 MM	

Machine Type | Group Description | Used-In | Group Number | Page No

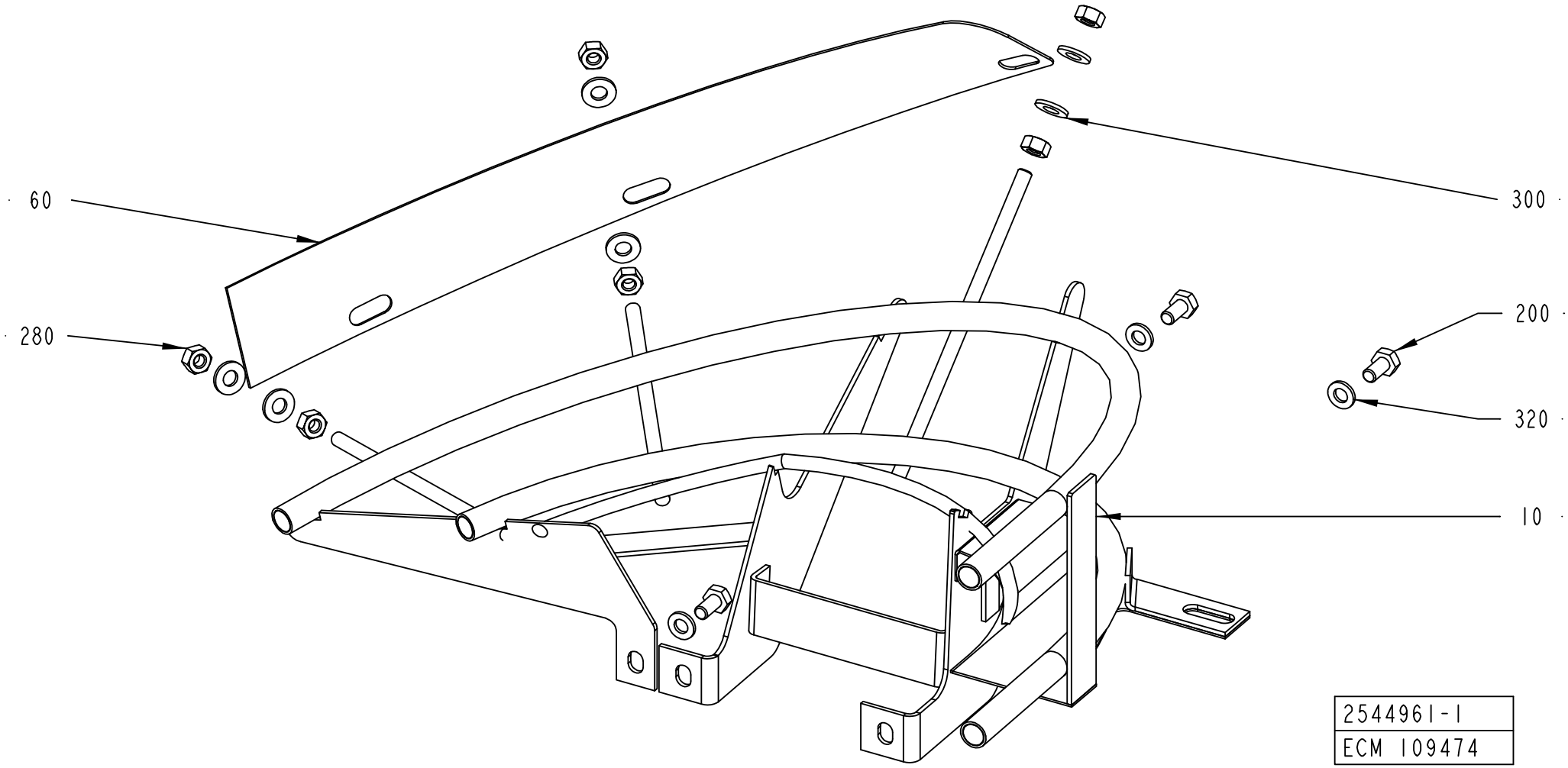
60
280
300
200
320
10
2544961-1
ECM 109474

ECM: 110050 - 20030113
Group number: 2544961-0100
Assembly Drawing: 2544961-1_1_AA

Pos	Part No	SP	UN	Qty	Description	Page No
TBA 0100B						
010	2555564-0000	A		1	GUIDE	
TBA 0125S						
010	2555563-0000	A		1	GUIDE	
TBA 0160S						
010	2555568-0000	A		1	GUIDE	
TBA 0180B						
010	2555567-0000	A		1	GUIDE	
TBA 0200B						
010	2555562-0000	A		1	GUIDE	
TBA 0200M						
010	2555571-0000	-		1	GUIDE	
TBA 0200S						
010	2545667-0000	A		1	GUIDE	
TBA 0250B						
010	2555565-0000	A		1	GUIDE	
TBA 0300S, TBA 0284B						
010	2555569-0000	-		1	GUIDE	
TBA 0330S, TBA 0250S						
010	2555566-0000	A		1	GUIDE	
Common Parts						
060	1539956-0000	B		1	PLATE	
200	312105-0366	-		3	SCREW M6S M6X12 A280	
280	312605-0316	-		6	HEXAGON NUT, M6M M6 A280	
300	315105-0156	-		6	WASHER PLAIN, BRB, 6,7/14,H=1,5	
320	315105-0153	-		3	WASHER ISO 7089-6-200 HV-A4	

Pos	Part No	SP	UN	Qty	Description	Page No

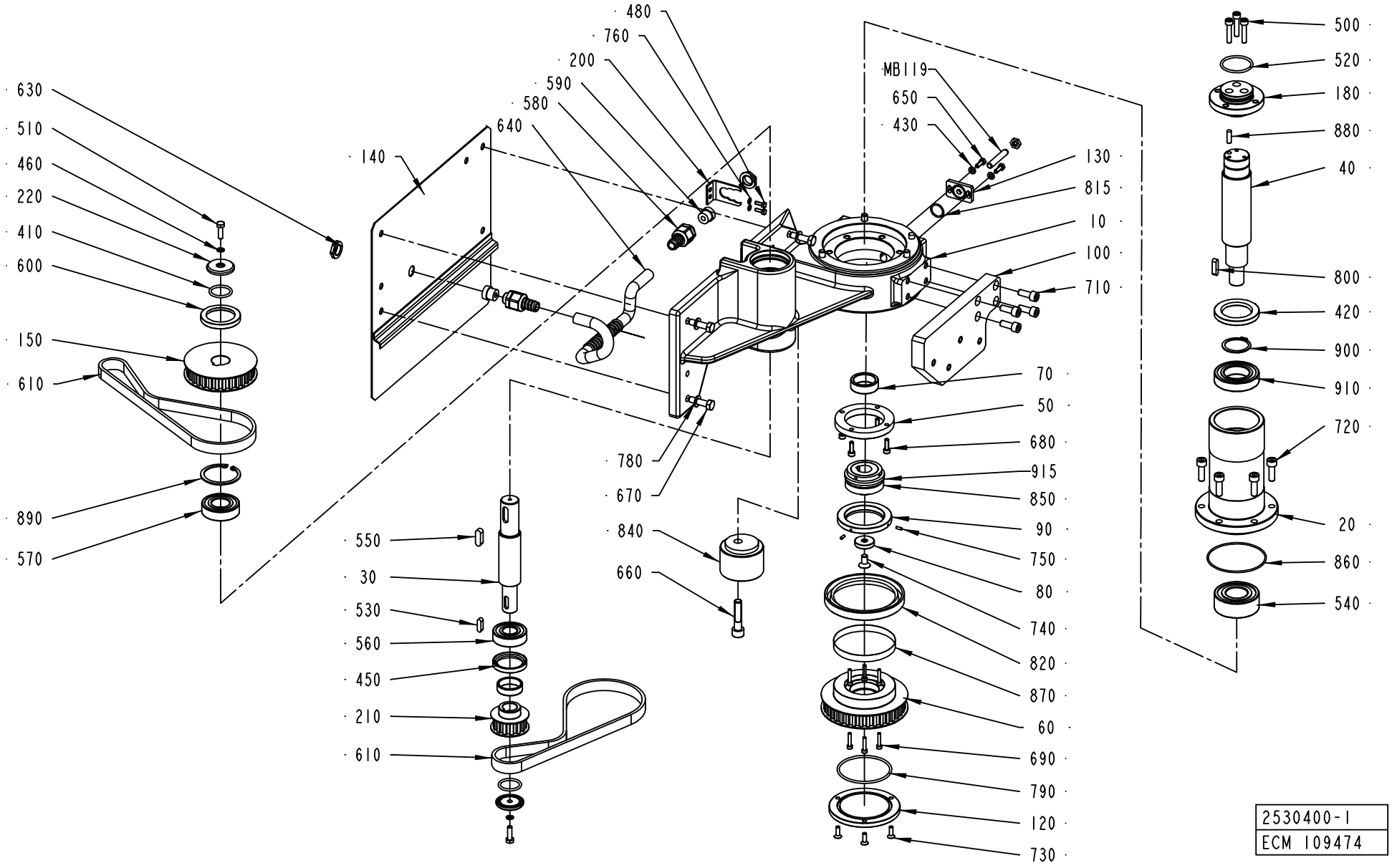
480
760
200
590
580
640
140
630
510
460
220
410
600
150
610
890
570
MB119
650
430
130
815
10
100
710
70
50
680
915
850
90
750
80
740
820
870
60
690
790
120
730
500
520
180
880
40
800
420
900
910
720
20
860
540
780
670
840
660
550
30
530
560
450
210
610
2530400-1
ECM 109474

ECM: 110045 - 20030113
Group number: 2530400-0100
Assembly Drawing: 2530400-1_1_AA

Pos	Part No	SP	UN	Qty	Description	Page No
-						
010	2544957-0000	-		1	AXLE SUPPORT	
020	2544958-0000	-		1	BEARING FLANGE	
030	2544962-0000	-		1	SHAFT	
040	2544963-0000	-		1	SHAFT	
050	2544964-0000	-		1	FLANGE	
060	2544965-0000	A		1	TOOTHED PULLEY	
070	2544968-0000	-		1	INNER RING	
080	2544969-0000	-		1	SPACER	
090	2544970-0000	-		1	FLANGE	
100	2544971-0000	-		1	BRACKET	
120	2544973-0000	-		1	CUP	
130	2544974-0000	-		1	BLANK PLUG	
140	2544975-0000	-		1	SHEET	
150	1539260-0000	A		1	TOOTHED PULLEY	
180	2559122-0000	-		1	FLANGE	
200	977527-0000	-		1	BRACKET	
210	1539256-0000	A		1	TOOTHED PULLEY	
220	1539261-0000	-		3	WASHER	
410	315202-0218	B		3	O-RING 26,2X3 MM	
420	315221-0185	B		1	RADIAL SEAL 40X62X7 MM	
430	315105-0146	-		2	WASHER ISO 7089-5-200 HV-A4	
450	315221-0175	B		1	RADIAL SEAL 35X47X7 MM	
460	315211-0103	-		2	GASKET BOLT HEAD 6,7X11X1 MM M6	
480	312105-0291	-		2	SCREW M6S ISO 4017 M4X12 A480	
500	312115-0374	-		1	SCREW ISO4762 M6X30 A4	
510	312105-0370	-		2	SCREW M6S ISO 4017 M6X20 A480	
520	315202-0223	B		1	O-RING 39,2X3 MM	
530	315705-0232	-		1	PARALLEL KEY W. ROUND ENDS 6X6X20 MM	
540	321330-0106	A		1	ANG. BALL BEAR, 30X62X23,8 MM	
550	315705-0265	-		1	PARALLEL KEY W. ROUND ENDS 8X7X25 MM	
560	321309-0104	A		1	BALL BEARING, 20X47X14 MM	
570	321309-0105	A		1	BALL BEARING, 25X52X15 MM	
580	90458-0427	-		2	EXTENDED WITHOUT INSERT, M16X1,5	
590	353249-0008	-		2	INSERT, SINGEL HOLE, EK 152/7	
600	90091-0305	-		1	RADIAL SEAL 40X55X7 MM DUST LIP	
610	90417-0292	A		2	TIMING BELT T10X690X16 POLYURETHANE	
630	90458-0322	-		2	NUT, M16X1,5	
640	90152-0058	-	M	1	SPIRAL CONDUIT, 15X9, UL 0909	
650	312105-0328	-		2	SCREW M6S ISO 4017 M5X14 A480	
660	312115-0500	-		1	SCREW ISO4762 M10X45 A4	
670	312105-0455	-		4	SCREW M6S ISO 4017 M8X30 A480	
680	312115-0329	-		4	SCREW ISO4762 M5X16 A4	
690	312115-0295	-		6	SCREW ISO4762 M4X20 A4	
700	312115-0374	-		2	SCREW ISO4762 M6X30 A4	
710	312115-0451	-		4	SCREW ISO4762 M8X20 A4	
720	312115-0453	-		9	SCREW ISO4762 M8X25 A4	
730	312155-0329	-		3	SCREW EN 10642 MF6S M5X16 A480	
740	312155-0449	-		1	SCREW EN 10642 MF6S M8X16 A480	
750	312318-0222	-		2	SCREW ISO4029 M3X8 A4	
760	315101-0136	-		2	BRICKA, BRB, 4,3/8 H=0,8	
780	315105-0165	-		4	WASHER ISO 7089-8-200 HV-A4	
790	315202-0305	B		1	O-RING 69,5X3 MM	
800	315701-0234	-		1	PARALLEL KEY W. ROUND ENDS 6X6X25 MM	
815	315205-0705	B		1	O-RING 17,17X1,78 MM	
820	90091-0233	B		1	RADIAL SEAL 85X110X12 MM DUST LIP	
840	90458-0220	-		1	TENSION ROLLER, M40/60-0-M EXCENTRIC	
850	90459-0737	A		1	SAFETY CLUTCH, SK1 15/D/20/5-20	
860	90459-0765	B		1	O-RING 78X2 MM	
870	90459-0766	-		1	SLEEVE, CR 99334	
880	311103-0353	-		1	PARALLELL PIN, M6, 6X20 MM	
890	315753-0132	-		1	RETAINING RING FOR HOLE, 52X2 MM	
900	315751-0124	-		1	RETAINING RING FOR SHAFT, 35X1,5 MM	
910	321306-0107	B		1	BALL BEARING, 35X62X14 MM	
915	90296-0070	-	KG		GREASE	
MB119	90044-0117	A		1	PROX.SW. IX 0208	

Machine Type | Group Description | Used-In | Group Number | Page No

Tetra Pak

SPC
Spare Parts Catalogue

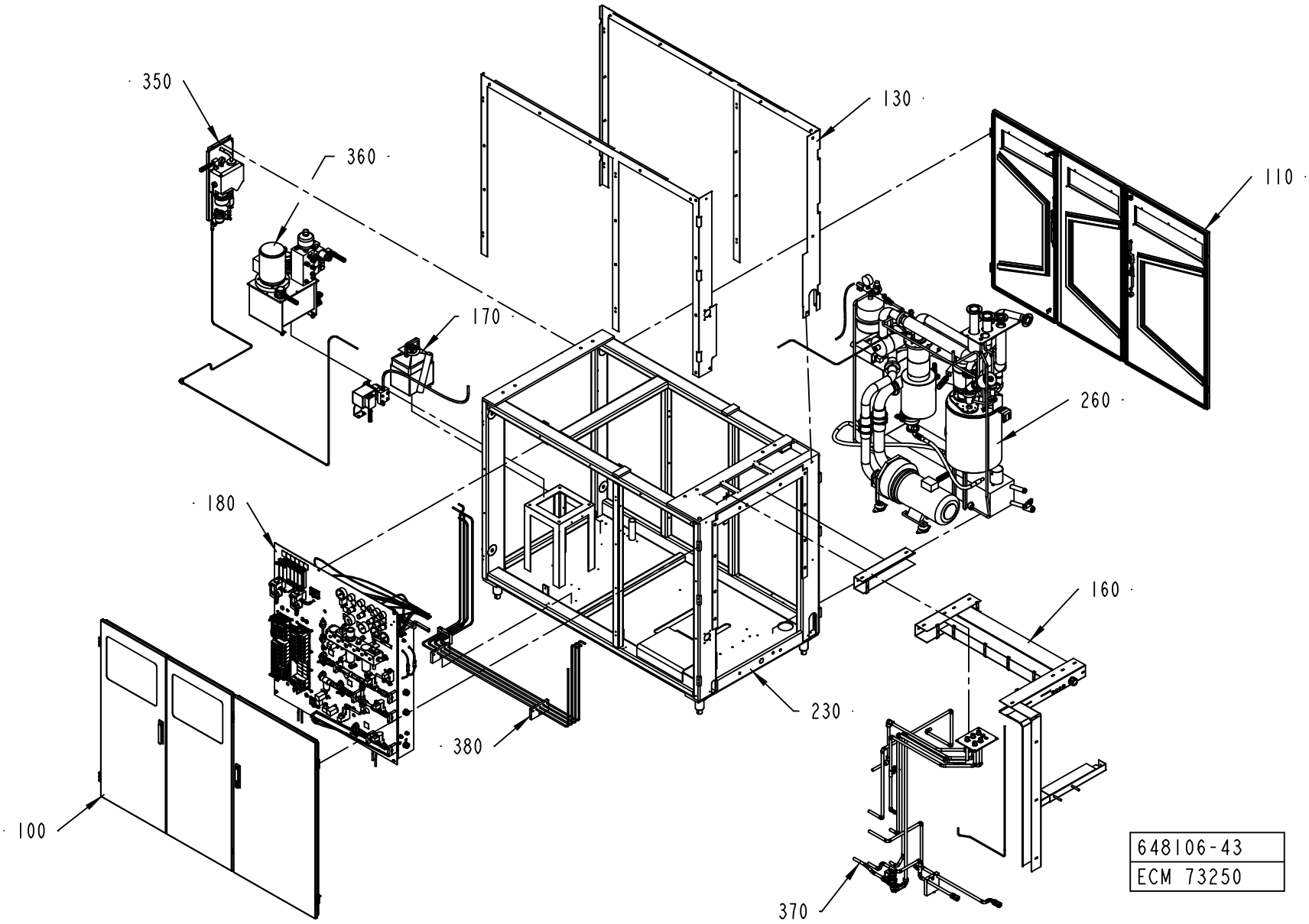
350
360
130
110
170
260
180
160
230
380
100
370
648106-43
ECM 73250

ECM: 73250 - 20011221
Group number: 648106-1200
Assembly Drawing: 648106-43_1_AA

Pos	Part No	SP	UN	Qty	Description	Page No
-						
100	A1350529-0100	-		1	DOORS LEFT SIDE	**395**
110	A1350531-0100	-		1	DOORS RIGHT SIDE	**397**
130	A979215-0200	-		1	COVER PLATE	**399**
160	A1524319-0100	-		1	CABLE DUCT	**401**
170	A490761-0200	-		1	DETERGENT PUMP	**403**
180	A1349029-0100	-		1	VALVE PANEL	**405, 407, 409**
230	A979216-0200	-		1	MACHINE BODY	**441**
260	A978834-0200	-		1	PEROXID AND STERILESYSTEM	**443**
350	A978823-0200	-		1	CENTRAL LUBRICATION	**469**
360	A1512304-0100	-		1	HYDRAULIC SYSTEM	**471, 473**
370	A1350184-0100	-		1	PIPE WORK,AIR WATER	**475**
380	A1519663-0100	-		1	PIPE WORK-HYDRAULIC	**477**
600	A469384-0100	-		1	START-UP KIT	**479**

Pos	Part No	SP	UN	Qty	Description	Page No

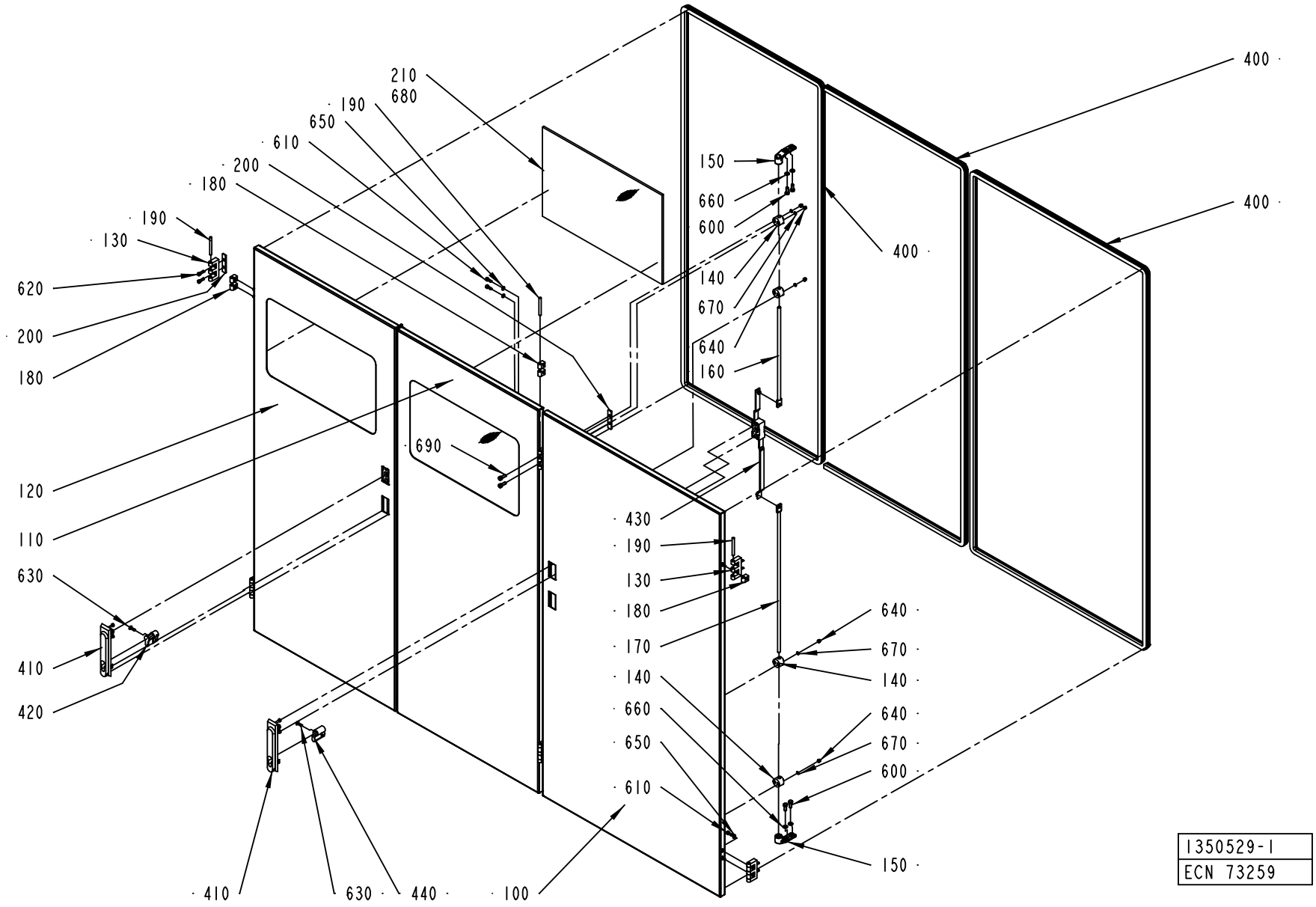
210
680
190
650
610
200
180
190
130
620
200
180
120
110
630
410
420
690
150
660
600
140
670
640
160
400
400
400
430
190
130
180
170
140
660
650
610
640
670
140
640
670
600
150
410
630
440
100
1350529-1
ECN 73259

ECM: 106562 - 20020313
Group number: 1350529-0100
Assembly Drawing: 1350529-1_1_AA

Pos	Part No	SP	UN	Qty	Description	Page No
-						
100	1512826-0000	-		1	DOOR	
110	1512827-0000	-		1	DOOR	
120	1512828-0000	-		1	DOOR	
130	1035792-0000	-		6	E-HINGE	
140	1129274-0000	-		8	GUIDE LUG	
150	1538868-0000	-		4	BRACKET	
160	1511613-0000	-		2	LOCKING ARM	
170	1511614-0000	-		2	LOCKING ARM	
180	1035794-0000	-		11	BLOCKING PIECE	
190	988685-0000	-		6	PIN	
200	1517182-0000	-		4	SPACER	
210	2517063-0000	-		2	GLASS PANE	
400	90143-0068	-	M	9	RUBBERSTRIP EMKA 1011-06	
410	90237-0175	-		2	TURNING HANDLE	
420	90237-0128	-		1	LOCK CYLINDER, 1109-U3	
430	90237-0153	-		2	LOCK HOUSING, 1121-U26-0B	
440	90237-0129	-		1	LOCK CYLINDER, 1109-U2	
600	312105-0368	-		8	SCREW M6S M6X16 A280	
610	312115-0327	-		11	SCREW ISO4762 M5X12 A4	
620	312115-0329	-		8	SCREW ISO4762 M5X16 A4	
630	312155-0329	-		2	SCREW EN 10642 MF6S M5X16 A480	
640	312705-0312	-		16	NUT HEX. DOMED CAP MHM-6 M4 A280	
650	315105-0146	-		11	WASHER ISO 7089-5-200 HV-A4	
660	315105-0153	-		8	WASHER ISO 7089-6-200 HV-A4	
670	315105-0136	-		16	WASHER ISO 7089-4-200 HV-A4	
680	90157-0041	-	ML	50	SEALING COMPOUND	
690	312115-0368	-		4	SCREW ISO4762 M6X16 A4	

Pos	Part No	SP	UN	Qty	Description	Page No

Machine Type	Group Description	Used-In	Group Number	Page No

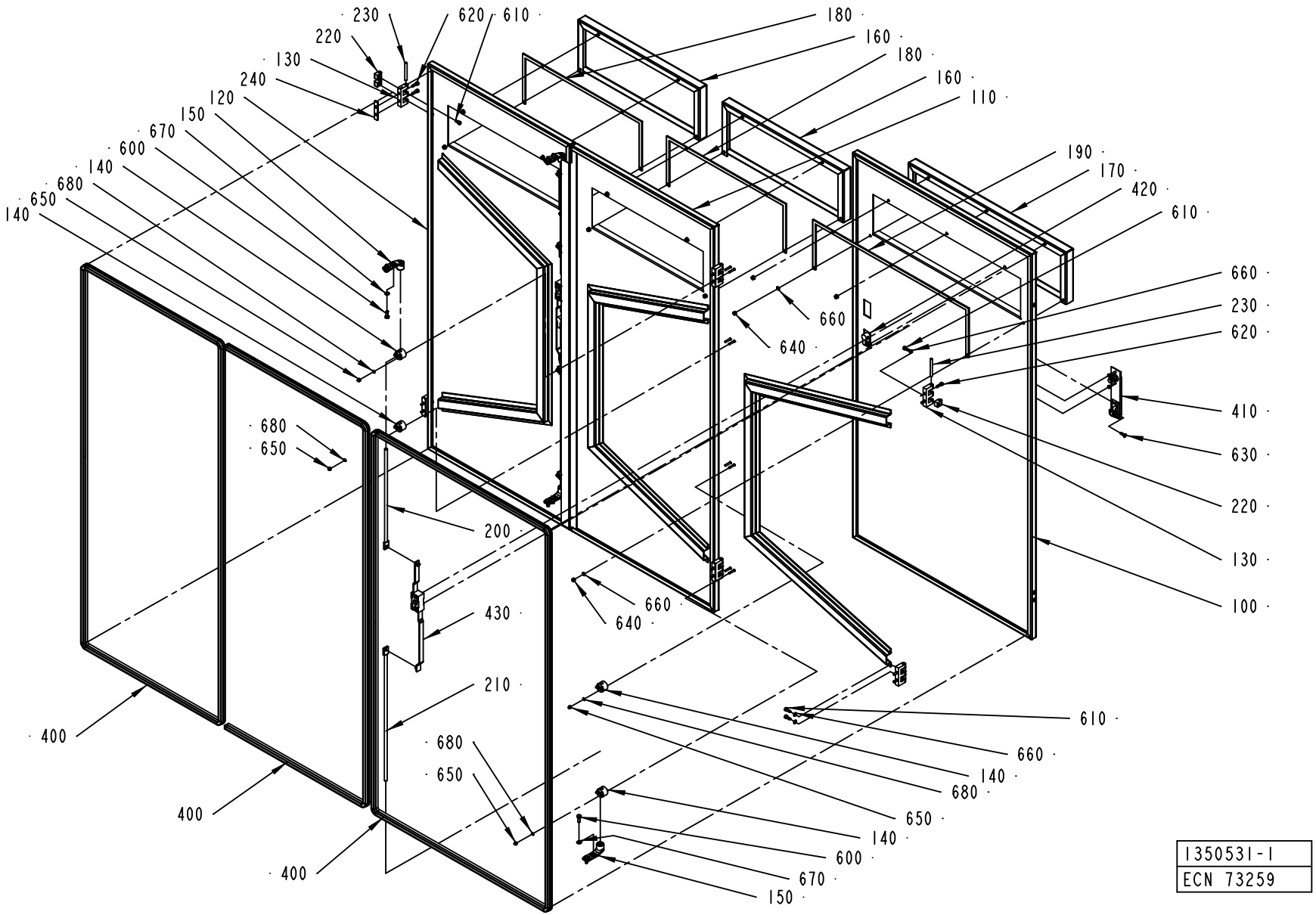
230
620
610
220
130
240
120
150
670
600
140
680
650
140
180
160
180
160
110
190
170
420
610
660
230
620
660
640
410
630
220
130
100
680
650
200
430
660
640
210
400
680
650
400
400
610
660
140
680
650
140
600
670
150
1350531-1
ECN 73259

ECM: 106563 - 20020313
Group number: 1350531-0100
Assembly Drawing: 1350531-1_1_AA

Pos	Part No	SP	UN	Qty	Description	Page No
-						
100	1512829-0000	-		1	DOOR	
110	1512830-0000	-		1	DOOR	
120	1512831-0000	-		1	DOOR	
130	1035792-0000	-		6	E-HINGE	
140	1129274-0000	-		8	GUIDE LUG	
150	1538868-0000	-		4	BRACKET	
160	1511609-0000	-		2	COVER	
170	1511610-0000	-		1	COVER	
180	1511611-0000	-		2	GASKET	
190	1511612-0000	-		1	GASKET	
200	1511613-0000	-		2	LOCKING ARM	
210	1511681-0000	-		2	LOCKING ARM	
220	1035794-0000	-		11	BLOCKING PIECE	
230	988685-0000	-		6	PIN	
240	1517182-0000	-		4	SPACER	
400	90143-0068	-	M	9	RUBBERSTRIP EMKA 1011-06	
410	90237-0175	-		2	TURNING HANDLE	
420	90237-0128	-		2	LOCK CYLINDER, 1109-U3	
430	90237-0153	-		2	LOCK HOUSING, 1121-U26-0B	
600	312105-0368	-		8	SCREW M6S M6X16 A280	
610	312115-0327	-		11	SCREW ISO4762 M5X12 A4	
620	312115-0329	-		12	SCREW ISO4762 M5X16 A4	
630	312155-0329	-		2	SCREW EN 10642 MF6S M5X16 A480	
640	312605-0314	-		13	HEXAGON NUT, M6M M5 A280	
650	312705-0312	-		16	NUT HEX. DOMED CAP MHM-6 M4 A280	
660	315105-0146	-		24	WASHER ISO 7089-5-200 HV-A4	
670	315105-0153	-		8	WASHER ISO 7089-6-200 HV-A4	
680	315105-0136	-		16	WASHER ISO 7089-4-200 HV-A4	

Pos	Part No	SP	UN	Qty	Description	Page No

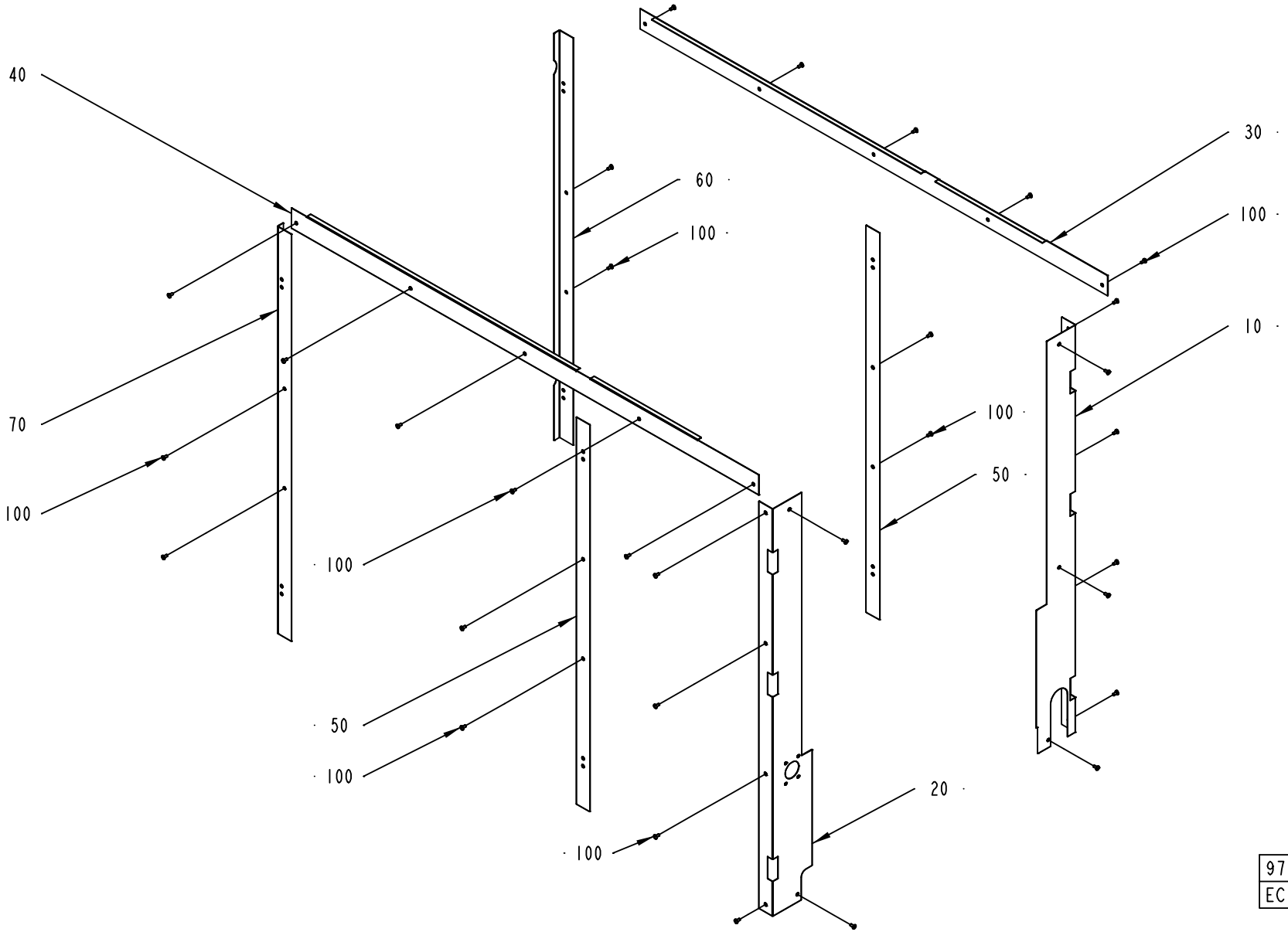
40
60
100
30
100
10
70
100
100
100
50
50
100
100
20
979215-4
ECN 73259

ECM: 73259 - 20011025
Group number: 979215-0200
Assembly Drawing: 979215-4_1_AA

Pos	Part No	SP	UN	Qty	Description	Page No
-						
10	1538089-0000	-		1	PLATE	
100	90287-0075	-		31	SCREW SLOT. PAN HEAD LKCS M6X12	
20	1517072-0000	-		1	PLATE	
30	1517073-0000	-		1	PLATE	
40	1517074-0000	-		1	PLATE	
50	1517075-0000	-		2	PLATE	
60	1517076-0000	-		1	PLATE	
70	1517077-0000	-		1	PLATE	

Pos	Part No	SP	UN	Qty	Description	Page No

CABLE DUCT

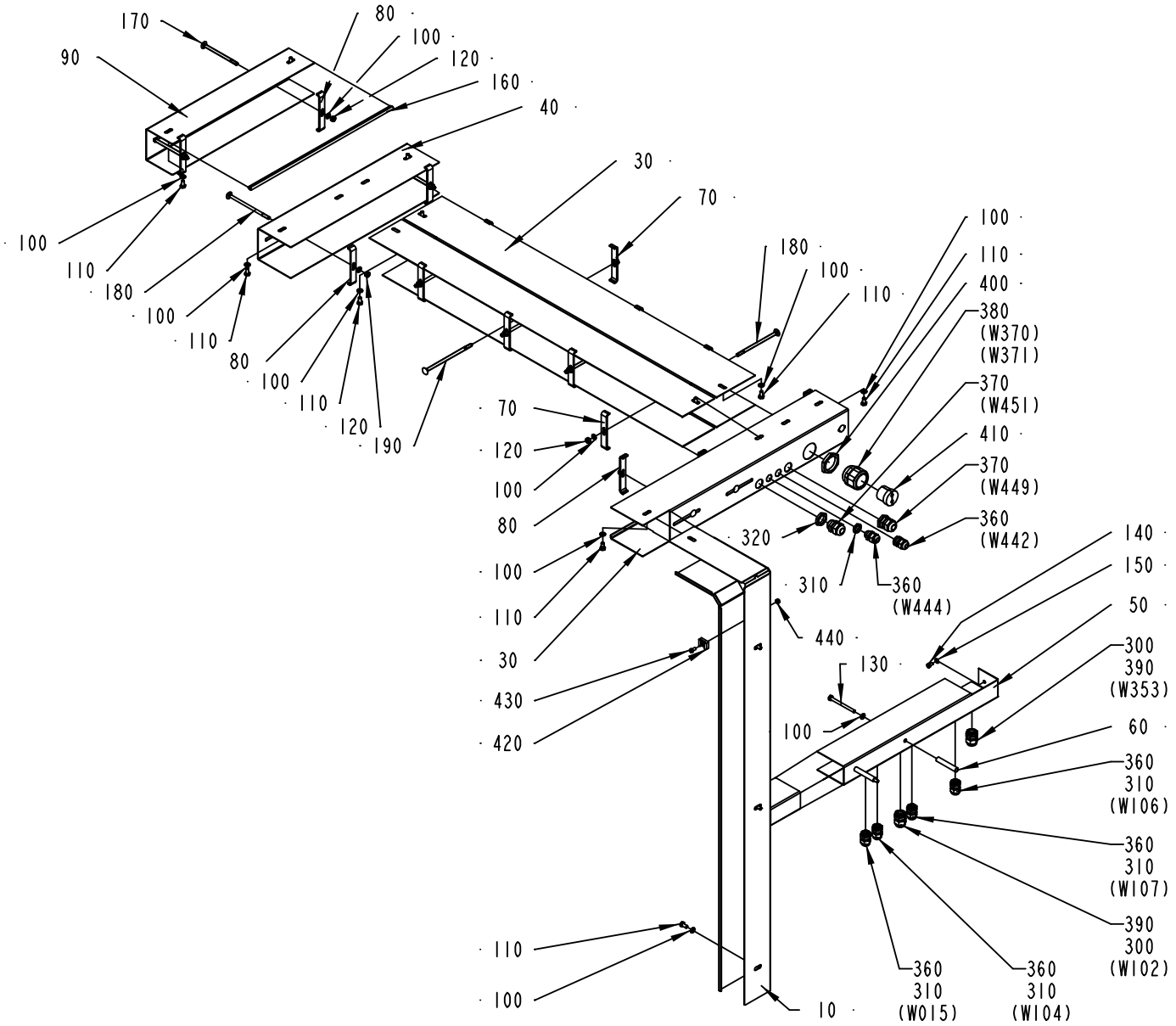

1524319-1
ECM 73260

ECM: 73260 - 20011220
Group number: 1524319-0100
Assembly Drawing: 1524319-1_1_AA

Pos	Part No	SP	UN	Qty	Description	Page No
-						
010	1519758-0000	-		1	CABLE DUCT	
020	1519760-0000	-		1	CABLE DUCT	
030	1519761-0000	-		1	CABLE DUCT	
040	1519762-0000	-		1	CABLE DUCT	
050	1519759-0000	-		1	CABLE DUCT	
060	1519764-0000	-		2	SPACER	
070	1519765-0001	-		8	SUPPORT	
080	1519765-0002	-		7	SUPPORT	
090	1519763-0000	-		1	CABLE DUCT	
100	315105-0153	-		30	WASHER ISO 7089-6-200 HV-A4	
110	312105-0366	-		13	SCREW M6S M6X12 A280	
120	312605-0316	-		15	HEXAGON NUT, M6M M6 A280	
130	312105-0384	-		2	SCREW M6S ISO 4014 M6X70 A480	
140	312105-0323	-		2	SKRUV M6S ISO 4017 M5X8 A480	
150	315105-0146	-		2	WASHER ISO 7089-5-200 HV-A4	
160	90143-0060	-	M	12	EDGE STRIP 9,5X6,3MM BLACK PVC	
170	90457-0148	-		2	SCREW CAP HEAD SQ. NECK M6X100 SS	
180	90458-1612	-		9	SCREW CAP HEAD SQ. NECK M6X120 SS	
190	90458-1613	-		4	SCREW CAP HEAD SQ. NECK M6X140 SS	
300	90099-0002	-		2	NUT PR 18,6 BRASS	
310	90099-0001	-		6	MUTTER PR 15,2 MäSSING	
320	90099-0087	-		2	NUT PR=20,4	
360	352103-0101	-		6	KABELFöRSKR. ST 9, PR15,2/PG9	
370	352103-0108	-		2	CABLE GLAND, ST 13,5 , PR20,4/PG13,5	
380	353240-0006	-		1	FöRSKRUVNING, PG 29	
390	352103-0106	-		2	CABLE GLAND, ST 11, PR18,6/PG11	
400	90099-0011	-		1	NUT PR 37 BRASS	
410	2504449-0000	-		1	INSERT	
420	352113-0204	-		5	ANCHOR PLATES FOR STRIPS, TYPE TM3S25-M	
430	312125-0325	-		5	SCREW SLOT.PAN HD. MCS 5X10 A480	
440	312605-0314	-		5	HEXAGON NUT, M6M M5 A280	

Pos	Part No	SP	UN	Qty	Description	Page No

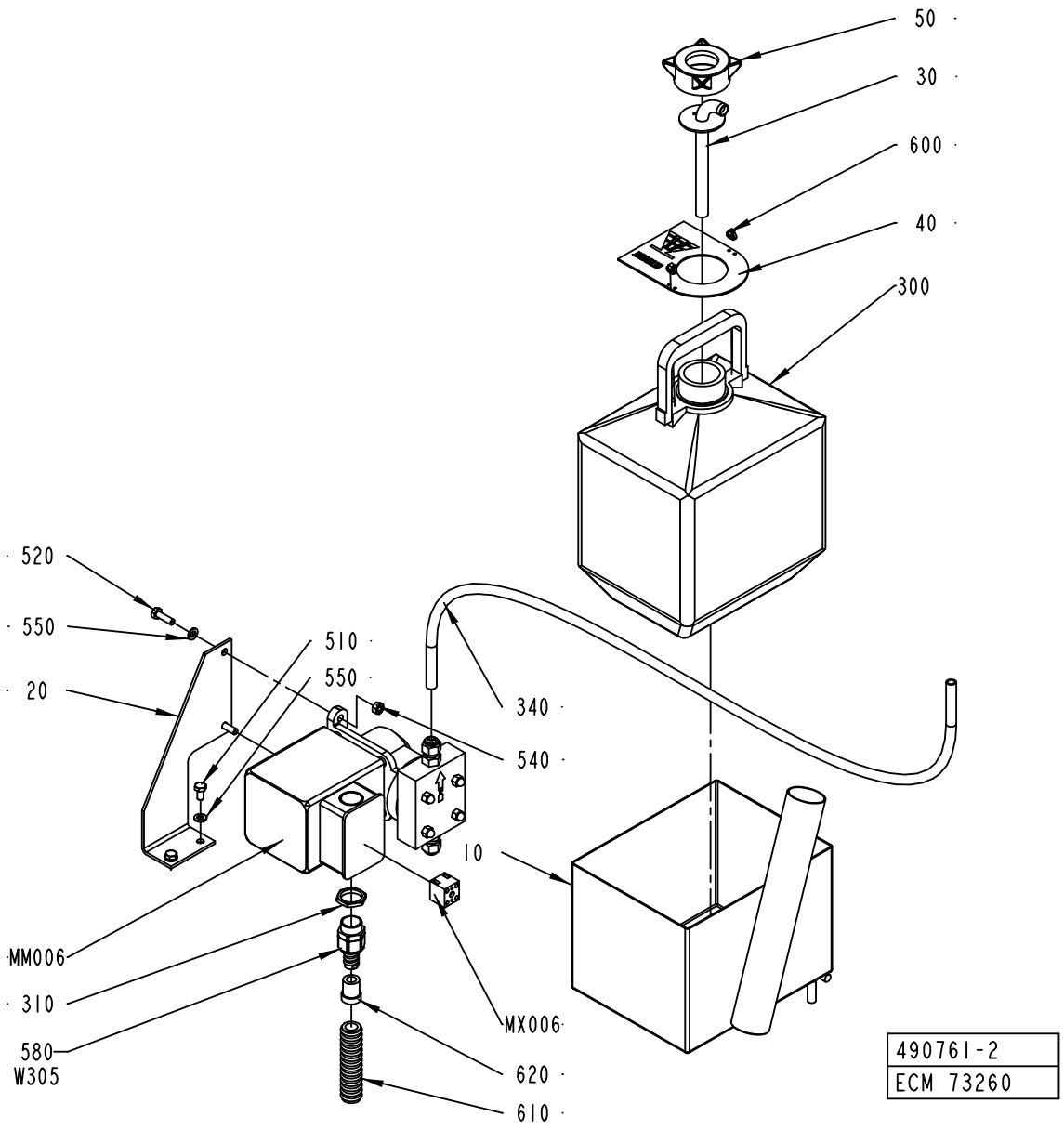
50
30
600
40
300
520
550
20
510
550
340
540
10
MM006
310
580
W305
MX006
620
610
490761-2
ECM 73260

ECM: 106564 - 20020313
Group number: 490761-0200
Assembly Drawing: 490761-2_1_AA

Pos	Part No	SP	UN	Qty	Description	Page No
-						
010	490768-0000	-		1	BOX	
020	490769-0000	-		1	BRACKET	
030	979217-0000	-		1	PIPE	
040	295387-0000	-		1	SIGN BOARD	
050	35962-0000	-		1	LID	
300	90050-0011	-		1	BOTTLE	
310	90099-0003	-		1	NUT	
340	90166-0008	-	CM	200	HOSE 7/10 PVC TRANSP.	
510	312105-0366	-		2	SCREW M6S M6X12 A280	
520	312105-0370	-		2	SCREW M6S ISO 4017 M6X20 A480	
540	312605-0316	-		2	HEXAGON NUT, M6M M6 A280	
550	315105-0153	-		4	WASHER ISO 7089-6-200 HV-A4	
580	B353242-0001	-		1	NORMAL WITHOUT INSERT, PG13,5	
	353249-0065	*-*		*1*	*INSERT, SINGEL HOLE, E152/09*	
600	352113-0101	-		2	CLIP STRIP, 92X2,5 MM	
610	90152-0059	-	MM	2500	SPIRAL CONDUIT, 18X12, UL 1211	
620	353249-0065	-		1	INSERT, SINGEL HOLE, E152/09	
MM006	B90321-0037	B		1	PUMP C-6125P EP 220V;50HZ	
	90321-0396	*C*		*1*	*FILTER*	
	90321-0380	*C*		*1*	*DIAPHRAGM*	
	90166-0157	*C*	*MM*	*1500*	*HOSE*	
MX006	90195-0020	B		1	TERMINAL BLOCK, 1977.2	
W305	351150-0412	-	M	4	CABLE OLFLEX 3X1,5 MM2 LIGHT/GREY	

Pos	Part No	SP	UN	Qty	Description	Page No

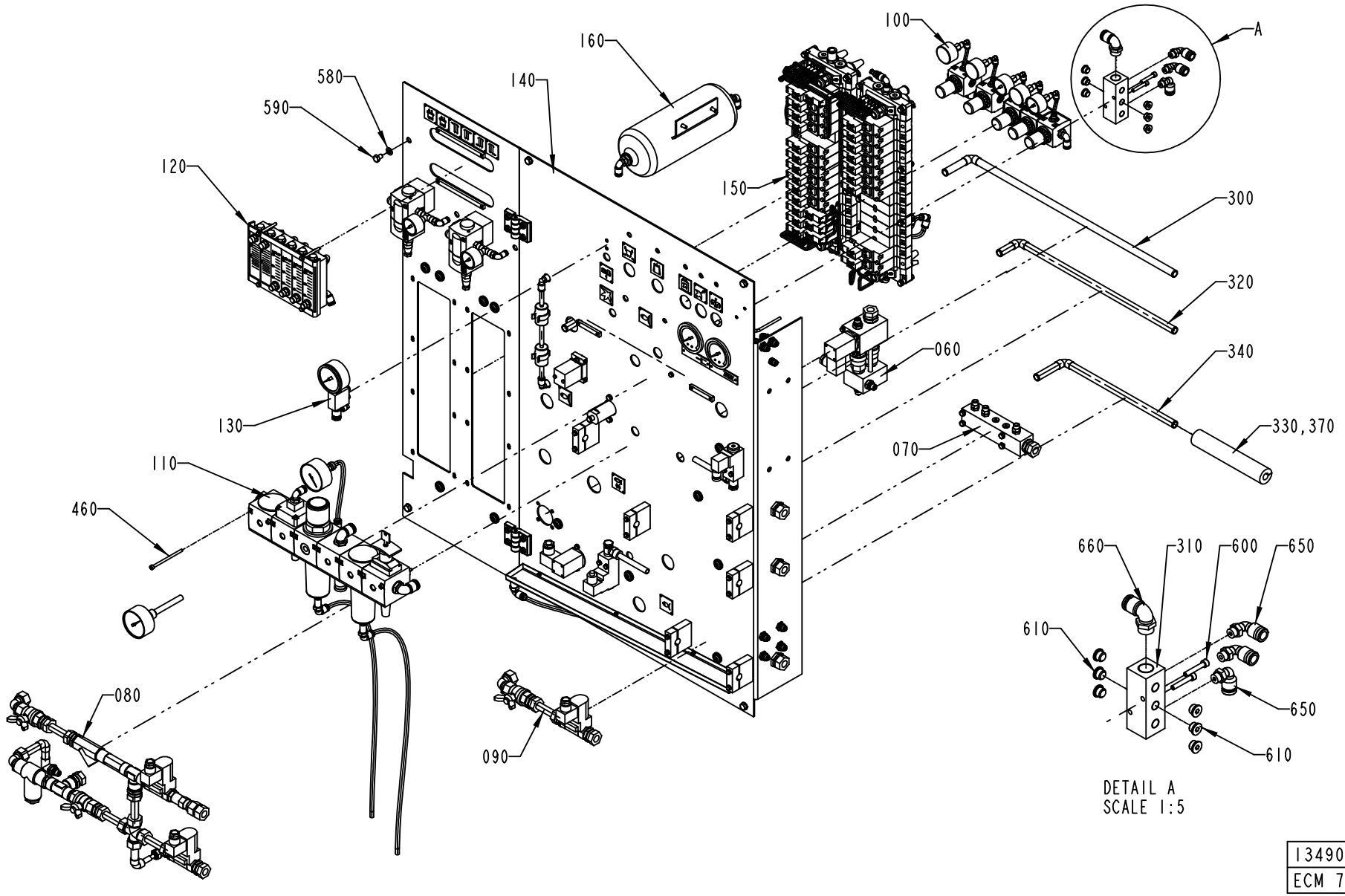

1349029-1
ECM 73251

ECM: 106552 - 20020313
Group number: 1349029-0100
Assembly Drawing: 1349029-1_1_AA

This list covers pages from 404 to 409

Pos	Part No	SP	UN	Qty	Description	Page No
-						
010	580993-0000	-		1	WATER DIAGRAM	
020	1348964-0000	-		1	AIR DIAGRAM	
060	A456757-0300	-		1	AIR INJECTOR	**411**
070	A469121-0400	-		1	JUNCTION BLOCK	**415**
080	A577824-0200	-		1	COOL WATER VALVE	**417**
090	A577825-0200	-		1	HOT WATER VALVE	**419**
100	A577822-0200	-		1	PRESSURE REGULATOR GROUP	**421**
110	A1348237-0100	-		1	AIR INLET GROUP	**423**
120	A1349090-0100	-		1	FLOW METER	**425**
130	A1349091-0100	-		1	GAUGE GROUP	**427**
140	A1349094-0100	-		1	VALVE PLATE	**429, 431**
150	A1478717-0100	-		1	VALVE GROUP	**433, 435, 437**
160	A929415-0100	-		1	BALANCE TANK	**439**
290	342946-0122	-		1	T-COUPLING,UNION 8/6	
300	2517051-0000	-		1	PIPE	
310	90458-0281	-		1	DISTRIBUTOR 8933502114	
320	577832-0000	-		1	PIPE	
330	456137-0000	-		1	HOSE	
340	576293-0000	-		1	PIPE	
350	342735-0110	-		1	ELBOW PIPE	
360	90055-0118	-		2	ELBOW PIPE JOINT -8MM	
370	90153-0035	-		1	ADHESIVE, CLIMAFLEX 1632864	
380	90166-0013	-	M	38	TUBE 8 MM PA BLUE	
390	90166-0196	-	CM	500	TUBE 14 MM PA BLUE	
400	90166-0068	-	M	3	TUBE 12 MM PA BLUE	
410	90166-0081	-	M	154	TUBE 6 MM PA BLUE	
420	90166-0118	-	M	9	TUBE 8 MM PA BLACK	
430	90166-0119	-	M	3	HOSE PUR 4/6 BLACK	
440	90230-0062	B		2	NON RETURN VALVE, 6, OP. PRESS. 0,2 BAR	
450	90235-0151	B		1	NON-RETURN VALVE	
460	90287-0212	-		4	SCREW MC6S M5X85 129	
470	90055-0101	-		3	Y-CONNECTION, 8-8	
580	315105-0165	-		6	WASHER ISO 7089-8-200 HV-A4	
590	312105-0447	-		6	SCREW M6S ISO 4017 M8X12 A480	
600	312115-0376	-		2	SCREW ISO4762 M6X35 A4	
610	342713-0210	-		6	PLUG, EXT THREAD HEX SOCKET 8638-00-140	
620	342716-0203	-		4	REDUCER 6-8	
630	342716-0209	-		3	REDUCER 8-12	
640	342722-0205	-		1	STRAIGHT COUPLING D=8-G1/4"	
650	342732-0109	-		3	ELBOW PIPE JOINT, EXT.THREAD, D=1MM-G1/4	
660	342732-0161	-		1	ELBOW PIPE JOINT,EXT.THREAD,D=14 MM-G1/2	
670	342735-0102	-		2	ELBOW PIPE JOINT	
680	342735-0103	-		2	ELBOW PIPE JOINT	
690	342735-0109	-		9	ELBOW PIPE JOINT	
700	342742-0104	-		1	T-COUPLING,ADJUST,F.PLASTIC TUBE 8-G1/4"	
710	342748-0102	-		3	T-CONNECTION 6MM	
720	342748-0103	-		4	T-CONNECTION 8MM	
730	342748-0109	-		5	T-CONNECTION 12MM	
740	342946-0112	-		2	T-COUPLING,UNION 6/4	
750	352113-0104	-		15	CLIP STRIP, 300X4,8 MM	
760	359000-0400	-		78	MARKING CO2/4"0"	
770	359000-0401	-		59	MARKING COLLAR 2/4 "1" YELLOW	
780	359000-0402	-		44	MARKING COLLAR 2/4 "2" YELLOW	
790	359000-0403	-		13	MARKING COLLAR PA2/4 "3" YELLOW	
800	359000-0404	-		18	MARKING COLLAR PA2/4 "4" YELLOW	
810	359000-0405	-		22	MARKING CO2/4"5"	
820	359000-0406	-		20	MARKING COLLAR PA2/4 "6" YELLOW	
830	359000-0407	-		16	MARKING COLLAR PA2/4 "7" YELLOW	
840	359000-0408	-		6	MARKING COLLAR PA2/4 "8" YELLOW	
850	359000-0409	-		11	MARKING COLLAR PA2/4 "9" YELLOW	
860	359000-0771	-		27	MARKING CO2/4"V"	

Machine Type | Group Description | Used-In | Group Number | Page No

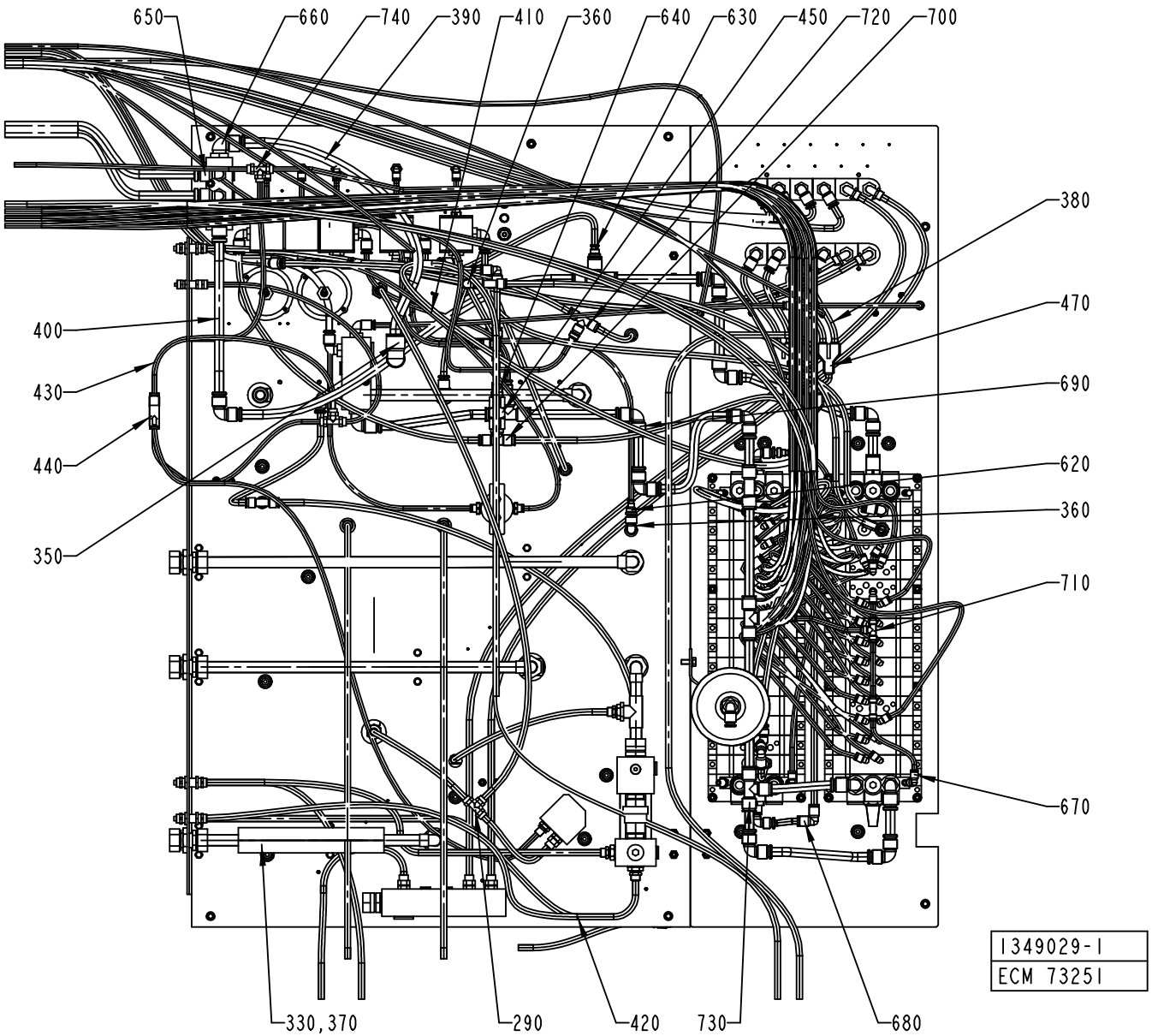
650
660
740
390
410
360
640
630
450
720
700
380
470
690
620
360
710
670
400
430
440
350
330,370
290
420
730
680
1349029-1
ECM 73251

ECM: 106552 - 20020313
Group number: 1349029-0100
Assembly Drawing: 1349029-1_2_AA

This list covers pages from 404 to 409

Pos	Part No	SP	UN	Qty	Description	Page No
-						
010	580993-0000	-		1	WATER DIAGRAM	
020	1348964-0000	-		1	AIR DIAGRAM	
060	A456757-0300	-		1	AIR INJECTOR	**411**
070	A469121-0400	-		1	JUNCTION BLOCK	**415**
080	A577824-0200	-		1	COOL WATER VALVE	**417**
090	A577825-0200	-		1	HOT WATER VALVE	**419**
100	A577822-0200	-		1	PRESSURE REGULATOR GROUP	**421**
110	A1348237-0100	-		1	AIR INLET GROUP	**423**
120	A1349090-0100	-		1	FLOW METER	**425**
130	A1349091-0100	-		1	GAUGE GROUP	**427**
140	A1349094-0100	-		1	VALVE PLATE	**429, 431**
150	A1478717-0100	-		1	VALVE GROUP	**433, 435, 437**
160	A929415-0100	-		1	BALANCE TANK	**439**
290	342946-0122	-		1	T-COUPLING,UNION 8/6	
300	2517051-0000	-		1	PIPE	
310	90458-0281	-		1	DISTRIBUTOR 8933502114	
320	577832-0000	-		1	PIPE	
330	456137-0000	-		1	HOSE	
340	576293-0000	-		1	PIPE	
350	342735-0110	-		1	ELBOW PIPE	
360	90055-0118	-		2	ELBOW PIPE JOINT -8MM	
370	90153-0035	-		1	ADHESIVE, CLIMAFLEX 1632864	
380	90166-0013	-	M	38	TUBE 8 MM PA BLUE	
390	90166-0196	-	CM	500	TUBE 14 MM PA BLUE	
400	90166-0068	-	M	3	TUBE 12 MM PA BLUE	
410	90166-0081	-	M	154	TUBE 6 MM PA BLUE	
420	90166-0118	-	M	9	TUBE 8 MM PA BLACK	
430	90166-0119	-	M	3	HOSE PUR 4/6 BLACK	
440	90230-0062	B		2	NON RETURN VALVE, 6, OP. PRESS. 0,2 BAR	
450	90235-0151	B		1	NON-RETURN VALVE	
460	90287-0212	-		4	SCREW MC6S M5X85 129	
470	90055-0101	-		3	Y-CONNECTION, 8-8	
580	315105-0165	-		6	WASHER ISO 7089-8-200 HV-A4	
590	312105-0447	-		6	SCREW M6S ISO 4017 M8X12 A480	
600	312115-0376	-		2	SCREW ISO4762 M6X35 A4	
610	342713-0210	-		6	PLUG, EXT THREAD HEX SOCKET 8638-00-140	
620	342716-0203	-		4	REDUCER 6-8	
630	342716-0209	-		3	REDUCER 8-12	
640	342722-0205	-		1	STRAIGHT COUPLING D=8-G1/4"	
650	342732-0109	-		3	ELBOW PIPE JOINT, EXT.THREAD, D=1MM-G1/4	
660	342732-0161	-		1	ELBOW PIPE JOINT,EXT.THREAD,D=14 MM-G1/2	
670	342735-0102	-		2	ELBOW PIPE JOINT	
680	342735-0103	-		2	ELBOW PIPE JOINT	
690	342735-0109	-		9	ELBOW PIPE JOINT	
700	342742-0104	-		1	T-COUPLING,ADJUST,F.PLASTIC TUBE 8-G1/4"	
710	342748-0102	-		3	T-CONNECTION 6MM	
720	342748-0103	-		4	T-CONNECTION 8MM	
730	342748-0109	-		5	T-CONNECTION 12MM	
740	342946-0112	-		2	T-COUPLING,UNION 6/4	
750	352113-0104	-		15	CLIP STRIP, 300X4,8 MM	
760	359000-0400	-		78	MARKING CO2/4"0"	
770	359000-0401	-		59	MARKING COLLAR 2/4 "1" YELLOW	
780	359000-0402	-		44	MARKING COLLAR 2/4 "2" YELLOW	
790	359000-0403	-		13	MARKING COLLAR PA2/4 "3" YELLOW	
800	359000-0404	-		18	MARKING COLLAR PA2/4 "4" YELLOW	
810	359000-0405	-		22	MARKING CO2/4"5"	
820	359000-0406	-		20	MARKING COLLAR PA2/4 "6" YELLOW	
830	359000-0407	-		16	MARKING COLLAR PA2/4 "7" YELLOW	
840	359000-0408	-		6	MARKING COLLAR PA2/4 "8" YELLOW	
850	359000-0409	-		11	MARKING COLLAR PA2/4 "9" YELLOW	
860	359000-0771	-		27	MARKING CO2/4"V"	

Machine Type | Group Description | Used-In | Group Number | Page No

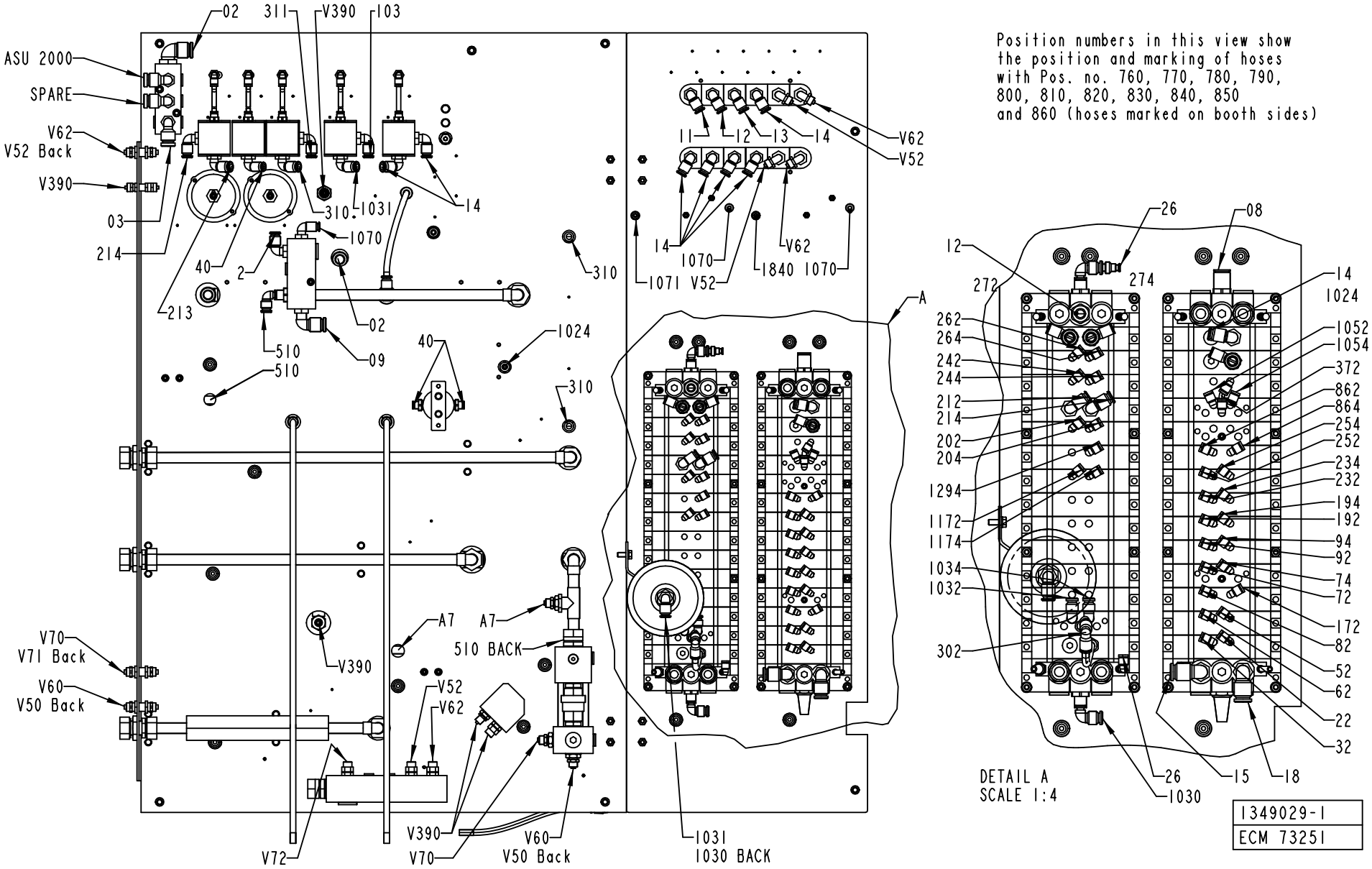
02
311
V390
103
ASU 2000
SPARE
V62
V52 Back
V390
03
214
213
40
2
310
1031
14
1070
02
09
510
510
310
1024
40
310
11
12
13
14
V62
V52
14
1070
1071 V52
V62
1840 1070
A
Position numbers in this view show the position and marking of hoses with Pos. no. 760, 770, 780, 790, 800, 810, 820, 830, 840, 850 and 860 (hoses marked on booth sides)
26
08
12
272
274
14
1024
262
264
242
244
212
214
202
204
1294
1172
1174
1034
1032
302
1052
1054
372
862
864
254
252
234
232
194
192
94
92
74
72
172
82
52
62
22
32
DETAIL A
SCALE 1:4
26
1030
15
18
V70
V71 Back
V60
V50 Back
A7
A7
510 BACK
V390
V52
V62
V72
V390
V70
V60
V50 Back
1031
1030 BACK
1349029-1
ECM 73251

ECM: 106552 - 20020313
Group number: 1349029-0100
Assembly Drawing: 1349029-1_3_AA

This list covers pages from 404 to 409

Pos	Part No	SP	UN	Qty	Description	Page No
-						
010	580993-0000	-		1	WATER DIAGRAM	
020	1348964-0000	-		1	AIR DIAGRAM	
060	A456757-0300	-		1	AIR INJECTOR	**411**
070	A469121-0400	-		1	JUNCTION BLOCK	**415**
080	A577824-0200	-		1	COOL WATER VALVE	**417**
090	A577825-0200	-		1	HOT WATER VALVE	**419**
100	A577822-0200	-		1	PRESSURE REGULATOR GROUP	**421**
110	A1348237-0100	-		1	AIR INLET GROUP	**423**
120	A1349090-0100	-		1	FLOW METER	**425**
130	A1349091-0100	-		1	GAUGE GROUP	**427**
140	A1349094-0100	-		1	VALVE PLATE	**429, 431**
150	A1478717-0100	-		1	VALVE GROUP	**433, 435, 437**
160	A929415-0100	-		1	BALANCE TANK	**439**
290	342946-0122	-		1	T-COUPLING,UNION 8/6	
300	2517051-0000	-		1	PIPE	
310	90458-0281	-		1	DISTRIBUTOR 8933502114	
320	577832-0000	-		1	PIPE	
330	456137-0000	-		1	HOSE	
340	576293-0000	-		1	PIPE	
350	342735-0110	-		1	ELBOW PIPE	
360	90055-0118	-		2	ELBOW PIPE JOINT -8MM	
370	90153-0035	-		1	ADHESIVE, CLIMAFLEX 1632864	
380	90166-0013	-	M	38	TUBE 8 MM PA BLUE	
390	90166-0196	-	CM	500	TUBE 14 MM PA BLUE	
400	90166-0068	-	M	3	TUBE 12 MM PA BLUE	
410	90166-0081	-	M	154	TUBE 6 MM PA BLUE	
420	90166-0118	-	M	9	TUBE 8 MM PA BLACK	
430	90166-0119	-	M	3	HOSE PUR 4/6 BLACK	
440	90230-0062	B		2	NON RETURN VALVE, 6, OP. PRESS. 0,2 BAR	
450	90235-0151	B		1	NON-RETURN VALVE	
460	90287-0212	-		4	SCREW MC6S M5X85 129	
470	90055-0101	-		3	Y-CONNECTION, 8-8	
580	315105-0165	-		6	WASHER ISO 7089-8-200 HV-A4	
590	312105-0447	-		6	SCREW M6S ISO 4017 M8X12 A480	
600	312115-0376	-		2	SCREW ISO4762 M6X35 A4	
610	342713-0210	-		6	PLUG, EXT THREAD HEX SOCKET 8638-00-140	
620	342716-0203	-		4	REDUCER 6-8	
630	342716-0209	-		3	REDUCER 8-12	
640	342722-0205	-		1	STRAIGHT COUPLING D=8-G1/4"	
650	342732-0109	-		3	ELBOW PIPE JOINT, EXT.THREAD, D=1MM-G1/4	
660	342732-0161	-		1	ELBOW PIPE JOINT,EXT.THREAD,D=14 MM-G1/2	
670	342735-0102	-		2	ELBOW PIPE JOINT	
680	342735-0103	-		2	ELBOW PIPE JOINT	
690	342735-0109	-		9	ELBOW PIPE JOINT	
700	342742-0104	-		1	T-COUPLING,ADJUST,F.PLASTIC TUBE 8-G1/4"	
710	342748-0102	-		3	T-CONNECTION 6MM	
720	342748-0103	-		4	T-CONNECTION 8MM	
730	342748-0109	-		5	T-CONNECTION 12MM	
740	342946-0112	-		2	T-COUPLING,UNION 6/4	
750	352113-0104	-		15	CLIP STRIP, 300X4,8 MM	
760	359000-0400	-		78	MARKING CO2/4"0"	
770	359000-0401	-		59	MARKING COLLAR 2/4 "1" YELLOW	
780	359000-0402	-		44	MARKING COLLAR 2/4 "2" YELLOW	
790	359000-0403	-		13	MARKING COLLAR PA2/4 "3" YELLOW	
800	359000-0404	-		18	MARKING COLLAR PA2/4 "4" YELLOW	
810	359000-0405	-		22	MARKING CO2/4"5"	
820	359000-0406	-		20	MARKING COLLAR PA2/4 "6" YELLOW	
830	359000-0407	-		16	MARKING COLLAR PA2/4 "7" YELLOW	
840	359000-0408	-		6	MARKING COLLAR PA2/4 "8" YELLOW	
850	359000-0409	-		11	MARKING COLLAR PA2/4 "9" YELLOW	
860	359000-0771	-		27	MARKING CO2/4"V"	

Machine Type | Group Description | Used-In | Group Number | Page No

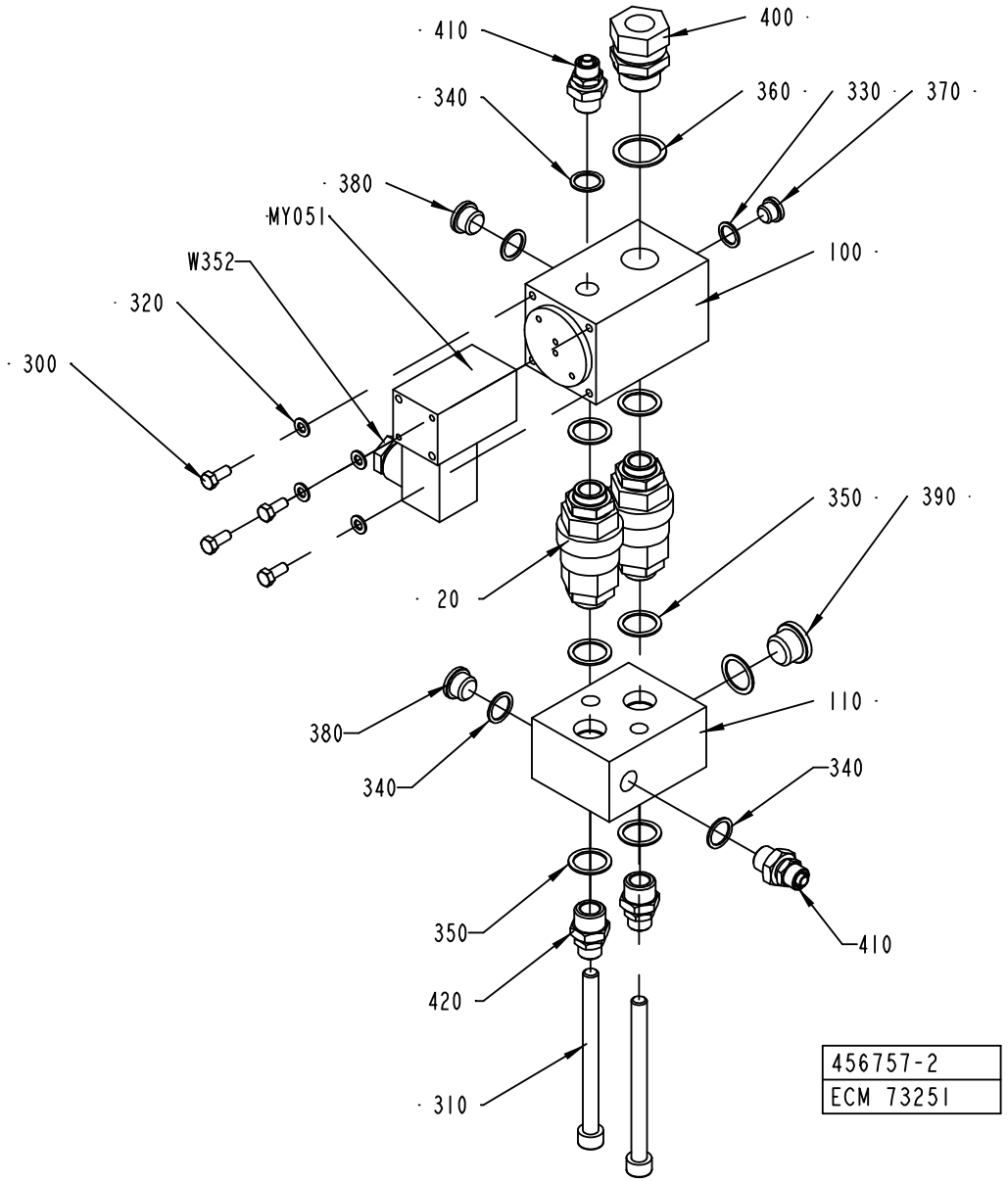
410
400
340
360
330
370
380
MY051
W352
100
320
300
350
390
20
380
110
340
340
350
410
420
310
456757-2
ECM 73251

ECM: 115746 - 20020930
Group number: 456757-0300
Assembly Drawing: 456757-2_1_AA

Pos	Part No	SP	UN	Qty	Description	Page No
-						
020	A491536-0200	B		2	NON-RETURN VALVE	**413**
100	456756-0000	-		1	BLOCK	
110	456755-0000	-		1	BLOCK	
300	312105-0327	-		4	SCREW M6S ISO 4017 M5X12 A480	
310	312111-0471	-		2	SCREW HEX.SOCK.HD.MC6S-TT 8X100 88 FZ	
320	315105-0146	-		4	WASHER ISO 7089-5-200 HV-A4	
330	315233-0109	-		1	WASHER PL.RND.NYL.10,3/14,H=1	
340	315233-0110	-		4	WASHER PL.RND.NYL.13,3/17,H=1	
350	315233-0111	-		7	WASHER PL.RND.NYL.17/22,H=1	
360	315233-0113	-		1	WASHER PL.RND.NYL.21,4/27,H=1,2	
370	342713-0209	-		1	PLUG, EXT THREAD HEX SOCKET 8638-00-180	
380	342713-0210	-		2	PLUG, EXT THREAD HEX SOCKET 8638-00-140	
390	342713-0211	-		1	PLUG, EXT THREAD HEX SOCKET 8638-00-380	
400	342720-0114	-		1	CONN. STR. GA-15-G1/2	
410	342921-0122	-		2	STRAIGHT COUPLING,EXT.THREADED 8/6-G1/4"	
420	342921-0123	-		2	STRAIGHT COUPLING,EXT.THREADED 8/6-G3/8"	
MY051	90042-0173	B		1	SOLENOID VALVE BURKERT	
W352	351150-0431	-	M	3	CABLE OLFLEX 2X0,75 MM2 LIGHT/GREY	

Pos	Part No	SP	UN	Qty	Description	Page No

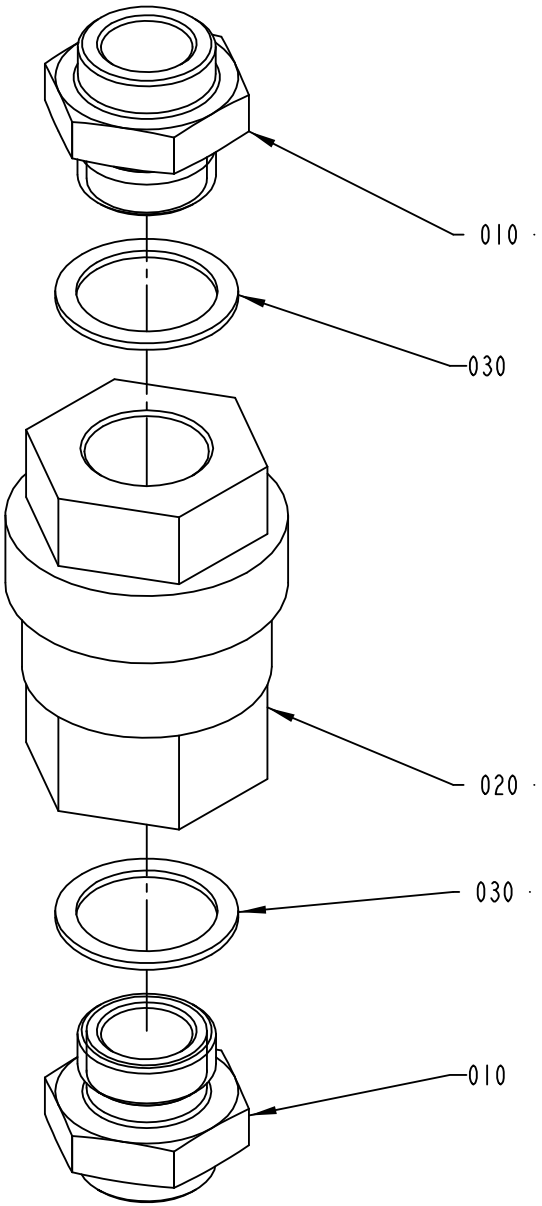

491536-2
ECM 73251

ECM: 115878 - 20020930
Group number: 491536-0200
Assembly Drawing: 491536-2_1_AA

Pos	Part No	SP	UN	Qty	Description	Page No
-						
010	751086-0000	-		2	NIPPLE	
020	90230-0028	B		1	NON-RETURN VALVE H 151 R 3/8"	
030	315233-0111	B		2	WASHER PL.RND.NYL.17/22,H=1	

Pos	Part No	SP	UN	Qty	Description	Page No

Machine Type | Group Description | Used-In | Group Number | Page No

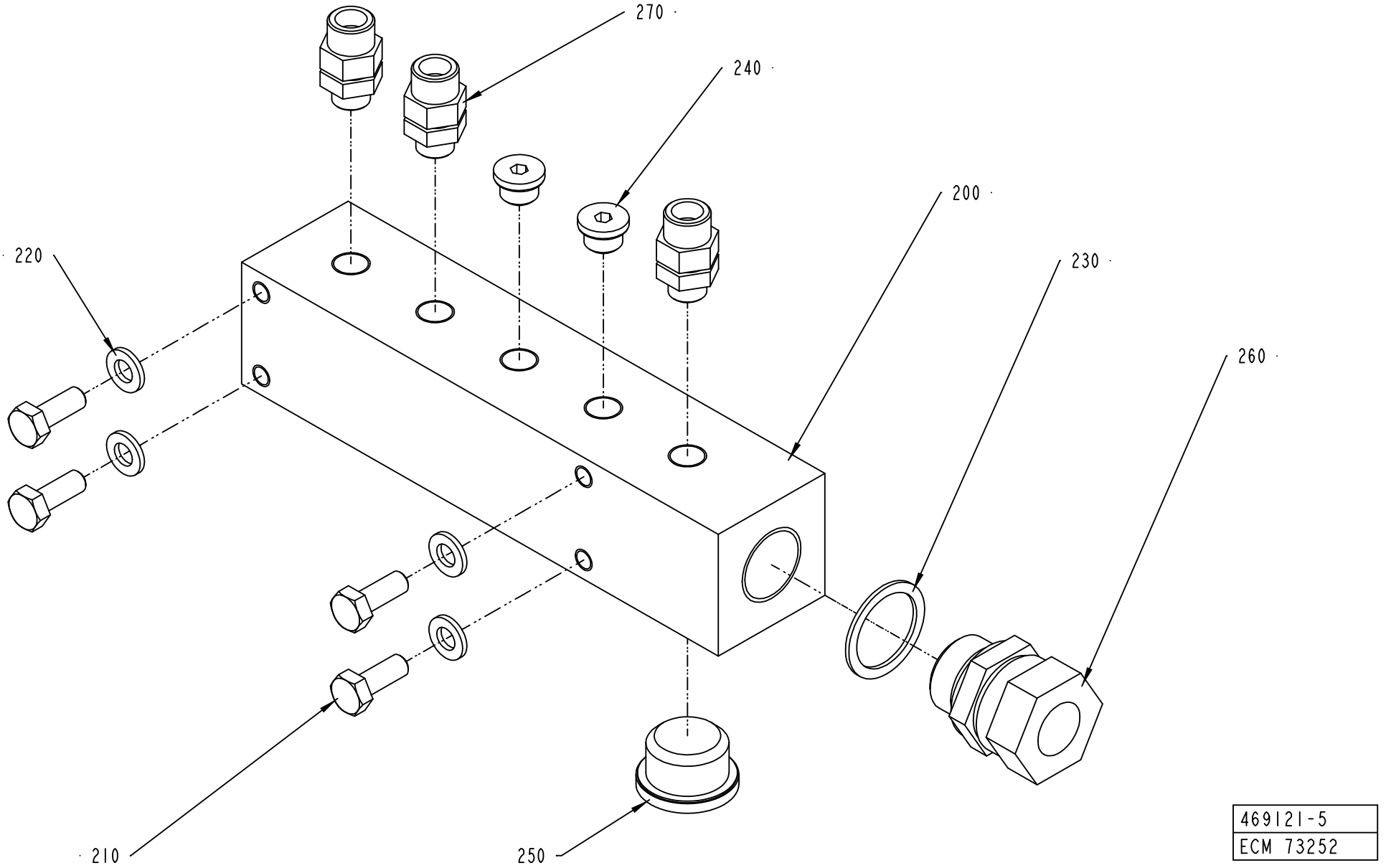
270
240
200
220
230
260
210
250
469121-5
ECM 73252

ECM: 73252 - 20011221
Group number: 469121-0400
Assembly Drawing: 469121-5_1_AA

Pos	Part No	SP	UN	Qty	Description	Page No
-						
200	469122-0000	-		1	BLOCK	
210	312105-0368	-		4	SCREW M6S M6X16 A280	
220	315105-0153	-		4	WASHER ISO 7089-6-200 HV-A4	
230	315233-0113	-		1	WASHER PL.RND.NYL.21,4/27,H=1,2	
240	342713-0209	-		2	PLUG, EXT THREAD HEX SOCKET 8638-00-180	
250	342713-0213	-		1	PLUG, EXT THREAD HEX SOCKET 8638-00-120	
260	342720-0114	-		1	CONN. STR. GA-15-G1/2	
270	342921-0121	-		3	STRAIGHT COUPLING,EXT.THREADED 8/6-G1/8"	

Pos	Part No	SP	UN	Qty	Description	Page No

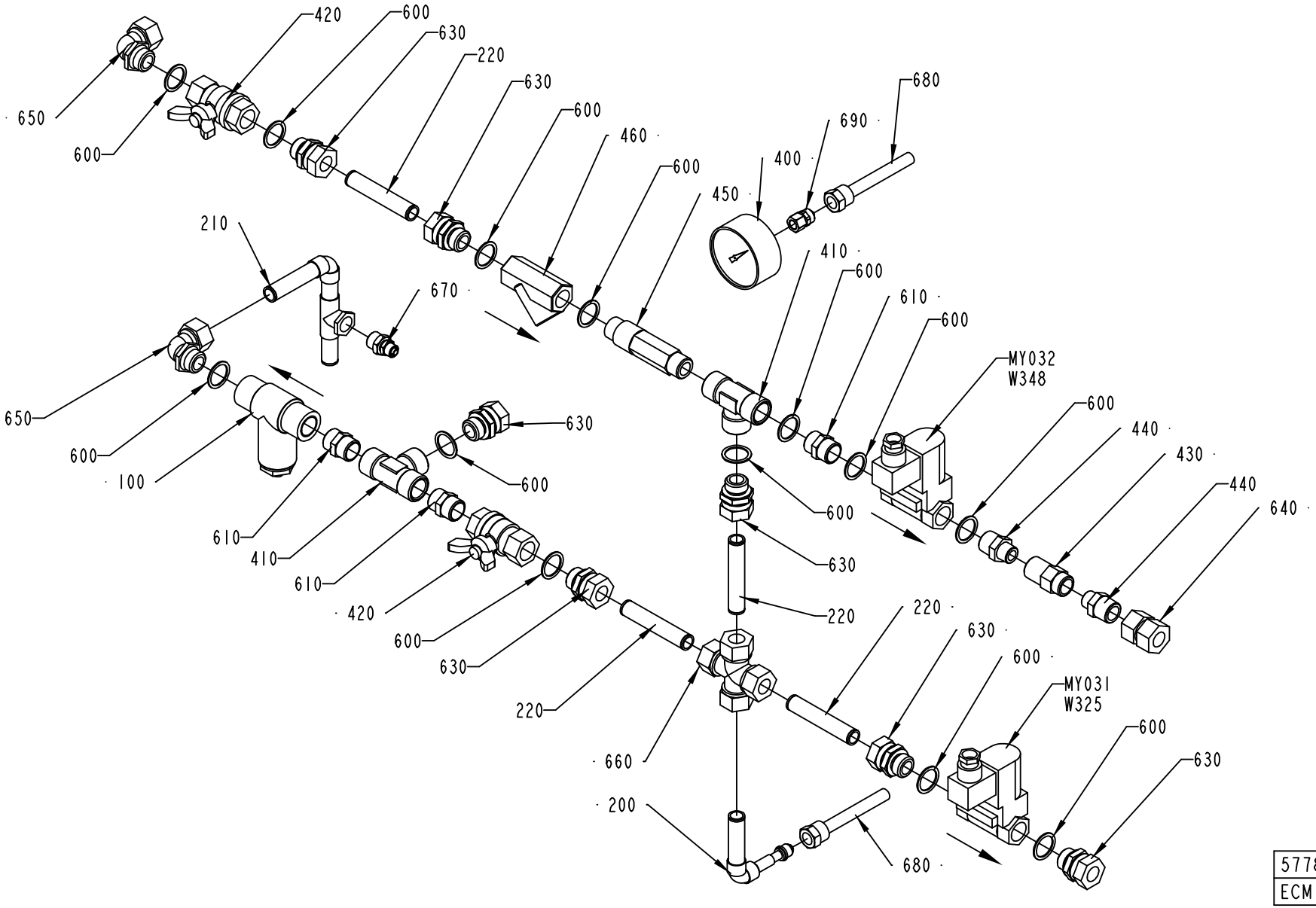
420
600
630
220
630
600
460
600
450
400
690
680
650
600
210
670
410
600
610
600
MY032
W348
600
440
430
440
640
650
600
100
630
600
610
410
610
420
600
630
220
630
600
MY031
W325
600
630
220
660
200
680
577824-2
ECM 73253

ECM: 115874 - 20020930
Group number: 577824-0200
Assembly Drawing: 577824-2_1_AA

Pos	Part No	SP	UN	Qty	Description	Page No
-						
100	B271823-0000	B		1	FILTER	
	90415-0314	*B*		*1*	*FILTER INSERT / 5594-36*	
	90415-0325	*B*		*1*	*GASKET*	
200	1512806-0000	-		1	PIPE	
210	1350188-0000	-		1	PIPE	
220	576287-0000	-		4	PIPE	
400	90043-0006	B		1	PRESSURE GAUGE, 2041 D=63 MM	
410	90140-0010	-		2	T-PIPE, INT. THREAD, 20031/2	
420	90187-0029	-		2	BALL VALVE G1/2, NPBR	
430	90270-0347	B		1	VALVE	
440	90330-0019	-		2	NIPPLES, EXT. THREAD. R1/2-R3/8	
450	90415-0018	B		1	FILTER FOR LIME SEPARATING / D MOD.AD	
460	90415-0019	B		1	FILTER / ART.NO. HH-M15-RG	
600	315233-0113	-		13	WASHER PL.RND.NYL.21,4/27,H=1,2	
610	342700-0113	-		3	NIPPLES,HEXAGON,EXT.G-THREAD G1/2"-G1/2"	
630	342720-0114	-		7	CONN. STR. GA-15-G1/2	
640	342723-0114	-		1	CONN. STR. PIPE GI-15-G1/2	
650	342730-0114	-		2	CONN. ELBOW WA-15-1/2	
660	342753-0114	-		1	CONN. CROSS K-15	
670	342921-0123	-		1	STRAIGHT COUPLING,EXT.THREADED 8/6-G3/8"	
680	342903-0121	-		2	NUT WITH SPRING 8/6-M12X1	
690	342923-0121	-		1	STRAIGHT COUPL.,INT.THREADED 8/6-G1/8"	
MY031	B90042-0172	B		1	SOLENOID VALVE 4023/1005/1032 24VDC	
	90042-0467	*A*		*1*	*COIL 24VDC GSR*	
MY032	B90042-0172	B		1	SOLENOID VALVE 4023/1005/1032 24VDC	
	90042-0467	*A*		*1*	*COIL 24VDC GSR*	
W325	351150-0403	-	M	3	CABLE OLFLEX 3X0,75 MM2 LIGHT/GREY	
W348	351150-0403	-	M	3	CABLE OLFLEX 3X0,75 MM2 LIGHT/GREY	

Pos	Part No	SP	UN	Qty	Description	Page No

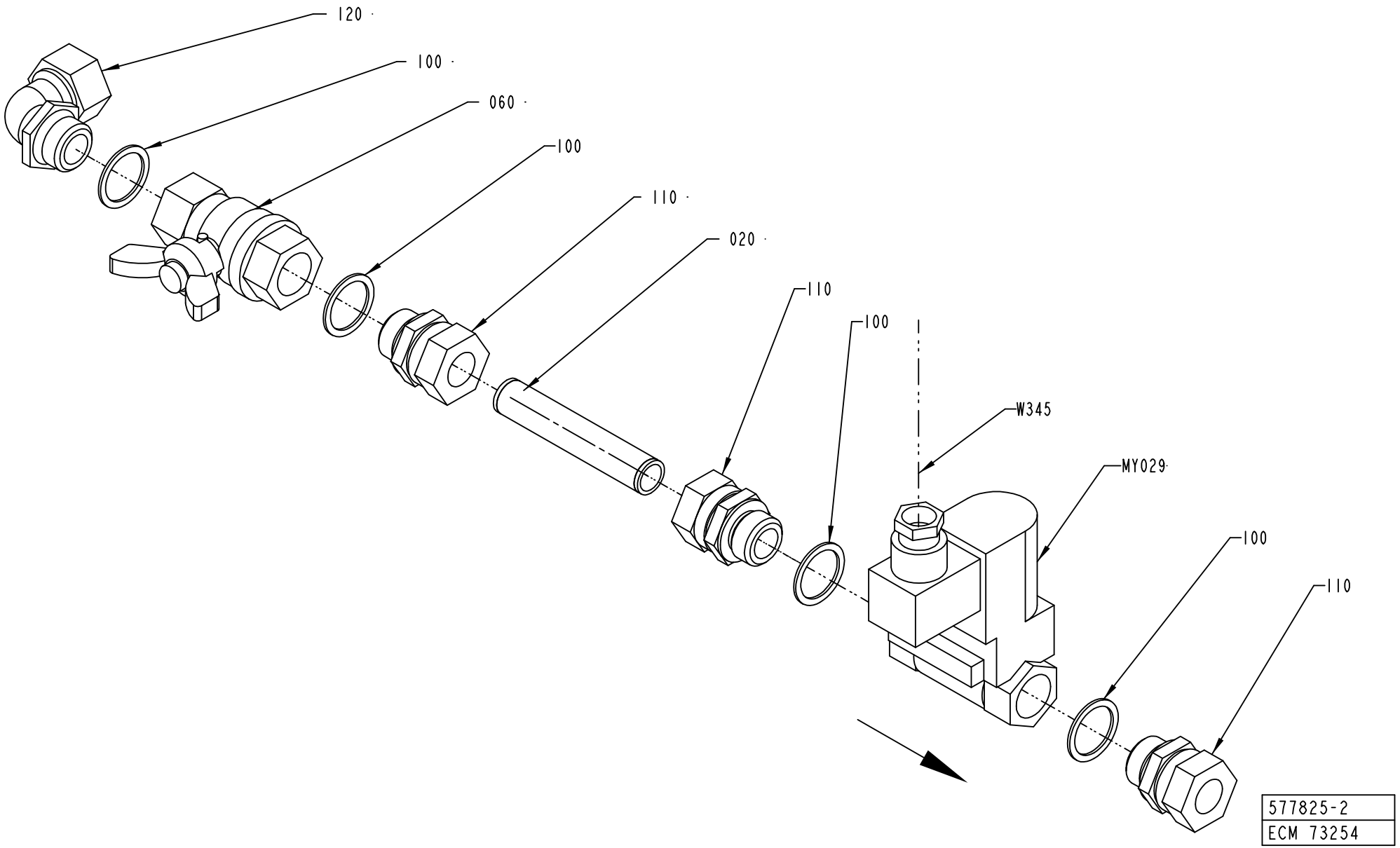
120
100
060
100
110
020
110
100
W345
MY029
100
110
577825-2
ECM 73254

ECM: 115876 - 20020930
Group number: 577825-0200
Assembly Drawing: 577825-2_1_AA

Pos	Part No	SP	UN	Qty	Description	Page No
-						
100	315233-0113	-		4	WASHER PL.RND.NYL.21,4/27,H=1,2	
110	342720-0114	-		3	CONN. STR. GA-15-G1/2	
120	342730-0114	-		1	CONN. ELBOW WA-15-1/2	
20	576287-0000	-		1	PIPE	
60	90187-0029	B		1	BALL VALVE G1/2, NPBR	
MY029	B90042-0172	B		1	SOLENOID VALVE 4023/1005/1032 24VDC	
	90042-0467	*A*		*1*	*COIL 24VDC GSR*	
W345	351150-0431	-	M	1	CABLE OLFLEX 2X0,75 MM2 LIGHT/GREY	

Pos	Part No	SP	UN	Qty	Description	Page No

Machine Type | Group Description | Used-In | Group Number | Page No

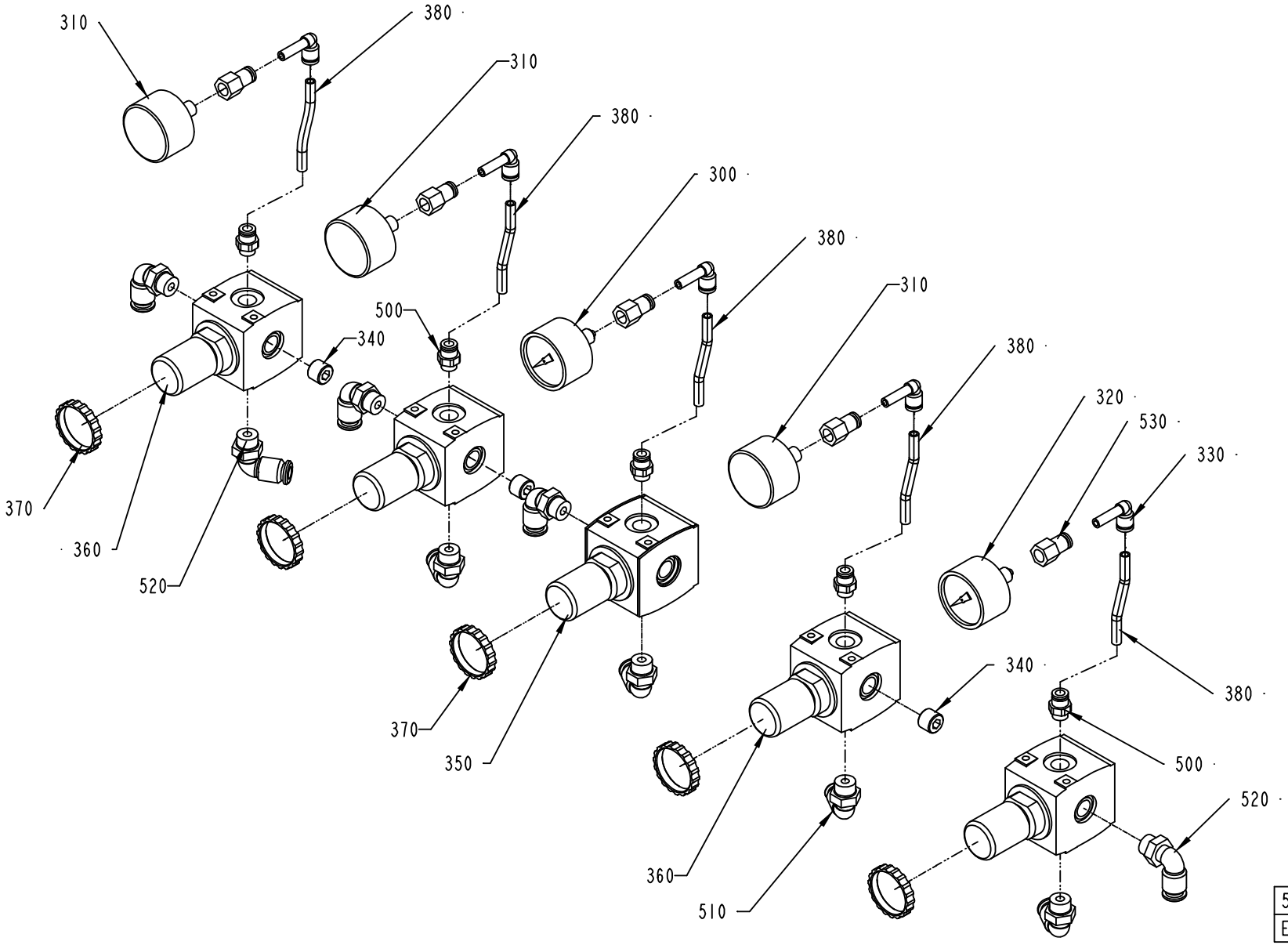
310
380
310
380
300
380
310
380
320
530
330
500
340
370
360
520
350
340
380
500
520
360
510
577822-2
ECM 73253

ECM: 106555 - 20020313
Group number: 577822-0200
Assembly Drawing: 577822-2_1_AA

Pos	Part No	SP	UN	Qty	Description	Page No
-						
300	90043-0021	B		1	PRESSURE GAUGE WIEGAND 0-1 BAR 1/8"	
310	90043-0068	B		3	PRESSURE GAUGE	
320	90043-0069	B		1	PRESSURE GAUGE 0-4BAR WIEGAND 2040	
330	90055-0217	-		5	ELBOW PIPE JOINT	
340	90087-0036	-		3	PLUG	
350	90113-0076	B		1	PRESSURE REGULATOR	
360	90113-0069	B		4	PRESSURE REGULATOR	
370	90113-0379	-		5	NUT	
380	90166-0081	-	MM	300	TUBE 6 MM PA BLUE	
500	342722-0202	-		5	PIPE COUPLING 1/8" D=6MM	
510	342732-0103	-		1	ELBOW PIPE JOINT, EXT.THREAD, D=6MM-G1/4	
520	342732-0104	-		8	ELBOW PIPE JOINT, EXT.THREAD, D=8MM-G1/4	
530	342770-0105	-		5	STRAIGHT COUPLING INT, D=6 MM - G1/8	

Pos	Part No	SP	UN	Qty	Description	Page No

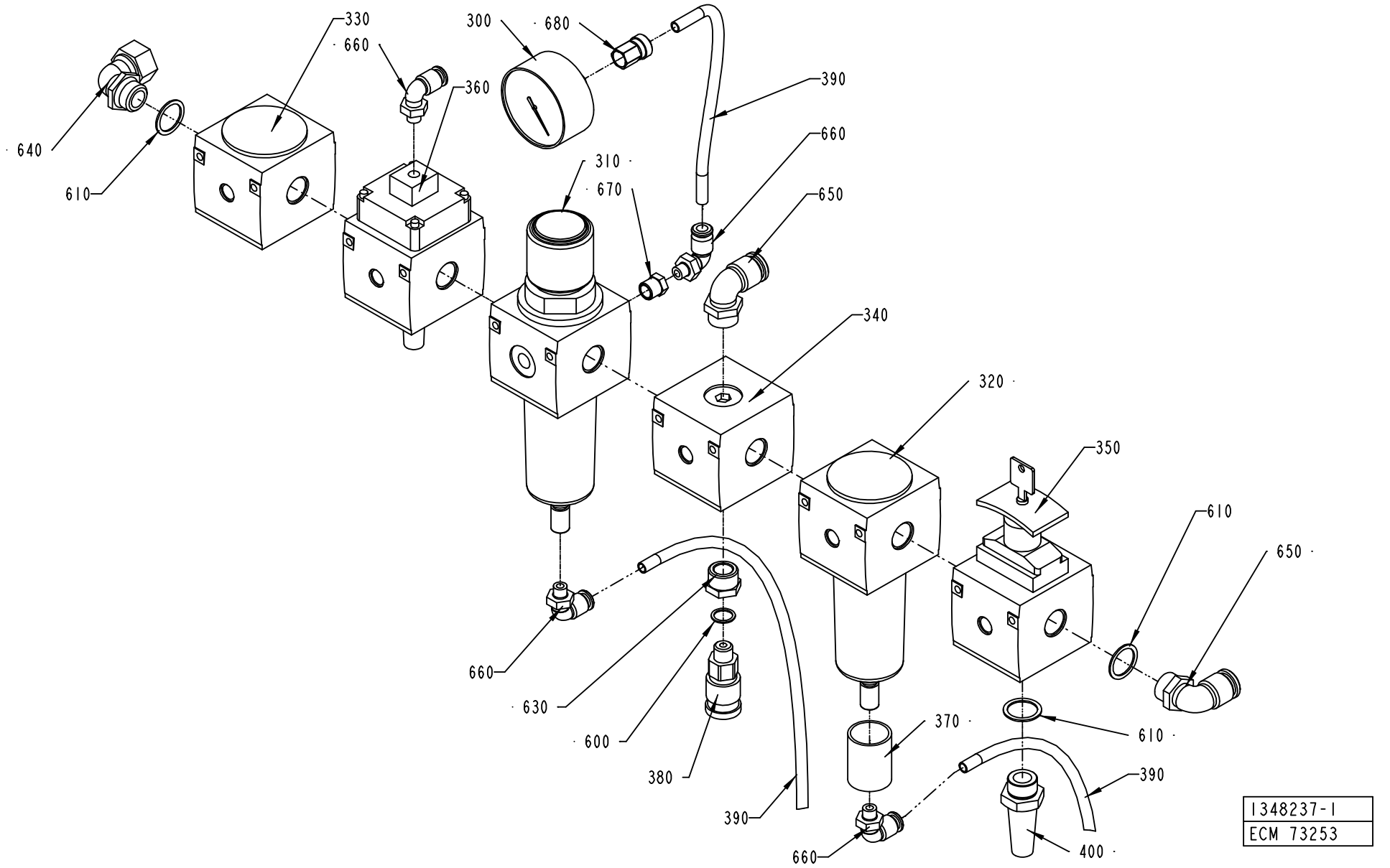
330
660
300
680
360
390
640
610
310
670
660
650
340
320
350
610
650
660
630
600
380
370
610
390
390
660
400
1348237-1
ECM 73253

ECM: 115869 - 20020930
Group number: 1348237-0100
Assembly Drawing: 1348237-1_1_AA

Pos	Part No	SP	UN	Qty	Description	Page No
-						
300	90043-0036	B		1	PRESSURE GAUGE, 2041 D=63 MM	
310	B90113-0085	B		1	PRESSURE REGULATOR	
	90113-0389	*-*		*1*	*FILTER ELEMENT 8æM FOR 90113-0085*	
	90113-0459	*-*		*1*	*O-RING*	
320	B90113-0128	B		1	FILTER	
	90113-0459	*-*		*1*	*O-RING*	
	90113-0389	*C*		*1*	*FILTER ELEMENT 8æM FOR 90113-0085*	
330	90113-0374	B		1	SLOW STARTING VALVE	
340	90113-0375	B		1	PRESSURE DISTRIBUTION	
350	90113-0377	B		1	SHUT-OFF VALVE	
360	90113-0378	B		1	SHUT-OFF VALVE	
370	90113-0387	B		1	FILTER ELEMENT 40æM FOR 90113-0094	
380	90163-0016	-		1	QUICK COUPLING, (F) LP 006-0-WR013	
390	90166-0118	-	M	3	TUBE 8 MM PA BLACK	
400	90328-0001	-		1	SILENCER	
600	315233-0110	-		1	WASHER PL.RND.NYL.13,3/17,H=1	
610	315233-0113	-		3	WASHER PL.RND.NYL.21,4/27,H=1,2	
630	342701-0205	-		1	BUSHING,INT./EXT.G-THREAD G1/2"-G1/4"	
640	342730-0114	-		1	CONN. ELBOW WA-15-1/2	
650	342732-0161	-		2	ELBOW PIPE JOINT,EXT.THREAD,D=14 MM-G1/2	
660	342732-0801	-		4	ELBOW PIPE JOINT, EXT.THREAD, D=8MM-G1/8	
670	342701-0201	-		1	BUSHING,INT./EXT.G-THREAD G1/4"-G1/8"	
680	342923-0122	-		1	STRAIGHT COUPL.,INT.THREADED 8/6-G1/4"	

Pos	Part No	SP	UN	Qty	Description	Page No

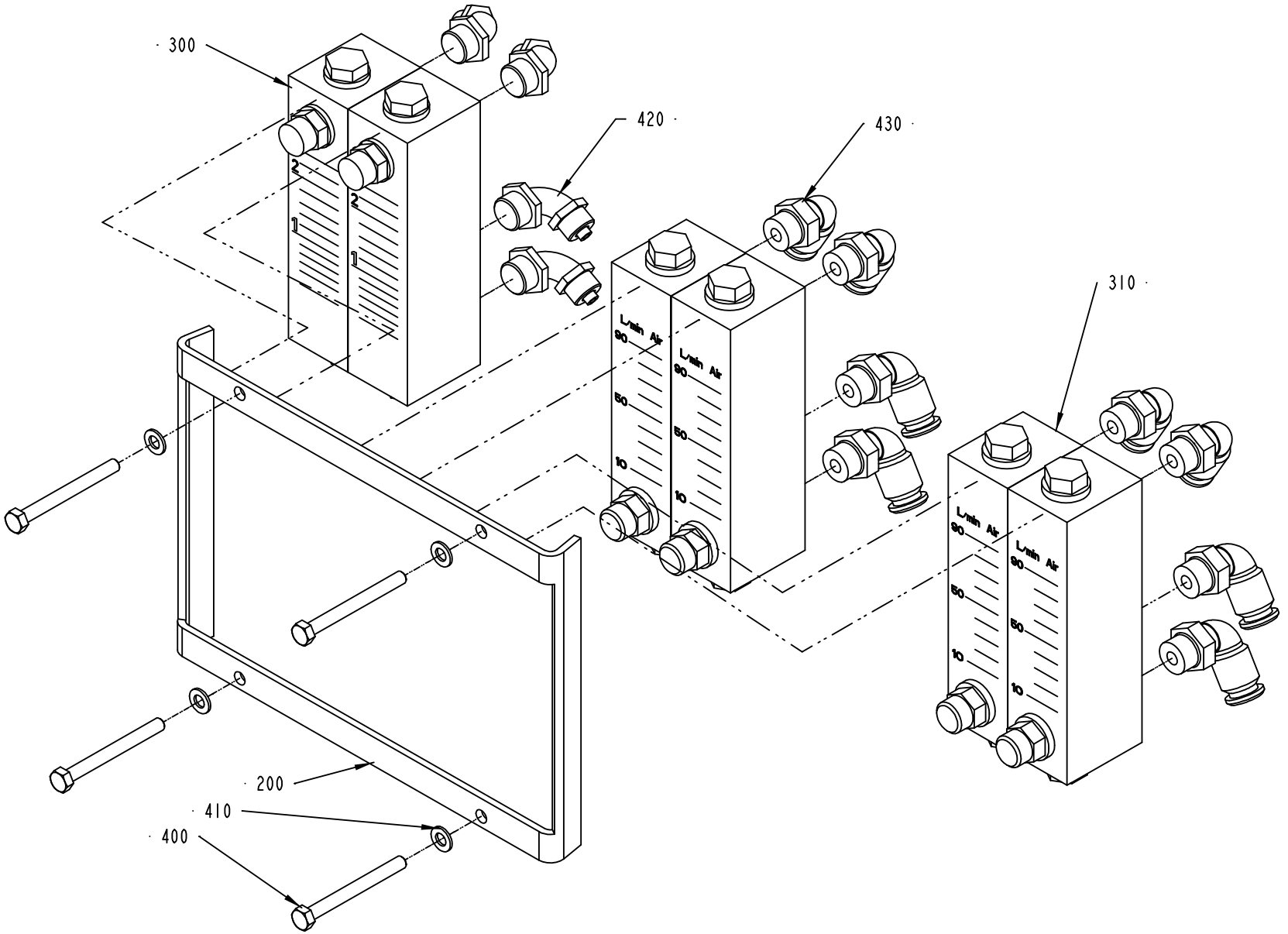

1349090-1
ECM 73254

ECM: 106561 - 20020313
Group number: 1349090-0100
Assembly Drawing: 1349090-1_1_AA

Pos	Part No	SP	UN	Qty	Description	Page No
-						
200	1512488-0000	-		1	HOLDER	
300	90243-0134	B		2	FLOW METER	
310	90457-0101	B		4	FLOW METER FOR AIR	
400	312105-0341	-		4	SCREW M6S ISO 4014 M5X50 A480	
410	315105-0146	-		4	WASHER ISO 7089-5-200 HV-A4	
420	342931-0122	-		4	ELBOW 90 COUPL.,EXT.THREAD 8/6-G1/4"	
430	342732-0104	-		8	ELBOW PIPE JOINT, EXT.THREAD, D=8MM-G1/4	

Pos	Part No	SP	UN	Qty	Description	Page No

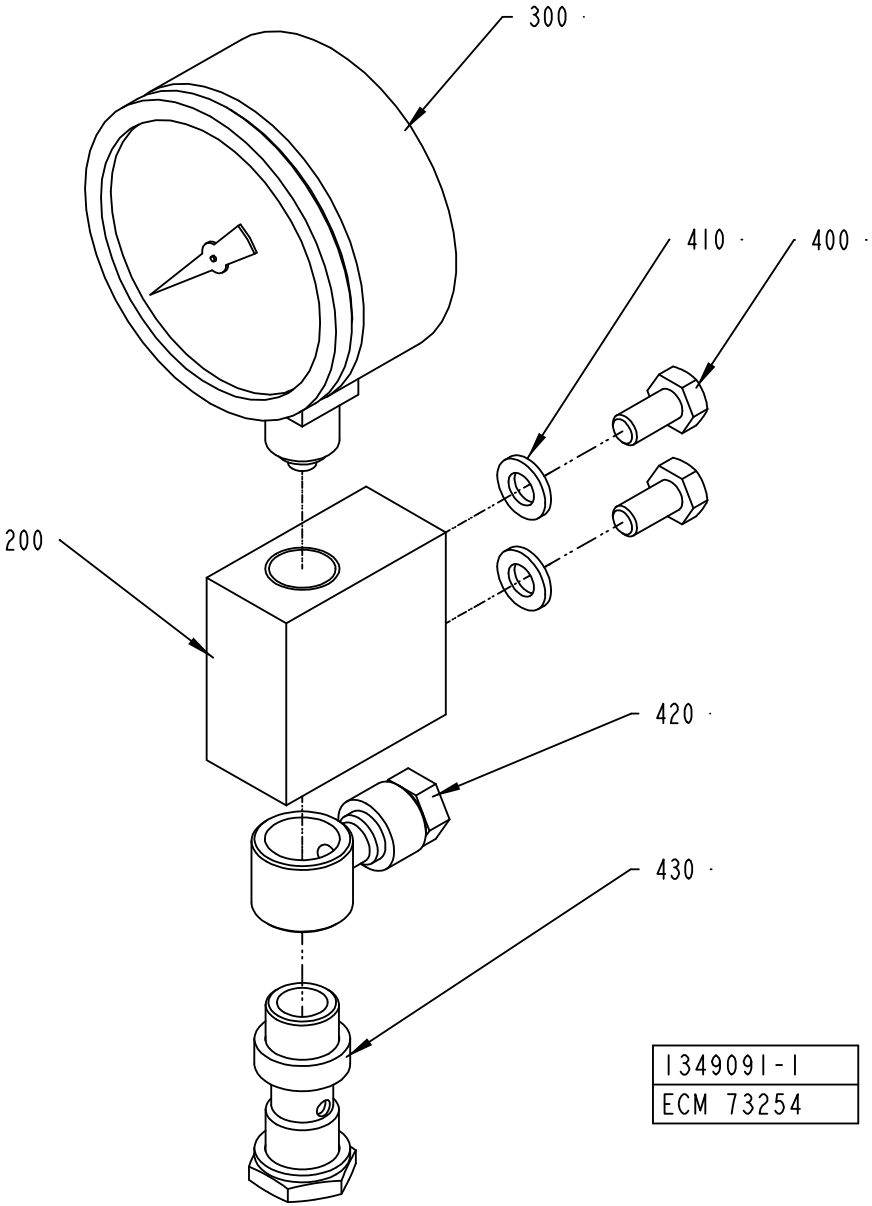
300
410
400
200
420
430
1349091-1
ECM 73254

ECM: 106560 - 20020313
Group number: 1349091-0100
Assembly Drawing: 1349091-1_1_AA

Pos	Part No	SP	UN	Qty	Description	Page No
-						
200	1349092-0000	-		1	SUPPORT	
300	90043-0095	B		1	PRESSURE GAUGE, 2740, D=63 MM, GLYC.	
400	312105-0366	-		2	SCREW M6S M6X12 A280	
410	315105-0153	-		2	WASHER ISO 7089-6-200 HV-A4	
420	342797-0122	-		1	CONN. BANJO, RINGPIECE 6-1/4	
430	342980-0304	-		1	BANJO-HOLLOW BOLT COUPL,EXT.THR.01-G1/4"	

Pos	Part No	SP	UN	Qty	Description	Page No

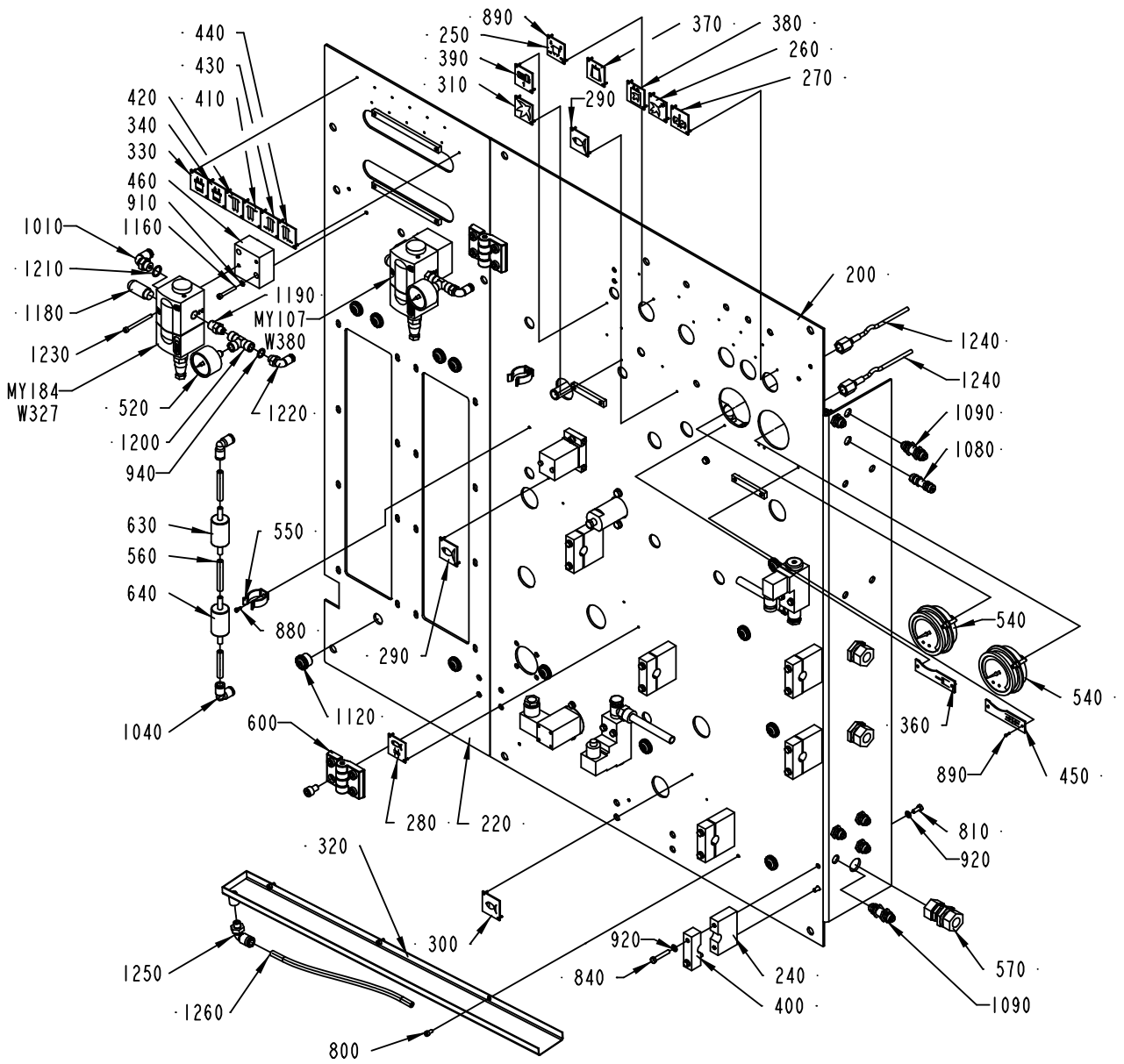
890
250
390
310
370
380
260
270
290
440
430
410
420
340
330
460
910
1160
1010
1210
1180
1230
MY184
W327
520
1200
940
1190
MY107
W380
1220
200
1240
1240
1090
1080
630
560
640
880
550
290
1040
600
1120
280
220
540
540
360
890
450
810
920
320
300
1250
1260
800
920
840
240
400
570
1090
1349094-1
ECM 73252

ECM: 115884 - 20020930
Group number: 1349094-0100
Assembly Drawing: 1349094-1_1_AA

This list covers pages from 428 to 431

Pos	Part No	SP	UN	Qty	Description	Page No
-						
0200	1512487-0000	-		1	PLATE	
0210	576294-0000	-		1	JUNCTION BLOCK	
0220	1512490-0000	-		1	PLATE	
0230	295496-0000	-		1	BLOCKING PIECE	
0240	576286-0000	-		6	HOLDER	
0250	273449-0000	-		1	SIGN	
0260	273450-0000	-		1	SIGN	
0270	273452-0000	-		1	SIGN	
0280	273454-0000	-		1	SIGN	
0290	273455-0000	-		2	LABEL (COLD WATER)	
0300	273456-0000	-		1	SIGN	
0310	273458-0000	-		1	LABEL (AIR)	
0320	1346061-0000	-		1	DRAIN CHUTE	
0330	445533-0000	-		1	SIGN	
0340	445534-0000	-		1	SIGN	
0350	491649-0000	-		1	BRACKET	
0360	247385-0000	-		1	SIGN	
0370	929413-0000	-		1	SIGN	
0380	978603-0000	-		1	SIGN	
0390	979421-0000	-		1	SIGN	
0400	979446-0000	-		6	HOLDER	
0410	1517498-0000	-		1	SIGN FLEW-METER AIR	
0420	1517499-0000	-		1	SIGN FLEW-METER AIR	
0430	1517500-0000	-		1	SIGN FLEW-METER AIR	
0440	1517501-0000	-		1	SIGN FLEW-METER AIR	
0450	247386-0000	-		1	SIGN	
0460	1538758-0000	-		2	SPACER	
0520	90043-0069	B		2	PRESSURE GAUGE 0-4BAR WIEGAND 2040	
0530	90055-0118	-		1	ELBOW PIPE JOINT -8MM	
0540	90458-2421	-		2	PRESSURE GAUGE, 1453 W. BRACKET	
0550	90165-0019	-		2	TOOL CLIP, 81/3, OPEN, 20 - 30 MM	
0560	90166-0194	-	M	1	TUBE 8 MM PUR BLUE	
0570	90224-0296	-		3	CONN. BULKHEAD, ART.NO. 116 1500	
0580	90235-0450	-		1	PLATE	
0590	90235-0708	A		1	VALVE	
0600	90248-0034	-		2	HINGE, 66073	
0630	90277-0045	B		1	FILTER / 9900-05-BK	
0640	90277-0046	A		1	FILTER / 9933-05-101	
0650	90277-0323	-		1	FILTER HOUSING / ART.NO 95S6-1/4 S 5430	
0660	90277-0324	B		1	FILTER CARTRIDGE / 050-11-A	
0800	312115-0287	-		3	SCREW ISO4762 M4X8 A4	
0810	312105-0327	-		16	SCREW M6S ISO 4017 M5X12 A480	
0820	312115-0329	-		2	SCREW ISO4762 M5X16 A4	
0830	312115-0447	-		8	SCREW ISO4762 M8X12 A4	
0840	312105-0335	-		12	SCREW M6S ISO 4014 M5X30 A480	
0850	312105-0339	-		4	SCREW M6S ISO 4014 M5X40 A480	
0860	312105-0341	-		1	SCREW M6S ISO 4014 M5X50 A480	
0870	312105-0380	-		2	SCREW M6S ISO 4014 M6X50 A480	
0880	312125-0222	-		2	SPåRSKRUV MCS M3X8 SS	
0890	90457-0104	-		38	BLANK RIVET 2X7,4	
0900	312605-0314	-		5	HEXAGON NUT, M6M M5 A280	
0910	315105-0136	-		6	WASHER ISO 7089-4-200 HV-A4	
0920	315105-0146	-		35	WASHER ISO 7089-5-200 HV-A4	
0930	315105-0153	-		3	WASHER ISO 7089-6-200 HV-A4	
0940	315233-0109	-		4	WASHER PL.RND.NYL.10,3/14,H=1	
0950	341001-0148	-	MM	17	COPPER TUBE	
0960	342713-0210	-		1	PLUG, EXT THREAD HEX SOCKET 8638-00-140	
0970	342713-0211	-		1	PLUG, EXT THREAD HEX SOCKET 8638-00-380	
0980	342722-0203	-		2	STRAIGHT COUPLING	
0990	342722-0204	-		1	PIPE COUPLING	
1000	342722-0206	-		1	STRAIGHT COUPLING D=8-G3/8"	
1010	342732-0103	-		3	ELBOW PIPE JOINT, EXT.THREAD, D=6MM-G1/4	
1020	342732-0104	-		1	ELBOW PIPE JOINT, EXT.THREAD, D=8MM-G1/4	
1030	342732-0110	-		1	ELBOW PIPE JOINT, EXT.THREAD,D=12MM-G3/8	
1040	342735-0103	-		2	ELBOW PIPE JOINT	
1050	342770-0105	-		2	STRAIGHT COUPLING INT, D=6 MM - G1/8	
1060	342921-0113	-		1	STRAIGHT COUPLING,EXT.THREADED 6/4-G1/8"	
1070	342921-0121	-		1	STRAIGHT COUPLING,EXT.THREADED 8/6-G1/8"	
1080	342960-0112	-		1	BULKHEAD COUPLING 6/4	
1090	342960-0122	-		6	BULKHEAD COUPLING 8/6	
1100	342980-0122	-		2	BANJO-CONNECTION,RING 8/6-G1/4"	
1110	342980-0304	-		2	BANJO-HOLLOW BOLT COUPL,EXT.THR.01-G1/4"	
1120	352101-0103	-		13	LEAD-IN, PR18,6/PG11, E-1457518	
1130	312605-0316	-		1	HEXAGON NUT, M6M M6 A280	
1140	312602-0316	-		8	MUTTER, EN 24032 M6M M6 NIPLBR	
1150	342903-0121	-		2	NUT WITH SPRING 8/6-M12X1	
1160	312115-0299	-		4	SCREW ISO4762 M4X30 A4	
1170	312812-0312	-		4	HEXAGON NUT, NY-LOCK M4 A480	
1180	90328-0026	A		2	SILENCER G1/4	
1190	90330-0013	-		2	NIPPLES, EXT. THREAD. ISO 7/1 R1/4-R1/8	
1200	90140-0015	-		2	T-PIPE, INT. THREAD, 2003-1/8	
1210	315233-0110	-		2	WASHER PL.RND.NYL.13,3/17,H=1	
1220	342732-0102	-		2	ELBOW PIPE JOINT, EXT.THREAD, D=6MM-G1/8	

Machine Type | Group Description | Used-In | Group Number | Page No

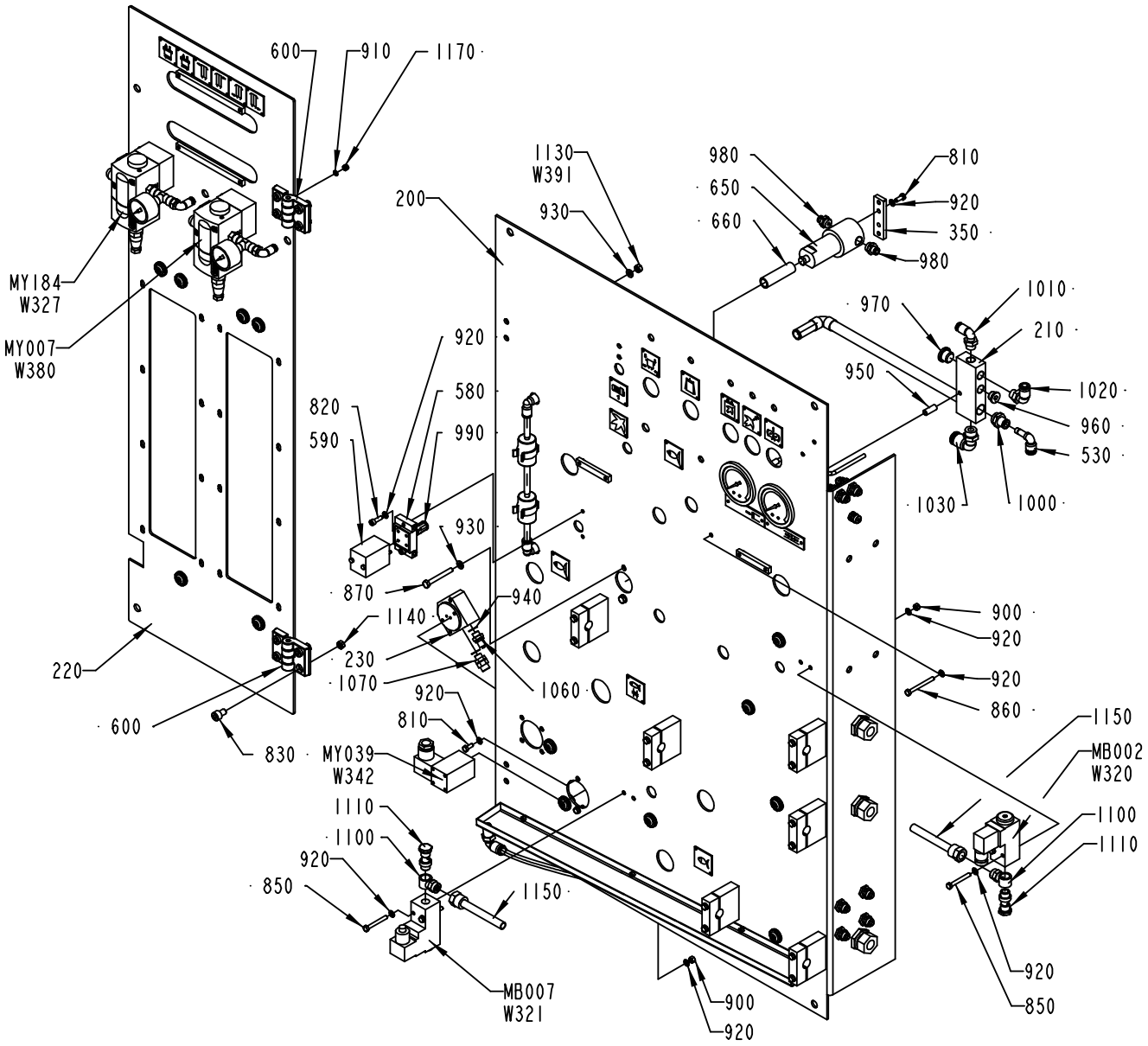

1349094-1
ECM 73252

Pos	Part No	SP	UN	Qty	Description	Page No
- (Cont'd)						
1230	312115-0305	-		4	SCREW ISO4762 M4X50 A4	
1240	90458-2488	-		2	MEASURING HOSE DN2 L=1500MM, MAX 400BAR	
1250	342732-0801	-		1	ELBOW PIPE JOINT, EXT.THREAD, D=8MM-G1/8	
1260	90166-0061	-	M	1	HOSE 4/8 PVC TRANSP.	
MB002	90274-0074	A		1	PRESSURE GUARD, 530 KPA	
MB007	90274-0056	A		1	PRESSURE SWITCH, 100 - 1200 KPA	
MY039	90042-0173	A		1	SOLENOID VALVE BURKERT	
MY107	B90458-1092	A		1	PROPORTIONAL VALVE 0 - 10V/0-6 BAR	
	90458-1262	*-*		*1*	*CONNECTOR 131028001 FOR PROP. VALVE*	
MY184	B90458-1092	A		1	PROPORTIONAL VALVE 0 - 10V/0-6 BAR	
	90458-1262	*-*		*1*	*CONNECTOR 131028001 FOR PROP. VALVE*	
W320	351150-0403	-	M	3	CABLE OLFLEX 3X0,75 MM2 LIGHT/GREY	
W321	351150-0403	-	M	3	CABLE OLFLEX 3X0,75 MM2 LIGHT/GREY	
W327	90220-0091	-	M	7	PAIR TWISTED CABLE 2X2X0,25MM2	
W342	351150-0403	-	M	3	CABLE OLFLEX 3X0,75 MM2 LIGHT/GREY	
W380	90220-0091	-	M	7	PAIR TWISTED CABLE 2X2X0,25MM2	
W391	351162-0106	-	M	4	CABLE AWM 1X4 MM2 YELLOW-GREEN	

Pos	Part No	SP	UN	Qty	Description	Page No

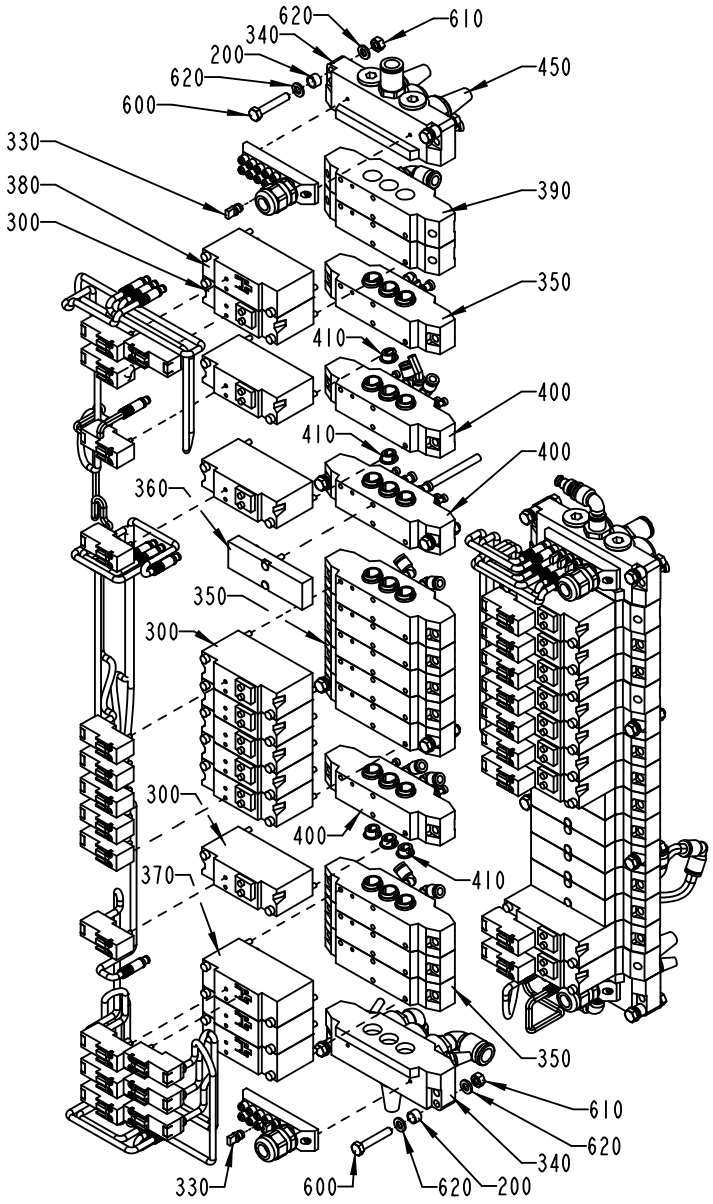

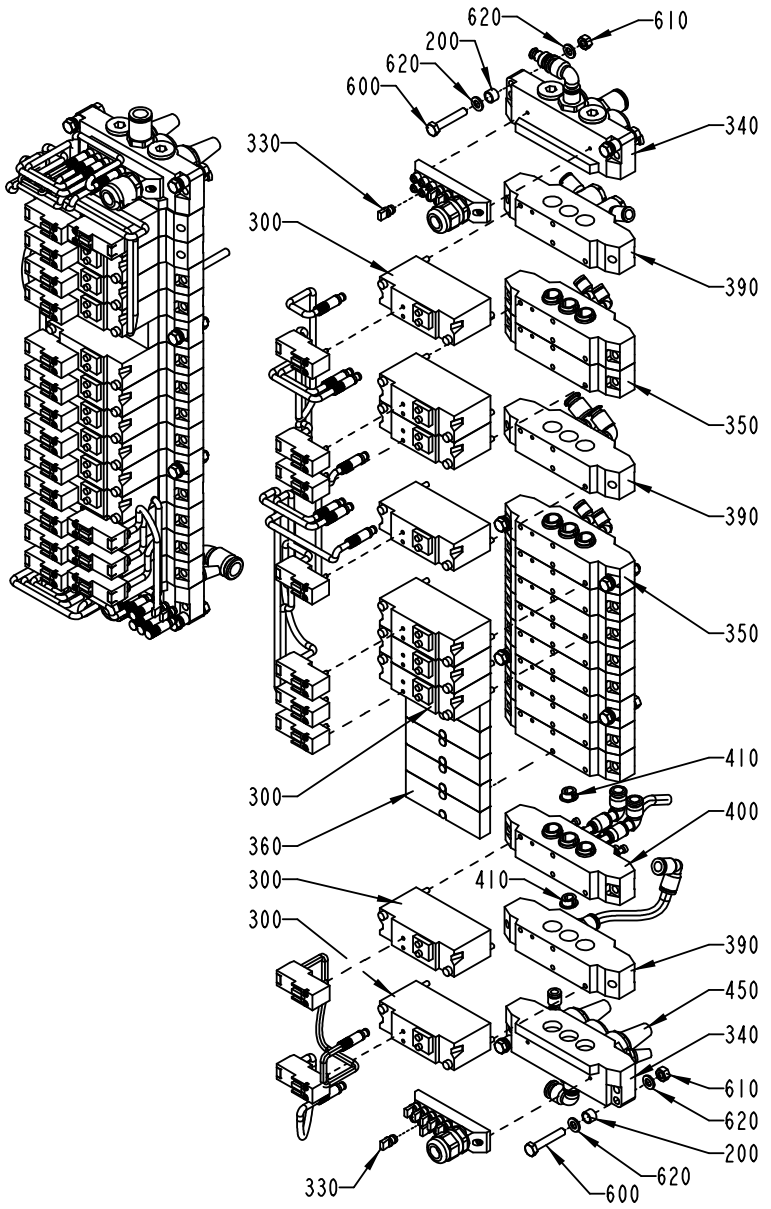

1478717-1
ECM 73254

ECM: 115883 - 20020930
Group number: 1478717-0100
Assembly Drawing: 1478717-1_1_AA

This list covers pages from 432 to 437

Pos	Part No	SP	UN	Qty	Description	Page No
-						
200	979219-0000	-		16	SPACER PIPE	
300	90042-0255	A		18	VALVE BODY 5/2 UNISTABLE	
330	90042-0550	-		14	PROTECTION PLUG FOR UNUSED CONNECTION	
340	90042-0565	-		4	PORTED END PIECE ISO VDMA 01	
350	90042-0566	-		19	BASE PLATE ISO VDMA 01	
360	90042-0567	-		6	BLANK PLATE VDMA SIZE 01	
370	90042-0579	A		3	VALVE BODY 2X3/2 NORM CLOSE	
380	90042-0580	A		1	VALVE BODY 5/2 BISTABLE	
390	90042-0581	-		5	BASE PLATE ISO VDMA 01	
400	90042-0586	-		4	BASE PLATE ISO VDMA 01	
410	90042-0587	-		7	BLANKING KIT SEALS VDMA SIZE 01	
420	90055-0217	-		32	ELBOW PIPE JOINT	
430	90055-0118	-		2	ELBOW PIPE JOINT -8MM	
440	90166-0081	-	M	4	TUBE 6 MM PA BLUE	
450	90328-0007	-		5	SILENCER	
460	90328-0017	-		2	SILENCER, D=6 MM	
600	312105-0376	-		16	SCREW M6S ISO 4014 M6X35 A480	
610	312605-0316	-		16	HEXAGON NUT, M6M M6 A280	
620	315105-0153	-		24	WASHER ISO 7089-6-200 HV-A4	
630	342713-0210	-		3	PLUG, EXT THREAD HEX SOCKET 8638-00-140	
640	342713-0211	-		13	PLUG, EXT THREAD HEX SOCKET 8638-00-380	
650	342715-0100	-		8	BLIND PLUG 4 MM	
660	342715-0102	-		26	BLIND PLUG 6 MM	
670	342722-0206	-		2	STRAIGHT COUPLING D=8-G3/8"	
680	342722-0210	-		2	RöRKOPPLING D=12-G3/8"	
690	342732-0103	-		1	ELBOW PIPE JOINT, EXT.THREAD, D=6MM-G1/4	
700	342732-0104	-		2	ELBOW PIPE JOINT, EXT.THREAD, D=8MM-G1/4	
710	342732-0110	-		2	ELBOW PIPE JOINT, EXT.THREAD,D=12MM-G3/8	
720	342722-0205	-		1	STRAIGHT COUPLING D=8-G1/4"	
730	90458-2169	-		3	INCREASER 6-8	
740	90055-0172	-		2	ELBOW WITH TAILPIECE 8/8 MM	
750	342735-0103	-		1	ELBOW PIPE JOINT	
760	90166-0013	-	M		TUBE 8 MM PA BLUE	
770	342716-0203	-		1	REDUCER 6-8	
780	90458-2661	A		3	THROTTLE CHECK VALVE G1/4" MANUAL, 8	
MX032	90042-0535	A		1	TERMINAL BOARD 19 CORDS	
MX033	90042-0535	A		1	TERMINAL BOARD 19 CORDS	
MX034	90042-0535	A		1	TERMINAL BOARD 19 CORDS	
MX035	90042-0535	A		1	TERMINAL BOARD 19 CORDS	
MY001	90042-0539	A		1	PILOT VALVE L=350MM	
MY002	90042-0539	A		1	PILOT VALVE L=350MM	
MY003	90042-0539	A		1	PILOT VALVE L=350MM	
MY005	90042-0539	A		1	PILOT VALVE L=350MM	
MY006	90042-0539	A		1	PILOT VALVE L=350MM	
MY007	90042-0539	A		1	PILOT VALVE L=350MM	
MY008	90042-0539	A		1	PILOT VALVE L=350MM	
MY009	90042-0539	A		1	PILOT VALVE L=350MM	
MY017	90042-0539	A		1	PILOT VALVE L=350MM	
MY019	90042-0539	A		1	PILOT VALVE L=350MM	
MY020	90042-0539	A		1	PILOT VALVE L=350MM	
MY021	90042-0539	A		1	PILOT VALVE L=350MM	
MY023	90042-0539	A		1	PILOT VALVE L=350MM	
MY024	90042-0539	A		1	PILOT VALVE L=350MM	
MY025	90042-0539	A		1	PILOT VALVE L=350MM	
MY026	90042-0539	A		1	PILOT VALVE L=350MM	
MY027	90042-0539	A		1	PILOT VALVE L=350MM	
MY030	90042-0539	A		1	PILOT VALVE L=350MM	
MY037	90042-0539	A		1	PILOT VALVE L=350MM	
MY086	90042-0539	A		1	PILOT VALVE L=350MM	
MY100	90042-0539	A		1	PILOT VALVE L=350MM	
MY102	90042-0539	A		1	PILOT VALVE L=350MM	
MY103	90042-0539	A		1	PILOT VALVE L=350MM	
MY105	90042-0539	A		1	PILOT VALVE L=350MM	
MY129	90042-0539	A		1	PILOT VALVE L=350MM	
MY915	90042-0539	A		1	PILOT VALVE L=350MM	

Machine Type	Group Description	Used-In	Group Number	Page No

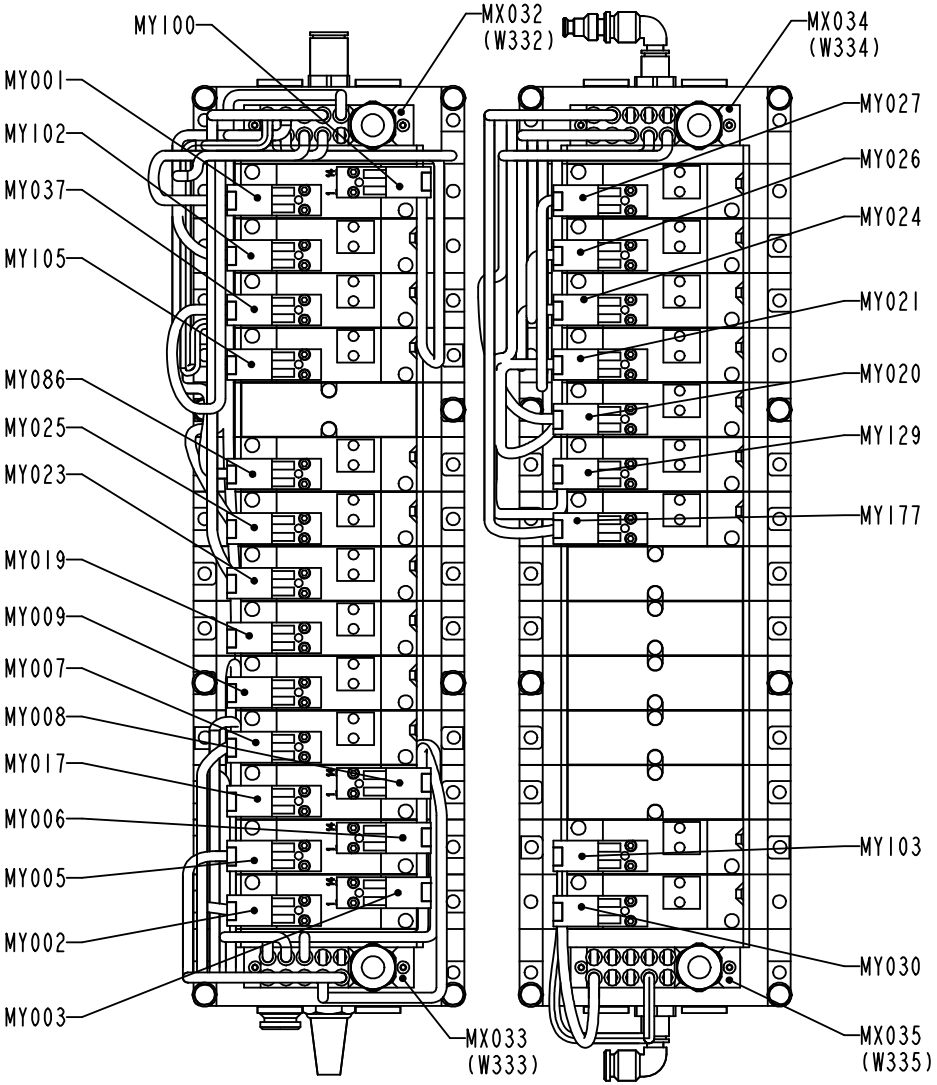
MY100
MX032 (W332)
MX034 (W334)
MY001
MY102
MY037
MY105
MY086
MY025
MY023
MY019
MY009
MY007
MY008
MY017
MY006
MY005
MY002
MY003
MY027
MY026
MY024
MY021
MY020
MY129
MY177
MY103
MY030
MX033 (W333)
MX035 (W335)

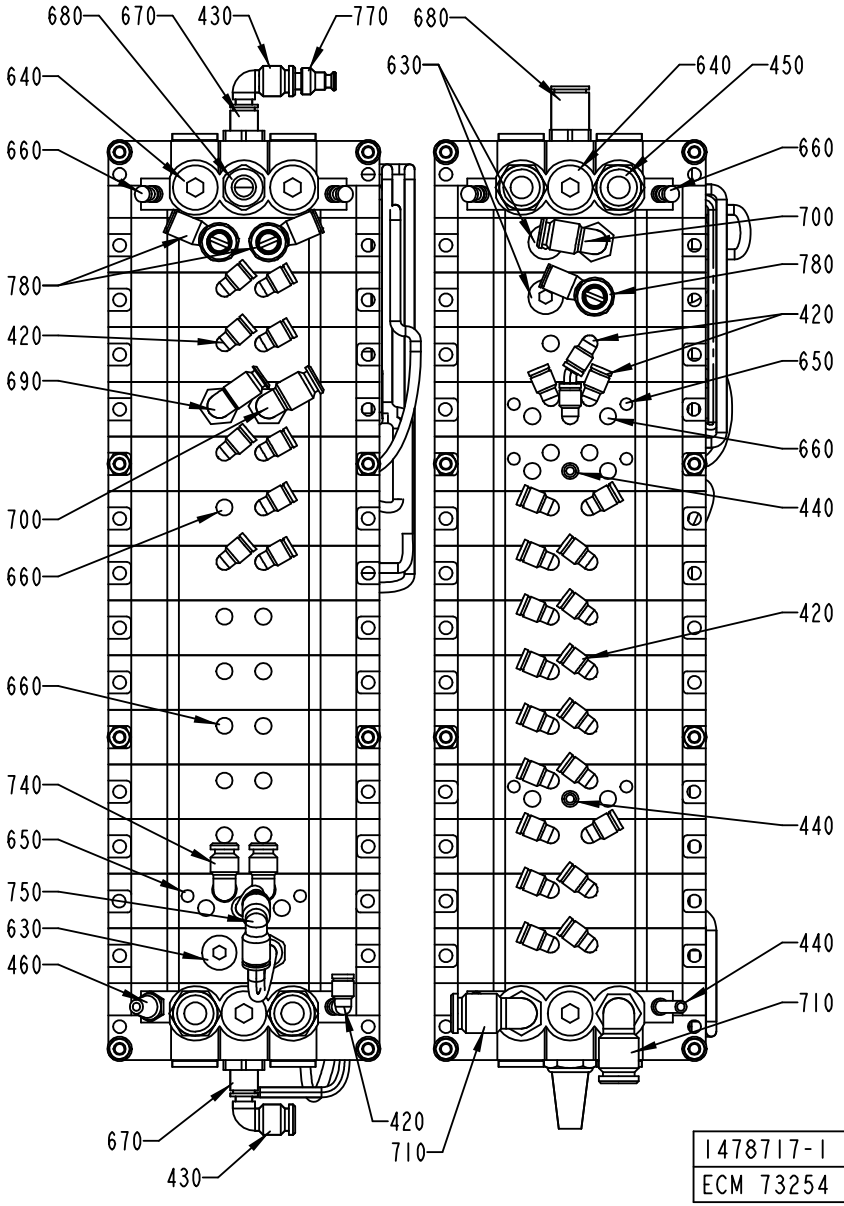
680
670
430
770
680
640
630
640
450
660
660
700
780
780
420
420
650
690
660
440
700
660
420
660
740
440
650
750
630
460
440
710
670
420
710
430
1478717-1
ECM 73254

ECM: 115883 - 20020930
Group number: 1478717-0100
Assembly Drawing: 1478717-1_2_AA

This list covers pages from 432 to 437

Pos	Part No	SP	UN	Qty	Description	Page No
-						
200	979219-0000	-		16	SPACER PIPE	
300	90042-0255	A		18	VALVE BODY 5/2 UNISTABLE	
330	90042-0550	-		14	PROTECTION PLUG FOR UNUSED CONNECTION	
340	90042-0565	-		4	PORTED END PIECE ISO VDMA 01	
350	90042-0566	-		19	BASE PLATE ISO VDMA 01	
360	90042-0567	-		6	BLANK PLATE VDMA SIZE 01	
370	90042-0579	A		3	VALVE BODY 2X3/2 NORM CLOSE	
380	90042-0580	A		1	VALVE BODY 5/2 BISTABLE	
390	90042-0581	-		5	BASE PLATE ISO VDMA 01	
400	90042-0586	-		4	BASE PLATE ISO VDMA 01	
410	90042-0587	-		7	BLANKING KIT SEALS VDMA SIZE 01	
420	90055-0217	-		32	ELBOW PIPE JOINT	
430	90055-0118	-		2	ELBOW PIPE JOINT -8MM	
440	90166-0081	-	M	4	TUBE 6 MM PA BLUE	
450	90328-0007	-		5	SILENCER	
460	90328-0017	-		2	SILENCER, D=6 MM	
600	312105-0376	-		16	SCREW M6S ISO 4014 M6X35 A480	
610	312605-0316	-		16	HEXAGON NUT, M6M M6 A280	
620	315105-0153	-		24	WASHER ISO 7089-6-200 HV-A4	
630	342713-0210	-		3	PLUG, EXT THREAD HEX SOCKET 8638-00-140	
640	342713-0211	-		13	PLUG, EXT THREAD HEX SOCKET 8638-00-380	
650	342715-0100	-		8	BLIND PLUG 4 MM	
660	342715-0102	-		26	BLIND PLUG 6 MM	
670	342722-0206	-		2	STRAIGHT COUPLING D=8-G3/8"	
680	342722-0210	-		2	RöRKOPPLING D=12-G3/8"	
690	342732-0103	-		1	ELBOW PIPE JOINT, EXT.THREAD, D=6MM-G1/4	
700	342732-0104	-		2	ELBOW PIPE JOINT, EXT.THREAD, D=8MM-G1/4	
710	342732-0110	-		2	ELBOW PIPE JOINT, EXT.THREAD,D=12MM-G3/8	
720	342722-0205	-		1	STRAIGHT COUPLING D=8-G1/4"	
730	90458-2169	-		3	INCREASER 6-8	
740	90055-0172	-		2	ELBOW WITH TAILPIECE 8/8 MM	
750	342735-0103	-		1	ELBOW PIPE JOINT	
760	90166-0013	-	M		TUBE 8 MM PA BLUE	
770	342716-0203	-		1	REDUCER 6-8	
780	90458-2661	A		3	THROTTLE CHECK VALVE G1/4" MANUAL, 8	
MX032	90042-0535	A		1	TERMINAL BOARD 19 CORDS	
MX033	90042-0535	A		1	TERMINAL BOARD 19 CORDS	
MX034	90042-0535	A		1	TERMINAL BOARD 19 CORDS	
MX035	90042-0535	A		1	TERMINAL BOARD 19 CORDS	
MY001	90042-0539	A		1	PILOT VALVE L=350MM	
MY002	90042-0539	A		1	PILOT VALVE L=350MM	
MY003	90042-0539	A		1	PILOT VALVE L=350MM	
MY005	90042-0539	A		1	PILOT VALVE L=350MM	
MY006	90042-0539	A		1	PILOT VALVE L=350MM	
MY007	90042-0539	A		1	PILOT VALVE L=350MM	
MY008	90042-0539	A		1	PILOT VALVE L=350MM	
MY009	90042-0539	A		1	PILOT VALVE L=350MM	
MY017	90042-0539	A		1	PILOT VALVE L=350MM	
MY019	90042-0539	A		1	PILOT VALVE L=350MM	
MY020	90042-0539	A		1	PILOT VALVE L=350MM	
MY021	90042-0539	A		1	PILOT VALVE L=350MM	
MY023	90042-0539	A		1	PILOT VALVE L=350MM	
MY024	90042-0539	A		1	PILOT VALVE L=350MM	
MY025	90042-0539	A		1	PILOT VALVE L=350MM	
MY026	90042-0539	A		1	PILOT VALVE L=350MM	
MY027	90042-0539	A		1	PILOT VALVE L=350MM	
MY030	90042-0539	A		1	PILOT VALVE L=350MM	
MY037	90042-0539	A		1	PILOT VALVE L=350MM	
MY086	90042-0539	A		1	PILOT VALVE L=350MM	
MY100	90042-0539	A		1	PILOT VALVE L=350MM	
MY102	90042-0539	A		1	PILOT VALVE L=350MM	
MY103	90042-0539	A		1	PILOT VALVE L=350MM	
MY105	90042-0539	A		1	PILOT VALVE L=350MM	
MY129	90042-0539	A		1	PILOT VALVE L=350MM	
MY915	90042-0539	A		1	PILOT VALVE L=350MM	

Machine Type	Group Description	Used-In	Group Number	Page No

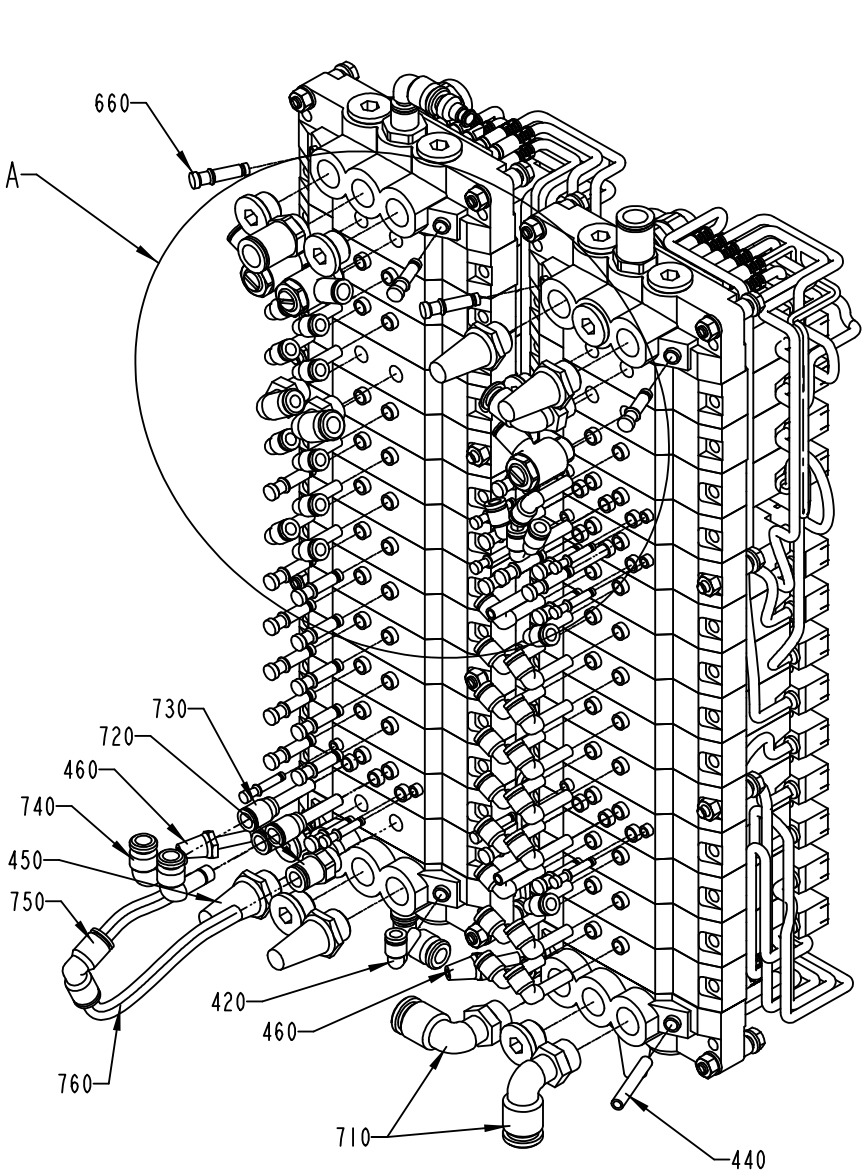
660
A
730
720
460
740
450
750
760
420
460
710
440

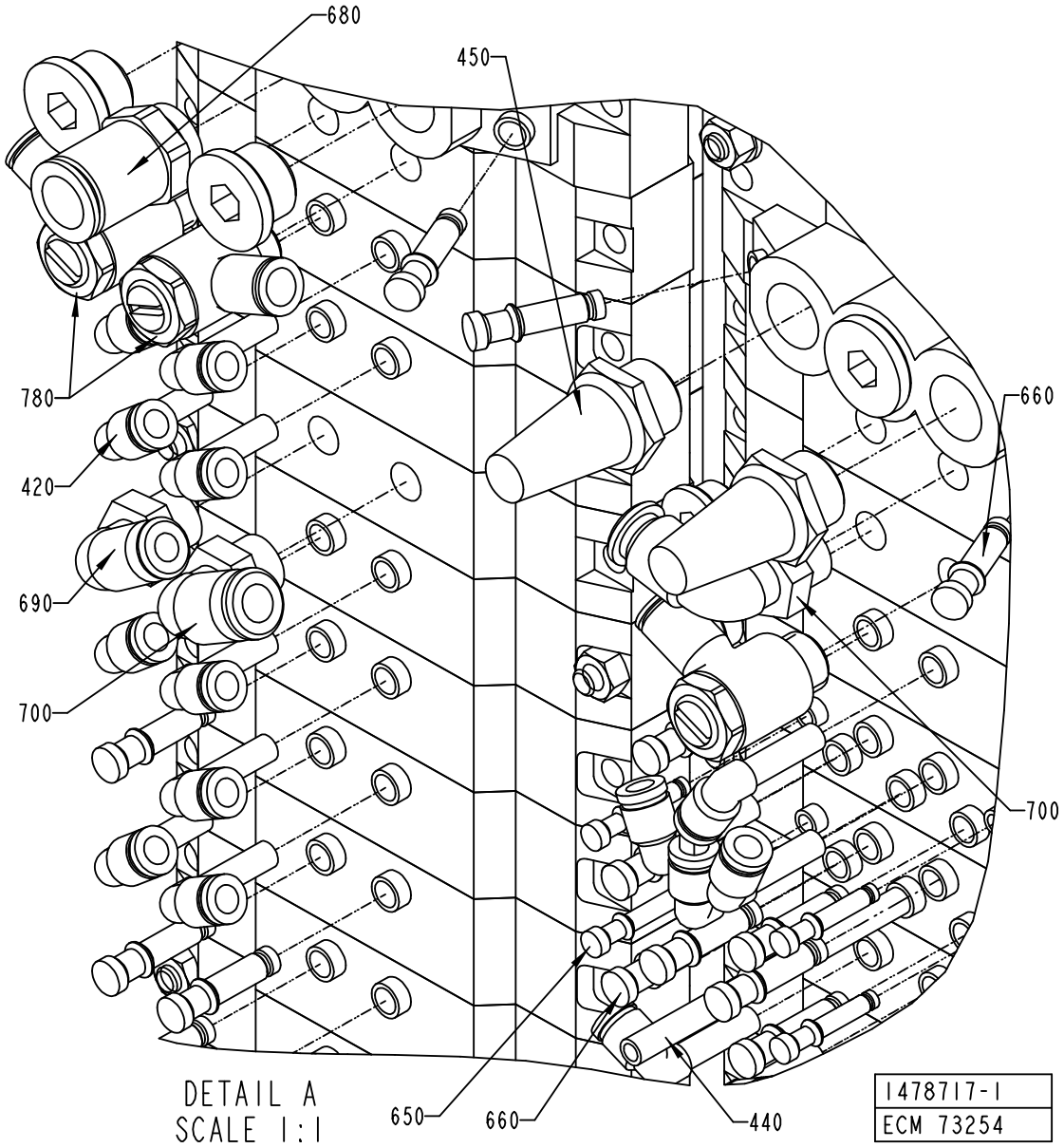
680
450
780
420
690
700
660
700
650
660
440
DETAIL A
SCALE 1:1
1478717-1
ECM 73254

ECM: 115883 - 20020930
Group number: 1478717-0100
Assembly Drawing: 1478717-1_3_AA

This list covers pages from 432 to 437

Pos	Part No	SP	UN	Qty	Description	Page No
-						
200	979219-0000	-		16	SPACER PIPE	
300	90042-0255	A		18	VALVE BODY 5/2 UNISTABLE	
330	90042-0550	-		14	PROTECTION PLUG FOR UNUSED CONNECTION	
340	90042-0565	-		4	PORTED END PIECE ISO VDMA 01	
350	90042-0566	-		19	BASE PLATE ISO VDMA 01	
360	90042-0567	-		6	BLANK PLATE VDMA SIZE 01	
370	90042-0579	A		3	VALVE BODY 2X3/2 NORM CLOSE	
380	90042-0580	A		1	VALVE BODY 5/2 BISTABLE	
390	90042-0581	-		5	BASE PLATE ISO VDMA 01	
400	90042-0586	-		4	BASE PLATE ISO VDMA 01	
410	90042-0587	-		7	BLANKING KIT SEALS VDMA SIZE 01	
420	90055-0217	-		32	ELBOW PIPE JOINT	
430	90055-0118	-		2	ELBOW PIPE JOINT -8MM	
440	90166-0081	-	M	4	TUBE 6 MM PA BLUE	
450	90328-0007	-		5	SILENCER	
460	90328-0017	-		2	SILENCER, D=6 MM	
600	312105-0376	-		16	SCREW M6S ISO 4014 M6X35 A480	
610	312605-0316	-		16	HEXAGON NUT, M6M M6 A280	
620	315105-0153	-		24	WASHER ISO 7089-6-200 HV-A4	
630	342713-0210	-		3	PLUG, EXT THREAD HEX SOCKET 8638-00-140	
640	342713-0211	-		13	PLUG, EXT THREAD HEX SOCKET 8638-00-380	
650	342715-0100	-		8	BLIND PLUG 4 MM	
660	342715-0102	-		26	BLIND PLUG 6 MM	
670	342722-0206	-		2	STRAIGHT COUPLING D=8-G3/8"	
680	342722-0210	-		2	RöRKOPPLING D=12-G3/8"	
690	342732-0103	-		1	ELBOW PIPE JOINT, EXT.THREAD, D=6MM-G1/4	
700	342732-0104	-		2	ELBOW PIPE JOINT, EXT.THREAD, D=8MM-G1/4	
710	342732-0110	-		2	ELBOW PIPE JOINT, EXT.THREAD,D=12MM-G3/8	
720	342722-0205	-		1	STRAIGHT COUPLING D=8-G1/4"	
730	90458-2169	-		3	INCREASER 6-8	
740	90055-0172	-		2	ELBOW WITH TAILPIECE 8/8 MM	
750	342735-0103	-		1	ELBOW PIPE JOINT	
760	90166-0013	-	M		TUBE 8 MM PA BLUE	
770	342716-0203	-		1	REDUCER 6-8	
780	90458-2661	A		3	THROTTLE CHECK VALVE G1/4" MANUAL, 8	
MX032	90042-0535	A		1	TERMINAL BOARD 19 CORDS	
MX033	90042-0535	A		1	TERMINAL BOARD 19 CORDS	
MX034	90042-0535	A		1	TERMINAL BOARD 19 CORDS	
MX035	90042-0535	A		1	TERMINAL BOARD 19 CORDS	
MY001	90042-0539	A		1	PILOT VALVE L=350MM	
MY002	90042-0539	A		1	PILOT VALVE L=350MM	
MY003	90042-0539	A		1	PILOT VALVE L=350MM	
MY005	90042-0539	A		1	PILOT VALVE L=350MM	
MY006	90042-0539	A		1	PILOT VALVE L=350MM	
MY007	90042-0539	A		1	PILOT VALVE L=350MM	
MY008	90042-0539	A		1	PILOT VALVE L=350MM	
MY009	90042-0539	A		1	PILOT VALVE L=350MM	
MY017	90042-0539	A		1	PILOT VALVE L=350MM	
MY019	90042-0539	A		1	PILOT VALVE L=350MM	
MY020	90042-0539	A		1	PILOT VALVE L=350MM	
MY021	90042-0539	A		1	PILOT VALVE L=350MM	
MY023	90042-0539	A		1	PILOT VALVE L=350MM	
MY024	90042-0539	A		1	PILOT VALVE L=350MM	
MY025	90042-0539	A		1	PILOT VALVE L=350MM	
MY026	90042-0539	A		1	PILOT VALVE L=350MM	
MY027	90042-0539	A		1	PILOT VALVE L=350MM	
MY030	90042-0539	A		1	PILOT VALVE L=350MM	
MY037	90042-0539	A		1	PILOT VALVE L=350MM	
MY086	90042-0539	A		1	PILOT VALVE L=350MM	
MY100	90042-0539	A		1	PILOT VALVE L=350MM	
MY102	90042-0539	A		1	PILOT VALVE L=350MM	
MY103	90042-0539	A		1	PILOT VALVE L=350MM	
MY105	90042-0539	A		1	PILOT VALVE L=350MM	
MY129	90042-0539	A		1	PILOT VALVE L=350MM	
MY915	90042-0539	A		1	PILOT VALVE L=350MM	

Machine Type	Group Description	Used-In	Group Number	Page No

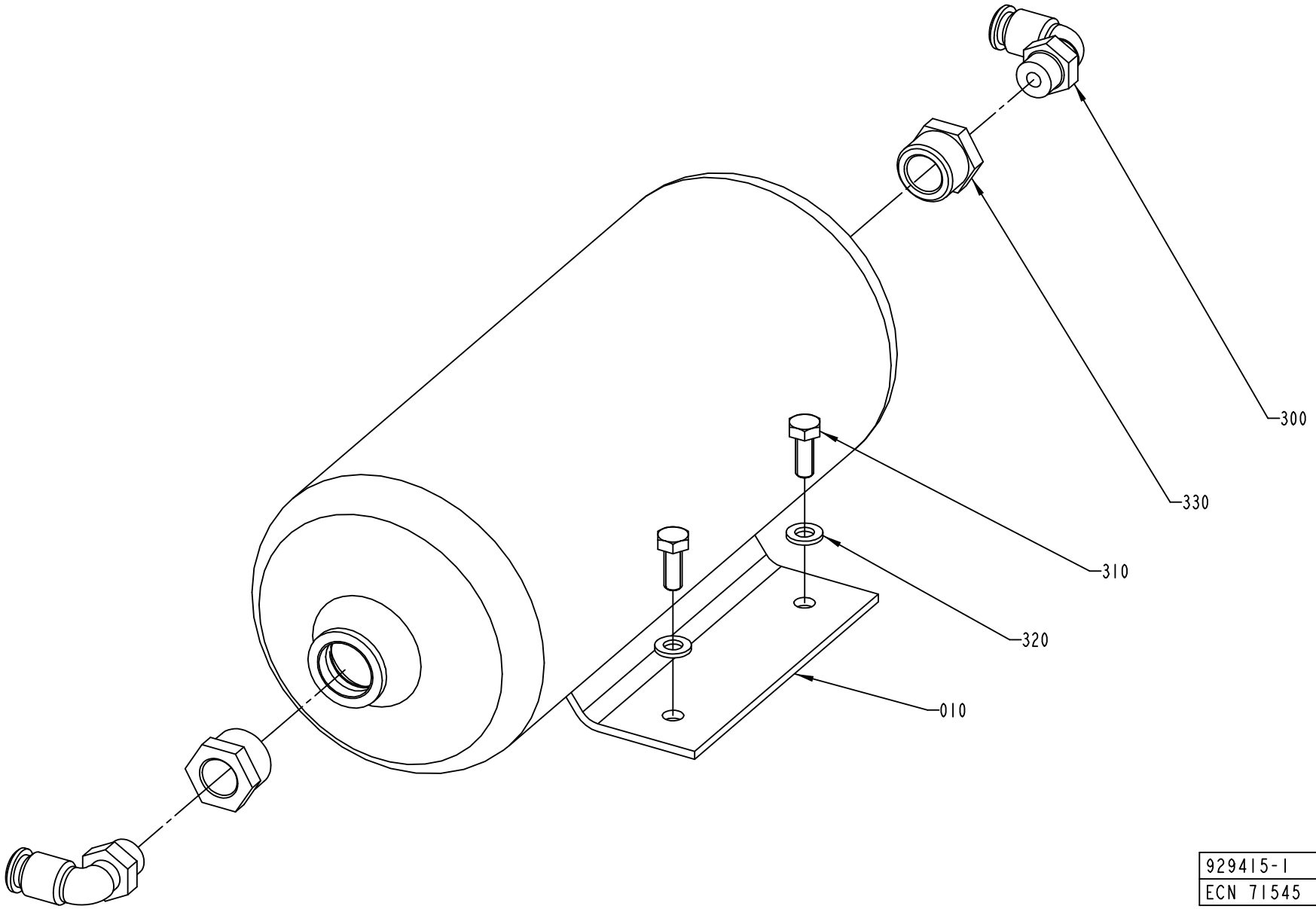

929415-1
ECN 71545

ECM: 71545 - 20010502
Group number: 929415-0100
Assembly Drawing: 929415-1_1_AC

Pos	Part No	SP	UN	Qty	Description	Page No
-						
010	90457-0100	-		1	ACCUMULATOR CRVZS-2	
300	342732-0104	-		2	ELBOW PIPE JOINT, EXT.THREAD, D=8MM-G1/4	
310	312105-0368	-		2	SCREW M6S M6X16 A280	
320	315105-0153	-		2	WASHER ISO 7089-6-200 HV-A4	
330	342701-0205	-		2	BUSHING,INT./EXT.G-THREAD G1/2"-G1/4"	

Pos	Part No	SP	UN	Qty	Description	Page No

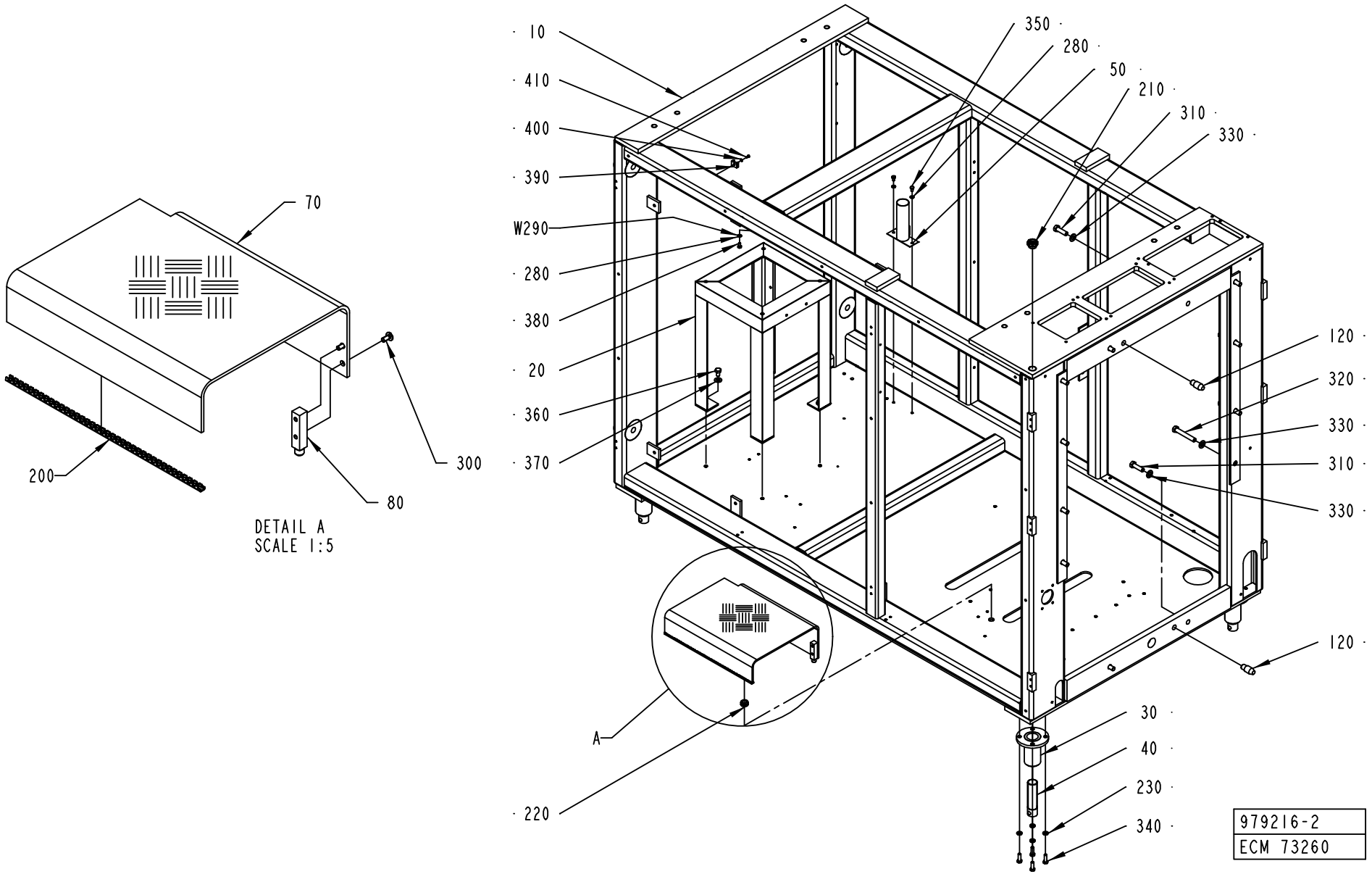
10
410
400
390
W290
280
380
20
360
370
220
350
280
50
210
310
330
120
320
330
310
330
120
30
40
230
340
A
70
200
300
80
DETAIL A
SCALE 1:5
979216-2
ECM 73260

ECM: 73260 - 20011220
Group number: 979216-0200
Assembly Drawing: 979216-2_1_AA

Pos	Part No	SP	UN	Qty	Description	Page No
-						
010	1512486-0000	-		1	MACHINE BODY	
020	1512489-0000	-		1	LITTLE FRAME	
030	469095-0000	-		4	HOLDER	
040	469096-0000	-		4	LEG	
050	295259-0000	-		1	HOLDER	
070	2518415-0000	-		1	COVER PLATE	
080	2518416-0000	-		2	JOINT BOLT	
120	1517252-0000	-		2	BOLT Ø20H7	
200	90143-0062	-	MM	380	STRIP	
210	90458-2487	-		1	SCREW PLUG HD-PE, M24	
220	90458-1227	-		2	LEAD-IN, BUSHING, DA 130/170/50	
230	315105-0165	-		16	WASHER ISO 7089-8-200 HV-A4	
280	315105-0153	-		3	WASHER ISO 7089-6-200 HV-A4	
300	90287-0075	-		4	SCREW SLOT. PAN HEAD LKCS M6X12	
310	312105-0540	-		4	SCREW M6S ISO 4017 M12X40 A480	
320	312105-0548	-		8	SCREW M6S ISO 4014 M12X80 A480	
330	315105-0178	-		12	WASHER ISO 7089-12-200 HV-A4	
340	312105-0453	-		16	SCREW M6S ISO 4017 M8X25 A480	
350	312105-0364	-		2	SCREW M6S ISO 4017 M6X10 A480	
360	312105-0489	-		4	SCREW M6S ISO 4017 M10X16 A480	
370	315105-0173	-		4	WASHER ISO 7089-10-200 HV-A4	
380	312105-0366	-		1	SCREW M6S M6X12 A280	
390	352113-0203	-		2	ANCHOR PLATES FOR STRIPS, TYPE TM3S8-M0	
400	315105-0136	-		2	WASHER ISO 7089-4-200 HV-A4	
410	312125-0287	-		2	SCREW PAN HEAD MCS M4X8 SS	
W390	351162-0109	-	M	4	CABLE AWM 1X16 MM2 YELLOW-GREEN	

Pos	Part No	SP	UN	Qty	Description	Page No

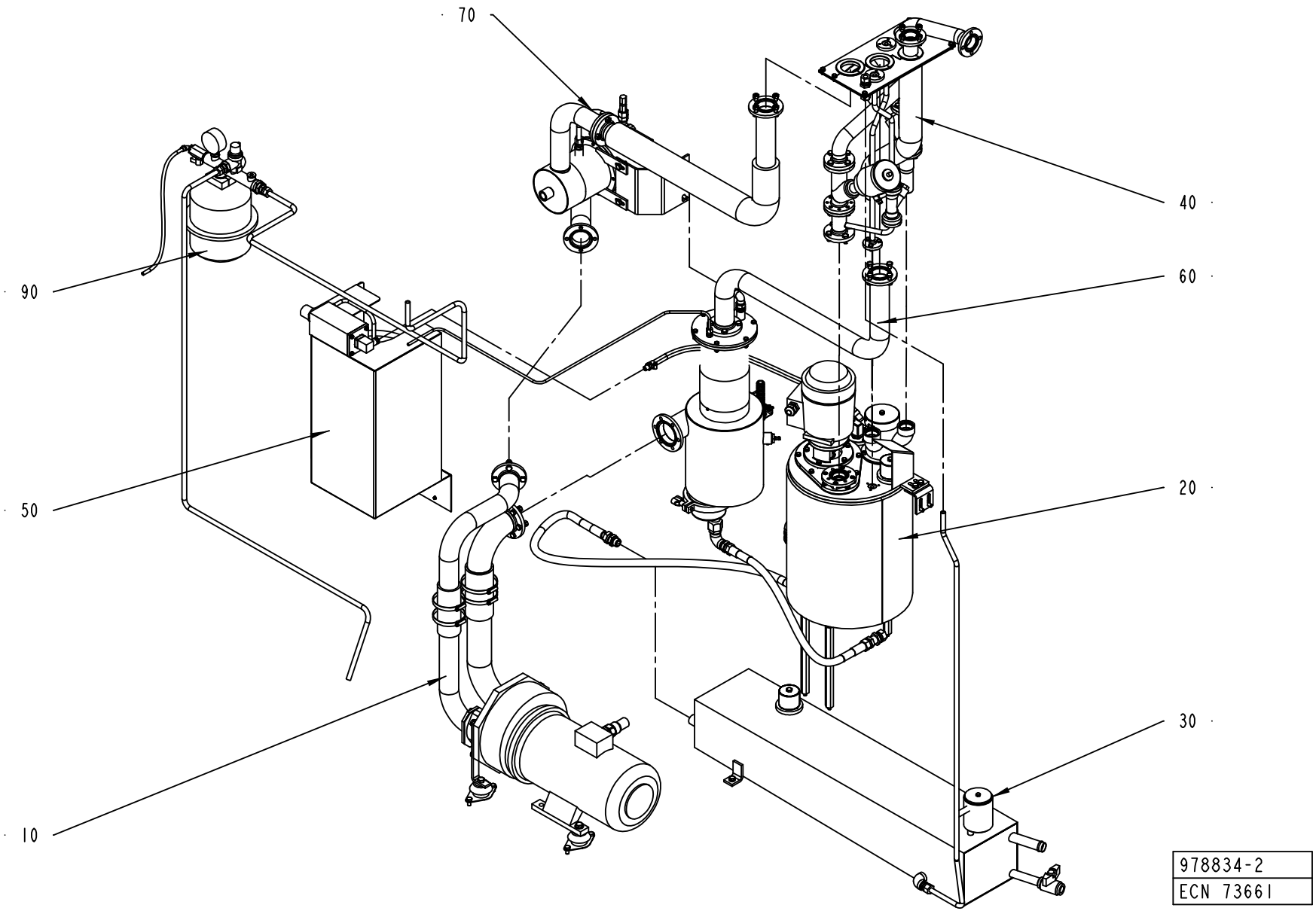
70
40
90
60
50
20
30
10
978834-2
ECN 73661

ECM: 73661 - 20011025
Group number: 978834-0200
Assembly Drawing: 978834-2_1_AA

Pos	Part No	SP	UN	Qty	Description	Page No
-						
010	A469452-0500	-		1	COMPRESSOR UNIT	**445**
020	A751373-0300	-		1	PEROXIDE TANK	**447**
030	A751398-0400	-		1	TANK	**453**
040	A978835-0200	-		1	PIPE WORK	**455**
050	A979328-0200	-		1	CABINET	**457**
060	A978988-0200	-		1	SEPARATOR	**463**
070	A978989-0200	-		1	SCRUBBER	**465**
090	A979026-0200	-		1	WATER CIRCULATION	**467**

Pos	Part No	SP	UN	Qty	Description	Page No

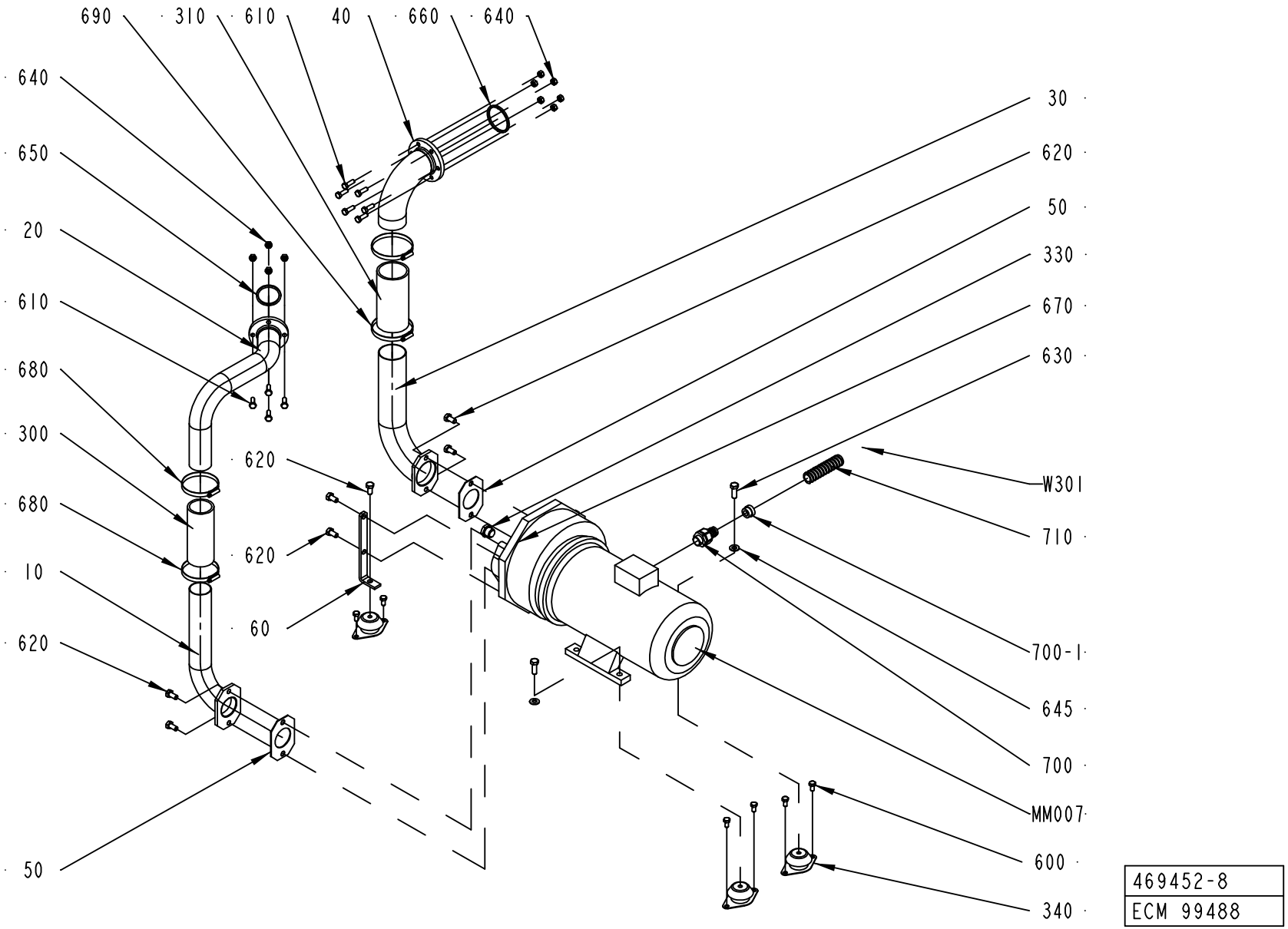
690
310
610
40
660
640
640
650
20
610
680
300
680
10
620
50
620
620
60
30
620
50
330
670
630
W301
710
700-1
645
700
MM007
600
340
469452-8
ECM 99488

ECM: 115872 - 20020930
Group number: 469452-0500
Assembly Drawing: 469452-8_1_AC

Pos	Part No	SP	UN	Qty	Description	Page No
-						
010	978963-0000	-		1	PIPE	
020	1511774-0000	-		1	PIPE	
030	979069-0000	-		1	PIPE	
040	B2514391-0000	-		1	PIPE	
	343421-0106	*-*		*1*	*FLANGE FOR AIR & PER. PIPE F D=63,5 MM*	
050	230551-0000	B		2	GASKET	
060	269859-0000	-		2	BRACKET	
300	90166-0244	B	MM	200	RUBBER HOSE	
310	90166-0245	B	MM	200	RUBBER HOSE	
330	90330-0037	-		1	PLUG, EXT. G-THREAD, G1/2	
340	90347-0144	B		4	VIBRATION DAMPER, NO. RA 40EM-A	
600	312105-0449	-		8	SCREW M6S ISO 4017 M8X16 A480	
610	312105-0453	-		10	SCREW M6S ISO 4017 M8X25 A480	
620	312105-0491	-		10	SCREW M6S ISO 4017 M10X20 A480	
630	312105-0495	B		2	SCREW M6S ISO 4017 M10X30 A480	
640	312605-0318	-		10	HEXAGON NUT, M6M M8 A280	
645	315105-0173	-		2	WASHER ISO 7089-10-200 HV-A4	
650	315229-0105	B		1	GASKETS, 48,5X55,5X3,7 MM 2" FDA	
660	315229-0106	B		1	GASKETS, 61,2X68,2X3,7 MM 2"1/2 FD	
670	315234-0113	-		1	WASHER PL.RND.CU.21,3//26 H=1,5	
680	342991-0112	-		2	HOSE CLIP,WORM DRIVE TYPE (73)-83	
690	342991-0113	-		2	HOSE CLIP,WORM DRIVE TYPE (83)-93	
700	353243-0005	-		1	EXTENDED WITHOUT INSERT, PG16	
700-1	353249-0013	-		1	INSERT, SINGEL HOLE, EK 154/13	
710	90152-0051	-	M	2	SPIRAL CONDUIT, 25X18, UL 1816	
MM007	90270-0017	A		1	COMPRESSOR NASH/ELMO 112 MB/4-2083	
W301	351150-0418	-	M	4	CABLE OLFLEX 4X2,5 MM2 LIGHT/GREY	

Pos	Part No	SP	UN	Qty	Description	Page No

Machine Type | Group Description | Used-In | Group Number | Page No

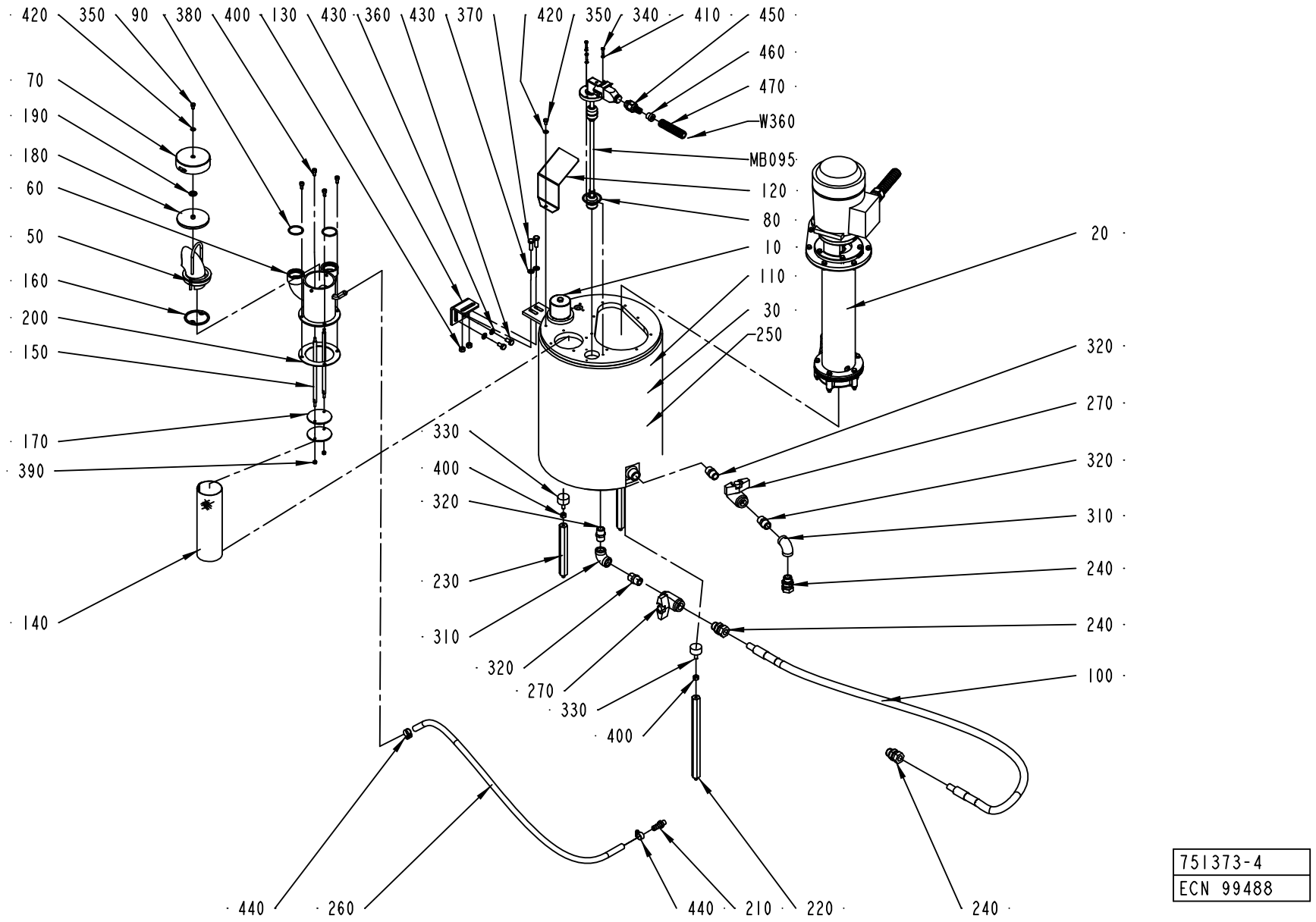

751373-4
ECN 99488

ECM: 115881 - 20020930
Group number: 751373-0300
Assembly Drawing: 751373-4_1_AC

Pos	Part No	SP	UN	Qty	Description	Page No
-						
010	A493652-0100	-		1	LID	**449**
020	A751393-0300	-		1	PEROXIDE PUMP	**451**
030	1523058-0000	-		1	TANK	
050	1523059-0000	B		1	HOLDER	
060	1523060-0000	B		1	FILLER TUBE	
070	751220-0000	-		1	FILLER CAP	
080	927422-0007	B		1	O-RING 44.2X3 SILICON	
090	927422-0014	B		2	O-RING 34.2X3 SILICON	
100	978973-0001	-		1	HOSE	
110	1499899-0000	-		1	INSULATION CLOTH	
120	1296118-0000	-		1	PROTECTION	
130	1499060-0000	-		1	HOLDER	
140	257202-0000	B		1	STRAINER	
150	491203-0000	-		2	STRUT	
160	491303-0000	-		1	WASHER	
170	491304-0000	-		2	WASHER	
180	563286-0000	B		1	GASKET	
190	563287-0000	-		1	WASHER	
200	577773-0000	B		1	GASKET	
210	979336-0000	-		1	HOSE NIPPLE	
220	1499061-0000	-		2	PILLAR	
230	1499062-0000	-		1	PILLAR	
240	90030-0188	-		3	CONN. STR. GA-15-G1/2	
250	90153-0048	-		1	ADHESIVE,DEVCON TYPE 5-MIN-EPOXI 28G	
260	90166-0138	-	MM	1300	HOSE	
270	90187-0059	-		2	BALL VALVE FOR HYDR.PER. G1/2 3MM HOLE	
310	90330-0020	-		2	ELBOW, 90 INT. THREAD, R-2221/2	
320	90330-0021	-		4	NIPPLES, EXT. THREAD. R-207R1/2	
330	90347-0004	B		3	VIBRATION DAMPER D=30 TH=M8 H=17 H2=21MM	
340	312105-0293	-		3	SCREW M6S ISO 4017 M4X16 A480	
350	312105-0364	-		2	SCREW M6S ISO 4017 M6X10 A480	
360	312105-0449	-		2	SCREW M6S ISO 4017 M8X16 A480	
370	312105-0453	-		2	SCREW M6S ISO 4017 M8X25 A480	
380	312115-0366	-		4	SCREW ISO4762 M6X12 A4	
390	312605-0314	-		2	HEXAGON NUT, M6M M5 A280	
400	312605-0318	-		5	HEXAGON NUT, M6M M8 A280	
410	315105-0136	-		3	WASHER ISO 7089-4-200 HV-A4	
420	315105-0153	-		2	WASHER ISO 7089-6-200 HV-A4	
430	315105-0165	-		4	WASHER ISO 7089-8-200 HV-A4	
440	342991-0101	-		2	HOSE CLIP,WORM DRIVE TYPE (13)-16	
450	353243-0002	-		1	EXTENDED WITHOUT INSERT, PG11	
460	353249-0009	-		1	INSERT, SINGEL HOLE, EK 152/9	
470	90152-0059	-	M	2	SPIRAL CONDUIT, 18X12, UL 1211	
MB095	1282411-0000	A		1	FLOAT	
W360	351150-0405	-	M	3	CABLE OLFLEX 5X0,75 MM2 LIGHT/GREY	

Machine Type | Group Description | Used-In | Group Number | Page No

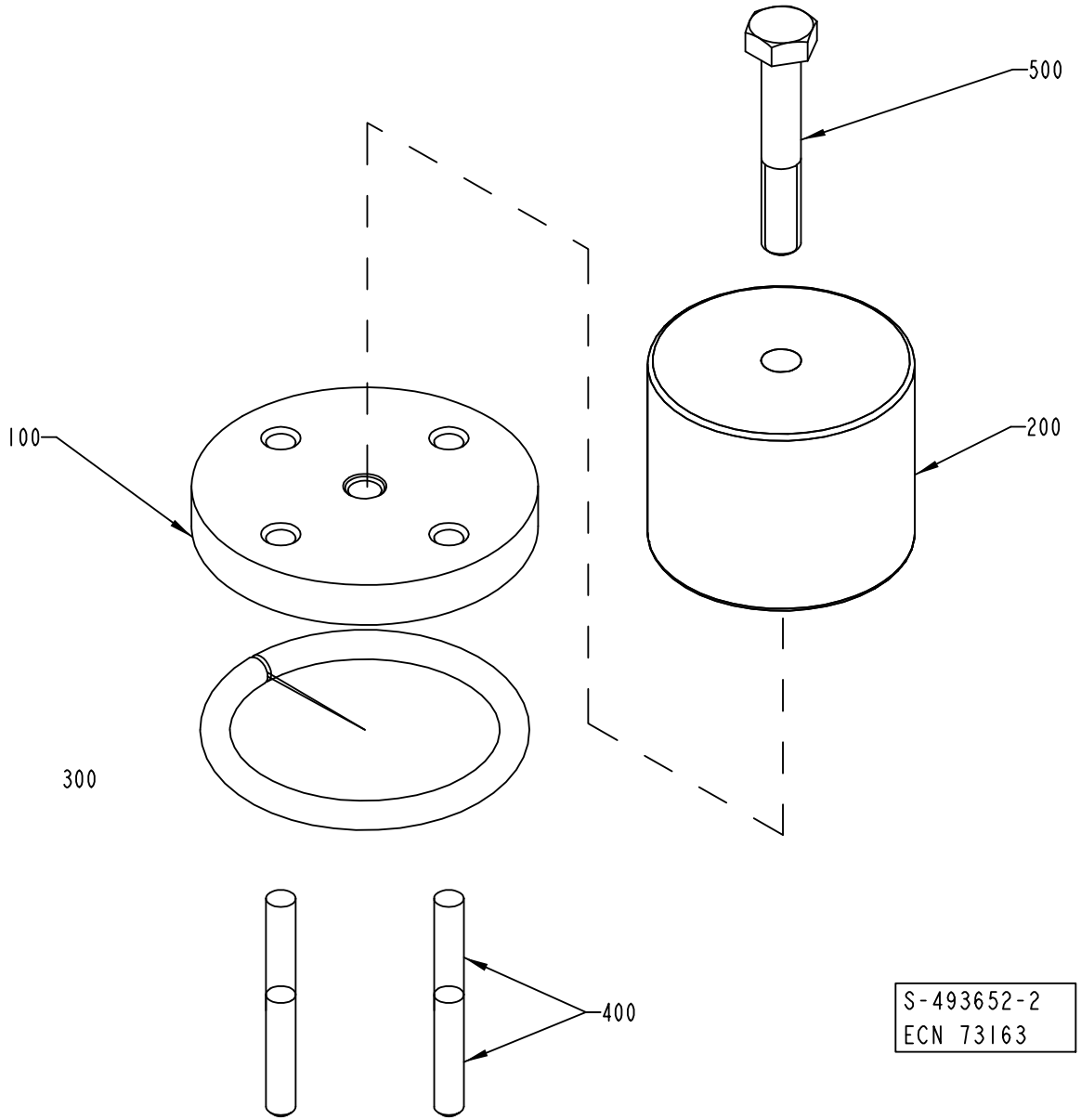
500
100
200
300
400
S-493652-2
ECN 73163

ECM: 73163 - 20000421
Group number: 493652-0100
Assembly Drawing: 493652-2_1_AB

Pos	Part No	SP	UN	Qty	Description	Page No
-						
100	273964-0000	-		1	LID	
200	273965-0001	-		1	WEIGHT	
300	90143-0020	-	MM	190	STRIP	
400	311103-0357	-		4	PARALLELL PIN, M6, 6X30 MM	
500	312105-0461	-		1	SCREW M6S ISO 4014 M8X50 A480	

Pos	Part No	SP	UN	Qty	Description	Page No

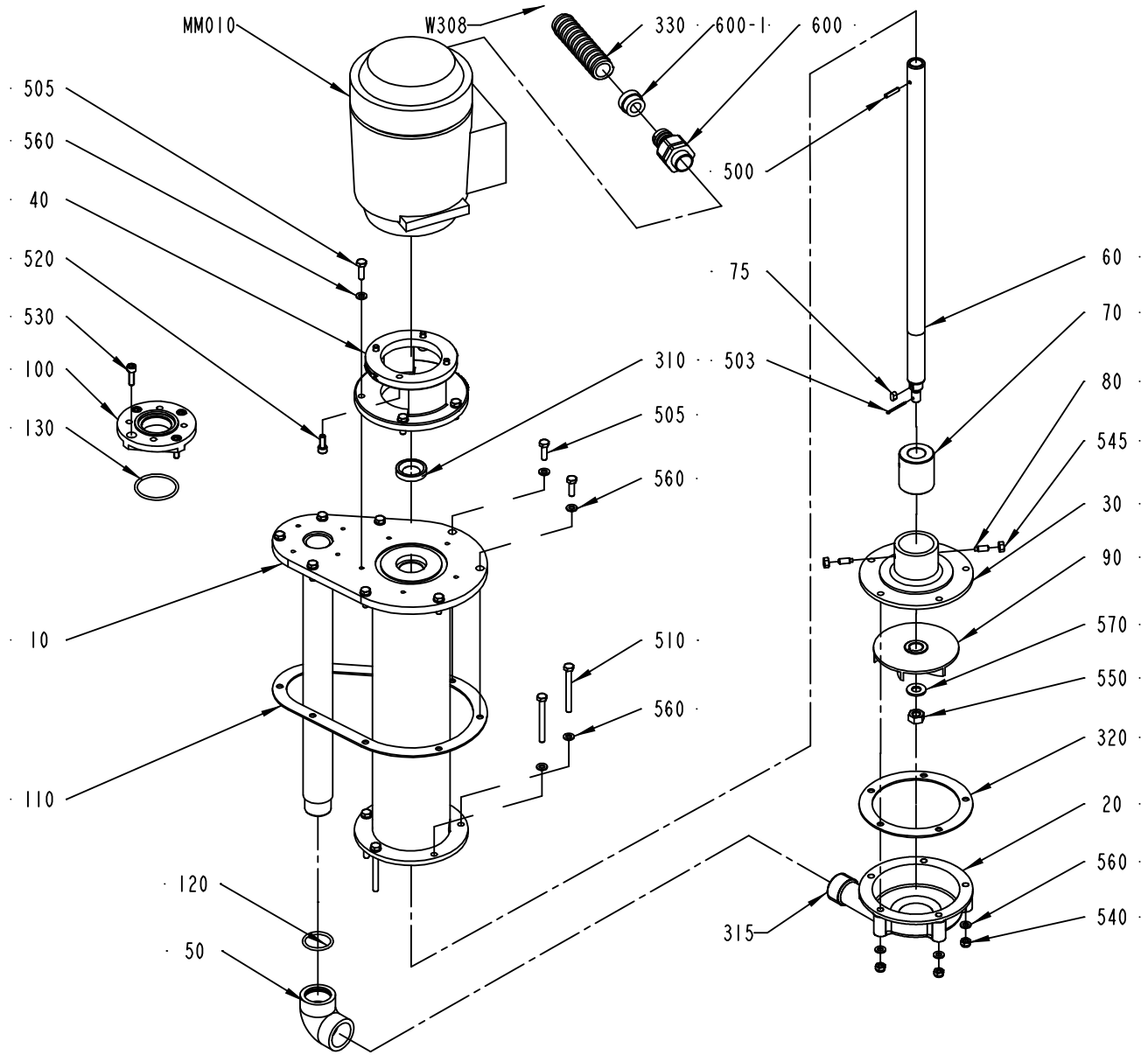

751393-3
ECN 99488

ECM: 115880 - 20020930
Group number: 751393-0300
Assembly Drawing: 751393-3_1_AB

Pos	Part No	SP	UN	Qty	Description	Page No
-						
010	577769-0000	-		1	EXTENSION PIPE	
020	292449-0000	-		1	PUMP HOUSING	
030	292456-0000	-		1	BEARING COVER	
040	751395-0000	-		1	FLANGE	
050	751316-0000	-		1	ELBOW PIPE	
060	577771-0000	B		1	SHAFT	
070	491770-0000	B		1	BUSHING	
075	315705-0196	-		1	PARALLEL KEY W. ROUND ENDS 5X5X10 MM	
080	312311-0368	-		2	SCREW ISO4028 M6X16 FZB	
090	491929-0000	-		1	IMPELLER WHEEL	
100	1523061-0000	-		1	FLANGE	
110	577770-0000	B		1	GASKET	
120	927422-0004	B		1	O-RING 29.2X3 SILICON	
130	927422-0007	B		1	O-RING 44.2X3 SILICON	
310	90091-0137	B		1	RADIAL SEAL VARILIP 20X35X7MM	
315	90144-0073	-	MM	1	TREBOFLON-TAPE W=13MM	
330	90152-0051	-	M	2	SPIRAL CONDUIT, 25X18, UL 1816	
500	311112-0256	-		1	SPRING PIN, ISO 8752 4X20-C	
503	311411-0169	-		1	SPLIT PIN SP2,5X25RFR	
505	312105-0370	-		14	SCREW M6S ISO 4017 M6X20 A480	
510	312105-0382	-		5	SCREW M6S ISO 4014 M6X60 A480	
520	312115-0368	-		4	SCREW ISO4762 M6X16 A4	
530	312115-0370	-		4	SCREW ISO4762 M6X20 A4	
540	312811-0316	-		5	NUT HEX.LOCK HELI COIL MID GRIP M6 SS	
545	312605-0316	-		2	HEXAGON NUT, M6M M6 A280	
550	312605-0320	-		1	HEXAGON NUT, M6M M10 A280	
560	315105-0153	-		24	WASHER ISO 7089-6-200 HV-A4	
570	315105-0173	-		1	WASHER ISO 7089-10-200 HV-A4	
600	353243-0005	-		1	EXTENDED WITHOUT INSERT, PG16	
600-1	353249-0013	-		1	INSERT, SINGEL HOLE, EK 154/13	
MM010	90045-0087	A		1	MOTOR 3GAA 071002-CSA M2AA 71B	
W308	351150-0418	-	M	3	CABLE OLFLEX 4X2,5 MM2 LIGHT/GREY	

Pos	Part No	SP	UN	Qty	Description	Page No

Machine Type | Group Description | Used-In | Group Number | Page No

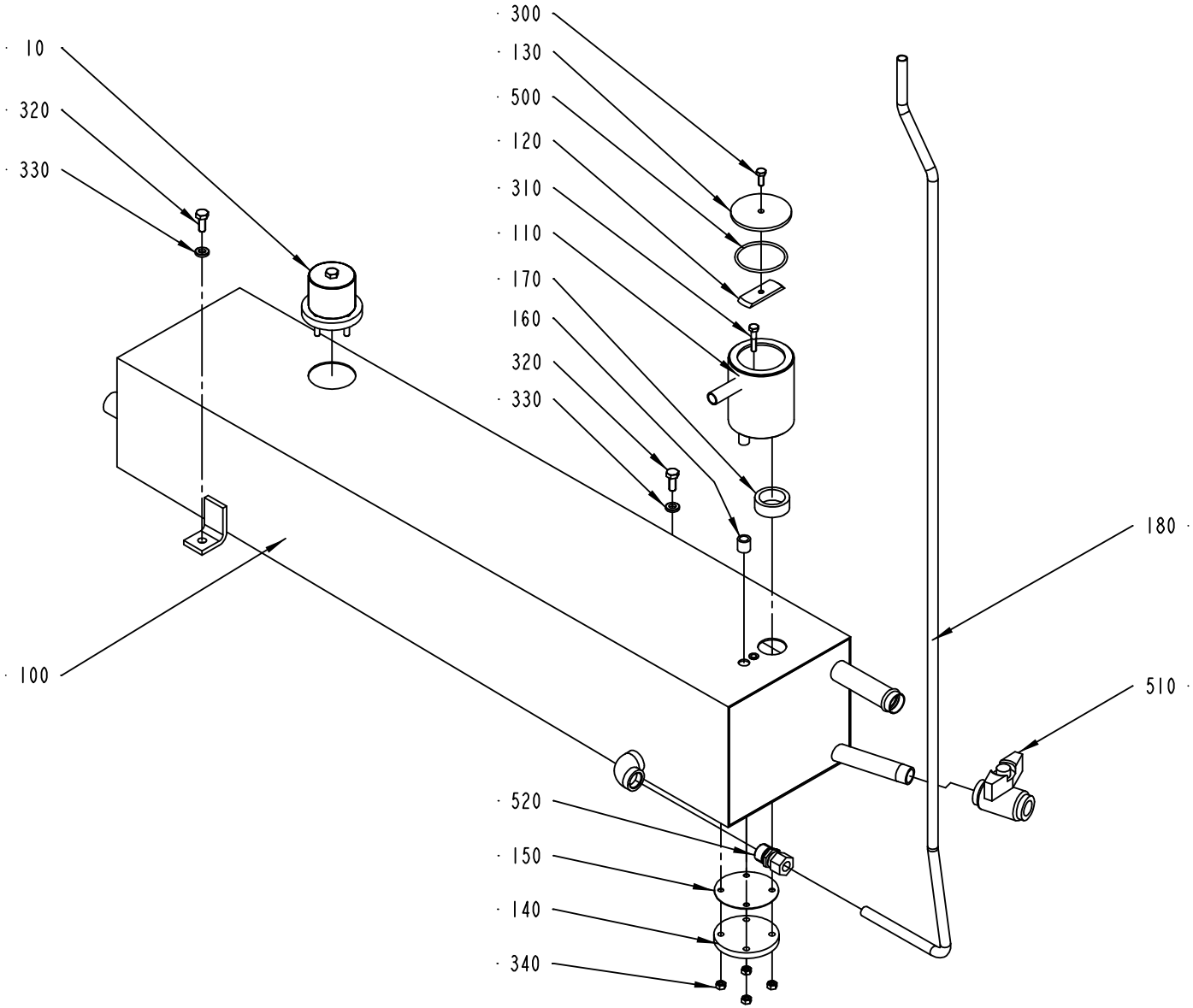

751398-5
ECN 82774

ECM: 106568 - 20020313
Group number: 751398-0400
Assembly Drawing: 751398-5_1_AB

Pos	Part No	SP	UN	Qty	Description	Page No
-						
010	A493652-0100	-		1	LID	**449**
100	1519389-0000	-		1	TANK	
110	978970-0000	-		1	METERING DEVICE	
120	751403-0000	-		1	BRACKET	
130	751223-0000	-		1	LID	
140	532205-0000	-		1	LID	
150	532206-0000	B		1	GASKET	
160	527906-0000	B		1	GASKET	
170	B2514491-0000	B		1	METERING DEVICE	
	90266-0025	-	*M*		*DAIRY PIPE 76,1X1,6*	
	90266-0172	-	*M*		*TUBE,GROUND 15X1,5 SS 2333-22*	
180	1511683-0000	-		1	PIPE	
300	312105-0368	-		1	SCREW M6S M6X16 A280	
310	312105-0374	-		1	SCREW M6S ISO 4014 M6X30 A480	
320	312105-0451	-		2	SCREW M6S ISO 4017 M8X20 A480	
330	315115-0165	-		2	WASHER PLAIN, TBRB 8,4/16 H=3	
340	312605-0316	-		4	HEXAGON NUT, M6M M6 A280	
500	927422-0009	B		1	O-RING 54.5X3 SILICON	
510	90187-0059	-		1	BALL VALVE FOR HYDR.PER. G1/2 3MM HOLE	
520	90030-0109	-		1	CONN. STR., 12-R1/2, EXT. THREAD	

Pos	Part No	SP	UN	Qty	Description	Page No

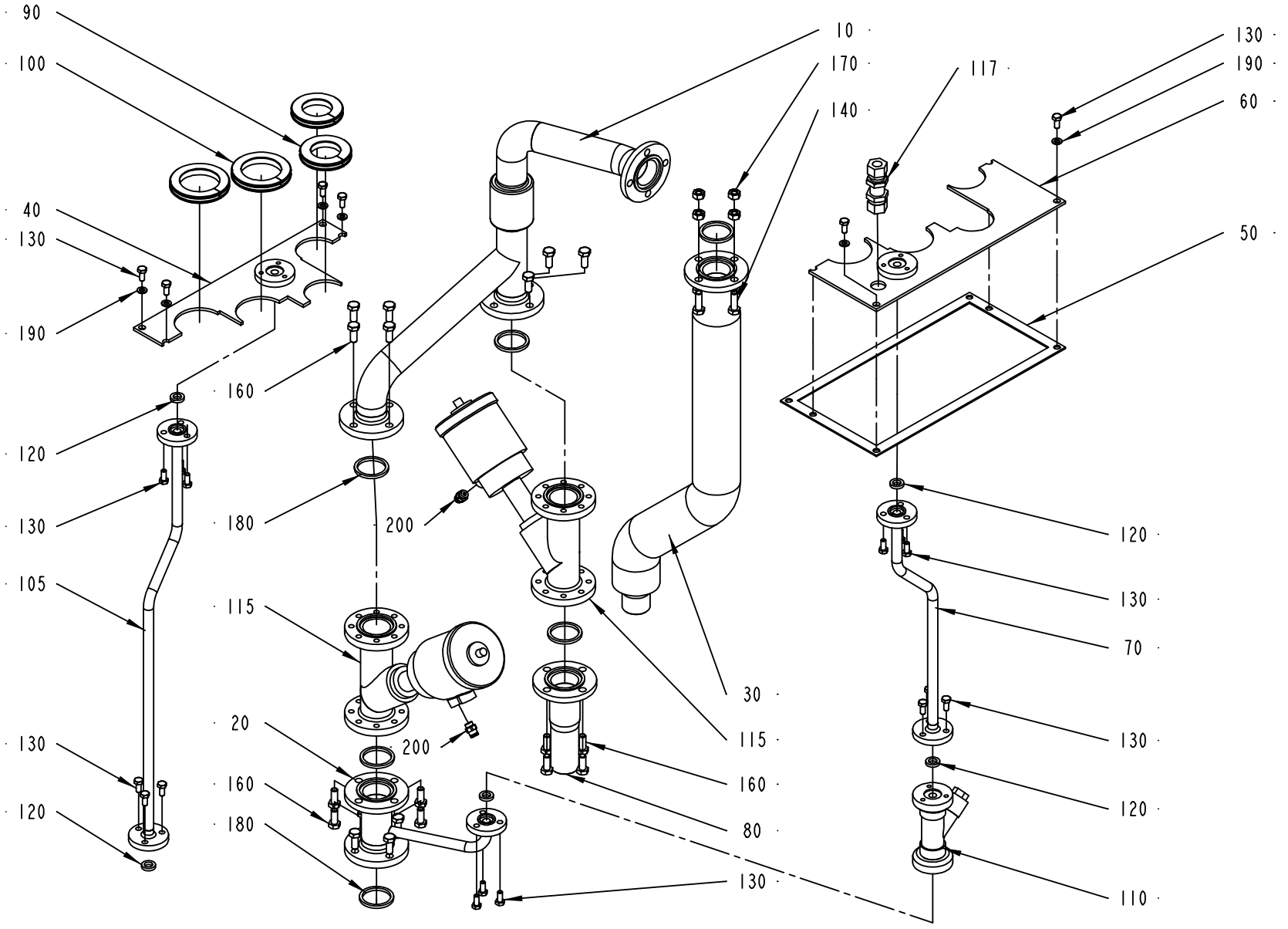

978835-2
ECN 82774

ECM: 115882 - 20020930
Group number: 978835-0200
Assembly Drawing: 978835-2_1_AB

Pos	Part No	SP	UN	Qty	Description	Page No
-						
010	1523062-0000	-		1	FILLING PIPE	
020	1523063-0000	-		1	TUBE	
030	1523064-0000	-		1	RETURN PIPE	
040	1523065-0000	-		1	PLATE	
050	1523066-0000	B		1	GASKET	
060	1523067-0000	-		1	PLATE	
070	1523068-0000	-		1	PIPE	
080	1523069-0000	-		1	PIPE CONNECTION	
090	1517492-0000	B		2	GASKET	
095	2550181-0000	B		1	GASKET	
100	1517058-0000	-		2	GASKET	
105	1548316-0000	-		1	PIPE	
110	1511701-0000	-		1	FILTER	
115	1512673-0000	A		2	VALVE	
117	90030-0030	-		1	CONN. BULKHEAD SV 12-L/SY	
120	315229-0101	B		5	GASKETS, 10,4X17,4X3,7 MM 1/2" FDA	
130	312105-0367	-		21	SCREW M6S M6X14 A280	
140	312105-0453	-		4	SCREW M6S ISO 4017 M8X25 A480	
160	312105-0451	-		20	SCREW M6S ISO 4017 M8X20 A480	
170	312605-0318	-		4	HEXAGON NUT, M6M M8 A280	
180	315229-0104	B		6	GASKETS, 35,8X42,8X3,7 MM 1"1/2 FD	
190	315105-0153	-		6	WASHER ISO 7089-6-200 HV-A4	
200	342722-0202	-		2	PIPE COUPLING 1/8" D=6MM	

Pos	Part No	SP	UN	Qty	Description	Page No

Machine Type | Group Description | Used-In | Group Number | Page No

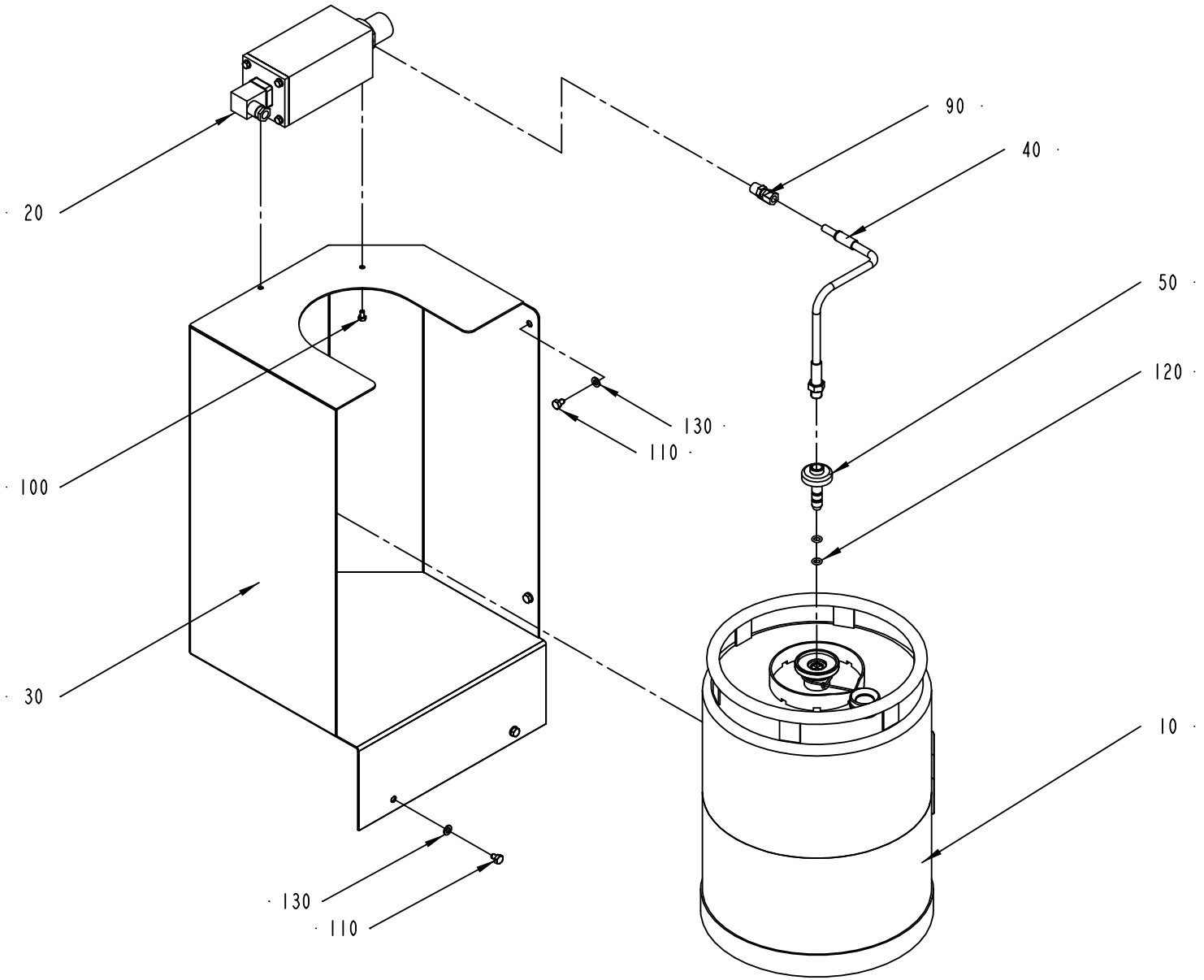

979328-2
ECN 82774

ECM: 115870 - 20020930
Group number: 979328-0200
Assembly Drawing: 979328-2_1_AB

Pos	Part No	SP	UN	Qty	Description	Page No
-						
010	A527898-0100	A		1	CONTAINER H2O2	**459**
020	A979329-0200	-		1	FILLING UNIT	**461**
030	1512805-0000	-		1	CABINET (SMALL)	
040	979300-0000	B		1	PIPE	
050	1511773-0000	-		1	CONNECTOR	
090	90030-0086	-		1	CONN. STR., 8-R1/4, EXT. THREAD	
100	312105-0323	-		2	SKRUV M6S ISO 4017 M5X8 A480	
110	312105-0362	-		4	SCREW M6S ISO 4017 M6X8 A480	
120	927421-0005	B		2	O-RING 7.3X2.4 SILICON	
130	315105-0153	-		4	WASHER ISO 7089-6-200 HV-A4	

Pos	Part No	SP	UN	Qty	Description	Page No

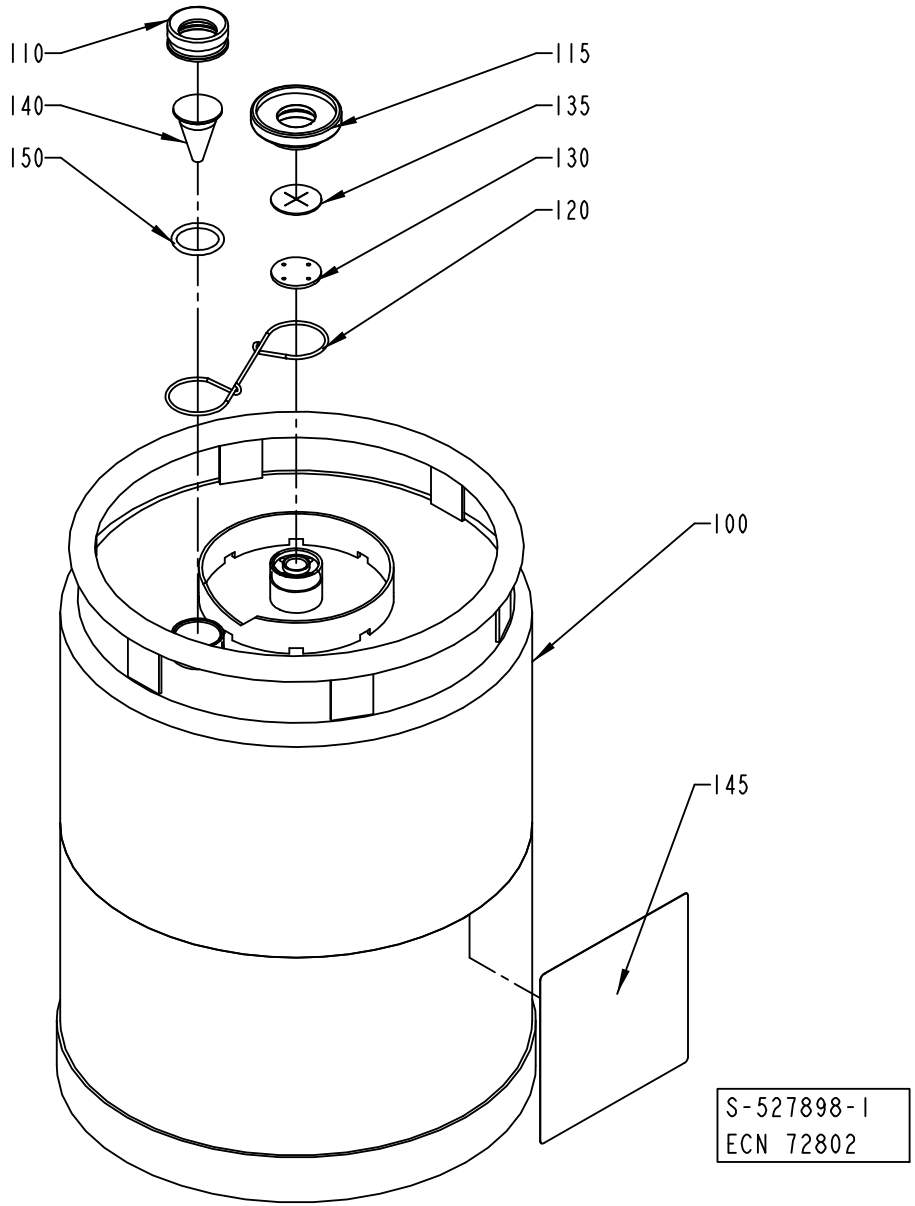
110
140
150
115
135
130
120
100
145
S-527898-1
ECN 72802

ECM: 115873 - 20020930
Group number: 527898-0100
Assembly Drawing: 527898-1_1_AB

Pos	Part No	SP	UN	Qty	Description	Page No
-						
100	561427-0000	-		1	CONTAINER	
110	273977-0000	-		1	NUT	
115	273996-0000	-		1	NUT	
120	273980-0000	-		1	SPRING	
130	565250-0000	B		1	WASHER	
135	565251-0000	B		1	VALVE	
140	273978-0000	-		1	LEVEL GLASS	
145	532655-0000	A		1	CAUTION SIGN	
150	927422-0003	B		1	O.RING 24.2X3 SILICON	

Pos	Part No	SP	UN	Qty	Description	Page No

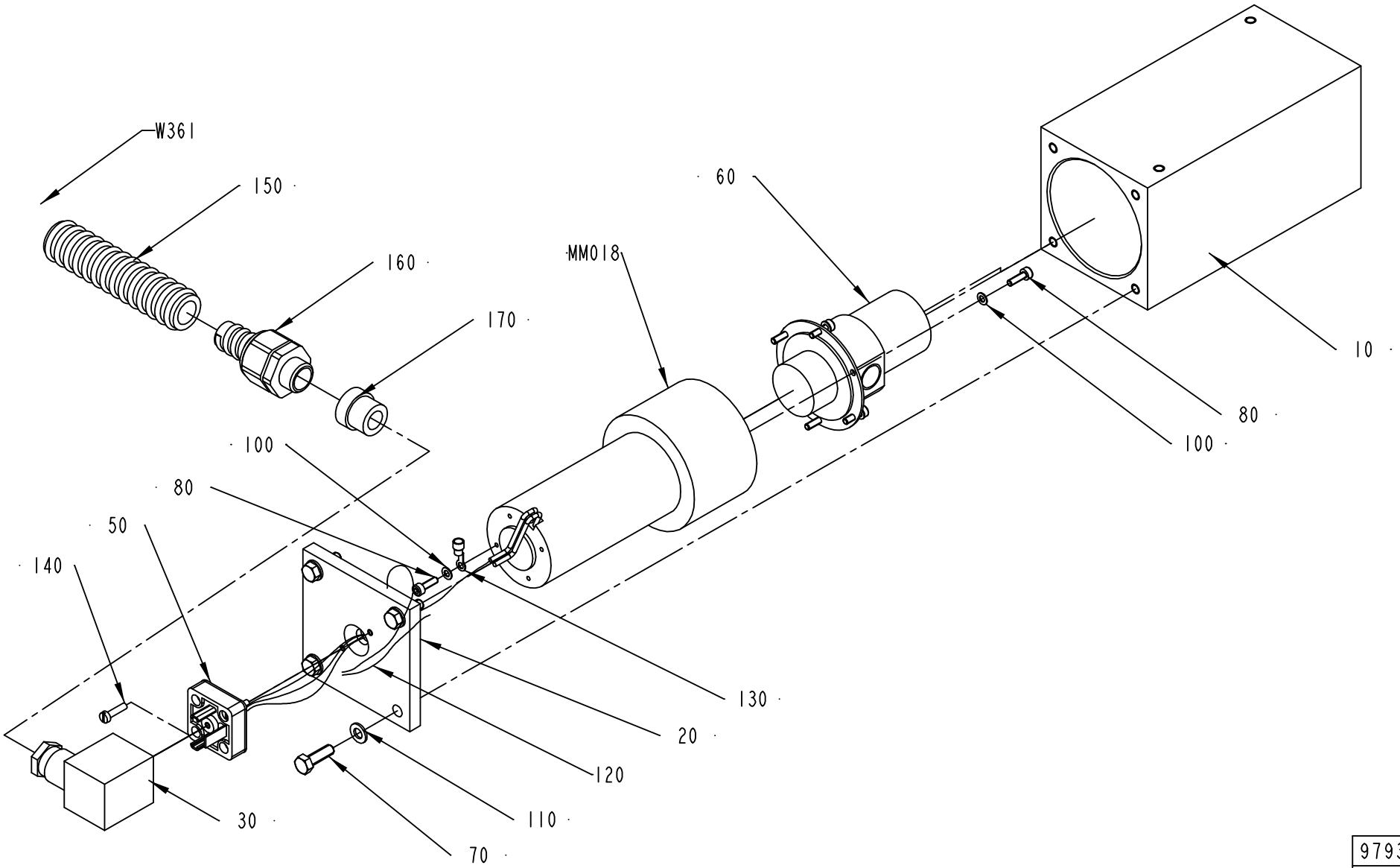

979329-2
ECN 99488

ECM: 115875 - 20020930
Group number: 979329-0200
Assembly Drawing: 979329-2_1_AB

Pos	Part No	SP	UN	Qty	Description	Page No
-						
010	979279-0000	-		1	COVER HOUSING	
020	979280-0000	-		1	COVER	
030	90042-0398	B		1	CONTACT 3 POLE+EARTH	
050	90110-0207	B		1	SOCKET	
060	90321-0101	B		1	GEAR PUMP	
070	312105-0329	-		4	SCREW M6S ISO 4017 M5X16 A480	
080	312115-0224	-		7	SCREW ISO4762 M3X10 A4	
100	315105-0124	-		7	WASHER ISO 7089-3-200 HV-A4	
110	315105-0146	-		4	WASHER ISO 7089-5-200 HV-A4	
120	351175-0102	-	CM	15	CABLE AWM 1X 075 MM2 YELLOW-GREEN	
130	353101-0118	-		1	KABELSKO 0,75-1,5MM2 RED	
140	312125-0226	-		2	SCREW PAN HEAD MCS M3X12 SS	
150	90152-0059	-	M	1	SPIRAL CONDUIT, 18X12, UL 1211	
160	353243-0001	-		1	EXTENDED WITHOUT INSERT, PG9	
170	353249-0009	-		1	INSERT, SINGEL HOLE, EK 152/9	
MM018	90045-0161	B		1	MOTOR MGC 11	
W361	351150-0403	-	M	3	CABLE OLFLEX 3X0,75 MM2 LIGHT/GREY	

Pos	Part No	SP	UN	Qty	Description	Page No

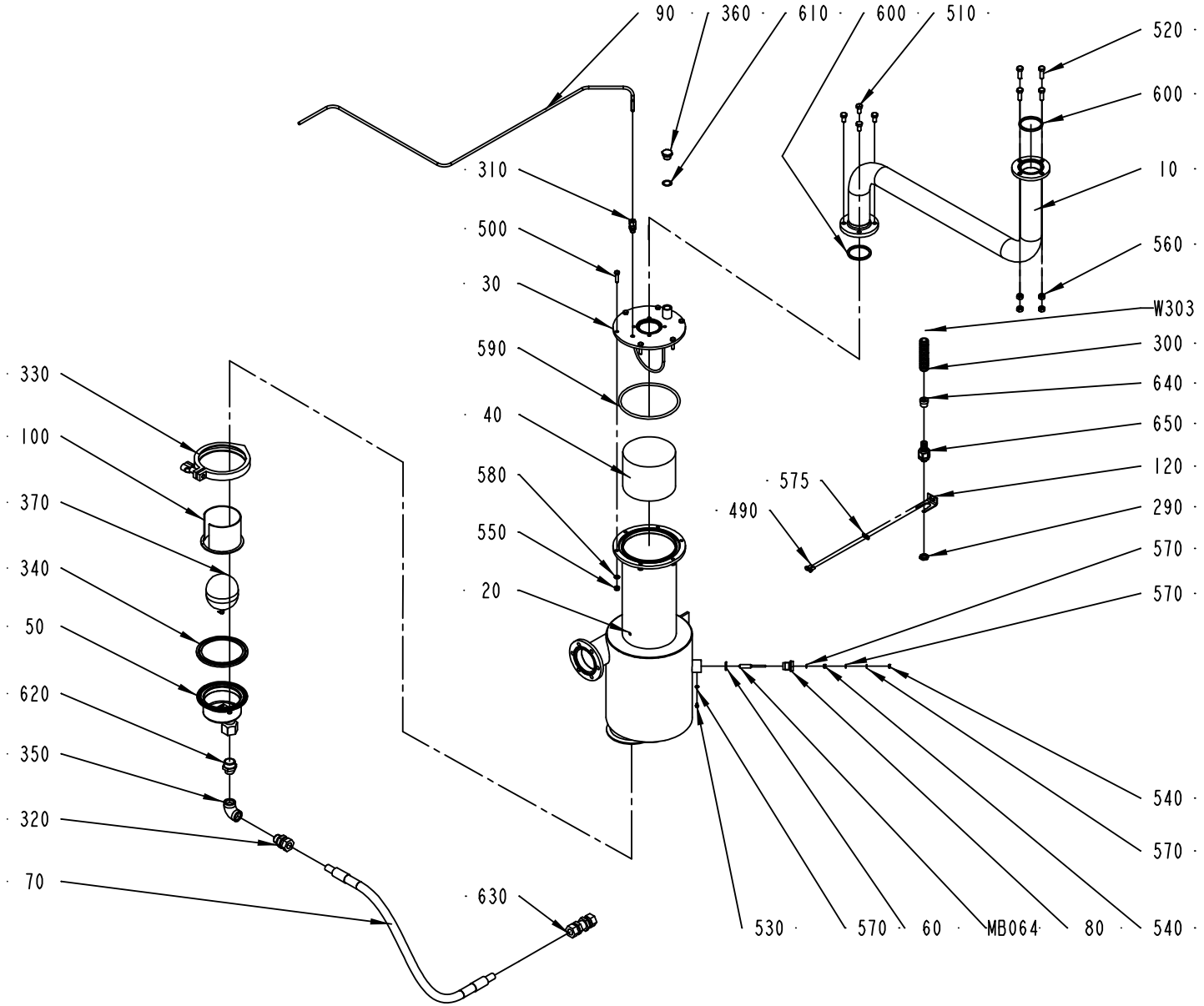

978988-2
ECM 99488

ECM: 106572 - 20020313
Group number: 978988-0200
Assembly Drawing: 978988-2_1_AC

Pos	Part No	SP	UN	Qty	Description	Page No
50HZ						
360	90330-0029	-		1	PLUG, EXT. G-THREAD, R-236R3/8	
60HZ						
110	90030-0136	-		1	ADJUSTABLE ELBOW CONNECTION,EXT 12-G3/8	
Common Parts						
010	1519395-0000	-		1	PIPE	
020	1511775-0000	-		1	SEPARATOR	
030	978956-0000	-		1	LID	
040	546929-0000	B		1	FILTER	
050	B571088-0000	-		1	DRAINING	
	90360-0304	*D*		*1*	*SPARE PART KIT*	
060	927421-0004	-		1	O-RING 15.3X2.4 SILICON	
070	978973-0003	-		1	HOSE	
080	560931-0000	-		1	BRACKET	
090	B2518125-0000	-		1	PIPE	
	90266-0166	-	*M*		*PIPE*	
100	568828-0000	-		1	FLOAT GUARD	
120	977527-0000	-		1	BRACKET	
290	90099-0001	-		1	MUTTER PR 15,2 MäSSING	
300	90152-0059	-	M	2	SPIRAL CONDUIT, 18X12, UL 1211	
310	90030-0184	-		1	CONN. STR. GA-6-G1/8	
320	90030-0188	-		1	CONN. STR. GA-15-G1/2	
330	90217-0312	-		1	CLAMP, ISO2852 FOR PIPE 101,6 MM	
340	90217-0313	B		1	GASKET 97,8X119X5,5 MM	
350	90330-0020	-		1	ELBOW, 90 INT. THREAD, R-2221/2	
370	90360-0305	-		1	FLOAT, ART NO 10739920	
490	312105-0327	-		2	SCREW M6S ISO 4017 M5X12 A480	
500	312105-0372	-		6	SCREW M6S ISO 4017 M6X25 A480	
510	312105-0449	-		4	SCREW M6S ISO 4017 M8X16 A480	
520	312105-0453	-		4	SCREW M6S ISO 4017 M8X25 A480	
530	312125-0285	-		1	SCREW SLOT.PAN HD. MCS 4X6 A480	
540	312605-0312	-		2	HEXAGON NUT, M6M M4 A280	
550	312605-0316	-		6	HEXAGON NUT, M6M M6 A280	
560	312605-0318	-		4	HEXAGON NUT, M6M M8 A280	
570	315105-0136	-		4	WASHER ISO 7089-4-200 HV-A4	
575	315105-0146	-		2	WASHER ISO 7089-5-200 HV-A4	
580	315105-0153	-		6	WASHER ISO 7089-6-200 HV-A4	
590	315202-0244	B		1	O-RING 134,3X5,7 MM	
600	315229-0105	B		2	GASKETS, 48,5X55,5X3,7 MM 2" FDA	
610	315233-0111	-		1	WASHER PL.RND.NYL.17/22,H=1	
620	342700-0210	-		1	NIPPLES,HEXAGON,EXT.G-THREAD G3/4"-G1/2"	
630	342762-0114	-		1	CONN. BULKHEAD SV 15-LFZB	
640	353249-0009	-		1	INSERT, SINGEL HOLE, EK 152/9	
650	353243-0001	-		1	EXTENDED WITHOUT INSERT, PG9	
MB064	567070-0012	-		1	ELECTRODE	
W303	351150-0431	-	M	3	CABLE OLFLEX 2X0,75 MM2 LIGHT/GREY	

Machine Type Group Description Used-In Group Number Page No

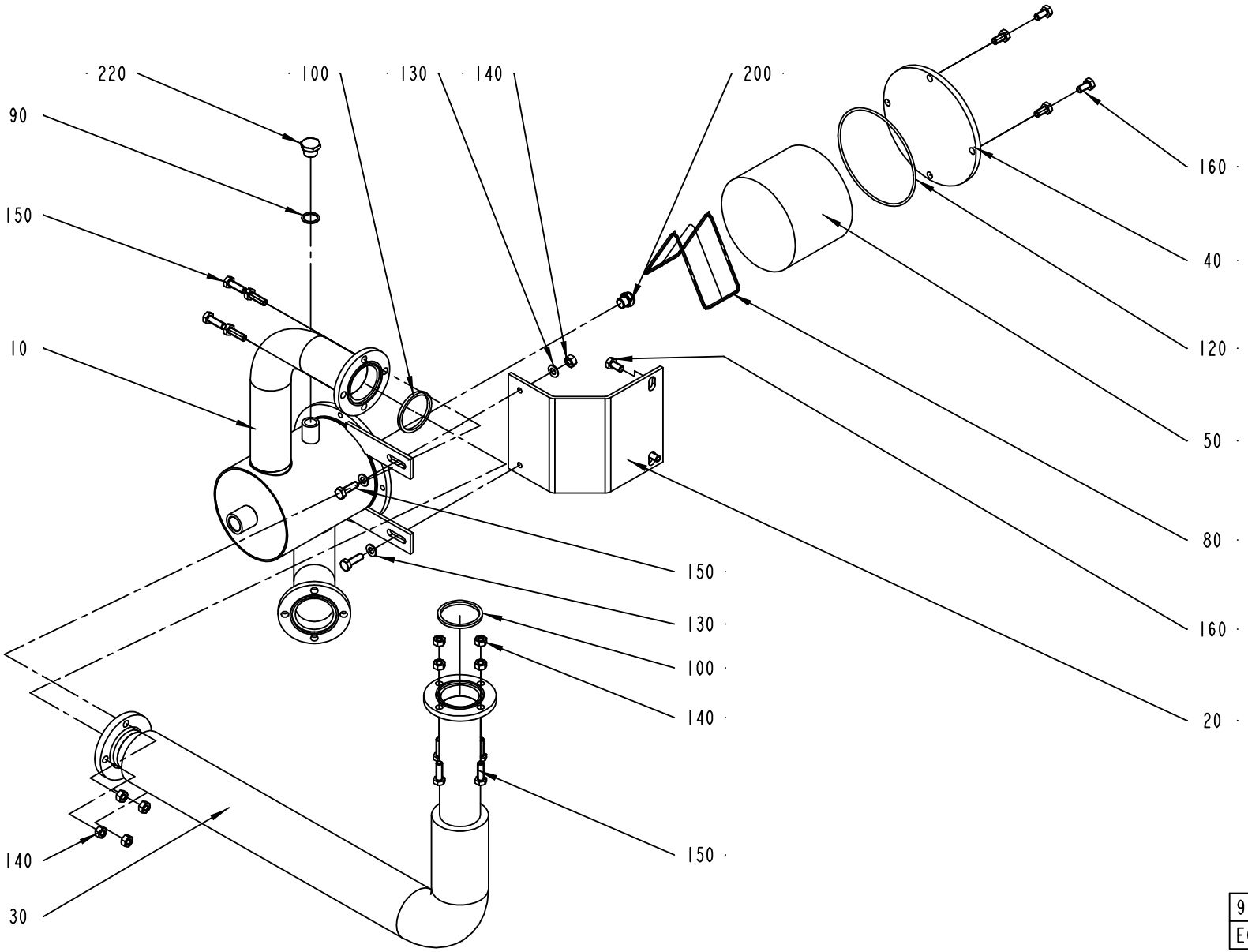

978989-2
ECN 82774

ECM: 106573 - 20020313
Group number: 978989-0200
Assembly Drawing: 978989-2_1_AB

Pos	Part No	SP	UN	Qty	Description	Page No
50HZ						
220	90330-0029	-		1	PLUG, EXT. G-THREAD, R-236R3/8	
60HZ						
060	1519390-0000	-		1	PIPE(FOR 60HZ)	
070	1519391-0000	-		1	PIPE BEND	
170	279589-0000	-		1	NUT	
180	209146-0000	-		1	BARRIER NUT	
190	209145-0000	-		1	THROTTLE SCREW	
210	90030-0058	-		1	CONN. T-PIPE T-12	
230	90030-0084	-		1	CONN. STR. GE 10-3/8-18 NPTF	
Common Parts						
010	1519392-0000	-		1	SCRUBBER	
020	1519393-0000	-		1	PLATE	
030	1519394-0000	-		1	PIPE	
040	568806-0000	-		1	LID	
050	546929-0000	B		1	FILTER	
080	571087-0000	-		1	RETAINING RING	
090	315233-0111	-		1	WASHER PL.RND.NYL.17/22,H=1	
100	315229-0105	B		2	GASKETS, 48,5X55,5X3,7 MM 2" FDA	
120	315202-0317	B		1	O-RING 129,5X3 MM	
130	315105-0165	-		4	WASHER ISO 7089-8-200 HV-A4	
140	312605-0318	-		10	HEXAGON NUT, M6M M8 A280	
150	312105-0453	-		10	SCREW M6S ISO 4017 M8X25 A480	
160	312105-0449	-		6	SCREW M6S ISO 4017 M8X16 A480	
200	90424-0054	-		1	SPRAY NOZZLE 120 DEG	

Pos	Part No	SP	UN	Qty	Description	Page No

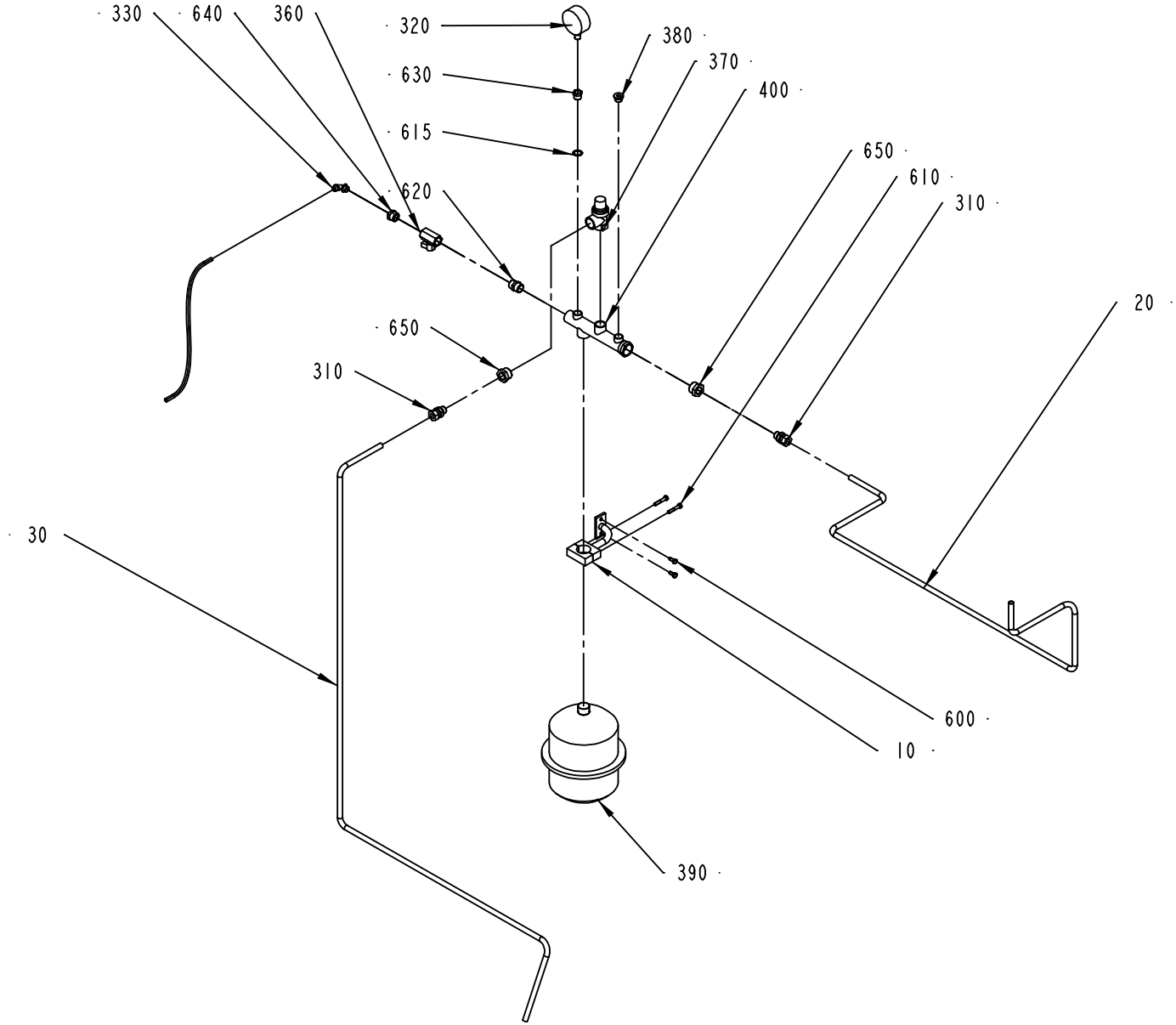

979026-2
ECN 82774

ECM: 115885 - 20020930
Group number: 979026-0200
Assembly Drawing: 979026-2_1_AB

Pos	Part No	SP	UN	Qty	Description	Page No
-						
010	978953-0000	-		1	BRACKET	
020	1350187-0000	-		1	PIPE	
030	1350186-0000	-		1	PIPE	
310	342752-0110	-		2	CONN. STR. GA-12-G3/8	
320	90043-0002	B		1	PRESSURE GAUGE, 2040 D=63 MM	
330	342931-0122	-		1	ELBOW 90 COUPL.,EXT.THREAD 8/6-G1/4"	
350	90166-0118	-	MM	1800	TUBE 8 MM PA BLACK	
360	90187-0062	-		1	BALL VALVE G1/2, NPBR	
370	90187-0104	B		1	SAFETY VALVE, R3/4,	
380	342713-0211	-		1	PLUG, EXT THREAD HEX SOCKET 8638-00-380	
390	90304-0020	B		1	LIQUID CONTAINER	
400	90304-0307	-		1	ATTACHMENT PIPE	
600	312105-0367	-		2	SCREW M6S M6X14 A280	
610	312105-0376	-		2	SCREW M6S ISO 4014 M6X35 A480	
615	315233-0111	-		1	WASHER PL.RND.NYL.17/22,H=1	
620	342700-0113	-		1	NIPPLES,HEXAGON,EXT.G-THREAD G1/2"-G1/2"	
630	342701-0203	-		1	BUSHING, INT/EXT. G-THREAD NO. 3/8-1/4	
640	342701-0205	-		1	BUSHING,INT./EXT.G-THREAD G1/2"-G1/4"	
650	342701-0209	-		2	BUSHING,INT./EXT.G-THREAD G3/4"-G3/8"	

Pos	Part No	SP	UN	Qty	Description	Page No

Machine Type | Group Description | Used-In | Group Number | Page No

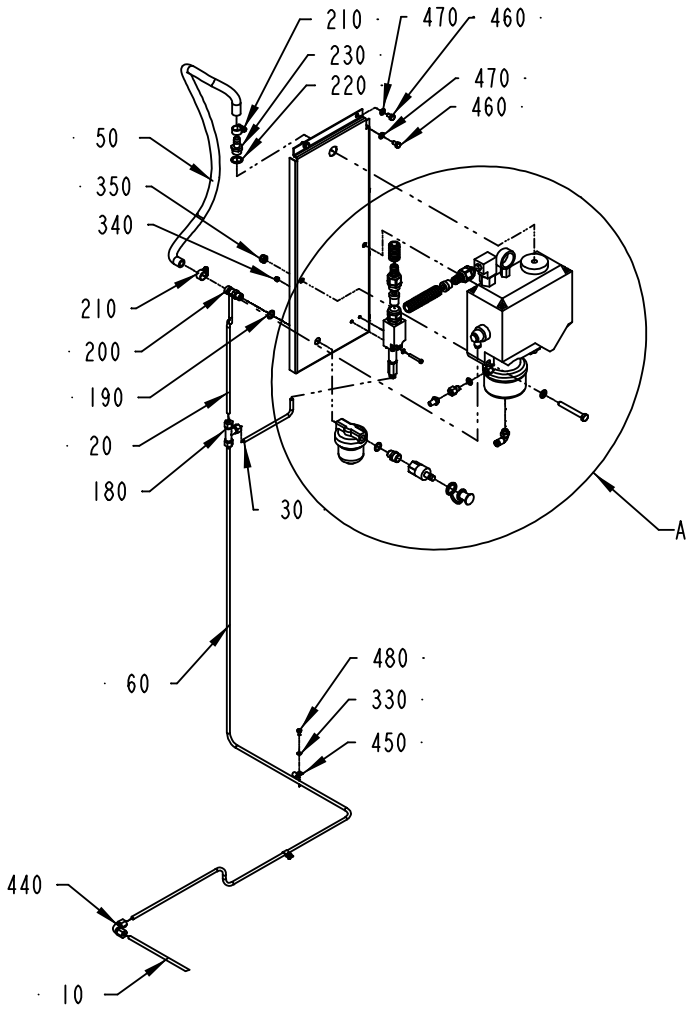

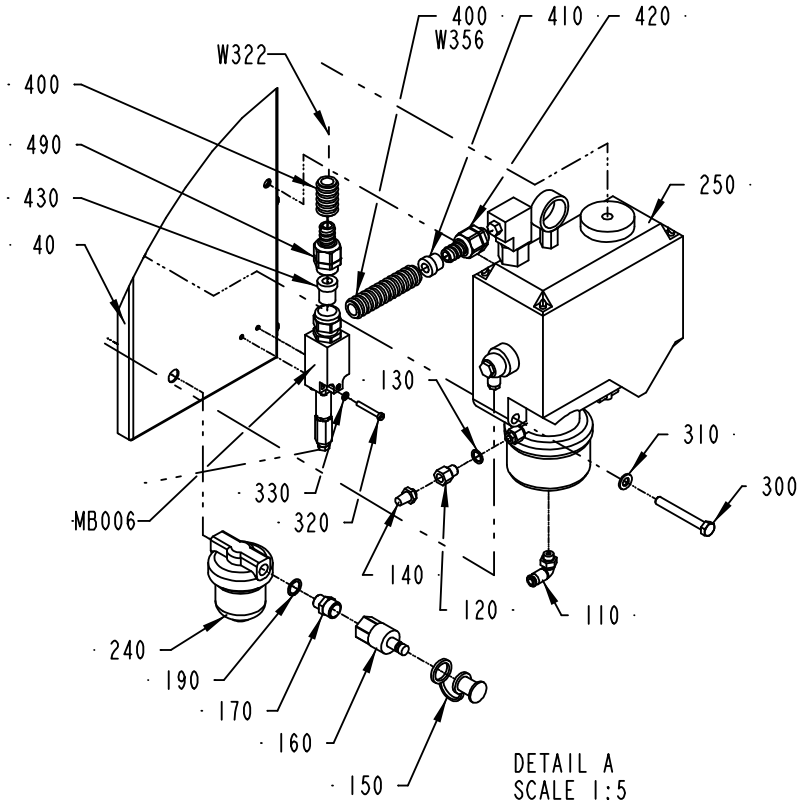

978823-2
ECM 73395

ECM: 115871 - 20020930
Group number: 978823-0200
Assembly Drawing: 978823-2_1_AA

Pos	Part No	SP	UN	Qty	Description	Page No
-						
010	1538908-0000	-		1	PIPE	
020	1538907-0000	-		1	PIPE	
030	1538906-0000	-		1	PIPE	
040	1558125-0000	-		1	MOUNTING SHEET	
050	90166-0113	-	M		HOSE	
060	1539332-0000	-		1	PIPE	
110	342732-0102	-		1	ELBOW PIPE JOINT, EXT.THREAD, D=6MM-G1/8	
120	90134-0081	-		1	REDUCTION SLEEVE M10X1/R 1/8"	
130	315233-0109	-		1	WASHER PL.RND.NYL.10,3/14,H=1	
140	346800-0109	-		1	SILENCER FILTER R1/8"	
150	90163-0304	-		1	QUICK COUPLING, LP-006-5-74-KU (DUST CAP	
160	90163-0064	-		1	QUICK COUPLING, (M) LP-006-2-WR517	
170	342700-0203	-		1	NIPPLES,HEXAGON,EXT.G-THREAD G3/8"-G1/4"	
180	90030-0076	-		1	CONN. T-PIPE T-6	
190	315233-0110	-		2	WASHER PL.RND.NYL.13,3/17,H=1	
200	90163-0014	-		1	QUICK COUPLING, (M) LP-006-1-WR013	
210	342991-0101	-		2	HOSE CLIP,WORM DRIVE TYPE (13)-16	
220	315233-0111	-		1	WASHER PL.RND.NYL.17/22,H=1	
230	90163-0041	-		1	HOSE NIPPLE, EXT.THR. 3/8-12 MM	
240	B90415-0033	-		1	OIL FILTER REFILLING UC-HP-1229-25	
	90415-0330	*C*		*1*	*FILTER INSERT ARTNO HR-1229-25UCC*	
250	B90048-0046	-		1	OIL PUMP	
	90274-0105	*-*		*1*	*LEVEL GUARD*	
	B90048-0041	*-*		*1*	*OIL PUMP NO CONTAINER*	
	90048-0526	*-*		*1*	*O-RING*	
	90048-0527	*-*		*1*	*SEALING RING*	
	90048-0528	*-*		*1*	*PISTON SEAL*	
	90048-0525	*-*		*1*	*PUMP HOUSING*	
	90048-0523	*-*		*1*	*PISTON SPR. 4.581921.1 FOR PUMP 90048-18*	
	90048-0452	*-*		*1*	*SEALING KIT*	
	90048-0450	*-*		*1*	*SPARE PARTS KIT*	
300	312105-0464	-		2	SCREW M6S ISO 4014 M8X65 A480	
310	315105-0165	-		2	WASHER ISO 7089-8-200 HV-A4	
320	312125-0299	-		2	SCREW PAN HEAD MCS M4X30 SS	
330	315105-0136	-		4	WASHER ISO 7089-4-200 HV-A4	
340	312812-0312	-		2	HEXAGON NUT, NY-LOCK M4 A480	
350	312812-0318	-		2	HEXAGON NUT, NY-LOCK M8 A480	
400	90152-0059	-	M	5	SPIRAL CONDUIT, 18X12, UL 1211	
410	353249-0009	-		1	INSERT, SINGEL HOLE, EK 152/9	
420	353243-0001	-		1	EXTENDED WITHOUT INSERT, PG9	
430	353249-0065	-		1	INSERT, SINGEL HOLE, E152/09	
440	342737-0204	-		1	CONN. ELBOW W-6 LRFR	
450	90165-0057	-		2	PIPE CLIP FOR TUBE D=6 MM	
460	312105-0364	-		6	SCREW M6S ISO 4017 M6X10 A480	
470	315105-0153	-		6	WASHER ISO 7089-6-200 HV-A4	
480	312105-0287	-		2	SCREW M6S ISO4017 M4X8 A480	
490	B353242-0001	-		1	NORMAL WITHOUT INSERT, PG13,5	
	353249-0065	*-*		*1*	*INSERT, SINGEL HOLE, E152/09*	
MB006	90274-0084	A		1	PRESSURE GUARD, 1800 KPA	
W322	351150-0403	-	M	4	CABLE OLFLEX 3X0,75 MM2 LIGHT/GREY	
W356	351150-0404	-	MM	3500	CABLE OLFLEX 4X0,75 MM2 LIGHT/GREY	

Machine Type | Group Description | Used-In | Group Number | Page No

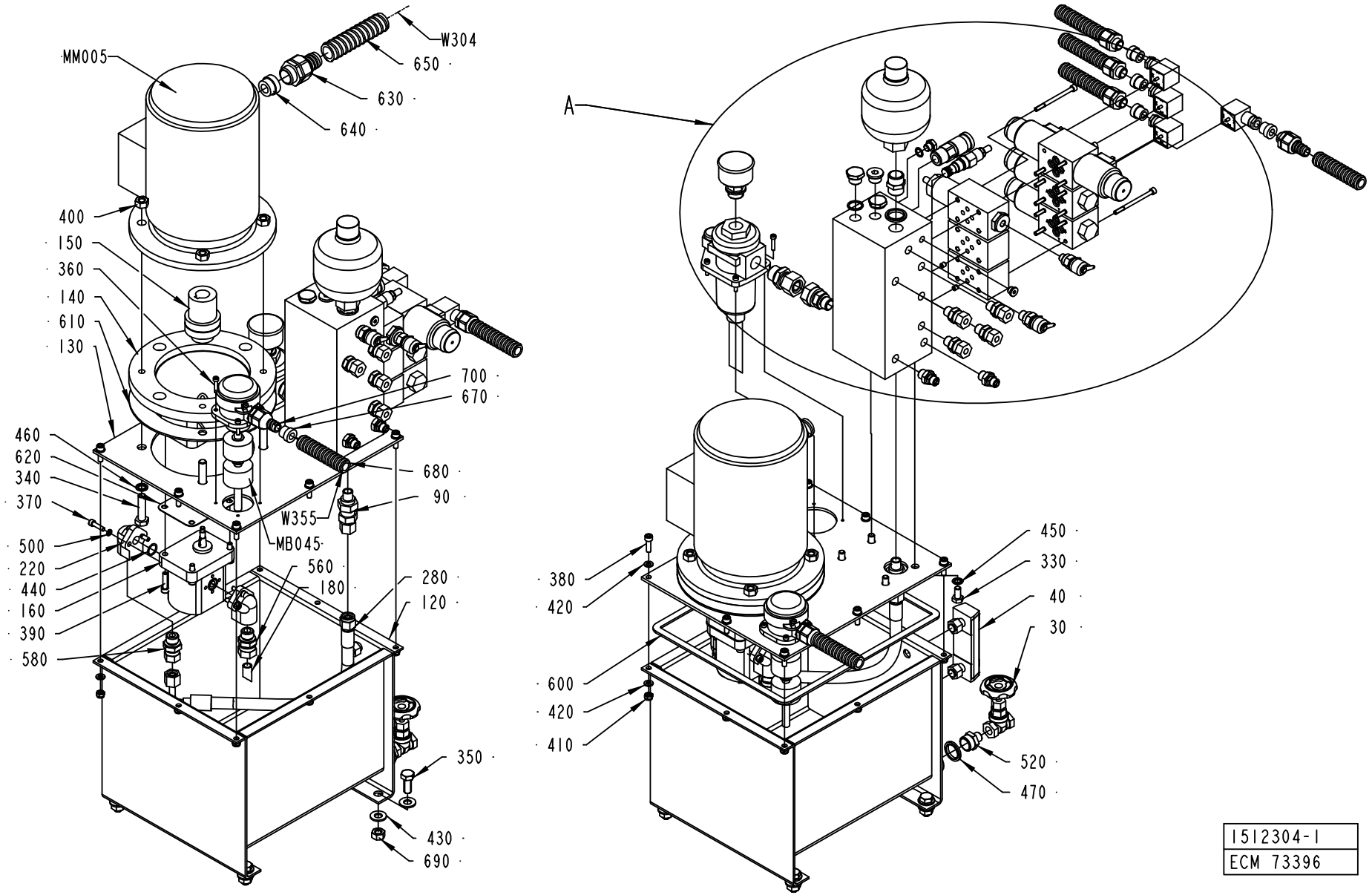

1512304-1
ECM 73396

ECM: 115877 - 20020930
Group number: 1512304-0100
Assembly Drawing: 1512304-1_1_AA

This list covers pages from 470 to 473

Pos	Part No	SP	UN	Qty	Description	Page No
-						
020	90163-0076	-		1	QUICK COUPLING, (F) LP-006-0-WR021	
030	90187-0120	-		1	FLAP VALVE, G1/4, L=38	
040	90199-0020	-		1	LEVEL GLASS/THERMOM. FSA 76.1.1./T/12	
050	B90201-0010	-		2	DIRECT CHECK VALVE, NO. DGMDC-3-Y-PK-41	
	90201-0303	-		*1*	*SPARE PARTS KIT*	
	90201-0302	-		*1*	*WASHER*	
	90201-0301	-		*1*	*SPRING*	
	90201-0300	-		*1*	*MOUNTING PLATE, NO. A1-89 57B*	
060	90201-0014	A		1	VALVE	
080	90201-0407	-		3	BOLT KIT	
090	90230-0026	B		1	NON-RETURN VALVE RHZ 10-PLR-ED	
100	90330-0029	-		2	PLUG, EXT. G-THREAD, R-236R3/8	
110	90330-0066	-		1	PLUG, EXT. G-THREAD, G1/8	
120	90457-0011	-		1	HYDRAULIC TANK, 12 LI, NO A3-14010	
130	90457-0012	-		1	TANK LID, LID-12L, NO A3-14011	
140	90457-0013	-		1	PUMP-MOTOR BRACKET, LS-211, NO 1711121	
150	90457-0014	A		1	FLEXIBLE COUPLING, ND5-A, CON.10X19 MM	
160	90457-0015	A		1	HYDR.PUMP, TFP100/2,2-S-C001, NO 1111250	
170	90457-0016	-		1	HYDR. VALVE MANIFOLD BLOCK, NO AI-14004	
180	90457-0017	-		1	TANK RET. OUTLET PIPE, NO 8185-0187	
190	90457-0018	A		1	HYDR.ACCU, NO SBO210-0,32EI/112A-210AK60	
220	90457-0021	-		2	PUMP CONN. ELBOW FLANGE T-26/12-3/8	
240	90030-0630	-		2	REDUCER, 1,5MM, M6, NO. 815406	
250	90201-0133	A		1	VALVE	
260	90201-0132	A		1	VALVE	
270	90201-0131	A		1	VALVE	
280	90457-0022	-		1	HYDR. HOSE, 6,4 & M16X1,5 STR+90DEGR.CON	
290	90458-0726	-		1	PRESSURE GAUGE, D=50 MM WITH FILTER	
300	90457-0024	-		1	RETURNFILTER UNIT, RF-P/30-G-010AI.IT	
320	90457-0023	-		1	CONN.STRAIGHTG1/2-M22X1,5, VADKO15-RL/WD	
330	312101-0499	-		4	SCREW M6S M10X40 FZB	
340	312104-0499	-		4	SCREW M6S M10X40H FZB	
350	312105-0493	-		4	SCREW M6S ISO 4017 M10X25 A480	
360	312111-0295	-		8	SCREW HEX.SOCK.HD.MC6S-TT 4X20 88 FZB	
370	312111-0331	-		6	SCREW HEX.SOCK.HD.MC6S-TT 5X20 88 FZB	
380	312111-0370	-		8	SCREW HEX.SOCK.HD.MC6S-TT 6X20 88 FZB	
390	312111-0372	-		4	SCREW HEX.SOCK.HD.MC6S-TT 6X25 88 FZB	
400	312601-0320	-		4	NUT M6M 10-8 FZB	
410	312810-0316	-		8	HEXAGON NUT, NY-LOCK M6 FZB	
420	315101-0153	-		16	WASHER PLAIN, BRB, 6,4/12 H=1,5	
430	315105-0173	-		8	WASHER ISO 7089-10-200 HV-A4	
440	315202-0112	-		2	O-RING 14,1X1,6 MM	
450	315211-0104	B		4	GASKET BOLT HEAD 8,7X14X1 MM M8	
460	315211-0106	B		4	GASKET BOLT HEAD 10,7X16X1,5 MM M10	
470	315211-0111	B		2	GASKET BOLT HEAD 21,5X28,6X2,5 MM G1/2	
480	315234-0109	-		1	WASHER,PL.RND.CU.10,3/13,5 H=1,0	
490	315234-0111	-		2	WASHER,PL.RND.CU.17,5//21 H=1,5	
500	315402-0146	-		6	LOCK WASHER FBB 5,1	
510	342700-0113	-		1	NIPPLES,HEXAGON,EXT.G-THREAD G1/2"-G1/2"	
520	342700-0205	-		1	NIPPLES,HEXAGON,EXT.G-THREAD G1/2"-G1/4"	
530	342713-0209	-		1	PLUG, EXT THREAD HEX SOCKET 8638-00-180	
540	342713-0211	-		1	PLUG, EXT THREAD HEX SOCKET 8638-00-380	
550	342752-0103	-		4	CONN. STR. GA-8-G1/4	
560	342752-0110	-		1	CONN. STR. GA-12-G3/8	
570	342921-0122	-		2	STRAIGHT COUPLING,EXT.THREADED 8/6-G1/4"	
580	90457-0139	-		1	CONN.STRAIGHT G3/8-10 MM, A 10-L/R3/8/WD	
590	90457-0140	-		1	CONN.STRAIGHT G3/8-15 MM, A 15-L/R3/8/WD	
600	90457-0136	B		1	FLAT GASKET TAPE W. ADHESIVE, 10X3.0	
610	90457-0138	B		1	GASKET, DP-200	
620	90457-0137	B		1	GASKET, GP IP	
630	90458-0431	-		1	EXTENDED WITHOUT INSERT, M25X1,5	
640	353249-0013	-		1	INSERT, SINGEL HOLE, EK 154/13	
650	90152-0051	-	M	1	SPIRAL CONDUIT, 25X18, UL 1816	
660	353243-0001	-		4	EXTENDED WITHOUT INSERT, PG9	
670	353249-0009	-		5	INSERT, SINGEL HOLE, EK 152/9	
680	90152-0059	-	M	8	SPIRAL CONDUIT, 18X12, UL 1211	
690	312605-0320	-		4	HEXAGON NUT, M6M M10 A280	
700	353243-0002	-		1	EXTENDED WITHOUT INSERT, PG11	
MB045	90457-0019	A		1	LEVEL PROBE, HMFB-S=45-0=80-0=90-T70	
MM005	90045-0228	A		1	MOTOR MEZ-4AP80-4-B5-0	
MY052	B90457-0170	A		1	DIRECTION VALVE, NO. 0 810 091 212	
	90457-0169	-		*1*	*SOL. COIL, 24VDC/1,4A, NO 1837001227*	
MY052A.1	90110-0095	-		1	CONNECTOR 3 POLE + EARTH	
MY052B.1	90110-0095	-		1	CONNECTOR 3 POLE + EARTH	
MY131	90458-2722	A		1	DIRECTION VALVE, NO. 0 810 091 222	
MY131.1	90110-0095	-		1	CONNECTOR 3 POLE + EARTH	
MY132	90458-2722	A		1	DIRECTION VALVE, NO. 0 810 091 222	
MY132.1	90110-0095	-		1	CONNECTOR 3 POLE + EARTH	
W304	351150-0418	-	M	3	CABLE OLFLEX 4X2,5 MM2 LIGHT/GREY	
W316	351150-0403	-	M	3	CABLE OLFLEX 3X0,75 MM2 LIGHT/GREY	
W317	351150-0403	-	M	3	CABLE OLFLEX 3X0,75 MM2 LIGHT/GREY	
W349	351150-0403	-	M	3	CABLE OLFLEX 3X0,75 MM2 LIGHT/GREY	
W350	351150-0403	-	M	3	CABLE OLFLEX 3X0,75 MM2 LIGHT/GREY	

Machine Type | Group Description | Used-In | Group Number | Page No

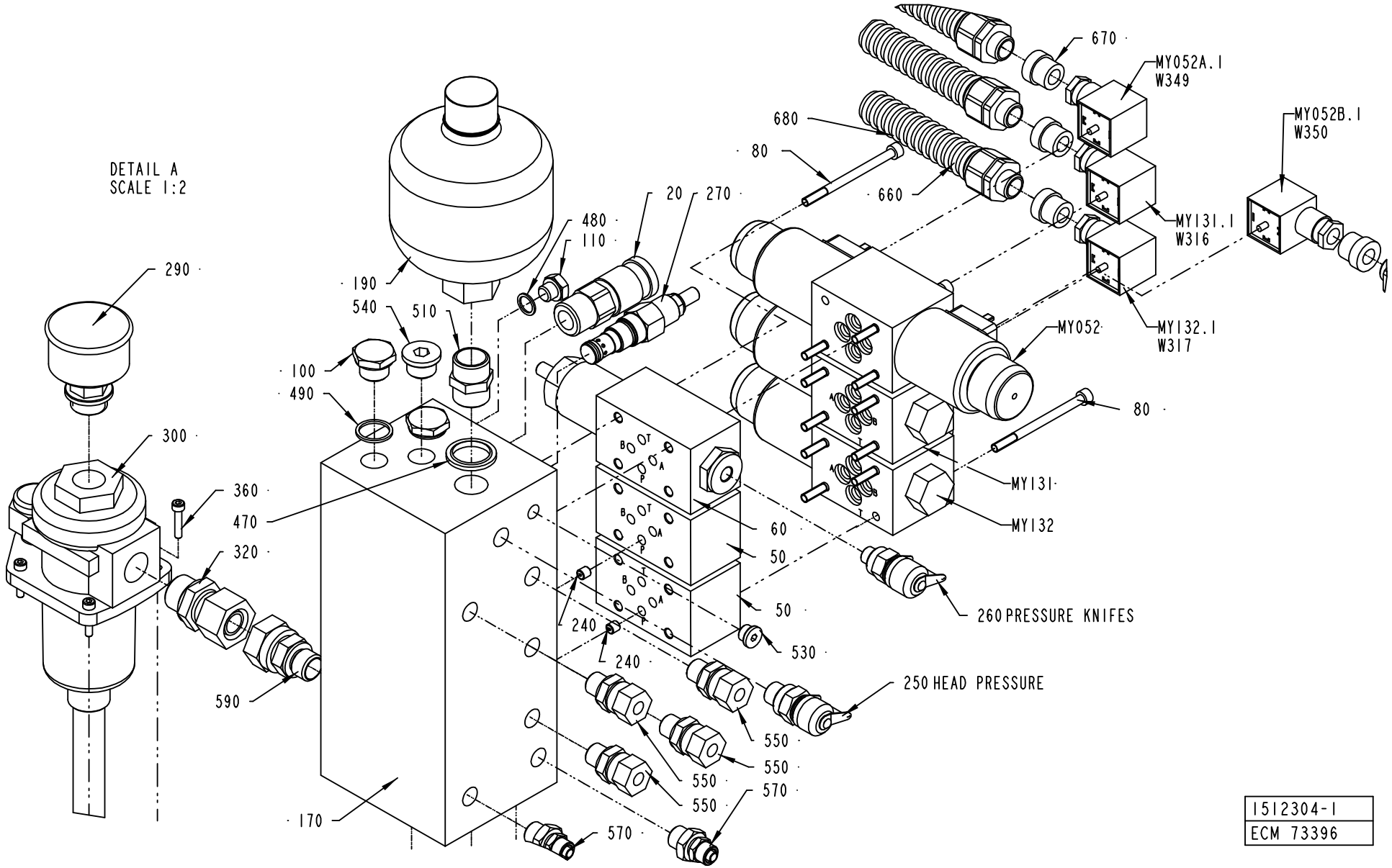

1512304-1
ECM 73396

Pos	Part No	SP	UN	Qty	Description	Page No
- (Cont'd)						
W355	351150-0404	-	M	3	CABLE OLFLEX 4X0,75 MM2 LIGHT/GREY	

Pos	Part No	SP	UN	Qty	Description	Page No

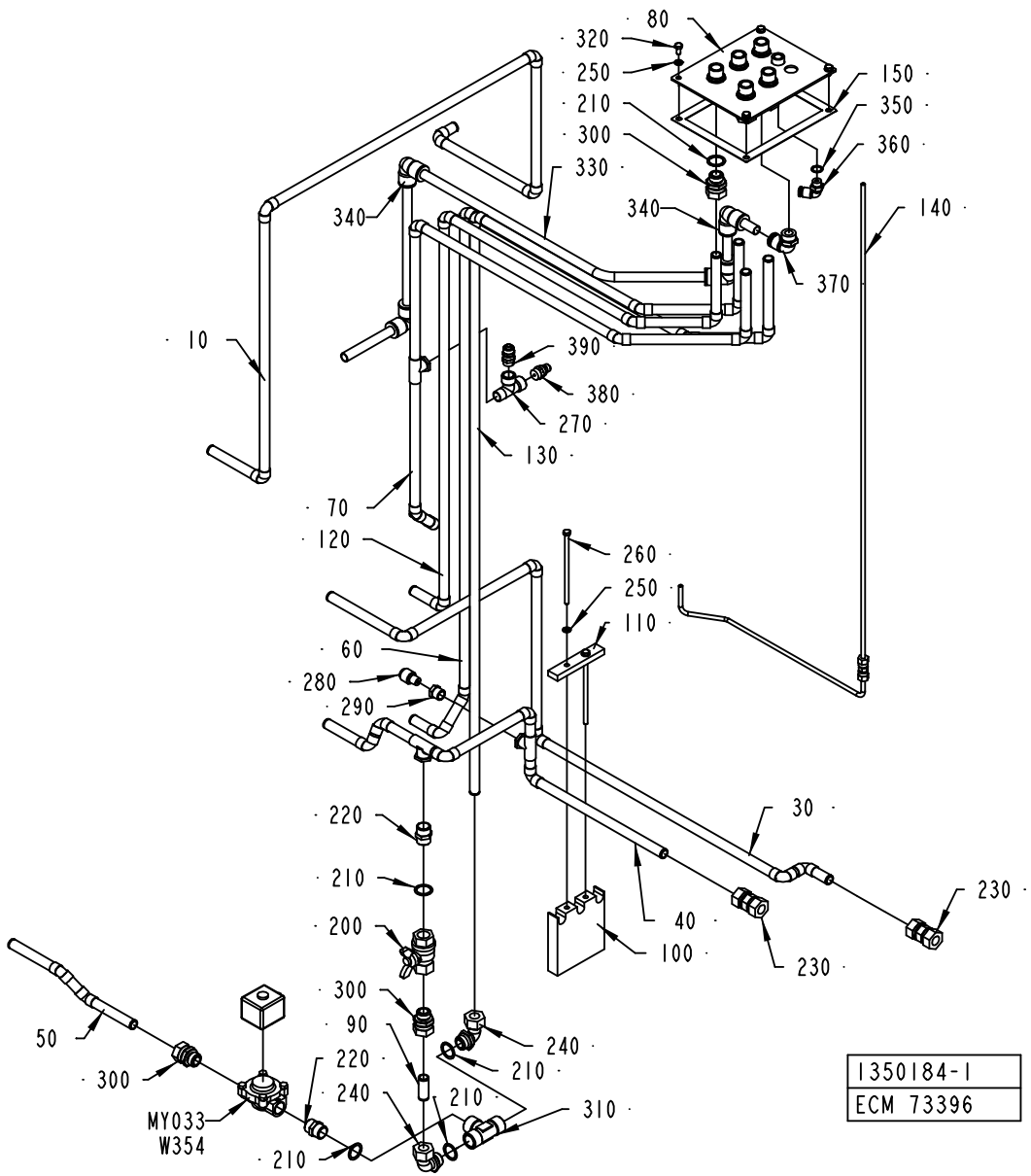
80
320
250
210
300
330
340
340
150
350
360
140
370
10
390
380
270
130
70
120
260
250
110
60
280
290
220
210
200
300
90
220
240
210
240
210
310
210
MY033
W354
300
50
30
230
40
100
230
1350184-1
ECM 73396

ECM: 106577 - 20020313
Group number: 1350184-0100
Assembly Drawing: 1350184-1_1_AA

Pos	Part No	SP	UN	Qty	Description	Page No
-						
010	1517484-0000	-		1	PIPE	
030	1517486-0000	-		1	PIPE	
040	1517487-0000	-		1	PIPE	
050	1517488-0000	-		1	PIPE	
060	1517489-0000	-		1	PIPE	
070	1350185-0000	-		1	PIPE	
080	1519997-0000	-		1	CONNECTION PLATE	
090	1548156-0000	-		1	PIPE	
100	1517490-0000	-		1	INFERIOR HOLDER	
110	1517491-0000	-		1	INFERIOR HOLDER	
120	1519577-0000	-		1	PIPE	
130	1519576-0000	-		1	PIPE	
140	1512353-0000	-		1	PIPE	
150	1517181-0000	-		1	GASKET	
200	90187-0029	-		1	BALL VALVE G1/2, NPBR	
210	315233-0113	B		8	WASHER PL.RND.NYL.21,4/27,H=1,2	
220	342700-0113	-		2	NIPPLES,HEXAGON,EXT.G-THREAD G1/2"-G1/2"	
230	342726-0114	-		2	CONN. PIPE G-15	
240	342730-0114	-		2	CONN. ELBOW WA-15-1/2	
250	315105-0153	-		6	WASHER ISO 7089-6-200 HV-A4	
260	90457-0143	-		2	SCREW M6S ISO 4014 M6X130 A480	
270	90140-0023	-		1	T-PIPE, INT. THREAD, NO. 2070-3/8-3/8	
280	90224-0094	-		1	NIPPLE	
290	342701-0203	-		1	BUSHING, INT/EXT. G-THREAD NO. 3/8-1/4	
300	342720-0114	-		6	CONN. STR. GA-15-G1/2	
310	90140-0010	-		1	T-PIPE, INT. THREAD, 20031/2	
320	312105-0366	-		4	SCREW M6S M6X12 A280	
330	90166-0196	-	MM	1800	TUBE 14 MM PA BLUE	
340	342735-0110	-		4	ELBOW PIPE	
350	315233-0110	-		1	WASHER PL.RND.NYL.13,3/17,H=1	
360	342732-0104	-		1	ELBOW PIPE JOINT, EXT.THREAD, D=8MM-G1/4	
370	342732-0161	-		1	ELBOW PIPE JOINT,EXT.THREAD,D=14 MM-G1/2	
380	342920-0115	-		1	STRAIGHT COUPLING,EXT.THREADED 6/4-R3/8"	
390	342920-0133	-		1	STRAIGHT COUPL.,EXT.THREADED 10/8-R3/8"	
MY033	B90042-0134	B		1	SOLENOID VALVE ASCO SCG 210 802 24VDC	
	90042-0428	*C*		*1*	*COIL ASCO 24VDC*	
W354	351150-0403	-	MM	3500	CABLE OLFLEX 3X0,75 MM2 LIGHT/GREY	

Pos	Part No	SP	UN	Qty	Description	Page No

Machine Type	Group Description	Used-In	Group Number	Page No

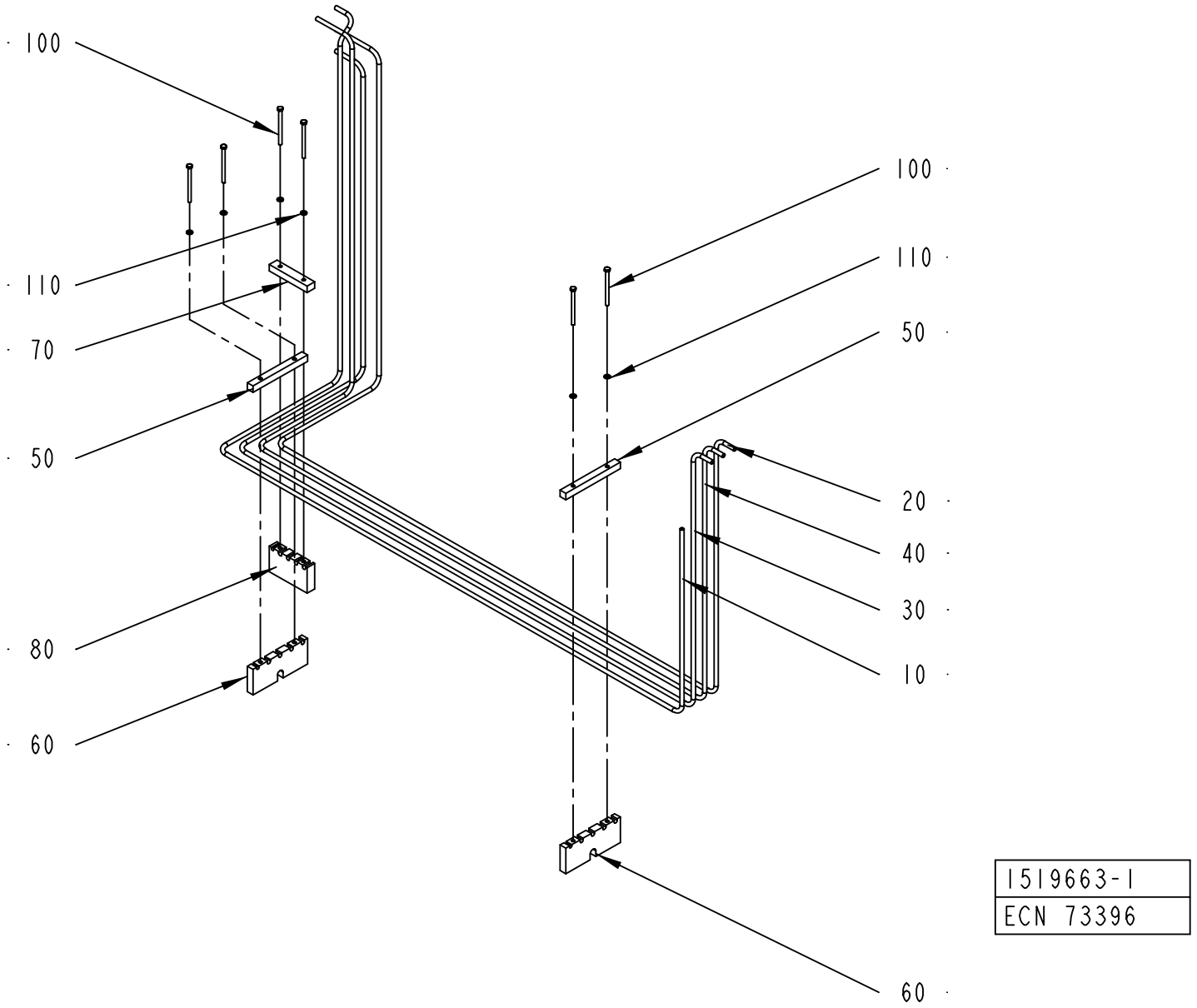
100
110
70
50
80
60
100
110
50
20
40
30
10
60
1519663-1
ECN 73396

ECM: 73396 - 20011221
Group number: 1519663-0100
Assembly Drawing: 1519663-1_1_AA

Pos	Part No	SP	UN	Qty	Description	Page No
-						
010	1519664-0000	-		1	PIPE	
020	1519665-0000	-		1	PIPE	
030	1519666-0000	-		1	PIPE	
040	1519667-0000	-		1	PIPE	
050	1519668-0000	-		2	PIPE HOLDER	
060	1519669-0000	-		2	PIPE HOLDER	
070	1519670-0000	-		1	PIPE HOLDER	
080	1519671-0000	-		1	PIPE HOLDER	
100	312105-0386	-		6	SCREW M6S ISO 4014 M6X80 A480	
110	315105-0153	-		6	WASHER ISO 7089-6-200 HV-A4	

Pos	Part No	SP	UN	Qty	Description	Page No

This page is intentionally left blank.

ECM: 70475 - 19961031
Group number: 469384-0100
Assembly Drawing:

Pos	Part No	SP	UN	Qty	Description	Page No
-						
010	90296-0053	-	L	10	OIL	
020	90296-0075	-	ML	2500	OIL 54322-320 ACC TO M 1254.322	
030	90298-0019	-		1	DETERGENT	
040	90144-0003	-		1	TAPE	

Pos	Part No	SP	UN	Qty	Description	Page No

Machine Type Group Description Used-In Group Number Page No

Tetra Pak

SPC
Spare Parts Catalogue

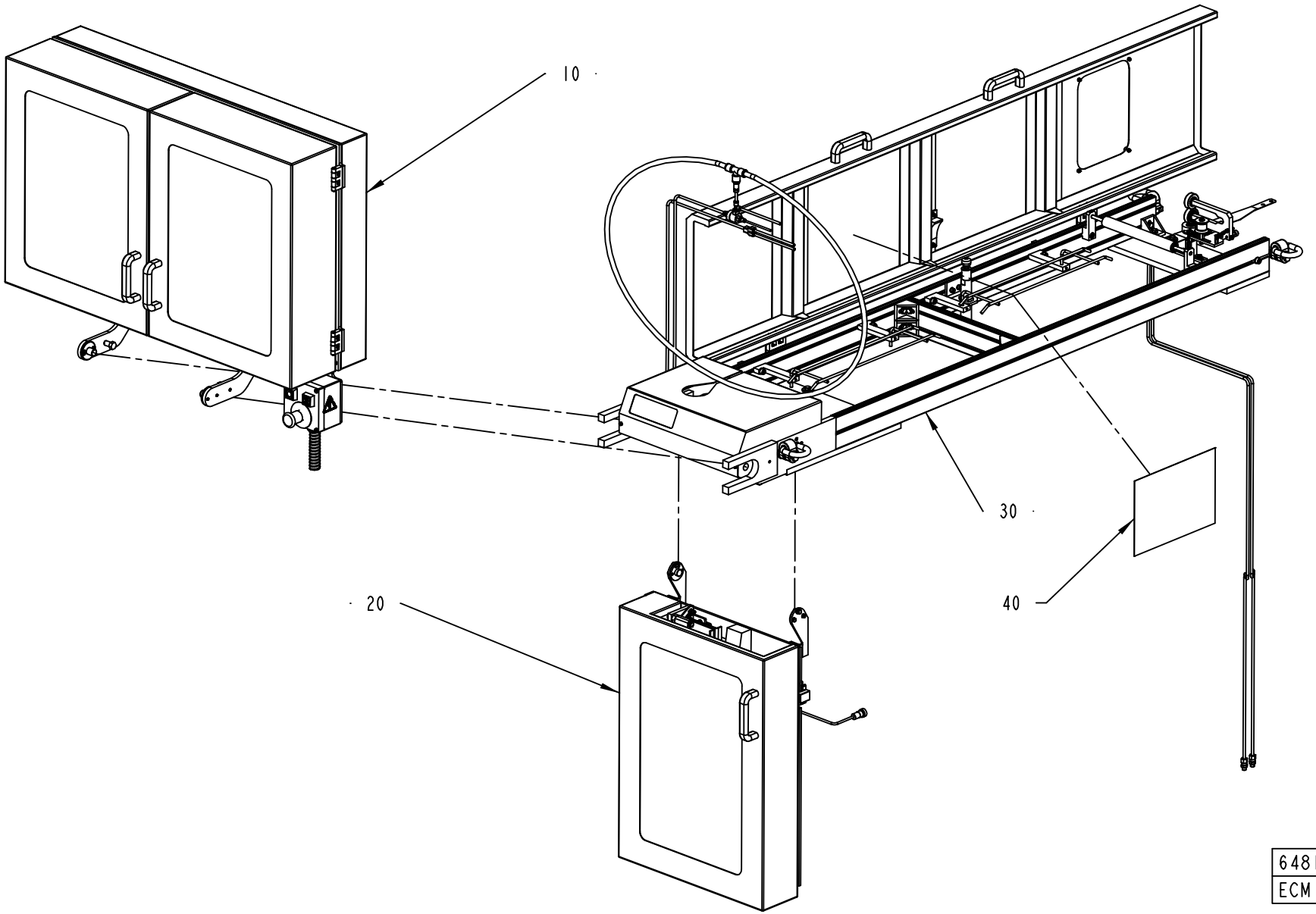
10
20
30
40
648107-16
ECM 99349

ECM: 109339 - 20020808
Group number: 648107-1200
Assembly Drawing: 648107-16_1_AB

Pos	Part No	SP	UN	Qty	Description	Page No
-						
010	A580037-0200	-		1	STRIP MAGAZINE	**485**
020	A580036-0200	-		1	STRIP APPLICATOR	**509**
030	A1499477-0100	-		1	WEB TUNNEL	**521**
040	2540724-0000	-		1	HOSE INSTALLATION	

Pos	Part No	SP	UN	Qty	Description	Page No

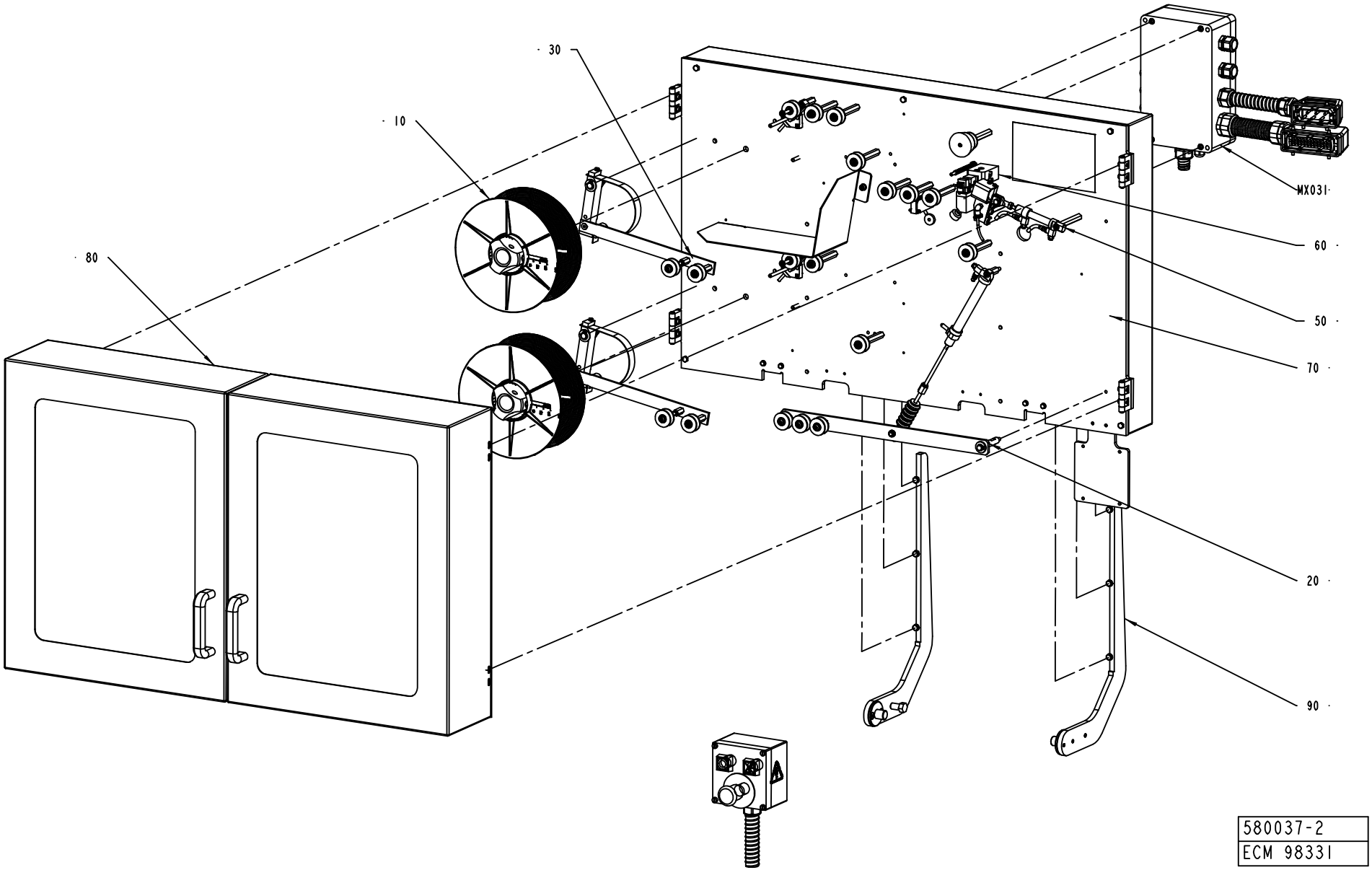
30
10
80
MX031
60
50
70
20
90
580037-2
ECM 98331

ECM: 100720 - 20020808
Group number: 580037-0200
Assembly Drawing: 580037-2_1_AC

Pos	Part No	SP	UN	Qty	Description	Page No
NOPT						
040	A580329-0200	-		1	PUSH BUTTON BOX	**487**
090	A1498753-0100	-		1	MAGAZINE HOLDER	**489**
Common Parts						
010	A580042-0100	-		2	HUB JUMBO	**491**
020	A580044-0200	-		1	SPLICING MAGAZINE	**493**
030	A580060-0200	-		2	BRAKE ARM	**495**
050	A1558897-0100	-		1	HEATING DEVICE	**497**
060	A1524477-0100	-		1	CUTTING TABLE	**499**
070	A1499480-0100	-		1	MOUNTING PLATE	**501, 503**
080	A1498751-0100	-		1	DOORS	**505**
MX031	A580064-0200	-		1	CONNECTION BOX	**507**

Pos	Part No	SP	UN	Qty	Description	Page No

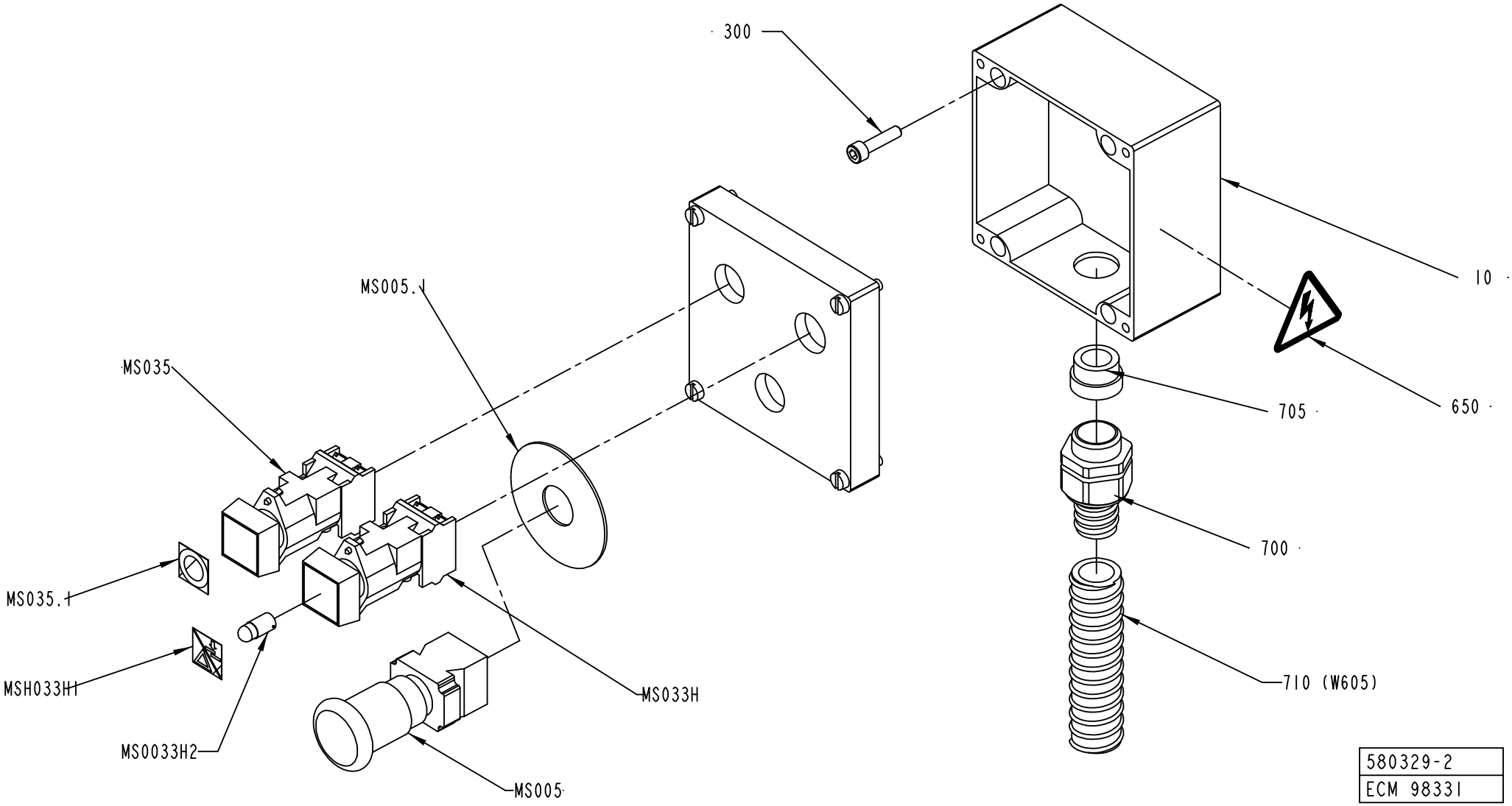
300
10
MS005.1
MS035
705
650
700
MS035.1
MSH033H1
MS033H
710 (W605)
MS0033H2
MS005
580329-2
ECM 98331

ECM: 116935 - 20030113
Group number: 580329-0200
Assembly Drawing: 580329-2_1_AB

Pos	Part No	SP	UN	Qty	Description	Page No
-						
010	1558892-0000	-		1	CONNECTION BOX	
300	312115-0372	-		4	SCREW ISO4762 M6X25 A4	
650	359705-0015	B		1	WARNING SIGN ISO, RISK OF ELECTRIC SHOCK	
700	90458-0431	-		1	EXTENDED WITHOUT INSERT, M25X1,5	
705	353249-0014	-		1	INSERT, SINGEL HOLE, EK 154/16	
710	90152-0051	-	MM	1600	SPIRAL CONDUIT, 25X18, UL 1816	
MS005	90458-1651	A		1	EMERGENCY STOP, ZB4-BS-844 ZB4-BZ-104	
MS005.1	486826-0001	-		1	SIGN "EMERGENCY STOP"	
MS033H	90064-0098	B		1	PUSH BUTTON, CLEAR	
MS033H1	90459-0691	-		1	SIGN, STRIP SPLICE/ RESET ALARM	
MS033H2	90036-0057	B		1	LIGHT BULB, BA9S 28V	
MS035	90064-0085	B		1	PUSH BUTTON, RED	
MS035.1	359301-0110	-		1	SIGN "SHORT STOP"	
W605	351150-0407	-	MM	1900	CABLE OLFLEX 12X0,75 MM2 LIGHT/GREY	

Pos	Part No	SP	UN	Qty	Description	Page No

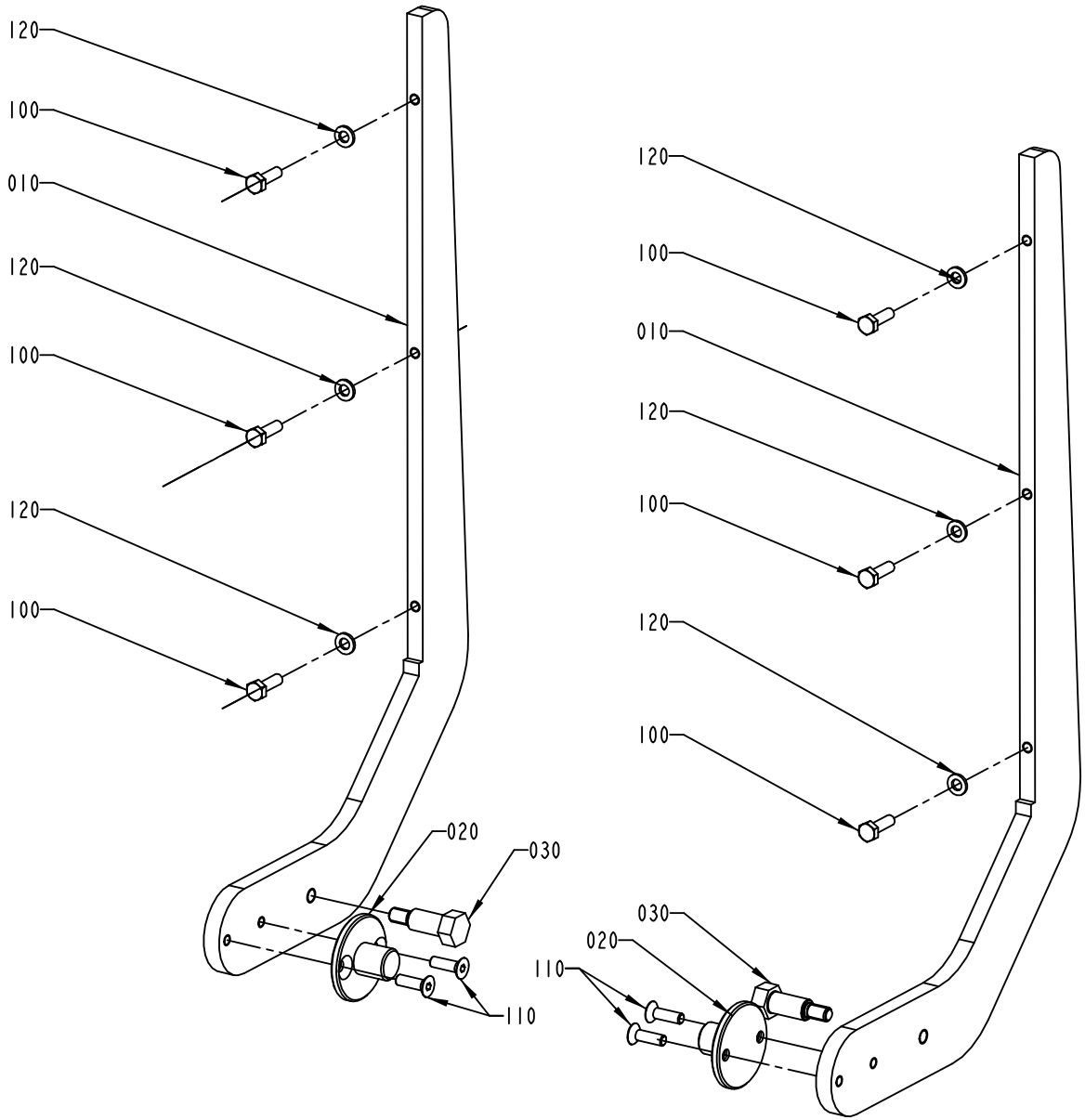

1498753-1
ECN 72945

ECM: 98335 - 20020808
Group number: 1498753-0100
Assembly Drawing: 1498753-1_1_AA

Pos	Part No	SP	UN	Qty	Description	Page No
-						
010	1498761-0000	-		2	MAGAZINE HOLDER	
020	1498757-0000	-		2	FLANGE	
030	1498758-0000	-		2	AXLE PIN	
100	312105-0370	-		6	SCREW M6S ISO 4017 M6X20 A480	
110	312155-0368	-		4	SCREW EN 10642 MF6S M6X16 A480	
120	315105-0153	-		6	WASHER ISO 7089-6-200 HV-A4	

Pos	Part No	SP	UN	Qty	Description	Page No

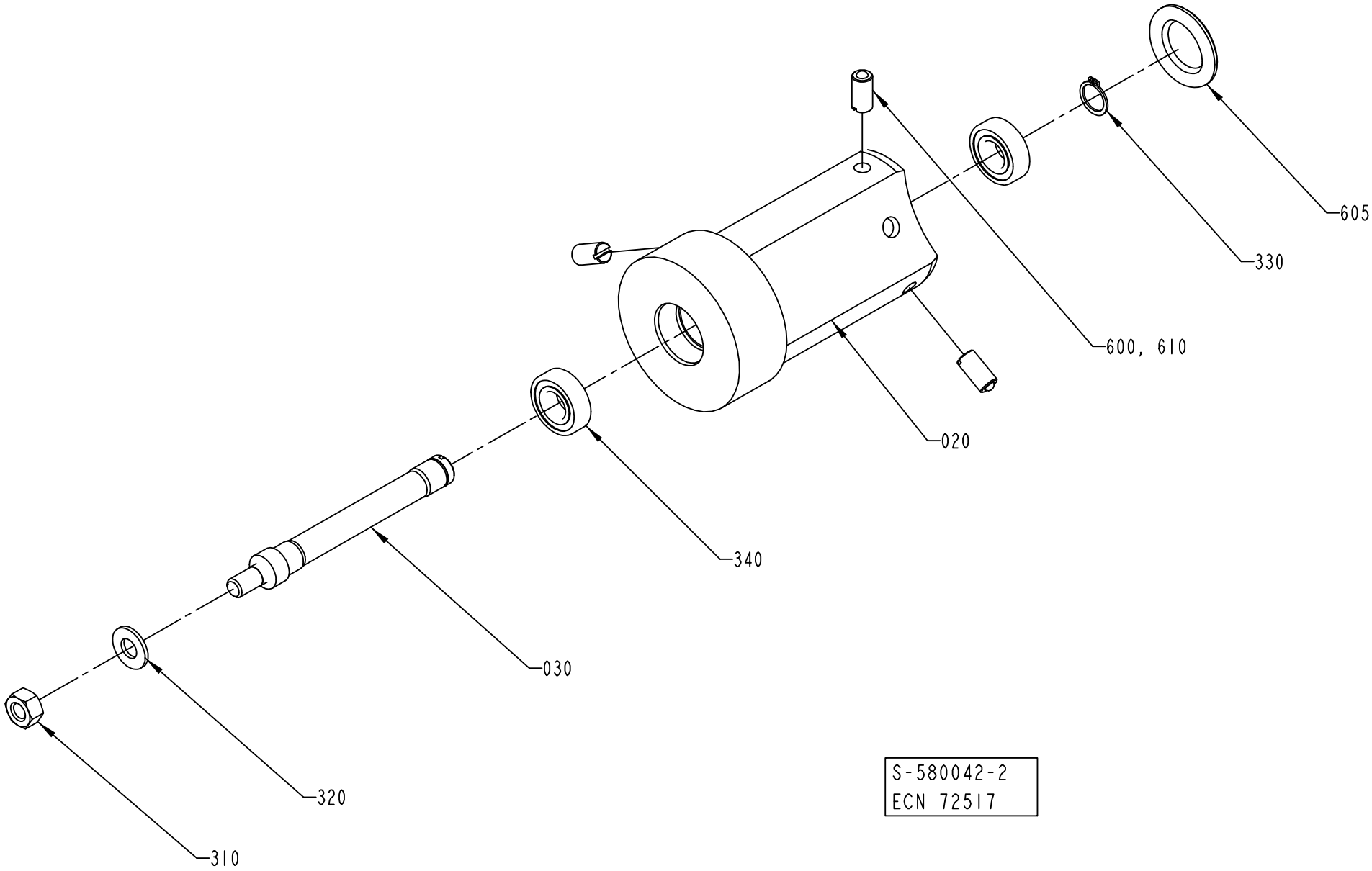
605
330
600, 610
020
340
030
320
310
S-580042-2
ECN 72517

ECM: 114168 - 20020930
Group number: 580042-0100
Assembly Drawing: 580042-2_1_AB

Pos	Part No	SP	UN	Qty	Description	Page No
TBA/19						
340	90214-0207	A		2	BALL BEARING, 15X32X9 MM	
Common Parts						
010	541751-0000	-		1	CONICAL BOBBIN	
020	536913-0000	B		1	HUB	
030	537327-0000	B		1	SHAFT	
310	312605-0320	-		1	HEXAGON NUT, M6M M10 A280	
320	315105-0173	-		1	WASHER ISO 7089-10-200 HV-A4	
330	315751-0112	-		1	RETAIN. RING, 15	
600	90157-0016	-		1	LOCKING FLUID	
605	90261-0049	A		1	PLUG, BLIND, PLASTIC, NO. SR1750	
610	90287-0106	A		3	SCREW SPRINGLOAD. SLOTTED HEAD M10X21	

Pos	Part No	SP	UN	Qty	Description	Page No

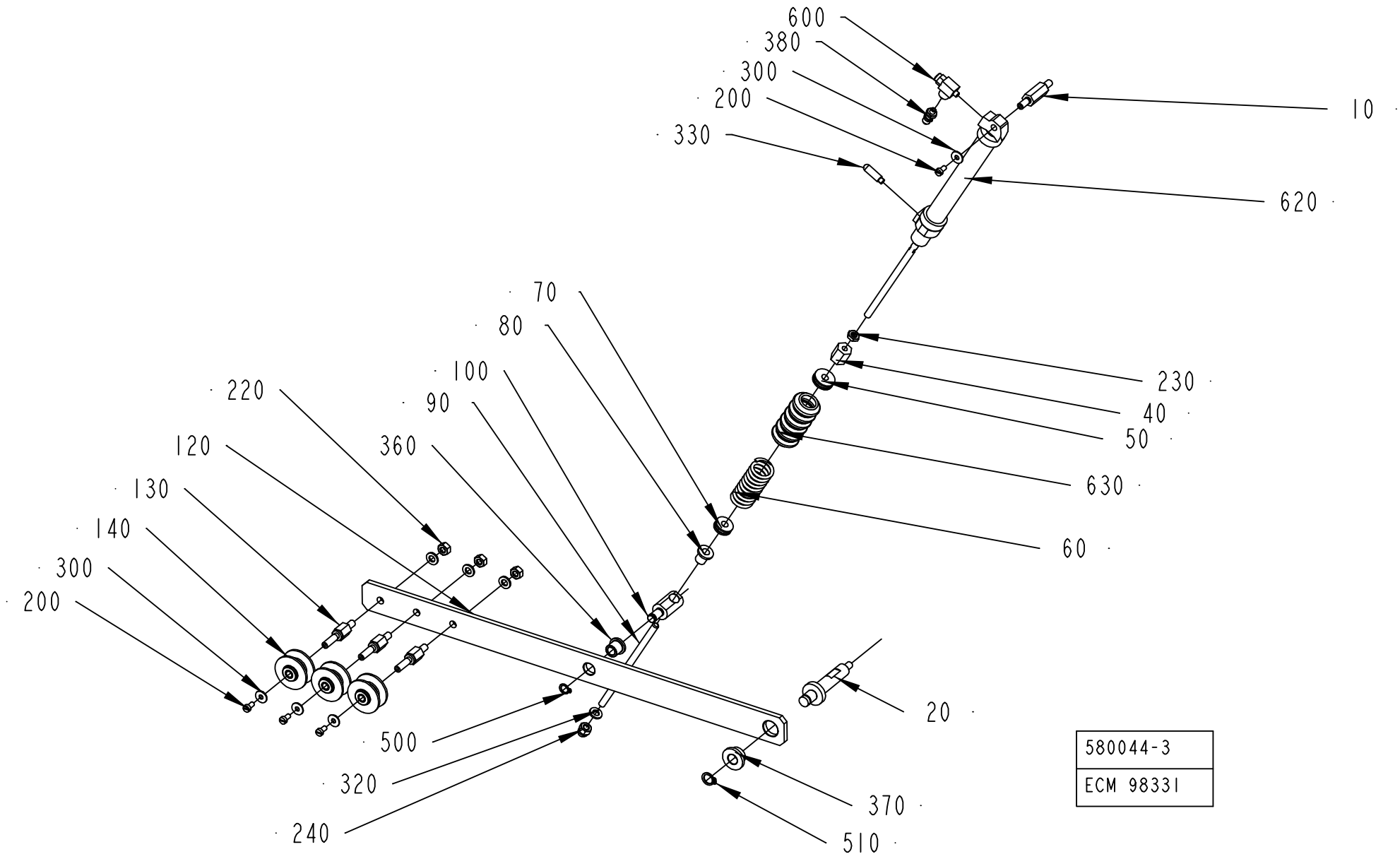
600
380
300
200
330
10
620
70
80
100
90
360
220
120
130
140
300
200
230
40
50
630
60
20
500
320
240
370
510
580044-3
ECM 98331

ECM: 113781 - 20030113
Group number: 580044-0200
Assembly Drawing: 580044-3_1_AC

Pos	Part No	SP	UN	Qty	Description	Page No
-						
010	979576-0000	-		1	AXLE PIN	
020	979578-0000	-		1	AXLE PIN	
040	401186-0000	-		1	HEX NUT	
050	401371-0000	B		1	BUSHING	
060	400800-0000	B		1	SPRING	
070	401372-0000	B		1	BUSHING	
080	401370-0000	B		1	BUSHING	
090	1499515-0000	-		1	SHAFT	
100	401183-0000	-		1	GUIDE AXLE	
120	580055-0000	-		1	ARM	
130	579553-0000	-		3	SHAFT	
140	B1512583-0000	A		3	ROLLER	
	321120-0101	*B*		*2*	*BEARING BUSHING W/O FLANGE,6/8X6*	
200	312125-0287	-		4	SCREW PAN HEAD MCS M4X8 SS	
220	312605-0316	-		3	HEXAGON NUT, M6M M6 A280	
230	312625-0316	-		1	HEXAGON THIN NUT, EN 24035 ML6M M6 A4	
240	312705-0316	-		1	NUT HEX. DOMED CAP MHM-6 M6 A280	
300	90005-0082	-		4	WASHER PLAIN ROUND 4,3(M4)/12,H=1	
320	315105-0153	-		4	WASHER ISO 7089-6-200 HV-A4	
330	90328-0029	B		1	SILENCER M5	
360	321111-0097	B		1	FLANGE BUSHING, 8X12X12 MM	
370	321111-0135	B		1	FLANGE BUSHING, 10X16X10 MM	
380	342921-0111	-		1	STRAIGHT COUPL,EXT.THREAD.6/4-M5	
500	90141-0015	-		1	RETAIN. RING, 8	
510	90141-0016	-		1	RETAIN. RING, 10	
600	90235-0289	A		2	VALVE	
620	90239-0819	B		1	DOUBLE ACTING, MINI-ISO, CYL.16-100	
630	90342-0013	B		1	BELLOWS	

Pos	Part No	SP	UN	Qty	Description	Page No

Machine Type | Group Description | Used-In | Group Number | Page No

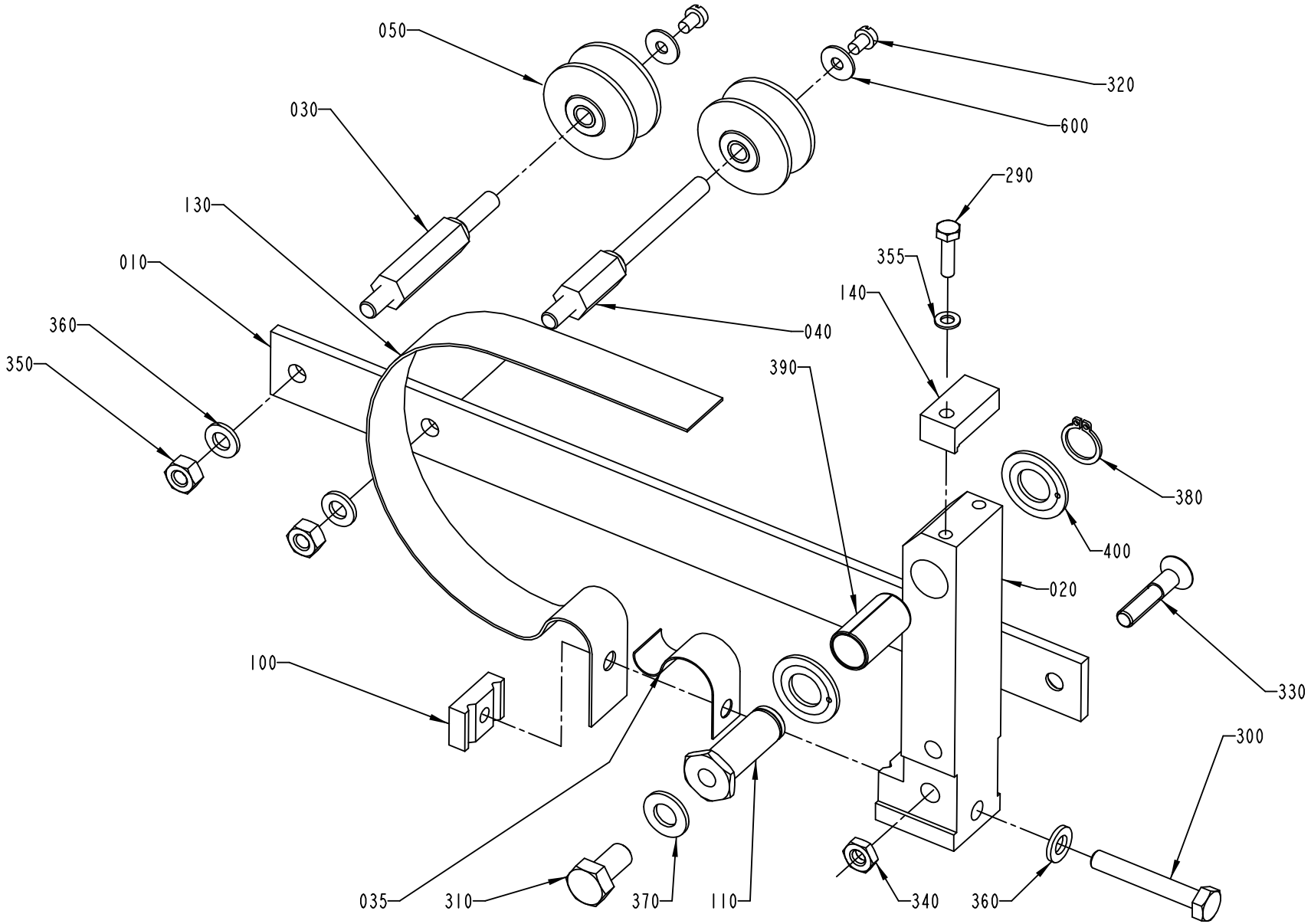

580060-3
ECM 98331

ECM: 114165 - 20020930
Group number: 580060-0200
Assembly Drawing: 580060-3_1_AB

Pos	Part No	SP	UN	Qty	Description	Page No
-						
010	979994-0000	D		1	ARM	
020	1260678-0000	-		1	ARM	
030	536917-0000	B		1	AXLE PIN	
035	1484486-0000	A		1	SPRING	
040	544726-0000	B		1	AXLE PIN	
050	B1512583-0000	B		2	ROLLER	
	321120-0101	*B*		*2*	*BEARING BUSHING W/O FLANGE,6/8X6*	
100	583878-0000	-		1	SPRING BRACKET	
110	541070-0000	B		1	SHAFT	
130	979990-0000	A		1	BELT BRAKE	
140	979991-0000	-		1	BLOCK	
290	312105-0293	-		1	SCREW M6S ISO 4017 M4X16 A480	
300	312105-0378	-		1	SCREW M6S ISO 4014 M6X40 A480	
310	312105-0449	-		1	SCREW M6S ISO 4017 M8X16 A480	
320	312125-0285	-		2	SCREW SLOT.PAN HD. MCS 4X6 A480	
330	312155-0374	-		1	SCREW EN 10642 MF6S M6X30 A480	
340	312625-0316	-		1	HEXAGON THIN NUT, EN 24035 ML6M M6 A4	
350	312605-0316	-		2	HEXAGON NUT, M6M M6 A280	
355	315105-0136	-		1	WASHER ISO 7089-4-200 HV-A4	
360	315105-0153	-		3	WASHER ISO 7089-6-200 HV-A4	
370	315105-0165	-		1	WASHER ISO 7089-8-200 HV-A4	
380	315751-0109	-		1	RETAIN. RING, 12	
390	321141-0193	B		1	BEARING BUSHING W/O FL, 12X14X25 MM	
400	321130-0180	B		2	THRUST WASHER, 12X24X1,5 MM	
600	90005-0082	-		2	WASHER PLAIN ROUND 4,3(M4)/12,H=1	

Pos	Part No	SP	UN	Qty	Description	Page No

Machine Type | Group Description | Used-In | Group Number | Page No

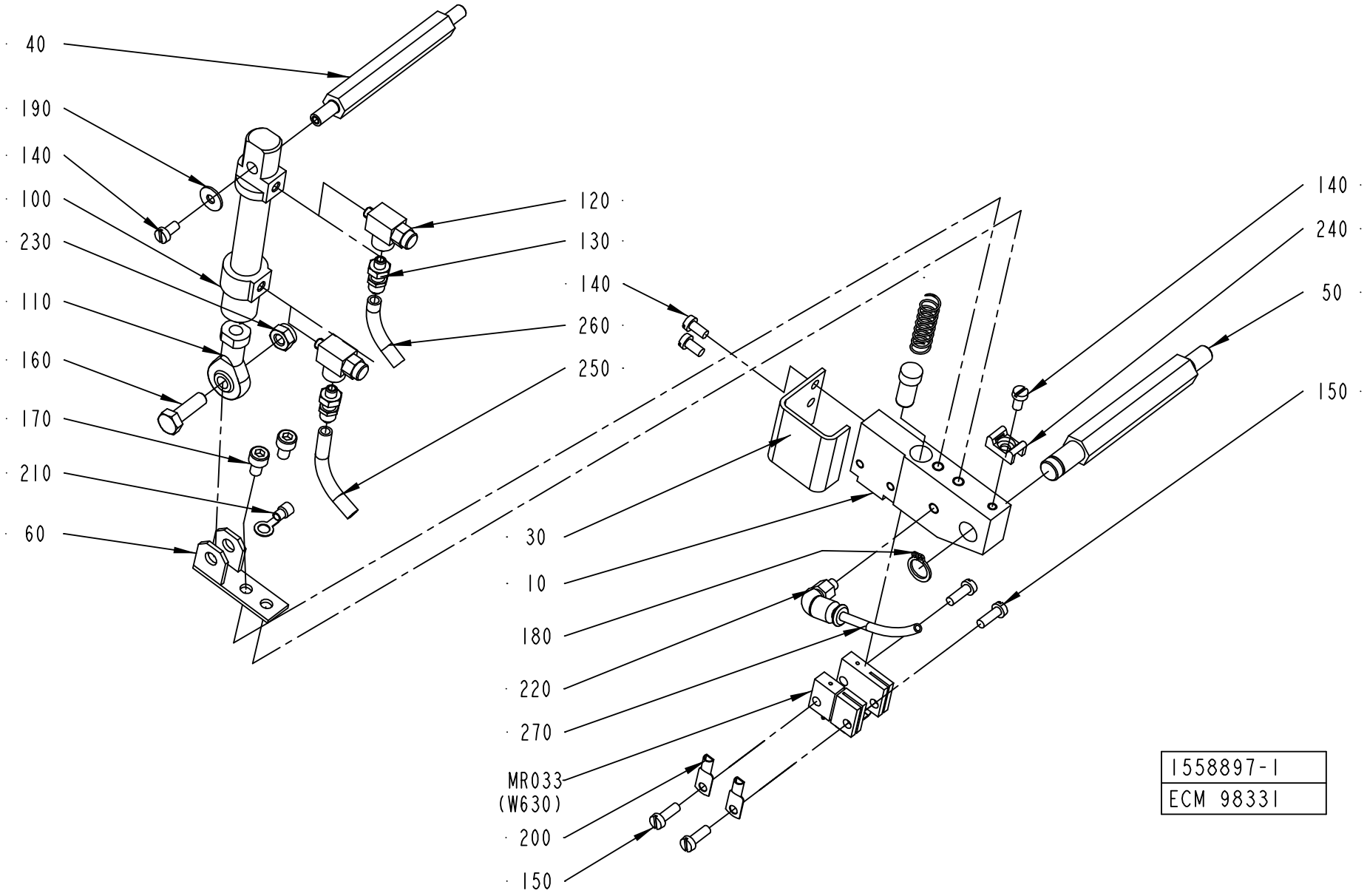
40
190
140
100
230
110
160
170
210
60
120
130
140
260
250
30
10
180
220
270
MR033
(W630)
200
150
140
240
50
150
1558897-1
ECM 98331

ECM: 98936 - 20020808
Group number: 1558897-0100
Assembly Drawing: 1558897-1_1_AA

Pos	Part No	SP	UN	Qty	Description	Page No
-						
010	1490804-0000	-		1	HOLDER	
020	400833-0000	-		1	PLUNGER	
030	2523596-0000	-		1	COVER	
040	1037121-0000	-		1	SHAFT	
050	1037120-0000	-		1	SHAFT	
060	1037124-0000	-		1	HOLDER	
070	400828-0000	B		1	SPRING	
100	90450-0306	A		1	DOUBLE ACTING, MINI-ISO, CYL. 12-25	
110	90239-0491	-		1	ROD END,BALL JOINT EYE,MINI-ISO M6	
120	90235-0289	-		2	VALVE	
130	342921-0111	-		2	STRAIGHT COUPL,EXT.THREAD.6/4-M5	
140	312125-0287	-		4	SCREW PAN HEAD MCS M4X8 SS	
150	312125-0291	-		4	SCREW PAN HEAD MCS M4X12 SS	
160	312105-0370	-		1	SCREW M6S ISO 4017 M6X20 A480	
170	312115-0323	-		2	SCREW ISO4762 M5X8 A4	
180	90141-0016	-		1	RETAIN. RING, 10	
190	90005-0082	-		1	WASHER PLAIN ROUND 4,3(M4)/12,H=1	
200	353104-0140	-		2	CABLE SHOEYAV 06 M 4*	
210	353101-0132	-		1	CABLE SHOE, RING ø5,3MM	
220	342732-0099	-		1	ELBOW PIPE JOINT, EXT.THREAD, D=4MM-M5	
230	312812-0316	-		1	HEXAGON NUT, NY-LOCK M6 A480	
240	352113-0205	-		1	ANCHOR PLATES FOR STRIPS, TYPE TM2S8-C10	
250	90166-0193	-	MM	1000	TUBE 6 MM PUR BLUE	
260	90166-0193	-	MM	1000	TUBE 6 MM PUR BLUE	
270	90166-0095	-	MM	500	TUBE 4 MM PA BLUE	
MR033	1538473-0000	A		1	SEALING BLOCK	
W630	351120-0146	-	MM	1000	CABLE SIHF 3X4MM2 GREEN/YELLOW	

Pos	Part No	SP	UN	Qty	Description	Page No

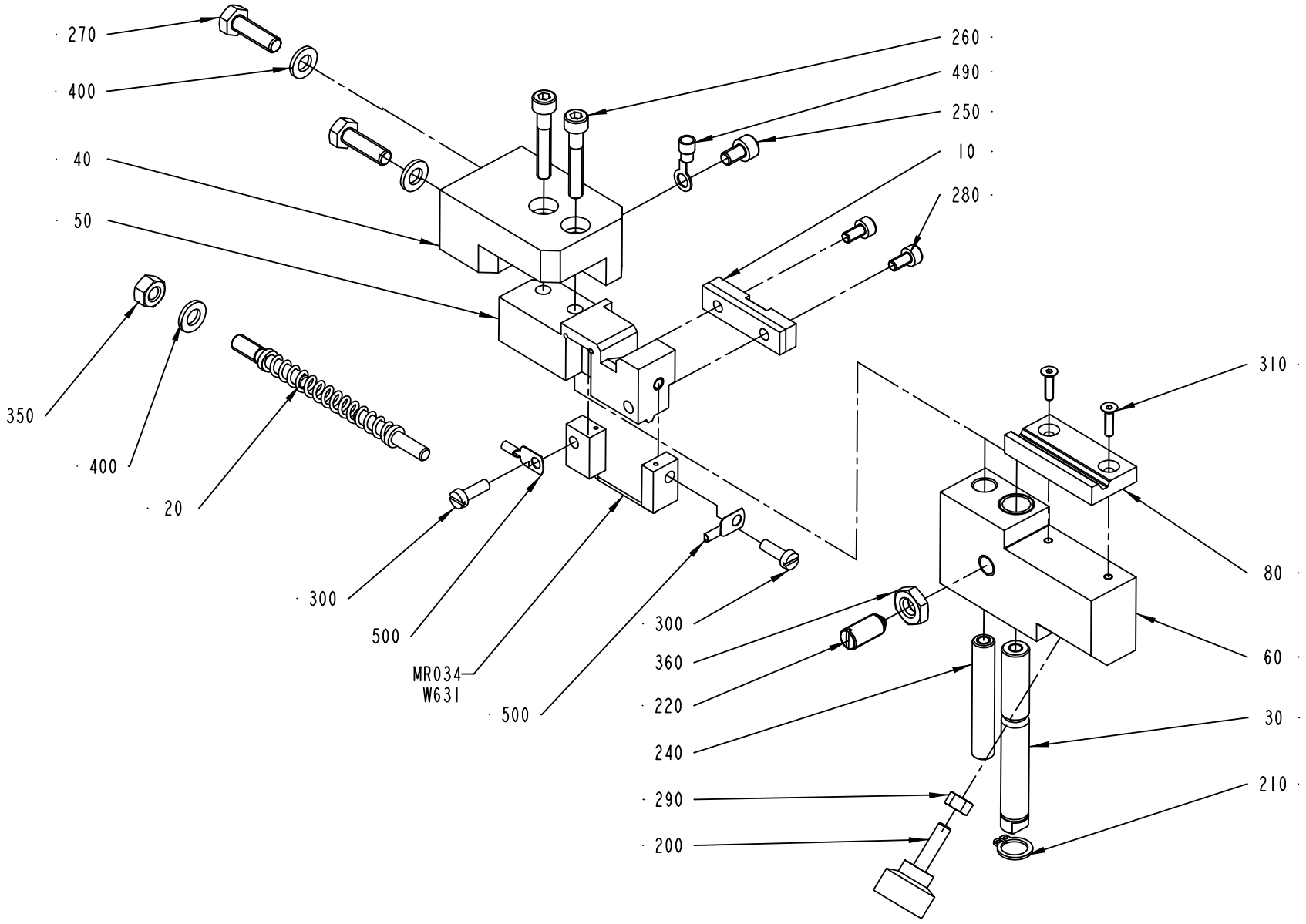

1524477-1
ECM 98331

ECM: 113779 - 20030113
Group number: 1524477-0100
Assembly Drawing: 1524477-1_1_AC

Pos	Part No	SP	UN	Qty	Description	Page No
-						
010	1349014-0000	-		1	PAD	
020	2540726-0000	-		1	FINGER	
030	1517751-0000	-		1	SHAFT	
040	2523599-0000	-		1	SUPPORT	
050	2523598-0000	A		1	SPLICING TABLE	
060	2523597-0000	-		1	SLIDER	
080	2523601-0000	A		1	PAD	
090	2523600-0000	-		1	PIN	
200	90051-0035	-		1	KNOB, EXTERNAL THREAD. NO. 8308-1135	
210	90141-0016	-		1	RETAIN. RING, 10	
220	90287-0112	A		1	SCREW SPRINGLOAD. SLOTTED HEAD M8X16	
250	312115-0323	-		1	SCREW ISO4762 M5X8 A4	
260	312115-0335	-		2	SCREW ISO4762 M5X30 A4	
270	312105-0370	-		2	SCREW M6S ISO 4017 M6X20 A480	
280	312115-0287	-		2	SCREW ISO4762 M4X8 A4	
290	312605-0314	-		1	HEXAGON NUT, M6M M5 A280	
300	312125-0291	-		1	SCREW PAN HEAD MCS M4X12 SS	
305	312125-0293	-		1	SCREW PAN HEAD MCS M4X16 SS	
310	312155-0226	-		2	SCREW EN 10642 MF6S M3X12 A480	
350	312605-0316	-		1	HEXAGON NUT, M6M M6 A280	
360	312625-0318	-		1	HEXAGON THIN NUT, EN 24035 ML6M M8 A4	
400	315101-0153	-		3	WASHER PLAIN, BRB, 6,4/12 H=1,5	
490	353101-0132	-		1	CABLE SHOE, RING ø5,3MM	
500	353101-0130	B		2	CABLE SHOE 1,5-2,5MM2 BLUE	
MR034	1524481-0000	A		1	SEALING BLOCK	
W631	351120-0145	-	MM	1000	CABLE SIHF 3X2,5MM2 GREEN/YELLOW	

Pos	Part No	SP	UN	Qty	Description	Page No

MOUNTING PLATE

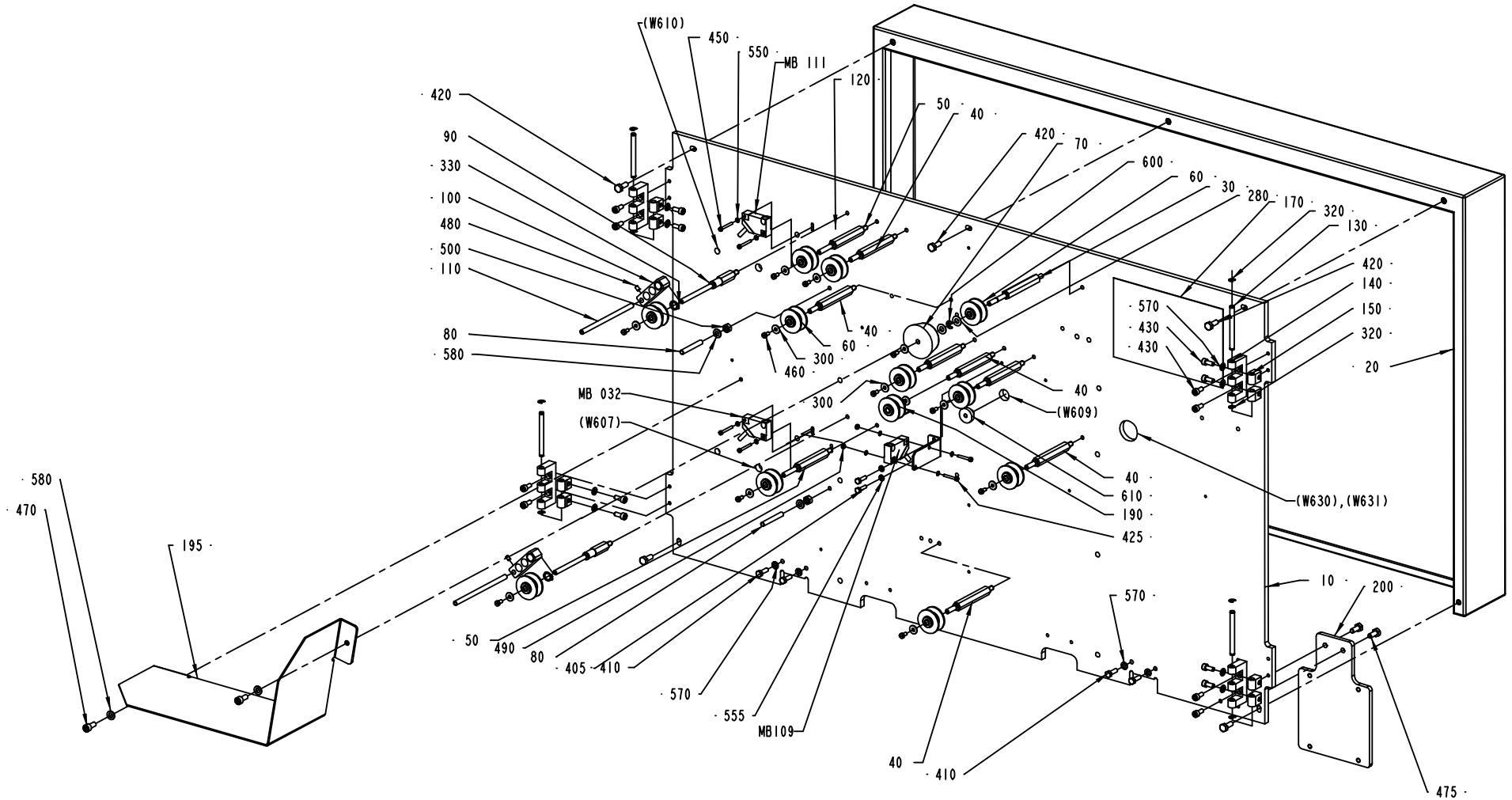

1499480-1
ECM 98331

ECM: 128482 - 20030303
Group number: 1499480-0100
Assembly Drawing: 1499480-1_1_AC

This list covers pages from 500 to 503

Pos	Part No	SP	UN	Qty	Description	Page No
NOPT (See drawing on pages: 500, 502)						
020	1498764-0000	-		1	COVER	
200	1498775-0000	-		1	BOX BRACKET	
420	312105-0368	-		5	SCREW M6S M6X16 A280	
475	312105-0367	-		2	SCREW M6S M6X14 A280	
Common Parts						
010	1498748-0000	-		1	MOUNTING PLATE	
030	1498762-0000	-		1	AXLE PIN	
040	2547218-0000	-		7	AXLE PIN	
050	2547219-0000	-		2	AXLE PIN	
060	B1512583-0000	A		11	ROLLER	
	321120-0101	*B*		*2*	*BEARING BUSHING W/O FLANGE,6/8X6*	
070	1499481-0000	A		1	ROLLER	
080	B469159-0000	-		2	PIN	
	311103-0369	*-*		*1*	*PARALLELL PIN, M6, 6X60 MM*	
090	2547217-0000	-		2	AXLE PIN	
100	B979667-0000	-		2	ARM	
	90240-0028	*-*		*1*	*BEARING BUSHING W/O FLANGE,10/12X15*	
110	979668-0000	-		2	FINGER	
120	979669-0000	-		2	FORCE PLATE	
130	1499512-0000	-		4	PIN	
140	1499514-0000	-		4	E-HINGE	
150	1035794-0000	-		8	BLOCKING PIECE	
160	2519644-0000	-		2	BRACKET	
170	1517464-0000	-		1	SIGN	
180	1538219-0000	-		1	SWITCH BRACKET	
190	B1517293-0000	A		1	ROLLER	
	B1512583-0000	*B*		*1*	*ROLLER*	
	321120-0101	*B*		*2*	*BEARING BUSHING W/O FLANGE,6/8X6*	
195	2506478-0000	-		1	COVER	
220	2588000-0000	-		1	BRACKET	
230	2588001-0000	-		1	AXLE PIN	
280	2033-0013	-		2	WASHER	
290	352113-0206	-		9	ANCHOR PLATES FOR STRIPS, TYPE ABM100-AT	
300	90005-0082	-		12	WASHER PLAIN ROUND 4,3(M4)/12,H=1	
320	315755-0106	-		8	LOCKING WASHER 4	
330	90141-0016	-		2	RETAIN. RING, 10	
400	312155-0287	-		9	SCREW EN 10642 MF6S M4X8 A480	
405	312105-0293	-		2	SCREW M6S ISO 4017 M4X16 A480	
410	312105-0329	-		4	SCREW M6S ISO 4017 M5X16 A480	
425	312115-0230	-		2	SCREW ISO4762 M3X20 A4	
430	312115-0327	-		16	SCREW ISO4762 M5X12 A4	
450	312125-0232	-		4	SCREW PAN HEAD MCS M3X25 SS	
460	312125-0287	-		12	SCREW PAN HEAD MCS M4X8 SS	
470	312115-0367	-		2	SCREW ISO4762 M6X14 A4	
480	312318-0285	-		2	SCREW ISO4029 M4X6 A4	
490	312605-0310	-		2	HEXAGON NUT, M6M M3 A280	
500	312605-0316	-		2	HEXAGON NUT, M6M M6 A280	
550	315105-0124	-		8	WASHER ISO 7089-3-200 HV-A4	
555	315105-0136	-		2	WASHER ISO 7089-4-200 HV-A4	
570	315105-0146	-		12	WASHER ISO 7089-5-200 HV-A4	
580	315105-0153	-		4	WASHER ISO 7089-6-200 HV-A4	
600	315755-0107	-		1	LOCKING WASHER 5	
610	90015-0020	-		1	LEAD-IN, TET5-7, E-1458016	
620	312105-0374	-		1	SCREW M6S ISO 4014 M6X30 A480	
MB032	90044-0194	A		1	PROX.SW. IN5329/IN3002-BPKG	
MB109	90044-0194	A		1	PROX.SW. IN5329/IN3002-BPKG	
MB111	90044-0194	A		1	PROX.SW. IN5329/IN3002-BPKG	

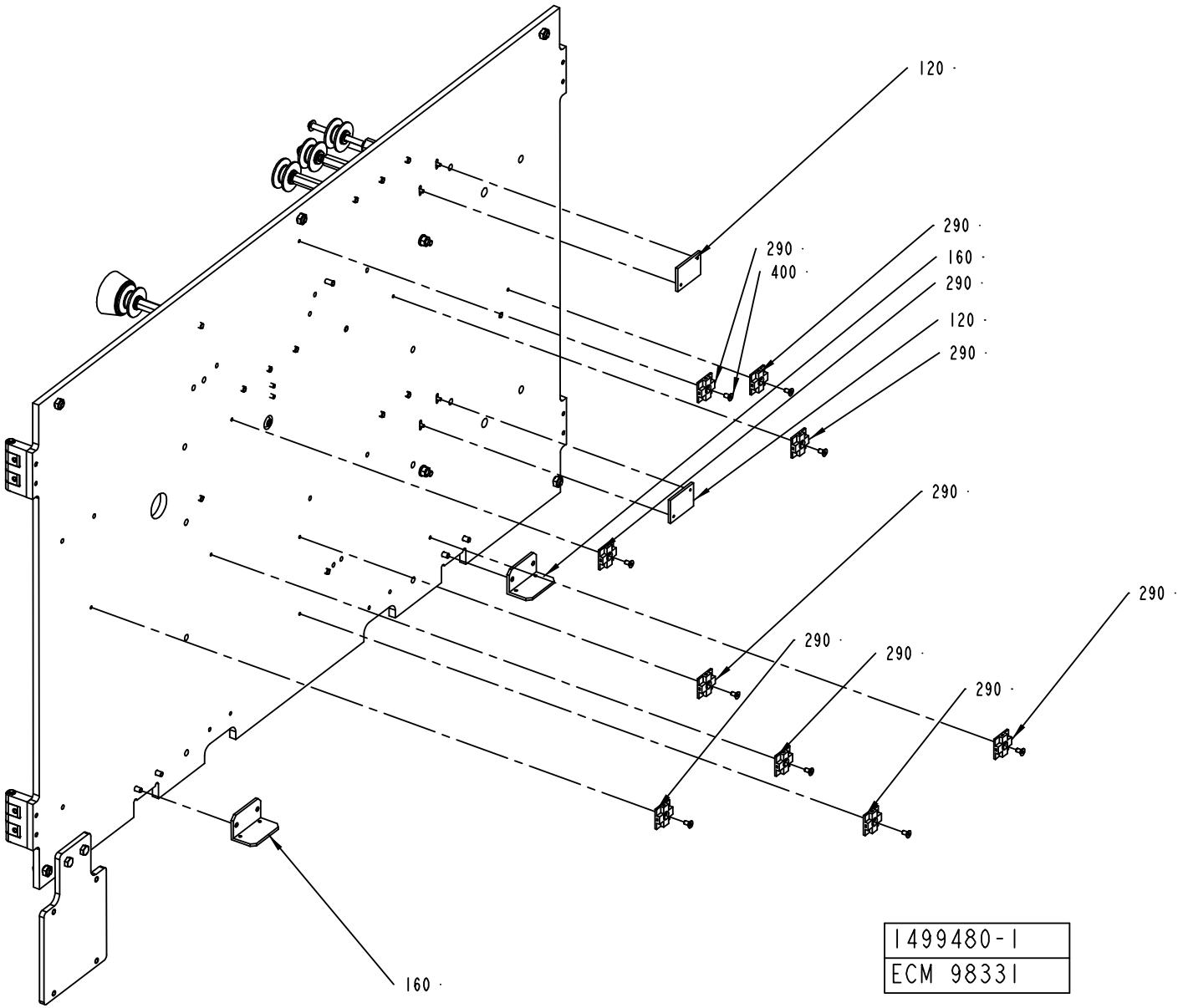
120 ·
290 ·
290 ·
160 ·
290 ·
400 ·
120 ·
290 ·
290 ·
290 ·
290 ·
290 ·
290 ·
160 ·
1499480-1
ECM 98331

ECM: 128482 - 20030303
Group number: 1499480-0100
Assembly Drawing: 1499480-1_2_AC

This list covers pages from 500 to 503

Pos	Part No	SP	UN	Qty	Description	Page No
NOPT (See drawing on pages: 500, 502)						
020	1498764-0000	-		1	COVER	
200	1498775-0000	-		1	BOX BRACKET	
420	312105-0368	-		5	SCREW M6S M6X16 A280	
475	312105-0367	-		2	SCREW M6S M6X14 A280	
Common Parts						
010	1498748-0000	-		1	MOUNTING PLATE	
030	1498762-0000	-		1	AXLE PIN	
040	2547218-0000	-		7	AXLE PIN	
050	2547219-0000	-		2	AXLE PIN	
060	B1512583-0000	A		11	ROLLER	
	321120-0101	*B*		*2*	*BEARING BUSHING W/O FLANGE,6/8X6*	
070	1499481-0000	A		1	ROLLER	
080	B469159-0000	-		2	PIN	
	311103-0369	*-*		*1*	*PARALLELL PIN, M6, 6X60 MM*	
090	2547217-0000	-		2	AXLE PIN	
100	B979667-0000	-		2	ARM	
	90240-0028	*-*		*1*	*BEARING BUSHING W/O FLANGE,10/12X15*	
110	979668-0000	-		2	FINGER	
120	979669-0000	-		2	FORCE PLATE	
130	1499512-0000	-		4	PIN	
140	1499514-0000	-		4	E-HINGE	
150	1035794-0000	-		8	BLOCKING PIECE	
160	2519644-0000	-		2	BRACKET	
170	1517464-0000	-		1	SIGN	
180	1538219-0000	-		1	SWITCH BRACKET	
190	B1517293-0000	A		1	ROLLER	
	B1512583-0000	*B*		*1*	*ROLLER*	
	321120-0101	*B*		*2*	*BEARING BUSHING W/O FLANGE,6/8X6*	
195	2506478-0000	-		1	COVER	
220	2588000-0000	-		1	BRACKET	
230	2588001-0000	-		1	AXLE PIN	
280	2033-0013	-		2	WASHER	
290	352113-0206	-		9	ANCHOR PLATES FOR STRIPS, TYPE ABM100-AT	
300	90005-0082	-		12	WASHER PLAIN ROUND 4,3(M4)/12,H=1	
320	315755-0106	-		8	LOCKING WASHER 4	
330	90141-0016	-		2	RETAIN. RING, 10	
400	312155-0287	-		9	SCREW EN 10642 MF6S M4X8 A480	
405	312105-0293	-		2	SCREW M6S ISO 4017 M4X16 A480	
410	312105-0329	-		4	SCREW M6S ISO 4017 M5X16 A480	
425	312115-0230	-		2	SCREW ISO4762 M3X20 A4	
430	312115-0327	-		16	SCREW ISO4762 M5X12 A4	
450	312125-0232	-		4	SCREW PAN HEAD MCS M3X25 SS	
460	312125-0287	-		12	SCREW PAN HEAD MCS M4X8 SS	
470	312115-0367	-		2	SCREW ISO4762 M6X14 A4	
480	312318-0285	-		2	SCREW ISO4029 M4X6 A4	
490	312605-0310	-		2	HEXAGON NUT, M6M M3 A280	
500	312605-0316	-		2	HEXAGON NUT, M6M M6 A280	
550	315105-0124	-		8	WASHER ISO 7089-3-200 HV-A4	
555	315105-0136	-		2	WASHER ISO 7089-4-200 HV-A4	
570	315105-0146	-		12	WASHER ISO 7089-5-200 HV-A4	
580	315105-0153	-		4	WASHER ISO 7089-6-200 HV-A4	
600	315755-0107	-		1	LOCKING WASHER 5	
610	90015-0020	-		1	LEAD-IN, TET5-7, E-1458016	
620	312105-0374	-		1	SCREW M6S ISO 4014 M6X30 A480	
MB032	90044-0194	A		1	PROX.SW. IN5329/IN3002-BPKG	
MB109	90044-0194	A		1	PROX.SW. IN5329/IN3002-BPKG	
MB111	90044-0194	A		1	PROX.SW. IN5329/IN3002-BPKG	

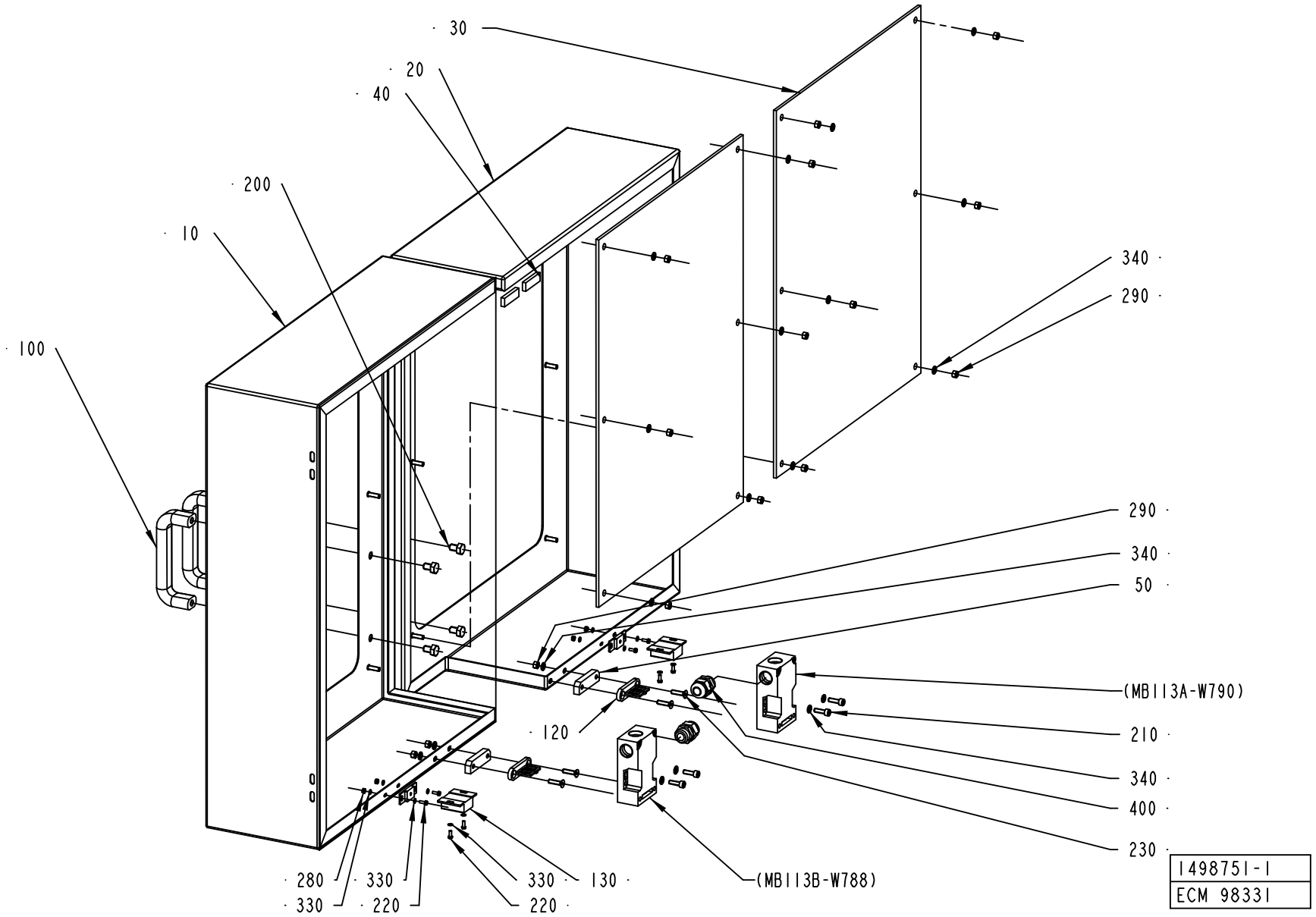
· 30
· 20
· 40
· 200
· 10
· 100
340 ·
290 ·
290 ·
340 ·
50 ·
(MB113A-W790)
· 120
210 ·
340 ·
400 ·
230 ·
· 280
· 330
· 330
· 220
330 · 130 ·
220 ·
(MB113B-W788)
1498751-1
ECM 98331

ECM: 114166 - 20020930
Group number: 1498751-0100
Assembly Drawing: 1498751-1_1_AB

Pos	Part No	SP	UN	Qty	Description	Page No
-						
010	1498749-0000	-		1	DOOR	
020	1498750-0000	-		1	DOOR	
030	1499511-0000	-		2	PANEL	
040	1511323-0000	-		2	STRIP ADHESIVE	
050	2506479-0000	-		2	PLATE	
100	90017-0022	-		2	HANDLE, NO. EL-037311	
120	90044-0310	A		2	KEY FOR SAFETY SWITCH, AZ 15/16 B1	
130	90237-0046	B		2	MAGNETIC LOCK, 46X33X15 MM	
200	312105-0447	-		4	SCREW M6S ISO 4017 M8X12 A480	
210	312115-0329	-		4	SCREW ISO4762 M5X16 A4	
220	312125-0222	-		8	SPåRSKRUV MCS M3X8 SS	
230	312155-0331	-		4	SCREW EN 10642 MF6S M5X20 A480	
280	312605-0310	-		4	HEXAGON NUT, M6M M3 A280	
290	312605-0314	-		16	HEXAGON NUT, M6M M5 A280	
330	315105-0124	-		12	WASHER ISO 7089-3-200 HV-A4	
340	315105-0146	-		20	WASHER ISO 7089-5-200 HV-A4	
400	352103-0106	-		2	CABLE GLAND, ST 11, PR18,6/PG11	
MB113A	90044-0139	A		1	KEY SAF.SW. AZ16-02 ZVR K-2254	
MB113B	90044-0139	A		1	KEY SAF.SW. AZ16-02 ZVR K-2254	
W802	351150-0405	-	MM	600	CABLE OLFLEX 5X0,75 MM2 LIGHT/GREY	
W803	351150-0405	-	MM	600	CABLE OLFLEX 5X0,75 MM2 LIGHT/GREY	

Pos	Part No	SP	UN	Qty	Description	Page No

Machine Type | Group Description | Used-In | Group Number | Page No

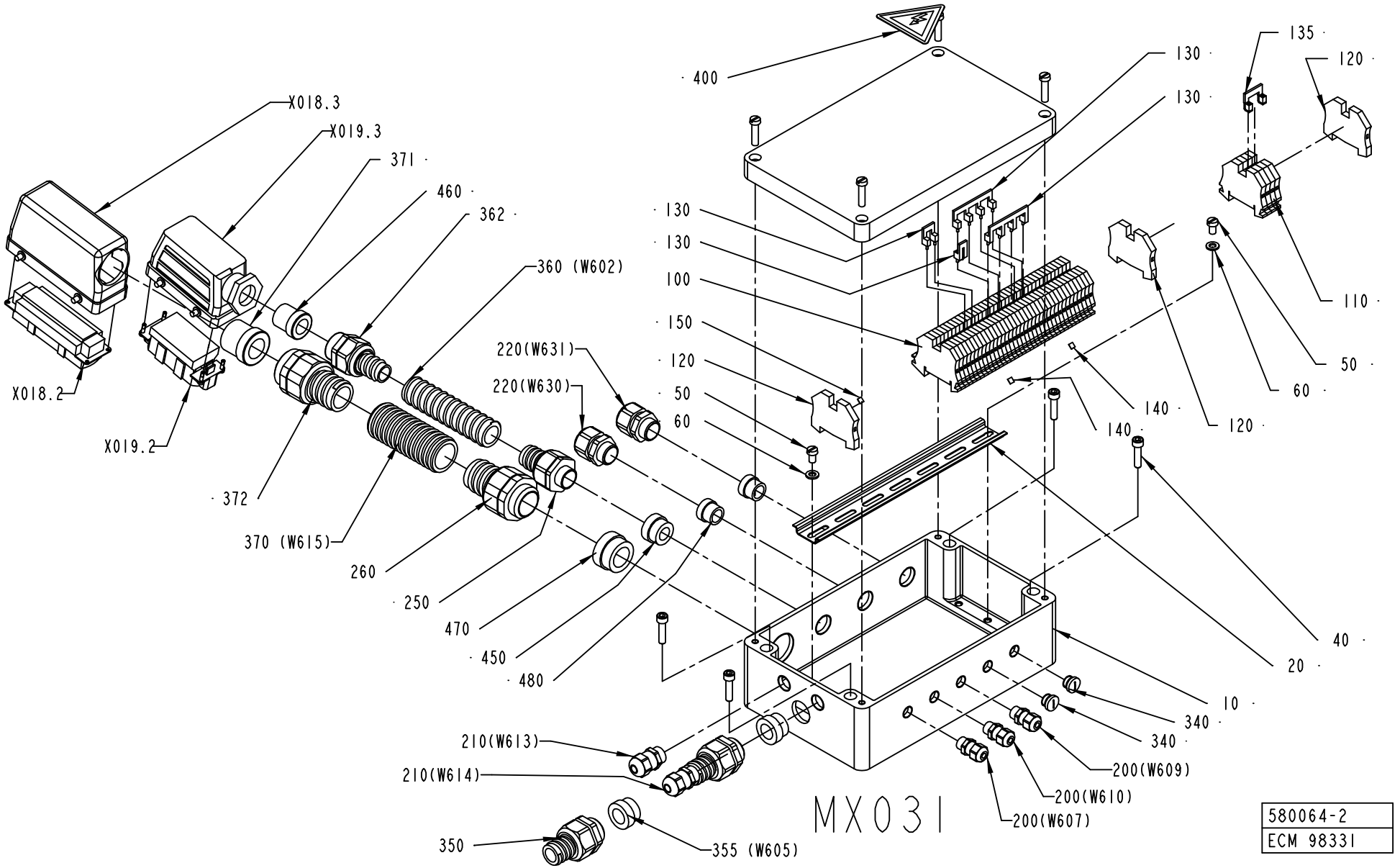
400
X018.3
X019.3
371
460
362
360 (W602)
220(W631)
220(W630)
X018.2
X019.2
372
370 (W615)
260
250
470
450
480
210(W613)
210(W614)
350
355 (W605)
130
130
100
150
120
50
60
135
120
110
50
60
140
140
120
40
20
10
340
340
200(W609)
200(W610)
200(W607)
MX031
580064-2
ECM 98331

ECM: 117147 - 20030113
Group number: 580064-0200
Assembly Drawing: 580064-2_1_AC

Pos	Part No	SP	UN	Qty	Description	Page No
-						
010	1512283-0000	-		1	CONNECTION BOX	
020	1512352-0000	-		1	RAIL	
040	312115-0372	-		4	SCREW ISO4762 M6X25 A4	
050	312125-0364	-		2	SCREW SLOT.PAN HD. MCS 6X10 A480	
060	315105-0153	-		2	WASHER ISO 7089-6-200 HV-A4	
100	353021-0212	-		36	FEED THROUGH TERMINAL, 10200.0	
110	353021-0213	-		4	FEED THROUGH TERMINAL, 10201.0	
120	353024-0205	-		3	EARTH TERMINAL, 1010.1	
130	353034-0030	-		3	BRIDGE CONNECTOR WQV 2,5/10, 10544.6	
135	353034-0039	-		1	BRIDGE CONN. WQV 4/4	
140	359011-0807	-		2	MARKING PLATES 5-FW 1-50	
150	359011-0819	-		1	MARKING PLATES 5-GW (EARTH)	
200	90458-0305	-		3	CABLE GLAND, M12X1,5, NO.5311 1000	
210	90458-0306	-		2	CABLE GLAND, M16X1,5, NO.5311 1010	
220	90458-0422	-		2	EXTENDED WITHOUT INSERT, M20X1,5	
250	90458-0430	-		1	EXTENDED WITHOUT INSERT, M20X1,5	
260	90458-0433	-		1	EXTENDED WITHOUT INSERT, M32X1,5	
340	90458-1306	-		2	BLIND PLUG CIRCULAR, M12X1,5 514GFK/212	
350	90458-0431	-		1	EXTENDED WITHOUT INSERT, M25X1,5	
355	353249-0014	-		1	INSERT, SINGEL HOLE, EK 154/16	
360	90152-0051	-	MM	1800	SPIRAL CONDUIT, 25X18, UL 1816	
362	90458-0146	-		1	GLAND, HOSE, WITHOUT INSERT, PG21	
370	90152-0070	-	MM	2100	METAL HOSE, 32,5X26, UL 2621	
371	353249-0072	-		1	INSERT, SINGEL HOLE, E155/20	
372	353242-0003	-		1	NORMAL WITHOUT INSERT, PG29	
400	359705-0015	A		1	WARNING SIGN ISO, RISK OF ELECTRIC SHOCK	
450	353249-0013	-		1	INSERT, SINGEL HOLE, EK 154/13	
460	353249-0070	-		1	INSERT, SINGEL HOLE, E154/16	
470	353249-0061	-		1	INSERT, SINGEL HOLE, EK 155/20	
480	353249-0075	-		2	INSERT, SINGEL HOLE, EK 153/13	
W602	351150-0422	-	MM	2300	CABLE OLFLEX 3X4 MM2 LIGHT/GREY	
W605	351150-0407	-	MM	1900	CABLE OLFLEX 12X0,75 MM2 LIGHT/GREY	
W615	351150-0425	-	MM	2600	CABLE OLFLEX 25X0,75 MM2 LIGHT/GREY	
X018.2	90110-0150	-		1	MALE INSERT 121110 0000	
X018.3	90110-0346	-		1	CABLE HOOD 1211220 00 00	
X019.2	90110-0156	-		1	MALE INSERT 70.210.0653.0	
X019.3	90110-0244	-		1	CABLE HOOD 6-POL 70.350.1628.0	

Pos	Part No	SP	UN	Qty	Description	Page No

Machine Type | Group Description | Used-In | Group Number | Page No

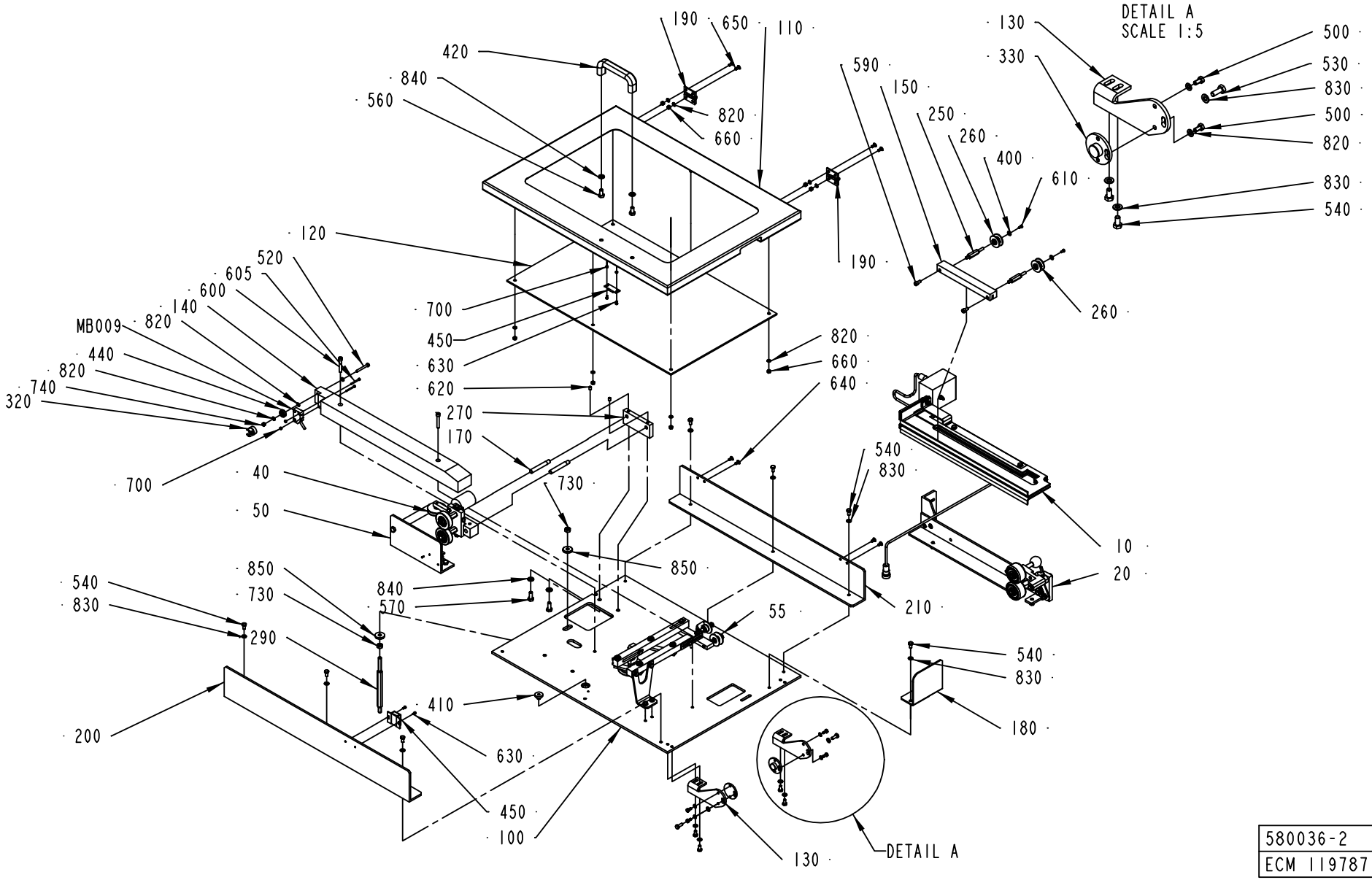

580036-2
ECM 119787

ECM: 111682 - 20030303
Group number: 580036-0200
Assembly Drawing: 580036-2_1_AE

Pos	Part No	SP	UN	Qty	Description	Page No
NOPT						
110	2552620-0000	-		1	DOOR	
120	1499483-0000	-		1	PANE	
180	2552619-0000	-		1	COVER	
190	90459-0075	-		2	HINGE, 1056-U30	
200	2552622-0000	-		1	HOLDER	
210	2552621-0000	-		1	HOLDER	
420	90017-0022	-		1	HANDLE, NO. EL-037311	
450	90237-0046	-		1	MAGNETIC LOCK, 46X33X15 MM	
540	312105-0366	-		11	SCREW M6S M6X12 A280	
560	312105-0449	-		2	SCREW M6S ISO 4017 M8X16 A480	
630	312115-0220	-		4	SCREW ISO4762 M3X6 A4 80	
640	312155-0325	-		4	SCREW EN 10642 MF6S M5X10 A480	
650	312155-0327	-		4	SCREW EN 10642 MF6S M5X12 A480	
660	312605-0314	-		10	HEXAGON NUT, M6M M5 A280	
700	312605-0310	-		4	HEXAGON NUT, M6M M3 A280	
820	315105-0146	-		17	WASHER ISO 7089-5-200 HV-A4	
830	315105-0153	-		13	WASHER ISO 7089-6-200 HV-A4	
840	315105-0165	-		4	WASHER ISO 7089-8-200 HV-A4	
Common Parts						
010	A580038-0200	-		1	INDUCTOR	**511**
020	A2506475-0100	-		1	PRESSURE ROLLER	**513**
040	A2524476-0100	-		1	WEB GUIDE	**515**
050	A1279624-0200	-		1	SPLICE DETECTOR	**517**
055	A2576240-0100	-		1	STRIP GUIDE	**519**
100	2552630-0000	-		1	MOUNTING PLATE	
130	1498773-0000	-		2	CANTILEVER	
140	1517535-0000	-		1	STEERING	
150	1282988-0000	-		1	RAIL	
170	1498778-0000	-		2	SHAFT	
250	1282989-0000	-		2	AXLE PIN	
260	B1512583-0000	A		2	ROLLER	
	321120-0101	*B*		*2*	*BEARING BUSHING W/O FLANGE,6/8X6*	
270	1498777-0000	-		1	GUIDE HOLDER	
290	1498765-0000	-		1	AXLE PIN	
320	1517534-0000	-		1	RUNNER RING	
330	1334331-0000	-		2	FLANGE	
400	90005-0082	-		2	WASHER PLAIN ROUND 4,3(M4)/12,H=1	
410	90015-0020	-		1	LEAD-IN, TET5-7, E-1458016	
440	90214-0138	A		1	BALL BEARING, 5X19X6 MM	
500	312105-0325	-		4	SCREW M6S ISO 4017 M5X10 A480	
520	312105-0339	-		1	SCREW M6S ISO 4014 M5X40 A480	
530	312105-0368	-		2	SCREW M6S M6X16 A280	
570	312105-0451	-		2	SCREW M6S ISO 4017 M8X20 A480	
590	312115-0366	-		2	SCREW ISO4762 M6X12 A4	
600	312115-0378	-		2	SCREW ISO4762 M6X40 A4	
605	312125-0234	-		2	SCREW PAN HEAD MCS M3X30 SS	
610	312125-0287	-		2	SCREW PAN HEAD MCS M4X8 SS	
620	312318-0362	-		2	SCREW ISO4029 M6X8 A4	
730	312605-0318	-		2	HEXAGON NUT, M6M M8 A280	
740	312812-0314	-		1	HEXAGON NUT, NY-LOCK M5 A480	
850	315125-0165	-		2	WASHER TBRSB 8,4X26X5 A4	
MB009	90044-0194	A		1	PROX.SW. IN5329/IN3002-BPKG	

Machine Type | Group Description | Used-In | Group Number | Page No

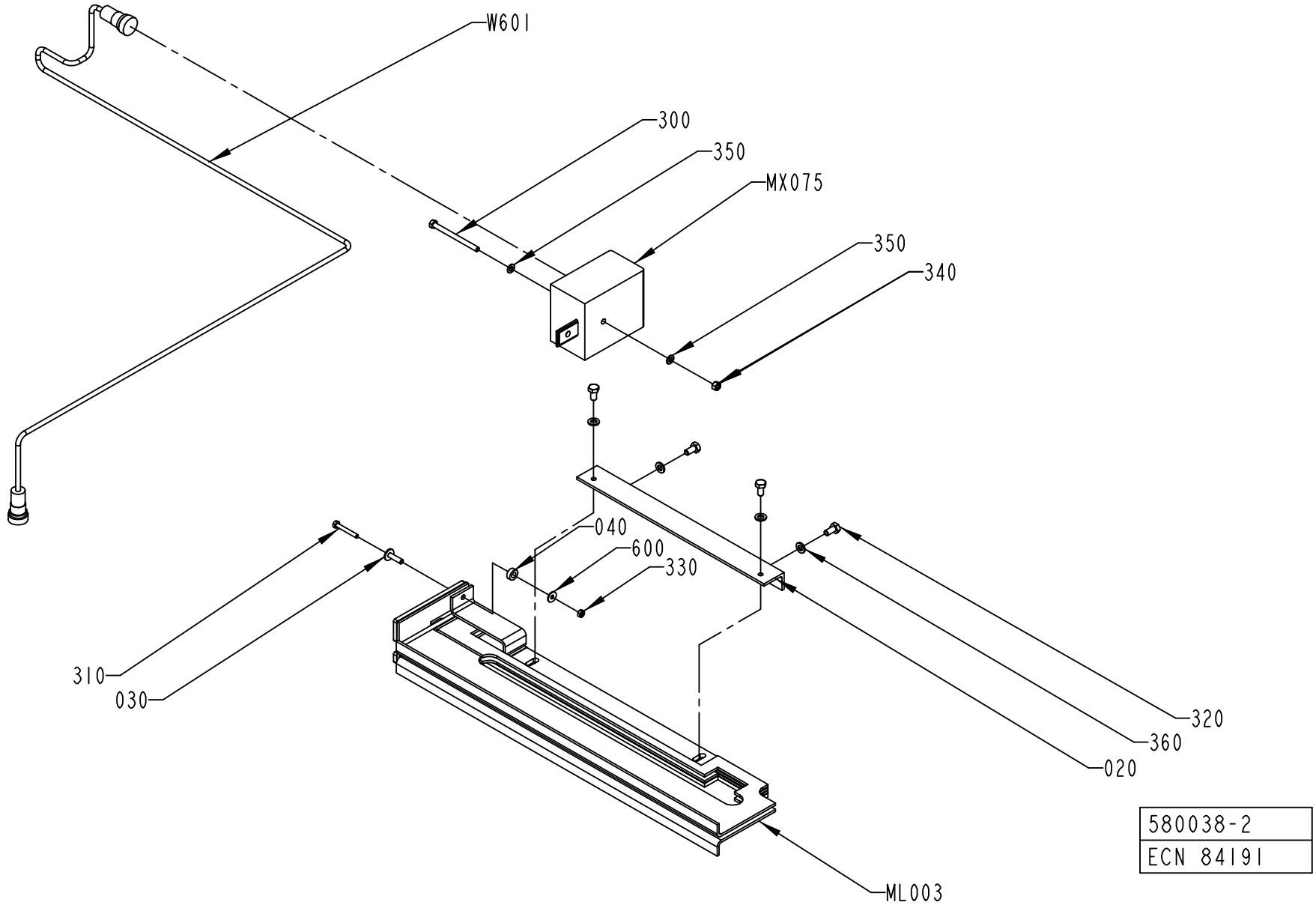
W601
300
350
MX075
350
340
040
600
330
310
030
320
360
020
ML003
580038-2
ECN 84191

ECM: 120692 - 20030113
Group number: 580038-0200
Assembly Drawing: 580038-2_1_AB

Pos	Part No	SP	UN	Qty	Description	Page No
-						
020	1036588-0000	-		1	BRACKET	
030	1038016-0000	-		1	SPACER	
040	32644-0000	-		1	WASHER	
300	312101-0344	-		1	SCREW M6S M5X65 FZB	
310	312105-0299	-		1	SCREW M6S ISO 4017 M4X30 A480	
320	312105-0366	-		4	SCREW M6S M6X12 A280	
330	312605-0312	-		1	HEXAGON NUT, M6M M4 A280	
340	312605-0314	-		1	HEXAGON NUT, M6M M5 A280	
350	315105-0146	-		2	WASHER ISO 7089-5-200 HV-A4	
360	315105-0153	-		4	WASHER ISO 7089-6-200 HV-A4	
600	90005-0082	-		1	WASHER PLAIN ROUND 4,3(M4)/12,H=1	
ML003	1035587-0000	A		1	INDUCTOR	
MX075	67380-0208	A		1	TRANSFORMER	
W601	548770-0006	A		1	COAXIAL CABLE L=1200 MM	

Pos	Part No	SP	UN	Qty	Description	Page No

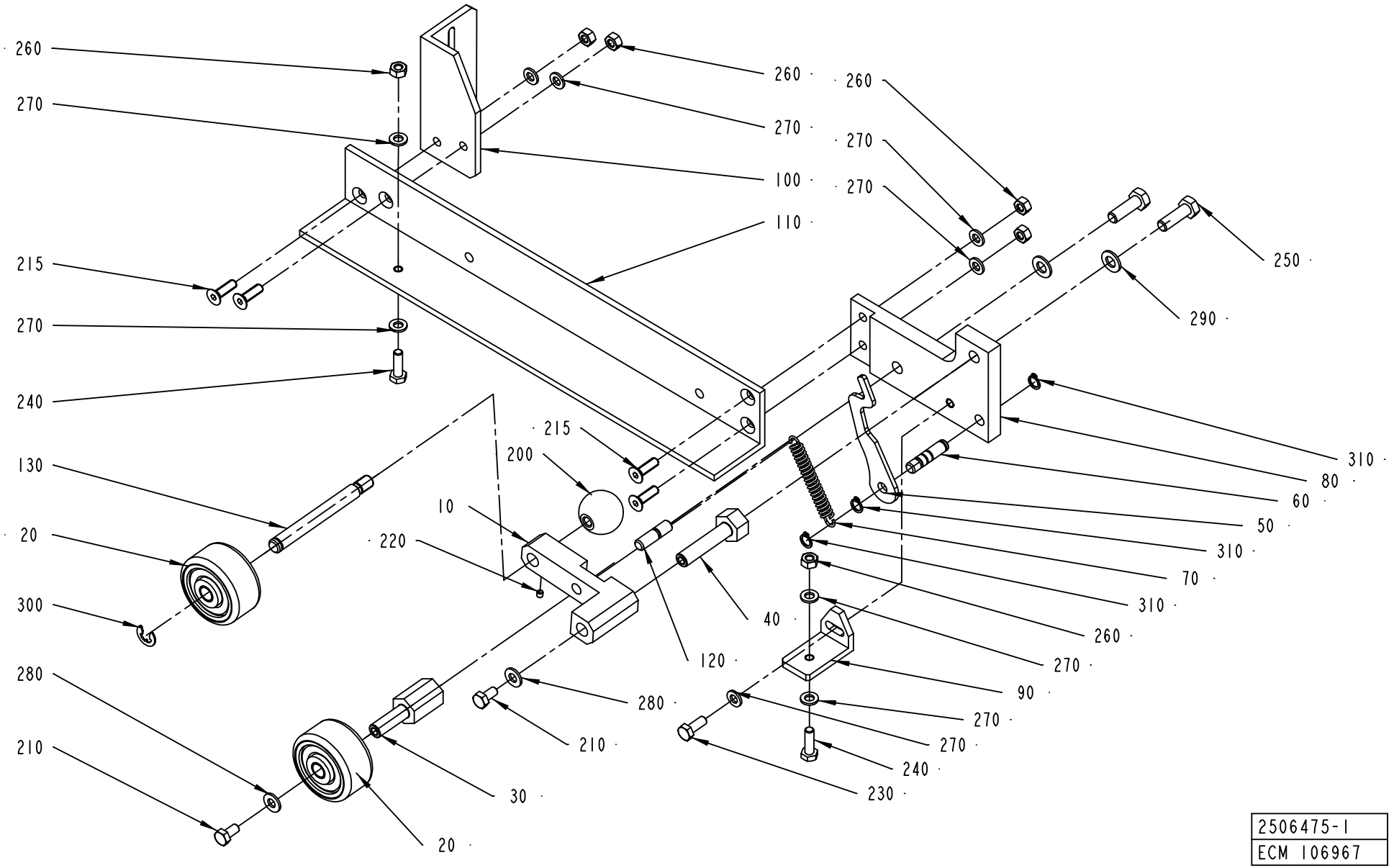

2506475-1
ECM 106967

ECM: 110380 - 20030113
Group number: 2506475-0100
Assembly Drawing: 2506475-1_1_AA

Pos	Part No	SP	UN	Qty	Description	Page No
-						
010	2524482-0000	-		1	BRACKET	
020	B1346988-0000	A		2	ROLL	
010	*90166-0056*	*-*	*MM*	*40*	*SHRINKABLE HOSE*	
020	*321120-0104*	*-*		*2*	*BEARBUSHING W/O FL,ANGE 10/12X10*	
030	1035895-0000	-		1	SHAFT	
040	2529646-0000	-		1	SHAFT	
050	2524479-0000	-		1	PLATE	
060	2524480-0000	-		1	PIN	
070	1478303-0000	A		1	TENSION SPRING	
080	2506471-0000	-		1	BRACKET	
090	2506472-0000	-		1	HOLDER	
100	2506473-0000	-		1	BRACKET	
110	2506474-0000	-		1	FASTENING BRACKET	
120	2524484-0000	-		1	PIN	
130	2524485-0000	-		1	PIN	
200	318800-0104	-		1	HANDLE,SPHERICAL KNOB,INT.THRE.,D.30-M8	
210	312105-0366	-		2	SCREW M6S M6X12 A280	
215	312155-0370	-		4	SCREW EN 10642 MF6S M6X20 A480	
220	312318-0283	-		1	SCREW ISO4029 M4X4 A4	
230	312105-0368	-		1	SCREW M6S M6X16 A280	
240	312105-0367	-		2	SCREW M6S M6X14 A280	
250	312105-0453	-		2	SCREW M6S ISO 4017 M8X25 A480	
260	312605-0316	-		4	HEXAGON NUT, M6M M6 A280	
270	315105-0153	-		7	WASHER ISO 7089-6-200 HV-A4	
280	315105-0156	-		2	WASHER PLAIN, BRB, 6,7/14,H=1,5	
290	315105-0165	-		2	WASHER ISO 7089-8-200 HV-A4	
300	315755-0801	-		1	LOCKING WASHER 8	
310	90141-0015	-		3	RETAIN. RING, 8	

Pos	Part No	SP	UN	Qty	Description	Page No

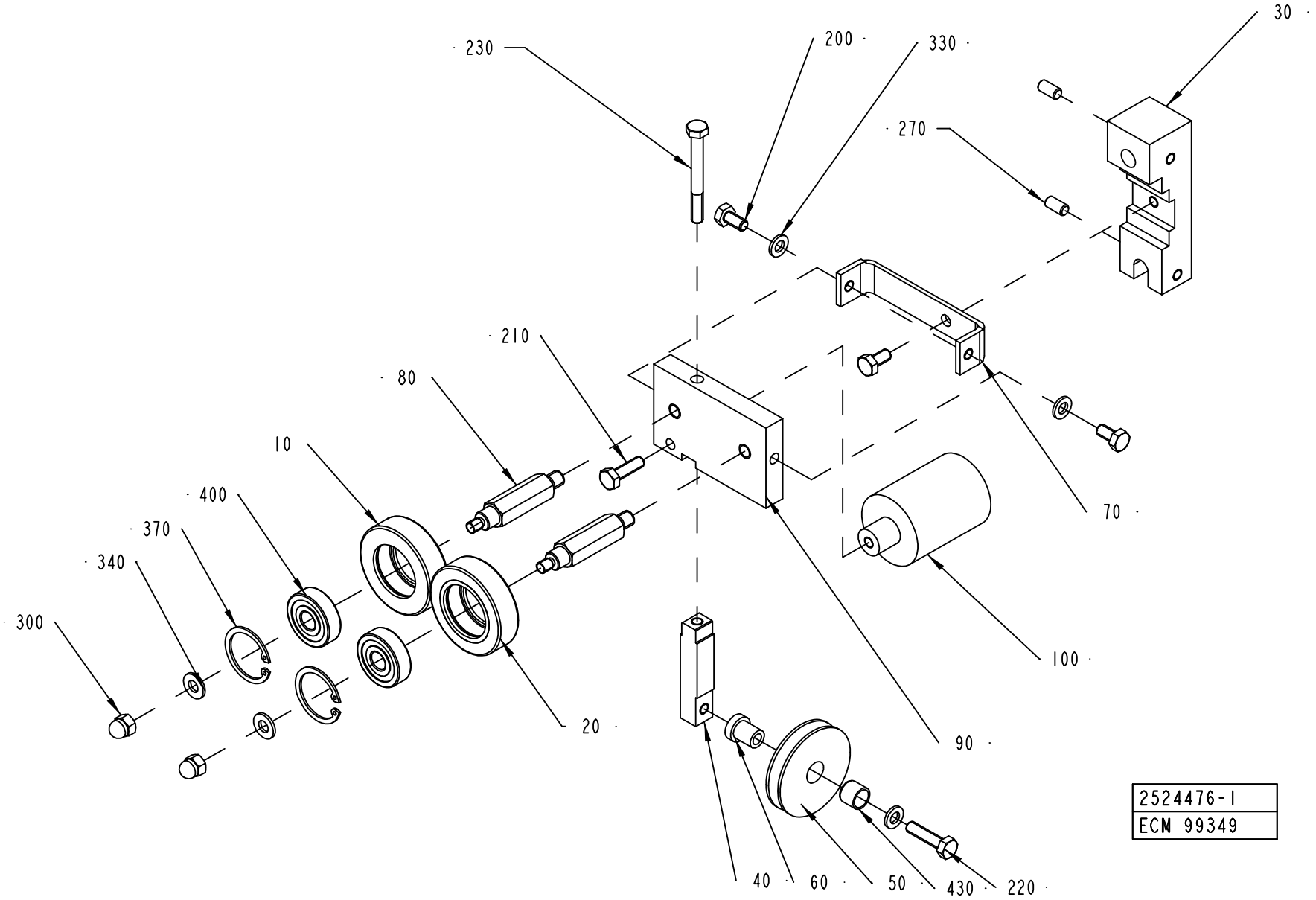
230
200
330
30
270
210
80
10
400
370
340
300
70
100
20
90
40
60
50
430
220
2524476-1
ECM 99349

ECM: 113780 - 20030113
Group number: 2524476-0100
Assembly Drawing: 2524476-1_1_AA

Pos	Part No	SP	UN	Qty	Description	Page No
-						
010	1036622-0000	-		1	GUIDE ROLLER	
020	1036623-0000	C		1	GUIDE ROLLER	
030	1511002-0000	-		1	HOLDER	
040	1499024-0000	-		1	BAR	
050	2524477-0000	-		1	ROLLER	
060	1499026-0000	-		1	SHAFT	
070	1499027-0000	-		1	BRACKET	
080	1511001-0000	-		1	SHAFT	
090	1511000-0000	-		1	PLATE	
100	1511003-0000	-		1	WEIGHT	
110	2552628-0000	-		1	PIN	
120	1346612-0000	-		1	SHAFT	
200	312105-0366	-		3	SCREW M6S M6X12 A280	
210	312105-0370	-		1	SCREW M6S ISO 4017 M6X20 A480	
220	312105-0372	-		1	SCREW M6S ISO 4017 M6X25 A480	
230	312105-0381	-		1	SCREW M6S ISO 4014 M6X55 A480	
240	312105-0333	-		1	SCREW M6S ISO 4017 M5X25 A480	
270	312318-0366	-		2	SCREW ISO4029 M6X12 A4	
300	312705-0316	-		2	NUT HEX. DOMED CAP MHM-6 M6 A280	
330	315105-0153	-		3	WASHER ISO 7089-6-200 HV-A4	
340	315105-0156	-		2	WASHER PLAIN, BRB, 6,7/14,H=1,5	
350	315105-0156	-		1	WASHER PLAIN, BRB, 6,7/14,H=1,5	
370	315753-0122	-		2	RETAIN. RING, 30	
400	321313-0100	A		2	BALL BEARING, 2 SEALS, 10X30X9 MM	
430	90240-0287	A		1	BUSHING, 10X12X10 MM	

Pos	Part No	SP	UN	Qty	Description	Page No

Machine Type | Group Description | Used-In | Group Number | Page No

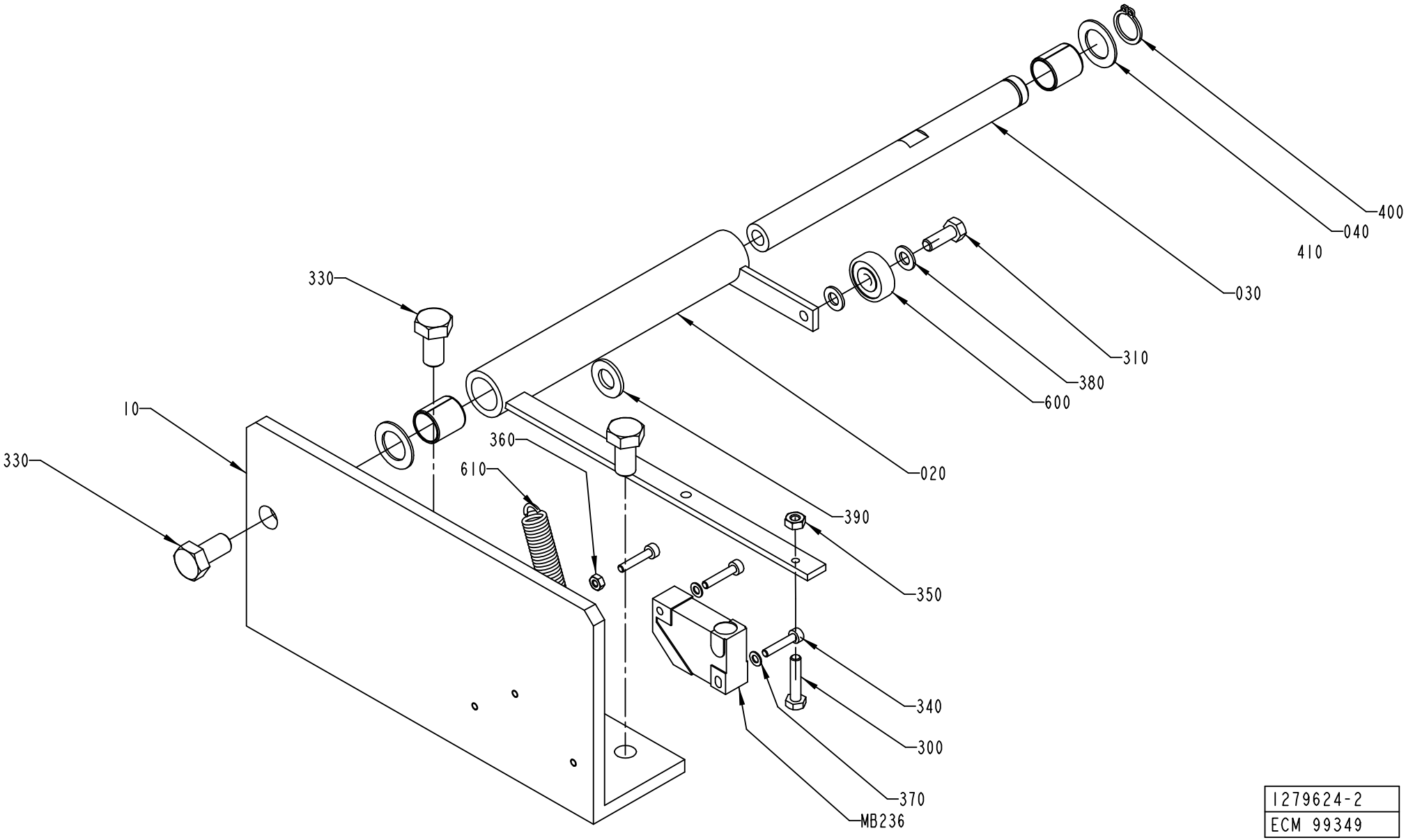

1279624-2
ECM 99349

ECM: 114175 - 20020930
Group number: 1279624-0200
Assembly Drawing: 1279624-2_1_AB

Pos	Part No	SP	UN	Qty	Description	Page No
-						
010	2524478-0000	-		1	BRACKET	
020	979899-0000	-		1	BRACKET	
030	1035897-0000	-		1	SHAFT	
040	266737-0000	-		2	WASHER	
300	312105-0295	-		1	SCREW M6S ISO4017 M4X20 A480	
310	312105-0328	-		1	SCREW M6S ISO 4017 M5X14 A480	
330	312105-0449	-		3	SCREW M6S ISO 4017 M8X16 A480	
340	312115-0228	-		3	SCREW ISO4762 M3X16 A4	
350	312605-0312	-		1	HEXAGON NUT, M6M M4 A280	
360	312605-0310	-		1	HEXAGON NUT, M6M M3 A280	
370	315105-0124	-		2	WASHER ISO 7089-3-200 HV-A4	
380	315105-0146	-		2	WASHER ISO 7089-5-200 HV-A4	
390	315105-0165	-		1	WASHER ISO 7089-8-200 HV-A4	
400	315751-0109	-		1	RETAIN. RING, 12	
410	321141-0183	B		2	BEARING BUSHING W/O FL, 12X14X15 MM	
600	90214-0138	A		1	BALL BEARING, 5X19X6 MM	
610	90335-0216	A		1	TENSION SPRING 40910, 0,5X5,5X27,7	
MB236	90044-0194	A		1	PROX.SW. IN5329/IN3002-BPKG	

Pos	Part No	SP	UN	Qty	Description	Page No

STRIP GUIDE

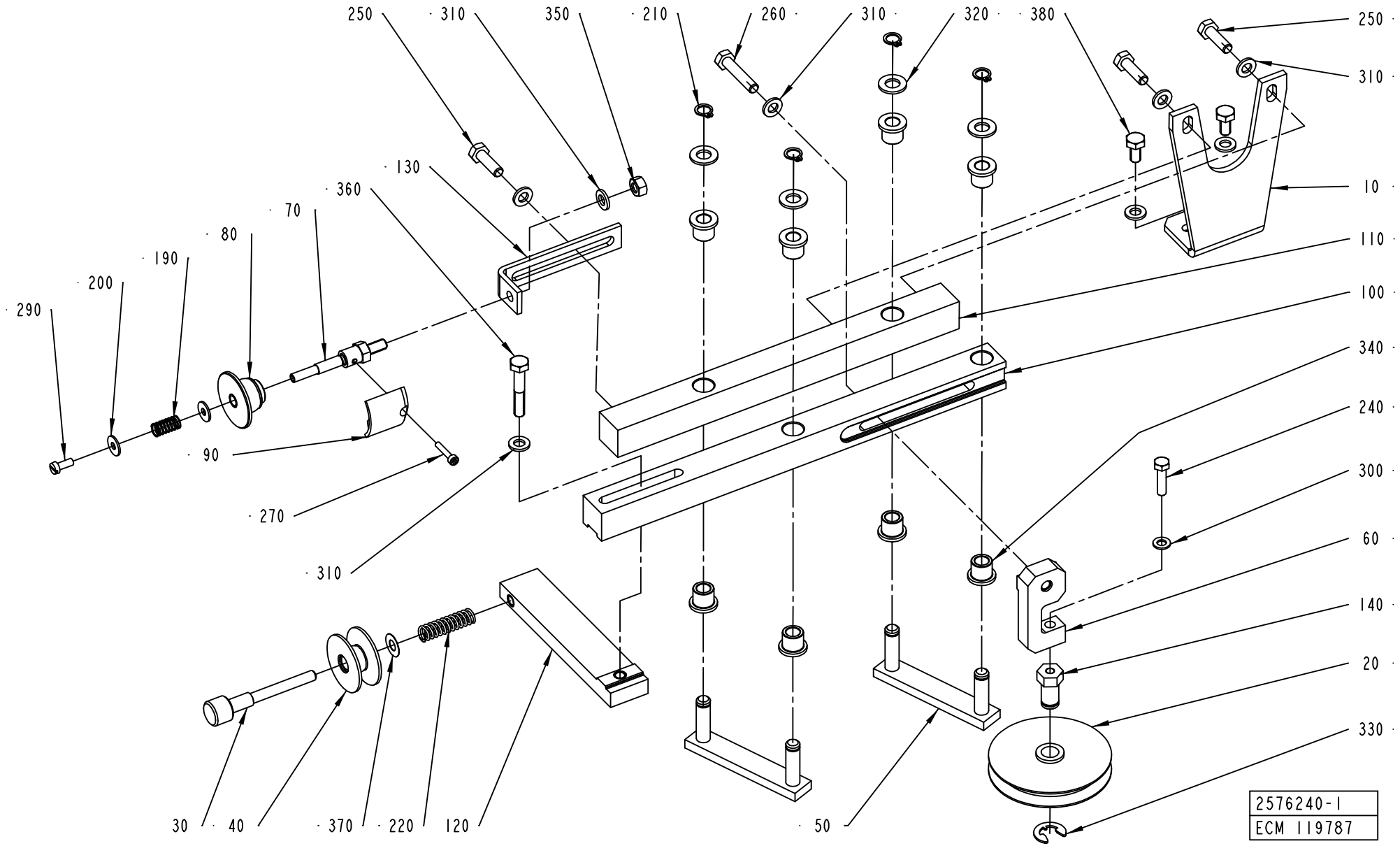
250
310
350
210
260
310
320
380
250
310
130
360
70
80
190
200
290
10
110
100
340
240
300
60
140
20
330
90
270
310
30
40
370
220
120
50
2576240-1
ECM 119787

ECM: 119789 - 20030303
Group number: 2576240-0100
Assembly Drawing: 2576240-1_1_AA

Pos	Part No	SP	UN	Qty	Description	Page No
TBA NOPT						
070	2552631-0000	-		1	AXLE PIN	
080	2552632-0000	A		1	ROLLER	
090	2552633-0000	-		1	ROLLER	
130	2575481-0000	-		1	BRACKET	
190	90335-0146	-		1	COMP. SPRING, 0,6X7,2X20	
200	90005-0082	-		2	WASHER PLAIN ROUND 4,3(M4)/12,H=1	
270	312115-0228	-		1	SCREW ISO4762 M3X16 A4	
290	312125-0289	-		1	SPåRSKRUV MCS 4X10 A480	
350	312605-0316	-		1	HEXAGON NUT, M6M M6 A280	
Common Parts						
010	2576239-0000	-		1	HOLDER	
020	282635-0000	A		1	GUIDE WHEEL	
030	1035893-0000	-		1	ADJUSTING SCREW	
040	B1285546-0000	A		1	ROLL	
010	*321120-0100*	*C*		*1*	*BEARING BUSHING W/O FLANGE 8/10X12*	
050	1346746-0000	-		2	LEVER	
060	2575480-0000	-		1	HOLDER	
100	2570400-0000	-		1	ROD	
110	2570401-0000	-		1	ROD	
120	2575484-0000	-		1	HOLDER	
140	2575482-0000	-		1	PIN	
210	90141-0015	-		4	RETAIN. RING, 8	
220	90335-0027	A		1	COMP. SPRING 22170, 1,25X9,25X33	
240	312105-0331	-		1	SCREW M6S ISO 4017 M5X20 A480	
250	312105-0370	-		3	SCREW M6S ISO 4017 M6X20 A480	
260	312105-0374	-		1	SCREW M6S ISO 4014 M6X30 A480	
300	315105-0146	-		1	WASHER ISO 7089-5-200 HV-A4	
310	315105-0153	-		8	WASHER ISO 7089-6-200 HV-A4	
320	315105-0165	-		4	WASHER ISO 7089-8-200 HV-A4	
330	315755-0110	-		1	LOCKING WASHER 9	
340	321111-0097	A		8	FLANGE BUSHING, 8X12X12 MM	
360	312105-0376	-		1	SCREW M6S ISO 4014 M6X35 A480	
370	2033-0013	-		1	WASHER	
380	312105-0366	-		2	SCREW M6S M6X12 A280	

Pos	Part No	SP	UN	Qty	Description	Page No

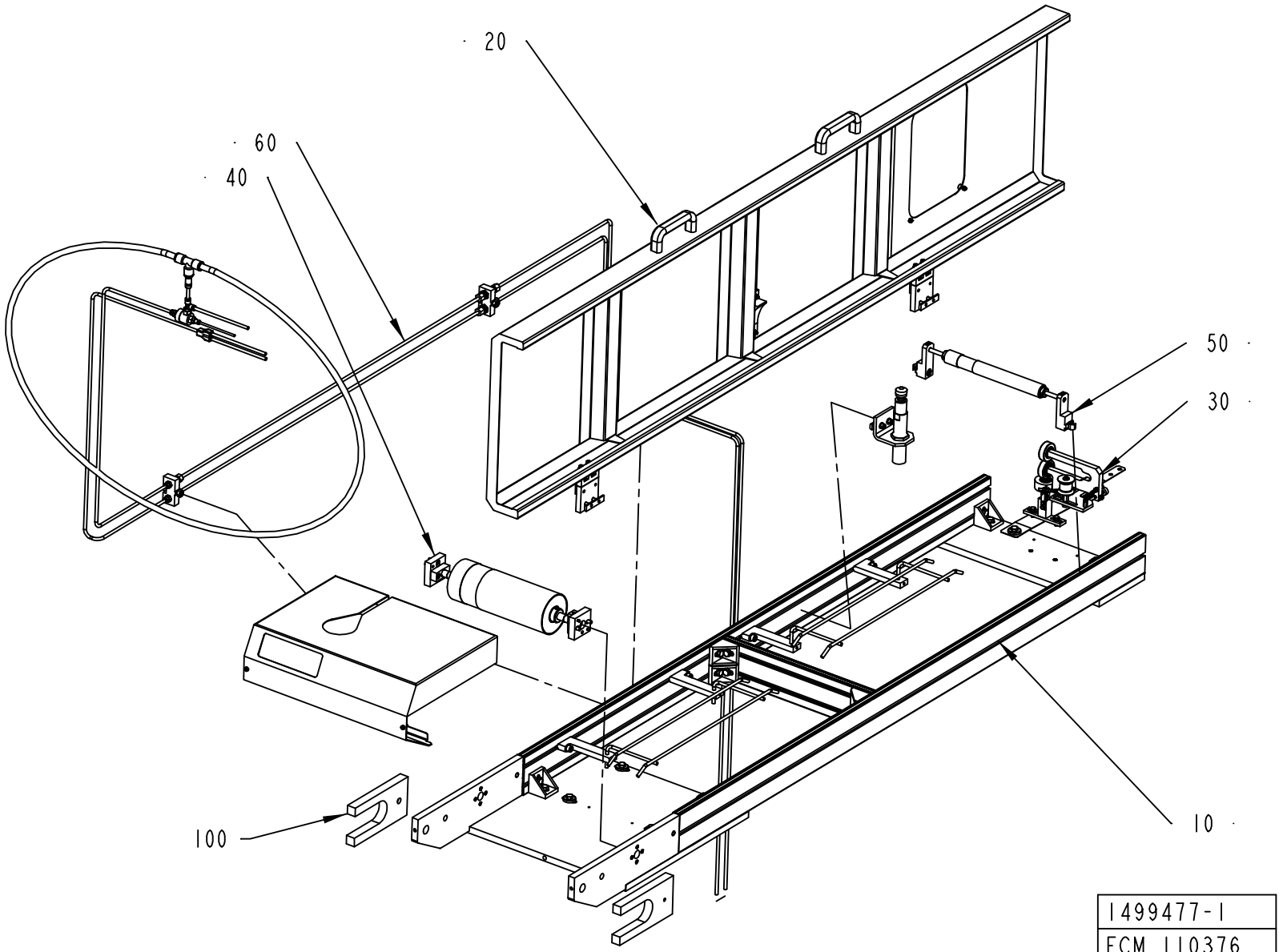
20
60
40
50
30
10
100
1499477-1
ECM 110376

ECM: 116565 - 20030113
Group number: 1499477-0100
Assembly Drawing: 1499477-1_1_AC

Pos	Part No	SP	UN	Qty	Description	Page No
-						
010	A1499484-0100	-		1	TUNNEL FRAME	**523**
020	A1511319-0100	-		1	TUNNEL COVER	**525**
030	A1517065-0100	-		1	WEB GUIDE	**527**
040	A2570394-0100	-		1	BENDING ROLLER	**529**
050	A1498756-0100	-		1	BENDING ROLLER	**531**
060	A580335-0200	-		1	PIPE WORK-PNEUMATIC	**533**
100	1499485-0000	-		2	TRANSPORT BRACKET	

Pos	Part No	SP	UN	Qty	Description	Page No

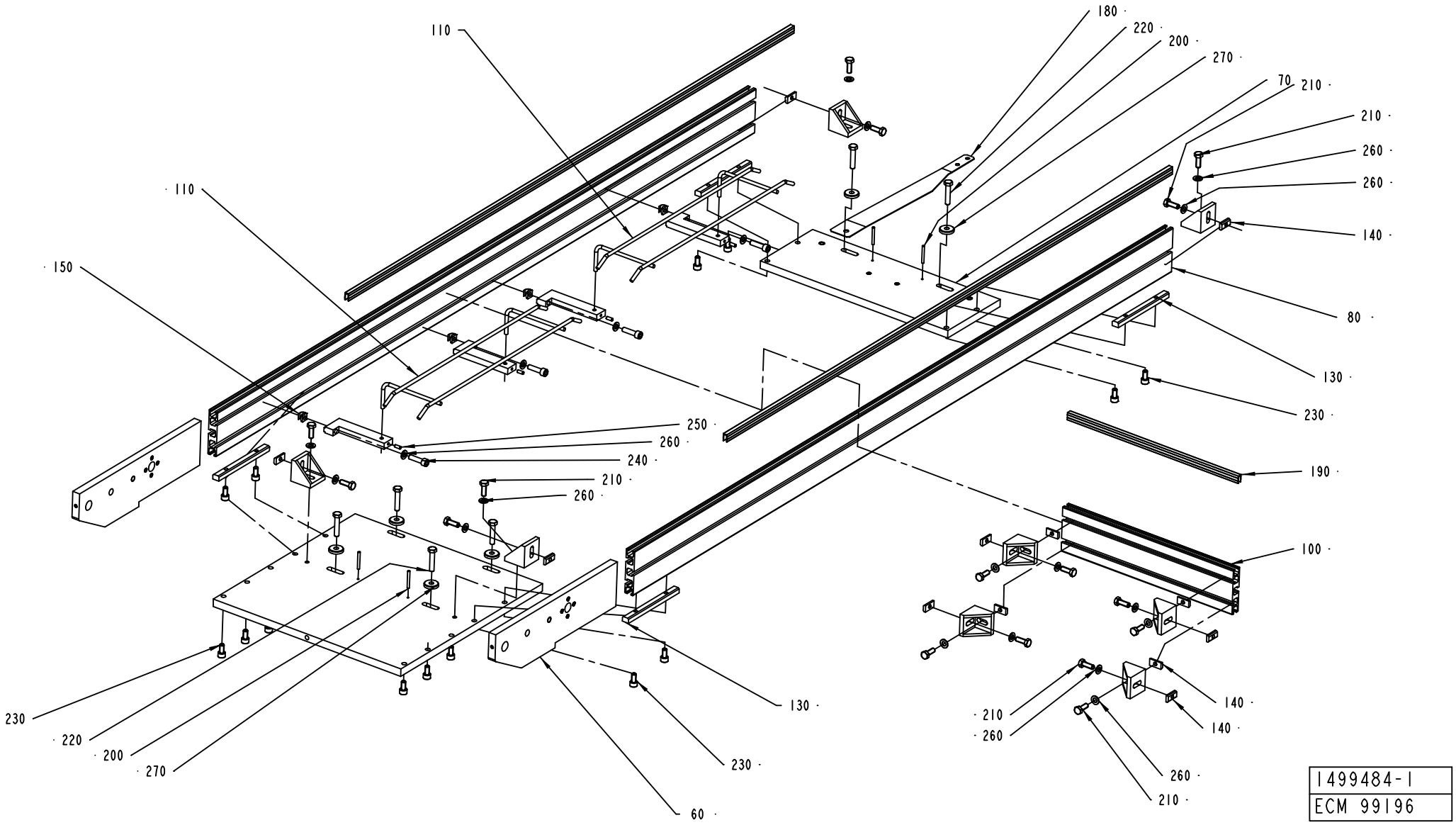
110
110
150
180
220
200
270
70
210
210
260
260
140
80
130
230
190
100
250
260
240
210
260
130
230
60
230
220
200
270
210
260
140
140
260
210
1499484-1
ECM 99196

ECM: 99200 - 20020808
Group number: 1499484-0100
Assembly Drawing: 1499484-1_1_AB

Pos	Part No	SP	UN	Qty	Description	Page No
-						
050	1498766-0000	-		1	LOWER PLATE	
060	1498767-0000	-		2	SIDE PIECE	
070	1498768-0000	-		1	LOWER PLATE	
080	1498769-0000	-		2	WALL	
090	1498771-0000	-		4	HOLDER	
100	2540729-0000	-		1	WALL	
110	36316-0000	-		2	PAPER SUPPORT	
120	1498759-0000	-		8	ANGLE HOLDER	
130	1498763-0000	-		4	JOINT PIECE	
140	1511308-0000	-		12	NUT PLATE	
150	1511310-0000	-		4	NUT	
160	1511320-0000	-		2	STRIP	
180	1499371-0000	-		1	JOINT PLATE	
190	2540730-0000	-		1	STRIP	
200	311103-0278	-		4	PARALLELL PIN, M6, 4X35 MM	
210	312105-0452	-		16	SCREW M6S ISO 4017 M8X22 A480	
220	312109-0459	-		6	SCREW M6S ISO 4017 M8X40 A480	
230	312115-0449	-		14	SCREW ISO4762 M8X16 A4	
240	312115-0455	-		4	SCREW ISO4762 M8X30 A4	
250	312318-0327	-		4	SCREW ISO4029 M5X12 A4	
260	315105-0165	-		20	WASHER ISO 7089-8-200 HV-A4	
270	315125-0165	-		6	WASHER TBRSB 8,4X26X5 A4	

Pos	Part No	SP	UN	Qty	Description	Page No

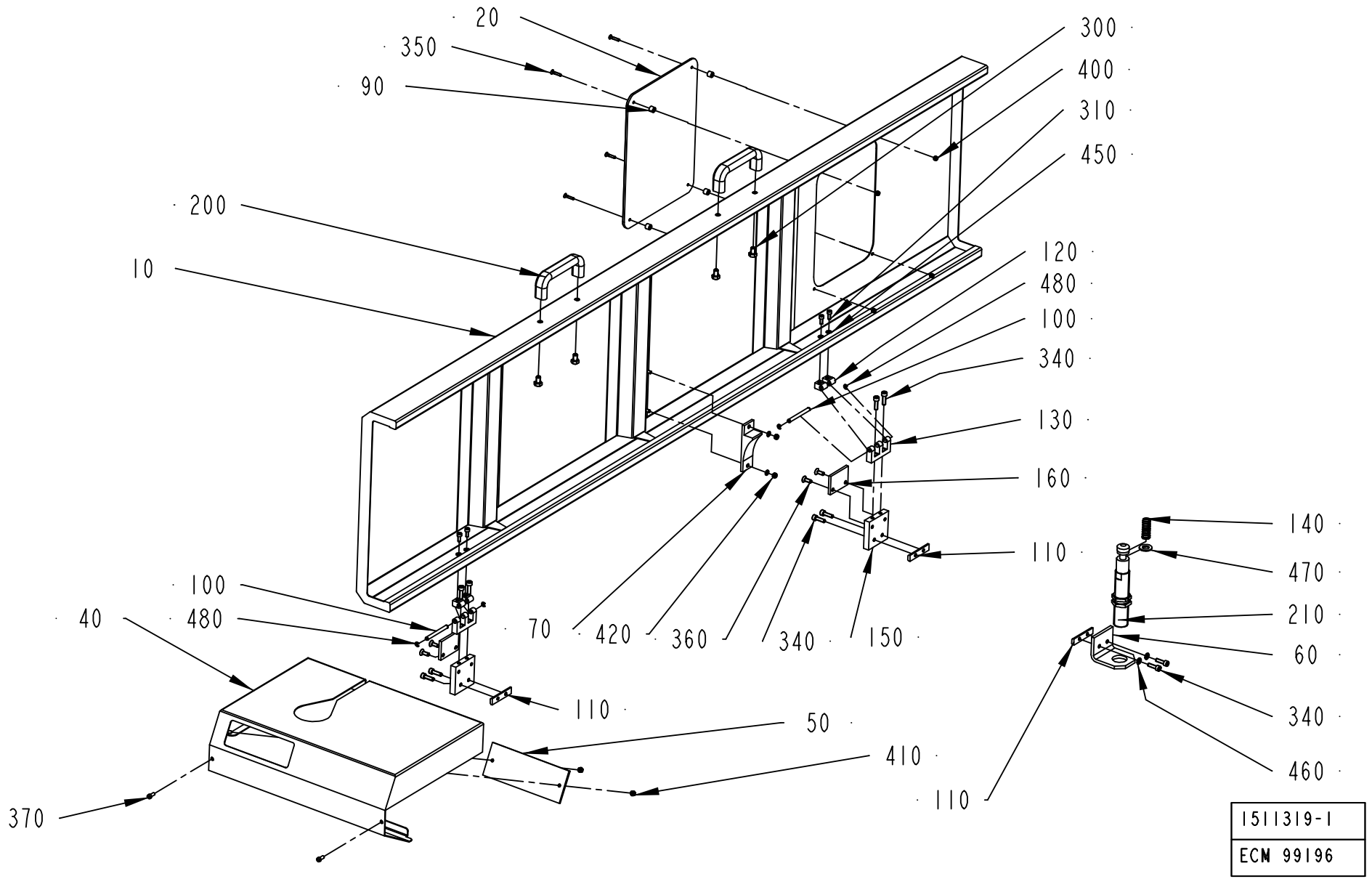
20
350
90
200
10
300
400
310
450
120
480
100
340
130
160
110
140
470
210
60
340
460
110
100
480
40
70
420
360
340
150
110
50
410
370
1511319-1
ECM 99196

ECM: 114179 - 20020930
Group number: 1511319-0100
Assembly Drawing: 1511319-1_1_AB

Pos	Part No	SP	UN	Qty	Description	Page No
-						
010	1499486-0000	-		1	TOP COVER	
020	1511317-0000	-		1	PANE	
040	1498780-0000	-		1	BACK COVER	
050	1511311-0000	-		1	GLASS PANE	
060	1511314-0000	-		1	DAMPER BRACKET	
070	1511315-0000	-		1	SLIDE BLOCK	
090	1511318-0000	-		4	SPACER	
100	1499512-0000	-		2	PIN	
110	1499513-0000	-		3	NUT PLATE	
120	1035794-0000	-		4	BLOCKING PIECE	
130	1499514-0000	-		2	E-HINGE	
140	1511324-0000	B		1	SPRING	
150	2519647-0000	-		2	BRACKET	
160	2519646-0000	-		2	PLATE	
200	90017-0022	-		2	HANDLE, NO. EL-037311	
210	90347-0024	B		1	SHOCK ABSORBER, 370-120-400	
300	312105-0447	-		4	SCREW M6S ISO 4017 M8X12 A480	
310	312115-0327	-		4	SCREW ISO4762 M5X12 A4	
340	312115-0370	-		10	SCREW ISO4762 M6X20 A4	
350	312155-0295	-		4	SCREW EN 10642 MF6S M4X20 A480	
360	312155-0368	-		4	SCREW EN 10642 MF6S M6X16 A480	
370	312125-0327	-		2	SCREW PAN HEAD MCS M5X12 SS	
400	312605-0312	-		4	HEXAGON NUT, M6M M4 A280	
410	312605-0314	-		2	HEXAGON NUT, M6M M5 A280	
420	312812-0314	-		2	HEXAGON NUT, NY-LOCK M5 A480	
450	315105-0146	-		6	WASHER ISO 7089-5-200 HV-A4	
460	315105-0153	-		2	WASHER ISO 7089-6-200 HV-A4	
470	315105-0178	-		1	WASHER ISO 7089-12-200 HV-A4	
480	315755-0106	-		4	LOCKING WASHER 4	

Pos	Part No	SP	UN	Qty	Description	Page No

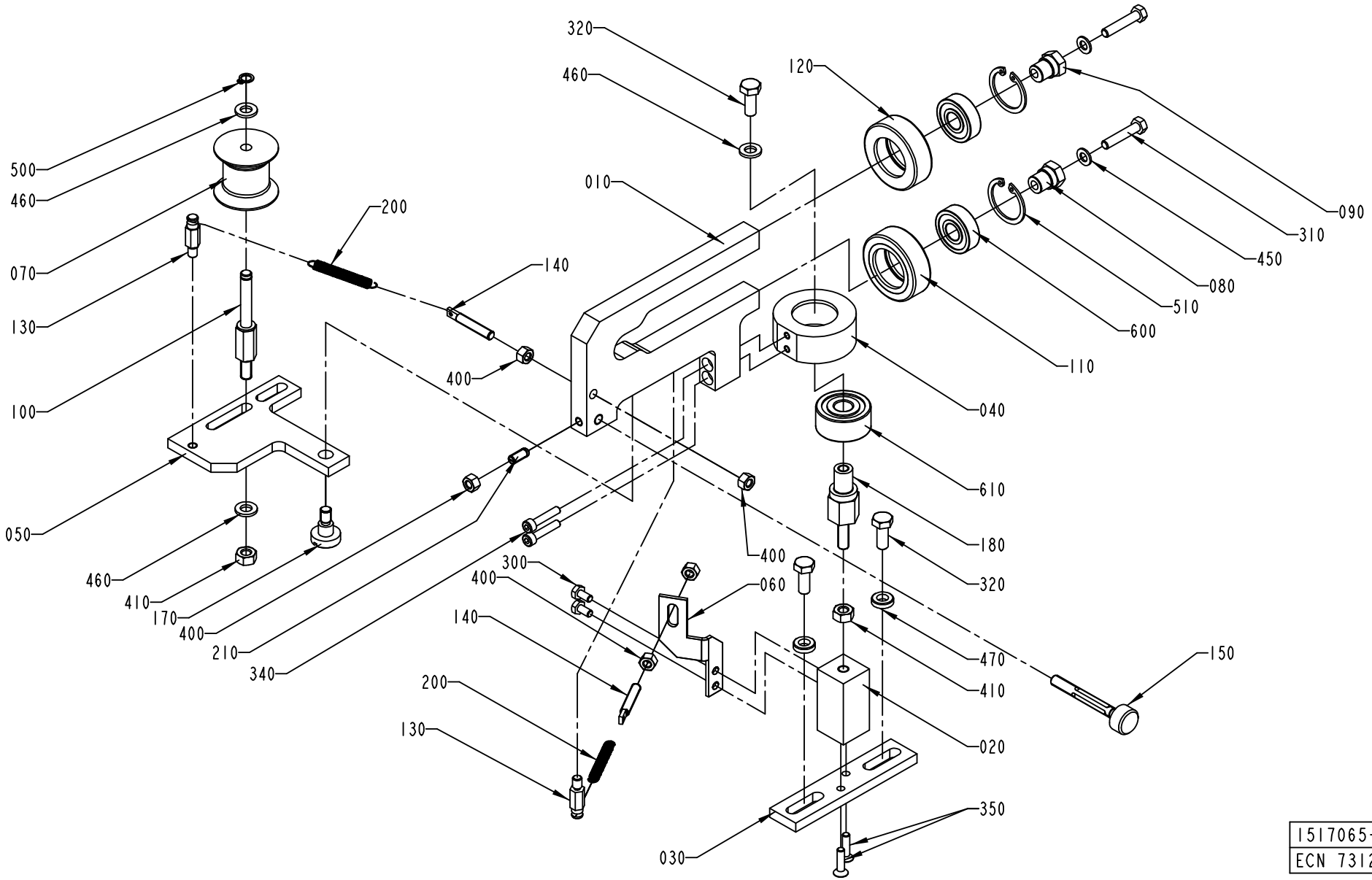

1517065-1
ECN 73123

ECM: 114180 - 20020930
Group number: 1517065-0100
Assembly Drawing: 1517065-1_1_AA

Pos	Part No	SP	UN	Qty	Description	Page No
-						
010	1517071-0000	-		1	BOW CLAMP	
020	1517068-0000	-		1	PILLAR	
030	1517069-0000	-		1	CLAMP PLATE	
040	1517070-0000	-		1	BEARING SEAT	
050	1517066-0000	B		1	PIVOT ARM	
060	1517067-0000	-		1	SPRING HOLDER	
070	979582-0000	A		1	ROLLER	
080	1334256-0000	B		1	SHAFT	
090	1346612-0000	B		1	SHAFT	
100	1538107-0000	B		1	SHAFT	
110	583737-0000	A		1	ROLLER	
120	583738-0000	A		1	ROLLER	
130	583735-0000	-		2	PIN	
140	583749-0000	-		2	PIN	
150	589432-0000	B		1	SCREW	
170	556541-0000	B		1	SCREW	
180	1517753-0000	B		1	ADJUSTING NUT	
200	90335-0216	A		2	TENSION SPRING 40910, 0,5X5,5X27,7	
210	90287-0148	-		1	SCREW SPRINGLOAD. SLOTTED HEAD M5X12	
300	312105-0287	-		2	SCREW M6S ISO4017 M4X8 A480	
310	312105-0333	-		2	SCREW M6S ISO 4017 M5X25 A480	
320	312105-0368	-		3	SCREW M6S M6X16 A280	
340	312115-0295	-		2	SCREW ISO4762 M4X20 A4	
350	312155-0293	-		2	SCREW EN 10642 MF6S M4X16 A480	
400	312605-0314	-		5	HEXAGON NUT, M6M M5 A280	
410	312605-0316	-		2	HEXAGON NUT, M6M M6 A280	
450	315105-0146	-		2	WASHER ISO 7089-5-200 HV-A4	
460	315105-0153	-		3	WASHER ISO 7089-6-200 HV-A4	
470	315115-0153	-		2	WASHER PLAIN, TBRB 6,4/12 H=3	
500	315751-0103	-		1	RETAIN. RING, 6	
510	315752-0120	-		2	RETAIN. RING, 26	
600	321308-0200	A		2	BALL BEARING, 2 SEALS, 10X26X8 MM	
610	321330-0100	A		1	ANG. BALL BEAR, 10X30X14 MM	

Pos	Part No	SP	UN	Qty	Description	Page No

Machine Type | Group Description | Used-In | Group Number | Page No

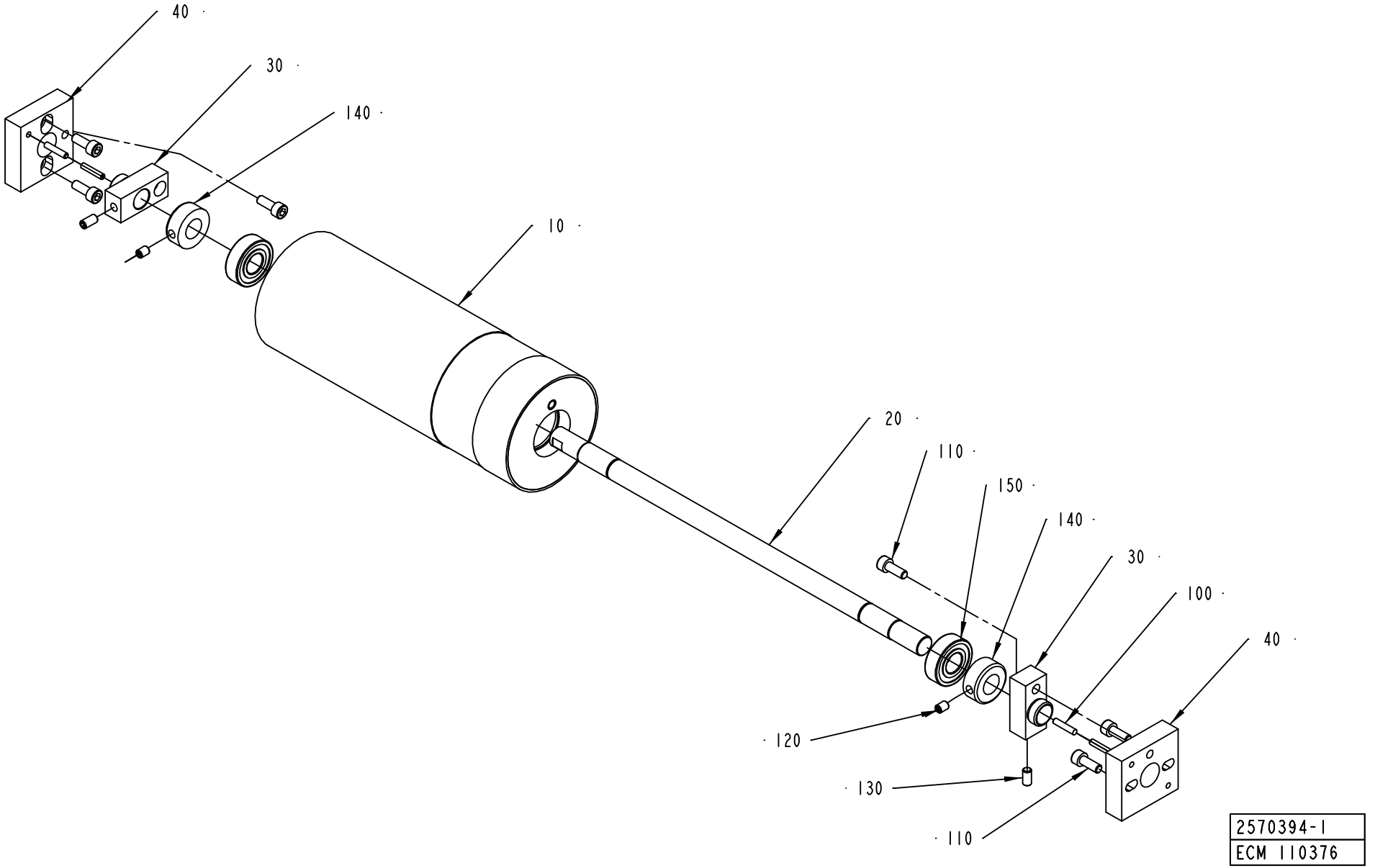
40
30
140
10
20
110
150
140
30
100
40
120
130
110
2570394-1
ECM 110376

ECM: 117146 - 20030113
Group number: 2570394-0100
Assembly Drawing: 2570394-1_1_AA

Pos	Part No	SP	UN	Qty	Description	Page No
-						
010	2570393-0000	-		1	BENDING ROLLER	
020	583683-0000	-		1	SHAFT	
030	583684-0000	-		2	AXLE SUPPORT	
040	583685-0000	-		2	BEARING SEAT	
100	311103-0272	-		4	PARALLELL PIN, M6, 4X20 MM	
110	312115-0368	-		6	SCREW ISO4762 M6X16 A4	
120	312318-0362	-		2	SCREW ISO4029 M6X8 A4	
130	312318-0366	-		2	SCREW ISO4029 M6X12 A4	
140	315742-0111	-		2	COLLAR, 15/30, H=12	
150	321313-0102	A		2	BALL BEARING, 2 SEALS, 15X35X11 MM	

Pos	Part No	SP	UN	Qty	Description	Page No

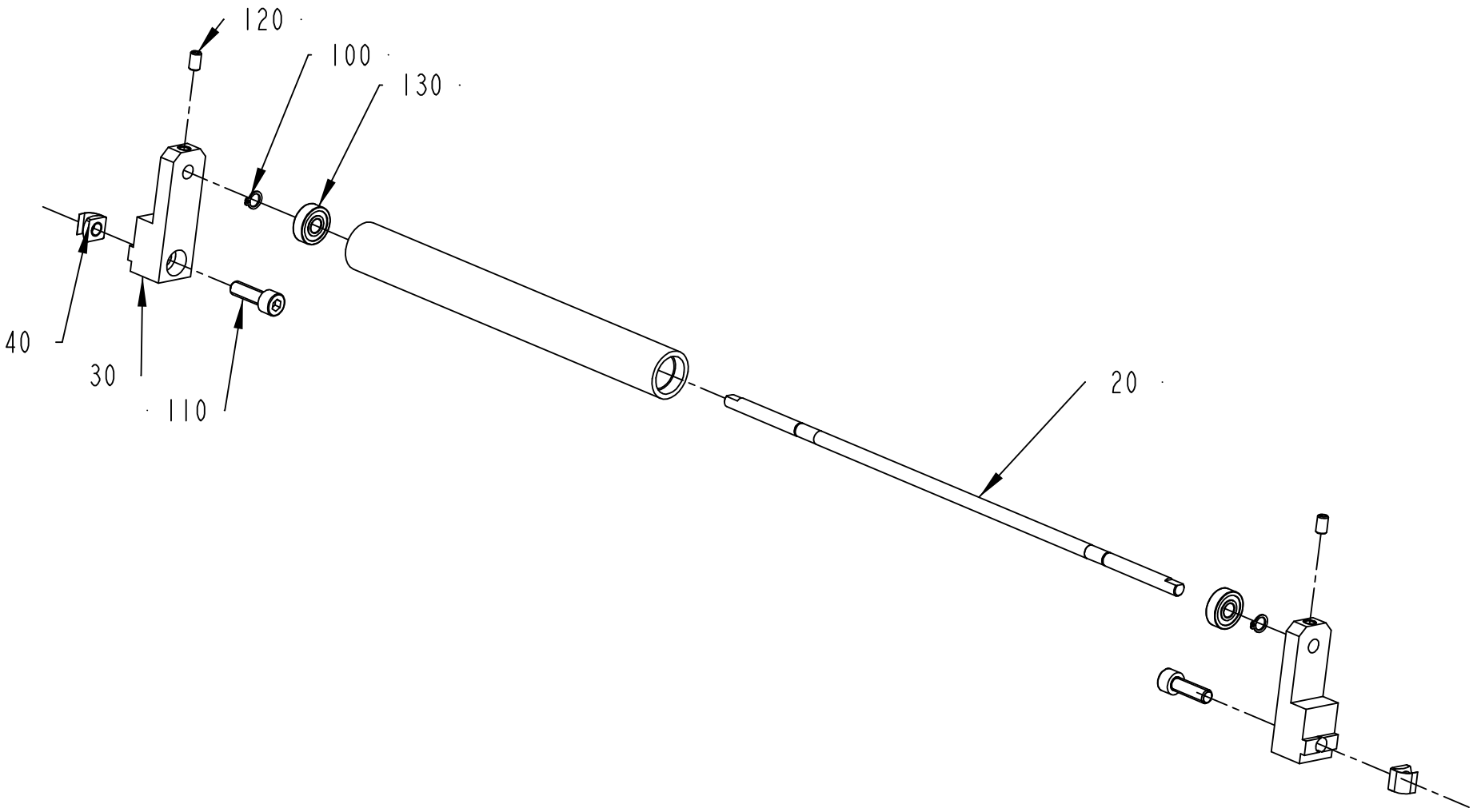

1498756-1
ECM 99196

ECM: 117145 - 20030113
Group number: 1498756-0100
Assembly Drawing: 1498756-1_1_AB

Pos	Part No	SP	UN	Qty	Description	Page No
-						
010	1511307-0000	-		1	ROLLER	
020	1499517-0000	-		1	SHAFT	
030	2506480-0000	-		2	HOLDER	
040	1511310-0000	-		2	NUT	
050	2570392-0000	-		2	RETAINING RING	
110	312115-0453	-		2	SCREW ISO4762 M8X25 A4	
120	312318-0364	-		2	SCREW ISO4029 M6X10 A4	
130	321302-0298	A		2	BALL BEARING, 2 SEALS, 8X22X7 MM	
140	312311-0285	-		2	SCREW ISO4028 M4X6 FZB	

Pos	Part No	SP	UN	Qty	Description	Page No

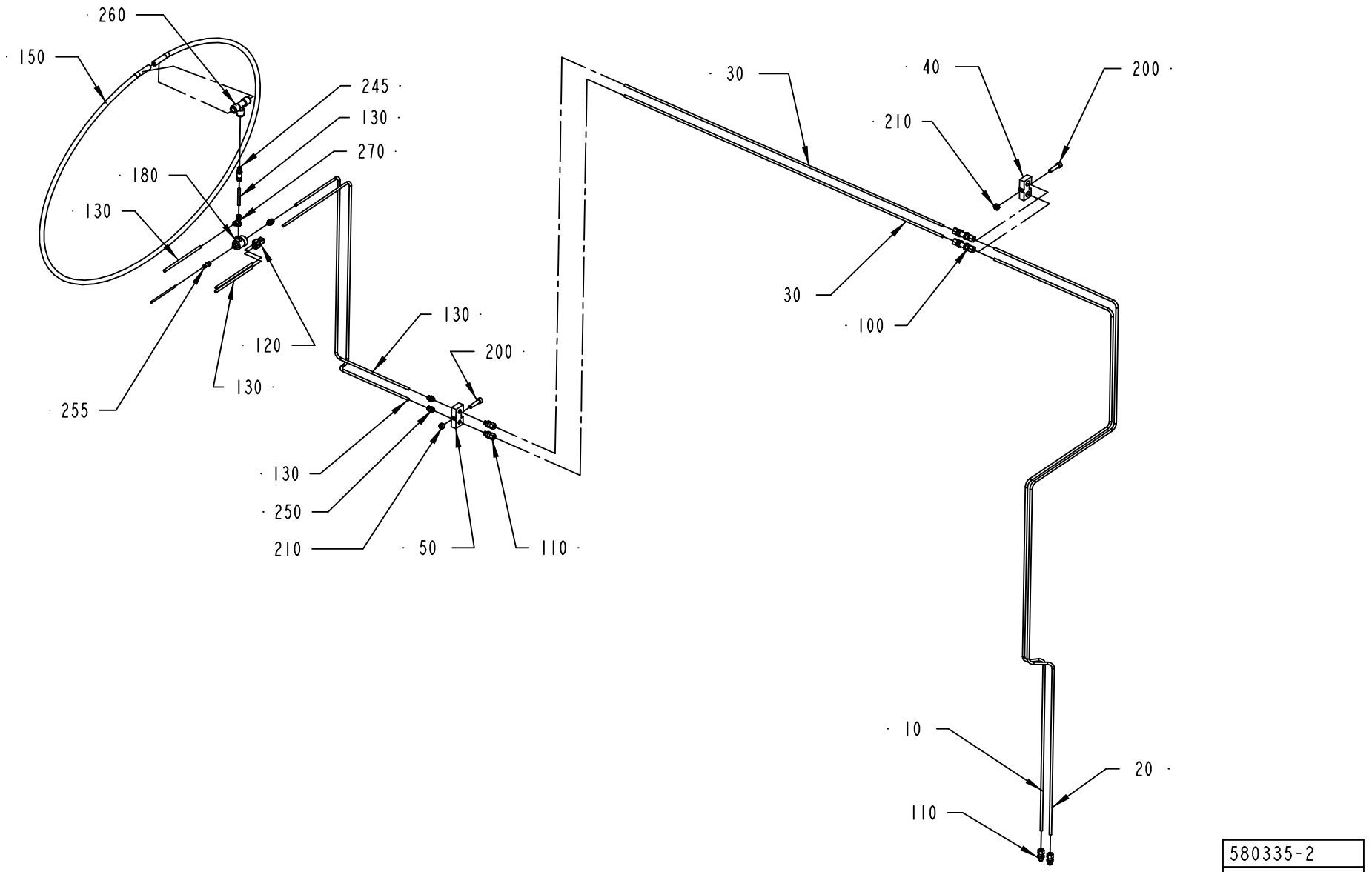

580335-2
ECM 99196

ECM: 116927 - 20030113
Group number: 580335-0200
Assembly Drawing: 580335-2_1_AB

Pos	Part No	SP	UN	Qty	Description	Page No
-						
010	1511460-0000	-		1	PIPE 1050	
020	1511461-0000	-		1	PIPE 1051	
030	1511462-0000	-		2	STRAIGHT PIPE	
040	1511463-0000	-		1	PIPE HOLDER	
050	1511464-0000	-		1	PIPE HOLDER	
100	90030-0066	-		2	CONN. BULKHEAD SV 6-L/SY	
110	90030-0184	-		2	CONN. STR. GA-6-G1/8	
120	90055-0100	-		1	Y-CONNECTION, 6-6	
130	90166-0081	-	M	4	TUBE 6 MM PA BLUE	
140	90166-0095	-	M	1	TUBE 4 MM PA BLUE	
150	90166-0068	-	MM	2500	TUBE 12 MM PA BLUE	
180	90235-0259	A		1	VALVE	
200	312115-0457	-		2	SCREW ISO4762 M8X35 A4	
210	312605-0318	-		2	HEXAGON NUT, M6M M8 A280	
245	342716-0210	-		1	REDUCER 6-12	
250	342722-0202	-		3	PIPE COUPLING 1/8" D=6MM	
255	342722-0199	-		1	STRAIGHT COUPLING	
260	342748-0109	-		1	T-CONNECTION 12MM	
270	342772-0113	-		1	ELBOW FITTING, 6 - G1/8	
300	359000-0400	-		14	MARKING CO2/4"0"	
310	359000-0401	-		14	MARKING COLLAR 2/4 "1" YELLOW	
320	359000-0405	-		14	MARKING CO2/4"5"	
330	359000-0404	-		7	MARKING COLLAR PA2/4 "4" YELLOW	
340	359000-0402	-		7	MARKING COLLAR 2/4 "2" YELLOW	

Pos	Part No	SP	UN	Qty	Description	Page No

Machine Type | Group Description | Used-In | Group Number | Page No

Tetra Pak

SPC
Spare Parts Catalogue

This page is intentionally left blank.

ECM: 104338 - 20030113
Group number: 648156-0100
Assembly Drawing:

Pos	Part No	SP	UN	Qty	Description	Page No
-						
010	A1549295-0100	-		1	MACHINE BODY	**539**
020	A1549296-0100	-		1	COVER PLATE	**543, 545**
030	A1549305-0100	-		1	COVER	**547**
040	A1549300-0100	-		1	PAPER MAGAZINE	**549, 551**
050	A579241-0200	-		1	DATING UNIT	**555**
060	A2501836-0100	-		1	SPLICING DEVICE	**587**
070	A979381-0100	-		1	PAPER REEL HOLDER	**599**
080	A1549480-0100	-		1	ELECTRIC EQUIPMENT	**601**

Pos	Part No	SP	UN	Qty	Description	Page No

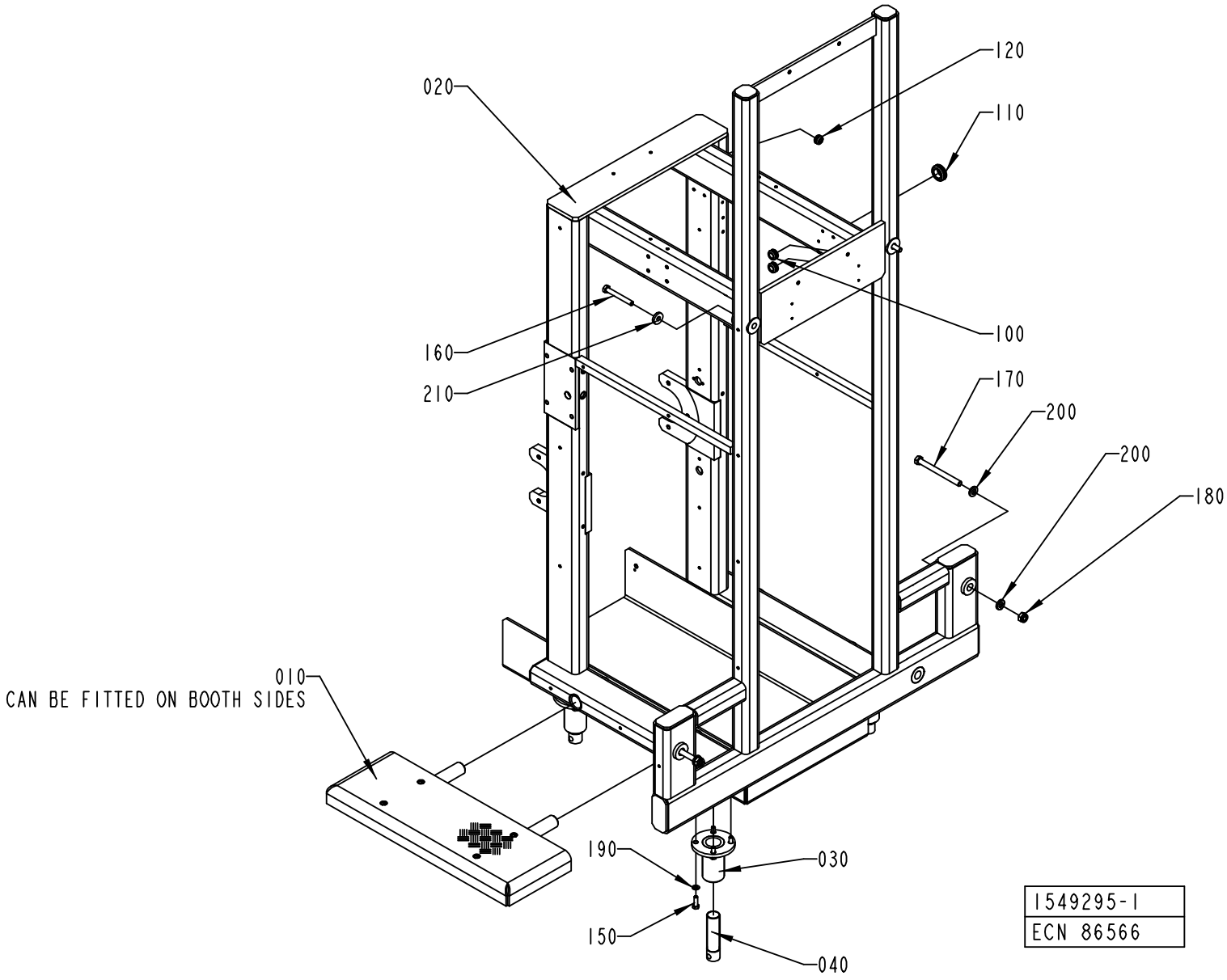
020
120
110
100
160
210
170
200
200
180
010
CAN BE FITTED ON BOOTH SIDES
190
030
150
040
1549295-1
ECN 86566

ECM: 91373 - 20020111
Group number: 1549295-0100
Assembly Drawing: 1549295-1_1_AA

Pos	Part No	SP	UN	Qty	Description	Page No
-						
010	A1558320-0100	-		1	PLATFORM	**541**
020	1549294-0000	-		1	MACHINE BODY	
030	469095-0000	-		4	HOLDER	
040	469096-0000	-		4	LEG	
100	90458-1227	-		2	LEAD-IN, BUSHING, DA 130/170/50	
110	90458-1228	-		1	LEAD-IN, BUSHING, DA 230/300/60	
120	90458-1229	-		1	LEAD-IN, BUSHING, DA 75/110/50	
150	312105-0453	-		16	SCREW M6S ISO 4017 M8X25 A480	
160	312105-0507	-		2	SCREW M6S ISO 4014 M10X80 A480	
170	1367022-0000	-		2	ALIGNMENT SCREW	
180	312812-0322	-		2	HEXAGON NUT, NY-LOCK M12 A480	
190	315105-0165	-		16	WASHER ISO 7089-8-200 HV-A4	
200	315115-0178	-		4	WASHER PLAIN, TBRB 13/24 H=4	
210	315125-0173	-		2	WASHER TBRSB 10,5X28X6 A4	
220	315105-0191	-		2	WASHER PLAIN, BRB, 20/36 H=3	
230	312605-0318	-		2	HEXAGON NUT, M6M M8 A280	
240	90287-0112	-		2	SCREW SPRINGLOAD. SLOTTED HEAD M8X16	

Pos	Part No	SP	UN	Qty	Description	Page No

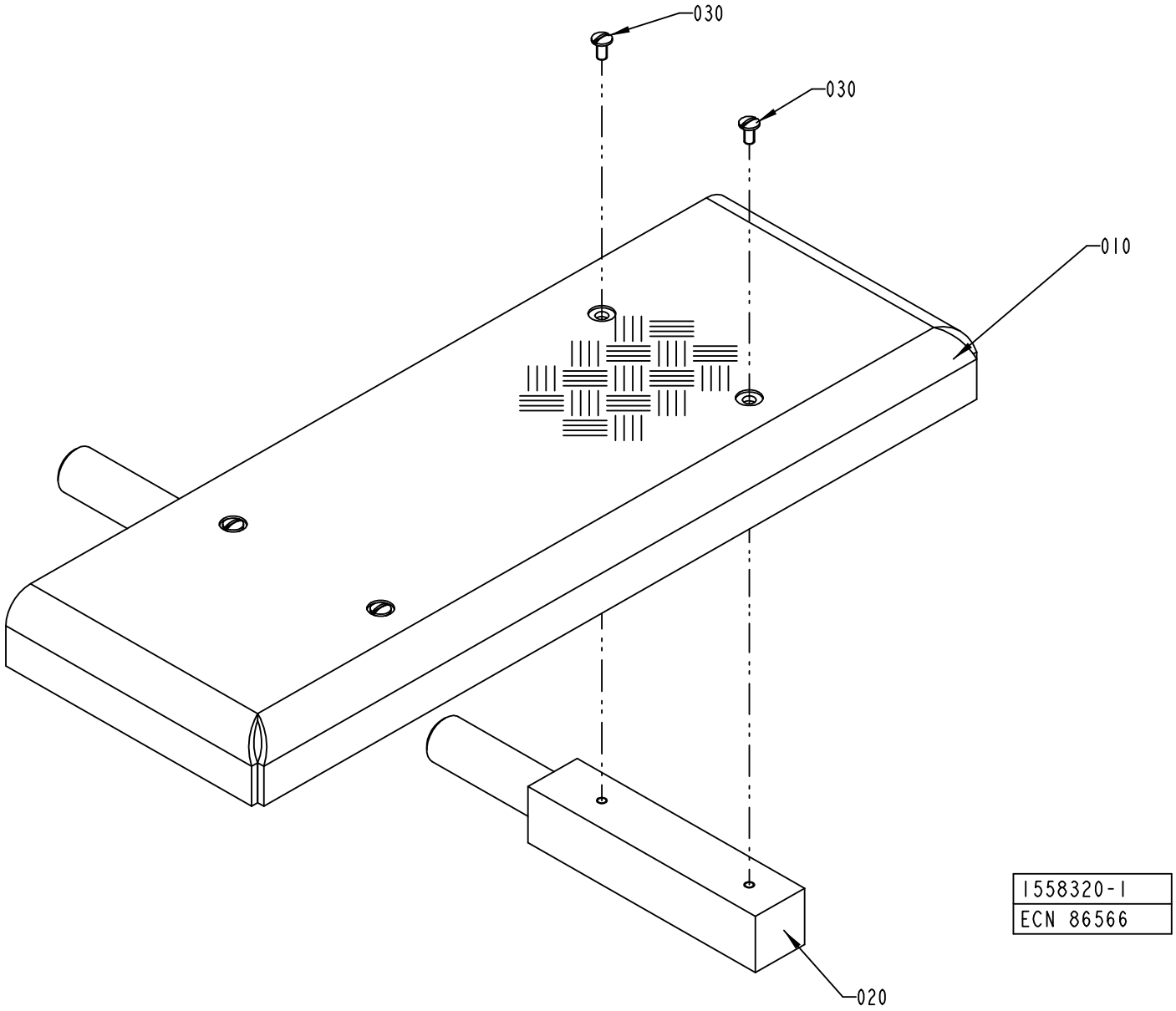
030
030
010
020
1558320-1
ECN 86566

ECM: 86574 - 20020111
Group number: 1558320-0100
Assembly Drawing: 1558320-1_1_AA

Pos	Part No	SP	UN	Qty	Description	Page No
-						
010	1558321-0000	-		1	COVER PLATE	
020	1558322-0000	-		2	JOINT BOLT	
030	90287-0075	-		4	SCREW SLOT. PAN HEAD LKCS M6X12	

Pos	Part No	SP	UN	Qty	Description	Page No

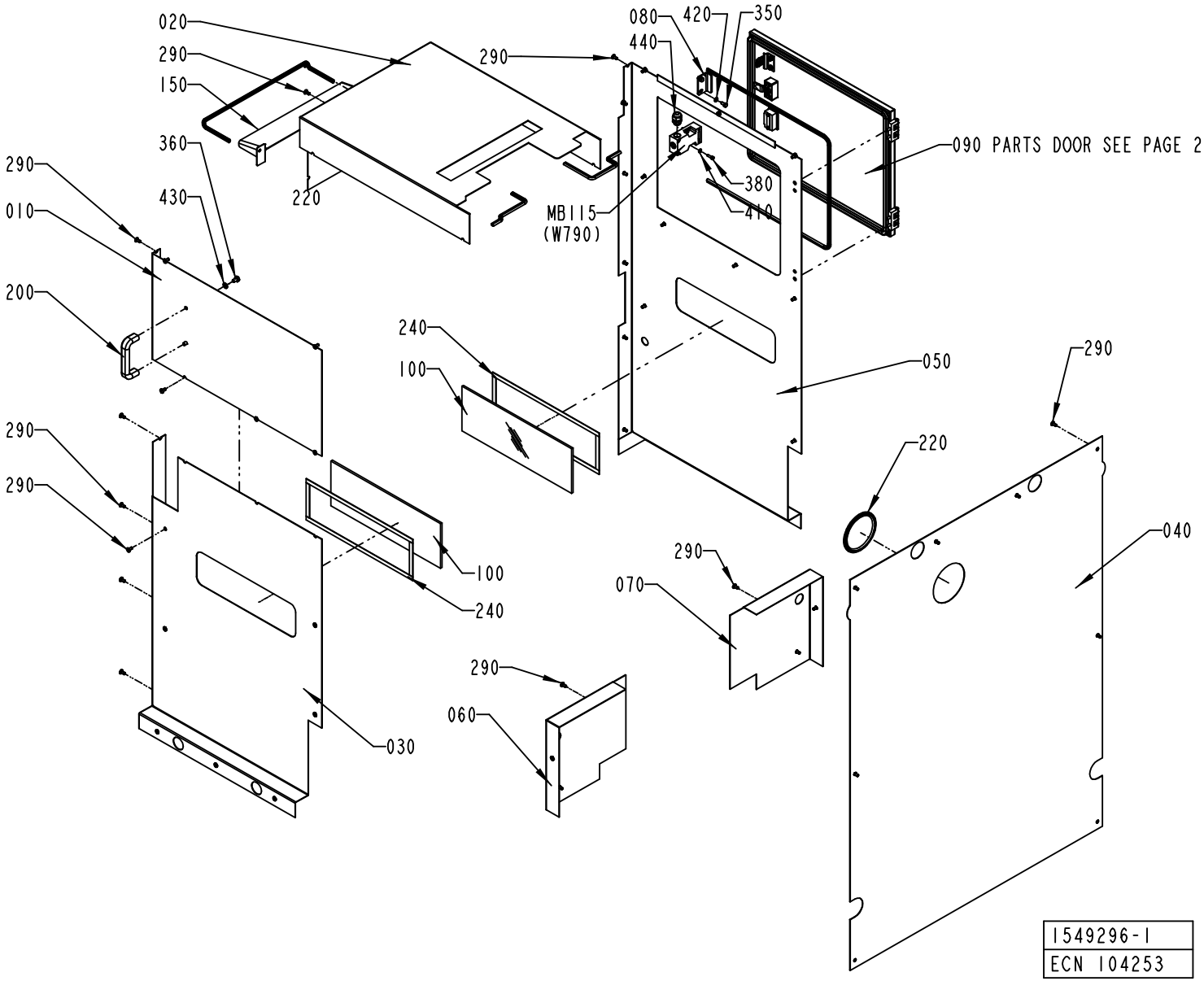
020
290
150
360
430
220
290
080
420
350
440
290
090 PARTS DOOR SEE PAGE 2
380
410
MB115
(W790)
290
010
200
240
100
050
290
220
040
290
290
100
240
290
070
290
060
030
1549296-1
ECN 104253

ECM: 104330 - 20030113
Group number: 1549296-0100
Assembly Drawing: 1549296-1_1_AB

This list covers pages from 542 to 545

Pos	Part No	SP	UN	Qty	Description	Page No
-						
010	1549299-0000	-		1	PLATE	
020	1549483-0000	-		1	PLATE	
030	1549484-0000	-		1	PLATE	
040	1549485-0000	-		1	PLATE	
050	1549486-0000	-		1	PLATE	
060	1549487-0000	-		1	PLATE	
070	1549488-0000	-		1	PLATE	
080	1549489-0000	-		1	BRACKET	
090	1549490-0000	-		1	DOOR	
100	2500050-0000	-		2	GLASS	
110	975917-0000	-		1	KEY FOR SAFETY SWITCH 90044-103	
120	988685-0000	-		2	PIN	
130	1035792-0000	-		2	E-HINGE	
140	1035794-0000	-		4	BLOCKING PIECE	
150	2551088-0000	-		1	COVER	
200	90017-0022	-		1	HANDLE, NO. EL-037311	
220	90143-0060	-	MM	7000	EDGE STRIP 9,5X6,3MM BLACK PVC	
230	90143-0068	-	M	1	RUBBERSTRIP EMKA 1011-06	
240	90144-0072	-	M	2	TAPE SCOTCH VHBS 4945 W=12,7MM	
250	90237-0128	-		1	LOCK CYLINDER, 1109-U3	
260	90237-0150	-		1	TURNING HANDLE, NO. 1125-U190-0A	
270	90237-0155	-		1	LOCK ADAPTER, 1121-U40	
280	90237-0156	-		1	LOCK BOLT, 1000-16	
290	90287-0075	-		45	SCREW SLOT. PAN HEAD LKCS M6X12	
300	90237-0154	-		1	LOCK HOUSING, 1121-U60-0C	
350	312105-0366	-		2	SCREW M6S M6X12 A280	
360	312105-0447	-		2	SCREW M6S ISO 4017 M8X12 A480	
370	312115-0327	-		4	SCREW ISO4762 M5X12 A4	
380	312115-0329	-		2	SCREW ISO4762 M5X16 A4	
390	312115-0368	-		4	SCREW ISO4762 M6X16 A4	
400	312605-0316	-		2	HEXAGON NUT, M6M M6 A280	
410	315105-0146	-		6	WASHER ISO 7089-5-200 HV-A4	
420	315105-0153	-		4	WASHER ISO 7089-6-200 HV-A4	
430	315105-0165	-		2	WASHER ISO 7089-8-200 HV-A4	
440	352103-0106	-		1	CABLE GLAND, ST 11, PR18,6/PG11	
450	312105-0293	-		3	SCREW M6S ISO 4017 M4X16 A480	
460	315105-0136	-		3	WASHER ISO 7089-4-200 HV-A4	
470	90243-0133	-		1	CONTAINER	
480	90287-0316	-		5	SCREW	
MB115	90044-0139	B		1	KEY SAF.SW. AZ16-02 ZVR K-2254	

Pos	Part No	SP	UN	Qty	Description	Page No

Machine Type	Group Description	Used-In	Group Number	Page No

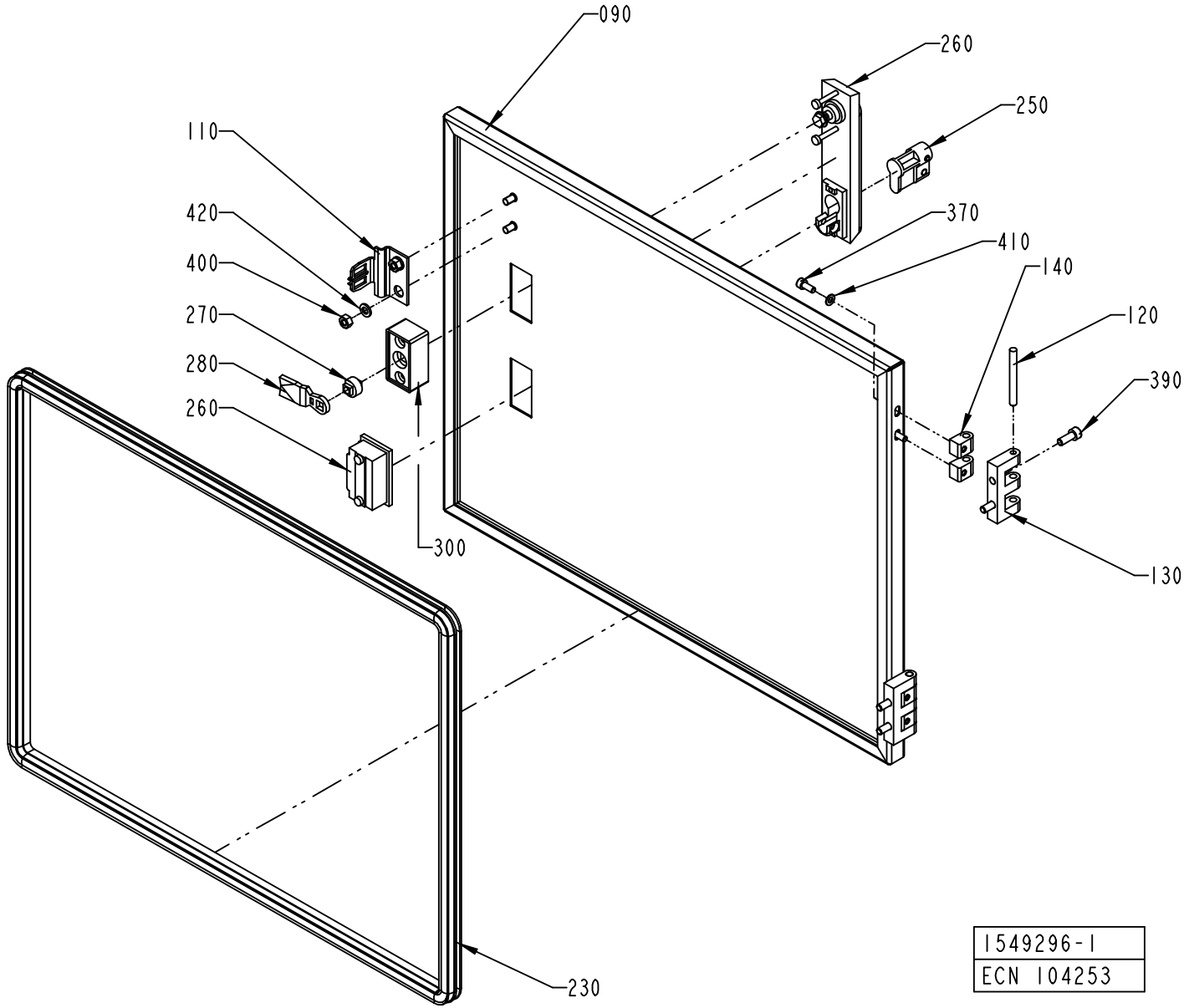
090
260
250
110
420
400
370
410
140
270
120
280
390
260
300
130
230
1549296-1
ECN 104253

ECM: 104330 - 20030113
Group number: 1549296-0100
Assembly Drawing: 1549296-1_2_AB

This list covers pages from 542 to 545

Pos	Part No	SP	UN	Qty	Description	Page No
-						
010	1549299-0000	-		1	PLATE	
020	1549483-0000	-		1	PLATE	
030	1549484-0000	-		1	PLATE	
040	1549485-0000	-		1	PLATE	
050	1549486-0000	-		1	PLATE	
060	1549487-0000	-		1	PLATE	
070	1549488-0000	-		1	PLATE	
080	1549489-0000	-		1	BRACKET	
090	1549490-0000	-		1	DOOR	
100	2500050-0000	-		2	GLASS	
110	975917-0000	-		1	KEY FOR SAFETY SWITCH 90044-103	
120	988685-0000	-		2	PIN	
130	1035792-0000	-		2	E-HINGE	
140	1035794-0000	-		4	BLOCKING PIECE	
150	2551088-0000	-		1	COVER	
200	90017-0022	-		1	HANDLE, NO. EL-037311	
220	90143-0060	-	MM	7000	EDGE STRIP 9,5X6,3MM BLACK PVC	
230	90143-0068	-	M	1	RUBBERSTRIP EMKA 1011-06	
240	90144-0072	-	M	2	TAPE SCOTCH VHBS 4945 W=12,7MM	
250	90237-0128	-		1	LOCK CYLINDER, 1109-U3	
260	90237-0150	-		1	TURNING HANDLE, NO. 1125-U190-0A	
270	90237-0155	-		1	LOCK ADAPTER, 1121-U40	
280	90237-0156	-		1	LOCK BOLT, 1000-16	
290	90287-0075	-		45	SCREW SLOT. PAN HEAD LKCS M6X12	
300	90237-0154	-		1	LOCK HOUSING, 1121-U60-0C	
350	312105-0366	-		2	SCREW M6S M6X12 A280	
360	312105-0447	-		2	SCREW M6S ISO 4017 M8X12 A480	
370	312115-0327	-		4	SCREW ISO4762 M5X12 A4	
380	312115-0329	-		2	SCREW ISO4762 M5X16 A4	
390	312115-0368	-		4	SCREW ISO4762 M6X16 A4	
400	312605-0316	-		2	HEXAGON NUT, M6M M6 A280	
410	315105-0146	-		6	WASHER ISO 7089-5-200 HV-A4	
420	315105-0153	-		4	WASHER ISO 7089-6-200 HV-A4	
430	315105-0165	-		2	WASHER ISO 7089-8-200 HV-A4	
440	352103-0106	-		1	CABLE GLAND, ST 11, PR18,6/PG11	
450	312105-0293	-		3	SCREW M6S ISO 4017 M4X16 A480	
460	315105-0136	-		3	WASHER ISO 7089-4-200 HV-A4	
470	90243-0133	-		1	CONTAINER	
480	90287-0316	-		5	SCREW	
MB115	90044-0139	B		1	KEY SAF.SW. AZ16-02 ZVR K-2254	

Pos	Part No	SP	UN	Qty	Description	Page No

Machine Type	Group Description	Used-In	Group Number	Page No

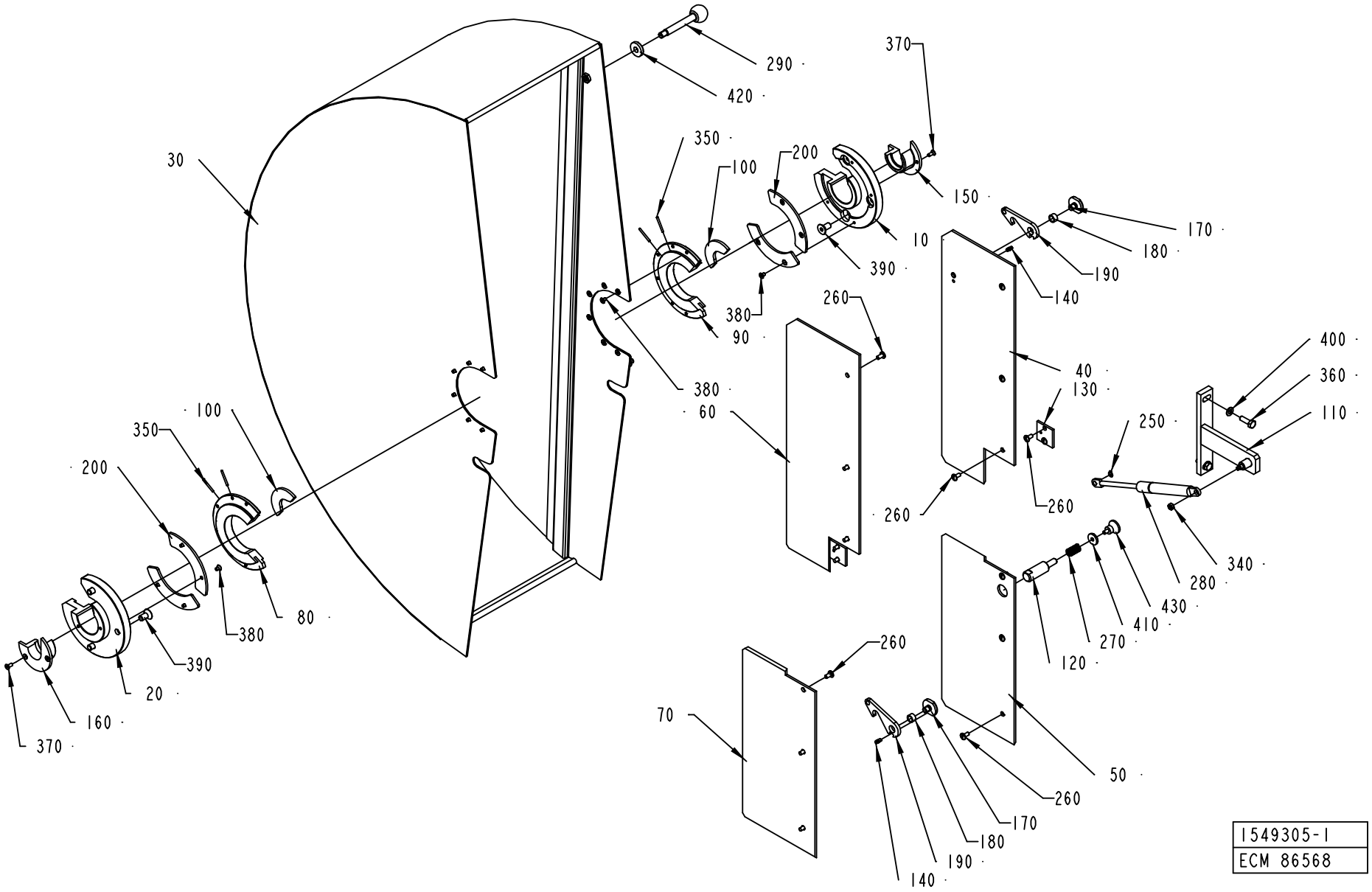
290
420
370
350
100
200
150
30
10
170
180
190
140
390
380
90
260
400
360
110
250
40
130
380
60
260
260
340
280
430
410
270
120
260
70
50
260
170
180
190
140
370
160
20
390
380
80
100
350
200
1549305-1
ECM 86568

ECM: 86576 - 20020111
Group number: 1549305-0100
Assembly Drawing: 1549305-1_1_AA

Pos	Part No	SP	UN	Qty	Description	Page No
-						
010	1549297-0000	-		1	REEL HOLDER	
020	1549298-0000	-		1	REEL HOLDER	
030	1549306-0000	-		1	COVER	
040	1549476-0000	-		1	PLATE	
050	1549477-0000	-		1	PLATE	
060	1549478-0000	-		1	PLATE	
070	1549479-0000	-		1	PLATE	
080	1549481-0000	-		1	REEL HOLDER	
090	1549482-0000	-		1	REEL HOLDER	
100	1549491-0000	-		2	REEL HOLDER	
110	1549492-0000	-		1	HOLDER	
120	1558313-0000	-		1	SHAFT	
130	1558314-0000	-		2	BRACKET	
140	1013-0000	-		2	SHAFT	
150	440252-0000	-		1	SLEEVE	
160	440253-0000	-		1	SLEEVE	
170	440271-0000	-		2	SCREW	
180	457358-0000	-		2	SLEEVE	
190	476117-0000	-		2	CATCH	
200	2508118-0000	-		4	FIXING RING	
250	90141-0015	-		1	RETAIN. RING, 8	
260	90287-0075	-		16	SCREW SLOT. PAN HEAD LKCS M6X12	
270	90335-0036	-		1	COMP. SPRING 22450, 1,6X14,1X24	
280	90347-0108	-		1	GAS SPRING NO. 03-08-100-084174	
290	90458-1226	-		1	HANDLE, NO. GN 310-12-100-A-NI	
340	312605-0316	-		8	HEXAGON NUT, M6M M6 A280	
350	311103-0242	-		4	PARALLELL PIN, M6, 3X30 MM	
360	312105-0453	-		4	SCREW M6S ISO 4017 M8X25 A480	
370	312155-0327	-		4	SCREW EN 10642 MF6S M5X12 A480	
380	312155-0323	-		20	SCREW EN 10642 MF6S M5X8 A480	
390	312155-0491	-		6	SCREW EN 10642 MF6S M10X20 A480	
400	315105-0165	-		2	WASHER ISO 7089-8-200 HV-A4	
410	315125-0153	-		1	WASHER TBRSB 6,4X22X4 A4	
420	315125-0173	-		1	WASHER TBRSB 10,5X28X6 A4	
430	318871-0104	-		1	KNOB CIRCULAR, EXT THREAD, NO. 8302-6118	

Pos	Part No	SP	UN	Qty	Description	Page No

Machine Type	Group Description	Used-In	Group Number	Page No

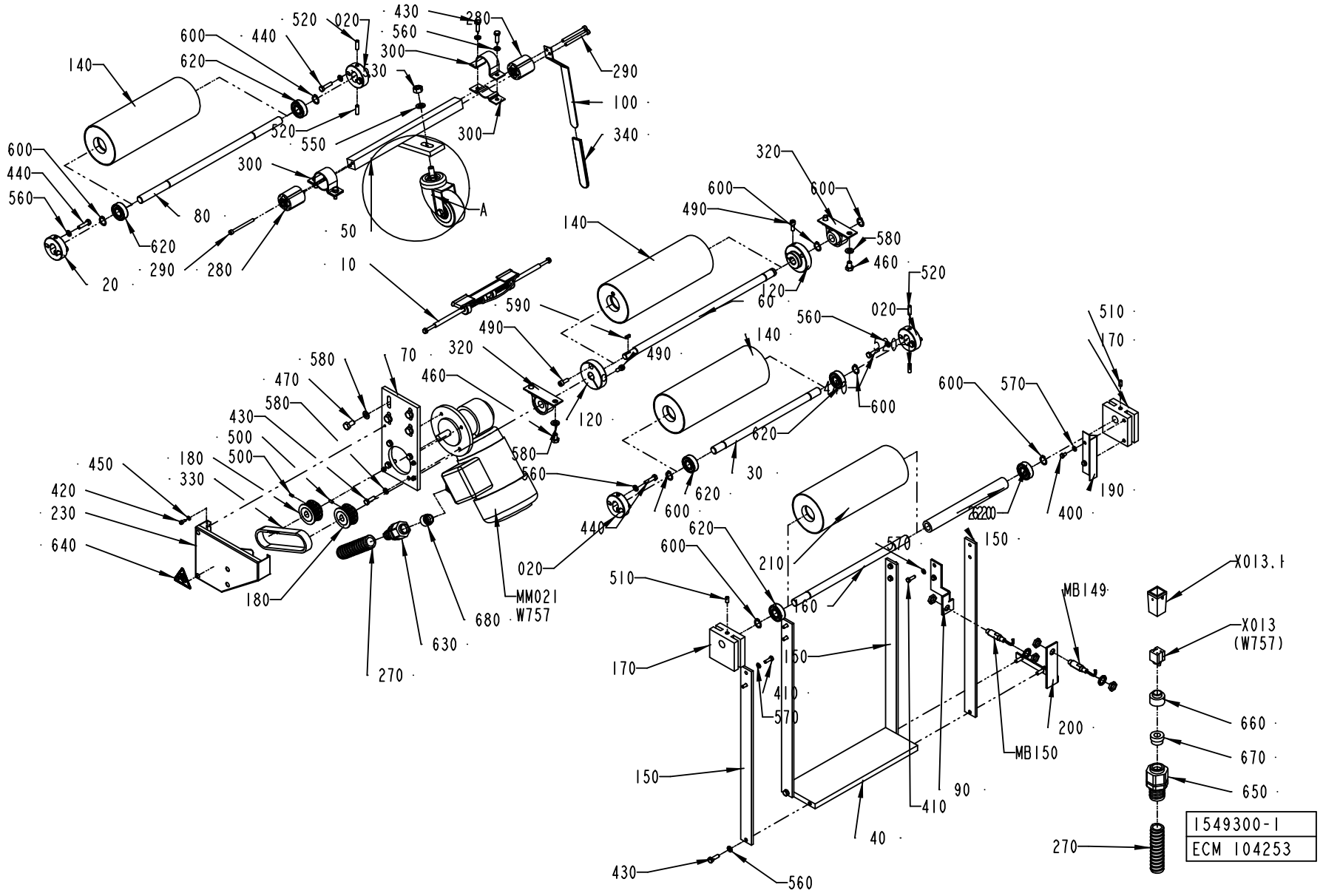
140
600
620
520
020
440
430
560
300
280
530
290
100
340
550
A
80
50
10
20
290
280
620
590
490
320
600
580
460
120
60
520
510
170
570
190
400
150
210
160
MB149
X013.1
X013
(W757)
660
670
650
200
MB150
410
90
40
70
470
430
500
180
330
450
420
230
640
680
630
270
MM021
W757
1549300-1
ECM 104253

ECM: 112108 - 20030113
Group number: 1549300-0100
Assembly Drawing: 1549300-1_1_AB

This list covers pages from 548 to 551

Pos	Part No	SP	UN	Qty	Description	Page No
-						
010	A577800-0200	-		1	PAPER GUIDE	**553**
020	1549301-0000	-		4	BEARING	
030	1549302-0000	-		1	SHAFT	
040	1549303-0000	-		1	PLATE	
050	1549304-0000	-		1	ARM	
060	2501613-0000	-		1	SHAFT	
070	1549307-0000	-		1	BRACKET	
080	1549474-0000	-		1	SHAFT	
090	1549475-0000	-		1	BRACKET	
100	1549493-0000	-		1	HANDSPIKE	
110	1558319-0000	-		2	BUSHING	
120	2501362-0000	-		2	CLAMP RING	
130	266710-0000	A		1	USE NEW PART 2555116 WHEEL	
140	574932-0000	-		3	BENDING ROLLER	
150	2525340-0000	-		4	BRACKET	
160	574937-0000	-		1	SHAFT	
170	574940-0000	-		2	BLOCKING PIECE	
180	574945-0000	-		2	TOOTHED PULLY	
190	574946-0000	-		1	FLAG	
200	576274-0000	-		1	BRACKET	
210	979555-0000	-		1	WEB TENSION ROLLER	
220	979946-0000	-		1	STEEL TUBE	
230	2509543-0000	-		1	PROTECTION	
270	90152-0051	-	M	3	SPIRAL CONDUIT, 25X18, UL 1816	
280	90458-1240	B		2	RUBBERSPRING DK-A 15X40	
290	90458-0058	-		4	SCREW M5X60 A280	
300	90458-1230	B		2	CLAMPING ELEMENT, DI=36 MM	
310	90458-1231	-		1	FORK HOLDER 913588/04	
320	90458-1232	-		2	BEARING BRACKET AY15	
330	90458-1233	A		1	TIMING BELT AT10 340X16 MM	
340	90458-1234	-		1	PROTECTIVE CAP 2X20X1.2X100	
400	312101-0323	-		2	SCREW M6S M5X8 FZB	
410	312105-0329	-		8	SCREW M6S ISO 4017 M5X16 A480	
420	312115-0287	-		4	SCREW ISO4762 M4X8 A4	
430	312105-0370	-		12	SCREW M6S ISO 4017 M6X20 A480	
440	312105-0372	-		8	SCREW M6S ISO 4017 M6X25 A480	
450	315105-0136	-		4	WASHER ISO 7089-4-200 HV-A4	
460	312105-0447	-		4	SCREW M6S ISO 4017 M8X12 A480	
470	312105-0449	-		4	SCREW M6S ISO 4017 M8X16 A480	
480	312115-0495	-		1	SCREW ISO4762 M10X30 A4	
490	312115-0368	-		3	SCREW ISO4762 M6X16 A4	
500	312318-0287	-		2	SCREW ISO4029 M4X8 A4	
510	312318-0366	-		2	SCREW ISO4029 M6X12 A4	
520	312318-0370	-		8	SCREW ISO4029 M6X20 A4	
530	312605-0320	-		1	HEXAGON NUT, M6M M10 A280	
540	312625-0320	-		1	HEXAGON THIN NUT, EN 24035 ML6M M10 A4	
550	315105-0171	-		1	WASHER PLAIN, BRB, 10/18,H=2	
560	315105-0153	-		20	WASHER ISO 7089-6-200 HV-A4	
570	315105-0146	-		10	WASHER ISO 7089-5-200 HV-A4	
580	315105-0165	-		8	WASHER ISO 7089-8-200 HV-A4	
590	315705-0166	-		1	PARALLEL KEY W. ROUND ENDS 4X4X12 MM	
600	315751-0112	-		8	RETAIN. RING, 15	
610	321308-0202	A		2	BALL BEARING, 2 SEALS, 15X32X9 MM	
620	321313-0102	A		6	BALL BEARING, 2 SEALS, 15X35X11 MM	
630	353247-0008	-		2	GLAND, PG13,5, 15254P13S05UL16	
640	359705-0001	A		1	WARNING SIGN ISO, ENTAGLEMENT	
650	353243-0005	-		1	EXTENDED WITHOUT INSERT, PG16	
660	90089-0007	-		1	REDUCING SLEEVE, PR18,6/PR22,5	
670	353249-0013	-		1	INSERT, SINGEL HOLE, EK 154/13	
MB149	90458-0675	A		1	PROXIMITY SENSOR, E2EG-X5MB1-5M	
MB150	90458-0675	A		1	PROXIMITY SENSOR, E2EG-X5MB1-5M	
MM021	90069-0600	A		1	GEARS, WORM MOTOR ODM90-60KE5	
W757	90220-0104	-	M	3	SCR. CABLE 4X1,5MM2	
X013	90110-0295	-		1	CONNECTOR 4 POLE + EARTH	
X013.1	90110-0371	-		1	PLUG HOOD	

Machine Type | Group Description | Used-In | Group Number | Page No

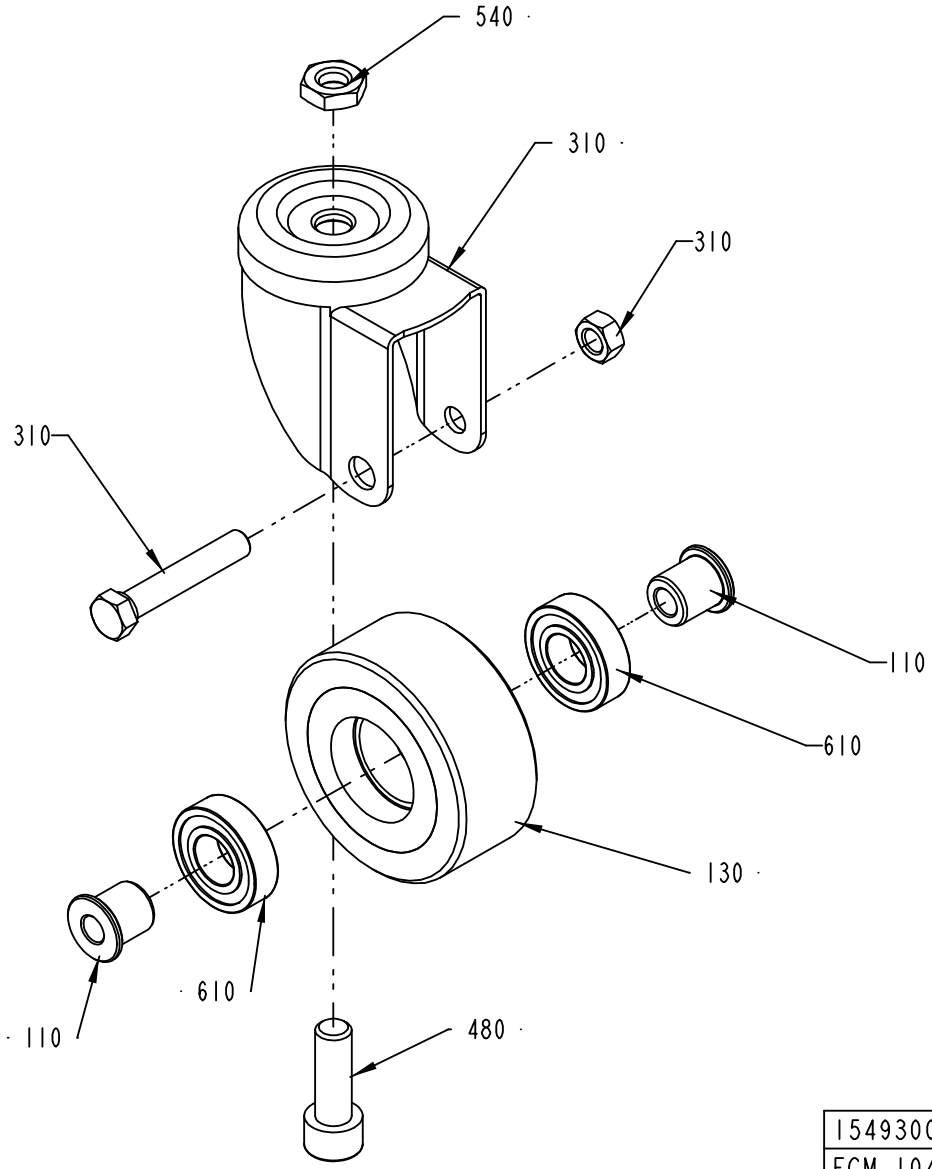

1549300-1
ECM 104253

DETAIL A

ECM: 112108 - 20030113
Group number: 1549300-0100
Assembly Drawing: 1549300-1_2_AB

This list covers pages from 548 to 551

Pos	Part No	SP	UN	Qty	Description	Page No
-						
010	A577800-0200	-		1	PAPER GUIDE	**553**
020	1549301-0000	-		4	BEARING	
030	1549302-0000	-		1	SHAFT	
040	1549303-0000	-		1	PLATE	
050	1549304-0000	-		1	ARM	
060	2501613-0000	-		1	SHAFT	
070	1549307-0000	-		1	BRACKET	
080	1549474-0000	-		1	SHAFT	
090	1549475-0000	-		1	BRACKET	
100	1549493-0000	-		1	HANDSPIKE	
110	1558319-0000	-		2	BUSHING	
120	2501362-0000	-		2	CLAMP RING	
130	266710-0000	A		1	USE NEW PART 2555116 WHEEL	
140	574932-0000	-		3	BENDING ROLLER	
150	2525340-0000	-		4	BRACKET	
160	574937-0000	-		1	SHAFT	
170	574940-0000	-		2	BLOCKING PIECE	
180	574945-0000	-		2	TOOTHED PULLY	
190	574946-0000	-		1	FLAG	
200	576274-0000	-		1	BRACKET	
210	979555-0000	-		1	WEB TENSION ROLLER	
220	979946-0000	-		1	STEEL TUBE	
230	2509543-0000	-		1	PROTECTION	
270	90152-0051	-	M	3	SPIRAL CONDUIT, 25X18, UL 1816	
280	90458-1240	B		2	RUBBERSPRING DK-A 15X40	
290	90458-0058	-		4	SCREW M5X60 A280	
300	90458-1230	B		2	CLAMPING ELEMENT, DI=36 MM	
310	90458-1231	-		1	FORK HOLDER 913588/04	
320	90458-1232	-		2	BEARING BRACKET AY15	
330	90458-1233	A		1	TIMING BELT AT10 340X16 MM	
340	90458-1234	-		1	PROTECTIVE CAP 2X20X1.2X100	
400	312101-0323	-		2	SCREW M6S M5X8 FZB	
410	312105-0329	-		8	SCREW M6S ISO 4017 M5X16 A480	
420	312115-0287	-		4	SCREW ISO4762 M4X8 A4	
430	312105-0370	-		12	SCREW M6S ISO 4017 M6X20 A480	
440	312105-0372	-		8	SCREW M6S ISO 4017 M6X25 A480	
450	315105-0136	-		4	WASHER ISO 7089-4-200 HV-A4	
460	312105-0447	-		4	SCREW M6S ISO 4017 M8X12 A480	
470	312105-0449	-		4	SCREW M6S ISO 4017 M8X16 A480	
480	312115-0495	-		1	SCREW ISO4762 M10X30 A4	
490	312115-0368	-		3	SCREW ISO4762 M6X16 A4	
500	312318-0287	-		2	SCREW ISO4029 M4X8 A4	
510	312318-0366	-		2	SCREW ISO4029 M6X12 A4	
520	312318-0370	-		8	SCREW ISO4029 M6X20 A4	
530	312605-0320	-		1	HEXAGON NUT, M6M M10 A280	
540	312625-0320	-		1	HEXAGON THIN NUT, EN 24035 ML6M M10 A4	
550	315105-0171	-		1	WASHER PLAIN, BRB, 10/18,H=2	
560	315105-0153	-		20	WASHER ISO 7089-6-200 HV-A4	
570	315105-0146	-		10	WASHER ISO 7089-5-200 HV-A4	
580	315105-0165	-		8	WASHER ISO 7089-8-200 HV-A4	
590	315705-0166	-		1	PARALLEL KEY W. ROUND ENDS 4X4X12 MM	
600	315751-0112	-		8	RETAIN. RING, 15	
610	321308-0202	A		2	BALL BEARING, 2 SEALS, 15X32X9 MM	
620	321313-0102	A		6	BALL BEARING, 2 SEALS, 15X35X11 MM	
630	353247-0008	-		2	GLAND, PG13,5, 15254P13S05UL16	
640	359705-0001	A		1	WARNING SIGN ISO, ENTAGLEMENT	
650	353243-0005	-		1	EXTENDED WITHOUT INSERT, PG16	
660	90089-0007	-		1	REDUCING SLEEVE, PR18,6/PR22,5	
670	353249-0013	-		1	INSERT, SINGEL HOLE, EK 154/13	
MB149	90458-0675	A		1	PROXIMITY SENSOR, E2EG-X5MB1-5M	
MB150	90458-0675	A		1	PROXIMITY SENSOR, E2EG-X5MB1-5M	
MM021	90069-0600	A		1	GEARS, WORM MOTOR ODM90-60KE5	
W757	90220-0104	-	M	3	SCR. CABLE 4X1,5MM2	
X013	90110-0295	-		1	CONNECTOR 4 POLE + EARTH	
X013.1	90110-0371	-		1	PLUG HOOD	

Machine Type | Group Description | Used-In | Group Number | Page No

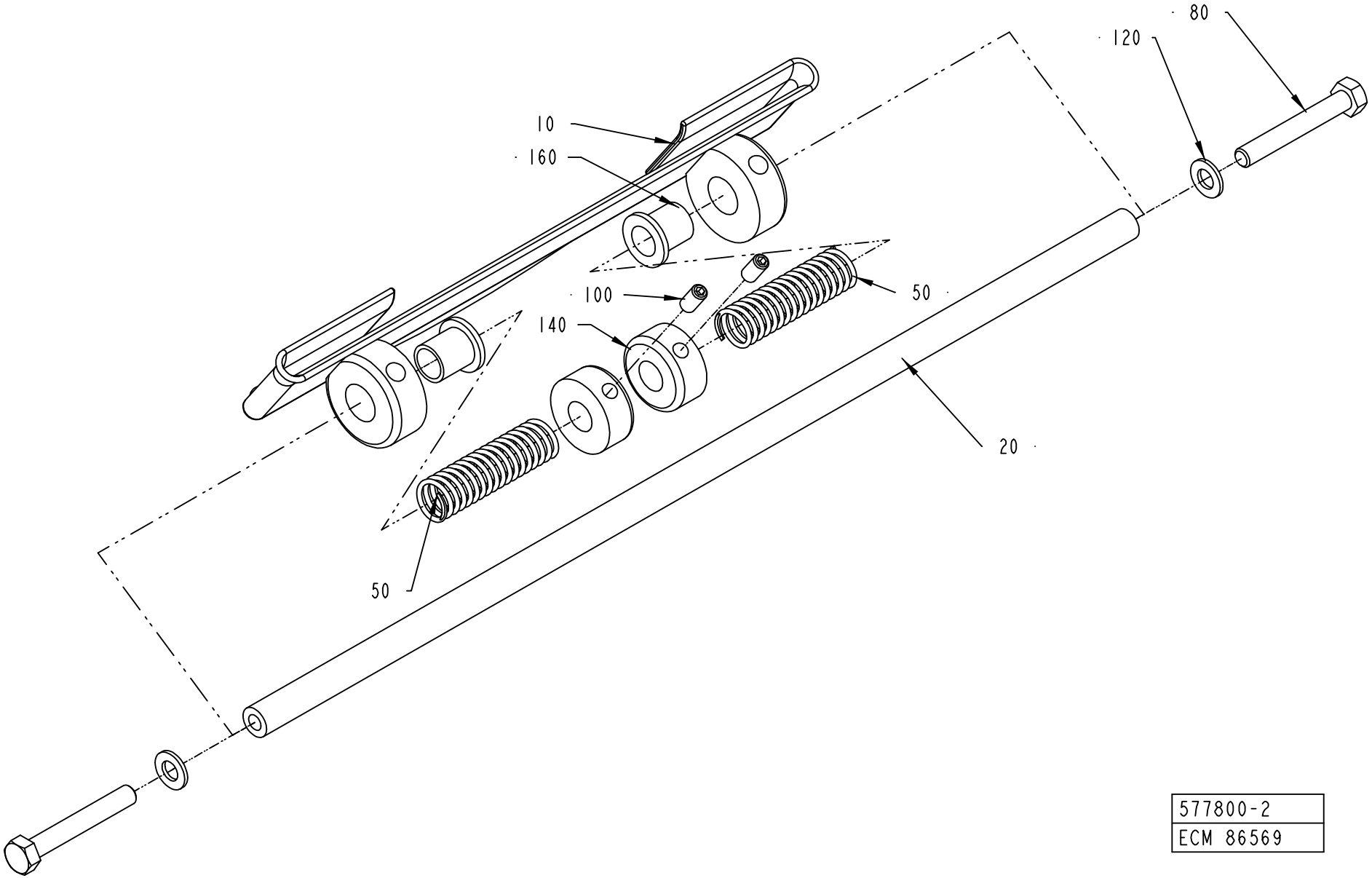

577800-2
ECM 86569

ECM: 112927 - 20020731
Group number: 577800-0200
Assembly Drawing: 577800-2_1_AA

Pos	Part No	SP	UN	Qty	Description	Page No
TBA 0125S, TBA 0100B						
010	B578685-0000	A		1	GUIDING ARBOR	
	315742-0106	*-*		*2*	*COLLAR, 10/25, H=10*	
TBA 0160S, TBA 0200S						
010	B577798-0000	A		1	GUIDING ARBOR	
	315742-0106	*-*		*2*	*COLLAR, 10/25, H=10*	
TBA 0250S, TBA 0200M						
010	B578687-0000	A		1	GUIDING ARBOR	
	315742-0106	*-*		*2*	*COLLAR, 10/25, H=10*	
TBA 0330S, TBA 0300S, TBA 0180B, TBA 0200B, TBA 0284B, TBA 0250B						
010	B578686-0000	A		1	GUIDING ARBOR	
	315742-0106	*-*		*2*	*COLLAR, 10/25, H=10*	
Common Parts						
020	577799-0000	-		1	SHAFT	
050	752085-0000	A		2	SPRING	
080	312105-0337	-		2	SCREW M6S ISO 4014 M5X35 A480	
100	312318-0287	-		2	SCREW ISO4029 M4X8 A4	
120	315105-0146	-		2	WASHER ISO 7089-5-200 HV-A4	
140	315742-0104	-		2	COLLAR, 8/20, H=9	
160	90240-0121	A		2	FLANGE BUSHING, 8X10X12 MM	

Pos	Part No	SP	UN	Qty	Description	Page No

This page is intentionally left blank.

ECM: 104335 - 20030113
Group number: 579241-0200
Assembly Drawing:

Pos	Part No	SP	UN	Qty	Description	Page No
NOPT TBA 0100B, NOPT TBA 0200M, NOPT TBA 0200S, NOPT TBA 0125S, NOPT TBA 0160S, NOPT TBA 0250S						
040	A752646-0400	-		1	DATING UNIT	**557, 559, 561**
NOPT TBA 0180B, NOPT TBA 0200B, NOPT TBA 0250B, NOPT TBA 0330S, NOPT TBA 0284B, NOPT TBA 0300S						
030	A752645-0400	-		1	DATING UNIT	**577, 579**

Pos	Part No	SP	UN	Qty	Description	Page No

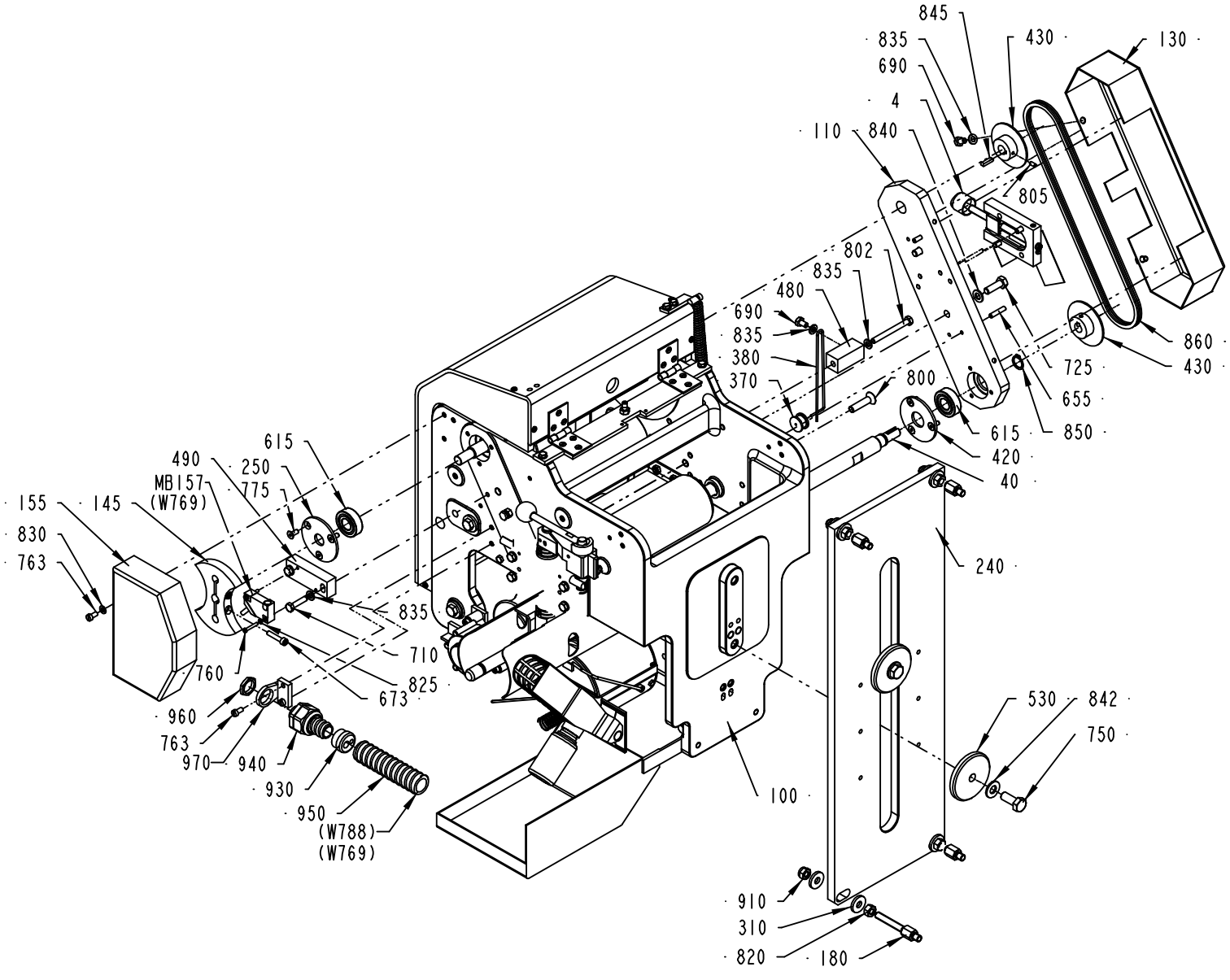

752646-6
ECM 104253

ECM: 104337 - 20030113
Group number: 752646-0400
Assembly Drawing: 752646-6_1_AB

This list covers pages from 556 to 561

Pos	Part No	SP	UN	Qty	Description	Page No
TBA 0100B						
010	752542-0002	D		1	BENDING ROLLER	
020	752543-0002	D		1	SHAFT	
030	456327-0000	D		2	CREASE BAR	
040	752536-0002	D		1	SHAFT	
050	979769-0000	D		2	SPACER	
060	456334-0000	D		1	SHAFT	
070	90166-0059	C	MM	37	HOSE PVC 12/16MM TRANSP.	
075	90166-0059	C	MM	37	HOSE PVC 12/16MM TRANSP.	
520	752541-0000	-		1	CANTILEVER	
670	311103-0357	-		1	PARALLELL PIN, M6, 6X30 MM	
735	312105-0457	-		1	SCREW M6S ISO 4014 M8X35 A480	
TBA 0125S						
010	752542-0002	D		1	BENDING ROLLER	
020	752543-0002	D		1	SHAFT	
030	456327-0000	D		2	CREASE BAR	
040	752536-0002	D		1	SHAFT	
050	441556-0007	D		2	SPACER	
060	456334-0000	D		1	SHAFT	
070	90166-0059	C	MM	37	HOSE PVC 12/16MM TRANSP.	
075	90166-0059	C	MM	37	HOSE PVC 12/16MM TRANSP.	
520	752541-0000	-		1	CANTILEVER	
670	311103-0357	-		1	PARALLELL PIN, M6, 6X30 MM	
735	312105-0457	-		1	SCREW M6S ISO 4014 M8X35 A480	
TBA 0160S						
010	752542-0002	D		1	BENDING ROLLER	
020	752543-0002	D		1	SHAFT	
030	441554-0000	D		2	CREASE BAR	
040	752536-0001	D		1	SHAFT	
040	752536-0002	D		1	SHAFT	
050	441556-0011	D		2	SPACER	
060	456334-0000	D		1	SHAFT	
070	90166-0059	C	MM	37	HOSE PVC 12/16MM TRANSP.	
075	90166-0059	C	MM	37	HOSE PVC 12/16MM TRANSP.	
520	752541-0000	-		1	CANTILEVER	
670	311103-0357	-		1	PARALLELL PIN, M6, 6X30 MM	
735	312105-0457	-		1	SCREW M6S ISO 4014 M8X35 A480	
TBA 0180B						
010	752542-0001	D		1	BENDING ROLLER	
020	752543-0001	D		1	SHAFT	
030	456767-0000	D		2	CREASE BAR	
040	752536-0001	-		1	SHAFT	
050	441556-0006	D		2	SPACER	
060	256400-0000	D		1	SHAFT	
070	90166-0059	C	MM	24	HOSE PVC 12/16MM TRANSP.	
075	90166-0059	C	MM	24	HOSE PVC 12/16MM TRANSP.	
520	752541-0000	-		1	CANTILEVER	
670	311103-0357	-		1	PARALLELL PIN, M6, 6X30 MM	
735	312105-0457	-		1	SCREW M6S ISO 4014 M8X35 A480	
TBA 0200B						
010	752542-0001	D		1	BENDING ROLLER	
020	752543-0001	D		1	SHAFT	
030	456767-0000	D		2	CREASE BAR	
040	752536-0001	D		1	SHAFT	
050	441556-0004	D		2	SPACER	
060	256400-0000	D		1	SHAFT	
070	90166-0059	C	MM	24	HOSE PVC 12/16MM TRANSP.	
075	90166-0059	C	MM	24	HOSE PVC 12/16MM TRANSP.	
520	752541-0000	-		1	CANTILEVER	
670	311103-0357	-		1	PARALLELL PIN, M6, 6X30 MM	
735	312105-0457	-		1	SCREW M6S ISO 4014 M8X35 A480	
TBA 0200M						
010	752542-0003	D		1	BENDING ROLLER	
020	752543-0003	D		1	SHAFT	
030	441554-0000	D		2	CREASE BAR	
040	752536-0003	D		1	SHAFT	
050	441556-0002	D		2	SPACER	
060	574443-0000	-		1	SHAFT	
070	90166-0059	C	MM	30	HOSE PVC 12/16MM TRANSP.	
075	90166-0059	C	MM	30	HOSE PVC 12/16MM TRANSP.	
080	574444-0000	-		1	SPACER	
520	574445-0000	-		1	CANTILEVER	
670	311103-0361	-		1	PARALLELL PIN, M6, 6X40 MM	
736	312105-0460	-		1	SCREW M6S ISO 4014 M8X45 A480	
TBA 0200S						
010	752542-0002	D		1	BENDING ROLLER	
020	752543-0002	D		1	SHAFT	
030	441554-0000	D		2	CREASE BAR	

Machine Type | Group Description | Used-In | Group Number | Page No

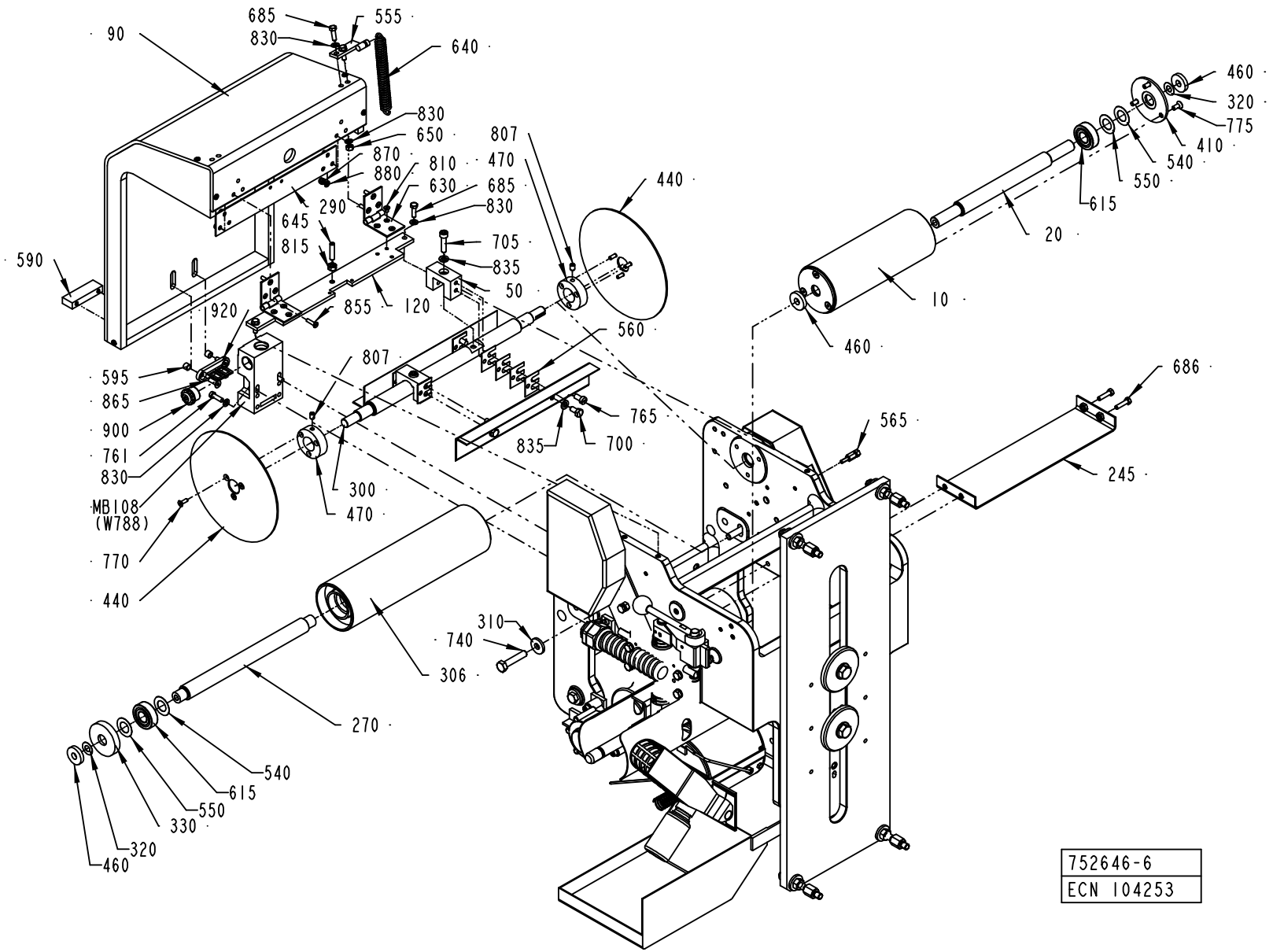

752646-6
ECN 104253

ECM: 104337 - 20030113
Group number: 752646-0400
Assembly Drawing: 752646-6_2_AB

This list covers pages from 556 to 561

Pos	Part No	SP	UN	Qty	Description	Page No
TBA 0200S (Cont'd)						
040	752536-0002	D		1	SHAFT	
050	441556-0009	D		2	SPACER	
060	456334-0000	D		1	SHAFT	
070	90166-0059	C	MM	37	HOSE PVC 12/16MM TRANSP.	
075	90166-0059	C	MM	37	HOSE PVC 12/16MM TRANSP.	
520	752541-0000	-		1	CANTILEVER	
670	311103-0357	-		1	PARALLELL PIN, M6, 6X30 MM	
735	312105-0457	-		1	SCREW M6S ISO 4014 M8X35 A480	
TBA 0250B						
010	752542-0001	D		1	BENDING ROLLER	
020	752543-0001	D		1	SHAFT	
030	456767-0000	D		2	CREASE BAR	
040	752536-0001	D		1	SHAFT	
050	441556-0002	D		2	SPACER	
060	256400-0000	D		1	SHAFT	
065	299643-0000	-		2	WASHER	
070	90166-0059	C	MM	24	HOSE PVC 12/16MM TRANSP.	
075	90166-0059	C	MM	24	HOSE PVC 12/16MM TRANSP.	
520	752541-0000	-		1	CANTILEVER	
670	311103-0357	-		1	PARALLELL PIN, M6, 6X30 MM	
735	312105-0457	-		1	SCREW M6S ISO 4014 M8X35 A480	
TBA 0250S						
010	752542-0003	D		1	BENDING ROLLER	
020	752543-0003	D		1	SHAFT	
030	441554-0000	D		2	CREASE BAR	
040	752536-0003	D		1	SHAFT	
050	441556-0010	D		2	SPACER	
060	574443-0000	-		1	SHAFT	
070	90166-0059	C	MM	30	HOSE PVC 12/16MM TRANSP.	
075	90166-0059	C	MM	30	HOSE PVC 12/16MM TRANSP.	
080	574444-0000	-		1	SPACER	
520	574445-0000	-		1	CANTILEVER	
670	311103-0361	-		1	PARALLELL PIN, M6, 6X40 MM	
736	312105-0460	-		1	SCREW M6S ISO 4014 M8X45 A480	
TBA 0330S, TBA 0300S, TBA 0284B						
010	752542-0001	D		1	BENDING ROLLER	
020	752543-0001	D		1	SHAFT	
030	456767-0000	D		2	CREASE BAR	
040	752536-0001	-		1	SHAFT	
050	441556-0001	D		2	SPACER	
060	256400-0000	D		1	SHAFT	
070	90166-0059	C	MM	24	HOSE PVC 12/16MM TRANSP.	
075	90166-0059	C	MM	24	HOSE PVC 12/16MM TRANSP.	
520	752541-0000	-		1	CANTILEVER	
670	311103-0357	-		1	PARALLELL PIN, M6, 6X30 MM	
735	312105-0457	-		1	SCREW M6S ISO 4014 M8X35 A480	
Common Parts						
001	A293684-0200	-		2	PRINTING WHEEL NSS	**563, 565**
002	A440286-0300	-		1	INK UNIT NSS	**567**
003	A751718-0100	-		1	HOLDER	**569**
004	A543143-0100	-		1	ADJUSTMENT DEVICE	**571, 573**
005	A1549584-0100	-		1	PAPER BRAKE	**575**
090	979790-0000	-		1	COVER	
100	752200-0000	-		1	CANTILEVER	
110	752526-0000	-		1	PLATE	
120	572252-0000	-		1	BRACKET	
130	752528-0000	-		1	COVER	
140	752527-0000	-		1	CANTILEVER	
145	491965-0000	-		1	CAM	
150	979544-0000	-		1	SPLASH PLATE	
155	556422-0000	-		1	PROTECTION	
160	752529-0000	D		1	BEARING COVER	
180	2531115-0000	C		4	SCREW	
240	752539-0000	-		1	PLATE	
245	572460-0000	-		1	SHEET	
250	752240-0000	-		1	LID	
270	752538-0000	D		2	SHAFT	
280	752642-0000	-		1	BRACKET	
290	572253-0000	-		1	SHEET	
300	752535-0000	D		1	SHAFT	
306	979709-0000	D		2	BENDING ROLLER	
310	28036-0000	-		12	WASHER	
320	2033-0011	D		6	WASHER	
330	265568-0000	C		4	DUST COVER	
340	32925-0000	D		1	CARRIER	
350	32926-0000	D		1	ROLL	
360	32927-0000	D		1	SHAFT	
370	33182-0000	C		1	ROLL	
380	752237-0000	C		1	SPRING	

Machine Type | Group Description | Used-In | Group Number | Page No

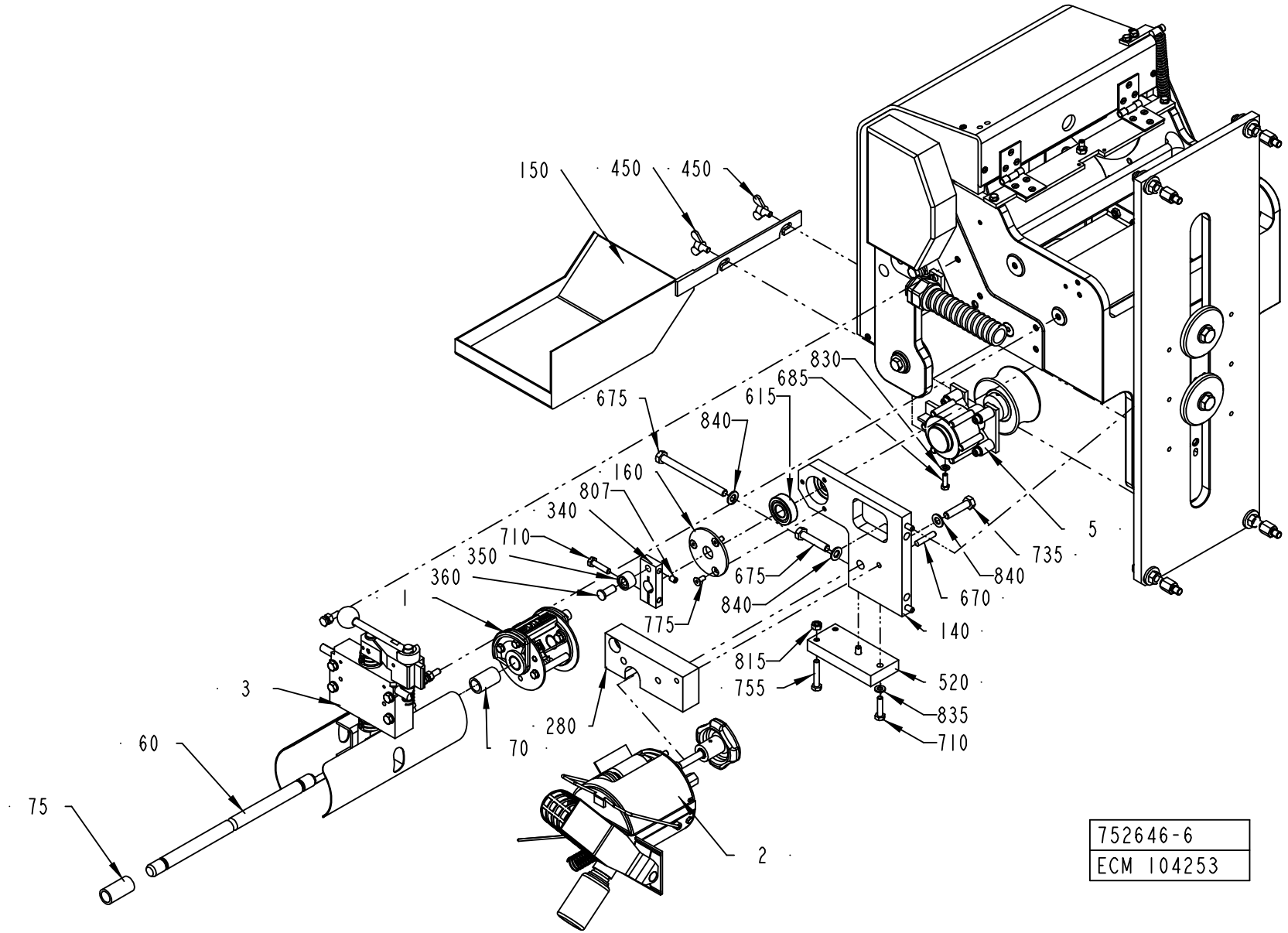
150
450
450
830
685
615
675
840
160
807
340
710
350
360
1
3
60
75
70
280
775
675
840
735
5
840
670
140
815
755
520
835
710
2
752646-6
ECM 104253

ECM: 104337 - 20030113
Group number: 752646-0400
Assembly Drawing: 752646-6_3_AB

This list covers pages from 556 to 561

Pos	Part No	SP	UN	Qty	Description	Page No
Common Parts (Cont'd)						
410	256248-0001	D		2	LID	
420	256398-0000	D		1	LID	
430	752530-0000	C		2	SPROCKET	
440	256406-0000	-		2	GABLE PLATE	
450	752644-0000	-		2	SCREW	
460	256409-0000	-		6	WASHER	
470	257141-0000	-		2	RETAINING RING	
480	752531-0000	-		1	BRACKET	
490	752534-0000	-		1	PLATE	
530	253107-0000	D		2	WASHER	
540	752544-0001	D		6	SHIM	
550	752544-0002	D		6	SHIM	
555	979789-0000	-		1	SPRING HOLDER	
560	456817-0001	C		16	SHIM	
565	979788-0000	-		1	SPRING HOLDER	
590	572254-0000	-		1	HANDLE	
595	572255-0000	-		2	SPACER	
615	90214-0098	C		10	BALL BEARING, 15X35X11 MM	
630	90248-0026	-		2	HINGE, 1703-80X32	
640	90335-0041	-		1	TENSION SPRING 42350, 2X14X68	
645	312318-0372	-		1	SCREW ISO4029 M6X25 A4	
650	312605-0314	-		2	HEXAGON NUT, M6M M5 A280	
655	311103-0312	-		2	PARALLELL PIN, M6, 5X25 MM	
673	312115-0333	-		2	SCREW ISO4762 M5X25 A4	
675	312111-0471	-		1	SCREW HEX.SOCK.HD.MC6S-TT 8X100 88 FZ	
685	312105-0329	-		5	SCREW M6S ISO 4017 M5X16 A480	
686	312105-0331	-		4	SCREW M6S ISO 4017 M5X20 A480	
690	312105-0364	-		3	SCREW M6S ISO 4017 M6X10 A480	
700	312105-0366	-		4	SCREW M6S M6X12 A280	
705	312115-0372	-		2	SCREW ISO4762 M6X25 A4	
710	312105-0372	-		5	SCREW M6S ISO 4017 M6X25 A480	
725	312105-0453	-		2	SCREW M6S ISO 4017 M8X25 A480	
740	312105-0459	-		5	SCREW M6S ISO 4014 M8X40 A480	
750	312105-0493	-		2	SCREW M6S ISO 4017 M10X25 A480	
755	312109-0376	-		1	SCREW M6S ISO 4017 M6X35 A480	
760	312125-0230	-		2	SPåRSKRUV MCS M3X20 SS	
761	312125-0329	-		2	SCREW PAN HEAD MCS M5X16 SS	
763	312125-0325	-		4	SCREW SLOT.PAN HD. MCS 5X10 A480	
765	312125-0366	-		4	SCREW PAN HEAD MCS M6X12 SS	
770	312155-0291	-		6	SCREW EN 10642 MF6S M4X12 A480	
775	312155-0327	-		15	SCREW EN 10642 MF6S M5X12 A480	
800	312155-0457	-		2	SCREW EN 10642 MF6S M8X35 A480	
802	312105-0382	-		1	SCREW M6S ISO 4014 M6X60 A480	
805	312318-0287	-		2	SCREW ISO4029 M4X8 A4	
807	312318-0362	-		3	SCREW ISO4029 M6X8 A4	
810	312145-0285	-		6	SCREW COUNTERS.SLOT.HD. MFS 4X6 SS	
815	312605-0316	-		2	HEXAGON NUT, M6M M6 A280	
820	312605-0318	-		4	HEXAGON NUT, M6M M8 A280	
825	315105-0124	-		2	WASHER ISO 7089-3-200 HV-A4	
830	315105-0146	-		11	WASHER ISO 7089-5-200 HV-A4	
835	315105-0153	-		14	WASHER ISO 7089-6-200 HV-A4	
840	315105-0165	-		5	WASHER ISO 7089-8-200 HV-A4	
842	315105-0173	-		2	WASHER ISO 7089-10-200 HV-A4	
845	315701-0169	C		2	PARALLEL KEY W. ROUND ENDS 4X4X18 MM	
850	315751-0112	C		1	RETAIN. RING, 15	
855	312145-0293	-		6	SCREW COUNTERS.SLOT.HD. MFS 4X16 SS	
860	318207-0168	C		1	ROLLER CHAIN, SINGLE 6MM-168	
865	312155-0329	-		2	SCREW EN 10642 MF6S M5X16 A480	
870	312812-0312	-		6	HEXAGON NUT, NY-LOCK M4 A480	
880	315101-0136	-		6	BRICKA, BRB, 4,3/8 H=0,8	
900	352101-0103	-		1	LEAD-IN, PR18,6/PG11, E-1457518	
910	312812-0318	-		4	HEXAGON NUT, NY-LOCK M8 A480	
920	90044-0310	-		1	KEY FOR SAFETY SWITCH, AZ 15/16 B1	
930	90458-1239	-		1	GLAND, INSERT, MULTI HOLE, 1X9/1X5,5	
940	90457-0146	-		1	EXTENDED WITHOUT INSERT,	
950	90152-0051	-	M	3	SPIRAL CONDUIT, 25X18, UL 1816	
960	90099-0002	-		1	NUT PR 18,6 BRASS	
970	352135-0202	-		1	CLIP, 16 MM, 913.016	
MB108	90044-0139	-		1	KEY SAF.SW. AZ16-02 ZVR K-2254	
MB154	90044-0194	C		1	PROX.SW. IN5329/IN3002-BPKG	

Machine Type | Group Description | Used-In | Group Number | Page No

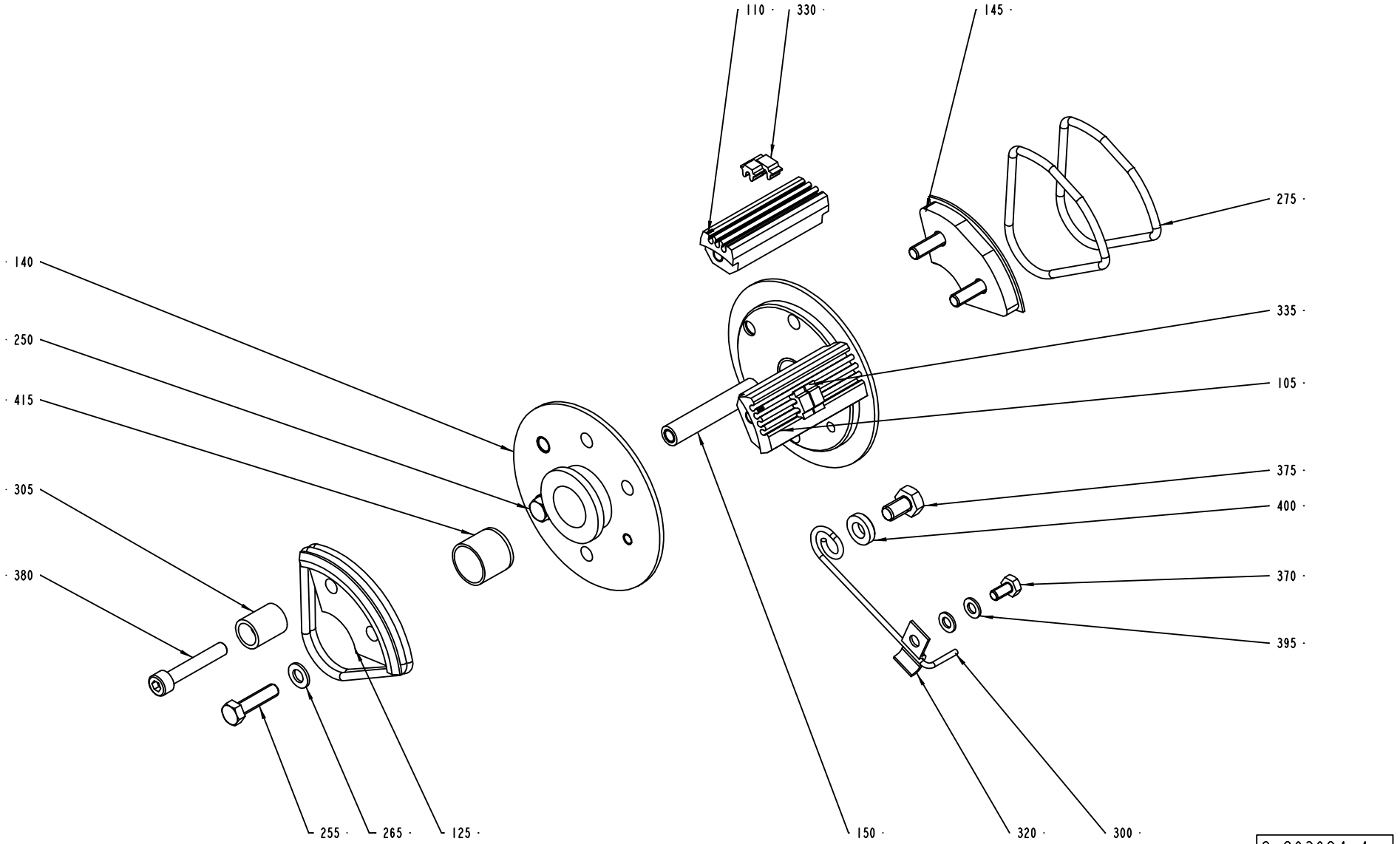
110
330
145
275
140
335
250
105
415
375
305
400
380
370
395
255
265
125
150
320
300
S-293684-4
ECN 73044

ECM: 118806 - 20021203
Group number: 293684-0200
Assembly Drawing: 293684-4_1_AB

This list covers pages from 562 to 565

Pos	Part No	SP	UN	Qty	Description	Page No
TBA 0284B (See drawing on pages: 562, 564)						
105	293395-0002	A		2	TYPE HOLDER	
110	293395-0001	A		2	TYPE HOLDER	
130	292412-0000	B		1	END SECTION	
135	292413-0000	B		1	END SECTION	
145	293659-0000	B		1	CARRIER	
255	312101-0331	-		7	SCREW M6S M5X20 FZB	
265	315101-0146	-		7	WASHER PLAIN, BRB, 5,3/10 H=1	
285	315202-0304	A		2	O-RING 64,5X3 MM	
410	315202-0305	A		2	O-RING 69,5X3 MM	
TBA 0330S, TBA 0300S, TBA 0180B, TBA 0160S, TBA 0200B, TBA 0189B, TBA 0125S, TBA 0100B, TBA 0250S, TBA 0200S, TBA 0200M, TBA 0250B (See drawing on pages: 562, 564)						
105	293395-0002	A		2	TYPE HOLDER	
110	293395-0001	A		2	TYPE HOLDER	
130	292412-0000	B		1	END SECTION	
135	292413-0000	B		1	END SECTION	
145	293659-0000	B		1	CARRIER	
255	312101-0331	-		7	SCREW M6S M5X20 FZB	
265	315101-0146	-		7	WASHER PLAIN, BRB, 5,3/10 H=1	
285	315202-0304	A		2	O-RING 64,5X3 MM	
410	315202-0305	A		2	O-RING 69,5X3 MM	
Common Parts						
300	32691-0000	B		1	LOCKING SPRING	
305	33011-0000	A		1	SLEEVE	
320	1511572-0000	-		1	CLIP	
330	90413-0043	A		1	CODE INSERT SET	
330	90413-0033	A		1	CODE INSERT SET 0-9	
335	90413-0047	A		1	CODE INSERT SET	
335	90413-0044	A		1	CODE INSERT SET	
370	312101-0287	-		1	SCREW M6S M4X8 FZB	
375	312101-0364	-		1	SCREW M6S M6X10 FZB	
380	312111-0335	-		1	SCREW HEX.SOCK.HD.MC6S-TT 5X30 88 FZB	
395	315101-0136	-		2	BRICKA, BRB, 4,3/8 H=0,8	
400	315111-0153	-		1	WASHER PLAIN, TBRB 6,4/12 H=3	
415	321120-0122	A		2	BEARING BUSHING W/O FL, 15X17X15 MM	

Pos	Part No	SP	UN	Qty	Description	Page No

Volume: TB- 180B. 200B. 200M. 200S. 236B. 250S. 300B.ml
TBA- 100B. 125S. 160S. 180B. 200B. 200M.
TBA- 200S. 250B. 250S. 284B. 300S. 330S.ml
TPA- 250SQ. 330SQ.ml

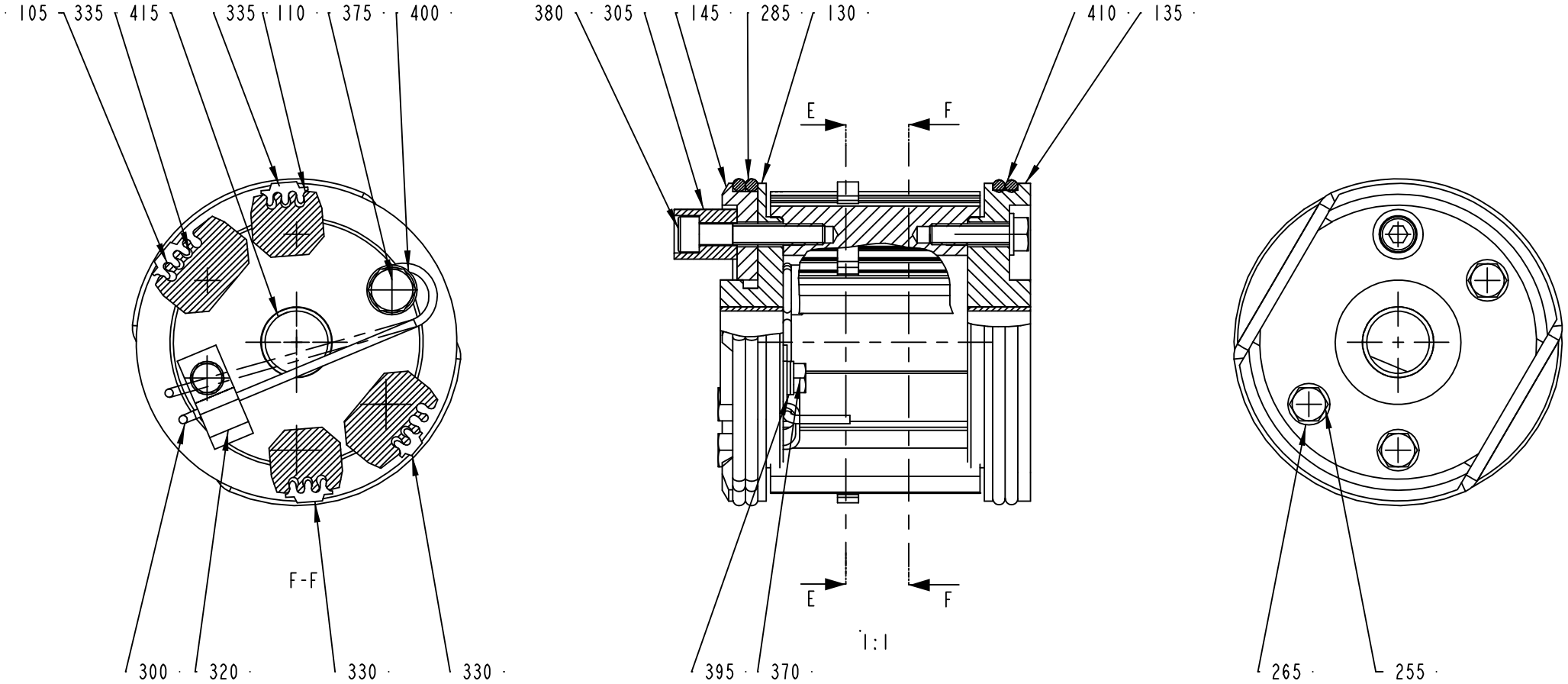

Pos	Part No	SP	UN	Qty	Description	Page No
TBA 0284B (See drawing on pages: 562, 564)						
105	293395-0002	A		2	TYPE HOLDER	
110	293395-0001	A		2	TYPE HOLDER	
130	292412-0000	B		1	END SECTION	
135	292413-0000	B		1	END SECTION	
145	293659-0000	B		1	CARRIER	
255	312101-0331	-		7	SCREW M6S M5X20 FZB	
265	315101-0146	-		7	WASHER PLAIN, BRB, 5,3/10 H=1	
285	315202-0304	A		2	O-RING 64,5X3 MM	
410	315202-0305	A		2	O-RING 69,5X3 MM	
TBA 0330S, TBA 0300S, TBA 0180B, TBA 0160S, TBA 0200B, TBA 0189B, TBA 0125S, TBA 0100B, TBA 0250S, TBA 0200S, TBA 0200M, TBA 0250B (See drawing on pages: 562, 564)						
105	293395-0002	A		2	TYPE HOLDER	
110	293395-0001	A		2	TYPE HOLDER	
130	292412-0000	B		1	END SECTION	
135	292413-0000	B		1	END SECTION	
145	293659-0000	B		1	CARRIER	
255	312101-0331	-		7	SCREW M6S M5X20 FZB	
265	315101-0146	-		7	WASHER PLAIN, BRB, 5,3/10 H=1	
285	315202-0304	A		2	O-RING 64,5X3 MM	
410	315202-0305	A		2	O-RING 69,5X3 MM	
Common Parts						
300	32691-0000	B		1	LOCKING SPRING	
305	33011-0000	A		1	SLEEVE	
320	1511572-0000	-		1	CLIP	
330	90413-0043	A		1	CODE INSERT SET	
330	90413-0033	A		1	CODE INSERT SET 0-9	
335	90413-0047	A		1	CODE INSERT SET	
335	90413-0044	A		1	CODE INSERT SET	
370	312101-0287	-		1	SCREW M6S M4X8 FZB	
375	312101-0364	-		1	SCREW M6S M6X10 FZB	
380	312111-0335	-		1	SCREW HEX.SOCK.HD.MC6S-TT 5X30 88 FZB	
395	315101-0136	-		2	BRICKA, BRB, 4,3/8 H=0,8	
400	315111-0153	-		1	WASHER PLAIN, TBRB 6,4/12 H=3	
415	321120-0122	A		2	BEARING BUSHING W/O FL, 15X17X15 MM	

Pos	Part No	SP	UN	Qty	Description	Page No

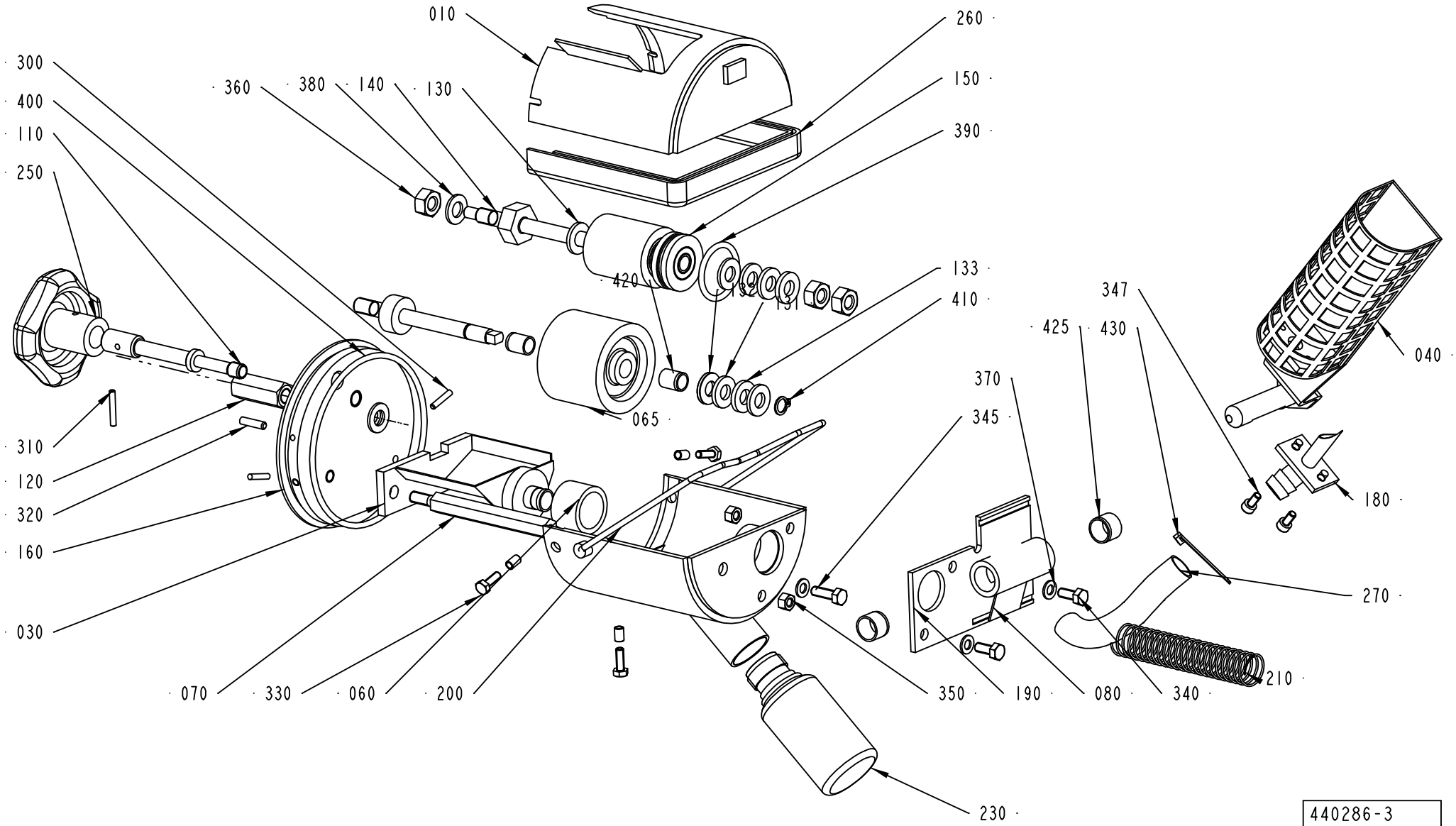

440286-3
ECN 95310

ECM: 104523 - 20021112
Group number: 440286-0300
Assembly Drawing: 440286-3_1_AC

Pos	Part No	SP	UN	Qty	Description	Page No
TBA/19						
230	90050-0012	B		1	BOTTLE, 50ML PLASTIC	
Common Parts						
010	440287-0000	-		1	COVER	
030	297211-0000	B		1	INK WELL	
040	476356-0000	B		1	HOLDER FOR INK BOTTLE	
060	445542-0000	B		1	MANTEL RUBBER	
065	450355-0000	A		1	INK ROLLER	
070	33010-0000	B		1	SCREW	
080	35547-0000	B		1	SPRING	
100	292044-0000	A		1	SHAFT	
110	293667-0000	A		1	DOWEL	
120	436927-0000	B		1	NUT	
130	293669-0001	A		4	WASHER	
131	293669-0002	A		2	WASHER	
132	293669-0003	A		2	WASHER	
133	293669-0004	A		2	WASHER	
140	293670-0000	A		1	SHAFT	
150	B543135-0000	A		1	INK TRANSFER ROLLER	
	90153-0050	-		*1*	*ADHESIVE, 3M TYPE SCOTCH-WELD 2216 B/A*	
	321120-0100	-		*1*	*BEARING BUSHING W/O FLANGE 8/10X12*	
160	293697-0000	B		1	END SECTION	
180	476354-0000	B		1	CANNULAR TUBE	
190	456773-0000	B		1	PIVOT BRACKET	
200	434747-0000	B		1	BOW CLAMP	
210	537308-0000	B		1	SPRING	
250	90051-0077	-		1	HANDLE	
260	90143-0029	B	MM	295	STRIP	
270	90166-0138	B	MM	100	HOSE	
280	90299-0072	A		48	INK	
300	311103-0236	-		2	PARALLELL PIN, M6, 3X16 MM	
310	311103-0238	-		1	CYLINDERPINNE M6, 3X20 MM	
320	311103-0270	-		1	PARALLELL PIN, M6, 4X16 MM	
330	312105-0291	-		3	SCREW M6S ISO 4017 M4X12 A480	
340	312105-0327	-		2	SCREW M6S ISO 4017 M5X12 A480	
345	312105-0329	-		1	SCREW M6S ISO 4017 M5X16 A480	
347	312115-0287	-		2	SCREW ISO4762 M4X8 A4	
350	312605-0314	-		2	HEXAGON NUT, M6M M5 A280	
360	312605-0318	-		3	HEXAGON NUT, M6M M8 A280	
370	315105-0146	-		3	WASHER ISO 7089-5-200 HV-A4	
380	315105-0165	-		2	WASHER ISO 7089-8-200 HV-A4	
390	315202-0218	A		1	O-RING 26,2X3 MM	
400	315202-0309	A		1	O-RING 89,5X3 MM	
410	315750-0105	-		1	RETAIN. RING, 8	
420	321120-0100	A		2	BEARING BUSHING W/O FLANGE 8/10X12	
425	321120-0109	A		2	BEARING BUSHING W/O FLANGE,12/14X10	
430	352113-0101	-		1	CLIP STRIP, 92X2,5 MM	

Machine Type Group Description Used-In Group Number Page No

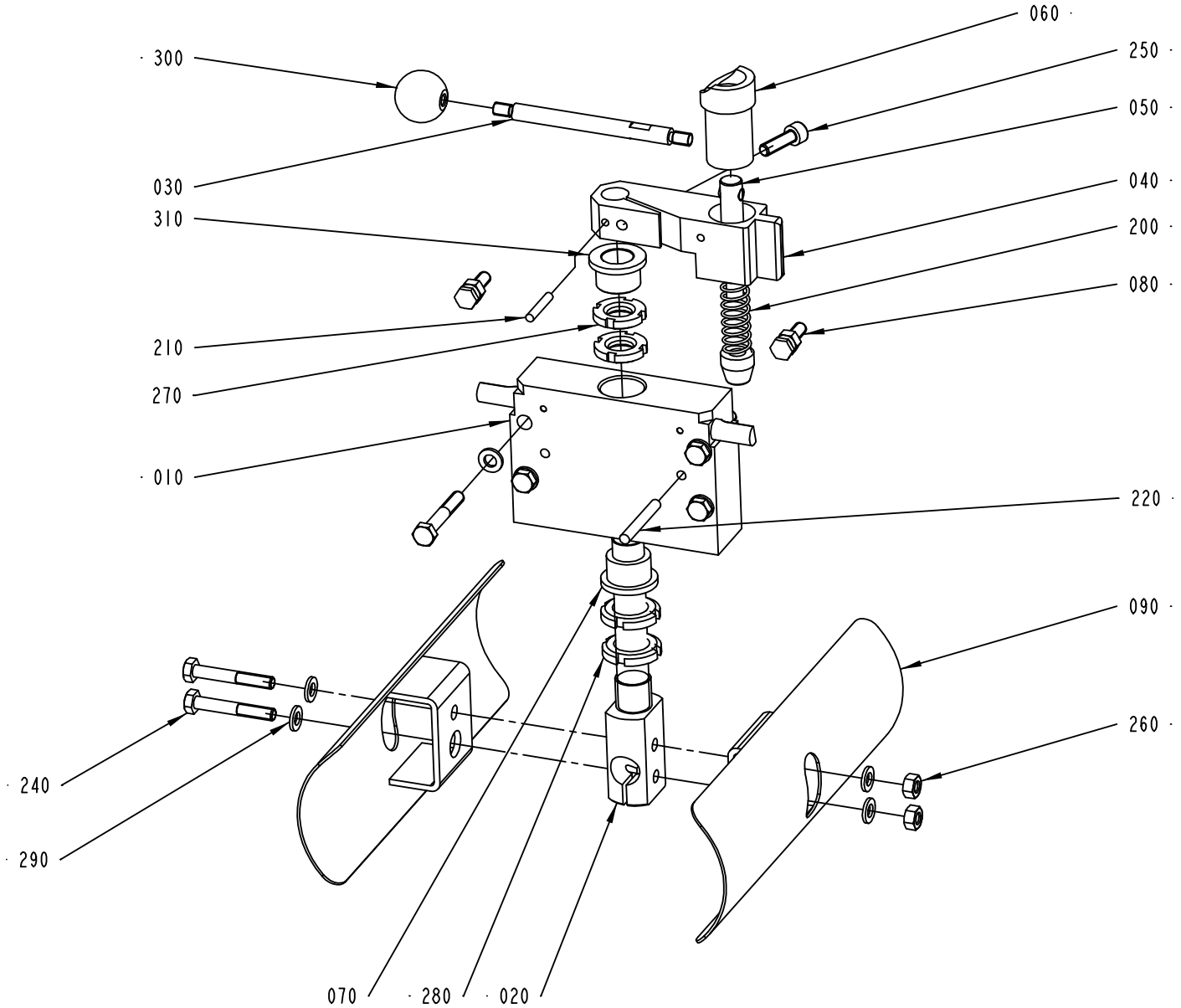

751718-1
ECN 73294

ECM: 114211 - 20020926
Group number: 751718-0100
Assembly Drawing: 751718-1_1_AD

Pos	Part No	SP	UN	Qty	Description	Page No
-						
010	464009-0003	-		1	BLOCKING PIECE	
020	979960-0000	B		1	SHAFT	
030	450500-0000	B		1	DOWEL	
040	464010-0000	-		1	ARM	
050	464011-0000	B		1	LOCK STUD	
060	464012-0000	-		1	CURVE	
070	B466430-0000	B		1	BUSHING	
	321111-0212	*-*		*1*	*FLANGE BUSHING, 15X21X15*	
080	B476377-0000	-		2	SCREW	
	312105-0371	*-*		*1*	*SCREW M6S ISO 4017 M6X22 A480*	
090	979942-0000	-		2	COVER	
200	90335-0064	B		1	COMP. SPRING 22270, 1,25X13,75X62,5	
210	311103-0274	-		2	PARALLELL PIN, M6, 4X25 MM	
220	311103-0318	-		2	PARALLELL PIN, M6, 5X40 MM	
240	312105-0378	-		6	SCREW M6S ISO 4014 M6X40 A480	
250	312115-0370	-		1	SCREW ISO4762 M6X20 A4	
260	312605-0316	-		4	HEXAGON NUT, M6M M6 A280	
270	312805-0102	-		2	NUT ROUND WITH SLOTS M15X1 FE	
280	312805-0103	-		2	NUT ROUND WITH SLOTS M17X1 FE	
290	315105-0153	-		8	WASHER ISO 7089-6-200 HV-A4	
300	318800-0103	-		1	HANDLES,SPHERICAL KNOB,INT.THRE.,D.25-M6	
310	321111-0212	B		1	FLANGE BUSHING, 15X21X15	

Pos	Part No	SP	UN	Qty	Description	Page No

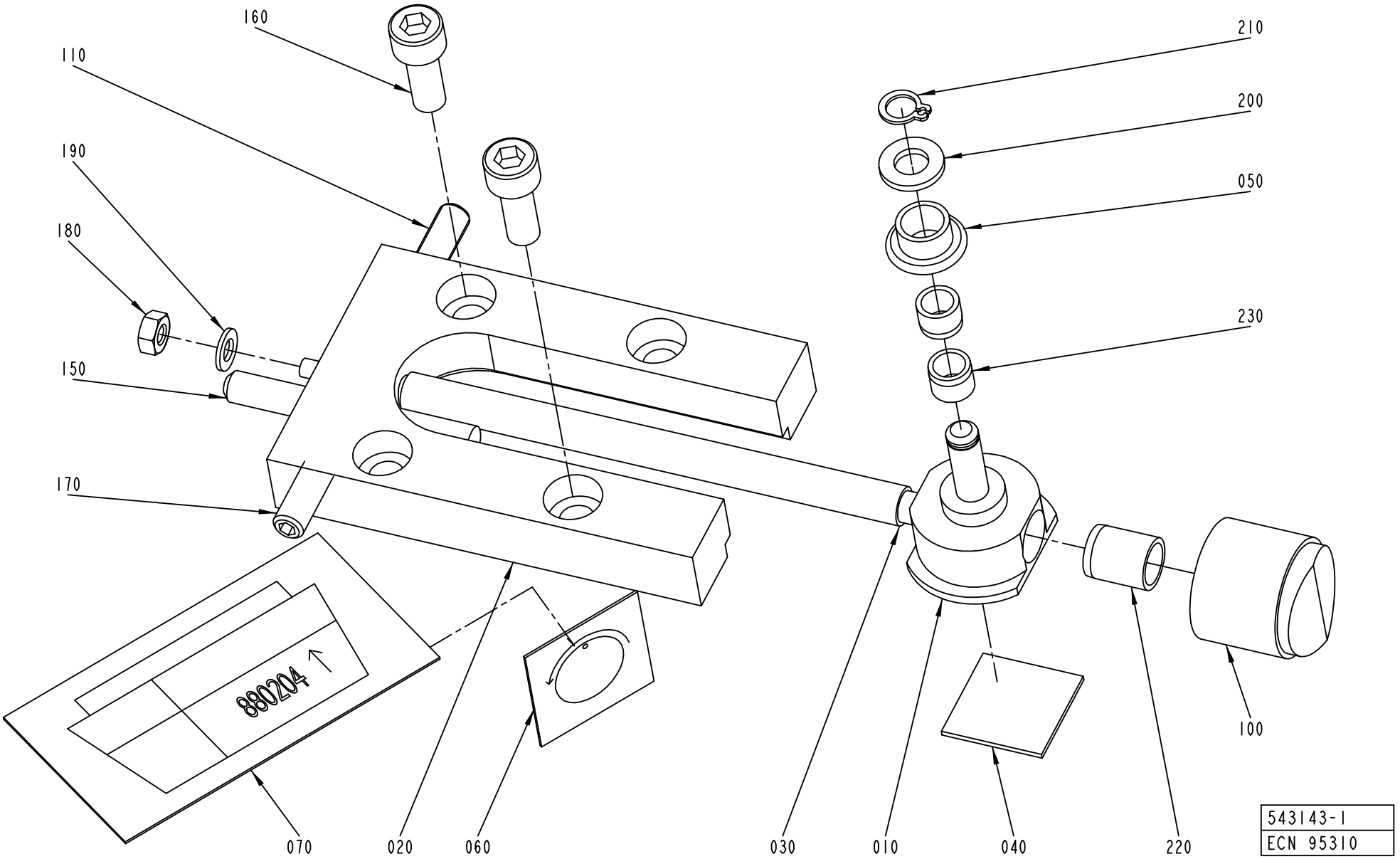
160
110
190
180
150
170
210
200
050
230
100
880204
070
020
060
030
010
040
220
543143-1
ECN 95310

ECM: 99112 - 20011129
Group number: 543143-0100
Assembly Drawing: 543143-1_1_AC

This list covers pages from 570 to 573

Pos	Part No	SP	UN	Qty	Description	Page No
-						
010	526984-0000	A		1	SADDLE	
020	526985-0000	B		1	PLATE	
030	526986-0001	B		1	SHAFT	
040	527649-0000	B		1	DISTANCE RUBBER	
050	529362-0000	A		1	SPROCKET	
060	543141-0000	-		1	SIGN	
070	543142-0000	-		1	SIGN	
100	90051-0089	-		1	SHIFTER HANDLE	
110	90287-0167	-		1	SCREW SPRINGLOAD. SOCK. HEX HEAD M6X20	
150	311103-0365	-		1	PARALLELL PIN, M6, 6X50 MM	
160	312115-0368	-		2	SCREW ISO4762 M6X16 A4	
170	312318-0368	-		1	SCREW ISO4029 M6X16 A4	
180	312605-0312	-		1	HEXAGON NUT, M6M M4 A280	
190	315105-0136	-		1	WASHER ISO 7089-4-200 HV-A4	
200	315105-0153	-		1	WASHER ISO 7089-6-200 HV-A4	
210	315751-0103	-		1	RETAIN. RING, 6	
220	321120-0100	A		1	BEARING BUSHING W/O FLANGE 8/10X12	
230	321120-0101	A		2	BEARING BUSHING W/O FLANGE,6/8X6	

Pos	Part No	SP	UN	Qty	Description	Page No

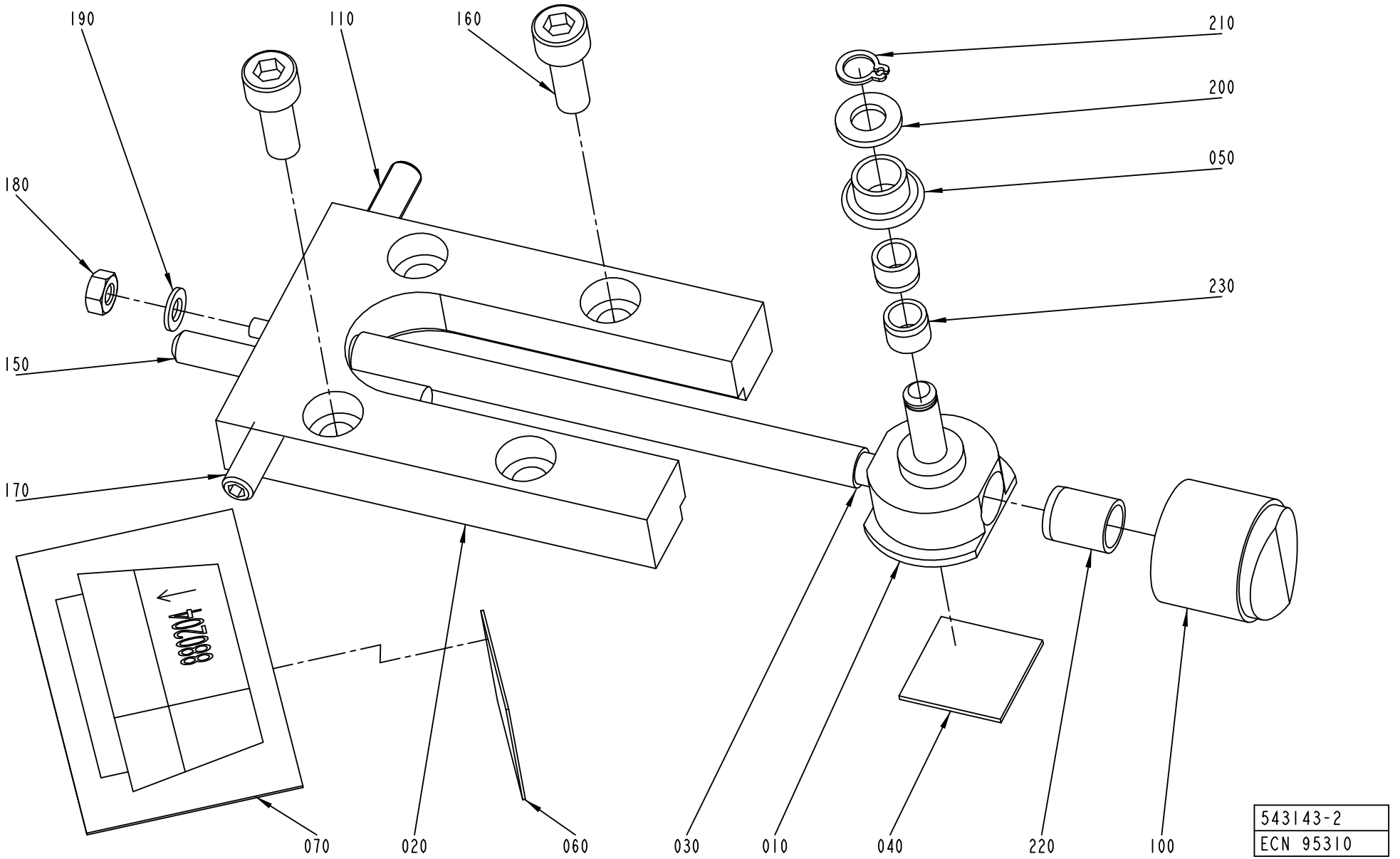
190
110
160
210
200
180
050
230
150
170
070
020
060
030
010
040
220
100
543143-2
ECN 95310

ECM: 99112 - 20011129
Group number: 543143-0100
Assembly Drawing: 543143-2_1_AB

This list covers pages from 570 to 573

Pos	Part No	SP	UN	Qty	Description	Page No
-						
010	526984-0000	A		1	SADDLE	
020	526985-0000	B		1	PLATE	
030	526986-0001	B		1	SHAFT	
040	527649-0000	B		1	DISTANCE RUBBER	
050	529362-0000	A		1	SPROCKET	
060	543141-0000	-		1	SIGN	
070	543142-0000	-		1	SIGN	
100	90051-0089	-		1	SHIFTER HANDLE	
110	90287-0167	-		1	SCREW SPRINGLOAD. SOCK. HEX HEAD M6X20	
150	311103-0365	-		1	PARALLELL PIN, M6, 6X50 MM	
160	312115-0368	-		2	SCREW ISO4762 M6X16 A4	
170	312318-0368	-		1	SCREW ISO4029 M6X16 A4	
180	312605-0312	-		1	HEXAGON NUT, M6M M4 A280	
190	315105-0136	-		1	WASHER ISO 7089-4-200 HV-A4	
200	315105-0153	-		1	WASHER ISO 7089-6-200 HV-A4	
210	315751-0103	-		1	RETAIN. RING, 6	
220	321120-0100	A		1	BEARING BUSHING W/O FLANGE 8/10X12	
230	321120-0101	A		2	BEARING BUSHING W/O FLANGE,6/8X6	

Pos	Part No	SP	UN	Qty	Description	Page No

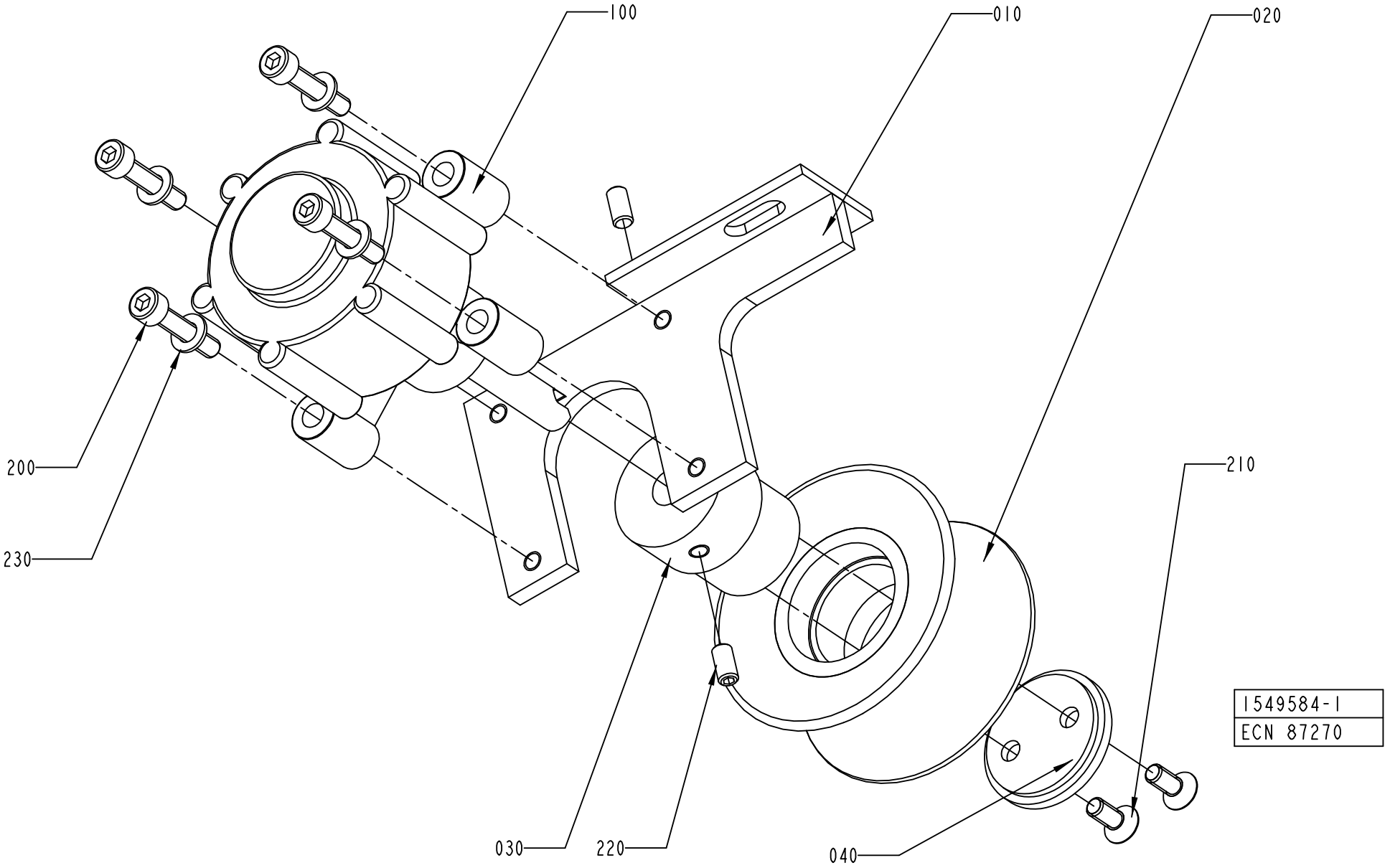
100
010
020
200
230
210
030
220
040
1549584-1
ECN 87270

ECM: 112931 - 20020731
Group number: 1549584-0100
Assembly Drawing: 1549584-1_1_AA

Pos	Part No	SP	UN	Qty	Description	Page No
-						
010	980002-0000	-		1	BRACKET	
020	540719-0000	A		1	WHEEL	
030	980003-0000	-		1	SHAFT	
040	980004-0000	-		1	PLUG	
100	90347-0054	A		1	DAMPER	
200	312115-0333	-		4	SCREW ISO4762 M5X25 A4	
210	312155-0327	-		2	SCREW EN 10642 MF6S M5X12 A480	
220	312318-0325	-		2	SCREW ISO4029 M5X10 A4	
230	315105-0146	-		4	WASHER ISO 7089-5-200 HV-A4	

Pos	Part No	SP	UN	Qty	Description	Page No

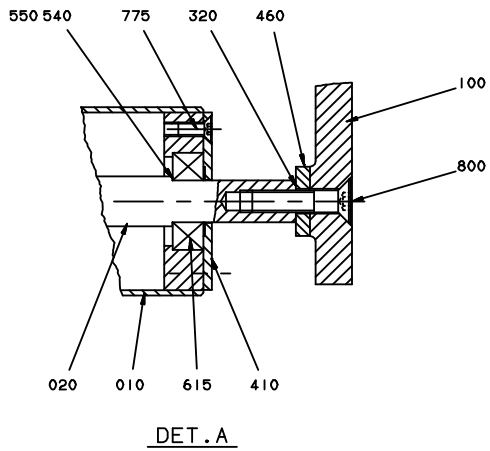

DET.A

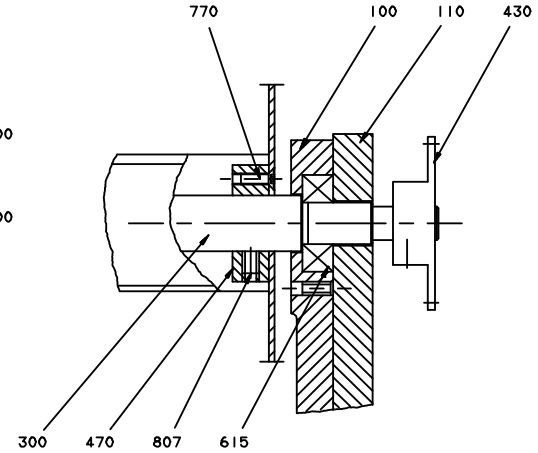

DET.B

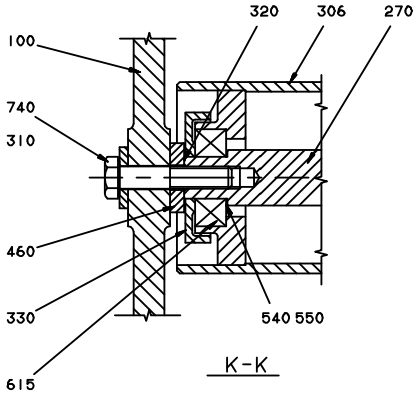

K-K

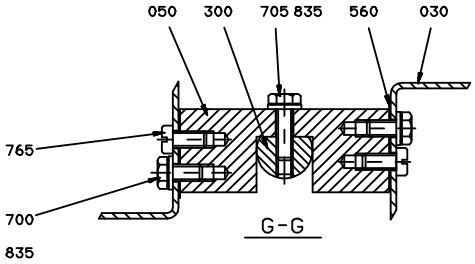

G-G

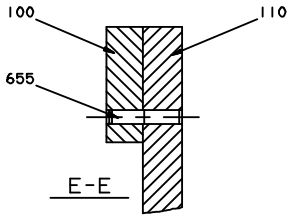

E-E

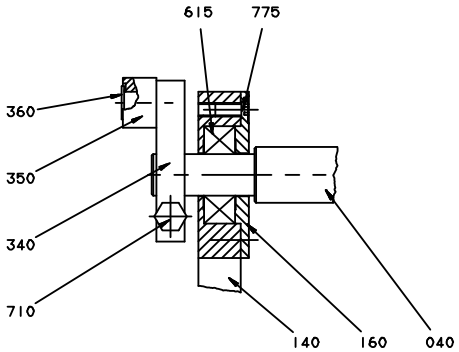

DET.C

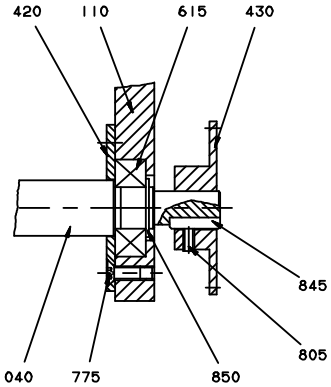

DET.D

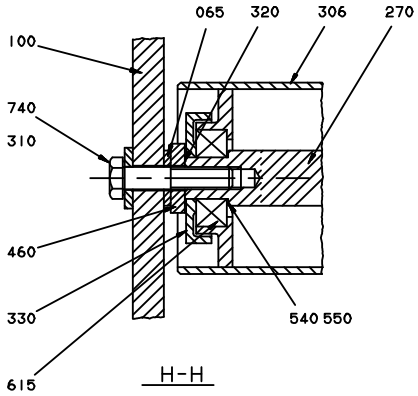

H-H
ONLY 250 ml

ECM: 104336 - 20030113
Group number: 752645-0400
Assembly Drawing: 752645-2_1_AH

This list covers pages from 576 to 579

Pos	Part No	SP	UN	Qty	Description	Page No
TBA 0180B						
030	456767-0000	D		2	CREASE BAR	
050	441556-0006	D		2	SPACER	
TBA 0200B						
030	456767-0000	D		2	CREASE BAR	
050	441556-0004	D		2	SPACER	
TBA 0250B						
030	456767-0000	D		2	CREASE BAR	
050	441556-0002	D		2	SPACER	
065	299643-0000	-		2	WASHER	
TBA 0330S, TBA 0300S, TBA 0284B						
030	456767-0000	D		2	CREASE BAR	
050	441556-0001	D		2	SPACER	
Common Parts						
	A1549584-0100	-		1	PAPER BRAKE	**575**
010	752542-0001	D		1	BENDING ROLLER	
020	752543-0001	D		1	SHAFT	
040	752536-0001	D		1	SHAFT	
060	256400-0000	C		1	SHAFT	
070	90166-0059	-	MM	24	HOSE PVC 12/16MM TRANSP.	
075	90166-0059	-	MM	24	HOSE PVC 12/16MM TRANSP.	
090	979790-0000	-		1	COVER	
100	752200-0000	-		1	CANTILEVER	
110	752526-0000	-		1	PLATE	
120	572252-0000	-		1	BRACKET	
130	752528-0000	-		1	COVER	
140	752527-0000	-		1	CANTILEVER	
145	491965-0000	-		1	CAM	
150	979543-0000	-		1	SPLASH PLATE	
155	556422-0000	-		1	PROTECTION	
160	752529-0000	D		1	BEARING COVER	
170	578000-0000	-		1	BRACKET	
180	578001-0000	-		2	SCREW	
240	752539-0000	-		1	PLATE	
245	572460-0000	-		1	SHEET	
250	752240-0000	-		1	LID	
270	752538-0000	-		2	SHAFT	
280	752642-0000	D		1	BRACKET	
290	572253-0000	-		1	SHEET	
300	752535-0000	D		1	SHAFT	
305	979701-0000	-		1	CABLE CONDUIT	
306	979709-0000	D		2	BENDING ROLLER	
307	1260476-0000	-		4	SCREW	
310	28036-0000	D		12	WASHER	
320	2033-0011	D		20	WASHER	
330	265568-0000	C		4	DUST COVER	
340	32925-0000	D		1	CARRIER	
350	32926-0000	D		1	ROLL	
360	32927-0000	D		1	SHAFT	
370	33182-0000	C		1	ROLL	
380	752237-0000	C		1	SPRING	
410	256248-0001	D		2	LID	
420	256398-0000	D		1	LID	
430	752530-0000	D		2	SPROCKET	
440	256406-0000	-		2	GABLE PLATE	
450	752644-0000	-		2	SCREW	
460	256409-0000	D		6	WASHER	
470	257141-0000	-		2	RETAINING RING	
480	752531-0000	-		1	BRACKET	
490	752534-0000	-		1	PLATE	
520	752541-0000	D		1	CANTILEVER	
530	253107-0000	D		2	WASHER	
540	752544-0001	C		6	SHIM	
550	752544-0002	C		8	SHIM	
555	979788-0000	-		1	SPRING HOLDER	
560	456817-0001	C		16	SHIM	
565	979789-0000	-		1	SPRING HOLDER	
590	572254-0000	-		1	HANDLE	
595	572255-0000	-		2	SPACER	
600	90044-0104	C		1	PROX.SWITCH IFM IN 3002	
612	90165-0056	-		6	PIPE CLIP FOR TUBE D=4 MM	
613	90165-0008	-		2	PIPE CLIP FOR TUBE D=10 MM	
615	90214-0098	C		10	BALL BEARING, 15X35X11 MM	
620	B90044-0103	C		1	KEY SAFETY SWITCH AZ 15 ZVR	
	90044-0310	*A*		*1*	*KEY FOR SAFETY SWITCH, AZ 15/16 B1*	
630	90248-0026	-		2	HINGE, 1703-80X32	
640	90335-0041	C		1	TENSION SPRING 42350, 2X14X68	
645	312318-0372	-		1	SCREW ISO4029 M6X25 A4	
650	312605-0314	-		2	HEXAGON NUT, M6M M5 A280	
655	311103-0312	-		2	PARALLELL PIN, M6, 5X25 MM	

Machine Type | Group Description | Used-In | Group Number | Page No

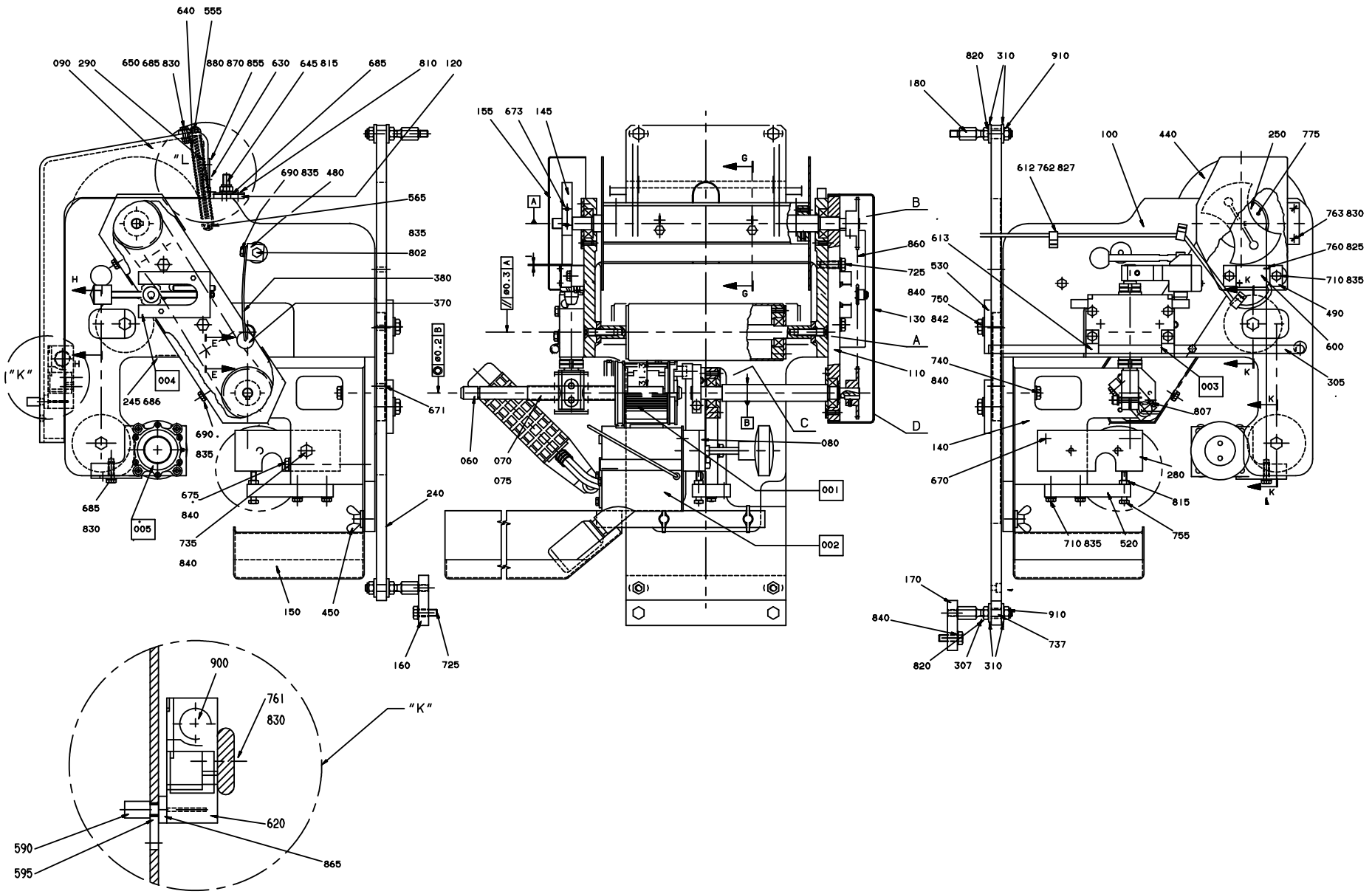
640 555
090 290
650 685 830
880 870 855
630
645 815
685
810 120
"L"
690 835 480
565
835
802
380
370
H
E
004
245 686
690
835
685
830
005
675
840
735
840
240
150
450
160
725
671
"K"
155 673 145
G
A
B
C
D
060.3 A
ø0.2 B
860
725
840
750
130 842
110
060
070
075
080
001
002
820 310 910
180
100
440
250 775
612 762 827
763 830
760 825
710 835
490
600
305
613
530
740
840
003
807
140
670
280
815
755
710 835
520
K
170
840
910
737
820
307
310
900
761
830
620
590
595
865

Pos	Part No	SP	UN	Qty	Description	Page No
Common Parts (Cont'd)						
670	311103-0357	-		1	PARALLELL PIN, M6, 6X30 MM	
671	311103-0353	-		2	PARALLELL PIN, M6, 6X20 MM	
673	312115-0333	-		2	SCREW ISO4762 M5X25 A4	
675	312111-0471	-		1	SCREW HEX.SOCK.HD.MC6S-TT 8X100 88 FZ	
685	312105-0329	-		5	SCREW M6S ISO 4017 M5X16 A480	
686	312105-0331	-		4	SCREW M6S ISO 4017 M5X20 A480	
690	312105-0364	-		3	SCREW M6S ISO 4017 M6X10 A480	
700	312105-0366	-		4	SCREW M6S M6X12 A280	
705	312115-0370	-		2	SCREW ISO4762 M6X20 A4	
710	312105-0372	-		5	SCREW M6S ISO 4017 M6X25 A480	
725	312105-0453	-		2	SCREW M6S ISO 4017 M8X25 A480	
735	312105-0457	-		1	SCREW M6S ISO 4014 M8X35 A480	
737	312115-0329	-		2	SCREW ISO4762 M5X16 A4	
740	312105-0459	-		5	SCREW M6S ISO 4014 M8X40 A480	
750	312105-0493	-		2	SCREW M6S ISO 4017 M10X25 A480	
755	312109-0376	-		1	SCREW M6S ISO 4017 M6X35 A480	
760	312125-0230	-		2	SPåRSKRUV MCS M3X20 SS	
761	312125-0329	-		2	SCREW PAN HEAD MCS M5X16 SS	
762	312125-0289	-		6	SPåRSKRUV MCS 4X10 A480	
763	312125-0325	-		2	SCREW SLOT.PAN HD. MCS 5X10 A480	
765	312125-0366	-		4	SCREW PAN HEAD MCS M6X12 SS	
770	312155-0291	-		6	SCREW EN 10642 MF6S M4X12 A480	
775	312155-0327	-		15	SCREW EN 10642 MF6S M5X12 A480	
800	312155-0457	-		2	SCREW EN 10642 MF6S M8X35 A480	
802	312105-0382	-		1	SCREW M6S ISO 4014 M6X60 A480	
805	312318-0287	-		2	SCREW ISO4029 M4X8 A4	
807	312318-0362	-		3	SCREW ISO4029 M6X8 A4	
810	312145-0285	-		6	SCREW COUNTERS.SLOT.HD. MFS 4X6 SS	
815	312605-0316	-		2	HEXAGON NUT, M6M M6 A280	
820	312605-0318	-		4	HEXAGON NUT, M6M M8 A280	
825	315105-0124	-		2	WASHER ISO 7089-3-200 HV-A4	
827	315105-0136	-		7	WASHER ISO 7089-4-200 HV-A4	
830	315105-0146	-		9	WASHER ISO 7089-5-200 HV-A4	
835	315105-0153	-		13	WASHER ISO 7089-6-200 HV-A4	
840	315105-0165	-		5	WASHER ISO 7089-8-200 HV-A4	
842	315105-0173	-		2	WASHER ISO 7089-10-200 HV-A4	
845	315701-0169	-		2	PARALLEL KEY W. ROUND ENDS 4X4X18 MM	
850	315751-0112	-		1	RETAIN. RING, 15	
855	312145-0293	-		6	SCREW COUNTERS.SLOT.HD. MFS 4X16 SS	
860	318207-0168	C		1	ROLLER CHAIN, SINGLE 6MM-168	
865	312155-0329	-		4	SCREW EN 10642 MF6S M5X16 A480	
870	312812-0312	-		6	HEXAGON NUT, NY-LOCK M4 A480	
880	315101-0136	-		6	BRICKA, BRB, 4,3/8 H=0,8	
900	352101-0103	-		1	LEAD-IN, PR18,6/PG11, E-1457518	
910	312812-0318	-		6	HEXAGON NUT, NY-LOCK M8 A480	
F001	A293685-0200	D		2	PRINTING WHEEL SS	**581, 583**
F002	A458192-0300	-		1	INK UNIT SS	**585**
F003	A751718-0100	-		1	HOLDER	**569**
F004	A543143-0100	-		1	ADJUSTMENT DEVICE	**571, 573**

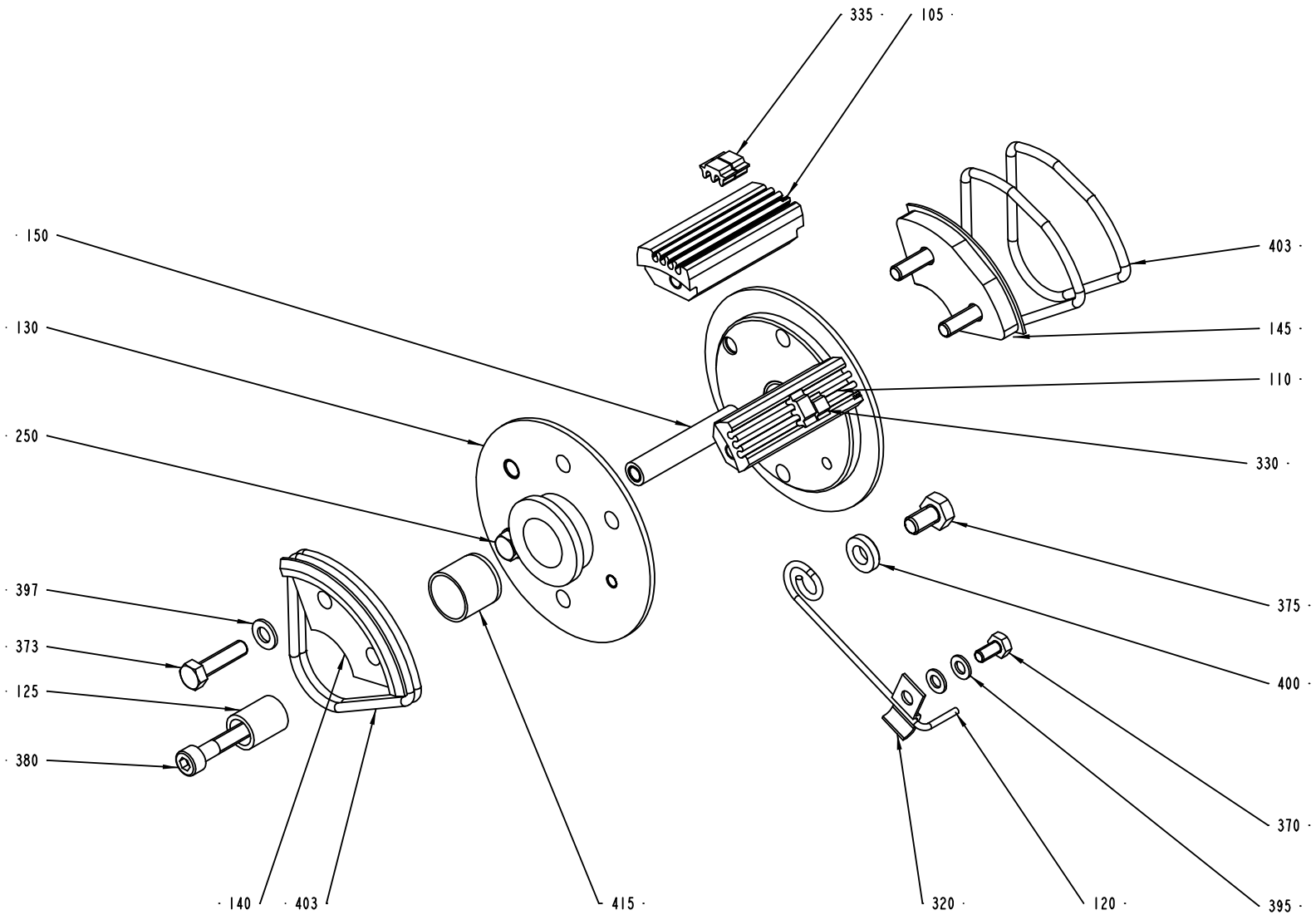

S-293685-2
ECN 73044

ECM: 102361 - 20011206
Group number: 293685-0200
Assembly Drawing: 293685-2_1_AB

This list covers pages from 580 to 583

Pos	Part No	SP	UN	Qty	Description	Page No
0125S, 0100B, 0180B, 0200B, 0300S, 0330S, 0250B, 0284B						
105-02	293395-0002	A		2	TYPE HOLDER	
110-02	293395-0001	A		2	TYPE HOLDER	
130	292412-0000	A		1	END SECTION	
135	292413-0000	A		1	END SECTION	
140	292414-0000	A		1	CARRIER	
373-02	312101-0331	-		7	SCREW M6S M5X20 FZB	
397-02	315101-0146	-		7	WASHER PLAIN, BRB, 5,3/10 H=1	
405	315202-0304	A		2	O-RING 64,5X3 MM	
410	315202-0305	A		2	O-RING 69,5X3 MM	
Common Parts						
120	32691-0000	A		1	LOCKING SPRING	
125	33011-0000	A		1	SLEEVE	
320	90165-0010	-		1	CLIP	
330	90413-0043	A		1	CODE INSERT SET	
330	90413-0033	A		1	CODE INSERT SET 0-9	
335	90413-0047	A		1	CODE INSERT SET	
335	90413-0044	A		1	CODE INSERT SET	
370	312101-0287	-		1	SCREW M6S M4X8 FZB	
375	312101-0364	-		1	SCREW M6S M6X10 FZB	
380	312111-0335	-		1	SCREW HEX.SOCK.HD.MC6S-TT 5X30 88 FZB	
395	315101-0136	-		1	BRICKA, BRB, 4,3/8 H=0,8	
400	315111-0153	-		1	WASHER PLAIN, TBRB 6,4/12 H=3	
415	321120-0122	A		2	BEARING BUSHING W/O FL, 15X17X15 MM	

Pos	Part No	SP	UN	Qty	Description	Page No

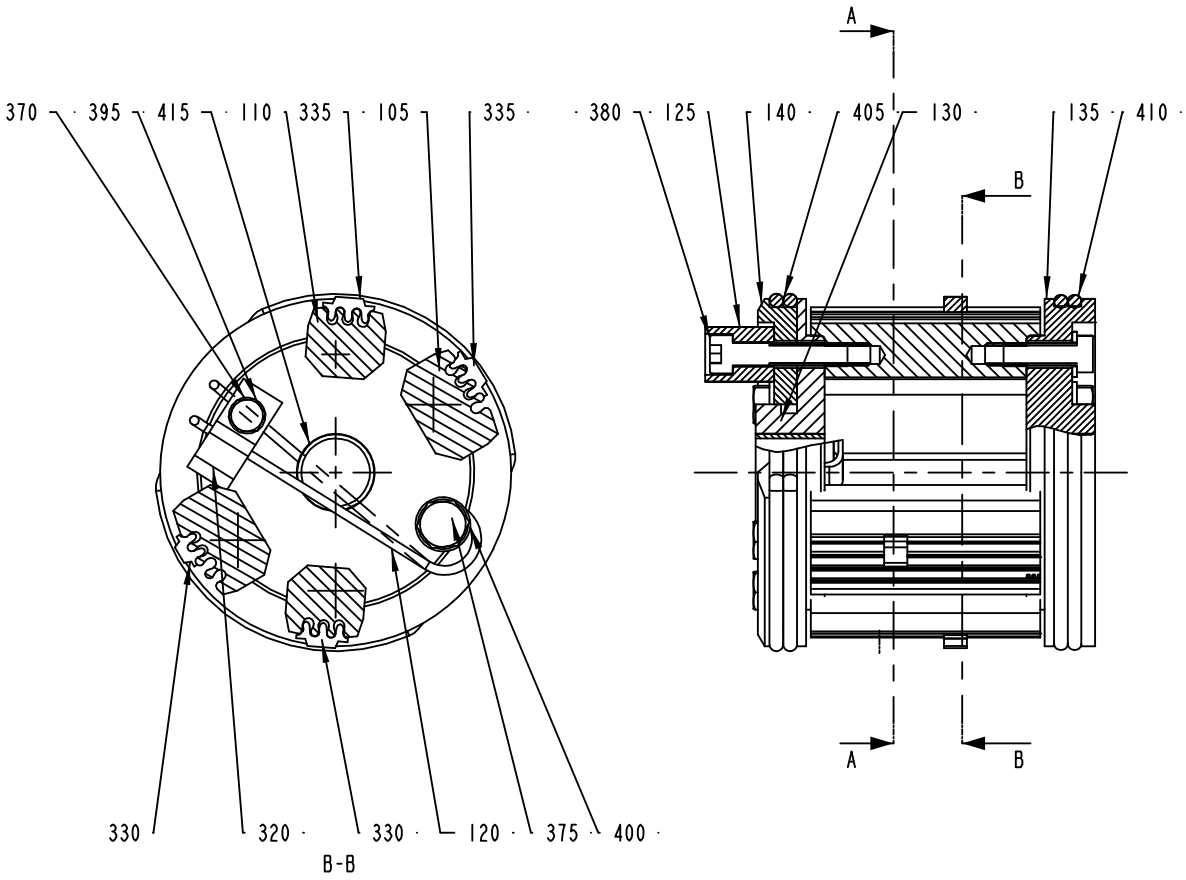

Volume: 100B. 125S. 180B. 189B. 200B. 236B. 250B.ml
284B. 300B. 300S. 330S.ml

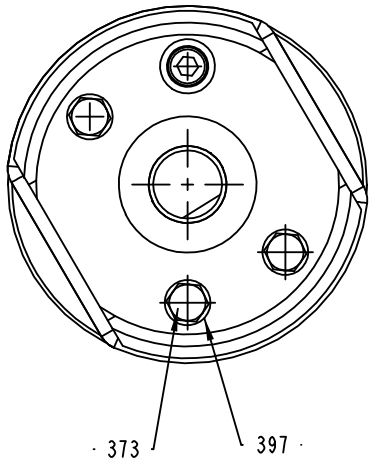

ECM: 102361 - 20011206
Group number: 293685-0200
Assembly Drawing: 293685-2_2_AB

This list covers pages from 580 to 583

Pos	Part No	SP	UN	Qty	Description	Page No
0125S, 0100B, 0180B, 0200B, 0300S, 0330S, 0250B, 0284B						
105-02	293395-0002	A		2	TYPE HOLDER	
110-02	293395-0001	A		2	TYPE HOLDER	
130	292412-0000	A		1	END SECTION	
135	292413-0000	A		1	END SECTION	
140	292414-0000	A		1	CARRIER	
373-02	312101-0331	-		7	SCREW M6S M5X20 FZB	
397-02	315101-0146	-		7	WASHER PLAIN, BRB, 5,3/10 H=1	
405	315202-0304	A		2	O-RING 64,5X3 MM	
410	315202-0305	A		2	O-RING 69,5X3 MM	
Common Parts						
120	32691-0000	A		1	LOCKING SPRING	
125	33011-0000	A		1	SLEEVE	
320	90165-0010	-		1	CLIP	
330	90413-0043	A		1	CODE INSERT SET	
330	90413-0033	A		1	CODE INSERT SET 0-9	
335	90413-0047	A		1	CODE INSERT SET	
335	90413-0044	A		1	CODE INSERT SET	
370	312101-0287	-		1	SCREW M6S M4X8 FZB	
375	312101-0364	-		1	SCREW M6S M6X10 FZB	
380	312111-0335	-		1	SCREW HEX.SOCK.HD.MC6S-TT 5X30 88 FZB	
395	315101-0136	-		1	BRICKA, BRB, 4,3/8 H=0,8	
400	315111-0153	-		1	WASHER PLAIN, TBRB 6,4/12 H=3	
415	321120-0122	A		2	BEARING BUSHING W/O FL, 15X17X15 MM	

Pos	Part No	SP	UN	Qty	Description	Page No

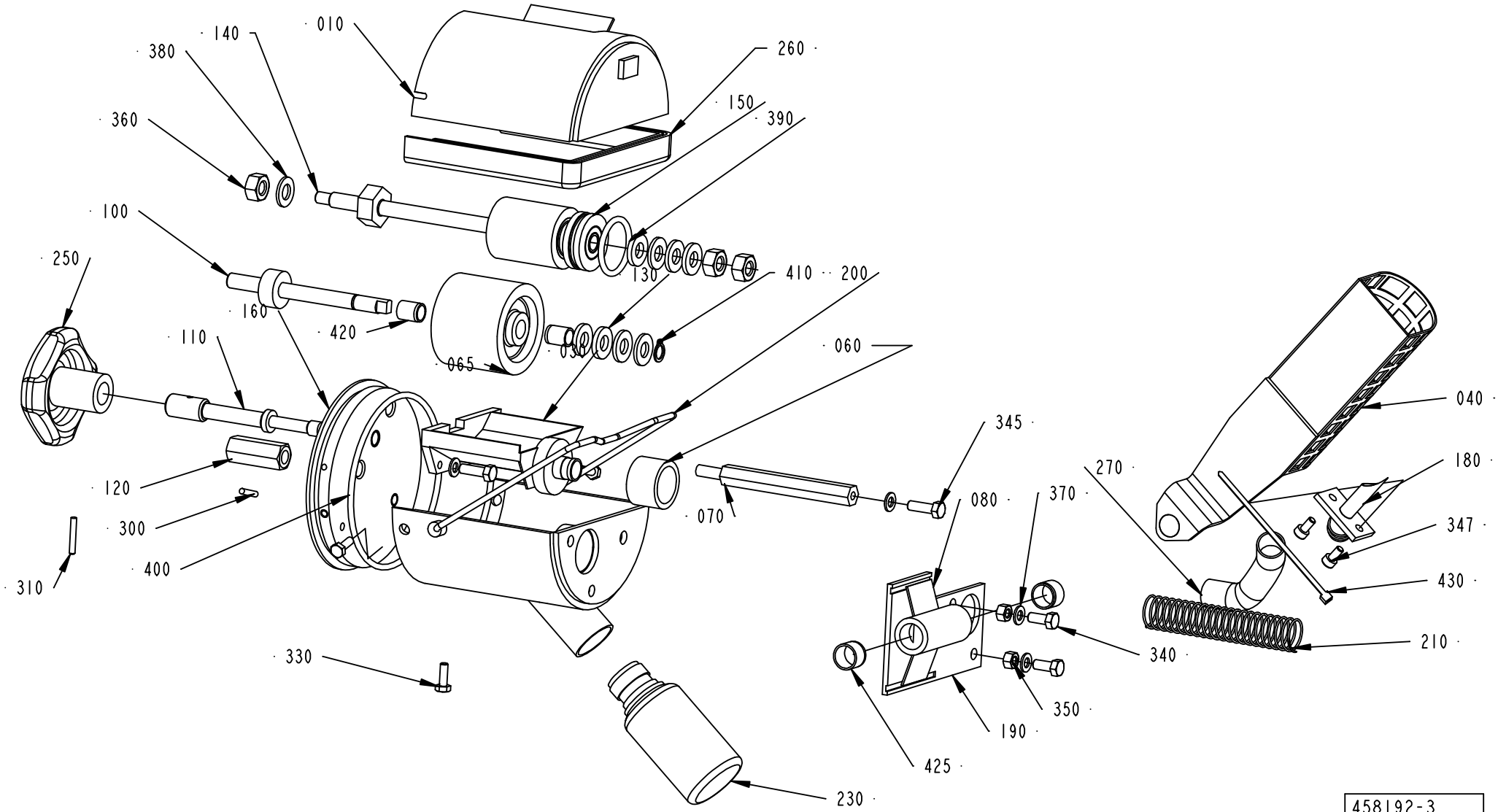

458192-3
ECN 73132

ECM: 106773 - 20021112
Group number: 458192-0300
Assembly Drawing: 458192-3_1_AB

Pos	Part No	SP	UN	Qty	Description	Page No
TBA/19						
230	90050-0012	B		1	BOTTLE, 50ML PLASTIC	
Common Parts						
010	458364-0000	A		1	COVER	
030	297210-0000	A		1	INK WELL	
040	476356-0000	A		1	HOLDER FOR INK BOTTLE	
060	445542-0000	B		1	MANTEL RUBBER	
065	450355-0000	A		1	INK ROLLER	
070	33010-0000	A		1	SCREW	
080	35547-0000	B		1	SPRING	
100	292044-0000	A		1	SHAFT	
110	293667-0000	A		1	DOWEL	
120	436927-0000	A		1	NUT	
130	293669-0001	A		4	WASHER	
130	293669-0004	A		2	WASHER	
130	293669-0003	A		2	WASHER	
130	293669-0002	A		2	WASHER	
140	293670-0000	A		1	SHAFT	
150	B543135-0000	A		1	INK TRANSFER ROLLER	
	90153-0050	-		*1*	*ADHESIVE, 3M TYPE SCOTCH-WELD 2216 B/A*	
	321120-0100	-		*1*	*BEARING BUSHING W/O FLANGE 8/10X12*	
160	297213-0000	A		1	END SECTION	
180	476355-0000	A		1	CANNULAR TUBE	
190	456772-0000	A		1	PIVOT BRACKET	
200	434747-0000	B		1	BOW CLAMP	
210	537308-0000	B		1	SPRING	
250	90051-0077	-		1	HANDLE	
260	90143-0029	B	MM	295	STRIP	
270	90166-0138	B	MM	100	HOSE	
280	90299-0072	A		48	INK	
300	311103-0236	-		2	PARALLELL PIN, M6, 3X16 MM	
310	311103-0238	-		1	CYLINDERPINNE M6, 3X20 MM	
320	311103-0270	-		1	PARALLELL PIN, M6, 4X16 MM	
330	312105-0291	-		3	SCREW M6S ISO 4017 M4X12 A480	
340	312105-0327	-		2	SCREW M6S ISO 4017 M5X12 A480	
345	312105-0329	-		1	SCREW M6S ISO 4017 M5X16 A480	
347	312115-0287	-		2	SCREW ISO4762 M4X8 A4	
350	312605-0314	-		2	HEXAGON NUT, M6M M5 A280	
360	312605-0318	-		3	HEXAGON NUT, M6M M8 A280	
370	315105-0146	-		3	WASHER ISO 7089-5-200 HV-A4	
380	315105-0165	-		2	WASHER ISO 7089-8-200 HV-A4	
390	315202-0218	A		1	O-RING 26,2X3 MM	
400	315202-0309	A		1	O-RING 89,5X3 MM	
410	315750-0105	-		1	RETAIN. RING, 8	
420	321120-0100	A		2	BEARING BUSHING W/O FLANGE 8/10X12	
425	321120-0109	A		2	BEARING BUSHING W/O FLANGE,12/14X10	
430	352113-0101	-		1	CLIP STRIP, 92X2,5 MM	

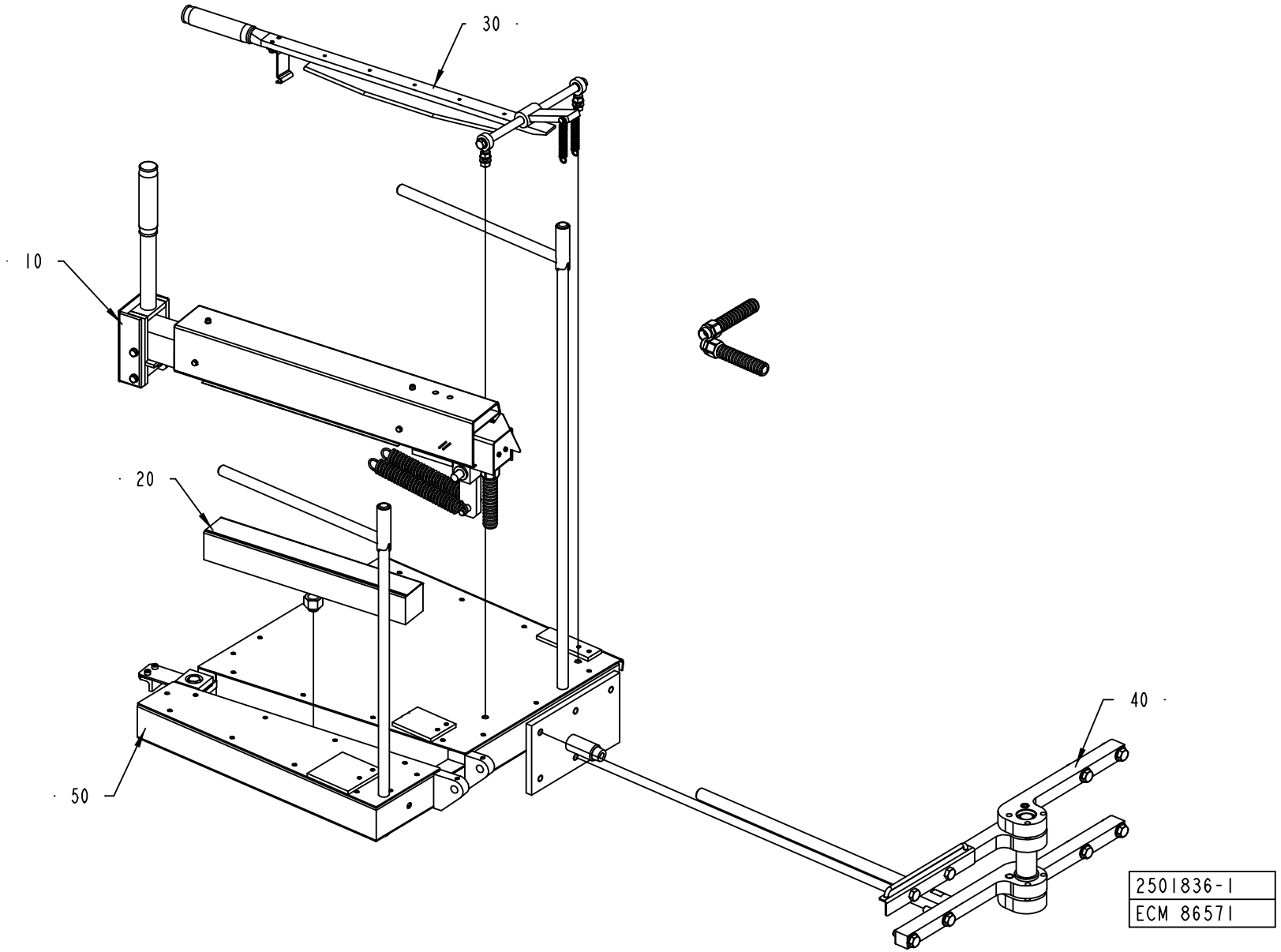
30
10
20
40
50
2501836-1
ECM 86571

ECM: 91613 - 20020111
Group number: 2501836-0100
Assembly Drawing: 2501836-1_1_AA

Pos	Part No	SP	UN	Qty	Description	Page No
-						
010	A37877-0400	-		1	HEATING BLOCK	**589**
020	A37894-0100	-		1	COUNTER RAIL	**591**
030	A450101-0300	-		1	TEARING DEVICE	**593**
040	A2500587-0100	-		1	SUSPENSION ARM	**595**
050	A271641-0500	-		1	SPLICING TABLE	**597**

Pos	Part No	SP	UN	Qty	Description	Page No

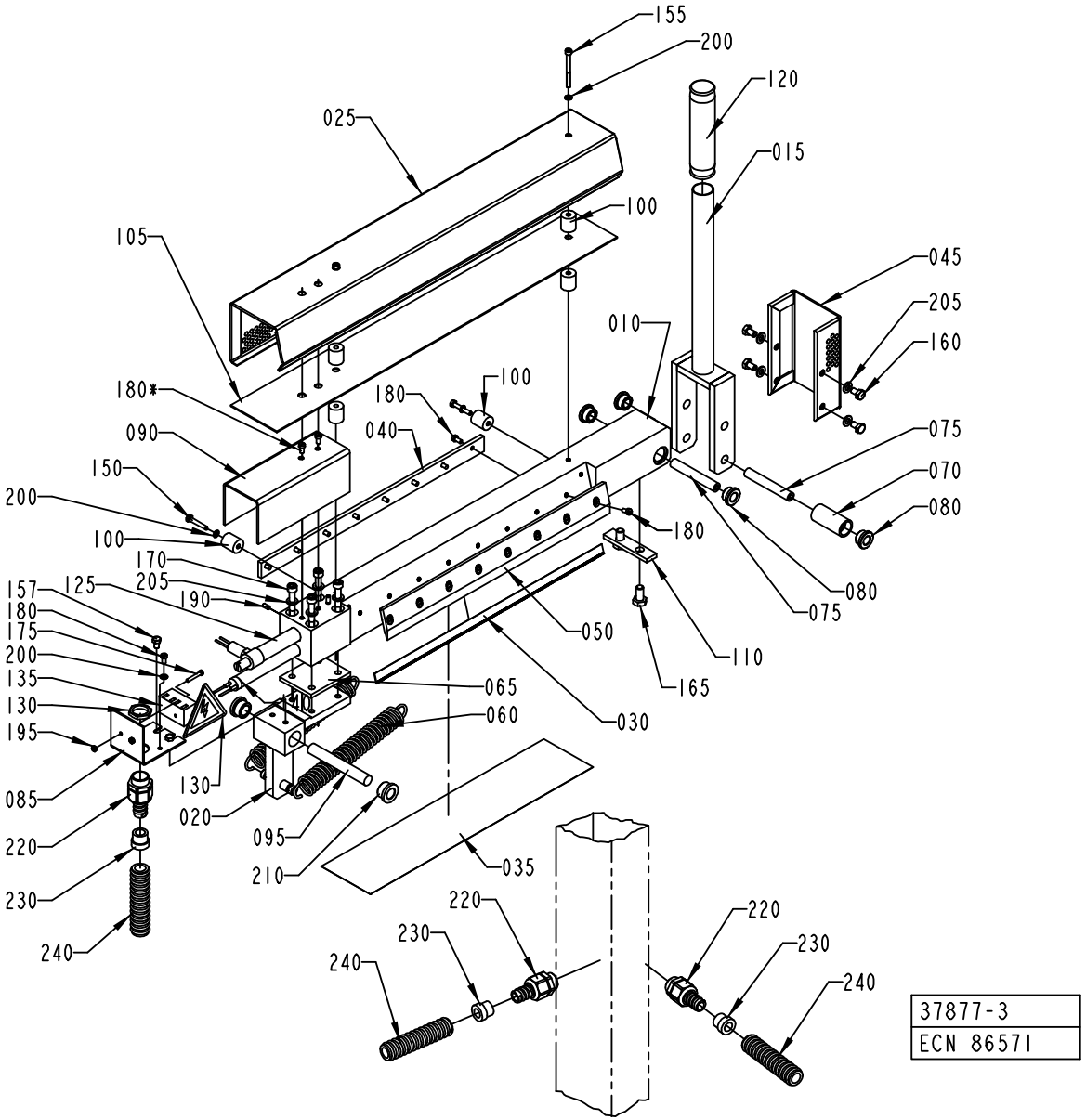
155
200
120
025
015
100
105
045
205
160
010
180*
180
100
040
075
090
070
150
080
200
180
100
170
205
190
157
125
180
175
200
135
130
195
050
110
165
065
060
030
085
220
230
240
130
020
095
210
035
220
230
240
220
230
240
37877-3
ECN 86571

ECM: 91449 - 20020111
Group number: 37877-0400
Assembly Drawing: 37877-3_1_AA

Pos	Part No	SP	UN	Qty	Description	Page No
-						
010	255301-0000	D		1	HEATING RAIL	
015	37879-0000	-		1	LOCKING ARM	
020	37880-0000	-		1	HINGE	
025	243132-0000	D		1	PROTECTION PLATE	
030	31017-0000	C		1	KNIFE	
035	31723-0000	C		1	TEFLON STRIP	
040	31724-0000	-		1	LOCK BAR	
045	37882-0000	D		1	PROTECTION PLATE	
050	37883-0000	-		1	LOCK BAR	
055	37884-0000	D		1	SHAFT	
060	37885-0000	C		2	TENSION SPRING	
065	37886-0000	D		1	INSULATING DISK	
070	37888-0000	D		1	ROLL	
075	37889-0000	D		2	SHAFT	
080	37890-0000	D		4	FLANGE ROLLER	
085	37892-0000	D		1	CONNECTION BOX	
090	37893-0000	-		1	LID	
095	208173-0000	D		1	SHAFT	
100	229775-0000	D		6	SPACER	
105	243133-0000	D		1	SHIELD PLATE	
110	245221-0000	-		1	STOP	
120	90017-0001	D		1	BIKE HANDLE	
125	90059-0001	C		1	THERMOSTAT	
130	90099-0002	-		1	NUT PR 18,6 BRASS	
135	90077-0102	-		1	TERMINAL BLOCK, 1952.2	
137	90194-0016	-		1	ETIKETT	
140	90206-0053	C		1	HEATING ELEMENT 230V 1200W	
150	312105-0297	-		2	SCREW M6S ISO 4017 M4X25 A480	
155	312115-0304	-		2	SCREW ISO4762 M4X45 A4	
157	312105-0323	-		2	SKRUV M6S ISO 4017 M5X8 A480	
160	312105-0364	-		4	SCREW M6S ISO 4017 M6X10 A480	
165	312105-0449	-		2	SCREW M6S ISO 4017 M8X16 A480	
170	312115-0380	-		4	SCREW ISO4762 M6X50 A4	
175	312125-0230	-		2	SPåRSKRUV MCS M3X20 SS	
180	312125-0287	-		19	SCREW PAN HEAD MCS M4X8 SS	
190	312318-0287	-		2	SCREW ISO4029 M4X8 A4	
195	312605-0310	-		2	HEXAGON NUT, M6M M3 A280	
200	315105-0136	-		5	WASHER ISO 7089-4-200 HV-A4	
205	315105-0153	-		8	WASHER ISO 7089-6-200 HV-A4	
210	321101-0173	-		2	FLANGE BUS 12F7X12	
220	353243-0002	-		3	EXTENDED WITHOUT INSERT, PG11	
230	353249-0010	-		3	INSERT, SINGEL HOLE, EK 152/11	
240	90152-0059	-	M	2	SPIRAL CONDUIT, 18X12, UL 1211	

Machine Type Group Description Used-In Group Number Page No

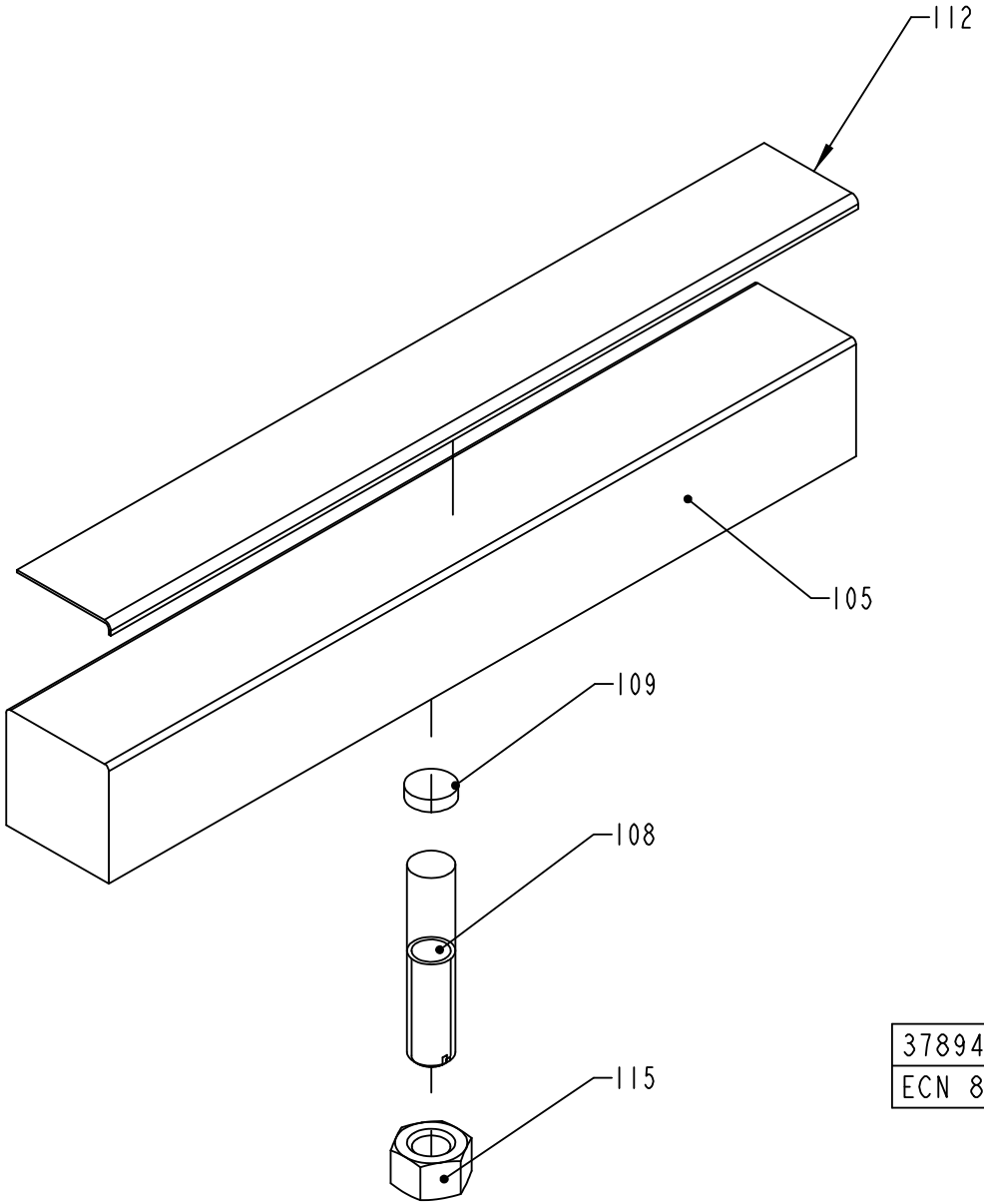

37894-1
ECN 89888

ECM: 102864 - 20020110
Group number: 37894-0100
Assembly Drawing: 37894-1_1_AB

Pos	Part No	SP	UN	Qty	Description	Page No
-						
105	37895-0000	-		1	RAIL	
108	37896-0000	-		1	DOWEL	
109	37897-0000	-		1	WASHER	
112	90144-0030	A	MM	360	TAPE	
115	312605-0324	-		1	HEXAGON NUT, M6M M16 A280	

Pos	Part No	SP	UN	Qty	Description	Page No

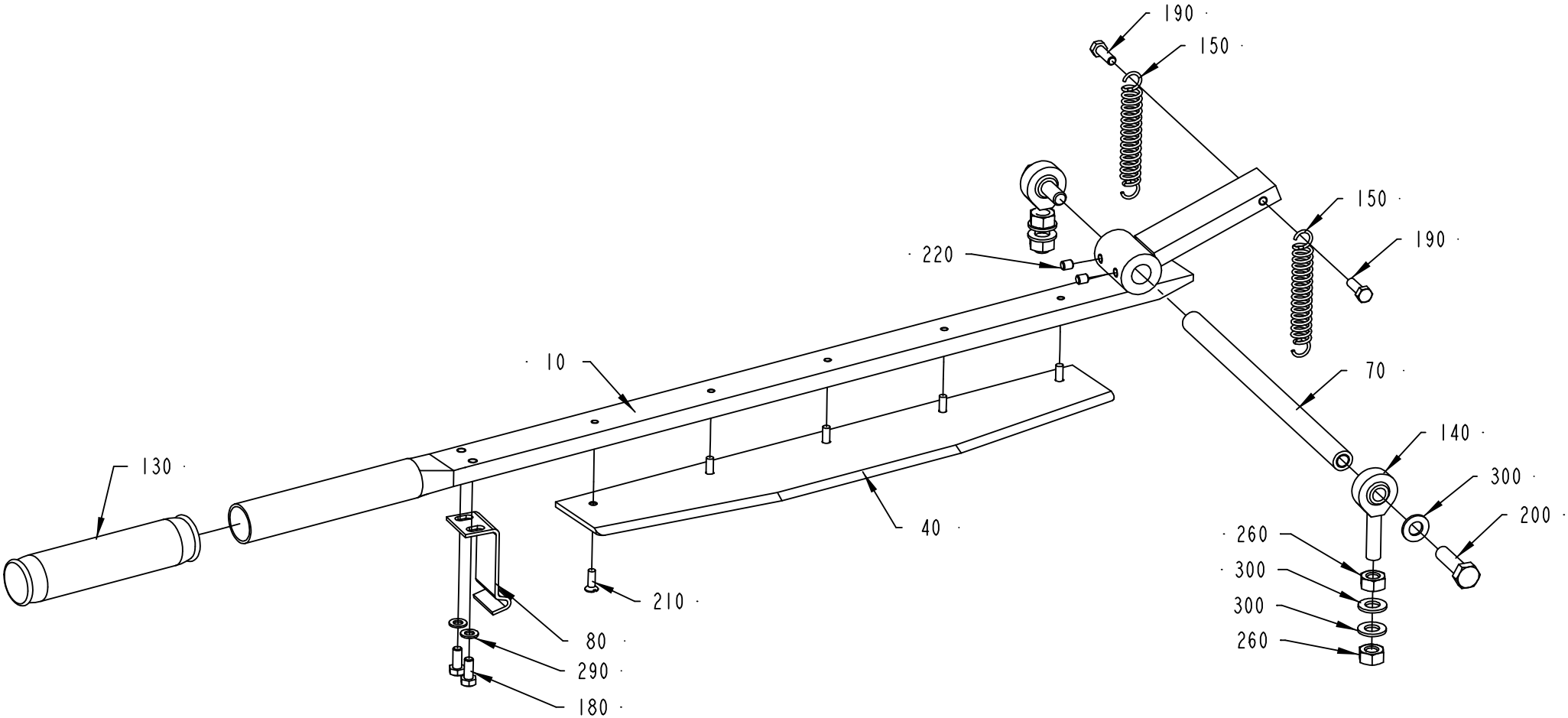

450101-3
ECM 86571

ECM: 91615 - 20020111
Group number: 450101-0300
Assembly Drawing: 450101-3_1_AA

Pos	Part No	SP	UN	Qty	Description	Page No
-						
010	571920-0000	-		1	PRESSURE ARM	
040	37900-0000	D		1	KNIFE	
070	979784-0000	-		1	SHAFT	
080	206913-0000	D		1	LOCKING LOOP	
130	90017-0001	-		1	BIKE HANDLE	
140	90115-0054	-		2	ROD END, ID=8 MM, M8X1,25	
150	90458-1241	-		2	TENSION SPRING RZ-1221	
180	312101-0327	-		2	SCREW M6S M5X12 FZB	
190	312101-0329	-		2	SCREW M6S M5X16 FZB	
200	312105-0455	-		2	SCREW M6S ISO 4017 M8X30 A480	
210	312145-0291	-		5	SCREW COUNT.SLOT.HD. 4X12 A4	
220	312316-0321	-		2	SCREW HEX.SOCK.SET CUP P.MSK6SS5X6 FZB	
260	312605-0318	-		4	HEXAGON NUT, M6M M8 A280	
290	315101-0146	-		2	WASHER PLAIN, BRB, 5,3/10 H=1	
300	315105-0165	-		6	WASHER ISO 7089-8-200 HV-A4	

Pos	Part No	SP	UN	Qty	Description	Page No

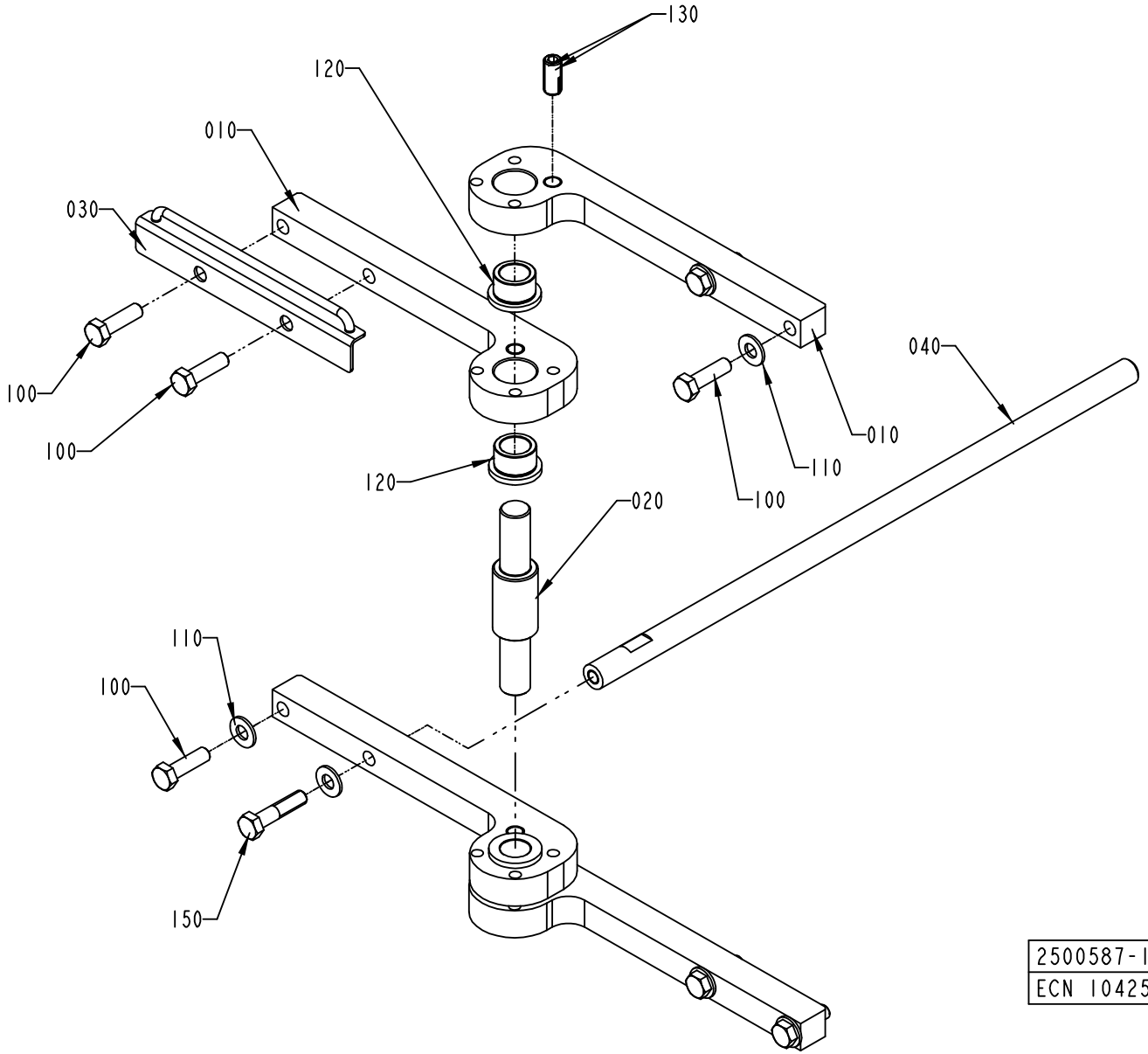

2500587-1
ECN 104253

ECM: 104333 - 20030113
Group number: 2500587-0100
Assembly Drawing: 2500587-1_1_AB

Pos	Part No	SP	UN	Qty	Description	Page No
-						
010	1558317-0000	-		4	BRACKET	
020	2501385-0000	-		1	SHAFT	
030	2500593-0000	-		1	BOW CLAMP	
040	272862-0000	-		1	HOLDER	
100	312105-0497	-		7	SCREW M6S ISO 4017 M10X35 A480	
110	315105-0173	-		6	WASHER ISO 7089-10-200 HV-A4	
120	321101-0233	-		4	FLANGE BUSHING, 20X28X20 MM	
130	90458-2078	-		2	SCREW SPRINGLOAD. SOCK. HEX HEAD M12X26	
150	312105-0500	-		1	SCREW M6S ISO 4014 M10X45 A480	

Pos	Part No	SP	UN	Qty	Description	Page No

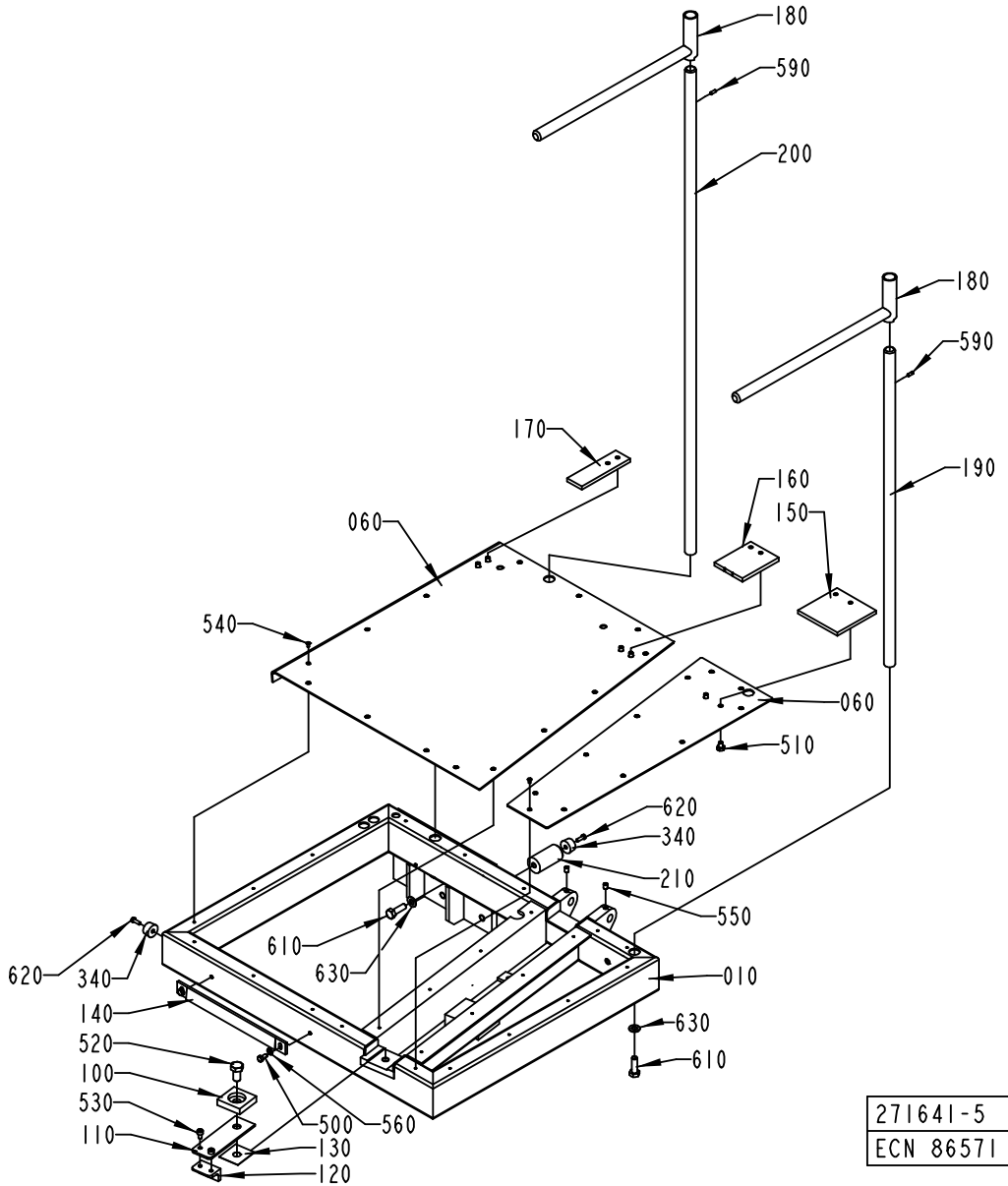

271641-5
ECN 86571

ECM: 91578 - 20020111
Group number: 271641-0500
Assembly Drawing: 271641-5_1_AA

Pos	Part No	SP	UN	Qty	Description	Page No
TBA 0125S, TBA 0100B						
150	271642-0000	-		1	RULER	
160	271643-0000	-		1	RULER	
170	271644-0000	-		1	RULER	
TBA 0160S, TBA 0200S						
150	272886-0000	-		1	RULER	
160	272887-0000	-		1	RULER	
170	272888-0000	-		1	RULER	
TBA 0250S, TBA 0200M						
150	574426-0000	D		1	RULER	
160	574427-0000	D		1	RULER	
170	574428-0000	D		1	RULER	
TBA 0330S, TBA 0300S, TBA 0180B, TBA 0200B, TBA 0284B, TBA 0250B						
150	37913-0000	D		1	RULER	
160	37916-0000	D		1	RULER	
170	37917-0000	D		1	RULER	
Common Parts						
010	37905-0000	-		1	FRAME	
050	979783-0000	-		1	PLATE	
060	979204-0000	-		1	PLATE	
100	37908-0000	-		1	PLATE	
110	37909-0000	D		1	SPRING	
120	37910-0000	D		1	LOCK	
130	37911-0000	-		1	LACE	
140	37912-0000	D		1	LOCK PLATE	
180	469141-0000	-		2	HOLDER	
190	978876-0000	-		1	SHAFT	
200	978877-0000	-		1	SHAFT	
210	2501835-0000	-		1	SHAFT	
340	90347-0005	-		2	DAMPER, NO. F 1006 B	
500	312105-0325	-		2	SCREW M6S ISO 4017 M5X10 A480	
510	312105-0362	-		6	SCREW M6S ISO 4017 M6X8 A480	
520	312105-0491	-		1	SCREW M6S ISO 4017 M10X20 A480	
530	312115-0323	-		2	SCREW ISO4762 M5X8 A4	
540	312145-0220	-		25	SCREW COUNTERS.SLOT.HD. MFS 3X6 SS	
550	312318-0362	-		2	SCREW ISO4029 M6X8 A4	
560	315105-0146	-		2	WASHER ISO 7089-5-200 HV-A4	
590	311103-0267	-		2	PARALLELL PIN, M6, 4X10 MM	
600	312105-0461	-		1	SCREW M6S ISO 4014 M8X50 A480	
610	312105-0453	-		2	SCREW M6S ISO 4017 M8X25 A480	
620	312125-0291	-		2	SCREW PAN HEAD MCS M4X12 SS	
630	315105-0165	-		3	WASHER ISO 7089-8-200 HV-A4	

Machine Type | Group Description | Used-In | Group Number | Page No

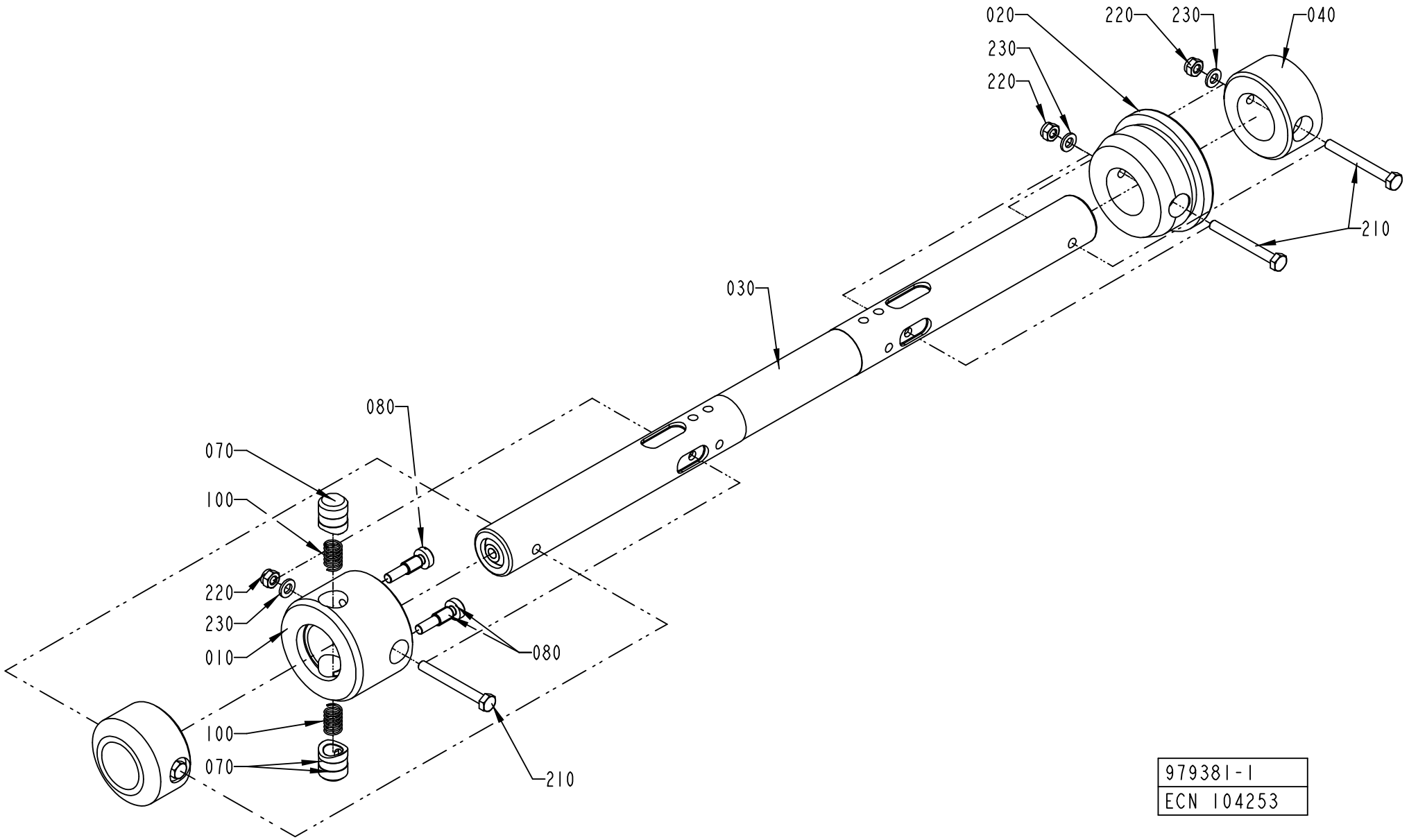
020
220
230
040
230
220
210
030
080
070
100
220
230
010
080
100
070
210
979381-1
ECN 104253

ECM: 104332 - 20030113
Group number: 979381-0100
Assembly Drawing: 979381-1_1_AC

Pos	Part No	SP	UN	Qty	Description	Page No
-						
010	271239-0000	-		1	SLEEVE	
020	272810-0001	-		1	SLEEVE	
030	979382-0000	-		1	SHAFT	
040	440259-0000	-		2	RETAINING RING	
070	272813-0000	-		2	PLUNGER	
080	271241-0000	-		2	SCREW	
100	90335-0025	-		2	COMP. SPRING 22010, 1X11X26	
210	312101-0381	-		4	SCREW M6S M6X55 FZB	
220	312812-0316	-		4	HEXAGON NUT, NY-LOCK M6 A480	
230	315101-0153	-		4	WASHER PLAIN, BRB, 6,4/12 H=1,5	

Pos	Part No	SP	UN	Qty	Description	Page No

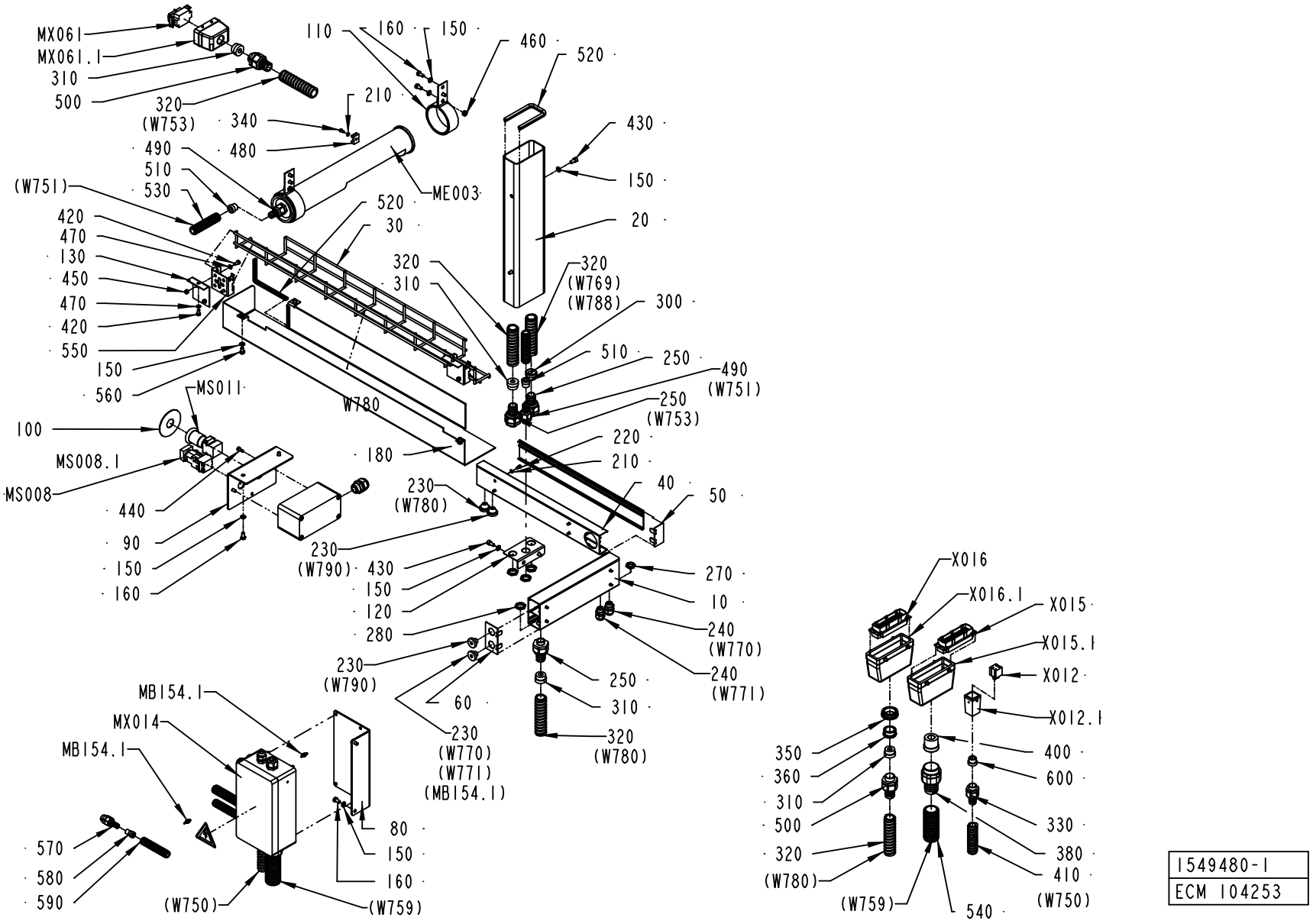

1549480-1
ECM 104253

ECM: 107791 - 20030113
Group number: 1549480-0100
Assembly Drawing: 1549480-1_1_AB

Pos	Part No	SP	UN	Qty	Description	Page No
-						
010	2501327-0000	-		1	CABLE DUCT	
020	2501328-0000	-		1	CABLE DUCT	
030	2501329-0000	-		1	CABLE DUCT	
040	2501330-0000	-		1	CABLE DUCT	
050	2501331-0000	-		1	LID	
060	2501332-0000	-		1	LID	
080	1558315-0000	-		1	BRACKET	
090	1558316-0000	-		1	BRACKET	
110	2526341-0000	-		2	LAMP HOLDER	
120	2526342-0000	-		1	BRACKET	
130	2500217-0000	-		2	BRACKET	
150	315105-0153	-		17	WASHER ISO 7089-6-200 HV-A4	
160	312105-0366	-		10	SCREW M6S M6X12 A280	
170	359705-0015	A		1	WARNING SIGN ISO, RISK OF ELECTRIC SHOCK	
180	2529564-0000	-		1	COVER	
210	315105-0136	-		9	WASHER ISO 7089-4-200 HV-A4	
220	312115-0287	-		8	SCREW ISO4762 M4X8 A4	
230	90015-0023	-		4	LEAD-IN, TET7-10, E-1458019	
240	352103-0100	-		2	CABLE GLAND, STR 9, PR15,2/PG9	
250	90457-0146	-		3	EXTENDED WITHOUT INSERT,	
260	2564115-0000	-		1	PUSH BUTTON BOX	
270	90099-0001	-		2	MUTTER PR 15,2 MäSSING	
280	90099-0002	-		4	NUT PR 18,6 BRASS	
290	90458-0307	-		1	CABLE GLAND, M20X1,5, NO.5311 1020	
300	90458-1239	-		1	GLAND, INSERT, MULTI HOLE, 1X9/1X5,5	
310	353249-0012	-		4	INSERT, SINGEL HOLE, EK 154/11	
320	90152-0051	-	M	4	SPIRAL CONDUIT, 25X18, UL 1816	
330	353243-0003	-		1	EXTENDED WITHOUT INSERT, PG11	
340	312125-0287	-		1	SCREW PAN HEAD MCS M4X8 SS	
350	90089-0005	-		1	REDUCING SLEEVE, PR37/PR28,3	
360	90089-0004	-		1	REDUCING SLEEVE, PR28,3/PR22,5	
380	353242-0003	-		1	NORMAL WITHOUT INSERT, PG29	
400	353249-0072	-		1	INSERT, SINGEL HOLE, E155/20	
410	90152-0050	-	M	4	SPIRAL CONDUIT, 20X13, UL 1313	
420	312105-0325	-		6	SCREW M6S ISO 4017 M5X10 A480	
430	312115-0366	-		4	SCREW ISO4762 M6X12 A4	
440	312125-0329	-		2	SCREW PAN HEAD MCS M5X16 SS	
450	312605-0314	-		4	HEXAGON NUT, M6M M5 A280	
460	312605-0316	-		2	HEXAGON NUT, M6M M6 A280	
470	315105-0146	-		6	WASHER ISO 7089-5-200 HV-A4	
480	352113-0203	-		1	ANCHOR PLATES FOR STRIPS, TYPE TM3S8-M0	
490	353243-0002	-		2	EXTENDED WITHOUT INSERT, PG11	
500	353243-0005	-		2	EXTENDED WITHOUT INSERT, PG16	
510	353249-0010	-		2	INSERT, SINGEL HOLE, EK 152/11	
520	90143-0060	-	MM	850	EDGE STRIP 9,5X6,3MM BLACK PVC	
530	90152-0059	-	M	4	SPIRAL CONDUIT, 18X12, UL 1211	
540	90152-0070	-	M	4	METAL HOSE, 32,5X26, UL 2621	
550	90181-0190	-		2	CABLE DUCT, WALL BRACKET, B4 MINI	
560	312105-0364	-		3	SCREW M6S ISO 4017 M6X10 A480	
570	353242-0005	-		1	NORMAL WITHOUT INSERT, PG9	
580	90458-1238	-		1	GLAND, INSERT, SINGLE HOLE,	
590	90152-0058	-	M	1	SPIRAL CONDUIT, 15X9, UL 0909	
600	353249-0011	-		1	INSERT, SINGEL HOLE, EK 153/11	
MB154.1	90232-0347	-		1	FIBRE LL3-TB01 5 308050	
ME003	B90164-0015	-		1	LIGHT FIXTURE, DWDCV111B/230V 50HZ	
	90297-0007	*B*		*1*	*FLUORESCENT TUBE, PL11*	
MS008	90064-0085	A		1	PUSH BUTTON, RED	
MS008.1	359301-0110	-		1	SIGN "SHORT STOP"	
MS011	90064-0124	A		1	SWITCH, EM. STOP, ZB2-BS844+ZB2-BZ1045	
MS011.1	486826-0001	A		1	SIGN "EMERGENCY STOP"	
MX060	A1558318-0100	-		1	CONNECTION BOX	**603, 605**
MX061	90110-0170	-		1	FEMALE INSERT 10-POLE	
MX061.1	90110-0171	-		1	COVER 10-POLE	
W780	351150-0406	-	M	4	CABLE OLFLEX 7X0,75 MM2 LIGHT/GREY	
X012	90110-0295	-		1	CONNECTOR 4 POLE + EARTH	
X012.1	90110-0371	-		1	PLUG HOOD	
X015	90110-0150	A		1	MALE INSERT 121110 0000	
X015.1	90110-0152	-		1	CABLE HOOD 24-POL 70.352.2428.1	
X016	90110-0150	-		1	MALE INSERT 121110 0000	
X016.1	90110-0152	-		1	CABLE HOOD 24-POL 70.352.2428.1	

Machine Type | Group Description | Used-In | Group Number | Page No

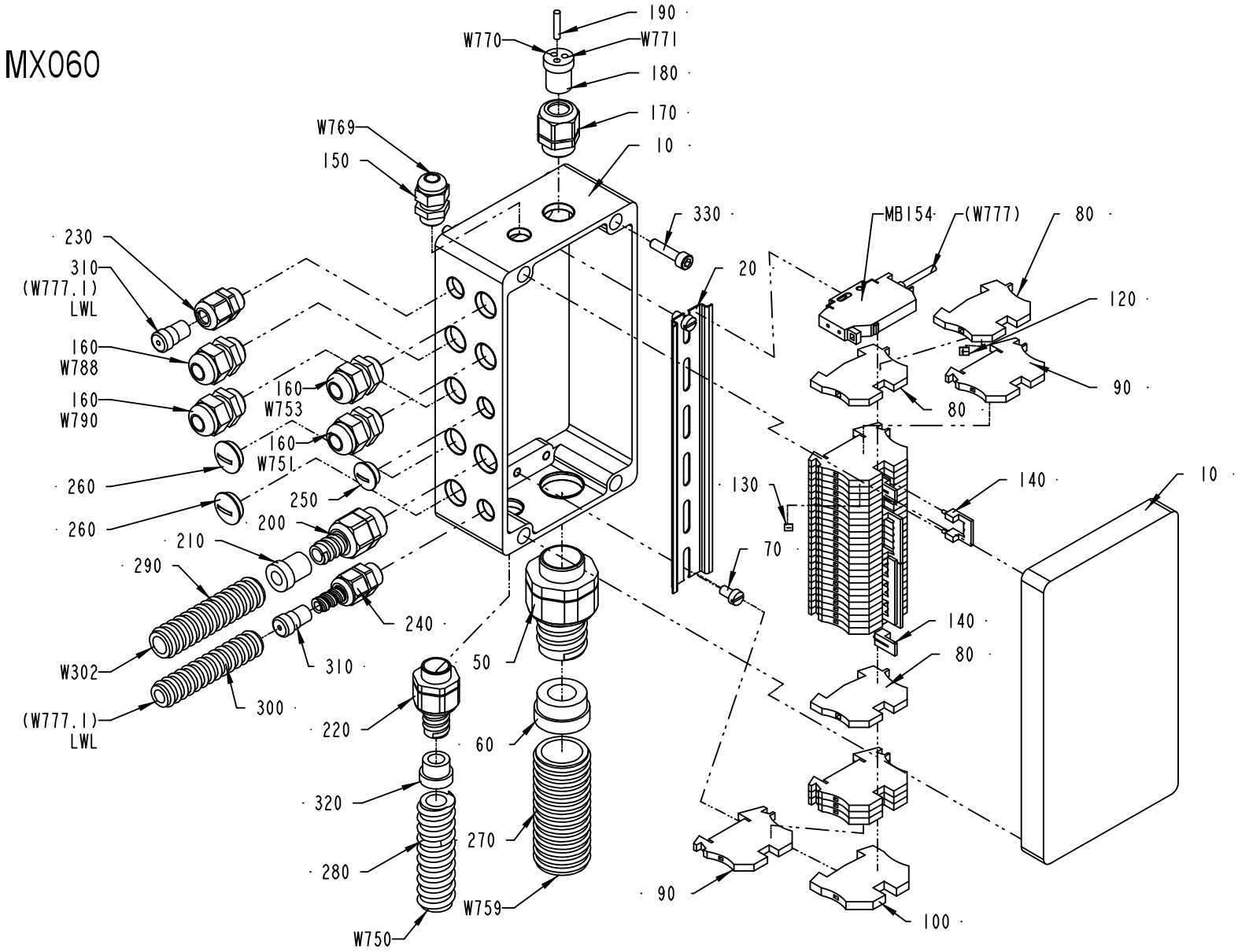

1558318-1
ECM 104253

ECM: 107792 - 20030113
Group number: 1558318-0100
Assembly Drawing: 1558318-1_1_AB

This list covers pages from 602 to 605

Pos	Part No	SP	UN	Qty	Description	Page No
-						
010	2501265-0000	-		1	CONNECTION BOX	
020	2501266-0000	-		1	RAIL	
050	353243-0007	-		1	EXTENDED WITHOUT INSERT, PG21	
060	353249-0016	-		1	INSERT, SINGEL HOLE, EK 155/18	
070	312125-0364	-		2	SCREW SLOT.PAN HD. MCS 6X10 A480	
080	353024-0204	-		3	EARTH TERMINAL WPE 2,5	
090	353021-0212	-		30	FEED THROUGH TERMINAL, 10200.0	
100	353024-0205	-		1	EARTH TERMINAL, 1010.1	
120	359011-0818	-		1	SYMBOL 5-GW (-) 50PC	
130	359011-0807	-		2	MARKING PLATES 5-FW 1-50	
135	359011-0809	-		2	MARKING PLATES 5-FW 101-150	
140	353034-0030	-		4	BRIDGE CONNECTOR WQV 2,5/10, 10544.6	
150	352103-0101	-		1	KABELFöRSKR. ST 9, PR15,2/PG9	
160	352103-0106	-		4	CABLE GLAND, ST 11, PR18,6/PG11	
170	353240-0003	-		1	NORMAL WITHOUT INSERT, PG 13,5	
180	353249-0025	-		1	INSERT, MULTI HOLE, E152M3X4	
190	353249-0301	-		1	SEALING PIN, 4X20	
200	B353242-0001	-		1	NORMAL WITHOUT INSERT, PG13,5	
	353249-0065	-		*1*	*INSERT, SINGEL HOLE, E152/09*	
210	353249-0065	-		1	INSERT, SINGEL HOLE, E152/09	
220	353249-0011	-		1	INSERT, SINGEL HOLE, EK 153/11	
230	353240-0001	-		1	NORMAL WITHOUT INSERT, PG 9	
240	353242-0005	-		1	NORMAL WITHOUT INSERT, PG9	
250	90002-0013	-		1	BLANK-OFF PLUG, PR 15,2 SKINDICHT-BLK9	
260	90002-0009	-		2	BLANK-OFF PLUG, PR 18.6 SKINDICHT-BLK11	
270	90152-0070	-	M	4	METAL HOSE, 32,5X26, UL 2621	
280	90152-0050	-	M	4	SPIRAL CONDUIT, 20X13, UL 1313	
290	90152-0059	-	M	4	SPIRAL CONDUIT, 18X12, UL 1211	
300	90152-0058	-	M	4	SPIRAL CONDUIT, 15X9, UL 0909	
310	90458-1238	-		2	GLAND, INSERT, SINGLE HOLE,	
320	353249-0003	-		1	INSERT, SINGEL HOLE, E151/11	
330	312115-0372	-		4	SCREW ISO4762 M6X25 A4	
MB154	90232-0123	A		1	PH.CELL WLL170-P135-6011723	
W302	351120-0144	-	M	4	CABLE SIHF 3X1,5MM2 GREEN/YELLOW	
W750	351150-0414	-	M	2	CABLE OLFLEX 5X1,5 MM2 LIGHT/GREY	
W751	351150-0412	-	M	2	CABLE OLFLEX 3X1,5 MM2 LIGHT/GREY	
W753	351150-0406	-	M	4	CABLE OLFLEX 7X0,75 MM2 LIGHT/GREY	
W759	351150-0425	-	M	2	CABLE OLFLEX 25X0,75 MM2 LIGHT/GREY	
W788	351150-0405	-	M	4	CABLE OLFLEX 5X0,75 MM2 LIGHT/GREY	
W790	351150-0405	-	M	4	CABLE OLFLEX 5X0,75 MM2 LIGHT/GREY	

Pos	Part No	SP	UN	Qty	Description	Page No

Machine Type | Group Description | Used-In | Group Number | Page No

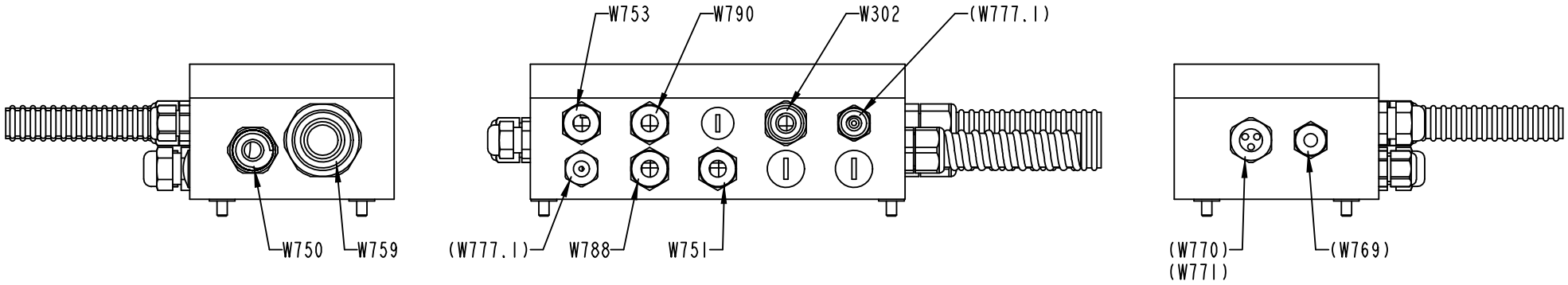

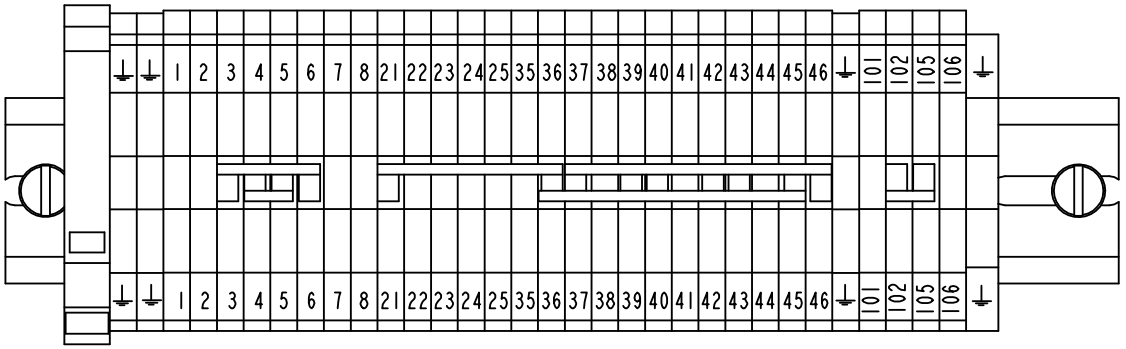

1558318-1
ECM 104253

ECM: 107792 - 20030113
Group number: 1558318-0100
Assembly Drawing: 1558318-1_2_AB

This list covers pages from 602 to 605

Pos	Part No	SP	UN	Qty	Description	Page No
-						
010	2501265-0000	-		1	CONNECTION BOX	
020	2501266-0000	-		1	RAIL	
050	353243-0007	-		1	EXTENDED WITHOUT INSERT, PG21	
060	353249-0016	-		1	INSERT, SINGEL HOLE, EK 155/18	
070	312125-0364	-		2	SCREW SLOT.PAN HD. MCS 6X10 A480	
080	353024-0204	-		3	EARTH TERMINAL WPE 2,5	
090	353021-0212	-		30	FEED THROUGH TERMINAL, 10200.0	
100	353024-0205	-		1	EARTH TERMINAL, 1010.1	
120	359011-0818	-		1	SYMBOL 5-GW (-) 50PC	
130	359011-0807	-		2	MARKING PLATES 5-FW 1-50	
135	359011-0809	-		2	MARKING PLATES 5-FW 101-150	
140	353034-0030	-		4	BRIDGE CONNECTOR WQV 2,5/10, 10544.6	
150	352103-0101	-		1	KABELFöRSKR. ST 9, PR15,2/PG9	
160	352103-0106	-		4	CABLE GLAND, ST 11, PR18,6/PG11	
170	353240-0003	-		1	NORMAL WITHOUT INSERT, PG 13,5	
180	353249-0025	-		1	INSERT, MULTI HOLE, E152M3X4	
190	353249-0301	-		1	SEALING PIN, 4X20	
200	B353242-0001	-		1	NORMAL WITHOUT INSERT, PG13,5	
	353249-0065	-		*1*	*INSERT, SINGEL HOLE, E152/09*	
210	353249-0065	-		1	INSERT, SINGEL HOLE, E152/09	
220	353249-0011	-		1	INSERT, SINGEL HOLE, EK 153/11	
230	353240-0001	-		1	NORMAL WITHOUT INSERT, PG 9	
240	353242-0005	-		1	NORMAL WITHOUT INSERT, PG9	
250	90002-0013	-		1	BLANK-OFF PLUG, PR 15,2 SKINDICHT-BLK9	
260	90002-0009	-		2	BLANK-OFF PLUG, PR 18.6 SKINDICHT-BLK11	
270	90152-0070	-	M	4	METAL HOSE, 32,5X26, UL 2621	
280	90152-0050	-	M	4	SPIRAL CONDUIT, 20X13, UL 1313	
290	90152-0059	-	M	4	SPIRAL CONDUIT, 18X12, UL 1211	
300	90152-0058	-	M	4	SPIRAL CONDUIT, 15X9, UL 0909	
310	90458-1238	-		2	GLAND, INSERT, SINGLE HOLE,	
320	353249-0003	-		1	INSERT, SINGEL HOLE, E151/11	
330	312115-0372	-		4	SCREW ISO4762 M6X25 A4	
MB154	90232-0123	A		1	PH.CELL WLL170-P135-6011723	
W302	351120-0144	-	M	4	CABLE SIHF 3X1,5MM2 GREEN/YELLOW	
W750	351150-0414	-	M	2	CABLE OLFLEX 5X1,5 MM2 LIGHT/GREY	
W751	351150-0412	-	M	2	CABLE OLFLEX 3X1,5 MM2 LIGHT/GREY	
W753	351150-0406	-	M	4	CABLE OLFLEX 7X0,75 MM2 LIGHT/GREY	
W759	351150-0425	-	M	2	CABLE OLFLEX 25X0,75 MM2 LIGHT/GREY	
W788	351150-0405	-	M	4	CABLE OLFLEX 5X0,75 MM2 LIGHT/GREY	
W790	351150-0405	-	M	4	CABLE OLFLEX 5X0,75 MM2 LIGHT/GREY	

Pos	Part No	SP	UN	Qty	Description	Page No

Machine Type | Group Description | Used-In | Group Number | Page No

Tetra Pak

SPC
Spare Parts Catalogue

This page is intentionally left blank.

ECM: 123880 - 20030228
Group number: 648109-1200
Assembly Drawing:

Pos	Part No	SP	UN	Qty	Description	Page No
-						
010	A1350086-0200	-		1	INSTALLATION DRAWING	
020	A1350087-0200	-		1	DIAGRAM	**611**
050	A2543594-0100	-		1	ELECTRICAL COMPONENTS	**613**
060	90459-0308	-		1	PAPER TROLLEY, STOCKA 32.04.250.9	
090	A531345-0200	-		1	PERSONAL PROTECT. EQ H2O2	**615**
100	A77099-0300	-		1	TOOL KIT	**617**
110	A2541126-0100	-		1	INSTALLATION ACCESSORIES	**619**
110	1520972-0000	-		5	TPO-BAR	
120	A2501528-0100	-		1	PLMS KIT	**621**
120	1519952-0000	-		5	DOLLY	
130	A2541886-0100	-		1	START-UP KIT	**635**
310	579899-0000	-		1	LIFTING UNIT	
320	441725-0000	-		1	COVERING PLATE	
330	90220-0104	-	M	20	SCR. CABLE 4X1,5MM2	
50	2531465-0000	-		1	SUPPORT	
600	579765-0000	-		1	MACHINE SIGN CE	
610	979548-0000	-		8	MACHINE PLATE	
900	90003-0422	-		1	CORRUGATED CARDBOARD BOX	
910	90347-0079	-		10	DAMPER TFE 601	

Pos	Part No	SP	UN	Qty	Description	Page No

Machine Type | Group Description | Used-In | Group Number | Page No

This page is intentionally left blank.

ECM: 118282 - 20030228
Group number: 1350087-0200
Assembly Drawing:

Pos	Part No	SP	UN	Qty	Description	Page No
ASU						
020	1511567-0000	-		1	AIR DIAGRAM ASU	
NOTCSB						
010	1348964-0000	-		1	AIR DIAGRAM	
TCSB						
080	2605572-0000	-		1	AIR DIAGRAM	
Common Parts						
030	2569978-0000	-		1	WATER DIAGRAM	
040	2569977-0000	-		1	ASEPTIC DIAGRAM	
050	2569976-0000	-		1	VALVE PANEL	
060	2569980-0000	-		1	LUBRIFICATION DIAGRAM	
070	2569979-0000	-		1	HYDRAULIC SYSTEM	

Pos	Part No	SP	UN	Qty	Description	Page No

This page is intentionally left blank.

ECM: 106690 - 20020514
Group number: 2543594-0100
Assembly Drawing:

Pos	Part No	SP	UN	Qty	Description	Page No
-						
010	90082-0301	-		3	OVERVOLTOLTAGE PROTECTOR	
020	90064-0315	-		1	LAMP REMOVER, NO:700	
030	90332-0325	-		1	PAPER FOR RECORDER 90332-20	
040	90332-0324	-		1	INK WHEEL	
050	779910-0101	-		1	PADLOCK	
060	B90233-0027	-		5	TUBE FUSE, 16A	
	90233-0305	*C*		*1*	*INDICATOR*	
070	B90233-0027	-		5	TUBE FUSE, 16A	
	90233-0305	*C*		*1*	*INDICATOR*	
080	90233-0029	-		5	TUBE FUSE, 25A	

Pos	Part No	SP	UN	Qty	Description	Page No

Machine Type | Group Description | Used-In | Group Number | Page No

This page is intentionally left blank.

ECM: 72190 - 19990628
Group number: 531345-0200
Assembly Drawing:

Pos	Part No	SP	UN	Qty	Description	Page No	Pos	Part No	SP	UN	Qty	Description	Page No
-													
	90303-0013	-		1	APRON								
	90303-0012	-		1	PROTECTIVE GLOVES								
	90303-0011	-		1	PROTECTIVE GOGGLES								

Machine Type | Group Description | Used-In | Group Number | Page No

This page is intentionally left blank.

ECM: 103434 - 20020514
Group number: 77099-0300
Assembly Drawing:

Pos	Part No	SP	UN	Qty	Description	Page No
TBA						
020	72947-0000	-		1	HOOK SPANNER	
040	76131-0000	-		1	ASSEMBLY CONE	
050	76132-0000	-		1	ASSEMBLY TOOL	
060	78801-0000	-		1	CALIBRATION TOOL	
130	777150-0801	-		2	KEY SET ,SEXKANT	

Pos	Part No	SP	UN	Qty	Description	Page No

This page is intentionally left blank.

ECM: 103435 - 20020514
Group number: 2541126-0100
Assembly Drawing:

Pos	Part No	SP	UN	Qty	Description	Page No
-						
010	1512848-0000	-		1	BRACKET	
300	90458-1960	-		2	STRETCHING SCREW, 468-697MM MAX2950KG	
310	90458-1959	-		8	LIFTING EYE BOLT, LGB (3) 3T M24	
320	312105-0463	-		4	SCREW M6S ISO 4014 M8X60 A480	

Pos	Part No	SP	UN	Qty	Description	Page No

This page is intentionally left blank.

ECM: 91113 - 20020514
Group number: 2501528-0100
Assembly Drawing:

Pos	Part No	SP	UN	Qty	Description	Page No
TBA						
	A2501547-0100	-		1	QUEUE GUARD	**623**
	359000-0104	-		10	MARKING CO01/3"4"	
	359000-0103	-		10	MARKING CO01/3"3"	
	359000-0102	-		10	MARKING CO01/3"2"	
	359000-0101	-		10	MARKING CO01/3"1"	
	359000-0100	-		10	MARKING CO01/3"0"	
	359000-0105	-		10	MARKING CO01/3"5"	
	359000-0109	-		10	MARKING CO01/3"9"	
	359000-0108	-		10	MARKING CO01/3"8"	
	359000-0107	-		10	MARKING CO01/3"7"	
	359000-0106	-		10	MARKING CO01/3"6"	
	353001-0102	-		50	END SLEEVE 0,75 MM2	
	90110-0518	-		5	PLINTH 15 PIN	
	353001-0101	-		50	END SLEEVE 0,5 MM2	
	90110-0383	-		5	CONTACT COVER 15 PIN	
MA451	90453-0001	-		1	MODEM MA-12	
MX022	A2510844-0100	-		1	CONNECTION BOX	**625**
Common Parts						
	A2501472-0100	-		1	COUNTER	**627**
	A2501471-0100	-		1	COUNTER	**629**
MX020	A2501466-0100	-		1	CONNECTION BOX	**631**
MX021	A2501465-0100	-		1	CONNECTION BOX	**633**
W951	90220-0091	-	M	200	PAIR TWISTED CABLE 2X2X0,25MM2	
W952	90220-0091	-	M	200	PAIR TWISTED CABLE 2X2X0,25MM2	
W956	90041-0068	-		1	DATACABLE MODEM PC	

Pos	Part No	SP	UN	Qty	Description	Page No

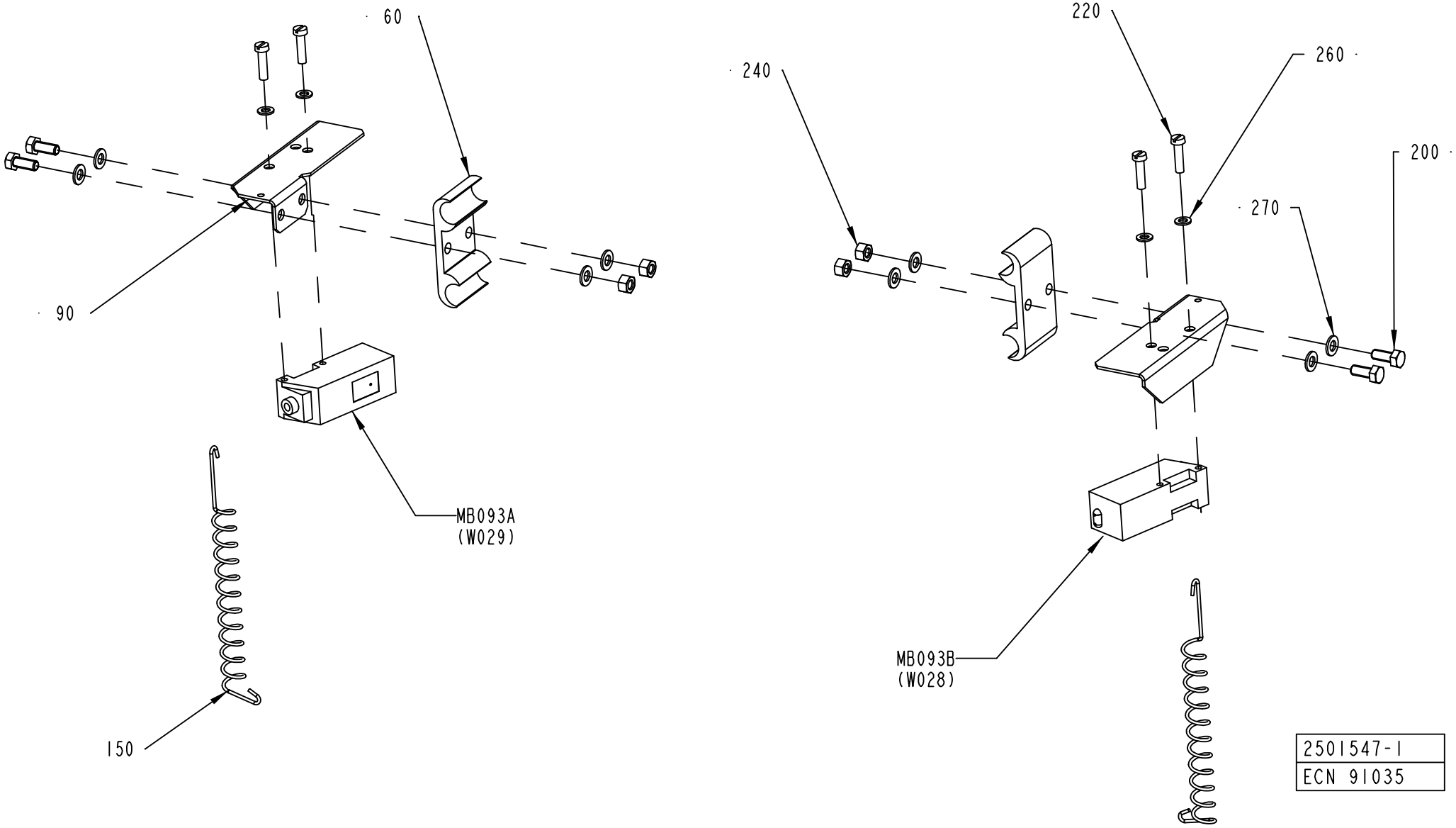
60
90
MB093A
(W029)
150
220
260
240
200
270
MB093B
(W028)
2501547-1
ECN 91035

ECM: 91168 - 20020514
Group number: 2501547-0100
Assembly Drawing: 2501547-1_1_AA

Pos	Part No	SP	UN	Qty	Description	Page No
TBA 0125S, TBA 0100B						
060	1020638-0000	-		2	HOLDER	
TBA 0330S, TBA 0300S, TBA 0180B, TBA 0160S, TBA 0200B, TBA 0250S, TBA 0284B, TBA 0200S, TBA 0200M, TBA 0250B						
060	1020637-0000	-		2	HOLDER	
Common Parts						
090	1086888-0000	-		2	COVER	
150	532412-0000	-		2	SPRING	
200	312105-0327	-		4	SCREW M6S ISO 4017 M5X12 A480	
220	312125-0293	-		4	SCREW PAN HEAD MCS M4X16 SS	
240	312605-0314	-		4	HEXAGON NUT, M6M M5 A280	
260	315105-0136	-		4	WASHER ISO 7089-4-200 HV-A4	
270	315105-0146	-		8	WASHER ISO 7089-5-200 HV-A4	
MB093A	90232-0103	C		1	PH.CELL E3S-CT61-L-5M	
MB093B	90232-0104	C		1	PH.CELL E3S-CT61-D-5M	

Pos	Part No	SP	UN	Qty	Description	Page No

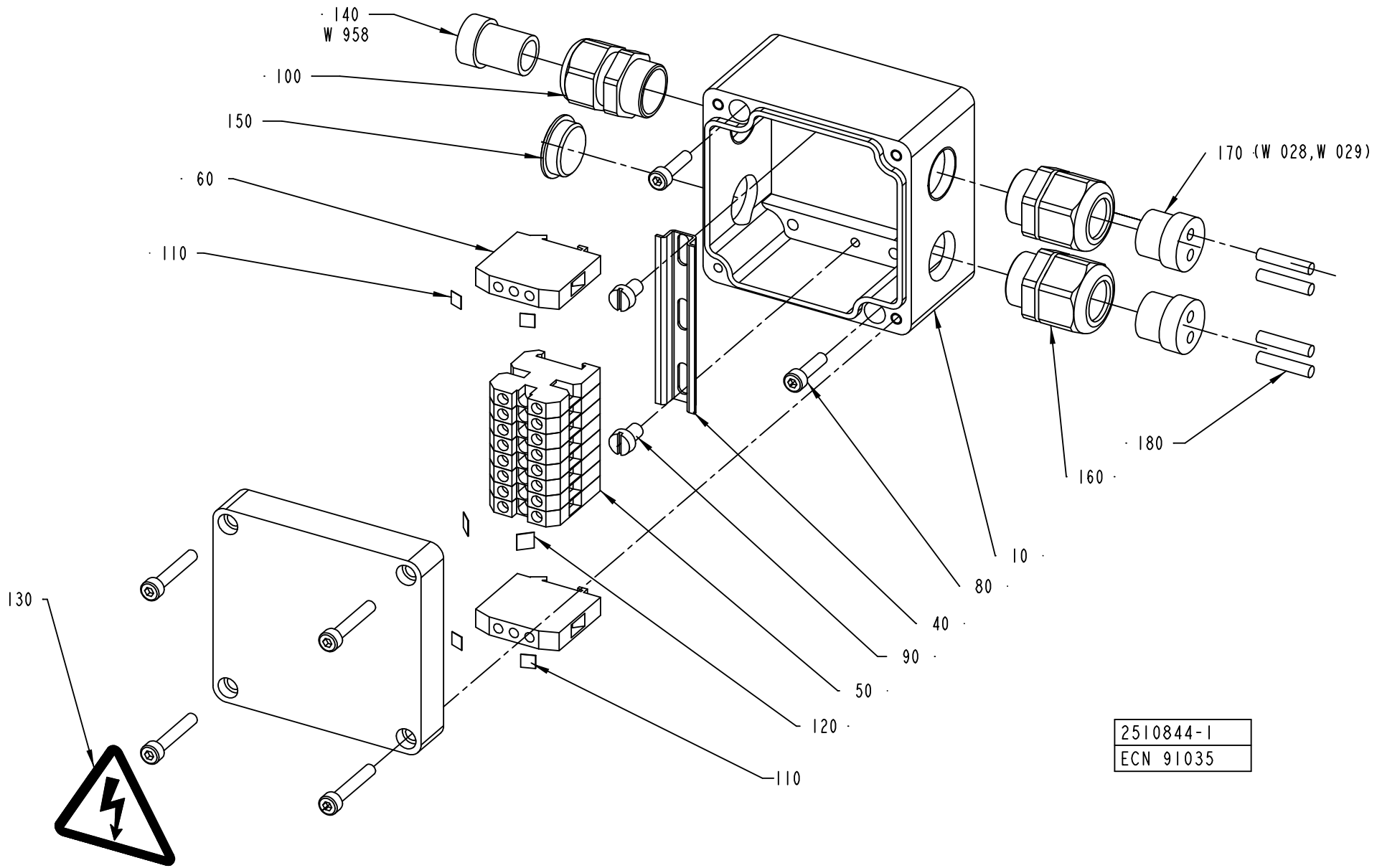
· 140
W 958
· 100
150
· 60
· 110
170 (W 028,W 029)
· 180
160 ·
10 ·
80 ·
40 ·
90 ·
50 ·
120 ·
110
130
2510844-1
ECN 91035

ECM: 95640 - 20020514
Group number: 2510844-0100
Assembly Drawing: 2510844-1_1_AA

Pos	Part No	SP	UN	Qty	Description	Page No
-						
010	1349568-0000	-		1	CONNECTION BOX	
040	90077-0328	-	M	65	RAIL TS15/5	
050	90077-0079	-		8	FEED THROUGH TERMINAL, 02943.6	
060	90135-0026	-		2	EARTH TERMINAL, 3802.6	
080	312115-0293	-		2	SCREW ISO4762 M4X16 A4	
090	312125-0323	-		2	SCREW PAN HEAD MCS M5X8 SS	
100	353240-0002	-		1	NORMAL WITHOUT INSERT, PG 11	
110	359011-0819	-		4	MARKING PLATES 5-GW (EARTH)	
120	359011-0821	-		2	SET OF SIGNS 6-FW 1-50	
130	359705-0015	-		1	WARNING SIGN ISO, RISK OF ELECTRIC SHOCK	
140	353249-0003	-		1	INSERT, SINGEL HOLE, E151/11	
150	90002-0009	-		1	BLANK-OFF PLUG, PR 18.6 SKINDICHT-BLK11	
160	353241-0002	-		2	EXTENDED WITHOUT INSERT, PG 11	
160	353249-0036	-		2	INSERT, MULTI HOLE, EK152 M 2X4	
180	353249-0301	-		4	SEALING PIN, 4X20	
200	353001-0113	-		2	ÄNDHYLSA 0,75MM2	
210	359000-0201	-		1	MARKING CO02/3"1"	
220	359000-0204	-		1	MARKING CO02/3"4"	
W958	351150-0405	-	M	40	CABLE OLFLEX 5X0,75 MM2 LIGHT/GREY	

Pos	Part No	SP	UN	Qty	Description	Page No

Machine Type | Group Description | Used-In | Group Number | Page No

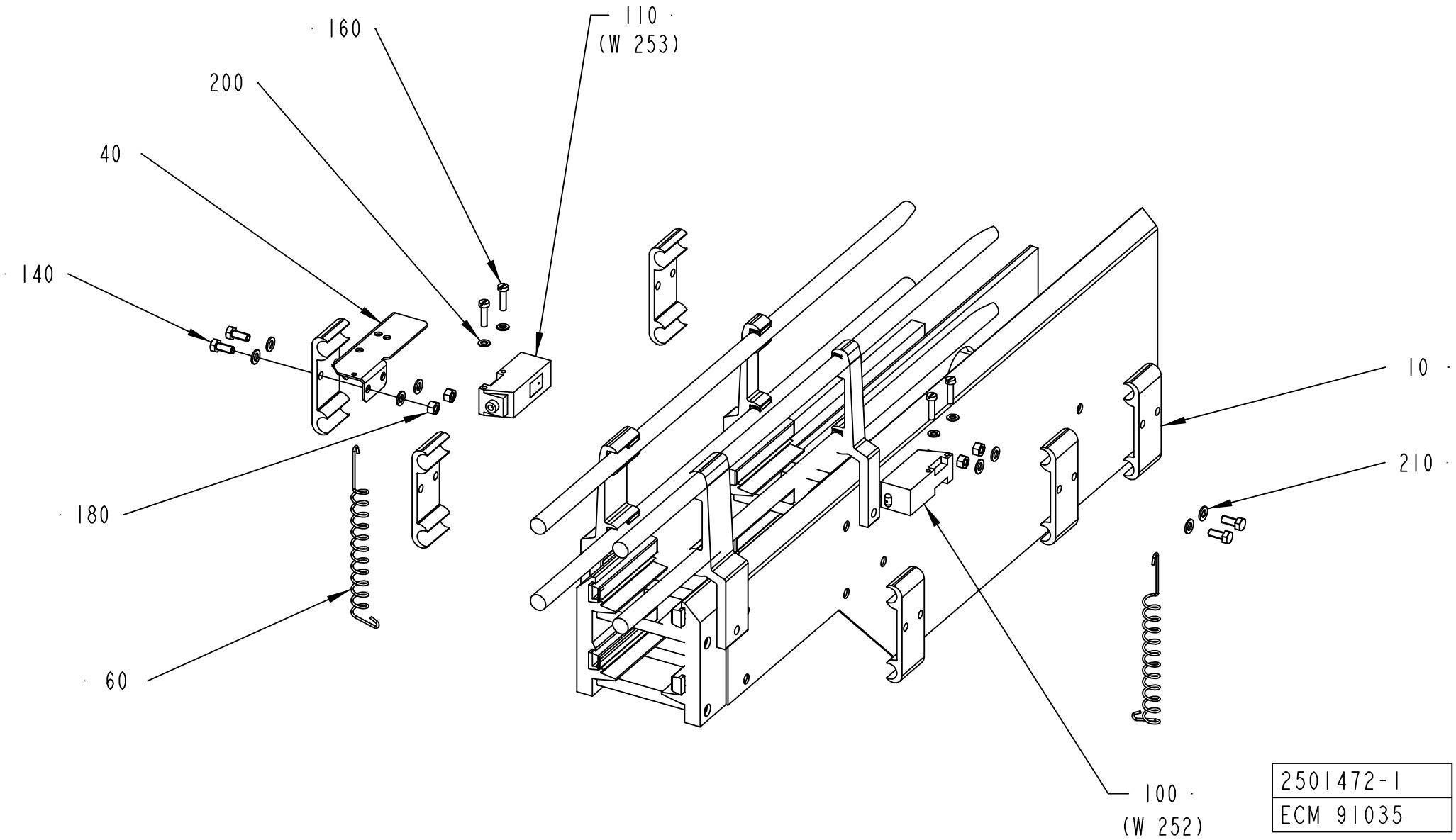
160
110
(W 253)
200
40
140
180
60
10
210
100
(W 252)
2501472-1
ECM 91035

ECM: 91093 - 20020514
Group number: 2501472-0100
Assembly Drawing: 2501472-1_1_AA

Pos	Part No	SP	UN	Qty	Description	Page No
-						
010	1020637-0000	-		6	HOLDER	
030	1020638-0000	-		6	HOLDER	
040	1086888-0000	-		2	COVER	
060	532412-0000	-		2	SPRING	
070	1478659-0000	-		4	BRACKET	
140	312105-0327	-		16	SCREW M6S ISO 4017 M5X12 A480	
150	312105-0323	-		2	SKRUV M6S ISO 4017 M5X8 A480	
160	312125-0293	-		4	SCREW PAN HEAD MCS M4X16 SS	
180	312605-0314	-		16	HEXAGON NUT, M6M M5 A280	
190	312705-0314	-		2	NUT HEX. DOMED CAP MHM-6 M5 A280	
200	315105-0136	-		8	WASHER ISO 7089-4-200 HV-A4	
210	315105-0146	-		12	WASHER ISO 7089-5-200 HV-A4	
MB092A	90232-0103	-		1	PH.CELL E3S-CT61-L-5M	
MB092B	90232-0104	-		1	PH.CELL E3S-CT61-D-5M	

Pos	Part No	SP	UN	Qty	Description	Page No

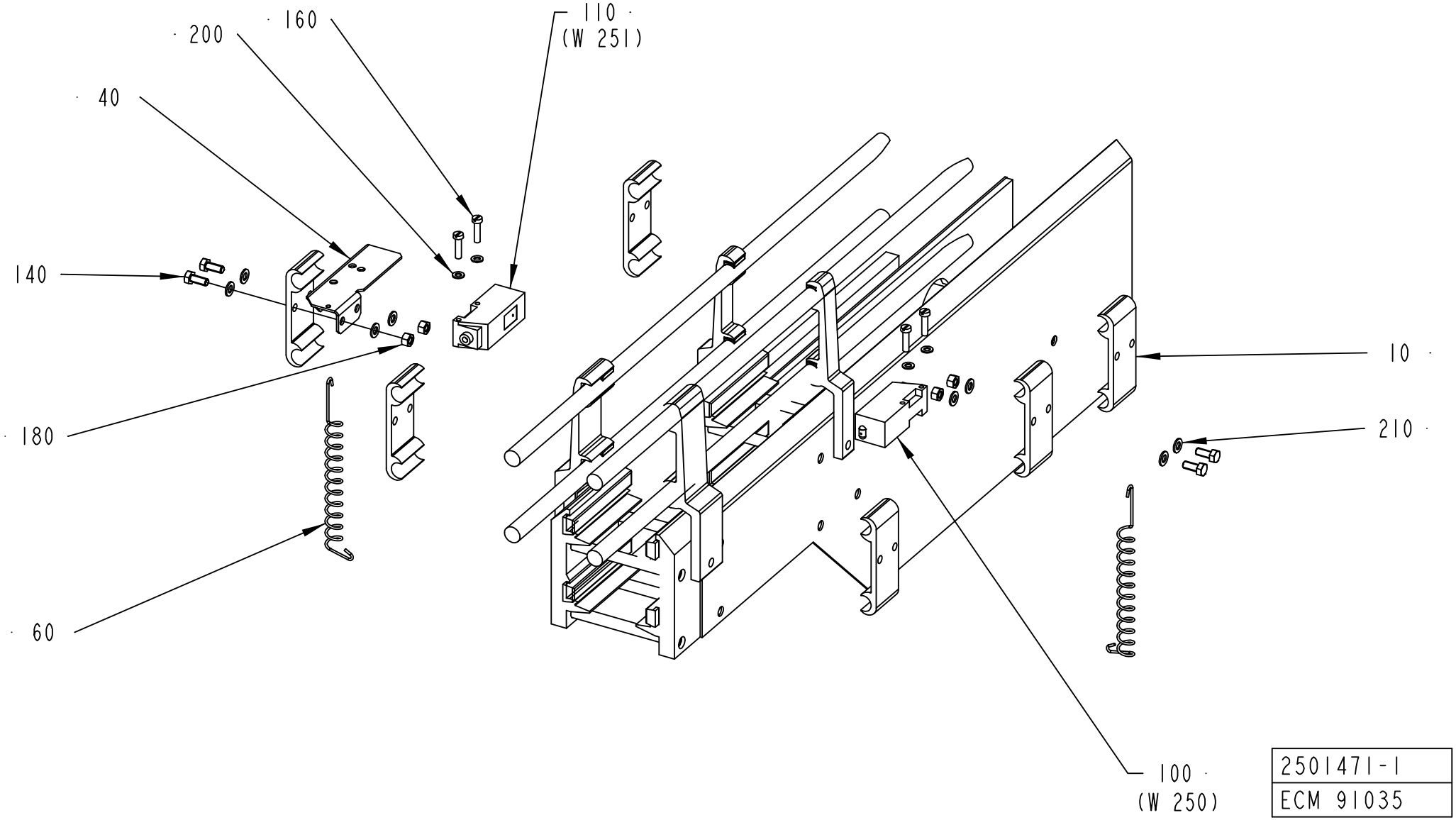
160
110
(W 251)
200
40
140
180
60
10
210
100
(W 250)
2501471-1
ECM 91035

ECM: 91092 - 20020514
Group number: 2501471-0100
Assembly Drawing: 2501471-1_1_AA

Pos	Part No	SP	UN	Qty	Description	Page No
-						
010	1020637-0000	-		6	HOLDER	
030	1020638-0000	-		6	HOLDER	
040	1086888-0000	-		2	COVER	
060	532412-0000	-		2	SPRING	
070	1478659-0000	-		4	BRACKET	
140	312105-0327	-		16	SCREW M6S ISO 4017 M5X12 A480	
150	312105-0323	-		2	SKRUV M6S ISO 4017 M5X8 A480	
160	312125-0293	-		4	SCREW PAN HEAD MCS M4X16 SS	
180	312605-0314	-		16	HEXAGON NUT, M6M M5 A280	
190	312705-0314	-		2	NUT HEX. DOMED CAP MHM-6 M5 A280	
200	315105-0136	-		8	WASHER ISO 7089-4-200 HV-A4	
210	315105-0146	-		12	WASHER ISO 7089-5-200 HV-A4	
MB091A	90232-0103	-		1	PH.CELL E3S-CT61-L-5M	
MB091B	90232-0104	-		1	PH.CELL E3S-CT61-D-5M	

Pos	Part No	SP	UN	Qty	Description	Page No

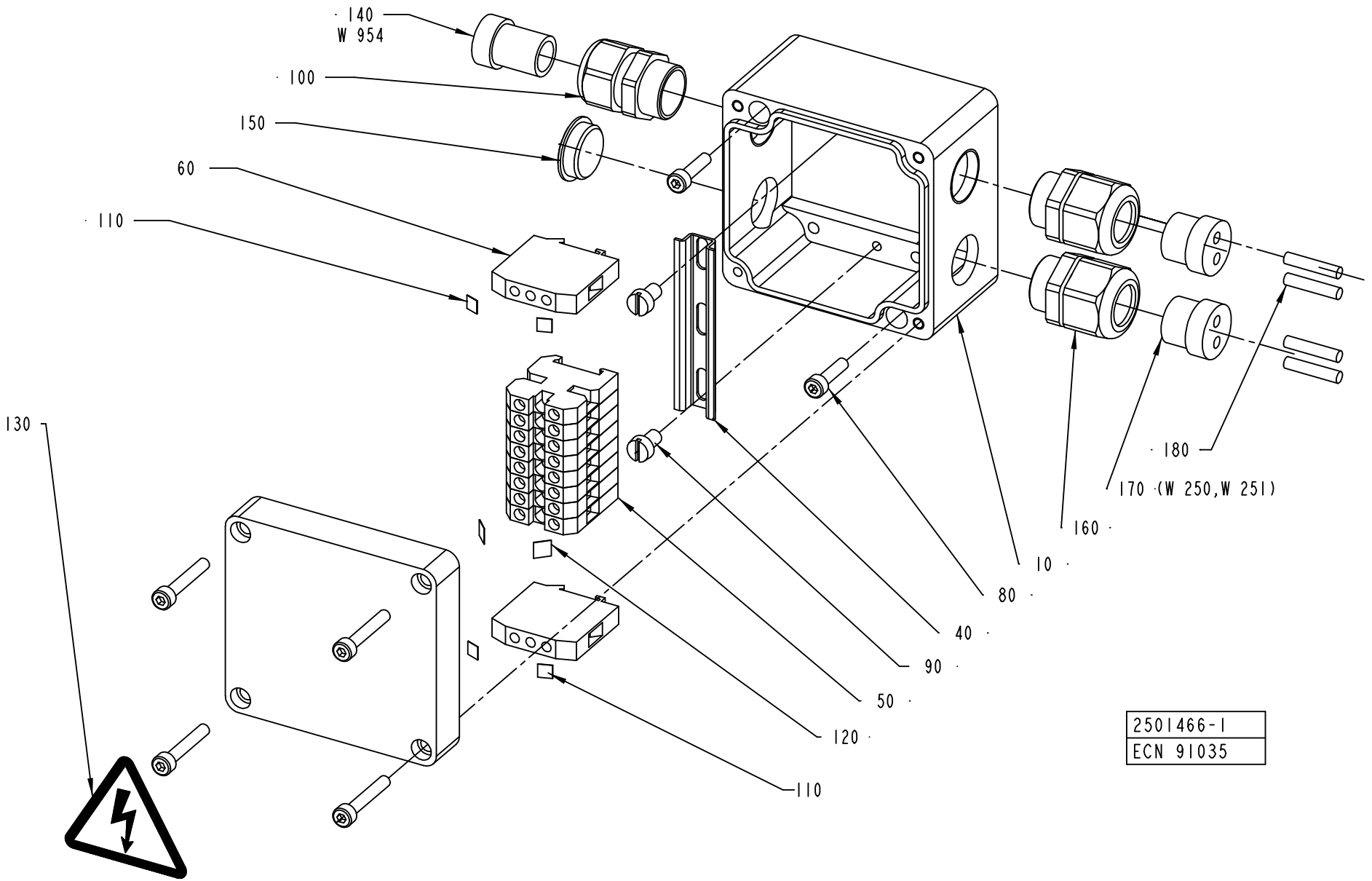
140
W 954
100
150
60
110
130
180
170 (W 250,W 251)
160
10
80
40
90
50
120
110
2501466-1
ECN 91035

ECM: 91048 - 20020514
Group number: 2501466-0100
Assembly Drawing: 2501466-1_1_AA

Pos	Part No	SP	UN	Qty	Description	Page No
-						
010	1349568-0000	-		1	CONNECTION BOX	
040	90077-0328	-	M	65	RAIL TS15/5	
050	90077-0079	-		8	FEED THROUGH TERMINAL, 02943.6	
060	90135-0026	-		2	EARTH TERMINAL, 3802.6	
080	312115-0293	-		2	SCREW ISO4762 M4X16 A4	
090	312125-0323	-		2	SCREW PAN HEAD MCS M5X8 SS	
100	353240-0002	-		1	NORMAL WITHOUT INSERT, PG 11	
110	359011-0819	-		4	MARKING PLATES 5-GW (EARTH)	
120	359011-0821	-		2	SET OF SIGNS 6-FW 1-50	
130	359705-0015	-		1	WARNING SIGN ISO, RISK OF ELECTRIC SHOCK	
140	353249-0003	-		1	INSERT, SINGEL HOLE, E151/11	
150	90002-0009	-		1	BLANK-OFF PLUG, PR 18.6 SKINDICHT-BLK11	
160	353241-0002	-		2	EXTENDED WITHOUT INSERT, PG 11	
160	353249-0036	-		2	INSERT, MULTI HOLE, EK152 M 2X4	
180	353249-0301	-		4	SEALING PIN, 4X20	
200	353001-0113	-		2	ÄNDHYLSA 0,75MM2	
210	359000-0201	-		1	MARKING CO02/3"1"	
220	359000-0204	-		1	MARKING CO02/3"4"	
W954	351150-0405	-	M	20	CABLE OLFLEX 5X0,75 MM2 LIGHT/GREY	

Pos	Part No	SP	UN	Qty	Description	Page No

Machine Type | Group Description | Used-In | Group Number | Page No

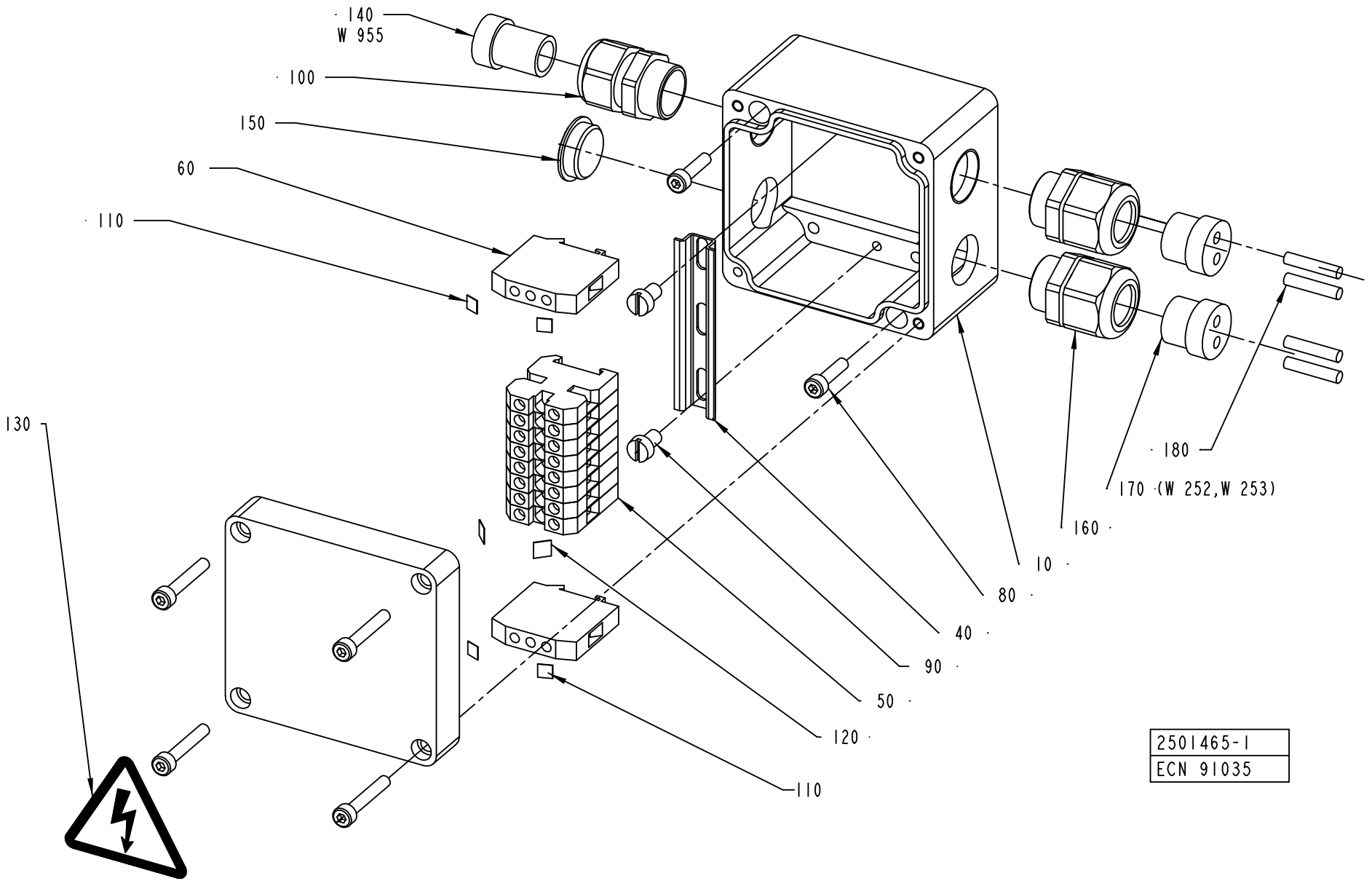
140
W 955
100
150
60
110
130
180
170 (W 252,W 253)
160
10
80
40
90
50
120
110
2501465-1
ECN 91035

ECM: 91047 - 20020514
Group number: 2501465-0100
Assembly Drawing: 2501465-1_1_AA

Pos	Part No	SP	UN	Qty	Description	Page No
-						
010	1349568-0000	-		1	CONNECTION BOX	
040	90077-0328	-	MM	65	RAIL TS15/5	
050	90077-0079	-		8	FEED THROUGH TERMINAL, 02943.6	
060	90135-0026	-		2	EARTH TERMINAL, 3802.6	
080	312115-0293	-		2	SCREW ISO4762 M4X16 A4	
090	312125-0323	-		2	SCREW PAN HEAD MCS M5X8 SS	
100	353240-0002	-		1	NORMAL WITHOUT INSERT, PG 11	
110	359011-0819	-		4	MARKING PLATES 5-GW (EARTH)	
120	359011-0821	-		2	SET OF SIGNS 6-FW 1-50	
130	359705-0015	-		1	WARNING SIGN ISO, RISK OF ELECTRIC SHOCK	
140	353249-0003	-		1	INSERT, SINGEL HOLE, E151/11	
150	90002-0009	-		1	BLANK-OFF PLUG, PR 18.6 SKINDICHT-BLK11	
160	353241-0002	-		2	EXTENDED WITHOUT INSERT, PG 11	
170	353249-0036	-		2	INSERT, MULTI HOLE, EK152 M 2X4	
180	353249-0301	-		4	SEALING PIN, 4X20	
200	353001-0113	-		2	ÄNDHYLSA 0,75MM2	
210	359000-0201	-		1	MARKING CO02/3"1"	
220	359000-0204	-		1	MARKING CO02/3"4"	
W955	351150-0405	-	M	130	CABLE OLFLEX 5X0,75 MM2 LIGHT/GREY	

Pos	Part No	SP	UN	Qty	Description	Page No

This page is intentionally left blank.

ECM: 106019 - 20020514
Group number: 2541886-0100
Assembly Drawing:

Pos	Part No	SP	UN	Qty	Description	Page No
-						
010	A295778-0600	-		1	START-UP KIT	**637**
020	A469384-0200	-		1	START-UP KIT	**641**
030	A295523-0500	-		1	START-UP KIT	**643**

Pos	Part No	SP	UN	Qty	Description	Page No

This page is intentionally left blank.

ECM: 106020 - 20020514
Group number: 295778-0600
Assembly Drawing:

Pos	Part No	SP	UN	Qty	Description	Page No
TBA 0160S, TBA 0125S, TBA 0100B, TBA 0250S, TBA 0200S, TBA 0200M						
030	272479-0000	-		1	PRESSURE ROLLER	
TBA 0330S, TBA 0300S, TBA 0180B, TBA 0200B, TBA 0284B, TBA 0250B						
020	257330-0000	-		1	PRESSURE ROLLER	
Common Parts						
010	A1296877-0100	-		1	SEAL KIT	**639**
040	441804-0000	-		1	COIL HEATER	
050	484197-0000	-		1	FILTER	
060	491418-0001	-		1	O-RING	
070	578494-0000	-		1	O-RING	
080	578495-0000	-		1	O-RING	
100	90206-0031	-		1	HEATING ELEMENT 700+1200W,220V	
110	B90206-0070	-		1	HEATING ELEMENT 6000W 380/220V	
	90269-0308	*-*		*1*	*GASKET 59X68X3 MM*	
	90206-0326	*-*		*1*	*JUNCTION BOX FOR 90206-56*	
120	90424-0304	-		1	GASKET	
130	927421-0006	-		1	O-RING 17.3X2.4 SILICON	
140	927422-0003	-		1	O.RING 24.2X3 SILICON	
150	927422-0008	-		1	O-RING 49.5X3 SILICON	
160	925998-0000	-		6	DIAPHRAGM	
170	736514-0000	-		1	SHOCK ABSORBER	
180	90328-0026	-		3	SILENCER G1/4	
190	342850-0303	-		6	GASKET 22,7X49,1X5,2 MM 1" FDA	
200	342850-0304	-		6	GASKET 35,4X49,1X5,2 1"1/2 FDA	
210	342850-0305	-		2	GASKET 47,8X62,6X5,2 MM 2" FDA	
220	926822-0000	-		6	GASKET	
230	90458-0138	-		1	PROX.SW. E2EG-X1R5B1-5M	

Pos	Part No	SP	UN	Qty	Description	Page No

Machine Type | Group Description | Used-In | Group Number | Page No

This page is intentionally left blank.

ECM: 70850 - 19970729
Group number: 1296877-0100
Assembly Drawing:

Pos	Part No	SP	UN	Qty	Description	Page No
-						
010	530589-0000	-		4	SEAL RING	
020	530588-0000	-		1	SEAL RING	
030	533169-0000	-		1	DIAPHRAGM	
040	539212-0000	-		1	GASKET	
050	90091-0266	-		2	SEAL RING 10,4X16,3X2,5 MM	
060	90207-0363	-		1	GASKET	
070	90207-0365	-		1	GASKET	
100	315204-0215	-		1	O-RING 19,2X3 MM	
110	315204-0301	-		1	O-RING 49,5X3 MM	

Pos	Part No	SP	UN	Qty	Description	Page No

This page is intentionally left blank.

ECM: 106107 - 20020514
Group number: 469384-0200
Assembly Drawing:

Pos	Part No	SP	UN	Qty	Description	Page No
-						
010	90298-0019	-		1	DETERGENT	
020	90144-0003	-	MM	1	TAPE	

Pos	Part No	SP	UN	Qty	Description	Page No

Machine Type | Group Description | Used-In | Group Number | Page No

This page is intentionally left blank.

ECM: 106108 - 20020514
Group number: 295523-0500
Assembly Drawing:

Pos	Part No	SP	UN	Qty	Description	Page No
TBA 0125S, TBA 0100B						
020	1110530-0000	-		2	INDUCTOR	
040	1520577-0001	-		20	DOLLY	
TBA 0160S, TBA 0200S						
020	1110532-0000	-		2	INDUCTOR	
055	1110391-0000	-		20	DOLLY	
TBA 0250S, TBA 0200M						
028	1110535-0000	-		2	INDUCTOR	
055	1110391-0000	-		20	DOLLY	
TBA 0330S, TBA 0300S, TBA 0180B, TBA 0200B, TBA 0284B, TBA 0250B						
010	1110534-0000	-		2	INDUCTOR	
055	1110391-0000	-		20	DOLLY	

Pos	Part No	SP	UN	Qty	Description	Page No

Tetra Pak

SPC
Spare Parts Catalogue

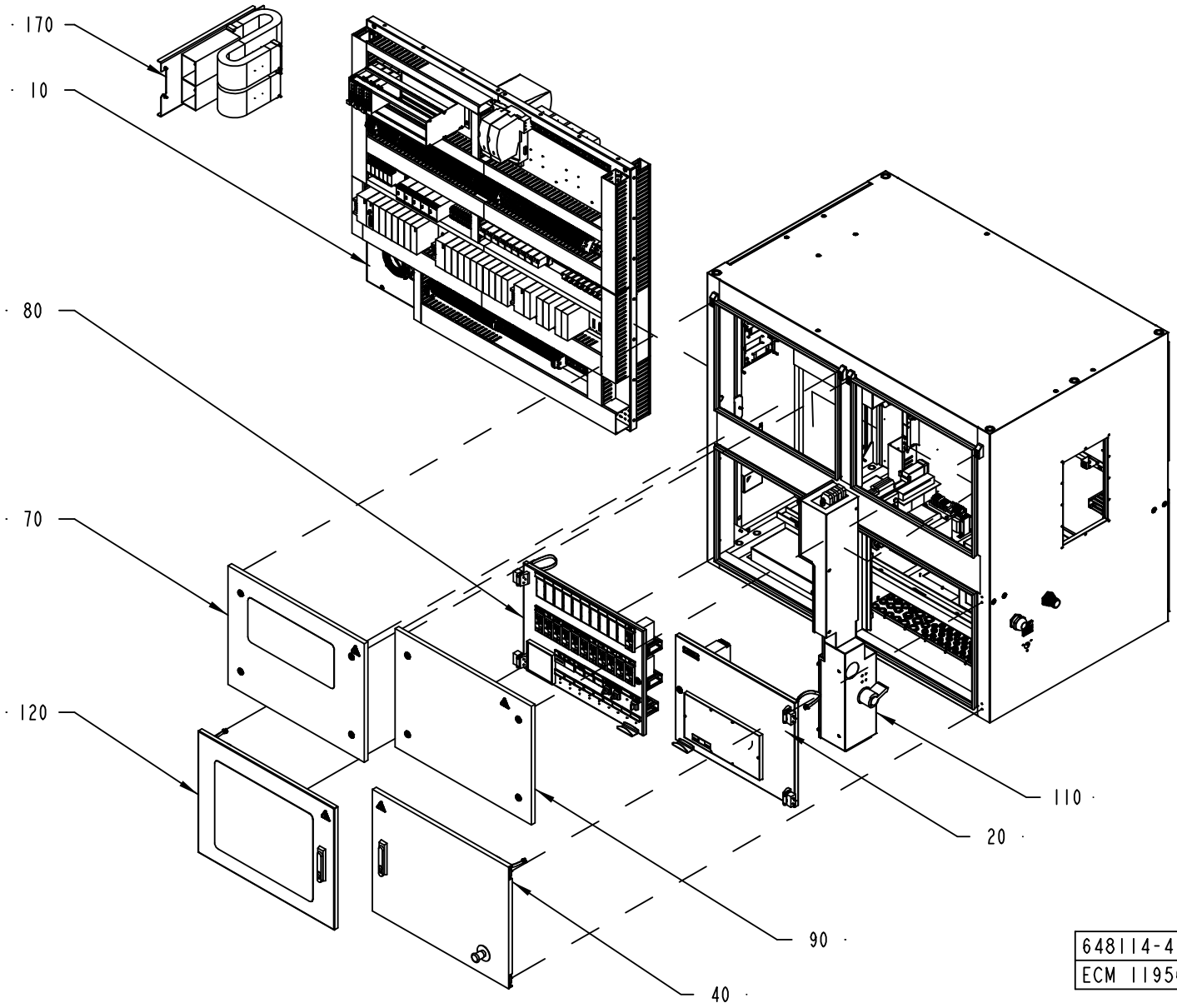
170
10
80
70
120
110
20
90
40
648114-4
ECM 119568

ECM: 118637 - 20030227
Group number: 648114-0100
Assembly Drawing: 648114-4_1_AC

This list covers pages from 646 to 649

Pos	Part No	SP	UN	Qty	Description	Page No
-						
	A1523972-0100	-		1	ELECTRICAL MATERIALS	**651**
010	A1511779-0100	-		1	COMPONENT PLATE	**653, 655, 657, 659, 661**
020	A1511790-0100	-		1	INTERNAL DOOR PLMS	**711**
030	A1511795-0100	-		1	CABINET	**715, 717**
040	A1511796-0100	-		1	EXTERNAL DOOR PLMS	**743**
050	A1511799-0100	-		1	EXTERNAL DOOR SPARE FUSES	**745**
060	A1511810-0100	-		1	INTERNAL DOOR FUSES	**747, 749**
070	A1511811-0100	-		1	REAR UPPER CONTROL DOOR	**757**
080	A1511814-0100	-		1	INTERNAL DOOR TERMOREGULATORS	**759, 761, 763**
090	A1511819-0100	-		1	FRONT UPPER CONTROL DOOR	**765**
100	A1511820-0100	-		1	UPPER DOOR POWER	**767**
110	A1511821-0100	-		1	POWER BOX	**769**
120	A1511830-0100	-		1	EXTERNAL DOOR TERMOREGULATORS	**773**
130	A1517653-0100	-		1	EXTERNAL DOOR FUSES	**775**
140	A1517677-0100	-		1	COOLER	**777**
150	A1517678-0100	-		1	TPIH	**779**
160	A1523961-0100	-		1	PLATE	**781**
170	A2598113-0100	-		1	CABLE LEAD-IN PLATE	**783**

Pos	Part No	SP	UN	Qty	Description	Page No

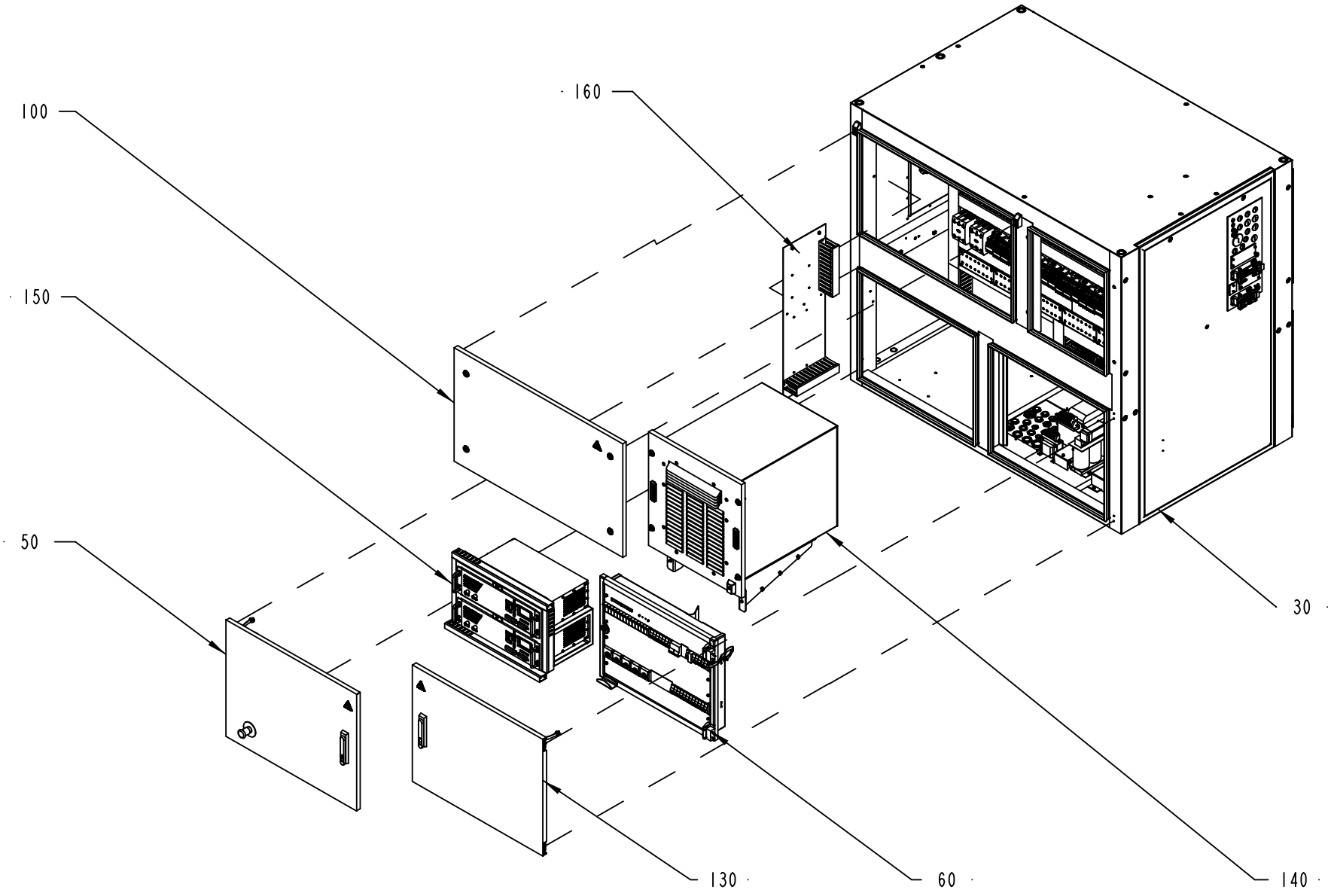

648114-4
ECM 119568

ECM: 118637 - 20030227
Group number: 648114-0100
Assembly Drawing: 648114-4_2_AC

This list covers pages from 646 to 649

Pos	Part No	SP	UN	Qty	Description	Page No
-						
	A1523972-0100	-		1	ELECTRICAL MATERIALS	**651**
010	A1511779-0100	-		1	COMPONENT PLATE	**653, 655, 657, 659, 661**
020	A1511790-0100	-		1	INTERNAL DOOR PLMS	**711**
030	A1511795-0100	-		1	CABINET	**715, 717**
040	A1511796-0100	-		1	EXTERNAL DOOR PLMS	**743**
050	A1511799-0100	-		1	EXTERNAL DOOR SPARE FUSES	**745**
060	A1511810-0100	-		1	INTERNAL DOOR FUSES	**747, 749**
070	A1511811-0100	-		1	REAR UPPER CONTROL DOOR	**757**
080	A1511814-0100	-		1	INTERNAL DOOR TERMOREGULATORS	**759, 761, 763**
090	A1511819-0100	-		1	FRONT UPPER CONTROL DOOR	**765**
100	A1511820-0100	-		1	UPPER DOOR POWER	**767**
110	A1511821-0100	-		1	POWER BOX	**769**
120	A1511830-0100	-		1	EXTERNAL DOOR TERMOREGULATORS	**773**
130	A1517653-0100	-		1	EXTERNAL DOOR FUSES	**775**
140	A1517677-0100	-		1	COOLER	**777**
150	A1517678-0100	-		1	TPIH	**779**
160	A1523961-0100	-		1	PLATE	**781**
170	A2598113-0100	-		1	CABLE LEAD-IN PLATE	**783**

Pos	Part No	SP	UN	Qty	Description	Page No

Machine Type | Group Description | Used-In | Group Number | Page No

This page is intentionally left blank.

ECM: 112273 - 20030113
Group number: 1523972-0100
Assembly Drawing:

Pos	Part No	SP	UN	Qty	Description	Page No
TBA NOPT ASU						
010	351160-0102	-	M	1941	CABLE AWM 1X0,75 MM2 DARKBLUE	
050	351161-0105	-	M	8	CABLE AWM 1X2,5 MM2 LIGHTBLUE	
080	351162-0105	-	M	24	CABLE AWM 1X2,5 MM2 YELLOW-GREEN	
090	351162-0106	-	M	6	CABLE AWM 1X4 MM2 YELLOW-GREEN	
130	351164-0105	-	M	132	CABLE AWM 1X2,5 MM2 BLACK	
140	351164-0106	-	M	9	CABLE AWM 1X4 MM2 BLACK	
TBA NOPT NOASU						
010	351160-0102	-	M	970	CABLE AWM 1X0,75 MM2 DARKBLUE	
050	351161-0105	-	M	6	CABLE AWM 1X2,5 MM2 LIGHTBLUE	
080	351162-0105	-	M	22	CABLE AWM 1X2,5 MM2 YELLOW-GREEN	
090	351162-0106	-	M	4	CABLE AWM 1X4 MM2 YELLOW-GREEN	
130	351164-0105	-	M	127	CABLE AWM 1X2,5 MM2 BLACK	
140	351164-0106	-	M	4	CABLE AWM 1X4 MM2 BLACK	
Common Parts						
020	351160-0105	-	M	10	CABLE AWM 1X2,5 MM2 DARKBLUE	
030	351160-0106	-	M	5	CABLE AWM 1X4 MM2 DARKBLUE	
040	351161-0104	-	M	66	CABLE AWM 1X1,5 MM2 LIGHTBLUE	
060	351161-0105	-	M	3	CABLE AWM 1X2,5 MM2 LIGHTBLUE	
070	351162-0104	-	M	25	CABLE AWM 1X1,5 MM2 YELLOW-GREEN	
100	351162-0107	-	M	20	CABLE AWM 1X6 MM2 YELLOW-GREEN	
110	351162-0109	-	M	5	CABLE AWM 1X16 MM2 YELLOW-GREEN	
120	351164-0104	-	M	124	CABLE AWM 1X1,5 MM2 BLACK	
150	351164-0107	-	M	44	CABLE AWM 1X6 MM2 BLACK	
160	351164-0110	-	M	45	CABLE AWM 1X25 MM2 BLACK	
170	351166-0102	-	M	21	CABLE AWM 1X0,75 MM2 ORANGE	
190	351163-0106	-	M	1	CABLE AWM 1X4 MM2 RED	
200	353101-0130	-		70	CABLE SHOE 1,5-2,5MM2 BLUE	
210	353001-0117	-		16	END SLEEVE H4.0/20 GREY	
220	353103-0138	-		8	CABLE SHOE	
230	353001-0115	-		155	END SLEEVE 2,5/14	
240	353001-0119	-		863	END SLEEVE H 1.0/14 YELLOW	
250	353101-0130	-		4	CABLE SHOE 1,5-2,5MM2 BLUE	
260	353001-0120	-		1	END SLEEVE H 10/28	
270	353101-0152	-		11	CABLE SHOE 4-6MM2,M5,YE	
280	353001-0120	-		2	END SLEEVE H 10/28	
290	353001-0118	-		47	END SLEEVE 6MM2 BLACK	
300	353103-0130	-		2	CABLE SHOE	
310	353001-0114	-		191	END SLEEVE 1,5MM2	
320	353001-0113	-		44	ÄNDHYLSA 0,75MM2	
330	90097-0017	-		26	FLAT PIN PLUG 6,3MM	
340	353101-0129	-		1	CABLE SHOE	
350	353101-0153	-		7	CABLE SHOE 4-6MM2 YELLOW	
360	353001-0102	-		335	END SLEEVE 0,75 MM2	
370	353104-0168	-		3	CABLE SHO YAV 16 M6*	
380	353104-0175	-		3	CABLE SHOEYAV 25 M6	
390	353104-0164	-		2	CABLE SHOEYAV 10 M10*	
400	352113-0101	-		100	CLIP STRIP, 92X2,5 MM	
410	352113-0102	-		30	CLIP-STRIP, BLACK 188X4,8 MM	
420	351161-0110	-	M	2	CABLE AWM 1X25 MM2 LIGHTBLUE	

Machine Type | Group Description | Used-In | Group Number | Page No

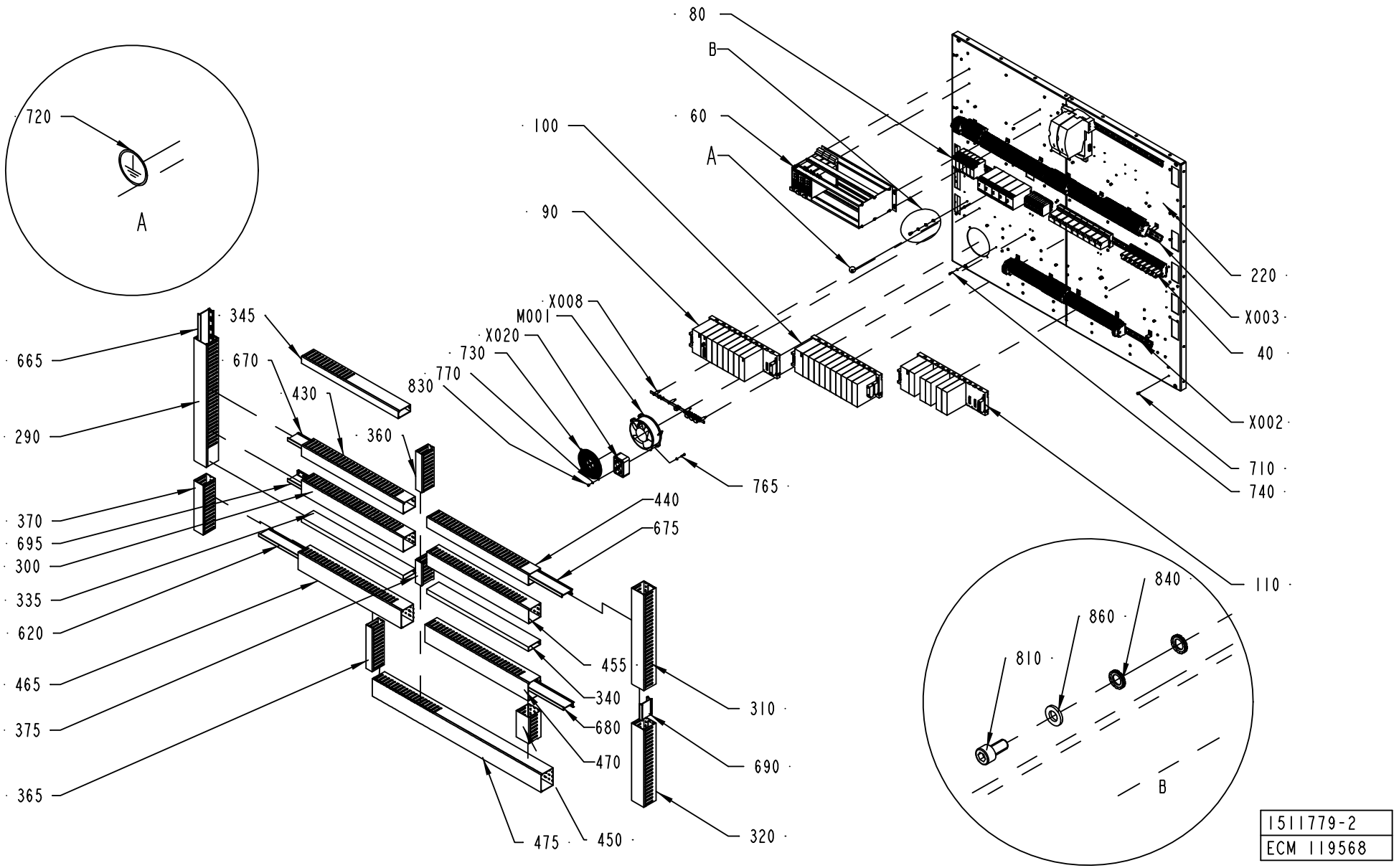
80
B
60
A
100
90
X008
M001
X020
730
770
830
765
440
675
455
340
680
470
475
450
310
690
320
720
A
345
670
430
360
665
290
370
695
300
335
620
465
375
365
220
X003
40
X002
710
740
110
840
860
810
B
1511779-2
ECM 119568

ECM: 119570 - 20030227
Group number: 1511779-0100
Assembly Drawing: 1511779-2_1_AB

This list covers pages from 652 to 661

Pos	Part No	SP	UN	Qty	Description	Page No
TBA NOPT ASU						
740	312115-0291	-		24	SCREW ISO4762 M4X12 A4	
750	312115-0325	-		22	SCREW ISO4762 M5X10 A4	
770	315105-0136	-		36	WASHER ISO 7089-4-200 HV-A4	
780	315402-0136	-		14	LOCK WASHER FBB 4,1	
790	315402-0146	-		22	LOCK WASHER FBB 5,1	
G002	90430-0070	A		1	FREQ.CONV. 6SE3213-6CA40	
Z006	90024-0047	B		1	EMI SUPPRESSION FERRITE	
Z007	90024-0047	B		1	EMI SUPPRESSION FERRITE	
Z009	90430-0326	A		1	FILTER 6SE3290-0BA87-0FB2	
TBA NOPT NOASU						
740	312115-0291	-		36	SCREW ISO4762 M4X12 A4	
750	312115-0325	-		18	SCREW ISO4762 M5X10 A4	
770	315105-0136	-		34	WASHER ISO 7089-4-200 HV-A4	
780	315402-0136	-		10	LOCK WASHER FBB 4,1	
790	315402-0146	-		18	LOCK WASHER FBB 5,1	
Common Parts						
020	A1511801-0100	-		1	SOLID STATE RELAY RAIL 1	**663**
030	90458-1490	-		2	CABLE CLIPS, D=7,9 MM	
040	A1511803-0100	-		1	RELAYS RAIL	**665**
060	A1511805-0100	-		1	RACK	**667**
070	A1511808-0100	-		1	FREQUENCY CONVERTER EARTH BAR	**669**
080	A1511824-0100	-		1	LEVEL RELAYS RAIL	**671**
090	A1511825-0100	-		1	PLC RACK 1	**673**
100	A1511826-0100	-		1	PLC RACK 2	**675**
110	A1511827-0100	-		1	PLC RACK 3	**677**
140	A1511834-0100	-		1	CONTACTORS RAIL	**679**
150	A1517651-0100	-		1	SOLID STATE RELAY RAIL 2	**681, 683**
160	A1517652-0100	-		1	SOLID STATE RELAY RAIL 3	**685**
170	A1523445-0100	-		1	SOLID STATE RELAY RAIL 4	**687**
180	A1523446-0100	-		1	SOLID STATE RELAY RAIL 5	**689**
190	A2531998-0100	-		1	RAIL	**691**
200	2531996-0000	-		5	COVER	
220	1523463-0000	-		1	PLATE	
250	1523949-0000	-		1	CABLE DUCT	
260	1523950-0000	-		1	CABLE DUCT	
270	2599045-0000	-		1	CABLE DUCT	
280	1523953-0000	-		1	CABLE DUCT	
290	1523954-0000	-		1	CABLE DUCT	
300	1523956-0000	-		1	CABLE DUCT	
310	1523959-0000	-		1	CABLE DUCT	
320	1523967-0000	-		1	CABLE DUCT	
325	90181-0052	-	MM	125	CABLE DUCT, 25X80MM	
326	90181-0052	-	MM	314	CABLE DUCT, 25X80MM	
330	90181-0052	-	MM	560	CABLE DUCT, 25X80MM	
335	90181-0052	-	MM	663	CABLE DUCT, 25X80MM	
340	90181-0052	-	MM	663	CABLE DUCT, 25X80MM	
345	90181-0053	-	MM	632	CABLE DUCT, 40X80MM	
360	90181-0053	-	MM	220	CABLE DUCT, 40X80MM	
365	90181-0053	-	MM	250	CABLE DUCT, 40X80MM	
370	1487445-0000	-		1	CABLE DUCT	
375	90181-0053	-	MM	133	CABLE DUCT, 40X80MM	
380	90181-0054	-	MM	950	CABLE DUCT, 60X80MM	
385	90181-0054	-	MM	890	CABLE DUCT, 60X80MM	
395	90181-0054	-	MM	670	CABLE DUCT, 60X80MM	
400	90181-0054	-	MM	670	CABLE DUCT, 60X80MM	
410	90181-0054	-	MM	460	CABLE DUCT, 60X80MM	
420	90181-0054	-	MM	230	CABLE DUCT, 60X80MM	
430	90181-0054	-	MM	663	CABLE DUCT, 60X80MM	
440	90181-0054	-	MM	663	CABLE DUCT, 60X80MM	
450	90181-0055	-	MM	150	CABLE DUCT, 80X80MM	
455	90181-0055	-	MM	665	CABLE DUCT, 80X80MM	
460	90181-0055	-	MM	780	CABLE DUCT, 80X80MM	
462	90181-0055	-	MM	390	CABLE DUCT, 80X80MM	
465	90181-0056	-	MM	674	CABLE DUCT, 100X80MM	
470	90181-0056	-	MM	674	CABLE DUCT, 100X80MM	
475	90181-0056	-	MM	1100	CABLE DUCT, 100X80MM	
500	90181-0064	-		42	LOCK ZP1 FOR CHANNEL T1	
605	90181-0067	-	MM	946	DIVIDING PLATE SEP80	
610	90181-0067	-	MM	61	DIVIDING PLATE SEP80	
615	90181-0067	-	MM	279	DIVIDING PLATE SEP80	
620	90181-0067	-	MM	660	DIVIDING PLATE SEP80	
625	90181-0067	-	MM	660	DIVIDING PLATE SEP80	
630	90181-0067	-	MM	660	DIVIDING PLATE SEP80	
635	90181-0067	-	MM	880	DIVIDING PLATE SEP80	
640	90181-0067	-	MM	233	DIVIDING PLATE SEP80	
660	90181-0067	-	MM	260	DIVIDING PLATE SEP80	
665	90181-0067	-	MM	586	DIVIDING PLATE SEP80	
670	90181-0067	-	MM	650	DIVIDING PLATE SEP80	
675	90181-0067	-	MM	650	DIVIDING PLATE SEP80	
680	90181-0067	-	MM	660	DIVIDING PLATE SEP80	
685	90181-0067	-	MM	89	DIVIDING PLATE SEP80	

Machine Type | Group Description | Used-In | Group Number | Page No

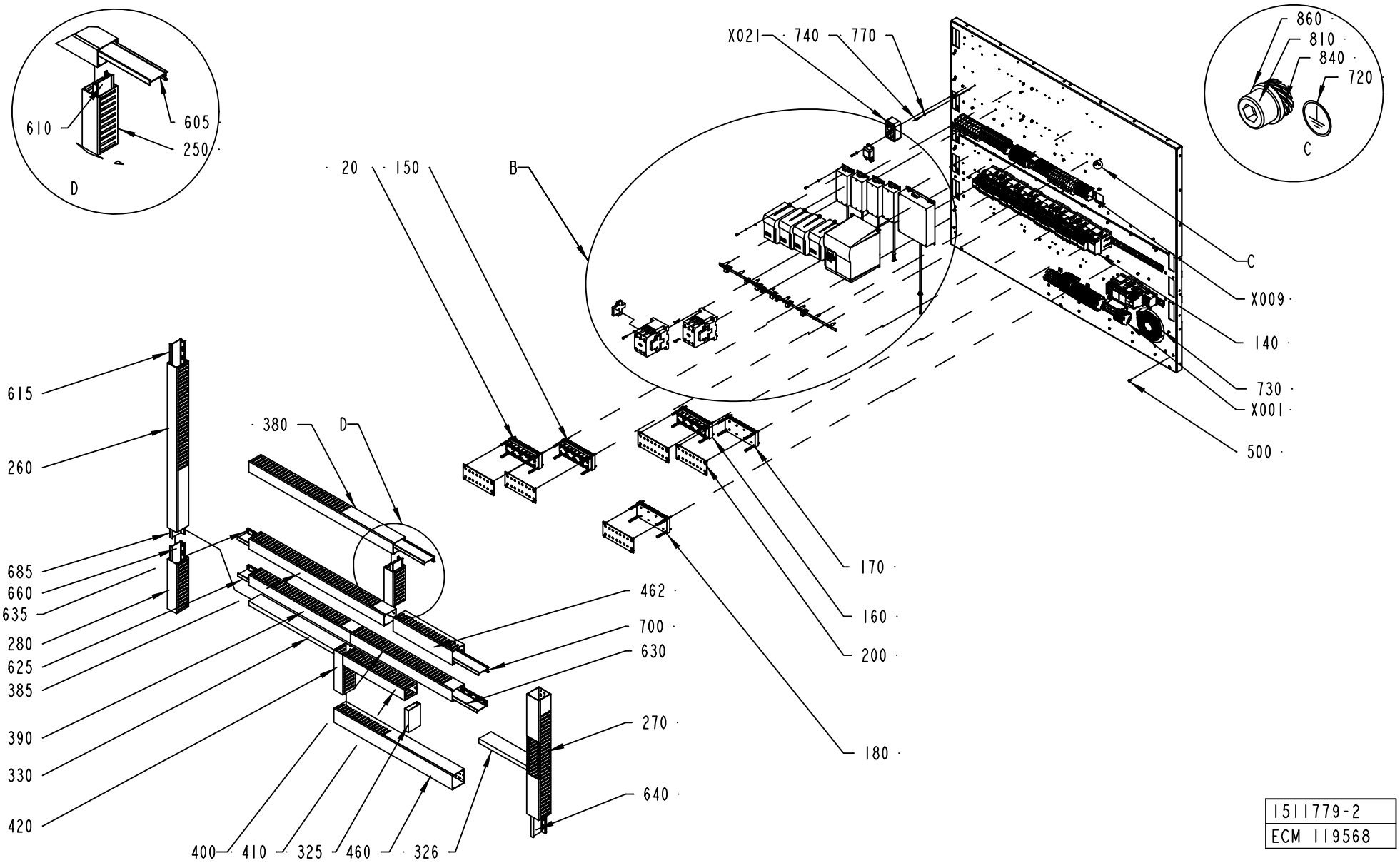

1511779-2
ECM 119568

ECM: 119570 - 20030227
Group number: 1511779-0100
Assembly Drawing: 1511779-2_2_AB

This list covers pages from 652 to 661

Pos	Part No	SP	UN	Qty	Description	Page No
Common Parts (Cont'd)						
690	90181-0067	-	MM	89	DIVIDING PLATE SEP80	
695	90181-0067	-	MM	386	DIVIDING PLATE SEP80	
700	90181-0067	-	MM	386	DIVIDING PLATE SEP80	
710	90181-0313	-		139	RIVET DUCTAFIX R4	
720	90194-0163	-		2	SIGN, EARTH WITHIN CIRCLE	
730	90457-0057	-		2	GRID FOR FAN LZ36	
735	312115-0323	-		3	SCREW ISO4762 M5X8 A4	
755	312115-0289	-		4	SCREW ISO4762 M4X10 A4	
765	312115-0295	-		4	SCREW ISO4762 M4X20 A4	
775	312115-0333	-		8	SCREW ISO4762 M5X25 A4	
810	312115-0366	-		4	SCREW ISO4762 M6X12 A4	
820	353042-0004	-	MM	650	RAIL TS 35/7,5	
830	312812-0312	-		4	HEXAGON NUT, NY-LOCK M4 A480	
840	90062-0061	-		8	LOCK WASHER NORD-LOCK,6,5/10,8, H=2,6	
850	315105-0146	-		3	WASHER ISO 7089-5-200 HV-A4	
860	315105-0153	-		4	WASHER ISO 7089-6-200 HV-A4	
A012	B90458-1300	A		1	2 AXIS DOCKING STATION D2/PLC	
	90458-1856	-		*1*	*ADHESIVE LABEL, CONNECTION DIAGRAM*	
A013	90458-0746	A		1	STEP MOTOR DRIVE L50	
A014	90458-0746	A		1	STEP MOTOR DRIVE L50	
G001	90430-0070	A		1	FREQ.CONV. 6SE3213-6CA40	
G003	90430-0070	A		1	FREQ.CONV. 6SE3213-6CA40	
G004	90430-0076	A		1	FREQ.CONV. 6SE3221-3DC40	
G005	90430-0070	A		1	FREQ.CONV. 6SE3213-6CA40	
K003	90458-2924	A		1	CONTACTOR 30KW COIL 24VDC	
K003.1	90458-2925	A		2	AUXILIARY CONTACT, DIL M820-XHI11-SI	
K030	90458-2924	A		1	CONTACTOR 30KW COIL 24VDC	
K030.1	90458-2925	A		2	AUXILIARY CONTACT, DIL M820-XHI11-SI	
L001	90297-0306	B		1	BALLAST COIL 50/60 HZ	
M001	90457-0056	B		1	FAN 7450 ES	
X001	A1511800-0100	-		1	POWER SIDE,BOTTOM TERMINAL BLOCK	**693, 695**
X002	A1511802-0100	-		1	LOGIC BOTTOM TERMINAL BLOCK	**697, 699**
X003	A1511804-0100	-		1	LOGIC SIDE,TOP TERMINAL BLOCK	**701, 703**
X008	A1511828-0100	-		1	X008	**705**
X009	A1511829-0100	-		1	POWER SIDE,TOP TERMINAL BLOCK	**707, 709**
X020	90001-0033	B		1	WALL SOCKET OUTLET	
X021	90001-0033	B		1	WALL SOCKET OUTLET	
X027	90458-1279	A		1	PLUG CONNECTOR DP1	
Z004	90024-0047	B		1	EMI SUPPRESSION FERRITE	
Z005	90024-0047	B		1	EMI SUPPRESSION FERRITE	
Z008	90430-0326	A		1	FILTER 6SE3290-0BA87-0FB2	
Z010	90024-0047	B		1	EMI SUPPRESSION FERRITE	
Z012	90430-0326	A		1	FILTER 6SE3290-0BA87-0FB2	
Z013	90024-0047	B		1	EMI SUPPRESSION FERRITE	
Z015	90430-0330	A		1	FILTER 6SE3290-0DC87-0FB4	
Z016	90024-0047	B		1	EMI SUPPRESSION FERRITE	
Z017	90430-0326	A		1	FILTER 6SE3290-0BA87-0FB2	
Z018	90024-0047	B		1	EMI SUPPRESSION FERRITE	
Z019	90458-1162	A		1	FILTER, 6 A, 250 VAC	
Z020	90024-0047	B		1	EMI SUPPRESSION FERRITE	
Z021	90024-0047	B		1	EMI SUPPRESSION FERRITE	
Z022	90024-0047	B		1	EMI SUPPRESSION FERRITE	

Machine Type | Group Description | Used-In | Group Number | Page No

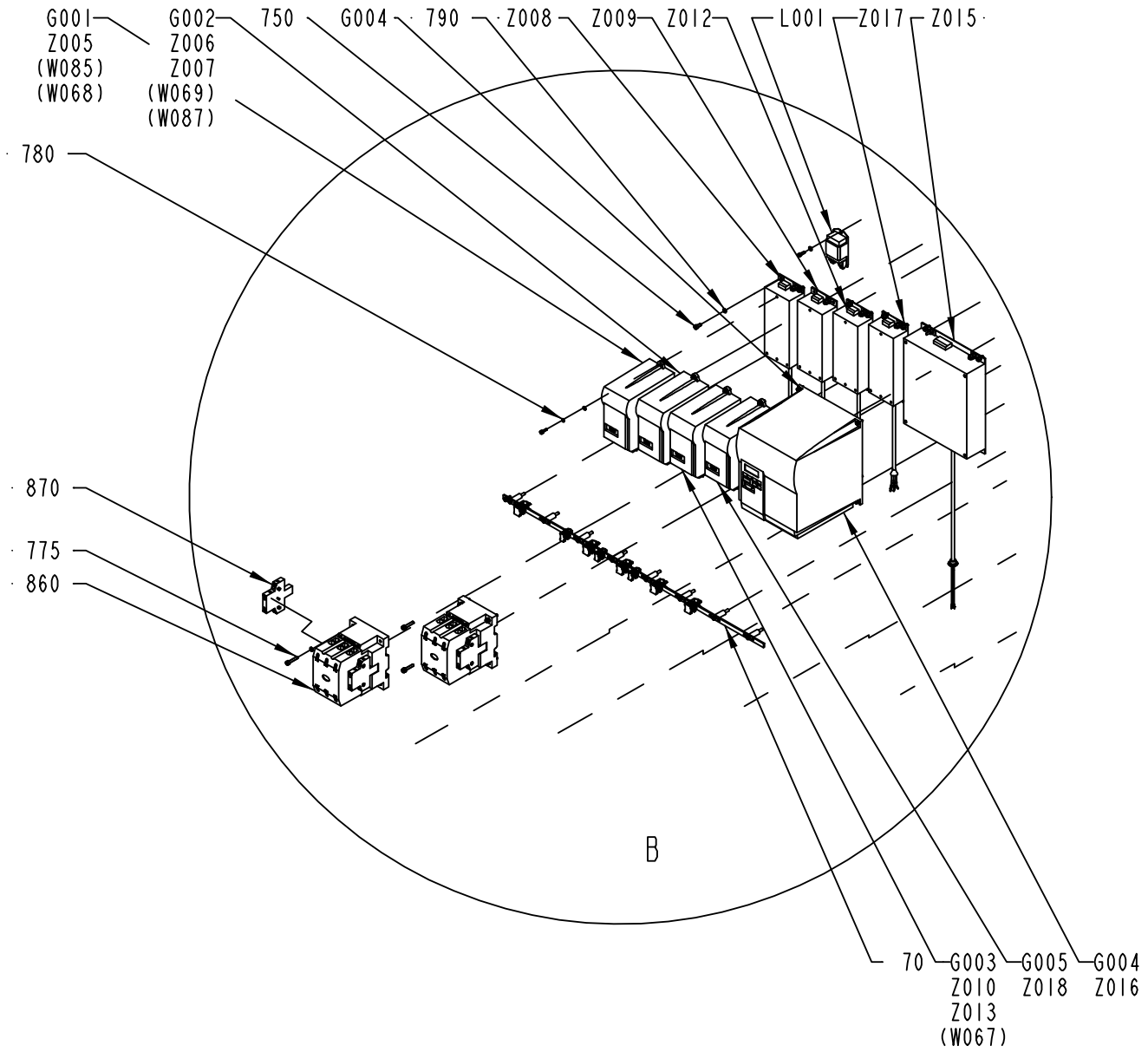

1511779-2
ECM 119568

ECM: 119570 - 20030227
Group number: 1511779-0100
Assembly Drawing: 1511779-2_3_AB

This list covers pages from 652 to 661

Pos	Part No	SP	UN	Qty	Description	Page No
SEE PREVIOUS LISTS PAGES: 653, 655.						

Pos	Part No	SP	UN	Qty	Description	Page No

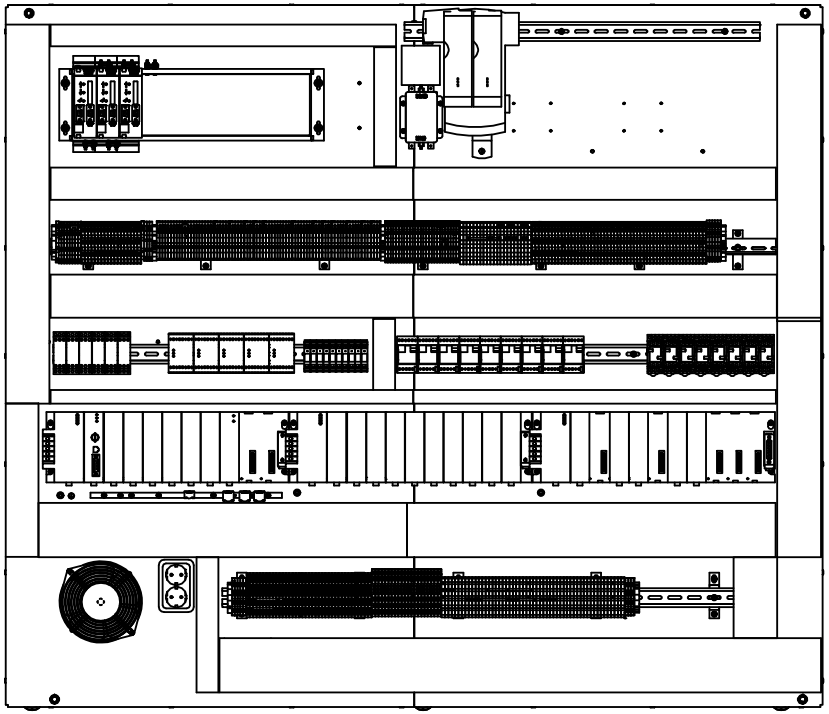

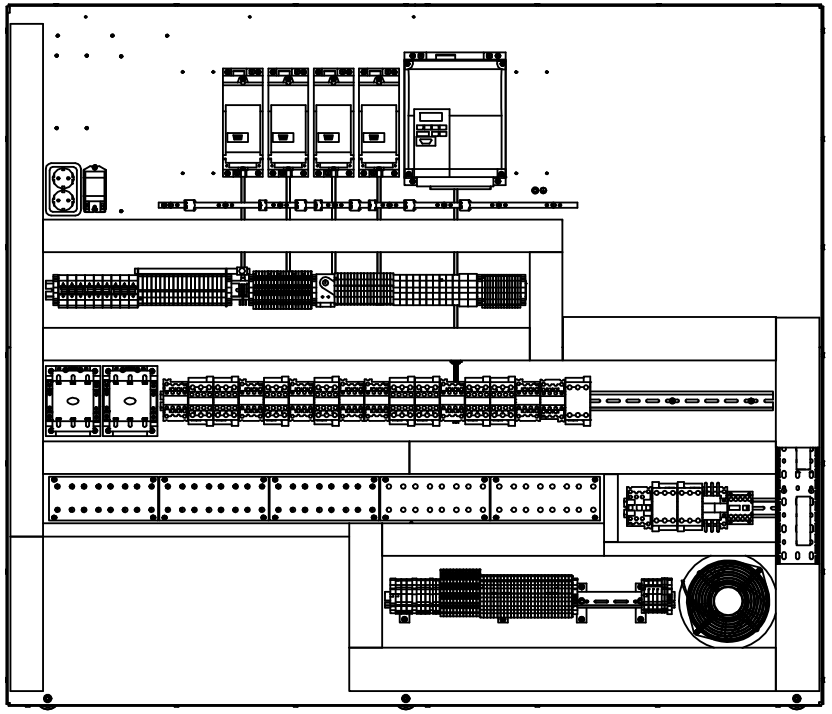

1511779-2
ECM 119568

Pos	Part No	SP	UN	Qty	Description	Page No

SEE PREVIOUS LISTS PAGES: 653, 655.

Pos	Part No	SP	UN	Qty	Description	Page No

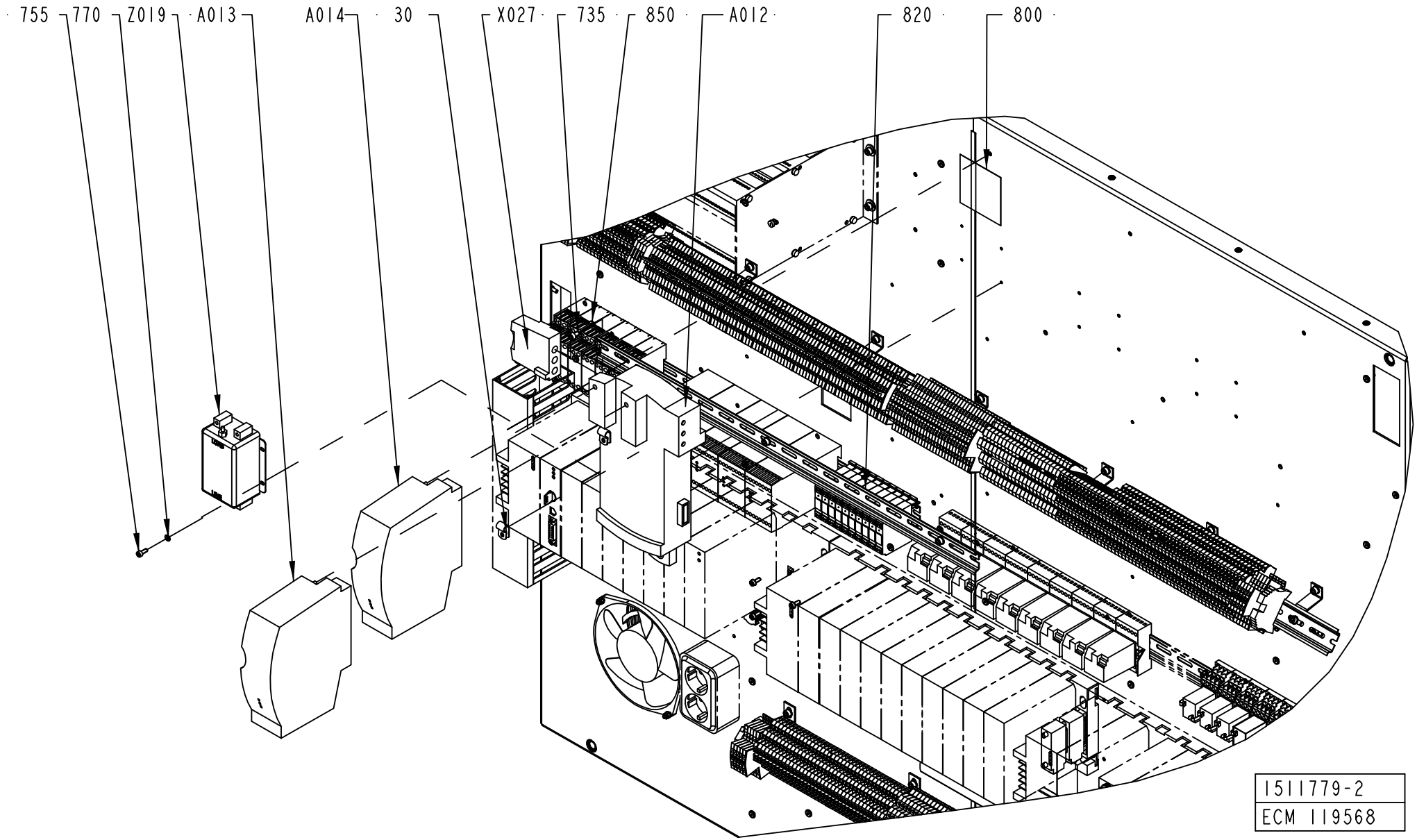
755
770
Z019
A013
A014
30
X027
735
850
A012
820
800
1511779-2
ECM 119568

Pos	Part No	SP	UN	Qty	Description	Page No
SEE PREVIOUS LISTS PAGES: 653, 655.						

Pos	Part No	SP	UN	Qty	Description	Page No

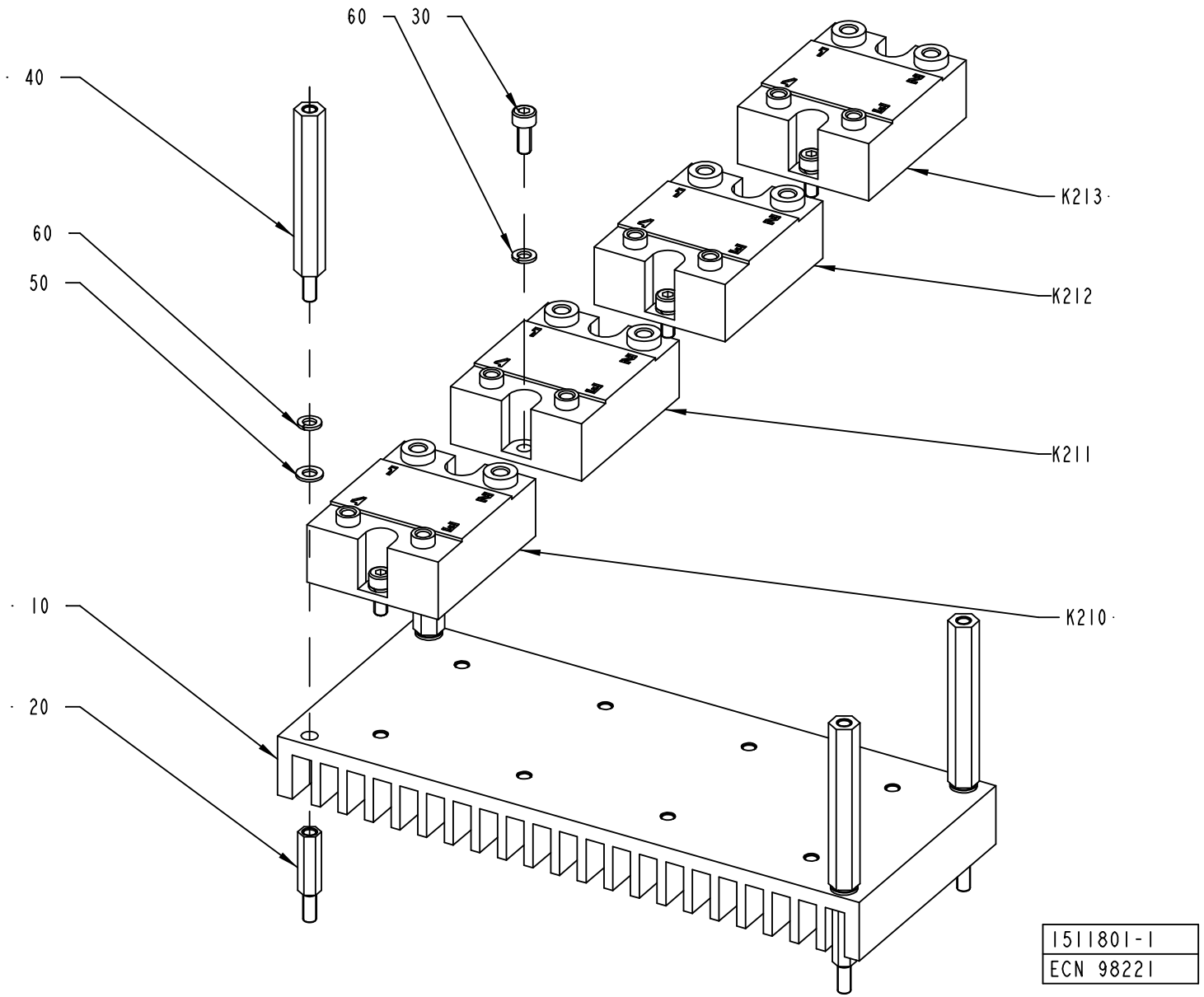
60
30
40
60
50
K213
K212
K211
K210
10
20
1511801-1
ECN 98221

ECM: 115723 - 20020930
Group number: 1511801-0100
Assembly Drawing: 1511801-1_1_AB

Pos	Part No	SP	UN	Qty	Description	Page No
-						
010	1498819-0000	-		1	COOLING PLATE	
020	1517675-0000	-		4	SPACER	
030	312115-0289	-		8	SCREW ISO4762 M4X10 A4	
040	2531997-0000	-		4	SPACER	
050	315105-0136	-		4	WASHER ISO 7089-4-200 HV-A4	
060	315402-0136	-		12	LOCK WASHER FBB 4,1	
K210	90119-0067	A		1	SOLID-STATE RELAY, H12WD4850	
K211	90119-0067	A		1	SOLID-STATE RELAY, H12WD4850	
K212	90119-0067	A		1	SOLID-STATE RELAY, H12WD4850	
K213	90119-0067	A		1	SOLID-STATE RELAY, H12WD4850	

Pos	Part No	SP	UN	Qty	Description	Page No

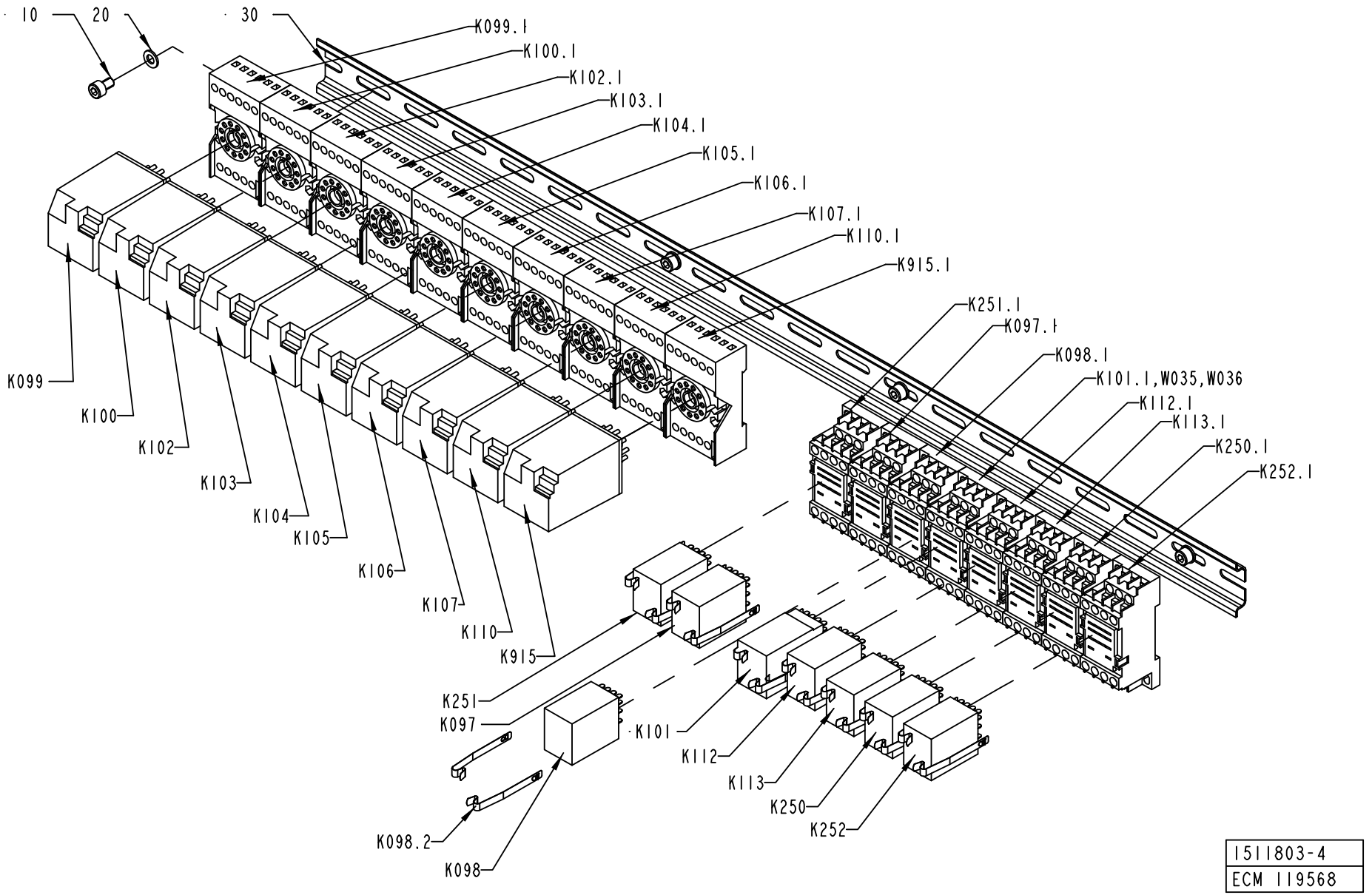

1511803-4
ECM 119568

ECM: 123604 - 20030227
Group number: 1511803-0100
Assembly Drawing: 1511803-4_1_AB

Pos	Part No	SP	UN	Qty	Description	Page No
TBA ASU NOTCSB						
K112	90119-0086	A		1	RELAY, AUXILIARY MY4IN4 24VDC	
K112.1	90119-0309	A		1	BASE UNIT, TYPE PYF 14AE	
K112.2	90119-0310	-		1	CLAMP, TYPE PYC-A1	
TBA ASU TCSB						
K112	90119-0086	A		1	RELAY, AUXILIARY MY4IN4 24VDC	
K112.1	90119-0309	A		1	BASE UNIT, TYPE PYF 14AE	
K112.2	90119-0310	-		1	CLAMP, TYPE PYC-A1	
K915	90119-0056	A		1	RELAY, AUXILIARY MK3P5-S 24VDC	
K915.1	90129-0006	A		1	BASE, S3-B	
TBA NOASU TCSB						
K915	90119-0056	A		1	RELAY, AUXILIARY MK3P5-S 24VDC	
K915.1	90129-0006	A		1	BASE, S3-B	
Common Parts						
010	312115-0323	-		4	SCREW ISO4762 M5X8 A4	
020	315105-0146	-		4	WASHER ISO 7089-5-200 HV-A4	
030	353042-0004	-	MM	690	RAIL TS 35/7,5	
K097	90119-0086	A		1	RELAY, AUXILIARY MY4IN4 24VDC	
K097.1	90119-0309	A		1	BASE UNIT, TYPE PYF 14AE	
K097.2	90119-0310	-		1	CLAMP, TYPE PYC-A1	
K098	90119-0086	A		1	RELAY, AUXILIARY MY4IN4 24VDC	
K098.1	90119-0309	A		1	BASE UNIT, TYPE PYF 14AE	
K098.2	90119-0310	-		1	CLAMP, TYPE PYC-A1	
K099	90119-0056	A		1	RELAY, AUXILIARY MK3P5-S 24VDC	
K099.1	90129-0006	A		1	BASE, S3-B	
K100	90119-0056	A		1	RELAY, AUXILIARY MK3P5-S 24VDC	
K100.1	90129-0006	A		1	BASE, S3-B	
K101	90119-0109	A		1	RELAY OMRON 24VDC MY4H	
K101.1	90119-0309	A		1	BASE UNIT, TYPE PYF 14AE	
K101.2	90119-0310	-		1	CLAMP, TYPE PYC-A1	
K102	90119-0056	A		1	RELAY, AUXILIARY MK3P5-S 24VDC	
K102.1	90129-0006	A		1	BASE, S3-B	
K103	90119-0056	A		1	RELAY, AUXILIARY MK3P5-S 24VDC	
K103.1	90129-0006	A		1	BASE, S3-B	
K104	90119-0056	A		1	RELAY, AUXILIARY MK3P5-S 24VDC	
K104.1	90129-0006	A		1	BASE, S3-B	
K105	90119-0056	A		1	RELAY, AUXILIARY MK3P5-S 24VDC	
K105.1	90129-0006	A		1	BASE, S3-B	
K106	90119-0056	A		1	RELAY, AUXILIARY MK3P5-S 24VDC	
K106.1	90129-0006	A		1	BASE, S3-B	
K107	90119-0056	A		1	RELAY, AUXILIARY MK3P5-S 24VDC	
K107.1	90129-0006	A		1	BASE, S3-B	
K110	90119-0056	A		1	RELAY, AUXILIARY MK3P5-S 24VDC	
K110.1	90129-0006	A		1	BASE, S3-B	
K113	90119-0086	A		1	RELAY, AUXILIARY MY4IN4 24VDC	
K113.1	90119-0309	A		1	BASE UNIT, TYPE PYF 14AE	
K113.2	90119-0310	-		1	CLAMP, TYPE PYC-A1	
K250	90119-0086	A		1	RELAY, AUXILIARY MY4IN4 24VDC	
K250.1	90119-0309	A		1	BASE UNIT, TYPE PYF 14AE	
K250.2	90119-0310	-		1	CLAMP, TYPE PYC-A1	
K251	90119-0086	A		1	RELAY, AUXILIARY MY4IN4 24VDC	
K251.1	90119-0309	A		1	BASE UNIT, TYPE PYF 14AE	
K251.2	90119-0310	-		1	CLAMP, TYPE PYC-A1	
K252	90119-0086	A		1	RELAY, AUXILIARY MY4IN4 24VDC	
K252.1	90119-0309	A		1	BASE UNIT, TYPE PYF 14AE	
K252.2	90119-0310	-		1	CLAMP, TYPE PYC-A1	
W035	90220-0059	-	MM	2000	THERMOCOUPLE CABLE K/ 2X0,81MM2	
W036	90220-0059	-	MM	2000	THERMOCOUPLE CABLE K/ 2X0,81MM2	

Machine Type | Group Description | Used-In | Group Number | Page No

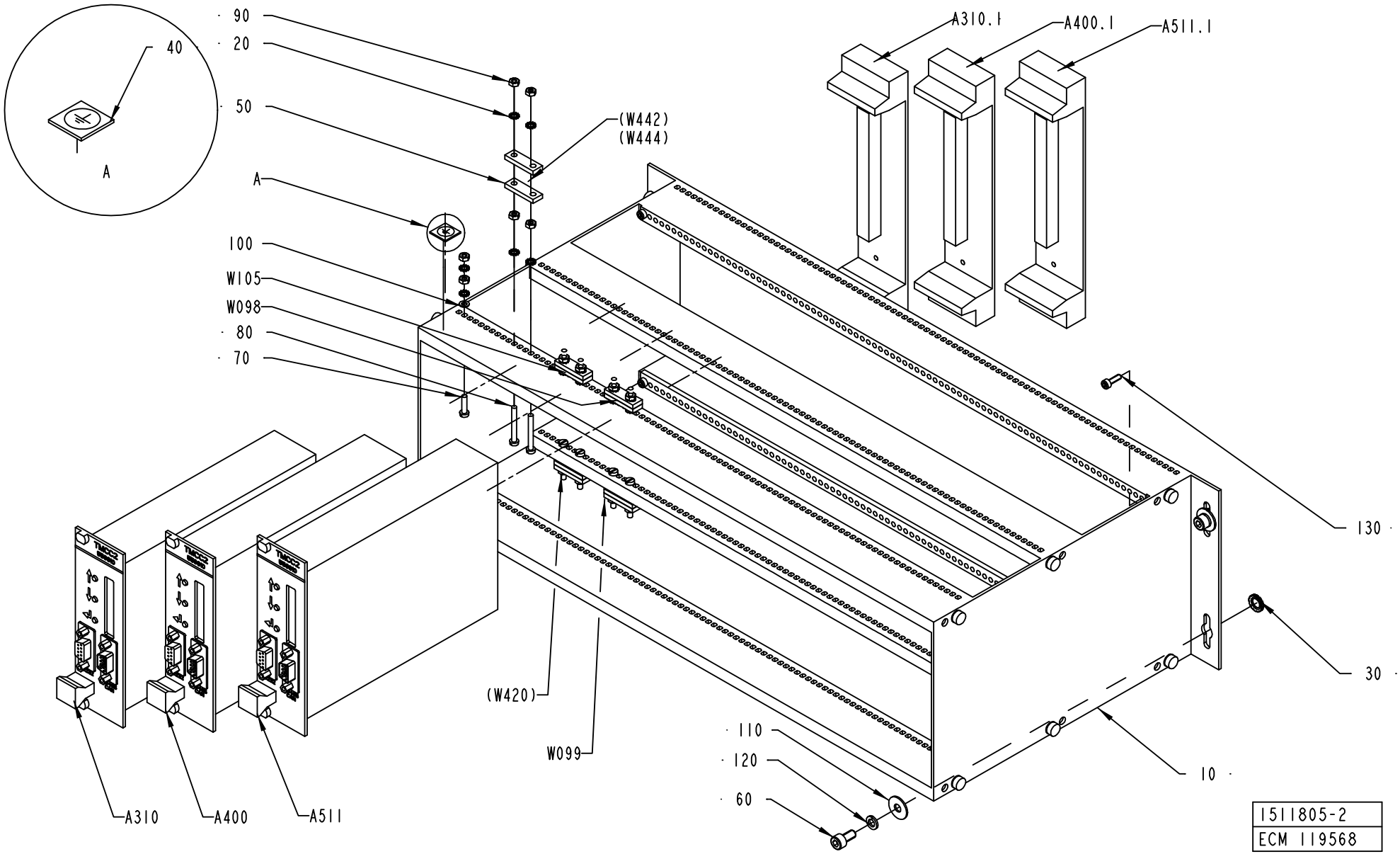

1511805-2
ECM 119568

ECM: 120870 - 20030227
Group number: 1511805-0100
Assembly Drawing: 1511805-2_1_AC

Pos	Part No	SP	UN	Qty	Description	Page No
TBA NOPT ASU						
A511	B559810-0101	A		1	TMCC2 CONTROLLER	
010	*B559809-0101*	*-*		*1*	*CIRCUIT BOARD*	
150	*559807-0000*	*-*		*1*	*PRINTED CIRCUIT BOARD*	
180	*B559811-0101*	*-*		*1*	*CIRCUIT BOARD*	
130	*559808-0000*	*-*		*1*	*PRINTED CIRCUIT BOARD*	
020	*2524654-0000*	*-*		*1*	*PLATE*	
030	*2524660-0000*	*-*		*1*	*CASING*	
070	*2524662-0000*	*-*		*1*	*COOLING BLOCK*	
100	*2524658-0000*	*-*		*1*	*COVER*	
170	*2524659-0000*	*-*		*1*	*CABLE*	
A511.1	B67372-0101	A		1	BACKPLANE 8TE(32 POLE)	
0010	*543336-0001*	*-*		*1*	*COMPONENTS WITHOUT TP-NO*	
0020	*543319-0000*	*-*		*1*	*PRINTED CIRCUIT BOARD*	
0030	*543337-0000*	*-*		*1*	*TERMINAL LABELS 1-4*	
Common Parts						
010	B67369-0102	-		1	RACK WALLMOUNTED 84TE	
030 2	*540282-0002*	*-*		*1*	*COMPONENTS WITHOUT TP-NO*	
020	90062-0058	-		18	LOCK WASHER SERRAT.EXT.GEAR,3,2/6 H=0,4	
030	90062-0061	-		4	LOCK WASHER NORD-LOCK,6,5/10,8, H=2,6	
040	90194-0152	-		1	SIGN, EARTH	
050	90220-0305	-		8	CLAMP FOR SCR.CABLE, 16MM,	
060	312115-0325	-		4	SCREW ISO4762 M5X10 A4	
070	312125-0226	-		1	SCREW PAN HEAD MCS M3X12 SS	
080	312125-0232	-		8	SCREW PAN HEAD MCS M3X25 SS	
090	312605-0310	-		18	HEXAGON NUT, M6M M3 A280	
110	315105-0124	-		1	WASHER ISO 7089-3-200 HV-A4	
110	315125-0146	-		4	WASHER TBRSB 5.3X15X1 A4	
120	315402-0146	-		4	LOCK WASHER FBB 5,1	
130	312115-0224	-		4	SCREW ISO4762 M3X10 A4	
A310	B559810-0101	A		1	TMCC2 CONTROLLER	
010	*B559809-0101*	*-*		*1*	*CIRCUIT BOARD*	
150	*559807-0000*	*-*		*1*	*PRINTED CIRCUIT BOARD*	
180	*B559811-0101*	*-*		*1*	*CIRCUIT BOARD*	
130	*559808-0000*	*-*		*1*	*PRINTED CIRCUIT BOARD*	
020	*2524654-0000*	*-*		*1*	*PLATE*	
030	*2524660-0000*	*-*		*1*	*CASING*	
070	*2524662-0000*	*-*		*1*	*COOLING BLOCK*	
100	*2524658-0000*	*-*		*1*	*COVER*	
170	*2524659-0000*	*-*		*1*	*CABLE*	
A310.1	B67372-0101	A		1	BACKPLANE 8TE(32 POLE)	
0010	*543336-0001*	*-*		*1*	*COMPONENTS WITHOUT TP-NO*	
0020	*543319-0000*	*-*		*1*	*PRINTED CIRCUIT BOARD*	
0030	*543337-0000*	*-*		*1*	*TERMINAL LABELS 1-4*	
A400	B559810-0101	A		1	TMCC2 CONTROLLER	
010	*B559809-0101*	*-*		*1*	*CIRCUIT BOARD*	
150	*559807-0000*	*-*		*1*	*PRINTED CIRCUIT BOARD*	
180	*B559811-0101*	*-*		*1*	*CIRCUIT BOARD*	
130	*559808-0000*	*-*		*1*	*PRINTED CIRCUIT BOARD*	
020	*2524654-0000*	*-*		*1*	*PLATE*	
030	*2524660-0000*	*-*		*1*	*CASING*	
070	*2524662-0000*	*-*		*1*	*COOLING BLOCK*	
100	*2524658-0000*	*-*		*1*	*COVER*	
170	*2524659-0000*	*-*		*1*	*CABLE*	
A400.1	B67372-0101	A		1	BACKPLANE 8TE(32 POLE)	
0010	*543336-0001*	*-*		*1*	*COMPONENTS WITHOUT TP-NO*	
0020	*543319-0000*	*-*		*1*	*PRINTED CIRCUIT BOARD*	
0030	*543337-0000*	*-*		*1*	*TERMINAL LABELS 1-4*	
W098	90220-0183	-	M	3	SCR. CABLE 2X0,34MM2	
W099	90220-0183	-	M	1	SCR. CABLE 2X0,34MM2	

Machine Type | Group Description | Used-In | Group Number | Page No

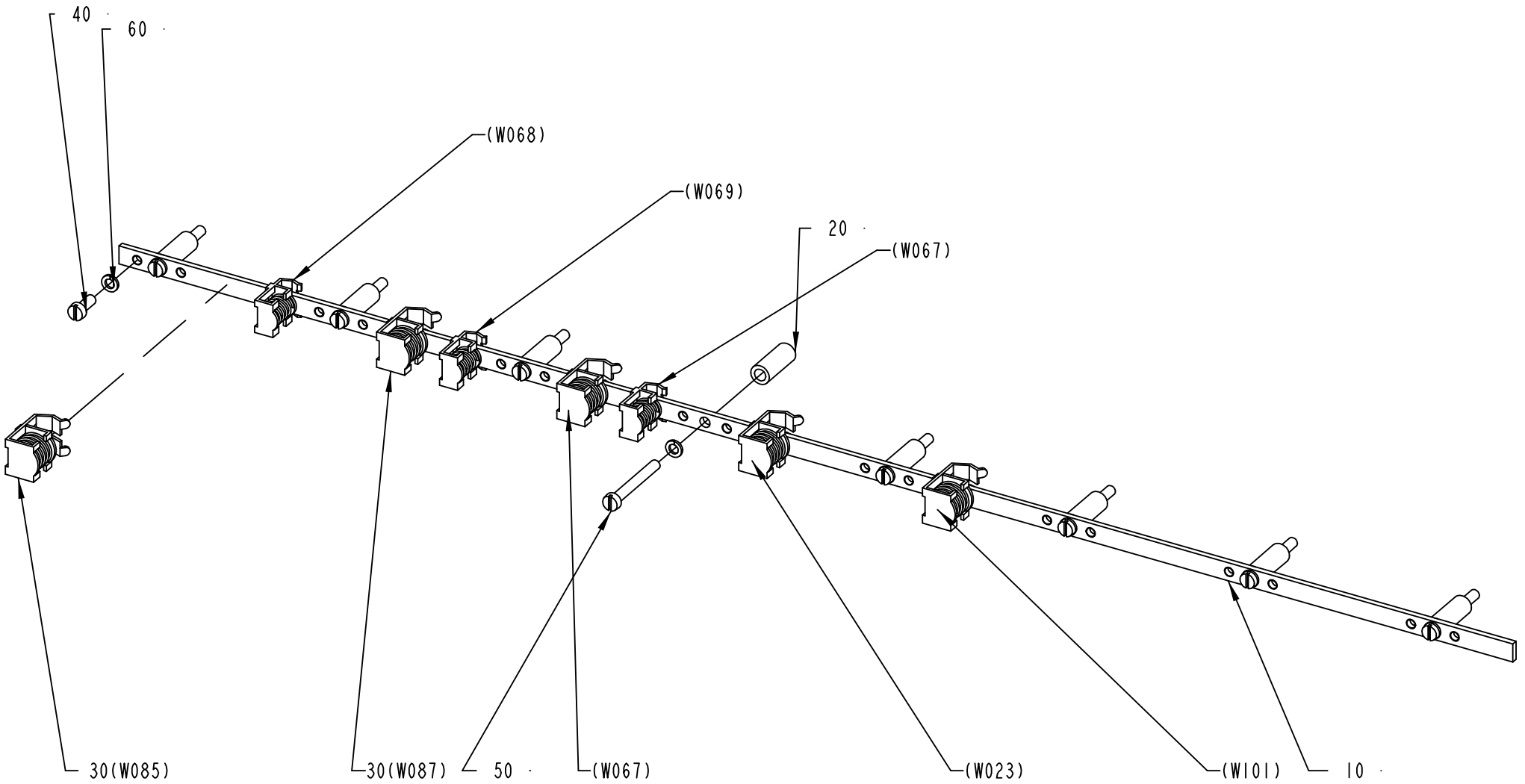

1511808-2
ECN 98221

ECM: 117663 - 20030113
Group number: 1511808-0100
Assembly Drawing: 1511808-2_1_AA

Pos	Part No	SP	UN	Qty	Description	Page No
TBA NOPT ASU						
030	90135-0039	-		5	SHIELD CLIP KLBU 4-13.5	
070	90135-0034	-		3	SHIELD CLAMP KLBU 3-8	
TBA NOPT NOASU						
030	90135-0039	-		4	SHIELD CLIP KLBU 4-13.5	
070	90135-0034	-		2	SHIELD CLAMP KLBU 3-8	
Common Parts						
010	1523947-0000	-		1	EARTH BAR	
020	988436-0000	-		8	SPACER SLEEVE	
040	312125-0327	-		1	SCREW PAN HEAD MCS M5X12 SS	
050	312125-0339	-		8	SCREW PAN HEAD MCS M5X40 SS	
060	315402-0146	-		8	LOCK WASHER FBB 5,1	

Pos	Part No	SP	UN	Qty	Description	Page No

Machine Type | Group Description | Used-In | Group Number | Page No

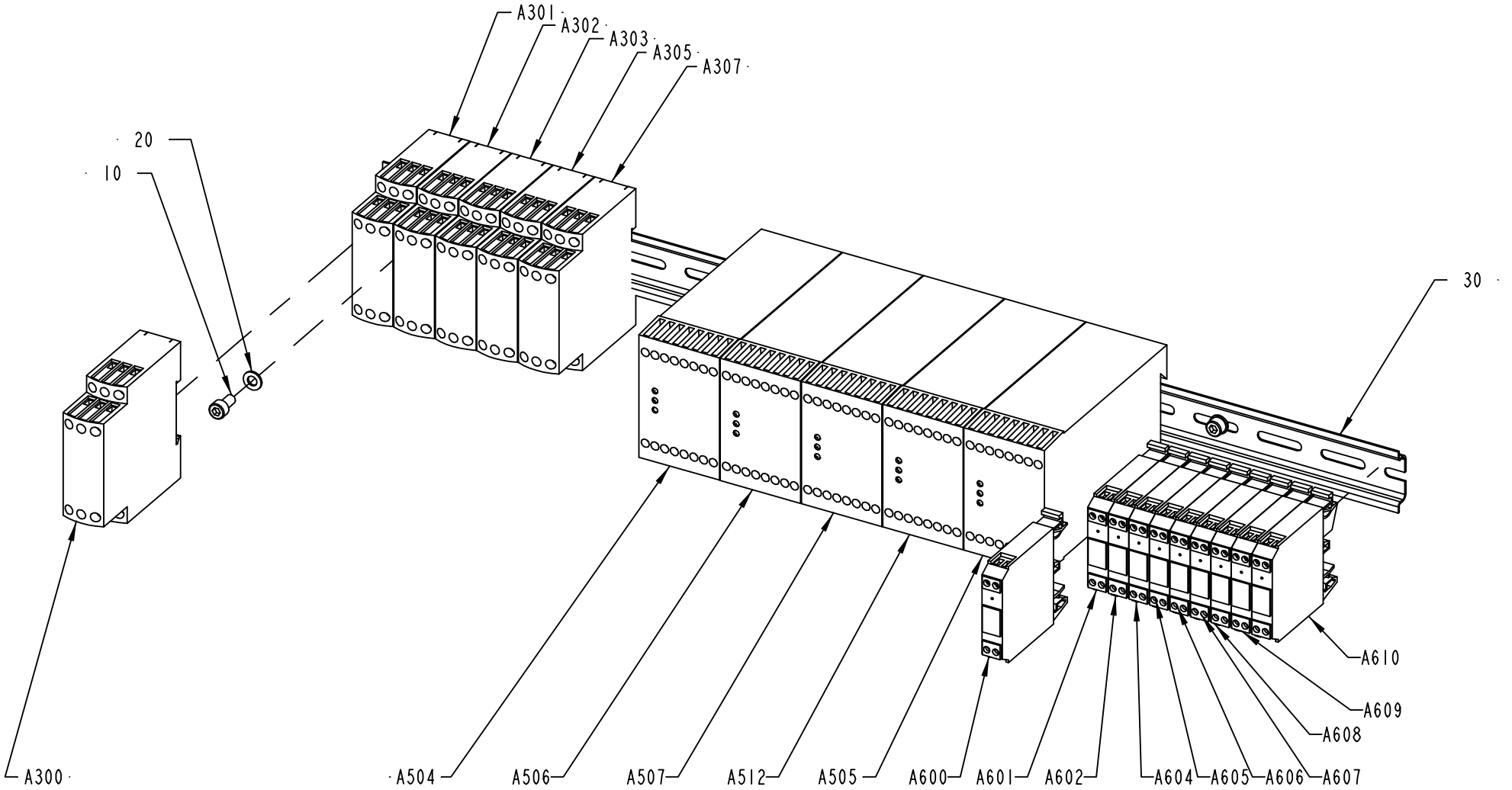

1511824-2
ECM 119568

ECM: 123603 - 20030227
Group number: 1511824-0100
Assembly Drawing: 1511824-2_1_AB

Pos	Part No	SP	UN	Qty	Description	Page No
TBA NOPT ASU						
A505	90119-0072	-		1	SAFETY RELAY, JSBR4	
Common Parts						
010	312115-0325	-		3	SCREW ISO4762 M5X10 A4	
020	315105-0146	-		3	WASHER ISO 7089-5-200 HV-A4	
030	353042-0004	-	MM	590	RAIL TS 35/7,5	
A300	90458-2580	A		1	LEVEL CONTROL RELAY RM4-LA32M	
A301	90458-2580	A		1	LEVEL CONTROL RELAY RM4-LA32M	
A302	90458-2580	A		1	LEVEL CONTROL RELAY RM4-LA32M	
A303	90458-2580	A		1	LEVEL CONTROL RELAY RM4-LA32M	
A305	90458-2580	A		1	LEVEL CONTROL RELAY RM4-LA32M	
A307	90458-2580	A		1	LEVEL CONTROL RELAY RM4-LA32M	
A504	90119-0089	-		1	SAFETY RELAY, JSBT4 24VDC	
A506	90119-0072	-		1	SAFETY RELAY, JSBR4	
A507	90119-0072	-		1	SAFETY RELAY, JSBR4	
A512	90119-0072	-		1	SAFETY RELAY, JSBR4	
A600	90119-0104	B		1	OPTO COUPLER AMMS 50070	
A601	90119-0063	B		1	OPTO-RELAY, DC/DC AMMS-10-1/30VDC	
A602	90119-0063	B		1	OPTO-RELAY, DC/DC AMMS-10-1/30VDC	
A604	90119-0063	A		1	OPTO-RELAY, DC/DC AMMS-10-1/30VDC	
A605	90119-0063	B		1	OPTO-RELAY, DC/DC AMMS-10-1/30VDC	
A606	90119-0063	B		1	OPTO-RELAY, DC/DC AMMS-10-1/30VDC	
A607	90119-0104	A		1	OPTO COUPLER AMMS 50070	
A608	90119-0104	A		1	OPTO COUPLER AMMS 50070	
A609	90119-0104	A		1	OPTO COUPLER AMMS 50070	
A610	90119-0104	A		1	OPTO COUPLER AMMS 50070	

Pos	Part No	SP	UN	Qty	Description	Page No

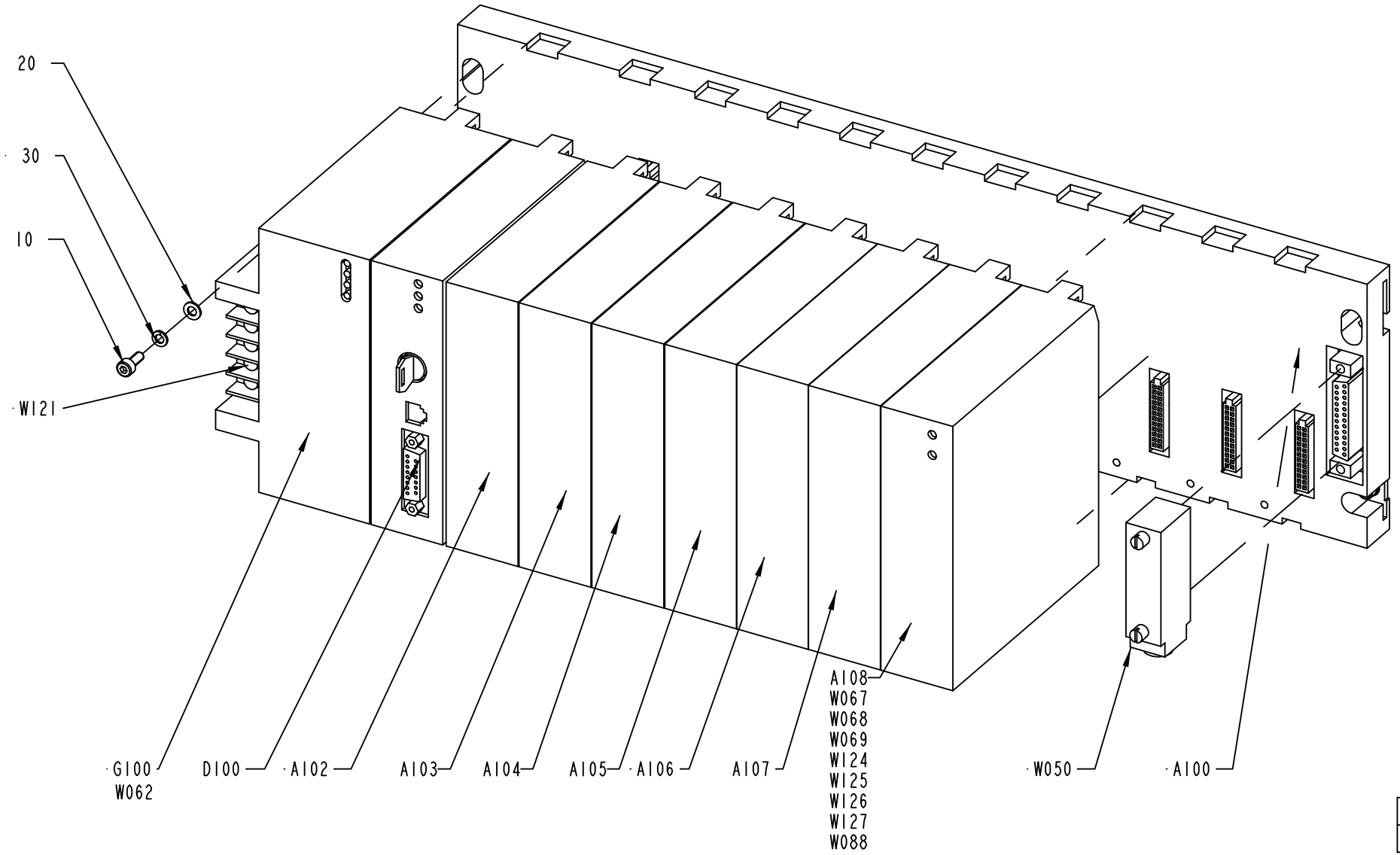

1511825-1
ECM 119568

ECM: 118388 - 20030227
Group number: 1511825-0100
Assembly Drawing: 1511825-1_1_AD

Pos	Part No	SP	UN	Qty	Description	Page No
TBA NOPT ASU						
W069	90220-0183	-	M	3	SCR. CABLE 2X0,34MM2	
Common Parts						
010	312115-0289	-		4	SCREW ISO4762 M4X10 A4	
020	315105-0136	-		4	WASHER ISO 7089-4-200 HV-A4	
030	315402-0136	-		4	LOCK WASHER FBB 4,1	
A100	90031-0051	A		1	BASEPLATE, 10-SLOT	
A102	90031-0057	A		1	PLC, DIGITAL INPUT MODULE	
A103	90031-0057	A		1	PLC, DIGITAL INPUT MODULE	
A104	90031-0057	A		1	PLC, DIGITAL INPUT MODULE	
A105	90031-0057	A		1	PLC, DIGITAL INPUT MODULE	
A106	90031-0058	A		1	PLC, DIGITAL INPUT MODULE	
A107	90031-0059	A		1	PLC, DIGITAL OUTPUT MODULE	
A108	90031-0062	A		1	PLC, ANALOG OUTPUT MODULE 8PT/CURR/VOLT	
D100	90031-0075	A		1	CPU363, SERIAL COMMUNICATION	
G100	B90031-0068	A		1	PLC, POWER SUPPLY	
	352551-0134	*A*		*1*	*FINE-WIRE FUSE 2 A SLOW;5X20MM*	
	90031-0301	*A*		*1*	*SPARE BATTERY CPU,PCM,2PCS*	
W050	90031-0305	A		1	I/O EXPANSION CABLE	
W067	90220-0183	-	M	3	SCR. CABLE 2X0,34MM2	
W068	90220-0183	-	M	3	SCR. CABLE 2X0,34MM2	
W088	1512322-0000	-		1	COPPER BRAID	
W121	1512322-0000	-		1	COPPER BRAID	
W124	90220-0183	-	M	3	SCR. CABLE 2X0,34MM2	
W125	90220-0183	-	M	3	SCR. CABLE 2X0,34MM2	
W126	90220-0183	-	M	3	SCR. CABLE 2X0,34MM2	
W127	90220-0183	-	M	2	SCR. CABLE 2X0,34MM2	

Pos	Part No	SP	UN	Qty	Description	Page No

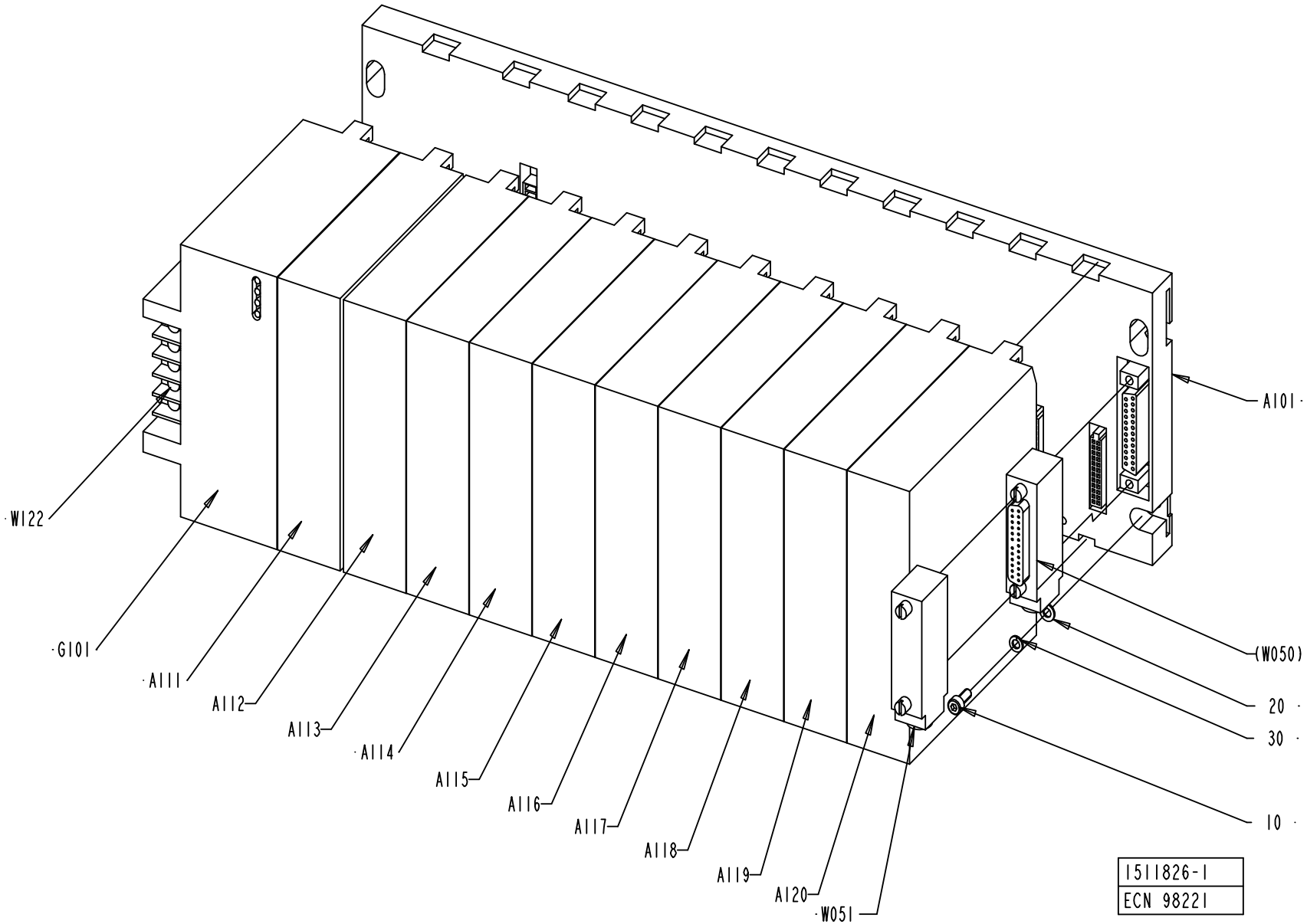
A101
W122
G101
A111
A112
A113
A114
A115
A116
A117
A118
A119
A120
W051
(W050)
20
30
10
1511826-1
ECN 98221

ECM: 115717 - 20020930
Group number: 1511826-0100
Assembly Drawing: 1511826-1_1_AB

Pos	Part No	SP	UN	Qty	Description	Page No
-						
010	312115-0289	-		4	SCREW ISO4762 M4X10 A4	
020	315105-0136	-		4	WASHER ISO 7089-4-200 HV-A4	
030	315402-0136	-		4	LOCK WASHER FBB 4,1	
A101	B90031-0053	A		1	BASEPLATE,10-SLOT	
	90031-0302	*-*		*1*	*I/O BUS TERMINATION PLUG*	
A111	90031-0057	A		1	PLC, DIGITAL INPUT MODULE	
A112	90031-0057	A		1	PLC, DIGITAL INPUT MODULE	
A113	90031-0057	A		1	PLC, DIGITAL INPUT MODULE	
A114	90031-0059	A		1	PLC, DIGITAL OUTPUT MODULE	
A115	90031-0059	A		1	PLC, DIGITAL OUTPUT MODULE	
A116	90031-0059	A		1	PLC, DIGITAL OUTPUT MODULE	
A117	90031-0059	A		1	PLC, DIGITAL OUTPUT MODULE	
A118	90031-0059	A		1	PLC, DIGITAL OUTPUT MODULE	
A119	90031-0059	A		1	PLC, DIGITAL OUTPUT MODULE	
A120	90031-0059	A		1	PLC, DIGITAL OUTPUT MODULE	
G101	B90031-0068	A		1	PLC, POWER SUPPLY	
	352551-0134	*A*		*1*	*FINE-WIRE FUSE 2 A SLOW;5X20MM*	
	90031-0301	*A*		*1*	*SPARE BATTERY CPU,PCM,2PCS*	
W050	90031-0305	A		1	I/O EXPANSION CABLE	
W122	1512322-0000	B		1	COPPER BRAID	

Pos	Part No	SP	UN	Qty	Description	Page No

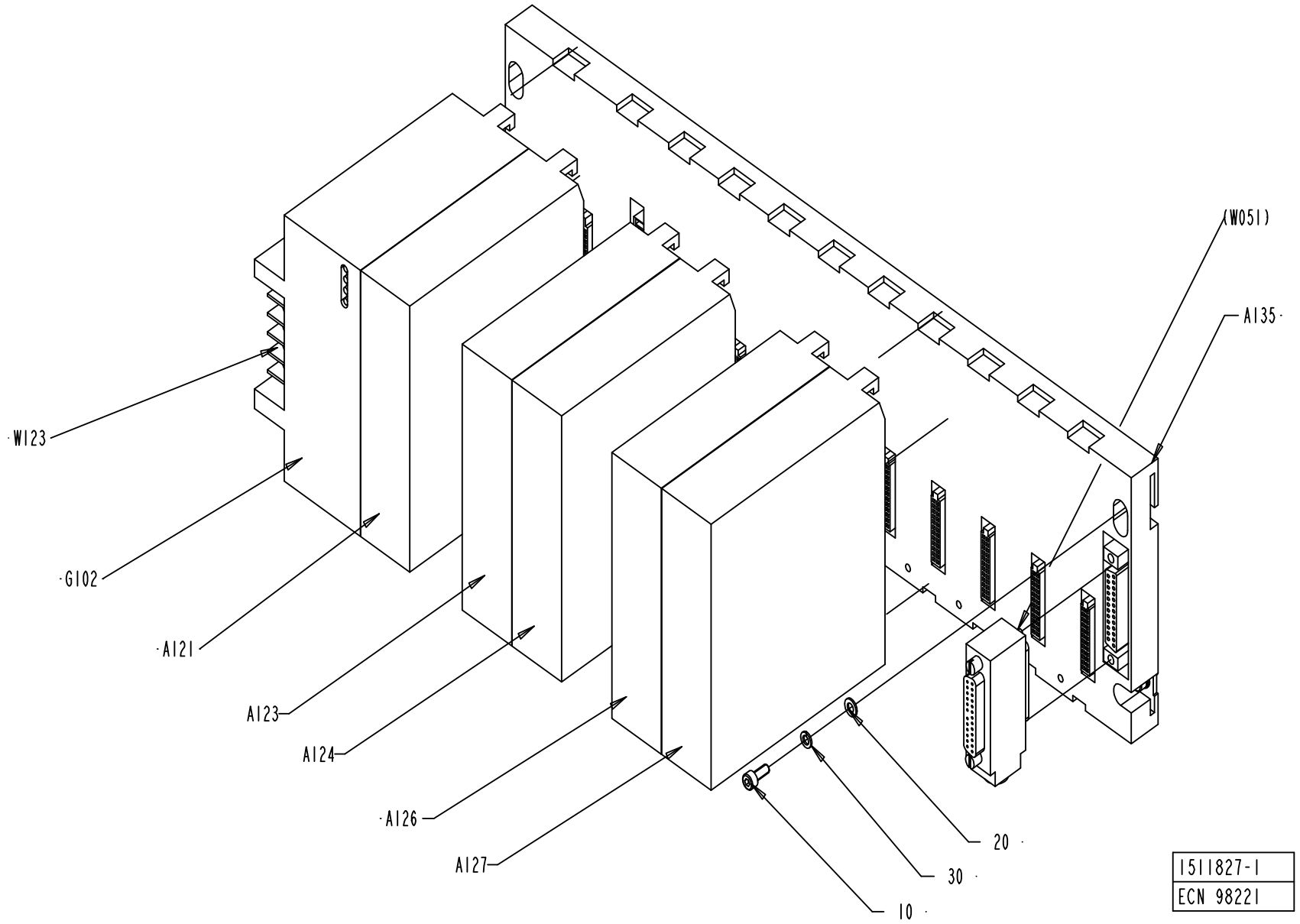
(W051)
A135
W123
G102
A121
A123
A124
A126
A127
20
30
10
1511827-1
ECN 98221

ECM: 115718 - 20020930
Group number: 1511827-0100
Assembly Drawing: 1511827-1_1_AB

Pos	Part No	SP	UN	Qty	Description	Page No
-						
0010	312115-0289	-		4	SCREW ISO4762 M4X10 A4	
0020	315105-0136	-		4	WASHER ISO 7089-4-200 HV-A4	
030	315402-0136	-		4	LOCK WASHER FBB 4,1	
A121	90031-0059	A		1	PLC, DIGITAL OUTPUT MODULE	
A123	90031-0059	A		1	PLC, DIGITAL OUTPUT MODULE	
A124	90031-0059	A		1	PLC, DIGITAL OUTPUT MODULE	
A126	90031-0057	A		1	PLC, DIGITAL INPUT MODULE	
A127	90031-0057	A		1	PLC, DIGITAL INPUT MODULE	
A135	B90031-0053	A		1	BASEPLATE,10-SLOT	
	90031-0302	*-*		*1*	*I/O BUS TERMINATION PLUG*	
G102	B90031-0068	A		1	PLC, POWER SUPPLY	
	352551-0134	*A*		*1*	*FINE-WIRE FUSE 2 A SLOW;5X20MM*	
	90031-0301	*A*		*1*	*SPARE BATTERY CPU,PCM,2PCS*	
W123	1512322-0000	B		1	COPPER BRAID	

Pos	Part No	SP	UN	Qty	Description	Page No

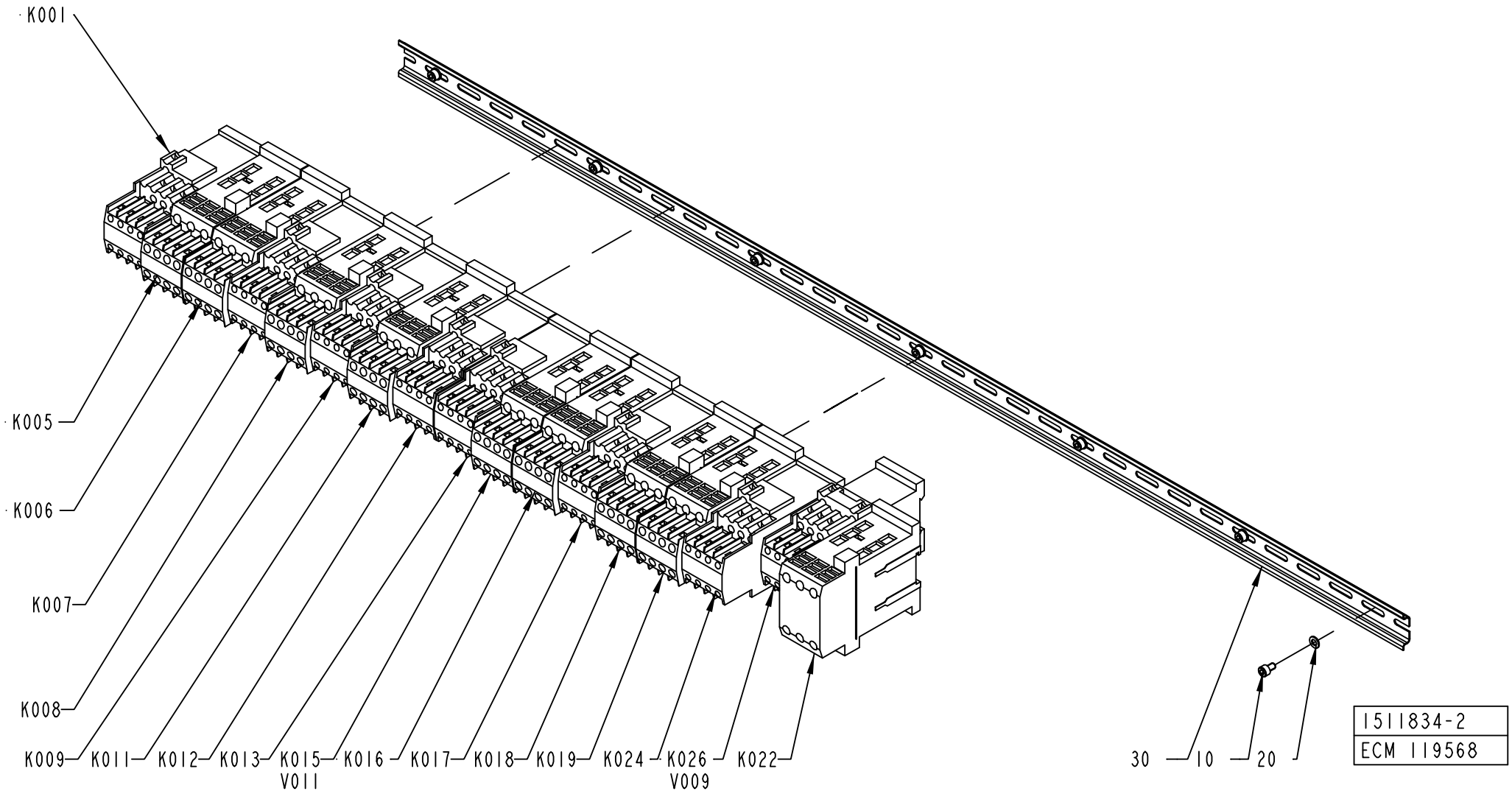
K001
K005
K006
K007
K008
K009
K011
K012
K013
K015
V011
K016
K017
K018
K019
K024
K026
V009
K022
30
10
20
1511834-2
ECM 119568

ECM: 123831 - 20030227
Group number: 1511834-0100
Assembly Drawing: 1511834-2_1_AB

Pos	Part No	SP	UN	Qty	Description	Page No
TBA NOPT ASU						
K022	90075-0128	A		1	CONTACTOR, 7,5KW 24VDC	
Common Parts						
010	312115-0323	-		7	SCREW ISO4762 M5X8 A4	
020	315105-0146	-		7	WASHER ISO 7089-5-200 HV-A4	
030	353042-0004	-	MM	1120	RAIL TS 35/7,5	
K001	B90075-0124	A		1	CONTACTOR, 4KW 24VDC	
	90075-0313	*A*		*1*	*AUXILIARY CONTACT K&M 22 DILM.2NO;2NC*	
K005	B90075-0125	A		1	CONTACTOR, 7,5KW 24VDC	
	90075-0313	*A*		*1*	*AUXILIARY CONTACT K&M 22 DILM.2NO;2NC*	
K006	B90075-0125	A		1	CONTACTOR, 7,5KW 24VDC	
	90075-0313	*A*		*1*	*AUXILIARY CONTACT K&M 22 DILM.2NO;2NC*	
K007	B90075-0124	A		1	CONTACTOR, 4KW 24VDC	
	90075-0313	*A*		*1*	*AUXILIARY CONTACT K&M 22 DILM.2NO;2NC*	
K008	B90075-0125	A		1	CONTACTOR, 7,5KW 24VDC	
	90075-0313	*A*		*1*	*AUXILIARY CONTACT K&M 22 DILM.2NO;2NC*	
K009	B90075-0124	A		1	CONTACTOR, 4KW 24VDC	
	90075-0313	*A*		*1*	*AUXILIARY CONTACT K&M 22 DILM.2NO;2NC*	
K011	B90075-0125	A		1	CONTACTOR, 7,5KW 24VDC	
	90075-0313	*A*		*1*	*AUXILIARY CONTACT K&M 22 DILM.2NO;2NC*	
K012	B90075-0124	A		1	CONTACTOR, 4KW 24VDC	
	90075-0313	*A*		*1*	*AUXILIARY CONTACT K&M 22 DILM.2NO;2NC*	
K013	B90075-0124	A		1	CONTACTOR, 4KW 24VDC	
	90075-0313	*A*		*1*	*AUXILIARY CONTACT K&M 22 DILM.2NO;2NC*	
K015	B90075-0125	A		1	CONTACTOR, 7,5KW 24VDC	
	90075-0313	*A*		*1*	*AUXILIARY CONTACT K&M 22 DILM.2NO;2NC*	
K016	B90075-0125	A		1	CONTACTOR, 7,5KW 24VDC	
	90075-0313	*A*		*1*	*AUXILIARY CONTACT K&M 22 DILM.2NO;2NC*	
K017	B90075-0124	A		1	CONTACTOR, 4KW 24VDC	
	90075-0313	*A*		*1*	*AUXILIARY CONTACT K&M 22 DILM.2NO;2NC*	
K018	B90075-0125	A		1	CONTACTOR, 7,5KW 24VDC	
	90075-0313	*A*		*1*	*AUXILIARY CONTACT K&M 22 DILM.2NO;2NC*	
K019	B90075-0125	A		1	CONTACTOR, 7,5KW 24VDC	
	90075-0313	*A*		*1*	*AUXILIARY CONTACT K&M 22 DILM.2NO;2NC*	
K024	B90075-0124	A		1	CONTACTOR, 4KW 24VDC	
	90075-0313	*A*		*1*	*AUXILIARY CONTACT K&M 22 DILM.2NO;2NC*	
K026	B90075-0124	A		1	CONTACTOR, 4KW 24VDC	
	90075-0313	*A*		*1*	*AUXILIARY CONTACT K&M 22 DILM.2NO;2NC*	
V009	90024-0034	B		1	DIODE SURGE SUPPRESSOR, FD B DIL	
V011	90024-0034	B		1	DIODE SURGE SUPPRESSOR, FD B DIL	

Pos	Part No	SP	UN	Qty	Description	Page No

Machine Type | Group Description | Used-In | Group Number | Page No

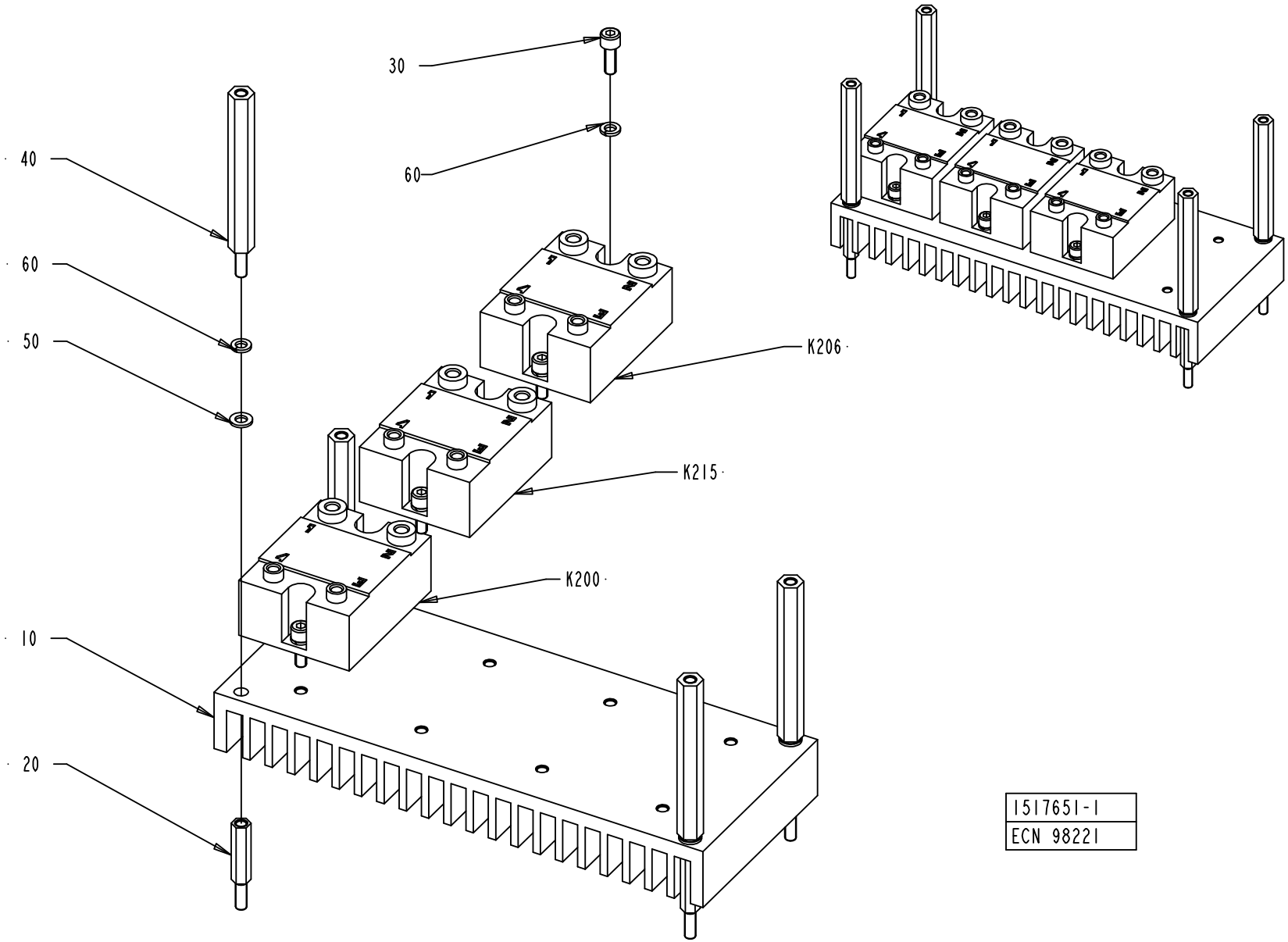

1517651-1
ECN 98221

ECM: 115724 - 20020930
Group number: 1517651-0100
Assembly Drawing: 1517651-1_1_AB

This list covers pages from 680 to 683

Pos	Part No	SP	UN	Qty	Description	Page No
TBA NOPT ASU (See drawing on page: 682)						
030	312115-0289	-		8	SCREW ISO4762 M4X10 A4	
060	315402-0136	-		12	LOCK WASHER FBB 4,1	
K205	90119-0067	A		1	SOLID-STATE RELAY, H12WD4850	
TBA NOPT NOASU (See drawing on page: 680)						
030	312115-0289	-		6	SCREW ISO4762 M4X10 A4	
060	315402-0136	-		10	LOCK WASHER FBB 4,1	
Common Parts						
010	1498819-0000	-		1	COOLING PLATE	
020	1517675-0000	-		4	SPACER	
040	2531997-0000	-		4	SPACER	
050	315105-0136	-		4	WASHER ISO 7089-4-200 HV-A4	
K200	90119-0067	A		1	SOLID-STATE RELAY, H12WD4850	
K206	90119-0067	A		1	SOLID-STATE RELAY, H12WD4850	
K215	90119-0067	A		1	SOLID-STATE RELAY, H12WD4850	

Pos	Part No	SP	UN	Qty	Description	Page No

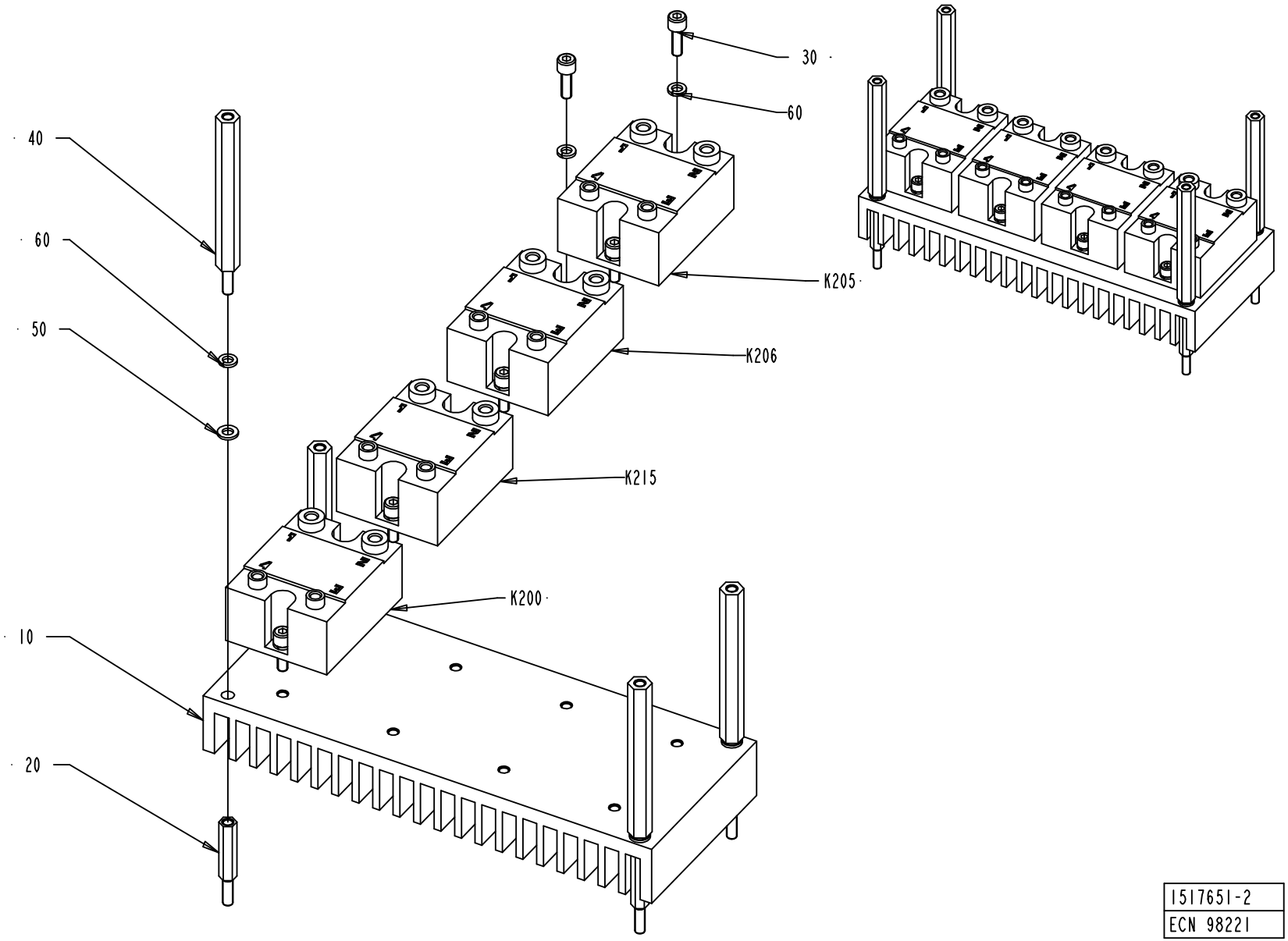

1517651-2
ECN 98221

ECM: 115724 - 20020930
Group number: 1517651-0100
Assembly Drawing: 1517651-2_1_AA

This list covers pages from 680 to 683

Pos	Part No	SP	UN	Qty	Description	Page No
TBA NOPT ASU (See drawing on page: 682)						
030	312115-0289	-		8	SCREW ISO4762 M4X10 A4	
060	315402-0136	-		12	LOCK WASHER FBB 4,1	
K205	90119-0067	A		1	SOLID-STATE RELAY, H12WD4850	
TBA NOPT NOASU (See drawing on page: 680)						
030	312115-0289	-		6	SCREW ISO4762 M4X10 A4	
060	315402-0136	-		10	LOCK WASHER FBB 4,1	
Common Parts						
010	1498819-0000	-		1	COOLING PLATE	
020	1517675-0000	-		4	SPACER	
040	2531997-0000	-		4	SPACER	
050	315105-0136	-		4	WASHER ISO 7089-4-200 HV-A4	
K200	90119-0067	A		1	SOLID-STATE RELAY, H12WD4850	
K206	90119-0067	A		1	SOLID-STATE RELAY, H12WD4850	
K215	90119-0067	A		1	SOLID-STATE RELAY, H12WD4850	

Pos	Part No	SP	UN	Qty	Description	Page No

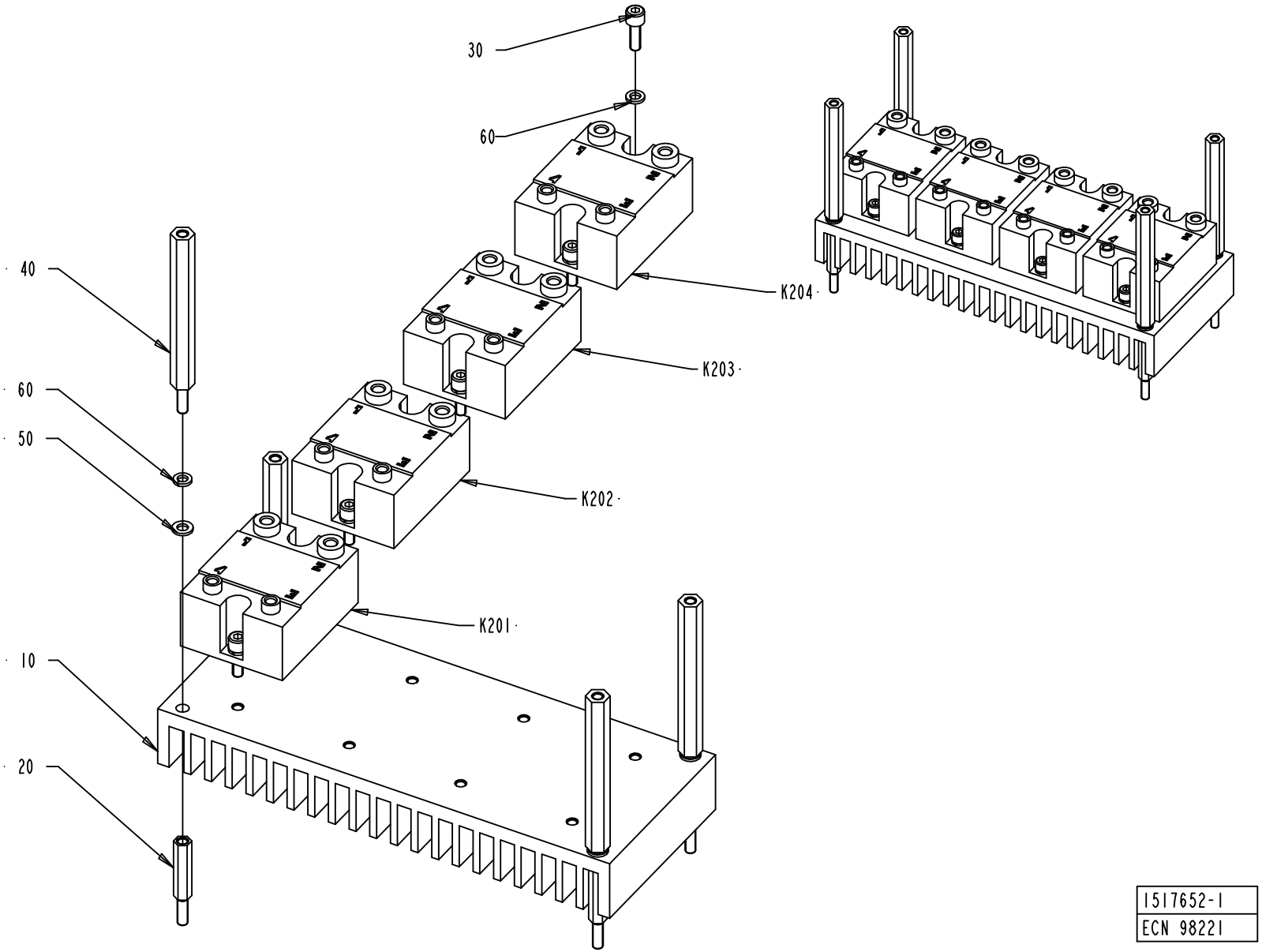

1517652-1
ECN 98221

ECM: 115727 - 20020930
Group number: 1517652-0100
Assembly Drawing: 1517652-1_1_AB

Pos	Part No	SP	UN	Qty	Description	Page No
-						
010	1498819-0000	-		2	COOLING PLATE	
020	1517675-0000	-		4	SPACER	
030	312115-0289	-		8	SCREW ISO4762 M4X10 A4	
040	2531997-0000	-		4	SPACER	
050	315105-0136	-		12	WASHER ISO 7089-4-200 HV-A4	
060	315402-0136	-		12	LOCK WASHER FBB 4,1	
K201	90119-0067	A		1	SOLID-STATE RELAY, H12WD4850	
K202	90119-0067	A		1	SOLID-STATE RELAY, H12WD4850	
K203	90119-0067	A		1	SOLID-STATE RELAY, H12WD4850	
K204	90119-0067	A		1	SOLID-STATE RELAY, H12WD4850	

Pos	Part No	SP	UN	Qty	Description	Page No

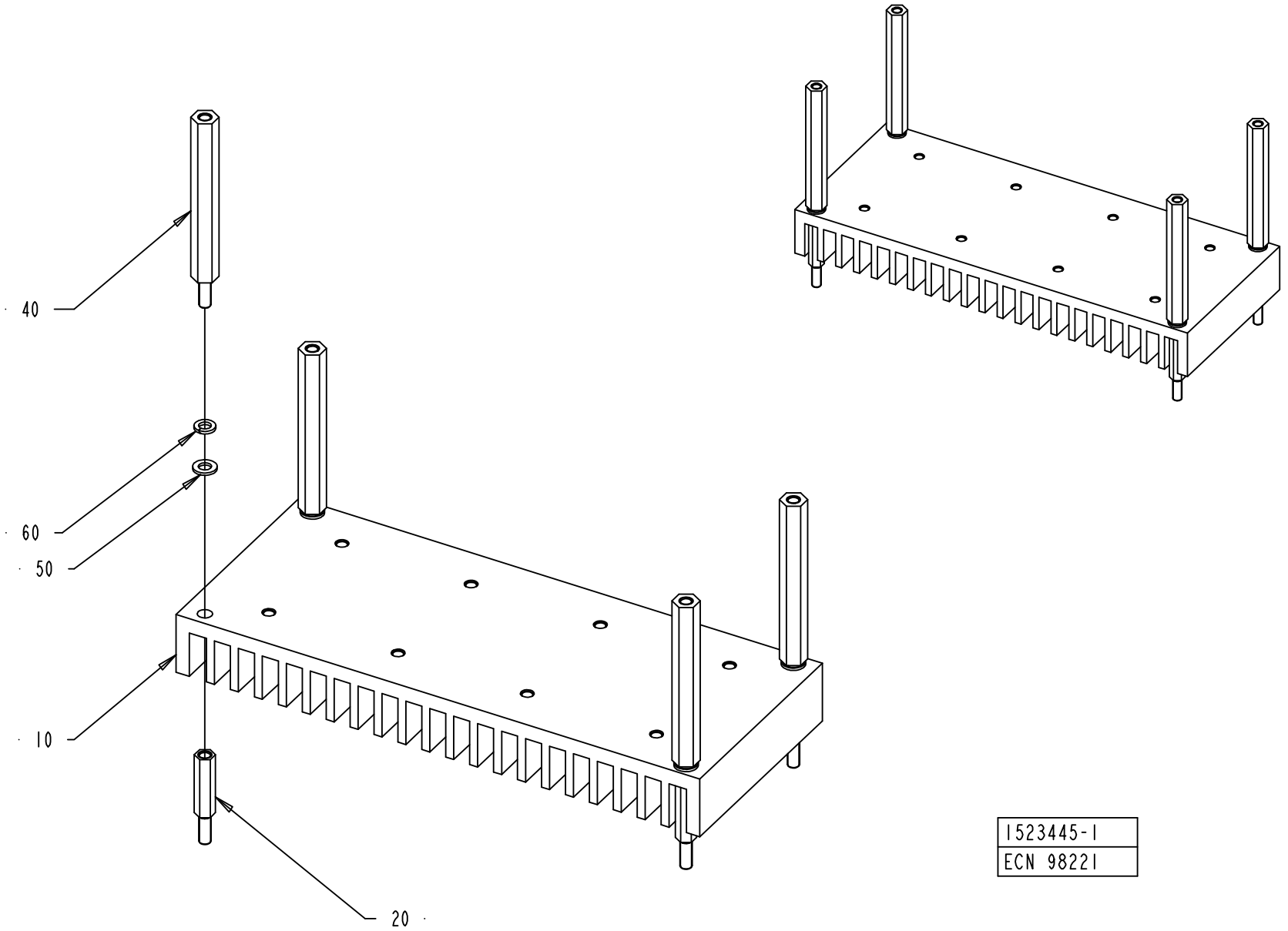

1523445-1
ECN 98221

ECM: 103856 - 20020521
Group number: 1523445-0100
Assembly Drawing: 1523445-1_1_AB

Pos	Part No	SP	UN	Qty	Description	Page No
-						
010	1498819-0000	-		1	COOLING PLATE	
020	1517675-0000	-		4	SPACER	
040	2531997-0000	-		4	SPACER	
050	315105-0136	-		4	WASHER ISO 7089-4-200 HV-A4	
060	315402-0136	-		4	LOCK WASHER FBB 4,1	

Pos	Part No	SP	UN	Qty	Description	Page No

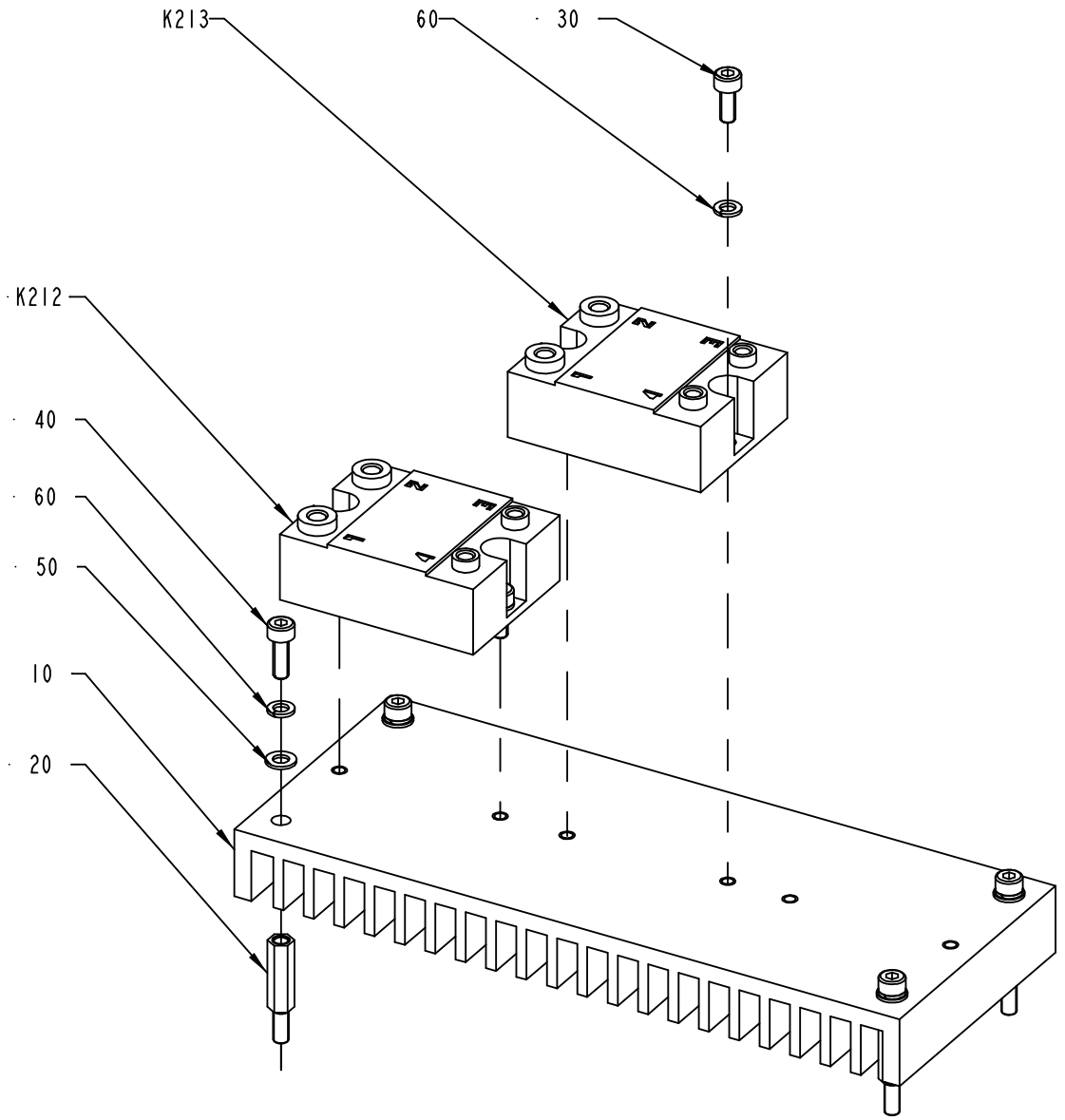

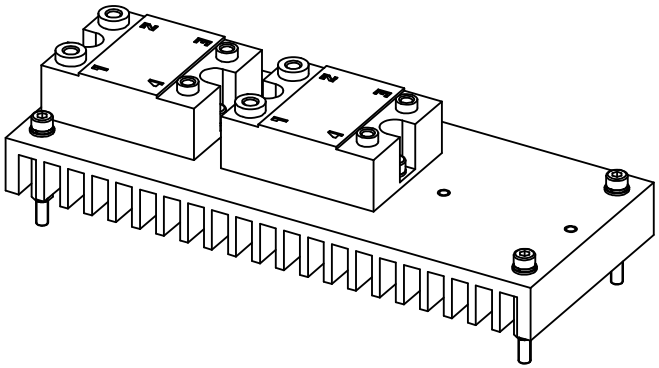

1523446-1
ECN 73191

ECM: 103857 - 20020521
Group number: 1523446-0100
Assembly Drawing: 1523446-1_1_AA

Pos	Part No	SP	UN	Qty	Description	Page No
-						
010	1498819-0000	-		1	COOLING PLATE	
020	1517675-0000	-		4	SPACER	
040	2531997-0000	-		4	SPACER	
050	315105-0136	-		4	WASHER ISO 7089-4-200 HV-A4	
060	315402-0136	-		4	LOCK WASHER FBB 4,1	

Pos	Part No	SP	UN	Qty	Description	Page No

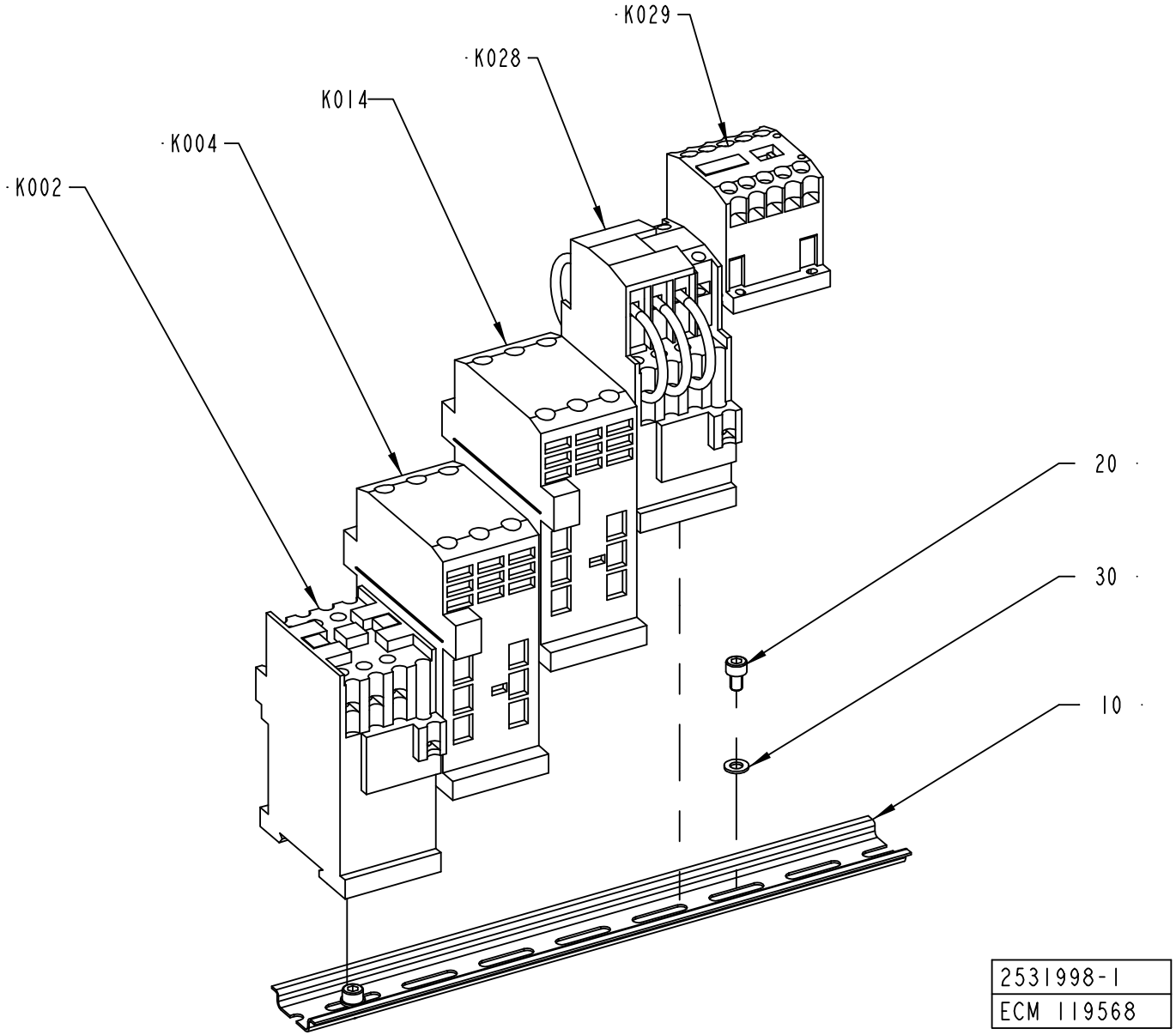
K029
K028
K014
K004
K002
20
30
10
2531998-1
ECM 119568

ECM: 126324 - 20030227
Group number: 2531998-0100
Assembly Drawing: 2531998-1_1_AB

Pos	Part No	SP	UN	Qty	Description	Page No
-						
010	353042-0004	-	MM	280	RAIL TS 35/7,5	
020	312115-0323	-		2	SCREW ISO4762 M5X8 A4	
030	315105-0146	-		2	WASHER ISO 7089-5-200 HV-A4	
K002	90075-0127	-		1	CONTACTOR, 4KW 24VDC	
K004	90075-0128	-		1	CONTACTOR, 7,5KW 24VDC	
K014	90075-0128	-		1	CONTACTOR, 7,5KW 24VDC	
K028	90458-1302	-		1	CONTACTOR, 4KW 48VAC	
K029	90075-0141	-		1	CONTACTOR, 4KW 24VDC	

Pos	Part No	SP	UN	Qty	Description	Page No

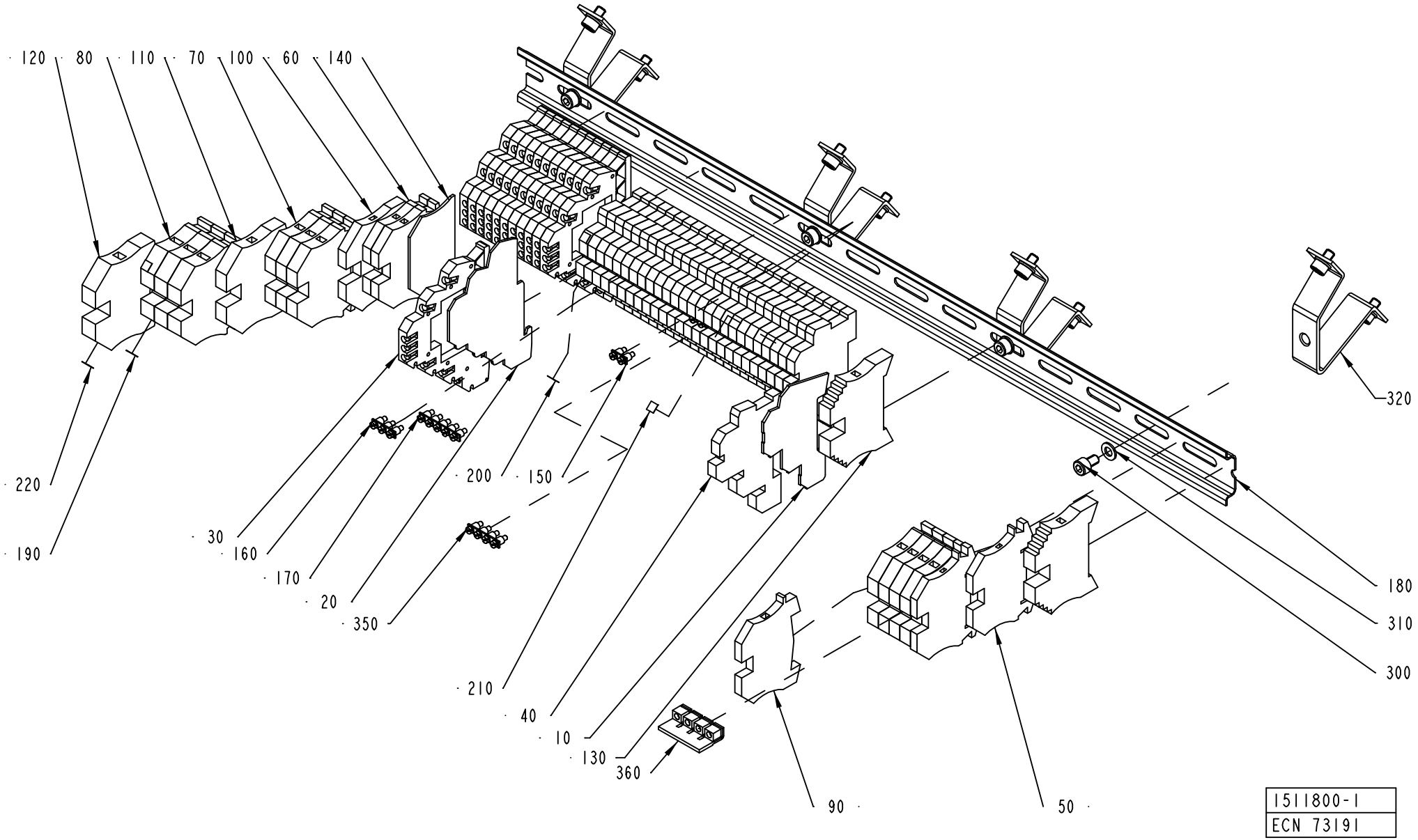
120
80
110
70
100
60
140
220
190
30
160
170
20
350
200
150
210
40
10
130
360
320
180
310
300
90
50
1511800-1
ECN 73191

ECM: 73191 - 20011221
Group number: 1511800-0100
Assembly Drawing: 1511800-1_1_AA

This list covers pages from 692 to 695

Pos	Part No	SP	UN	Qty	Description	Page No
-						
010	90457-0051	-		1	END PLATE	
020	90457-0052	-		1	END PLATE	
030	90457-0054	-		12	FEED THROUGH TERMINAL, 161527	
040	353021-0132	-		27	TERMINALS,TRIPLE-LEVEL, DLD 2,5/PE	
050	353021-0212	-		2	FEED THROUGH TERMINAL, 10200.0	
060	353021-0213	-		2	FEED THROUGH TERMINAL, 10201.0	
070	353021-0214	-		3	FEED THROUGH TERMINAL, 10202.0	
080	353021-0215	-		3	FEED THROUGH TERMINAL, 10203.0	
090	353024-0204	-		1	EARTH TERMINAL WPE 2,5	
100	353024-0205	-		1	EARTH TERMINAL, 1010.1	
110	353024-0206	-		1	EARTH TERMINAL, 1010.2	
120	353024-0207	-		1	EARTH TERMINAL, 1010.3	
130	353031-0203	-		2	END SUPPORT, WEW 35/2	
140	353032-0004	-		1	END PLATE WAP 2,5-10 BEIGE	
150	353034-0401	-		3	BRIDGE CONNECTOR Q2, 13125.0	
160	353034-0402	-		1	BRIDGE CONNECTOR Q3, 13126.0	
170	353034-0404	-		1	BRIDGE CONNECTOR Q10, 13131.0	
180	353042-0004	-	MM	530	RAIL TS 35/7,5	
190	359011-0807	-		4	MARKING PLATES 5-FW 1-50	
200	359011-0808	-		2	MARKING PLATES 5-FW 51-100	
210	359011-0809	-		2	MARKING PLATES 5-FW 101-150	
220	359011-0819	-		1	MARKING PLATES 5-GW (EARTH)	
300	312115-0323	-		4	SCREW ISO4762 M5X8 A4	
310	315105-0146	-		4	WASHER ISO 7089-5-200 HV-A4	
320	90094-0005	-		4	RAIL BRACKET	
330	312125-0327	-		4	SCREW PAN HEAD MCS M5X12 SS	
340	90458-1447	-		4	MOUNTING RAIL SUPPORT TST 128660	
350	353034-0403	-		1	BRIDGE CONNECTOR Q4, 13127,0	
360	353034-0032	-		1	BRIDGE CONNECTOR, WQV 6/10, 10522.6	

Pos	Part No	SP	UN	Qty	Description	Page No

Machine Type | Group Description | Used-In | Group Number | Page No

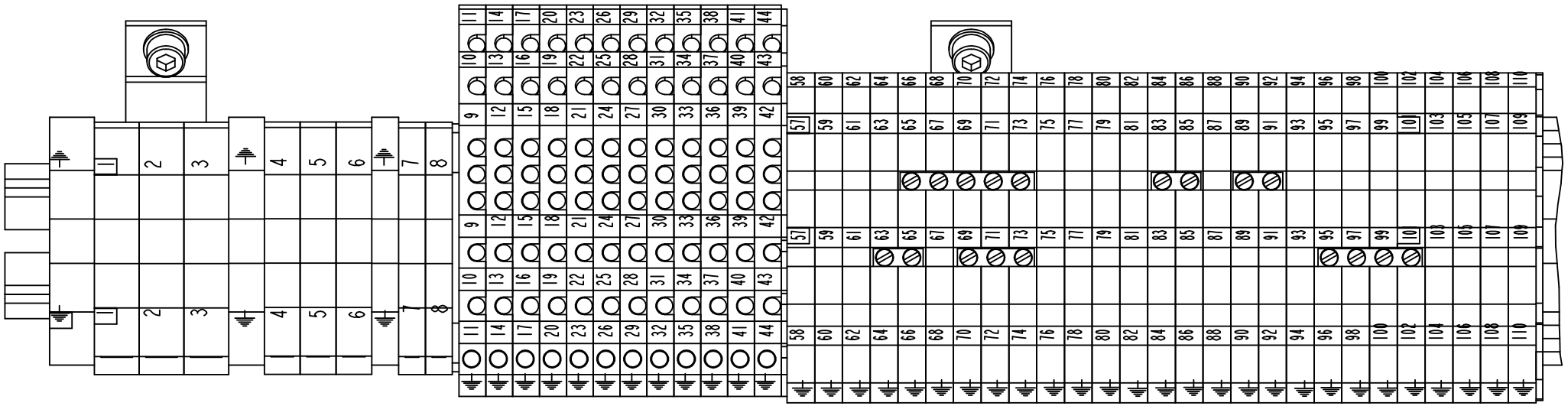

X001

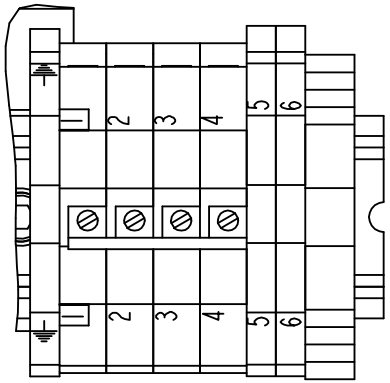

X006

1511800-1
ECN 73191

ECM: 73191 - 20011221
Group number: 1511800-0100
Assembly Drawing: 1511800-1_2_AA

This list covers pages from 692 to 695

Pos	Part No	SP	UN	Qty	Description	Page No
-						
010	90457-0051	-		1	END PLATE	
020	90457-0052	-		1	END PLATE	
030	90457-0054	-		12	FEED THROUGH TERMINAL, 161527	
040	353021-0132	-		27	TERMINALS,TRIPLE-LEVEL, DLD 2,5/PE	
050	353021-0212	-		2	FEED THROUGH TERMINAL, 10200.0	
060	353021-0213	-		2	FEED THROUGH TERMINAL, 10201.0	
070	353021-0214	-		3	FEED THROUGH TERMINAL, 10202.0	
080	353021-0215	-		3	FEED THROUGH TERMINAL, 10203.0	
090	353024-0204	-		1	EARTH TERMINAL WPE 2,5	
100	353024-0205	-		1	EARTH TERMINAL, 1010.1	
110	353024-0206	-		1	EARTH TERMINAL, 1010.2	
120	353024-0207	-		1	EARTH TERMINAL, 1010.3	
130	353031-0203	-		2	END SUPPORT, WEW 35/2	
140	353032-0004	-		1	END PLATE WAP 2,5-10 BEIGE	
150	353034-0401	-		3	BRIDGE CONNECTOR Q2, 13125.0	
160	353034-0402	-		1	BRIDGE CONNECTOR Q3, 13126.0	
170	353034-0404	-		1	BRIDGE CONNECTOR Q10, 13131.0	
180	353042-0004	-	MM	530	RAIL TS 35/7,5	
190	359011-0807	-		4	MARKING PLATES 5-FW 1-50	
200	359011-0808	-		2	MARKING PLATES 5-FW 51-100	
210	359011-0809	-		2	MARKING PLATES 5-FW 101-150	
220	359011-0819	-		1	MARKING PLATES 5-GW (EARTH)	
300	312115-0323	-		4	SCREW ISO4762 M5X8 A4	
310	315105-0146	-		4	WASHER ISO 7089-5-200 HV-A4	
320	90094-0005	-		4	RAIL BRACKET	
330	312125-0327	-		4	SCREW PAN HEAD MCS M5X12 SS	
340	90458-1447	-		4	MOUNTING RAIL SUPPORT TST 128660	
350	353034-0403	-		1	BRIDGE CONNECTOR Q4, 13127,0	
360	353034-0032	-		1	BRIDGE CONNECTOR, WQV 6/10, 10522.6	

Pos	Part No	SP	UN	Qty	Description	Page No

LOGIC BOTTOM TERMINAL BLOCK

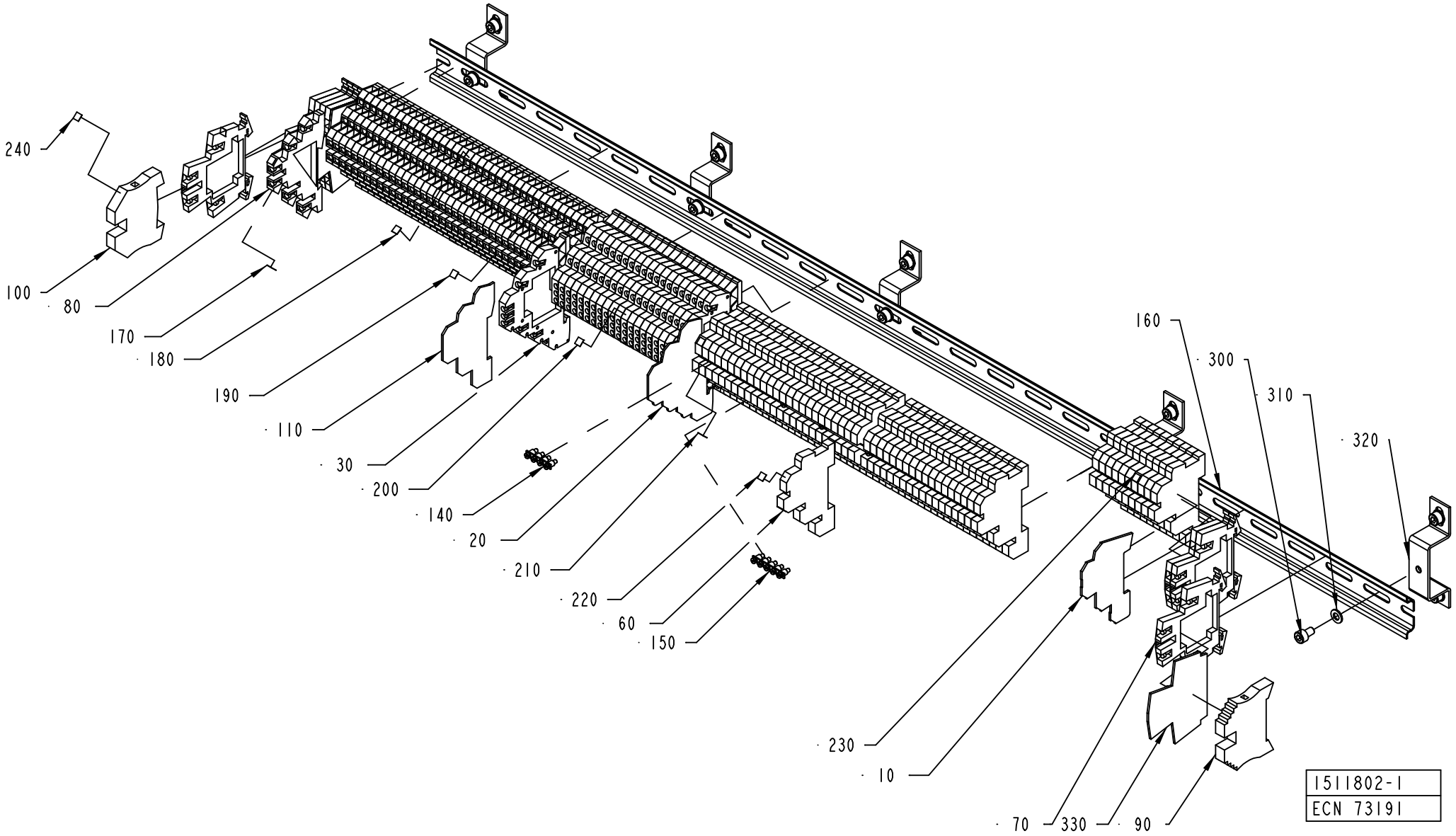

ECM: 104297 - 20020521
Group number: 1511802-0100
Assembly Drawing: 1511802-1_1_AA

This list covers pages from 696 to 699

Pos	Part No	SP	UN	Qty	Description	Page No
-						
010	90457-0051	-		1	END PLATE	
020	90457-0052	-		1	END PLATE	
030	90457-0054	-		21	FEED THROUGH TERMINAL, 161527	
060	353021-0132	-		54	TERMINALS,TRIPLE-LEVEL, DLD 2,5/PE	
070	90458-1136	-		8	TERMINAL BLOCK, 103630	
080	353021-0302	-		38	TERMINALS,TRIPLE-LEVEL, DLD 2,5/35 PA	
090	353031-0203	-		1	END SUPPORT, WEW 35/2	
100	353024-0206	-		1	EARTH TERMINAL, 1010.2	
110	353032-0302	-		1	END PLATE WAP	
140	353034-0403	-		2	BRIDGE CONNECTOR Q4, 13127,0	
150	353034-0404	-		7	BRIDGE CONNECTOR Q10, 13131.0	
160	353042-0004	-	MM	935	RAIL TS 35/7,5	
170	359011-0807	-		2	MARKING PLATES 5-FW 1-50	
180	359011-0808	-		2	MARKING PLATES 5-FW 51-100	
190	359011-0809	-		2	MARKING PLATES 5-FW 101-150	
200	359011-0810	-		2	MARKING PLATES 5-FW 151-200	
210	359011-0811	-		2	MARKING PLATES 5-FW 201-250	
220	359011-0812	-		2	SET OF SIGNS 5-FW 251-300	
230	359011-0813	-		2	SET OF SIGNS 5-FW 301-350	
240	359011-0819	-		2	MARKING PLATES 5-GW (EARTH)	
300	312115-0323	-		15	SCREW ISO4762 M5X8 A4	
310	315105-0146	-		15	WASHER ISO 7089-5-200 HV-A4	
320	90458-1447	-		5	MOUNTING RAIL SUPPORT TST 128660	
330	353032-0009	-		2	END PLATE, WAP 16/35	

Pos	Part No	SP	UN	Qty	Description	Page No

Machine Type | Group Description | Used-In | Group Number | Page No

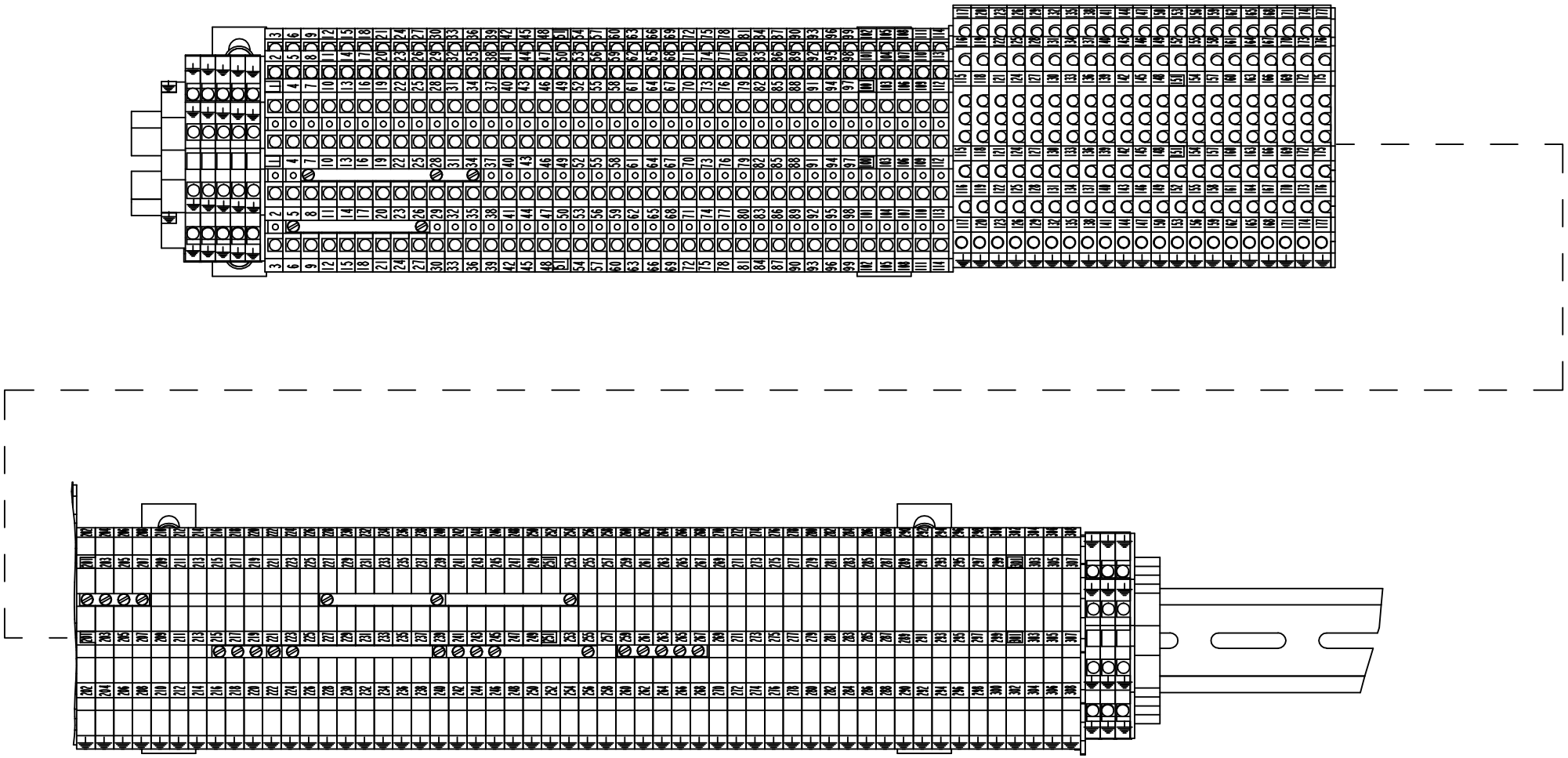

1511802-1
ECN 73191

X002

ECM: 104297 - 20020521
Group number: 1511802-0100
Assembly Drawing: 1511802-1_2_AA

This list covers pages from 696 to 699

Pos	Part No	SP	UN	Qty	Description	Page No
-						
010	90457-0051	-		1	END PLATE	
020	90457-0052	-		1	END PLATE	
030	90457-0054	-		21	FEED THROUGH TERMINAL, 161527	
060	353021-0132	-		54	TERMINALS,TRIPLE-LEVEL, DLD 2,5/PE	
070	90458-1136	-		8	TERMINAL BLOCK, 103630	
080	353021-0302	-		38	TERMINALS,TRIPLE-LEVEL, DLD 2,5/35 PA	
090	353031-0203	-		1	END SUPPORT, WEW 35/2	
100	353024-0206	-		1	EARTH TERMINAL, 1010.2	
110	353032-0302	-		1	END PLATE WAP	
140	353034-0403	-		2	BRIDGE CONNECTOR Q4, 13127,0	
150	353034-0404	-		7	BRIDGE CONNECTOR Q10, 13131.0	
160	353042-0004	-	MM	935	RAIL TS 35/7,5	
170	359011-0807	-		2	MARKING PLATES 5-FW 1-50	
180	359011-0808	-		2	MARKING PLATES 5-FW 51-100	
190	359011-0809	-		2	MARKING PLATES 5-FW 101-150	
200	359011-0810	-		2	MARKING PLATES 5-FW 151-200	
210	359011-0811	-		2	MARKING PLATES 5-FW 201-250	
220	359011-0812	-		2	SET OF SIGNS 5-FW 251-300	
230	359011-0813	-		2	SET OF SIGNS 5-FW 301-350	
240	359011-0819	-		2	MARKING PLATES 5-GW (EARTH)	
300	312115-0323	-		15	SCREW ISO4762 M5X8 A4	
310	315105-0146	-		15	WASHER ISO 7089-5-200 HV-A4	
320	90458-1447	-		5	MOUNTING RAIL SUPPORT TST 128660	
330	353032-0009	-		2	END PLATE, WAP 16/35	

Pos	Part No	SP	UN	Qty	Description	Page No

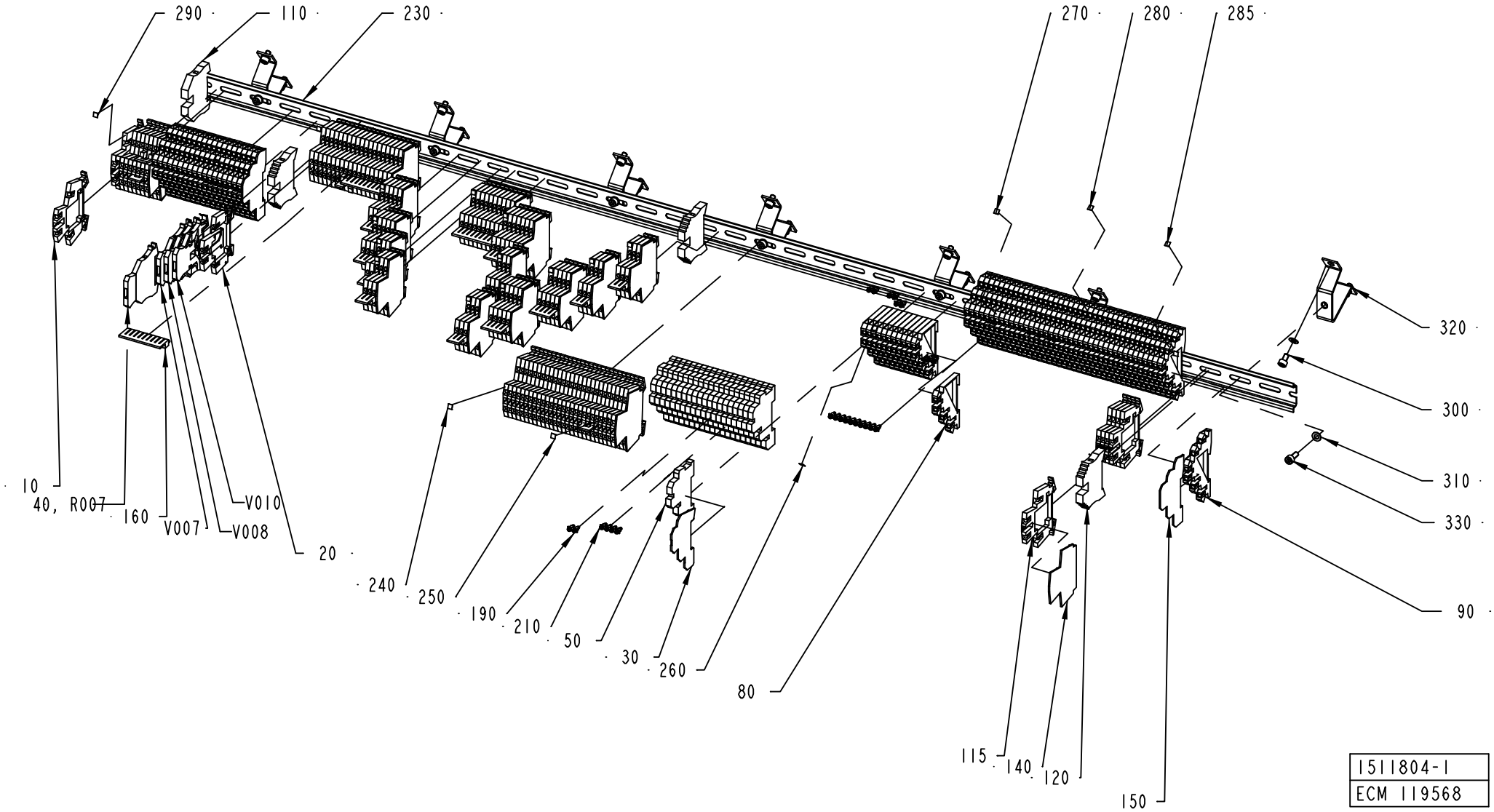
290
110
230
270
280
285
320
300
310
330
90
10
40, R007
160
V007
V008
V010
20
240
250
190
210
50
30
260
80
115
140
120
150
1511804-1
ECM 119568

ECM: 121770 - 20030227
Group number: 1511804-0100
Assembly Drawing: 1511804-1_1_AB

This list covers pages from 700 to 703

Pos	Part No	SP	UN	Qty	Description	Page No
-						
010	90077-0113	-		35	FEED THROUGH TERMINAL, 10-00102150-1	
020	90457-0049	-		75	TERMINAL BLOCK, 102230	
030	90457-0051	-		1	END PLATE	
040	353021-0127	-		1	TERMINAL DISCONNECTBLE, WTR 2,5+WSD 2,5	
050	353021-0132	-		21	TERMINALS,TRIPLE-LEVEL, DLD 2,5/PE	
080	353021-0301	-		12	TERMINALS,TRIPLE-LEVEL, DLI 2,5/35 PA	
090	353021-0302	-		59	TERMINALS,TRIPLE-LEVEL, DLD 2,5/35 PA	
110	353024-0206	-		1	EARTH TERMINAL, 1010.2	
115	90458-1136	-		6	TERMINAL BLOCK, 103630	
120	353031-0203	-		3	END SUPPORT, WEW 35/2	
140	353032-0009	-		16	END PLATE, WAP 16/35	
150	353032-0302	-		2	END PLATE WAP	
160	353034-0030	-		19	BRIDGE CONNECTOR WQV 2,5/10, 10544.6	
190	353034-0401	-		10	BRIDGE CONNECTOR Q2, 13125.0	
210	353034-0403	-		3	BRIDGE CONNECTOR Q4, 13127,0	
220	353034-0404	-		9	BRIDGE CONNECTOR Q10, 13131.0	
230	353042-0004	-	MM	1328	RAIL TS 35/7,5	
240	359011-0807	-		17	MARKING PLATES 5-FW 1-50	
250	359011-0808	-		5	MARKING PLATES 5-FW 51-100	
260	359011-0809	-		3	MARKING PLATES 5-FW 101-150	
270	359011-0810	-		2	MARKING PLATES 5-FW 151-200	
280	359011-0811	-		2	MARKING PLATES 5-FW 201-250	
285	359011-0812	-		2	SET OF SIGNS 5-FW 251-300	
290	359011-0819	-		2	MARKING PLATES 5-GW (EARTH)	
300	312115-0323	-		14	SCREW ISO4762 M5X8 A4	
310	315105-0146	-		21	WASHER ISO 7089-5-200 HV-A4	
320	90094-0005	-		7	RAIL BRACKET	
330	312115-0327	-		7	SCREW ISO4762 M5X12 A4	
R007	90121-0132	A		1	RESISTANCE FIXED, 0,51 KOHM, 0,25 W	
V007	353021-0122	-		1	TERMINAL DISCONNECTBLE, WTR 2,5 D	
V008	353021-0122	-		1	TERMINAL DISCONNECTBLE, WTR 2,5 D	
V009	90024-0034	-		1	DIODE SURGE SUPPRESSOR, FD B DIL	
V010	353021-0122	-		1	TERMINAL DISCONNECTBLE, WTR 2,5 D	
V011	90024-0034	-		1	DIODE SURGE SUPPRESSOR, FD B DIL	

Pos	Part No	SP	UN	Qty	Description	Page No

Machine Type | Group Description | Used-In | Group Number | Page No

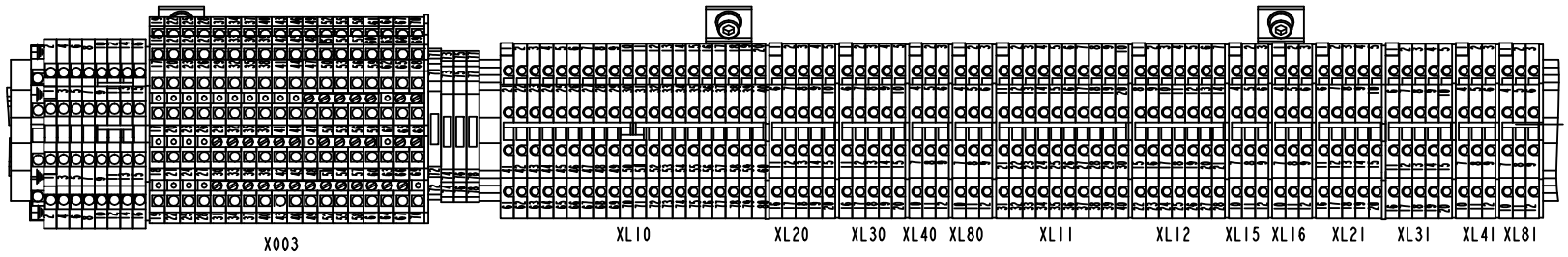

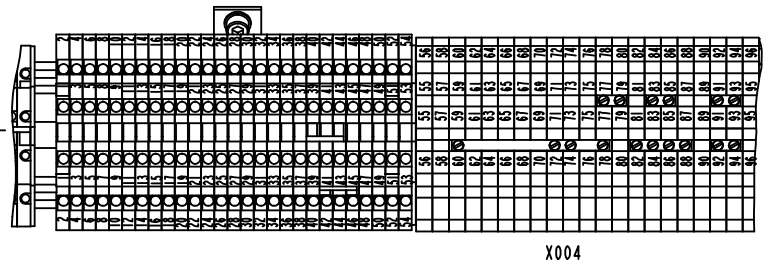

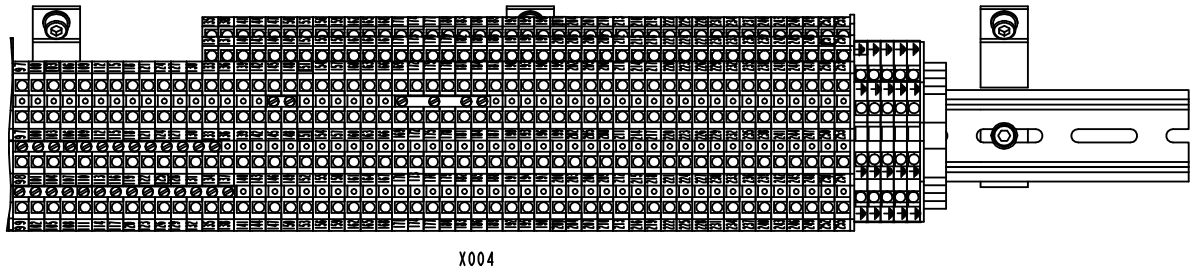

1511804-1
ECN 119568

ECM: 121770 - 20030227
Group number: 1511804-0100
Assembly Drawing: 1511804-1_2_AB

This list covers pages from 700 to 703

Pos	Part No	SP	UN	Qty	Description	Page No
-						
010	90077-0113	-		35	FEED THROUGH TERMINAL, 10-00102150-1	
020	90457-0049	-		75	TERMINAL BLOCK, 102230	
030	90457-0051	-		1	END PLATE	
040	353021-0127	-		1	TERMINAL DISCONNECTBLE, WTR 2,5+WSD 2,5	
050	353021-0132	-		21	TERMINALS,TRIPLE-LEVEL, DLD 2,5/PE	
080	353021-0301	-		12	TERMINALS,TRIPLE-LEVEL, DLI 2,5/35 PA	
090	353021-0302	-		59	TERMINALS,TRIPLE-LEVEL, DLD 2,5/35 PA	
110	353024-0206	-		1	EARTH TERMINAL, 1010.2	
115	90458-1136	-		6	TERMINAL BLOCK, 103630	
120	353031-0203	-		3	END SUPPORT, WEW 35/2	
140	353032-0009	-		16	END PLATE, WAP 16/35	
150	353032-0302	-		2	END PLATE WAP	
160	353034-0030	-		19	BRIDGE CONNECTOR WQV 2,5/10, 10544.6	
190	353034-0401	-		10	BRIDGE CONNECTOR Q2, 13125.0	
210	353034-0403	-		3	BRIDGE CONNECTOR Q4, 13127,0	
220	353034-0404	-		9	BRIDGE CONNECTOR Q10, 13131.0	
230	353042-0004	-	MM	1328	RAIL TS 35/7,5	
240	359011-0807	-		17	MARKING PLATES 5-FW 1-50	
250	359011-0808	-		5	MARKING PLATES 5-FW 51-100	
260	359011-0809	-		3	MARKING PLATES 5-FW 101-150	
270	359011-0810	-		2	MARKING PLATES 5-FW 151-200	
280	359011-0811	-		2	MARKING PLATES 5-FW 201-250	
285	359011-0812	-		2	SET OF SIGNS 5-FW 251-300	
290	359011-0819	-		2	MARKING PLATES 5-GW (EARTH)	
300	312115-0323	-		14	SCREW ISO4762 M5X8 A4	
310	315105-0146	-		21	WASHER ISO 7089-5-200 HV-A4	
320	90094-0005	-		7	RAIL BRACKET	
330	312115-0327	-		7	SCREW ISO4762 M5X12 A4	
R007	90121-0132	A		1	RESISTANCE FIXED, 0,51 KOHM, 0,25 W	
V007	353021-0122	-		1	TERMINAL DISCONNECTBLE, WTR 2,5 D	
V008	353021-0122	-		1	TERMINAL DISCONNECTBLE, WTR 2,5 D	
V009	90024-0034	-		1	DIODE SURGE SUPPRESSOR, FD B DIL	
V010	353021-0122	-		1	TERMINAL DISCONNECTBLE, WTR 2,5 D	
V011	90024-0034	-		1	DIODE SURGE SUPPRESSOR, FD B DIL	

Pos	Part No	SP	UN	Qty	Description	Page No

Machine Type | Group Description | Used-In | Group Number | Page No

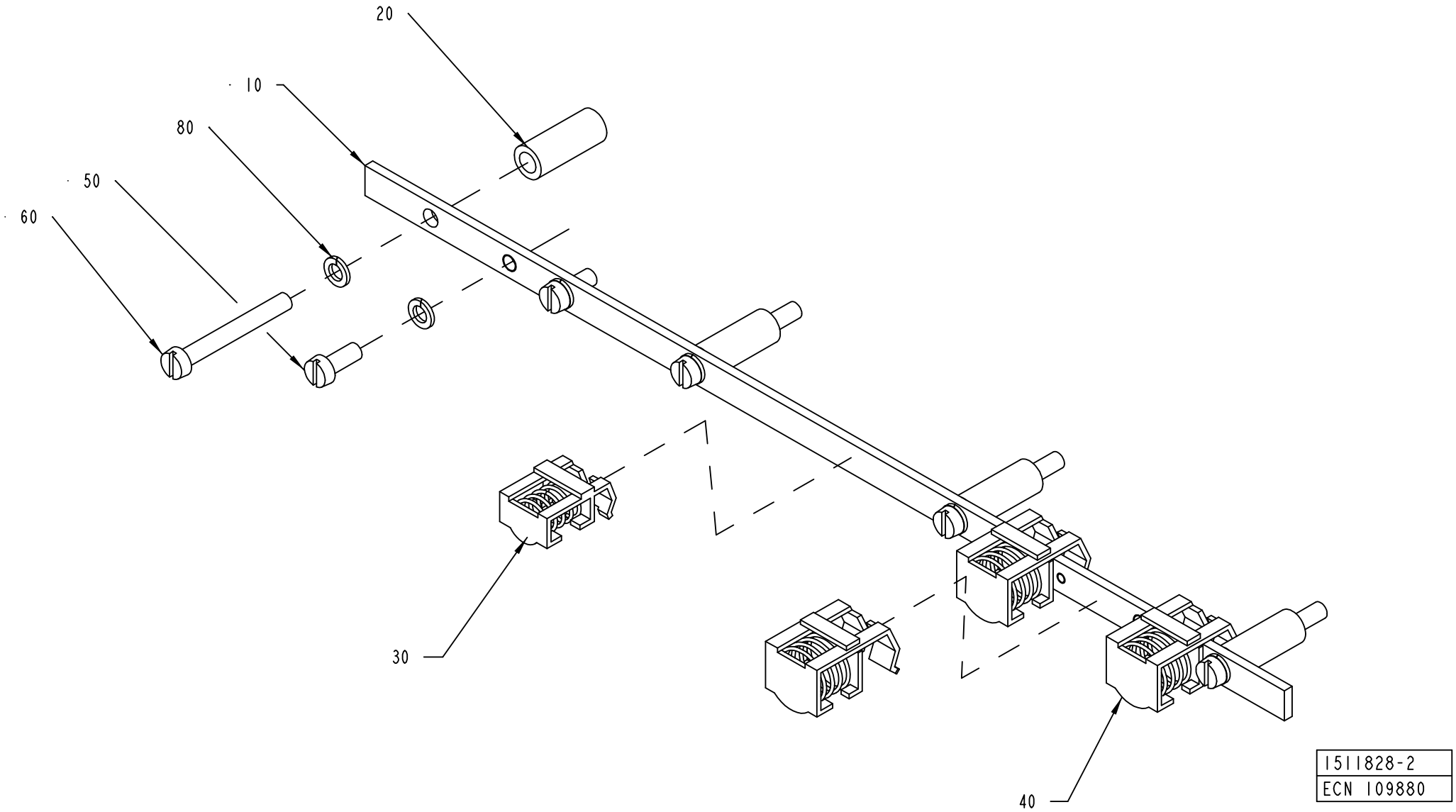
20
10
80
50
60
30
40
1511828-2
ECN 109880

ECM: 109912 - 20030113
Group number: 1511828-0100
Assembly Drawing: 1511828-2_1_AB

Pos	Part No	SP	UN	Qty	Description	Page No
TBA NOPT ASU						
030	90135-0034	B		1	SHIELD CLAMP KLBU 3-8	
Common Parts						
010	1523948-0000	-		1	EARTH BAR	
020	988436-0000	-		4	SPACER SLEEVE	
040	90135-0039	-		3	SHIELD CLIP KLBU 4-13.5	
050	312125-0327	-		2	SCREW PAN HEAD MCS M5X12 SS	
060	312125-0339	-		4	SCREW PAN HEAD MCS M5X40 SS	
080	315402-0146	-		6	LOCK WASHER FBB 5,1	

Pos	Part No	SP	UN	Qty	Description	Page No

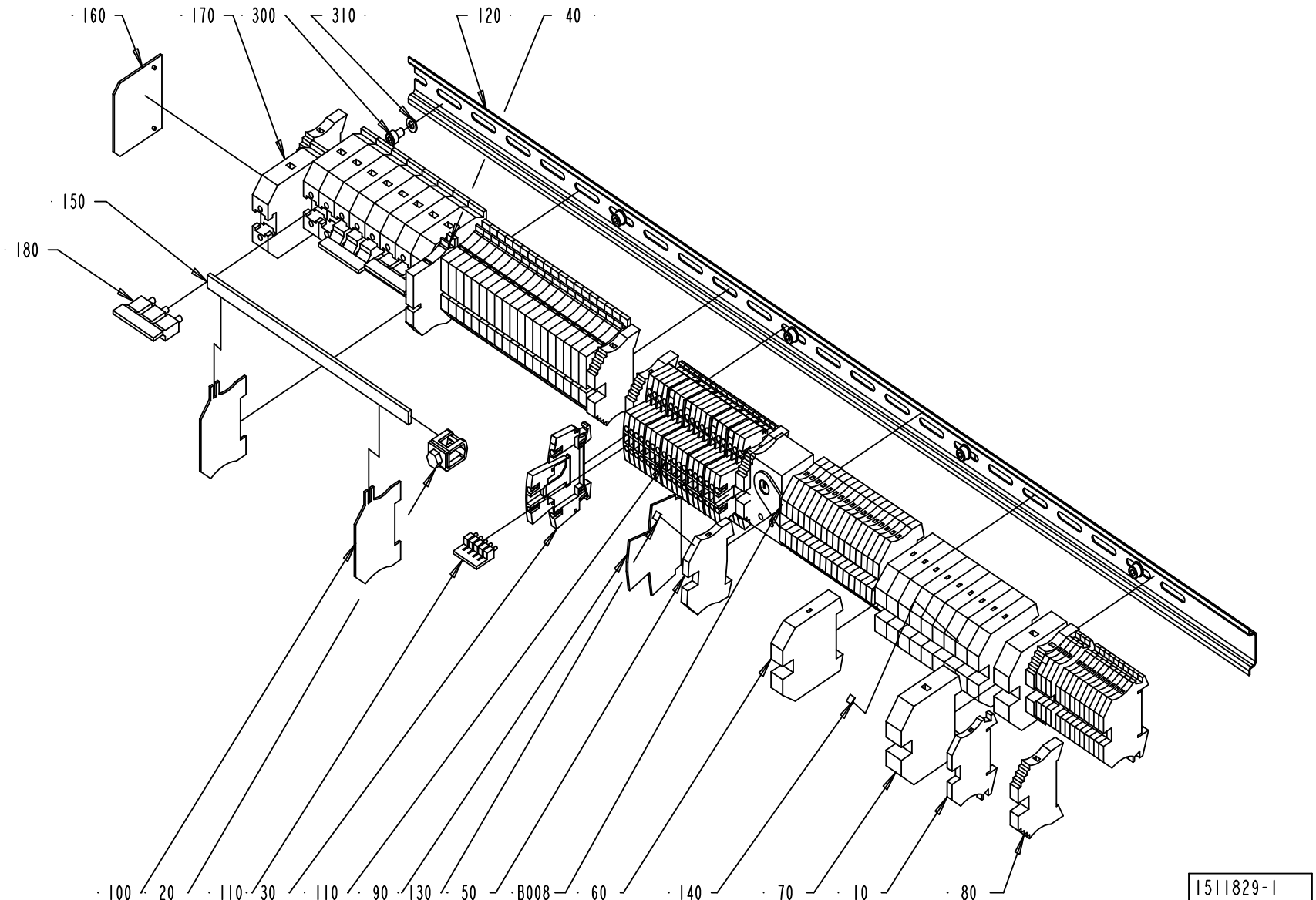
160
170
300
310
120
40
150
180
100
20
110
30
110
90
130
50
B008
60
140
70
10
80
1511829-1
ECN 98221

ECM: 115721 - 20020930
Group number: 1511829-0100
Assembly Drawing: 1511829-1_1_AB

This list covers pages from 706 to 709

Pos	Part No	SP	UN	Qty	Description	Page No
-						
010	353021-0212	-		14	FEED THROUGH TERMINAL, 10200.0	
020	90135-0019	-		1	CLAMP ZB 35	
030	90457-0049	-		19	TERMINAL BLOCK, 102230	
040	353022-0003	-		20	NEUTRAL TERMINAL, 10108.8	
050	353024-0205	-		18	EARTH TERMINAL, 1010.1	
060	353024-0208	-		10	EARTH TERMINAL, 1010.4	
070	353024-0209	-		2	EARTH TERMINAL, 1010.5	
080	353031-0203	-		7	END SUPPORT, WEW 35/2	
090	353032-0009	-		5	END PLATE, WAP 16/35	
100	353033-0104	-		2	END PLATE, 10502.8	
110	353034-0030	-		2	BRIDGE CONNECTOR WQV 2,5/10, 10544.6	
120	353042-0004	-	MM	880	RAIL TS 35/7,5	
130	359011-0807	-		11	MARKING PLATES 5-FW 1-50	
140	359011-0808	-		1	MARKING PLATES 5-FW 51-100	
150	495498-0021	-		1	CU-RAIL L=210MM	
160	353033-0105	-		1	PARTITITION, 10501.0	
170	353021-0219	-		9	FEED THROUGH TERMINAL, 10205.0	
180	353034-0035	-		1	BRIDGE CONNECTOR, WQV 35/10, 10531.6	
300	312115-0323	-		5	SCREW ISO4762 M5X8 A4	
310	315105-0146	-		5	WASHER ISO 7089-5-200 HV-A4	
B008	90458-1114	B		1	BIMET. ELECTROMECH. THERMOSTAT K7H.020	

Pos	Part No	SP	UN	Qty	Description	Page No

Machine Type | Group Description | Used-In | Group Number | Page No

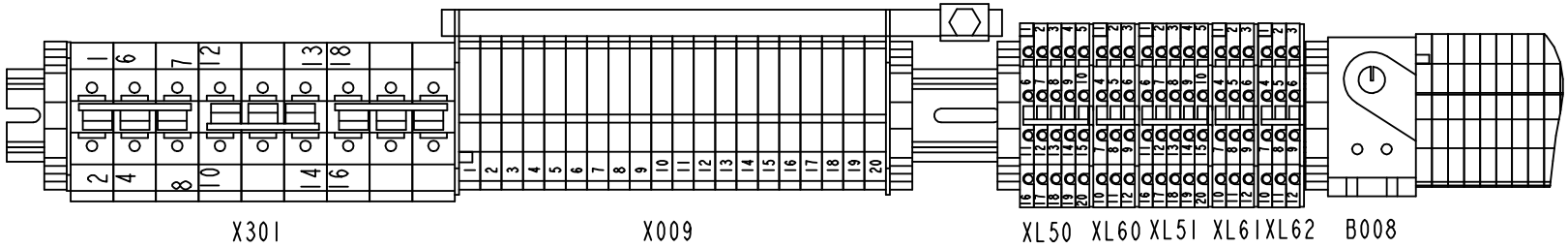

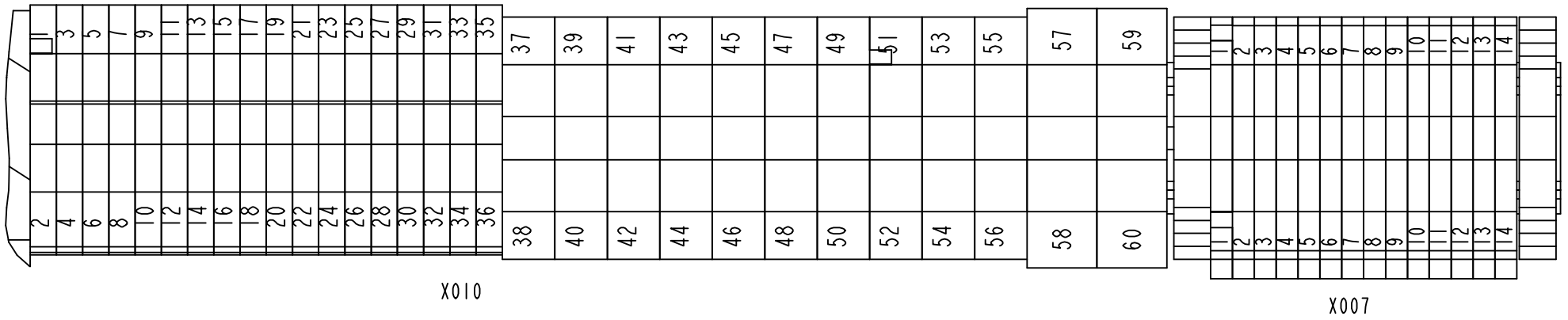

1511829-1
ECN 98221

ECM: 115721 - 20020930
Group number: 1511829-0100
Assembly Drawing: 1511829-1_2_AB

This list covers pages from 706 to 709

Pos	Part No	SP	UN	Qty	Description	Page No
-						
010	353021-0212	-		14	FEED THROUGH TERMINAL, 10200.0	
020	90135-0019	-		1	CLAMP ZB 35	
030	90457-0049	-		19	TERMINAL BLOCK, 102230	
040	353022-0003	-		20	NEUTRAL TERMINAL, 10108.8	
050	353024-0205	-		18	EARTH TERMINAL, 1010.1	
060	353024-0208	-		10	EARTH TERMINAL, 1010.4	
070	353024-0209	-		2	EARTH TERMINAL, 1010.5	
080	353031-0203	-		7	END SUPPORT, WEW 35/2	
090	353032-0009	-		5	END PLATE, WAP 16/35	
100	353033-0104	-		2	END PLATE, 10502.8	
110	353034-0030	-		2	BRIDGE CONNECTOR WQV 2,5/10, 10544.6	
120	353042-0004	-	MM	880	RAIL TS 35/7,5	
130	359011-0807	-		11	MARKING PLATES 5-FW 1-50	
140	359011-0808	-		1	MARKING PLATES 5-FW 51-100	
150	495498-0021	-		1	CU-RAIL L=210MM	
160	353033-0105	-		1	PARTITITION, 10501.0	
170	353021-0219	-		9	FEED THROUGH TERMINAL, 10205.0	
180	353034-0035	-		1	BRIDGE CONNECTOR, WQV 35/10, 10531.6	
300	312115-0323	-		5	SCREW ISO4762 M5X8 A4	
310	315105-0146	-		5	WASHER ISO 7089-5-200 HV-A4	
B008	90458-1114	B		1	BIMET. ELECTROMECH. THERMOSTAT K7H.020	

Pos	Part No	SP	UN	Qty	Description	Page No

Machine Type | Group Description | Used-In | Group Number | Page No

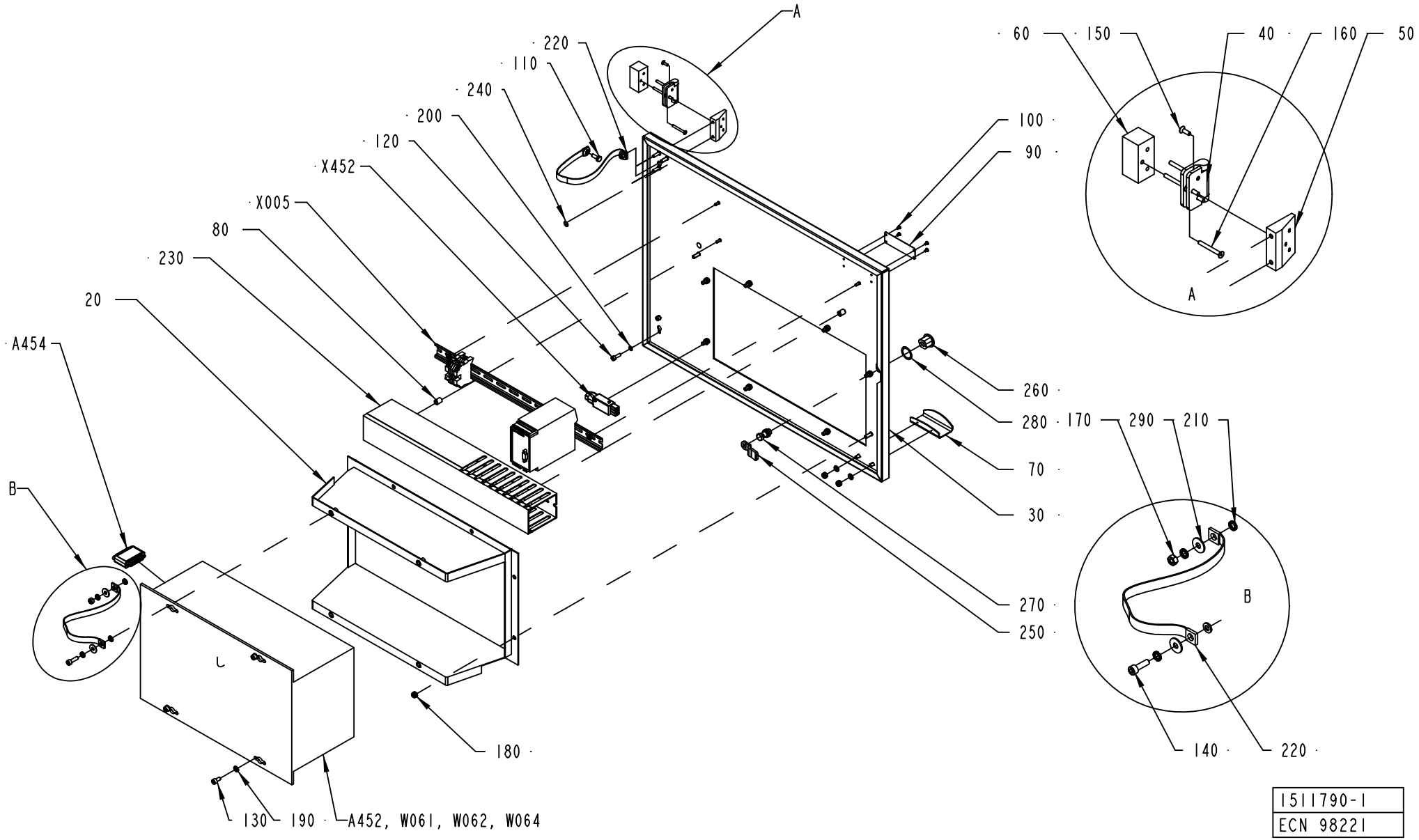

1511790-1
ECN 98221

ECM: 113245 - 20030113
Group number: 1511790-0100
Assembly Drawing: 1511790-1_1_AB

Pos	Part No	SP	UN	Qty	Description	Page No
-						
020	1523435-0000	-		1	FRAME	
030	1523436-0000	-		1	DOOR	
040	1523437-0000	B		2	HINGE	
050	1523439-0000	-		2	SPACER	
060	1523440-0000	-		2	SPACER	
070	1523968-0000	-		1	HANDLE	
080	1285109-0000	-		2	NUT	
090	979548-0000	-		1	MACHINE PLATE	
100	311521-0142	-		4	BLANK RIVET 3,2X6	
110	312105-0368	-		1	SCREW M6S M6X16 A280	
120	312115-0329	-		4	SCREW ISO4762 M5X16 A4	
130	312115-0366	-		3	SCREW ISO4762 M6X12 A4	
140	312115-0370	-		1	SCREW ISO4762 M6X20 A4	
150	312155-0291	-		6	SCREW EN 10642 MF6S M4X12 A480	
160	312155-0301	-		6	SCREW EN 10642 MF6S M4X35 A480	
170	312605-0316	-		2	HEXAGON NUT, M6M M6 A280	
180	312812-0316	-		10	HEXAGON NUT, NY-LOCK M6 A480	
190	315105-0153	-		6	WASHER ISO 7089-6-200 HV-A4	
200	315402-0146	-		4	LOCK WASHER FBB 5,1	
210	90062-0015	-		7	LOCK WASHER SERRAT.EXT.GEAR,6,4/11 H=0,7	
220	90135-0044	A		2	EARTH WIRE, L=320 MM 16 MM2	
230	90181-0054	-	MM	465	CABLE DUCT, 60X80MM	
240	90194-0163	-		2	SIGN, EARTH WITHIN CIRCLE	
250	90237-0157	-		1	LOCK BOLT, 1000-230	
260	90237-0319	-		1	LOCK HOUSING, 1000-U134	
270	90237-0320	-		1	LOCK HOUSING, 1000-U136	
280	90237-0322	-		1	LOCK GASKET, 1000-U137	
290	90457-0192	-		4	WASHER PLAIN ROUND, 6,5/18, H=1,5	
A452	B1363288-0301	A		1	FLEXBOX TETRA BRIK	
100	*B90041-0092*	*A*		*1*	*FLEX BOX INNOSCAN E100006A*	
	90458-0266	*A*		*1*	*POWER SUPPLY UNIT, U036407A*	
	90264-0064	*A*		*1*	*FAN / FL 12G308*	
	90041-0091	*A*		*1*	*PC 2,5" HD BAY, 3016-0028-013*	
	90041-0029	*A*		*1*	*FLOPPY DISC UNIT FD-235HF 1,4MB*	
	90041-0027	*A*		*1*	*BACK PLANE CARD 7-SLOT, 2120-0037-015*	
110	*90041-0083*	*A*		*1*	*HOST COMM. LINK BOARD LVDS, E000013A-02*	
120	*90458-0259*	*A*		*1*	*PROCESSOR BOARD PMMX E000032B*	
130	*90041-0087*	*A*		*1*	*SERIAL CARD 2 CHANNEL RS486/422 BOARD*	
140	*90041-0090*	*A*		*1*	*HARD DISC 2,5" , U036403A*	
150	*90041-0080*	*A*		*1*	*CABLE, CPU-LVDSCARD+DISPLAY-LVDSCARD*	
160	*90041-0086*	*A*		*1*	*CABLE, COM 2, 2223-0012-015*	
A454	90456-0001	A		1	INTOUCH OEM 2000 V.5.6B/6.0B HW KEY	
W061	1254442-0000	-		1	CABLE SERIAL	
W062	1511793-0000	-		1	CABLE	
W064	1478661-0000	-		1	CABLE SERIAL	
W953	1366189-0000	-		1	CABLE LVDS 6M	
X005	A1517659-0100	B		1	MODEM	**713**
X452	90110-0028	A		1	CONTACT UNIT 4-POLE	

Machine Type	Group Description	Used-In	Group Number	Page No

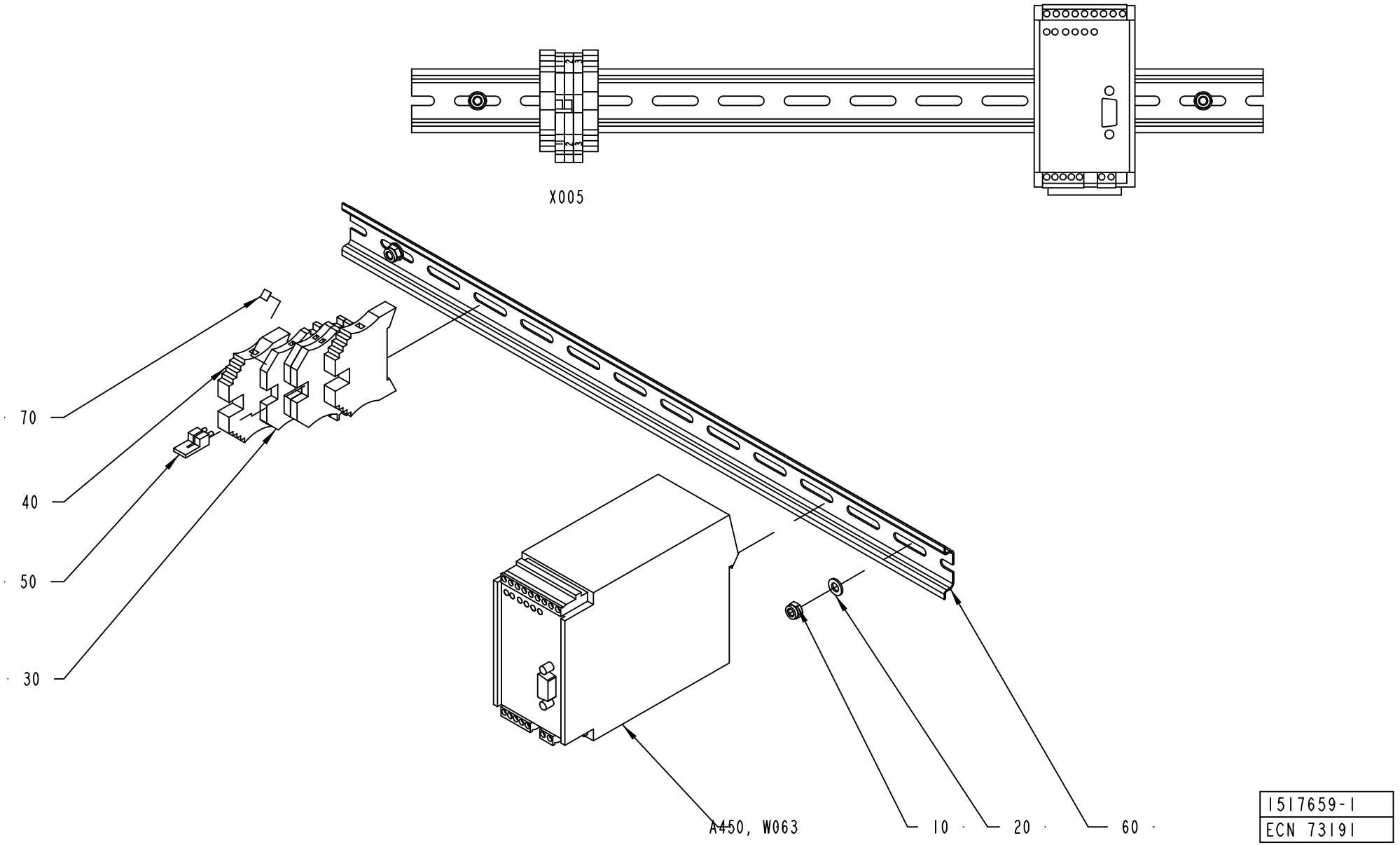
X005
70
40
50
30
A450, W063
10
20
60
1517659-1
ECN 73191

ECM: 115715 - 20020930
Group number: 1517659-0100
Assembly Drawing: 1517659-1_1_AA

Pos	Part No	SP	UN	Qty	Description	Page No
-						
010	312812-0314	-		2	HEXAGON NUT, NY-LOCK M5 A480	
020	315105-0146	-		2	WASHER ISO 7089-5-200 HV-A4	
030	353021-0212	-		3	FEED THROUGH TERMINAL, 10200.0	
040	353031-0203	-		2	END SUPPORT, WEW 35/2	
050	353034-0030	-		1	BRIDGE CONNECTOR WQV 2,5/10, 10544.6	
060	353042-0004	-	MM	465	RAIL TS 35/7,5	
070	359011-0807	-		2	MARKING PLATES 5-FW 1-50	
A450	90453-0002	B		1	MODEM MD-12 DC	
W063	90220-0091	-	M	10	PAIR TWISTED CABLE 2X2X0,25MM2	

Pos	Part No	SP	UN	Qty	Description	Page No

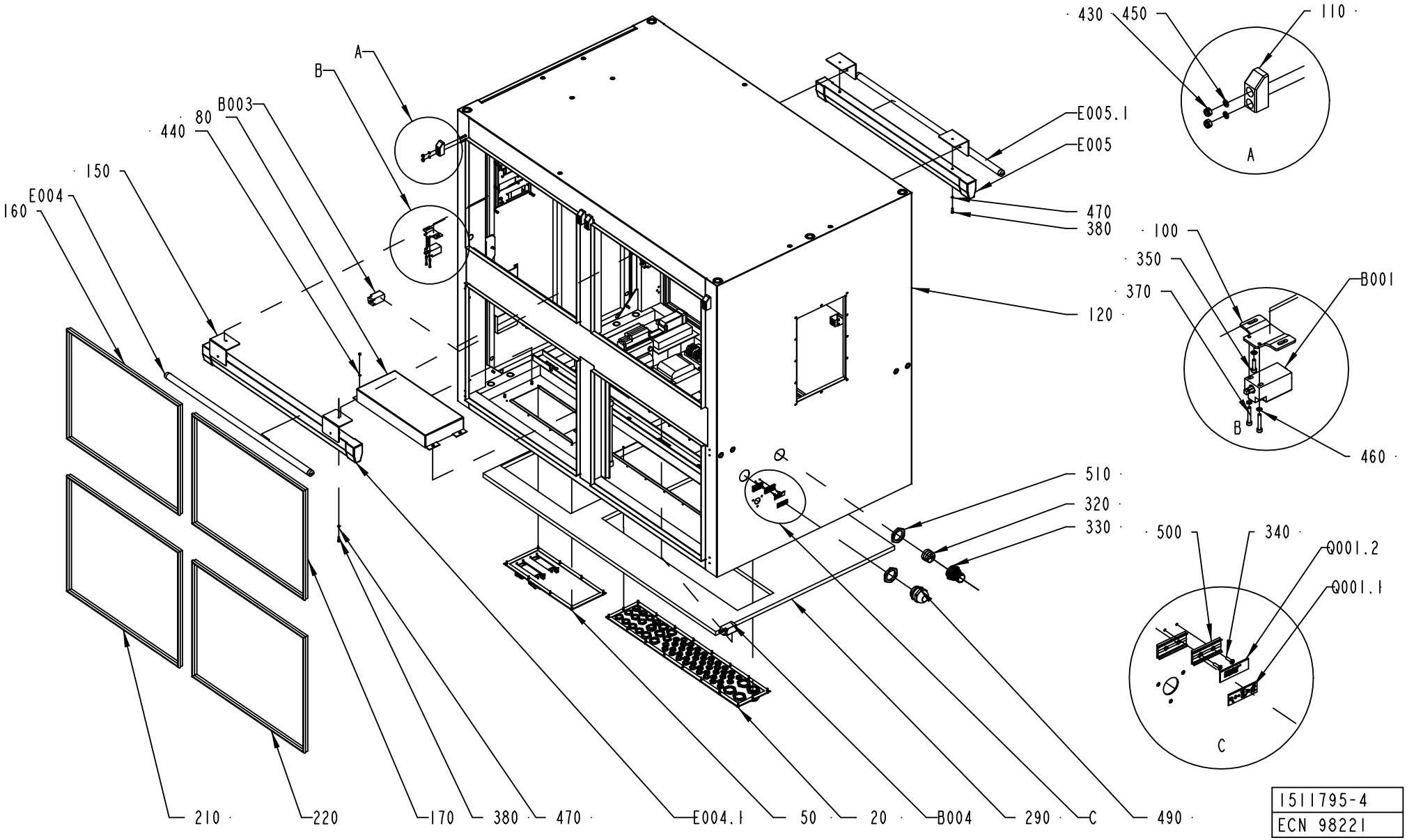

1511795-4
ECN 98221

ECM: 109909 - 20030113
Group number: 1511795-0100
Assembly Drawing: 1511795-4_1_AA

This list covers pages from 714 to 717

Pos	Part No	SP	UN	Qty	Description	Page No
TBA NOPT ASU 50Hz, TBA NOPT ASU 60Hz						
400	312115-0368	-		6	SCREW ISO4762 M6X16 A4	
480	315402-0156	-		20	LOCK WASHER FBB 6,5	
520	90457-0192	-		4	WASHER PLAIN ROUND, 6,5/18, H=1,5	
T005	90245-0029	A		1	TRANSFORMER, 1280-3660/TP 182	
TBA NOPT NOASU 50Hz, TBA NOPT NOASU 60Hz						
400	312115-0368	-		2	SCREW ISO4762 M6X16 A4	
480	315402-0156	-		16	LOCK WASHER FBB 6,5	
Common Parts						
010	A1511784-0100	-		1	POWER CABLE INLETS	**719, 721**
020	A1511785-0100	-		1	CONTROL CABLE INLETS	**723, 725**
030	2532862-0000	-		2	SPACER	
031	2531999-0000	-		1	COVER	
040	A1511788-0100	-		1	POWER CONNECTOR PLATE	**727, 729**
050	A1511789-0100	-		1	CONTROL CONNECTOR PLATE	**731**
060	A1511791-0100	-		1	BLIND DOOR	**733**
070	1517694-0000	-		2	END BLOCK	
080	1517697-0000	-		1	PROTECTION	
090	1517698-0000	-		1	PROTECTION	
100	1517699-0000	-		3	SUPPORT	
110	1517700-0000	-		6	EDGE GUIDE	
120	1517695-0000	-		1	WELDED CABINET	
130	1523459-0000	-		4	SUPPORT	
140	1523960-0000	-		1	SPACER	
150	1523974-0000	-		4	SUPPORT	
160	90143-0057	-	MM	2430	STRIP EMKA 1011-05 21X11MM	
170	90143-0057	-	MM	2430	STRIP EMKA 1011-05 21X11MM	
180	90143-0057	-	MM	2872	STRIP EMKA 1011-05 21X11MM	
190	90143-0057	-	MM	1960	STRIP EMKA 1011-05 21X11MM	
200	90143-0057	-	MM	4116	STRIP EMKA 1011-05 21X11MM	
210	90143-0057	-	MM	2850	STRIP EMKA 1011-05 21X11MM	
220	90143-0057	-	MM	2850	STRIP EMKA 1011-05 21X11MM	
230	90143-0057	-	MM	2850	STRIP EMKA 1011-05 21X11MM	
240	90143-0057	-	MM	2850	STRIP EMKA 1011-05 21X11MM	
250	90143-0073	-	MM	585	RUBBER STRIP	
260	90143-0073	-	MM	585	RUBBER STRIP	
270	90143-0073	-	MM	585	RUBBER STRIP	
280	90143-0073	-	MM	585	RUBBER STRIP	
290	1523464-0000	-		1	GASKET	
310	90194-0163	-		1	SIGN, EARTH WITHIN CIRCLE	
320	90457-0029	-		1	INSERT, MULTI HOLE, E156M5,9,11,19	
330	90458-1747	-		1	NORMAL WITHOUT INSERT, M50X1,5	
340	311521-0146	-		4	BLANK RIVET 3,2X12	
350	312115-0293	-		8	SCREW ISO4762 M4X16 A4	
360	312115-0299	-		8	SCREW ISO4762 M4X30 A4	
370	312115-0297	-		6	SCREW ISO4762 M4X25 A4	
380	312115-0329	-		8	SCREW ISO4762 M5X16 A4	
390	312115-0366	-		10	SCREW ISO4762 M6X12 A4	
410	312155-0291	-		8	SCREW EN 10642 MF6S M4X12 A480	
420	312812-0312	-		16	HEXAGON NUT, NY-LOCK M4 A480	
430	312812-0316	-		12	HEXAGON NUT, NY-LOCK M6 A480	
440	315105-0136	-		20	WASHER ISO 7089-4-200 HV-A4	
450	315105-0146	-		12	WASHER ISO 7089-5-200 HV-A4	
460	315402-0136	-		18	LOCK WASHER FBB 4,1	
470	315402-0146	-		8	LOCK WASHER FBB 5,1	
490	90458-0311	-		1	CABLE GLAND, M50X1,5, NO.5311 1060	
500	359240-0100	-		2	SIGN HOLDER FOR 359240-0001	
510	90458-0327	-		2	NUT, M50X1,5	
530	315105-0153	-		8	WASHER ISO 7089-6-200 HV-A4	
540	312115-0289	-		4	SCREW ISO4762 M4X10 A4	
550	352113-0205	-		25	ANCHOR PLATES FOR STRIPS, TYPE TM2S8-C10	
B001	90044-0192	B		1	LIMIT SW. SZ2586.000	
B002	90044-0192	B		1	LIMIT SW. SZ2586.000	
B003	90044-0192	B		1	LIMIT SW. SZ2586.000	
B004	90044-0192	B		1	LIMIT SW. SZ2586.000	
B005	90044-0192	B		1	LIMIT SW. SZ2586.000	
B006	90044-0192	B		1	LIMIT SW. SZ2586.000	
B007	90044-0192	B		1	LIMIT SW. SZ2586.000	
E004	90297-0011	B		1	FLUORESCENT TUBE, TDL 30W/840	
E004.1	90164-0018	-		1	LIGHT FIXTURE, FK 130	
E005	90297-0011	B		1	FLUORESCENT TUBE, TDL 30W/840	
E005.1	90164-0018	-		1	LIGHT FIXTURE, FK 130	
E006	90457-0175	-		1	LIGHT FIXTURE, FLUO K SET 108	
Q001.1	90457-0123	A		1	SIGN, MAIN SWITCH	
Q001.2	359241-0297	-		1	SIGN, 400 V, 50 HZ, 63 A	
T001	90458-0917	A		1	TRANSF. 3-PH 750VA SEC. 23A	
T004	90458-1273	A		1	TRANSFORMER, OFL-1350	
T006	90458-0258	A		1	TRANSFORMER, 220VAC/6-9-12VAC	
V001	90038-0024	A		1	RECTIFIER, 10/22A SKD 50/04A3	

Machine Type | Group Description | Used-In | Group Number | Page No

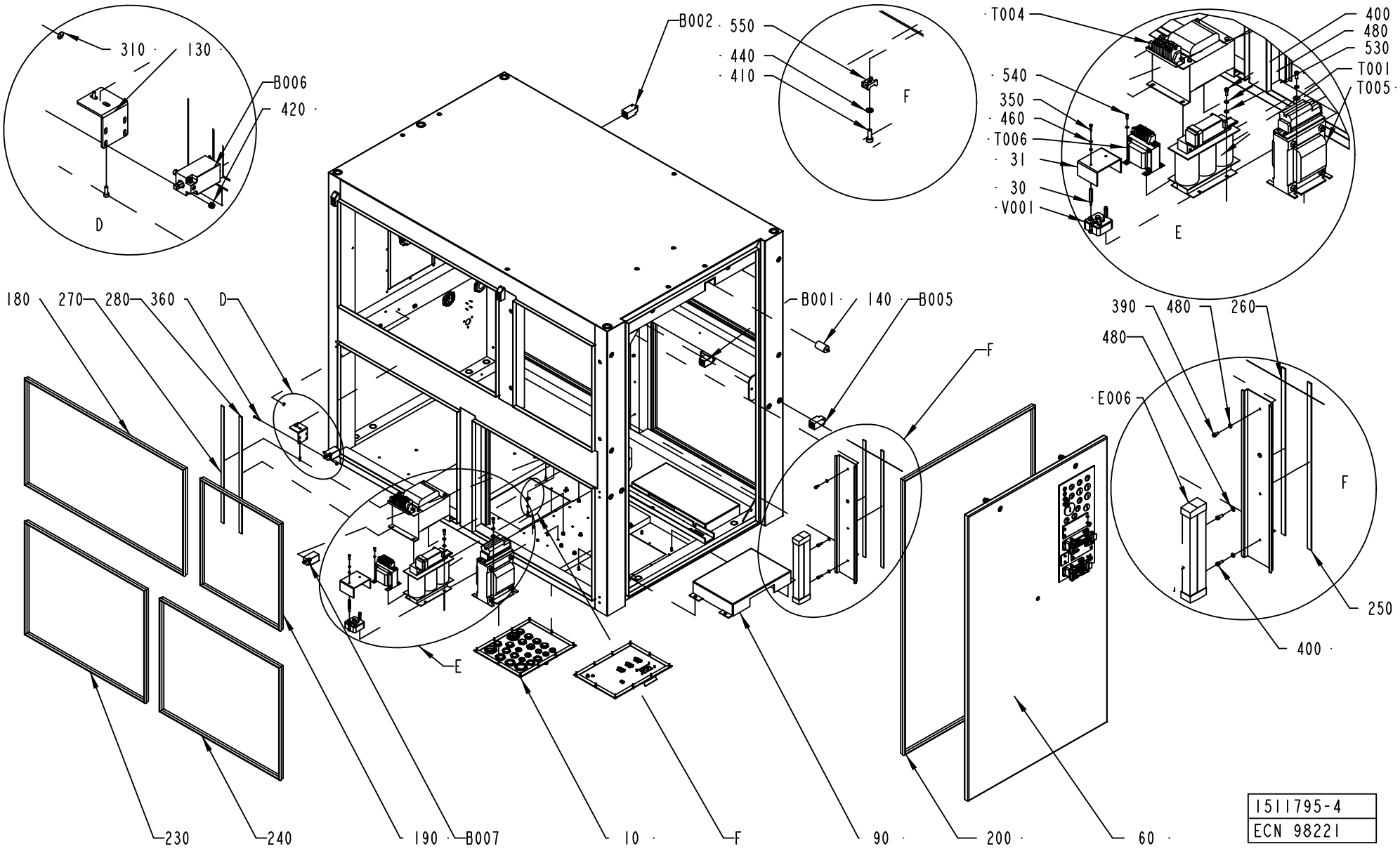
310
130
B006
420
D
B002
550
440
410
F
T004
400
480
530
T001
T005
540
350
460
T006
31
30
V001
E
180
270
280
360
D
B001
140
B005
F
390
480
260
480
E006
F
250
400
E
230
240
190
B007
10
F
90
200
60
1511795-4
ECN 98221

ECM: 109909 - 20030113
Group number: 1511795-0100
Assembly Drawing: 1511795-4_2_AA

This list covers pages from 714 to 717

Pos	Part No	SP	UN	Qty	Description	Page No
TBA NOPT ASU 50Hz, TBA NOPT ASU 60Hz						
400	312115-0368	-		6	SCREW ISO4762 M6X16 A4	
480	315402-0156	-		20	LOCK WASHER FBB 6,5	
520	90457-0192	-		4	WASHER PLAIN ROUND, 6,5/18, H=1,5	
T005	90245-0029	A		1	TRANSFORMER, 1280-3660/TP 182	
TBA NOPT NOASU 50Hz, TBA NOPT NOASU 60Hz						
400	312115-0368	-		2	SCREW ISO4762 M6X16 A4	
480	315402-0156	-		16	LOCK WASHER FBB 6,5	
Common Parts						
010	A1511784-0100	-		1	POWER CABLE INLETS	**719, 721**
020	A1511785-0100	-		1	CONTROL CABLE INLETS	**723, 725**
030	2532862-0000	-		2	SPACER	
031	2531999-0000	-		1	COVER	
040	A1511788-0100	-		1	POWER CONNECTOR PLATE	**727, 729**
050	A1511789-0100	-		1	CONTROL CONNECTOR PLATE	**731**
060	A1511791-0100	-		1	BLIND DOOR	**733**
070	1517694-0000	-		2	END BLOCK	
080	1517697-0000	-		1	PROTECTION	
090	1517698-0000	-		1	PROTECTION	
100	1517699-0000	-		3	SUPPORT	
110	1517700-0000	-		6	EDGE GUIDE	
120	1517695-0000	-		1	WELDED CABINET	
130	1523459-0000	-		4	SUPPORT	
140	1523960-0000	-		1	SPACER	
150	1523974-0000	-		4	SUPPORT	
160	90143-0057	-	MM	2430	STRIP EMKA 1011-05 21X11MM	
170	90143-0057	-	MM	2430	STRIP EMKA 1011-05 21X11MM	
180	90143-0057	-	MM	2872	STRIP EMKA 1011-05 21X11MM	
190	90143-0057	-	MM	1960	STRIP EMKA 1011-05 21X11MM	
200	90143-0057	-	MM	4116	STRIP EMKA 1011-05 21X11MM	
210	90143-0057	-	MM	2850	STRIP EMKA 1011-05 21X11MM	
220	90143-0057	-	MM	2850	STRIP EMKA 1011-05 21X11MM	
230	90143-0057	-	MM	2850	STRIP EMKA 1011-05 21X11MM	
240	90143-0057	-	MM	2850	STRIP EMKA 1011-05 21X11MM	
250	90143-0073	-	MM	585	RUBBER STRIP	
260	90143-0073	-	MM	585	RUBBER STRIP	
270	90143-0073	-	MM	585	RUBBER STRIP	
280	90143-0073	-	MM	585	RUBBER STRIP	
290	1523464-0000	-		1	GASKET	
310	90194-0163	-		1	SIGN, EARTH WITHIN CIRCLE	
320	90457-0029	-		1	INSERT, MULTI HOLE, E156M5,9,11,19	
330	90458-1747	-		1	NORMAL WITHOUT INSERT, M50X1,5	
340	311521-0146	-		4	BLANK RIVET 3,2X12	
350	312115-0293	-		8	SCREW ISO4762 M4X16 A4	
360	312115-0299	-		8	SCREW ISO4762 M4X30 A4	
370	312115-0297	-		6	SCREW ISO4762 M4X25 A4	
380	312115-0329	-		8	SCREW ISO4762 M5X16 A4	
390	312115-0366	-		10	SCREW ISO4762 M6X12 A4	
410	312155-0291	-		8	SCREW EN 10642 MF6S M4X12 A480	
420	312812-0312	-		16	HEXAGON NUT, NY-LOCK M4 A480	
430	312812-0316	-		12	HEXAGON NUT, NY-LOCK M6 A480	
440	315105-0136	-		20	WASHER ISO 7089-4-200 HV-A4	
450	315105-0146	-		12	WASHER ISO 7089-5-200 HV-A4	
460	315402-0136	-		18	LOCK WASHER FBB 4,1	
470	315402-0146	-		8	LOCK WASHER FBB 5,1	
490	90458-0311	-		1	CABLE GLAND, M50X1,5, NO.5311 1060	
500	359240-0100	-		2	SIGN HOLDER FOR 359240-0001	
510	90458-0327	-		2	NUT, M50X1,5	
530	315105-0153	-		8	WASHER ISO 7089-6-200 HV-A4	
540	312115-0289	-		4	SCREW ISO4762 M4X10 A4	
550	352113-0205	-		25	ANCHOR PLATES FOR STRIPS, TYPE TM2S8-C10	
B001	90044-0192	B		1	LIMIT SW. SZ2586.000	
B002	90044-0192	B		1	LIMIT SW. SZ2586.000	
B003	90044-0192	B		1	LIMIT SW. SZ2586.000	
B004	90044-0192	B		1	LIMIT SW. SZ2586.000	
B005	90044-0192	B		1	LIMIT SW. SZ2586.000	
B006	90044-0192	B		1	LIMIT SW. SZ2586.000	
B007	90044-0192	B		1	LIMIT SW. SZ2586.000	
E004	90297-0011	B		1	FLUORESCENT TUBE, TDL 30W/840	
E004.1	90164-0018	-		1	LIGHT FIXTURE, FK 130	
E005	90297-0011	B		1	FLUORESCENT TUBE, TDL 30W/840	
E005.1	90164-0018	-		1	LIGHT FIXTURE, FK 130	
E006	90457-0175	-		1	LIGHT FIXTURE, FLUO K SET 108	
Q001.1	90457-0123	A		1	SIGN, MAIN SWITCH	
Q001.2	359241-0297	-		1	SIGN, 400 V, 50 HZ, 63 A	
T001	90458-0917	A		1	TRANSF. 3-PH 750VA SEC. 23A	
T004	90458-1273	A		1	TRANSFORMER, OFL-1350	
T006	90458-0258	A		1	TRANSFORMER, 220VAC/6-9-12VAC	
V001	90038-0024	A		1	RECTIFIER, 10/22A SKD 50/04A3	

Machine Type | Group Description | Used-In | Group Number | Page No

POWER CABLE INLETS

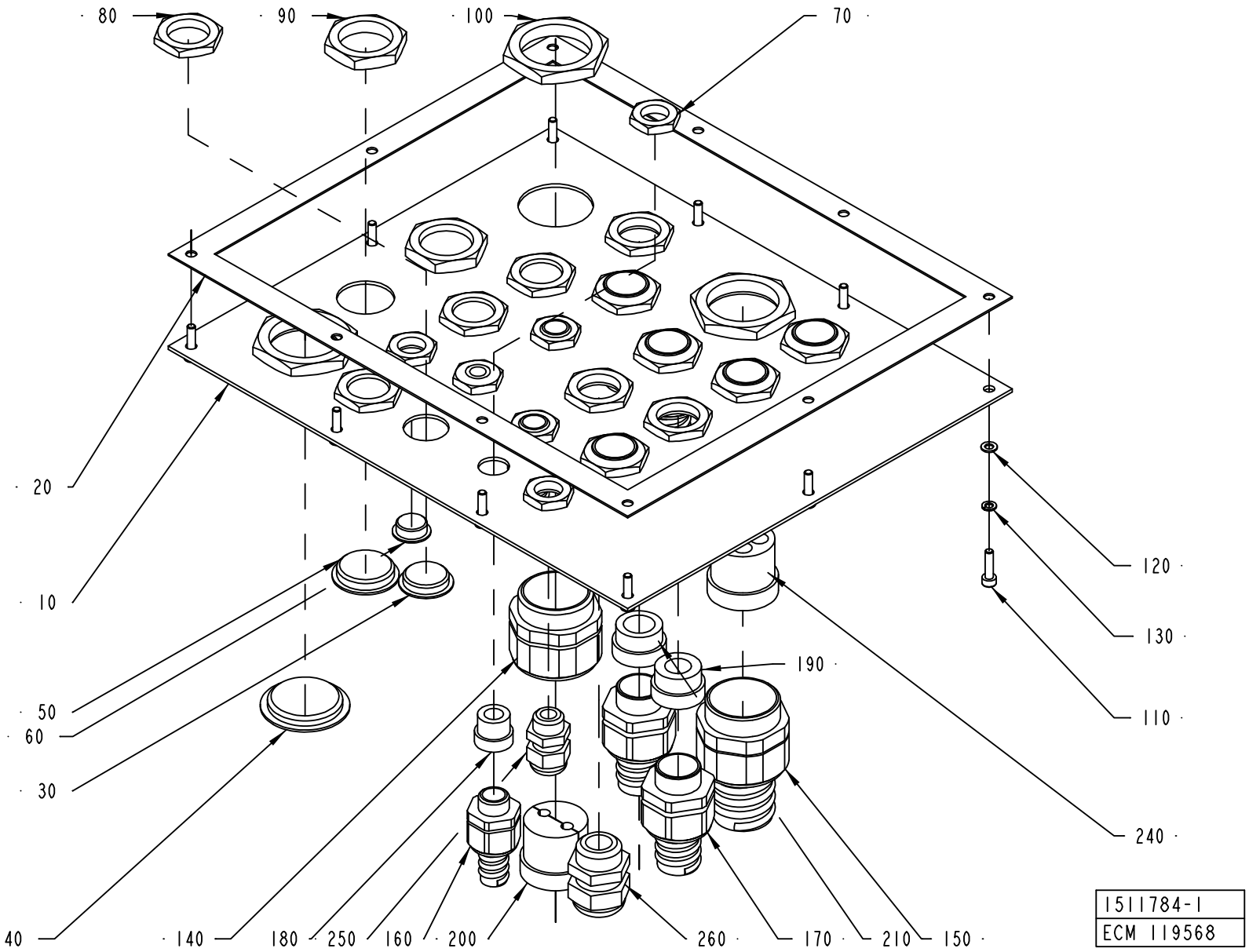

ECM: 125690 - 20030227
Group number: 1511784-0100
Assembly Drawing: 1511784-1_1_AB

This list covers pages from 718 to 721

Pos	Part No	SP	UN	Qty	Description	Page No
-						
010	1511831-0000	-		1	PLATE	
020	1511841-0000	-		1	GASKET	
030	90002-0004	-		4	BLANK-OFF PLUG, PR 22,5 SKINDICHT-BLK16	
040	90002-0010	-		1	BLANK-OFF PLUG, PR 37 SKINDICHT-BLK29	
050	90002-0012	-		2	BLANK-OFF PLUG, PR 28,3 SKINDICHT-BLK21	
060	90002-0013	-		1	BLANK-OFF PLUG, PR 15,2 SKINDICHT-BLK9	
070	90099-0104	-		6	NUT, PR 15,2 (PG9)	
080	90099-0110	-		12	NUT, PR 22,5 (PG16)	
090	90099-0119	-		2	NUT, PR 28,3 (PG21)	
100	90099-0120	-		3	MUTTER PR 37 (PG29)	
110	312115-0293	-		10	SCREW ISO4762 M4X16 A4	
120	315105-0136	-		10	WASHER ISO 7089-4-200 HV-A4	
130	315402-0136	-		10	LOCK WASHER FBB 4,1	
140	353240-0006	-		1	FöRSKRUVNING, PG 29	
150	353242-0003	-		1	NORMAL WITHOUT INSERT, PG29	
160	353243-0001	-		3	EXTENDED WITHOUT INSERT, PG9	
170	353243-0005	-		7	EXTENDED WITHOUT INSERT, PG16	
180	353249-0009	-		3	INSERT, SINGEL HOLE, EK 152/9	
190	353249-0013	-		5	INSERT, SINGEL HOLE, EK 154/13	
200	2504449-0000	-		1	INSERT	
210	353249-0014	-		2	INSERT, SINGEL HOLE, EK 154/16	
240	90457-0027	-		1	INSERT, MULTI HOLE, E155M1X5/4X9	
250	352103-0101	-		2	KABELFöRSKR. ST 9, PR15,2/PG9	
260	352103-0110	-		1	CABLE GLAND, STR 16, PR22,5/PG16	

Pos	Part No	SP	UN	Qty	Description	Page No

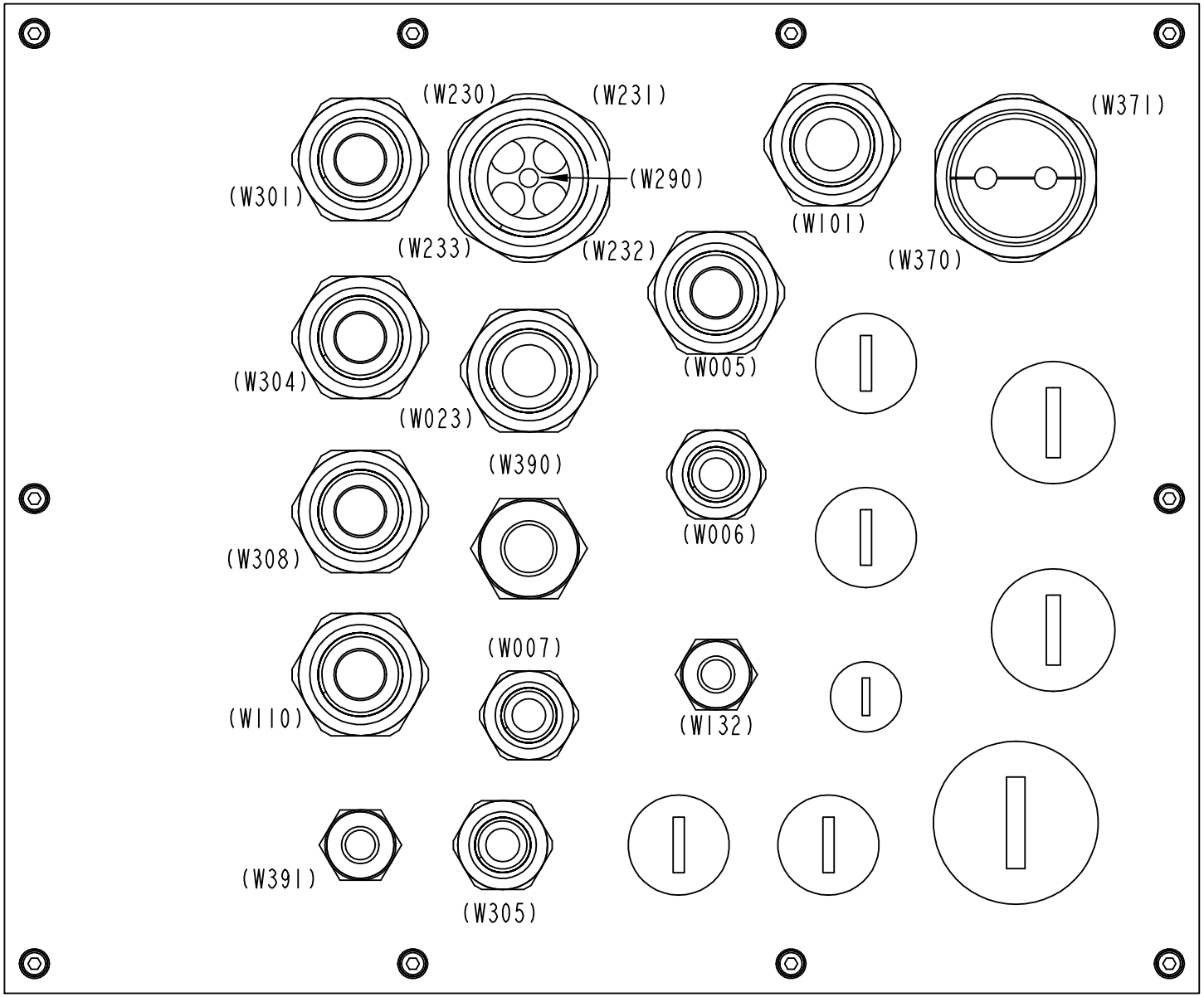

1511784-1
ECM 119568

ECM: 125690 - 20030227
Group number: 1511784-0100
Assembly Drawing: 1511784-1_2_AB

This list covers pages from 718 to 721

Pos	Part No	SP	UN	Qty	Description	Page No
-						
010	1511831-0000	-		1	PLATE	
020	1511841-0000	-		1	GASKET	
030	90002-0004	-		4	BLANK-OFF PLUG, PR 22,5 SKINDICHT-BLK16	
040	90002-0010	-		1	BLANK-OFF PLUG, PR 37 SKINDICHT-BLK29	
050	90002-0012	-		2	BLANK-OFF PLUG, PR 28,3 SKINDICHT-BLK21	
060	90002-0013	-		1	BLANK-OFF PLUG, PR 15,2 SKINDICHT-BLK9	
070	90099-0104	-		6	NUT, PR 15,2 (PG9)	
080	90099-0110	-		12	NUT, PR 22,5 (PG16)	
090	90099-0119	-		2	NUT, PR 28,3 (PG21)	
100	90099-0120	-		3	MUTTER PR 37 (PG29)	
110	312115-0293	-		10	SCREW ISO4762 M4X16 A4	
120	315105-0136	-		10	WASHER ISO 7089-4-200 HV-A4	
130	315402-0136	-		10	LOCK WASHER FBB 4,1	
140	353240-0006	-		1	FöRSKRUVNING, PG 29	
150	353242-0003	-		1	NORMAL WITHOUT INSERT, PG29	
160	353243-0001	-		3	EXTENDED WITHOUT INSERT, PG9	
170	353243-0005	-		7	EXTENDED WITHOUT INSERT, PG16	
180	353249-0009	-		3	INSERT, SINGEL HOLE, EK 152/9	
190	353249-0013	-		5	INSERT, SINGEL HOLE, EK 154/13	
200	2504449-0000	-		1	INSERT	
210	353249-0014	-		2	INSERT, SINGEL HOLE, EK 154/16	
240	90457-0027	-		1	INSERT, MULTI HOLE, E155M1X5/4X9	
250	352103-0101	-		2	KABELFöRSKR. ST 9, PR15,2/PG9	
260	352103-0110	-		1	CABLE GLAND, STR 16, PR22,5/PG16	

Pos	Part No	SP	UN	Qty	Description	Page No

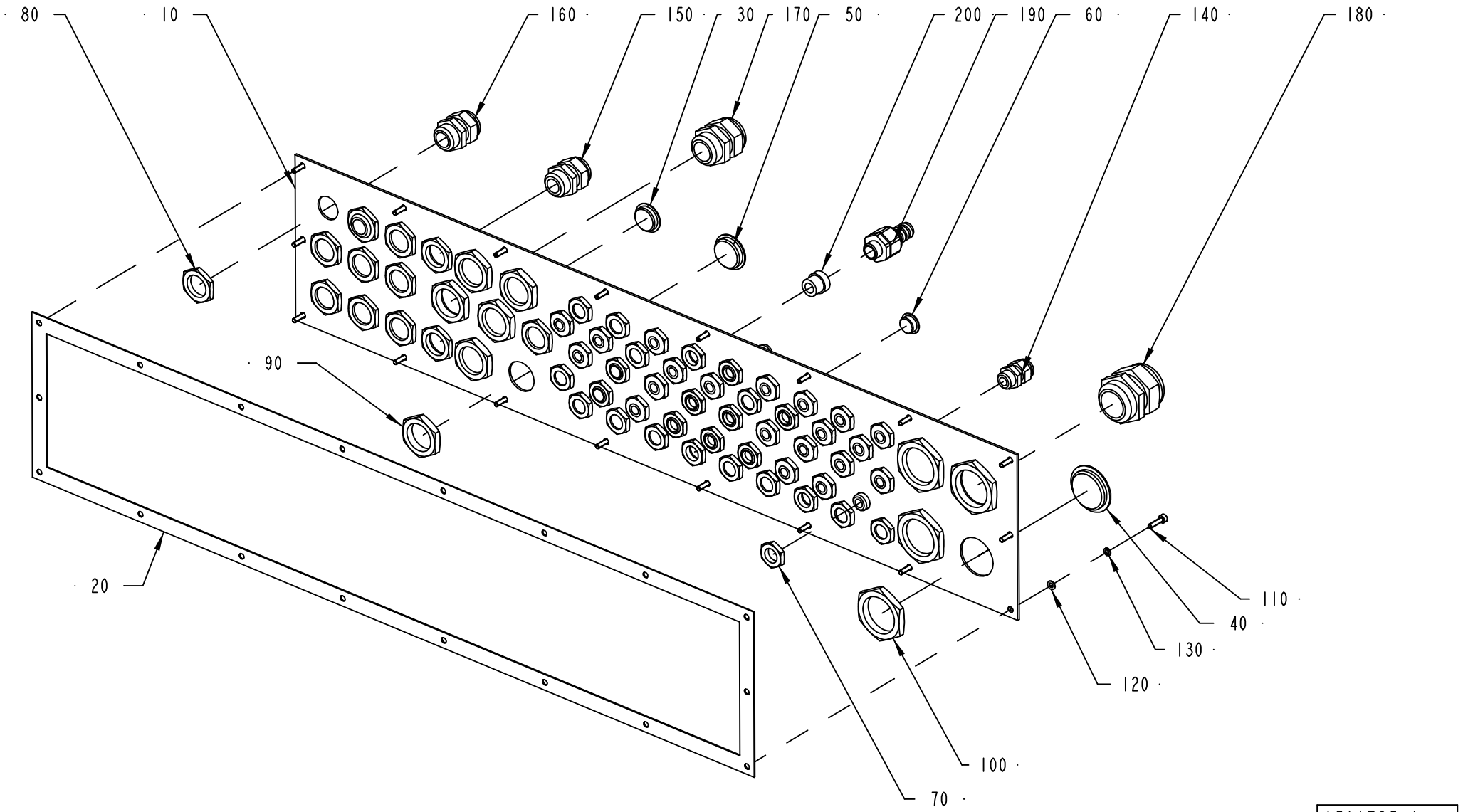

1511785-1
ECN 73363

ECM: 94619 - 20020521
Group number: 1511785-0100
Assembly Drawing: 1511785-1_1_AB

This list covers pages from 722 to 725

Pos	Part No	SP	UN	Qty	Description	Page No
-						
010	1511842-0000	-		1	PLATE	
020	1511843-0000	-		1	GASKET	
030	90002-0004	-		9	BLANK-OFF PLUG, PR 22,5 SKINDICHT-BLK16	
040	90002-0010	-		3	BLANK-OFF PLUG, PR 37 SKINDICHT-BLK29	
050	90002-0012	-		5	BLANK-OFF PLUG, PR 28,3 SKINDICHT-BLK21	
060	90002-0013	-		12	BLANK-OFF PLUG, PR 15,2 SKINDICHT-BLK9	
070	90099-0104	-		45	NUT, PR 15,2 (PG9)	
080	90099-0110	-		12	NUT, PR 22,5 (PG16)	
090	90099-0119	-		6	NUT, PR 28,3 (PG21)	
100	90099-0120	-		4	MUTTER PR 37 (PG29)	
110	312115-0293	-		18	SCREW ISO4762 M4X16 A4	
120	315105-0136	-		18	WASHER ISO 7089-4-200 HV-A4	
130	315402-0136	-		18	LOCK WASHER FBB 4,1	
140	352103-0101	-		22	KABELFöRSKR. ST 9, PR15,2/PG9	
150	352103-0110	-		1	CABLE GLAND, STR 16, PR22,5/PG16	
160	352103-0111	-		2	CABLE GLAND, ST 16, PR22,5/PG16	
170	352103-0116	-		1	KABELFöRSKR. ST 21, PR28,3/PG21	
180	352103-0121	-		1	CABLE GLAND, ST 29, PR37,0/PG29	
190	353243-0001	-		10	EXTENDED WITHOUT INSERT, PG9	
200	353249-0009	-		10	INSERT, SINGEL HOLE, EK 152/9	

Pos	Part No	SP	UN	Qty	Description	Page No

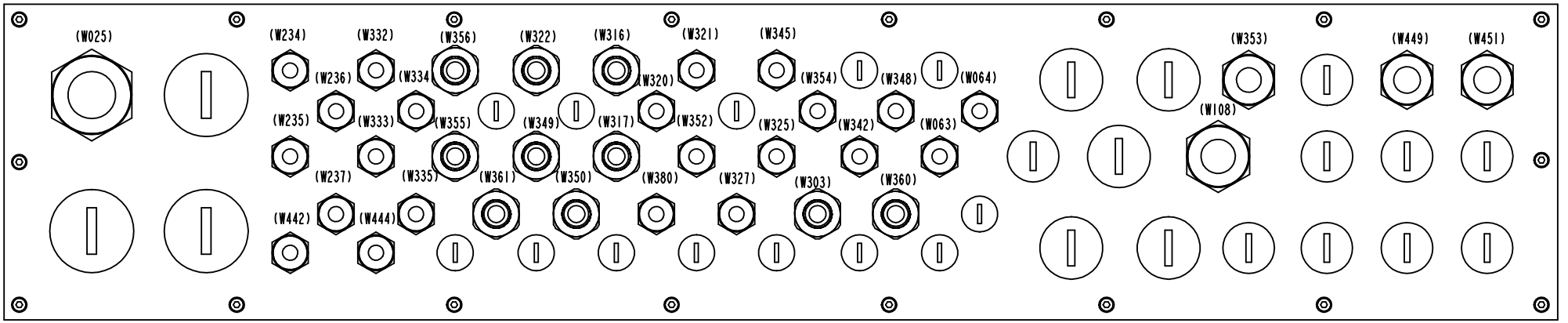

1511785-1
ECN 98221

ECM: 94619 - 20020521
Group number: 1511785-0100
Assembly Drawing: 1511785-1_2_AB

This list covers pages from 722 to 725

Pos	Part No	SP	UN	Qty	Description	Page No
-						
010	1511842-0000	-		1	PLATE	
020	1511843-0000	-		1	GASKET	
030	90002-0004	-		9	BLANK-OFF PLUG, PR 22,5 SKINDICHT-BLK16	
040	90002-0010	-		3	BLANK-OFF PLUG, PR 37 SKINDICHT-BLK29	
050	90002-0012	-		5	BLANK-OFF PLUG, PR 28,3 SKINDICHT-BLK21	
060	90002-0013	-		12	BLANK-OFF PLUG, PR 15,2 SKINDICHT-BLK9	
070	90099-0104	-		45	NUT, PR 15,2 (PG9)	
080	90099-0110	-		12	NUT, PR 22,5 (PG16)	
090	90099-0119	-		6	NUT, PR 28,3 (PG21)	
100	90099-0120	-		4	MUTTER PR 37 (PG29)	
110	312115-0293	-		18	SCREW ISO4762 M4X16 A4	
120	315105-0136	-		18	WASHER ISO 7089-4-200 HV-A4	
130	315402-0136	-		18	LOCK WASHER FBB 4,1	
140	352103-0101	-		22	KABELFöRSKR. ST 9, PR15,2/PG9	
150	352103-0110	-		1	CABLE GLAND, STR 16, PR22,5/PG16	
160	352103-0111	-		2	CABLE GLAND, ST 16, PR22,5/PG16	
170	352103-0116	-		1	KABELFöRSKR. ST 21, PR28,3/PG21	
180	352103-0121	-		1	CABLE GLAND, ST 29, PR37,0/PG29	
190	353243-0001	-		10	EXTENDED WITHOUT INSERT, PG9	
200	353249-0009	-		10	INSERT, SINGEL HOLE, EK 152/9	

Pos	Part No	SP	UN	Qty	Description	Page No

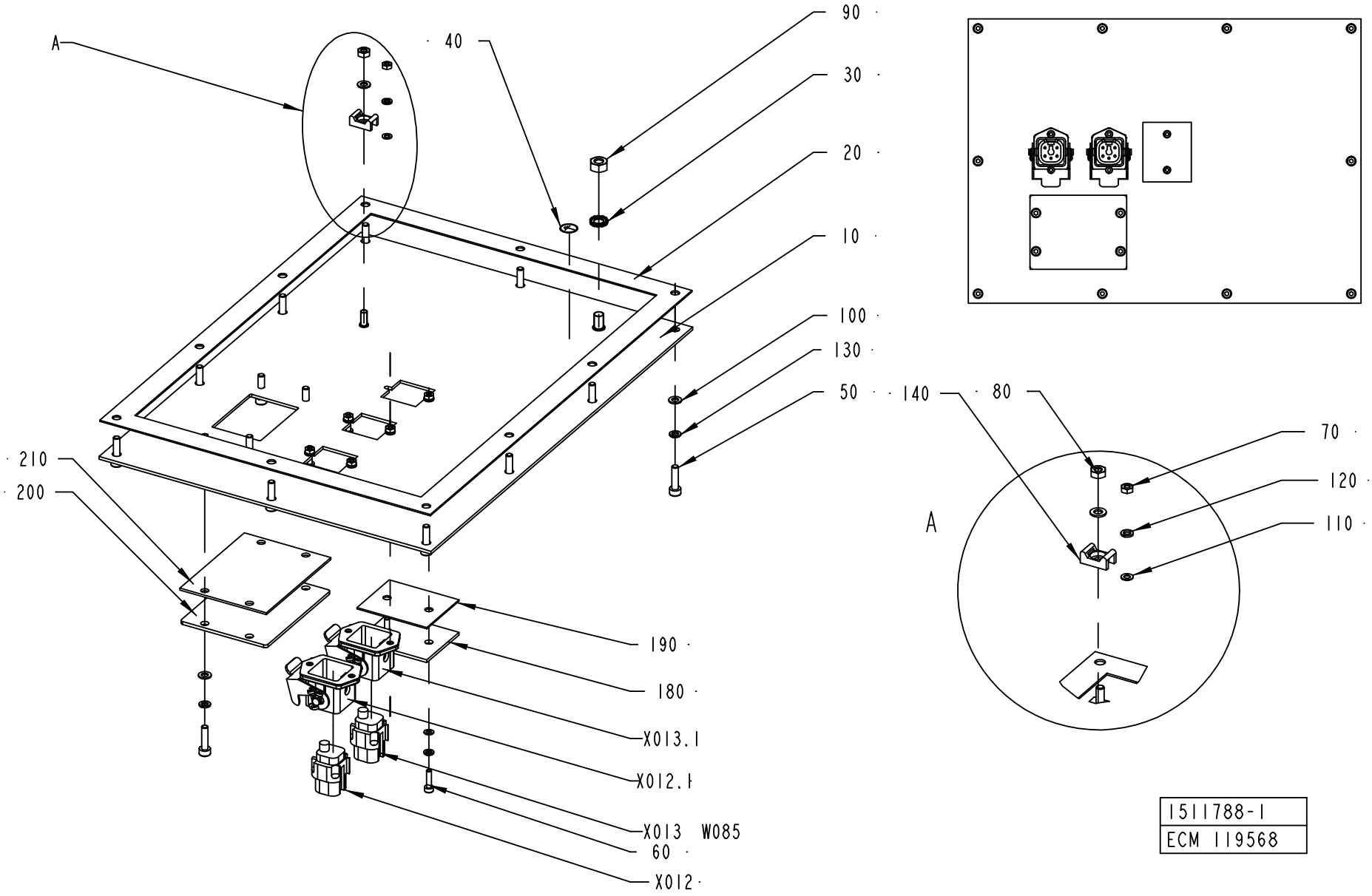

1511788-1
ECM 119568

ECM: 120813 - 20030227
Group number: 1511788-0100
Assembly Drawing: 1511788-1_1_AB

This list covers pages from 726 to 729

Pos	Part No	SP	UN	Qty	Description	Page No
TBA NOPT ASU (See drawing on page: 728)						
X011	90458-0876	A		1	FEMALE INSERT HAN 6B 09 14002 2751	
X011.1	90458-0871	-		1	HOUSING BULKHEAD MOUNTING HAN 6B-AGG-RB	
X011.2	90458-0875	-		1	HINGED FRAME HAN 6B FOR HOUSING	
X014	90110-0296	A		1	CONTACT SCREW	
X014.1	90457-0050	-		1	BULKHEAD HOUSING 149760	
TBA NOPT NOASU (See drawing on page: 726)						
180	1487430-0000	-		1	COVER	
190	1487431-0000	-		1	GASKET	
200	1037572-0000	-		1	COVER PLATE	
210	1037573-0000	-		1	GASKET	
Common Parts						
010	1511837-0000	-		1	PLATE	
020	1511838-0000	-		1	GASKET	
030	90062-0015	-		1	LOCK WASHER SERRAT.EXT.GEAR,6,4/11 H=0,7	
040	90194-0163	-		1	SIGN, EARTH WITHIN CIRCLE	
050	312115-0293	-		14	SCREW ISO4762 M4X16 A4	
060	312115-0226	-		6	SCREW ISO4762 M3X12 A4	
070	312605-0310	-		6	HEXAGON NUT, M6M M3 A280	
080	312605-0312	-		1	HEXAGON NUT, M6M M4 A280	
090	312605-0316	-		1	HEXAGON NUT, M6M M6 A280	
100	315105-0136	-		15	WASHER ISO 7089-4-200 HV-A4	
110	315105-0124	-		12	WASHER ISO 7089-3-200 HV-A4	
120	315402-0128	-		12	LOCK WASHER FBB 3,6	
130	315402-0136	-		14	LOCK WASHER FBB 4,1	
140	352113-0205	-		1	ANCHOR PLATES FOR STRIPS, TYPE TM2S8-C10	
W085	90220-0104	-	M	4	SCR. CABLE 4X1,5MM2	
X012	90110-0296	A		1	CONTACT SCREW	
X012.1	90457-0050	-		1	BULKHEAD HOUSING 149760	
X013	90110-0296	A		1	CONTACT SCREW	
X013.1	90457-0050	-		1	BULKHEAD HOUSING 149760	

Pos	Part No	SP	UN	Qty	Description	Page No

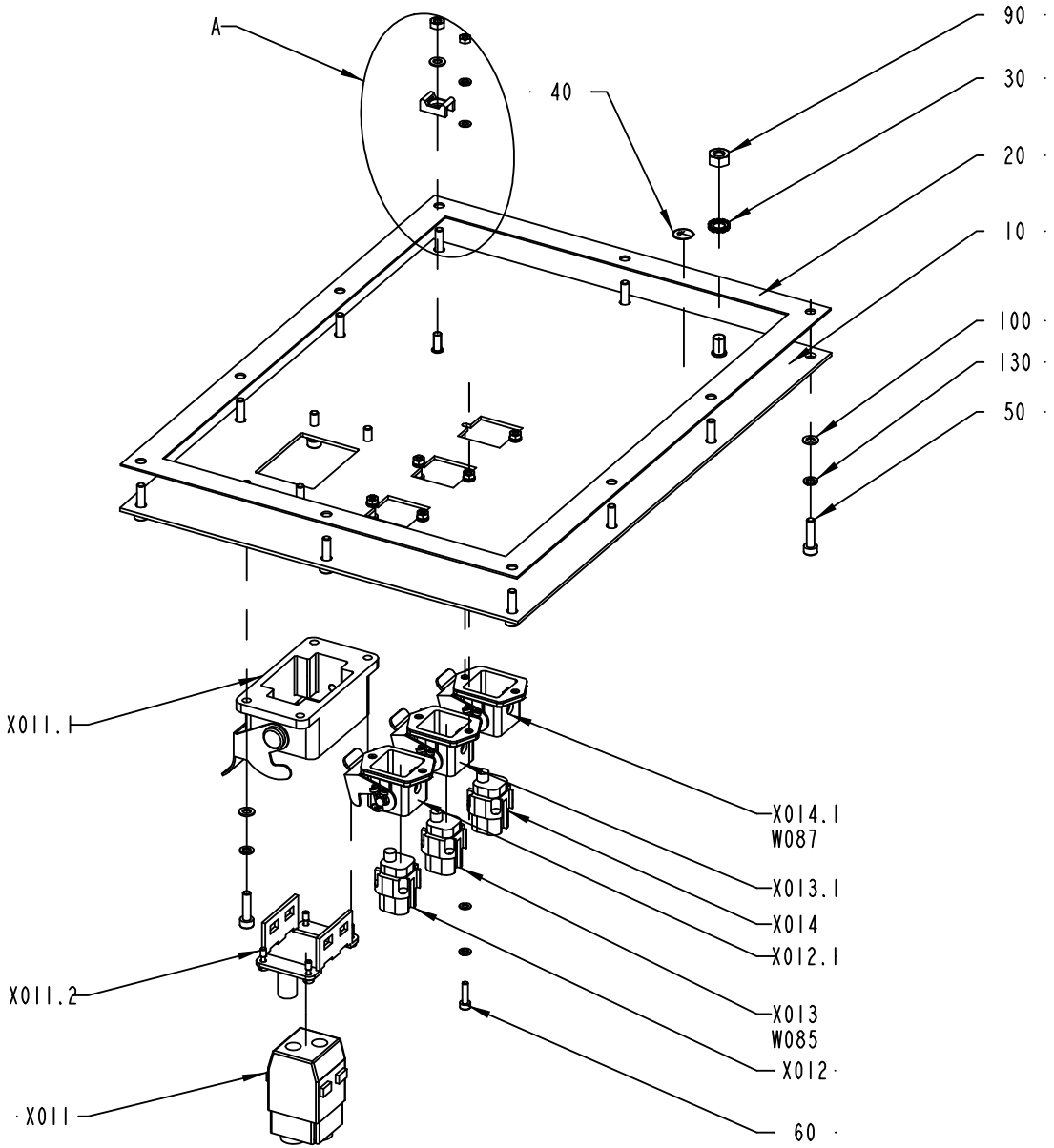

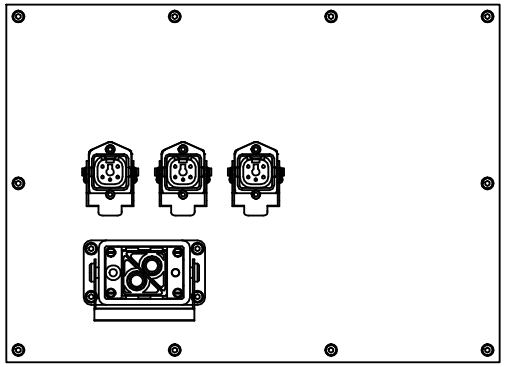

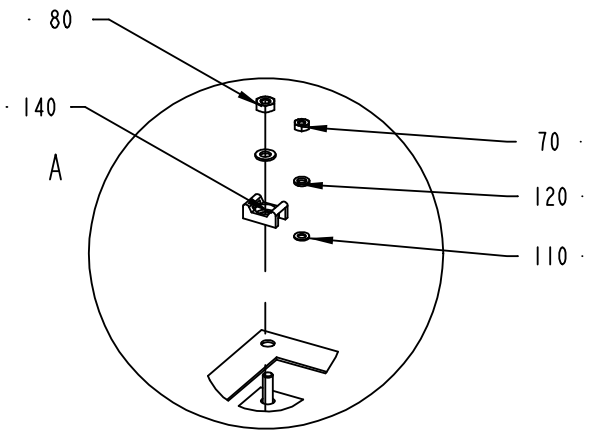

1511788-2
ECM 119568

ECM: 120813 - 20030227
Group number: 1511788-0100
Assembly Drawing: 1511788-2_1_AB

This list covers pages from 726 to 729

Pos	Part No	SP	UN	Qty	Description	Page No
TBA NOPT ASU (See drawing on page: 728)						
X011	90458-0876	A		1	FEMALE INSERT HAN 6B 09 14002 2751	
X011.1	90458-0871	-		1	HOUSING BULKHEAD MOUNTING HAN 6B-AGG-RB	
X011.2	90458-0875	-		1	HINGED FRAME HAN 6B FOR HOUSING	
X014	90110-0296	A		1	CONTACT SCREW	
X014.1	90457-0050	-		1	BULKHEAD HOUSING 149760	
TBA NOPT NOASU (See drawing on page: 726)						
180	1487430-0000	-		1	COVER	
190	1487431-0000	-		1	GASKET	
200	1037572-0000	-		1	COVER PLATE	
210	1037573-0000	-		1	GASKET	
Common Parts						
010	1511837-0000	-		1	PLATE	
020	1511838-0000	-		1	GASKET	
030	90062-0015	-		1	LOCK WASHER SERRAT.EXT.GEAR,6,4/11 H=0,7	
040	90194-0163	-		1	SIGN, EARTH WITHIN CIRCLE	
050	312115-0293	-		14	SCREW ISO4762 M4X16 A4	
060	312115-0226	-		6	SCREW ISO4762 M3X12 A4	
070	312605-0310	-		6	HEXAGON NUT, M6M M3 A280	
080	312605-0312	-		1	HEXAGON NUT, M6M M4 A280	
090	312605-0316	-		1	HEXAGON NUT, M6M M6 A280	
100	315105-0136	-		15	WASHER ISO 7089-4-200 HV-A4	
110	315105-0124	-		12	WASHER ISO 7089-3-200 HV-A4	
120	315402-0128	-		12	LOCK WASHER FBB 3,6	
130	315402-0136	-		14	LOCK WASHER FBB 4,1	
140	352113-0205	-		1	ANCHOR PLATES FOR STRIPS, TYPE TM2S8-C10	
W085	90220-0104	-	M	4	SCR. CABLE 4X1,5MM2	
X012	90110-0296	A		1	CONTACT SCREW	
X012.1	90457-0050	-		1	BULKHEAD HOUSING 149760	
X013	90110-0296	A		1	CONTACT SCREW	
X013.1	90457-0050	-		1	BULKHEAD HOUSING 149760	

Pos	Part No	SP	UN	Qty	Description	Page No

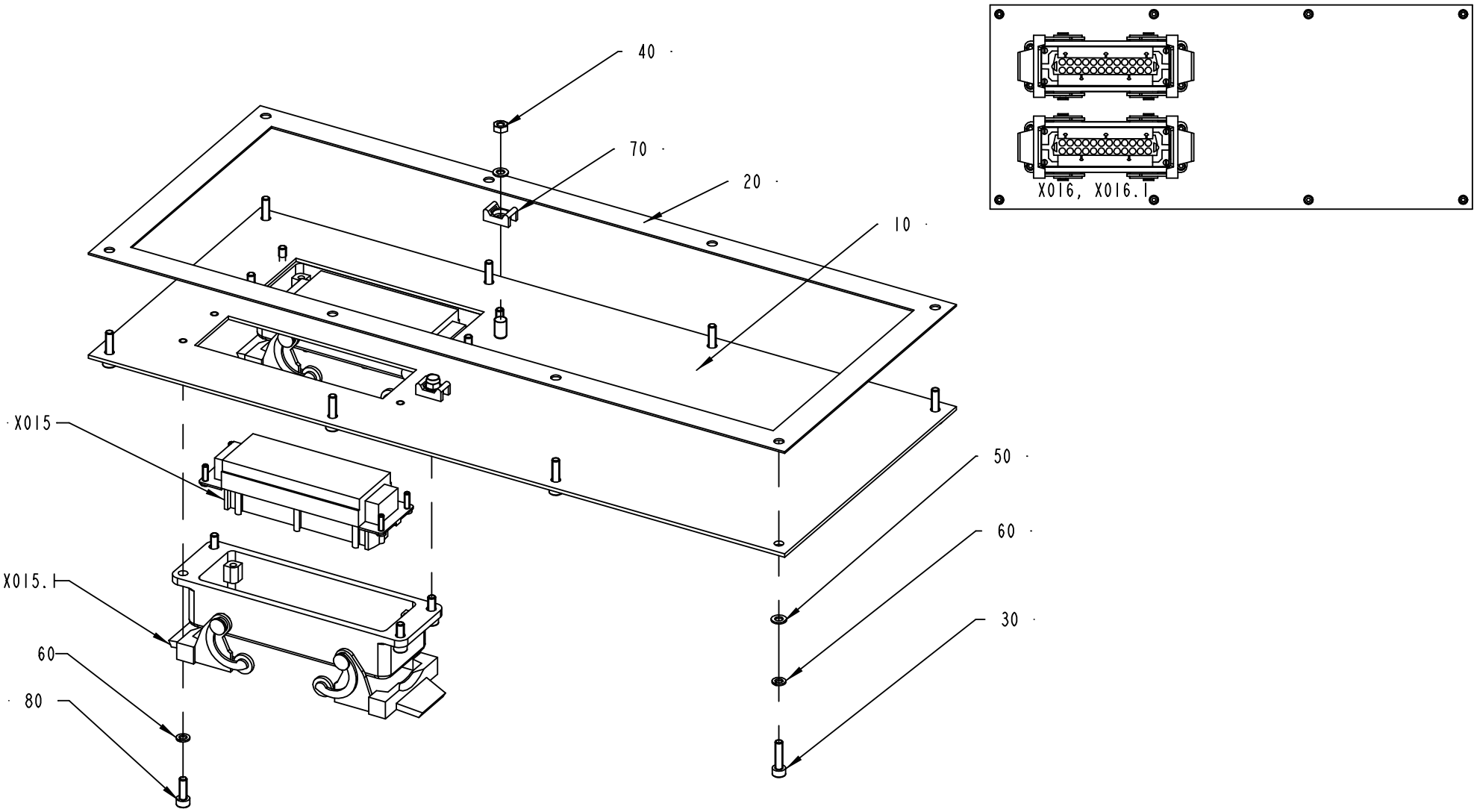

1511789-1
ECN 73363

ECM: 115706 - 20020930
Group number: 1511789-0100
Assembly Drawing: 1511789-1_1_AA

Pos	Part No	SP	UN	Qty	Description	Page No
-						
010	1511839-0000	-		1	PLATE	
020	1511840-0000	-		1	GASKET	
030	312115-0293	-		8	SCREW ISO4762 M4X16 A4	
040	312605-0312	-		2	HEXAGON NUT, M6M M4 A280	
050	315105-0136	-		10	WASHER ISO 7089-4-200 HV-A4	
060	315402-0136	-		8	LOCK WASHER FBB 4,1	
070	352113-0205	-		2	ANCHOR PLATES FOR STRIPS, TYPE TM2S8-C10	
080	312115-0291	-		8	SCREW ISO4762 M4X12 A4	
X015	90110-0151	A		1	FEMALE INSERT 24-POL 121130 0000	
X015.1	90110-0153	-		1	CHASSIS HOUSING 24-P CHI 24, 121240 0000	
X016	90110-0151	A		1	FEMALE INSERT 24-POL 121130 0000	
X016.1	90110-0153	-		1	CHASSIS HOUSING 24-P CHI 24, 121240 0000	

Pos	Part No	SP	UN	Qty	Description	Page No

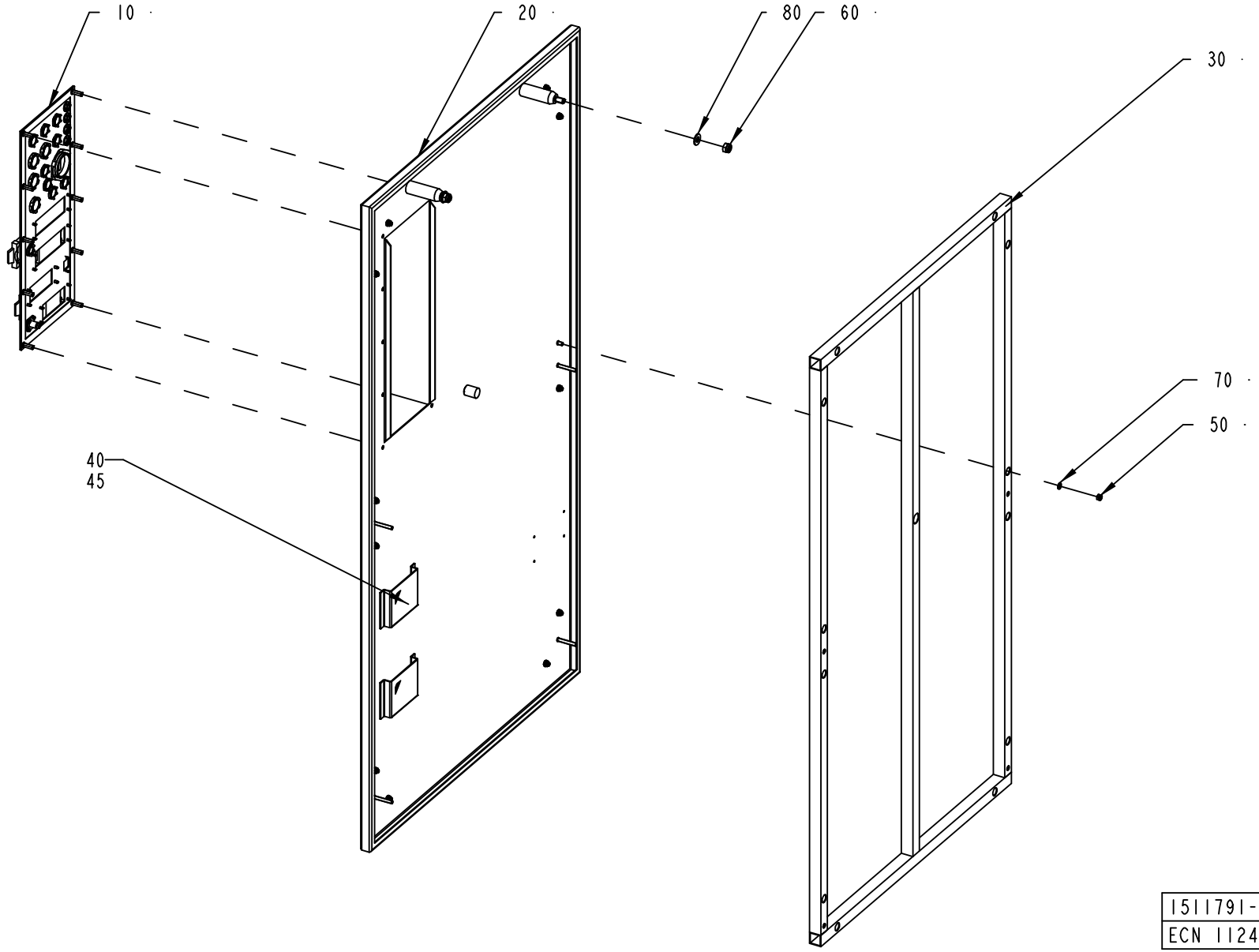
10
20
80
60
30
70
50
40
45
1511791-1
ECN 112412

ECM: 113248 - 20030113
Group number: 1511791-0100
Assembly Drawing: 1511791-1_1_AB

Pos	Part No	SP	UN	Qty	Description	Page No
-						
010	A1511787-0100	-		1	STRIP APPLICATOR CABLE INLETS	**735, 737, 739, 741**
020	1511797-0000	-		1	DOOR	
030	1511798-0000	-		1	FRAME	
040	970802-0000	-		2	DISCETTE BOX 3,5"	
045	90144-0072	-	MM	400	TAPE SCOTCH VHBS 4945 W=12,7MM	
050	312812-0316	-		12	HEXAGON NUT, NY-LOCK M6 A480	
060	312812-0320	-		2	HEXAGON NUT, NY-LOCK M10 A480	
070	315105-0153	-		12	WASHER ISO 7089-6-200 HV-A4	
080	315105-0173	-		2	WASHER ISO 7089-10-200 HV-A4	

Pos	Part No	SP	UN	Qty	Description	Page No

STRIP APPLICATOR CABLE INLETS

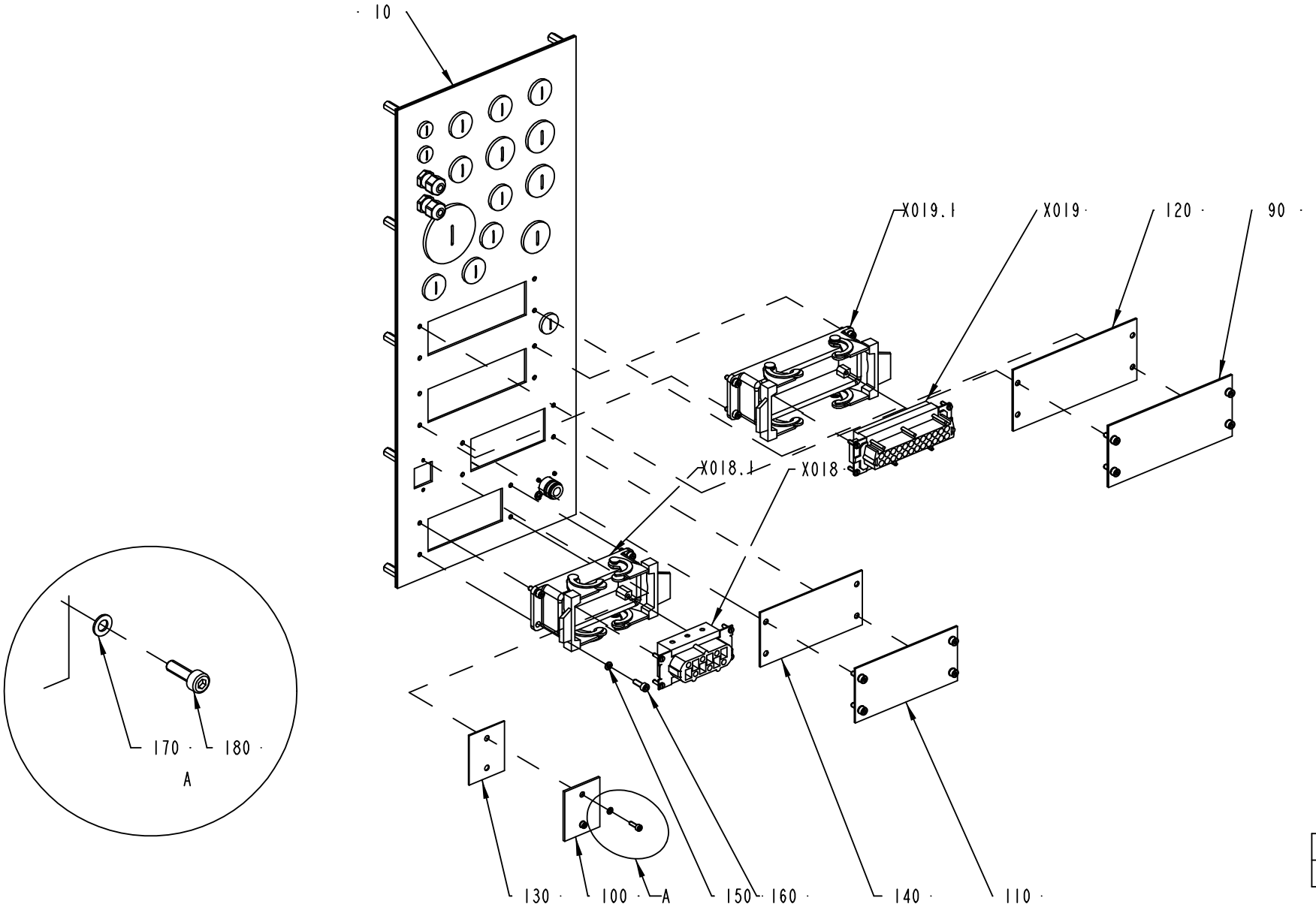

1511787-1
ECN 73363

ECM: 115728 - 20020930
Group number: 1511787-0100
Assembly Drawing: 1511787-1_1_AA

This list covers pages from 734 to 741

Pos	Part No	SP	UN	Qty	Description	Page No
-						
010	1511832-0000	-		1	PLATE	
020	1511833-0000	-		1	GASKET	
030	1517676-0000	-		10	SPACER	
090	1037574-0000	-		1	COVER PLATE	
100	1487430-0000	-		1	COVER	
110	1129481-0000	-		1	COVERING PLATE	
120	1037575-0000	-		1	GASKET	
130	1487431-0000	-		1	GASKET	
135	1129478-0000	-		1	GASKET	
140	315105-0146	-		10	WASHER ISO 7089-5-200 HV-A4	
150	315402-0136	-		16	LOCK WASHER FBB 4,1	
160	312115-0291	-		16	SCREW ISO4762 M4X12 A4	
170	315105-0124	-		2	WASHER ISO 7089-3-200 HV-A4	
180	312115-0224	-		2	SCREW ISO4762 M3X10 A4	
190	90110-0127	-		1	COAXIAL CONNECTOR, GE 15057C10HBN	
200	312115-0220	-		4	SCREW ISO4762 M3X6 A4 80	
210	90458-0305	-		2	CABLE GLAND, M12X1,5, NO.5311 1000	
220	90458-1306	-		2	BLIND PLUG CIRCULAR, M12X1,5 514GFK/212	
230	90458-0321	-		4	NUT, M12X1,5	
240	90458-1308	-		8	BLIND PLUG CIRCULAR, M20X1,5 514GFK/220	
250	90458-0461	-		8	GLAND, LOCKNUT, M20X1,5	
260	90458-1309	-		4	BLIND PLUG CIRCULAR, M25X1,5 514GFK/225	
270	90458-0462	-		4	GLAND, LOCKNUT, M25X1,5	
280	90458-1312	-		1	BLIND PLUG CIRCULAR, M50X1,5 514GFK/250	
290	90458-0465	-		1	GLAND, LOCKNUT, M50X1,5	
300	90458-0460	-		1	GLAND, LOCKNUT, M16X1,5	
310	90458-1307	-		1	BLIND PLUG CIRCULAR, M16X1,5 514GFK/216	
X018	90110-0247	A		1	FEMALE INSERT 70.200.0653.0	
X018.1	90110-0243	-		1	CONTACT HOUSING 16-POL 70.320.1628.0	
X019	90110-0151	A		1	FEMALE INSERT 24-POL 121130 0000	
X019.1	90110-0153	-		1	CHASSIS HOUSING 24-P CHI 24, 121240 0000	

Pos	Part No	SP	UN	Qty	Description	Page No

Machine Type | Group Description | Used-In | Group Number | Page No

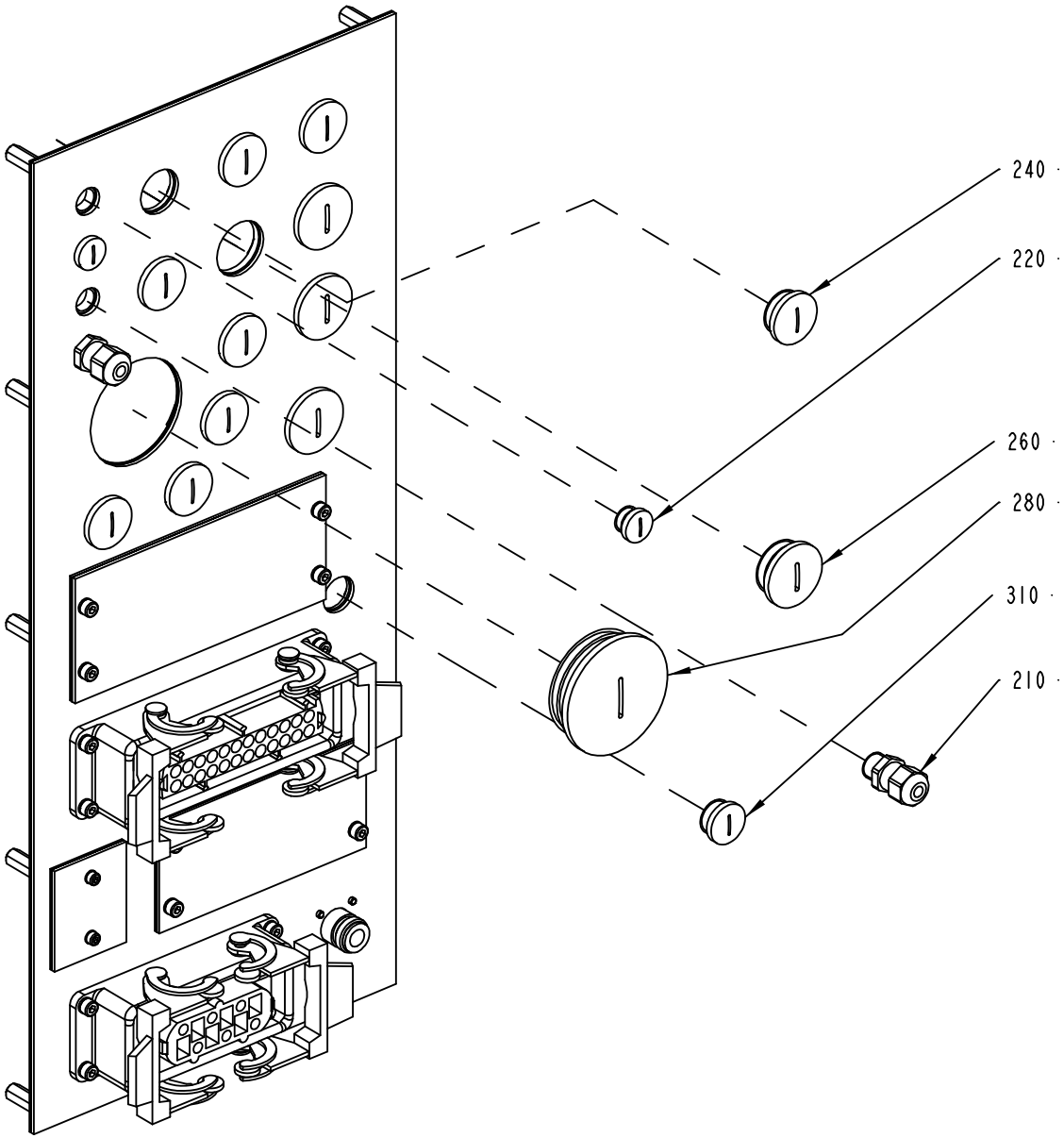

1511787-1
ECN 73363

ECM: 115728 - 20020930
Group number: 1511787-0100
Assembly Drawing: 1511787-1_2_AA

This list covers pages from 734 to 741

Pos	Part No	SP	UN	Qty	Description	Page No
-						
010	1511832-0000	-		1	PLATE	
020	1511833-0000	-		1	GASKET	
030	1517676-0000	-		10	SPACER	
090	1037574-0000	-		1	COVER PLATE	
100	1487430-0000	-		1	COVER	
110	1129481-0000	-		1	COVERING PLATE	
120	1037575-0000	-		1	GASKET	
130	1487431-0000	-		1	GASKET	
135	1129478-0000	-		1	GASKET	
140	315105-0146	-		10	WASHER ISO 7089-5-200 HV-A4	
150	315402-0136	-		16	LOCK WASHER FBB 4,1	
160	312115-0291	-		16	SCREW ISO4762 M4X12 A4	
170	315105-0124	-		2	WASHER ISO 7089-3-200 HV-A4	
180	312115-0224	-		2	SCREW ISO4762 M3X10 A4	
190	90110-0127	-		1	COAXIAL CONNECTOR, GE 15057C10HBN	
200	312115-0220	-		4	SCREW ISO4762 M3X6 A4 80	
210	90458-0305	-		2	CABLE GLAND, M12X1,5, NO.5311 1000	
220	90458-1306	-		2	BLIND PLUG CIRCULAR, M12X1,5 514GFK/212	
230	90458-0321	-		4	NUT, M12X1,5	
240	90458-1308	-		8	BLIND PLUG CIRCULAR, M20X1,5 514GFK/220	
250	90458-0461	-		8	GLAND, LOCKNUT, M20X1,5	
260	90458-1309	-		4	BLIND PLUG CIRCULAR, M25X1,5 514GFK/225	
270	90458-0462	-		4	GLAND, LOCKNUT, M25X1,5	
280	90458-1312	-		1	BLIND PLUG CIRCULAR, M50X1,5 514GFK/250	
290	90458-0465	-		1	GLAND, LOCKNUT, M50X1,5	
300	90458-0460	-		1	GLAND, LOCKNUT, M16X1,5	
310	90458-1307	-		1	BLIND PLUG CIRCULAR, M16X1,5 514GFK/216	
X018	90110-0247	A		1	FEMALE INSERT 70.200.0653.0	
X018.1	90110-0243	-		1	CONTACT HOUSING 16-POL 70.320.1628.0	
X019	90110-0151	A		1	FEMALE INSERT 24-POL 121130 0000	
X019.1	90110-0153	-		1	CHASSIS HOUSING 24-P CHI 24, 121240 0000	

Pos	Part No	SP	UN	Qty	Description	Page No

Machine Type	Group Description	Used-In	Group Number	Page No

STRIP APPLICATOR CABLE INLETS

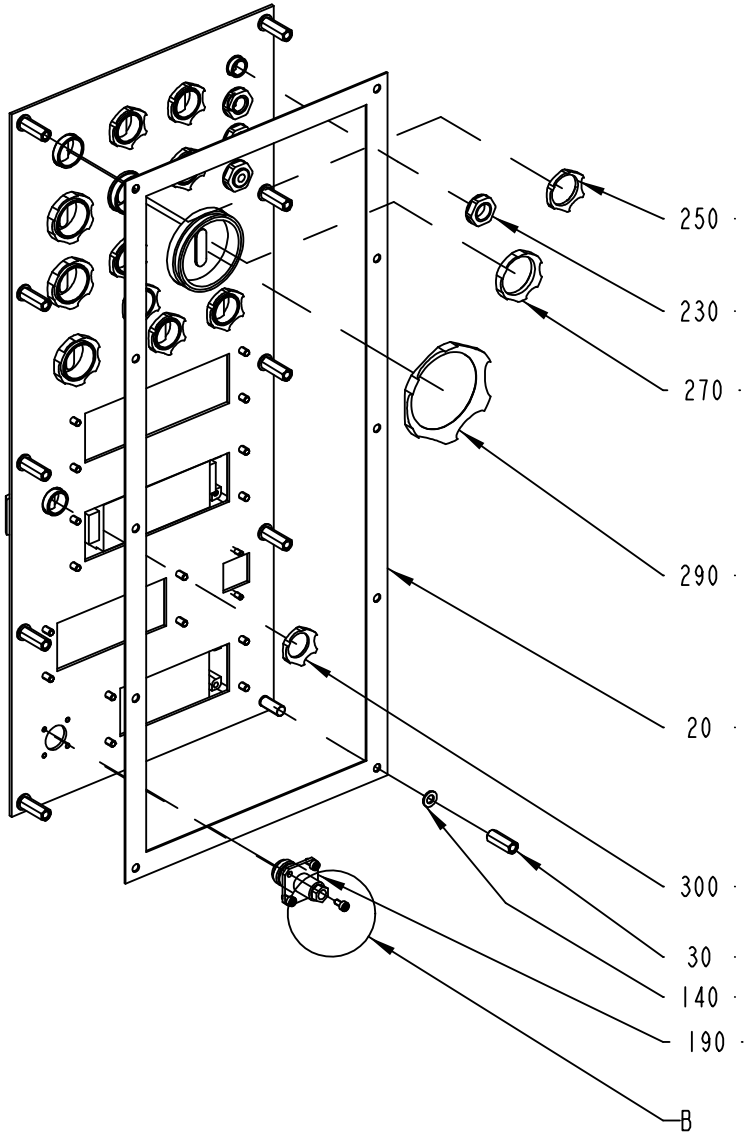

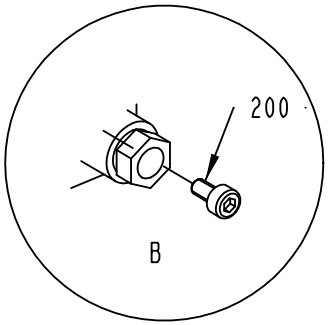

1511787-1
ECN 73363

ECM: 115728 - 20020930
Group number: 1511787-0100
Assembly Drawing: 1511787-1_3_AA

This list covers pages from 734 to 741

Pos	Part No	SP	UN	Qty	Description	Page No
-						
010	1511832-0000	-		1	PLATE	
020	1511833-0000	-		1	GASKET	
030	1517676-0000	-		10	SPACER	
090	1037574-0000	-		1	COVER PLATE	
100	1487430-0000	-		1	COVER	
110	1129481-0000	-		1	COVERING PLATE	
120	1037575-0000	-		1	GASKET	
130	1487431-0000	-		1	GASKET	
135	1129478-0000	-		1	GASKET	
140	315105-0146	-		10	WASHER ISO 7089-5-200 HV-A4	
150	315402-0136	-		16	LOCK WASHER FBB 4,1	
160	312115-0291	-		16	SCREW ISO4762 M4X12 A4	
170	315105-0124	-		2	WASHER ISO 7089-3-200 HV-A4	
180	312115-0224	-		2	SCREW ISO4762 M3X10 A4	
190	90110-0127	-		1	COAXIAL CONNECTOR, GE 15057C10HBN	
200	312115-0220	-		4	SCREW ISO4762 M3X6 A4 80	
210	90458-0305	-		2	CABLE GLAND, M12X1,5, NO.5311 1000	
220	90458-1306	-		2	BLIND PLUG CIRCULAR, M12X1,5 514GFK/212	
230	90458-0321	-		4	NUT, M12X1,5	
240	90458-1308	-		8	BLIND PLUG CIRCULAR, M20X1,5 514GFK/220	
250	90458-0461	-		8	GLAND, LOCKNUT, M20X1,5	
260	90458-1309	-		4	BLIND PLUG CIRCULAR, M25X1,5 514GFK/225	
270	90458-0462	-		4	GLAND, LOCKNUT, M25X1,5	
280	90458-1312	-		1	BLIND PLUG CIRCULAR, M50X1,5 514GFK/250	
290	90458-0465	-		1	GLAND, LOCKNUT, M50X1,5	
300	90458-0460	-		1	GLAND, LOCKNUT, M16X1,5	
310	90458-1307	-		1	BLIND PLUG CIRCULAR, M16X1,5 514GFK/216	
X018	90110-0247	A		1	FEMALE INSERT 70.200.0653.0	
X018.1	90110-0243	-		1	CONTACT HOUSING 16-POL 70.320.1628.0	
X019	90110-0151	A		1	FEMALE INSERT 24-POL 121130 0000	
X019.1	90110-0153	-		1	CHASSIS HOUSING 24-P CHI 24, 121240 0000	

Pos	Part No	SP	UN	Qty	Description	Page No

Machine Type	Group Description	Used-In	Group Number	Page No

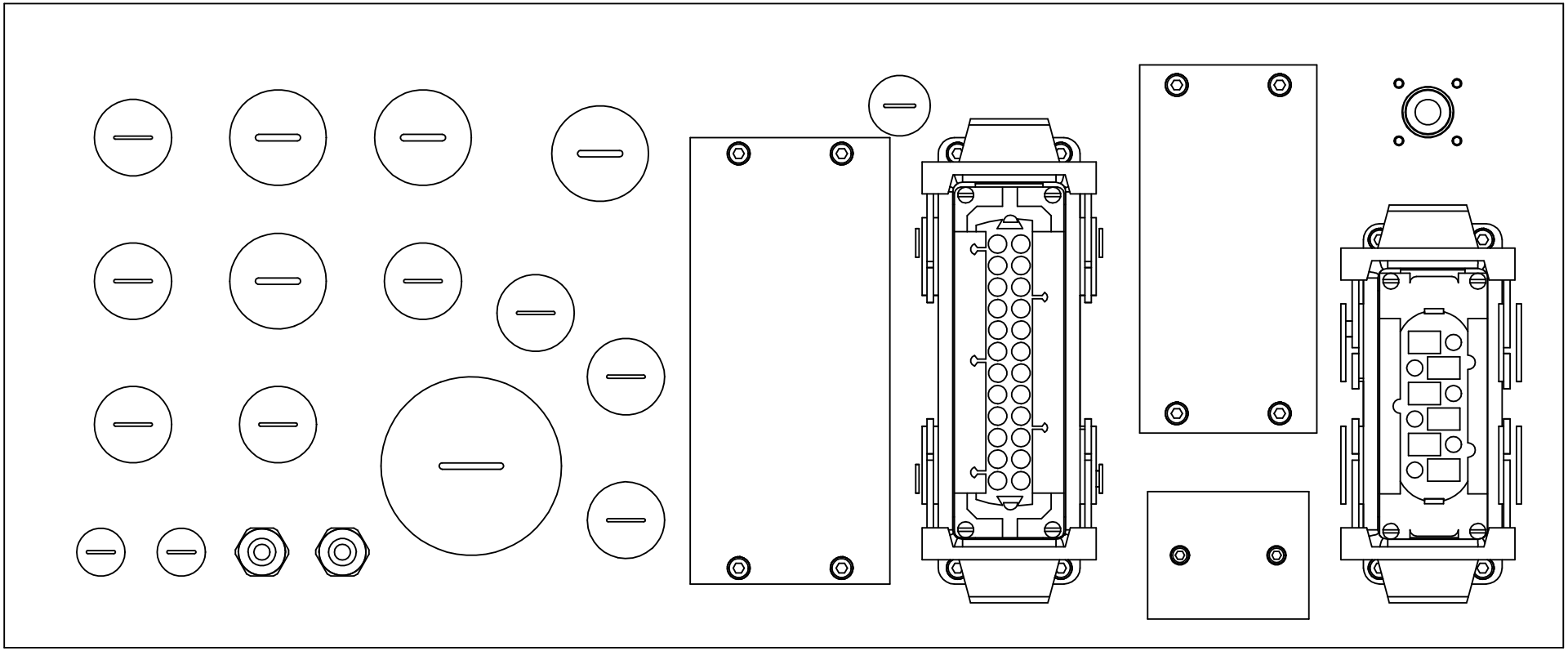

1511787-1
ECN 73363

ECM: 115728 - 20020930
Group number: 1511787-0100
Assembly Drawing: 1511787-1_4_AA

This list covers pages from 734 to 741

Pos	Part No	SP	UN	Qty	Description	Page No
-						
010	1511832-0000	-		1	PLATE	
020	1511833-0000	-		1	GASKET	
030	1517676-0000	-		10	SPACER	
090	1037574-0000	-		1	COVER PLATE	
100	1487430-0000	-		1	COVER	
110	1129481-0000	-		1	COVERING PLATE	
120	1037575-0000	-		1	GASKET	
130	1487431-0000	-		1	GASKET	
135	1129478-0000	-		1	GASKET	
140	315105-0146	-		10	WASHER ISO 7089-5-200 HV-A4	
150	315402-0136	-		16	LOCK WASHER FBB 4,1	
160	312115-0291	-		16	SCREW ISO4762 M4X12 A4	
170	315105-0124	-		2	WASHER ISO 7089-3-200 HV-A4	
180	312115-0224	-		2	SCREW ISO4762 M3X10 A4	
190	90110-0127	-		1	COAXIAL CONNECTOR, GE 15057C10HBN	
200	312115-0220	-		4	SCREW ISO4762 M3X6 A4 80	
210	90458-0305	-		2	CABLE GLAND, M12X1,5, NO.5311 1000	
220	90458-1306	-		2	BLIND PLUG CIRCULAR, M12X1,5 514GFK/212	
230	90458-0321	-		4	NUT, M12X1,5	
240	90458-1308	-		8	BLIND PLUG CIRCULAR, M20X1,5 514GFK/220	
250	90458-0461	-		8	GLAND, LOCKNUT, M20X1,5	
260	90458-1309	-		4	BLIND PLUG CIRCULAR, M25X1,5 514GFK/225	
270	90458-0462	-		4	GLAND, LOCKNUT, M25X1,5	
280	90458-1312	-		1	BLIND PLUG CIRCULAR, M50X1,5 514GFK/250	
290	90458-0465	-		1	GLAND, LOCKNUT, M50X1,5	
300	90458-0460	-		1	GLAND, LOCKNUT, M16X1,5	
310	90458-1307	-		1	BLIND PLUG CIRCULAR, M16X1,5 514GFK/216	
X018	90110-0247	A		1	FEMALE INSERT 70.200.0653.0	
X018.1	90110-0243	-		1	CONTACT HOUSING 16-POL 70.320.1628.0	
X019	90110-0151	A		1	FEMALE INSERT 24-POL 121130 0000	
X019.1	90110-0153	-		1	CHASSIS HOUSING 24-P CHI 24, 121240 0000	

Pos	Part No	SP	UN	Qty	Description	Page No

Machine Type | Group Description | Used-In | Group Number | Page No

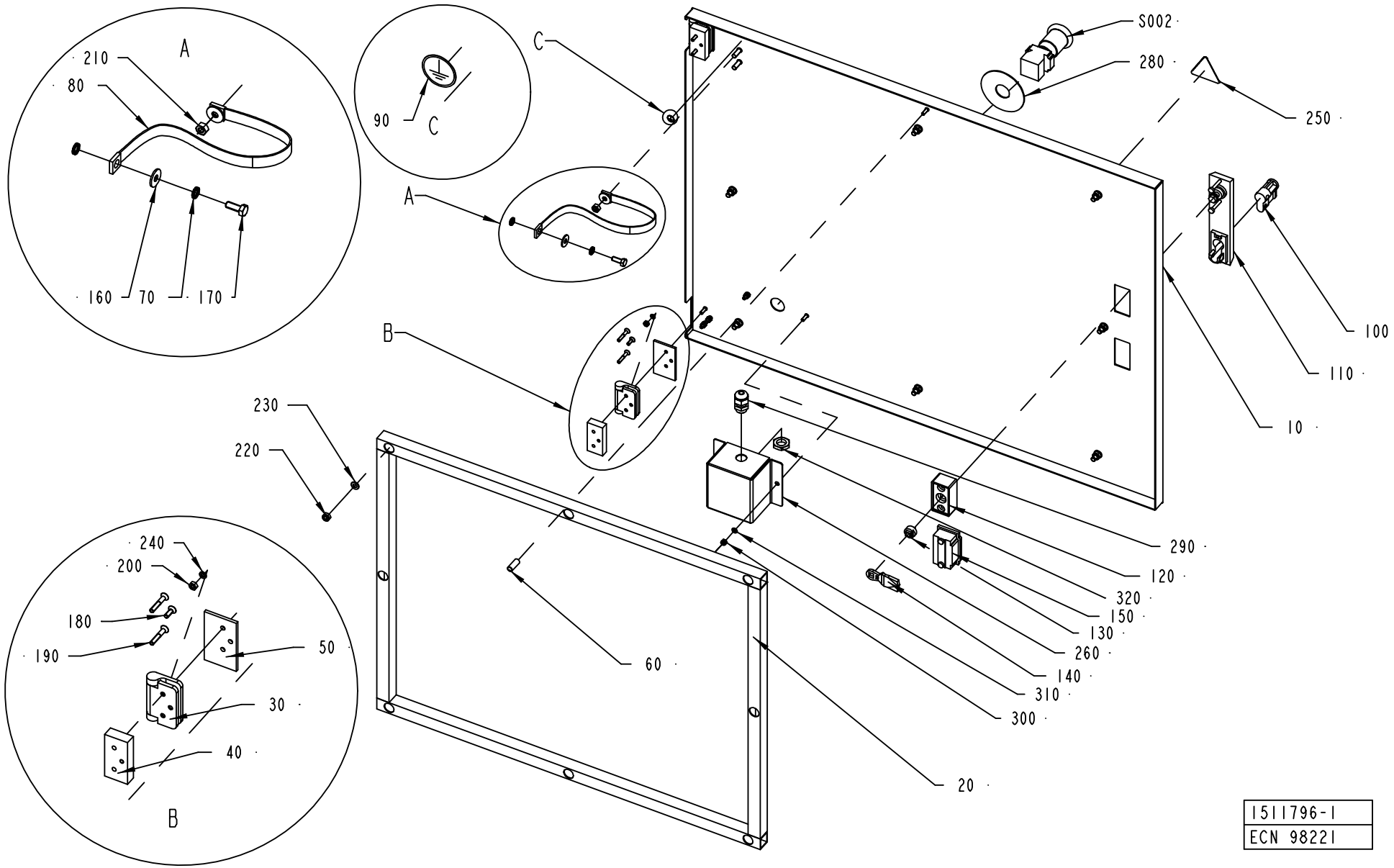

1511796-1
ECN 98221

ECM: 115708 - 20020930
Group number: 1511796-0100
Assembly Drawing: 1511796-1_1_AB

Pos	Part No	SP	UN	Qty	Description	Page No
-						
010	1523969-0000	-		1	DOOR	
020	1517664-0000	-		1	FRAME	
030	1523438-0000	B		2	HINGE	
040	1523441-0000	-		2	SPACER SHEET	
050	1523442-0000	-		2	SPACER SHEET	
060	1523957-0000	-		2	SPACER	
070	90062-0015	-		4	LOCK WASHER SERRAT.EXT.GEAR,6,4/11 H=0,7	
080	90135-0044	A		1	EARTH WIRE, L=320 MM 16 MM2	
090	90194-0163	-		1	SIGN, EARTH WITHIN CIRCLE	
100	90237-0128	-		1	LOCK CYLINDER, 1109-U3	
110	90237-0150	-		1	TURNING HANDLE, NO. 1125-U190-0A	
120	90237-0154	-		1	LOCK HOUSING, 1121-U60-0C	
130	90237-0155	-		1	LOCK ADAPTER, 1121-U40	
140	90237-0156	-		1	LOCK BOLT, 1000-16	
150	90237-0176	-		1	TURNING HANDLE	
160	90457-0192	-		2	WASHER PLAIN ROUND, 6,5/18, H=1,5	
170	312105-0368	-		1	SCREW M6S M6X16 A280	
180	312155-0291	-		2	SCREW EN 10642 MF6S M4X12 A480	
190	312155-0297	-		4	SCREW EN 10642 MF6S M4X25 A480	
200	312605-0312	-		6	HEXAGON NUT, M6M M4 A280	
210	312605-0316	-		1	HEXAGON NUT, M6M M6 A280	
220	312812-0316	-		8	HEXAGON NUT, NY-LOCK M6 A480	
230	315105-0153	-		8	WASHER ISO 7089-6-200 HV-A4	
240	315402-0136	-		6	LOCK WASHER FBB 4,1	
250	359705-0015	A		1	WARNING SIGN ISO, RISK OF ELECTRIC SHOCK	
260	1523971-0000	-		1	CONNECTION BOX	
280	486826-0000	-		1	SIGN	
290	352103-0101	-		1	KABELFöRSKR. ST 9, PR15,2/PG9	
300	312812-0312	-		2	HEXAGON NUT, NY-LOCK M4 A480	
310	315105-0136	-		2	WASHER ISO 7089-4-200 HV-A4	
320	90099-0104	-		1	NUT, PR 15,2 (PG9)	
S002	90064-0124	A		1	SWITCH, EM. STOP, ZB2-BS844+ZB2-BZ1045	

Pos	Part No	SP	UN	Qty	Description	Page No

Machine Type | Group Description | Used-In | Group Number | Page No

EXTERNAL DOOR SPARE FUSES

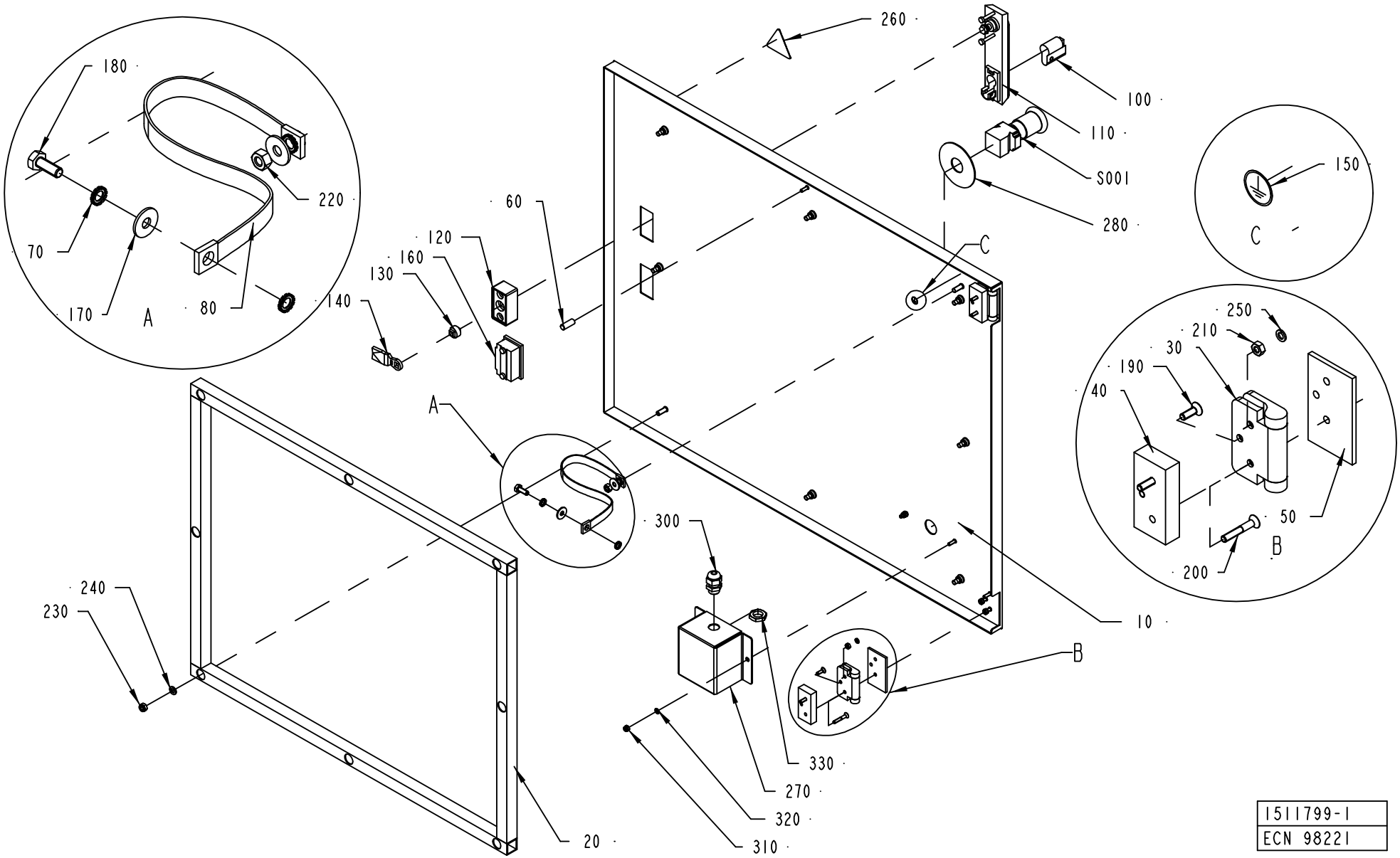

ECM: 115709 - 20020930
Group number: 1511799-0100
Assembly Drawing: 1511799-1_1_AB

Pos	Part No	SP	UN	Qty	Description	Page No
-						
020	1517664-0000	-		1	FRAME	
030	1523438-0000	B		2	HINGE	
040	1523441-0000	-		2	SPACER SHEET	
050	1523442-0000	-		2	SPACER SHEET	
060	1523957-0000	-		1	SPACER	
070	90062-0015	-		4	LOCK WASHER SERRAT.EXT.GEAR,6,4/11 H=0,7	
080	90135-0044	A		1	EARTH WIRE, L=320 MM 16 MM2	
090	1517667-0000	-		1	DOOR	
100	90237-0129	-		1	LOCK CYLINDER, 1109-U2	
110	90237-0150	-		1	TURNING HANDLE, NO. 1125-U190-0A	
120	90237-0154	-		1	LOCK HOUSING, 1121-U60-0C	
130	90237-0155	-		1	LOCK ADAPTER, 1121-U40	
140	90237-0156	-		1	LOCK BOLT, 1000-16	
150	90194-0163	-		1	SIGN, EARTH WITHIN CIRCLE	
160	90237-0176	-		1	TURNING HANDLE	
170	90457-0192	-		2	WASHER PLAIN ROUND, 6,5/18, H=1,5	
180	312105-0368	-		1	SCREW M6S M6X16 A280	
190	312155-0291	-		2	SCREW EN 10642 MF6S M4X12 A480	
200	312155-0297	-		4	SCREW EN 10642 MF6S M4X25 A480	
210	312605-0312	-		6	HEXAGON NUT, M6M M4 A280	
220	312605-0316	-		1	HEXAGON NUT, M6M M6 A280	
230	312812-0316	-		8	HEXAGON NUT, NY-LOCK M6 A480	
240	315105-0153	-		8	WASHER ISO 7089-6-200 HV-A4	
250	315402-0136	-		6	LOCK WASHER FBB 4,1	
260	359705-0015	A		1	WARNING SIGN ISO, RISK OF ELECTRIC SHOCK	
270	1523971-0000	-		1	CONNECTION BOX	
290	486826-0000	-		1	SIGN	
300	352103-0101	-		1	KABELFöRSKR. ST 9, PR15,2/PG9	
310	312812-0312	-		2	HEXAGON NUT, NY-LOCK M4 A480	
320	315105-0136	-		2	WASHER ISO 7089-4-200 HV-A4	
330	90099-0104	-		1	NUT, PR 15,2 (PG9)	
S001	90064-0124	A		1	SWITCH, EM. STOP, ZB2-BS844+ZB2-BZ1045	

Pos	Part No	SP	UN	Qty	Description	Page No

Machine Type | Group Description | Used-In | Group Number | Page No

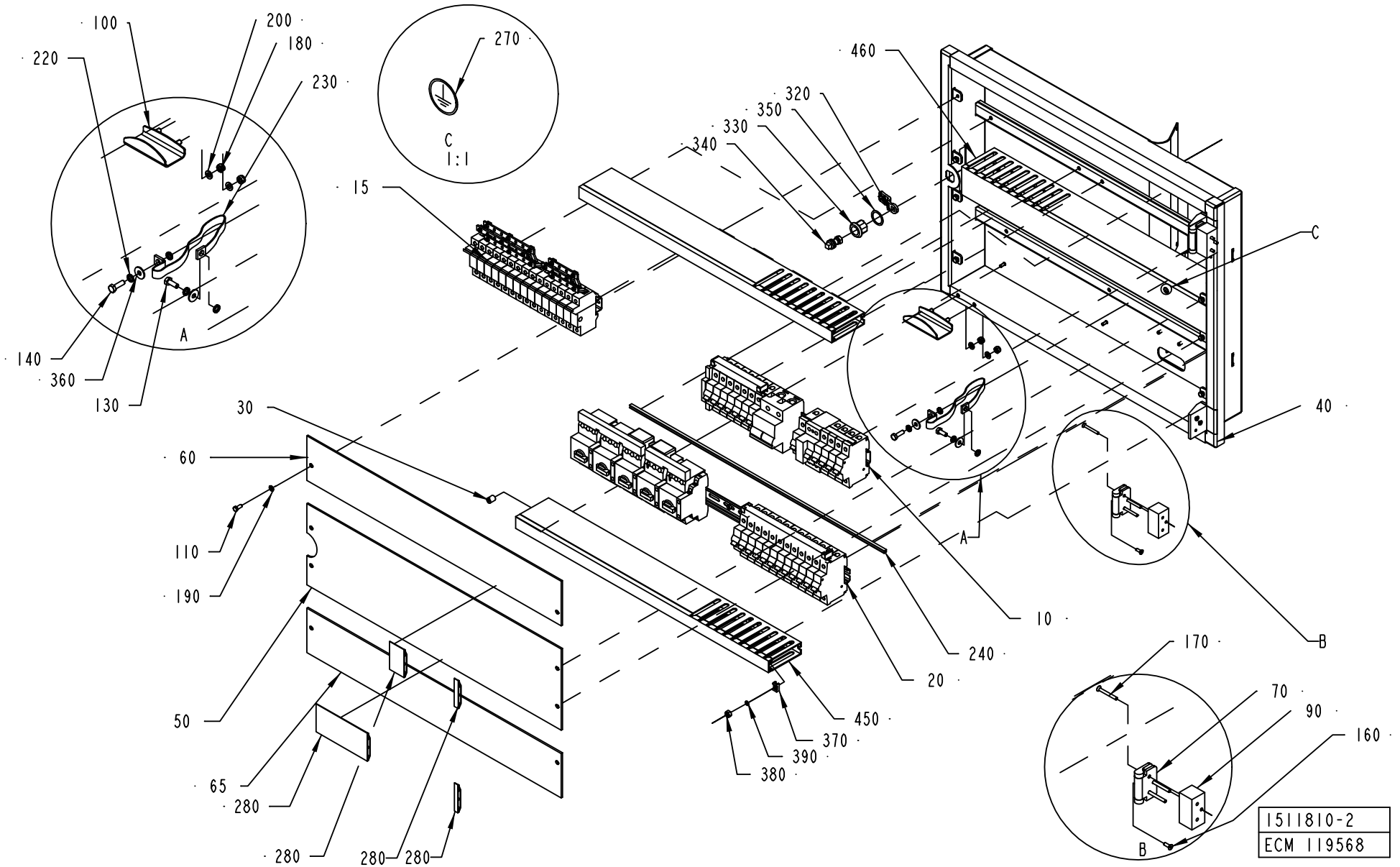
100
200
180
220
230
270
C
1:1
460
320
350
330
340
15
C
A
140
360
130
30
60
110
190
50
65
280
280
280
280
10
240
20
450
370
390
380
40
A
B
170
70
90
160
B
1511810-2
ECM 119568

ECM: 126327 - 20030227
Group number: 1511810-0100
Assembly Drawing: 1511810-2_1_AC

This list covers pages from 746 to 749

Pos	Part No	SP	UN	Qty	Description	Page No
-						
010	A1511822-0100	-		1	FUSES RAIL	**751**
015	A1487447-0100	-		1	FUSE	**753**
020	A1511823-0100	-		1	OVERLOAD RAIL	**755**
030	1285109-0000	-		6	NUT	
040	2598114-0000	-		1	DOOR	
050	2542329-0000	-		1	COVER	
060	2542328-0000	-		1	COVER	
065	2542328-0000	-		1	COVER	
070	1523437-0000	B		2	HINGE	
090	1523440-0000	-		2	SPACER	
100	1523968-0000	-		1	HANDLE	
120	312105-0327	-		8	SCREW M6S ISO 4017 M5X12 A480	
130	312105-0368	-		1	SCREW M6S M6X16 A280	
140	312105-0370	-		1	SCREW M6S ISO 4017 M6X20 A480	
160	312155-0291	-		6	SCREW EN 10642 MF6S M4X12 A480	
170	312155-0301	-		6	SCREW EN 10642 MF6S M4X35 A480	
180	312812-0316	-		2	HEXAGON NUT, NY-LOCK M6 A480	
190	315101-0146	-		10	WASHER PLAIN, BRB, 5,3/10 H=1	
200	315105-0153	-		2	WASHER ISO 7089-6-200 HV-A4	
220	90062-0015	-		4	LOCK WASHER SERRAT.EXT.GEAR,6,4/11 H=0,7	
230	90135-0044	A		1	EARTH WIRE, L=320 MM 16 MM2	
240	90143-0094	-	MM	2330	SEAL	
270	90194-0163	-		1	SIGN, EARTH WITHIN CIRCLE	
280	90226-0455	-		1	BLIND PLATE ABB 1666060	
320	90237-0157	-		1	LOCK BOLT, 1000-230	
330	90237-0319	-		1	LOCK HOUSING, 1000-U134	
340	90237-0320	-		1	LOCK HOUSING, 1000-U136	
350	90237-0322	-		1	LOCK GASKET, 1000-U137	
360	90457-0192	-		2	WASHER PLAIN ROUND, 6,5/18, H=1,5	
370	352113-0205	-		3	ANCHOR PLATES FOR STRIPS, TYPE TM2S8-C10	
380	312605-0316	-		3	HEXAGON NUT, M6M M6 A280	
390	315105-0136	-		3	WASHER ISO 7089-4-200 HV-A4	
450	2598375-0000	-		2	CABLE DUCT	
460	2598376-0000	-		1	CABLE DUCT	
470	2598377-0000	-		1	CABLE DUCT	
480	90181-0313	-		4	RIVET DUCTAFIX R4	

Pos	Part No	SP	UN	Qty	Description	Page No

Machine Type | Group Description | Used-In | Group Number | Page No

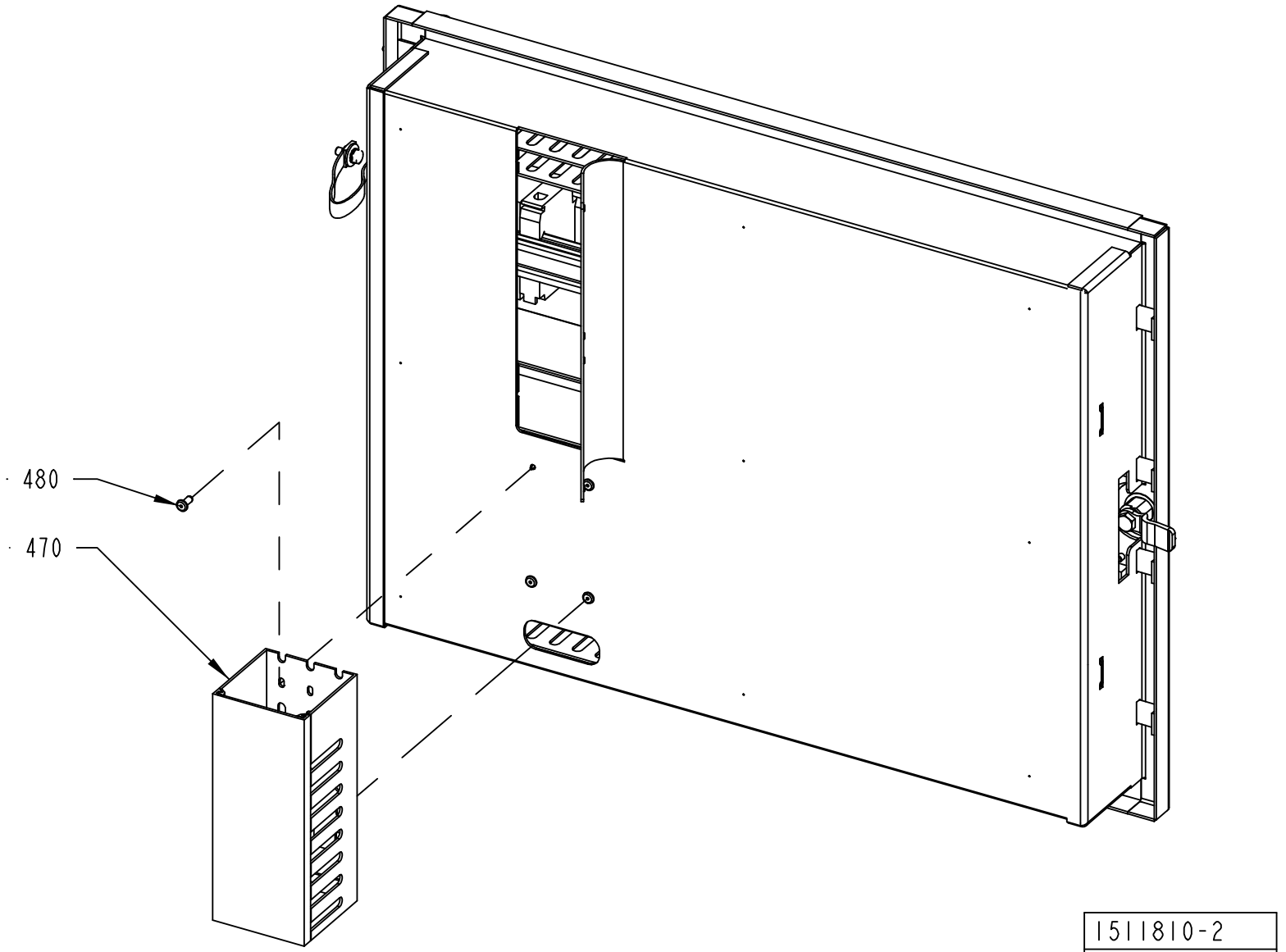
480
470
1511810-2
ECM 119568

ECM: 126327 - 20030227
Group number: 1511810-0100
Assembly Drawing: 1511810-2_2_AC

This list covers pages from 746 to 749

Pos	Part No	SP	UN	Qty	Description	Page No
-						
010	A1511822-0100	-		1	FUSES RAIL	**751**
015	A1487447-0100	-		1	FUSE	**753**
020	A1511823-0100	-		1	OVERLOAD RAIL	**755**
030	1285109-0000	-		6	NUT	
040	2598114-0000	-		1	DOOR	
050	2542329-0000	-		1	COVER	
060	2542328-0000	-		1	COVER	
065	2542328-0000	-		1	COVER	
070	1523437-0000	B		2	HINGE	
090	1523440-0000	-		2	SPACER	
100	1523968-0000	-		1	HANDLE	
120	312105-0327	-		8	SCREW M6S ISO 4017 M5X12 A480	
130	312105-0368	-		1	SCREW M6S M6X16 A280	
140	312105-0370	-		1	SCREW M6S ISO 4017 M6X20 A480	
160	312155-0291	-		6	SCREW EN 10642 MF6S M4X12 A480	
170	312155-0301	-		6	SCREW EN 10642 MF6S M4X35 A480	
180	312812-0316	-		2	HEXAGON NUT, NY-LOCK M6 A480	
190	315101-0146	-		10	WASHER PLAIN, BRB, 5,3/10 H=1	
200	315105-0153	-		2	WASHER ISO 7089-6-200 HV-A4	
220	90062-0015	-		4	LOCK WASHER SERRAT.EXT.GEAR,6,4/11 H=0,7	
230	90135-0044	A		1	EARTH WIRE, L=320 MM 16 MM2	
240	90143-0094	-	MM	2330	SEAL	
270	90194-0163	-		1	SIGN, EARTH WITHIN CIRCLE	
280	90226-0455	-		1	BLIND PLATE ABB 1666060	
320	90237-0157	-		1	LOCK BOLT, 1000-230	
330	90237-0319	-		1	LOCK HOUSING, 1000-U134	
340	90237-0320	-		1	LOCK HOUSING, 1000-U136	
350	90237-0322	-		1	LOCK GASKET, 1000-U137	
360	90457-0192	-		2	WASHER PLAIN ROUND, 6,5/18, H=1,5	
370	352113-0205	-		3	ANCHOR PLATES FOR STRIPS, TYPE TM2S8-C10	
380	312605-0316	-		3	HEXAGON NUT, M6M M6 A280	
390	315105-0136	-		3	WASHER ISO 7089-4-200 HV-A4	
450	2598375-0000	-		2	CABLE DUCT	
460	2598376-0000	-		1	CABLE DUCT	
470	2598377-0000	-		1	CABLE DUCT	
480	90181-0313	-		4	RIVET DUCTAFIX R4	

Pos	Part No	SP	UN	Qty	Description	Page No

Machine Type | Group Description | Used-In | Group Number | Page No

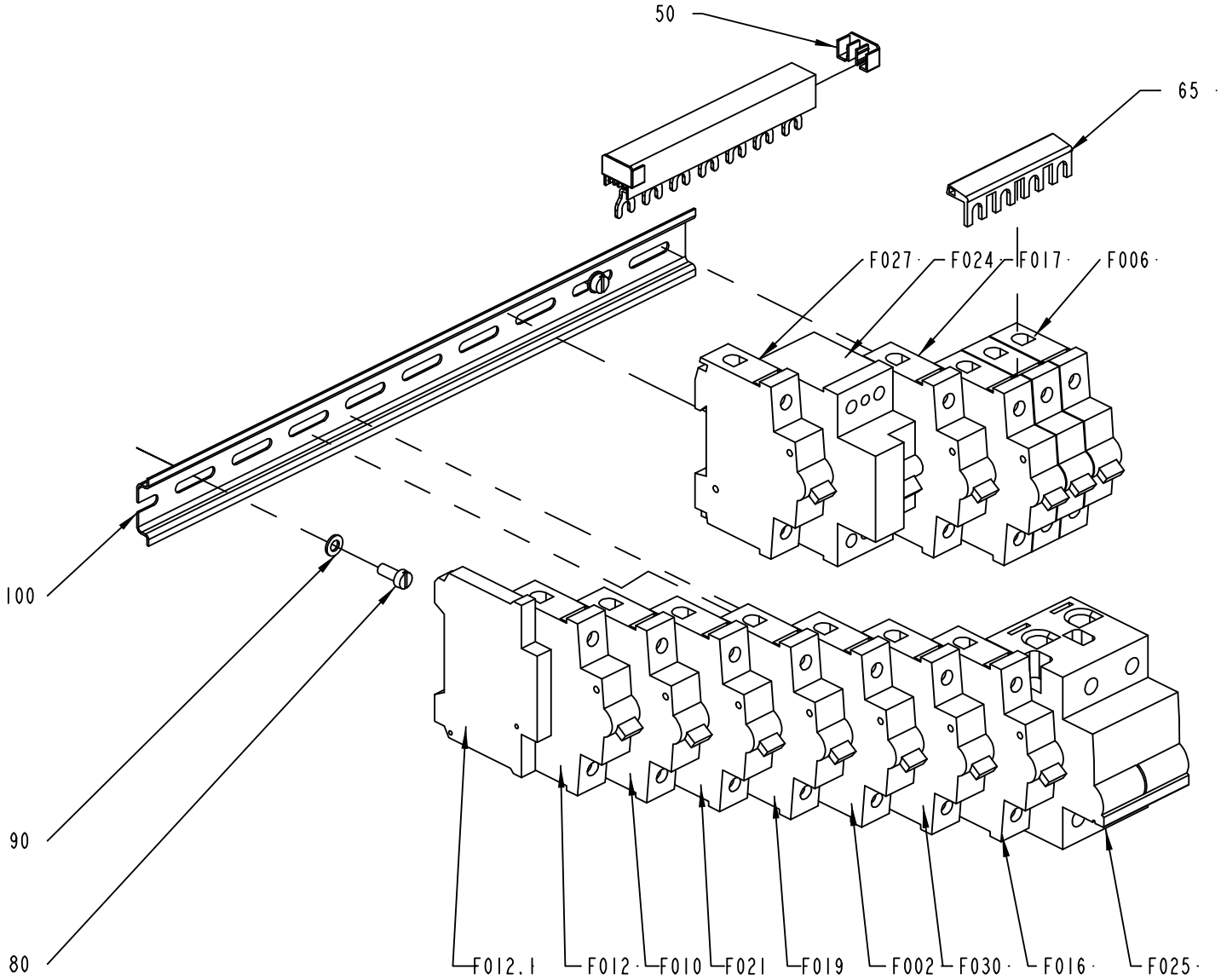

1511822-2
ECM 119568

ECM: 121963 - 20030227
Group number: 1511822-0100
Assembly Drawing: 1511822-2_1_AC

Pos	Part No	SP	UN	Qty	Description	Page No
TBA NOPT ASU						
060	B90457-0125	-	MM	119	POWER RAIL SZ-PSB 12 N	
	90457-0124	-		*1*	*END CAP PSB-END6*	
F016	90007-0131	A		1	CIRCUIT BREAKER, 1P 16 A K	
F025	90458-1448	A		1	MAGNETIC FUSE, S292 C100	
TBA NOPT NOASU						
060	B90457-0125	-	MM	102	POWER RAIL SZ-PSB 12 N	
	90457-0124	-		*1*	*END CAP PSB-END6*	
Common Parts						
050	90457-0124	-		2	END CAP PSB-END6	
065	B90457-0125	-	MM	68	POWER RAIL SZ-PSB 12 N	
	90457-0124	-		*1*	*END CAP PSB-END6*	
080	312125-0327	-		3	SCREW PAN HEAD MCS M5X12 SS	
090	315105-0146	-		3	WASHER ISO 7089-5-200 HV-A4	
100	353042-0004	-	MM	347	RAIL TS 35/7,5	
F002	90007-0129	A		1	CIRCUIT BREAKER, 1P 10 A K	
F006	90007-0146	A		1	CIRCUIT BREAKER, 3P 6 A K	
F010	90007-0129	A		1	CIRCUIT BREAKER, 1P 10 A K	
F012	90459-2063	A		1	CIRCUIT BREAKER, 1P 0,75 A K	
F012.1	90007-0312	-		1	AUXILIARY CONTACT	
F017	90007-0128	A		1	CIRCUIT BREAKER, 1P 6 A K	
F019	90007-0129	B		1	CIRCUIT BREAKER, 1P 10 A K	
F021	90007-0155	A		1	CIRCUIT BREAKER, 1P 0,5 A K	
F024	90111-0172	B		1	EARTH FAULT BREAKER, F 362-25/0.03	
F027	90007-0129	A		1	CIRCUIT BREAKER, 1P 10 A K	
F030	90007-0155	A		1	CIRCUIT BREAKER, 1P 0,5 A K	

Pos	Part No	SP	UN	Qty	Description	Page No

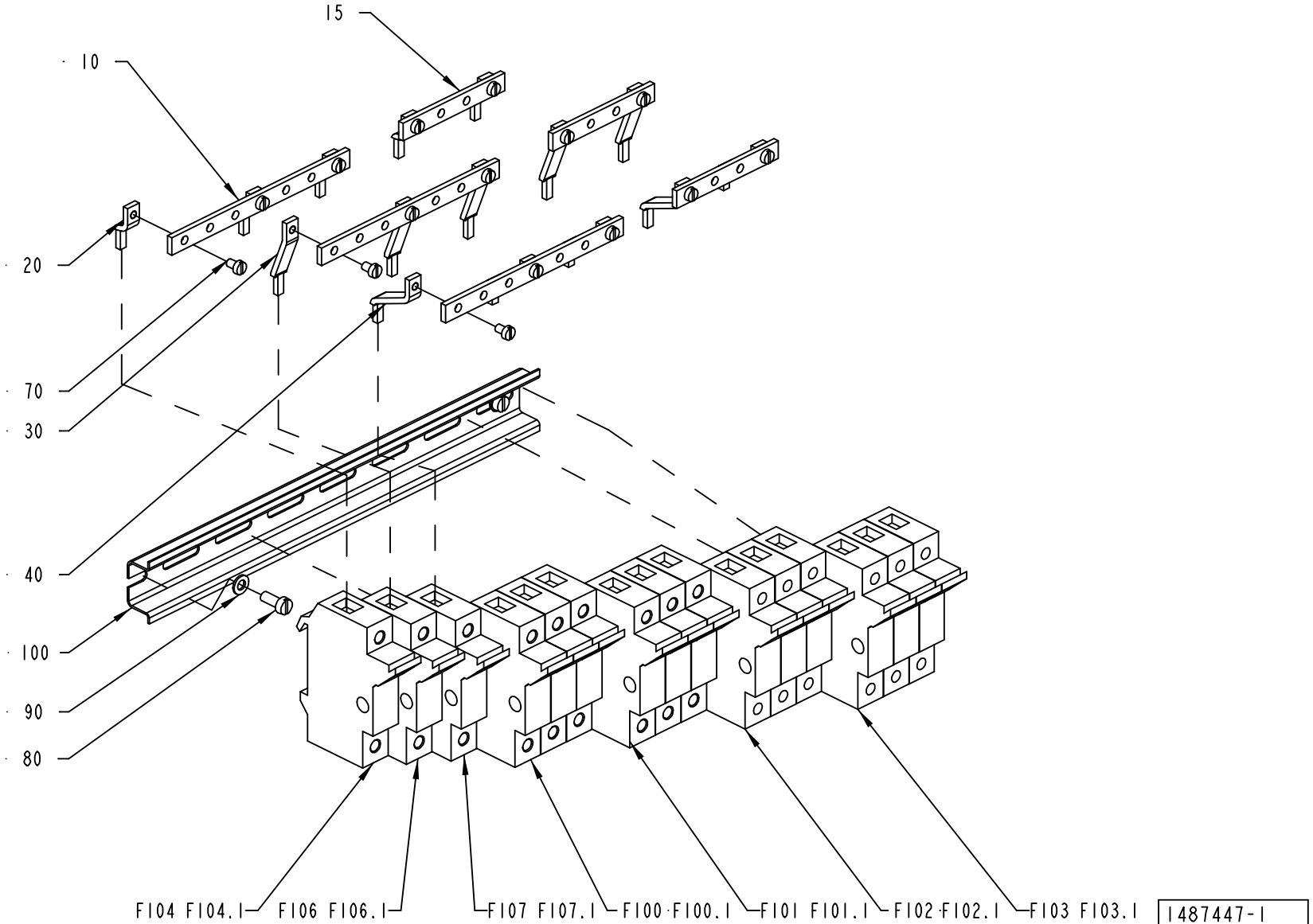

1487447-1
ECN 98221

ECM: 114920 - 20030113
Group number: 1487447-0100
Assembly Drawing: 1487447-1_1_AB

Pos	Part No	SP	UN	Qty	Description	Page No
-						
010	732419-0007	-		3	RAIL	
015	732419-0004	-		3	RAIL	
020	971140-0000	-		5	PHASE BAR ANGLED	
030	971141-0000	-		5	PHASE BAR ANGLED	
040	971142-0000	-		5	PHASE BAR ANGLED	
070	312125-0285	-		15	SCREW SLOT.PAN HD. MCS 4X6 A480	
080	312125-0327	-		2	SCREW PAN HEAD MCS M5X12 SS	
090	315105-0146	-		2	WASHER ISO 7089-5-200 HV-A4	
100	353042-0003	-	MM	269	RAIL TS35/15/1,5	
F100	B90233-0027	A		3	TUBE FUSE, 16A	
	90233-0305	*C*		*1*	*INDICATOR*	
F100.1	90233-0303	B		3	FUSE HOLDER, ST10	
F101	90233-0029	A		3	TUBE FUSE, 25A	
F101.1	90233-0303	B		3	FUSE HOLDER, ST10	
F102	B90233-0027	A		3	TUBE FUSE, 16A	
	90233-0305	*C*		*1*	*INDICATOR*	
F102.1	90233-0304	B		1	FUSE HOLDER, ST10	
F103	B90233-0027	A		3	TUBE FUSE, 16A	
	90233-0305	*C*		*1*	*INDICATOR*	
F103.1	90233-0304	B		1	FUSE HOLDER, ST10	
F104	B90233-0027	A		1	TUBE FUSE, 16A	
	90233-0305	*C*		*1*	*INDICATOR*	
F104.1	90233-0303	B		1	FUSE HOLDER, ST10	
F106	90233-0028	A		1	TUBE FUSE, 10A	
F106.1	90233-0303	B		1	FUSE HOLDER, ST10	
F107	90233-0028	A		1	TUBE FUSE, 10A	
F107.1	90233-0303	B		1	FUSE HOLDER, ST10	

Pos	Part No	SP	UN	Qty	Description	Page No

Machine Type | Group Description | Used-In | Group Number | Page No

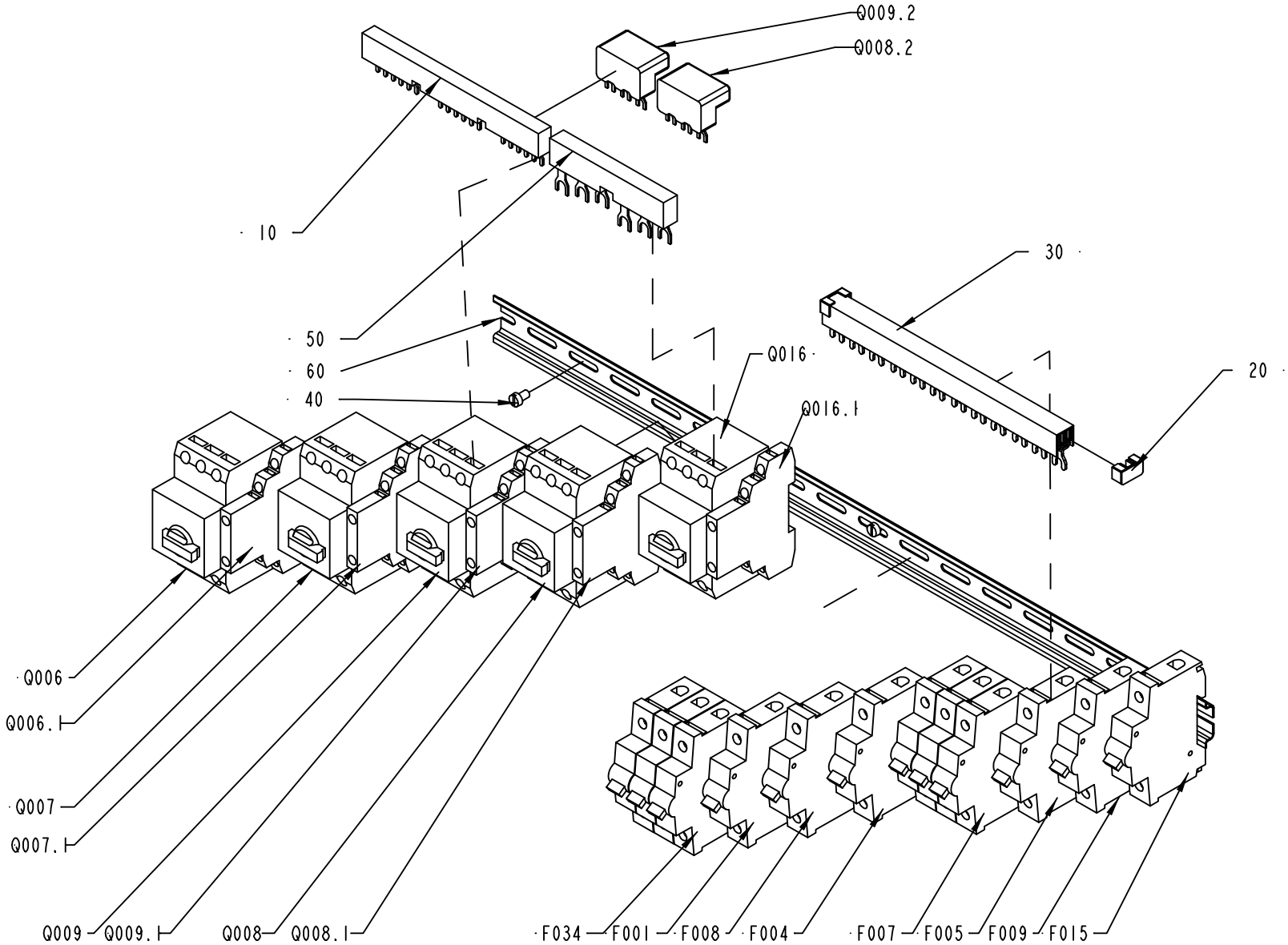

1511823-2
ECM 119568

ECM: 119569 - 20030227
Group number: 1511823-0100
Assembly Drawing: 1511823-2_1_AB

Pos	Part No	SP	UN	Qty	Description	Page No
TBA NOPT ASU						
030	B90457-0125	-	MM	210	POWER RAIL SZ-PSB 12 N	
	90457-0124	-		*1*	*END CAP PSB-END6*	
F015	90007-0129	A		1	CIRCUIT BREAKER, 1P 10 A K	
TBA NOPT NOASU						
030	B90457-0125	-	MM	192	POWER RAIL SZ-PSB 12 N	
	90457-0124	-		*1*	*END CAP PSB-END6*	
Common Parts						
010	90259-0311	-		1	3 POLE BUSBAR K&M B3.1/5	
020	90457-0124	-		2	END CAP PSB-END6	
040	312125-0323	-		3	SCREW PAN HEAD MCS M5X8 SS	
050	90259-0315	-		1	BUS BAR 3-POLE, K&M B 3.1/2-PKZM1	
060	353042-0004	-	MM	620	RAIL TS 35/7,5	
F001	90007-0129	A		1	CIRCUIT BREAKER, 1P 10 A K	
F004	90007-0129	A		1	CIRCUIT BREAKER, 1P 10 A K	
F005	90007-0128	A		1	CIRCUIT BREAKER, 1P 6 A K	
F007	90007-0149	A		1	CIRCUIT BREAKER, 3P 20 A K	
F008	90007-0129	A		1	CIRCUIT BREAKER, 1P 10 A K	
F009	90007-0129	A		1	CIRCUIT BREAKER, 1P 10 A K	
F034	90459-2195	-		1	CIRCUIT BREAKER, 3P 2 A K	
Q006	90095-0077	A		1	OVERLOAD PROTECTION, PKZM 6-10 A	
Q006.1	90259-0313	A		1	AUX. CONTACT K&M NHI21-PKZM0	
Q007	90095-0075	A		1	OVERLOAD PROTECTION, PKZM 4 A	
Q007.1	90259-0313	A		1	AUX. CONTACT K&M NHI21-PKZM0	
Q008	90095-0077	A		1	OVERLOAD PROTECTION, PKZM 6-10 A	
Q008.1	90259-0313	A		1	AUX. CONTACT K&M NHI21-PKZM0	
Q008.2	90259-0308	-		1	CONN.TERM.K&M BK25/3PKZM1	
Q009	90095-0073	A		1	OVERLOAD PROTECTION, PKZM 1,6 A	
Q009.1	90259-0313	A		1	AUX. CONTACT K&M NHI21-PKZM0	
Q009.2	90259-0308	-		1	CONN.TERM.K&M BK25/3PKZM1	
Q016	90095-0069	A		1	OVERLOAD PROTECTION, PKZM 0,25 A	
Q016.1	90259-0313	A		1	AUX. CONTACT K&M NHI21-PKZM0	

Pos	Part No	SP	UN	Qty	Description	Page No

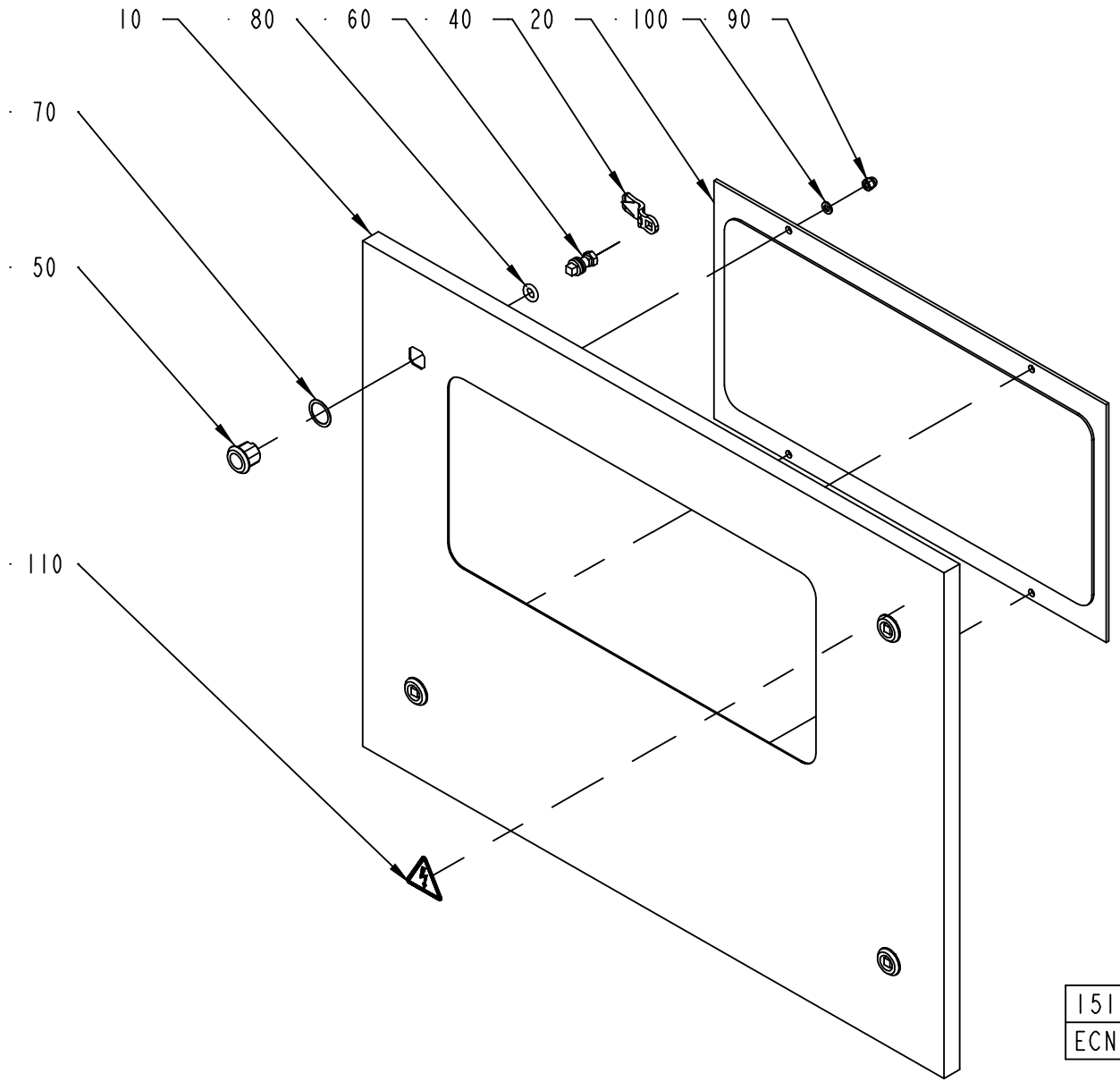

1511811-1
ECN 73363

ECM: 115722 - 20020930
Group number: 1511811-0100
Assembly Drawing: 1511811-1_1_AA

Pos	Part No	SP	UN	Qty	Description	Page No
-						
010	1511812-0000	-		1	DOOR	
020	1511813-0000	-		1	WINDOW	
030	90144-0072	-	MM	1500	TAPE SCOTCH VHBS 4945 W=12,7MM	
040	90237-0157	-		4	LOCK BOLT, 1000-230	
050	90237-0319	-		4	LOCK HOUSING, 1000-U134	
060	90237-0320	-		4	LOCK HOUSING, 1000-U136	
070	90237-0322	-		4	LOCK GASKET, 1000-U137	
080	90237-0323	-		4	LOCK O-RINGT, 1000-24	
090	312705-0316	-		4	NUT HEX. DOMED CAP MHM-6 M6 A280	
100	315105-0153	-		4	WASHER ISO 7089-6-200 HV-A4	
110	359705-0015	A		1	WARNING SIGN ISO, RISK OF ELECTRIC SHOCK	

Pos	Part No	SP	UN	Qty	Description	Page No

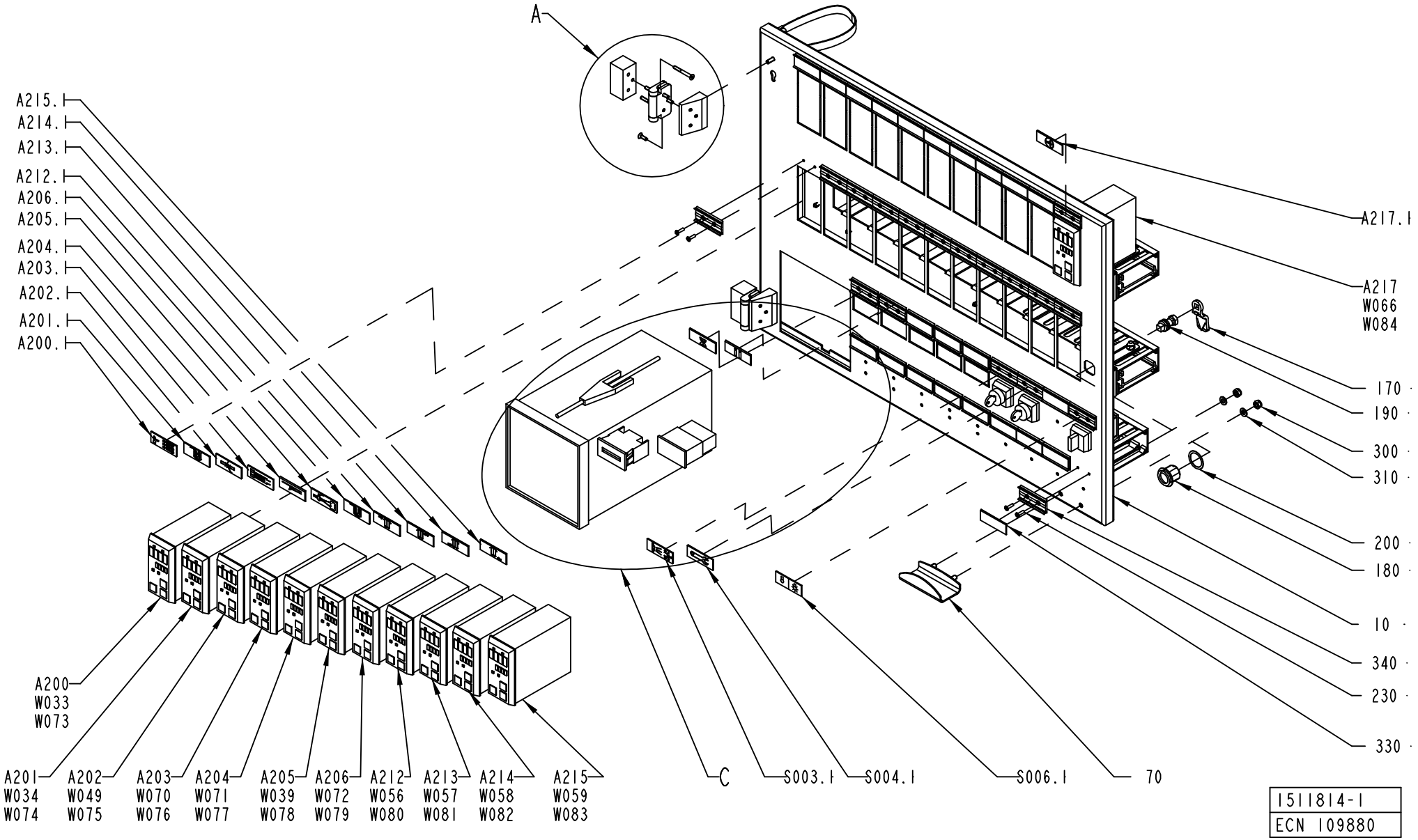

1511814-1
ECN 109880

ECM: 109905 - 20030113
Group number: 1511814-0100
Assembly Drawing: 1511814-1_1_AB

This list covers pages from 758 to 763

Pos	Part No	SP	UN	Qty	Description	Page No
-						
010	1511815-0000	-		1	DOOR	
020	1511817-0000	-		1	CABLE DUCT	
030	1523437-0000	B		2	HINGE	
040	1523439-0000	-		2	SPACER	
050	1523440-0000	-		2	SPACER	
060	1523444-0000	-		3	SPACER	
065	1523443-0000	-		1	COVER	
070	1523968-0000	-		1	HANDLE	
080	1285109-0000	-		3	NUT	
090	90062-0022	-		12	LOCKING WASHER D=6,4/11	
100	90062-0015	-		4	LOCK WASHER SERRAT.EXT.GEAR,6,4/11 H=0,7	
110	90135-0044	A		1	EARTH WIRE, L=320 MM 16 MM2	
120	90181-0064	-		8	LOCK ZP1 FOR CHANNEL T1	
125	90181-0054	-	MM	555	CABLE DUCT, 60X80MM	
130	90181-0054	-	MM	555	CABLE DUCT, 60X80MM	
135	90181-0054	-	MM	210	CABLE DUCT, 60X80MM	
140	90181-0067	-	MM	555	DIVIDING PLATE SEP80	
145	90181-0067	-	MM	555	DIVIDING PLATE SEP80	
150	90181-0088	-		8	PLASTIC RIVET, PR 52314	
160	90194-0163	-		1	SIGN, EARTH WITHIN CIRCLE	
170	90237-0157	-		1	LOCK BOLT, 1000-230	
180	90237-0319	-		1	LOCK HOUSING, 1000-U134	
190	90237-0320	-		1	LOCK HOUSING, 1000-U136	
200	90237-0322	-		1	LOCK GASKET, 1000-U137	
210	90457-0055	-		3	PROTECTION, 704-9645	
220	90457-0192	-		2	WASHER PLAIN ROUND, 6,5/18, H=1,5	
230	311521-0146	-		80	BLANK RIVET 3,2X12	
240	312105-0368	-		1	SCREW M6S M6X16 A280	
250	312115-0222	-		3	SCREW ISO4762 M3X8 A4	
260	312155-0291	-		6	SCREW EN 10642 MF6S M4X12 A480	
270	312155-0301	-		6	SCREW EN 10642 MF6S M4X35 A480	
280	312115-0329	-		4	SCREW ISO4762 M5X16 A4	
290	312605-0316	-		13	HEXAGON NUT, M6M M6 A280	
300	312812-0316	-		2	HEXAGON NUT, NY-LOCK M6 A480	
310	315105-0153	-		2	WASHER ISO 7089-6-200 HV-A4	
320	315402-0146	-		4	LOCK WASHER FBB 5,1	
330	359240-0001	-		23	SIGN, NOT ENGRAVED	
340	359240-0100	-		40	SIGN HOLDER FOR 359240-0001	
A200	90410-0051	A		1	TEMPERATURE CONTROLLER, KS 40	
A200.1	359241-0123	-		1	SIGN, TEMP. PRE-STERILIZATION VALVE	
A201	90410-0051	A		1	TEMPERATURE CONTROLLER, KS 40	
A201.1	359241-0141	-		1	SIGN, PEROXIDE / WATER BATH	
A202	90410-0051	A		1	TEMPERATURE CONTROLLER, KS 40	
A202.1	359241-0131	-		1	SIGN, TEMP. LS HEATER	
A203	90410-0051	A		1	TEMPERATURE CONTROLLER, KS 40	
A203.1	359241-0130	-		1	SIGN, TEMP. AIR SUPER HEATER	
A204	90410-0051	A		1	TEMPERATURE CONTROLLER, KS 40	
A204.1	359241-0126	-		1	SIGN, TEMP. AIR KNIFE	
A205	90410-0051	A		1	TEMPERATURE CONTROLLER, KS 40	
A205.1	359241-0121	-		1	SIGN "STEAM"	
A206	90410-0051	A		1	TEMPERATURE CONTROLLER, KS 40	
A206.1	359241-0125	-		1	SIGN, PEROXIDE BATH	
A212	90410-0051	A		1	TEMPERATURE CONTROLLER, KS 40	
A212.1	359241-0338	-		1	SIGN "FLAP HEAT TOP L"	
A213	90410-0051	A		1	TEMPERATURE CONTROLLER, KS 40	
A213.1	359241-0337	-		1	SIGN "FLAP HEAT TOP R"	
A214	90410-0051	A		1	TEMPERATURE CONTROLLER, KS 40	
A214.1	359241-0340	-		1	SIGN "FLAPPHEAT BOTTOM L"	
A215	90410-0051	A		1	TEMPERATURE CONTROLLER, KS 40	
A215.1	359241-0339	-		1	SIGN "FLAPPHEAT BOTTOM R"	
A216	90410-0051	A		1	TEMPERATURE CONTROLLER, KS 40	
A216.1	90457-0058	-		1	SIGN, LS SHORT STOP	
P002	90053-0031	B		1	HOUR COUNTER, B 609.10 10-50VDC	
P002.1	359241-0201	-		1	SIGN "HOUR GLASS"	
P003	90053-0029	B		1	COUNTER, F524.800FA3C 24VDC	
P003.1	359241-0180	-		1	SIGN "PRODUCTION"	
P005	B90332-0020	A		1	RECORDER HONEYWELL	
	90332-0328	-		*1*	*RECORDER CASSETTE PAPER ROLL FOR 90332-2*	
	90332-0326	-		*1*	*DOWNLOADE INTRFACE FOR RECORDER 90332-20*	
	90332-0325	-		*1*	*PAPER FOR RECORDER 90332-20*	
	90332-0324	-		*1*	*INK WHEEL*	
S003	90111-0124	A		1	KEY SWITCH, 1NO,1NC CONTACT	
S003.1	359241-0122	-		1	SIGN, CIP OF STEAM BARRIER SPACE	
S004	90111-0122	A		1	KEY SWITCH, 2 NO CONTACTS	
S004.1	359241-0133	-		1	SIGN, SERVICE SWITCH	
S006	90111-0120	A		1	SWITCH, 2 POS.704.510 .0A+704.901.5/A	
S006.1	359241-0140	-		1	SIGN "LIGHTING MACHINE"	
W033	90220-0059	-	M	4	THERMOCOUPLE CABLE K/ 2X0,81MM2	
W034	90220-0059	-	M	4	THERMOCOUPLE CABLE K/ 2X0,81MM2	
W037	90220-0059	-	MM	5000	THERMOCOUPLE CABLE K/ 2X0,81MM2	
W038	90220-0059	-	MM	5000	THERMOCOUPLE CABLE K/ 2X0,81MM2	
W039	90220-0059	-	M	4	THERMOCOUPLE CABLE K/ 2X0,81MM2	
W040	90220-0059	-	MM	5000	THERMOCOUPLE CABLE K/ 2X0,81MM2	

Machine Type | Group Description | Used-In | Group Number | Page No

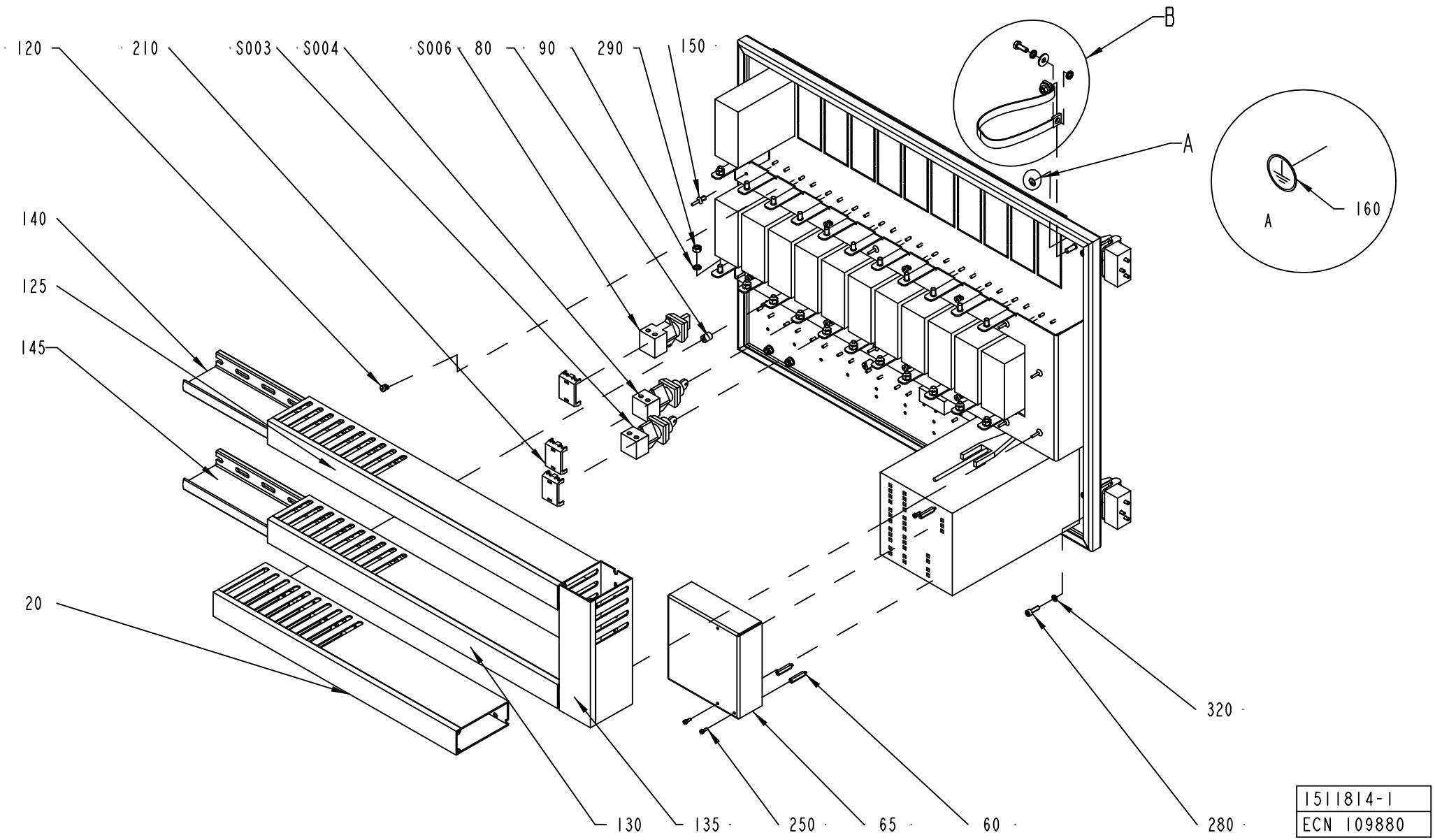
120
210
S003
S004
S006
80
90
290
150
B
A
160
140
125
145
20
130
135
250
65
60
320
280
1511814-1
ECN 109880

Pos	Part No	SP	UN	Qty	Description	Page No
- (Cont'd)						
W049	90220-0059	-	M	3	THERMOCOUPLE CABLE K/ 2X0,81MM2	
W056	90220-0059	-	M	3	THERMOCOUPLE CABLE K/ 2X0,81MM2	
W057	90220-0059	-	M	3	THERMOCOUPLE CABLE K/ 2X0,81MM2	
W058	90220-0059	-	M	3	THERMOCOUPLE CABLE K/ 2X0,81MM2	
W059	90220-0059	-	M	3	THERMOCOUPLE CABLE K/ 2X0,81MM2	
W066	90220-0059	-	M	4	THERMOCOUPLE CABLE K/ 2X0,81MM2	
W070	90220-0059	-	M	1	THERMOCOUPLE CABLE K/ 2X0,81MM2	
W071	90220-0059	-	M		THERMOCOUPLE CABLE K/ 2X0,81MM2	
W072	90220-0059	-	M		THERMOCOUPLE CABLE K/ 2X0,81MM2	
W073	1143884-0000	B		1	COPPER BRAID	
W074	1143884-0000	B		1	COPPER BRAID	
W075	1143884-0000	B		1	COPPER BRAID	
W076	1143884-0000	B		1	COPPER BRAID	
W077	1143884-0000	B		1	COPPER BRAID	
W078	1143884-0000	B		1	COPPER BRAID	
W079	1143884-0000	B		1	COPPER BRAID	
W080	1143884-0000	B		1	COPPER BRAID	
W081	1143884-0000	B		1	COPPER BRAID	
W082	1143884-0000	B		1	COPPER BRAID	
W083	1143884-0000	B		1	COPPER BRAID	
W084	1143884-0000	B		1	COPPER BRAID	

Pos	Part No	SP	UN	Qty	Description	Page No

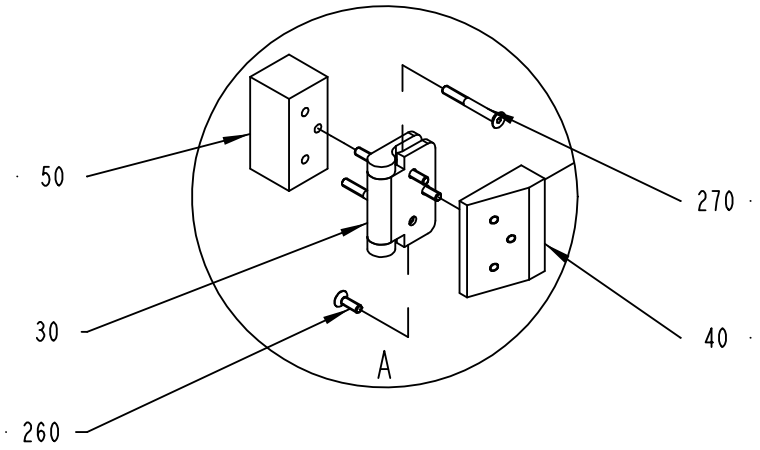

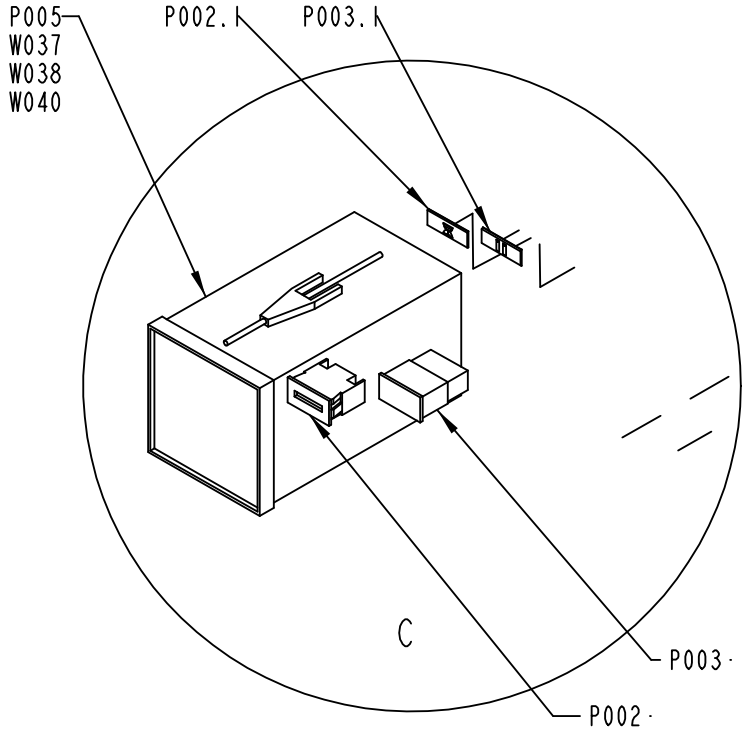

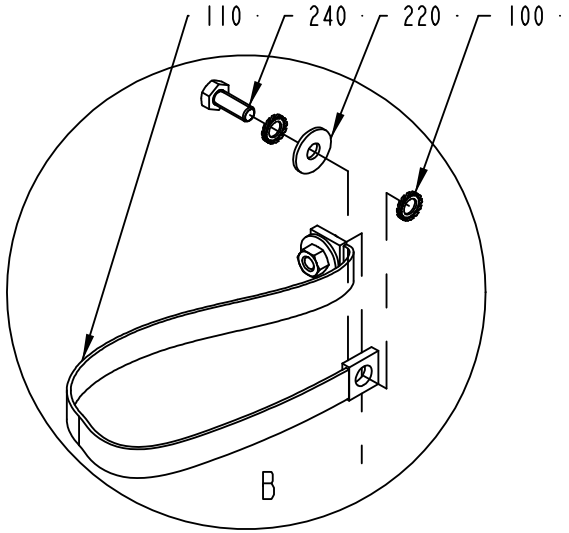

1511814-1
ECN 109880

ECM: 109905 - 20030113
Group number: 1511814-0100
Assembly Drawing: 1511814-1_3_AB

This list covers pages from 758 to 763

Pos	Part No	SP	UN	Qty	Description	Page No
SEE PREVIOUS LISTS PAGES: 759, 761.						

Pos	Part No	SP	UN	Qty	Description	Page No

Machine Type	Group Description	Used-In	Group Number	Page No

FRONT UPPER CONTROL DOOR

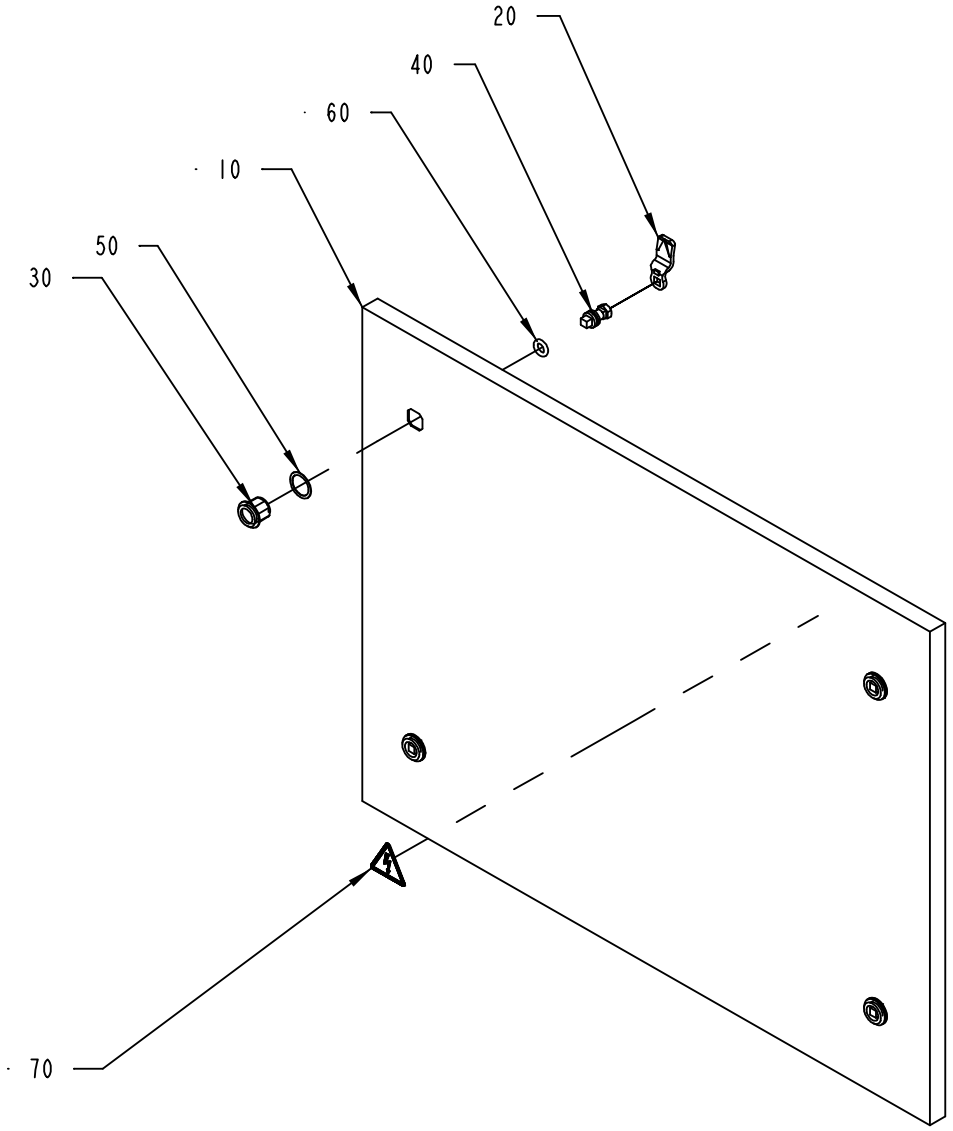

1511819-1
ECN 73363

ECM: 115712 - 20020930
Group number: 1511819-0100
Assembly Drawing: 1511819-1_1_AA

Pos	Part No	SP	UN	Qty	Description	Page No
-						
010	1517671-0000	-		1	DOOR	
020	90237-0157	-		4	LOCK BOLT, 1000-230	
030	90237-0319	-		4	LOCK HOUSING, 1000-U134	
040	90237-0320	-		4	LOCK HOUSING, 1000-U136	
050	90237-0322	-		4	LOCK GASKET, 1000-U137	
060	90237-0323	-		4	LOCK O-RINGT, 1000-24	
070	359705-0015	A		1	WARNING SIGN ISO, RISK OF ELECTRIC SHOCK	

Pos	Part No	SP	UN	Qty	Description	Page No

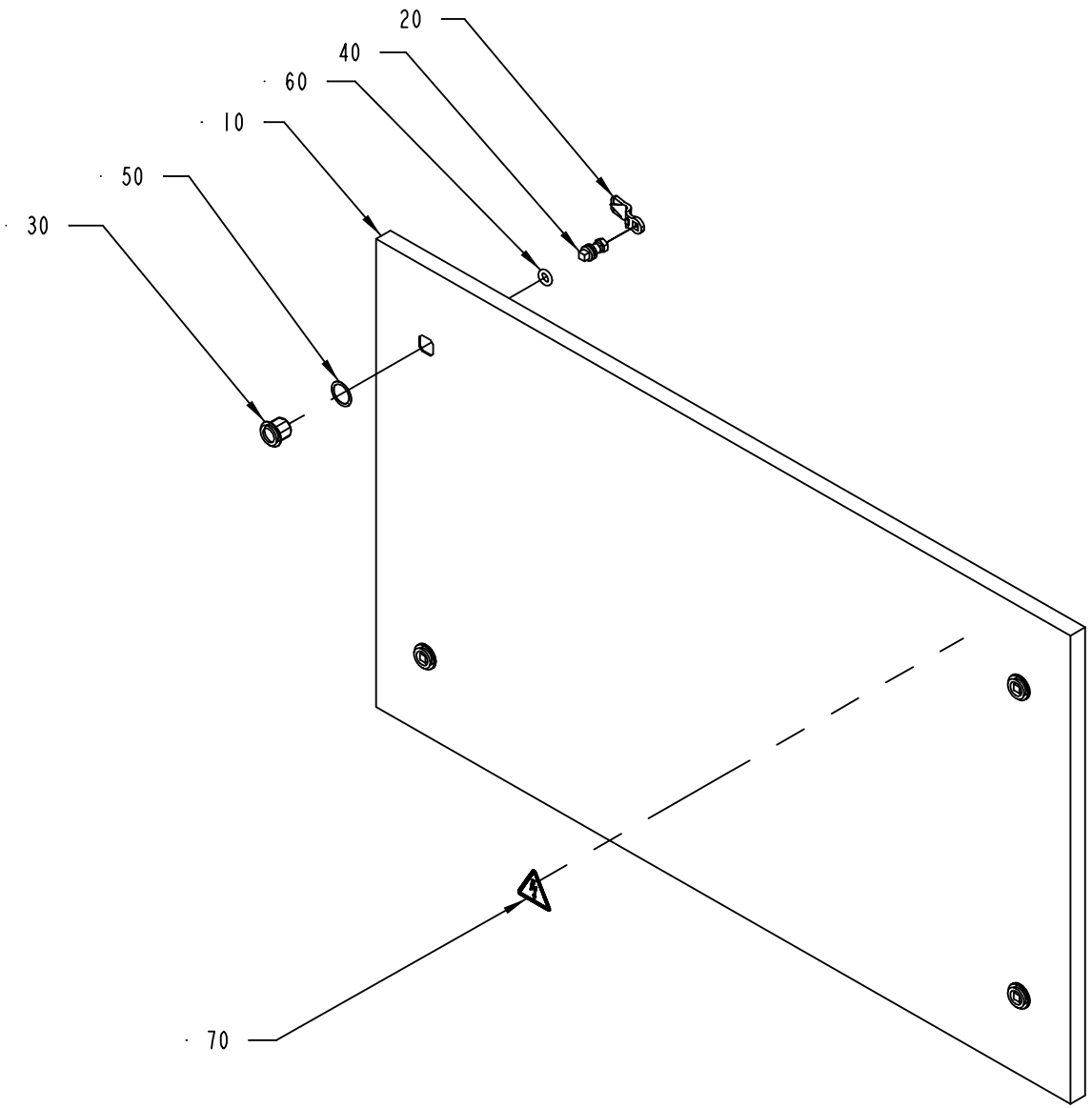

1511820-1
ECN 73363

ECM: 115729 - 20020930
Group number: 1511820-0100
Assembly Drawing: 1511820-1_1_AA

Pos	Part No	SP	UN	Qty	Description	Page No
-						
010	1517672-0000	-		1	DOOR	
020	90237-0157	-		4	LOCK BOLT, 1000-230	
030	90237-0319	-		4	LOCK HOUSING, 1000-U134	
040	90237-0320	-		4	LOCK HOUSING, 1000-U136	
050	90237-0322	-		4	LOCK GASKET, 1000-U137	
060	90237-0323	-		4	LOCK O-RINGT, 1000-24	
070	359705-0015	A		1	WARNING SIGN ISO, RISK OF ELECTRIC SHOCK	

Pos	Part No	SP	UN	Qty	Description	Page No

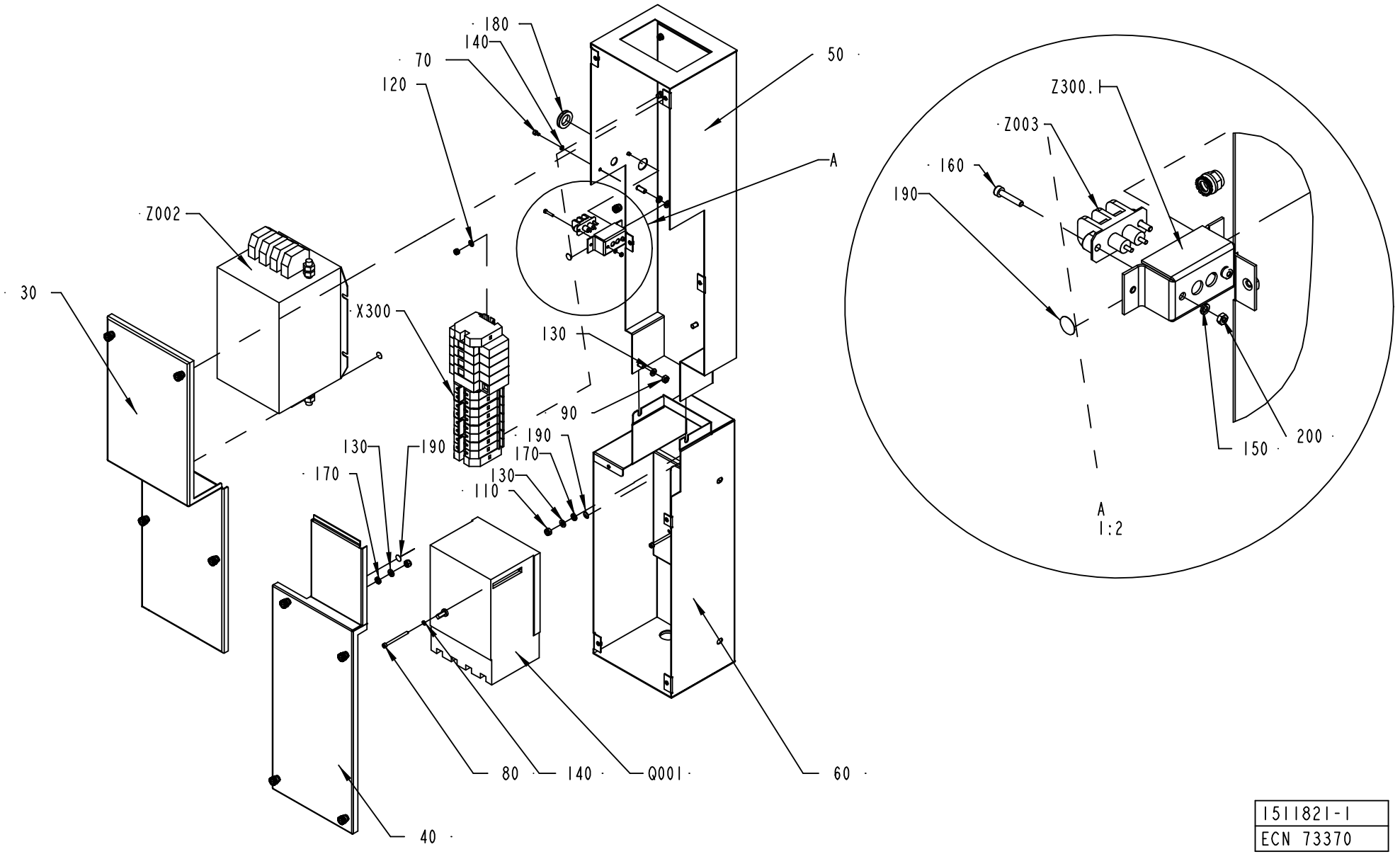

1511821-1
ECN 73370

ECM: 115719 - 20020930
Group number: 1511821-0100
Assembly Drawing: 1511821-1_1_AA

Pos	Part No	SP	UN	Qty	Description	Page No
-						
030	1511780-0000	-		1	COVER	
040	1511781-0000	-		1	COVER	
050	1511782-0000	-		1	BOX	
060	1511783-0000	-		1	BOX	
070	312115-0285	-		2	SCREW ISO4762 M4X6 A4	
080	312115-0305	-		2	SCREW ISO4762 M4X50 A4	
090	312605-0316	-		2	HEXAGON NUT, M6M M6 A280	
100	312812-0314	-		4	HEXAGON NUT, NY-LOCK M5 A480	
110	312812-0316	-		4	HEXAGON NUT, NY-LOCK M6 A480	
120	315105-0146	-		4	WASHER ISO 7089-5-200 HV-A4	
130	315105-0153	-		6	WASHER ISO 7089-6-200 HV-A4	
140	315402-0136	-		4	LOCK WASHER FBB 4,1	
150	315402-0128	-		2	LOCK WASHER FBB 3,6	
160	312115-0228	-		2	SCREW ISO4762 M3X16 A4	
170	90062-0015	-		4	LOCK WASHER SERRAT.EXT.GEAR,6,4/11 H=0,7	
180	90143-0094	-	MM	100	SEAL	
190	90194-0163	-		4	SIGN, EARTH WITHIN CIRCLE	
200	312605-0310	-		2	HEXAGON NUT, M6M M3 A280	
Q001	90457-0198	A		1	MAIN SWITCH	
X300	A1511806-0100	-		1	X300	**771**
Z002	90024-0060	A		1	POWER LINE FILTER, 80 A 250/440 VAC	
Z003	90024-0036	B		1	FILTERED TERMINAL BLOCK	
Z003.1	1285108-0000	-		1	COVER	

Pos	Part No	SP	UN	Qty	Description	Page No

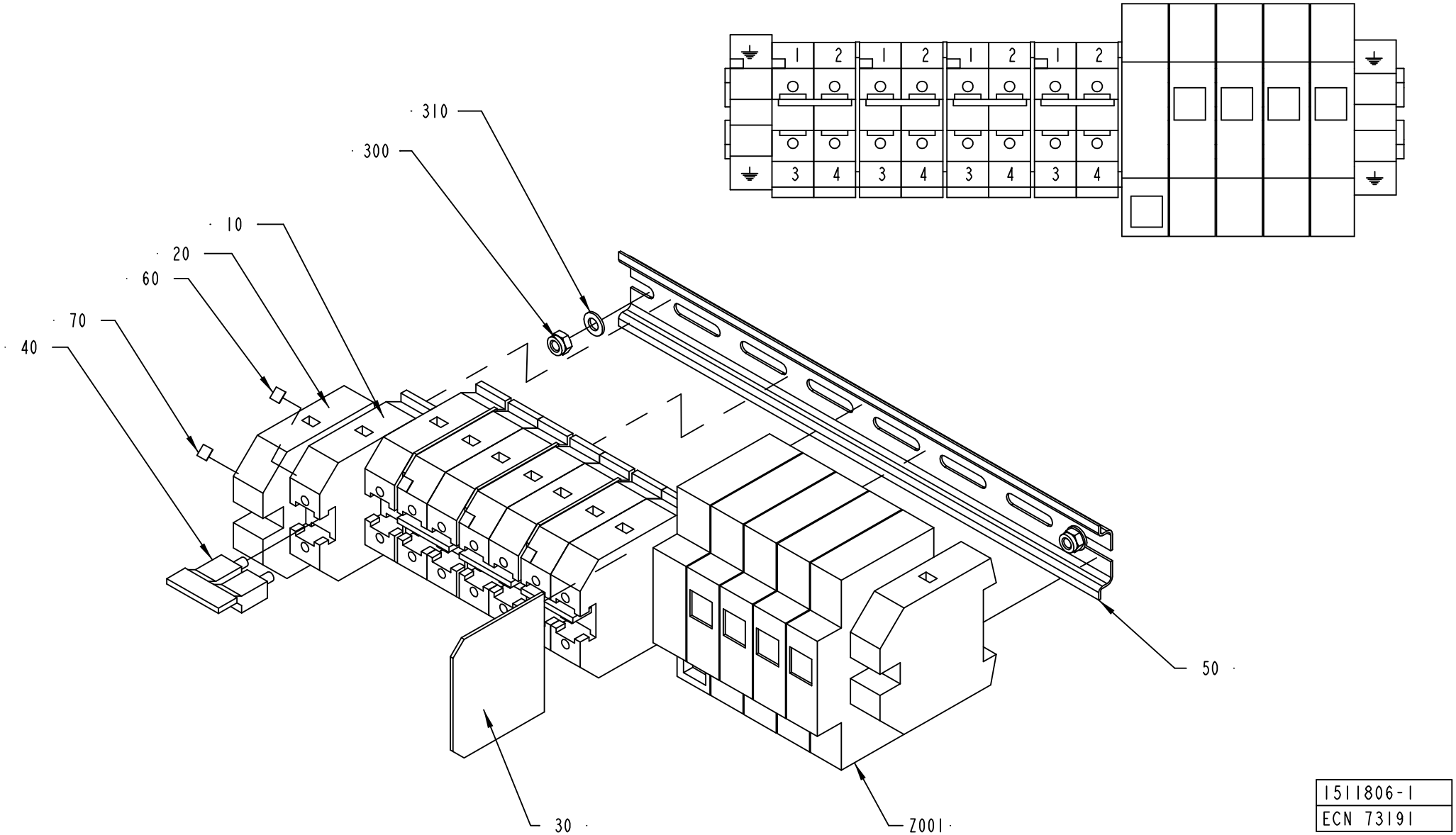

1511806-1
ECN 73191

ECM: 115730 - 20020930
Group number: 1511806-0100
Assembly Drawing: 1511806-1_1_AA

Pos	Part No	SP	UN	Qty	Description	Page No
-						
010	353021-0219	-		8	FEED THROUGH TERMINAL, 10205.0	
020	353024-0209	-		2	EARTH TERMINAL, 1010.5	
030	353033-0105	-		1	PARTITITION, 10501.0	
040	353034-0026	-		4	BRIDGE CONNECTOR, WQV 35/2, 10530.6	
050	353042-0004	-	MM	260	RAIL TS 35/7,5	
060	359011-0807	-		4	MARKING PLATES 5-FW 1-50	
070	359011-0819	-		1	MARKING PLATES 5-GW (EARTH)	
300	312812-0314	-		2	HEXAGON NUT, NY-LOCK M5 A480	
310	315105-0146	-		2	WASHER ISO 7089-5-200 HV-A4	
Z001	B90082-0013	A		1	OVERVOLTAGE PROTECTOR	
	90082-0301	*A*		*3*	*OVERVOLTOLTAGE PROTECTOR*	

Pos	Part No	SP	UN	Qty	Description	Page No

EXTERNAL DOOR TERMOREGULATORS

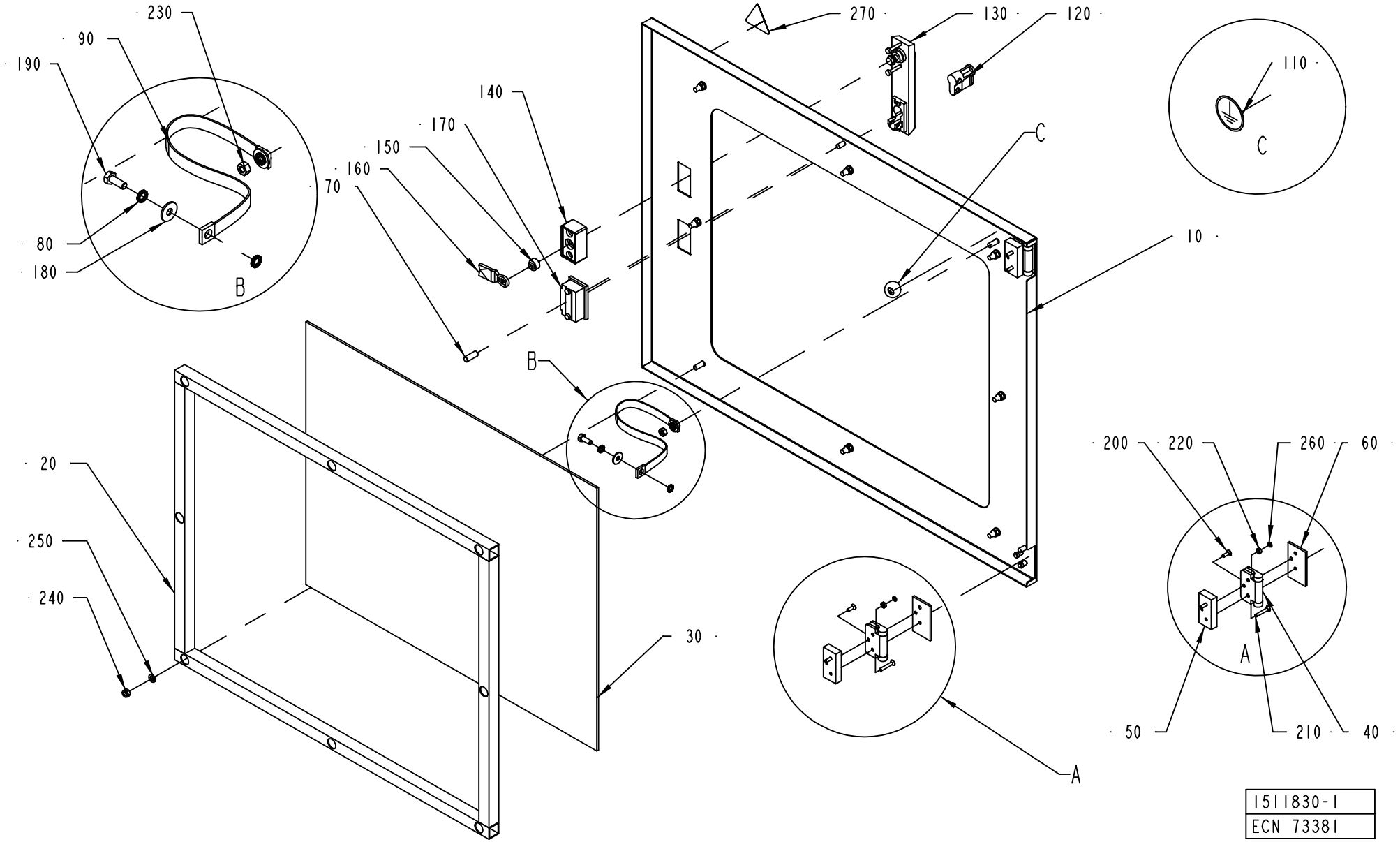

1511830-1
ECN 73381

ECM: 115710 - 20020930
Group number: 1511830-0100
Assembly Drawing: 1511830-1_1_AA

Pos	Part No	SP	UN	Qty	Description	Page No
-						
010	1517663-0000	-		1	DOOR	
020	1517664-0000	-		1	FRAME	
030	1517665-0000	-		1	WINDOW	
040	1523438-0000	B		2	HINGE	
050	1523441-0000	-		2	SPACER SHEET	
060	1523442-0000	-		2	SPACER SHEET	
070	1523957-0000	-		1	SPACER	
080	90062-0015	-		4	LOCK WASHER SERRAT.EXT.GEAR,6,4/11 H=0,7	
090	90135-0044	A		1	EARTH WIRE, L=320 MM 16 MM2	
100	90144-0072	-	MM	2060	TAPE SCOTCH VHBS 4945 W=12,7MM	
110	90194-0163	-		1	SIGN, EARTH WITHIN CIRCLE	
120	90237-0128	-		1	LOCK CYLINDER, 1109-U3	
130	90237-0150	-		1	TURNING HANDLE, NO. 1125-U190-0A	
140	90237-0154	-		1	LOCK HOUSING, 1121-U60-0C	
150	90237-0155	-		1	LOCK ADAPTER, 1121-U40	
160	90237-0156	-		1	LOCK BOLT, 1000-16	
170	90237-0176	-		1	TURNING HANDLE	
180	90457-0192	-		2	WASHER PLAIN ROUND, 6,5/18, H=1,5	
190	312105-0368	-		1	SCREW M6S M6X16 A280	
200	312155-0291	-		2	SCREW EN 10642 MF6S M4X12 A480	
210	312155-0297	-		4	SCREW EN 10642 MF6S M4X25 A480	
220	312605-0312	-		6	HEXAGON NUT, M6M M4 A280	
230	312605-0316	-		1	HEXAGON NUT, M6M M6 A280	
240	312812-0316	-		8	HEXAGON NUT, NY-LOCK M6 A480	
250	315105-0153	-		8	WASHER ISO 7089-6-200 HV-A4	
260	315402-0136	-		6	LOCK WASHER FBB 4,1	
270	359705-0015	A		1	WARNING SIGN ISO, RISK OF ELECTRIC SHOCK	

Pos	Part No	SP	UN	Qty	Description	Page No

Machine Type | Group Description | Used-In | Group Number | Page No

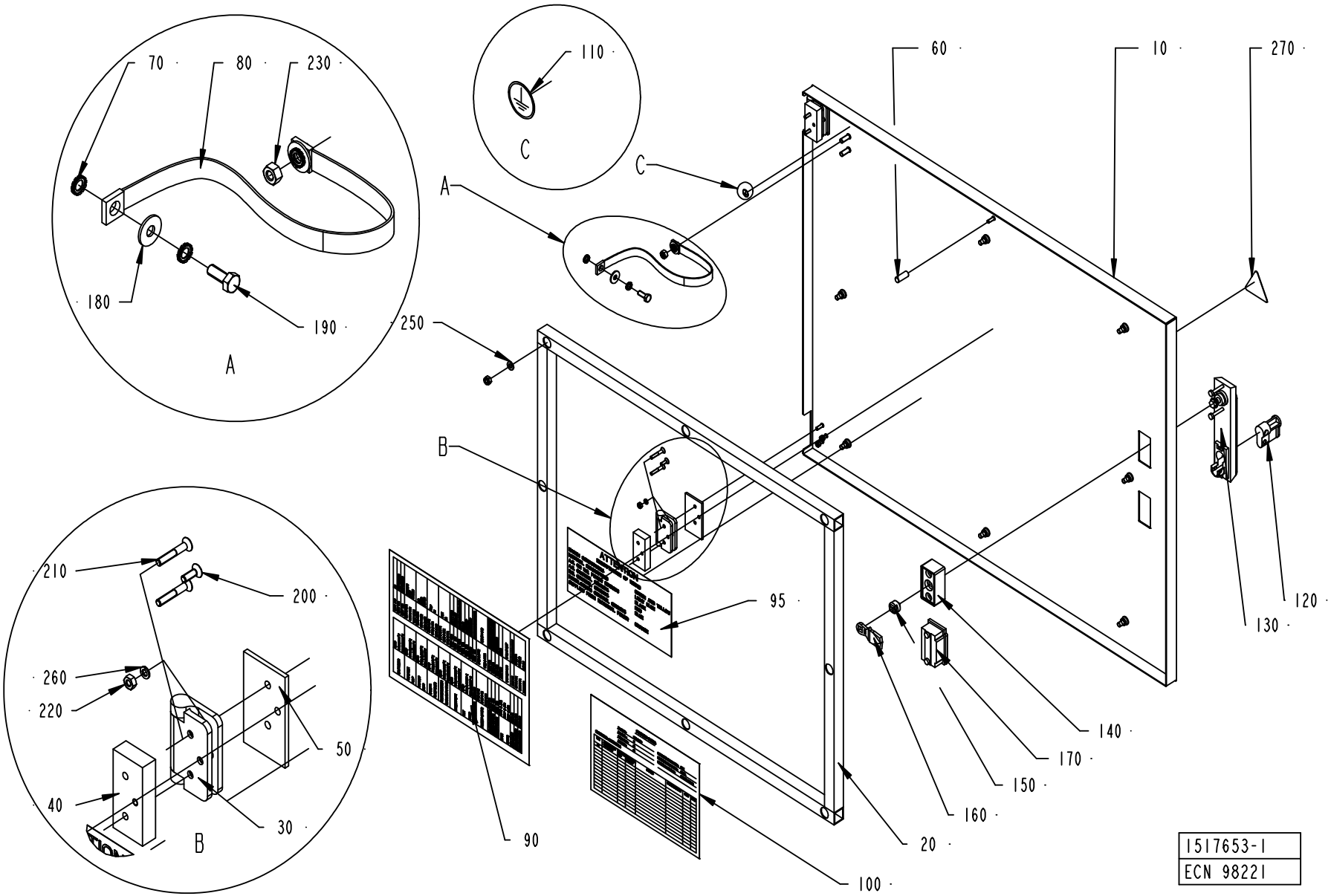
70
80
230
180
190
A
110
C
A
C
60
10
270
250
B
95
120
130
140
170
150
160
20
100
90
210
200
260
220
50
40
30
B
1517653-1
ECN 98221

ECM: 115707 - 20020930
Group number: 1517653-0100
Assembly Drawing: 1517653-1_1_AB

Pos	Part No	SP	UN	Qty	Description	Page No
-						
010	1517667-0000	-		1	DOOR	
020	1517664-0000	-		1	FRAME	
030	1523438-0000	B		2	HINGE	
040	1523441-0000	-		2	SPACER SHEET	
050	1523442-0000	-		2	SPACER SHEET	
060	1523957-0000	A		1	SPACER	
070	90062-0015	-		4	LOCK WASHER SERRAT.EXT.GEAR,6,4/11 H=0,7	
080	90135-0044	-		1	EARTH WIRE, L=320 MM 16 MM2	
090	1538212-0000	-		1	FUSE BOARD	
095	90194-0080	-		1	SIGN, IDENTIFICATION OF WIRING	
100	1517654-0000	-		1	DELIVERED DESIGN	
110	90194-0163	-		1	SIGN, EARTH WITHIN CIRCLE	
120	90237-0128	-		1	LOCK CYLINDER, 1109-U3	
130	90237-0150	-		1	TURNING HANDLE, NO. 1125-U190-0A	
140	90237-0154	-		1	LOCK HOUSING, 1121-U60-0C	
150	90237-0155	-		1	LOCK ADAPTER, 1121-U40	
160	90237-0156	-		1	LOCK BOLT, 1000-16	
170	90237-0176	-		1	TURNING HANDLE	
180	90457-0192	-		2	WASHER PLAIN ROUND, 6,5/18, H=1,5	
190	312105-0368	-		1	SCREW M6S M6X16 A280	
200	312155-0291	-		2	SCREW EN 10642 MF6S M4X12 A480	
210	312155-0297	-		4	SCREW EN 10642 MF6S M4X25 A480	
220	312605-0312	-		6	HEXAGON NUT, M6M M4 A280	
230	312605-0316	-		1	HEXAGON NUT, M6M M6 A280	
240	312812-0316	-		8	HEXAGON NUT, NY-LOCK M6 A480	
250	315105-0153	-		8	WASHER ISO 7089-6-200 HV-A4	
260	315402-0136	-		6	LOCK WASHER FBB 4,1	
270	359705-0015	A		1	WARNING SIGN ISO, RISK OF ELECTRIC SHOCK	

Pos	Part No	SP	UN	Qty	Description	Page No

Machine Type | Group Description | Used-In | Group Number | Page No

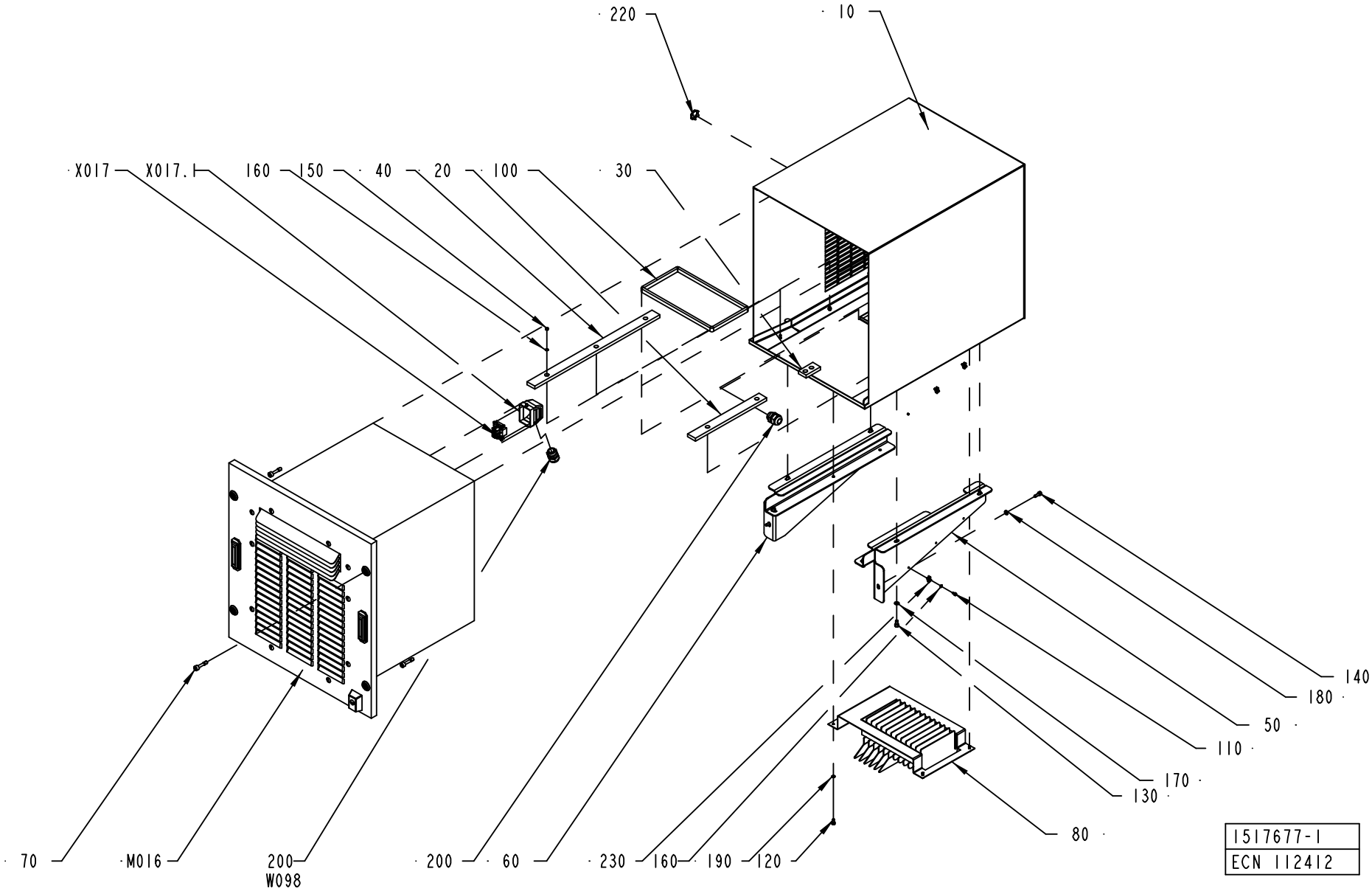
220
10
X017
X017.
160
150
40
20
100
30
140
180
50
110
170
130
80
70
M016
200
W098
200
60
230
160
190
120
1517677-1
ECN 112412

ECM: 113220 - 20030113
Group number: 1517677-0100
Assembly Drawing: 1517677-1_1_AB

Pos	Part No	SP	UN	Qty	Description	Page No
-						
010	1523448-0000	-		1	FRAME	
020	1523449-0000	-		1	SLIDE	
030	1523450-0000	-		1	SLIDE	
040	1523451-0000	-		1	SLIDE	
050	1523452-0000	-		1	SUPPORT	
060	1523453-0000	-		1	SUPPORT	
070	1523454-0000	-		4	SCREW	
080	1523973-0000	-		1	FRAME	
100	90143-0059	-	MM	830	SEAL STRIP 4610069	
120	312115-0325	-		4	SCREW ISO4762 M5X10 A4	
130	312115-0366	-		4	SCREW ISO4762 M6X12 A4	
140	312115-0368	-		4	SCREW ISO4762 M6X16 A4	
150	312605-0312	-		7	HEXAGON NUT, M6M M4 A280	
160	315105-0136	-		7	WASHER ISO 7089-4-200 HV-A4	
170	315105-0153	-		4	WASHER ISO 7089-6-200 HV-A4	
180	315401-0153	-		4	WASHER FBH6,1FZB	
190	315402-0146	-		4	LOCK WASHER FBB 5,1	
200	352103-0111	-		2	CABLE GLAND, ST 16, PR22,5/PG16	
220	90099-0110	-		1	NUT, PR 22,5 (PG16)	
M016	90457-0063	B		1	COOLING UNIT, KB17TB.CBB	
W098	351150-0415	-	MM	3000	CABLE OLFLEX 7X1,5 MM2 LIGHT/GREY	
X017	90110-0163	B		1	FEMALE INSERT 70 300 0640 0	
X017.1	90110-0226	-		1	CABLE HOOD 6-POL 70.350.0628.0	

Pos	Part No	SP	UN	Qty	Description	Page No

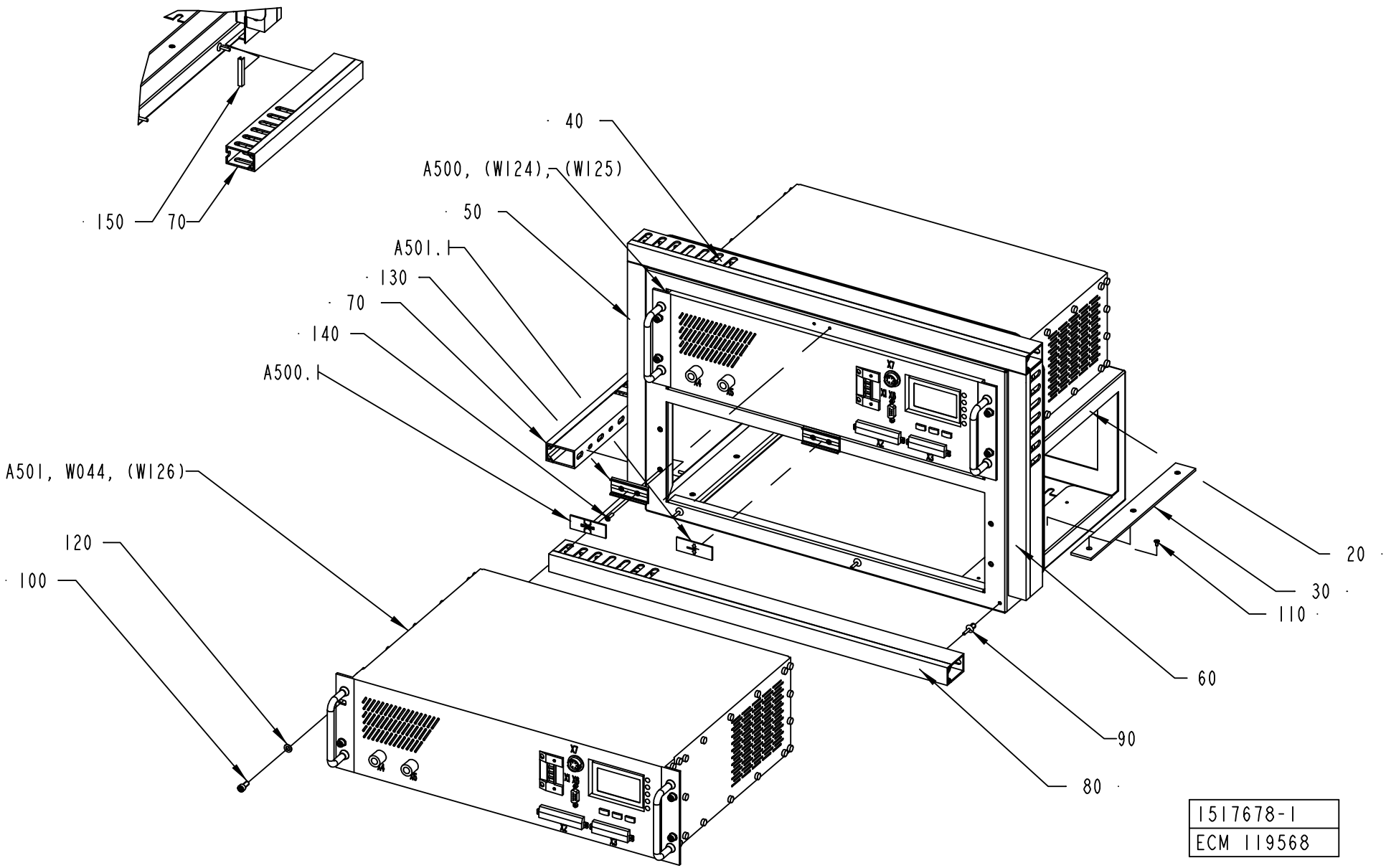
150
70
40
A500, (W124), (W125)
50
A501.1
130
70
140
A500.1
A501, W044, (W126)
120
100
20
30
110
60
90
80
1517678-1
ECM 119568

ECM: 120812 - 20030227
Group number: 1517678-0100
Assembly Drawing: 1517678-1_1_AC

Pos	Part No	SP	UN	Qty	Description	Page No
-						
020	1523455-0000	-		1	FRAME	
030	1523456-0000	-		4	SLIDE	
040	90181-0037	-	MM	560	CABLE DUCT, 25X40MM	
050	90181-0037	-	MM	320	CABLE DUCT, 25X40MM	
060	90181-0037	-	MM	320	CABLE DUCT, 25X40MM	
070	90181-0037	-	MM	263	CABLE DUCT, 25X40MM	
080	90181-0037	-	MM	560	CABLE DUCT, 25X40MM	
090	90181-0088	-		14	PLASTIC RIVET, PR 52314	
100	312115-0327	-		8	SCREW ISO4762 M5X12 A4	
110	312155-0220	-		12	SCREW EN 10642 MF6S M3X6 A480	
120	315105-0146	-		8	WASHER ISO 7089-5-200 HV-A4	
130	359240-0100	-		2	SIGN HOLDER FOR 359240-0001	
140	311521-0146	-		4	BLANK RIVET 3,2X12	
150	90143-0094	-	MM	38	SEAL	
A500	1499642-0101	A		1	TPIH 2500 HORIZONTAL MOUNTING	
A500.1	90458-1423	A		1	CONNECTOR, PC 4/4-STF-7.62	
A500.2	90458-1424	A		1	CONNECTOR, MSTB 2.5/10-STF-5.08	
A500.3	359241-0135	-		1	SIGN, TRANSVERSAL SEALING	
A501	1499642-0101	A		1	TPIH 2500 HORIZONTAL MOUNTING	
A501.1	90458-1423	A		1	CONNECTOR, PC 4/4-STF-7.62	
A501.2	90458-1424	A		1	CONNECTOR, MSTB 2.5/10-STF-5.08	
A501.3	359241-0132	-		1	SIGN, TEMP. STRIP APPLICATOR	
W044	551969-0012	A		1	COAXIAL CABLE	
W102	90220-0183	-	M	4	SCR. CABLE 2X0,34MM2	
W103	90220-0183	-	M	4	SCR. CABLE 2X0,34MM2	
W104	90220-0183	-	M	4	SCR. CABLE 2X0,34MM2	

Pos	Part No	SP	UN	Qty	Description	Page No

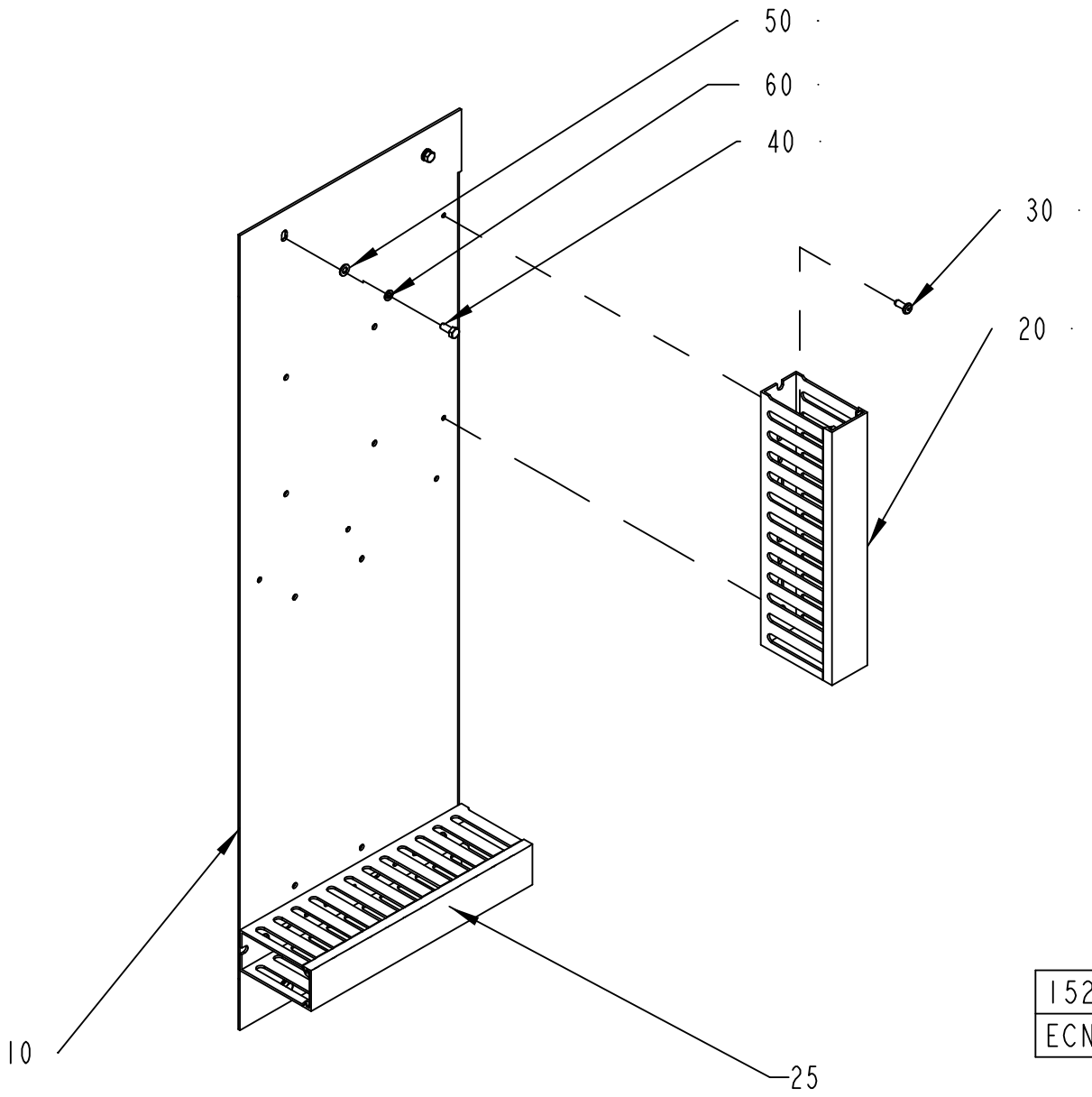

1523961-1
ECN 73370

ECM: 81707 - 20011221
Group number: 1523961-0100
Assembly Drawing: 1523961-1_1_AA

Pos	Part No	SP	UN	Qty	Description	Page No
-						
010	1523963-0000	-		1	SUPPORT PLATE	
020	90181-0053	-	MM	250	CABLE DUCT, 40X80MM	
025	90181-0053	-	MM	250	CABLE DUCT, 40X80MM	
030	90181-0313	-		4	RIVET DUCTAFIX R4	
040	312105-0327	-		4	SCREW M6S ISO 4017 M5X12 A480	
050	315105-0146	-		4	WASHER ISO 7089-5-200 HV-A4	
060	315402-0146	-		4	LOCK WASHER FBB 5,1	

Pos	Part No	SP	UN	Qty	Description	Page No

CABLE LEAD-IN PLATE

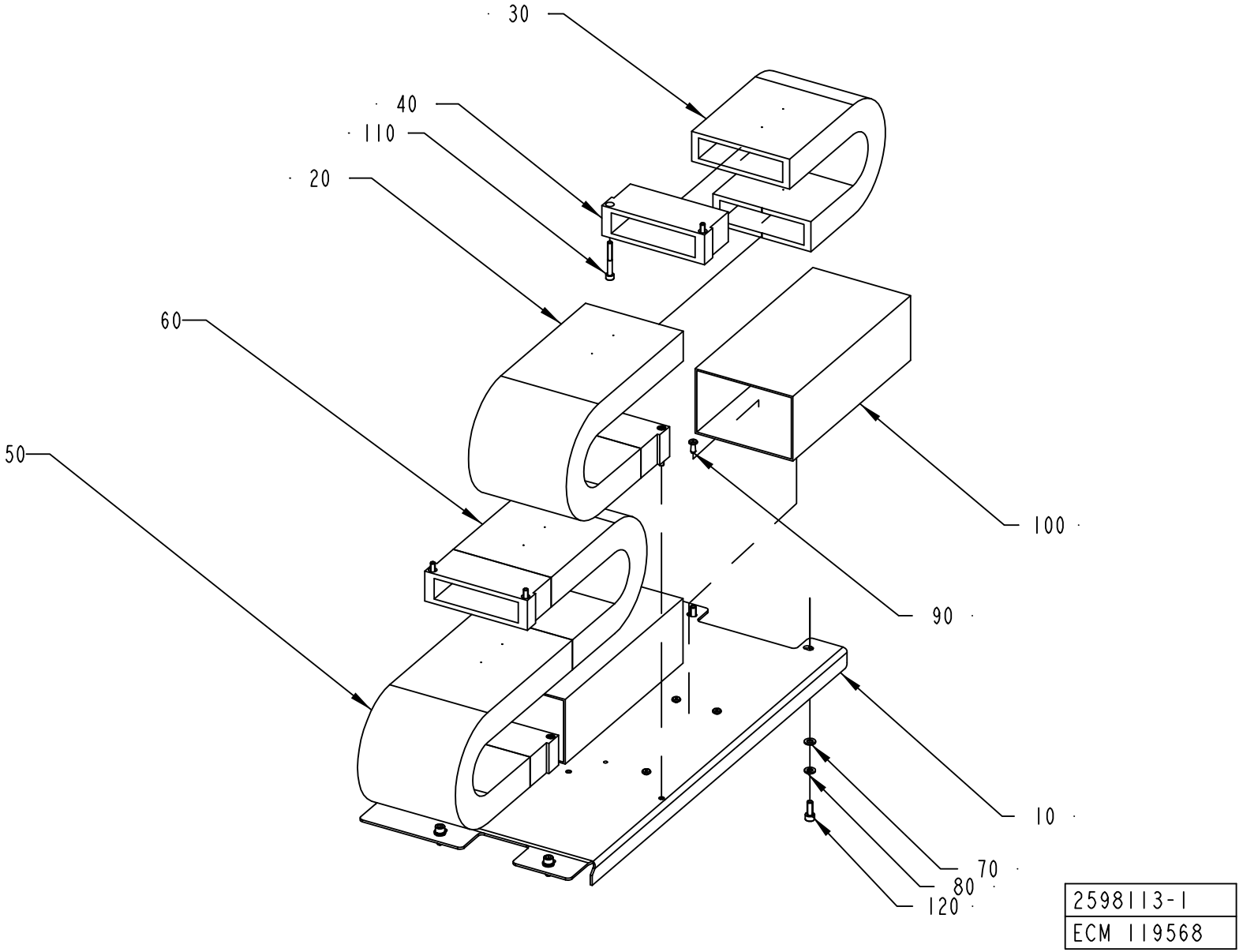

ECM: 126326 - 20030227
Group number: 2598113-0100
Assembly Drawing: 2598113-1_1_AA

Pos	Part No	SP	UN	Qty	Description	Page No
-						
010	2598430-0000	-		1	SUPPORT	
020	90459-2309	-	MM	405	FLEXIBLE CHAIN, A325A103KM	
030	90459-2309	-	MM	360	FLEXIBLE CHAIN, A325A103KM	
040	90459-2350	-		4	END BRACKET, A325A103KM	
050	90459-2309	-	MM	405	FLEXIBLE CHAIN, A325A103KM	
060	90459-2309	-	MM	360	FLEXIBLE CHAIN, A325A103KM	
070	315101-0153	-		4	WASHER PLAIN, BRB, 6,4/12 H=1,5	
080	315401-0153	-		4	WASHER FBH6,1FZB	
090	90181-0313	-		8	RIVET DUCTAFIX R4	
100	90181-0057	-	MM	500	CABLE DUCT, 120X80MM	
110	312115-0339	-		8	SCREW ISO4762 M5X40 A4	
120	312115-0368	-		4	SCREW ISO4762 M6X16 A4	

Pos	Part No	SP	UN	Qty	Description	Page No

Tetra Pak

SPC
Spare Parts Catalogue

Part No	Description	Page No
1013-0000	SHAFT	547
1755-0001	WASHER	311
1755-0002	WASHER	311
1755-0003	WASHER	311
2033-0007	WASHER	31, 33
2033-0008	WASHER	87, 89
2033-0009	WASHER	313
2033-0011	WASHER	71, 73, 75, 77, 79, 81, 83, 87, 89, 93, 95, 557, 559, 561, 577, 579
2033-0013	WASHER	501, 503, 519
2033-0014	WASHER	313
6161-0000	ROLL	115
12228-0000	COMPRESSION SPRING	235
12242-0001	GASKET 32X25X5,5	43
12242-0003	GASKET 48X38X5,5	103
12242-0005	GASKET 61X51X5,5	103
18542-0000	WASHER	165
20239-0000	COMPRESSION SPRING	295, 297, 299, 301
21521-0000	COMPRESSION SPRING	21, 107
22463-0000	ROLL	247, 249, 251, 253
22475-0000	CURVE ROLLER	295, 297, 299, 301
26490-0000	WASHER	71, 73, 75, 77
27815-0000	WASHER	313
28036-0000	WASHER	31, 33, 115, 557, 559, 561, 577, 579
28037-0000	WASHER	71, 73, 75, 77
28509-0000	BRICKA	305, 307
29876-0000	COVER	27
30298-0000	INSULATION	27
31017-0000	KNIFE	589
31553-0001	WASHER	341
31559-0000	SPRING PLATE	341
31723-0000	TEFLON STRIP	589
31724-0000	LOCK BAR	589
32079-0000	WASHER	305, 307
32544-0000	INSULATION NUT	305, 307
32644-0000	WASHER	293, 511
32691-0000	LOCKING SPRING	563, 565, 581, 583
32925-0000	CARRIER	557, 559, 561, 577, 579
32926-0000	ROLL	557, 559, 561, 577, 579
32927-0000	SHAFT	557, 559, 561, 577, 579
33010-0000	SCREW	567, 585
33011-0000	SLEEVE	563, 565, 581, 583
33182-0000	ROLL	557, 559, 561, 577, 579
33408-0000	BEARING	247, 249, 251, 253
35547-0000	SPRING	567, 585
35918-0000	SHAFT	87, 89
35919-0000	COMPRESSION SPRING	87, 89
35962-0000	LID	403
36316-0000	PAPER SUPPORT	523
36325-0000	KNOB	87, 89
37877-0400	HEATING BLOCK	587
37879-0000	LOCKING ARM	589
37880-0000	HINGE	589
37882-0000	PROTECTION PLATE	589
37883-0000	LOCK BAR	589
37884-0000	SHAFT	589
37885-0000	TENSION SPRING	589
37886-0000	INSULATING DISK	589
37888-0000	ROLL	589
37889-0000	SHAFT	589
37890-0000	FLANGE ROLLER	589
37892-0000	CONNECTION BOX	589
37893-0000	LID	589
37894-0100	COUNTER RAIL	587
37895-0000	RAIL	591
37896-0000	DOWEL	591
37897-0000	WASHER	591
37900-0000	KNIFE	593
37905-0000	FRAME	597
37908-0000	PLATE	597
37909-0000	SPRING	597
37910-0000	LOCK	597
37911-0000	LACE	597
37912-0000	LOCK PLATE	597
37913-0000	RULER	597
37916-0000	RULER	597
37917-0000	RULER	597
38087-0000	WASHER	183, 185
42062-0200	LEVEL PROBE	137
42063-0100	LEVEL DETECTOR	139
42067-0100	SENSOR BOARD	141
42068-0100	CONVERTER BOARD	141
67369-0102	RACK WALLMOUNTED 84TE	667
67372-0101	BACKPLANE 8TE(32 POLE)	667
67379-0254	TRANSFORMER	305, 307

Part No	Description	Page No
67379-0262	TRANSFORMER	305, 307
67379-0264	TRANSFORMER	305, 307
67379-0265	TRANSFORMER	305, 307
67380-0208	TRANSFORMER	511
72947-0000	HOOK SPANNER	617
76131-0000	ASSEMBLY CONE	617
76132-0000	ASSEMBLY TOOL	617
77099-0300	TOOL KIT	609
78801-0000	CALIBRATION TOOL	617
90001-0033	WALL SOCKET OUTLET	653, 655
90002-0004	BLANK-OFF PLUG, PR 22,5 SKINDICHT-BLK16	113, 381, 383, 719, 721, 723, 725
90002-0009	BLANK-OFF PLUG, PR 18.6 SKINDICHT-BLK11	151, 381, 383, 603, 605, 625, 631, 633
90002-0010	BLANK-OFF PLUG, PR 37 SKINDICHT-BLK29	111, 113, 381, 383, 719, 721, 723, 725
90002-0012	BLANK-OFF PLUG, PR 28,3 SKINDICHT-BLK21	113, 379, 719, 721, 723, 725
90002-0013	BLANK-OFF PLUG, PR 15,2 SKINDICHT-BLK9	113, 151, 603, 605, 719, 721, 723, 725
90003-0422	CORRUGATED CARDBOARD BOX	609
90005-0003	GASKET BOLT HEAD 6,7X11X1 MM M6	303, 315, 317
90005-0005	GASKET BOLT HEAD 13,7X20,6X2,1 MM G1/4"	315, 317
90005-0007	GASKET BOLT HEAD 8,7X14X1 MM M8	315, 317, 353
90005-0014	GASKET BOLT HEAD 21,5X28,6X2,5 MM G1/2"	303
90005-0047	WASHER,PL.RND.CU.12,2/ H=1,5	309, 311
90005-0060	WASHER PLAIN, RBS 6,4/M6)/18,H=1,5	153, 155, 277, 279, 281, 283
90005-0082	WASHER PLAIN ROUND 4,3(M4)/12,H=1	493, 495, 497, 501, 503, 509, 511, 519
90005-0116	WASHER PLAIN ROUND 8,4(M8)/24, H=2	357
90005-0143	SPACER 3,3/7, H=3	141
90007-0128	CIRCUIT BREAKER, 1P 6 A K	751, 755
90007-0129	CIRCUIT BREAKER, 1P 10 A K	751, 755
90007-0131	CIRCUIT BREAKER, 1P 16 A K	751
90007-0146	CIRCUIT BREAKER, 3P 6 A K	751
90007-0149	CIRCUIT BREAKER, 3P 20 A K	755
90007-0155	CIRCUIT BREAKER, 1P 0,5 A K	751
90007-0312	AUXILIARY CONTACT	751
90012-0119	GLAND, EXTENDED WITH INSERT, PG9	139
90012-0126	NORMAL WITHOUT INSERT, PG29	27
90015-0020	LEAD-IN, TET5-7, E-1458016	111, 501, 503, 509
90015-0021	LEAD-IN, TET10-14, E-1458023	111
90015-0023	LEAD-IN, TET7-10, E-1458019	111, 601
90015-0028	LEAD-IN BUSHING	365
90016-0010	DISC SPRINGS,50X25,4X2	213
90017-0001	BIKE HANDLE	589, 593
90017-0022	HANDLE, NO. EL-037311	505, 509, 525, 543, 545
90024-0034	DIODE SURGE SUPPRESSOR, FD B DIL	679, 701, 703
90024-0036	FILTERED TERMINAL BLOCK	769
90024-0047	EMI SUPPRESSION FERRITE	653, 655
90024-0060	POWER LINE FILTER, 80 A 250/440 VAC	769
90028-0001	CONE 5/32"	159, 161, 163
90028-0020	CONE TUBE 2,5MM	159, 161, 163, 217, 219, 221, 223, 303, 315, 317, 339, 365
90028-0021	CONE TUBE 4 MM	159, 161, 163, 217, 219, 221, 223, 339, 365
90028-0025	CONE TUBE 6 MM	365
90030-0030	CONN. BULKHEAD SV 12-L/SY	455
90030-0051	CONN. STR., 6-R1/8, EXT. THREAD	49, 159, 161, 163
90030-0058	CONN. T-PIPE T-12	105, 465
90030-0062	CONN. STR. GE 6-1/4-18 NPTF	43
90030-0065	PIPE CONNECTION	167, 285, 287, 289, 291, 315, 317
90030-0066	CONN. BULKHEAD SV 6-L/SY	533
90030-0075	PIPE CONNECTION G-6	67, 69
90030-0076	CONN. T-PIPE T-6	65, 469
90030-0084	CONN. STR. GE 10-3/8-18 NPTF	465
90030-0086	CONN. STR., 8-R1/4, EXT. THREAD	457
90030-0088	CONN. STR., 12-R1/4, EXT. THREAD	45, 47
90030-0089	STRAIGHT CONNECTION	63
90030-0091	CONN. PIPE G-8	167
90030-0092	STRAIGHT CONN., 6-R1/4,EXT. TAPPERED	49, 67, 69
90030-0096	CONN. ELBOW W-12	45, 47
90030-0098	ACCESSORIES, FERRULE 8	159, 161, 163
90030-0106	CONN. PIPE G-12	45, 47, 49
90030-0109	CONN. STR., 12-R1/2, EXT. THREAD	45, 47, 49, 453
90030-0110	ACCESSORIES, FERRULE 12	49
90030-0115	CONN. ELBOW WA 12-R3/8	49
90030-0136	ADJUSTABLE ELBOW CONNECTION,EXT 12-G3/8	49, 463
90030-0137	CONN. ELBOW WA 6-R1/8	49
90030-0151	CONN. STR.,15-R1/2, EXT. THREAD	165
90030-0162	CONN. STR. 6-M10X1, EXT. THREAD	159, 161, 163
90030-0164	CONN. T-PIPE T6-LL	67, 69
90030-0170	REDUCER 2521-1/4"X3/8"	49
90030-0184	CONN. STR. GA-6-G1/8	23, 25, 45, 47, 65, 99, 105, 315, 317, 319, 463, 533
90030-0186	CONN. STR. GA-10-G1/4	187
90030-0187	CONN. STR. GA-12-G3/8	19, 21, 23, 45, 47, 103, 105, 187
90030-0188	CONN. STR. GA-15-G1/2	447, 463
90030-0200	CONN. ELBOW, 6-M10X1, EXT.THREAD	159, 161, 163
90030-0202	CONN. STR., 6-G1/4, EXT. THREAD	65
90030-0203	ADJUSTABLE ELBOW CONNECTION,EXT 6-G1/4	65
90030-0212	NIPPLES, REDUSING, INT. THR. NO. 2521	45, 47
90030-0213	CONN. STR. M12 MSC1/2K-316 EXT. TAPPERED	45, 47

Part No	Description	Page No
90030-0336	CONN. STRAIGHT, 316L-12M-BVCO-3	51
90030-0338	NUT, PIPE & CONNECTORS, SS-8-BVCO-4	51
90030-0348	CONN. STR., 6-G3/8, INT. THREAD	49
90030-0630	REDUCER, 1,5MM, M6, NO. 815406	471, 473
90031-0051	BASEPLATE, 10-SLOT	673
90031-0053	BASEPLATE,10-SLOT	675, 677
90031-0057	PLC, DIGITAL INPUT MODULE	673, 675, 677
90031-0058	PLC, DIGITAL INPUT MODULE	673
90031-0059	PLC, DIGITAL OUTPUT MODULE	673, 675, 677
90031-0062	PLC, ANALOG OUTPUT MODULE 8PT/CURR/VOLT	673
90031-0068	PLC, POWER SUPPLY	673, 675, 677
90031-0075	CPU363, SERIAL COMMUNICATION	673
90031-0305	I/O EXPANSION CABLE	673, 675
90032-0014	DISTR. BLOCK & DIST.5/16-24UNF X6	159, 161, 163
90032-0026	DISTR. BLOCK, 5/16-24UNF X2	159, 161, 163
90032-0030	DISTR. BLOCK, 5/16-24UNF X3	159, 161, 163
90032-0031	DISTR. BLOCK, 5/16-24UNF X5	159, 161, 163
90032-0038	BLOCK 2 WAYS	159, 161, 163
90032-0039	BLOCK 4 WAYS	159, 161, 163, 221, 223, 339, 365
90032-0040	BLOCK 6 WAYS	217, 219, 339, 365
90036-0057	LIGHT BULB, BA9S 28V	487
90036-0068	BULB 6.5W 24V	181, 191
90038-0024	RECTIFIER, 10/22A SKD 50/04A3	715, 717
90041-0068	DATACABLE MODEM PC	621
90042-0134	SOLENOID VALVE ASCO SCG 210 802 24VDC	475
90042-0171	SOLENOID VALVE BUERKERT	65
90042-0172	SOLENOID VALVE 4023/1005/1032 24VDC	417, 419
90042-0173	SOLENOID VALVE BURKERT	411, 429, 431
90042-0255	VALVE BODY 5/2 UNISTABLE	433, 435, 437
90042-0398	CONTACT 3 POLE+EARTH	461
90042-0535	TERMINAL BOARD 19 CORDS	433, 435, 437
90042-0539	PILOT VALVE L=350MM	433, 435, 437
90042-0550	PROTECTION PLUG FOR UNUSED CONNECTION	433, 435, 437
90042-0565	PORTED END PIECE ISO VDMA 01	433, 435, 437
90042-0566	BASE PLATE ISO VDMA 01	433, 435, 437
90042-0567	BLANK PLATE VDMA SIZE 01	433, 435, 437
90042-0579	VALVE BODY 2X3/2 NORM CLOSE	433, 435, 437
90042-0580	VALVE BODY 5/2 BISTABLE	433, 435, 437
90042-0581	BASE PLATE ISO VDMA 01	433, 435, 437
90042-0586	BASE PLATE ISO VDMA 01	433, 435, 437
90042-0587	BLANKING KIT SEALS VDMA SIZE 01	433, 435, 437
90043-0002	PRESSURE GAUGE, 2040 D=63 MM	467
90043-0006	PRESSURE GAUGE, 2041 D=63 MM	417
90043-0021	PRESSURE GAUGE WIEGAND 0-1 BAR 1/8"	421
90043-0034	PRESSURE GAUGE	67, 69
90043-0036	PRESSURE GAUGE, 2041 D=63 MM	423
90043-0068	PRESSURE GAUGE	421
90043-0069	PRESSURE GAUGE 0-4BAR WIEGAND 2040	421, 429, 431
90043-0082	PRESSURE GAUGE, 2740, D=63 MM	49
90043-0095	PRESSURE GAUGE, 2740, D=63 MM, GLYC.	427
90043-0302	SCREW	67, 69
90044-0084	LIMIT SW. 14 CE1-4	13, 15
90044-0103	KEY SAFETY SWITCH AZ 15 ZVR	577, 579
90044-0104	PROX.SWITCH IFM IN 3002	31, 33, 35, 37, 577, 579
90044-0116	CYLINDER,SENSOR	21
90044-0117	PROX.SW. IX 0208	389
90044-0124	PROX.SW. 922AB2XM-A9P-050-LZ-876	241
90044-0139	KEY SAF.SW. AZ16-02 ZVR K-2254	31, 33, 505, 543, 545, 557, 559, 561
90044-0145	PROX.SW. 922 AAIY-A9P-050-LZ876	63
90044-0151	LIMIT SW. GLEB24C	235
90044-0192	LIMIT SW. SZ2586.000	715, 717
90044-0194	PROX.SW. IN5329/IN3002-BPKG	45, 47, 105, 501, 503, 509, 517, 557, 559, 561
90044-0310	KEY FOR SAFETY SWITCH, AZ 15/16 B1	31, 33, 169, 171, 505, 557, 559, 561
90045-0087	MOTOR 3GAA 071002-CSA M2AA 71B	451
90045-0161	MOTOR MGC 11	461
90045-0228	MOTOR MEZ-4AP80-4-B5-0	471, 473
90048-0046	OIL PUMP	469
90050-0011	BOTTLE	403
90050-0012	BOTTLE, 50ML PLASTIC	567, 585
90051-0035	KNOB, EXTERNAL THREAD. NO. 8308-1135	499
90051-0077	HANDLE	567, 585
90051-0089	SHIFTER HANDLE	571, 573
90053-0029	COUNTER, F524.800FA3C 24VDC	759, 761
90053-0031	HOUR COUNTER, B 609.10 10-50VDC	759, 761
90055-0100	Y-CONNECTION, 6-6	117, 125, 127, 533
90055-0101	Y-CONNECTION, 8-8	405, 407, 409
90055-0118	ELBOW PIPE JOINT -8MM	405, 407, 409, 429, 431, 433, 435, 437
90055-0154	HOSE COUPLING	357
90055-0172	ELBOW WITH TAILPIECE 8/8 MM	433, 435, 437
90055-0217	ELBOW PIPE JOINT	421, 433, 435, 437
90056-0071	WORM GEAR	343
90059-0001	THERMOSTAT	589
90061-0027	ANGLE ENCODER 670900035	241
90062-0015	LOCK WASHER SERRAT.EXT.GEAR,6,4/11 H=0,7	711, 727, 729, 743, 745, 747, 749, 759, 761

Part No	Description	Page No
		769, 773, 775
90062-0022	LOCKING WASHER D=6,4/11	759, 761
90062-0058	LOCK WASHER SERRAT.EXT.GEAR,3,2/6 H=0,4	667
90062-0061	LOCK WASHER NORD-LOCK,6,5/10,8, H=2,6	653, 655, 667
90064-0085	PUSH BUTTON, RED	487, 601
90064-0098	PUSH BUTTON, CLEAR	487
90064-0124	SWITCH, EM. STOP, ZB2-BS844+ZB2-BZ1045	111, 601, 743, 745
90064-0315	LAMP REMOVER, NO:700	613
90066-0013	PUSH BUTTON BOX XB2-SAS 11	111
90069-0600	GEARS, WORM MOTOR ODM90-60KE5	29, 549, 551
90074-0001	CABLE CLIPS, D=10 MM	125, 127
90074-0026	PIPE CLIP FOR TUBE D=24-35 MM	213
90075-0124	CONTACTOR, 4KW 24VDC	679
90075-0125	CONTACTOR, 7,5KW 24VDC	679
90075-0127	CONTACTOR, 4KW 24VDC	691
90075-0128	CONTACTOR, 7,5KW 24VDC	679, 691
90075-0141	CONTACTOR, 4KW 24VDC	691
90077-0079	FEED THROUGH TERMINAL, 02943.6	625, 631, 633
90077-0102	TERMINAL BLOCK, 1952.2	589
90077-0113	FEED THROUGH TERMINAL, 10-00102150-1	381, 383, 701, 703
90077-0328	RAIL TS15/5	625, 631, 633
90082-0013	OVERVOLTAGE PROTECTOR	771
90082-0301	OVERVOLTOLTAGE PROTECTOR	613
90083-0016	PLATE FOR AXK 2035	221, 223
90087-0002	PIPE PLUG	147
90087-0019	PLUG M10X1 STAINLESS	217, 219, 339, 365
90087-0036	PLUG	421
90089-0003	REDUCING SLEEVE, PR22,5/PR18,6	111
90089-0004	REDUCING SLEEVE, PR28,3/PR22,5	601
90089-0005	REDUCING SLEEVE, PR37/PR28,3	601
90089-0007	REDUCING SLEEVE, PR18,6/PR22,5	549, 551
90090-0005	BALL, D=3 MM	285, 287, 289, 291
90090-0008	BALL, D=7,1 MM	159, 161, 163
90090-0016	BALL, D=15 MM	125, 127
90091-0089	ROD SEAL, GLIDORING 16X22X2,5 MM	285, 287, 289, 291
90091-0091	ROD SEAL, GLIDORING 10X14X1,7 MM	247, 249, 251, 253
90091-0106	SCRAPER 30X40X10 MM	147
90091-0137	RADIAL SEAL VARILIP 20X35X7MM	451
90091-0162	WEAR RING 16X19X3,2 MM	285, 287, 289, 291
90091-0169	WEAR RING 12X15X3,2 MM	247, 249, 251, 253
90091-0170	WEAR RING 25X30X4,2 MM	285, 287, 289, 291
90091-0214	ROD SEAL, GLIDORING 16X20,9X2,2 MM	285, 287, 289, 291
90091-0215	ROD SEAL, GLIDORING 25X32,5X3,2 MM	285, 287, 289, 291
90091-0216	PISTON SEAL, GLIDORING 7,1X12X2,2 MM	247, 249, 251, 253
90091-0233	RADIAL SEAL 85X110X12 MM DUST LIP	389
90091-0237	ROD SEAL, GLIDORING 20X27,5X3 MM	53, 55, 57
90091-0238	WEAR RING 20X22X10 MM	53, 55, 57
90091-0266	SEAL RING 10,4X16,3X2,5 MM	51, 639
90091-0305	RADIAL SEAL 40X55X7 MM DUST LIP	389
90091-0306	RADIAL SEAL 30X47X7 MM DUST LIP	365
90091-0335	PISTON SEAL,GLIDORING 62,5X70X3 MM	55
90091-0336	PISTON SEAL, GLIDORING 79X90X4 MM	53, 57
90092-0052	METERING VALVE 10 MM3	159, 161, 163, 217, 219, 221, 223, 285, 287, 289, 291, 295, 297 299, 301, 303, 315, 317, 339
90092-0053	METERING VALVE 30 MM3	159, 161, 163, 217, 219, 221, 223, 285, 287, 289, 291, 315, 317, 365
90092-0054	METERING VALVE 50 MM3	365
90094-0005	RAIL BRACKET	693, 695, 701, 703
90095-0069	OVERLOAD PROTECTION, PKZM 0,25 A	755
90095-0073	OVERLOAD PROTECTION, PKZM 1,6 A	755
90095-0075	OVERLOAD PROTECTION, PKZM 4 A	755
90095-0077	OVERLOAD PROTECTION, PKZM 6-10 A	755
90097-0017	FLAT PIN PLUG 6,3MM	651
90099-0001	MUTTER PR 15,2 MäSSING	167, 401, 463, 601
90099-0002	NUT PR 18,6 BRASS	149, 401, 557, 559, 561, 589, 601
90099-0003	NUT	403
90099-0011	NUT PR 37 BRASS	111, 401
90099-0057	NUT HEX. M20X1,5	349
90099-0085	NUT	187, 189
90099-0087	NUT PR=20,4	167, 401
90099-0104	NUT, PR 15,2 (PG9)	113, 719, 721, 723, 725, 743, 745
90099-0110	NUT, PR 22,5 (PG16)	113, 719, 721, 723, 725, 777
90099-0117	NUT, PR 18,6 (PG11)	111
90099-0118	NUT, PR 20,4 (PG13,5)	111
90099-0119	NUT, PR 28,3 (PG21)	111, 113, 719, 721, 723, 725
90099-0120	MUTTER PR 37 (PG29)	111, 113, 719, 721, 723, 725
90099-0131	NUT HEX. M16X2 SS	67, 69
90110-0028	CONTACT UNIT 4-POLE	711
90110-0095	CONNECTOR 3 POLE + EARTH	471, 473
90110-0127	COAXIAL CONNECTOR, GE 15057C10HBN	735, 737, 739, 741
90110-0150	MALE INSERT 121110 0000	507, 601
90110-0151	FEMALE INSERT 24-POL 121130 0000	731, 735, 737, 739, 741
90110-0152	CABLE HOOD 24-POL 70.352.2428.1	601
90110-0153	CHASSIS HOUSING 24-P CHI 24, 121240 0000	731, 735, 737, 739, 741
90110-0156	MALE INSERT 70.210.0653.0	507

Part No	Description	Page No
90110-0163	FEMALE INSERT 70 300 0640 0	777
90110-0170	FEMALE INSERT 10-POLE	601
90110-0171	COVER 10-POLE	601
90110-0207	SOCKET	461
90110-0216	MALE INSERT 70 310 1040 0	191
90110-0226	CABLE HOOD 6-POL 70.350.0628.0	777
90110-0243	CONTACT HOUSING 16-POL 70.320.1628.0	735, 737, 739, 741
90110-0244	CABLE HOOD 6-POL 70.350.1628.0	507
90110-0247	FEMALE INSERT 70.200.0653.0	735, 737, 739, 741
90110-0295	CONNECTOR 4 POLE + EARTH	549, 551, 601
90110-0296	CONTACT SCREW	727, 729
90110-0346	CABLE HOOD 1211220 00 00	507
90110-0371	PLUG HOOD	549, 551, 601
90110-0383	CONTACT COVER 15 PIN	621
90110-0518	PLINTH 15 PIN	621
90111-0120	SWITCH, 2 POS.704.510 .0A+704.901.5/A	759, 761
90111-0122	KEY SWITCH, 2 NO CONTACTS	759, 761
90111-0124	KEY SWITCH, 1NO,1NC CONTACT	759, 761
90111-0172	EARTH FAULT BREAKER, F 362-25/0.03	751
90113-0063	PRESSURE REGULATOR	49
90113-0064	PRESSURE REGULATOR	49
90113-0069	PRESSURE REGULATOR	421
90113-0076	PRESSURE REGULATOR	421
90113-0085	PRESSURE REGULATOR	423
90113-0128	FILTER	423
90113-0374	SLOW STARTING VALVE	423
90113-0375	PRESSURE DISTRIBUTION	423
90113-0377	SHUT-OFF VALVE	423
90113-0378	SHUT-OFF VALVE	423
90113-0379	NUT	421
90113-0387	FILTER ELEMENT 40æM FOR 90113-0094	423
90115-0054	ROD END, ID=8 MM, M8X1,25	593
90115-0173	ROD END, ID=6 MM, M6X1	157
90119-0056	RELAY, AUXILIARY MK3P5-S 24VDC	665
90119-0063	OPTO-RELAY, DC/DC AMMS-10-1/30VDC	671
90119-0067	SOLID-STATE RELAY, H12WD4850	663, 681, 683, 685
90119-0072	SAFETY RELAY, JSBR4	671
90119-0086	RELAY, AUXILIARY MY4IN4 24VDC	665
90119-0089	SAFETY RELAY, JSBT4 24VDC	671
90119-0104	OPTO COUPLER AMMS 50070	671
90119-0109	RELAY OMRON 24VDC MY4H	665
90119-0309	BASE UNIT, TYPE PYF 14AE	665
90119-0310	CLAMP, TYPE PYC-A1	665
90121-0132	RESISTANCE FIXED, 0,51 KOHM, 0,25 W	701, 703
90125-0020	PLATE	23
90129-0006	BASE, S3-B	665
90134-0003	BUSHING	159, 161, 163
90134-0004	PIPE CONNECTION R1/8	339, 365
90134-0030	SLEEVE FOR PLASTIC TUBE	159, 161, 163
90134-0031	SLEEVE FOR PLASTIC TUBE	159, 161, 163, 217, 219, 339, 365
90134-0034	NIPPLE	159, 161, 163, 167
90134-0038	BUSHING/NUT INLET/OUTLET 4 MM	159, 161, 163, 217, 219, 221, 223, 339, 365
90134-0039	BUSHING VALVE CONNECTION 2,5 MM	159, 161, 163, 217, 219, 221, 223, 303, 315, 317, 339, 365
90134-0040	BUSHING VALVE CONNECTION 4 MM	365
90134-0042	SPACER DOSING VALVE	285, 287, 289, 291
90134-0045	PLUG M12X1	285, 287, 289, 291
90134-0047	CONNECTION FOR DOSING VALVE	285, 287, 289, 291
90134-0051	SPACING COLLAR DOSING BLOCK	365
90134-0052	PLUG DOSING BLOCK	217, 219, 365
90134-0055	BUSHING/NUT INLET/OUTLET 6 MM	365
90134-0058	CONNECTION	213, 217, 219, 221, 223, 247, 249, 251, 253, 285, 287, 289, 291, 295, 297, 299, 301, 303, 335, 337
90134-0065	CONNECTION M6 TUBE 2,5 MM	369
90134-0066	CONNECTION M6 TUBE 4 MM	315, 317
90134-0068	CONNECTION	237, 239, 295, 297, 299, 301, 315, 317
90134-0081	REDUCTION SLEEVE M10X1/R 1/8"	469
90135-0019	CLAMP ZB 35	707, 709
90135-0026	EARTH TERMINAL, 3802.6	625, 631, 633
90135-0034	SHIELD CLAMP KLBU 3-8	669, 705
90135-0039	SHIELD CLIP KLBU 4-13.5	669, 705
90135-0044	EARTH WIRE, L=320 MM 16 MM2	711, 743, 745, 747, 749, 759, 761, 773, 775
90136-0002	PLUG 5/16"24	159, 161, 163
90137-0010	BANJO CONN. M6, D=2,5 MM	147
90140-0010	T-PIPE, INT. THREAD, 20031/2	417, 475
90140-0015	T-PIPE, INT. THREAD, 2003-1/8	429, 431
90140-0023	T-PIPE, INT. THREAD, NO. 2070-3/8-3/8	475
90141-0015	RETAIN. RING, 8	493, 513, 519, 547
90141-0016	RETAIN. RING, 10	19, 493, 497, 499, 501, 503
90141-0017	SPåRRING 17	367
90141-0022	SNAP RING B 16	25, 41
90142-0005	HOSE	213
90143-0010	STRIP	147
90143-0012	STRIP	147
90143-0020	STRIP	449

Part No	Description	Page No
90143-0028	STRIP	361
90143-0029	STRIP	567, 585
90143-0057	STRIP EMKA 1011-05 21X11MM	715, 717
90143-0059	SEAL STRIP 4610069	197, 777
90143-0060	EDGE STRIP 9,5X6,3MM BLACK PVC	187, 401, 543, 545, 601
90143-0062	STRIP	441
90143-0068	RUBBERSTRIP EMKA 1011-06	169, 171, 173, 175, 201, 203, 395, 397, 543, 545
90143-0073	RUBBER STRIP	715, 717
90143-0076	PROFILE	183, 185
90143-0094	SEAL	747, 749, 769, 779
90144-0003	TAPE	479, 641
90144-0030	TAPE	591
90144-0072	TAPE SCOTCH VHBS 4945 W=12,7MM	543, 545, 733, 757, 773
90144-0073	TREBOFLON-TAPE W=13MM	49, 65, 213, 365, 451
90148-0037	HOSE	159, 161, 163
90148-0038	HOSE	159, 161, 163
90151-0001	BRASS PIPE DI=2,6 MM	159, 161, 163
90152-0016	HOSE (SPIRAL)	177
90152-0017	HOSE (SPIRAL)	179
90152-0050	SPIRAL CONDUIT, 20X13, UL 1313	601, 603, 605
90152-0051	SPIRAL CONDUIT, 25X18, UL 1816	147, 169, 171, 205, 215, 361, 445, 451, 471, 473, 487, 507, 549, 551, 557, 559, 561, 601
90152-0058	SPIRAL CONDUIT, 15X9, UL 0909	389, 601, 603, 605
90152-0059	SPIRAL CONDUIT, 18X12, UL 1211	147, 199, 403, 447, 461, 463, 469, 471, 473, 589, 601, 603, 605
90152-0060	SPIRAL CONDUIT, 42X35, UL3529	189
90152-0070	METAL HOSE, 32,5X26, UL 2621	13, 15, 27, 147, 365, 507, 601, 603, 605
90153-0015	ADHESIVE,LOCTITE IS 496/CYANOLOT 303	247, 249, 251, 253
90153-0016	ADHESIVE,TUBE 100G RHODORSIL CAF 3	13, 15
90153-0017	ADHESIVE, 2963 TUBE 160G	147
90153-0020	ADHESIVE, BOSTIK 1782 125ML	27
90153-0023	ADHESIVE, SILICON 251470 TUB 90CC	13, 15
90153-0035	ADHESIVE, CLIMAFLEX 1632864	405, 407, 409
90153-0048	ADHESIVE,DEVCON TYPE 5-MIN-EPOXI 28G	447
90155-0008	HANGER CHAIN, 18	101
90157-0016	LOCKING FLUID	119, 147, 213, 217, 219, 221, 223, 227, 229, 491
90157-0021	LOCKING FLUID	311
90157-0022	SEALING COMPOUND	147, 173, 175, 365
90157-0037	SEALING COMPOUND	45, 47
90157-0041	SEALING COMPOUND	169, 171, 197, 201, 203, 395
90161-0001	O-RING MATERIAL 3 MM	153, 155
90163-0013	QUICK COUPLING, (F) LP 006-0-WR013-01-2	177, 179
90163-0014	QUICK COUPLING, (M) LP-006-1-WR013	469
90163-0015	QUICK COUPLING, (M) LP-006-1-WR513	177, 179
90163-0016	QUICK COUPLING, (F) LP 006-0-WR013	423
90163-0041	HOSE NIPPLE, EXT.THR. 3/8-12 MM	45, 47, 103, 469
90163-0046	SLEEVE LP-004-0-WR 0510-21-1 BRASS	365
90163-0048	NIPPLE LP-004-2-WR 510-23-1	339
90163-0052	HOSE NIPPLE, EXT.THR. 1/4-12 MM	343
90163-0057	NIPPLE 1/8" BRASS	45, 47, 63
90163-0062	QUICK COUPLING, (F) 5053-1/8	45, 47, 63, 365
90163-0064	QUICK COUPLING, (M) LP-006-2-WR517	469
90163-0076	QUICK COUPLING, (F) LP-006-0-WR021	471, 473
90163-0304	QUICK COUPLING, LP-006-5-74-KU (DUST CAP	469
90164-0015	LIGHT FIXTURE, DWDCV111B/230V 50HZ	199, 601
90164-0018	LIGHT FIXTURE, FK 130	715, 717
90164-0301	HOLDING FIXTURE	149
90165-0002	CLIP	159, 161, 163, 217, 219, 221, 223
90165-0008	PIPE CLIP FOR TUBE D=10 MM	577, 579
90165-0010	CLIP	581, 583
90165-0019	TOOL CLIP, 81/3, OPEN, 20 - 30 MM	429, 431
90165-0022	PIPE CLIP, FOR TUBE D=2,5 MM, B-3570	159, 161, 163, 217, 219, 221, 223
90165-0023	CLIP	159, 161, 163
90165-0039	PIPE CLAMP, RSGU 1.15/12, D=15 MM	159, 161, 163
90165-0056	PIPE CLIP FOR TUBE D=4 MM	577, 579
90165-0057	PIPE CLIP FOR TUBE D=6 MM	469
90165-0065	PIPE CLAMP, RSGU 1.8/9, D=8 MM	159, 161, 163, 221, 223, 237, 239
90165-0099	PIPE CLAMP, DOUBLE, RBP-108, D=8 MM	167
90166-0008	HOSE 7/10 PVC TRANSP.	403
90166-0013	TUBE 8 MM PA BLUE	365, 405, 407, 409, 433, 435, 437
90166-0059	HOSE PVC 12/16MM TRANSP.	557, 559, 561, 577, 579
90166-0060	HOSE 19/26-27 REINF.PVC	213
90166-0061	HOSE 4/8 PVC TRANSP.	429, 431
90166-0068	TUBE 12 MM PA BLUE	405, 407, 409, 533
90166-0081	TUBE 6 MM PA BLUE	159, 161, 163, 167, 405, 407, 409, 421, 433, 435, 437, 533
90166-0089	HOSE 4/6.2 PE BLUE	353, 355
90166-0090	HOSE 6/8.4 PE BLUE	353
90166-0095	TUBE 4 MM PA BLUE	255, 257, 259, 261, 319, 357, 497, 533
90166-0108	TUBE 6 MM PA,TRANSP.	159, 161, 163, 167, 351
90166-0109	TUBE 4 MM PA,TRANSP.	159, 161, 163, 221, 223, 315, 317, 339, 365
90166-0113	HOSE	343, 469
90166-0118	TUBE 8 MM PA BLACK	159, 161, 163, 167, 405, 407, 409, 423, 467
90166-0119	HOSE PUR 4/6 BLACK	67, 69, 117, 405, 407, 409
90166-0124	TUBE 6 MM PA,TRANSP.	97
90166-0132	TUBE 6 MM PA,TRANSP.	67, 69, 125, 127

Part No	Description	Page No
90166-0133	TUBE 8 MM PA,TRANSP.	213, 345, 347
90166-0135	TUBE 10 MM PA BLACK	179
90166-0138	HOSE	45, 47, 103, 447, 567, 585
90166-0143	TUBE 2,5 MM PA,TRANSP.	217, 219, 221, 223, 285, 287, 289, 291, 303, 315, 317, 339, 365
90166-0159	RUBBER HOSE	269, 271, 273, 275
90166-0193	TUBE 6 MM PUR BLUE	497
90166-0194	TUBE 8 MM PUR BLUE	429, 431
90166-0196	TUBE 14 MM PA BLUE	405, 407, 409, 475
90166-0244	RUBBER HOSE	445
90166-0245	RUBBER HOSE	445
90181-0037	CABLE DUCT, 25X40MM	779
90181-0052	CABLE DUCT, 25X80MM	653, 655
90181-0053	CABLE DUCT, 40X80MM	653, 655, 781
90181-0054	CABLE DUCT, 60X80MM	653, 655, 711, 759, 761
90181-0055	CABLE DUCT, 80X80MM	653, 655
90181-0056	CABLE DUCT, 100X80MM	653, 655
90181-0057	CABLE DUCT, 120X80MM	783
90181-0064	LOCK ZP1 FOR CHANNEL T1	653, 655, 759, 761
90181-0067	DIVIDING PLATE SEP80	653, 655, 759, 761
90181-0088	PLASTIC RIVET, PR 52314	759, 761, 779
90181-0190	CABLE DUCT, WALL BRACKET, B4 MINI	187, 601
90181-0313	RIVET DUCTAFIX R4	653, 655, 747, 749, 781, 783
90187-0029	BALL VALVE G1/2, NPBR	417, 419, 475
90187-0051	BALL VALVE G3/8 PTFE	103
90187-0059	BALL VALVE FOR HYDR.PER. G1/2 3MM HOLE	447, 453
90187-0062	BALL VALVE G1/2, NPBR	467
90187-0082	BALL VALVE G1/2	45, 47, 49
90187-0089	BALL VALVE G3/8, NPBR	45, 47
90187-0104	SAFETY VALVE, R3/4,	467
90187-0105	PURGING VALVE, G3/8 FOR WATER	13, 15
90187-0112	COCK VALVE, G1/4, 4-WAY, VITON	49
90187-0120	FLAP VALVE, G1/4, L=38	471, 473
90194-0016	ETIKETT	13, 15, 111, 151, 381, 383, 589
90194-0080	SIGN, IDENTIFICATION OF WIRING	775
90194-0152	SIGN, EARTH	667
90194-0163	SIGN, EARTH WITHIN CIRCLE	653, 655, 711, 715, 717, 727, 729, 743, 745, 747, 749, 759, 761, 769, 773, 775
90195-0020	TERMINAL BLOCK, 1977.2	149, 403
90195-0028	TERM.BLOCK 6-POLE STEATIT	27
90195-0029	CONN. LINK NO324 FOR -28	27
90199-0020	LEVEL GLASS/THERMOM. FSA 76.1.1./T/12	471, 473
90201-0010	DIRECT CHECK VALVE, NO. DGMDC-3-Y-PK-41	471, 473
90201-0014	VALVE	471, 473
90201-0131	VALVE	471, 473
90201-0132	VALVE	471, 473
90201-0133	VALVE	471, 473
90201-0407	BOLT KIT	471, 473
90206-0031	HEATING ELEMENT 700+1200W,220V	23, 637
90206-0053	HEATING ELEMENT 230V 1200W	589
90206-0070	HEATING ELEMENT 6000W 380/220V	13, 15, 637
90206-0322	GASKET	23
90206-0326	JUNCTION BOX FOR 90206-56	13, 15
90207-0363	GASKET	51, 639
90207-0365	GASKET	51, 639
90208-0031	BUSHING	329
90208-0080	CLAMPING ELEMENT WITH SLEEVE, 25X34 MM	227, 229
90208-0091	CLAMPING ELEMENT WITH SLEEVE, 60X77 MM	227, 229
90208-0120	CONE CLAMP. ELEMENT 22/32, L=25	213
90214-0092	BALL BEARING, 17X30X7 MM	367
90214-0098	BALL BEARING, 15X35X11 MM	557, 559, 561, 577, 579
90214-0122	BALL BEARING, 30X72X27 MM	331
90214-0138	BALL BEARING, 5X19X6 MM	509, 517
90214-0166	BALL BEARING, 2 SEALS, 20X37X12 MM	309
90214-0207	BALL BEARING, 15X32X9 MM	491
90217-0041	NIPPLE LKBN, RD 60-6 - R1 1/2 M	373
90217-0204	ASEPT. MALE FITTING ISO, 03-32-406/42	101
90217-0206	UNION NUT, 1 1/2 APV, 07-01-376/17	101
90217-0207	ASEPT. MALE FITTING ISO, 03-32-456/42	45, 47
90217-0209	UNION NUT, 2 APV, 07-01-426/17	45, 47
90217-0312	CLAMP, ISO2852 FOR PIPE 101,6 MM	463
90217-0313	GASKET 97,8X119X5,5 MM	463
90217-0347	GASKET 32X22,6X3,6 MM	45, 47, 101, 103, 105
90217-0348	GASKET 35,4X46,8X4 MM	45, 47, 101, 105
90217-0349	GASKET 48,4X59,8X4 MM	45, 47
90220-0034	THERMOCOUPLE CABLE K/ 2X0,5MM2	147, 345, 347
90220-0059	THERMOCOUPLE CABLE K/ 2X0,81MM2	13, 15, 19, 23, 27, 41, 45, 47, 105, 665, 759, 761
90220-0085	CABLES, MULTI-CONDUCTOR SCREENED	139
90220-0091	PAIR TWISTED CABLE 2X2X0,25MM2	429, 431, 621, 713
90220-0104	SCR. CABLE 4X1,5MM2	29, 147, 549, 551, 609, 727, 729
90220-0105	SCR. CABLE 4X2,5MM2	215
90220-0107	SCR. CABLE 5X0,75MM2	255, 257, 259, 261
90220-0183	SCR. CABLE 2X0,34MM2	667, 673, 779
90220-0305	CLAMP FOR SCR.CABLE, 16MM,	667
90224-0094	NIPPLE	475

Part No	Description	Page No
90224-0296	CONN. BULKHEAD, ART.NO. 116 1500	429, 431
90224-0308	CONN. BANJO, ART. NO. 2023-1/8-1/8	45, 47, 63
90226-0455	BLIND PLATE ABB 1666060	747, 749
90230-0025	NON-RETURN VALVE, 12MM, L=85	49
90230-0026	NON-RETURN VALVE RHZ 10-PLR-ED	471, 473
90230-0028	NON-RETURN VALVE H 151 R 3/8"	413
90230-0062	NON RETURN VALVE, 6, OP. PRESS. 0,2 BAR	405, 407, 409
90232-0103	PH.CELL E3S-CT61-L-5M	623, 627, 629
90232-0104	PH.CELL E3S-CT61-D-5M	623, 627, 629
90232-0123	PH.CELL WLL170-P135-6011723	603, 605
90232-0347	FIBRE LL3-TB01 5 308050	601
90233-0027	TUBE FUSE, 16A	613, 753
90233-0028	TUBE FUSE, 10A	753
90233-0029	TUBE FUSE, 25A	613, 753
90233-0303	FUSE HOLDER, ST10	753
90233-0304	FUSE HOLDER, ST10	753
90235-0151	NON-RETURN VALVE	405, 407, 409
90235-0206	QUICK EXHAUST VALVE, SEU-1/8	353
90235-0259	VALVE	45, 47, 67, 69, 533
90235-0261	ANGLE SEAT VALVE G1/2, N.C. DN13	49
90235-0274	THROTTLE CHECK VALVES,G1/8"	19, 23, 35, 37, 45, 47, 93, 95
90235-0289	VALVE	493, 497
90235-0450	PLATE	429, 431
90235-0708	VALVE	429, 431
90235-0723	THROTTLE VALVE	117
90235-0844	THROTTLE CHECK VALVE, M5, MANUAL, 6MM	157
90237-0046	MAGNETIC LOCK, 46X33X15 MM	505, 509
90237-0128	LOCK CYLINDER, 1109-U3	201, 203, 395, 397, 543, 545, 743, 773, 775
90237-0129	LOCK CYLINDER, 1109-U2	395, 745
90237-0150	TURNING HANDLE, NO. 1125-U190-0A	543, 545, 743, 745, 773, 775
90237-0153	LOCK HOUSING, 1121-U26-0B	201, 203, 395, 397
90237-0154	LOCK HOUSING, 1121-U60-0C	543, 545, 743, 745, 773, 775
90237-0155	LOCK ADAPTER, 1121-U40	543, 545, 743, 745, 773, 775
90237-0156	LOCK BOLT, 1000-16	543, 545, 743, 745, 773, 775
90237-0157	LOCK BOLT, 1000-230	711, 747, 749, 757, 759, 761, 765, 767
90237-0175	TURNING HANDLE	395, 397
90237-0176	TURNING HANDLE	201, 203, 743, 745, 773, 775
90237-0319	LOCK HOUSING, 1000-U134	711, 747, 749, 757, 759, 761, 765, 767
90237-0320	LOCK HOUSING, 1000-U136	711, 747, 749, 757, 759, 761, 765, 767
90237-0322	LOCK GASKET, 1000-U137	711, 747, 749, 757, 759, 761, 765, 767
90237-0323	LOCK O-RINGT, 1000-24	757, 765, 767
90239-0357	ROD END, CLEVIS WITH AXLE M10X1,25	255, 257, 259, 261
90239-0405	ROD END,BALL JOINT EYE M10X1,25	35, 153, 155
90239-0453	BRACKET	35, 37, 93, 95, 107
90239-0460	BRACKET	19
90239-0486	REAR,CLEVIS,MINI-ISO 16	157
90239-0487	REAR,CLEVIS,MINI-ISO 20-25	23
90239-0489	ROD END, CLEVIS WITH AXLE M6X1,25	133
90239-0491	ROD END,BALL JOINT EYE,MINI-ISO M6	497
90239-0516	ROD END, CLEVIS WITH AXLE M10X1,25	19, 21, 37, 93, 95, 107
90239-0532	ROD END, CLEVIS WITH AXLE M8X1,25	19, 23
90239-0773	CYLINDER	35, 37
90239-0779	CYLINDER	19, 93, 95, 107
90239-0817	DOUBLE ACTING, MINI-ISO, CYL.16-50	133
90239-0819	DOUBLE ACTING, MINI-ISO, CYL.16-100	493
90239-0840	DOUBLE ACTING, MINI-ISO, CYL.16-12	97
90239-0842	DOUBLE ACTING, MINI-ISO, CYL.16-50	157
90239-0847	DOUBLE ACTING, MINI-ISO, CYL.20-50	23
90240-0048	PLAIN BEAR,SELF ADJ.SPHER. 25X42X20 MM	217, 219, 221, 223
90240-0050	PLAIN BEAR,SELF ADJ. 20X35X24	217, 219, 221, 223
90240-0073	BEARING BUSHING W/O FL, 16X18X20 MM	153, 155
90240-0094	BEARING BUSHING W/O FL, 50X55X40 MM	349
90240-0121	FLANGE BUSHING, 8X10X12 MM	553
90240-0146	FLANGE BUSHING,15X21X20 MM	13, 15
90240-0152	PLAIN BEAR,SELF ADJ.SPHER.12X22X10 MM	309
90240-0172	FLANGE BUSHING, 8X12X10 MM	71, 73, 75, 77, 79, 81, 83, 87, 89, 93, 95
90240-0180	FLANGE BUSHING 10X14X15MM	313
90240-0287	BUSHING, 10X12X10 MM	515
90240-0331	FLANGE BUSHING, 10X12X17 MM	385
90240-0332	FLANGE BUSHING, 16X18X12 MM	385
90242-0093	O-RING MATERIAL 1,5 MM	247, 249, 251, 253
90243-0061	AIR GUN, CEJN SERIE 204 ED: 90459-0173	177
90243-0133	CONTAINER	543, 545
90243-0134	FLOW METER	425
90245-0029	TRANSFORMER, 1280-3660/TP 182	715, 717
90248-0026	HINGE, 1703-80X32	557, 559, 561, 577, 579
90248-0034	HINGE, 66073	429, 431
90257-0002	FILTER PLUG, NO. 8145-00-120 TYP F12	343
90258-0031	PIN, STRAIGHT SLOTTED SPRING FRP 3X20	309
90259-0308	CONN.TERM.K&M BK25/3PKZM1	755
90259-0311	3 POLE BUSBAR K&M B3.1/5	755
90259-0313	AUX. CONTACT K&M NHI21-PKZM0	755
90259-0315	BUS BAR 3-POLE, K&M B 3.1/2-PKZM1	755
90261-0049	PLUG, BLIND, PLASTIC, NO. SR1750	491

Part No	Description	Page No
90261-0071	PLUG, BLIND, PLASTIC, NO. GPN500B58	13, 15
90261-0073	PLUG, BLIND, PLASTIC, NO. GPN250/15	343
90266-0006	TUBE	159, 161, 163
90266-0019	PIPE	159, 161, 163, 217, 219, 221, 223, 315, 317
90270-0017	COMPRESSOR NASH/ELMO 112 MB/4-2083	445
90270-0347	VALVE	417
90274-0045	PRESSURE GUARD, 14 KPA	151
90274-0056	PRESSURE SWITCH, 100 - 1200 KPA	429, 431
90274-0074	PRESSURE GUARD, 530 KPA	429, 431
90274-0084	PRESSURE GUARD, 1800 KPA	469
90277-0045	FILTER / 9900-05-BK	429, 431
90277-0046	FILTER / 9933-05-101	429, 431
90277-0055	FILTER HOUSING / MDS 4463 G 08 H	45, 47, 49
90277-0323	FILTER HOUSING / ART.NO 95S6-1/4 S 5430	429, 431
90277-0324	FILTER CARTRIDGE / 050-11-A	429, 431
90287-0075	SCREW SLOT. PAN HEAD LKCS M6X12	147, 157, 197, 201, 203, 255, 257, 259, 261, 399, 441, 541, 543, 545, 547
90287-0076	SCREW SLOT. PAN HEAD LKCS M6X20	147
90287-0081	SCREW MC6S M6X10 129	213
90287-0106	SCREW SPRINGLOAD. SLOTTED HEAD M10X21	491
90287-0112	SCREW SPRINGLOAD. SLOTTED HEAD M8X16	499, 539
90287-0143	SCREW MC6S M6X25 129	221, 223
90287-0144	SCREW MC6S M6X35 129	221, 223
90287-0145	SCREW MC6S M5X16 129	227, 229
90287-0148	SCREW SPRINGLOAD. SLOTTED HEAD M5X12	527
90287-0163	SCREW SPRINGLOAD. SLOTTED HEAD M6X14	235
90287-0167	SCREW SPRINGLOAD. SOCK. HEX HEAD M6X20	571, 573
90287-0212	SCREW MC6S M5X85 129	405, 407, 409
90287-0316	SCREW	543, 545
90288-0066	ROLLER CHAIN, SINGLE 3/8 -365	13, 15
90296-0053	OIL	479
90296-0068	GREASE UNIWAY LI62 CARTRID.400GR	213, 285, 287, 289, 291
90296-0070	GREASE	331, 389
90296-0073	OIL	333, 343
90296-0075	OIL 54322-320 ACC TO M 1254.322	213, 479
90296-0091	LUBRICATION GREASE	133, 135
90297-0006	FLUORESCENT TUBE, PL9	149
90297-0011	FLUORESCENT TUBE, TDL 30W/840	715, 717
90297-0306	BALLAST COIL 50/60 HZ	653, 655
90298-0019	DETERGENT	479, 641
90299-0072	INK	567, 585
90303-0011	PROTECTIVE GOGGLES	615
90303-0012	PROTECTIVE GLOVES	615
90303-0013	APRON	615
90304-0020	LIQUID CONTAINER	467
90304-0307	ATTACHMENT PIPE	467
90321-0037	PUMP C-6125P EP 220V;50HZ	403
90321-0101	GEAR PUMP	461
90326-0012	PROTECTIVE COVER, T31A4618	13, 15, 19, 23, 27, 41, 45, 47, 105
90326-0017	GLAND 1/8".REPL.BY 90326-306	19
90326-0020	PLUG, FEMALE YELLOW CR-AL	13, 15, 19, 23, 27, 41, 45, 47, 105
90326-0022	PLUG, MALE YELLOW CR-AL	345, 347
90326-0048	THERMOCOUPLE, 12826-31	19, 23
90326-0051	THERMOCOUPLE, 12826-33	27, 41, 105
90326-0052	THERMO ELEMENT	13, 15
90326-0057	THERMOCOUPLE, CR-AL	19
90326-0077	CONTACT	345, 347
90326-0080	THERMOCOUPLE, 5110080-000	345, 347
90326-0089	THERMOCOUPLE, 5110-089-000	45, 47
90326-0304	LEAD IN, 9041-15-KS-UB60	19, 23
90326-0306	GLAND FITTING 9041-45-KS-KR.1/8" D=4,5MM	23
90328-0001	SILENCER	423
90328-0003	SILENCER	45, 47, 67, 69
90328-0007	SILENCER	433, 435, 437
90328-0017	SILENCER, D=6 MM	433, 435, 437
90328-0020	SILENCER	133
90328-0026	SILENCER G1/4	63, 429, 431, 637
90328-0029	SILENCER M5	493
90330-0013	NIPPLES, EXT. THREAD. ISO 7/1 R1/4-R1/8	49, 429, 431
90330-0019	NIPPLES, EXT. THREAD. R1/2-R3/8	417
90330-0020	ELBOW, 90 INT. THREAD, R-2221/2	49, 447, 463
90330-0021	NIPPLES, EXT. THREAD. R-207R1/2	45, 47, 49, 447
90330-0025	BUSHING, INT/EXT. THR. R1/4-RP1/8	49
90330-0029	PLUG, EXT. G-THREAD, R-236R3/8	21, 23, 463, 465, 471, 473
90330-0032	NIPPLES, EXT. THREAD. ISO 7/1 R1/8-R1/8	45, 47
90330-0037	PLUG, EXT. G-THREAD, G1/2	303, 445
90330-0043	NIPPLES, EXT. THREAD. R-207R1/4	49
90330-0048	BUSHING, INT/EXT. THR. R1/2-RP3/8	49
90330-0049	T-PIPE, INT. THREAD, R-221R1/2	49
90330-0066	PLUG, EXT. G-THREAD, G1/8	63, 247, 249, 251, 253, 471, 473
90330-0078	BUSHING, INT/EXT. THR. R3/4-RP3/8	365
90330-0081	ELBOW, 90 INT. THREAD, R-222R1/4	49
90330-0085	BUSHING, INT/EXT. THR. R1/2-RP1/4	343
90330-0097	NIPPLES, EXT. THREAD, G1/8	165

Part No	Description	Page No
90330-0099	ELBOW, 90 INT. THREAD, R-222R1/8	165
90330-0101	NIPPLES, EXT. THREAD, G1/4	367
90330-0106	PIPE COUPLING	45, 47, 49
90332-0020	RECORDER HONEYWELL	759, 761
90332-0324	INK WHEEL	613
90332-0325	PAPER FOR RECORDER 90332-20	613
90335-0008	COMP. SPRING 22490, 1,6X14,1X115	71, 73, 75, 77
90335-0025	COMP. SPRING 22010, 1X11X26	599
90335-0027	COMP. SPRING 22170, 1,25X9,25X33	519
90335-0036	COMP. SPRING 22450, 1,6X14,1X24	345, 347, 547
90335-0041	TENSION SPRING 42350, 2X14X68	557, 559, 561, 577, 579
90335-0055	COMP. SPRING 22470, 1,6X14,1X53,5	369
90335-0064	COMP. SPRING 22270, 1,25X13,75X62,5	569
90335-0146	COMP. SPRING, 0,6X7,2X20	519
90335-0216	TENSION SPRING 40910, 0,5X5,5X27,7	517, 527
90337-0315	FILTERINSERT / MCS 4463	45, 47, 49
90342-0013	BELLOWS	493
90344-0022	SPROCKET	235
90347-0004	VIBRATION DAMPER D=30 TH=M8 H=17 H2=21MM	193, 447
90347-0005	DAMPER, NO. F 1006 B	597
90347-0024	SHOCK ABSORBER, 370-120-400	525
90347-0054	DAMPER	575
90347-0079	DAMPER TFE 601	609
90347-0108	GAS SPRING NO. 03-08-100-084174	547
90347-0144	VIBRATION DAMPER, NO. RA 40EM-A	445
90347-0189	SHOCK ABSORBER, 370-050-400	349
90348-0007	FREE WHEEL COUPLING	29, 39
90355-0048	TORQUE RIGID COUPLING, 22X22 MM	225
90360-0020	STEAM TRAP / MK36/51 3/8"	45, 47
90360-0305	FLOAT, ART NO 10739920	463
90410-0051	TEMPERATURE CONTROLLER, KS 40	759, 761
90411-0005	INSULATOR	27
90413-0033	CODE INSERT SET 0-9	563, 565, 581, 583
90413-0043	CODE INSERT SET	563, 565, 581, 583
90413-0044	CODE INSERT SET	563, 565, 581, 583
90413-0047	CODE INSERT SET	563, 565, 581, 583
90415-0018	FILTER FOR LIME SEPARATING / D MOD.AD	417
90415-0019	FILTER / ART.NO. HH-M15-RG	417
90415-0022	FILTER / R1 1/2" TYP. 1012	373
90415-0033	OIL FILTER REFILLING UC-HP-1229-25	469
90417-0076	TIMING BELT T10X920X25 POLYURETH	213
90417-0292	TIMING BELT T10X690X16 POLYURETHANE	389
90419-0307	GASKET	181, 191
90424-0009	SPRAY NOZZLE 103 DEG	353
90424-0010	SPRAY NOZZLE 142 DEG BSPT 1/4 K5	365
90424-0016	SPRAY NOZZLE 103 DEG R 1/8 GG8W	353
90424-0017	SPRAY NOZZLE	43
90424-0025	SPRAY NOZZLE 145 DEG	367
90424-0027	SPRAY NOZZLE TIP, 8613-8V-TC	147
90424-0032	SPRAY NOZZLE 95 DEG	165
90424-0033	SPRAY NOZZLE 76 DEG	165
90424-0035	SPRAY NOZZLE 95 DEG	165
90424-0054	SPRAY NOZZLE 120 DEG	465
90424-0070	SPRAY NOZZLE 61 DEG	375
90424-0304	GASKET	637
90426-0003	HAND SHOWER	179
90430-0070	FREQ.CONV. 6SE3213-6CA40	653, 655
90430-0076	FREQ.CONV. 6SE3221-3DC40	653, 655
90430-0326	FILTER 6SE3290-0BA87-0FB2	653, 655
90430-0330	FILTER 6SE3290-0DC87-0FB4	653, 655
90432-0023	BRAKE ORTLINGHAUS	213
90450-0033	CYLINDER	153, 155
90450-0281	DOUBLE ACTING,PROF.CYL 32-80	25, 41
90450-0306	DOUBLE ACTING, MINI-ISO, CYL. 12-25	497
90450-0328	DOUBLE ACTING,PROFILE CYL32-25	21
90450-0434	DOUBLE ACTING, COMPACT, CYL 50-30	335, 337
90450-0654	BRACKET,REAR,EYE WITH AXLE 32	255, 257, 259, 261
90450-0669	SENSOR, BRACKET SERIES 168	21, 41
90450-0747	INTERMEDIATE PLATE	255, 257
90450-0756	BRACKET, REAR EYE 32	21
90453-0001	MODEM MA-12	621
90453-0002	MODEM MD-12 DC	713
90456-0001	INTOUCH OEM 2000 V.5.6B/6.0B HW KEY	711
90457-0011	HYDRAULIC TANK, 12 LI, NO A3-14010	471, 473
90457-0012	TANK LID, LID-12L, NO A3-14011	471, 473
90457-0013	PUMP-MOTOR BRACKET, LS-211, NO 1711121	471, 473
90457-0014	FLEXIBLE COUPLING, ND5-A, CON.10X19 MM	471, 473
90457-0015	HYDR.PUMP, TFP100/2,2-S-C001, NO 1111250	471, 473
90457-0016	HYDR. VALVE MANIFOLD BLOCK, NO AI-14004	471, 473
90457-0017	TANK RET. OUTLET PIPE, NO 8185-0187	471, 473
90457-0018	HYDR.ACCU, NO SBO210-0,32EI/112A-210AK60	471, 473
90457-0019	LEVEL PROBE, HMFB-S=45-0=80-0=90-T70	471, 473
90457-0021	PUMP CONN. ELBOW FLANGE T-26/12-3/8	471, 473
90457-0022	HYDR. HOSE, 6,4 & M16X1,5 STR+90DEGR.CON	471, 473

Part No	Description	Page No
90457-0023	CONN.STRAIGHTG1/2-M22X1,5, VADKO15-RL/WD	471, 473
90457-0024	RETURNFILTER UNIT, RF-P/30-G-010AI.IT	471, 473
90457-0027	INSERT, MULTI HOLE, E155M1X5/4X9	381, 383, 719, 721
90457-0028	INSERT, MULTI HOLE, E154M5X5	379
90457-0029	INSERT, MULTI HOLE, E156M5,9,11,19	189, 715, 717
90457-0030	INSERT, MULTI HOLE, EK155M4X9	381, 383
90457-0031	NORMAL WITHOUT INSERT, PG 36	189
90457-0047	SENSOR 2750-1-5111-1 W.ADAPTER PNP	41
90457-0049	TERMINAL BLOCK, 102230	701, 703, 707, 709
90457-0050	BULKHEAD HOUSING 149760	727, 729
90457-0051	END PLATE	381, 383, 693, 695, 697, 699, 701, 703
90457-0052	END PLATE	693, 695, 697, 699
90457-0054	FEED THROUGH TERMINAL, 161527	693, 695, 697, 699
90457-0055	PROTECTION, 704-9645	759, 761
90457-0056	FAN 7450 ES	653, 655
90457-0057	GRID FOR FAN LZ36	653, 655
90457-0058	SIGN, LS SHORT STOP	759, 761
90457-0063	COOLING UNIT, KB17TB.CBB	777
90457-0086	BULKHEAD CONNECTOR 6MM	67, 69
90457-0087	BULKHEAD CONNECTOR 12 MM	67, 69
90457-0100	ACCUMULATOR CRVZS-2	439
90457-0101	FLOW METER FOR AIR	425
90457-0104	BLANK RIVET 2X7,4	429, 431
90457-0123	SIGN, MAIN SWITCH	715, 717
90457-0124	END CAP PSB-END6	751, 755
90457-0125	POWER RAIL SZ-PSB 12 N	751, 755
90457-0127	TENSIONER, TYPE SE-F-15	213, 215
90457-0128	CLAMPING ROLL	213, 215
90457-0131	PUMP SV805 R22T 50HZ	373
90457-0132	VALVE, BUTTERFLY, N.O. ZVF1200BSAAO	355
90457-0136	FLAT GASKET TAPE W. ADHESIVE, 10X3.0	471, 473
90457-0137	GASKET, GP IP	471, 473
90457-0138	GASKET, DP-200	471, 473
90457-0139	CONN.STRAIGHT G3/8-10 MM, A 10-L/R3/8/WD	471, 473
90457-0140	CONN.STRAIGHT G3/8-15 MM, A 15-L/R3/8/WD	471, 473
90457-0141	BULKHEAD CONNECTOR, 8MM	345, 347
90457-0143	SCREW M6S ISO 4014 M6X130 A480	475
90457-0146	EXTENDED WITHOUT INSERT,	111, 557, 559, 561, 601
90457-0147	GLAND, INSERT, MULTI HOLE, 2X7	111, 169, 171, 205
90457-0148	SCREW CAP HEAD SQ. NECK M6X100 SS	401
90457-0150	FLEXIBLE COUPLING, 10X25 MM	241
90457-0151	WORM GEAR UCZ 151 SIZE 125 39:1	213
90457-0162	CLAMPING ELEMENT, 00203005	241
90457-0170	DIRECTION VALVE, NO. 0 810 091 212	471, 473
90457-0172	MOTOR 3GAA 131001-ASA	215
90457-0175	LIGHT FIXTURE, FLUO K SET 108	715, 717
90457-0178	EQUAL BULKHEAD ELBOW CONNECTOR 36390800	167
90457-0179	ELBOW COUPLING 6179 04 10	167
90457-0180	ELBOW COUPLING 6179 06 10	167
90457-0181	EQUAL BULKHEAD ELBOW CONNECTOR 31390600	167
90457-0182	PIPE CLAMP, D=8 MM, RAPOD8X	167
90457-0183	COVER PLATE DPA0X, FOR 90457-0182	167
90457-0184	T-CONNECTION 6 MM 6104 06 00	167
90457-0188	BEARING 25X42X20 MM	233
90457-0192	WASHER PLAIN ROUND, 6,5/18, H=1,5	711, 715, 717, 743, 745, 747, 749, 759, 761, 773, 775
90457-0198	MAIN SWITCH	769
90457-0199	INSERT EK 156M 5X5/4X9	345, 347, 365
90457-0937	SCREW MC6S M3X40 A480	319
90458-0058	SCREW M5X60 A280	549, 551
90458-0072	SCREW, HEX.SOCK.BUTTON HEAD M6X12	183, 185
90458-0073	WASHER 6,4/30, H=1,5	183, 185
90458-0138	PROX.SW. E2EG-X1R5B1-5M	237, 239, 637
90458-0145	SEALING, 3X15 MM CLOSED CELL SPONGE	157, 197, 205
90458-0146	GLAND, HOSE, WITHOUT INSERT, PG21	507
90458-0147	GLAND, INSERT, MULTI HOLE, 2X6,5	381, 383
90458-0220	TENSION ROLLER, M40/60-0-M EXCENTRIC	365, 389
90458-0256	PROXIMITY SWITCH IIA 3010-BPKG/6M	153, 155
90458-0258	TRANSFORMER, 220VAC/6-9-12VAC	715, 717
90458-0281	DISTRIBUTOR 8933502114	405, 407, 409
90458-0292	BASE, KT70-1001	181, 191
90458-0293	LIGHT ELEMENT, RED, KL70-401R	181, 191
90458-0294	LIGHT ELEMENT, YELLOW, KL70-401Y	181, 191
90458-0295	LIGHT ELEMENT, BLUE, KL70-401L	181, 191
90458-0302	SIREN WITH ADJUSTABLE VOLUME KS 70-3004	191
90458-0305	CABLE GLAND, M12X1,5, NO.5311 1000	507, 735, 737, 739, 741
90458-0306	CABLE GLAND, M16X1,5, NO.5311 1010	507
90458-0307	CABLE GLAND, M20X1,5, NO.5311 1020	189, 601
90458-0308	CABLE GLAND, M25X1,5, NO.5311 1030	189
90458-0311	CABLE GLAND, M50X1,5, NO.5311 1060	715, 717
90458-0314	CABLE GLAND, M16X1,5, NO.5311 1110	365
90458-0321	NUT, M12X1,5	735, 737, 739, 741
90458-0322	NUT, M16X1,5	365, 389
90458-0326	NUT, M40X1,5	365
90458-0327	NUT, M50X1,5	715, 717

Part No	Description	Page No
90458-0422	EXTENDED WITHOUT INSERT, M20X1,5	507
90458-0427	EXTENDED WITHOUT INSERT, M16X1,5	389
90458-0430	EXTENDED WITHOUT INSERT, M20X1,5	169, 171, 205, 373, 507
90458-0431	EXTENDED WITHOUT INSERT, M25X1,5	361, 471, 473, 487, 507
90458-0433	EXTENDED WITHOUT INSERT, M32X1,5	507
90458-0438	GLAND, EXTENDED WITH INSERT, M20X1,5	255, 257, 259, 261
90458-0450	GLAND, M25X1,5, NO. 2255416S08UL16	215
90458-0459	EXTENDED WITHOUT INSERT, HIGH TEMP, 40X1	365
90458-0460	GLAND, LOCKNUT, M16X1,5	735, 737, 739, 741
90458-0461	GLAND, LOCKNUT, M20X1,5	735, 737, 739, 741
90458-0462	GLAND, LOCKNUT, M25X1,5	735, 737, 739, 741
90458-0465	GLAND, LOCKNUT, M50X1,5	735, 737, 739, 741
90458-0601	PHOTOCELL, SICK PHOTOCELL 1	125, 127
90458-0675	PROXIMITY SENSOR, E2EG-X5MB1-5M	133, 549, 551
90458-0676	PROXIMITY SWITCH,E2EG-X5B1-6M	45, 47
90458-0726	PRESSURE GAUGE, D=50 MM WITH FILTER	471, 473
90458-0746	STEP MOTOR DRIVE L50	653, 655
90458-0747	SENSOR FOR CYLINDER, SMH-1PC	259, 261
90458-0824	BUSHING, 8X10X8 MM	133
90458-0825	FLANGE BUSHING,16X18X17 MM	133
90458-0871	HOUSING BULKHEAD MOUNTING HAN 6B-AGG-RB	727, 729
90458-0875	HINGED FRAME HAN 6B FOR HOUSING	727, 729
90458-0876	FEMALE INSERT HAN 6B 09 14002 2751	727, 729
90458-0894	PROXIMITY SENSOR E2E2-X10MB1-5M	365
90458-0917	TRANSF. 3-PH 750VA SEC. 23A	715, 717
90458-1092	PROPORTIONAL VALVE 0 - 10V/0-6 BAR	429, 431
90458-1114	BIMET. ELECTROMECH. THERMOSTAT K7H.020	707, 709
90458-1136	TERMINAL BLOCK, 103630	381, 383, 697, 699, 701, 703
90458-1162	FILTER, 6 A, 250 VAC	653, 655
90458-1226	HANDLE, NO. GN 310-12-100-A-NI	547
90458-1227	LEAD-IN, BUSHING, DA 130/170/50	441, 539
90458-1228	LEAD-IN, BUSHING, DA 230/300/60	539
90458-1229	LEAD-IN, BUSHING, DA 75/110/50	539
90458-1230	CLAMPING ELEMENT, DI=36 MM	549, 551
90458-1231	FORK HOLDER 913588/04	549, 551
90458-1232	BEARING BRACKET AY15	549, 551
90458-1233	TIMING BELT AT10 340X16 MM	549, 551
90458-1234	PROTECTIVE CAP 2X20X1.2X100	549, 551
90458-1238	GLAND, INSERT, SINGLE HOLE,	601, 603, 605
90458-1239	GLAND, INSERT, MULTI HOLE, 1X9/1X5,5	557, 559, 561, 601
90458-1240	RUBBERSPRING DK-A 15X40	549, 551
90458-1241	TENSION SPRING RZ-1221	593
90458-1273	TRANSFORMER, OFL-1350	715, 717
90458-1279	PLUG CONNECTOR DP1	653, 655
90458-1298	CONNECTOR AND CABLE 403000E 18M 080	255, 257, 259, 261
90458-1300	2 AXIS DOCKING STATION D2/PLC	653, 655
90458-1301	CYLINDER ETS32-M10NA2X-FM50-AEUM1D	255, 257, 259, 261
90458-1302	CONTACTOR, 4KW 48VAC	691
90458-1306	BLIND PLUG CIRCULAR, M12X1,5 514GFK/212	507, 735, 737, 739, 741
90458-1307	BLIND PLUG CIRCULAR, M16X1,5 514GFK/216	735, 737, 739, 741
90458-1308	BLIND PLUG CIRCULAR, M20X1,5 514GFK/220	189, 735, 737, 739, 741
90458-1309	BLIND PLUG CIRCULAR, M25X1,5 514GFK/225	735, 737, 739, 741
90458-1312	BLIND PLUG CIRCULAR, M50X1,5 514GFK/250	735, 737, 739, 741
90458-1423	CONNECTOR, PC 4/4-STF-7.62	779
90458-1424	CONNECTOR, MSTB 2.5/10-STF-5.08	779
90458-1447	MOUNTING RAIL SUPPORT TST 128660	693, 695, 697, 699
90458-1448	MAGNETIC FUSE, S292 C100	751
90458-1489	CABLE CLIPS, D=4,75 MM	167
90458-1490	CABLE CLIPS, D=7,9 MM	653, 655
90458-1517	SCREW SPRINGLOAD. SOCK. HEX HEAD M8X18	309
90458-1590	KNOB WITH SHAFT, M6	235
90458-1591	TIMING BELT T10X1000X25 POLYURETHANE	213
90458-1612	SCREW CAP HEAD SQ. NECK M6X120 SS	401
90458-1613	SCREW CAP HEAD SQ. NECK M6X140 SS	401
90458-1651	EMERGENCY STOP, ZB4-BS-844 ZB4-BZ-104	487
90458-1704	BALL BEARING, 15X35X11 MM	29, 35, 39, 135
90458-1721	INDEXING GEAR, 10707205	333
90458-1747	NORMAL WITHOUT INSERT, M50X1,5	715, 717
90458-1790	BUSHING, 6X8X6 MM	133
90458-1879	GEARS, WORM MOTOR 528V--L06-B01	39
90458-1906	GLAND, INSERT, MULTI HOLE, 4X5	381, 383
90458-1958	ARTICULATION, 300DEG WITH STOP	189
90458-1959	LIFTING EYE BOLT, LGB (3) 3T M24	619
90458-1960	STRETCHING SCREW, 468-697MM MAX2950KG	619
90458-2039	CONN. STR., 6-R1/8, EXT. THREAD	119
90458-2040	ELBOW PIPE JOINT, INT.THREAD, G1/8"D=6MM	119
90458-2078	SCREW SPRINGLOAD. SOCK. HEX HEAD M12X26	595
90458-2169	INCREASER 6-8	433, 435, 437
90458-2199	GASKET, LOWARA 168061340	373
90458-2200	ELECTROMAGNETIC CLUTCH, 30 MM/24 VDC	213
90458-2418	CHASSI HOUSING 10-POLE, 70.331.1028.0	191
90458-2421	PRESSURE GAUGE, 1453 W. BRACKET	429, 431
90458-2487	SCREW PLUG HD-PE, M24	441
90458-2488	MEASURING HOSE DN2 L=1500MM, MAX 400BAR	429, 431

Part No	Description	Page No
90458-2557	CABLE OLFLEX 25X1 MM2	189
90458-2580	LEVEL CONTROL RELAY RM4-LA32M	671
90458-2661	THROTTLE CHECK VALVE G1/4" MANUAL, 8	433, 435, 437
90458-2722	DIRECTION VALVE, NO. 0 810 091 222	471, 473
90458-2762	PUMP SV805 R406T 60HZ	373
90458-2840	SHAFT COUPLING 22,225H9/9	39
90458-2841	SHAFT COUPLING 22,225H9/15	29
90458-2924	CONTACTOR 30KW COIL 24VDC	653, 655
90458-2925	AUXILIARY CONTACT, DIL M820-XHI11-SI	653, 655
90458-2954	ELBOW PIPE JOINT, EXT.THREAD, D=4MM M5	319
90458-2956	ELBOW PIPE JOINT, EXT.THREAD, D=6MM-G1/8	335, 337, 355
90458-2964	ELBOW PIPE JOINT, EXT.THREAD, D=8MM-G1/8	353
90459-0075	HINGE, 1056-U30	509
90459-0251	DOUBLE ACTING, COMPACT, CYL 12-15	319
90459-0308	PAPER TROLLEY, STOCKA 32.04.250.9	609
90459-0472	KEY SAF.SW. AZ 16 02ZVRK-M20-2152-2254	169, 171, 205
90459-0691	SIGN, STRIP SPLICE/ RESET ALARM	487
90459-0737	SAFETY CLUTCH, SK1 15/D/20/5-20	389
90459-0765	O-RING 78X2 MM	389
90459-0766	SLEEVE, CR 99334	389
90459-1060	VIBRATION DAMPER, T15688	205
90459-1066	LEAD-IN, BUSHING, DA 300/350/10	187
90459-2045	O-RING 14X4 MM	137
90459-2063	CIRCUIT BREAKER, 1P 0,75 A K	751
90459-2195	CIRCUIT BREAKER, 3P 2 A K	755
90459-2309	FLEXIBLE CHAIN, A325A103KM	783
90459-2350	END BRACKET, A325A103KM	783
206913-0000 ..	LOCKING LOOP	593
208173-0000 ..	SHAFT	589
209145-0000 ..	THROTTLE SCREW	105, 465
209146-0000 ..	BARRIER NUT	105, 465
209183-0000 ..	RING	101
229207-0000 ..	BEARING SLEEVE	377
229775-0000 ..	SPACER	589
230551-0000 ..	GASKET	445
239440-0000 ..	SHAFT	93, 95
240797-0000 ..	HANDLE	309
243132-0000 ..	PROTECTION PLATE	589
243133-0000 ..	SHIELD PLATE	589
245039-0000 ..	GUIDE WHEEL	377
245221-0000 ..	STOP	589
247248-0000 ..	PIN	13, 15
247349-0000 ..	STEERING	31, 33
247357-0000 ..	SPROCKET	31, 33
247358-0000 ..	SHIFTER HANDLE	31, 33
247385-0000 ..	SIGN	429, 431
247386-0000 ..	SIGN	429, 431
250590-0000 ..	BEARING COVER	29
250592-0000 ..	WASHER	29, 39
253107-0000 ..	WASHER	557, 559, 561, 577, 579
255301-0000 ..	HEATING RAIL	589
255609-0000 ..	ARM CUTTING JAW	295, 297, 299, 301
255653-0000 ..	FLANGE BUSHING	295, 297, 299, 301
255742-0000 ..	COMPRESSION SPRING	247, 249, 251, 253
255801-0000 ..	RETAINING RING	247, 249, 251, 253
255870-0000 ..	VALVE HOUSING	21
255874-0000 ..	BEARING COVER	107
255875-0000 ..	BUSHING	21, 107
255939-0000 ..	WASHER	153, 155
255940-0000 ..	SPACER	153, 155
255942-0000 ..	SLIDER	153, 155
255943-0000 ..	HOLDER	153, 155
255969-0000 ..	SHAFT	93, 95
255970-0000 ..	BUSHING	93, 95
255977-0000 ..	SHAFT	109
255978-0000 ..	FORK	109
255986-0000 ..	WHEEL	31, 33
255995-0000 ..	SCREW	37
256005-0000 ..	GASKET	13, 15
256014-0800 ..	BATH	11
256022-0000 ..	BUSHING	37
256055-0700 ..	HOT AIR ELEMENT	11
256082-0000 ..	CAP	295, 297, 299, 301
256084-0700 ..	CHANGE-OVER VALVE	11
256095-0700 ..	HOT AIR ELEMENT	11
256112-0000 ..	BRACKET	23
256163-0000 ..	SHAFT	31, 33
256170-0000 ..	DRIP PLATE	31, 33
256173-0600 ..	WORM GEAR	211
256176-0000 ..	GEAR WHEEL	213
256177-0000 ..	SHAFT	213
256178-0000 ..	FIXING RING	213
256179-0000 ..	SPACER SLEEVE	213
256181-0000 ..	SPACER PIPE	213

Part No	Description	Page No
256197-0500 ..	ARM	211
256200-0300 ..	INTERMEDIARY SHAFT	211
256202-0700 ..	CURVE PACK	211
256204-0600 ..	CUTTING JAW	245
256205-0600 ..	CUTTING JAW	245
256208-0400 ..	KNIFE HOLDER	245
256212-0600 ..	PRESSURE JAW	245
256213-0600 ..	PRESSURE JAW	245
256214-0400 ..	PRESSURE RAIL	245
256217-0500 ..	GUIDE	245
256248-0001 ..	LID	557, 559, 561, 577, 579
256279-0000 ..	ANGLE	79, 81, 83
256280-0000 ..	DOWEL	71, 73, 75, 77, 79, 81, 83
256309-0000 ..	SHAFT	71, 73, 75, 77
256312-0000 ..	WASHER	71, 73, 75, 77
256398-0000 ..	LID	557, 559, 561, 577, 579
256400-0000 ..	SHAFT	557, 559, 561, 577, 579
256406-0000 ..	GABLE PLATE	557, 559, 561, 577, 579
256409-0000 ..	WASHER	557, 559, 561, 577, 579
256410-0900 ..	INDEXING UNIT	325
256418-0000 ..	BEARING BRACKET	221, 223
256421-0000 ..	PULLEY	217, 219
256422-0000 ..	WASHER	217, 219, 221, 223
256426-0001 ..	WASHER	217, 219, 221, 223
256426-0002 ..	WASHER	217, 219, 221, 223
256427-0000 ..	SHAFT	217, 219, 221, 223
256437-0200 ..	DISC COUPLING	325
256438-0300 ..	WORM GEAR	325
256472-0000 ..	WASHER	217, 219, 221, 223
256487-0000 ..	CUTTING JAW	247, 249, 251, 253
256515-0000 ..	END PIECE	221, 223
256516-0000 ..	CAP	221, 223, 231
256517-0000 ..	SCREW	221, 223
256557-0001 ..	WASHER	285, 287, 289, 291
256557-0002 ..	WASHER	285, 287, 289, 291
256557-0003 ..	WASHER	285, 287, 289, 291
256576-0000 ..	ROLL	285, 287, 289, 291
256607-0000 ..	AXLE PIN	247, 249, 251, 253
256621-0000 ..	WASHER	255, 257, 259, 261
256626-0000 ..	EAR	247, 249, 251, 253
256628-0000 ..	PIECE	295, 297, 299, 301
256629-0001 ..	AXLE PIN	295, 297, 299, 301
256629-0003 ..	AXLE PIN	295, 297, 299, 301
256641-0000 ..	LEG	373
256659-0000 ..	OPERATING ROD	247, 249, 251, 253
256665-0200 ..	HATCH	145
256674-0500 ..	BOTTOM VALVE	325
256704-0000 ..	WASHER	295, 297, 299, 301
256705-0000 ..	LACE	255, 257, 259, 261
256706-0000 ..	BEARING PLATE	247, 249, 251, 253
256707-0000 ..	BRACKET	255, 257, 259, 261
256710-0000 ..	SHAFT	295, 297, 299, 301
256738-0000 ..	WASHER	303
256739-0000 ..	SCREW	303
256769-0000 ..	CUTTING JAW	247, 249, 251, 253
256812-0000 ..	SHAFT	235
256814-0000 ..	WASHER	235
256816-0000 ..	PIPE	235
256828-0000 ..	SPRING	235
256829-0000 ..	SCREW	295, 297, 299, 301, 303
256831-0001 ..	SPACER	295, 297, 299, 301
256831-0002 ..	SPACER	295, 297, 299, 301
256831-0003 ..	SPACER	295, 297, 299, 301, 303
256831-0004 ..	SPACER	303
256834-0000 ..	YOKE	295, 297, 299, 301
256849-0000 ..	VOLUMEFLAP 125 ML	269, 271, 273, 275
256859-0000 ..	SCREW	269, 271, 273, 275
256860-0000 ..	ROLL	269, 271, 273, 275
256870-0000 ..	BRACKET	295, 297, 299, 301
256882-0000 ..	WASHER	293
256889-0000 ..	PLUNGER	295, 297, 299, 301
256890-0000 ..	LACE	295, 297, 299, 301
256891-0000 ..	LACE	295, 297, 299, 301
256899-0000 ..	SHAFT	115
256907-0000 ..	WASHER	353
256951-0500 ..	YOKE RIGHT	245
256952-0500 ..	YOKE LEFT	245
256953-0000 ..	BLOCK RIGHT	295, 297
256954-0000 ..	BLOCK LEFT	299, 301
257000-0000 ..	NIPPLE	315, 317
257040-0000 ..	FORK	93, 95
257041-0000 ..	FORK	93, 95
257042-0000 ..	BRACKET	93, 95
257043-0000 ..	ANGLE BRACKET	93, 95

Part No	Description	Page No
257044-0000 ..	ROLL	93, 95
257090-0000 ..	SHIFTER HANDLE	71, 73, 75, 77
257141-0000 ..	RETAINING RING	557, 559, 561, 577, 579
257174-0000 ..	SEALING WASHER	213
257175-0000 ..	WASHER	87, 89
257179-0000 ..	GEAR WHEEL	213, 235
257190-0000 ..	SEPARATION BLOCK	165
257202-0000 ..	STRAINER	447
257213-0000 ..	BUSHING	295, 297, 299, 301
257231-0000 ..	WINDOW	173, 175
257249-0000 ..	SCREW	285, 287, 289, 291
257250-0000 ..	LID	285, 287, 289, 291
257306-0000 ..	ROLL	217, 219
257308-0000 ..	SCREW	217, 219
257309-0000 ..	SHAFT	217, 219, 237, 239
257310-0000 ..	NUT	217, 219, 237, 239
257311-0000 ..	CAP	217, 219, 221, 223
257317-0000 ..	LACE	295, 297, 299, 301
257326-0000 ..	CRANK	235
257327-0000 ..	SLIDER	235
257328-0000 ..	END PIECE	235
257330-0000 ..	PRESSURE ROLLER	109, 637
257334-0000 ..	LEAF SPRING	255, 257, 259, 261
257362-0000 ..	LACE	247, 249, 251, 253
257379-0000 ..	HYDRAULIC PIPE RIGHT	315
257380-0000 ..	HYDRAULIC PIPE LEFT	317
257381-0300 ..	MANIFOLD RIGHT	245
257382-0300 ..	MANIFOLD LEFT	245
263311-0000 ..	WASHER	37
263655-0006 ..	SHAFT	31, 33
265568-0000 ..	DUST COVER	557, 559, 561, 577, 579
266710-0000 ..	USE NEW PART 2555116 WHEEL	549, 551
266737-0000 ..	WASHER	21, 107, 517
266739-0000 ..	CABLE GLAND	23
267033-0000 ..	WASHER	31, 33
269859-0000 ..	BRACKET	445
271007-0000 ..	POINTER	227, 229
271100-0000 ..	DOWEL	295, 297, 299, 301
271121-0000 ..	FORCE SPRING	165
271163-0000 ..	CANTILEVER	153, 155
271169-0500 ..	VALVE	11
271181-0600 ..	AIR SUPER-HEATER	11
271239-0000 ..	SLEEVE	599
271241-0000 ..	SCREW	599
271261-0700 ..	CLEANING SYSTEM	159, 161, 163
271269-0000 ..	BUSHING	19, 23, 35
271284-0000 ..	BLOCKING PIECE	255, 257, 259, 261
271387-0400 ..	SPRAY GUN	145
271414-0300 ..	AIR JET GUN	145
271435-0000 ..	WASHER	373
271509-0000 ..	JUNCTION BLOCK	117
271622-0000 ..	LACE	159, 161, 163
271623-0000 ..	LACE	159, 161, 163
271641-0500 ..	SPLICING TABLE	587
271642-0000 ..	RULER	597
271643-0000 ..	RULER	597
271644-0000 ..	RULER	597
271689-0000 ..	WASHER	213
271820-0001 ..	STEERING RAIL	37
271820-0002 ..	STEERING RAIL	37
271823-0000 ..	FILTER	417
271824-0000 ..	AIR KNIFE, MOVABLE	37
271825-0000 ..	FIXED AIR KNIFE	37
271827-0001 ..	HEAD PLATE	37
271827-0002 ..	HEAD PLATE	37
271846-0000 ..	INSULATION NUT	293
271848-0000 ..	SCREW	293
271858-0000 ..	FLANGE	37
271860-0000 ..	CLAMP BLOCK	121, 123
271863-0000 ..	SHAFT	31, 33
271864-0000 ..	WASHER	31, 33
271898-0000 ..	SCREW	35
271899-0000 ..	SCREW	35
271941-0001 ..	FRAME	37
271941-0002 ..	FRAME	37
271942-0001 ..	AIR GUIDE	37
271942-0002 ..	AIR GUIDE	37
272002-0000 ..	PROTECTIVE COVER LEFT	31, 33
272003-0000 ..	PROTECTIVE COVER RIGHT	31, 33
272004-0500 ..	BENDING ROLLER	11
272021-0800 ..	ASEPTIC CHAMBER	11
272022-0000 ..	AIR KNIFE, MOVABLE	37
272023-0000 ..	FIXED AIR KNIFE	37
272024-0500 ..	CALENDER ROLLER	11

Part No	Description	Page No
272025-0400 ..	AIR KNIFE	11
272026-0001 ..	AIR DISTRIBUTOR	37
272026-0002 ..	AIR DISTRIBUTOR	37
272027-0001 ..	GLASS PANE	37
272027-0002 ..	GLASS PANE	37
272028-0800 ..	BENDING ROLLER	11
272033-0000 ..	BRACKET	35
272095-0000 ..	SHAFT	115
272116-0000 ..	CAP	217, 219
272140-0001 ..	HEAD PLATE	37
272140-0002 ..	HEAD PLATE	37
272141-0001 ..	FILTER	37
272141-0002 ..	FILTER	37
272191-0000 ..	DISTRIBUTOR	353
272275-0000 ..	LID	43
272277-0000 ..	GASKET	43
272286-0000 ..	AXLE SUPPORT	19
272287-0000 ..	AXLE SUPPORT	23
272325-0000 ..	SPIRAL	43
272329-0001 ..	LACE	37
272329-0002 ..	LACE	37
272337-0600 ..	VALVE	11
272372-0000 ..	HOUSE	213
272376-0000 ..	SHUTTER	213
272377-0001 ..	CRAMP	213
272377-0002 ..	CRAMP	213
272388-0000 ..	CRAMP	213
272407-0400 ..	GENERATOR	11
272415-0000 ..	ARM	295, 297, 299, 301
272416-0000 ..	CARRIER	247, 249, 251, 253
272419-0000 ..	CARRIER	247, 249, 251, 253
272420-0000 ..	FOLDING FLAP	247, 249, 251, 253
272421-0000 ..	FOLDING FLAP	247, 249, 251, 253
272422-0000 ..	FOLDING FLAP	247, 249, 251, 253
272423-0000 ..	FOLDING FLAP	247, 249, 251, 253
272424-0000 ..	FOLDING FLAP	247, 249, 251, 253
272425-0000 ..	FOLDING FLAP	247, 249, 251, 253
272427-0000 ..	BRACKET	247, 249, 251, 253
272442-0000 ..	CANTILEVER	217, 219
272454-0000 ..	PIVOT PIN	295, 297, 299, 301
272455-0000 ..	BEARING BRACKET	217, 219
272456-0000 ..	LINK	217, 219
272457-0000 ..	BOW CLAMP	217, 219
272458-0000 ..	ECCENTRIC SHAFT	217
272459-0000 ..	WASHER	217
272461-0000 ..	WASHER	217
272462-0000 ..	AXLE BOLT	221, 223
272464-0000 ..	ANGLE BRACKET	37
272472-0000 ..	END PIECE	237, 239
272479-0000 ..	PRESSURE ROLLER	109, 637
272490-0000 ..	SLEEVE	303
272491-0000 ..	BRACKET	255, 257, 259, 261
272492-0000 ..	ARM RIGHT	295, 297
272493-0000 ..	ARM LEFT	299, 301
272496-0000 ..	BRACKET RIGHT	295, 297
272497-0000 ..	BRACKET LEFT	299, 301
272501-0000 ..	BRACKET RIGHT	285, 287
272502-0000 ..	BRACKET LEFT	289, 291
272503-0000 ..	CLAMPING PIECE	285, 287, 289, 291
272506-0000 ..	LACE	285, 287, 289, 291
272560-0800 ..	PRODUCT VALVE	11
272600-0000 ..	ARM	153, 155
272602-0000 ..	SCREW	153, 155
272607-0000 ..	BELT HOLDER	221, 223
272608-0000 ..	BELT HOLDER	231
272623-0700 ..	SPRAY SYSTEM	11
272640-0001 ..	COUNTER CAM	255, 257, 259, 261
272640-0002 ..	COUNTER CAM	255, 257, 259, 261
272640-0005 ..	COUNTER CAM	255, 257, 259, 261
272640-0006 ..	COUNTER CAM	255, 257, 259, 261
272640-0007 ..	COUNTER CAM	255, 257, 259, 261
272640-0009 ..	COUNTER CAM	255, 257, 259, 261
272641-0000 ..	PILLAR	259, 261
272642-0000 ..	PILLAR	255, 257
272645-0000 ..	RAIL	255, 257, 259, 261
272654-0000 ..	ECCENTRIC SHAFT	255, 257, 259, 261
272664-0000 ..	CANTILEVER	235
272673-0000 ..	LEG	361
272679-0000 ..	PIPE	165
272736-0000 ..	CANTILEVER	235
272737-0000 ..	BRACKET	235
272742-0000 ..	FINGER	153, 155
272743-0000 ..	LID	361
272746-0000 ..	ROD	341

Part No	Description	Page No
272747-0000 ..	CONNECTION	341
272753-0000 ..	STEERING	263, 265, 267
272755-0000 ..	NUT	263, 265, 267
272780-0000 ..	COVER SLIP	121
272781-0002 ..	COVER SLIP	123
272782-0000 ..	COVER SLIP	121, 123
272783-0002 ..	GLASS PANE	123
272783-0003 ..	GLASS PANE	121
272784-0002 ..	RUBBER STRIP	123
272785-0000 ..	RUBBER STRIP	121
272810-0001 ..	SLEEVE	599
272813-0000 ..	PLUNGER	599
272840-0000 ..	ROD	303
272844-0000 ..	BRACKET	65
272852-0000 ..	HOLDER	153, 155
272853-0000 ..	SCREW	153, 155
272857-0000 ..	RING	225
272862-0000 ..	HOLDER	595
272886-0000 ..	RULER	597
272887-0000 ..	RULER	597
272888-0000 ..	RULER	597
272927-0000 ..	PRESSURE ARM	35
272945-0000 ..	LOCK	111
272948-0003 ..	SHAFT	23
272949-0000 ..	VOLUME CAM LEFT	311
272956-0000 ..	VOLUME CAM LEFT	311
272957-0000 ..	VOLUME CAM RIGHT	311
272964-0000 ..	VOLUME CAM RIGHT	311
272965-0000 ..	VOLUME CAM LEFT, WIDE	311
272967-0000 ..	VOLUME CAM RIGHT, WIDE	311
272973-0000 ..	DOWEL	311
272986-0001 ..	VOLUME SHIM	269, 271, 273, 275
272986-0003 ..	VOLUME SHIM	269, 271, 273, 275
272986-0004 ..	VOLUME SHIM	269, 271, 273, 275
272986-0005 ..	VOLUME SHIM	269, 271, 273, 275
272986-0006 ..	VOLUME SHIM 330S	269, 271, 273, 275
272987-0000 ..	VOLUME SHIM	269, 271, 273, 275
272988-0004 ..	VOLUME BULGE	269, 271, 273, 275
272990-0000 ..	VOLUME BULGE	269, 271, 273, 275
272991-0000 ..	VOLUME SHIM	269, 271, 273, 275
272997-0000 ..	STOPPER	349
273429-0000 ..	WASHER	19, 23
273449-0000 ..	SIGN	429, 431
273450-0000 ..	SIGN	429, 431
273452-0000 ..	SIGN	429, 431
273454-0000 ..	SIGN	429, 431
273455-0000 ..	LABEL (COLD WATER)	187, 429, 431
273456-0000 ..	SIGN	187, 429, 431
273458-0000 ..	LABEL (AIR)	187, 429, 431
273937-0000 ..	DIAPHRAGM	13, 15
273953-0000 ..	SEAL	31, 33
273954-0000 ..	SEAL	13, 15
273964-0000 ..	LID	449
273965-0001 ..	WEIGHT	449
273977-0000 ..	NUT	459
273978-0000 ..	LEVEL GLASS	459
273980-0000 ..	SPRING	459
273996-0000 ..	NUT	459
279008-0000 ..	BUSHING	31, 33
279589-0000 ..	NUT	105, 465
282635-0000 ..	GUIDE WHEEL	519
292044-0000 ..	SHAFT	567, 585
292412-0000 ..	END SECTION	563, 565, 581, 583
292413-0000 ..	END SECTION	563, 565, 581, 583
292414-0000 ..	CARRIER	581, 583
292449-0000 ..	PUMP HOUSING	451
292456-0000 ..	BEARING COVER	451
293395-0001 ..	TYPE HOLDER	563, 565, 581, 583
293395-0002 ..	TYPE HOLDER	563, 565, 581, 583
293610-0000 ..	GEAR WHEEL	309
293659-0000 ..	CARRIER	563, 565
293667-0000 ..	DOWEL	567, 585
293669-0001 ..	WASHER	567, 585
293669-0002 ..	WASHER	567, 585
293669-0003 ..	WASHER	567, 585
293669-0004 ..	WASHER	567, 585
293670-0000 ..	SHAFT	567, 585
293684-0200 ..	PRINTING WHEEL NSS	557, 559, 561
293685-0200 ..	PRINTING WHEEL SS	577, 579
293697-0000 ..	END SECTION	567
295045-0900 ..	PIPE WORK-PNEUMATIC	11
295075-0000 ..	PROTECTION	153, 155
295097-0000 ..	SLIDER	153, 155
295140-0000 ..	PIN	213, 227, 229

Part No	Description	Page No
295203-0000 ..	LID	371
295204-0001 ..	SHIM	349
295204-0002 ..	SHIM	349
295204-0003 ..	SHIM	349
295205-0000 ..	SPACER SLEEVE	349
295206-0000 ..	FLAP	349
295259-0000 ..	HOLDER	441
295376-0000 ..	SHAFT	109
295377-0001 ..	HOOD	109
295377-0002 ..	HOOD	109
295387-0000 ..	SIGN BOARD	403
295399-0000 ..	HOLDER	153, 155
295417-0000 ..	GASKET	165, 373
295426-0000 ..	CAP	31, 33
295427-0000 ..	LOCK	31, 33
295428-0000 ..	HINGE	31, 33
295429-0000 ..	HANDLE	31, 33
295434-0000 ..	BUSHING	373
295466-0000 ..	LOCK	111
295496-0000 ..	BLOCKING PIECE	429, 431
295523-0400 ..	START-UP KIT	245
295523-0500 ..	START-UP KIT	635
295604-0000 ..	CRAMP	67, 69
295605-0000 ..	BRACKET	67, 69
295729-0000 ..	WASHER	359
295766-0000 ..	SCREW	213
295767-0000 ..	SEALING WASHER	213
295770-0000 ..	AXLE BOLT	217, 219
295778-0600 ..	START-UP KIT	635
295785-0000 ..	FORCE SPRING	165
295909-0000 ..	BUSHING	19
295910-0000 ..	BUSHING	23
295936-0000 ..	BUSHING	23
295978-0000 ..	PIPE	165
295983-0000 ..	CONNECTION	225
295984-0000 ..	DRIP GUARD	109
295985-0000 ..	FORCE SPRING	165
295986-0000 ..	HOLDER	159, 161, 163
295993-0000 ..	GASKET HOLDER	43
297210-0000 ..	INK WELL	585
297211-0000 ..	INK WELL	567
297213-0000 ..	END SECTION	585
299643-0000 ..	WASHER	557, 559, 561, 577, 579
311101-0267 ..	PARALLELL PIN, CP, H6, 4X10 MM	217, 219, 221, 223
311102-0153 ..	PARALLELL PIN, CP, M6, 1,5X10 MM	213
311103-0236 ..	PARALLELL PIN, M6, 3X16 MM	43, 567, 585
311103-0238 ..	CYLINDERPINNE M6, 3X20 MM	93, 95, 309, 567, 585
311103-0242 ..	PARALLELL PIN, M6, 3X30 MM	285, 287, 289, 291, 547
311103-0267 ..	PARALLELL PIN, M6, 4X10 MM	217, 219, 221, 223, 597
311103-0268 ..	PARALLELL PIN, M6, 4X12 MM	295, 297, 299, 301
311103-0270 ..	PARALLELL PIN, M6, 4X16 MM	13, 15, 293, 567, 585
311103-0272 ..	PARALLELL PIN, M6, 4X20 MM	165, 227, 229, 385, 529
311103-0274 ..	PARALLELL PIN, M6, 4X25 MM	569
311103-0276 ..	PARALLELL PIN, M6, 4X30 MM	227, 229
311103-0278 ..	PARALLELL PIN, M6, 4X35 MM	277, 279, 281, 283, 523
311103-0280 ..	PARALLELL PIN, M6, 4X40 MM	277, 279, 281, 283
311103-0308 ..	PARALLELL PIN, M6, 5X16 MM	31, 33
311103-0310 ..	PARALLELL PIN, M6, 5X20 MM	13, 15, 31, 33
311103-0312 ..	PARALLELL PIN, M6, 5X25 MM	87, 89, 247, 249, 251, 253, 285, 287, 289, 291, 557, 559, 561, 577, 579
311103-0313 ..	CYLINDRICACP M6 5X28 RFR	31, 33
311103-0314 ..	PARALLELL PIN, M6, 5X30 MM	255, 257, 259, 261
311103-0316 ..	PARALLELL PIN, M6, 5X35 MM	255, 257, 259, 261
311103-0318 ..	PARALLELL PIN, M6, 5X40 MM	569
311103-0320 ..	PARALLELL PIN, CP, M6, 5X45 MM	255, 257, 259, 261
311103-0351 ..	PARALLELL PIN, M6, 6X16 MM	335, 337
311103-0353 ..	PARALLELL PIN, M6, 6X20 MM	389, 577, 579
311103-0355 ..	PARALLELL PIN, M6, 6X25 MM	13, 15, 311
311103-0357 ..	PARALLELL PIN, M6, 6X30 MM	449, 557, 559, 561, 577, 579
311103-0361 ..	PARALLELL PIN, M6, 6X40 MM	13, 15, 235, 557, 559, 561
311103-0365 ..	PARALLELL PIN, M6, 6X50 MM	571, 573
311103-0401 ..	PARALLELL PIN, M6, 8X20 MM	295, 297, 299, 301, 303, 365
311103-0407 ..	PARALLELL PIN, M6, 8X35 MM	361
311103-0409 ..	PARALLELL PIN, M6, 8X40 MM	255, 257, 259, 261, 371
311103-0413 ..	PARALLELL PIN, M6, 8X50 MM	121, 123
311103-0415 ..	PARALLELL PIN, CP, M6, 8X55 MM	147
311103-0458 ..	PARALLELL PIN, M6, 10X30 MM	147
311103-0470 ..	PARALLELL PIN, M6, 10X60 MM	235
311111-0207 ..	PIN, STRAIGHT SLOTTED SPRING FRP 3X14	247, 249, 251, 253
311111-0209 ..	PIN, STRAIGHT SLOTTED SPRING FRP 3X18	139
311111-0308 ..	PIN, STRAIGHT SLOTTED SPRING FRP 5X20	247, 249, 251, 253
311112-0206 ..	SPRING PIN, ISO 8752 3X12-C	157
311112-0256 ..	SPRING PIN, ISO 8752 4X20-C	31, 33, 309, 451
311112-0262 ..	SPRING PIN, ISO 8752 4X32-C	31, 33

Part No	Description	Page No
311303-0234 ..	SLOTTED PIRPB3X12FZB	217
311307-0275 ..	SLOTTED PIRPD4X28FZB	235
311411-0140 ..	SPLIT PIN SP1,6X16RFR	93, 95
311411-0150 ..	SPLIT PIN SP2X12RFR	87, 89
311411-0165 ..	SPLIT PIN SP2,5X16RFR	87, 89
311411-0169 ..	SPLIT PIN SP2,5X25RFR	451
311521-0142 ..	BLANK RIVET 3,2X6	49, 711
311521-0146 ..	BLANK RIVET 3,2X12	715, 717, 759, 761, 779
312101-0287 ..	SCREW M6S M4X8 FZB	563, 565, 581, 583
312101-0289 ..	SCREW M6S M4X10 FZB	237, 239
312101-0297 ..	SCREW M6S M4X25 FZB	217, 219, 221, 223
312101-0305 ..	SCREW M6S M4X50 FZB	339
312101-0323 ..	SCREW M6S M5X8 FZB	549, 551
312101-0325 ..	SCREW M6S M5X10 FZB	227, 229
312101-0327 ..	SCREW M6S M5X12 FZB	593
312101-0329 ..	SCREW M6S M5X16 FZB	213, 593
312101-0331 ..	SCREW M6S M5X20 FZB	153, 155, 563, 565, 581, 583
312101-0333 ..	SCREW M6S M5X25 FZB	221, 223, 231
312101-0337 ..	SCREW M6S M5X35 FZB	159, 161, 163
312101-0343 ..	SCREW M6S M5X60 FZB	305, 307
312101-0344 ..	SCREW M6S M5X65 FZB	511
312101-0362 ..	SCREW M6S M6X8 FZB	217, 219, 221, 223
312101-0364 ..	SCREW M6S M6X10 FZB	217, 219, 221, 223, 563, 565, 581, 583
312101-0366 ..	SCREW M6S M6X12 FZB	213
312101-0368 ..	SCREW M6S M6X16 FZB	213
312101-0370 ..	SCREW M6S M6X20 FZB	213
312101-0376 ..	SCREW M6S M6X35 FZB	213, 237, 239
312101-0381 ..	SCREW M6S M6X55 FZB	599
312101-0392 ..	SCREW M6S M6X110 FZB	167
312101-0453 ..	SCREW M6S M8X25 FZB	217, 219, 341
312101-0455 ..	SCREW M6S M8X30 FZB	341
312101-0459 ..	SCREW M6S M8X40 FZB	341
312101-0489 ..	SCREW M6S M10X16 FZB	213
312101-0493 ..	SCREW M6S M10X25 FZB	217, 219, 221, 223
312101-0499 ..	SCREW M6S M10X40 FZB	153, 155, 471, 473
312101-0502 ..	SCREW M6S M10X55 FZB	219, 237, 239
312101-0504 ..	SCREW M6S M10X65 FZB	213, 217, 219, 221, 223
312101-0507 ..	SCREW M6S M10X80 FZB	217, 219
312101-0515 ..	SCREW M6S M10X120 FZB	221, 223
312101-0530 ..	SCREW M6S M12X16 FZB	329
312101-0550 ..	SCREW M6S M12X90 FZB	213
312101-0552 ..	SCREW M6S M12X100 FZB	343
312101-0630 ..	SCREW M6S M16X50 FZB	193
312104-0499 ..	SCREW M6S M10X40H FZB	235, 471, 473
312105-0287 ..	SCREW M6S ISO4017 M4X8 A480	23, 27, 29, 39, 63, 115, 125, 127, 469, 527
312105-0289 ..	SCREW M6S ISO 4017 M4X10 A480	135
312105-0291 ..	SCREW M6S ISO 4017 M4X12 A480	389, 567, 585
312105-0293 ..	SCREW M6S ISO 4017 M4X16 A480	35, 37, 447, 495, 501, 503, 543, 545
312105-0295 ..	SCREW M6S ISO4017 M4X20 A480	159, 161, 163, 517
312105-0297 ..	SCREW M6S ISO 4017 M4X25 A480	159, 161, 163, 589
312105-0299 ..	SCREW M6S ISO 4017 M4X30 A480	511
312105-0301 ..	SCREW M6S ISO 4017 M4X35 A480	133, 157, 235
312105-0303 ..	SCREW M6S ISO 4017 M4X40 A480	365
312105-0323 ..	SKRUV M6S ISO 4017 M5X8 A480	43, 369, 377, 401, 457, 589, 627, 629
312105-0325 ..	SCREW M6S ISO 4017 M5X10 A480	27, 29, 45, 47, 87, 89, 115, 133, 149, 305, 307, 509, 597, 601
312105-0327 ..	SCREW M6S ISO 4017 M5X12 A480	13, 15, 19, 31, 33, 37, 165, 167, 241, 277, 279, 281, 283 411, 429, 431, 463, 567, 585, 623, 627, 629, 747, 749, 781
312105-0328 ..	SCREW M6S ISO 4017 M5X14 A480	305, 307, 389, 517
312105-0329 ..	SCREW M6S ISO 4017 M5X16 A480	87, 89, 125, 127, 293, 461, 501, 503, 549, 551, 557, 559 561, 567, 577, 579, 585
312105-0331 ..	SCREW M6S ISO 4017 M5X20 A480	37, 39, 93, 95, 133, 331, 359, 519, 557, 559, 561, 577, 579
312105-0332 ..	SCREW M6S ISO 4017 M5X22 A480	71, 73, 75, 77, 87, 89
312105-0333 ..	SCREW M6S ISO 4017 M5X25 A480	115, 189, 313, 515, 527
312105-0335 ..	SCREW M6S ISO 4014 M5X30 A480	305, 307, 329, 429, 431
312105-0337 ..	SCREW M6S ISO 4014 M5X35 A480	147, 553
312105-0339 ..	SCREW M6S ISO 4014 M5X40 A480	429, 431, 509
312105-0341 ..	SCREW M6S ISO 4014 M5X50 A480	425, 429, 431
312105-0362 ..	SCREW M6S ISO 4017 M6X8 A480	19, 31, 33, 97, 247, 249, 251, 253, 345, 347, 359, 457, 597
312105-0364 ..	SCREW M6S ISO 4017 M6X10 A480	23, 35, 37, 67, 69, 93, 95, 101, 105, 107, 109, 111, 165 197, 309, 351, 441, 447, 469, 557, 559, 561, 577, 579, 589, 601
312105-0366 ..	SCREW M6S M6X12 A280	21, 23, 29, 35, 37, 63, 65, 97, 105, 111, 115, 121, 123, 125, 127, 129 131, 133, 147, 151, 153, 155, 167, 179, 187, 235, 309, 365, 375, 377, 387, 401, 403, 427, 441, 475 509, 511, 513, 515, 519, 543, 545, 557, 559, 561, 577, 579, 601
312105-0367 ..	SCREW M6S M6X14 A280	99, 133, 247, 249, 251, 253, 335, 337, 361, 455, 467, 501, 503, 513
312105-0368 ..	SCREW M6S M6X16 A280	13, 15, 19, 23, 31, 33, 37, 39, 43, 67, 69, 71, 73, 75, 77, 79, 81, 83 85, 87, 89, 93, 95, 129, 131, 133, 153, 155, 169, 171, 181, 191, 193, 199, 205, 235, 255, 257, 259 261, 277, 279, 281, 283, 295, 297, 299, 301, 345, 347, 357, 373, 377, 395, 397, 415, 439, 453, 501 503, 509, 513, 527, 711, 743, 745, 747, 749, 759, 761, 773, 775
312105-0370 ..	SCREW M6S ISO 4017 M6X20 A480	19, 23, 25, 37, 41, 63, 85, 87, 89, 93, 95, 97, 101, 107, 125 127, 233, 235, 285, 287, 289, 291, 333, 335, 337, 361, 369, 371, 373, 389, 403, 451, 489, 497, 499 515, 519, 549, 551, 747, 749
312105-0371 ..	SCREW M6S ISO 4017 M6X22 A480	71, 73, 75, 77, 103, 183, 185
312105-0372 ..	SCREW M6S ISO 4017 M6X25 A480	13, 15, 19, 21, 23, 31, 33, 93, 95, 99, 109, 129, 131, 153 155, 159, 161, 163, 255, 257, 259, 261, 277, 279, 281, 283, 303, 335, 337, 359, 365, 371, 373, 463

Part No	Description	Page No
		515, 549, 551, 557, 559, 561, 577, 579
312105-0374 ..	SCREW M6S ISO 4014 M6X30 A480	147, 217, 219, 221, 223, 247, 249, 251, 253, 285, 287, 289
		291, 303, 335, 337, 349, 353, 453, 501, 503, 519
312105-0376 ..	SCREW M6S ISO 4014 M6X35 A480	19, 153, 155, 247, 249, 251, 253, 285, 287, 289, 291, 295
		297, 299, 301, 315, 317, 335, 337, 357, 433, 435, 437, 467, 519
312105-0378 ..	SCREW M6S ISO 4014 M6X40 A480	31, 33, 117, 165, 353, 495, 569
312105-0379 ..	SCREW M6S ISO 4014 M6X45 A480	31, 33, 269, 271, 273, 275, 357
312105-0380 ..	SCREW M6S ISO 4014 M6X50 A480	153, 155, 255, 257, 259, 261, 295, 297, 299, 301, 309, 349
		353, 385, 429, 431
312105-0381 ..	SCREW M6S ISO 4014 M6X55 A480	87, 89, 515
312105-0382 ..	SCREW M6S ISO 4014 M6X60 A480	49, 451, 557, 559, 561, 577, 579
312105-0384 ..	SCREW M6S ISO 4014 M6X70 A480	255, 257, 259, 261, 401
312105-0386 ..	SCREW M6S ISO 4014 M6X80 A480	31, 33, 335, 337, 477
312105-0447 ..	SCREW M6S ISO 4017 M8X12 A480	35, 37, 93, 95, 205, 285, 287, 289, 291, 405, 407, 409, 505
		525, 543, 545, 549, 551
312105-0449 ..	SCREW M6S ISO 4017 M8X16 A480	13, 15, 19, 39, 125, 127, 193, 205, 309, 357, 445, 447, 463
		465, 495, 509, 517, 549, 551, 589
312105-0451 ..	SCREW M6S ISO 4017 M8X20 A480	27, 31, 33, 45, 47, 71, 73, 75, 77, 79, 81, 83, 93, 95, 121
		123, 137, 147, 153, 155, 193, 205, 309, 361, 363, 377, 453, 455, 509
312105-0452 ..	SCREW M6S ISO 4017 M8X22 A480	137, 303, 523
312105-0453 ..	SCREW M6S ISO 4017 M8X25 A480	25, 27, 31, 33, 41, 43, 45, 47, 93, 95, 97, 99, 105, 205, 235
		255, 257, 259, 261, 285, 287, 289, 291, 295, 297, 299, 301, 335, 337, 345, 347, 357, 441, 445, 447
		455, 463, 465, 513, 539, 547, 557, 559, 561, 577, 579, 597
312105-0455 ..	SCREW M6S ISO 4017 M8X30 A480	19, 23, 79, 81, 83, 153, 155, 215, 255, 257, 259, 261, 285
		287, 289, 291, 295, 297, 299, 301, 345, 347, 363, 385, 389, 593
312105-0457 ..	SCREW M6S ISO 4014 M8X35 A480	27, 79, 81, 83, 313, 357, 557, 559, 561, 577, 579
312105-0459 ..	SCREW M6S ISO 4014 M8X40 A480	165, 255, 257, 259, 261, 365, 557, 559, 561, 577, 579
312105-0460 ..	SCREW M6S ISO 4014 M8X45 A480	303, 335, 337, 557, 559, 561
312105-0461 ..	SCREW M6S ISO 4014 M8X50 A480	449, 597
312105-0462 ..	SCREW M6S ISO 4014 M8X55 A480	19, 247, 249, 251, 253
312105-0463 ..	SCREW M6S ISO 4014 M8X60 A480	353, 619
312105-0464 ..	SCREW M6S ISO 4014 M8X65 A480	37, 469
312105-0469 ..	SCREW M6S ISO 4014 M8X90 A480	373
312105-0489 ..	SCREW M6S ISO 4017 M10X16 A480	147, 441
312105-0491 ..	SCREW M6S ISO 4017 M10X20 A480	373, 445, 597
312105-0493 ..	SCREW M6S ISO 4017 M10X25 A480	471, 473, 557, 559, 561, 577, 579
312105-0495 ..	SCREW M6S ISO 4017 M10X30 A480	35, 87, 89, 215, 445
312105-0497 ..	SCREW M6S ISO 4017 M10X35 A480	349, 595
312105-0499 ..	SCREW M6S ISO 4014 M10X40 A480	31, 33
312105-0500 ..	SCREW M6S ISO 4014 M10X45 A480	595
312105-0507 ..	SCREW M6S ISO 4014 M10X80 A480	539
312105-0511 ..	SCREW M6S ISO 4014 M10X100 A480	189
312105-0515 ..	SCREW M6S ISO 4014 M10X120 A480	205
312105-0532 ..	SCREW M6S ISO 4017 M12X20 A480	215, 233, 373
312105-0534 ..	SCREW M6S ISO 4017 M12X25 A480	183, 185, 331
312105-0536 ..	SCREW M6S ISO 4017 M12X30 A480	35, 87, 89, 93, 95, 97
312105-0540 ..	SCREW M6S ISO 4017 M12X40 A480	441
312105-0544 ..	SCREW M6S ISO 4014 M12X60 A480	361, 371
312105-0547 ..	SCREW M6S ISO 4014 M12X75 A480	333
312105-0548 ..	SCREW M6S ISO 4014 M12X80 A480	441
312105-0622 ..	SCREW M6S ISO 4017 M16X25 A480	183, 185
312105-0628 ..	SCREW M6S ISO 4017 M16X40 A480	183, 185, 373
312105-0630 ..	SCREW M6S ISO 4017 M16X50 A480	195
312105-0648 ..	SCREW M6S M16X150 A280	183, 185
312109-0335 ..	SCREW M6S ISO 4017 M5X30 A480	125, 127
312109-0376 ..	SCREW M6S ISO 4017 M6X35 A480	67, 69, 557, 559, 561, 577, 579
312109-0378 ..	SCREW M6S ISO4017 M6X40 A480	153, 155
312109-0457 ..	SCREW M6S ISO 4017 M8X35 A480	19, 345, 347
312109-0459 ..	SCREW M6S ISO 4017 M8X40 A480	523
312111-0295 ..	SCREW HEX.SOCK.HD.MC6S-TT 4X20 88 FZB	471, 473
312111-0331 ..	SCREW HEX.SOCK.HD.MC6S-TT 5X20 88 FZB	471, 473
312111-0335 ..	SCREW HEX.SOCK.HD.MC6S-TT 5X30 88 FZB	563, 565, 581, 583
312111-0368 ..	SCREW HEX.SOCK.HD.MC6S-TT 6X16 88 FZB	225
312111-0370 ..	SCREW HEX.SOCK.HD.MC6S-TT 6X20 88 FZB	471, 473
312111-0372 ..	SCREW HEX.SOCK.HD.MC6S-TT 6X25 88 FZB	471, 473
312111-0376 ..	SCREW HEX.SOCK.HD.MC6S-TT 6X35 88 FZB	217, 219
312111-0378 ..	SCREW HEX.SOCK.HD.MC6S-TT 6X40 88 FZB	217, 219
312111-0471 ..	SCREW HEX.SOCK.HD.MC6S-TT 8X100 88 FZ	411, 557, 559, 561, 577, 579
312115-0220 ..	SCREW ISO4762 M3X6 A4 80	509, 735, 737, 739, 741
312115-0222 ..	SCREW ISO4762 M3X8 A4	759, 761
312115-0224 ..	SCREW ISO4762 M3X10 A4	107, 461, 667, 735, 737, 739, 741
312115-0226 ..	SCREW ISO4762 M3X12 A4	241, 727, 729
312115-0228 ..	SCREW ISO4762 M3X16 A4	45, 47, 105, 517, 519, 769
312115-0230 ..	SCREW ISO4762 M3X20 A4	501, 503
312115-0285 ..	SCREW ISO4762 M4X6 A4	769
312115-0287 ..	SCREW ISO4762 M4X8 A4	63, 153, 155, 189, 429, 431, 499, 549, 551, 567, 585, 601
312115-0289 ..	SCREW ISO4762 M4X10 A4	159, 161, 163, 369, 653, 655, 663, 673, 675, 677, 681, 683, 685
		715, 717
312115-0291 ..	SCREW ISO4762 M4X12 A4	57, 319, 343, 369, 653, 655, 731, 735, 737, 739, 741
312115-0293 ..	SCREW ISO4762 M4X16 A4	293, 625, 631, 633, 715, 717, 719, 721, 723, 725, 727, 729, 731
312115-0295 ..	SCREW ISO4762 M4X20 A4	389, 527, 653, 655
312115-0297 ..	SCREW ISO4762 M4X25 A4	715, 717
312115-0299 ..	SCREW ISO4762 M4X30 A4	429, 431, 715, 717
312115-0304 ..	SCREW ISO4762 M4X45 A4	589

Part No	Description	Page No
312115-0305 ..	SCREW ISO4762 M4X50 A4	45, 47, 429, 431, 769
312115-0323 ..	SCREW ISO4762 M5X8 A4	65, 497, 499, 597, 653, 655, 665, 679, 691, 693, 695, 697, 699, 701, 703, 707, 709
312115-0325 ..	SCREW ISO4762 M5X10 A4	37, 653, 655, 667, 671, 777
312115-0327 ..	SCREW ISO4762 M5X12 A4	169, 171, 201, 203, 395, 397, 501, 503, 525, 543, 545, 701, 703, 779
312115-0329 ..	SCREW ISO4762 M5X16 A4	31, 33, 45, 47, 105, 169, 171, 201, 203, 205, 247, 249, 251, 253, 389, 395, 397, 429, 431, 505, 543, 545, 577, 579, 711, 715, 717, 759, 761
312115-0331 ..	SCREW ISO4762 M5X20 A4	13, 15, 149, 293
312115-0333 ..	SCREW ISO4762 M5X25 A4	557, 559, 561, 575, 577, 579, 653, 655
312115-0335 ..	SCREW ISO4762 M5X30 A4	499
312115-0339 ..	SCREW ISO4762 M5X40 A4	783
312115-0340 ..	SCREW ISO4762 M5X45 A4	45, 47
312115-0362 ..	SCREW ISO4762 M6X8 A4	213
312115-0364 ..	SCREW ISO4762 M6X10 A4	39, 107, 165, 319
312115-0366 ..	SCREW ISO4762 M6X12 A4	13, 15, 37, 107, 119, 247, 249, 251, 253, 381, 383, 447, 509, 601, 653, 655, 711, 715, 717, 777
312115-0367 ..	SCREW ISO4762 M6X14 A4	501, 503
312115-0368 ..	SCREW ISO4762 M6X16 A4	335, 337, 395, 451, 529, 543, 545, 549, 551, 571, 573, 715, 717, 777, 783
312115-0370 ..	SCREW ISO4762 M6X20 A4	29, 31, 33, 247, 249, 251, 253, 313, 451, 525, 569, 577, 579, 711
312115-0371 ..	SCREW ISO4762 M6X22 A4	285, 287, 289, 291
312115-0372 ..	SCREW ISO4762 M6X25 A4	29, 133, 151, 167, 213, 247, 249, 251, 253, 303, 365, 381, 383, 487, 507, 557, 559, 561, 603, 605
312115-0374 ..	SCREW ISO4762 M6X30 A4	29, 31, 33, 187, 389
312115-0376 ..	SCREW ISO4762 M6X35 A4	405, 407, 409
312115-0378 ..	SCREW ISO4762 M6X40 A4	509
312115-0380 ..	SCREW ISO4762 M6X50 A4	589
312115-0385 ..	SCREW ISO4762 M6X75 A4	187
312115-0447 ..	SCREW ISO4762 M8X12 A4	429, 431
312115-0449 ..	SCREW ISO4762 M8X16 A4	97, 523
312115-0451 ..	SCREW ISO4762 M8X20 A4	39, 345, 347, 389
312115-0453 ..	SCREW ISO4762 M8X25 A4	227, 229, 255, 257, 259, 261, 311, 389, 531
312115-0455 ..	SCREW ISO4762 M8X30 A4	49, 109, 523
312115-0457 ..	SCREW ISO4762 M8X35 A4	533
312115-0463 ..	SCREW ISO4762 M8X60 A4	173, 175
312115-0495 ..	SCREW ISO4762 M10X30 A4	549, 551
312115-0500 ..	SCREW ISO4762 M10X45 A4	227, 229, 365, 389
312115-0503 ..	SCREW ISO4762 M10X60 A4	147
312121-0287 ..	SCREW SLOT.PAN HD. MCS 4X8 FZB	217, 219, 221, 223
312121-0289 ..	SCREW SLOT.PAN HD. MCS 4X10 FZB	159, 161, 163
312121-0323 ..	SCREW SLOT.PAN HD. MCS 5X8 FZB	213
312122-0294 ..	SCREW SLOT.PAN HD. MCS 4X18 BR NP	305, 307
312125-0220 ..	SKRUV SLOT.PAN HD. MCS 3X6 A480	23, 149, 319
312125-0222 ..	SPåRSKRUV MCS M3X8 SS	147, 429, 431, 505
312125-0226 ..	SCREW PAN HEAD MCS M3X12 SS	19, 461, 667
312125-0228 ..	SCREW PAN HEAD MCS M3X16 A480	35, 141
312125-0230 ..	SPåRSKRUV MCS M3X20 SS	31, 33, 37, 149, 557, 559, 561, 577, 579, 589
312125-0232 ..	SCREW PAN HEAD MCS M3X25 SS	501, 503, 667
312125-0234 ..	SCREW PAN HEAD MCS M3X30 SS	509
312125-0285 ..	SCREW SLOT.PAN HD. MCS 4X6 A480	13, 15, 23, 65, 255, 257, 259, 261, 463, 495, 753
312125-0287 ..	SCREW PAN HEAD MCS M4X8 SS	31, 33, 159, 161, 163, 167, 205, 241, 379, 441, 493, 497, 501, 503, 509, 589, 601
312125-0289 ..	SPåRSKRUV MCS 4X10 A480	519, 577, 579
312125-0291 ..	SCREW PAN HEAD MCS M4X12 SS	23, 173, 175, 497, 499, 597
312125-0293 ..	SCREW PAN HEAD MCS M4X16 SS	499, 623, 627, 629
312125-0299 ..	SCREW PAN HEAD MCS M4X30 SS	469
312125-0323 ..	SCREW PAN HEAD MCS M5X8 SS	19, 27, 53, 55, 57, 111, 147, 153, 155, 159, 161, 163, 625, 631, 633, 755
312125-0325 ..	SCREW SLOT.PAN HD. MCS 5X10 A480	191, 401, 557, 559, 561, 577, 579
312125-0327 ..	SCREW PAN HEAD MCS M5X12 SS	525, 669, 693, 695, 705, 751, 753
312125-0329 ..	SCREW PAN HEAD MCS M5X16 SS	173, 557, 559, 561, 577, 579, 601
312125-0331 ..	SCREW PAN HEAD MCS M5X20 SS	27
312125-0339 ..	SCREW PAN HEAD MCS M5X40 SS	669, 705
312125-0364 ..	SCREW SLOT.PAN HD. MCS 6X10 A480	151, 381, 383, 507, 603, 605
312125-0366 ..	SCREW PAN HEAD MCS M6X12 SS	27, 557, 559, 561, 577, 579
312145-0220 ..	SCREW COUNTERS.SLOT.HD. MFS 3X6 SS	217, 219, 221, 223, 597
312145-0228 ..	SCREW COUNTERS.SLOT.HD. MFS 3X16 SS	23
312145-0285 ..	SCREW COUNTERS.SLOT.HD. MFS 4X6 SS	557, 559, 561, 577, 579
312145-0289 ..	SCREW COUNTERS.SLOT.HD. MFS 4X10 SS	247, 249, 251, 253
312145-0291 ..	SCREW COUNT.SLOT.HD. 4X12 A4	247, 249, 251, 253, 269, 271, 273, 275, 593
312145-0293 ..	SCREW COUNTERS.SLOT.HD. MFS 4X16 SS	557, 559, 561, 577, 579
312151-0287 ..	SCREW HEX.SOCK.COUNT.MF6S 4X8 FZB	217, 219, 221, 223
312151-0364 ..	SCREW HEX.SOCK.COUNT.MF6S 6X10 FZB	217, 219, 221, 223
312155-0220 ..	SCREW EN 10642 MF6S M3X6 A480	779
312155-0226 ..	SCREW EN 10642 MF6S M3X12 A480	499
312155-0287 ..	SCREW EN 10642 MF6S M4X8 A480	501, 503
312155-0291 ..	SCREW EN 10642 MF6S M4X12 A480	335, 337, 557, 559, 561, 577, 579, 711, 715, 717, 743, 745, 747, 749, 759, 761, 773, 775
312155-0293 ..	SCREW EN 10642 MF6S M4X16 A480	527
312155-0295 ..	SCREW EN 10642 MF6S M4X20 A480	525
312155-0297 ..	SCREW EN 10642 MF6S M4X25 A480	49, 743, 745, 773, 775
312155-0299 ..	SCREW EN 10642 MF6S M4X30 A480	367
312155-0301 ..	SCREW EN 10642 MF6S M4X35 A480	711, 747, 749, 759, 761
312155-0323 ..	SCREW EN 10642 MF6S M5X8 A480	269, 271, 273, 275, 547

Part No	Description	Page No
312155-0325 ..	SCREW EN 10642 MF6S M5X10 A480	147, 509
312155-0327 ..	SCREW EN 10642 MF6S M5X12 A480	509, 547, 557, 559, 561, 575, 577, 579
312155-0329 ..	SCREW EN 10642 MF6S M5X16 A480	121, 123, 169, 171, 389, 395, 397, 557, 559, 561, 577, 579
312155-0331 ..	SCREW EN 10642 MF6S M5X20 A480	377, 505
312155-0364 ..	SCREW EN 10642 MF6S M6X10 A480	21, 107
312155-0366 ..	SCREW EN 10642 MF6S M6X12 A480	235
312155-0368 ..	SCREW EN 10642 MF6S M6X16 A480	153, 155, 277, 279, 281, 283, 351, 489, 525
312155-0370 ..	SCREW EN 10642 MF6S M6X20 A480	133, 357, 371, 513
312155-0372 ..	SCREW EN 10642 MF6S M6X25 A480	359, 365
312155-0374 ..	SCREW EN 10642 MF6S M6X30 A480	21, 495
312155-0449 ..	SCREW EN 10642 MF6S M8X16 A480	213, 363, 389
312155-0451 ..	SCREW EN 10642 MF6S M8X20 A480	311
312155-0457 ..	SCREW EN 10642 MF6S M8X35 A480	557, 559, 561, 577, 579
312155-0459 ..	SCREW EN 10642 MF6S M8X40 A480	311
312155-0491 ..	SCREW EN 10642 MF6S M10X20 A480	547
312155-0532 ..	SCREW EN 10642 MF6S M12X20 A480	45, 47
312311-0285 ..	SCREW ISO4028 M4X6 FZB	531
312311-0287 ..	SCREW ISO4028 M4X8 FZB	39
312311-0321 ..	SCREW ISO4028 M5X6 FZB	29, 221, 223
312311-0327 ..	SCREW ISO4028 M5X12 FZB	189
312311-0366 ..	SCREW ISO4028 M6X12 FZB	29, 39
312311-0368 ..	SCREW ISO4028 M6X16 FZB	451
312316-0321 ..	SCREW HEX.SOCK.SET CUP P.MSK6SS5X6 FZB	593
312318-0222 ..	SCREW ISO4029 M3X8 A4	389
312318-0283 ..	SCREW ISO4029 M4X4 A4	513
312318-0285 ..	SCREW ISO4029 M4X6 A4	87, 89, 93, 95, 501, 503
312318-0287 ..	SCREW ISO4029 M4X8 A4	549, 551, 553, 557, 559, 561, 577, 579, 589
312318-0325 ..	SCREW ISO4029 M5X10 A4	125, 127, 575
312318-0327 ..	SCREW ISO4029 M5X12 A4	523
312318-0360 ..	SCREW ISO4029 M6X6 A4	295, 297, 299, 301
312318-0362 ..	SCREW ISO4029 M6X8 A4	35, 231, 235, 509, 529, 557, 559, 561, 577, 579, 597
312318-0364 ..	SCREW ISO4029 M6X10 A4	227, 229, 531
312318-0366 ..	SCREW ISO4029 M6X12 A4	235, 515, 529, 549, 551
312318-0368 ..	SCREW ISO4029 M6X16 A4	93, 95, 295, 297, 299, 301, 335, 337, 571, 573
312318-0370 ..	SCREW ISO4029 M6X20 A4	549, 551
312318-0372 ..	SCREW ISO4029 M6X25 A4	557, 559, 561, 577, 579
312318-0447 ..	SCREW ISO4029 M8X12 A4	195
312318-0451 ..	SCREW ISO4029 M8X20 A4	93, 95
312502-0120 ..	DRIVE SCREW ROUND HEAD KDS 0X5	67, 69, 187
312502-0221 ..	DRIVE SCREW ROUND HEAD KDS 4X6	183, 185
312601-0318 ..	NUT M6M8FZB	217, 219, 221, 223
312601-0320 ..	NUT M6M 10-8 FZB	153, 155, 471, 473
312601-0324 ..	NUT M6M 16-8 FZB	221, 223
312602-0312 ..	HEXAGON NUT, EN 24032 M6M M4 NIPLBR	305, 307
312602-0316 ..	MUTTER, EN 24032 M6M M6 NIPLBR	429, 431
312605-0310 ..	HEXAGON NUT, M6M M3 A280	37, 319, 501, 503, 505, 509, 517, 589, 667, 727, 729, 769
312605-0312 ..	HEXAGON NUT, M6M M4 A280	13, 15, 65, 115, 173, 175, 201, 203, 235, 463, 511, 517, 525 571, 573, 727, 729, 731, 743, 745, 773, 775, 777
312605-0314 ..	HEXAGON NUT, M6M M5 A280	37, 43, 45, 47, 121, 123, 377, 397, 401, 429, 431, 447, 499, 505 509, 511, 525, 527, 557, 559, 561, 567, 577, 579, 585, 601, 623, 627, 629
312605-0316 ..	HEXAGON NUT, M6M M6 A280	13, 15, 29, 31, 33, 49, 93, 95, 99, 101, 111, 133, 183, 185, 187 193, 199, 335, 337, 353, 357, 373, 377, 387, 401, 403, 429, 431, 433, 435, 437, 451, 453, 463, 493 495, 499, 501, 503, 513, 519, 527, 543, 545, 547, 557, 559, 561, 569, 577, 579, 601, 711, 727, 729 743, 745, 747, 749, 759, 761, 769, 773, 775
312605-0318 ..	HEXAGON NUT, M6M M8 A280	19, 25, 27, 41, 43, 79, 81, 83, 93, 95, 97, 99, 105, 109, 115, 153 155, 193, 247, 249, 251, 253, 311, 335, 337, 357, 363, 445, 447, 455, 463, 465, 509, 533, 539, 557 559, 561, 567, 577, 579, 585, 593
312605-0320 ..	HEXAGON NUT, M6M M10 A280	35, 93, 95, 235, 345, 347, 349, 451, 471, 473, 491, 549, 551
312605-0322 ..	HEXAGON NUT, M6M M12 A280	97, 193, 333, 345, 347
312605-0324 ..	HEXAGON NUT, M6M M16 A280	591
312625-0316 ..	HEXAGON THIN NUT, EN 24035 ML6M M6 A4	235, 493, 495
312625-0318 ..	HEXAGON THIN NUT, EN 24035 ML6M M8 A4	499
312625-0320 ..	HEXAGON THIN NUT, EN 24035 ML6M M10 A4	549, 551
312705-0312 ..	NUT HEX. DOMED CAP MHM-6 M4 A280	395, 397
312705-0314 ..	NUT HEX. DOMED CAP MHM-6 M5 A280	627, 629
312705-0316 ..	NUT HEX. DOMED CAP MHM-6 M6 A280	111, 157, 493, 515, 757
312805-0102 ..	NUT ROUND WITH SLOTS M15X1 FE	569
312805-0103 ..	NUT ROUND WITH SLOTS M17X1 FE	569
312805-0106 ..	NUT ROUND WITH SLOTS M30X1,5 FE	331
312810-0314 ..	HEXAGON NUT, NY-LOCK M5 FZB	173
312810-0316 ..	HEXAGON NUT, NY-LOCK M6 FZB	471, 473
312811-0316 ..	NUT HEX.LOCK HELI COIL MID GRIP M6 SS	103, 451
312811-0318 ..	NUT HEX.LOCK HELI COIL M8 SS	295, 297, 299, 301
312811-0320 ..	NUT HEX.LOCK HELI COIL MID GRIP M10 SS	313
312811-0322 ..	NUT HEX.LOCK HELI COIL MID GRIP M12 SS	217
312811-0324 ..	NUT HEX.LOCK HELI COIL MID GRIP M16 SS	217, 219, 221, 223
312811-0326 ..	NUT HEX.LOCK HELI COIL MID GRIP M20 SS	217, 219, 221, 223
312812-0310 ..	HEXAGON NUT, NY-LOCK M3 A480	141
312812-0312 ..	HEXAGON NUT, NY-LOCK M4 A480	157, 429, 431, 469, 557, 559, 561, 577, 579, 653, 655, 715 717, 743, 745
312812-0314 ..	HEXAGON NUT, NY-LOCK M5 A480	121, 123, 201, 203, 509, 525, 713, 769, 771
312812-0316 ..	HEXAGON NUT, NY-LOCK M6 A480	125, 127, 157, 497, 599, 711, 715, 717, 733, 743, 745, 747 749, 759, 761, 769, 773, 775
312812-0318 ..	HEXAGON NUT, NY-LOCK M8 A480	125, 127, 469, 557, 559, 561, 577, 579

Part No	Description	Page No
312812-0320 ..	HEXAGON NUT, NY-LOCK M10 A480	233, 733
312812-0322 ..	HEXAGON NUT, NY-LOCK M12 A480	539
312812-0324 ..	HEXAGON NUT, NY-LOCK M16 A480	183, 185
312901-0324 ..	NUT M6M16VFZB	221, 223
312902-0316 ..	NUT HEX. LEFT THREAD, M6 A280	129, 131, 133
312902-0318 ..	NUT HEX. LEFT THREAD, M8 A280	335, 337
315101-0136 ..	BRICKA, BRB, 4,3/8 H=0,8	217, 219, 221, 223, 389, 557, 559, 561, 563, 565, 577, 579, 581, 583
315101-0146 ..	WASHER PLAIN, BRB, 5,3/10 H=1	159, 161, 163, 221, 223, 227, 229, 231, 563, 565, 581, 583 593, 747, 749
315101-0153 ..	WASHER PLAIN, BRB, 6,4/12 H=1,5	567, 213, 217, 219, 221, 223, 237, 239, 471, 473, 499, 599, 783
315101-0165 ..	WASHER PLAIN, BRB, 8,4/16 H=1,5	217, 219, 235
315101-0173 ..	WASHER PLAIN, BRB, 10,5/22 H=2	217, 219, 221, 223, 227, 229
315101-0178 ..	WASHER PLAIN, BRB, 13/24 H=2	343
315101-0186 ..	WASHER PLAIN, BRB, 17/30 H=3	217, 219, 221, 223
315105-0124 ..	WASHER ISO 7089-3-200 HV-A4	31, 33, 45, 47, 105, 141, 149, 241, 319, 461, 501, 503, 505 517, 557, 559, 561, 577, 579, 667, 727, 729, 735, 737, 739, 741
315105-0136 ..	WASHER ISO 7089-4-200 HV-A4	13, 15, 23, 45, 47, 63, 65, 87, 89, 153, 155, 157, 189, 201, 203 205, 235, 241, 293, 319, 339, 343, 365, 395, 397, 429, 431, 441, 447, 463, 469, 495, 501, 503, 543 545, 549, 551, 571, 573, 577, 579, 589, 601, 623, 627, 629, 653, 655, 663, 673, 675, 677, 681, 683 685, 687, 689, 715, 717, 719, 721, 723, 725, 727, 729, 731, 743, 745, 747, 749, 777
315105-0146 ..	WASHER ISO 7089-5-200 HV-A4	27, 37, 39, 43, 45, 47, 111, 113, 121, 123, 125, 127, 133, 147 149, 153, 155, 165, 167, 169, 171, 173, 201, 203, 205, 235, 241, 277, 279, 281, 283, 293, 305, 307 329, 331, 377, 389, 395, 397, 401, 411, 425, 429, 431, 461, 463, 501, 503, 505, 509, 511, 517, 519 525, 527, 543, 545, 549, 551, 553, 557, 559, 561, 567, 575, 577, 579, 585, 597, 601, 623, 627, 629 653, 655, 665, 671, 679, 691, 693, 695, 697, 699, 701, 703, 707, 709, 713, 715, 717, 735, 737, 739 741, 751, 753, 769, 771, 779, 781
315105-0153 ..	WASHER ISO 7089-6-200 HV-A4	13, 15, 21, 23, 29, 31, 33, 35, 37, 39, 49, 63, 65, 93, 95, 97 101, 105, 107, 111, 115, 119, 125, 127, 129, 131, 133, 147, 151, 153, 155, 157, 165, 167, 169, 171 179, 181, 183, 185, 187, 191, 193, 197, 199, 205, 233, 235, 255, 257, 259, 261, 277, 279, 281, 283 285, 287, 289, 291, 303, 309, 313, 319, 345, 347, 349, 351, 353, 359, 361, 365, 369, 371, 373, 375 377, 385, 387, 395, 397, 401, 403, 415, 427, 429, 431, 433, 435, 437, 439, 441, 447, 451, 455, 457 463, 469, 475, 477, 489, 493, 495, 501, 503, 507, 509, 511, 513, 515, 519, 525, 527, 543, 545, 549 551, 557, 559, 561, 569, 571, 573, 577, 579, 589, 601, 653, 655, 711, 715, 717, 733, 743, 745, 747 749, 757, 759, 761, 769, 773, 775, 777
315105-0156 ..	WASHER PLAIN, BRB, 6,7/14,H=1,5	387, 513, 515
315105-0165 ..	WASHER ISO 7089-8-200 HV-A4	13, 15, 19, 27, 71, 73, 75, 77, 87, 89, 93, 95, 97, 147, 153, 155 173, 175, 193, 205, 215, 255, 257, 259, 261, 285, 287, 289, 291, 295, 297, 299, 301, 303, 309, 311 335, 337, 345, 347, 357, 361, 363, 373, 377, 385, 389, 405, 407, 409, 441, 447, 465, 469, 495, 509 513, 517, 519, 523, 539, 543, 545, 547, 549, 551, 557, 559, 561, 567, 577, 579, 585, 593, 597
315105-0171 ..	WASHER PLAIN, BRB, 10/18,H=2	139, 549, 551
315105-0173 ..	WASHER ISO 7089-10-200 HV-A4	189, 215, 233, 313, 345, 347, 441, 445, 451, 471, 473, 491 557, 559, 561, 577, 579, 595, 733
315105-0178 ..	WASHER ISO 7089-12-200 HV-A4	183, 185, 215, 241, 333, 361, 371, 373, 441, 525
315105-0186 ..	WASHER ISO 7089-16-200 HV-A4	183, 185, 193, 195, 373
315105-0191 ..	WASHER PLAIN, BRB, 20/36 H=3	539
315111-0153 ..	WASHER PLAIN, TBRB 6,4/12 H=3	563, 565, 581, 583
315111-0165 ..	WASHER PLAIN, TBRB 8,4/16 H=3	365
315111-0173 ..	WASHER PLAIN, TBRB 10,5/22 H=4	213, 217, 219, 221, 223
315111-0178 ..	WASHER PLAIN, TBRB 13/24 H=4	213
315115-0153 ..	WASHER PLAIN, TBRB 6,4/12 H=3	31, 33, 35, 125, 127, 247, 249, 251, 253, 277, 279, 281, 283 285, 287, 289, 291, 295, 297, 299, 301, 315, 317, 527
315115-0165 ..	WASHER PLAIN, TBRB 8,4/16 H=3	31, 33, 39, 71, 73, 75, 77, 79, 81, 83, 93, 95, 125, 127, 137 153, 155, 255, 257, 259, 261, 313, 453
315115-0173 ..	WASHER PLAIN, TBRB 10,5/22 H=4	31, 33
315115-0178 ..	WASHER PLAIN, TBRB 13/24 H=4	87, 89, 93, 95, 539
315121-0153 ..	WASHER PLAIN, TBRSB 6,4/22 H=4	213
315121-0173 ..	WASHER PLAIN, TBRSB 10,5/28 H=6	219, 237, 239
315121-0178 ..	WASHER PLAIN, TBRSB 13/36 H=6	213, 233
315125-0146 ..	WASHER TBRSB 5.3X15X1 A4	667
315125-0153 ..	WASHER TBRSB 6,4X22X4 A4	19, 31, 33, 109, 129, 131, 235, 357, 547
315125-0165 ..	WASHER TBRSB 8,4X26X5 A4	19, 23, 45, 47, 509, 523
315125-0173 ..	WASHER TBRSB 10,5X28X6 A4	205, 539, 547
315202-0102 ..	O-RING 4,1X1,6 MM	285, 287, 289, 291, 293
315202-0105 ..	O-RING 7,1X1,6 MM	173, 175
315202-0106 ..	O-RING 8,1X1,6 MM	285, 287, 289, 291, 303
315202-0108 ..	O-RING 10,1X1,6 MM	285, 287, 289, 291
315202-0110 ..	O-RING 12,1X1,6 MM	247, 249, 251, 253
315202-0112 ..	O-RING 14,1X1,6 MM	471, 473
315202-0118 ..	O-RING 22,1X1,6 MM	365
315202-0120 ..	O-RING 27,1X1,6 MM	139
315202-0204 ..	O-RING 5,3X2,4 MM	303
315202-0206 ..	O-RING 7,3X2,4 MM	153, 155, 295, 297, 299, 301
315202-0207 ..	O-RING 8,3X2,4 MM	295, 297, 299, 301, 303
315202-0211 ..	O-RING 13,3X2,4 MM	147
315202-0215 ..	O-RING 19,2X3 MM	333, 349, 373
315202-0217 ..	O-RING 24,2X3 MM	367
315202-0218 ..	O-RING 26,2X3 MM	333, 389, 567, 585
315202-0219 ..	O-RING 29,2X3 MM	295, 297, 299, 301, 303
315202-0223 ..	O-RING 39,2X3 MM	389
315202-0244 ..	O-RING 134,3X5,7 MM	463
315202-0265 ..	O-RING 12,3X2,4 MM	247, 249, 251, 253
315202-0304 ..	O-RING 64,5X3 MM	55, 563, 565, 581, 583
315202-0305 ..	O-RING 69,5X3 MM	389, 563, 565, 581, 583
315202-0306 ..	O-RING 74,5X3 MM	329, 331

Part No	Description	Page No
315202-0307 ..	O-RING 79,5X3 MM	189
315202-0308 ..	O-RING 84,5X3 MM	53, 57
315202-0309 ..	O-RING 89,5X3 MM	567, 585
315202-0317 ..	O-RING 129,5X3 MM	465
315204-0109 ..	O-RING 11,1X1,6 MM	31, 33
315204-0110 ..	O-RING 12,1X1,6 MM	21, 107
315204-0111 ..	O-RING 13,1X1,6 MM	35
315204-0119 ..	O-RING 25,1X1,6 MM	105
315204-0215 ..	O-RING 19,2X3 MM	53, 55, 57, 639
315204-0222 ..	O-RING 36,2X3 MM	107
315204-0223 ..	O-RING 39,2X3 MM	41
315204-0301 ..	O-RING 49,5X3 MM	55, 105, 639
315204-0302 ..	O-RING 54,5X3 MM	21, 107
315204-0309 ..	O-RING 89,5X3 MM	31, 33, 39
315205-0705 ..	O-RING 17,17X1,78 MM	389
315211-0101 ..	GASKET BOLT HEAD 4,5X7X1 MM M4	247, 249, 251, 253
315211-0103 ..	GASKET BOLT HEAD 6,7X11X1 MM M6	247, 249, 251, 253, 389
315211-0104 ..	GASKET BOLT HEAD 8,7X14X1 MM M8	471, 473
315211-0106 ..	GASKET BOLT HEAD 10,7X16X1,5 MM M10	471, 473
315211-0107 ..	GASKET BOLT HEAD 12,7X18X1,5 MM M12	373
315211-0111 ..	GASKET BOLT HEAD 21,5X28,6X2,5 MM G1/2	471, 473
315220-0167 ..	V-RINGS 27X35X10,5 MM V-30S	39
315220-0210 ..	V-RINGS 54X64X13 MM V-60S	329, 331
315221-0169 ..	RADIAL SEAL 30X47X7 MM	213
315221-0175 ..	RADIAL SEAL 35X47X7 MM	389
315221-0177 ..	RADIAL SEAL 35X52X7 MM	331
315221-0185 ..	RADIAL SEAL 40X62X7 MM	389
315229-0101 ..	GASKETS, 10,4X17,4X3,7 MM 1/2" FDA	13, 15, 99, 455
315229-0103 ..	GASKETS, 23,1X30,1X3,7 MM 1" FDA	13, 15
315229-0104 ..	GASKETS, 35,8X42,8X3,7 MM 1"1/2 FD	99, 103, 455
315229-0105 ..	GASKETS, 48,5X55,5X3,7 MM 2" FDA	97, 445, 463, 465
315229-0106 ..	GASKETS, 61,2X68,2X3,7 MM 2"1/2 FD	445
315229-0203 ..	GASKET 34,8X42,8X3,7 MM 1"1/2	41, 105
315229-0204 ..	GASKET 34,8X42,8X3,7 MM 1"1/2	27, 41
315229-0205 ..	GASKET 47,5X55,5X3,7 MM 2"	25, 27, 41, 43
315229-0206 ..	GASKET 60,2X68,2X3,7 MM 2"1/2	25, 27, 41, 105
315230-0157 ..	BEARING SEAL 12X16X3 MM	247, 249, 251, 253
315233-0101 ..	WASHER PL.RND.NYL.5,2/8,H=1	53, 55, 57, 327
315233-0109 ..	WASHER PL.RND.NYL.10,3/14,H=1	63, 119, 147, 255, 257, 259, 261, 365, 411, 429, 431, 469
315233-0110 ..	WASHER PL.RND.NYL.13,3/17,H=1	177, 179, 411, 423, 429, 431, 469, 475
315233-0111 ..	WASHER PL.RND.NYL.17/22,H=1	153, 155, 365, 411, 413, 463, 465, 467, 469
315233-0113 ..	WASHER PL.RND.NYL.21,4/27,H=1,2	165, 179, 411, 415, 417, 419, 423, 475
315234-0109 ..	WASHER,PL.RND.CU.10,3/13,5 H=1,0	23, 159, 161, 163, 285, 287, 289, 291, 471, 473
315234-0110 ..	WASHER,PL.RND.CU.13,5/18 H=1,5	343
315234-0111 ..	WASHER,PL.RND.CU.17,5//21 H=1,5	471, 473
315234-0113 ..	WASHER PL.RND.CU.21,3//26 H=1,5	343, 445
315237-0106 ..	WASHER,PL.RND.AL.6/10,H=1	247, 249, 251, 253, 285, 287, 289, 291
315237-0107 ..	WASHER,PL.RND.AL.8/14,H=1	285, 287, 289, 291
315237-0109 ..	WASHER,PL.RND.AL.10/14,H=1,5	247, 249, 251, 253
315250-0103 ..	GASKET 48X38X5,5 MM	373
315250-0104 ..	GASKET 61X51X5,5 MM	355
315259-0102 ..	FELT SEAL 22-47 MM	147
315401-0153 ..	WASHER FBH6,1FZB	777, 783
315402-0128 ..	LOCK WASHER FBB 3,6	727, 729, 769
315402-0136 ..	LOCK WASHER FBB 4,1	57, 653, 655, 663, 673, 675, 677, 681, 683, 685, 687, 689, 715, 717 719, 721, 723, 725, 727, 729, 731, 735, 737, 739, 741, 743, 745, 769, 773, 775
315402-0146 ..	LOCK WASHER FBB 5,1	113, 471, 473, 653, 655, 667, 669, 705, 711, 715, 717, 759, 761, 777, 781
315402-0156 ..	LOCK WASHER FBB 6,5	715, 717
315410-0106 ..	LOCK WASHER MB 6 D=30 H=1,25	331
315701-0169 ..	PARALLEL KEY W. ROUND ENDS 4X4X18 MM	557, 559, 561, 577, 579
315701-0234 ..	PARALLEL KEY W. ROUND ENDS 6X6X25 MM	389
315701-0235 ..	PARALLEL KEY W. ROUND ENDS 6X6X28 MM	225
315701-0239 ..	PARALLEL KEY W. ROUND ENDS 6X6X40 MM	213, 225
315701-0268 ..	PARALLEL KEY W. ROUND ENDS 8X7X32 MM	213
315701-0335 ..	PARALLEL KEY W. ROUND ENDS 12X8X56 MM	217, 219, 221, 223
315705-0166 ..	PARALLEL KEY W. ROUND ENDS 4X4X12 MM	549, 551
315705-0196 ..	PARALLEL KEY W. ROUND ENDS 5X5X10 MM	451
315705-0201 ..	PARALLEL KEY W. ROUND ENDS 5X5X20 MM	29
315705-0232 ..	PARALLEL KEY W. ROUND ENDS 6X6X20 MM	235, 333, 389
315705-0265 ..	PARALLEL KEY W. ROUND ENDS 8X7X25 MM	389
315705-0269 ..	PARALLEL KEY W. ROUND ENDS 8X7X35 MM	213
315705-0271 ..	PARALLEL KEY W. ROUND ENDS 8X7X45 MM	333
315705-0307 ..	PARALLEL KEY W. ROUND ENDS 10X8X70 MM	215
315742-0102 ..	COLLAR, 6/16, H=8	255, 257, 259, 261
315742-0104 ..	COLLAR, 8/20, H=9	553
315742-0111 ..	COLLAR, 15/30, H=12	529
315742-0112 ..	COLLAR, 16/32, H=12	35
315742-0116 ..	COLLAR, 20/36, H=13	235
315750-0105 ..	RETAIN. RING, 8	567, 585
315751-0103 ..	RETAIN. RING, 6	157, 319, 527, 571, 573
315751-0109 ..	RETAIN. RING, 12	309, 311, 495, 517
315751-0112 ..	RETAIN. RING, 15	35, 39, 135, 491, 549, 551, 557, 559, 561, 577, 579
315751-0116 ..	RETAIN. RING, 20	309
315751-0119 ..	RETAIN. RING, 25	233

Part No	Description	Page No
315751-0122 ..	RETAIN. RING, 30	309
315751-0124 ..	RETAINING RING FOR SHAFT, 35X1,5 MM	389
315752-0120 ..	RETAIN. RING, 26	527
315752-0125 ..	RETAINING RING FOR HOLE, 37X1,5 MM	309
315753-0122 ..	RETAIN. RING, 30	515
315753-0124 ..	RETAIN. RING, 35	35, 39
315753-0132 ..	RETAINING RING FOR HOLE, 52X2 MM	389
315754-0113 ..	LOCKING WAE 15	53, 55, 57
315755-0106 ..	LOCKING WASHER 4	501, 503, 525
315755-0107 ..	LOCKING WASHER 5	133, 501, 503
315755-0110 ..	LOCKING WASHER 9	519
315755-0801 ..	LOCKING WASHER 8	513
318201-0150 ..	ROLLER CHAIN, SINGLE 3/8 -150	235
318207-0168 ..	ROLLER CHAIN, SINGLE 6MM-168	557, 559, 561, 577, 579
318800-0103 ..	HANDLES,SPHERICAL KNOB,INT.THRE.,D.25-M6	31, 33, 569
318800-0104 ..	HANDLE,SPHERICAL KNOB,INT.THRE.,D.30-M8	513
318860-0106 ..	KNOB, ADJUST.HI.EXT.THREAD, NO 8324-3674	189
318871-0104 ..	KNOB CIRCULAR, EXT THREAD, NO. 8302-6118	547
321101-0143 ..	FLANGE BUSHING, 8X14X8 MM	125, 127
321101-0172 ..	FLANGE BUS 12F7X10	309
321101-0173 ..	FLANGE BUS 12F7X12	311, 589
321101-0233 ..	FLANGE BUSHING, 20X28X20 MM	595
321111-0097 ..	FLANGE BUSHING, 8X12X12 MM	493, 519
321111-0135 ..	FLANGE BUSHING, 10X16X10 MM	493
321111-0212 ..	FLANGE BUSHING, 15X21X15	569
321120-0098 ..	BEARING BUSHING W/O FL, 10/12X8	255, 257, 259, 261
321120-0100 ..	BEARING BUSHING W/O FLANGE 8/10X12	567, 571, 573, 585
321120-0101 ..	BEARING BUSHING W/O FLANGE,6/8X6	571, 573
321120-0109 ..	BEARING BUSHING W/O FLANGE,12/14X10	567, 585
321120-0118 ..	BEARBUSHING W/O FL 14X16X15	255, 257, 259, 261
321120-0122 ..	BEARING BUSHING W/O FL, 15X17X15 MM	563, 565, 581, 583
321120-0132 ..	BEARBUSHING W/O FL 18X20X20	285, 287, 289, 291
321120-0153 ..	BEARBUSHING W/O FL 24X27X20	255, 257, 259, 261
321129-0137 ..	THRUST WASHER, 22/38X1,5	217, 219
321130-0180 ..	THRUST WASHER, 12X24X1,5 MM	335, 337, 495
321130-0200 ..	THRUST WASHER, 14X26X1,5 MM	335, 337
321130-0260 ..	THRUST WASHER, 20X36X1,5 MM	235
321141-0142 ..	BEARING BUSHING W/O FL, 10X12X12 MM	369
321141-0183 ..	BEARING BUSHING W/O FL, 12X14X15 MM	517
321141-0193 ..	BEARING BUSHING W/O FL, 12X14X25 MM	495
321141-0260 ..	BEARING BUSHING W/O FL, 20X23X20 MM	235
321302-0298 ..	BALL BEARING, 2 SEALS, 8X22X7 MM	531
321306-0107 ..	BALL BEARING, 35X62X14 MM	389
321308-0200 ..	BALL BEARING, 2 SEALS, 10X26X8 MM	527
321308-0202 ..	BALL BEARING, 2 SEALS, 15X32X9 MM	549, 551
321308-0207 ..	BALL BEARING, 2 SEALS, 35X62X14 MM	213
321309-0104 ..	BALL BEARING, 20X47X14 MM	389
321309-0105 ..	BALL BEARING, 25X52X15 MM	389
321313-0100 ..	BALL BEARING, 2 SEALS, 10X30X9 MM	515
321313-0102 ..	BALL BEARING, 2 SEALS, 15X35X11 MM	529, 549, 551
321313-0105 ..	BALL BEAR. 2 SEALS 25X52X15MM	213
321330-0100 ..	ANG. BALL BEAR, 10X30X14 MM	527
321330-0106 ..	ANG. BALL BEAR, 30X62X23,8 MM	389
321531-0248 ..	NEEDLE SLEEVE W/O CONE 20X26X16	217, 219, 221, 223
321576-0260 ..	BEAR.ROLLER, 2 SEALS 20X47X25	217, 219, 221, 223
321600-0114 ..	SEAL COVER LL3052	213
341001-0148 ..	COPPER TUBE	429, 431
342700-0113 ..	NIPPLES,HEXAGON,EXT.G-THREAD G1/2"-G1/2"	417, 467, 471, 473, 475
342700-0203 ..	NIPPLES,HEXAGON,EXT.G-THREAD G3/8"-G1/4"	469
342700-0205 ..	NIPPLES,HEXAGON,EXT.G-THREAD G1/2"-G1/4"	471, 473
342700-0210 ..	NIPPLES,HEXAGON,EXT.G-THREAD G3/4"-G1/2"	463
342701-0201 ..	BUSHING,INT./EXT.G-THREAD G1/4"-G1/8"	423
342701-0203 ..	BUSHING, INT/EXT. G-THREAD NO. 3/8-1/4	467, 475
342701-0205 ..	BUSHING,INT./EXT.G-THREAD G1/2"-G1/4"	179, 423, 439, 467
342701-0208 ..	BUSHING, INT/EXT. G-THREAD NO. 3/4-1/4	213
342701-0209 ..	BUSHING,INT./EXT.G-THREAD G3/4"-G3/8"	467
342703-0208 ..	NUT, PIPES & CONNECTORS,NUT M-8 SS	159, 161, 163
342706-0130 ..	ACCESSORIES, INSERT SLEEVE 6 MM	167
342710-0115 ..	REDUCTION RBM 16/8	165
342713-0209 ..	PLUG, EXT THREAD HEX SOCKET 8638-00-180	165, 285, 287, 289, 291, 411, 415, 471, 473
342713-0210 ..	PLUG, EXT THREAD HEX SOCKET 8638-00-140	405, 407, 409, 411, 429, 431, 433, 435, 437
342713-0211 ..	PLUG, EXT THREAD HEX SOCKET 8638-00-380	411, 429, 431, 433, 435, 437, 467, 471, 473
342713-0213 ..	PLUG, EXT THREAD HEX SOCKET 8638-00-120	415
342715-0100 ..	BLIND PLUG 4 MM	433, 435, 437
342715-0102 ..	BLIND PLUG 6 MM	433, 435, 437
342716-0202 ..	REDUCER 4-6	167
342716-0203 ..	REDUCER 6-8	159, 161, 163, 405, 407, 409, 433, 435, 437
342716-0209 ..	REDUCER 8-12	405, 407, 409
342716-0210 ..	REDUCER 6-12	533
342720-0114 ..	CONN. STR. GA-15-G1/2	165, 411, 415, 417, 419, 475
342722-0197 ..	STRAIGHT COUPLING	117, 133
342722-0198 ..	STRAIGHT COUPLING	357
342722-0199 ..	STRAIGHT COUPLING	533
342722-0202 ..	PIPE COUPLING 1/8" D=6MM	351, 421, 455, 533

Part No	Description	Page No
342722-0203 ..	STRAIGHT COUPLING	429, 431
342722-0204 ..	PIPE COUPLING	429, 431
342722-0205 ..	STRAIGHT COUPLING D=8-G1/4"	405, 407, 409, 433, 435, 437
342722-0206 ..	STRAIGHT COUPLING D=8-G3/8"	429, 431, 433, 435, 437
342722-0210 ..	RöRKOPPLING D=12-G3/8"	433, 435, 437
342723-0114 ..	CONN. STR. PIPE GI-15-G1/2	417
342725-0108 ..	CONN. STR. PIPE GI-10-G1/4	177
342726-0109 ..	CONN. PIPE G-12	165
342726-0114 ..	CONN. PIPE G-15	475
342727-0102 ..	CONN. PIPE G-6-LFZB	159, 161, 163
342730-0114 ..	CONN. ELBOW WA-15-1/2	417, 419, 423, 475
342732-0099 ..	ELBOW PIPE JOINT, EXT.THREAD, D=4MM-M5	497
342732-0102 ..	ELBOW PIPE JOINT, EXT.THREAD, D=6MM-G1/8	429, 431, 469
342732-0103 ..	ELBOW PIPE JOINT, EXT.THREAD, D=6MM-G1/4	421, 429, 431, 433, 435, 437
342732-0104 ..	ELBOW PIPE JOINT, EXT.THREAD, D=8MM-G1/4	421, 425, 429, 431, 433, 435, 437, 439, 475
342732-0109 ..	ELBOW PIPE JOINT, EXT.THREAD, D=1MM-G1/4	405, 407, 409
342732-0110 ..	ELBOW PIPE JOINT, EXT.THREAD,D=12MM-G3/8	13, 15, 429, 431, 433, 435, 437
342732-0161 ..	ELBOW PIPE JOINT,EXT.THREAD,D=14 MM-G1/2	405, 407, 409, 423, 475
342732-0801 ..	ELBOW PIPE JOINT, EXT.THREAD, D=8MM-G1/8	423, 429, 431
342735-0102 ..	ELBOW PIPE JOINT	405, 407, 409
342735-0103 ..	ELBOW PIPE JOINT	405, 407, 409, 429, 431, 433, 435, 437
342735-0109 ..	ELBOW PIPE JOINT	405, 407, 409
342735-0110 ..	ELBOW PIPE	405, 407, 409, 475
342736-0114 ..	CONN. ELBOW W-15	165
342737-0204 ..	CONN. ELBOW W-6 LRFR	45, 47, 67, 69, 469
342738-0208 ..	ADJUSTABLE ELBOW CONNECTION,EXT 8-G1/4	167
342742-0104 ..	T-COUPLING,ADJUST,F.PLASTIC TUBE 8-G1/4"	405, 407, 409
342746-0114 ..	CONN. T-PIPE T-15	165, 353
342748-0100 ..	T-CONNECTION 4MM	319
342748-0102 ..	T-CONNECTION 6MM	167, 405, 407, 409
342748-0103 ..	T-CONNECTION 8MM	159, 161, 163, 405, 407, 409
342748-0109 ..	T-CONNECTION 12MM	405, 407, 409, 533
342751-0204 ..	CONN. L-PIPE, EXT. LE-6-R1/8	67, 69
342751-0215 ..	CONN. L-PIPE, EXT. LE-12-R3/8	49
342752-0103 ..	CONN. STR. GA-8-G1/4	471, 473
342752-0110 ..	CONN. STR. GA-12-G3/8	467, 471, 473
342753-0114 ..	CONN. CROSS K-15	417
342762-0114 ..	CONN. BULKHEAD SV 15-LFZB	463
342767-0100 ..	CONN. BULKHEAD G1/8	159, 161, 163, 167
342767-0104 ..	CONN. BULKHEAD G1/4	167
342768-0102 ..	BULKHEAD CONNECTOR, 6 MM	147, 167
342770-0101 ..	STRAIGHT COUPLING INT, D=4 MM - G1/8	319
342770-0105 ..	STRAIGHT COUPLING INT, D=6 MM - G1/8	421, 429, 431
342770-0107 ..	STRAIGHT COUPLING INT, D=8 MM - G1/8	353
342772-0113 ..	ELBOW FITTING, 6 - G1/8	533
342797-0121 ..	CONN. BANJO, RINGPIECE 6-1/8	19, 21, 23, 35, 37, 41, 67, 69, 93, 95, 107, 159, 161, 163
342797-0122 ..	CONN. BANJO, RINGPIECE 6-1/4	49, 427
342803-0103 ..	UNION NUT, RD 60-6 (SMS 38)	373
342807-0104 ..	PIPE ELBOW 90 DEGR. SMS1220, D=51 MM	355
342840-0101 ..	CLAMP, 12,7 AND 19,1 MM 3-A PCS+PMCS	375
342850-0101 ..	GASKET, FDA, 3-A, 1/2	375
342850-0303 ..	GASKET 22,7X49,1X5,2 MM 1" FDA	637
342850-0304 ..	GASKET 35,4X49,1X5,2 1"1/2 FDA	637
342850-0305 ..	GASKET 47,8X62,6X5,2 MM 2" FDA	637
342903-0121 ..	NUT WITH SPRING 8/6-M12X1	153, 155, 417, 429, 431
342920-0115 ..	STRAIGHT COUPLING,EXT.THREADED 6/4-R3/8"	475
342920-0133 ..	STRAIGHT COUPL.,EXT.THREADED 10/8-R3/8"	475
342921-0111 ..	STRAIGHT COUPL,EXT.THREAD.6/4-M5	493, 497
342921-0113 ..	STRAIGHT COUPLING,EXT.THREADED 6/4-G1/8"	117, 365, 429, 431
342921-0121 ..	STRAIGHT COUPLING,EXT.THREADED 8/6-G1/8"	415, 429, 431
342921-0122 ..	STRAIGHT COUPLING,EXT.THREADED 8/6-G1/4"	411, 471, 473
342921-0123 ..	STRAIGHT COUPLING,EXT.THREADED 8/6-G3/8"	411, 417
342923-0121 ..	STRAIGHT COUPL.,INT.THREADED 8/6-G1/8"	417
342923-0122 ..	STRAIGHT COUPL.,INT.THREADED 8/6-G1/4"	423
342923-0132 ..	STRAIGHT COUPL.,INT.THREADED 10/8-G1/4"	179
342930-0122 ..	ELBOW 90 COUPL.,EXT.THREAD 8/6-R1/4"	213
342931-0122 ..	ELBOW 90 COUPL.,EXT.THREAD 8/6-G1/4"	425, 467
342946-0112 ..	T-COUPLING,UNION 6/4	405, 407, 409
342946-0122 ..	T-COUPLING,UNION 8/6	405, 407, 409
342960-0112 ..	BULKHEAD COUPLING 6/4	353, 365, 429, 431
342960-0121 ..	BULKHEAD COUPLING 8/6-6/4	353
342960-0122 ..	BULKHEAD COUPLING 8/6	353, 365, 429, 431
342960-0133 ..	BULKHEAD COUPLING 10/8	353
342980-0111 ..	BANJO-CONNECTION,RING 6/4-M5	97
342980-0113 ..	BANJO-CONNECTION,RING 6/4-G1/8"	21, 67, 69
342980-0121 ..	BANJO-CONNECTION,RING 8/6-G1/8"	153, 155, 315, 317
342980-0122 ..	BANJO-CONNECTION,RING 8/6-G1/4"	213, 429, 431
342980-0301 ..	BANJO-HOLLOW BOLT COUPL.,EXT.THREA.01-M5	97
342980-0303 ..	BANJO-HOLLOW BOLT COUPL,EXT.THR.01-G1/8"	41, 45, 47, 63, 67, 69, 107, 153, 155, 159, 161, 163, 315, 317
342980-0304 ..	BANJO-HOLLOW BOLT COUPL,EXT.THR.01-G1/4"	49, 213, 427, 429, 431
342980-0313 ..	BANJO-HOLLOW BOLT COUPL,EXT.THR.02-G1/8"	21
342991-0101 ..	HOSE CLIP,WORM DRIVE TYPE (13)-16	45, 47, 103, 343, 447, 469
342991-0104 ..	HOSE CLIP,WORM DRIVE TYPE (23)-27	213

Machine Type Group Description Page No

Part No	Description	Page No
342991-0112 ..	HOSE CLIP,WORM DRIVE TYPE (73)-83	445
342991-0113 ..	HOSE CLIP,WORM DRIVE TYPE (83)-93	445
346800-0109 ..	SILENCER FILTER R1/8"	469
351120-0144 ..	CABLE SIHF 3X1,5MM2 GREEN/YELLOW	23, 345, 347, 603, 605
351120-0145 ..	CABLE SIHF 3X2,5MM2 GREEN/YELLOW	19, 499
351120-0146 ..	CABLE SIHF 3X4MM2 GREEN/YELLOW	497
351120-0167 ..	CABLE SIHF 4X6MM2 GREEN/YELLOW	13, 15
351120-0168 ..	CABLE SIHF 4X10MM2 GREEN/YELLOW	27
351150-0403 ..	CABLE OLFLEX 3X0,75 MM2 LIGHT/GREY	13, 15, 65, 417, 429, 431, 461, 469, 471, 473, 475
351150-0404 ..	CABLE OLFLEX 4X0,75 MM2 LIGHT/GREY	65, 469, 471, 473
351150-0405 ..	CABLE OLFLEX 5X0,75 MM2 LIGHT/GREY	31, 33, 111, 235, 447, 505, 603, 605, 625, 631, 633
351150-0406 ..	CABLE OLFLEX 7X0,75 MM2 LIGHT/GREY	181, 189, 191, 601, 603, 605
351150-0407 ..	CABLE OLFLEX 12X0,75 MM2 LIGHT/GREY	487, 507
351150-0412 ..	CABLE OLFLEX 3X1,5 MM2 LIGHT/GREY	13, 15, 147, 197, 403, 603, 605
351150-0413 ..	CABLE OLFLEX 4X1,5 MM2 LIGHT/GREY	39, 147
351150-0414 ..	CABLE OLFLEX 5X1,5 MM2 LIGHT/GREY	603, 605
351150-0415 ..	CABLE OLFLEX 7X1,5 MM2 LIGHT/GREY	777
351150-0418 ..	CABLE OLFLEX 4X2,5 MM2 LIGHT/GREY	147, 445, 451, 471, 473
351150-0422 ..	CABLE OLFLEX 3X4 MM2 LIGHT/GREY	507
351150-0425 ..	CABLE OLFLEX 25X0,75 MM2 LIGHT/GREY	147, 507, 603, 605
351150-0428 ..	CABLE OLFLEX 41X0,75 MM2 LIGHT/GREY	147
351150-0431 ..	CABLE OLFLEX 2X0,75 MM2 LIGHT/GREY	13, 15, 63, 169, 171, 205, 373, 411, 419, 463
351160-0102 ..	CABLE AWM 1X0,75 MM2 DARKBLUE	651
351160-0105 ..	CABLE AWM 1X2,5 MM2 DARKBLUE	651
351160-0106 ..	CABLE AWM 1X4 MM2 DARKBLUE	651
351161-0104 ..	CABLE AWM 1X1,5 MM2 LIGHTBLUE	651
351161-0105 ..	CABLE AWM 1X2,5 MM2 LIGHTBLUE	651
351161-0110 ..	CABLE AWM 1X25 MM2 LIGHTBLUE	651
351162-0104 ..	CABLE AWM 1X1,5 MM2 YELLOW-GREEN	651
351162-0105 ..	CABLE AWM 1X2,5 MM2 YELLOW-GREEN	651
351162-0106 ..	CABLE AWM 1X4 MM2 YELLOW-GREEN	147, 189, 429, 431, 651
351162-0107 ..	CABLE AWM 1X6 MM2 YELLOW-GREEN	651
351162-0109 ..	CABLE AWM 1X16 MM2 YELLOW-GREEN	441, 651
351163-0106 ..	CABLE AWM 1X4 MM2 RED	651
351164-0104 ..	CABLE AWM 1X1,5 MM2 BLACK	651
351164-0105 ..	CABLE AWM 1X2,5 MM2 BLACK	651
351164-0106 ..	CABLE AWM 1X4 MM2 BLACK	651
351164-0107 ..	CABLE AWM 1X6 MM2 BLACK	651
351164-0110 ..	CABLE AWM 1X25 MM2 BLACK	651
351166-0102 ..	CABLE AWM 1X0,75 MM2 ORANGE	651
351175-0102 ..	CABLE AWM 1X 075 MM2 YELLOW-GREEN	461
352100-0106 ..	CABLE GLANR.18,6-10,5	19
352101-0103 ..	LEAD-IN, PR18,6/PG11, E-1457518	429, 431, 557, 559, 561, 577, 579
352101-0106 ..	LEAD-IN, PR28,3/PG21, E-1457528	111
352101-0107 ..	LEAD-IN, PR37/PG29, E-1457537	111
352103-0100 ..	CABLE GLAND, STR 9, PR15,2/PG9	147, 601
352103-0101 ..	KABELFöRSKR. ST 9, PR15,2/PG9	31, 33, 113, 151, 167, 401, 603, 605, 719, 721, 723, 725, 743, 745
352103-0105 ..	CABLE GLAND, STR 11, PR 18,6/PG11	31, 33
352103-0106 ..	CABLE GLAND, ST 11, PR18,6/PG11	13, 15, 23, 137, 151, 183, 185, 381, 383, 401, 505, 543, 545, 603, 605
352103-0108 ..	CABLE GLAND, ST 13,5 , PR20,4/PG13,5	167, 401
352103-0110 ..	CABLE GLAND, STR 16, PR22,5/PG16	113, 191, 719, 721, 723, 725
352103-0111 ..	CABLE GLAND, ST 16, PR22,5/PG16	113, 379, 723, 725, 777
352103-0115 ..	CABLE GLAND, STR 21, PR28,3/PG21	379
352103-0116 ..	KABELFöRSKR. ST 21, PR28,3/PG21	151, 723, 725
352103-0120 ..	CABLE GLAND, STR 29, PR37,0/PG29	113
352103-0121 ..	CABLE GLAND, ST 29, PR37,0/PG29	113, 379, 381, 383, 723, 725
352103-0122 ..	CABLE GLAND, ST 36, PR47,0/PG36	187
352110-0100 ..	CABLE CLIPS, D=5-7 MM	31, 33
352110-0103 ..	CABLE CLIPS, D=14-20 MM	343
352113-0101 ..	CLIP STRIP, 92X2,5 MM	159, 161, 163, 221, 223, 255, 257, 259, 261, 403, 567, 585, 651
352113-0102 ..	CLIP-STRIP, BLACK 188X4,8 MM	137, 379, 651
352113-0104 ..	CLIP STRIP, 300X4,8 MM	405, 407, 409
352113-0203 ..	ANCHOR PLATES FOR STRIPS, TYPE TM3S8-M0	441, 601
352113-0204 ..	ANCHOR PLATES FOR STRIPS, TYPE TM3S25-M	205, 401
352113-0205 ..	ANCHOR PLATES FOR STRIPS, TYPE TM2S8-C10	241, 255, 257, 259, 261, 379, 497, 715, 717, 727, 729, 731, 747, 749
352113-0206 ..	ANCHOR PLATES FOR STRIPS, TYPE ABM100-AT	501, 503
352135-0202 ..	CLIP, 16 MM, 913.016	557, 559, 561
353001-0101 ..	END SLEEVE 0,5 MM2	621
353001-0102 ..	END SLEEVE 0,75 MM2	621, 651
353001-0113 ..	ÄNDHYLSA 0,75MM2	625, 631, 633, 651
353001-0114 ..	END SLEEVE 1,5MM2	651
353001-0115 ..	END SLEEVE 2,5/14	651
353001-0117 ..	END SLEEVE H4.0/20 GREY	651
353001-0118 ..	END SLEEVE 6MM2 BLACK	651
353001-0119 ..	END SLEEVE H 1.0/14 YELLOW	651
353001-0120 ..	END SLEEVE H 10/28	651
353021-0122 ..	TERMINAL DISCONNECTBLE, WTR 2,5 D	701, 703
353021-0127 ..	TERMINAL DISCONNECTBLE, WTR 2,5+WSD 2,5	701, 703
353021-0132 ..	TERMINALS,TRIPLE-LEVEL, DLD 2,5/PE	381, 383, 693, 695, 697, 699, 701, 703
353021-0212 ..	FEED THROUGH TERMINAL, 10200.0	151, 507, 603, 605, 693, 695, 707, 709, 713
353021-0213 ..	FEED THROUGH TERMINAL, 10201.0	381, 383, 507, 693, 695

Part No	Description	Page No
353021-0214 ..	FEED THROUGH TERMINAL, 10202.0	693, 695
353021-0215 ..	FEED THROUGH TERMINAL, 10203.0	693, 695
353021-0219 ..	FEED THROUGH TERMINAL, 10205.0	707, 709, 771
353021-0301 ..	TERMINALS,TRIPLE-LEVEL, DLI 2,5/35 PA	381, 383, 701, 703
353021-0302 ..	TERMINALS,TRIPLE-LEVEL, DLD 2,5/35 PA	381, 383, 697, 699, 701, 703
353022-0003 ..	NEUTRAL TERMINAL, 10108.8	707, 709
353024-0204 ..	EARTH TERMINAL WPE 2,5	151, 381, 383, 603, 605, 693, 695
353024-0205 ..	EARTH TERMINAL, 1010.1	507, 603, 605, 693, 695, 707, 709
353024-0206 ..	EARTH TERMINAL, 1010.2	381, 383, 693, 695, 697, 699, 701, 703
353024-0207 ..	EARTH TERMINAL, 1010.3	693, 695
353024-0208 ..	EARTH TERMINAL, 1010.4	707, 709
353024-0209 ..	EARTH TERMINAL, 1010.5	707, 709, 771
353031-0203 ..	END SUPPORT, WEW 35/2	151, 693, 695, 697, 699, 701, 703, 707, 709, 713
353032-0004 ..	END PLATE WAP 2,5-10 BEIGE	381, 383, 693, 695
353032-0009 ..	END PLATE, WAP 16/35	381, 383, 697, 699, 701, 703, 707, 709
353032-0013 ..	END PLATE, 13818.6	381, 383
353032-0302 ..	END PLATE WAP	381, 383, 697, 699, 701, 703
353033-0104 ..	END PLATE, 10502.8	707, 709
353033-0105 ..	PARTITITION, 10501.0	707, 709, 771
353034-0026 ..	BRIDGE CONNECTOR, WQV 35/2, 10530.6	771
353034-0030 ..	BRIDGE CONNECTOR WQV 2,5/10, 10544.6	151, 507, 603, 605, 701, 703, 707, 709, 713
353034-0032 ..	BRIDGE CONNECTOR, WQV 6/10, 10522.6	693, 695
353034-0035 ..	BRIDGE CONNECTOR, WQV 35/10, 10531.6	707, 709
353034-0039 ..	BRIDGE CONN. WQV 4/4	507
353034-0401 ..	BRIDGE CONNECTOR Q2, 13125.0	381, 383, 693, 695, 701, 703
353034-0402 ..	BRIDGE CONNECTOR Q3, 13126.0	381, 383, 693, 695
353034-0403 ..	BRIDGE CONNECTOR Q4, 13127,0	693, 695, 697, 699, 701, 703
353034-0404 ..	BRIDGE CONNECTOR Q10, 13131.0	381, 383, 693, 695, 697, 699, 701, 703
353042-0003 ..	RAIL TS35/15/1,5	753
353042-0004 ..	RAIL TS 35/7,5	653, 655, 665, 671, 679, 691, 693, 695, 697, 699, 701, 703, 707, 709, 713, 751, 755, 771
353042-0005 ..	RAIL TS 35/7.5	381, 383
353101-0118 ..	KABELSKO 0,75-1,5MM2 RED	461
353101-0123 ..	CABLE SHOE 0,5-1,5MM2 RED	373
353101-0126 ..	CABLE SHOE	373
353101-0129 ..	CABLE SHOE	651
353101-0130 ..	CABLE SHOE 1,5-2,5MM2 BLUE	499, 651
353101-0132 ..	CABLE SHOE, RING ø5,3MM	19, 497, 499
353101-0152 ..	CABLE SHOE 4-6MM2,M5,YE	651
353101-0153 ..	CABLE SHOE 4-6MM2 YELLOW	651
353103-0130 ..	CABLE SHOE	651
353103-0138 ..	CABLE SHOE	651
353104-0130 ..	CABLE SHOEYAV 025 M 4*	23
353104-0140 ..	CABLE SHOEYAV 06 M 4*	497
353104-0164 ..	CABLE SHOEYAV 10 M10*	651
353104-0168 ..	CABLE SHO YAV 16 M6*	651
353104-0175 ..	CABLE SHOEYAV 25 M6	651
353240-0001 ..	NORMAL WITHOUT INSERT, PG 9	603, 605
353240-0002 ..	NORMAL WITHOUT INSERT, PG 11	625, 631, 633
353240-0003 ..	NORMAL WITHOUT INSERT, PG 13,5	235, 603, 605
353240-0004 ..	NORMAL WITHOUT INSERT, PG 16	381, 383
353240-0005 ..	NORMAL WITHOUT INSERT, PG 21	379, 381, 383
353240-0006 ..	FöRSKRUVNING, PG 29	381, 383, 401, 719, 721
353241-0002 ..	EXTENDED WITHOUT INSERT, PG 11	625, 631, 633
353241-0003 ..	EXTENDED WITHOUT INSERT, PG 21	379
353241-0005 ..	EXTENDED WITHOUT INSERT, PG 13,5	381, 383
353241-0007 ..	EXTENDED WITHOUT INSERT, PG 16/21	381, 383
353242-0001 ..	NORMAL WITHOUT INSERT, PG13,5	111, 403, 469, 603, 605
353242-0003 ..	NORMAL WITHOUT INSERT, PG29	507, 601, 719, 721
353242-0005 ..	NORMAL WITHOUT INSERT, PG9	601, 603, 605
353243-0001 ..	EXTENDED WITHOUT INSERT, PG9	461, 463, 469, 471, 473, 719, 721, 723, 725
353243-0002 ..	EXTENDED WITHOUT INSERT, PG11	111, 149, 199, 447, 471, 473, 589, 601
353243-0003 ..	EXTENDED WITHOUT INSERT, PG11	601
353243-0005 ..	EXTENDED WITHOUT INSERT, PG16	445, 451, 549, 551, 601, 719, 721
353243-0006 ..	EXTENDED WITHOUT INSERT, PG16	13, 15
353243-0007 ..	EXTENDED WITHOUT INSERT, PG21	111, 603, 605
353244-0007 ..	EXTENDED WITHOUT INSERT, HIGH TEMP, PG29	345, 347
353247-0008 ..	GLAND, PG13,5, 15254P13S05UL16	549, 551
353249-0003 ..	INSERT, SINGEL HOLE, E151/11	603, 605, 625, 631, 633
353249-0008 ..	INSERT, SINGEL HOLE, EK 152/7	389
353249-0009 ..	INSERT, SINGEL HOLE, EK 152/9	149, 447, 461, 463, 469, 471, 473, 719, 721, 723, 725
353249-0010 ..	INSERT, SINGEL HOLE, EK 152/11	111, 199, 589, 601
353249-0011 ..	INSERT, SINGEL HOLE, EK 153/11	601, 603, 605
353249-0012 ..	INSERT, SINGEL HOLE, EK 154/11	601
353249-0013 ..	INSERT, SINGEL HOLE, EK 154/13	361, 445, 451, 471, 473, 507, 549, 551, 719, 721
353249-0014 ..	INSERT, SINGEL HOLE, EK 154/16	373, 487, 507, 719, 721
353249-0016 ..	INSERT, SINGEL HOLE, EK 155/18	13, 15, 603, 605
353249-0025 ..	INSERT, MULTI HOLE, E152M3X4	603, 605
353249-0036 ..	INSERT, MULTI HOLE, EK152 M 2X4	625, 631, 633
353249-0037 ..	INSERT, MULTI HOLE, EK155M4X8	379
353249-0051 ..	INSERT, MULTI HOLE, E154M4X8	381, 383
353249-0059 ..	GLAND, INSERT, MULTI HOLE, 4X8	381, 383
353249-0060 ..	INSERT, MULTI HOLE, E155M2X13	381, 383
353249-0061 ..	INSERT, SINGEL HOLE, EK 155/20	507

Machine Type Group Description Page No

Part No	Description	Page No
353249-0065 ..	INSERT, SINGEL HOLE, E152/09	111, 235, 403, 469, 603, 605
353249-0070 ..	INSERT, SINGEL HOLE, E154/16	507
353249-0072 ..	INSERT, SINGEL HOLE, E155/20	507, 601
353249-0075 ..	INSERT, SINGEL HOLE, EK 153/13	507
353249-0084 ..	INSERT, MULTI HOLE, EK 154M4X7,5	379, 381, 383
353249-0301 ..	SEALING PIN, 4X20	603, 605, 625, 631, 633
353249-0304 ..	SEALING PIN, 6X25	381, 383
353249-0307 ..	SEALING PIN, 7,5X20	379
353249-0308 ..	SEALING PIN, 8X20	381, 383
353249-0309 ..	SEALING PIN, 9,3X20	381, 383
359000-0100 ..	MARKING CO01/3"0"	621
359000-0101 ..	MARKING CO01/3"1"	621
359000-0102 ..	MARKING CO01/3"2"	621
359000-0103 ..	MARKING CO01/3"3"	621
359000-0104 ..	MARKING CO01/3"4"	621
359000-0105 ..	MARKING CO01/3"5"	621
359000-0106 ..	MARKING CO01/3"6"	621
359000-0107 ..	MARKING CO01/3"7"	621
359000-0108 ..	MARKING CO01/3"8"	621
359000-0109 ..	MARKING CO01/3"9"	621
359000-0201 ..	MARKING CO02/3"1"	625, 631, 633
359000-0204 ..	MARKING CO02/3"4"	625, 631, 633
359000-0400 ..	MARKING CO2/4"0"	67, 69, 97, 117, 159, 161, 163, 405, 407, 409, 533
359000-0401 ..	MARKING COLLAR 2/4 "1" YELLOW	67, 69, 97, 159, 161, 163, 405, 407, 409, 533
359000-0402 ..	MARKING COLLAR 2/4 "2" YELLOW	67, 69, 97, 159, 161, 163, 405, 407, 409, 533
359000-0403 ..	MARKING COLLAR PA2/4 "3" YELLOW	67, 69, 97, 117, 159, 161, 163, 405, 407, 409
359000-0404 ..	MARKING COLLAR PA2/4 "4" YELLOW	67, 69, 405, 407, 409, 533
359000-0405 ..	MARKING CO2/4"5"	67, 69, 159, 161, 163, 405, 407, 409, 533
359000-0406 ..	MARKING COLLAR PA2/4 "6" YELLOW	67, 69, 159, 161, 163, 405, 407, 409
359000-0407 ..	MARKING COLLAR PA2/4 "7" YELLOW	67, 69, 159, 161, 163, 405, 407, 409
359000-0408 ..	MARKING COLLAR PA2/4 "8" YELLOW	67, 69, 405, 407, 409
359000-0409 ..	MARKING COLLAR PA2/4 "9" YELLOW	67, 69, 117, 405, 407, 409
359000-0771 ..	MARKING CO2/4"V"	67, 69, 117, 159, 161, 163, 405, 407, 409
359011-0807 ..	MARKING PLATES 5-FW 1-50	151, 381, 383, 507, 603, 605, 693, 695, 697, 699, 701, 703, 707, 709, 713, 771
359011-0808 ..	MARKING PLATES 5-FW 51-100	381, 383, 693, 695, 697, 699, 701, 703, 707, 709
359011-0809 ..	MARKING PLATES 5-FW 101-150	603, 605, 693, 695, 697, 699, 701, 703
359011-0810 ..	MARKING PLATES 5-FW 151-200	697, 699, 701, 703
359011-0811 ..	MARKING PLATES 5-FW 201-250	697, 699, 701, 703
359011-0812 ..	SET OF SIGNS 5-FW 251-300	697, 699, 701, 703
359011-0813 ..	SET OF SIGNS 5-FW 301-350	697, 699
359011-0818 ..	SYMBOL 5-GW (-) 50PC	381, 383, 603, 605
359011-0819 ..	MARKING PLATES 5-GW (EARTH)	151, 507, 625, 631, 633, 693, 695, 697, 699, 701, 703, 771
359011-0821 ..	SET OF SIGNS 6-FW 1-50	625, 631, 633
359240-0001 ..	SIGN, NOT ENGRAVED	759, 761
359240-0100 ..	SIGN HOLDER FOR 359240-0001	715, 717, 759, 761, 779
359241-0121 ..	SIGN "STEAM"	759, 761
359241-0122 ..	SIGN, CIP OF STEAM BARRIER SPACE	759, 761
359241-0123 ..	SIGN, TEMP. PRE-STERILIZATION VALVE	759, 761
359241-0125 ..	SIGN, PEROXIDE BATH	759, 761
359241-0126 ..	SIGN, TEMP. AIR KNIFE	759, 761
359241-0130 ..	SIGN, TEMP. AIR SUPER HEATER	759, 761
359241-0131 ..	SIGN, TEMP. LS HEATER	759, 761
359241-0132 ..	SIGN, TEMP. STRIP APPLICATOR	779
359241-0133 ..	SIGN, SERVICE SWITCH	759, 761
359241-0135 ..	SIGN, TRANSVERSAL SEALING	779
359241-0140 ..	SIGN "LIGHTING MACHINE"	759, 761
359241-0141 ..	SIGN, PEROXIDE / WATER BATH	759, 761
359241-0180 ..	SIGN "PRODUCTION"	759, 761
359241-0201 ..	SIGN "HOUR GLASS"	759, 761
359241-0297 ..	SIGN, 400 V, 50 HZ, 63 A	715, 717
359241-0337 ..	SIGN "FLAP HEAT TOP R"	759, 761
359241-0338 ..	SIGN "FLAP HEAT TOP L"	759, 761
359241-0339 ..	SIGN "FLAPPHEAT BOTTOM R"	759, 761
359241-0340 ..	SIGN "FLAPPHEAT BOTTOM L"	759, 761
359301-0110 ..	SIGN "SHORT STOP"	487, 601
359705-0001 ..	WARNING SIGN ISO, ENTAGLEMENT	549, 551
359705-0003 ..	WARNING SIGN ISO, DANGEROUS CHEMICALS	101
359705-0007 ..	WARNING SIGN ISO, HOT SURFACE	345, 347
359705-0015 ..	WARNING SIGN ISO, RISK OF ELECTRIC SHOCK	305, 307, 345, 347, 487, 507, 601, 625, 631, 633, 743, 745, 757, 765, 767, 773, 775
400800-0000 ..	SPRING	493
400828-0000 ..	SPRING	497
400833-0000 ..	PLUNGER	497
401183-0000 ..	GUIDE AXLE	493
401186-0000 ..	HEX NUT	493
401370-0000 ..	BUSHING	493
401371-0000 ..	BUSHING	493
401372-0000 ..	BUSHING	493
434747-0000 ..	BOW CLAMP	567, 585
436927-0000 ..	NUT	567, 585
440252-0000 ..	SLEEVE	547
440253-0000 ..	SLEEVE	547
440259-0000 ..	RETAINING RING	599

Part No	Description	Page No
440271-0000 ..	SCREW	547
440286-0300 ..	INK UNIT NSS	557, 559, 561
440287-0000 ..	COVER	567
440647-0000 ..	SLEEVE	45, 47
440650-0000 ..	WASHER	57
440655-0000 ..	RING	53
440659-0000 ..	CYLINDRICAL PIN	57
440660-0000 ..	COMPRESSION SPRING	57
440661-0000 ..	COMPRESSION SPRING	57
440662-0000 ..	COMPRESSION SPRING	55
440663-0000 ..	COMPRESSION SPRING	53, 57
440731-0000 ..	PLATE	45, 47
441024-0000 ..	LACE	213
441031-0000 ..	LINK BEARING	303
441077-0000 ..	NOZZLE BRACKET	147
441212-0000 ..	HOLDER	147
441217-0000 ..	BUSHING LOWER	147
441218-0000 ..	BUSHING UPPER	147
441221-0000 ..	WASHER	147
441268-0000 ..	GUIDE	303
441269-0000 ..	GUIDE	303
441304-0400 ..	MOVABLE FORMING RING	11
441307-0300 ..	UPPER TUBE SUPPORT	11
441339-0000 ..	SHAFT	225
441353-0000 ..	TENSION SPRING	231
441355-0000 ..	BLEEDING SCREW	285, 287, 289, 291, 303, 315, 317
441356-0000 ..	BRACKET	213
441360-0000 ..	PLATE	213
441385-0000 ..	HUB	285, 287, 289, 291
441483-0000 ..	CYLINDER BRACKET	93, 95, 107
441486-0400 ..	DIVIDED FORMING RING	11
441501-0000 ..	INSULATION	43
441534-0200 ..	LIGHT FIXTURE	147
441536-0000 ..	GASKET	149
441546-0000 ..	BENDING ROLLER	39
441547-0000 ..	BENDING ROLLER	39
441554-0000 ..	CREASE BAR	557, 559, 561
441556-0001 ..	SPACER	557, 559, 561, 577, 579
441556-0002 ..	SPACER	557, 559, 561, 577, 579
441556-0004 ..	SPACER	557, 559, 561, 577, 579
441556-0006 ..	SPACER	557, 559, 561, 577, 579
441556-0007 ..	SPACER	557, 559, 561
441556-0009 ..	SPACER	557, 559, 561
441556-0010 ..	SPACER	557, 559, 561
441556-0011 ..	SPACER	557, 559, 561
441576-0000 ..	SPACER	37
441578-0001 ..	CYLINDER BRACKET	37
441578-0002 ..	CYLINDER BRACKET	35
441593-0000 ..	GASKET	147
441665-0000 ..	FORCE SPRING	165
441677-0000 ..	FRONT PLATE	147
441679-0000 ..	STAIR	193
441695-0500 ..	MACHINE BODY	325
441706-0000 ..	WASHER	295, 297, 299, 301
441718-0000 ..	SPACER	121, 123
441720-0000 ..	SPACER	225
441725-0000 ..	COVERING PLATE	609
441726-0000 ..	COMPRESSION SPRING	263, 265, 267
441727-0000 ..	CUTTING JAW	247, 249, 251, 253
441737-0000 ..	WASHER	121, 123
441739-0000 ..	WASHER	121, 123
441740-0000 ..	HINGE FLANGE	121, 123
441741-0000 ..	HINGE FLANGE	121, 123
441750-0000 ..	YOKE	303
441751-0000 ..	LACE	303
441758-0000 ..	PIPE RIGHT	311
441759-0000 ..	PIPE LEFT	311
441764-0000 ..	SHAFT	285, 287, 289, 291
441792-0000 ..	HEAD	367
441793-0000 ..	BEARING HOUSING	367
441794-0000 ..	PIVOT PIN	367
441795-0000 ..	WASHER	367
441796-0000 ..	SEAL	367
441797-0000 ..	SHIM	367
441800-0000 ..	STRAIGHT FITTING	367
441804-0000 ..	COIL HEATER	19, 637
441811-0100 ..	ROTOR	365, 373
441850-0700 ..	CABLE	325
441871-0000 ..	PENDULUM SUSPENSION	25, 41
441876-0000 ..	ROLL	31, 33
441904-0000 ..	ARM	35
441905-0000 ..	RETARD PIN	193
441918-0000 ..	BRACKET	87, 89
441957-0000 ..	BEARING COVER	21

Part No	Description	Page No
442237-0000 ..	NUT	105
445533-0000 ..	SIGN	429, 431
445534-0000 ..	SIGN	429, 431
445542-0000 ..	MANTEL RUBBER	567, 585
449939-0001 ..	HEATING ELEMENT 15KW	27
450101-0300 ..	TEARING DEVICE	587
450355-0000 ..	INK ROLLER	567, 585
450500-0000 ..	DOWEL	569
450833-0000 ..	FILTER	65
450837-0000 ..	LID	65
451117-0000 ..	ROLL	87, 89
451148-0000 ..	BRACKET	87, 89
451149-0000 ..	SHAFT	87, 89
451430-0000 ..	CONNECTION HOUS.(MINOR)	27
456002-0000 ..	BEARING	303
456004-0000 ..	SPACER	303
456005-0001 ..	VOLUME BULGE	269, 271, 273, 275
456005-0003 ..	VOLUME BULGE	269, 271, 273, 275
456009-0000 ..	LINK	263, 265, 267
456017-0000 ..	HOSE HOLDER RIGHT	315
456018-0000 ..	HOSE HOLDER LEFT	317
456042-0000 ..	SCREW	71, 73, 75, 77
456128-0000 ..	FORCE SPRING	165
456129-0001 ..	FORCE SPRING	165
456129-0002 ..	FORCE SPRING	165
456137-0000 ..	HOSE	405, 407, 409
456181-0000 ..	SPACER	87, 89
456182-0000 ..	PLATE	87, 89
456199-0000 ..	LOCK PLATE	87, 89
456230-0000 ..	ANGLE BRACKET	87, 89
456263-0000 ..	SHEET	149
456264-0000 ..	GLASS	149
456309-0600 ..	LOWER FORMING RING	11
456311-0000 ..	TORSION SPRING RIGHT	285, 287
456312-0000 ..	TORSION SPRING LEFT	289, 291
456327-0000 ..	CREASE BAR	557, 559, 561
456334-0000 ..	SHAFT	557, 559, 561
456395-0000 ..	GASKET	373
456396-0000 ..	GASKET	373
456407-0000 ..	LACE	159, 161, 163
456455-0600 ..	PIPE WORK	325
456472-0000 ..	ANGLE	13, 15
456474-0000 ..	ADJUSTMENT PLATE	13, 15
456555-0600 ..	SUCTION PIPE	11
456556-0400 ..	PEROXIDE PIPE	11
456744-0000 ..	HUB	227, 229
456755-0000 ..	BLOCK	411
456756-0000 ..	BLOCK	411
456757-0300 ..	AIR INJECTOR	405, 407, 409
456760-0003 ..	FOLDING FLAP CAM 200S	255, 257, 259, 261
456760-0010 ..	FOLDING FLAP CAM 200B & 125S	255, 257, 259, 261
456760-0011 ..	FOLDING FLAP CAM 250B	255, 257, 259, 261
456760-0012 ..	FOLDING FLAP CAM	255, 257, 259, 261
456767-0000 ..	CREASE BAR	557, 559, 561, 577, 579
456772-0000 ..	PIVOT BRACKET	585
456773-0000 ..	PIVOT BRACKET	567
456784-0000 ..	LID	13, 15
456794-0000 ..	RING	31, 33
456796-0000 ..	ROLLER	31, 33
456797-0000 ..	AXLE SUPPORT	31, 33
456817-0001 ..	SHIM	557, 559, 561, 577, 579
456827-0400 ..	CONNECTION BOX	147
456836-0600 ..	CLEANING SYSTEM	11
456837-0000 ..	HOLDER	93, 95
456853-0001 ..	PIPE CLAMP	353
456853-0002 ..	PIPE CLAMP	353
456853-0003 ..	PIPE CLAMP	353
456854-0001 ..	CRAMP	353
456854-0002 ..	CRAMP	353
456872-0000 ..	LOCK PLATE	87, 89
456900-0000 ..	PIPE	65
456905-0000 ..	FASTENING PLATE	71, 73, 75, 77
456907-0000 ..	LOCK PLATE	71, 73, 75, 77
456934-0000 ..	SEALING WASHER	213
456976-0700 ..	HEAT EXCHANGER	11
456995-0000 ..	CARRIER	13, 15
456996-0000 ..	ROLLER	31, 33
457358-0000 ..	SLEEVE	547
457367-0000 ..	SHAFT	125, 127
457368-0000 ..	SPRING	125, 127
457696-0001 ..	JOINT PIECE	377
458192-0300 ..	INK UNIT SS	577, 579
458364-0000 ..	COVER	585
464009-0003 ..	BLOCKING PIECE	569

Part No	Description	Page No
464010-0000 ..	ARM	569
464011-0000 ..	LOCK STUD	569
464012-0000 ..	CURVE	569
464173-0000 ..	LABEL HOLDER	67, 69
464174-0000 ..	SIGN	67, 69
464175-0000 ..	SIGN	67, 69
466074-0002 ..	SLIDER	377
466430-0000 ..	BUSHING	569
466477-0000 ..	INNER PIPE	107
466478-0000 ..	OUTER PIPE	107
466479-0000 ..	PIECE	107
466483-0000 ..	CLAMPING PIECE	107
466484-0000 ..	NET	107
469041-0000 ..	HOLDER	79, 81, 83
469047-0000 ..	ANGLE	79, 81, 83
469078-0000 ..	HOLDER	79, 81, 83
469091-0500 ..	FILLER TUBE	11
469095-0000 ..	HOLDER	147, 441, 539
469096-0000 ..	LEG	147, 441, 539
469121-0400 ..	JUNCTION BLOCK	405, 407, 409
469122-0000 ..	BLOCK	415
469131-0000 ..	LACE	159, 161, 163
469132-0000 ..	PIPE	159, 161, 163
469133-0000 ..	PIPE	159, 161, 163
469141-0000 ..	HOLDER	597
469146-0000 ..	HOSE	165
469159-0000 ..	PIN	31, 33, 501, 503
469336-0000 ..	COVER	149
469337-0000 ..	REFLECTOR	149
469369-0000 ..	YOKECAM 180ML	227, 229
469370-0000 ..	ARMCAM 180ML	227, 229
469374-0600 ..	CABLE TRENCH	11
469384-0100 ..	START-UP KIT	393
469384-0200 ..	START-UP KIT	635
469452-0500 ..	COMPRESSOR UNIT	443
469458-0000 ..	BRACKET	115
469459-0000 ..	BRACKET	115
469460-0000 ..	BRACKET	115
469461-0000 ..	ROLL	115
469463-0000 ..	SHAFT	115
469464-0000 ..	ROLL	115
469466-0000 ..	PLATE	115
469501-0400 ..	AIR NOZZLE	11
469502-0000 ..	SLIDER	153, 155
469745-0000 ..	BRACKET	87, 89
469781-0400 ..	TUBE FLUSHING DEVICE	11
469867-0000 ..	HOSE HOLDER	213
469937-0000 ..	PIPE	147
469964-0000 ..	LID	173
469982-0000 ..	WASHER	13, 15
469999-0000 ..	FLANGE	213
476117-0000 ..	CATCH	547
476185-0000 ..	VALVE CONE	55
476220-0000 ..	SPACER	377
476354-0000 ..	CANNULAR TUBE	567
476355-0000 ..	CANNULAR TUBE	585
476356-0000 ..	HOLDER FOR INK BOTTLE	567, 585
476377-0000 ..	SCREW	569
476859-0300 ..	WEAC-VALVE	105
484196-0000 ..	FILTER	65
484197-0000 ..	FILTER	637
486826-0000 ..	SIGN	743, 745
486826-0001 ..	SIGN "EMERGENCY STOP"	111, 487, 601
490518-0000 ..	HOLDER	93, 95
490761-0200 ..	DETERGENT PUMP	393
490768-0000 ..	BOX	403
490769-0000 ..	BRACKET	403
490876-0000 ..	BRACKET	125, 127
490890-0000 ..	NUT PLATE	13, 15
490900-0000 ..	SEALING RING	31, 33
490901-0000 ..	SEAL	31, 33
490902-0000 ..	AXLE SUPPORT	31, 33
490903-0000 ..	SHAFT	31, 33
490916-0000 ..	AXLE PIN	217, 219, 221, 223
490940-0000 ..	CYLINDER	285, 287, 289, 291
490942-0000 ..	COMPRESSION SPRING	285, 287, 289, 291
490943-0000 ..	COMPRESSION SPRING	285, 287, 289, 291
490964-0000 ..	COVER	31, 33
490985-0000 ..	SPACER SHEET	45, 47
490998-0000 ..	THROTTLE SCREW	105
491022-0000 ..	CYLINDER BRACKET	93, 95
491097-0000 ..	HEAT GUARD	23
491128-0000 ..	GASKET	31, 33
491143-0000 ..	BRACKET	115

Part No	Description	Page No
491153-0000 ..	COMPRESSION GLAND	71, 73, 75, 77
491165-0000 ..	ROLL	221, 223
491166-0000 ..	SHAFT	221, 223
491169-0000 ..	PIVOT ARM	19
491170-0000 ..	COVER	19
491171-0000 ..	BEARING BLOCK	19
491172-0000 ..	GASKET	19
491173-0000 ..	BRACKET	19
491174-0000 ..	ARM	19
491175-0000 ..	LINK	19
491177-0000 ..	ARM	19
491203-0000 ..	STRUT	447
491223-0000 ..	COVER	23
491224-0000 ..	BRACKET	23
491227-0000 ..	SLIDER	327
491228-0001 ..	SHAFT	327
491228-0002 ..	SHAFT	327
491229-0000 ..	BUSHING	327
491230-0000 ..	GRUB SCREW	327
491231-0000 ..	BUSHING	327
491258-0000 ..	DRIVE WHEEL	329
491266-0000 ..	SHIM	359
491274-0000 ..	HUB	213
491291-0000 ..	LID	331
491303-0000 ..	WASHER	447
491304-0000 ..	WASHER	447
491305-0000 ..	CONN.DIAGRAM AIR SUPERH.	27
491319-0000 ..	LACE	221, 223
491349-0000 ..	BEARING SEAT	295, 297, 299, 301
491350-0000 ..	SLIDER	295, 297, 299, 301
491390-0000 ..	PIPE CENTRAL LUBRICATION	159, 161, 163
491409-0000 ..	WASHER	213
491410-0000 ..	LACE	213
491418-0001 ..	O-RING	109, 637
491418-0002 ..	O-RING	31, 33
491441-0000 ..	HOOD	109
491487-0000 ..	BUSHING	19
491536-0200 ..	NON-RETURN VALVE	411
491545-0000 ..	BRACKET	23
491570-0200 ..	DOOR	11
491579-0200 ..	DOOR	11
491602-0000 ..	GASKET HOLDER	31, 33
491649-0000 ..	BRACKET	429, 431
491681-0000 ..	GASKET	293
491770-0000 ..	BUSHING	451
491814-0300 ..	SLEWING BRACKET RIGHT	211
491815-0300 ..	SLEWING BRACKET LEFT	211
491846-0300 ..	TENSION SPROCKET	325
491850-0100 ..	DRIVE WHEEL	325
491851-0000 ..	LID	329
491854-0000 ..	PIPE WATER	159, 161, 163
491859-0000 ..	HOLDER	159, 161, 163
491860-0000 ..	HOLDER	159, 161, 163
491868-0000 ..	VOLUME BULGE	269, 271, 273, 275
491880-0000 ..	FASTENING PLATE	125, 127
491918-0000 ..	CAMSEGMENT R	227, 229
491919-0000 ..	CAMSEGMENT L	227, 229
491929-0000 ..	IMPELLER WHEEL	451
491931-0000 ..	SHAFT	19
491965-0000 ..	CAM	557, 559, 561, 577, 579
491976-0300 ..	PHOTOCELL UNIT	11
493652-0100 ..	LID	447, 453
495498-0021 ..	CU-RAIL L=210MM	707, 709
497748-0000 ..	PIN	59, 61
526984-0000 ..	SADDLE	571, 573
526985-0000 ..	PLATE	571, 573
526986-0001 ..	SHAFT	571, 573
527649-0000 ..	DISTANCE RUBBER	571, 573
527898-0100 ..	CONTAINER H2O2	457
527906-0000 ..	GASKET	453
529362-0000 ..	SPROCKET	571, 573
530587-0000 ..	WASHER	55
530588-0000 ..	SEAL RING	55, 639
530589-0000 ..	SEAL RING	25, 41, 53, 57, 639
530590-0000 ..	VALVE CONE	25, 41, 53, 57
530591-0000 ..	HOLDER	57
530592-0000 ..	SEAL RING HOLDER	53
530595-0000 ..	SEAL RING HOLDER	53
530597-0000 ..	WASHER	57
530598-0000 ..	WASHER	57
530599-0000 ..	RING	25, 41, 57
531345-0200 ..	PERSONAL PROTECT. EQ H2O2	609
531731-0000 ..	GASKET	27
532117-0000 ..	CLAMP RING	59

Part No	Description	Page No
532118-0000 ..	CLAMP RING	61
532205-0000 ..	LID	453
532206-0000 ..	GASKET	453
532349-0000 ..	PLAIN BEARING	25, 41
532412-0000 ..	SPRING	623, 627, 629
532655-0000 ..	CAUTION SIGN	459
533169-0000 ..	DIAPHRAGM	53, 639
536374-0000 ..	WASHER	125, 127
536913-0000 ..	HUB	491
536917-0000 ..	AXLE PIN	495
537308-0000 ..	SPRING	567, 585
537327-0000 ..	SHAFT	491
539212-0000 ..	GASKET	51, 639
540719-0000 ..	WHEEL	575
541070-0000 ..	SHAFT	495
541163-0200 ..	CLAMP RING	51
541164-0200 ..	CLAMP RING	51
541165-0000 ..	WASHER	59, 61
541166-0000 ..	WASHER	53
541751-0000 ..	CONICAL BOBBIN	491
543135-0000 ..	INK TRANSFER ROLLER	567, 585
543141-0000 ..	SIGN	571, 573
543142-0000 ..	SIGN	571, 573
543143-0100 ..	ADJUSTMENT DEVICE	557, 559, 561, 577, 579
544726-0000 ..	AXLE PIN	495
544906-0000 ..	SOLENOID VALVE	13, 15, 65
546929-0000 ..	FILTER	463, 465
548770-0006 ..	COAXIAL CABLE L=1200 MM	511
551969-0006 ..	COAXIAL CABLES	147
551969-0012 ..	COAXIAL CABLE	779
553586-0000 ..	SPACER	103
553607-0000 ..	SLEEVE	53, 55, 57
554162-0000 ..	SCREW	59, 61
555458-0000 ..	SEALING WASHER	57
555541-0000 ..	BRACKET	107
556133-0000 ..	SEALING WASHER	55
556422-0000 ..	PROTECTION	557, 559, 561, 577, 579
556541-0000 ..	SCREW	527
559810-0101 ..	TMCC2 CONTROLLER	667
560931-0000 ..	BRACKET	13, 15, 65, 463
561427-0000 ..	CONTAINER	459
562118-0000 ..	LID	305, 307
562119-0000 ..	GASKET	305, 307
562120-0000 ..	ARM PRESSURE JAW	295, 297, 299, 301
563286-0000 ..	GASKET	447
563287-0000 ..	WASHER	447
565250-0000 ..	WASHER	459
565251-0000 ..	VALVE	459
565462-0100 ..	LOCK PLATE	79, 81, 83
566191-0000 ..	BENDING ROLLER	13, 15
566669-0000 ..	NIPPLE	97
566696-0000 ..	GUIDE CONSOLE	35
566697-0000 ..	AXLE SUPPORT	35
567018-0000 ..	STEAM HOUSE	51
567070-0010 ..	ELECTRODE	65
567070-0011 ..	ELECTRODE	13, 15
567070-0012 ..	ELECTRODE	463
567070-0013 ..	ELECTRODE	65
567070-0019 ..	ELECTRODE	13, 15
568577-0000 ..	AIR NOZZLE	115
568578-0000 ..	AIR NOZZLE	115
568581-0000 ..	DISTRIBUTOR WING	115
568583-0000 ..	FORK	109
568806-0000 ..	LID	465
568828-0000 ..	FLOAT GUARD	463
571087-0000 ..	RETAINING RING	465
571088-0000 ..	DRAINING	463
571532-0000 ..	BRACKET	23
571533-0000 ..	BRACKET	23
571534-0000 ..	PLATE	71, 73, 75, 77
571535-0000 ..	CANTILEVER	71, 73, 75, 77
571536-0000 ..	CANTILEVER	71, 73, 75, 77
571537-0000 ..	RING	31, 33
571538-0000 ..	RING	31, 33
571539-0000 ..	RING	31, 33
571540-0000 ..	PIN	31, 33
571543-0000 ..	BEARING PLATE	93, 95
571544-0000 ..	BEARING PLATE	93, 95
571871-0000 ..	BUSBAR,RIGHT	305
571872-0000 ..	BUSBAR,LEFT	307
571873-0000 ..	SEAL	305, 307
571874-0000 ..	SEALING PLUG	305, 307
571920-0000 ..	PRESSURE ARM	593
572157-0000 ..	BEARING PANEL	39

Part No	Description	Page No
572158-0000 ..	BEARING PANEL	39
572252-0000 ..	BRACKET	557, 559, 561, 577, 579
572253-0000 ..	SHEET	557, 559, 561, 577, 579
572254-0000 ..	HANDLE	557, 559, 561, 577, 579
572255-0000 ..	SPACER	557, 559, 561, 577, 579
572294-0000 ..	COLLAR	147
572460-0000 ..	SHEET	557, 559, 561, 577, 579
572485-0000 ..	BRACKET	97
572486-0000 ..	PISTON	97
572487-0000 ..	THROTTLING	97
572642-0200 ..	TRANSFER	245
572643-0200 ..	TRANSFER	245
574333-0000 ..	ROLL	31, 33
574334-0000 ..	RING	31, 33
574335-0000 ..	RING	31, 33
574336-0000 ..	SEAL	31, 33
574337-0000 ..	BRACKET	93, 95
574341-0000 ..	FORK	93, 95
574346-0000 ..	ROLL	93, 95
574347-0000 ..	COUNTER ROLLER	93, 95
574365-0000 ..	VOLUMEFLAP 250S	269, 271, 273, 275
574366-0000 ..	VOLUME SHIM	269, 271, 273, 275
574367-0000 ..	VOLUME BULGE	269, 271, 273, 275
574369-0000 ..	CARRIER RULER RIGHT	247, 249
574370-0000 ..	CARRIER RULER RIGHT	247, 249
574371-0000 ..	CARRIER RULER LEFT	251, 253
574372-0000 ..	CARRIER RULER LEFT	251, 253
574385-0000 ..	ROLLER TBA250SL	313
574386-0000 ..	CUTTING JAW	247, 249, 251, 253
574393-0000 ..	LOCK PLATE	87, 89
574395-0000 ..	SHAFT	87, 89
574396-0000 ..	BRACKET	87, 89
574397-0000 ..	ROLL	87, 89
574398-0000 ..	ROLL	87, 89
574399-0000 ..	ROLL	87, 89
574400-0000 ..	ROLL	87, 89
574401-0000 ..	ROLL	87, 89
574402-0000 ..	ROLL	87, 89
574403-0000 ..	ROLL	87, 89
574404-0000 ..	BRACKET	71, 73, 75, 77
574415-0000 ..	INDICATOR 250S	29
574416-0000 ..	BRACKET	79, 81, 83
574417-0000 ..	ROLL	79, 81, 83
574418-0000 ..	ROLL	79, 81, 83
574426-0000 ..	RULER	597
574427-0000 ..	RULER	597
574428-0000 ..	RULER	597
574443-0000 ..	SHAFT	557, 559, 561
574444-0000 ..	SPACER	557, 559, 561
574445-0000 ..	CANTILEVER	557, 559, 561
574449-0000 ..	SLIDER	153, 155
574452-0000 ..	PROTECTION	153, 155
574456-0000 ..	BRACKET	87, 89
574479-0000 ..	ROLL	71, 73, 75, 77
574480-0000 ..	ROLL	71, 73, 75, 77
574481-0000 ..	ROLL	71, 73, 75, 77
574494-0000 ..	FOLDING FLAP CAM	255, 257, 259, 261
574932-0000 ..	BENDING ROLLER	549, 551
574937-0000 ..	SHAFT	549, 551
574940-0000 ..	BLOCKING PIECE	549, 551
574945-0000 ..	TOOTHED PULLY	549, 551
574946-0000 ..	FLAG	549, 551
576274-0000 ..	BRACKET	549, 551
576286-0000 ..	HOLDER	429, 431
576287-0000 ..	PIPE	417, 419
576293-0000 ..	PIPE	405, 407, 409
576294-0000 ..	JUNCTION BLOCK	429, 431
576434-0200 ..	AP-VALVE 51-38	45, 47
576436-0100 ..	A-CYLINDER	51
576437-0100 ..	C-CYLINDER	51
576438-0100 ..	B-CYLINDER	51
576439-0000 ..	CYLINDER HOUSING	53, 57
576440-0000 ..	END SECTION	53, 57
576441-0000 ..	PISTON	53, 57
576442-0000 ..	PISTON ROD	57
576443-0000 ..	CYLINDER HOUSING	55
576444-0000 ..	END SECTION	55
576445-0000 ..	PISTON	55
576446-0000 ..	PISTON ROD	53
576447-0000 ..	PISTON ROD	55
576448-0000 ..	SPACER	53
576449-0000 ..	SPACER	53
576450-0000 ..	SPACER	57
576451-0000 ..	SPACER	55

Part No	Description	Page No
577211-0000 ..	VOLUMEFLAP 160 ML	269, 271, 273, 275
577212-0000 ..	VOLUME SHIM	269, 271, 273, 275
577213-0000 ..	VOLUME BULGE 160 ML	269, 271, 273, 275
577217-0000 ..	YOKECAM 160ML	227, 229
577218-0000 ..	ARMCAM 160ML	227, 229
577219-0000 ..	CAMSEGMENT R	227, 229
577220-0000 ..	CAMSEGMENT L	227, 229
577225-0000 ..	FOLDING FLAP CAM	255, 257, 259, 261
577360-0000 ..	CANTILEVER	45, 47
577462-0000 ..	CABLE TRENCH	111
577463-0000 ..	CABLE TRENCH	111
577467-0000 ..	LID	111
577468-0000 ..	LID	111
577469-0000 ..	LID	111
577470-0000 ..	LID	111
577541-0000 ..	TUBE 90	67, 69
577542-0000 ..	TUBE 90	67, 69
577769-0000 ..	EXTENSION PIPE	451
577770-0000 ..	GASKET	451
577771-0000 ..	SHAFT	451
577773-0000 ..	GASKET	447
577782-0000 ..	TUBE 200	67, 69
577783-0000 ..	TUBE 201	67, 69
577784-0000 ..	TUBE260	67, 69
577785-0000 ..	TUBE 261	67, 69
577786-0000 ..	TUBE 240	67, 69
577787-0000 ..	TUBE 241	67, 69
577788-0000 ..	TUBE 80	67, 69
577789-0000 ..	TUBE 90	67, 69
577790-0000 ..	TUBE 70	67, 69
577791-0000 ..	TUBE 40	67, 69
577798-0000 ..	GUIDING ARBOR	553
577799-0000 ..	SHAFT	553
577800-0200 ..	PAPER GUIDE	549, 551
577822-0200 ..	PRESSURE REGULATOR GROUP	405, 407, 409
577824-0200 ..	COOL WATER VALVE	405, 407, 409
577825-0200 ..	HOT WATER VALVE	405, 407, 409
577832-0000 ..	PIPE	405, 407, 409
578000-0000 ..	BRACKET	577, 579
578001-0000 ..	SCREW	577, 579
578002-0000 ..	TUBE 190	67, 69
578003-0000 ..	TUBE 191	67, 69
578004-0000 ..	TUBE 211	67, 69
578005-0000 ..	TUBE 213	67, 69
578008-0000 ..	TUBE 250	67, 69
578009-0000 ..	TUBE 251	67, 69
578013-0000 ..	TUBE 213 AND 211	67, 69
578015-0000 ..	TUBE 1071	67, 69
578017-0000 ..	TUBE 190	67, 69
578018-0000 ..	TUBE 191	67, 69
578019-0000 ..	TUBE40	65
578020-0000 ..	TUBE 70	67, 69
578021-0000 ..	TUBE 1071	67, 69
578022-0000 ..	TUBE 211	67, 69
578023-0000 ..	TUBE 213	67, 69
578026-0000 ..	PIPE	65
578027-0000 ..	CRAMP	67, 69
578028-0000 ..	BRACKET	67, 69
578030-0000 ..	GASKET	67, 69
578031-0000 ..	VALVE HOUSING	107
578035-0000 ..	LID	111
578091-0000 ..	BRANCH PIPE	165
578104-0000 ..	SHEET	305, 307
578480-0000 ..	BRACKET	45, 47
578486-0000 ..	WHEEL	13, 15
578490-0000 ..	LID	13, 15
578491-0000 ..	LID	13, 15
578492-0000 ..	LID	13, 15
578493-0000 ..	SHAFT	13, 15
578494-0000 ..	O-RING	13, 15, 637
578495-0000 ..	O-RING	13, 15, 637
578496-0000 ..	LID	111
578500-0000 ..	PIPE	111
578676-0000 ..	RAIL	151
578685-0000 ..	GUIDING ARBOR	553
578686-0000 ..	GUIDING ARBOR	553
578687-0000 ..	GUIDING ARBOR	553
579241-0200 ..	DATING UNIT	537
579553-0000 ..	SHAFT	493
579623-0000 ..	PROTECTIVE CASING	233
579624-0000 ..	GASKET	233
579625-0100 ..	PROTECTIVE GRATING	11
579626-0000 ..	TOUCH GUARD	129, 131
579627-0000 ..	TOUCH GUARD	129, 131

Part No	Description	Page No
579628-0000 ..	TOUCH GUARD	129, 131
579629-0000 ..	TOUCH GUARD	129, 131
579630-0000 ..	BRACKET	129, 131
579631-0000 ..	BRACKET	129, 131
579632-0000 ..	BRACKET	129, 131
579633-0000 ..	BRACKET	129, 131
579634-0000 ..	BRACKET	129, 131
579635-0000 ..	BRACKET	129, 131
579636-0000 ..	BRACKET	129, 131
579637-0000 ..	CATCH	103
579765-0000 ..	MACHINE SIGN CE	609
579771-0000 ..	CATCH	103
579899-0000 ..	LIFTING UNIT	609
580036-0200 ..	STRIP APPLICATOR	483
580037-0200 ..	STRIP MAGAZINE	483
580038-0200 ..	INDUCTOR	509
580042-0100 ..	HUB JUMBO	485
580044-0200 ..	SPLICING MAGAZINE	485
580055-0000 ..	ARM	493
580060-0200 ..	BRAKE ARM	485
580064-0200 ..	CONNECTION BOX	485
580329-0200 ..	PUSH BUTTON BOX	485
580335-0200 ..	PIPE WORK-PNEUMATIC	521
580356-0000 ..	YOKECAM 250ML SLIM	227, 229
580357-0000 ..	ARMCAM 250ML SLIM	227, 229
580358-0000 ..	CAM SEGMENT L	227, 229
580359-0000 ..	CAM SEGMENT R	227, 229
580363-0000 ..	PIPE 71	67, 69
580364-0000 ..	PIPE 71	67, 69
580993-0000 ..	WATER DIAGRAM	405, 407, 409
581015-0000 ..	PIPE 91	67, 69
581016-0000 ..	PIPE 91	67, 69
581533-0000 ..	YOKE CAM 284ML	227, 229
581534-0000 ..	ARM CAM 284ML	227, 229
581535-0000 ..	CAMSEGMENT R 284ML	227, 229
581536-0000 ..	CAMSEGMENT L 284ML	227, 229
582162-0000 ..	FOLDING FLAP CAM	255, 257, 259, 261
582163-0000 ..	VOLUME FLAP 330S	269, 271, 273, 275
582164-0000 ..	VOLUME CAM R 330S	311
582165-0000 ..	VOLUME CAM R WIDE 330S	311
582166-0000 ..	VOLUME CAM L 330S	311
582167-0000 ..	VOLUME CAM L WIDE 330S	311
582195-0000 ..	ARM CAM 330S	227, 229
582197-0000 ..	YOKE CAM 330S	227, 229
582199-0000 ..	CAM SEGMENT RIGHT	227, 229
582200-0000 ..	CAM SEGMENT LEFT	227, 229
582433-0000 ..	LID	13, 15
583683-0000 ..	SHAFT	529
583684-0000 ..	AXLE SUPPORT	529
583685-0000 ..	BEARING SEAT	529
583735-0000 ..	PIN	527
583737-0000 ..	ROLLER	527
583738-0000 ..	ROLLER	527
583749-0000 ..	PIN	527
583878-0000 ..	SPRING BRACKET	495
589432-0000 ..	SCREW	527
595430-0200 ..	LIGHT FIXTURE	197
597874-0000 ..	RAIL RIGHT	193
597875-0000 ..	RAIL LEFT	193
597888-0000 ..	BRACKET	193
597889-0000 ..	BRACKET	193
598762-0200 ..	LADDER	145
732419-0004 ..	RAIL	753
732419-0007 ..	RAIL	753
736514-0000 ..	SHOCK ABSORBER	63, 139, 637
751009-0000 ..	INSULATION	27
751010-0000 ..	GASKET	115
751015-0000 ..	GASKET	23
751018-0000 ..	WASHER	23
751019-0000 ..	WASHER	19
751020-0000 ..	GASKET	19
751023-0000 ..	GASKET	19, 23
751024-0000 ..	GASKET	115
751078-0000 ..	BRACKET RIGHT	221
751079-0000 ..	BRACKET LEFT	223
751085-0000 ..	BUSHING	147
751086-0000 ..	NIPPLE	413
751109-0000 ..	RAIL RIGHT	359
751110-0000 ..	RAIL LEFT	359
751131-0000 ..	SHAFT	31, 33
751132-0000 ..	SHAFT	35
751165-0000 ..	BUSHING	37
751212-0000 ..	ARM	217, 219, 221, 223
751220-0000 ..	FILLER CAP	447

Part No	Description	Page No
751223-0000 ..	LID	453
751230-0000 ..	PLAIN BEARING	31, 33
751245-0000 ..	FLANGE	213
751267-0000 ..	CANTILEVER	79, 81, 83
751283-0000 ..	ROLL	79, 81, 83
751284-0000 ..	ROLL	79, 81, 83
751287-0000 ..	PLATE	79, 81, 83
751288-0000 ..	PLATE	79, 81, 83
751316-0000 ..	ELBOW PIPE	451
751318-0000 ..	SHAFT	87, 89
751331-0000 ..	GASKET	13, 15
751333-0000 ..	SETTING PLATE	71, 73, 75, 77
751334-0000 ..	SPACER	71, 73, 75, 77
751373-0300 ..	PEROXIDE TANK	443
751393-0300 ..	PEROXIDE PUMP	447
751395-0000 ..	FLANGE	451
751398-0400 ..	TANK	443
751403-0000 ..	BRACKET	453
751456-0000 ..	HOLDER	125, 127
751457-0000 ..	CANTILEVER	125, 127
751476-0000 ..	CANTILEVER	125, 127
751491-0000 ..	ROLL	71, 73, 75, 77
751492-0000 ..	ROLL	71, 73, 75, 77
751494-0000 ..	ROLL	71, 73, 75, 77
751495-0000 ..	ROLL	87, 89
751496-0000 ..	ROLL	87, 89
751497-0000 ..	ROLL	87, 89
751498-0000 ..	ROLL	87, 89
751499-0000 ..	ROLL	87, 89
751500-0000 ..	ROLL	87, 89
751501-0000 ..	ROLL	87, 89
751502-0000 ..	ROLLER	93, 95
751503-0000 ..	COUNTER ROLLER	93, 95
751575-0000 ..	RULERPART R	247, 249
751576-0000 ..	RULERPART L	251, 253
751577-0000 ..	RULERPART R	247, 249
751578-0000 ..	RULERPART L	251, 253
751579-0000 ..	ADJUSTING SCREW	247, 249, 251, 253
751580-0000 ..	SHIM	247, 249, 251, 253
751680-0000 ..	SCREW	13, 15
751684-0000 ..	STOP LUG	31, 33
751718-0100 ..	HOLDER	557, 559, 561, 577, 579
751722-0000 ..	PIPE-LINE	115
751730-0000 ..	LOCKING CIRCLIP	31, 33
751731-0000 ..	BEARING COVER	21
751732-0000 ..	BRACKET	21
751733-0000 ..	HEATING PIPE	23
751743-0000 ..	PISTON	285, 287, 289, 291
751769-0000 ..	SLEEVE	285, 287, 289, 291
752009-0000 ..	RULERPART R	247, 249
752010-0000 ..	RULERPART R	247, 249
752011-0000 ..	RULERPART L	251, 253
752012-0000 ..	RULERPART L	251, 253
752014-0000 ..	RULERPART R	247, 249
752015-0000 ..	RULERPART R	247, 249
752016-0000 ..	RULERPART L	251, 253
752017-0000 ..	RULERPART L	251, 253
752038-0000 ..	SHIM	93, 95
752047-0000 ..	BUSHING	93, 95
752085-0000 ..	SPRING	553
752115-0000 ..	PLUNGER	247, 249, 251, 253
752126-0000 ..	FORMING ROLLER	71, 73, 75, 77
752127-0000 ..	FORMING ROLLER	71, 73, 75, 77
752128-0000 ..	FORMING ROLLER	71, 73, 75, 77
752129-0000 ..	FORMING ROLLER	79, 81, 83
752130-0000 ..	FORMING ROLLER	79, 81, 83
752131-0000 ..	FORMING ROLLER	87, 89
752132-0000 ..	FORMING ROLLER	87, 89
752133-0000 ..	FORMING ROLLER	87, 89
752134-0000 ..	FORMING ROLLER	87, 89
752135-0000 ..	FORMING ROLLER	87, 89
752136-0000 ..	FORMING ROLLER	87, 89
752137-0000 ..	FORMING ROLLER	87, 89
752138-0000 ..	FORMING ROLLER	93, 95
752140-0000 ..	COUNTER ROLLER	93, 95
752141-0000 ..	FORMING ROLLER	71, 73, 75, 77
752142-0000 ..	FORMING ROLLER	71, 73, 75, 77
752143-0000 ..	FORMING ROLLER	71, 73, 75, 77
752144-0000 ..	FORMING ROLLER	79, 81, 83
752145-0000 ..	FORMING ROLLER	79, 81, 83
752146-0000 ..	FORMING ROLLER	87, 89
752147-0000 ..	FORMING ROLLER	87, 89
752148-0000 ..	FORMING ROLLER	87, 89
752149-0000 ..	FORMING ROLLER	87, 89

Part No	Description	Page No
752150-0000 ..	FORMING ROLLER	87, 89
752151-0000 ..	FORMING ROLLER	87, 89
752152-0000 ..	FORMING ROLLER	87, 89
752153-0000 ..	FORMING ROLLER	93, 95
752155-0000 ..	COUNTER ROLLER	93, 95
752156-0000 ..	FLANGE BUSHING	71, 73, 75, 77, 87, 89
752174-0000 ..	HEATING PIPE	19
752185-0000 ..	SHAFT	87, 89
752186-0001 ..	SHAFT	79, 81, 83
752186-0002 ..	SHAFT	71, 73, 75, 77
752186-0003 ..	SHAFT	87, 89, 93, 95
752186-0004 ..	SHAFT	79, 81, 83, 87, 89, 93, 95
752186-0005 ..	SHAFT	71, 73, 75, 77, 87, 89, 93, 95
752186-0006 ..	SHAFT	71, 73, 75, 77, 87, 89
752186-0007 ..	SHAFT	87, 89
752186-0008 ..	SHAFT	71, 73, 75, 77
752186-0009 ..	SHAFT	71, 73, 75, 77
752186-0010 ..	SHAFT	79, 81, 83
752186-0011 ..	SHAFT	79, 81, 83
752186-0012 ..	SHAFT	79, 81, 83, 93, 95
752187-0000 ..	SHAFT	71, 73, 75, 77
752200-0000 ..	CANTILEVER	557, 559, 561, 577, 579
752212-0000 ..	VOLUME FLAP 200 ML	269, 271, 273, 275
752218-0000 ..	ATTACHMENT	115
752237-0000 ..	SPRING	557, 559, 561, 577, 579
752240-0000 ..	LID	557, 559, 561, 577, 579
752282-0000 ..	CONNECTION RIGHT	285, 287
752283-0000 ..	CONNECTION LEFT	289, 291
752284-0000 ..	SHAFT	285, 287, 289, 291
752288-0000 ..	SLEEVE	247, 249, 251, 253
752289-0000 ..	CLAMP RIGHT	285, 287
752290-0000 ..	CLAMP LEFT	289, 291
752292-0000 ..	VOLUMEFLAP 180 ML	269, 271, 273, 275
752425-0000 ..	LINK	277, 279, 281, 283
752476-0000 ..	SCREW	247, 249, 251, 253, 285, 287, 289, 291
752495-0300 ..	ATTACHMENT	101
752499-0000 ..	RING	103
752519-0002 ..	PIN	31, 33
752526-0000 ..	PLATE	557, 559, 561, 577, 579
752527-0000 ..	CANTILEVER	557, 559, 561, 577, 579
752528-0000 ..	COVER	557, 559, 561, 577, 579
752529-0000 ..	BEARING COVER	557, 559, 561, 577, 579
752530-0000 ..	SPROCKET	557, 559, 561, 577, 579
752531-0000 ..	BRACKET	557, 559, 561, 577, 579
752534-0000 ..	PLATE	557, 559, 561, 577, 579
752535-0000 ..	SHAFT	557, 559, 561, 577, 579
752536-0001 ..	SHAFT	557, 559, 561, 577, 579
752536-0002 ..	SHAFT	557, 559, 561
752536-0003 ..	SHAFT	557, 559, 561
752538-0000 ..	SHAFT	557, 559, 561, 577, 579
752539-0000 ..	PLATE	557, 559, 561, 577, 579
752541-0000 ..	CANTILEVER	557, 559, 561, 577, 579
752542-0001 ..	BENDING ROLLER	557, 559, 561, 577, 579
752542-0002 ..	BENDING ROLLER	557, 559, 561
752542-0003 ..	BENDING ROLLER	557, 559, 561
752543-0001 ..	SHAFT	557, 559, 561, 577, 579
752543-0002 ..	SHAFT	557, 559, 561
752543-0003 ..	SHAFT	557, 559, 561
752544-0001 ..	SHIM	557, 559, 561, 577, 579
752544-0002 ..	SHIM	557, 559, 561, 577, 579
752554-0000 ..	SPACER	125, 127
752556-0000 ..	SPACER	277, 279, 281, 283
752559-0000 ..	STOP PERF 1	277, 279
752560-0000 ..	STOP PERF 2	281, 283
752561-0000 ..	STOP PERF 1	277, 279
752562-0000 ..	STOP PERF 2	281, 283
752563-0000 ..	STOP PERF 1	277, 279
752564-0000 ..	STOP PERF 2	281, 283
752576-0000 ..	CONTAINER	65
752598-0000 ..	SHAFT	269, 271, 273, 275
752615-0000 ..	SPACER	269, 271, 273, 275
752642-0000 ..	BRACKET	557, 559, 561, 577, 579
752644-0000 ..	SCREW	557, 559, 561, 577, 579
752645-0400 ..	DATING UNIT	555
752646-0400 ..	DATING UNIT	555
752671-0100 ..	SHOCK ABSORBER	245
752672-0100 ..	SHOCK ABSORBER	245
752673-0000 ..	SPACER	277, 279, 281, 283
752675-0000 ..	PIPE	65
752676-0000 ..	PIPE	65
752678-0000 ..	SPRING PERF 1	277, 279
752679-0000 ..	SPRING PERF 2	281, 283
752680-0000 ..	SLEEVE	277, 279, 281, 283
752681-0000 ..	WASHER	277, 279, 281, 283

Part No	Description	Page No
752739-0000 ..	VOLUME BULGE	269, 271, 273, 275
752774-0000 ..	PLUNGER	227, 229
752857-0000 ..	POINTER	29
752858-0000 ..	POINTER	29
752859-0000 ..	POINTER	29
752999-0000 ..	VOLUME FLAP 200S	269, 271, 273, 275
777150-0801 ..	KEY SET ,SEXKANT	617
779910-0101 ..	PADLOCK	613
925877-0000 ..	SUPPORT	139
925991-0200 ..	LEVEL PROBE	11
925998-0000 ..	DIAPHRAGM	63, 637
925999-0000 ..	PROTECTION PIPE	139
926820-0000 ..	PLUG	139
926822-0000 ..	GASKET	637
926906-0000 ..	SPACER	63
926907-0000 ..	SCREW	63
926909-0000 ..	COMPRESSION SPRING	63
926914-0000 ..	BRACKET	45, 47
926934-0000 ..	SUPPORT	63
927007-0000 ..	SHUTTER	63
927044-0000 ..	SPACER	63
927194-0000 ..	BODY	63
927203-0000 ..	COVER	63
927205-0200 ..	REGULATING VALVE	45, 47
927421-0003 ..	O-RING 13.3X2.4 SILICON	65
927421-0004 ..	O-RING 15.3X2.4 SILICON	13, 15, 65, 463
927421-0005 ..	O-RING 7.3X2.4 SILICON	457
927421-0006 ..	O-RING 17.3X2.4 SILICON	637
927422-0001 ..	O-RING 19.2X3 SILICON	345, 347
927422-0003 ..	O.RING 24.2X3 SILICON	459, 637
927422-0004 ..	O-RING 29.2X3 SILICON	451
927422-0007 ..	O-RING 44.2X3 SILICON	447, 451
927422-0008 ..	O-RING 49.5X3 SILICON	97, 637
927422-0009 ..	O-RING 54.5X3 SILICON	453
927422-0011 ..	O-RING 69.5X3 SILICON	65
927422-0014 ..	O-RING 34.2X3 SILICON	13, 15, 447
927422-0015 ..	O-RING 39.2X3 SILICON	97
929284-0000 ..	ROLLER	31, 33
929286-0000 ..	SEAL	31, 33
929402-0000 ..	ARM	255, 257, 259, 261
929413-0000 ..	SIGN	429, 431
929415-0100 ..	BALANCE TANK	405, 407, 409
929438-0100 ..	ARM	211
929444-0000 ..	PIN	227, 229
970802-0000 ..	DISCETTE BOX 3,5"	733
971140-0000 ..	PHASE BAR ANGLED	753
971141-0000 ..	PHASE BAR ANGLED	753
971142-0000 ..	PHASE BAR ANGLED	753
975917-0000 ..	KEY FOR SAFETY SWITCH 90044-103	543, 545
977527-0000 ..	BRACKET	389, 463
978031-0000 ..	VOLUMEFLAP 284 ML	269, 271, 273, 275
978184-0000 ..	STOPPER	255, 257, 259, 261
978185-0000 ..	SHIM	255, 257, 259, 261
978207-0000 ..	SPACER PIPE	233
978209-0000 ..	NUT	233
978262-0000 ..	GUIDE PIN	227, 229
978272-0000 ..	BRACKET	217, 219, 221, 223
978275-0000 ..	BEARING HOLDER	217, 219, 221, 223
978340-0000 ..	SPACER	227, 229
978366-0000 ..	VOLUME FLAP 250 ML	269, 271, 273, 275
978462-0000 ..	PROTECTION PLATE	35
978531-0000 ..	BRACKET	31, 33
978532-0000 ..	BRACKET	31, 33
978539-0000 ..	CABLE CONDUIT	111
978540-0000 ..	CABLE CONDUIT	111
978541-0000 ..	CABLE CONDUIT	111
978542-0000 ..	FRAME	121
978543-0000 ..	FRAME	123
978603-0000 ..	SIGN	429, 431
978609-0000 ..	ALIGNMENT TEMPLATE	227, 229
978714-0000 ..	CARRIER LEFT	251, 253
978715-0000 ..	CARRIER RIGHT	247, 249
978735-0000 ..	FASTENING PLATE	125, 127
978736-0000 ..	BRACKET	19
978745-0000 ..	CATCH	247, 249, 251, 253
978746-0000 ..	CATCH	285, 287, 289, 291
978756-0000 ..	PIN	313
978757-0000 ..	ROLLER 180-284ML	313
978758-0000 ..	ROLLER 125ML	313
978760-0000 ..	ROLLER TBA200SL	313
978768-0000 ..	YOKECURVE200ML	227, 229
978769-0000 ..	ARMCURVE 200ML	227, 229
978770-0000 ..	CAMSEGMENTL	227, 229
978771-0000 ..	CAMSEGMENTL	227, 229

Part No	Description	Page No
978772-0000 ..	YOKECURVE 200SL	227, 229
978773-0000 ..	ARMCURVE 200SL	227, 229
978774-0000 ..	CAMSEGMENT R	227, 229
978775-0000 ..	CAMSEGMENT L	227, 229
978776-0000 ..	YOKECURVE 250ML	227, 229
978777-0000 ..	ARMCURVE 250ML	227, 229
978778-0000 ..	CAMSEGMENT R	227, 229
978779-0000 ..	CAMSEGMENT L	227, 229
978790-0000 ..	BRACKET	87, 89
978791-0000 ..	HOLDER	79, 81, 83
978792-0000 ..	PLATE	71, 73, 75, 77
978793-0000 ..	YOKECURVE 125ML	227, 229
978794-0000 ..	ARMCURVE 125ML	227, 229
978795-0000 ..	CAMSEGMENT R	227, 229
978796-0000 ..	CAMSEGMENT L	227, 229
978823-0200 ..	CENTRAL LUBRICATION	393
978834-0200 ..	PEROXID AND STERILESYSTEM	393
978835-0200 ..	PIPE WORK	443
978838-0000 ..	HEAT EXCHANGER	105
978865-0000 ..	HOUSE	31, 33
978870-0000 ..	BEARING PLATE	31, 33
978871-0000 ..	BEARING PLATE	31, 33
978872-0000 ..	LOCK WASHER	31, 33
978876-0000 ..	SHAFT	597
978877-0000 ..	SHAFT	597
978879-0000 ..	CONTAINER	43
978953-0000 ..	BRACKET	467
978956-0000 ..	LID	463
978963-0000 ..	PIPE	445
978970-0000 ..	METERING DEVICE	453
978971-0000 ..	DISCHARGE TRAY	43
978972-0000 ..	DISCHARGE TRAY	43
978973-0001 ..	HOSE	447
978973-0003 ..	HOSE	463
978988-0200 ..	SEPARATOR	443
978989-0200 ..	SCRUBBER	443
978996-0000 ..	BRANCH PIPE	41
979026-0200 ..	WATER CIRCULATION	443
979028-0000 ..	PIPE	105
979031-0000 ..	PIPE	105
979069-0000 ..	PIPE	445
979109-0000 ..	HOLDER	105
979204-0000 ..	PLATE	597
979215-0200 ..	COVER PLATE	393
979216-0200 ..	MACHINE BODY	393
979217-0000 ..	PIPE	403
979219-0000 ..	SPACER PIPE	433, 435, 437
979279-0000 ..	COVER HOUSING	461
979280-0000 ..	COVER	461
979300-0000 ..	PIPE	457
979326-0000 ..	FLOAT	137
979328-0200 ..	CABINET	443
979329-0200 ..	FILLING UNIT	457
979330-0000 ..	FLOATER	137
979336-0000 ..	HOSE NIPPLE	447
979368-0000 ..	HOLDER	137
979381-0100 ..	PAPER REEL HOLDER	537
979382-0000 ..	SHAFT	599
979421-0000 ..	SIGN	429, 431
979434-0000 ..	FERRULE	63
979446-0000 ..	HOLDER	429, 431
979486-0000 ..	LUBRICATING PIPE	159, 161, 163
979500-0001 ..	ELECTRODE	13, 15
979506-0000 ..	TOUCH GUARD	129, 131
979543-0000 ..	SPLASH PLATE	577, 579
979544-0000 ..	SPLASH PLATE	557, 559, 561
979547-0000 ..	BRACKET	111
979548-0000 ..	MACHINE PLATE	609, 711
979555-0000 ..	WEB TENSION ROLLER	549, 551
979557-0000 ..	CONNECTING PIPE	339
979559-0000 ..	HINGE	13, 15
979576-0000 ..	AXLE PIN	493
979578-0000 ..	AXLE PIN	493
979582-0000 ..	ROLLER	527
979667-0000 ..	ARM	501, 503
979668-0000 ..	FINGER	501, 503
979669-0000 ..	FORCE PLATE	501, 503
979701-0000 ..	CABLE CONDUIT	577, 579
979709-0000 ..	BENDING ROLLER	557, 559, 561, 577, 579
979722-0000 ..	BLOCK	21
979728-0000 ..	CATCH	103
979751-0000 ..	VOLUME FLAP 100	269, 271, 273, 275
979754-0000 ..	VOLUME SHIM 100	269, 271, 273, 275
979755-0000 ..	VOLUME BULGE 100	269, 271, 273, 275

Part No	Description	Page No
979756-0000 ..	SHAFT	269, 271, 273, 275
979757-0000 ..	SPACER	269, 271, 273, 275
979758-0000 ..	STOP PERF 1	277, 279
979759-0000 ..	STOP PERF 2	281, 283
979760-0000 ..	SPACER	277, 279, 281, 283
979761-0000 ..	SLEEVE	277, 279, 281, 283
979763-0000 ..	CARRIER LEFT 100	251, 253
979764-0000 ..	CARRIER RIGHT 100	285, 287
979765-0000 ..	CARRIER LEFT 100	289, 291
979769-0000 ..	SPACER	557, 559, 561
979770-0000 ..	FOLDING FLAP CAM 100	255, 257, 259, 261
979771-0000 ..	COUNTER CAM 100	255, 257, 259, 261
979772-0000 ..	VOLUME CAM L 100	311
979773-0000 ..	VOLUME CAM L WIDE 100	311
979774-0000 ..	VOLUME CAM R 100	311
979775-0000 ..	VOLUME CAM R WIDE 100	311
979778-0000 ..	YOKE CAM 100	227, 229
979779-0000 ..	ARM CAM 100	227, 229
979780-0000 ..	CAM SEGMENT R 100	227, 229
979781-0000 ..	CAM SEGMENT L 100	227, 229
979783-0000 ..	PLATE	597
979784-0000 ..	SHAFT	593
979788-0000 ..	SPRING HOLDER	557, 559, 561, 577, 579
979789-0000 ..	SPRING HOLDER	557, 559, 561, 577, 579
979790-0000 ..	COVER	557, 559, 561, 577, 579
979792-0000 ..	VOLUME BULGE	269, 271, 273, 275
979793-0000 ..	CARRIER	285, 287
979794-0000 ..	CARRIER	289, 291
979860-0000 ..	VOLUME BULGE	269, 271, 273, 275
979861-0000 ..	VOLUME SHIM	269, 271, 273, 275
979899-0000 ..	BRACKET	517
979931-0000 ..	VOLUME BULGE	269, 271, 273, 275
979938-0000 ..	SLIDER	153, 155
979942-0000 ..	COVER	569
979946-0000 ..	STEEL TUBE	549, 551
979953-0000 ..	WASHER	107
979960-0000 ..	SHAFT	569
979961-0000 ..	PIVOT PIN	31, 33
979962-0000 ..	ARM	31, 33
979966-0000 ..	BRACKET	193
979990-0000 ..	BELT BRAKE	495
979991-0000 ..	BLOCK	495
979994-0000 ..	ARM	495
980002-0000 ..	BRACKET	575
980003-0000 ..	SHAFT	575
980004-0000 ..	PLUG	575
988436-0000 ..	SPACER SLEEVE	669, 705
988685-0000 ..	PIN	169, 171, 201, 203, 395, 397, 543, 545
1020637-0000 .	HOLDER	623, 627, 629
1020638-0000 .	HOLDER	623, 627, 629
1035587-0000 .	INDUCTOR	511
1035792-0000 .	E-HINGE	169, 171, 201, 203, 395, 397, 543, 545
1035794-0000 .	BLOCKING PIECE	169, 171, 201, 203, 395, 397, 501, 503, 525, 543, 545
1035893-0000 .	ADJUSTING SCREW	519
1035895-0000 .	SHAFT	513
1035897-0000 .	SHAFT	517
1036187-0000 .	T-PIPE	41
1036188-0000 .	SHAFT	25, 41
1036189-0000 .	SPINDLE GUIDE	25, 41
1036191-0000 .	SEAL HOLDER	25, 41
1036192-0000 .	SPACER ROD	25, 41
1036193-0000 .	CYLINDER BRACKET	25, 41
1036194-0000 .	T-PIPE	25, 41
1036443-0000 .	CONTACT UNIT	345, 347
1036588-0000 .	BRACKET	511
1036622-0000 .	GUIDE ROLLER	515
1036623-0000 .	GUIDE ROLLER	515
1037120-0000 .	SHAFT	497
1037121-0000 .	SHAFT	497
1037124-0000 .	HOLDER	497
1037572-0000 .	COVER PLATE	727, 729
1037573-0000 .	GASKET	727, 729
1037574-0000 .	COVER PLATE	735, 737, 739, 741
1037575-0000 .	GASKET	735, 737, 739, 741
1038016-0000 .	SPACER	511
1086888-0000 .	COVER	623, 627, 629
1091683-0000 .	SPACER	377
1091684-0000 .	RAIL	377
1091685-0000 .	RAIL	377
1091686-0000 .	SPACER	377
1091719-0000 .	BRACKET	377
1110391-0000 .	DOLLY	247, 249, 251, 253, 321, 643
1110530-0000 .	INDUCTOR	293, 321, 643
1110532-0000 .	INDUCTOR	293, 321, 643

Part No	Description	Page No
1110534-0000	.INDUCTOR	293, 321, 643
1110535-0000	.INDUCTOR	293, 321, 643
1110820-0000	.CUTTING RAIL	247, 249, 251, 253
1110829-0000	.CUTTING RAIL	247, 249, 251, 253
1129274-0000	.GUIDE LUG	201, 203, 395, 397
1129478-0000	.GASKET	735, 737, 739, 741
1129481-0000	.COVERING PLATE	735, 737, 739, 741
1140129-0000	.HOLDER	199
1143884-0000	.COPPER BRAID	759, 761
1144059-0000	.WIRE	345, 347
1144122-0000	.REDUCTION	345, 347
1144159-0000	.HEATING ELEMENT (1100 W)	345, 347
1144507-0000	.BUSHING	335, 337
1144508-0000	.AXLE PIN	335, 337
1144521-0000	.CLAMP	335, 337
1144916-0000	.ADJUSTING SCREW	335, 337
1144943-0000	.SPACER	377
1195044-0000	.SPRING	335, 337
1195054-0000	.ROLLER	335, 337
1195428-0000	.GASKET	147
1195454-0000	.BRACKET	369
1195456-0000	.SHAFT	369
1254027-0000	.CORNER STRIP	183, 185
1254028-0000	.FASTENING PLATE	183, 185
1254442-0000	.CABLE SERIAL	711
1255874-0000	.SPACER	381, 383
1255876-0200	.CHAIN TENSIONER	365
1255924-0000	.LABEL	49
1255925-0000	.COVER	49
1260065-0000	.BRACKET	385
1260068-0000	.SHAFT	385
1260069-0000	.ROLLER	385
1260070-0000	.SHAFT	385
1260261-0000	.T-PIPE	49
1260262-0000	.T-PIPE	49
1260263-0000	.PIPE	49
1260265-0000	.PIPE	49
1260266-0000	.PIPE	49
1260267-0000	.PIPE	49
1260268-0000	.PIPE	49
1260443-0000	.CLAMP HOLDER	49
1260476-0000	.SCREW	577, 579
1260478-0000	.BENDING ROLLER	39
1260480-0000	.PIPE	105
1260481-0000	.PIPE	105
1260483-0000	.BENDING ROLLER	39
1260486-0000	.PLATE	125, 127
1260487-0000	.PLATE	125, 127
1260489-0000	.PIPE	105
1260490-0000	.NUT	125, 127
1260491-0000	.NUT	125, 127
1260678-0000	.ARM	495
1260743-0000	.HEAT GUARD	19
1279044-0000	.HATCH	173
1279045-0000	.HATCH	175
1279086-0000	.LOCKING PLATE	87, 89
1279087-0000	.LOCKING PLATE	71, 73, 75, 77, 85
1279088-0000	.LOCKING PLATE	79, 81, 83
1279089-0000	.LOCKING PLATE	79, 81, 83
1279090-0000	.LOCKING PLATE	87, 89
1279091-0000	.LOCKING PLATE	71, 73, 75, 77
1279092-0000	.LOCKING PLATE	93, 95
1279093-0000	.LOCKING PLATE	87, 89
1279094-0000	.LOCKING PLATE	87, 89
1279095-0000	.LOCKING PLATE	93, 95
1279096-0000	.LOCKING PLATE	93, 95
1279456-0000	.LABEL	49
1279624-0200	.SPLICE DETECTOR	509
1279701-0000	.WASHER	331
1279702-0000	.BRACKET	345, 347
1282022-0000	.TENSION SPROCKET	331
1282309-0000	.ARM CAM 200 ML MID	227, 229
1282310-0000	.YOKE CAM 200ML MID	227, 229
1282311-0000	.CAM SEGMENT L	227, 229
1282312-0000	.CAM SEGMENT R	227, 229
1282315-0000	.VOLUME CAM LEFT	311
1282316-0000	.VOLUME CAM RIGHT	311
1282411-0000	.FLOAT	447
1282426-0000	.CLIP	147, 305, 307
1282435-0001	.CARTON STATION	327
1282435-0002	.CARTON STATION	327
1282444-0000	.CARTON STATION WITH BEVEL	327
1282581-0000	.BENDING ROLLER	13, 15
1282645-0000	.KNIFE	263, 265, 267

Part No	Description	Page No
1282646-0000	.KNIFE	263, 265, 267
1282647-0000	.KNIFE	263, 265, 267
1282988-0000	.RAIL	509
1282989-0000	.AXLE PIN	509
1285108-0000	.COVER	769
1285109-0000	.NUT	711, 747, 749, 759, 761
1285546-0000	.ROLL	519
1285580-0000	.SPRING	109
1286000-0000	.PIPE	187
1296118-0000	.PROTECTION	447
1296310-0001	.CARTON STATION WITH BEVEL	327
1296310-0002	.CARTON STATION WITH BEVEL	327
1296310-0004	.CARTON STATION WITH BEVEL	327
1296310-0006	.CARTON STATION WITH BEVEL	327
1296310-0007	.CARTON STATION WITH BEVEL	327
1296311-0000	.CARTON STATION WITH BEVEL	327
1296312-0000	.CARTON STATION WITH BEVEL	327
1296313-0000	.CARTON STATION	327
1296415-0000	.GASKET	345, 347
1296815-0100	.HATCH	145
1296849-0000	.DISCHARGE TRAY	27
1296850-0000	.DISCHARGE TRAY	27
1296854-0000	.PIPE	187
1296855-0000	.BATH	13, 15
1296877-0100	.SEAL KIT	637
1296912-0000	.ROLL	71, 73, 75, 77
1296913-0000	.ROLL	71, 73, 75, 77
1296914-0000	.ROLL	71, 73, 75, 77
1296915-0000	.ROLL	71, 73, 75, 77
1317228-0000	.WASHER	351, 357
1317257-0000	.CONTAINER	45, 47
1317262-0000	.COVER	45, 47
1317263-0000	.PIPE	45, 47
1317399-0000	.TANK	45, 47
1317526-0100	.STATION CHAIN	325
1317663-0000	.PIPE	45, 47
1317756-0000	.PIPE	45, 47
1317896-0000	.BRACKET	45, 47
1317903-0000	.BRACKET	45, 47
1317905-0000	.BRACKET	45, 47
1317914-0000	.UPPER FILLING TUBE	109
1317989-0000	.UPPER FILLING TUBE	109
1317991-0000	.SPRING	109
1334234-0000	.HUB	29, 39
1334256-0000	.SHAFT	527
1334331-0000	.FLANGE	509
1334694-0000	.CONNECTION PLATE	187
1334721-0000	.BLOCK	369
1334768-0000	.LID	111
1334769-0000	.LID	111
1334841-0200	.T.C.S.B. UNIT	45, 47
1346061-0000	.DRAIN CHUTE	429, 431
1346612-0000	.SHAFT	515, 527
1346746-0000	.LEVER	519
1346933-0000	.BRACKET	369
1346988-0000	.ROLL	513
1348053-0000	.BRACKET	247, 249, 251, 253
1348237-0100	.AIR INLET GROUP	405, 407, 409
1348476-0000	.TOUCH GUARD	45, 47
1348477-0000	.TOUCH GUARD	105
1348636-0000	.TOUCH GUARD	45, 47
1348637-0000	.TOUCH GUARD	105
1348707-0101	.DISPLAY UNIT 12"	207
1348964-0000	.AIR DIAGRAM	405, 407, 409, 611
1349014-0000	.PAD	499
1349029-0100	.VALVE PANEL	393
1349090-0100	.FLOW METER	405, 407, 409
1349091-0100	.GAUGE GROUP	405, 407, 409
1349092-0000	.SUPPORT	427
1349094-0100	.VALVE PLATE	405, 407, 409
1349568-0000	.CONNECTION BOX	625, 631, 633
1350086-0200	.INSTALLATION DRAWING	609
1350087-0200	.DIAGRAM	609
1350184-0100	.PIPE WORK,AIR WATER	393
1350185-0000	.PIPE	475
1350186-0000	.PIPE	467
1350187-0000	.PIPE	467
1350188-0000	.PIPE	417
1350307-0000	.PIPE	187
1350308-0000	.PIPE	187
1350309-0000	.PIPE	187
1350472-0000	.HOLDER	187
1350473-0000	.HOLDER	187
1350529-0100	.DOORS LEFT SIDE	393

Part No	Description	Page No
1350531-0100	.DOORS RIGHT SIDE	393
1359565-0000	.NUT	377
1363288-0301	.FLEXBOX TETRA BRIK	711
1364345-0300	.TPOP PANEL 12"	145
1364346-0302	.PANEL UNIT 12"	207
1366189-0000	.CABLE LVDS 6M	711
1366726-0000	.HOLDER	377
1366727-0000	.CLAMP	377
1367022-0000	.ALIGNMENT SCREW	539
1478222-0000	.BEARING HOUSING	247, 249, 251, 253
1478223-0000	.BEARING HOUSING	247, 249, 251, 253
1478224-0000	.BEARING HOUSING	247, 249, 251, 253
1478225-0000	.BEARING HOUSING	247, 249, 251, 253
1478303-0000	.TENSION SPRING	513
1478659-0000	.BRACKET	627, 629
1478661-0000	.CABLE SERIAL	711
1478717-0100	.VALVE GROUP	405, 407, 409
1478767-0000	.THROTTLE SCREW	105
1478813-0000	.SPACER	63
1478814-0000	.SENSOR	63
1484452-0000	.SHAFT	233
1484453-0000	.SPACER	233
1484454-0000	.ROCKER ARM	233
1484455-0000	.SPACER	233
1484456-0000	.SHAFT	233
1484457-0000	.BRACKET	233
1484461-0000	.SPACER	233
1484486-0000	.SPRING	495
1484791-0000	.SCALE	217, 219, 221, 223
1484792-0000	.SCALE	217, 219, 221, 223
1487430-0000	.COVER	727, 729, 735, 737, 739, 741
1487431-0000	.GASKET	727, 729, 735, 737, 739, 741
1487445-0000	.CABLE DUCT	653, 655
1487447-0100	.FUSE	747, 749
1490113-0000	.LINK HEAD	237, 239
1490114-0000	.PIN	237, 239
1490116-0000	.SPACER	237, 239
1490117-0000	.NUT	237, 239
1490118-0000	.LINK	237, 239
1490119-0000	.SHAFT	237, 239
1490120-0100	.DISCONNECTION LINK LEFT	211
1490133-0000	.SPACER	237, 239
1490235-0000	.VOLUME CAM	311
1490236-0000	.VOLUME CAM	311
1490237-0000	.VOLUME CAM, WIDE	311
1490238-0000	.VOLUME CAM, WIDE	311
1490239-0000	.VOLUME CAM	311
1490240-0000	.VOLUME CAM	311
1490407-0000	.WASHER	29
1490804-0000	.HOLDER	497
1490839-0000	.PIPE	13, 15
1490840-0000	.PIPE	13, 15
1490928-0000	.SHAFT	331
1490931-0000	.WHEEL	319
1490932-0000	.SHAFT	319
1498194-0000	.SPACER	237, 239
1498216-0000	.LID	345, 347
1498217-0000	.HEATING CHAMBER	345, 347
1498218-0000	.PIPE	345, 347
1498219-0000	.PIPE	345, 347
1498220-0000	.PIPE	345, 347
1498221-0000	.PIPE	345, 347
1498222-0000	.PLATE	345, 347
1498223-0000	.PLATE	345, 347
1498224-0000	.PLATE	345, 347
1498233-0000	.GASKET	345, 347
1498245-0000	.SUPPORTING ARM	365
1498748-0000	.MOUNTING PLATE	501, 503
1498749-0000	.DOOR	505
1498750-0000	.DOOR	505
1498751-0100	.DOORS	485
1498753-0100	.MAGAZINE HOLDER	485
1498756-0100	.BENDING ROLLER	521
1498757-0000	.FLANGE	489
1498758-0000	.AXLE PIN	489
1498759-0000	.ANGLE HOLDER	523
1498761-0000	.MAGAZINE HOLDER	489
1498762-0000	.AXLE PIN	501, 503
1498763-0000	.JOINT PIECE	523
1498764-0000	.COVER	501, 503
1498765-0000	.AXLE PIN	509
1498766-0000	.LOWER PLATE	523
1498767-0000	.SIDE PIECE	523
1498768-0000	.LOWER PLATE	523

Part No	Description	Page No
1498769-0000	.WALL	523
1498771-0000	.HOLDER	523
1498773-0000	.CANTILEVER	509
1498775-0000	.BOX BRACKET	501, 503
1498777-0000	.GUIDE HOLDER	509
1498778-0000	.SHAFT	509
1498780-0000	.BACK COVER	525
1498819-0000	.COOLING PLATE	663, 681, 683, 685, 687, 689
1499024-0000	.BAR	515
1499026-0000	.SHAFT	515
1499027-0000	.BRACKET	515
1499060-0000	.HOLDER	447
1499061-0000	.PILLAR	447
1499062-0000	.PILLAR	447
1499371-0000	.JOINT PLATE	523
1499408-0000	.CLEANING PIPE	103
1499477-0100	.WEB TUNNEL	483
1499480-0100	.MOUNTING PLATE	485
1499481-0000	.ROLLER	501, 503
1499483-0000	.PANE	509
1499484-0100	.TUNNEL FRAME	521
1499485-0000	.TRANSPORT BRACKET	521
1499486-0000	.TOP COVER	525
1499511-0000	.PANEL	505
1499512-0000	.PIN	501, 503, 525
1499513-0000	.NUT PLATE	525
1499514-0000	.E-HINGE	501, 503, 525
1499515-0000	.SHAFT	493
1499517-0000	.SHAFT	531
1499642-0101	.TPIH 2500 HORIZONTAL MOUNTING	779
1499899-0000	.INSULATION CLOTH	447
1511000-0000	.PLATE	515
1511001-0000	.SHAFT	515
1511002-0000	.HOLDER	515
1511003-0000	.WEIGHT	515
1511021-0000	.SHAFT	335, 337
1511027-0001	.BLOCK	335, 337
1511027-0002	.BLOCK	335, 337
1511027-0003	.BLOCK	335, 337
1511027-0004	.BLOCK	335, 337
1511027-0005	.BLOCK	335, 337
1511027-0006	.BLOCK	335, 337
1511027-0007	.BLOCK	335, 337
1511027-0008	.BLOCK	335, 337
1511027-0009	.BLOCK	335, 337
1511027-0010	.BLOCK	335, 337
1511027-0011	.BLOCK	335, 337
1511028-0001	.BLOCK	335, 337
1511028-0002	.BLOCK	335, 337
1511028-0003	.BLOCK	335, 337
1511028-0004	.BLOCK	335, 337
1511028-0005	.BLOCK	335, 337
1511028-0006	.BLOCK	335, 337
1511028-0007	.BLOCK	335, 337
1511028-0008	.BLOCK	335, 337
1511028-0009	.BLOCK	335, 337
1511028-0010	.BLOCK	335, 337
1511028-0011	.BLOCK	335, 337
1511069-0100	.TUBE FOLDING DEVICE	245
1511291-0000	.CURVE	373
1511293-0000	.BRACKET	373
1511294-0000	.CLEANING PIPE	373
1511307-0000	.ROLLER	531
1511308-0000	.NUT PLATE	523
1511310-0000	.NUT	523, 531
1511311-0000	.GLASS PANE	525
1511314-0000	.DAMPER BRACKET	525
1511315-0000	.SLIDE BLOCK	525
1511317-0000	.PANE	525
1511318-0000	.SPACER	525
1511319-0100	.TUNNEL COVER	521
1511320-0000	.STRIP	523
1511323-0000	.STRIP ADHESIVE	505
1511324-0000	.SPRING	525
1511403-0100	.SUPPORT ROLLER	245
1511404-0000	.ECCENTRIC SHAFT	313
1511405-0001	.BRACKET	313
1511405-0002	.BRACKET	313
1511405-0003	.BRACKET	313
1511405-0004	.BRACKET	313
1511406-0000	.BRACKET	313
1511407-0000	.BRACKET	313
1511437-0000	.BRACKET	169, 171
1511460-0000	.PIPE 1050	533

Part No	Description	Page No
1511461-0000	.PIPE 1051	533
1511462-0000	.STRAIGHT PIPE	533
1511463-0000	.PIPE HOLDER	533
1511464-0000	.PIPE HOLDER	533
1511487-0000	.STUD SCREW	333
1511567-0000	.AIR DIAGRAM ASU	611
1511572-0000	.CLIP	563, 565
1511600-0000	.SPACER	63
1511609-0000	.COVER	397
1511610-0000	.COVER	397
1511611-0000	.GASKET	397
1511612-0000	.GASKET	397
1511613-0000	.LOCKING ARM	395, 397
1511614-0000	.LOCKING ARM	395
1511681-0000	.LOCKING ARM	397
1511683-0000	.PIPE	453
1511701-0000	.FILTER	455
1511773-0000	.CONNECTOR	457
1511774-0000	.PIPE	445
1511775-0000	.SEPARATOR	463
1511779-0100	.COMPONENT PLATE	647, 649
1511780-0000	.COVER	769
1511781-0000	.COVER	769
1511782-0000	.BOX	769
1511783-0000	.BOX	769
1511784-0100	.POWER CABLE INLETS	715, 717
1511785-0100	.CONTROL CABLE INLETS	715, 717
1511786-0100	.TOWER CABLE INLETS	111
1511787-0100	.STRIP APPLICATOR CABLE INLETS	733
1511788-0100	.POWER CONNECTOR PLATE	715, 717
1511789-0100	.CONTROL CONNECTOR PLATE	715, 717
1511790-0100	.INTERNAL DOOR PLMS	647, 649
1511791-0100	.BLIND DOOR	715, 717
1511793-0000	.CABLE	711
1511795-0100	.CABINET	647, 649
1511796-0100	.EXTERNAL DOOR PLMS	647, 649
1511797-0000	.DOOR	733
1511798-0000	.FRAME	733
1511799-0100	.EXTERNAL DOOR SPARE FUSES	647, 649
1511800-0100	.POWER SIDE,BOTTOM TERMINAL BLOCK	653, 655
1511801-0100	.SOLID STATE RELAY RAIL 1	653, 655
1511802-0100	.LOGIC BOTTOM TERMINAL BLOCK	653, 655
1511803-0100	.RELAYS RAIL	653, 655
1511804-0100	.LOGIC SIDE,TOP TERMINAL BLOCK	653, 655
1511805-0100	.RACK	653, 655
1511806-0100	.X300	769
1511808-0100	.FREQUENCY CONVERTER EARTH BAR	653, 655
1511810-0100	.INTERNAL DOOR FUSES	647, 649
1511811-0100	.REAR UPPER CONTROL DOOR	647, 649
1511812-0000	.DOOR	757
1511813-0000	.WINDOW	757
1511814-0100	.INTERNAL DOOR TERMOREGULATORS	647, 649
1511815-0000	.DOOR	759, 761
1511817-0000	.CABLE DUCT	759, 761
1511819-0100	.FRONT UPPER CONTROL DOOR	647, 649
1511820-0100	.UPPER DOOR POWER	647, 649
1511821-0100	.POWER BOX	647, 649
1511822-0100	.FUSES RAIL	747, 749
1511823-0100	.OVERLOAD RAIL	747, 749
1511824-0100	.LEVEL RELAYS RAIL	653, 655
1511825-0100	.PLC RACK 1	653, 655
1511826-0100	.PLC RACK 2	653, 655
1511827-0100	.PLC RACK 3	653, 655
1511828-0100	.X008	653, 655
1511829-0100	.POWER SIDE,TOP TERMINAL BLOCK	653, 655
1511830-0100	.EXTERNAL DOOR TERMOREGULATORS	647, 649
1511831-0000	.PLATE	719, 721
1511832-0000	.PLATE	735, 737, 739, 741
1511833-0000	.GASKET	735, 737, 739, 741
1511834-0100	.CONTACTORS RAIL	653, 655
1511835-0000	.PLATE	113
1511836-0000	.GASKET	113
1511837-0000	.PLATE	727, 729
1511838-0000	.GASKET	727, 729
1511839-0000	.PLATE	731
1511840-0000	.GASKET	731
1511841-0000	.GASKET	719, 721
1511842-0000	.PLATE	723, 725
1511843-0000	.GASKET	723, 725
1511887-0000	.DISTRIBUTOR	353
1512123-0000	.CLEANING PIPE	103
1512128-0000	.PLUG	349
1512129-0000	.BRACKET	349
1512133-0000	.STOP	349

Part No	Description	Page No
1512283-0000	.CONNECTION BOX	507
1512284-0100	.ANGLE ENCODER	211
1512286-0100	.CRANK	211
1512304-0100	.HYDRAULIC SYSTEM	393
1512305-0100	.MOTORIZED DESIGN CONTROL SYSTEM, LEFT	245
1512306-0100	.MOTORIZED DESIGN CONTROL SYSTEM, RIGHT	245
1512322-0000	.COPPER BRAID	673, 675, 677
1512350-0000	.PLATFORM	183, 185
1512351-0000	.PLATFORM	183, 185
1512352-0000	.RAIL	507
1512353-0000	.PIPE	475
1512354-0000	.BRACKET	235
1512355-0000	.ECCENTRIC SHAFT	235
1512356-0000	.CONNECTION DEVICE	67, 69
1512377-0000	.COVER	45, 47
1512411-0000	.PIPE	45, 47
1512440-0000	.BRACKET	373
1512442-0000	.CONNECTING PIPE	339, 365
1512443-0000	.PLATE CHOKE	369
1512444-0000	.GUIDE RAIL	369
1512448-0000	.PIPE CONNECTION	365
1512486-0000	.MACHINE BODY	441
1512487-0000	.PLATE	429, 431
1512488-0000	.HOLDER	425
1512489-0000	.LITTLE FRAME	441
1512490-0000	.PLATE	429, 431
1512583-0000	.ROLLER	493, 495, 501, 503, 509
1512631-0000	.CHECKER PLATE	183, 185
1512632-0000	.CHECKER PLATE	183, 185
1512633-0000	.CHECKER PLATE	183, 185
1512635-0000	.RAILING	195
1512636-0000	.RAILING	195
1512637-0000	.RAILING	195
1512638-0000	.RAILING	195
1512640-0000	.TOE PLATE	183, 185
1512641-0000	.TOE PLATE	183, 185
1512642-0000	.TOE PLATE	183, 185
1512643-0000	.TOE PLATE	183, 185
1512660-0100	.PLATFORM	145
1512666-0000	.TOE PLATE	183, 185
1512667-0000	.CONNECTION BOX	151
1512673-0000	.VALVE	455
1512805-0000	.CABINET (SMALL)	457
1512806-0000	.PIPE	417
1512826-0000	.DOOR	395
1512827-0000	.DOOR	395
1512828-0000	.DOOR	395
1512829-0000	.DOOR	397
1512830-0000	.DOOR	397
1512831-0000	.DOOR	397
1512840-0000	.BRACKET	151
1512845-0000	.CHECKER PLATE	183, 185
1512846-0000	.CHECKER PLATE	183, 185
1512847-0000	.BRACKET	183, 185
1512848-0000	.BRACKET	619
1512851-0000	.COVER	183, 185
1517058-0000	.GASKET	455
1517065-0100	.WEB GUIDE	521
1517066-0000	.PIVOT ARM	527
1517067-0000	.SPRING HOLDER	527
1517068-0000	.PILLAR	527
1517069-0000	.CLAMP PLATE	527
1517070-0000	.BEARING SEAT	527
1517071-0000	.BOW CLAMP	527
1517072-0000	.PLATE	399
1517073-0000	.PLATE	399
1517074-0000	.PLATE	399
1517075-0000	.PLATE	399
1517076-0000	.PLATE	399
1517077-0000	.PLATE	399
1517181-0000	.GASKET	475
1517182-0000	.SPACER	395, 397
1517230-0000	.BRACKET	215
1517231-0000	.RUBBER SHIM	215
1517248-0000	.BRACKET	181, 191
1517249-0000	.BRACKET	183, 185
1517252-0000	.BOLT Ø20H7	441
1517268-0000	.CABLE TRENCH	111
1517269-0000	.CABLE TRENCH	111
1517270-0000	.LID	111
1517271-0000	.LID	111
1517293-0000	.ROLLER	501, 503
1517464-0000	.SIGN	501, 503
1517484-0000	.PIPE	475

Part No	Description	Page No
1517486-0000	.PIPE	475
1517487-0000	.PIPE	475
1517488-0000	.PIPE	475
1517489-0000	.PIPE	475
1517490-0000	.INFERIOR HOLDER	475
1517491-0000	.INFERIOR HOLDER	475
1517492-0000	.GASKET	455
1517493-0000	.PIPE	65
1517494-0000	.PIPE	65
1517495-0000	.PIPE	65
1517498-0000	.SIGN FLEW-METER AIR	429, 431
1517499-0000	.SIGN FLEW-METER AIR	429, 431
1517500-0000	.SIGN FLEW-METER AIR	429, 431
1517501-0000	.SIGN FLEW-METER AIR	429, 431
1517504-0000	.AIR NOZZLE	345, 347
1517505-0000	.AIR NOZZLE	345, 347
1517506-0000	.SHIM	331
1517510-0000	.PIPE	375
1517519-0000	.PLATE	353
1517523-0000	.BLOCK	373
1517534-0000	.RUNNER RING	509
1517535-0000	.STEERING	509
1517641-0000	.FLANGE BUSHING	247, 249, 251, 253, 285, 287, 289, 291
1517651-0100	.SOLID STATE RELAY RAIL 2	653, 655
1517652-0100	.SOLID STATE RELAY RAIL 3	653, 655
1517653-0100	.EXTERNAL DOOR FUSES	647, 649
1517654-0000	.DELIVERED DESIGN	775
1517659-0100	.MODEM	711
1517663-0000	.DOOR	773
1517664-0000	.FRAME	743, 745, 773, 775
1517665-0000	.WINDOW	773
1517667-0000	.DOOR	745, 775
1517671-0000	.DOOR	765
1517672-0000	.DOOR	767
1517675-0000	.SPACER	663, 681, 683, 685, 687, 689
1517676-0000	.SPACER	113, 735, 737, 739, 741
1517677-0100	.COOLER	647, 649
1517678-0100	.TPIH	647, 649
1517694-0000	.END BLOCK	715, 717
1517695-0000	.WELDED CABINET	715, 717
1517697-0000	.PROTECTION	715, 717
1517698-0000	.PROTECTION	715, 717
1517699-0000	.SUPPORT	715, 717
1517700-0000	.EDGE GUIDE	715, 717
1517751-0000	.SHAFT	499
1517753-0000	.ADJUSTING NUT	527
1517983-0000	.BRACKET	235
1517984-0000	.SHAFT	235
1517985-0000	.SETTING RING	235
1517986-0000	.SCREW BUSHING	235
1519086-0100	.LAMP	145
1519117-0100	.VOLUME ADJUSTER	245
1519118-0100	.VOLUM CURVE PIECE	309
1519133-0000	.JOINT	311
1519134-0000	.JOINT	311
1519307-0000	.AIR NOZZLE	345, 347
1519308-0000	.AIR NOZZLE	345, 347
1519313-0000	.AIR NOZZLE	345, 347
1519314-0000	.AIR NOZZLE	345, 347
1519318-0000	.AIR NOZZLE	345, 347
1519319-0000	.AIR NOZZLE	345, 347
1519374-0001	.CARRIER	269, 271, 273, 275
1519374-0002	.CARRIER	269, 271, 273, 275
1519375-0001	.SHAFT	269, 271, 273, 275
1519376-0000	.AXLE PIN	269, 271, 273, 275
1519377-0000	.WASHER	269, 271, 273, 275
1519380-0000	.PIPE	105
1519381-0000	.PIPE	105
1519382-0000	.PIPE	105
1519383-0000	.PIPE	105
1519384-0000	.PIPE	105
1519385-0000	.PIPE	105
1519386-0000	.PIPE	105
1519387-0000	.PIPE	105
1519388-0000	.PIPE	105
1519389-0000	.TANK	453
1519390-0000	.PIPE(FOR 60HZ)	465
1519391-0000	.PIPE BEND	465
1519392-0000	.SCRUBBER	465
1519393-0000	.PLATE	465
1519394-0000	.PIPE	465
1519395-0000	.PIPE	463
1519401-0000	.SUCTION PIPE	97
1519402-0000	.SUCTION PIPE	97

Part No	Description	Page No
1519403-0000	.SUCTION PIPE	97
1519416-0000	.BOTTOM PLATE	361
1519417-0000	.STAIR	363
1519418-0000	.PLATE	363
1519421-0000	.BUSHING	363
1519422-0000	.BUSHING	363
1519423-0000	.SUPPORT	363
1519424-0000	.SUPPORT	363
1519425-0000	.SPACER	363
1519426-0100	.STAIR	361
1519427-0100	.VOLUME FLAP	245
1519482-0000	.PIPE	27
1519483-0000	.HEATING PIPE	27
1519484-0000	.SUPPORT	27
1519576-0000	.PIPE	475
1519577-0000	.PIPE	475
1519601-0000	.BUSHING	27
1519602-0100	.RAILING	145
1519663-0100	.PIPE WORK-HYDRAULIC	393
1519664-0000	.PIPE	477
1519665-0000	.PIPE	477
1519666-0000	.PIPE	477
1519667-0000	.PIPE	477
1519668-0000	.PIPE HOLDER	477
1519669-0000	.PIPE HOLDER	477
1519670-0000	.PIPE HOLDER	477
1519671-0000	.PIPE HOLDER	477
1519756-0000	.PIPE	45, 47
1519757-0000	.PIPE	45, 47
1519758-0000	.CABLE DUCT	401
1519759-0000	.CABLE DUCT	401
1519760-0000	.CABLE DUCT	401
1519761-0000	.CABLE DUCT	401
1519762-0000	.CABLE DUCT	401
1519763-0000	.CABLE DUCT	401
1519764-0000	.SPACER	401
1519765-0001	.SUPPORT	401
1519765-0002	.SUPPORT	401
1519934-0000	.PIPE	21
1519936-0000	.PIPE	45, 47
1519937-0000	.REGULATOR BODY	63
1519938-0000	.CLEANING PIPE	103
1519952-0000	.DOLLY	609
1519969-0000	.PIPE	45, 47
1519997-0000	.CONNECTION PLATE	475
1520577-0001	.DOLLY	247, 249, 251, 253, 321, 643
1520972-0000	.TPO-BAR	609
1523049-0000	.PIPE	99
1523050-0000	.PIPE	99
1523051-0000	.PIPE	99
1523052-0000	.PIPE	99
1523053-0000	.PIPE	99
1523057-0000	.AP-VALVE-BODY (51-38)	51
1523058-0000	.TANK	447
1523059-0000	.HOLDER	447
1523060-0000	.FILLER TUBE	447
1523061-0000	.FLANGE	451
1523062-0000	.FILLING PIPE	455
1523063-0000	.TUBE	455
1523064-0000	.RETURN PIPE	455
1523065-0000	.PLATE	455
1523066-0000	.GASKET	455
1523067-0000	.PLATE	455
1523068-0000	.PIPE	455
1523069-0000	.PIPE CONNECTION	455
1523151-0000	.BRACKET	241
1523152-0000	.ANGLE ENCODER	241
1523158-0001	.SHIM	31, 33
1523158-0002	.SHIM	31, 33
1523158-0003	.SHIM	31, 33
1523210-0100	.MOTOR	211
1523211-0000	.WASHER	215
1523215-0000	.TIMING PULLEY	215
1523222-0000	.PLATE	109
1523223-0000	.NUT	109
1523224-0000	.NUT	109
1523225-0000	.FASTENING PLATE	109
1523228-0000	.FLANGE	29
1523364-0000	.LID	101
1523365-0000	.PIPE	101
1523366-0000	.PIPE	101
1523383-0000	.CONNECTION PLATE	167
1523384-0000	.CONNECTION PLATE	167
1523431-0000	.PIPE	167

Part No	Description	Page No
1523432-0000	.PIPE	167
1523433-0000	.PIPE	167
1523434-0000	.PIPE	167
1523435-0000	.FRAME	711
1523436-0000	.DOOR	711
1523437-0000	.HINGE	711, 747, 749, 759, 761
1523438-0000	.HINGE	743, 745, 773, 775
1523439-0000	.SPACER	711, 759, 761
1523440-0000	.SPACER	711, 747, 749, 759, 761
1523441-0000	.SPACER SHEET	743, 745, 773, 775
1523442-0000	.SPACER SHEET	743, 745, 773, 775
1523443-0000	.COVER	759, 761
1523444-0000	.SPACER	759, 761
1523445-0100	.SOLID STATE RELAY RAIL 4	653, 655
1523446-0100	.SOLID STATE RELAY RAIL 5	653, 655
1523448-0000	.FRAME	777
1523449-0000	.SLIDE	777
1523450-0000	.SLIDE	777
1523451-0000	.SLIDE	777
1523452-0000	.SUPPORT	777
1523453-0000	.SUPPORT	777
1523454-0000	.SCREW	777
1523455-0000	.FRAME	779
1523456-0000	.SLIDE	779
1523459-0000	.SUPPORT	715, 717
1523463-0000	.PLATE	653, 655
1523464-0000	.GASKET	715, 717
1523494-0000	.PILLAR	31, 33
1523505-0000	.SUPPORT	357
1523754-0000	.MACHINE BODY	147
1523755-0000	.COVERING PLATE	147
1523756-0000	.COVER	147
1523757-0000	.PLATE	147
1523758-0000	.PLATE	147
1523759-0000	.COVER	147
1523760-0000	.FRONT PLATE	147
1523828-0000	.SPACER	227, 229
1523829-0100	.DISTRIBUTOR BLOCK	159, 161, 163
1523832-0000	.HOSE HOLDER	167
1523886-0000	.SPACER PLATE	167
1523887-0000	.SPACER PLATE	167
1523947-0000	.EARTH BAR	669
1523948-0000	.EARTH BAR	705
1523949-0000	.CABLE DUCT	653, 655
1523950-0000	.CABLE DUCT	653, 655
1523953-0000	.CABLE DUCT	653, 655
1523954-0000	.CABLE DUCT	653, 655
1523956-0000	.CABLE DUCT	653, 655
1523957-0000	.SPACER	743, 745, 773, 775
1523959-0000	.CABLE DUCT	653, 655
1523960-0000	.SPACER	715, 717
1523961-0100	.PLATE	647, 649
1523963-0000	.SUPPORT PLATE	781
1523967-0000	.CABLE DUCT	653, 655
1523968-0000	.HANDLE	711, 747, 749, 759, 761
1523969-0000	.DOOR	743
1523971-0000	.CONNECTION BOX	743, 745
1523972-0100	.ELECTRICAL MATERIALS	647, 649
1523973-0000	.FRAME	777
1523974-0000	.SUPPORT	715, 717
1524018-0000	.TIMING BELT PULLEY	213
1524319-0100	.CABLE DUCT	393
1524477-0100	.CUTTING TABLE	485
1524481-0000	.SEALING BLOCK	499
1524653-0000	.BRACKET	37
1524654-0000	.ARM	37
1524655-0000	.PROTECTION PLATE	37
1524662-0000	.AIR NOZZLE	23
1524663-0000	.TUBE 55	67, 69
1524664-0000	.TUBE 861	67, 69
1524665-0000	.TUBE 860	67, 69
1524666-0000	.TUBE 230	67, 69
1524667-0000	.TUBE 231	67, 69
1524669-0000	.PIPE	67, 69
1524670-0000	.PIPE	67, 69
1524671-0000	.TUBE 210	67, 69
1524672-0000	.TUBE 211	67, 69
1524673-0000	.BRACKET	67, 69
1524674-0000	.REDUCTION SLEEVE	67, 69
1524780-0000	.PLATE	39
1524805-0000	.PLATE	39
1524814-0000	.BRACKET	133
1524829-0000	.PLATE	133
1524830-0000	.SHAFT	133

Part No	Description	Page No
1524878-0000	.PIPE	101
1532583-0000	.PIPE	49
1532584-0100	.MACHINE BODY	145
1538039-0000	.CURVE	303
1538089-0000	.PLATE	399
1538096-0000	.CALENDER ROLLER	35
1538097-0000	.CALENDER ROLLER	35
1538098-0000	.CLAMP	35
1538099-0000	.SHAFT	35
1538102-0000	.SHAFT	35
1538103-0000	.FORK	35
1538104-0000	.GUIDE	35
1538107-0000	.SHAFT	527
1538212-0000	.FUSE BOARD	775
1538219-0000	.SWITCH BRACKET	501, 503
1538473-0000	.SEALING BLOCK	497
1538758-0000	.SPACER	429, 431
1538868-0000	.BRACKET	205, 395, 397
1538906-0000	.PIPE	469
1538907-0000	.PIPE	469
1538908-0000	.PIPE	469
1538924-0000	.RAILING	195
1538942-0000	.CARRIER	269, 271, 273, 275
1538948-0000	.ECCENTRIC	309
1538949-0000	.ECCENTRIC	309
1539101-0000	.BRACKET	311
1539102-0000	.ARM	311
1539103-0000	.ARM	311
1539104-0000	.SPINDLE	311
1539105-0000	.BOX	309
1539106-0000	.SHAFT	309
1539107-0000	.TIMING BELT	309
1539108-0000	.TIMING BELT PULLEY	309
1539109-0000	.SHAFT	309
1539110-0000	.LID	309
1539111-0000	.SUPPORT	309
1539112-0000	.SUPPORT	309
1539113-0000	.COVER	189
1539237-0000	.PIPE	45, 47, 67, 69
1539238-0000	.PIPE	67, 69
1539248-0001	.TIMING BELT	231
1539248-0002	.TIMING BELT	231
1539248-0003	.TIMING BELT	231
1539248-0005	.TIMING BELT	231
1539250-0000	.SPACER	67, 69
1539256-0000	.TOOTHED PULLEY	389
1539260-0000	.TOOTHED PULLEY	389
1539261-0000	.WASHER	333, 389
1539265-0100	.OUTFEED UNIT	325
1539266-0000	.CAM	385
1539267-0000	.DRUM	385
1539268-0000	.CARRIER	385
1539296-0000	.PIVOT ARM	349
1539301-0000	.TOOTHED PULLEY	333
1539302-0000	.SPACER	333
1539332-0000	.PIPE	469
1539766-0100	.DISCONNECTION LINK RIGHT	211
1539789-0000	.BLOCK	357
1539792-0000	.PIN	357
1539920-0200	.PENDULUM	11
1539943-0000	.SHIELD PLATE	365
1539947-0000	.PIPE	373
1539948-0000	.SHAFT	371
1539949-0100	.FIXING UNIT	325
1539950-0000	.WASHER	371
1539951-0000	.HOUSE	371
1539953-0000	.PROTECTIVE COVER	365
1539956-0000	.PLATE	387
1539957-0000	.PLATE	365
1539960-0000	.MACHINE BODY	361
1539964-0001	.AIR NOZZLE	345, 347
1539964-0002	.AIR NOZZLE	345, 347
1539964-0003	.AIR NOZZLE	345, 347
1539964-0004	.AIR NOZZLE	345, 347
1539964-0005	.AIR NOZZLE	345, 347
1539964-0006	.AIR NOZZLE	345, 347
1539964-0007	.AIR NOZZLE	345, 347
1539964-0008	.AIR NOZZLE	345, 347
1539964-0009	.AIR NOZZLE	345, 347
1539964-0010	.AIR NOZZLE	345, 347
1539964-0011	.AIR NOZZLE	345, 347
1539965-0000	.PLATE	371
1539966-0000	.BRACKET	345, 347
1539967-0000	.GASKET	345, 347

Part No	Description	Page No
1539968-0100	.FLAP HEATER	325
1539969-0100	.GUIDE	325
1539970-0100	.FOLDING BAR	325
1539972-0000	.PIPE	351
1539975-0100	.FORMING UNIT	325
1539976-0000	.GUIDE	357
1539977-0000	.GUIDE	357
1539995-0100	.CANTILEVER	325
1539996-0000	.SHAFT	135
1539997-0000	.AXLE SUPPORT	39
1548000-0100	.FRAME	325
1548003-0000	.LINK	133
1548004-0001	.LINK	133
1548004-0002	.LINK	133
1548005-0000	.SHAFT	133
1548006-0000	.ADJUSTING SCREW	133
1548010-0200	.PENDULUM ROLLER	133
1548052-0000	.ROLLER	135
1548053-0000	.COVER	135
1548056-0000	.AXLE SUPPORT	29
1548059-0000	.AXLE SUPPORT	133
1548141-0000	.WASHER	133
1548142-0000	.BUSHING	133
1548143-0000	.END PLATE	39
1548147-0000	.PLATE	133
1548148-0000	.PLATE	133
1548152-0000	.PIN	133
1548155-0000	.COAXIAL CABLE	305, 307
1548156-0000	.PIPE	475
1548225-0000	.CLAMP	133
1548275-0000	.SEAL COVER	29
1548276-0000	.LEVER	133
1548277-0000	.FLANGE	133
1548284-0000	.ROLLER	29
1548313-0000	.FORCE LIMITING DEVICE	237, 239
1548315-0000	.PIPE	99
1548316-0000	.PIPE	455
1548332-0000	.PRESSURE FLANGE	137
1548532-0000	.LEVER	133
1548576-0100	.PIPE WORK	145
1548833-0000	.BRACKET	101
1549182-0000	.CARRIER	385
1549183-0000	.CARRIER	385
1549184-0000	.CARRIER	385
1549186-0000	.CARRIER	385
1549187-0000	.CARRIER	385
1549190-0000	.CARRIER	385
1549191-0000	.CARRIER	385
1549193-0000	.CARRIER	385
1549294-0000	.MACHINE BODY	539
1549295-0100	.MACHINE BODY	537
1549296-0100	.COVER PLATE	537
1549297-0000	.REEL HOLDER	547
1549298-0000	.REEL HOLDER	547
1549299-0000	.PLATE	543, 545
1549300-0100	.PAPER MAGAZINE	537
1549301-0000	.BEARING	549, 551
1549302-0000	.SHAFT	549, 551
1549303-0000	.PLATE	549, 551
1549304-0000	.ARM	549, 551
1549305-0100	.COVER	537
1549306-0000	.COVER	547
1549307-0000	.BRACKET	549, 551
1549474-0000	.SHAFT	549, 551
1549475-0000	.BRACKET	549, 551
1549476-0000	.PLATE	547
1549477-0000	.PLATE	547
1549478-0000	.PLATE	547
1549479-0000	.PLATE	547
1549480-0100	.ELECTRIC EQUIPMENT	537
1549481-0000	.REEL HOLDER	547
1549482-0000	.REEL HOLDER	547
1549483-0000	.PLATE	543, 545
1549484-0000	.PLATE	543, 545
1549485-0000	.PLATE	543, 545
1549486-0000	.PLATE	543, 545
1549487-0000	.PLATE	543, 545
1549488-0000	.PLATE	543, 545
1549489-0000	.BRACKET	543, 545
1549490-0000	.DOOR	543, 545
1549491-0000	.REEL HOLDER	547
1549492-0000	.HOLDER	547
1549493-0000	.HANDSPIKE	549, 551
1549540-0000	.BRACKET	319

Part No	Description	Page No
1549581-0100	.VOLUME FLAP	245
1549584-0100	.PAPER BRAKE	557, 559, 561, 577, 579
1549603-0100	.LAMP	145
1549608-0000	.GLASS PANE	197
1558124-0000	.FORK HEAD	319
1558125-0000	.MOUNTING SHEET	469
1558126-0000	.PIPE	319
1558127-0000	.PIPE	319
1558128-0100	.NOZZLE	117
1558129-0000	.BRACKET	319
1558130-0000	.BRACKET	319
1558190-0001	.HOLDER	357
1558190-0002	.HOLDER	357
1558190-0003	.HOLDER	357
1558190-0004	.HOLDER	357
1558190-0005	.HOLDER	357
1558190-0006	.HOLDER	357
1558190-0007	.HOLDER	357
1558190-0008	.HOLDER	357
1558190-0009	.HOLDER	357
1558190-0010	.HOLDER	357
1558190-0011	.HOLDER	357
1558191-0000	.PLATE	357
1558192-0000	.PIPE	351
1558193-0000	.PIPE	351
1558194-0001	.FOLDING BAR	359
1558194-0002	.FOLDING BAR	359
1558194-0003	.FOLDING BAR	359
1558194-0004	.FOLDING BAR	359
1558195-0001	.FOLDING BAR	359
1558195-0002	.FOLDING BAR	359
1558195-0003	.FOLDING BAR	359
1558195-0004	.FOLDING BAR	359
1558196-0000	.PIPE	351
1558197-0000	.BLOCK	357
1558198-0000	.BLOCK	357
1558199-0000	.BLOCK	357
1558200-0000	.PIPE	351
1558201-0000	.PIPE	351
1558202-0001	.PRESSURE PLATE	357
1558202-0002	.PRESSURE PLATE	357
1558202-0003	.PRESSURE PLATE	357
1558202-0004	.PRESSURE PLATE	357
1558203-0000	.PIPE	351
1558204-0000	.BLOCK	357
1558205-0000	.BLOCK	357
1558206-0000	.BLOCK	357
1558207-0000	.BLOCK	357
1558208-0000	.BLOCK	357
1558313-0000	.SHAFT	547
1558314-0000	.BRACKET	547
1558315-0000	.BRACKET	601
1558316-0000	.BRACKET	601
1558317-0000	.BRACKET	595
1558318-0100	.CONNECTION BOX	601
1558319-0000	.BUSHING	549, 551
1558320-0100	.PLATFORM	539
1558321-0000	.COVER PLATE	541
1558322-0000	.JOINT BOLT	541
1558403-0000	.DISC	39
1558442-0000	.UPPER FILLING TUBE	109
1558443-0000	.FILLING PIPE	137
1558444-0000	.PRESSURE FLANGE	137
1558446-0000	.PRESSURE FLANGE	137
1558892-0000	.CONNECTION BOX	487
1558897-0100	.HEATING DEVICE	485
1558949-0000	.PLATE	189
2500050-0000	.GLASS	543, 545
2500214-0100	.PIPE WORK	183, 185
2500215-0000	.CABLE DUCT	187
2500216-0000	.CABLE DUCT	187
2500217-0000	.BRACKET	187, 601
2500218-0000	.CABLE TRENCH	187
2500233-0100	.CONVEYOR	325
2500234-0000	.PLATE	377
2500235-0000	.PLATE	377
2500236-0000	.RAIL	377
2500237-0000	.RAIL	377
2500241-0000	.BLOCK	357
2500242-0000	.BLOCK	357
2500243-0000	.PIPE	351
2500244-0000	.PIPE	351
2500245-0000	.PIPE	351
2500246-0000	.PIPE	351

Part No	Description	Page No
2500247-0000	.PIPE	351
2500248-0000	.PIPE	351
2500259-0000	.BRACKET	189
2500260-0000	.ARM	189
2500261-0000	.FIXING RING	189
2500293-0000	.PLATE	119
2500294-0000	.PIPE	119
2500332-0100	.PIVOT ARM	183, 185
2500587-0100	.SUSPENSION ARM	587
2500593-0000	.BOW CLAMP	595
2501265-0000	.CONNECTION BOX	603, 605
2501266-0000	.RAIL	603, 605
2501327-0000	.CABLE DUCT	601
2501328-0000	.CABLE DUCT	601
2501329-0000	.CABLE DUCT	601
2501330-0000	.CABLE DUCT	601
2501331-0000	.LID	601
2501332-0000	.LID	601
2501362-0000	.CLAMP RING	549, 551
2501385-0000	.SHAFT	595
2501465-0100	.CONNECTION BOX	621
2501466-0100	.CONNECTION BOX	621
2501471-0100	.COUNTER	621
2501472-0100	.COUNTER	621
2501528-0100	.PLMS KIT	609
2501542-0000	.AXLE SUPPORT	29
2501547-0100	.QUEUE GUARD	621
2501613-0000	.SHAFT	549, 551
2501835-0000	.SHAFT	597
2501836-0100	.SPLICING DEVICE	537
2502192-0000	.CARRIER	385
2502194-0000	.CARRIER	385
2502197-0000	.PIPE	67, 69
2502198-0000	.PIPE	67, 69
2502424-0100	.LUBRICATION	335, 337
2504445-0000	.PLATE	153, 155
2504449-0000	.INSERT	401, 719, 721
2504952-0000	.PROTRACTOR	227, 229
2505236-0000	.PLATFORM	183, 185
2505282-0000	.CHECKER PLATE	183, 185
2506319-0000	.HEAD PLATE	153, 155
2506321-0000	.HEAD PLATE	153, 155
2506322-0000	.HEAD PLATE	153, 155
2506323-0000	.HEAD PLATE	153, 155
2506324-0000	.HEAD PLATE	153, 155
2506331-0200	.CONNECTION BOX	379
2506332-0000	.BOX	381, 383
2506432-0000	.LOCKING FINGER	137
2506433-0000	.LOCKING FINGER	137
2506471-0000	.BRACKET	513
2506472-0000	.HOLDER	513
2506473-0000	.BRACKET	513
2506474-0000	.FASTENING BRACKET	513
2506475-0100	.PRESSURE ROLLER	509
2506478-0000	.COVER	501, 503
2506479-0000	.PLATE	505
2506480-0000	.HOLDER	531
2506530-0000	.LOCKING FINGER	137
2506608-0000	.PLATE	183, 185
2506609-0000	.PLATE	183, 185
2506638-0000	.VOLUME CAM	311
2506639-0000	.VOLUME CAM	311
2506640-0000	.VOLUME CAM	311
2506641-0000	.VOLUME CAM	311
2506642-0000	.VOLUME CAM	311
2506643-0000	.VOLUME CAM	311
2506644-0000	.VOLUME CAM	311
2506645-0000	.VOLUME CAM	311
2506646-0000	.STRIP	183, 185
2506790-0100	.HOLD-DOWN DEVICE	211
2507014-0100	.ROCKER ARM	231
2508118-0000	.FIXING RING	547
2508256-0000	.SPACER	39
2509543-0000	.PROTECTION	549, 551
2510532-0000	.PROTECTION	133
2510541-0000	.PRESSURE FLANGE	137
2510767-0000	.RAILING	195
2510844-0100	.CONNECTION BOX	621
2511668-0000	.SUPPORT	377
2512787-0000	.HOLDER	255, 257, 259, 261
2512805-0000	.TOE PLATE	183, 185
2514018-0000	.TOP TIE PLATE	183, 185
2514041-0000	.PROTECTION	255, 257
2514042-0000	.PROTECTION	259, 261

Part No	Description	Page No
2514090-0000	.FORCE PLATE	303
2514091-0000	.BRACKET	303
2514112-0000	.COVER	193
2514301-0000	.PRESSURE FLANGE	137
2514391-0000	.PIPE	445
2514491-0000	.METERING DEVICE	453
2516972-0000	.HOSE HOLDER	165
2517051-0000	.PIPE	405, 407, 409
2517063-0000	.GLASS PANE	395
2518102-0000	.RAIL	377
2518103-0000	.RAIL	377
2518125-0000	.PIPE	463
2518410-0000	.FLANGE	213
2518415-0000	.COVER PLATE	441
2518416-0000	.JOINT BOLT	441
2519460-0000	.SPRING BRACKET	231
2519644-0000	.BRACKET	501, 503
2519646-0000	.PLATE	525
2519647-0000	.BRACKET	525
2522105-0000	.HEAD PLATE	153, 155
2522106-0000	.HEAD PLATE	153, 155
2522107-0000	.HEAD PLATE	153, 155
2522108-0000	.HEAD PLATE	153, 155
2522109-0000	.HEAD PLATE	153, 155
2522110-0000	.PLATE	153, 155
2522248-0000	.BRACKET	39
2522249-0000	.SHAFT	39
2523596-0000	.COVER	497
2523597-0000	.SLIDER	499
2523598-0000	.SPLICING TABLE	499
2523599-0000	.SUPPORT	499
2523600-0000	.PIN	499
2523601-0000	.PAD	499
2523703-0000	.PIPE	187
2523725-0100	.PRESSURE DEVICE	325
2523730-0000	.LEVER	335, 337
2523732-0001	.LEVER	335, 337
2523732-0002	.LEVER	335, 337
2523732-0003	.LEVER	335, 337
2523732-0004	.LEVER	335, 337
2523732-0005	.LEVER	335, 337
2523732-0006	.LEVER	335, 337
2523732-0007	.LEVER	335, 337
2523732-0008	.LEVER	335, 337
2523732-0009	.LEVER	335, 337
2523732-0010	.LEVER	335, 337
2523732-0011	.LEVER	335, 337
2523736-0000	.SHAFT	335, 337
2523737-0000	.SHAFT	335, 337
2523738-0000	.BUSHING	335, 337
2523739-0000	.SHAFT	335, 337
2523740-0000	.LEVER	335, 337
2523741-0000	.LEVER	335, 337
2523744-0000	.ROLLER	335, 337
2523745-0000	.PLATE	335, 337
2524341-0000	.FILLING PIPE	137
2524342-0000	.FILLING PIPE	137
2524343-0000	.FILLING PIPE	137
2524394-0000	.BRACKET	179
2524476-0100	.WEB GUIDE	509
2524477-0000	.ROLLER	515
2524478-0000	.BRACKET	517
2524479-0000	.PLATE	513
2524480-0000	.PIN	513
2524482-0000	.BRACKET	513
2524484-0000	.PIN	513
2524485-0000	.PIN	513
2524578-0000	.HOLDER	335, 337
2524579-0004	.BLOCK	335, 337
2524579-0005	.BLOCK	335, 337
2524579-0008	.BLOCK	335, 337
2524579-0010	.BLOCK	335, 337
2524579-0011	.BLOCK	335, 337
2525340-0000	.BRACKET	549, 551
2526249-0000	.ROLLER	335, 337
2526300-0000	.DROP CHUTE	153, 155
2526301-0000	.DROP CHUTE	153, 155
2526302-0000	.DROP CHUTE	153, 155
2526303-0000	.DROP CHUTE	153, 155
2526304-0000	.DROP CHUTE	153, 155
2526305-0000	.DROP CHUTE	153, 155
2526306-0000	.DROP CHUTE	153, 155
2526308-0000	.DROP CHUTE	153, 155
2526309-0000	.DROP CHUTE	153, 155

Part No	Description	Page No
2526310-0000	.DROP CHUTE	153, 155
2526311-0000	.DROP CHUTE	153, 155
2526323-0000	.LEAF SPRING	153, 155
2526324-0000	.LEAF SPRING	153, 155
2526325-0000	.LEAF SPRING	153, 155
2526326-0000	.LEAF SPRING	153, 155
2526327-0000	.LEAF SPRING	153, 155
2526328-0000	.LEAF SPRING	153, 155
2526329-0000	.LEAF SPRING	153, 155
2526338-0100	.DROP CHUTE	145
2526341-0000	.LAMP HOLDER	601
2526342-0000	.BRACKET	601
2526343-0000	.PLATE	359
2526344-0000	.PLATE	359
2526843-0000	.CABLE TRENCH	111
2526844-0000	.LID	111
2526845-0000	.CABLE TRENCH	111
2526846-0000	.LID	111
2526847-0000	.CABLE TRENCH	111
2526848-0000	.CABLE TRENCH	111
2526863-0000	.PUMP	13, 15
2527135-0000	.RAIL (TITANIUM)	293
2527136-0000	.RAIL	293
2527137-0000	.RAIL (TITANIUM)	293
2527337-0000	.CYLINDER BRACKET	21
2527454-0000	.SHIM	335, 337
2527513-0000	.SIDE PIECE	193
2527514-0000	.SIDE PIECE	193
2527651-0000	.SPACER	213
2527652-0000	.ARM	213
2527706-0000	.FILLING PIPE	137
2527707-0000	.FILLING PIPE	137
2527708-0000	.PRESSURE FLANGE	137
2527710-0000	.FILLING PIPE	137
2527717-0000	.FILLING PIPE	137
2527724-0000	.CARRIER	247, 249, 251, 253
2528094-0000	.PIPE	13, 15
2528095-0000	.PIPE	97
2528198-0000	.PLATE	345, 347
2528199-0000	.HANDLE	345, 347
2529564-0000	.COVER	601
2529646-0000	.SHAFT	513
2530400-0100	.TRASMISSION UNIT	325
2530401-0000	.SHIM	335, 337
2531115-0000	.SCREW	557, 559, 561
2531465-0000	.SUPPORT	609
2531996-0000	.COVER	653, 655
2531997-0000	.SPACER	663, 681, 683, 685, 687, 689
2531998-0100	.RAIL	653, 655
2531999-0000	.COVER	715, 717
2532862-0000	.SPACER	715, 717
2540724-0000	.HOSE INSTALLATION	483
2540726-0000	.FINGER	499
2540729-0000	.WALL	523
2540730-0000	.STRIP	523
2541126-0100	.INSTALLATION ACCESSORIES	609
2541886-0100	.START-UP KIT	609
2542328-0000	.COVER	747, 749
2542329-0000	.COVER	747, 749
2543594-0100	.ELECTRICAL COMPONENTS	609
2544957-0000	.AXLE SUPPORT	389
2544958-0000	.BEARING FLANGE	389
2544959-0000	.PIPE	373
2544960-0000	.CLEANING BASIN	373
2544961-0100	.RAIL	325
2544962-0000	.SHAFT	389
2544963-0000	.SHAFT	389
2544964-0000	.FLANGE	389
2544965-0000	.TOOTHED PULLEY	389
2544966-0000	.PLATE	365
2544968-0000	.INNER RING	389
2544969-0000	.SPACER	389
2544970-0000	.FLANGE	389
2544971-0000	.BRACKET	389
2544973-0000	.CUP	389
2544974-0000	.BLANK PLUG	389
2544975-0000	.SHEET	389
2544979-0000	.PIPE	375
2544980-0100	.CLEANING SYSTEM	325
2544981-0100	.CLEANING CIRCUIT	373
2545249-0000	.TEFLON HOSE	285, 287, 289, 291
2545667-0000	.GUIDE	387
2546226-0000	.SUPPORT	377
2547217-0000	.AXLE PIN	501, 503

Part No	Description	Page No
2547218-0000	.AXLE PIN	501, 503
2547219-0000	.AXLE PIN	501, 503
2547232-0000	.PIVOT ARM	153, 155
2550181-0000	.GASKET	455
2551088-0000	.COVER	543, 545
2552073-0000	.SEAL	345, 347
2552081-0000	.REDUCTION	345, 347
2552527-0000	.BEARING HOUSING	285, 287, 289, 291
2552528-0000	.BEARING HOUSING	285, 287, 289, 291
2552529-0000	.BEARING HOUSING	285, 287, 289, 291
2552530-0000	.BEARING HOUSING	285, 287, 289, 291
2552619-0000	.COVER	509
2552620-0000	.DOOR	509
2552621-0000	.HOLDER	509
2552622-0000	.HOLDER	509
2552628-0000	.PIN	515
2552630-0000	.MOUNTING PLATE	509
2552631-0000	.AXLE PIN	519
2552632-0000	.ROLLER	519
2552633-0000	.ROLLER	519
2552679-0000	.GLASS PANE	201, 203
2552680-0100	.DOOR	145
2552681-0100	.DOOR	145
2552682-0000	.LOCKING ARM	201, 203
2552683-0000	.LOCKING ARM	201, 203
2552684-0000	.CHUTE	205
2552685-0000	.CHUTE	205
2552686-0000	.KEY	201, 203
2552687-0000	.SPACER	201, 203
2552688-0000	.GUIDE BRACKET	201, 203
2552691-0000	.DOOR	201
2552692-0000	.DOOR	203
2552693-0000	.DOOR	169
2552694-0100	.DOOR	145
2552695-0100	.DOOR	145
2552696-0000	.DOOR	171
2552697-0000	.LID	157
2552698-0000	.DISCHARGE CHUTE	157
2552699-0100	.DISCHARGE CHUTE	145
2552700-0100	.COVER PLATES	145
2552701-0000	.TOP SECTION	197
2552702-0000	.COVER	197
2552703-0000	.COVER	197
2552704-0000	.COVER PLATE	197
2552705-0000	.FRONT COVER	197
2552706-0000	.COVER	197
2552707-0000	.COVER PLATE	197
2552708-0000	.COVERING PLATE	197
2552709-0000	.COVERING PLATE	197
2552710-0000	.COVER	197
2552711-0000	.COVER	197
2552712-0000	.SHAFT	157
2552713-0000	.BUSHING	157
2552714-0000	.BRACKET	157
2552720-0000	.PLATE	335, 337
2552721-0000	.CAM	335, 337
2552722-0000	.AXLE PIN	335, 337
2552723-0000	.SPRING BRACKET	335, 337
2552724-0000	.SUPPORT	335, 337
2552725-0000	.AXLE PIN	335, 337
2552726-0000	.GUIDE	335, 337
2552727-0000	.PLATE	335, 337
2552728-0000	.PLATE	335, 337
2552729-0000	.SUPPORT	335, 337
2552731-0000	.WASHER	335, 337
2552732-0000	.SPRING BRACKET	335, 337
2552733-0000	.PLATE	335, 337
2552734-0001	.BLOCK	335, 337
2552734-0002	.BLOCK	335, 337
2553110-0000	.CAM	311
2553111-0000	.CAM	311
2553350-0000	.GLASS	169, 171
2553830-0100	.FRAME	145
2553831-0000	.FRAME	205
2553832-0000	.FRAME	205
2553895-0000	.COVER	197
2554959-0000	.GUIDE	201, 203
2554960-0000	.BUSBAR LEFT	307
2554961-0000	.BUSBAR RIGHT	305
2554975-0000	.COVER	157
2554977-0001	.BLOCK	335, 337
2554977-0002	.BLOCK	335, 337
2554977-0003	.BLOCK	335, 337
2554977-0004	.BLOCK	335, 337

Part No	Description	Page No
2555063-0000	.PIN	195
2555070-0000	.SIGN	187
2555562-0000	.GUIDE	387
2555563-0000	.GUIDE	387
2555564-0000	.GUIDE	387
2555565-0000	.GUIDE	387
2555566-0000	.GUIDE	387
2555567-0000	.GUIDE	387
2555568-0000	.GUIDE	387
2555569-0000	.GUIDE	387
2555571-0000	.GUIDE	387
2556243-0000	.SPACER	201, 203
2556246-0000	.HATCH	147
2559121-0000	.BRACKET	377
2559122-0000	.FLANGE	389
2564115-0000	.PUSH BUTTON BOX	601
2565490-0000	.PIPE	45, 47
2569976-0000	.VALVE PANEL	611
2569977-0000	.ASEPTIC DIAGRAM	611
2569978-0000	.WATER DIAGRAM	611
2569979-0000	.HYDRAULIC SYSTEM	611
2569980-0000	.LUBRIFICATION DIAGRAM	611
2570392-0000	.RETAINING RING	531
2570393-0000	.BENDING ROLLER	529
2570394-0100	.BENDING ROLLER	521
2570400-0000	.ROD	519
2570401-0000	.ROD	519
2575480-0000	.HOLDER	519
2575481-0000	.BRACKET	519
2575482-0000	.PIN	519
2575484-0000	.HOLDER	519
2576239-0000	.HOLDER	519
2576240-0100	.STRIP GUIDE	509
2588000-0000	.BRACKET	501, 503
2588001-0000	.AXLE PIN	501, 503
2598113-0100	.CABLE LEAD-IN PLATE	647, 649
2598114-0000	.DOOR	747, 749
2598375-0000	.CABLE DUCT	747, 749
2598376-0000	.CABLE DUCT	747, 749
2598377-0000	.CABLE DUCT	747, 749
2598430-0000	.SUPPORT	783
2599045-0000	.CABLE DUCT	653, 655

Part No	Description	Page No
2605572-0000	.AIR DIAGRAM	611

Part No	Description	Page No

Part No	Description	Page No

Machine Type	Group Description	Page No

Tetra Pak

SPC
Spare Parts Catalogue

Pos	Part No	Description	Page No
A			
A012	90458-1300	2 AXIS DOCKING STATION D2/PLC	653, 655
A013	90458-0746	STEP MOTOR DRIVE L50	653, 655
A014	90458-0746	STEP MOTOR DRIVE L50	653, 655
A100	90031-0051	BASEPLATE, 10-SLOT	673
A101	90031-0053	BASEPLATE,10-SLOT	675
A102	90031-0057	PLC, DIGITAL INPUT MODULE	673
A103	90031-0057	PLC, DIGITAL INPUT MODULE	673
A104	90031-0057	PLC, DIGITAL INPUT MODULE	673
A105	90031-0057	PLC, DIGITAL INPUT MODULE	673
A106	90031-0058	PLC, DIGITAL INPUT MODULE	673
A107	90031-0059	PLC, DIGITAL OUTPUT MODULE	673
A108	90031-0062	PLC, ANALOG OUTPUT MODULE 8PT/CURR/VOLT	673
A111	90031-0057	PLC, DIGITAL INPUT MODULE	675
A112	90031-0057	PLC, DIGITAL INPUT MODULE	675
A113	90031-0057	PLC, DIGITAL INPUT MODULE	675
A114	90031-0059	PLC, DIGITAL OUTPUT MODULE	675
A115	90031-0059	PLC, DIGITAL OUTPUT MODULE	675
A116	90031-0059	PLC, DIGITAL OUTPUT MODULE	675
A117	90031-0059	PLC, DIGITAL OUTPUT MODULE	675
A118	90031-0059	PLC, DIGITAL OUTPUT MODULE	675
A119	90031-0059	PLC, DIGITAL OUTPUT MODULE	675
A120	90031-0059	PLC, DIGITAL OUTPUT MODULE	675
A121	90031-0059	PLC, DIGITAL OUTPUT MODULE	677
A123	90031-0059	PLC, DIGITAL OUTPUT MODULE	677
A124	90031-0059	PLC, DIGITAL OUTPUT MODULE	677
A126	90031-0057	PLC, DIGITAL INPUT MODULE	677
A127	90031-0057	PLC, DIGITAL INPUT MODULE	677
A135	90031-0053	BASEPLATE,10-SLOT	677
A200	90410-0051	TEMPERATURE CONTROLLER, KS 40	759, 761
A200.1	359241-0123	SIGN, TEMP. PRE-STERILIZATION VALVE	759, 761
A201	90410-0051	TEMPERATURE CONTROLLER, KS 40	759, 761
A201.1	359241-0141	SIGN, PEROXIDE / WATER BATH	759, 761
A202	90410-0051	TEMPERATURE CONTROLLER, KS 40	759, 761
A202.1	359241-0131	SIGN, TEMP. LS HEATER	759, 761
A203	90410-0051	TEMPERATURE CONTROLLER, KS 40	759, 761
A203.1	359241-0130	SIGN, TEMP. AIR SUPER HEATER	759, 761
A204	90410-0051	TEMPERATURE CONTROLLER, KS 40	759, 761
A204.1	359241-0126	SIGN, TEMP. AIR KNIFE	759, 761
A205	90410-0051	TEMPERATURE CONTROLLER, KS 40	759, 761
A205.1	359241-0121	SIGN "STEAM"	759, 761
A206	90410-0051	TEMPERATURE CONTROLLER, KS 40	759, 761
A206.1	359241-0125	SIGN, PEROXIDE BATH	759, 761
A212	90410-0051	TEMPERATURE CONTROLLER, KS 40	759, 761
A212.1	359241-0338	SIGN "FLAP HEAT TOP L"	759, 761
A213	90410-0051	TEMPERATURE CONTROLLER, KS 40	759, 761
A213.1	359241-0337	SIGN "FLAP HEAT TOP R"	759, 761
A214	90410-0051	TEMPERATURE CONTROLLER, KS 40	759, 761
A214.1	359241-0340	SIGN "FLAPPHEAT BOTTOM L"	759, 761
A215	90410-0051	TEMPERATURE CONTROLLER, KS 40	759, 761
A215.1	359241-0339	SIGN "FLAPPHEAT BOTTOM R"	759, 761
A216	90410-0051	TEMPERATURE CONTROLLER, KS 40	759, 761
A216.1	90457-0058	SIGN, LS SHORT STOP	759, 761
A300	90458-2580	LEVEL CONTROL RELAY RM4-LA32M	671
A301	90458-2580	LEVEL CONTROL RELAY RM4-LA32M	671
A302	90458-2580	LEVEL CONTROL RELAY RM4-LA32M	671
A303	90458-2580	LEVEL CONTROL RELAY RM4-LA32M	671
A305	90458-2580	LEVEL CONTROL RELAY RM4-LA32M	671
A307	90458-2580	LEVEL CONTROL RELAY RM4-LA32M	671
A310.1	67372-0101	BACKPLANE 8TE(32 POLE)	667
A310	559810-0101	TMCC2 CONTROLLER	667
A400.1	67372-0101	BACKPLANE 8TE(32 POLE)	667
A400	559810-0101	TMCC2 CONTROLLER	667
A450	90453-0002	MODEM MD-12 DC	713
A452	1363288-0301	FLEXBOX TETRA BRIK	711
A454	90456-0001	INTOUCH OEM 2000 V.5.6B/6.0B HW KEY	711
A500.1	90458-1423	CONNECTOR, PC 4/4-STF-7.62	779
A500.2	90458-1424	CONNECTOR, MSTB 2.5/10-STF-5.08	779
A500.3	359241-0135	SIGN, TRANSVERSAL SEALING	779
A500	1499642-0101	TPIH 2500 HORIZONTAL MOUNTING	779
A501.1	90458-1423	CONNECTOR, PC 4/4-STF-7.62	779
A501.2	90458-1424	CONNECTOR, MSTB 2.5/10-STF-5.08	779
A501.3	359241-0132	SIGN, TEMP. STRIP APPLICATOR	779
A501	1499642-0101	TPIH 2500 HORIZONTAL MOUNTING	779
A504	90119-0089	SAFETY RELAY, JSBT4 24VDC	671
A505	90119-0072	SAFETY RELAY, JSBR4	671
A506	90119-0072	SAFETY RELAY, JSBR4	671
A507	90119-0072	SAFETY RELAY, JSBR4	671
A511.1	67372-0101	BACKPLANE 8TE(32 POLE)	667
A511	559810-0101	TMCC2 CONTROLLER	667
A512	90119-0072	SAFETY RELAY, JSBR4	671
A600	90119-0104	OPTO COUPLER AMMS 50070	671
A601	90119-0063	OPTO-RELAY, DC/DC AMMS-10-1/30VDC	671

Pos	Part No	Description	Page No
A			
A602	90119-0063	OPTO-RELAY, DC/DC AMMS-10-1/30VDC	671
A604	90119-0063	OPTO-RELAY, DC/DC AMMS-10-1/30VDC	671
A605	90119-0063	OPTO-RELAY, DC/DC AMMS-10-1/30VDC	671
A606	90119-0063	OPTO-RELAY, DC/DC AMMS-10-1/30VDC	671
A607	90119-0104	OPTO COUPLER AMMS 50070	671
A608	90119-0104	OPTO COUPLER AMMS 50070	671
A609	90119-0104	OPTO COUPLER AMMS 50070	671
A610	90119-0104	OPTO COUPLER AMMS 50070	671
B			
B001	90044-0192	LIMIT SW. SZ2586.000	715, 717
B002	90044-0192	LIMIT SW. SZ2586.000	715, 717
B003	90044-0192	LIMIT SW. SZ2586.000	715, 717
B004	90044-0192	LIMIT SW. SZ2586.000	715, 717
B005	90044-0192	LIMIT SW. SZ2586.000	715, 717
B006	90044-0192	LIMIT SW. SZ2586.000	715, 717
B007	90044-0192	LIMIT SW. SZ2586.000	715, 717
B008	90458-1114	BIMET. ELECTROMECH. THERMOSTAT K7H.020	707, 709
D			
D100	90031-0075	CPU363, SERIAL COMMUNICATION	673
E			
E004.1	90164-0018	LIGHT FIXTURE, FK 130	715, 717
E004	90297-0011	FLUORESCENT TUBE, TDL 30W/840	715, 717
E005.1	90164-0018	LIGHT FIXTURE, FK 130	715, 717
E005	90297-0011	FLUORESCENT TUBE, TDL 30W/840	715, 717
E006	90457-0175	LIGHT FIXTURE, FLUO K SET 108	715, 717
F			
F001	90007-0129	CIRCUIT BREAKER, 1P 10 A K	755
F001	293685-0200	PRINTING WHEEL SS	577, 579
F002	90007-0129	CIRCUIT BREAKER, 1P 10 A K	751
F002	458192-0300	INK UNIT SS	577, 579
F003	751718-0100	HOLDER	577, 579
F004	90007-0129	CIRCUIT BREAKER, 1P 10 A K	755
F004	543143-0100	ADJUSTMENT DEVICE	577, 579
F005	90007-0128	CIRCUIT BREAKER, 1P 6 A K	755
F006	90007-0146	CIRCUIT BREAKER, 3P 6 A K	751
F007	90007-0149	CIRCUIT BREAKER, 3P 20 A K	755
F008	90007-0129	CIRCUIT BREAKER, 1P 10 A K	755
F009	90007-0129	CIRCUIT BREAKER, 1P 10 A K	755
F010	90007-0129	CIRCUIT BREAKER, 1P 10 A K	751
F012.1	90007-0312	AUXILIARY CONTACT	751
F012	90459-2063	CIRCUIT BREAKER, 1P 0,75 A K	751
F015	90007-0129	CIRCUIT BREAKER, 1P 10 A K	755
F016	90007-0131	CIRCUIT BREAKER, 1P 16 A K	751
F017	90007-0128	CIRCUIT BREAKER, 1P 6 A K	751
F019	90007-0129	CIRCUIT BREAKER, 1P 10 A K	751
F021	90007-0155	CIRCUIT BREAKER, 1P 0,5 A K	751
F024	90111-0172	EARTH FAULT BREAKER, F 362-25/0.03	751
F025	90458-1448	MAGNETIC FUSE, S292 C100	751
F027	90007-0129	CIRCUIT BREAKER, 1P 10 A K	751
F030	90007-0155	CIRCUIT BREAKER, 1P 0,5 A K	751
F034	90459-2195	CIRCUIT BREAKER, 3P 2 A K	755
F100	90233-0027	TUBE FUSE, 16A	753
F100.1	90233-0303	FUSE HOLDER, ST10	753
F101	90233-0029	TUBE FUSE, 25A	753
F101.1	90233-0303	FUSE HOLDER, ST10	753
F102	90233-0027	TUBE FUSE, 16A	753
F102.1	90233-0304	FUSE HOLDER, ST10	753
F103	90233-0027	TUBE FUSE, 16A	753
F103.1	90233-0304	FUSE HOLDER, ST10	753
F104	90233-0027	TUBE FUSE, 16A	753
F104.1	90233-0303	FUSE HOLDER, ST10	753
F106	90233-0028	TUBE FUSE, 10A	753
F106.1	90233-0303	FUSE HOLDER, ST10	753
F107	90233-0028	TUBE FUSE, 10A	753
F107.1	90233-0303	FUSE HOLDER, ST10	753
G			
G001	90430-0070	FREQ.CONV. 6SE3213-6CA40	653, 655
G002	90430-0070	FREQ.CONV. 6SE3213-6CA40	653, 655
G003	90430-0070	FREQ.CONV. 6SE3213-6CA40	653, 655
G004	90430-0076	FREQ.CONV. 6SE3221-3DC40	653, 655
G005	90430-0070	FREQ.CONV. 6SE3213-6CA40	653, 655
G100	90031-0068	PLC, POWER SUPPLY	673
G101	90031-0068	PLC, POWER SUPPLY	675
G102	90031-0068	PLC, POWER SUPPLY	677
K			
K001	90075-0124	CONTACTOR, 4KW 24VDC	679
K002	90075-0127	CONTACTOR, 4KW 24VDC	691
K003	90458-2924	CONTACTOR 30KW COIL 24VDC	653, 655
K003.1	90458-2925	AUXILIARY CONTACT, DIL M820-XHI11-SI	653, 655
K004	90075-0128	CONTACTOR, 7,5KW 24VDC	691
K005	90075-0125	CONTACTOR, 7,5KW 24VDC	679
K006	90075-0125	CONTACTOR, 7,5KW 24VDC	679

Pos	Part No	Description	Page No
K			
K007	90075-0124	CONTACTOR, 4KW 24VDC	679
K008	90075-0125	CONTACTOR, 7,5KW 24VDC	679
K009	90075-0124	CONTACTOR, 4KW 24VDC	679
K011	90075-0125	CONTACTOR, 7,5KW 24VDC	679
K012	90075-0124	CONTACTOR, 4KW 24VDC	679
K013	90075-0124	CONTACTOR, 4KW 24VDC	679
K014	90075-0128	CONTACTOR, 7,5KW 24VDC	691
K015	90075-0125	CONTACTOR, 7,5KW 24VDC	679
K016	90075-0125	CONTACTOR, 7,5KW 24VDC	679
K017	90075-0124	CONTACTOR, 4KW 24VDC	679
K018	90075-0125	CONTACTOR, 7,5KW 24VDC	679
K019	90075-0125	CONTACTOR, 7,5KW 24VDC	679
K022	90075-0128	CONTACTOR, 7,5KW 24VDC	679
K024	90075-0124	CONTACTOR, 4KW 24VDC	679
K026	90075-0124	CONTACTOR, 4KW 24VDC	679
K028	90458-1302	CONTACTOR, 4KW 48VAC	691
K029	90075-0141	CONTACTOR, 4KW 24VDC	691
K030	90458-2924	CONTACTOR 30KW COIL 24VDC	653, 655
K030.1	90458-2925	AUXILIARY CONTACT, DIL M820-XHI11-SI	653, 655
K097	90119-0086	RELAY, AUXILIARY MY4IN4 24VDC	665
K097.1	90119-0309	BASE UNIT, TYPE PYF 14AE	665
K097.2	90119-0310	CLAMP, TYPE PYC-A1	665
K098	90119-0086	RELAY, AUXILIARY MY4IN4 24VDC	665
K098.1	90119-0309	BASE UNIT, TYPE PYF 14AE	665
K098.2	90119-0310	CLAMP, TYPE PYC-A1	665
K099	90119-0056	RELAY, AUXILIARY MK3P5-S 24VDC	665
K099.1	90129-0006	BASE, S3-B	665
K100	90119-0056	RELAY, AUXILIARY MK3P5-S 24VDC	665
K100.1	90129-0006	BASE, S3-B	665
K101	90119-0109	RELAY OMRON 24VDC MY4H	665
K101.1	90119-0309	BASE UNIT, TYPE PYF 14AE	665
K101.2	90119-0310	CLAMP, TYPE PYC-A1	665
K102	90119-0056	RELAY, AUXILIARY MK3P5-S 24VDC	665
K102.1	90129-0006	BASE, S3-B	665
K103	90119-0056	RELAY, AUXILIARY MK3P5-S 24VDC	665
K103.1	90129-0006	BASE, S3-B	665
K104	90119-0056	RELAY, AUXILIARY MK3P5-S 24VDC	665
K104.1	90129-0006	BASE, S3-B	665
K105	90119-0056	RELAY, AUXILIARY MK3P5-S 24VDC	665
K105.1	90129-0006	BASE, S3-B	665
K106	90119-0056	RELAY, AUXILIARY MK3P5-S 24VDC	665
K106.1	90129-0006	BASE, S3-B	665
K107	90119-0056	RELAY, AUXILIARY MK3P5-S 24VDC	665
K107.1	90129-0006	BASE, S3-B	665
K110	90119-0056	RELAY, AUXILIARY MK3P5-S 24VDC	665
K110.1	90129-0006	BASE, S3-B	665
K112	90119-0086	RELAY, AUXILIARY MY4IN4 24VDC	665
K112.1	90119-0309	BASE UNIT, TYPE PYF 14AE	665
K112.2	90119-0310	CLAMP, TYPE PYC-A1	665
K113	90119-0086	RELAY, AUXILIARY MY4IN4 24VDC	665
K113.1	90119-0309	BASE UNIT, TYPE PYF 14AE	665
K113.2	90119-0310	CLAMP, TYPE PYC-A1	665
K200	90119-0067	SOLID-STATE RELAY, H12WD4850	681, 683
K201	90119-0067	SOLID-STATE RELAY, H12WD4850	685
K202	90119-0067	SOLID-STATE RELAY, H12WD4850	685
K203	90119-0067	SOLID-STATE RELAY, H12WD4850	685
K204	90119-0067	SOLID-STATE RELAY, H12WD4850	685
K205	90119-0067	SOLID-STATE RELAY, H12WD4850	681, 683
K206	90119-0067	SOLID-STATE RELAY, H12WD4850	681, 683
K210	90119-0067	SOLID-STATE RELAY, H12WD4850	663
K211	90119-0067	SOLID-STATE RELAY, H12WD4850	663
K212	90119-0067	SOLID-STATE RELAY, H12WD4850	663
K213	90119-0067	SOLID-STATE RELAY, H12WD4850	663
K215	90119-0067	SOLID-STATE RELAY, H12WD4850	681, 683
K250	90119-0086	RELAY, AUXILIARY MY4IN4 24VDC	665
K250.1	90119-0309	BASE UNIT, TYPE PYF 14AE	665
K250.2	90119-0310	CLAMP, TYPE PYC-A1	665
K251	90119-0086	RELAY, AUXILIARY MY4IN4 24VDC	665
K251.1	90119-0309	BASE UNIT, TYPE PYF 14AE	665
K251.2	90119-0310	CLAMP, TYPE PYC-A1	665
K252	90119-0086	RELAY, AUXILIARY MY4IN4 24VDC	665
K252.1	90119-0309	BASE UNIT, TYPE PYF 14AE	665
K252.2	90119-0310	CLAMP, TYPE PYC-A1	665
K915	90119-0056	RELAY, AUXILIARY MK3P5-S 24VDC	665
K915.1	90129-0006	BASE, S3-B	665
L			
L001	90297-0306	BALLAST COIL 50/60 HZ	653, 655
M			
MB080:1	90458-0601	PHOTOCELL, SICK PHOTOCELL 1	125, 127
MB080:2	90458-0601	PHOTOCELL, SICK PHOTOCELL 1	125, 127
M001	90457-0056	FAN 7450 ES	653, 655
M016	90457-0063	COOLING UNIT, KB17TB.CBB	777

Pos	Part No	Description	Page No
M			
MA451	...90453-0001	MODEM MA-12	621
MB001	...90061-0027	ANGLE ENCODER 670900035	241
MB002	...90274-0074	PRESSURE GUARD, 530 KPA	429, 431
MB004	...90326-0052	THERMO ELEMENT	13, 15
MB006	...90274-0084	PRESSURE GUARD, 1800 KPA	469
MB007	...90274-0056	PRESSURE SWITCH, 100 - 1200 KPA	429, 431
MB009	...90044-0194	PROX.SW. IN5329/IN3002-BPKG	509
MB010	...90044-0151	LIMIT SW. GLEB24C	235
MB011	...90459-0472	KEY SAF.SW. AZ 16 02ZVRK-M20-2152-2254	205
MB012	...90459-0472	KEY SAF.SW. AZ 16 02ZVRK-M20-2152-2254	205
MB013	...312105-0372	SCREW M6S ISO 4017 M6X25 A480	373
MB015	...90459-0472	KEY SAF.SW. AZ 16 02ZVRK-M20-2152-2254	169
MB019	...90459-0472	KEY SAF.SW. AZ 16 02ZVRK-M20-2152-2254	171
MB020	...90458-0894	PROXIMITY SENSOR E2E2-X10MB1-5M	365
MB032	...90044-0194	PROX.SW. IN5329/IN3002-BPKG	501, 503
MB034	...567070-0011	ELECTRODE	13, 15
MB034	...567070-0019	ELECTRODE	13, 15
MB038	...90326-0052	THERMO ELEMENT	13, 15
MB039	...90326-0051	THERMOCOUPLE, 12826-33	27
MB040	...90326-0051	THERMOCOUPLE, 12826-33	105
MB043.1	567070-0010	ELECTRODE	65
MB043.2	567070-0013	ELECTRODE	65
MB045	...90457-0019	LEVEL PROBE, HMFB-S=45-0=80-0=90-T70	471, 473
MB046	...90044-0104	PROX.SWITCH IFM IN 3002	35
MB047	...90044-0104	PROX.SWITCH IFM IN 3002	37
MB050	...90326-0089	THERMOCOUPLE, 5110-089-000	45, 47
MB051	...90458-0676	PROXIMITY SWITCH,E2EG-X5B1-6M	45, 47
MB053	...90044-0194	PROX.SW. IN5329/IN3002-BPKG	45, 47
MB055	...90326-0051	THERMOCOUPLE, 12826-33	41
MB061	...90044-0104	PROX.SWITCH IFM IN 3002	31, 33
MB062	...90274-0045	PRESSURE GUARD, 14 KPA	151
MB063	...90044-0194	PROX.SW. IN5329/IN3002-BPKG	105
MB064	...567070-0012	ELECTRODE	463
MB071	...90457-0047	SENSOR 2750-1-5111-1 W.ADAPTER PNP	41
MB072	...90326-0080	THERMOCOUPLE, 5110080-000	345, 347
MB073	...90326-0080	THERMOCOUPLE, 5110080-000	345, 347
MB074	...90326-0080	THERMOCOUPLE, 5110080-000	345, 347
MB075	...90326-0080	THERMOCOUPLE, 5110080-000	345, 347
MB085	...979500-0001	ELECTRODE	13, 15
MB094	...90044-0116	CYLINDER,SENSOR	21
MB095	...1282411-0000	FLOAT	447
MB104	...90044-0194	PROX.SW. IN5329/IN3002-BPKG	45, 47
MB108	...90044-0139	KEY SAF.SW. AZ16-02 ZVR K-2254	557, 559, 561
MB109	...90044-0194	PROX.SW. IN5329/IN3002-BPKG	501, 503
MB111	...90044-0194	PROX.SW. IN5329/IN3002-BPKG	501, 503
MB112	...42063-0100	LEVEL DETECTOR	139
MB115	...90044-0139	KEY SAF.SW. AZ16-02 ZVR K-2254	543, 545
MB116	...1478814-0000	SENSOR	63
MB117	...90044-0145	PROX.SW. 922 AAIY-A9P-050-LZ876	63
MB119	...90044-0117	PROX.SW. IX 0208	389
MB120	...90044-0124	PROX.SW. 922AB2XM-A9P-050-LZ-876	241
MB132	...90458-0747	SENSOR FOR CYLINDER, SMH-1PC	259, 261
MB134	...90450-0747	INTERMEDIATE PLATE	255, 257
MB149	...90458-0675	PROXIMITY SENSOR, E2EG-X5MB1-5M	549, 551
MB150	...90458-0675	PROXIMITY SENSOR, E2EG-X5MB1-5M	549, 551
MB154	...90044-0194	PROX.SW. IN5329/IN3002-BPKG	557, 559, 561
MB154	...90232-0123	PH.CELL WLL170-P135-6011723	603, 605
MB154.1	90232-0347	FIBRE LL3-TB01 5 308050	601
MB160	...90458-0675	PROXIMITY SENSOR, E2EG-X5MB1-5M	133
MB236	...90044-0194	PROX.SW. IN5329/IN3002-BPKG	517
ME003	...90164-0015	LIGHT FIXTURE, DWDCV111B/230V 50HZ	601
ML001	...571872-0000	BUSBAR,LEFT	307
ML001	...2554960-0000	BUSBAR LEFT	307
ML002	...571871-0000	BUSBAR,RIGHT	305
ML002	...2554961-0000	BUSBAR RIGHT	305
ML003	...1035587-0000	INDUCTOR	511
MM001	..90457-0172	MOTOR 3GAA 131001-ASA	215
MM004	..90457-0131	PUMP SV805 R22T 50HZ	373
MM004	..90458-2762	PUMP SV805 R406T 60HZ	373
MM005	..90045-0228	MOTOR MEZ-4AP80-4-B5-0	471, 473
MM006	..90321-0037	PUMP C-6125P EP 220V;50HZ	403
MM007	..90270-0017	COMPRESSOR NASH/ELMO 112 MB/4-2083	445
MM010	..90045-0087	MOTOR 3GAA 071002-CSA M2AA 71B	451
MM017	..2526863-0000	PUMP	13, 15
MM018	..90045-0161	MOTOR MGC 11	461
MM019	..90458-1879	GEARS, WORM MOTOR 528V--L06-B01	39
MM021	..90069-0600	GEARS, WORM MOTOR ODM90-60KE5	549, 551
MM132	..90458-1301	CYLINDER ETS32-M10NA2X-FM50-AEUM1D	259, 261
MM134	..90458-1301	CYLINDER ETS32-M10NA2X-FM50-AEUM1D	255, 257
MR032	..449939-0001	HEATING ELEMENT 15KW	27
MR033	...1538473-0000	SEALING BLOCK	497
MR034	...1524481-0000	SEALING BLOCK	499

Pos	Part No	Description	Page No
M			
MR035	..441804-0000	COIL HEATER	19
MR036	..90206-0070	HEATING ELEMENT 6000W 380/220V	13, 15
MR037	..90206-0031	HEATING ELEMENT 700+1200W,220V	23
MS004	...90064-0124	SWITCH, EM. STOP, ZB2-BS844+ZB2-BZ1045	111
MS004.1	486826-0001	SIGN "EMERGENCY STOP"	111
MS005	...90458-1651	EMERGENCY STOP, ZB4-BS-844 ZB4-BZ-104	487
MS005.1	486826-0001	SIGN "EMERGENCY STOP"	487
MS008	...90064-0085	PUSH BUTTON, RED	601
MS008.1	359301-0110	SIGN "SHORT STOP"	601
MS011	...90064-0124	SWITCH, EM. STOP, ZB2-BS844+ZB2-BZ1045	601
MS011.1	486826-0001	SIGN "EMERGENCY STOP"	601
MS035	...90064-0085	PUSH BUTTON, RED	487
MS035.1	359301-0110	SIGN "SHORT STOP"	487
MT001	...67379-0254	TRANSFORMER	307
MT001	...67379-0262	TRANSFORMER	307
MT001	...67379-0264	TRANSFORMER	307
MT001	...67379-0265	TRANSFORMER	307
MT002	...67379-0254	TRANSFORMER	305
MT002	...67379-0262	TRANSFORMER	305
MT002	...67379-0264	TRANSFORMER	305
MT002	...67379-0265	TRANSFORMER	305
MX002	...2506331-0200 ..	CONNECTION BOX	379
MX004.1	90326-0012	PROTECTIVE COVER, T31A4618	13, 15
MX004	...90326-0020	PLUG, FEMALE YELLOW CR-AL	13, 15
MX006	...90195-0020	TERMINAL BLOCK, 1977.2	403
MX007	...456827-0400	CONNECTION BOX	147
MX008	...1036443-0000 ..	CONTACT UNIT	345, 347
MX009	...1036443-0000 ..	CONTACT UNIT	345, 347
MX010	...1036443-0000 ..	CONTACT UNIT	345, 347
MX011	...1036443-0000 ..	CONTACT UNIT	345, 347
MX020	...2501466-0100 ..	CONNECTION BOX	621
MX021	...2501465-0100 ..	CONNECTION BOX	621
MX022	...2510844-0100 ..	CONNECTION BOX	621
MX031	...580064-0200	CONNECTION BOX	485
MX032	...90042-0535	TERMINAL BOARD 19 CORDS	433, 435, 437
MX033	...90042-0535	TERMINAL BOARD 19 CORDS	433, 435, 437
MX034	...90042-0535	TERMINAL BOARD 19 CORDS	433, 435, 437
MX035	...90042-0535	TERMINAL BOARD 19 CORDS	433, 435, 437
MX038.1	90326-0012	PROTECTIVE COVER, T31A4618	13, 15
MX038	...90326-0020	PLUG, FEMALE YELLOW CR-AL	15
MX039.1	90326-0012	PROTECTIVE COVER, T31A4618	27
MX039	...90326-0020	PLUG, FEMALE YELLOW CR-AL	27
MX040.1	90326-0012	PROTECTIVE COVER, T31A4618	105
MX040	...90326-0020	PLUG, FEMALE YELLOW CR-AL	105
MX050.1	90326-0012	PROTECTIVE COVER, T31A4618	45, 47
MX050	...90326-0020	PLUG, FEMALE YELLOW CR-AL	45, 47
MX055.1	90326-0012	PROTECTIVE COVER, T31A4618	41
MX055	...90326-0020	PLUG, FEMALE YELLOW CR-AL	41
MX060	...1558318-0100 ..	CONNECTION BOX	601
MX061	...90110-0170	FEMALE INSERT 10-POLE	601
MX061.1	90110-0171	COVER 10-POLE	601
MX061	...90110-0216	MALE INSERT 70 310 1040 0	191
MX061.1	90458-2418	CHASSI HOUSING 10-POLE, 70.331.1028.0	191
MX075	...67380-0208	TRANSFORMER	511
MX079.1	90326-0012	PROTECTIVE COVER, T31A4618	23
MX212	...90326-0022	PLUG, MALE YELLOW CR-AL	345, 347
MX213	...90326-0022	PLUG, MALE YELLOW CR-AL	345, 347
MX214	...90326-0022	PLUG, MALE YELLOW CR-AL	345, 347
MX215	...90326-0022	PLUG, MALE YELLOW CR-AL	345, 347
MY001	...90042-0539	PILOT VALVE L=350MM	433, 435, 437
MY002	...90042-0539	PILOT VALVE L=350MM	433, 435, 437
MY003	...90042-0539	PILOT VALVE L=350MM	433, 435, 437
MY004	...544906-0000	SOLENOID VALVE	65
MY005	...90042-0539	PILOT VALVE L=350MM	433, 435, 437
MY006	...90042-0539	PILOT VALVE L=350MM	433, 435, 437
MY007	...90042-0539	PILOT VALVE L=350MM	433, 435, 437
MY008	...90042-0539	PILOT VALVE L=350MM	433, 435, 437
MY009	...90042-0539	PILOT VALVE L=350MM	433, 435, 437
MY017	...90042-0539	PILOT VALVE L=350MM	433, 435, 437
MY019	...90042-0539	PILOT VALVE L=350MM	433, 435, 437
MY020	...90042-0539	PILOT VALVE L=350MM	433, 435, 437
MY021	...90042-0539	PILOT VALVE L=350MM	433, 435, 437
MY022	...90458-2200	ELECTROMAGNETIC CLUTCH, 30 MM/24 VDC	213
MY023	...90042-0539	PILOT VALVE L=350MM	433, 435, 437
MY024	...90042-0539	PILOT VALVE L=350MM	433, 435, 437
MY025	...90042-0539	PILOT VALVE L=350MM	433, 435, 437
MY026	...90042-0539	PILOT VALVE L=350MM	433, 435, 437
MY027	...90042-0539	PILOT VALVE L=350MM	433, 435, 437
MY029	...90042-0172	SOLENOID VALVE 4023/1005/1032 24VDC	419
MY030	...90042-0539	PILOT VALVE L=350MM	433, 435, 437
MY031	...90042-0172	SOLENOID VALVE 4023/1005/1032 24VDC	417
MY032	...90042-0172	SOLENOID VALVE 4023/1005/1032 24VDC	417

Pos	Part No	Description	Page No
M			
MY033	90042-0134	SOLENOID VALVE ASCO SCG 210 802 24VDC	475
MY034	90042-0171	SOLENOID VALVE BUERKERT	65
MY035	544906-0000	SOLENOID VALVE	65
MY037	90042-0539	PILOT VALVE L=350MM	433, 435, 437
MY039	90042-0173	SOLENOID VALVE BURKERT	429, 431
MY043	90432-0023	BRAKE ORTLINGHAUS	213
MY051	90042-0173	SOLENOID VALVE BURKERT	411
MY052	90457-0170	DIRECTION VALVE, NO. 0 810 091 212	471, 473
MY086	90042-0539	PILOT VALVE L=350MM	433, 435, 437
MY100	90042-0539	PILOT VALVE L=350MM	433, 435, 437
MY102	90042-0539	PILOT VALVE L=350MM	433, 435, 437
MY103	90042-0539	PILOT VALVE L=350MM	433, 435, 437
MY105	90042-0539	PILOT VALVE L=350MM	433, 435, 437
MY107	90458-1092	PROPORTIONAL VALVE 0 - 10V/0-6 BAR	429, 431
MY108	544906-0000	SOLENOID VALVE	13, 15
MY129	90042-0539	PILOT VALVE L=350MM	433, 435, 437
MY131.1	90110-0095	CONNECTOR 3 POLE + EARTH	471, 473
MY131	90458-2722	DIRECTION VALVE, NO. 0 810 091 222	471, 473
MY132.1	90110-0095	CONNECTOR 3 POLE + EARTH	471, 473
MY132	90458-2722	DIRECTION VALVE, NO. 0 810 091 222	471, 473
MY184	90458-1092	PROPORTIONAL VALVE 0 - 10V/0-6 BAR	429, 431
MY915	90042-0539	PILOT VALVE L=350MM	433, 435, 437
P			
P002	90053-0031	HOUR COUNTER, B 609.10 10-50VDC	759, 761
P002.1	359241-0201	SIGN "HOUR GLASS"	759, 761
P003	90053-0029	COUNTER, F524.800FA3C 24VDC	759, 761
P003.1	359241-0180	SIGN "PRODUCTION"	759, 761
P005	90332-0020	RECORDER HONEYWELL	759, 761
Q			
Q001.1	90457-0123	SIGN, MAIN SWITCH	715, 717
Q001	90457-0198	MAIN SWITCH	769
Q001.2	359241-0297	SIGN, 400 V, 50 HZ, 63 A	715, 717
Q006	90095-0077	OVERLOAD PROTECTION, PKZM 6-10 A	755
Q006.1	90259-0313	AUX. CONTACT K&M NHI21-PKZM0	755
Q007	90095-0075	OVERLOAD PROTECTION, PKZM 4 A	755
Q007.1	90259-0313	AUX. CONTACT K&M NHI21-PKZM0	755
Q008	90095-0077	OVERLOAD PROTECTION, PKZM 6-10 A	755
Q008.2	90259-0308	CONN.TERM.K&M BK25/3PKZM1	755
Q008.1	90259-0313	AUX. CONTACT K&M NHI21-PKZM0	755
Q009	90095-0073	OVERLOAD PROTECTION, PKZM 1,6 A	755
Q009.2	90259-0308	CONN.TERM.K&M BK25/3PKZM1	755
Q009.1	90259-0313	AUX. CONTACT K&M NHI21-PKZM0	755
Q016	90095-0069	OVERLOAD PROTECTION, PKZM 0,25 A	755
Q016.1	90259-0313	AUX. CONTACT K&M NHI21-PKZM0	755
R			
R007	90121-0132	RESISTANCE FIXED, 0,51 KOHM, 0,25 W	701, 703
S			
S001	90064-0124	SWITCH, EM. STOP, ZB2-BS844+ZB2-BZ1045	745
S002	90064-0124	SWITCH, EM. STOP, ZB2-BS844+ZB2-BZ1045	743
S003	90111-0124	KEY SWITCH, 1NO,1NC CONTACT	759, 761
S003.1	359241-0122	SIGN, CIP OF STEAM BARRIER SPACE	759, 761
S004	90111-0122	KEY SWITCH, 2 NO CONTACTS	759, 761
S004.1	359241-0133	SIGN, SERVICE SWITCH	759, 761
S006	90111-0120	SWITCH, 2 POS.704.510 .0A+704.901.5/A	759, 761
S006.1	359241-0140	SIGN "LIGHTING MACHINE"	759, 761
T			
T001	90458-0917	TRANSF. 3-PH 750VA SEC. 23A	715, 717
T004	90458-1273	TRANSFORMER, OFL-1350	715, 717
T005	90245-0029	TRANSFORMER, 1280-3660/TP 182	715, 717
T006	90458-0258	TRANSFORMER, 220VAC/6-9-12VAC	715, 717
V			
V001	90038-0024	RECTIFIER, 10/22A SKD 50/04A3	715, 717
V007	353021-0122	TERMINAL DISCONNECTBLE, WTR 2,5 D	701, 703
V008	353021-0122	TERMINAL DISCONNECTBLE, WTR 2,5 D	701, 703
V009	90024-0034	DIODE SURGE SUPPRESSOR, FD B DIL	679, 701, 703
V010	353021-0122	TERMINAL DISCONNECTBLE, WTR 2,5 D	701, 703
V011	90024-0034	DIODE SURGE SUPPRESSOR, FD B DIL	679, 701, 703
W			
W005	351150-0418	CABLE OLFLEX 4X2,5 MM2 LIGHT/GREY	147
W006	351150-0412	CABLE OLFLEX 3X1,5 MM2 LIGHT/GREY	147
W007	351150-0412	CABLE OLFLEX 3X1,5 MM2 LIGHT/GREY	147
W009	351150-0406	CABLE OLFLEX 7X0,75 MM2 LIGHT/GREY	181, 189
W010	351150-0431	CABLE OLFLEX 2X0,75 MM2 LIGHT/GREY	169
W011	351150-0431	CABLE OLFLEX 2X0,75 MM2 LIGHT/GREY	171
W013	351150-0431	CABLE OLFLEX 2X0,75 MM2 LIGHT/GREY	373
W018	90458-2557	CABLE OLFLEX 25X1 MM2	189
W019	351150-0412	CABLE OLFLEX 3X1,5 MM2 LIGHT/GREY	197
W023	90220-0104	SCR. CABLE 4X1,5MM2	147
W025	351150-0428	CABLE OLFLEX 41X0,75 MM2 LIGHT/GREY	147
W033	90220-0059	THERMOCOUPLE CABLE K/ 2X0,81MM2	759, 761
W034	90220-0059	THERMOCOUPLE CABLE K/ 2X0,81MM2	759, 761
W035	90220-0059	THERMOCOUPLE CABLE K/ 2X0,81MM2	665

W

Pos	Part No	Description	Page No
W036	90220-0059	THERMOCOUPLE CABLE K/ 2X0,81MM2	665
W037	90220-0059	THERMOCOUPLE CABLE K/ 2X0,81MM2	759, 761
W038	90220-0059	THERMOCOUPLE CABLE K/ 2X0,81MM2	759, 761
W039	90220-0059	THERMOCOUPLE CABLE K/ 2X0,81MM2	759, 761
W040	90220-0059	THERMOCOUPLE CABLE K/ 2X0,81MM2	759, 761
W044	551969-0012	COAXIAL CABLE	779
W049	90220-0059	THERMOCOUPLE CABLE K/ 2X0,81MM2	759, 761
W050	90031-0305	I/O EXPANSION CABLE	673, 675
W056	90220-0059	THERMOCOUPLE CABLE K/ 2X0,81MM2	759, 761
W057	90220-0059	THERMOCOUPLE CABLE K/ 2X0,81MM2	759, 761
W058	90220-0059	THERMOCOUPLE CABLE K/ 2X0,81MM2	759, 761
W059	90220-0059	THERMOCOUPLE CABLE K/ 2X0,81MM2	759, 761
W061	1254442-0000	CABLE SERIAL	711
W062	1511793-0000	CABLE	711
W063	90220-0091	PAIR TWISTED CABLE 2X2X0,25MM2	713
W064	1478661-0000	CABLE SERIAL	711
W066	90220-0059	THERMOCOUPLE CABLE K/ 2X0,81MM2	759, 761
W067	90220-0183	SCR. CABLE 2X0,34MM2	673
W068	90220-0183	SCR. CABLE 2X0,34MM2	673
W069	90220-0183	SCR. CABLE 2X0,34MM2	673
W070	90220-0059	THERMOCOUPLE CABLE K/ 2X0,81MM2	759, 761
W071	90220-0059	THERMOCOUPLE CABLE K/ 2X0,81MM2	759, 761
W072	90220-0059	THERMOCOUPLE CABLE K/ 2X0,81MM2	759, 761
W073	1143884-0000	COPPER BRAID	759, 761
W074	1143884-0000	COPPER BRAID	759, 761
W075	1143884-0000	COPPER BRAID	759, 761
W076	1143884-0000	COPPER BRAID	759, 761
W077	1143884-0000	COPPER BRAID	759, 761
W078	1143884-0000	COPPER BRAID	759, 761
W079	1143884-0000	COPPER BRAID	759, 761
W080	1143884-0000	COPPER BRAID	759, 761
W081	1143884-0000	COPPER BRAID	759, 761
W082	1143884-0000	COPPER BRAID	759, 761
W083	1143884-0000	COPPER BRAID	759, 761
W084	1143884-0000	COPPER BRAID	759, 761
W085	90220-0104	SCR. CABLE 4X1,5MM2	727, 729
W088	1512322-0000	COPPER BRAID	673
W098	90220-0183	SCR. CABLE 2X0,34MM2	667
W098	351150-0415	CABLE OLFLEX 7X1,5 MM2 LIGHT/GREY	777
W099	90220-0183	SCR. CABLE 2X0,34MM2	667
W101	90220-0105	SCR. CABLE 4X2,5MM2	215
W102	90220-0183	SCR. CABLE 2X0,34MM2	779
W102	351150-0405	CABLE OLFLEX 5X0,75 MM2 LIGHT/GREY	235
W103	90220-0183	SCR. CABLE 2X0,34MM2	779
W104	90220-0183	SCR. CABLE 2X0,34MM2	779
W108	351150-0425	CABLE OLFLEX 25X0,75 MM2 LIGHT/GREY	147
W110	351150-0413	CABLE OLFLEX 4X1,5 MM2 LIGHT/GREY	147
W121	1512322-0000	COPPER BRAID	673
W122	1512322-0000	COPPER BRAID	675
W123	1512322-0000	COPPER BRAID	677
W124	90220-0183	SCR. CABLE 2X0,34MM2	673
W125	90220-0183	SCR. CABLE 2X0,34MM2	673
W126	90220-0183	SCR. CABLE 2X0,34MM2	673
W127	90220-0183	SCR. CABLE 2X0,34MM2	673
W230	351150-0412	CABLE OLFLEX 3X1,5 MM2 LIGHT/GREY	147
W231	351150-0412	CABLE OLFLEX 3X1,5 MM2 LIGHT/GREY	147
W232	351150-0412	CABLE OLFLEX 3X1,5 MM2 LIGHT/GREY	147
W233	351150-0412	CABLE OLFLEX 3X1,5 MM2 LIGHT/GREY	147
W234	90220-0034	THERMOCOUPLE CABLE K/ 2X0,5MM2	147
W235	90220-0034	THERMOCOUPLE CABLE K/ 2X0,5MM2	147
W236	90220-0034	THERMOCOUPLE CABLE K/ 2X0,5MM2	147
W237	90220-0034	THERMOCOUPLE CABLE K/ 2X0,5MM2	147
W238	90220-0034	THERMOCOUPLE CABLE K/ 2X0,5MM2	345, 347
W239	90220-0034	THERMOCOUPLE CABLE K/ 2X0,5MM2	345, 347
W240	90220-0034	THERMOCOUPLE CABLE K/ 2X0,5MM2	345, 347
W241	90220-0034	THERMOCOUPLE CABLE K/ 2X0,5MM2	345, 347
W242	351120-0144	CABLE SIHF 3X1,5MM2 GREEN/YELLOW	345, 347
W243	351120-0144	CABLE SIHF 3X1,5MM2 GREEN/YELLOW	345, 347
W244	351120-0144	CABLE SIHF 3X1,5MM2 GREEN/YELLOW	345, 347
W245	351120-0144	CABLE SIHF 3X1,5MM2 GREEN/YELLOW	345, 347
W246	351150-0431	CABLE OLFLEX 2X0,75 MM2 LIGHT/GREY	205
W247	351150-0431	CABLE OLFLEX 2X0,75 MM2 LIGHT/GREY	169
W248	351150-0431	CABLE OLFLEX 2X0,75 MM2 LIGHT/GREY	205
W249	351150-0431	CABLE OLFLEX 2X0,75 MM2 LIGHT/GREY	171
W290	351162-0106	CABLE AWM 1X4 MM2 YELLOW-GREEN	147
W301	351150-0418	CABLE OLFLEX 4X2,5 MM2 LIGHT/GREY	445
W302	351120-0144	CABLE SIHF 3X1,5MM2 GREEN/YELLOW	603, 605
W303	351150-0431	CABLE OLFLEX 2X0,75 MM2 LIGHT/GREY	463
W304	351150-0418	CABLE OLFLEX 4X2,5 MM2 LIGHT/GREY	471, 473
W305	351150-0412	CABLE OLFLEX 3X1,5 MM2 LIGHT/GREY	403
W308	351150-0418	CABLE OLFLEX 4X2,5 MM2 LIGHT/GREY	451
W312	351150-0412	CABLE OLFLEX 3X1,5 MM2 LIGHT/GREY	13, 15

Pos	Part No	Description	Page No
W			
W316	351150-0403	CABLE OLFLEX 3X0,75 MM2 LIGHT/GREY	471, 473
W317	351150-0403	CABLE OLFLEX 3X0,75 MM2 LIGHT/GREY	471, 473
W320	351150-0403	CABLE OLFLEX 3X0,75 MM2 LIGHT/GREY	429, 431
W321	351150-0403	CABLE OLFLEX 3X0,75 MM2 LIGHT/GREY	429, 431
W322	351150-0403	CABLE OLFLEX 3X0,75 MM2 LIGHT/GREY	469
W325	351150-0403	CABLE OLFLEX 3X0,75 MM2 LIGHT/GREY	417
W327	90220-0091	PAIR TWISTED CABLE 2X2X0,25MM2	429, 431
W342	351150-0403	CABLE OLFLEX 3X0,75 MM2 LIGHT/GREY	429, 431
W345	351150-0431	CABLE OLFLEX 2X0,75 MM2 LIGHT/GREY	419
W348	351150-0403	CABLE OLFLEX 3X0,75 MM2 LIGHT/GREY	417
W349	351150-0403	CABLE OLFLEX 3X0,75 MM2 LIGHT/GREY	471, 473
W350	351150-0403	CABLE OLFLEX 3X0,75 MM2 LIGHT/GREY	471, 473
W352	351150-0431	CABLE OLFLEX 2X0,75 MM2 LIGHT/GREY	411
W354	351150-0403	CABLE OLFLEX 3X0,75 MM2 LIGHT/GREY	475
W355	351150-0404	CABLE OLFLEX 4X0,75 MM2 LIGHT/GREY	471, 473
W356	351150-0404	CABLE OLFLEX 4X0,75 MM2 LIGHT/GREY	469
W360	351150-0405	CABLE OLFLEX 5X0,75 MM2 LIGHT/GREY	447
W361	351150-0403	CABLE OLFLEX 3X0,75 MM2 LIGHT/GREY	461
W370	551969-0006	COAXIAL CABLES	147
W371	551969-0006	COAXIAL CABLES	147
W372	1548155-0000	COAXIAL CABLE	307
W373	1548155-0000	COAXIAL CABLE	305
W380	90220-0091	PAIR TWISTED CABLE 2X2X0,25MM2	429, 431
W390	351162-0109	CABLE AWM 1X16 MM2 YELLOW-GREEN	441
W391	351162-0106	CABLE AWM 1X4 MM2 YELLOW-GREEN	429, 431
W392	351162-0106	CABLE AWM 1X4 MM2 YELLOW-GREEN	189
W401	351120-0167	CABLE SIHF 4X6MM2 GREEN/YELLOW	13, 15
W402	351120-0144	CABLE SIHF 3X1,5MM2 GREEN/YELLOW	23
W403	351120-0145	CABLE SIHF 3X2,5MM2 GREEN/YELLOW	19
W404	90220-0104	SCR. CABLE 4X1,5MM2	29
W405	351150-0431	CABLE OLFLEX 2X0,75 MM2 LIGHT/GREY	63
W406	90220-0059	THERMOCOUPLE CABLE K/ 2X0,81MM2	13, 15
W407	90220-0059	THERMOCOUPLE CABLE K/ 2X0,81MM2	105
W408	90220-0059	THERMOCOUPLE CABLE K/ 2X0,81MM2	15
W409	90220-0059	THERMOCOUPLE CABLE K/ 2X0,81MM2	27
W410	90220-0059	THERMOCOUPLE CABLE K/ 2X0,81MM2	19
W411	90220-0059	THERMOCOUPLE CABLE K/ 2X0,81MM2	41
W412	90220-0059	THERMOCOUPLE CABLE K/ 2X0,81MM2	45, 47
W416	351150-0405	CABLE OLFLEX 5X0,75 MM2 LIGHT/GREY	31, 33
W417	351150-0405	CABLE OLFLEX 5X0,75 MM2 LIGHT/GREY	31, 33
W418	351150-0405	CABLE OLFLEX 5X0,75 MM2 LIGHT/GREY	31, 33
W420	90220-0085	CABLES, MULTI-CONDUCTOR SCREENED	139
W425	351150-0404	CABLE OLFLEX 4X0,75 MM2 LIGHT/GREY	65
W426	351150-0403	CABLE OLFLEX 3X0,75 MM2 LIGHT/GREY	13, 15
W427	351150-0431	CABLE OLFLEX 2X0,75 MM2 LIGHT/GREY	13, 15
W430	351150-0403	CABLE OLFLEX 3X0,75 MM2 LIGHT/GREY	65
W431	351150-0403	CABLE OLFLEX 3X0,75 MM2 LIGHT/GREY	65
W432	351150-0403	CABLE OLFLEX 3X0,75 MM2 LIGHT/GREY	65
W433	90220-0059	THERMOCOUPLE CABLE K/ 2X0,81MM2	23
W434	351150-0405	CABLE OLFLEX 5X0,75 MM2 LIGHT/GREY	111
W442	90458-1298	CONNECTOR AND CABLE 403000E 18M 080	259, 261
W444	90458-1298	CONNECTOR AND CABLE 403000E 18M 080	255, 257
W449	90220-0107	SCR. CABLE 5X0,75MM2	259, 261
W450	90220-0059	THERMOCOUPLE CABLE K/ 2X0,81MM2	19
W451	90220-0107	SCR. CABLE 5X0,75MM2	255, 257
W452	351120-0168	CABLE SIHF 4X10MM2 GREEN/YELLOW	27
W459	351150-0413	CABLE OLFLEX 4X1,5 MM2 LIGHT/GREY	39
W601	548770-0006	COAXIAL CABLE L=1200 MM	511
W602	351150-0422	CABLE OLFLEX 3X4 MM2 LIGHT/GREY	507
W605	351150-0407	CABLE OLFLEX 12X0,75 MM2 LIGHT/GREY	487, 507
W615	351150-0425	CABLE OLFLEX 25X0,75 MM2 LIGHT/GREY	507
W630	351120-0146	CABLE SIHF 3X4MM2 GREEN/YELLOW	497
W631	351120-0145	CABLE SIHF 3X2,5MM2 GREEN/YELLOW	499
W750	351150-0414	CABLE OLFLEX 5X1,5 MM2 LIGHT/GREY	603, 605
W751	351150-0412	CABLE OLFLEX 3X1,5 MM2 LIGHT/GREY	603, 605
W753	351150-0406	CABLE OLFLEX 7X0,75 MM2 LIGHT/GREY	603, 605
W754	351150-0406	CABLE OLFLEX 7X0,75 MM2 LIGHT/GREY	191
W757	90220-0104	SCR. CABLE 4X1,5MM2	549, 551
W759	351150-0425	CABLE OLFLEX 25X0,75 MM2 LIGHT/GREY	603, 605
W780	351150-0406	CABLE OLFLEX 7X0,75 MM2 LIGHT/GREY	601
W788	351150-0405	CABLE OLFLEX 5X0,75 MM2 LIGHT/GREY	603, 605
W790	351150-0405	CABLE OLFLEX 5X0,75 MM2 LIGHT/GREY	603, 605
W802	351150-0405	CABLE OLFLEX 5X0,75 MM2 LIGHT/GREY	505
W951	90220-0091	PAIR TWISTED CABLE 2X2X0,25MM2	621
W952	90220-0091	PAIR TWISTED CABLE 2X2X0,25MM2	621
W953	1366189-0000	CABLE LVDS 6M	711
W954	351150-0405	CABLE OLFLEX 5X0,75 MM2 LIGHT/GREY	631
W955	351150-0405	CABLE OLFLEX 5X0,75 MM2 LIGHT/GREY	633
W956	90041-0068	DATACABLE MODEM PC	621
W958	351150-0405	CABLE OLFLEX 5X0,75 MM2 LIGHT/GREY	625
X			
X001	1511800-0100	POWER SIDE,BOTTOM TERMINAL BLOCK	653, 655

Pos	Part No	Description	Page No
X			
X002	1511802-0100	LOGIC BOTTOM TERMINAL BLOCK	653, 655
X003	1511804-0100	LOGIC SIDE,TOP TERMINAL BLOCK	653, 655
X005	1517659-0100	MODEM	711
X008	1511828-0100	X008	653, 655
X009	1511829-0100	POWER SIDE,TOP TERMINAL BLOCK	653, 655
X011.1	90458-0871	HOUSING BULKHEAD MOUNTING HAN 6B-AGG-RB	727, 729
X011.2	90458-0875	HINGED FRAME HAN 6B FOR HOUSING	727, 729
X011	90458-0876	FEMALE INSERT HAN 6B 09 14002 2751	727, 729
X012	90110-0295	CONNECTOR 4 POLE + EARTH	601
X012	90110-0296	CONTACT SCREW	727, 729
X012.1	90110-0371	PLUG HOOD	601
X012.1	90457-0050	BULKHEAD HOUSING 149760	727, 729
X013	90110-0295	CONNECTOR 4 POLE + EARTH	549, 551
X013	90110-0296	CONTACT SCREW	727, 729
X013.1	90110-0371	PLUG HOOD	549, 551
X013.1	90457-0050	BULKHEAD HOUSING 149760	727, 729
X014	90110-0296	CONTACT SCREW	727, 729
X014.1	90457-0050	BULKHEAD HOUSING 149760	727, 729
X015	90110-0150	MALE INSERT 121110 0000	601
X015	90110-0151	FEMALE INSERT 24-POL 121130 0000	731
X015.1	90110-0152	CABLE HOOD 24-POL 70.352.2428.1	601
X015.1	90110-0153	CHASSIS HOUSING 24-P CHI 24, 121240 0000	731
X016	90110-0150	MALE INSERT 121110 0000	601
X016	90110-0151	FEMALE INSERT 24-POL 121130 0000	731
X016.1	90110-0152	CABLE HOOD 24-POL 70.352.2428.1	601
X016.1	90110-0153	CHASSIS HOUSING 24-P CHI 24, 121240 0000	731
X017	90110-0163	FEMALE INSERT 70 300 0640 0	777
X017.1	90110-0226	CABLE HOOD 6-POL 70.350.0628.0	777
X018.2	90110-0150	MALE INSERT 121110 0000	507
X018.1	90110-0243	CONTACT HOUSING 16-POL 70.320.1628.0	735, 737, 739, 741
X018	90110-0247	FEMALE INSERT 70.200.0653.0	735, 737, 739, 741
X018.3	90110-0346	CABLE HOOD 1211220 00 00	507
X019	90110-0151	FEMALE INSERT 24-POL 121130 0000	735, 737, 739, 741
X019.1	90110-0153	CHASSIS HOUSING 24-P CHI 24, 121240 0000	735, 737, 739, 741
X019.2	90110-0156	MALE INSERT 70.210.0653.0	507
X019.3	90110-0244	CABLE HOOD 6-POL 70.350.1628.0	507
X020	90001-0033	WALL SOCKET OUTLET	653, 655
X021	90001-0033	WALL SOCKET OUTLET	653, 655
X027	90458-1279	PLUG CONNECTOR DP1	653, 655
X300	1511806-0100	X300	769
X452	90110-0028	CONTACT UNIT 4-POLE	711

Pos	Part No	Description	Page No
Z			
Z001	90082-0013	OVERVOLTAGE PROTECTOR	771
Z002	90024-0060	POWER LINE FILTER, 80 A 250/440 VAC	769
Z003	90024-0036	FILTERED TERMINAL BLOCK	769
Z003.1	1285108-0000	COVER	769
Z004	90024-0047	EMI SUPPRESSION FERRITE	653, 655
Z005	90024-0047	EMI SUPPRESSION FERRITE	653, 655
Z006	90024-0047	EMI SUPPRESSION FERRITE	653, 655
Z007	90024-0047	EMI SUPPRESSION FERRITE	655
Z008	90430-0326	FILTER 6SE3290-0BA87-0FB2	653, 655
Z009	90430-0326	FILTER 6SE3290-0BA87-0FB2	655
Z010	90024-0047	EMI SUPPRESSION FERRITE	653, 655
Z012	90430-0326	FILTER 6SE3290-0BA87-0FB2	653, 655
Z013	90024-0047	EMI SUPPRESSION FERRITE	653, 655
Z015	90430-0330	FILTER 6SE3290-0DC87-0FB4	653, 655
Z016	90024-0047	EMI SUPPRESSION FERRITE	653, 655
Z017	90430-0326	FILTER 6SE3290-0BA87-0FB2	653, 655
Z018	90024-0047	EMI SUPPRESSION FERRITE	653, 655
Z019	90458-1162	FILTER, 6 A, 250 VAC	653, 655
Z020	90024-0047	EMI SUPPRESSION FERRITE	653, 655

Pos	Part No	Description	Page No	Pos	Part No	Description	Page No

Machine Type	Group Description	Page No

Tetra Pak

SPC binder labels. 30 mm Full width *Note! This page is generated* **automatically.**
using the **variable definitions** *made in the* **front page** *file!!*

TBA/19 020V
648160-2000
Issue: 2003-05 Doc No: SPC-81656-0105

TBA/19 020V
648160-2000
Issue: 2003-05 Doc No: SPC-81656-0105

TBA/19 020V
648160-2000
Issue: 2003-05 Doc No: SPC-81656-0105

TBA/19 020V
648160-2000
Issue: 2003-05 Doc No: SPC-81656-0105

TBA/19 020V
648160-2000
Issue: 2003-05 Doc No: SPC-81656-0105

TBA/19 020V
648160-2000
Issue: 2003-05 Doc No: SPC-81656-0105

TBA/19 020V
648160-2000
Issue: 2003-05 Doc No: SPC-81656-0105

TBA/19 020V
648160-2000
Issue: 2003-05 Doc No: SPC-81656-0105

TBA/19 020V
648160-2000
Issue: 2003-05 Doc No: SPC-81656-0105

TBA/19 020V
648160-2000
Issue: 2003-05 Doc No: SPC-81656-0105

TBA/19 020V
648160-2000
Issue: 2003-05 Doc No: SPC-81656-0105

TBA/19 020V
648160-2000
Issue: 2003-05 Doc No: SPC-81656-0105

TBA/19 020V
648160-2000
Issue: 2003-05 Doc No: SPC-81656-0105